STATE OF OHIO
DEPARTMENT OF TRANSPORTATION

LAK-608-3.37

CONCORD TOWNSHIP
LAKE COUNTY

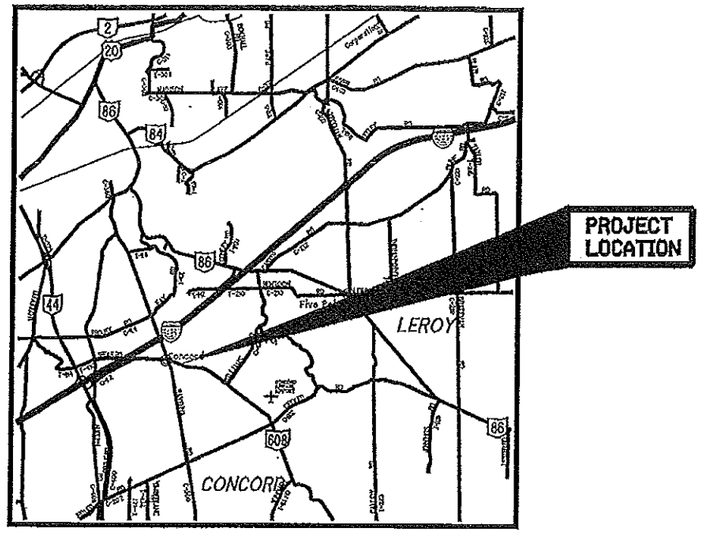

LOCATION MAP

LATITUDE: N41°40'25" LONGITUDE: W81°13'15"

SCALE IN MILES
0 1 2 3 4

PORTION TO BE IMPROVED
INTERSTATE HIGHWAY
FEDERAL ROUTES
STATE ROUTES
COUNTY & TOWNSHIP ROADS
OTHER ROADS

DESIGN DESIGNATION

CURRENT ADT (2017)	2700
DESIGN YEAR ADT (2037)	2700
DESIGN HOURLY VOLUME (2037)	240
DIRECTIONAL DISTRIBUTION	53%
TRUCKS (24 HOUR B&C)	5%
DESIGN SPEED	40 MPH
LEGAL SPEED	35 MPH
DESIGN FUNCTIONAL CLASSIFICATION:	
URBAN COLLECTOR	
NHS PROJECT	NO

DESIGN EXCEPTIONS

NONE

UNDERGROUND UTILITIES

CONTACT BOTH SERVICES
CALL TWO WORKING DAYS
BEFORE YOU DIG

CALL
1-800-362-2764
(TOLL FREE)
OHIO UTILITIES PROTECTION SERVICE
NON-MEMBERS
MUST BE CALLED DIRECTLY

OIL & GAS PRODUCERS UNDERGROUND
PROTECTION SERVICE CALL: **1-800-925-0988**

PLAN PREPARED BY:
Thomas Fok & Associates, Inc.
Consulting Engineers & Surveyors
TF ASSOCIATES EDGE CERTIFIED CONSULTANT
3895 Mahoning Ave | Youngstown OH | 44515 | 330.799.3501

ENGINEERS SEAL:
SHEETS 1-44
STATE OF OHIO STEPHEN D. LETTIERI E-64076 REGISTERED PROFESSIONAL ENGINEER
SIGNED: Stephen D. Lettieri
DATE: NOVEMBER 2, 2016

ENGINEERS SEAL:
SHEETS 45-55
STATE OF OHIO WEN H. TSENG 59368 REGISTERED PROFESSIONAL ENGINEER
SIGNED: Wen Tseng
DATE: NOVEMBER 2, 2016

INDEX OF SHEETS:

TITLE SHEET	1
SCHEMATIC PLAN	2
TYPICAL SECTIONS	3
GENERAL NOTES	4-5
MAINTENACE OF TRAFFIC	6-7
GENERAL SUMMARY	8-9, 9A
SUBSUMMARIES	10-11
PROJECT SITE PLAN	12
PLAN & PROFILE	13-14
CROSS SECTIONS - S.R. 608	15-26
CROSS SECTIONS - BIKEPATH	27-32
UNDERDRAIN & DRIVE DETAILS	33
STORM SEWER PROFILES	34
RETAINING WALLS	35-36
SANITARY SEWER	37-39
WATER WORK	40-42
TRAFFIC CONTROL	43
LIGHTING	44
STRUCTURES (20' SPAN AND UNDER)	45-55
RIGHT OF WAY	56-60
FOUNDATION EXPLORATION	

STANDARD CONSTRUCTION DRAWINGS

								SUPPLEMENTAL SPECIFICATIONS		SPECIAL PROVISIONS
BP-3.1	7/18/14	MGS-1.1	7/19/13	TC-42.20	10/18/13			800-2016	10-21-16	WATERWAY PERMIT
BP-4.1	7/19/13	MGS-2.1	7/19/13	TC-62.10	10/18/13			832	1-17-14	CONDITIONS
		MGS-2.3	7/18/14	TC-65.10	1/17/14					9/30/2016
CB-1.1	1/15/16	MGS-4.2	7/19/13	TC-65.11	7/15/16					
HW-2.1	1/15/16	HL-30.11	7/15/16							
HW-2.2	1/15/16	HL-30.22	1/17/14							
		HL-40.10	1/17/14							
MH-1.2	1/15/16	HL-40.20	7/15/16							
		HL-60.31	7/17/15							
DM-1.1 -	1/15/16									
DM-1.2	1/18/13	MT-101.60	7/19/13							
DM-4.2	7/20/12	MT-105.10	7/19/13							
DM-4.3	1/15/16									
DM-4.4	1/15/16	TC-41.20	10/18/13							
		TC-41.30	10/18/13							

PROJECT DESCRIPTION

REPLACEMENT OF THE EXISTING FIVE-SPAN STRUCTURE WITH A NEW 20' SPAN X 10' RISE CONCRETE ARCH CULVERT ON CAST-IN-PLACE PEDESTALS. ADDITIONAL UPGRADES INCLUDE: IMPROVED VERTICAL ALIGNMENT, NEW PAVEMENT MARKINGS AND SIGNS, AND DRAINAGE IMPROVEMENTS.

PROJECT EARTH DISTURBED AREA:	1.15 ACRES
ESTIMATED CONTRACTOR EARTH DISTURBED AREA:	0.25 ACRES
NOTICE OF INTENT EARTH DISTURBED AREA:	4.90 ACRES

2016 SPECIFICATIONS

THE STANDARD SPECIFICATIONS OF THE STATE OF OHIO, DEPARTMENT OF TRANSPORTATION, INCLUDING CHANGES AND SUPPLEMENTAL SPECIFICATIONS LISTED IN THE PROPOSAL SHALL GOVERN THIS IMPROVEMENT.

I HEREBY APPROVE THESE PLANS AND DECLARE THAT THE MAKING OF THIS IMPROVEMENT WILL REQUIRE THE CLOSING TO TRAFFIC OF THE HIGHWAY AND THAT DETOURS WILL BE PROVIDED AS INDICATED ON SHEETS 6-7.

APPROVED Mark S. Kl
DATE 11-03-16 DISTRICT DEPUTY DIRECTOR

APPROVED Jerry Wray
DATE 11-28-16 DIRECTOR, DEPARTMENT OF TRANSPORTATION

FEDERAL PROJECT NO. E-130(589)

PID NO. 93229

CONSTRUCTION PROJECT NO.

RAILROAD INVOLVEMENT NONE

LAK-608-3.37

LAK - SR 608-03.37
170061 PID - 93229
Dist 12 2/2/2017

Contract Proposal Available @ www.
Contracts.dot.state.oh.us/home

DATE: 02-NOV-16
FILE: P:\LAK\93229\ROADWAY\SHEETS\93229GT001.DGN
SCALE: 1 : 1

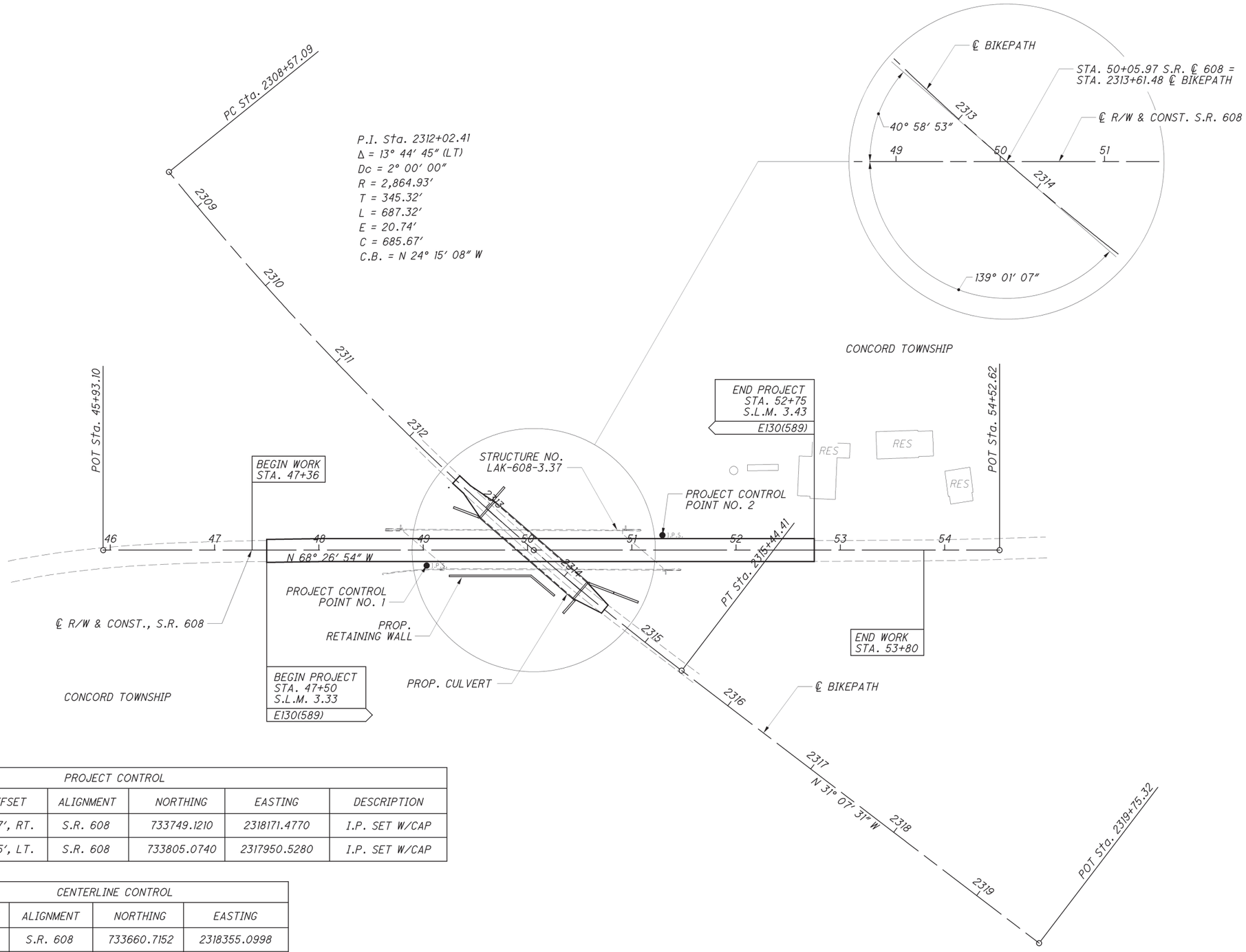

PROJECT CONTROL						
POINT NO.	STATION	OFFSET	ALIGNMENT	NORTHING	EASTING	DESCRIPTION
1	49+03.26	14.77′, RT.	S.R. 608	733749.1210	2318171.4770	I.P. SET W/CAP
2	51+29.32	14.35′, LT.	S.R. 608	733805.0740	2317950.5280	I.P. SET W/CAP

CENTERLINE CONTROL			
STATION	ALIGNMENT	NORTHING	EASTING
47+00	S.R. 608	733660.7152	2318355.0998
53+00	S.R. 608	733881.1194	2317797.0478
2312+00	BIKEPATH	733627.8056	2318140.9273
2313+61.48	BIKEPATH	733773.1103	2318070.5212
2315+44.41	BIKEPATH	733932.6133	2317981.0268

NOTE: NORTHING AND EASTING VALUES SHOWN ARE PROJECT COORDINATES.
SEE GENERAL NOTE SHEET 4 FOR RELATION TO OHIO STATE PLANE GRID VALUES.

THERE ARE NO EXISTING LANDSCAPED AREAS WITHIN THE WORK AREA.

HORIZONTAL SCALE IN FEET
0 25 50 100

CALCULATED SDL
CHECKED WT

SCHEMATIC PLAN

LAK-608-3.37

P:\LAK\93229\Roadway\Sheets\93229GB001.dgn Sheet 4/8/2016 11:55:00 AM slettieri

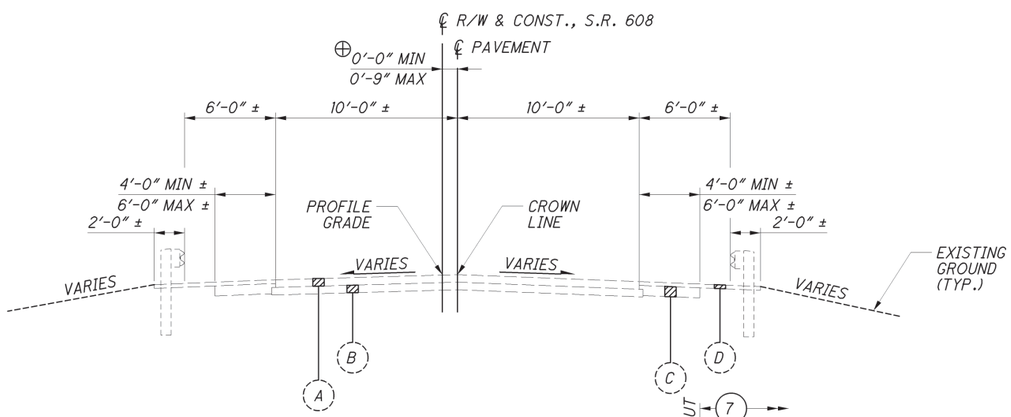

EXISTING SECTION - S.R. 608

STA 47+50.00 AND STA 52+75.00

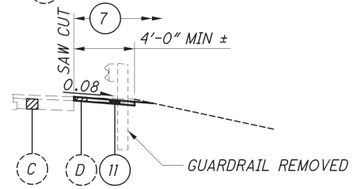

SHOULDER RESTORATION - S.R. 608

STA 52+75.00 TO STA 53+80.00

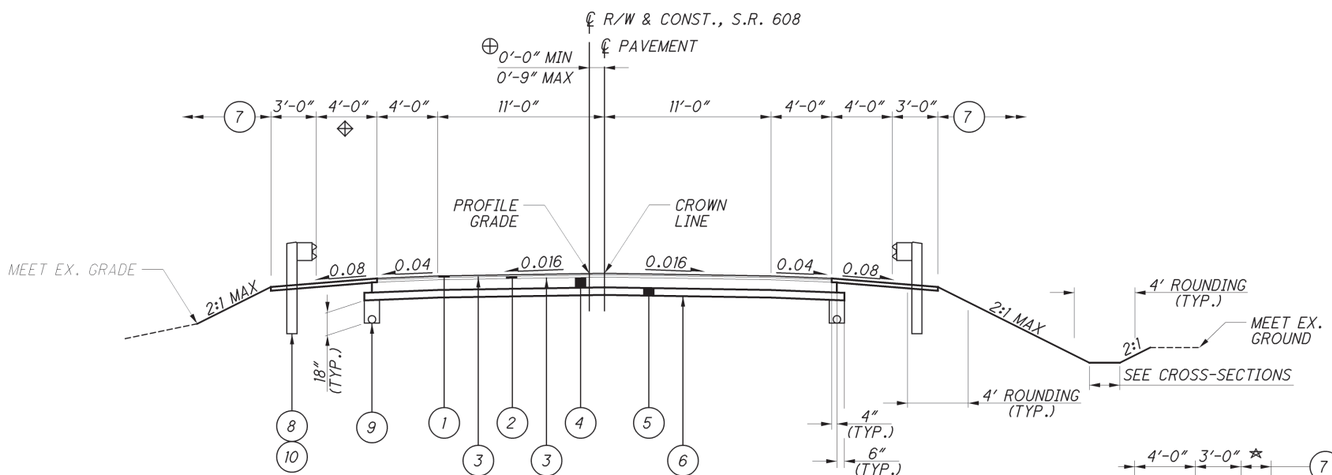

NORMAL SECTION - S.R. 608

STA 47+50.00 TO STA 52+75.00

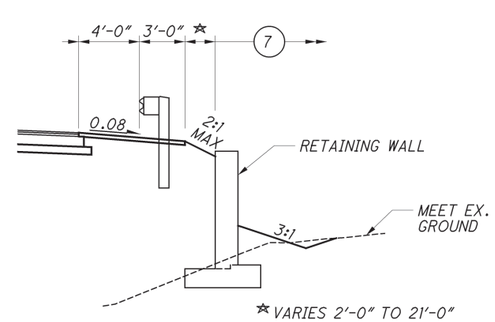

WALL SECTION - S.R. 608

STA 49+25.00 TO STA 50+25.20

LEGEND

1 — ITEM 441 - 1 1/4" ASPHALT CONCRETE SURFACE COURSE, TYPE 1 (448), APP

2 — ITEM 441 - 1 3/4" ASPHALT CONCRETE INTERMEDIATE COURSE, TYPE 2, (448)

3 — ITEM 407 - NON-TRACKING TACK COAT (@ 0.05 GAL./S.Y.)

4 — ITEM 301 - 6" ASPHALT CONCRETE BASE, PG64-22

5 — ITEM 304 - 6" AGGREGATE BASE

6 — ITEM 204 - SUBGRADE COMPACTION

7 — ITEM 659 - SEEDING AND MULCHING

8 — ITEM 606 - GUARDRAIL, TYPE MGS

9 — ITEM 605 - 6" BASE PIPE UNDERDRAINS WITH GEOTEXTILE FABRIC

10 — ITEM 441 - 3" ASPHALT CONCRETE INTERMEDIATE COURSE, TYPE 1, (448), (UNDER GUARDRAIL), AS PER PLAN

11 — ITEM 203 - EXCAVATION / EMBANKMENT

A — 6"± EXISTING ASPHALT PAVEMENT

B — 6"± EXISTING ASPHALT BASE

C — 8"± EXISTING AGGREGATE BASE

D — 3"± EXISTING ASPHALT PAVEMENT

E — 6"± EXISTING AGGREGATE BASE

⊕ VARIES FROM 0'-9" @ STA. 47+50 TO 0'-0" @ STA. 48+00

✡ VARIES FROM 4'-9" @ STA. 47+53 TO 4'-0" @ STA. 48+00

VARIES 5'-0" @ STA 2312+75.00 TO 10'-0" @ STA 2313+01.48
VARIES 10'-0" @ STA 2314+21.48 TO 5'-0" @ STA 2314+50.00

VARIES 0" @ STA 2312+75.00 TO 7 1/2" @ STA 2313+01.48
VARIES 7½" @ STA 2314+21.48 TO 0" @ STA 2314+50.00

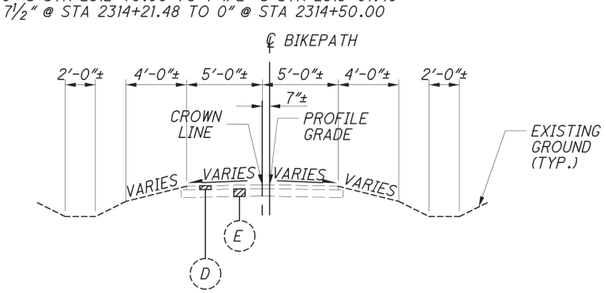

EXISTING SECTION - BIKEPATH

STA 2312+75 AND STA 2314+50

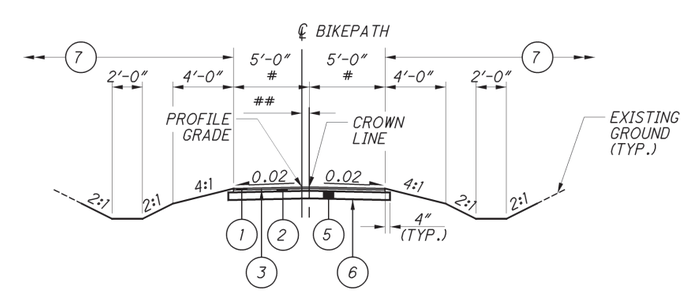

PROPOSED SECTION - BIKEPATH

STA 2312+61.00 TO STA 2313+01.48
STA 2313+01.48 TO STA 2314+21.48 (SEE SHEET NO. 48 FOR TYPICAL)
STA 2314+21.48 TO STA 2314+50.00

TYPICAL SECTIONS

LAK-608-3.37

3
60

SCALE: 1 = 5E

ROUNDING

THE ROUNDING AT SLOPE BREAKPOINTS SHOWN ON THE TYPICAL SECTIONS APPLIES TO ALL CROSS-SECTIONS EVEN THOUGH OTHERWISE SHOWN.

UTILITIES

LISTED BELOW ARE ALL UTILITIES LOCATED WITHIN THE PROJECT CONSTRUCTION LIMITS TOGETHER WITH THEIR RESPECTIVE OWNERS:

DOMINION EAST OHIO
320 SPRINGSIDE DRIVE, SUITE 320
AKRON, OHIO 44333
(330) 664-2575
CONTACT: MICHAEL W. NORTH

ORWELL NATURAL GAS
8500 STATION ST., SUITE 100
MENTOR, OHIO 44060-4336
(440) 701-5100
CONTACT: JEFF HEIDNIK

CITY OF PAINESVILLE
ATTN: WATER DEPARTMENT
9565 HEADLANDS RD.
MENTOR, OHIO 44077
440-392-9565
CONTACT: BRUCE HOOK

TIME WARNER
7820 DIVISION DR.
MENTOR, OHIO 44060
(216) 575-8016
CONTACT: MATT HANNAH

ORWELL TRUMBULL PIPELINE
3511 LOST NATION ROAD, SUITE 213
WILLOUGHBY, OHIO 44094
(440) 942-8489
CONTACT: ELLIOTT DULY

CONCORD TOWNSHIP
ATTN: SERVICE DEPT.
7229 RAVENNA ROAD
CONCORD TOWNSHIP, OH 44077
(440) 354-7500 EXT. 104
CONTACT: KATHY MITCHELL

LAKE COUNTY ENGINEER'S OFFICE
550 BLACKBROOK ROAD
PAINESVILLE, OHIO 44077
(440) 350-2770
CONTACT: JAMES GILLS, PE, PS

THE ILLUMINATING COMPANY
7755 AUBURN RD.
PAINESVILLE, OHIO 44077
440-358-4991
CONTACT: RALPH N. DELLIGATTI

LAKE COUNTY DEPT. OF UTILITIES
105 MAIN ST.
PO BOX 490
PAINESVILLE, OH 44077
(440) 350-2649
CONTACT: ALBERT J. SAARI, PE

THE LOCATION OF THE UNDERGROUND UTILITIES SHOWN ON THE PLANS ARE AS OBTAINED FROM THE OWNERS AS REQUIRED BY SECTION 153.64 O.R.C.

CONSTRUCTION NOISE

ACTIVITIES AND LAND USE ADJACENT TO THIS PROJECT MAY BE AFFECTED BY CONSTRUCTION NOISE. IN ORDER TO MINIMIZE ANY ADVERSE CONSTRUCTION NOISE IMPACTS, DO NOT OPERATE POWER-OPERATED CONSTRUCTION-TYPE DEVICES BETWEEN THE HOURS OF 7 PM AND 8 AM. IN ADDITION, DO NOT OPERATE AT ANY TIME ANY DEVICE IN SUCH A MANNER THAT THE NOISE CREATED SUBSTANTIALLY EXCEEDS THE NOISE CUSTOMARILY AND NECESSARILY ATTENDANT TO THE REASONABLE AND EFFICIENT PERFORMANCE OF SUCH EQUIPMENT.

SURVEYING PARAMETERS

PRIMARY PROJECT CONTROL MONUMENTS GOVERN ALL POSITIONING ON ODOT PROJECTS. SEE SHEET 2 OF THE PLANS FOR A TABLE CONTAINING PROJECT CONTROL INFORMATION.

USE THE FOLLOWING PROJECT CONTROL, VERTICAL POSITIONING, AND HORIZONTAL POSITIONING PARAMETERS FOR ALL SURVEYING:

PROJECT CONTROL

POSITIONING METHOD: ODOT VRS GPS
MONUMENT TYPE: B

VERTICAL POSITIONING

ORTHOMETRIC HEIGHT DATUM: NAVD 88
GEOID: GEOID 2012A

HORIZONTAL POSITIONING

REFERENCE FRAME: - NAD83 (2011)
ELLIPSOID: GRS 80
MAP PROJECTION: LAMBERT CONFORMAL CONIC
COORDINATE SYSTEM: OHIO NORTH ZONE (3401)
COMBINED SCALE FACTOR: 0.99995842
ORIGIN OF COORDINATE SYSTEM: 0,0

USE THE POSITIONING METHODS AND MONUMENT TYPE USED IN THE ORIGINAL SURVEY TO RESTORE ALL MONUMENTS RELATED TO PRIMARY PROJECT CONTROL THAT ARE DAMAGED OR DESTROYED BY CONSTRUCTION ACTIVITIES. RESTORE THE DAMAGED OR DESTROYED MONUMENTS IN ACCORDANCE WITH CMS 623.

UNITS ARE IN U.S. SURVEY FEET. USE THE FOLLOWING CONVERSION FACTOR: 1 METER = 3.280833333 U.S. SURVEY FEET.

CROSSINGS AND CONNECTIONS TO EXISTING PIPES AND UTILITIES

WHERE PLANS PROVIDE FOR A PROPOSED CONDUIT TO BE CONNECTED TO, OR CROSS OVER OR UNDER AN EXISTING SEWER OR UNDERGROUND UTILITY, THE CONTRACTOR SHALL LOCATE THE EXISTING PIPES OR UTILITIES BOTH AS TO LINE AND GRADE BEFORE STARTING TO LAY THE PROPOSED CONDUIT.

IF IT IS DETERMINED THAT THE ELEVATION OF THE EXISTING CONDUIT, OR EXISTING APPURTENANCE TO BE CONNECTED, DIFFERS FROM THE PLAN ELEVATION OR RESULTS IN A CHANGE IN THE PLAN CONDUIT SLOPE, THE ENGINEER SHALL BE NOTIFIED BEFORE STARTING CONSTRUCTION OF ANY PORTION OF THE PROPOSED CONDUIT WHICH WILL BE AFFECTED BY THE VARIANCE IN THE EXISTING ELEVATIONS.

IF IT IS DETERMINED THAT THE PROPOSED CONDUIT WILL INTERSECT AN EXISTING SEWER OR UNDERGROUND UTILITY IF CONSTRUCTED AS SHOWN ON THE PLAN, THE ENGINEER SHALL BE NOTIFIED BEFORE STARTING CONSTRUCTION OF ANY PORTION OF THE PROPOSED CONDUIT WHICH WOULD BE AFFECTED BY THE INTERFERENCE WITH AN EXISTING FACILITY.

PAYMENT FOR ALL THE OPERATIONS DESCRIBED ABOVE SHALL BE INCLUDED IN THE CONTRACT PRICE FOR THE PERTINENT 611 CONDUIT ITEM.

POST CONSTRUCTION STORM WATER TREATMENT

THIS PLAN UTILIZES STRUCTURAL BEST MANAGEMENT PRACTICES (BMP'S) FOR POST CONSTRUCTION STORM WATER TREATMENT.

ITEM 441 ASPHALT CONCRETE SURFACE COURSE, TYPE 1, (448), AS PER PLAN

THE COARSE VIRGIN AGGREGATE FOR THIS ITEM SHALL BE A BLEND OF 60% MIN. AIR COOLED BLAST FURNACE SLAG (ACBFS) OR TRAP ROCK FROM ONTARIO WITH LIMESTONE COMPRISING THE REMAINING PERCENTAGE.

USE A PG64-22 BINDER.

ASPHALT CONCRETE SURFACE COURSE SEALING REQUIREMENTS

IN ADDITION TO THE GUTTER SEALING REQUIREMENTS SPECIFIED IN SCD BP-3.1 AND C&MS 401.15, THE CONTRACTOR SHALL SEAL THE FOLLOWING LOCATIONS:

- ALL CASTINGS INCLUDING BUT NOT LIMITED TO MONUMENTS, MANHOLES, WATER VALVES, CATCH BASINS, CURB INLETS.
- BUTT JOINTS AND FEATHER JOINTS INCLUDING BRIDGE APPROACHES.
- BUTT JOINT BETWEEN PAVED SHOULDER AND DRIVEWAY ASPHALT AND THE TAPERED EDGE WHEN FEATHERING TO AN EXISTING ASPHALT DRIVEWAY.
- PERIMETER OF ALL PAVEMENT REPAIRS OR OTHER ASPHALT INLAYS WHEN THE REPAIR/INLAY IS NOT OVERLAID WITH AN ASPHALT CONCRETE SURFACE COURSE.
- ALL COLD LONGITUDINAL JOINTS BETWEEN PAVED SHOULDERS AND GUARDRAIL ASPHALT.

THE MATERIAL USED SHALL BE A CERTIFIED 702.01 PG BINDER. THE WIDTH OF THE SEALER SHALL BE 2-3 INCHES.

ANY ADDITIONAL COSTS ASSOCIATED WITH THE WORK IDENTIFIED IN THIS NOTE SHALL BE INCLUDED IN THE APPROPRIATE ASPHALT CONCRETE SURFACE COURSE ITEM OF WORK.

REVIEW OF DRAINAGE FACILITIES

BEFORE ANY WORK IS STARTED ON THE PROJECT AND AGAIN BEFORE FINAL ACCEPTANCE BY THE STATE, REPRESENTATIVES OF THE STATE AND THE CONTRACTOR, ALONG WITH LOCAL REPRESENTATIVES, SHALL MAKE AN INSPECTION OF ALL EXISTING SEWERS WHICH ARE TO REMAIN IN SERVICE AND WHICH MAY BE AFFECTED BY THE WORK. THE CONDITION OF THE EXISTING CONDUITS AND THEIR APPURTENANCE SHALL BE DETERMINED FROM FIELD OBSERVATIONS. RECORDS OF THE INSPECTION SHALL BE KEPT IN WRITING BY THE STATE.

ALL NEW CONDUITS, INLETS, CATCH BASINS, AND MANHOLES CONSTRUCTED AS A PART OF THE PROJECT SHALL BE FREE OF ALL FOREIGN MATTER AND IN A CLEAN CONDITION BEFORE THE PROJECT WILL BE ACCEPTED BY THE STATE.

ALL EXISTING SEWERS INSPECTED INITIALLY BY THE ABOVE MENTIONED PARTIES SHALL BE MAINTAINED AND LEFT IN A CONDITION REASONABLY COMPARABLE TO THAT DETERMINED BY THE ORIGINAL INSPECTION. ANY CHANGE IN THE CONDITION RESULTING FROM THE CONTRACTOR'S OPERATIONS SHALL BE CORRECTED BY THE CONTRACTOR TO THE SATISFACTION OF THE ENGINEER.

PAYMENT FOR ALL OPERATIONS DESCRIBED ABOVE SHALL BE INCLUDED IN THE CONTRACT PRICE FOR THE PERTINENT 611 CONDUIT ITEMS.

ITEM SPECIAL - ASBESTOS ABATEMENT

AN ASBESTOS SURVEY OF THE CONCORD-HAMBDEN ROAD BRIDGE OVER A MULTI-PURPOSE PATH WAS COMPLETED ON OCTOBER 29, 2013 BY A CERTIFIED ASBESTOS HAZARD EVALUATION SPECIALIST. THE SURVEY DID NOT IDENTIFY ANY SUSPECT ASBESTOS CONTAINING MATERIALS.

THE REMOVAL AND DISPOSAL OF ALL ASBESTOS CONTAINING MATERIAL WITHIN THE PROJECT WORK LIMITS DURING DEMOLITION OF THE BRIDGE MUST COMPLY WITH THE OHIO ADMINISTRATIVE CODE, THE OCCUPATIONAL SAFETY AND HEALTH ADMINISTRATION (OSHA) REGULATIONS, AND THE NATIONAL EMISSION STANDARD FOR HAZARDOUS AIR POLLUTANTS (NESHAP) STANDARDS FOR ASBESTOS.

A COPY OF THE OHIO ENVIRONMENTAL PROTECTION AGENCY (OEPA) NOTIFICATION OF DEMOLITION AND RENOVATION FORM WITH SECTIONS I-IV, VI, VII, AND XVI COMPLETED IS INCLUDED WITH THE BID PACKAGE. THE CONTRACTOR SHALL COMPLETE SECTIONS V, VIII-XVIII OF THE SIGNED FORM AND SUBMIT THE COMPLETED FORM TO THE LOCAL AIR AUTHORITY AT LEAST TEN (10) DAYS PRIOR TO DEMOLITION OF THE BRIDGE. THE CONTRACTOR SHALL PROVIDE A COPY OF THE COMPLETED FORM TO THE ENGINEER. THE LOCAL AIR AUTHORITY IS:

BERT MECHENBIER
LAKE COUNTY
AIR POLLUTION CONTROL
33 MILL STREET
PAINESVILLE, OHIO 44077

THE CONTRACTOR SHALL PROVIDE AN INDIVIDUAL TRAINED IN THE PROVISIONS OF NESHAP THAT WILL BE ON-SITE DURING REMOVAL OF THE ASBESTOS CONTAINING MATERIALS. IN ADDITION TO THE ASBESTOS CONTAINING MATERIAL IDENTIFIED IN THE ASBESTOS SURVEY REPORT, ANY ADDITIONAL NON-VISIBLE ASBESTOS ENCOUNTERED WITHIN THE PROJECT WORK LIMITS SHALL ALSO BE MONITORED BY THIS INDIVIDUAL.

THE CONTRACTOR SHALL FURNISH ALL LABOR, EQUIPMENT, AND MATERIALS NECESSARY TO COMPLETE, SUBMIT, AND COMPLY WITH THE OEPA NOTIFICATION FORM AND TO REMOVE, TRANSPORT, AND DISPOSE OF THE MATERIALS CONTAINING ASBESTOS FROM WITHIN THE PROJECT WORK LIMITS. PAYMENT OF THIS WORK SHALL BE INCLUDED IN THE BID LUMP SUM PRICE ITEM SPECIAL - ASBESTOS ABATEMENT.

ITEM	UNIT
ITEM SPECIAL - ASBESTOS ABATEMENT	LUMP SUM

WORK LIMITS

THE WORK LIMITS SHOWN ON THESE PLANS ARE FOR PHYSICAL CONSTRUCTION ONLY. PROVIDE THE INSTALLATION AND OPERATION OF ALL WORK ZONE TRAFFIC CONTROL AND WORK ZONE TRAFFIC CONTROL DEVICES REQUIRED BY THESE PLANS WHETHER INSIDE OR OUTSIDE THESE WORK LIMITS.

CALCULATED SDL CHECKED WT

GENERAL NOTES

LAK-608-3.37

P:\LAK\93229\Roadway\Sheets\93229GN001.dgn Sheet 4/8/2016 1:13:42 PM slettieri

SEEDING AND MULCHING

THE FOLLOWING QUANTITIES ARE PROVIDED TO PROMOTE GROWTH AND CARE OF PERMANENT SEEDED AREAS:

659, SOIL ANALYSIS TEST 2 EACH

659, TOPSOIL 301 CY

659, SEEDING AND MULCHING 2,714 SY

659, REPAIR SEEDING AND MULCHING 136 SY

659, INTER-SEEDING 136 SY

659, COMMERCIAL FERTILIZER 0.40 TON

659, LIME 0.56 ACRE

659, WATER 15 MGAL

659, MOWING 6 MSF

SEEDING AND MULCHING SHALL BE APPLIED TO ALL AREAS OF EXPOSED SOIL BETWEEN THE RIGHT-OF-WAY LINES, AND WITHIN THE CONSTRUCTION LIMITS FOR AREAS OUTSIDE THE RIGHT-OF-WAY LINES COVERED BY WORK AGREEMENT OR SLOPE EASEMENT. QUANTITY CALCULATIONS FOR SEEDING AND MULCHING ARE BASED ON THESE LIMITS.

ITEM 204 - PROOF ROLLING

THE FOLLOWING QUANTITY IS PROVIDED IN THE GENERAL SUMMARY TO ADDRESS LOCATIONS REQUIRING PROOF ROLLING.

ITEM 204 - PROOF ROLLING 2 HOUR.

CLEARING AND GRUBBING

REMOVE ALL TREES AND STUMPS SPECIFICALLY MARKED FOR REMOVAL WITHIN THE CONSTRUCTION LIMITS UNDER THE LUMP SUM BID FOR ITEM 201, CLEARING AND GRUBBING. THE FOLLOWING IS AN APPROXIMATE ESTIMATE OF THE NUMBER OF TREES AND STUMPS TO BE REMOVED.

SIZES	NO. TREES	NO. STUMPS	TOTAL
18"	4	0	4
30"	1	0	1

ITEM 606 - ANCHOR ASSEMBLY, MGS TYPE E

THIS ITEM SHALL CONSIST OF FURNISHING AND INSTALLING ANY OF THE GUARDRAIL END TERMINALS FOR TYPE MGS GUARDRAIL AS LISTED ON ROADWAY ENGINEERING'S WEB PAGE UNDER ROADSIDE SAFETY DEVICES FOR APPROVED GUARDRAIL END TREATMENTS. INSTALLATION SHALL BE AT THE LOCATIONS SPECIFIED IN THE PLANS, IN ACCORDANCE WITH THE MANUFACTURER'S SPECIFICATIONS.

THE FACE OF THE TYPE E IMPACT HEAD SHALL BE COVERED WITH A SHEET OF TYPE G REFLECTIVE SHEETING, PER CMS 730.19.

REFER TO THE MANUFACTURER'S INSTRUCTIONS REGARDING THE INSTALLATION OF, AND THE GRADING AROUND THE FOUNDATION TUBES AND GROUND STRUT. THE TOP OF ANY FOUNDATION TUBE SHOULD BE LESS THAN 4 INCHES ABOVE THE GROUND. THE PLACEMENT OF THE FOUNDATION TUBES SHOULD BE AN APPROPRIATE DEPTH BELOW THE LEVEL LINE IN ORDER TO MAINTAIN THE FINISHED GUARDRAIL HEIGHT OF 31 INCHES FROM THE EDGE OF THE SHOULDER.

ON-SITE GRADING IS REQUIRED IF THE TOP OF THE FOUNDATION TUBES OR TOP OF THE GROUND STRUT DOES PROJECT MORE THAN 4 INCHES ABOVE THE GROUND LINE.

PAYMENT FOR THE ABOVE WORK SHALL BE MADE AT THE UNIT PRICE BID FOR ITEM 606, ANCHOR ASSEMBLY, MGS TYPE E, EACH, AND SHALL INCLUDE ALL LABOR, TOOLS, EQUIPMENT AND MATERIALS NECESSARY TO CONSTRUCT A COMPLETE AND FUNCTIONAL ANCHOR ASSEMBLY SYSTEM, INCLUDING ALL RELATED TRANSITIONS, REFLECTIVE SHEETING, HARDWARE, GRADING, EMBANKMENT AND EXCAVATION NOT SEPARATELY SPECIFIED, AS REQUIRED BY THE MANUFACTURER.

ITEM - 619 FIELD OFFICE, TYPE B, AS PER PLAN

A TYPE B FIELD OFFICE IS REQUIRED FOR THIS PROJECT

THE FOLLOWING REVISIONS TO EQUIPMENT SUPPLIED WITH THE TYPE B FIELD OFFICE, AS SPECIFIED IN TABLE 619.02-1 FIELD OFFICE, SHALL APPLY:

THE MULTI-FUNCTION COPIER SUPPLIED MUST MEET THE REQUIREMENTS OF THE MULTI-FUNCTION COPIER SUPPLIED WITH THE TYPE C FIELD OFFICE.

THE BROADBAND INTERNET CONNECTION MUST MEET THE REQUIREMENTS OF THE MINIMUM DOWNLOAD SPEED SUPPLIED WITH THE TYPE C FIELD OFFICE.

ALL OTHER FIELD OFFICE ITEMS SUPPLIED SHALL MEET THE REQUIREMENTS OF A TYPE B FIELD OFFICE.

CEMETERY PROTECTION

THE CONTRACTOR SHALL ERECT ITEM 607, SNOW FENCE WITHIN THE EXISTING RIGHT OF WAY ADJACENT TO THE CONCORD CEMETERY AS SHOWN ON SHEET NO. 13. THE CONTRACTOR AND HIS SUB-CONTRACTORS SHALL BE RESTRICTED FROM ENTERING THE CEMETERY OTHER THAN TO RECONSTRUCT THE WESTERLY CEMETERY DRIVE APPROACH SHOWN AS DR-1. DUE TO THE PROXIMITY OF THE GRAVE SITES NEAR THE DRIVE APPROACH, THE CONTRACTOR SHALL EXERCISE EXTREME CAUTION. PEDESTRIAN AND VEHICLE TRAFFIC OUTSIDE OF THE DRIVE APPROACH RECONSTRUCTION LIMITS AND TEMPORARY WORK EASEMENT IS STRICTLY PROHIBITED.

PAVING UNDER GUARDRAIL

THIS OPERATION SHALL INCLUDE PREPARATION OF THE GRADED SHOULDER USING ITEM 209 - RESHAPING UNDER GUARDRAIL, AS PER PLAN AND PAVING UNDER THE GUARDRAIL USING ITEM 441 - ASPHALT CONCRETE INTERMEDIATE COURSE, TYPE 1, (448), (UNDER GUARDRAIL), AS PER PLAN.

ITEM 209 - RESHAPING UNDER GUARDRAIL, AS PER PLAN SHALL CONSIST OF EXCAVATING TOPSOIL OR OLD ASPHALT CONCRETE, COMPACTING AND APPLYING HERBICIDE AS SPECIFIED IN THE PLANS AND IN ACCORDANCE WITH THE FOLLOWING:

ALL COLLECTED DEBRIS AND TOPSOIL, INCLUDING RHIZOMES, ROOTS, AND OTHER VEGETATIVE PLANT MATERIAL SHALL BE REMOVED AND DISPOSED OF AS SPECIFIED IN 105.17.

THE REMOVED MATERIAL SHALL BE REPLACED WITH MATERIAL AS DETAILED ON THE TYPICAL SECTIONS OR AS APPROVED BY THE ENGINEER.

HERBICIDE SHALL BE EPA APPROVED FOR PAVING UNDER GUARDRAIL. IT SHALL BE APPLIED TO THE PREPARED AREA AFTER FINAL LEVELING AND GRADING HAS BEEN COMPLETED. THE APPLICATION SHALL BE JUST PRIOR TO PAVING AND SHALL STRICTLY ADHERE TO THE MANUFACTURER'S INSTRUCTIONS. DO NOT SPRAY WITHIN 1000 FT. OF A STATE SCENIC RIVER.

EACH SUCCESSFUL BIDDER MUST BE LICENSED BY THE OHIO DEPARTMENT OF AGRICULTURE AS A COMMERCIAL APPLICATOR AND ALL PERSONS INVOLVED IN THE ACTUAL SPRAYING SHALL BE LICENSED AS COMMERCIAL OPERATORS IN THE APPROPRIATE SPRAY CATEGORY.

HERBICIDE LABEL, MATERIAL SAFETY DATA SHEET AND COPY OF APPLICATOR LICENSES SHALL BE SUBMITTED TO THE ENGINEER FOR VERIFICATION PRIOR TO COMMENCING WORK.

HERBICIDE LABEL, MATERIAL SAFETY DATA SHEET AND COPY OF APPLICATOR LICENSES SHALL BE SUBMITTED TO THE ENGINEER

ALL LABOR, EQUIPMENT AND MATERIALS REQUIRED TO PERFORM THE WORK OUTLINED ABOVE SHALL BE INCLUDED FOR PAYMENT UNDER ITEM - 209 RESHAPING UNDER GUARDRAIL, AS PER PLAN.

PAVING UNDER GUARDRAIL SHALL CONSIST OF PLACING ITEM 441 ASPHALT CONCRETE TO A DEPTH OF 3" AND A MAXIMUM WIDTH OF 4' USING ONE OF THE FOLLOWING METHODS:

METHOD A:
1. SET GUARDRAIL POSTS
2. PLACE ITEM 441

METHOD B:
1. PLACE ITEM 441
2. BORE ASPHALT AT POST LOCATIONS (MAY BE OMITTED IF STEEL POSTS ARE USED)
3. SET GUARDRAIL POSTS
4. PATCH AROUND POSTS. THE MATERIALS USED FOR PATCHING SHALL BE AN ASPHALT CONCRETE APPROVED BY THE ENGINEER. PATCHED AREAS SHALL BE COMPACTED USING EITHER HAND OR MECHANICAL METHODS. FINISHED SURFACES SHALL BE SMOOTH AND SLOPED TO DRAIN AWAY FROM THE POSTS.

ALL LABOR, EQUIPMENT, AND MATERIALS REQUIRED TO PERFORM THE WORK OUTLINED ABOVE, WITH THE EXCEPTION OF SETTING GUARDRAIL POSTS, SHALL BE INCLUDED FOR PAYMENT UNDER ITEM 441, ASPHALT CONCRETE, INTERMEDIATE COURSE, TYPE 1, (448), (UNDER GUARDRAIL), AS PER PLAN.

ITEM SPECIAL - MAILBOX SUPPORT

THIS WORK SHALL CONSIST OF FURNISHING AND ERECTING MAILBOX SUPPORTS AND ANY ASSOCIATED MOUNTING HARDWARE IN ACCORDANCE WITH PLAN DETAILS, AND ATTACHING AN OWNER-SUPPLIED MAILBOX AT LOCATIONS SPECIFIED IN THE PLAN, OR OTHERWISE ESTABLISHED BY THE ENGINEER.

WOOD POSTS SHALL BE NOMINAL 4 INCHES BY 4 INCHES SQUARE OR 4.5 INCHES DIAMETER ROUND, AND CONFORM TO 710.14.

STEEL POSTS SHALL BE NOMINAL PIPE SIZE 2 INCHES I.D., AND CONFORM TO AASHTO M 181.

ALL HARDWARE INCLUDING BUT NOT LIMITED TO PLATES, SCREWS, BOLTS, AND ETC. SHALL BE COMMERCIAL-GRADE GALVANIZED STEEL.

POSTS SHALL BE SET PER THE FIRST PARAGRAPH OF 606.03, AND SHALL IN NO INSTANCE BE ENCASED IN CONCRETE.

SUPPORT HARDWARE SHALL ACCOMMODATE EITHER A SINGLE OR A DOUBLE MAILBOX INSTALLATION, AND NO MORE THAN TWO BOXES MAY BE MOUNTED ON A SINGLE POST.

THE MAILBOX SHALL BE SECURELY AND NEATLY ATTACHED BY THE CONTRACTOR TO THE NEW SUPPORT. THE CONTRACTOR SHALL FURNISH ALL NECESSARY ATTACHMENT HARDWARE (NUTS, BOLTS, PLATES, SPACERS, AND WASHERS) AS NECESSARY TO ACCOMMODATE THE COMPLETE INSTALLATION.

IN THE ABSENCE OF A NEW BOX SUPPLIED BY THE OWNER, THE CONTRACTOR SHALL SALVAGE THE EXISTING BOX AND PLACE IT ON THE NEW SUPPORT. DUE CARE SHALL BE EXERCISED IN SUCH AN OPERATION, AND THE CONTRACTOR SHALL BE RESPONSIBLE FOR REPAIRING OR REPLACING ANY BOX DAMAGED BY IMPROPER HANDLING ON HIS PART, AS JUDGED AND DIRECTED BY THE ENGINEER.

THE CONTRACTOR SHALL BE RESPONSIBLE FOR COORDINATING WITH THE LOCAL POST MASTER REGARDING THE TIMING OF THE MOVEMENT OF ANY MAILBOX TO A NEW LOCATION.

PAYMENT UNDER THIS ITEM SHALL BE LIMITED TO FINAL PERMANENT INSTALLATIONS. TEMPORARY INSTALLATIONS SHALL BE IN ACCORDANCE WITH 107.10. HOWEVER, THE SAME MATERIAL AND SIZE LIMITATIONS AS FOR PERMANENT INSTALLATIONS SHALL APPLY.

MAILBOX SUPPORTS, COMPLETE IN PLACE, WILL BE PAID FOR AT THE CONTRACT UNIT PRICE PER EACH, FOR ITEM SPECIAL MAILBOX SUPPORT SYSTEM, (SINGLE) (DOUBLE).

P:\LAK\93229\Roadway\Sheets\93229GN001.dgn Sheet 4/8/2016 1:13:42 PM slettieri

ITEM 614, MAINTAINING TRAFFIC

THIS ITEM SHALL CONSIST OF MAINTENANCE OF TRAFFIC ON EXISTING ROADWAYS AND RAMPS IN ACCORDANCE WITH THE OHIO MANUAL OF UNIFORM TRAFFIC CONTROL DEVICES FOR STREETS AND HIGHWAYS (OMUTCD), CURRENT EDITION, LATEST REVISION, THE SPECIFICATIONS AND THE FOLLOWING:

1. A MINIMUM OF ONE TEN FOOT LANE IN EACH DIRECTION SHALL BE MAINTAINED ON THE EXISTING PAVEMENT DURING CONSTRUCTION. A MINIMUM CLEARANCE OF ONE (1) FOOT SHALL BE MAINTAINED BETWEEN TRAFFIC AND CHANNELIZING DEVICES (DRUMS, PCB, ETC.). THIS REQUIREMENT DOES NOT APPLY DURING THE DETOUR PHASE OF THIS PROJECT.

2. THE CONTRACTOR SHALL ADVISE THE ODOT DISTRICT OFFICE (TWELVE) (216-518-2100) AND THE LAKE COUNTY ENGINEER'S OFFICE (440) 350-2770 EIGHTEEN (18) DAYS IN ADVANCE OF WHEN THE DETOUR ROUTE SHOULD BE IN EFFECT. ALL WORK ZONE DEVICES REQUIRED SHALL BE FURNISHED, ERECTED, MAINTAINED, AND SUBSEQUENTLY REMOVED BY THE CONTRACTOR.

THE CONTRACTOR SHALL ERECT, MAINTAIN AND REMOVE THE DETOUR. PAYMENT FOR ALL MATERIAL, LABOR AND EQUIPMENT TO PERFORM THIS WORK SHALL BE INCLUDED IN THE LUMP SUM BID FOR ITEM 614 - DETOUR SIGNING.

ALL WORK AND TRAFFIC CONTROL DEVICES SHALL BE IN ACCORDANCE WITH C&MS 614 AND OTHER APPLICABLE PORTIONS OF THE SPECIFICATIONS, AS WELL AS THE OHIO MANUAL OF UNIFORM TRAFFIC CONTROL DEVICES. PAYMENT FOR ALL LABOR, EQUIPMENT AND MATERIALS SHALL BE INCLUDED IN THE LUMP SUM CONTRACT PRICE FOR ITEM 614, MAINTAINING TRAFFIC, UNLESS SEPARATELY ITEMIZED IN THE PLAN.

SEQUENCE OF CONSTRUCTION

PHASE 1A
CLOSE THE BIKEPATH USING (R11-2) ROAD CLOSED ON TYPE III BARRICADES PRIOR TO ANY WORK COMMENCING. THE BIKEPATH SHALL REMAINED CLOSED FOR THE DURATION OF THE PROJECT.

PHASE 1
COMPLETE ALL WATER WORK AND SANITARY WORK PRIOR TO COMMENCEMENT OF THE PROPOSED CULVERT AND ROADWAY WORK.

PHASE 2
CONSTRUCT THE CULVERT, HEADWALLS, WINGWALLS, DRAINAGE APPURTENANCES AND RETAINING WALL WHILE MAINTAINING ONE (1) LANE OF TRAFFIC IN EACH DIRECTION ON S. R. 608/CONCORD HAMBDEN ROAD.

PHASE 3
UPON SUBSTANTIAL COMPLETION OF PHASE 2 WORK, THE CONTRACTOR SHALL CLOSE S.R. 608/CONCORD HAMBDEN ROAD AND DETOUR TRAFFIC AS SHOWN ON SHEET NO. 7.

THE EXISTING STRUCTURE SHALL BE REMOVED AND THE NEW PAVEMENT, EMBANKMENT AND ROADWAY ITEMS CONSTRUCTED PRIOR TO REOPENING THE ROAD TO TRAFFIC.

PUBLIC OUTREACH AND NOTIFICATION (ROAD CLOSURE)

THE CONTRACTOR SHALL BE RESPONSIBLE FOR CONTACTING THE DISTRICT 12 PUBLIC INFORMATION OFFICE AT (216) 584-2005 TO COORDINATE EFFORTS TO NOTIFY ALL LOCAL, COUNTY, STATE AND FEDERAL EMERGENCY SERVICES, SCHOOL DISTRICTS AND ADJACENT RESIDENTS AND BUSINESSES OF THE UPCOMING CLOSURE. ADVANCE NOTIFICATION SHALL OCCUR NO LATER THAN FOURTEEN (14) DAYS PRIOR TO CLOSING THE ROAD. IF, SUBSEQUENT TO THE ADVANCE NOTIFICATION, THE START DATE IS CHANGED, THEN A NEW SEVEN (7) DAY NOTIFICATION WILL BE REQUIRED. THE ROAD CANNOT BE CLOSED UNLESS PRIOR NOTIFICATION HAS BEEN ACCOMPLISHED. THE SAME PARTIES SHALL BE NOTIFIED WHEN THE CLOSURE HAS CONCLUDED AND THE ROAD IS BACK OPEN TO TRAFFIC. ALL NOTIFICATIONS SHALL BE MADE UTILIZING THE TEMPLATE PROVIDED BY THE DISTRICT 12 PUBLIC INFORMATION OFFICE.

DETOUR DURATION (ROAD ONLY)

THE MAXIMUM LENGTH OF TIME FOR THE DETOUR ROUTE TO BE IN EFFECT FOR ALL PHASES OF CONSTRUCTION SHALL BE 45 CONSECUTIVE DAYS. CONSTRUCTION WORK MAY BE PERFORMED BEFORE AND AFTER THE DETOUR LIMITATION DATES, BUT THERE SHALL BE NO RESTRICTIONS (LANE WIDTH REDUCTIONS, TEMPORARY ROADWAYS, OR ONE WAY TRAFFIC) TO THROUGH OR LOCAL TRAFFIC. IT SHALL BE THE RESPONSIBILITY OF THE CONTRACTOR TO SCHEDULE AND PERFORM THE CONSTRUCTION WORK WITHIN THE DETOUR LIMITATION TIME. THE FAILURE OF THE CONTRACTOR TO MEET THE DETOUR LIMITATION DATES WILL CAUSE SEPARATE LIQUIDATED DAMAGES OF $5,000 PER CALENDAR DAY OF OVERRUN OF DETOUR LIMITATION TIME TO BE ASSESSED. THE CONTRACTOR WILL COMPLY WITH ALL PROVISIONS OF 108.07 OF THE DEPARTMENT OF TRANSPORTATION CONSTRUCTION AND MATERIAL SPECIFICATIONS.

FURTHERMORE, THE CONTRACTOR SHALL PHASE HIS WORK SO THAT DRIVE ACCESS WILL BE MAINTAINED TO EACH PROPERTY WITHIN THE CLOSURE AREA FOR THE DURATION OF THE DETOUR.

ITEM 614, MAINTAINING TRAFFIC (NOTICE OF CLOSURE SIGN)

NOTICE OF CLOSURE SIGNS, AS DETAILED IN THESE PLANS, SHALL BE ERECTED BY THE CONTRACTOR AT LEAST ONE WEEK IN ADVANCE OF THE SCHEDULED ROAD OR RAMP CLOSURE. THE SIGNS SHALL BE ERECTED ON THE RIGHT-HAND SIDE OF THE ROAD/RAMP FACING TRAFFIC. THEY SHALL BE PLACED SO AS NOT TO INTERFERE WITH THE VISIBILITY OF ANY OTHER TRAFFIC CONTROL SIGNS. ON ROADWAYS, THEY SHOULD BE ERECTED AT THE POINT OF CLOSURE. THE SIGNS MAY BE ERECTED ANYWHERE ON RAMPS AS LONG AS THEY ARE VISIBLE TO THE MOTORISTS USING THE RAMP. ON ENTRANCE RAMPS, THE SIGN SHALL BE ERECTED WELL IN ADVANCE OF THE MERGE AREA TO AVOID DISTRACTING MOTORISTS.

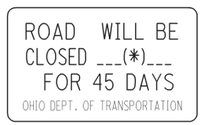

W20-H14-60

(*) DAY OF WEEK OF THE SCHEDULED CLOSURE

DUST CONTROL

THE CONTRACTOR SHALL FURNISH AND APPLY WATER FOR DUST CONTROL AS DIRECTED BY THE ENGINEER. THE FOLLOWING ESTIMATED QUANTITIES HAVE BEEN INCLUDED FOR DUST CONTROL PURPOSES:

ITEM 616, WATER 2 MGAL

ITEM 614, MAINTAINING TRAFFIC (ESTIMATED QUANTITIES)

THE FOLLOWING ESTIMATED QUANTITIES HAVE BEEN INCLUDED IN THE GENERAL SUMMARY FOR USE AS DETERMINED BY THE ENGINEER FOR THE MAINTENANCE OF TRAFFIC.

ITEM 410, TRAFFIC COMPACTED SURFACE, TYPE A OR B	100 CU. YD.
ITEM 614, ASPHALT CONCRETE FOR MAINTAINING TRAFFIC	50 CU. YD.
ITEM 616, WATER	5 M. GAL.

EXISTING STONE PATH TO BE PAVED

THE EXISTING STONE PATH (GREENWAY CONNECTOR TRAIL) LOCATED APPROXIMATELY 450 FEET NORTH OF THE CENTERLINE OF S.R. 608 AND WHICH LEADS TO THE LAKE COUNTY METROPARKS ENVIRONMENTAL LEARNING CENTER SHALL BE PAVED PRIOR TO CLOSURE OF THE BIKEPATH. THE PAVEMENT BUILDUP SHALL FOLLOW THE TYPICAL SECTION OF THE PROPOSED BIKEPATH LOCATED ON SHEET NO. 3 EXCEPT THAT CALL-OUT NO. 5, ITEM 304 - 6" AGGREGATE BASE WILL ONLY BE USED IF THE EXISTING BASE NEEDS REPAIRED, THE PATH WIDTH WILL BE 8'-0" AND SLOPED AT 2% TO ONE SIDE. ADDITIONALLY, A 1'-0" BERM COMPOSED OF ODOT ITEM 617 - 2" COMPACTED AGGREGATE, APP SHALL BE PLACED ON EITHER SIDE OF THE PATH. THE TOTAL APPROXIMATE LENGTH TO BE PAVED IS 700 FEET.

PRIOR TO CONSTRUCTION THE STONE PATH SHALL BE GRADED SUCH THAT ANY LOW SPOTS OR DEPRESSIONS IN THE EXISTING BASE ARE REMOVED. IF ANY TREES NEED TO BE REMOVED OR TRIMMED TO ALLOW FOR PAVING OPERATIONS, ODOT D12 AND LAKE METROPARKS SHALL BE CONTACTED FOR APPROVAL. ALL AREAS IMMEDIATELY ADJACENT TO THE NEWLY PAVED PATH THAT WERE DISTURBED BY PAVING OPERATIONS SHALL HAVE TOP SOIL PLACED AND SEEDED AND MULCHED.

ALL EXISTING SIGNS, POSTS AND FENCES ALONG THE PATH SHALL NOT BE DISTURBED.

THE FOLLOWING ESTIMATED QUANTITIES HAVE BEEN INCLUDED FOR INFORMATION ONLY:

ITEM 441 ASPHALT CONCRETE SURFACE COURSE, TYPE 1 (448), APP	22 CY
ITEM 441 ASPHALT CONCRETE INTERMEDIATE COURSE, TYPE 2 (448)	31 CY
ITEM 407 - NON-TRACKING TACK COAT	32 GAL
ITEM 304 - AGGREGATE BASE	30 CY
ITEM 617 - COMPACTED AGGREGATE, APP	9 CY
ITEM 659 - SEEDING AND MULCHING	300 SY
ITEM 659 - TOP SOIL	36 CY

PAYMENT FOR ALL LABOR, EQUIPMENT AND MATERIALS AS DESCRIBED ABOVE SHALL BE INCLUDED IN THE LUMP SUM CONTRACT PRICE FOR ITEM 614, MAINTAINING TRAFFIC.

ENVIRONMENTAL COMMITMENTS

1. SECTION 4(F) - THE PROJECT WILL CREATE A TEMPORARY TRAILHEAD AT THE LCMP ENVIRONMENTAL LEARNING CENTER.

2. SECTION 4(F) - THE PROJECT WILL INCLUDE PAVING A STONE PATH LOCATED NORTH OF THE BRIDGE THAT LEADS TO THE LCMP ENVIRONMENTAL LEARNING CENTER PARKING FACILITY.

3. SECTION 4(F) - THE PAVED PARKING AREA WILL ACCOMMODATE THE ADDITIONAL PARKING DURING THE CLOSURE OF THE TRAILHEAD SOUTH OF THE BRIDGE.

4. SECTION 4(F) - ACCESS TO THE NORTHERN GREENWAY TRAIL WILL BE MAINTAINED THROUGHOUT CONSTRUCTION. SIGNAGE WILL BE PLACED IN THE OTHER TRAILHEADS TO NOTIFY USERS OF THE CLOSURE AT SR-608 .

5. SECTION 4(F) - INCLUDE A STAMPED LAKE COUNTY METROPARKS ICON ON THE SOUTHEAST AND NORTHWEST WINGWALLS OF THE CULVERT.

6. SECTION 4(F) - ACCESS TO THE NORTHERN SECTION OF THE GREENWAY TRAIL WILL BE MAINTAINED AT ALL TIMES DURING CONSTRUCTION ACTIVITIES.

7. SECTION 4(F) - TEMPORARY CONSTRUCTION FENCING WILL BE INSTALLED ALONG PROPOSED CONSTRUCTION LIMITS PRIOR TO THE START OF CONSTRUCTION ACTIVITIES TO PROTECT THE EXISTING 4(F) PROPERTY AND THE PUBLIC.

8. SECTION 4(F) - EXCEPT AS NECESSARY TO FACILITATE CONSTRUCTION ACTIVITIES, THE STAGING AND/OR STORAGE OF CONSTRUCTION EQUIPMENT WILL NOT TAKE PLACE OUTSIDE PROPOSED CONSTRUCTION LIMITS, WITHIN PROPERTY BOUNDARIES.

9. SECTION 4(F) - THE CONTRACTOR WILL BE REQUIRED TO CLOSELY COORDINATE THE CONSTRUCTION SCHEDULE WITH ODOT AND THE LAKE COUNTY METROPARKS.

10. ECOLOGICAL USFWS - CULVERTS SHOULD BE PLACED TO ALLOW FREE MOVEMENT OF AQUATIC FAUNA.

11. ECOLOGICAL USFWS - THE CONTRACTOR SHOULD USE NATIVE VEGETATION TO CONTROL EROSION, OR, AT A MINIMUM, USING NATIVE VEGETATION IN COMBINATION WITH RIPRAP OR SIMILAR MATERIALS.

12. ECOLOGICAL USFWS - THE CONTRACTOR SHALL INSPECT THE UNDERSIDE OF THE BRIDGE FOR BATS PRIOR TO DEMOLITION BETWEEN APRIL 1ST AND SEPTEMBER 30TH AND NOTIFY THE ODOT DISTRICT 12 ENVIRONMENTAL STAFF IF BATS ARE FOUND.

13. ECOLOGICAL USFWS - TREE CLEARING OF ALL TREES OVER 3" DBH THAT ARE PROPOSED FOR IMPACT FOR THIS PROJECT WILL BE CLEARED ONLY BETWEEN OCTOBER 1 AND MARCH 31.

ODOT ITEM 617 - COMPACTED AGGREGATE, APP

THE MATERIALS FURNISHED FOR THIS ITEM SHALL BE LIMITED TO CRUSHED LIMESTONE (CCS) ONLY.

CALCULATED SDL
CHECKED WT

MOT / ENVIRONMENTAL GENERAL NOTES

LAK-608-3.37

P:\LAK\93229\Roadway\Sheets\93229MD001.dgn Sheet 11/3/2016 8:32:44 AM sletieri

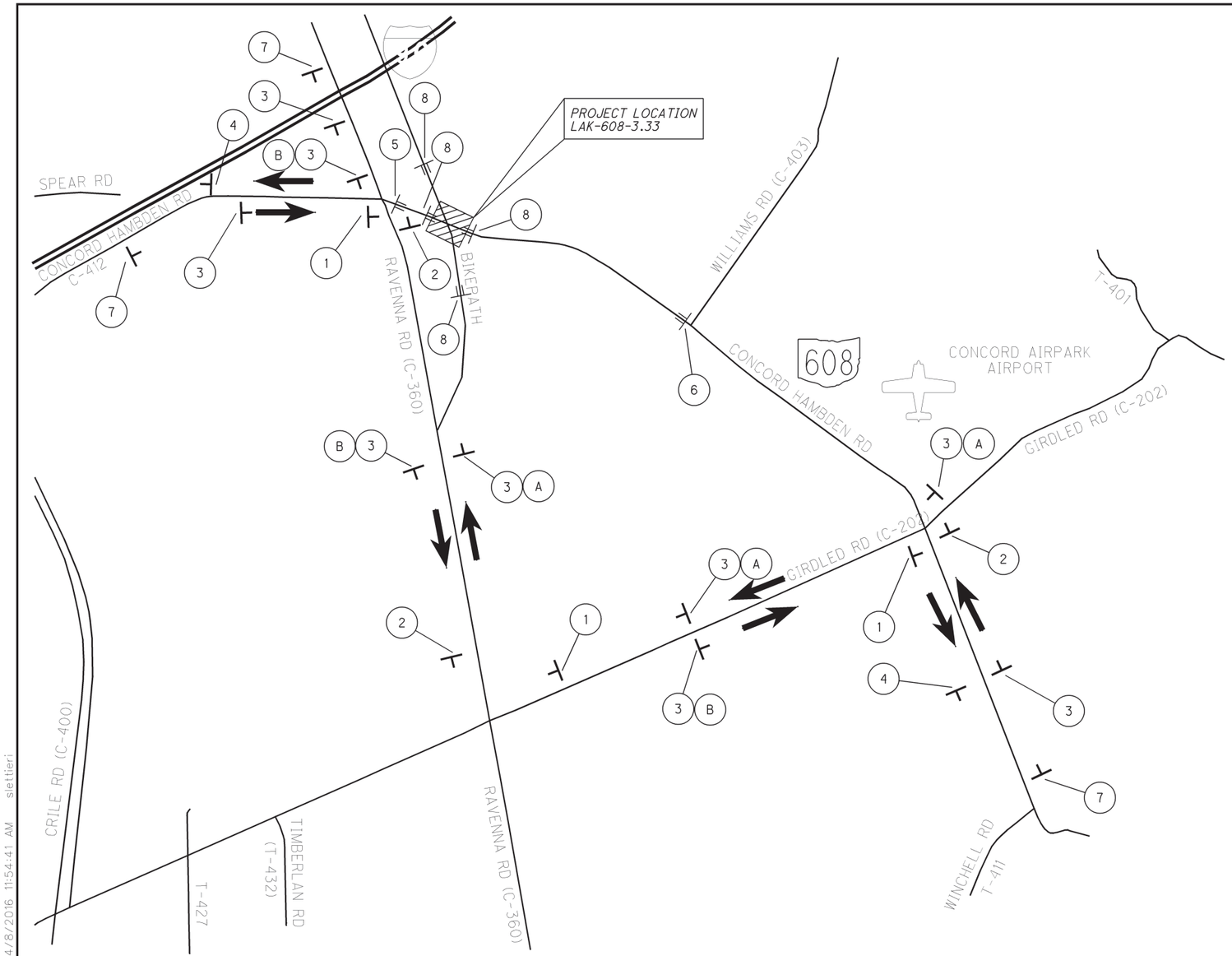

LEGEND

CLOSED PER MT-101.60

* ON GATES AND BARRICADES
\# ON TYPE III BARRICADE

DESIGNATED DETOUR ROUTE

1 — DETOUR (M4-8) — CONCORD HAMBDEN RD (D3-2-24) — 608 (M1-5-30-3) — (M5-1R)

2 — DETOUR (M4-8) — CONCORD HAMBDEN RD (D3-2-24) — 608 (M1-5-30-3) — (M5-1L)

3 — DETOUR (M4-8) — CONCORD HAMBDEN RD (D3-2-24) — 608 (M1-5-30-3) — (M6-3)

4 — END DETOUR (M4-8A) — CONCORD HAMBDEN RD (D3-2-24) — 608 (M1-5-30-3)

5 # — BRIDGE OUT 0.2 MILES AHEAD LOCAL TRAFFIC ONLY (R11-3B)

6 # — BRIDGE OUT 0.7 MILES AHEAD LOCAL TRAFFIC ONLY (R11-3B)

7 — DETOUR AHEAD (W20-2)

8 * — ROAD CLOSED (R11-2)

A — WEST (M3-2)

B — EAST (M3-4)

HORIZONTAL SCALE IN FEET

CALCULATED SDL
CHECKED WT

MAINTENANCE OF TRAFFIC DETOUR PLAN

LAK-608-3.37

P:\LAK\93229\Roadway\Sheets\93229WD001.dgn Sheet 4/8/2016 11:54:41 AM sieltieri

SHEET NUM. 4	5	10	11	12	33	36	39	41				Office Calcs	PART. 01/BRO/BR	ITEM	ITEM EXT	GRAND TOTAL	UNIT	DESCRIPTION	SEE SHEET NO.
																		ROADWAY	
	LS												LS	201	11000	LS		CLEARING AND GRUBBING	
							464						464	202	34900	464	FT	PIPE REMOVED	
		143											143	202	35100	143	FT	PIPE REMOVED, 24" AND UNDER	
								321					321	202	35700	321	FT	ASBESTOS PIPE REMOVED (10" AC WATERLINE)	
		442											442	202	38000	442	FT	GUARDRAIL REMOVED	
		4											4	202	98100	4	EACH	REMOVAL MISC.:Post	13-14
		1											1	202	53100	1	EACH	MAILBOX REMOVED	
							2						2	202	58000	2	EACH	MANHOLE REMOVED	
		2											2	202	58100	2	EACH	CATCH BASIN REMOVED	
		40											40	202	75000	40	FT	FENCE REMOVED	
			2,043		57								2,100	203	10000	2,100	CY	EXCAVATION	
			3,543										3,543	203	20000	3,543	CY	EMBANKMENT	
			39										39	203	35110	39	CY	GRANULAR MATERIAL, TYPE B	
												2,438	2,438	204	10000	2,438	SY	SUBGRADE COMPACTION	
			287										287	204	13000	287	CY	EXCAVATION OF SUBGRADE	
			287										287	204	30010	287	CY	GRANULAR MATERIAL, TYPE B	
	2												2	204	45000	2	HOUR	PROOF ROLLING	
		343.75											343.75	606	15050	343.75	FT	GUARDRAIL, TYPE MGS	
		100											100	606	17350	100	FT	GUARDRAIL, TYPE MGS, 25' LONG-SPAN	
		3											3	606	26150	3	EACH	ANCHOR ASSEMBLY, MGS TYPE E	
		1											1	606	26550	1	EACH	ANCHOR ASSEMBLY, MGS TYPE T	
		381											381	607	30000	381	FT	FENCE, SNOW	
		1											1	SPECIAL	69050100	1	EACH	MAILBOX SUPPORT SYSTEM, SINGLE	5
LS													LS	SPECIAL	69071000	LS		ASBESTOS ABATEMENT	4
																		EROSION CONTROL	
		5											5	601	32104	5	CY	ROCK CHANNEL PROTECTION, TYPE B WITH GEOTEXTILE FABRIC	
		2											2	601	32204	2	CY	ROCK CHANNEL PROTECTION, TYPE C WITH GEOTEXTILE FABRIC	
	2												2	659	00100	2	EACH	SOIL ANALYSIS TEST	
	301												301	659	00300	301	CY	TOPSOIL	
	2,714												2,714	659	10000	2,714	SY	SEEDING AND MULCHING	
	136												136	659	14000	136	SY	REPAIR SEEDING AND MULCHING	
	136												136	659	15000	136	SY	INTER-SEEDING	
	0.4												0.4	659	20000	0.4	TON	COMMERCIAL FERTILIZER	
	0.56												0.56	659	31000	0.56	ACRE	LIME	
	15												15	659	35000	15	MGAL	WATER	
	6												6	659	40000	6	MSF	MOWING	
		99											99	670	00710	99	SY	DITCH EROSION PROTECTION MAT, TYPE A	
				LS									LS	832	15000	LS		STORM WATER POLLUTION PREVENTION PLAN	
				13,700									13,700	832	30000	13,700	EACH	EROSION CONTROL	
																		DRAINAGE	
		1.42											1.42	602	20000	1.42	CY	CONCRETE MASONRY	
					969								969	605	14020	969	FT	6" BASE PIPE UNDERDRAINS WITH GEOTEXTILE FABRIC	
					99								99	611	00510	99	FT	6" CONDUIT, TYPE F FOR UNDERDRAIN OUTLETS	
		188											188	611	04400	188	FT	12" CONDUIT, TYPE B	
		92											92	611	04600	92	FT	12" CONDUIT, TYPE C	
		72											72	611	05200	72	FT	12" CONDUIT, TYPE F	
		17											17	611	07400	17	FT	18" CONDUIT, TYPE B	
		183											183	611	10400	183	FT	24" CONDUIT, TYPE B	
		2											2	611	98470	2	EACH	CATCH BASIN, NO. 2-2B	
		6											6	611	99574	6	EACH	MANHOLE, NO. 3	
					1	1							2	611	99710	2	EACH	PRECAST REINFORCED CONCRETE OUTLET	
																		PAVEMENT	
												301	301	301	46000	301	CY	ASPHALT CONCRETE BASE, PG64-22	
												393	393	304	20000	393	CY	AGGREGATE BASE	
												184	184	407	20000	184	GAL	NON-TRACKING TACK COAT	
												74	74	441	50101	74	CY	ASPHALT CONCRETE SURFACE COURSE, TYPE 1, (448), AS PER PLAN	4
												103	103	441	50300	103	CY	ASPHALT CONCRETE INTERMEDIATE COURSE, TYPE 2, (448)	
												7	7	441	50400	7	CY	ASPHALT CONCRETE SURFACE COURSE, TYPE 1, (448), (DRIVEWAYS)	
												42	42	441	50701	42	CY	ASPHALT CONCRETE INTERMEDIATE COURSE, TYPE 1, (448), (UNDER GUARDRAIL), AS PER PLAN	5

CALCULATED SDL CHECKED WT

GENERAL SUMMARY

LAK-608-3.37

P:\LAK\93229\Roadway\Sheets\93229GG001.dgn Design 4/8/2016 1:22:30 PM slettieri

SHEET NUM. 10	36	39	41	43	44	46							PART. 01/BRO/BR	ITEM	ITEM EXT	GRAND TOTAL	UNIT	DESCRIPTION	SEE SHEET NO.
																		WATER WORK	
			24										24	SPECIAL	63820422	24	FT	10" WATER MAIN POLYVINYL CHLORIDE PIPE AND FITTINGS (PAINESVILLE)	40
			358										358	SPECIAL	63820424	358	FT	12" WATER MAIN POLYVINYL CHLORIDE PIPE AND FITTINGS (PAINESVILLE)	40
			18										18	SPECIAL	63820462	18	FT	20" STEEL PIPE ENCASEMENT, OPEN CUT (PAINESVILLE)	40
			1										1	SPECIAL	63820500	1	EACH	VALVE BOX ADJUSTED TO GRADE(PAINESVILLE)	40
			1										1	SPECIAL	63820574	1	EACH	10" INSERTING VALVE WITH VALVE BOX (PAINESVILLE)	40
			2										2	SPECIAL	63820702	2	EACH	10" X 10" TAPPING SLEEVE, VALVE AND VALVE BOX (PAINESVILLE)	40
																		SANITARY SEWER	
		1											1	611	99690	1	EACH	MANHOLE, MISC.:VALVE AND CLEANOUT CHAMBER	37
		441											441	SPECIAL	68044304	441	LF	3" FORCE MAIN	37
																		LIGHTING	
					12								12	625	00500	12	EACH	CONNECTOR KIT, TYPE II	
					215								215	625	23000	215	FT	NO. 4 AWG 600 VOLT DISTRIBUTION CABLE	
					50								50	625	23306	50	FT	NO. 10 AWG 600 VOLT DISTRIBUTION CABLE	
					180								180	625	25200	180	FT	CONDUIT, 1-1/4", 725.04	
					24								24	625	25920	24	FT	CONDUIT, MISC.:3/4" LFMC	44
					6								6	625	27501	6	EACH	LUMINAIRE, UNDERPASS, AS PER PLAN (LED)	44
					84								84	625	29000	84	FT	TRENCH	
					6								6	625	29900	6	EACH	JUNCTION BOX (6" X 6" X 4")	
					1								1	625	30600	1	EACH	PULL BOX, 725.07, SIZE 1.5	
					1								1	625	32000	1	EACH	GROUND ROD	
					1								1	625	34000	1	EACH	POWER SERVICE	
					84								84	625	36000	84	FT	PLASTIC CAUTION TAPE	
																		TRAFFIC CONTROL	
				7									7	621	00100	7	EACH	RPM	
8													8	626	00100	8	EACH	BARRIER REFLECTOR	
				14									14	630	03100	14	FT	GROUND MOUNTED SUPPORT, NO. 3 POST	
				7									7	630	80100	7	SF	SIGN, FLAT SHEET	
				5									5	630	84900	5	EACH	REMOVAL OF GROUND MOUNTED SIGN AND DISPOSAL	
				5									5	630	86002	5	EACH	REMOVAL OF GROUND MOUNTED POST SUPPORT AND DISPOSAL	
				1									1	630	85100	1	EACH	REMOVAL OF GROUND MOUNTED SIGN AND REERECTION	
				0.2									0.2	642	00090	0.2	MILE	EDGE LINE, 4"	
				0.1									0.1	642	00290	0.1	MILE	CENTER LINE	
																		RETAINING WALLS	
	56												56	503	21100	56	CY	UNCLASSIFIED EXCAVATION	
	4,463												4,463	509	10000	4,463	LB	EPOXY COATED REINFORCING STEEL	
	71												71	511	46012	71	CY	CLASS QC1 CONCRETE WITH QC/QA, RETAINING/WINGWALL NOT INCLUDING FOOTING	
	70												70	512	10100	70	SY	SEALING OF CONCRETE SURFACES (EPOXY-URETHANE)	
	7												7	512	33000	7	SY	TYPE 2 WATERPROOFING	
	29												29	518	21200	29	CY	POROUS BACKFILL WITH GEOTEXTILE FABRIC	
	109												109	518	40000	109	FT	6" PERFORATED CORRUGATED PLASTIC PIPE	
	7												7	518	40010	7	FT	6" NON-PERFORATED CORRUGATED PLASTIC PIPE, INCLUDING SPECIALS	
																		STRUCTURE 20 FOOT SPAN AND OVER (LAK-608-0337)	
						LS							LS	202	11002	LS		STRUCTURE REMOVED, OVER 20 FOOT SPAN	
						826							826	202	23500	826	SY	WEARING COURSE REMOVED	
						LS							LS	503	11101	LS		COFFERDAMS AND EXCAVATION BRACING, AS PER PLAN	46
						992							992	503	21102	992	CY	UNCLASSIFIED EXCAVATION, INCLUDING SHALE	
						36,264							36,264	509	10000	36,264	LB	EPOXY COATED REINFORCING STEEL	
						132							132	510	10000	132	EACH	DOWEL HOLES WITH NONSHRINK, NONMETALLIC GROUT	
						433							433	511	46012	433	CY	CLASS QC1 CONCRETE WITH QC/QA, RETAINING/WINGWALL NOT INCLUDING FOOTING	
						708							708	512	10100	708	SY	SEALING OF CONCRETE SURFACES (EPOXY-URETHANE)	
						561							561	512	33000	561	SY	TYPE 2 WATERPROOFING	
						93							93	516	13600	93	SF	1" PREFORMED EXPANSION JOINT FILLER	
						88							88	518	21200	88	CY	POROUS BACKFILL WITH GEOTEXTILE FABRIC	
						105							105	518	40000	105	FT	6" PERFORATED CORRUGATED PLASTIC PIPE	
						53							53	518	40010	53	FT	6" NON-PERFORATED CORRUGATED PLASTIC PIPE, INCLUDING SPECIALS	
						120							120	611	71000	120	FT	CONDUIT, TYPE A, PRECAST REINFORCED CONCRETE ARCH SECTIONS (20' SPAN X 10' RISE)	
						39							39	613	41200	39	CY	LOW STRENGTH MORTAR BACKFILL	

CALCULATED SDL
CHECKED WT

GENERAL SUMMARY

LAK-608-3.37

P:\LAK\93229\Roadway\Sheets\93229GG002.dgn Design 11/14/2016 2:48:05 PM slettieri

SHEET NUM.													PART.	ITEM	ITEM EXT	GRAND TOTAL	UNIT	DESCRIPTION	SEE SHEET NO.
6													01/BRO/BR						
																		MAINTENANCE OF TRAFFIC	
100													100	410	12000	100	CY	TRAFFIC COMPACTED SURFACE, TYPE A OR B	
LS													LS	614	12420	LS		DETOUR SIGNING	
50													50	614	13000	50	CY	ASPHALT CONCRETE FOR MAINTAINING TRAFFIC	
7													7	616	10000	7	MGAL	WATER	
																		INCIDENTALS	
													LS	614	11000	LS		MAINTAINING TRAFFIC	
													6	619	16011	6	MNTH	FIELD OFFICE, TYPE B, AS PER PLAN	5
													LS	623	10000	LS		CONSTRUCTION LAYOUT STAKES AND SURVEYING	
													LS	624	10000	LS		MOBILIZATION	

CALCULATED SDL
CHECKED WT

GENERAL SUMMARY

LAK-608-3.37

P:\LAK\93229\Roadway\Sheets\93229GG003.dgn Design 4/8/2016 1:24:48 PM slettieri

REF NO.	SHEET NO.	STATION FROM	STATION TO	SIDE	202 REMOVAL MISC.: POST	202 FENCE REMOVED	202 GUARDRAIL REMOVED	202 PIPE REMOVED, 24" & UNDER	202 CATCH BASIN REMOVED	202 MAILBOX REMOVED	601 ROCK CHANNEL PROT., TYPE C WITH GEOTEXTILE FABRIC	601 ROCK CHANNEL PROT., TYPE B WITH GEOTEXTILE FABRIC	602 CONCRETE MASONRY	606 GUARDRAIL, TYPE MGS, 25' LONG-SPAN	606 GUARDRAIL, TYPE MGS	606 ANCHOR ASSEMBLY, MGS TYPE E	606 ANCHOR ASSEMBLY, MGS TYPE T	607 FENCE, SNOW	611 12" CONDUIT, TYPE B	611 12" CONDUIT, TYPE C	611 12" CONDUIT, TYPE F	611 18" CONDUIT, TYPE B	611 24" CONDUIT, TYPE B	611 MANHOLE, NO. 3	611 CATCHBASIN, NO. 2-2B	626 BARRIER REFLECTOR	670 DITCH EROSION PROTECTION MAT, TYPE A	SPECIAL MAILBOX SUPPORT SYSTEM, SINGLE
					EACH	FT	FT	FT	EACH	EACH	CY	CY	CY	FT	FT	EACH	EACH	FT	FT	FT	FT	FT	FT	FT	FT	EACH	SY	EACH
R-1	13	47+49		LT	2																							
R-2	13	47+52.5	48+63.5	LT			111																					
R-3	13	48+55.5	48+71.6	LT/RT				39	1																			
R-4	13	48+71.6	49+02.4	LT				48	1																			
R-5	13	51+00.0	51+30.0	RT				30																				
R-6	13	51+05.1	52+01.6	LT			96.5																					
R-7	13	52+02.6		LT	1																							
R-8	13-14	51+43.4	53+77.4	RT			234																					
R-9	13	51+20.3	51+53.2	LT		40																						
R-10	13	51+66.0		LT				6																				
R-11	13	52+28.3	52+47.8	LT				19.5																				
R-12	13	52+51.6		LT						1																		
R-13	14	53+78.4		RT	1																							
GR-1	13	47+57.4	50+76.1	LT										50	162.5	2										4		
GR-2	13	48+66.5	51+67.1	RT										50	181.25	1	1									4		
E-1	13	49+00.0	49+34.0	LT																							32	
E-2	13	49+76.0	50+50.0	LT																							67	
E-3	13	2314+61.0		RT							2																	
E-4	13	2314+71.0		LT								5																
F-1	13	47+50.0	49+88.0	RT														238										
F-2	13	49+88.0	2315+10	RT														143										
MB-1	13	52+50.0		LT																								1
D-1	13	2312+75.0	2312+90.0	RT									0.21						17					1				
D-2	13	2312+90.0	2314+33.0	RT															143					1				
D-3	13	2314+33.0	2314+61.0	RT									0.21						28									
D-4	13	2314+33.0	50+41.0	RT																8	17				1			
D-5	13	49+75.0	50+29.0	LT																69				1				
D-6	13	2312+90.0	49+75.0	LT																5	24				1			
D-7	13	2312+75.0	2312+90.0	LT									0.33									17		1				
D-8	13	2312+90.0	2314+33.0	LT																			143	1				
D-9	13	2314+33.0	2314+71.0	LT									0.46										40					
D-10	13	51+08.0	51+25.0	RT									0.21							10	31			1				
TOTALS					4	40	441.5	142.5	2	1	2	5	1.42	100	343.75	3	1	381	188	92	72	17	183	6	2	8	99	1
TOTALS CARRIED TO GENERAL SUMMARY					4	40	442	143	2	1	2	5	1.42	100	343.75	3	1	381	188	92	72	17	183	6	2	8	99	1

CALCULATED SDL
CHECKED WHT

SUB-SUMMARY

LAK-608-3.37

EXCAVATION, EMBANKMENT, AND SEEDING AND MULCHING SUB-SUMMARY

SHEET NO.	203 EXCAVATION	203 EMBANKMENT	203 EXCAVATION	203 GRANULAR MATERIAL, TYPE B	204 EXCAVATION OF SUBGRADE	204 GRANULAR MATERIAL, TYPE B	659 SEEDING AND MULCHING
	CY	CY	CY	CY	CY	CY	SY
15	0	0	0	0	0	0	14
16	162	9	0	0	0	0	135
17	399	0	0	0	0	0	51
18	97	148	0	0	0	0	136
19	32	-264	26	26	0	0	186
20	50	1802	13	13	0	0	374
21	42	1465	0	0	0	0	369
22	159	321	0	0	9	9	227
23	329	24	0	0	70	70	163
24	314	1	0	0	84	84	209
25	144	2	0	0	83	83	119
26	70	1	0	0	41	41	82
27	0	0	0	0	0	0	0
28	37	6	0	0	0	0	109
29	23	7	0	0	0	0	89
30	77	21	0	0	0	0	262
31	69	0	0	0	0	0	189
32	0	0	0	0	0	0	0
TOTALS CARRIED TO GENERAL SUMMARY	2004	3543	39	39	287	287	
TOTAL CARRIED TO SHEET NO. 5							2714

ITEM 659 - TOPSOIL
111 CY X 2,714 SY / 1000 SY = 301.3 CY USE: 301 CY

ITEM 659 - SOIL ANALYSIS TEST
145 CY / 10000 CY = 2 TESTS MINIMUM USE: 2 EACH

ITEM 659 - REPAIR SEEDING AND MULCHING
0.05 X 2,714 SY = 135.7 SY USE: 136 SY

ITEM 659 - INTER-SEEDING
0.05 X 2,714 SY = 135.7 SY USE: 136 SY

ITEM 659 - COMMERCIAL FERTILIZER
1 TON X 2,714 SY / 7410 SY = 0.37 TON
1 TON X 136 SY / 4940 SY = 0.03 TON USE: 0.40 TON

ITEM 659 - LIME
1,308 SY / 4840 ACRE/SY = 0.56 ACRE USE: 0.56 ACRE

ITEM 659 - WATER
2 X 1,308 SY X 0.0027 MGAL/SY = 14.7 MGAL
1 X 136 SY X 0.0027 MGAL/SY = 0.4 MGAL USE: 15 MGAL

TOTALS CARRIED TO GENERAL NOTES SHEET 5.

CALCULATED SDL
CHECKED WHT

SUB-SUMMARY

LAK-608-3.37

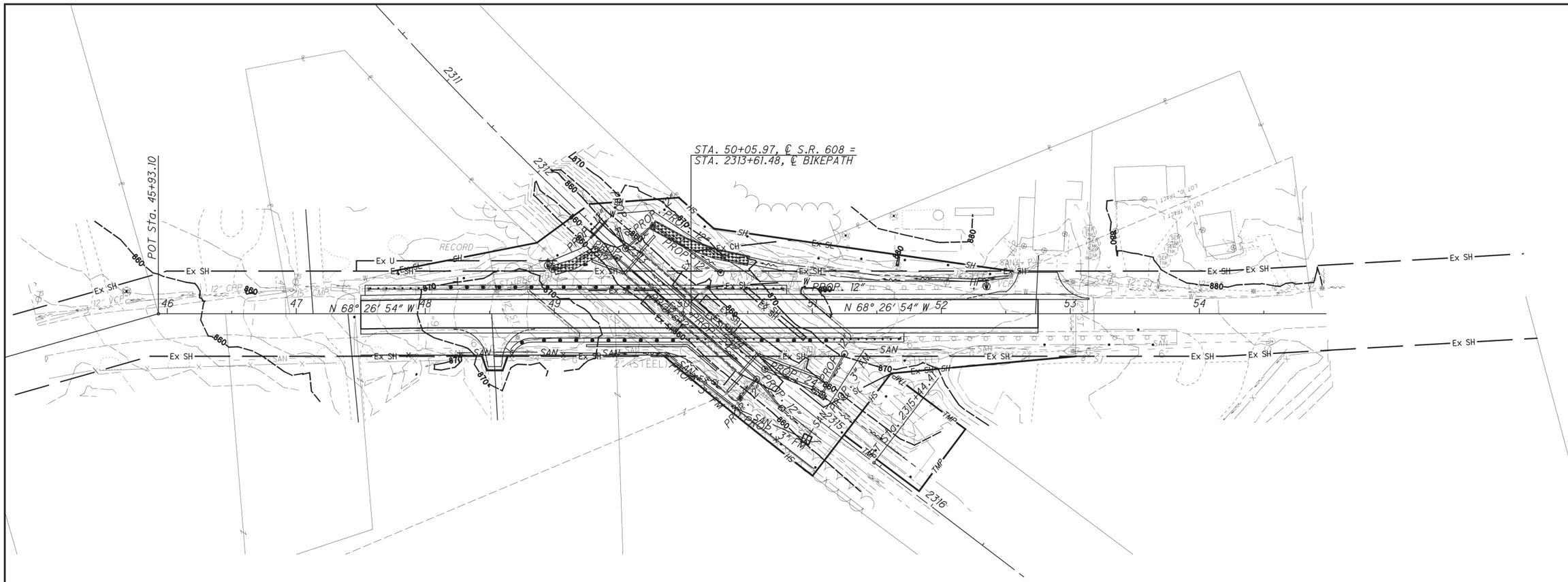

PROJECT DATA	
PROJECT RIGHT-OF-WAY AREA	1.50 ACRES
PROJECT EARTH DISTURBED AREA	1.15 ACRES
CONTRACTOR EARTH DISTURBED AREA	0.25 ACRES
NOI EARTH DISTURBED AREA	4.90
RUNOFF COEFFICIENT (POST CONSTR.)	0.65
RUNOFF COEFFICIENT (PRE-CONSTR.)	0.65
USGS 7.5 MINUTE QUADRANGLE MAP	PAINESVILLE, OHIO
SOIL/WATER CONSERVATION MAPS	SOIL SURVEY LAKE COUNTY, OHIO
PAVED AREA (PRE-CONSTR.)	0.58 ACRES
PAVED AREA (POST CONSTR.)	0.57 ACRES
IMMEDIATE RECEIVING WATERS	JORDAN CREEK
SUBSEQUENT RECEIVING WATERS	BIG CREEK/GRAND RIVER
APPROXIMATE CENTER OF PROJECT	LATITUDE: N 41° 40' 25"
	LONGITUDE: W 81° 13' 15"

VEGETATED BIOFILTER						
BEGIN STATION	OFFSET*	WIDTH	END STATION	OFFSET	WIDTH	CREDIT (AC)
52+25	25.8'	2.00'	52+00	27.0'	2.00'	0.02
52+00	27.0'	2.00'	51+50	28.0'	4.00'	0.04
51+50	28.0'	4.00'	51+00	33.5'	4.70'	0.04
51+00	33.5'	4.70'	50+50	41.5'	5.50'	0.04
50+50	41.5'	5.50'	50+00	55.6'	6.00'	0.07
50+00	55.6'	6.00'	49+75	68.8'	6.00'	0.08

*OFFSET TO CENTER OF DITCH

QUANTITIES

ITEM 832 - STORM WATER POLLUTION PREVENTION PLAN	LS
ITEM 832 - EROSION CONTROL	13,700 EACH

TOTALS CARRIED TO THE GENERAL SUMMARY

POST-CONSTRUCTION STORM WATER BEST MANAGEMENT PRACTICES (BMP)

THIS PROJECT UTILIZES PERMANENT VEGETATED BIOFILTERS FOR PERPETUAL MANAGEMENT OF STORM WATER RUNOFF.

PROJECT DESCRIPTION

REPLACEMENT OF THE EXISTING FIVE-SPAN STRUCTURE WITH A NEW 20' SPAN X 10' RISE CONCRETE ARCH CULVERT ON CAST-IN-PLACE PEDESTALS. ADDITIONAL UPGRADES INCLUDE: IMPROVED VERTICAL ALIGNMENT, NEW PAVEMENT MARKINGS AND SIGNS, AND DRAINAGE IMPROVEMENTS.

HORIZONTAL SCALE IN FEET
0 20 40 80

CALCULATED SDL
CHECKED WT

PROJECT SITE PLAN

LAK-608-3.37

P:\LAK\93229\Roadway\Sheets\93229DE001.dgn Sheet 4/8/2016 1:16:39 PM slettieri

BEGIN PROJECT
STA. 47+50
S.L.M. 3.33
E130(589)

BIKEPATH CURVE DATA
P.I.= Sta. 2312+02.41
D = 13° 44′ 45″ (LT)
Dc = 2° 00′ 00″
R = 2,864.93′
T = 345.32′
L = 687.32′
E = 20.74′
C = 685.67′
C.B. = N 24° 15′ 08″ W

(38′ x 7.5′W)/9=32 SY

℄ BIKEPATH

LONG-SPAN GUARDRAIL
PER SCD MGS-2.3
SEE POST LOCATION THIS SHEET

STA. 50+05.97, ℄ S.R. 608 =
STA. 2313+61.48, ℄ BIKEPATH

(80′ x 7.5′W)/9=67 SY

TO BE RELOCATED

CONSTR. LIMITS

8′ METAL
STORAGE
CONTAINER

GARDEN

FR.SHED

FR. GARAGE

2 STORY
MASONRY
#11636
RES.-2ND
GAR.-1ST

APPROX. LOCATION OF
LEACH FIELD, PER
L.C.H.D. SKETCH

TO BE
RELOCATED

MATCH LINE STA 53+00

N 68° 26′ 54″ W

TYPE E

EX. POST HYDRANT
(DO NOT DISTURB)

VINYL FENCE

CONSTR. LIMITS

DO NOT DISTURB
HEADSTONES (TYP.)

EX. STRUCTURE
(TO BE REMOVED)

PROP. 3″ FM

℄ R/W & CONST.
S.R. 608

PROP. RETAINING WALL

CEMETERY

LONG-SPAN GUARDRAIL
PER SCD MGS-2.3
SEE POST LOCATION THIS SHEET

PROP. CULVERT

EX. GAS REGULATOR
(TO BE RELOCATED)

TEMPORARY SUPPORT
OF EXCAVATION

RCP, TYPE C
(4′ x 4′ x 2.5′)/27 = 1.48
USE 2 C.Y.

RCP, TYPE B
(4′ X 12′ X 2.5′)/27 = 4.44
(4′ X 1′ X 2.5′)/27 = 0.37
USE 5 C.Y.

DO NOT DISTURB
EX. FENCE

PT (Sta. 2315+44.41)

END PROJECT
STA. 52+75
S.L.M. 3.43
E130(589)

BEGIN WORK
STA. 47+36

SEE SHEET NO. 40-42 FOR WATER WORK PLAN AND QUANTITIES
SEE SHEET NO. 37-39 FOR SANITARY SEWER PLAN AND QUANTITIES
SEE SHEET NO. 33 FOR UNDERDRAIN DETAILS
SEE SHEET NO. 33 FOR DRIVE DETAILS
SEE SHEET NO. 34 FOR STORM SEWER PROFILES
*SEE SHEET NO. 5 FOR CEMETERY PROTECTION NOTE

ITEM 670 - DITCH EROSION PROTECTON MAT, TYPE A

PAVEMENT/SOIL BORING LOCATION

LONG-SPAN G.R. POST LOCATION AT F/G.R.
Ⓐ STA. 49+69.9, 19′ LT.
Ⓑ STA. 49+94.9, 19′ LT.
Ⓒ STA. 50+17.1, 19′ RT.
Ⓓ STA. 50+42.1, 19′ RT.

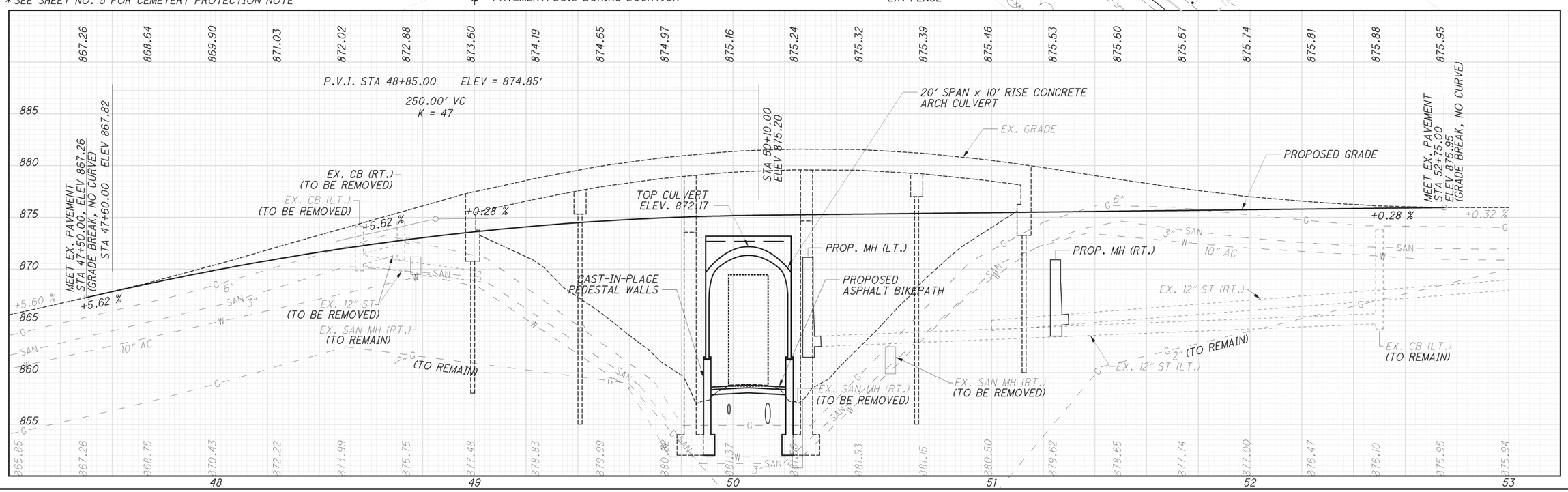

HORIZONTAL
SCALE IN FEET
0 10 20 40

CALCULATED SDL
CHECKED WT

PLAN AND PROFILE
STA. 47+15 TO STA. 53+00

LAK-608-3.37

13
60

P:\LAK\93229\Roadway\Sheets\93229GP001.dgn Sheet 4/11/2016 2:48:43 PM slettieri

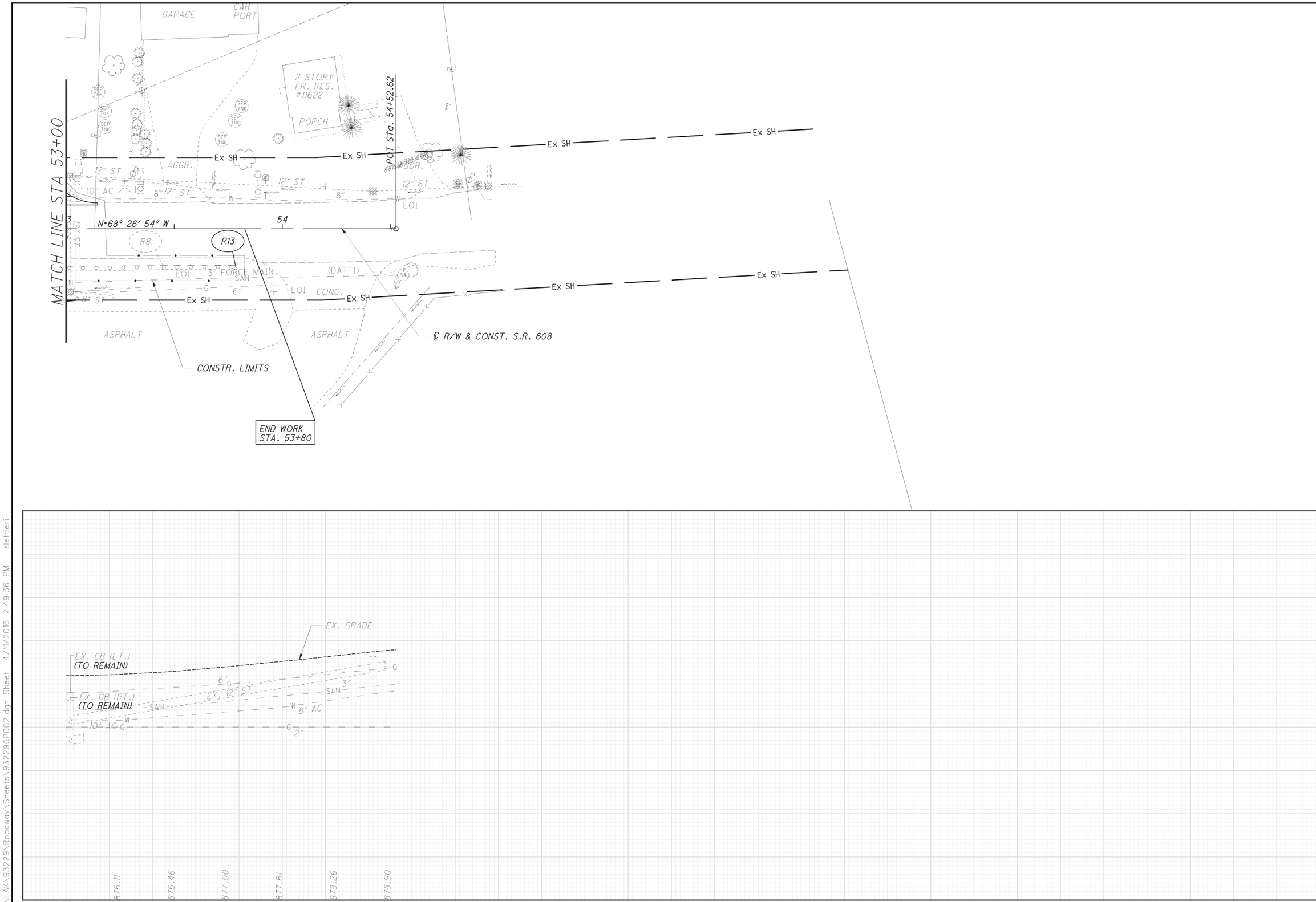

HORIZONTAL SCALE IN FEET
0 10 20 40

CALCULATED SDL
CHECKED WT

PLAN AND PROFILE
STA. 53+00 TO STA. 54+50

LAK-608-3.37

14
60

P:\LAK\93229\Roadway\Sheets\93229GP002.dgn Sheet 4/11/2016 2:49:36 PM settieri

SEEDING END WIDTH	SEEDING SQ. YDS.
9	
	14
0	
14	

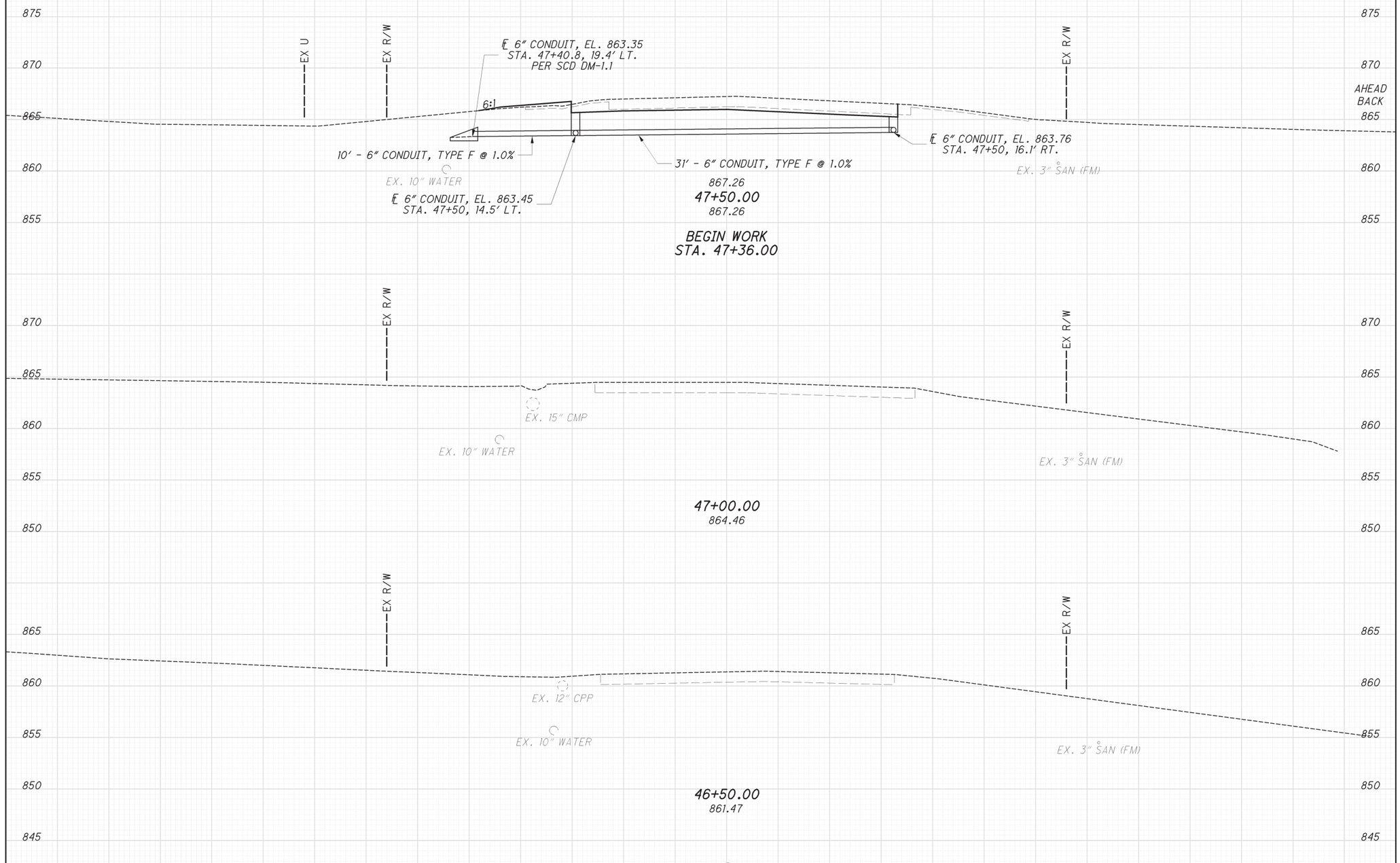

END AREA CUT	END AREA FILL	VOLUME CUT	VOLUME FILL
AHEAD 39	2		
BACK 0	0		
		0	0
0	0		
TOTALS CARRIED TO SHEET NO. 11		0	0

CALCULATED SDL
CHECKED WT

CROSS SECTIONS
STA 46+50 TO STA 47+50

LAK-608-3.37

P:\LAK\93229\Roadway\Sheets\93229XS001.dgn Design 4/11/2016 2:56:17 PM sletteri

SEEDING END WIDTH	SEEDING SQ. YDS.	END AREA CUT	END AREA FILL	VOLUME CUT	VOLUME FILL
12	40	95	0	73	0
17	53	63	1	50	4
21	42	45	8	39	5
	135			TOTALS CARRIED TO SHEET NO. 11	162	9

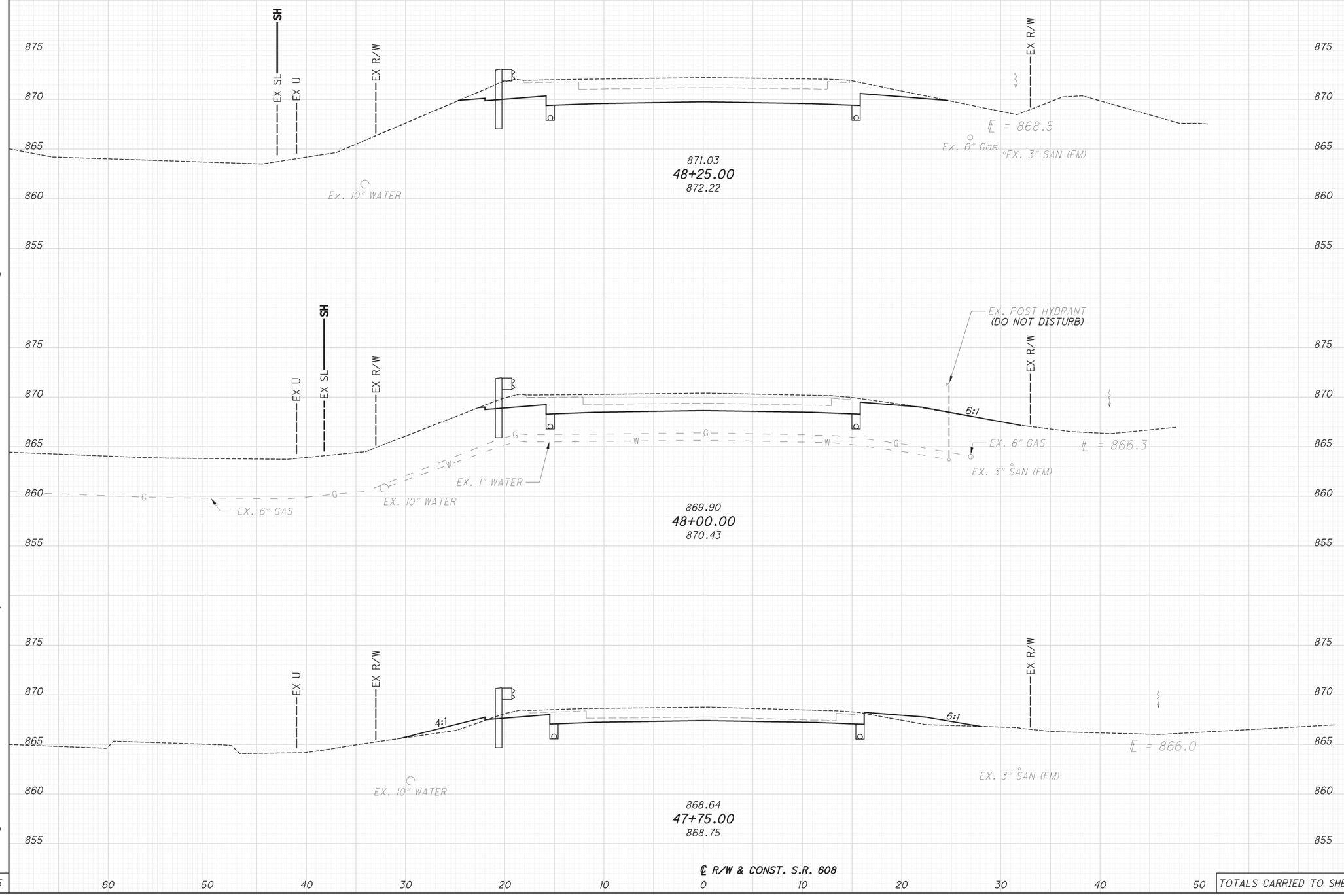

CALCULATED SDL
CHECKED WT

CROSS SECTIONS
STA 47+75 TO STA 48+25

LAK-608-3.37

16
60

P:\LAK\93229\Roadway\Sheets\93229XS001.dgn Design 4/11/2016 2:56:12 PM sletteri

SEEDING END WIDTH	SEEDING SQ. YDS.	END AREA CUT	END AREA FILL	VOLUME CUT	VOLUME FILL
13		173	0		
	26			157	0
6		166	0		
	25			242	0
	51	TOTALS CARRIED TO SHEET NO. 11		399	0

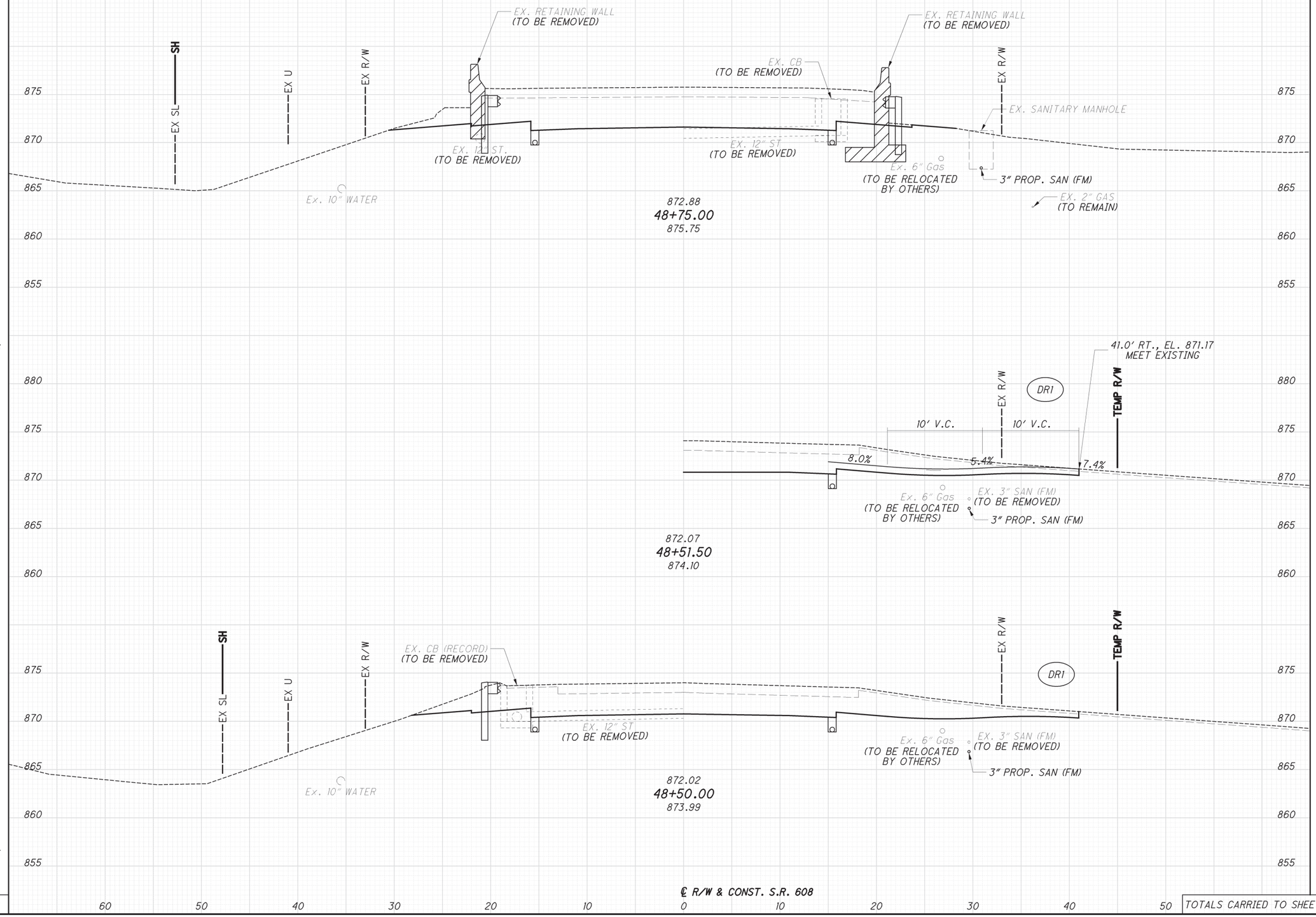

CALCULATED SDL
CHECKED WT

CROSS SECTIONS
STA 48+50 TO STA 48+75

LAK-608-3.37

17
60

P:\LAK\93229\Roadway\Sheets\93229XS001.dgn Design 4/11/2016 2:55:50 PM slettieri

SEEDING END WIDTH	SEEDING SQ. YDS.	END AREA CUT	END AREA FILL	VOLUME CUT	VOLUME FILL
39					
	86				
23		23 (14)	208 (14)		
	50				
		7	56		
				14	122
				83	26
136				97	148

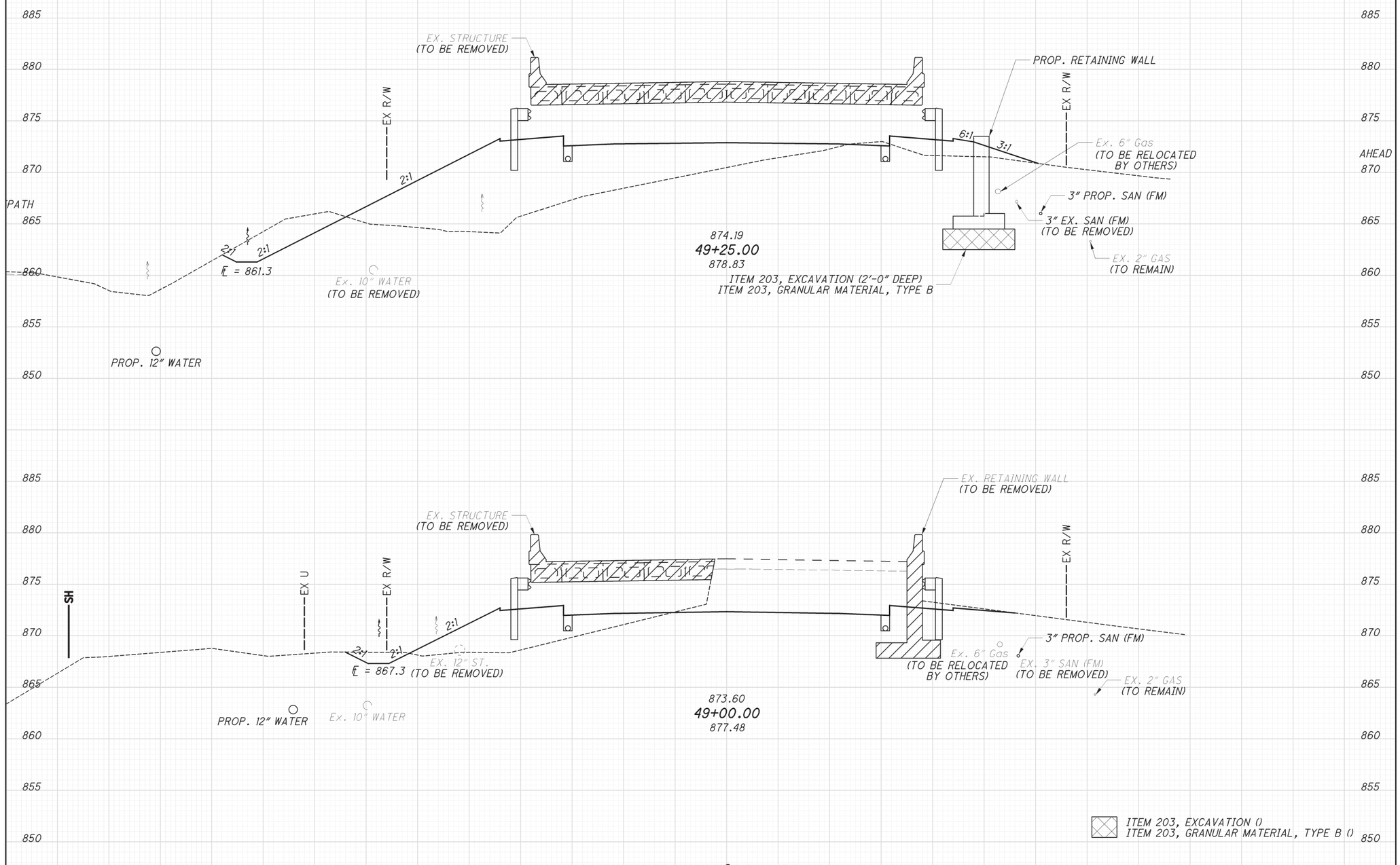

TOTALS CARRIED TO SHEET NO. 11

CALCULATED SDL
CHECKED WT

CROSS SECTIONS
STA 49+00 TO STA 49+25

LAK-608-3.37

P:\LAK\93229\Roadway\Sheets\93229XS001.dgn Design 4/11/2016 2:56:30 PM slettieri

SEEDING END WIDTH	SEEDING SQ. YDS.
61	
	126
30	
60	
	186

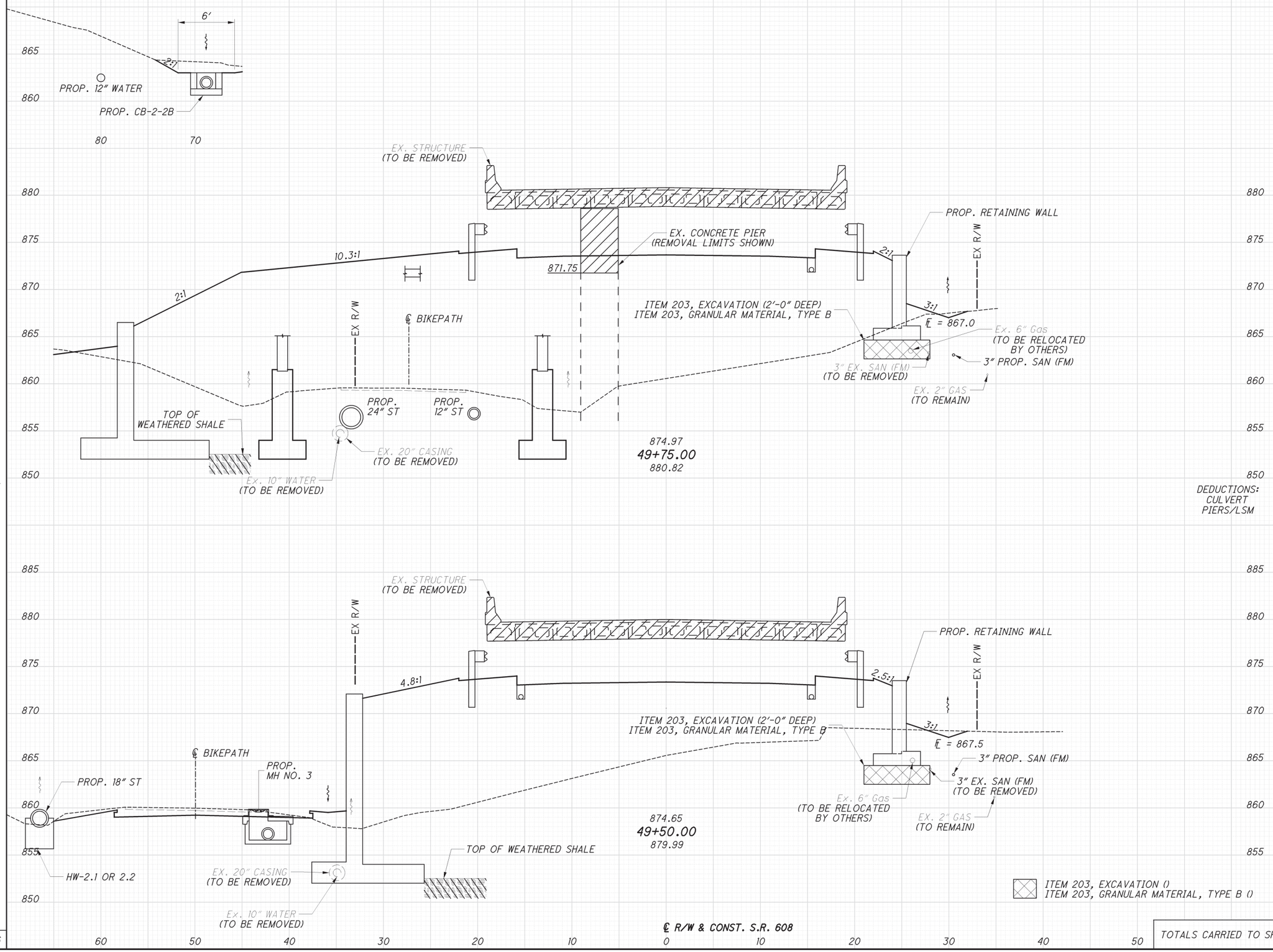

END AREA CUT	END AREA FILL	VOLUME CUT	VOLUME FILL
10 (14)	968 (14)		
		13 (13)	691 (13)
			-1218 -76
18 (14)	524 (14)		
		19 (13)	339 (13)
TOTALS CARRIED TO SHEET NO. 11		32 (26)	-264 (26)

CALCULATED SDL
CHECKED WT

CROSS SECTIONS
STA 49+50 TO STA 49+75

LAK-608-3.37

P:\LAK\93229\Roadway\Sheets\93229XS001.dgn Design 4/11/2016 2:56:23 PM slettieri

SEEDING END WIDTH	SEEDING SQ. YDS.	END AREA CUT	END AREA FILL	VOLUME CUT	VOLUME FILL
74					
	196	27	1085		
				29	928
67					
		36 (14)	920 (14)		
	178			21 (13)	874 (13)
	374			50 (13)	1802 (13)

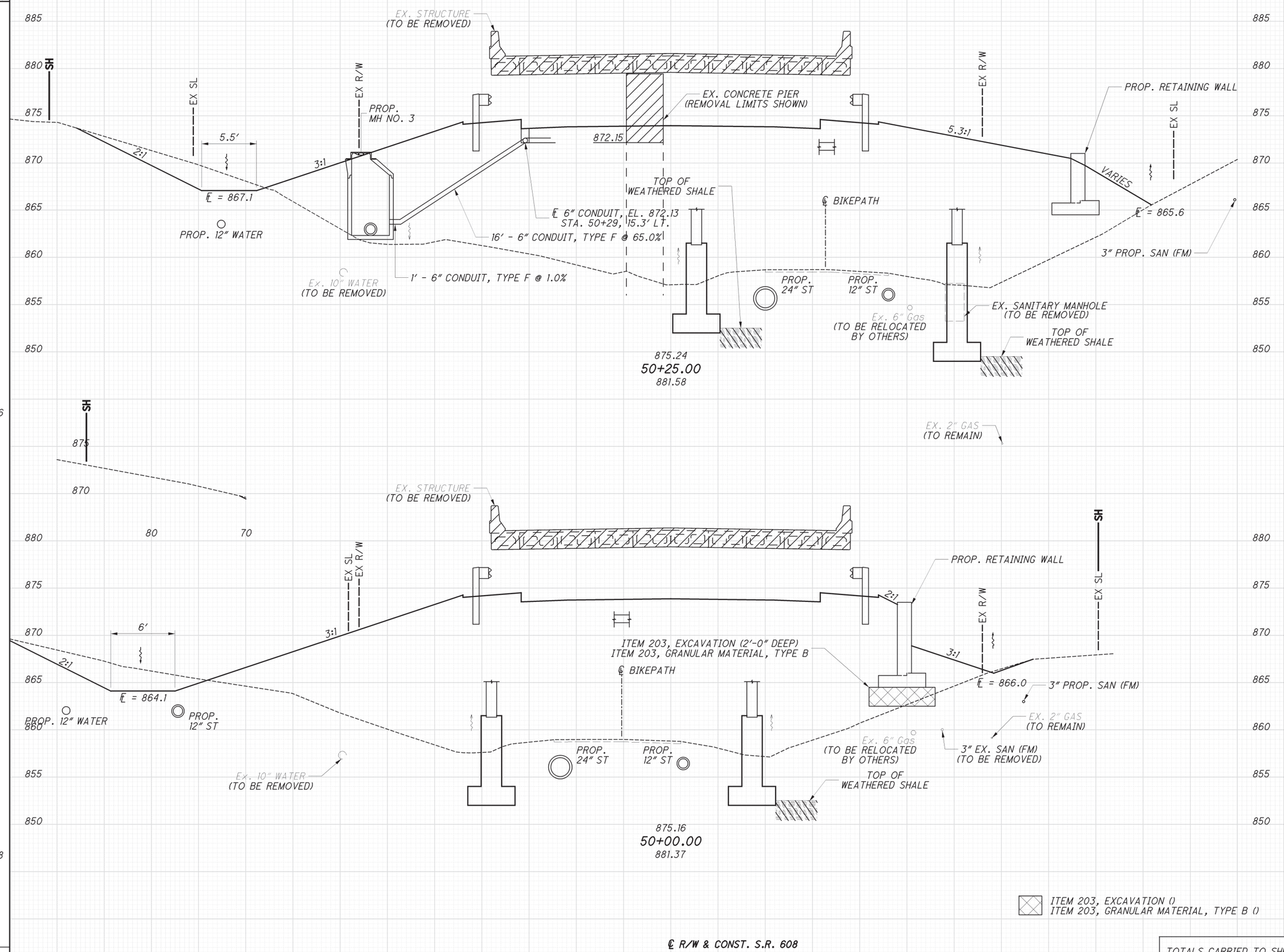

TOTALS CARRIED TO SHEET NO. 11

CALCULATED SDL
CHECKED WT

CROSS SECTIONS
STA 50+00 TO STA 50+25

LAK-608-3.37

20/60

P:\LAK\93229\Roadway\Sheets\93229XS001.dgn Design 4/11/2016 2:56:20 PM sletieri

SEEDING		END AREA		VOLUME	
END WIDTH	SQ. YDS.	CUT	FILL	CUT	FILL
69	181	36	431		
61	188	14	827	23	582
				19	885
	369			42	1465

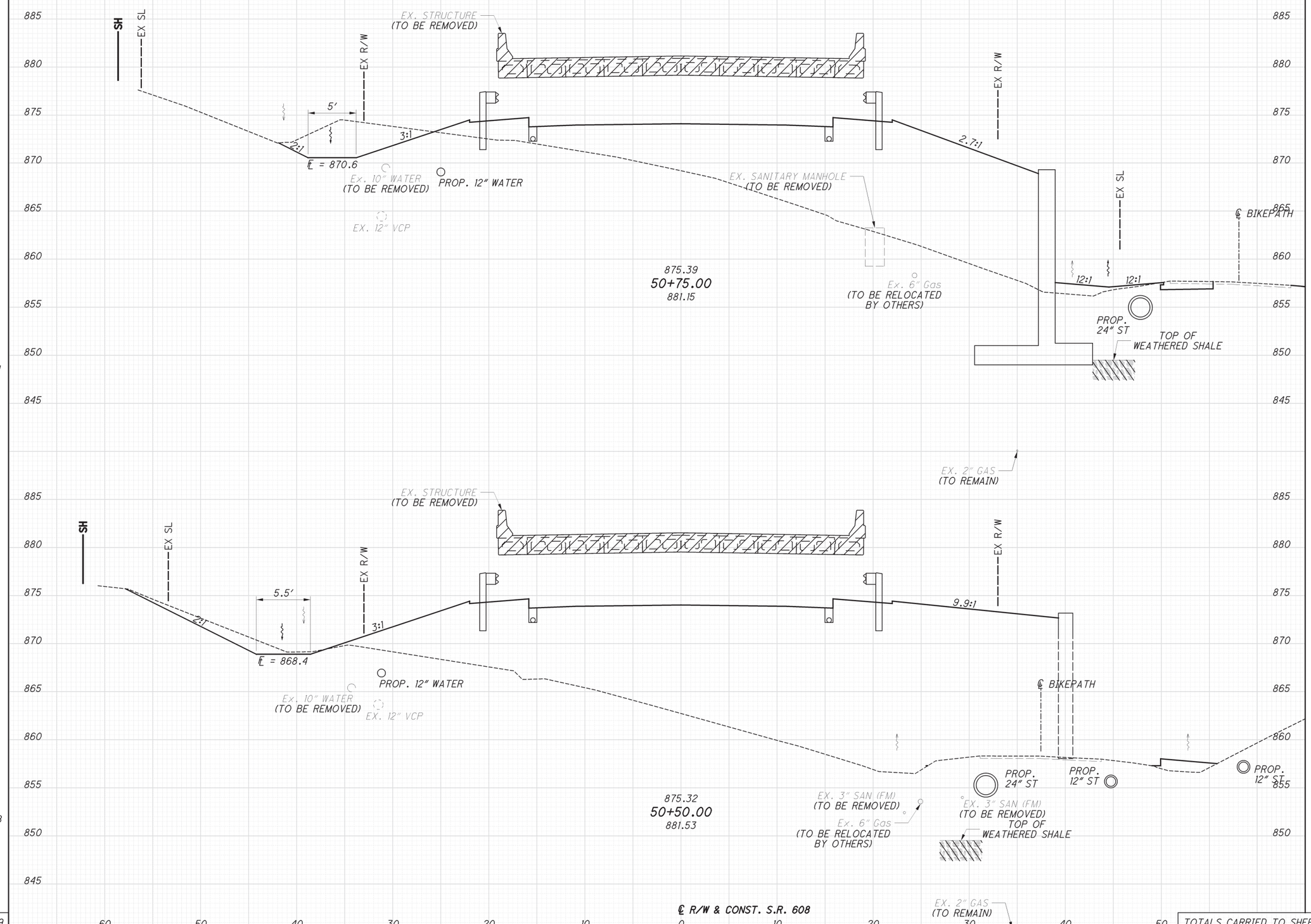

TOTALS CARRIED TO SHEET NO. 11

CALCULATED SDL
CHECKED WT

CROSS SECTIONS
STA 50+50 TO STA 50+75

LAK-608-3.37

P:\LAK\93229\Roadway\Sheets\93229XS001.dgn Design 4/11/2016 2:56:40 PM slettieri

SEEDING END WIDTH	SEEDING SQ. YDS.
52	58
53	169
	227

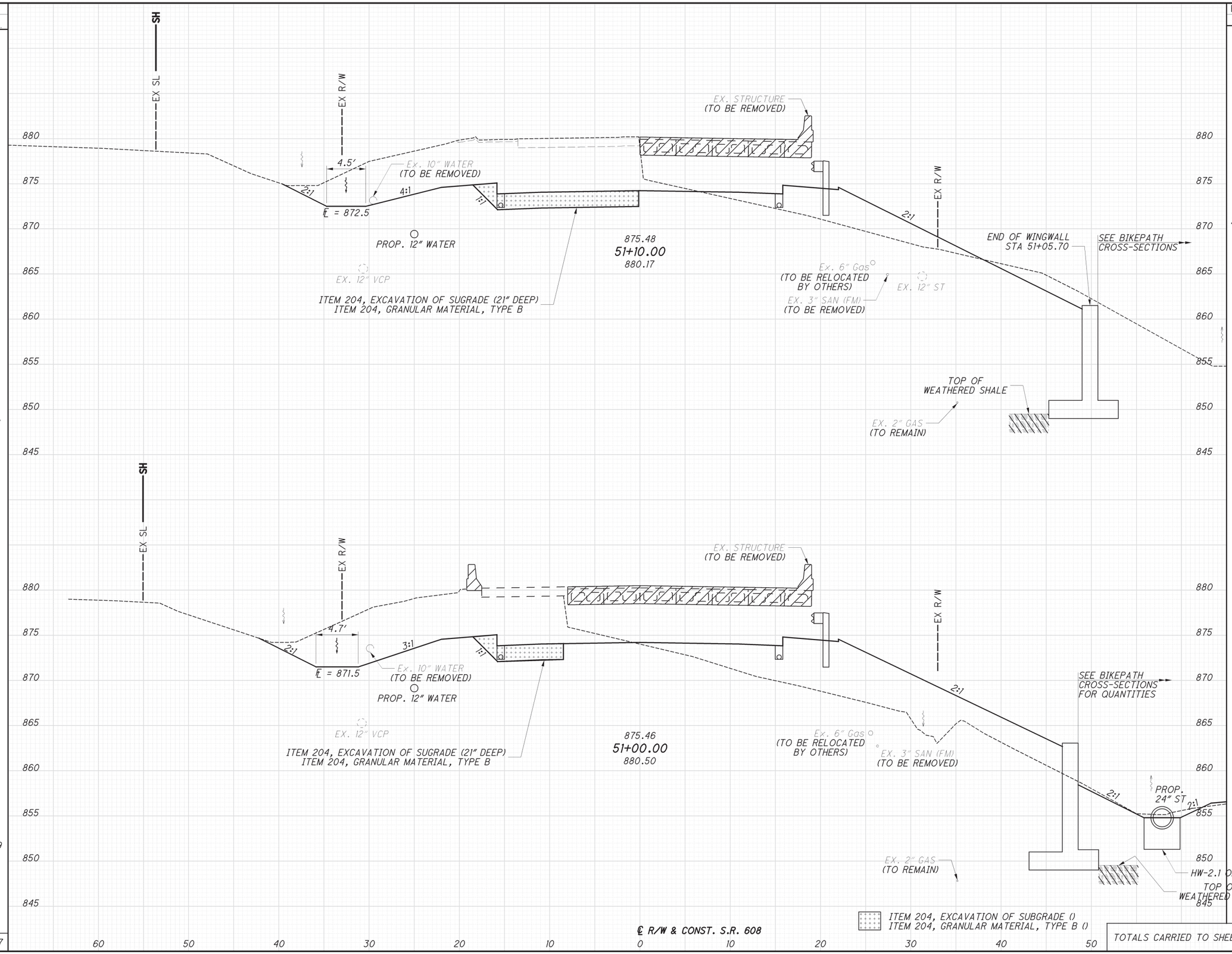

END AREA CUT	END AREA FILL	VOLUME CUT	VOLUME FILL
207 (31)	63 (31)		
		68 (9)	43 (9)
161 (17)	170 (17)		
		91	278
TOTALS CARRIED TO SHEET NO. 11		159 (9)	321 (9)

CALCULATED SDL
CHECKED WT

CROSS SECTIONS
STA 51+00 TO STA 51+10

LAK-608-3.37

P:\LAK\93229\Roadway\Sheets\93229XS001.dgn Design 4/11/2016 2:56:34 PM slettieri

SEEDING END WIDTH	SEEDING SQ. YDS.
35	93
32	70
	163

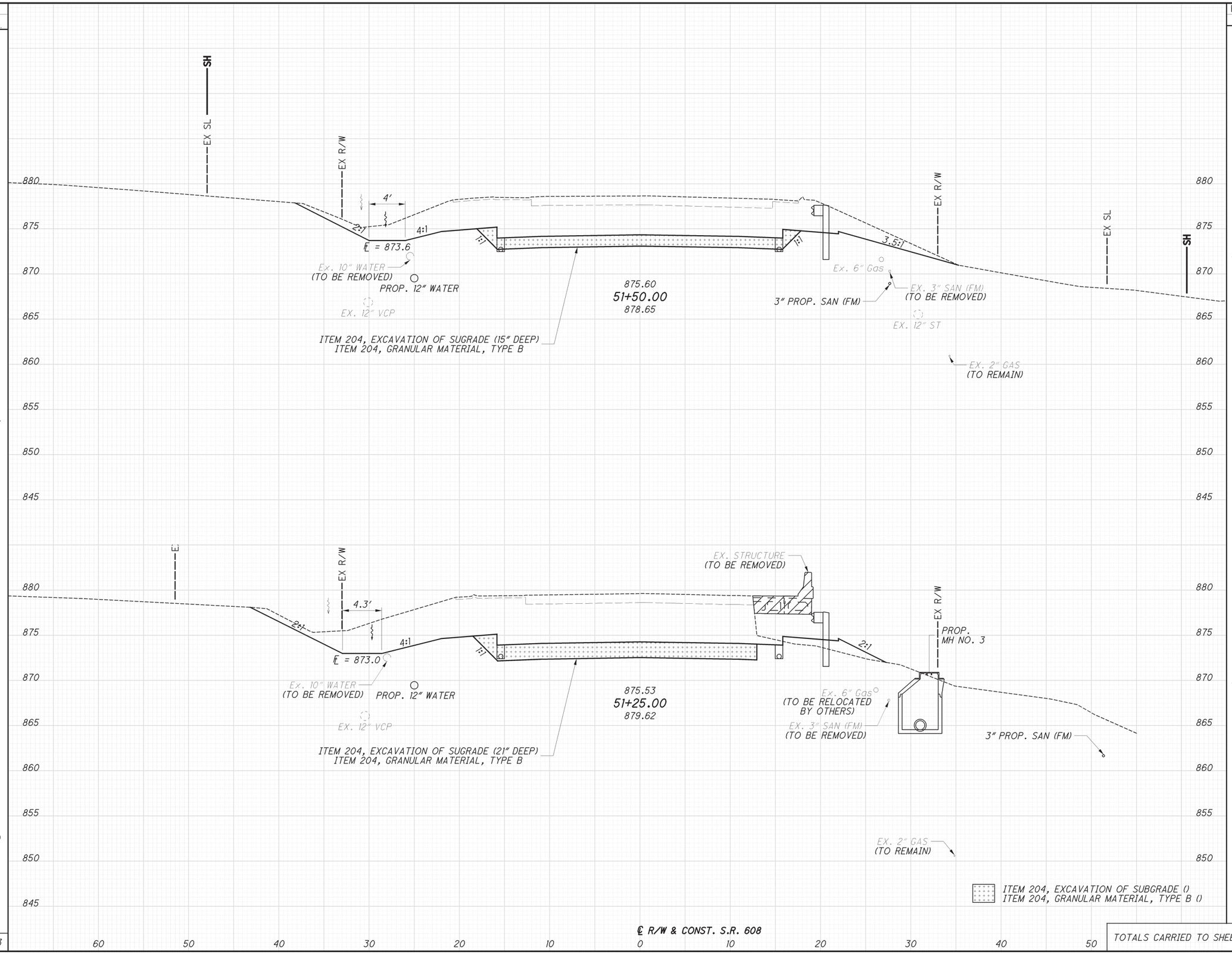

END AREA CUT	END AREA FILL	VOLUME CUT	VOLUME FILL
217 (45)	0 (45)		
231 (54)	9 (54)	207 (46)	4 (46)
		122 (24)	20 (24)
TOTALS CARRIED TO SHEET NO. 11		329 (70)	24 (70)

CALCULATED SDL
CHECKED WT

CROSS SECTIONS
STA 51+25 TO STA 51+50

LAK-608-3.37

P:\LAK\93229\Roadway\Sheets\93229XS001.dgn Design 4/11/2016 2:57:04 PM slettieri

SEEDING END WIDTH	SEEDING SQ. YDS.
32	106
32	103
	209

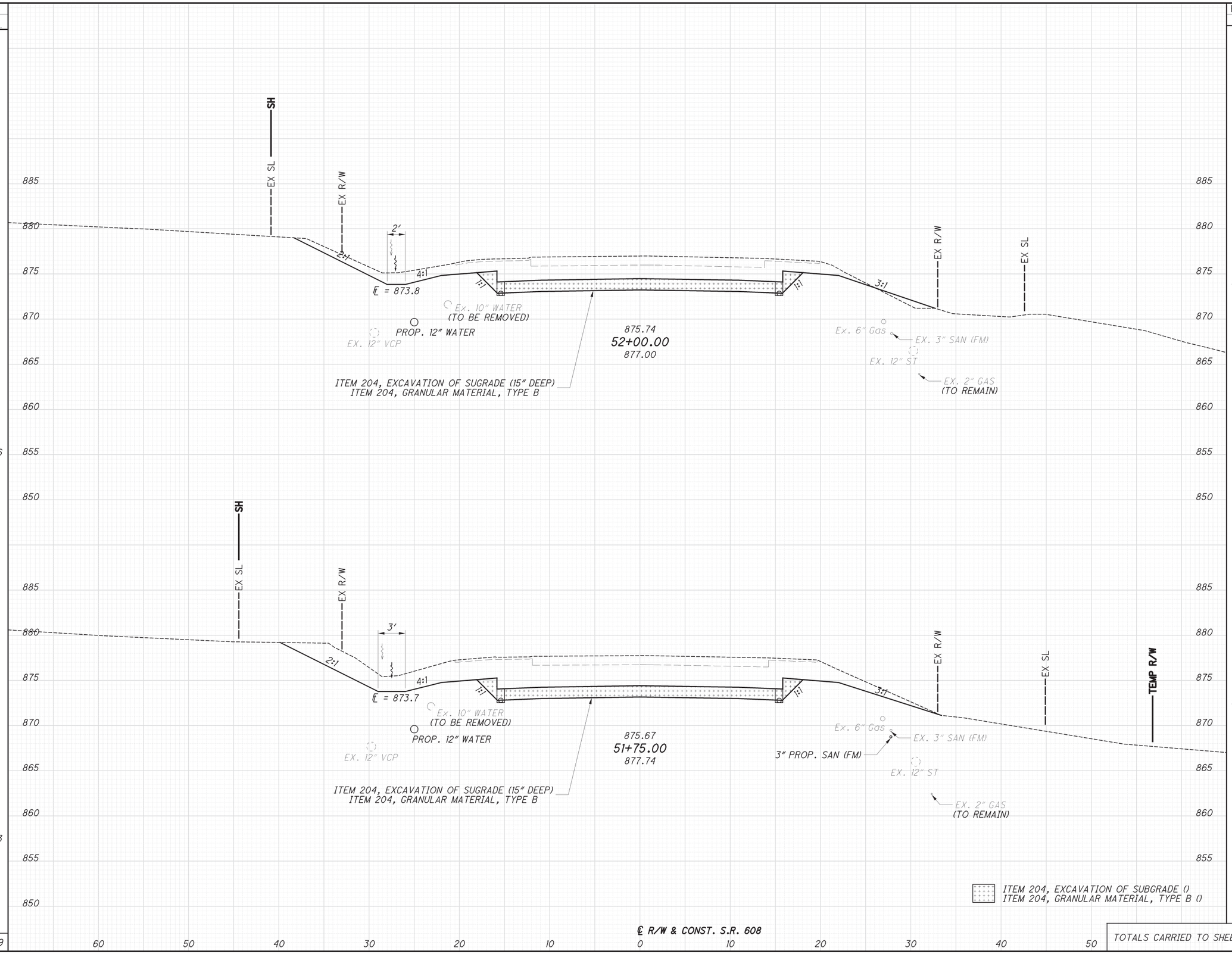

END AREA CUT	END AREA FILL	VOLUME CUT	VOLUME FILL
113 (45)	3 (45)	133 (42)	1 (42)
175 (45)	0 (45)	181 (42)	0 (42)
TOTALS CARRIED TO SHEET NO. 11		314 (84)	1 (84)

CALCULATED SDL
CHECKED WT

CROSS SECTIONS
STA 51+75 TO STA 52+00

LAK-608-3.37

P:\LAK\93229\Roadway\Sheets\93229XS001.dgn Design 4/11/2016 2:56:59 PM stettieri

SEEDING END WIDTH	SEEDING SQ. YDS.
19	
	47
39	
	72
	119

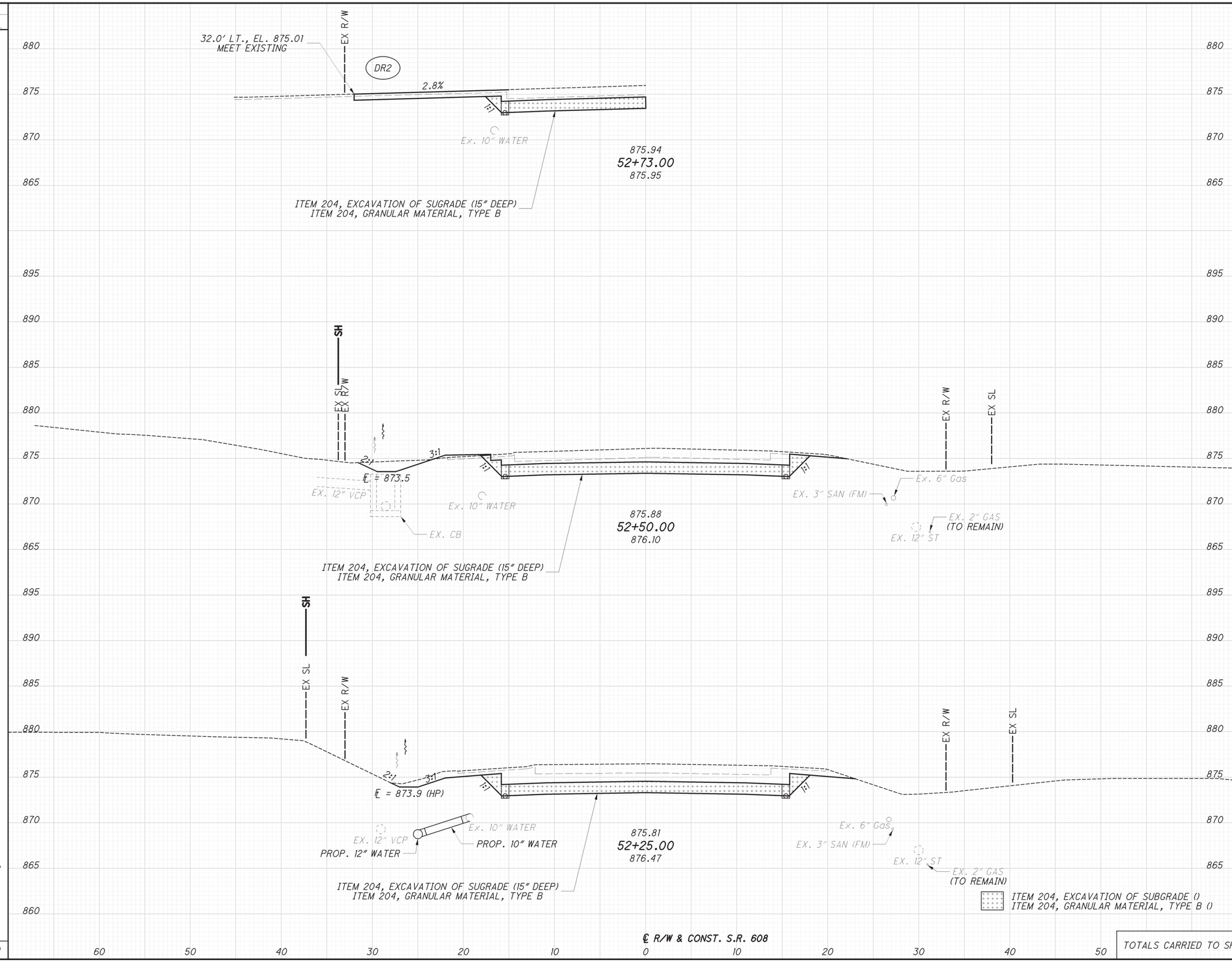

END AREA CUT	END AREA FILL	VOLUME CUT	VOLUME FILL
53 (44)	1 (44)		
		58 (41)	1 (41)
73 (45)	0 (45)		
		86 (42)	1 (42)
TOTALS CARRIED TO SHEET NO. 11		144 (83)	2 (83)

CALCULATED SDL
CHECKED WT

CROSS SECTIONS
STA 52+25 TO STA 52+73

LAK-608-3.37

P:\LAK\93229\Roadway\Sheets\93229XS001.dgn Design 4/11/2016 2:56:51 PM sieltieri

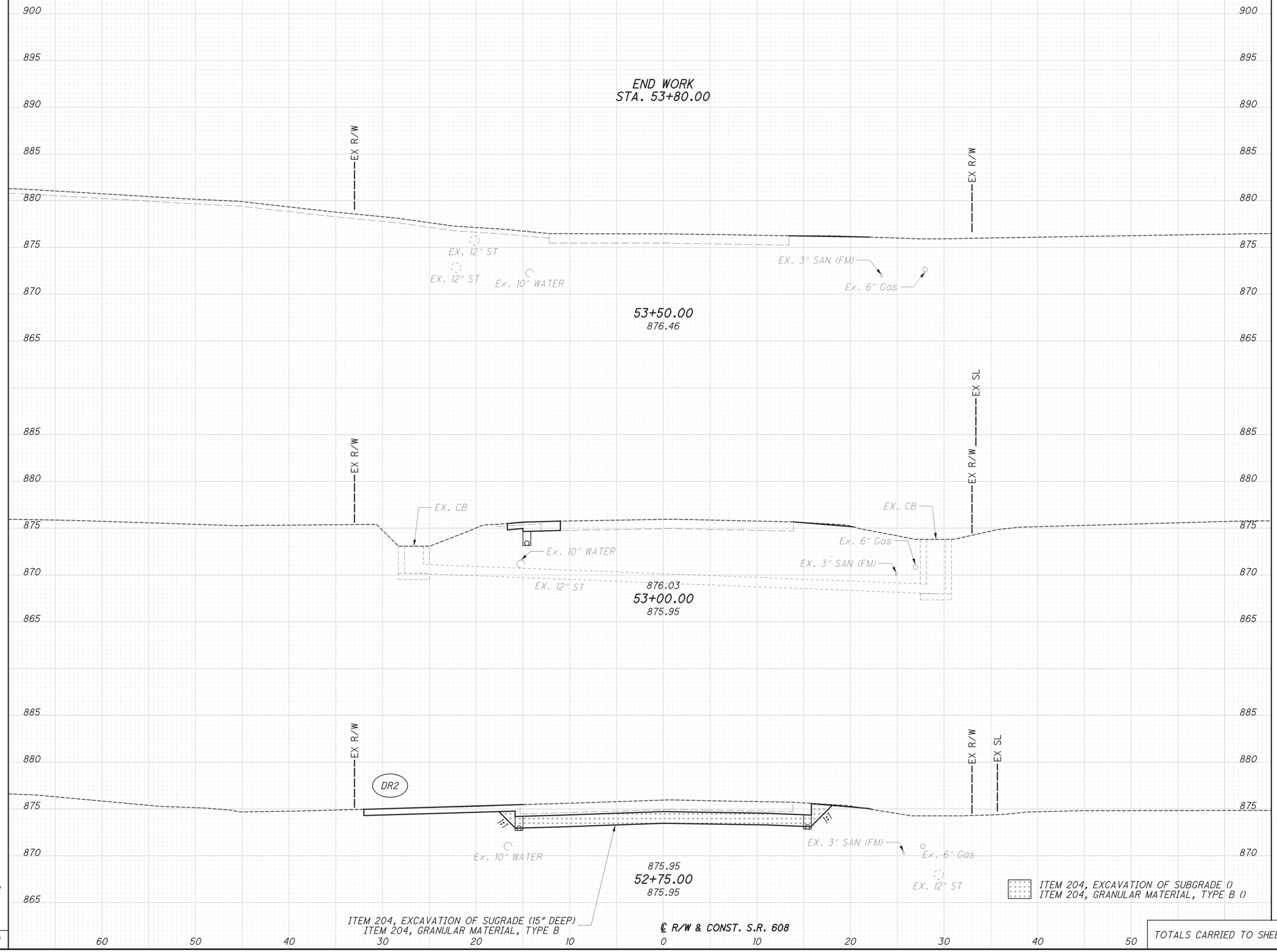

SEEDING END WIDTH	SEEDING SQ. YDS.	END AREA CUT	END AREA FILL	VOLUME CUT	VOLUME FILL
0					
	15	0	0		
9				0	0
		0	0		
	21				
				6	0
6					
		6	0		
	14			21	0
4					
		39 (44)	0 (44)		
	32			43 (41)	1 (41)
	82			70 (41)	1 (41)

TOTALS CARRIED TO SHEET NO. 11

CALCULATED SDL
CHECKED WT

CROSS SECTIONS
STA 52+75 TO STA 53+50

LAK-608-3.37

26
60

P:\LAK\93229\Roadway\Sheets\93229XS001.dgn Design 4/11/2016 2:57:08 PM sletteri

SEEDING		END AREA		VOLUME	
END WIDTH	SQ. YDS.	CUT	FILL	CUT	FILL
0					
	0			0	0
0		0	0		
	0				

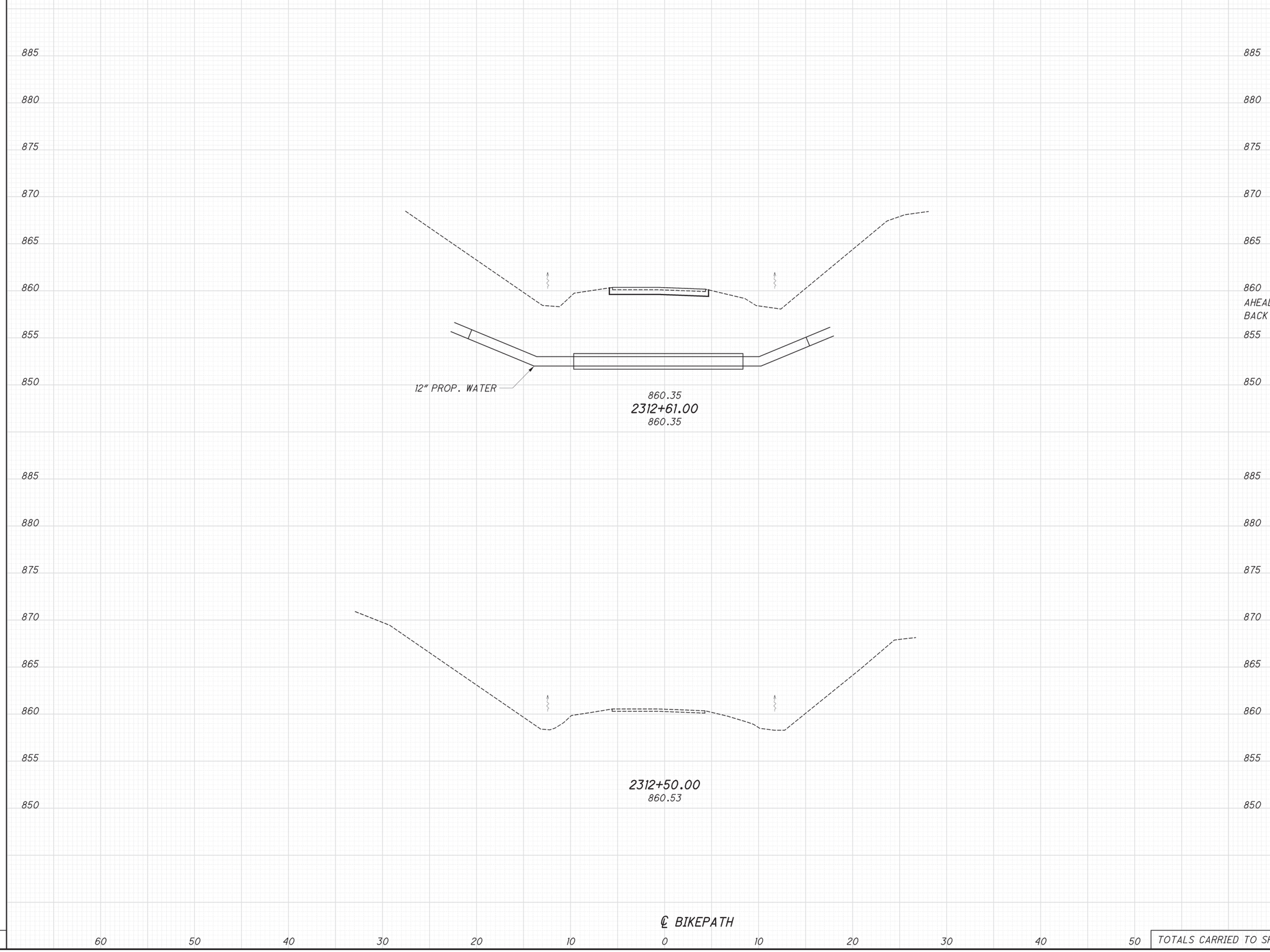

AHEAD	5	0
BACK	0	0

TOTALS CARRIED TO SHEET NO. 11

CALCULATED SDL
CHECKED WT

CROSS SECTIONS
STA 2312+50 TO STA 2312+61

LAK-608-3.37

P:\LAK\93229\Roadway\Sheets\93229XS002.dgn Design 4/11/2016 2:58:52 PM sieltieri

SEEDING END WIDTH	SEEDING SQ. YDS.	END AREA CUT	END AREA FILL	VOLUME CUT	VOLUME FILL
44		42	13		
	92			30	6
22		23	0		
	17			7	0
	109	TOTALS CARRIED TO SHEET NO. 11		37	6

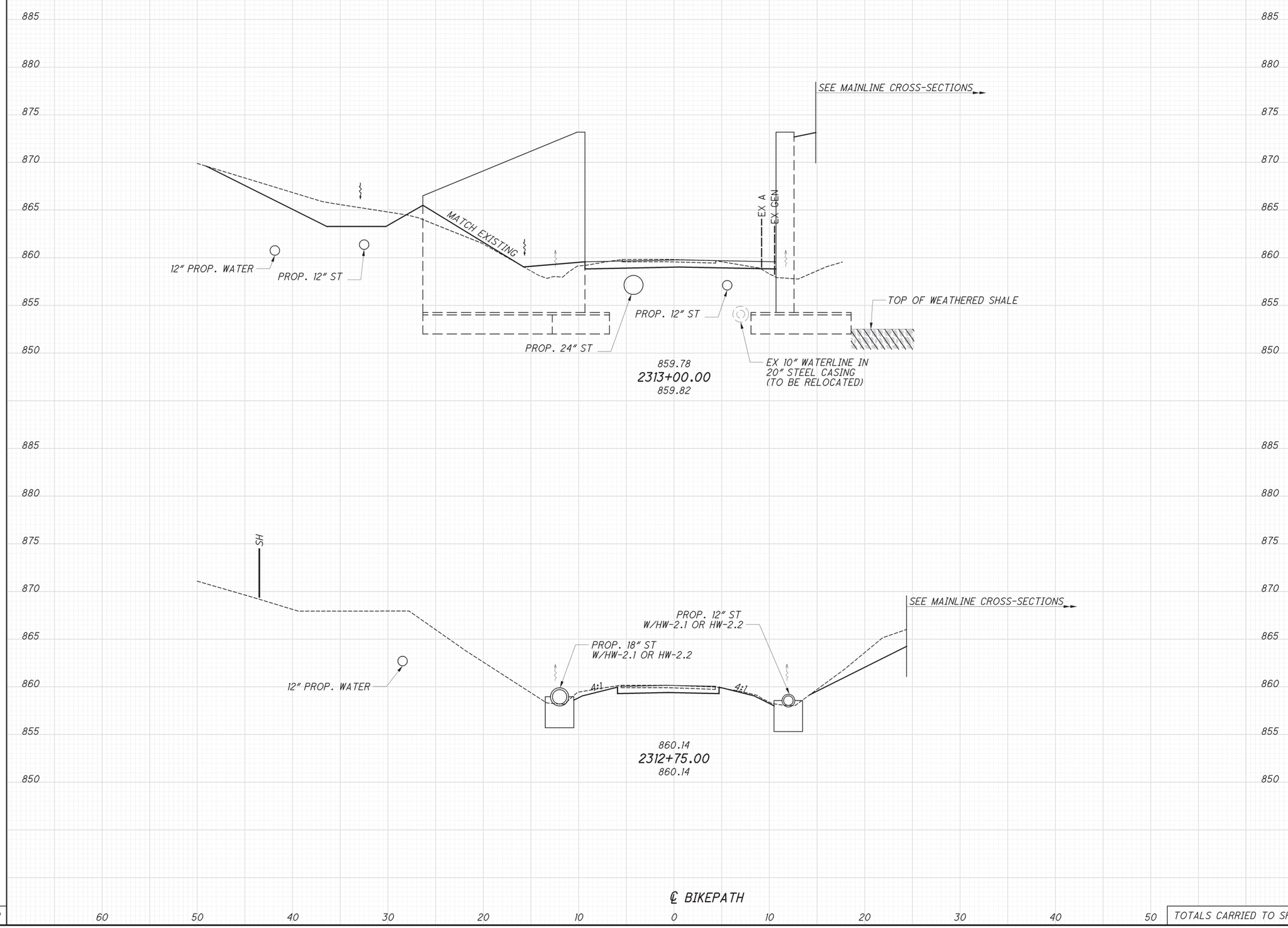

CALCULATED SDL
CHECKED WT

CROSS SECTIONS
STA 2312+75 TO STA 2313+00

LAK-608-3.37

P:\LAK\93229\Roadway\Sheets\93229XS002.dgn Design 4/11/2016 2:58:44 PM slettieri

SEEDING END WIDTH	SEEDING SQ. YDS.	END AREA CUT	END AREA FILL	VOLUME CUT	VOLUME FILL
30		13	6		
	82			21	6
44		45	11		
	7			2	1
	89			23	7

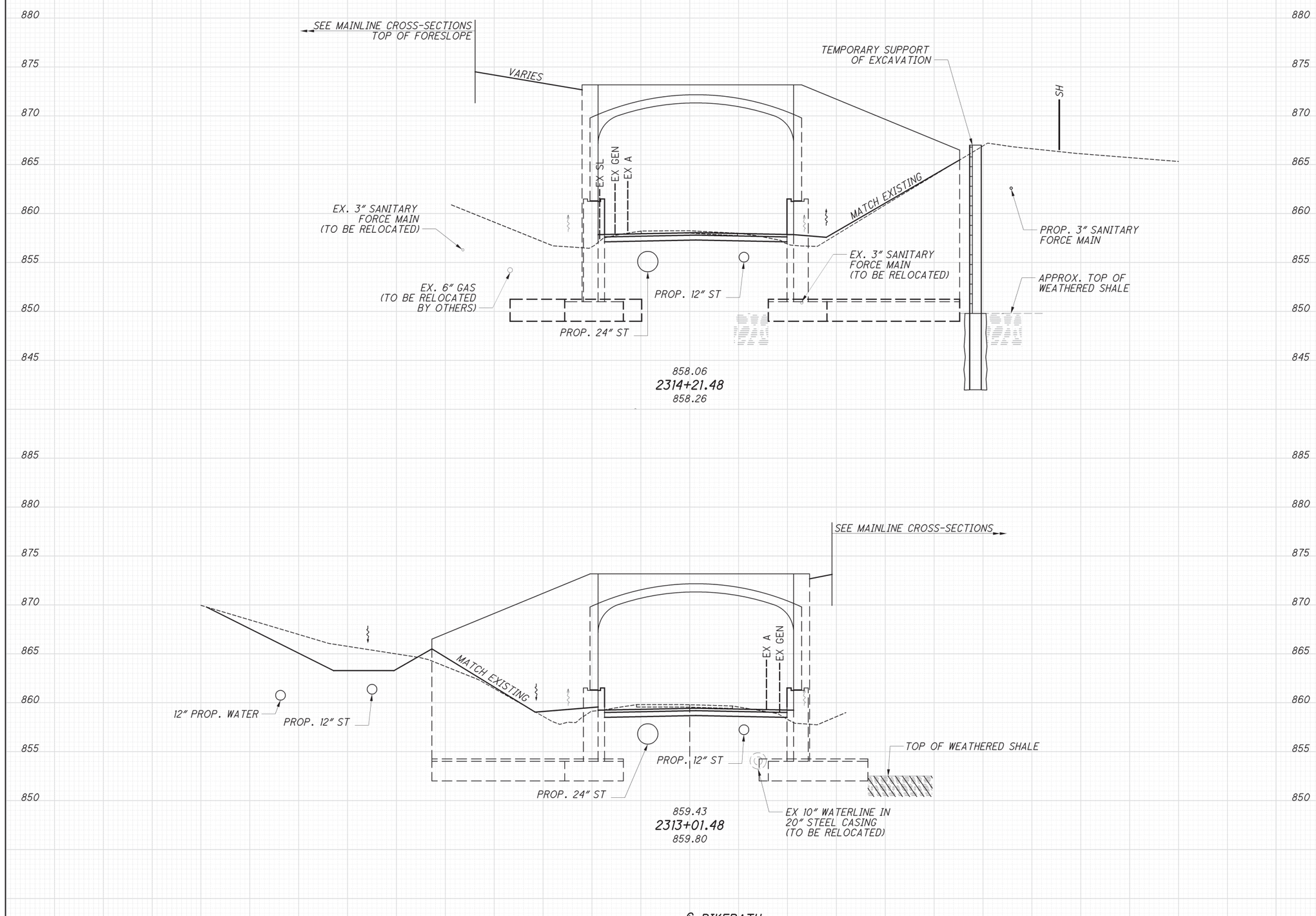

TOTALS CARRIED TO SHEET NO. 11

CALCULATED SDL
CHECKED WT

CROSS SECTIONS

STA 2313+01.48 TO STA 2314+21.48

LAK-608-3.37

P:\LAK\93229\Roadway\Sheets\93229XS002.dgn Design 4/11/2016 2:57:41 PM slettieri

SEEDING END WIDTH	SEEDING SQ. YDS.	END AREA CUT	END AREA FILL	VOLUME CUT	VOLUME FILL
44		67	0		
	181			67	11
21		5	12		
	81			10	10
	262	TOTALS CARRIED TO SHEET NO. 11		77	21

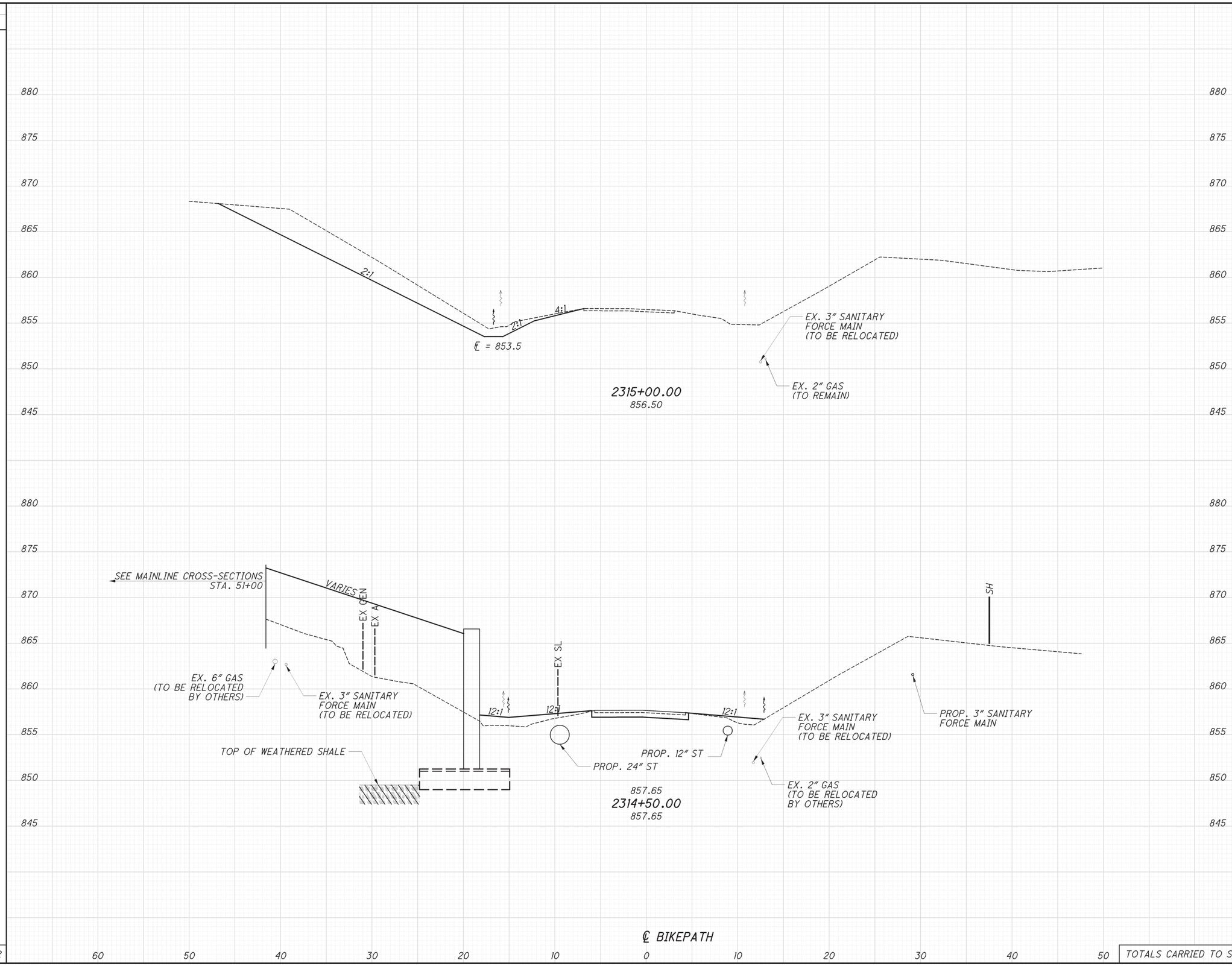

CALCULATED SDL
CHECKED WT

CROSS SECTIONS
STA 2314+50 TO STA 2315+00

LAK-608-3.37

30/60

P:\LAK\93229\Roadway\Sheets\93229XS002.dgn Design 4/11/2016 2:59:20 PM slettieri

SEEDING END WIDTH	SEEDING SQ. YDS.	END AREA CUT	END AREA FILL	VOLUME CUT	VOLUME FILL
0		0	0		
	33			2	0
12		5	0		
	156			67	0
	189	TOTALS CARRIED TO SHEET NO. 11		69	0

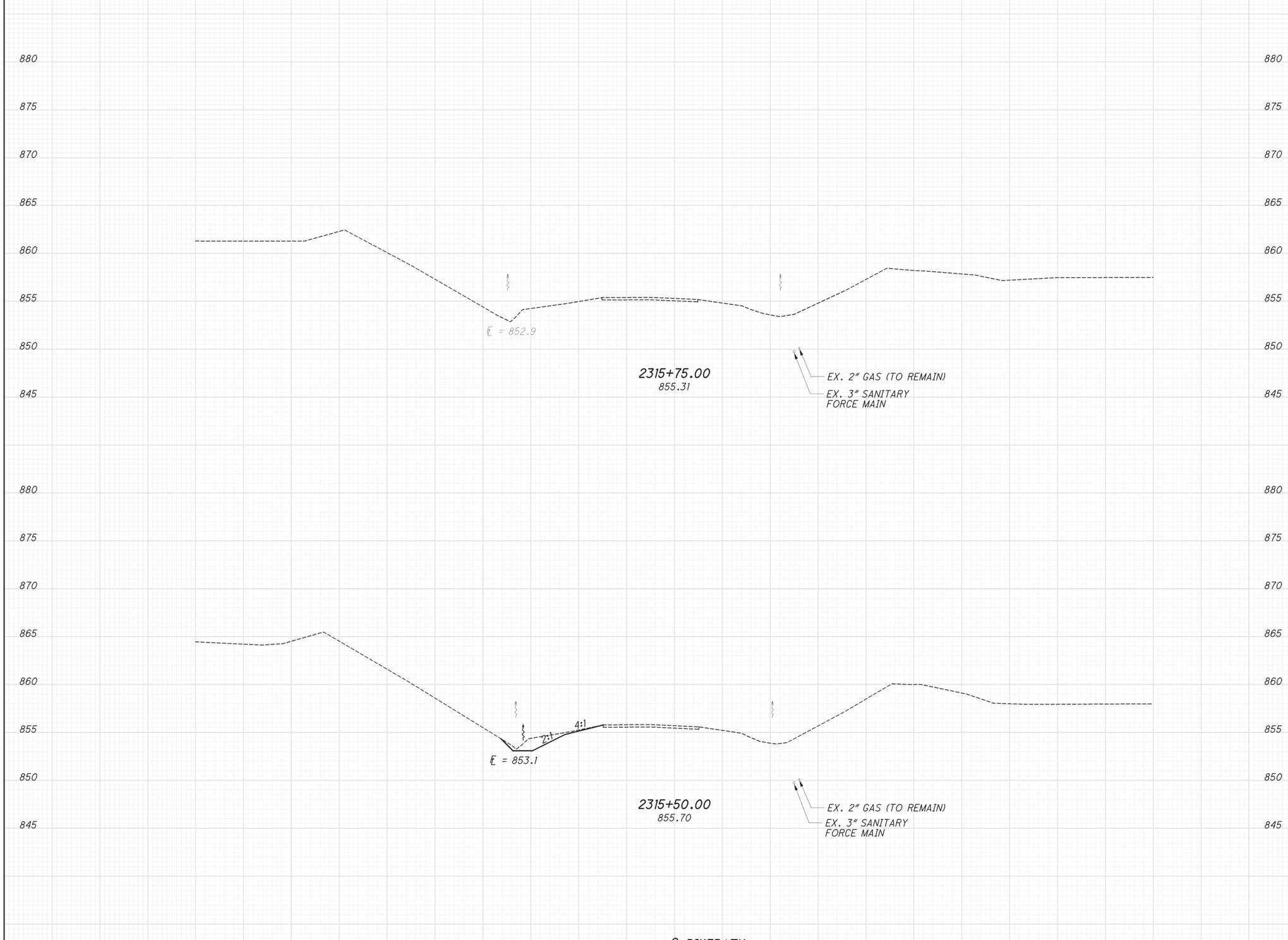

CALCULATED SDL
CHECKED WT

CROSS SECTIONS
STA 2315+50 TO STA 2315+75

LAK-608-3.37

P:\LAK\93229\Roadway\Sheets\93229XS002.dgn Design 4/11/2016 2:59:10 PM slettieri

SEEDING		END AREA		VOLUME	
END WIDTH	SQ. YDS.	CUT	FILL	CUT	FILL
0	0	0	0	0	0
	0				

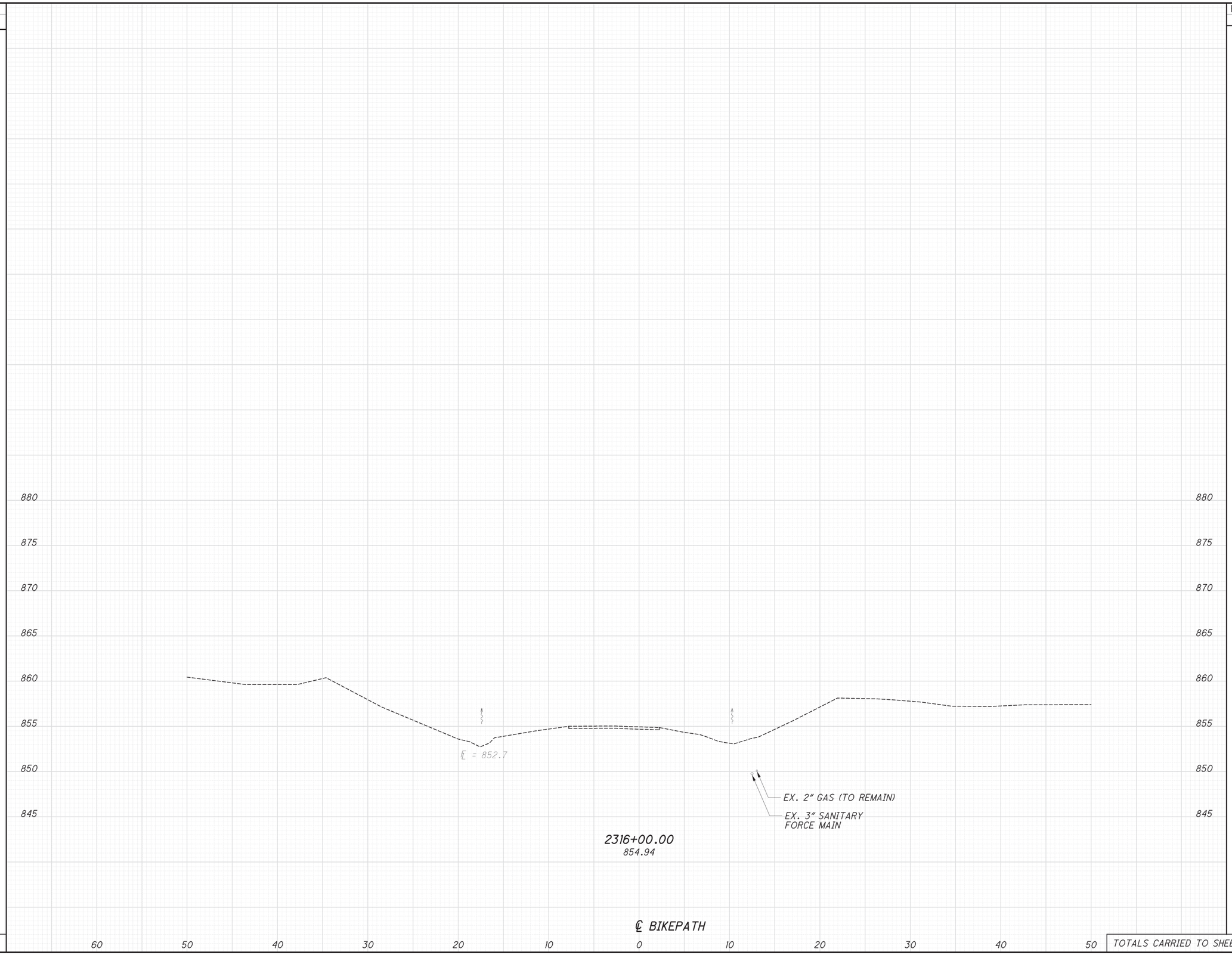

TOTALS CARRIED TO SHEET NO. 11

CALCULATED SDL
CHECKED WT

CROSS SECTIONS
STA 2316+00

LAK-608-3.37

P:\LAK\93229\Roadway\Sheets\93229XS002.dgn Design 4/11/2016 2:59:02 PM slettieri

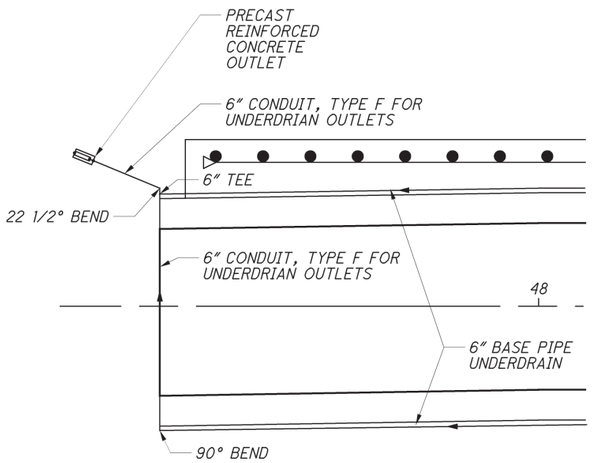

STA. 47+40.8, LT.

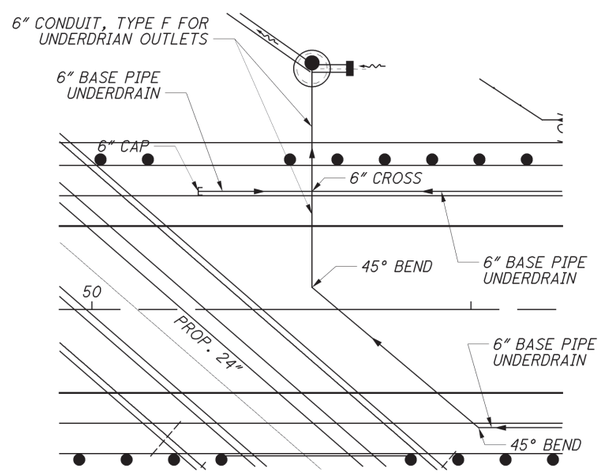

STA. 50+29.00, LT.

PLAN SHEET NO.	PROFILE SHEET NO.	REFERENCE NO.	DRIVEWAY ℄ STATION	SIDE	DRIVE TYPE	EXISTING MATERIAL	DRIVE ANGLE	DRIVEWAY LENGTH	WIDTH AT DRIVE	WIDTH AT SHOULDER	CADD GENERATED SURFACE AREA	203 EXCAVATION	203 EMBANKMENT	204 SUBGRADE COMPACTION	304 6" AGGREGATE BASE		441 2" ASPHALT CONCRETE SURFACE COURSE, TYPE 1, (448), PG64-22 (DRIVEWAYS)	
							DEG.	FT	FT	FT	SQ FT	CU YD	CU YD					
13	17	DR-1	48+51.50	RT.	SPECIAL	ASPH.	87	30	10	38.3	477	40.5	0.0	SEE OFFICE CALCS				
13	25	DR-2	52+73.00	LT.	RES.	AGGR.	87	21	30.3	55.6	682	16.8	0.0					
SUB-TOTALS												57.3	0.0					
TOTALS CARRIED TO GENERAL SUMMARY												57	0					

PROPOSED ASPHALT RESIDENTIAL DRIVE:

441 - 2" ASPHALT CONCRETE SURFACE COURSE, TYPE 1, (448), PG64-22 (DRIVEWAYS)

304 - 6" AGGREGATE BASE

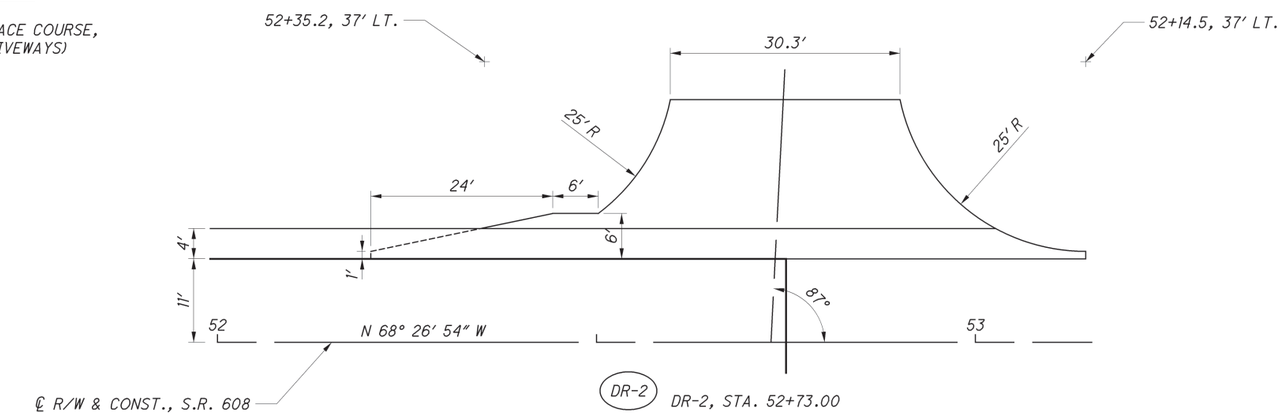

DR-2, STA. 52+73.00

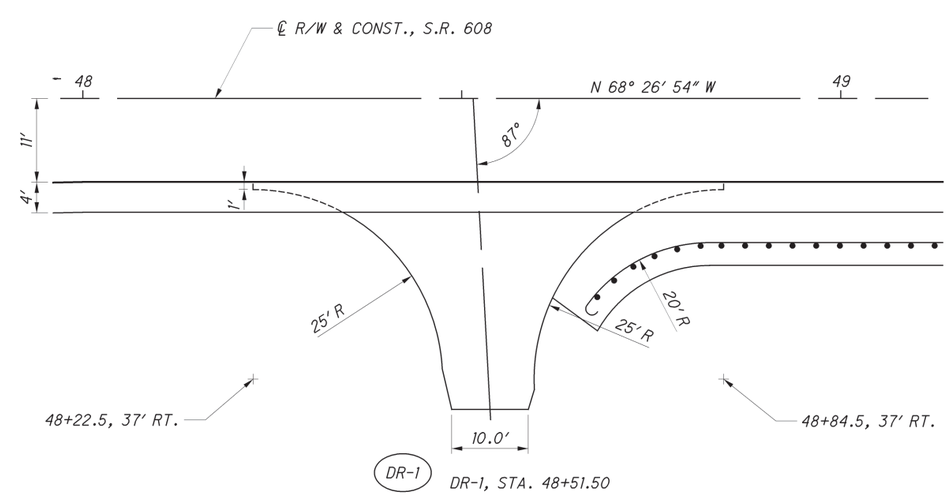

DR-1, STA. 48+51.50

REF NO.	SHEET NO.	STATION FROM	STATION TO	SIDE	605 6" BASE PIPE UNDERDRAINS WITH GEOTEXTILE FABRIC	611 6" CONDUIT, TYPE F FOR UNDERDRAIN OUTLETS	611 PRECAST REINFORCED CONCRETE OUTLET	BENDS & BRANCHES (FOR INFORMATION ONLY) 90° (EACH)	45° (EACH)	22.5° (EACH)	TEE (EACH)	CROSS (EACH)
					FT	FT	EA					
U-1	13	47+40.8	49+61.00	LT	211	10	1			1	1	
U-2	13	47+50.00	49+98.00	RT	248	31		1				
U-3	13	50+14.00	50+29.00	LT	15							1
U-4	13	50+29.00	53+00.00	LT	271							
U-5	13	50+29.00	52+75.00	RT	224	58			2			
TOTALS CARRIED TO GENERAL SUMMARY					969	99	1					

CALCULATED SDL
CHECKED WT

UNDERDRAIN AND DRIVE DETAILS

LAK-608-3.37

P:\LAK\93229\Roadway\Sheets\93229GD001.dgn Sheet 4/8/2016 11:54:52 AM stettieri

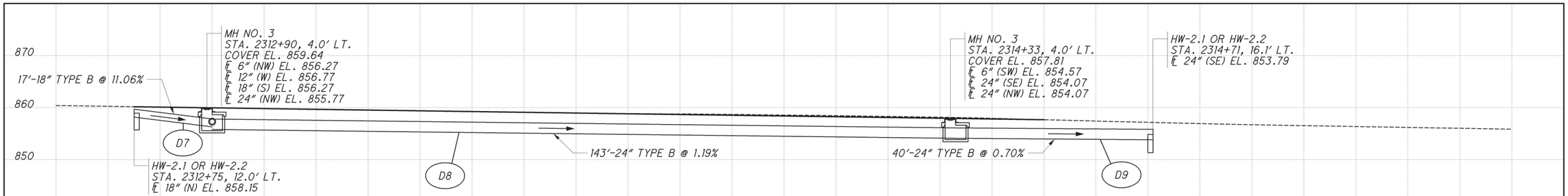

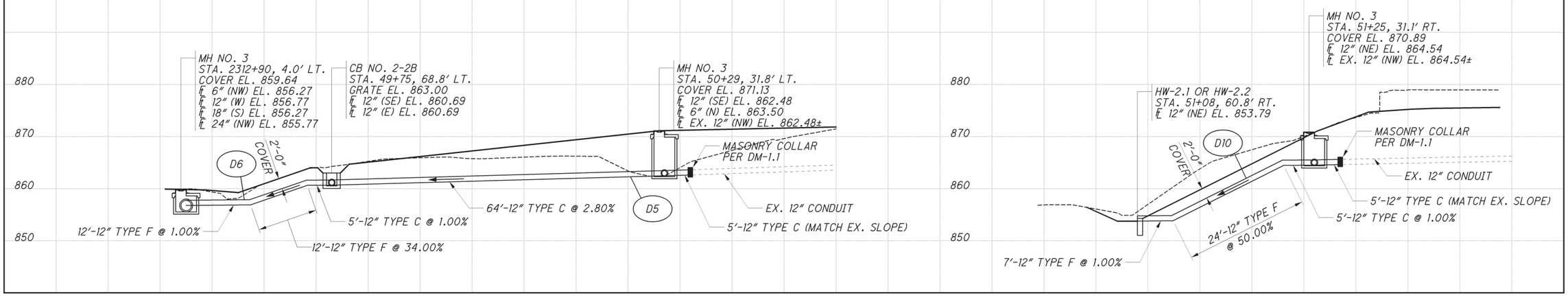

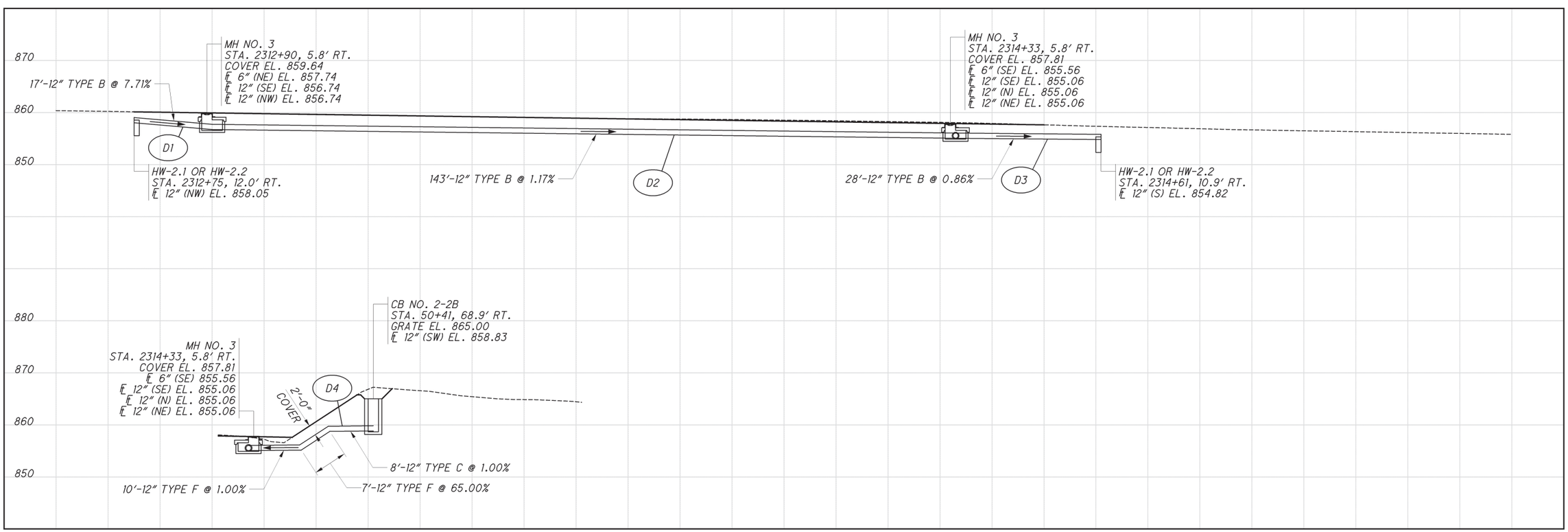

CALCULATED SDL
CHECKED WT

STORM SEWER PROFILE

LAK-608-3.37

P:\LAK\93229\Roadway\Sheets\93229DF001.dgn Sheet 4/8/2016 11:55:03 AM sletteri

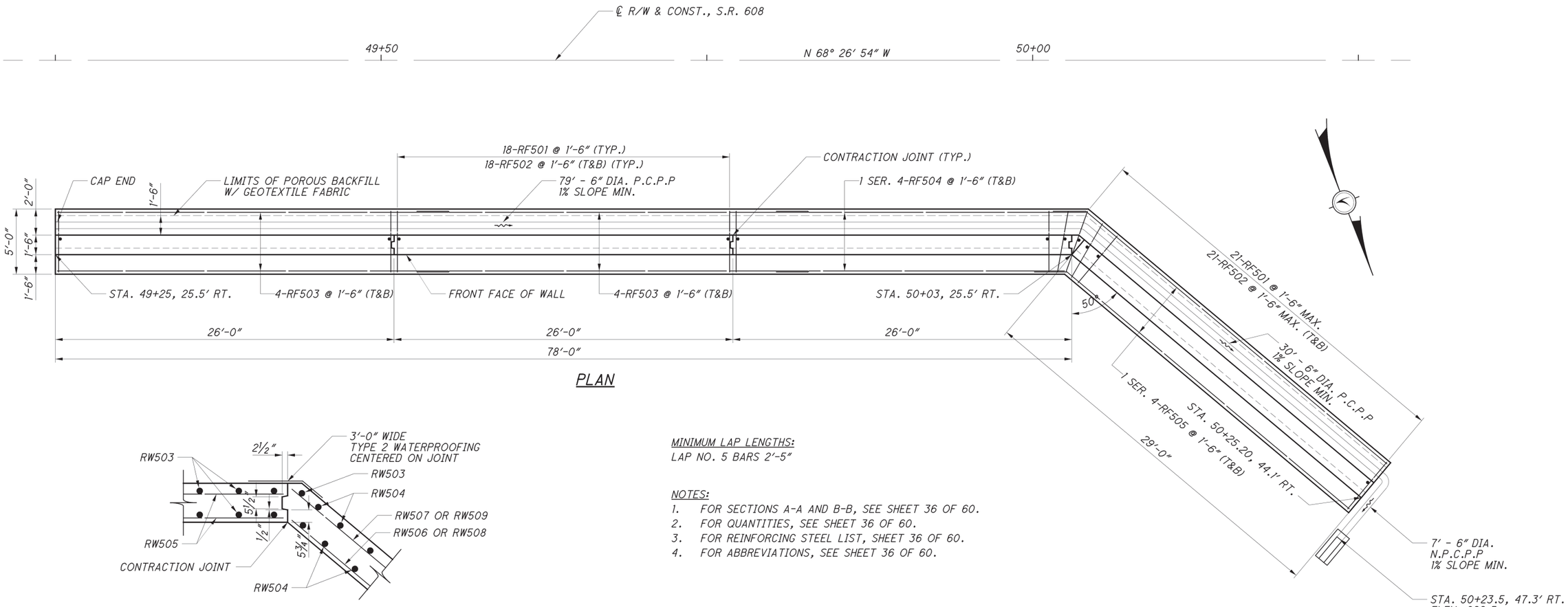

PLAN

SECTION C-C

MINIMUM LAP LENGTHS:
LAP NO. 5 BARS 2′-5″

NOTES:
1. FOR SECTIONS A-A AND B-B, SEE SHEET 36 OF 60.
2. FOR QUANTITIES, SEE SHEET 36 OF 60.
3. FOR REINFORCING STEEL LIST, SHEET 36 OF 60.
4. FOR ABBREVIATIONS, SEE SHEET 36 OF 60.

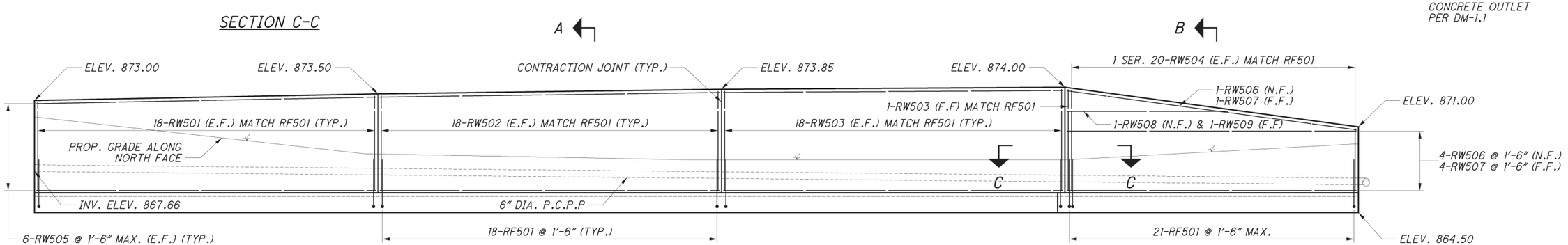

ELEVATION
NORTH FACE

CALCULATED SDL
CHECKED WT

RETAINING WALL PLAN AND ELEVATION

LAK-608-3.37

35
60

P:\LAK\93229\Roadway\Sheets\93229WE001.dgn Sheet 4/8/2016 11:54:50 AM slettieri

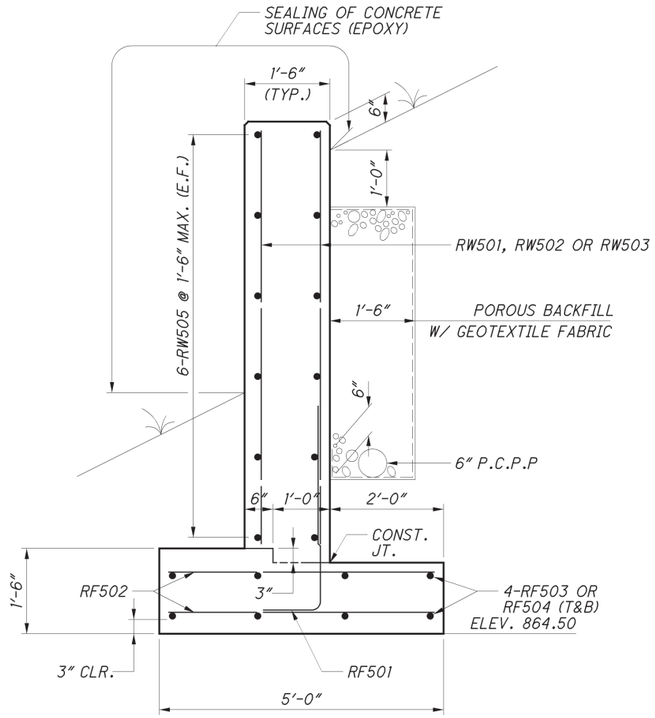

SECTION A-A

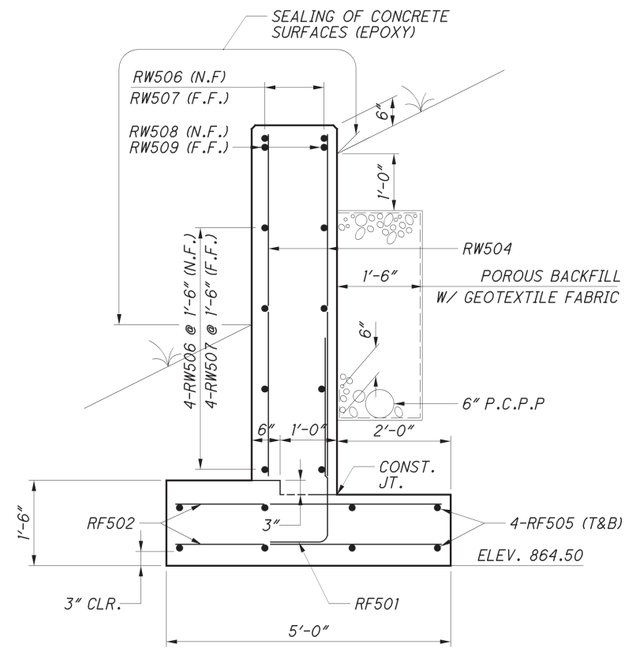

SECTION B-B

RETAINING WALL REINFORCING SCHEDULE								
BAR MARK	NUMBER	LENGTH	WEIGHT (LBS.)	TYPE	BAR TYPE DIMENSIONS			INC.
					A	B	C	
RF501	75	4'-11"	385	1	4'-2"	0'-10"		
RF502	150	4'-8"	730	STR				
RF503	16	30'-0"	501	STR				
RF504	2 SER.	22'-3" TO	192	STR				0'-6"
	OF 4	23'-9"						
RF505	2 SER.	31'-0" TO	265	2	28'-6" TO	1'-11"	1'-7"	0'-6"
	OF 4	32'-6"			30'-0"			
RW501	36	6'-10"	257	STR				
RW502	36	7'-4"	275	STR				
RW503	37	7'-8"	296	STR				
RW504	2 SER.	4'-8" TO	261	STR				0'-2"
	OF 20	7'-10"						
RW505	36	25'-8"	964	STR				
RW506	5	28'-9"	150	STR				
RW507	5	29'-6"	154	STR				
RW508	1	15'-9"	16	STR				
RW509	1	16'-6"	17	STR				
		TOTAL	4463					

MINIMUM LAP LENGTHS:
LAP NO. 5 BARS 2'-5"

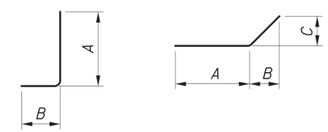

TYPE 1 TYPE 2

NOTES:
1. FOR LOCATION OF SECTIONS A-A & B-B, SEE SHEET 35 OF 60.
2. THE PLANS SPECIFY THE BAR SIZE NUMBER IN THE BAR MARK COLUMN. THE FIRST DIGIT INDICATES THE BAR SIZE NUMBER. FOR EXAMPLE, RW501 IS A NO. 5 BAR. BAR DIMENSIONS SHOWN ARE OUT TO OUT.
3. "STR" IN THE TYPE COLUMN INDICATES STRAIGHT BARS.
4. REFER TO C.M.S. SECTION 509.05 FOR STANDARD BEND DIMENSIONS.
5. ALL REINFORCING STEEL CLEARANCES ARE 2" UNLESS OTHERWISE NOTED.

GENERAL NOTES:

DESIGN SPECIFICATIONS:
THIS STRUCTURE CONFORMS TO "LRFD BRIDGE DESIGN SPECIFICATIONS" ADOPTED BY THE AMERICAN ASSOCIATION OF STATE HIGHWAY AND TRANSPORTATION OFFICIALS, 2014, INCLUDING THE 2016 INTERIMS, AND THE ODOT BRIDGE DESIGN MANUAL 2007.

DESIGN DATA:
CONCRETE CLASS QC1 - COMPRESSIVE STRENGTH 4.0 KSI (FOOTING AND RETAINING WALL)

REINFORCING STEEL - MINIMUM YIELD STRENGTH 60 KSI (ALL REINFORCING SHALL BE EPOXY COATED)

FOUNDATION BEARING RESISTANCE:
RETAINING WALL FOOTING, AS DESIGNED, PRODUCE A MAXIMUM SERVICE LOAD PRESSURE OF 1.8 KIPS PER SQUARE FOOT AND A MAXIMUM STRENGTH LOAD PRESSURE OF 2.0 KIPS PER SQUARE FOOT. THE FACTORED BEARING RESISTANCE IS 4.1 KIPS PER SQUARE FOOT.

SEALING OF RETAINING WALL:
SEAL ALL EXPOSED RETAINING WALL CONCRETE AS SHOWN IN THE PLANS WITH EPOXY SEALER. PAYMENT FOR THE EPOXY SEALER IS PER ITEM 512 - SEALING OF CONCRETE SURFACES.

POROUS BACKFILL WITH GEOTEXTILE FABRIC:
PLACE 1'-6" THICK BEHIND THE RETAINING AND EXTEND TO 12" BELOW THE EMBANKMENT SURFACE. PLACE GEOTEXTILE FABRIC BETWEEN THE POROUS BACKFILL AND REPLACED EXCAVATION ADJACENT TO THE STRUCTURE. IT TURNS UNDER THE BOTTOM OF THE POROUS BACKFILL AND RETURNS 6".

WATERPROOFING:
TYPE 2 WATERPROOFING, PER CMS 512.08 AND 711.25 SHALL BE THREE FOOT WIDE CENTERED ACROSS THE CONTRACTION JOINT AS SHOWN IN THE PLANS. TYPE 2 WATERPROOFING SHALL BE APPLIED VERTICALLY FROM THE PROPOSED GROUND SURFACE TO THE TOP OF THE FOOTING. PAYMENT FOR THE MEMBRANE WATERPROOFING IS AT THE CONTRACT PRICE BID PER SQUARE YARD FOR ITEM 512 - TYPE 2 WATERPROOFING.

BASIS OF PAYMENT:
ALL LABOR, EQUIPMENT AND INCIDENTALS REQUIRED TO CONSTRUCT THE FOOTING AND RETAINING WALL ARE INCLUDED WITH EACH ITEM 511 - CLASS QC1 CONCRETE. PAYMENT FOR REINFORCING STEEL IS INCLUDED WITH ITEM 509 - EPOXY COATED REINFORCING STEEL.

ABBREVIATIONS:
CLR. = CLEARANCE
CONST. = CONSTRUCTION
DIA. = DIAMETER
E.F. = EACH FACE
ELEV. = ELEVATION
F.F. = FAR FACE
JT. = JOINT
INV. = INVERT
LT. = LEFT
MAX. = MAXIMUM
MIN. = MINIMUM
N.F. = NEAR FACE
N.P.C.P.P. = NON-PERFORATED CORRUGATED PLASTIC PIPE
P.C.P.P. = PERFORATED CORRUGATED PLASTIC PIPE
PROP. = PROPOSED
RT. = RIGHT
R/W = RIGHT OF WAY
SER. = SERIES
STA. = STATION
T&B = TOP & BOTTOM
TYP. = TYPICAL

ESTIMATED QUANTITIES					
ITEM	ITEM EXT	TOTAL	UNIT	DESCRIPTION	SEE SHT.
503	21100	56	CY	UNCLASSIFIED EXCAVATION	
509	10000	4463	LB	EPOXY COATED REINFORCING STEEL	
511	46212	71	CY	CLASS QC1 CONCRETE WITH QC/QA	
512	10100	70	SY	SEALING OF CONCRETE SURFACES (EPOXY-URETHANE)	
512	33000	7	SY	TYPE 2 WATERPROOFING	
518	21200	29	CY	POROUS BACKFILL WITH GEOTEXTILE FABRIC	
518	40000	109	FT	6" PERFORATED CORRUGATED PLASTIC PIPE	
518	40010	7	FT	6" NON-PERFORATED CORRUGATED PLASTIC PIPE, INCLUDING SPECIALS	
611	99710	1	EACH	PRECAST REINFORCED CONCRETE OUTLET	

NOTE: TOTALS CARRIED TO GENERAL SUMMARY SHEET

CALCULATED SDL
CHECKED WT

RETAINING WALL SECTIONS, NOTES AND QUANTITIES

LAK-608-3.37

P:\LAK\93229\Roadway\Sheets\93229WE001.dgn Sheet 4/8/2016 11:54:51 AM sletteri

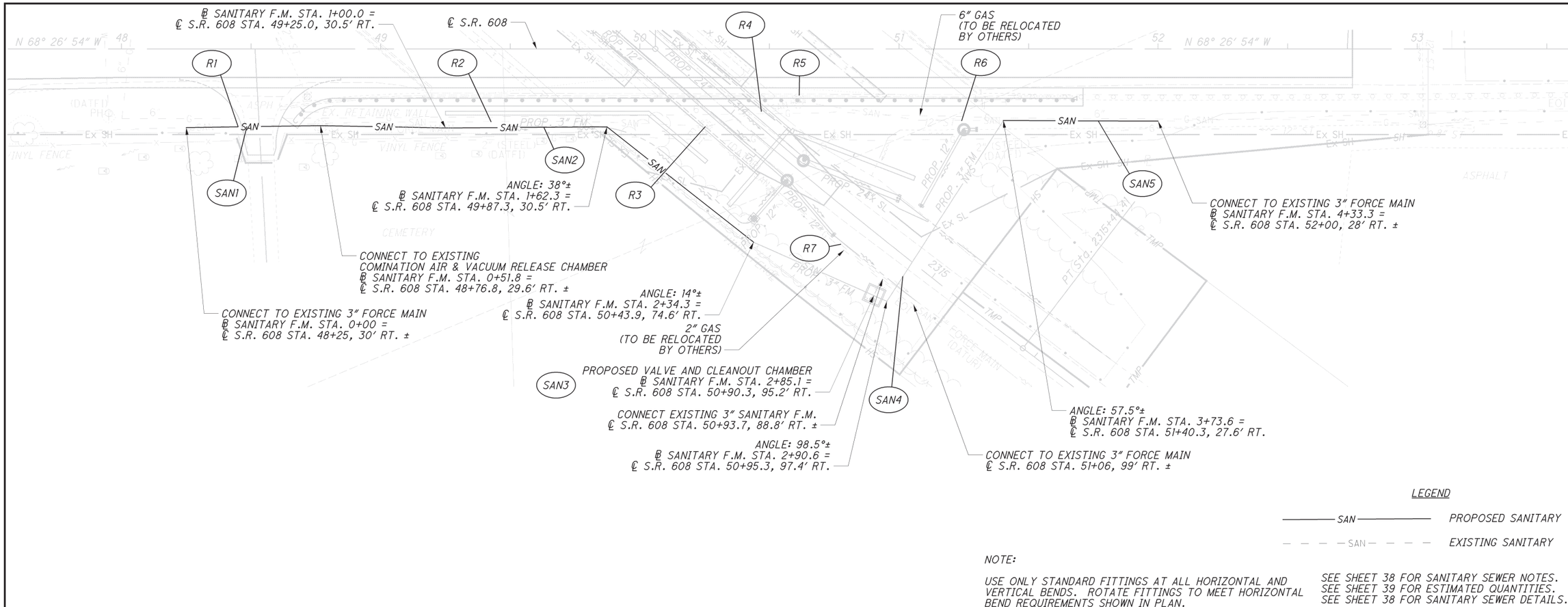

LEGEND

SAN — PROPOSED SANITARY

SAN — EXISTING SANITARY

NOTE:

USE ONLY STANDARD FITTINGS AT ALL HORIZONTAL AND VERTICAL BENDS. ROTATE FITTINGS TO MEET HORIZONTAL BEND REQUIREMENTS SHOWN IN PLAN.

SEE SHEET 38 FOR SANITARY SEWER NOTES.
SEE SHEET 39 FOR ESTIMATED QUANTITIES.
SEE SHEET 38 FOR SANITARY SEWER DETAILS.

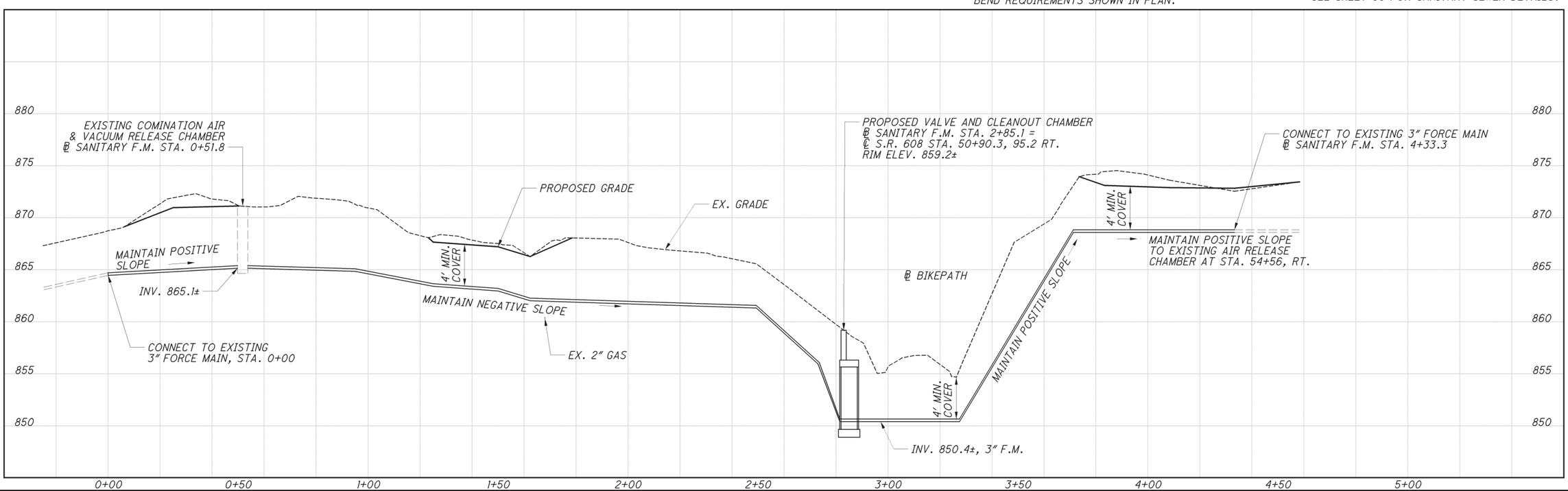

HORIZONTAL SCALE IN FEET
0 10 20 40

CALCULATED SDL
CHECKED JD

SANITARY SEWER PLAN AND PROFILE

LAK-608-3.37

P:\LAK\93229\Roadway\Sheets\93229UP002.dgn Sheet 4/8/2016 11:54:48 AM slettieri

SPECIAL - 3" FORCE MAIN

1. 3" PVC FORCE MAIN SHALL MEET PIPE SPECIFICATION ASTM D2241, JOINT SPECIFICATION ASTM D3139, INSTALLATION SPECIFICATION ASTM D2321 AND MEET OR EXCEED SDR 26 UNLESS OTHERWISE SPECIFIED IN THE PLANS.

2. ALL HORIZONTAL AND VERTICTAL BENDS, FITTINGS, PLUGS, CONCRETE THRUST BLOCKS, RESTRAINED JOINTS, AND ALL AS REQUIRED OR DIRECTED BY ENGINEER SHALL BE INCLUDED IN THE UNIT PRICES BID FOR ITEM SPECIAL-3" FORCE MAIN.

3. TRANSITION FITTINGS REQUIRED FOR CONNECTION TO EXISTING FORCE MAINS SHALL BE A SOLID SLEEVE, MECHANICAL JOINT WITH APPLICABLE ADAPTORS IN ACCORDANCE WITH PIPE MANUFACTURER RECOMMENDATIONS AND SHALL BE INCLUDED IN THE UNIT PRICE BID FOR ITEM-SPECIAL 3" FORCE MAIN.

4. LEAKAGE TESTING IN ACCORDANCE WITH ALL OHIO EPA SPECIFICATIONS. NECESSARY REPAIRS SHALL BE PERFORMED PRIOR TO MAKING CONNECTION(S) TO EXISTING FORCE MAIN(S) AND PLACING LINE INTO SERVICE. ALL TEMPORARY PLUGS, FITTINGS AND ALL OTHER WORK NECESSARY TO PROPERLY TEST THE FORCE MAIN AS REQUIRED SHALL BE INCLUDED IN THE UNIT PRICE BID FOR ITEM SPECIAL- 3" FORCE MAIN.

5. TRACER WIRE SHALL BE INCLUDED IN THE INSTALLATION. PAYMENT FOR THIS WORK SHALL BE INCLUDED IN THE UNIT PRICE BID FOR ITEM-SPECIAL 3" FORCE MAIN.

6. ANY PAVEMENT DISTURBED BY THE INSTALLATION OF THE FORCE MAIN SHALL BE RESTORED TO ITS ORIGINAL CONDITION. PAYMENT FOR THIS WORK SHALL BE INCLUDED IN THE UNIT PRICE BID FOR ITEM-SPECIAL 3" FORCE MAIN.

MAINTENANCE OF SEWER FLOW

THE CONTRACTOR SHALL MAINTAIN SEWER FLOW OF THE MAINLINE AT ALL TIMES, INCLUDING FLOW FROM LATERALS AND OTHER TRIBUTARY SANITARY SEWERS. THE CONTRACTOR SHALL SUBMIT A MAINTENANCE OF SEWER FLOW PLAN FOR APPROVAL PRIOR TO ANY WORK BEGINNING. THIS WORK SHALL BE INCIDENTAL AND PAYMENT SHALL BE INCLUDED IN THE VARIOUS SANITARY SEWER PAY ITEMS ON THIS PROJECT.

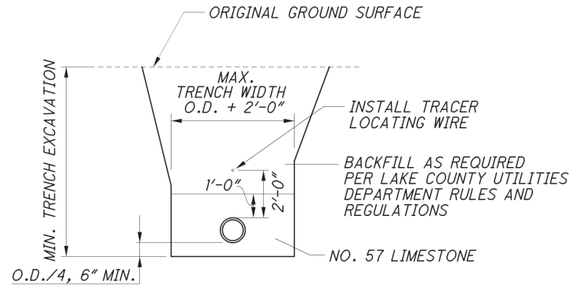

BEDDING DETAIL FOR FORCE MAIN

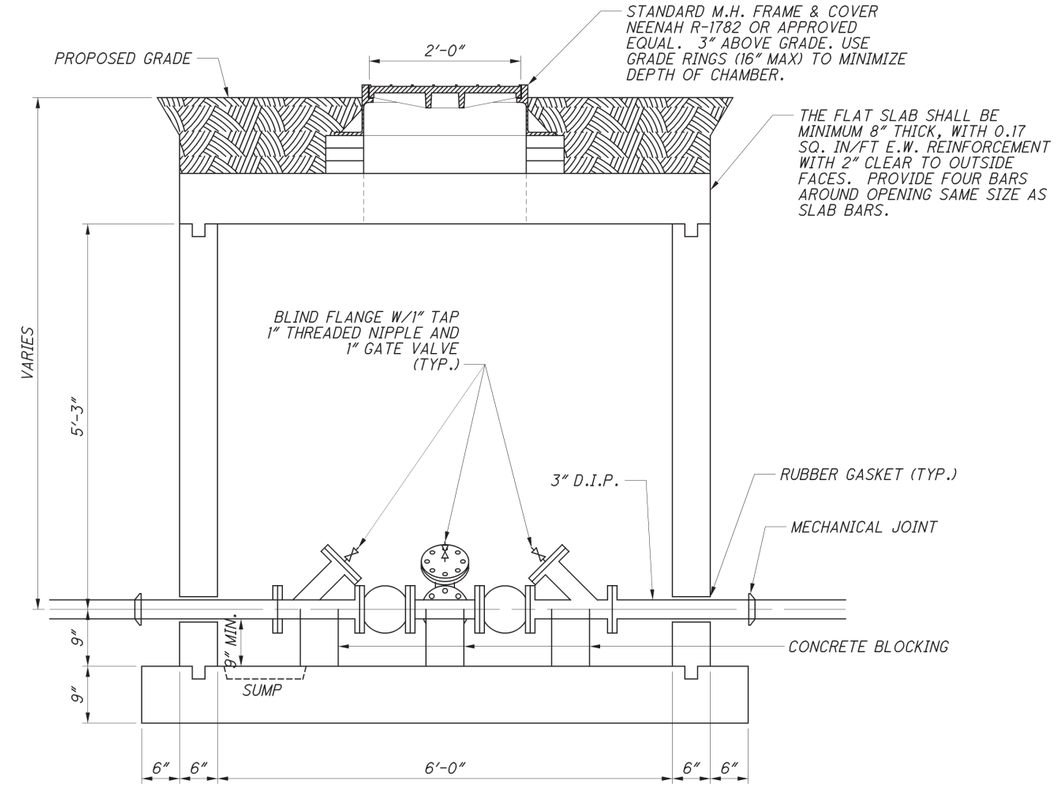

ELEVATION VIEW

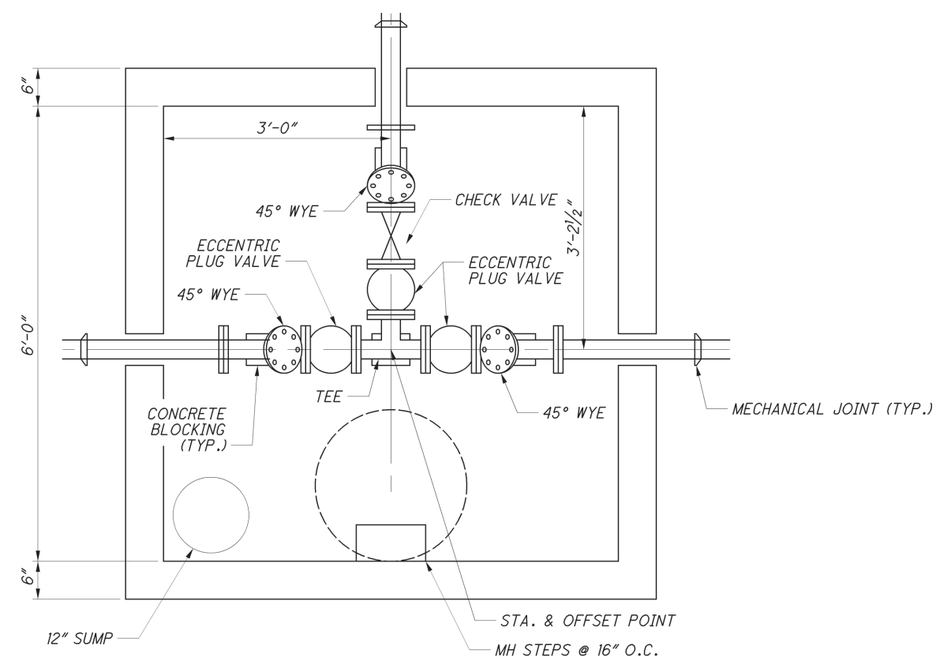

PLAN VIEW

MANHOLE MISC.: VALVE AND CLEANOUT CHAMBER

NOTES:
1. INSIDE VAULT - ALL FLANGED FITTINGS WITH STAINLESS STEEL NUTS & BOLTS.
2. 1" VALVES TO BE FULL STAINLESS STEEL FLANGED BALL VALVES.
3. DISCHARGE SIDE OF 1" VALVE TO END WITH A 1" THREADED STAINLESS STEEL NIPPLE (WITH THREADED PLUG).
4. RUBBER GASKET SHALL BE AS SPECIFIED FOR SANITARY MANHOLES (ASTM C923).
5. PRECAST CHAMBERS ADEQUATE FOR H-20 LOADING ARE REQUIRED.
6. CHAMBER MUST BE WATERTIGHT.
7. SHOP DRAWINGS MUST BE SUBMITTED AND APPROVED BY THE OWNER.
8. SLOPE CONCRETE FILL 1/4"/FT. MIN. TO SUMP.
9. ALL FITTINGS AND VALVES SHOWN IN DETAIL SHALL BE PAID FOR UNDER ITEM MANHOLE MISC.: VALVE AND CLEANOUT CHAMBER.

CALCULATED SDL
CHECKED JD

SANITARY SEWER · NOTES & DETAILS

LAK-608-3.37

3.8
6.0

P:\LAK\93229\Roadway\Sheets\93229UP002.dgn Sheet 4/8/2016 11:54:48 AM slettieri

REF NO.	SHEET NO.	STATION FROM	STATION TO	SIDE	202 PIPE REMOVED	202 MANHOLE REMOVED	611 MANHOLE, MISC: VALVE AND CLEANOUT CHAMBER	680 SPECIAL 3" FORCE MAIN
SAN1	37	0+00	0+51.8	℄				52
SAN2	37	0+51.8	2+85.1	℄				233
SAN3	37	2+85.1		℄			1	
SAN4	37	2+85.1	2314+85, BIKEPATH	℄				8
SAN5	37	2+85.1	4+33.3	℄				148
R1	37	48+25	48+76.8	RT	52			
R2	37	48+76.8	50+25.2	RT	148			
R3	37	50+25.2		RT		1		
R4	37	50+25.2	50+61.0	RT	36			
R5	37	50+61.0		RT		1		
R6	37	50+61.0	52+00	RT	139			
R7	37	2313+96, BIKEPATH	2314+85, BIKEPATH	RT	89			
TOTALS CARRIED TO GENERAL SUMMARY					464	2	1	441

CALCULATED SDL
CHECKED JD

SANITARY SEWER ESTIMATED QUANTITIES

LAK-608-3.37

P:\LAK\93229\Roadway\Sheets\93229UP002.dgn Sheet 4/8/2016 1:46:19 PM slettieri

CITY OF PAINESVILLE WATERLINE NOTES

1. ALL WATER LINES WITHIN THE STREET RIGHT-OF-WAY WILL BELONG TO THE CITY OF PAINESVILLE WATER DEPARTMENT. THE MATERIAL AND INSTALLATION SHALL BE IN ACCORDANCE WITH CITY REQUIREMENTS.

2. PAINESVILLE WATER DEPARTMENT SPECIFICATIONS AND DETAILS ARE TO BE USED FOR ALL WATER LINE INSTALLATIONS.

3. THE CONTRACTOR SHALL EXPOSE ALL UTILITIES OR STRUCTURE PRIOR TO CONSTRUCTION TO VERIFY THE VERTICAL AND HORIZONTAL LOCATION OF THE UTILITY OR STRUCTURE AND ITS EFFECT ON THE PROPOSED WATERLINE CONSTRUCTION. THE CONTRACTOR SHALL COORDINATE THIS WORK WITH THE UTILITY OWNER.

4. ALL BENDS, TEES, AND REDUCERS TO BE MEGA-LUG RESTRAINED.

5. THE CONTRACTOR SHALL NOTIFY THE CITY OF PAINESVILLE AT LEAST FORTY-EIGHT HOURS IN ADVANCE OF ANY WORK ON THEIR SYSTEMS.

6. INSPECTION SERVICES SHALL BE PERFORMED BY THE CITY OF PAINESVILLE. COST FOR INSPECTION SHALL BE BILLED TO THE WATERLINE INSTALLATION CONTRACTOR.

7. THE CITY OF PAINESVILLE SHALL PROVIDE WATER FOR THE NEW WATER MAIN WITHOUT COST TO THE CONTRACTOR FOR THE INITIAL FILLING OPERATION. ALL WATER FOR SUBSEQUENT FLUSHING OPERATIONS SHALL BE PAID FOR BY THE CONTRACTOR AT THE CURRENT RATER PER 100 CUBIC FEET OF WATER USED.

8. THE PROPOSED WATERLINE AND HYDRANTS SHALL HAVE 4'-9" MINIMUM COVER OVER THE TOP OF THE PIPE AT ALL PLACES.

9. ALL WATER SERVICE CONNECTIONS WHICH ARE BROKEN BY THE CONTRACTOR SHALL BE REPAIRED BY THE CITY OF PAINESVILLE OR THE CONTRACTOR, ALL AT THE CONTRACTOR'S EXPENSE. ALL RECONNECTED WATER SERVICE CONNECTIONS SHALL BE TAPPED INTO THE NEW WATER MAIN AND DOCUMENTED AS SUCH. ALL NEW SERVICE CONNECTIONS SHALL BE *" TYPE K COPPER, UNLESS OTHERWISE SHOWN ON THE PLANS, REGARDLESS OF THE BROKEN SERVICE CONNECTION MATERIAL. NO PLASTIC WATERLINE CAN BE USED FOR CONNECTIONS ONE INCH (1") OR SMALLER.

10. ALL SHOP DRAWINGS SHALL BE SUBMITTED TO THE PAINESVILLE CITY ENGINEER FOR CHECKING AND APPROVAL.

11. LOCATIONS OF STERILIZATION AND TESTING CONNECTIONS AT VALVES SHALL BE AS DIRECTED BY THE CITY OF PAINESVILLE AND ALL COSTS ASSOCIATED WITH PLACING AND UTILIZING SAID STERILIZATION AND TESTING CONNECTIONS SHALL BE INCLUDED IN THE PRICE BID PER LINEAL FOOT OF THE WATER MAINS.

12. ALL WATER MAIN PIPE SHALL BE PVC C - 909 WITH A BORN ON DATE WITHIN SIX MONTHS OF INSTALLATION, UNLESS OTHERWISE SHOWN ON THE APPROVED PLANS, WITH PUSH-ON OR RESTRAINED MECHANICAL JOINTS, FITTINGS SHALL BE LIGHT BODY (C153) ONLY DUCTILE IRON MECHANICAL JOINT AND UNLESS OTHERWISE SHOWN ON THE APPROVED PLANS.

13. COST FOR THRUST BLOCKING OR RESTRAINED JOINTS SHALL BE INCLUDED IN THE UNIT PRICE BID PER LINEAL FOOT OF WATER MAIN.

14. THE CONTRACTOR SHALL INSTALL WATER LINE TAPE AND TRACER LOCATING WIRE IN THE SAME TRENCH WITH ALL WATER MAINS ON TOP OF THE GRAVEL BEDDING. TAPE SHALL BE 3" WIDE, BLUE CODED POTABLE WATER ON BOTH SIDES. WATER LINE TAPE SHALL BE ALARM GUARD, LINE GUARD OR EQUAL. THE COST FOR TAPE SHALL BE INCLUDED IN THE PRICE BID PER LINEAL FOOT OF WATER MAIN. LOCATING WIRE SHALL BE INSTALLED OUTSIDE OF ALL MAIN LINE VALVES UP TO 1" FOOT BELOW GRADE THEN INSTALLED INSIDE OF VALVE BOX.

15. NO WATER SERVICE CONNECTIONS TO ANY BUILDING SHALL BE PERMITTED PRIOR TO FINAL ACCEPTANCE OF THE SANITARY SEWERS BY THE CITY ENGINEER AND OR THE WATERLINE BY THE CITY OF PAINESVILLE WATER DEPARTMENT, WHICH SHALL INCLUDE APPROVED RECTIFICATION OF ALL PUNCH LIST ITEMS.

16. CONTRACTOR SHALL CONSTRUCT WATER SERVICE CONNECTIONS FROM MAIN TAP TO CURB BOX OR METER VAULTS AND CURB BOX TO THE LOCATIONS INDICATED ON THE PLANS.

17. ZINC ANODE THREADED CAPS SHALL BE PLACED ON EVERY BOLT OF ALL MECHANICAL JOINT FITTINGS. JOINT BOLTS TO BE WRAPPED.

18. FIRE DEPARTMENT SHALL BE NOTIFIED, BY THE CONTRACTOR, OF AND PRIOR TO ANY PRESSURE TESTING.

19. INSTALLATION, PRESSURE TESTING, AND DISINFECTION PROCEDURES SHALL MEET OR EXCEED AWWA STANDARDS C600 AND C651, RESPECTIVELY.

CITY OF PAINESVILLE WATERLINE NOTES CON'T

20. BOOSTER PUMPS ARE NOT PERMITTED ON SERVICE CONNECTIONS

21. LINE AND GRADE STAKES SHALL BE PROVIDED BY THE CONTRACTOR AT 100' INTERVALS FOR WATER MAIN AND FOR EACH FITTING AND APPURTENANCE.

22. ONCE PUNCH LIST ITEMS ARE COMPLETED, THE CONTRACTOR SHALL BE RESPONSIBLE FOR GRADE ADJUSTMENTS TO WATER FACILITIES AT TIME OF BUILDING CONSTRUCTION AND DURING FINAL GRADING.

23. THE CONTRACTOR MUST GIVE A MINIMUM OF 48 HOURS NOTICE TO CUSTOMERS BEFORE ANY SHUTDOWNS.

24. A MINIMUM OF 12 INCHES VERTICAL AND 4 FEET HORIZONTAL CLEARANCE SHALL BE MAINTAINED BETWEEN THE WATER MAIN AND STORM SEWERS.

25. A MINIMUM OF 18 INCHES VERTICAL AND 10 FEET HORIZONTAL CLEARANCE SHALL BE MAINTAINED BETWEEN THE WATER MAIN AND SANITARY SEWERS.

26. A MINIMUM OF 5 FEET HORIZONTAL SEPARATION SHALL BE MAINTAINED BETWEEN UTILITY CONDUIT CROSSOVERS AND WATER LINE APPURTENANCES, I. E. HYDRANTS, VALVES, TEES, ETC.

27. ALL WATER MAINS AND SERVICE LATERALS, INSTALLED UNDERNEATH EXISTING, PROPOSED, OR FUTURE PAVEMENT SHALL BE BACKFILLED WITH LSM 50 UNLESS OTHER WISE APPROVED.

28. BACKFILL MATERIAL IN ALL OTHER TRENCHES SHALL BE COMPACTED WITH MACHINE MOUNTED COMPACTION EQUIPMENT TO THE SATISFACTION OF THE PAINESVILLE CITY ENGINEER. COMPACTION TESTS WILL BE PERFORMED BY THE CITY ENGINEER, OR A REPRESENTATIVE AT THE CONTRACTOR'S EXPENSE.

29. NO SLAG PRODUCTS SHALL BE PERMITTED FOR PIPE BEDDING OR BACKFILL.

30. ALL WATER METERS TO BE OUTSIDE IN VAULTS WITH TOUCH PADS UNLESS OTHER WISE APPROVED.

31. ALL RIS SEATS VALVES TO HAVE S. S. BOLTS FOR BONNET AND PACKING.

32. TAPPING SLEEVES AND VALVES SHALL BE STAINLESS STEEL WHEN CONNECTING PVC. CAST IRON IS TO BE USED IF APPROVED DUCTILE IRON CLASS 52 IS BEING USED.

33. CONSTRUCTION SHALL BE IN ACCORDANCE WITH THE APPROVED DRAWINGS. SPECIFIC REQUIREMENTS MAY BE SHOWN ON THE DETAIL SHEETS.

34. NO WATERLINE WILL BE PUT IN SERVICE UNTIL ALL BILLING PAPERWORK FOR SERVICES AND HYDRANTS FEES ARE PAID WITH A CORRECT BILL ADDRESS AT PAINESVILLE CITY UTILITIES.

35. ALL JOBS HAVING FIVE OR MORE HYDRANTS AND OR VALVES WILL BE REQUIRED TO PROVIDE AN ADJUSTABLE HYDRANT WRENCH AND VALVE KEY FOR EACH SET OF FIVE HYDRANTS AND OR VALVES TURNED OVER TO THE CITY OF PAINESVILLE WATER BEFORE THE LINE IS TURNED ON AND PUT IN SERVICE

36. HYDRANTS TO BE MUELLER CENTURION 5-1/4", ALL HYDRANTS TO BE "SELF - DRAINING" UNLESS APPROVED PLANS CALL FOR NON-DRAINING HYDRANTS BY THE CITY OF PAINESVILLE WATER DEPARTMENT. ANY NON-DRAINING HYDRANTS WILL BE PUMPED DRY BY THE INSTALLATION CONTRACTOR.

37. ALL HYDRANTS SHALL BE POSITIONED SO THAT THE STEAMER NOZZLES POINT IN THE DIRECTION SHOWN ON THE PLANS AND "BAGGED" UNTIL LINE IS PUT IN SERVICE.

38. CONTRACTOR ATTENTION IS CALLED TO THE FACT THAT HYDRANT DEPTH OF BURY VARIES AND IS RESPONSIBLE TO ADJUST ALL HYDRANTS TO FINISHED GRADE AT NO ADDITIONAL COST. WATER LINE BURY DEPTH IS AS SHOWN ON PROFILES.

39. ALL HYDRANTS TO BE POSITIONED AT HIGH POINTS ALONG WATERLINE.

40. STORTZ QUICK CONNECTIONS SHALL BE PLACED ON HYDRANTS. 4" SIZE FOR PAINESVILLE CITY & PAINESVILLE TOWNSHIP. 5" SIZE FOR GRAND RIVER & CONCORD TOWNSHIP.

41. HYDRANT OPERATION NUTS OPEN TO THE LEFT.

42. PRIVATE HYDRANTS SHALL BE BILLED BY THE PAINESVILLE CITY UTILITY DEPARTMENT AT $25.00 PER MONTH.

43. ALL NEW VALVES SHALL OPEN BY TURNING CLOCKWISE. VALVES SHALL BE THE SAME SIZE AS THE WATER MAIN. ALL VALVE BOXES SHALL BE INSTALLED FLUSH WITH THE GRADE.

CITY OF PAINESVILLE WATERLINE NOTES CON'T

44. ANY VALVES ABANDONED IN PAVEMENT WILL BE REMOVED ONE FOOT (1') BELOW PAVEMENT GRADE

45. ALL CURB STOPS BOXES, VALVES BOXES, ETC., ARE TO BE SET AS SHOWN ON THE PLANS. RINGS WILL BE RAISED OR LOWERED AND BOXES PLUMBED AS NECESSARY BY THE CONTRACTOR WHEN FINAL GRADING IS COMPLETED.

46. CURB STOPS SHALL HAVE COPPER INLETS AND OUTLETS AND SHALL BE HAYS 4, 304 FORD 822 OR EQUAL. SERVICE BOXES SHALL BE BUFFALO PATTERN WITH 2- 1/2" SHAFTS. THE BOXES SHALL BE ADJUSTABLE IN HEIGHT FROM 42" TO 60" AND SHALL HAVE THE WORD "WATER" CAST NEATLY AND LEGIBLY ON THE LID WHICH SHALL BE HELD IN PLACE BY A BRONZE OR BRASS STANDARD BOLT. CURB BOXES SHALL BE STANDARD WEIGHT, SIZE 94E, AND SHALL BE MUELLER H-10350, TYPE PIPE INDUSTRIES 6500, OR EQUAL, ONLY ON LOTS WHERE WATER LATERALS ARE SHOWN.

47. TWO INCH (2") WATERLINE CAN BE K COPPER OR PLASTIC OWNERS CHOICE. ALL 2" PLASTIC LINE SHALL BE HIGH DENSITY POLYETHYLENE (HDPE) SDR 9, MANUFACTURED FOR POTABLE WATER. HDPE PIPE MUST MEET ALL APPLICABLE PERFORMANCE STANDARDS FOR PRESSURE RATED APPLICATIONS AS REQUIRED IN NSF/ANSI STANDARD 14, AND SHALL COMPLY WITH NSF/ANSI STANDARD 61 FOR HEALTH EFFECTS. HDPE PIPE MUST BE MARKED AS NSF- PW (NSF COMPLIANT FOR POTABLE WATER). THE HDPE PIPE MUST MEET ALL REQUIREMENTS OF AWWA C901, AWWA C906, NSF 14, NSF61 AND ASTM D3035.

48. WHENEVER POSSIBLE, A 45° BEND SHALL BE THE MAXIMUM ALLOWABLE WHEN ESTABLISHING VERTICAL GRADE.

49. THE EXISTING 10" ASBESTOS-CEMENT (AC) WATER LINE'S OUTSIDE DIAMETER SHALL BE VERIFIED BY THE CONTRACTOR AND ALL NECESSARY REPAIR PARTS SHALL BE ON-HAND PRIOR TO ANY WORK PROCEEDING. THE CONTRACTOR SHALL BE AWARE OF ALL LEAD TIMES FOR REPAIR PARTS AND SHALL SCHEDULE THE WORK ACCORDINGLY.

50. THE EXISTING VALVE AND VALVE BOX SHOWN AT THIS LOCATION IS FROM RECORD PLANS. THE CONTRACTOR SHALL VERIFY ITS LOCATION AND ADJUST THE TAPPING LOCATION SUCH THAT IT REMAINS TO THE WEST OF THE EXISTING VALVE.

ITEM 638 - 10" OR 12" WATER MAIN POLYVINYL CHLORIDE PIPE AND FITTINGS (PAINESVILLE)

THE CITY OF PAINESVILLE'S WATERLINE SPECIFICATIONS SHOWN ON THIS SHEET SHALL TAKE PRECEDENT OVER THOSE PORTIONS AS DESCRIBED IN THE OHIO DEPARTMENT OF TRANSPORATION'S CONSTRUCTION AND MATERIAL SPECIFICATIONS.

CALCULATED SDL
CHECKED JD

WATERLINE NOTES

LAK-608-3.37

P:\LAK\93229\Roadway\Sheets\93229UP001.dgn Sheet 11/7/2016 2:21:52 PM sletlieri

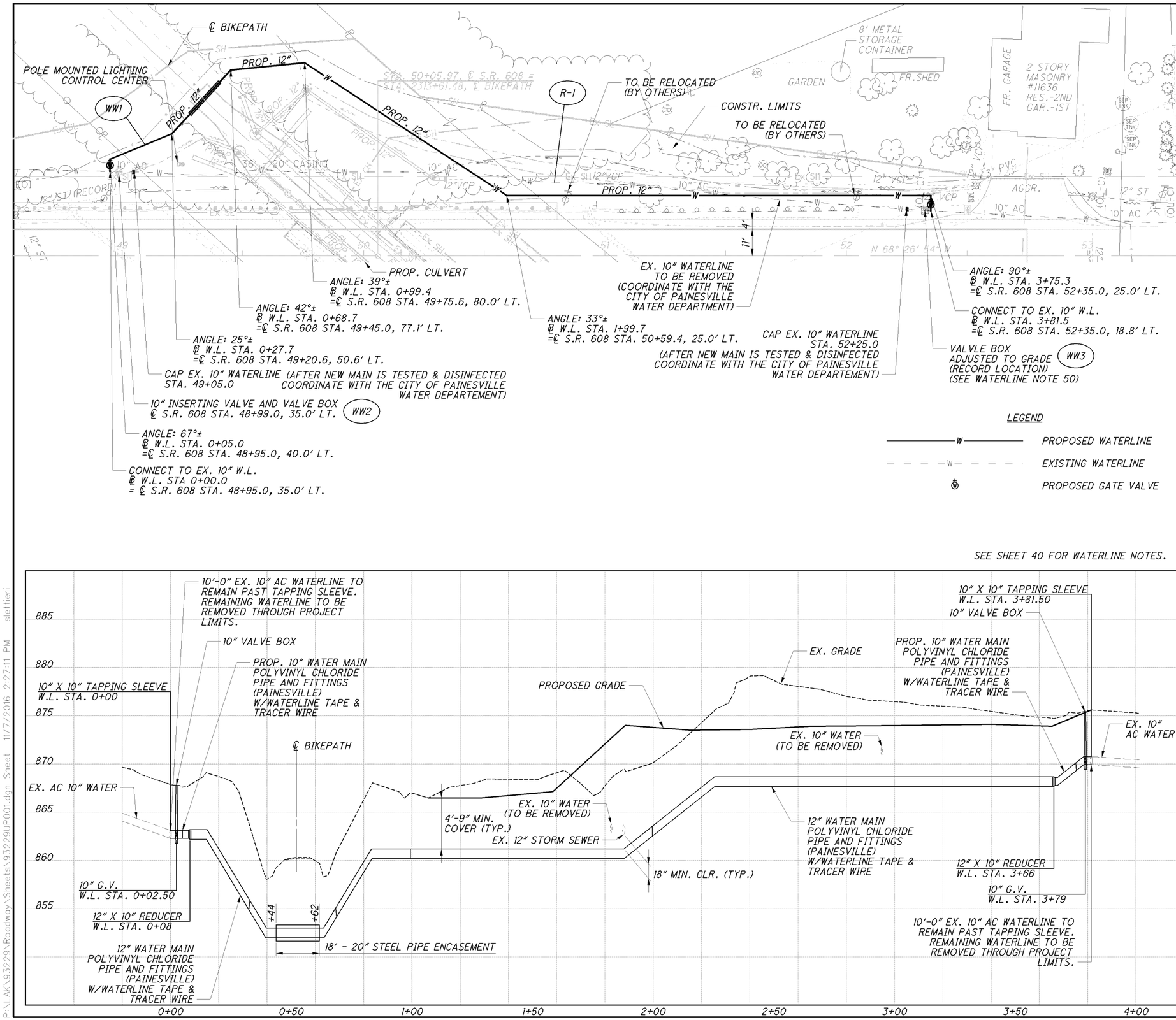

REF NO.	STATION FROM	STATION TO	SIDE	202 ASBESTOS PIPE REMOVED (10" AC WATERLINE) FT	638 12" WATER MAIN POLYVINYL CHLORIDE PIPE AND FITTINGS (PAINESVILLE) FT	638 10" WATER MAIN POLYVINYL CHLORIDE PIPE AND FITTINGS (PAINESVILLE) FT	638 20" STEEL PIPE ENCASEMENT, OPEN CUT (PAINESVILLE) FT	638 10" X 10" TAPPING SLEEVE, VALVE AND VALVE BOX (PAINESVILLE) EACH	638 10" INSERTING VALVE AND VALVE BOX (PAINESVILLE) EACH	638 VALVE BOX ADJUSTED TO GRADE (PAINESVILLE) EACH	TOTALS CARRIED TO GENERAL SUMMARY
WW-1	0+00	3+81.5	LT		358	24	18	2		1	1
WW-2	48+99.0		LT						1		1
WW-3	48+99.0		LT							1	1
R-1	49+05.0	52+25.0	LT	321							2
TOTALS CARRIED TO GENERAL SUMMARY				321	358	24	18	2	1	1	

HORIZONTAL SCALE IN FEET 0 10 20 40

CALCULATED SDL CHECKED JD

WATER WORK PLAN AND PROFILE

LAK-608-3.37

P:\LAK\93229\Roadway\Sheets\93229UP001.dgn Sheet 11/7/2016 2:27:11 PM sieltieri

CONC ALLOWANCE BACKING AROUND PIPE FITTING				
PIPE SIZE	CONC ALLOWANCE CU FT			
	TEE	WYE	BEND	CROSS
6"-12"	7	4	3	8
14"-18"	12	7	5	14
20"-24"	20	10	8	22

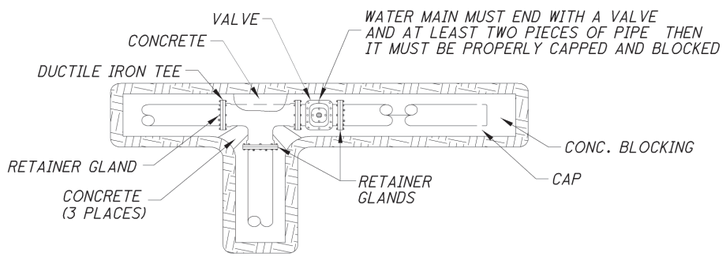

DUCTILE IRON TEE

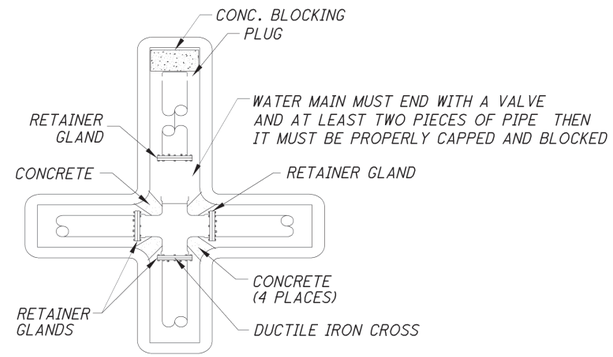

DUCTILE IRON CROSS

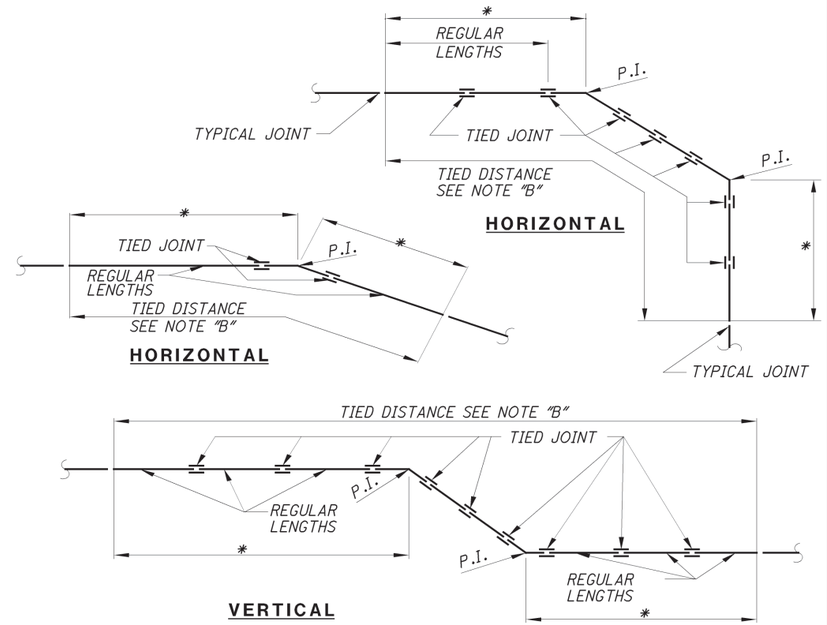

* NOTE "A" - COMPUTED TIED LENGTH EACH LEG, 20 FEET MINIMUM.

NOTE "B" - THE ABOVE LAYOUTS SHOW TYPICAL ARRANGEMENTS FOR BOTH HORIZONTAL AND VERTICAL BENDS. SPECIAL CASES MAY REQUIRE A COMBINATION OF HORIZONTAL AND VERTICAL "TIED DISTANCES".

TYPICAL WATER MAIN HARNESSED JOINTS

NOTE: SEE WATER MAIN GENERAL NOTES FOR ADDITIONAL THRUST RESTRAINT REQUIREMENTS.

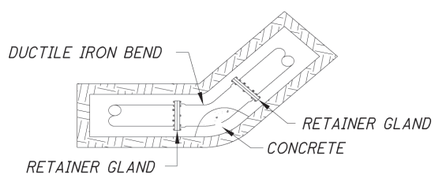

DUCTILE IRON BEND

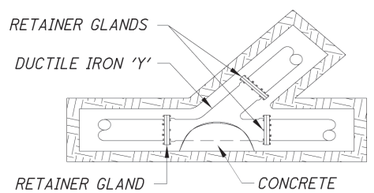

DUCTILE IRON 'Y' BRANCH

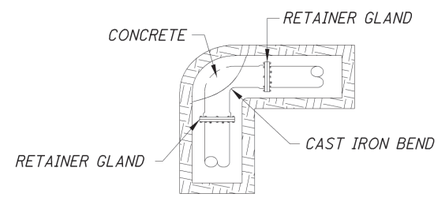

DUCTILE IRON 1/4 BEND

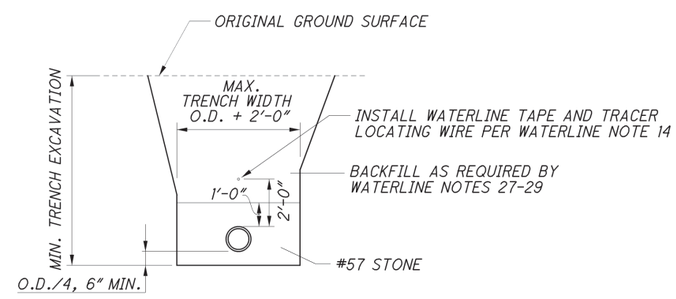

BEDDING DETAIL FOR P.V.C. WATER MAIN

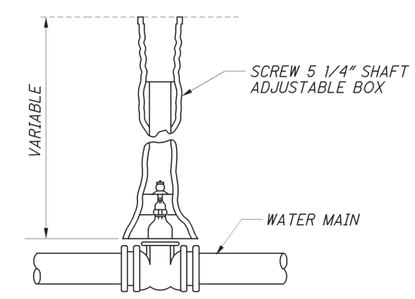

TYPICAL VALVE SETTING

CALCULATED SDL
CHECKED JD

WATERLINE DETAILS

LAK-608-3.37

4.2
6.0

P:\LAK\93229\Roadway\Sheets\93229UP001.dgn Sheet 4/8/2016 11:54:46 AM sieltieri

SIGNING SUB-SUMMARY

REFERENCE NO.	STATION	SIDE	CODE	SIZE (INCHES)	630 GROUND MOUNTED SUPPORT, NO. 3 POST (FT)	630 SIGN, FLAT SHEET (SF)	630 REMOVAL OF GROUND MOUNTED SIGN AND DISPOSAL (EACH)	630 REMOVAL OF GROUND MOUNTED POST SUPPORT AND DISPOASL (EACH)	630 REMOVAL OF GROUND MOUNTED SIGN & RE-ERECTION (EACH)
S-1	STA. 47+95	RT							1
S-2	STA 48+00	LT					1	1	
S-3	STA. 48+25	LT	W1-2L-30	30 X 30	14	6.25			
S-4	STA. 48+72	LT					1	1	
S-5	STA. 48+65	RT					1	1	
S-6	STA. 50+97	LT					1	1	
S-7	STA. 51+41	RT					1	1	
S-8	STA. 13+73	RT							
S-9	STA. 16+25	LT	R2-1-24	24 X 30					
S-10	STA. 12+00	RT	R2-1-24	24 X 30					
TOTALS CARRIED TO GENERAL SUMMARY					14	7	5	5	1

SIGN LEGEND

EXISTING SIGN TO BE REMOVED

EXISTING SIGN

PROPOSED SIGN

R2-1-24

PAVEMENT MARKING LEGEND

(C) CENTER LINE, DOUBLE SOLID, YELLOW

(E) EDGE LINE, WHITE

PAVEMENT MARKING SUB-SUMMARY

STATION FROM	STATION TO	SIDE	642 EDGE LINE, 4" (MILE)	642 CENTER LINE (MILE)
STA. 47+50	STA. 52+75	℄		0.10
STA. 47+50	STA. 52+75	LT	0.10	
STA. 47+50	STA. 52+75	RT	0.10	
TOTALS CARRIED TO GENERAL SUMMARY			0.20	0.10

RAISED PAVEMENT MARKERS SUB-SUMMARY

STATION FROM	STATION TO	SIDE	621 RPM 2-WAY YELLOW/YELLOW (EACH)	
STA. 47+50	STA. 52+75	℄	7	
TOTALS CARRIED TO GENERAL SUMMARY			7	

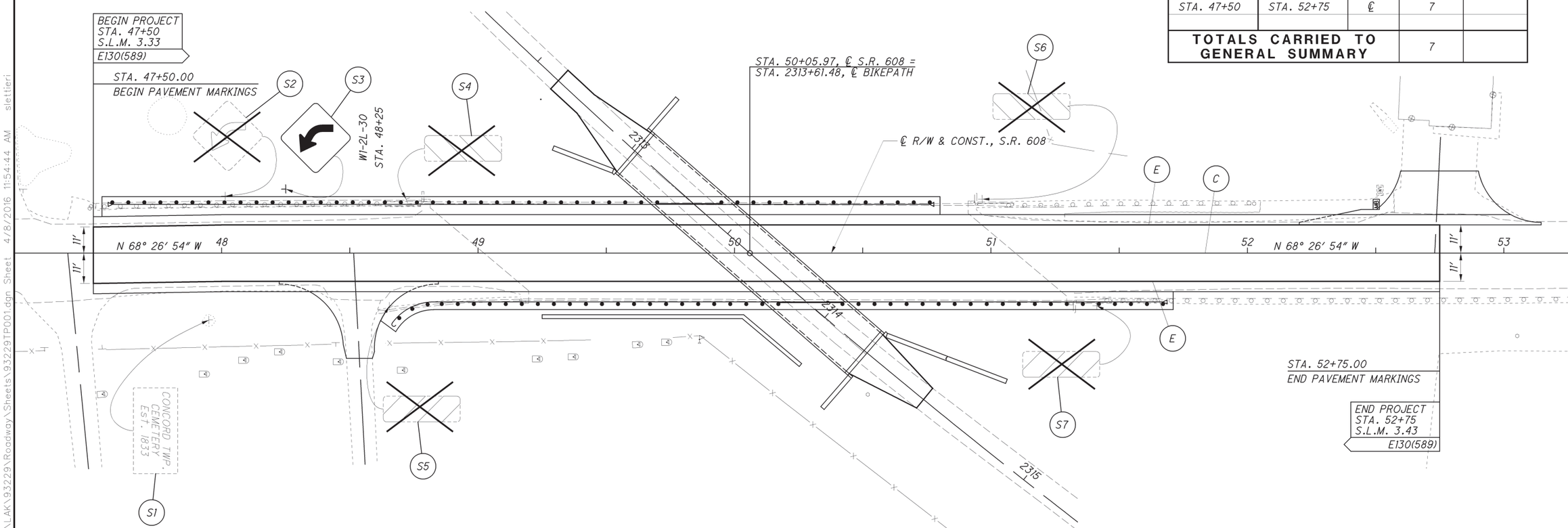

HORIZONTAL SCALE IN FEET 0 10 20 40

CALCULATED SDL CHECKED WT

PAVEMENT MARKING AND SIGNING PLAN

LAK-608-3.37

P:\LAK\93229\Roadway\Sheets\93229TP001.dgn Sheet 4/8/2016 11:54:44 AM sletieri

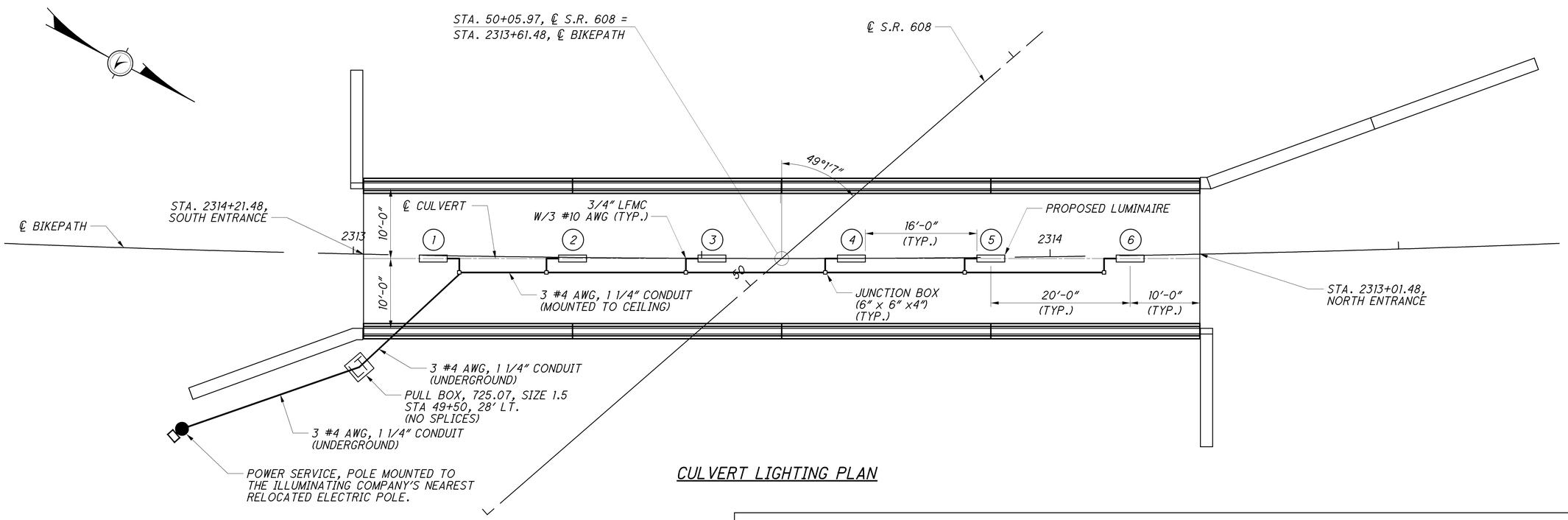

CULVERT LIGHTING PLAN

POWER SERVICE DATA

POWER SERVICE	LINE VOLTAGE (VOLTS)	CONNECTED LOAD (KVA)	SERVICE ENTRANCE CONDUCTOR SIZE (AWG)	ENCLOSURE TYPE	CIRCUIT NO.	CIRCUIT LOAD (AMPS)	CIRCUIT FUSE SIZE (AMPS)	CIRCUIT CONDUCTOR SIZE (AWG)	MAINTAINING AGENCY
"A"	(120/240V), 1 PHASE, 3-WIRE GROUNDED NEUTRAL	0.81	4	S-60	A	3.36	35	4	ODOT

NOTE:
1. FOR ADDITIONAL POWER SERVICE DETAILS, SEE ODOT STANDARD CONSTRUCTION DRAWINGS HL-40.10, HL-40.20 AND HL-60.31.
2. PHOTO-ELECTRIC CONTROL IS NOT REQUIRED.

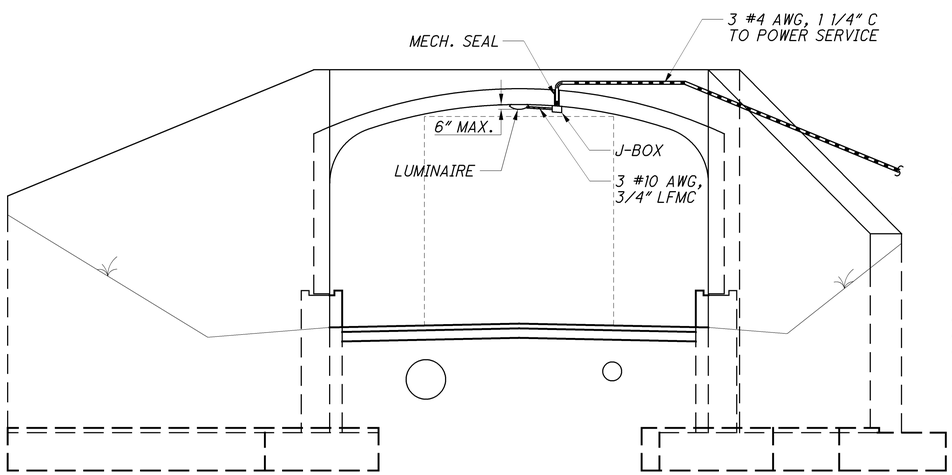

CULVERT LIGHTING SECTION

ITEM 625, LUMINAIRE, UNDERPASS, AS PER PLAN
THIS ITEM SHALL INCLUDE ALL LABOR AND MATERIALS TO FURNISH AND INSTALL THE FOLLOWING CEILING MOUNTED LUMINAIRE(s): PHILIPS LIGHTING FLOW LED, CAT. NO. BGP491, OR HOLOPHANE EMW LED, CAT NO. EMWLED12LPCLCS89 OR APPROVED EQUAL. THE DEPTH OF THE LUMINAIRE SHALL NOT EXCEED 6" AS MEASURED FROM THE CEILING OF THE CULVERT.

ITEM 625, CONDUIT MISC.: 3/4" LFMC
FURNISH LIQUID TIGHT FLEXIBLE METAL CONDUIT (LFMC) BETWEEN THE JUNCTION BOX AND THE UNDERPASS LUMINAIRE. USE STANDARD UL-360 REFERENCES.

LIGHTING ESTIMATED QUANTITIES

ITEM	QUANTITY	UNIT	DESCRIPTION
625	6	EACH	LUMINAIRE, UNDERPASS, AS PER PLAN
625	6	EACH	JUNCTION BOX (6" X 6" X 4")
625	1	EACH	PULL BOX, 725.07, SIZE 1.5
625	180	FOOT	CONDUIT, 1 1/4", 725.04
625	24	FOOT	CONDUIT, MISC.: 3/4" LFMC
625	84	FOOT	TRENCH
625	1	EACH	GROUND ROD
625	50	FOOT	NO. 10 AWG 600 VOLT DISTRIBUTION CABLE
625	215	FOOT	NO. 4 AWG 600 VOLT DISTRIBUTION CABLE
625	84	FOOT	PLASTIC CAUTION TAPE
625	1	EACH	POWER SERVICE
625	12	EACH	CONNECTOR KIT, TYPE II

NOTE: TOTALS CARRIED TO GENERAL SUMMARY.

CALCULATED SDL CHECKED DAK

CULVERT LIGHTING PLAN AND DETAILS

LAK-608-3.37

P:\LAK\93229\Roadway\Sheets\93229LD001.dgn Sheet 11/14/2016 2:45:51 PM sletieri

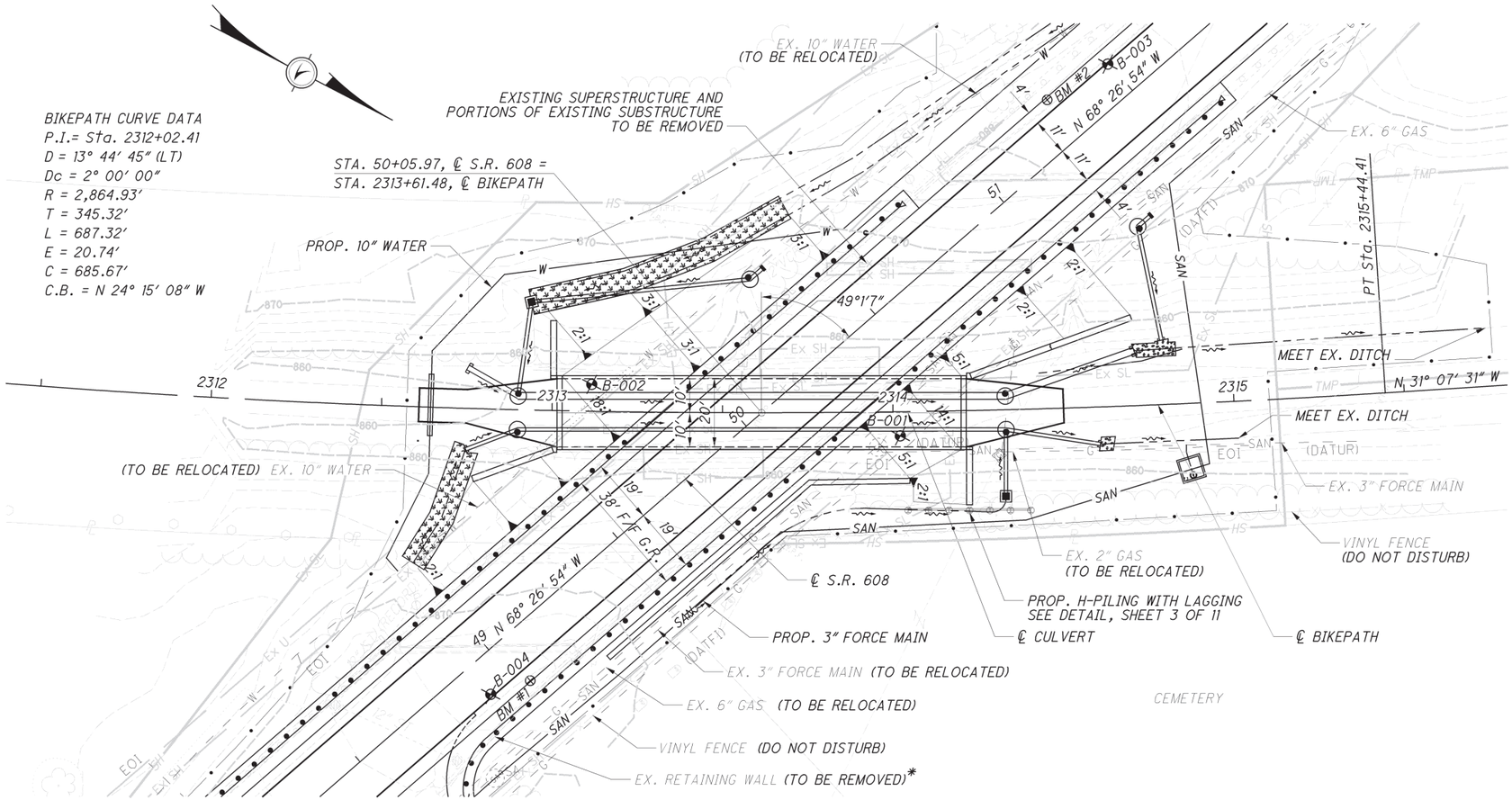

PLAN

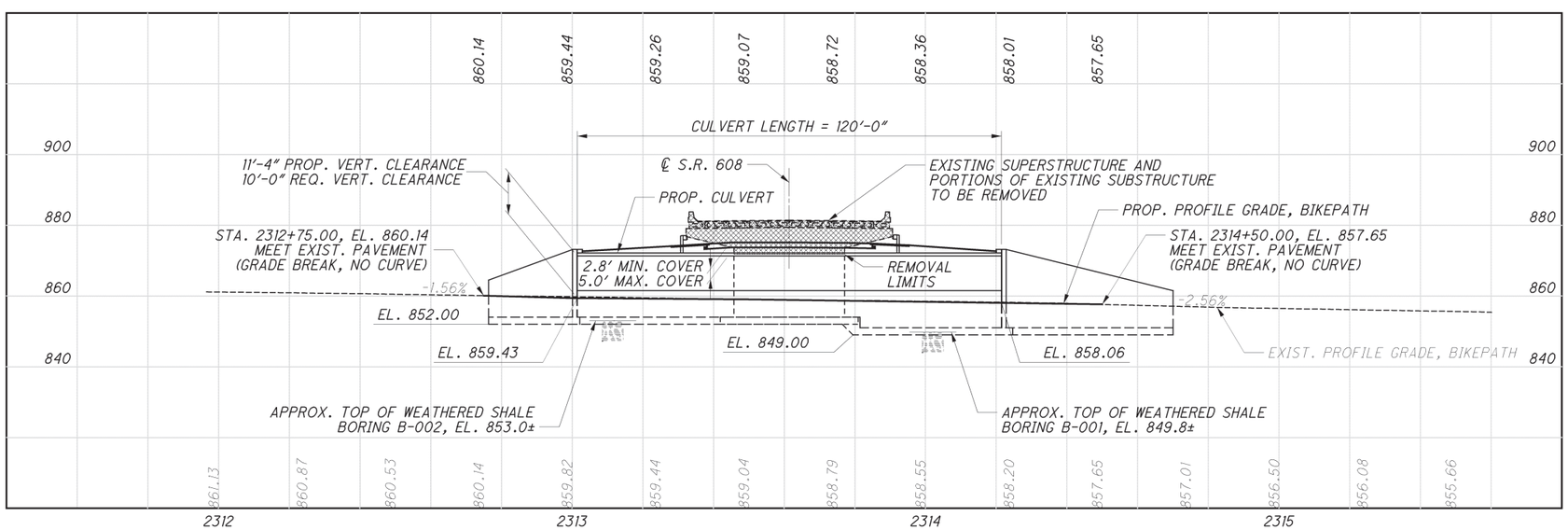

PROFILE ALONG ℄ OF CONSTRUCTION, BIKEPATH

BENCHMARK DATA

BM #1 - I.P. SET		
STA. 49+03.26	ELEV. = 877.43	OFFSET = 14.77′ RT.
BM #2 - I.P. SET		
STA. 51+29.32	ELEV. = 879.31	OFFSET = 14.35′ LT.

PROPOSED WORK:

1. CONSTRUCT CULVERT AND WINGWALL FOOTING.
2. INSTALL CULVERT AND CONSTRUCT WINGWALLS.
3. REMOVE SUPERSTRUCTURE AND PORTIONS OF THE SUBSTRUCTURE.
4. SEAL CONCRETE SURFACES.

NOTES:

EARTHWORK LIMITS SHOWN ARE APPROXIMATE. ACTUAL SLOPES SHALL CONFORM TO PLAN CROSS SECTIONS.

DESIGN TRAFFIC:

2017 ADT = 2700 2017 ADTT = 135
2037 ADT = 2700 2037 ADTT = 135
DIRECTIONAL DISTRIBUTION = 53%

LEGEND:

BORING LOCATION

REMOVAL PER ITEM 202

* INCLUDE WITH ITEM 202 - PORTIONS OF STRUCTURE REMOVED, OVER 20 FOOT SPAN FOR PAYMENT.

EXISTING STRUCTURE

TYPE: FIVE-SPAN CONCRETE BOX BEAM BRIDGE WITH REINFORCED CONCRETE SUBSTRUCTURE
SPANS: 40′-6″±, 40′-6″±, 43′-0″±, 40′-6″±, 40′-6″±
ROADWAY: 36′-2″± F/F PARAPET
LOADING: HS20-44 & THE ALTERNATE MILITARY LOADING
SKEW: 50°± R.F.
APPROACH SLABS: NONE
ALIGNMENT: TANGENT
CROWN: 0.016 FT/FT±
WEARING SURFACE: 2½″± ASPHALT CONCRETE
STRUCTURE FILE NUMBER: 4306317
YEAR BUILT: 1979
DISPOSITION: SUPERSTRUCTURE TO BE REMOVED, SUBSTRUCTURE PARTIAL REMOVAL

PROPOSED STRUCTURE

PROPOSED WORK: PRECAST REINFORCED CONCRETE ARCH CULVERT ON CAST-IN-PLACE PEDESTAL WALLS
SPAN X RISE: 20′-0″ X 10′-0″ WITH PEDESTAL WALLS
ROADWAY: 36′-0″ F/F GUARDRAIL
LOADING: HL-93; 60 PSF FWS
SKEW: 49° 1′ 7″ R.F. WITH ℄ CULVERT
EARTH COVER: 3′-0″ MAX., 2′-9″ MIN.
COORDINATES: LATITUDE: N41°40′25″ LONGITUDE: W81°13′15″

DESIGN AGENCY
Thomas Fok & Associates, Inc.
CONSULTING ENGINEERS & SURVEYORS
EDGE CERTIFIED CONSULTANT
3366 Mahoning Ave | Youngstown, OH 44515 | 330.792.9745

DESIGNED	CHECKED	DRAWN	REVISED	REVIEWED	DATE	STRUCTURE FILE NUMBER
WHT	DAK	WHT		SDL	7-30-15	4306318

LAKE COUNTY
STA. 50+05.97

SITE PLAN
BRIDGE NO. LAK-608-0337
OVER LAKE METROPARKS GREENWAY CORRIDOR

LAK-608-3.37
PID No. 93229

P:\LAK\93229\Structures\Sheets\608_0337SP001.dgn Sheet 4/8/2016 4:51:49 PM slettieri

GENERAL NOTES

STANDARD DRAWINGS AND SUPPLEMENTAL SPECIFICATIONS:

REFER TO THE FOLLOWING STANDARD BRIDGE DRAWING(S):
NONE

AND TO THE FOLLOWING SUPPLEMENTAL SPECIFICATION(S):
NONE

DESIGN SPECIFICATIONS:

THIS STRUCTURE CONFORMS TO "LRFD BRIDGE DESIGN SPECIFICATIONS" ADOPTED BY THE AMERICAN ASSOCIATION OF STATE HIGHWAY AND TRANSPORTATION OFFICIALS, 2014, INCLUDING THE 2016 INTERIMS, AND THE ODOT BRIDGE DESIGN MANUAL 2007.

OPERATIONAL IMPORTANCE:

A LOAD MODIFIER OF 1.0 HAS BEEN ASSUMED FOR THE DESIGN OF THIS STRUCTURE IN ACCORDANCE WITH THE AASHTO LRFD BRIDGE DESIGN SPECIFICATIONS, ARTICLE 1.3.5 AND THE ODOT BRIDGE DESIGN MANUAL, 2007.

DESIGN LOADING:

HL-93
FUTURE WEARING SURFACE (FWS) OF 0.060 KIPS/SQ.FT.

DESIGN DATA:

CONCRETE CLASS QC1 - COMPRESSIVE STRENGTH 4.0 KSI (FOOTING, PEDESTAL WALL, WINGWALL AND HEADWALL)

REINFORCING STEEL - MINIMUM YIELD STRENGTH 60 KSI (ALL REINFORCING SHALL BE EPOXY COATED)

FOUNDATION BEARING RESISTANCE:

WINGWALLS AND THREE-SIDED BOX FOOTINGS, AS DESIGNED, PRODUCE A MAXIMUM SERVICE LOAD PRESSURE OF 3.8 KIPS PER SQUARE FOOT AND A MAXIMUM STRENGTH LOAD PRESSURE OF 5.3 KIPS PER SQUARE FOOT. THE FACTORED BEARING RESISTANCE IS 5.4 KIPS PER SQUARE FOOT.

ITEM 511 WINGWALLS OR HEADWALLS FOR 611 ITEMS

FOR ITEMS 706.05, 706.051, 706.052 AND 706.053 WITH A CAST-IN-PLACE WINGWALL OR HEADWALL A PRECAST ALTERNATIVE MAY BE FURNISHED PER 602.03. THE PRECAST ALTERNATIVE WILL MEET THE CAST-IN-PLACE STRUCTURAL DESIGN LOADINGS, DESIGN HEIGHT, AND DESIGN LENGTH DIMENSIONS. FOOTINGS FOR WINGWALLS AND CULVERT SHALL BE CAST-IN-PLACE.

FULL COMPENSATION FOR THE PRECAST WINGWALL OR HEADWALL IS THE NUMBER OF CUBIC YARDS OF ITEM 511 AND POUNDS OF ITEM 509 FOR THE CORRESPONDING CAST-IN-PLACE STRUCTURE.

HEADWALL ANCHOR DOWELS:

THREADED INSERTS OR NONPROTRUDING MECHANICAL CONNECTORS CAST INTO THE CULVERT BY THE MANUFACTURER SHALL BE USED PROVIDED THEY CAN RESIST AN ULTIMATE PULL-OUT STRENGTH OF 12 KIPS AND MAINTAIN A MINIMUM COVER OF 3 INCHES AT THE BOTTOM OF THE CULVERT SLAB. MECHANICAL CONNECTORS MUST PROVIDE AN "L-SHAPED" BAR INSIDE THE CULVERT WITH A MINIMUM HORIZONTAL LENGTH OF 12 INCHES. PAYMENT FOR INSERTS OR MECHANICAL CONNECTORS IS INCLUDED WITH ITEM 611.

SEALING OF FORESLOPE WALL AND WINGWALLS:

SEAL ALL EXPOSED HEADWALL AND WINGWALL CONCRETE AND CULVERT AS SHOWN IN THE PLANS WITH EPOXY SEALER. PAYMENT FOR THE EPOXY SEALER IS PER ITEM 512 - SEALING OF CONCRETE SURFACES.

WATERPROOFING:

TYPE 2 WATERPROOFING, PER CMS 512.08 AND 711.25 SHALL BE APPLIED VERTICALLY DOWN THE ENTIRE SIDES OF THE PRECAST CULVERT SECTIONS TO THE TOP OF THE PEDESTAL WALLS AND ONE FOOT SIX INCHES ONTO THE WINGWALLS FOR ALL PORTIONS OF THE CULVERT WHICH SHALL BE IN CONTACT WITH THE BACKFILL. PAYMENT FOR THE MEMBRANE WATERPROOFING IS AT THE CONTRACT PRICE BID PER SQUARE YARD FOR ITEM 512 - TYPE 2 WATERPROOFING.

TYPE 2 WATERPROOFING, PER CMS 512.08 AND 711.25 SHALL BE APPLIED TO THE ENTIRE TOP SURFACE OF THE PRECAST CULVERT SECTIONS AND SHALL EXTEND ONE FOOT VERTICALLY DOWN THE SIDES. TYPE 2 WATERPROOFING SHALL EXTEND VERTICALLY UP THE HEADWALL FOR ALL PORTIONS OF THE CULVERT WHICH SHALL BE IN CONTACT WITH THE BACKFILL. PAYMENT FOR THE MEMBRANE WATERPROOFING IS AT THE CONTRACT PRICE BID PER SQUARE YARD FOR ITEM 512 - TYPE 2 WATERPROOFING.

BASIS OF PAYMENT:

PAYMENT FOR MATERIALS AND INCIDENTALS REQUIRED TO CONSTRUCT THE FOOTING, WINGWALLS, PEDESTAL WALLS AND HEADWALLS IS INCLUDED WITH ITEM 511 - CLASS QC1 CONCRETE. PAYMENT FOR REINFORCING STEEL IS INCLUDED WITH ITEM 509 - EPOXY COATED REINFORCING STEEL.

POROUS BACKFILL WITH GEOTEXTILE FABRIC:

PLACE 2'-0" THICK BEHIND THE WINGWALLS ONLY AND EXTEND TO 12" BELOW THE EMBANKMENT SURFACE. PLACE GEOTEXTILE FABRIC BETWEEN THE POROUS BACKFILL AND REPLACED EXCAVATION ADJACENT TO THE STRUCTURE. IT TURNS UNDER THE BOTTOM OF THE POROUS BACKFILL AND RETURNS 6".

PREFORMED EXPANSION JOINT FILLER:

PLACE PREFORMED EXPANSION JOINT FILLER (PEJF) CONFORMING TO CMS 705.03, 1 INCH THICK, ABOVE THE FOOTING BETWEEN THE SIDES OF THE PRECAST CULVERT AND THE ENDS OF THE WINGWALLS. PAYMENT FOR MATERIALS AND INSTALLATION IS INCLUDED WITH ITEM 516 - 1" PREFORMED EXPANSION JOINT FILLER.

ARCH SECTION WALL AND TOP SLAB THICKNESS:

IF THE WALL AND/OR TOP SLAB THICKNESS OF THE CULVERT PROPOSED ARE DIFFERENT FROM WHAT IS SHOWN IN THE PLANS, A MARKED COPY OF THE PROJECT PLANS, INCLUDING ALL PLAN NOTES AND DETAILS SHOWING ALL ITEMS AFFECTED BY THE DIFFERENT CULVERT DIMENSIONS, SHALL BE SUBMITTED FOR APPROVAL WITH THE SHOP DRAWINGS. ALL WORK REQUIRED TO ACCOMMODATE ANY REVISED DIMENSIONS SHALL BE AT NO EXTRA COST TO THE STATE.

FOOTINGS:

FOOTINGS SHALL EXTEND A MINIMUM OF 6 INCHES INTO BEDROCK OR TO THE ELEVATION SHOWN, WHICHEVER IS LOWER.

TEXTURED ARCHITECTURAL CONCRETE AND LOGO:

FORMLINING SHALL BE APPLIED TO ALL WINGWALLS AS SHOWN ON THE PLANS. FORMLINERS SHALL BE PATTERN NO. 16954 AS MANUFACTURED BY FITZGERALD FORMLINERS, 1500 E. CHESTNUT AVENUE, SANTA ANA, CA 92701, PHONE 714-547-6710 OR PATTERN NO. 1112 AS MANUFACTURED BY SPEC FORMLINERS, INC., 1038 E. 4TH ST., SANTA ANA, CA 92701 PHONE 714-429-9500 OR APPROVED EQUAL.

LOGOS SHALL BE PLACED ON WINGWALLS NO. 1 AND NO. 4. THE CONTRACTOR SHALL COORDINATE WITH LAKE METROPARKS FOR FINAL DIMENSION, DETAIL AND LOCATION OF LOGOS.

LAKE METROPARKS LOGO

CONTACT:
TIM LANE, PLA
PARK PLANNER, LANDSCAPE ARCHITECT
LAKE METROPARKS
11211 SPEAR ROAD
CONCORD TOWNSHIP, OHIO 44077
440-639-7275 EXT. 1608

PAYMENT FOR FORMLINERS, LOGOS AND ASSOCIATED WORK AND MATERIALS IS INCLUDED WITH ITEM 511 - CLASS QC1 CONCRETE.

ITEM 503, COFFERDAMS AND EXCAVATION BRACING, AS PER PLAN:

THE DESIGN SHOWN ON THE PLANS FOR TEMPORARY SUPPORT OF EXCAVATION IS ONE REPRESENTATIVE DESIGN THAT MAY BE USED TO CONSTRUCT THE PROJECT. THE CONTRACTOR MAY CONSTRUCT THE DESIGN SHOWN ON THE PLANS OR PREPARE AN ALTERNATE DESIGN TO SUPPORT THE SIDES OF EXCAVATIONS. IF CONSTRUCTING AN ALTERNATE DESIGN FOR TEMPORARY SUPPORT OF EXCAVATION, PREPARE AND PROVIDE PLANS IN ACCORDANCE WITH C&MS 501.05. THE DEPARTMENT WILL PAY FOR THE TEMPORARY SUPPORT OF EXCAVATION AT THE CONTRACT LUMP SUM PRICE FOR COFFERDAMS AND EXCAVATION BRACING. NO ADDITIONAL PAYMENT WILL BE MADE FOR PROVIDING AN ALTERNATE DESIGN.

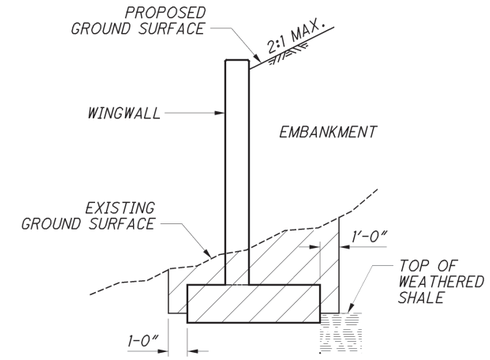

LIMITS OF UNCLASSIFIED EXCAVATION INCLUDING SHALE

ABBREVIATIONS:

CLR. = CLEARANCE
CONC. = CONCRETE
CONST. = CONSTRUCTION
DIA. = DIAMETER
E.F. = EACH FACE
EL. = ELEVATION
EQ. = EQUAL
EX. = EXISTING
F/F = FACE TO FACE
F.F. = FAR FACE
G.R. = GUARDRAIL
JT. = JOINT
INV. = INVERT
LT. = LEFT
MAX. = MAXIMUM
MIN. = MINIMUM
N.F. = NEAR FACE
N.P.C.P.P. = NON-PERFORATED CORRUGATED PLASTIC PIPE
P.C.P.P. = PERFORATED CORRUGATED PLASTIC PIPE
P.E.J.F. = PREFORMED EXPANSION JOINT FILLER
PROP. = PROPOSED
RT. = RIGHT
R/W = RIGHT OF WAY
SER. = SERIES
SPA. = SPACING
STA. = STATION
T&B = TOP & BOTTOM
TYP. = TYPICAL

ESTIMATED QUANTITIES

ITEM	ITEM EXT	TOTAL	UNIT	DESCRIPTION	SEE SHT.
202	11202	LS		PORTIONS OF STRUCTURE REMOVED, OVER 20 FOOT SPAN	
202	23500	826	SY	WEARING COURSE REMOVED	
503	11101	LS		COFFERDAMS AND EXCAVATION BRACING, AS PER PLAN	2/11
503	21102	992	CY	UNCLASSIFIED EXCAVATION INCLUDING SHALE	
509	10000	36,264	LB	EPOXY COATED REINFORCING STEEL	
510	10000	132	EACH	DOWEL HOLES WITH NONSHRINK, NONMETALLIC GROUT	
511	46212	433	CY	CLASS QC1 CONCRETE WITH QC/QA	
512	10100	708	SY	SEALING OF CONCRETE SURFACES (EPOXY-URETHANE)	
512	33000	561	SY	TYPE 2 WATERPROOFING	
516	13600	93	SF	1" PREFORMED EXPANSION JOINT FILLER	
518	21200	88	CY	POROUS BACKFILL WITH GEOTEXTILE FABRIC	
518	40000	105	FT	6" PERFORATED CORRUGATED PLASTIC PIPE	
518	40010	53	FT	6" NON-PERFORATED CORRUGATED PLASTIC PIPE INCLUDING SPECIALS	
611	71000	120	FT	CONDUIT, TYPE A, PRECAST REINFORCED CONCRETE ARCH SECTIONS 20' SPAN X 10' RISE	
613	41200	39	CY	LOW STRENGTH MORTAR BACKFILL	

NOTE: TOTALS CARRIED TO GENERAL SUMMARY SHEET

DESIGN AGENCY
TF Thomas Fok & Associates, Inc.
Consulting Engineers & Surveyors
EDGE CERTIFIED CONSULTANT
3366 Mahoning Ave | Youngstown, OHIO 44515 | 330.792.9567

DATE 7-30-15
REVIEWED SDL
STRUCTURE FILE NUMBER 4306318
DRAWN WHT
REVISED
DESIGNED WHT
CHECKED DAK

GENERAL NOTES & ESTIMATED QUANTITIES
BRIDGE NO. LAK-608-0337
OVER LAKE METROPARKS GREENWAY CORRIDOR

LAK-608-3.37
PID No. 93229

P:\LAK\93229\Structures\Sheets\608_0337GN001.dgn Sheet 4/8/2016 11:46:18 AM slettieri

BIKEPATH CURVE DATA
P.I.= Sta. 2312+02.41
D = 13° 44′ 45″ (LT)
Dc = 2° 00′ 00″
R = 2,864.93′
T = 345.32′
L = 687.32′
E = 20.74′
C = 685.67′
C.B. = N 24° 15′ 08″ W

NOTES:
1. FOR ABBREVIATIONS, SEE SHEET 2 OF 11.
2. FOR CULVERT SECTION, SEE SHEET 4 OF 11.
3. FOR FOOTING PLAN, SEE SHEET 5 OF 11.
4. FOR WINGWALL ELEVATIONS, SEE SHEET 7 OF 11.
5. FOR 6″ DIA. P.C.P.P. PROFILE, SEE SHEET 7 OF 11.

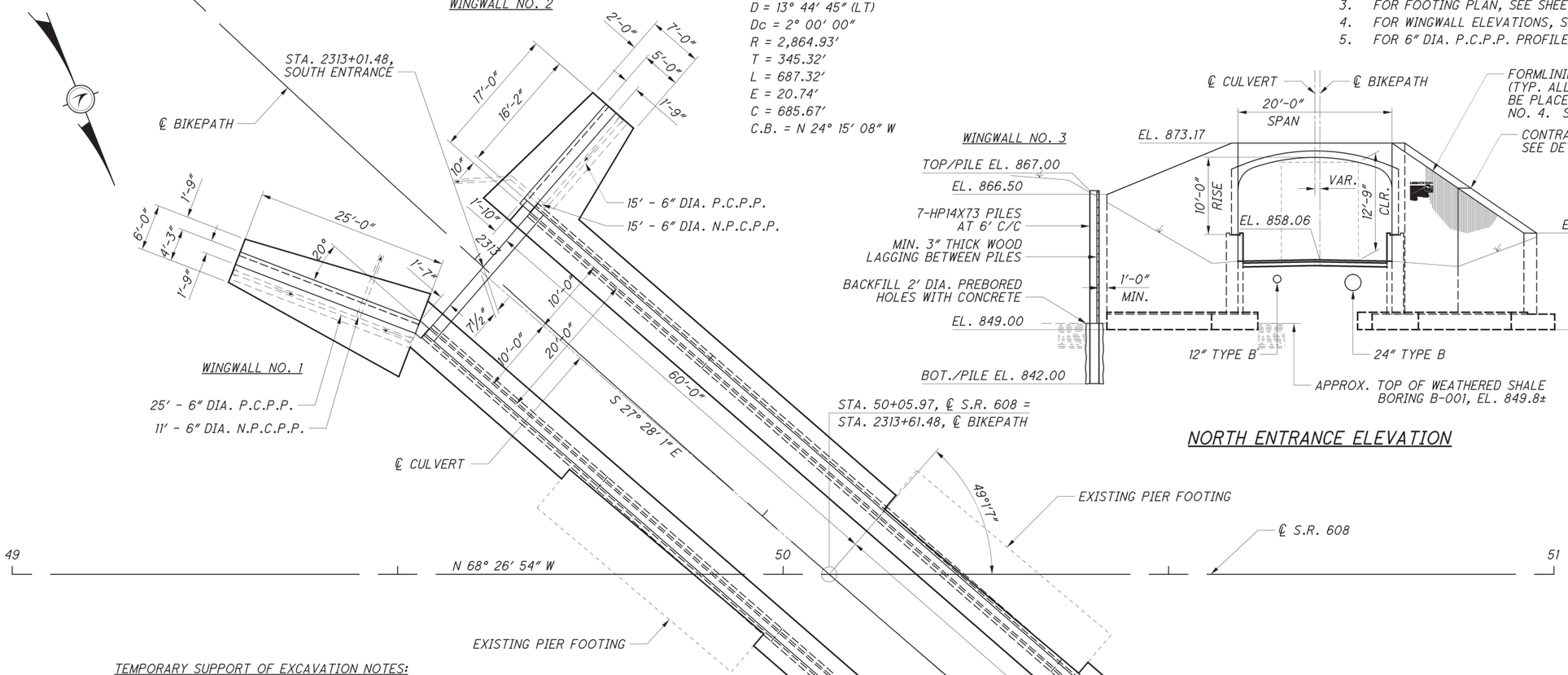

CULVERT & WINGWALL LAYOUT PLAN

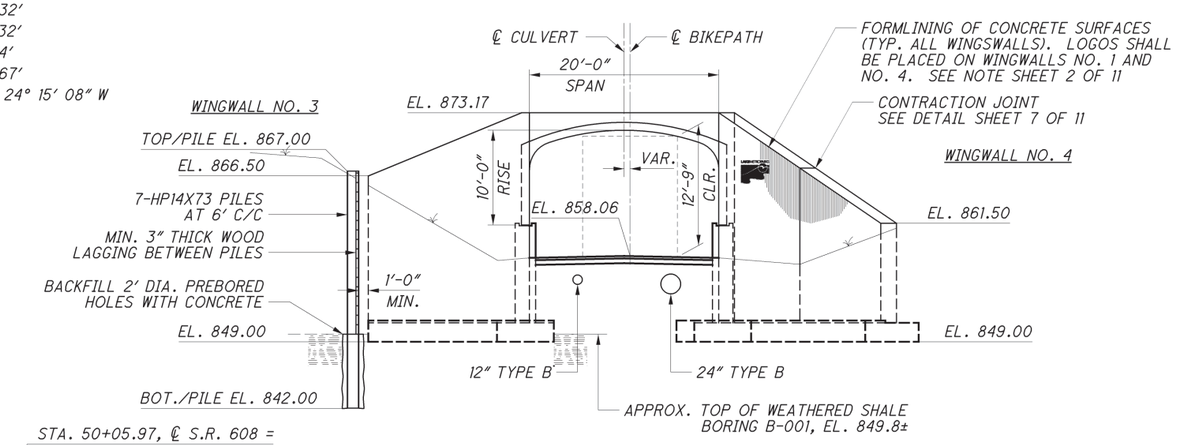

NORTH ENTRANCE ELEVATION

TEMPORARY SUPPORT OF EXCAVATION NOTES:
1. STEEL H-PILES SHALL BE ASTM A572 GR50.
2. CONCRETE FOR BACKFILL OF PREBORED HOLES SHALL BE 4000 PSI CLASS QC1.
3. PAYMENT FOR ALL LABOR AND MATERIALS TO CONSTRUCT AND REMOVE TEMPORARY SUPPORT OF EXCAVATION SHALL BE INCLUDED WITH ITEM 503, COFFERDAMS AND EXCAVATION BRACING, AS PER PLAN. SEE NOTE, SHEET 2 OF 11.

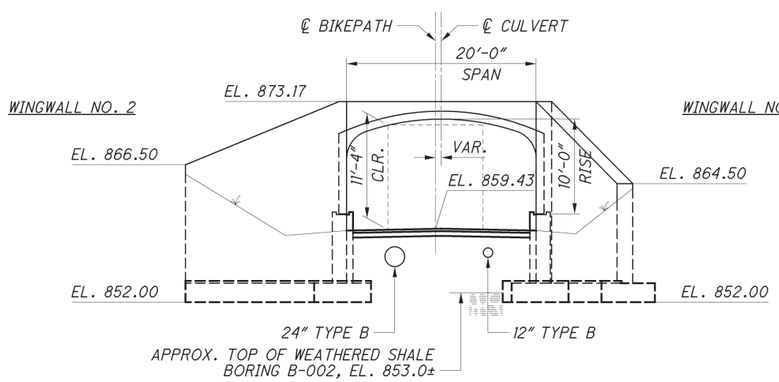

SOUTH ENTRANCE ELEVATION

DESIGN AGENCY
Thomas Fok & Associates, Inc.
Consulting Engineers & Surveyors
EDGE CERTIFIED CONSULTANT
3555 Mayfield Road | Youngstown, Ohio 44511 | 330-270-1955

DESIGNED	CHECKED	DRAWN	REVISED	REVIEWED	DATE	STRUCTURE FILE NUMBER
WHT	DAK	WHT		SDL	7-30-15	4306318

WINGWALL LAYOUT AND ELEVATIONS
BRIDGE NO. LAK-608-0337
OVER LAKE METROPARKS GREENWAY CORRIDOR

LAK-608-3.37
PID No. 93229

P:\LAK\93229\Structures\Sheets\608_0337NDD01.dgn Sheet 4/8/2016 11:54:57 AM slettieri

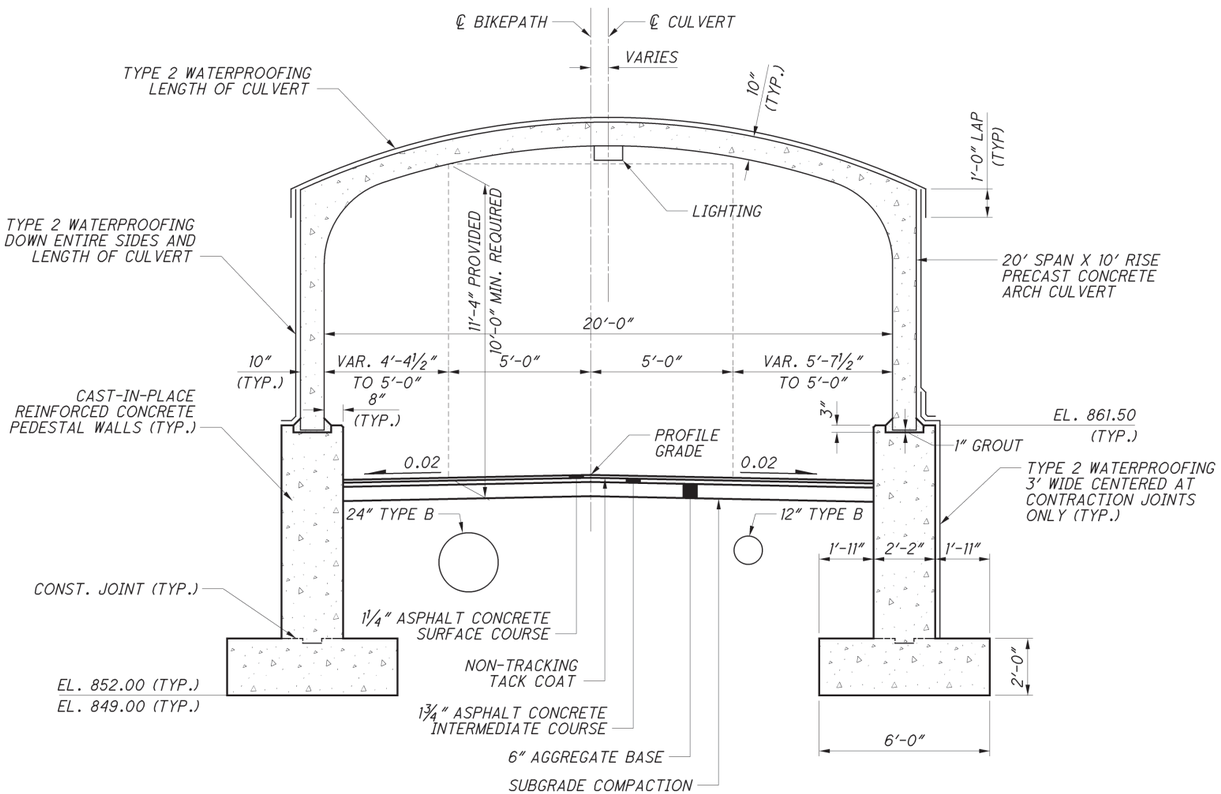

PRECAST CONCRETE ARCH CULVERT SECTION

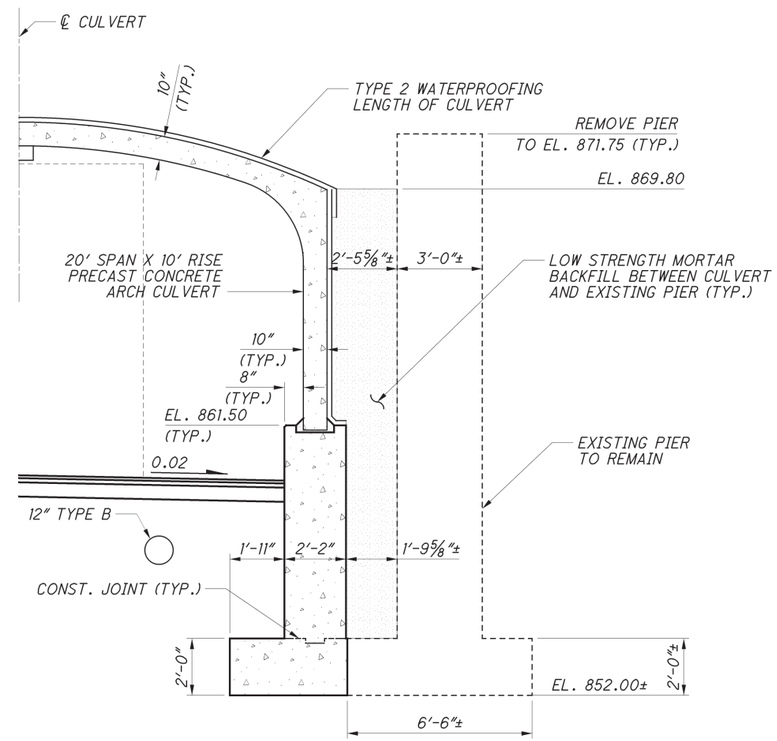

PRECAST CONCRETE ARCH CULVERT HALF SECTION @ EXISTING PIER

NOTES:
1. FOR ABBREVIATIONS, SEE SHEET 2 OF 11.
2. FOR FOOTING PLAN, SEE SHEET 5 OF 11.
3. FOR PEDESTAL WALL REINFORCING, SEE SHEET 9 OF 11.

DESIGN AGENCY
TF Thomas Fok & Associates, Inc.
Consulting Engineers & Surveyors
ASSOC. CAPES
3986 Mahoning Ave | Youngstown OH 44515 | 330.792.1045
EDGE CERTIFIED CONSULTANT

DESIGNED	DRAWN	REVIEWED	DATE
WHT	WHT	SDL	7-30-15
CHECKED	REVISED	STRUCTURE FILE NUMBER	
DAK		4306318	

CULVERT SECTION
BRIDGE NO. LAK-608-0337
OVER LAKE METROPARKS GREENWAY CORRIDOR

LAK-608-3.37
PID No. 93229

P:\LAK\93229\Structures\Sheets\608_0337MD002.dgn Sheet 4/8/2016 11:54:54 AM sletieri

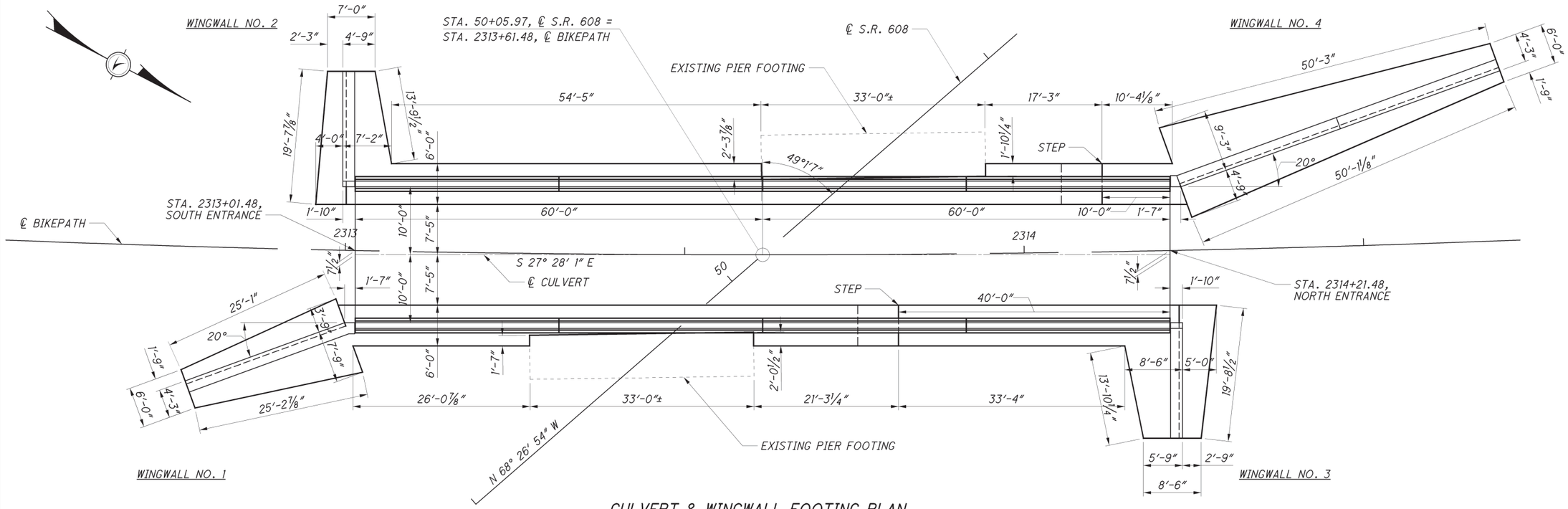

CULVERT & WINGWALL FOOTING PLAN

NOTES:

1. FOR ABBREVIATIONS, SEE SHEET 2 OF 11.
2. FOR FOOTING STEP DETAIL SEE SHEET 6 OF 11.
3. FOR FOOTING REINFORCING PLAN, SEE SHEET 6 OF 11.
4. FOR PEDESTAL WALL ELEVATIONS AND SECTIONS, SEE SHEET 9 OF 11.

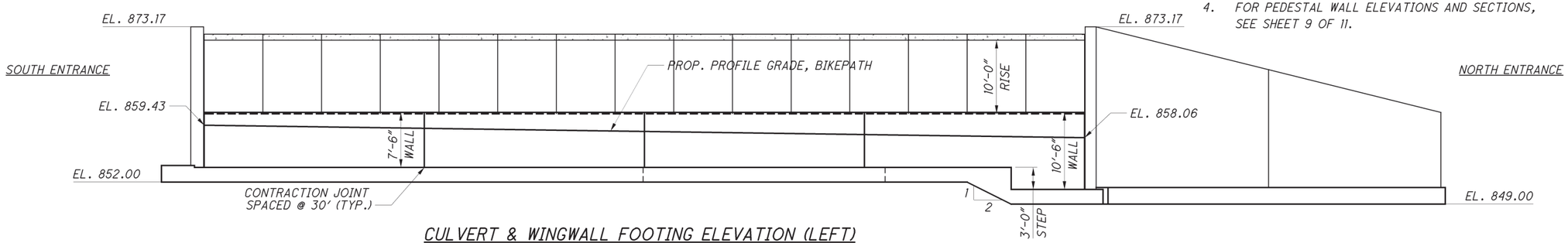

CULVERT & WINGWALL FOOTING ELEVATION (LEFT)

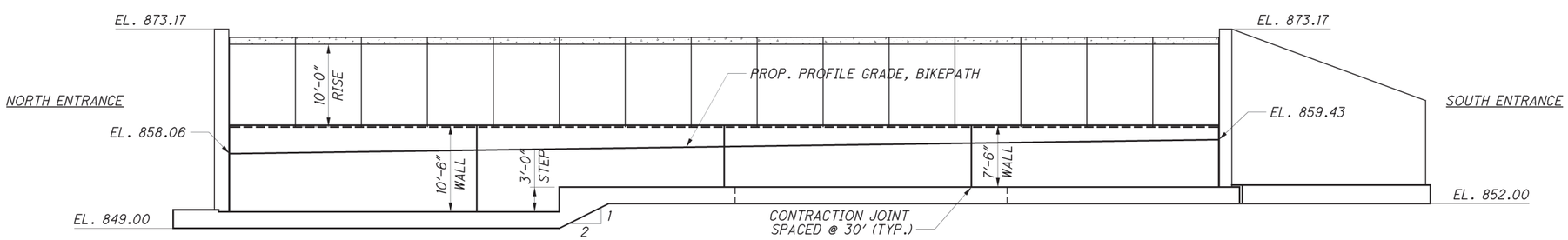

CULVERT & WINGWALL FOOTING ELEVATION (RIGHT)

DESIGN AGENCY
Thomas Fok & Associates, Inc.
Consulting Engineers & Surveyors
EDGE CERTIFIED CONSULTANT
3366 Mahoning Ave | Youngstown OHIO 44515 | 330.792.1005

DESIGNED	DRAWN	REVIEWED	DATE
WHT	WHT	SDL	7-30-15
CHECKED	REVISED	STRUCTURE FILE NUMBER	
DAK		4306318	

FOOTING PLAN & ELEVATION
BRIDGE NO. LAK-608-0337
OVER LAKE METROPARKS GREENWAY CORRIDOR

LAK-608-3.37
PID No. 93229

P:\LAK\93229\Structures\Sheets\608_0337FP001.dgn Sheet 4/8/2016 11:54:40 AM settieri

MINIMUM LAP LENGTHS:
LAP NO. 5 BARS 2'-5"
LAP NO. 6 BARS 2'-11"
LAP NO. 7 BARS 3'-8"
LAP NO. 8 BARS 4'-11"

NOTES:
1. FOR ABBREVIATIONS, SEE SHEET 2 OF 11.
2. FOR CONTRACTION JOINT DETAIL, SEE SHEET 7 OF 11.
3. FOR REINFORCING STEEL LIST, SHEETS 10 & 11 OF 11.

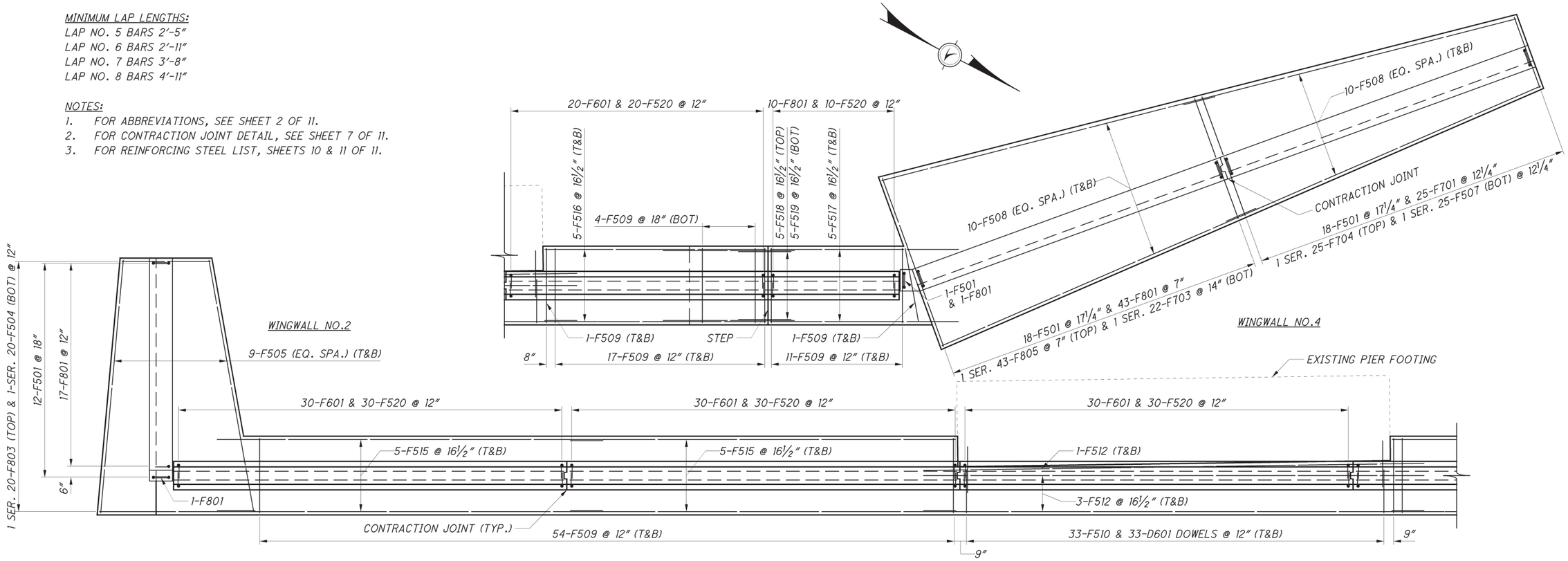

CULVERT & WINGWALL FOOTING PLAN (LEFT)

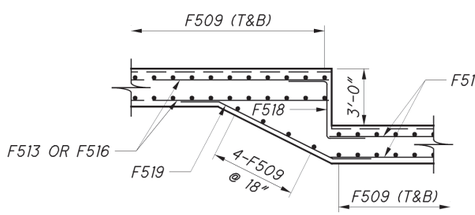

FOOTING STEP DETAIL

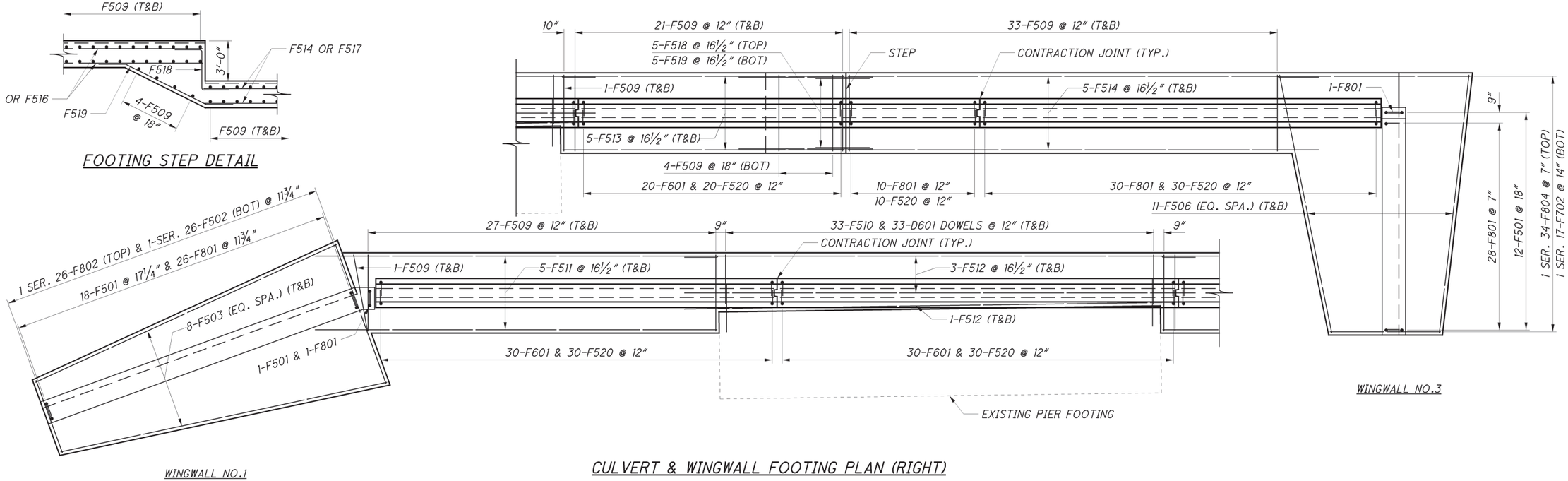

CULVERT & WINGWALL FOOTING PLAN (RIGHT)

DESIGN AGENCY
Thomas Fok & Associates, Inc.
Consulting Engineers & Surveyors
EDGE CERTIFIED CONSULTANT
3555 Corporate Ave | Youngstown, OHIO 44515 | 330.792.9745

DATE	REVIEWED	DRAWN	DESIGNED
7-30-15	SDL	WHT	WHT
STRUCTURE FILE NUMBER	REVISED		CHECKED
4306318			DAK

FOOTING REINFORCING PLAN
BRIDGE NO. LAK-608-0337
OVER LAKE METROPARKS GREENWAY CORRIDOR

LAK-608-3.37
PID No. 93229

P:\LAK\93229\Structures\Sheets\608_0337FP002.dgn Sheet 4/8/2016 11:54:43 AM sletieri

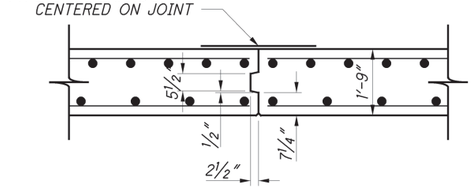

CONTRACTION JOINT DETAIL

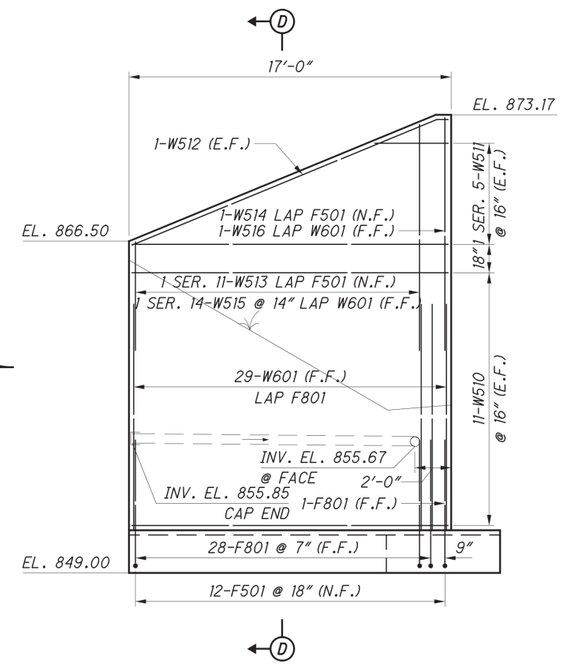

WINGWALL NO. 3 ELEVATION

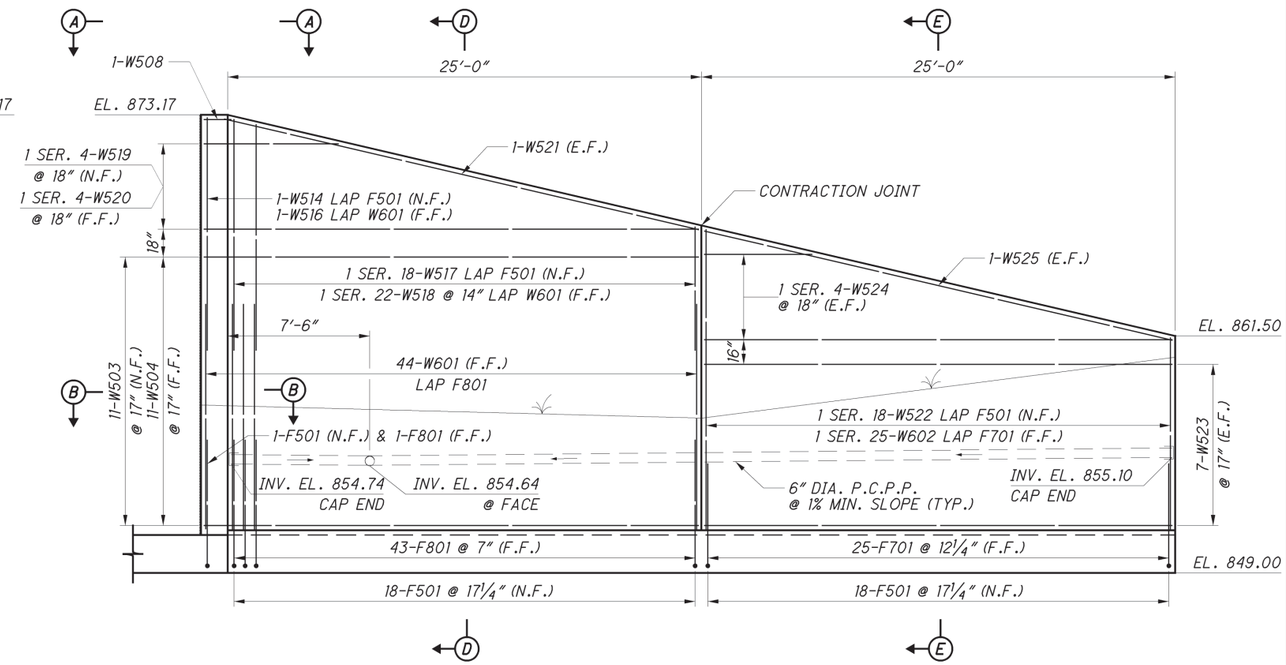

WINGWALL NO. 4 ELEVATION

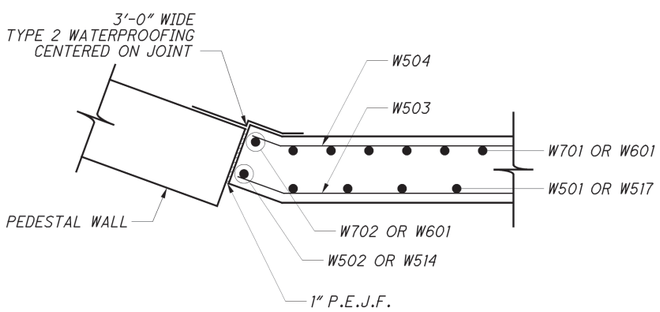

SECTION B-B

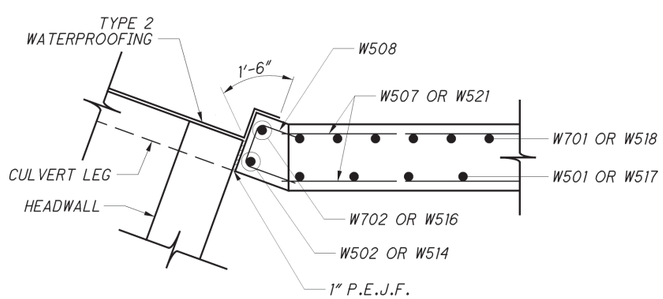

VIEW A-A

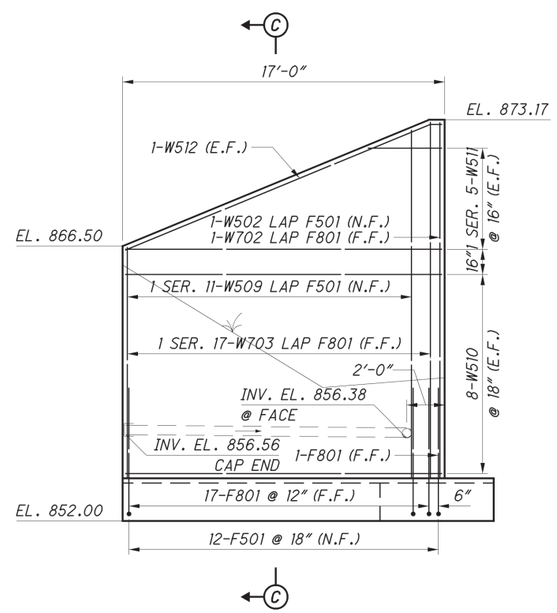

WINGWALL NO. 2 ELEVATION

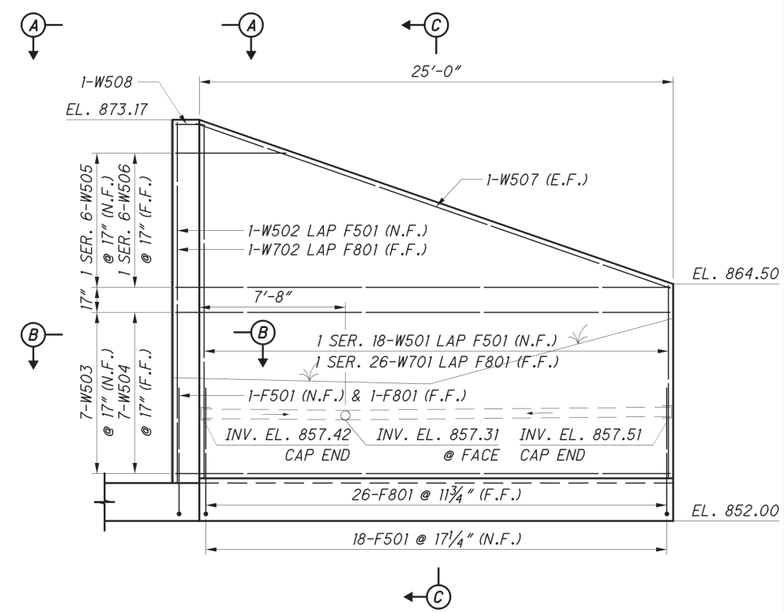

WINGWALL NO. 1 ELEVATION

MINIMUM LAP LENGTHS:
LAP NO. 5 BARS 2'-5"
LAP NO. 6 BARS 2'-11"
LAP NO. 7 BARS 3'-8"
LAP NO. 8 BARS 4'-11"

NOTES:
1. FOR ABBREVIATIONS, SEE SHEET 2 OF 11.
2. FOR WINGWALL SECTIONS C-C, D-D & E-E, SEE SHEET 8 OF 11.
3. FOR REINFORCING STEEL LIST, SHEETS 10 & 11 OF 11.

DESIGN AGENCY
Thomas Fok & Associates, Inc.
Consulting Engineers & Surveyors
3355 Cabot Blvd. West | Youngstown OH 44515 | 330.792.7545
EDGE CERTIFIED CONSULTANT

DATE	REVIEWED	STRUCTURE FILE NUMBER
7-30-15	SDL	4306318
DRAWN	REVISED	
WHT		
DESIGNED	CHECKED	
WHT	DAK	

WINGWALL ELEVATIONS AND DETAILS
BRIDGE NO. LAK-608-0337
OVER LAKE METROPARKS GREENWAY CORRIDOR

LAK-608-3.37
PID No. 93229

P:\LAK\93229\Structures\Sheets\608_0337MD003.dgn Sheet 4/8/2016 11:54:34 AM slettieri

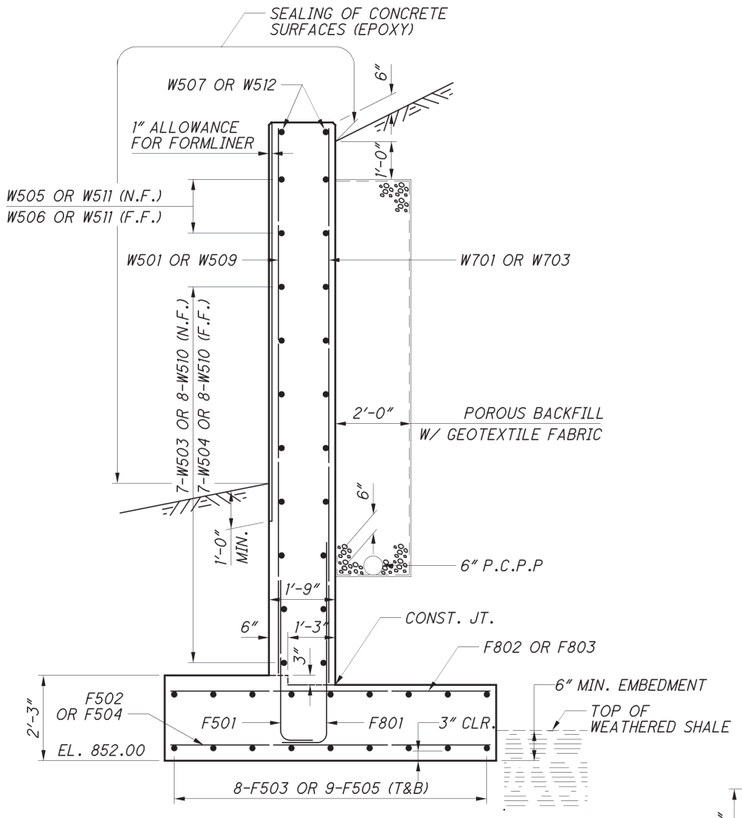

SECTION C-C

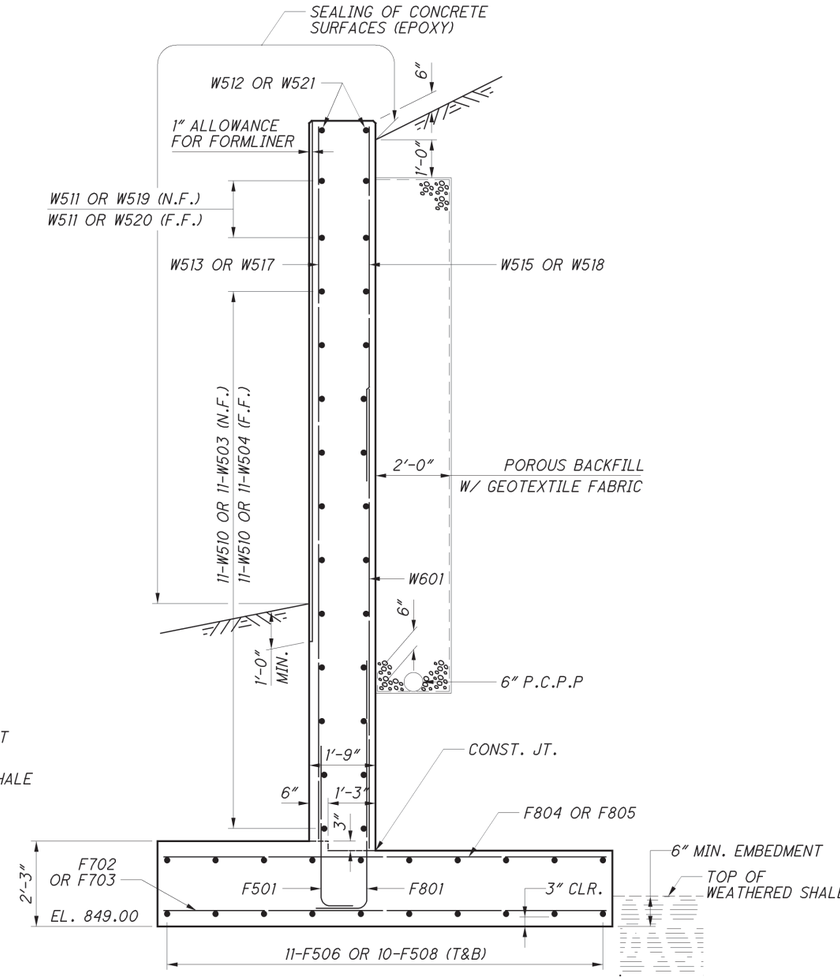

SECTION D-D

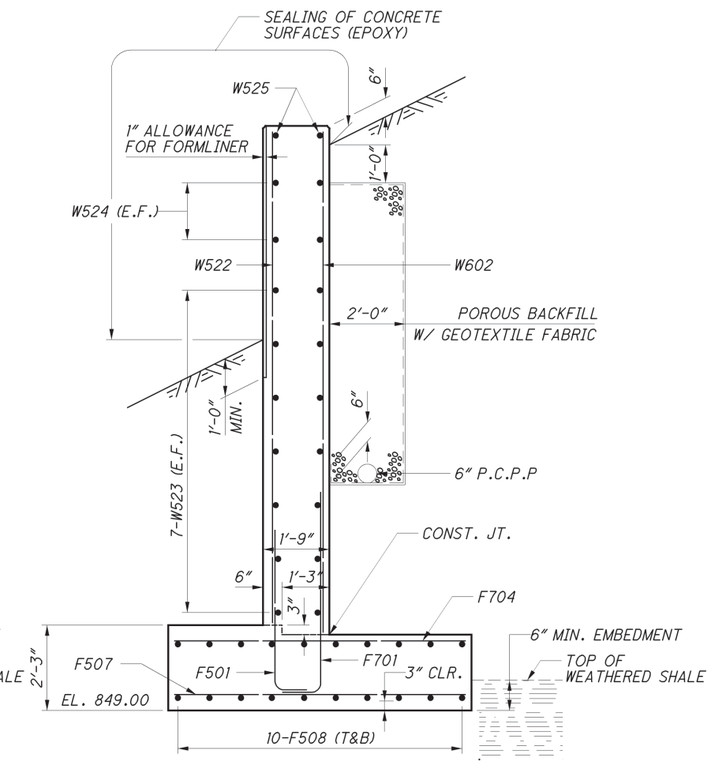

SECTION E-E

MINIMUM LAP LENGTHS:
LAP NO. 5 BARS 2'-5"
LAP NO. 6 BARS 2'-11"
LAP NO. 7 BARS 3'-8"
LAP NO. 8 BARS 4'-11"

NOTES:
1. *FOR ABBREVIATIONS, SEE SHEET 2 OF 11.*
2. *FOR LOCATION OF SECTIONS C-C, D-D & E-E, SEE SHEET 7 OF 11.*
3. *FOR REINFORCING STEEL LIST, SHEETS 10 & 11 OF 11.*

DESIGN AGENCY
Thomas Fok & Associates, Inc.
Consulting Engineers & Surveyors
EDGE CERTIFIED CONSULTANT
3366 Mahoning Ave | Youngstown, OH 44515 | 330.792.1905

DESIGNED	DRAWN	REVIEWED	DATE
WHT	WHT	SDL	7-30-15
CHECKED	REVISED	STRUCTURE FILE NUMBER	
DAK		4306318	

STRUCTURE DETAILS AND SECTIONS
BRIDGE NO. LAK-608-0337
OVER LAKE METROPARKS GREENWAY CORRIDOR

LAK-608-3.37
PID No. 93229

P:\LAK\93229\Structures\Sheets\608_0337MD004.dgn Sheet 4/8/2016 11:55:02 AM sletieri

NOTE:
HEADWALL REINFORCING SYMMETRICAL ABOUT ℄ CULVERT

MINIMUM LAP LENGTHS:
LAP NO. 5 BARS 2'-5"
LAP NO. 6 BARS 2'-11"
LAP NO. 7 BARS 3'-8"
LAP NO. 8 BARS 4'-11"

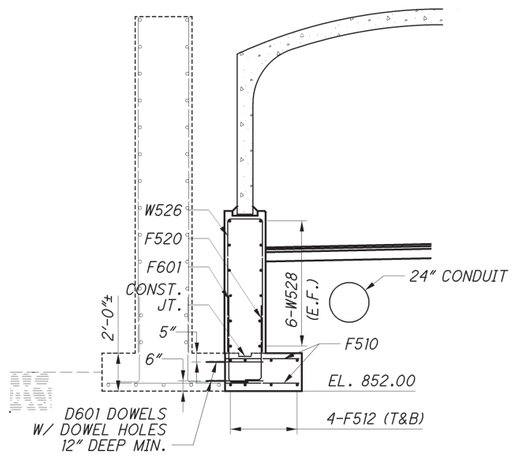

CULVERT HALF-SECTION @ EXIST. PIER

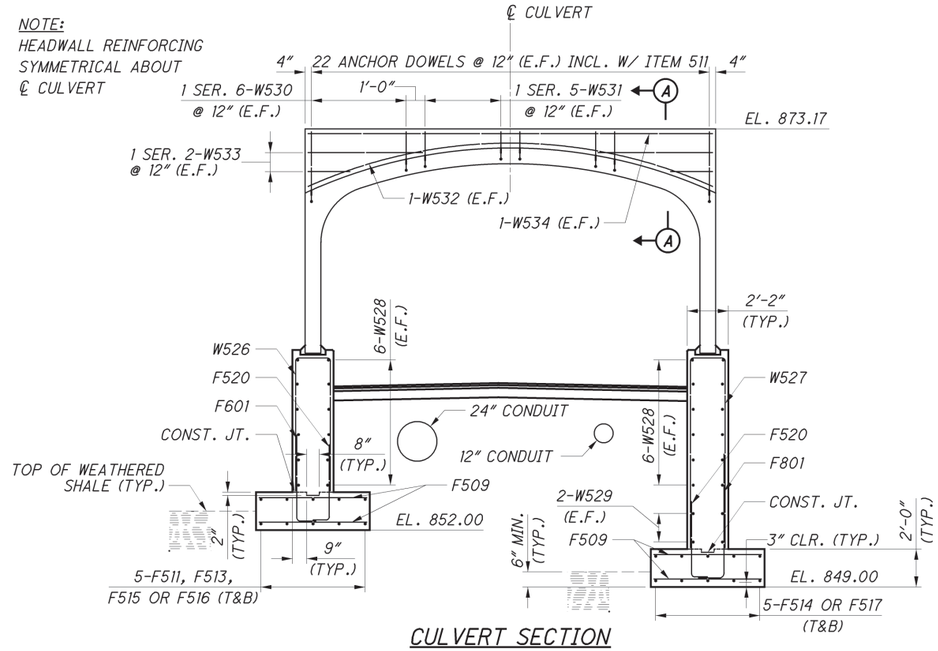

CULVERT SECTION

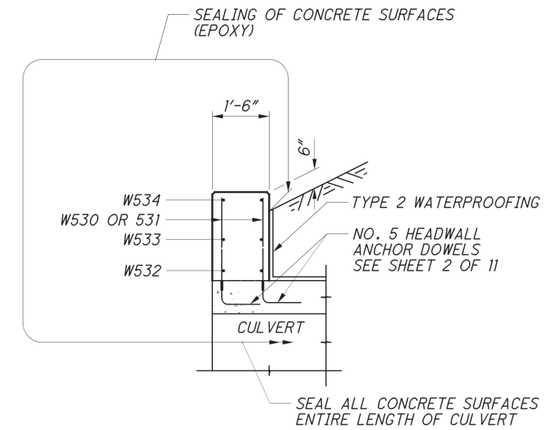

SECTION A-A

NOTES:
1. FOR ABBREVIATIONS, SEE SHEET 2 OF 11.
2. FOR FOOTING PLAN, SEE SHEET 5 OF 11.
3. FOR REINFORCING STEEL LIST, SHEETS 10 & 11 OF 11.

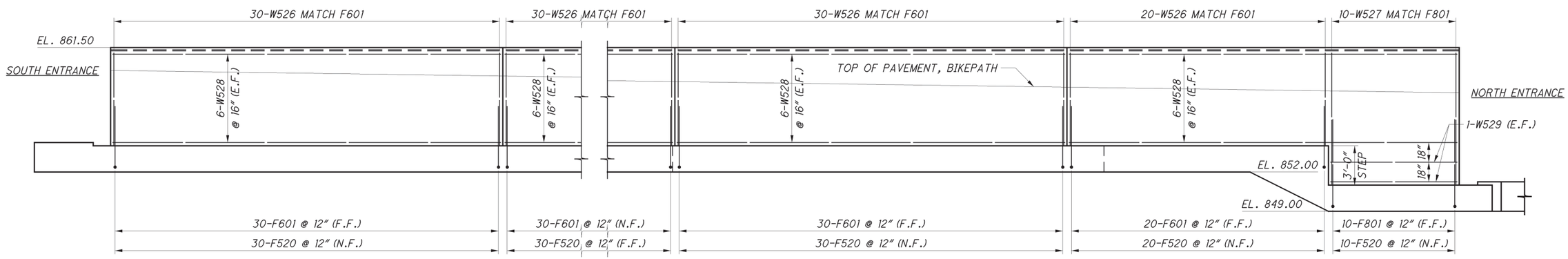

PEDESTAL WALL ELEVATION (LEFT)

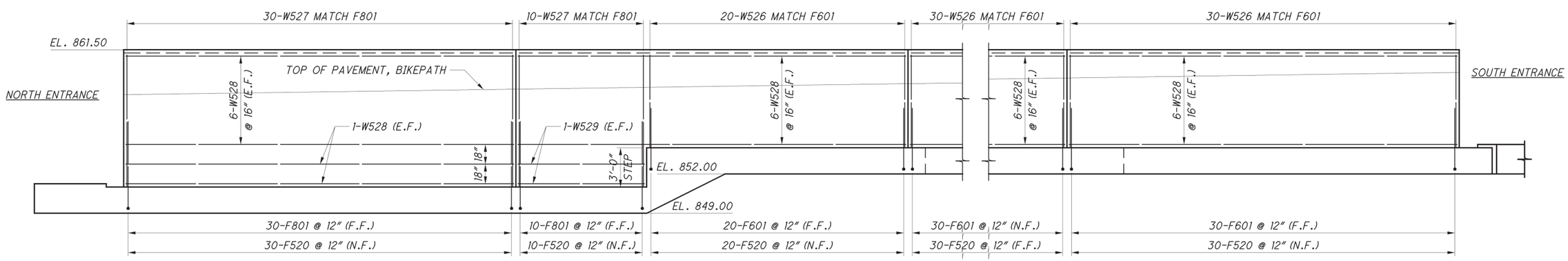

PEDESTAL WALL ELEVATION (RIGHT)

DESIGN AGENCY
Thomas Fok & Associates, Inc.
Consulting Engineers & Surveyors
EDGE CERTIFIED CONSULTANT
3555 Corporate Way | Youngstown OH 44511 | 330.792.9745

DESIGNED	DRAWN	REVIEWED	DATE
WHT	WHT	SDL	7-30-15
CHECKED	REVISED	STRUCTURE FILE NUMBER	
DAK		4306318	

PEDESTAL WALL ELEVATIONS AND SECTIONS
BRIDGE NO. LAK-608-0337
OVER LAKE METROPARKS GREENWAY CORRIDOR

LAK-608-3.37
PID No. 93229

P:\LAK\93229\Structures\Sheets\608_0337MD005.dgn Sheet 4/8/2016 11:55:06 AM sieltieri

REINFORCING SCHEDULE (WINGWALL)

BAR MARK	NUMBER: WINGWALL NO. 1	NO. 2	NO. 3	NO. 4	TOTAL	LENGTH	WEIGHT (LBS.)	TYPE	BAR TYPE DIMENSIONS: A	B	C	INC.
	1				1	10′-0″						
W501	SERIES				SERIES	TO	268	STR				0′-6″
	OF 18				OF 18	18′-6″						
W502	1	1			2	18′-8″	39	STR				
W503	7			11	18	26′-0″	488	2	24′-9″	1′-2½″	0′-5″	
W504	7			11	18	25′-7″	480	2	24′-10″	0′-8½″	0′-3″	
	1				1	5′-7″			4′-4″			
W505	SERIES				SERIES	TO	99	2	TO	1′-2½″	0′-5″	4′-1″
	OF 6				OF 6	26′-0″			24′-9″			
	1				1	5′-2″			4′-5″			
W506	SERIES				SERIES	TO	96	2	TO	0′-8½″	0′-3″	4′-1″
	OF 6				OF 6	25′-7″			24′-10″			
W507	2				2	26′-5″	55	STR				
W508	1			1	2	3′-11″	8	3	1′-5″	1′-4″		
		1			1	12′-0″						
W509		SERIES			SERIES	TO	173	STR				0′-7⅜″
		OF 11			OF 11	18′-2″						
W510		16	22		38	16′-8″	661	STR				
		2	2		4	3′-8″						
W511		SERIES	SERIES		SERIES	TO	212	STR				3′-3″
		OF 5	OF 5		OF 5	16′-8″						
W512		2	2		4	18′-0″	75	2	17′-4″	0′-7″	0′-3″	
			1		1	15′-1″						
W513			SERIES		SERIES	TO	208	STR				0′-7⅜″
			OF 11		OF 11	21′-3″						
W514			1	1	2	21′-8″	45	STR				
			1		1	5′-9″						
W515			SERIES		SERIES	TO	130	STR				0′-5¾″
			OF 14		OF 14	12′-0″						
W516			1	1	2	12′-3″	26	STR				
				1	1	15′-10″						
W517				SERIES	SERIES	TO	350	STR				0′-4″
				OF 18	OF 18	21′-6″						
				1	1	6′-6″						
W518				SERIES	SERIES	TO	214	STR				0′-3¼″
				OF 22	OF 22	12′-2″						
				1	1	7′-0″			5′-9″			
W519				SERIES	SERIES	TO	69	2	TO	1′-2½″	0′-5″	6′-4″
				OF 4	OF 4	26′-0″			24′-9″			
				1	1	6′-7″			5′-10″			
W520				SERIES	SERIES	TO	67	2	TO	0′-8½″	0′-3″	6′-4″
				OF 4	OF 4	25′-7″			24′-10″			
W521				2	2	25′-8″	54	STR				
				1	1	10′-0″						
W522				SERIES	SERIES	TO	241	STR				0′-4″
				OF 18	OF 18	15′-8″						
W523				14	14	24′-8″	360	STR				
				2	2	5′-8″						
W524				SERIES	SERIES	TO	127	STR				6′-4″
				OF 4	OF 4	24′-8″						
W525				2	2	25′-4″	53	STR				

REINFORCING SCHEDULE (WINGWALL) (CON'T)

BAR MARK	NUMBER: WINGWALL NO. 1	NO. 2	NO. 3	NO. 4	TOTAL	LENGTH	WEIGHT (LBS.)	TYPE	BAR TYPE DIMENSIONS: A	B	C	INC.
W601			29	44	73	12′-1″	1325	STR				
				1	1	10′-3″						
W602				SERIES	SERIES	TO	493	STR				0′-2⅞″
				OF 25	OF 25	16′-0″						
	1				1	10′-3″						
W701	SERIES				SERIES	TO	771	STR				0′-4⅛″
	OF 26				OF 26	18′-9″						
W702	1	1			2	18′-11″	77	STR				
		1			1	12′-3″						
W703		SERIES			SERIES	TO	540	STR				0′-5″
		OF 17			OF 17	18′-10″						
						SUBTOTAL	7804					

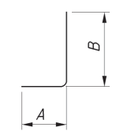

TYPE-1

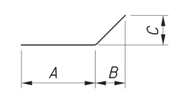

TYPE-2

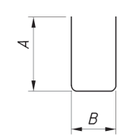

TYPE-3

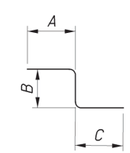

TYPE-4

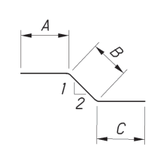

TYPE-5

NOTES:

1. THE PLANS SPECIFY THE BAR SIZE NUMBER IN THE BAR MARK COLUMN. THE FIRST DIGIT INDICATES THE BAR SIZE NUMBER. FOR EXAMPLE, W501 IS A NO. 5 BAR. BAR DIMENSIONS SHOWN ARE OUT TO OUT.
2. ALL REINFORCING STEEL SHALL BE EPOXY COATED.
3. "STR" IN THE TYPE COLUMN INDICATES STRAIGHT BARS.
4. REFER TO C.M.S. SECTION 509.05 FOR STANDARD BEND DIMENSIONS.
5. ALL REINFORCING STEEL CLEARANCES ARE 2" UNLESS OTHERWISE NOTED.

DESIGN AGENCY
Thomas Fok & Associates, Inc.
Consulting Engineers & Surveyors
EDGE CERTIFIED CONSULTANT
3366 Mahoning Ave | Youngstown OH 44515 | 330.792.9745

DESIGNED	DRAWN	REVIEWED	DATE
WHT	WHT	SDL	7-30-15
CHECKED	REVISED	STRUCTURE FILE NUMBER	
DAK		4306318	

REINFORCING STEEL LIST
BRIDGE NO. LAK-608-0337
OVER LAKE METROPARKS GREENWAY CORRIDOR

LAK-608-3.37
PID No. 93229

P:\LAK\93229\Structures\Sheets\608_0337RL001.dgn Sheet 4/8/2016 11:55:08 AM sletieri

REINFORCING SCHEDULE (FOOTING)

BAR MARK	NUMBER LEFT	NUMBER RIGHT	NUMBER TOTAL	LENGTH	WEIGHT (LBS.)	TYPE	BAR TYPE DIMENSIONS A	BAR TYPE DIMENSIONS B	BAR TYPE DIMENSIONS C	INC.
F501	49	31	80	5′-3″	438	1	0′-10″	4′-6″		
		1	1	5′-8″						
F502		SERIES	SERIES	TO	228	STR				0′-2⅝″
		OF 26	OF 26	11′-2″						
F503		16	16	24′-8″	412	STR				
	1		1	6′-8″						
F504	SERIES		SERIES	TO	193	STR				0′-3¼″
	OF 20		OF 20	11′-10″						
F505	18		18	19′-3″	361	STR				
F506		22	22	19′-3″	442	STR				
	1		1	5′-8″						
F507	SERIES		SERIES	TO	200	STR				0′-2″
	OF 25		OF 25	9′-8″						
F508	40		40	26′-2″	1092	STR				
F509	172	170	342	5′-8″	2021	STR				
F510	66	66	132	3′-4″	459	STR				
F511		10	10	30′-0″	313	STR				
F512	8	8	16	38′-2″	637	STR				
F513		10	10	21′-0″	219	STR				
F514		10	10	35′-2″	367	STR				
F515	20		20	29′-4″	612	STR				
F516	10		10	16′-10″	176	STR				
F517	10		10	14′-4″	149	STR				
F518	5	5	10	6′-9″	70	4	2′-0″	3′-0″	2′-0″	
F519	5	5	10	10′-7″	110	5	2′-0″	6′-8″	2′-0″	
F520	120	120	240	5′-0″	1252	1	0′-10″	4′-3″		
F601	110	80	190	5′-7″	1593	1	1′-0″	4′-9″		
F701	25		25	6′-6″	332	1	1′-2″	5′-6″		
		1	1	8′-2″						
F702		SERIES	SERIES	TO	391	STR				0′-4⅝″
		OF 17	OF 17	14′-4″						
	1		1	9′-9″						
F703	SERIES		SERIES	TO	527	STR				0′-2¼″
	OF 22		OF 22	13′-8″						
	1		1	5′-8″						
F704	SERIES		SERIES	TO	392	STR				0′-2″
	OF 25		OF 25	9′-8″						
F801	72	96	168	7′-11″	3551	1	1′-4″	6′-9″		
		1	1	5′-8″						
F802		SERIES	SERIES	TO	584	STR				0′-2⅝″
		OF 26	OF 26	11′-2″						
	1		1	6′-8″						
F803	SERIES		SERIES	TO	494	STR				0′-3¼″
	OF 20		OF 20	11′-10″						
		1	1	8′-2″						
F804		SERIES	SERIES	TO	1021	STR				0′-2¼″
		OF 34	OF 34	14′-4″						
	1		1	9′-9″						
F805	SERIES		SERIES	TO	1344	STR				0′-1⅛″
	OF 43		OF 43	13′-8″						
D601	66	66	132	3′-6″	694	STR				
				SUBTOTAL	20,674					

REINFORCING SCHEDULE (PEDESTAL WALL)

BAR MARK	NUMBER LEFT	NUMBER RIGHT	NUMBER TOTAL	LENGTH	WEIGHT (LBS.)	TYPE	BAR TYPE DIMENSIONS A	BAR TYPE DIMENSIONS B	BAR TYPE DIMENSIONS C	INC.
W526	110	80	190	15′-7″	3088	3	7′-0″	1′-10″		
W527	10	40	50	21′-7″	1126	3	10′-0″	1′-10″		
W528	48	52	100	29′-8″	3094	STR				
W529	4	4	8	9′-8″	81	STR				
				SUBTOTAL	7389					

REINFORCING SCHEDULE (HEADWALL)

BAR MARK	NUMBER SOUTH	NUMBER NORTH	NUMBER TOTAL	LENGTH	WEIGHT (LBS.)	TYPE	BAR TYPE DIMENSIONS A	BAR TYPE DIMENSIONS B	BAR TYPE DIMENSIONS C	INC.
	4	4	8	1′-4″						
*W530	SERIES	SERIES	SERIES	TO	108	STR				0′-4″
	OF 6	OF 6	OF 6	3′-0″						
	4	4	8	0′-9″						
*W531	SERIES	SERIES	SERIES	TO	40	STR				0′-1¼″
	OF 5	OF 5	OF 5	1′-2″						
W532	2	2	4	22′-0″	92	STR				
	4	4	8	2′-2″						
W533	SERIES	SERIES	SERIES	TO	68	STR				3′-10″
	OF 2	OF 2	OF 2	6′-0″						
W534	2	2	4	21′-4″	89	STR				
				SUBTOTAL	397					

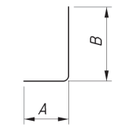

TYPE-1

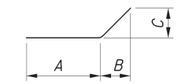

TYPE-2

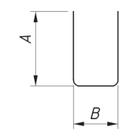

TYPE-3

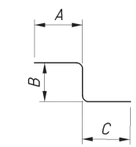

TYPE-4

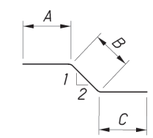

TYPE-5

NOTES:

1. THE PLANS SPECIFY THE BAR SIZE NUMBER IN THE BAR MARK COLUMN. THE FIRST DIGIT INDICATES THE BAR SIZE NUMBER. FOR EXAMPLE, W501 IS A NO. 5 BAR. BAR DIMENSIONS SHOWN ARE OUT TO OUT.
2. ALL REINFORCING STEEL SHALL BE EPOXY COATED.
3. "STR" IN THE TYPE COLUMN INDICATES STRAIGHT BARS.
4. REFER TO C.M.S. SECTION 509.05 FOR STANDARD BEND DIMENSIONS.
5. ALL REINFORCING STEEL CLEARANCES ARE 2" UNLESS OTHERWISE NOTED.

* THESE BARS REQUIRE MECHANICAL CONNECTORS. THE CONTRACTOR SHALL ADJUST LENGTH AS REQUIRED FOR THE MECHANICAL SPLICES USED.

DESIGN AGENCY
Thomas Fok & Associates, Inc.
Consulting Engineers & Surveyors
EDGE CERTIFIED CONSULTANT
3366 Mahoning Ave | Youngstown OH 44515 | 330.792.1045

DESIGNED	CHECKED	DRAWN	REVISED	REVIEWED	DATE	STRUCTURE FILE NUMBER
WHT	DAK	WHT		SDL	7-30-15	4306318

REINFORCING STEEL LIST

BRIDGE NO. LAK-608-0337
OVER LAKE METROPARKS GREENWAY CORRIDOR

LAK-608-3.37
PID No. 93229

P:\LAK\93229\Structures\Sheets\608_0337RL001.dgn Sheet 4/8/2016 11:55:09 AM sletteri

SCALE: 1 = 1E

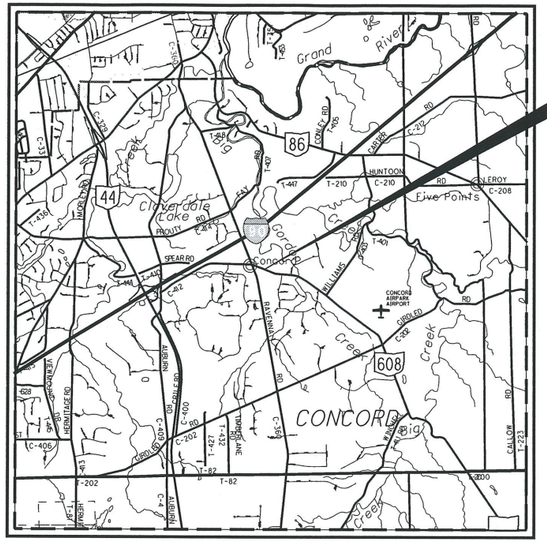

BEGIN ACQUISITION
STA. 47+75.00

PROJECT LOCATION
S.L.M. 3.37

END ACQUISITION
STA. 53+04.18

LOCATION MAP

LATITUDE: N41°40'25" LONGITUDE: W81°13'15"

SCALE IN MILES

0 1 2 3 4

N

RIGHT OF WAY LEGEND SHEET LAK-608-3.37

LAKE COUNTY, CONCORD TOWNSHIP
LOTS 10 & 11, TRACT 1
TOWNSHIP 10, RANGE VIII
CONNECTICUT WESTERN RESERVE

PROJECT DESCRIPTION

REPLACEMENT OF THE EXISTING FIVE-SPAN STRUCTURE WITH A NEW 20' SPAN X 10' RISE CONCRETE ARCH CULVERT ON CAST-IN-PLACE PEDESTALS. ADDITIONAL UPGRADES INCLUDE: IMPROVED VERTICAL ALIGNMENT, NEW PAVEMENT MARKINGS AND SIGNS, AND DRAINAGE IMPROVEMENTS. THE EXISTING AND PROPOSED RIGHT OF WAY WERE ESTABLISHED FROM THE CENTERLINE OF RIGHT OF WAY OF S.R. 608.

INDEX OF SHEETS:

LEGEND SHEET	1
PROPERTY MAP	2
SUMMARY OF ADDITIONAL R/W	3
R/W DETAIL SHEETS	4-5

UTILITY OWNERS

TYPE	NAME & ADDRESS
OIL & NATURAL GAS	DOMINION EAST OHIO 320 SPRINGSIDE DRIVE, SUITE 320 AKRON, OHIO 44333 (330) 664-2575 CONTACT: MICHAEL W. NORTH
	ORWELL NATURAL GAS 8500 STATION ST., SUITE 100 MENTOR, OHIO 44060-4336 (440) 701-5100 CONTACT: JEFF HEIDNIK
	ORWELL TRUMBULL PIPELINE 3511 LOST NATION ROAD, SUITE 213 WILLOUGHBY, OHIO 44094 (440) 942-8489 CONTACT: ELLIOTT DULY
CABLE TV	TIME WARNER 7820 DIVISION DR. MENTOR, OHIO 44060 (216) 575-8016 CONTACT: MATT HANNAH
TOWNSHIP, EMERGENCY SERVICES, CEMETERY	CONCORD TOWNSHIP ATTN: SERVICE DEPT. 7229 RAVENNA ROAD CONCORD TOWNSHIP, OH 44077 (440) 354-7500 EXT. 104 CONTACT: KATHY MITCHELL
WATER	CITY OF PAINESVILLE ATTN: WATER DEPARTMENT 9565 HEADLANDS RD. MENTOR, OHIO 44060 440-392-9565 CONTACT: BRUCE HOOK
SANITARY	LAKE COUNTY DEPT. OF UTILITIES 105 MAIN ST. PO BOX 490 PAINESVILLE, OH 44077 (440) 350-2649 CONTACT: ALBERT J. SAARI, PE
DRAINAGE / MOT	LAKE COUNTY ENGINEER'S OFFICE 550 BLACKBROOK ROAD PAINESVILLE, OHIO 44077 (440) 350-2770 CONTACT: JAMES GILLS, PE, PS
ELECTRIC	THE ILLUMINATING COMPANY 7755 AUBURN RD. PAINESVILLE, OHIO 44077 (440) 358-4991 CONTACT: RALPH DELLIGATTI

NOTES: THE LOCATION OF THE UNDERGROUND UTILITIES SHOWN ON THE PLANS ARE OBTAINED FROM THE OWNER OF THE UTILITIES AS REQUIRED BY SECTION 153.64 O.R.C.

STRUCTURE KEY

- RESIDENTIAL
- COMMERCIAL
- OUT-BUILDING

TYPES OF TITLE LEGEND:
SH = STANDARD HIGHWAY EASEMENT
T = TEMPORARY EASEMENT

PLANS PREPARED BY:

FIRM NAME: THOMAS FOK & ASSOCIATES, INC.
R/W DESIGNER: JOSEPH P. SLIFKA, JR., PE
R/W REVIEWER: FRANKLIN D. SNYDER, JR., PS
FIELD REVIEWER: FRANKLIN D. SNYDER, JR., PS
PRELIMINARY FIELD REVIEW DATE: 5/8/2015
TRACINGS FIELD REVIEW DATE: 5/8/2015
OWNERSHIP UPDATED BY: F. SNYDER
DATE COMPLETED: 5/20/2015
PLAN COMPLETION DATE: 5/21/2015

CONVENTIONAL SYMBOLS

County Line
Township Line
Section Line
Corporation Line or
Fence Line (Ex) (Pr)
Center Line
Right of Way (Ex) Ex R/W
Right of Way (Pr) R/W
Standard Highway Ease.(Ex) Ex SH
Standard Highway Ease.(Pr) SH
Temporary Right of Way TMP
Channel Ease. (Pr) CH
Utility Ease. (Ex) Ex U
Railroad or
Guardrail (Ex) (Pr)
Construction Limits
Edge of Pavement (Ex)
Edge of Pavement (Pr)
Edge of Shoulder (Ex)
Edge of Shoulder (Pr)
Ditch / Creek (Ex)
Ditch / Creek (Pr)
Tree Line (Ex)
Ownership Hook Symbol , Example
Property Line Symbol , Example
Break Line Symbol , Example
Tree (Pr) , Tree (Ex) , Shrub (Ex)
Tree (Remove) , Shrub (Remove)
Evergreen (Ex) , Stump
Evergreen (Remove) , Stump (Remove)
Wetland (Pr) , Grass (Pr) , Aerial Target
Post (Ex) , Mailbox (Ex) , Mailbox (Pr) MB
Light (Ex) , Telephone Marker (Ex) TEL
Fire Hydrant (Ex) , Water Meter (Ex) W
Water Valve (Ex) , Utility Valve Unknown (Ex.)
Telephone Pole (Ex) , Power Pole (Ex)
Light Pole (Ex)

I, Franklin D. Snyder, Jr., P. S. have conducted a survey of the existing conditions for the Ohio Department of Transportation on beginning in October 2013. The results of that survey are contained herein.

The horizontal coordinates expressed herein are based on the Ohio State Plane Coordinate System, North Zone on NAD 83 (2011, epoch 2010.0000) datum. The Project Coordinates (US Survey feet) are relative to State Plane Grid Coordinates (US Survey feet) by a Combined Scale Factor of 0.99995842.

Underground utility locations are shown for information purposes only. Though they are believed to be accurate, their location was marked on the ground by the utility company per OUPS Confirmation Number A330102843.

As a part of this project I have established the locations of the existing property lines and centerline of existing Right of Way and proposed property lines, calculated the Gross Take, present road occupied (PRO), Net Take and Net Residue as well as prepared the legal descriptions necessary to acquire the parcels as shown herein.

All of my work contained herein was conducted in accordance with Ohio Administrative Code 4733-37 commonly known as "The Minimum Standards for Boundary Surveys in the State of Ohio" unless noted.

The words I and my as used herein are to mean either myself or someone working under my direct supervision.

All iron pins shown as set shall be 3/4" X 30" rebar w/ 2-1/2" aluminium cap stamped ODOT R/W S-7468 THOMAS FOK & ASSOC., and placed upon notification by the Ohio Department of Transportation, District 12.

Franklin D. Snyder, Jr. PS
Franklin D. Snyder, Jr., Registered Professional Surveyor No. S-7468.

05/21/2015
Date

STATE OF OHIO
FRANKLIN D. SNYDER, JR. 7468
REGISTERED PROFESSIONAL SURVEYOR
SURVEYOR'S SEAL

FEDERAL PROJECT NO. E130(589)
PID NO. 93229
CALCULATED JPS
CHECKED FDS
RIGHT OF WAY LEGEND SHEET
LAK-608-3.37
1/5
56/60

P:\LAK\93229\Row\sheets\93229RL001.dgn 5/21/2015 10:21:39 AM jslifka

NOTE: FOR PROJECT CONTROL, SEE CONSTRUCTION PLAN SCHEMATIC SHEET 2.

LAKE COUNTY - CONCORD TOWNSHIP
LOTS 10 & 11, TRACT 1
TOWNSHIP 10, RANGE VIII
CONNECTICUT WESTERN RESERVE

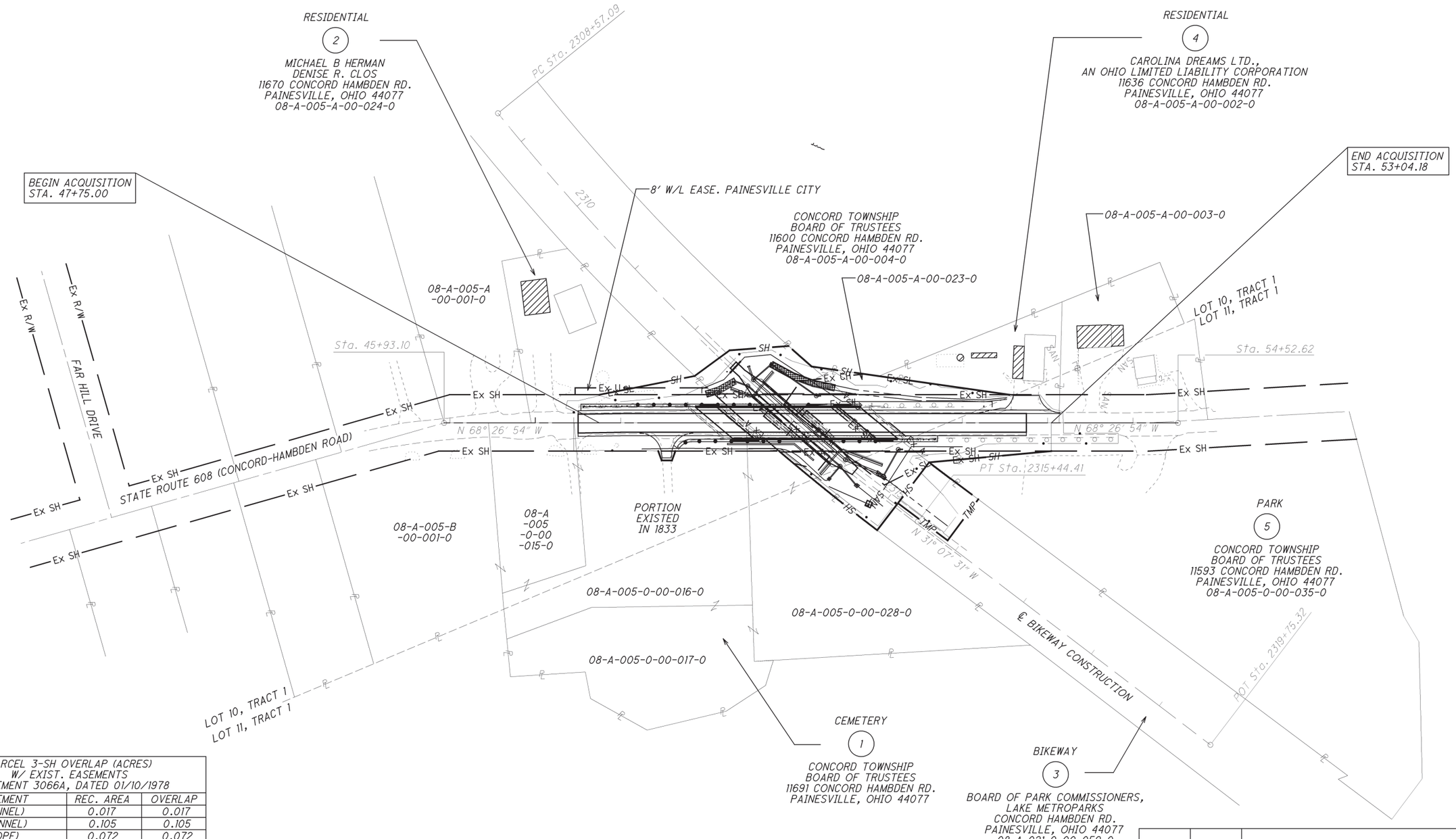

PARCEL 3-SH OVERLAP (ACRES) W/ EXIST. EASEMENTS AGREEMENT 3066A, DATED 01/10/1978		
EASEMENT	REC. AREA	OVERLAP
10-X1 (CHANNEL)	0.017	0.017
10-X2 (CHANNEL)	0.105	0.105
10-SL1 (SLOPE)	0.072	0.072
10-SL2 (SLOPE)	0.179	0.179
10-A (HIGHWAY - PIER)	0.007	0.007
10-B (HIGHWAY - PIER)	0.007	0.007
10-C (HIGHWAY - PIER)	0.005	0.005
10-AERIAL (AERIAL)	0.252	0.243

NOTE: THE ABOVE LISTED EASEMENTS ALONG WITH THE P.R.O. ENCUMBER ALL BUT 0.070 ACRES OF THE GROSS TAKE AREA OF PARCEL 3-SH.

REV. BY	DATE	DESCRIPTION

DATE COMPLETED: 5/21/2015

SCALE: 1 - 60E

HORIZONTAL SCALE IN FEET 0 30 60 120

PID NO. 93229

R/W DESIGNER JPS
R/W REVIEWER FDS

PROPERTY MAP

LAK-608-3.37

P:\LAK\93229\Row\sheets\93229RM001.dgn Sheet 4/8/2016 2:15:39 PM sieltieri

GRAND TOTAL NUMBER OF :

3 OWNERSHIPS — 0 TOTAL TAKES

4 PARCELS — 0 OWNERSHIPS W/ STRUCTURES INVOLVED

TYPES OF TITLE LEGEND:
SH = STANDARD HIGHWAY EASEMENT
T = TEMPORARY EASEMENT

* DENOTES RIGHT OF WAY ENCROACHMENT
(c) = CALCULATED AREA

NET RESIDUE = RECORD AREA - TOTAL PRO - NET TAKE

OR = OFFICIAL RECORD; DV = DEED VOLUME

ALL AREAS IN ACRES

GRANTEE:
ALL RIGHT OF WAY ACQUIRED IN THE NAME OF THE STATE OF OHIO DEPARTMENT OF TRANSPORTATION UNLESS OTHERWISE SHOWN.

PARCEL NO.	OWNER	SHEET NO.	OWNERS RECORD BOOK	OWNERS RECORD PAGE	AUDITOR'S PARCEL	RECORD AREA	TOTAL P.R.O.	GROSS TAKE	P.R.O. IN TAKE	NET TAKE	STRU-CTURE	NET RESIDUE LEFT	NET RESIDUE RIGHT	TYPE FUND	REMARKS	AS ACQUIRED BOOK	AS ACQUIRED PAGE
1-T	CONCORD TOWNSHIP BOARD OF TRUSTEES	4	EXISTED IN 1833		08-A-005-0-00-016-0	0.460	0.000	0.004	0.000		N				TO RECONSTRUCT DRIVE		
			DV807	352	08-A-005-0-00-028-0	0.920											
			2014R029572		08-A-005-0-00-017-0	0.707											
			DV144	*238*	08-A-005-0-00-015-0	0.420											
			DV144	*240*	08-A-005-B-00-001-0	1.000											
	TOTAL:		*DV144*	*242*		3.507											
			2001R044143														
2-SH	MICHAEL B. HERMAN AND DENISE R. CLOS	4	2010R013429		08-A-005-A-00-024-0	0.750	0.179	0.034	0.000	0.034	N	0.537			FOR UTILITY RELOCATION AND GRADING 0.020 Ac. OVERLAP W/ EX. 8' W/L EASE. PAINESVILLE CITY, DOCUMENT NOT FOUND 0.034 Ac. OVERLAP W/ PARCEL 9-SL, VOL. 1057 PG. 81		
3-SH	BOARD OF PARK COMMISSIONERS,	4	OR586	554	08-A-021-0-00-059-0	5.390	0.235	0.600	0.235	0.365	N	4.790			TAKE (9) TREES; * TAKE C.O. & 14 L.F. 4" PVC PIPE;		
	LAKE METROPARKS		OR586	992	08-A-005-A-00-023-0	0.090	0.000	0.090	0.000	0.090		0.000			* TAKE 36 L.F. CHAINLINK FENCE		
	TOTAL:					5.480		0.690							FOR NEW BIKEWAY CULVERT, DRAINAGE & UTILITY RELOCATIONS. SEE OVERLAP TABLE W/ EXISTING EASEMENT, SEE SHEET 4		
3-T					08-A-021-0-00-059-0		0.000	0.100	0.000		N			100% STATE	TO GRADE		
4	CAROLINA DREAMS LTD., AN OHIO LIMITED LIABILITY CORPORATION	4-5	2004R052580		08-A-005-A-00-002-0	0.330									NO ADDITIONAL RIGHT OF WAY REQUIRED		
5	MICHAEL P. LYNCH AS TRUSTEE, CAROLINE N. LUHTA AS TRUSTEE, JOHN SHERWOOD AS TRUSTEE FOR THE TOWNSHIP OF CONCORD, OHIO	4-5	OR1144	693	08-A-005-0-00-035-0	3.087									NO ADDITIONAL RIGHT OF WAY REQUIRED		

NOTE: ALL TEMPORARY PARCELS TO BE OF 12 MONTH DURATION.

NOTE: UNDER NO CIRCUMSTANCES ARE TEMPORARY EASEMENTS TO BE USED FOR STORAGE OF MATERIAL OR EQUIPMENT BY THE CONTRACTOR UNLESS NOTED OTHERWISE.

REV. BY	DATE	DESCRIPTION

DATE COMPLETED: 5/21/2015

FEDERAL PROJECT NO. E130(589)

PID NO. 93229

STATE JOB NO. 520578

R/W DESIGNER JPS — R/W REVIEWER FDS

SUMMARY OF ADDITIONAL RIGHT OF WAY (PARCELS 1-3)

LAK-608-3.37

SCALE: 1 - 1E

P:\LAK\93229\Row\sheets\93229RS001.dgn Sheet 4/8/2016 2:17:04 PM slettieri

LAKE COUNTY - CONCORD TOWNSHIP
LOTS 10 & 11, TRACT 1
TOWNSHIP 10, RANGE VIII
CONNECTICUT WESTERN RESERVE

SCALE: 1 = 20E

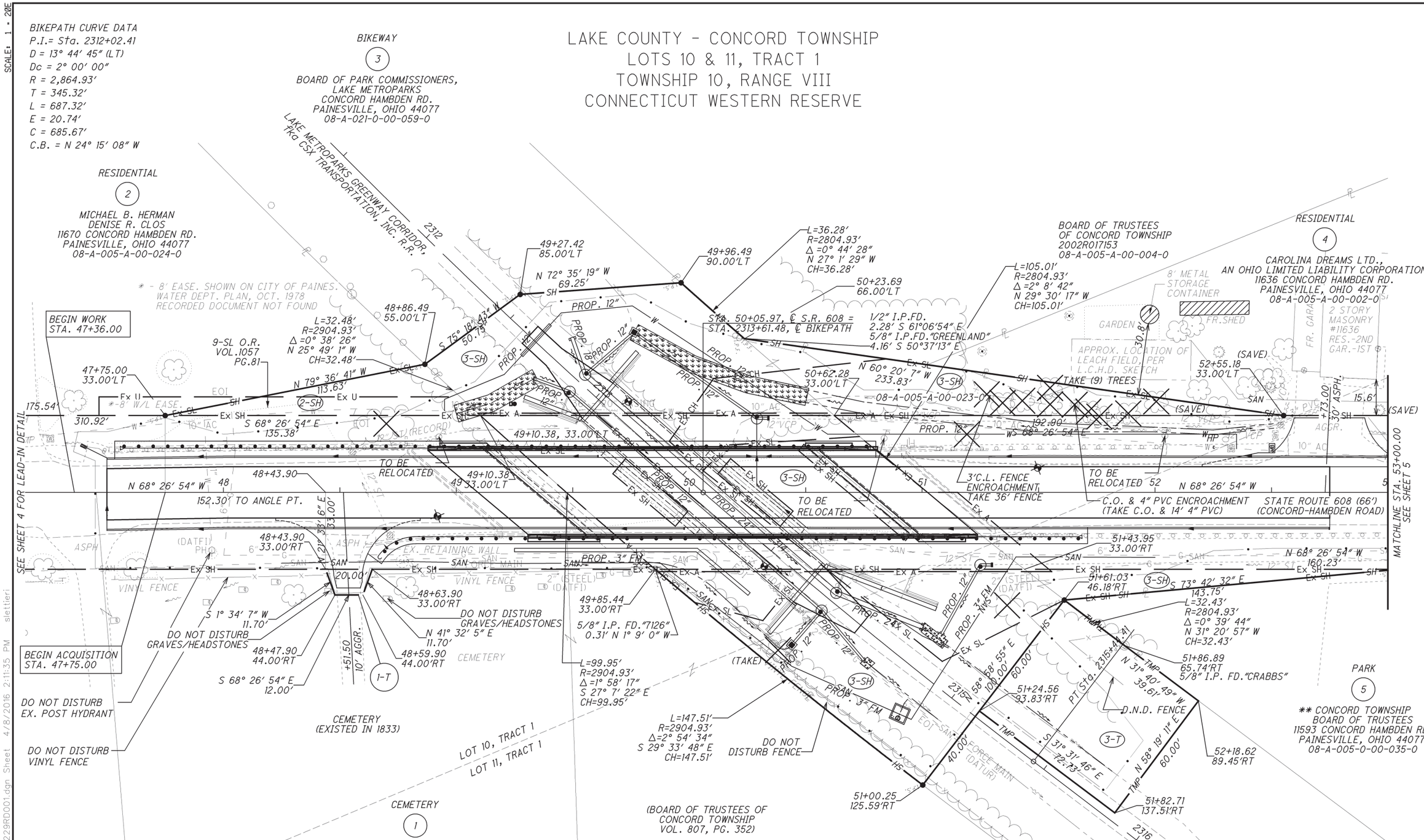

PARCEL 3-SH (AREA OF OVERLAP)	
EASEMENT	RECORD AREA (ACRES)
10-X1 (CHANNEL)	0.017
10-X2 (CHANNEL)	0.105
10-SL1 (SLOPE)	0.072
10-SL2 (SLOPE)	0.179
10-A (HIGHWAY (PIERS))	0.007
10-B (HIGHWAY (PIERS))	0.007
10-C (HIGHWAY (PIERS))	0.005
10-AERIAL (AERIAL)	0.243

** MICHAEL P. LYNCH AS TRUSTEE, CAROLINE N. LUHTA AS TRUSTEE,
JOHN SHERWOOD AS TRUSTEE FOR THE TOWNSHIP OF CONCORD, OHIO

REV. BY	DATE	DESCRIPTION
FDS	05/26/15	SEPTIC DATA FROM L.C.H.D. #11622 & #11636

DATE COMPLETED: 5/21/2015

HORIZONTAL SCALE IN FEET 0 10 20 40

PID NO. 93229

R/W DESIGNER JPS
R/W REVIEWER FDS

RIGHT OF WAY DETAIL SHEET
STA. 47+15.00 TO STA. 53+00.00

LAK-608-3.37

P:\LAK\93229\Row\sheets\93229RD001.dgn Sheet 4/8/2016 2:11:35 PM sletteri

SCALE: 1 = 20E

NOTE: THE EXISTING R/W WIDTH AND LOCATION
WERE DETERMINED USING;
LAKE COUNTY DEED RECORDS LISTED, ET AL.
LAK-608-3.35 R/W PLANS, 11/07/1977
FAR HILL SUBDIVISION PLAT VOL.K, PG.58
FAR HILL SUBD. #2 PLAT VOL.V, PG.14
ZARANEC & LAUX, INC. SURVEY 10/12/1992
LAUX & ASSOCIATES SURVEY 12/09/2002
S.R. 608 WATER DEPT. PLANS, PAINESVILLE CITY, OCT.1978

LAKE COUNTY - CONCORD TOWNSHIP
LOTS 10 & 11, TRACT 1
TOWNSHIP 10, RANGE VIII
CONNECTICUT WESTERN RESERVE

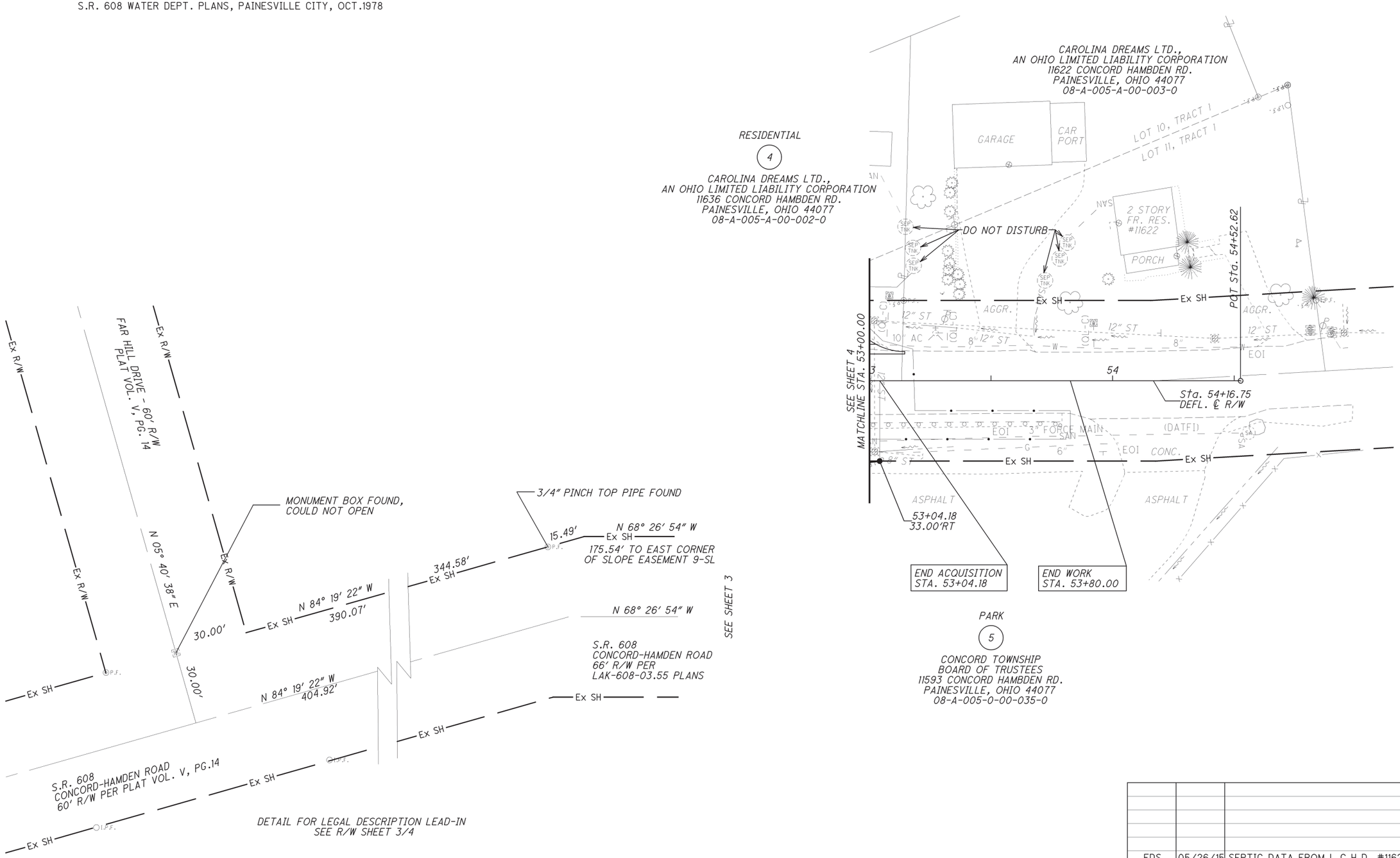

REV. BY	DATE	DESCRIPTION
FDS	05/26/15	SEPTIC DATA FROM L.C.H.D. #11622 & #11636

DATE COMPLETED: 5/21/2015

HORIZONTAL SCALE IN FEET 0 10 20 40

PID NO. 93229

R/W DESIGNER JPS
R/W REVIEWER FDS

RIGHT OF WAY DETAIL SHEET
STA. 53+00.00 TO STA. 54+00.00

LAK-608-3.37

5 / 5

60 / 60

P:\LAK\93229\Row\sheets\93229RD002.dgn Sheet 4/8/2016 2:12:50 PM sletteri

PROJECT DESCRIPTION

THE PROJECT SITE IS LOCATED ON STATE ROUTE 608 IN CONCORD TOWNSHIP, LAKE COUNTY, OHIO. THE SITE IS APPROXIMATELY 1,000 FEET SOUTHEAST OF THE INTERSECTION OF STATE ROUTE 608 (CONCORD HAMBDEN ROAD) AND PAINESVILLE RAVENNA ROAD. IN THE PROJECT AREA THE ROADWAY IS TWO LANES WIDE AND ASPHALT PAVED. NTH UNDERSTANDS THAT THE EXISTING 5-SPAN PRECAST BOX BEAM BRIDGE CROSSING THE LAKE METROPARKS GREENWAY CORRIDOR WILL BE REPLACED BY A 3-SIDED CULVERT. THE PURPOSE OF THIS EXPLORATION IS TO PROVIDE GEOTECHNICAL DATA FOR THE PROPOSED CONSTRUCTION OF A NEW CULVERT STRUCTURE TO LAKE COUNTY AND THOMAS FOK & ASSOCIATES, INC. (TFA).

HISTORIC RECORDS

BASED ON THE SOIL PROFILE (INCLUDING BORING LOGS) PROVIDED TO NTH, A TOTAL OF TEN PREVIOUS BORINGS WERE PERFORMED FOR LAK-608-3.37 BY OTHERS IN SEPTEMBER 1977. TWO OF THESE TEN STRUCTURE BORINGS, B-3 AND B-4, WERE PERFORMED NEAR THE EXISTING BIKE TRAIL. IN GENERAL, A THIN LAYER OF MISCELLANEOUS FILL WAS ENCOUNTERED IN ALL PREVIOUS BORINGS, WITH THICKER FILL LAYERS ENCOUNTERED TO DEPTHS RANGING FROM ABOUT 3 TO 13 FEET IN THREE BORINGS. BELOW PAVEMENT AND FILL MATERIALS, CLAY SOILS WERE GENERALLY ENCOUNTERED TO TOP OF BEDROCK. BEDROCK WAS ENCOUNTERED AT ELEVATION 849 TO 850, CLOSEST TO THE PROPOSED CULVERT LOCATION. GROUNDWATER WAS ENCOUNTERED DURING DRILLING IN BORINGS B-3 AND B-4 AT DEPTHS OF ABOUT 0.3 AND 1.5 FEET, RESPECTIVELY.

GEOLOGY

BASED UPON THE "PHYSIOGRAPHIC REGIONS OF OHIO" MAP, THE SITE IS LOCATED IN THE KILLBUCK-GLACIATED PITTSBURGH PLATEAU REGION WHERE THE NATURAL SOILS AT THE SITE TYPICALLY CONSIST OF THIN TO THICK CLAY TO LOAM TILL FROM THE WISCONSINAN AGE. THERE ARE DEEP VALLEYS LOCATED THROUGHOUT THE GEOLOGIC REGION. GEOLOGIC PUBLICATIONS BY THE OHIO DEPARTMENT OF NATURAL RESOURCES INDICATE THESE SOIL DEPOSITS GENERALLY OVERLIE SHALLOW MISSISSIPPIAN AND PENNSYLVANIAN-AGE SHALES, SANDSTONES, CONGLOMERATES AND COALS. BEDROCK TOPOGRAPHY MAPS SUGGEST WEATHERED ROCK COULD BE AT A DEPTH OF ABOUT 10 TO 20 FEET BELOW THE EXISTING GROUND SURFACE.

RECONNAISSANCE

NTH PERSONNEL VISITED THE SITE ON MAY 17, 2013 TO PERFORM SITE RECONNAISSANCE. THE EXISTING 5-SPAN CONCRETE STRUCTURE IS LOCATED IN A RESIDENTIAL AREA. CURRENTLY, STATE ROUTE 608 OVER THE LAKE METROPARKS GREENWAY CORRIDOR IS A TWO-LANE ASPHALT PAVED ROADWAY WITH SHOULDERS. THE WIDTH OF THE BRIDGE WAS MEASURED AT ABOUT 36 FEET BETWEEN GUARDRAILS. THE LENGTH OF THE BRIDGE WAS MEASURED AT ABOUT 218 FEET.

SUBSURFACE EXPLORATION

THE GEOTECHNICAL FIELD EXPLORATION WAS PERFORMED ON NOVEMBER 11, 2013 AND NOVEMBER 12, 2013. NTH AND OUR DRILLING SUBCONTRACTOR, OHIO TESTBOR, INC. (OTB), MOBILIZED TO THE PROJECT SITE, WHERE WE PERFORMED TWO STRUCTURE BORINGS DESIGNATED AS B-001 AND B-002, TWO PAVEMENT BORINGS DESIGNATED AS B-003, AND B-004, AND TWO PAVEMENT CORES DESIGNATED AS P-003 AND P-004.

(1) SOIL SAMPLING SOIL SAMPLES WERE OBTAINED AT 2.5-FOOT INTERVALS TO A DEPTH OF ABOUT 10 FEET FOR BORINGS B-001 AND B-002. CONTINUOUS SOIL SAMPLES WERE OBTAINED AT 2.5-FOOT INTERVALS TO A DEPTH OF ABOUT 7.5 FEET AND ONE SAMPLE FROM 8.5 TO 10 FEET FOR BORINGS B-003 AND B-004.

(2) ROCK SAMPLING NTH'S DRILLING SUBCONTRACTOR UTILIZED ROTARY ROCK CORING METHODS TO ADVANCE BOREHOLES THROUGH BEDROCK TO THEIR PLANNED TERMINATION DEPTHS OF APPROXIMATELY 20 FEET (APPROXIMATE ELEVATION 838 TO 839). ROCK CORE RUNS OF UP TO 10 FEET WERE PERFORMED. IMMEDIATELY AFTER PLACING THE CORE INTO ITS RESPECTIVE BOX, THE FIELD REPRESENTATIVE RECORDED THE PERCENT RECOVERY, FRACTURES PER FOOT OF CORE RECOVERED, OBTAINED PHOTOGRAPHS OF THE CORES WITHIN THE SAMPLE BOXES, AND DETERMINED THE ROCK QUALITY DESIGNATION (RQD) VALUE FOR EACH CORE RUN.

EXPLORATION FINDINGS

THE GROUND SURFACE CONSISTED OF TOPSOIL AND WAS OBSERVED TO RANGE FROM 3 INCHES TO 12 INCHES THICK AT B-001 AND B-002. BELOW THE TOPSOIL IN B-001, NATURAL SOILS CONSISTING OF SOFT TO MEDIUM STIFF SILT AND CLAYS (A-6A) WERE ENCOUNTERED TO A DEPTH OF 5.5 FEET (APPROXIMATE ELEVATION 852) BELOW THE EXISTING GROUND SURFACE. FILL MATERIALS CONSISTING OF SANDY SILT (A-4A) AND GRAVEL AND STONE FRAGMENTS (A-2-4) WERE ENCOUNTERED TO A DEPTH OF 6.5 FEET (APPROXIMATE ELEVATION 853) IN B-002. UNDERLYING THE COHESIVE SOILS IN B-001 AND FILL SOILS IN B-002, HARD SILT AND CLAY (DECOMPOSED SHALE) AND HIGHLY WEATHERED AND HIGHLY FRACTURED GRAY SHALE WERE ENCOUNTERED AT DEPTHS RANGING FROM ABOUT 5.5 TO 6.5 BELOW THE GROUND SURFACE TO THE TERMINATION OF THE SOIL BORINGS AT APPROXIMATELY 9 FEET. DURING DRILLING WITHIN SOILS, GROUNDWATER WAS ENCOUNTERED AT 6 FEET (APPROXIMATE ELEVATION 853) IN BORING B-001 AND 6.3 FEET (APPROXIMATE ELEVATION 853) IN B-002. TEN FEET OF ROCK CORES WERE COLLECTED AT BORINGS B-001 AND B-002 AT DEPTHS OF 10 FEET. THE ROCK CONSISTED OF SLIGHTLY TO MODERATELY WEATHERED, WEAK TO MODERATELY STRONG, FINE GRAINED, VERY THIN TO MEDIUM BEDDED, GRAY, ARGILLACEOUS SHALE. THE RECOVERY OF ROCK CORES RANGED FROM 93 TO 100 PERCENT, AND RQD VALUES RANGED FROM 69 TO 77 PERCENT.

THE GROUND SURFACE CONSISTED OF ASPHALT PAVEMENT AND GRAVEL BASE COURSE AND WAS OBSERVED TO BE ABOUT 12 TO 16 INCHES THICK AT B-003 AND B-004. THERE WAS ABOUT 6 INCHES OF SAND SUBBASE ENCOUNTERED BELOW THE GRAVEL BASE COURSE IN B-003. FILL MATERIALS CONSISTING OF MEDIUM STIFF TO VERY STIFF SILT AND CLAY (A-6A) WERE ENCOUNTERED BELOW THE PAVEMENT MATERIALS TO THE TERMINATION OF THE BORINGS AT A DEPTH OF 10 FEET (APPROXIMATE ELEVATION 867 TO 869) BELOW THE EXISTING GROUND SURFACE. DURING DRILLING WITHIN SOILS, GROUNDWATER WAS NOT ENCOUNTERED IN BORINGS B-003 OR B-004.

SPECIFICATIONS

THIS GEOTECHNICAL EXPLORATION WAS PERFORMED IN ACCORDANCE WITH THE STATE OF OHIO, DEPARTMENT OF TRANSPORTATION, OFFICE OF GEOTECHNICAL ENGINEERING, SPECIFICATIONS FOR GEOTECHNICAL EXPLORATIONS, DATED JULY 2011.

LEGEND

	DESCRIPTION	ODOT CLASS	CLASSIFIED MECH./VISUAL	
	GRAVEL/STONE FRAGMENTS W/ SAND & SILT	A-2-4	1	
	SANDY SILT	A-4a	1	
	SILT & CLAY	A-6a	9	4
		TOTAL	11	4
	SHALE			
	SHALE WEATHERED			
	PAVEMENT OR BASE = X = APPROXIMATE THICKNESS	VISUAL		
	SOD AND TOPSOIL = X = APPROXIMATE THICKNESS	VISUAL		
	BORING LOCATION - PLAN VIEW.			
	HISTORIC BORING LOCATION - PLAN VIEW.			
	DRIVE SAMPLE AND/OR ROCK CORE BORING PLOTTED TO VERTICAL SCALE ONLY. HORIZONTAL BAR INDICATES A CHANGE IN STRATIGRAPHY.			
WC	INDICATES WATER CONTENT IN PERCENT.			
N_{60}	INDICATES STANDARD PENETRATION RESISTANCE NORMALIZED TO 60% DRILL ROD ENERGY RATIO.			
X/Y/Z	NUMBER OF BLOWS FOR STANDARD PENETRATION TEST (SPT): X= NUMBER OF BLOWS FOR FIRST 6 INCHES. Y= NUMBER OF BLOWS FOR SECOND 6 INCHES. Z= NUMBER OF BLOWS FOR THIRD 6 INCHES.			
W—	INDICATES FREE WATER ELEVATION.			
⊖	INDICATES A NON-PLASTIC MATERIAL WITH A MOISTURE CONTENT GREATER THAN 25 % OR GREATER THAN 19 % WITH A WET APPEARANCE.			
*	INDICATES A SAMPLE TAKEN WITHIN 3 FT OF PROPOSED GRADE.			
SS	INDICATES A SPLIT SPOON SAMPLE.			
NP	INDICATES A NON-PLASTIC SAMPLE.			

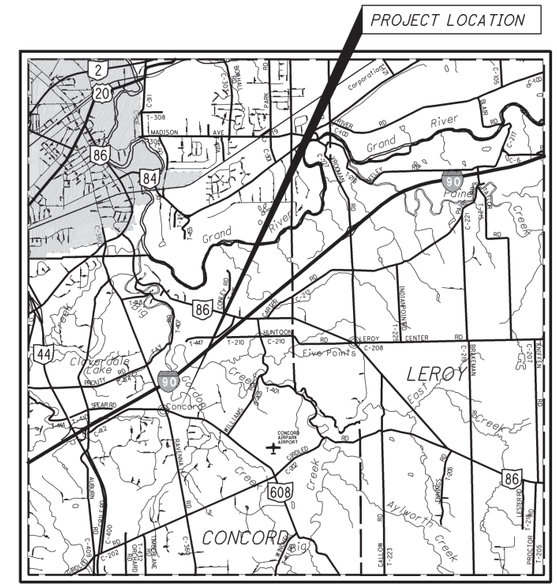

LOCATION MAP

SCALE IN MILES

0 1 2 3 4

N

PARTICLE SIZE DEFINITIONS

BOULDERS	12"	COBBLES	3"	GRAVEL	2.0 mm (No. 10 SIEVE)	COARSE SAND	0.42 mm (No. 40 SIEVE)	FINE SAND	0.074 mm (No. 200 SIEVE)	SILT	0.005 mm	CLAY

AVAILABLE INFORMATION

ALL AVAILABLE SOIL AND BEDROCK INFORMATION THAT CAN BE CONVENIENTLY SHOWN ON THE GEOTECHNICAL EXPLORATION SHEETS HAS BEEN SO REPORTED. ADDITIONAL EXPLORATIONS MAY HAVE BEEN MADE TO STUDY SOME SPECIAL ASPECT OF THE PROJECT. COPIES OF THIS DATA, IF ANY, MAY BE INSPECTED IN THE DISTRICT DEPUTY DIRECTOR'S OFFICE, THE OFFICE OF GEOTECHNICAL ENGINEERING AT 1600 WEST BROAD STREET OR THE OFFICE OF STRUCTURAL ENGINEERING AT 1980 WEST BROAD STREET.

SUMMARY OF SOIL TEST DATA
LAK-608-03.37, PID 93229

Station & Offset	FROM TO	SAMPLE ID	% REC	% GR	% CS	% FS	% SILT	% CLAY	LL	PL	PI	% WC	ODOT CLASS(GI)
B-001 Sta. 2314+02, 7.0' RT	1-2.5	SS-1	50	16	8	11	33	32	33	19	14	19	A-6a (8)
N. 733812.290, E.2318057.770	3.5-5	SS-2	53	7	2	4	38	49	36	21	15	18	A-6a (10)
	6-7.5	SS-3	89	4	0	0	49	47	33	21	12	11	A-6a (9)
B-002 STA. 2313+12, 8.0' LT	1-2.5	SS-1	56	27	10	10	28	25	28	19	9	16	A-4a (4)
N. 733725.060, E. 2318086.100	3.5-5	SS-2	78	37	15	18	20	10	NP	NP	NP	22	A-2-4 (0)
B-003 STA. 51+50, 11.0' LT	1.5-3	SS-1	83	17	8	7	30	38	34	20	14	16	A-6a (8)
N. 733816.010, E. 2317933.040	3-4.5	SS-2	83	17	6	7	33	37	34	20	14	16	A-6a (9)
	4.5-6	SS-3	89				Same as SS-2					16	A-6a (VISUAL)
	6-7.5	SS-4	39				Same as SS-5					30	A-6a (VISUAL)
	8.5-10	SS-5	94	1	3	6	43	47	36	21	15	22	A-6a (10)
B-004 STA. 48+92, 10.0' RT	1.5-3	SS-1	100	19	11	12	27	31	28	17	11	15	A-6a (5)
N. 733740.700, E. 2318180.370	3-4.5	SS-2	67	13	7	8	32	40	34	20	14	18	A-6a (9)
	4.5-6	SS-3	78				Same as SS-5					20	A-6a (VISUAL)
	6-7.5	SS-4	67				Same as SS-5					17	A-6a (VISUAL)
	8.5-10	SS-5	44	33	6	5	29	27	29	18	11	17	A-6a (5)

RECON. - BEM
DRILLING - OHIO TESTBOR
DRAWN - TCG
REVIEWED - PSL

Figure No. 1

DESIGN AGENCY
NTH CONSULTANTS, LTD.
820 W. SUPERIOR AVE. ST.302
CLEVELAND, OHIO 44113

PID NO. 93229

STRUCTURE FOUNDATION EXPLORATION
BRIDGE No. LAK-608-3370 OVER BIKE PATH

LAK-608-3.37

J:\86\130469\sheets\93229IC001.dgn 6/30/2014 4:00:54 PM tgregory

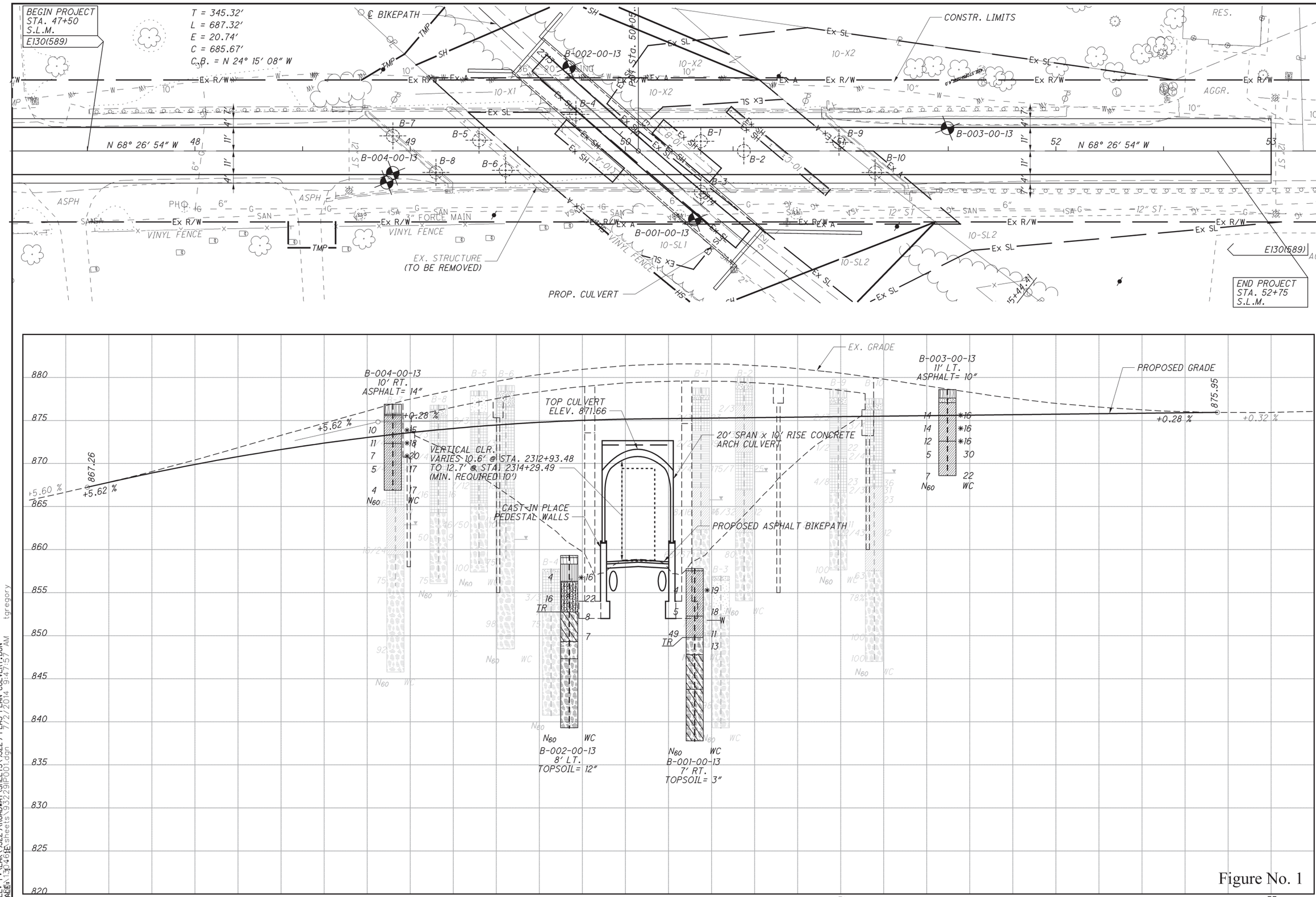

Figure No. 1

HORIZONTAL SCALE IN FEET

CALCULATED SDL
CHECKED WT

STRUCTURE FOUNDATION EXPLORATION
BRIDGE No. LAK-608-3370 OVER BIKE PATH

LAK-608-3.37

2/6

DATE: 20-JAN-14 16:52
FILE: P:\LAK\93229\ROADWAY\SHEETS\93229 FEAS PLAN CULVERT.DGN
SCALE: 1:40 PE sheets\93229IP001.dgn 7/2/2014 9:47:57 AM tgregory

PROJECT: LAK-608-03.37	DRILLING FIRM / OPERATOR: OTB / J. MINCHAK	DRILL RIG: DIEDRICH D50	STATION / OFFSET: 2314+02, 7 RT
TYPE: BRIDGE REPLACEMENT	SAMPLING FIRM / LOGGER: NTH / D. VOGEL	HAMMER: AUTOMATIC HAMMER	ALIGNMENT: EX. SR 608
PID: 93229 BR ID: SFN 430631	DRILLING METHOD: 3.25" HSA / NX	CALIBRATION DATE: 10/12/11	ELEVATION: 857.8 (MSL) EOB: 20.0 ft.
START: 11/11/13 END: 11/11/13	SAMPLING METHOD: SPT/NX	ENERGY RATIO (%): 81.7	COORD: 733812.290 N, 2318057.770 E

EXPLORATION ID B-001-00-13

PAGE 1 OF 1

MATERIAL DESCRIPTION AND NOTES	ELEV. 857.8	DEPTHS	SPT/ RQD	N_{60}	REC (%)	SAMPLE ID	HP (tsf)	GR	CS	FS	SI	CL	LL	PL	PI	WC	ODOT CLASS (GI)	BACK FILL
3" Topsoil	857.6																	
SOFT TO MEDIUM STIFF, BROWN AND GRAY MOTTLED, **SILT AND CLAY**, LITTLE SAND, LITTLE SHALE FRAGMENTS		1 2	1 1 2	4	50	SS-1	0.50	16	8	11	33	32	33	19	14	19	A-6a (8)	
		4 5	2 2 2	5	53	SS-2	2.50	7	2	4	38	49	36	21	15	18	A-6a (10)	
	852.3																	
HARD, GRAY, **SILT AND CLAY**, TRACE GRAVEL		W 6 7	13 17 19	49	89	SS-3	4.5+	4	0	0	49	47	33	21	12	11	A-6a (9)	
	849.8	TR 8																
SHALE, GRAY, SEVERLY WEATHERED.		9	50/5"	-	100	SS-4	-	-	-	-	-	-	-	-	-	13	Rock (V)	
	847.8																	
SHALE, GRAY, MODERATELY WEATHERED, WEAK, FINE GRAINED, VERY THIN TO THIN BEDDED, ARGILLACEOUS, FRACTURED TO MODERATELY FRACTURED, VERY ROUGH; RQD 36%, REC 100%.		10 11 12 13																
	843.8																	
SHALE, GRAY, MODERATELY TO SLIGHTLY WEATHERED, MODERATELY STRONG, FINE GRAINED, THIN TO MEDIUM BEDDED, ARGILLACEOUS, FRACTURED TO SLIGHTLY FRACTURED, SLIGHTLY ROUGH; RQD 91%, REC 100%.		14 15 16 17 18 19	69		100	NX-1											CORE	
	837.8	EOB																

NOTES: NONE

ABANDONMENT METHODS, MATERIALS, QUANTITIES: BACKFILLED WITH AUGER CUTTINGS

PROJECT: LAK-608-03.37	DRILLING FIRM / OPERATOR: OTB / J. MINCHAK	DRILL RIG: DIEDRICH D50	STATION / OFFSET: 2313+12, 8 LT
TYPE: BRIDGE REPLACEMENT	SAMPLING FIRM / LOGGER: NTH / D. VOGEL	HAMMER: AUTOMATIC HAMMER	ALIGNMENT: EX. SR 608
PID: 93229 BR ID: SFN 430631	DRILLING METHOD: 3.25" HSA / NX	CALIBRATION DATE: 10/12/11	ELEVATION: 859.3 (MSL) EOB: 20.0 ft.
START: 11/11/13 END: 11/11/13	SAMPLING METHOD: SPT/NX	ENERGY RATIO (%): 81.7	COORD: 733725.060 N, 2318086.100 E

EXPLORATION ID B-002-00-13

PAGE 1 OF 1

MATERIAL DESCRIPTION AND NOTES	ELEV. 859.3	DEPTHS	SPT/ RQD	N_{60}	REC (%)	SAMPLE ID	HP (tsf)	GR	CS	FS	SI	CL	LL	PL	PI	WC	ODOT CLASS (GI)	BACK FILL
1' Topsoil	858.3																	
SOFT, GRAYISH BLACK, **SANDY SILT**, SOME GRAVEL, SOME CLAY (FILL)		1 2	1 1 2	4	56	SS-1	0.50	27	10	10	28	25	28	19	9	16	A-4a (4)	
	856.3																	
MEDIUM DENSE, GRAY, **GRAVEL AND STONE FRAGMENTS WITH SAND AND SILT**, TRACE CLAY, CONTAINS CINDERS (FILL)		4 5	5 7 5	16	78	SS-2	-	37	15	18	20	10	NP	NP	NP	22	A-2-4 (0)	
	853.0	TR 6																
SHALE, GRAY, DECOMPOSED TO SEVERELY WEATHERED.		7	13 50/5"	-	100	SS-3	4.5+	-	-	-	-	-	-	-	-	8	Rock (V)	
		9	40 50/4"	-	100	SS-4	-	-	-	-	-	-	-	-	-	7	Rock (V)	
	849.3																	
SHALE, GRAY, HIGHLY WEATHERED, WEAK, FINE GRAINED, VERY THIN TO THIN BEDDED, ARGILLACEOUS, FRACTURED TO MODERATELY FRACTURED, VERY ROUGH; RQD 46%, REC 83.3%.		10 11 12																
	847.3																	
SHALE, GRAY, MODERATELY TO SLIGHTLY WEATHERED, MODERATELY STRONG, FINE GRAINED, THIN TO MEDIUM BEDDED, ARGILLACEOUS, FRACTURED TO SLIGHTLY FRACTURED, SLIGHTLY ROUGH; RQD 84%, REC 95.8%.		13 14 15 16 17 18 19	77		93	NX-1											CORE	
	839.3	EOB																

NOTES: NONE

ABANDONMENT METHODS, MATERIALS, QUANTITIES: BACKFILLED WITH AUGER CUTTINGS

Figure No. 1

PROJECT: LAK-608-03.37	DRILLING FIRM / OPERATOR: OTB / J. MINCHAK	DRILL RIG: DIEDRICH D50	STATION / OFFSET: 51+50, 11 LT	EXPLORATION ID B-003-00-13
TYPE: BRIDGE REPLACEMENT	SAMPLING FIRM / LOGGER: NTH / D. VOGEL	HAMMER: AUTOMATIC HAMMER	ALIGNMENT: EX. BIKE PATH	
PID: 93229 BR ID: SFN 430631	DRILLING METHOD: 3.25" HSA	CALIBRATION DATE: 10/12/11	ELEVATION: 878.6 (MSL) EOB: 10.0 ft.	PAGE 1 OF 1
START: 11/12/13 END: 11/12/13	SAMPLING METHOD: SPT	ENERGY RATIO (%): 81.7	COORD: 733816.010 N, 2317933.040 E	

MATERIAL DESCRIPTION AND NOTES	ELEV. 878.6	DEPTHS	SPT/RQD	N_{60}	REC (%)	SAMPLE ID	HP (tsf)	GR	CS	FS	SI	CL	LL	PL	PI	WC	ODOT CLASS (GI)	BACK FILL
10" Asphalt	877.8																	
2" Granular Base	877.6	1																
6" Sandy Fill	877.1																	
STIFF TO VERY STIFF, BROWN AND GRAY MOTTLED, **SILT AND CLAY**, LITTLE GRAVEL, LITTLE SAND (FILL)		2	5 6 4	14	83	SS-1	3.00	17	8	7	30	38	34	20	14	16	A-6a (8)	
		3 4	3 4 6	14	83	SS-2	3.25	17	6	7	33	37	34	20	14	16	A-6a (9)	
		5	5 4 5	12	89	SS-3	2.25	-	-	-	-	-	-	-	-	16	A-6a (V)	
	872.6	6																
MEDIUM STIFF TO STIFF, BROWN AND GRAY MOTTLED, **SILT AND CLAY**, TRACE GRAVEL, TRACE SAND (FILL)		7	1 1 3	5	39	SS-4	1.25	-	-	-	-	-	-	-	-	30	A-6a (V)	
		8																
		9	2 2 3	7	94	SS-5	3.25	1	3	6	43	47	36	21	15	22	A-6a (10)	
	868.6	EOB 10																

NOTES: NONE

ABANDONMENT METHODS, MATERIALS, QUANTITIES: BACKFILLED WITH AUGER CUTTINGS

PROJECT: LAK-608-03.37	DRILLING FIRM / OPERATOR: OTB / J. MINCHAK	DRILL RIG: DIEDRICH D50	STATION / OFFSET: 48+92, 10 RT	EXPLORATION ID B-004-00-13
TYPE: BRIDGE REPLACEMENT	SAMPLING FIRM / LOGGER: NTH / D. VOGEL	HAMMER: AUTOMATIC HAMMER	ALIGNMENT: EX. BIKE PATH	
PID: 93229 BR ID: SFN 430631	DRILLING METHOD: 3.25" HSA	CALIBRATION DATE: 10/12/11	ELEVATION: 876.9 (MSL) EOB: 10.0 ft.	PAGE 1 OF 1
START: 11/12/13 END: 11/12/13	SAMPLING METHOD: SPT	ENERGY RATIO (%): 81.7	COORD: 733740.700 N, 2318180.370 E	

MATERIAL DESCRIPTION AND NOTES	ELEV. 876.9	DEPTHS	SPT/RQD	N_{60}	REC (%)	SAMPLE ID	HP (tsf)	GR	CS	FS	SI	CL	LL	PL	PI	WC	ODOT CLASS (GI)	BACK FILL
14" Asphalt	875.7	1																
2" Granular Base	875.5																	
STIFF, BROWN AND GRAY MOTTLED, **SILT AND CLAY**, LITTLE GRAVEL, LITTLE TO SOME SAND (FILL)		2	2 4 3	10	100	SS-1	1.75	19	11	12	27	31	28	17	11	15	A-6a (5)	
		3	3 4 4	11	67	SS-2	1.00	13	7	8	32	40	34	20	14	18	A-6a (9)	
	872.4																	
MEDIUM STIFF TO STIFF, BROWN AND GRAY MOTTLED, **SILT AND CLAY**, SOME GRAVEL, LITTLE SAND (FILL)		5	3 2 3	7	78	SS-3	1.50	-	-	-	-	-	-	-	-	20	A-6a (V)	
		7	2 3 1	5	67	SS-4	3.00	-	-	-	-	-	-	-	-	17	A-6a (V)	
		8																
		9	3 1 2	4	44	SS-5	1.50	33	6	5	29	27	29	18	11	17	A-6a (5)	
	866.9	EOB 10																

NOTES: NONE

ABANDONMENT METHODS, MATERIALS, QUANTITIES: BACKFILLED WITH AUGER CUTTINGS

STANDARD OHDOT SOIL BORING LOG (8.5X11) - OHDOT.GDT - 4/8/14 16:51 - S:\SHARED\TECHNICAL SOFTWARE\GINT\PROJECTS\2013\ODOT\86-130469-01.GPJ

Figure No. 1

MICROFILMED
JAN 7 1983

LOG OF BORING NO. B-1

SHEET 1 OF 2 SHEETS

BRIDGE LAK-608-337
LAKE COUNTY, OHIO

TYPE: 2-INCH O.D. SPLIT BARREL / NX CORE BARREL — LOCATION: STA 50+69, 4.5'L — ELEVATION: 878.8 — DATE: 9/15/77

DEPTH, FEET	SAMPLE NO.	BLOWS/6" SAMPLING EFFORT	DESCRIPTION	TEST RESULTS
			ASPHALT - 10 INCHES	
			FILL: MEDIUM-DENSE BLACK F-C SAND. EST. A-1-b	
	1	1/2/3	VERY-STIFF BROWN MOTTLED WITH GRAY SILTY CLAY, TRACE FINE TO COARSE SAND, TRACE FINE GRAVEL. A-7-6	H=2.3-4.5+
	2	1/2/2	VERY-STIFF TO HARD BROWN MOTTLED WITH GRAY SILTY CLAY, LITTLE TO SOME FINE TO COARSE SAND, TRACE TO LITTLE FINE TO COARSE GRAVEL (VERY-SOFT SHALE FRAGMENTS). @ 8.5' TO 9.7' PARTLY SIMILAR TO VERY-SOFT SHALE.	H=2.0-4.5+ G
	3	2/3/4	A-6a(7)/A-6b	H=2.5-4.5+
	4	5/6/16	VERY-HARD BROWN MOTTLED WITH GRAY SILTY CLAY, SIMILAR TO VERY-SOFT SHALE. EST. A-6a	H=4.5+
	5	25/65/67	VERY-SOFT TO SOFT BROWN MOTTLED WITH GRAY SHALE, FRAGMENTAL STRUCTURE, SIMILAR TO VERY-HARD CLAYEY SILT.	
	6	4"R NXM 97%	VERY-SOFT TO SOFT BROWN AND GRAY SHALE, NEARLY HORIZONTALLY BEDDED, MOSTLY SIM TO VERY-HARD SOIL. SOFT TO MEDIUM-HARD GRAY SHALE, NEARLY HORIZONTALLY BEDDED, FEW VERTICAL AND DIAGONAL FRACTURES, 1/8" TO 4" LAYERS.	RQD=0% (VERY-POOR) RQD=7.5% (VERY-POOR)
			- CONTINUED -	

COMPLETION DEPTH: 30.0'

RECORD OF WATER LEVEL READINGS		
DATE:	9/15	9/16
READING:	14.8'	13.0'

PLASTIC LIMIT — LIQUID LIMIT — NATURAL MOISTURE CONTENT

W-UNIT DRY WEIGHT-pcf; Q-UN. COMPRESSION-tsf; D-RELATIVE DENSITY-%; H-PENETROMETER-tsf; G-GRADATION CURVE; T-TRIAXIAL CURVE; C-CONSOLIDATION CURVE

LOG OF BORING NO. B-2

BRIDGE LAK-608-337
LAKE COUNTY, OHIO

TYPE: 2-INCH O.D. SPLIT-BARREL / NX CORE BARREL — LOCATION: STA 50+89, 9'R — ELEVATION: 880.1 — DATE: 9/19/77

DEPTH, FEET	SAMPLE NO.	BLOWS/6" SAMPLING EFFORT	DESCRIPTION	TEST RESULTS
			ASPHALT - 8 INCHES	
			FILL: VERY-DENSE CINDERS EST. A-1-b	
	1A		STIFF TO VERY-STIFF BROWN MOTTLED WITH GRAY SILTY CLAY. EST. A-7-6	
	1B	2/2/3	VERY-STIFF BROWN MOTTLED WITH GRAY SILTY CLAY, LITTLE FINE TO COARSE SAND, TRACE FINE GRAVEL, MANY SHALE FRAGMENTS.	H=1.7-2.2 H=2.2-3.7
	2	2/2/3	A-6a	H=2.5-3.7
	3	3/5/7	VERY-STIFF BROWN MOTTLED WITH GRAY SILTY CLAY, TRACE FINE SAND TO FINE GRAVEL. A-7-6	LL=55% H=3.2-3.7
	4	9/15/32	VERY-HARD BROWN MOTTLED WITH GRAY SILTY CLAY, SIMILAR TO VERY-SOFT SHALE. EST. A-6a	
	5	22/60	VERY-SOFT BROWN MOTTLED WITH GRAY SHALE, SIMILAR TO VERY-HARD CLAYEY SILT.	
	6	NXM 82%	SOFT TO MEDIUM-HARD BROWN AND GRAY SHALE, NEARLY HORIZONTALLY BEDDED, 1/2" TO 3-1/2" LAYERS.	RQD=0% (VERY-POOR)

USED 4-1/2" AUGER, 0.0' TO 21.0'. USED WATER, 21.0' to 26.0'; LOST 25%. SET 21' OF 4" CASING.

RECORD OF WATER LEVEL READINGS		
DATE:	9/19	9/20
READING:	10.1'	11.0'

PLASTIC LIMIT — LIQUID LIMIT — NATURAL MOISTURE CONTENT

W-UNIT DRY WEIGHT-pcf; Q-UN. COMPRESSION-tsf; D-RELATIVE DENSITY-%; H-PENETROMETER-tsf; G-GRADATION CURVE; T-TRIAXIAL CURVE; C-CONSOLIDATION CURVE

LOG OF BORING NO. B-4

BRIDGE LAK-608-337
LAKE COUNTY, OHIO

TYPE: 2-INCH O.D. SPLIT-BARREL / NX CORE BARREL — LOCATION: STA 49+77, 17'L — ELEVATION: 857.8 — DATE: 9/21/77

DEPTH, FEET	SAMPLE NO.	BLOWS/6" SAMPLING EFFORT	DESCRIPTION	TEST RESULTS
			FILL: MEDIUM-DENSE BROWN GRAVEL. EST. A-1-b	
	1	2/3/3	MEDIUM-STIFF GRAY MOTTLED WITH DARK-GRAY AND BROWN SILTY CLAY, LITTLE FINE TO COARSE SAND, CONTAINS DECAYED WOOD. EST. A-7-6	H=0.5-1.0
	2	25/75	VERY-SOFT GRAY SHALE, NEARLY HORIZONTALLY BEDDED, SIMILAR TO VERY-HARD CLAYEY SILT.	H=4.5+
	3	NXM 87%	MEDIUM-HARD GRAY SHALE, NEARLY HORIZONTALLY BEDDED, FEW DIAGONAL FRACTURES, 1/2" TO 12" LAYERS. @ 7.0' TO 8.9', SOFT TO MEDIUM-HARD. @ 8.9' TO 17.0', FEW SILTSTONE AND FINE SANDSTONE STREAKS.	RQD=21% (VERY-POOR)
	4	100		RQD=65% (FAIR)

USED 4-1/2" AUGER, 0.0' TO 7.0'. USED WATER, 7.0' TO 17.0'. SET 7' OF 4" CASING.

COMPLETION DEPTH: 17.0'

RECORD OF WATER LEVEL READINGS		
DATE:	9/21	
READING:	1.5'	

PLASTIC LIMIT — LIQUID LIMIT — NATURAL MOISTURE CONTENT

W-UNIT DRY WEIGHT-pcf; Q-UN. COMPRESSION-tsf; D-RELATIVE DENSITY-%; H-PENETROMETER-tsf; G-GRADATION CURVE; T-TRIAXIAL CURVE; C-CONSOLIDATION CURVE

LOG OF BORING NO. B-6

SHEET 1 OF 2 SHEETS

BRIDGE LAK-608-337
LAKE COUNTY, OHIO

TYPE: 2-INCH O.D. SPLIT-BARREL / NX CORE BARREL — LOCATION: STA 49+44, 9'R — ELEVATION: 879.2 — DATE: 9/20-21/77

DEPTH, FEET	SAMPLE NO.	BLOWS/6" SAMPLING EFFORT	DESCRIPTION	TEST RESULTS
			ASPHALT - 8 INCHES	
			FILL: MEDIUM-DENSE BLACK FINE TO COARSE SAND. EST. A-1-b	
	1	2/2/3	FILL: VERY-STIFF BROWN MOTTLED WITH GRAY SILTY CLAY, LITTLE FINE TO COARSE SAND, TRACE TO LITTLE FINE GRAVEL (SHALE FRAGMENTS).	H=2.4-3.7
	2	2/2/3	EST. A-7-6	H=2.8-3.6
	3	2/3/5	VERY-STIFF TO HARD BROWN MOTTLED WITH GRAY SILTY CLAY, LITTLE FINE TO COARSE SAND. EST. A-7-6	H=2.0-4.5+
	4	6/9/13	VERY-HARD BROWN MOTTLED WITH GRAY SILTY CLAY, SIMILAR TO VERY-SOFT SHALE. EST. A-7-6	H=4.5+
	5	75-6"R NXM	VERY-SOFT TO SOFT BROWN AND GRAY SHALE, NEARLY HORIZONTALLY BEDDED, PARTLY SIMILAR TO VERY-HARD CLAYEY SILT.	H=4.5+
	6	97%	SOFT TO MEDIUM-HARD BROWN SHALE, NEARLY HORIZONTALLY BEDDED, MANY VERTICAL AND DIAGONAL FRACTURES, 1/4" TO 2" LAYERS. @ 24.3' TO 25.5', VERY-SOFT TO SOFT.	RQD= 0% (VERY-POOR)

COMPLETION DEPTH: 30.5'

RECORD OF WATER LEVEL READINGS		
DATE:	9/21	
READING:	18.0'	

PLASTIC LIMIT — LIQUID LIMIT — NATURAL MOISTURE CONTENT

W-UNIT DRY WEIGHT-pcf; Q-UN. COMPRESSION-tsf; D-RELATIVE DENSITY-%; H-PENETROMETER-tsf; G-GRADATION CURVE; T-TRIAXIAL CURVE; C-CONSOLIDATION CURVE

LOG OF BORING NO. B-1 (CONTINUED)

SHEET 2 OF 2 SHEETS

BRIDGE LAK-608-337
LAKE COUNTY, OHIO

TYPE: 2-INCH O.D. SPLIT-BARREL / NX CORE BARREL — LOCATION: STA 50+69, 4.5'L — ELEVATION: 878.8 — DATE: 9/15/77

DEPTH, FEET	SAMPLE NO.	BLOWS/6" SAMPLING EFFORT	DESCRIPTION	TEST RESULTS
25	NXM		SOFT TO MEDIUM-HARD GRAY SHALE, NEARLY HORIZONTALLY BEDDED, FEW VERTICAL AND DIAGONAL FRACTURES, 1/8" TO 4" LAYERS.	
	7	78%	RQD = 7.5% (VERY-POOR)	
30			USED 4½" AUGER, 0.0' TO 20.0'. USED WATER, 20.0' TO 30.0'. SET 20.0' OF 4" CASING.	

COMPLETION DEPTH: 30.0'

RECORD OF WATER LEVEL READINGS		
DATE:	9/15	9/16
READING:	14.8'	13.0'

PLASTIC LIMIT — LIQUID LIMIT — NATURAL MOISTURE CONTENT

W-UNIT DRY WEIGHT-pcf; Q-UN. COMPRESSION-tsf; D-RELATIVE DENSITY-%; H-PENETROMETER-tsf; G-GRADATION CURVE; T-TRIAXIAL CURVE; C-CONSOLIDATION CURVE

LOG OF BORING NO. B-3

BRIDGE LAK-608-337
LAKE COUNTY, OHIO

TYPE: 2-INCH O.D. SPLIT-BARREL / NX CORE BARREL — LOCATION: STA 50+35, 19'R — ELEVATION: 856.9 — DATE: 9/21/77

DEPTH, FEET	SAMPLE NO.	BLOWS/6" SAMPLING EFFORT	DESCRIPTION	TEST RESULTS
			FILL: MEDIUM-DENSE GRAY GRAVEL EST. A-1-b	
	1	5/9/8	FILL: MEDIUM-DENSE GRAY CINDERS (FINE TO COARSE SAND, SOME FINE TO COARSE GRAVEL, SOME CLAYEY SILT). EST. A-3a	H=0.5-0.7
	2	5/12/64	VERY-SOFT GRAY SHALE, SIMILAR TO VERY-HARD CLAYEY SILT.	
	3	NXM 95%	SOFT TO MEDIUM-HARD GRAY SHALE, NEARLY HORIZONTALLY BEDDED, FEW DIAGONAL FRACTURES, (@ 7.5' to 12.5'), 1/8" TO 25" LAYERS, PARTLY ARENACEOUS, FEW TO MANY FINE SANDSTONE AND SILTSTONE SEAMS.	RQD=8% (VERY-POOR)
	4	98		RQD=98% (EXCELLENT)

USED 4-1/2" AUGER; 0.0' TO 7.5'. USED WATER, 7.5' TO 17.5'; LOST 30%. SET 7.5' OF 4" CASING.

COMPLETION DEPTH: 17.5'

RECORD OF WATER LEVEL READINGS		
DATE:	7/21	
READING:	0.3'	

PLASTIC LIMIT — LIQUID LIMIT — NATURAL MOISTURE CONTENT

W-UNIT DRY WEIGHT-pcf; Q-UN. COMPRESSION-tsf; D-RELATIVE DENSITY-%; H-PENETROMETER-tsf; G-GRADATION CURVE; T-TRIAXIAL CURVE; C-CONSOLIDATION CURVE

LOG OF BORING NO. B-5

BRIDGE LAK-608-337
LAKE COUNTY, OHIO

TYPE: 2-INCH O.D. SPLIT-BARREL — LOCATION: STA 49+32, 5'L — ELEVATION: 878.6 — DATE: 9/20/77

DEPTH, FEET	SAMPLE NO.	BLOWS/6" SAMPLING EFFORT	DESCRIPTION	TEST RESULTS
			ASPHALT - 8"	
			FILL: MEDIUM-DENSE BLACK FINE TO COARSE SAND, LITTLE FINE TO COARSE GRAVEL. EST. A-3a	
	1	1/2/3	FILL: VERY-STIFF TO HARD BROWN MOTTLED WITH GRAY SILTY CLAY, TRACE TO LITTLE FINE TO COARSE SAND, TRACE FINE GRAVEL (SHALE FRAGMENTS).	H=2.2-4.5+
	2	1/2/4		H=2.2-2.5
	3	5/7/12	- BECOMES VERY-HARD WITH DEPTH. A-7-6	H=4.5+
	4	50/46/50/3"R	VERY-HARD GRAY MOTTLED WITH BROWN SILTY CLAY, SIMILAR TO VERY-SOFT SHALE.	
	5	40/100	A-6a	

REFUSAL @ 21.0'.

USED 4-1/2" AUGER.

COMPLETION DEPTH: 21.0'

RECORD OF WATER LEVEL READINGS		
DATE:	9/20	
READING:	DRY @ 21.0'	

PLASTIC LIMIT — LIQUID LIMIT — NATURAL MOISTURE CONTENT

W-UNIT DRY WEIGHT-pcf; Q-UN. COMPRESSION-tsf; D-RELATIVE DENSITY-%; H-PENETROMETER-tsf; G-GRADATION CURVE; T-TRIAXIAL CURVE; C-CONSOLIDATION CURVE

LOG OF BORING NO. B-6 (CONTINUED)

SHEET 2 OF 2 SHEETS

BRIDGE LAK-608-337
LAKE COUNTY, OHIO

TYPE: 2-INCH O.D. SPLIT-BARREL / NX CORE BARREL — LOCATION: STA 49+44, 9'R — ELEVATION: 879.2 — DATE: 9/20-21/77

DEPTH, FEET	SAMPLE NO.	BLOWS/6" SAMPLING EFFORT	DESCRIPTION	TEST RESULTS
25	6	NXM		
	7	98%	SOFT TO MEDIUM-HARD GRAY SHALE, NEARLY HORIZONTALLY BEDDED, 1/4" TO 3" LAYERS.	RQD= 0% (VERY-POOR)
30			USED 4-1/2" AUGER, 0.0' TO 20.5'. USED WATER, 20.5' TO 30.5'. LOST 30%. SET 20.5' OF 4" CASING.	
35				

COMPLETION DEPTH: 30.5'

RECORD OF WATER LEVEL READINGS		
DATE:	9/21	
READING:	18.0'	

PLASTIC LIMIT — LIQUID LIMIT — NATURAL MOISTURE CONTENT

W-UNIT DRY WEIGHT-pcf; Q-UN. COMPRESSION-tsf; D-RELATIVE DENSITY-%; H-PENETROMETER-tsf; G-GRADATION CURVE; T-TRIAXIAL CURVE; C-CONSOLIDATION CURVE

Figure No. 1

DESIGN AGENCY
NTH CONSULTANTS, LTD.
820 W. SUPERIOR AVE. SUITE 320
CLEVELAND, OHIO 44113

PID NO. 93229

STRUCTURE FOUNDATION EXPLORATION
BRIDGE No. LAK-608-3370 OVER BIKE PATH

LAK-608-03.37

J:\86\130469\sheets\93229IL003.dgn 7/1/2014 3:01:02 PM tgregory

MICROFILMED
JAN 7 1983

SHEET 1 OF 2 SHEETS

LOG OF BORING NO. B-7
BRIDGE LAK-608-337
LAKE COUNTY, OHIO

TYPE: 2-INCH O.D. SPLIT-BARREL NX CORE BARREL — LOCATION: STA 48+93, 7'L
ELEVATION: 875.9 — DATE: 9/20/77

DEPTH, FEET	SAMPLE NO.	BLOWS/6" SAMPLING EFFORT	DESCRIPTION	TEST RESULTS
0			ASPHALT - 6 INCHES	
			FILL: MEDIUM-DENSE BLACK FINE TO COARSE SAND. EST. A-5a	
	1	2/2/4	VERY-STIFF TO HARD BROWN MOTTLED WITH GRAY AND DARK-GRAY SILTY CLAY, TRACE TO LITTLE FINE TO COARSE SAND, TRACE FINE GRAVEL.	H=3.2-4.5+
5			CONTAINS SEAMS OF BLACK FINE TO COARSE SAND. BECOMES VERY-HARD WITH DEPTH.	
	2	3/5/4		H=3.5-4.5+
10	3A	5/8/16	A-7-6	H=4.5+
	3B		VERY-HARD BROWN MOTTLED WITH GRAY SILTY CLAY, SIMILAR TO VERY-SOFT SHALE.	H=4.5+
15	4	11/16/26	EST. A-6a	H=4.5+
			VERY-SOFT GRAY AND BROWN SHALE, FRAGMENTAL STRUCTURE, SIMILAR TO VERY-HARD CLAYEY SILT.	
20	5	17/75		
		NXM	SOFT GRAY SHALE, NEARLY HORIZONTALLY BEDDED, FEW VERTICAL AND DIAGONAL FRACTURES, 1/4" TO 4" LAYERS.	RQD=7.5% (VERY-POOR)
	6	95%		
25			(CONTINUED)	

COMPLETION DEPTH: 30.0'
RECORD OF WATER LEVEL READINGS
DATE: 9/20 — 9/21
READING: 9.8' — 12.8'

PLASTIC LIMIT — NATURAL MOISTURE CONTENT — LIQUID LIMIT

W-UNIT DRY WEIGHT-pcf; Q-UN. COMPRESSION-tsf; D-RELATIVE DENSITY-%; H-PENETROMETER-tsf; G-GRADATION CURVE; T-TRIAXIAL CURVE; C-CONSOLIDATION CURVE

FORM: F-1 JOB: 2139

SHEET 2 OF 2 SHEETS

LOG OF BORING NO. B-7 (CONTINUED)
BRIDGE LAK-608-337
LAKE COUNTY, OHIO

TYPE: 2-INCH O.D. SPLIT BARREL NX CORE BARREL — LOCATION: STA 48+93, 7'L
ELEVATION: 875.9 — DATE: 9/20/77

DEPTH, FEET	SAMPLE NO.	BLOWS/6" SAMPLING EFFORT	DESCRIPTION	TEST RESULTS
25		NXM	SOFT TO MEDIUM-HARD GRAY SHALE, NEARLY HORIZONTALLY BEDDED, 1/4" TO 3" LAYERS.	RQD= 0% (VERY-POOR)
	7	92%		
30			USED 4-1/2" AUGER. USED WATER 20.0' TO 30.0'; LOST 30%. SET 20.0' of 4" CASING.	
35				

COMPLETION DEPTH: 30.0'
RECORD OF WATER LEVEL READINGS
DATE: 9/20 — 9/21
READING: 9.8' — 12.8'

PLASTIC LIMIT — NATURAL MOISTURE CONTENT — LIQUID LIMIT

W-UNIT DRY WEIGHT-pcf; Q-UN. COMPRESSION-tsf; D-RELATIVE DENSITY-%; H-PENETROMETER-tsf; G-GRADATION CURVE; T-TRIAXIAL CURVE; C-CONSOLIDATION CURVE

FORM: F-1 JOB: 2139

PLATE

LOG OF BORING NO. B-8
BRIDGE LAK-608-337
LAKE COUNTY, OHIO

TYPE: 2-INCH O.D. SPLIT-BARREL — LOCATION: STA 49+13, 10'R
ELEVATION: 876.9 — DATE: 9/20/77

DEPTH, FEET	SAMPLE NO.	BLOWS/6" SAMPLING EFFORT	DESCRIPTION	TEST RESULTS
0			ASPHALT - 6 INCHES	
			FILL: MEDIUM-DENSE BLACK SAND. EST. A-1-b	
	1A	2/3/3	FILL: VERY-STIFF TO HARD BROWN MOTTLED WITH GRAY SILTY CLAY, LITTLE FINE TO COARSE SAND, TRACE FINE TO COARSE GRAVEL (SHALE FRAGMENTS).	H=3.2-4.5+
	1B			H=3.2-3.7
5				
	2	2/3/4		H=2.0-3.7
			A-7-6	
10	3	7/10/16	VERY-HARD BROWN MOTTLED WITH GRAY SILTY CLAY, TRACE FINE SAND TO FINE GRAVEL.	H=4.5+
			A-7-6	
15	4	13/36/50	VERY-SOFT BROWN AND GRAY SHALE, NEARLY HORIZONTALLY BEDDED, MOSTLY SIMILAR TO VERY-HARD CLAYEY SILT. FRAGMENTAL STRUCTURE, FEW DIAGONAL AND VERTICAL FRACTURES.	
20	5	26/75/4"R	REFUSAL @ 20.8'. USED 4-1/2" AUGER.	
25				

COMPLETION DEPTH: 20.8'
RECORD OF WATER LEVEL READINGS
DATE: 9/20
READING: DRY @ 20.8'

PLASTIC LIMIT — NATURAL MOISTURE CONTENT — LIQUID LIMIT

W-UNIT DRY WEIGHT-pcf; Q-UN. COMPRESSION-tsf; D-RELATIVE DENSITY-%; H-PENETROMETER-tsf; G-GRADATION CURVE; T-TRIAXIAL CURVE; C-CONSOLIDATION CURVE

SHEET 2 OF 2 SHEETS

LOG OF BORING NO. B-9
BRIDGE LAK-608-337
LAKE COUNTY, OHIO

TYPE: 2-INCH O.D. SPLIT-BARREL — LOCATION: STA 50+98, 4'L
ELEVATION: 878.7 — DATE: 9/19/77

DEPTH, FEET	SAMPLE NO.	BLOWS/6" SAMPLING EFFORT	DESCRIPTION	TEST RESULTS
0			ASPHALT - 12 INCHES	
			FILL: MEDIUM-DENSE CINDERS. EST. A-1-b	
	1A	2/2/3	STIFF TO VERY-STIFF BROWN MOTTLED WITH GRAY SILTY CLAY, LITTLE FINE TO COARSE SAND, TRACE TO LITTLE FINE GRAVEL (SHALE FRAGMENTS).	H=1.7-2.0
	1B			H=1.7-1.9
5				
	2	2/1/2	A-6b	H=2.1-2.7
10	3	5/14/8	VERY-STIFF TO HARD BROWN MOTTLED WITH GRAY SILTY CLAY, TRACE FINE SAND TO FINE GRAVEL (SHALE FRAGMENTS).	H=3.0-4.5+
			A-7-6	
15	4	12/12/45	VERY-SOFT BROWN AND GRAY SHALE, NEARLY HORIZONTALLY BEDDED, SIMILAR TO VERY-HARD CLAYEY SILT, FRAGMENTAL STRUCTURE.	
20	5	24/100/R	REFUSAL @ 21.0'. USED 4-1/2" AUGER.	
25				

COMPLETION DEPTH: 21.0'
RECORD OF WATER LEVEL READINGS
DATE: 9/19
READING: DRY @ 21.0'

PLASTIC LIMIT — NATURAL MOISTURE CONTENT — LIQUID LIMIT

W-UNIT DRY WEIGHT-pcf; Q-UN. COMPRESSION-tsf; D-RELATIVE DENSITY-%; H-PENETROMETER-tsf; G-GRADATION CURVE; T-TRIAXIAL CURVE; C-CONSOLIDATION CURVE

PLATE

SHEET 1 OF 2 SHEETS

LOG OF BORING NO. B-10
BRIDGE LAK-608-337
LAKE COUNTY, OHIO

TYPE: 2-INCH O.D. SPLIT-BARREL NX CORE BARREL — LOCATION: STA 51+18, 10'R
ELEVATION: 877.6 — DATE: 9/19/77

DEPTH, FEET	SAMPLE NO.	BLOWS/6" SAMPLING EFFORT	DESCRIPTION	TEST RESULTS
0			ASPHALT - 7"	
			FILL: VERY-DENSE CINDERS. EST. A-1-b	
	1A	2/3/4	VERY-STIFF BROWN MOTTLED WITH GRAY SILTY CLAY, LITTLE FINE TO COARSE SAND, TRACE FINE GRAVEL.	H=3.2-3.7
	1B		@ 3.8' TO 3.9' FINE TO COARSE GRAVEL.	H=3.7-4.1
5				
	2A	2/2/4	EST. A-7-6	
	2B		STIFF GRAY MOTTLED WITH BROWN SILTY CLAY, LITTLE FINE TO COARSE SAND.	H=3.7-4.5+
10	3A	1/2/3	EST. A-7-6	H=1.7-2.0
	3B		MEDIUM-STIFF GRAY SILTY CLAY. A-6a	H=0.25-0.5
	3C		HARD BROWN MOTTLED WITH GRAY SILTY CLAY.	NMC=51%
	3D			H=.5-1.2
			EST. A-6a	H=4.2
15	4	21/22/43	VERY-HARD BROWN MOTTLED WITH GRAY SILTY CLAY, SIMILAR TO VERY-SOFT SHALE.	H=4.5+
			A-6a	
20	5	63"/6"R	SOFT TO MEDIUM-HARD GRAY SHALE, NEARLY HORIZONTALLY BEDDED, FEW VERTICAL AND DIAGONAL FRACTURES, 1/2" TO 6-1/2" LAYERS.	
		NXM		
	6	78%	@ 2.0' TO 20.5', VERY-SOFT	
25			(CONTINUED)	

COMPLETION DEPTH: 30.5'
RECORD OF WATER LEVEL READINGS
DATE: 9/19 — 9/20
READING: 7.0' — 8.6'

PLASTIC LIMIT — NATURAL MOISTURE CONTENT — LIQUID LIMIT

W-UNIT DRY WEIGHT-pcf; Q-UN. COMPRESSION-tsf; D-RELATIVE DENSITY-%; H-PENETROMETER-tsf; G-GRADATION CURVE; T-TRIAXIAL CURVE; C-CONSOLIDATION CURVE

SHEET 2 OF 2 SHEETS

LOG OF BORING NO. B-10 (CONTINUED)
BRIDGE LAK-608-337
LAKE COUNTY, OHIO

TYPE: 2-INCH O.D. SPLIT-BARREL NX CORE BARREL — LOCATION: STA 51+18, 10'R
ELEVATION: 877.6 — DATE: 9/19/77

DEPTH, FEET	SAMPLE NO.	BLOWS/6" SAMPLING EFFORT	DESCRIPTION	TEST RESULTS
25	6	NXM	SOFT TO MEDIUM-HARD GRAY SHALE, NEARLY HORIZONTALLY BEDDED, FEW VERTICAL AND DIAGONAL FRACTURES, 1/2" TO 6-1/2" LAYERS.	
	7	100%		
30	8	100	USED 4-1/2" AUGER; 0.0' TO 20.5'. USED WATER; 20.5' TO 30.5'; LOST 30%. SET 20.5' OF 4" CASING FROM 10.2' TO 11.2', SLIGHT SEEPAGE.	
35				

COMPLETION DEPTH: 30.5'
RECORD OF WATER LEVEL READINGS
DATE: 9/19 — 9/20
READING: 7.0' — 8.6'

PLASTIC LIMIT — NATURAL MOISTURE CONTENT — LIQUID LIMIT

W-UNIT DRY WEIGHT-pcf; Q-UN. COMPRESSION-tsf; D-RELATIVE DENSITY-%; H-PENETROMETER-tsf; G-GRADATION CURVE; T-TRIAXIAL CURVE; C-CONSOLIDATION CURVE

PLATE

GRADATION RESULTS

BORING	SAMPLE	DEPTH	% AGG	% C.S.	% F.S.	% SILT & CLAY
B-1	2	6.0-7.0	9.5	14.7	11.6	64.2

BORING LOGS
BRIDGE LAK-608-337 (6/6)
LAKE COUNTY, OHIO

Figure No. 1

DESIGN AGENCY
NTH CONSULTANTS, LTD.
820 W. SUPERIOR AVE. SUITE 320
CLEVELAND, OHIO 44113

PID NO. 93229

STRUCTURE FOUNDATION EXPLORATION
BRIDGE No. LAK-608-3370 OVER BIKE PATH

LAK-608-03.37

6/6

J:\86\130469\sheets\93229L004.dgn 7/1/2014 3:01:49 PM tgregory

SPECIAL PROVISIONS

WATERWAY PERMITS CONDITIONS

C-R-S: LAK-608-3.37

PID: 93229

Date: 9/30/2016

The environmental review, consultation, and other actions required by applicable Federal environmental laws for this project are being, or have been, carried-out by ODOT pursuant to 23 U.S.C. 327 and a Memorandum of Understanding dated December 11, 2015, and executed by FHWA and ODOT.

1. Waterway Permit Time Restrictions:

Regional General Permit (RGP) Section B (Maintenance) is authorized for GEA-44-13.05, PID 84490. A copy of the RGP shall be kept at the work site at all times and made available to all contractors and subcontractors. The permit is effective starting: **September 30, 2016**. The permit expires: **October 24, 2019.**

For permitted work in aquatic resources (including, but not limited to: streams, wetlands, jurisdictional ditches, captured streams, lakes, ponds), the Department will consider the Contractor's submission of a reauthorization to the waterway permit end date based on project constraints. In order to be considered, the Contractor must submit a justification to the Engineer at least 90 days prior to the waterway permit end date. The Engineer will submit the request for a time extension to ODOT-OES-WPU for consideration and coordination with the U.S. Army Corps of Engineers (USACE), Ohio Environmental Protection Agency (OEPA), U.S. Coast Guard (USCG), U.S. Fish and Wildlife Service (USFWS), and Ohio Department of Natural Resources (ODNR).

2. Deviations From Permitted Construction Activities

No deviation from the requirements for work in aquatic resources depicted in the plans, Special Provisions, and/or working drawings may be made unless a modification has been submitted to ODOT-OES-WPU and approved by the appropriate agencies (i.e., USACE, OEPA, USCG, ODNR, and USFWS).

For emergency situations resulting in unanticipated impacts to aquatic resources, provide notification (verbal or written) to the Engineer as soon as possible following discovery of the situation. Written notification to the Engineer and notification to the ODOT-OES-WPU (614-466-7100) must be made within 24 hours.

For non-emergency situations, notify the Engineer in writing for submission to the ODOT-OES-WPU (614-466-7100) for consideration and coordination with the appropriate agencies. Notification must be made at least 90 days prior to planned, non-permitted activities. Consideration of the requested deviation is at the discretion of the Director and must be coordinated with the appropriate regulatory agencies.

3. In-Stream Work Restrictions

Work in the following aquatic resources is further restricted as follows:

Stream Name /Description	Location (Station)	Work restriction dates (No in-stream work permitted)
Unnamed Tributary 1	50+05	None

In-stream work has been defined as the placement and/or removal of fill materials (temporary or permanent) below ordinary high water of a stream. Examples of "fill" include, but are not limited to: bridge piers, abutments, culverts, rock channel protection, scour protection and temporary work pads.

Fills placed within a stream identified in the above table (outside of the work restriction dates) can continue to be worked from during the work restriction dates, but cannot be expanded, removed, or otherwise modified (below ordinary high water) until once again outside of the work restriction dates.

4. Materials:

Materials utilized in or adjacent to aquatic resources on this project for temporary or permanent fill or bank protection shall consist of suitable material free from toxic contaminants in other than trace quantities. Broken asphalt is specifically excluded. Chromated Copper Arsenate (CCA), creosote, and other pressure treated lumber shall not be used in structures that are placed in aquatic resources.

5. Cultural Resources

If archeological sites or human remains are discovered, cease all work in the immediate area and notify the Engineer who will immediately contact the ODOT-District Environmental Coordinator and ODOT-OES-Cultural Resource Section at 614-466-7100. In the event of human remains are identified by OES-Cultural Resources Section the Engineer shall also contact the Lake County Sheriff's Office at (440) 350-5500.

6. Aquatic Resource Demarcation:

All aquatic resources indicated on the plans shall be demarcated in the field as per SS 832 prior to site disturbance. Specifically, only the locations and quantities in the table below are authorized to be impacted.

Resource ID	Resource Location	Impact Location (Station)	Impact Amount
Unnamed Trib. 1	LAK-608-3.37	50+05	212 feet (0.047 acre) permanent impact
Unnamed Trib. 1	LAK-608-3.37	50+05	10 feet (0.0005 acre) temporary impact

The remainder of the aquatic resources must be demarcated as to ensure avoidance. The fence shall remain in place and be maintained throughout the construction process. Following the completion of the project, the fence and posts shall be removed.

7. Spill containment:

Provide and Maintain an Oil Spill Kit with a minimum capacity of 65 gallons. The Spill Kit shall contain:

- 6 - 3 in. X 8 ft. Oil only socks
- 4 - 18 in. X18 in. Oil only pillows
- 2 - 5 in. X 10ft. Booms
- 50 - 16in. X 20 in. Oil only pads
- 10- Disposable Bags
- 1- 65 Gallon drum with lid
- 25 pounds of Granular Oil Absorbent

The Oil Spill Kit shall be located within 150 feet of any equipment working in a stream or wetland. The oil Spill Kit shall be maintained for the life of the contract. Any materials utilized during the project will be replaced within 48 hours. All costs associated with furnishing and maintaining the above referenced spill containment kit is incidental to work.

8. Blasting:

State law requires notification to the Ohio Department of Natural Resources should blasting be required within or near stream channels (See ORC 1533.58 & CMS 107.09). Notify Engineer, in writing, for submission to ODOT-OES-WPU (614-466-7100) for coordination with ODNR.

9. Bridge Inspection:

Prior to the removal of bridge structures, the underside must be carefully examined for the presence of birds and bats. Should any birds or bats be found roosting on the underside of the bridge, the Contractor is required to notify the Engineer for coordination with ODOT-OES-WPU (614-466-7100).

10. Project Inspection:

Inspection of Work may include inspection by representatives of other government agencies or railroad corporations that pay a portion of the cost of the Work or regulate the Work through State and Federal law. Comments from the representatives of these agencies shall be directed to the Engineer. Please forward a copy to ODOT-OES-WPU (614-466-7100).

11. Temporary Access Fills (Stream and River Crossings and Fills)

Special Provisions Notes:

Definitions:

Hydraulic Opening
The cross sectional area allowing an unimpeded discharge equal to twice the highest monthly flow without producing a rise in the backwater above the Ordinary High Water Mark (OHWM)*.

Standard Temporary Discharge
The hydraulic opening providing a capacity for a discharge equal to twice the *highest monthly flow* without producing a rise in the backwater above the OHWM shall be known as the Standard Temporary Discharge. The U.S. Geologic Service publication "Techniques for estimating Selected Streamflow Characteristics of Rural Unregulated Streams in Ohio" provides equations that estimate monthly flow for Ohio Waterways These flows are also available in a web application by USGS StreamStats, (http//water.usgs.gov/osw/streamstat/ohi.html).

Average Monthly Flow
The average monthly flow represents the estimated "normal" flow.

Temporary Access Fills (TAFs)
In Streams and Rivers may include, but are not limited to, causeways, cofferdams (as described by other items of work), access pads, temporary bridges, etc. The Contractor will make every attempt minimize disturbance to water bodies, stream banks, stream beds, and approach sections during the construction, maintenance, and removal of the TAFs. Fording of streams and rivers is prohibited. Construct TAFs in such a manner that will maintain flows, minimize upstream flooding, and avoid overtopping the TAF on a regular basis. ***TAFs shall be designed and constructed so that the hydraulic opening provides capacity for a discharge equal to twice the highest monthly flow without producing a rise in the backwater above the Ordinary High Water Mark (OHWM)*.***

Requirements
21 calendar days prior to the initiation of any in-stream work, provide the Engineer with working drawings that include:

- Plan view drawing (200 scale or less) showing the location of all jurisdictional temporary fill proposed for use on the project.
- Scaled Cross section and profile drawing showing the OHWM and the proposed compliant hydraulic opening.
- A description of the installation and staging of all temporary jurisdictional fill over the life of the

contract.

- A description of the removal of all jurisdictional temporary fill and restoration of the channel and all areas impacted by the jurisdictional temporary fill.
- A schedule outlining the timing of the placement and removal of all TAF.
- Have an Ohio Registered Engineer prepare, sign, seal, and date the working drawings. Have a second Ohio Registered Engineer check, sign, and seal and date the working drawings. The preparer and checker are two different Engineers. Include the following statement on the working drawings:
  "These working drawings were prepared in compliance with the terms of the Regional General Permit and all contract documents."
- Include supporting hydraulic calculations developed by the engineer(s) who sealed the working drawings.
- Do not begin in-stream work until the Engineer has accepted the working drawings.

If the OHWM is not shown on the plans, the Department will establish the OHWM based on the definition of OHWM (as defined in SS 832) or the peak discharge from the 2 year event, using the method described in the most current version of the Department's Location and Design Manual Volume II.

If the Contractor proposes a TAF which does not provide for the Standard Temporary Discharge (discharge equal to twice the highest monthly flow without producing a rise in the backwater), the Contractor is required to coordinate the request for the contractor's proposed TAF with the Engineer and the ODOT Office of Environmental Services (OES). The Department makes no guarantee to grant the request. The contractor's proposed TAF request will be coordinated by OES with the USACE and the OEPA, as appropriate.

In addition to the requirements described in SS 832, supply the Engineer/OES with the following:

1. A plan and profile showing the temporary access fill(s) with the OHWM.
2. Cross section showing the hydraulic opening and the anticipated discharge flow.
3. A restoration plan for the area affected by the temporary access fill(s).
4. A schedule outlining the timing of the placement and removal of the temporary access fill(s).

The time frame allowed for the coordination of the contractor's proposed TAF will be a minimum of 60 days. Installation of any jurisdictional fill without a 404 Permit authorized by the USACE is strictly prohibited. All direct coordination with the USACE and/or OEPA will be performed through OES.

TAFs Construction and Payment

Begin planning and installing causeways and access fills as early in construction as possible to avoid conflicts with 404/401 permits or other environmental commitments that have been included in the construction plans.

TAFs in Streams and Rivers may include, but are not limited to, causeways, cofferdams, access pads, temporary bridges, etc. Make every attempt minimize disturbance to water bodies, stream banks, stream beds, and approach sections during the construction, maintenance, and removal of the TAFs. Make every attempt to minimize disturbance to water bodies during construction, maintenance, and removal of the causeway and access fills. Construct the causeway and access fills as narrow as practical. Install in-stream conduits parallel to the stream banks. Make the causeway and access fills in shallow areas rather than deep pools where possible. Minimize clearing, grubbing, and excavation of stream banks, bed, and approach sections. Construct the causeway and access fills as to not erode stream banks or allow sediment deposits in the channel.

Prior to the initiation of any in-stream work, establish a monument upstream of proposed temporary crossing or temporary construction access fill to visually monitor the water elevation in the waterway where the fill is permitted. Maintain the monument throughout the project. Provide a visual mark on the monument that identifies the elevation 1 foot above the OHWM. If the OHWM is not shown on the plans, the Department will establish the OHWM based on the definition of OHWM (SS 832.02) or the peak discharge from the 2 year event, using the method described in the most current version of the

Department's Location and Design Manual Volume II.

Ensure that the monument can be read from the bank of the waterway. Have this elevation set and certified by an Ohio Registered Surveyor.

TAFs placed by the contractor above the OHWM are not subject to the 404/401 permit constraints. All costs associated with furnishing and maintaining the above referenced monument is incidental to the work.

Should the water elevation of the waterway, exceed the elevation 1 foot above OHWM, the Department will compensate the Contractor for repair of any resulting damage to the permitted temporary access fill up to the elevation of 1 foot above the OHWM, except as noted. Follow the requirements in Item 502 for Structures for Maintaining Traffic and in Item 503 for Cofferdams and any modifications to these items as shown in the plans. The Department will not pay for repair and maintenance of temporary access structures that are related to the construction access fill.

Should the water elevation of the waterway exceed the elevation shown on the monument, the Department will recognize this event as an excusable, non-compensable delay in accordance with Section 108.06 of the Construction & Materials Specifications.

Construct the causeway and fills, not including cofferdams and temporary bridges, to a water elevation at least 1 foot (0.3 m) above the OHWM. If more than one-third the width of the stream is filled, then use culvert pipes to allow the movement of aquatic life. Ensure that any ponding of water behind the causeway and access fills will not damage property or threaten human health and safety.

The following minimum requirements apply to TAFs where culverts are used.

A. Furnish culverts on the existing stream bottom.
B. Avoid a drop in water elevation at the downstream end of the culvert.
C. Furnish a sufficient number of culverts in addition to stream openings to providing a discharge equal to twice the highest monthly flow without producing a rise in the backwater above the OHWM.
D. Furnish culverts with a minimum diameter of 18 inches (0.5 m).

For all fill and surface material placed in the channel, around the culverts, or on the surface of the causeway and access fills furnish clean, non-erodible, nontoxic dumped rock fill, Type B, C, or D, as specified in C&MS 703.19.B. Extend rock fill up the slope from original stream bank for 50 feet (10 m) to catch and remove erodible material from equipment.

When the work requiring the TAFs is complete all portions of the TAF (including all rock and culverts) will be removed in its entirety. The material will not be disposed in other waters of the US or isolated wetland. The stream bottom affected by the causeway and access fills will be restored to its pre-construction elevations. The TAF will not be paid as a separate item but will be included by the Contractor as part of the total project cost.

Unless specific TAFs compensation is included in the plans, all environmental protection and control associated with the 404/401 permit activities, including but not limited to TAFs, are incidental to the work within the boundaries of the 404/401 permit or as otherwise identified in the 404/401 permit application.

12. Excavation Activities:

Excavated material will be placed at the upland site and disposed of in such a manner that sediment and runoff to streams and other waters is controlled and minimized. If any changes to the proposed work are deemed necessary, you must notify and coordinate with the ODOT-OES-WPU (614-466-7100).

13. Bridge Demolition Debris:

Demolition debris from bridge removal activities is considered a fill activity by the USACE and Ohio EPA and is not authorized for this project. If project impacts change, please contact ODOT-Office of Environmental Services-Waterway Permits Unit at 614-466-7100.