STATE OF OHIO, DEPARTMENT OF TRANSPORTATION

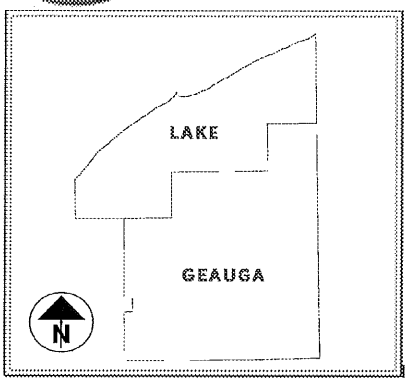

LAK-307-0.00 & VARIOUS

CONSTRUCTION PROJ NO.: _____-_____

PID NO.: 100450

FEDERAL PROJECT NUMBER: 100% State

PROJECT DESCRIPTION:
THIS PROJECTS CONSISTS OF THE CHIP SEALING OF SR-307 FROM SLM 0.00 TO SLM 2.32 IN LAKE COUNTY, AND SR-282 FROM SLM 0.00 TO SLM 0.36 IN GEAUGA COUNTY.

2013 SPECIFICATIONS
THE STANDARD SPECIFICATIONS OF THE STATE OF OHIO, DEPARTMENT OF TRANSPORTATION, INCLUDING CHANGES AND SUPPLEMENTAL SPECIFICATIONS LISTED IN THE PROPOSAL SHALL GOVERN THIS IMPROVEMENT.

LATITUDE 41°34'24" LONGITUDE 81°02' 58"

EARTH DISTURBED AREA: N/A (MAINTENANCE PROJECT)

PROJECT EARTH DISTURBED AREA: N/A (MAINTENANCE PROJECT)

EST. CONTRACTOR EARTH DISTURBED AREA: N/A (MAINTENANCE PROJECT)

NOTICE OF INTENT EARTH DISTURBED AREA: N/A (MAINTENANCE PROJECT)

RAILROAD INVOLVEMENT: NONE

TYPE OF PROJECT: _____ CHIP SEALING

DESIGN DESIGNATION: _____

DESIGN EXCEPTION: NONE

UNDERGROUND UTILITIES

CONTACT BOTH SERVICES
CALL TWO WORKING DAYS
BEFORE YOU DIG

CALL
1-800-362-2764
(TOLL FREE)
OHIO UTILITIES PROTECTION SERVICE
NON-MEMBERS
MUST BE CALLED DIRECTLY

OIL & GAS PRODUCERS UNDERGROUND PROTECTION SERVICE CALL: 1-800-925-0988

I HEREBY APPROVE THESE PLANS AND DECLARE THAT THE MAKING OF THIS IMPROVEMENT WILL NOT REQUIRE THE CLOSING TO TRAFFIC OF THE HIGHWAY AND THAT PROVISIONS FOR THE MAINTENANCE AND SAFETY OF TRAFFIC WILL BE AS SET FORTH ON THE PLANS AND ESTIMATES.

APPROVED: _____
DISTRICT DEPUTY DIRECTOR

DATE: 02-29-16

APPROVED: _____
DIRECTOR, DEPARTMENT OF TRANSPORTATION

DATE: _____

PLANS PREPARED BY:

ODOT DISTRICT 12 PLANNING & ENGINEERING DEPT.
5500 TRANSPORTATION BLVD.
GARFIELD HEIGHTS, OH 44125

ENGINEERS SEAL:

STATE OF OHIO
KEITH DOUGLAS HAMILTON
E-72668
REGISTERED PROFESSIONAL ENGINEER

SIGNED: _____
DATE: 2/26/2016

STANDARD CONSTRUCTION DRAWINGS								SUPPLEMENTAL SPECIFICATIONS	
BP-3.1	07/08/14	MT-97.10	07/18/14					800	01/15/16
		MT-97.11	07/18/14					832	01/17/14
		MT-99.20	07/19/13						
TC-41.20	10/18/13	MT-105.10	07/19/13						
TC-52.10	10/18/13								
TC-52.20	07/18/14								
TC-65.10	01/17/14							SPECIAL PROVISIONS	
TC-65.11	07/18/14								
TC-71.10	01/17/14								

CHECKED BY: EMK

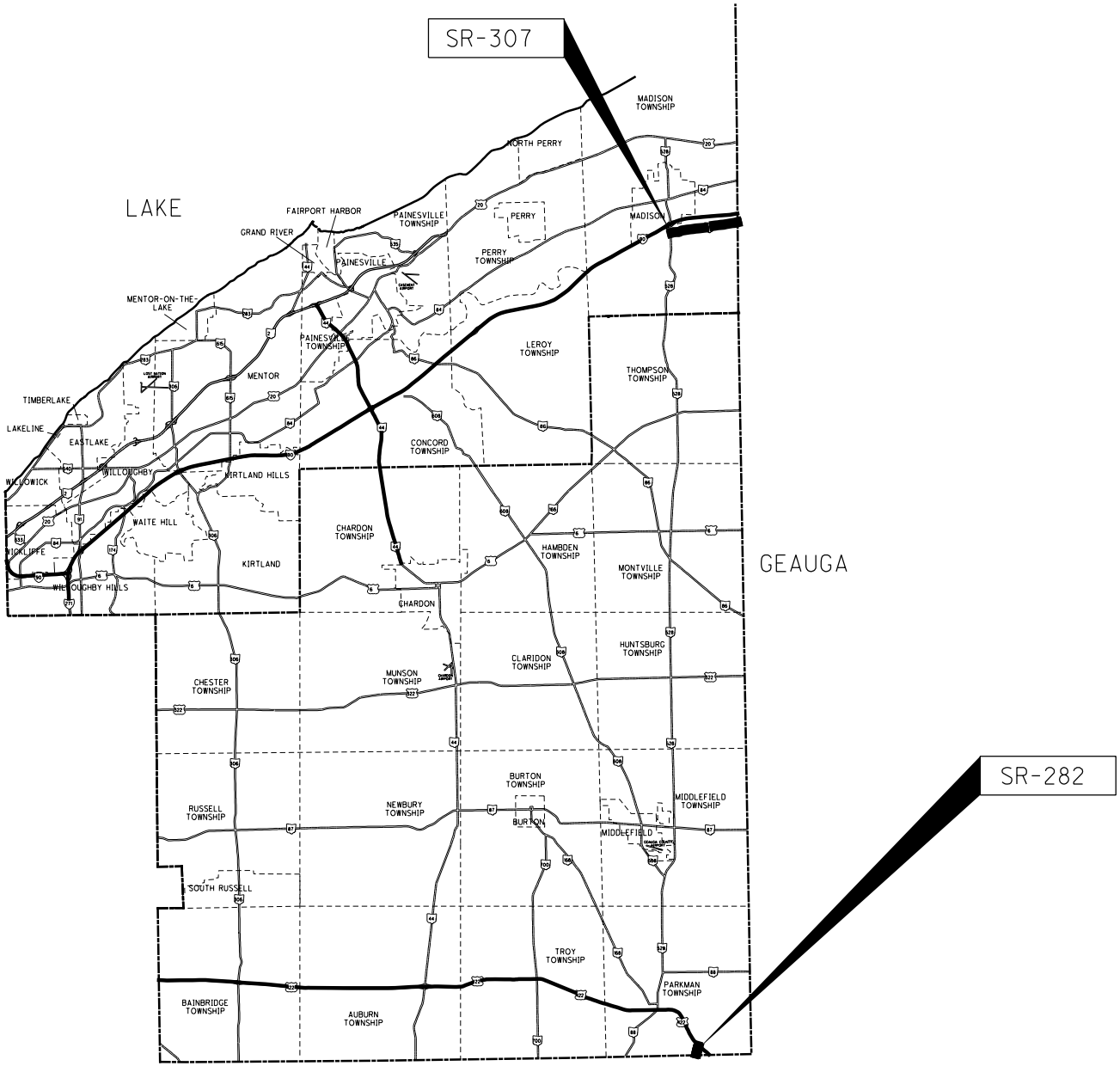

2 / 6	LAK-307-0.00/ VAR	LOCATION MAP	CALCULATED KDH CHECKED EMK

Construction Notification

The Contractor shall advise the Project Engineer a minimum of fourteen (14) days prior to the following: The start of construction activities, lane restrictions, lane closures, and or road closures. The Project Engineer will forward this information to the following:

District Public Information Officer (PIO) by email at D12.publicinformation@dot.ohio.gov

The PIO will notify the public, the local emergency services, affected schools and businesses, and any other impacted local public agency of any of the above mentioned items via media sources.

Contractor Requirements

Two-way traffic shall be maintained at all times except that one-way traffic will be permitted for minimum periods of time consistent with the requirements of the specifications for protection of completed chip seal and asphalt concrete courses.

The Contractor shall avoid placing chip seal on any monument boxes, valve boxes, manholes, etc. that exist in the pavement surface.

The Contractor is instructed to omit chip sealing on structures which have concrete decks or concrete overlays.

Routine Maintenance

Between the time that bids are taken and the start of construction, the maintaining agency may enter upon the project and perform routine maintenance such as crack sealing, patching, and berm and shoulder repair. The effects of the performance of routine maintenance shall be considered as inherent in work of the character provided for in the plans and the resulting conditions shall not be considered as differing materially from those existing at the time bids were taken.

Item 251 –Partial Depth Pavement Repair, As Per Plan

This item shall be used for the repair of unsound, cold-patch, or pop-out areas as directed by the Engineer. This work shall be performed prior to the placement of the chip seal. The depth of the repair shall be 3 in. below the top of the existing surface. The width of the repair shall be 12 in. centered on the existing joint.

251, Partial Depth Pavement Repair, As Per Plan..... **400 SY**

Item 642 – Final Pavement Markings

In addition to the pavement markings placed on the chip seal immediately after completing the fog seal work, an additional application of the final pavement markings has been provided to be used as directed by the Engineer, and shall be placed no sooner than 30 calendar days and no more than 45 calendar days after the fog seal work has been completed.

The Contractor must lay out all center lines using the most recent copy of the Center Line Log. Copies of the Center Line Log may be obtained from the District 12 Roadway Services Department.

Item Special – Misc.: Fog Seal

Description: This work consists of preparing and fog sealing a chip sealed surface. The requirements of Item 407 Tack Coat apply except as noted below.

Material: Use Supplement 1032 certified 702.12 non-tracking tack diluted a maximum of 2 parts non-tracking tack to 1 part water. Only dilute material at the asphalt terminal. Supply certified test data to the Engineer showing the material supplied was tested for and meets 702.12 non-tracking tack prior to dilution.

Equipment: Contact the manufacturer's representative for required spray nozzle size, distributor and nozzle settings, and any field conditions that are not suitable for their material. If an anionic fog seal is supplied thoroughly clean all equipment if cationic emulsion was previously used.

Preparation of surface: Ensure that the surface has been swept just before application and is thoroughly clean, dry and free of loose chips. Remove dirt, dust and loose chips cleaned from the surface and dispose of it off of the project.

Application of Fog Seal: Wait two weeks after chip seal installation before applying fog seal. Uniformly apply the fog seal with a distributor per the requirements of 407.06 except as noted. Prior to application, agitate or gently circulate the material.

Ensure all nozzles and spray patterns are identical to one another along the distributor spray bar. Place the angle of the nozzle at a 15 to 30 degree angle to the spray bar axis to maximize overlay or as recommended by the nozzle manufacturer.

Overlap the fog seal by 2 in. to 6 in. at all adjacent spray passes. Overlapped areas may take longer to dry.

Do not dilute the fog seal at the project. Apply the fog seal at a rate of 0.12-0.15 gal/SY. Recommended application temperature is 160°F to 180°F. Do not exceed 180°F. Obtain the Engineer's approval for the final rate of application, temperature, distributor settings, and areas to be treated before application of the fog seal. The Engineer will determine the actual application rate in gallons per square yard by a check on the project.

The application is considered satisfactory when the material is applied uniformly with no visible evidence of streaking or ridging, fog seal is seen to stay in place with adequate buildup and little to no runoff, and the application rate is ±10% of the specified rate.

If the fog seal material is seen to be excessively running off the chip seal stop placement and obtain a sample of the fog seal material. Immediately deliver to OMM for a viscosity and residue test. Reject all on hand material that appears to be or is tested to be over diluted. Reapply fog seal material that meets dilution requirements on areas where non-specification material was placed.

Traffic and Markings: Do not release traffic on the fog seal material for a minimum of 20 minutes and as directed by the Engineer after the material has been determined to be tack free and set. Note: Damp conditions, cold temperatures, and shaded areas will require up to one hour for fog seal to be tack free.

Apply water based work zone and/or water based final pavement markings after cure. Apply non-water based pavement markings, if required on the project, after two weeks from the fog seal application.

Method of Measurement: The Department will measure fog seal by the number of gallons of fog seal applied.

Basis of Pavement: The Department will pay for accepted quantities at the contact unit price as follows:

Item	Unit	Description
Special	Gallon	Misc.: Fog Seal

Work Zone Pavement Markings

The following estimated quantities have been carried to the General Summary, to be used as directed by the Engineer, to place work zone pavement markings after the Contractor has placed the chip seal.

614, Work Zone Center Line, Class III, 642 Paint ..... **2.62 Mile**

614, Work Zone Edge Line, Class III, 642 Paint..... **5.24 Mile**

614, Work Zone Stop Line, Class III, 642 Paint ..... **24 Feet**

Item 614 – Work Zone Marking Sign

The following estimated quantity has been carried to the General Summary for use as directed by the Engineer for the temporary work zone marking signs per the requirements of the Construction and Materials Specifications, 614.04.

614, Work Zone Marking Sign ..... **6 Each**

Item 614 – Work Zone Marking Sign, As Per Plan, Advance Notice

The CHIP SEAL BEGINS signs, as detailed in these plans, shall be erected by the Contractor at least one week in advance of the scheduled start of the chip seal operations. The signs shall be erected on the right hand side of the roadway at the project limits of each roadway being chip sealed. They shall be placed so as not to interfere with the visibility of any other traffic control signs. The sign details for this black on orange sign will be provided at the preconstruction meeting. Below is an example of the layout of the sign. Start date to be provided by the Contractor.

The following estimated quantities have been included in the General Summary for use as determined by the engineer for this advance notification:

614, Work Zone Marking Sign, As Per Plan, Advance Notice... **4 Each**

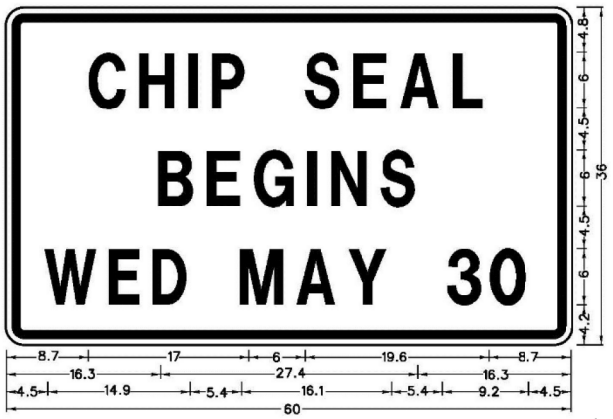

2.3" Radius, 0.9" Border, 0.6" Indent, Black and Orange "CHIP SEAL" D; "BEGINS" D, "WED MAY 30" D 90% spacing;

CALCULATED KDH
CHECKED EMK

MAINTENANCE OF TRAFFIC GENERAL NOTES

LAK-307-0.00/VAR

i:\ProjectData\LAK\100450\Design\Roadway\Sheets\100450_GN002.dgn Sheet 2/11/2016 4:16:31 PM khamilt1

SHEET NUMBER						PARTICIPATION		ITEM	ITEM EXT.	GRAND TOTAL	UNIT	DESCRIPTION	SEE SHEET NO.
3	4	8				01/NFP/PV							
												EROSION CONTROL	
						1000		832	30000	1000	EACH	EROSION CONTROL	
												PAVEMENT	
400						400		251	01001	400	SY	PARTIAL DEPTH PAVEMENT REPAIR, AS PER PLAN	3
		38191				38191		422	10000	38191	SY	SINGLE CHIP SEAL	
		5729				5729		SPECIAL	69098900	5729	GAL	MISC.: FOG SEAL	3
												TRAFFIC CONTROL	
		189				189		621	00100	189	EACH	RPM	
		189				189		621	54000	189	EACH	RAISED PAVEMENT MARKER REMOVED	
		10.48				10.48		642	00090	10.48	MILE	EDGE LINE, 4"	
		5.24				5.24		642	00290	5.24	MILE	CENTER LINE	
		48				48		642	00490	48	FT	STOP LINE	
												MAINTENANCE OF TRAFFIC	
	6					6		614	12460	6	EACH	WORK ZONE MARKING SIGN	
	4					4		614	12461	4	EACH	WORK ZONE MARKING SIGN, AS PER PLAN, ADVANCE NOTICE	4
2.62						2.62		614	21550	2.62	MILE	WORK ZONE CENTER LINE, CLASS III, 642 PAINT	
5.24						5.24		614	22350	5.24	MILE	WORK ZONE EDGE LINE, CLASS III, 642 PAINT	
24						24		614	26610	24	FT	WORK ZONE STOP LINE, CLASS III, 642 PAINT	
								614	11000	LS		MAINTAINING TRAFFIC	
								623	10000	LS		CONSTRUCTION LAYOUT STAKES AND SURVEYING	
								624	10000	LS		MOBILIZATION	

COUNTY	ROUTE	LOG POINT TO LOG POINT		LENGTH	LENGTH	WIDTH	TYPICAL NUMBER	PAVEMENT AREA	422 SINGLE CHIP SEAL	SPECIAL MISC.: FOG SEAL @ 0.15 GAL/SY	621 RAISED PAVEMENT MARKER REMOVED	621 RPM	644 EDGE LINE	644 CENTER LINE	644 STOP LINE
				MILE	FT	FT		SY	SY	GAL	EACH	EACH	MILE	MILE	FEET
LAK	307	0.00	2.32	2.32	12250	25	1	34027	34027	5104	169	169	4.64	2.32	24
GEA	282	0.00	0.30	0.30	1595	23.5	2	4165	4165	625	20	20	0.60	0.30	
SECOND APPLICATION OF PAVEMENT MARKINGS													5.24	2.62	24
TOTALS CARRIED TO GENERAL SUMMARY									38191	5729	189	189	10.48	5.24	48

LAK-307-0.00/ VAR

SUBSUMMARY

CALCULATED KDH
CHECKED EMK

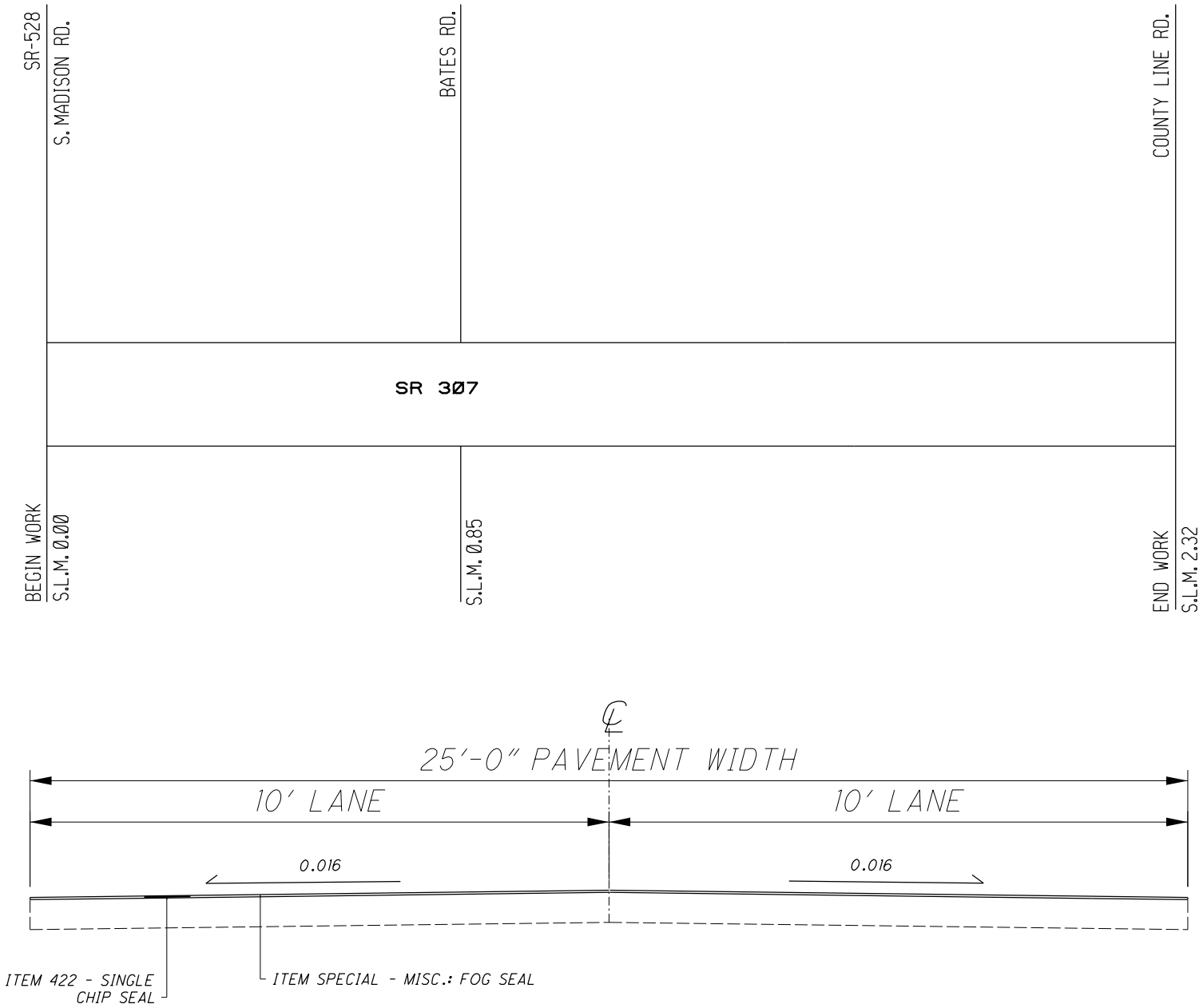

9 / 1	LAK-307-0.00/ VAR	SR-307 SCHEMATIC AND TYPICAL SECTION	CALCULATED KDH CHECKED EMK NOT TO SCALE

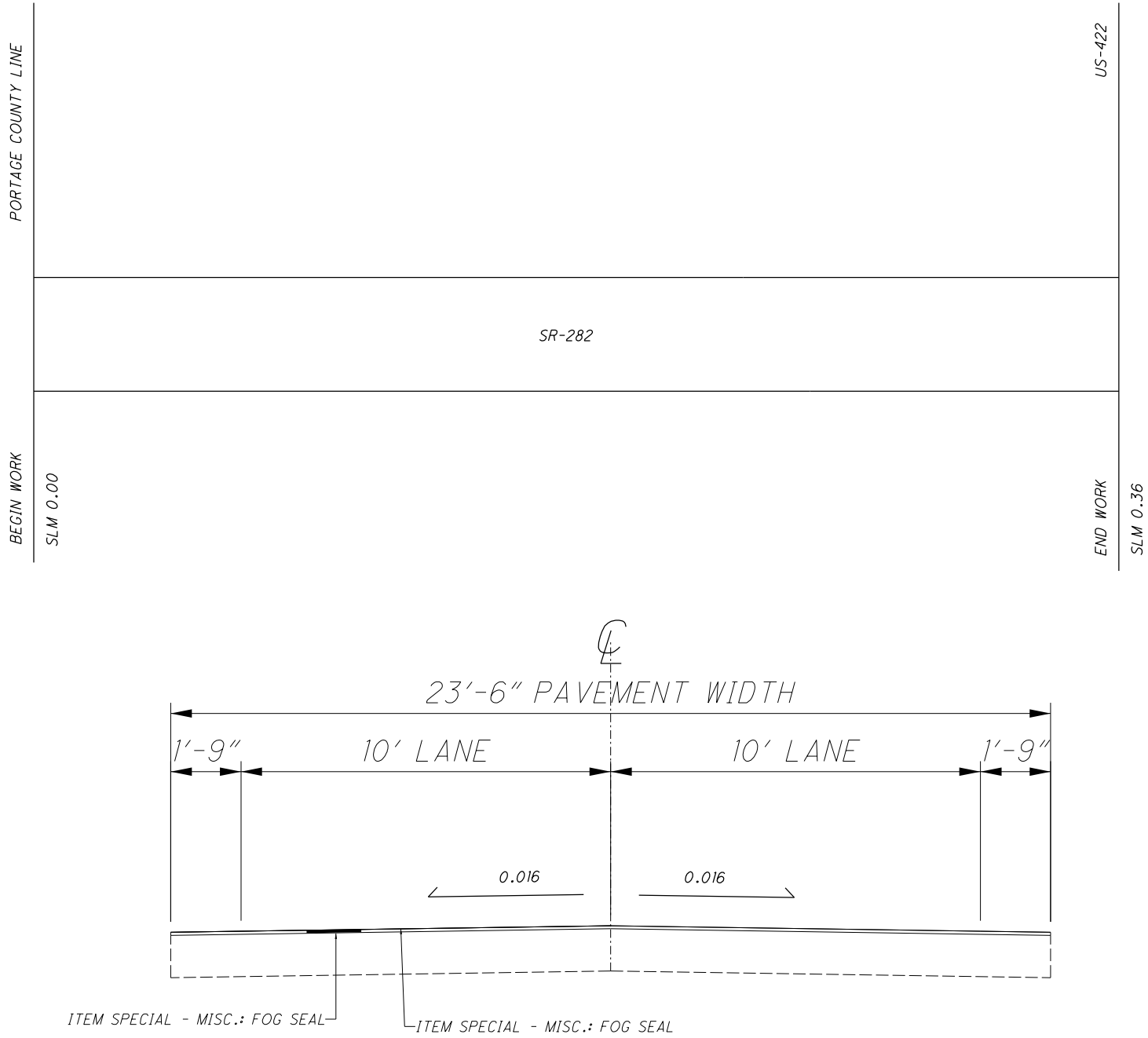

9 / 8	LAK-307-0.00/ VAR	SR-282 SCHEMATIC AND TYPICAL SECTION	CALCULATED KDH CHECKED EMK NOT TO SCALE

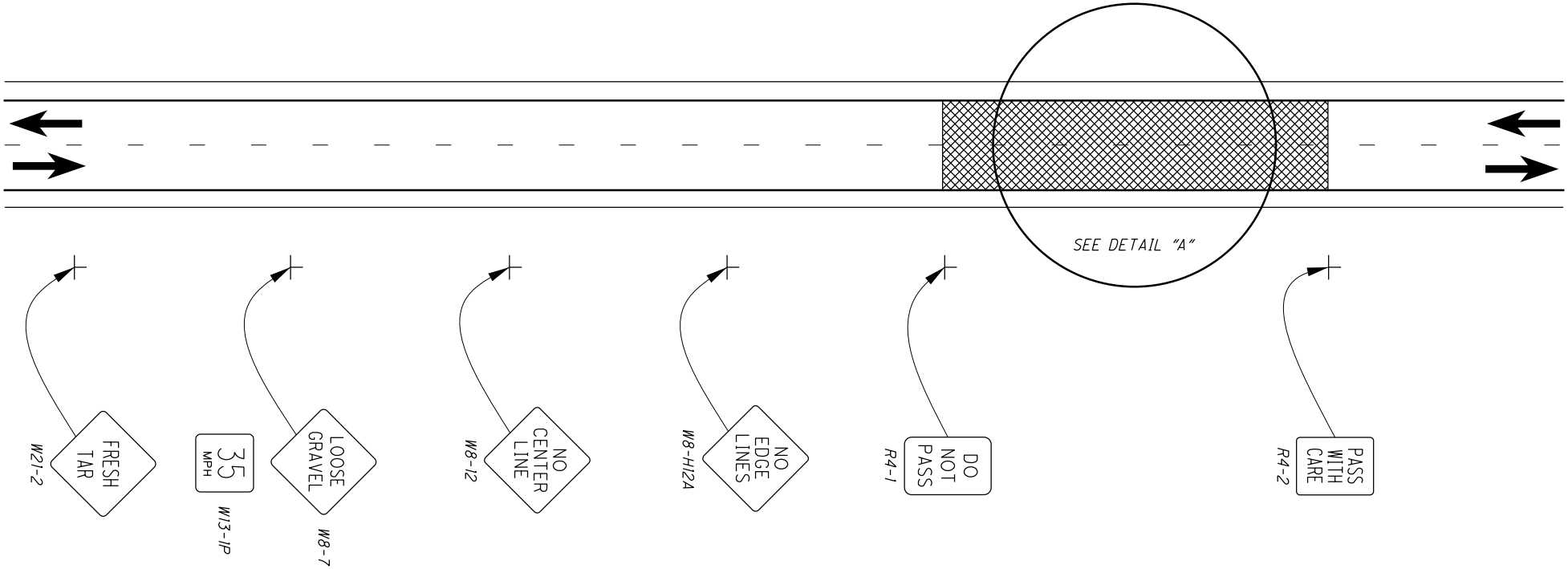

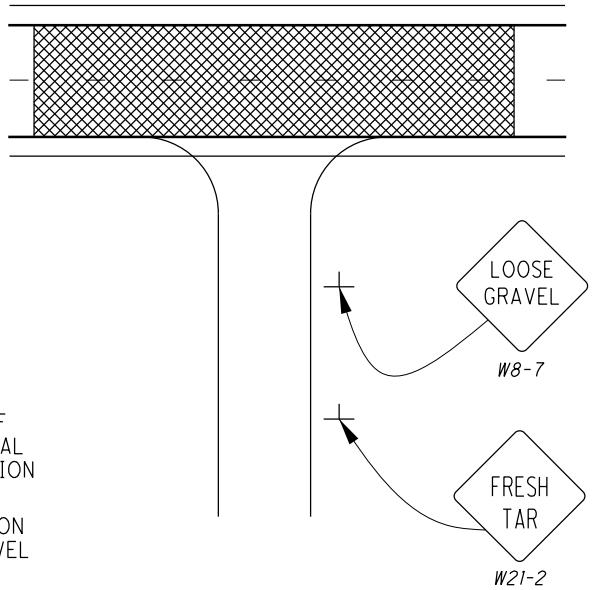

GENERAL NOTES

1. The suggested minimum sign spacing is 200 feet (60 m), with 500 feet (150 m) spacing desirable.
2. The "NO CENTER LINE" (W8-H12), "NO EDGE LINES" (W8-H12a), and "DO NOT PASS" (R4-1) signs should be repeated every 2 miles per C&MS 614.04.
3. The "PASS WITH CARE" (R4-2) sign, shown at the termination point of the chip seal activity, shall not be installed if this point is located in a passing zone or within 500 feet (150 m) of the next no passing zone.
4. Repeat the "LOOSE GRAVEL" (W8-7) with an Advisory Speed Plaque (W13-1P) every ½mile per C&MS 422.09.
5. Remove the "NO CENTER LINE" (W8-H12) and "NO EDGE LINES" (W8-H12a) signs after placing final markings.
6. Repeat sign layout in opposite direction.
7. Temporary traffic control for chip seal operations is not shown.
8. For signing of side roads intersecting the work area, see Detail "A".
9. Payment for all signs shown shall be under Item 614 Maintaining Traffic, unless itemized separately in the plans.

LEGEND

AREA OF CHIP SEAL OPERATION

DIRECTION OF TRAVEL

LAK-307-0.00/ VAR

TRAFFIC CONTROL FOR CHIP SEAL OPERATIONS

CALCULATED CLW
CHECKED KDH