STATE OF OHIO

DEPARTMENT OF TRANSPORTATION

STRUCTURAL IMPROVEMENT BRIDGE REPAIR

GRADE SEPARATION WITH THE CSX TRANSPORTATION, INC.

LIC-62-18.94

WASHINGTON TOWNSHIP

LICKING COUNTY

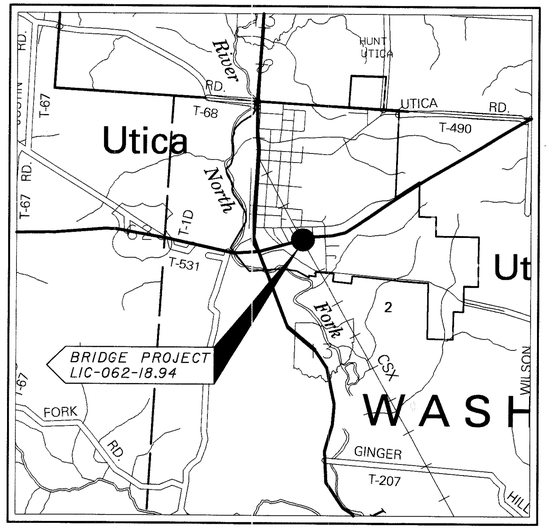

LOCATION MAP

LATITUDE: 40°13'45" LONGITUDE: 82°27'00"

SCALE IN MILES

0 1 2 3 4

N

PORTION TO BE IMPROVED
INTERSTATE & DIVIDED HIGHWAY
UNDIVIDED STATE & FEDERAL ROUTES
OTHER ROADS

DESIGN DESIGNATION

CURRENT ADT (1999)	3500
DESIGN YEAR ADT (2019)	4000
DESIGN HOURLY VOLUME (2019)	400
DIRECTIONAL DISTRIBUTION	55%
TRUCKS (24 HOUR B&C)	4%
DESIGN SPEED	55 MPH
LEGAL SPEED	55 MPH

DESIGN FUNCTIONAL CLASSIFICATION - MAJOR COLLECTOR

DESIGN EXCEPTIONS

NONE

INDEX OF SHEETS:

TITLE SHEET	1
TYPICAL SECTION	2
GENERAL NOTES	3&4
GENERAL SUMMARY	5&6
CALCULATION	7
MAINTENANCE OF TRAFFIC	8-11
GENERAL PLAN & ELEVATION	12
EXISITING ABUTMENT REMOVALS	13
PROPOSED ABUTMENT DETAILS	14
EXPANSION JOINT DETAILS	15
TRANSVERSE SECTION	16
PARAPET DETAILS	17
REINFORCING STEEL SCHEDULE	18

PROJECT DESCRIPTION

CONCRETE OVERLAY WITH NEW DEFLECTOR PARAPETS AND MINOR RESURFACING.

1997 SPECIFICATIONS

THE STANDARD SPECIFICATIONS OF THE STATE OF OHIO, DEPARTMENT OF TRANSPORTATION, INCLUDING CHANGES AND SUPPLEMENTAL SPECIFICATIONS LISTED IN THE PROPOSAL SHALL GOVERN THIS IMPROVEMENT.

I HEREBY APPROVE THESE PLANS AND DECLARE THAT THE MAKING OF THIS IMPROVEMENT WILL NOT REQUIRE THE CLOSING TO TRAFFIC OF THE HIGHWAY AND THAT PROVISIONS FOR THE MAINTENANCE AND SAFETY OF TRAFFIC WILL BE AS SET FORTH ON THE PLANS AND ESTIMATES.

UNDERGROUND UTILITIES
TWO WORKING DAYS
BEFORE YOU DIG
CALL 1-800-362-2764 (TOLL FREE)
OHIO UTILITIES PROTECTION SERVICE
NON-MEMBERS
MUST BE CALLED DIRECTLY

PLAN PREPARED BY:

OHIO DEPARTMENT OF TRANSPORTATION
DISTRICT 5 PRODUCTION

ENGINEERS SEAL:

STATE OF OHIO Curtis L. Zigan E-68440 REGISTERED PROFESSIONAL ENGINEER

SIGNED: Curtis L. Zigan
DATE: 4/14/2001

STANDARD CONSTRUCTION DRAWINGS

BR-1	1-06-99	MT-96.11M	1-20-95
PCB-91	7-06-99	MT-96.20M	1-30-95
		MT-96.25	4-20-01
BP-3.1	7-28-00	MT-99.10M	1-30-95
		MT-105.10M	4-25-94
		MT-105.11M	4-25-94
GR-1.1M	10-21-97		
GR-1.2M	1-03-96		
GR-1.3M	11-30-94		
GR-2.1M	4-14-98		
GR-3.1M	10-21-97		
RM-4.2M	10-21-97		

SUPPLEMENTAL SPECIFICATIONS

806	9-09-97
842	1-06-99
843	5-05-98
846	9-09-97
847	6-30-98
899	10-21-98
954	9-09-97

SPECIAL PROVISIONS

APPROVED Christopher T. Engle
DATE 4/15/01 DISTRICT DEPUTY DIRECTOR

APPROVED Gordon Proctor
DATE 3-20-02 DIRECTOR, DEPARTMENT OF TRANSPORTATION

FEDERAL PROJECT NO. TE21-G000(269)

PID NO. 20766

CONSTRUCTION PROJECT NO.

RAILROAD INVOLVEMENT CSX TRANSPORTAION INC.

LIC-62-18.94

LIC - USR 62 - 18.94
020260 PID - 20766
Dist 5 6/5/2002

L0620001.GTS (SCALE = 100)

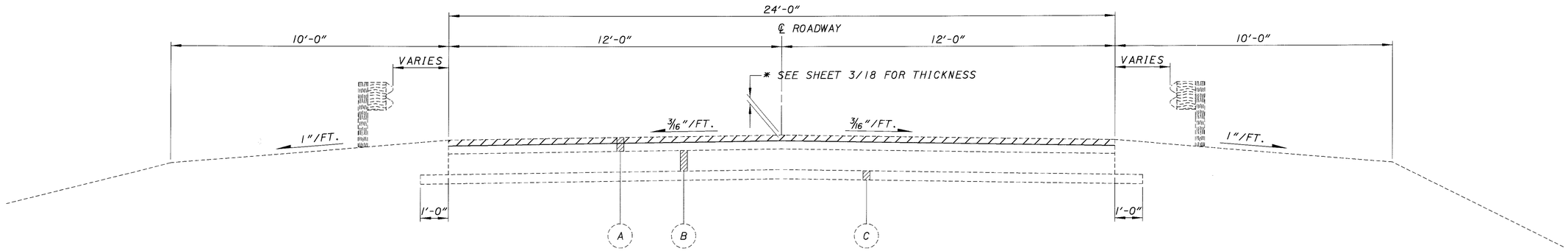

EXISTING TYPICAL SECTIONS

STA. 155+05 TO STA. 156+83.36 = 178.36 LIN. FT.
STA. 158+65.42 TO STA. 160+45 = 179.58 LIN. FT.
TOTAL = 357.94 LIN. FT.

ITEM 202 WEARING COURSE REMOVED

(A) 6"± ASPHALT CONCRETE

(B) 9" REINFORCED PORTLAND CEMENT CONCRETE PAVEMENT

(C) 4" SUBBASE

▲ TAPERS FROM 2'-0" STA. 155+05 TO 3'-9" STA. 156+55.
TAPERS FROM 3'-9" STA. 158+95 TO 2'-0" STA. 160+45

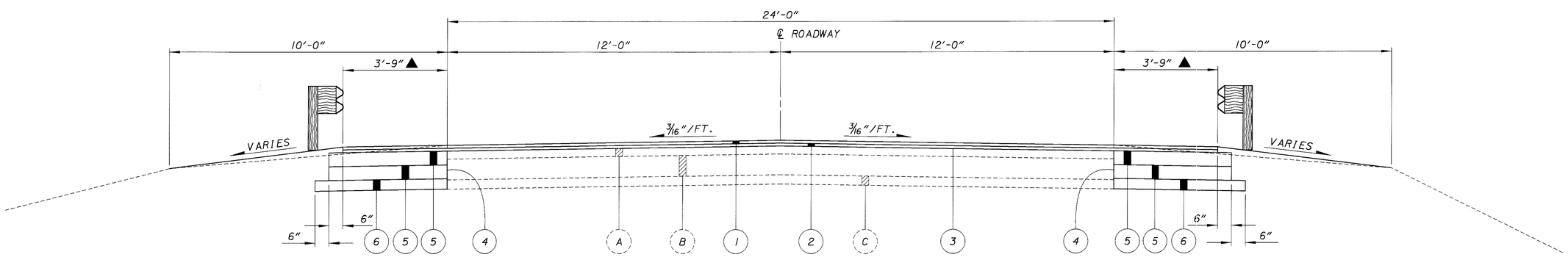

PROPOSED TYPICAL SECTIONS

STA. 155+05 TO STA. 156+83.36 = 178.36 LIN. FT.
STA. 158+65.42 TO STA. 160+45 = 179.58 LIN. FT.
TOTAL = 357.94 LIN. FT.

(1) ITEM 448 1¼" ASPHALT CONCRETE SURFACE COURSE, TYPE 1, PG 64-22

(2) ITEM 448 1" ASPHALT CONCRETE INTERMEDIATE COURSE, TYPE 1, PG 64-22

(3) ITEM 407 TACK COAT (@ 0.075 GAL/SQ.YD.)

(4) ITEM 407 TACK COAT (@ 0.025 GAL/SQ.YD.)

(5) ITEM 301 6" BITUMINOUS AGGREGATE BASE, PG64-22

(6) ITEM 304 4" AGGREGATE BASE

TYPICAL SECTIONS

LIC-62-18.94

.L0620001.PTS (07-20-99)

REFERENCE SHALL BE MADE TO STANDARD DRAWINGS

			RM-4.2M	DATED: 10-21-97
BR-1	DATED: 1-06-99		MT-96.11M	DATED: 1-30-95
BP-3.1	DATED: 7-28-00		MT-96.20M	DATED: 1-30-95
PCB-91	DATED: 7-06-99		MT-96.25	DATED: 4-20-01

REFERENCE

DETAILED DRAWINGS OF THE EXISTING STRUCTURE MAY BE INSPECTED IN THE DISTRICT 5 OFFICE OF THE OHIO DEPARTMENT OF TRANSPORTATION, JACKSONTOWN, OHIO.

PORTIONS OF STRUCTURE REMOVED, AS PER PLAN

PORTIONS OF STRUCTURE REMOVED, AS PER PLAN SHALL INCLUDE THE ELEMENTS INDICATED IN THE PLANS AND GENERAL NOTES AND ARE NOT SEPARATELY LISTED FOR PAYMENT, EXCEPT FOR WEARING COURSE REMOVAL. ITEMS TO BE REMOVED INCLUDE ALL EXISTING MATERIALS BEING REPLACED BY NEW CONSTRUCTION AND MISCELLANEOUS ITEMS THAT ARE NOT SHOWN TO BE INCORPORATED INTO THE FINAL CONSTRUCTION AND ARE DIRECTED TO BE REMOVED BY THE ENGINEER. THE USE OF EXPOSIVES, HEADACHE BALLS AND/OR HOE-RAMS WILL NOT BE PERMITTED. THE METHOD OF REMOVAL AND THE WEIGHT OF HAMMER SHALL BE APPROVED BY THE ENGINEER. ALL WORK SHALL BE DONE IN A MANNER THAT WILL NOT CUT, ELONGATE OR DAMAGE THE EXISTING REINFORCING STEEL TO BE PRESERVED. CHIPPING HAMMERS SHALL NOT BE HEAVIER THAN THE NOMINAL 90-POUND CLASS. PNEUMATIC HAMMERS SHALL NOT BE PLACED IN DIRECT CONTACT WITH REINFORCING STEEL THAT IS TO BE RETAINED IN THE REBUILT STRUCTURE.

CUT LINE CONSTRUCTION JOINT PREPARATION

SAW CUT BOUNDARIES OF PROPOSED CONCRETE REMOVALS 1" DEEP. REMOVE CONCRETE TO A ROUGH SURFACE. WHERE PRACTICABLE, THE EXISTING REINFORCING STEEL WHERE REQUIRED IN THE PLANS SHALL BE LEFT IN PLACE. INSTALL DOWEL BARS IF SPECIFIED. PRIOR TO CONCRETE PLACEMENT ABRASIVELY CLEAN JOINT SURFACE AND EXPOSED REINFORCEMENT TO REMOVE LOOSE AND DISINTEGRATED CONCRETE AND LOOSE RUST. THE JOINT SURFACE AND EXPOSED REINFORCEMENT SHALL BE THOROUGHLY CLEANED OF ALL DIRT, DUST, OR OTHER FOREIGN MATERIAL BY USE OF WATER, AIR UNDER PRESSURE, OR OTHER METHODS THAT PRODUCE SATISFACTORY RESULTS. CONCRETE BONDING SURFACES SHALL BE WET WITHOUT FREE WATER AS CONCRETE IS PLACED.

CONSTRUCTION NOTIFICATION

IN ORDER FOR ODOT TO PREPARE SIGNING WHEN REQUIRED AND TO NOTIFY THE GENERAL MOTORING PUBLIC, THE CONTRACTOR SHALL NOTIFY (IN WRITTING) THE DISTRICT 5 HIGHWAY MANAGEMENT ADMINISTRATOR WITH COPIES FOR THE DISTRICT 5 ROADWAY SERVICES MANAGER, AREA ENGINEER AND PERMIT TECHNICIAN NOT LESS THAN 21 DAYS BEFORE ACTIVATING SUCH CLOSURE OR LANE RESTRICTION. SEND NOTIFICATION TO:

DISTRICT 5 HIGHWAY
MANAGEMENT ADMINISTRATOR
P.O. BOX 306
JACKSONTOWN, OHIO 43030
(614) 323-4400 / 323-5240

ITEM 622 PORTABLE CONCRETE BARRIER, 32"

THE CONTRACTOR SHALL INSTALL A PORTABLE CONCRETE BARRIER, 32" AS PER STANDARD DRAWING RM-4.2M. ITEM 622 PORTABLE CONCRETE BARRIER, 32" HAS BEEN PROVIDED FOR MAINTAINING TRAFFIC AS SHOWN ON SHEETS 8/18 - 10/18. FLAGGERS SHALL BE UTILIZED FOR PROTECTION OF VEHICULAR TRAFFIC UNTIL THE MOVEMENT OF THE BARRIERS IS COMPLETE AND TRAFFIC IS MAINTAINED. AFTER THE PROJECT HAS BEEN COMPLETED THE PORTABLE CONCRETE BARRIER SHALL BECOME THE PROPERTY OF THE CONTRACTOR AND SHALL BE REMOVED BY HIM FROM THE PROJECT SITE.

CONVERSION OF STANDARD BRIDGE DRAWINGS

CONVERSION OF STANDARD BRIDGE DRAWINGS THE STANDARD BRIDGE DRAWINGS REFERENCED IN THIS PLAN ARE METRIC. ANY CONVERSION OF DIMENSIONS REQUIRED TO CONSTRUCT THE ITEMS SHOWN ON THE STANDARDS SHALL BE THE RESPONSIBILITY OF THE CONTRACTOR. CONVERSIONS SHALL BE MADE USING THE SI (METRIC) TO ENGLISH CONVERSION FACTORS PROVIDED IN SECTION 109.011 OF THE 1997 CONSTRUCTION AND MATERIALS SPECIFICATIONS. THE APPENDIX OF ASTM E380 SHALL BE UTILIZED FOR ANY ADDITIONAL CONVERSION FACTORS REQUIRED. CONVERSIONS SHALL BE APPROPRIATELY PRECISE AND SHALL REFLECT STANDARD INDUSTRY ENGLISH VALUES WHERE SUITABLE.

SUBSTRUCTURE CONCRETE REMOVAL

SUBSTRUCTURE CONCRETE REMOVAL SHALL BE BY MEANS OF APPROVED PNEUMATIC HAMMERS EMPLOYING POINTED AND BLUNT CHISEL TOOLS. HYDRAULIC HOE-RAM TYPE HAMMERS WILL NOT BE PERMITTED. THE WEIGHT OF THE HAMMER SHALL NOT BE MORE THAN 35 POUNDS FOR REMOVAL WITHIN 18 INCHES OF PORTIONS TO BE PRESERVED. OUTSIDE THE 18-INCH LIMIT, A HAMMER HEAVIER THAN 35 POUNDS, BUT NOT TO EXCEED 90 POUNDS, MAY BE USED AT THE APPROVAL OF THE ENGINEER. PNEUMATIC HAMMERS SHALL NOT BE PLACED IN DIRECT CONTACT WITH REINFORCING STEEL THAT IS TO BE RETAINED IN THE REBUILT STRUCTURE.

EXISTING STRUCTURE VERIFICATION

DETAILS AND DIMENSIONS SHOWN ON THESE PLANS PERTAINING TO THE EXISTING STRUCTURE HAVE BEEN OBTAINED FROM PLANS OF THE EXISTING STRUCTURE AND FROM FIELD OBSERVATIONS AND MEASUREMENTS. CONSEQUENTLY , THEY ARE INDICATIVE OF THE EXISTING STRUCTURE AND THE PROPOSED WORK BUT THEY SHALL BE CONSIDERED TENTATIVE AND APPROXIMATE. THE CONTRACTOR IS REFERRED TO CMS SECTIONS 102.05, 105.02 AND 513.02.

CONTRACT BID PRICES SHALL BE BASED UPON A RECOGNITION OF THE UNCERTAINTIES DESCRIBED ABOVE AND UPON A PREBID EXAMINATION OF THE EXISTING STRUCTURE BY THE CONTRACTOR. HOWEVER, ALL PROJECT WORK SHALL BE BASED UPON ACTUAL DETAILS AND DIMENSIONS WHICH HAVE BEND VERIFIED BY THE CONTRACTOR IN THE FIELD.

REPLACEMENT OF EXISTING REINFORCING STEEL

ANY EXISTING REINFORCING BARS WHICH ARE TO BE INCORPORATED INTO THE NEW WORK AND WHICH ARE MADE UNUSABLE BY CONCRETE REMOVAL OPERATIONS SHALL BE REPLACED WITH NEW STEEL AT THE CONTRACTOR'S COST. ANY EXISTING REINFORCING BARS DEEMED BY THE ENGINEER TO BE UNUSABLE BECAUSE OF CORROSION SHALL BE REPLACED WITH NEW STEEL AND SHALL BE INCLUDED FOR PAYMENT IN THE APPROPRIATE CONCRETE ITEM.

CONCRETE PARAPETS

THE NECESSARY DEFLECTION JOINTS CUT INTO THE PARAPET SHALL HAVE A SAWCUT MADE IN THE COMPLETE CIRCUMFERENCE OF THE PARAPET. THE DEPTH OF THE SAWCUT SHALL BE 1 INCH. THE SAWING SHALL BE DONE NO MORE THAN 48 HOURS AFTER THE CONCRETE PLACEMENT. THE USE OF AN EDGE GUIDE, FENCE OR JIG IS REQUIRED TO ENSURE THAT THE CUT IS STRAIGHT, TRUE AND ALIGNED ON ALL FACES OF THE PARAPET. THE JOINT WIDTH SHALL BE THE WIDTH OF THE SAW BLADE, NOT TO EXCEED ONE-QUARTER OF AN INCH. THE SAWCUT SHALL BE AIR BLASTED CLEAN AND FILLED WITH A CAULKING MATERIAL CONFORMING TO FEDERAL SPECIFICATION TT-S-00227 E PRIOR TO SEALING OF CONCRETE SURFACES WITH EPOXY-URETHANE. THE BOTTOM ONE-HALF INCH OF BOTH THE INSIDE AND OUTSIDE FACES OF THE PARAPET SHOULD BE LEFT UNCAULKED TO ALLOW ANY WATER WHICH MAY ENTER THE JOINT TO ESCAPE. THE ABOVE WORK INCLUDING ALL LABOR, EQUIPMENT AND MATERIALS SHALL BE INCLUDED IN THE UNIT PRICE BID FOR ITEM 842 CLASS S CONCRETE, SUPERSTRUCTURE.

DECK OVERLAY LIMITATIONS

NO SCARIFICATION SHALL BE PERFORMED AFTER OCTOBER 1. DECKS THAT ARE SCARIFIED PRIOR TO OCTOBER 1 SHALL BE POURED NO LATER THAN OCTOBER 15. NO 24 HOUR LANE CLOSURES SHALL BE PERMITTED BETWEEN OCTOBER 18 AND MARCH 15. IF THE CONTRACTOR FAILS TO HAVE THE BRIDGE DECK OPEN BY OCTOBER 15, HE SHALL PLACE ITEM 448 ASPHALT CONCRETE ON THE DECK TO ALLOW THE SAFE TRAVEL OF THE PUBLIC. THIS WORK SHALL BE PERFORMED AT THE DIRECTION OF THE PROJECT ENGINEER AND AT THE CONTRACTOR'S EXPENSE.

BRIDGE DECK OVERLAY (VARIABLE THICKNESS)

THE CONTRACTOR SHALL MAKE AVAILABLE TO THE ENGINEER SUFFICIENT SPRAY PAINT TO OUTLINE THE REMOVAL AREAS. THE COST OF THE SPRAY PAINT SHALL BE INCLUDED IN THE BRIDGE DECK OVERLAY (VARIABLE THICKNESS). IN THE EVENT OF RAIN, FINAL SOUNDING SHALL BE DONE NO SOONER THAN 24 HOURS AFTER THE RAIN, WHICH SHALL INCLUDE 8 HOURS OF GOOD DRYING WEATHER. IN NO CASE SHALL THE FINAL SOUNDING BE MADE IF THE DECK IS DAMP. FINAL SOUNDING MAY INCLUDE ONE OR MORE ATTEMPTS TO ASSURE THAT ALL DETERIORATED CONCRETE HAS BEEN REMOVED.

ESTIMATED QUANTITIES

AN ESTIMATED AMOUNT OF THE FOLLOWING QUANTITIES HAVE BEEN INCLUDED IN THE GENERAL SUMMARY FOR BIDDING PURPOSES, BUT FINAL QUANTITIES SHALL BE DETERMINED BY ACTUAL FIELD MEASUREMENTS AT THE COMPLETION OF THE WORK.

ITEM 847 MICRO-SILICA MODIFIED CONCRETE OVERLAY (VARIABLE THICKNESS)..... 35 CU.YD.

PERMANENT PAVEMENT MARKINGS

THE CONTRACTOR SHALL NOTIFY (IN WRITING) THE ROADWAY SERVICES MANAGER WITH COPIES TO THE AREA ENGINEER AND TRAFFIC CONTROL SUPERINTENDENT 14 CALENDER DAYS PRIOR TO OPENING THE ROADWAY TO TWO WAY TRAFFIC. THIS WILL ALLOW SUFFICIENT TIME FOR THE TRAFFIC CONTROL SUPERINTENDENT TO SCHEDULE THE STRIPING OF THE PERMANENT EDGE LINES AND CENTER LINE. SEND NOTIFICATION TO:

TOM BRADFORD
DISTRICT 5 ROADWAY SERVICES MANAGER
P.O. BOX 306
JACKSONTOWN, OHIO 43030
(614) 323-4400/323-5260

TROY RODENISER
DISTRICT 5 TRAFFIC CONTROL SUPERINTENDENT
P.O. BOX 306
JACKSONTOWN, OHIO 43030
(614) 323-4400/323-5285

ITEM 519 PATCHING CONCRETE STRUCTURE

THE CONTRACTOR SHALL PATCH AREAS ON THE ABUTMENTS AS DIRECTED BY THE ENGINEER. THE AREAS TO BE PATCHED SHALL HAVE A MAXIMUM SAW CUT OF 1" TO PREVENT CHIPPING AND SPALLING OF THE CONCRETE. THE PATCHED AREAS SHALL HAVE A MINIMUM DEPTH OF 4" AND MAXIMUM DEPTH OF 6". AN ESTIMATED QUANTITY OF 70 SQ. FT. HAS BEEN INCLUDED IN THE GENERAL SUMMARY FOR BIDDING PURPOSES BUT FINAL QUANTITIES SHALL BE MEASURED AT THE COMPLETION OF WORK.

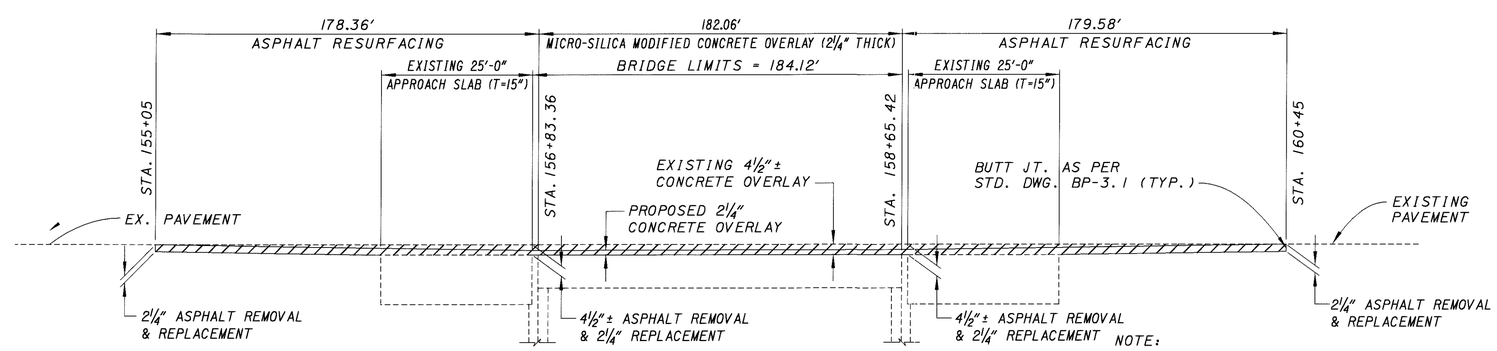

EXISTING & PROPOSED PAVEMENT PROFILE
(ALONG ℄ OF SR 062)

NOTE:
PAVEMENT TO BE FINISHED ¼" HIGHER AT APPROACH SLAB ENDS

WEARING COURSE REMOVAL

CALCULATED TAG
CHECKED RSD

GENERAL NOTES

LIC-062-18.94

L0620001.BNS (PID# 20766)

ITEM 622 PORTABLE CONCRETE BARRIER, 32", BRIDGE MOUNTED

THE CONTRACTOR SHALL INSTALL A PORTABLE CONCRETE BARRIER, 32", BRIDGE MOUNTED AS PER STANDARD DRAWING PCB-91. CONNECTIONS OF THE SEGMENTS SHELL BE ACCOMPLISHED BY USING 1¼" DIA. HIGH STRENGTH BOLTS. ANCHORING OF ALL PORTABLE CONCRETE BARRIER ON THE BRIDGE SHALL BE REQUIRED. ITEM 622 PORTABLE CONCRETE BARRIER, 32", BRIDGE MOUNTED HAS BEEN PROVIDED FOR MAINTAINING TRAFFIC AS SHOWN ON SHEETS 5/15 & 6/15. FLAGGERS SHALL BE UTILIZED FOR PROTECTION OF VEHICULAR TRAFFIC UNTIL THE MOVEMENT OF THE BARRIERS IS COMPLETE AND TRAFFIC IS MAINTAINED. AFTER THE PROJECT HAS BEEN COMPLETED THE PORTABLE CONCRETE BARRIER SHALL BECOME THE PROPERTY OF THE CONTRACTOR AND SHALL BE REMOVED BY HIM FROM THE PROJECT SITE.

CONSTRUCTION NOISE

ACTIVITIES AND LAND USE ADJACENT TO THIS PROJECT MAY BE EFFECTED BY THE CONSTRUCTION NOISE. IN ORDER TO MINIMIZE ANY ADVERSE CONSTRUCTION NOISE IMPACTS, ANY POWER-OPERATED CONSTRUCTION-TYPE DEVICE SHALL NOT BE OPERATED BETWEEN THE HOURS OF 6:00 PM AND 7:30 AM. IN ADDITION, ANY SUCH DEVICE SHALL NOT BE OPERATED AT ANY TIME IN SUCH A MANNER THAT THE NOISE CREATED SUBSTANTIALLY EXCEEDS THE NOISE CUSTOMARILY AND NECESSARILY ATTENDANT TO THE REASONABLE AND EFFICIENT PERFORMANCE OF SUCH EQUIPMENT.

ITEM 518 SCUPPER, VERTICAL EXTENSION

DOWNSPOUT EXTENSION SHALL BE ⅜" THICK GALVANIZED STEEL PIPE, THE ACTUAL SIZE OF EACH EXTENSION SHALL BE FIELD MEASURED BY THE CONTRACTOR TO ENSURE PROPER INSTALLATION. JOINT CONNECTIONS SHALL BE WELDED AS REQUIRED BY 513.17. GALVANIZING SHALL BE IN ACCORDANCE WITH 711.02. PAINTING SHALL CONFORM TO 514.03. FINISH PAINT SHALL BE FS-595B-16251(GRAY). ALL MATERIALS, LABOR, TOOLS AND INCIDENTALS NECESSARY TO COMPLETE THE ABOVE WORK SHALL BE PAID FOR UNDER ITEM 518 SCUPPER, LENGTHENING.

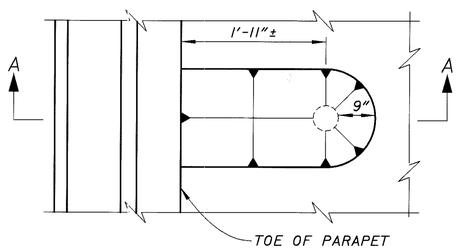

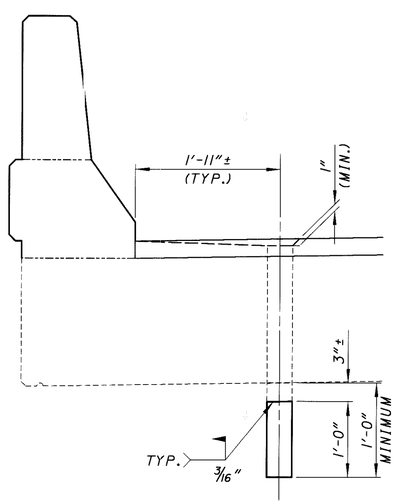

SECTION A-A

CLEANING OF EXPOSED REINFORCING STEEL

ALL EXPOSED STEEL BEING PRESERVED IN PLACE SHALL BE CLEANED BY SANDBLASTING OR AN ALTERNATIVE METHOD APPROVED BY THE DISTRICT CONSTRUCTION ENGINEER TO REMOVE LOOSE RUST AND SURFACE CORROSION. PRIOR TO PLACEMENT OF THE CONRETE, THE ENGINEER SHALL INSPECT AND APPROVE THE CONDITION OF THE RE-STEEL. THE ABOVE WORK INCLUDING LABOR, MATERIALS, TOOLS AND INCIDENTIALS SHALL BE INCLUDED IN THE UNIT BID PRICE FOR ALL THE 842 AND 847 CONCRETE ITEMS.

ITEM SPECIAL-SEALING OF CONCRETE SURFACES (EPOXY-URETHANE)

A CONCRETE SEALER SAHLL BE APPLIED TO ALL EXPOSED SURFACES OF THE PARAPETS AND DECK EDGES AS SHOWN ON SHEET 18/18.

SEE PROPOSAL NOTE FOR SURFACE PREPARATION REQUIREMENTS, APPLICATION PROCEDURES AND RATES, AND MATERIAL REQUIREMENTS.

THE COLOR OF THE URETHANE SEALER SHALL BE FEDERAL COLOR STANDARD No. 17778 (OFF WHITE).

ITEM 614 MAINTAINING TRAFFIC

THROUGH TRAFFIC SHALL BE MAINTAINED AT ALL TIMES BY THE USE OF PART WIDTH CONSTRUCTION AS SHOWN ON SHEETS 8/18 & 10/18. ALL WORK AND TRAFFIC CONTROL DEVICES SHALL BE IN ACCORDANCE WITH ITEM 614 AND OTHER APPLICABLE PORTIONS OF THE SPECIFICATIONS, AS WELL AS THE OHIO MANUAL OF UNIFORM TRAFFIC CONTROL DEVICES. PAYMENT FOR ALL LABOR, EQUIPMENT MATERIALS AND TOOLS SHALL BE INCLUDED IN THE LUMP SUM CONTRACT PRICE FOR ITEM 614, MAINTAINING TRAFFIC, UNLESS SEPARATELY ITEMIZED IN THE PLANS.

TEMPORARY SOIL EROSION AND SEDIMENT CONTROL

THE FOLLOWING ESTIMATED QUANTITIES ARE TO BE PLACED BY THE CONTRACTOR WITH THE ENGINEER'S CONCURRENCE FOR TEMPORARY EROSION AND SEDIMAENT CONTROL MEASURES:

877	30000	700	LIN.FT.	TEMPORARY PERIMETER, DITCH CHECK OR INLET PROTECTION FILTER FABRIC FENCE
877	60000	35	CU.YD.	SEDIMENT REMOVAL

BERM RESHAPING

BERMS AT LOCATIONS WHERE EXISTING GUARDRAIL IS REMOVED OR WHERE NEW GUARDRAIL IS TO BE ERECTED SHALL BE RESHAPED AS DIRECTED BY THE ENGINEER TO ENSURE A SMOOTH SURFACE FREE FROM ALL IRREGULARITIES. EXCESS EXCAVATION RESULTING FROM RESHAPING BERMS SHALL BE DISPOSED OF AS DIRECTED BY THE ENGINEER. PAYMENT FOR RESHAPING BERMS AS DESCRIBED SHALL BE INCLUDED IN THE CONTRACT UNIT PRICE BID PER LINEAR FOOT FOR ITEM SPECIAL, BERM RESHAPING 400 LIN.FT. BERM RESHAPING, GUARDRAIL REMOVAL AND CONSTRUCTION SHALL BE PREFORMED ON ONE SIDE OF THE PAVEMENT AT ANY GIVEN TIME. THE OPEN AREA DUE TO GUARDRAIL REMOVAL SHALL BE ADEQUATELY MAINTAINED AND PROTECTED WITH TEMPORARY GUIDE MARKERS OR BARRICADES AT ALL TIMES. WHERE EXISTING GUARDRAIL IS REMOVED, NEW GUARDRAIL SHALL BE ERECTED AS SOON AS PRACTICAL. ANY AREAS LEFT UNGUARDED OVERNIGHT SHALL BE PROTECTED BY THE USE OF BARRICADES, DRUMS, OR OTHER WARNING DEVICES SATISFACTORY TO THE ENGINEER.

CONNECTION BETWEEN EXISTING AND PROPOSED GUARDRAIL

WHEN IT IS NECESSARY TO SPLICE PROPOSED GUARDRAIL TO EXISTING GUARDRAIL, ONLY THE EXISTING GUARDRAIL SHALL BE CUT, DRILLED, OR PUNCHED. THE CONNECTION SHALL BE MADE USING A "W-BEAM RAIL SPLICE" AS SHOWN ON STANDARD CONSTRUCTION DRAWING GR-1.1M. PAYMENT SHALL INCLUDED IN THE CONTRACT PRICE FOR THE RESPECTIVE GUARDRAIL ITEMS.

ITEM 614 BITUMINOUS CONCRETE FOR MAINTAINING TRAFFIC

AN ADDITIONAL QUANTITIY OF 10 CU.YDS. HAS BEEN INCLUDED IN THE PLANS TO STABILIZE BERMS AND OR REPAIR PAVEMENT OR BERMS DAMAGES WHEN MAINTAING TRAFFIC.

ITEM 516 2" DEEP JOINT SEALER, AS PER PLAN

ITEM 516 2" DEEP JOINT SEALER, AS PER PLAN SHALL USE A HOT APPLIED MATERIAL WHICH ALSO MEETS THE REQUIREMENTS OF 705.04. SANDBLAST ALL VERTICAL SURFACES AND WIPE CLEAN BEFORE APPLING THE JOINT SEALER. IF RUST FORMS BEFORE THE JOINT SEALER IS APPLIED RE-SANDBLAST AND WIPE CLEAN ALL THE VERTICAL SURFACES. ALL LABOR, TOOLS, INCIDENTIALS AND ALL MATERIALS SHOWN ON SHEET 15/18 NECESSARY TO COMPLETE THE ABOVE WORK SHALL BE PAID FOR UNDER ITEM 516 2" JOINT SEALER, AS PER PLAN.

CSX DEMOLITION METHOD "A"

DURING DEMOLITION OF THE DECK, A PROTECTION SHIELD SHALL BE ERECTED OVER THE TRACK TO CATCH FALLING DEBRIS. THE SHIELD SHALL BE SUPPORTED FROM GIRDERS AND BEAMS AND SHALL NOT BE LOWER THAN THE ALLOWED TEMPORARY CLEARANCE. THE DECK SHALL BE REMOVED BY CUTTING INTO THE SECTIONS AND LIFTING THEM OUT. LARGE PIECES OF THE DECK SHALL NOT BE ALLOWED TO FALL ON THE PROTECTION SHIELD. THE CONTRACTOR SHALL SUBMIT DETAILED PLANS OF THE PROTECTION SHIELD TO THE DIVISION ENGINEER FOR APPROVAL PRIOR TO THE START OF DEMOLITIONS. THE PLANS SHALL BE PREPARED BY A REGISTERED PROFESSIONAL ENGINEER AND SHALL BEAR HIS SEAL AND SIGNATURE. BLASTING WILL NOT BE PERMITTED OVER RAILROAD RIGHT-OF-WAY.

COOPERATION WITH RAILROAD

THE CONTRACTOR IS TO COOPERATE AT ALL TIMES WITH THE LOCAL OFFICIALS OF THE RAILROAD COMPANY. HE SHALL USE ALL REASONABLE CARE AND DILIGENCE IN THE WORK IN ORDER TO AVOID ACCIDENTS, DAMAGE OR UNNECESSARY DELAY TO, OR INTERFERENCE WITH THE TRAINS AND OTHER PROPERTY OF THE RAILROAD. THE CONTRACTOR SHALL NOTIFY THE LOCAL OFFICIALS OF THE RAILROAD PRIOR TO STARTING WORK THAT MAY AFFECT RAILROAD PROPERTY AND FACILITIES. NO SCAFFOLD, PLANKS OR OTHER EQUIPMENT SHALL BE SUSPENDED OR ERECTED ABOVE OR WITHIN 21.3' FEET OF THE RAIL OVER WHICH TRAINS ARE OPERATING WITHOUT PRIOR WRITTEN APPROVAL OF THE CHIEF ENGINEER OF THE RAILROAD COMPANY, OR HIS AUTHORIZED REPRESENTATIVE. FAILURE TO NOTIFY THE RAILROAD COMPANY AS NOTED ABOVE SHALL BE CAUSE FOR STOPPING WORK UNTIL ALL PROVISIONS FOR PROTECTING RAILROAD PROPERTY HAVE BEEN PROVIDED.

CSX TRANSPORTATION
4901 BELFORD RD.
SUITE 130
JACKSONVILLE, FL 32256
(904) 359-1836

ESTIMATED QUANTITIES

AN ESTIMATED AMOUNT OF THE FOLLOWING QUANTITIES HAVE BEEN INCLUDED IN THE GENERAL SUMMARY FOR BIDDING PURPOSES, BUT THE FINAL QUANTITIES SHALL BE DETERMINED BY ACTUAL FIELD MEASUREMENTS AT THE COMPLETION OF THE WORK.

ITEM 870 - SEEDING AND MULCHING	255 SQ.YD.
ITEM 870 - COMMERCIAL FERTILIZER	0.030 TON
ITEM 870 - AGRICULTURAL LIMING	0.105 TON
ITEM 870 - WATER	1.38 MGAL.

ITEM SPECIAL BLACK OUT TAPE

ITEM SPECIAL BLACK OUT TAPE SHALL BE INSTALLED IN THE AREAS OF EXISTING CONFLICTING PAVEMENT MARKINGS DURING THE MAINTENANCE OF TRAFFIC AT THE LOCATIONS INDICATED IN THE PLAN. THIS TAPE SHALL BE INSTALLED TEMPORARILY AND MAINTAINED AS DIRECTED BY THE PROJECT ENGINEER AND REMOVED WHEN NO LONGER NEEDED FOR THE MAINTENANCE OF TRAFFIC. AN ESTIMATED QUANTITY HAS BEEN INCLUDED IN THE GENERAL SUMMARY FOR USE AS DIRECTED BY THE PROJECT ENGINEER FOR THE MAINTENANCE OF TRAFFIC.

ITEM 601 RIPRAP, GROUTED, AS PER PLAN

RIPRAP, GROUTED, AS PER PLAN SHALL BE PLACED IN AREAS AS DETAILED ON SHEET 12/18 AND IN AREAS DESIGNATED BY THE ENGINEER. CONCRETE REMOVED FROM THE STRUCTURE MAY BE USED PROVIDING THAT ALL REINFORCING STEEL PROTRUDING FROM THE CONCRETE IS REMOVED BY FLAME CUTTING. ALL CONCRETE PIECES SHALL CONFORM TO 601.04 RIPRAP (1). NO ASPHALT CONCRETE SHALL BE PLACED ON THE EMBANKMENT. PRIOR TO THE PLACEMENT OF THE RIPRAP, FILTER FABRIC SHALL BE PLACED ON THE SURFACE OF THE SLOPE. PAYMENT SHALL BE PER SQUARE YARD OF ITEM 601 RIPRAP, GROUTED, AS PER PLAN WHICH SHALL INCLUDE ALL MATERIAL INCLUDING FILTER FABRIC, FORMWORK, LABOR, TOOLS AND INCIDENTALS NECESSARY TO COMPLETE THIS ITEM.

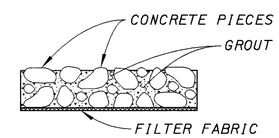

CALCULATED TAG
CHECKED RSD

GENERAL NOTES

LIC-062-18.94

L0620001.BNS (PID# 20766)

SHEET NUMBER											ITEM	ITEM EXT.	GRAND TOTAL	UNIT	DESCRIPTION	SEE SHEET NO.
		4		7		11	12									
															ROADWAY	
201											201	11000	LUMP		CLEARING AND GRUBBING	
202				954.5							202	23500	954.5	SQ YD	WEARING COURSE REMOVED	
202							400				202	38000	400	LIN FT	GUARDRAIL REMOVED	
203				141.5							203	12000	141.5	CU YD	EXCAVATION NOT INCLUDING EMBANKMENT CONSTRUCTION	
606							400				606	13000	400	LIN FT	GUARDRAIL, TYPE 5	
606							4				606	35000	4	EACH	BRIDGE TERMINAL ASSEMBLY, TYPE 1	
SPECIAL							400				SPECIAL	60650000	400	LIN FT	RESHAPING BERM	
															EROSION CONTROL	
601							404				601	12001	404	SQ YD	RIPRAP, GROUTED, AS PER PLAN	
870		255									870	10000	255	SQ YD	SEEDING AND MULCHING	
870		0.03									870	20000	0.03	TON	COMMERCIAL FERTILIZER	
870		0.105									870	30000	0.105	TON	AGRICULTURAL LIME	
870		1.38									870	35000	1.38	M GAL	WATER	
877		700									877	30000	700	LIN FT	TEMPORARY PERIMETER, DITCH CHECK OR INLET PROTECTION FILTER FABRIC FENCE	
877		20									877	60000	20	CU YD	SEDIMENT REMOVAL	
															PAVEMENT	
301				94							301	46000	94	CU YD	BITUMINOUS AGGREGATE BASE, PG64-22	
304				36							304	20000	36	CU YD	AGGREGATE BASE	
407				92							407	10000	92	GALLON	TACK COAT	
448				33							448	46020	33	CU YD	ASPHALT CONCRETE INTERMEDIATE COURSE, TYPE 1, PG64-22	
448				41							448	47020	41	CU YD	ASPHALT CONCRETE SURFACE COURSE, TYPE 1, PG64-22	
															TRAFFIC CONTROL	
626											626	00300	16	EACH	BARRIER REFLECTOR, TYPE A2	
626											626	00400	14	EACH	BARRIER REFLECTOR, TYPE B2	
															MAINTENANCE OF TRAFFIC	
614						864					614	12800	864	EACH	TEMPORARY RAISED PAVEMENT MARKER	
614											614	13000	10	CU YD	BITUMINOUS CONCRETE FOR MAINTAINING TRAFFIC	
614				34							614	13302	34	EACH	BARRIER REFLECTOR, TYPE B2	
614				34							614	13350	34	EACH	OBJECT MARKER	
614				24							614	26400	24	LIN FT	TEMPORARY STOP LINE, CLASS 1, 740.06, TYPE 1	
622				300							622	40020	300	LIN FT	PORTABLE CONCRETE BARRIER, 32"	
622				480							622	40040	480	LIN FT	PORTABLE CONCRETE BARRIER, 32", BRIDGE MOUNTED	
SPECIAL				290							SPECIAL	69098100	290	LIN FT	MISC.: BLACK OUT TAPE	

CALCULATED TAG
CHECKED RSD

GENERAL SUMMARY

LIC-062-18.94

L0620002.BNS (07/19/99) (PID#)

SHEET NUMBER											ITEM	ITEM EXT.	GRAND TOTAL	UNIT	DESCRIPTION	SEE SHEET NO.
		3						18								
															STRUCTURE REPIAR	
202											202	11200	LUMP		PORTIONS OF STRUCTURE REMOVED, SUPERSTRUCTURE	
202											202	11200	LUMP		PORTIONS OF STRUCTURE REMOVED, SUBSTRUCTURE	
SPECIAL								465			SPECIAL	51267510	465	SQ YD	SEALING OF CONCRETE SURFACES (EPOXY-URETHANE)	
516											516	31011	71	LIN FT	2" DEEP JOINT SEALER, AS PER PLAN	
518											518	12900	20	EACH	SCUPPER, LENGTHENING	
519		70									519	11100	70	SQ FT	PATCHING CONCRETE STRUCTURES	
842											842	31500	47	CU YD	CLASS S CONCRETE, SUPERSTRUCTURE	
842											842	45700	3	CU YD	CLASS C CONCRETE, ABUTMENT	
847											847	10000	640	SQ YD	MICRO-SILICA MODIFIED CONCRETE OVERLAY (2¼" THICK)	
847		35									847	20000	35	CU YD	MICRO-SILICA MODIFIED CONCRETE OVERLAY (VARIABLE THICKNESS)	
847											847	30000	LUMP		TEST SLAB	
847											847	30200	25	CU YD	FULL-DEPTH REPAIR	
											847	30400	573	SQ YD	EXISTING CONCRETE OVERLAY REMOVED (4½" NOMINAL THICKNESS)	
614																
624																
860																
											614	11000	LUMP		MAINTAINING TRAFFIC	
											624	10000	LUMP		MOBILIZATION	
											806	16000	2	MONTH	FIELD OFFICE, TYPE A	

CALCULATED TAG
CHECKED RSD

GENERAL SUMMARY

LIC-062-18.94

L0620002.BNS (07/19/99) (PID#)

ITEM 202 WEARING COURSE REMOVED
STA. 155+05 TO STA. 156+83.36
[(178.36')(24.0')/9] = 475.6 SQ.YD.
STA. 158+65.42 TO STA. 160+45
[(179.58')(24.0')/9] = 478.9 SQ.YD.
TOTAL = 954.5 SQ.YD.

ITEM 203 EXCAVATION NOT INCLUDING EMBANKMENT CONSTRUCTION
STA. 155+05 TO STA. 156+55 (RT. & LT.)
2[(150.0')((3.0'+4.75')/2)(1.33')]/27 = 57.2 CU.YD.
STA. 156+55 TO STA. 156+83.36 (RT. & LT.)
2[(28.36')(4.75')(1.33')]/27 = 13.3 CU.YD.
STA. 158+65.42 TO STA. 158+95 (RT. & LT.)
2[(29.58')(4.75')(1.33')]/27 = 13.8 CU.YD.
STA. 158+95 TO STA. 160+45 (RT. & LT.)
2[(150.0')((3.0'+4.75')/2)(0.33')]/27 = 57.2 CU.YD.
TOTAL = 141.5 CU.YD.

ITEM 301 BITUMINOUS AGREGATE BASE, AS PER PLAN
STA. 155+05 TO STA. 156+55 (RT. & LT.)
2[(150.0')((2.5'+4.25')/2)(1.0')]/27 = 37.5 CU.YD.
STA. 156+55 TO STA. 156+83.36 (RT. & LT.)
2[(28.36')(4.25')(1.0')]/27 = 8.9 CU.YD.
STA. 158+65.42 TO STA. 158+95 (RT. & LT.)
2[(29.58')(4.25')(1.0')]/27 = 9.3 CU.YD.
STA. 158+95 TO STA. 160+45 (RT. & LT.)
2[(150.0')((2.5'+4.25')/2)(1.0')]/27 = 37.5 CU.YD.
TOTAL = 93.2 CU.YD. (USE 94 CU.YD.)

ITEM 304 AGREGATE BASE
STA. 155+05 TO STA. 156+55 (RT. & LT.)
2[(150.0')((3.0'+4.75')/2)(0.33')]/27 = 14.2 CU.YD.
STA. 156+55 TO STA. 156+83.36 (RT. & LT.)
2[(28.36')(4.75')(0.33')]/27 = 3.3 CU.YD.
STA. 158+65.42 TO STA. 158+95 (RT. & LT.)
2[(29.58')(4.75')(0.33')]/27 = 3.4 CU.YD.
STA. 158+95 TO STA. 160+45 (RT. & LT.)
2[(150.0')((3.0'+4.75')/2)(0.33')]/27 = 14.2 CU.YD.
TOTAL = 35.1 CU.YD. (USE 36 CU.YD.)

ITEM 448 ASPHALT SURFACE COURSE,TYPE 1, PG64-22
STA. 155+05 TO STA. 156+83.36
[(178.36')((28.0'+31.5')/2)(0.104')]/27 = 20.4 CU.YD.
STA. 158+65.42 TO STA. 160+45
[(179.58')(28.0'+31.5')/2)(0.104')]/27 = 20.6 CU.YD.
TOTAL = 41.0 CU.YD.

ITEM 448 ASPHALT INTERMEDIATE COURSE,TYPE 1, PG64-22
STA. 155+05 TO STA. 156+83.36
[(178.36')((28.0'+31.5')/2)(0.083')]/27 = 16.4 CU.YD.
STA. 158+65.42 TO STA. 160+45
[(179.58')(28.0'+31.5')/2)(0.083')]/27 = 16.5 CU.YD.
TOTAL = 32.9 CU.YD. (USE 33 CU.YD.)

ITEM 407 TACK COAT(@ 0.075 GAL/SQ.YD.)
STA. 155+05 TO STA. 156+83.36
[(((178.36')((28.0'+31.5')/2)/9)(0.075 GAL/SQ.YD.)] = 44.2 GAL.
STA. 158+65.42 TO STA. 160+45
[(((179.58')((28.0'+31.5')/2)/9)(0.075 GAL/SQ.YD.)] = 44.5 GAL.
ITEM 407 TACK COAT (@ 0.025 GAL/SQ.YD.)
STA. 155+05 TO STA. 156+83.36
[2(178.36')(1.3333')/9(0.025 GAL/SQ.YD.)] = 1.3 GAL.
STA. 158+65.42 TO STA. 160+45
[2(179.58')(1.3333')/9(0.025 GAL/SQ.YD.)] = 1.3 GAL.
TOTAL = 91.3 GAL. (USE 92 GAL.)

ITEM 622 PORTABLE CONCRETE BARRIER, 32"
PHASE 1
STA. 156+05 TO STA. 156+55 = 50 LIN.FT.
STA. 158+95 TO STA. 159+95 = 100 LIN.FT.

PHASE 2
STA. 155+55 TO STA. 156+55 = 100 LIN.FT.
STA. 158+95 TO STA. 159+45 = 50 LIN.FT.
TOTAL = 300 LIN.FT.

ITEM 622 PORTABLE CONCRETE BARRIER, 32", BRIDGE MOUNTED
PHASE 1
STA. 156+55 TO STA. 158+95 = 240 LIN.FT.

PHASE 2
STA. 156+55 TO STA. 158+45 = 240 LIN.FT.
TOTAL = 480 LIN.FT.

ITEM 614 STOP LINE, CLASS 1, 740.06, TYPE 1
STA. 155+05 = 12.0 LIN.FT.
STA. 160+45 = 12.0 LIN.FT.
TOTAL = 24.0 LIN.FT.

ITEM 614 BARRIER REFLECTOR, TYPE B2
PHASE 1
3 EACH @ 25' SPA. (END TRANSITION)
10 EACH @ 25' SPA. (P.C.B. ON BRIDGE)
4 EACH @ 25' SPA. (BEGINNING TRANSITION)

PHASE 2
4 EACH @ 25' SPA. (BEGINNING TRANSITION)
10 EACH @ 25' SPA. (P.C.B. ON BRIDGE)
3 EACH @ 25' SPA. (END TRANSITION)
34 EACH

ITEM 614 OBJECT MARKER
PHASE 1
3 EACH @ 25' SPA. (END TRANSITION)
10 EACH @ 25' SPA. (P.C.B. ON BRIDGE)
4 EACH @ 25' SPA. (BEGINNING TRANSITION)

PHASE 2
4 EACH @ 25' SPA. (BEGINNING TRANSITION)
10 EACH @ 25' SPA. (P.C.B. ON BRIDGE)
3 EACH @ 25' SPA. (END TRANSITION)
34 EACH

ITEM 690 BLACKOUT TAPE
STA. 155+05 TO STA. 156+50 = 145 LIN.FT.
STA. 159+00 TO STA. 160+45 = 145 LIN.FT.
TOTAL = 290 LIN.FT.

QUANTITIES CARRIED TO GENERAL SUMMARY SHEET 5/18.

CALCULATED TAG CHECKED CLZ

CALCULATIONS

LIC-062-18.94

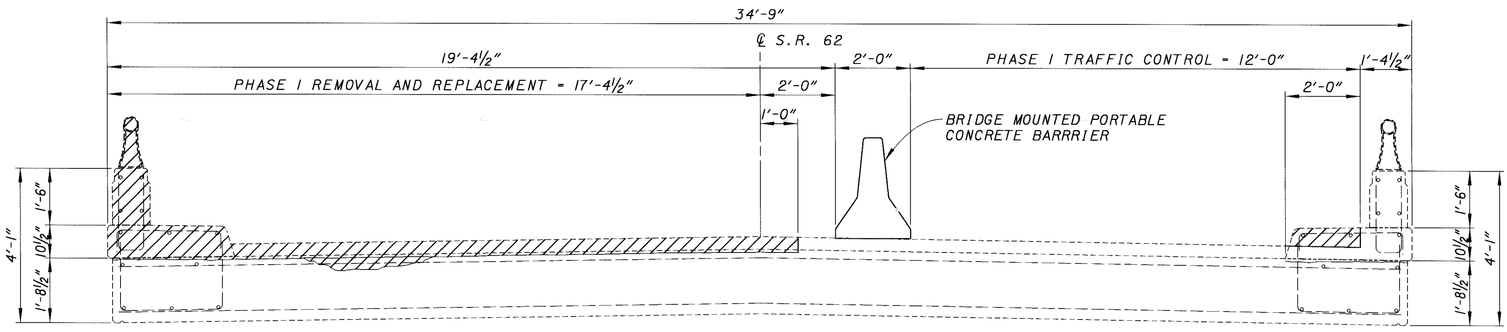

PHASE 1

PHASE 1 REMOVAL

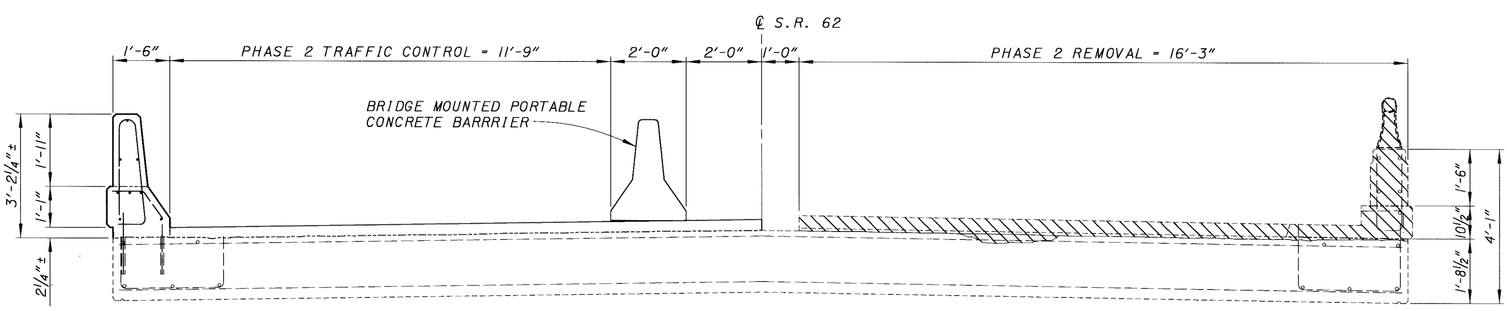

PHASE 2

PHASE 2 REMOVAL

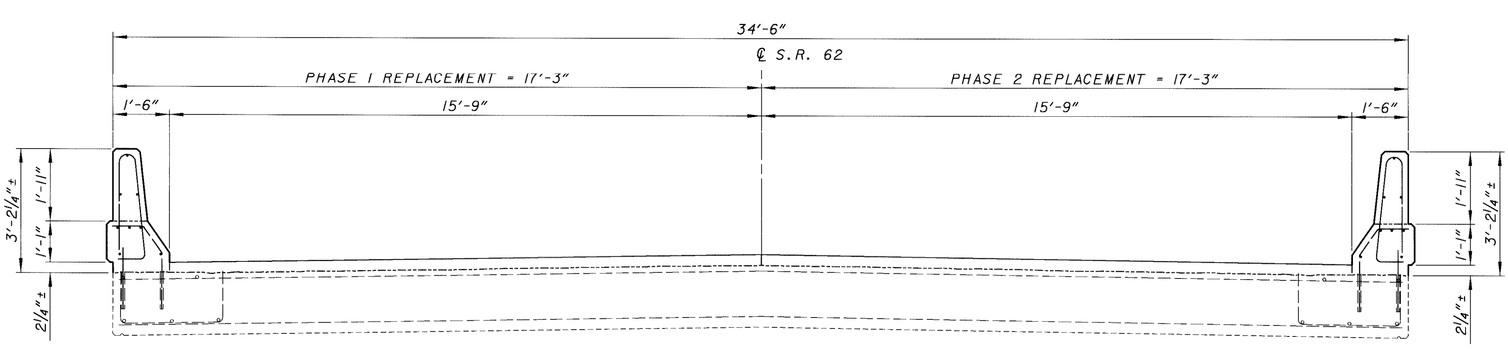

PROPOSED TRANSVERSE SECTION

8/18	LIC-062-18.94	MAINTENANCE OF TRAFFIC BRIDGE NO. LIC-062-1894 OVER CSX TRANSPORTATION RAILROAD & PLANT ENTRANCE	DESIGNED TAG CHECKED RSD	DRAWN TAG REVISED	REVIEWED CLZ DATE 2-01-2000 STRUCTURE FILE NUMBER 4502825	DESIGN AGENCY OHIO DEPARTMENT OF TRANSPORTATION DISTRICT 5

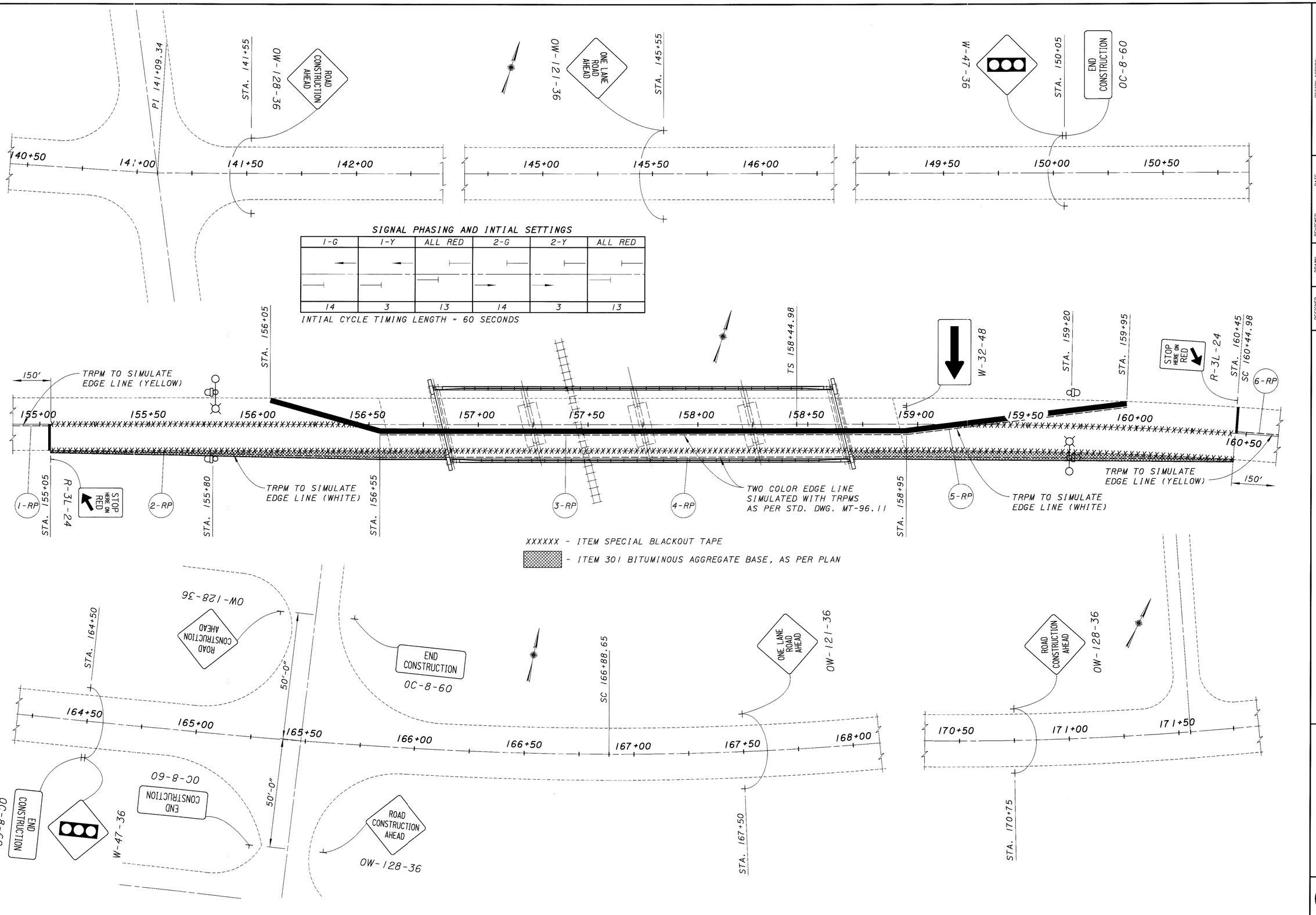

L0620002.BMT (07-23-99) SCALE = 20

DESIGN AGENCY
OHIO DEPARTMENT OF TRANSPORTATION DISTRICT 5

DESIGNED	DRAWN	REVIEWED	DATE
TAG	TAG	CLZ	2-01-2000
CHECKED	REVISED	STRUCTURE FILE NUMBER	
RSD		4502825	

PHASE I MAINTENANCE OF TRAFFIC

BRIDGE NO. LIC-062-1894

OVER CSX TRANSPORTATION RAILROAD & PLANT ENTRANCE

LIC-062-18.94

9/18

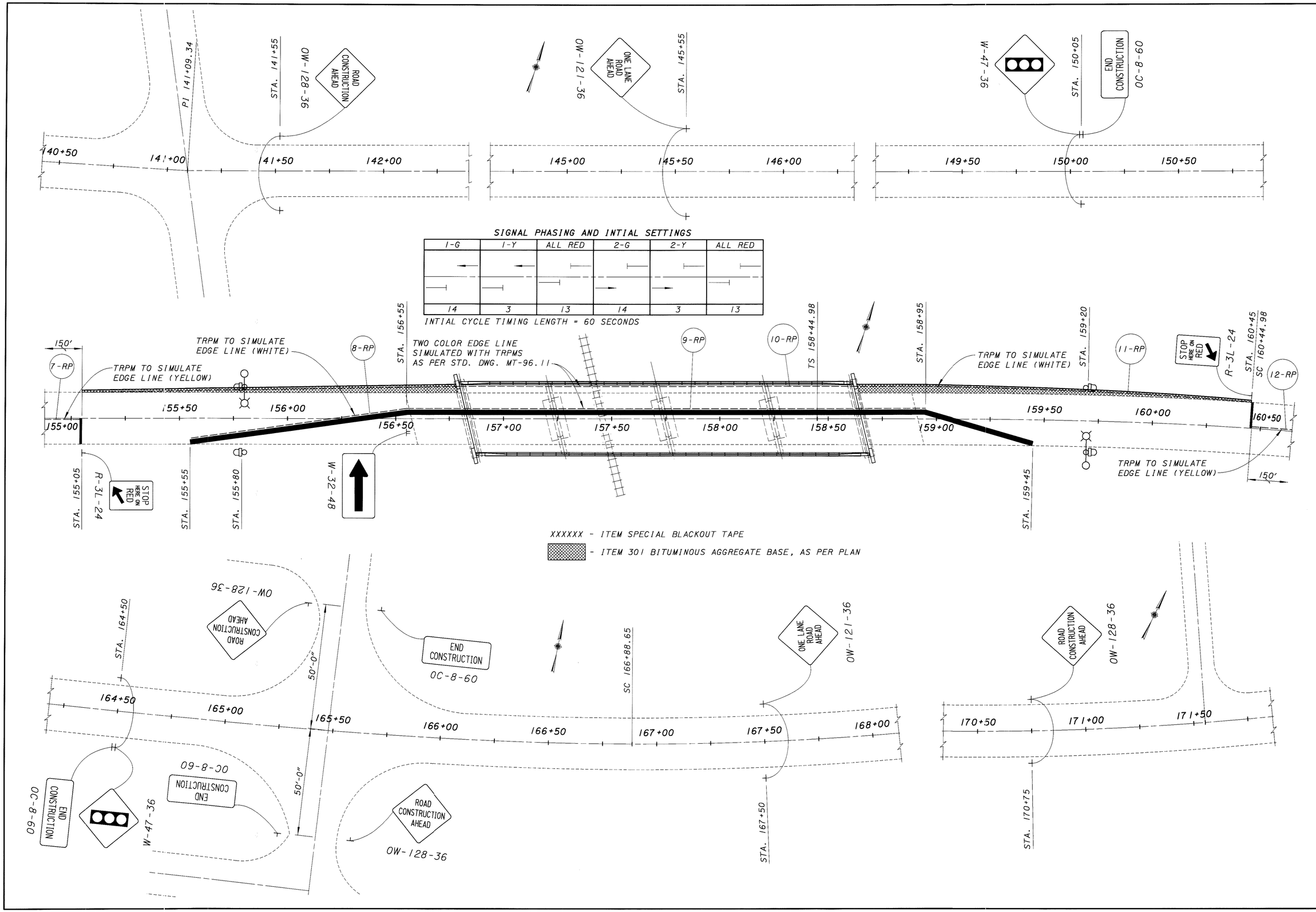

L0620003.BMT (07-23-99) SCALE -20

DESIGN AGENCY
OHIO DEPARTMENT OF TRANSPORTATION DISTRICT 5

DESIGNED	DRAWN	REVIEWED	DATE
TAG	TAG	CLZ	2-01-2000
CHECKED	REVISED	STRUCTURE FILE NUMBER	
RSD		4502825	

PHASE 2 MAINTENANCE OF TRAFFIC

BRIDGE NO. LIC-062-1894
OVER CSX TRANSPORTATION RAILROAD & PLANT ENTRANCE

LIC-062-18.94

GENERAL

THIS ITEM OF WORK SHALL CONSIST OF FURNISHING, INSTALLING, MAINTAINING, AND SUBSEQUENTLY REMOVING TEMPORARY RAISED PAVEMENT MARKERS (TRPM'S). THE MARKERS SHALL BE YELLOW OR WHITE, AS DESCRIBED IN THE PLAN.

MATERIAL

ALL MARKERS SHALL BE OF SUFFICIENT STRENGTH AND PROPERLY SHAPED SO AS NOT TO BE DISLODGED OR BROKEN, OR THE REFLECTOR DISLODGED OR BROKEN, OR THE REFLECTOR DISLODGED OR DAMAGED BY IMPACTS FROM VEHICLES TIRES, INCLUDING THOSE OF HIGH PRESSURE TRUCK TIRES LOADED TO 4500 POUNDS.

RETROREFLECTORS SHALL BE PROVIDED IN ONE OR TWO DIRECTIONS ON EACH MARKER AS REQUIRED BY THE USAGE AND SHALL RETURN WHITE OR YELLOW LIGHT AS IS APPROPRIATE FOR THE APPLICATION.

THE REFLECTOR SHALL HAVE AN EFFECTIVE AREA OF 0.35 SQUARE INCHES FOR TYPE A OR 3.0 SQUARE INCHES FOR TYPE B. ITS BRIGHTNESS OR SPECIFIC INTENSITY (WHEN TESTED AT 0.2 DEGREE ANGLE OF OBSERVATION AND THE FOLLOWING ANGLES OF INCIDENCE) SHALL MEET OR EXCEED THE FOLLOWING:

SPECIFIC INTENSITY

TYPE A

INCIDENCE ANGLE (DEGREES)	WHITE	YELLOW
0	1.0	0.6
20	0.4	0.24
45	—	—

TYPE B

	WHITE	YELLOW
0	3.0	1.8
20	1.2	0.72
45	0.3	0.2

ANGLE OF INCIDENCE FORMED BY A RAY FROM LIGHT SOURCE TO THE MARKER AND THE NORMAL TO THE LEADING EDGE OF THE MARKER FACE (ALSO HORIZONTAL ENTRANCE ANGLE) .

ANGLE OF OBSERVATION FORMED BY A RAY FROM LIGHT SOURCE TO THE MARKER AND THE RETURNED RAY FROM THE MARKER TO THE MEASURING RECEPTOR.

SPECIFIC INTENSITY IS THE MEAN CANDLEPOWER OF THE REFLECTED LIGHT (AT GIVEN INCIDENCE AND DIVERGENCE ANGLES) FOR EACH FOOT-CANDLE AT THE REFLECTOR (ON A PLANE PERPENDICULAR TO THE INCIDENT LIGHT) .

TYPE A MARKERS ARE INTENDED TO PROVIDE HIGH VISIBILITY BOTH DAY AND NIGHT. THEIR DAY TIME VISIVILITY SHALL BE ASSURED BY SIZE, SHAPE AND COLOR AS FOLLOWS:

1) THE MARKERS SHALL BE A HIGH VISIBILITY YELLOW OR WHITE COLOR WHICH WILL NOT DEGRADE SUBSTANTIALLY DUE TO TRAFFIC WEAR AND WHICH WILL MATCH THE COLOR OF THE REFLECTOR.

2) WHEN VIEWED FROM ABOVE, THE MARKERS SHALL HAVE A VISIBLE AREA OF NOT LESS THAN 14 SQUARE INCHES.

3) WHEN VIEWED FROM THE FRONT, PARALLEL TO THE PAVEMENT, AS FROM APPROACHING TRAFFIC, THE MARKER SHALL HAVE A WIDTH OF APPROXIMATELY 4 INCHES AND A VISIBLE AREA OF NOT LESS THAN 1.5 SQUARE INCHES.

TYPE B MARKERS ARE INTENDED TO PROVIDE HIGH VISIBILITY AT NIGHT BY RETROREFLECTING AUTOMOTIVE HEADLIGHT BACK TO DRIVER.

INSTALLATION

TEMPORARY RAISED PAVEMENT MARKERS SHALL BE ATTACHED TO CLEAN, DRY PAVEMENT BY A BUTYL ADHESIVE PAD, A BITUMINOUS ADHESIVE OR OTHER CONSTRUCTION GRADE ADHESIVES (SUCH AS FRANKLIN PANEL AND METAL ADHESIVE) SUITABLE TO ANCHOR THE MARKER UNDER THE ABOVE CONDITIONS. WHEN IT IS NECESSARY TO ATTACH MARKERS TO NEW CONCRETE PAVEMENT WITH CURING COMPOUND REMAINING, THE CURING COMPOUND MEMBRANE SHALL BE REMOVED BY SANDBLASTING OR OTHER MECHANICAL CLEANING METHOD. MARKERS SHALL BE INSTALLED IN ACCORDANCE WITH THE MANUFACTURER'S RECOMMENDATIONS.

THE CONTRACTOR SHALL IMMEDIATELY REPLACE, AT HIS EXPENSE, ANY MARKERS WHICH FAIL (BROKEN HOUSING, HOUSING WORN TO THE EXTENT THAT DAYTIME VISIBILITY IS SIGNIFICANTLY DIMINISHED OR OF AN UNACCEPTABLE COLOR, DETACHED OR BROKEN REFLECTOR, HOUSING DETACHED FROM ADHESIVE).

MARKERS ARE LIKELY TO BE REMOVED BY SNOW PLOWING OPERATIONS, THUS THEY ARE NOT CONSIDERED SUITABLE FOR USE DURING THE PERIOD FROM OCTOBER 15 UNTIL APRIL 30. THE CONTRACTOR IS ADVISED TO SCHEDULE HIS WORK AND/OR THE USE OF THESE DEVICES TO AVOID THIS PERIOD. SHOULD THE CONTRACTOR CHOOSE TO USE TRPM'S DURING THIS PERIOD AND THEY ARE SUBSEQUENTLY REMOVED OR DESTROYED BY SNOW AND ICE CONTROL ACTIVITIES. THE CONTRACTOR SHALL IMMEDIATELY, AT HIS EXPENSE, PROVIDE A SUBSTITUTE TRAFFIC GUIDANCE SYSTEM EFFECTIVE DURING DAY AND NIGHT AND WHICH IS ACCEPTABLE TO THE ENGINEER.

THE MARKERS SHALL BE PLACED ACCURATELY TO DEPICT STRAIGHT OR UNIFORMLY CURVING LINES. WHEN USED TO SUPPLEMENT TEMPORARY PAVEMENT MARKINGS, THEY SHALL BE PLACED ON OR IMMEDIATELY ADJACENT TO THE PAVEMENT MARKING. LOCATIONS SHALL BE ADJUSTED UP TO ONE FOOT LONGITUDINALLY OR SIX INCHES LATERALLY TO AVOID PLACEMENT ON JOINTS, OR ON CRACKED OR DETERIORATED PAVEMENT. MARKERS SHALL NOT BE PLACED DIRECTLY ON PAVEMENT MARKINGS IF THIS DETRACTS FROM THEIR ABILITY TO REMAIN ATTACHED TO THE PAVEMENT.

APPLICATION

1) WHEN REQUIRED TO SUPPLEMENT PAVEMENT MARKING, TEMPORARY RAISED PAVEMENT MARKERS SHALL BE PLACED AS FOLLOWS:

LINE	TYPE	SPACING
EDGE LINE	A OR B	20'C/C
LANE LINE	A OR B	40'C/C*
CENTER LINE (SINGLE/BROKEN)	A OR B	40'C/C*
CENTER LINE (DOUBLE/SOLID)	A OR B	2 UNITS SIDE BY SIDE 4 INCHES APART 20'C/C
CHANNELIZING LINE (INCLUDES EXIT GORE NOSE)	A OR B	10'C/C

* CENTERED IN GAP

2) WHEN USED TO SIMULATE (REPLACE) PAVEMENT MARKING, TEMPORARY RAISED PAVEMENT MARKERS SHALL BE PLACED AS FOLLOWS:

LINE	TYPE	SPACING
EDGE LINE	A	5' C/C
LANE LINE	A	4 @ 3.33'C/C 30'GAP (40'CYCLE)
CENTER LINE (DOUBLE/SOLID)	A	2 UNITS SIDE BY SIDE 5' C/C
CENTER LINE (SINGLE/BROKEN)	A	4 @ 3.33'C/C 30'GAP (40'CYCLE)
CHANNELIZING LINE (INCLUDES EXIT GORE NOSE)	A	5' C/C
EDGE LINE (TWO COLOR) (WHITE/YELLOW)	A	BACK TO BACK 5' C/C

YELLOW MARKERS USED TO SEPARATE OPPOSITE FLOWS OF TRAFFIC (CENTER LINES) SHALL INCLUDE REFLECTIONS FOR BOTH DIRECTIONS. ALL OTHER YELLOW AND WHITE MARKERS SHALL PROVIDE RETROREFLECTIVITY FOR ONE DIRECTION ONLY.

REMOVAL

REMOVAL SHALL BE ACCOMPLISHED IN A MANNER THAT LITTLE OR NONE OF THE ADHESIVE REMAINS ON THE PAVEMENT. PERMANENT PAVEMENT SURFACES SHALL NOT BE SCARRED, BROKEN OR ROUGHENED SIGNIFICANTLY.

PAVEMENT

BASIS OF PAYMENT SHALL BE AT THE CONTRACT UNIT PRICE PER EACH MARKER AND SHALL INCLUDE ALL LABOR, EQUIPMENT, HARDWARE AND INCIDENTALS REQUIRED TO PERFORM THE WORK. IT SHALL ALSO INCLUDE REPLACEMENT AT NO ADDITIONAL COST OF ALL TEMPORARY RAISED PAVEMENT MARKERS WHICH, IN THE JUDGEMENT OF THE ENGINEER, FAIL FOR ANY REASON, EXECPT DUE TO FAILURE OF THE PAVEMENT TO WHICH THEY ARE ATTACHED.

ITEM	UNIT	DESCRIPTION
614	EACH	TEMPORARY RAISED PAVEMENT MARKERS.

	STATIONING			SPACING	TYPE A				TYPE B OR A				REMARKS	REFERENCE SHEET
	FROM	TO	SIDE	(FT)	W	Y	Y/Y		W	Y	Y/Y		(LINE TYPE)	
1-RP	153+55	155+05	-	5'			62						DOUBLE SOLID CENTER LINE	
2-RP	155+05	156+55	RT.	5'	31								EDGE LINE	
3-RP	156+55	158+95	LT.	5'	49	49							EDGE LINE (TWO COLOR)	
4-RP	156+55	160+45	RT.	5'	79	79							EDGE LINE (TWO COLOR)	
5-RP	158+95	159+95	LT.	5'	21								EDGE LINE	
6-RP	160+45	161+95	-	5'			62						DOUBLE SOLID CENTER LINE	
7-RP	153+55	155+05	-	5'			62						DOUBLE SOLID CENTER LINE	
8-RP	155+55	156+55	RT.	5'	21								EDGE LINE	
9-RP	156+55	158+95	RT.	5'	49	49							EDGE LINE (TWO COLOR)	
10-RP	155+05	158+95	LT.	5'	79	79							EDGE LINE (TWO COLOR)	
11-RP	158+95	160+45	LT.	5'	31								EDGE LINE	
12-RP	160+45	161+95	-	5'			62						DOUBLE SOLID CENTER LINE	
TOTALS					360	256	248							
					864									

REVISED BY: DATE:

210120	DATE
614 TEMPORARY RAISED PAVEMENT MARKERS	03/30/88 03/23/90 03/28/90 07/03/90
PLAN INSERT SHEET	

DESIGN AGENCY: OHIO DEPARTMENT OF TRANSPORTATION DISTRICT 5

REVIEWED CLZ DATE 2-01-2000 | STRUCTURE FILE NUMBER 4502825

DRAWN TAG | REVISED

DESIGNED TAG | CHECKED RSD

614 TEMPORARY RAISED PAVEMENT MARKERS
BRIDGE NO. LIC-062-1894
OVER CXS TRANSPORTATION RAILROAD & PLANT ENTRANCE

LIC-062-18.94

11/18

L0620004.BWT (07-23-99) SCALE - 12

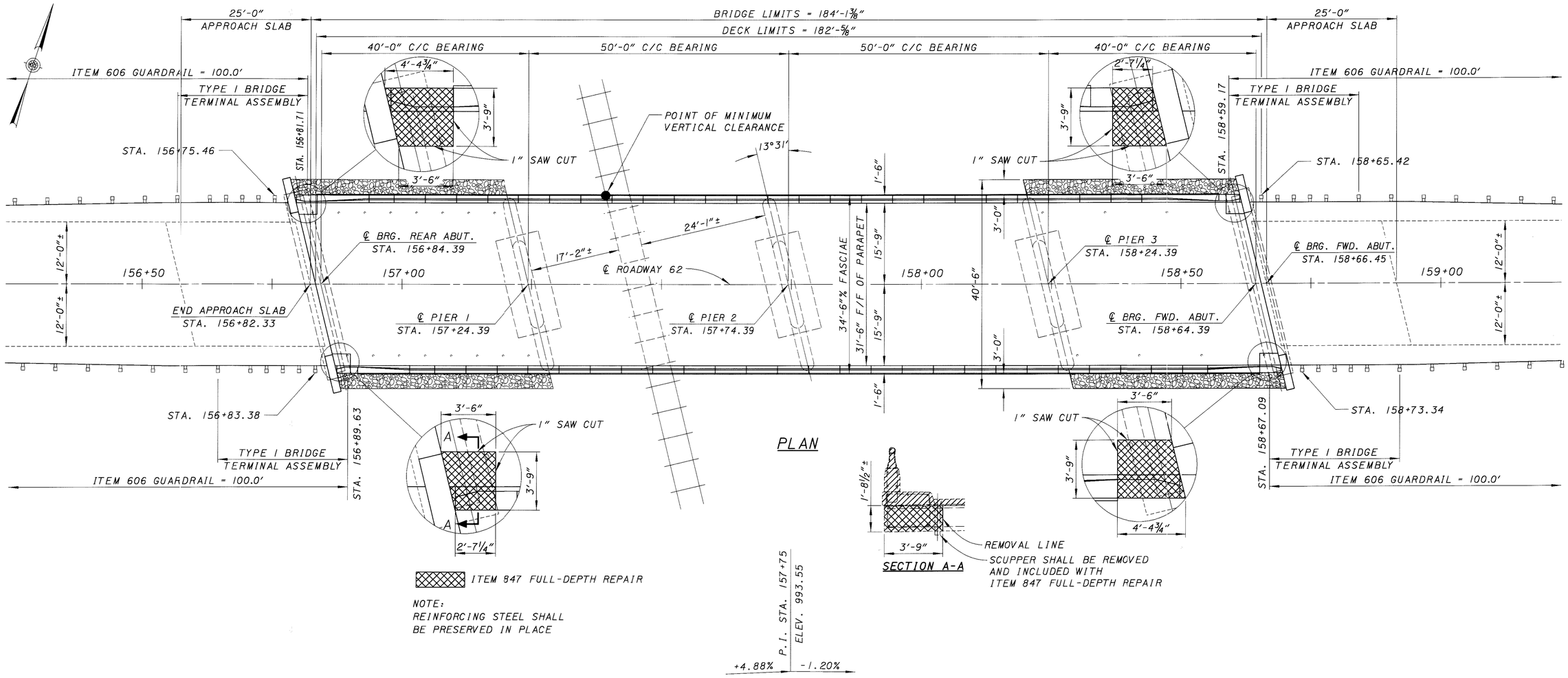

EXISTING STRUCTURE	PROPOSED STRUCTURE
TYPE: CONTINUOUS REINFORCED CONCRETE SLAB WITH REINFORCED CONCRETE SUBSTRUCTURE	TYPE: CONTINUOUS REINFORCED CONCRETE SLAB WITH REINFORCED CONCRETE SUBSTRUCTURE
SPANS: 40'-50'-50'-40'	SPANS: 40'-50'-50'-40'
ROADWAY: 28'-0" F/F 2'-0" SAFETY CURB	ROADWAY: 28'-0" F/F 2'-0" SAFETY CURB
LOAD FREQUENCY: CF=130 (51)	LOAD FREQUENCY: CF=130 (51)
SKEW: 13°31' RIGHT FORWARD	SKEW: 13°31' RIGHT FORWARD
WEARING SURFACE: 3/4" MONO. CONCRETE	WEARING SURFACE: 1 1/4" MICRO-SILICA OVERLAY
APPROACH SLABS: AS-1-54 (25'-0" LONG)	APPROACH SLABS: AS-1-54 (25'-0" LONG)
NO. OF TRACKS: ONE EXISTING	NO. OF TRACKS: ONE EXISTING
ALIGNMENT: TANGENT	ALIGNMENT: TANGENT

DESIGN AGENCY: OHIO DEPARTMENT OF TRANSPORTATION DISTRICT 5

DESIGNED	DRAWN	REVIEWED	DATE
TAG	TAG	CLZ	2-01-2000
CHECKED	REVISED	STRUCTURE FILE NUMBER	
RSD		4502825	

GENERAL PLAN & ELEVATION

BRIDGE NO. LIC-062-1894

OVER CSX TRANSPORTATION RAILROAD & PLANT ENTRANCE

LIC-062-18.94

L0620001.BPE (07-16-99) SCALE = 10

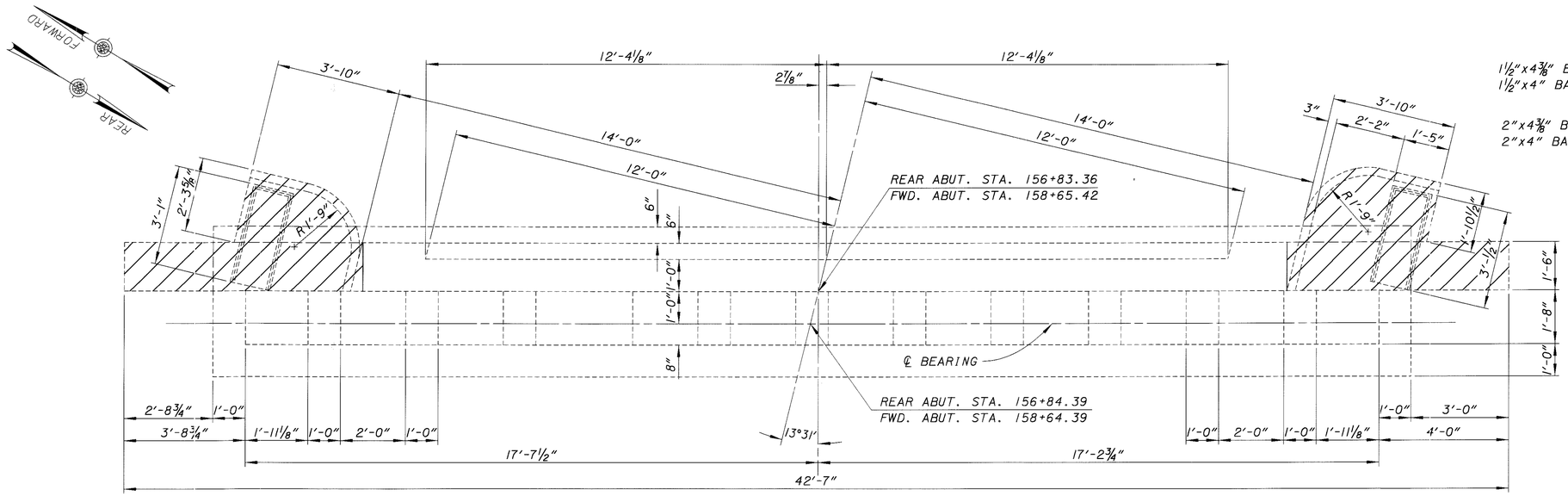

PLAN

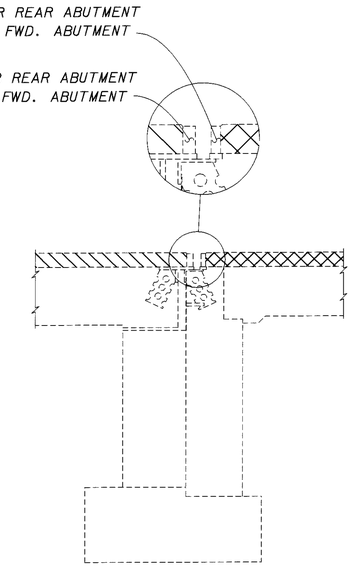

SECTION A-A

ITEM 202 PORTIONS OF STRUCTURE REMOVED (ABUTMENT)

ITEM 202 PORTIONS OF STRUCTURE REMOVED (SUPERSTRUCTURE)

ITEM 202 WEARING COURSE

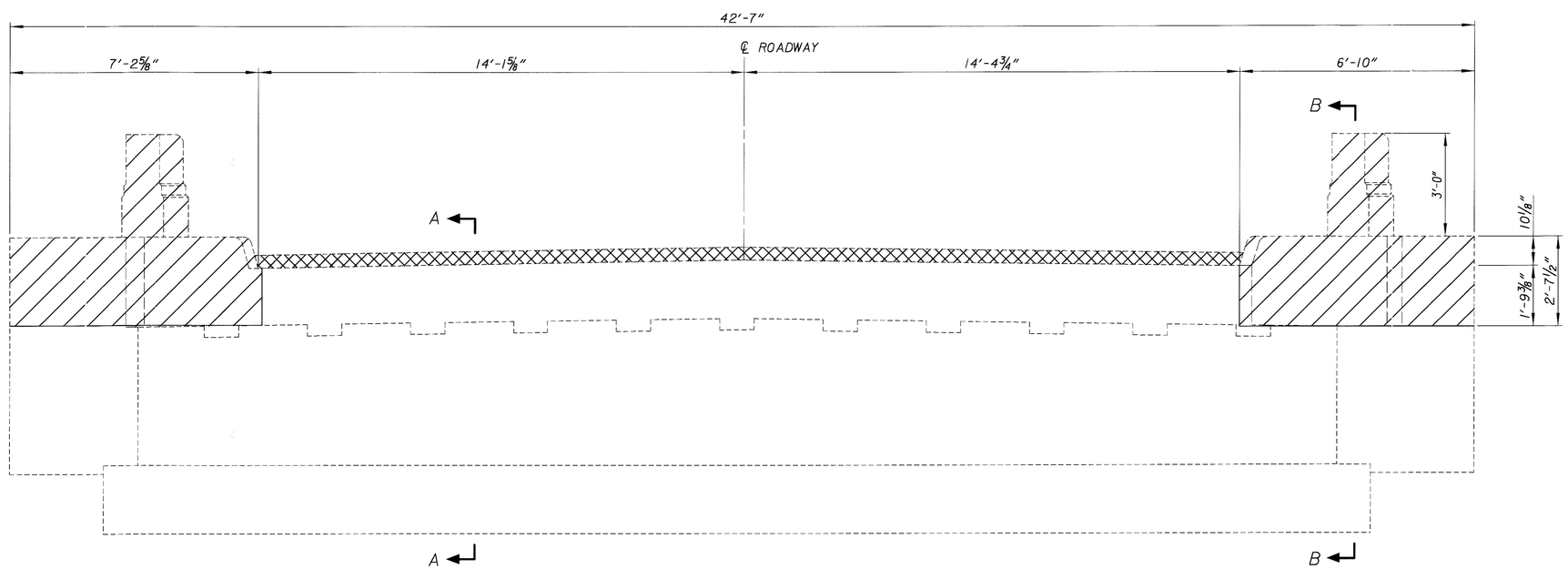

ELEVATION

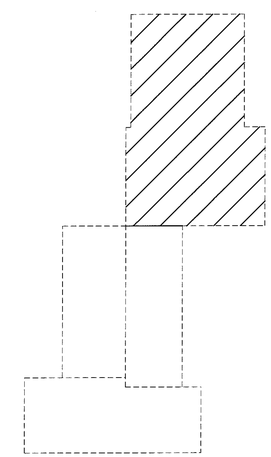

SECTION B-B

DESIGN AGENCY
OHIO DEPARTMENT OF TRANSPORTATION DISTRICT 5

DATE 2-01-2000 | REVIEWED CLZ | STRUCTURE FILE NUMBER 4502825

DRAWN TAG | REVISED

DESIGNED TAG | CHECKED RSD

EXISTING ABUTMENT REMOVAL
BRIDGE NO. LIC-062-1894
OVER CSX TRANSPORTATION RAILROAD & PLANT ENTRANCE

LIC-062-18.94

L0620001.BEA (07/19/99) SCALE - 2

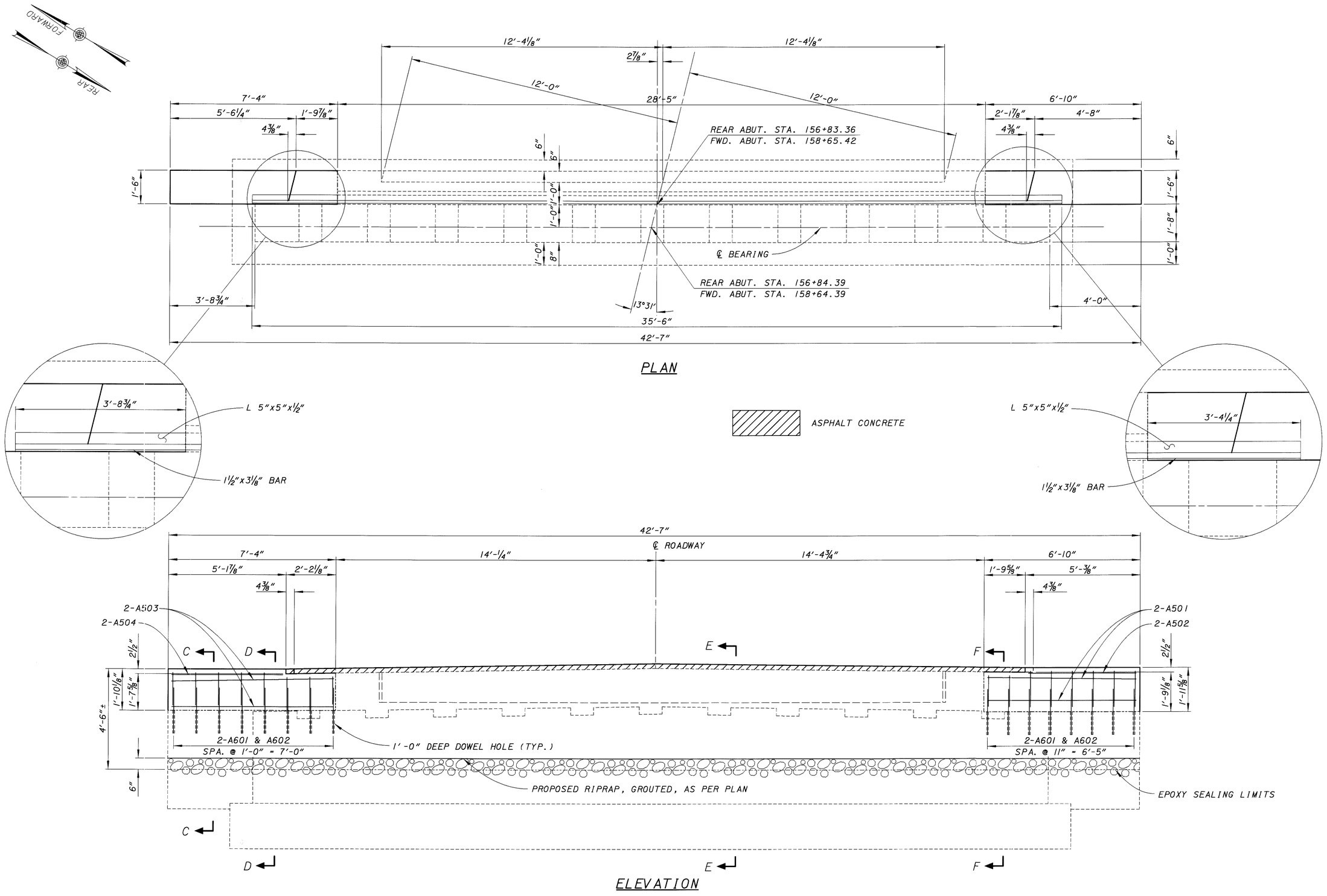

SEE SHT. 15/18 FOR SECTION DETAILS

L0620001.BPA (07/22/99) SCALE = 2

DESIGN AGENCY
OHIO DEPARTMENT OF TRANSPORTATION DISTRICT 5

DESIGNED	DRAWN	REVIEWED	DATE
TAG	TAG	CLZ	2-01-2000
CHECKED	REVISED	STRUCTURE FILE NUMBER	
RSD		4502825	

PROPOSED ABUTMENT DETAILS
BRIDGE NO. LIC-062-18.94
OVER CSX TRANSPORTATION RAILROAD & PLANT ENTRANCE

LIC-062-18.94

14/18

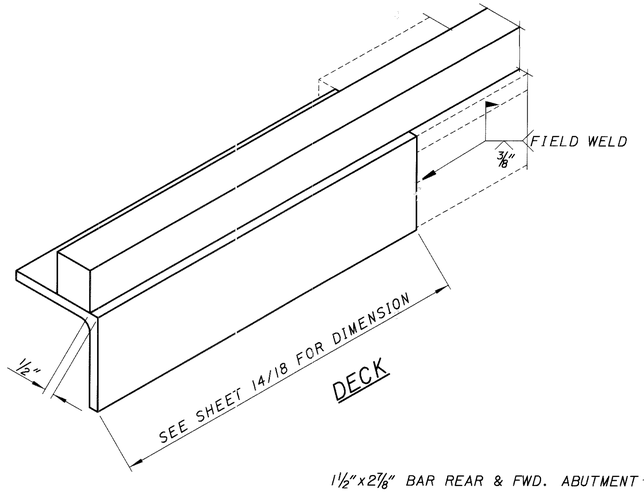

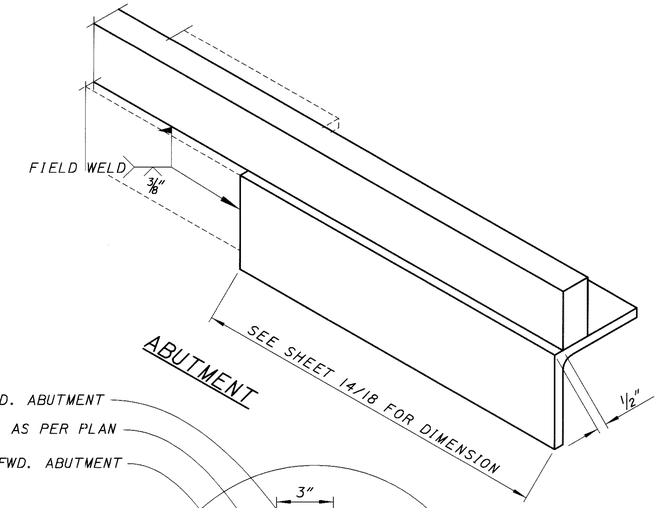

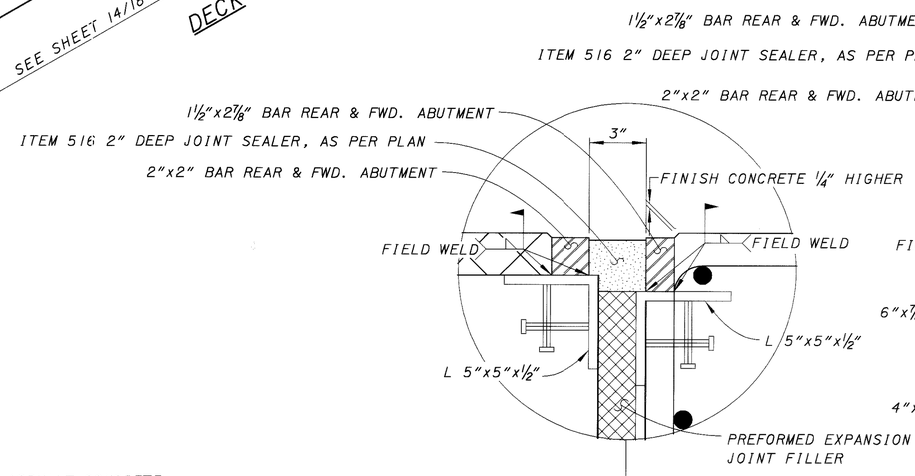

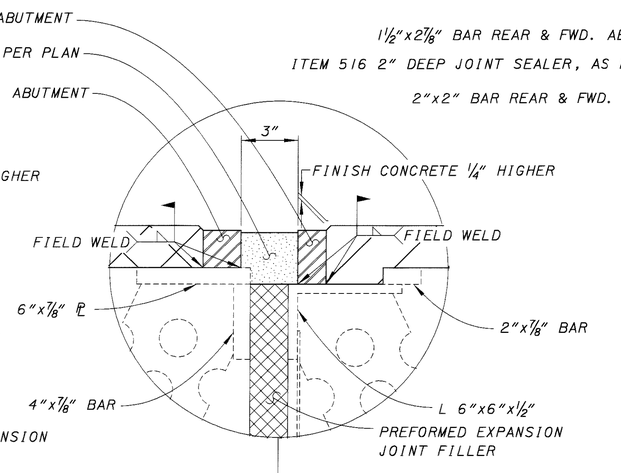

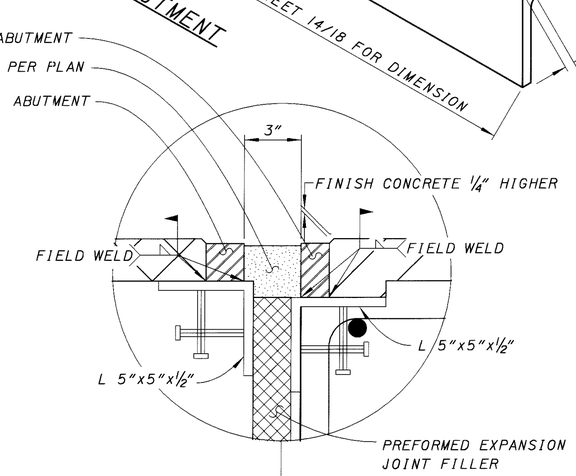

ASPHALT CONCRETE

ITEM 847 MICRO-SILICA MODIFIED CONCRETE OVERLAY

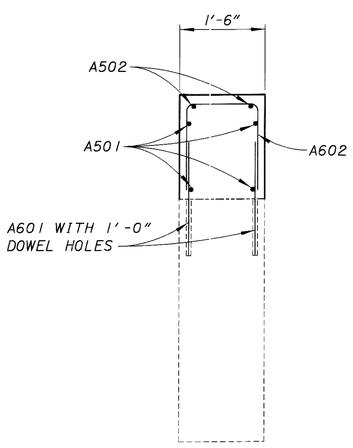

SECTION C-C

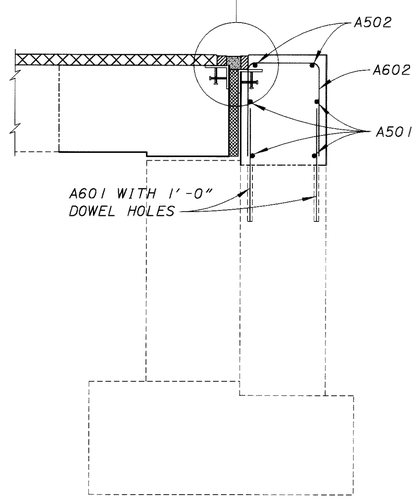

SECTION D-D

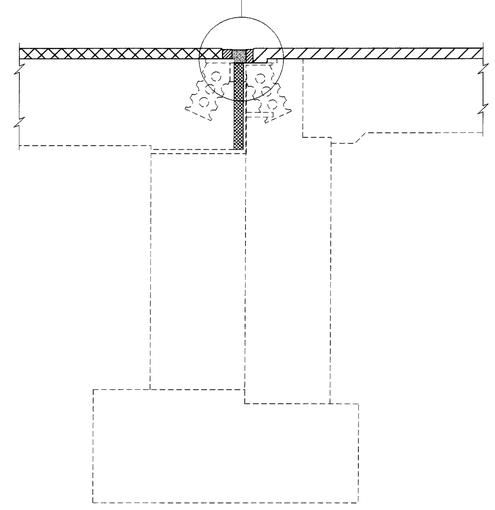

SECTION E-E

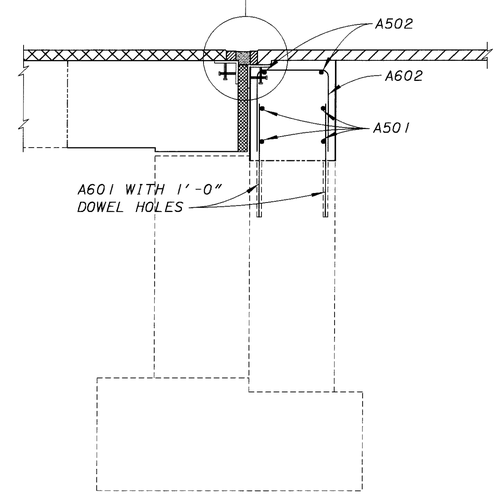

SECTION F-F

DESIGN AGENCY
OHIO DEPARTMENT OF TRANSPORTATION DISTRICT 5

DESIGNED	DRAWN	REVIEWED	DATE
TAG	TAG	CLZ	2-01-2000
CHECKED	REVISED	STRUCTURE FILE NUMBER	
RSD		4502825	

EXPANSION JOINT DETAILS
BRIDGE NO. LIC-062-18.94
OVER CSX TRANSPORTATION RAILROAD & PLANT ENTRANCE

LIC-062-18.94

15/18

L0620001.BPA (09-01-99) PID 20766 (SCALE = 1.333)

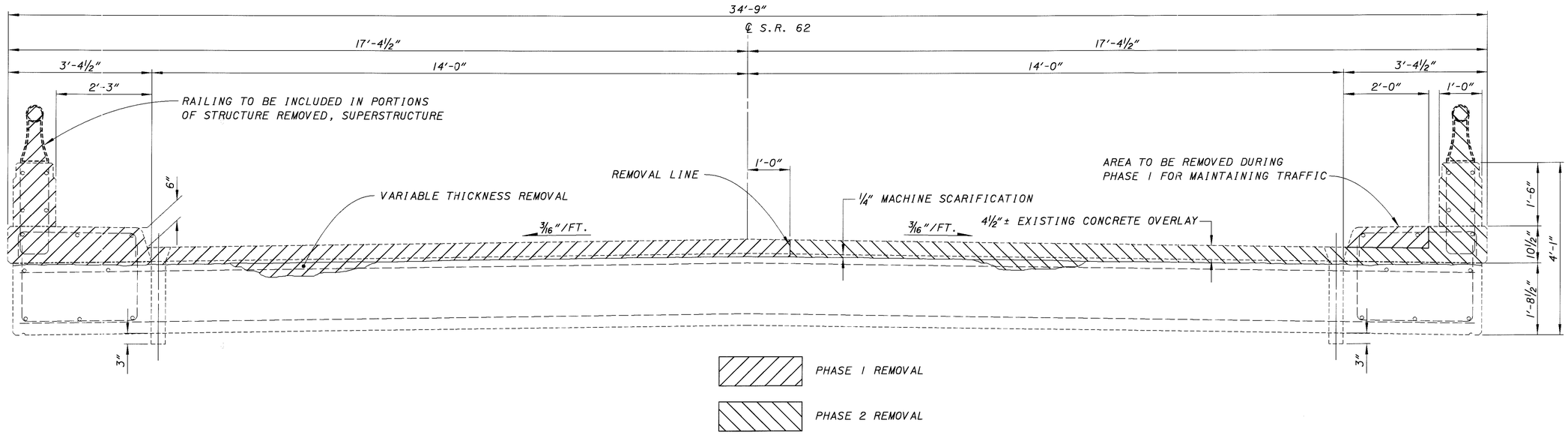

EXISTING TRANSVERSE SECTION

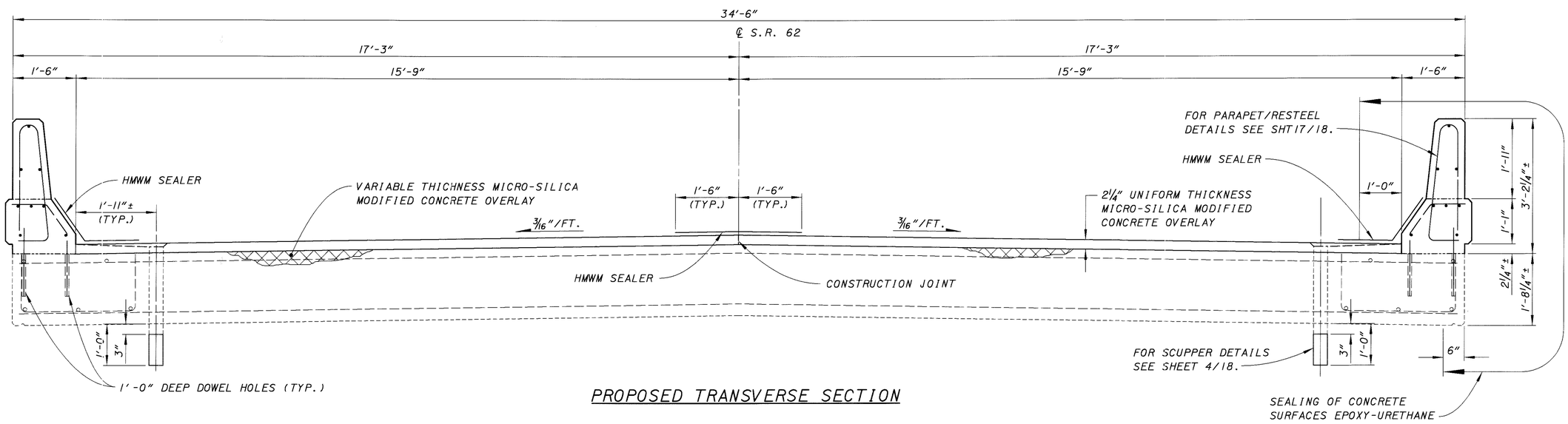

PROPOSED TRANSVERSE SECTION

DESIGN AGENCY	OHIO DEPARTMENT OF TRANSPORTATION DISTRICT 5
REVIEWED CLZ	DATE 2-01-2000
STRUCTURE FILE NUMBER	4502825
DRAWN TAG	REVISED
DESIGNED TAG	CHECKED RSD

TRANSVERSE SECTION
BRIDGE NO. LIC-062-1894
OVER CSX TRANSPORTATION RAILROAD & PLANT ENTRANCE

LIC-062-18.94

16/18

L0620001.BTS (07-15-99) SCALE = 1.3333

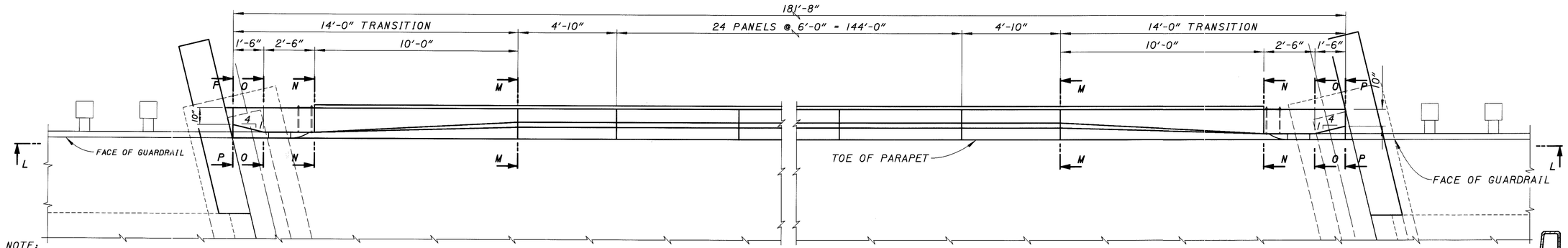

PART PLAN AT ABUTMENT

PART PLAN AT ABUTMENT

NOTE:
- ALL REINFORCING STEEL TO BE EPOXY COATED.
- FIELD BEND BARS WHERE NECESSARY.
- FOR ADDITIONAL DETAILS SEE STD. DWG. BR-1
* SEALING OF CONCRETE SURFACE (EPOXY-URETHANE)

LEGEND: N.S.=NEAR SIDE
F.S.=FAR SIDE

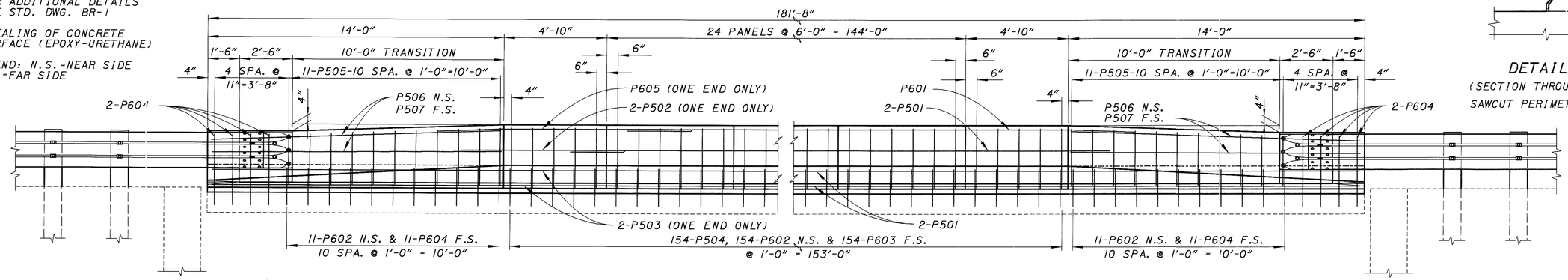

SECTION L-L

SECTION L-L

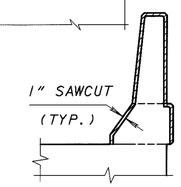

DETAIL A
(SECTION THROUGH SAWCUT)
SAWCUT PERIMETER= 7'-1"

SUPERSTRUCTURE MINIMUM LAP LENGTH
No. 5 = 2'-6"
No. 6 = 3'-0"

2¼" UNIFORM THICKNESS MICRO-SILICA MODIFIED CONCRETE OVERLAY

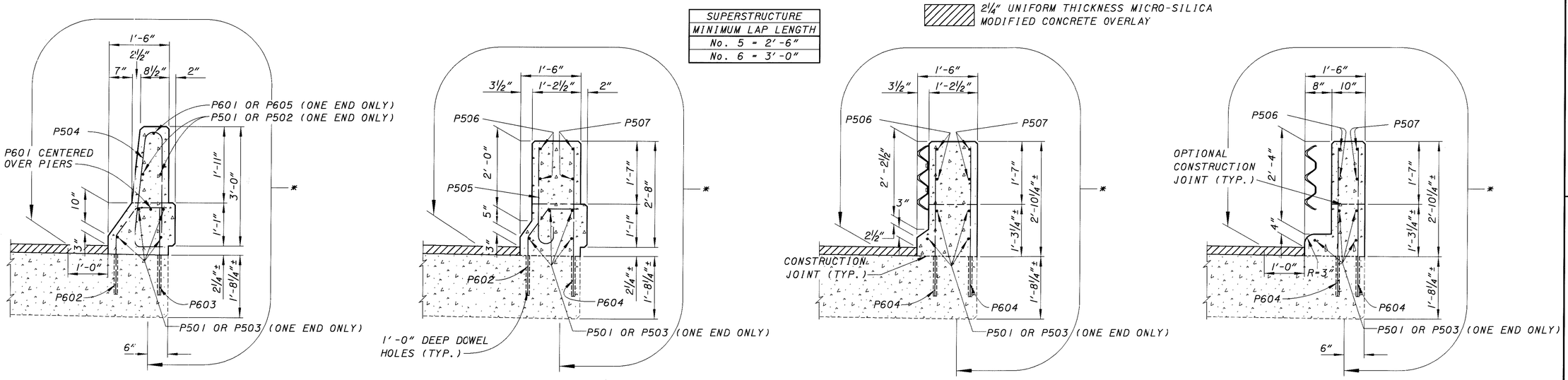

SECTION M-M

SECTION N-N

SECTION O-O

SECTION P-P

L0620001.BPD 09/02/99 (SCALE = 2.6667)

ORIGIN AGENCY: OHIO DEPARTMENT OF TRANSPORTATION DISTRICT 5

DESIGNED	DRAWN	REVIEWED	DATE
TAG	TAG	CLZ	2-01-2000
CHECKED	REVISED	STRUCTURE FILE NUMBER	
RSD		4502825	

EXISTING ABUTMENT REMOVAL

BRIDGE NO. LIC-062-1894
OVER CSX TRANSPORTATION RAILROAD & PLANT ENTRANCE

LIC-062-18.94

ABUTMENTS				
MARK	NUMBER REQ'D.	SHAPE	LENGTH	EST. WEIGHT
A501	8	STR.	6'-6"	54
A502	4	STR.	4'-8"	20
A503	8	STR.	7'-1"	59
A504	4	STR.	4'-10"	20
A601	64	STR.	2'-0"	192
A602	32	BT.	3'-9"	180
PARAPET				
P501	48	STR.	40'-0"	2003
P502	4	STR.	7'-8"	32
P503	8	STR.	31'-3"	261
P504	308	BT.	6'-0"	1927
P505	44	BT.	3'-0"	138
P506	8	BT.	13'-10"	115
P507	8	STR.	13'-10"	115
P601	14	STR.	40'-0"	841
P602	352	BT.	2'-11"	1542
P603	308	STR.	2'-2"	1002
P604	76	STR.	3'-9"	428
P605	2	STR.	11'-11"	36
TOTAL				8965

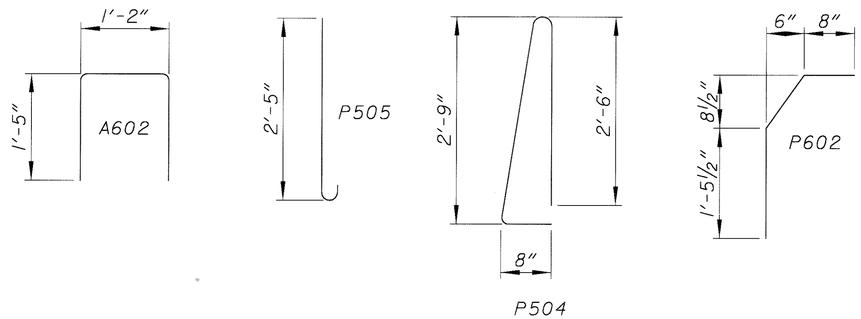

	SEALING OF CONCRETE SURFACES (EPOXY-URETHANE)		
		AREA LOCATION ON ABUTMENTS	
		REAR ABUT.	FWD. ABUT.
A	FACE OF BREASTWALL	10.7	10.7
B	SIDE OF BREAST WALL	1.0	1.0
C	FRONT OF WINGWALL	5.1	5.1
D	SIDE OF WINGWALL	1.4	1.4
E	TOP OF WINGWALL	1.7	1.7
F	BACK OF WINGWALL	2.2	2.2
SUB-TOTAL		44.2	
PARAPETS & DECK		420.7	
		464.9	
GRAND TOTAL		464.9 (USE 465)	

TOTALS CARRIED TO GENERAL SUMMARY SHT. 7/28.

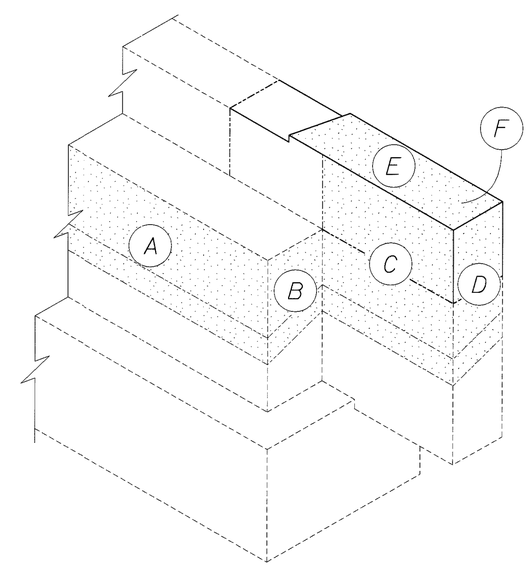

L062000I.BRL 07/19/99

DESIGN AGENCY
OHIO DEPARTMENT OF TRANSPORTATION DISTRICT 5

DATE REVIEWED: CLZ 2-01-2000
STRUCTURE FILE NUMBER: 4502825

DRAWN: TAG
REVISED:

DESIGNED: TAG
CHECKED: RSD

REINFORCING STEEL SCHEDULE

BRIDGE NO. LIC-062-1894
OVER CSX RAILROAD & PLANT ENTRANCE

LIC-062-18.94