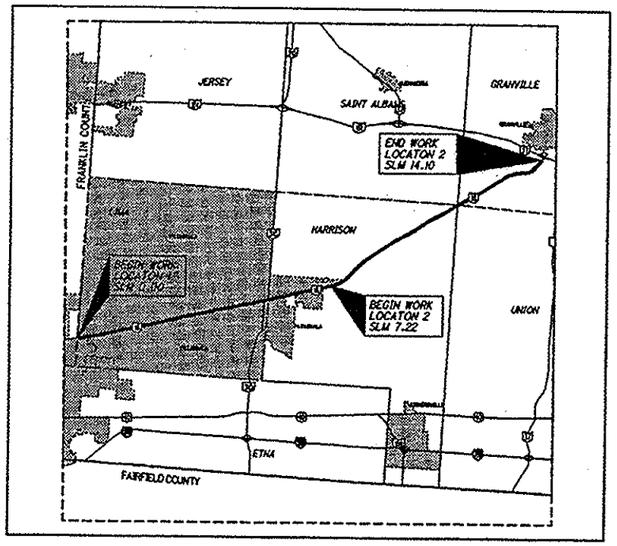

LOCATION MAP

LATITUDE: 40° 00′ 31″ LONGITUDE: 82° 38′ 34″

PORTION TO BE IMPROVED

STATE OF OHIO
DEPARTMENT OF TRANSPORTATION
LIC-16-0.00
CITY OF PATASKALA
HARRISON, LIMA AND GRANVILLE TOWNSHIPS
LICKING COUNTY

PROJECT DESCRIPTION:

ASPHALT CONCRETE RESURFACING AND RELATED WORK ON S.R. 16 IN LICKING COUNTY.

Project Earth Disturbed Area = N/A (Maintenance Project)
Estimated Contractor Earth Disturbed Area = N/A (Maintenance Project)
Notice of Intent Earth Disturbed Area = N/A (Maintenance Project)

LOCATION	COUNTY	ROUTE	BEGIN SLM	END SLM	LENGTH MILES	CITY/VILLAGE
1	LIC	16	0.00	7.22	*6.99	PATASKALA
2	LIC	16	7.22	14.10	6.88	

* SUSPEND WORK SLM 2.78 / RESUME WORK SLM 3.01 - DEDUCT 0.23 MILE

DESIGN DESIGNATION	LOCATION 1 S.R. 16	LOCATION 2 S.R. 16
Functional Classification	RPA	RPA
Opening Year ADT (2013)	14,000	11,000
Design Year ADT (2025)	16,000	13,000
Design Hourly Volume (2025)	1,400	1,300
Directional Distribution	53%	53%
Trucks (24 Hour B&C)	3%	2%
Design Speed	55mph	55mph
Legal Speed	35-50mph	55mph

RPA = RURAL PRINCIPAL ARTERIAL

INDEX OF SHEETS:

TITLE SHEET 1
GENERAL NOTES 2-6
SAFETY EDGE DETAIL 7
RADIO INTERCONNECT DATA 8-9
ASPHALT CONCRETE DATA 10-12
SHOULDER TREATMENT DATA 13
EXTRA AREA DATA 14-15
BRIDGE TREATMENT DATA 16
PAVEMENT MARKING DATA 17-19
PAVEMENT MARKING DETAILS 20-39
RAISED PAVEMENT MARKER DATA 40
CURB RAMP SUMMARY/DETAIL SHEETS 41-44
LOCATION SUB-SUMMARIES 45-46
GENERAL SUMMARY 47

2010 SPECIFICATIONS

THE STANDARD SPECIFICATIONS OF THE STATE OF OHIO, DEPARTMENT OF TRANSPORTATION, INCLUDING CHANGES AND SUPPLEMENTAL SPECIFICATIONS LISTED IN THE PROPOSAL SHALL GOVERN THIS IMPROVEMENT.

I HEREBY APPROVE THESE PLANS AND DECLARE THAT THE MAKING OF THIS IMPROVEMENT WILL NOT REQUIRE THE CLOSING TO TRAFFIC OF THE HIGHWAY AND THAT PROVISIONS FOR THE MAINTENANCE AND SAFETY OF TRAFFIC WILL BE AS SET FORTH ON THE PANS AND ESTIMATES.

DESIGN EXCEPTIONS: NONE

UNDERGROUND UTILITIES
CONTACT BOTH SERVICES
CALL TWO WORKING DAYS
BEFORE YOU DIG
CALL
1-800-362-2764
(TOLL FREE)
OHIO UTILITIES PROTECTION SERVICE
NON-MEMBERS
MUST BE CALLED DIRECTLY
OIL & GAS PRODUCERS PROTECTIVE SERVICE CALL: 1-800-925-0988

PLAN PREPARED BY:
OHIO DEPARTMENT OF TRANSPORTATION
DISTRICT 5 PLANNING & ENGINEERING

ENGINEER'S SEAL

STATE OF OHIO
DOUGLAS N. MORGAN
E-63839
REGISTERED PROFESSIONAL ENGINEER

SIGNED: Douglas N. Morgan
DATE: 11-8-2012

STANDARD CONSTRUCTION DRAWINGS				SUPPLEMENTAL SPECIFICATIONS	
BP-3.1	4-20-12	TC-65.10	4-20-12	800	10-19-12
BP-4.1	7-16-04	TC-65.11	4-20-12	815	1-19-07
		TC-71.10	10-19-12	817	4-20-12
MT-95.31	7-20-12	TC-73.10	4-20-12	823	7-20-12
MT-95.32	7-20-12	TC-82.10	1-21-11	832	5-5-09
MT-97.10	7-20-12			906	10-15-10
MT-97.12	7-20-12				
MT-99.20	7-20-12			SPECIAL PROVISIONS	
MT-101.90	10-19-12				
MT-105.10	7-20-12				

APPROVED
DATE 11/8/12 DISTRICT DEPUTY DIRECTOR

APPROVED
DATE 11-27-12 DIRECTOR, DEPARTMENT OF TRANSPORTATION

FEDERAL PROJECT NO. E036(434)
PID NO. 76431
CONSTRUCTION PROJECT NO.
RAILROAD INVOLVEMENT NONE
LIC-16-0.00

LIC - SR-16-0.00
130098 PID - 76431
Dist 5 2/14/2013
Contract Proposal Available @www.contracts.dot.state.oh.us / home

L016_MTS_001.dgn 10-4-12

UTILITIES

THERE ARE NO UNDERGROUND UTILITIES SHOWN ON THIS PLAN. THE NATURE OF THE WORK REQUIRED BY THIS PROJECT WILL NOT AFFECT ANY KNOWN UNDERGROUND UTILITIES THAT EXIST UNDER OR ADJACENT TO THE WORK AREA.

CONTINGENCY QUANTITIES

THE CONTRACTOR SHALL NOT ORDER MATERIALS OR PERFORM WORK FOR ITEMS DESIGNATED BY PLAN NOTE TO BE USED "AS DIRECTED BY THE ENGINEER" UNLESS AUTHORIZED BY THE ENGINEER. THE ACTUAL WORK LOCATIONS AND QUANTITIES USED FOR SUCH ITEMS SHALL BE INCORPORATED INTO THE FINAL CHANGE ORDER GOVERNING COMPLETION OF THIS PROJECT.

NOTIFICATION OF ROAD CLOSURE OR RESTRICTION

IN ORDER FOR ODOT TO PROPERLY PERMIT OVERSIZE LOADS, PREPARE PROPER SIGNING WHEN REQUIRED AND FURTHER TO NOTIFY THE GENERAL MOTORING PUBLIC, THE CONTRACTOR SHALL NOTIFY (IN WRITING) THE DISTRICT 5 CONSTRUCTION ENGINEER WITH COPIES FOR THE DISTRICT 5 ROADWAY SERVICES MANAGER AND PROJECT ENGINEER NOT LESS THAN 21 DAYS BEFORE SUCH CLOSURE OR LANE RESTRICTIONS.

SEND NOTIFICATION TO:
DISTRICT 5 CONSTRUCTION ENGINEER
P.O. BOX 306
JACKSONSTOWN, OH 43030
PHONE: (740) 323-4400 EXT. 5241

PART-WIDTH CONSTRUCTION

BECAUSE OF THE NECESSITY TO BUILD THIS PROJECT UNDER TRAFFIC AND TO CONSTRUCT THE FULL PAVEMENT WIDTH IN STAGES, EXERCISE CARE TO PREVENT THE CONSTRUCTION OF A BUTT JOINT IN THE BASE COURSES. LAP LONGITUDINAL JOINTS AS SHOWN ON STANDARD CONSTRUCTION DRAWING BP-3.1.

ITEM 209 PREPARING SUBGRADE FOR SHOULDER PAVING, AS PER PLAN

PREPARE THE SHOULDER FOR PAVING A CONSISTENT SAFETY EDGE IN BOTH THICKNESS AND WIDTH.

PRIOR TO PAVING THE SAFETY EDGE, GRADE AN AREA 10 INCHES WIDE, BEGINNING AT THE EDGE OF THE PAVED ROADWAY, TO PROVIDE A LEVEL SURFACE FREE OF VEGETATION FOR CONSTRUCTION OF THE SAFETY EDGE. IF NECESSARY, EXCAVATE THE GRADED AREA TO THE DEPTH NECESSARY TO CONSTRUCT THE SAFETY EDGE. COMPACT THE GRADED SHOULDER ACCORDING TO 617.05, OR AS DIRECTED BY THE ENGINEER.

THE FOLLOWING QUANTITY HAS BEEN CARRIED TO THE SUB-SUMMARY FOR THE PURPOSE DESCRIBED ABOVE:

ITEM 209 PREPARING SUBGRADE FOR SHOULDER PAVING, AS PER PLAN
LOCATION 1 – 13 MILE
LOCATION 2 – 13 MILE

ITEM 209 LINEAR GRADING

IN ORDER TO PROVIDE POSITIVE DRAINAGE FROM THE ROADWAY SURFACE TO THE SHOULDER BREAK, THE EXISTING ROADWAY SHOULDERS SHALL BE GRADED AND SHAPED USING A GRADER OF ADEQUATE SIZE TO PERFORM THE WORK TO THE SATISFACTION OF THE ENGINEER.

ALL EXCESS MATERIAL REMAINING AROUND GUARDRAIL AND OTHER AREAS AFTER THE GRADER WORK IS COMPLETED AND NOT DISPOSED OF ON THE SITE, SHALL BE REMOVED AND DISPOSED OF BY THE CONTRACTOR. ALL EQUIPMENT, LABOR, OR INCIDENTALS REQUIRED TO COMPLETE THIS ITEM SHALL BE INCLUDED FOR PAYMENT IN THE UNIT PRICE BID FOR ITEM 209 LINEAR GRADING.

THIS WORK MAY BE INTERMITTENT AND SPREAD THROUGHOUT THE PROJECT LIMITS, AS DIRECTED BY THE ENGINEER. THE CONTRACTOR WILL ONLY BE PAID FOR INTERSECTIONS AND GAPS IF THEY ARE WITHIN THE LIMITS OF A SECTION MARKED BY THE ENGINEER FOR GRADING.

ALL LINEAR GRADING WORK SHALL BE DONE BEFORE PLACING THE ASPHALT SURFACE COURSE

THE FOLLOWING QUANTITY HAS BEEN CARRIED TO THE SUB-SUMMARY FOR THE ABOVE PURPOSES.

ITEM 209 LINEAR GRADING
LOCATION 1 – 13 MILE
LOCATION 2 – 13 MILE

ITEM 253 PAVEMENT REPAIR

AN ESTIMATED QUANTITY FOR PAVEMENT REPAIR HAS BEEN INCLUDED IN THE PLAN TO BE USED AS DIRECTED BY THE ENGINEER. REPAIRS SHALL TAKE PLACE PRIOR TO THE PLANING OPERATION. THE INTENT OF THIS OPERATION IS TO REPAIR THOSE AREAS OF PAVEMENT WHICH HAVE COMPLETELY FAILED (PUMPING OF SUB-BASE MATERIAL) AND NOT TO CORRECT SURFACE IRREGULARITIES. DEPTH OF EXCAVATION SHALL BE 7". THE MINIMUM WIDTH SHALL BE 4 FT. AFTER EXCAVATION HAS BEEN COMPLETED, THE FACE OF THE REPAIR SHALL BE COATED WITH 407 TACK COAT. REPLACEMENT MATERIAL WILL BE 7" OF ITEM 301 ASPHALT CONCRETE BASE, PG64-22 (PLACED AND COMPACTED IN TWO LIFTS).

REPAIR QUANTITIES MAY BE USED ON THE MAINLINE PAVEMENT OR ON PAVED SHOULDERS. ALL EXCAVATION, MATERIALS, LABOR, EQUIPMENT, TOOLS, TRAFFIC CONTROL AND INCIDENTALS NEEDED TO COMPLETE THE WORK DESCRIBED ABOVE SHALL BE PAID FOR UNDER ITEM 253 PAVEMENT REPAIR, AS PER PLAN.

THE FOLLOWING QUANTITY HAS BEEN CARRIED TO THE SUB-SUMMARY FOR THE ABOVE DESCRIBED PURPOSE.

ITEM 253 PAVEMENT REPAIR
LOCATION 1 – 50 CU.YD.
LOCATION 2 – 50 CU.YD.

ITEM 254 PAVEMENT PLANING, ASPHALT CONCRETE

DEPTH OF PLANING SHALL BE 3.0" ON S.R. 16 THE FULL WIDTH OF PAVEMENT, INCLUDING PAVED SHOULDERS. THE ROADWAY SHALL BE PLANED SUCH THAT POSITIVE DRAINAGE IS CREATED FROM THE CENTER LINE TO THE EDGE OF PAVEMENT IN TANGENT SECTIONS AND SHALL FOLLOW EXISTING SUPERELEVATIONS WHERE APPLICABLE. ALL REQUIREMENTS OF ITEM 254 SHALL APPLY.

PAVEMENT MARKING

STOP LINES, CROSSWALK LINES, CHANNELIZING LINES, ETC., SHOWN IN THE PLANS ARE TAKEN FROM EXISTING MARKINGS. THE CONTRACTOR SHALL DOCUMENT ALL OF THE EXISTING PAVEMENT MARKING LOCATIONS THAT WILL BE REMOVED/OBLITERATED DURING THIS PROJECT. THE CONTRACTOR SHALL PLACE NEW PAVEMENT MARKINGS AT THE LOCATION OF THE EXISTING MARKINGS UNLESS OTHERWISE DIRECTED BY THE ENGINEER. DOCUMENTATION OF PAVEMENT MARKING SHALL BE SUPPLIED TO THE ENGINEER BEFORE COMMENCEMENT OF ANY OPERATION WHICH WILL REMOVE/OBLITERATE MARKINGS. THE METHOD OF DOCUMENTATION SHALL BE APPROVED BY THE ENGINEER IN ORDER TO PROVIDE AN ACCEPTABLE TOLERANCE BETWEEN THE EXISTING AND PROPOSED PAVMENT MARKINGS.

ITEM 407 TACK COAT

THE RATE OF APPLICATION OF THE 407 TACK COAT SHALL BE SUBJECT TO ADJUSTMENT AS DIRECTED BY THE ENGINEER. PLAN QUANTITIES INDICATE AN AVERAGE APPLICATION RATE OF 0.075 GALLONS PER SQUARE YARD FOR ESTIMATING PURPOSES ONLY.

ITEM 407 TACK COAT FOR INTERMEDIATE COURSE

THE RATE OF APPLICATION OF THE 407 TACK COAT FOR INTERMEDIATE COURSE SHALL BE SUBJECT TO ADJUSTMENT AS DIRECTED BY THE ENGINEER. PLAN QUANTITIES INDICATE AN AVERAGE APPLICATION RATE OF 0.05 GALLONS PER SQUARE YARD FOR ESTIMATING PURPOSES ONLY.

ITEM 408 PRIME COAT, AS PER PLAN

THE CONTRACTOR SHALL APPLY ONE COAT OF MC-70 (AS PER SECTION 702) AT A RATE OF 0.40 GALLON PER SQUARE YARD TO THE COMPLETED AGGREGATE SHOULDER (ITEM 617) AS DIRECTED BY THE ENGINEER. THE CONTRACTOR SHALL PROVIDE A SHIELD TO PREVENT THE SPRAYING OR DRIFTING OF LIQUID BITUMINOUS MATERIAL ONTO THE EDGE OF PAVEMENT OR EDGE LINE. THE ATTENTION OF THE CONTRACTOR IS DIRECTED TO 107.10 OF THE SPECIFICATIONS.

THE FOLLOWING QUANTITY OF PRIME COAT, AS PER PLAN HAS BEEN CARRIED TO THE SUB-SUMMARY AND SHALL INCLUDE ALL LABOR, MATERIAL AND EQUIPMENT TO PERFORM THE ABOVE MENTIONED WORK.

ITEM 408 PRIME COAT, AS PER PLAN
LOCATION 1 –15,573 SQ.YD. X 0.40 GAL./SQ YD = 6,230 GAL
LOCATION 2 –16,143 SQ.YD. X 0.40 GAL./SQ YD = 6,458 GAL

ITEM 516 2" DEEP JOINT SEALER, AS PER PLAN

THE CONTRACTOR SHALL PLACE A 1" X 2.0" DEEP BEAD OF JOINT SEALER (AS PER 705.04) AT THE LOCATIONS SHOWN IN PLANS. THE CONTRACTOR SHALL SAW CUT A CHANNEL FOR THE JOINT SEALER. THE COST FOR SAW CUTTING THE CHANNEL FOR THE JOINT SEALER SHALL BE INCLUDED FOR PAYMENT WITH ITEM 516, 2" DEEP JOINT SEALER, AS PER PLAN

ITEM 621 RAISED PAVEMENT MARKER REMOVED

RPM REMOVAL SHALL NOT OCCUR SOONER THAN 10 DAYS PRIOR TO RESURFACING OF THE ROADWAY. ALL RPM'S REMOVED SHALL BECOME THE PROPERTY OF THE CONTRACTOR.

ITEM 407, TACK COAT, TRACKLESS TACK, INTERMEDIATE AND SURFACE COURSES

DESCRIPTION: THIS WORK CONSISTS OF PREPARING AND TREATING A PAVED SURFACE WITH A TRACKLESS TACK ASPHALT EMULSION.

ALTERNATE PRODUCTS TO BE USED MUST BE ON FILE WITH THE NEW PRODUCT ENGINEER AT THE TIME OF THE ADVERSTISEMENT DATE OF THE PROJECT PLANS. PLEASE CONTACT BRAD YOUNG, ODOT NEW PRODUCT ENGINEER, 614-351-2882.

THIS WORK IS CONSIDERED AN EXPERIMENTAL CONSTRUCTION FEATURE FOR EVALUATION OF PRODUCTS THAT ARE ON FILE WITH THE NEW PRODUCT ENGINEER.

MEET ALL REQUIREMENTS OF ODOT 407 TACK COAT IN THE CONSTRUCTION AND MATERIALS SPECIFICATIONS REQUIRED BY THE CONTRACT, EXCEPT AS NOTED BELOW.

A MANUFACTURER'S REPRESENTATIVE MUST BE AT THE PROJECT SITE DURING THE FIRST TWO DAYS OF APPLICATION OF TRACKLESS TACK.

MATERIAL: IF USING BLACKLIDGE TRACKLESS TACK THE MATERIAL WILL CONFORM TO THE FOLLOWING TYPICAL PHYSICAL PROPERTIES:

PARAMETER	TEST METHOD	MIN.	MAX.
SAYBOLT FUROL VISCOSITY, SFS @ 25°C	AASHTO T59	15	100
STORAGE STABILITY, 24 HRS, %	AASHTO T59	--	1
STORAGE STABILITY, 5 DAYS, %	AASHTO T59	--	5
RESIDUE BY DISTILLATION, %	AASHTO T59	50	--
OIL DISTILLATE, %	AASHTO T59	--	1
SIEVE TEST, %	AASHTO T59	--	0.30
TEST ON RESIDUE			
PENETRATION, @ 25°C,	AASHTO T49	--	20
SOFTENING POINT RANGE DEG C	AASHTO T53	65	--
SOLUBILITY, %	AASHTO T44	97.5	--
ORIGINAL BINDER DSR@82°C G*/SIN δ,10 RAD/SEC	AASHTO T315	1.00	--

FOR TRACKLESS TACK OTHER THAN BLACKLIDGE TRACKLESS TACK, THE MATERIAL WILL CONFORM TO THE PHYSICAL PROPERTIES SUPPLIED BY THE NEW PRODUCT ENGINEER FOR THE TESTS LISTED BELOW:

PARAMETER	TEST METHOD
SAYBOLT FUROL VISCOSITY, SFS @ 25°C	AASHTO T59
STORAGE STABILITY, 24 HRS, %	AASHTO T59
STORAGE STABILITY, 5 DAYS, %	AASHTO T59
RESIDUE BY DISTILLATION, %	AASHTO T59
OIL DISTILLATE, %	AASHTO T59
SIEVE TEST, %	AASHTO T59
TEST ON RESIDUE	
PENETRATION, @ 25°C,	AASHTO T49
SOFTENING POINT RANGE DEG C	AASHTO T53
SOLUBILITY, %	AASHTO T44
ORIGINAL BINDER DSR@82°C G*/SIN δ,10 RAD/SEC	AASHTO T315

NOTE: TRACKLESS TACK SHOULD NOT CONTAIN FILLER SUCH AS CLAY, ETC.

ITEM 407, TACK COAT, TRACKLESS TACK, INTERMEDIATE AND SURFACE COURSES (con't.)

ACCEPTANCE AND SAMPLING OF MATERIALS: FOR ALL TRACKLESS TACK SUPPLY CERTIFIED TEST DATA FROM AN INDEPENDENT LABORATORY TO THE ENGINEER AND TO THE DISTRICT LABORATORY SHOWING THE TRACKLESS TACK SUPPLIED WAS TESTED FOR AND MEETS THE PROPERTIES SUPPLIED BY THE NEW PRODUCT ENGINEER.

DURING CONSTRUCTION, ODOT PERSONNEL WILL SAMPLE AND SUPPLY TO THE DISTRICT TEST LAB A MINIMUM OF 2 QUARTS OF TRACKLESS TACK SAMPLED FROM THE DISTRIBUTOR ON THE FIRST DAY OF APPLICATION. CLEARLY MARK ON THE SAMPLES THE MANUFACTURER'S NAME, PROJECT NUMBER, AND THE WORDS "TRACKLESS TACK".

ADDITIONAL SAMPLING OF BLACKLIDGE TRACKLESS TACK WILL FOLLOW THE REQUIREMENTS OF ITEM 407. FOR ALTERNATE TRACKLESS TACK MATERIAL, 2 QUARTS OF MATERIAL WILL BE SAMPLED EACH DAY THE MATERIAL IS USED.

EQUIPMENT: SEE MANUFACTURER'S REPRESENTATIVE FOR CORRECT DISTRIBUTOR SETTINGS. THOROUGHLY CLEAN ALL EQUIPMENT IF PREVIOUSLY USED MATERIAL CHARGE IS DIFFERENT THAN THE PROPOSED MATERIAL.

APPLICATION OF ASPHALT MATERIAL: UNIFORMLY APPLY THE TRACKLESS TACK WITH A DISTRIBUTOR. IF TRACKLESS TACK IS STORED FOR AN EXTENDED PERIOD OF TIME, PRIOR TO APPLICATION, AGITATE OR GENTLY CIRCULATE THE MATERIAL.

ENSURE ALL NOZZLES AND SPRAY PATTERNS ARE IDENTICAL TO ONE ANOTHER ALONG THE DISTRIBUTOR SPRAY BAR. PLACE THE ANGLE OF THE NOZZLE AT A 15 TO 30 DEGREE ANGLE TO THE SPRAY BAR AXIS TO MAXIMIZE OVERLAP OR AS RECOMMENDED BY THE NOZZLE MANUFACTURER. CONTACT THE MANUFACTURER'S REPRESENTATIVE FOR REQUIRED SPRAY NOZZLE SIZE AND DISTRIBUTOR AND NOZZLE SETTINGS.

APPLY AT A RATE OF 0.04 TO 0.1 GALLONS PER SQUARE YARD. DO NOT DILUTE TRACLESS TACK. RECOMMENDED APPLICATION TEMPERATURE IS 160°F TO 180°F. DO NOT EXCEED 180°F. THE ENGINEER AND MANUFACTURER'S REPRESENTATIVE WILL APPROVE THE QUANTITY, RATE OF APPLICATION, TEMPERATURE, DISTRIBUTOR SETTINGS, AND AREAS TO BE TREATED BEFORE APPLICATION OF THE TRACKLESS TACK COAT. THE ENGINEER WILL DETERMINE THE ACTUAL APPLICATION IN GALLONS PER SQUARE YARD BY A CHECK ON THE PROJECT.

PERFORMANCE OF TRACKLESS TACK: FOR ANY TRACKLESS TACK USED SUPPLY DATA FOR SHEAR AND TENSILE BOND STRENGTH ACCORDING TO METHODS DESCRIBED IN VIRGINIA TRANSPORTATION RESEARCH COUNCIL REPORT VTRC 09-R21. RANDOMLY TAKE 6-4 INCH DIAMETER CORES FROM THE PROJECT AND PERFORM 3 SHEAR AND 3 TENSILE BOND STRENGTH TESTS. BE SURE CORES TAKEN INCLUDE BOTH AN ASPHALT LAYER ABOVE AND ASPHALT LAYER BELOW THE TRACKLESS TACK LAYER.

DETERMINE THE TIME TO SET FOR THE MATERIAL TO BECOME TRACKLESS. THE ENGINEER WILL REPORT ANY ISSUES WITH EXCESSIVE TIME TO SET, OR AFTER SET ISSUES WITH STICKINESS, OR PICKUP OF THE TACK TO THE DET AND NEW PRODUCT ENGINEER, BRAD YOUNG 614-351-2882.

IF THE CERTIFIED TEST DATA FAILS TO MEET THE LAB TESTING CRITERIA, OR FIELD SAMPLES FAIL TO MEET THE LAB TEST CRITERIA, OR THE TRACKLESS TACK FAILS TO PERFORM SATISFACTORILY IN THE FIELD, AS NOTED ABOVE, THE CONTRACTOR WILL BE REQUIRED TO REPLACE AND SUPPLY BLACKLIDGE TRACKLESS TACK FOR THE REMAINDER OF THE PROJECT AT NO COST TO THE DEPARTMENT.

ANY FAILING EXPERIMENTAL TRACKLESS TACK PRODUCT WILL BE REMOVED FROM THE NEW PRODUCT ENGINEER'S LIST.

ITEM 407, TACK COAT, TRACKLESS TACK, INTERMEDIATE AND SURFACE COURSES (con't.)

IN THE EVENT THE PRODUCT FAILS TO PERFORM TO THE SATISFACTION OF THE DEPARTMENT, THE MANUFACTURER MAY PERFORM THE FOLLOWING ITEMS IN ORDER TO BE CONSIDERED FOR FUTURE EXPERIMENTAL CONSTRUCTION FEATURE PROJECTS:

1. SUBMIT IN WRITING TO THE DEPARTMENT THE REASON(S) WHY PRODUCT FAILED TO PERFORM AND DETAIL CHANGES THAT WILL BE MADE TO ELIMINATE THE CAUSE(S) OF FAILURE, AND

2. PROPOSE CHANGES TO THE PRODUCT'S SPECIFICATIONS, AND

3. SUBMIT SAMPLES OF THE REDEVELOPED PRODUCT TO THE LABORATORY FOR TESTING TO THE NEW SPECIFICATIONS, AND

4. DEMONSTRATE TO THE DEPARTMENT SUCCESSFUL USE OF THE MATERIAL ON AT LEAST ONE NON-ODOT PROJECT.

WHEN THE ABOVE ITEMS ARE COMPLETED TO THE DEPARTMENT'S SATISFACTION, THE REDEVELOPED AND FIELD TESTED PRODUCT MAY BE PUT BACK ON FILE WITH THE NEW PRODUCT ENGINEER AND EVALUATED ON FUTURE ODOT PROJECTS USING THE EXPERIMENTAL CONSTRUCTION FEATURE PROCESS.

RESIDENTIAL AND COMMERCIAL DRIVES

AN ESTIMATED QUANTITY OF ITEM 448 ASPHALT CONCRETE, HAS BEEN INCLUDED IN THE PLAN TO BE USED AS DIRECTED BY THE ENGINEER TO PAVE APPROACH AREAS TO EXISTING DRIVEWAYS. PAVING SHALL TYPICALLY EXTEND 4' INTO THE DRIVEWAY (MEASURED FROM THE EDGE OF PAVEMENT OR PAVED SHOULDER IF PRESENT). THERE ARE 5 TYPES OF DRIVES: CONCRETE, ASPHALT, GRAVEL, GRAVEL WITH ASPHALT APRON AND FIELD/OIL WELL DRIVES. FIELD DRIVES AND OIL WELL DRIVES SHALL NOT BE PAVED. GRAVEL DRIVES SHALL BE PAVED BACK 4' INTO THE DRIVE-WAY UNLESS OTHERWISE DIRECTED BY THE ENGINEER. CONCRETE AND ASPHALT DRIVES SHALL HAVE BUTT JOINTS OR AS SHORT AN ASPHALT TAPER AS POSSIBLE (PREFERRED 4') AS DIRECTED BY THE ENGINEER SO AS TO PROVIDE A SMOOTH TRANSITION. GRAVEL DRIVES WITH ASPHALT APRONS SHALL ALSO HAVE BUTT JOINTS OR AS SHORT AN ASPHALT TAPER AS POSSIBLE (PREFERRED 4') BUT ONLY IF THE EXISTING ASPHALT APRON IS IN AN ACCEPTABLE CONDITION TO BE PAVED OVER AS DIRECTED BY THE ENGINEER. IF THE ASPHALT APRON CANNOT BE PAVED OVER (FOR EXAMPLE, BROKEN INTO SMALL PIECES) AS DETERMINED BY THE ENGINEER, IT SHALL BE REMOVED BEFORE BEING PAVED BACK 4' INTO THE DRIVEWAY. ALL GRADING, PRIME OR TACK COAT, MATERIALS, LABOR, EQUIPMENT TOOLS AND INCIDENTALS NECESSARY TO COMPLETE THE DRIVES SHALL BE INCLUDED IN THE UNIT PRICE BID FOR THE ITEMS LISTED BELOW.

THE FOLLOWING QUANTITIES HAVE BEEN CARRIED TO THE SUB-SUMMARY FOR THE ABOVE DESCRIBED PURPOSE.

ITEM 448 ASPHALT CONCRETE SURFACE COURSE, TYPE 1, PG 70-22M
LOCATION 1 – 46 CU.YD.
LOCATION 2 - 32 CU.YD.

ITEM 202 WEARING COURSE REMOVED
LOCATION 1 – 1310 SQ.YD.
LOCATION 2 – 900 SQ.YD.

ITEM 617 COMPACTED AGGREGATE, AS PER PLAN

ALL AGGREGATE SHALL BE 100% CRUSHED LIMESTONE. ALL QUALITY REQUIREMENTS EXCEPT SHALE SHALL BE WAIVED. OTHER GRADATION REQUIREMENTS SHALL BE AS SPECIFIED EXCEPT THE PLASTICITY INDEX SHALL BE WAIVED. IF SO PERMITTED, THE CONTRACTOR MAY USE RECYCLED ASPHALT CONCRETE PAVEMENT (RACP MEETING REQUIREMENTS OF 617.02) IN LIEU OF CRUSHED LIMESTONE.

SAFETY EDGE PLAN NOTE

IN ADDITION TO THE REQUIREMENTS OF 401.12, ATTACH A DEVICE TO THE SCREED OF THE PAVER THAT CONFINES THE MATERIAL AT THE END GATE AND EXTRUDES THE ASPHALT MATERIAL IN SUCH A WAY THAT RESULTS IN A CAMPACTED WEDGE SHAPE PAVEMENT EDGE OF APPROXIMATELY 30 DEGREES (NOT STEEPER THAN 40 DEGREES). ENSURE THE DEVICE MAINTAINS CONTACT WITH THE EXISTING SURFACE, AND ALLOW FOR AUTOMATIC TRANSITION TO CROSS ROADS, DRIVEWAYS AND OBSTRUCTIONS. DO NOT USE CONVENTIONAL SINGLE PLATE STRIKE OFF.

CONSTRUCTION OF SAFETY EDGE CAN BE OMITTED AT LOCATIONS WHERE EXISTING WIDTH OF GRADED SHOULDER OR BERM IS LESS THAN 12". PROJECTS WITH VARYING CONDITIONS SHOULD USE SAFETY EDGE WHERE POSSIBLE. PLAN PREPARATION HAS MADE EVERY REASONABLE ATTEMPT TO IDENTIFY POSSIBLE SAFETY EDGE LOCATIONS.

USE THE TRANS TECH SHOULDER WEDGE MAKER, THE CARLSON SAFETY EDGE END GATE, THE ADVANT-EDGER, THE TROXLER SAFETSLOPE OR A SIMILAR APPROVED-EQUAL DEVICE THAT PRODUCES THE SAME WEDGE CONSOLIDATION RESULTS. CONTACT INFORMATION FOR THESE WEDGE SHAPE COMPACTION DEVICES IS THE FOLLOWING:

TransTech Systems, Inc.
1594 State Street
Schenectady, NY 12304
1-800-724-6306
www.transtechsys.com

Advant-Edge Paving Equipment, LLC.
P.O. Box 9163
Niskayuna, NY 12309-0163
518-280-6090
www.advantaedgepaving.com

Carlson Safety Edge End Gate
18425 50th Avenue East
Tacoma, WA 98446
253-875-8000

Troxler Electronics Laboratories, Inc.
3008 E. Cornwallis Rd.
Research Triangle Park, NC 27709
1-877-TROXLER
www.troxlerlabs.com

IF ELECTING TO USE A SIMILAR DEVICE, PROVIDE PROOF THAT THE DEVICE HAS BEEN USED ON PREVIOUS PROJECTS WITH ACCEPTABLE RESULTS OR CONSTRUCT A TEST SECTION PRIOR TO THE BEGINNING OF WORK AND DEMONSTRATE WEDGE COMPACTION TO THE SATISFACTION OF THE ENGINEER. SHORT SECTIONS OF HANDWORK WILL BE ALLOWED WHEN NECESSARY FOR TRANSITIONS AND TUENOUTRS OR OTHERWISE AUTHORIZED BY THE ENGINEER.

IN ADDITION TO THE REQUIREMENTS OF 401.16, MAKE THE FIRST ROLLER PASS 8 TO 12 INCHES (200 TO 300 mm) AWAY FROM TAPERED EDGE. DO NOT ROLL THE TAPER.

THE FOLLOWING QUANTITY HAS BEEN CARRIED TO THE SUB-SUMMARY TO PROVIDE EXTRA ASPHALT FOR CONSTRUCTION OF THE SAFETY EDGE:

ITEM 448 ASPHALT CONCRETE SURFACE COURSE, TYPE 1, PG 70-22M
LOCATION 1 – 96 CU.YD.
LOCATION 2 – 96 CU.YD.

ITEM 817 SPRAY THERMOPLASTIC FOR EXPERIMENTAL PURPOSES

THE OHIO DEPARTMENT OF TRANSPORTATION WILL CONDUCT AN EXPERIMENTAL PRODUCT EVALUATION ON THIS PROJECT. FROM SLM 11.95 (12MM SIGN) TO THE END OF PROJECT AT SLM 14.10, THE CONTRACTOR SHALL PLACE THE FOLLOWING LONG LINE PAVEMENT MARKING PRODUCT IN ACCORDANCE WITH ITEM 817 SPECIFICATIONS.

SHERWIN WILLIAMS – SMART SPRAY W1SS5056 (EDGE LINE)
SHERWIN WILLIAMS – SMART SPRAY Y1SS5006 (CENTER LINE)

ALL MATERIAL SHALL BE SUPPLIED AT NO COST TO THE CONTRACTOR OR THE OHIO DEPARTMENT OF TRANSPORTATION BY THE SHERWIN-WILLIAMS COMPANY.

MAIL BOX TURN OUTS

A QUANTITY OF ASPHALT CONCRETE HAS BEEN PROVIDED IN THE PLAN TO COVER MAIL BOX TURN-OUTS. TURN-OUTS SHALL BE PAVED AS SHOWN IN THE DETAIL IN DRAWING BP-4.1. ANY EXTRA GRADING OF THE SHOULDERS, PRIME OR TACK COAT, MATERIALS, LABOR, EQUIPMENT, TOOLS AND INCIDENTALS NECESSARY TO COMPLETE MAIL BOX TURN OUTS SHALL BE INCLUDED IN THE UNIT PRICE BID FOR THE ITEMS LISTED BELOW.

THE FOLLOWING QUANTITIES HAVE BEEN CARRIED TO THE SUB-SUMMARY FOR THE ABOVE PURPOSES.

ITEM 448 ASPHALT CONCRETE INTERMEDIATE COURSE, TYPE 2, PG 64-22
LOCATION 1 – 37 CU.YD.
LOCATION 2 - 30 CU.YD.

ITEM 448 ASPHALT CONCRETE SURFACE COURSE, TYPE 1, PG 70-22M
LOCATION 1 – 26 CU.YD.
LOCATION 2 - 22 CU.YD.

ITEM 202 WEARING COURSE REMOVED
LOCATION 1 – 750 SQ.YD.
LOCATION 2 – 610 SQ.YD.

ITEM 632 DETECTOR LOOP, AS PER PLAN

ALL STOP LINE INDUCTANCE DETECTOR LOOPS SHALL BE THE POWER HEAD CONFIGURATION SHOWN ON TC-82.10. THE WIDTH SHALL BE AS SPECIFIED ON TC-82.10 AND THE LENGTH SHALL BE AS CURRENTLY CALLED FOR IN THE PLANS. THE STOP LINE DETECTOR LOOPS SHALL NOT BE WIRED TO ANY OTHER LOOPS AND SHALL HAVE ITS OWN DETECTOR CHANNEL. ALL STOP LINE DETECTION SHALL BE TESTED FOR A BICYCLE TARGETAND ALL DILEMMA DETECTION ZONES SHALL BE TESTED FOR A MOTORCYCLE TARGET.

ALL DILEMMA ZONE INDUCTANCE DETECTOR LOOPS CALLED FOR IN THE PLANS SHALL BE THE ANGULAR DESIGN DETECTION (ADD) LOOP AS SHOWN ON TC-82.10. DIMENSIONS SHALL BE AS SPECIFIED ON TC-82.10.

ALL DETECTOR LOOPS SHALL BE CUT INTO THE PLANED SURFACE OR THE PROPOSED INTERMEDIATE COURSE AT A DEPTH OF 4" FROM THE PROPOSED SURFACE ELEVATION. THE CONTRACTOR SHALL TEST ALL LEAD-IN CABLES PRIOR TO MAKING THE FINAL SPLICE. PLACEMENT SHALL BE AS PER SPECIFICATION 632.10. FINAL LOCATIONS, SIZE AND ORIENTATION SHALL BE PROVIDED TO THE CONTRACTOR AT THE PRE-CONSTRUCTION MEETING.

THE MODE, LENGTH AND LOCATION OF ALL OF THE LOOPS IN LOCATION 1 WILL BE PROVIDED TO THE CONTRACTOR BY THE CITY OF PATASKALA. THE CONTRACTOR SHALL CONTACT ROBERT SCHROEDER, AT 740-964-1316, TO ARRANGE A MEETING WITH THE CITY. AT THIS MEETING, THE CITY WILL PROVIDE THE NECESSARY DETECTOR LOOP INFORMATION TO THE CONTRACTOR FOR INSTALLATION.

ALL MATERIALS, LABOR, TOOLS, EQUIPMENT, TRAFFIC CONTROL AND INCIDENTALS NECESSARY TO PERFORM THE WORK DESCRIBED ABOVE SHALL BE INCLUDED IN THE UNIT PRICE BID FOR ITEM 632, DETECTOR LOOP, AS PER PLAN.

THE FOLLOWING QUANTITIES HAVE BEEN CARRIED TO THE SUB-SUMMARY FOR THE ABOVE PURPOSES.

ITEM 632 DETECTOR LOOP, AS PER PLAN
LOCATION 1 – 68 EACH

42 POWERHEAD, 20 DILEMMA, 6 SYSTEM

LOCATION 2 – 10 EACH

6 POWERHEAD, 5 DILEMMA

ITEM 604 CATCH BASIN/ MANHOLE ADJUSTED TO GRADE
ITEM 638 VALVE BOX ADJUSTED TO GRADE

THESE ITEMS SHALL BE USED TO ADJUST CATCH BASINS, MANHOLES, INLETS AND WATER VALVE BOXES LOCATED THROUGHOUT THE PROJECT LIMITS AS DIRECTED BY THE ENGINEER. ANY GAS VALVE BOXES AND TELEPHONE COMPANY MANHOLES ON THIS PROJECT SHALL BE ADJUSTED TO GRADE BY THE RESPECTIVE OWNERS.

ALL MATERIALS, LABOR, EQUIPMENT, TOOLS AND INCIDENTALS NECESSARY TO COMPLETE THE WORK DESCRIBED SHALL BE INCLUDED FOR PAYMENT WITH THE ITEMS LISTED BELOW.

THE FOLLOWING QUANTITIES HAVE BEEN CARRIED TO THE SUB-SUMMARY FOR THE ABOVE PURPOSES.

LOCATION 1:

ITEM 604 – CATCH BASIN ADJUSTED TO GRADE – 2 EACH

ITEM 604 – MANHOLE ADJUSTED TO GRADE – 3 EACH

ITEM 638 – VALVE BOX ADJUSTED TO GRADE – 10 EACH

ITEM SPECIAL – REINFORCED MESH FOR TRANSVERSE AND/OR LONGITUDINAL JOINTS AND CRACKS

THIS ITEM SHALL BE USED TO REINFORCE TRANSVERSE JOINT CRACKS AND LONGITUDINAL CRACKS LOCATED AT SOME TURN LANE AREAS. PLACE REINFORCING MESH ON PLANED SURFACE, 5.0' WIDE FROM EDGE LINE TO EDGE LINE (24' LENGTH) CENTERED OVER TRANSVERSE JOINT CRACK. PLACE MESH LONGITUDINALY OVER WIDENING JOINT CRACK IN TURN LANE AREAS AS DESIGNATED BY THE ENGINEER THE ENTIRE ROADWAY SHALL BE OVERLAYED WITH 3.0" ASPHALT CONCRETE AFTER PLACING OF THE REINFORCING MESH. THIS WORK SHALL BE PERFORMED ON APPROXIMATELY 75% OF JOINTS THROUGHOUT THE PROJECT LIMITS AS DIRECTED BY THE PROJECT ENGINEER. THE PROJECT ENGINEER SHALL SELECT TRANSVERSE JOINT CRACKS UNTIL ALL OF THE MATERIAL SHOWN BELOW HAS BEEN UTILIZED. REINFORCING MATERIAL SHALL BE GLASGRID CG100 OR EQUIVALENT AND SHALL BE PLACED ACCORDING TO MANUFACTURER'S SPECIFICATIONS AND THIS NOTE.

ALL MATERIALS, LABOR, EQUIPMENT, TOOLS, TRAFFIC CONTROL AND INCIDENTALS NEEDED TO COMPLETE THE WORK DESCRIBED ABOVE SHALL BE INCLUDED FOR PAYMENT IN THE UNIT PRICE BID FOR ITEM SPECIAL – REINFORCED MESH FOR TRANSVERSE AND/OR LONGITUDINAL JOINTS AND CRACKS.

TRANSVERSE JOINTS:
LOCATION 1
SLM 5.43 TO SLM 7.22 = 9451' / 60' SPACING = 158 JOINTS
158 X 75% = 118 JOINTS X 24' X 5' WIDE / 9 = 1,574 SQ.YD.

LOCATION 2
SLM 7.22 TO SLM 14.10 = 36,327' / 60' SPACING = 605 JOINTS
605 X 75% = 454 JOINTS X 24' X 5' WIDE / 9 = 6,054 SQ.YD.

LONGITUDINAL:
LOCATION 1
1,795' X 5' WIDE / 9 = 998 SQ.YD.

LOCATION 2
3803' X 5' WIDE / 9 = 2,113 SQ.YD.

THE FOLLOWING QUANTITIES HAVE BEEN CARRIED TO THE SUB-SUMMARY FOR THE ABOVE PURPOSES.

ITEM 690 SPECIAL – REINFORCED MESH FOR TRANSVERSE AND/OR LONGITUDINAL JOINTS AND CRACKS
LOCATION 1 – 2,572 SQ.YD.
LOCATION 2 – 8,167 SQ.YD.

CALCULATED LME
CHECKED DNM

GENERAL NOTES

LIC-16-0.00

ITEM 614 MAINTAINING TRAFFIC

A MINIMUM OF 1 LANE OF TRAFFIC SHALL BE MAINTAINED AT ALL TIMES ON S.R. 16 BY USE OF THE EXISTING PAVEMENT AND STANDARD DRAWING MT-97.12, MT-95.31 OR MT-95.32.

NO WORK SHALL BE PERFORMED AND THERE SHALL BE NO LANE RESTRICTIONS BETWEEN THE HOURS OF 5:30 AM TO 8:00 PM MONDAY THROUGH FRIDAY AND BETWEEN THE HOURS OF 5:30 AM SATURDAY TO 8:00 PM SUNDAY.

THERE SHALL ALSO BE NO LANE CLOSURES ON HOLIDAYS OR HOLIDAY WEEKENDS. THE FOLLOWING ARE CONSIDERED HOLIDAYS:

MEMORIAL DAY, FOURTH OF JULY, LABOR DAY, THANKSGIVING, CHRISTMAS , NEW YEARS, EASTER.

THE PERIOD OF TIME THAT THE LANES ARE TO BE OPEN DEPENDS ON THE DAY OF THE WEEK ON WHICH THE HOLIDAY FALLS. THE FOLLOWING SCHEDULE SHALL BE USED TO DETERMINE THIS PERIOD:

DAY OF THE WEEK	TIMES ALL LANES MUST BE OPEN TO TRAFFIC
SUNDAY	12:00N FRIDAY THROUGH 12:00N TUESDAY
MONDAY	12:00N FRIDAY THROUGH 12:00N TUESDAY
TUESDAY	12:00N MONDAY THROUGH 12:00N WEDNESDAY
WEDNESDAY	12:00N TUESDAY THROUGH 12:00N THURSDAY
THURSDAY	12:00N WEDNESDAY THROUGH 12:00N FRIDAY
FRIDAY	12:00N THURSDAY THROUGH 12:00N MONDAY
SATURDAY	12:00N FRIDAY THROUGH 12:00N MONDAY

NO EXTENSIONS OF TIME SHALL BE GRANTED FOR DELAYS IN MATERIAL DELIVERIES, UNLESS SUCH DELAYS ARE INDUSTRY-WIDE, OR FOR LABOR STRIKES, UNLESS SUCH STRIKES ARE AREA-WIDE.

SHOULD THE CONTRACTOR FAIL TO MEET ANY OF THESE REQUIREMENTS, THE CONTRACTOR SHALL BE ASSESSED A DISINCENTIVE IN THE AMOUNT OF $50 FOR EACH MINUTE THE ABOVE DESCRIBED LANE CLOSURE RESTRICTIONS ARE VIOLATED.

AT NO TIME SHALL TRAFFIC BE MAINTAINED ON THE PLANED SURFACE, AT LEAST ONE COURSE OF ASPHALT CONCRETE SHALL BE IN PLACE BEFORE OPENING TO TRAFFIC.

ONLY ITEM 614 WORK ZONE CENTER LINE, CLASS II HAS BEEN ITEMIZED IN THE PLAN. ALL OTHER WORK ZONE PAVEMENT MARKINGS NECESSARY SHALL BE INCLUDED IN THE LUMP SUM BID FOR MAINTAINING TRAFFIC.

LENGTH AND DURATION OF LANE CLOSURES AND RESTRICTIONS SHALL BE AT THE APPROVAL OF THE ENGINEER. IT IS THE INTENT TO MINIMIZE THE IMPACT TO THE TRAVELING PUBLIC. LANE CLOSURES OR RESTRICTIONS OVER SEGMENTS OF THE PROJECT, IN WHICH NO WORK IS ANTICIPATED WITHIN A REASONABLE TIME FRAME, AS DETERMINED BY THE ENGINEER, SHALL NOT BE PERMITTED. THE LEVEL OF UTILIZATION OF MAINTENANCE OF TRAFFIC DEVICES SHALL BE COMMENSURATE WITH THE WORK IN PROGRESS.

ALL WORK AND TRAFFIC CONTROL DEVICES SHALL BE IN ACCORDANCE WITH CMS 614 AND OTHER APPLICABLE PORTIONS OF THE SPECIFICATIONS, AS WELL AS THE OHIO MANUAL OF UNIFORM TRAFFIC CONTROL DEVICES. PAYMENT FOR ALL LABOR, EQUIPMENT AND MATERIALS SHALL BE INCLUDED IN THE LUMP SUM CONTRACT PRICE FOR ITEM 614, MAINTAINING TRAFFIC, UNLESS SEPARATELY ITEMIZED IN THE PLAN.

ITEM 614 WORK ZONE MARKING SIGN

IN ACCORDANCE WITH CMS SECTION 614.04, THE QUANTITY OF WORK ZONE MARKING SIGNS HAVE BEEN CARRIED TO THE SUB-SUMMARY TO BE USED AS DIRECTED BY THE ENGINEER.

W8-H12a (NO EDGE LINES): LOCATION 1 - 8 EACH, LOCATION 2 – 8 EACH
R4-1 (DO NOT PASS): LOCATION 1 – 23 EACH, LOCATION 2 - 18 EACH
R4-2 (PASS WITH CARE): LOCATION 1 – 18 EACH, LOCATION 2 - 14 EACH

ITEM 614, WORK ZONE MARKING SIGN
LOCATION 1 - 49 EACH
LOCATION 2 - 40 EACH

IN ADDITION, THE CONTRACTOR SHALL ERECT A "GROOVED PAVEMENT" SIGN 250 FEET IN ADVANCE OF ANY SECTION OF ROADWAY WHERE TRAFFIC MUST TRAVEL ON A PLANED SURFACE. ENSURE THESE SIGNS ARE IN PLACE BEFORE OPENING THE ROADWAY TO TRAFFIC. ERECT THESE SIGNS AT INTERSECTIONS OF THROUGH ROUTES TO WARN TRAFFIC OF THIS SURFACE CONDITION. "GROOVED PAVEMENT" SIGNS SHALL BE INCLUDED FOR PAYMENT WITH THE LUMP SUM BID FOR ITEM 614 MAINTAINING TRAFFIC AS PER CMS SECTION 614.055.

BUTT JOINT

A BUTT JOINT WILL BE REQUIRED AT LOCATIONS SPECIFIED BELOW AND AT THE EXTRA AREAS WITH WEARING COURSE REMOVED.

BUTT JOINTS SHALL BE AS PER STANDARD CONSTRUCTION DRAWING BP-3.1 UNLESS OTHERWISE SHOWN IN THE PLANS.

MINIMUM LENGTH FOR ASPHALT WEDGE AT BUTT JOINTS SHALL BE 10'.

LOCATION	ROUTE	DESCRIPTION	S.L.M.	ITEM 614 ASPHALT CONCRETE FOR MAINTAINING TRAFFIC CU. YD.
1	S.R. 16	BEGIN WORK	0.00	3.7
1	S.R. 16	SUSPEND/RESUME	2.78 / 3.01	3.0
1	S.R. 16	BRIDGE: LIC-16-0326	3.26	3.7
1	**S.R. 16**	**TOTAL**		**10.4**
2	S.R. 16	END WORK	14.10	1.5
2	**S.R. 16**	**TOTAL**		**1.5**

THE GRINDING FOR BUTT JOINTS SHALL BE INCLUDED WITH ITEM 254 PAVEMENT PLANING, ASPHALT CONCRETE

THE FOLLOWING QUANTITIES HAVE BEEN CARRIED TO THE SUB-SUMMARY FOR THE ABOVE PURPOSES.

ITEM 614 ASPHALT CONCRETE FOR MAINTAINING TRAFFIC
LOCATION 1 – 10.4 CU. YD.
LOCATION 2 – 1.5 CU. YD.

FLOODLIGHTING

FLOODLIGHTING OF THE WORK SITE FOR OPERATIONS CONDUCTED DURING NIGHTTIME PERIODS SHALL BE ACCOMPLISHED SO THAT THE LIGHTS DO NOT CAUSE GLARE TO THE DRIVERS ON THE ROADWAY. TO ENSURE THE ADEQUACY OF THE FLOODLIGHT PLACEMENT, THE CONTRACTOR AND THE ENGINEER SHALL DRIVE THROUGH THE WORK SITE EACH NIGHT WHEN THE LIGHTING IS IN PLACE AND OPERATIVE PRIOR TO COMMENCING ANY WORK. IF GLARE IS DETECTED, THE LIGHT PLACEMENT AND SHIELDING SHALL BE ADJUSTED TO THE SATISFACTION OF THE ENGINEER BEFORE WORK PROCEEDS.

PAYMENT FOR ALL LABOR, EQUIPMENT AND MATERIALS SHALL BE INCLUDED IN THE LUMP SUM CONTRACT PRICE FOR ITEM 614, MAINTAINING TRAFFIC.

DROPOFFS IN WORK ZONES

DROPOFFS THAT DEVELOP DURING CONSTRUCTION OPERATIONS AND THAT ARE NOT OTHERWISE PROVIDED FOR IN THE PLANS SHALL BE TREATED AS SHOWN ON STANDARD DRAWING MT-101.90. WHERE THE PLANS DO NOT PROVIDE SPECIFIC ITEMS FOR LABOR, EQUIPMENT, OR MATERIALS TO IMPLEMENT THE DROP-OFF TREATMENTS SPECIFIED, THEY SHALL BE INCLUDED FOR PAYMENT IN THE LUMP SUM BID FOR ITEM 614, MAINTAINING TRAFFIC.

ITEM 614 - LAW ENFORCEMENT OFFICER (WITH PATROL CAR) FOR ASSISTANCE DURINGCONSTRUCTION OPERATIONS

USE OF LAW ENFORCEMENT OFFICERS (LEOS) BY CONTRACTORS OTHER THAN THE USES SPECIFIED BELOWWILL NOT BE PERMITTED AT PROJECT COST. LEOS SHOULD NOT BE USED WHERE THE OMUTCD INTENDS THAT FLAGGERS BE USED.

IN ADDITION TO THE REQUIREMENTS OF CMS 614 AND THE OMUTCD, A UNIFORMED LEO WITH ANOFFICIAL PATROL CAR (CAR WITH TOP-MOUNTED EMERGENCY FLASHING LIGHTS AND COMPLETE MARKINGS OF THE APPROPRIATE LAW ENFORCEMENT AGENCY) SHALL BE PROVIDED FOR THE FOLLOWING TRAFFIC CONTROL TASKS:

• DURING THE ENTIRE ADVANCE PREPARATION AND CLOSURE SEQUENCE WHERE COMPLETE BLOCKAGE OF TRAFFIC IS REQUIRED.

IN ADDITION TO THE REQUIREMENT OF CMS 614 AND THE OMUTCD, A UNIFORMED LEO WITH AN OFFICIAL PATROL CAR (CAR WITH TOP-MOUNTED EMERGENCY FLASHING LIGHTS AND COMPLETE MARKINGS OF THE APPROPRIATE LAW ENFORCEMENT AGENCY) SHOULD BE PROVIDED FOR THE FOLLOWING TRAFFIC CONTROL TASKS:

• FOR LANE CLOSURES: DURING INITIAL SET-UP PERIODS, TEAR DOWN PERIODS, SUBSTANTIAL SHIFTS OF A CLOSURE POINT OR WHEN NEW LANE CLOSURE ARRANGEMENTS ARE INITIATED FOR LONG-TERM LANE CLOSURES/SHIFTS (FOR THE FIRST AND LAST DAY OF MAJOR CHANGES IN TRAFFIC CONTROL SETUP). IN GENERAL, LEOS SHOULD BE POSITIONED AT THE POINT OF LANE RESTRICTION OR ROAD CLOSURE AND TO MANUALLY CONTROL TRAFFIC MOVEMENTS THROUGH INTERSECTIONS IN WORK ZONES.

LEOS SHOULD NOT FORGO THEIR TRAFFIC CONTROL RESPONSIBILITIES TO APPREHEND MOTORISTS FOR ROUTINE TRAFFIC VIOLATIONS. HOWEVER, IF A MOTORIST'S ACTIONS ARE CONSIDERED TO BE RECKLESS, THEN PURSUIT OF THE MOTORIST IS APPROPRIATE.

THE LEOS WORK AT THE DIRECTION OF THE CONTRACTOR. THE CONTRACTOR IS RESPONSIBLE FOR SECURING THE SERVICES OF THE LEOS WITH THE APPROPRIATE AGENCIES AND COMMUNICATING THE INTENTIONS OF THE PLANS WITH RESPECT TO DUTIES OF THE LEOS. THE ENGINEER SHALL HAVE FINAL CONTROL OVER THE LEOS' DUTIES AND PLACEMENT, AND WILL RESOLVE ANY ISSUES THAT MAY ARISE BETWEEN THE TWO PARTIES.

THE LEO SHALL REPORT IN TO THE CONTRACTOR PRIOR TO THE START OF THE SHIFT, IN ORDER TO RECEIVE INSTRUCTIONS REGARDING SPECIFIC WORK ASSIGNMENTS DURING HIS/HER SHIFT. THE LEO IS EXPECTED TO STAY AT THE PROJECT SITE FOR THE ENTIRE DURATION OF HIS/HER SHIFT. THE LEO SHALL REPORT TO THE CONTRACTOR AT THE END OF HIS/HER SHIFT. ONCE THE LEO HAS COMPLETED THE DUTIES DESCRIBED ABOVE AND STILL HAS TIME REMAINING ON HIS/HER SHIFT, THE LEO MAY BE ASKED TO PATROL THROUGH THE WORK ZONE (WITH FLASHING LIGHTS OFF) OR BE PLACED AT A LOCATION TO DETER MOTORISTS FROM SPEEDING. SHOULD IT BE NECESSARY TO LEAVE THE PROJECT SITE, THE LEO SHALL NOTIFY THE ENGINEER. THE CONTRACTOR SHALL PROVIDE THE LEO WITH A TWO-WAY COMMUNICATION DEVICE WHICH SHALL BE RETURNED TO THE CONTRACTOR AT THE END OF HIS/HER SHIFT.

THE HOURS PAID SHALL INCLUDE ANY MINIMUM SHOW-UP TIME REQUIRED BY THE LAW ENFORCEMENT AGENCY INVOLVED.

ANY ADDITIONAL COSTS (ADMINISTRATIVE OR OTHERWISE) INCURRED BY THE CONTRACTOR TO OBTAIN THE SERVICES OF AN LEO ARE INCLUDED WITH THE BID UNIT PRICE FOR ITEM 614, LAW ENFORCEMENT OFFICER WITH PATROL CAR FOR ASSISTANCE.

LEOS (WITH PATROL CAR) REQUIRED BY THE TRAFFIC MAINTENANCE TASKS ABOVE SHALL BE PAID FOR ON A UNIT PRICE (HOURLY) BASIS UNDER ITEM 614, LAW ENFORCEMENT OFFICER (WITH PATROL CAR) FOR ASSISTANCE.

ITEM 614 - LAW ENFORCEMENT OFFICER (WITH PATROL CAR) FOR ASSISTANCE DURINGCONSTRUCTION OPERATIONS, (CONT'D)

THE FOLLOWING ESTIMATED QUANTITIES HAVE BEEN CARRIED TO THE SUB-SUMMARY.

ITEM 614, LAW ENFORCEMENT OFFICER WITH PATROL CAR FOR ASSISTANCE
LOCATION 1 – 300 HOURS
LOCATION 2 – 200 HOURS

ITEM 614 PORTABLE CHANGEABLE MESSAGE SIGNS, AS PER PLAN

THE CONTRACTOR SHALL FURNISH, INSTALL, MAINTAIN AND REMOVE, WHEN NO LONGER NEEDED, TWO CHANGEABLE MESSAGE SIGNS. THE SIGNS SHALL BE OF A TYPE SHOWN ON A LIST OF APPROVED PCMS UNITS AVAILABLE ON THE OFFICE OF MATERIALS MANAGEMENT WEB PAGE. THE LIST CONTAINS CLASS A AND B UNITS WITH MINIMUM LEGIBILITY DISTANCES OF 650 FEET AND 475 FEET, RESPECTIVELY.

EACH SIGN SHALL BE TRAILER-MOUNTED AND EQUIPPED WITH A FUNCTIONAL DIMMING MECHANISM, TO DIM THE SIGN DURING DARKNESS, AND A TAMPER AND VANDAL PROOF ENCLOSURE. EACH SIGN SHALL BE PROVIDED WITH APPROPRIATE TRAINING AND OPERATION INSTRUCTIONS TO ENABLE ON-SITE PERSONNEL TO OPERATE AND TROUBLESHOOT THE UNIT. THE SIGN SHALL ALSO BE CAPABLE OF BEING POWERED BY AN ELECTRICAL SERVICE DROP FROM A LOCAL UTILITY COMPANY. PCMS TRAILERS SHOULD BE DELINEATED ON A PERMANENT BASIS BY AFFIXING RETROREFLECTIVE MATERIAL, IN A CONTINUOUS LINE ON THE FACE OF THE TRAILER AS SEEN BY ONCOMING ROAD USERS.

THE PROBABLE PCMS LOCATIONS AND WORK LIMITS FOR THOSE LOCATIONS ARE SHOWN ON SHEET(S) OF THE PLAN. PLACEMENT, OPERATION, MAINTENANCE AND ALL ACTIVATION OF THE SIGNS BY THE CONTRACTOR SHALL BE AS DIRECTED BY THE ENGINEER. THE PCMS SHALL BE LOCATED IN A HIGHLY VISIBLE POSITION YET PROTECTED FROM TRAFFIC. THE CONTRACTOR SHALL, AT THE DIRECTION OF THE ENGINEER, RELOCATE THE PCMS TO IMPROVE VISIBILITY OR ACCOMMODATE CHANGED CONDITIONS. WHEN NOT IN USE, THE PCMS SHALL BE TURNED OFF. ADDITIONALLY, WHEN NOT IN USE FOR EXTENDED PERIODS OF TIME, THE PCMS SHALL BE TURNED, FACING AWAY FROM ALL TRAFFIC, AND SHALL DISPLAY ONE OR MORE TYPE G YELLOW RETROREFLECTIVE SHEETING SURFACES OF 9-INCH BY 15-INCH MINIMUM SIZE FACING TRAFFIC.

THE ENGINEER SHALL BE PROVIDED ACCESS TO EACH SIGN UNIT AND SHALL BE PROVIDED WITH APPROPRIATE TRAINING AND OPERATION INSTRUCTIONS TO ENABLE ODOT PERSONNEL TO OPERATE AND TROUBLESHOOT THE UNIT, AND TO REVISE SIGN MESSAGES, IF NECESSARY.

THE CONTRACTOR SHALL IMPLEMENT A SYSTEM WHEREBY CHANGEABLE MESSAGES WILL BE IMPLEMENTED WITHIN 2 HOURS FOLLOWING TELEPHONE NOTIFICATION FROM THE PROJECT ENGINEER TO A DESIGNATED PHONE.

ALL MESSAGES TO BE DISPLAYED ON THE SIGN WILL BE PROVIDED BY THE ENGINEER. A LIST OF ALL REQUIRED PRE-PROGRAMMED MESSAGES WILL BE GIVEN TO THE CONTRACTOR AT THE PROJECT PRECONSTRUCTION CONFERENCE. THE SIGN SHALL HAVE THE CAPABILITY TO STORE UP TO 99 MESSAGES. MESSAGE MEMORY OR PRE-PROGRAMMED DISPLAYS SHALL NOT BE LOST AS A RESULT OF POWER FAILURES TO THE ON-BOARD COMPUTER. THE SIGN LEGEND SHALL BE CAPABLE OF BEING CHANGED IN THE FIELD. THREE-LINE PRESENTATION FORMATS WITH UP TO SIX MESSAGE PHASES SHALL BE SUPPORTED. PCMS FORMAT SHALL PERMIT THE COMPLETE MESSAGE FOR EACH PHASE TO BE READ AT LEAST TWICE.

ITEM 614 PORTABLE CHANGEABLE MESSAGE SIGNS, AS PER PLAN (CONT'D)

THE PCMS SHALL CONTAIN AN ACCURATE CLOCK AND PROGRAMMING LOGIC WHICH WILL ALLOW THE SIGN TO BE ACTIVATED, DEACTIVATED OR MESSAGES CHANGED AUTOMATICALLY AT DIFFERENT TIMES OF THE DAY FOR DIFFERENT DAYS OF THE WEEK.

THE PCMS UNIT SHALL BE MAINTAINED IN GOOD WORKING ORDER BY THE CONTRACTOR IN ACCORDANCE WITH THE PROVISIONS OF CMS 614.07. THE CONTRACTOR SHALL, PRIOR TO ACTIVATING THE UNIT, MAKE ARRANGEMENTS, WITH AN AUTHORIZED SERVICE AGENT FOR THE PCMS, TO ASSURE PROMPT SERVICE IN THE EVENT OF FAILURE. ANY FAILURE SHALL NOT RESULT IN THE SIGN BEING OUT OF SERVICE FOR MORE THAN 12 HOURS, INCLUDING WEEKENDS. FAILURE TO COMPLY MAY RESULT IN AN ORDER TO STOP WORK AND OPEN ALL TRAFFIC LANES AND/OR IN THE DEPARTMENT TAKING APPROPRIATE ACTION TO SAFELY CONTROL TRAFFIC. THE ENTIRE COST TO CONTROL TRAFFIC, ACCRUED BY THE DEPARTMENT DUE TO THE CONTRACTOR'S

NONCOMPLIANCE, WILL BE DEDUCTED FROM MONEYS DUE, OR TO BECOME DUE THE CONTRACTOR ON HIS CONTRACT.

THE CONTRACTOR SHALL BE RESPONSIBLE FOR 24-HOUR-PER-DAY OPERATION AND MAINTENANCE OF THESE SIGNS ON THE PROJECT FOR THE DURATION OF THE PHASES WHEN THE PLAN REQUIRES THEIR USE.

PAYMENT FOR THE ABOVE DESCRIBED ITEM SHALL BE AT THE CONTRACT UNIT PRICE. PAYMENT SHALL INCLUDE ALL LABOR, MATERIALS, EQUIPMENT, FUELS, LUBRICATING OILS, SOFTWARE, HARDWARE AND INCIDENTALS TO PERFORM THE ABOVE DESCRIBED WORK.

A TOTAL OF 2 PCMS SHALL BE REQUIRED FOR THIS PROJECT.

THE FOLLOWING ESTIMATED QUANTITIES HAVE BEEN CARRIED TO THE SUB-SUMMARY.

ITEM 614 PORTABLE CHANGEABLE MESSAGE SIGN, AS PER PLAN
LOCATION 1 – 90 DAY
LOCATION 2 – 90 DAY

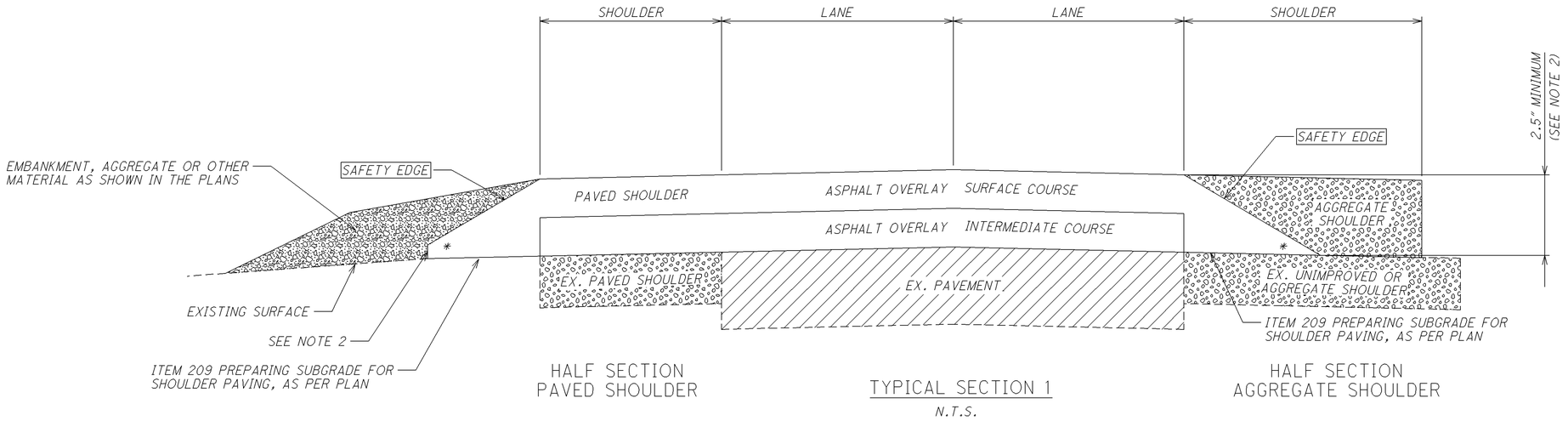

TYPICAL SECTION 1

N.T.S.

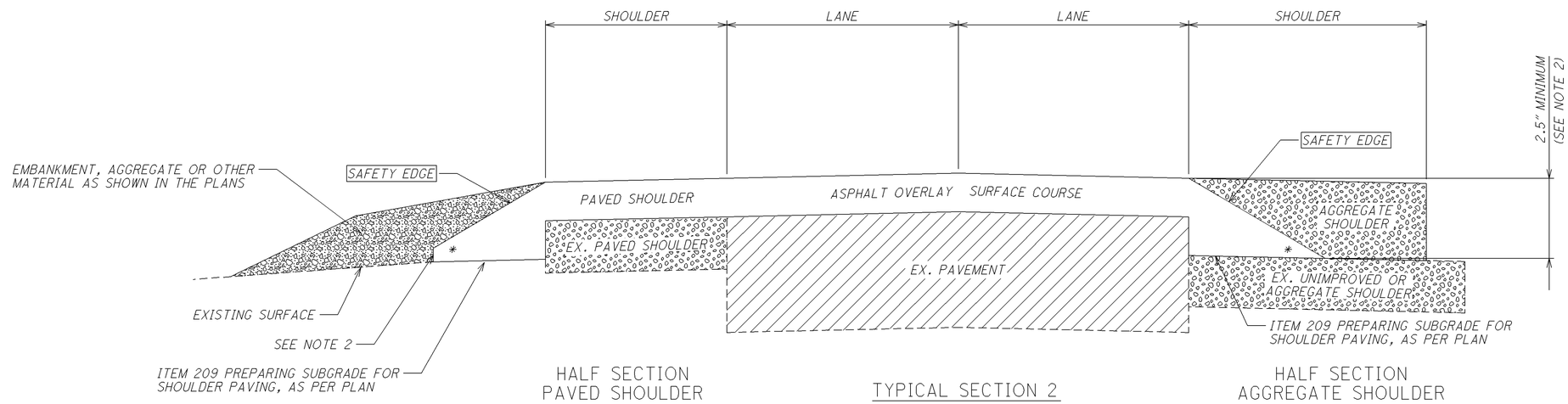

TYPICAL SECTION 2

N.T.S.

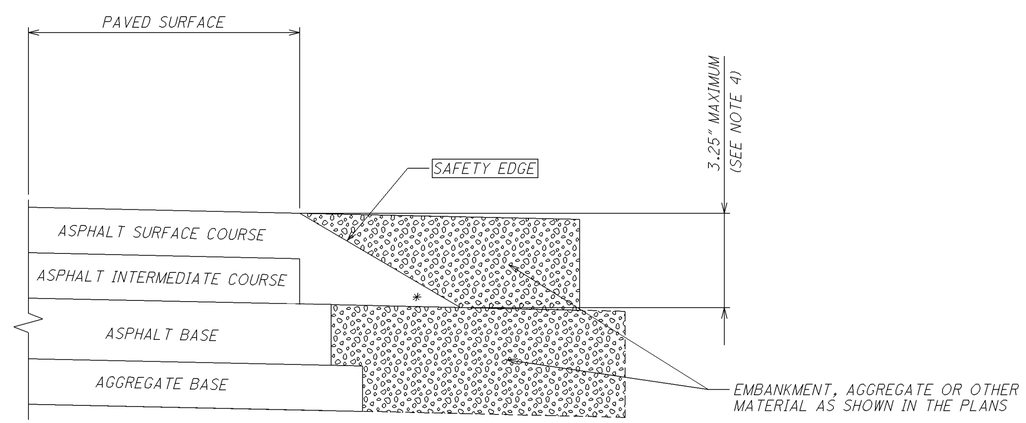

HALF SECTION
NEW CONSTRUCTION

TYPICAL SECTION 3

N.T.S.

NOTES:

1.) SAFETY EDGES ARE REQUIRED AT THE OUTSIDE EDGES OF THE PAVED ROADWAY (EDGE OF TRAVEL LANE OR EDGE OF PAVED SHOULDER).

2.) CONSTRUCT THE SAFETY EDGE THE FULL ASPHALT CONCRETE OVERLAY THICKNESS OR 2.5" (63MM) WHICHEVER IS GREATER, NOT TO EXCEED THE MAXIMUM SAFETY EDGE THICKNESS OF 6" (150MM). CONSTRUCT A NEAR-VERTICAL FACE BELOW THE SAFETY EDGE FOR THICKNESS GREATER THAN 6" (150 MM).

3.) BLADE AND SHAPE EXISTING SHOULDER MATERIAL TO FORM A UNIFORM SURFACE UNDER THE SAFETY EDGE PRIOR TO PLACEMENT OF THE ASPHALT CONCRETE OVERLAY.

4.) FOR NEW PAVEMENT CONSTRUCT THE SAFETY EDGE THE FULL THICKNESS OF THE SURFACE AND INTERMEDIATE COURSES, NOT TO EXCEED 3.25" (82 MM).

* 40° MAX

CALCULATED

CHECKED

SAFETY EDGE DETAIL

LIC-16-0.00

L016_SED_001.DGN 10-5-12

CITY OF PATASKALA - S.R. 16 CORRIDOR (FOR INFORMATION ONLY)									
LOCATION	INTERSECTION		CONTOLLER TYPE	MANUFACTURER	CONFLICT MONITOR	CABINET	ANTENNA	RADIO UNIT	CABLE (LIN.FT.)
1	S.R. 16 & VINE ST.	LOCAL	ASC/25 - 2100	ECONOLITE	SSM-12LE	PM	YAGI	1 - SLAVE	40
2	S.R. 16 & S.R. 310 (SOUTH)	LOCAL	ASC/25 - 2100	ECONOLITE	TRANSYT 6EL	PM	YAGI	1 - SLAVE	40
3	S.R. 16 & S.R. 310 (NORTH)	LOCAL	ASC/25 - 2100	ECONOLITE	MMU-16	GM	OMNI	1 - MASTER/SLAVE	65
		MASTER	ASC/2M - 1000	ECONOLITE					
4	S.R. 16 & OXFORD DR.	LOCAL	ASC/25 - 2100	ECONOLITE	SSM-12LE	GM	YAGI	1 - SLAVE	65
5	S.R. 16 & CORYLUS DR.	LOCAL	ASC/25 - 2100	ECONOLITE	SSM-12LE	GM	YAGI	1 - SLAVE	65
6	S.R. 16 & ONE HEALTHY PL.	LOCAL	ASC/25 - 2100	ECONOLITE	MMU-16	GM	YAGI	1 - SLAVE	65
		MASTER	ASC/2M - 1000	ECONOLITE					
7	S.R. 16 & WATKINS RD.	LOCAL	ASC/25 - 2100	ECONOLITE	TRANSYT 12ELRA	GM	YAGI	1 - SLAVE	65

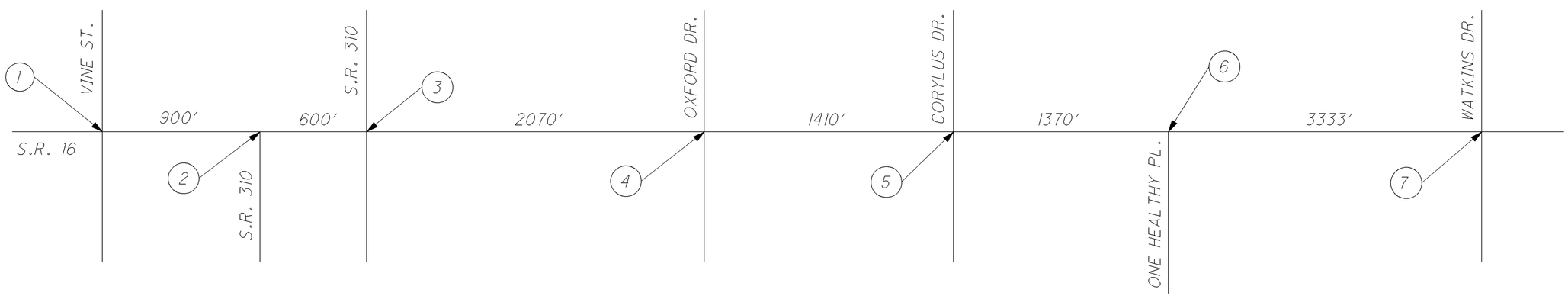

ITEM 815 SPREAD SPECTRUM RADIO, AS PER PLAN

THIS ITEM SHALL CONSIST OF INSTALLATION AND SETUP OF A COMPLETE AND OPERATIONAL SPREAD SPECTRUM RADIO IN ACCORDANCE WITH THE MANUFACTURERS RECOMMENDATIONS AND SUPPLEMENTAL SPECIFICATION 815. THE CONTRACTOR SHALL INSTALL THE MANUFACTURERS RECOMMENDED COAXIAL CABLE FROM THE ANTENNA TO A TERMINATION POINT IN THE TRAFFIC SIGNAL CABINET. THE CONTRACTOR SHALL BE RESPONSIBLE FOR, BUT NOT LIMITED TO, SUPPLYING AND INSTALLATION OF RADIO UNIT, ALL CABLING, YAGI/OMINI-DIRECTIONAL ANTENNA, LIGHTENING PROTECTION PHASERS, GROUND STRAPS, AND ALL TERMINATION CONNECTORS ETC..

THE CONTRACTOR WILL ALSO BE RESPONSIBLE FOR REMOVING AND REPLACING ANY EXISTING SIGNAL EQUIPMENT, ATTACHED TO THE EXISTING SIGNAL POLES, THAT MUST BE MOVED IN ORDER FOR THE ANTENNA TO ACHIEVE MAXIMUM SIGNAL STRENGTH.

THE DEPARTMENT WILL MEASURE SPREAD SPECTRUM RADIO BY THE NUMBER OF EACH INTERSECTION SHOWN IN THE PLANS AND WILL INCLUDE FURNISHING, INSTALLING AND TESTING A COMPLETE, FULLY FUNCTIONING WIRELESS INTERCONNECT SYSTEM AT EACH INTERSECTION INCLUDING COMMUNICATION TO THE MASTER CONTROLLER.

THE DEPARTMENT WILL MEASURE TRAINING ON A LUMP SUM BASIS, AND WILL INCLUDE PROVIDING THE INSTRUCTION MATERIALS, INSTRUCTOR TRAVEL EXPENSES AND TEST OR MEDIA EQUIPMENT FOR PRESENTING THE TRAINING MATERIAL.

THE FOLLOWING QUANTITIES HAVE BEEN CARRIED TO THE GENERAL SUMMARY FOR THE ABOVE DESCRIBED PURPOSE.

ITEM 815 SPREAD SPECTRUM RADIO, AS PER PLAN
LOCATION 3 - 7 EACH

ITEM 815 TRAINING FOR SPREAD SPECTRUM RADIO
LOCATION 3 - LUMP

CALCULATED LME
CHECKED DNM

RADIO INTERCONNECT DETAILS

LIC-16-0.00

NOTES

1. All antenna links shall use vertical polarization, unless otherwise authorized by the engineer.

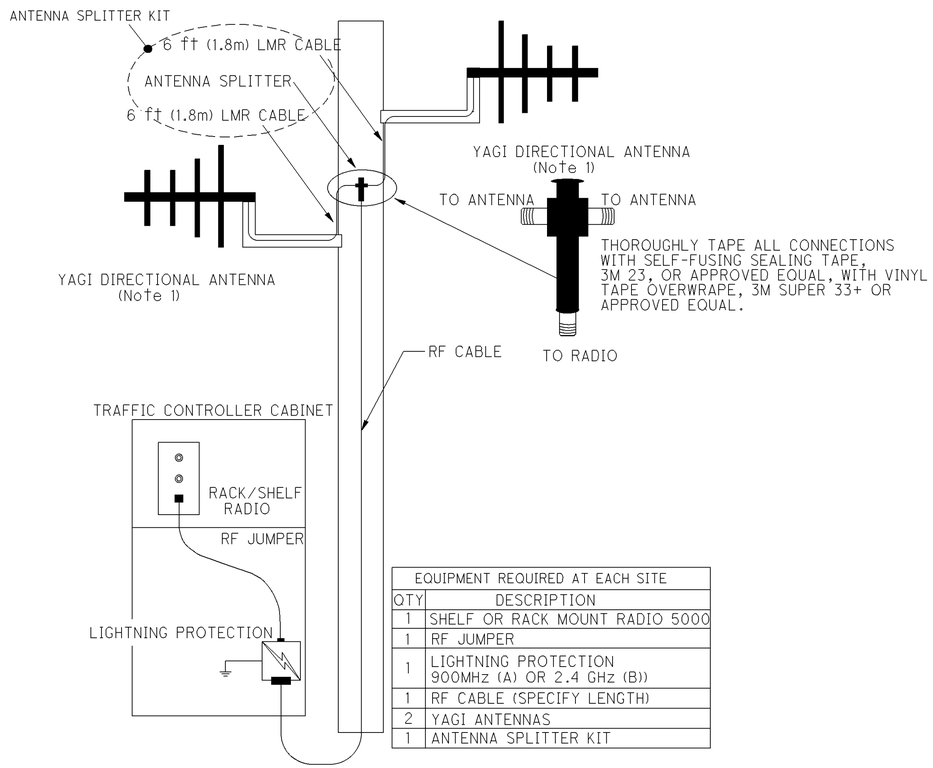

EQUIPMENT REQUIRED AT EACH SITE	
QTY	DESCRIPTION
1	SHELF OR RACK MOUNT RADIO 5000
1	RF JUMPER
1	LIGHTNING PROTECTION 900MHz (A) OR 2.4 GHz (B))
1	RF CABLE (SPECIFY LENGTH)
2	YAGI ANTENNAS
1	ANTENNA SPLITTER KIT

ANTENNA SPLITTER KIT

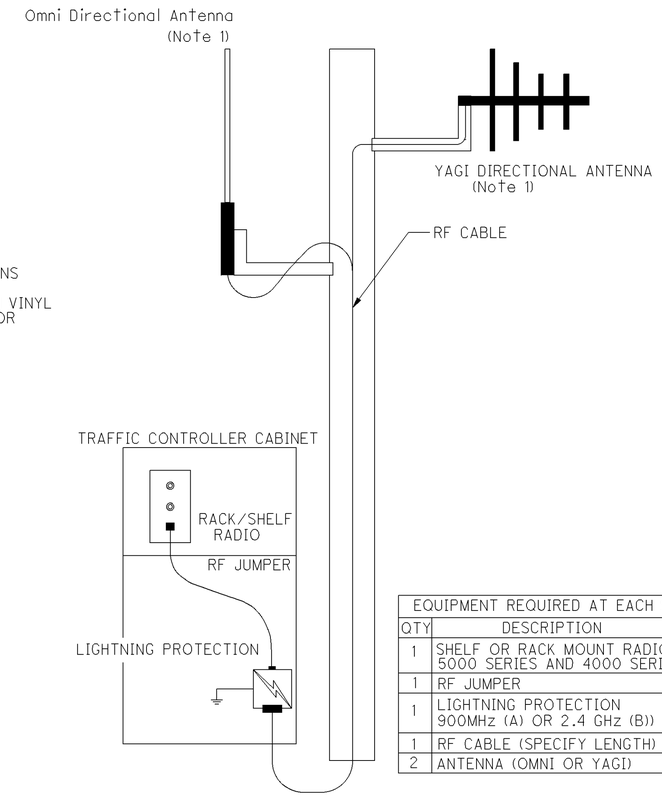

EQUIPMENT REQUIRED AT EACH SITE	
QTY	DESCRIPTION
1	SHELF OR RACK MOUNT RADIO 5000 SERIES AND 4000 SERIES
1	RF JUMPER
1	LIGHTNING PROTECTION 900MHz (A) OR 2.4 GHz (B))
1	RF CABLE (SPECIFY LENGTH)
2	ANTENNA (OMNI OR YAGI)

OMNI OR YAGI DIRECTIONAL ANTENNA

OFFICE OF TRAFFIC ENGINEERING

DESIGNED | REVIEWED KRD

REVISION DATE 04/20/12 | CHECKED

PIS NUMBER 207560

PLAN INSERT SHEET

RADIO INTERCONNECT DETAILS

LIC-16-0.00

1 / 1

9 / 47

RADIO INTERCONNECT 10-5-12

NOTE:
THE PAVEMENT WIDTHS SHOWN IN THE "PAVEMENT DATA" TABLE ARE THE WIDTHS WHICH HAVE BEEN DETERMINED TO HAVE SUFFICIENT ROADWAY BASE FOR PAVING. IF ACTUAL ROADWAY WIDTHS DIFFER, THE ROADWAY SHALL BE PAVED ONLY THE WIDTH SHOWN IN THE AFOREMENTIONED TABLE. IF THE EXISTING ROADWAY IS WIDER THAN THAT WHICH IS SHOWN IN THE TABLE, PAVING SHALL BE CENTERED ABOUT THE FULL WIDTH OF THE ROADWAY AND ANY EXCESS EXISTING PAVEMENT ON THE EDGES SHALL BE COVERED WITH ITEM 617 COMPACTED AGGREGATE. PAVING IN CURBED ROADWAY SECTIONS SHALL BE FROM CURB TO CURB.

PW = PAVEMENT WIDTH
PS = PAVED SHOULDER
AS = AGGREGATE SHOULDER

TYPICAL 1

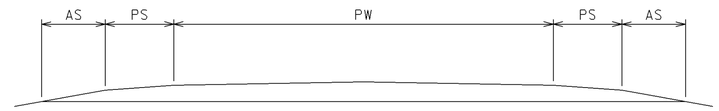

TYPICAL 2

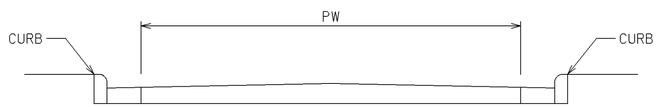

TYPICAL 3

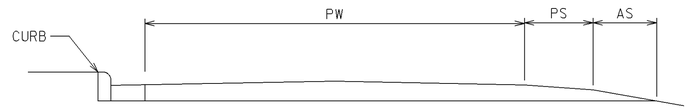

TYPICAL 4

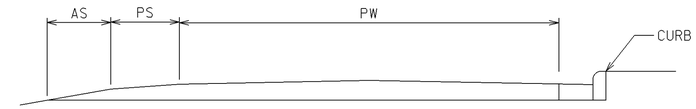

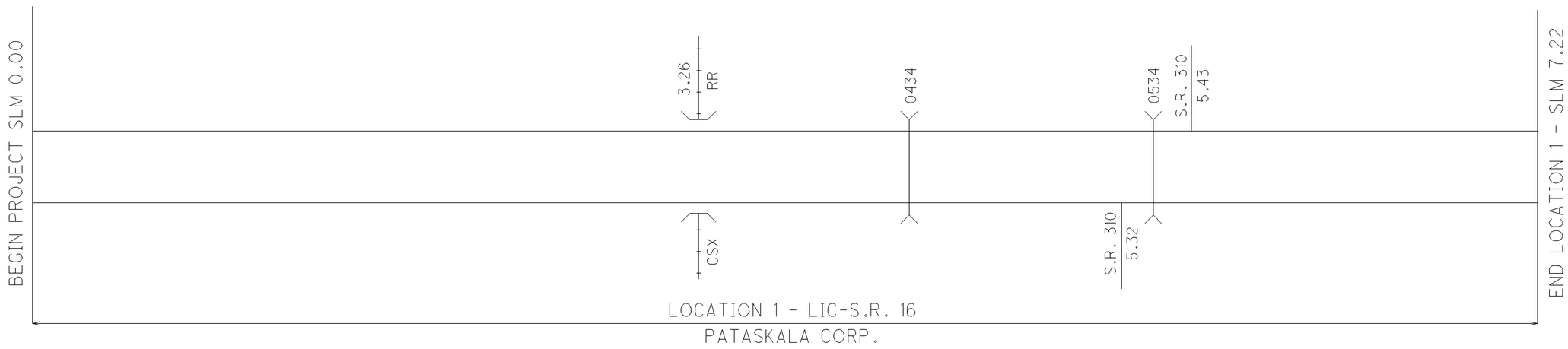

CALCULATED LME
CHECKED DNM

ASPHALT CONCRETE DATA

LIC-16-0.00

L016_MAC_001.DGN 9-24-12

PAVEMENT DATA

LOCATION	COUNTY	ROUTE	BEGIN LOG POINT SLM	END LOG POINT SLM	LENGTH MILES	LENGTH LIN. FT.	PAVEMENT WIDTH (FEET)	TYPICAL	EXISTING PAVEMENT TYPE	PAVEMENT AREA SQ. YD.	254 PAVEMENT PLANING, ASPHALT CONCRETE SQ. YD.	407 TACK COAT @ 0.075 GAL./S.Y. GAL.	407 TACK COAT FOR INTERMEDIATE COURSE @ 0.05 GAL./S.Y. GAL.	407 TACK COAT, TRACKLESS TACK, INTERMEDIATE COURSE @ 0.075 GAL./S.Y. GAL.	407 TACK COAT, TRACKLESS TACK, SURFACE COURSE @ 0.05 GAL./S.Y. GAL.	448 ASPHALT CONCRETE THICKNESS INCHES	448 ASPHALT CONCRETE INTERMEDIATE COURSE, TYPE 2, PG 64-22 CU. YD.	448 ASPHALT CONCRETE THICKNESS INCHES	448 ASPHALT CONCRETE SURFACE COURSE, TYPE 1, PG 70-22M CU. YD.	614 WORK ZONE CENTER LINE, CLASS II MILE
1	LIC	S.R. 16	0.00	0.28	0.28	1,478.4	60.0	1	448	9,856.0	9,856.0	739.2	492.8			1.75	479.2	1.25	342.3	0.56
1	LIC	S.R. 16	0.28	0.34	0.06	316.8	48.0	1	443	1,689.6	1,689.6	126.8	84.5			1.75	82.2	1.25	58.7	0.12
1	LIC	S.R. 16	0.34	0.43	0.09	475.2	36.0 AVG	1	448	1,900.8	1,900.8	142.6	95.1			1.75	92.4	1.25	66.0	0.18
1	LIC	S.R. 16	0.43	0.71	0.28	1,478.4	24.0	1	443	3,942.4	3,942.4	295.7	197.2			1.75	191.7	1.25	136.9	0.56
1	LIC	S.R. 16	0.71	0.79	0.08	422.4	35.0 AVG	1	448	1,642.7	1,642.7	123.3	82.2			1.75	79.9	1.25	57.1	0.16
1	LIC	S.R. 16	0.79	0.83	0.04	211.2	36.0	1	443	844.8	844.8	63.4	42.3			1.75	41.1	1.25	29.4	0.08
1	LIC	S.R. 16	0.83	0.88	0.05	264.0	30.0 AVG	1	443	880.0	880.0	66.0	44.0			1.75	42.8	1.25	30.6	0.10
1	LIC	S.R. 16	0.88	0.99	0.11	580.8	24.0	1	448	1,548.8	1,548.8	116.2	77.5			1.75	75.3	1.25	53.8	0.22
1	LIC	S.R. 16	0.99	1.05	0.06	316.8	30.0 AVG	1	443	1,056.0	1,056.0	79.2	52.8			1.75	51.4	1.25	36.7	0.12
1	LIC	S.R. 16	1.05	1.13	0.08	422.4	36.0	1	448	1,689.6	1,689.6	126.8	84.5			1.75	82.2	1.25	58.7	0.16
1	LIC	S.R. 16	1.13	1.20	0.07	369.6	30.0 AVG	1	443	1,232.0	1,232.0	92.4	61.6			1.75	59.9	1.25	42.8	0.14
1	LIC	S.R. 16	1.20	2.78	1.58	8,342.4	24.0	1	443	22,246.4	22,246.4	1,668.5	1,112.4			1.75	1,081.5	1.25	772.5	3.16
1	LIC	S.R. 16	2.78	2.83	0.05	264.0	30.0 AVG	1	448	880.0	SKIP AREA - BUTT JOINT AT EACH END OF NEW PAVEMENT									
1	LIC	S.R. 16	2.83	2.89	0.06	316.8	48.0	1	443	1,689.6										
1	LIC	S.R. 16	2.89	2.95	0.06	316.8	36.0	1	448	1,267.2										
1	LIC	S.R. 16	2.95	3.01	0.06	316.8	30.0 AVG	1	443	1,056.0										
1	LIC	S.R. 16	3.01	3.67	0.66	3,484.8	24.0	1	448	9,292.8	9,292.8	697.0	464.7			1.75	451.8	1.25	322.7	1.32
1	LIC	S.R. 16	3.67	3.71	0.04	211.2	29.0 AVG	1	448	680.5	680.5	51.1	34.1			1.75	33.1	1.25	23.7	0.08
1	LIC	S.R. 16	3.71	3.76	0.05	264.0	34.0	1	443	997.3	997.3	74.8	49.9			1.75	48.5	1.25	34.7	0.10
1	LIC	S.R. 16	3.76	3.80	0.04	211.2	29.0 AVG	1	448	680.5	680.5	51.1	34.1			1.75	33.1	1.25	23.7	0.08
1	LIC	S.R. 16	3.80	4.50	0.70	3,696.0	24.0	1	443	9,856.0	9,856.0	739.2	492.8			1.75	479.2	1.25	342.3	1.40
1	LIC	S.R. 16	4.50	4.83	0.33	1,742.4	24.0	1	448	4,646.4	4,646.4			348.5	232.4	1.75	225.9	1.25	161.4	0.66
1	LIC	S.R. 16	4.83	4.86	0.03	158.4	30.0 AVG	1	448	528.0	528.0			39.6	26.4	1.75	25.7	1.25	18.4	0.06
1	LIC	S.R. 16	4.86	4.91	0.05	264.0	36.0	1	448	1,056.0	1,056.0			79.2	52.8	1.75	51.4	1.25	36.7	0.10
1	LIC	S.R. 16	4.91	4.96	0.05	264.0	46.0	1	448	1,349.3	1,349.3			101.2	67.5	1.75	65.6	1.25	46.9	0.10
1	LIC	S.R. 16	4.96	4.99	0.03	158.4	35.0 AVG	1	448	616.0	616.0			46.2	30.8	1.75	30.0	1.25	21.4	0.06
1	LIC	S.R. 16	4.99	5.05	0.06	316.8	24.0	1	448	844.8	844.8			63.4	42.3	1.75	41.1	1.25	29.4	0.12
1	LIC	S.R. 16	5.05	5.08	0.03	158.4	36.0 AVG	1	443	633.6	633.6			47.6	31.7	1.75	30.8	1.25	22.0	0.06
1	LIC	S.R. 16	5.08	5.54	0.46	2,428.8	48.0	1	443	12,953.6	12,953.6			971.6	647.7	1.75	629.7	1.25	449.8	0.92
1	LIC	S.R. 16	5.54	5.58	0.04	211.2	36.0	1	448	844.8	844.8			63.4	42.3	1.75	41.1	1.25	29.4	0.08
1	LIC	S.R. 16	5.58	5.63	0.05	264.0	30.0 AVG	1	443	880.0	880.0			66.0	44.0	1.75	42.8	1.25	30.6	0.10
1	LIC	S.R. 16	5.63	5.66	0.03	158.4	24.0	1	448	422.4	422.4			31.7	21.2	1.75	20.6	1.25	14.7	0.06
1	LIC	S.R. 16	5.66	5.71	0.05	264.0	30.0 AVG	1	443	880.0	880.0			66.0	44.0	1.75	42.8	1.25	30.6	0.10
1	LIC	S.R. 16	5.71	5.89	0.18	950.4	36.0	1/3	448	3,801.6	3,801.6			285.2	190.1	1.75	184.8	1.25	132.0	0.36
1	LIC	S.R. 16	5.89	5.91	0.02	105.6	42.0 AVG	3	448	492.8	492.8			37.0	24.7	1.75	24.0	1.25	17.2	0.04
1	LIC	S.R. 16	5.91	5.99	0.08	422.4	48.0	2	443	2,252.8	2,252.8			169.0	112.7	1.75	109.6	1.25	78.3	0.16
1	LIC	S.R. 16	5.99	6.02	0.03	158.4	54.0 AVG	2	448	950.4	950.4			71.3	47.6	1.75	46.2	1.25	33.0	0.06
1	LIC	S.R. 16	6.02	6.10	0.08	422.4	48.0	2	443	2,252.8	2,252.8			169.0	112.7	1.75	109.6	1.25	78.3	0.16
1	LIC	S.R. 16	6.10	6.11	0.01	52.8	54.0 AVG	2	448	316.8	316.8			23.8	15.9	1.75	15.4	1.25	11.0	0.02
1	LIC	S.R. 16	6.11	6.13	0.02	105.6	60.0	2	448	704.0	704.0			52.8	35.2	1.75	34.3	1.25	24.5	0.04
1	LIC	S.R. 16	6.13	6.14	0.01	52.8	48.0 AVG	4	443	281.6	281.6			21.2	14.1	1.75	13.7	1.25	9.8	0.02
1	LIC	S.R. 16	6.14	6.29	0.15	792.0	36.0	4	448	3,168.0	3,168.0			237.6	158.4	1.75	154.0	1.25	110.0	0.30
1	LIC	S.R. 16	6.29	6.30	0.01	52.8	42.0 AVG	4	443	246.4	246.4			18.5	12.4	1.75	12.0	1.25	8.6	0.02
1	LIC	S.R. 16	6.30	6.35	0.05	264.0	48.0	4	448	1,408.0	1,408.0			105.6	70.4	1.75	68.5	1.25	48.9	0.10
1	LIC	S.R. 16	6.35	6.43	0.08	422.4	36.0	4	443	1,689.6	1,689.6			126.8	84.5	1.75	82.2	1.25	58.7	0.16
1	LIC	S.R. 16	6.43	6.44	0.01	52.8	42.0 AVG	4	443	246.4	246.4			18.5	12.4	1.75	12.0	1.25	8.6	0.02
1	LIC	S.R. 16	6.44	6.55	0.11	580.8	48.0	4	448	3,097.6	3,097.6			232.4	154.9	1.75	150.6	1.25	107.6	0.22
1	LIC	S.R. 16	6.55	6.60	0.05	264.0	36.0 AVG	1	443	1,056.0	1,056.0			79.2	52.8	1.75	51.4	1.25	36.7	0.10
1	LIC	S.R. 16	6.60	6.84	0.24	1,267.2	24.0	1	448	3,379.2	3,379.2	253.5	169.0			1.75	164.3	1.25	117.4	0.48
1	LIC	S.R. 16	6.84	6.90	0.06	316.8	30.0 AVG	1	443	1,056.0	1,056.0	79.2	52.8			1.75	51.4	1.25	36.7	0.12
1	LIC	S.R. 16	6.90	7.03	0.13	686.4	36.0	1	448	2,745.6	2,745.6	206.0	137.3			1.75	133.5	1.25	95.4	0.26
1	LIC	S.R. 16	7.03	7.10	0.07	369.6	30.0 AVG	1	443	1,232.0	1,232.0	92.4	61.6			1.75	59.9	1.25	42.8	0.14
1	LIC	S.R. 16	7.10	7.22	0.12	633.6	24.0	1	448	1,689.6	1,689.6	126.8	84.5			1.75	82.2	1.25	58.7	0.24
DEDUCT FOR BRIDGES (FROM SHEET 16)										(917.3)	(917.3)	(68.7)	(45.8)			1.75	(44.5)	1.25	(31.8)	(0.07)
LOCATION 1 TOTALS (CARRIED TO SUB-SUMMARY)											**126,841.0**	**5,942.5**	**3,961.9**	**3,572.3**	**2,381.9**		**6,167.9**		**4,406.3**	**13.91**

CALCULATED LME
CHECKED DNM

ASPHALT CONCRETE DATA

LIC-16-0.00

L016_MAC_002.DGN 9-24-12

PAVEMENT DATA

LOCATION	COUNTY	ROUTE	BEGIN LOG POINT SLM	END LOG POINT SLM	LENGTH MILES	LENGTH LIN. FT.	PAVEMENT WIDTH (FEET)	TYPICAL	EXISTING PAVEMENT TYPE	PAVEMENT AREA SQ. YD.	254 PAVEMENT PLANING, ASPHALT CONCRETE SQ. YD.	407 TACK COAT @ 0.075 GAL./S.Y. GAL.	407 TACK COAT FOR INTERMEDIATE COURSE @ 0.05 GAL./S.Y. GAL.	448 ASPHALT CONCRETE THICKNESS INCHES	448 INTERMEDIATE COURSE, TYPE 2, PG 64-22 CU. YD.	448 THICKNESS INCHES	448 SURFACE COURSE, TYPE 1, PG 70-22M CU. YD.	614 WORK ZONE CENTER LINE, CLASS II MILE
2	LIC	S.R. 16	7.22	7.36	0.14	739.2	24.0	1	448	1,971.2	1,971.2	147.9	98.6	1.75	95.9	1.25	68.5	0.28
2	LIC	S.R. 16	7.36	7.42	0.06	316.8	30.0 AVG	1	448	1,056.0	1,056.0	79.2	52.8	1.75	51.4	1.25	36.7	0.12
2	LIC	S.R. 16	7.42	7.49	0.07	369.6	36.0	1	448	1,478.4	1,478.4	110.9	74.0	1.75	71.9	1.25	51.4	0.14
2	LIC	S.R. 16	7.49	7.54	0.05	264.0	30.0 AVG	1	448	880.0	880.0	66.0	44.0	1.75	42.8	1.25	30.6	0.10
2	LIC	S.R. 16	7.54	8.12	0.58	3,062.4	24.0	1	448	8,166.4	8,166.4	612.5	408.4	1.75	397.0	1.25	283.6	1.16
2	LIC	S.R. 16	8.12	8.14	0.02	105.6	30.0 AVG	1	448	352.0	352.0	26.4	17.6	1.75	17.2	1.25	12.3	0.04
2	LIC	S.R. 16	8.14	8.18	0.04	211.2	36.0	1	448	844.8	844.8	63.4	42.3	1.75	41.1	1.25	29.4	0.08
2	LIC	S.R. 16	8.18	8.72	0.54	2,851.2	24.0	1	448	7,603.2	7,603.2	570.3	380.2	1.75	369.6	1.25	264.0	1.08
2	LIC	S.R. 16	8.72	8.83	0.11	580.8	30.0 AVG	1	448	1,936.0	1,936.0	145.2	96.8	1.75	94.2	1.25	67.3	0.22
2	LIC	S.R. 16	8.83	8.88	0.05	264.0	36.0	1	448	1,056.0	1,056.0	79.2	52.8	1.75	51.4	1.25	36.7	0.10
2	LIC	S.R. 16	8.88	8.99	0.11	580.8	30.0 AVG	1	448	1,936.0	1,936.0	145.2	96.8	1.75	94.2	1.25	67.3	0.22
2	LIC	S.R. 16	8.99	9.01	0.02	105.6	24.0	1	448	281.6	281.6	21.2	14.1	1.75	13.7	1.25	9.8	0.04
2	LIC	S.R. 16	9.01	9.11	0.10	528.0	30.0 AVG	1/3	448	1,760.0	1,760.0	132.0	88.0	1.75	85.6	1.25	61.2	0.20
2	LIC	S.R. 16	9.11	9.24	0.13	686.4	36.0	1	448	2,745.6	2,745.6	206.0	137.3	1.75	133.5	1.25	95.4	0.26
2	LIC	S.R. 16	9.24	9.35	0.11	580.8	30.0 AVG	1	448	1,936.0	1,936.0	145.2	96.8	1.75	94.2	1.25	67.3	0.22
2	LIC	S.R. 16	9.35	10.00	0.65	3,432.0	24.0	1	448	9,152.0	9,152.0	686.4	457.6	1.75	444.9	1.25	317.8	1.30
2	LIC	S.R. 16	10.00	10.10	0.10	528.0	30.0 AVG	1	448	1,760.0	1,760.0	132.0	88.0	1.75	85.6	1.25	61.2	0.20
2	LIC	S.R. 16	10.10	10.18	0.08	422.4	36.0	1	448	1,689.6	1,689.6	126.8	84.5	1.75	82.2	1.25	58.7	0.16
2	LIC	S.R. 16	10.18	10.25	0.07	369.6	30.0 AVG	1	448	1,232.0	1,232.0	92.4	61.6	1.75	59.9	1.25	42.8	0.14
2	LIC	S.R. 16	10.25	11.44	1.19	6,283.2	24.0	1	448	16,755.2	16,755.2	1,256.7	837.8	1.75	814.5	1.25	581.8	2.38
2	LIC	S.R. 16	11.44	11.47	0.03	158.4	33.0 AVG	1	448	580.8	580.8	43.6	29.1	1.75	28.3	1.25	20.2	0.06
2	LIC	S.R. 16	11.47	11.50	0.03	158.4	41.0 AVG	1	448	721.6	721.6	54.2	36.1	1.75	35.1	1.25	25.1	0.06
2	LIC	S.R. 16	11.50	11.51	0.01	52.8	48.0	1	448	281.6	281.6	21.2	14.1	1.75	13.7	1.25	9.8	0.02
2	LIC	S.R. 16	11.51	11.56	0.05	264.0	36.0	1	448	1,056.0	1,056.0	79.2	52.8	1.75	51.4	1.25	36.7	0.10
2	LIC	S.R. 16	11.56	11.65	0.09	475.2	30.0 AVG	1	448	1,584.0	1,584.0	118.8	79.2	1.75	77.0	1.25	55.0	0.18
2	LIC	S.R. 16	11.65	11.68	0.03	158.4	30.0 AVG	1	448	528.0	528.0	39.6	26.4	1.75	25.7	1.25	18.4	0.06
2	LIC	S.R. 16	11.68	11.72	0.04	211.2	39.0 AVG	1	448	915.2	915.2	68.7	45.8	1.75	44.5	1.25	31.8	0.08
2	LIC	S.R. 16	11.72	11.75	0.03	158.4	48.0	1	448	844.8	844.8	63.4	42.3	1.75	41.1	1.25	29.4	0.06
2	LIC	S.R. 16	11.75	11.79	0.04	211.2	36.0	1	448	844.8	844.8	63.4	42.3	1.75	41.1	1.25	29.4	0.08
2	LIC	S.R. 16	11.79	11.91	0.12	633.6	30.0 AVG	1	448	2,112.0	2,112.0	158.4	105.6	1.75	102.7	1.25	73.4	0.24
2	LIC	S.R. 16	11.91	12.58	0.67	3,537.6	24.0	1	448	9,433.6	9,433.6	707.6	471.7	1.75	458.6	1.25	327.6	1.34
2	LIC	S.R. 16	12.58	12.66	0.08	422.4	30.0 AVG	1	448	1,408.0	1,408.0	105.6	70.4	1.75	68.5	1.25	48.9	0.16
2	LIC	S.R. 16	12.66	12.69	0.03	158.4	36.0	1	448	633.6	633.6	47.6	31.7	1.75	30.8	1.25	22.0	0.06
2	LIC	S.R. 16	12.69	12.72	0.03	158.4	48.0	1	448	844.8	844.8	63.4	42.3	1.75	41.1	1.25	29.4	0.06
2	LIC	S.R. 16	12.72	12.80	0.08	422.4	38.0 AVG	1	448	1,783.5	1,783.5	133.8	89.2	1.75	86.7	1.25	62.0	0.16
2	LIC	S.R. 16	12.80	12.82	0.02	105.6	26.0 AVG	1	448	305.1	305.1	22.9	15.3	1.75	14.9	1.25	10.6	0.04
2	LIC	S.R. 16	12.82	13.46	0.64	3,379.2	24.0	1	448	9,011.2	9,011.2	675.9	450.6	1.75	438.1	1.25	312.9	1.28
2	LIC	S.R. 16	13.46	13.51	0.05	264.0	30.0 AVG	1	448	880.0	880.0	66.0	44.0	1.75	42.8	1.25	30.6	0.10
2	LIC	S.R. 16	13.51	13.55	0.04	211.2	36.0	1	448	844.8	844.8	63.4	42.3	1.75	41.1	1.25	29.4	0.08
2	LIC	S.R. 16	13.55	13.59	0.04	211.2	48.0	1	448	1,126.4	1,126.4	84.5	56.4	1.75	54.8	1.25	39.2	0.08
2	LIC	S.R. 16	13.59	13.60	0.01	52.8	42.0 AVG	1	448	246.4	246.4	18.5	12.4	1.75	12.0	1.25	8.6	0.02
2	LIC	S.R. 16	13.60	13.76	0.16	844.8	36.0 AVG	1/3	448	3,379.2	3,379.2	253.5	169.0	1.75	164.3	1.25	117.4	0.32
2	LIC	S.R. 16	13.76	13.82	0.06	316.8	30.0 AVG	1	448	1,056.0	1,056.0	79.2	52.8	1.75	51.4	1.25	36.7	0.12
2	LIC	S.R. 16	13.82	14.10	0.28	1,478.4	24.0	1	448	3,942.4	3,942.4	295.7	197.2	1.75	191.7	1.25	136.9	0.56
LOCATION 2 TOTALS (CARRIED TO SUB-SUMMARY)											**108,955.8**	**8,173.0**	**5,449.0**		**5,298.2**		**3,785.2**	**13.76**

CALCULATED LME
CHECKED DNM

ASPHALT CONCRETE DATA

LIC-16-0.00

L016_MAC_001.DGN 9-24-12

PW = PAVEMENT WIDTH
PS = PAVED SHOULDER
AS = AGGREGATE SHOULDER

CALCULATED LME
CHECKED DNM

SHOULDER DATA

LOCATION	COUNTY	ROUTE	BEGIN LOG POINT SLM	END LOG POINT SLM	LENGTH MILES	LENGTH LIN. FT.	TYPICAL	PROPOSED WIDTH (FT.) A	PROPOSED WIDTH (FT.) B	SHOULDER AREA SQ. YD.	254 PAVEMENT PLANING, ASPHALT CONCRETE SQ. YD.	407 TACK COAT @ 0.075 GAL./S.Y. GAL.	407 TACK COAT FOR INTERMEDIATE COURSE @ 0.05 GAL./S.Y. GAL.	407 TACK COAT, TRACKLESS TACK, INTERMEDIATE COURSE @ 0.075 GAL./S.Y. GAL.	407 TACK COAT, TRACKLESS TACK, SURFACE COURSE @ 0.05 GAL./S.Y. GAL.	448 ASPHALT CONCRETE THICKNESS INCHES	448 INTERMEDIATE COURSE, TYPE 2, PG 64-22 CU. YD.	448 THICKNESS INCHES	448 SURFACE COURSE, TYPE 1, PG 70-22M CU. YD.	617 THICKNESS INCHES	617 COMPACTED AGGREGATE, AS PER PLAN (2' WIDTH) CU. YD.
1	LIC	S.R. 16	0.00	0.29	0.29	1531.2	1	10	10	3,402.7	3,402.7	255.2	170.1			1.75	165.4	1.25	118.1	2.00	37.8
1	LIC	S.R. 16	0.29	0.43	0.14	739.2	1	6 AVG	12 AVG	1,478.4	1,478.4	110.9	73.9			1.75	71.9	1.25	51.3	2.00	18.3
1	LIC	S.R. 16	0.43	2.78	2.35	12408.0	1	4	4	11,029.3	11,029.3	827.2	551.5			1.75	536.1	1.25	383.0	2.00	306.4
											SKIP AREA - BUTT JOINT AT EACH END OF NEW PAVEMENT										
1	LIC	S.R. 16	3.01	4.32	1.31	6916.8	1	4	4	6,148.3	6,148.3	461.1	307.4			1.75	298.9	1.25	213.5	2.00	170.8
1	LIC	S.R. 16	4.32	4.33	0.01	52.8	1	7 AVG	7 AVG	82.1	82.1	6.2	4.1			1.75	4.0	1.25	2.9	2.00	1.3
1	LIC	S.R. 16	4.33	4.35	0.02	105.6	1	10	10	234.7	234.7	17.6	11.7			1.75	11.4	1.25	8.1	2.00	2.6
1	LIC	S.R. 16	4.35	4.36	0.01	52.8	1	7 AVG	7 AVG	82.1	82.1	6.2	4.1			1.75	4.0	1.25	2.9	2.00	1.3
1	LIC	S.R. 16	4.36	4.50	0.14	739.2	1	4	4	657.1	657.1	49.3	32.9			1.75	31.9	1.25	22.8	2.00	18.3
1	LIC	S.R. 16	4.50	5.05	0.55	2904.0	1	4	4	2,581.3	2,581.3			193.6	129.1	1.75	125.5	1.25	89.6	2.00	71.7
1	LIC	S.R. 16	5.05	5.10	0.05	264.0	1	4	8	352.0	352.0			26.4	17.6	1.75	17.1	1.25	12.2	2.00	6.5
1	LIC	S.R. 16	5.10	5.16	0.06	316.8	1	7 AVG	8	528.0	528.0			39.6	26.4	1.75	25.7	1.25	18.3	2.00	7.8
1	LIC	S.R. 16	5.16	5.28	0.12	633.6	1	10	8 AVG	1,267.2	1,267.2			95.0	63.4	1.75	61.6	1.25	44.0	2.00	15.6
1	LIC	S.R. 16	5.28	5.37	0.09	475.2	1	10	10	1,056.0	1,056.0			79.2	52.8	1.75	51.3	1.25	36.7	2.00	11.7
1	LIC	S.R. 16	5.37	5.40	0.03	158.4	1	7 AVG	9 AVG	281.6	281.6			21.1	14.1	1.75	13.7	1.25	9.8	2.00	3.9
1	LIC	S.R. 16	5.40	5.44	0.04	211.2	1	5	7	281.6	281.6			21.1	14.1	1.75	13.7	1.25	9.8	2.00	5.2
1	LIC	S.R. 16	5.44	5.47	0.03	158.4	1	8	8	281.6	281.6			21.1	14.1	1.75	13.7	1.25	9.8	2.00	3.9
1	LIC	S.R. 16	5.47	5.54	0.07	369.6	1	6 AVG	6 AVG	492.8	492.8			37.0	24.6	1.75	24.0	1.25	17.1	2.00	9.1
1	LIC	S.R. 16	5.54	5.80	0.26	1372.8	1	4	4	1,220.3	1,220.3			91.5	61.0	1.75	59.3	1.25	42.4	2.00	33.9
1	LIC	S.R. 16	5.80	5.91	0.11	580.8	3		4	258.1	258.1			19.4	12.9	1.75	12.5	1.25	9.0	2.00	7.2
1	LIC	S.R. 16	5.91	6.12	0.21	1108.8	2														
1	LIC	S.R. 16	6.12	6.34	0.22	1161.6	4	4		516.3	516.3			38.7	25.8	1.75	25.1	1.25	17.9	2.00	14.3
1	LIC	S.R. 16	6.34	6.35	0.01	52.8	4	8 AVG		46.9	46.9			3.5	2.3	1.75	2.3	1.25	1.6	2.00	1.3
1	LIC	S.R. 16	6.35	6.39	0.04	211.2	4	12		281.6	281.6			21.1	14.1	1.75	13.7	1.25	9.8	2.00	5.2
1	LIC	S.R. 16	6.39	6.40	0.01	52.8	4	8 AVG		46.9	46.9			3.5	2.3	1.75	2.3	1.25	1.6	2.00	1.3
1	LIC	S.R. 16	6.40	6.55	0.15	792.0	4	4		352.0	352.0			26.4	17.6	1.75	17.1	1.25	12.2	2.00	19.6
1	LIC	S.R. 16	6.55	6.60	0.05	264.0	1	4	4	234.7	234.7			17.6	11.7	1.75	11.4	1.25	8.1	2.00	6.5
1	LIC	S.R. 16	6.60	7.22	0.62	3273.6	1	4	4	2,909.9	2,909.9	218.2	145.5			1.75	141.5	1.25	101.0	2.00	80.8
	DEDUCT FOR BRIDGES (FROM SHEET 16)									(305.8)	(305.8)	(22.9)	(15.3)			1.75	(14.9)	1.25	(10.6)	2.00	(13.3)
LOCATION 1 TOTALS (CARRIED TO SUB-SUMMARY)											**35,797.7**	**1,929.0**	**1,285.9**	**755.8**	**503.9**		**1,740.2**		**1,242.9**		**849.0**
2	LIC	S.R. 16	7.22	14.10	6.88	36326.4	VAR	4	4	32,290.1	32,290.1	2,421.8	1,614.5			1.75	1,569.7	1.25	1,121.2	2.00	896.9
LOCATION 2 TOTALS (CARRIED TO SUB-SUMMARY)											**32,290.1**	**2,421.8**	**1,614.5**				**1,569.7**		**1,121.2**		**896.9**

PAVED SHOULDER DATA

LIC-16-0.00

L016_MPS_001.DGN 10-5-12

EXTRA AREAS

LOCATION	COUNTY	ROUTE	SIDE	DESCRIPTION	INTERSECTIONS DETAIL DIMENSION A	B	C	AREA	202 WEARING COURSE REMOVED	407 TACK COAT @ 0.075 GAL./ SQ. YD.	TACK COAT FOR INTERMEDIATE COURSE@ 0.05 GAL./ SQ. YD.	TACK COAT, TRACKLESS TACK, INTERMEDIATE COURSE @ 0.075 GAL./S.Y.	TACK COAT, TRACKLESS TACK, SURFACE COURSE @ 0.05 GAL./S.Y.	448 ASPHALT CONCRETE THICKNESS	INTERMEDIATE COURSE, TYPE 2, PG 64-22	THICKNESS	SURFACE COURSE, TYPE 1, PG 64-22
					FT.	FT.	FT.	SQ. YD.	SQ. YD.	GAL.	GAL.	GAL.	GAL.	IN.	CU. YD.	IN.	CU. YD.
1	LIC	S.R. 16	RT.	TAYLOR RD	70	35	92	493.9	493.9	37.1	24.7			1.75	24.1	1.25	17.2
1	LIC	S.R. 16	LT.	TAYLOR RD	40	38	92	288.9	288.9	21.7	14.5			1.75	14.1	1.25	10.1
1	LIC	S.R. 16	RT.	ANNETTE DR	22	20	41	74.6	74.6	5.6						1.25	2.6
1	LIC	S.R. 16	RT.	SUMMIT RIDGE DR	25	20	78	136.2	136.2	10.3						1.25	4.8
1	LIC	S.R. 16	LT.	SUMMIT RIDGE DR	30	24	68	153.4	153.4	11.6						1.25	5.4
1	LIC	S.R. 16	RT.	SOUTH BELMAR RD.	33	18	62	146.7	146.7	11.1						1.25	5.1
1	LIC	S.R. 16	LT.	NORTH BELMAR RD.	30	18	63	135.0	135.0	10.2						1.25	4.7
1	LIC	S.R. 16	LT.	CARRAGE BLVD.	44	30	88	288.5	288.5	21.7						1.25	10.1
1	LIC	S.R. 16	RT.	SUMMIT RD. (TWP. RD. 26)	40	32	130	360.0	360.0	27.0						1.25	12.5
1	LIC	S.R. 16	LT.	SUMMIT RD. (CO. RD. 26)	40	32	130	360.0	360.0	27.0						1.25	12.5
1	LIC	S.R. 16	RT.	DALEY DR.	30	22	60	136.7	136.7	10.3						1.25	4.8
1	LIC	S.R. 16	RT.	CHARLES DR.	50	22	92	316.7	316.7	23.8						1.25	11.0
1	LIC	S.R. 16	RT.	MINK ST. (CO. RD. 41)	30	34	90	206.7	206.7	15.6						1.25	7.2
1	LIC	S.R. 16	LT.	MINK ST. (CO. RD. 41)	40	22	80	226.7	226.7	17.1						1.25	7.9
1	LIC	S.R. 16	RT.	ETNA PKWY.	NO WORK PERFORMED												
1	LIC	S.R. 16	RT.	MILL ST.	20	20	40	66.7	66.7	5.1						1.25	2.4
1	LIC	S.R. 16	LT.	CONNERS AVE.	30	22	65	145.0	145.0	10.9						1.25	5.1
1	LIC	S.R. 16	RT.	JEFFERSON PARK DR.	16	38	63	89.8	89.8	6.8						1.25	3.2
1	LIC	S.R. 16	RT.	COLUMBIA RD. (TWP. RD. 38)	30	32	63	158.4	158.4	11.9						1.25	5.5
1	LIC	S.R. 16	LT.	COLUMBIA RD. (TWP. RD. 38)	30	27	70	161.7	161.7	12.2						1.25	5.7
1	LIC	S.R. 16	RT.	RAILROAD ST.	30	23	55	130.0	130.0	9.8						1.25	4.6
1	LIC	S.R. 16	RT.	CONNIE WAY	18	24	58	82.0	82.0	6.2						1.25	2.9
1	LIC	S.R. 16	RT.	PARK AVE.	50	36	110	405.6	405.6			30.5				1.25	14.1
1	LIC	S.R. 16	LT.	JOHN REESE PARKWAY	12	115	120	156.7	156.7			11.8				1.25	5.5
1	LIC	S.R. 16	RT.	LINDEN AVE.	35	20	68	171.2	171.2			12.9				1.25	6.0
1	LIC	S.R. 16	RT.	SPRING ST.	30	19	60	131.7	131.7			9.9				1.25	4.6
1	LIC	S.R. 16	RT.	VINE ST.	30	19	60	131.7	131.7			9.9				1.25	4.6
1	LIC	S.R. 16	LT.	OAK MEADOW DR.	25	24	63	120.9	120.9			9.1				1.25	4.2
1	LIC	S.R. 16	RT.	BEESON AVE.	24	19	39	77.4	77.4			5.9				1.25	2.7
1	LIC	S.R. 16	LT.	PAT HAVEN DR.	29	35	59	151.5	151.5			11.4				1.25	5.3
1	LIC	S.R. 16	RT.	NORTH END DR.	24	20	27	62.7	62.7			4.8				1.25	2.2
1	LIC	S.R. 16	RT.	S.R.310	40	40	125	366.7	366.7			27.6	18.4	1.75	17.9	1.25	12.8
1	LIC	S.R. 16	RT.	TOWNSHIP RD.	50	45	100	402.8	402.8			30.3	20.2	1.75	19.6	1.25	14.0
1	LIC	S.R. 16	LT.	S.R.310	60	45	145	633.4	633.4			47.6	31.7	1.75	30.8	1.25	22.0
1	LIC	S.R. 16	LT.	BUCKEYE BLVD	31	20	65	146.4	146.4			11.0				1.25	5.1
1	LIC	S.R. 16	RT.	INTERNATIONAL DRIVE	36	17	80	194.0	194.0			14.6				1.25	6.8
1	LIC	S.R. 16	RT.	OXFORD DR.	40	36	110	324.5	324.5			24.4				1.25	11.3
1	LIC	S.R. 16	LT.	OXFORD DR.	35	35	90	243.1	243.1			18.3				1.25	8.5
1	LIC	S.R. 16	RT.	LOIS LN.				175.0	175.0			13.2				1.25	6.1
1	LIC	S.R. 16	RT.	CORYLUS DR.	36	48	100	296.0	296.0			22.2				1.25	10.3
1	LIC	S.R. 16	LT.	CORYLUS DR.	36	36	100	272.0	272.0			20.4				1.25	9.5
1	LIC	S.R. 16	RT.	LEGACY LN.	36	36	125	322.0	322.0			24.2				1.25	11.2
1	LIC	S.R. 16	LT.	BARRINGTON RIDGE	30	36	96	220.0	220.0	16.5						1.25	7.7
1	LIC	S.R. 16	RT.	WATKINS RD.	41	21	62	189.1	189.1	14.2						1.25	6.6
1	LIC	S.R. 16	LT.	WATKINS RD.	45	23	64	217.5	217.5	16.4						1.25	7.6
LOCATION 1 TOTALS (CARRIED TO SUB-SUMMARY)									**9,569.5**	**360.1**	**39.2**	**360.0**	**70.3**		**106.5**		**334.0**

$$AREA = \left[\frac{A\ (B + C)}{2}\right] / 9$$

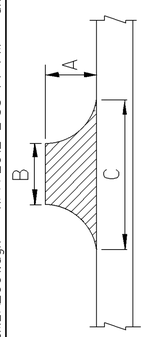

CALCULATED LME
CHECKED DNM

EXTRA AREA DATA

LIC-16-0.00

P:\LIC\76431\Design\Roadway\Plan_Sheets\General\L016_MEA_001.dgn 11/7/2012 2:35:44 PM dmorgan

EXTRA AREAS

LOCATION	COUNTY	ROUTE	SIDE	DESCRIPTION	INTERSECTIONS DETAIL DIMENSION A	B	C	AREA	202 WEARING COURSE REMOVED	407 TACK COAT @ 0.075 GAL./ SQ. YD.	TACK COAT FOR INTERMEDIATE COURSE@ 0.05 GAL./ SQ. YD.	448 ASPHALT CONCRETE THICKNESS	INTERMEDIATE COURSE, TYPE 2, PG 64-22	THICKNESS	SURFACE COURSE, TYPE 1, PG 64-22
					FT.	FT.	FT.	SQ. YD.	SQ. YD.	GAL.	GAL.	IN.	CU. YD.	IN.	CU. YD.
2	LIC	S.R. 16	LT.	VIRGINIA CT.	36	34	76	220.0	220.0	16.5				1.25	7.7
2	LIC	S.R. 16	RT.	BEECHER RD.	70	25	112	532.8	532.8	40.0				1.25	18.5
2	LIC	S.R. 16	LT.	BEECHER RD.	70	28	130	614.5	614.5	46.1				1.25	21.4
2	LIC	S.R. 16	RT.	YORK RD.	102	SEE DETAIL BELOW		370.0	370.0	27.8				1.25	12.9
2	LIC	S.R. 16	LT.	YORK RD.	92	SEE DETAIL BELOW		312.0	312.0	23.4				1.25	10.9
2	LIC	S.R. 16	RT.	ZACKARY DR.	26	22	55	111.3	111.3	8.4				1.25	3.9
2	LIC	S.R. 16	RT.	ASHCRAFT DR.	20	28	56	93.4	93.4	7.1				1.25	3.3
2	LIC	S.R. 16	LT.	ELLINGTON BLVD.	20	57	110	185.6	185.6	14.0				1.25	6.5
2	LIC	S.R. 16	RT.	JOSHUA LN.	30	24	84	180.0	180.0	13.5				1.25	6.3
2	LIC	S.R. 16	RT.	AMANDA DR.	30	24	84	180.0	180.0	13.5				1.25	6.3
2	LIC	S.R. 16	LT.	EPHRIAM DR.	36	34	112	292.0	292.0	21.9				1.25	10.2
2	LIC	S.R. 16	RT.	OUTVILLE RD.	92	24	112	695.2	695.2	52.2				1.25	24.2
2	LIC	S.R. 16	LT.	OUTVILLE RD.	80	24	103	564.5	564.5	42.4				1.25	19.7
2	LIC	S.R. 16	RT.	CHEROKEE TL	50	48	115	452.8	452.8	34.0				1.25	15.8
2	LIC	S.R. 16	LT.	WESLEYAN CHURCH RD.	28	26	85	172.7	172.7	13.0				1.25	6.0
2	LIC	S.R. 16	RT.	GALE RD.	34	26	82	204.0	204.0	15.3				1.25	7.1
2	LIC	S.R. 16	RT.	SILVER ST.	164	SEE DETAIL BELOW		567.0	567.0	42.6				1.25	19.7
2	LIC	S.R. 16	LT.	GOOSE LANE RD.	152	SEE DETAIL BELOW		550.0	550.0	41.3				1.25	19.1
2	LIC	S.R. 16	RT.	OLD COLUMBUS RD.	26	20	55	108.4	108.4	8.2				1.25	3.8
2	LIC	S.R. 16	RT.	OLD COLUMBUS RD.	21	20	65	99.2	99.2	7.5				1.25	3.5
2	LIC	S.R. 16	RT.	GRANDVIEW RD.	66	18	80	359.4	359.4	27.0				1.25	12.5
2	LIC	S.R. 16	LT.	KENDAL DR.	38	32	80	236.5	236.5	17.8				1.25	8.3
2	LIC	S.R. 16	RT.	SUNSET DR.	20	20	48	75.6	75.6	5.7				1.25	2.7
LOCATION 2 TOTALS (CARRIED TO SUB-SUMMARY)									**7,176.9**	**539.2**					**250.3**

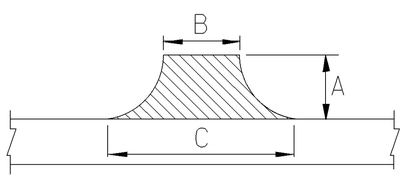

$$AREA = \left[A \frac{(B + C)}{2}\right] / 9$$

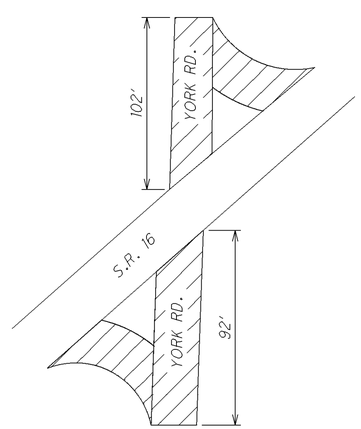

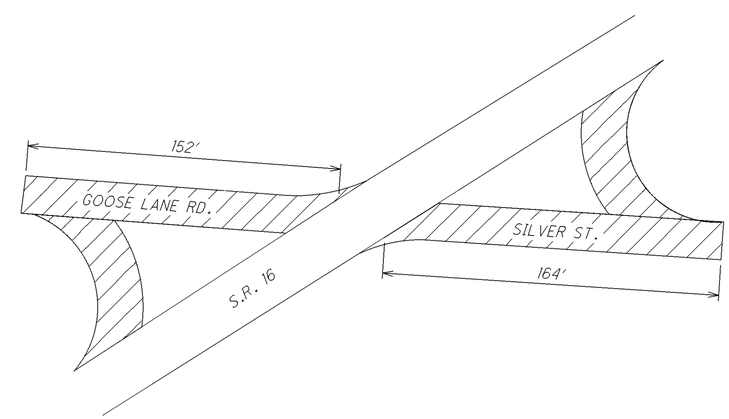

CALCULATED LME
CHECKED DNM

EXTRA AREA DATA

LIC-16-0.00

P:\LIC\76431\Design\Roadway\Plan_Sheets\General\L016_mea_002.dgn 11/7/2012 2:37:54 PM dmorgan

BRIDGE TREATMENT

LOCATION 1

LIC-16-0326: BUTT JOINT AT APPROACH SLABS

LIC-16-0434: PAVE OVER SAME AS ROADWAY (ADDITIONAL WIDTH AT BRIDGE HAS BEEN INCLUDED IN ASPHALT CONCRETE AND SHOULDER TREATMENT DATA)

LIC-16-0434: PAVE OVER SAME AS ROADWAY (ADDITIONAL WIDTH AT BRIDGE HAS BEEN INCLUDED IN ASPHALT CONCRETE AND SHOULDER TREATMENT DATA)

DEDUCTIONS = PAVEMENT/SHOULDER WIDTHS X (BRIDGE LENGTH + APPROACH SLABS)

BRIDGE DATA

LOCATION	COUNTY, ROUTE, BRIDGE NO.	LENGTH (BRIDGE LIMITS)	WIDTH	AREA	APPROACH SLAB LENGTH	APPROACH SLAB WIDTH	APPROACH SLAB AREA (INCLUDES BOTH APPROACH SLABS)	DETAILS	MAINLINE DEDUCTIONS (CARRIED TO SHEET 11)	SHOULDER DEDUCTIONS (CARRIED TO SHEET 13)	202	407		448 ASPHALT CONCRETE				516
											WEARING COURSE REMOVED	TACK COAT FOR INTERMEDIATE COURSE @ 0.05 GAL./S.Y.	TACK COAT @ 0.075 GAL./S.Y.	THICKNESS	INTERMEDIATE COURSE, TYPE 2, PG 64-22	THICKNESS	SURFACE COURSE, TYPE 1, PG 70-22M	2" DEEP JOINT SEALER, AS PER PLAN
		LIN. FT.	LIN. FT.	SQ. YD.	LIN. FT.	LIN. FT.	SQ. YD.		SQ.YD.	SQ.YD.	SQ.YD.	GAL.	GAL.	INCHES	CU. YD.	INCHES	CU. YD.	FEET
1	LIC-16-0326	314	40	1,395.6	15.0	40.0	133.3	1	917.3	305.8								80.0
1	LIC-16-0434	67	44	327.6	25.0	44.0	244.4											
1	LIC-16-0534	89	68	672.5	25.0	68.0	377.8											
	SUB-TOTALS	470			65.0				917.3	305.8								
	LOCATION 1 TOTALS (CARRIED TO SUB-SUMMARY)																	**80.0**

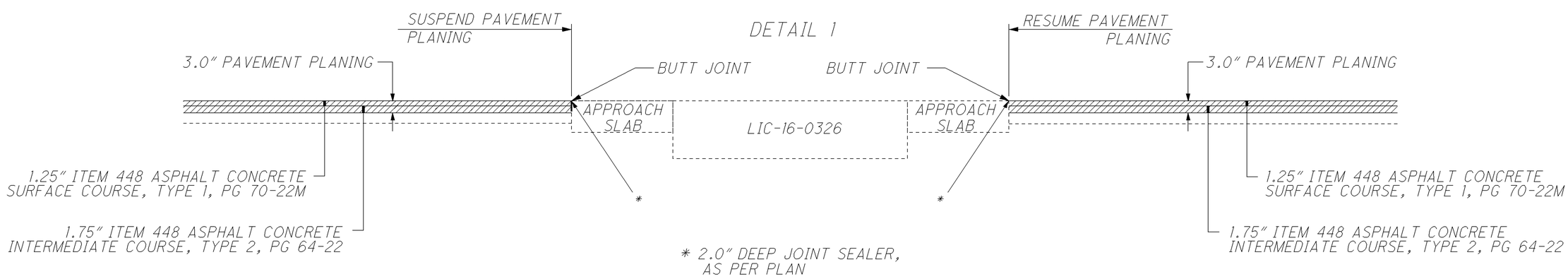

CALCULATED LME
CHECKED DNM

BRIDGE DECK TREATMENT DATA

LIC-16-0.00

L016_MBT_001.dgn 10-12-12

ITEM 817 EDGE LINE

LOCATION	COUNTY	ROUTE	S.L.M. FROM	S.L.M. TO	TOTAL LENGTH (MILES)	INFORMATION ONLY: WHITE EDGE LINE QUANTITIES TOTAL MILES	HIGHWAY MILES	RAMP MILES	TOTAL EDGE LINE MILES	REMARKS
1	LIC	S.R. 16	0.00	2.78	2.78	5.56	5.56		5.56	SUSPEND WORK SLM 2.78
1	LIC	S.R. 16	3.01	5.83	2.82	5.64	5.64		5.64	RESUME WORK SLM 3.01
1	LIC	S.R. 16	5.83	5.91	0.08	0.08	0.08		0.08	ONLY ONE EDGE LINE IN SECTION, SUSPEND WORK SLM 5.91
1	LIC	S.R. 16	6.12	7.22	1.10	2.20	2.20		2.20	RESUME WORK SLM 6.12
LOCATION 1 TOTALS CARRIED TO SUB-SUMMARY)									13.48	
2	LIC	S.R. 16	7.22	14.10	6.88	13.76	13.76		13.76	
LOCATION 2 TOTALS (CARRIED TO SUB-SUMMARY)									13.76	

ITEM 817 LANE LINE

			FROM	TO	ITEM 817 6" LANE LINE QUANTITIES: TOTAL LANE LINE MILE	DASHED MILE	SOLID MILE	
1	LIC	S.R. 16 E.B.	0.00	0.22	0.22	0.22		PATASKALA
1	LIC	S.R. 16 W.B.	0.00	0.32	0.32	0.32		PATASKALA
1	LIC	S.R. 16 E.B.	5.08	5.44	0.36	0.36		PATASKALA
1	LIC	S.R. 16 W.B.	5.18	5.25	0.07	0.07		PATASKALA
1	LIC	S.R. 16 E.B.	6.53	6.56	0.03	0.03		PATASKALA
LOCATION 1 TOTAL (CARRIED TO SUB-SUMMARY)					1.00			

ITEM 817 CENTER LINE

LOCATION	COUNTY	ROUTE	S.L.M. FROM	S.L.M. TO	TOTAL LENGTH (MILES)	INFORMATION ONLY: CENTER LINE QUANTITIES TOTAL MILES	EQUIVALENT SOLID LINE		TOTAL CENTER LINE MILES	REMARKS
1	LIC	S.R. 16	0.00	0.22	0.22	0.44	0.660		0.44	2 WAY LEFT TURN LANE
1	LIC	S.R. 16	0.22	2.78	2.56	2.56	3.224		2.56	SUSPEND WORK AT ETNA PARKWAY
1	LIC	S.R. 16	3.01	7.22	4.21	4.21	7.262		4.21	RESUME WORK SLM 3.01
LOCATION 1 TOTAL (CARRIED TO SUB-SUMMARY)									8.57	ADDED 1.36 MILE FOR TURN LANES
2	LIC	S.R. 16	7.22	14.10	6.88	8.38	9.575		8.38	ADDED 1.50 MILE FOR TURN LANES
LOCATION 2 TOTAL (CARRIED TO SUB-SUMMARY)									8.38	

CALCULATED LME
CHECKED DNM

PAVEMENT MARKING DATA (EDGE/LANE/CENTER LINES)

LIC-16-0.00

L016_PMS_001.DGN 10-5-12

644 THERMOPLASTIC AUXILARY MARKING

LOCATION	COUNTY	ROUTE	DESCRIPTION	SIDE	TRANSEVERSE/ DIANGONAL LINES (24") WHITE FT.	TRANSEVERSE/ DIANGONAL LINES (24") YELLOW FT.	STOP LINE (24") FT.	12" CROSSWALK LINE FT.	WORD ON PAVEMENT ONLY 72" EACH	WORD ON PAVEMENT ONLY 96" EACH	LANE ARROWS COMBINATION LT./TH. EACH	LANE ARROWS COMBINATION RT./TH. EACH	LANE ARROWS TURN LT. EACH	LANE ARROWS TURN RT. EACH	8" CHANNELIZING LINE FEET	ISLAND MARKING SQ.FT.	REMARKS
1	LIC	S.R. 16	TAYLOR RD		297	232	131			3			9	2	570		SEE DETAIL SHEET 20
1	LIC	S.R. 16	ANNETTE DR	RT.			12										PLACE AT EXISTING LOCATION OR AS DIRECTED
1	LIC	S.R. 16	SUMMIT RIDGE DR	RT.			12										PLACE AT EXISTING LOCATION OR AS DIRECTED
1	LIC	S.R. 16	SUMMIT RIDGE DR	LT.			12										PLACE AT EXISTING LOCATION OR AS DIRECTED
1	LIC	S.R. 16	SOUTH BELMAR RD.	RT.			14										PLACE AT EXISTING LOCATION OR AS DIRECTED
1	LIC	S.R. 16	NORTH BELMAR RD.	LT.			16										PLACE AT EXISTING LOCATION OR AS DIRECTED
1	LIC	S.R. 16	VILLAGE GATE APARTMENTS	RT.		238				2			2	2	360	57	SEE DETAIL SHEET 21
1	LIC	S.R. 16	CARRAGE BLVD.	LT.			24										PLACE AT EXISTING LOCATION OR AS DIRECTED
1	LIC	S.R. 16	SUMMIT RD. (TWP. RD. 26)	RT./LT.		262	94						4		160		SEE DETAIL SHEET 22
1	LIC	S.R. 16	DALEY DR.	RT.			18										PLACE AT EXISTING LOCATION OR AS DIRECTED
1	LIC	S.R. 16	CHARLES DR.	RT.			18										PLACE AT EXISTING LOCATION OR AS DIRECTED
1	LIC	S.R. 16	MINK ST. (CO. RD. 41)	RT.			27										PLACE AT EXISTING LOCATION OR AS DIRECTED
1	LIC	S.R. 16	MINK ST. (CO. RD. 41)	LT.			20										PLACE AT EXISTING LOCATION OR AS DIRECTED
1	LIC	S.R. 16	ETNA PKWY.	RT.	NO WORK TO BE PERFORMED												
1	LIC	S.R. 16	MILL ST.	RT.			14										PLACE AT EXISTING LOCATION OR AS DIRECTED
1	LIC	S.R. 16	CONNERS AVE.	LT.			20										PLACE AT EXISTING LOCATION OR AS DIRECTED
1	LIC	S.R. 16	JEFFERSON PARK DR.	RT.		257							2		122	57	SEE DETAIL SHEET 23
1	LIC	S.R. 16	COLUMBIA RD. (TWP. RD. 38)	RT.			18										PLACE AT EXISTING LOCATION OR AS DIRECTED
1	LIC	S.R. 16	COLUMBIA RD. (TWP. RD. 38)	LT.			23										PLACE AT EXISTING LOCATION OR AS DIRECTED
1	LIC	S.R. 16	RAILROAD ST.	RT.			17										PLACE AT EXISTING LOCATION OR AS DIRECTED
1	LIC	S.R. 16	CONNIE WAY	RT.			18										PLACE AT EXISTING LOCATION OR AS DIRECTED
1	LIC	S.R. 16	PARK AVE.	RT.			18										
1	LIC	S.R. 16	JOHN REESE PARKWAY	LT.		324	40			2			2	2	520	57	SEE DETAIL SHEET 24
1	LIC	S.R. 16	LINDEN AVE.	RT.			25										PLACE AT EXISTING LOCATION OR AS DIRECTED
1	LIC	S.R. 16	SPRING ST.	RT.			20										PLACE AT EXISTING LOCATION OR AS DIRECTED
1	LIC	S.R. 16	VINE ST./OAK MEADOW DR.	RT./LT.		113	84			2			4		360		SEE DETAIL SHEET 23
1	LIC	S.R. 16	BEESON AVE.	RT.			16										PLACE AT EXISTING LOCATION OR AS DIRECTED
1	LIC	S.R. 16	PAT HAVEN DR.	LT.			24										PLACE AT EXISTING LOCATION OR AS DIRECTED
1	LIC	S.R. 16	NORTH END DR.	RT.			12										PLACE AT EXISTING LOCATION OR AS DIRECTED
1	LIC	S.R. 16	S.R.310	RT.		168	76			2			8		260	57	SEE DETAIL SHEET 25
1	LIC	S.R. 16	TOWNSHIP RD./S.R. 310	RT./LT.			90			1			2		286		SEE DETAIL SHEET 25
1	LIC	S.R. 16	BUCKEYE BLVD	LT.		240	36			4			6	3	1014		SEE DETAIL SHEET 26
1	LIC	S.R. 16	INTERNATIONAL DRIVE	RT.			9										PLACE AT EXISTING LOCATION OR AS DIRECTED
1	LIC	S.R. 16	OXFORD DR.	RT./LT.		262	110	434		2			7	2	750		SEE DETAIL SHEET 27
1	LIC	S.R. 16	LOIS LN./CORYLUS DR.	RT./LT.		301	176	232		7			7	11	1438		SEE DETAIL SHEET 28
1	LIC	S.R. 16	ONE HEALTHY PL.	RT.		412	25	84		1			4	3	350		SEE DETAIL SHEET 29
1	LIC	S.R. 16	LEGACY LN.	RT.		470				2			5	3	650	57	SEE DETAIL SHEET 30
1	LIC	S.R. 16	BARRINGTON RIDGE	LT.			18										PLACE AT EXISTING LOCATION OR AS DIRECTED
1	LIC	S.R. 16	WATKINS RD.	RT./LT.		285	70			2			4		400		SEE DETAIL SHEET 31
			SUB-TOTALS		297	3,564							66	28			
LOCATION 1 TOTALS (CARRIED TO SUB-SUMMARY)					**3,861**		**1,357**	**750**		**30**	**94**				**7,240**	**285**	

CALCULATED LME
CHECKED DNM

PAVEMENT MARKING DATA (AUXILIARY MARKINGS)

LIC-16-0.00

L016_PMS_002.DGN 10-5-12

644 THERMOPLASTIC AUXILARY MARKING

LOCATION	COUNTY	ROUTE	DESCRIPTION	SIDE	TRANSEVERSE/ DIANGONAL LINES (24")		STOP LINE (24")	12" CROSSWALK LINE	WORD ON PAVEMENT		LANE ARROWS				8" CHANNELIZING LINE	ISLAND MARKING	REMARKS
									ONLY		COMBINATION		TURN				
					WHITE	YELLOW			72"	96"	LT./TH.	RT./TH.	LT.	RT.			
					FT.	FT.	FT.	FT.	EACH	EACH	EACH	EACH	EACH	EACH	FEET	SQ.FT.	
2	LIC	S.R. 16	VIRGINIA CT.	LT.		275	28			1			3	2	306		SEE DETAIL SHEET 32
2	LIC	S.R. 16	BEECHER RD.	RT.			47										PLACE AT EXISTING LOCATION OR AS DIRECTED
2	LIC	S.R. 16	BEECHER RD.	LT.			45										PLACE AT EXISTING LOCATION OR AS DIRECTED
2	LIC	S.R. 16	YORK RD.	RT.			40										PLACE AT EXISTING LOCATION OR AS DIRECTED
2	LIC	S.R. 16	YORK RD.	LT.			31										PLACE AT EXISTING LOCATION OR AS DIRECTED
2	LIC	S.R. 16	ZACKARY DR.	RT.		398	14						2		100	57	SEE DETAIL SHEET 33
2	LIC	S.R. 16	ASHCRAFT DR./ELLINGTON BLVD.	RT./LT.		396	46			2			4		455		SEE DETAIL SHEET 34
2	LIC	S.R. 16	JOSHUA LN.	RT.			12										PLACE AT EXISTING LOCATION OR AS DIRECTED
2	LIC	S.R. 16	AMANDA DR.	RT.			12										PLACE AT EXISTING LOCATION OR AS DIRECTED
2	LIC	S.R. 16	EPHRIAM DR.	LT.			20										PLACE AT EXISTING LOCATION OR AS DIRECTED
2	LIC	S.R. 16	OUTVILLE RD.	RT./LT.	110	292	24						4		391		SEE DETAIL SHEET 35
2	LIC	S.R. 16	CHEROKEE TL	RT.			35										PLACE AT EXISTING LOCATION OR AS DIRECTED
2	LIC	S.R. 16	WESLEYAN CHURCH RD.	LT.			26										PLACE AT EXISTING LOCATION OR AS DIRECTED
2	LIC	S.R. 16	GALE RD.	RT.			28										PLACE AT EXISTING LOCATION OR AS DIRECTED
2	LIC	S.R. 16	PARAMOUNT GROUP	RT.		308				2			2	2	395	57	SEE DETAIL SHEET 36
2	LIC	S.R. 16	HOLOPHANE	RT.		397							2	2	225	57	SEE DETAIL SHEET 37
2	LIC	S.R. 16	SILVER ST.	RT.			28										PLACE AT EXISTING LOCATION OR AS DIRECTED
2	LIC	S.R. 16	GOOSE LANE RD.	LT.			28										PLACE AT EXISTING LOCATION OR AS DIRECTED
2	LIC	S.R. 16	OWENS CORNING	LT.		305	50						2	2	260	57	SEE DETAIL SHEET 38
2	LIC	S.R. 16	OLD COLUMBUS RD.	RT.			18										PLACE AT EXISTING LOCATION OR AS DIRECTED
2	LIC	S.R. 16	OLD COLUMBUS RD.	RT.			16										PLACE AT EXISTING LOCATION OR AS DIRECTED
2	LIC	S.R. 16	GRANDVIEW RD./KENDAL DR./SUNSET DR	RT./LT.		576	67			3		1	7	2	475		SEE DETAIL SHEET 39
			SUB-TOTALS		110	2,947						1	26	10			
LOCATION 2 TOTALS (CARRIED TO SUB-SUMMARY)					**3,057**		**615**			**8**	**37**				**2,607**	**228**	

CALCULATED LME
CHECKED DNM

PAVEMENT MARKING DATA (AUXILIARY MARKINGS)

LIC-16-0.00

L016_PMS_003.DGN 10-5-12

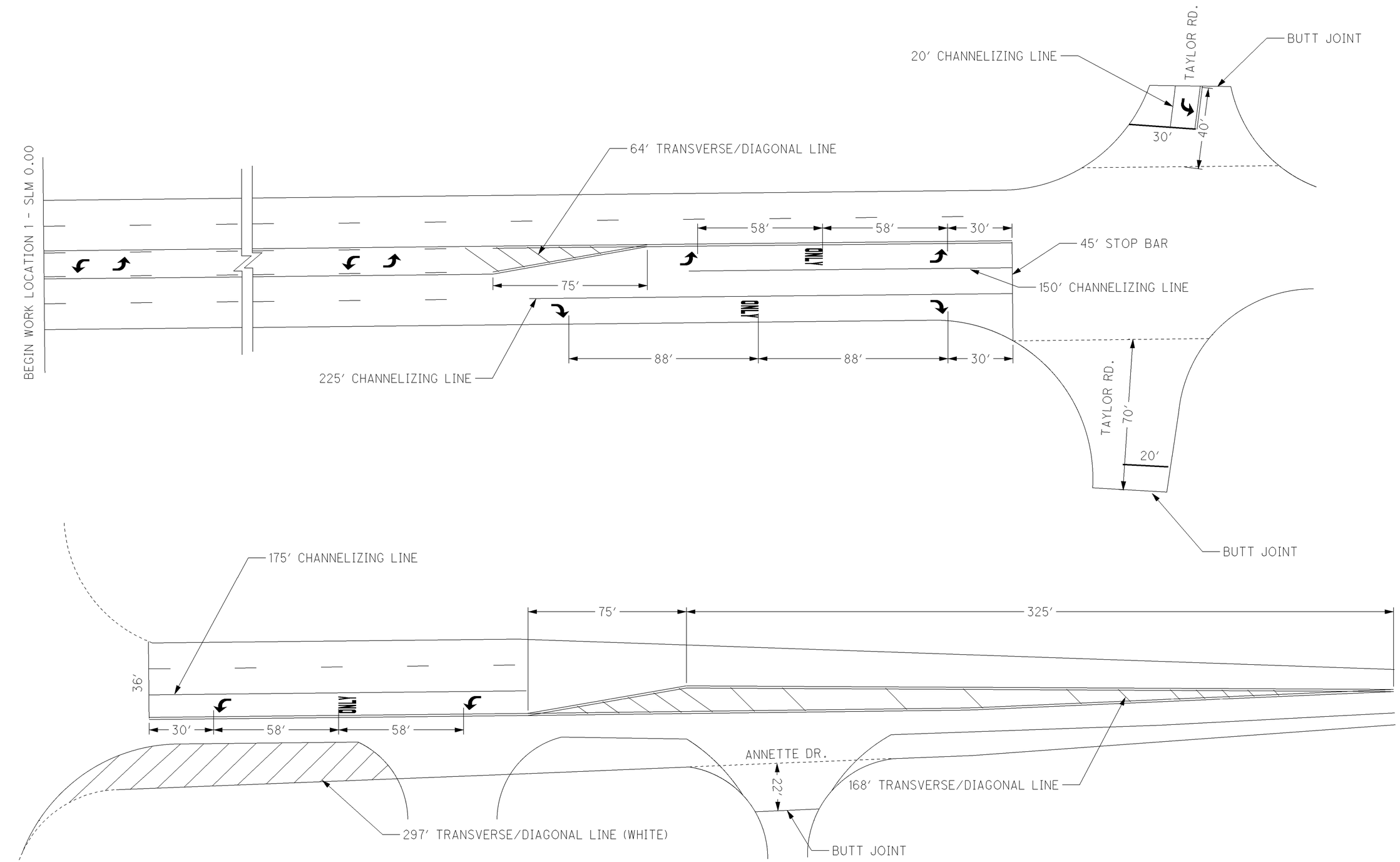

ITEM 644 CHANNELIZING LINE - 570 FEET
ITEM 644 STOP LINE - 131 FEET
ITEM 644 TRANSVERSE/DIAGONAL LINE - 529 FEET
ITEM 644 LANE ARROW - 11 EACH
ITEM 644 WORD ON PAVEMENT, 96" - 3 EACH

QUANTITIES CARRIED TO SHEET 18

CALCULATED LME
CHECKED DNM

PAVEMENT MARKING DETAILS - TAYLOR RD.

LIC-16-0.00

P:\LIC\76431\Design\Roadway\Plan_Sheets\General\L016_PMD_001.dgn 11/7/2012 10:42:01 AM dmorgan

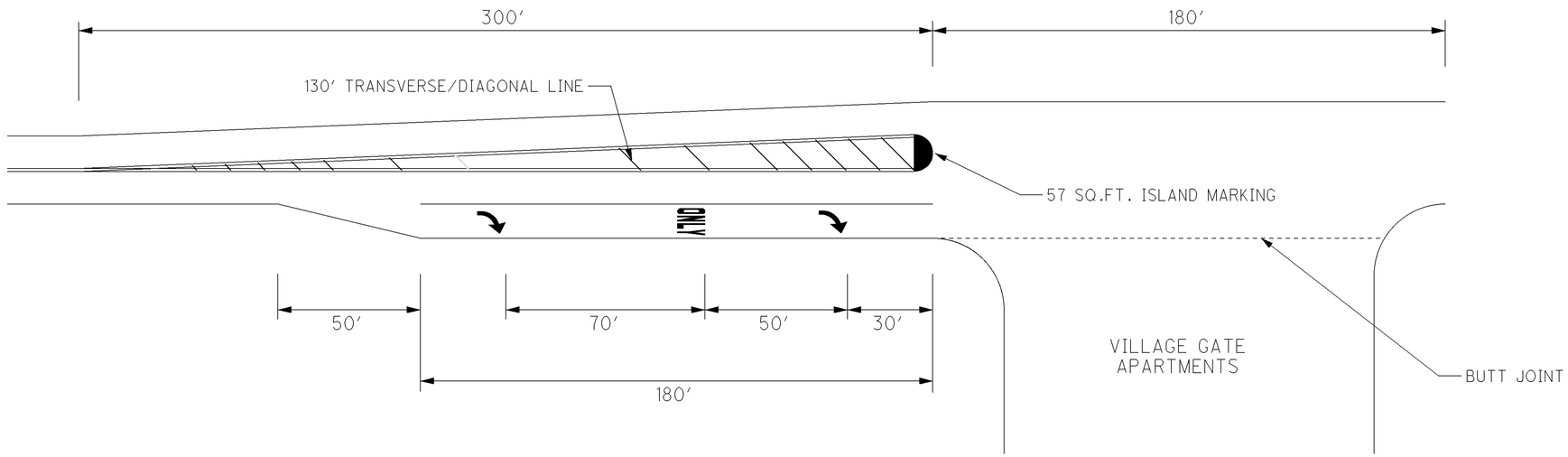

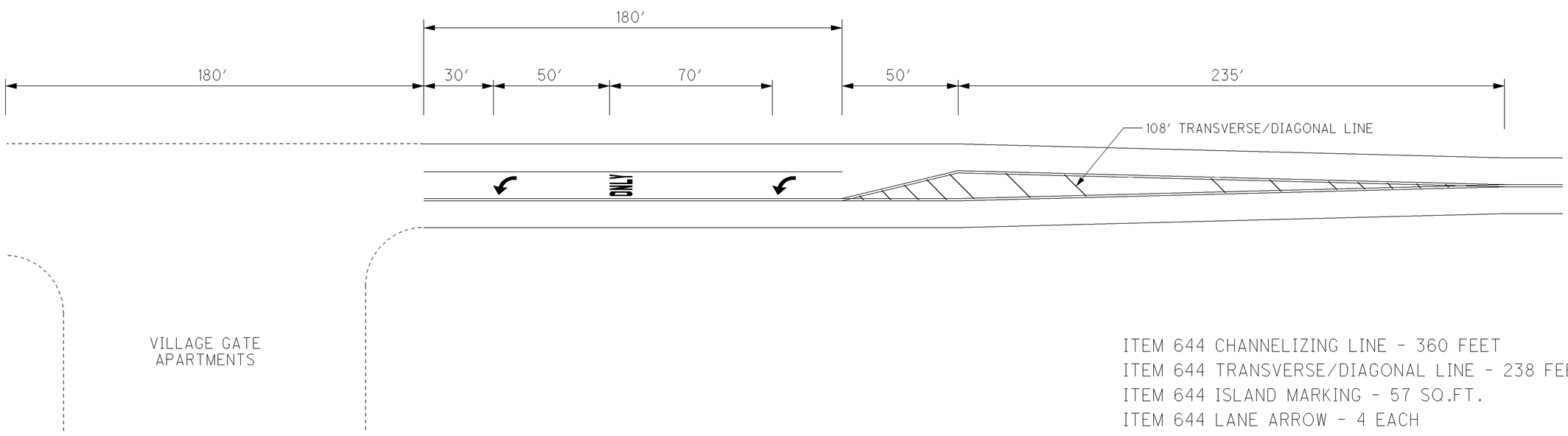

ITEM 644 CHANNELIZING LINE - 360 FEET
ITEM 644 TRANSVERSE/DIAGONAL LINE - 238 FEET
ITEM 644 ISLAND MARKING - 57 SQ.FT.
ITEM 644 LANE ARROW - 4 EACH
ITEM 644 WORD ON PAVEMENT, 96″ - 2 EACH

QUANTITIES CARRIED TO SHEET 18

CALCULATED LME
CHECKED DNM

PAVEMENT MARKING DETAILS - VILLAGE GATE APTS.

LIC-16-0.00

L016_PMD_002A.DGN 10-11-12

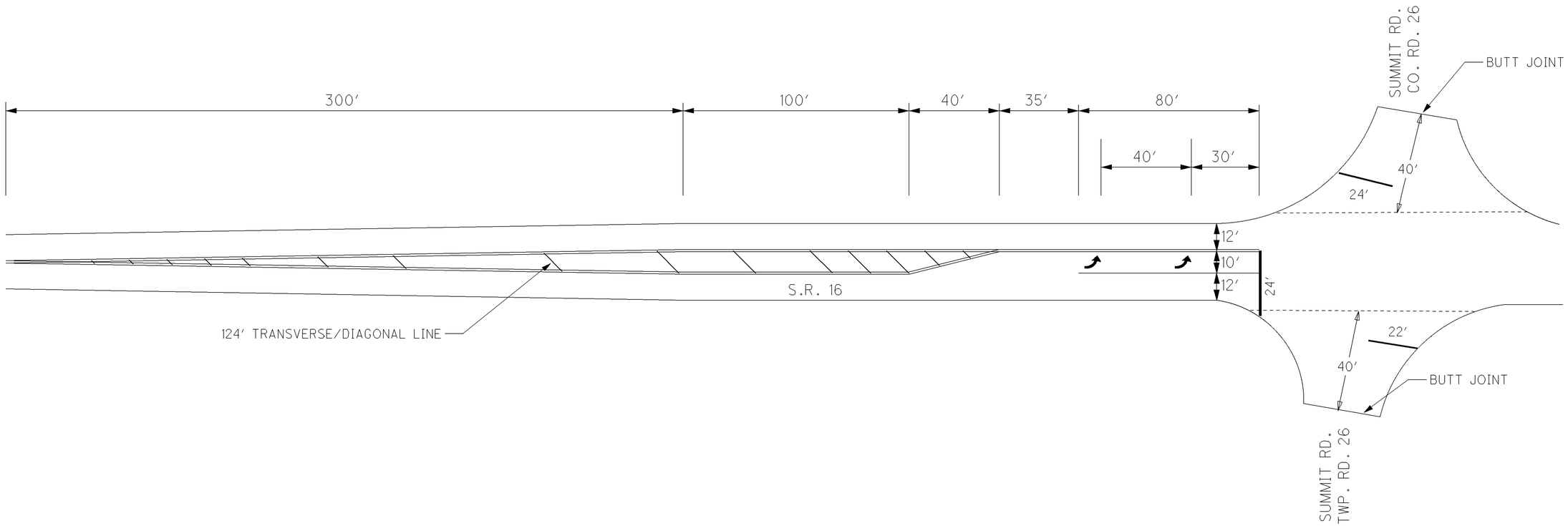

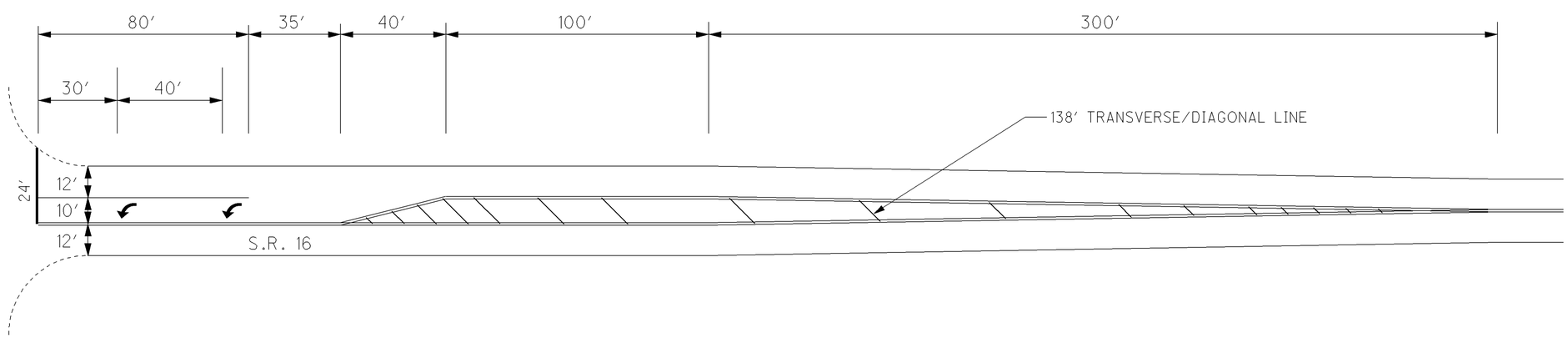

ITEM 644 CHANNELIZING LINE - 160 FEET
ITEM 644 STOP LINE - 94 FEET
ITEM 644 TRANSVERSE/DIAGONAL LINE - 262 FEET
ITEM 644 LANE ARROW - 4 EACH

QUANTITIES CARRIED TO SHEET 18

CALCULATED LME
CHECKED DNM

PAVEMENT MARKING DETAILS - SUMMIT RD.

LIC-16-0.0.00

L016_PMD_002.DGN 9-6-12

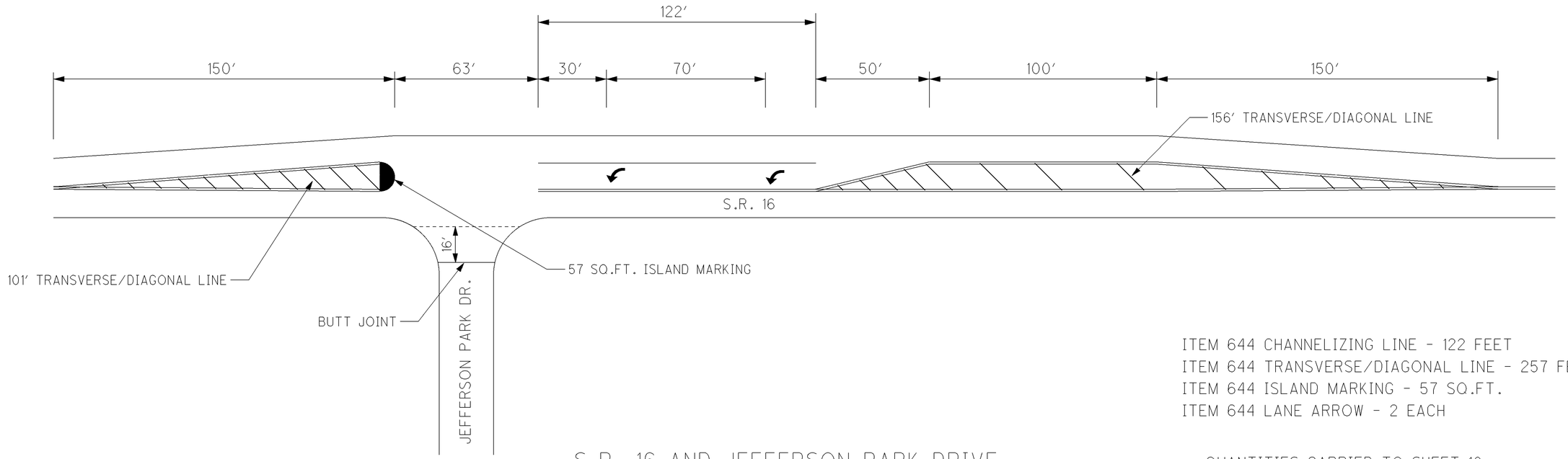

ITEM 644 CHANNELIZING LINE - 122 FEET
ITEM 644 TRANSVERSE/DIAGONAL LINE - 257 FEET
ITEM 644 ISLAND MARKING - 57 SQ.FT.
ITEM 644 LANE ARROW - 2 EACH

S.R. 16 AND JEFFERSON PARK DRIVE

QUANTITIES CARRIED TO SHEET 18

ITEM 644 CHANNELIZING LINE - 360 FEET
ITEM 644 STOP LINE - 84 FEET
ITEM 644 TRANSVERSE/DIAGONAL LINE - 113 FEET
ITEM 644 LANE ARROW - 4 EACH
ITEM 644 WORD ON PAVEMENT, 96″ - 2 EACH

QUANTITIES CARRIED TO SHEET 18

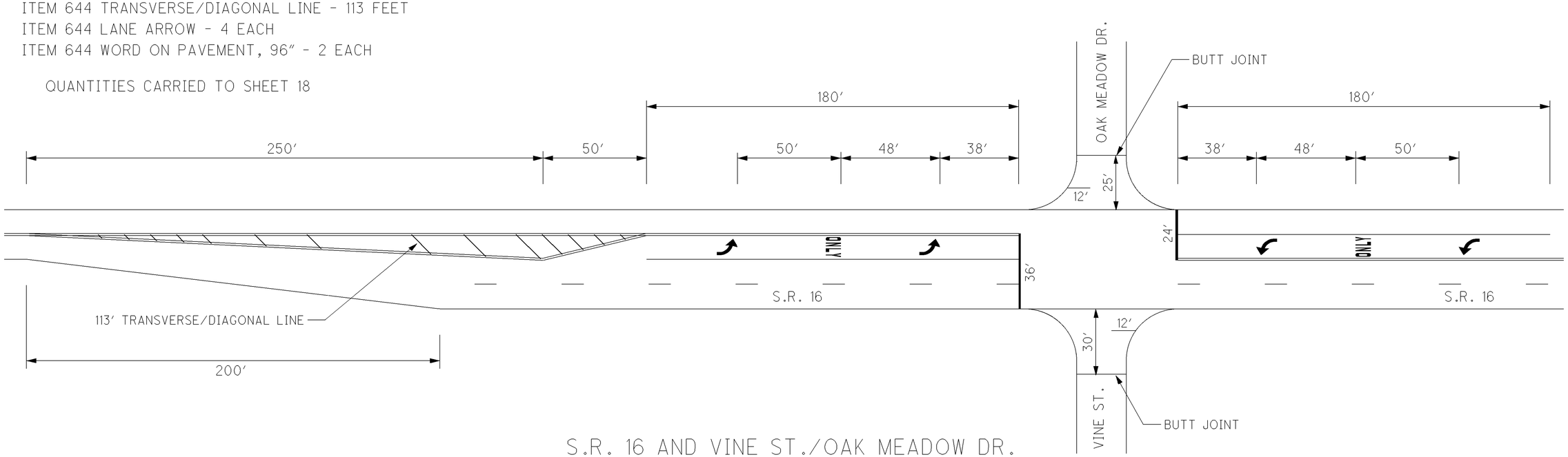

S.R. 16 AND VINE ST./OAK MEADOW DR.

CALCULATED LME
CHECKED DNM

PAVEMENT MARKING DETAILS - JEFFERSON PARK DR. & VINE ST./OAK MEADOWS DR.

LIC-16-0.00

L016_PMD_003 9-6-12

ITEM 644 CHANNELIZING LINE - 520 FEET
ITEM 644 STOP LINE - 40 FEET
ITEM 644 TRANSVERSE/DIAGONAL LINE - 324 FEET
ITEM 644 ISLAND MARKING - 57 SQ.FT.
ITEM 644 LANE ARROW - 4 EACH
ITEM 644 WORD ON PAVEMENT, 96" - 2 EACH

QUANTITIES CARRIED TO SHEET 18

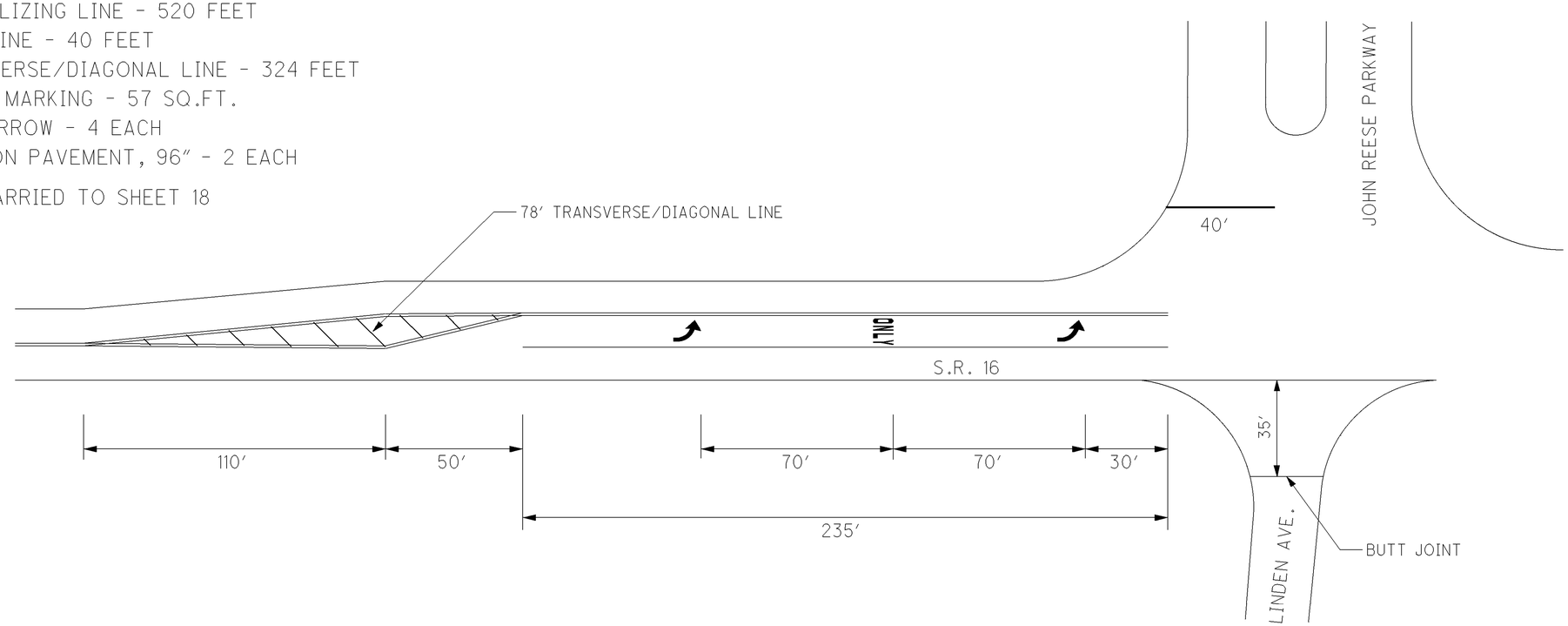

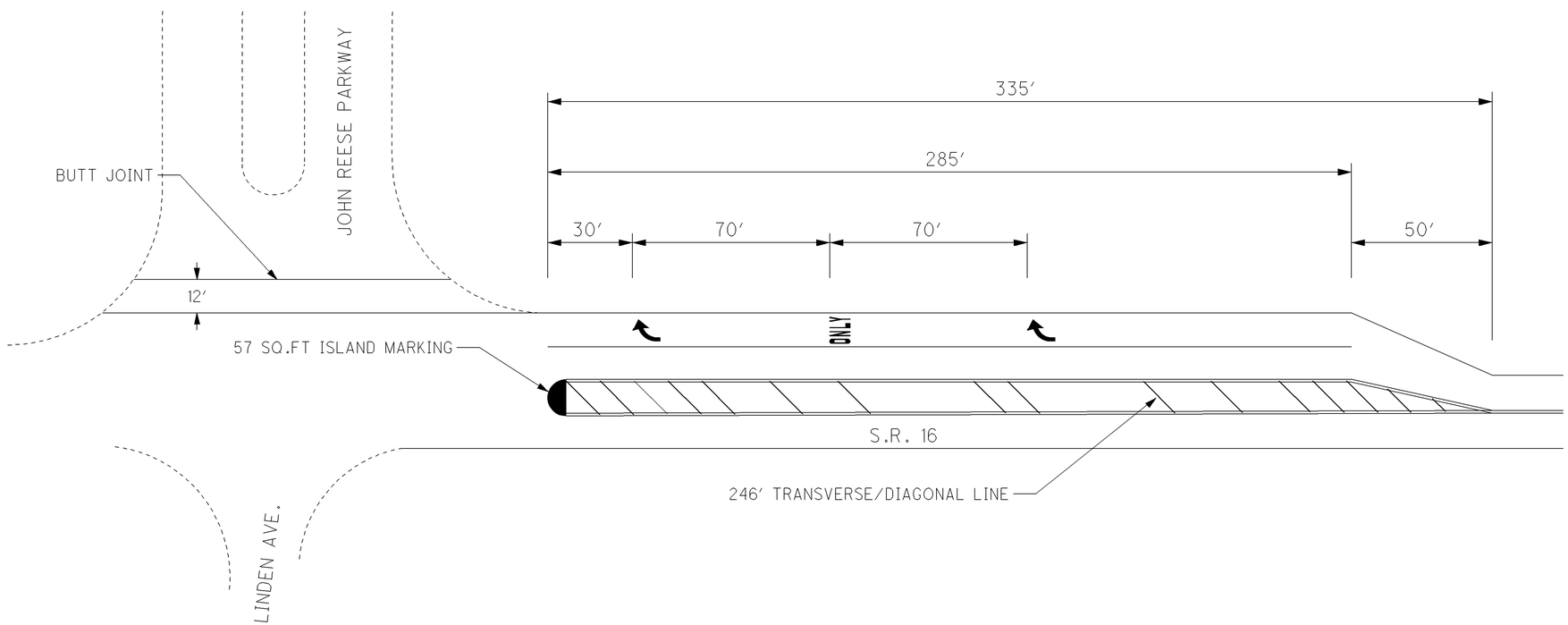

CALCULATED LME
CHECKED DNM

PAVEMENT MARKING DETAILS - JOHN REESE PKWY

LIC-16-0.00

L016_PMD_004.DGN 9-6-12

NOTE:
AN ADDITIONAL 4 (LEFT) LANE ARROWS HAVE BEEN PROVIDED TO BE PLACED AS DIRECTED BY THE ENGINEER FOR SIDE ROADS.

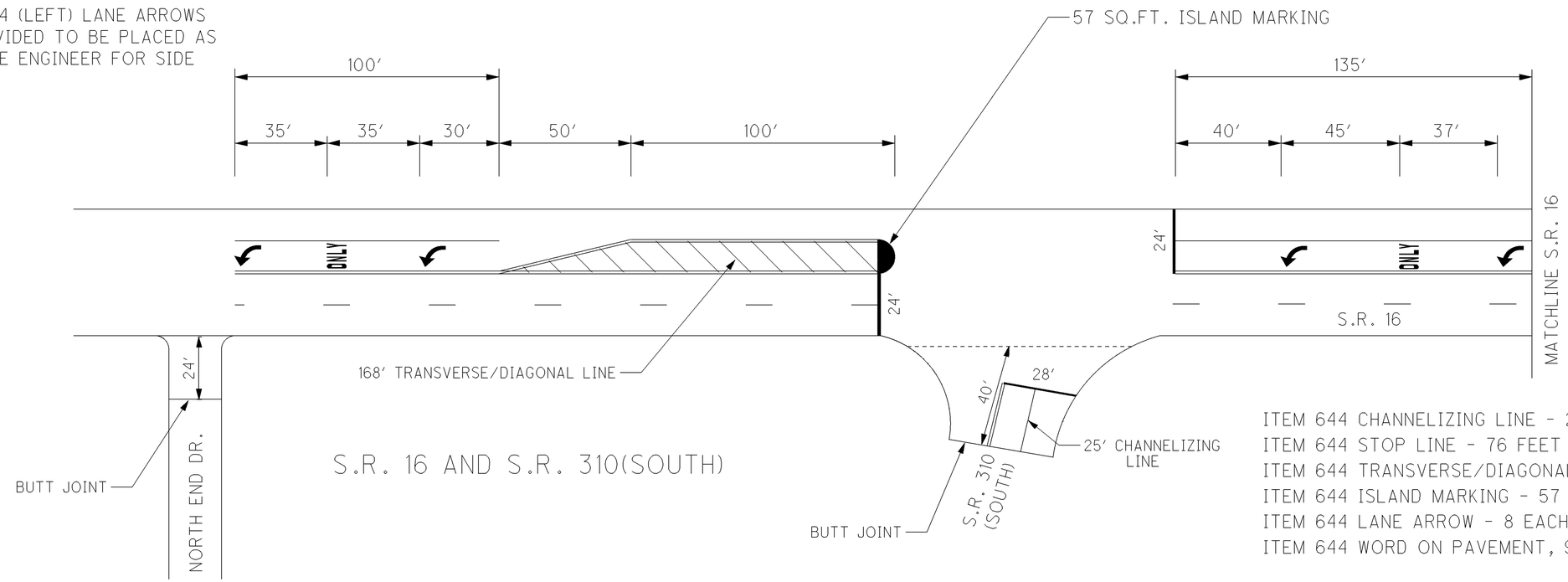

ITEM 644 CHANNELIZING LINE - 260 FEET
ITEM 644 STOP LINE - 76 FEET
ITEM 644 TRANSVERSE/DIAGONAL LINE - 168 FEET
ITEM 644 ISLAND MARKING - 57 SQ.FT.
ITEM 644 LANE ARROW - 8 EACH
ITEM 644 WORD ON PAVEMENT, 96″ - 2 EACH

QUANTITIES CARRIED TO SHEET 18

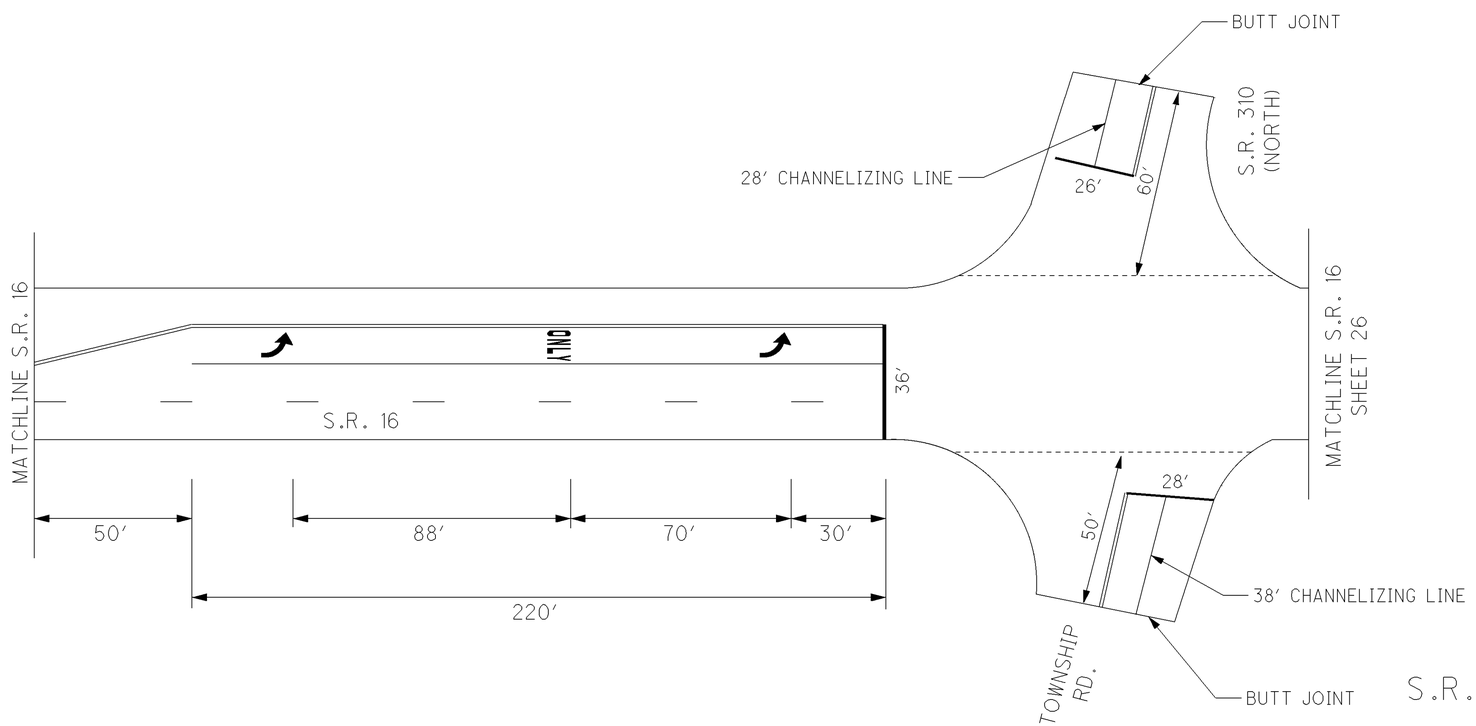

ITEM 644 CHANNELIZING LINE - 286 FEET
ITEM 644 STOP LINE - 90 FEET
ITEM 644 LANE ARROW - 2 EACH
ITEM 644 WORD ON PAVEMENT, 96″ - 1 EACH

QUANTITIES CARRIED TO SHEET 18

S.R. 16 AND
S.R. 310(NORTH)/TOWNSHIP RD.

CALCULATED LME
CHECKED DNM

PAVEMENT MARKING DETAILS - S.R. 310

LIC-16-0.00

L016_PMD_006.DGN 9-7-12

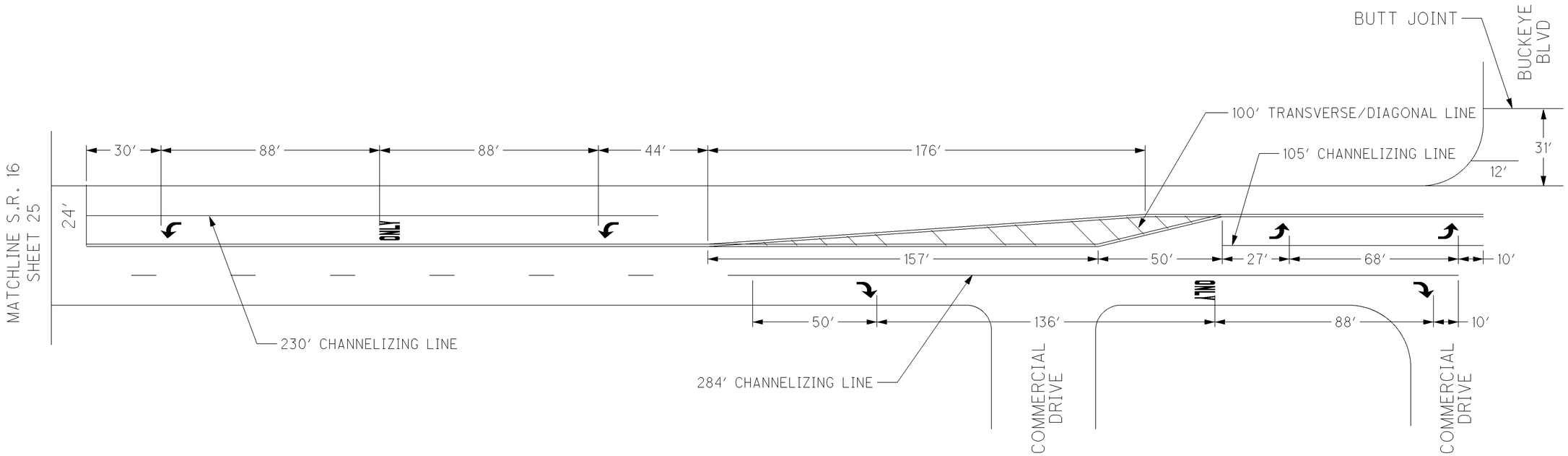

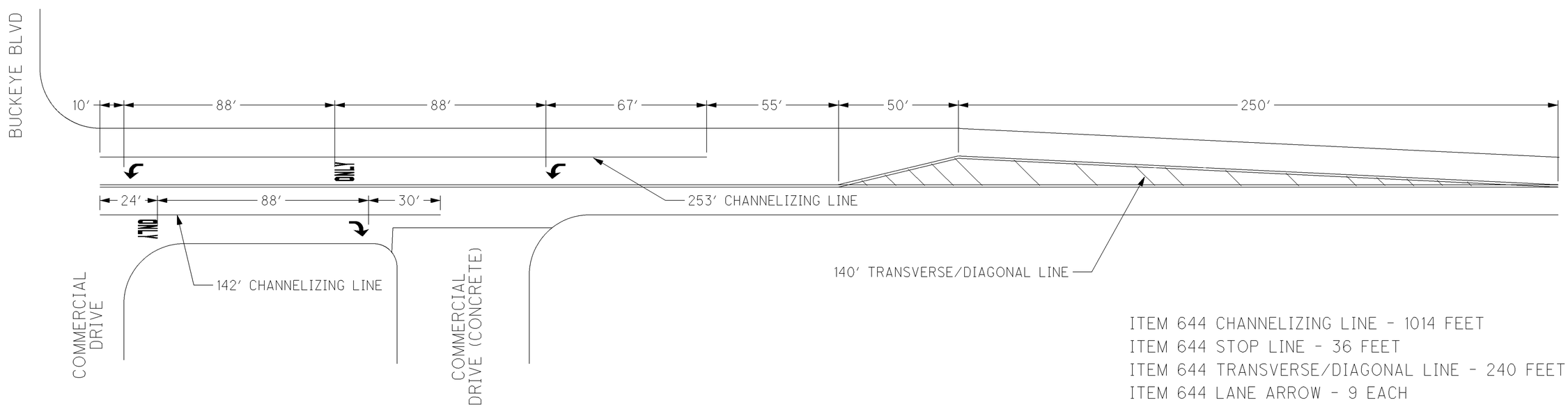

ITEM 644 CHANNELIZING LINE - 1014 FEET
ITEM 644 STOP LINE - 36 FEET
ITEM 644 TRANSVERSE/DIAGONAL LINE - 240 FEET
ITEM 644 LANE ARROW - 9 EACH
ITEM 644 WORD ON PAVEMENT, 96" - 4 EACH

QUANTITIES CARRIED TO SHEET 18

CALCULATED LME
CHECKED DNM

PAVEMENT MARKING DETAILS - S.R. 310/ BUCKEYE BLVD.

LIC-16-0.00

P:\LIC\76431\Design\Roadway\Plan_Sheets\General\L016_PMD_007.dgn 11/6/2012 12:01:00 PM dmorgan

ITEM 644 CHANNELIZING LINE - 750 FEET
ITEM 644 STOP LINE - 110 FEET
ITEM 644 CROSSWALK LINE - 434 FEET
ITEM 644 TRANSVERSE/DIAGONAL LINE - 262 FEET
ITEM 644 LANE ARROW - 9 EACH
ITEM 644 WORD ON PAVEMENT, 96" - 2 EACH

QUANTITIES CARRIED TO SHEET 18

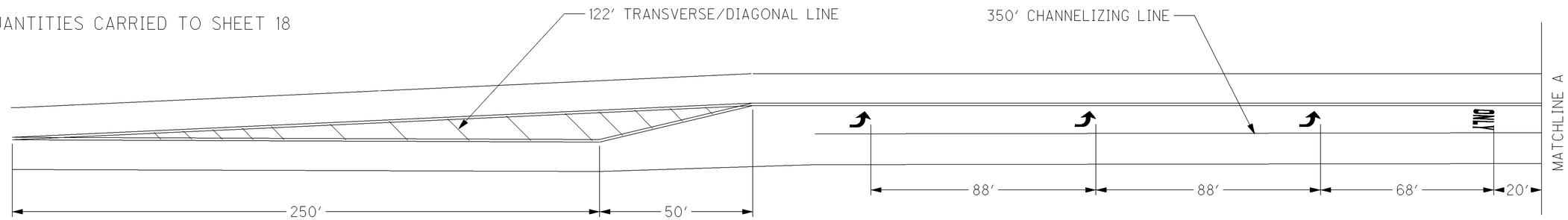

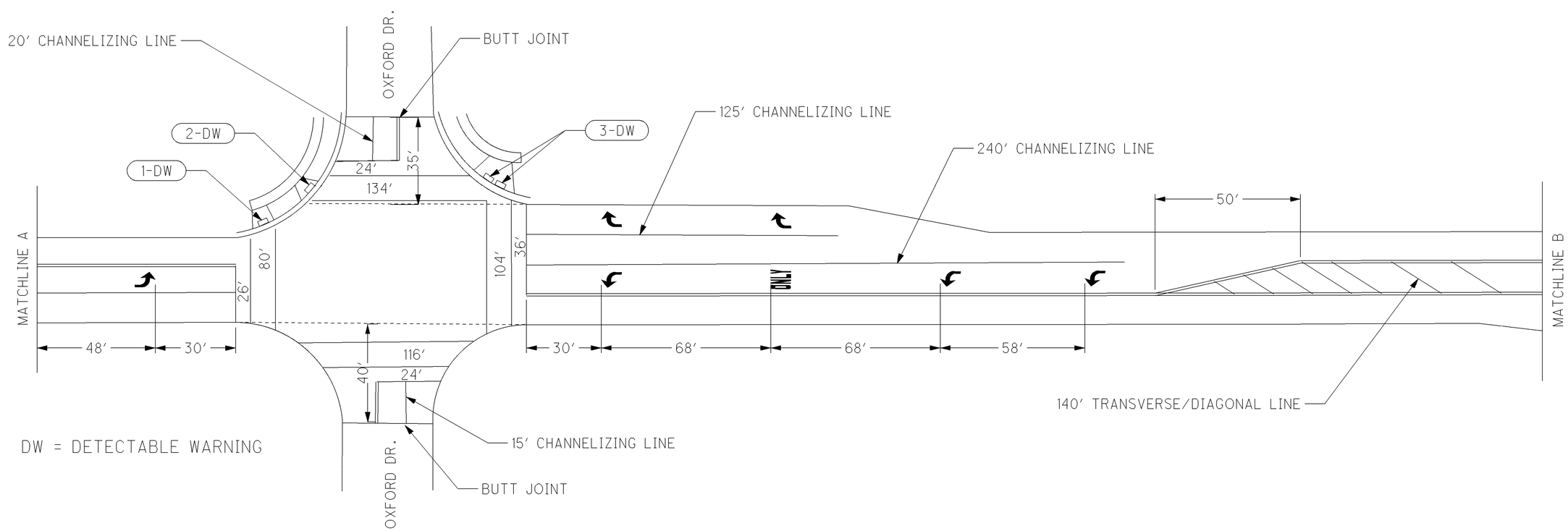

DW = DETECTABLE WARNING

NOTE:
FOR CURB RAMP QUANITITIES, SEE SHEET 41

CALCULATED LME
CHECKED DNM

PAVEMENT MARKING DETAIL - OXFORD DR.

LIC-16-0.00

P:\LIC\76431\Design\Roadway\Plan_Sheets\General\L016_PMD_007A.dgn 11/8/2012 10:49:05 AM dmorgan

ITEM 644 CROSSWALK LINE - 232 FEET
ITEM 644 CHANNELIZING LINE - 1438 FEET
ITEM 644 STOP LINE - 176 FEET
ITEM 644 TRANSVERSE/DIAGONAL LINE - 301 FEET
ITEM 644 LANE ARROW - 18 EACH
ITEM 644 WORD ON PAVEMENT, 96" - 7 EACH

QUANTITIES CARRIED TO SHEET 18

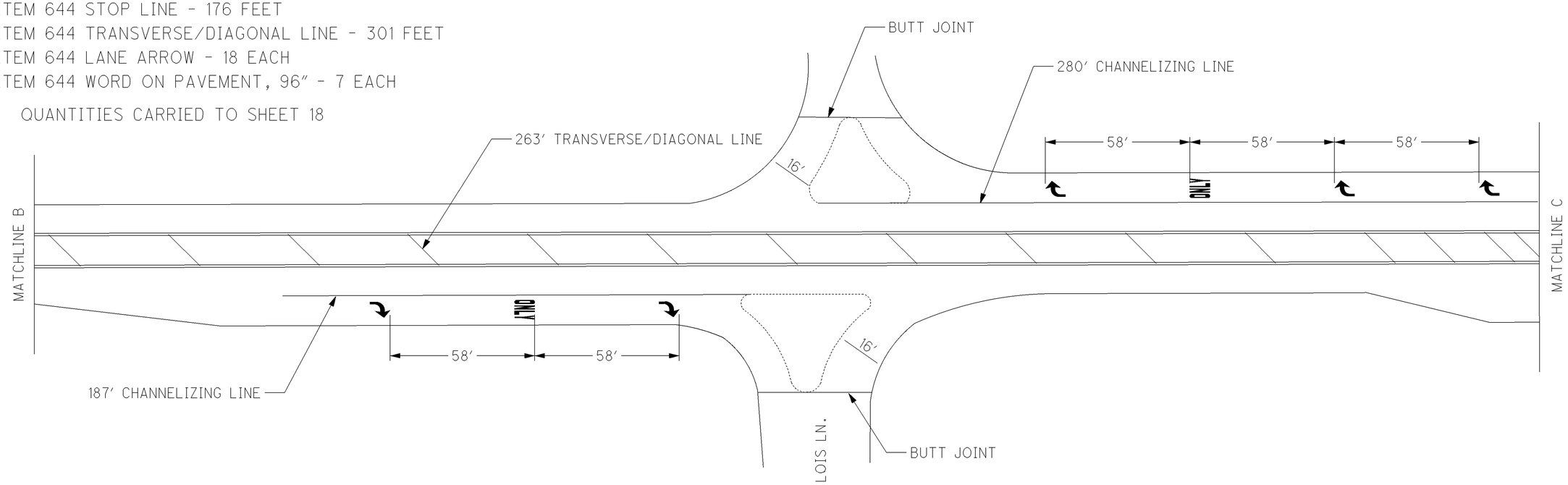

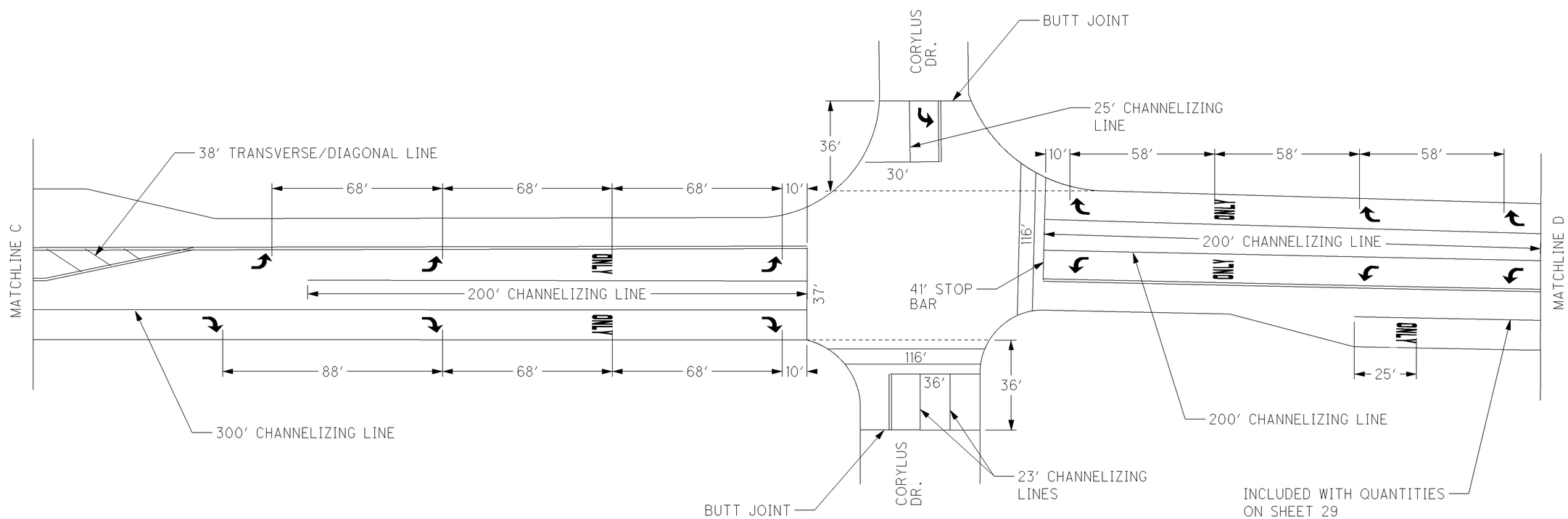

CALCULATED LME
CHECKED DNM

PAVEMENT MARKING DETAILS - LOIS LN/CORYLUS DR.

LIC-16-0.00

P:\LIC\76431\Design\Roadway\Plan_Sheets\General\L016_PMD_007B.dgn 11/6/2012 1:50:45 PM dmorgan

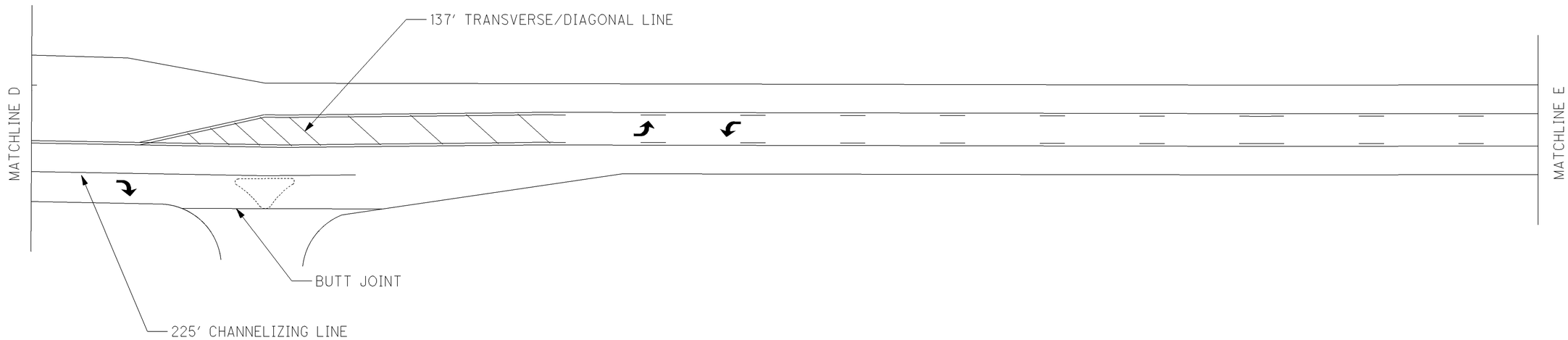

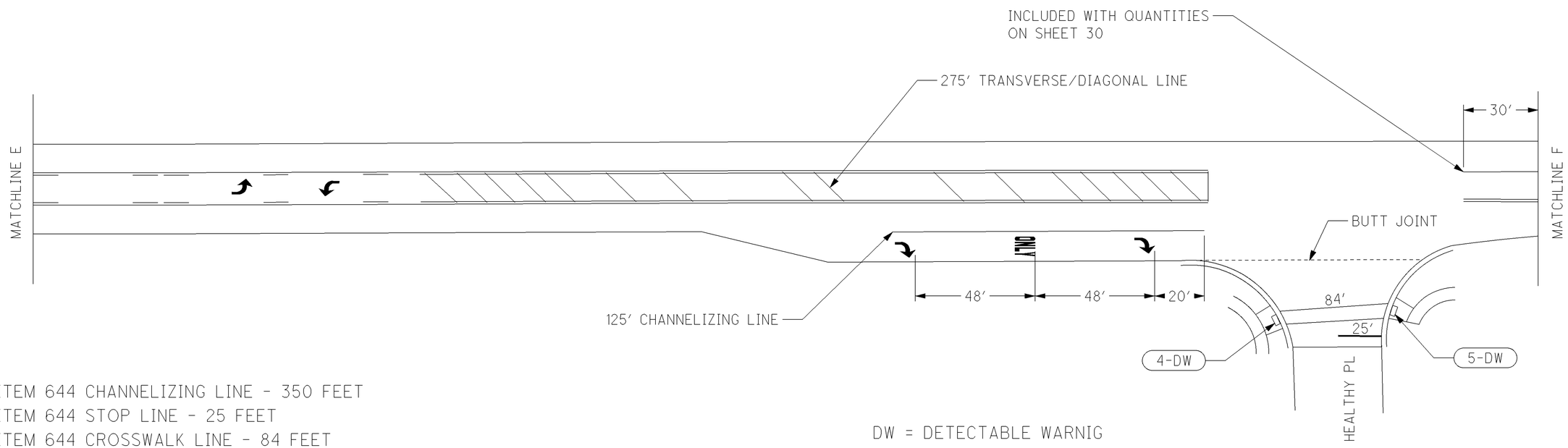

ITEM 644 CHANNELIZING LINE - 350 FEET
ITEM 644 STOP LINE - 25 FEET
ITEM 644 CROSSWALK LINE - 84 FEET
ITEM 644 TRANSVERSE/DIAGONAL LINE - 412 FEET
ITEM 644 LANE ARROW - 7 EACH
ITEM 644 WORD ON PAVEMENT, 96″ - 1 EACH

DW = DETECTABLE WARNIG

QUANTITIES CARRIED TO SHEET 18

NOTE:
FOR CURB RAMP QUANTITIES, SEE SHEET 41

CALCULATED LME
CHECKED DNM

PAVEMENT MARKING DETAILS - ONE HEALTHY PL.

LIC-16-0.00

P:\LIC\76431\Design\Roadway\Plan_Sheets\General\L016_PMD_007C.dgn 11/7/2012 11:09:34 AM dmorgan

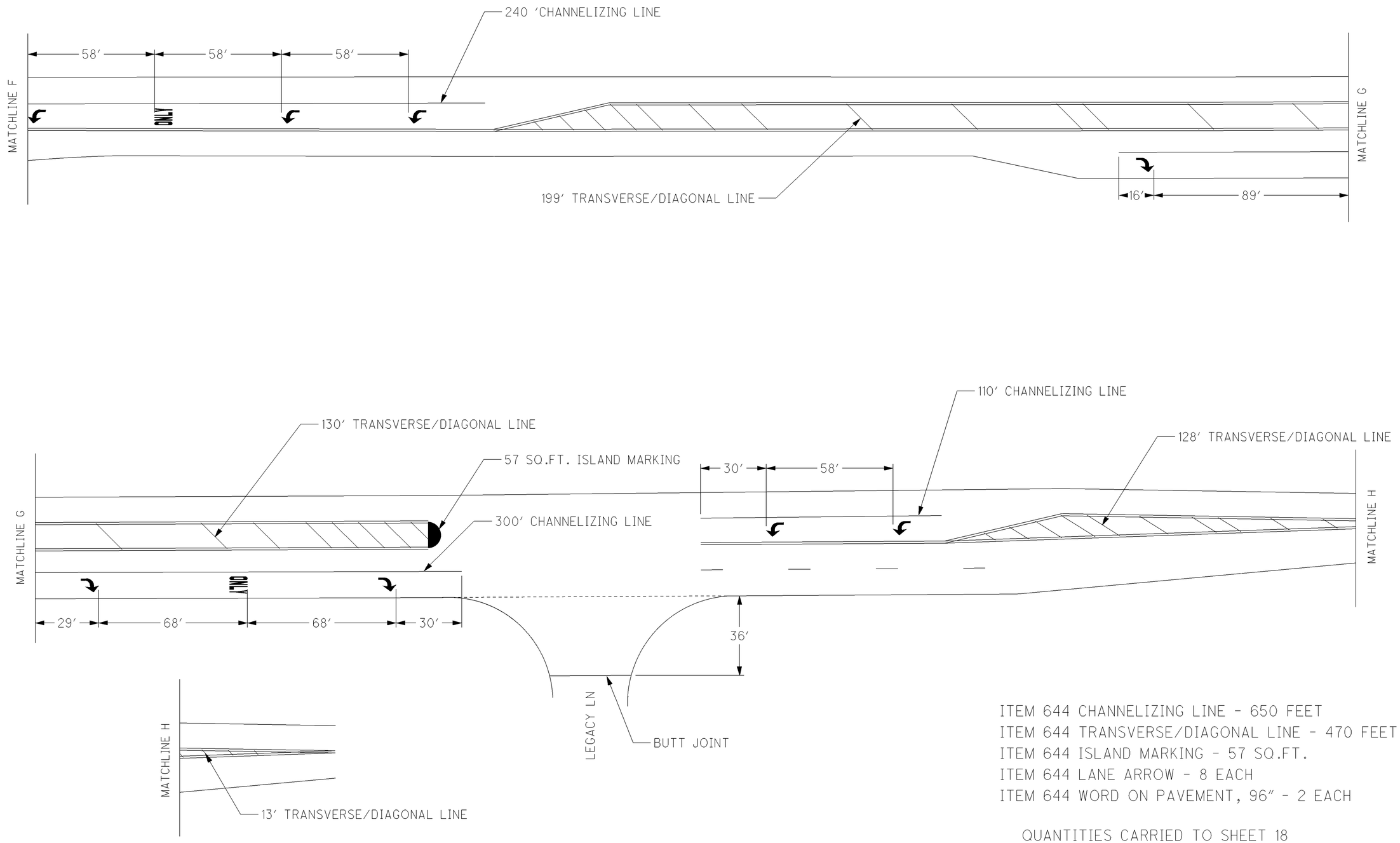

ITEM 644 CHANNELIZING LINE - 650 FEET
ITEM 644 TRANSVERSE/DIAGONAL LINE - 470 FEET
ITEM 644 ISLAND MARKING - 57 SQ.FT.
ITEM 644 LANE ARROW - 8 EACH
ITEM 644 WORD ON PAVEMENT, 96" - 2 EACH

QUANTITIES CARRIED TO SHEET 18

CALCULATED LME
CHECKED DNM

PAVEMENT MARKING DETAILS - LEGACY LN.

LIC-16-0.00

P:\LIC\76431\Design\Roadway\Plan_Sheets\General\L016_PMD_007D.dgn 11/7/2012 8:09:30 AM dmorgan

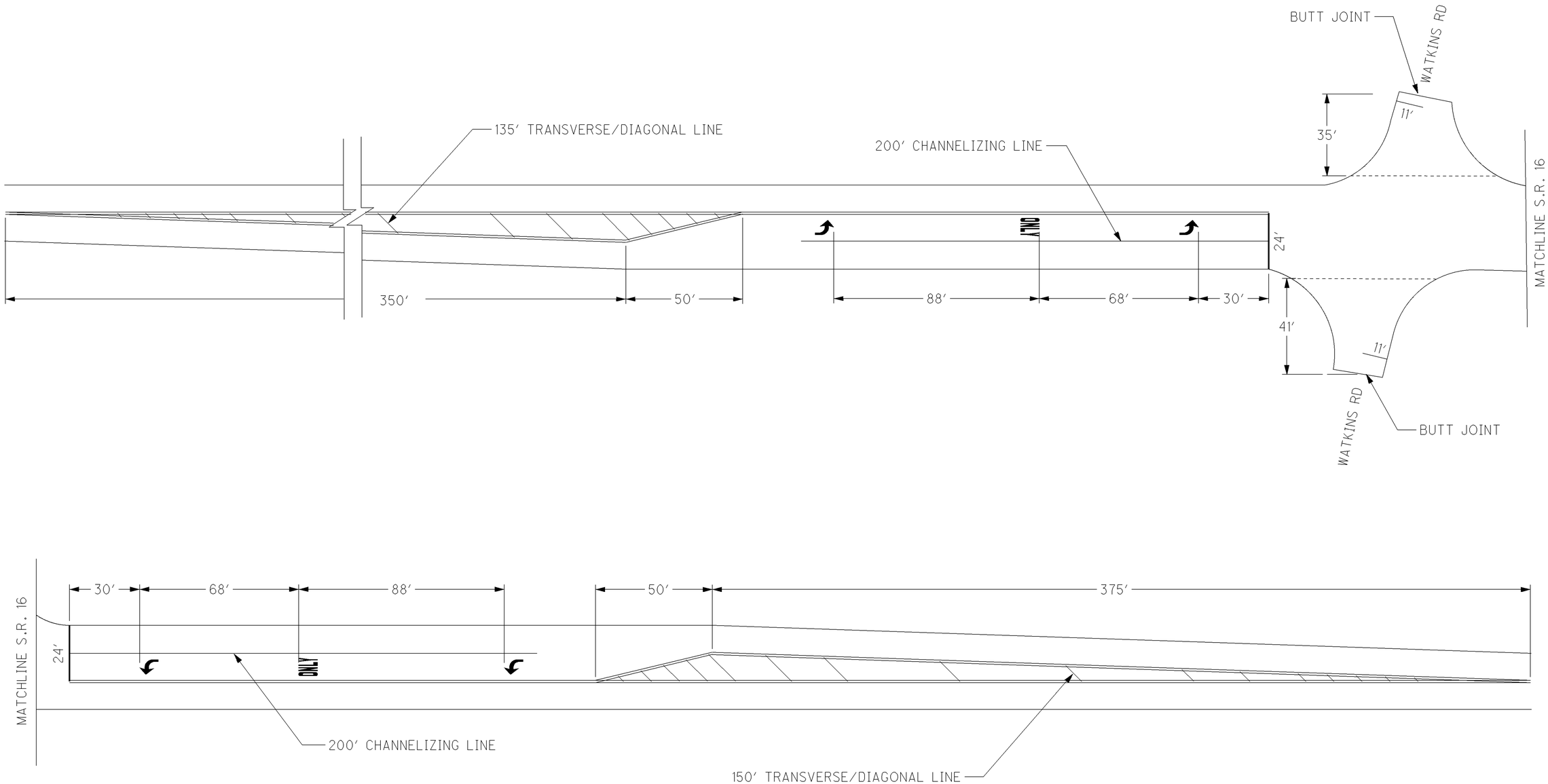

ITEM 644 CHANNELIZING LINE - 400 FEET
ITEM 644 STOP LINE - 70 FEET
ITEM 644 TRANSVERSE/DIAGONAL LINE - 285 FEET
ITEM 644 LANE ARROW - 4 EACH
ITEM 644 WORD ON PAVEMENT, 96" - 2 EACH

QUANTITIES CARRIED TO SHEET 18

CALCULATED LME
CHECKED DNM

PAVEMENT MARKING DETAILS - WATKINS RD.

LIC-16-0.00

P:\LIC\76431\Design\Roadway\Plan_Sheets\General\L016_PMD_008.dgn 11/6/2012 3:18:54 PM dmorgan

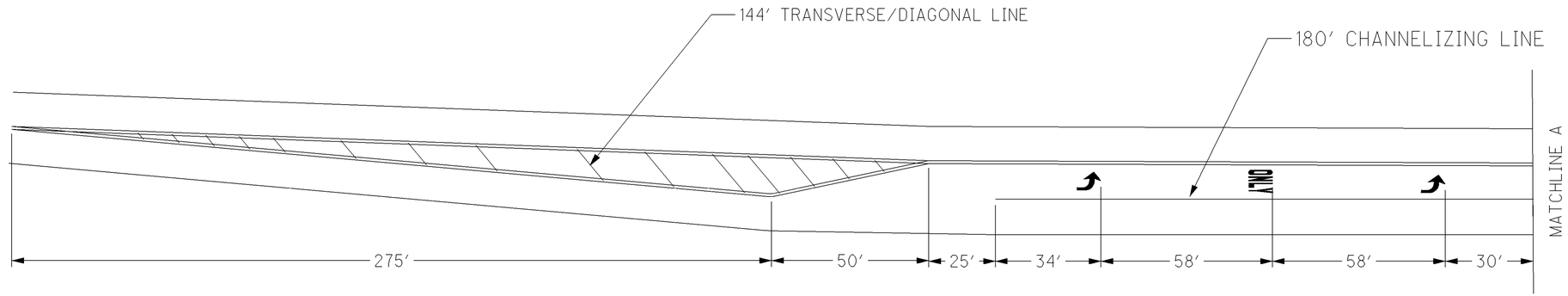

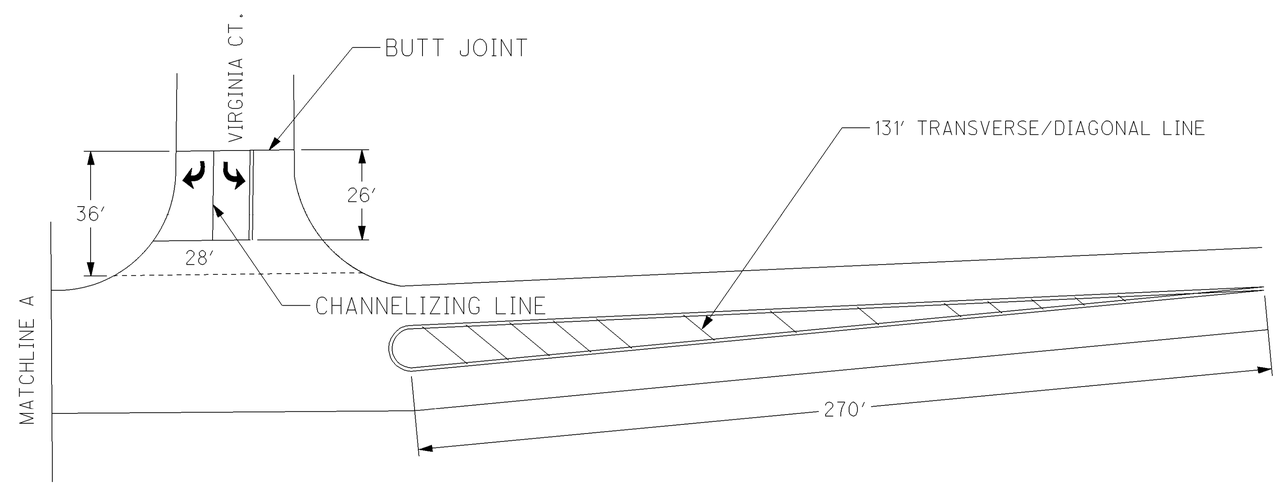

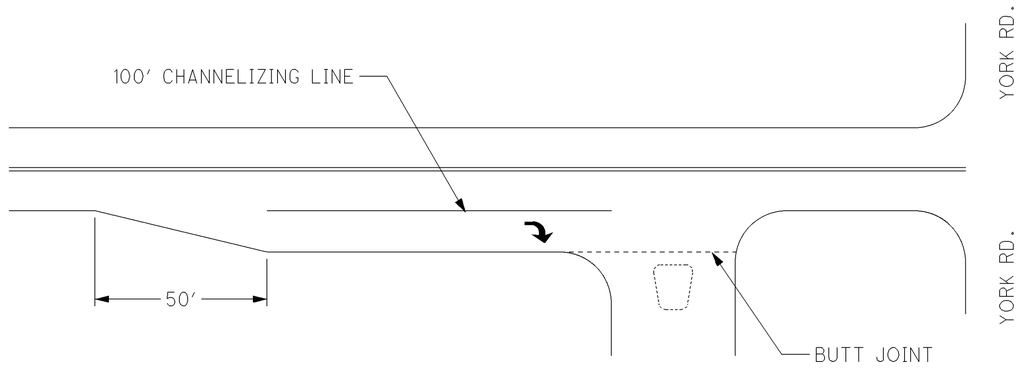

SHELL GAS STATION

ITEM 644 CHANNELIZING LINE - 306 FEET
ITEM 644 STOP LINE - 28 FEET
ITEM 644 TRANSVERSE/DIAGONAL LINE - 275 FEET
ITEM 644 LANE ARROW - 5 EACH
ITEM 644 WORD ON PAVEMENT, 96″ - 1 EACH

QUANTITIES CARRIED TO SHEET 19

CALCULATED LME
CHECKED DNM

PAVEMENT MARKING DETAILS - VIRGINIA CT.

LIC-16-0.00

P:\LIC\76431\Design\Roadway\Plan_Sheets\General\L016_PMD_008A.dgn 11/7/2012 10:44:31 AM dmorgan

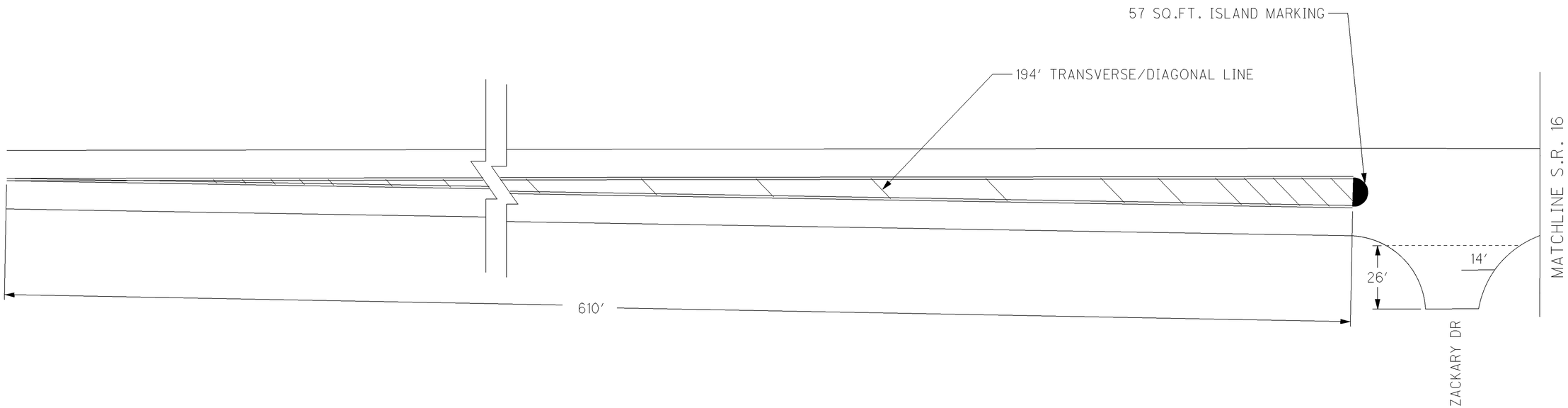

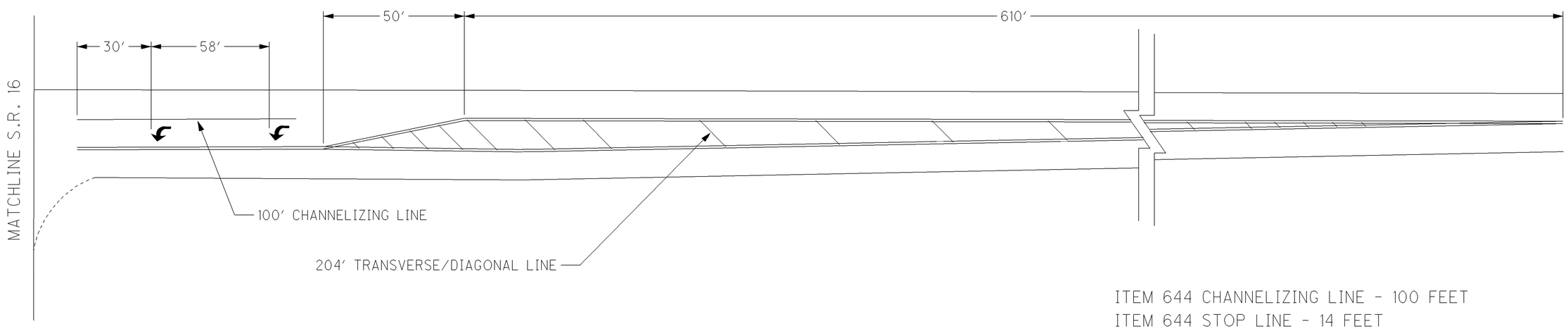

ITEM 644 CHANNELIZING LINE - 100 FEET
ITEM 644 STOP LINE - 14 FEET
ITEM 644 TRANSVERSE/DIAGONAL LINE - 398 FEET
ITEM 644 ISLAND MARKING - 57 SQ.FT.
ITEM 644 LANE ARROW - 2 EACH

QUANTITIES CARRIED TO SHEET 19

CALCULATED LME
CHECKED DNM

PAVEMENT MARKING DETAILS - ZACKARY DR.

LIC-16-0.00

P:\LIC\76431\Design\Roadway\Plan_Sheets\General\L016_PMD_008B.dgn 11/7/2012 6:32:39 AM dmorgan

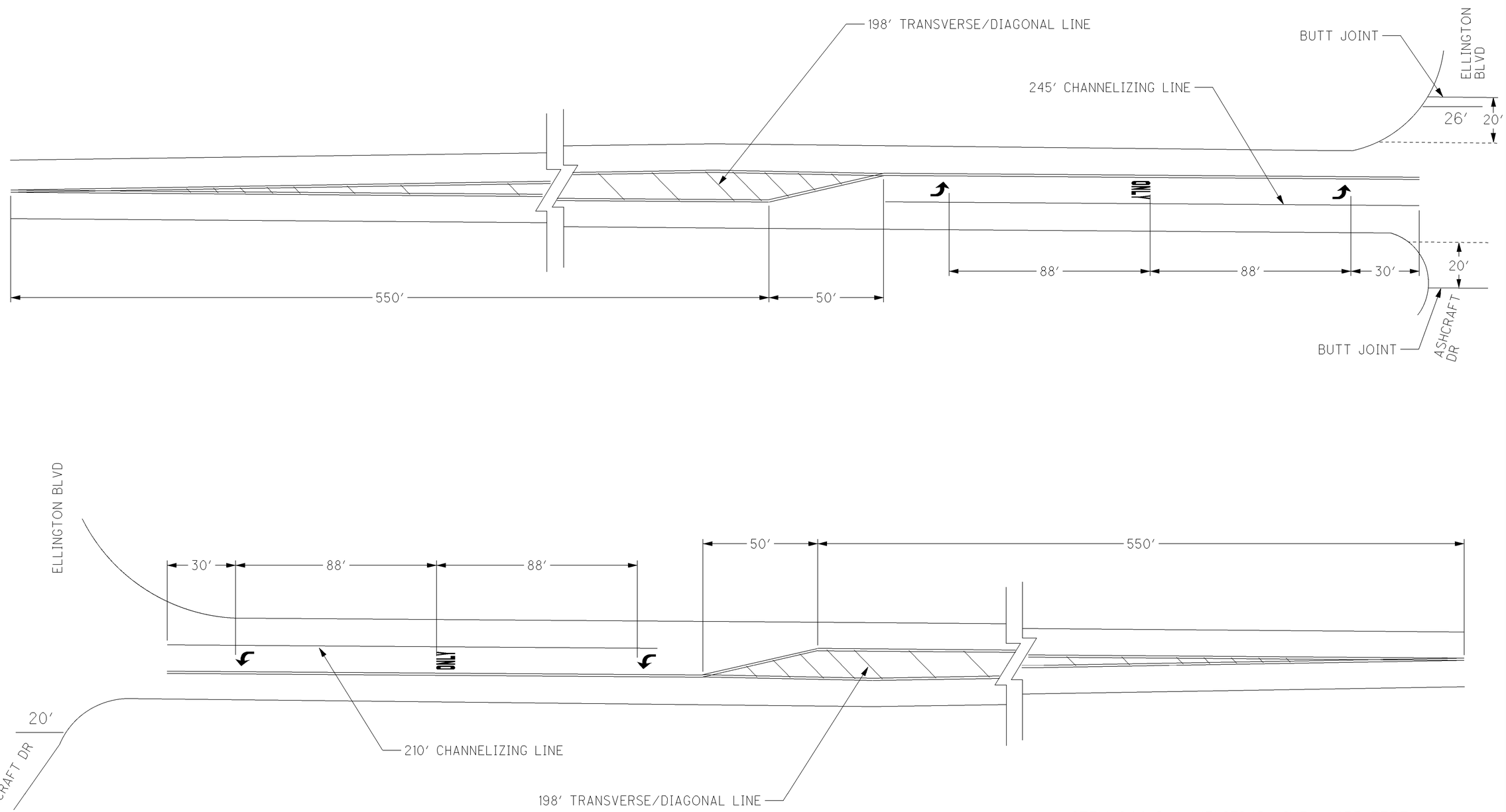

ITEM 644 CHANNELIZING LINE - 455 FEET
ITEM 644 STOP LINE - 46 FEET
ITEM 644 TRANSVERSE/DIAGONAL LINE - 396 FEET
ITEM 644 LANE ARROW - 4 EACH
ITEM 644 WORD ON PAVEMENT, 96" - 2 EACH

QUANTITIES CARRIED TO SHEET 19

CALCULATED LME
CHECKED DNM

PAVEMENT MARKING DETAIL - ELLINGTON BLVD./ ASHCRAFT DR.

LIC-16-0.00

P:\LIC\76431\Design\Roadway\Plan_Sheets\General\L016_PMD_008C.dgn 11/7/2012 6:44:50 AM dmorgan

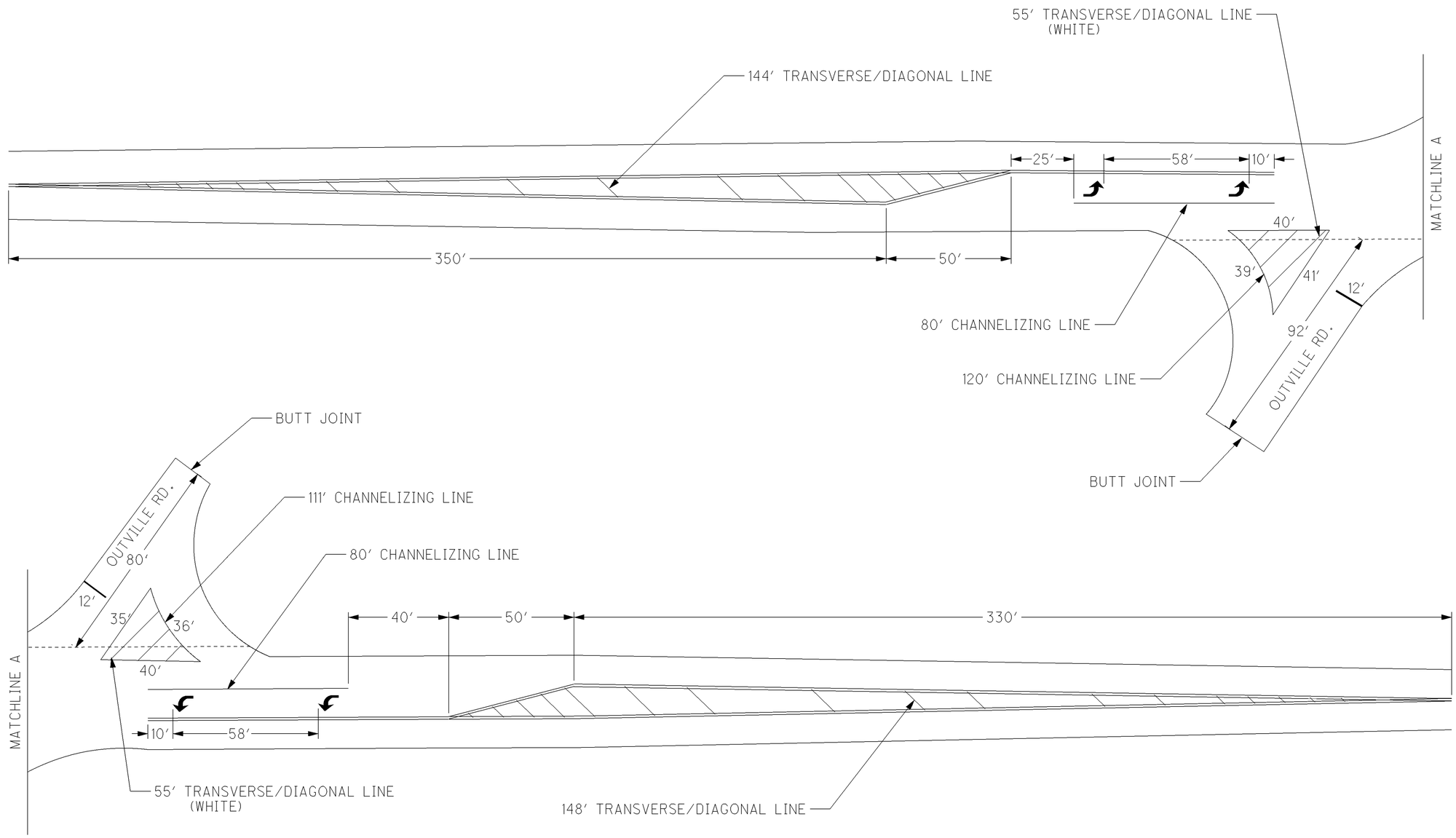

ITEM 644 CHANNELIZING LINE - 391 FEET
ITEM 644 STOP LINE - 24 FEET
ITEM 644 TRANSVERSE/DIAGONAL LINE - 402 FEET
ITEM 644 LANE ARROW - 4 EACH

QUANTITIES CARRIED TO SHEET 19

CALCULATED LME
CHECKED DNM

PAVEMENT MARKING DETAILS - OUTVILLE RD.

LIC-16-0.00

P:\LIC\76431\Design\Roadway\Plan_Sheets\General\L016_PMD_009.dgn 11/7/2012 6:53:38 AM dmorgan

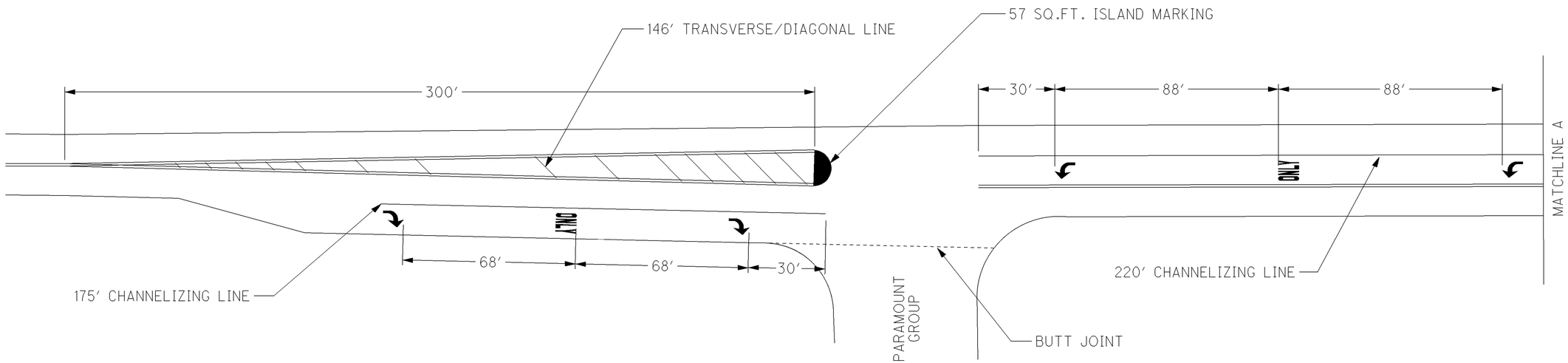

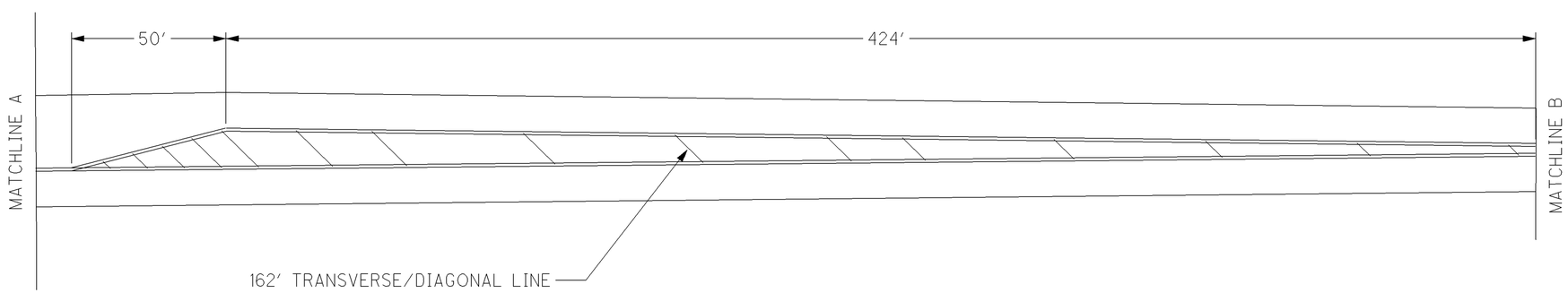

ITEM 644 CHANNELIZING LINE - 395 FEET
ITEM 644 TRANSVERSE/DIAGONAL LINE - 308 FEET
ITEM 644 ISLAND MARKING - 57 SQ.FT.
ITEM 644 LANE ARROW - 4 EACH
ITEM 644 WORD ON PAVEMENT, 96″ - 2 EACH

QUANTITIES CARRIED TO SHEET 19

CALCULATED LME
CHECKED DNM

PAVEMENT MARKING DETAILS - PARAMOUNT GROUP

LIC-16-0.00

P:\LIC\76431\Design\Roadway\Plan_Sheets\General\L016_PMD_010.dgn 11/7/2012 7:03:01 AM dmorgan

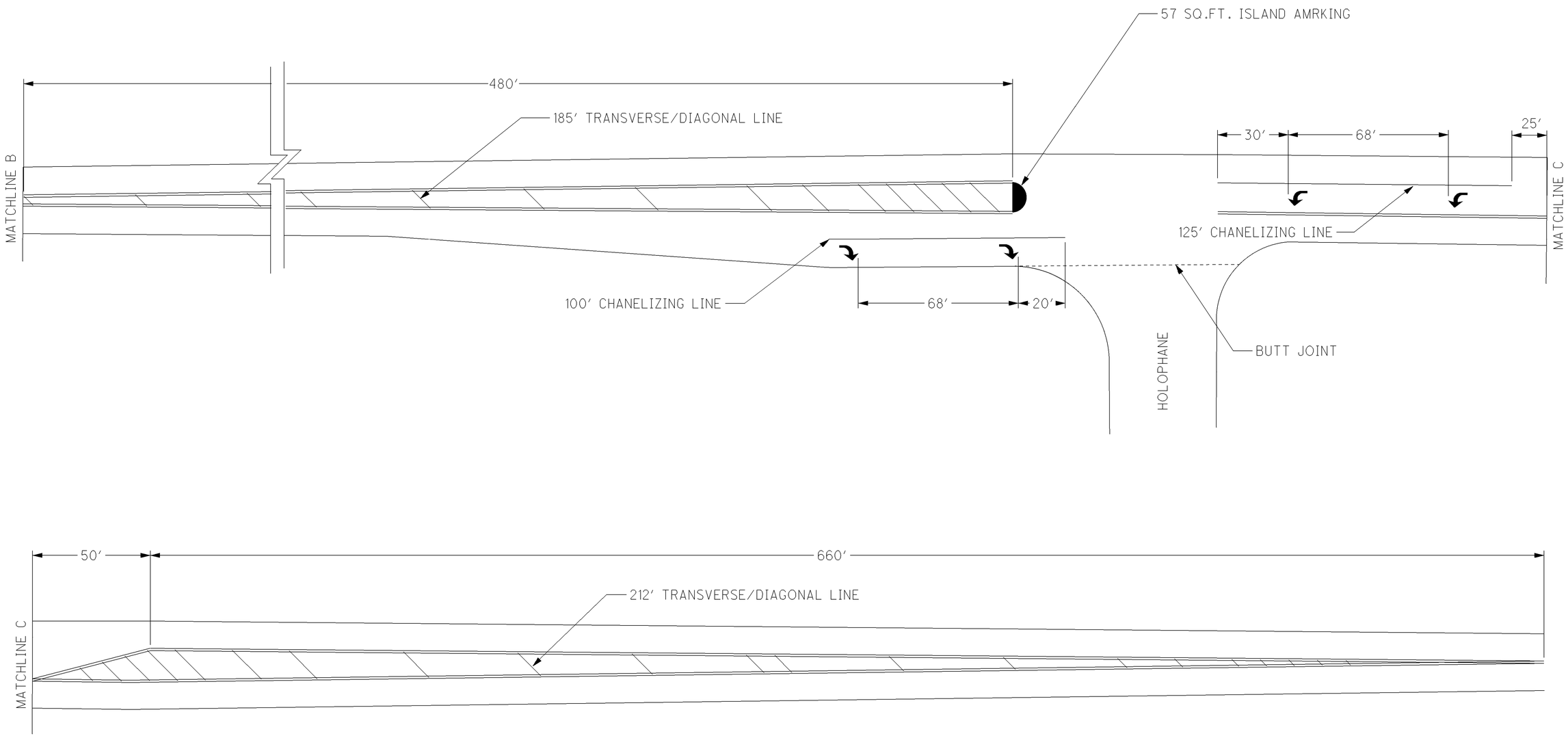

ITEM 644 CHANNELIZING LINE - 225 FEET
ITEM 644 TRANSVERSE/DIAGONAL LINE - 397 FEET
ITEM 644 ISLAND MARKING - 57 SQ.FT.
ITEM 644 LANE ARROW - 4 EACH

QUANTITIES CARRIED TO SHEET 19

CALCULATED LME
CHECKED DNM

PAVEMENT MARKING DETAILS - HOLOPHANE

LIC-16-0.00

P:\LIC\76431\Design\Roadway\Plan_Sheets\General\L016_PMD_011.dgn 11/7/2012 7:09:00 AM dmorgan

LOOP	CONFIGURATION	LENGTH	LOCATION FROM STOP BAR
L-1	ADD	-	450′
L-2	ADD	-	280′
L-3	POWERHEAD	25′	4′
L-4	POWERHEAD	25′	4′
L-5	POWERHEAD	20′	1′
L-6	POWERHEAD	10′	20′
L-7	POWERHEAD	25′	4′
L-8	POWERHEAD	25′	4′
L-9	ADD	-	300′
L-10	ADD	-	300′
L-11	ADD	-	450′

ADD = ANGULAR DESIGN DETECTION, LENGTH AND WIDTH PER STD. DWG. TC-82.10

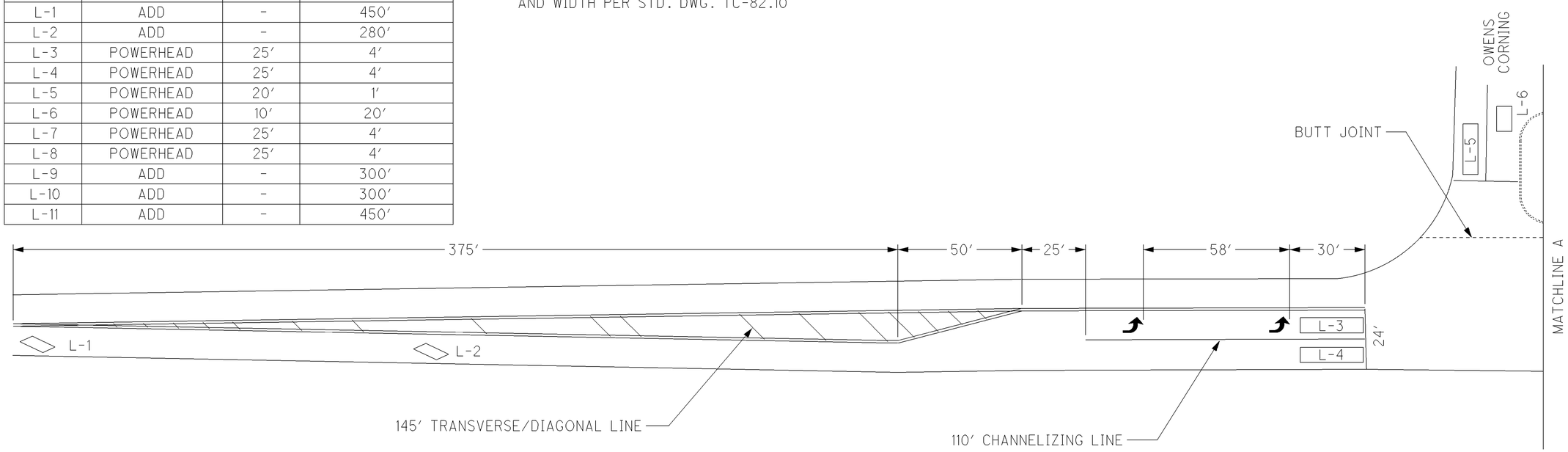

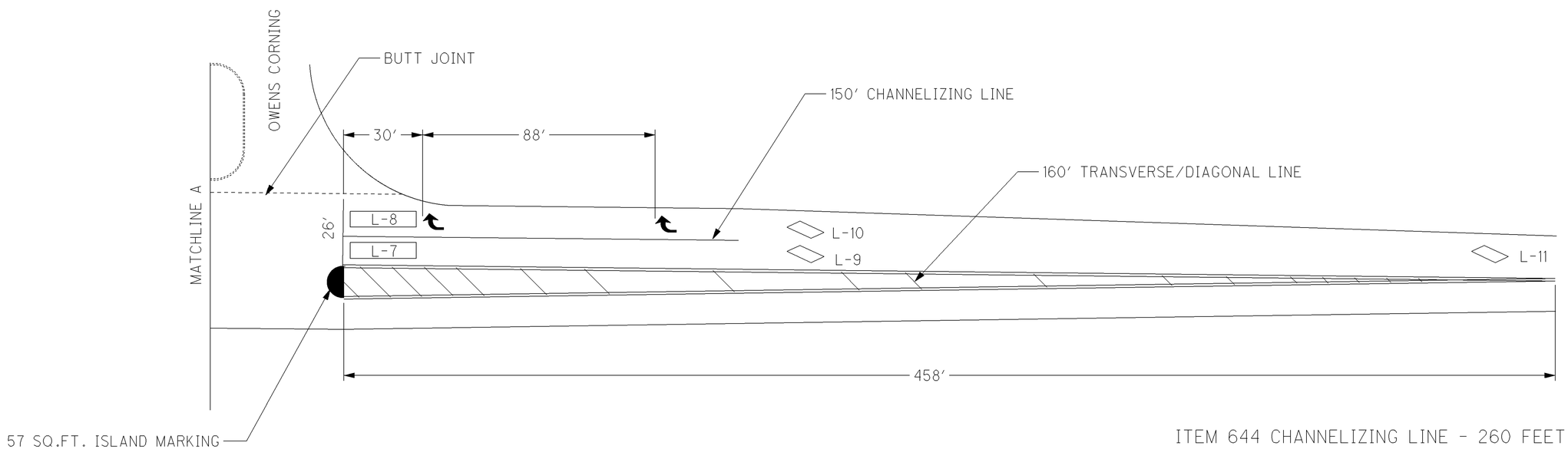

ITEM 644 CHANNELIZING LINE - 260 FEET
ITEM 644 STOP LINE - 50 FEET
ITEM 644 TRANSVERSE/DIAGONAL LINE - 305 FEET
ITEM 644 ISLAND MARKING - 57 SQ.FT.
ITEM 644 LANE ARROW - 4 EACH

QUANTITIES CARRIED TO SHEET 19

CALCULATED LME
CHECKED DNM

PAVEMENT MARKING DETAILS - OWENS CORNING

LIC-16-0.00

P:\LIC\76431\Design\Roadway\Plan_Sheets\General\L016_PMD_012.dgn 11/13/2012 10:05:39 AM dmorgan

ITEM 644 CHANNELIZING LINE - 506 FEET
ITEM 644 STOP LINE - 67 FEET
ITEM 644 TRANSVERSE/DIAGONAL LINE - 576 FEET
ITEM 644 LANE ARROW - 10 EACH
ITEM 644 WORD ON PAVEMENT, 96" - 3 EACH

QUANTITIES CARRIED TO SHEET 19

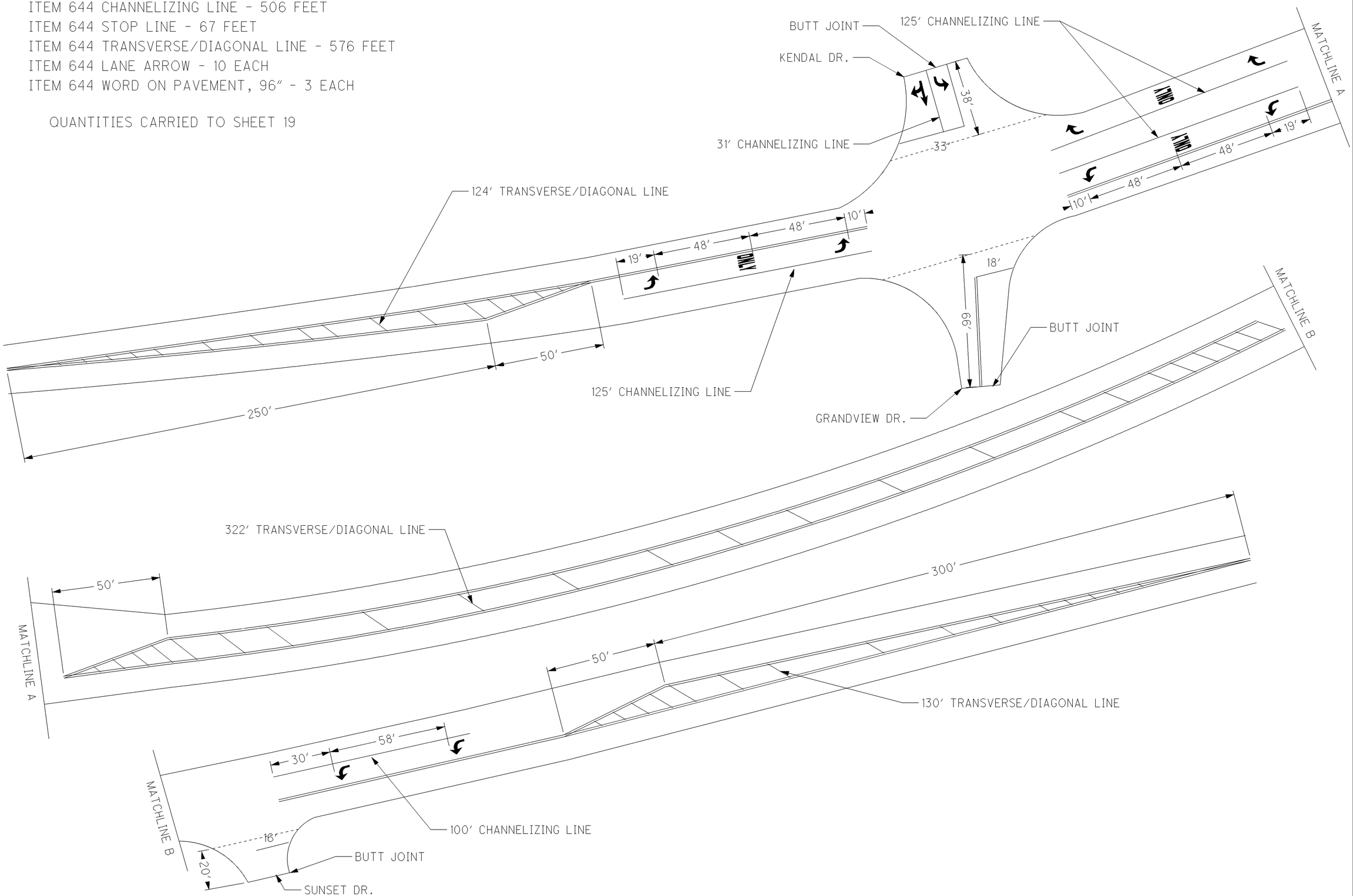

CALCULATED LME
CHECKED DNM

PAVEMENT MARKING DETAILS - GRANDVIEW DR./KENDAL DR. & SUNSET DR.

LIC-16-0.00

P:\LIC\76431\Design\Roadway\Plan_Sheets\General\L016_PMD_013.dgn 11/7/2012 10:48:22 AM dmorgan

DETAIL	SEE STD. DWG. TC-65.11
1	TAPERED ACCELERATION LANE
2	DECELERATION LANE
3	MULTILANE DIVIDED/ CONTROLLED ACCESS

DETAIL	SEE STD. DWG. TC-65.11
4	4 LANE DIVIDED TO 2 LANE TRANSITION
5	4 LANE UNDIVIDED TO 2 LANE TRANSITION
6	ONE LANE BRIDGE
7	STOP APPROACH
8	THRU APPROACH
9	TWO WAY LEFT TURN LANE

DETAIL	SEE STD. DWG. TC-65.11
10	APPROACH W/LT. TURN LANE
11	HORIZONTAL CURVE 40'
12	HORIZONTAL CURVE ALT.
GAP	CENTERLINE AT 80' TYP.

ITEM 621 RPM SUB-SUMMARY

LOCATION	COUNTY	ROUTE	BEGIN LOG POINT SLM	END LOG POINT SLM	LENGTH		DETAIL	621	621	PRISMATIC RETRO-REFLECTOR COLORS					REMARKS
										INFORMATION ONLY					
								RAISED PAVEMENT MARKER REMOVED	RPM	ONE-WAY		TWO-WAY			
					MILES	LIN.FT.		EACH	EACH	WHITE	YELLOW	YELLOW / YELLOW	WHITE / RED	YELLOW / RED	
1	LIC	S.R. 16	0.00	0.29	0.29	1,531	7 / 9 / 10	92	92	16		38	38		TAYLOR RD.
1	LIC	S.R. 16	0.29	0.41	0.12	634	7 / 10	41	41	16		15	10		TAYLOR RD.
1	LIC	S.R. 16	0.41	0.71	0.30	1,584	GAP	20	20			20			
1	LIC	S.R. 16	0.71	0.88	0.17	898	10	31	31			21	10		VILLAGE GATE APARTMENTS
1	LIC	S.R. 16	0.88	0.98	0.10	528	GAP	7	7			7			
1	LIC	S.R. 16	0.98	1.21	0.23	1,214	10	69	69	32		31	6		SUMMIT RD.
1	LIC	S.R. 16	1.21	2.78	1.57	8,290	GAP / 7	136	136	32		104			STOP AT MINK RD.
1	LIC	S.R. 16	2.78	3.01	0.23	1,214		SUSPEND PAVING OPERATION THIS SECTION							ETNA PKWY
1	LIC	S.R. 16	3.01	4.48	1.47	7,762	GAP	97	97			97			SUSPEND RPMS AT 35MPH SIGN
1	LIC	S.R. 16	6.59	6.86	0.27	1,426	GAP	18	18			18			RESUME RPMS AT 50MPH SIGN
1	LIC	S.R. 16	6.86	7.12	0.26	1,373	7 / 10	76	76	32		32	12		WATKINS RD.
1	LIC	S.R. 16	7.12	7.22	0.10	528	GAP	7	7			7			END LOCATION 1
LOCATION 1 SUB-TOALS (FOR INFORMATION ONLY)										128		390	76		
LOCATION 1 TOTALS (CARRIED TO SUB-SUMMARY)								**594**	**594**						
1	LIC	S.R. 16	7.22	7.40	0.18	950	GAP	12	12			12			BEGIN LOCATION 2
1	LIC	S.R. 16	7.40	7.57	0.17	898	10	26	26			21	5		VIRGINIA CT.
1	LIC	S.R. 16	7.57	8.75	1.18	6,230	GAP	81	81			78	3		WHITE/RED RPM FOR RIGHT TURN AT SLM 8.17
1	LIC	S.R. 16	8.75	9.02	0.27	1,426	10	39	39			36	3		ZACKARY DR.
1	LIC	S.R. 16	9.02	9.04	0.02	106	GAP	1	1			1			
1	LIC	S.R. 16	9.04	9.37	0.33	1,742	10	55	55			42	13		ELLINGTON BLVD.
1	LIC	S.R. 16	9.37	10.04	0.67	3,538	GAP	44	44			44			
1	LIC	S.R. 16	10.04	10.28	0.24	1,267	7 / 10	69	69	32		31	6		OUTVILLE RD.
1	LIC	S.R. 16	10.28	11.47	1.19	6,283	GAP	79	79			79			
1	LIC	S.R. 16	11.47	11.68	0.21	1,109	10	37	37			26	11		PARAMOUNT GROUP
1	LIC	S.R. 16	11.68	11.94	0.26	1,373	10	41	41			34	7		HOLOPHANE
1	LIC	S.R. 16	11.94	12.62	0.68	3,590	GAP	45	45			45			
1	LIC	S.R. 16	12.62	12.82	0.20	1,056	7 / 10	67	67	32		26	9		OWENS SCIENCE AND TECHNOLOGY
1	LIC	S.R. 16	12.82	13.49	0.67	3,538	GAP	44	44			44			
1	LIC	S.R. 16	13.49	13.74	0.25	1,320	10	46	46			34	12		KENDAL DR./GRANDVIEW DR.
1	LIC	S.R. 16	13.74	13.85	0.11	581	10	17	17			14	3		SUNSET DR.
1	LIC	S.R. 16	13.85	14.10	0.25	1,320	GAP	17	17			17			END LOCATION 2
LOCATION 2 SUB-TOALS (FOR INFORMATION ONLY)										64		584	72		
LOCATION 2 TOTALS (CARRIED TO SUB-SUMMARY)								**720**	**720**						

CALCULATED LME
CHECKED DNM

RAISED PAVEMENT MARKER DATA

LIC-16-0.00

L016_TRM_001.DGN 10-12-12

REFERENCE NO.	SHEET NO.	LOCATION	SIDE	202		608		690				609	COMMENTS
				WALK REMOVED	CURB REMOVED	4" CONCRETE WALK, (CURB RAMP AREA)	4" CONCRETE WALK, (EXTRA WALK AREA)	SPECIAL-MISC.: DETECTABLE WARNING	SPECIAL-MISC.: CURB RAMPS,			CURB, TYPE 6	
									TYPE A1	TYPE A2	TYPE D		
			CL./LT./RT.	SQ. FT.	FT.	SQ. FT.	SQ. FT.	SQ. FT.	EACH	EACH	EACH	FT.	
		S.R. 16 - PATASKALA											
1-DW	27	OXFORD DR.	LT	54.0		46.0		8					
2-DW	27	OXFORD DR.	LT	44.0		36.0		8					
3-DW	27	OXFORD DR.	LT	140.0		124.0		16					
4-DW	29	ONE HEALTHY PL.	RT	66.0		58.0		8					
5-DW	29	ONE HEALTHY PL.	RT	56.0		48.0		8					
SUB-TOTALS						312.0							
TOTALS (CARRIED TO LOCATION 3 ON GENERAL SUMMARY)				360.0		312.0		48					

CALCULATED LME
CHECKED DNM

CURB RAMP SUB-SUMMARY

LIC-16-0.00

L016_CRS_001.DGN 10-15-12

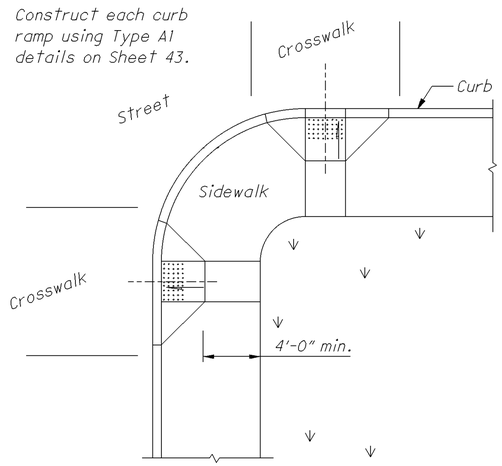

Use curb ramps with flared sides at locations with wide sidewalks.

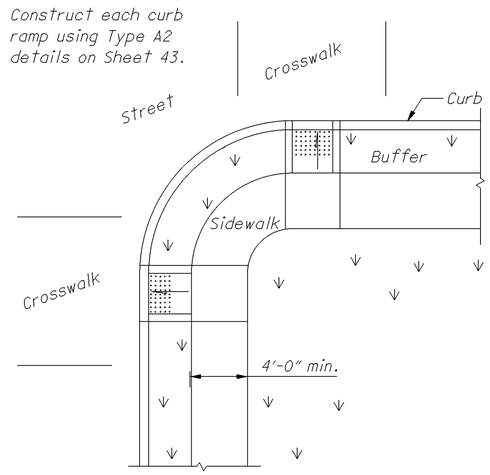

Use curb ramps with returned curbs where buffer is wide enough to accommodate ramp slope.

PERPENDICULAR CURB RAMPS

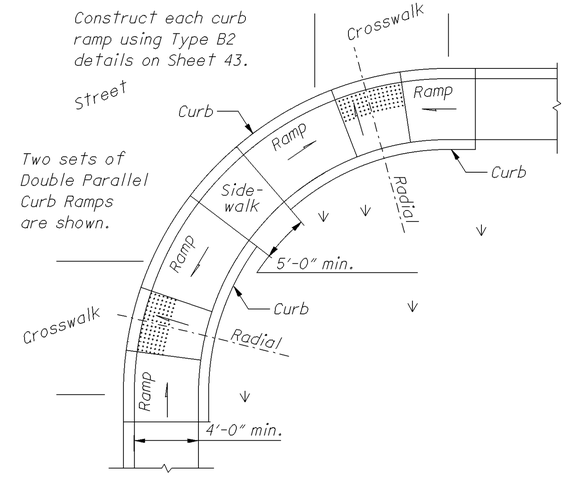

Place on streets having wide turning radius and where sidewalks are narrow.

PARALLEL CURB RAMPS

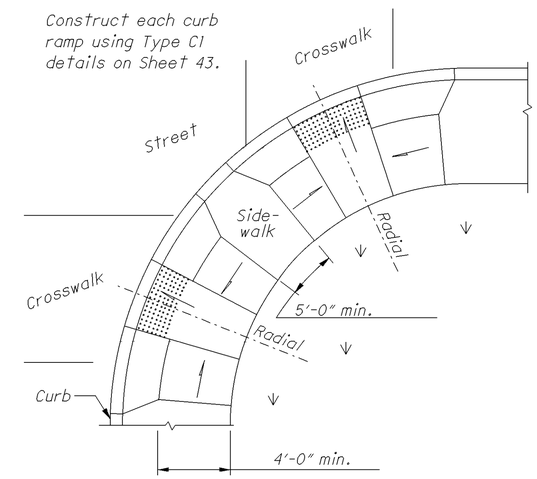

Curb ramp placement where streets have wide turning radius, and sufficient sidewalks width.

COMBINATION CURB RAMPS

NOTES

GENERAL: This drawing shows curb ramp types details and placement examples for curb ramp construction, including the installation of detectable warnings.

Curb ramp types are shown on Sheet 43 and include Perpendicular, Parallel, and Combined types as specified to be constructed in the locations shown in the project plans.

The contractor may adjust the placement of curb ramps if existing field conditions warrant with the approval of the Engineer.

Excavate, form, place, finish, and cure according to 608.03.A, 608.03.B, 608.03.C, and 608.03.E.

DETECTABLE WARNINGS: Install Detectable Warnings on each curb ramp with approved materials, as shown on Sheet 44. Install these proprietary products as per manufacturer's written instructions.

DRAINAGE: Contractor is to ensure the base of each constructed curb ramp allows for proper drainage, without exceeding allowable cross slope or ramp slopes. Vertical change in level exceeding ⅛″ between the 1) pavement and gutter, and 2) gutter and ramp, are not allowed.

JOINTS: Provide expansion joints in the curb ramp as extensions of walk joints and consistent with Item 608.03 requirements for a new concrete walk. Provide a ½″ Item 705.03 expansion joint filler around the edge of ramps built in existing concrete walks. Lines shown on this drawing indicate the ramp edges and slope changes, and do not necessarily indicate joint lines.

METHOD OF MEASUREMENT: The Department will measure Curb Ramps by the number of each completed curb ramp. The Department will measure Detectable Warnings in existing curb ramps and at grade crossings by the number of square feet completed.

Concrete Walk and Curb, Item 608 and 609, will be measured through out the curb ramp area and paid for under their respective Items.

METHOD OF PAYMENT: New Curb Ramps constructed in new or existing Walk are paid for under Item 690 Special Misc.: Curb Ramp, Type __ (A1, A2, B1, B2, B3, C1, C2, or D) each, and includes the cost of any additional materials and installation (including detectable warnings), grading, forming and finishing.

Detectable Warnings constructed in existing curb ramps or for at-grade crossing locations are paid for under Item 690-Special Misc.: Detectable Warning (Sq. Ft.) and is full compensation for excavation, backfill, base course material, reinforcing steel, expansion joint materials, and any incidentals required to complete the installation as specified. The work to cast the tiles in place will also require removal of existing pavement or sidewalk (Item 202) to the nearest joint, or if no joint exists, a minimum of 4 feet.

Removal of existing curb, pavement, walk (or existing curb ramps) are paid under Item 202.

LEGEND

[2] May be reduced to 3′-4″ in existing sidewalks to better fit the walk configuration or where site conditions are restricted by narrow walks, pole foundations, drainage inlets, etc. The width may be tapered.

Acceptable design on corners with wide turning radius where user is able to maneuver within crosswalk limits so as not to encroach into adjacent traveled lanes.

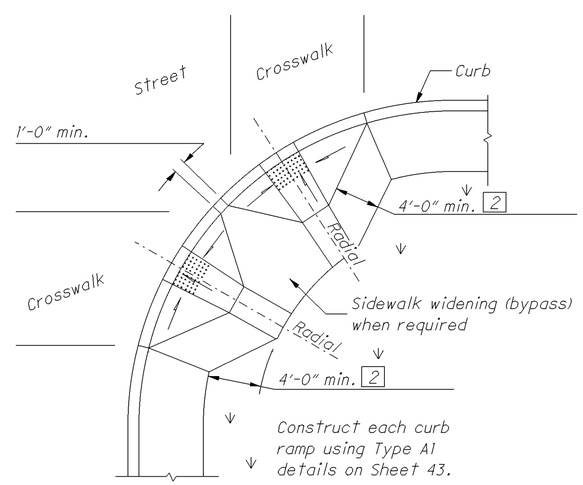

PERPENDICULAR RAMPS

Acceptable design for retrofit only where utilities prevent using a preferred layout.

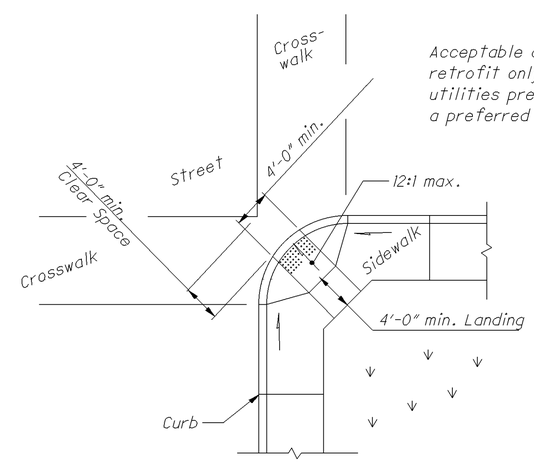

Use this design only for existing walks, and when site constraints prohibit other designs. The diagonal Type D ramp may be constructed as either a Perpendicular, Parallel or Combination curb ramp type. Avoid using where curb radii are less than 20′-0″.

DIAGONAL RAMP (Type D)

ACCEPTABLE CONSTRUCTION PLACEMENT

CALCULATED JLS CHECKED DNM

CURB RAMP AND DETECTABLE WARNING DETAILS

LIC-16-0.00

7643LCRD_001.DGN 10-15-12

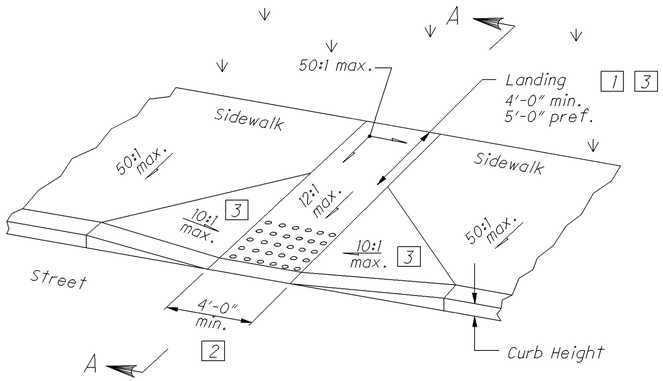

Type A1 (Perpendicular with flared sides)

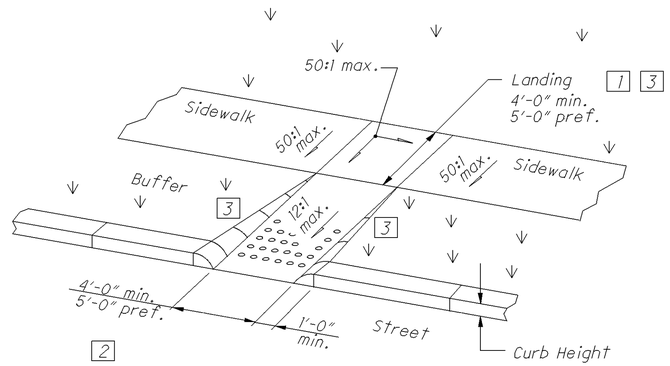

Type A2 (Perpendicular with returned curb)

PERPENDICULAR CURB RAMP DETAILS

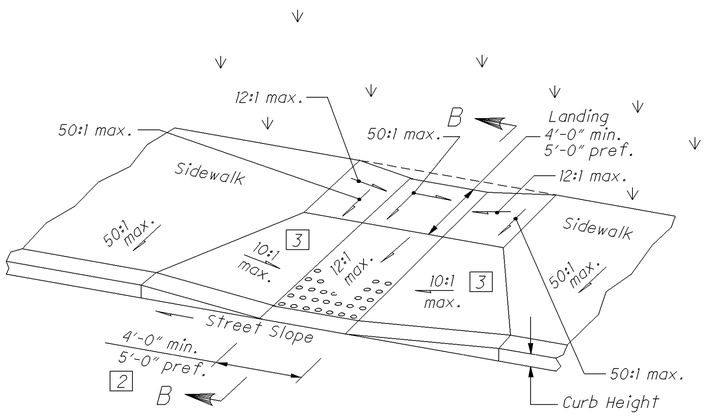

Type C1 (Combined with flared sides)

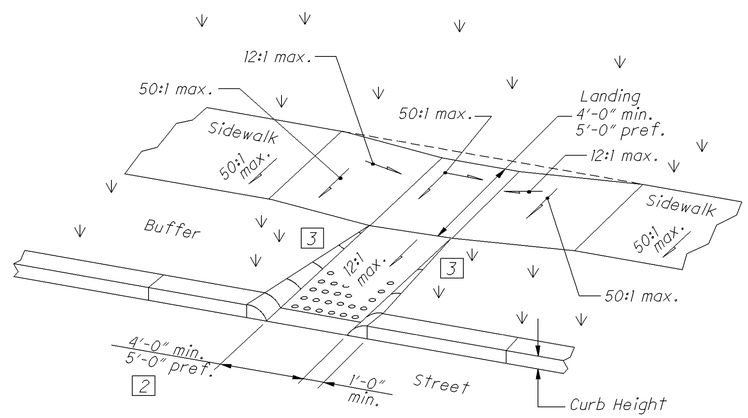

Type C2 (Combined with returned curb)

COMBINED CURB RAMP DETAILS

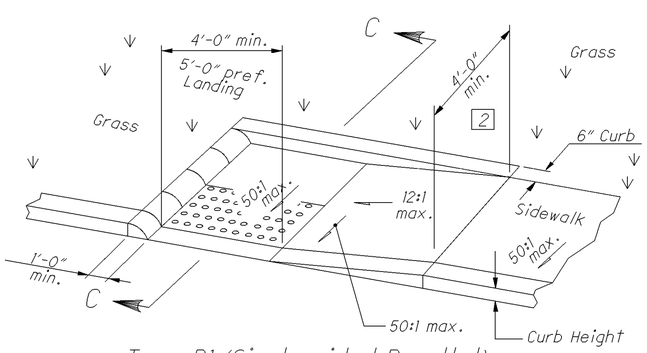

Type B1 (Single sided Parallel)

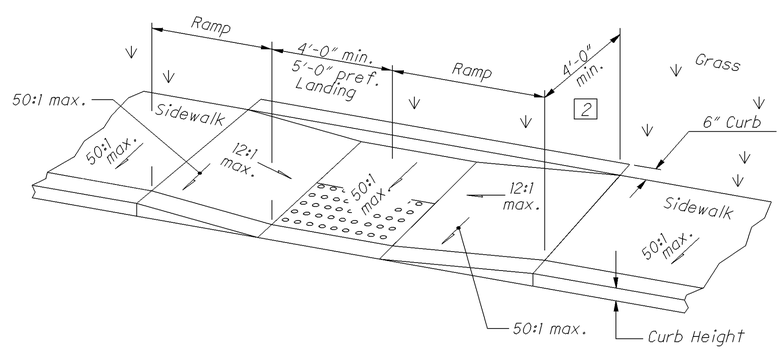

Type B2 (Double sided Parallel)

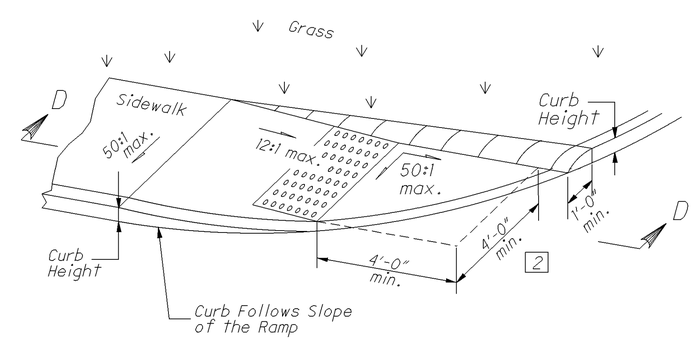

Type B3 (Single sided Parallel)

PARALLEL CURB RAMP DETAILS

NOTES

The running slope of the ramp is preferred to be 12:1 or flatter. In existing sidewalks, where the maximum ramp slope is not feasible due to site constraints (e.g. utility poles or vaults, right-of-way limits) it may be reduced as follows:

A) 10:1 for a max. rise of 6",
B) 8:1 for a max. rise of 3",
C) 6:1 over a max. run of 2'-0" for historic areas where a flatter slope is not feasible.

To prevent chasing the grade indefinately, the transition from exisiting sidewalk to the curb ramp area is not required to exceed 15 feet in length.

While ramps may be skewed to the crosswalk, the entire lower landing area must fall within the cross walk that the ramp serves and cannot be located in the traveled lane of opposing traffic.

The counter slope of the gutter or street at the foot of a curb ramp, landing, or blended transitions shall be 20:1 ot flatter.

The bottom edge of the ramp shall change planes perpendicular to the landing.

The edge of the curb shall be flush with the edge of the adjacent pavement and gutter and surface slopes that meet grade breaks shall also be flush.

Ramp landings shall be 4' min. x 4' min. with a 50:1 or flatter cross slope and running slope, unless otherwise shown.

LEGEND

1 Dimension may be reduced to 3'-0" in existing sidewalks if the landing is unconstrained along the back edge.

2 May be reduced to 3'-4" in existing sidewalks to better fit the walk configuration or where site conditions are restricted by narrow walks, pole foundations, drainage inlets, etc. The width may be tapered.

3 Where landing width (D) has been reduced to 3'-0" the flared sides shall have a maximum slope of 12:1.

Flared sides are not required where the edges of a curb ramp are protected by landscaping or other barriers to travel by wheelchair users or pedestrians across the edge of the curb ramp. However, if the flared sides are used in these areas, they may be of any slope.

See Sheet 44 for Sections.

CALCULATED JLS
CHECKED DNM

DETECTABLE WARNING DETAILS
CURB RAMP AND DETAILS

LIC-16-0.00

76431_CRD_002.DGN 10-15-12

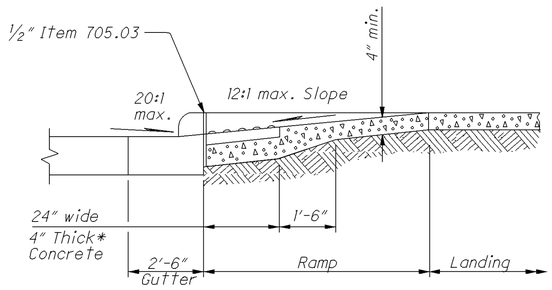

New gutter shown.

SECTION A-A
NORMAL DETAIL
See Sheet 43.

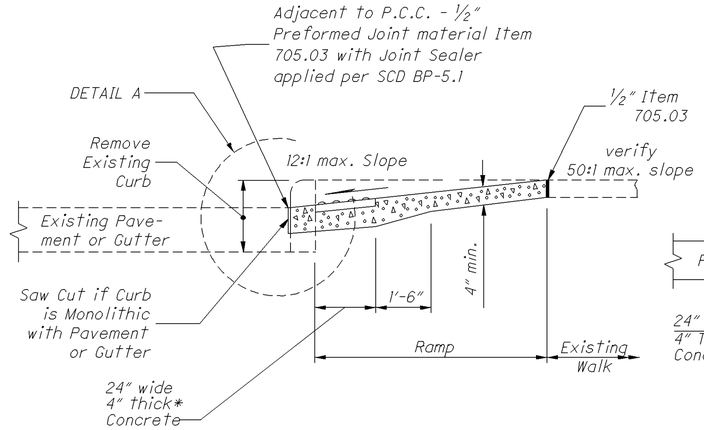

SECTION A-A
EXISTING WALK DETAIL
See Sheet 43.

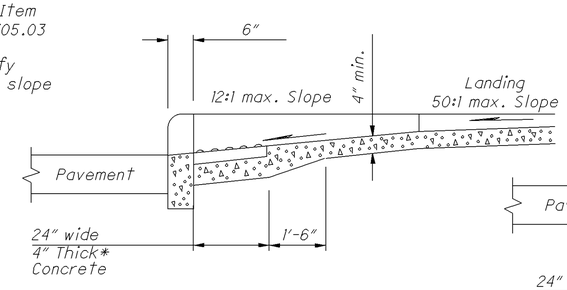

SECTION B-B
See Sheet 43.

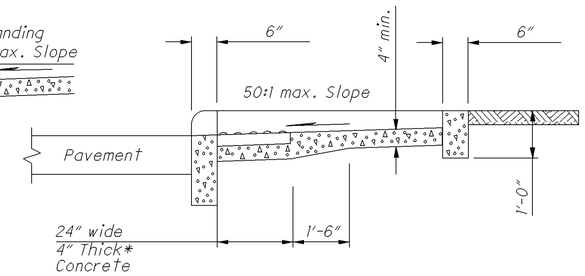

SECTION C-C
See Sheet 43.

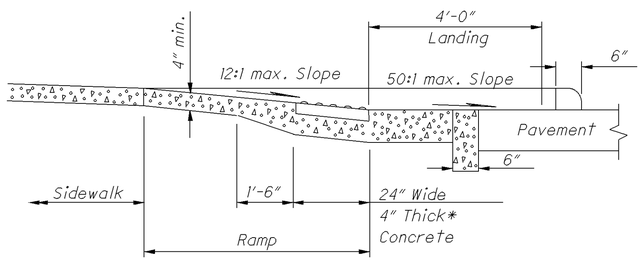

SECTION D-D
See Sheet 43.

*Where possible, pour ramp area integral with the curb, otherwise use 6" thick walk.

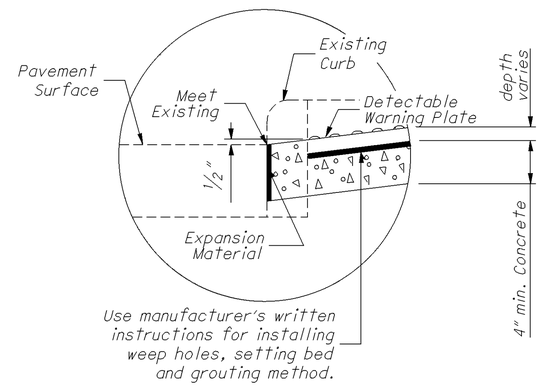

DETAIL A

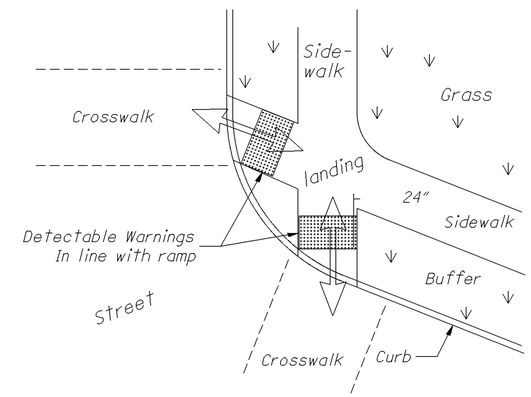

DETECTABLE WARNING ALIGNMENT

DETECTABLE WARNINGS NOTES

GENERAL: Detectable Warnings are a distinctive surface pattern of truncated domes which are detectable by cane or underfoot to alert people with vision impairments of their approach to streets and hazardous drop-offs.

PLACEMENT: Detectable warnings are to be installed at any location where pedestrians might cross paths with vehicular traffic lanes, such as the base of curb ramps or at blended curbs. A 24" strip of domes is to be installed for the full width of the ramp or walk. Typical street corner placement locations are shown on Sheet 42.

The depth of concrete underneath detectable warning products shall be a minimum of 4". See DETAIL A.

ALIGNMENT: Truncated domes should be aligned with the primary direction of the ramp as shown on the DETECTABLE WARNING ALIGNMENT Detail. Normally the detectable warnings should be flush with the back of the curb, but in skewed conditions at least one corner of the 24" strip should be adjacent to the back of curb. For non-standard layouts, detectable warning materials may have to be mitered and placed segmentally.

PRODUCTS & COLORS: Color of the detectable warnings should contrast with surrounding concrete walk and ramp. Black is not an acceptable color. Approved products and guidance on color may be found on the Office of Roadway Engineering Service's Detectable Warnings Approved List. Install products as per manufacturer's printed instructions.

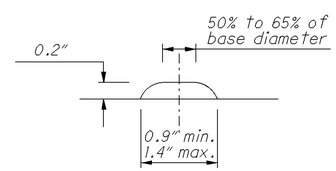

HEIGHT AND DIAMETER

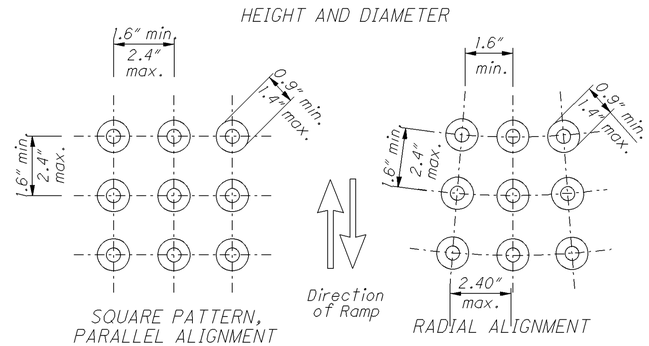

SQUARE PATTERN, PARALLEL ALIGNMENT

RADIAL ALIGNMENT

TRUNCATED DOMES DETAILS

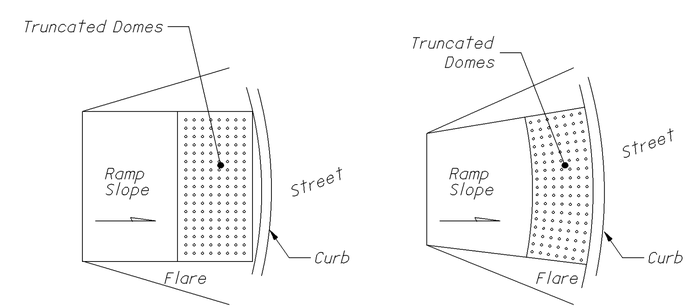

DOME ALIGNMENT ON RADIUSED CURB

CALCULATED JLS
CHECKED DNM

CURB RAMP AND DETECTABLE WARNING DETAILS

LIC-16-0.00

76431_CRD_003.DGN 10-15-12

LOCATION 1 SHEET TOTALS												ITEM	ITEM EXT.	LOCATION 1 TOTALS	UNIT	DESCRIPTION
Sht. 2	Sht. 3	Sht. 4	Sht. 5	Sht. 6	Sht. 11	Sht. 13	Sht. 14	Sht. 16	Sht. 17	Sht. 18	Sht. 40					
	1,310	750					9,570					202	23500	11,630	SQ YD	WEARING COURSE REMOVED
13												209	60500	13	MILE	LINEAR GRADING
13												209	72051	13	MILE	PREPARING SUBGRADE FOR SHOULDER PAVING, AS PER PLAN
50												253	02000	50	CU YD	PAVEMENT REPAIR
					126,841	35,798						254	01000	162,639	SQ YD	PAVEMENT PLANING, ASPHALT CONCRETE
					5,943	1,929	361					407	10000	8,233	GALLON	TACK COAT
					3,962	1,286	40					407	14000	5,288	GALLON	TACK COAT FOR INTERMEDIATE COURSE
					3,573	756	360					407	20000	4,689	GALLON	TACK COAT, TRACKLESS TACK, INTERMEDIATE COURSE
					2,382	504	71					407	20100	2,957	GALLON	TACK COAT, TRACKLESS TACK, SURFACE COURSE
6,230												408	10001	6,230	GALLON	PRIME COAT, AS PER PLAN
		37			6,168	1,741	107					448	46050	8,053	CU YD	ASPHALT CONCRETE INTERMEDIATE COURSE, TYPE 2, PG64-22
	46	122			4,407	1,243						448	46904	5,818	CU YD	ASPHALT CONCRETE SURFACE COURSE, TYPE 1, PG70-22M
							334					448	47020	334	CU YD	ASPHALT CONCRETE SURFACE COURSE, TYPE 1, PG64-22
								80				516	31011	80	FT	2" DEEP JOINT SEALER, AS PER PLAN
		2										604	09000	2	EACH	CATCH BASIN ADJUSTED TO GRADE
		3										604	34500	3	EACH	MANHOLE ADJUSTED TO GRADE
				300								614	11110	300	HOUR	LAW ENFORCEMENT OFFICER WITH PATROL CAR FOR ASSISTANCE
			49									614	12460	49	EACH	WORK ZONE MARKING SIGN
			10									614	13000	10	CU YD	ASPHALT CONCRETE FOR MAINTAINING TRAFFIC
				90								614	18401	90	DAY	PORTABLE CHANGEABLE MESSAGE SIGN, AS PER PLAN
					13.91							614	21400	13.91	MILE	WORK ZONE CENTER LINE, CLASS II
						849						617	10101	849	CU YD	COMPACTED AGGREGATE, AS PER PLAN
											594	621	00100	594	EACH	RPM
											594	621	54000	594	EACH	RAISED PAVEMENT MARKER REMOVED
		68										632	26501	68	EACH	DETECTOR LOOP, AS PER PLAN
		10										638	10800	10	EACH	VALVE BOX ADJUSTED TO GRADE
										7,240		644	00400	7,240	FT	CHANNELIZING LINE, 8"
										1,357		644	00500	1,357	FT	STOP LINE
										750		644	00600	750	FT	CROSSWALK LINE
										3,861		644	00700	3,861	FT	TRANSVERSE/DIAGONAL LINE
										285		644	00900	285	SQ FT	ISLAND MARKING
										94		644	01300	94	EACH	LANE ARROW
										30		644	01410	30	EACH	WORD ON PAVEMENT, 96"
		2,572										690	12050	2,572	SQ YD	SPECIAL - REINFORCED MESH FOR TRANSVERSE AND/OR LONGITUDINAL JOINTS AND CRACKS
									13.48			817	00100	13.48	MILE	EDGE LINE, 4"
									1.00			817	00200	1.00	MILE	LANE LINE, 4"
									8.57			817	00300	8.57	MILE	CENTER LINE

CALCULATED LME
CHECKED DNM

LOCATION 1 SUB-SUMMARY

LIC-16-0.00

L016_LSS_001.DGN 10-5-12

LOCATION 2 SHEET TOTALS											ITEM	ITEM EXT.	LOCATION 2 TOTALS	UNIT	DESCRIPTION
Sht. 2	Sht. 3	Sht. 4	Sht. 5	Sht. 6	Sht. 12	Sht. 13	Sht. 15	Sht. 17	Sht. 19	Sht. 40					
	900	610					7,177				202	23500	8,687	SQ YD	WEARING COURSE REMOVED
13											209	60500	13	MILE	LINEAR GRADING
13											209	72051	13	MILE	PREPARING SUBGRADE FOR SHOULDER PAVING, AS PER PLAN
50											253	02000	50	CU YD	PAVEMENT REPAIR
					108,956	32,291					254	01000	141,247	SQ YD	PAVEMENT PLANING, ASPHALT CONCRETE
					8,173	2,422	540				407	10000	11,135	GALLON	TACK COAT
					5,449	1,615					407	14000	7,064	GALLON	TACK COAT FOR INTERMEDIATE COURSE
6,458											408	10001	6,458	GALLON	PRIME COAT, AS PER PLAN
		30			5,299	1,570					448	46050	6,899	CU YD	ASPHALT CONCRETE INTERMEDIATE COURSE, TYPE 2, PG64-22
	32	118			3,786	1,122					448	46904	5,058	CU YD	ASPHALT CONCRETE SURFACE COURSE, TYPE 1, PG70-22M
							251				448	47020	251	CU YD	ASPHALT CONCRETE SURFACE COURSE, TYPE 1, PG64-22
				200							614	11110	200	HOUR	LAW ENFORCEMENT OFFICER WITH PATROL CAR FOR ASSISTANCE
			40								614	12460	40	EACH	WORK ZONE MARKING SIGN
			2								614	13000	2	CU YD	ASPHALT CONCRETE FOR MAINTAINING TRAFFIC
				90							614	18401	90	DAY	PORTABLE CHANGEABLE MESSAGE SIGN, AS PER PLAN
					13.76						614	21400	13.76	MILE	WORK ZONE CENTER LINE, CLASS II
						897					617	10101	897	CU YD	COMPACTED AGGREGATE, AS PER PLAN
										720	621	00100	720	EACH	RPM
										720	621	54000	720	EACH	RAISED PAVEMENT MARKER REMOVED
		11									632	26501	11	EACH	DETECTOR LOOP, AS PER PLAN
									2,607		644	00400	2,607	FT	CHANNELIZING LINE, 8"
									615		644	00500	615	FT	STOP LINE
									3,057		644	00700	3,057	FT	TRANSVERSE/DIAGONAL LINE
									228		644	00900	228	SQ FT	ISLAND MARKING
									37		644	01300	37	EACH	LANE ARROW
									8		644	01410	8	EACH	WORD ON PAVEMENT, 96"
		8,167									690	12050	8,167	SQ YD	SPECIAL - REINFORCED MESH FOR TRANSVERSE AND/OR LONGITUDINAL JOINTS AND CRACKS
								13.76			817	00100	13.76	MILE	EDGE LINE, 4"
								8.38			817	00300	8.38	MILE	CENTER LINE

CALCULATED LME
CHECKED DNM

LOCATION 2 SUB-SUMMARY

LIC-16-0.00

LOCATION FUNDING SPLITS			ITEM	ITEM EXT.	GRAND TOTALS	UNIT	DESCRIPTION	SEE SHEET
LOCATION 1 01/NHS/PV/PATA	LOCATION 2 02/NHS/PV	LOCATION 3 03/NHS/OT/PATA						
11,630	8,687		202	23500	20,317	SQ YD	WEARING COURSE REMOVED	
		360	202	30000	360	SQ FT	WALK REMOVED	
13	13		209	60500	26	MILE	LINEAR GRADING	
13	13		209	72051	26	MILE	PREPARING SUBGRADE FOR SHOULDER PAVING, AS PER PLAN	2
50	50		253	02000	100	CU YD	PAVEMENT REPAIR	
162,639	141,247		254	01000	303,886	SQ YD	PAVEMENT PLANING, ASPHALT CONCRETE	
8,233	11,135		407	10000	19,368	GALLON	TACK COAT	
5,288	7,064		407	14000	12,352	GALLON	TACK COAT FOR INTERMEDIATE COURSE	
4,689			407	20000	4,689	GALLON	TACK COAT, TRACKLESS TACK, INTERMEDIATE COURSE	3
2,957			407	20100	2,957	GALLON	TACK COAT, TRACKLESS TACK, SURFACE COURSE	3
6,230	6,458		408	10001	12,688	GALLON	PRIME COAT, AS PER PLAN	2
8,053	6,899		448	46050	14,952	CU YD	ASPHALT CONCRETE INTERMEDIATE COURSE, TYPE 2, PG64-22	
5,818	5,058		448	46904	10,876	CU YD	ASPHALT CONCRETE SURFACE COURSE, TYPE 1, PG70-22M	
334	251		448	47020	585	CU YD	ASPHALT CONCRETE SURFACE COURSE, TYPE 1, PG64-22	
80			516	31011	80	FT	2" DEEP JOINT SEALER, AS PER PLAN	2
2			604	09000	2	EACH	CATCH BASIN ADJUSTED TO GRADE	
3			604	34500	3	EACH	MANHOLE ADJUSTED TO GRADE	
		312	608	10000	312	SQ FT	4" CONCRETE WALK	
300	200		614	11110	500	HOUR	LAW ENFORCEMENT OFFICER WITH PATROL CAR FOR ASSISTANCE	
49	40		614	12460	89	EACH	WORK ZONE MARKING SIGN	
10	2		614	13000	12	CU YD	ASPHALT CONCRETE FOR MAINTAINING TRAFFIC	
90	90		614	18401	180	DAY	PORTABLE CHANGEABLE MESSAGE SIGN, AS PER PLAN	6
13.91	13.76		614	21400	27.67	MILE	WORK ZONE CENTER LINE, CLASS II	
849	897		617	10101	1,746	CU YD	COMPACTED AGGREGATE, AS PER PLAN	3
594	720		621	00100	1,314	EACH	RPM	
594	720		621	54000	1,314	EACH	RAISED PAVEMENT MARKER REMOVED	
68	11		632	26501	79	EACH	DETECTOR LOOP, AS PER PLAN	4
10			638	10800	10	EACH	VALVE BOX ADJUSTED TO GRADE	
7,240	2,607		644	00400	9,847	FT	CHANNELIZING LINE, 8"	
1,357	615		644	00500	1,972	FT	STOP LINE	
750			644	00600	750	FT	CROSSWALK LINE	
3,861	3,057		644	00700	6,918	FT	TRANSVERSE/DIAGONAL LINE	
285	228		644	00900	513	SQ FT	ISLAND MARKING	-
94	37		644	01300	131	EACH	LANE ARROW	
30	8		644	01410	38	EACH	WORD ON PAVEMENT, 96"	
2,572	8,167		690	12050	10,739	SQ YD	SPECIAL - REINFORCED MESH FOR TRANSVERSE AND/OR LONGITUDINAL JOINTS AND CRACKS	4
		48	690	98200	48	SQ FT	SPECIAL - MISC.: DETECTABLE WARNING	
		7	815	30001	7	EACH	SPREAD SPECTRUM RADIO, AS PER PLAN	8
		LUMP	815	30100	LUMP		TRAINING FOR SPREAD SPECTRUM RADIO	
13.48	13.76		817	00100	27.24	MILE	EDGE LINE, 4"	
1.00			817	00200	1.00	MILE	LANE LINE, 4"	
8.57	8.38		817	00300	16.95	MILE	CENTER LINE	
52%	47%	1%	103	05000	LUMP		PREMIUM FOR CONTRACT PERFORMANCE BOND AND FOR PAYMENT BOND	
52%	47%	1%	614	11000	LUMP		MAINTAINING TRAFFIC	
52%	47%	1%	619	16000	3	MONTH	FIELD OFFICE, TYPE A	
52%	47%	1%	624	10000	LUMP		MOBILIZATION	
52%	47%	1%	823	10000	LUMP		CONSTRUCTION LAYOUT STAKES	