STATE OF OHIO
DEPARTMENT OF TRANSPORTATION

LOG-273-0.02

RICHLAND TOWNSHIP
LOGAN COUNTY

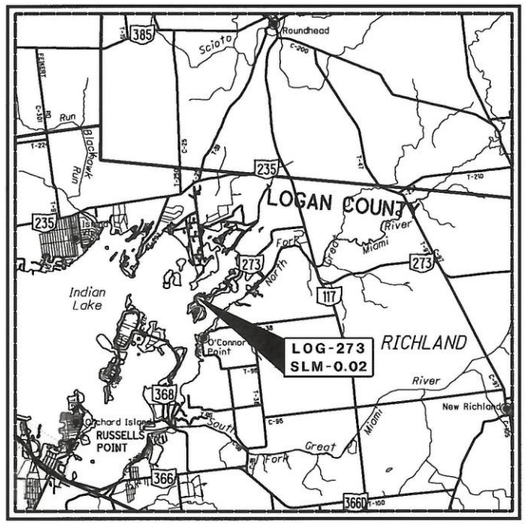

LOCATION MAP

LATITUDE: 40 °30'18" LONGITUDE: 83 °51'16"

SCALE IN MILES

0 1 2 3 4

N

PORTION TO BE IMPROVED
INTERSTATE HIGHWAY
FEDERAL ROUTES
STATE ROUTES
COUNTY & TOWNSHIP ROADS
OTHER ROADS

DESIGN DESIGNATION

CURRENT ADT (2019)	350
DESIGN YEAR ADT (2039)	360
DESIGN HOURLY VOLUME (2019)	40
DIRECTIONAL DISTRIBUTION	0.56
TRUCKS (24 HOUR B&C)	12%
DESIGN SPEED	45 MPH
LEGAL SPEED	40 MPH
DESIGN FUNCTIONAL CLASSIFICATION: MINOR COLLECTOR	
NHS PROJECT	NO

DESIGN EXCEPTIONS

NONE

UNDERGROUND UTILITIES

CONTACT BOTH SERVICES TWO WORKING DAYS **BEFORE YOU DIG.**

OHIO Utilities Protection SERVICE — Call Before You Dig **1-800-362-2764**

(Non-members must be called directly)

OIL & GAS PRODUCERS UNDERGROUND PROTECTION SERVICE **1-800-925-0988**

PLAN PREPARED BY:
ODOT DISTRICT 7 - ENGINEERING
1001 ST MARYS AVENUE
SIDNEY, OHIO

ENGINEERS SEAL:

STATE OF OHIO — CHRISTOPHER WILLIAM WEISS — E-77417 — REGISTERED PROFESSIONAL ENGINEER

SIGNED: Chris Weiss
DATE: 1/29/2019

INDEX OF SHEETS:

TITLE SHEET	1
GENERAL NOTES	2
MAINTENANCE OF TRAFFIC	3-5
GENERAL SUMMARY	6
STRUCTURES OVER 20 FOOT SPAN LOG-273-0002	7-16
RIGHT OF WAY	17-23

STANDARD CONSTRUCTION DRAWINGS								SUPPLEMENTAL SPECIFICATIONS		SPECIAL PROVISIONS	
BP-3.1	7/18/14	MT-101.90	7/21/17					800-2016	1/18/19	WPC	1/18/18
		MT-105.10	7/19/13					832	10/19/18	OEPA DEMO	
MGS-1.1	1/19/18										1/15/16
MGS-3.1	1/19/18	TC-41.20	10/18/13								
MGS-4.3	1/18/13	TC-42.20	10/18/13								
		TC-52.10	10/18/13								
DS-1-92	7/18/03	TC-52.20	7/20/18								
PCB-91	1/18/13										
		TC-61.30	1/20/17								
MT-96.11	1/20/17										
MT-96.20	7/15/16										
MT-96.26	7/19/13										
MT-97.10	7/18/14										
MT-97.12	1/20/17										
MT-101.70	7/20/18										
MT-101.75	7/15/16										

PROJECT DESCRIPTION

REHABILITATION OF THE EXISTING STRUCTURE OVER THE INDIAN LAKE BOAT PASSAGE BY REPLACING THE BRIDGE DECK, BRIDGE RAILING AND APPROACH PAVEMENT.

EARTH DISTURBED AREAS

PROJECT EARTH DISTURBED AREA:	N/A*
ESTIMATED CONTRACTOR EARTH DISTURBED AREA:	N/A*
NOTICE OF INTENT EARTH DISTURBED AREA:	N/A*

* MAINTENANCE PROJECT

2016 SPECIFICATIONS

THE STANDARD SPECIFICATIONS OF THE STATE OF OHIO, DEPARTMENT OF TRANSPORTATION, INCLUDING SUPPLEMENTAL SPECIFICATIONS LISTED IN THE PLANS AND CHANGES LISTED IN THE PROPOSAL SHALL GOVERN THIS IMPROVEMENT.

I HEREBY APPROVE THESE PLANS AND DECLARE THAT THE MAKING OF THIS IMPROVEMENT WILL NOT REQUIRE THE CLOSING TO TRAFFIC OF THE HIGHWAY AND THAT PROVISIONS FOR THE MAINTENANCE AND SAFETY OF TRAFFIC WILL BE AS SET FORTH ON THE PLANS AND ESTIMATES.

APPROVED Ryan Schwalley P.E., P.S.
DATE 1-30-19 DISTRICT DEPUTY DIRECTOR

APPROVED _____
DATE _____ DIRECTOR, DEPARTMENT OF TRANSPORTATION

FEDERAL PROJECT NO. **NON-FEDERAL**

PID NO. **99857**

CONSTRUCTION PROJECT NO. **NONE**

RAILROAD INVOLVEMENT **NONE**

LOG-273-0.02

I:\ProjectData\LOG\99857_SR273-0002\Design\Roadway\Sheets\99857_GT001.dgn Sheet 1/29/2019 9:43:49 AM cweiss

UTILITIES

LISTED BELOW ARE ALL UTILITIES LOCATED WITHIN THE PROJECT CONSTRUCTION LIMITS TOGETHER WITH THEIR RESPECTIVE OWNERS:

ELECTRIC
DAYTON POWER AND LIGHT COMPANY
1900 DRYDEN RD.
DAYTON, OH 45439
937-331-4521
WILLIAM GOURLEY
WILLIAM.GOURLEY@AES.COM

GAS
VECTREN ENERGY DELIVERY
6500 CLYO RD.
CENTERVILLE, OH 45459
937-312-2533
DON SPECHT
DSPECHT@VECTREN.COM

TELEPHONE
CENTURY LINK
127 N. MAIN ST.
BELLEFONTAINE, OH 43311
937-599-9285
RICK KROGMAN
RICK.A.KROGRAM@CENTURYLINK.COM

WATER
LOGAN COUNTY WATER POLLUTION CONTROL
P.O. BOX 1550
8100 ST. RT. 708 S.
RUSSELLS POINT, OH 43348
937-843-3328
BRIAN SCHULTZ
Bschultz@lcowpc.com

EXISTING PLANS

EXISTING PLANS ENTITLED LOG-273-0.00 (1970) MAY BE INSPECTED IN THE ODOT DISTRICT 7 OFFICE IN SIDNEY, OHIO.

SEEDING AND MULCHING

THE FOLLOWING QUANTITIES ARE PROVIDED TO PROMOTE GROWTH AND CARE OF PERMANENT SEEDED AREAS:

659, TOPSOIL 45 CU. YD.

659, SEEDING AND MULCHING 408 SQ. YD.

659, COMMERCIAL FERTILIZER 0.05 TON

659, WATER 2.0 M. GAL.

SEEDING AND MULCHING SHALL BE APPLIED TO ALL AREAS OF EXPOSED SOIL BETWEEN THE RIGHT-OF-WAY LINES, AND WITHIN THE CONSTRUCTION LIMITS FOR AREAS OUTSIDE THE RIGHT-OF-WAY LINES COVERED BY WORK AGREEMENT OR SLOPE EASEMENT. QUANTITY CALCULATIONS FOR SEEDING AND MULCHING ARE BASED ON THESE LIMITS.

CONSTRUCTION NOISE

ACTIVITIES AND LAND USE ADJACENT TO THIS PROJECT MAY BE AFFECTED BY CONSTRUCTION NOISE. IN ORDER TO MINIMIZE ANY ADVERSE CONSTRUCTION NOISE IMPACTS, DO NOT OPERATE POWER-OPERATED CONSTRUCTION-TYPE DEVICES BETWEEN THE HOURS OF 9PM AND 7AM. IN ADDITION, DO NOT OPERATE AT ANY TIME ANY DEVICE IN SUCH A MANNER THAT THE NOISE CREATED SUBSTANTIALLY EXCEEDS THE NOISE CUSTOMARILY AND NECESSARILY ATTENDANT TO THE REASONABLE AND EFFICIENT PERFORMANCE OF SUCH EQUIPMENT.

WORK LIMITS

THE WORK LIMITS SHOWN ON THESE PLANS ARE FOR PHYSICAL CONSTRUCTION ONLY. PROVIDE THE INSTALLATION AND OPERATION OF ALL WORK ZONE TRAFFIC CONTROL AND WORK ZONE TRAFFIC CONTROL DEVICES REQUIRED BY THESE PLANS WHETHER INSIDE OR OUTSIDE THESE WORK LIMITS.

SURVEYING PARAMETERS

USE THE FOLLOWING VERTICAL POSITIONING AND HORIZONTAL POSITIONING PARAMETERS FOR ALL SURVEYING:

VERTICAL POSITIONING

ORTHOMETRIC HEIGHT DATUM: NAVD 88
GEOID: 12B

HORIZONTAL POSITIONING

REFERENCE FRAME: NAVD83 (2011)
ELLIPSOID: GRS 80
MAP PROJECTION: LAMBER CONIC CONFORMAL
COORDINATE SYSTEM: OHIO NORTH 3401
COMBINED SCALE FACTOR: COORDINATES PROVIDED ARE GRID

UNITS ARE IN U.S. SURVEY FEET. USE THE FOLLOWING CONVERSION FACTOR: 1 METER = 3.280833333 U.S. SURVEY FEET.

INDIAN LAKE STATE PARK

THE INDIAN LAKE STATE PARK MANAGEMENT, (937-843-2717), SHALL BE NOTIFIED NOT LESS THAN TWO WEEKS PRIOR TO THE START OF THE CONSTRUCTION ACTIVITIES.

CLOSURE NOTICES FOR THE CHANNEL MUST BE POSTED AT THE BRIDGE LOCATION. BOATERS WILL BE DETOURED AROUND THE SOUTH SIDE OF LONG ISLAND. THE INDIAN LAKE STATE PARK MANAGEMENT MUST BE CONTACTED IN ADVANCE TO ARRANGE FOR NOTICE BUOYS TO BE INSTALLED AT THE CHANNEL ENTRANCES.

ODNR ADVANCE NOTIFICATION

AT LEAST TWO WEEKS PRIOR TO THE START OF CONSTRUCTION, THE CONTRACTOR SHALL NOTIFY THE DIVISION OF PARKS AND WATERCRAFT (TOM ARBOUR; PHONE: 614-265-6575; EMAIL: THOMAS.ARBOUR@DNR.STATE.OH.US), TO ALLOW ODNR TO POST NOTIFICATIONS ON ITS ONLINE BOATING WEBPAGE AND ASSOCIATED MAPS.

PART-WIDTH CONSTRUCTION

BECAUSE OF THE NECESSITY TO BUILD THIS PROJECT UNDER TRAFFIC AND TO CONSTRUCT THE FULL PAVEMENT WIDTH IN STAGES, EXERCISE CARE TO PREVENT THE CONSTRUCTION OF A BUTT JOINT IN THE BASE COURSES. LAP LONGITUDINAL JOINTS AS SHOWN ON STANDARD CONSTRUCTION DRAWING BP-3.1.

CONNECTION BETWEEN EXISTING AND PROPOSED GUARDRAIL

WHEN IT IS NECESSARY TO SPLICE PROPOSED GUARDRAIL TO EXISTING GUARDRAIL, ONLY THE EXISTING GUARDRAIL SHALL BE CUT, DRILLED, OR PUNCHED. THE CONNECTION SHALL BE MADE USING A W-BEAM, BEAM SPLICE AS SHOWN IN AASHTO M 180-12, EXCEPT THE BEAM WASHERS ARE NOT TO BE USED. PAYMENT SHALL BE INCLUDED IN THE CONTRACT PRICE FOR THE RESPECTIVE GUARDRAIL ITEMS.

MIGRATORY BIRD PROTECTION

PRIOR TO THE START OF CONSTRUCTION THE CONTRACTOR MUST INSPECT THE BRIDGE FOR EVIDENCE OF ACTIVE BIRD NESTS. WRITTEN CONFIRMATION OF THE INSPECTION, INCLUDING A STATEMENT WHETHER ACTIVE NESTS WERE FOUND, MUST BE PROVIDED TO THE ODOT CONSTRUCTION ENGINEER. IF AN ACTIVE NESTS CONTAINING AN EGG OR CHICK IS PRESENT, IMPACTS TO THE NEST MUST BE AVOIDED UNTIL ALL DEVELOPING BIRDS ARE ABLE TO INDEPENDENTLY FLY FROM THE NEST. NESTS THAT DO NOT CONTAIN AN EGG OR CHICK ARE CONSIDERED INACTIVE AND MAY BE REMOVED TO DISCOURAGE BIRDS FROM NESTING AND CONSTRUCTION ACTIVITIES MAY PROCEED. NESTING BIRDS MAY BE AVOIDED BY UNDERTAKING THE WORK FROM OCTOBER 1 TO MARCH 1. IF AN ACTIVE NEST CANNOT BE AVOIDED, THE CONTRACTOR MUST OBTAIN A DEPREDATION PERMIT FROM THE USFWS PRIOR TO DESTROYING ANY ACTIVE NEST. INFORMATION ON OBTAINING A DEPREDATION PERMIT MAY BE OBTAINED BY CONTACTING THE REGION 3 MIGRATORY BIRD REGIONAL PERMIT OFFICE AT 5600 AMERICAN BLVD. WEST, SUITE 990, BLOOMINGTON, MN 55437-1458; PHONE: 612-713-5436. IF OPERATING UNDER A PERMIT, DOCUMENTATION MUST BE PROVIDED TO THE ODOT CONSTRUCTION ENGINEER.

INDIANA BAT AND NORTHERN LONG-EARED BAT PROTECTION

PRIOR TO THE START OF CONSTRUCTION, THE CONTRACTOR MUST INSPECT THE BRIDGE FOR EVIDENCE OF BATS. WRITTEN CONFIRMATION OF THE INSPECTION, INCLUDING A STATEMENT WHETHER EVIDENCE OF BATS WAS FOUND, MUST BE PROVIDED TO THE ODOT CONSTRUCTION ENGINEER. IF BATS ARE PRESENT, CONSTRUCTION MAY NOT OCCUR FROM APRIL 1 TO SEPTEMBER 30; ALL ACCESS MUST OCCUR FROM OCTOBER 1 TO MARCH 31.

INCIDENTAL FILL

ONLY INCIDENTAL FILL BELOW ORDINARY HIGH WATER MARK IS PERMITTED: THE CONTRACTOR SHALL NOT PLACE TEMPORARY FILL BELOW THE ORDINARY HIGH WATER MARK, INCLUDING, BUT NOT LIMITED TO, SCAFFOLDING OR BRACING. THE CONTRACTOR SHALL NOT PLACE EQUIPMENT BELOW THE ORDINARY HIGH WATER MARK. IN-WATER ACCESS BY BOAT IS PERMITTED. IF DEBRIS ENTERS THE WATERWAY DURING CONSTRUCTION, THE CONTRACTOR SHALL REMOVE THE DEBRIS IMMEDIATELY BY UTILIZING EQUIPMENT STAGED ABOVE THE ORDINARY HIGH WATER MARK. ONLY INCIDENTAL FILL DUE TO ROCK PLACEMENT IS PERMITTED. ROCK SLOPES MAY NOT BE PLACED BETWEEN APRIL 15 AND JUNE 30.

POST-CONSTRUCTION BRIDGE INSPECTION

AT LEAST TWO WEEKS PRIOR TO THE END OF CONSTRUCTION, THE CONTRACTOR SHALL NOTIFY THE ODOT DISTRICT 7 BRIDGE INSPECTION ENGINEER (937-497-6884) TO ALLOW FOR THE NATIONAL BRIDGE INSPECTION STANDARDS (NBIS) REQUIRED POST-CONSTRUCTION INITIAL INSPECTION OF THE BRIDGE.

MIGRATORY BIRD NEST PREVENTION SYSTEM

THE UNDER SIDE OF THE BRIDGE HAS BEEN SEALED OFF WITH PLYWOOD/SPRAY FOAM AND HORIZONTAL SURFACES ON THE EXTRA BEAMS WERE COVER TO DISCOURAGE NESTING. UPON AWARD OF THE CONTRACT, THE CONTRACTOR WILL TAKE OWNERSHIP OF THE MIGRATORY BIRD NEST PREVENTION SYSTEM AND SHALL MAINTAIN THE SYSTEM UNTIL CONSTRUCTION BEGINS. PAYMENT FOR REMOVAL OF THE SYSTEM DURING CONSTRUCTION WILL BE INCLUDED IN ITEM 202, PORTIONS OF STRUCTURE REMOVED, OVER 20 FOOT SPAN, AS PER PLAN

ITEM 630 SIGN, FLAT SHEET, AS PER PLAN

THIS ITEM SHALL BE USED TO INSTALL A NEW STRUCTURE IDENTIFICATION SIGN ON THE SIDE OF THE GUARDRAIL.

SEE SHEET 7 /23 FOR LOCATION OF SIGN.

THE SIGN SIZE SHALL BE 24" x 4". THE SIGN SHALL BE ALUMINUM WITH NON-REFLECTIVE WHITE SHEETING BACKGROUND AS PER CMS 730.20. LETTERS SHALL BE BLACK 2" HEIGHT, SERIES C STROKE WIDTH, AND SILK SCREENED AS PER CMS 730.22. SIGNS SHALL BE BOLTED TO THE GUARDRAIL BY USING TWO 5/16" DIAMETER BOLTS X 6" LONG AND TWO 5/16" NUTS.

A QUANTITY OF 0.67 SQ FT IS CARRIED TO THE GENERAL SUMMARY.

PAVEMENT MARKINGS

PAVEMENT MARKINGS SHALL BE REPLACED FROM APPROXIMATELY MAPLE LANE STATION 0+40.00 TO S.R. 273 STATION 2+50.00. THE FOLLOWING ESTIMATED QUANTITIES HAVE BEEN CARRIED TO THE GENERAL SUMMARY:

EDGE LINE, 6" - 0.10 MILE

CENTERLINE - 0.05 MILE

CALCULATED CWW
CHECKED DHG

GENERAL NOTES

LOG-273-0.02

I:\ProjectData\LOG\99857_SR273-0002\Design\Roadway\Sheets\99857_GN001.dgn Sheet 1/29/2019 9:43:51 AM cweiss

ITEM 614, MAINTAINING TRAFFIC

PART WIDTH CONSTRUCTION WILL BE USED ON THE REHABILITATION OF BRIDGE NO. LOG-273-0.02. ONE LANE OF THE TWO LANE HIGHWAY WILL REMAIN OPEN THROUGH THE USE OF WORK ZONE TRAFFIC SIGNALS; INITIALLY FLAGGERS WILL BE USED AS PER SCD MT-97.12 TO ALLOW FOR CONSTRUCTION OF PAVEMENT FOR MAINTAINING TRAFFIC. FLAGGERS MAY ALSO BE USED AFTER THE PORTABLE BARRIERS ARE REMOVED TO COMPLETE THE PAVING AND/OR THE REMOVAL OF PAVEMENT FOR MAINTAINING TRAFFIC.

LENGTH AND DURATION OF LANE CLOSURES AND RESTRICTIONS SHALL BE AT THE APPROVAL OF THE ENGINEER. IT IS THE INTENT TO MINIMIZE THE IMPACT TO THE TRAVELING PUBLIC. LANE CLOSURES OR RESTRICTIONS OVER SEGMENTS OF THE PROJECT IN WHICH NO WORK IS ANTICIPATED WITHIN A REASONABLE TIME FRAME, AS DETERMINED BY THE ENGINEER, SHALL NOT BE PERMITTED. THE LEVEL OF UTILIZATION OF MAINTENANCE OF TRAFFIC DEVICES SHALL BE COMMENSURATE WITH THE WORK IN PROGRESS.

THE CONTRACTOR SHALL PROVIDE, ERECT AND MAINTAIN SIGNS AND SIGN SUPPORTS, AS DETAILED IN THE OHIO MANUAL OF UNIFORM TRAFFIC CONTROL DEVICES, AND TYPE III BARRICADES OF THE TYPE AND LOCATION AS FOLLOWS:

SEE DETAILED M.O.T. SHEET FOR LOCATIONS.

NOTIFICATION OF TRAFFIC RESTRICTIONS

THROUGHOUT THE DURATION OF THE PROJECT, THE CONTRACTOR SHALL NOTIFY THE PROJECT ENGINEER IN WRITING OF ALL TRAFFIC RESTRICTIONS AND UPCOMING MAINTENANCE OF TRAFFIC CHANGES. THE CONTRACTOR SHALL ENSURE THE WRITING OF ALL TRAFFIC RESTRICTIONS AND UPCOMING MAINTENANCE OF TRAFFIC CHANGES. THE CONTRACTOR SHALL ENSURE THE WRITTEN NOTIFICATION IS SUBMITTED IN A TIMELY MANNER TO ALLOW THE PROJECT ENGINEER TO MEET THE REQUIRED TIME FRAMES SET FORTH IN THE TABLE BELOW TO INFORM THE SPECIAL HAULING PERMITS SECTION (HAULING.PERMITS@DOT.OHIO.GOV) AND THE DISTRICT PUBLIC INFORMATION OFFICE (PIO). THIS NOTIFICATION SHALL BE RECEIVED BY THE PROJECT ENGINEER PRIOR TO THE PHYSICAL SETUP OF ANY APPLICABLE SIGNS OR MESSAGE BOARDS.

INFORMATION SHOULD INCLUDE, BUT IS NOT LIMITED TO, ALL CONSTRUCTION ACTIVITIES THAT IMPACT OR INTERFERE WITH TRAFFIC AND SHALL LIST THE SPECIFIC LOCATION, TYPE OF WORK, ROAD STATUS, DATE AND TIME OF RESTRICTION, DURATION OF RESTRICTION, NUMBER OF LANES MAINTAINED, NUMBER OF LANES CLOSED, MINIMUM VERTICAL CLEARANCE, MINIMUM WIDTH OF DRIVABLE PAVEMENT, DETOUR ROUTES, IF APPLICABLE, AND ANY OTHER INFORMATION REQUESTED BY THE PROJECT ENGINEER.

NOTIFICATION TIME TABLE

ITEM	DURATION OF CLOSURE	NOTICE DUE TO D7 PERMITS & PIO
RAMP & ROAD CLOSURES	>= 2 WKS	21 CALENDAR DAYS PRIOR TO CLOSURE
	> 12 HRS & < 2 WKS	14 CALENDAR DAYS PRIOR TO CLOSURE
	< 12 HRS	4 BUSINESS DAYS PRIOR TO CLOSURE
LANE CLOSURES AND RESTRICTIONS	>= 2 WKS	14 CALENDAR DAYS PRIOR TO CLOSURE
	< 2 WKS	5 BUSINESS DAYS PRIOR TO CLOSURE
START OF CONSTRUCTION & TRAFFIC PATTERN CHANGES	N/A	14 CALENDAR DAYS PRIOR TO IMPLEMENTATION

ANY UNFORESEEN CONDITIONS NOT SPECIFIED IN THE PLANS REQUIRING TRAFFIC RESTRICTIONS SHALL ALSO BE REPORTED TO THE PROJECT ENGINEER USING THE NOTIFICATION TIME TABLE.

ALL WORK AND TRAFFIC CONTROL DEVICES SHALL BE IN ACCORDANCE WITH C&MS 614 AND OTHER APPLICABLE PORTIONS OF THE SPECIFICATIONS, AS WELL AS THE OHIO MANUAL OF UNIFORM TRAFFIC CONTROL DEVICES. PAYMENT FOR ALL LABOR, EQUIPMENT AND MATERIALS SHALL BE INCLUDED IN THE LUMP SUM CONTRACT PRICE FOR ITEM 614, MAINTAINING TRAFFIC, UNLESS SEPARATELY ITEMIZED IN THE PLAN.

DELINEATION OF PORTABLE AND PERMANENT BARRIER

BARRIER REFLECTORS AND OBJECT MARKERS SHALL BE INSTALLED ON ALL PORTABLE BARRIER (PB) USED FOR TRAFFIC CONTROL AND ON PERMANENT CONCRETE BARRIER (INCLUDING BRIDGE PARAPETS) LOCATED WITHIN 5 FEET OF THE EDGE OF THE ADJACENT TRAVEL LANE.

BARRIER REFLECTORS SHALL CONFORM TO C&MS 626, EXCEPT THAT THE SPACING SHALL BE AS PER TRAFFIC SCD MT-101.70. OBJECT MARKERS AND THEIR INSTALLATION SHALL CONFORM TO C&MS 614.03 AND SCD MT-101.70. WHEN THE PB CONTAINS GLARE SCREEN, ONE SET OF THREE VERTICAL STRIPES OF SHEETING SHALL BE CONSIDERED EQUIVALENT TO AN OBJECT MARKER, ONE-WAY.

INCREASED BARRIER DELINEATION, AS SPECIFIED HEREIN, SHALL BE INSTALLED ON ALL PB AND PERMANENT CONCRETE BARRIER LOCATED WITHIN 5 FEET OF THE EDGE OF THE TRAVELED LANE UNDER EITHER OF THE FOLLOWING CONDITIONS: ALONG TAPERS AND TRANSITION AREAS; OR ALONG CURVES (OUTSIDE ONLY) WITH DEGREE OF CURVATURE GREATER THAN OR EQUAL TO 3 DEGREES.

THE INCREASED BARRIER DELINEATION SHALL CONSIST OF EITHER DELINEATION PANELS OR THE TRIPLE STACKING OF WORK ZONE BARRIER REFLECTORS.

DELINEATION PANELS SHALL CONSIST OF PANELS OF DELINEATION, APPROXIMATELY 34 INCHES LONG AND 6 INCHES WIDE AND SHALL BE "CRIMPED." PANELS SHALL BE INSTALLED AND SPACED PER TRAFFIC SCD MT-101.70.

TRIPLE-STACKED BARRIER REFLECTORS SHALL CONSIST OF ALIGNING THREE BARRIER REFLECTORS VERTICALLY, AT LOCATIONS WHERE A SINGLE BARRIER REFLECTOR WOULD BE OTHERWISE ATTACHED. THERE SHALL BE NO OPEN SPACE BETWEEN THE ADJACENT BARRIER REFLECTORS. THE TRIPLESTACKED BARRIER REFLECTORS SHALL CONFORM TO C&MS 626, EXCEPT THAT THEY SHALL BE SPACED AND ALIGNED PER TRAFFIC SCD MT-101.70.

THE FOLLOWING ESTIMATED QUANTITIES HAVE BEEN INCLUDED IN THE PLANS AND CARRIED TO THE GENERAL SUMMARY:

ITEM 614, BARRIER REFLECTOR, TYPE 1 (BIDIRECTIONAL) 8 EACH

ITEM 614, OBJECT MARKER, TWO-WAY 8 EACH

ITEM 614, INCREASED BARRIER DELINEATION 300 FEET

PAYMENT SHALL BE FULL COMPENSATION FOR ALL MATERIAL, LABOR, INCIDENTALS AND EQUIPMENT NECESSARY FOR FURNISHING, INSTALLING, MAINTAINING AND REMOVING EACH OF THE ABOVE ITEMS.

ALONG RUNS OF INCREASED BARRIER DELINEATION WHERE THIS ITEM IS PROVIDED, THE QUANTITY SHALL BE MEASURED AS THE ENTIRE LENGTH OF THE RUN OF INCREASED BARRIER DELINEATION, INCLUDING THE SPACES BETWEEN THE INDIVIDUAL DELINEATION PANELS OR STACKS OF BARRIER REFLECTORS.

DELINEATION OF TEMPORARY AND PERMANENT GUARDRAIL

BARRIER REFLECTORS SHALL BE INSTALLED ON ALL TEMPORARY GUARDRAIL USED FOR TRAFFIC CONTROL AND ON ALL PERMANENT GUARDRAIL LOCATED WITHIN 5 FEET OF THE EDGE OF THE ADJACENT TRAVEL LANE. BARRIER REFLECTORS SHALL CONFORM TO C&MS 626.

OBJECT MARKERS SHALL BE INSTALLED ON ALL TEMPORARY AND PERMANENT GUARDRAIL LOCATED WITHIN 5 FEET OF THE EDGE OF THE ADJACENT TRAVEL LANE. GUARDRAIL-MOUNTING OF OBJECT MARKERS SHALL BE MADE BY INSTALLING THE OBJECT MARKERS ON THE EXTENSION BLOCKS RATHER THAN DIRECTLY ONTO THE GUARDRAIL ITSELF. OBJECT MARKERS SHALL CONFORM TO C&MS 614.03 AND THE SPACING SHALL BE APPROXIMATELY 50 FEET.

THE FOLLOWING ESTIMATED QUANTITIES HAVE BEEN INCLUDED IN THE PLANS AND CARRIED TO THE GENERAL SUMMARY:

ITEM 626, BARRIER REFLECTOR, TYPE 2, Bi-Directional 15 EACH

ITEM 614, OBJECT MARKER, TWO WAY 15 EACH

PAYMENT SHALL BE FULL COMPENSATION FOR ALL MATERIAL, LABOR, INCIDENTALS AND EQUIPMENT NECESSARY FOR FURNISHING, INSTALLING, MAINTAINING AND REMOVING THE ABOVE ITEM(S).

ITEM 614, WORK ZONE IMPACT ATTENUATOR FOR 24" WIDE HAZARDS (BIDIRECTIONAL)

THIS ITEM SHALL CONSIST OF FURNISHING AND INSTALLING A NON-GATING IMPACT ATTENUATOR. FURNISH AN IMPACT ATTENUATOR FROM THE OFFICE OF ROADWAY ENGINEERING'S APPROVED LIST FOR WORK ZONE IMPACT ATTENUATORS, FROM THE ROADWAY STANDARDS WEB PAGE FOR ROADWAY STANDARDS WEB PAGE.

INSTALLATION SHALL BE AT THE LOCATIONS SPECIFIED IN THE PLANS IN ACCORDANCE WITH THE MANUFACTURER'S SPECIFICATIONS.

THE CONTRACTOR SHALL REPAIR OR REPLACE A DAMAGED UNIT WITHIN 24 HOURS OF A DAMAGING IMPACT.

WHEN BIDIRECTIONAL DESIGNS ARE SPECIFIED, THE CONTRACTOR SHALL SUPPLY APPROPRIATE TRANSITIONS.

PAYMENT FOR THE ABOVE WORK SHALL BE MADE AT THE UNIT PRICE BID AND SHALL INCLUDE ALL LABOR, TOOLS, EQUIPMENT AND MATERIALS NECESSARY TO CONSTRUCT AND MAINTAIN A COMPLETE AND FUNCTIONAL IMPACT ATTENUATOR SYSTEM, INCLUDING ALL RELATED BACKUPS, TRANSITIONS, LEVELING PADS, HARDWARE AND GRADING, NOT SEPARATELY SPECIFIED, AS REQUIRED BY THE MANUFACTURER.

WORK ZONE MARKINGS AND SIGNS

THE FOLLOWING ESTIMATED QUANTITIES HAVE BEEN CARRIED TO THE GENERAL SUMMARY FOR USE AT LOCATIONS IDENTIFIED BY THE ENGINEER FOR WORK ZONE PAVEMENT MARKINGS AND SIGNS PER THE REQUIREMENTS OF C&MS 614.04 AND 614.11.

WORK ZONE EDGE LINE, CLASS I, 6"	0.16 MILE
WORK ZONE STOP LINE, CLASS I	20 FEET

FULLY-ACTUATED OPERATION OF WORK ZONE TRAFFIC SIGNAL

THE WORK ZONE SIGNAL CONTROL REQUIRED FOR THIS PROJECT AND SHOWN ON SHEETS 4-5 AND TRAFFIC SCDS MT-96.11, 96.20 AND 96.26 SHALL BE FULLY TRAFFIC-ACTUATED AND OPERATE IN A MANNER SIMILAR TO THAT DESCRIBED IN SECTION 733.02 OF THE CONSTRUCTION AND MATERIAL SPECIFICATIONS.

THE INITIAL CONTROLLER TIMING SHALL BE AS FOLLOWS:

	PHASE 2		PHASE 3	
	(All Red) Dummy Phase	Mainline (direction)	(All Red) Dummy Phase	Mainline (direction)
MIN. GREEN		10		10
EXTENSION		4		4
MAX. GREEN		30		30
YELLOW		3.5		3.5
ALL RED	7.0*		7.0*	
RECALL	ON	OFF	OFF	OFF

*CALCULATED CLEARANCE TIMES IN ACCORDANCE WITH TABLES 697-2 IN THE ODOT TRAFFIC ENGINEERING MANUAL(TEM).

THE CONTRACTOR SHALL ALSO DESIGN, FURNISH, INSTALL AND MAINTAIN A TRAFFIC DETECTOR ON EACH TRAFFIC APPROACH WHICH WILL RELIABLY DETECT ALL LEGAL TRAFFIC APPROACHING (BUT NOT LEAVING) THE SIGNAL AS IT PASSES OR WAITS IN THE DESIGNATED DETECTOR ZONE SHOWN IN THE PLANS. DETECTOR DESIGNS WHICH DO NOT PROVIDE RELIABLE DETECTION, FREE FROM FALSE CALLS, SHALL BE IMMEDIATELY REPLACED BY THE CONTRACTOR.

I:\ProjectData\LOG\99857_SR273-0002\Design\Roadway\Sheets\99857_MN001.dgn Sheet 1/29/2019 9:43:52 AM cweiss

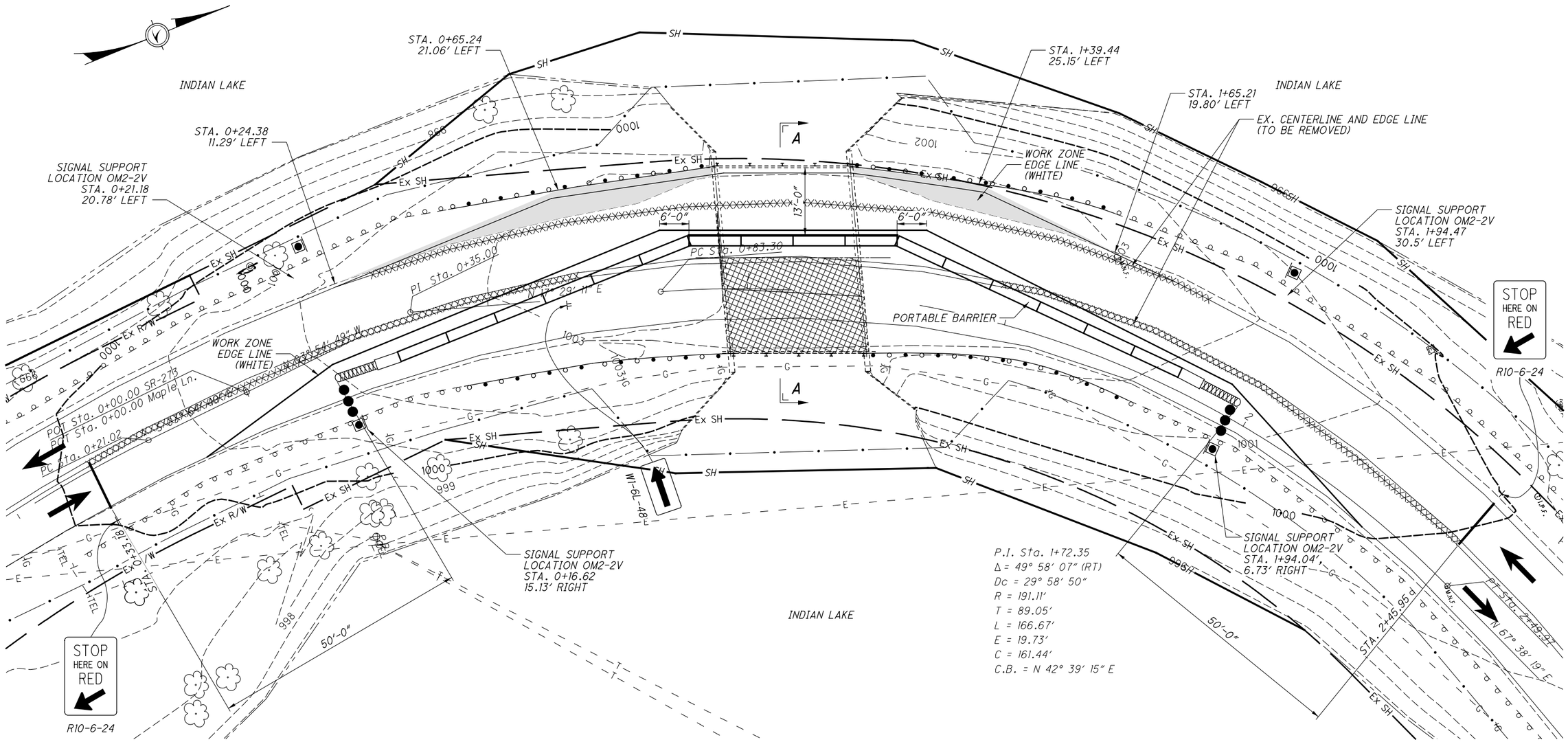

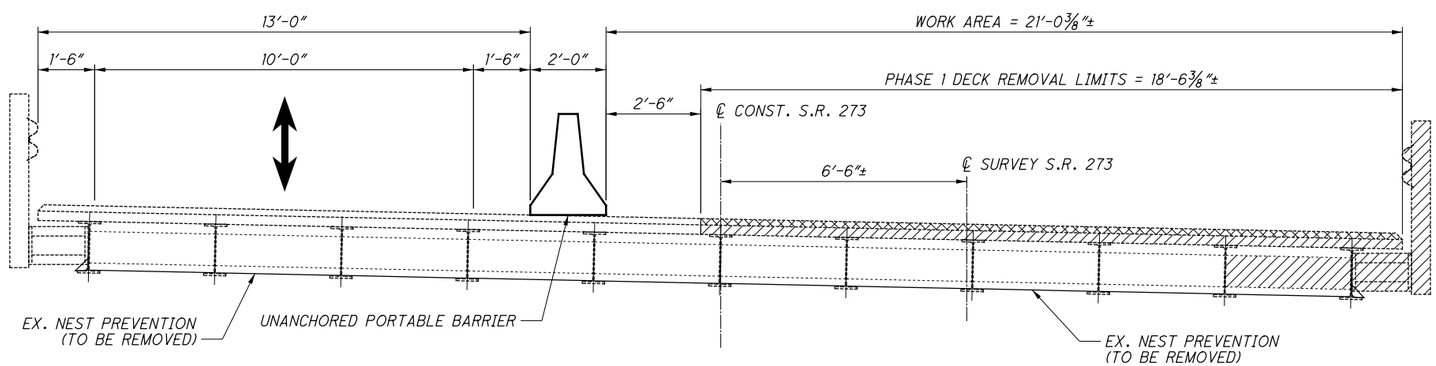

SECTION A-A

NOTES & LEGEND

1. APPROACH SIGNS SHALL BE PLACE PER STANDARD DRAWING MT-96.11.
2. TWO NO PARKING SIGNS (R7-1-12) SHALL BE PLACED ON THE LEFT SIDE OF THE ROADWAY BETWEEN STATION 3+00 AND STATION 5+00.
3. ONE "BE PREPARED TO STOP" SIGN (W3-4-36) SHALL BE PLACE ON BOTH SIDES OF THE ROAD AT STATION 8+00.

- DRUMS
- PORTABLE BARRIER
- WORK ZONE IMPACT ATTENUATOR
- PROPOSED WORK AREA
- PAVEMENT FOR MAINTAINING TRAFFIC, CLASS B

CALCULATED CWW
CHECKED PNS

MAINTENANCE OF TRAFFIC PHASE 1 DETAILS

BRIDGE NO.: LOG-273-0002

LOG-273-0.02

I:\ProjectData\LOG\99857_SR273-0002\Design\Roadway\Sheets\99857_MH001.dgn Sheet 1/29/2019 9:43:57 AM cweiss

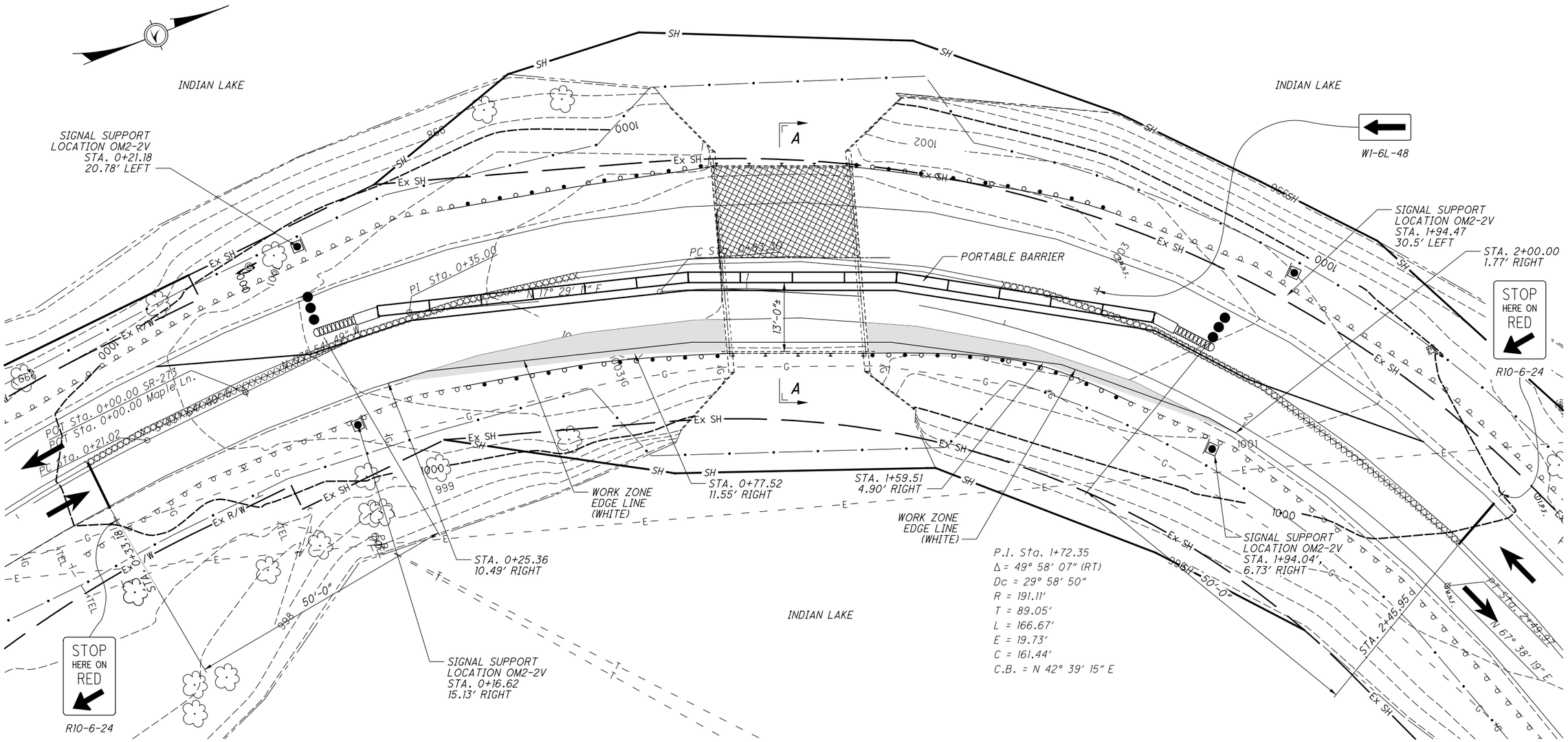

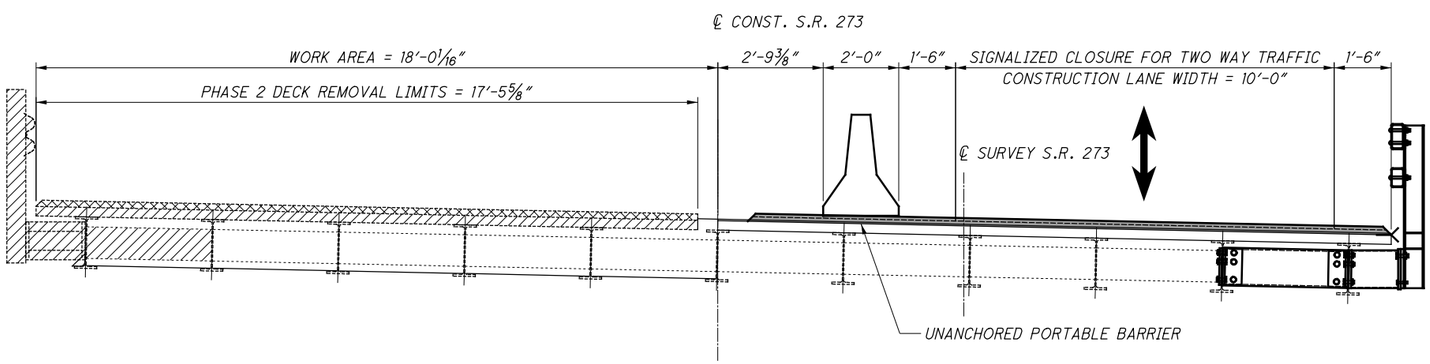

SECTION A-A

NOTES & LEGEND

1. APPROACH SIGNS SHALL BE PLACE PER STANDARD DRAWING MT-96.11.
2. TWO NO PARKING SIGNS (R7-1-12) SHALL BE PLACED ON THE LEFT SIDE OF THE ROADWAY BETWEEN STATION 3+00 AND STATION 5+00.
3. ONE "BE PREPARED TO STOP" SIGN (W3-4-36) SHALL BE PLACE ON BOTH SIDES OF THE ROAD AT STATION 8+00.

- DRUMS
- PORTABLE BARRIER
- WORK ZONE IMPACT ATTENUATOR
- PROPOSED WORK AREA
- PAVEMENT FOR MAINTAINING TRAFFIC, CLASS B

CALCULATED CWW
CHECKED PNS

MAINTENANCE OF TRAFFIC PHASE 2 DETAILS

BRIDGE NO.: LOG-273-0002

LOG-273-0.02

I:\ProjectData\LOG\99857_SR273-0002\Design\Roadway\Sheets\99857_MH002.dgn Sheet 1/29/2019 9:44:11 AM cweiss

SHEET NUM. 2		3			8						PART. 01/NFA/BR			ITEM	ITEM EXT	GRAND TOTAL	UNIT	DESCRIPTION	SEE SHEET NO.
																		ROADWAY	
											329			202	23500	329	SY	WEARING COURSE REMOVED	
											200			202	38000	200	FT	GUARDRAIL REMOVED	
											75			202	38500	75	FT	BRIDGE RAILING REMOVED	
											4			202	47000	4	EACH	BRIDGE TERMINAL ASSEMBLY REMOVED	
											100			606	15050	100	FT	GUARDRAIL, TYPE MGS	
											4			606	35002	4	EACH	MGS BRIDGE TERMINAL ASSEMBLY, TYPE 1	
																		EROSION CONTROL	
											39			601	26000	39	CY	DUMPED ROCK FILL, TYPE B	
45											45			659	00300	45	CY	TOPSOIL	
408											408			659	00500	408	SY	SEEDING AND MULCHING, CLASS 1	
0.05											0.05			659	20000	0.05	TON	COMMERCIAL FERTILIZER	
2											2			659	35000	2	MGAL	WATER	
											1,000			832	30000	1,000	EACH	EROSION CONTROL	
																		PAVEMENT	
											24			407	10000	24	GAL	TACK COAT	
											23			441	50000	23	CY	ASPHALT CONCRETE SURFACE COURSE, TYPE 1, (448), PG64-22	
																		TRAFFIC CONTROL	
											4			621	54000	4	EACH	RAISED PAVEMENT MARKER REMOVED	
		15									15			626	00110	15	EACH	BARRIER REFLECTOR, TYPE 2, BI-DIRECTIONAL	
											0.67			630	80101	0.67	SF	SIGN, FLAT SHEET, AS PER PLAN	2
											0.1			642	00094	0.1	MILE	EDGE LINE, 6"	
											0.05			642	00290	0.05	MILE	CENTER LINE	
											640			642	30000	640	FT	REMOVAL OF PAVEMENT MARKING	
																		STRUCTURE REPAIR (LOG-273-0002)	
					LS						LS			202	11203	LS		PORTIONS OF STRUCTURE REMOVED, OVER 20 FOOT SPAN, AS PER PLAN	9
					72						72			409	30000	72	FT	SAWING AND SEALING ASPHALT CONCRETE PAVEMENT JOINTS	
					108						108			512	33010	108	SY	TYPE 3 WATERPROOFING	
					LS						LS			513	10001	LS		STRUCTURAL STEEL MEMBERS, LEVEL UF, AS PER PLAN	9
					176						176			514	27700	176	SF	FIELD PAINTING, MISC.:COLD GALVANIZING	9
					58						58			517	76300	58	FT	RAILING, MISC.:MODIFIED ILLINOIS TWO TUBE BRIDGE RAIL	9
					70						70			SPECIAL	51822300	70	FT	STEEL DRIP STRIP	9
																		MAINTENANCE OF TRAFFIC	
		300									300			614	11630	300	FT	INCREASED BARRIER DELINEATION	
											4			614	12338	4	EACH	WORK ZONE IMPACT ATTENUATOR (BIDIRECTIONAL)	
		8									8			614	13310	8	EACH	BARRIER REFLECTOR, TYPE 1, BIDIRECTIONAL	
		23									23			614	13360	23	EACH	OBJECT MARKER, TWO WAY	
		0.16									0.16			614	22010	0.16	MILE	WORK ZONE EDGE LINE, CLASS I, 6"	
											20			614	26000	20	FT	WORK ZONE STOP LINE, CLASS I	
											LS			615	10000	LS		ROADS FOR MAINTAINING TRAFFIC	
											95			615	25000	95	SY	PAVEMENT FOR MAINTAINING TRAFFIC, CLASS B	
											320			622	41000	320	FT	PORTABLE BARRIER, 32"	
																		INCIDENTALS	
											LS			614	11000	LS		MAINTAINING TRAFFIC	
											2			619	16000	2	MNTH	FIELD OFFICE, TYPE A	
											LS			623	10000	LS		CONSTRUCTION LAYOUT STAKES AND SURVEYING	
											LS			624	10000	LS		MOBILIZATION	

CALCULATED CWW
CHECKED DHG

GENERAL SUMMARY

LOG-273-0.02

I:\ProjectData\LOG\99857_SR273-0002\Design\Roadway\Sheets\99857_GG001.dgn Sheet 1/29/2019 9:44:15 AM cweiss

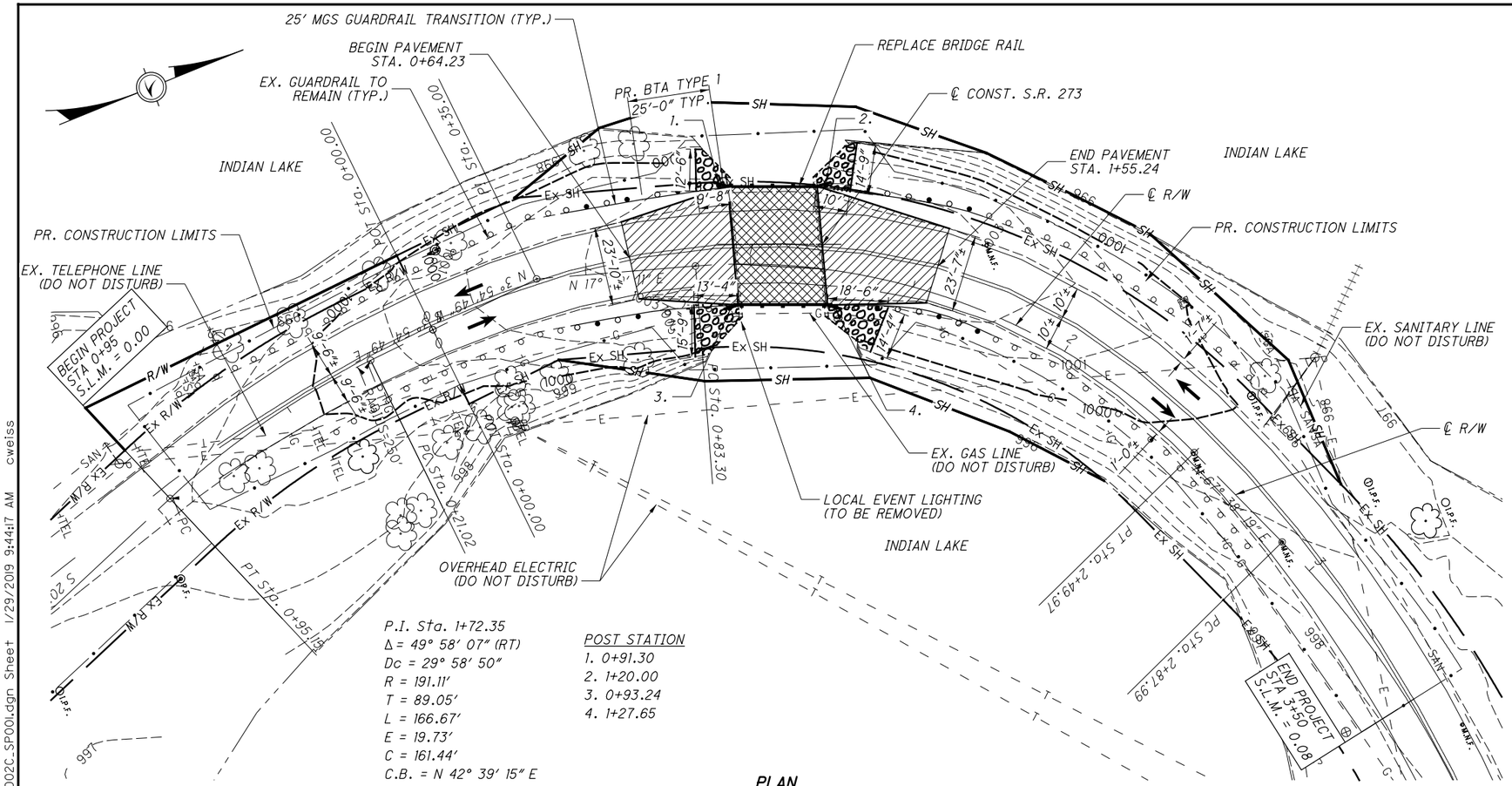

P.I. Sta. 1+72.35
Δ = 49° 58' 07" (RT)
Dc = 29° 58' 50"
R = 191.11'
T = 89.05'
L = 166.67'
E = 19.73'
C = 161.44'
C.B. = N 42° 39' 15" E

POST STATION
1. 0+91.30
2. 1+20.00
3. 0+93.24
4. 1+27.65

PLAN

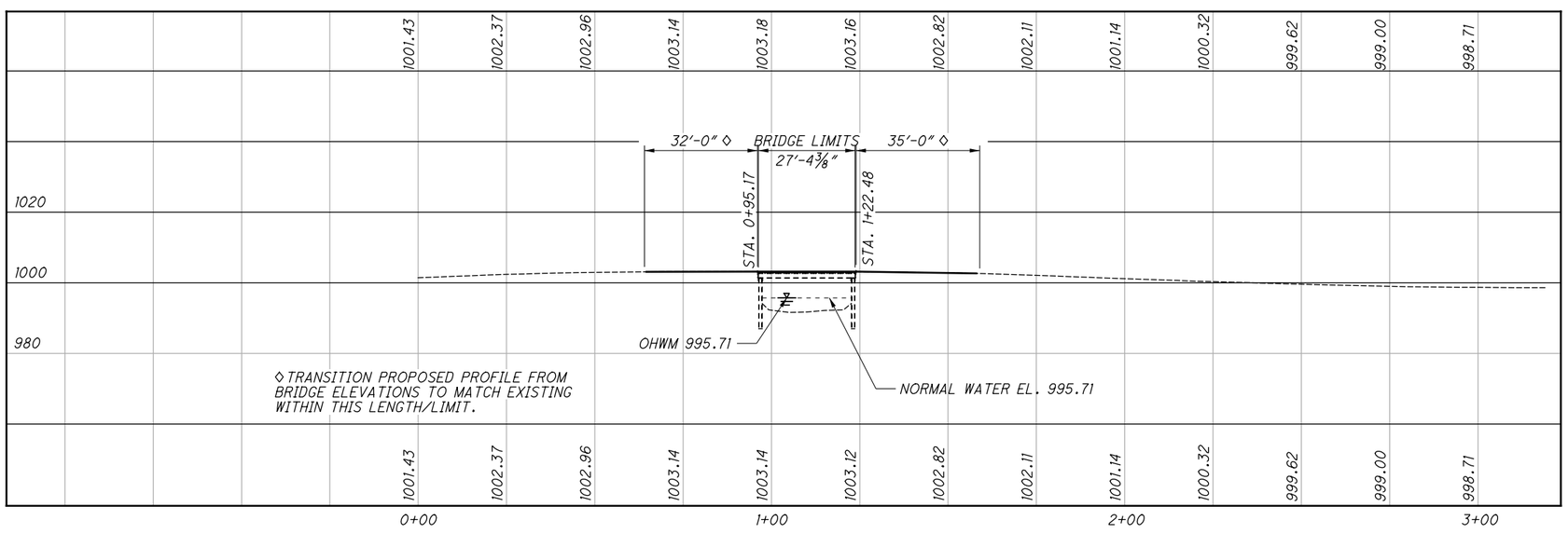

PROFILE ALONG ℄ R/W OF S.R. 273

BENCHMARK DATA

BM #1 N. 308066.2086, E. 1591877.1530, ELEV. 997.54 ,
BM #2 STA. 3+47.33 , ELEV. 997.36 , OFFSET 20.88', RT.
BM #3 STA. 4+39.70 , ELEV. 997.49 , OFFSET 25' , LT.

DESIGN TRAFFIC:
2019 ADT = 350 2019 ADTT = 42
2039 ADT = 360 2039 ADTT = 43
DIRECTIONAL DISTRIBUTION = 0.56

NOTES

DIMENSIONS AND DATA TAKEN FROM EXISTING PLANS AND ARE FOR REFERENCE ONLY. ALL DIMENSIONS ARE CONSIDERED ±.
ROADWAY QUANTITIES ARE INCLUDED IN ROADWAY GENERAL NOTES, SHEET 2/16.

LEGEND

- ONE LIFT 2" MAXIMUM THICKNESS ITEM 441, ASPHALT CONCRETE SURFACE COURSE, TYPE 1, 448) PG64-22, AND ITEM 202 - WEARING COURSE REMOVED (DEPTH VARIES 1.25"± TO 2"±)
- TWO LIFTS 1.25" MAXIMUM THICKNESS PER LIFT (2.5"± TOTAL THICKNESS) ITEM 441, ASPHALT CONCRETE SURFACE COURSE, TYPE 1, (448), PG64-22, AND ITEM 202 - WEARING COURSE REMOVED (DEPTH VARIES - 2"± ABOVE CORRUGATIONS)
- DUMPED ROCK FILL, TYPE B

HYDRAULIC DATA

NO DRAINAGE AREA. BRIDGE FOR PASSAGE OF BOATS ONLY.

STRUCTURE CLEARS THE TOP OF THE SPILLWAY - 5.4'

EXISTING STRUCTURE

TYPE: SIMPLE STEEL BEAM WITH ASPHALT FILLED CORRUGATED METAL DECK ON PILE SUBSTRUCTURE.

SPANS: 26'- 1 5/8"
ROADWAY: 35'-10 1/4" F/F GUARD RAIL
LOADING: HS 20-44
SKEW: 4°59' R.F.
APPROACH SLABS: NONE
ALIGNMENT: 30° CURVE LEFT
SUPERELEVATION: 0.021 FT/FT
WEARING SURFACE:ASPHALT 2"± THICK
STRUCTURAL FILE NUMBER: 4602315
DATE BUILT: 7/1/1970
DISPOSITION: TO BE REHABILITATED

PROPOSED WORK

1. REPLACE EXISTING CORRUGATED METAL DECKING.
2. REPLACE EXISTING BRIDGE RAIL.
3. MODIFY EXISTING CROSS FRAMING.
4. REPLACE WEARING SURFACE AND APPROACH ASPHALT.
5. PLACE DUMPED ROCK FILL AT ABUTMENT CORNERS.
6. REPLACE BRIDGE TERMINAL ASSEMBLIES.

WORK LISTED IS NOT ALL INCLUSIVE, CONTRACTOR WILL SEQUENCE WORK AS NEEDED.

DESIGN AGENCY
ODOT DISTRICT 7
ENGINEERING

DRAWN	REVIEWED	DATE
CWW	MRB	1/2/2019
DESIGNED	REVISED	STRUCTURE FILE NUMBER
CWW	XXX	4602315
CHECKED		
DHG		

LOGAN COUNTY
STA. 0+95.67
STA. 1+21.97

SITE PLAN
BRIDGE NO.: LOG-273-0002
S.R. 273 OVER INDIAN LAKE BOAT PASSAGE

LOG-273-0.02
PID No. 99857

I:\Project Data\LOG\99857_SR273-0002\Design\Structures\LOG273_0002C\Sheets\273_0002C_SP001.dgn Sheet 1/29/2019 9:44:17 AM cweiss

STANDARD DRAWINGS AND SUPPLEMENTAL SPECIFICATIONS

REFER TO THE FOLLOWING STANDARD BRIDGE DRAWING(S):

DS-1-92 DATED/REVISED 7/18/2003

PCB-91 DATED/REVISED 1/18/2013

AND TO THE FOLLOWING SUPPLEMENTAL SPECIFICATION(S):

800 DATED 1/18/19

DESIGN SPECIFICATIONS

THIS STRUCTURE CONFORMS TO "STANDARD SPECIFICATIONS FOR HIGHWAY BRIDGES" ADOPTED BY THE AMERICAN ASSOCIATION OF STATE HIGHWAY AND TRANSPORTATION OFFICIALS, 2002, AND THE ODOT BRIDGE DESIGN MANUAL, EXCEPT AS NOTED ELSEWHERE IN THE PLANS.

DESIGN LOADING

HS20, CASE II AND THE ALTERNATE MILITARY LOADING. FUTURE WEARING SURFACE (FWS) OF 60 POUNDS PER SQUARE FOOT.

DESIGN DATA

STRUCTURAL STEEL (FLOORING) - ASTM A1011 GRADE 50, MINIMUM YIELD STRENGTH 50 KSI

STRUCTURAL STEEL (POST, PLATES, CROSS FRAMES) - ASTM A709 GRADE 50 , MINIMUM YIELD STRENGTH 50 KSI

STRUCTURAL STEEL (TUBULAR STEEL) - ASTM A500-B, MINIMUM YIELD STRENGTH 46 KSI

DECK PROTECTION METHOD

WATERPROOFING AND ASPHALT CONCRETE OVERLAY

STEEL DRIP STRIP

EXISTING STRUCTURE VERIFICATION

EXISTING STRUCTURE VERIFICATION: DETAILS AND DIMENSIONS SHOWN ON THESE PLANS PERTAINING TO THE EXISTING STRUCTURE HAVE BEEN OBTAINED FROM PLANS OF THE EXISTING STRUCTURE AND FROM FIELD OBSERVATIONS AND MEASUREMENTS. CONSEQUENTLY, THEY ARE INDICATIVE OF THE EXISTING STRUCTURE AND THE PROPOSED WORK BUT THEY SHALL BE CONSIDERED TENTATIVE AND APPROXIMATE. THE CONTRACTOR IS REFERRED TO CMS SECTIONS 102.05, 105.02 AND 513.04.

BASE CONTRACT BID PRICES UPON A RECOGNITION OF THE UNCERTAINTIES DESCRIBED ABOVE AND UPON A PREBID EXAMINATION OF THE EXISTING STRUCTURE. HOWEVER, THE DEPARTMENT WILL PAY FOR ALL PROJECT WORK BASED UPON ACTUAL DETAILS AND DIMENSIONS WHICH HAVE BEEN VERIFIED IN THE FIELD.

ITEM 202, PORTIONS OF STRUCTURE REMOVED, OVER 20 FOOT SPAN, AS PER PLAN

THIS ITEM SHALL INCLUDE THE ELEMENTS INDICATED IN THE PLANS AND GENERAL NOTES AND THAT ARE NOT SEPARATELY LISTED FOR PAYMENT, EXCEPT FOR WEARING COURSE REMOVAL. ITEMS TO BE REMOVED INCLUDE ALL EXISTING MATERIALS BEING REPLACED BY NEW CONSTRUCTION AND MISCELLANEOUS ITEMS THAT ARE NOT SHOWN TO BE INCORPORATED INTO THE FINAL CONSTRUCTION AND ARE DIRECTED TO BE REMOVED BY THE ENGINEER. THIS INCLUDES, BUT IS NOT LIMITED TO THE MIGRATORY BIRD NEST PREVENTION SYSTEM AND LOCAL EVENT LIGHTING. THE USE OF EXPLOSIVES, HEADACHE BALLS AND/OR HOE-RAMS WILL NOT BE PERMITTED. THE METHOD OF REMOVAL AND THE WEIGHT OF HAMMER SHALL BE APPROVED BY THE ENGINEER. PERFORM ALL WORK IN A MANNER THAT WILL NOT CUT, ELONGATE OR DAMAGE THE EXISTING STRUCTURAL STEEL TO BE PRESERVED. CHIPPING HAMMERS SHALL NOT BE HEAVIER THAN THE NOMINAL 90-POUND CLASS. PNEUMATIC HAMMERS SHALL NOT BE PLACED IN DIRECT CONTACT WITH REINFORCING STEEL THAT IS TO BE RETAINED IN THE REBUILT STRUCTURE. SUBMIT CONSTRUCTION PLANS ACCORDING TO CMS 501.05.

ITEM 513 - STRUCTURAL STEEL MEMBERS, LEVEL UF, AS PER PLAN

ITEM 513 - STRUCTURAL STEEL MEMBERS, LEVEL UF, AS PER PLAN: ALL REQUIREMENTS OF 513 APPLY TO SHOP FABRICATED MEMBERS. PERFORM WORK FOR FIELD FABRICATED MEMBERS ACCORDING TO ITEM 513, EXCEPT AS MODIFIED HEREIN. THE DEPARTMENT WILL NOT REQUIRE THE CONTRACTOR PERFORMING FIELD FABRICATION TO BE PRE-QUALIFIED AS SPECIFIED IN SUPPLEMENT 1078. SUBMIT A WRITTEN LETTER OF MATERIAL ACCEPTANCE IN ACCORDANCE WITH 501.06, TO THE ENGINEER. PROVIDE THE ENGINEER "AS-BUILT" DRAWINGS ACCORDING TO 513.06, EXCEPT 501.04 DOES NOT APPLY. UPON RECEIPT OF THE ENGINEER?S ACCEPTANCE, SUPPLY A COPY OF THE DRAWINGS, ACCORDING TO SUPPLEMENT 1002, TO THE OFFICE OF MATERIAL MANAGEMENT FOR RECORD PURPOSES.

THE FOLLOWING MEMBERS ARE INCLUDED IN THIS ITEM: CROSS FRAMES, STRUCTURAL TEES, PLATES, STEEL DECKING, ANGLES, END DAMS AND HARDWARE.

- ALL STEEL COMPONENTS SHALL BE GALVANIZED ACCORDING TO ODOT C&MS 711.02
- STEEL DECKING SHALL BE 9"X3" 5 GAUGE CORRUGATED STEEL FLOORING PER ASTM A 1011-SS-GR50 STEEL SHEET
- STEEL DECKING SHALL HAVE A MIN. SECTION MODULUS OF 5.206 IN^3 .
- STEEL DECKING SHALL BE INSTALLED PERPENDICULAR TO THE BEAMS IN 18" LAYING WIDTHS.
- FIELD SPLICES SHALL BE OVER THE CENTER STRINGER ONLY AND SHALL HAVE A CONTINUOUS BUTT WELD.
- DAMAGE TO THE GALVANIZED SURFACES SHALL BE CLEANED AND COATED WITH AN APPROVED COLD GALVANIZING COMPOUND.
- STEEL DECKING SHALL BE BOLTED DOWN TO THE STRINGERS AS DETAILED IN THE PLANS.

PAYMENT FOR ALL OF THE ABOVE DESCRIBED LABOR AND MATERIALS WILL BE MADE AT THE CONTRACT PRICE BID FOR ITEM 513 - STRUCTURAL STEEL MEMBERS, LEVEL UF, AS PER PLAN

ITEM 514 - FIELD PAINTING, MISC.: COLD GALVANIZING

THE TOPS OF THE BEAMS AND ANY AREAS AFFECTED BY THE REMOVAL OR INSTALLATION OF DECKING AND CROSSFRAMES SHALL HAVE THE PROTECTIVE COATING SYSTEM REPAIRED WITH A COLD GALVANIZING COMPOUND. THE COLD GALVANIZING COMPOUND SHALL BE AN ORGANIC ZINC-RICH COATING CONTAINING 95% METALLIC ZINC, BY WEIGHT IN THE DRIED FILM; RECOGNIZED UNDER THE COMPONENT PROGRAM OF UNDERWRITER'S LABORATORIES, INC. AS AN EQUIVALENT TO HOT-DIP GALVANIZING AND CONFORMING TO FEDERAL SPECIFICATION DOD-P-21035A (FORMALLY MIL-P-21035A) FOR REPAIR OF HOT-DIP GALVANIZING. PRIOR TO APPLICATION, POWER TOOL CLEAN THE SURFACE TO SSPC-SP3 STANDARDS. THE COLD GALVANIZING COMPOUND SHALL BE APPLIED USING A BRUSH OR ROLLER TO A 1.5 MIL THICKNESS. TWO COATS SHALL BE APPLIED TO ACHIEVE A TOTAL THICKNESS OF 3.0 MIL. PAYMENT FOR ALL OF THE ABOVE DESCRIBED LABOR AND MATERIALS WILL BE MADE AT THE CONTRACT PRICE BID FOR ITEM 514 - FIELD PAINTING, MISC.: COLD GALVANIZING

ITEM - 517 RAILING MISC.: MODIFIED ILLINOIS TWO TUBE BRIDGE RAIL

THIS ITEM SHALL INCLUDE THE RAILS, POST, D2B ASSEMBLY AND HARDWARE REQUIRED FOR INSTALLATION AS DETAILED IN THE PLANS.
- ALL HARDWARE IS TO BE HOT DIP GALVANIZE PER ASTM A153 OR ASTM F2329.
- ALL BOLTS SHALL BE TIGHTENED IN ACCORDANCE WITH ODOT C&MS 513. LOCK WASHERS ARE NOT REQUIRED FOR BOLTS TIGHTENED PER C&MS 513.
- ALL BOLTS ARE UNC THREADS UNLESS OTHERWISE NOTED.
- ALL BOLTS IN STANDARD HOLES SHALL HAVE A STANDARD GALVANIZED ASTM F-436 HARDENED WASHER UNDER THE ELEMENT (NUT/BOLT HEAD) TURNED IN TIGHTENING.
- ALL STEEL COMPONENTS SHALL BE GALVANIZED ACCORDING TO ODOT C&MS 711.02.
- ALL TUBULAR STEEL MATERIALS SHALL BE ASTM A500-B IN ACCORDANCE WITH ODOT C&MS 707.10.

ALL BOLTS IN SLOTTED HOLES SHALL HAVE AN ASTM A-709 GRADE 36 OR 50 GALVANIZED 5/16" THICK PLATE WASHER WITH STANDARD HOLE UNDER BOTH THE NUT AND THE BOLT HEAD.

PAYMENT FOR ALL OF THE ABOVE DESCRIBED LABOR AND MATERIALS WILL BE MADE AT THE CONTRACT PRICE BID FOR ITEM - 517 RAILING MISC.: MODIFIED ILLINOIS TWO TUBE BRIDGE RAIL

ESTIMATED QUANTITIES (01/NFA/BR)

ITEM	EXTENSION	TOTAL	UNIT	DESCRIPTION	ABUT.	PIERS	SUPER.	GEN.	SEE SHEET
202	11203	LS		PORTIONS OF STRUCTURE REMOVED, OVER 20 FOOT SPAN, AS PER PLAN					8
512	33010	108	SY	TYPE 3 WATERPROOFING			108		
513	10001	LS		STRUCTURAL STEEL MEMBERS, LEVEL UF, AS PER PLAN			LS		8
514	27700	176	SF	FIELD PAINTING, MISC.:COLD GALVANIZING			176		8
409	30000	72	FT	SAWING AND SEALING ASPHALT CONCRETE PAVEMENT JOINTS				72	8
517	76300	58	FT	RAILING, MISC.:MODIFIED ILLINOIS TWO TUBE BRIDGE RAIL			58		8
SPECIAL	51822300	70	FT	STEEL DRIP STRIP			70		

DESIGN AGENCY
ODOT DISTRICT 7
ENGINEERING

DESIGNED	DRAWN	REVIEWED	DATE
CWW	CWW	MRB	1/2/2019
CHECKED	REVISED	STRUCTURE FILE NUMBER	
DHG	XXX	4602315	

ESTIMATED QUANTITIES
BRIDGE NO.: LOG-273-0002
S.R. 273 OVER INDIAN LAKE BOAT PASSAGE

LOG-273-0.02
PID No. 99857

i:\ProjectData\LOG\99857_SR273-0002\Design\Structures\LOG273_0002C\Sheets\273_0002C_S0001.dgn Sheet 1/29/2019 9:44:23 AM cweiss

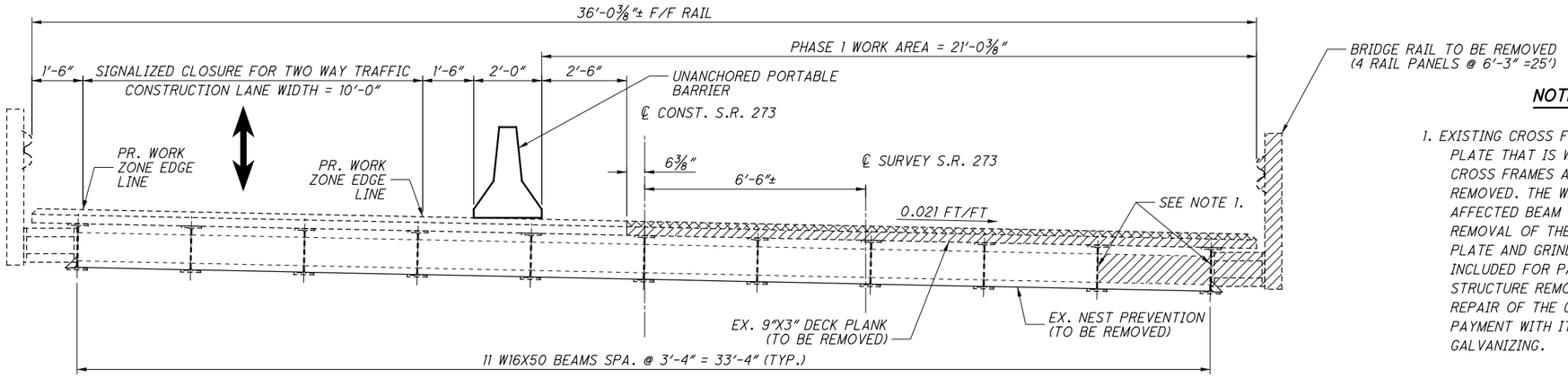

PHASE 1

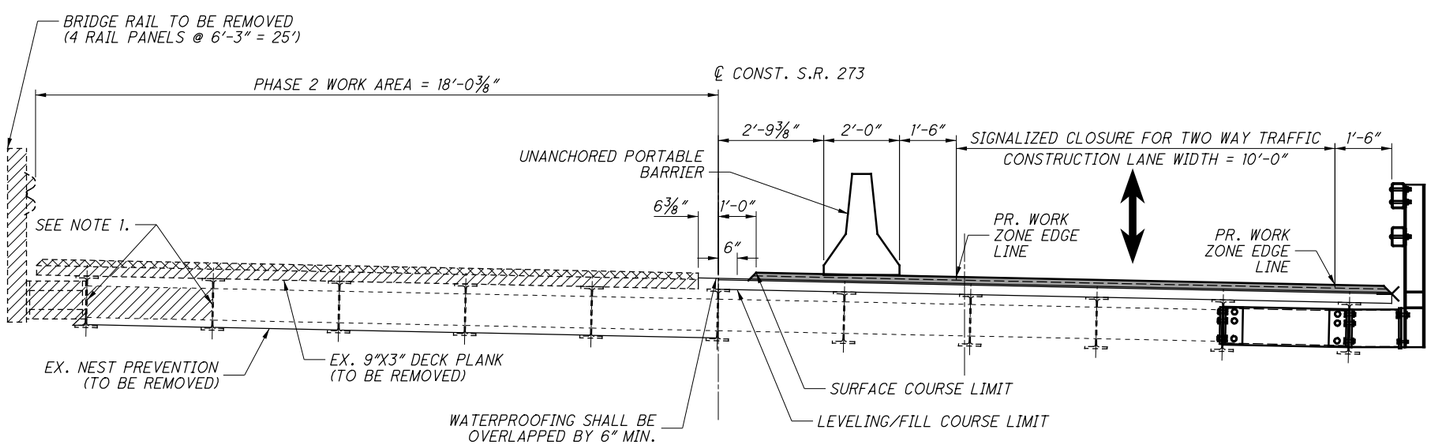

PHASE 2

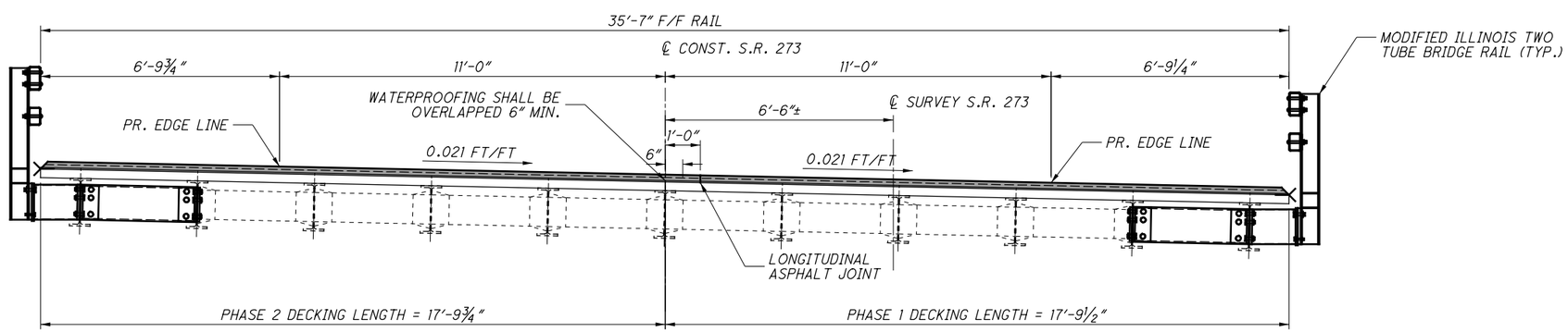

PROPOSED TRANSVERSE SECTION

NOTES & LEGEND

1. EXISTING CROSS FRAMES ARE BOLTED TO A CONNECTION PLATE THAT IS WELDED TO THE BEAMS. THE OUTSIDE CROSS FRAMES AND CONNECTION PLATE SHALL BE REMOVED. THE WELDS SHALL BE GROUND SMOOTH AND THE AFFECTED BEAM GALVANIZING SHALL BE REPAIRED. REMOVAL OF THE EXISTING CROSS FRAMES, CONNECTION PLATE AND GRINDING OF THE EXISTING WELDS SHALL BE INCLUDED FOR PAYMENT WITH ITEM 202, PORTIONS OF STRUCTURE REMOVED, OVER 20 FOOT SPAN, AS PER PLAN. REPAIR OF THE GALVANIZING SHALL BE INCLUDED FOR PAYMENT WITH ITEM 514 FIELD PAINTING, MISC.: COLD GALVANIZING.

- ITEM 202 WEARING COURSE REMOVED

- ITEM 202 PORTIONS OF STRUCTURE REMOVED, OVER 20 FOOT SPAN, AS PER PLAN

DESIGN AGENCY
ODOT DISTRICT 7
ENGINEERING

DESIGNED	DRAWN	REVIEWED	DATE
CWW	CWW	MRB	1/2/2019
CHECKED	REVISED	STRUCTURE FILE NUMBER	
DHG	XXX	4602315	

STAGE CONSTRUCTION DETAILS
BRIDGE NO.: LOG-273-0002
S.R. 273 OVER INDIAN LAKE BOAT PASSAGE

LOG-273-0.02
PID No. 99857

i:\ProjectData\LOG\99857_SR273-0002\Design\Structures\LOG273_0002C\Sheets\273_0002C_SC001.dgn Sheet 1/29/2019 9:44:25 AM cweiss

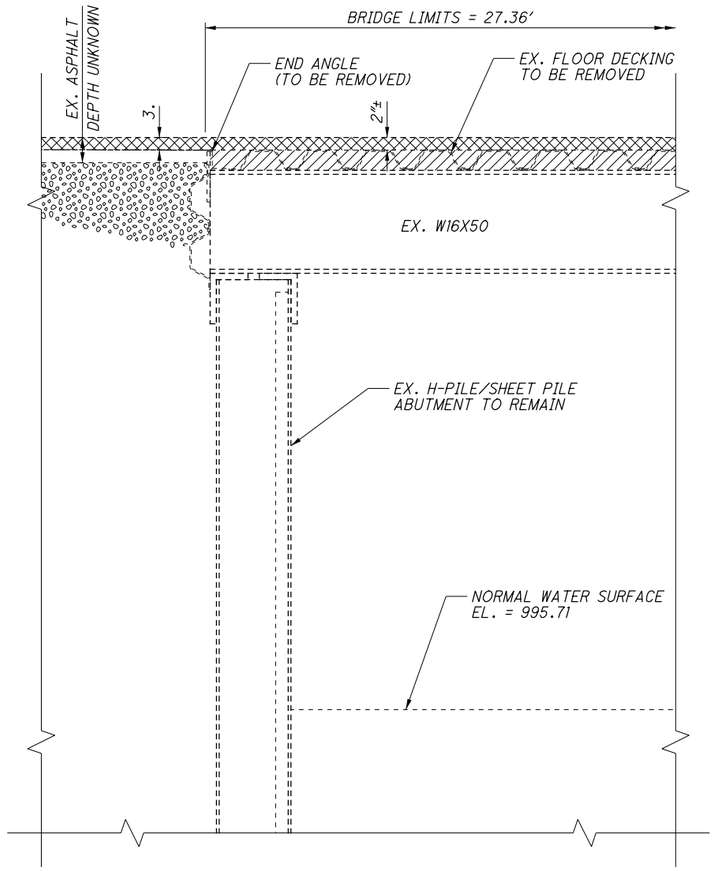

EXISTING ABUTMENT SECTION

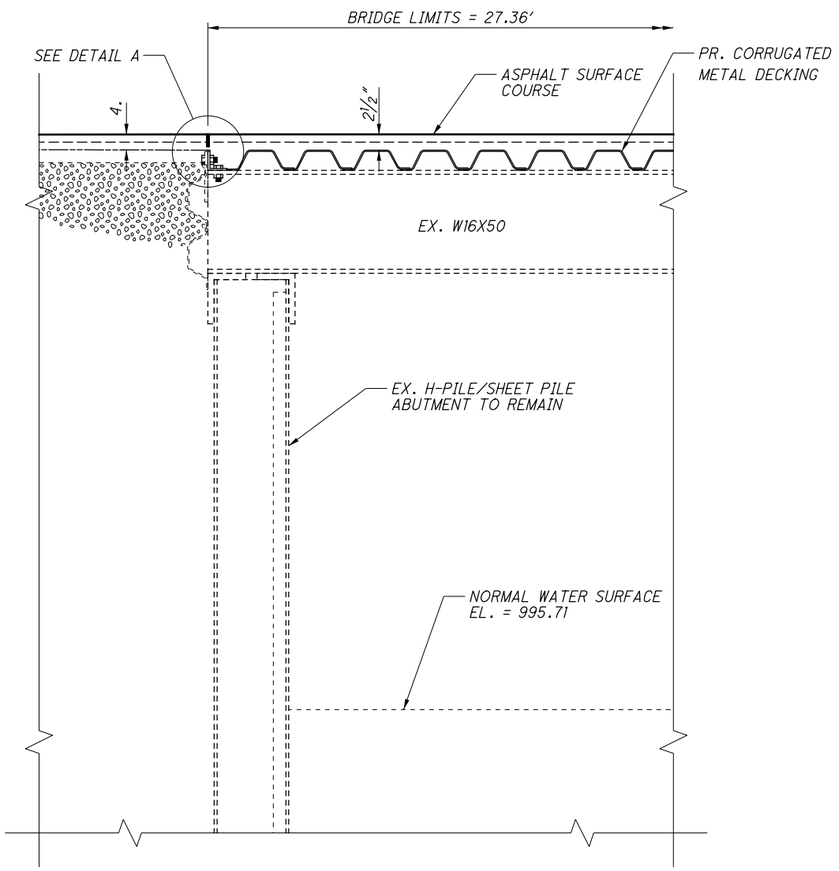

PROPOSED ABUTMENT SECTION

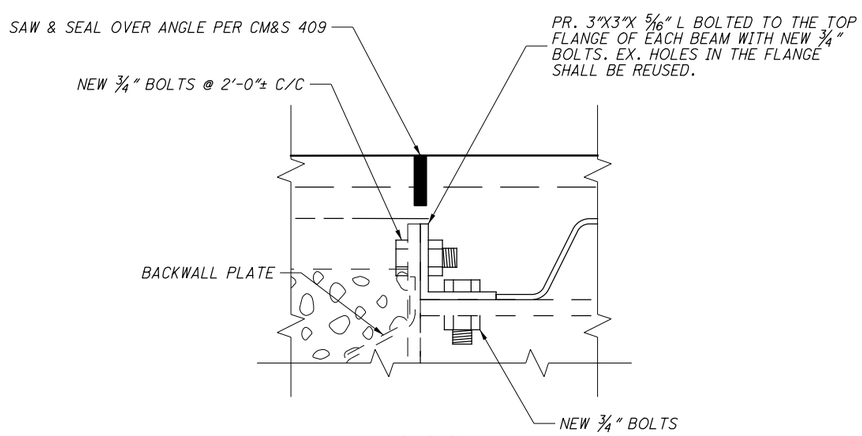

DETAIL A

NOTES & LEGEND

1. CARE SHALL BE TAKEN DURING REMOVAL OF THE EXISTING DECKING AS TO NOT DAMAGE THE EXISTING BEAMS.

2. THE PROPOSED END ANGLE AND HARDWARE NEEDED FOR INSTALLATION IN DETAIL A SHALL BE INCLUDED IN THE PAYMENT FOR THE DECKING.

3. TRANSITION MILLING DEPTH FROM 2" AT THE BRIDGE LIMITS TO 1¼" AT THE PAVEMENT LIMITS.

4. TRANSITION PAVEMENT DEPTH FROM 2 ½" AT THE BRIDGE LIMITS TO 1 ¼" AT THE PAVEMENT LIMITS USING TWO LIFTS.

- ITEM 202 WEARING COURSE REMOVED

- ITEM 202 PORTIONS OF STRUCTURE REMOVED, OVER 20 FOOT SPAN, AS PER PLAN

DESIGN AGENCY
ODOT DISTRICT 7
ENGINEERING

DESIGNED	DRAWN	REVIEWED	DATE
CWW	CWW	MRB	1/2/2019
CHECKED	REVISED	STRUCTURE FILE NUMBER	
DHG	XXX	4602315	

ABUTMENT DETAILS
BRIDGE NO.: LOG-273-0002
S.R. 273 OVER INDIAN LAKE BOAT PASSAGE

LOG-273-0.02
PID No. 99857

I:\Project Data\LOG\99857_SR273-0002\Design\Structures\LOG273_0002C\Sheets\273_0002C_SR001.dgn Sheet 1/29/2019 9:44:27 AM cweiss

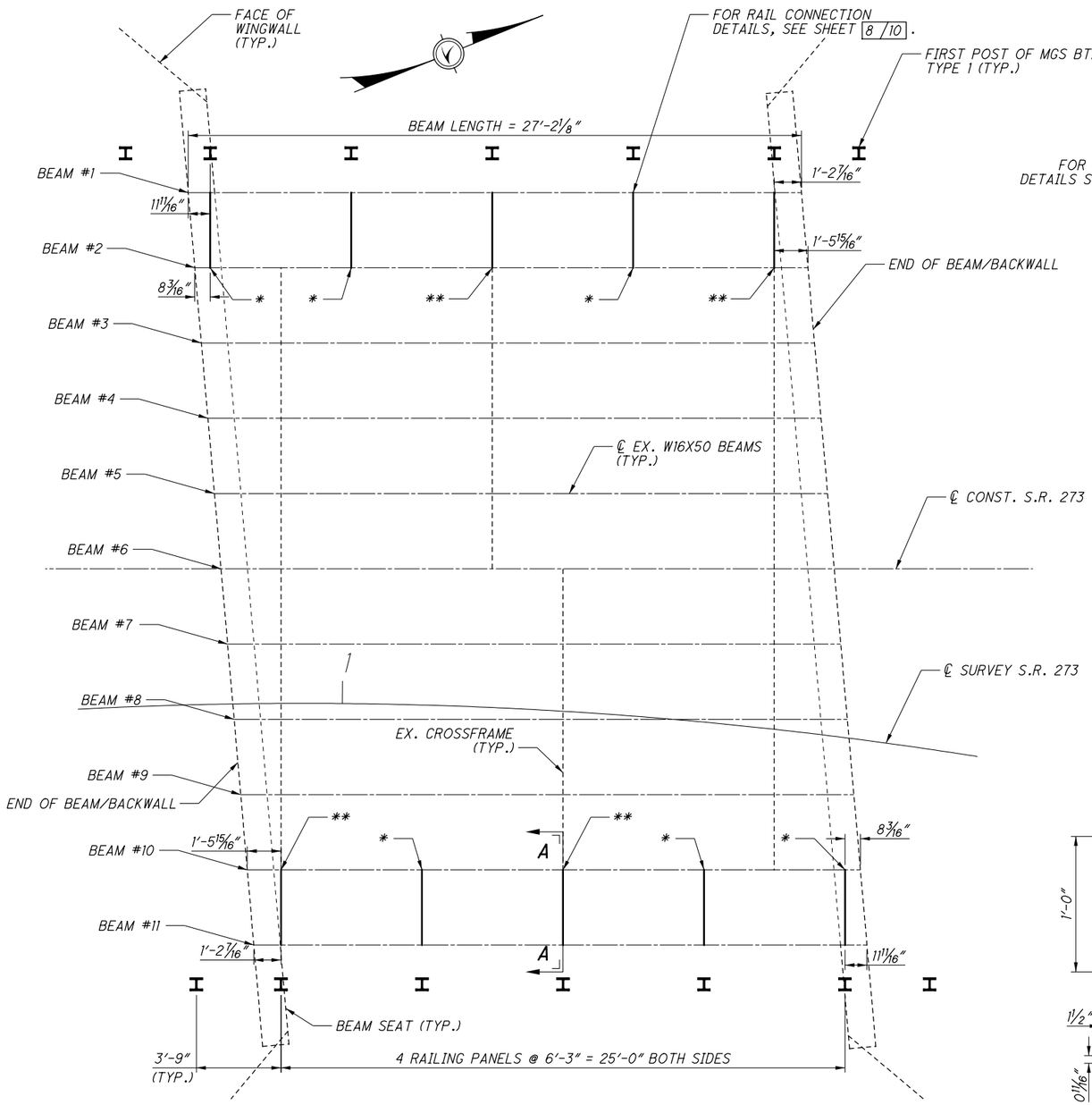

PLAN VIEW

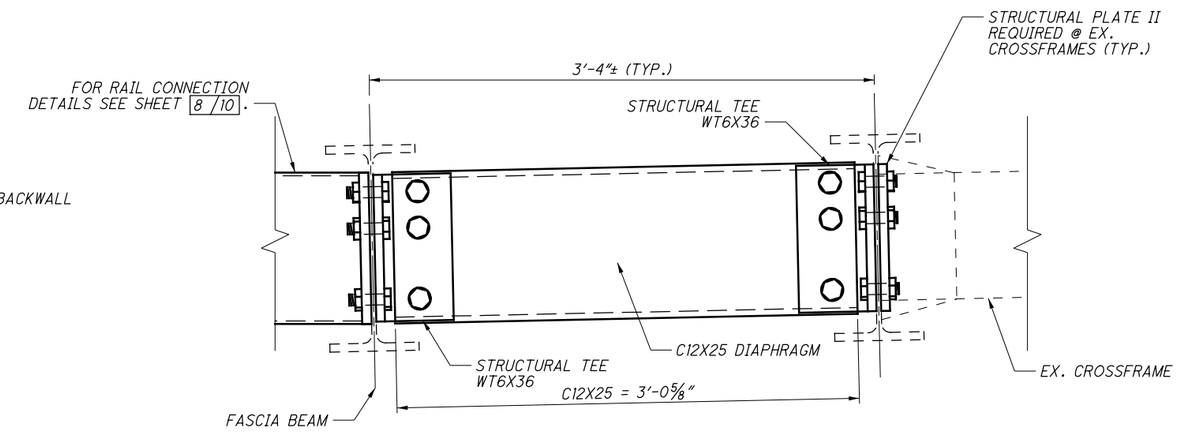

SECTION A-A

(DECK NOT SHOWN)

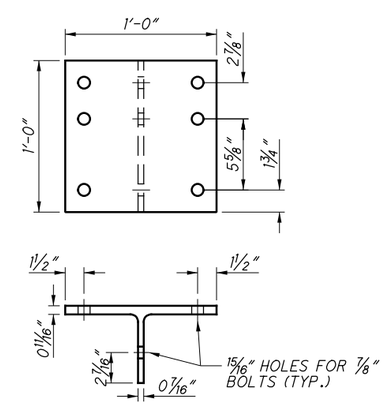

STRUCTURAL TEE DETAILS

(20 STRUCTURAL TEE REQUIRED)

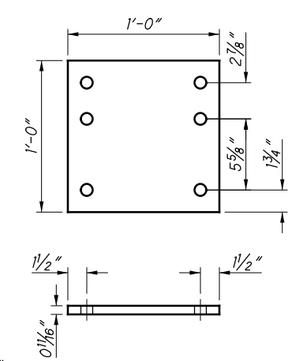

STRUCTURAL PLATE I DETAILS

(6 STRUCTURAL PLATE I REQUIRED)

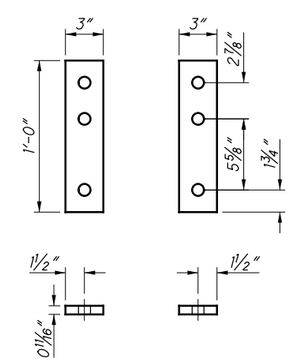

STRUCTURAL PLATE II DETAILS

(4 SETS OF STRUCTURAL PLATE II REQUIRED)

NOTES & LEGEND

1. BOLT HOLES IN THE BEAMS AND THE DIAPHRAGM SHALL BE FIELD DRILLED TO ENSURE FIT UP.

* - STRUCTURAL PLATE I

** - STRUCTURAL PLATE II

DESIGN AGENCY
ODOT DISTRICT 7
ENGINEERING

DESIGNED	DRAWN	REVIEWED	DATE
CWW	CWW	MRB	1/2/2019
CHECKED	REVISED	STRUCTURE FILE NUMBER	
DHG	XXX	4602315	

SUPERSTRUCTURE DETAILS
BRIDGE NO.: LOG-273-0002
S.R. 273 OVER INDIAN LAKE BOAT PASSAGE

LOG-273-0.02
PID No. 99857

i:\ProjectData\LOG\99857_SR273-0002\Design\Structures\LOG273_0002C\Sheets\273_0002C_SS001.dgn Sheet 1/29/2019 9:44:29 AM cweiss

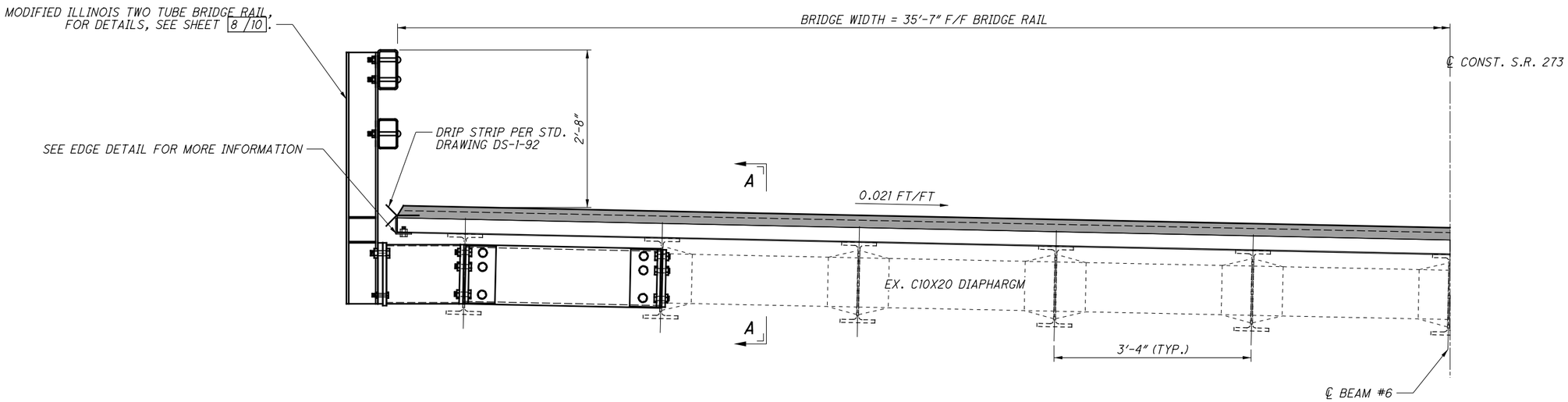

HALF TRANSVERSE SECTION

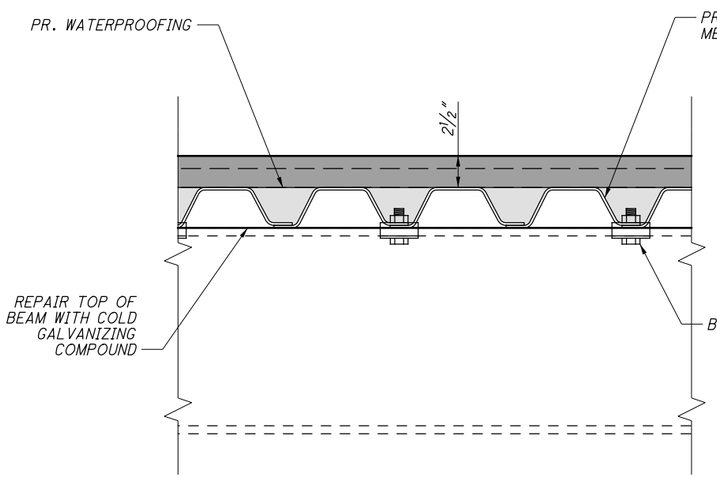

SECTION A-A

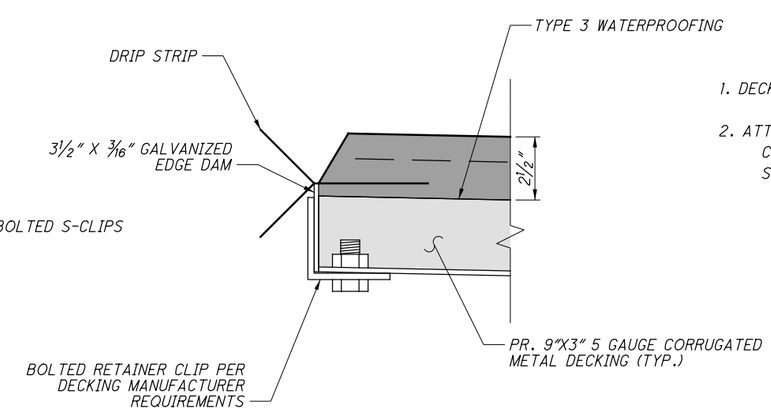

EDGE DETAIL

NOTES & LEGEND

1. DECK SPLICES SHALL BE BUTT WELDED AT THE CRESTS OVER BEAM #6.

2. ATTACH DECKING TO BEAM FLANGES USING CLIPS PER DECKING MANUFACTURER REQUIREMENTS. CLIPS SHALL BE INSTALLED ON OPPOSITE SIDES OF THE BEAM FLANGES IN A 9" MAX. STAGGERED PATTERN. INSTALL ON BOTH SIDES OF CENTER BEAM.

- TWO LIFTS, 1 1/4" MAXIMUM THICKNESS ITEM 441, ASPHALT CONCRETE SURFACE COURSE, TYPE 1, (448), PG64-22

- ITEM 441, ASPHALT CONCRETE SURFACE COURSE, TYPE 1, (448), PG64-22

DESIGN AGENCY
ODOT DISTRICT 7
ENGINEERING

DESIGNED	DRAWN	REVIEWED	DATE
CWW	CWW	MRB	1/2/2019
CHECKED	REVISED	STRUCTURE FILE NUMBER	
DHG	XXX	4602315	

TRANSVERSE SECTION
BRIDGE NO.: LOG-273-0002
S.R. 273 OVER INDIAN LAKE BOAT PASSAGE

LOG-273-0.02
PID No. 99857

I:\ProjectData\LOG\99857_SR273-0002\Design\Structures\LOG273_0002C\Sheets\273_0002C_ST001.dgn Sheet 1/29/2019 9:44:30 AM cweiss

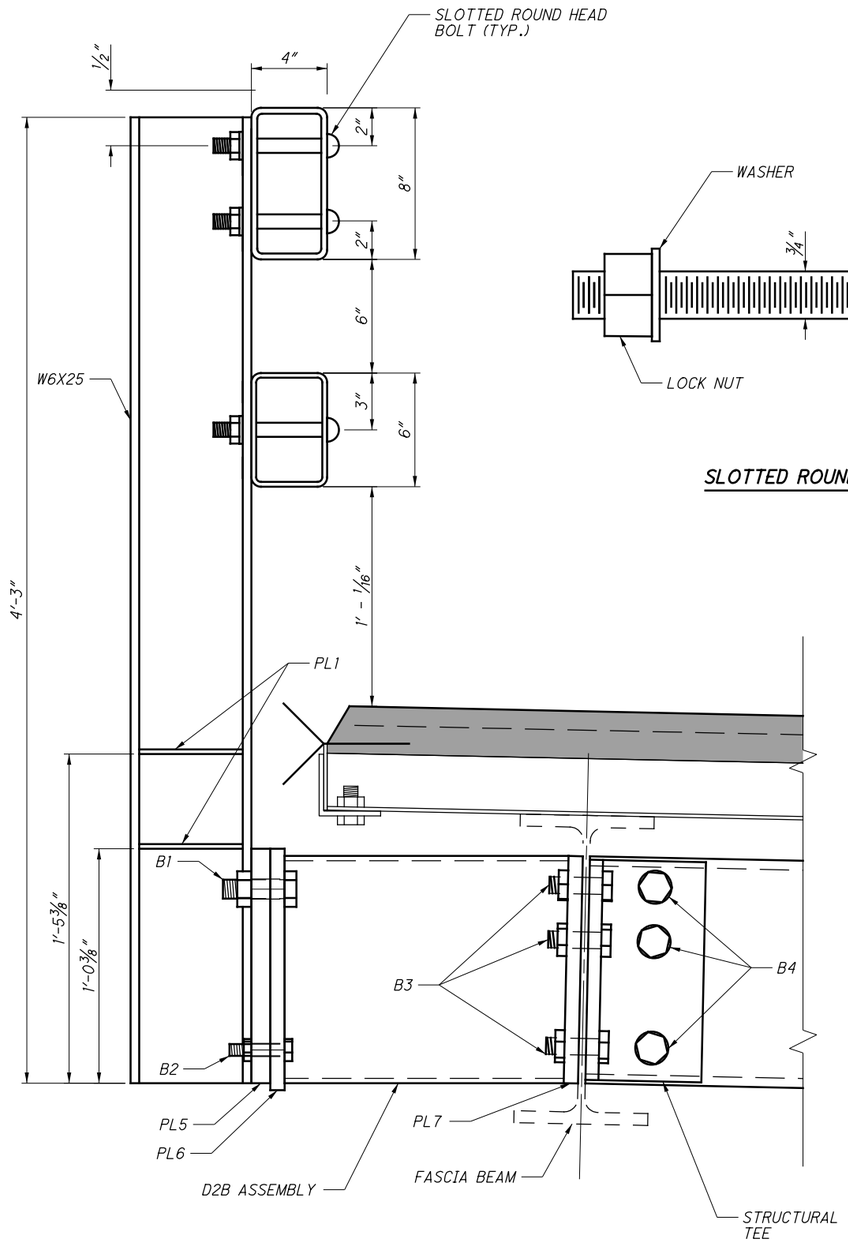

BRIDGE RAIL POST DETAIL

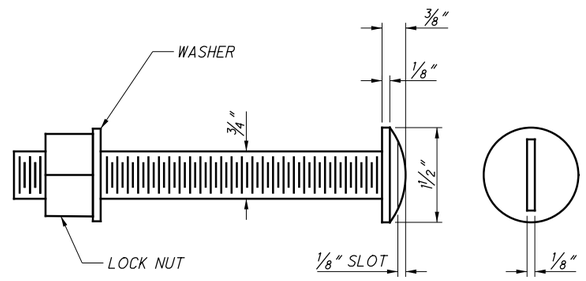

SLOTTED ROUND HEAD BOLT

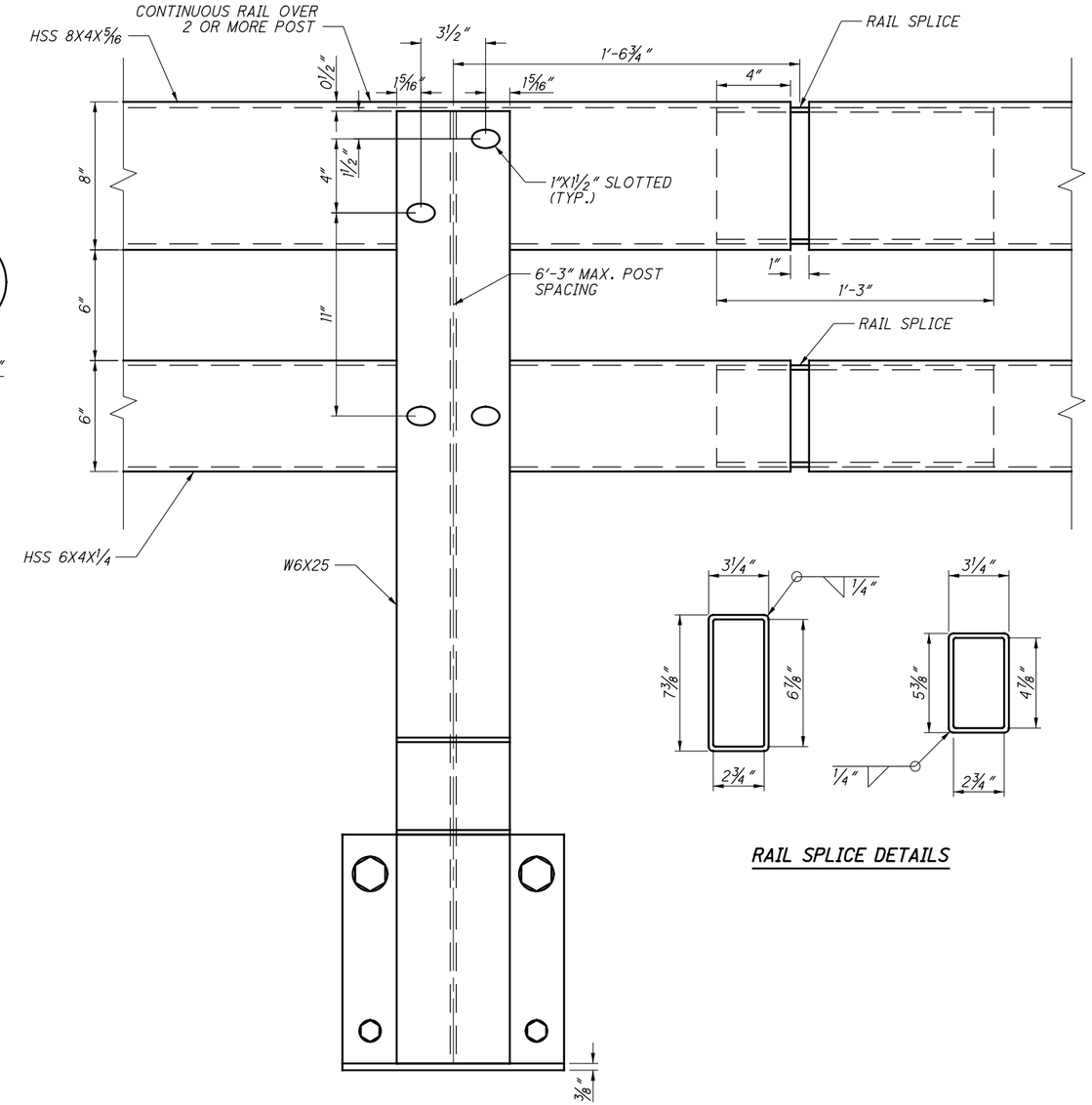

RAIL SPLICE DETAILS

BRIDGE RAIL DETAILS

BOLT	DIAMETER	LENGTH	CLASS	NUT TYPE	FLAT WASHERS	
					TYPE	QTY/BOLT
B1	1"	3-1/4"	ASTM A325-1	ASTM A563-DH	ASTM F436-1	2
B2	5/8"	3-1/4"	ASTM A325-1	ASTM A563-DH	ASTM F436-1	2
B3	7/8"	2-11/16"	ASTM A325-1	ASTM A563-DH	ASTM F436-1	2
B4	7/8"	2-11/16"	ASTM A325-1	ASTM A563-DH	ASTM F436-1	2

NOTES & LEGEND

1. 1/2" DRAIN HOLE AT LOWEST POINT OF THE TUBE RAIL WHEN SAG VERTICAL CURVES OCCUR.
2. THE TOP EDGE OF ASSEMBLY D2B SHALL BE POSITIONED ON THE WEB OF THE FASCIA BEAM SUCH THAT THE TOP EDGE OF THE MOUNTING PLATE (PL7) IS FLUSH WITH THE WEB TO FLANGE RADIUS BOUNDARY OF THE FASCIA BEAM.
3. THE TOP EDGE OF THE STRUCTURAL TEE SHALL BE POSITIONED ON THE WEB OF THE FASCIA BEAM, OPPOSITE D2B AND SUCH THAT THE TOP EDGE OF THE STRUCTURAL TEE IS FLUSH WITH THE WEB TO FLANGE RADIUS BOUNDARY OF THE FASCIA BEAM.
4. SEE SHEET 9/10 FOR ADDITIONAL RAILING DETAILS AND NOTES.

DESIGN AGENCY
ODOT DISTRICT 7
ENGINEERING

DESIGNED	REVIEWED	DATE
CWW	MRB	1/2/2019
DRAWN	REVISED	STRUCTURE FILE NUMBER
CWW	XXX	4602315
CHECKED		
DHG		

RAILING DETAILS (1 OF 3)
BRIDGE NO.: LOG-273-0002
S.R. 273 OVER INDIAN LAKE BOAT PASSAGE

LOG-273-0.02
PID No. 99857

i:\ProjectData\LOG\99857_SR273-0002\Design\Structures\LOG273.0002C\Sheets\273.0002C.SA001.dgn Sheet 1/29/2019 9:44:31 AM cweiss

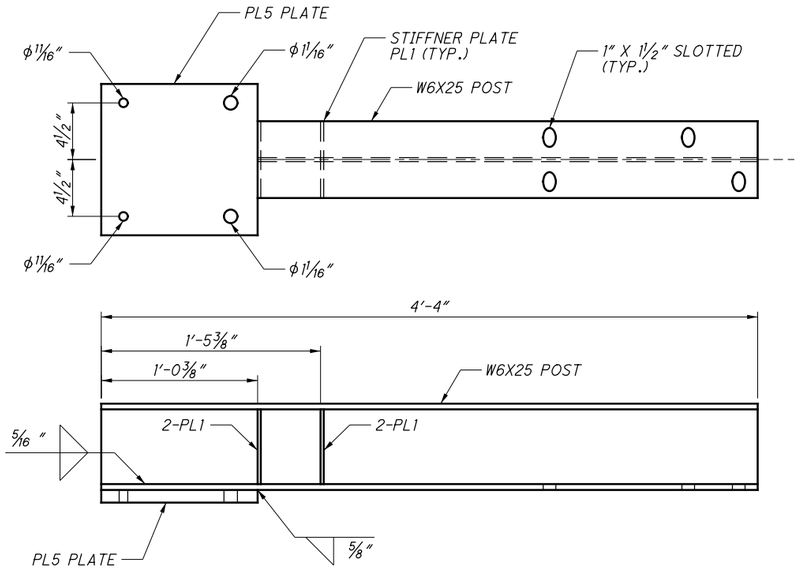

POST ASSEMBLY

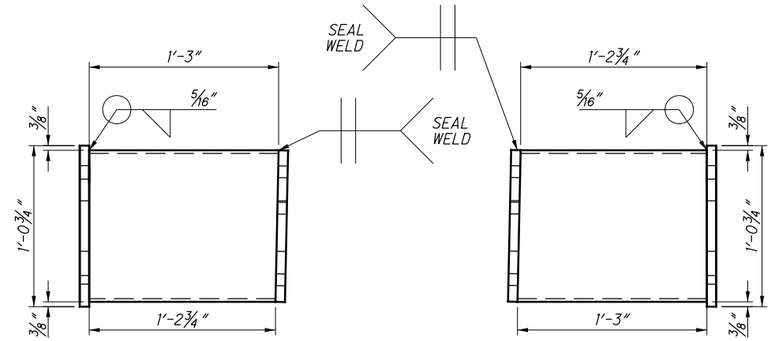

D2B ELEVATION VIEW

(LEFT SIDE POST SUPPORT ASSEMBLY)

D2B ELEVATION VIEW

(RIGHT SIDE POST SUPPORT ASSEMBLY)

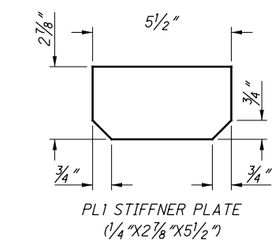

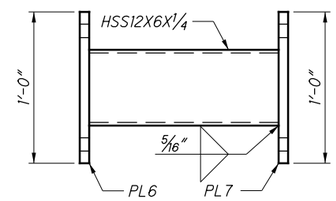

D2B PLAN VIEW

(LEFT SIDE POST SUPPORT ASSEMBLY)

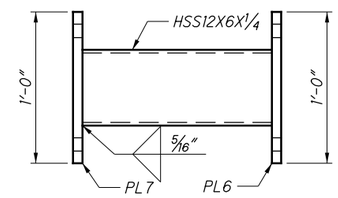

D2B PLAN VIEW

(RIGHT SIDE POST SUPPORT ASSEMBLY)

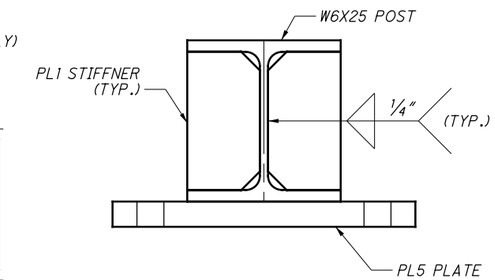

POST ASSEMBLY CROSS SECTION

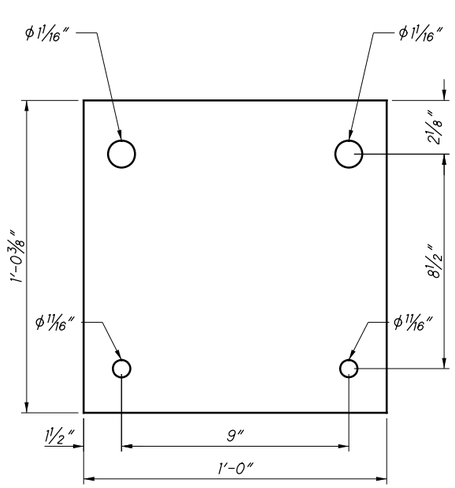

PL5 (POST SUPPORT PLATE 1)

1" THICK X 12⅜"X12"

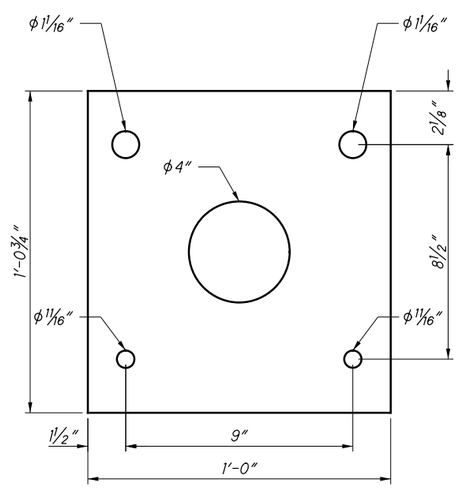

PL6 (FRONT TUBE SUPPORT PLATE 2)

¾" THICK X 12¾"X12"

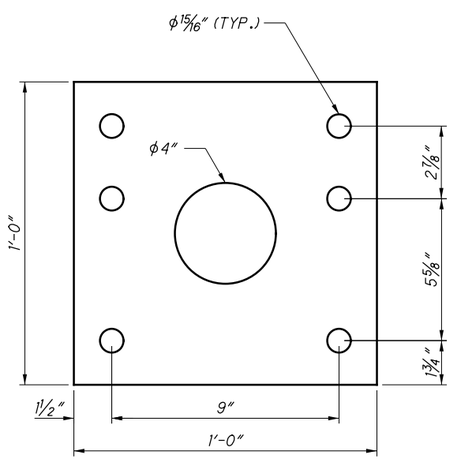

PL7 (BACK TUBE SUPPORT PLATE 3)

¾" THICK X 12"X12"

NOTES & LEGEND

1. THE 4" HOLE IN THE CENTER OF THE POST SUPPORT PLATES IS FOR VENTING PURPOSES DURING GALVANIZING.
2. ALL WELDS SHALL BEGIN AND END ¼" ± ⅛" FROM JOINT ENDS.

DESIGN AGENCY
ODOT DISTRICT 7
ENGINEERING

DESIGNED	DRAWN	REVIEWED	DATE
CWW	CWW	MRB	1/2/2019
CHECKED	REVISED	STRUCTURE FILE NUMBER	
DHG	XXX	4602315	

RAILING DETAILS (2 OF 3)
BRIDGE NO.: LOG-273-0002
S.R. 273 OVER INDIAN LAKE BOAT PASSAGE

LOG-273-0.02
PID No. 99857

I:\ProjectData\LOG\99857_SR273-0002\Design\Structures\LOG273_0002C\Sheets\273_0002C_SA002.dgn Sheet 1/29/2019 9:44:33 AM cweiss

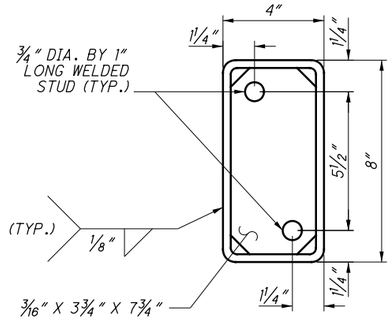

UPPER RAIL

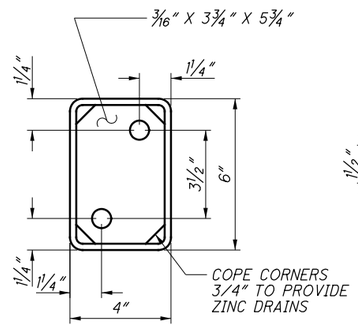

LOWER RAIL

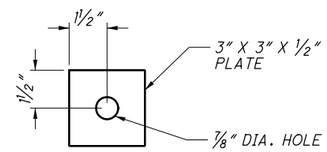

BEARING PLATE

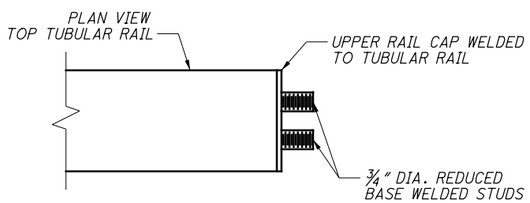

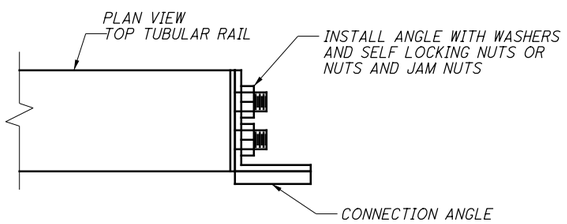

RAIL CAP DETAILS

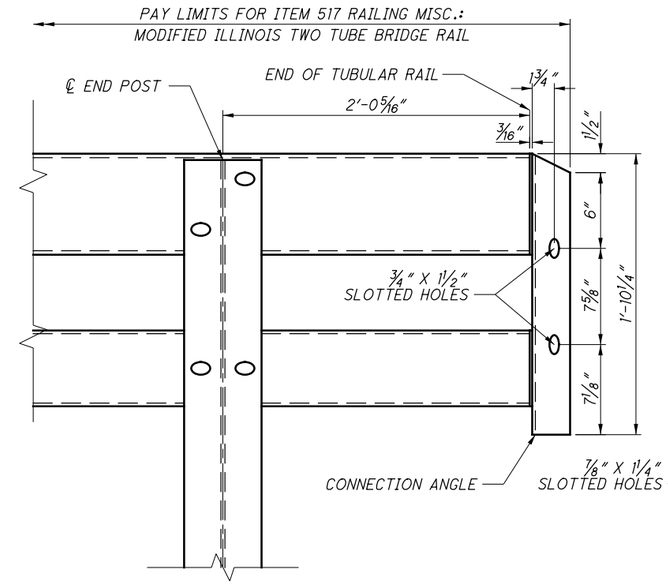

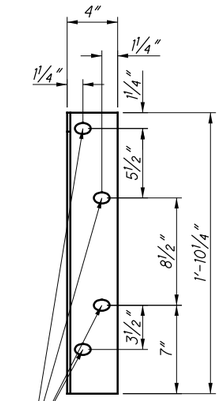

CONNECTION ANGLE
L3 X 4 X ¼" X 22¼"

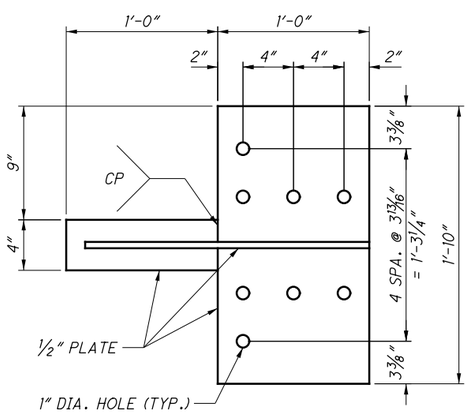

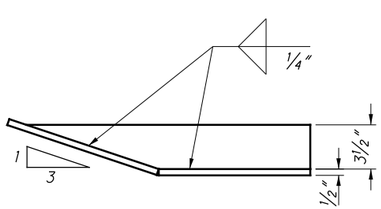

CONNECTION PLATE

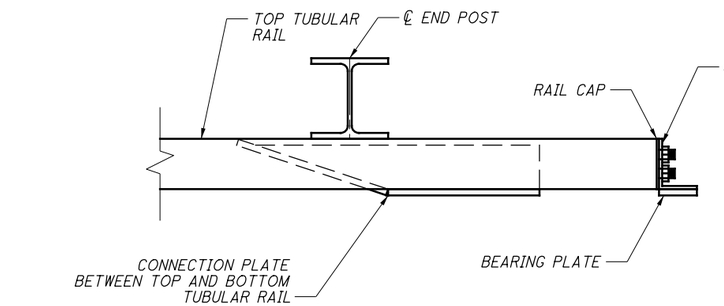

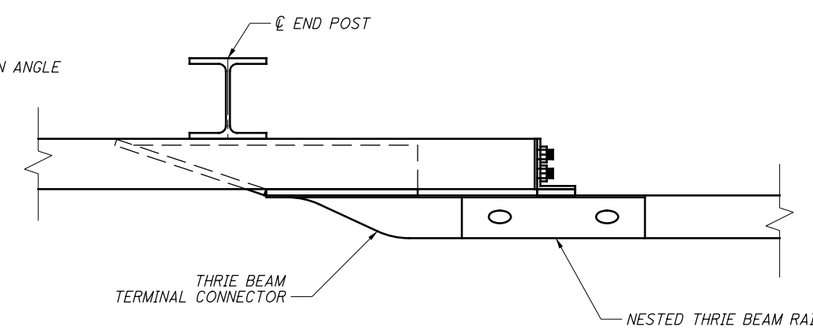

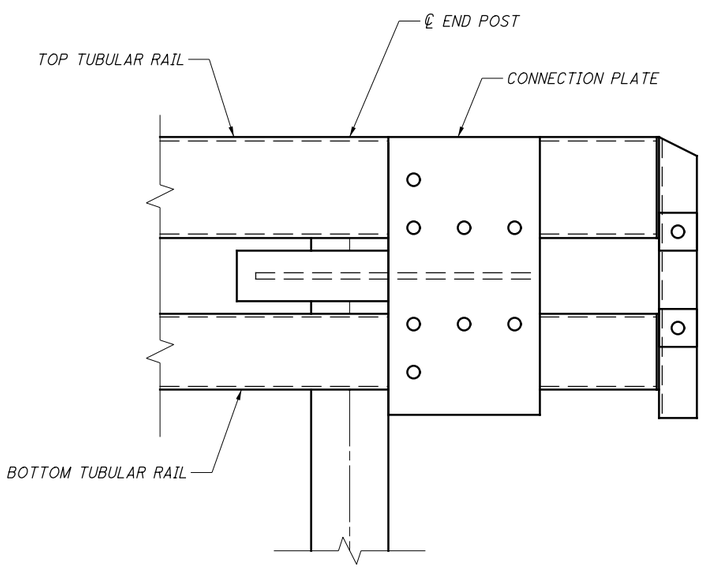

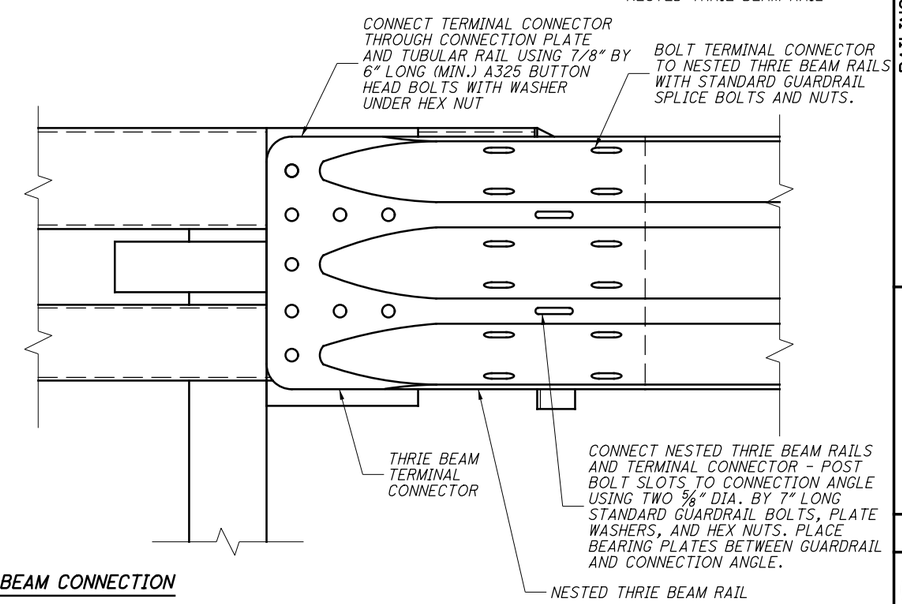

THRIE BEAM CONNECTION

DESIGN AGENCY
ODOT DISTRICT 7
ENGINEERING

DESIGNED	DRAWN	REVIEWED	DATE
CWW	CWW	MRB	1/2/2019
CHECKED	REVISED	STRUCTURE FILE NUMBER	
DHG	XXX	4602315	

RAILING DETAILS (3 OF 3)
BRIDGE NO.: LOG-273-0002
S.R. 273 OVER INDIAN LAKE BOAT PASSAGE

LOG-273-0.02
PID No. 99857

I:\ProjectData\LOG\99857_SR273-0002\Design\Structures\LOG273_0002C\Sheets\273_0002C_SA003.dgn Sheet 1/29/2019 9:44:35 AM cweiss

RIGHT OF WAY LEGEND SHEET
LOG-273-0.02

LOGAN COUNTY, OHIO
RICHLAND TOWNSHIP
V.M.S. 13393
LONG ISLAND

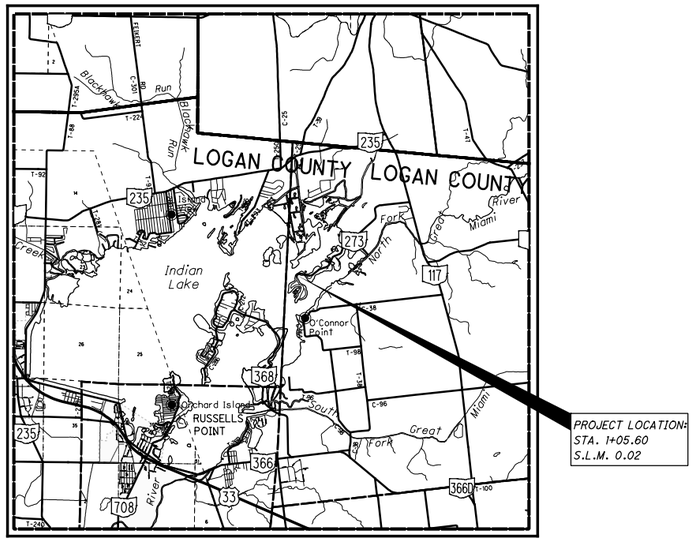

LOCATION MAP

LATITUDE: 40° 30′ 18.00″ LONGITUDE: 83° 51′ 15.77″

SCALE IN MILES
0 1 2 3 4

N

PORTION TO BE IMPROVED
INTERSTATE HIGHWAY
FEDERAL ROUTES
STATE ROUTES
COUNTY & TOWNSHIP ROADS
OTHER ROADS

NOTE: THE EXISTING R/W WIDTH AND LOCATION WERE DETERMINED USING R/W PLANS LOG-273-0.00 AND FERNWOOD SUBDIVISION PLAT ONE & TWO.

STRUCTURE KEY

- RESIDENTIAL
- COMMERCIAL
- OUT-BUILDING

TYPES OF TITLE LEGEND:
WL = FEE SIMPLE WITH LIMITATION OF ACCESS
WD = WARRANTY DEED
PRW = PROPERTY RIGHT FEE SIMPLE
SH = STANDARD HIGHWAY EASEMENT
LA = LIMITED ACCESS EASEMENT
T = TEMPORARY EASEMENT
CH = CHANNEL EASEMENT
A = AERIAL EASEMENT
SL = SLOPE EASEMENT
PRE = PROPERTY RIGHT EASEMENT

INDEX OF SHEETS:

LEGEND SHEET	1
CENTERLINE PLAT	2-3
PROPERTY MAP	4
SUMMARY SHEET	5
DETAIL SHEETS	6-7

CONVENTIONAL SYMBOLS

County Line
Township Line
Section Line
Corporation Line or
Fence Line (Ex) (Pr)
Center Line
Right of Way (Ex) Ex R/W
Right of Way (Pr) R/W
Standard Highway Ease.(Ex) Ex SH
Standard Highway Ease.(Pr) SH
Temporary Right of Way TMP
Channel Ease. (Pr) CH
Utility Ease. (Ex) Ex U
Railroad or
Guardrail (Ex) (Pr)
Construction Limits
Edge of Pavement (Ex)
Edge of Pavement (Pr)
Edge of Shoulder (Ex)
Edge of Shoulder (Pr)
Ditch / Creek (Ex)
Ditch / Creek (Pr)
Tree Line (Ex)
Ownership Hook Symbol , Example
Property Line Symbol , Example
Break Line Symbol , Example
Tree (Pr) , Tree (Ex) , Shrub (Ex)
Tree (Remove) , Shrub (Remove)
Evergreen (Ex) , Stump
Evergreen (Remove) , Stump (Remove)
Wetland (Pr) , Grass (Pr) , Aerial Target
Post (Ex) , Mailbox (Ex) , Mailbox (Pr)
Light (Ex) , Telephone Marker (Ex)
Fire Hydrant (Ex) , Water Meter (Ex)
Water Valve (Ex) , Utility Valve Unknown (Ex.)
Telephone Pole (Ex) , Power Pole (Ex)
Light Pole (Ex)

PLANS PREPARED BY:

FIRM NAME: OHIO DEPARTMENT OF TRANSPORTATION
R/W DESIGNER: TIM WAMPLER
R/W REVIEWER: MARK H. RATLIFF
FIELD REVIEWER:
PRELIMINARY FIELD REVIEW DATE:
TRACINGS FIELD REVIEW DATE:
OWNERSHIP UPDATED BY: TIM WAMPLER
DATE COMPLETED: 9/25/17
PLAN COMPLETION DATE:

PROJECT DESCRIPTION

REHABILITATION OF THE EXISTING STRUCTURE OVER THE INDIAN BOAT PASSAGE BY REPLACING THE BRIDGE DECK, BRIDGE RAILING AND APPROACH PAVEMENT.

PROJECT CONTROL

STATE PLANE GRID NORTH, NORTH ZONE 3401
PROJECT ADJUSTMENT FACTOR 0.99994472

UTILITIES

CONSTRUCTION LIMITS TOGETHER WITH THEIR RESPECTIVE OWNERS:

ELECTRIC
DAYTON POWER AND LIGHT COMPANY
1900 DRYDEN RD.
DAYTON, OH 45439
937-331-4521
WILLIAM GOURLEY
WILLIAM.GOURLEY@AES.COM

GAS
VECTREN ENERGY DELIVERY
6500 CLYO RD.
CENTERVILLE, OH 45459
937-312-2533
DON SPECHT
DSPECHT@VECTREN.COM

TELEPHONE
CENTURY LINK
127 N. MAIN ST.
BELLEFONTAINE, OH 43311
937-599-9285
RICK KROGMAN
RICK.A.KROGRAM@CENTURYLINK.COM

WATER
LOGAN COUNTY WATER POLLUTION
CONTROL DISTRICT
P.O. BOX 1550
RUSSELLS POINT, OH 43348
937-843-3328
GARIS PUGH
GPUGH@LOGANCOWPC.COM

NOTES: THE LOCATION OF THE UNDERGROUND UTILITIES SHOWN ON THE PLANS ARE OBTAINED FROM THE OWNER OF THE UTILITIES AS REQUIRED BY SECTION 153.64 O.R.C.

I, Mark H. Ratliff, P. S. have conducted a survey of the existing conditions for the Ohio Department of Transportation in June, 2017. The results of that survey are contained herein. The horizontal coordinates expressed herein are based on the Ohio State Plane Coordinate System, North Zone on NAD 83 (2011) datum. The Project Coordinates (US Survey feet) are relative to State Plane Grid Coordinates (meters or US Survey feet) by a Project Adjustment Factor multiplier of 0.99994472. As a part of this project I have reestablished the locations of the existing property lines and centerline of existing Right of Way for property takes contained herein. All of my work contained herein was conducted in accordance with Ohio Administrative Code 4733-37 commonly known as "A Minimum Standards for Boundary Surveys in the State of Ohio" unless noted. The words I and my as used herein are to mean either myself or someone working under my direct supervision.

STATE OF OHIO
MARK H. RATLIFF
S-7936
REGISTERED
PROFESSIONAL SURVEYOR

Mark H. Ratliff, Professional Land Surveyor No. 7936, Date:

FEDERAL PROJECT NO. NA
PID NO. 99857
CALCULATED TPW
CHECKED MHR

RIGHT OF WAY LEGEND SHEET
LOG-273-0.02

I:\ProjectData\LOG\99857_SR273-0002\Design\RW\Sheets\LOG273_002_RL001.dgn Sheet 1/29/2019 9:44:37 AM cweiss

Note:
Stationing on the 1936 SH 920 Sec A (273) plans run from the north at SR-117 to the south, ending at Sta 105+64.62. The current stationig runs south to north making old sta. 105+64.62 equaling present Sta. 0+00.00

LOG-273-0.02

LOGAN COUNTY, OHIO
RICHLAND TOWNSHIP
V.M.S. 13393
LONG ISLAND

P.I. Sta. 1+72.35
Δ = 49° 58′ 07″ (RT)
Dc = 29° 58′ 50″
R = 191.11′
T = 89.05′
L = 166.67′
E = 19.73′
C = 161.44′
C.B. = N 42° 39′ 15″ E

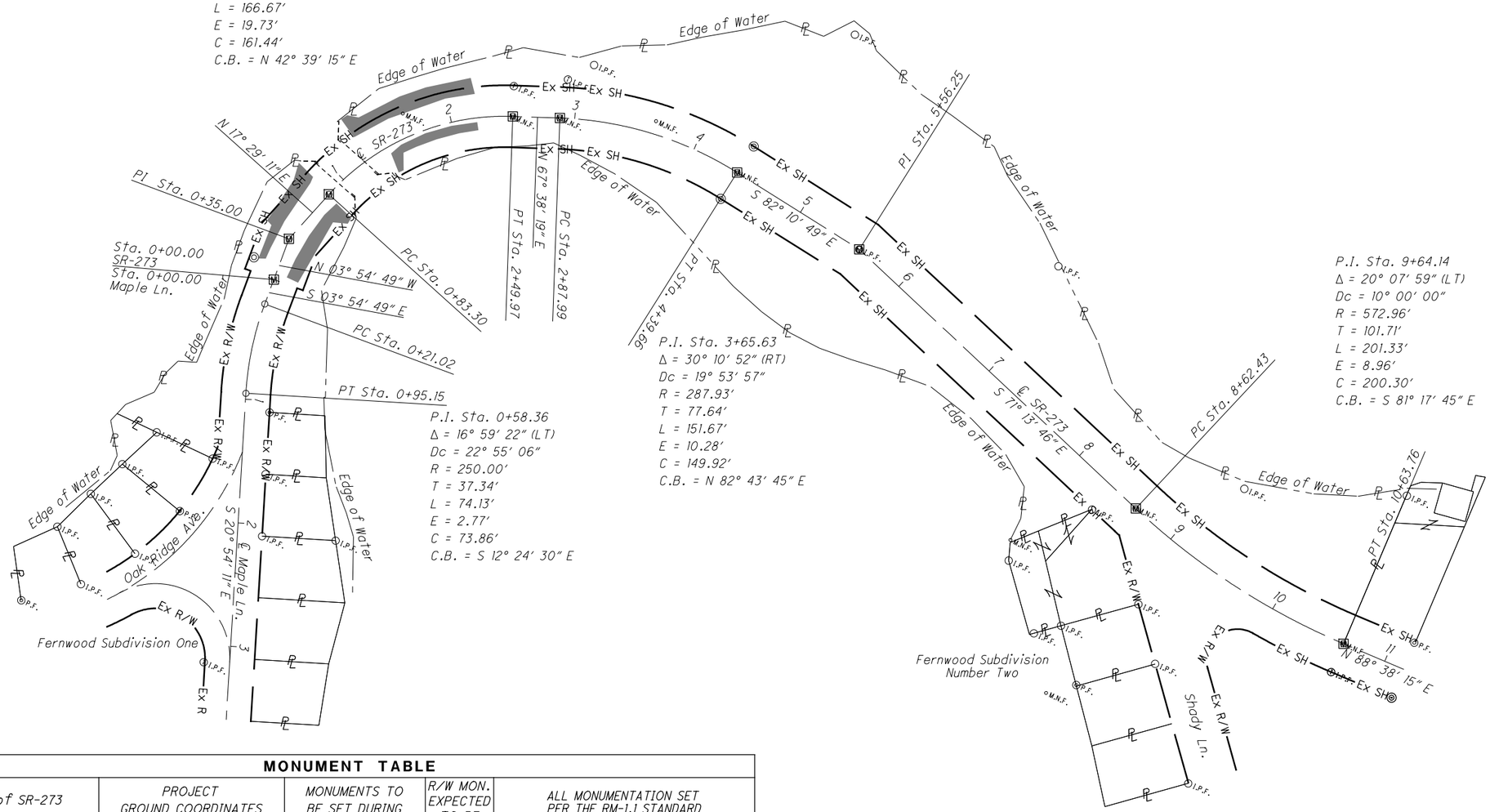

P.I. Sta. 0+58.36
Δ = 16° 59′ 22″ (LT)
Dc = 22° 55′ 06″
R = 250.00′
T = 37.34′
L = 74.13′
E = 2.77′
C = 73.86′
C.B. = S 12° 24′ 30″ E

P.I. Sta. 3+65.63
Δ = 30° 10′ 52″ (RT)
Dc = 19° 53′ 57″
R = 287.93′
T = 77.64′
L = 151.67′
E = 10.28′
C = 149.92′
C.B. = N 82° 43′ 45″ E

P.I. Sta. 9+64.14
Δ = 20° 07′ 59″ (LT)
Dc = 10° 00′ 00″
R = 572.96′
T = 101.71′
L = 201.33′
E = 8.96′
C = 200.30′
C.B. = S 81° 17′ 45″ E

MONUMENT TABLE

℄ of SR-273		PROJECT GROUND COORDINATES SEE SURVEY CERTIFICATION		MONUMENTS TO BE SET DURING CONSTRUCTION		R/W MON. EXPECTED TO BE DISTURBED	ALL MONUMENTATION SET PER THE RM-1.1 STANDARD CONSTRUCTION DRAWING
STATION	OFFSET	NORTH (Y)	EAST (X)	MON. ASSY.	REF. MON.	R/W MON.	DESCRIPTION
POT 0+00.00	℄	308,213.0730	1,591,872.0069	1			MONBOX SET WITH ¾″ IP SET
PI 0+35.00	℄	308,247.9914	1,591,869.6180	1			MONBOX SET WITH ¾″ IP SET
PC 0+83.30	℄	308,294.0594	1,591,884.1311	1			MONBOX SET WITH ¾″ IP SET
PI 1+72.35	19.73′ Lt.	308,378.9102	1,591,911.1615				
PT 2+49.97	℄	308,412.7899	1,591,993.5172	1			MONBOX SET WITH ¾″ IP SET
PC 2+87.99	℄	308,427.2524	1,592,028.6782	1			MONBOX SET WITH ¾″ IP SET
PI 3+65.63	10.28′ Lt.	308,456.7919	1,592,100.4785				
PT 4+39.66	℄	308,446.2288	1,592,177.3951	1			MONBOX SET WITH ¾″ IP SET
PI 5+56.25	℄	308,430.3661	1,592,292.9010	1			MONBOX SET WITH ¾″ IP SET
PC 8+62.43	℄	308,331.8443	1,592,582.7969	1			MONBOX SET WITH ¾″ IP SET
PI 9+64.14	8.96′ Rt.	308,299.1150	1,592,679.1010				
PT 10+63.76	℄	308,301.5334	1,592,780.7860	1			MONBOX SET WITH ¾″ IP SET
TOTAL CARRIED TO GENERAL SUMMARY SHEET				9			

PROJECT CONTROL

STATE PLANE GRID NORTH NORTH ZONE 3401
GRID TO GROUND PROJECT ADJUSTMENT FACTOR 1.00005528

SETTING OF ALL MONUMENTS SHALL BE PERFORMED BY A SURVEYOR REGISTERED IN THE STATE OF OHIO. THE MONUMENT ASSEMBLIES AND REFERENCE MONUMENTS WILL BE INSTALLED BY THE CONTRACTOR AT THE TIME OF CONSTRUCTION. THE IRON PIN AND CAP (WHEN REQUIRED) ARE TO BE INSTALLED BY THE CONTRACTOR'S SURVEYOR.

CHANGES OR ALTERATIONS TO THE LOCATION OF ANY MONUMENTS SHOWN IN THIS TABLE, REQUIRE PRIOR APPROVAL FROM THE DISTRICT REAL ESTATE ADMINISTRATOR OF THE OHIO DEPARTMENT OF TRANSPORTATION. IN THE EVENT THAT CHANGES OR ALTERATIONS ARE APPROVED, A REVISED CENTERLINE PLAT WITH THE NEW LOCATIONS SHALL BE RECORDED IN THE APPLICABLE COUNTY RECORDS AND THE OHIO DEPARTMENT OF TRANSPORTATION. SPECIFICATIONS FOR MONUMENT ASSEMBLIES, REFERENCE MONUMENTS AND RIGHT OF WAY MONUMENTS ARE SHOWN ON STANDARD CONSTRUCTION DRAWING RM-1.1.

MONUMENT LEGEND

- EXISTING R/W MONUMENT BOX
- PROPOSED R/W MONUMENT BOX
- EXISTING CONCRETE MONUMENT
- PROPOSED CONCRETE MONUMENT
- RAILROAD SPIKE FOUND
- RAILROAD SPIKE SET
- I.P.F. IRON PIN FOUND
- I.P.F. IRON PIN FOUND W/ ID CAP
- I.P.S. IRON PIN SET W/ ID CAP
- P.F. IRON PIPE FOUND
- P.S. IRON PIPE SET
- P.K.F. P.K. NAIL FOUND
- P.K.S. P.K. NAIL SET

HORIZONTAL SCALE IN FEET 0 25 50 100

PID NO. 99857

R/W DESIGNER TPW
R/W REVIEWER MHR

CENTERLINE PLAT

LOG-273-0.02

I:\ProjectData\LOG\99857_SR273-0002\Design\RW\Sheets\LOG273_002_RC001.dgn Design 1/29/2019 9:44:40 AM cweiss

LOG-273-0.02

LOGAN COUNTY, OHIO
RICHLAND TOWNSHIP
V.M.S. 13393
LONG ISLAND

FOUND MONUMENT TABLE

℄ of SR-273		PROJECT GROUND COORDINATES SEE SURVEY CERTIFICATION		R/W MON. EXPECTED TO BE DISTURBED	
STATION	OFFSET	NORTH (Y)	EAST (X)	R/W MON.	DESCRIPTION
0+11.21	21.37′ Lt.	308,222.7986	1,591,849.9200		R/W Conc. Mon. Fd.
1+66.43	18.99′ Lt.	308,378.2432	1,591,911.5490		Magnail Fd.
2+49.94	24.46′ Lt.	308,435.3944	1,591,984.1770		⅝″ Iron Pin Fd.
2+50.01	0.36′ Rt.	308,412.4721	1,591,993.6950		Magnail Fd.
2+87.99	0.13′ Rt.	308,427.1349	1,592,028.7290		Magnail Fd.
2+92.90	31.40′ Lt.	308,458.3246	1,592,021.7880		⅝″ Iron Pin Fd.
3+10.66	44.78′ Lt.	308,477.6750	1,592,036.2360		⅝″ Iron Pin Fd.
3+63.90	10.48′ Lt.	308,456.9966	1,592,100.5270		Magnail Fd.
4+39.70	0.12′ Lt.	308,446.3410	1,592,177.4540		Magnail Fd.
4+39.70	25.00′ Lt.	308,470.9900	1,592,180.8400		R/W Conc. Mon. Fd.
4+39.76	25.03′ Rt.	308,421.4200	1,592,174.0900		R/W Conc. Mon. Fd.
5+56.25	℄	308,430.3661	1,592,292.9010		Iron Pin Fd.
6+82.99	100.05′ Lt.	308,484.3090	1,592,445.0930		⅝″ Iron Pin Fd.
8+05.90	87.84 Rt.	308,266.8640	1,592,501.0080		Magnail Fd.
8+16.24	100.96′ Rt.	308,251.1140	1,592,506.5780		⅝″ Iron Pin Fd.
8+37.23	24.92′ Rt.	308,316.3620	1,592,550.9210		⅝″ Iron Pin Fd.
8+62.30	0.05′ Lt.	308,331.9336	1,592,582.6860		Magnail Fd.
8+69.68	129.98′ Rt.	308,205.9660	1,592,549.4150		⅝″ Iron Pin Fd.
8+79.79	110.80′ Rt.	308,220.5630	1,592,566.8610		⅝″ Iron Pin Fd.
9+00.77	159.94′ Rt.	308,166.1970	1,592,578.2660		Magnail Fd.
9+12.00	57.41′ Rt.	308,262.1970	1,592,616.6560		⅝″ Iron Pin Fd.
9+12.68	139.74′ Rt.	308,182.0450	1,592,597.8240		¾″ Iron Pipe Fd.
9+22.99	68.73′ Lt.	308,382.4690	1,592,656.1890		⅝″ Iron Pin Fd.
9+47.00	88.15′ Rt.	308,223.9000	1,592,648.8060		⅝″ Iron Pin Fd.
10+07.61	156.48′ Rt.	308,146.9000	1,592,713.0710		⅝″ Iron Pin Fd.
TOTAL CARRIED TO GENERAL SUMMARY SHEET					

FOUND MONUMENT TABLE

℄ of SR-273		PROJECT GROUND COORDINATES SEE SURVEY CERTIFICATION		FD. MON. EXPECTED TO BE DISTURBED	
STATION	OFFSET	NORTH (Y)	EAST (X)	R/W MON.	DESCRIPTION
10+63.51	0.03′ Rt.	308,301.5010	1,592,780.5360		Magnail Fd.
10+63.54	25.01′ Rt.	308,276.5246	1,592,781.1520		Iron Pin Fd.
10+64.15	130.03′ Lt.	308,431.5370	1,592,778.0880		⅝″ Iron Pin Fd.
11+16.11	23.08′ Lt.	308,325.8510	1,592,832.5740		1″ Iron Pipe Fd.
11+16.54	25.00′ Rt.	308,277.7977	1,592,834.1490		R/W Conc. Mon. Fd.
		307,907.9912	1,591,947.8890		1″ Iron Pipe Fd.
		308,377.1021	1,593,082.8870		R/W Conc. Mon. Fd.
		308,060.8190	1,591,886.5780		Iron Pin Fd.
		308,061.5540	1,591,836.6270		Iron Pin Fd.
		308,026.6560	1,591,821.9630		Iron Pin Fd.
		308,011.2910	1,591,879.9210		Iron Pipe Fd.
		307,964.9620	1,591,961.1170		⅝″ Iron Pin Fd.
		307,994.2690	1,591,808.6570		⅝″ Iron Pin Fd.
		307,958.9660	1,591,795.0050		⅝″ Iron Pin Fd.
		307,924.5180	1,591,831.4710		⅝″ Iron Pin Fd.
		307,892.7500	1,591,792.9350		Iron Pipe Fd.
		307,865.8100	1,591,750.6970		Iron Pin Fd.
		307,839.1980	1,591,708.4970		Iron Pin Fd.
		308,020.1790	1,591,948.8340		⅝″ Iron Pin Fd.
		308,041.4260	1,592,004.4880		⅝″ Iron Pin Fd.
		308,066.9970	1,591,930.7120		⅝″ Iron Pin Fd.
		308,113.8070	1,591,913.0750		Iron Pipe Fd.
		308,382.4690	1,592,656.1890		⅝″ Iron Pin Fd.
TOTAL CARRIED TO GENERAL SUMMARY SHEET					

TO BE SET MONUMENT TABLE

℄ of SR-273 & ℄ MAPLE LN.		PROJECT GROUND COORDINATES SEE SURVEY CERTIFICATION		SET MON. EXPECTED TO BE DISTURBED	Set per the RM-1.1 Standard Construction Drawing
STATION	OFFSET	NORTH (Y)	EAST (X)	R/W MON.	DESCRIPTION
MAPLE LN.					
0+21.02	20.00′ Rt.	308,190.7383	1,591,853.4881	1	¾″ Iron Pin Set
0+95.15	20.00′ Rt.	308,112.8337	1,591,870.6286		¾″ Iron Pin Set
0+95.15	37.55′ Rt.	308,106.5723	1,591,854.2342		¾″ Iron Pin Set
SR-273					
0+00.00	20.00′ Lt.	308,211.7079	1,591,852.0535	1	¾″ Iron Pin Set
0+00.00	20.00′ Rt.	308,214.4381	1,591,891.9603		¾″ Iron Pin Set
0+00.00	25.00′ Lt.	308,211.3667	1,591,847.0652		¾″ Iron Pin Set
0+00.00	25.00′ Rt.	308,214.7794	1,591,896.9487		¾″ Iron Pin Set
0+35.00	25.44′ Lt.	308,250.9980	1,591,844.3540		¾″ Iron Pin Set
0+35.00	25.44′ Rt.	308,244.9813	1,591,894.8810		¾″ Iron Pin Set
0+57.61	44.02′ Lt.	308,282.7829	1,591,834.4280		¾″ Iron Pin Set
0+73.50	32.75′ Rt.	308,274.8672	1,591,912.4218		¾″ Iron Pin Set
0+84.23	29.19′ Rt.	308,285.9491	1,591,912.1850	1	¾″ Iron Pin Set
1+39.32	25.00′ Rt.	308,330.0541	1,591,929.2723	1	¾″ Iron Pin Set
1+43.70	29.93′ Rt.	308,330.2896	1,591,935.4610		¾″ Iron Pin Set
1+58.41	45.31′ Lt.	308,388.6158	1,591,885.6200		¾″ Iron Pin Set
1+82.82	43.17′ Lt.	308,408.8789	1,591,908.0600		¾″ Iron Pin Set
2+03.37	43.86′ Lt	308,425.3438	1,591,927.0120		¾″ Iron Pin Set
2+34.71	25.00′ Rt.	308,384.1382	1,591,990.9737		¾″ Iron Pin Set
2+49.97	40.00′ Lt.	308,449.7820	1,591,978.2993		¾″ Iron Pin Set
2+87.99	25.00′ Lt.	308,450.3746	1,592,019.1670		¾″ Iron Pin Set
TOTAL CARRIED TO GENERAL SUMMARY SHEET				4	

Note:
Stationing on the 1936 SH 920 Sec A (273) plans run from the north at SR-117 to the south, ending at Sta 105+64.62. The current stationig runs south to north making old sta. 105+64.62 equaling present Sta. 0+00.00

I HEREBY CERTIFY THAT THIS PLAT IS A TRUE DELINEATION OF A SURVEY MADE BY THE OHIO DEPARTMENT OF TRANSPORTATION IN 2017 AND WAS PERFORMED IN ACCORDANCE WITH OAC CHAPTER 4733-37 STANDARDS FOR BOUNDARY SURVEYS.

THE ESTABLISHMENT OF THE PROPERTY LINES AND EXISTING RIGHT OF WAY LINES SHOWN ON THIS PLAN AS OF THIS DATE WERE PERFORMED BY ME OR UNDER MY DIRECT SUPERVISION.
BY

STATE OF OHIO
MARK H. RATLIFF
S-7936
REGISTERED
PROFESSIONAL SURVEYOR

Mark H. Ratliff, Professional Land Surveyor No. 7936, Date:

RECEIVED _____, 20___
RECORDED _____, 20___
BOOK _____ PAGE _____

COUNTY RECORDER

HORIZONTAL SCALE IN FEET 0 25 50 100

PID NO. 99857

R/W DESIGNER TPW
R/W REVIEWER MHR

CENTERLINE PLAT

LOG-273-0.02

I:\ProjectData\LOG\99857_SR273-0002\Design\RW\Sheets\LOG273_002_RC002.dgn Design 1/29/2019 9:44:42 AM cweiss

LOG-273-0.02
LOGAN COUNTY, OHIO
RICHLAND TOWNSHIP
V.M.S. 13393
LONG ISLAND

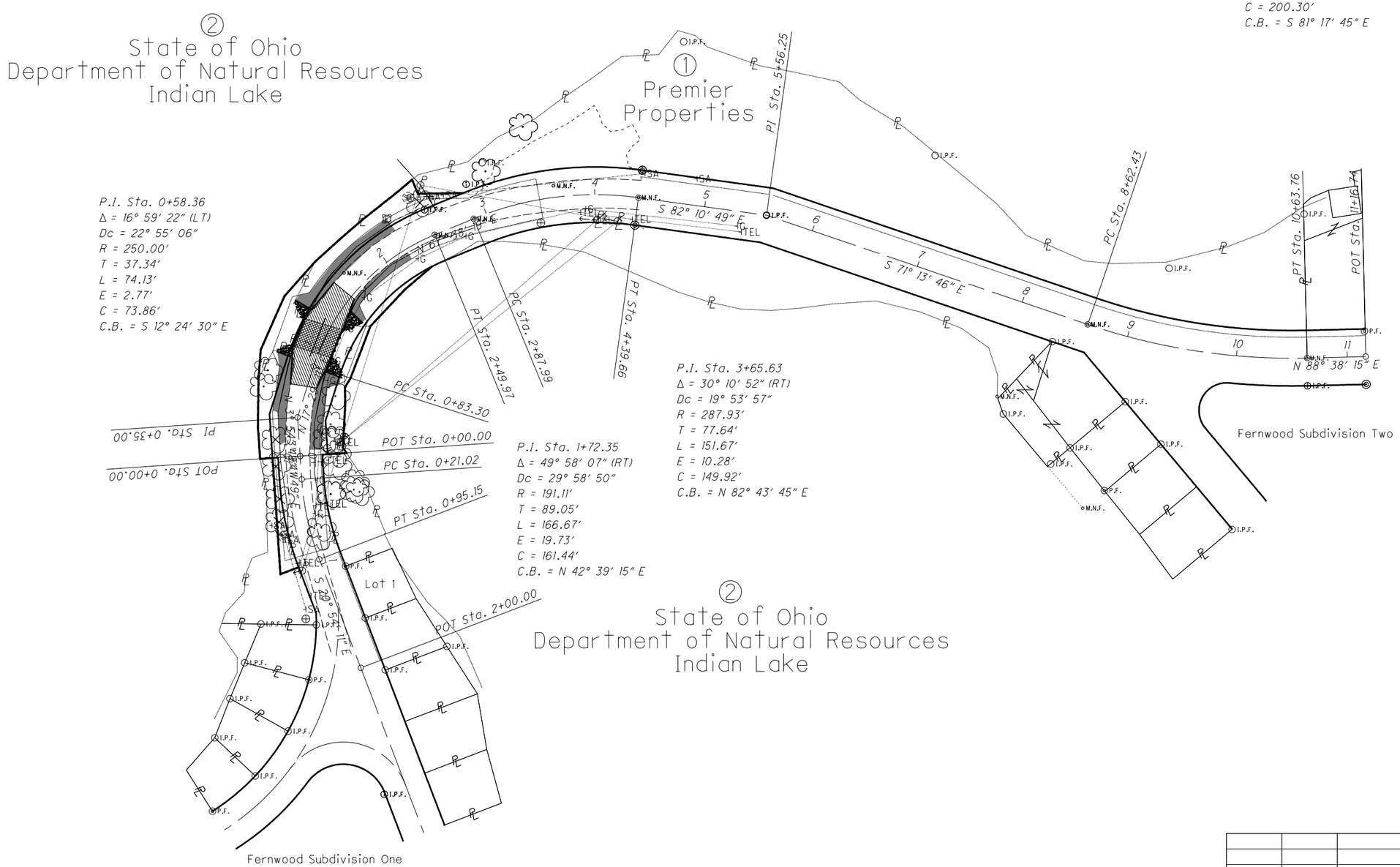

REV. BY	DATE	DESCRIPTION

DATE COMPLETED 12/21/17

HORIZONTAL SCALE IN FEET 0 25 50 100

PID NO. 99857

R/W DESIGNER TPW
R/W REVIEWER MHR

PROPERTY MAP

LOG-273-0.02

4 / 7

20 / 23

i:\ProjectData\LOG\99857_SR273-0002\Design\RW\Sheets\LOG273_002_RW001.dgn Sheet 1/29/2019 9:44:46 AM cweiss

TOTAL NUMBER OF :

2 OWNERSHIPS 0 TOTAL TAKES

7 PARCELS 0 OWNERSHIPS W/ STRUCTURES INVOLVED

NET RESIDUE = RECORD AREA - TOTAL PRO - NET TAKE

ALL AREAS IN ACRES.

GRANTEE:

ALL RIGHT OF WAY ACQUIRED IN THE NAME OF STATE OF OHIO DEPARTMENT OF TRANSPORTATION UNLESS OTHERWISE SHOWN.

PARCEL NO.	OWNER	SHEET NO.	OWNERS RECORD	AUDITOR'S PARCEL	RECORD AREA	TOTAL P.R.O.	GROSS TAKE	P.R.O. IN TAKE	NET TAKE	STRUC-TURE	NET RESIDUE LEFT	NET RESIDUE RIGHT	TYPE FUND	REMARKS	AS ACQUIRED BOOK	AS ACQUIRED PAGE
1-WDV	Premier Properties	6	O.R. 116 / 978	36-019-06-02-012-000	2.00 (A)	0.000	0.005	0.000	0.005	NO			STATE	2.00 acres is the remainder of the original 26.12 acres as shown on the deed.		
1-SH1		6-7	O.R. 116 / 978	36-019-06-02-012-000	2.00 (A)	0.000	0.018	0.000	0.018							
1-SH2						0.000	0.005	0.000	0.005							
1-SH3						0.000	0.008	0.000	0.008							
1-SH4						0.000	0.066	0.000	0.066							
					--------	--------	--------	--------	--------							
				TOTALS	2.00 (A)	0.000	0.097	0.000	0.097							
				GRAND TOTAL			0.102		0.102		BOTH SIDES	1.898				
2-SH1	State of Ohio	6-7	No Record Found		?	0.000	0.011	0.000	0.011	NO			STATE	Indian Lake		
	Ohio Department of Narural Resources															
2-SH2						0.000	0.031	0.000	0.031							
						--------	--------	--------	--------							
				TOTALS		0.000	0.042	0.000	0.042							

NOTE: UNDER NO CIRCUMSTANCES ARE TEMPORARY EASEMENTS TO BE USED FOR STORAGE OF MATERIAL OR EQUIPMENT BY THE CONTRACTOR UNLESS NOTED OTHERWISE.

+ DENOTES REMOVAL ITEMS SEE CORRESPONDING RIGHT OF WAY PLAN SHEET FOR DESCRIPTION

(A) = AUDITOR'S ACREAGE
(D) = DEED ACREAGE
(c) = CALCULATED AREA

* DENOTES RIGHT OF WAY ENCROACHMENT

NOTE: ALL TEMPORARY PARCELS TO BE OF 12 MONTH DURATION.

TYPES OF TITLE LEGEND:
WL = FEE SIMPLE WITH LIMITATION OF ACCESS
WD = WARRANTY DEED
PRW = PROPERTY RIGHT FEE SIMPLE
SH = STANDARD HIGHWAY EASEMENT
LA = LIMITED ACCESS EASEMENT
T = TEMPORARY EASEMENT
CH = CHANNEL EASEMENT
A = AERIAL EASEMENT
SL = SLOPE EASEMENT
PRE = PROPERTY RIGHT EASEMENT

REV. BY	DATE	DESCRIPTION

FIELD REVIEW BY DATE:
OWNERSHIP VERIFIED BY DATE:
DATE COMPLETED 12/21/17

FEDERAL PROJECT NO. NA

PID NO. 99857

STATE JOB NO. 470361

R/W DESIGNER TPW

R/W REVIEWER MHR

SUMMARY OF ADDITIONAL RIGHT OF WAY

LOG-273-0.02

I:\ProjectData\LOG\99857_SR273-0002\Design\RW\Sheets\LOG273_002_RS001.dgn Sheet 1/29/2019 9:44:51 AM cweiss

Stationing on the 1936 SH 920 Sec A (273) plans run from the north at SR-117 to the south, ending at Sta 105+64.62. The current stationig runs south to north making old sta. 105+64.62 equaling present Sta. 0+00.00

LOG-273-0.02
LOGAN COUNTY, OHIO
RICHLAND TOWNSHIP
V.M.S. 13393
LONG ISLAND

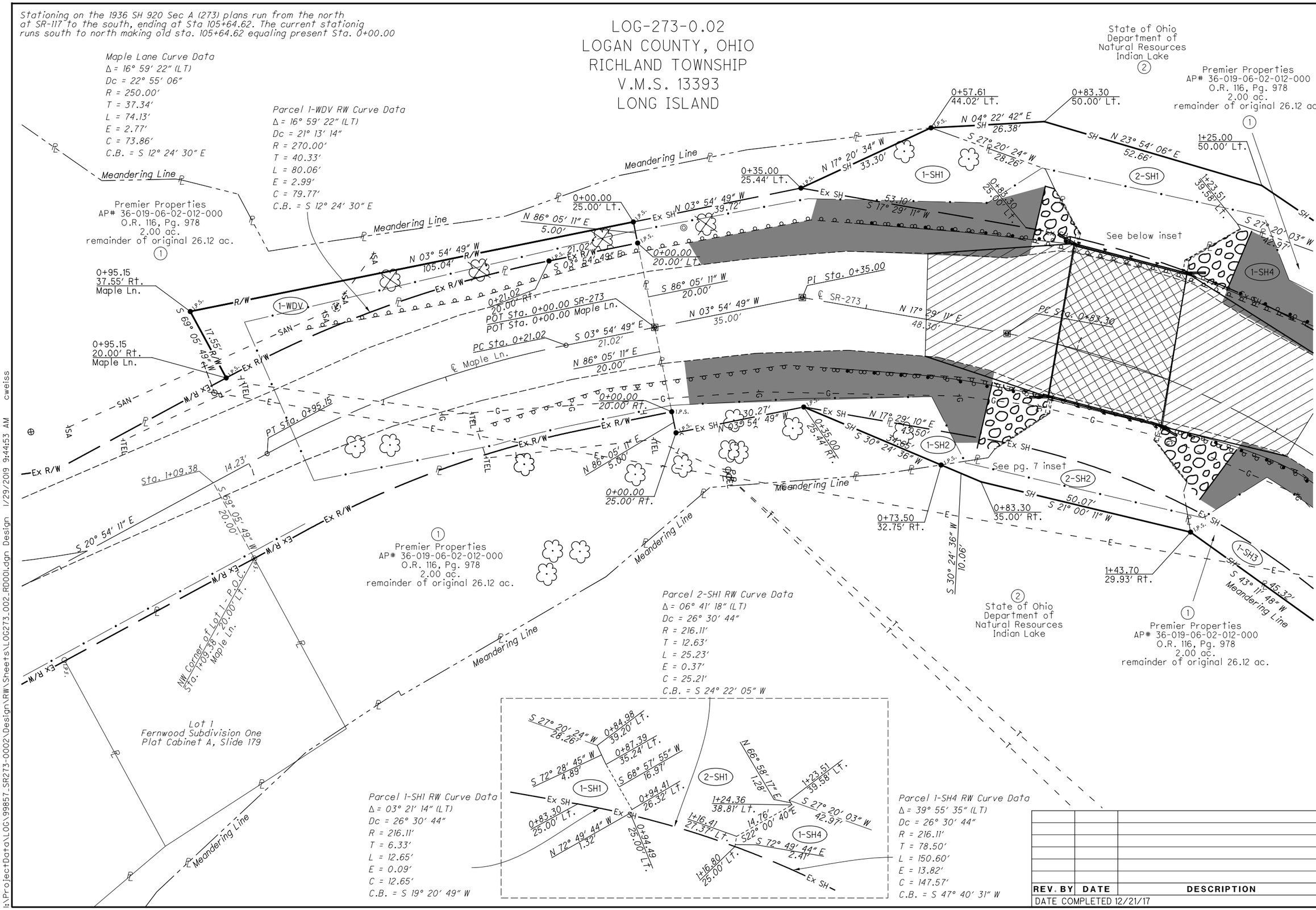

REV. BY	DATE	DESCRIPTION

DATE COMPLETED 12/21/17

HORIZONTAL SCALE IN FEET 0 5 10 20

PID NO. 99857

R/W DESIGNER TPW
R/W REVIEWER MHR

RIGHT OF WAY PLAN
DETAIL SHEET

LOG-273-0.02

6 / 7

22 / 23

I:\ProjectData\LOG\99857_SR273-0002\Design\RW\Sheets\LOG273_002_RD001.dgn Design 1/29/2019 9:44:53 AM cweiss

LOG-273-0.02
LOGAN COUNTY, OHIO
RICHLAND TOWNSHIP
V.M.S. 13393
LONG ISLAND

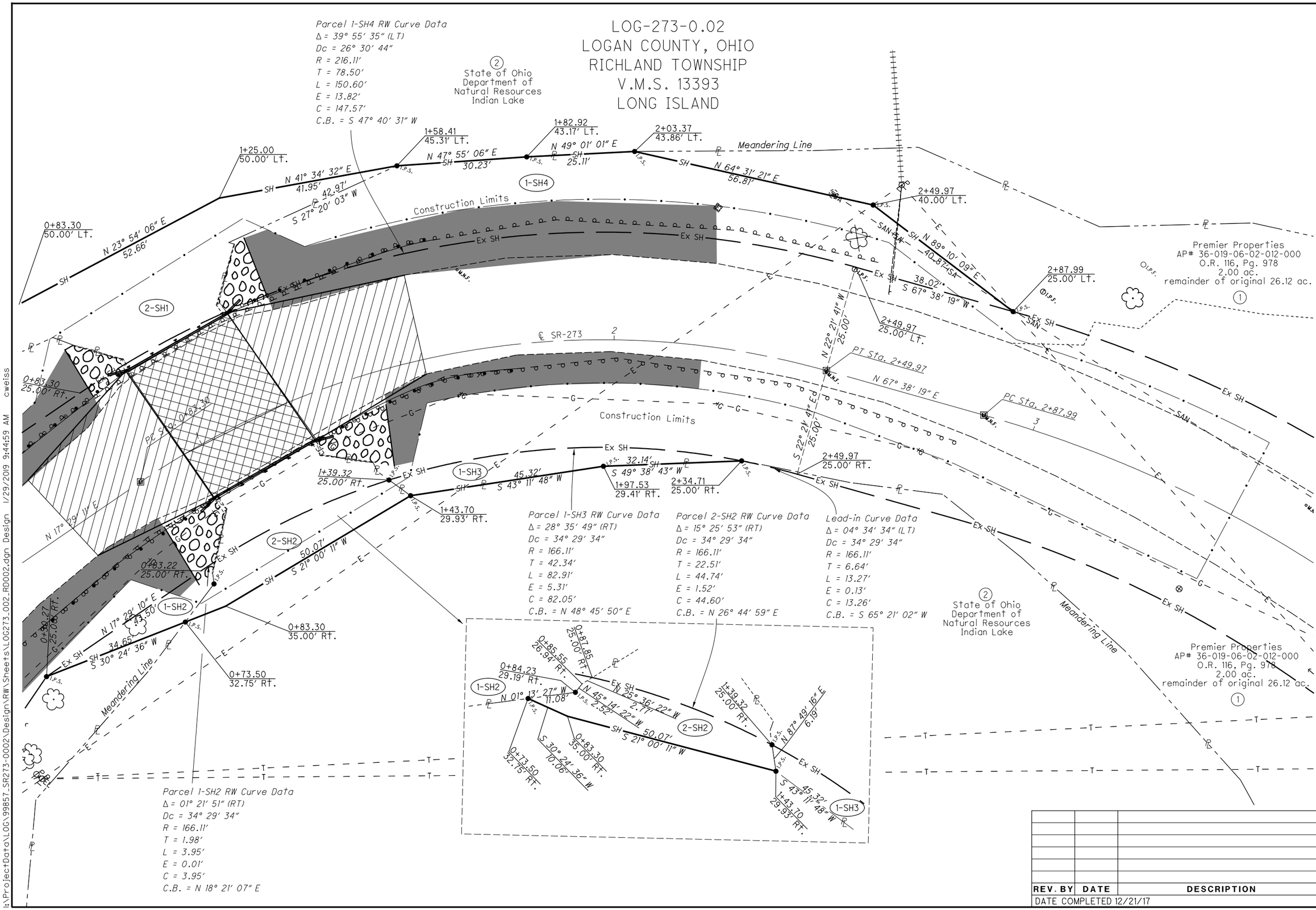

REV. BY	DATE	DESCRIPTION

DATE COMPLETED 12/21/17

HORIZONTAL SCALE IN FEET 0 5 10 20

PID NO. 99857

R/W DESIGNER TPW
R/W REVIEWER MHR

RIGHT OF WAY PLAN
DETAIL SHEET

LOG-273-0.02

7 / 7

23 / 23

I:\ProjectData\LOG\99857_SR273-0002\Design\RW\Sheets\LOG273.002.RD002.dgn Design 1/29/2019 9:44:59 AM cweiss