MICROFILMED
SEP 24 1990

LOR-57-6.57	OHIO	1 / 6
	FHWA REGION 5	
	FEDERAL PROJECT	

PLAN NO. BR-33-86

STATE OF OHIO
DEPARTMENT OF TRANSPORTATION

LOR-57-6.57

GRAFTON TOWNSHIP
LORAIN COUNTY

CULVERT REPLACEMENT

CONVENTIONAL SIGNS

County Line
Township Line
Section Line
Corporation Line or
Fence Line (existing) (proposed)
Center Line 352 353
Trees, Stumps, (to be removed)
Utility Poles: Telephone, Power, Light.

Limited Access (only) LA
Right of Way (only) RW
Limited Access & Right of Way LA & RW
Existing Right of Way
Property Line (in existing fence)
Railroad or
Guardrail (existing) (proposed)

INDEX OF SHEETS

TITLE SHEET 1
TYPICAL SECTION 2
GENERAL SUMMARY 2
GENERAL NOTES 3
PLAN & PROFILE 4
CROSS SECTIONS 5
CULVERT DETAILS 6

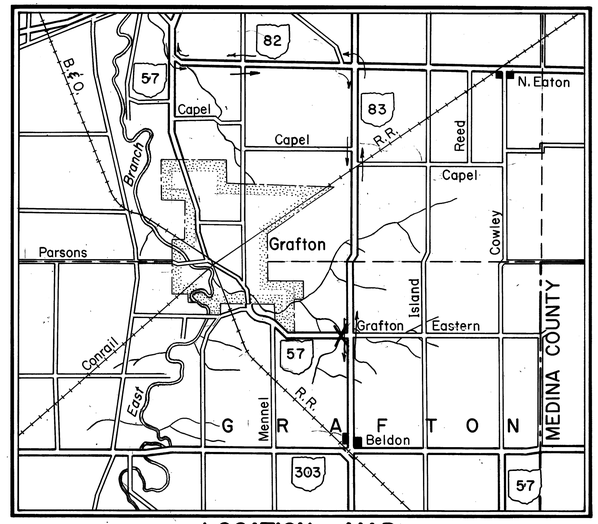

LOCATION MAP

SCALE IN MILES
1 0 1 2 3

1985 SPECIFICATIONS

The standard specifications of the State of Ohio, Department of Transportation, including changes and supplemental specifications listed in the proposal shall govern this improvement.

I hereby approve these plans and declare that the making of this improvement will require the closing to traffic of the highway and that detours will be provided as indicated on the plans.

Approved Gary W. Lang
Date 5/8/86 District Deputy Director of Transportation

Approved Walter J. Jestings
Date 6-16-86 Engineer, Bureau of Bridges and Structural Design

Approved James R. Longenecker
Date 6-16-86 Deputy Director, Operations

Approved Warren F. Smith
Date 6-17-86 Director, Department of Transportation

LINE DATA

BEGIN PROJECT	STA. 346+70
END PROJECT	STA. 347+15
PROJECT LENGTH	45.00 LIN. FT. OR 0.009 MILE
BEGIN WORK	STA. 345+45
END WORK	STA. 348+50
WORK LENGTH	305.00 LIN. FT. OR 0.058 MILE

UNDERGROUND UTILITIES

TWO WORKING DAYS
BEFORE YOU DIG
Call---800-362-2764 (Toll free)
OHIO UTILITIES PROTECTION SERVICE

NON-MEMBERS
MUST BE CALLED DIRECTLY

Portion to be improved
State & Federal Routes
Other Roads
Detour Route

SCALES

Plan 20 0 20
Profile: Horizontal 20 0 20, Vertical 5 0 5
Cross Section: Horizontal 5 0 5, Vertical 5 0 5

SUPPLEMENTAL SPECIFICATIONS		
955	6-3-78	

SUPPLEMENTAL PRINTS OF STANDARD CONSTRUCTION DRAWINGS					
GR-1	1-11-85				
GR-2B	2-5-82				
GR-4	2-5-82				
GR-4A	1-30-84				
BP-5	1-11-85				
MC-4	7-26-76				

Plan Prepared By:
District 3 Design

SEAL

DEPARTMENT OF TRANSPORTATION
FEDERAL HIGHWAY ADMINISTRATION

APPROVED:

DIVISION ADMINISTRATOR DATE

Project: LOR - 57 - 6.57 LORAIN CO.
Date of Letting _____ 19__, Contract No. _____

LD 0300 Rev. 1-1-81

MICROFILMED
SEP 24 1990

FHWA REGION	STATE	PROJECT	
5	OHIO		

LOR - 57 - 6.57

2 / 6

PLAN NO. BR-33-86

TYPICAL SECTION

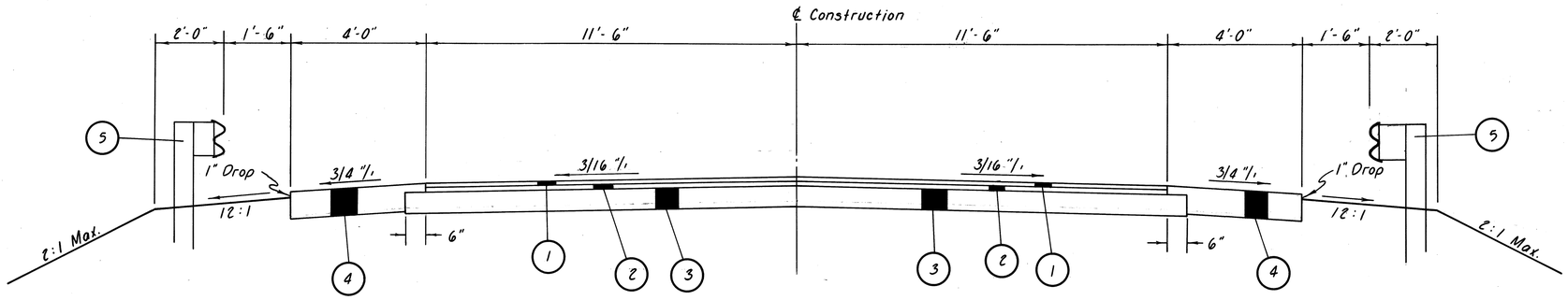

NOTE: All Angles at change in Slope shall have 2' Rounding.

LEGEND

1. 404 1 1/4" Asphalt Concrete, AC-20
2. 402 1 3/4" Asphalt Concrete, AC-20
3. 301 6" Bituminous Aggregate Base: AC-20; or RT-11 or RT-12
4. 304 8" Aggregate Base
5. 606 Guardrail, Type 5

659 COMMERCIAL FERTILIZER:
659 Seeding & Mulching = 1020 Sq. Yd.

Fertilizer = $\frac{1020 \times 9 \times 20}{1000 \times 2000}$ = 0.09 Ton

GENERAL SUMMARY

Item	Plan Quantity	Units	Description
201	Lump	Lump	Clearing and Grubbing
202	Lump	Lump	Structure Removed
202	425	Lin. Ft.	Guardrail Removed
203	49	Cu. Yd.	Excavation not including Embankment Construction
203	254	Cu. Yd.	Embankment
606	312.5	Lin. Ft.	Guardrail, Type 5
606	3	Each	Anchor Assembly, Standard Type A
606	1	Each	Anchor Assembly, Standard Type T
659	2	M-Gal.	Water
659	1020	Sq. Yd.	Seeding and Mulching
659	0.09	Ton	Commercial Fertilizer
602	7.0	Cu. Yd.	Concrete Masonry
603	12	Lin. Ft.	12" Conduit, Type D
603	58	Lin. Ft.	Conduit, Type A, 10' x 6' Precast Reinforced Concrete Box Section, As per SS-955, ASTM C-850, Table 2
512	65	Sq. Yd.	Type D Waterproofing
301	20	Cu. Yd.	Bituminous Aggregate Base: AC-20; or RT-11 or RT-12
304	9	Cu. Yd.	Aggregate Base
402	6	Cu. Yd.	Asphalt Concrete, AC-20
404	4	Cu. Yd.	Asphalt Concrete, AC-20
614	Lump	Lump	Maintaining Traffic
623	Lump	Lump	Construction Layout Stakes
624	Lump	Lump	Mobilization

MICROFILMED
SEP 24 1980

GENERAL NOTES

CALC. BY: _____
CHK'D. BY: _____

FHWA REGION	STATE	PROJECT	
5	OHIO		

3/6

LOR-57-6.57

PLAN NO. BR-53-86

ROUNDING OF CORNERS SHOWN ON CROSS SECTIONS

THE ROUNDED CORNERS SHOWN ON THE TYPICAL SECTIONS, APPLY TO ALL CROSS SECTIONS EVEN THOUGH OTHERWISE SHOWN ON THESE PLANS.

CONTINGENCY QUANTITIES

THE CONTRACTOR SHALL NOT ORDER MATERIALS OR PERFORM WORK LISTED IN THE GENERAL SUMMARY FOR ITEMS DESIGNATED BY PLAN NOTE TO BE USED "AS DIRECTED BY THE ENGINEER" UNLESS AUTHORIZED BY THE ENGINEER.

UNDERGROUND UTILITIES

THE LOCATIONS OF UNDERGROUND UTILITIES SHOWN ON THE PLANS ARE AS OBTAINED FROM THE OWNERS OF THE UTILITY AS REQUIRED BY SECTION 153.64 ORC.

UTILITY OWNERSHIP

THE FOLLOWING UTILITIES AND OWNERS ARE LOCATED WITHIN THE WORK LIMITS OF THIS PROJECT:

ELECTRIC	OHIO EDISION COMPANY 76 SOUTH MAIN STREET AKRON, OHIO 44308 PHONE (216) 384-5244
GAS	COLUMBIA GAS TRANSMISSION COMPANY P.O. BOX 1273 CHARLESTON, WEST VIRGINIA 25325 PHONE (304) 357-3445
TELEPHONE	GENERAL TELEPHONE COMPANY OF OHIO 6233 NORWALK ROAD MEDINA, OHIO 44257 PHONE (216) 722-9580
WATER AND SANITARY	RURAL LORAIN COUNTY WATER AUTHORITY 42401 ROUTE 303-P.O. BOX 567 LAGRANGE, OHIO 44050 PHONE (216) 355-5121

LOCATION OF GUARDRAIL

THE LOCATIONS OF GUARDRAIL RUNS, AS SHOWN IN THESE PLANS, ARE SUBJECT TO ADJUSTMENT PRIOR TO FINAL ACCEPTANCE. THE ENGINEER SHALL BE SATISFIED THAT ALL INSTALLATIONS WILL AFFORD MAXIMUM PROTECTION FOR TRAFFIC.

SEEDING

QUANTITIES FOR SEEDING, WHERE REQUIRED BY PLAN, ARE CALCULATED FOR THE SOIL AREAS BETWEEN TEN (10) FEET OUTSIDE THE WORK LIMITS, AS SHOWN ON THE CROSS-SECTIONS, OR TO THE RIGHT-OF WAY OR TEMPORARY LINES, IF SUCH LINE IS LESS THAN TEN (10) FEET FROM THE WORK LIMITS.

WATERING PERMANENT SEEDED AREAS

THE FOLLOWING ESTIMATED QUANTITY IS TO BE USED AS DIRECTED BY THE ENGINEER TO PROMOTE GROWTH OF THE PERMANENT SEEDED AREAS AS PER 659.09:

ITEM 659 WATER 2 M-GAL.

REMOVAL OF TREES OR STUMPS

ALL TREES AND STUMPS SPECIFICALLY MARKED FOR REMOVAL WITHIN THE CONSTRUCTION LIMITS OF THIS PROJECT SHALL BE REMOVED UNDER THE LUMP SUM BID FOR ITEM 201, CLEARING AND GRUBBING, EXCEPT THAT THOSE TREES FOR WHICH PROTECTION AND PRESERVATION WORK IS INDICATED ELSEWHERE IN THESE PLANS SHALL NOT BE REMOVED.

THE FOLLOWING IS AN APPROXIMATE ESTIMATE OF THE NUMBER OF TREES AND STUMPS TO BE REMOVED:

SIZES	NO. TREES	NO. STUMPS	TOTAL
18"	0	0	0
30"	0	0	0
48"	0	0	0
60"	0	0	0

THE ABOVE ESTIMATE IS APPROXIMATE AND THE STATE OF OHIO RESERVES THE RIGHT TO ORDER THE REMOVAL OF ADDITIONAL TREES OR STUMPS OUTSIDE OF THE LIMITS OF CONSTRUCTION BUT WITHIN THE RIGHT-OF-WAY AND/OR EASEMENT LINES. PAYMENT FOR THE REMOVAL OF THESE ADDITIONAL TREES OR STUMPS SHALL BE INCLUDED IN THE LUMP SUM PRICE BID FOR ITEM 201, CLEARING AND GRUBBING.

PRECAST REINFORCED CONCRETE BOX SECTIONS

DESCRIPTION:
THIS ITEM SHALL CONSIST OF FURNISHING AND CONSTRUCTING PRECAST REINFORCED CONCRETE BOX SECTIONS AS PER SUPPLEMENTAL SPECIFICATION 955 AT THE LOCATION INDICATED.

MATERIALS:
MATERIAL FOR THE PRECAST REINFORCED CONCRETE BOX SECTIONS SHALL BE IN ACCORDANCE WITH SUPPLEMENTAL SPECIFICATION 955. GRANULAR BEDDING AND BACKFILL MATERIAL SHALL MEET THE REQUIREMENTS OF 603.02 AND FILL MATERIAL, WHEN SPECIFIED, SHALL BE IN ACCORDANCE WITH 203.

INSTALLATION:
THE STRUCTURE SHALL BE INSTALLED IN ACCORDANCE WITH SPECIFICATIONS FOR TYPE A CONDUIT IN SECTION 603 OF THE CONSTRUCTION AND MATERIAL SPECIFICATIONS, STATE OF OHIO, DEPARTMENT OF TRANSPORTATION, EXCEPT AS MODIFIED HEREIN.

603.03

WHERE THE BOX SECTION IS TO BE PLACED IN A TRENCH, A MINIMUM TRENCH WIDTH OF 2 FEET ON EACH SIDE OF THE BOX SECTION SHALL BE REQUIRED. WHERE THE BOX SECTION IS TO BE PLACED WITHIN AN EMBANKMENT OR THE BOX SECTION IS ABOVE THE EXISTING GROUND, THE REQUIREMENT THAT THE EMBANKMENT SHALL BE CONSTRUCTED AT LEAST TO THE SPRINGLINE BEFORE TRENCHING IS WAIVED.

603.04

THE BEDDING SHALL CONSIST OF A BED OF GRANULAR MATERIAL HAVING A THICKNESS OF AT LEAST 6 INCHES BELOW THE BOTTOM OF THE BOX SECTION AND EXTENDING 2 FEET ON EACH SIDE OF THE BOX SECTION.

603.06

THE JOINTS SHALL BE SEALED WITH A FLEXIBLE PLASTIC MATERIAL CONFORMING TO AASHTO M-198 TYPE B. THE CROSS SECTION OF THE JOINT SEALING MATERIAL SHALL HAVE A MINIMUM HEIGHT OF TWICE THE ANNULAR SPACE OF THE JOINT AND A MINIMUM WIDTH OF 150% THE HEIGHT. THE CONCRETE JOINT SHALL BE PRIMED WITH A PRIMER AS RECOMMENDED BY THE MANUFACTURER BEFORE INSTALLATION. BOX SECTIONS SHALL BE FORCED TO A MAXIMUM OF 1/2" GAP BETWEEN SECTIONS. THE EXTERIOR JOINT GAP ON THE TOP OF THE BOX SHALL BE FILLED WITH PORTLAND CEMENT MORTAR.

THE UPSTREAM END SHALL BE A RECESSED TYPE JOINT.

603.08

WHEN THE TOP OF THE TRENCH IS ABOVE THE TOP OF THE BOX, BACKFILLING SHALL BE IN ACCORDANCE WITH TYPE A OR TYPE B CONDUIT. WHEN THE TOP OF THE BOX SECTION IS ABOVE THE TOP OF THE TRENCH, GRANULAR MATERIAL SHALL BE PLACED AND COMPACTED TO A MINIMUM DEPTH OF 2 FEET OVER THE TOP OF THE BOX SECTIONS (WHERE APPLICABLE) AND FOR A WIDTH OF 2 FEET ON EACH SIDE OF THE BOX SECTION OR AS DIRECTED BY THE ENGINEER. THE REMAINDER OF THE ADJACENT EMBANKMENT MATERIAL SHALL BE FURNISHED, PLACED, AND PAID FOR IN ACCORDANCE WITH 203. BACKFILL AND FILL MATERIAL SHALL BE PLACED UNIFORMLY ON BOTH SIDES OF THE BOX SECTION.

FILL MATERIAL AT THE SIDES OF THE BOX SECTIONS MAY BE COMPACTED BY HEAVY COMPACTION EQUIPMENT.

TYPE D WATERPROOFING SHALL BE PROVIDED ON THE TOP SURFACE OF THE BOX SECTIONS AND SHALL EXTEND 1' VERTICALLY DOWN EACH SIDE. THE WATERPROOFING SHALL BE PROVIDED FOR THE FULL LENGTH OF THE STRUCTURE OR WITHIN THE LIMITS WHICH ARE IN CONTACT WITH THE BACKFILL. PAID FOR UNDER ITEM 512.

BASIS FOR PAYMENT

PAYMENT SHALL BE MADE AT THE CONTRACT UNIT PRICE FOR:

603	LINEAR FOOT SPAN' X RISE'	PRECAST REINFORCED CONCRETE BOX SECTIONS (AS PER SS 955) C-850 TABLE 2

PAYMENT SHALL BE FULL COMPENSATION FOR ALL MATERIAL, LABOR AND EQUIPMENT NECESSARY TO COMPLETE THE INSTALLATION.

CONNECTION TO EXISTING PIPE

WHERE THE PLANS PROVIDE FOR PROPOSED CONDUIT TO BE CONNECTED TO, OR TO CROSS EITHER OVER OR UNDER AN EXISTING SEWER, IT SHALL BE THE RESPONSIBILITY OF THE CONTRACTOR TO LOCATE THE EXISTING PIPE BOTH AS TO LINE AND GRADE BEFORE HE STARTS TO LAY THE PROPOSED CONDUIT.

PAYMENT FOR ALL OPERATIONS DESCRIBED ABOVE SHALL BE INCLUDED IN THE UNIT PRICE BID FOR THE PERTINENT 603 CONDUIT ITEMS.

614 MAINTAINING TRAFFIC

THROUGH TRAFFIC ON S.R. 57 SHALL BE DETOURED AS SHOWN ON SHEET NO.1. THE DETOUR SHALL BE LIMITED TO A MAXIMUM OF FOUR (4) WEEKS DURATION. ALL DETOUR SIGNING WILL BE PROVIDED BY STATE FORCES. THE CONTRACTOR SHALL NOTIFY THE DISTRICT TRAFFIC ENGINEER SEVEN (7) DAYS IN ADVANCE OF THE PLACEMENT OF DETOUR SIGNING.

CULVERT END

IT IS DESIRED THAT THE BOX CULVERT END COME PRECAST WITH A 2:1 SLOPE AS INDICATED IN THE CULVERT DETAIL, AND THAT THE END SECTION BE ANCHORED TO THE HEADWALLS BY A METHOD APPROVED BY THE ENGINEER.

FED. RD. DIVISION	STATE	PROJECT	
2	OHIO		

4/6

LOR-57-6.57

PLAN NO. BR-33-86

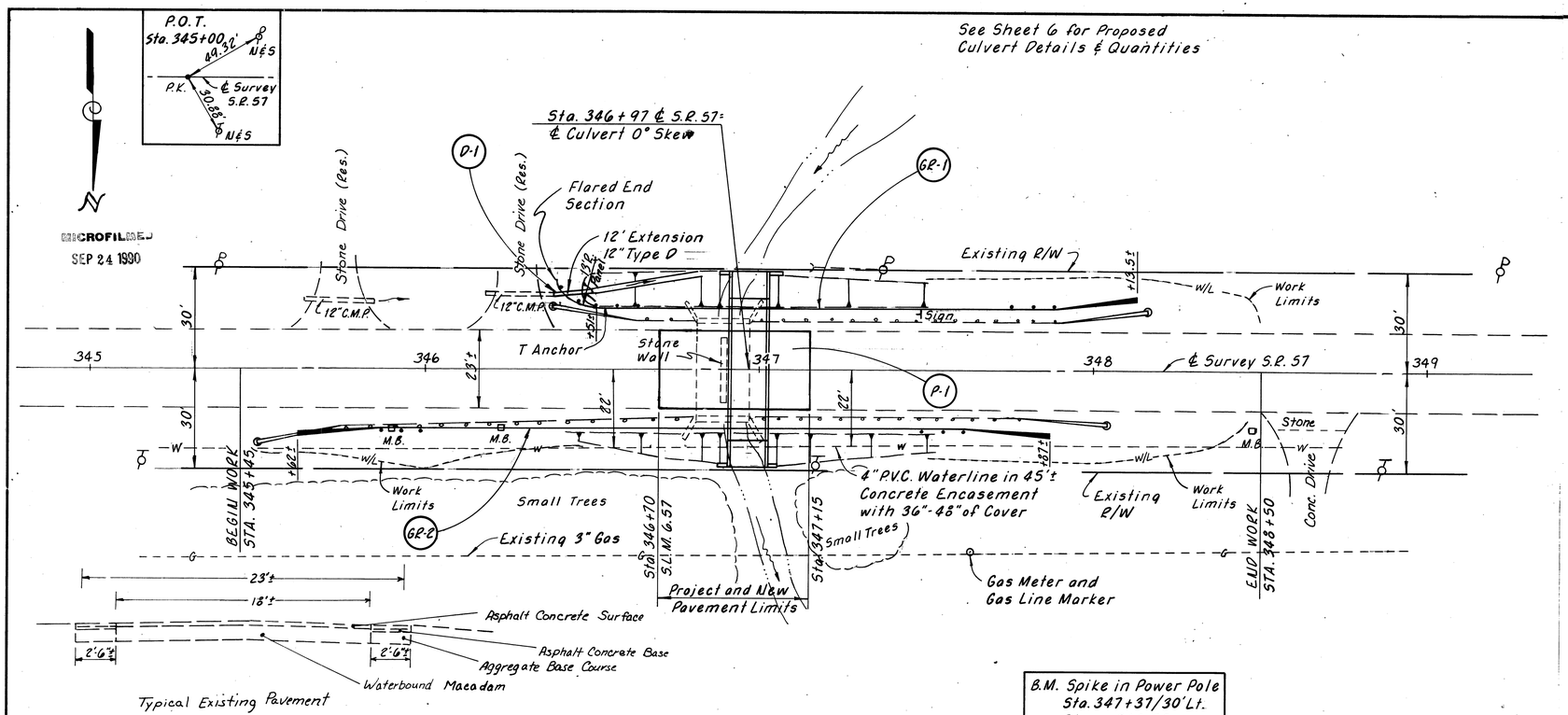

Excavation	49	Cu. Yds.
Embankment	254	Cu. Yds.
Seeding	1020	Sq. Yds.

Ref. No.	Station	603 12" Conduit, Type D (Lin. Ft.)	304 Aggregate Base 8" (Cu. Yd.)	301 Bituminous Aggregate Base 6" (Cu. Yd.)	402 Asphalt Concrete 1¾" (Cu. Yd.)	404 Asphalt Concrete 1¼" (Cu. Yd.)	606 Anchor Assemblies Type T (Each)	606 Anchor Assemblies Type A (Each)	606 Guardrail Type 5 (Lin. Ft.)	202 Guardrail Removed (Lin. Ft.)
GR-1	346+39± to 348+14± Lt.						1	1	137.5	175*
GR-2	345+52± to 348+02± Rt.							2	175	250*
D-1	346+38 to 346+50 Lt.	12								
P-1	346+70 to 347+15		8.5	20.0	5.6	4.0				
Totals		12	8.5	20.0	5.6	4.0	1	3	312.5	425

* Removal length includes "A" anchors and length on existing bridge

MICROFILMED SEP 24 1990

FINAL SURVEY		BY	DATE
NOTE BOOK	SURVEYED		
	PLOTTED		
	TEMPLATE		
	AREAS		
NO.	AREAS CHECKED		

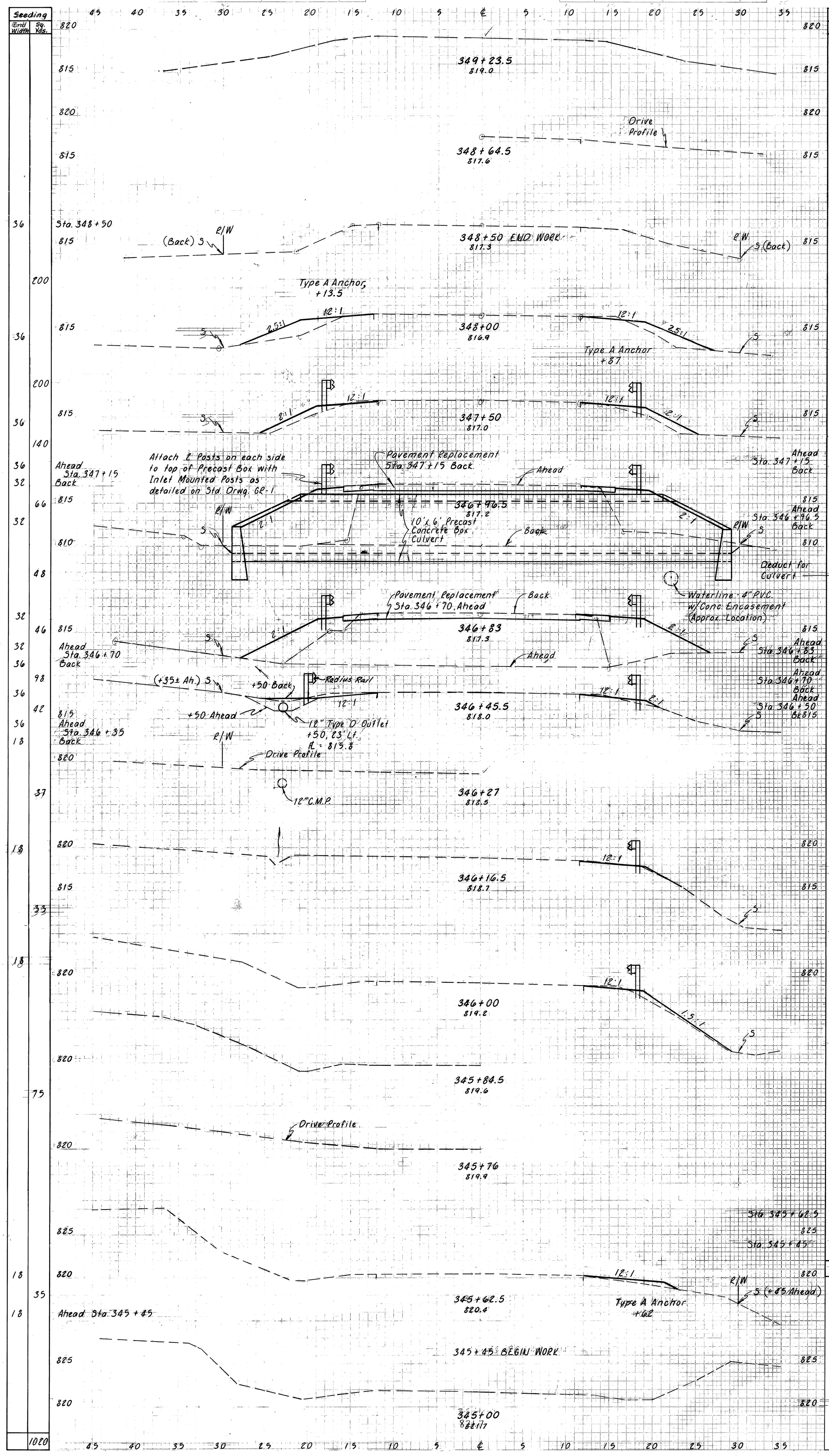

Seeding Width	Seeding Sq. Yds.	End Area Cut	End Area Fill	Volume Cut	Volume Fill
36		0	0		
	200			1	12
36		1	13		
	200			2	24
36		1	13		
	140			1	55
36		1	72		
32		21	72		
	66			14	61
32		21	106		
		21	314		
	48				-89
32				11	138
	46				
32		21	238		
36		21	62		
	98	23	41	11	25
36		2	41	4	16
	42	8	2		
36		2	3	1	1
18		2	3		
	37			2	2
18		1	1		
	33			1	2
18		1	5		
	75			1	6
		0	3		
		0	0	0	1
18				49	254
	35				
18					
	1020				

PLAN NO. BR-33-86

LOR-57-6.57

5/6

MICROFILMED
SEP 24 1980

FED. RD. DIVISION	STATE	PROJECT		
2	OHIO			

6
6

LOR-57-6.57

PLAN NO. BR-33-86

Bevel all edges at inlet 30° and 5".

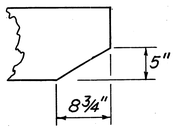

Bevel Detail

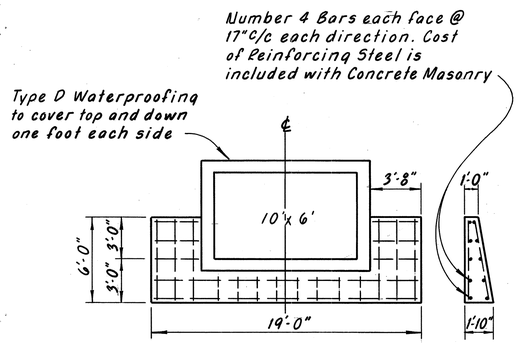

HEADWALL DETAILS

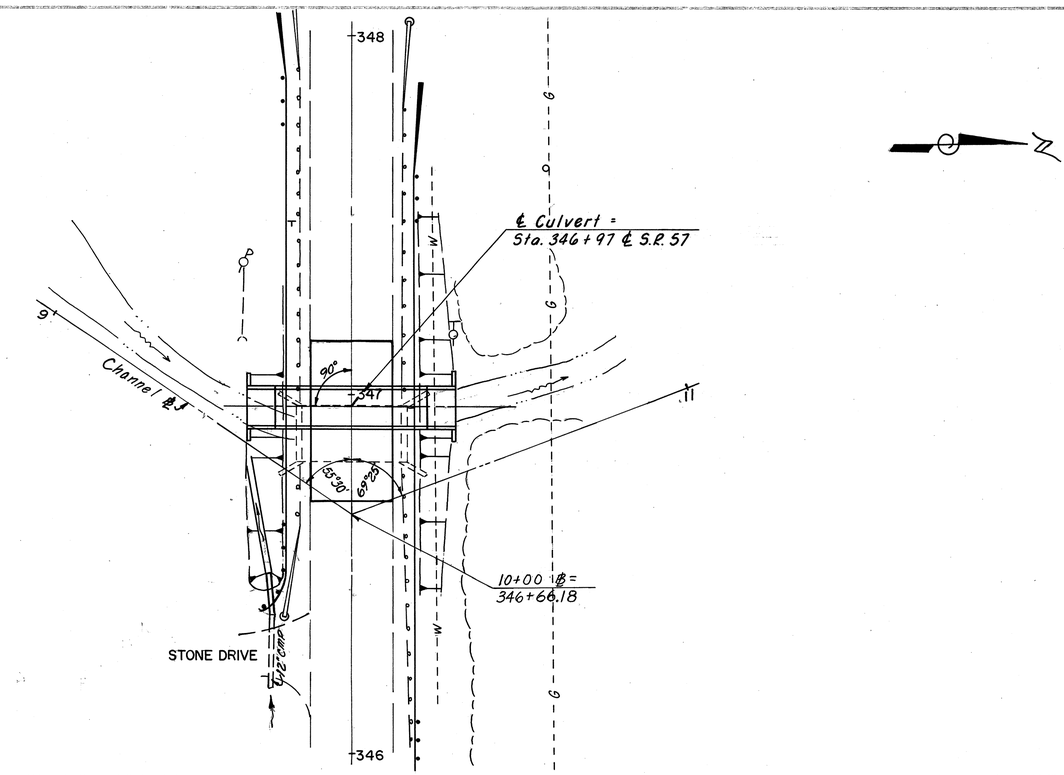

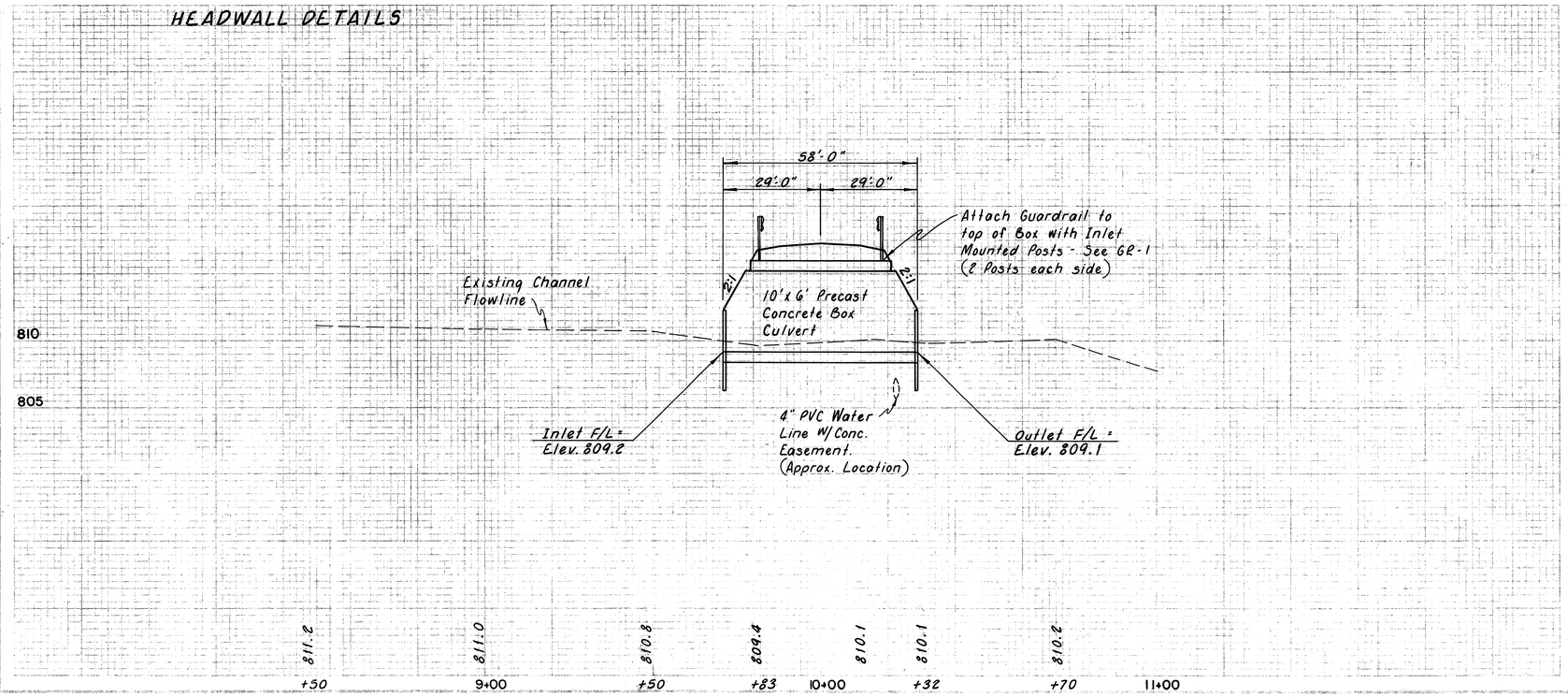

EXISTING BRIDGE DATA

Type: Twin Slab Concrete & Stone
Span: 2 @ 6'-0"
Length: 16'-2"
Width: 26'-5" f/f Railings
Wearing Surface: Asphalt
Loading:
Alignment: Tangent
Skew: 0°
Sub-Structure: Stone & Concrete

HYDROLOGIC DATA

Drainage Area = 1.04 Sq. Mi.
Q25 = 302 cfs. Q100 = 420 cfs.

PROPOSED STRUCTURE DATA

Conduit Type A, 10'X6' Precast Reinforced Concrete Box
Skew: 0°
Design: HW25 = 814.9 HW100 = 816.0

ESTIMATED QUANTITIES

Item	Total	Unit	Description
202	Lump	Lump	Structure Removed
512	65	Sq. Yd.	Type D Waterproofing
602	6.98	Cu. Yd.	Concrete Masonry
603	58	Lin. Ft.	Conduit, Type A, 10'X6' Precast Reinforced Concrete Box Section, As per SS-955, ASTM C-850, Table 2*

Shear connectors as specified and illustrated on supplemental specification 955 are not required.

CULVERT DETAILS