OHIO DEPARTMENT OF TRANSPORTATION

LOCATION MAP

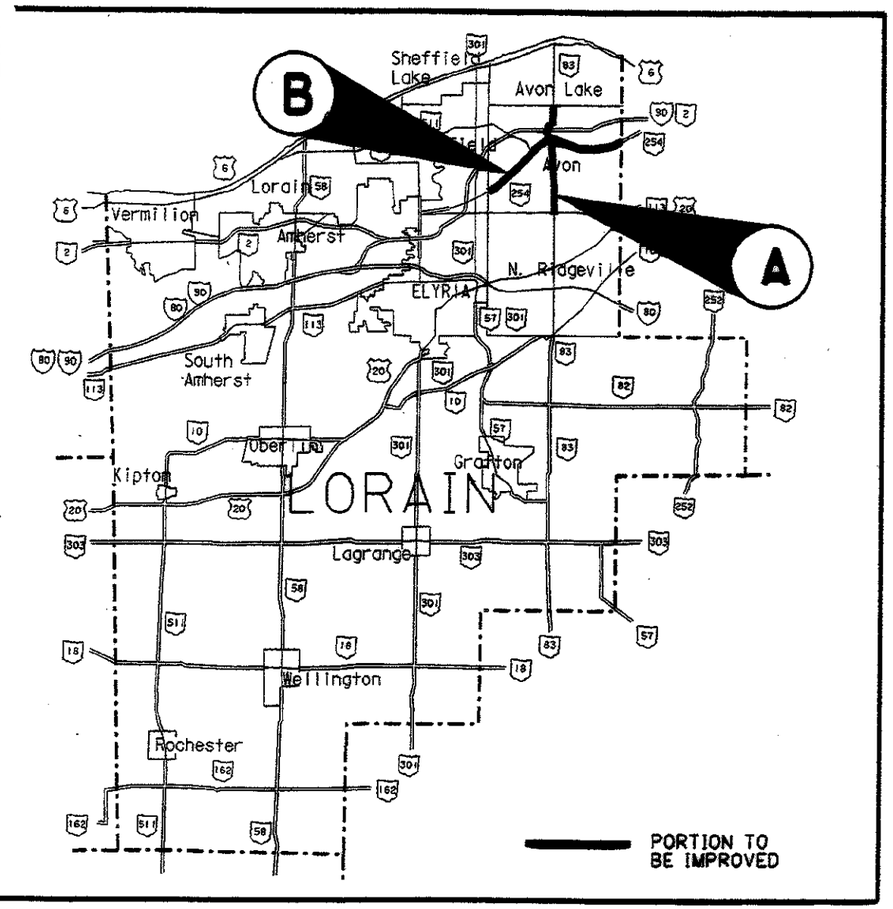

N

PART	COUNTY	ROUTE	PROJECT TERMINI straight line mileage BEGIN	END	NET LENGTH miles	CITY	VILLAGE
A	LORAIN	SR 83	15.17	19.31	4.25	AVON	
B	LORAIN	SR 254	2.83	8.85	6.02	AVON	

PROJECT DESCRIPTION: This project will include pavement repair, resurfacing with an intermediate and a surface course of asphalt concrete, guardrail construction, bridge rehabilitation, and pavement markings as detailed in the plan.

INDEX OF SHEETS:

1 - TITLE SHEET
2 - GENERAL SUMMARY
3 - SCHEMATIC/ DESIGIN DESIGNATION
4 - TYPICAL SECTIONS
5 - PAVEMENT DATA
6 - SHOULDER DATA
7, 8 - GENERAL NOTES
9, 10 - GUARDRAIL GENERAL NOTES
11 - MAILBOX FACILITIES
12-13 - STRUCTURE SUMMARY
14 - STRUCTURE GENERAL NOTES
15 - BRIDGE TREATMENT
16-22 - STRUCTURE DETAILS
23 - GUARDRAIL ESTIMATED QUANTITIES
24-28 - GUARDRAIL DETAILS
29 - PAVEMENT MARKING INFORMATION

1997 SPECIFICATIONS

THE STANDARD 1997 SPECIFICATIONS OF THE STATE OF OHIO DEPARTMENT OF TRANSPORTATION, INCLUDING CHANGES AND SUPPLEMENTAL SPECIFICATIONS LISTED IN THE PLANS AND THE PROPOSAL SHALL GOVERN THESE IMPROVEMENTS.

I HEREBY APPROVE THESE PLANS AND DECLARE THAT THE MAKING OF THESE IMPROVEMENTS WILL NOT REQUIRE THE CLOSING OF THE HIGHWAY AND PROVISIONS FOR THE MAINTENANCE AND SAFETY OF TRAFFIC WILL BE AS SET FORTH IN THE PLANS AND ESTIMATES.

1-14-3 — APPROVED DATE — DISTRICT DEPUTY DIRECTOR OF TRANSPORTATION

2-18-03 — APPROVED DATE — DIRECTOR, DEPARTMENT OF TRANSPORTATION

CONVERSION OF METRIC STANDARD DRAWINGS

THE METRIC STANDARD DRAWINGS REFERENCED IN THIS PLAN SHALL BE CONVERTED TO ENGLISH UNITS USING THE SI (METRIC) TO ENGLISH CONVERSION FACTORS PROVIDED IN SECTION 109.011 OF THE CMS. THE APPENDIX OF ASTM E 380 SHALL BE UTILIZED FOR ANY ADDITIONAL CONVERSION FACTORS REQUIRED. CONVERSIONS SHALL BE APPROXIMATELY PRECISE AND SHALL REFLECT STANDARD INDUSTRY ENGLISH VALUES WHERE SUITABLE.

TWO WORKING DAYS BEFORE YOU DIG
Call- 800-362-2764
TOLL FREE
OHIO UTILITIES PROTECTION SERVICE
NON-MEMBERS MUST BE CALLED DIRECTLY

DISTRICT THREE PRODUCTION DEPARTMENT

ROADWAY ENGINEER'S SEAL: STATE OF OHIO — MICHAEL JOSEPH SCHAFRATH 57843 — REGISTERED PROFESSIONAL ENGINEER
SIGNED: Michael J. Schafrath
DATE: 1/14/03

STRUCTURAL ENGINEER'S SEAL: STATE OF OHIO — DAVID C. MOLLENSHOTT E-50210 — REGISTERED PROFESSIONAL ENGINEER
SIGNED: David C. Mollenshott
DATE: 1/14/03

STANDARD DRAWINGS		STANDARD DRAWINGS		STANDARD DRAWINGS		SUPPLEMENTAL SPECIFICATIONS	
BP-3.1	07-28-00	GR-5.3M	11-30-94	MT-97.12	04-19-02	SS814	06-02-98
BP-4.1	07-28-00	RM-1.1	04-29-99	MT-99.20M	01-30-95	SS864	07-11-00
GR-1.1M	10-21-97			MT-105.10	10-18-02	SS870	03-27-01
GR-1.2M	01-03-96	TC-41.20	01-19-01	MT-105.11	10-18-02	SS901	06-14-95
GR-1.3M	11-30-94	TC-42.20	04-20-01			SS905	04-01-98
GR-2.1M	04-14-98	TC-71.10	04-19-02			SS906	05-05-98
GR-3.4M	10-21-97	TC-73.10	01-19-01			SS907	10-18-02
GR-4.1M	11-30-94	TC-82.10	04-19-02			SS908	11-07-00
GR-4.2M	10-21-97	MT-35.10	04-20-01				
GR-4.3M	10-21-97	MT-95.30	04-19-02				
GR-4.4M	11-30-94	MT-95.31	04-19-02				
GR-5.1M	04-21-95	MT-95.32	04-19-02				
GR-5.2M	11-30-94	MT-97.10	04-19-02				

FEDERAL PROJECT NO. TE21 G020(208)

PID NO. 21929

CONSTRUCTION PROJECT NO.

RAILROAD INVOLVEMENT NONE

LOR-83-15.17

LOR - SR 83/254 - 15.17
030241 PID - 21929
Dist 3 4/23/2003

GENERAL SUMMARY

(80% Federal - 20% State)				100% CITY				(80% Federal - 20% City)							Participation								
	7	11		5	8	9	23	5	6	7	8	29			FED-STATE	FED-CITY	100% CITY	ITEM	ITEM EXT.	TOTAL	UNIT	DESCRIPTION	REF. SHT.
																						ROADWAY ITEMS	
						25	2337.5										2362.5	202	38000	2362.5	linear foot	GUARDRAIL REMOVED	
						1	5										6	202	42000	6	each	ANCHOR ASSEMBLY REMOVED, TYPE A	
						20	155										175	203	20001	175	cubic yard	EMBANKMENT, AS PER PLAN	9
		245													245			203	60700	245	each	GRADING MAILBOX APPROACHES	
								3								3		604	39500	3	each	MONUMENT BOX ADJUSTED TO GRADE	
						50	2050										2100	606	13000	2100	linear foot	GUARDRAIL, TYPE 5	
						10											10	606	18000	10	each	GUARDRAIL POST	
							1										1	606	22000	1	each	ANCHOR ASSEMBLY, TYPE B-98	
							2										2	606	22010	2	each	ANCHOR ASSEMBLY, TYPE E-98	
						1											1	606	25000	1	each	ANCHOR ASSEMBLY, TYPE A	
							9										9	606	26500	9	each	ANCHOR ASSEMBLY, TYPE T	
							4										4	606	35140	4	each	BRIDGE TERMINAL ASSEMBLY, TYPE 4	
						25	2713										2738	SPECIAL	60650000	2738	linear foot	RESHAPING BERM	9
							37.5										37.5	606	98000	37.5	linear foot	GUARDRAIL, MISC.: ADJUST HEIGHT, EXISTING TYPE 5 GUARDRAIL	9
									26172							26172		617	20000	26172	square yard	SHOULDER PREPARATION	
		368							1638						368	1638		617	98200	2006	ton	SHOULDER RECONDITIONING, MISC.: COMPACTED AGGREGATE	8
	30														30			630	02100	30	lin. ft.	GROUND MOUNTED SUPPORT, NO. 2 POST	
	4														4			630	85100	4	each	REMOVAL OF GROUND MOUNTED SIGN AND REERECTION	
		13													13			SPECIAL	69050100	13	each	MAILBOX SUPPORT SYSTEM, SINGLE	
		12													12			SPECIAL	69050200	12	each	MAILBOX SUPPORT SYSTEM, DOUBLE	
																						DRAINAGE ITEMS	
								5								5		604	09000	5	each	CATCH BASIN ADJUSTED TO GRADE	
								3								3		604	34500	3	each	MANHOLE ADJUSTED TO GRADE	
																						PAVEMENT ITEMS	
					145												145	253	02000	145	cubic yard	PAVEMENT REPAIR	
								159367								159367		254	01000	159367	square yard	PAVEMENT PLANING, BITUMINOUS	
								1594								1594		254	01600	1594	square yard	PATCHING PLANED SURFACE	
								14769								14769		407	10000	14769	gallon	TACK COAT	
									10468							10468		408	10000	10468	gallon	BITUMINOUS PRIME COAT	
								7690								7690		446	47020	7690	cubic yard	ASPHALT CONCRETE SURFACE COURSE, TYPE 1, PG 64-22	
																						WATER WORKS ITEMS	
								9								9		638	10800	9	each	VALVE BOX ADJUSTED TO GRADE	
																						MAINTENANCE OF TRAFFIC ITEMS	
											57					57		614	12460	57	each	WORK ZONE MARKING SIGN	
										50						50		614	13000	50	cubic yard	BITUMINOUS CONCRETE FOR MAINTAINING TRAFFIC	
												3.28				3.28		614	20500	3.28	mile	TEMPORARY LANE LINE, CLASS II, 642 PAINT	
												20.32				20.32		614	21500	20.32	mile	TEMPORARY CENTER LINE, CLASS II, 642 PAINT	
												11002				11002		614	23200	11002	linear foot	TEMPORARY CHANNELIZING LINE, CLASS I, 642 PAINT	
																						TRAFFIC CONTROL ITEMS	
							34										34	626	00100	34	each	BARRIER REFLECTOR, TYPE A	
											43					43		632	26500	43	each	DETECTOR LOOP	
												12.38				12.38		642	00102	12.38	mile	EDGE LINE, TYPE 2	
												1.64				1.64		642	00202	1.64	mile	LANE LINE, TYPE 2	
												10.16				10.16		642	00302	10.16	mile	CENTER LINE, TYPE 2	
												5501				5501		642	00402	5501	linear foot	CHANNELIZING LINE, TYPE 2	
												888				888		642	00502	888	linear foot	STOP LINE, TYPE 2	
												1854				1854		642	00602	1854	linear foot	CROSSWALK LINE, TYPE 2	
												745				745		642	00702	745	linear foot	TRANSVERSE LINE, TYPE 2	
												2				2		642	01002	2	each	RAILROAD SYMBOL MARKI NG, TYPE 2	
												4				4		642	01102	4	each	SCHOOL SYMBOL MARKING, 72", TYPE 2	
												29				29		642	01302	29	each	LANE ARROW, TYPE 2	
												35				35		642	01402	35	each	WORD ON PAVEMENT, 72", TYPE 2	
															100%							BRIDGE NO. LOR-83-1556 SFN 4704193	
																						SEE STRUCTURE SUMMARY ON SHEET 12	
																						BRIDGE NO. LOR-83-1712 SFN 4704223	
																						SEE STRUCTURE SUMMARY ON SHEET 12	
																						BRIDGE NO. LOR-83-1831L SFN 4704266	
																						SEE STRUCTURE SUMMARY ON SHEET 13	
																						BRIDGE NO. LOR-83-1831R SFN 4704290	
																						SEE STRUCTURE SUMMARY ON SHEET 13	
															LUMP			614	11000	LUMP		MAINTAINING TRAFFIC	
															LUMP			624	10000	LUMP		MOBILIZATION	

CALC BY CV/H
CHK'D By MJS

GENERAL SUMMARY

LOR-83-15.17

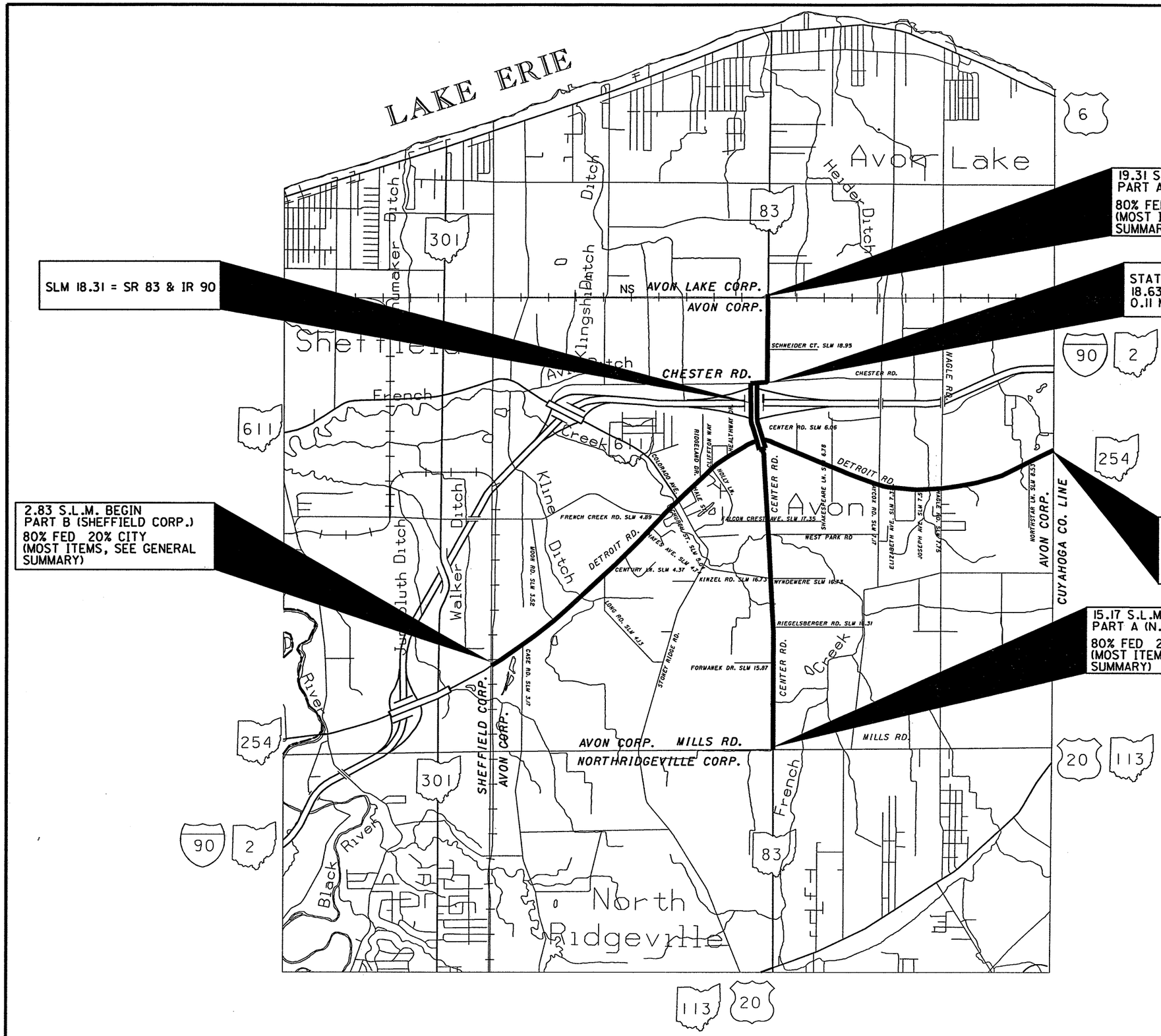

SLM 18.31 = SR 83 & IR 90

19.31 S.L.M. END
PART A (AVON LAKE CORP.)
80% FED 20% CITY
(MOST ITEMS, SEE GENERAL SUMMARY)

STATION EQUATION
18.63 BACK = 18.52 AHEAD
0.11 MILES

2.83 S.L.M. BEGIN
PART B (SHEFFIELD CORP.)
80% FED 20% CITY
(MOST ITEMS, SEE GENERAL SUMMARY)

8.85 S.L.M. END
PART B (CUYAHOGA CO. LINE)
80% FED 20% CITY
(MOST ITEMS, SEE GENERAL SUMMARY)

15.17 S.L.M. BEGIN
PART A (N. RIDGEVILLE CORP.)
80% FED 20% CITY
(MOST ITEMS, SEE GENERAL SUMMARY)

DESIGN DESIGNATION (ENGLISH UNITS)

	SR 83	SR 254
CURRENT ADT (2003)	19780	13000
DESIGN YEAR ADT (2015)	26280	15110
DESIGN HOURLY VOLUME (2015)	2628	1511
DIRECTIONAL DISTRIBUTION	50%	50%
TRUCKS (24 HOUR B&C)	962	290
DESIGN SPEED	3R PROJECT	3R PROJECT
LEGAL SPEED	VARIOUS	VARIOUS
DESIGN FUNCTIONAL CLASSIFICATION:	URBAN MINOR ARTERIAL	URBAN MINOR ARTERIAL
NHS PROJECT	NO	NO
DESIGN EXCEPTION	8-19-02	APPROVED

calculated CVH
checked MJS

SCHEMATIC

LOR-83-15.17

TYPICAL 1

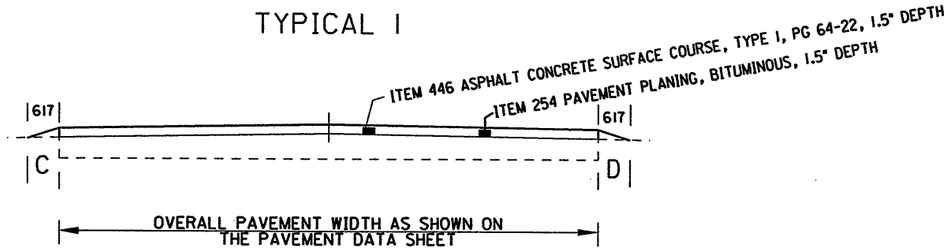

TYPICAL 2

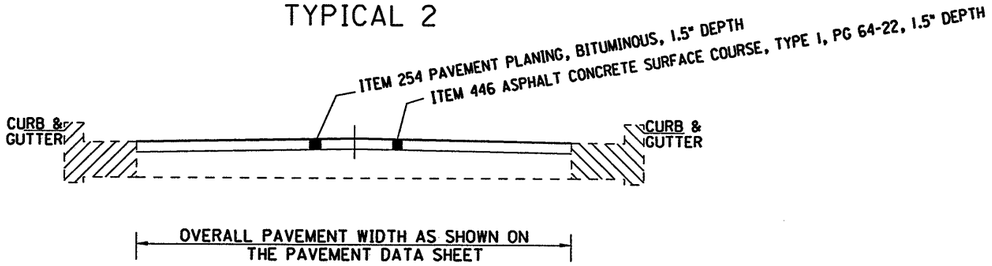

TYPICAL 3

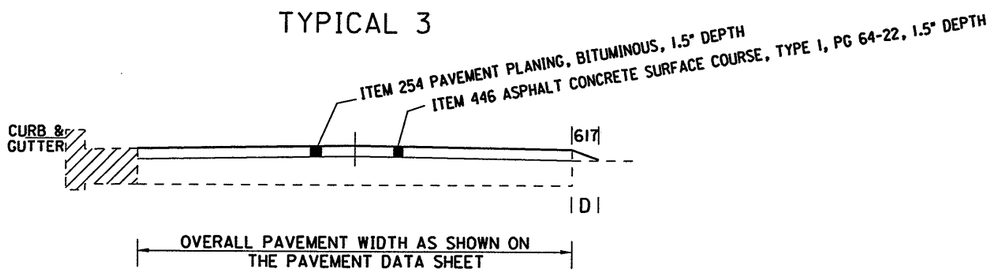

TYPICAL 4

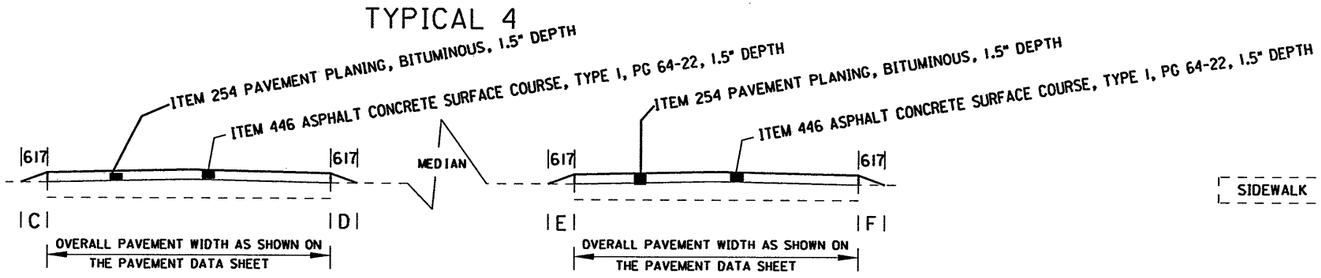

TYPICAL 5

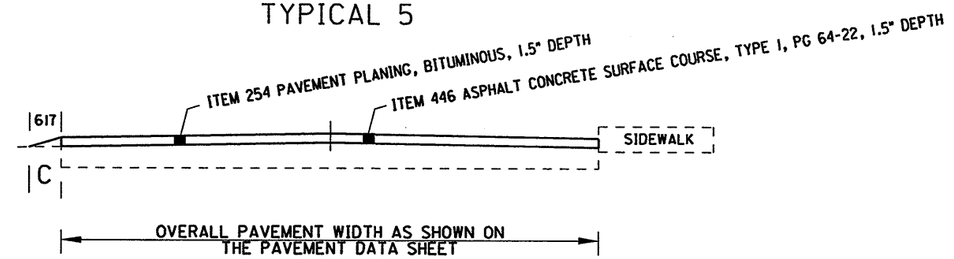

TYPICAL 6

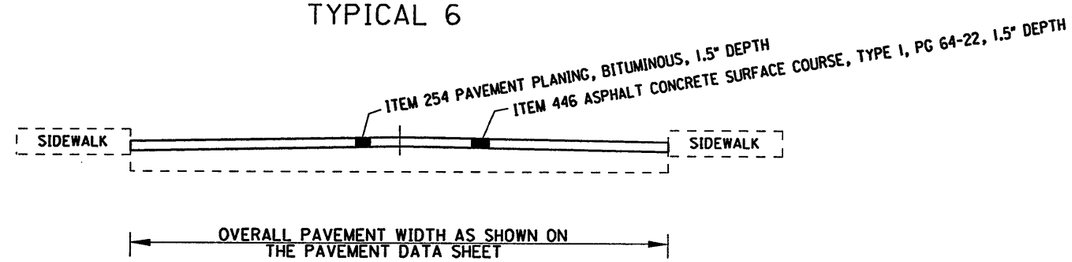

TYPICAL 7

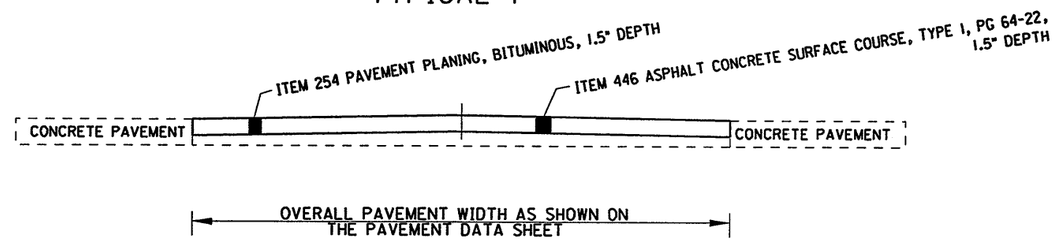

TYPICAL 8

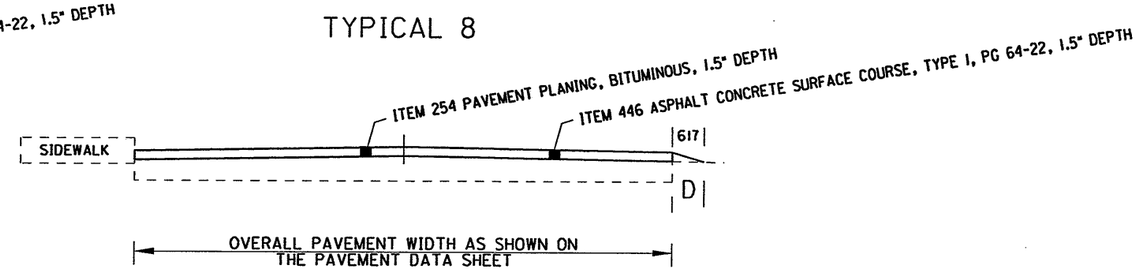

calculated CVH
checked MJS

TYPICALS

LOR-83-15.17

USE BUTT JOINTS THROUGHOUT PROJECT

* - FOR TYPICALS, SEE SHEET 4

SEE BRIDGE TREATMENT SHEET FOR PLANING AND PAVING AT STRUCTURES

PART	ROUTE	LOG POINT TO LOG POINT (STRAIGHT LINE MILEAGE)		LENGTH MILE	LENGTH FEET	WIDTH FEET AVG.	* TYPICAL	EXISTING PAVEMENT TYPE	PAVEMENT AREA SQUARE YARDS	407 TACK COAT @ 0.08 GAL/SY GALLON	446 ASPHALT CONCRETE SURFACE COURSE, TYPE 1, PG 64-22 THICK AVG. INCH	446 CU.YD.	254 PAVEMENT PLANING, BITUMINOUS SQ.YD	254 PATCHING PLANED SURFACES SQ.YD	604 MANHOLE ADJUSTED TO GRADE EACH	604 CATCH BASIN ADJUSTED TO GRADE EACH	604 MONUMENT BOX ADJUSTED TO GRADE EACH	638 VALVE BOX ADJUSTED TO GRADE EACH
A	SR 83	15.17	15.78	0.61	3221	23	1	404	8231	658	1.50	343	8231	82				
		15.78	15.95	0.17	898	35	1	404	3491	279	1.50	145	3491	35				
		15.95	16.50	0.55	2904	23	1	404	7421	594	1.50	309	7421	74				
		16.50	16.58	0.08	422	23	7	404	1079	86	1.50	45	1079	11				
		16.58	16.64	0.06	317	23	1	404	810	65	1.50	34	810	8				
		16.64	16.83	0.19	1003	33	1	404	3678	294	1.50	153	3678	37				
		16.83	17.28	0.45	2376	23	1	404	6072	486	1.50	253	6072	61				
		17.28	17.40	0.12	634	23	7	404	1619	130	1.50	67	1619	16				
		17.40	17.81	0.41	2165	23	1	404	5532	443	1.50	231	5532	55				
		17.81	17.90	0.09	475	40	1	404	2112	169	1.50	88	2112	21				
		17.90	17.99	0.09	475	67	2	404	3538	283	1.50	147	3538	35				
		17.99	18.02	0.03	158	66	2	404	1162	93	1.50	48	1162	12				
		18.02	18.06	0.04	211	66	3	404	1549	124	1.50	65	1549	15				
		18.06	18.16	0.10	528	70	1	404	4107	329	1.50	171	4107	41				
		18.16	18.19	0.03	158	72	1	404	1267	101	1.50	53	1267	13				
		18.19	18.21	0.02	106	62	4	404	727	58	1.50	30	727	7				
		18.21	18.33	0.12	634	91	4	404	6406	512	1.50	267	6406	64				
		18.33	18.38	0.05	264	96	4	404	2816	225	1.50	117	2816	28				
		18.38	18.47	0.09	475	72	4	404	3802	304	1.50	158	3802	38				
		18.47	18.56	0.09	475	37	1	404	1954	156	1.50	81	1954	20				
		18.56	18.66	0.10	528	34	1	404	1995	160	1.50	83	1995	20				
		18.66	19.31	0.65	3432	22	1	404	8389	671	1.50	350	8389	84				
	EXTRA AREA FOR INTERS., DRIVES, + M.B.								3620	290	1.50	151	950	10				
	TOTAL	**PART A**							**81377**	**6510**		**3389**	**78707**	**787**		**3**	**1**	**4**
B	SR 254	2.83	4.65	1.82	9610	24.0	1	404	25626	2050	1.50	1068	25626	256				
		4.65	4.78	0.13	686	36.0	1	404	2746	220	1.50	114	2746	27				
		4.78	4.93	0.15	792	24.0	1	404	2112	169	1.50	88	2112	21				
		4.93	4.99	0.06	317	30.0	6	404	1056	84	1.50	44	1056	11				
		4.99	5.06	0.07	370	42.0	5	404	1725	138	1.50	72	1725	17				
		5.06	5.09	0.03	158	35.0	1	404	616	49	1.50	26	616	6				
		5.09	5.13	0.04	211	44.0	2	404	1033	83	1.50	43	1033	10				
		5.13	5.19	0.06	317	49.0	8	404	1725	138	1.50	72	1725	17				
		5.19	5.88	0.69	3643	25.0	1	404	10120	810	1.50	422	10120	101				
		5.88	5.93	0.05	264	53.0	1	404	1555	124	1.50	65	1555	16				
		5.93	6.15	0.22	1162	63.0	2	404	8131	650	1.50	339	8131	81				
		6.15	6.36	0.21	1109	46.0	2	404	5667	453	1.50	236	5667	57				
		6.36	6.70	0.34	1795	33.0	2	404	6582	527	1.50	274	6582	66				
		6.70	6.85	0.15	792	38.0	1	404	3344	268	1.50	139	3344	33				
		6.85	7.13	0.28	1478	24.0	1	404	3942	315	1.50	164	3942	39				
		7.13	7.23	0.10	528	41.0	1	404	2405	192	1.50	100	2405	24				
		7.23	8.85	1.62	8554	24.0	1	404	22810	1825	1.50	950	1825	18				
	EXTRA AREA FOR INTERS., DRIVES, + M.B.								2046	164	1.50	85	450	5				
	TOTAL	**PART B**							**103241**	**8259**		**4301**	**80660**	**807**	**3**	**2**	**2**	**5**
	GRAND TOTAL								**184618**	**14769**		**7690**	**159367**	**1594**	**3**	**5**	**3**	**9**

CALC BY: CVH
CHK'D BY: MJS

PAVEMENT DATA

LOR-83-15.17

* - FOR TYPICALS, SEE SHEET 4

PART	ROUTE	LOG POINT TO LOG POINT (STRAIGHT LINE MILEAGE)		LENGTH MILE	LENGTH FEET	* TYPICAL	PAVED SHOULDER PROPOSED WIDTH FEET (AVG.) A	PAVED SHOULDER PROPOSED WIDTH FEET (AVG.) B	PAVED SHOULDER AREA (SQUARE YARDS)					AGGREGATE SHOULDER PROPOSED WIDTH FEET (AVG.) E	AGGREGATE SHOULDER PROPOSED WIDTH FEET (AVG.) F	AGGREGATE SHOULDER PROPOSED WIDTH FEET (AVG.) C	AGGREGATE SHOULDER PROPOSED WIDTH FEET (AVG.) D	AGGREGATE SHOULDER AREA (SQUARE YARDS)	617 SHOULDER PREPARATION (SQ.YD)	617 SHOULDER RECONDITIONING, MISC: COMPATED AGGREGATE 1.5 TON/CU.YD. 1.50 IN. AVG. THICKNESS (TON)			408 BITUMINOUS PRIME COAT @ 0.40 GAL/SY (GALLON)	
A	SR 83	15.17	15.78	0.61	3221	1										2.0	2.0	1431	1431	89			572	
		15.78	15.95	0.17	898	1										2.0	2.0	399	399	25			160	
		15.95	16.50	0.55	2904	1										2.0	2.0	1291	1291	81			516	
		16.50	16.58	0.08	422	7										2.0	2.0	188	188	12			75	
		16.58	16.64	0.06	317	1										2.0	2.0	141	141	9			56	
		16.64	16.83	0.19	1003	1										2.0	2.0	446	446	28			178	
		16.83	17.28	0.45	2376	1										2.0	2.0	1056	1056	66			422	
		17.28	17.40	0.12	634	7										2.0	2.0	282	282	18			113	
		17.40	17.81	0.41	2165	1										2.0	2.0	962	962	60			385	
		17.81	17.90	0.09	475	1										2.0	2.0	211	211	13			84	
		17.90	17.99	0.09	475	2																		
		17.99	18.02	0.03	158	2																		
		18.02	18.06	0.04	211	3											2.0	47	47	3			19	
		18.06	18.16	0.10	528	1										8.0	8.0	939	939	59			376	
		18.16	18.19	0.03	158	1										8.0	8.0	282	282	18			113	
		18.19	18.21	0.02	106	4								2.0	8.0	8.0	2.0	235	235	15			94	
		18.21	18.33	0.12	634	4								2.0	8.0	8.0	2.0	1408	1408	88			563	
		18.33	18.38	0.05	264	4								2.0	8.0	8.0	2.0	587	587	37			235	
		18.38	18.47	0.09	475	4								2.0	8.0	8.0	2.0	1056	1056	66			422	
		18.47	18.56	0.09	475	1										2.0	2.0	211	211	13			84	
		18.56	18.66	0.10	528	1										2.0	2.0	235	235	15			94	
		18.66	19.31	0.65	3432	1										2.0	2.0	1525	1525	95			610	
	EXTRA AREA FOR																	582	582	36			233	
	INTERS., DRIVES, + M.B.																							
	TOTAL	**PART A**																**13514**	**13514**	**846**			**5404**	
B		2.83	4.65	1.82	9610	1										2.0	2.0	4271	4271	267			1708	
		4.65	4.78	0.13	686	1										2.0	2.0	305	305	19			122	
		4.78	4.93	0.15	792	1										2.0	2.0	352	352	22			141	
		4.93	4.99	0.06	317	6																		
		4.99	5.06	0.07	370	5										2.0		82	82	5			33	
		5.06	5.09	0.03	158	1										2.0	2.0	70	70	4			28	
		5.09	5.13	0.04	211	2																		
		5.13	5.19	0.06	317	8											2.0	70	70	4			28	
		5.19	5.88	0.69	3643	1										2.0	2.0	1619	1619	101			648	
		5.88	5.93	0.05	264	1										2.0	2.0	117	117	7			47	
		5.93	6.15	0.22	1162	2																		
		6.15	6.36	0.21	1109	2																		
		6.36	6.70	0.34	1795	2																		
		6.70	6.85	0.15	792	1										2.0	2.0	352	352	22			141	
		6.85	7.13	0.28	1478	1										2.0	2.0	657	657	41			263	
		7.13	7.23	0.10	528	1										2.0	2.0	235	235	15			94	
		7.23	8.85	1.62	8554	1										2.0	2.0	3802	3802	238			1521	
	EXTRA AREA FOR																	726	726	45			290	
	INTERS., DRIVES, + M.B.																							
	TOTAL	**PART B**																**12658**	**12658**	**791**			**5064**	
	GRAND TOTAL																	**26172**	**26172**	**1638**			**10468**	

CALC BY: CVH
CHK'D BY: MJS

SHOULDER DATA

LOR-83-15.17

ROUTINE MAINTENANCE:

BETWEEN THE TIME THAT BIDS ARE TAKEN AND THE START OF CONSTRUCTION, THE MAINTAINING AGENCY MAY ENTER UPON THE PROJECT AND PERFORM ROUTINE MAINTENANCE SUCH AS CRACK SEALING, PATCHING, AND BERM AND SHOULDER REPAIR. THE EFFECTS, IF ANY, OF THE PERFORMANCE OF ROUTINE MAINTENANCE SHALL BE CONSIDERED AS INHERENT IN WORK OF THE CHARACTER PROVIDED FOR IN THE PLAN AND THE RESULTING CONDITIONS SHALL NOT BE CONSIDERED AS DIFFERING MATERIALLY FROM THOSE EXISTING AT THE TIME BIDS WERE TAKEN.

CONTINGENCY QUANTITIES

THE CONTRACTOR SHALL NOT ORDER MATERIALS OR PERFORM WORK FOR ITEMS DESIGNATED BY PLAN NOTE TO BE USED "AS DIRECTED BY THE ENGINEER" UNLESS AUTHORIZED BY THE ENGINEER. THE ACTUAL WORK LOCATIONS AND QUANTITIES USED FOR SUCH ITEMS SHALL BE INCORPORATED INTO THE FINAL CHANGE ORDER GOVERNING COMPLETION OF THIS PROJECT.

PROGRESSION OF WORK:

GUARDRAIL WORK SHALL BE DONE AFTER RESURFACING, EMBANKMENT AND BERM WORK SO AS TO ESTABLISH PROPER GRADES FROM WHICH TO CONSTRUCT THE GUARDRAIL.

PAVEMENT CONTROL:

AN AUTOMATIC SCREED CONTROL, HAVING A 20 FT. MINIMUM SKI-ARM, SHALL BE USED FOR PLACING THE INTERMEDIATE COURSE AND SURFACE COURSE ON EXISTING PAVEMENT WIDTHS OF 20 FT. AND OVER.

SPECIAL ATTENTION SHALL BE GIVEN TO SUPER-ELEVATED CURVES. THE SUPER-ELEVATION SHALL BE MAINTAINED AND/OR RESTORED, IF NECESSARY, AS DIRECTED BY THE ENGINEER.

THE CONTRACTOR SHALL MAINTAIN POSITIVE DRAINAGE INTO ALL CATCH BASINS AND INLETS.

BUTT JOINTS

BUTT JOINTS SHALL NOT BE CUT AND LEFT OPEN TO TRAFFIC. THEY SHALL BE FILLED IN WITH A TEMPORARY ASPHALT CONCRETE WEDGE, OF SUFFICIENT LENGTH, AS DIRECTED BY THE ENGINEER.

CONSTRUCTION "BUMP" (OW-62) AND "ADVISORY SPEED" (OW-143) SIGNS SHALL BE ERECTED AND MAINTAINED DURING THIS TIME PERIOD. THESE SIGNS SHALL BE PAID FOR UNDER THE LUMP SUM ITEM FOR ITEM 614 MAINTAINING TRAFFIC.

INTERSECTIONS AND DRIVES:

RURAL-INTERSECTIONS SHALL BE PAVED TO THE END OF THE RADII OR AS DIRECTED BY THE ENGINEER. (TO PROVIDE A SMOOTH TRANSITION BETWEEN THE TWO HIGHWAYS, AND TO ELIMINATE WATER POCKETS)

URBAN-INTERSECTIONS WHERE PLANING IS BEING DONE SHALL NOT HAVE THE RADII PAVED.

EXISTING PAVED DRIVES SHALL BE PAVED SO AS TO PROVIDE A SMOOTH TRANSITION BETWEEN THE HIGHWAY AND THE DRIVE, (DISTANCE FROM EDGE OF ROADWAY MAY VARY - AT EACH DRIVE) AS DIRECTED BY THE ENGINEER.

EXISTING AGGREGATE DRIVES SHALL BE PAVED WITH AN APRON THE WIDTH OF THE 617 BERM OR 2.0 FT. MINIMUM. THE SLOPE OF THIS APRON SHALL BE THE SAME AS THE ADJACENT PAVEMENT SLOPE OR AS DIRECTED BY THE ENGINEER. ITEM 617 AGGREGATE SHALL BE PLACED ADJACENT TO THIS APRON TO PROVIDE A SMOOTH TRANSITION FROM THE APRON TO THE EXISTING DRIVE, (WIDTH OF THIS 617 APPLICATION MAY VARY.) AS DIRECTED BY THE ENGINEER. AN ADDITIONAL QUANTITY HAS BEEN ESTIMATED TO COMPLETE THIS WORK AND IS SHOWN ON THE "SHOULDER DATA" SHEET.

ANY HAZARD OR UNSAFE CONDITION RESULTING FROM THE ABOVE WORK MUST BE CORRECTED IMMEDIATELY, AS DIRECTED BY THE ENGINEER. THE CONTRACTOR IS REMINDED OF SECTIONS 104.04, 107.07 & 614.02 (a): PUBLIC CONVENIENCE AND SAFETY.

PROFILE AND ALIGNMENT

THE PROPOSED PAVEMENT RESURFACING SHALL FOLLOW THE ALIGNMENT AND PROFILE OF THE EXISTING PAVEMENT.

UTILITIES:

EXTREME CAUTION SHALL BE EXERCISED IN AREAS WITH UTILITIES. THE CONTRACTOR IS FULLY RESPONSIBLE FOR ALL DAMAGE INFLICTED ON UTILITIES IN THE EXECUTION OF THIS CONTRACT.

THE FOLLOWING IS A LIST OF UTLITIES WHICH MAY BE INVOLVED. THE OHIO DEPT. OF TRANSPORTATION DOES NOT GUARANTEE THE COMPLETENESS OF THIS LIST.

CENTURYTEL OF OHIO
1730 WEST 19TH ST.
LORAIN, OH 44052
440-244-8415

CITY OF ELYRIA
200 W. ERIE AVE.
LORAIN, OH 44052
440-244-1300

OHIO EDISON
1910 WEST MARKET ST.
AKRON, OH 44313
330-384-4746

NORTHEAST OHIO NATURAL GAS
9081 SR 250 NW
STRASBURG, OH 44680
330-878-5589

COLUMBIA GAS OF OHIO
3101 N. RIDGE RD.
LORAIN, OH 44055

LEVEL 3 COMMUNICATIONS
1025 ELDORADO BLVD.
BROOMFIELD, CO. 80021
720-888-5794

ALL UTILITIES WILL REMAIN IN PLACE AND IN SERVICE.

MAPS OF LOCATIONS OF UTILITIES CAN BE PROVIDED TO THE CONTRACTOR AT THE PRE-CONSTRUCTION MEETING.

PLACEMENT OF ASPHALT CONCRETE

TWO-WAY TRAFFIC SHALL BE MAINTAINED AT ALL TIMES EXCEPT THAT ONE-WAY TRAFFIC WILL BE PERMITTED IN THE TWO LANE SECTION FOR MINIMUM PERIODS OF TIME CONSISTENT WITH THE REQUIREMENTS OF THE SPECIFICATIONS FOR PROTECTION OF COMPLETED ASPHALT CONCRETE COURSES.

ITEM 254 PATCHING PLANED SURFACE

AN ESTIMATED QUANTITY OF ITEM 254, PATCHING PLANED SURFACE HAS BEEN SET UP ON SHEET NO. 5 TO BE USED AS DIRECTED BY THE ENGINEER AS DESCRIBED IN THE CONSTRUCTION AND MATERIALS SPECIFICATIONS MANUAL 254.05. PATCHING DEPTH IS 0 TO 2 IN.

ITEM 614, BITUMINOUS CONCRETE FOR MAINTAINING TRAFFIC:

THE FOLLOWING ESTIMATED QUANTITY HAS BEEN CARRIED TO THE GENERAL SUMMARY TO CONSTRUCT A TEMPORARY ASPHALT WEDGE FROM THE EXISTING PAVEMENT TO THE PLANED SURFACE AT BUTT JOINTS AND OTHER LOCATIONS THAT RESULT IN A DROP-OFF IN EXCESS OF 1½ in, AS DIRECTED BY THE ENGINEER. THIS QUANTITY SHALL ALSO BE USED AT PLANED SURFACES WHERE A TEMPORARY ASPHALT WEDGE IS NEEDED AROUND CASTINGS, AS DIRECTED BY THE ENGINEER.

50 cu. yd - ITEM 614, BITUMINOUS CONCRETE FOR MAINTAINING TRAFFIC

ITEM 604, CASTINGS ADJUSTED TO GRADE:

ANY UNIT OF THIS ITEM MAY BE NONPERFORMED IF SO DIRECTED BY THE ENGINEER AND THE SURFACE SHALL BE FEATHERED TO MEET THE EXISTING CASTING OR INLET IN A MANNER ACCEPTABLE TO THE ENGINEER. ALL ADJUSTING RINGS SHALL HAVE THE ENGINEERS APPROVAL BEFORE USING.

UNDER ITEM 604.03, ADJUSTING TO GRADE, PARAGRAPH (A), THE CASTING TO BE ADJUSTED MAY OR MAY NOT HAVE AN EXISTING FRAME. THE WORK SHALL CONSIST OF ADJUSTING THE EXISTING CASTING OR GRATE TO THE SATISFACTION OF THE ENGINEER. THE CONTRACTOR IS REMINDED TO FIELD CHECK ALL ADJUSTMENT TO GRADE ITEMS PRIOR TO BIDDING, AS NO ADDITIONAL COMPENSATION WILL BE GRANTED FOR LABOR AND MATERIAL REQUIRED TO SATISFACTORILY ADJUST CASTINGS WITHOUT FRAMES.

ITEM 254, PAVEMENT PLANING, BITUMINOUS

THE INTENT OF THE PLANING IS TO MILL 1.5 INCHES MINIMUM CENTERLINE AND/OR EDGE OF PAVEMENT AND ¼ inch MINIMUM DEPTH IN BOTTOM OF WHEEL RUTS. THE PAVEMENT SLOPE MAY VARY BETWEEN 3/16 INCH AND ⅞ INCH PER FOOT, CONTINUOUS FOR PAVEMENT WIDTH. THE MILLING DEPTH SHALL BE CONTROLLED FROM THE CENTER LINE OR EDGE OF PAVEMENT, TO PRODUCE THE LEAST AMOUNT OF MILLING IN CONFORMANCE WITH ABOVE LIMITS. FIELD WORK NECESSARY FOR PROPER CONTROL WITHIN PLAN INTENT SHALL BE THE RESPONSIBILITY OF THE CONTRACTOR.
AN AUTOMATIC MILLING HEAD PROFILE CONTROL HAVING A MINIMUM 30 ft SKI-ARM SHALL BE USED DURING PLANING OPERATION.

ABOVE CONDITIONS DO NOT APPLY TO PLANING PERFORMED IN AREAS AS DIRECTED BY THE ENGINEER TO ELIMINATE ADVERSE SURFACE DISTORTION, OR TO PROVIDE A SATISFACTORY GRADE AT CASTINGS. THESE AREAS INCLUDE MATERIAL DISPLACED BY RUTTING OR SHOVING ASPHALT, SURFACE PATCHES, CONCRETE PATCHING, TRANSVERSE BUMPS, PAVEMENT AT RAILROADS, CASTINGS, ETC. PLANING OF THESE AREAS SHALL BE PERFORMED THROUGHOUT THE PROJECT PRIOR TO PAVING. AREAS TO BE PLANED WILL BE DESIGNATED BY THE ENGINEER.

THE PROGRESSION OF THE PLANING SHALL PROCEED IN SUCH A MANNER THAT NORMAL TRAFFIC WILL NOT BE REQUIRED TO RUN OVER THE PLANED ROADWAY SURFACE MORE THAN TWENTY-ONE (21) CALENDAR DAYS. THE 21 CALENDAR DAYS SHALL BE CONSIDERED AN INTERIM COMPLETION DATE (SECTION 108) AND FOR EACH CALENDAR DAY BEYOND THE 21 DAYS THAT THE ROADWAY REMAINS EXPOSED TO THE PLANED SURFACE, THE CONTRACTOR WILL BE ASSESSED LIQUIDATED DAMAGES AS PER 108.07. PLANED AREAS WHICH CREATE A LONGITUDINAL JOINT BETWEEN TRAVELED LANES SHALL BE COMPLETED IN SUCH A MANNER SO AS TO REMOVE THE JOINT BEFORE THE END OF EACH DAY'S WORK. BEFORE THIS JOINT IS EXPOSED TO TRAFFIC, THE CONTRACTOR SHALL ERECT OW-171 SIGNS (UNEVEN PAVEMENT). THESE SIGNS SHALL REMAIN ONLY WHEN THE CONDITION EXISTS.

ITEM 446, ASPHALT CONCRETE SURFACE COURSE, TYPE 1, PG 64-22

IN ADDITION TO SECTION 401.12 AND STANDARD DRAWING BP-3.1, TRANSVERSE, FEATHERED, OR BUTT JOINTS SHALL BE SEALED WITH A 6 INCH WIDE BAND OF ASPHALT CEMENT ACROSS THE TOP SURFACE. THE COST OF THIS WORK SHALL BE INCLUDED IN THE UNIT PRICE BID FOR THIS ITEM.

BRIDGE LOCATION MARKER SIGN

THE BRIDGE LOCATION MARKER SIGN INDICATES THE COUNTY, THE ROUTE, AND THE STAIGHT LINE MILEAGE OF THE STRUCTURE. THE CONTRACTOR SHALL REMOVE THE EXISTING BRIDGE LOCATION MARKER SIGNS AND REERECT THE SIGNS IN KIND. IF THERE ARE ANY QUESTIONS ON THE LOCATION, PLEASE CONTACT THE DISTRICT BRIDGE ENGINEER.

ALL COSTS INCLUDING THE SIGN REMOVAL, SIGN REERECTION, POST REMOVAL, AND POST INSTALLATION SHALL BE INCLUDED IN THE FOLLOWING PAY ITEMS:

ITEM 630, GROUND MOUNTED SUPPORT, NO. 2 POST 30 LIN. FT.
ITEM 630, REMOVAL OF GROUND MOUNTED SIGN AND REERECTION 4 EACH

ITEM 407, TACK COAT

AS PER 407.05 THE APPLICATION RATE SHALL BE 0.08 GAL. PER SQ.YD. FOR ESTIMATING PURPOSES ONLY. THE RATE OF APPLICATION SHALL BE SUBJECT TO ADJUSTMENT AS DIRECTED BY THE ENGINEER. A COMPLETE PAVEMENT SURFACE COVERAGE SHALL BE REQUIRED. AREAS OF TACK STRIPPED BY CONSTRUCTION EQUIPMENT OR TRAFFIC SHALL BE RECOATED PRIOR TO PLACING ASPHALT CONCRETE. ALL COST AS DESCRIBED ABOVE SHALL BE INCLUDED IN THE UNIT PRICE BID PER GALLON FOR ITEM 407, TACK COAT.

ITEM 617. SHOULDER RECONDITIONING, MISC.: COMPACTED AGGREGATE

THIS ITEM OF WORK SHALL CONFORM TO ITEM 617 IN THE CONSTRUCTION AND MATERIALS SPECIFICATIONS BOOK WITH EXCEPTION OF 617.03 (MATERIALS) AND 617.06 (METHOD OF MEASUREMENT).

THE MATERIAL ON THIS PROJECT SHALL BE THE BITUMINOUS ASPHALT GRINDINGS RESULTING FROM ITEM 254. THE GRINDINGS USED FOR THIS WORK ARE TO BE PLACED AND COMPACTED AS DESCRIBED IN 617.05 WITH SPECIAL CARE TO CREATE PROPER COMPACTION. 100% OF THIS MATERIAL SHALL PASS A 1¼ IN. SIEVE AS JUDGED BY THE ENGINEER. THE CONTRACTOR SHALL TAKE SPECIAL CARE TO MEET THE TYPICAL SECTIONS SHOWN IN THE PLANS AND AS DIRECTED BY THE ENGINEER.

THE MATERIAL ON THIS PROJECT WILL BE PAID FOR BY THE TON. THE CONTRACTOR SHALL BE RESPONSIBLE FOR RECORDING THE GROSS, TARE, AND NET WEIGHT OF EACH TRUCK LOAD OF MATERIAL TO THE NEAREST 100 LBS. IN TRIPLICATE ON PLANT TICKET FORMS APPROVED BY THE ENGINEER. THE CONTRACTOR SHALL PROVIDE A TARE WEIGHT FOR EACH TRUCK AT THE BEGINNING OF EACH DAY'S OPERATION. ONE COPY OF THE WEIGHT TICKET SHALL ACCOMPANY EACH LOAD DELIVERED TO THE PROJECT AND SHALL BE PRESENTED TO THE ENGINEER.

PAYMENT FOR ALL THE ABOVE SHALL BE INCLUDED IN THE PRICE BID PER TON OF 617 SHOULDER RECONDITIONING, MISC.: COMPACTED AGGREGATE.

SR 83 RAILROAD CROSSING INFORMATION

OWNER OF RAILROAD: NORFOLK AND SOUTHERN CORPORATION

TYPE OF LINE: MAINLINE (LOR-83-19.31 S.L.M.)

CROSSING: AT GRADE

NO. OF TRACKS: 1

THE NUMBER OF TRAINS OPERATING THROUGH THE IMPROVEMENT IS ESTIMATED TO BE:

PASSENGER TRAINS/DAY: 0 @ 0 MILES PER HOUR
FREIGHT TRAINS/DAY: 5 @ 45 MILES PER HOUR
HAZARDOUS MATERIAL: YES

THE IDENTIFICATION OF THE CROSSING IS KNOWN AS:
RR MILE POST: 19.31 S.L.M.
AARDOT NO.: 472 258 U

LOCAL CONTACT PERSON FOR FLAGGING: MR. MASON (419) 483-1885

SR 254 RAILROAD CROSSING INFORMATION

OWNER OF RAILROAD: NORFOLK AND SOUTHERN CORPORATION

TYPE OF LINE: MAINLINE (LOR-254-2.83 S.L.M.)

CROSSING: AT GRADE

NO. OF TRACKS: 1

THE NUMBER OF TRAINS OPERATING THROUGH THE IMPROVEMENT IS ESTIMATED TO BE:

PASSENGER TRAINS/DAY: 0 @ 0 MILES PER HOUR
FREIGHT TRAINS/DAY: 3 @ 10 MILES PER HOUR
HAZARDOUS MATERIAL: NO

THE IDENTIFICATION OF THE CROSSING IS KNOWN AS:
RR MILE POST: 2.83 S.L.M.
AARDOT NO.: 510 262 P

LOCAL CONTACT PERSON FOR FLAGGING: RICH RIETZEL (440) 989-1474

ITEM 253. PAVEMENT REPAIR:

THIS ITEM OF WORK SHALL CONSIST OF THE REMOVAL OF THE EXISTING PAVEMENT OR PAVED BERM WHICH MAY BE ASPHALT, BRICK, CONCRETE, OR A COMBINATION OF EACH, IN AREAS OF EXISTING PAVEMENT FAILURE.

THE ENGINEER SHALL DESIGNATE THE LOCATIONS AND LIMITS OF THE AREAS TO BE REPAIRED. PAVEMENT REPAIR SHALL BE PERFORMED AFTER PAVEMENT PLANING. THE REPAIR AREAS SHALL BE ROUGHLY RECTANGULAR IN SHAPE AND CUT OR SAWED TO A NEAT LINE. THE PAVEMENT SHALL BE REMOVED WITHIN THE DESIGNATED AREAS BY METHODS WHICH WILL NOT DAMAGE THE ADJACENT PAVEMENT. THE DEPTH OF REMOVAL, AS DIRECTED BY THE ENGINEER, SHALL BE SUFFICIENT TO REMOVE ALL DETERIORATED PAVEMENT (ESTIMATED DEPTH MAY VARY FROM 2" to 12"). THE MATERIALS SO REMOVED SHALL BE DISPOSED OF IN ACCORDANCE WITH 203.05.

REPLACEMENT MATERIAL SHALL BE ITEM 301 OR ITEM 448, TYPE 2 MATERIAL AND SHALL BE PLACED AND COMPACTED TO FINISH FLUSH WITH THE ADJACENT PAVEMENT SURFACE. THE REPAIR AREAS SHALL BE PAINTED WITH BITUMINOUS MATERIAL (SIDES AND BOTTOM) AT AN APPLICATION RATE OF 0.25 Gal/yd^2 . ALL COMPACTION SHALL BE ACHIEVED BY MECHANICAL METHODS TO THE SATISFACTION OF THE ENGINEER. MAXIMUM LIFT THICKNESS SHALL BE 3".

PAYMENT SHALL INCLUDE ALL LABOR, EQUIPMENT AND MATERIALS NECESSARY TO COMPLETE THE PAVEMENT REPAIR. THE FOLLOWING ESTIMATED QUANTITY IS PROVIDED IN THE GENERAL SUMMARY TO BE USED AS DIRECTED BY THE ENGINEER. PAYMENT WILL BE MADE AT THE UNIT BID PRICE PER cubic yard, (BY TICKET WEIGHT CONVERSION), OF ITEM 253, PAVEMENT REPAIR.

75 cu. yd. - PART A - FULL DEPTH REPAIRS NEEDED
70 cu. yd. - PART B ON NORTH END OF SR 83

RAILROAD CROSSINGS

PRIOR TO ANY WORK AT RAILROAD CROSSINGS THE CONTRACTOR SHALL CONTACT THE AFFECTED RAILROAD AUTHORITY AS TO MAKE THEM AWARE OF THE PROGRESS AND SCHEDULE OF WORK. THE CONTRACTOR SHALL COOPERATE WITH THE RAILROAD SO AS TO ELIMINATE ANY SAFETY CONCERNS. FLAGGING MAY BE REQUIRED BY THE RAILROAD. THE CONTRACTOR IS RESPONSIBLE FOR PAYING THE RAILROAD FOR ALL FLAGGING COSTS. REFER TO RAILROAD LIABILITY INSURANCE PROPOSAL NOTE.

THE CROWN SHALL BE WORKED OUT OF THE RESURFACED PAVEMENT ON EACH SIDE OF THE RAILROAD CROSSING, BEGINNING 50 FEET FROM THE NEAREST RAIL, BY RAISING THE EDGES OF THE RESURFACED PAVEMENT TO MEET THE PLATFORM ELEVATION.

OMIT AND RESUME RESURFACING AT THE HEADER TIE, AS DIRECTED BY THE ENGINEER.

ITEM 614. WORK ZONE MARKING SIGN

THE FOLLOWING ESTIMATED QUANTITY HAS BEEN CARRIED TO THE GENERAL SUMMARY FOR USE AS DIRECTED BY THE ENGINEER FOR TEMPORARY WORK ZONE MARKING SIGNS PER THE REQUIREMENTS OF THE CONSTRUCTION AND MATERIALS SPECIFICATIONS, 614.04.

PART A

WORK ZONE MARKING SIGN:	(OW-167-36) NO EDGE LINE	=	10 each
WORK ZONE MARKING SIGN:	(R-33-24) DO NOT PASS	=	17 each
WORK ZONE MARKING SIGN:	(R-34-24) PASS WITH CARE	=	2 each
	TOTAL	=	29 each

PART B

WORK ZONE MARKING SIGN:	(OW-167-36) NO EDGE LINE	=	10 each
WORK ZONE MARKING SIGN:	(R-33-24) DO NOT PASS	=	18 each
	TOTAL	=	28 each

COORDINATION OF ASPHALT PLANING/PAVING OPERATIONS WITH LOOP DETECTOR REPLACEMENT

DURING THE COURSE OF THE CONTRACT IT WILL BE NECESSARY FOR THE CONTRACTOR TO REPLACE THE EXISTING LOOP DETECTORS. THE INTENT IS TO REPLACE LOOP DETECTORS DAMAGED OR REMOVED BY ASPHALT PLANING OPERATIONS AND ALSO TO INSTALL NEW LOOP DETECTORS FOR PROPOSED TRAFFIC SIGNALS ON THE PLANED ASPHALT URFACE AND WIDENED ASPHALT SURFACE PRIOR TO RESURFACING COURSES. THE INTERSECTIONS INVOLVED ARE AS FOLLOWS:

STATE ROUTE 254 & AVON COMMONS 1- 12' X 33' & 1- 6' x 30' NORTH SIDE
STATE ROUTE 254 & AVON COMMONS 1- 6' X 30' WEST SIDE
STATE ROUTE 254 & MIDDLETON AVE. 1- 12' X 30' & 1- 6' X 30' NORTH SIDE
STATE ROUTE 254 & MIDDLETON AVE. 1- 6' X 30' WEST SIDE
STATE ROUTE 254 & CLIFTON WAY/ GARDEN DR. 1 - 10' X 30' NORTH SIDE
STATE ROUTE 254 & CLIFTON WAY/ GARDEN DR. 1 - 6' X 30' SOUTH SIDE
STATE ROUTE 254 & ST. RT. 611/ STONEY RIDGE ROAD 10 - 6' X 30'
STATE ROUTE 254 & JAYCOX RD. 2- 6' X 30' NORTH SIDE
STATE ROUTE 254 & JAYCOX RD. 2- 6' X 30' SOUTH SIDE
STATE ROUTE 83 & WYNDEMERE/ KINZEL 1- 12' X 45' EAST SIDE, 1- 6' X 30' SOUTH SIDE 1- 6' X 45', & 1- 12' X 27' WEST SIDE

STATE ROUTE 83 & CHESTER RD./ PARK AND RIDE 2- 6' X 30' EAST SIDE, 2- 8' X 30' SOUTH SIDE & 1- 6' X 30' WEST SIDE

STATE ROUTE 83 & CHESTER RD./ CENTER RD. 1- 12' X 36' SOUTH SIDE, 1- 6' X 30' WEST SIDE 1- 12' X 36' & 1- 6' X 30' NORTH SIDE

STATE ROUTE 83 & STATE ROUTE 254 1- 8' X 20', 2- 6' X 27' NORTH SIDE, 1- 6' X 54' WEST SIDE, 1- 8' X 33', 1- 6' X 27' EAST SIDE, & 1- 8' X 18', 1- 6' X 45' SOUTH SIDE

PAYMENT FOR ALL THE ABOVE SHALL BE INCLUDED IN THE UNIT PRICE BID PER EACH OF ITEM 632 DETECTOR LOOP.

ITEM 632 DETECTOR LOOP 43 EACH WILL BE CARRIED TO THE GENERAL SUMMARY

CONNECTION BETWEEN EXISTING AND PROPOSED GUARDRAIL

WHEN IT IS NECESSARY TO SPLICE PROPOSED GUARDRAIL TO EXISTING GUARDRAIL, ONLY THE EXISTING GUARDRAIL SHALL BE CUT, DRILLED, OR PUNCHED. THE CONNECTION SHALL BE MADE USING A "W-BEAM RAIL SPLICE" AS SHOWN ON STANDARD CONSTRUCTION DRAWING GR-1.1M. PAYMENT SHALL BE INCLUDED IN THE CONTRACT PRICE FOR THE RESPECTIVE GUARDRAIL ITEMS.

GUARDRAIL REPLACEMENT

NO HAZARD SHALL BE LEFT UNPROTECTED EXCEPT FOR THE ACTUAL TIME NECESSARY TO REMOVE GUARDRAIL, INSTALL EMBANKMENT, GRADE AND REINSTALL GUARDRAIL IN A CONTINUOUS OPERATION. THE REMOVAL OF ALL GUARDRAIL SHALL AT ALL TIMES BE AS DIRECTED BY THE ENGINEER. NO GUARDRAIL SHALL BE REMOVED UNTIL THE REPLACEMENT MATERIAL IS ON SITE, READY FOR INSTALLATION. FAILURE TO COMPLY WITH THIS REQUIREMENT SHALL BE DEEMED SUFFICIENT CAUSE TO ORDER WORK SUSPENDED ON THIS PROJECT UNTIL SUCH TIME THAT THE ENGINEER IS ASSURED OF SAID COMPLIANCE.

LOCATIONS OF GUARDRAIL

THE GUARDRAIL PROTECTION PROVIDED IN THIS PLAN SHALL BE LOCATED IN THE FIELD TO ASSURE THAT THE INSTALLATION WILL AFFORD THE MAXIMUM PROTECTION FOR TRAFFIC. THIS LOCATION SHALL BE POSITIONED AS FAR AS POSSIBLE FROM THE EDGE OF PAVEMENT WHILE MAINTAINING PROPER GRADE IN FRONT OF GUARDRAIL AS PER STANDARD DRAWINGS AND PLAN DETAILS.

ITEM 202 ANCHOR ASSEMBLY REMOVED, TYPE A

THIS ITEM SHALL INCLUDE THE REMOVAL OF THE EXISTING TYPE A, ANCHOR ASSEMBLY INCLUDING ALL POSTS, HARDWARE, RAIL ELEMENTS, AND CONCRETE ANCHORS. ALL ITEMS REMOVED SHALL BECOME THE PROPERTY OF THE CONTRACTOR AND SHALL BE PROPERLY DISPOSED OF.

THE EXISTING CONCRETE ANCHOR AND CONCRETE AT POSTS SHALL BE REMOVED ENTIRELY. ALL HOLES REMAINING AFTER REMOVAL SHALL BE FILLED WITH GRANULAR MATERIAL OR EXCESS MATERIAL RESULTING FROM GUARDRAIL CONSTRUCTION. ALL FILL MATERIAL SHALL BE THOROUGHLY COMPACTED AND LEVELED, AS DIRECTED BY THE ENGINEER.

PAYMENT FOR ALL OF THE ABOVE SHALL BE INCLUDED IN THE UNIT BID PRICE FOR ITEM 202, ANCHOR ASSEMBLY REMOVED, TYPE A.

CONNECTING GUARDRAIL TO EXISTING RAIL

IN LOCATIONS WHERE TYPE 5 GUARDRAIL, TERMINAL ASSEMBLIES, ETC. ARE TO BE CONNECTED TO EXISTING RAIL SOME MODIFICATIONS MAY BE REQUIRED, INCLUDING EXTRA POSTS, DRILLING HOLES AND POSSIBLY PARTIAL SECTIONS OF ADDITIONAL RAIL ELEMENTS. THE COST OF THIS ADDITIONAL WORK SHALL BE INCLUDED IN THE UNIT BID PRICE FOR TYPE 5 GUARDRAIL. IF ADDITIONAL PORTIONS OF RAIL ELEMENT ARE USED THE LINEAL MEASUREMENT OF THIS ADDITIONAL PORTION SHALL BE ADDED FOR PAYMENT. THE FOLLOWING QUANTITY WILL BE CARRIED TO THE GENERAL SUMMARY FOR USE IN THIS MANNER.

25 LIN. FT. GUARDRAIL, TYPE 5

ITEM 203, EMBANKMENT, AS PER PLAN:

AT SPECIFIED LOCATIONS AND LOCATIONS AS DIRECTED BY THE ENGINEER, EMBANKMENT SHALL BE PLACED AS TO PROVIDE A SUITABLE AREA TO CONSTRUCT GUARDRAIL AND TO PROVIDE FOR THE STRUCTURAL INTEGRITY OF THE ROADWAY SHOULDER.

AREAS WHERE EMBANKMENT MATERIALS ARE TO BE PLACED SHALL BE SCALPED. THE REQUIREMENTS FOR BENCHING SHALL BE WAIVED. THE DEPTH OF LAYERS IN WHICH THE EMBANKMENTS ARE PLACED SHALL BE LIMITED TO EIGHT (8) INCHES IN THICKNESS. THE METHOD OF COMPACTION AND EQUIPMENT USED SHALL BE SUFFICIENT TO PROVIDE A MINIMUM OF 60 PERCENT RELATIVE COMPACTION.

AFTER THE EMBANKMENT HAS BEEN PLACED, THE AREAS SHALL BE FERTILIZED, SEEDED, MULCHED, AND WATERED AS PER ITEM 659. THE COST SHALL BE INCLUDED IN THIS ITEM FOR PAYMENT.

THE METHOD OF MEASUREMENT FOR EMBANKMENT MATERIAL SHALL BE THE NUMBER OF CUBIC YARDS MEASURED BY LOOSE VOLUME IN THE CARRIER AT THE WORK SITE, IN LIEU OF THE REQUIREMENTS OF 203.15, AND PAYMENT FOR ACCEPTED QUANTITIES WILL BE MADE AT THE CONTRACT UNIT BID PRICE PER CUBIC YARD FOR ITEM 203 - EMBANKMENT, AS PER PLAN AND SHALL INCLUDE ALL WORK DESCRIBED ABOVE AND AT ALL TIMES BE AS DIRECTED BY THE ENGINEER.

ITEM SPECIAL - RESHAPING BERM

BERMS AND SHOULDERS AT LOCATIONS WHERE EXISTING GUARDRAIL IS REMOVED OR WHERE GUARDRAIL IS TO BE BUILT, SHALL BE RESHAPED AS DIRECTED BY THE ENGINEER TO INSURE A SMOOTH SURFACE FREE OF IRREGULARITIES. EXCESS MATERIAL RESULTING SHALL BE USED ELSEWHERE FOR THIS ITEM IF SO DIRECTED OR DISPOSED OF. IF EXTRA MATERIAL IS REQUIRED IT SHALL BE PAID FOR WITH ITEM 203 - EMBANKMENT, AS PER PLAN. THIS WORK SHALL NOT BE STARTED UNTIL AFTER THE RESURFACING AND BERM WORK HAS BEEN COMPLETED.

THE AREA IN FRONT OF THE GUARDRAIL SHALL BE GRADED AND RESHAPED TO PROVIDE AN AREA THAT HAS A SLOPE OF 10:1 MAX.

A QUANTITY OF 20 CU YD OF ITEM 203 EMBANKMENT, AS PER PLAN HAS BEEN CARRIED TO THE GENERAL SUMMARY FOR THIS PURPOSE.

THE ABOVE WORK SHALL BE PAID FOR WITH ITEM SPECIAL, RESHAPING BERM WITH THE EXCEPTION OF ANY EXTRA MATERIAL REQUIRED TO MEET THE SLOPE REQUIREMENTS WHICH SHALL BE PAID BY ITEM 203 - EMBANKMENT, AS PER PLAN.

GUARDRAIL REPAIR AND/OR REPLACEMENT

THE FOLLOWING CONTINGENCY QUANTITIES ARE CARRIED TO THE GENERAL SUMMARY AND SHALL BE USED FOR THE REPAIR AND/OR REPLACEMENT OF DAMAGED GUARDRAIL NOTICED DURING THE COMPLETION OF OTHER WORK INCLUDED ON THIS PLAN. THE ABOVE WORK SHALL BE COMPLETED AS DIRECTED BY THE ENGINNER.

25 LIN. FT. ITEM 202, GUARDRAIL REMOVED
25 LIN. FT. ITEM 606, GUARDRAIL, TYPE 5
1 EACH ITEM 606, ANCHOR ASSEMBLY, TYPE A
25 LIN. FT. ITEM SPECIAL RESHAPING BERM
1 EACH ITEM 202, ANCHOR ASSEMBLY REMOVED, TYPE A

ITEM 606 - GUARDRAIL POST:

THIS ITEM SHALL BE USED IN CONJUNCTION WITH ITEM 606 - GUARDRAIL, MISC.: ADJUST HEIGHT, EXISTING TYPE 5 GUARDRAIL, AND AS DIRECTED BY THE ENGINEER. IT SHALL CONSIST OF REPLACING EXISTING GUARDRAIL POSTS DEEMED BY THE ENGINEER TO BE INSUFFICIENT. THE POSTS SHALL BE OF THE SAME TYPE, SIZE, AND SPACING OF THE EXISTING GUARDRAIL RUN. THEY SHALL BE PLACED IN ACCORDANCE WITH STANDARD CONSTRUCTION DRAWING GR-1.2M.

A QUANTITIY OF 10 POSTS IS INCLUDED IN THE TOTAL ON THE GENERAL SUMMARY SHEET AS A CONTINGENCY.

ITEM 606 GUARDRAIL MISC.: ADJUST HEIGHT, EXISTING TYPE 5 GUARDRAIL

WHERE DESIGNATED ON THE PLAN, THE EXISTING TYPE 5 GUARDRAIL SHALL BE RAISED OR LOWERED ON THE EXISTING WOOD POSTS AS PER STANDARD DRAWING GR-2.1M SO AS TO OBTAIN THE STANDARD 27.80 IN. HEIGHT. THE RAIL SHALL BE REATTACHED TO THE POSTS USING NEW POST BOLTS. FOR RAIL THAT REQUIRES BEING LOWERED THE POSTS SHALL BE CUT OR TRIMMED AND THE TOPS SHALL BE TREATED.

THE RAIL SHALL BE DISMANTLED ONLY TO THE EXTENT NECESSARY TO FIELD BORE NEW BOLT HOLES IN THE WOOD POSTS, AND TO RECONNECT THE RAIL AND BLOCK TO EXISTING POSTS.

THE EXISTING TYPE "A" ANCHOR ASSEMBLIES THAT ARE TO REMAIN SHALL NOT BE ADJUSTED. THE LAST RAIL ELEMENT SHALL BE TRANSITIONED TO MEET THESE ASSEMBLIES.

THE EXISTING TYPE "E" ANCHOR ASSEMBLIES THAT ARE TO REMAIN SHALL BE ADJUSTED AS DESCRIBED ABOVE. THE EXTRUDER SHALL ALSO BE ADJUSTED ON THE FIRST POST TO MATCH THE NEW RAIL HEIGHT. ALL WORK REQUIRED TO ADJUST EXISTING "E" ANCHORS SHALL BE INLUDED IN THIS ITEM FOR PAYMENT.

PAYMENT FOR ALL OF THE ABOVE SHALL BE AT THE UNIT PRICE BID FOR ITEM 606, GUARDRAIL MISC.: ADJUST HEIGHT, EXISTING TYPE 5 GUARDRAIL, WHICH WILL INCLUDE ALL LABOR, EQUIPMENT, MATERIALS AND INCIDENTALS NECESSARY TO COMPLETE THE ABOVE WORK.

ITEM 606 - ANCHOR ASSEMBLY, TYPE E-98

THIS ITEM SHALL CONSIST OF FURNISHING AND INSTALLING EITHER OF THE FOLLOWING GUARDRAIL END TERMINALS.

1) THE ET-2000 (1997) MANUFACTURED BY TRINITY INDUSTRY, 1170 N. STATE STREET, GIRARD, OHIO 44420 (TELEPHONE: 330-545-4373).

THE LENGTH OF THE ET-2000 (1997) SYSTEM IS CONSIDERED TO BE 50 FEET (15.24 m), INCLUSIVE OF TWO 25 FOOT (7.62 m) LONG RAIL ELEMENTS. INSTALLATION SHALL BE AT THE LOCATIONS SPECIFIED IN THE PLANS, IN ACCORDANCE WITH THE MANUFACTURER'S SPECIFICATIONS AS DETAILED ON THE FOLLOWING PRE-APPROVED SHOP DRAWINGS:

Dwg. #	Drawing Name	Dwg./Rev. Date	ODOT Approval Date
SS265M	ET-2000 (1997) PLAN, ELEVATION & SECTIONS	6/20/97	3/6/98
SS142	ET-2000 PLUS 50'-0" PLAN, ELEVATION & SECTION 25'-0" RAIL, SLEEVE W/PL POSTS 1-4	4/12/00	7/31/00
SS141	ET-2000 PLUS PLAN, ELEVATION & SECTION 25'-0" RAIL, HBA POSTS 1-4	2/29/00	7/31/00
SS158	ET-2000 PLUS 50'-0" WITH 12'-6" PANELS & HBA POSTS 1-4 PLAN, ELEVATION & SECTION	5/22/00	7/31/00

2) THE SKT-350 MANUFACTURED BY ROAD SYSTEMS, INC., 2516 MALLORY LANE, STOW, OHIO 44224 (TELEPHONE: 330-346-0721)

THE LENGTH OF THE SKT-350 SYSTEM IS CONSIDERED TO BE 50'-0" (15.24 m), INCLUSIVE OF FOUR 12'-6" (3.81m) LONG RAIL ELEMENTS. INSTALLATION SHALL BE AT THE LOCATIONS SPECIFIED IN THE PLANS, IN ACCORDANCE WITH THE MANUFACTURER'S SPECIFICATIONS AS DETAILED ON THE FOLLOWING PRE-APPROVED SHOP DRAWINGS:

Dwg. #	Drawing Name	Dwg./Rev. Date	ODOT Approval Date
SKT-4M	SEQUENTIAL KINKING TERMINAL (SKT-350) ASSEMBLY WITH 4 FOUNDATION TUBES	12/11/97	3/6/98

THE FACE OF THE TYPE E-98 IMPACT HEAD SHALL BE COVERED WITH A SHEET OF TYPE G REFLECTIVE SHEETING, PER CMS 730.19, APPROXIMATELY 18" x 18" (450mm X 450mm).

THE CONTRACTOR MAY USE A SALVAGED EXTRUDER WHEN ASSEMBLING THE ITEM 606 ANCHOR ASSEMBLY, TYPE E-98. ALL WELDS ON THE EXTERIOR OF THE SALVAGED EXTRUDER SHALL NOT BE DAMAGED AND THE FEEDER SHUTE SHALL NOT BE BENT.

REFER TO THE MANUFACTURER'S INSTRUCTION REGARDING THE INSTALLATION OF, AND THE GRADING AROUND, THE FOUNDATION TUBES AND GROUND STRUT. THE TOP OF ANY FOUNDATION TUBE SHOULD BE LESS THAN 4 INCHES (100mm) ABOVE THE GROUND. THE PLACEMENT OF THE FOUNDATION TUBES SHOULD BE AN APPROPRIATE DEPTH BELOW THE LEVEL LINE IN ORDER TO MAINTAIN THE FINISHED GUARDRAIL HEIGHT OF 27 3/4 INCHES (706mm) FROM THE EDGE OF THE SHOULDER.

ON SITE GRADING IS REQUIRED IF THE TOP OF THE FOUNDATION TUBES OR TOP OF THE GROUND STRUT DOES NOT PROJECT MORE THAN 4 INCHES (100mm) ABOVE THE GROUND LINE.

PAYMENT FOR THE ABOVE WORK SHALL BE MADE AT THE UNIT PRICE BID FOR ITEM 606, ANCHOR ASSEMBLY, TYPE E-98, EACH, AND SHALL INCLUDE ALL LABOR, TOOLS, EQUIPMENT AND MATERIALS NECESSARY TO CONSTRUCT A COMPLETE AND FUNCTIONAL ANCHOR ASSEMBLY SYSTEM, INCLUDING ALL RELATED TRANSITIONS, REFLECTIVE SHEETING, HARDWARE, GRADING, EMBANKMENT AND EXCAVATION NOT SEPARATELY SPECIFIED, AS REQUIRED BY THE MANUFACTURER.

ITEM 606 - ANCHOR ASSEMBLY, TYPE B-98

THIS ITEM SHALL CONSIST OF FURNISHING AND INSTALLING EITHER OF THE FOLLOWING GUARDRAIL END TERMINALS.

1) THE SRT-350, GUARDRAIL END TERMINAL AS MANUFACTURED BY TRINITY INDUSTRY, 1170 N. STATE STREET, GIRARD, OHIO 44420 (TELEPHONE: 330.545.4373).

THE LENGTH OF THE SRT-350 SYSTEM IS CONSIDERED TO BE 37'-6" (11.43 m), INCLUSIVE OF THREE 12'-6" (3.81 m) LONG RAIL ELEMENTS. INSTALLATION SHALL BE AT THE LOCATIONS SPECIFIED IN THE PLANS, IN ACCORDANCE WITH THE MANUFACTURER'S SPECIFICATIONS AS DETAILED ON THE FOLLOWING PRE-APPROVED SHOP DRAWINGS:

Dwg. #	Drawing Name	Dwg./Rev. Date	ODOT Approval Date
SS444 SS444M	Slotted Rail Terminal Post Layout and Erection Details SRT-350 (12.5, 8 Post)	7/12/99 Rev. 1 7/12/99	8/27/99
SS425M	Slotted Rail Terminal SRT-350 Post Layout and Erection Details (12.5, 9 Post)	6/21/97 Rev. 1	3/6/98

2) THE FLEAT-350 MANUFACTURED BY ROAD SYSTEMS, INC., 2516 MALLORY LANE, STOW, OHIO, 44224 (TELEPHONE: 330.346.0721).

THE LENGTH OF THE FLEAT-350 IS CONSIDERED TO BE 37'-6" (11.43 m), INCLUSIVE OF THREE 12'-6" (3.81 m) LONG RAIL ELEMENTS. INSTALLATION SHALL BE AT THE LOCATIONS SPECIFIED IN THE PLANS, IN ACCORDANCE WITH THE MANUFACTURER'S SPECIFICATIONS AS DETAILED ON THE FOLLOWING PRE-APPROVED SHOP DRAWINGS:

Dwg. #	Drawing Name	Dwg./Rev. Date	ODOT Approval Date
FLT-M	Flared Energy Absorbing Terminal (FLEAT-350) Assembly	4/16/98	7/31/98

REFER TO THE MANUFACTURER'S INSTRUCTION REGARDING THE INSTALLATION OF, AND THE GRADING AROUND, THE FOUNDATION TUBES AND GROUND STRUT. THE TOP OF ANY FOUNDATION TUBE SHOULD BE LESS THAN 4 INCHES (100mm) ABOVE THE GROUND. THE PLACEMENT OF THE FOUNDATION TUBES SHOULD BE AN APPROPRIATE DEPTH BELOW THE LEVEL LINE IN ORDER TO MAINTAIN THE FINISHED GUARDRAIL HEIGHT OF 27 3/4 INCHES (706mm) FROM THE EDGE OF THE SHOULDER.

ON SITE GRADING IS REQUIRED IF THE TOP OF THE FOUNDATION TUBES OR TOP OF THE GROUND STRUT DOES NOT PROJECT MORE THAN 4 INCHES (100mm) ABOVE THE GROUND LINE.

THE FACE OF THE TYPE B-98 IMPACT HEAD SHALL BE COVERED WITH TYPE G REFLECTIVE SHEETING, PER CMS 730.19: APPROXIMATELY 36 IN. WIDE X 12 IN. HIGH (915 mm W x 305 mm H) FOR THE SRT-350 AND 14 IN. WIDE X 20 IN. HIGH (350 mm W x 500 mm H) FOR THE FLEAT-350.

PAYMENT FOR THE ABOVE WORK SHALL BE MADE AT THE UNIT PRICE BID FOR ITEM 606, ANCHOR ASSEMBLY, TYPE B-98, EACH, AND SHALL INCLUDE ALL LABOR, TOOLS, EQUIPMENT AND MATERIALS NECESSARY TO CONSTRUCT A COMPLETE AND FUNCTIONAL ANCHOR ASSEMBLY SYSTEM, INCLUDING REFLECTIVE SHEETING AND ALL RELATED HARDWARE, GRADING, EMBANKMENT AND EXCAVATION NOT SEPARATELY SPECIFIED, AS REQUIRED BY THE MANUFACTURER.

ITEM SPECIAL, MAILBOX SUPPORT

THIS ITEM OF WORK SHALL CONSIST OF THE REMOVAL OF EXISTING NON-STANDARD MAILBOX SUPPORTS AND FURNISHING AND ERECTING MAILBOX SUPPORTS AND ANY ASSOCIATED HARDWARE IN ACCORDANCE WITH THE DETAILS SHOWN, AND ATTACHING AN OWNER SUPPLIED MAILBOX, AT LOCATIONS DETERMINED BY THE ENGINEER.

IN ABSENCE OF A NEW BOX SUPPLIED BY THE OWNER THE CONTRACTOR SHALL SALVAGE THE EXISTING BOX AND PLACE IT ON THE NEW SUPPORT. DUE CARE SHALL BE EXERCISED IN SUCH AN OPERATION, THE CONTRACTOR SHALL BE RESPONSIBLE FOR REPAIRING OR REPLACING ANY BOX DAMAGED BY IMPROPER HANDLING, AS JUDGED AND DIRECTED BY THE ENGINEER.

THE BOX SHALL BE SECURELY AND NEATLY ATTACHED BY THE CONTRACTOR TO THE NEW SUPPORT. THE CONTRACTOR SHALL SUPPLY ALL NECESSARY ATTACHMENT HARDWARE (NUTS, BOLTS, PLATES, SPACERS AND WASHERS) AS NECESSARY TO ACCOMODATE THE COMPLETE INSTALLATION. SUPPORT HARDWARE SHALL ACCOMODATE EITHER A SINGLE OR A DOUBLE MAILBOX INSTALLATION, AND NO MORE THAN TWO MAILBOXES MAY BE MOUNTED ON A SINGLE POST. [HARDWARE SHALL BE COMMERCIAL GRADE GALVANIZED STEEL.]

WOOD POSTS SHALL BE NOMINAL 4 IN. x 4 IN. (S4S) OR 4½IN. DIAMETER ROUND, AND CONFORM TO 710.14. STEEL POSTS SHALL BE NOMINAL PIPE SIZE 2 IN. I.D., AND CONFORM TO AASHTO M 181.

POSTS SHALL BE SET AS PER THE FIRST PARAGRAPH OF 606.03, AND SHALL IN NO INSTANCE BE ENCASED IN CONCRETE.

THE CONTRACTOR SHALL BE RESPONSIBLE FOR COORDINATING WORK WITH THE LOCAL POST MASTER AND NOTIFYING THE PROPERTY OWNERS PRIOR TO WORK.

GROUP MAILBOX SUPPORTS SHALL BE PLACED ON 3 FT. CENTERS AND THE TURNOUT LENGTHENED TO ACCOMODATE THE GROUPING.

WHERE GUARDRAIL EXISTS, MAILBOXES AND THEIR SUPPORTS SHALL BE PLACED BEHIND THE GUARDRAIL. SUPPORTS MUST STILL MEET THE BREAKAWAY REQUIREMENTS LISTED ABOVE.

THE FOLLOWING ESTIMATED QUANTITIES HAVE BEEN CARRIED TO THE GENERAL SUMMARY TO BE USED AS DESCRIBED ABOVE.

ITEM SPECIAL-MAILBOX SUPPORT SYSTEM, SINGLE
PART A - 7 EACH
PART B - 6 EACH

ITEM SPECIAL-MAILBOX SUPPORT SYSTEM, DOUBLE
PART A - 4 EACH
PART B - 8 EACH

MAILBOXES

THE MAILBOX APPROACHES SHALL BE PAVED WITH 1.00 IN. OF ITEM 448 INTERMEDIATE COURSE AND 1.25 IN. OF ITEM 446 SURFACE COURSE. THEY SHALL CONFORM AS MUCH AS PRACTICAL TO STANDARD DRAWING BP-4.1 OR AS DIRECTED BY THE ENGINEER.

GRADING SHALL BE PERFORMED IN THESE AREAS TO OBTAIN A BASE WHICH WILL ALLOW THE FINISHED GRADE TO BE FLUSH WITH ADJACENT PAVEMENT. A QUANTITY OF ITEM 617 SHOULDER RECONDITIONING, MISC.: COMPACTED AGGREGATE HAS BEEN PROVIDED FOR AREAS WHERE THE SHOULDER IS LOW PRIOR TO GRADING AND/OR LOW AREAS CAUSED BY THE REMOVAL OF UNSUITABLE MATERIAL. QUANTITIES TO PERFORM THIS WORK HAVE BEEN INCLUDED IN THE GENERAL SUMMARY AND ARE ESTIMATED AS FOLLOWS.

ITEM 203 - GRADING MAILBOX APPROACHES:
PART A - 120 EACH
PART B - 125 EACH

ITEM 617 - SHOULDER RECONDITIONING, MISC.: COMPACTED AGGREGATE
368 TON

FOR DETAILS NOT SHOWN SEE STANDARD DRAWING BP-4.1

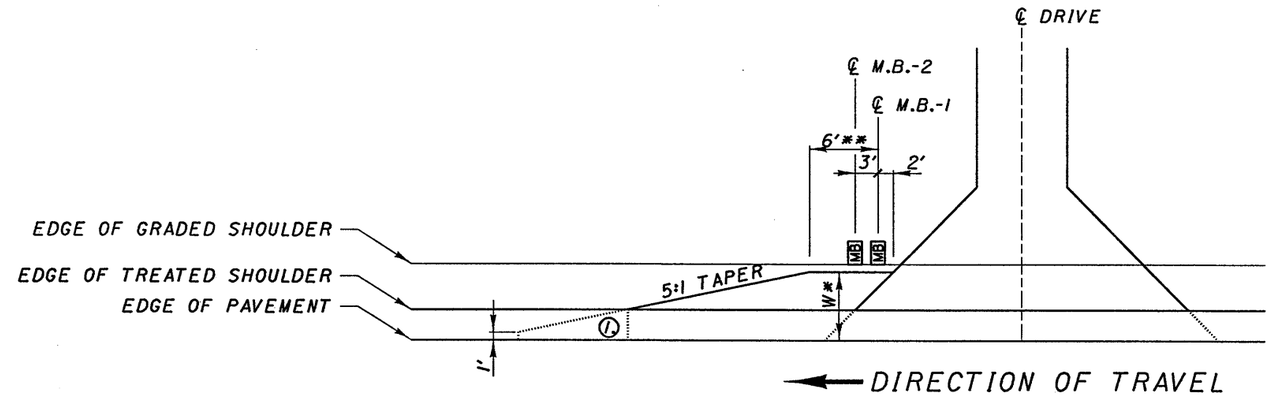

① END MAILBOX TURNOUT AT EDGE OF TREATED SHOULDER OR 1' WHICH EVER IS GREATER.

* WHERE MAILBOX POSTS ARE BEHIND GUARDRAIL, TURNOUT WIDTH SHALL EXTEND TO FACE OF GUARDRAIL. WHERE NO GUARDRAIL IS REQUIRED, TURNOUT WIDTH SHALL BE 6 FT. MINIMUM, EXCEPT WHERE FIELD CONDITIONS WILL NOT PERMIT.

** 6' FOR SINGLE MAILBOX SUPPORT, ADD 3 FT. FOR EACH ADDITIONAL MAILBOX

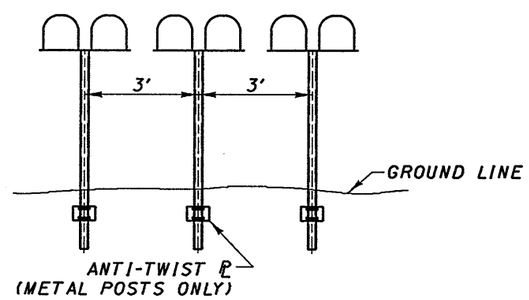

GROUP MAILBOX INSTALLATION

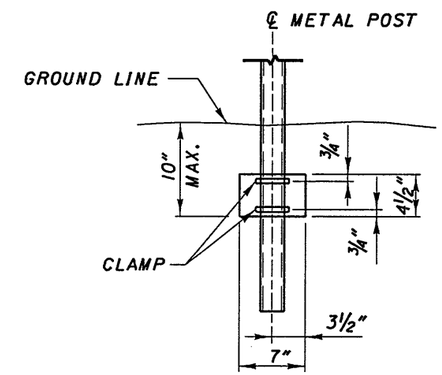

ANTI-TWIST PLATE

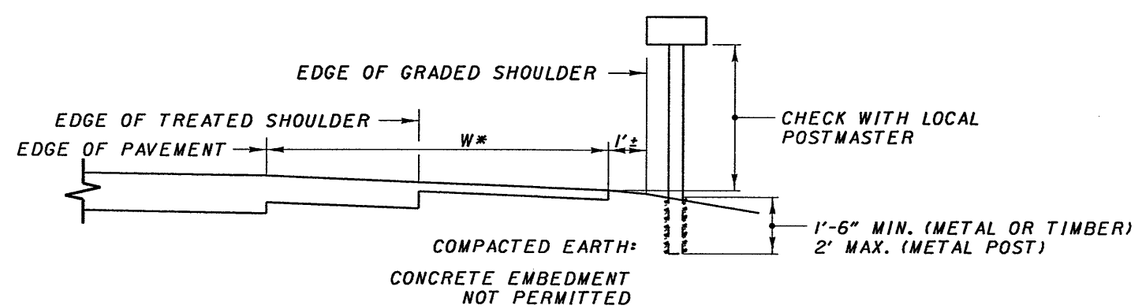

CROSS SECTION / ELEVATION VIEW

CALCULATED CVH CHECKED MJS

MAILBOX FACILITIES

LOR-83-15.17

11/29

DESIGN FILE: $$$$$.DGNFILESPECIFICATIONS$$$$$
WORKSTATION: $TERMINAL$ DATE: $$$$$DATE$$$$$

BRIDGE NUMBER LOR-83-1556 SFN 4704193

ITEM	EXTENSION	QUANTITY	UNIT	DESCRIPTION
864	10100	24	SQ. YD.	SEALING OF CONCRETE SURFACES (EPOXY-URETHANE)

BRIDGE NUMBER LOR-83-1712 SFN 4704223

ITEM	EXTENSION	QUANTITY	UNIT	DESCRIPTION
254	01001	223	SQ. YD.	PAVEMENT PLANING, BITUMINOUS, AS PER PLAN
448	46020	13	CU. YD.	ASPHALT CONCRETE INTERMEDIATE COURSE, TYPE 1, PG64-22
512	55800	223	SQ. YD.	TYPE D WATERPROOFING
SPECIAL	51631300	80	LIN. FT.	POLYMER MODIFIED ASPHALT EXPANSION JOINT SYSTEM
				(3½ IN. THICK)
864	10100	157	SQ. YD.	SEALING OF CONCRETE SURFACES (EPOXY-URETHANE)

DESIGN FILE: I:\projects\21929\Staut\estquant.dgn
WORKSTATION: dmollens DATE: 12/18/02

DESIGN AGENCY: DISTRICT THREE
DESIGNED DCM | CHECKED RDN | DRAWN DCM | REVISED | REVIEWED | DATE

STRUCTURE SUMMARY

LOR-83-15.17

BRIDGE NUMBER LOR-83-1831L SFN 4704266

ITEM	EXTENSION	QUANTITY	UNIT	DESCRIPTION
SPECIAL	51273500	1612	SQ. YD.	TREATING CONCRETE BRIDGE DECKS WITH GRAVITY FED RESIN
864	10100	1245	SQ. YD.	SEALING OF CONCRETE SURFACES (EPOXY-URETHANE)

BRIDGE NUMBER LOR-83-1831R SFN 4704290

ITEM	EXTENSION	QUANTITY	UNIT	DESCRIPTION
SPECIAL	51273500	1240	SQ. YD.	TREATING CONCRETE BRIDGE DECKS WITH GRAVITY FED RESIN
864	10100	1130	SQ. YD.	SEALING OF CONCRETE SURFACES (EPOXY-URETHANE)

DESIGN FILE: I:\projects\21929\Struct\estquant.dgn
WORKSTATION: dmollens DATE: 12/18/02

DESIGN AGENCY DISTRICT THREE

REVIEWED	DATE

DRAWN	REVISED
DCM	

DESIGNED	CHECKED
DCM	RDN

STRUCTURE SUMMARY

LOR-83-15.17

REFERENCES SHALL BE MADE TO STANDARD DRAWINGS:

BP-3.1 DATED 7/28/00

AND TO SUPPLEMENTAL SPECIFICATIONS:

864 DATED 7/11/00

EXISTING STRUCTURE VERIFICATION:

DETAILS AND DIMENSIONS SHOWN ON THESE PLANS PERTAINING TO THE EXISTING STRUCTURES HAVE BEEN OBTAINED FROM PLANS OF THE EXISTING STRUCTURES AND FROM FIELD OBSERVATION AND MEASUREMENTS. CONSEQUENTLY, THEY ARE INDICATIVE OF THE EXISTING STRUCTURES AND THE PROPOSED WORK BUT THEY SHALL BE CONSIDERED TENTATIVE AND APPROXIMATE. THE CONTRACTOR IS REFERRED TO CMS SECTIONS 102.05, 105.02 AND 513.02. THE ORIGINAL CONSTRUCTION PLANS OF THE EXISTING BRIDGES ARE AVAILABLE UPON REQUEST AT THE DISTRICT 3 OFFICE OF THE OHIO DEPARTMENT OF TRANSPORTATION, ASHLAND, OHIO.

CONTRACT BID PRICES SHALL BE BASED UPON A RECOGNITION OF THE UNCERTAINTIES DESCRIBED ABOVE AND UPON A PRE-BID EXAMINATION OF THE EXISTING STRUCTURES BY THE CONTRACTOR. HOWEVER, ALL PROJECT WORK SHALL BE BASED ON ACTUAL DETAILS AND DIMENSIONS WHICH HAVE BEEN VERIFIED BY THE CONTRACTOR IN THE FIELD.

DESIGN SPECIFICATIONS:

THIS STRUCTURE CONFORMS TO "STANDARD SPECIFICATIONS FOR HIGHWAY BRIDGES" ADOPTED BY THE AMERICAN ASSOCIATION OF STATE HIGHWAY AND TRANSPORTATION OFFICIALS, 1996 INCLUDING THE 1997, 1998, 1999 AND 2000 INTERIM SPECIFICATIONS, AND THE ODOT BRIDGE DESIGN MANUAL.

PLACING ASPHALT CONCRETE FEATHERING ON APPROACHES TO BRIDGES:

SPECIAL CARE SHALL BE TAKEN, WHEN PLACING THE ASPHALT CONCRETE FEATHERING TO EFFECT A SMOOTH TRANSITION FROM THE EXISTING APPROACH PAVEMENT TO THE BRIDGE DECK OR APPROACH SLAB. THE CONTRACTOR'S ATTENTION IS CALLED TO SECTION 404.16 OF THE CMS AND TO STANDARD DRAWING BP-3.1 FOR REQUIRED TOLERANCES.

BRIDGE DECK DATA								ROADWAY DATA		
PART	COUNTY, ROUTE, BRIDGE NO.	STRUCTURE TYPE	LENGTH (BRIDGE DECK)	WIDTH	BRIDGE DECK AREA	SKEW	EXISTING WEARING SURFACE	EXISTING PAVEMENT WIDTH	EXISTING APPROACH SLAB WIDTH	EXISTING APPROACH SLAB LENGTH
			LIN.FT.	LIN.FT.	SQ.YD.			LIN.FT.	LIN.FT.	LIN.FT.
A	+ LOR-83-1556	PRECAST CONCRETE BOX				0°	ASPHALT	23.0		
A	* LOR-83-1712	SINGLE-SPAN PRESTRESSED BEAM	50.16	40.0	223	0°	ASPHALT	23.0	40.0	15.0
A	** LOR-83-1831L	4-SPAN STEEL BEAM	282.0	52.0	1629	0°	CONCRETE			
A	** LOR-83-1831R	4-SPAN STEEL BEAM	282.0	40.0	1629	0°	CONCRETE			
B	*** LOR-254-0497	SINGLE-SPAN CONCRETE & STONE ARCH				0°	ASPHALT	30.0		

\+ SEE ROADWAY PLANS FOR PLANING AND PAVING QUANTITIES. (SEE DETAILS IN THE PLAN FOR STRUCTURE WORK, SEE ROADWAY PLANS FOR GUARDRAIL DETAILS)

* PLANE ALL ASPHALT OFF BRIDGE DECK. PAVE OVER BRIDGE DECK WITH 2 " INTERMEDIATE COURSE. INITIAL PLANING AND PAVING BRIDGE DECK WITH SURFACE COURSE IS INCLUDED WITH ROADWAY QUANTITIES. (SEE DETAILS IN THE PLAN FOR STRUCTURE WORK, SEE ROADWAY PLANS FOR GUARDRAIL DETAILS)

ITEM 254 - PAVEMENT PLANING, BITUMINOUS, AS PER PLAN: 223 SQUARE YARDS. (CARRIED TO SHEET NO. 17)

ITEM 448 - ASPHALT CONCRETE INTERMEDIATE COURSE, TYPE 1, PG64-22: 13 CUBIC YARDS. (CARRIED TO SHEET NO. 17)

** (SEE ROADWAY PLANS FOR PAVEMENT DETAILS, SEE DETAILS IN THE PLAN FOR STRUCTURE WORK) NO GUARDRAIL WORK.

*** NO STRUCTURE WORK. NO GUARDRAIL WORK. SEE ROADWAY PLANS FOR PLANING AND PAVING QUANTITIES.

DESIGN AGENCY: DISTRICT THREE
DATE | REVIEWED | DRAWN DCM | REVISED | DESIGNED DCM | CHECKED RDN

BRIDGE TREATMENT

LOR-83-15.17

DESIGN FILE: I:\projects\21929\Struct\bridgetreat.dgn
WORKSTATION: dmollens DATE: 12/18/02

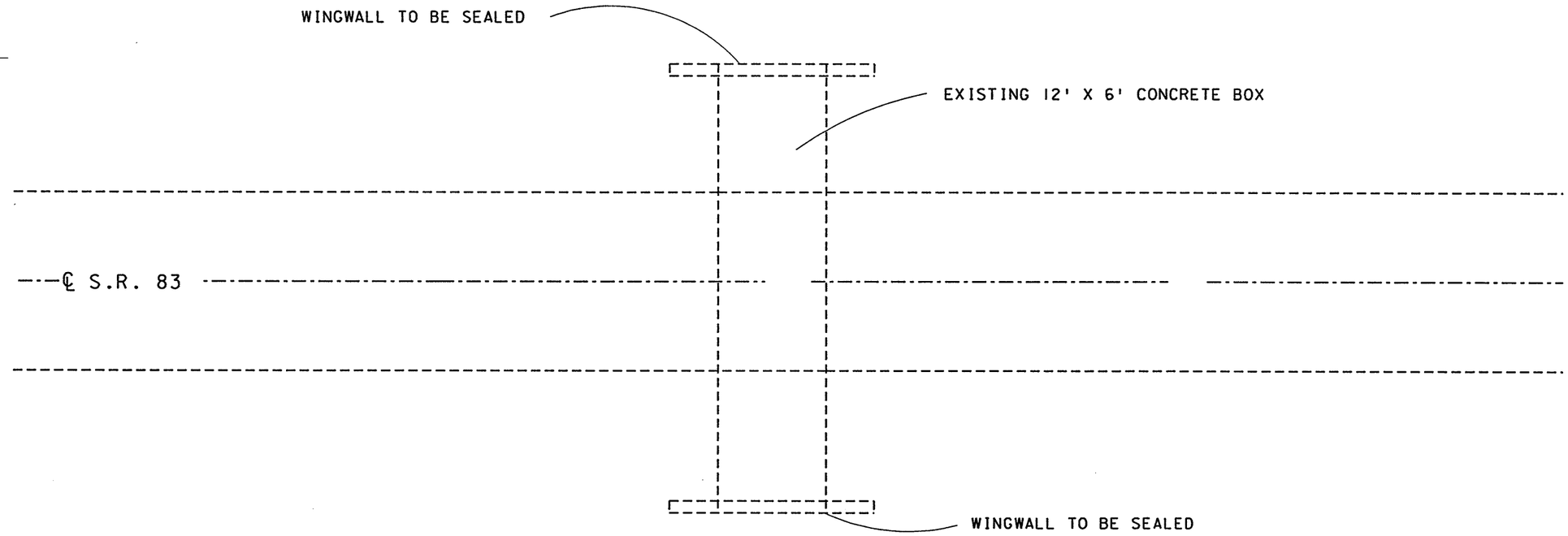

PLAN VIEW

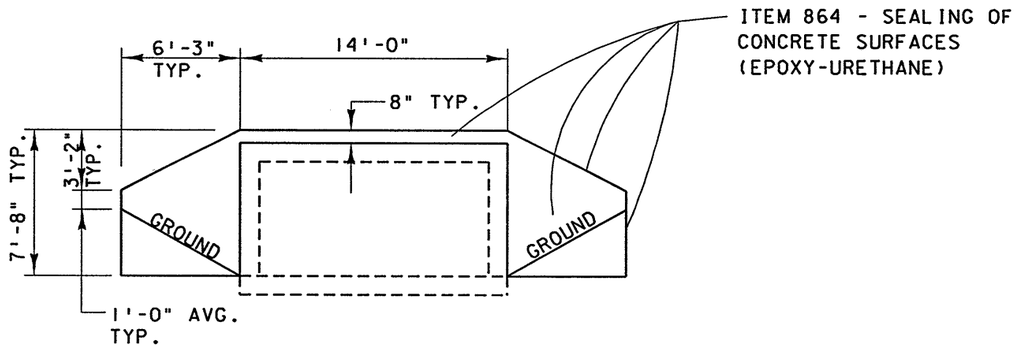

WINGWALLS ARE 1'-6" THICK

TYPICAL WINGWALL SEALING DETAILS

ITEM	QUANTITY	UNIT	DESCRIPTION
864	24	square yard	SEALING OF CONCRETE SURFACES (EPOXY-URETHANE)

ALL QUANTITIES CARRIED TO STRUCTURE SUMMARY SHEET, SHEET NO. 12

NOTES:

1) THE EXISTING GUARDRAIL IS NOT SHOWN.

2) EXPOSED AREAS OF THE WINGWALLS SHALL BE SEALED USING ITEM 864 - SEALING OF CONCRETE SURFACES (EPOXY-URETHANE)

DESIGN FILE: I:\projects\21929\Struct\details.dgn
WORKSTATION: dmollens DATE: 12/18/02

DESIGN AGENCY: DISTRICT THREE

DESIGNED	DRAWN	REVIEWED	DATE
DCM	DCM		
CHECKED	REVISED	STRUCTURAL FILE NUMBER	
RDN		4704193	

PLAN VIEW
LOR-83-1556

LOR-83-15.17

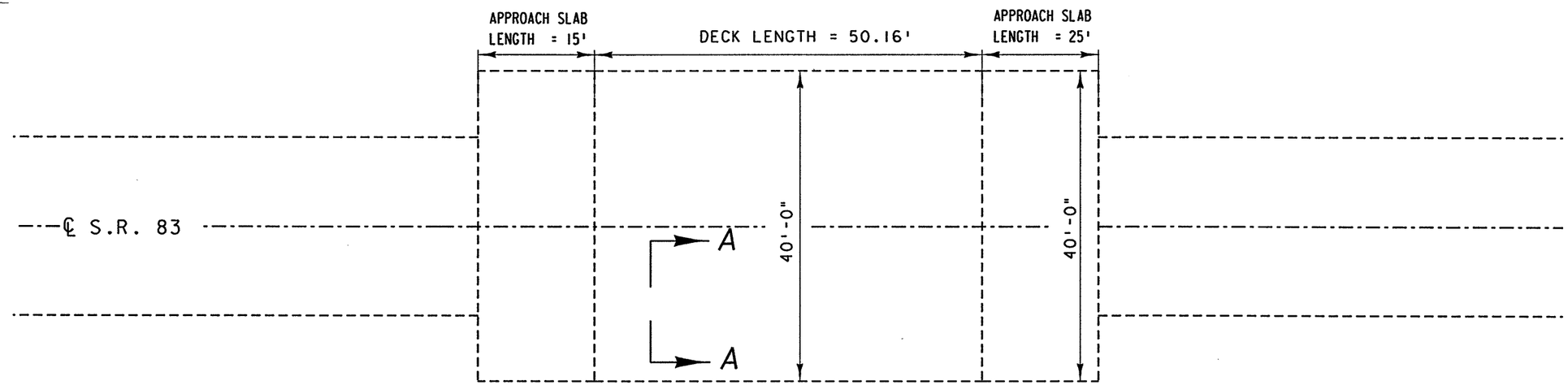

PLAN VIEW

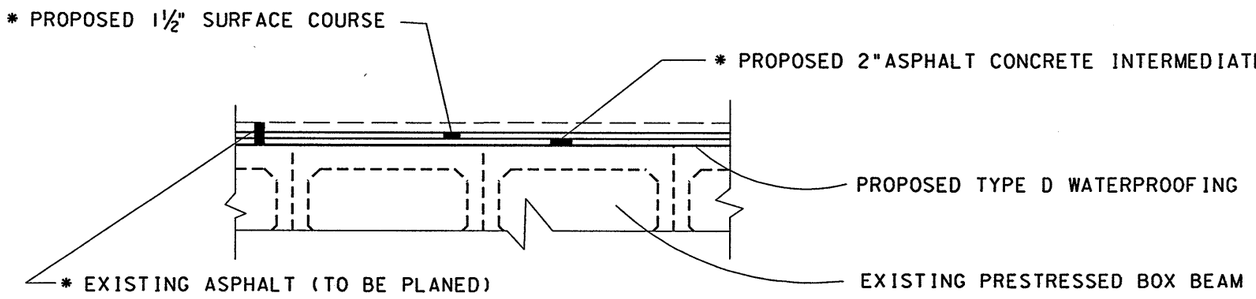

SECTION A-A

• INITIAL 1½" PLANING QUANTITY INCLUDED IN ROADWAY QUANTITIES. AN ADDITIONAL 4" IS TO BE PLANED OFF AND THE REMAINING ½" IS TO BE REMOVED USING HAND TOOLS. PAVE OVER WITH 2" INTERMEDIATE COURSE. SURFACE COURSE INCLUDED WITH ROADWAY QUANTITIES

ITEM	QUANTITY	UNIT	DESCRIPTION
254	223	square yard	PAVEMENT PLANING, BITUMINOUS, AS PER PLAN
448	13	cubic yard	ASPHALT CONCRETE INTERMEDIATE COURSE, TYPE I, PG64-22
512	223	square yard	TYPE D WATERPROOFING
SPECIAL	80	linear feet	POLYMER MODIFIED ASPHALT EXPANSION JOINT SYSTEM (3½ IN. THICK)
864	157	square yard	SEALING OF CONCRETE SURFACES (EPOXY-URETHANE)

ALL QUANTITIES CARRIED TO STRUCTURE SUMMARY SHEET, SHEET NO. 12

NOTES:

1) THE EXISTING GUARDRAIL IS NOT SHOWN.

2) THE FASCIA BEAMS AND ABUTMENTS SHALL BE SEALED USING ITEM 864 - SEALING OF CONCRETE SURFACES (EPOXY-URETHANE) (SEE SHEET 18 FOR DETAILS)

3) THE DECK SHALL BE WATERPROOFED USING ITEM 512- TYPE D WATERPROOFING.

4) POLYMER MODIFIED ASPHALT EXPANSION JOINTS SHALL BE INSTALLED AT BOTH ENDS OF THE STRUCTURE. FOR DETAILS SEE SHEET NO. 19

DESIGN AGENCY: DISTRICT THREE
REVIEWED | DATE
STRUCTURAL FILE NUMBER: 4704223
DRAWN: DCM | REVISED
DESIGNED: DCM | CHECKED: RDN
PLAN VIEW
LOR-83-1712
LOR-83-15.17
17/29

DESIGN FILE: I:\projects\21929\Structure\details.dgn
WORKSTATION: dmallens DATE: 12/18/02

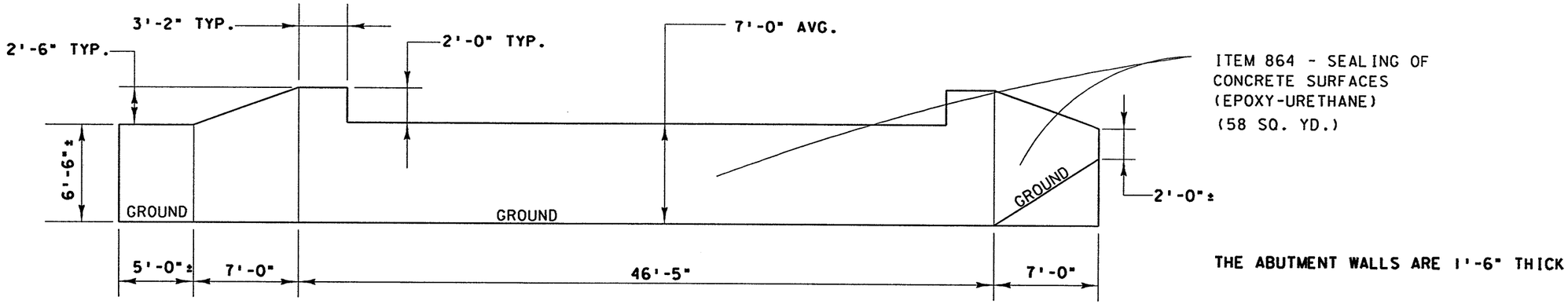

TYPICAL FORWARD ABUTMENT SEALING DETAIL

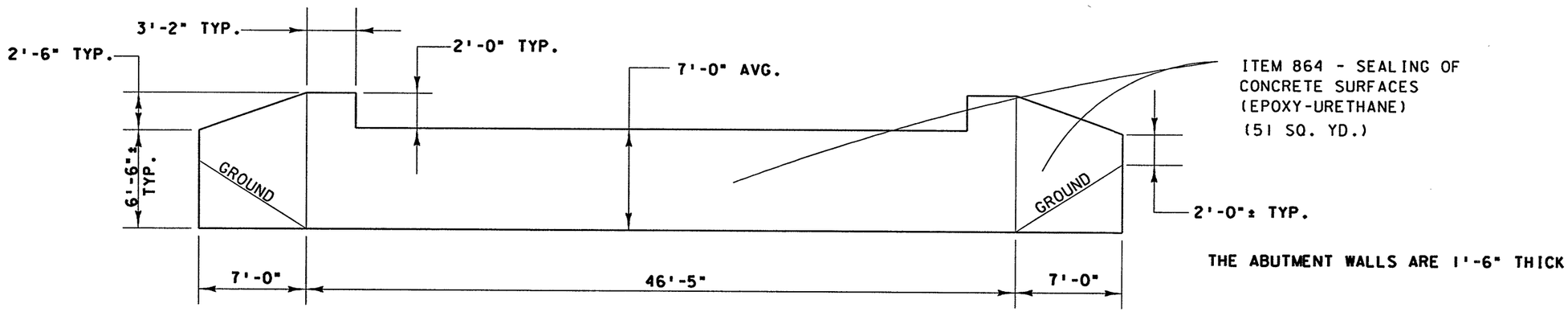

TYPICAL REAR ABUTMENT SEALING DETAIL

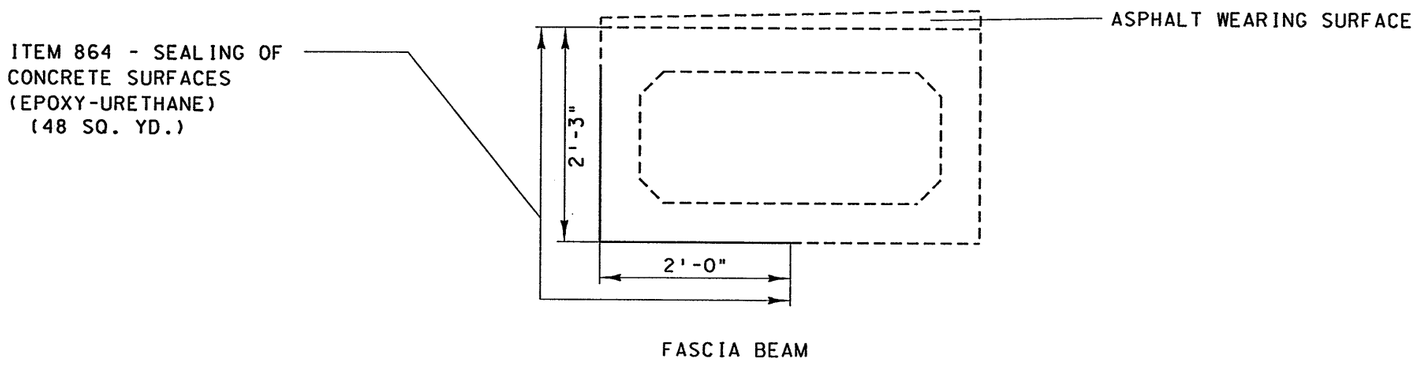

ALL QUANTITIES CARRIED TO SHEET NO. 17

TYPICAL BEAM SEALING DETAILS

DESIGN FILE: I:\projects\121929\Struct\details.dgn
WORKSTATION: dmollens DATE: 12/18/02

DESIGN AGENCY: DISTRICT THREE

DESIGNED	DRAWN	REVIEWED	DATE
DCM	DCM		
CHECKED	REVISED	STRUCTURAL FILE NUMBER	
RDN		4704223	

SEALING DETAIL

LOR-83-1712

LOR-83-15.17

GENERAL NOTES AND DETAILS FOR POLYMER MODIFIED ASPHALT EXPANSION JOINT SYSTEM

ITEM SPECIAL - POLYMER-MODIFIED ASPHALT EXPANSION JOINT SYSTEM

THIS ITEM WILL BE USED TO SEAL THE EXPANSION/CONTRACTION JOINTS AS PER THESE DETAILS AND THE MANUFACTURER'S REQUIREMENTS USING A POLYMER-MODIFIED ASPHALT SYSTEM. THE PRIME CONTRACTOR WILL OBTAIN THE SERVICES OF ONE OF THE FOLLOWING APPROVED APPLICATORS WHO WILL FURNISH AND INSTALL THE NEW BRIDGE EXPANSION JOINT SYSTEM AFTER ALL PAVING ON THE AFFECTED BRIDGE(S) HAS BEEN COMPLETED.

D.S. BROWN COMPANY
300 E. CHERRY STREET
N. BALTIMORE, OH 45872-0158
TEL: (419) 257-3561

LINEAR DYNAMICS, INC.
79 MONTGOMERY ST.
MONTGOMERY, PA 17752
TEL: (570) 547-1621

SILICONE SPECIALTIES INC. (S.S.I.)
P.O. BOX 50009
TULSA, OK 74150
TEL: (918) 587-5567 OR
(800) 888-8909

WATSON BOWMAN ACME
95 PINEVIEW DR.
AMHERST, NY 14228
TEL: (716) 691-7566 OR
(800) 253-9226

MATERIALS:

BRIDGING PLATE:

MILD STEEL 1/8" OR 1/4" THICK PLATE, 8" WIDE OR 18 GAUGE ALUMINUM, 8" WIDE.

BINDER:

TYPE:	POLYMER MODIFIED ASPHALT
SOFTENING POINT:	180 DEGREES F. MIN.
FLOW:	3 mm. MAX. AT 140 DEGREES F.
PENETRATION:	9 mm. MAX. AT 77 DEGREES F. 1 mm. MIN AT 0 DEGREES F. ASTM D 3407
DUCTILITY:	40 cm. MIN. ASTM D 113
RESILIENCE:	60% MIN. AT 77 DEGREES F.
TENSILE ADHESION:	700% MIN.
SPECIFIC GRAVITY:	1.10 ± 0.05
POURING TEMP:	350 - 390 DEGREES F.

AGGREGATE:

TYPE:	CRUSHED, DOUBLE WASHED, AND DRIED GRANITE OR BASALT
GRADATION	THE GRADATION OF THE AGGREGATE VARIES BY MANUFACTURER AND WILL BE AS PER THE MANUFACTURER'S RECOMMENDATIONS FOR THE SYSTEM BEING USED ON THIS PROJECT.

BACKER ROD:

THE BACKER SHALL BE A CLOSED CELL FOAM EXPANSION JOINT FILLER CAPABLE OF WITHSTANDING THE PLACEMENT TEMPERATURE OF THE POLYMER MODIFIED ASPHALT.

NOTE: PRIOR TO PLACEMENT OF ANY PORTION OF THE JOINT SYSTEM, THE PROJECT ENGINEER MUST HAVE CERTIFIED TEST DATA MEETING ALL THE MINIMUM REQUIREMENTS OF ALL THE MATERIALS OF THE JOINT SYSTEM.

INSTALLATION PROCEDURES:

SAWING AND SURFACE PREPARATION:

AFTER ALL PAVING OPERATIONS ARE COMPLETE, THE OVERLAY IS TO BE TRANSVERSELY SAW CUT FULL DEPTH NO LESS THAN TWO INCHES DEEP (20" CENTERED OVER JOINT OPENING, UNLESS OTHERWISE NOTED). REMOVE ALL MATERIAL, INCLUDING WATER-PROOFING MATERIAL, BETWEEN SAW CUTS. THOROUGHLY CLEAN AND DRY EXPOSED CONCRETE, STEEL, AND CUT SURFACES USING COMPRESSED AIR AND A HOT COMPRESSED AIR (HCA) LANCE. THE LANCE MUST PRODUCE A FLAME RETARDED AIR STREAM TEMPERATURE OF 3000 DEGREES F. AT A VELOCITY OF 3,000 FEET PER SECOND WITH 15 PSIG CHAMBER PRESSURE. IF THERE IS AN INTERRUPTION DUE TO WEATHER OR OTHER CAUSES, THE OPERATION WILL BE REPEATED WITH THE HCA LANCE IMMEDIATELY BEFORE THE BINDER COAT OPERATION. ALSO, 6 INCHES OF THE ROAD SURFACE ON EITHER SIDE OF THE JOINT WILL BE DRIED SO THAT A SUITABLE SURFACE FOR BITUMEN ADHESION IS OBTAINED.

SEALING OF EXPANSION JOINT: (PRE-STRESSED BOX OR CONCRETE SLAB)

THE EXPANSION JOINT GAP IS TO BE SEALED AND A BRIDGING PLATE CENTERED ALONG IT. A VERY NARROW GAP WILL BE SEALED BY POURING HOT BINDER INTO THE GAP. GAPS OF 1/8" OR MORE WILL FIRST BE FILLED WITH AN APPROPRIATELY SIZED BACKER ROD. THE BACKER ROD WILL BE INSTALLED SO THAT IT IS BETWEEN 1/8" AND 1-1/8" BELOW THE TOP OF THE EXISTING GAP. THE GAP WILL THEN BE FILLED WITH BINDER.

BOND BREAKER:

SPREAD BINDER OVER SURFACE AREA WHERE THE METAL BRIDGING PLATE WILL BE PLACED. CENTER THE BRIDGING PLATE OVER THE EXISTING JOINT AND BED INTO THE HOT BINDER. BUTT JOINT THE BRIDGING PLATES TO ACCOMODATE THE ENTIRE JOINT LENGTH. SPIKE HOLES WILL BE DRILLED AT 1 FOOT INTERVALS ALONG THE LONGITUDINAL CENTERLINE OF THE PLATES. SECURE BRIDGING PLATE WITH NAILS OR SPIKES. SEAL BUTT JOINTS WITH HOT BINDER AND ALLOW BINDER TO SETUP BEFORE NEXT OPERATION. WHEN ALUMINUM BRIDGING PLATES ARE USED, ONLY THE BINDER IS REQUIRED TO SECURE THE INDIVIDUAL PLATES.

BINDER COAT:

SEAL ALL PREPARED, EXPOSED SURFACES OF THE JOINT WITH BINDER. POUR THE HOT BINDER OVER THE FLOOR AREA OF THE JOINT AND SPREAD TO COAT ALL EXPOSED SURFACES. THE BINDER WILL BE A MINIMUM OF 1/32" THICK ON THE BOTTOM OF THE JOINT CAVITY, WITH POOLS OF GREATER THICKNESS WHERE SURFACE IRREGULARITIES EXIST. THE BINDER APPLICATION TEMPERATURE WILL BE BETWEEN 350 AND 390 DEGREES F. THE BINDER WILL NOT BE ALLOWED TO BE HEATED ABOVE 410 DEGREES F. NOR ALLOWED TO EXCEED 390 DEGREES F. FOR MORE THAN 1 HOUR. A DOUBLE JACKETED OIL MELTER WILL BE USED TO HEAT THE BINDER. THE MELTER WILL BE EQUIPPED WITH A CONTINUOUS AGITATION SYSTEM, TEMPERATURE CONTROLS, AND A CALIBRATED THERMOMETER. ALSO A SYSTEM FOR ACCURATELY MEASURING THE WEIGHTS OF THE BINDER AND THE AGGREGATE WILL BE REQUIRED.

BUILD-UP OF JOINT LAYERS:

AGGREGATE PREPARATION:

HEAT THE AGGREGATE TO A TEMPERATURE OF 275 TO 325 DEGREES F., WITH A SUITABLE ROTATING DRUM WITH ATTACHED HEAT SOURCE OR A HOT COMPRESSED AIR LANCE, TO REMOVE DUST AND MOISTURE.

AGGREGATE PROPORTION AND LAYER THICKNESS:

MIX THE AGGREGATE WITH THE BINDER SUCH THAT THE MINIMUM AGGREGATE CONTENT BY WEIGHT WILL BE 68%. THE HEATED AGGREGATE AND BINDER WILL BE COMBINED IN LAYERS, UNLESS PATENTED INSTALLATION REQUIRES DIFFERENTLY, NOT LESS THAN 3/4 OF AN INCH NOR EXCEEDING 2-1/2 INCHES. THE THICKNESS OF EACH LAYER CAN BE VARIED WITHIN THESE LIMITS, TO ACHIEVE THE REQUIRED JOINT THICKNESS (MIN. 2 INCHES). THE OBJECTIVE IS TO COAT EACH STONE AND FILL THE VOIDS WHILE AVOIDING AN EXCESS OF BINDER. THIS WILL ACHIEVE THE MAXIMUM CONTENT OF STONE CONSISTENT WITH ALL STONES BEING COATED WITH BINDER. RAKE THE MIXTURE TO MIX AND LEVEL.

THE TOP LAYER THICKNESS WILL VARY BETWEEN 1/2 INCH AND ONE (1) INCH. IN PREPARING THE TOP LAYER, THE RATIO OF AGGREGATE TO BINDER WILL BE APPROXIMATELY 6:1 BY WEIGHT. OVERFILL THE TOP LAYER AND COMPACT TO THE LEVEL OF THE ADJACENT SURFACES USING A ROLLER OR VIBRATORY PLATE COMPACTOR. IMMEDIATELY AFTER COMPLETION OF THE COMPACTION, POUR SUFFICIENT BINDER OVER THE JOINT TO FILL THE SURFACE VOIDS AND COAT THE SURFACE STONE. DUST THE FINISHED JOINT WITH A FINE, DRY AGGREGATE TO PREVENT TACKINESS.

MAINTENANCE OF TRAFFIC:

IF NECESSARY TO FACILITATE TRAFFIC MAINTENANCE, THE JOINT WILL BE INSTALLED IN TWO (2) HALF-WIDTH PHASES. DURING PHASE 1 APPROXIMATELY HALF OF THE TOTAL JOINT WILL BE INSTALLED. DURING PHASE 2, A MINIMUM OF TWO (2) INCHES OF THE PHASE 1 JOINT WILL BE REMOVED, AT OR NEAR THE CENTERLINE, WITH THE REMAINDER OF THE JOINT INSTALLED. IN ALL CASES, OPERATIONS WILL BE SCHEDULED SO THAT ALL LANES CAN BE OPEN TO TRAFFIC DURING ALL NON-WORKING HOURS.

TESTING:

CERTIFICATION WILL BE SUPPLIED FOR EACH PROJECT SHOWING BINDER COMPLIANCE WITH REQUIRED PROPERTIES. A ONE QUART SAMPLE OF BINDER WILL BE RETRIEVED FROM EACH BRIDGE FOR FURTHER TESTING BY THE O.D.O.T TESTING LABORATORY.

PAYMENT:

PAYMENT FOR ALL THE ABOVE WILL BE AT THE UNIT PRICE BID PER LINEAR FOOT OF SEALED JOINT IN PLACE FOR ITEM SPECIAL 516 31300, POLYMER MODIFIED ASPHALT EXPANSION JOINT SYSTEM (3 1/2 INCHES THICK). THIS WILL INCLUDE ALL LABOR, EQUIPMENT, MATERIALS, AND INCIDENTALS NECESSARY TO COMPLETE THE ABOVE WORK.

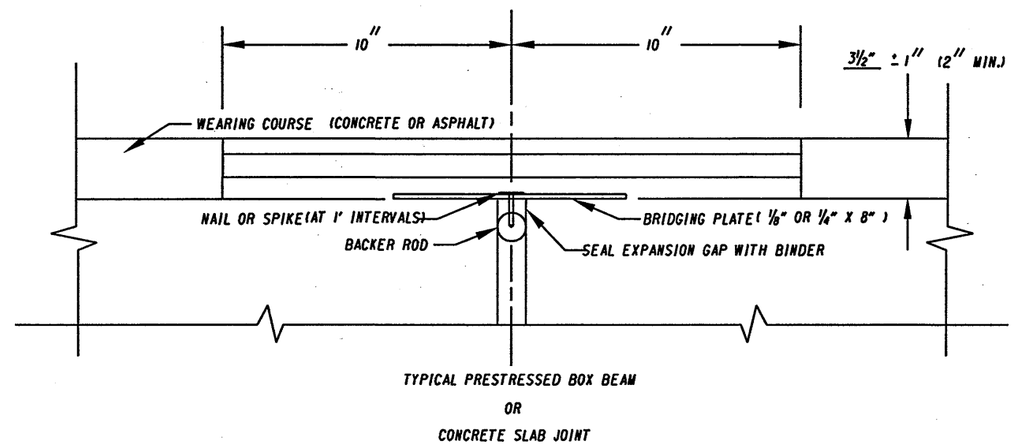

LOR-83-1712 SFN 4704223

ITEM	DESCRIPTION	UNIT	QUANTITY
SPECIAL	POLYMER MODIFIED ASPHALT EXPANSION JOINT SYSTEM (3 1/2" THICK)	LIN. FT.	80

QUANTITY CARRIED TO SHEET NO. 17

CALCULATED DCM CHECKED
DATE REVISED 10-28-96
DESIGNED WAM DRAWN WAM

POLYMER MODIFIED ASPHALT EXPANSION JOINT SYSTEM

LOR-83-15.17

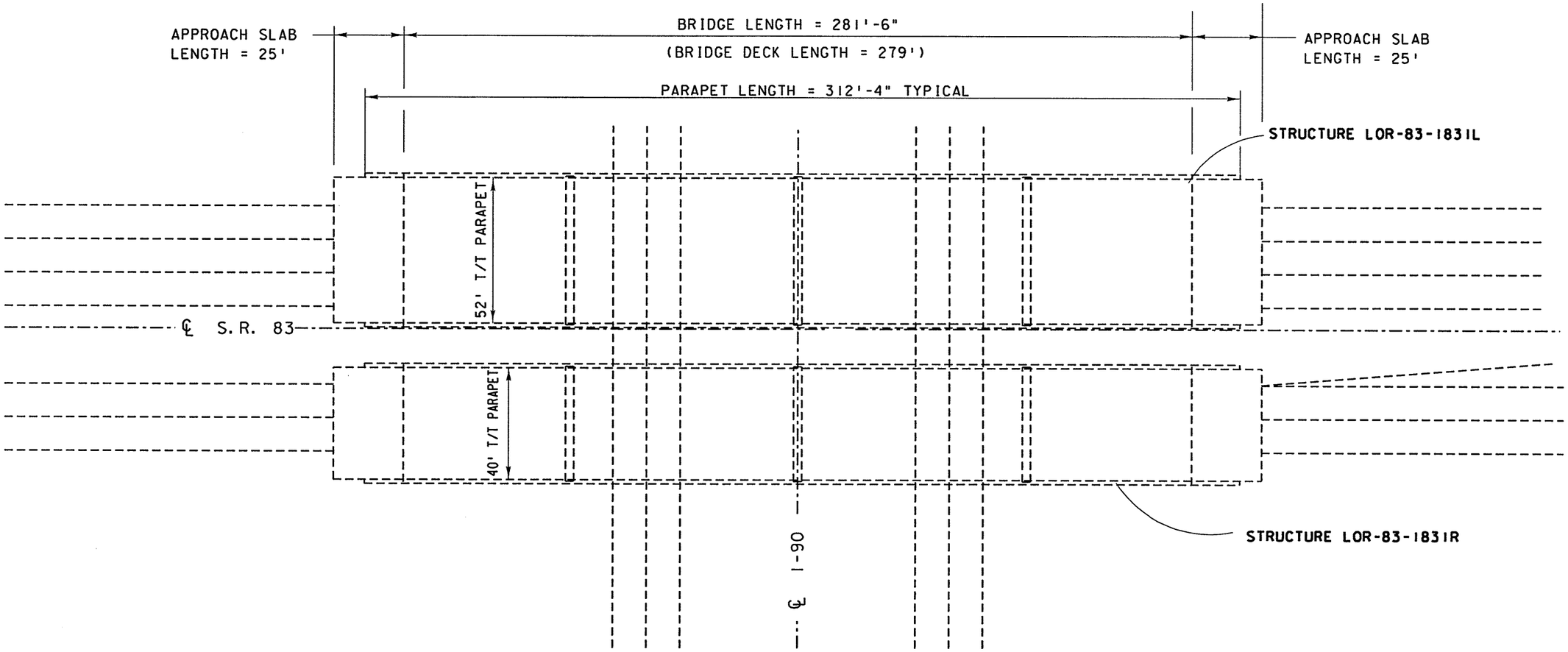

PLAN VIEW

ITEM	QUANTITY		UNIT	DESCRIPTION
	LOR 83-1831L	LOR 83-1831R		
SPECIAL	1612	1240	square yard	TREATING CONCRETE BRIDGE DECKS WITH GRAVITY FED RESIN
864	1245	1130	square yard	SEALING OF CONCRETE SURFACES (EPOXY-URETHANE)

ALL QUANTITIES CARRIED TO STRUCTURE SUMMARY SHEET, SHEET NO. 13

NOTES:

1) THE PARAPETS, ABUTMENTS, WINGWALLS, PIER COLUMNS AND PIER CAPS SHALL BE COMPLETELY SEALED USING ITEM 864 - SEALING OF CONCRETE SURFACES (EPOXY-URETHANE).FOR DETAILS SEE SHEET NO. 21 & 22.

2) THE DECK SHALL BE SEALED USING ITEM SPECIAL - TREATING CONCRETE DECKS WITH GRAVITY FED RESIN

DESIGN FILE: i:\projects\2129\Str\uct\details.dgn
WORKSTATION: dmollens DATE: 12/18/02

DESIGN AGENCY: DISTRICT THREE

DESIGNED	DRAWN	REVIEWED	DATE
DCM	DCM		
CHECKED	REVISED	STRUCTURAL FILE NUMBER	
RDN		4704266/4704290	

PLAN VIEW
LOR-83-1831 L&R

LOR-83-15.17

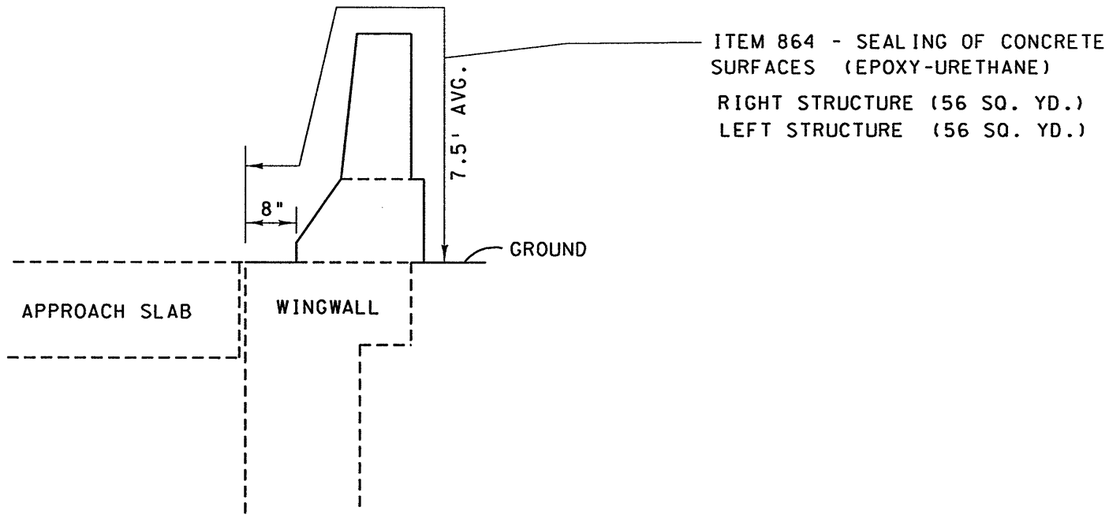

RIGHT STRUCTURE PARAPET LENGTH= 18'-4" FORWARD WINGWALLS & 15'-0" REAR WINGWALLS
LEFT STRUCTURE PARAPET LENGTH = 18'-4" FORWARD WINGWALLS & 15'-0" REAR WINGWALLS

TYPICAL WINGWALL PARAPET SEALING DETAILS

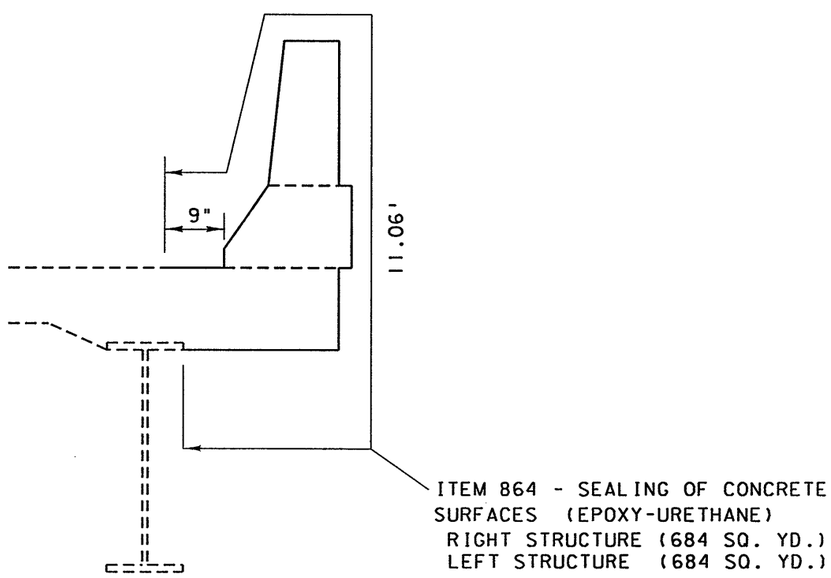

DECK PARAPET LENGTH= 278.24' RIGHT STRUCTURE
DECK PARAPET LENGTH= 278.24' LEFT STRUCTURE

TYPICAL DECK PARAPET SEALING DETAILS

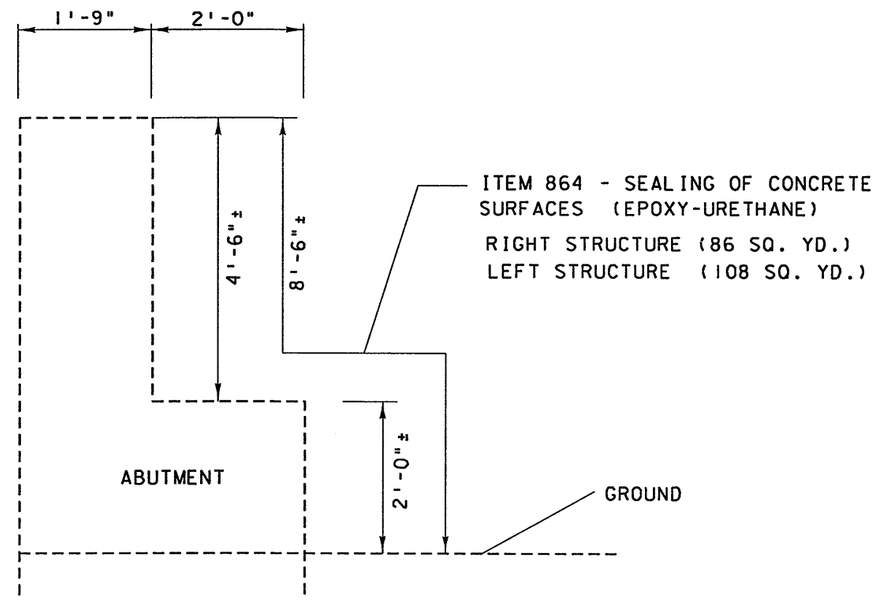

RIGHT STRUCTURE ABUTMENT LENGTH IS 41.67'
LEFT STRUCTURE ABUTMENT LENGTH IS 53.67'

TYPICAL ABUTMENT SEALING DETAILS

ALL QUANTITIES CARRIED TO SHEET, SHEET NO. 20

DESIGN FILE: I:\projects\21929\structure\details.dgn
WORKSTATION: dmollens DATE: 12/18/02

DESIGNED	DRAWN	REVIEWED	DATE
DCM	DCM		
CHECKED	REVISED	STRUCTURAL FILE NUMBER	
RDN		4704266/4704290	

DESIGN AGENCY
DISTRICT THREE

SEALING DETAIL
LOR-83-1831 L&R

LOR-83-15.17

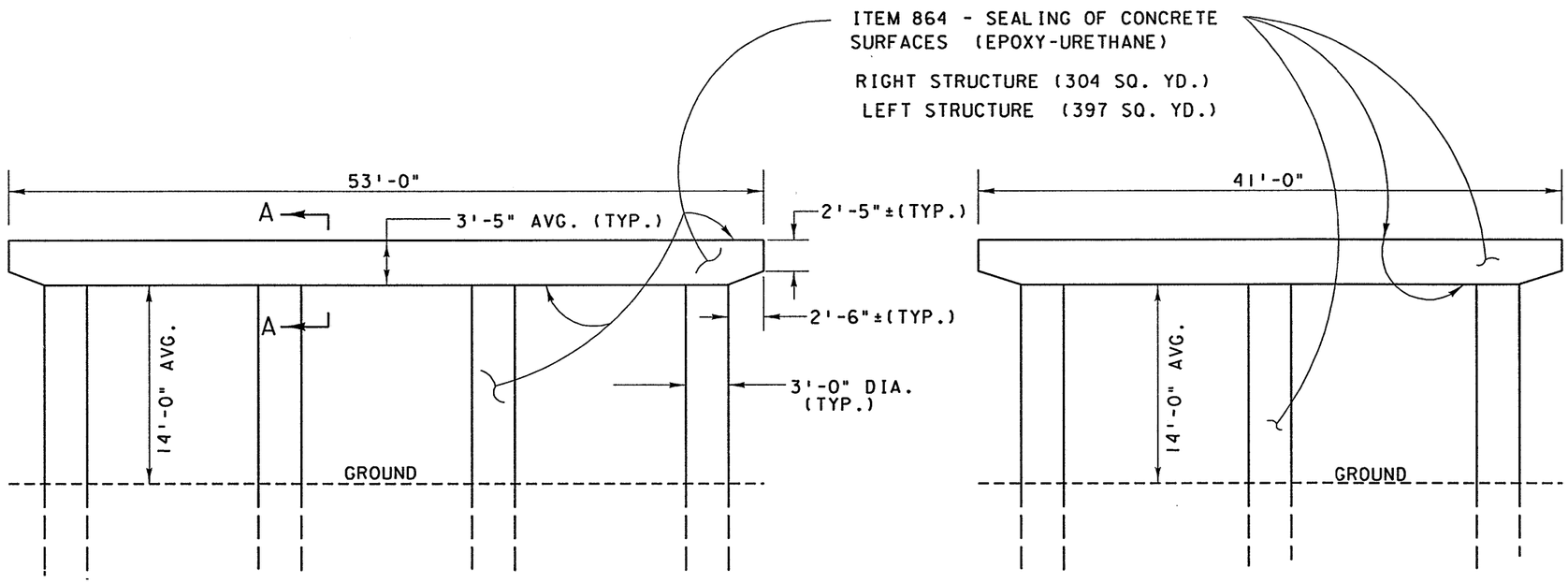

LEFT STRUCTURE (3 PIERS)

RIGHT STRUCTURE (3 PIERS)

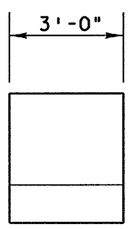

SECTION A-A

TYPICAL PIER SEALING DETAILS

ALL QUANTITIES CARRIED TO SHEET, SHEET NO. 20

DESIGN FILE: I:\projects\21929\structure\details.dgn
WORKSTATION: dmollens DATE: 12/18/02

DESIGN AGENCY: DISTRICT THREE

DESIGNED	DRAWN	REVIEWED	DATE
DCM	DCM		
CHECKED	REVISED	STRUCTURAL FILE NUMBER	
RDN		4704266/4704290	

SEALING DETAIL
LOR-83-1831 L&R

LOR-83-15.17

Part	LOCATION	Sheet Number	202 GUARDRAIL REMOVED (lin. ft.)	202 ANCHOR ASSEMBLY REMOVED, TYPE A (each)		203 EMBANKMENT, AS PER PLAN (cubic yard)	606 GUARDRAIL, TYPE 5 (lin. ft.)		606 GUARDRAIL, MISC.: ADJUST HEIGHT, EXISTING TYPE 5 GUARDRAIL (lin. ft.)		606 ANCHOR ASSEMBLY, TYPE T (each)		606 ANCHOR ASSEMBLY, TYPE E-98 (each)	606 ANCHOR ASSEMBLY, TYPE B-98 (each)	606 BRIDGE TERMINAL ASSEMBLY, TYPE 4 (each)		SPECIAL RESHAPING BERM (lin. ft.)	626 BARRIER REFLECTOR, TYPE A (each)
A	LOR-83-15.17 S.L.M.	24	212.5	2							1						237.5	
A	LOR-83-1556 (15.56 S.L.M.)	25	62.5	2		17							2				262.5	2
A	LOR-83-1712 (17.12 S.L.M.)	26	175			12	150				4				4		200	8
A	LOR-83-18.07 S.L.M.	27	1,762.5	1		111	1,762.5		37.5					1			1825	20
B	LOR-254-3.80 S.L.M.	28	125			15	137.5				4						187.5	4
	TOTAL		**2,337.5**	**5**		**155**	**2,050**		**37.5**		**9**		**2**	**1**	**4**		**2,713**	**34**

CALC BY: CVH
CHK'D By: MJS

GUARDRAIL ESTIMATED QUANTITIES

LOR-83-15.17

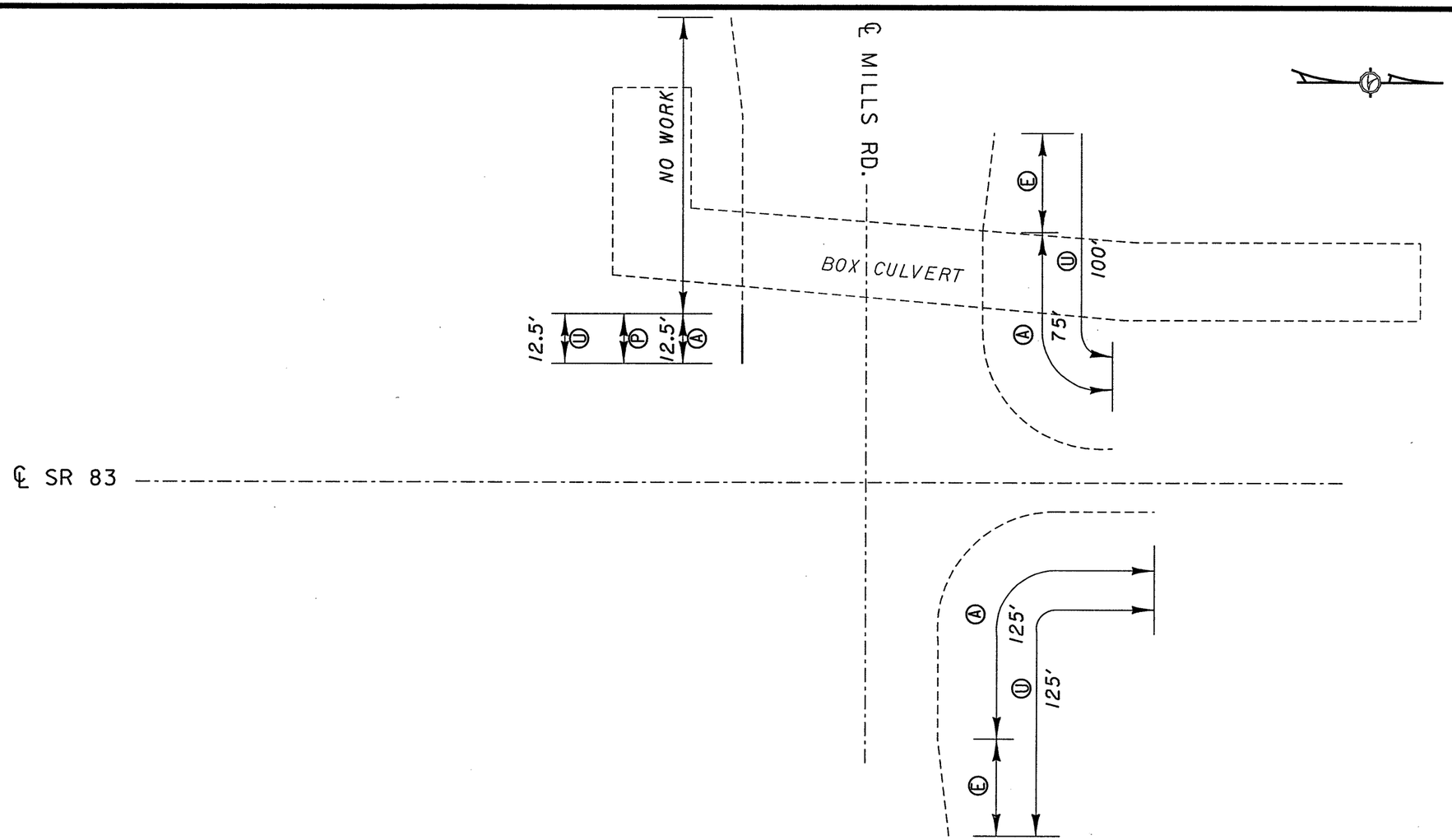

NOTES:

1. ALL QUANTITIES CARRIED TO ESTIMATED QUANTITIES, SHEETS 23

LOCATION	ITEM	DESCRIPTION	UNIT	QUANTITY		TOTAL QUANTITY
				LEFT	RIGHT	
Ⓐ	202	GUARDRAIL REMOVED	LIN. FT.	87.5	125	212.5
Ⓔ	202	ANCHOR ASSEMBLY REMOVED, TYPE A	EACH	1	1	2
Ⓟ	606	ANCHOR ASSEMBLY, TYPE T	EACH	1		1
Ⓤ	SPECIAL	RESHAPING BERM	LIN. FT.	112.5	125	237.5

TYPICAL SECTION

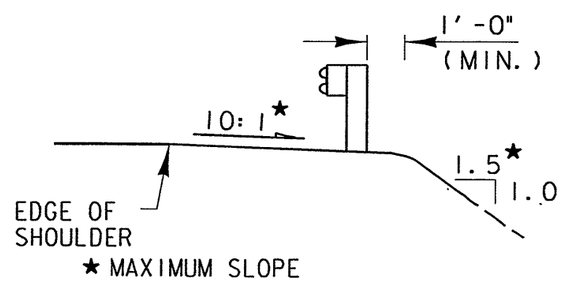

DESIGN AGENCY
DISTRICT THREE
PRODUCTION DEPARTMENT

DESIGNED	DRAWN	REVIEWED	DATE
	CVH	WJS	6/6/02
CHECKED	REVISED	STRUCTURAL FILE NUMBER	
WJS	CVH		

GUARDRAIL DETAIL
LOR-83-1517 (15.17 S.L.M.)

LOR-83-15.17

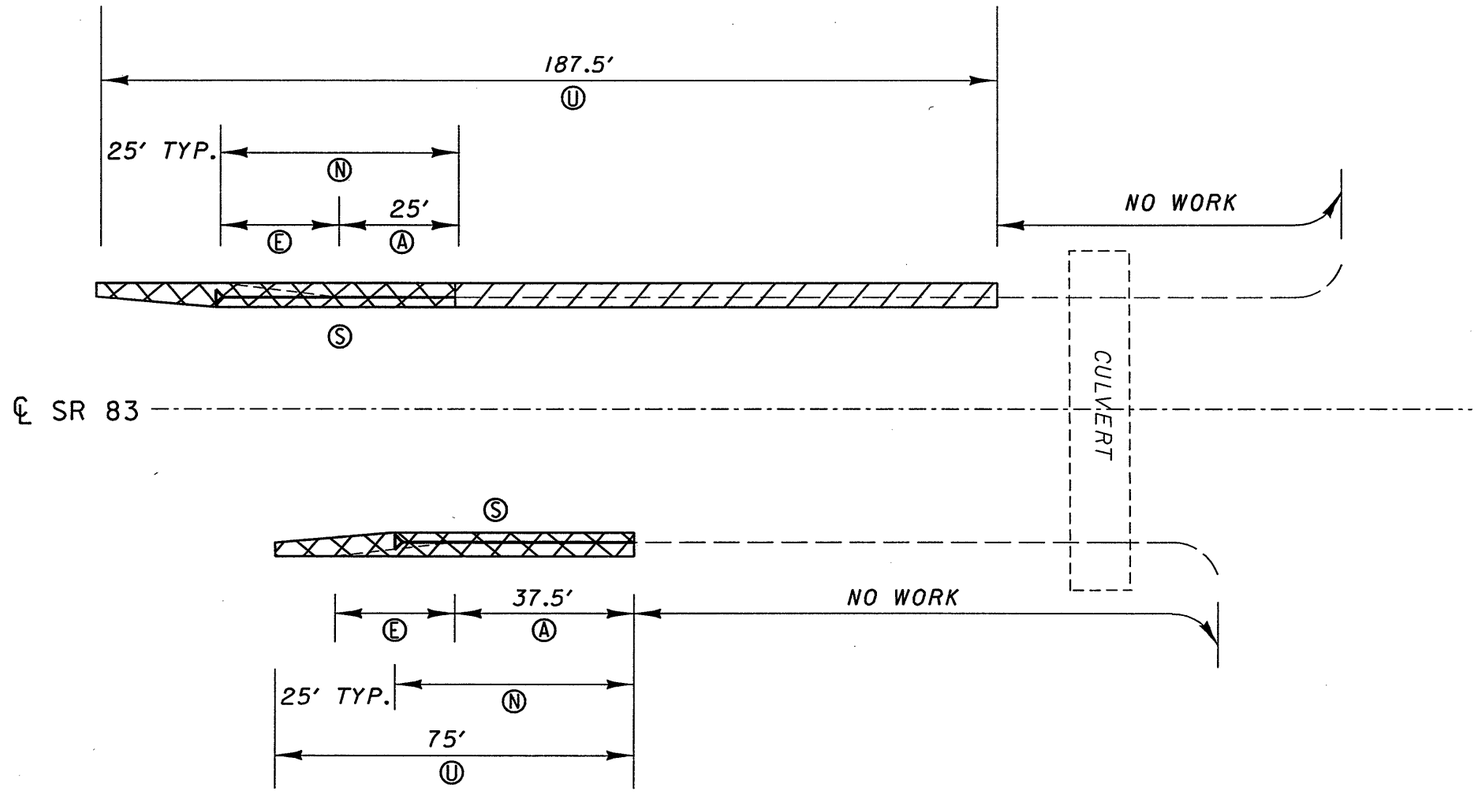

NOTES:

1. ALL QUANTITIES CARRIED TO ESTIMATED QUANTITIES, SHEETS 23.
2. GRADE EMBANKMENT AS PER TYPICAL SECTION E-98 FOR THE ENTIRE LENGTH OF ANCHOR ASSEMBLY, E-98 AND THE 25 FT. GRADING BEYOND THE GUARDRAIL RUN.

TYPICAL SECTION

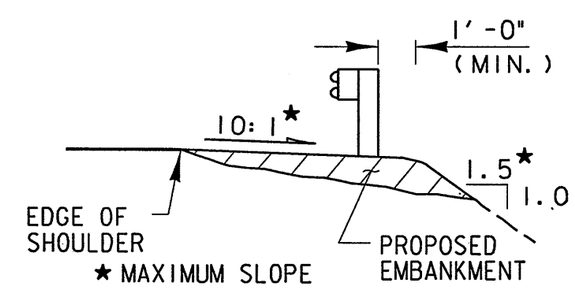

TYPICAL SECTION E-98

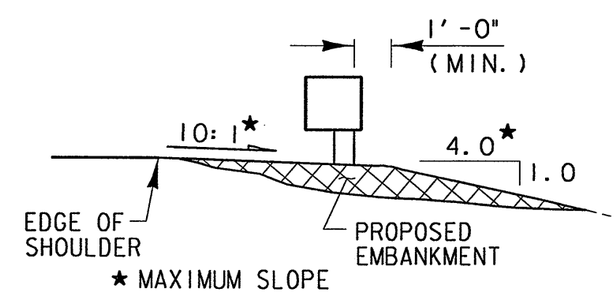

LOCATION	ITEM	DESCRIPTION	UNIT	QUANTITY LEFT	QUANTITY RIGHT	TOTAL QUANTITY
Ⓐ	202	GUARDRAIL REMOVED	LIN. FT.	25	37.5	62.5
Ⓔ	202	ANCHOR ASSEMBLY REMOVED, TYPE A	EACH	1	1	2
▨ ▨	203	EMBANKMENT, AS PER PLAN	CU. YD.	12	5	17
Ⓝ	606	ANCHOR ASSEMBLY, TYPE E-98	EACH	1	1	2
Ⓤ	SPECIAL	RESHAPING BERM	LIN. FT.	187.5	75	262.5
Ⓢ	626	BARRIER REFLECTOR, TYPE A	EACH	1	1	2

DESIGN AGENCY
DISTRICT THREE
PRODUCTION DEPARTMENT

DESIGNED	DRAWN	REVIEWED	DATE
	CVH	MJS	6/6/02
CHECKED	REVISED	STRUCTURAL FILE NUMBER	
MJS	CVH		

GUARDRAIL DETAIL
LOR-83-1556 (15.56 S.L.M.)

LOR-83-15.17

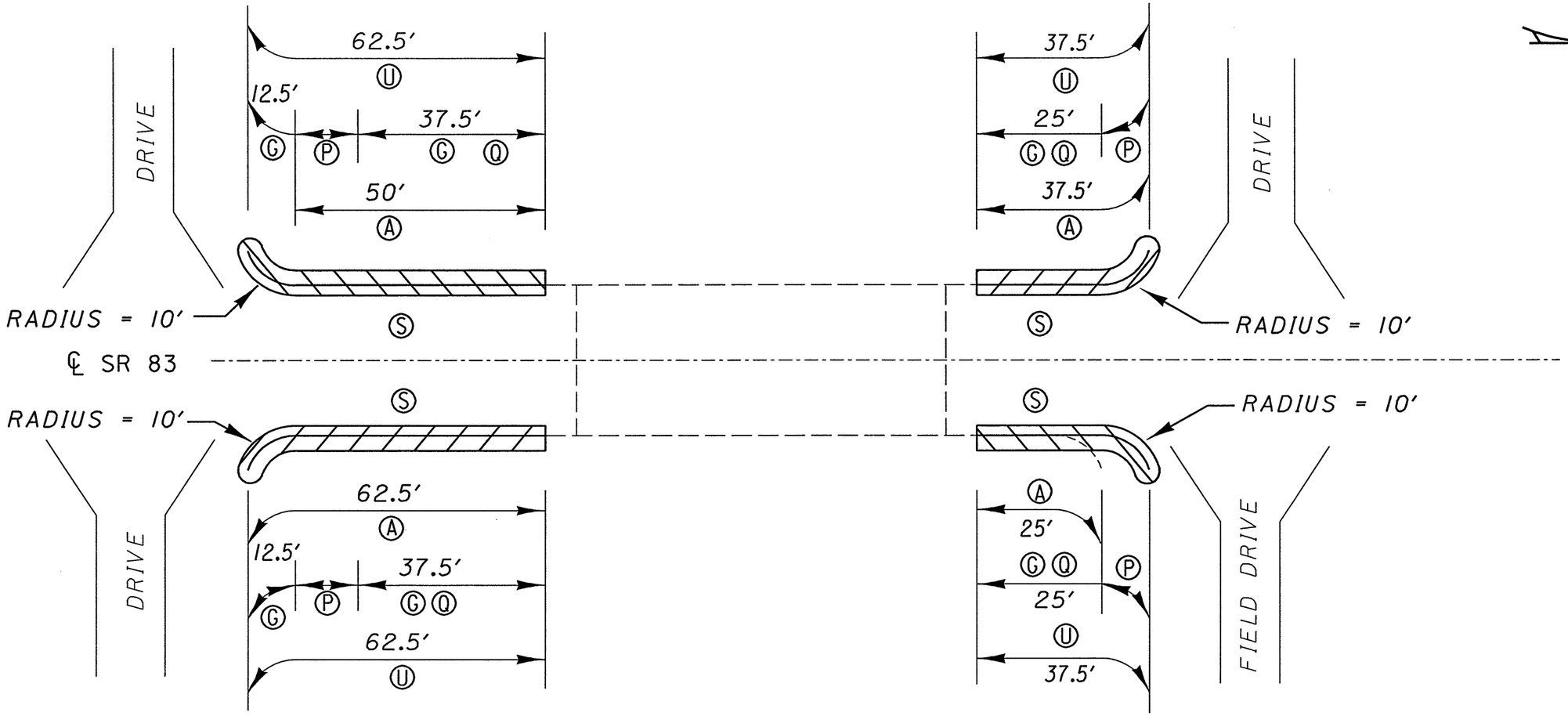

NOTES:

1. ALL QUANTITIES CARRIED TO ESTIMATED QUANTITIES, SHEETS 23.

LOCATION	ITEM	DESCRIPTION	UNIT	QUANTITY LEFT	QUANTITY RIGHT	TOTAL QUANTITY
Ⓐ	202	GUARDRAIL REMOVED	LIN. FT.	87.5	87.5	175
▨	203	EMBANKMENT, AS PER PLAN	CUB. YD.	6	6	12
Ⓖ	606	GUARDRAIL, TYPE 5	LIN. FT.	75	75	150
Ⓟ	606	ANCHOR ASSEMBLY, TYPE T	EACH	2	2	4
Ⓠ	606	BRIDGE TERMINAL ASSEMBLY, TYPE 4	EACH	2	2	4
Ⓤ	SPECIAL	RESHAPING BERM	LIN. FT.	100	100	200
Ⓢ	626	BARRIER REFLECTOR, TYPE A	EACH	4	4	8

TYPICAL SECTION

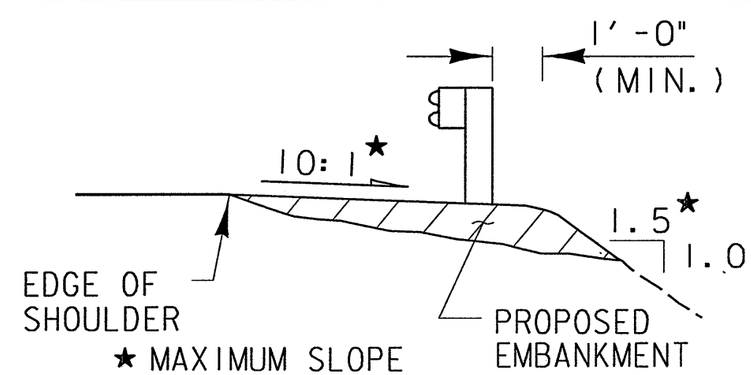

DESIGN AGENCY
DISTRICT THREE
PRODUCTION DEPARTMENT

DESIGNED	DRAWN	REVIEWED	DATE
CVH	CVH	MJS	6/6/02
CHECKED	REVISED	STRUCTURAL FILE NUMBER	
MJS			

GUARDRAIL DETAIL
LOR-83-1712 (17.12 S.L.M.)

LOR-83-15.17

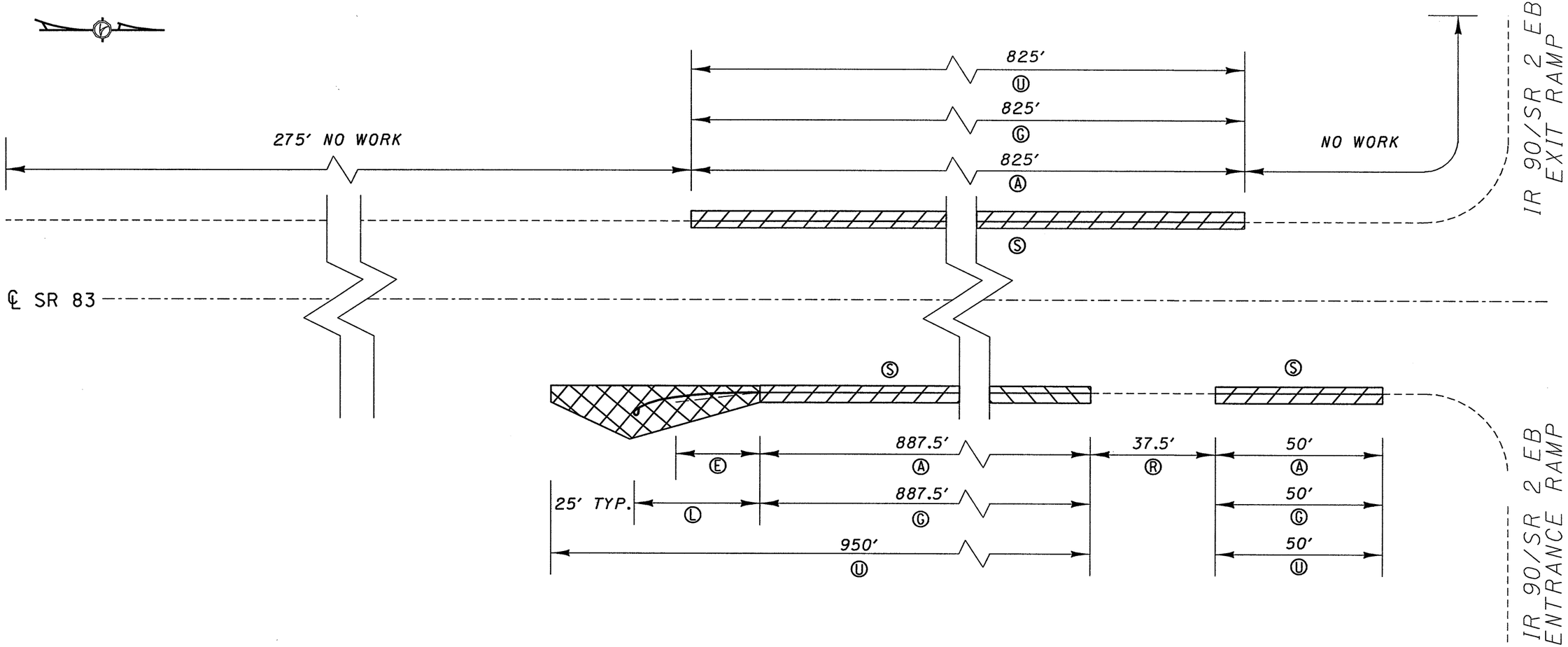

NOTES:

1. ALL QUANTITIES CARRIED TO ESTIMATED QUANTITIES, SHEETS 23.

LOCATION	ITEM	DESCRIPTION	UNIT	QUANTITY		TOTAL QUANTITY
				LEFT	RIGHT	
Ⓐ	202	GUARDRAIL REMOVED	LIN. FT.	825	937.5	1762.5
Ⓔ	202	ANCHOR ASSEMBLY REMOVED, TYPE A	EACH		1	1
▨ ▩	203	EMBANKMENT, AS PER PLAN	CU. YD.	46	65	111
Ⓖ	606	GUARDRAIL, TYPE 5	LIN. FT.	825	937.5	1762.5
Ⓛ	606	ANCHOR ASSEMBLY, TYPE B-98	EACH		1	1
Ⓤ	SPECIAL	RESHAPING BERM	LIN. FT.	825	1000	1825
Ⓡ	606	GUARDRAIL, MISC.: ADJUST HEIGHT, EXISTING TYPE 5 GUARDRAIL	LIN. FT.		37.5	37.5
Ⓢ	626	BARRIER REFLECTOR, TYPE A	EACH	9	11	20

TYPICAL SECTION "B-98"

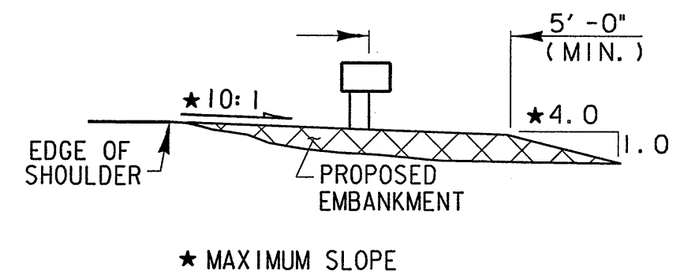

TYPICAL SECTION

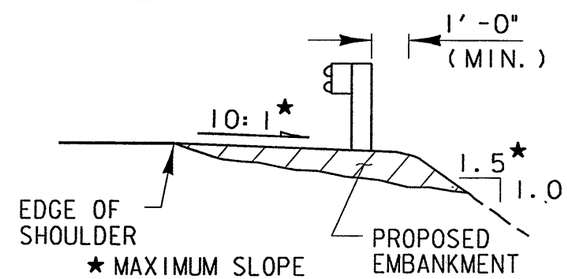

DESIGN AGENCY: DISTRICT THREE PRODUCTION DEPARTMENT

DESIGNED	DRAWN	REVIEWED	DATE
	CVH	MJS	6/6/02
CHECKED	REVISED	STRUCTURAL FILE NUMBER	
MJS	CVH		

GUARDRAIL DETAIL

LOR-83-18.07 S.L.M.

LOR-83-15.17

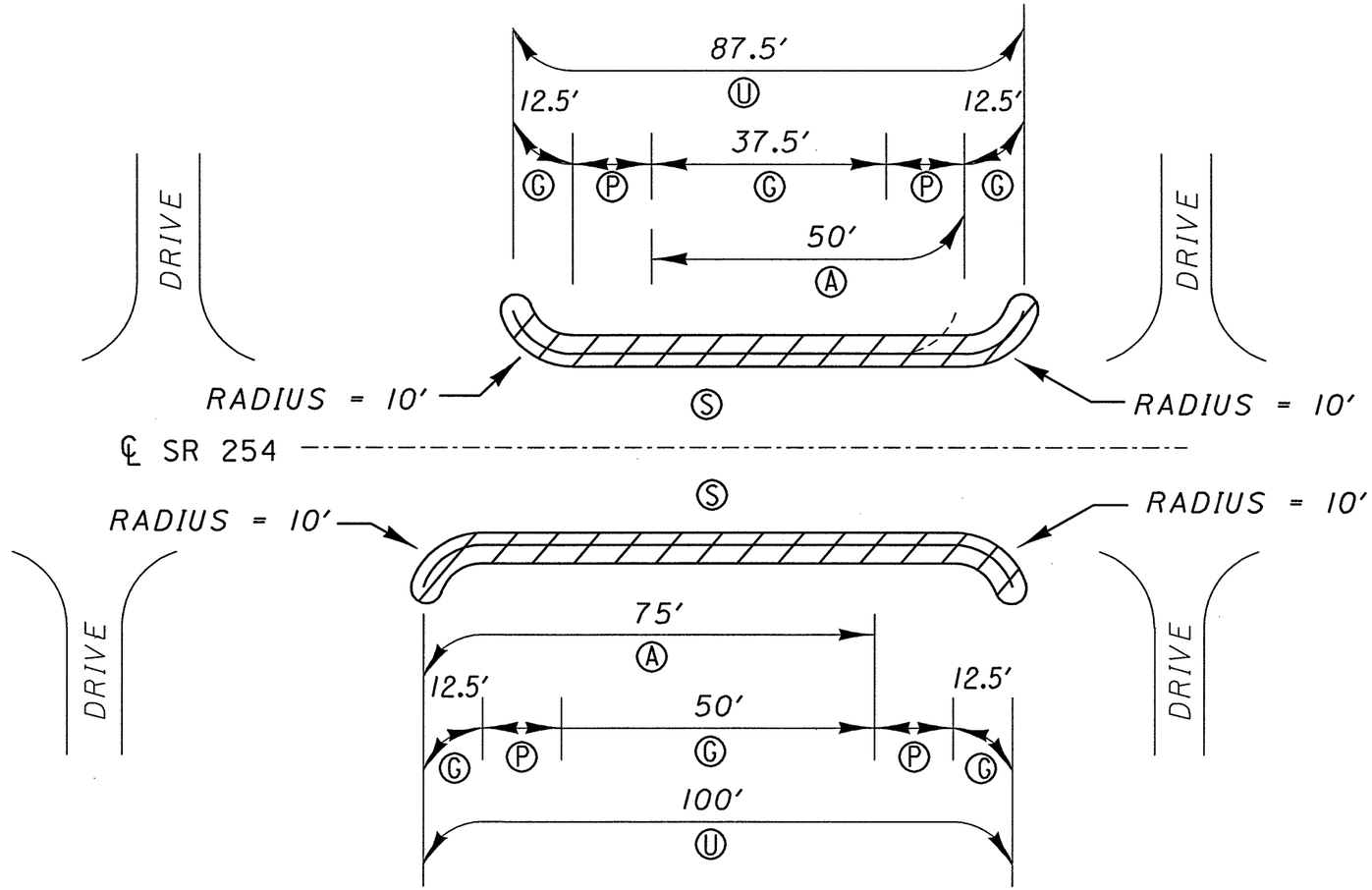

NOTES:

1. ALL QUANTITIES CARRIED TO ESTIMATED QUANTITIES, SHEETS 23.

LOCATION	ITEM	DESCRIPTION	UNIT	QUANTITY		TOTAL QUANTITY
				LEFT	RIGHT	
Ⓐ	202	GUARDRAIL REMOVED	LIN. FT.	50	75	125
▨	203	EMBANKMENT, AS PER PLAN	CU. YD.	8	7	15
Ⓖ	606	GUARDRAIL, TYPE 5	LIN. FT.	62.5	75	137.5
Ⓟ	606	ANCHOR ASSEMBLY, TYPE T	EACH	2	2	4
Ⓤ	SPECIAL	RESHAPING BERM	LIN. FT.	87.5	100	187.5
Ⓢ	626	BARRIER REFLECTOR, TYPE A	EACH	2	2	4

TYPICAL SECTION

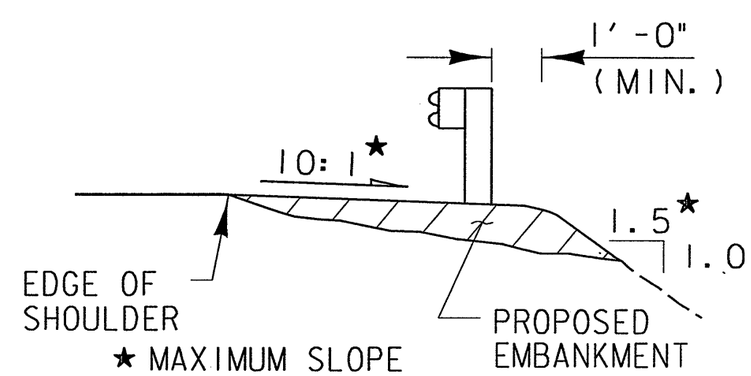

DESIGN AGENCY: DISTRICT THREE PRODUCTION DEPARTMENT

DESIGNED	DRAWN	REVIEWED	DATE
CVH	CVH	MJS	6/6/02
CHECKED	REVISED	STRUCTURAL FILE NUMBER	
MJS			

GUARDRAIL DETAIL

LOR-254-3.80 S.L.M.

LOR-83-15.17

AUXILIARY & LONG LINE MARKINGS

PART	ROUTE	FROM SLM	FROM	TO SLM	TO	202 RAISED PAVEMENT MARKER REMOVED FOR STORAGE each	LANE WIDTH ft	642, TYPE 2 EDGE LINE HIGHWAY Miles mi	642, TYPE 2 EDGE LINE TOTAL (PAY QUANT.) mi	642, TYPE 2 LANE LINE mi	642, TYPE 2 CENTER LINE SOLID LINE EQUIVALENT mi	642, TYPE 2 CENTER LINE TOTAL (PAY QUANT.) mi	642, TYPE 2 AUXILIARY MARKINGS (740.02) CHANNELIZING LINE 8 in lin ft	STOP LINE 24 in lin ft	CROSSWALK LINE 12 in lin ft	TRANSVERSE LINE 24 in lin ft	RAILROAD SYMBOL MARKING each	SCHOOL SYMBOL MARKING 72 in each	SCHOOL SYMBOL MARKING 96 in each	PARKING LOT STALL MARKING lin ft	LANE ARROW TURN LEFT each	LANE ARROW TURN RIGHT each	LANE ARROW THRU each	LANE ARROW COMBINATION each	WORD ON PAVEMENT "ONLY" 72 in each	WORD ON PAVEMENT "ONLY" 96 in each	HANDICAP SYMBOL MARKING each	614 TEMPORARY CENTER LINE, CLASS II, 642 PAINT mi	614 TEMPORARY LANE LINE, CLASS II, 642 PAINT mi	614 TEMPORARY CHANNELIZING LINE, CLASS I, 642 PAINT lin ft
A	SR 83	15.17	N. RIDGEVILLE N. CORP. LIMIT (MILLS RD.)	19.31	AVON LAKE S. CORP. LIMIT		12	0.47	0.94	1.26	8.28	4.14	2336	421	954	677	1				6	3	1	3	15			8.28	2.52	4672
B	SR 254	2.83	SHEFFIELD E. CORP. LIMIT	8.85	CUYAHOGA CO. LINE			5.72	11.44	0.38	12.04	6.02	3165	467	900	68	1	4			8	4	2	2	20			12.04	0.76	6330
									12.38	1.64		10.16	5501	888	1854	745	2	4			14	7	3	5	35			20.32	3.28	11002

RAISED PAVEMENT MARKERS

LOCATION PART	LOCATION COUNTY	LOCATION ROUTE	LOCATION SLM SECTION FROM	LOCATION SLM SECTION TO	DETAIL	621 RAISED PAVEMENT MARKER, HIGH PROFILE, INSTALLATION ONLY each	PRISMATIC RETRO-REFLECTOR TYPES ONE - WAY WHITE	TWO - WAY YELLOW/ YELLOW	TWO - WAY WHITE/ RED	TWO - WAY YELLOW/ RED	REMARKS

DETAIL	
1	MULTILANE UNDIVIDED
1	TYPICAL SPACING
2	TAPERED ACCEL LANE
3	DECELERATION LANE
4	PARALLEL ACEL LANE
5	MULTILANE DIVIDED/ EXPRESSWAY
6	STOP APPROACH
7	1 LANE APPR. W/LT. TURN LANE
8	THRU APPROACH
9	2 LANE APPR. W/LT TURN LANE
10	4 LANE DIVIDED TO 2 LANE TRANSITION
11	4 LANE UNDIVIDED TO 2 LANE TRANSITION
12	TWO LANE NARROW BRIDGE
13	TWO WAY LEFT TURN LANE
14	ONE LANE BRIDGE
15	HORIZONTAL CURVE
16	HORIZONTAL CURVE ALT.
17	STOP APPROACH ALT.
GAP	CENTER LINE AT 80 FT. TYP.

calculated CVH checked MJS

PAVEMENT MARKING INFORMATION

LOR-83-15.17