AVON BELDEN ROAD (S.R. 83)
SEWER SEPARATION
CITY OF AVON LAKE
LORAIN COUNTY, OHIO

"AS BUILTS"

RECEIVED
FEB 17 2006
AVON LAKE MUNICIPAL UTILITIES DEPT.

PROPOSED WORK LEGEND

	EXISTING	PROPOSED
SANITARY MANHOLE	SA	SA
COMBINATION SEWER MANHOLE	CM	
STORM MANHOLE	ST	ST
ROUND CATCH BASIN	CB	
GUTTER CATCH BASIN	CB	
SQUARE INLET		
STORM SEWER	STM	STM
SANITARY SEWER	SAN	SAN
COMBINATION SEWER	COMB	
SANITARY SERVICE CONNECTION		
WATER LINE	W	W

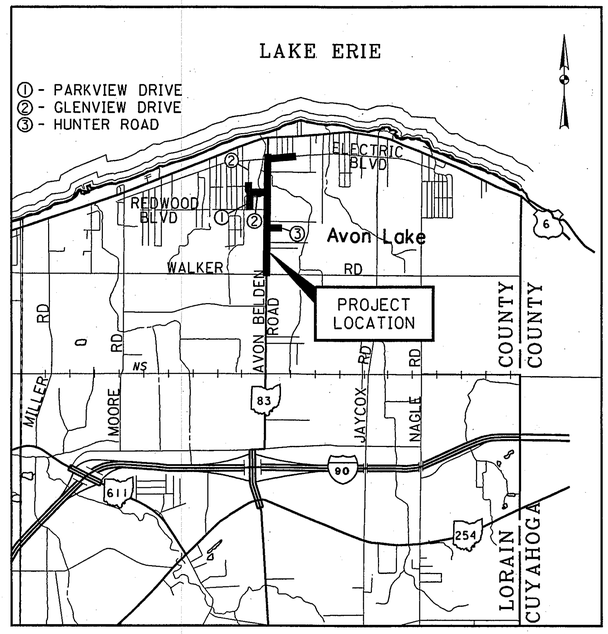

LOCATION MAP
NOT TO SCALE

INDEX OF SHEETS:

TITLE SHEET	
SCHEMATIC PLAN AND SHEET INDEX	G1
GENERAL NOTES	G2
BASELINE REFERENCE POINTS AND BENCHMARKS	G3
PLAN AND PROFILE, AVON BELDEN ROAD	C1 - C14
PLAN AND PROFILE, ELECTRIC BOULEVARD	C15 - C17
PLAN AND PROFILE, GLENVEIW DRIVE	C18 - C21
PLAN AND PROFILE, PARKVIEW DRIVE	C22 - C23
PLAN AND PROFILE, HUNTER ROAD	C24 - C25
MISCELLANEOUS DETAILS	D1 - D10
MAINTENANCE OF TRAFFIC GENERAL NOTES	T1
MAINTENANCE OF TRAFFIC SCHEMATIC PLAN	T2
MAINTENANCE OF TRAFFIC DETAILS	T3 - T8
MAINTENANCE OF TRAFFIC GLENVIEW DR/PARKVIEW DR SCHEMATIC PLAN	T9
MAINTENANCE OF TRAFFIC DETOUR PLANS	T10 - T11

AS-BUILT PLANS

UNDERGROUND UTILITIES
TWO WORKING DAYS
BEFORE YOU DIG
CALL 1-800-362-2764 (TOLL FREE)
OHIO UTILITIES PROTECTION SERVICE
NON-MEMBERS
MUST BE CALLED DIRECTLY

ODOT STANDARD CONSTRUCTION DRAWINGS

MT-35.10	4/20/01		
MT-95.31	4/19/02		
MT-97.10	4/19/02		
MT-105.10	10/18/02		
MT-105.11	10/18/02		

PLAN PREPARED BY:
PARSONS BRINCKERHOFF
100 YEARS
614 West Superior Avenue
Cleveland, Ohio 44113

20

20

AVON BELDEN, HUNTER ROAD, ELECTRIC BLVD, GLENVIEW DRIVE, PARKVIEW DRIVE

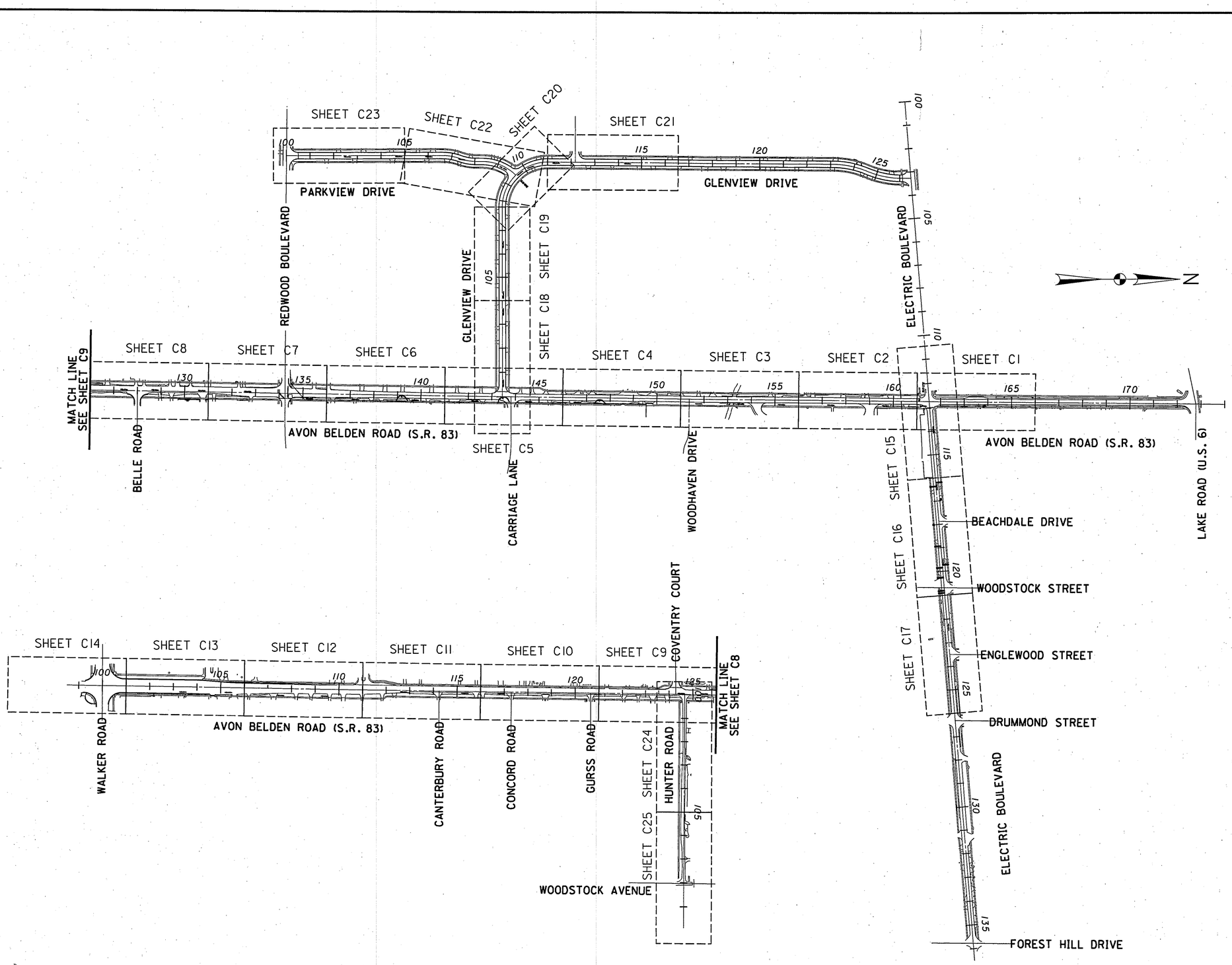

PARSONS BRINCKERHOFF

REVISED	DATE

DESIGNED	DRAWN	DATE
MME	MME	8/18/03
CHECKED		
DLC		

SCHEMATIC PLAN

AVON BELDEN ROAD SEWER SEPARATION

G1

g:\PROJECTS\avon\plans\gb001abr.dgn C:\TMP\gb001abrf.prf Thu Jan 12 15:37:54 2006

ABBREVIATIONS

AC	ASBESTOS CEMENT PIPE
ASPH	ASPHALT
ACCMP	ASPHALT COATED CORRUGATED METAL PIPE
ASTM	AMERICAN SOCIETY FOR TESTING AND MATERIALS
BC	BITUMINOUS CONCRETE
BIT	BITUMINOUS
BLDG	BUILDING
BM	BENCH MARK
℄	BASELINE
BV	BUTTERFLY VALVE
CATV	CABLE TELEVISION
CB	CATCH BASIN
CC	CONCRETE CURB
CI	CAST IRON
℄	CENTERLINE
CL	CEMENT LINED
CMP	CORRUGATED METAL PIPE
COMB	COMBINED
CONC	CONCRETE
CU FT	CUBIC FEET
CY	CUBIC YARD
D	STORM DRAIN, DEPTH FROM RIM TO INVERT
DI	DROP INLET, DUCTILE IRON
DIA	DIAMETER
DMH	DRAIN MANHOLE
DWG	DRAWING
E	EAST, ELECTRIC
EA	EACH
EF	EACH FACE
ELEV	ELEVATION
EOP	EDGE OF PAVEMENT
EW	EACH WAY
EXIST	EXISTING
FLG	FLANGE
FMCBM	FORCE MAIN CLEANOUT / BYPASS MANHOLE
FT	FEET, FOOT
FD	FOUND
G	NATURAL GAS
GALV	GALVANIZED
GC	GRANITE CURB
GR	GRANITE
GRAV	GRAVEL
HC	HOUSE CONNECTION
HORIZ	HORIZONTAL
HP	HIGH PRESSURE
HYD	FIRE HYDRANT
I	INVERT
INV	INVERT
ID	INSIDE DIAMETER
IP	IRON PIPE
LB	POUND
LF	LINEAR FEET
LS	LUMP SUM
MAX	MAXIMUM
MB	MAIL BOX
MECH	MECHANICAL
MH	MANHOLE
MIN	MINIMUM
MISC	MISCELLANEOUS
MJ	MECHANICAL JOINT
N	NORTH
NE	NORTH EAST
NW	NORTH WEST
NF	NOT FOUND
NO OR #	NUMBER
OD	OUTSIDE DIAMETER
OH	OVERHEAD
ODOT	OHIO DEPARTMENT OF TRANSPORTATION
PCCP	PRESTRESSED CONCRETE CYLINDER PIPE
PE	PLAIN END, POLYETHYLENE
⅊	PROPERTY LINE
PL	PLATE
PVC	POLYVINYL CHLORIDE
PVMT	PAVEMENT
(R)	RECORD
RCP	REINFORCED CONCRETE PIPE
ROW	RIGHT-OF-WAY
RQD	ROCK QUALITY
S	SOUTH, SEWER
(S)	SURVEYED
SAN	SANITARY
SE	SOUTH EAST
SECT	SECTION
SF	SQUARE FEET
SHT	SHEET
SPEC	SPECIFICATIONS
SQ FT	SQUARE FEET
SS	SEWER SERVICE, STAINLESS STEEL
STA	STATION
STL	STEEL
STM	STORM
SW	SIDEWALK, SOUTH WEST
T	HYDROSTATIC THRUST, TELEPHONE
TBM	TEMPORARY BENCH MARK
THK	THICK (NESS)
TYP	TYPICAL
TP	TRANSIT PIPE
UC	UNDERGROUND CONDUIT
UE	UNDERGROUND ELECTRIC
UP	UTILITY POLE
VC	VITRIFIED CLAY
VERT	VERTICAL
W	WEST, WATER
WAT	WATER
W/	WITH
W/O	WITHOUT

EXISTING LEGEND

MONUMENT BOX	M	ROCK	
BRASS DISC	B.D.	SPRINKLER	
IRON PIN FOUND	I.R.F.	FLAG POLE	
IRON PIPE FOUND	P.F.	SIGN	
DRILLHOLE FOUND	D.H.F.	MAILBOX	
PK NAIL FOUND	P.K.F.	TELEPHONE MANHOLE	T
IRON PIN SET	I.R.S.	TELEPHONE PEDESTAL	
MAG NAIL SET	MAG.S.	MONITORING WELL	M WELL
PK NAIL SET	P.K.S.	ELECTRIC HANDHOLE	E
BENCH MARK		GAS VALVE	G
CLEANOUT	CO	WATER METER	W
TELEPHONE AND POWER POLE		WATER MANHOLE	W
LIGHT POLE		WATER VALVE	W
POWER POLE		FIRE HYDRANT	
TELEPHONE POLE		OVERHEAD ELECTRIC LINE	---OH E---
UTILITY POLE		OVERHEAD TELEPHONE LINE	---OH T---
UNKNOWN MANHOLE	UM	OVERHEAD CABLE TV LINE	---OH C---
POST		UNDERGROUND ELECTRIC LINE	---UG E---
GUY ANCHOR		UNDERGROUND TELEPHONE LINE	---UG T---
TREE		UNDERGROUND CABLE TV LINE	---UG C---
EVERGREEN TREE		GAS LINE	— —G— —
SHRUB		WATER LINE	— —W— —
STUMP		FIBER OPTIC CABLE	—FIBER—

CONSTRUCTION NOTES:

1. THE CONTRACTOR SHALL CALL OHIO UTILITIES PROTECTION SERVICE (OUPS) AT 1-800-362-2764 AT LEAST 48 HOURS, SATURDAYS, SUNDAYS, AND HOLIDAYS EXCLUDED, PRIOR TO EXCAVATING AT ANY LOCATION. A COPY OF THE OUPS PROJECT REFERENCE NUMBER(S) SHALL BE GIVEN TO THE OWNER PRIOR TO EXCAVATION. ALSO NOTIFY THE AVON LAKE MUNICIPAL UTILITIES DEPARTMENT AT (440) 933-6226 AT THE TIME THAT OUPS IS NOTIFIED.
2. LOCATIONS OF EXISTING PIPES, CONDUITS, UTILITIES, FOUNDATIONS AND OTHER UNDERGROUND OBJECTS ARE NOT WARRANTED TO BE CORRECT AND THE CONTRACTOR SHALL HAVE NO CLAIM ON THAT ACCOUNT SHOULD THEY BE OTHER THAN SHOWN. THESE PLANS ARE NOT INTENDED TO REPRESENT A COMPLETE BOUNDARY SURVEY.
3. STONE WALLS, FENCES, MAIL BOXES, SIGNS, CURBS, LIGHT POLES, ETC., SHALL BE REMOVED AND REPLACED AS NECESSARY TO PERFORM THE WORK. UNLESS OTHERWISE INDICATED, ALL SUCH WORK SHALL BE INCIDENTAL TO CONSTRUCTION OF THE PROJECT.
4. ALL PAVEMENT DISTURBED BY THE CONTRACTOR'S OPERATIONS SHALL BE REPLACED IN ACCORDANCE WITH THE SPECIFICATIONS AND AS SHOWN ON THE DRAWINGS.
5. ALL AREAS DISTURBED BY THE CONTRACTOR BEYOND PAYMENT LIMITS SHALL BE RESTORED TO THE ORIGINAL CONDITION OR BETTER AT NO ADDITIONAL COST TO THE OWNER.
6. CONCRETE CRADLES OR ARCHES SHALL BE CONSTRUCTED WHERE SHOWN ON THE DRAWINGS OR WHERE DIRECTED BY THE ENGINEER. UNLESS OTHERWISE INDICATED, CONCRETE USED FOR PIPE ANCHOR BLOCKS, BACKING, PIPE CRADLES, ARCHES, AND FILL SHALL HAVE A MINIMUM COMPRESSIVE STRENGTH OF 3000 PSI AT 28 DAYS.
7. APPROVED JOINT RESTRAINT METHODS SHALL BE PROVIDED FOR FORCE MAINS WHERE ANY BENDS, TEES, PLUGS, OR WYES ARE INSTALLED. CONCRETE THRUST BLOCKS, ANCHOR BLOCKS AND THE RODS MAY BE USED FOR 6-INCH AND 8-INCH PIPE WHERE JOINT RESTRAINT IS NOT FEASIBLE. FOR THRUST BLOCK DETAILS AND MINIMUM BLOCK BEARING AREAS, SEE DETAILS AND SPECIFICATIONS.
8. SEWER TRENCHES MAY BE EXCAVATED WIDER THAN THE "LIMIT OF EXCAVATION AND PAYMENT FOR EARTH EXCAVATION" ABOVE THE "LINE OF NARROW TRENCH LIMIT." ANY SUCH ADDITIONAL EXCAVATION SHALL BE AT THE CONTRACTORS EXPENSE AND SHALL NOT BE MEASURED FOR PAYMENT.
9. BELOW THE "LINE OF NARROW TRENCH LIMIT" THE TRENCH SHOULD NOT BE EXCAVATED BEYOND THE TRENCH WIDTH "W". IF MATERIAL IS LOOSENED OR REMOVED BEYOND THE ABOVE MENTIONED LIMITS, THE CONTRACTOR WILL BE REQUIRED TO PROVIDE CRUSHED STONE FOR THE FULL WIDTH OF THE TRENCH AT NO ADDITIONAL COST TO THE OWNER.
10. SHEETING TO BE LEFT IN PLACE SHALL BE USED WHERE SHOWN ON THE DRAWINGS OR WHERE DIRECTED BY THE ENGINEER. IT SHALL BE LEFT IN PLACE BELOW A LINE 12 INCHES ABOVE THE TOP OF THE PIPE UNLESS OTHERWISE DIRECTED BY THE ENGINEER.
11. FOUR FOOT INSIDE DIAMETER MANHOLES SHALL BE USED WITH SEWERS LESS THAN 24 INCHES IN DIAMETER, AND FIVE FOOT INSIDE DIAMETER MANHOLES SHALL BE USED WITH SEWERS EQUAL TO OR GREATER THAN 24 INCHES IN DIAMETER, UNLESS OTHERWISE SPECIFIED.
12. OPENINGS FOR PIPE IN PRECAST MANHOLE BASES SHALL BE CAST IN THE REQUIRED LOCATIONS DURING MANHOLE MANUFACTURE. FIELD CUT OPENINGS SHALL NOT BE PERMITTED UNLESS APPROVED BY THE ENGINEER.
13. LATERAL SANITARY CONNECTIONS INSIDE THE EXISTING 84 INCH PIPE ARE TO BE MADE USING PVC PRESSURE PIPE. FITTINGS FOR 6" LATERALS ARE TO CONFORM TO AWWA C907 AND HAVE SAME PRESSURE RATING AS PIPE. FITTINGS FOR 16" SEWER MAIN ARE TO BE FABRICATED AND CONFORM TO ALL REQUIREMENTS OF AWWA C905 AND BE OF SAME PRESSURE RATING AS PIPE. SEE SPECIFICATION SECTION 02629.
14. IN PAVED AREAS THE TOP OF THE MANHOLE COVER SHALL BE SET FLUSH WITH THE PAVED SURFACE. IN OTHER AREAS THE TOP OF THE COVER SHALL EXTEND 6 INCHES ABOVE FINISHED GRADE, OR AS SHOWN ON THE DRAWINGS, OR AS DIRECTED BY THE ENGINEER.
15. HOUSE CONNECTION LOCATIONS SHOWN ON THESE DRAWINGS ARE APPROXIMATE. EXACT LOCATIONS WILL BE DETERMINED BY THE CONTRACTOR PRIOR TO STARTING CONSTRUCTION IN ACCORDANCE WITH SPECIFICATIONS.
16. PROTECTION OF WATER SUPPLIES - WHENEVER A SEWER MUST CROSS UNDER A WATER MAIN, THE SEWER SHALL BE LAID AT SUCH AN ELEVATION THAT THE TOP OF THE SEWER IS A MINIMUM OF 18 INCHES BELOW THE BOTTOM OF THE WATER MAIN. WHEN THE ELEVATION OF THE SEWER CANNOT BE VARIED TO MEET THE ABOVE REQUIRMENT, THE WATER MAIN SHALL BE RELOCATED BY THE CONTRACTOR AS DIRECTED BY THE ENGINEER TO PROVIDE THIS SEPARATION OR THE CONTRACTOR SHALL CONSTRUCT THE NEW SEWER OF CLASS 150 PRESSURE PIPE FOR A DISTANCE OF 10 FEET ON EACH SIDE OF THE WATER MAIN. ONE FULL LENGTH OF CLASS 150 PRESSURE PIPE SEWER SHOULD BE CENTERED ON THE WATER MAIN AS MUCH AS POSSIBLE. THE SEWER CONSTRUCTED OF THE PRESSURE PIPE MUST BE PRESSURE TESTED TO ASSURE WATER TIGHTNESS.
17. CALCULATION OF PIPE SLOPES IS BASED ON ELEVATION CHANGES DIVIDED BY THE DISTANCE BETWEEN THE CENTERLINE OF MANHOLES. "IN" INDICATES UPSTREAM END OF MANHOLE, "OUT" INDICATES DOWN-STREAM END OF MANHOLE.
18. ALL STREET EXCAVATIONS SHALL BE COMPLETELY CLOSED AT THE END OF EACH WORKING DAY BY BACKFILLING OR COVERING WITH FLAT STEEL PLATES, PINNED AND EDGED RAMPED WITH ASPHALT PATCH ON HEAVILY TRAVELED ROADS.
19. UNLESS OTHERWISE NOTED, THE ELEVATIONS REFERENCED ARE BASED ON VERTICAL DATUM NAVD 1988. THE BASIS OF BEARING FOR THIS SURVEY IS OHIO STATE PLANE, NORTH ZONE NAD 83 (1995) GRID NORTH.
20. ALL CATCH BASINS SHALL BE PROTECTED BY HAYBALES OR FILTER FABRIC SILT BARRIERS DURING CONSTRUCTION, AS SHOWN ON DETAIL SHEETS AND AS SPECIFIED.
21. ALL WORK PERFORMED WITHIN STATE HIGHWAY LIMITS SHALL CONFORM TO THE PERMIT ISSUED FOR THIS PROJECT.
22. ALL DRAIN MANHOLES SHALL HAVE A 4-FOOT INSIDE DIAMETER UNLESS OTHERWISE NOTED.
23. ALL DRAIN CATCH BASINS SHALL HAVE STANDARD SUMPS UNLESS OTHERWISE NOTED.
24. ALL DRAIN LATERALS FROM CATCH BASINS TO STORM SEWERS SHALL BE 12-INCH PVC PIPE UNLESS OTHERWISE NOTED. MINIMUM GRADE TO BE 0.4% OR AS SHOWN ON PLANS. SEE SPECIFICATION SECTION 02617.
25. THIS PROJECT INCLUDES WORK WITHIN AN ACTIVE SEWER SYSTEM. THE CONTRACTOR SHALL FOLLOW ALL FEDERAL, STATE, LOCAL AND OSHA REQUIREMENTS FOR CONFINED SPACE ENTRY AND OTHER SAFETY RELATED ISSUES. CONTRACTOR AND/OR SUBCONTRACTOR(S) SHALL INCLUDE ALL NECESSARY LABOR, MATERIAL, EQUIPMENT AND SUPPLIES REQUIRED BY LAW AND TYPICAL INDUSTRY STANDARDS TO COMPLETE THE PROJECT. ALL COSTS ARE INCIDENTAL TO THE COSTS OF THAT PARTICULAR BID ITEM OF WORK.
26. ROOF DRAINS, FOUNDATION DRAINS AND OTHER CLEAN WATER CONNECTIONS TO THE SANITARY SEWER SYSTEM ARE PROHIBITED.
27. ASPHALT SHOULDERS TO BE CONSTRUCTED ALONG AVON BELDEN ROAD. SEE SHEET D10 FOR ASPHALT SHOULDER DETAIL AND LIMITS.
28. FIBER-OPTIC CABLE OWNED BY AVON LAKE CITY SCHOOLS TO BE REPLACED FROM STA. 26+30 TO STA. 36+00 AFTER INSTALLATION OF RELOCATED CONDUIT AROUND DUAL ACCESS STRUCTURES AT STATIONS 26+40, 30+44 AND 34+76. CABLE REPLACEMENT TO BEGIN AFTER METHODS AND SCHEDULE APPROVED BY ENGINEER.

OWNERS OF UTILITIES

1. COLUMBIA GAS OF OHIO, INC.
   3101 NORTH RIDGE ROAD, E.
   LORIAN, OHIO 44055
   (440) 240-6103
2. CENTRAL TELEPHONE CO. OF OHIO
   203 NINTH STREET
   LORAIN, OHIO 44052
   (440) 244-8423
3. THE ILLUMINATING COMPANY
   4141 ROCKSIDE ROAD
   SEVEN HILLS, OHIO 44131
4. MEDIA ONE CABLE TV
   576 TERNES AVENUE
   ELYRIA, OHIO 44035
   (440) 365-2556
5. CITY OF AVON LAKE
   UTILITIES DEPARTMENT
   DIVISION OF WATER & SEWER
   33370 LAKE ROAD
   (440) 933-6226
6. AVON LAKE CITY SCHOOLS
   175 AVON BELDEN ROAD
   AVON LAKE, OHIO 44012
   (440) 933-5163

PARSONS BRINCKERHOFF

REVISED	DATE

DRAWN	DATE
MME	8/18/03

DESIGNED	CHECKED
DSW	DLC

GENERAL NOTES

AVON BELDEN ROAD SEWER SEPARATION

G2

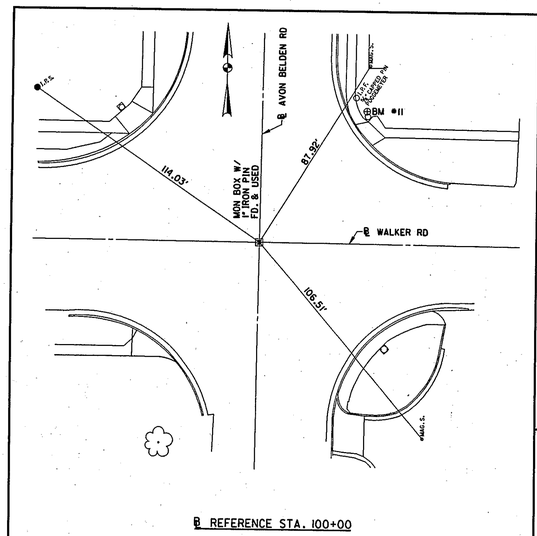

℄ REFERENCE STA. 100+00

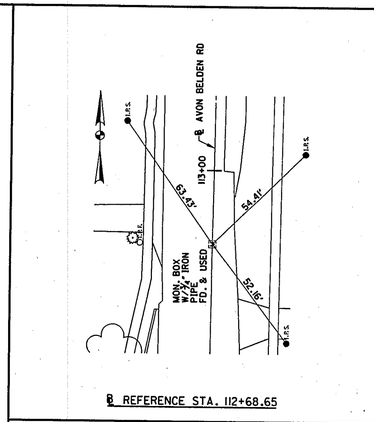

℄ REFERENCE STA. 112+68.65

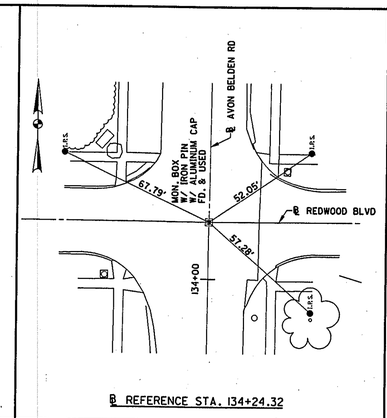

℄ REFERENCE STA. 134+24.32

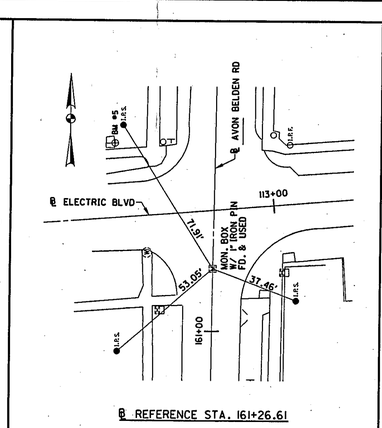

℄ REFERENCE STA. 161+26.61

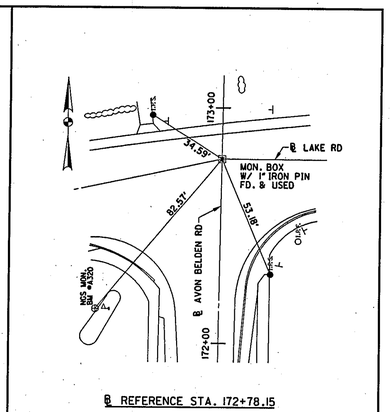

℄ REFERENCE STA. 172+78.15

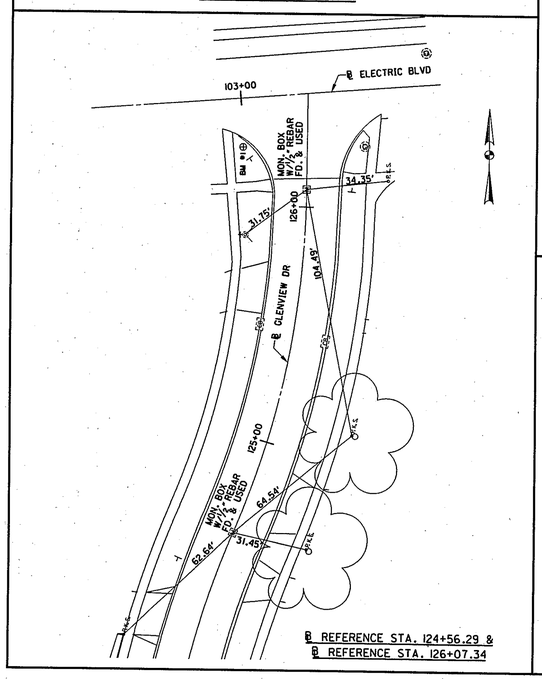

℄ REFERENCE STA. 124+56.29 &
℄ REFERENCE STA. 126+07.34

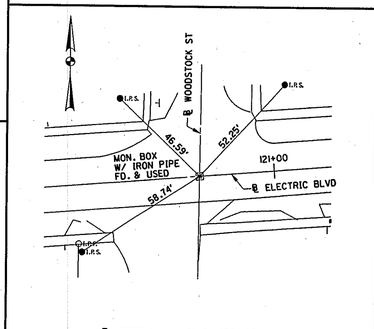

℄ REFERENCE STA. 128+68.55

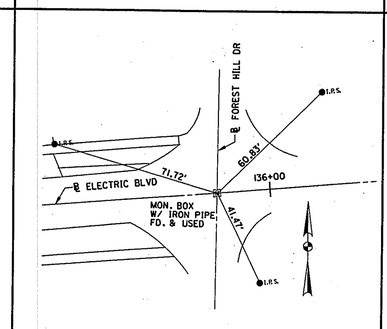

℄ REFERENCE STA. 135+77.77

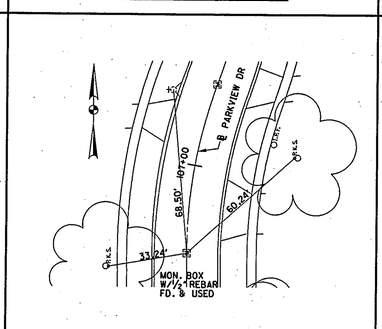

℄ REFERENCE STA. 106+62.95

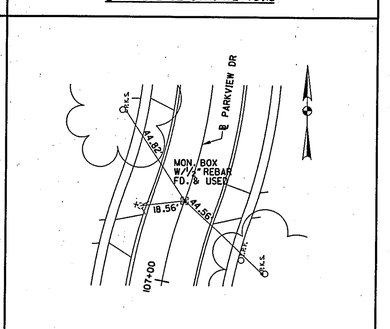

℄ REFERENCE STA. 107+34.92

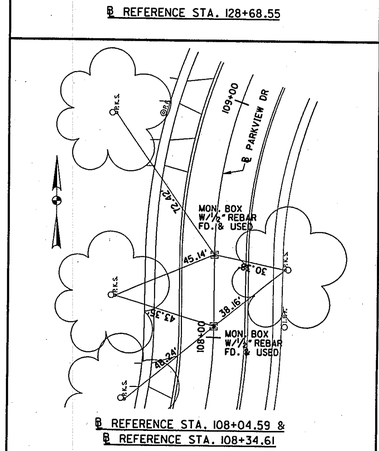

℄ REFERENCE STA. 108+04.59 &
℄ REFERENCE STA. 108+34.61

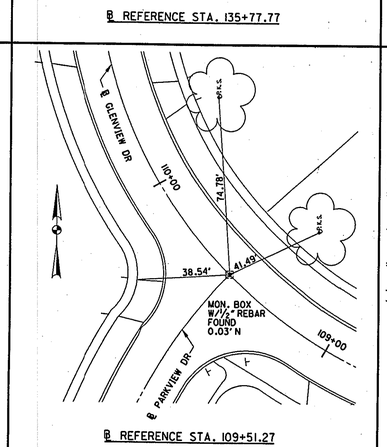

℄ REFERENCE STA. 109+51.27

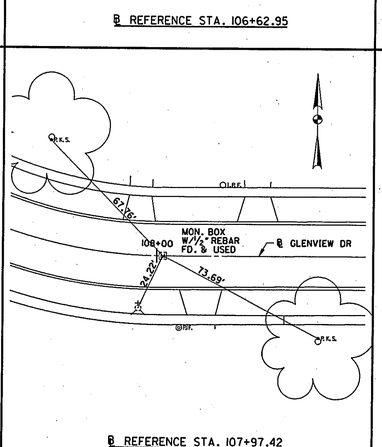

℄ REFERENCE STA. 107+97.42

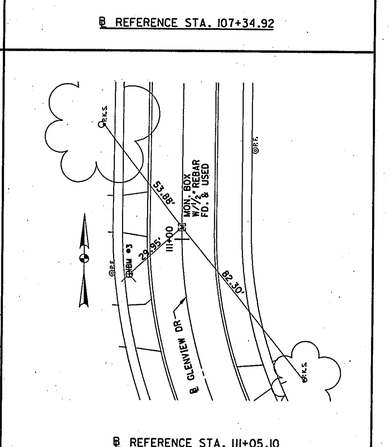

℄ REFERENCE STA. 111+05.10

BENCH MARKS

BENCH MARK #1
RAILROAD SPIKE IN UTILITY POLE #279816
ELEV. = 602.60

BENCH MARK #2
CHISELED "X" ON NORTH FLANGE NUT ON HYDRANT WEST SIDE OF GLENVIEW DRIVE #166
ELEV. = 607.22

BENCH MARK #3
CHISELED "X" ON NORTH FLANGE NUT ON HYDRANT WEST SIDE OF GLENVIEW DRIVE #214
ELEV. = 609.09

BENCH MARK #4
CHISELED "X" ON NORTH FLANGE NUT ON HYDRANT SOUTH SIDE OF REDWOOD BOULEVARD #32839
ELEV. = 612.23

BENCH MARK #5
SQUARE CUT IN NE CORNER OF CONCRETE PAD FOR TRAFFIC PEDESTAL, NW CORNER OF S.R. 83/ ELECTRIC BOULEVARD INTERSECTION
ELEV. = 603.07

BENCH MARK #6
CHISELED "X" ON NORTH FLANGE NUT ON HYDRANT WEST SIDE OF S.R. 83 #210
ELEV. = 608.73

BENCH MARK #7
CHISELED "X" ON NORTH FLANGE NUT ON HYDRANT WEST SIDE OF S.R. 83 #258
ELEV. = 611.60

BENCH MARK #8
CHISELED "X" ON NORTH FLANGE NUT ON HYDRANT WEST SIDE OF S.R. 83 #300
ELEV. = 612.66

BENCH MARK #9
CHISELED "X" ON NORTH FLANGE NUT ON HYDRANT WEST SIDE OF S.R. 83 #360
ELEV. = 615.35

BENCH MARK #10
CHISELED "X" ON NORTH FLANGE NUT ON HYDRANT WEST SIDE OF S.R. 83
ELEV. = 621.81

BENCH MARK #11
TOP OF NORTH BOLT ON TRAFFIC SIGNAL CONTROL POLE AT NE CORNER OF S.R. 83/ WALKER ROAD INTERSECTION
ELEV. = 625.32

BENCH MARK #12
CHISELED "X" ON NORTH FLANGE NUT ON HYDRANT NORTH SIDE OF ELECTRIC BOULEVARD #32564
ELEV. = 604.80

BENCH MARK #13
CHISELED SQUARE ON TOP NE CORNER OF STORM STRUCTURE
ELEV. = 600.83

BENCH MARK #14
MAG NAIL SET IN NORTHERLY FACE OF 15" TREE ON SOUTH SIDE OF HUNTER ROAD, 200' EAST OF EASTERLY R/W OF S.R. 83
ELEV. = 612.92

BENCH MARK #15
MAG NAIL SET IN NORTHERLY FACE OF 18" TREE ON SOUTH SIDE OF HUNTER ROAD, 100' WEST OF HUNTER/ WOODSTOCK RD. INTERSECTION
ELEV. = 613.32

BENCH MARK #A320
METAL ROD IN MONUMENT BOX AT SW CORNER OF SR 83 AND LAKE ROAD INTERSECTION
ELEV. = 591.74

(VERTICAL DATUM IS NAVD 1988)

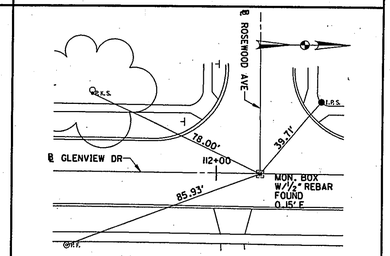

℄ REFERENCE STA. 112+18.31

PARSONS BRINCKERHOFF

REVISED	DATE

DESIGNED	DRAWN	DATE
KS	MME	8/18/03
CHECKED		
DLC		

ROADWAY BASELINE REFERENCE POINTS AND BENCHMARKS

AVON BELDEN ROAD SEWER SEPARATION

G3

UTILITY NOTE:
CONTRACTOR SHALL CONTACT THE OHIO UTILITIES PROTECTION SERVICE (OUPS) AND ANY NON-MEMBERS OF OUPS AT LEAST TWO WORKING DAYS BEFORE DIGGING. IT IS THE RESPONSIBILITY OF THE CONTRACTOR TO VERIFY AND RESOLVE POTENTIAL CONFLICTS WITH EXISTING UTILITIES SHOWN OR NOT SHOWN IN THESE PLANS PRIOR TO CONSTRUCTION.

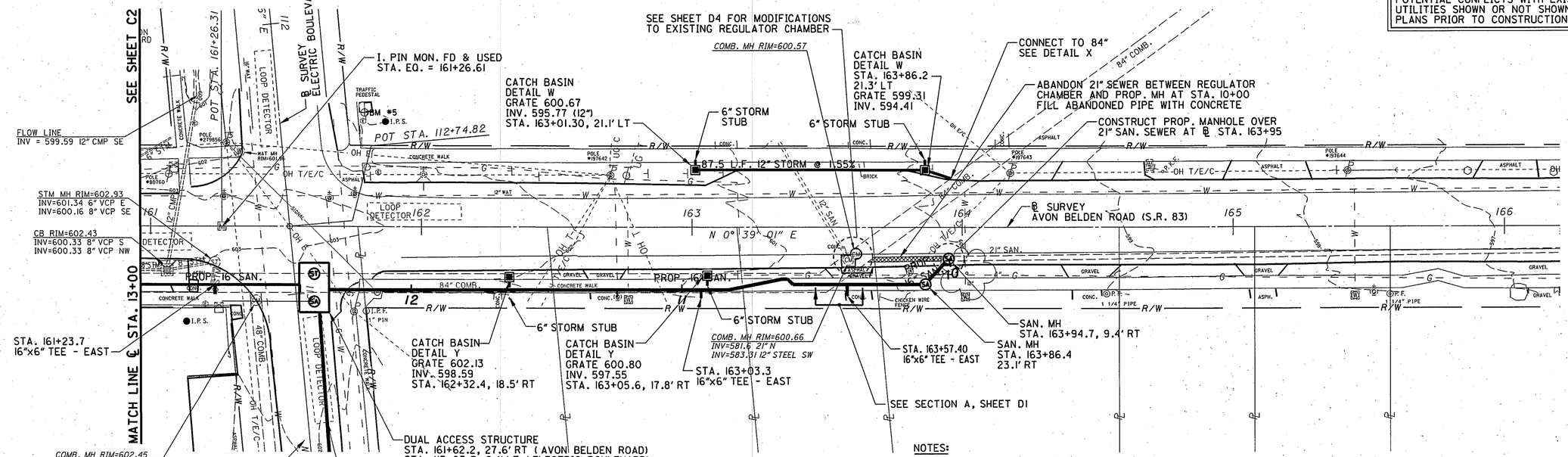

NOTES:

SEE NOTE NO. 13, SHEET G2, FOR CONSTRUCTION DETAILS INSIDE EXISTING 84 INCH COMBINED SEWER.

SEE NOTE NO. 24, SHEET G2, FOR CONSTRUCTION DETAILS OF PROPOSED CATCH BASINS AND STORM SEWERS.

HORIZONTAL SCALE IN FEET: 0, 10, 20, 40

VERTICAL SCALE IN FEET: 0, 2.5, 5, 10

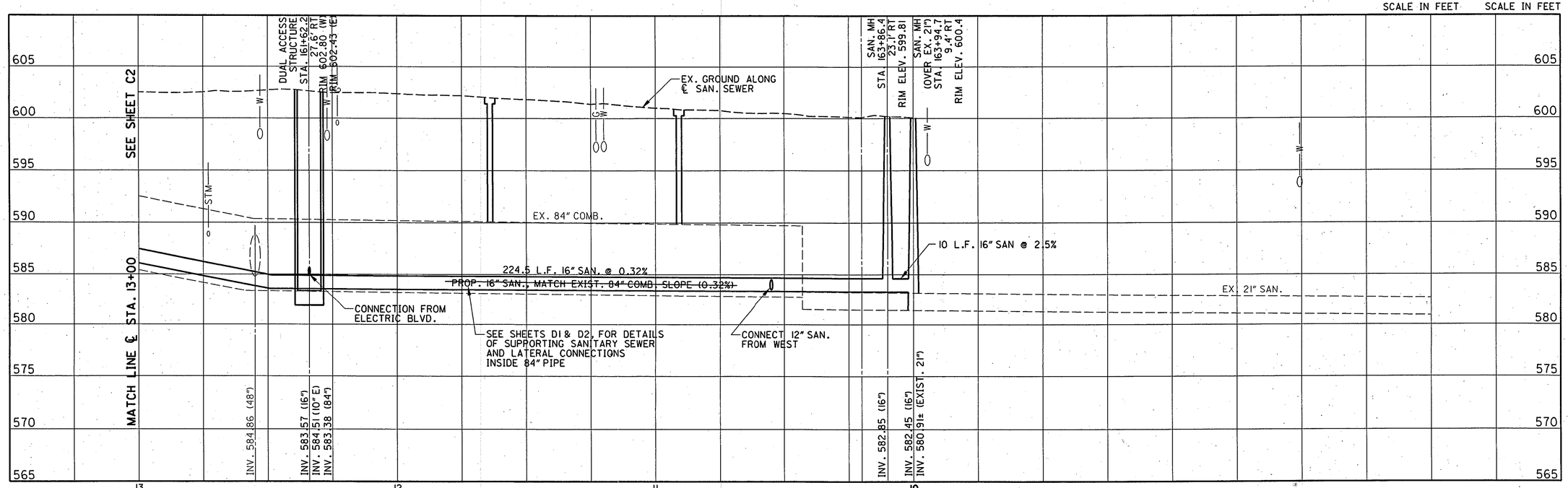

PARSONS BRINCKERHOFF

REVISED BKJ	DATE 11/14/05	
DRAWN MME	DATE 8/18/03	
DESIGNED DSW	CHECKED DLC	

AVON BELDEN ROAD SEWER SEPARATION (AS-BUILT PLANS)

PLAN & PROFILE - AVON BELDEN ROAD STA. 10+00 TO STA. 13+00

C1

g:\PROJECTS\avon\AS_BUILT\gp014abr.dgn C:\TMP\gp014abr.prf Wed Jan 11 14:45:44 2006

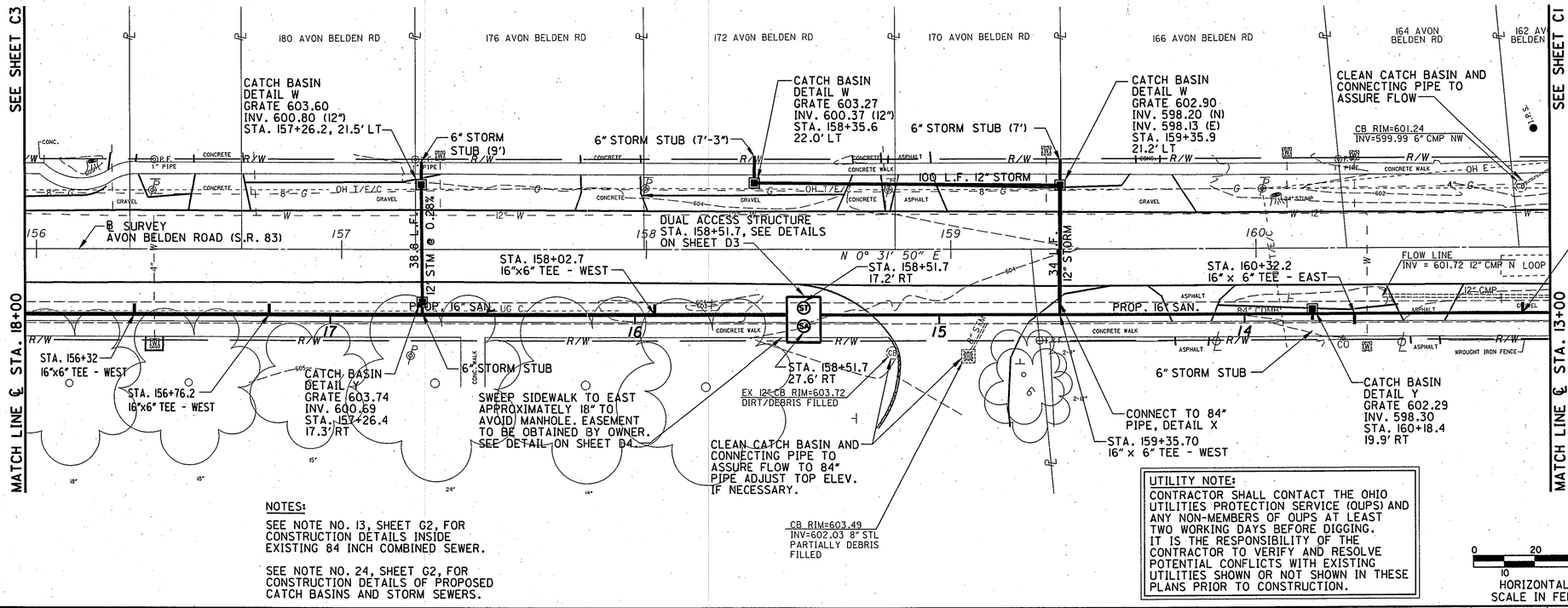

NOTES:

SEE NOTE NO. 13, SHEET G2, FOR CONSTRUCTION DETAILS INSIDE EXISTING 84 INCH COMBINED SEWER.

SEE NOTE NO. 24, SHEET G2, FOR CONSTRUCTION DETAILS OF PROPOSED CATCH BASINS AND STORM SEWERS.

UTILITY NOTE:

CONTRACTOR SHALL CONTACT THE OHIO UTILITIES PROTECTION SERVICE (OUPS) AND ANY NON-MEMBERS OF OUPS AT LEAST TWO WORKING DAYS BEFORE DIGGING. IT IS THE RESPONSIBILITY OF THE CONTRACTOR TO VERIFY AND RESOLVE POTENTIAL CONFLICTS WITH EXISTING UTILITIES SHOWN OR NOT SHOWN IN THESE PLANS PRIOR TO CONSTRUCTION.

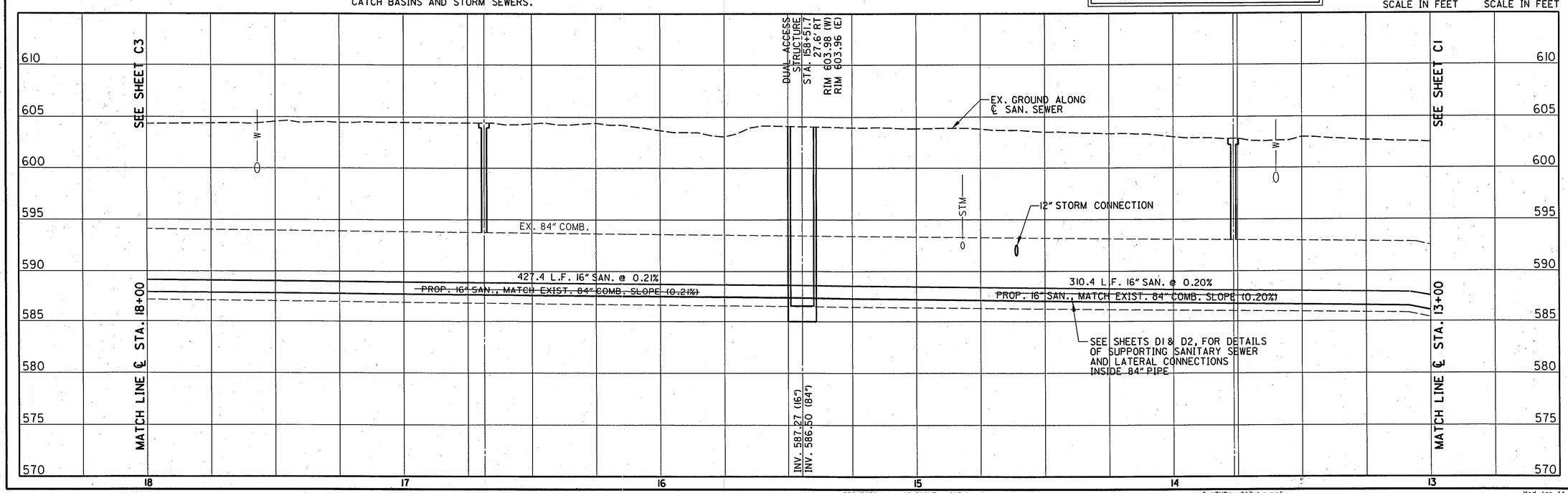

PARSONS BRINCKERHOFF

REVISED BKJ	DATE 11/14/05
DRAWN MME	DATE 8/18/03
DESIGNED DSW	CHECKED DLC

AVON BELDEN ROAD
PLAN & PROFILE - AVON BELDEN ROAD
STA. 13+00 TO STA. 18+00

AVON BELDEN ROAD SEWER SEPARATION (AS-BUILT PLANS)

C2

UTILITY NOTE:
CONTRACTOR SHALL CONTACT THE OHIO UTILITIES PROTECTION SERVICE (OUPS) AND ANY NON-MEMBERS OF OUPS AT LEAST TWO WORKING DAYS BEFORE DIGGING. IT IS THE RESPONSIBILITY OF THE CONTRACTOR TO VERIFY AND RESOLVE POTENTIAL CONFLICTS WITH EXISTING UTILITIES SHOWN OR NOT SHOWN IN THESE PLANS PRIOR TO CONSTRUCTION.

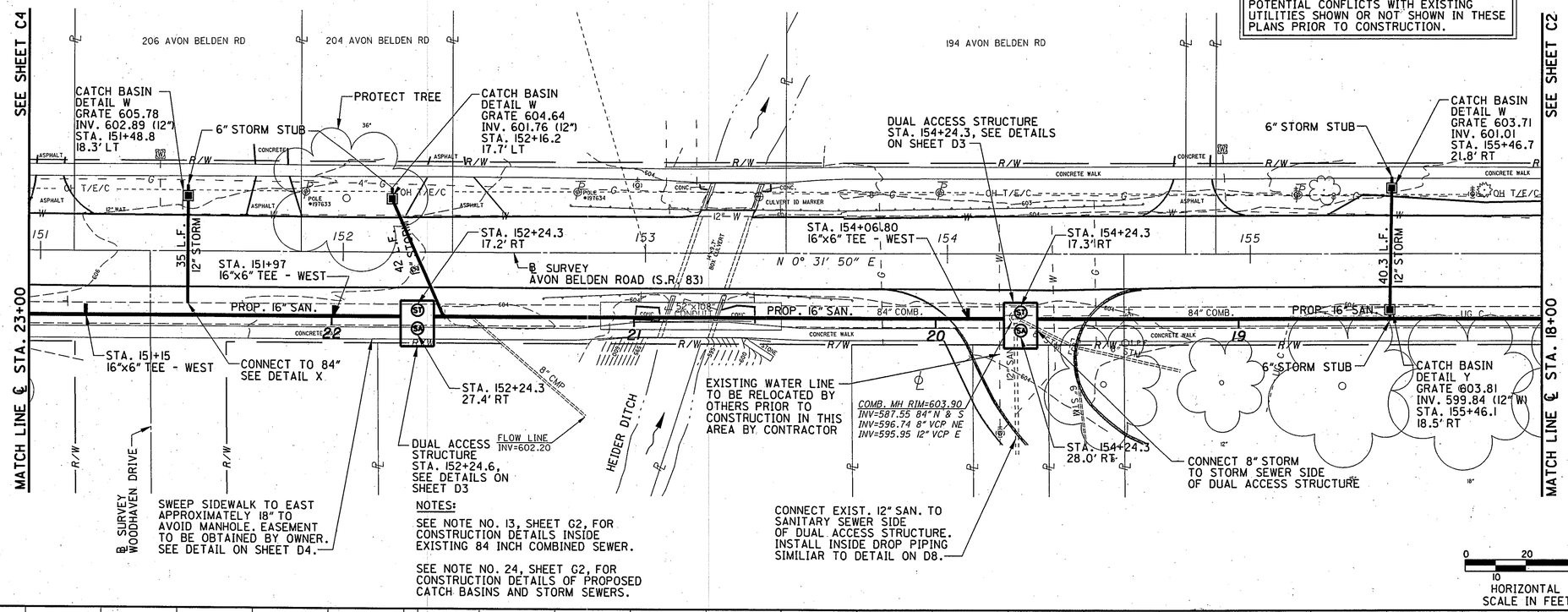

NOTES:

SEE NOTE NO. 13, SHEET G2, FOR CONSTRUCTION DETAILS INSIDE EXISTING 84 INCH COMBINED SEWER.

SEE NOTE NO. 24, SHEET G2, FOR CONSTRUCTION DETAILS OF PROPOSED CATCH BASINS AND STORM SEWERS.

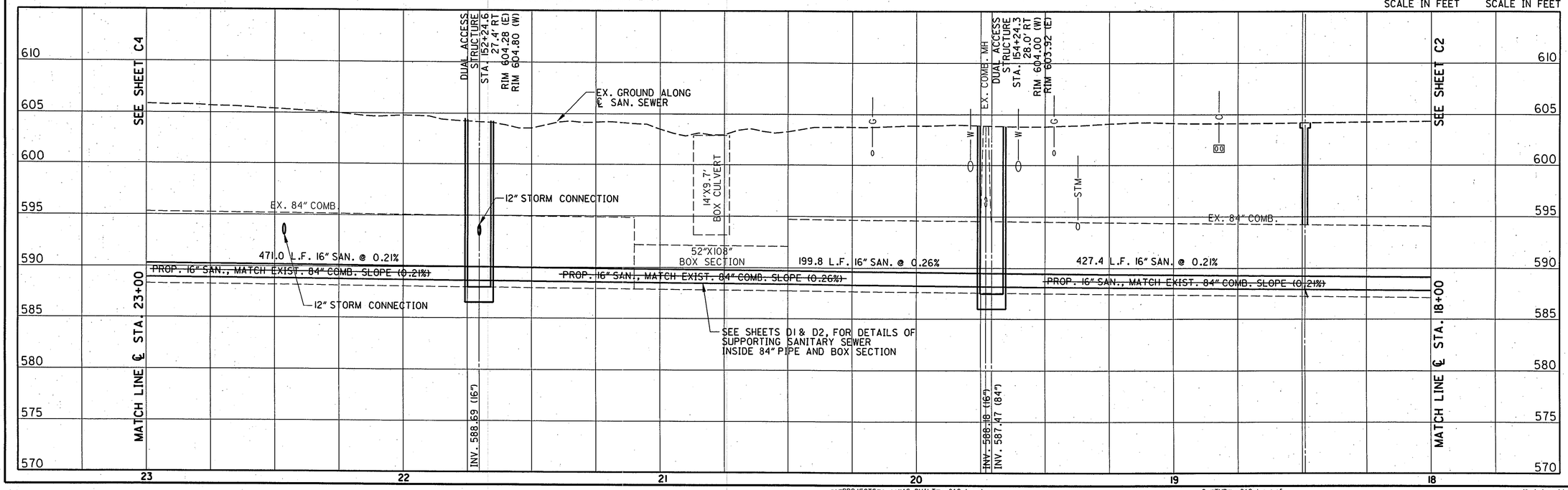

PARSONS BRINCKERHOFF

REVISED	DATE
BKJ	11/14/05

DRAWN	DATE
MME	8/18/03

DESIGNED	CHECKED
DSW	DLC

PLAN & PROFILE - AVON BELDEN ROAD STA. 18+00 TO STA. 23+00

AVON BELDEN ROAD SEWER SEPARATION (AS-BUILT PLANS)

C3

g:\PROJECTS\avon\AS_BUILT\gp012abr.dgn C:\TMP\gp012abr.prf Wed Jan 11 14:50:13 2006

UTILITY NOTE:
CONTRACTOR SHALL CONTACT THE OHIO UTILITIES PROTECTION SERVICE (OUPS) AND ANY NON-MEMBERS OF OUPS AT LEAST TWO WORKING DAYS BEFORE DIGGING. IT IS THE RESPONSIBILITY OF THE CONTRACTOR TO VERIFY AND RESOLVE POTENTIAL CONFLICTS WITH EXISTING UTILITIES SHOWN OR NOT SHOWN IN THESE PLANS PRIOR TO CONSTRUCTION.

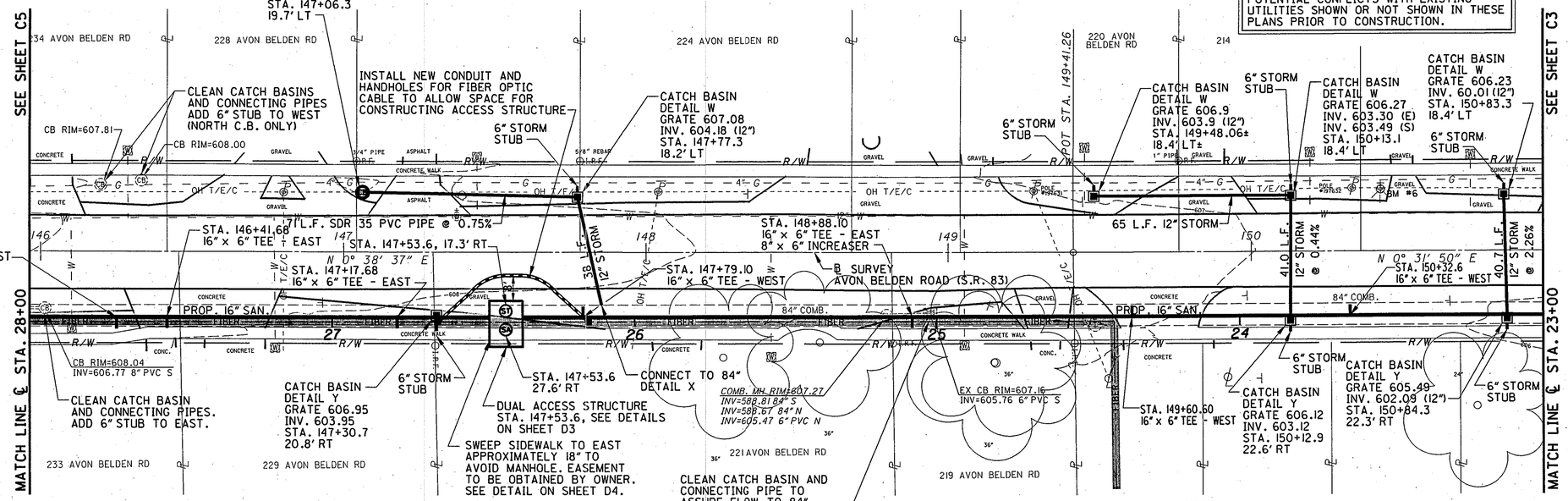

CONTRACTOR TO COORDINATE WITH FIBER OPTIC CABLE OWNER TO ASSURE PROTECTION DURING CONSTRUCTION.

NOTES:

SEE NOTE NO. 13, SHEET G2, FOR CONSTRUCTION DETAILS INSIDE EXISTING 84 INCH COMBINED SEWER.

SEE NOTE NO. 24, SHEET G2, FOR CONSTRUCTION DETAILS OF PROPOSED CATCH BASINS AND STORM SEWERS.

HORIZONTAL SCALE IN FEET: 0, 10, 20, 40

VERTICAL SCALE IN FEET: 0, 2.5, 5, 10

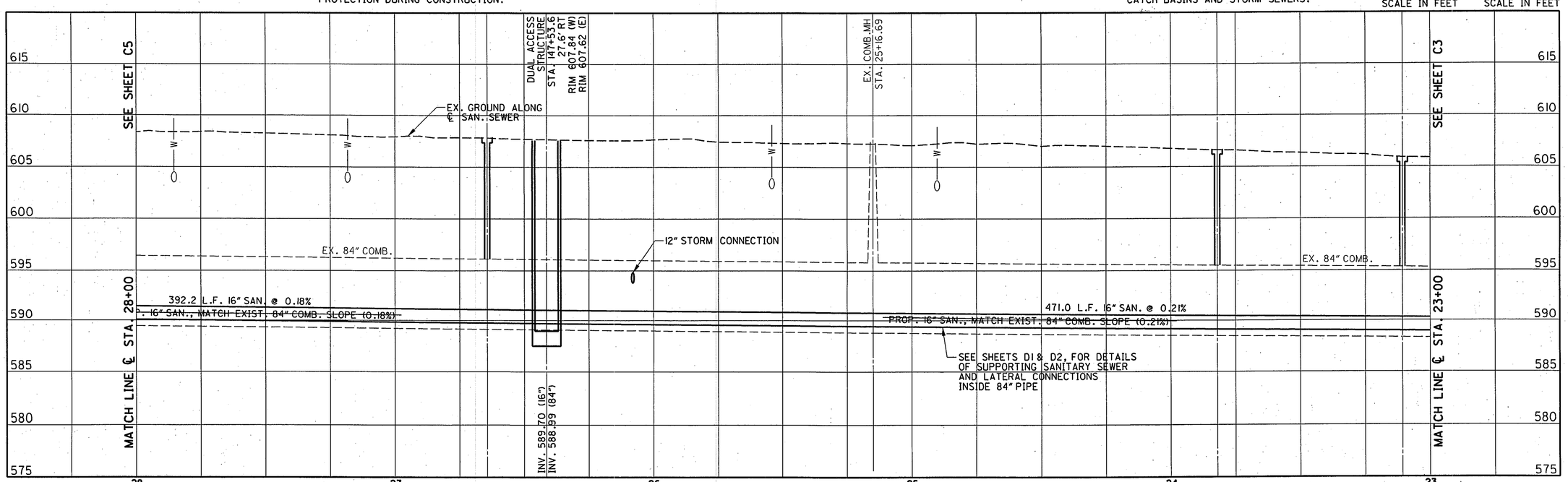

PARSONS BRINCKERHOFF

REVISED BKJ DATE 11/14/05

DRAWN MME DATE 8/18/03

DESIGNED DSW CHECKED DLC

AVON BELDEN ROAD
PLAN & PROFILE - AVON BELDEN ROAD STA. 23+00 TO STA. 28+00
AVON BELDEN ROAD SEWER SEPARATION (AS-BUILT PLANS)

C4

g:\PROJECTS\avon\AS_BUILT\gp011dbr.dgn C:\TMP\gp011dbr.prf Wed Jan 11 14:51:03 2006

UTILITY NOTE:
CONTRACTOR SHALL CONTACT THE OHIO UTILITIES PROTECTION SERVICE (OUPS) AND ANY NON-MEMBERS OF OUPS AT LEAST TWO WORKING DAYS BEFORE DIGGING. IT IS THE RESPONSIBILITY OF THE CONTRACTOR TO VERIFY AND RESOLVE POTENTIAL CONFLICTS WITH EXISTING UTILITIES SHOWN OR NOT SHOWN IN THESE PLANS PRIOR TO CONSTRUCTION.

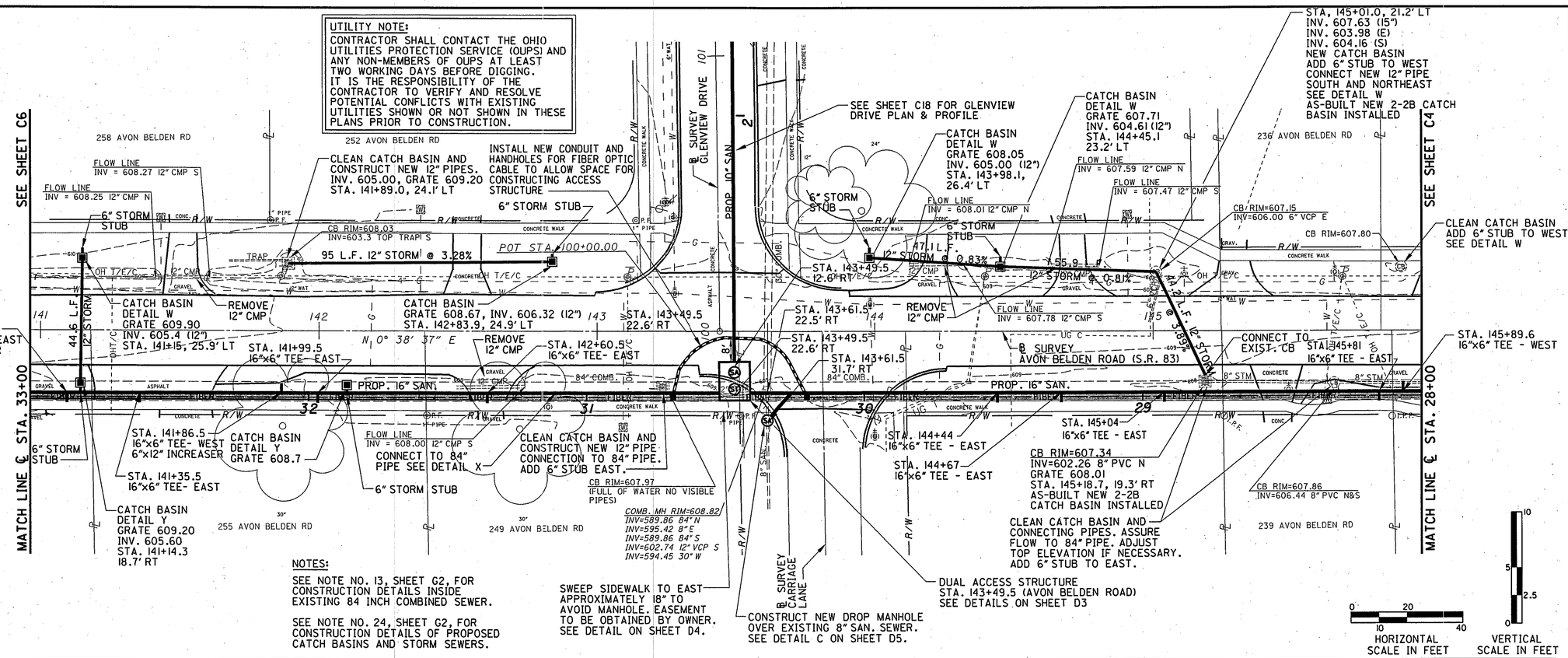

NOTES:

SEE NOTE NO. 13, SHEET G2, FOR CONSTRUCTION DETAILS INSIDE EXISTING 84 INCH COMBINED SEWER.

SEE NOTE NO. 24, SHEET G2, FOR CONSTRUCTION DETAILS OF PROPOSED CATCH BASINS AND STORM SEWERS.

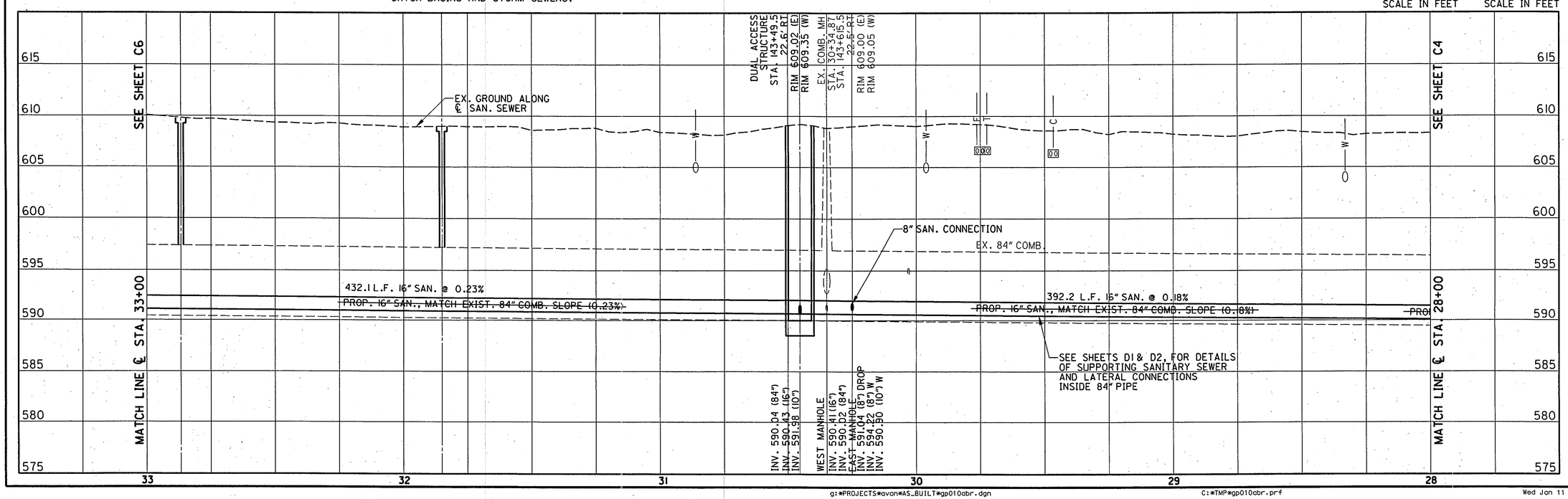

PARSONS BRINCKERHOFF

REVISED	DATE
BKJ	11/14/05

DRAWN	DATE
MME	8/18/03

DESIGNED	CHECKED
DSW	DLC

AVON BELDEN ROAD
PLAN & PROFILE - AVON BELDEN ROAD STA. 28+00 TO STA. 33+00
AVON BELDEN ROAD SEWER SEPARATION (AS-BUILT PLANS)

C5

g:*PROJECTS*avon*AS_BUILT*gp010abr.dgn C:*TMP*gp010abr.prf Wed Jan 11 14:51:53 2006

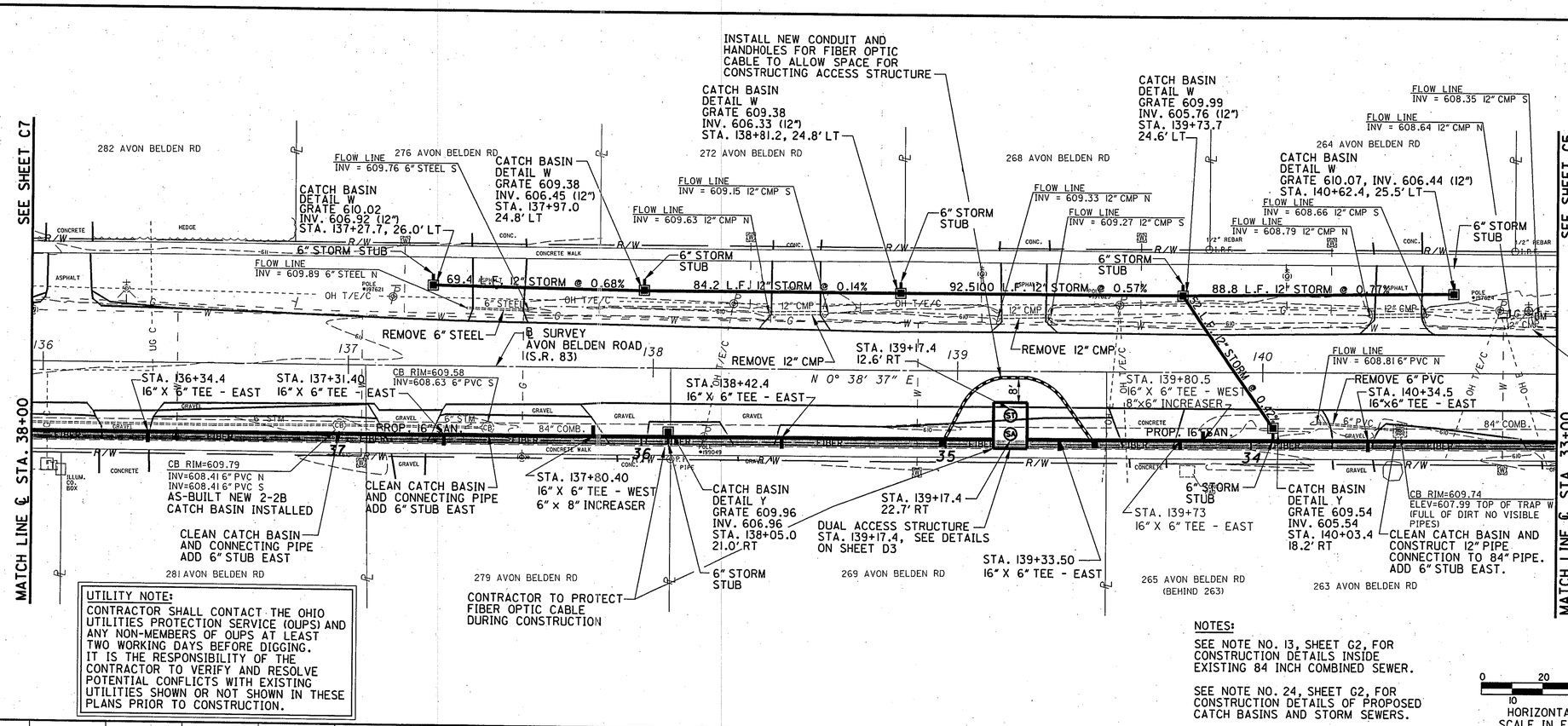

PARSONS BRINCKERHOFF

DATE	11/14/05
REVISED	BKJ
DRAWN	MME
DATE	8/18/03
DESIGNED	DSW
CHECKED	DLC

PLAN & PROFILE - AVON BELDEN ROAD STA. 33+00 TO STA. 38+00

AVON BELDEN ROAD SEWER SEPARATION (AS-BUILT PLANS)

C6

g:\PROJECTS\avon\AS_BUILT\gp009abr.dgn C:\TMP\gp009abr.prf Wed Jan 11 14:53:09 2006

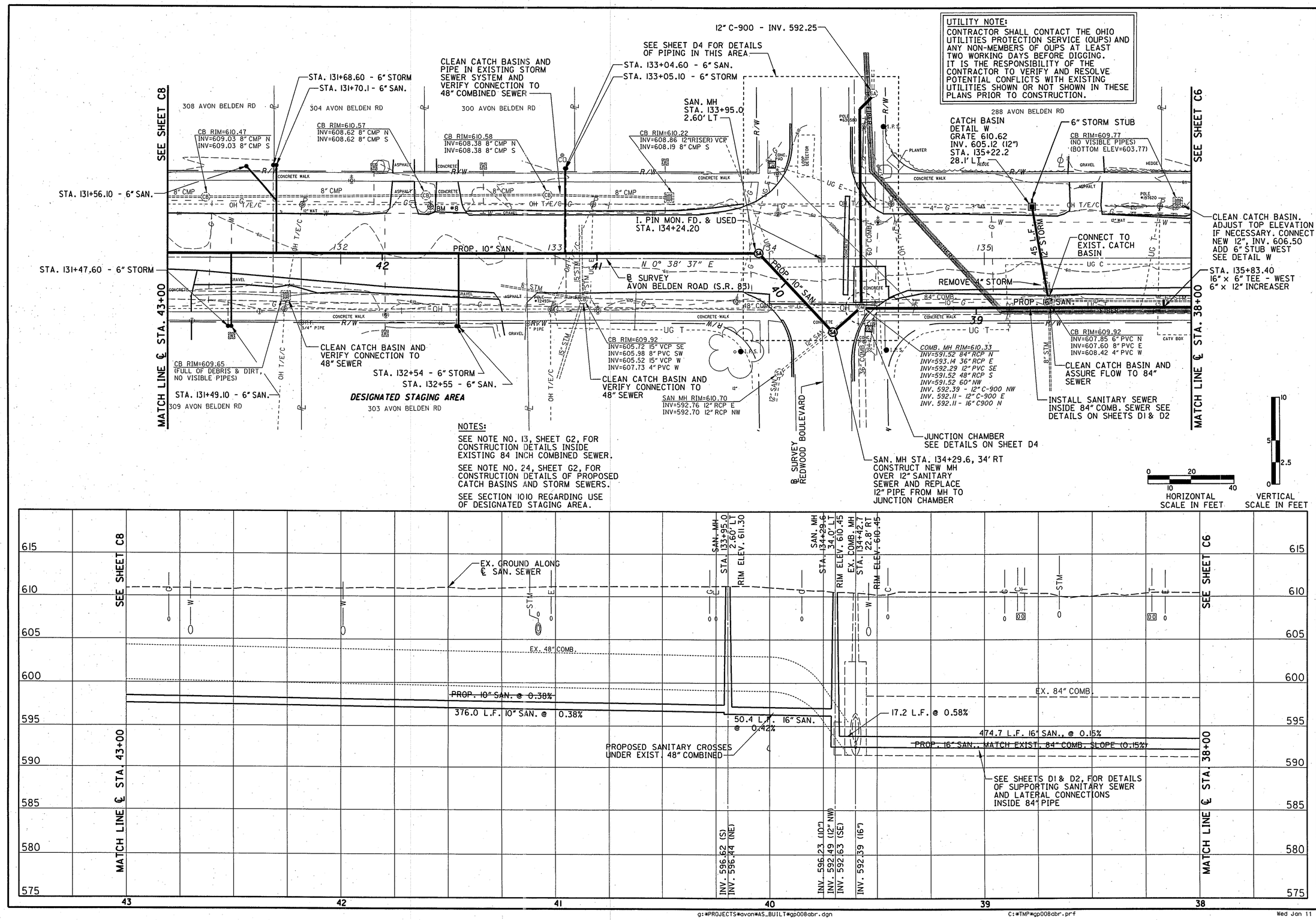

PARSONS BRINCKERHOFF

REVISED BKJ	DATE 11/14/05
DRAWN MME	DATE 8/18/03
DESIGNED DSW	CHECKED DLC

AVON BELDEN ROAD
PLAN & PROFILE - AVON BELDEN ROAD STA. 38+00 TO STA. 43+00

AVON BELDEN ROAD SEWER SEPARATION (AS-BUILT PLANS)

C7

g:\PROJECTS\avon\AS_BUILT\gp008abr.dgn C:\TMP\gp008abr.prf Wed Jan 11 14:54:40 2006

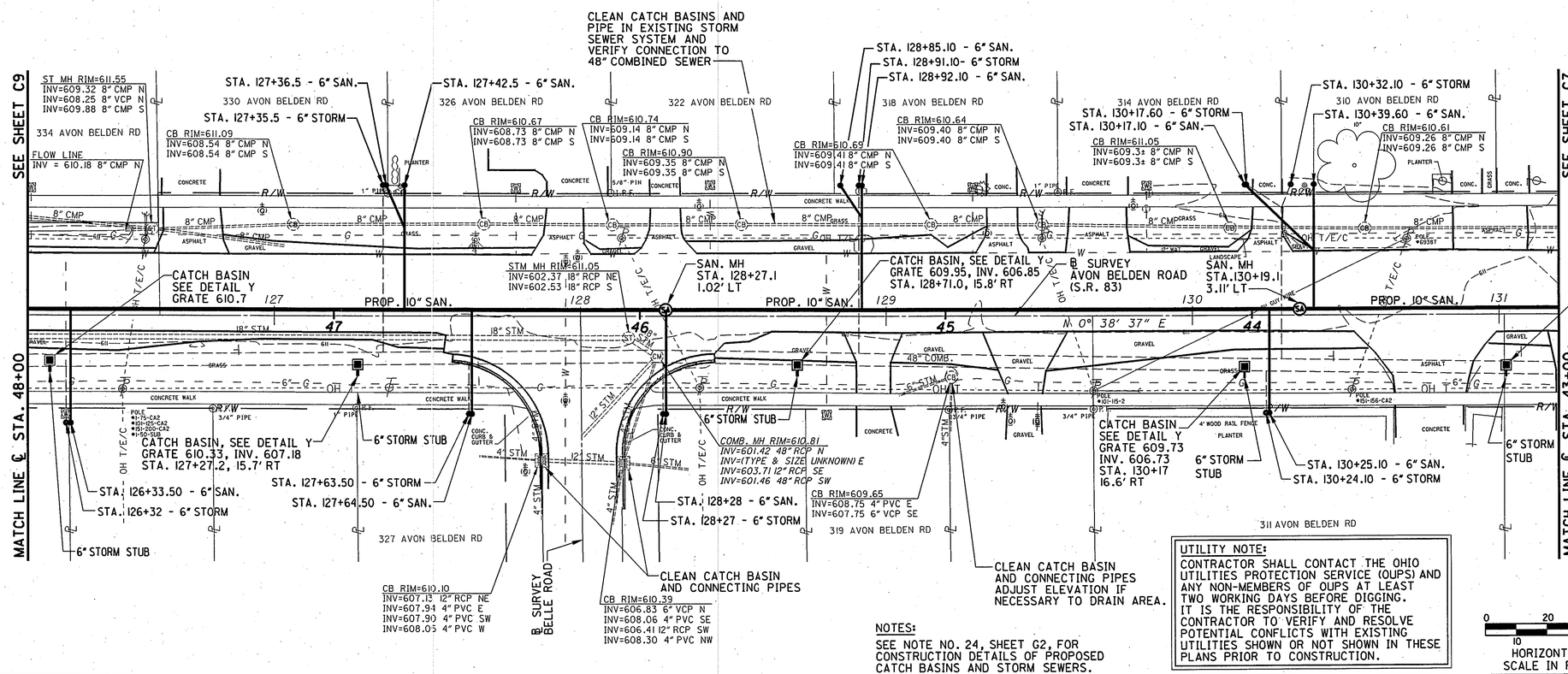

NOTES:

SEE NOTE NO. 24, SHEET G2, FOR CONSTRUCTION DETAILS OF PROPOSED CATCH BASINS AND STORM SEWERS.

UTILITY NOTE:

CONTRACTOR SHALL CONTACT THE OHIO UTILITIES PROTECTION SERVICE (OUPS) AND ANY NON-MEMBERS OF OUPS AT LEAST TWO WORKING DAYS BEFORE DIGGING. IT IS THE RESPONSIBILITY OF THE CONTRACTOR TO VERIFY AND RESOLVE POTENTIAL CONFLICTS WITH EXISTING UTILITIES SHOWN OR NOT SHOWN IN THESE PLANS PRIOR TO CONSTRUCTION.

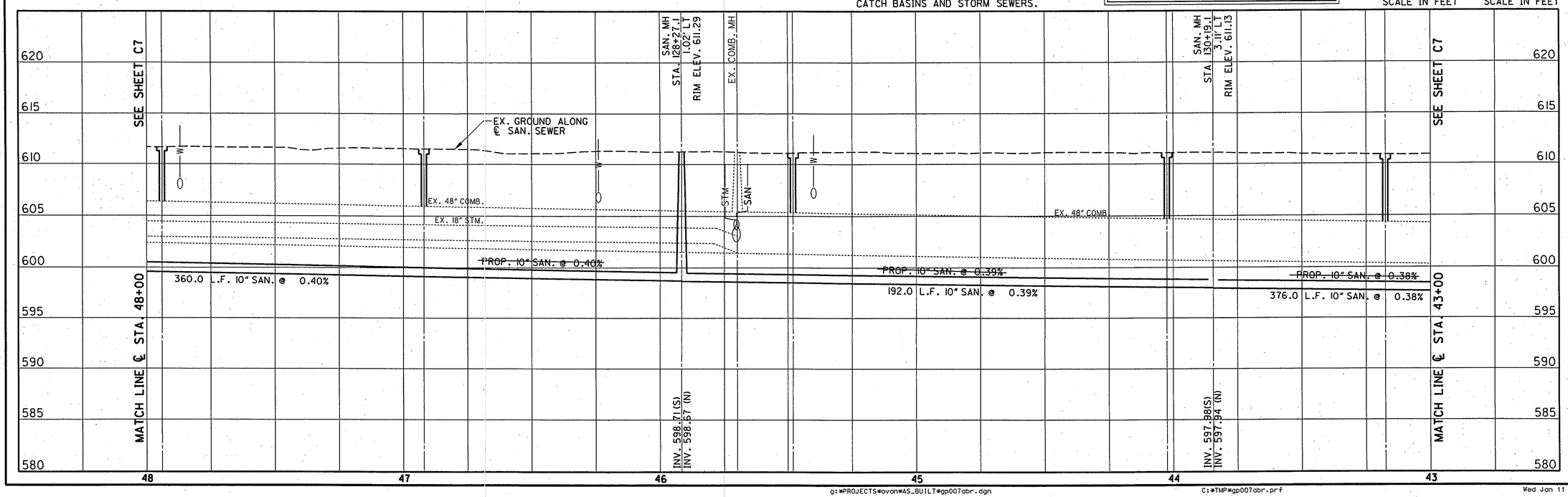

PARSONS BRINCKERHOFF

REVISED	BKJ
DATE	11/14/05
DRAWN	MME
DATE	8/18/03
DESIGNED	DSW
CHECKED	DLC

AVON BELDEN ROAD SEWER SEPARATION (AS-BUILT PLANS)

PLAN & PROFILE - AVON BELDEN ROAD STA. 43+00 TO STA. 48+00

C8

g:*PROJECTS*avon*AS_BUILT*gp007abr.dgn C:*TMP*gp007abr.prf Wed Jan 11 14:56:56 2006

UTILITY NOTE:
CONTRACTOR SHALL CONTACT THE OHIO UTILITIES PROTECTION SERVICE (OUPS) AND ANY NON-MEMBERS OF OUPS AT LEAST TWO WORKING DAYS BEFORE DIGGING. IT IS THE RESPONSIBILITY OF THE CONTRACTOR TO VERIFY AND RESOLVE POTENTIAL CONFLICTS WITH EXISTING UTILITIES SHOWN OR NOT SHOWN IN THESE PLANS PRIOR TO CONSTRUCTION.

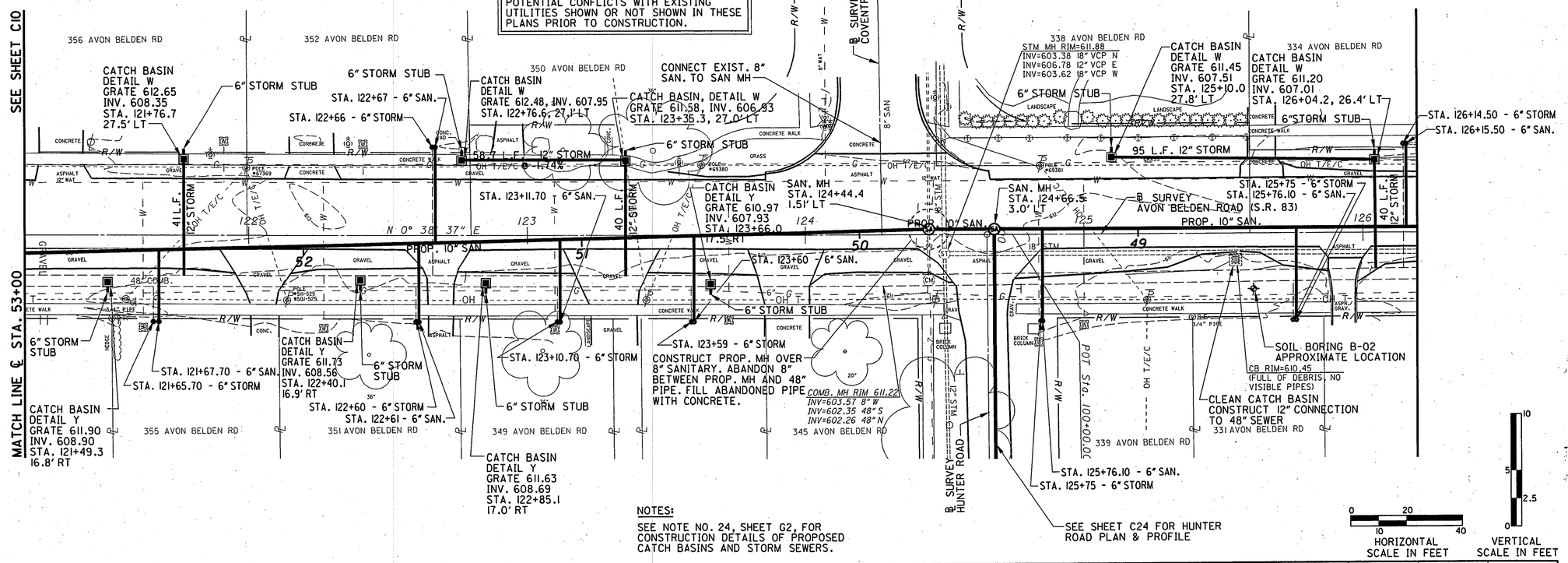

NOTES:

SEE NOTE NO. 24, SHEET G2, FOR CONSTRUCTION DETAILS OF PROPOSED CATCH BASINS AND STORM SEWERS.

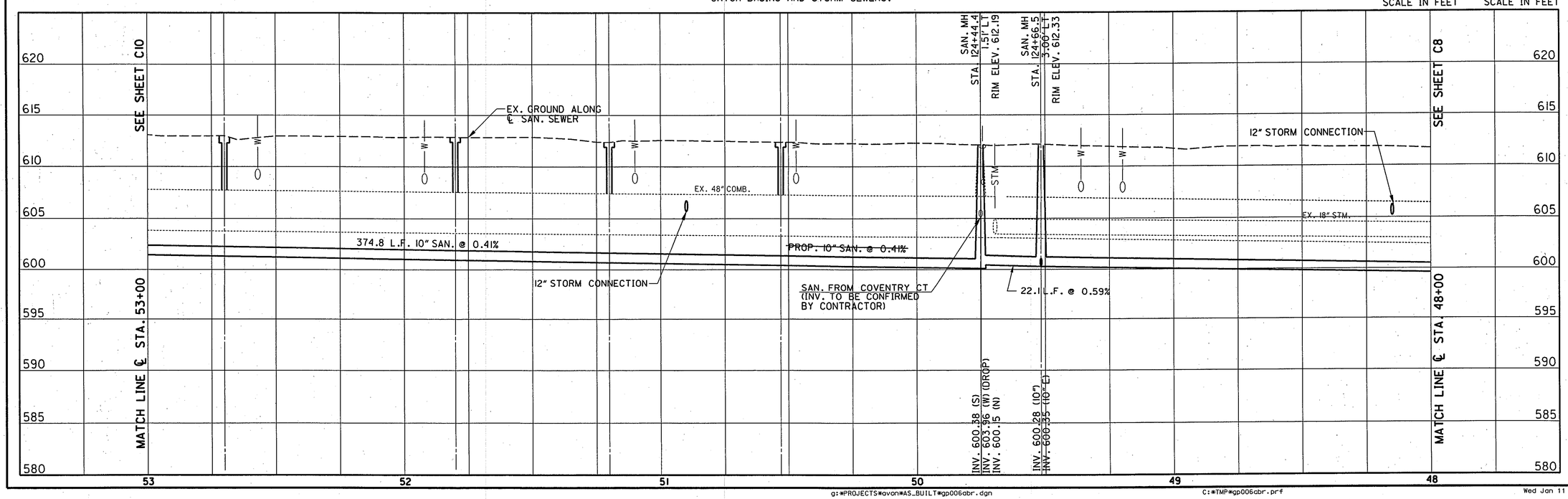

PARSONS BRINCKERHOFF

REVISED	DATE
BKJ	11/14/05
DRAWN	DATE
MME	8/18/03
DESIGNED	CHECKED
DSW	DLC

AVON BELDEN ROAD
PLAN & PROFILE - AVON BELDEN ROAD STA. 48+00 TO STA. 53+00

AVON BELDEN ROAD SEWER SEPARATION (AS-BUILT PLANS)

C9

g:\PROJECTS\avon\AS_BUILT\gp006abr.dgn C:\TMP\gp006abr.prf Wed Jan 11 14:57:43 2006

UTILITY NOTE:
CONTRACTOR SHALL CONTACT THE OHIO UTILITIES PROTECTION SERVICE (OUPS) AND ANY NON-MEMBERS OF OUPS AT LEAST TWO WORKING DAYS BEFORE DIGGING. IT IS THE RESPONSIBILITY OF THE CONTRACTOR TO VERIFY AND RESOLVE POTENTIAL CONFLICTS WITH EXISTING UTILITIES SHOWN OR NOT SHOWN IN THESE PLANS PRIOR TO CONSTRUCTION.

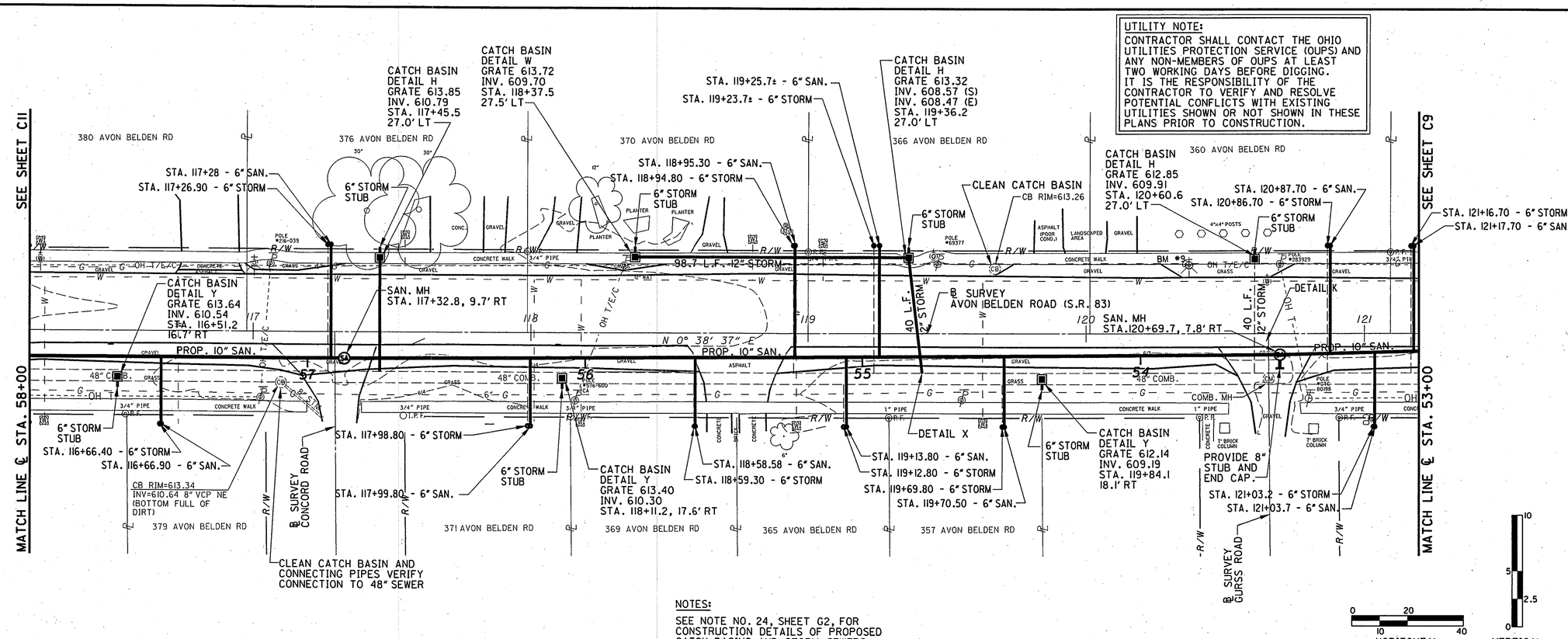

NOTES:

SEE NOTE NO. 24, SHEET G2, FOR CONSTRUCTION DETAILS OF PROPOSED CATCH BASINS AND STORM SEWERS.

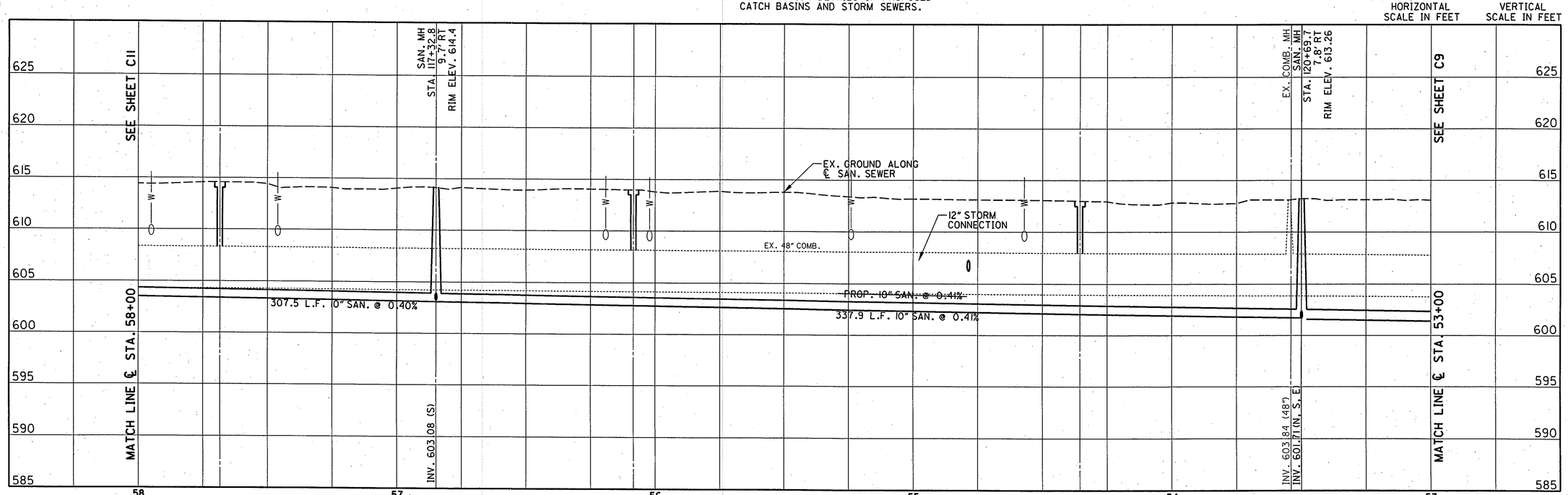

PARSONS BRINCKERHOFF

REVISED BKJ	DATE 11/14/05
DRAWN MME	DATE 8/18/03
DESIGNED DSW	CHECKED DLC

PLAN & PROFILE - AVON BELDEN ROAD
STA. 53+00 TO STA. 58+00

AVON BELDEN ROAD SEWER SEPARATION (AS-BUILT PLANS)

C10

g:\PROJECTS\avon\AS_BUILT\gp005abr.dgn C:\TMP\gp005abr.prf Wed Jan 11 14:58:07 2006

UTILITY NOTE:
CONTRACTOR SHALL CONTACT THE OHIO UTILITIES PROTECTION SERVICE (OUPS) AND ANY NON-MEMBERS OF OUPS AT LEAST TWO WORKING DAYS BEFORE DIGGING. IT IS THE RESPONSIBILITY OF THE CONTRACTOR TO VERIFY AND RESOLVE POTENTIAL CONFLICTS WITH EXISTING UTILITIES SHOWN OR NOT SHOWN IN THESE PLANS PRIOR TO CONSTRUCTION.

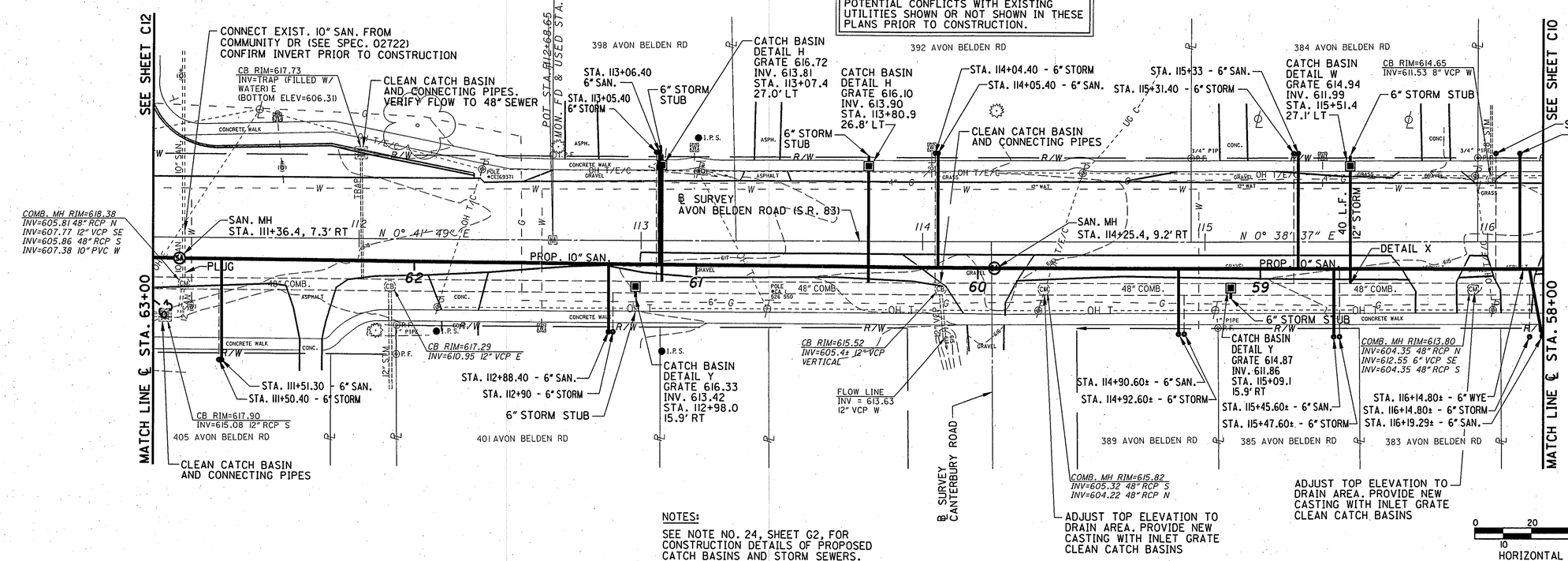

NOTES:
SEE NOTE NO. 24, SHEET G2, FOR CONSTRUCTION DETAILS OF PROPOSED CATCH BASINS AND STORM SEWERS.

HORIZONTAL SCALE IN FEET: 0, 10, 20, 40
VERTICAL SCALE IN FEET: 0, 2.5, 5, 10

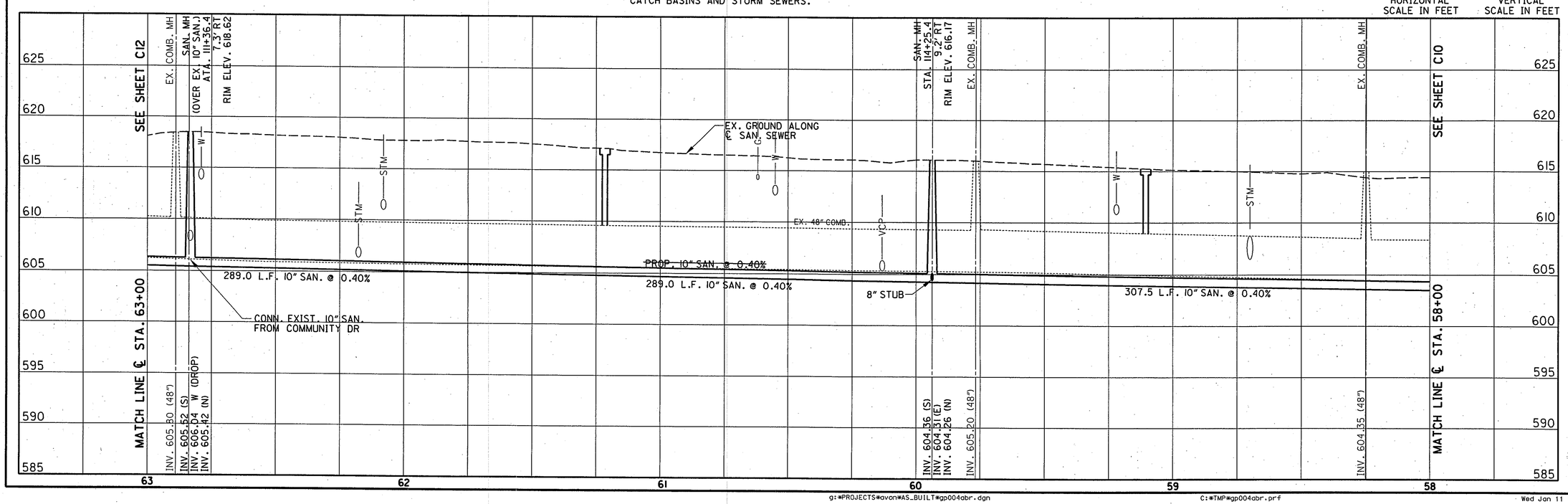

g:\PROJECTS\avon\AS_BUILT\gp004abr.dgn C:\TMP\gp004abr.prf Wed Jan 11 14:58:31 2006

PARSONS BRINCKERHOFF

REVISED	DATE
BKJ	11/14/05

DRAWN	DATE
MME	8/18/03

DESIGNED	CHECKED
DSW	DLC

PLAN & PROFILE - AVON BELDEN ROAD STA. 58+00 TO STA. 63+00

AVON BELDEN ROAD SEWER SEPARATION (AS-BUILT PLANS)

C11

UTILITY NOTE:
CONTRACTOR SHALL CONTACT THE OHIO UTILITIES PROTECTION SERVICE (OUPS) AND ANY NON-MEMBERS OF OUPS AT LEAST TWO WORKING DAYS BEFORE DIGGING. IT IS THE RESPONSIBILITY OF THE CONTRACTOR TO VERIFY AND RESOLVE POTENTIAL CONFLICTS WITH EXISTING UTILITIES SHOWN OR NOT SHOWN IN THESE PLANS PRIOR TO CONSTRUCTION.

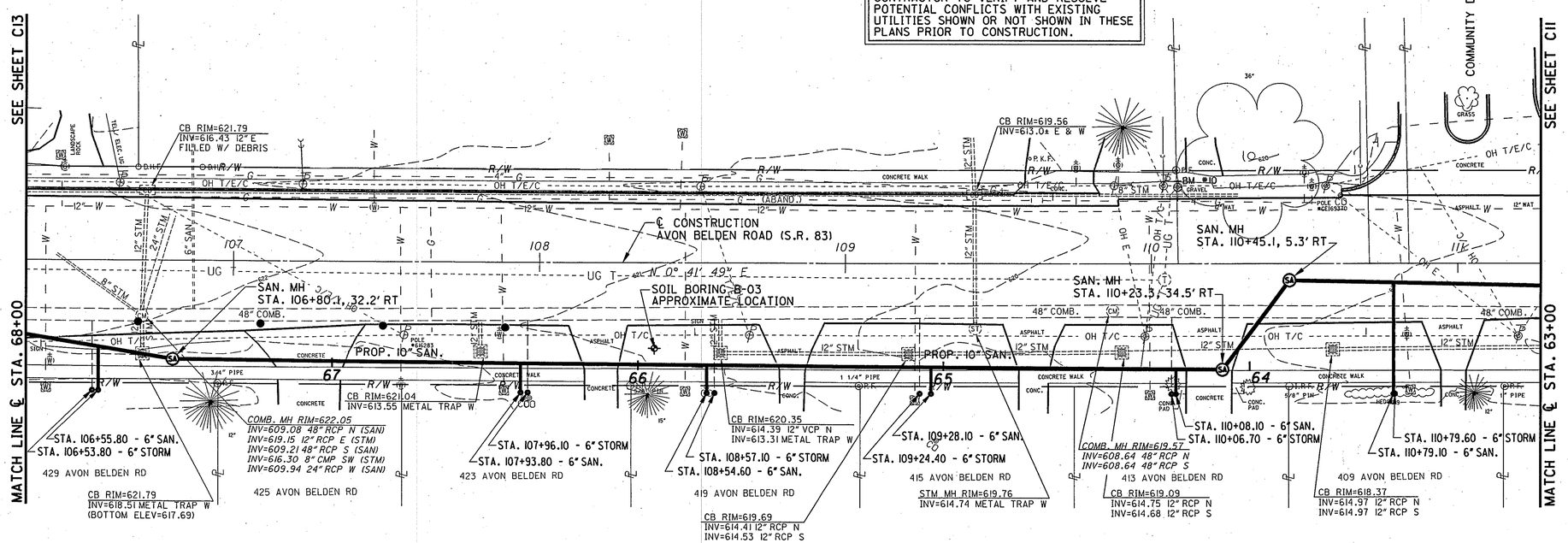

NOTES:

SEE NOTE NO. 24, SHEET G2, FOR CONSTRUCTION DETAILS OF PROPOSED CATCH BASINS AND STORM SEWERS.

HORIZONTAL SCALE IN FEET (0, 10, 20, 40)

VERTICAL SCALE IN FEET (0, 2.5, 5, 10)

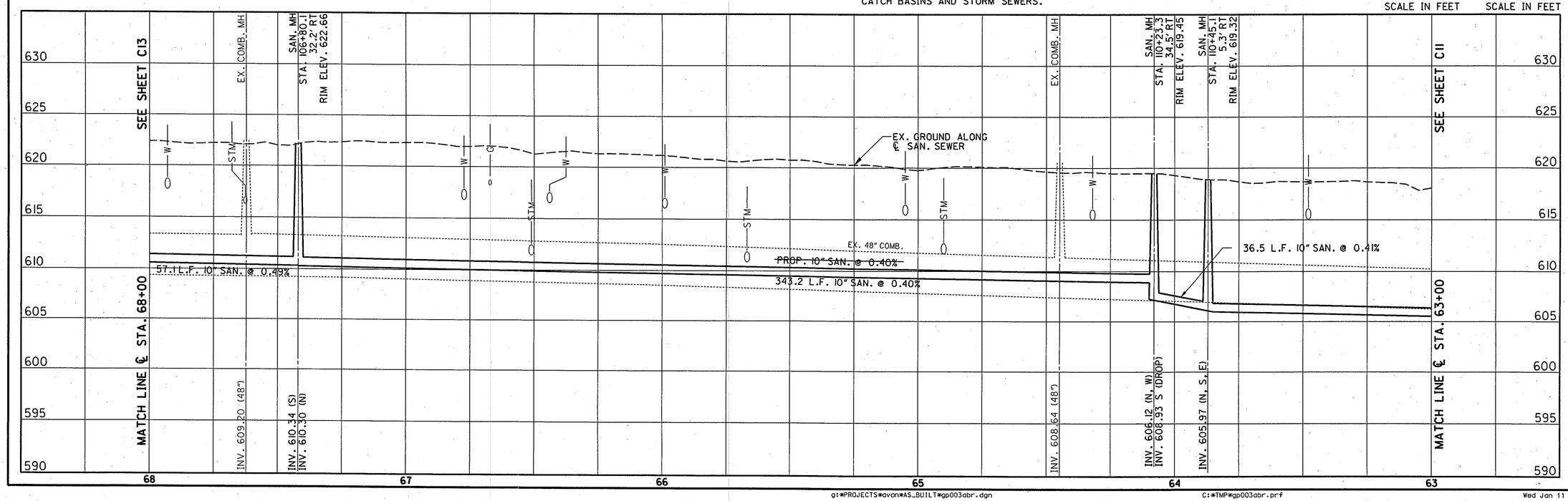

PARSONS BRINCKERHOFF

REVISED	BKJ
DATE	11/14/05
DRAWN	MME
DATE	8/18/03
DESIGNED	DSW
CHECKED	DLC

AVON BELDEN ROAD
PLAN & PROFILE - AVON BELDEN ROAD STA. 63+00 TO STA. 68+00

AVON BELDEN ROAD SEWER SEPARATION (AS-BUILT PLANS)

C12

g:\PROJECTS\avon\AS_BUILT\gp003abr.dgn C:\TMP\gp003abr.prf Wed Jan 11 14:58:56 2006

UTILITY NOTE:
CONTRACTOR SHALL CONTACT THE OHIO UTILITIES PROTECTION SERVICE (OUPS) AND ANY NON-MEMBERS OF OUPS AT LEAST TWO WORKING DAYS BEFORE DIGGING. IT IS THE RESPONSIBILITY OF THE CONTRACTOR TO VERIFY AND RESOLVE POTENTIAL CONFLICTS WITH EXISTING UTILITIES SHOWN OR NOT SHOWN IN THESE PLANS PRIOR TO CONSTRUCTION.

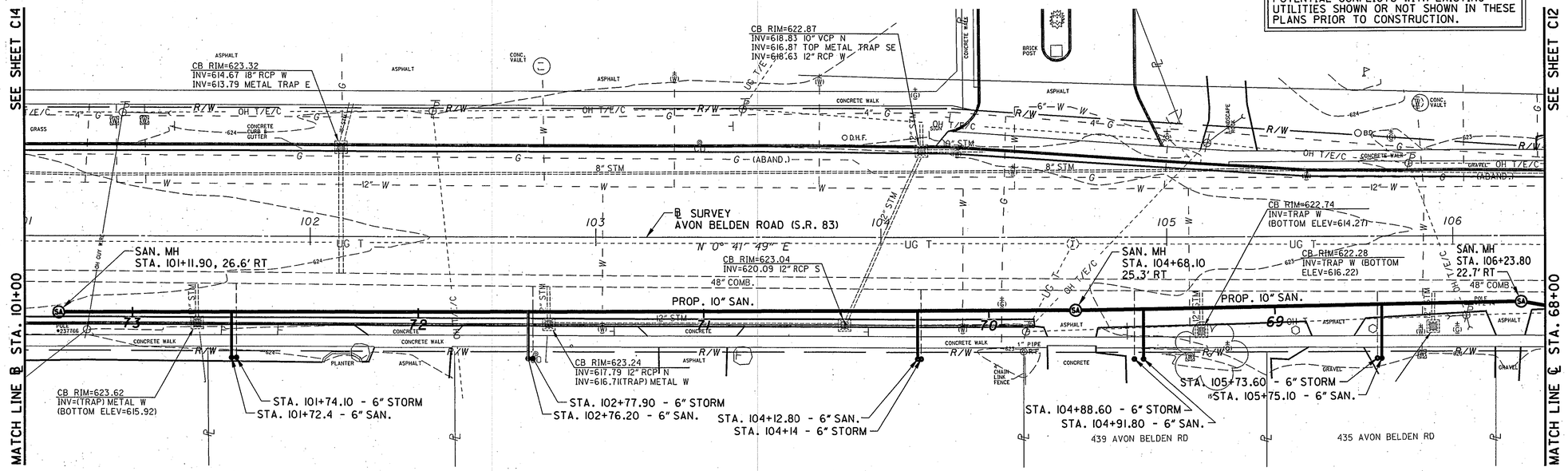

NOTES:
SEE NOTE NO. 32, SHEET G2, FOR CONSTRUCTION DETAILS OF PROPOSED CATCH BASINS AND STORM SEWERS.

HORIZONTAL SCALE IN FEET (0, 10, 20, 40)
VERTICAL SCALE IN FEET (0, 2.5, 5, 10)

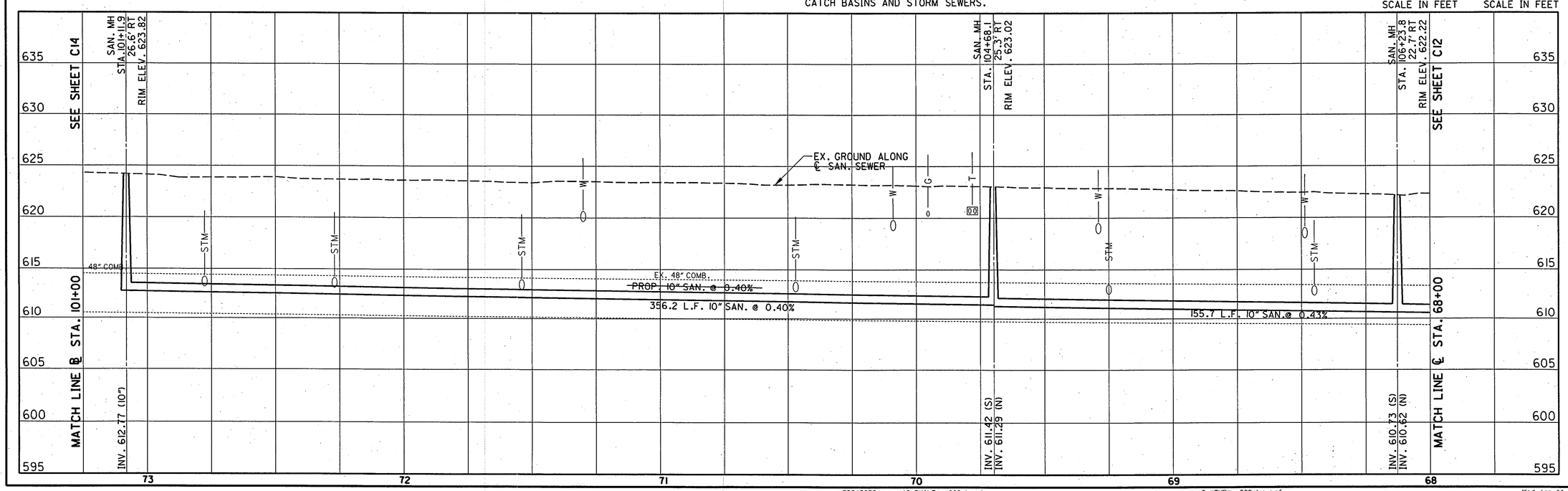

PARSONS BRINCKERHOFF

REVISED	DATE
BKJ	11/14/05

DRAWN	DATE
MME	8/18/03

DESIGNED	CHECKED
DSW	DLC

AVON BELDEN ROAD SEWER SEPARATION (AS-BUILT PLANS)

PLAN & PROFILE - AVON BELDEN ROAD STA. 68+00 TO STA. 73+13

C13

g:*PROJECTS*avon*AS_BUILT*gp002abr.dgn C:*TMP*gp002abr.prf Wed Jan 11 14:59:44 2006

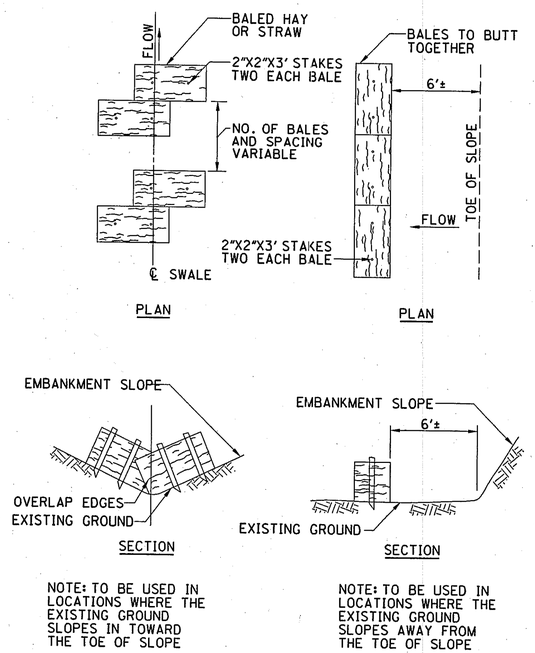

HAY BALES DETAIL

NOT TO SCALE

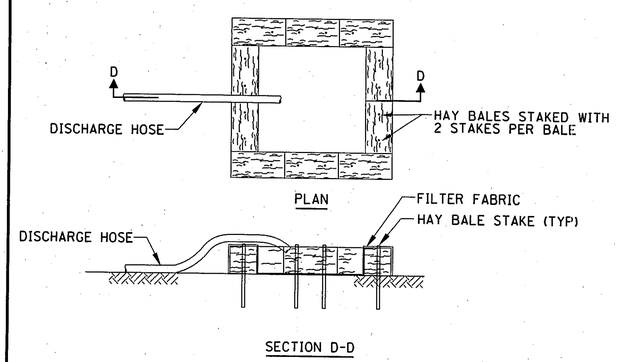

DEWATERING DISCHARGE DISPOSAL DETAIL

NOT TO SCALE

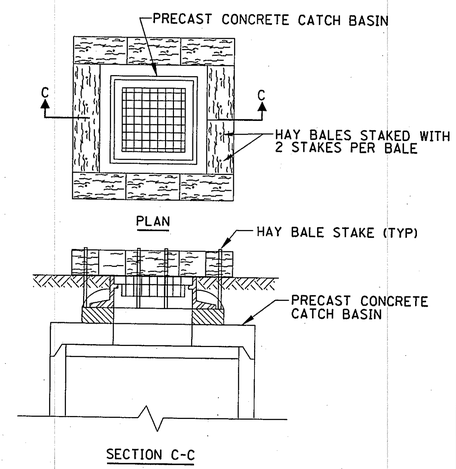

HAYBALES AROUND CATCH BASIN DETAIL

NOT TO SCALE

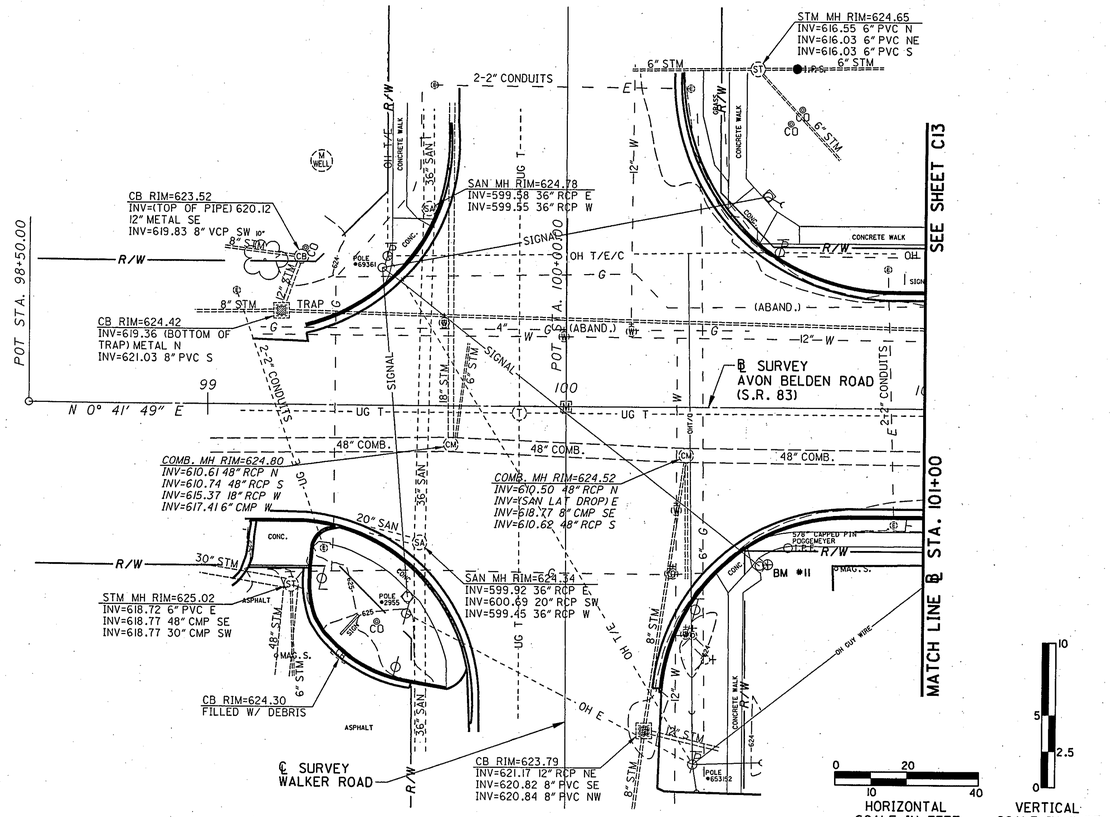

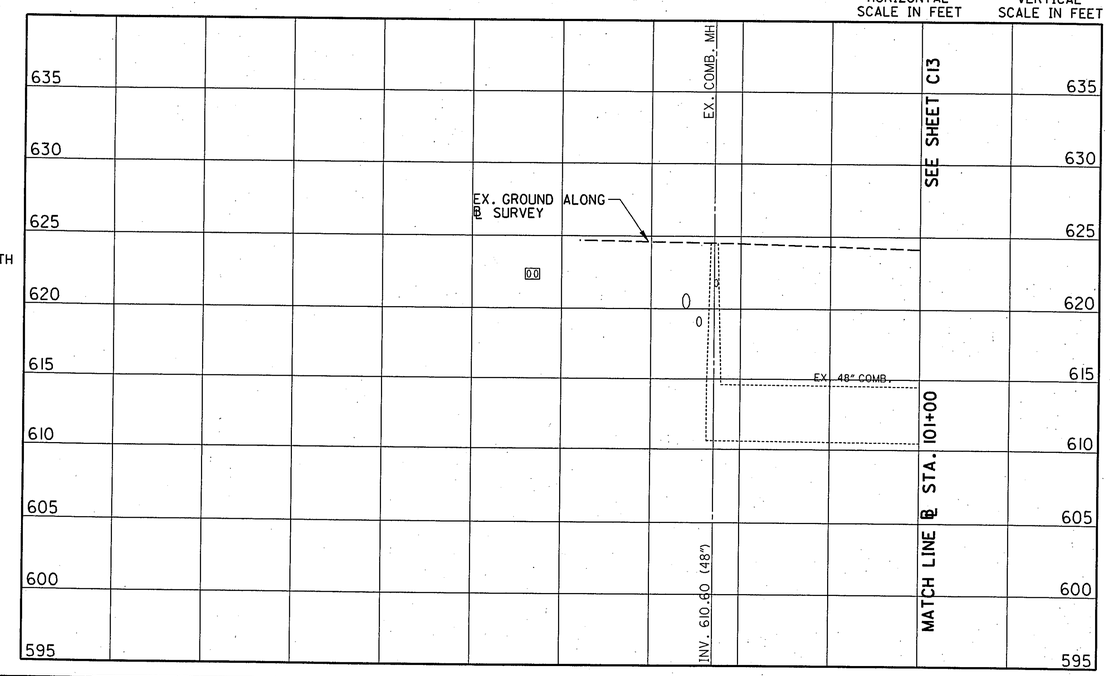

PARSONS BRINCKERHOFF

REVISED BKJ	DATE 11/14/05
DRAWN MME	DATE 8/18/03
DESIGNED DSW	CHECKED DLC

PLAN & PROFILE - AVON BELDEN ROAD WALKER ROAD INTERSECTION

AVON BELDEN ROAD SEWER SEPARATION (AS-BUILT PLANS)

C14

UTILITY NOTE:
CONTRACTOR SHALL CONTACT THE OHIO UTILITIES PROTECTION SERVICE (OUPS) AND ANY NON-MEMBERS OF OUPS AT LEAST TWO WORKING DAYS BEFORE DIGGING. IT IS THE RESPONSIBILITY OF THE CONTRACTOR TO VERIFY AND RESOLVE POTENTIAL CONFLICTS WITH EXISTING UTILITIES SHOWN OR NOT SHOWN IN THESE PLANS PRIOR TO CONSTRUCTION.

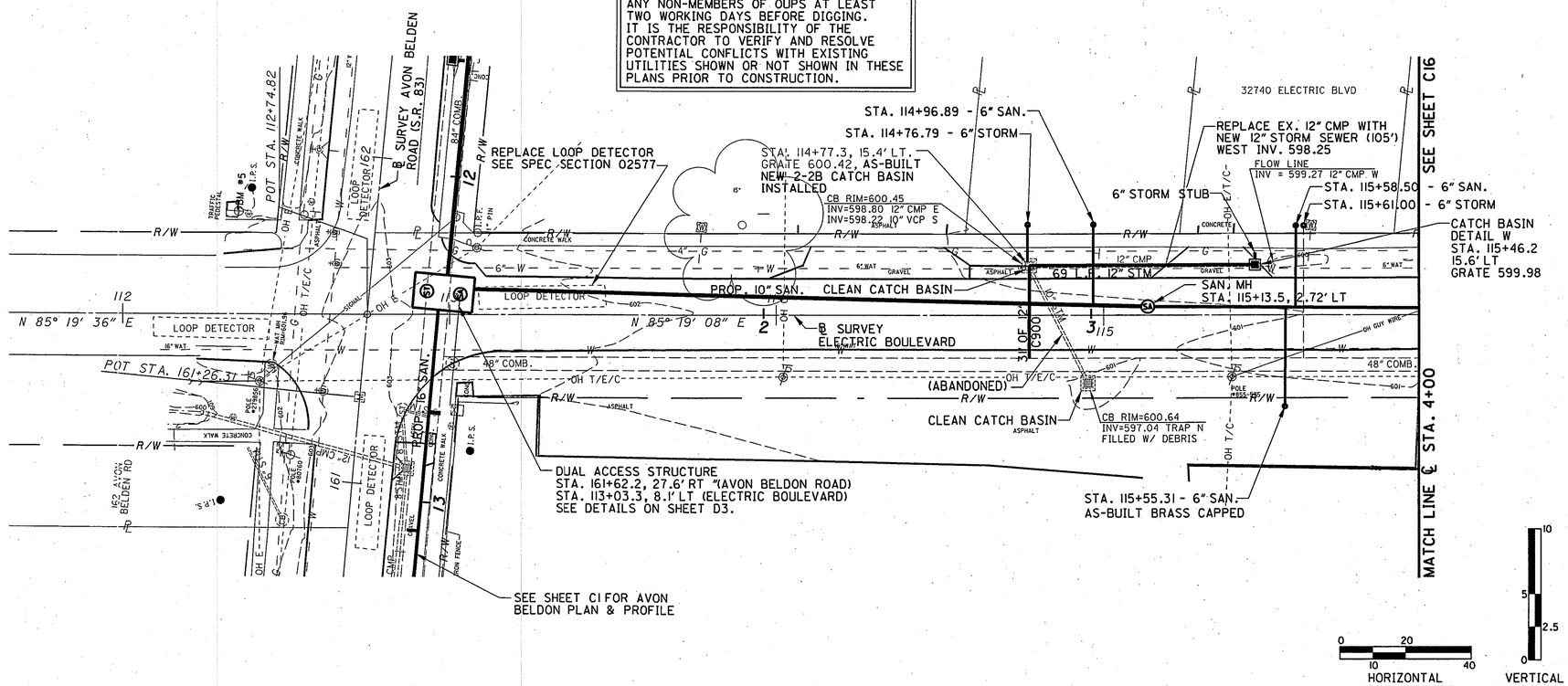

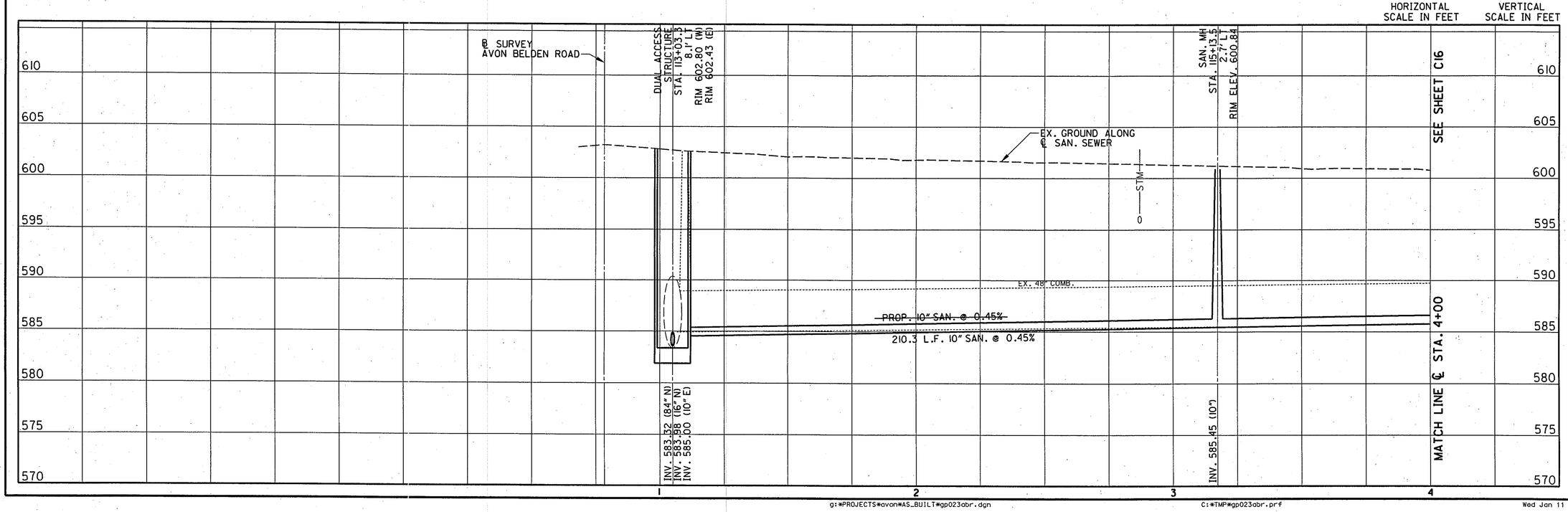

PARSONS BRINCKERHOFF

REVISED BKJ	DATE 11/14/05
DRAWN MME	DATE 8/18/03
DESIGNED DSW	CHECKED DLC

PLAN & PROFILE - ELECTRIC BOULEVARD STA. 1+00 TO STA. 4+00

AVON BELDEN ROAD SEWER SEPARATION (AS-BUILT PLANS)

C15

g:\PROJECTS\avon\AS_BUILT\gp023abr.dgn C:\TMP\gp023abr.prf Wed Jan 11 15:00:34 2006

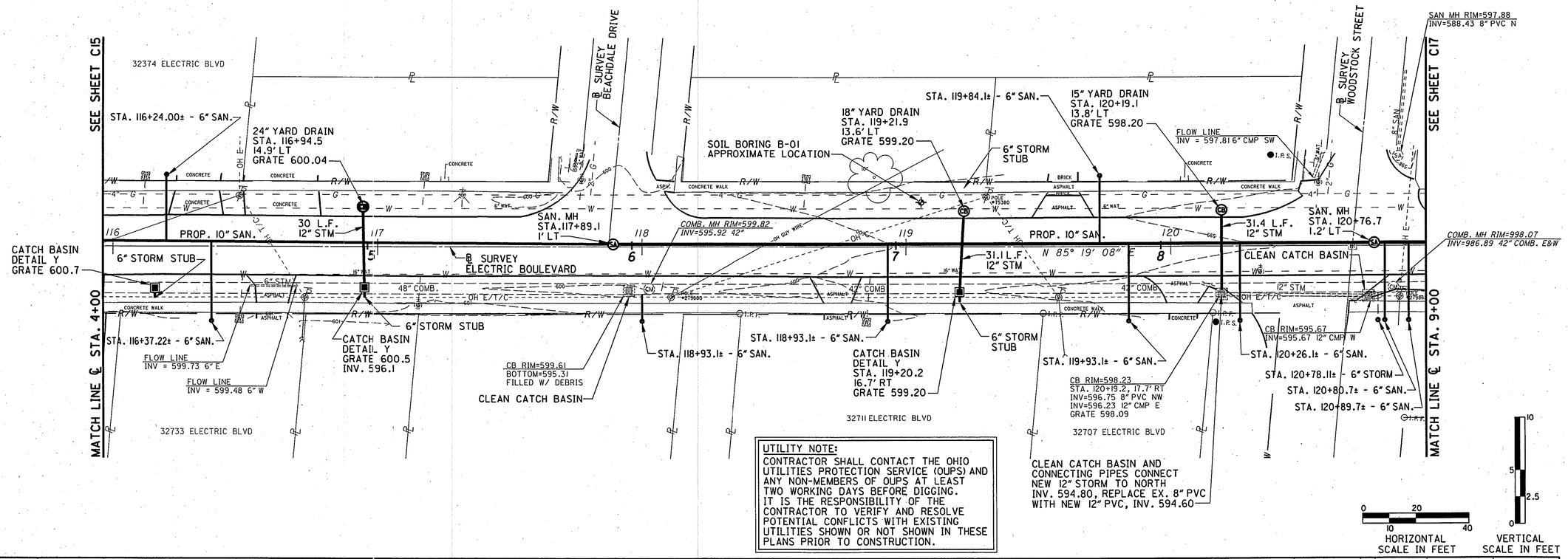

UTILITY NOTE:
CONTRACTOR SHALL CONTACT THE OHIO UTILITIES PROTECTION SERVICE (OUPS) AND ANY NON-MEMBERS OF OUPS AT LEAST TWO WORKING DAYS BEFORE DIGGING. IT IS THE RESPONSIBILITY OF THE CONTRACTOR TO VERIFY AND RESOLVE POTENTIAL CONFLICTS WITH EXISTING UTILITIES SHOWN OR NOT SHOWN IN THESE PLANS PRIOR TO CONSTRUCTION.

HORIZONTAL SCALE IN FEET: 0, 10, 20, 40

VERTICAL SCALE IN FEET: 0, 2.5, 5, 10

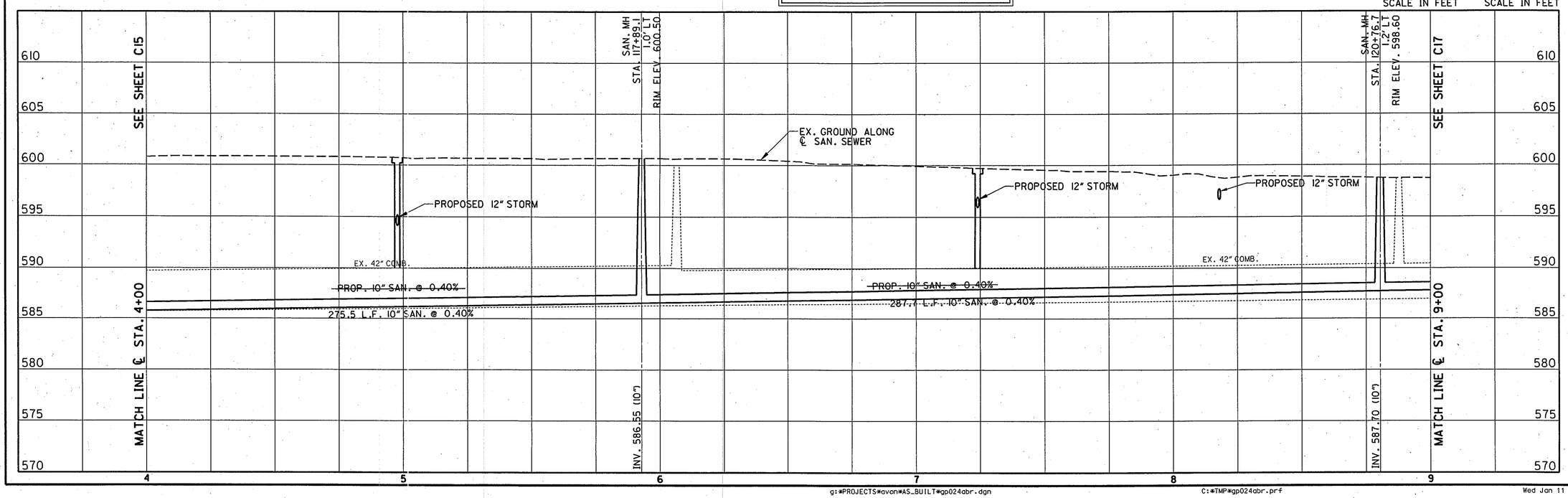

PARSONS BRINCKERHOFF

REVISED BKJ	DATE 11/14/05
DRAWN MME	DATE 8/18/03
DESIGNED DSW	CHECKED DLC

PLAN & PROFILE - ELECTRIC BOULEVARD STA. 4+00 TO STA. 9+00

AVON BELDEN ROAD SEWER SEPARATION (AS-BUILT PLANS)

C16

UTILITY NOTE:
CONTRACTOR SHALL CONTACT THE OHIO UTILITIES PROTECTION SERVICE (OUPS) AND ANY NON-MEMBERS OF OUPS AT LEAST TWO WORKING DAYS BEFORE DIGGING. IT IS THE RESPONSIBILITY OF THE CONTRACTOR TO VERIFY AND RESOLVE POTENTIAL CONFLICTS WITH EXISTING UTILITIES SHOWN OR NOT SHOWN IN THESE PLANS PRIOR TO CONSTRUCTION.

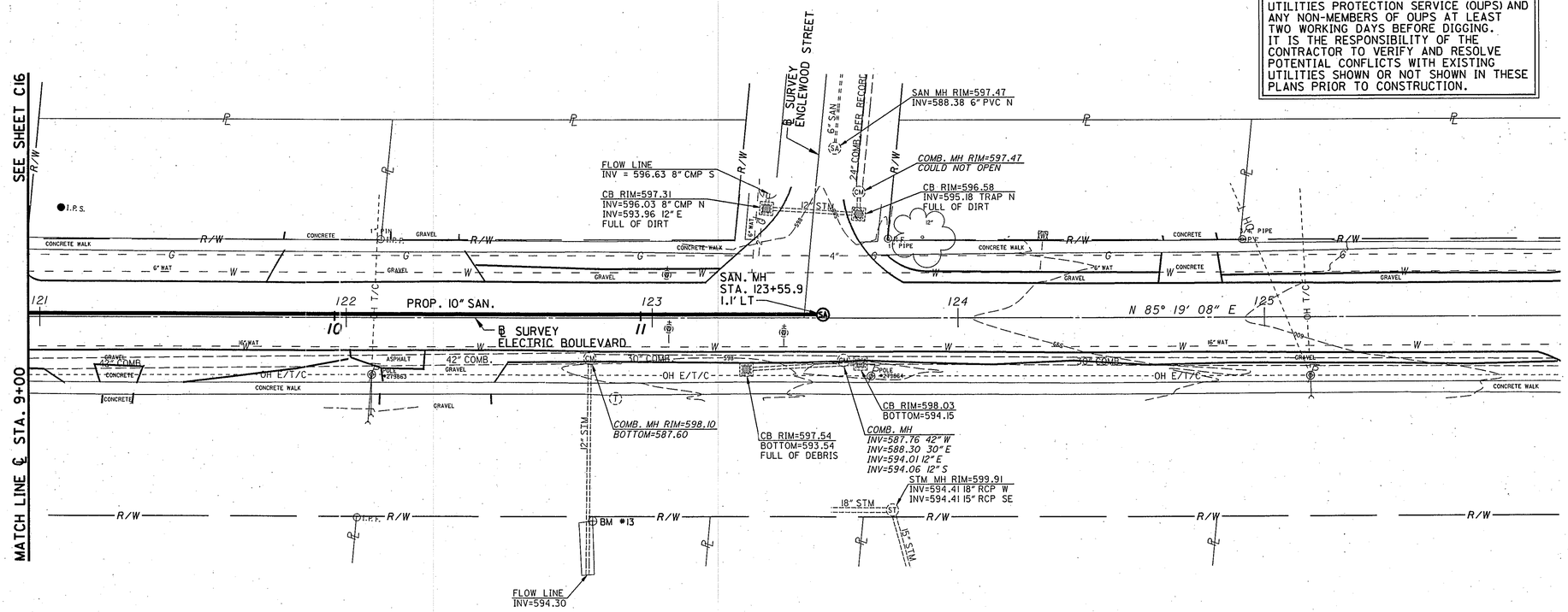

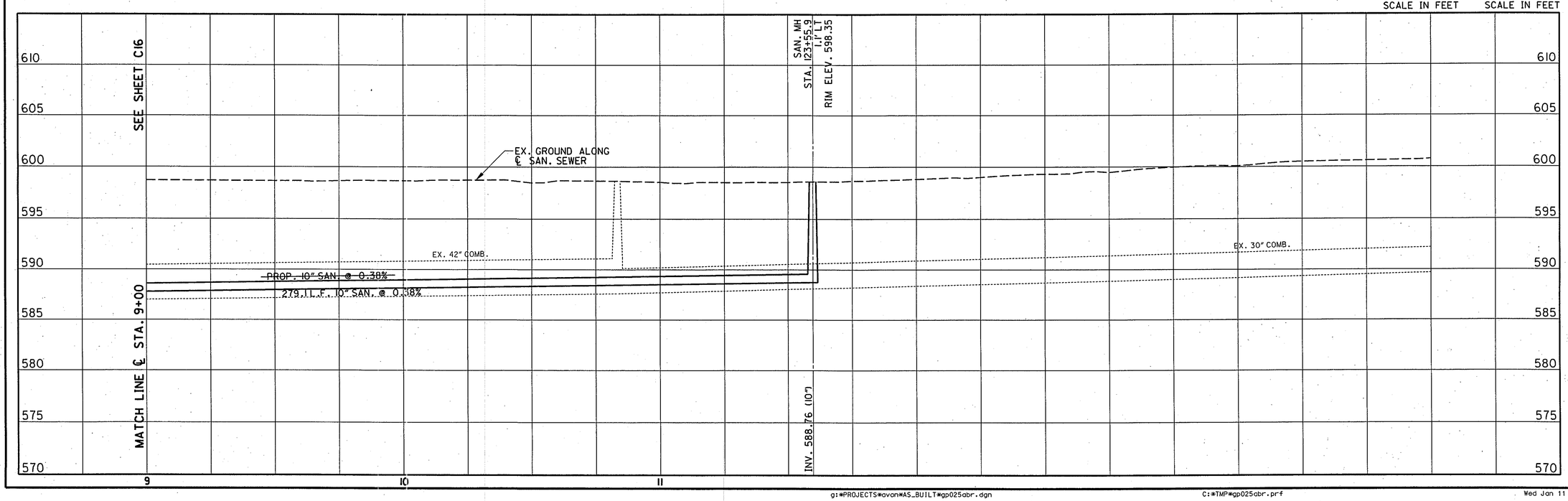

PARSONS BRINCKERHOFF

DESIGNED DSW	DRAWN MME
CHECKED DLC	DATE 8/18/03
REVISED BKJ	DATE 11/14/05

PLAN & PROFILE - ELECTRIC BOULEVARD
STA. 9+00 TO STA. 11+62

AVON BELDEN ROAD
SEWER SEPARATION
(AS-BUILT PLANS)

C17

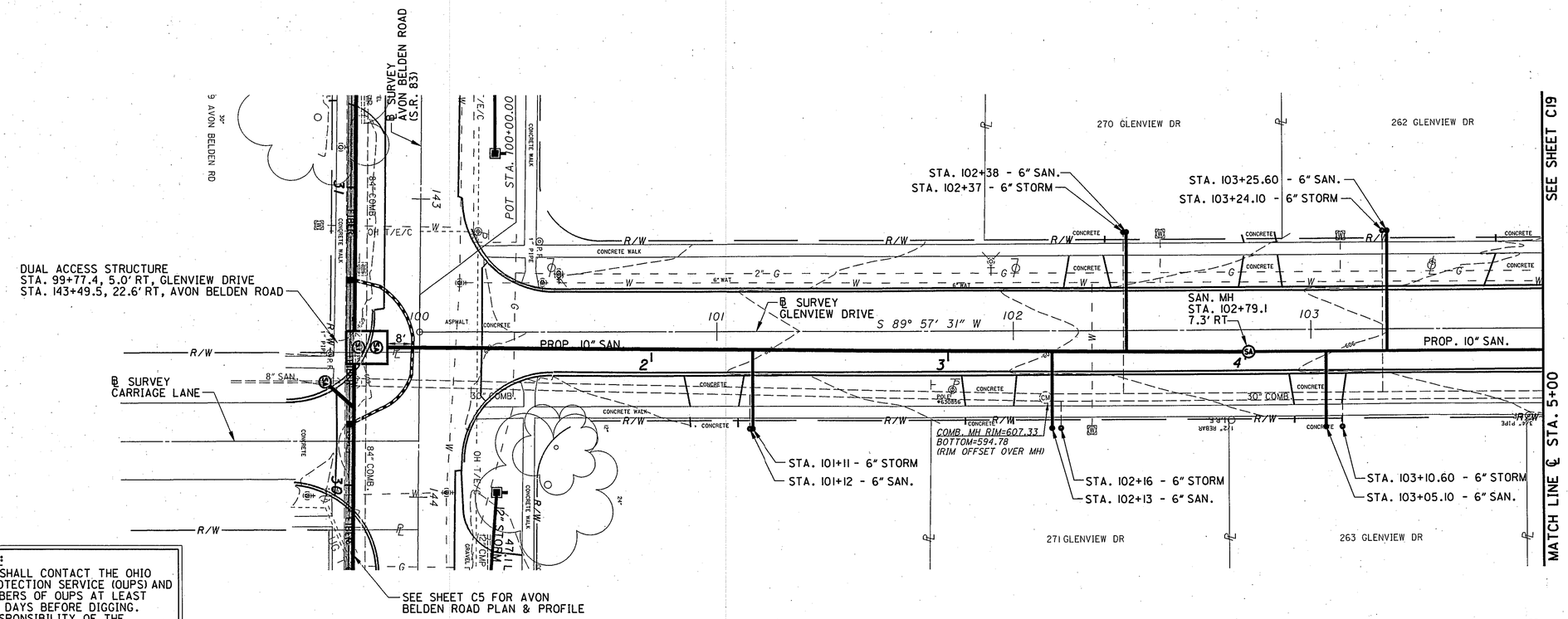

UTILITY NOTE:
CONTRACTOR SHALL CONTACT THE OHIO UTILITIES PROTECTION SERVICE (OUPS) AND ANY NON-MEMBERS OF OUPS AT LEAST TWO WORKING DAYS BEFORE DIGGING. IT IS THE RESPONSIBILITY OF THE CONTRACTOR TO VERIFY AND RESOLVE POTENTIAL CONFLICTS WITH EXISTING UTILITIES SHOWN OR NOT SHOWN IN THESE PLANS PRIOR TO CONSTRUCTION.

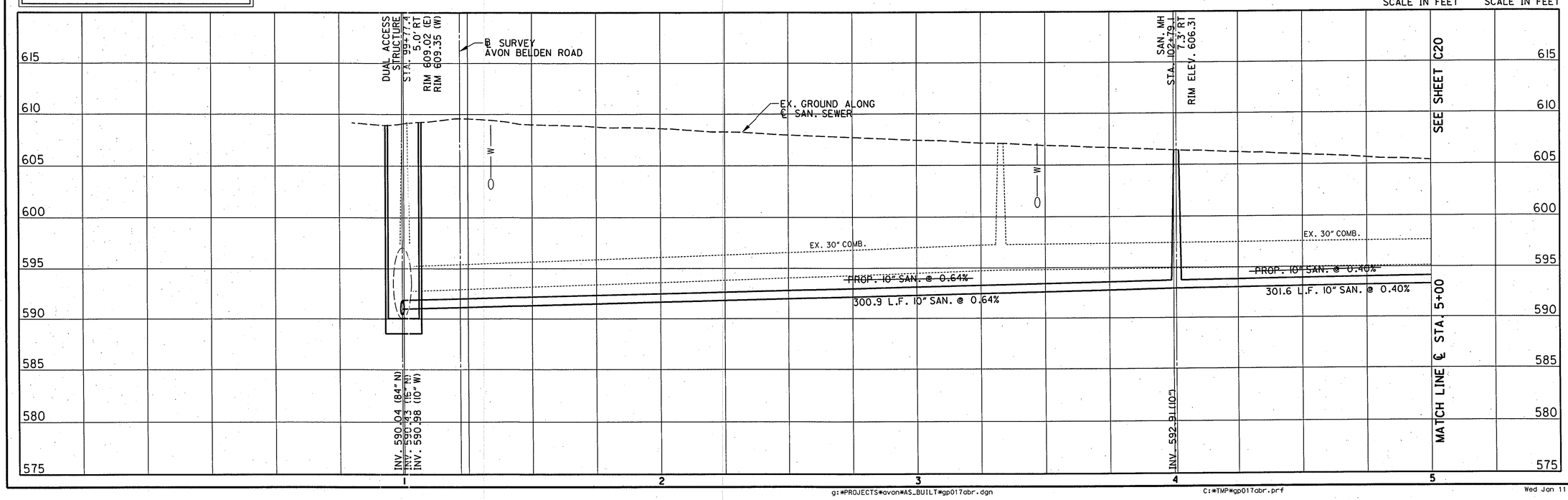

PARSONS BRINCKERHOFF

REVISED	DATE
BKJ	11/14/05

DRAWN	DATE
MME	8/18/03

DESIGNED	CHECKED
DSW	DLC

PLAN & PROFILE - GLENVIEW DRIVE STA. 1+00 TO STA. 5+00

AVON BELDEN ROAD SEWER SEPARATION (AS-BUILT PLANS)

C18

UTILITY NOTE:
CONTRACTOR SHALL CONTACT THE OHIO UTILITIES PROTECTION SERVICE (OUPS) AND ANY NON-MEMBERS OF OUPS AT LEAST TWO WORKING DAYS BEFORE DIGGING. IT IS THE RESPONSIBILITY OF THE CONTRACTOR TO VERIFY AND RESOLVE POTENTIAL CONFLICTS WITH EXISTING UTILITIES SHOWN OR NOT SHOWN IN THESE PLANS PRIOR TO CONSTRUCTION.

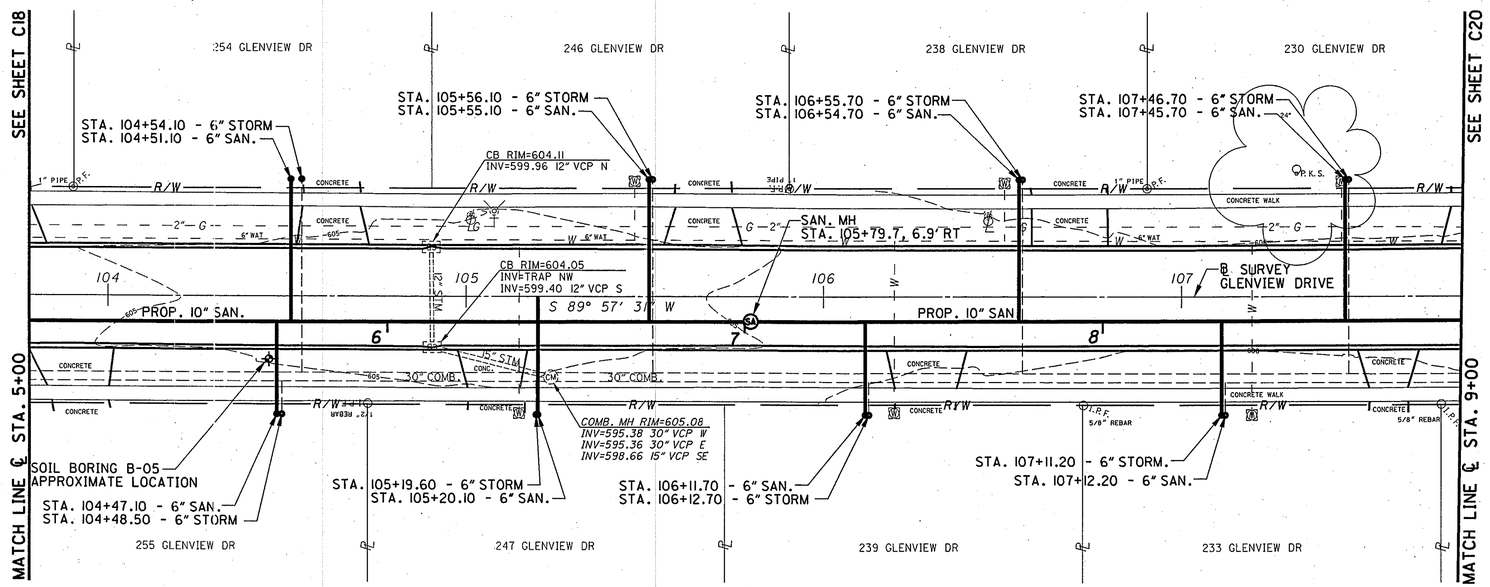

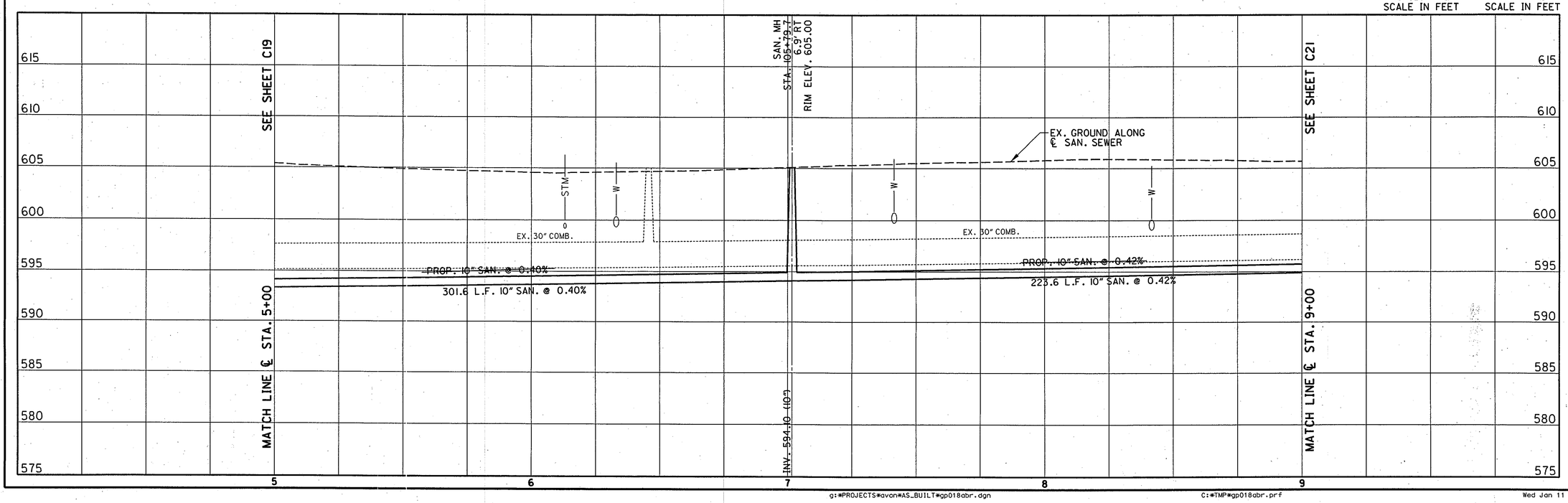

HORIZONTAL SCALE IN FEET (0, 10, 20, 40)

VERTICAL SCALE IN FEET (0, 2.5, 5, 10)

PARSONS BRINCKERHOFF

REVISED	DATE
BKJ	11/14/05

DRAWN	DATE
MME	8/18/03

DESIGNED	CHECKED
DSW	DLC

PLAN & PROFILE - GLENVIEW DRIVE STA. 5+00 TO STA. 9+00

AVON BELDEN ROAD SEWER SEPARATION (AS-BUILT PLANS)

C19

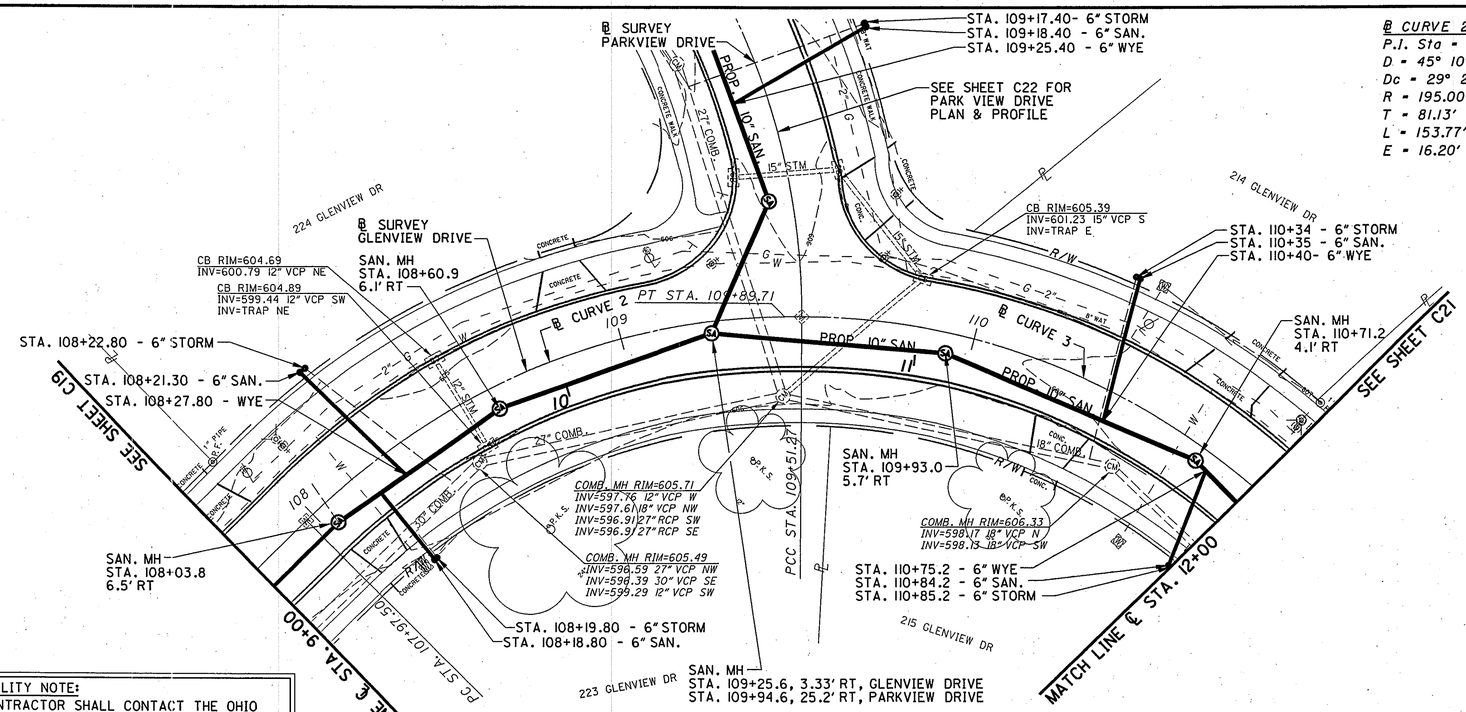

℄ CURVE 2
P.I. Sta = 108+78.63
D = 45° 10' 50" (RT)
Dc = 29° 22' 57"
R = 195.00'
T = 81.13'
L = 153.77'
E = 16.20'

℄ CURVE 3
P.I. Sta = 110+32.46
D = 45° 12' 33" (RT)
Dc = 29° 22' 57"
R = 195.00'
T = 81.19'
L = 153.86'
E = 16.23'

UTILITY NOTE:
CONTRACTOR SHALL CONTACT THE OHIO UTILITIES PROTECTION SERVICE (OUPS) AND ANY NON-MEMBERS OF OUPS AT LEAST TWO WORKING DAYS BEFORE DIGGING. IT IS THE RESPONSIBILITY OF THE CONTRACTOR TO VERIFY AND RESOLVE POTENTIAL CONFLICTS WITH EXISTING UTILITIES SHOWN OR NOT SHOWN IN THESE PLANS PRIOR TO CONSTRUCTION.

0 20 10 40 HORIZONTAL SCALE IN FEET

10 5 2.5 0 VERTICAL SCALE IN FEET

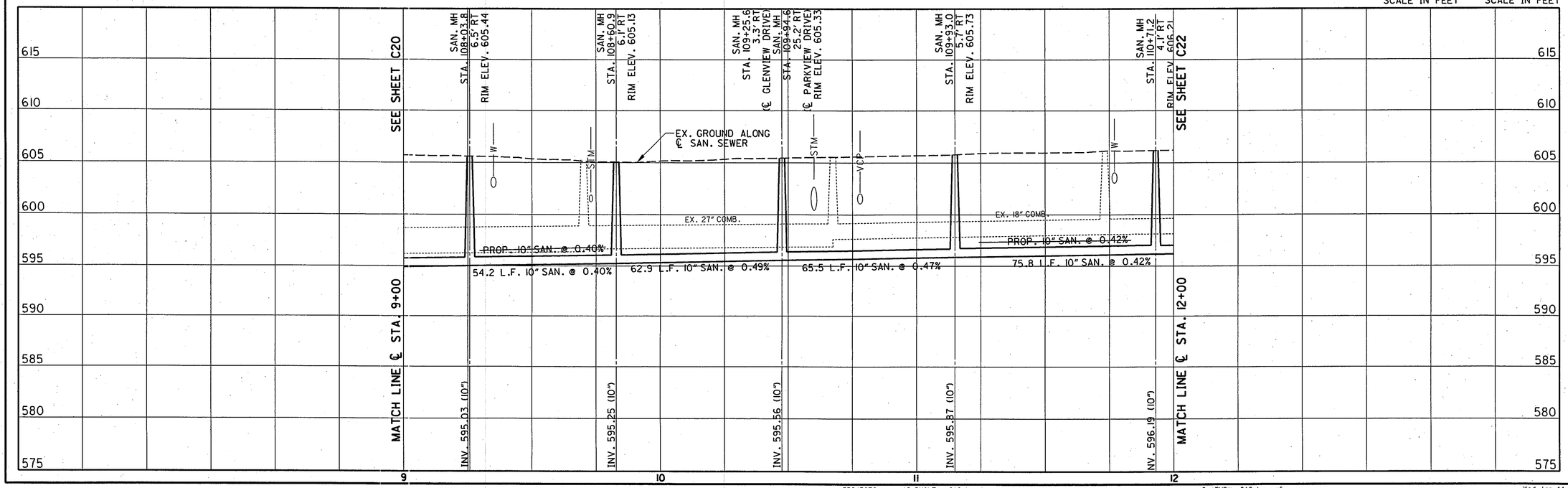

PARSONS BRINCKERHOFF

REVISED	DATE
BKJ	11/14/05

DRAWN	DATE
MME	8/18/03

DESIGNED	CHECKED
DSW	DLC

PLAN & PROFILE - GLENVIEW DRIVE STA. 9+00 TO STA. 12+00

AVON BELDEN ROAD SEWER SEPARATION (AS-BUILT PLANS)

C20

g:*PROJECTS*avon*AS_BUILT*gp019abr.dgn C:*TMP*gp019abr.prf Wed Jan 11 15:04:43 2006

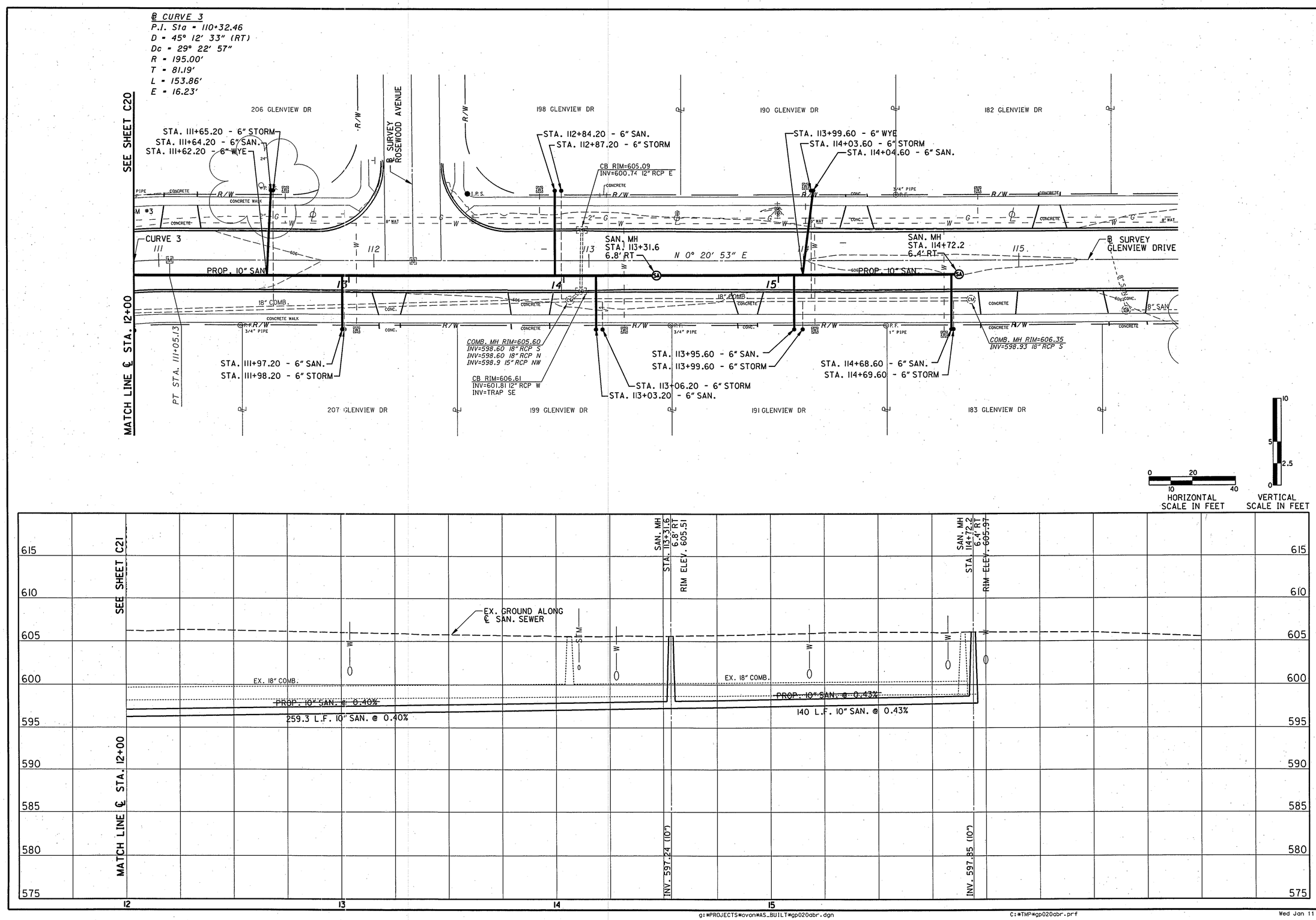

g:\PROJECTS\avon\AS_BUILT\gp020abr.dgn C:\TMP\gp020abr.prf Wed Jan 11 15:05:33 2006

PARSONS BRINCKERHOFF

REVISED BKJ	DATE 11/14/05	
DRAWN MME	DATE 8/18/03	
DESIGNED DSW	CHECKED DLC	

PLAN & PROFILE - GLENVIEW DRIVE
STA. 12+00 TO STA. 15+92.00

AVON BELDEN ROAD
SEWER SEPARATION
(AS-BUILT PLANS)

C21

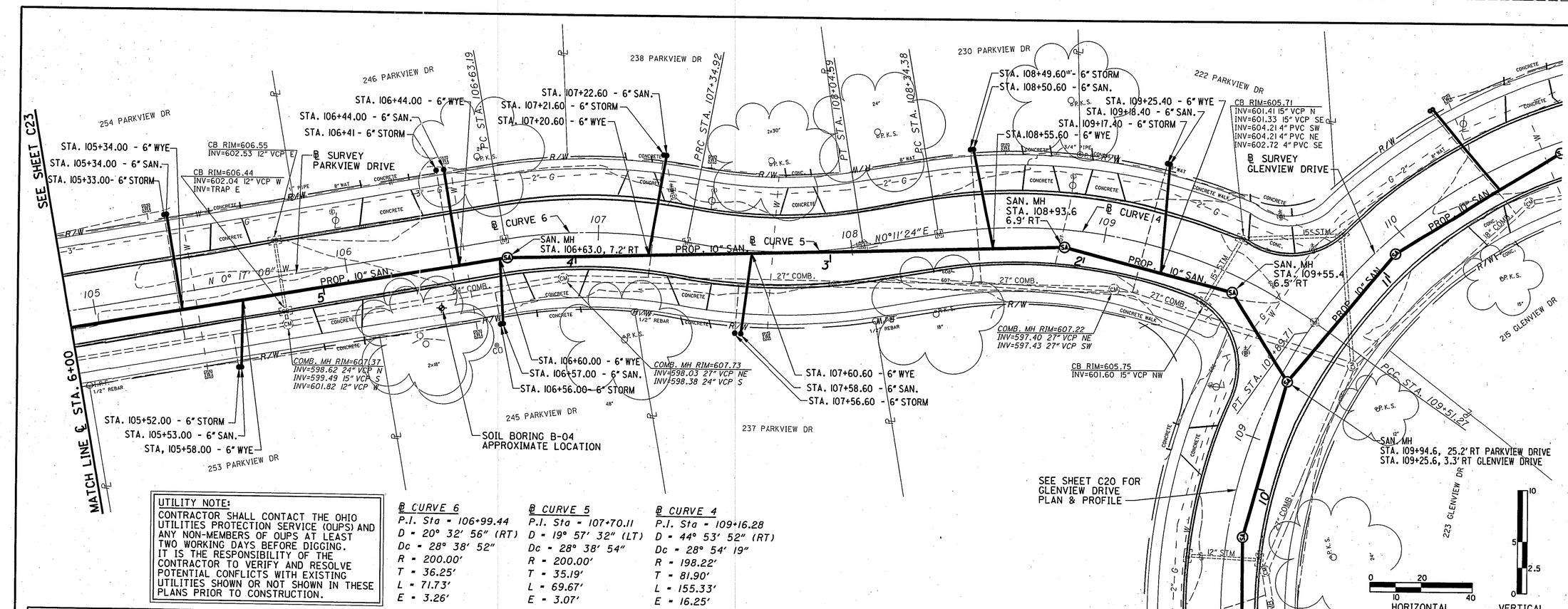

UTILITY NOTE:
CONTRACTOR SHALL CONTACT THE OHIO UTILITIES PROTECTION SERVICE (OUPS) AND ANY NON-MEMBERS OF OUPS AT LEAST TWO WORKING DAYS BEFORE DIGGING. IT IS THE RESPONSIBILITY OF THE CONTRACTOR TO VERIFY AND RESOLVE POTENTIAL CONFLICTS WITH EXISTING UTILITIES SHOWN OR NOT SHOWN IN THESE PLANS PRIOR TO CONSTRUCTION.

℄ CURVE 6	℄ CURVE 5	℄ CURVE 4
P.I. Sta = 106+99.44	P.I. Sta = 107+70.11	P.I. Sta = 109+16.28
D = 20° 32' 56" (RT)	D = 19° 57' 32" (LT)	D = 44° 53' 52" (RT)
Dc = 28° 38' 52"	Dc = 28° 38' 54"	Dc = 28° 54' 19"
R = 200.00'	R = 200.00'	R = 198.22'
T = 36.25'	T = 35.19'	T = 81.90'
L = 71.73'	L = 69.67'	L = 155.33'
E = 3.26'	E = 3.07'	E = 16.25'

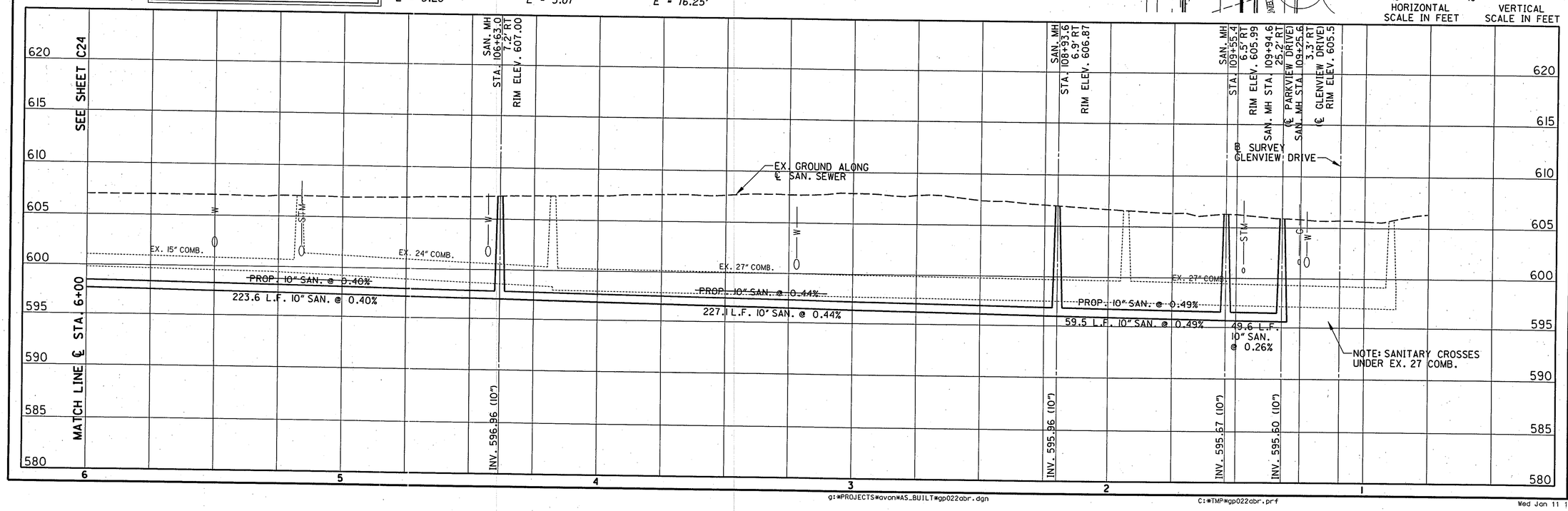

PARSONS BRINCKERHOFF

REVISED	BKJ	11/14/05
DRAWN	MME	8/18/03
DESIGNED	DSW	
CHECKED	DLC	

PLAN & PROFILE - PARKVIEW DRIVE STA. 1+00 TO STA. 6+00

AVON BELDEN ROAD SEWER SEPARATION (AS-BUILT PLANS)

C22

g:\PROJECTS\avon\AS_BUILT\gp022abr.dgn C:\TMP\gp022abr.prf Wed Jan 11 15:09:47 2006

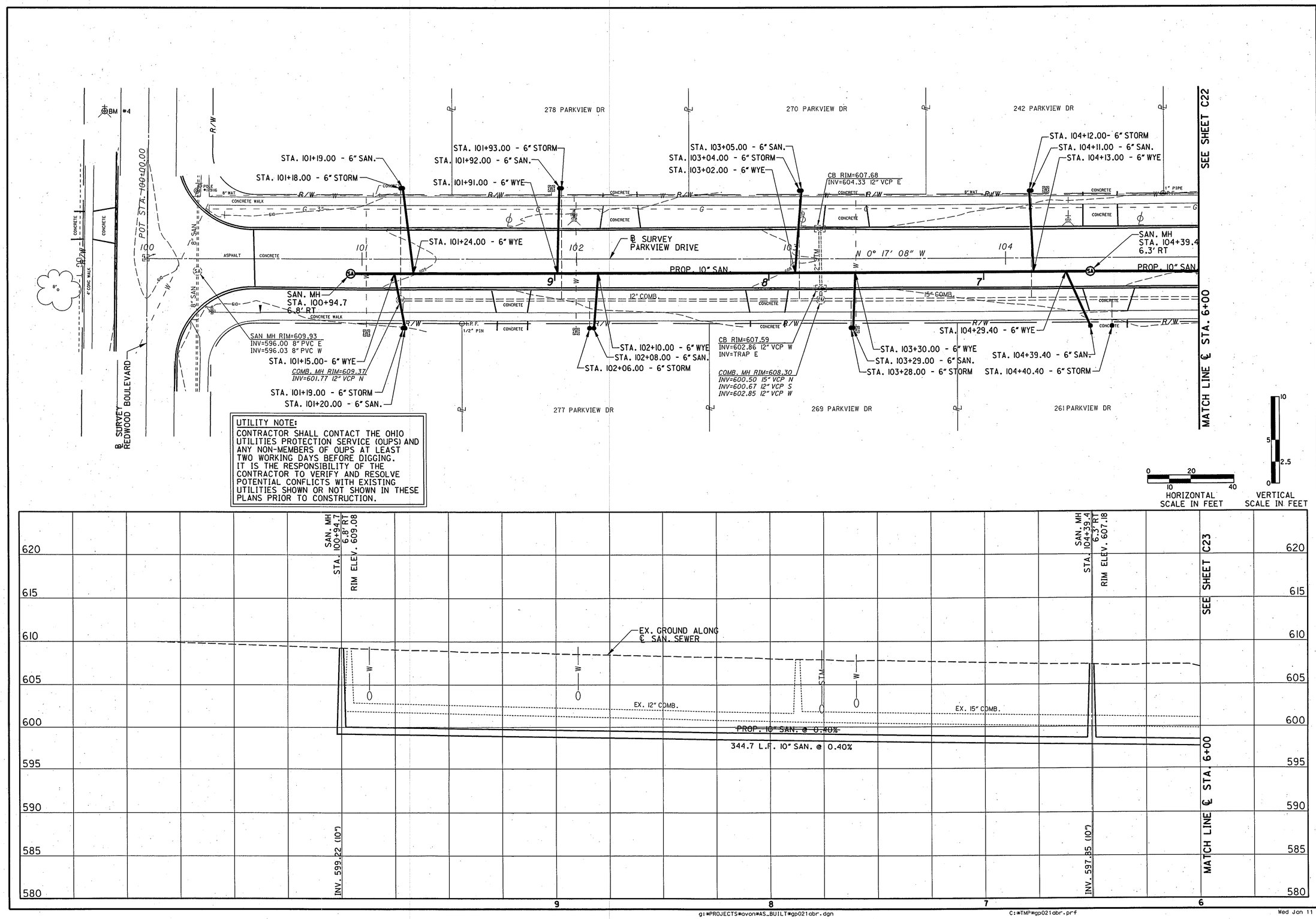

PARSONS BRINCKERHOFF

REVISED	DATE
BKJ	11/14/05

DRAWN	DATE
MME	8/18/03

DESIGNED	CHECKED
DSW	DLC

PLAN & PROFILE - PARKVIEW DRIVE
STA. 6+00 TO STA. 9+80.00

AVON BELDEN ROAD
SEWER SEPARATION
(AS-BUILT PLANS)

C23

UTILITY NOTE:
CONTRACTOR SHALL CONTACT THE OHIO UTILITIES PROTECTION SERVICE (OUPS) AND ANY NON-MEMBERS OF OUPS AT LEAST TWO WORKING DAYS BEFORE DIGGING. IT IS THE RESPONSIBILITY OF THE CONTRACTOR TO VERIFY AND RESOLVE POTENTIAL CONFLICTS WITH EXISTING UTILITIES SHOWN OR NOT SHOWN IN THESE PLANS PRIOR TO CONSTRUCTION.

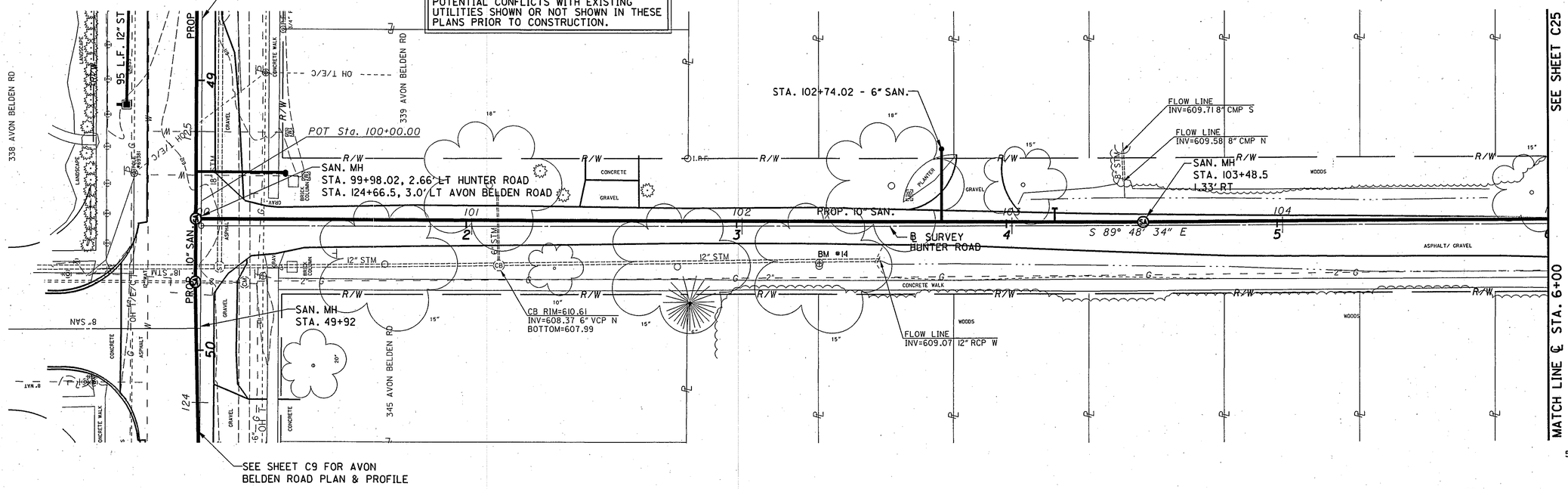

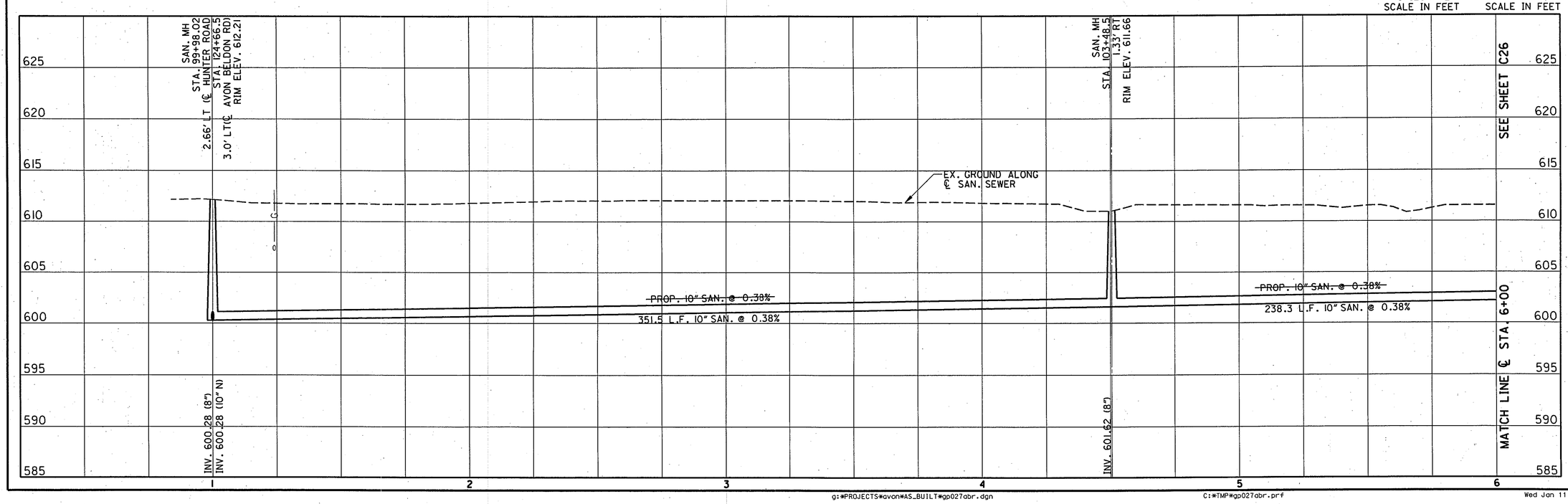

PARSONS BRINCKERHOFF

REVISED	DATE
BKJ	11/14/05

DESIGNED	DRAWN	DATE
DSW	MME	8/18/03
CHECKED		
DLC		

PLAN & PROFILE - HUNTER ROAD STA. 1+00 TO STA. 6+00

AVON BELDEN ROAD SEWER SEPARATION (AS-BUILT PLANS)

C24

g:\PROJECTS\avon\AS_BUILT\gp027abr.dgn C:\TMP\gp027abr.prf Wed Jan 11 15:11:27 2006

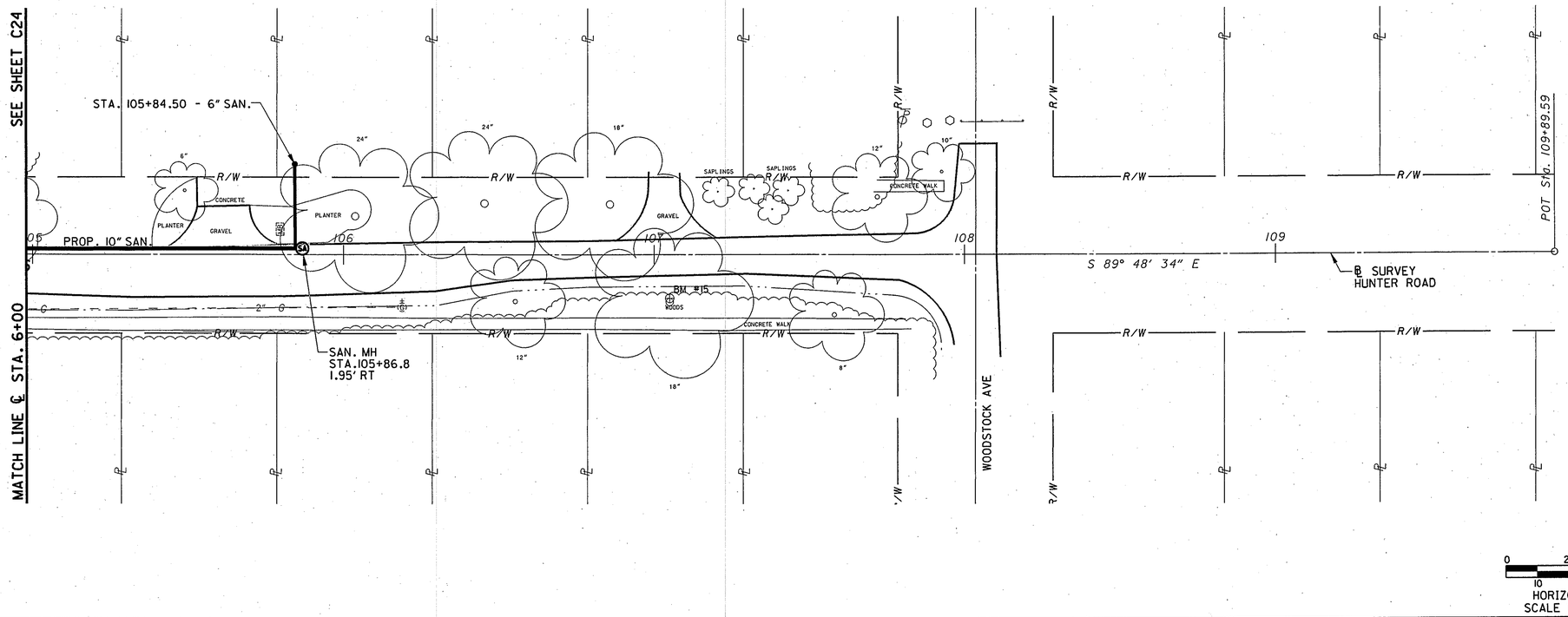

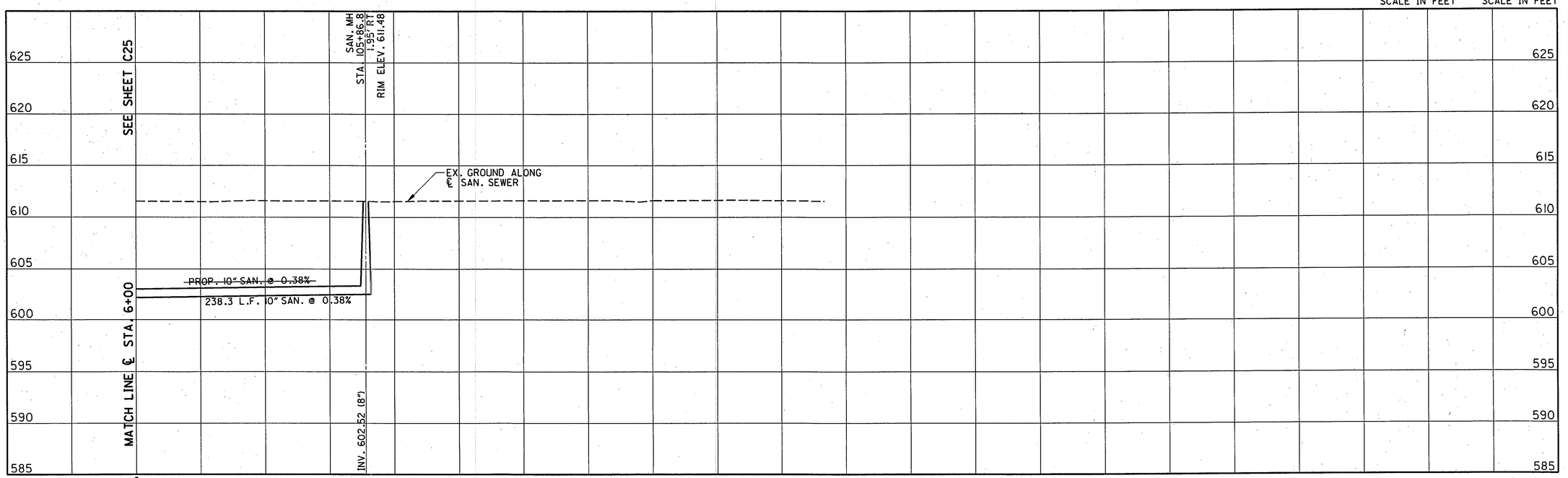

PARSONS BRINCKERHOFF

REVISED	DATE
BKJ	11/14/05

DESIGNED	DRAWN	DATE
DSW	MME	8/18/03
	CHECKED	
	DLC	

PLAN & PROFILE - HUNTER ROAD STA. 6+00 TO STA. 6+90

AVON BELDEN ROAD SEWER SEPARATION (AS-BUILT PLANS)

C25

g:\PROJECTS\avon\AS_BUILT\gp028abr.dgn C:\TMP\gp028abr.prf Wed Jan 11 15:12:42 2006

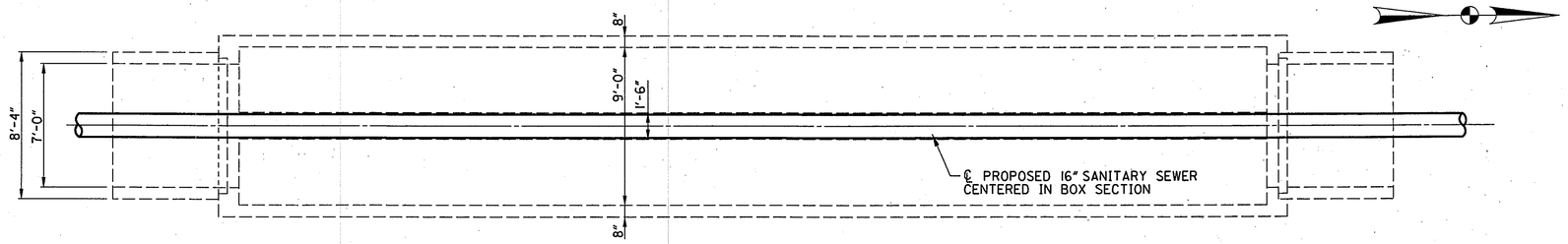

SECTIONAL PLAN
1/4" = 1'-0"

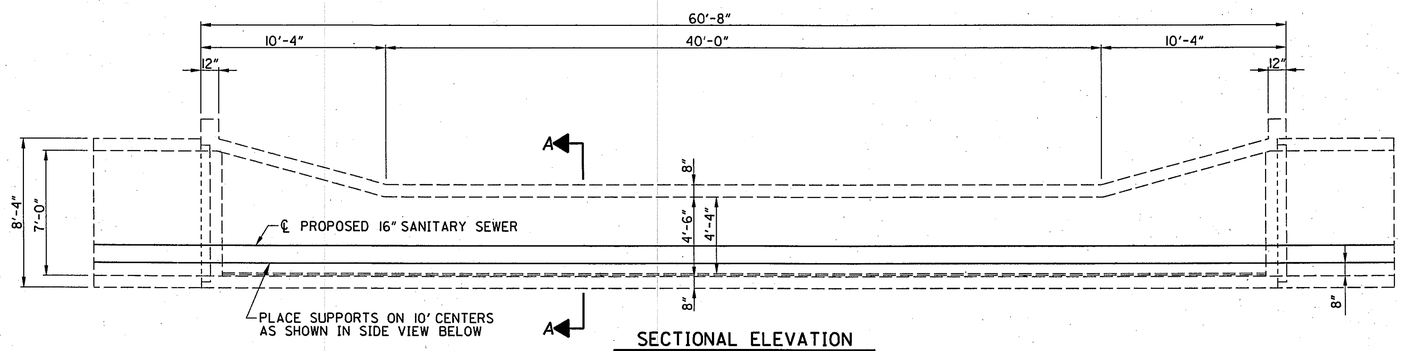

SECTIONAL ELEVATION
BOX SECTION UNDER HEIDER DITCH
1/4" = 1'-0"

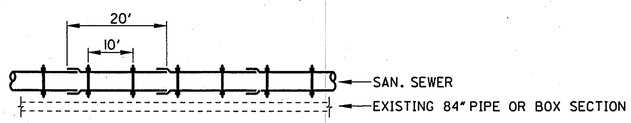

SIDE VIEW
NOT TO SCALE

NOTE:
PROPOSED WORK TO BE INSTALLED
INSIDE ACTIVE COMBINED SEWER.

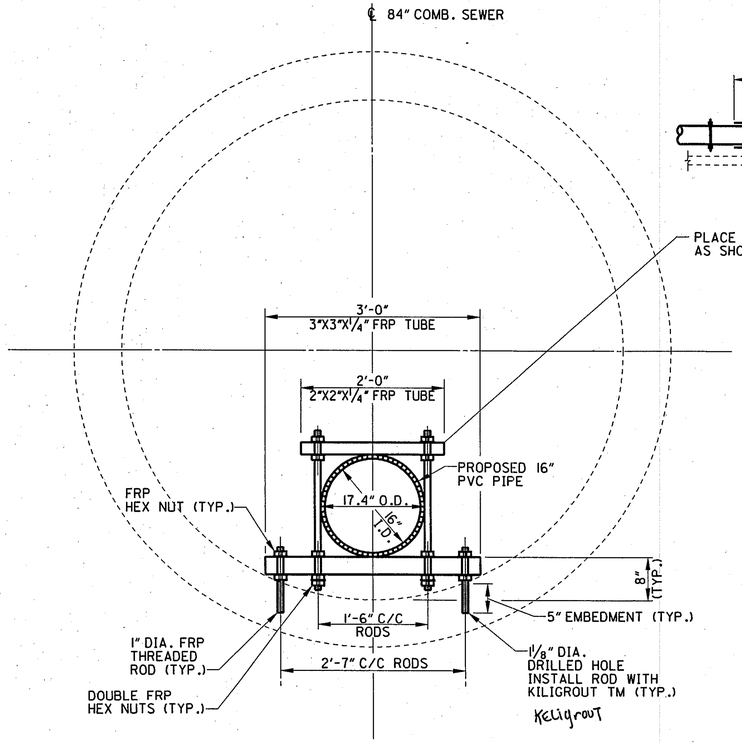

TYPICAL SUPPORT DETAIL IN 84" PIPE
1" = 1'-0"

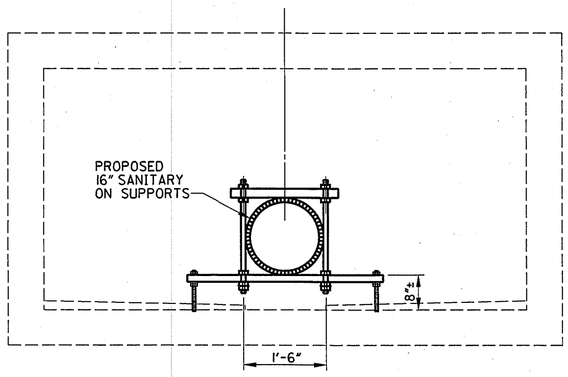

SECTION A-A
3/4" = 1'-0"

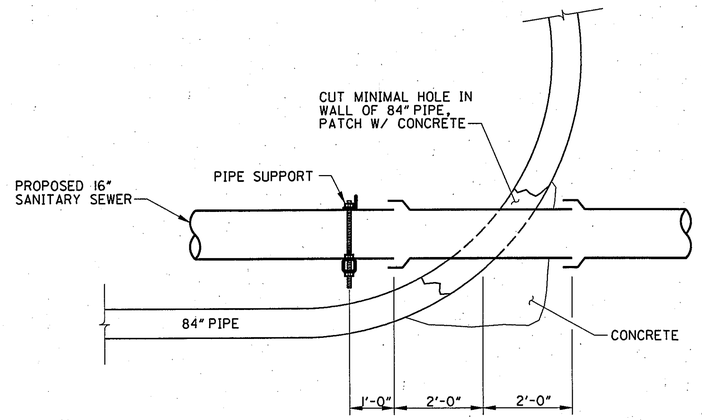

SECTION A - SHEET C1
SANITARY SEWER EXIT 84" PIPE
NOT TO SCALE

PARSONS BRINCKERHOFF

REVISED	DATE

DESIGNED	DRAWN	DATE
PJL	MME	8/18/03
CHECKED		
DLC		

MISCELLANEOUS DETAILS

AVON BELDEN ROAD
SEWER SEPARATION

D1

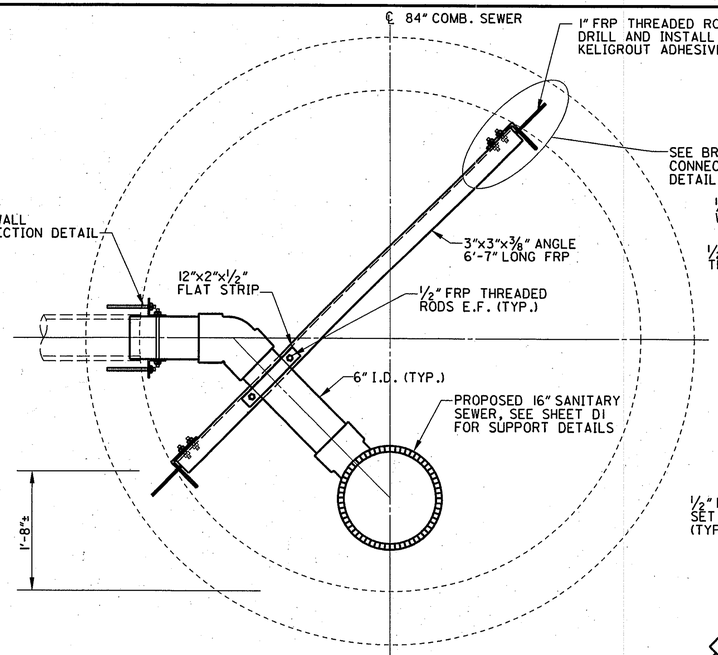

TYPICAL LATERAL CONNECTION BRACING

CONNECTION SHOWN FROM EAST
WEST CONNECTION OPPOSITE HAND
1" = 1'-0"

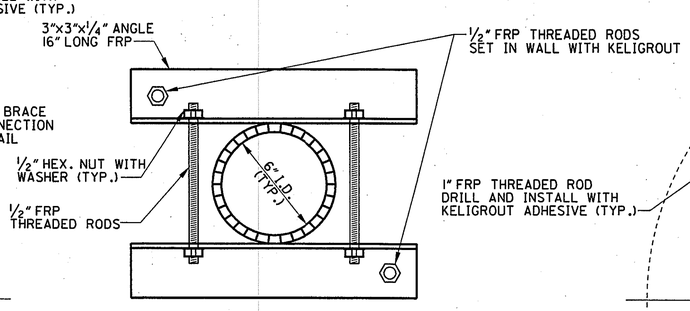

SECTION A-A

3" = 1'-0"

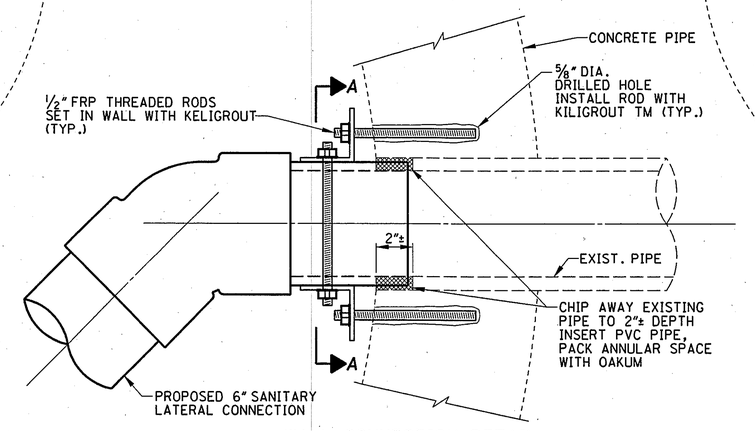

WALL CONNECTION DETAIL

3" = 1'-0"

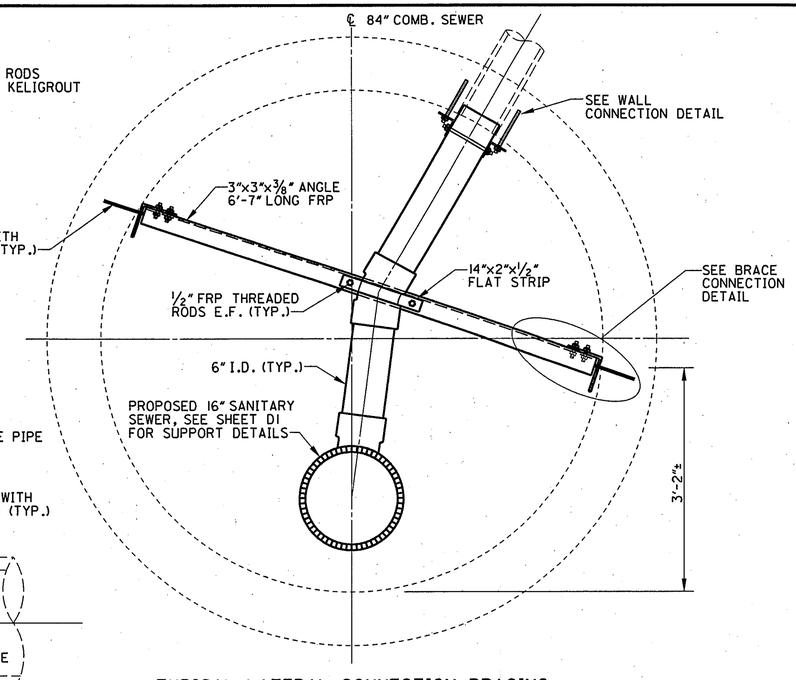

TYPICAL LATERAL CONNECTION BRACING

CONNECTION SHOWN FROM EAST
WEST CONNECTION OPPOSITE HAND
1" = 1'-0"

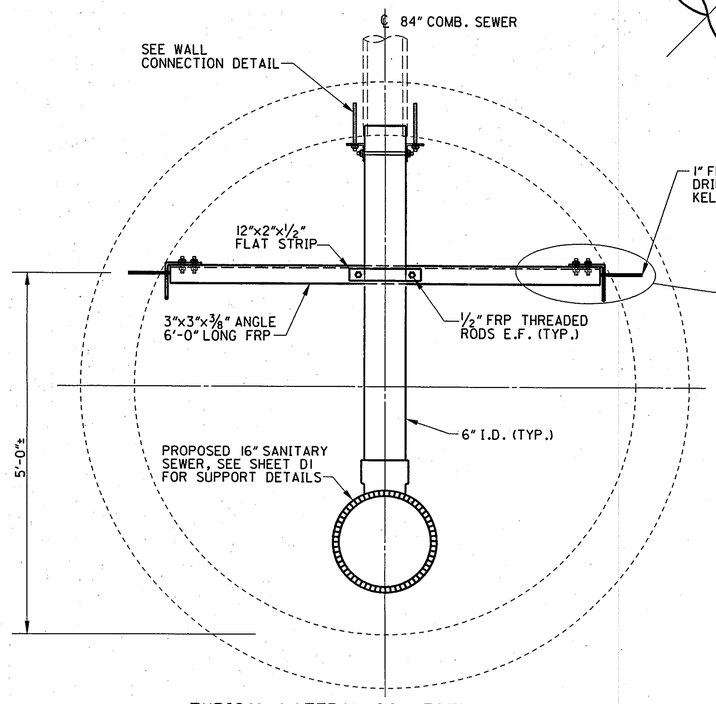

TYPICAL LATERAL CONNECTION BRACING

1" = 1'-0"

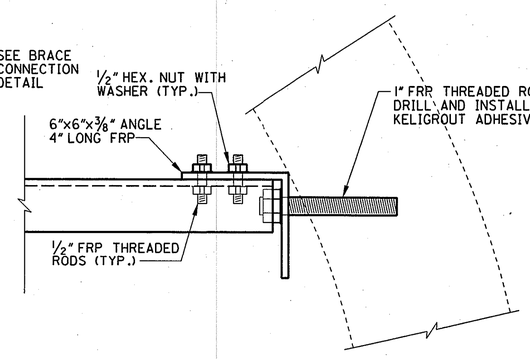

BRACE CONNECTION DETAIL

3" = 1'-0"

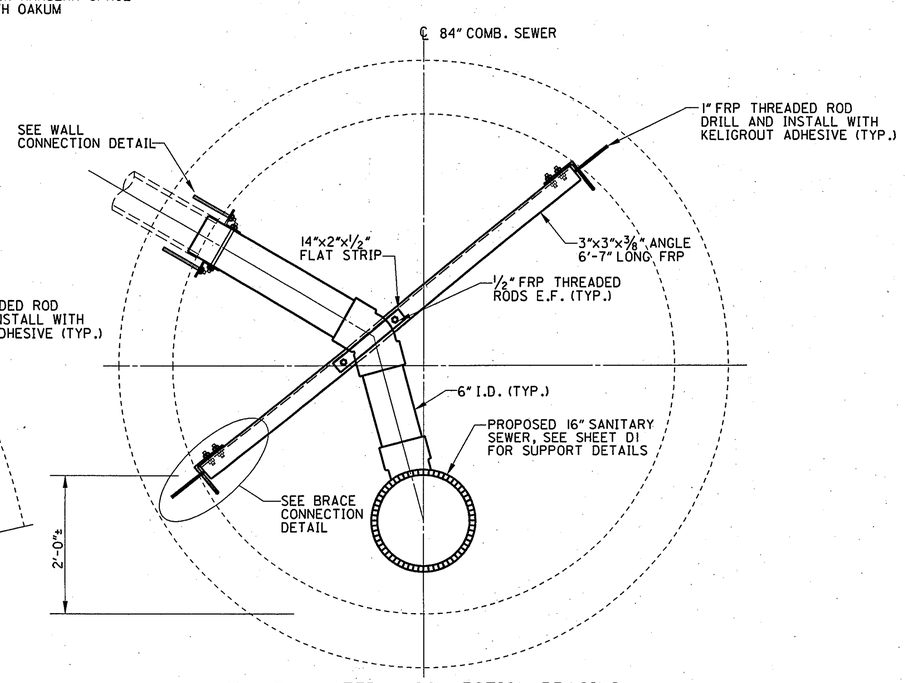

TYPICAL LATERAL CONNECTION BRACING

CONNECTION SHOWN FROM EAST
WEST CONNECTION OPPOSITE HAND
1" = 1'-0"

NOTE:
PROPOSED WORK TO BE INSTALLED INSIDE ACTIVE COMBINED SEWER.

PARSONS BRINCKERHOFF

DESIGNED PJL	DRAWN LEL	REVISED
CHECKED DLC	DATE 8/18/03	DATE

MISCELLANEOUS DETAILS

AVON BELDEN ROAD SEWER SEPARATION

D2

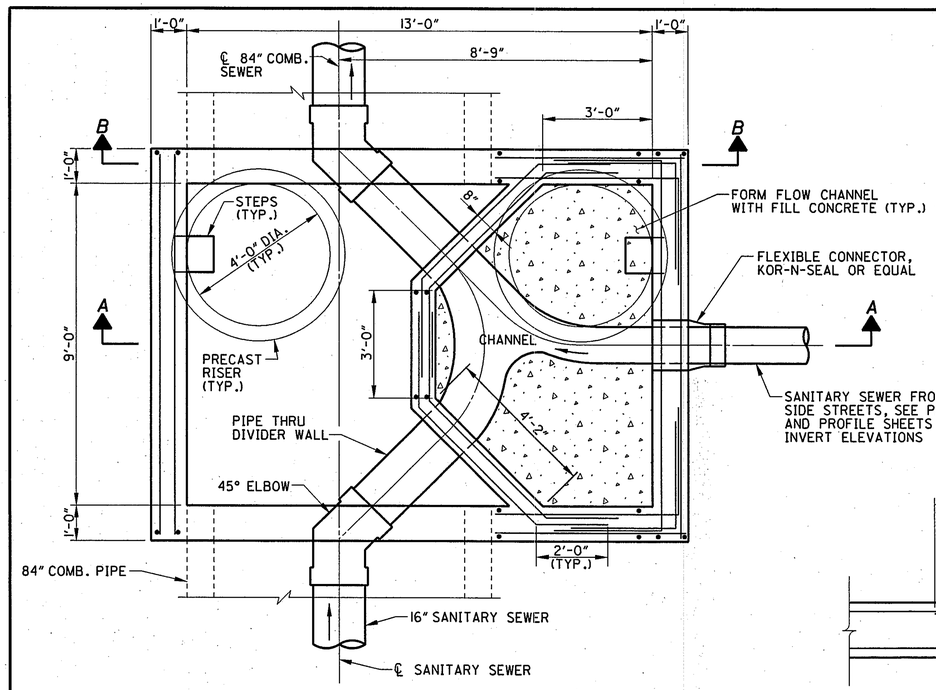

DUAL ACCESS STRUCTURE PLAN VIEW

1/2" = 1'-0"

NOTE:
THERE ARE SEVEN TOTAL DUAL ACCESS STRUCTURES. THREE HAVE A SANITARY SEWER CONNECTION FROM THE EAST OR WEST. SOME STRUCTURES ARE CONSTRUCTED WITH THE SANITARY CHAMBER ON THE WEST SIDE TO ACCOMMODATE RIGHT OF WAY RESTRICTIONS. THE FOLLOWING TABLE SUMMARIZES ORIENTATION OF STRUCTURES.

STATION	SANITARY CHAMBER	CONNECTING SEWER
12+41	EAST	ELECTRIC BLVD
15+31	WEST	NONE
19+74	EAST	HIGH SCHOOL
21+81	WEST	NONE
26+40	WEST	NONE
30+44	WEST	GLENVIEW DR
34+76	WEST	NONE

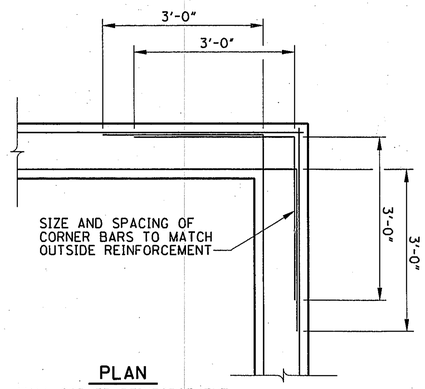

PLAN

WALL CORNER REINFORCEMENT
3/4" = 1'-0"

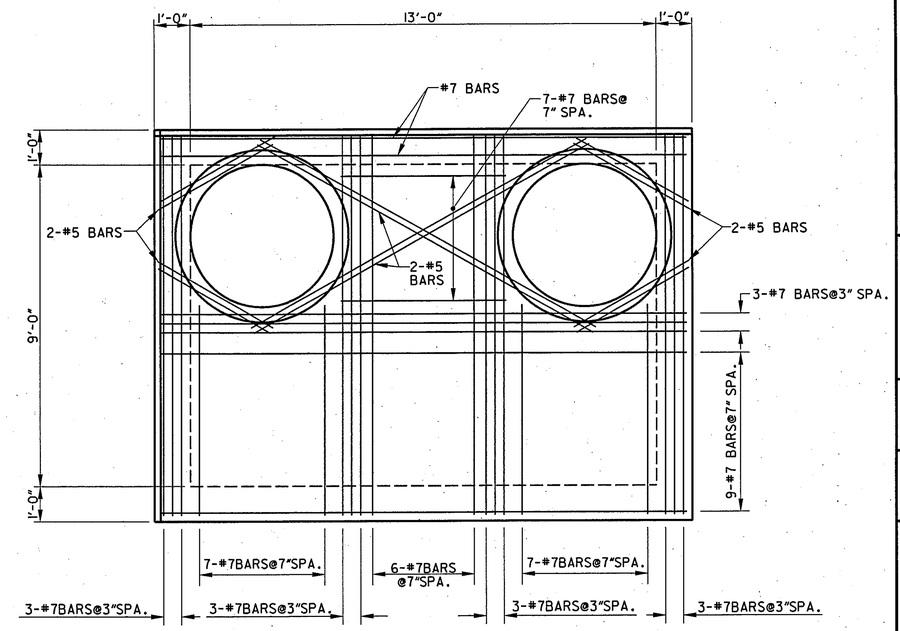

TOP SLAB DETAIL

BOTTOM REINFORCEMENT
1/2" = 1'-0"

NOTE:
1. IN LIEU OF THE TONGUE AND GROOVE JUNCTION BETWEEN THE RISER AND THE BASE, THE RISER MAY HAVE A SQUARE END IN A BED OF MORTAR ON THE BASE, AS APPROVED BY THE ENGINEER.

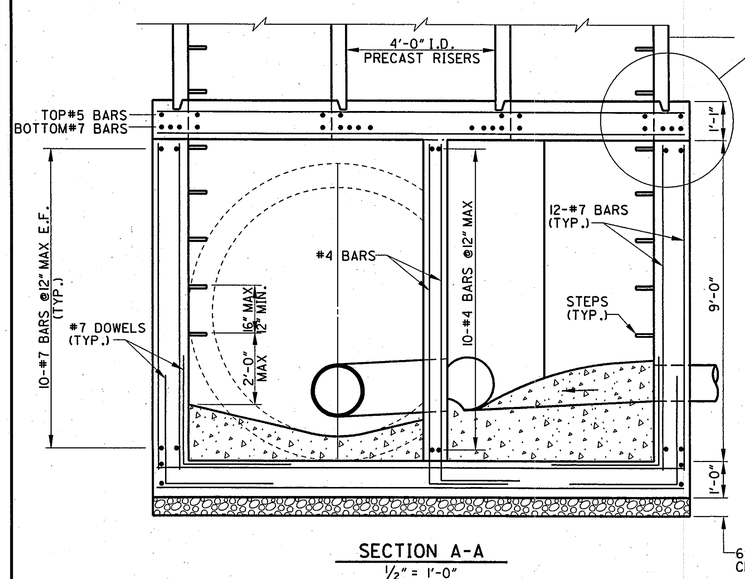

SECTION A-A

1/2" = 1'-0"

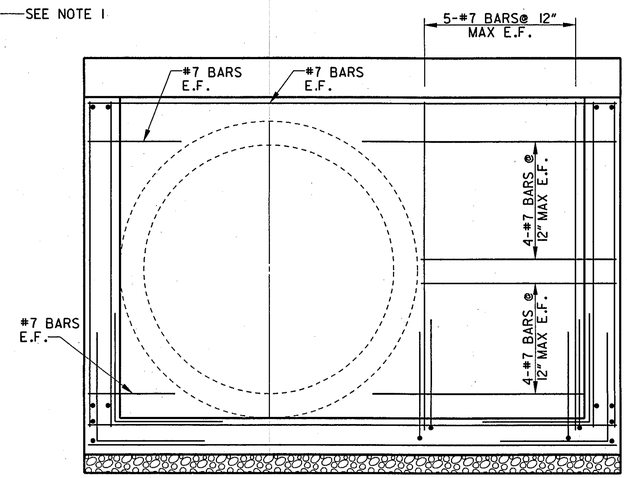

SECTION B-B

1/2" = 1'-0"

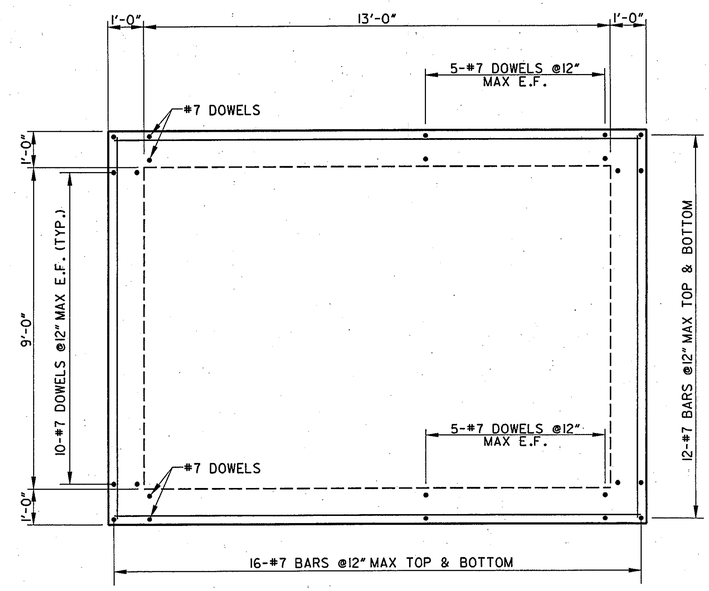

BOTTOM SLAB DETAIL

1/2" = 1'-0"

PARSONS BRINCKERHOFF

REVISED	DATE
DRAWN LEL	DATE 8/18/03
DESIGNED PJL	CHECKED DLC

ACCESS STRUCTURE DETAILS

AVON BELDEN ROAD SEWER SEPARATION

D3

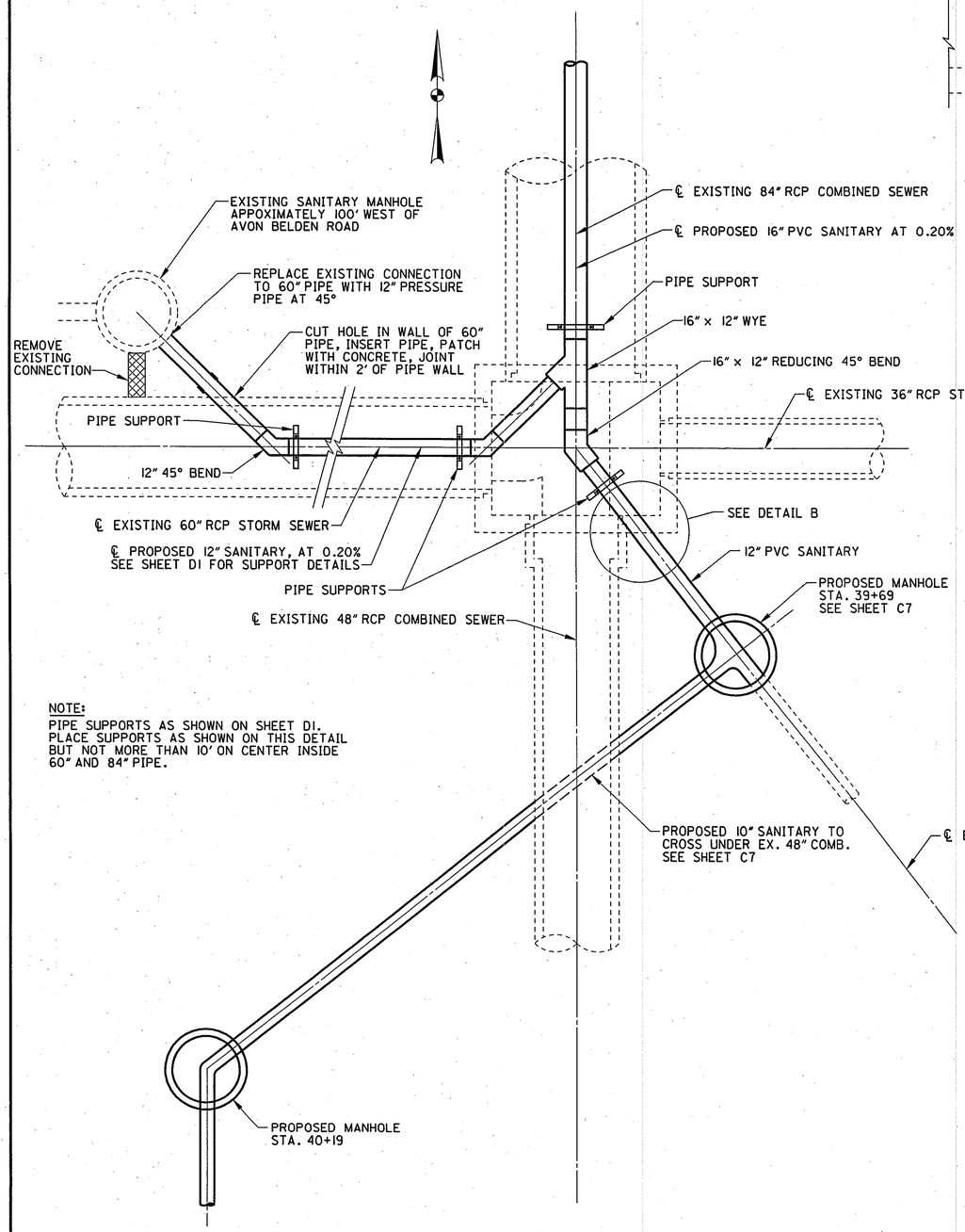

NOTE:
PIPE SUPPORTS AS SHOWN ON SHEET D1. PLACE SUPPORTS AS SHOWN ON THIS DETAIL BUT NOT MORE THAN 10' ON CENTER INSIDE 60" AND 84" PIPE.

PLAN - JUNCTION CHAMBER AT REDWOOD BLVD

1/4" = 1'-0"

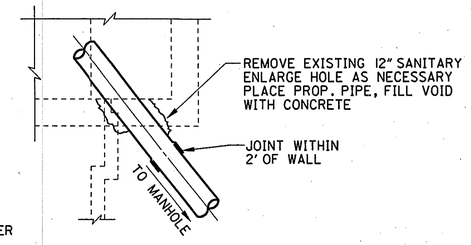

DETAIL B

3/8" = 1'-0"

NOTE:
PROPOSED WORK TO BE INSTALLED INSIDE ACTIVE COMBINED AND/OR STORM SEWER SYSTEM.

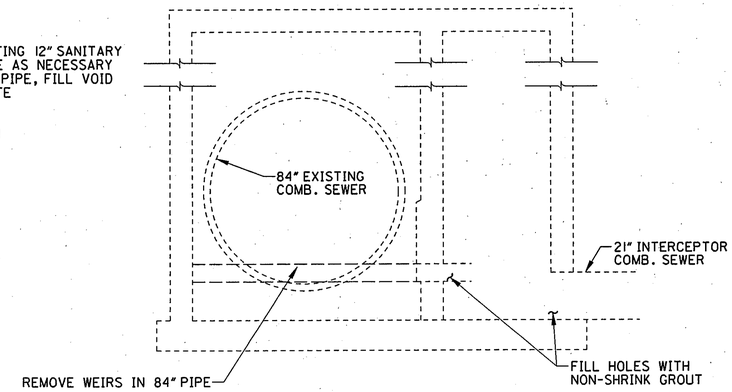

SECTION A-A

3/8" = 1'-0"

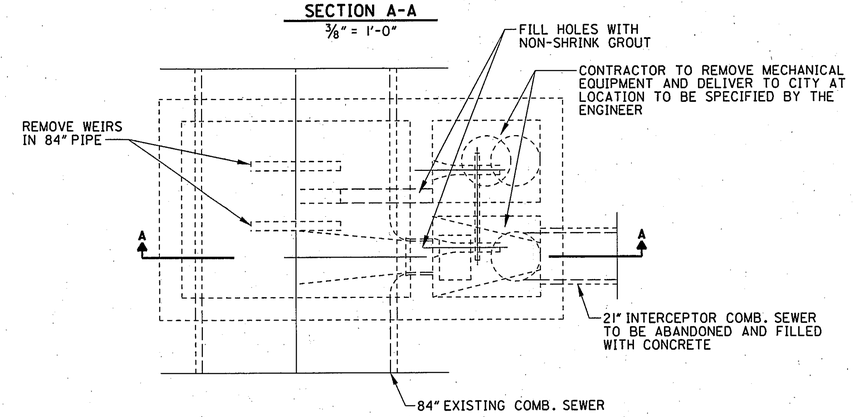

EXISTING REGULATOR STRUCTURE NEAR SURVEY STATION 163+60

3/8" = 1'-0"

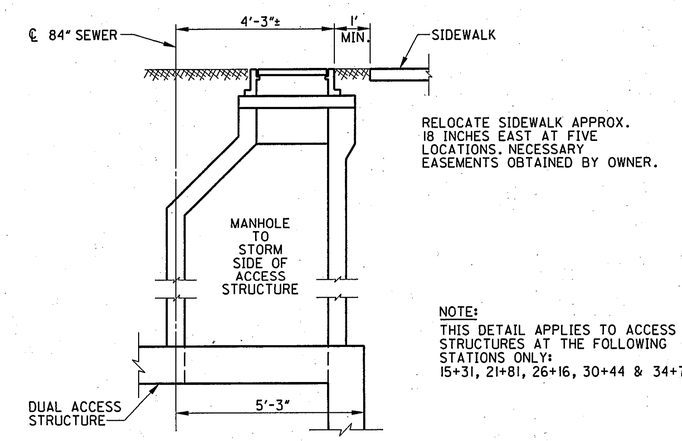

NOTE:
THIS DETAIL APPLIES TO ACCESS STRUCTURES AT THE FOLLOWING STATIONS ONLY:
15+31, 21+81, 26+16, 30+44 & 34+76

SIDEWALK/ACCESS STRUCTURE COORDINATION DETAIL

1/2" = 1'-0"

PARSONS BRINCKERHOFF

REVISED	DATE

DESIGNED	DRAWN	DATE
PJL	MME	8/18/03
	CHECKED	
	DLC	

MISCELLANEOUS DETAILS

AVON BELDEN ROAD SEWER SEPARATION

D4

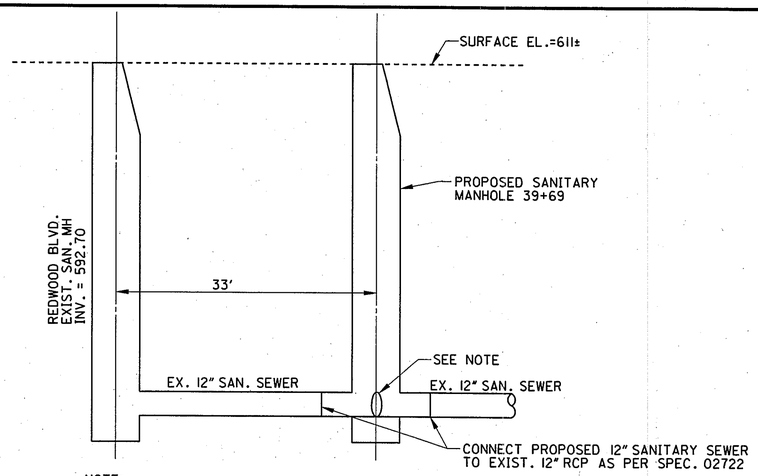

NOTE:
INVERT OF EXIST. 12" SANITARY SEWER AT PROPOSED MANHOLE LOCATION TO BE CONFIRMED PRIOR TO CONSTRUCTION OF PROPOSED 10" SANITARY SEWER BETWEEN SAN. MH 40+09 AND SAN. MH 39+69±. INVERT OF PROPOSED 10" SANITARY SEWER TO MATCH INVERT OF EXISTING 12" SANITARY SEWER AT PROPOSED SAN. MH 39+69±.

DETAIL A

INTERSECTION OF AVON BELDEN ROAD AND REDWOOD BOULEVARD (SEE SHEET C7)
NOT TO SCALE

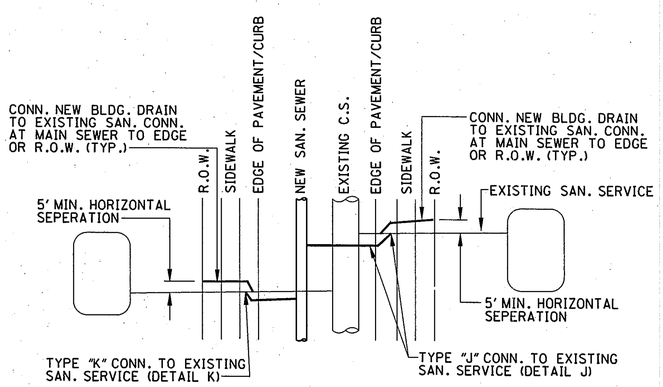

PLAN SCHEMATIC

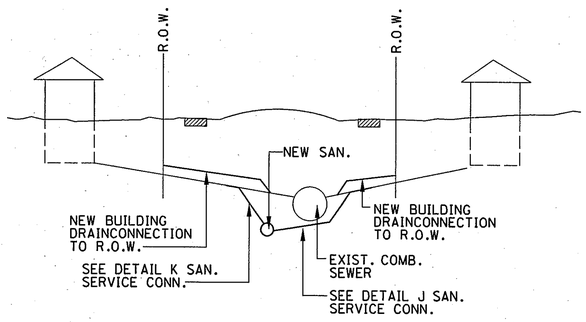

SECTION

SANITARY AND BUILDING DRAIN SERVICE CONNECTION SCHEMATIC

NOT TO SCALE

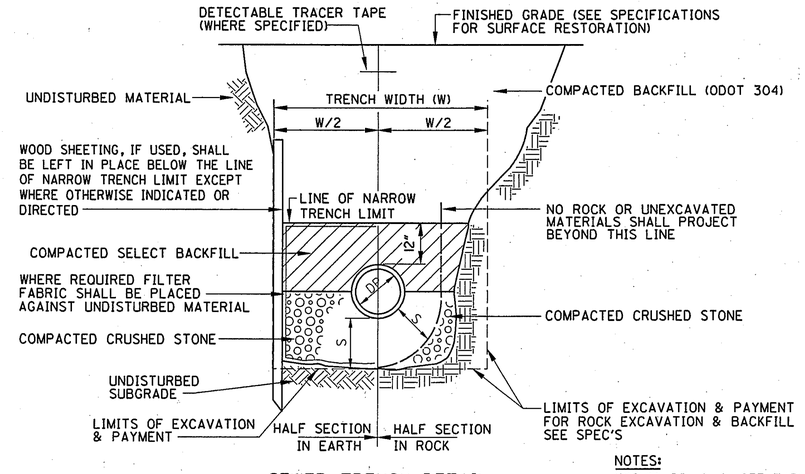

SEWER TRENCH DETAIL

NOT TO SCALE

NOTES:
FOR W, DP, & S, SEE TABLE A THIS SHEET.
NO SLAG TO BE USED IN BEDDING OR BACKFILL.

DEPTH TO INVERT	DIAMETER OF PIPE (DP)	MAXIMUM TRENCH WIDTH BELOW LINE OF NARROW TRENCH LIMIT (SHEETED OR UNSHEETED) (W)	MINIMUM CLEARANCE (S)
0-16'	TO 18"	5'	6"
0-16'	21"-24"	5'	7½"
OVER 16'	TO 18"	7'	6"
OVER 16'	21"-24"	7'	7½"

TABLE A

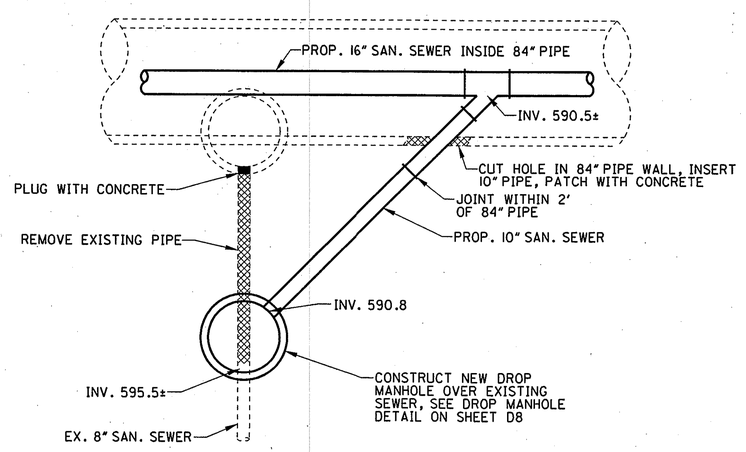

DETAIL C - CONNECTION OF CARRIAGE LANE SAN. SEWER

SEE SHEET C5
½" = 1'-0"

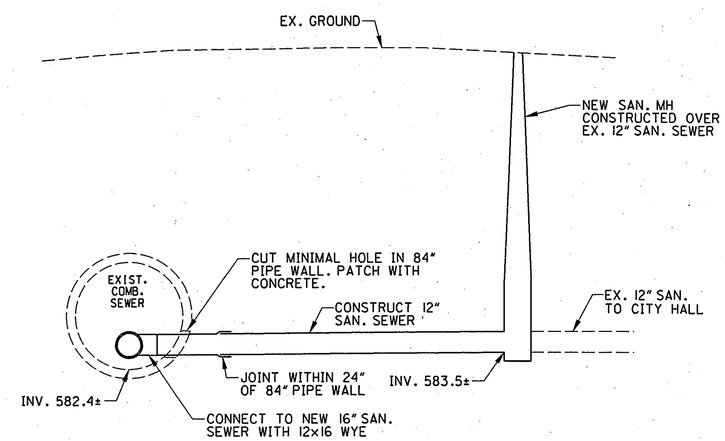

DETAIL B - 12" CONNECTION AT STATION 10+55 (AVON BELDEN ROAD)

SEE SHEET C1

PARSONS BRINCKERHOFF

REVISED	DATE

DESIGNED	DRAWN	DATE
DSW	MME	8/18/03
	CHECKED	
	DLC	

MISCELLANEOUS DETAILS

AVON BELDEN ROAD SEWER SEPARATION

D5

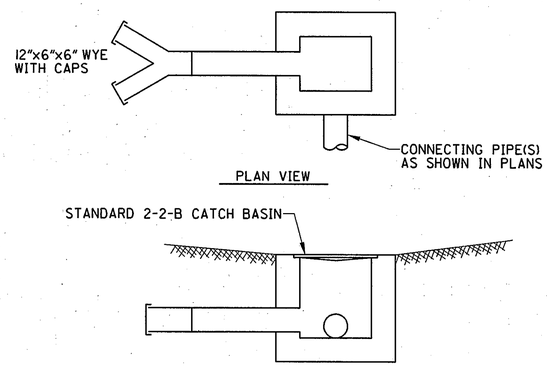

DETAIL W
NEW CATCH BASIN
NOT TO SCALE

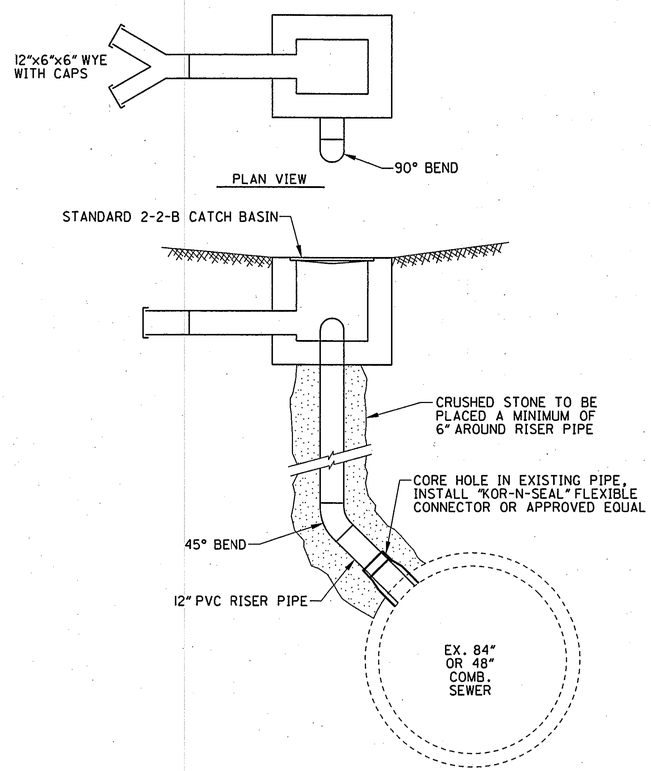

DETAIL Y
NEW CATCH BASIN CONNECTED OVER
EXISTING COMBINED SEWER
NOT TO SCALE

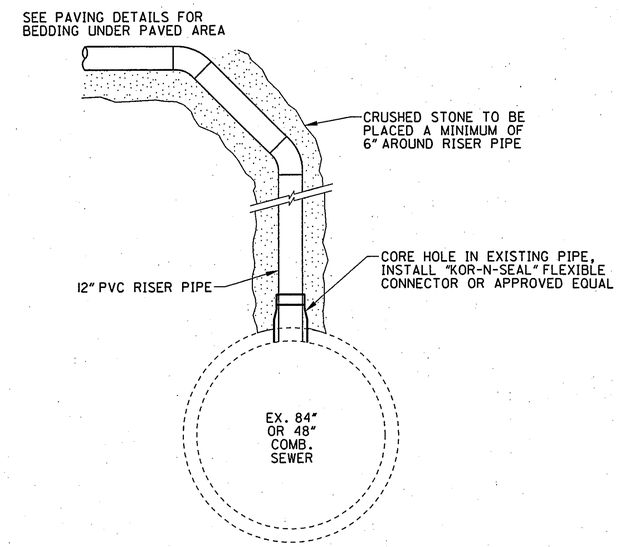

DETAIL X
STORM SEWER LATERAL
CONNECTON TO EXISTING SEWER
NOT TO SCALE

PARSONS BRINCKERHOFF

REVISED	DATE

DESIGNED	DRAWN	DATE
DSW	MME	8/18/03
CHECKED		
DLC		

MISCELLANEOUS DETAILS

AVON BELDEN ROAD
SEWER SEPARATION

D6

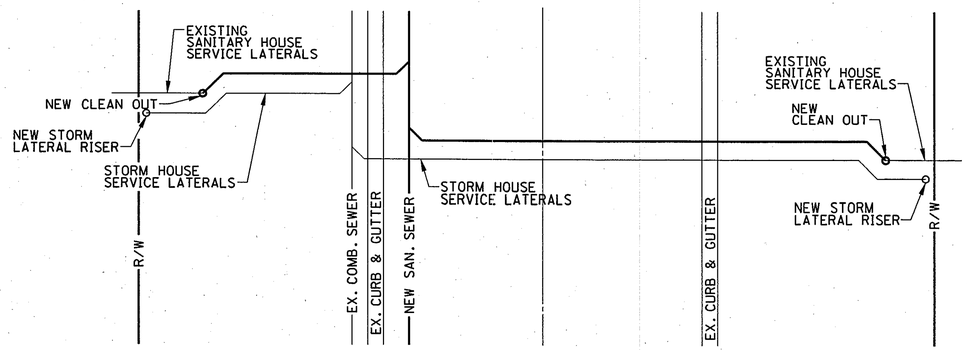

PLAN

SCHEMATIC OF HOUSE SERVICE AND BUILDING CONNECTIONS

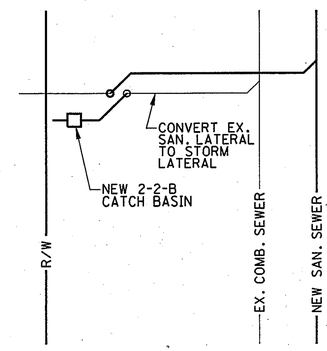

DETAIL H

NEW STORM LATERAL WITH CATCH BASIN

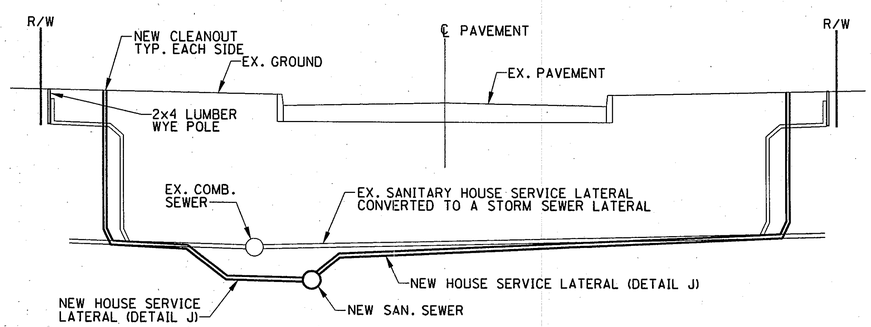

DETAILS J AND K

NEW HOUSE SERVICE LATERAL UNDER EXISTING SEWER

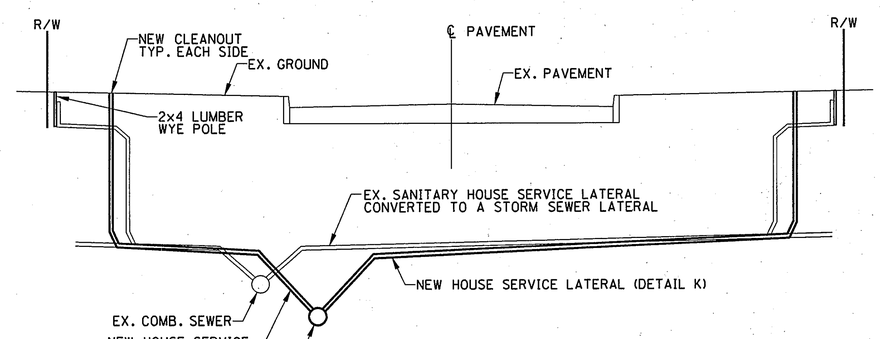

DETAILS J AND K

NEW HOUSE SERVICE LATERAL OVER EXISTING SEWER

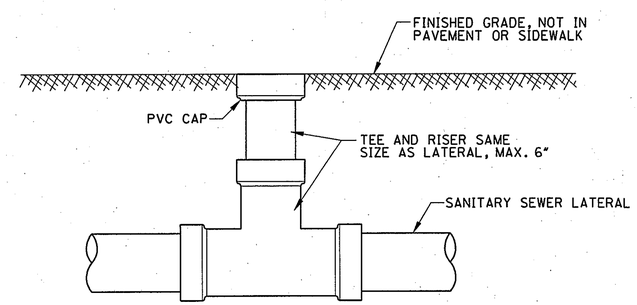

CLEANOUT DETAIL

N.T.S.

PARSONS BRINCKERHOFF

DESIGNED	DRAWN	REVISED	DATE
DSW	MME		
CHECKED	DATE		
DLC	8/18/03		

MISCELLANEOUS DETAILS

AVON BELDEN ROAD SEWER SEPARATION

D7

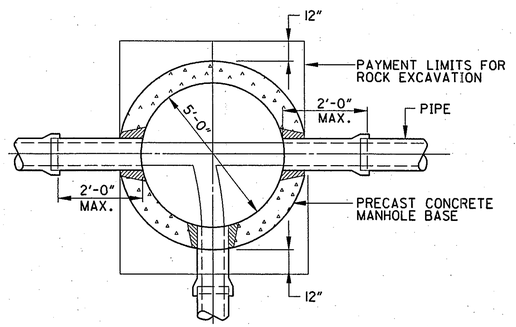

5'-0" DIA. OR LARGER MANHOLE PLAN

NOT TO SCALE

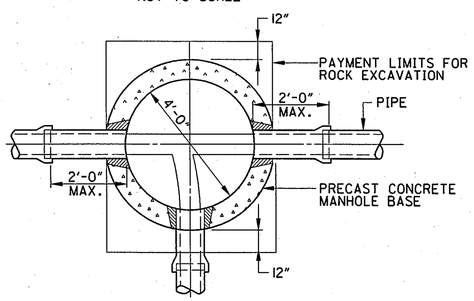

4'-0" DIA. PRECAST CONCRETE MANHOLE PLAN

NOT TO SCALE

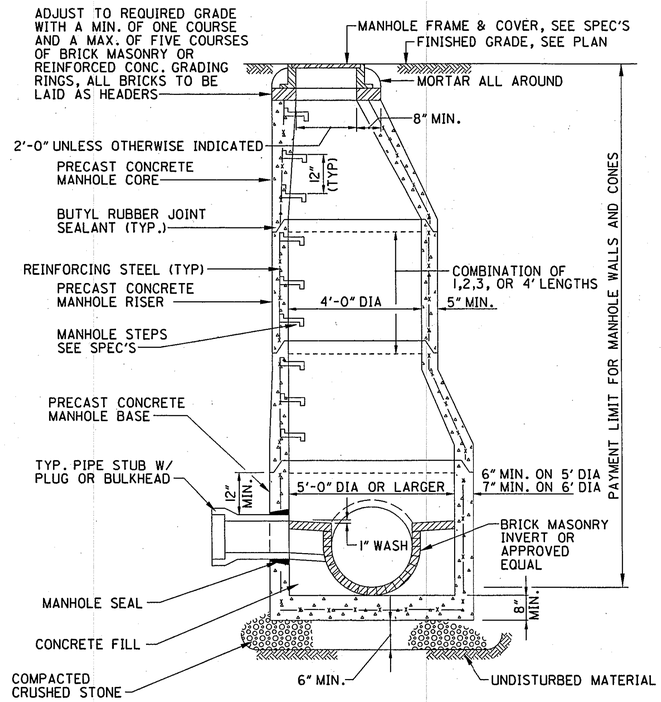

5'-0" DIA. OR LARGER PRECAST CONCRETE MANHOLE DETAIL

NOT TO SCALE

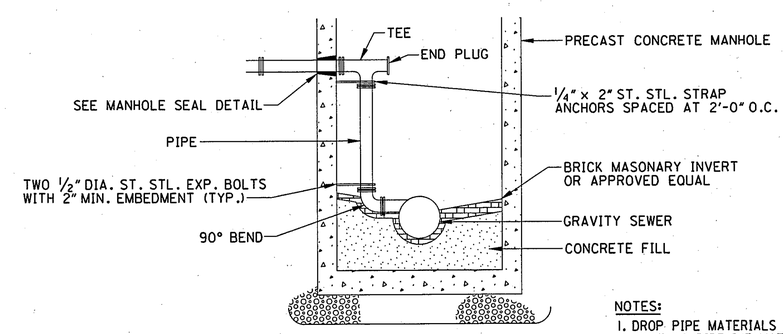

INSIDE DROP CONNECTION DETAIL

NOT TO SCALE

NOTES:

1. DROP PIPE MATERIALS TO BE SAME AS PIPELINE MATERAILS
2. DIMENSIONS & CONSTRUCTION OF MANHOLE TO BE SIMILIAR TO TYP. MANHOLE EXCEPT AS SHOWN
3. FOR PIPE UP TO AND INCLUDING 8" USE 4' DIAMETER MANHOLE; OVER 8" USE 5' DIAMETER MANHOLE

NOTE:
ALL 2-2-B CATCH BASINS TO HAVE STUB FOR FUTURE ROOF DRAIN CONNECTION. SEE SHEET D6.

PARSONS BRINCKERHOFF

REVISED	DATE

DESIGNED	DRAWN	DATE
DSW	MME	8/18/03
CHECKED		
DLC		

MISCELLANEOUS DETAILS

AVON BELDEN ROAD SEWER SEPARATION

D8

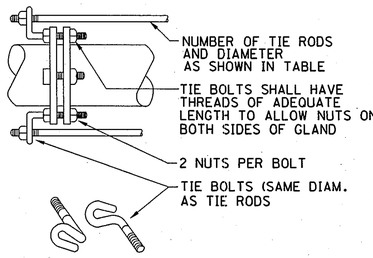

TABLE OF TIE RODS		
PIPE SIZE	TIE ROD NO.	TIE ROD DIA.
4"	2	1/2"
6"	2	1/2"
8"	2	5/8"
10"	2	3/4"
12"	4	3/4"
16"	6	3/4"
20"	10	3/4"

JOINT RESTRAINT DETAIL
NOT TO SCALE

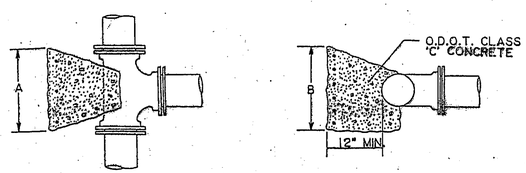

RUN	BRANCH	A	B	CU.YDS. CONC.
6	6	2'0"	2'0"	0.2
8	6	2'0"	2'0"	0.2
	8	3'0"	2'3"	0.2
10	8	3'0"	2'3"	0.2
12	6	2'0"	2'0"	0.2
	8	3'0"	2'3"	0.3
	12	4'6"	3'6"	0.7

NOTES: SIDE OF BLOCKING SHALL BE PLACED AGAINST FIRM, UNDISTURBED EARTH.

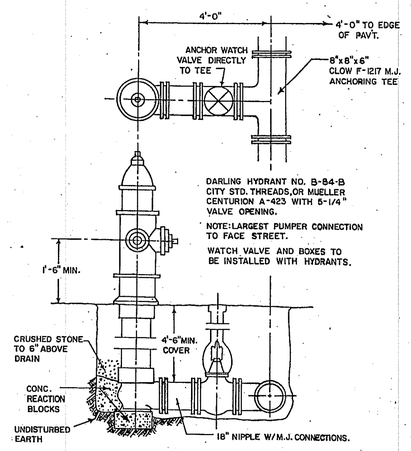

HYDRANT DETAIL
(NO SCALE)

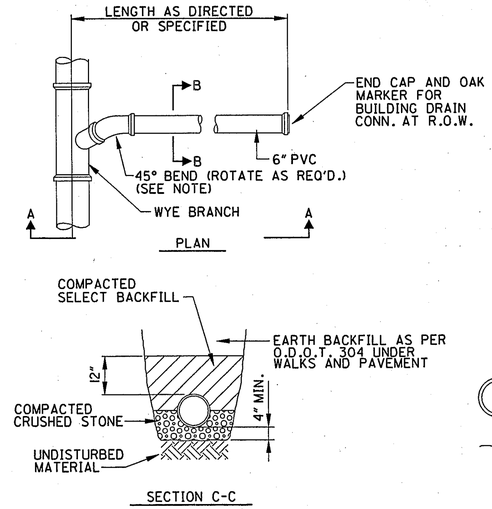

NOTE:
BE SURE THAT END OF BELL ON WYE BRANCH DOES NOT RUB ON UNDERSIDE OF 45° BEND.

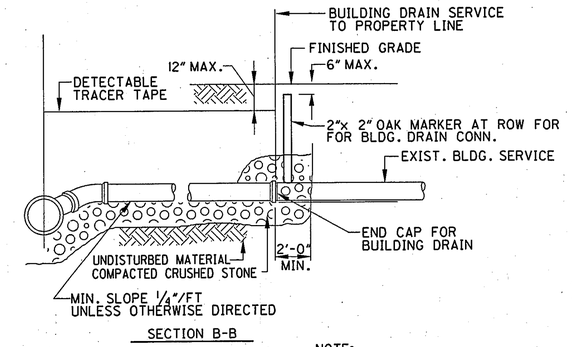

NOTE:
NO SLAG TO BE USED IN BACKFILL OR BEDDING.

SANITARY SERVICE AND BLDG. DRAIN BEDDING AND INSTALLATION DETAIL
NOT TO SCALE

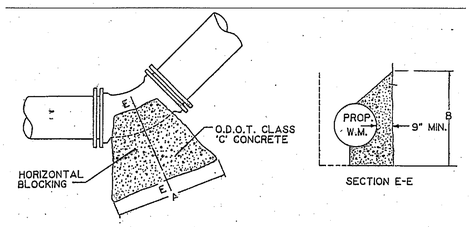

	DEGREE BEND	A	B	CU.YDS. CONC.
6	11 1/4	1'6"	1'6"	0.1
	22 1/2	1'6"	1'6"	0.1
	45	2'0"	1'6"	0.1
8	11 1/4	1'6"	1'9"	0.1
	22 1/2	1'6"	1'9"	0.1
	45	2'6"	2'0"	0.2
10	11 1/4	1'6"	1'6"	0.1
	22 1/2	2'0"	2'0"	0.2
	45	3'0"	2'6"	0.4
12	11 1/4	1'6"	2'0"	0.2
	22 1/2	2'6"	2'6"	0.3
	45	3'6"	3'6"	0.6

NOTES: THRUST SIDE OF BLOCKING SHALL BE PLACED AGAINST FIRM, UNDISTURBED EARTH.

Note: All mechanical joint bolts shall be painted with bitumastic compound and then wrap all mechanical joints with two layers of polyethylene sheeting.

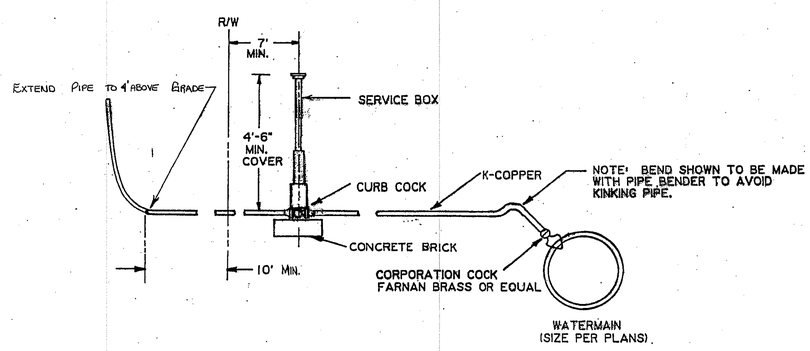

WATER SERVICE CONNECTION
(NO SCALE)

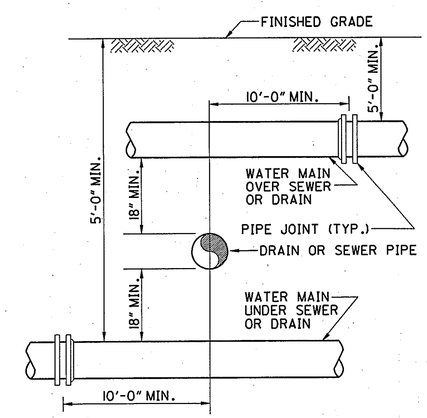

SEWER OR DRAIN CROSSING DETAIL
NOT TO SCALE

PARSONS BRINCKERHOFF

DESIGNED	DRAWN	REVISED
DSW	MME	
CHECKED	DATE	DATE
DLC	8/18/03	

MISCELLANEOUS DETAILS

AVON BELDEN ROAD SEWER SEPARATION

D9

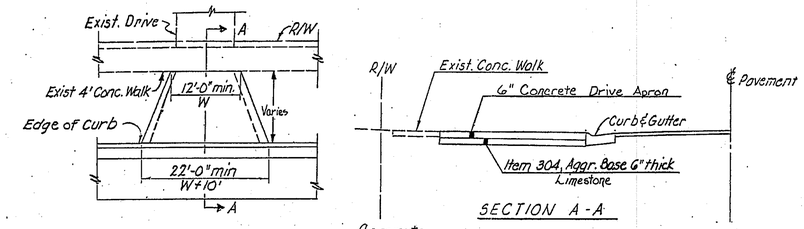

TYPICAL DRIVE DETAIL

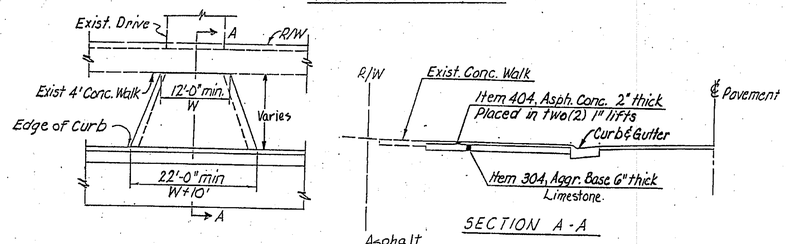

TYPICAL DRIVE DETAIL

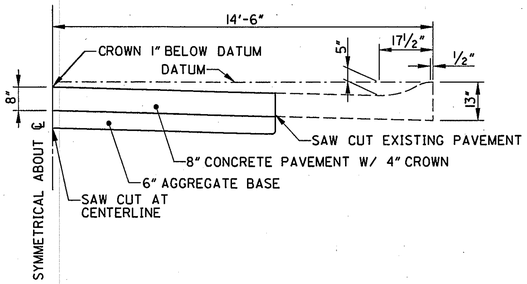

CONCRETE PAVEMENT REPLACEMENT
N.T.S.

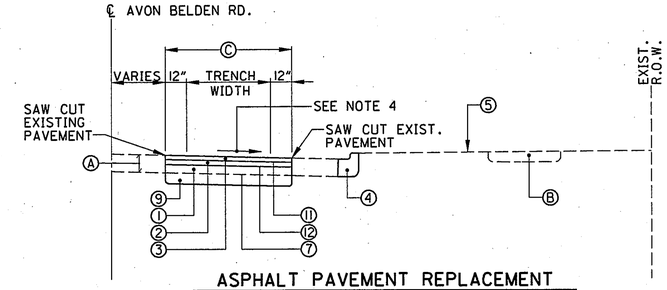

ASPHALT PAVEMENT REPLACEMENT
N.T.S.

PAVING NOTES:

1. THE BITUMINOUS PRIME COAT SHALL BE PLACED 24 HOURS IN ADVANCE OF THE INSTALLATION OF THE ASPHALT.
2. THE EXISTING PAVEMENT EDGE SHALL BE SAWCUT TO LOCATE A SOUND PAVEMENT EDGE SHALL BE SAWCUT TO LOCATE A PURPOSES, AN AVERAGE WIDTH OF 1 FT OF EXISTING PAVEMENT BEING REPLACED HAS BEEN ASSUMED UNLESS OTHERWISE SHOWN IN THE PLANS.
3. SEE PLAN AND PROFILE SHEETS FOR PAVEMENT REPLACEMENT LIMITS AT THE INTERSECTION OF S.R. 83 AND WALKER ROAD.
4. MATCH EXISTING PAVEMENT SLOPE.

PAVING LEGEND:

Ⓐ EXISTING ASPHALT CONCRETE PAVEMENT - TICKNESS UNKNOWN.
Ⓑ EXISTING CONCRETE WALK.
Ⓒ EXISTING ASPHALT CONCRETE AND/OR GRAVEL SHOULDER, THICKNESS UNKNOWN - TO BE REMOVED
① ITEM 301 - 7" BITUMINOUS AGGREGATE BASE.
② ITEM 402 - 1¾" ASPHALT CONCRETE.
③ ITEM 404 - 1¼" ASPHALT CONCRETE.
④ ITEM 609 - CURB, TYPE 2 (T=10) AND GUTTER.
⑤ ITEM 658 - SEEDING AND MULCHING.
⑥ ITEM 203 - SUBGRADE COMPACTION.
⑦ ITEM 408 - BITUMINOUS PRIME COAT (AT 0.40 GAL. PER SQ. YD.)
⑧ NOT USED.
⑨ ITEM 304 - 6" AGGREGATE BASE.
⑩ ITEM 254 - PAVEMENT PLANING
⑪ ITEM 407 - TACK COAT (AT 0.075 GAL. PER SQ. YD.)
⑫ ITEM 407 - TACK COAT FOR INTERMEDIATE COURSE (AT 0.045 GAL. PER SQ. YD)

REPLACE EXISTING JOINTS WITH DETAILS BELOW

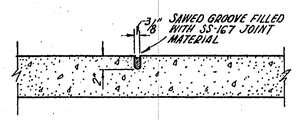

CONTRACTION JOINT

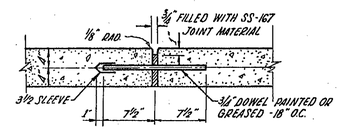

EXPANSION JOINT

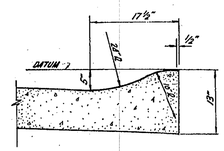

DETAIL "A"
INTEGRAL CURB

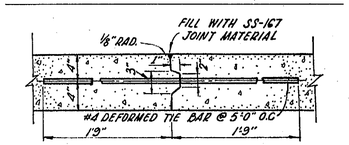

LONGITUDINAL JOINT

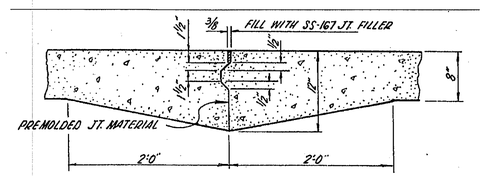

THICKENED EDGE KEY JOINT

TYPICAL SIDEWALK PLACEMENT
ON EXISTING RESIDENTIAL PROPERTIES

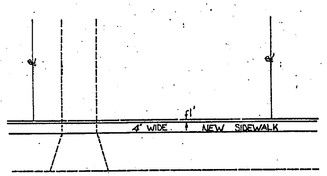

GENERAL NOTES:

1. TYPICAL SIDEWALK CROSS SLOPE TO BE ¼"/FT., ANY DEVIATION WILL HAVE TO BE APPROVED BY THE CITY ENGINEER, AND IN NO SITUATION SHALL THE CROSS SLOPE EXCEED ½"/FT.
2. EXPANSION JOINTS TO BE PLACED EVERY 25 ft. AND TROWL JOINTS EVERY 5 ft.
3. ALL SIDEWALKS ARE TO BE 6" THICK IN WAY OF DRIVEWAYS AND CURBRAMPS, AND 4" THICK ELSEWHERE.
4. SIDEWALK BASE TO BE 2" MIN. LIMESTONE SCREENINGS.
5. WHITE CURE COMPOUND TO BE USED.
6. WHEN EXISTING CONDITIONS HAMPER THESE SPECIFICATIONS THE SIDEWALKS WILL BE LAID UNDER THE DIRECTION AND ACCEPTANCE OF THE MUNICIPAL ENGINEER.

TYPICAL SIDEWALK PLACEMENT

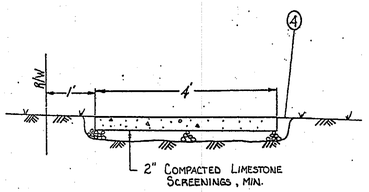

GENERAL NOTES:

1. MINIMUM SIDEWALK CROSS SLOPE TO BE ¼"/FT., ANY DEVIATION WILL HAVE TO BE APPROVED BY THE CITY ENGINEER, AND IN NO SITUATION SHALL THE CROSS SLOPE EXCEED ½"/FT.
2. EXPANSION JOINTS TO BE PLACED EVERY 25 ft AND TROWL JOINTS EVERY 5 ft.
3. ALL SIDEWALKS ARE TO BE 6" THICK IN WAY OF DRIVEWAYS AND CURBRAMPS, AND 4" THICK ELSEWHERE.
4. SCREENED HUMUS TOPSOIL TO BE USED FREE OF ALL LUMPS, STONES, ROOTS AND DEBRIS.

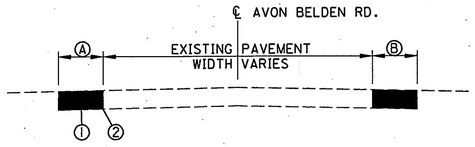

ASPHALT SHOULDER CONSTRUCTION
N.T.S.

LIMITS OF SHOULDERS:

CONSTRUCT ASPHALT SHOULDERS ALONG AVON BELDEN ROAD AS FOLLOWS:

Ⓐ WEST SIDE FROM ELECTRIC BLVD. (STA. 12+60±) TO COVENTRY CT. (STA. 49+70±). WEST SIDE SHOULDER TO BE 4' WIDE.

Ⓑ EAST SIDE FROM ELECTRIC BLVD. (STA. 12+70±) TO THE NORTH SIDE OF THE CONCRETE DRIVEWAY AT HOUSE NUMBER 309 (STA. 42+85±). THIS SECTION OF EAST SIDE SHOULDER TO BE 4' WIDE.

Ⓑ EAST SIDE FROM SOUTH SIDE OF CONCRETE DRIVEWAY AT HOUSE NUMBER 309 (STA. 43+04±) TO NORTH SIDE OF CONCRETE DRIVEWAY AT HOUSE NUMBER 401 (STA. 61+75±). THIS SECTION OF EAST SIDE SHOULDER TO BE 2.5' WIDE.

SHOULDER PAVING NOTES:

① SHOULDER PAVEMENT SECTION TO BE SAME AS ASPHALT PAVEMENT REPLACEMENT SHOWN ABOVE.
② SAW CUT EXISTING PAVEMENT PRIOR TO PLACING SHOULDER.
③ SHOULDER SLOPE TO MATCH EXISTING GROUND SLOPE.
④ DO NOT PLACE SHOULDER OVER EXISTING CONCRETE OR ASPHALT PAVEMENT OR DRIVEWAYS.

PARSONS BRINCKERHOFF

REVISED	DATE

DESIGNED	DRAWN	REVIEWED
DSW	MME	DLC
CHECKED	DATE	
DLC	8/18/03	

MISCELLANEOUS DETAILS

AVON BELDEN ROAD SEWER SEPARATION

D10

GENERAL

LENGTH AND DURATION OF LANE CLOSURES AND RESTRICTIONS SHALL BE AT THE APPROVAL OF THE ENGINEER. IT IS THE INTENT TO PERFORM THE REQUIRED WORK WITH THE LEAST INCONVENIENCE TO THE TRAVELING PUBLIC AND THE MAXIMUM SAFETY OF THE CONTRACTOR. LANE CLOSURES OR RESTRICTIONS OVER SEGMENTS OF THE PROJECT IN WHICH NO WORK IS ANTICIPATED WITHIN A REASONABLE TIME FRAME, AS DETERMINED BY THE ENGINEER, SHALL NOT BE PERMITTED. THE LEVEL OF UTILIZATION OF MAINTENANCE OF TRAFFIC DEVICES SHALL BE COMMENSURATE WITH THE WORK IN PROGRESS.

ALL TEMPORARY TRAFFIC CONTROL DEVICES SHALL BE FURNISHED, ERECTED, MAINTAINED, AND REMOVED BY THE CONTRACTOR IN ACCORDANCE WITH THE REQUIREMENTS OF THE ODOT CONSTRUCTION AND MATERIALS SPECIFICATIONS MANUAL, SPEC. 614, THE "OHIO MANUAL OF UNIFORM TRAFFIC CONTROL DEVICES", AND THE ODOT TRAFFIC ENGINEERING MANUAL. COPIES OF WHICH ARE AVAILABLE FROM THE OHIO DEPARTMENT OF TRANSPORTATION, BUREAU OF TRAFFIC, 1980 WEST BROAD STREET, COLUMBUS, OHIO 43223.

BEFORE THE WORK BEGINS, THE CONTRACTOR SHALL SUBMIT TO THE ENGINEER THE NAMES AND TELEPHONE NUMBERS OF A PERSON OR PERSONS WHO CAN BE CONTACTED TWENTY-FOUR (24) HOURS PER DAY BY CITY OF AVON LAKE, ENGINEERING DEPARTMENT AND ALL INTERESTED POLICE AGENCIES. THIS PERSON OR PERSONS SHALL BE RESPONSIBLE FOR PLACING OR REPLACING NECESSARY TRAFFIC CONTROL DEVICES IN ACCORDANCE WITH THE "OHIO MANUAL OF UNIFORM TRAFFIC CONTROL DEVICES".

ALL WORK AND TRAFFIC CONTROL DEVICES SHALL BE IN ACCORDANCE WITH 614 AND OTHER APPLICABLE PORTIONS OF THE SPECIFICATIONS, AS WELL AS THE OHIO MANUAL OF UNIFORM TRAFFIC CONTROL DEVICES. PAYMENT FOR ALL LABOR, EQUIPMENT AND MATERIALS SHALL BE INCLUDED IN THE LUMP SUM CONTRACT PRICE FOR 614, MAINTAINING TRAFFIC, UNLESS SEPARATELY ITEMIZED IN THE PLANS.

THE GENERAL MAINTENANCE OF TRAFFIC PLAN PROVIDED IS FOR BIDDING PURPOSES ONLY AND REPRESENTS THE LEVEL OF TRAFFIC CONTROL EXPECTED DURING THE PERFORMANCE OF THE WORK. THE CONTRACTOR SHALL DEVELOP A FINAL MAINTENANCE OF TRAFFIC PLAN SUITABLE TO HIS NEEDS THAT MINIMIZES TRAFFIC DISRUPTION. LANE CLOSURES SHALL ONLY BE MAINTAINED IN AREAS WHERE WORK IS BEING PERFORMED ON A DAILY BASIS. IF WORK IS COMPLETE IN ONE AREA AND HAS MOVED TO ANOTHER, THE MAINTENANCE OF TRAFFIC FACILITIES SHALL BE REMOVED FROM THE COMPLETED SECTION. IF WORK IS SUSPENDED IN ANY AREA FOR MORE THAN TWO CONSECUTIVE DAYS FOR ORDERING AND SHIPPING OF MATERIALS, INCLEMENT WEATHER, OR OTHER REASONS, LANE CLOSURES MUST BE TEMPORARILY REMOVED.

THE CONTRACTOR'S MAINTENANCE OF TRAFFIC CONTROL PLAN (MTCP) SHALL BE SUBMITTED TO THE CITY OF AVON LAKE, ENGINEERING DEPARTMENT (440) 930-4101 AT THE PRE-CONSTRUCTION MEETING OR A MINIMUM OF TEN (10) WORKING DAYS PRIOR TO BEGINNING WORK. COPIES OF THE APPROVED MTCP SHALL BE GIVEN TO THE PROJECT ENGINEER AND KEPT ON THE PROJECT SITE.

UPON INITIATION OF THE PROJECT AND PRIOR TO BLOCKING ANY STREETS, THE CONTRACTOR SHALL NOTIFY LOCAL RESIDENTS AND BUSINESSES AS TO THE ACCESS RESTRICTIONS AND SCHEDULE OF THE PROJECT, AND SHALL PROVIDE FOR NEEDED ACCESS TO THE EXTENT SAFE AND FEASIBLE.

THE ROADWAY SHALL NOT BE OPENED TO TRAFFIC UNTIL PERMANENT TRAFFIC CONTROLS ARE IN PLACE, OR UNTIL TEMPORARY TRAFFIC CONTROLS, APPROVED BY THE ENGINEER, ARE INSTALLED. THE CONTRACTOR ASSUMES ALL LIABILITY FOR THE PREMATURE REMOVAL OF TEMPORARY TRAFFIC CONTROLS.

ALL PERMANENT TRAFFIC CONTROLS NOT IN CONFLICT WITH THE TEMPORARY TRAFFIC CONTROLS SHALL BE MAINTAINED THROUGHOUT THIS PROJECT BY THE CONTRACTOR. PERMANENT TRAFFIC CONTROLS MAY BE TEMPORARILY RELOCATED OR COVERED, AS APPROVED BY THE ENGINEER. THE CONTRACTOR SHALL ASSUME ALL LIABILITY FOR MISSING, DAMAGED, AND IMPROPERLY PLACED DEVICES.

TRAFFIC MUST BE RESTORED TO NORMAL AND TEMPORARY TRAFFIC CONTROL SIGNS AND DEVICES REMOVED ON OR BEFORE THE PROJECT COMPLETION DATE.

CONSTRUCTION OPERATIONS SHALL NOT BEGIN UNTIL ALL TEMPORARY TRAFFIC CONTROLS ARE IN PLACE.

THE CONTRACTOR SHALL INSTALL ORANGE PLASTIC FENCING AROUND THE ACTIVE WORK AREA AND SHALL TAKE SUCH OTHER MEASURES AS NECESSARY, SUCH AS WARNING SIGNS, TO PREVENT PEDESTRIAN ACCESS TO THE WORK AREA. FENCING SHALL NOT PREVENT PEDESTRIAN ACCESS TO PUBLIC SIDEWALKS OR TO BUILDINGS EXCEPT DURING INSTANCES WHEN CONSTRUCTION REQUIRES WORK IN THE SIDEWALK, SUCH AS WHEN REPAIRING OR REPLACING A DAMAGED UTILITY SERVICE LINE.

A FLASHING ARROW PANEL (48" X 96" TYPE "C") SHALL BE USED IN LANE CLOSURES IN ACCORDANCE WITH THE OHIO MANUAL.

ALL OVERHEAD CABLE, DOWN GUYS OR BACK GUYS SHALL NOT BLOCK ANY PORTION OF A TRAFFIC SIGNAL, TRAFFIC CONTROL SIGN, OR OTHER TRAFFIC CONTROL DEVICE SUCH THAT VISIBILITY OR OPERATION OF THE TRAFFIC CONTROL DEVICE IS IMPAIRED.

WORK SHALL NOT BE PERFORMED IN AND LANE CLOSURES MUST BE REMOVED FROM THE FOLLOWING INTERSECTIONS BETWEEN THE HOURS OF 6 AM TO 9 AM AND 4 PM TO 7 PM, MONDAY THROUGH FRIDAY:

AVON BELDEN ROAD AND REDWOOD BOULEVARD
AVON BELDEN ROAD AND ELECTRIC BOULEVARD
(SATURDAY HOURS - WORK PERMITTED 6:00 A.M. TO 9:00 P.M.)

A FIRE DEPARTMENT AND POLICE DEPARTMENT ARE LOCATED IN THE VICINITY OF THE PROJECT. THE CONTRACTOR SHALL NOTIFY THE FIRE CHIEF FIRE AT (440) 930-4155 AND THE POLICE CHIEF AT (440) 930-4118 WITH HIS SCHEDULE AND LOCATION OF WORK AT LEAST 48 HOURS IN ADVANCE OF THE ANTICIPATED START OF CONSTRUCTION.

ITEM 614, LAW ENFORCEMENT OFFICER (WITH PATROL CAR)

IN ADDITION TO THE REQUIREMENTS OF 614 AND THE LATEST EDITION OF THE OHIO MANUAL OF UNIFORM TRAFFIC CONTROL DEVICES (OMUTCD), A UNIFORMED LAW ENFORCEMENT OFFICER (AND OFFICIAL PATROL CAR WITH WORKING TOP MOUNTED EMERGENCY FLASHING LIGHTS) SHALL BE PROVIDED FOR CONTROLLING TRAFFIC FOR THE FOLLOWING TASKS:

FOR LANE CLOSURES: DURING INITIAL SET-UP PERIODS, TEAR DOWN PERIODS, SUBSTANTIAL SHIFTS OF A CLOSURE POINT OR WHEN NEW LANE CLOSURE ARRANGEMENTS ARE INITIATED.

DURING THE ENTIRE ADVANCE PREPARATION AND CLOSURE SEQUENCE WHERE COMPLETE BLOCKAGE IS REQUIRED.

LAW ENFORCEMENT OFFICERS (L.E.O.'S) SHOULD NOT BE USED WHERE THE OMUTCD INTENDS THAT FLAGGERS BE USED. THE LEO'S ARE CONSIDERED TO BE EMPLOYED BY THE CONTRACTOR AND THE CONTRACTOR SHALL BE RESPONSIBLE FOR THEIR ACTIONS. ALTHOUGH THEY ARE EMPLOYED BY THE CONTRACTOR, THE PROJECT ENGINEER SHALL HAVE CONTROL OVER THEIR PLACEMENT. THE OFFICIAL PATROL CAR SHALL BE A PUBLIC SAFETY VEHICLE AS REQUIRED BY THE OHIO REVISED CODE.

THE CONTRACTOR SHALL MAKE ARRANGEMENTS FOR THESE SERVICES WITH:

CITY OF AVON LAKE POLICE DEPARTMENT
32855 WALKER ROAD
AVON LAKE, OHIO 44012
(440) 933-4567

LAW ENFORCEMENT OFFICERS (WITH PATROL CAR) REQUIRED BY THE TRAFFIC MAINTENANCE TASKS ABOVE SHALL BE PAID FOR ON A UNIT PRICE (HOURLY) BASIS. THE HOURS PAID SHALL INCLUDE MINIMUM SHOW-UP TIME OF FOUR (4) HOURS REQUIRED BY THE LAW ENFORCEMENT AGENCY INVOLVED.

IF THE CONTRACTOR WISHES TO UTILIZE LEO'S FOR FLAGGING AND TRAFFIC CONTROL OTHER THAN FOR THAT REQUIRED IN THESE PLANS, HE MAY DO SO AT HIS OWN EXPENSE.

ITEM SPECIAL, REPLACEMENT SIGN

FLAT SHEET SIGNS FURNISHED BY THE CONTRACTOR IN ACCORDANCE WITH THE REQUIREMENTS OF THE PLANS, SPECIFICATIONS AND PROPOSAL WHICH BECOME DAMAGED BY TRAFFIC FOR REASONS BEYOND THE CONTROL OF THE CONTRACTOR SHALL BE REPLACED IN KIND WHEN ORDERED BY THE ENGINEER. REPLACEMENT SIGNS SHALL BE NEW. OTHER MATERIALS MAY BE IN USED BUT GOOD CONDITION SUBJECT TO APPROVAL BY THE ENGINEER. SIGNS SHALL BE FLAT SHEET, TYPE H.

PAYMENT FOR THE NEW SIGNS SHALL BE MADE AT THE CONTRACT PRICE PER SQUARE FOOT FOR ITEM SPECIAL, REPLACEMENT SIGN, AND SHALL INCLUDE THE COST OF REMOVING AND DISPOSING OF DAMAGED SIGNS, HARDWARE AND SUPPORTS, AND PROVIDING THE NECESSARY REPLACEMENT HARDWARE, SUPPORTS, ETC.

ITEM SPECIAL, REPLACEMENT DRUM

DRUMS FURNISHED BY THE CONTRACTOR IN ACCORDANCE WITH THE REQUIREMENTS OF THE PLANS, SPECIFICATIONS AND PROPOSAL WHICH BECOME DAMAGED BY TRAFFIC FOR REASONS BEYOND THE CONTROL OF THE CONTRACTOR SHALL BE REPLACED IN KIND WHEN ORDERED BY THE ENGINEER. REPLACEMENT DRUMS SHALL BE NEW.

PAYMENT FOR THE NEW DRUMS SHALL BE MADE AT THE CONTRACT PRICE PER EACH FOR ITEM SPECIAL, REPLACEMENT DRUM, AND SHALL INCLUDE THE COST OF REMOVING AND DISPOSING OF THE DAMAGED DRUM, AND PROVIDING AND MAINTAINING THE REPLACEMENT DRUM IN ACCORDANCE WITH THE CONTRACT REQUIREMENTS FOR THE ORIGINAL DRUM.

PAYMENT

PAYMENT FOR ALL MAINTENANCE OF TRAFFIC ITEMS SHALL BE INCLUDED IN THE LUMP "ITEM 614, MAINTAINING TRAFFIC".

GENERAL M.O.T. LEGEND

SIGNALIZED INTERSECTION

INDICATES TYPE "A" FLASHING BARRICADE WARNING LIGHT

CONSTRUCTION DRUM

CONSTRUCTION SIGN

TYPE III BARRICADE

DETOUR SIGN LEGEND

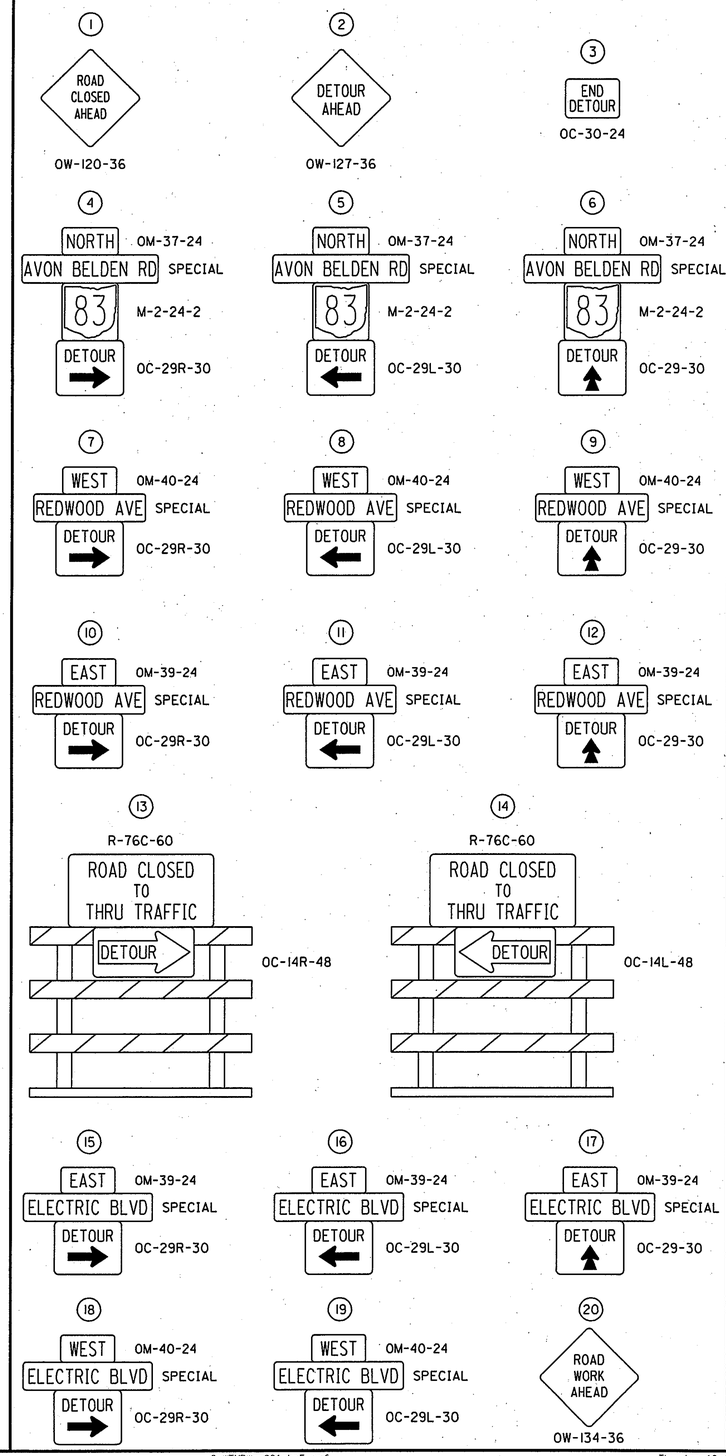

PARSONS BRINCKERHOFF

DESIGNED	DRAWN	REVISED	DATE
MME	MME		
CHECKED	DATE		
EJC	8/18/03		

MAINTENANCE OF TRAFFIC
GENERAL NOTES & DETOUR SIGN LEGEND

AVON BELDEN ROAD
SEWER SEPARATION

T1

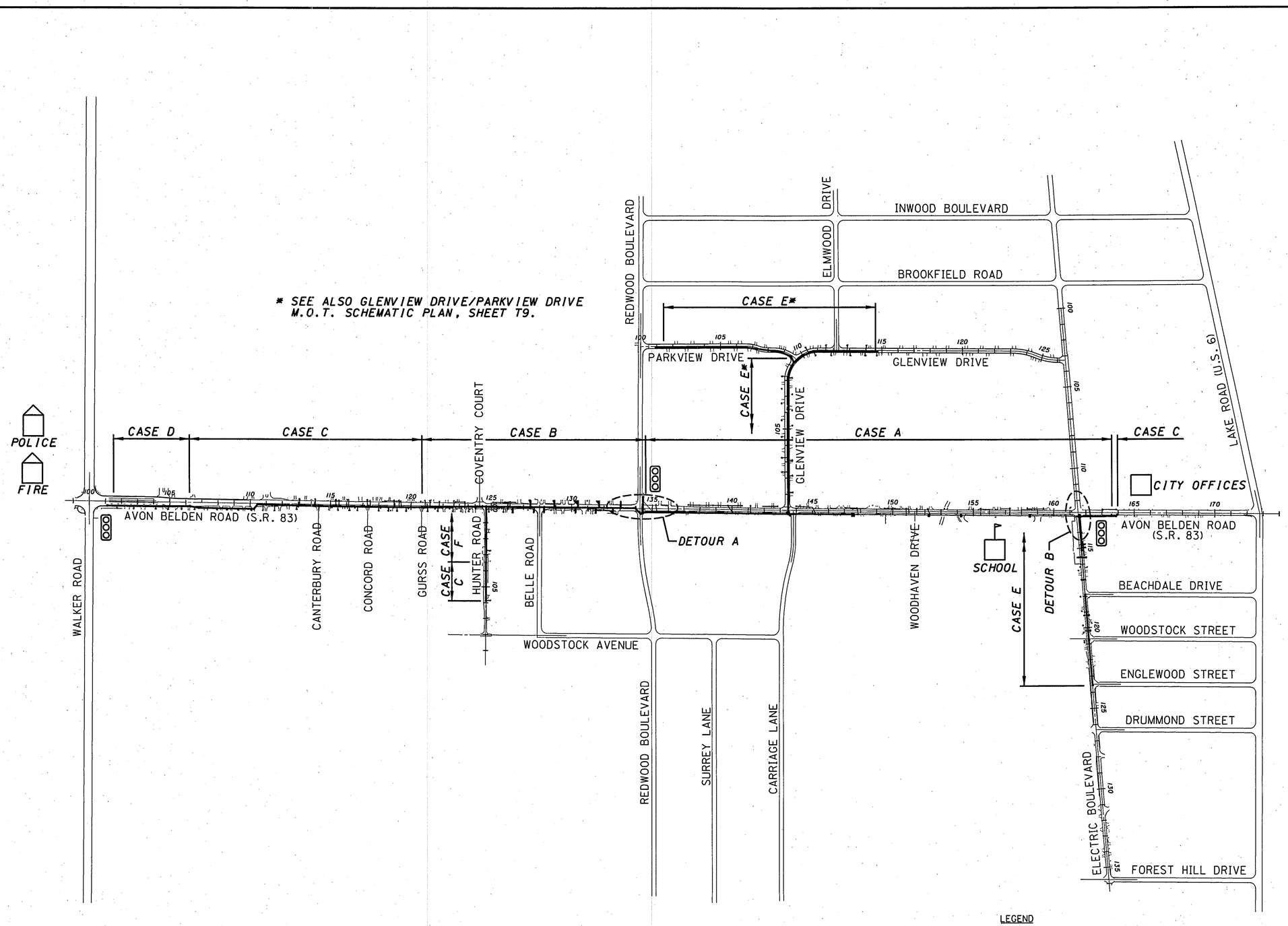

LEGEND

CASE "X"- REFERS TO M.O.T. DETAIL PLAN

- EXISTING TRAFFIC SIGNAL

NOTE:

STATIONING REFERENCED IN THE MAINTENANCE OF TRAFFIC PLANS IS TO THE ℄ OF SURVEY.

PARSONS BRINCKERHOFF

REVISED	DATE

DESIGNED	DRAWN	DATE
MME	MME	8/18/03
CHECKED		
EJC		

MAINTENANCE OF TRAFFIC SCHEMATIC PLAN

AVON BELDEN ROAD SEWER SEPARATION

T2

g:\PROJECTS\avon\plans\mp901abr.dgn C:\TMP\mp901abrF.prf Thu Jan 12 15:58:07 2006

CASE A

SHOULDER CLOSURE
TRAFFIC TO BE MAINTAINED
AVON BELDEN ROAD (S.R. 83) STA. 134+50 TO STA. 163+50

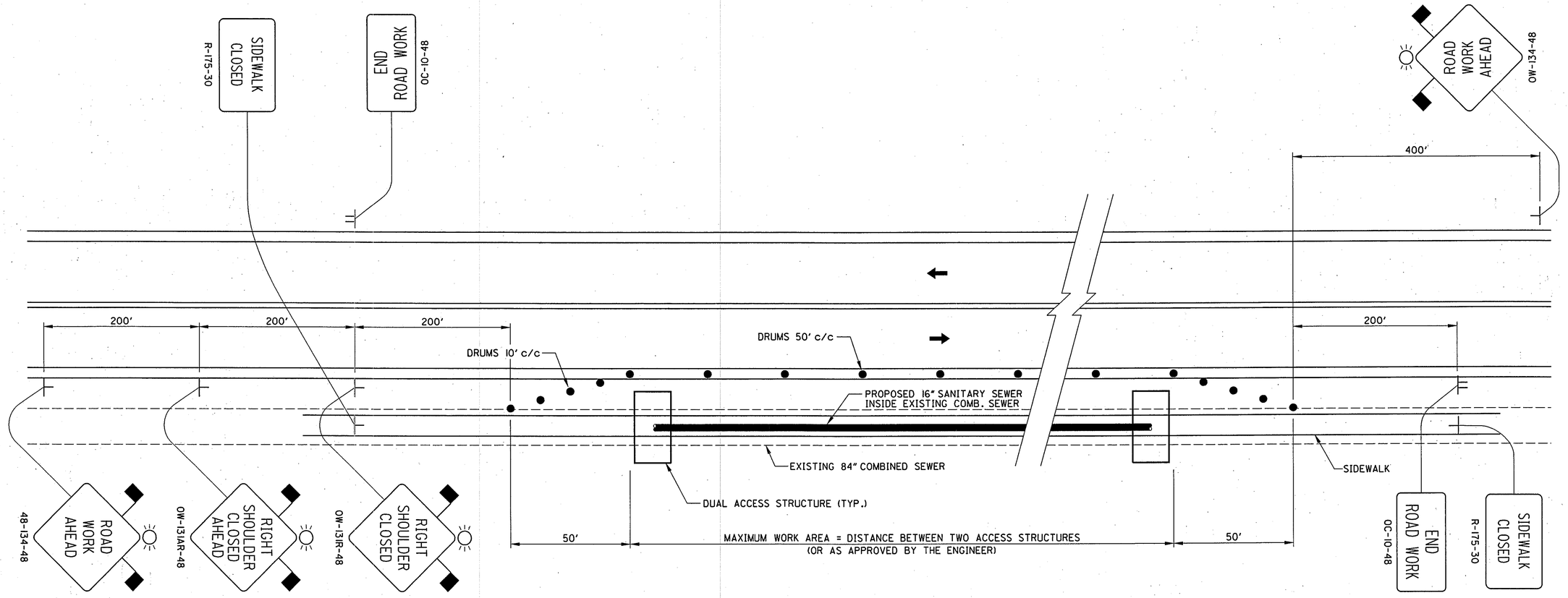

NOTES:

FOR ADDITIONAL INFORMATION SEE ODOT STD. DWG. MT-97.10, MT-105.10M & MT-105-11M.

CONTRACTOR SHALL MAINTAIN ACCESS TO DRIVES AT ALL TIMES.

STATIONING REFERENCED IN THE MAINTENANCE OF TRAFFIC PLANS IS TO THE ℄ SURVEY.

CONTRACTOR TO SURROUND WORK AREA WITH TEMPORARY ORANGE CONSTRUCTION FENCING WHENEVER OR WHEREVER WORKERS ARE NOT PRESENT.

PARSONS BRINCKERHOFF

REVISED	DATE

DESIGNED	DRAWN	DATE
MME	MME	8/18/03
CHECKED		
EJC		

MAINTENANCE OF TRAFFIC DETAIL
CASE A

AVON BELDEN ROAD
SEWER SEPARATION

T3

CASE B

ONE-LANE, TWO-WAY FLAGGING OPERATION
AVON BELDEN ROAD (S.R. 83) STA. 120+75 TO STA. 134+50

SEE DETOUR "A" PLAN FOR AVON BELDEN ROAD/
REDWOOD BOULEVARD INTERSECTION CONSTRUCTION

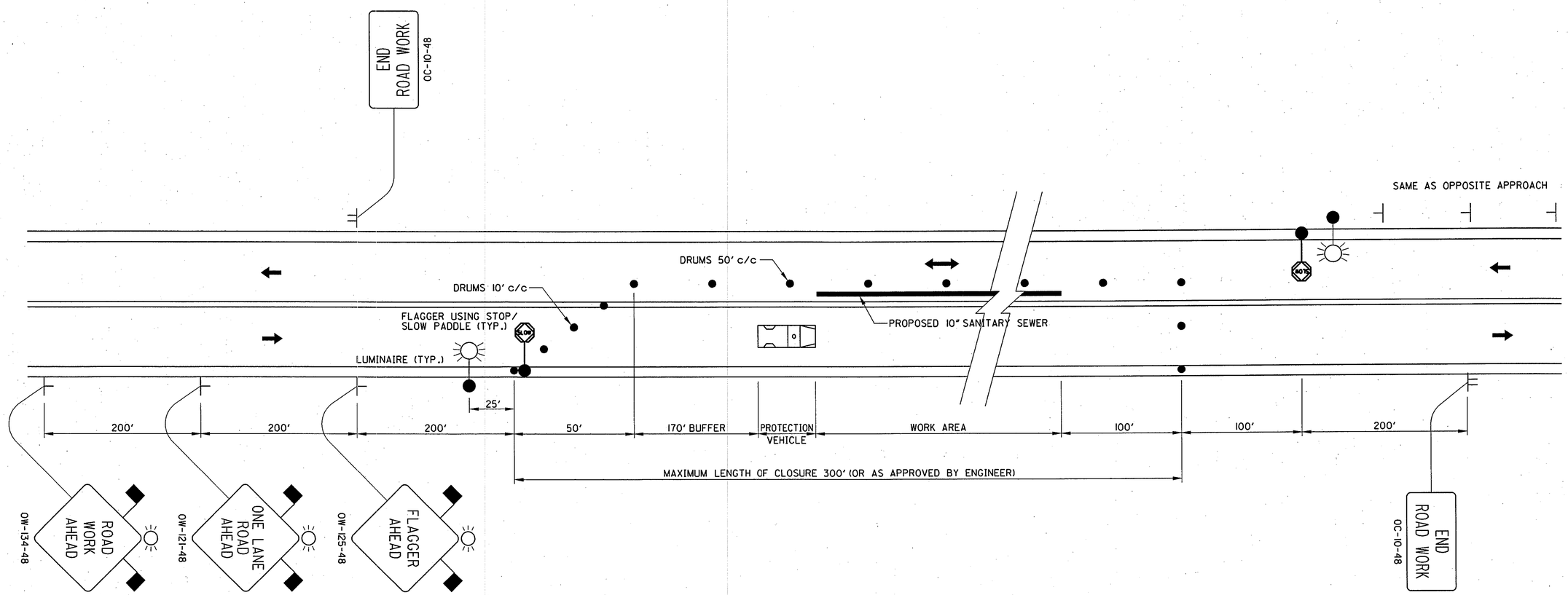

NOTES:

FOR ADDITIONAL INFORMATION SEE ODOT STD. DWG. MT-97.10, MT-105.10M & MT-105-11M.

CONTRACTOR SHALL MAINTAIN ACCESS TO DRIVES AT ALL TIMES.

STATIONING REFERENCED IN THE MAINTENANCE OF TRAFFIC PLANS IS TO THE ℄ SURVEY.

PARSONS BRINCKERHOFF

REVISED	DATE

DESIGNED	DRAWN	DATE
MME	MME	8/18/03
CHECKED		
EJC		

MAINTENANCE OF TRAFFIC DETAIL
CASE B

AVON BELDEN ROAD
SEWER SEPARATION

T4

CASE C

SHOULDER CLOSURE
TRAFFIC TO BE MAINTAINED
AVON BELDEN ROAD (S.R. 83) STA. 106+25 TO STA. 120+75
& STA. 163+50 TO STA. 164+00
HUNTER ROAD STA. 103+50 TO STA. 105+90

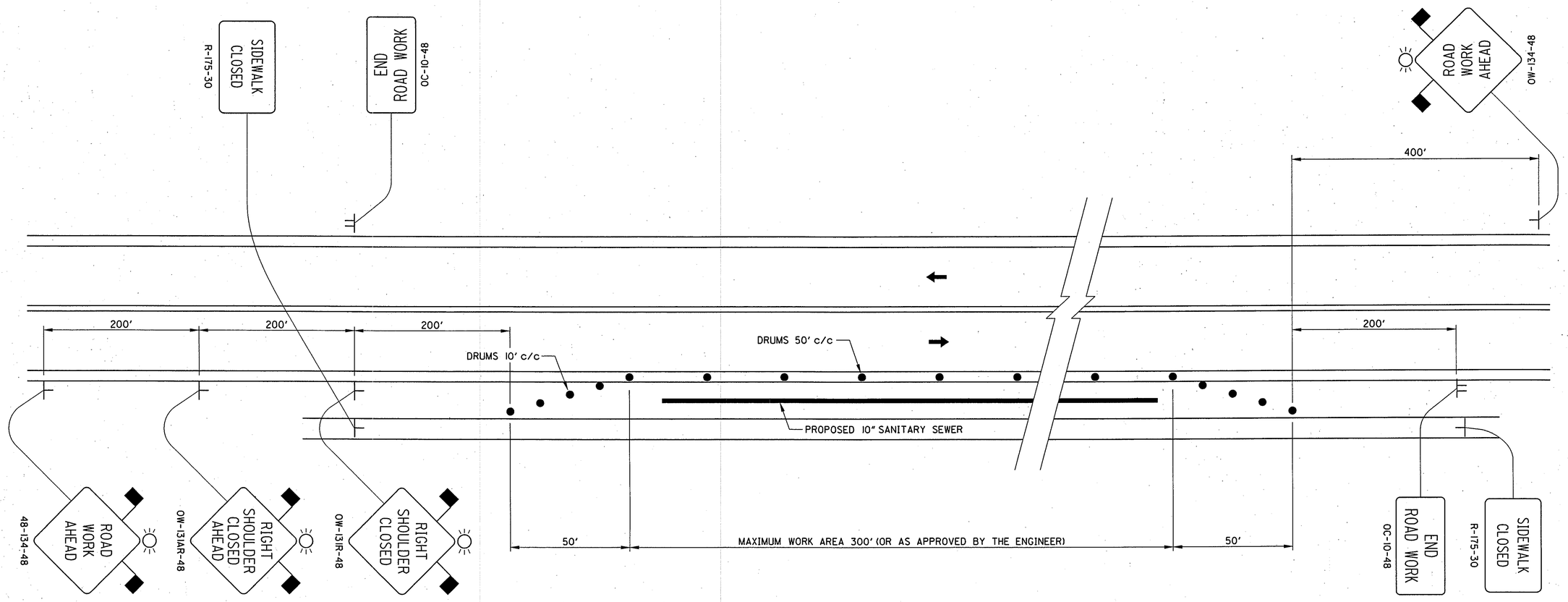

NOTES:

FOR ADDITIONAL INFORMATION SEE ODOT STD. DWG. MT-97.10, MT-105.10M & MT-105-11M.

CONTRACTOR SHALL MAINTAIN ACCESS TO DRIVES AT ALL TIMES.

STATIONING REFERENCED IN THE MAINTENANCE OF TRAFFIC PLANS IS TO THE ℄ SURVEY.

CONTRACTOR TO SURROUND WORK AREA WITH TEMPORARY ORANGE CONSTRUCTION FENCING WHENEVER OR WHEREVER WORKERS ARE NOT PRESENT.

PARSONS BRINCKERHOFF

REVISED	DATE

DESIGNED	DRAWN	DATE
MME	MME	8/18/03
CHECKED		
EJC		

MAINTENANCE OF TRAFFIC DETAIL
CASE C

AVON BELDEN ROAD
SEWER SEPARATION

T5

CASE D

RIGHT LANE CLOSURE
TRAFFIC TO BE MAINTAINED
AVON BELDEN ROAD (S.R. 83) STA. 101+50 TO STA. 106+25

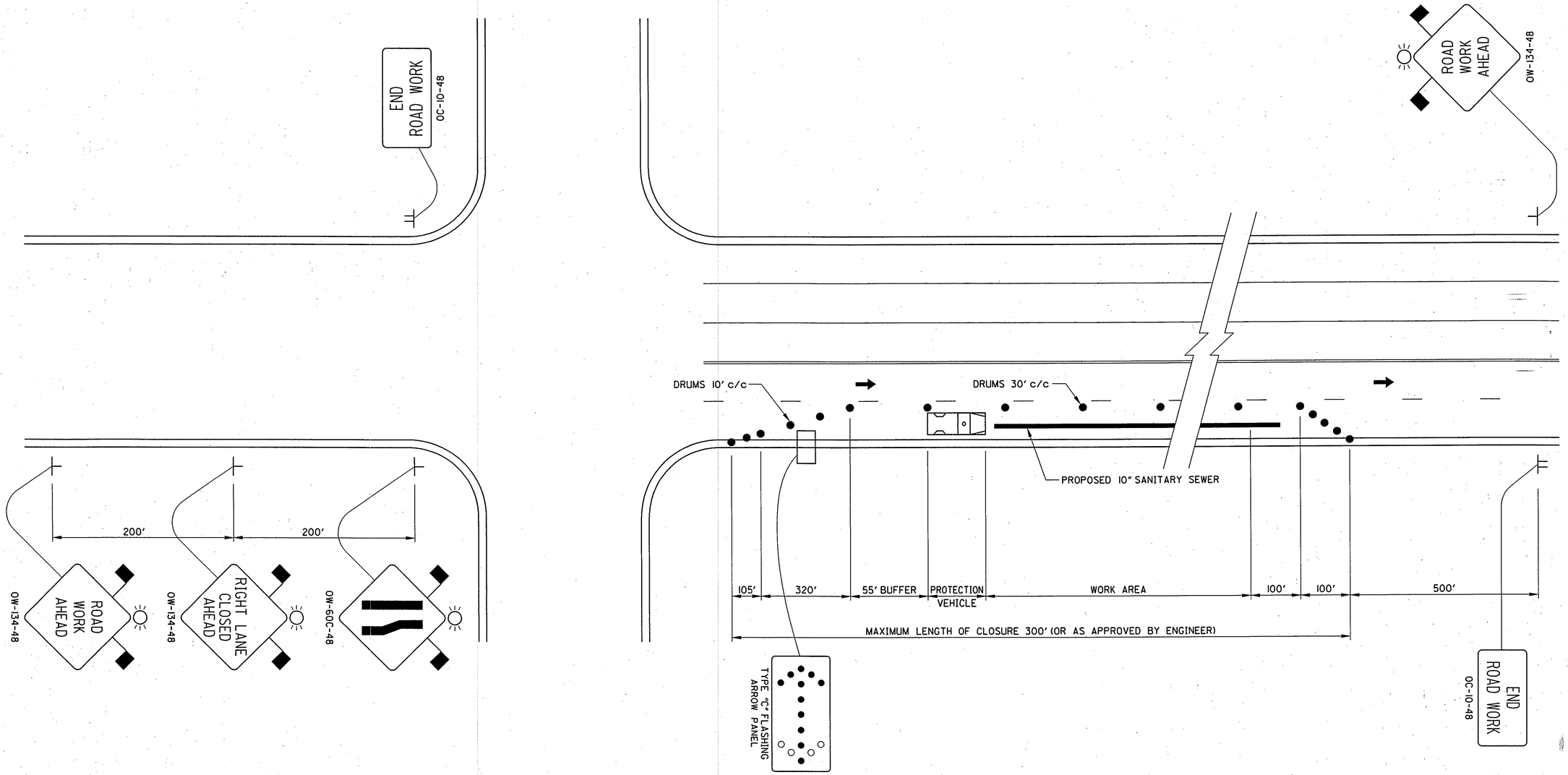

NOTES:

FOR ADDITIONAL INFORMATION SEE ODOT STD. DWG. MT-35.10, MT-95.31, MT-105.10M & MT-105-11M.

CONTRACTOR SHALL MAINTAIN ACCESS TO DRIVES AT ALL TIMES.

STATIONING REFERENCED IN THE MAINTANENCE OF TRAFFIC PLANS IS TO THE ℄ SURVEY.

PARSONS BRINCKERHOFF

REVISED	DATE

DESIGNED	DRAWN	DATE
MME	MME	8/18/03
CHECKED		
EJC		

MAINTENANCE OF TRAFFIC DETAIL
CASE D

AVON BELDEN ROAD
SEWER SEPARATION

T6

CASE E

PARTIAL ROAD CLOSURE
(SEE GLENVIEW DRIVE/PARKVIEW DRIVE M.OT. SCHEMATIC PLAN)
ONE-LANE, TWO-WAY FLAGGING OPERATION
WITH ROAD CLOSED TO THRU TRAFFIC
GLENVIEW DRIVE STA. 100+00 TO STA. 114+75
PARKVIEW DRIVE STA. 100+00 TO 110+00
ELECTRIC BOULEVARD STA. 112+85 TO STA. 123+60

SEE DETOUR "B" PLAN FOR AVON BELDEN ROAD (S.R. 83)/
ELECTRIC BOULEVARD INTERSECTION CONSTRUCTION

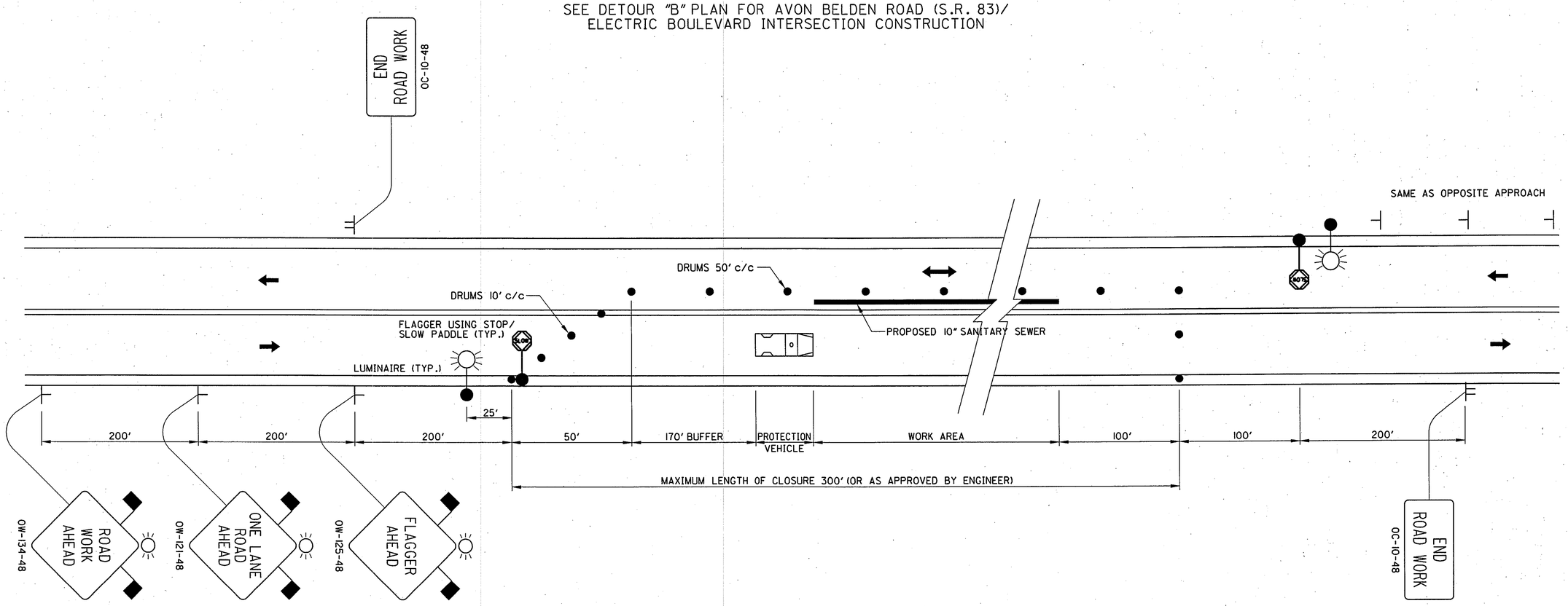

NOTES:

FOR ADDITIONAL INFORMATION SEE ODOT STD. DWG. MT-97.10, MT-105.10M & MT-105-11M.

CONTRACTOR SHALL MAINTAIN ACCESS TO DRIVES AT ALL TIMES.

STATIONING REFERENCED IN THE MAINTANENCE OF TRAFFIC PLANS IS TO THE ℄ SURVEY.

PARSONS BRINCKERHOFF

REVISED	DATE

DESIGNED	DRAWN	DATE
MME	MME	8/18/03
CHECKED		
EJC		

MAINTENANCE OF TRAFFIC DETAIL
CASE E

AVON BELDEN ROAD
SEWER SEPARATION

T7

CASE F

ONE-LANE, TWO-WAY FLAGGING OPERATION
HUNTER ROAD STA. 100+00 TO STA. 103+50

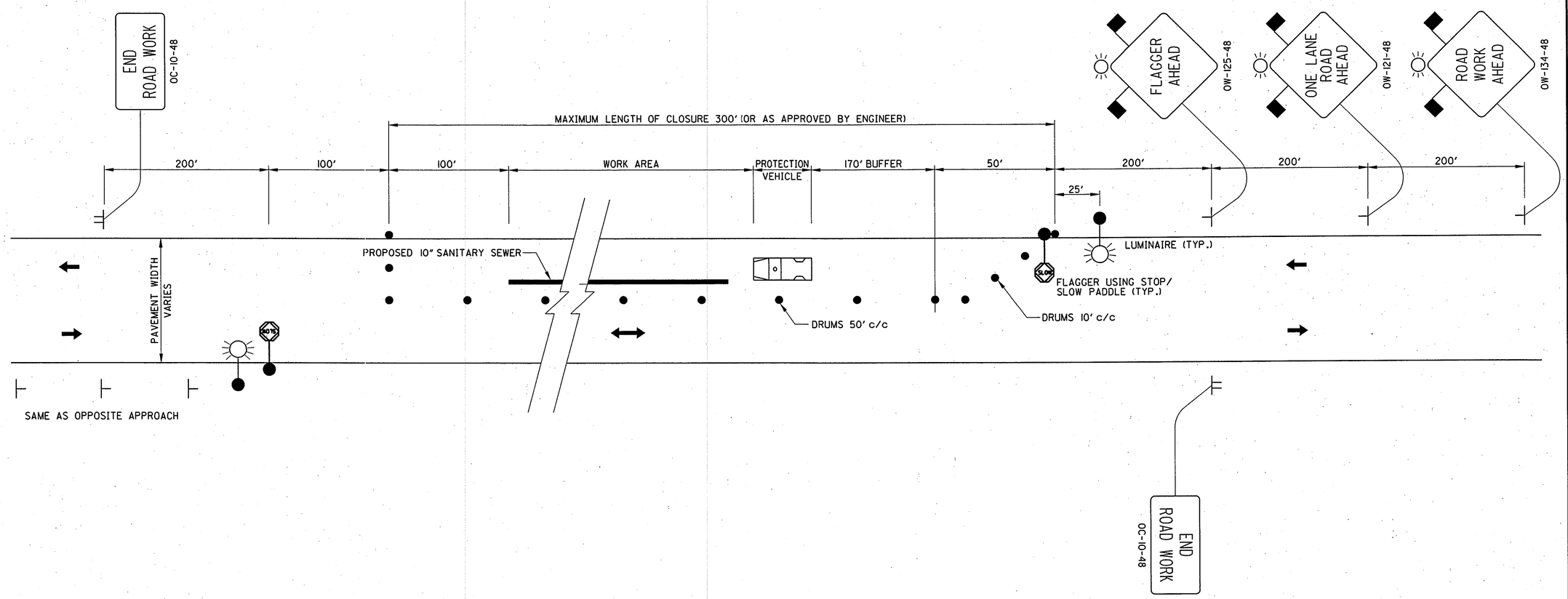

NOTES:

FOR ADDITIONAL INFORMATION SEE ODOT STD. DWG. MT-97.10, MT-105.10M & MT-105-1IM.

CONTRACTOR SHALL MAINTAIN ACCESS TO DRIVES AT ALL TIMES.

STATIONING REFERENCED IN THE MAINTANENCE OF TRAFFIC PLANS IS TO THE ℄ SURVEY.

PARSONS BRINCKERHOFF

REVISED	DATE

DESIGNED	DRAWN	DATE
MME	MME	8/18/03
CHECKED		
EJC		

MAINTENANCE OF TRAFFIC DETAIL
CASE F

AVON BELDEN ROAD SEWER SEPARATION

T8

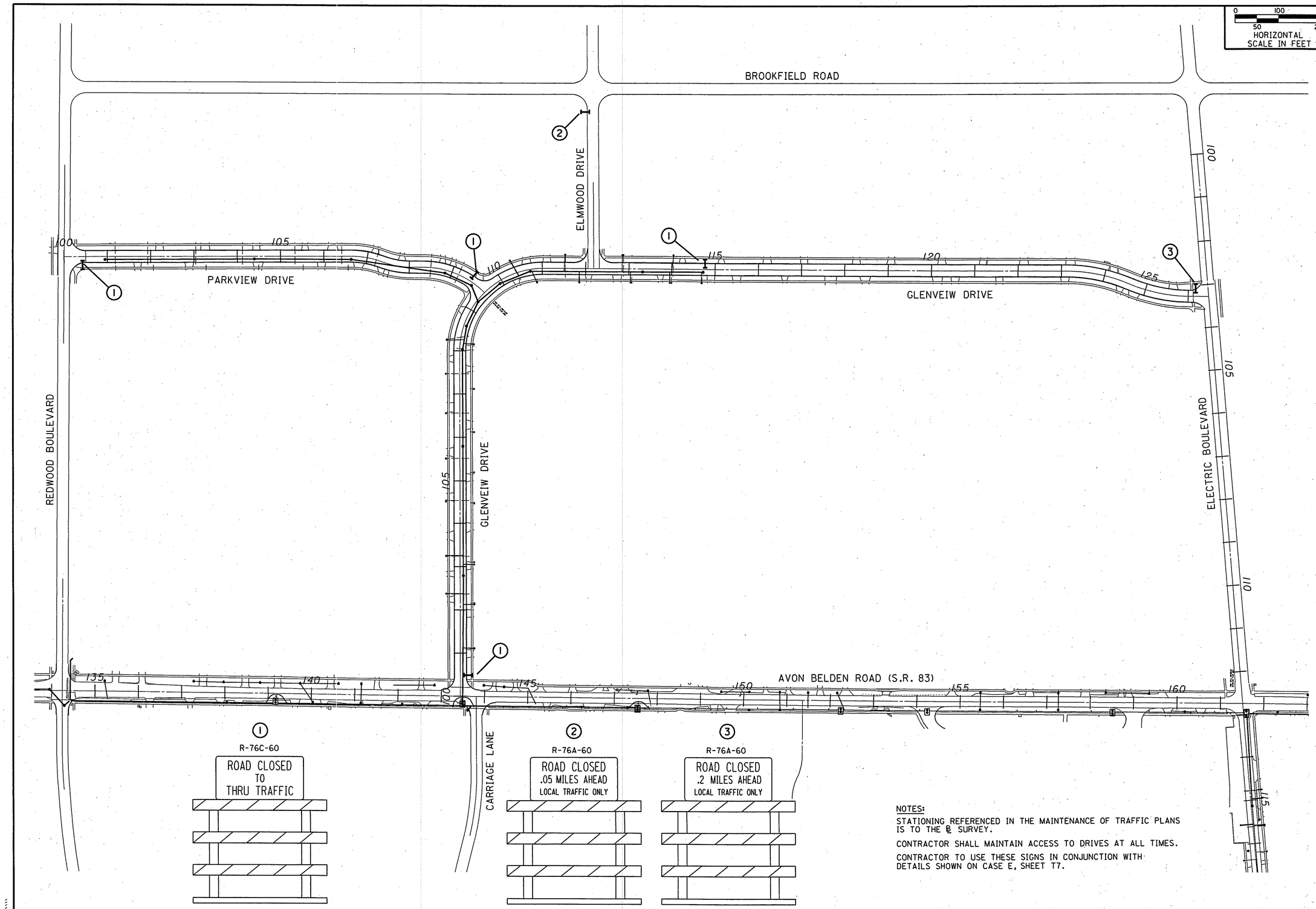

NOTES:

STATIONING REFERENCED IN THE MAINTENANCE OF TRAFFIC PLANS IS TO THE ℄ SURVEY.

CONTRACTOR SHALL MAINTAIN ACCESS TO DRIVES AT ALL TIMES.

CONTRACTOR TO USE THESE SIGNS IN CONJUNCTION WITH DETAILS SHOWN ON CASE E, SHEET T7.

PARSONS BRINCKERHOFF

REVISED	DATE

DESIGNED	DRAWN	DATE
NME	NME	8/18/03
CHECKED		
EJC		

MAINTENANCE OF TRAFFIC SCHEMATIC PLAN
GLENVIEW DRIVE/PARKVIEW DRIVE

AVON BELDEN ROAD SEWER SEPARATION

T9

g:\PROJECTS\avon\plans\mp005abr.dgn C:\TMP\mp005abrF.prf Thu Jan 12 15:56:05 2006

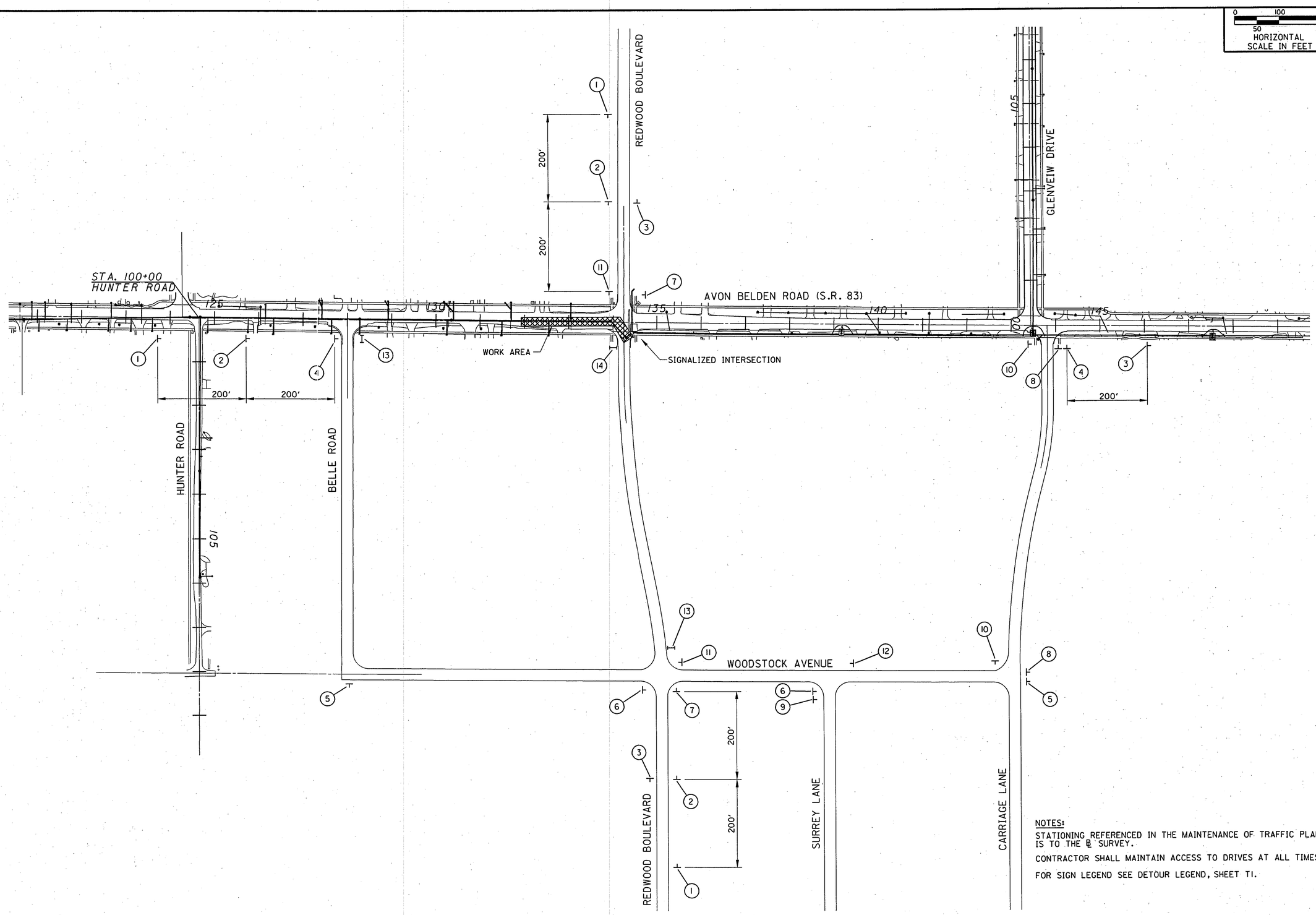

NOTES:

STATIONING REFERENCED IN THE MAINTENANCE OF TRAFFIC PLANS IS TO THE ℄ SURVEY.

CONTRACTOR SHALL MAINTAIN ACCESS TO DRIVES AT ALL TIMES.

FOR SIGN LEGEND SEE DETOUR LEGEND, SHEET T1.

PARSONS BRINCKERHOFF

REVISED	DATE

DRAWN	DATE
MME	8/18/03
DESIGNED MME	CHECKED EJC

MAINTENANCE OF TRAFFIC
DETOUR A

AVON BELDEN ROAD
SEWER SEPARATION

T10

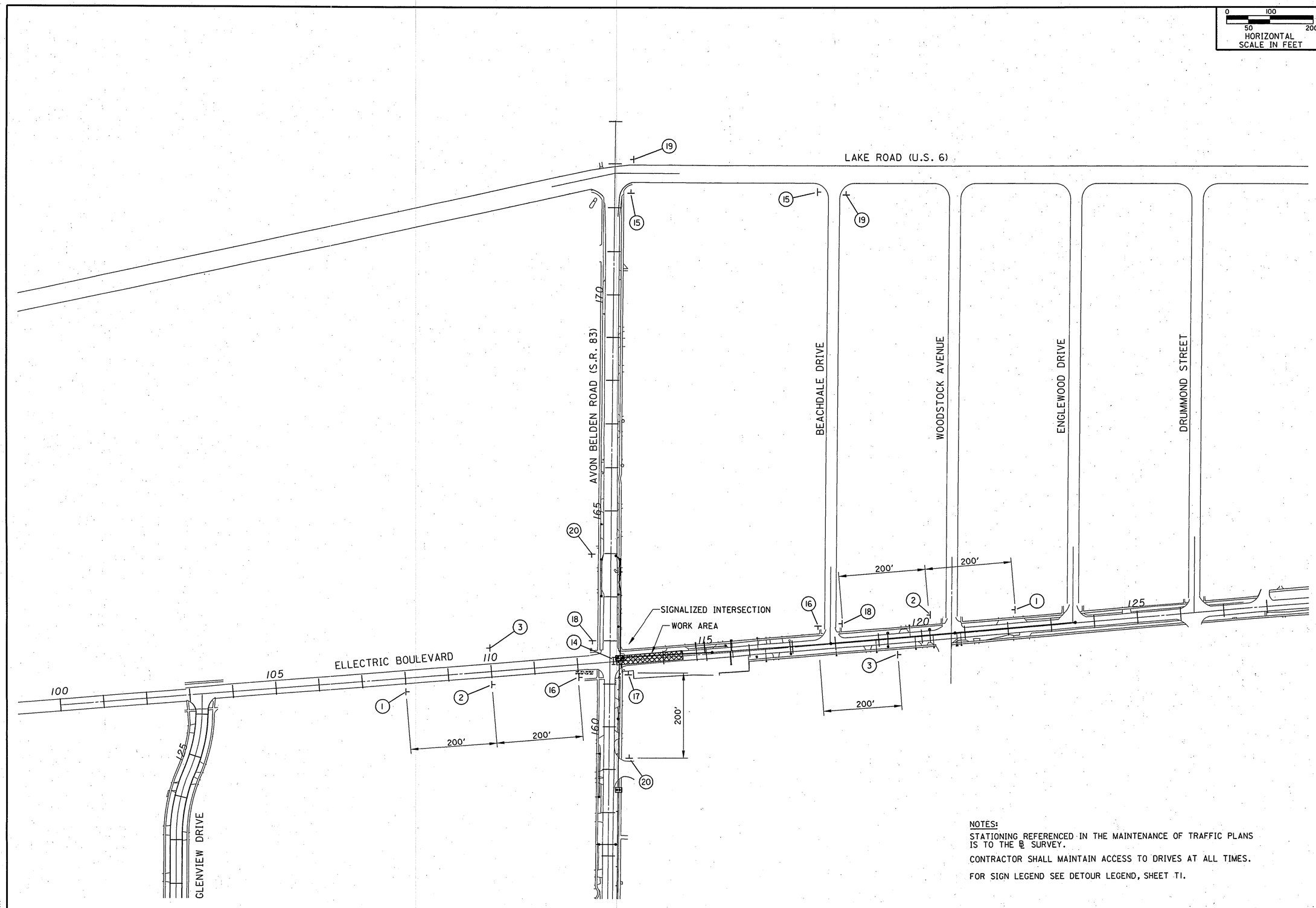

NOTES:

STATIONING REFERENCED IN THE MAINTENANCE OF TRAFFIC PLANS IS TO THE ℄ SURVEY.

CONTRACTOR SHALL MAINTAIN ACCESS TO DRIVES AT ALL TIMES.

FOR SIGN LEGEND SEE DETOUR LEGEND, SHEET T1.

PARSONS BRINCKERHOFF

REVISED	DATE

DESIGNED	DRAWN
MME	MME
CHECKED	DATE
EJC	8/18/03

MAINTENANCE OF TRAFFIC
DETOUR B

AVON BELDEN ROAD
SEWER SEPARATION

T11