MAH - 680 - 0.00
091061 PID 76328
DIST 04 7/15/2009

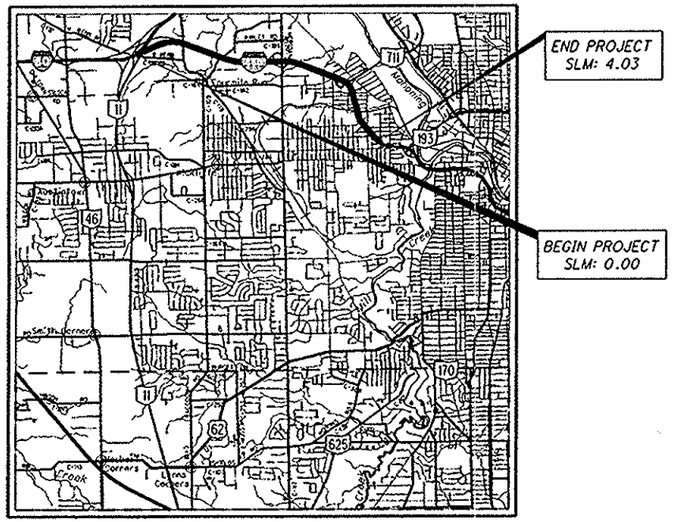

LOCATION MAP

LATITUDE: N41°07'21" LONGITUDE: W80°42'45"

SCALE IN MILES

0 1 2 3 4

N

PORTION TO BE IMPROVED
INTERSTATE HIGHWAY
STATE & FEDERAL ROUTES
COUNTY & TOWNSHIP ROADS
OTHER ROADS

DESIGN DESIGNATION

DESIGN FUNCTIONAL CLASSIFICATION:
URBAN INTERSTATE
NHS PROJECT ..... YES

DESIGN EXCEPTIONS

NONE

UNDERGROUND UTILITIES

CONTACT BOTH SERVICES
CALL TWO WORKING DAYS
BEFORE YOU DIG

CALL
1-800-362-2764
(TOLL FREE)
OHIO UTILITIES PROTECTION SERVICE
NON-MEMBERS
MUST BE CALLED DIRECTLY

OIL & GAS PRODUCERS PROTECTIVE
SERVICE CALL: 1-800-925-0988

PLAN PREPARED BY:
ODOT --- DISTRICT 4
2088 SOUTH ARLINGTON RD
AKRON, OH 44306

STATE OF OHIO
DEPARTMENT OF TRANSPORTATION

MAH-680-0.00

CITY OF YOUNGSTOWN
AUSTINTOWN TOWNSHIP
MAHONING COUNTY

INDEX OF SHEETS:

TITLE SHEET	1
TYPICAL SECTIONS	2-3
GENERAL NOTES	4-5
MAINTENANCE OF TRAFFIC	6, 6A, 6B
GENERAL SUMMARY	7
ASPHALT CONCRETE SUB-SUMMARY	8
RAISED PAVEMENT MARKING SUB-SUMMARY	9
PAVEMENT MARKING SUB-SUMMARY	10
STRUCTURES	11-23, 16A

PROJECT DESCRIPTION

IMPROVEMENT OF 4.03 MILES OF I.R. 680 AND THE RAMPS ON AND OFF I.R. 680 IN MAHONING COUNTY BY RESURFACING. ALSO PERFORMING MINOR GUARDRAIL UPGRADES AND REPLACING DAMAGED SECTIONS AND MINOR STRUCTURE WORK.

PROJECT EARTH DISTURBED AREA: 0 ACRES
ESTIMATED CONTRACTOR EDA: N/A (MAINTENANCE PROJECT)
NOTICE OF INTENT EDA: N/A (MAINTENANCE PROJECT)

LIMITED ACCESS

THIS IMPROVEMENT IS ESPECIALLY DESIGNED FOR THROUGH TRAFFIC AND HAS BEEN DECLARED A LIMITED ACCESS HIGHWAY OR FREEWAY BY ACTION OF THE DIRECTOR IN ACCORDANCE WITH THE PROVISIONS OF SECTION 5511.02 OF THE OHIO REVISED CODE.

2008 SPECIFICATIONS

THE STANDARD SPECIFICATIONS OF THE STATE OF OHIO, DEPARTMENT OF TRANSPORTATION, INCLUDING CHANGES AND SUPPLEMENTAL SPECIFICATIONS LISTED IN THE PROPOSAL SHALL GOVERN THIS IMPROVEMENT.

• I HEREBY APPROVE THESE PLANS AND DECLARE THAT THE MAKING OF THIS IMPROVEMENT WILL NOT REQUIRE THE CLOSING OF THE HIGHWAY TO TRAFFIC AND THAT PROVISIONS FOR THE MAINTENANCE AND SAFETY OF TRAFFIC WILL BE AS SET FORTH IN THE PLANS AND ESTIMATES.

ENGINEERS SEAL:

STATE OF OHIO
DOUGLAS A. YARD
E-58044
REGISTERED
PROFESSIONAL ENGINEER

SIGNED: [signature]
DATE: 05/11/09

STANDARD CONSTRUCTION DRAWINGS										SUPPLEMENTAL SPECIFICATIONS	
BP-3.1	10/19/07	MT-101.90	1/16/09	TC-41.20	1/19/01	GR-1.1	7/16/04			800-2008	04-17-09
BP-2.5	7/18/08	MT-105.10	10/18/02	TC-42.10	1/19/07	GR-2.1	1/16/04			832	5/5/09
BP-4.1	7/16/04	MT-105.11	10/18/02	TC-42.20	7/16/04	GR-4.2	1/19/07			843	04-18-03
				TC-52.10	1/19/07	GR-5.2	1/16/04				
DM-1.1	4/21/06			TC-52.20	1/19/07	GR-5.3	1/16/04				
DM-1.4	4/21/06			TC-65.10	1/21/05	GR-6.1	4/18/03				
DM-4.3	7/19/02			TC-65.11	1/21/05						
DM-4.4	7/19/02			TC-71.10	1/19/07						
				TC-73.10	1/19/01						
MT-35.10	4/20/01									SPECIAL PROVISIONS	
MT-95.30	4/17/09			HW-2.1	4/21/06						
MT-95.50	9/05/06			HW-2.2	4/21/06						
MT-97.10	9/05/06										
MT-97.12	9/05/06			GSD-1-96	7/19/02						
MT-99.20	1/16/09			VPF-1-90	7/19/02						
MT-101.60	9/20/06										

APPROVED [signature]
DATE 3-11-09 DISTRICT DEPUTY DIRECTOR

APPROVED [signature]
DATE 5-11-09 DIRECTOR, DEPARTMENT OF TRANSPORTATION

FEDERAL PROJECT NO. E090(373)

PID NO. 76328

CONSTRUCTION PROJECT NO.

RAILROAD INVOLVEMENT
YOUNGSTOWN & AUSTINTOWN RR

MAH-680-0.00

I:\Projects\MAH\76328_680_0.00\76328\roadway\sheets\76328GI...

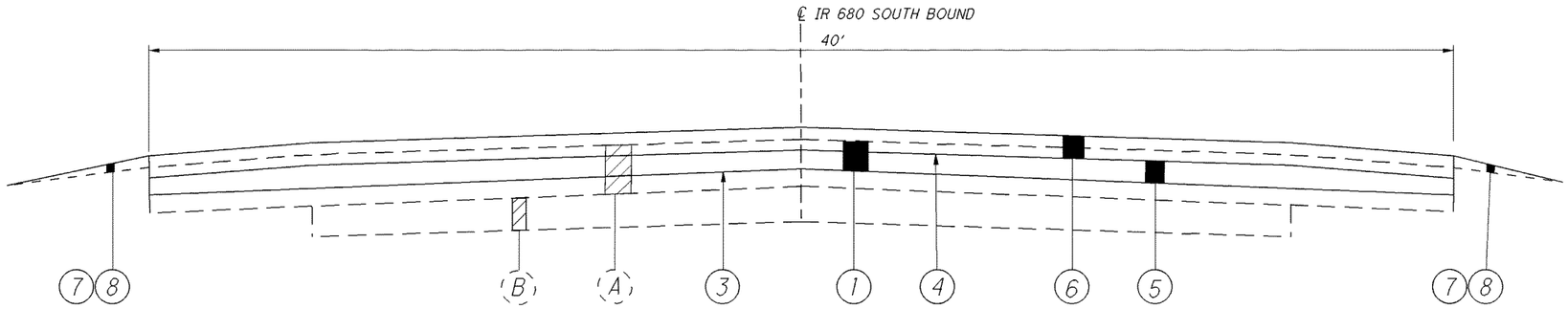

IR 680
SLM 0.00 TO SLM 4.03

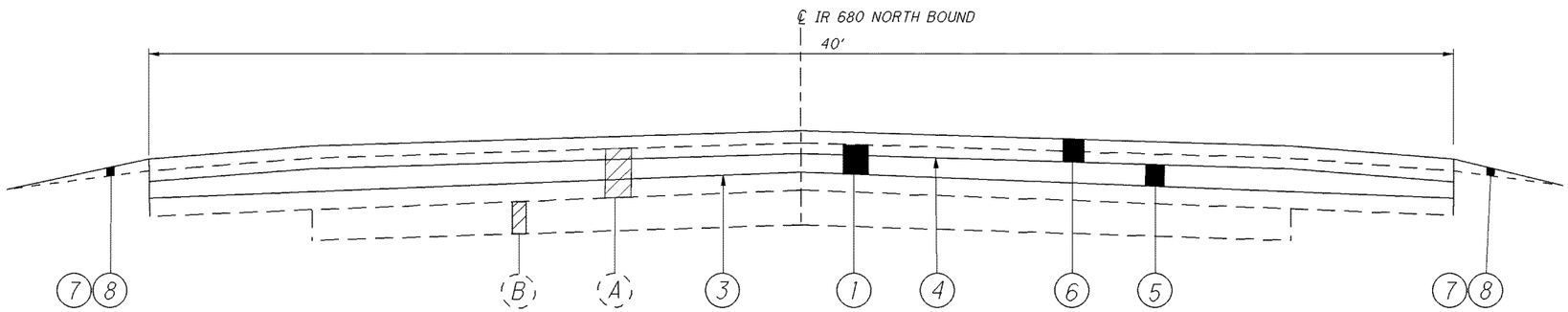

IR 680
SLM 0.00 TO SLM 4.03

LEGEND

1. 254, ASPHALT CONCRETE PAVEMENT PLANING (T=2")
2. 254, ASPHALT CONCRETE PAVEMENT PLANING (T=1 1/4")
3. 407, TACK COAT @ 0.15 GAL/SY
4. 407, TACK COAT FOR INTERMEDIATE COURSE @ 0.04 GAL/SY
5. 442, ASPHALT CONCRETE INTERMEDIATE COURSE, 19MM TYPE B (448) (T=1 3/4")
6. 442, ASPHALT CONCRETE SURFACE COURSE, 12.5MM TYPE B (448) (T= 1 1/2")
7. 408, PRIME COAT, AS PER PLAN
8. 617, COMPACTED AGGREGATE, AS PER PLAN

(A) EXISTING ASPHALT CONCRETE PAVEMENT

(B) EXISTING REINFORCED CONCRETE BASE

TYPICAL SECTIONS

MAH-680-0.00

I:\Projects\MAH\76328_680_0.00\76328\roadway\sheets\76328GY001.dgn 16-MAR-2009 8:42AM dyard

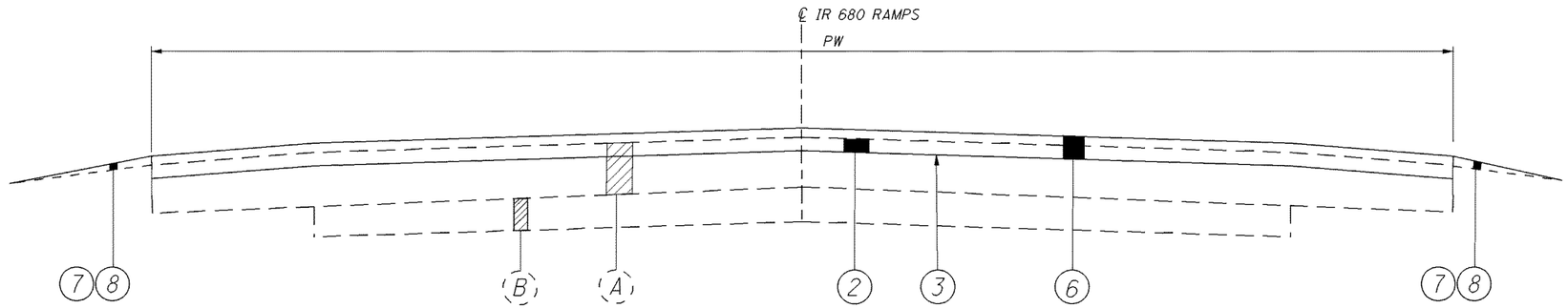

IR 680
RAMPS

RAMPS	RAMP AVG. PW	RAMP AVG. LENGTH
SB680 OFF TO MERIDAN	24'	1900'
MERIDAN ON TO SB680	24'	1600'
NB680 OFF TO MERIDAN	25'	2160'
MERIDAN ON TO NB680	25'	1926'
SB680 OFF TO SR711	26'	2200'
SR711 ON TO SB680	25'	1520'
NB680 OFF TO SR711	23'	1430'
SR711 ON TO NB680	25'	2000'
SB680 OFF TO BELLE VISTA	28'	1870'
BELLE VISTA ON TO NB680	26'	1035'

*SEE SHEET 2 FOR LEGEND

TYPICAL SECTIONS

MAH-680-0.00

I:\Projects\MAH\76328_680_0.00\76328\roadway\sheets\76328GY001.dgn 16-MAR-2009 8:42AM dyard

UTILITIES

THE CONTRACTOR SHALL USE THE FOLLOWING PROCEDURE AT EACH LOCATION WHERE WORK IS PERFORMED, IN ACCORDANCE WITH SECTIONS 105.07 AND 107.16 IN THE CONSTRUCTION AND MATERIALS SPECIFICATIONS.

THE CONTRACTOR SHALL NOTIFY THE PROJECT ENGINEER, THE OHIO UTILITIES PROTECTION SERVICE (OUPS), THE OHIO & GAS PROCEDURES UNDERGROUND PROTECTION SERVICE (OGPUPS), THE OHIO DEPARTMENT OF TRANSPORTATION DISTRICT 4 HEADQUARTERS AND ALL NON REGISTERED UTILITY OWNERS AT LEAST TWO (2) WORKING DAYS PRIOR TO COMMENCING CONSTRUCTION IN ALL AREAS.

OUPS 1-800-362-2764 (CONTACT LIMITED BASIS PARTICIPANTS DIRECTLY)
OGPUPS 1-800-925-0988
ODOT 330-786-3145 KEN GREENE

THE LOCATION OF EXISTING UNDERGROUND UTILITIES ARE NOT SHOWN ON THE PLANS, BUT CAN BE OBTAINED FROM THE OWNERS OF THE UTILITIES. THE CONTRACTOR IS RESPONSIBLE FOR ANY DAMAGE TO UTILITIES.

PROFILE AND ALIGNMENT

PLACE THE PROPOSED PAVEMENT TO FOLLOW THE ALIGNMENT AND PROFILE OF THE EXISTING PAVEMENT. PLACE THE PROPOSED ASPHALT CONCRETE OVERLAY AS SHOWN ON THE TYPICAL SECTIONS.

WORK LIMITS

THE WORK LIMITS SHOWN ON THESE PLANS ARE FOR PHYSICAL CONSTRUCTION ONLY. PROVIDE THE INSTALLATION AND OPERATION OF ALL WORK ZONE TRAFFIC CONTROL AND WORK ZONE TRAFFIC CONTROL DEVICES REQUIRED BY THESE PLANS WHETHER INSIDE OR OUTSIDE THESE WORK LIMITS.

PAVEMENT MARKING LANE WIDTHS

THE NORMAL LANE WIDTH FOR THE PAVEMENT MARKINGS ON THIS PROJECT SHALL BE AS FOLLOWS:

ROUTE	S.L.M. TO S.L.M.	LANE WIDTH
680	0.00 TO 4.03	12'

ITEM 408 - PRIME COAT, AS PER PLAN

THE CONTRACTOR WILL APPLY "MC-70" AT A RATE OF 0.4 GALLONS PER SQUARE YARD, OR AS DETERMINED BY THE ENGINEER, TO THE COMPLETED COMPACTED AGGREGATE SHOULDER.

THE CONTRACTOR SHALL PROVIDE A SHIELD TO PREVENT THE SPRAYING OR DRIFTING OF LIQUID PRIME COAT MATERIAL ONTO THE EDGE OF THE PAVEMENT OR EDGELINE. CARE ALSO SHALL BE TAKEN TO AVOID SPRAYING LIQUID PRIME COAT MATERIAL ONTO DRIVEWAY APRONS, MAILBOX APPROACHES OR ANY PEDESTRIAN AREAS. THE ATTENTION OF THE CONTRACTOR IS DIRECTED TO 107.10 OF THE SPECIFICATIONS.

ITEM 617 COMPACTED AGGREGATE, AS PER PLAN

IN LOW SHOULDER AREAS EXCEEDING 1", OR AS DIRECTED BY THE ENGINEER, RECYCLED ASPHALT PAVEMENT (RAP) SHALL BE USED IN AREAS ADJACENT TO THE PAVED BERM. THE RAP SHALL HAVE A MINIMUM PG CONTENT OF 4.5% AND MEET THE FOLLOWING GRADATION. ONCE THE STOCKPILE MEETS THE GRADATION, THE PG CONTENT OF THE RAP SHALL BE DETERMINED PER 441.03. THE RAP ANALYSIS MUST BE SUBMITTED TO THE ENGINEER FOR APPROVAL 2 WEEKS PRIOR TO USE. METHOD OF MEASUREMENT SHALL BE AS PER 617.06. PLACEMENT AND COMPACTION SHALL MEET THE REQUIREMENTS OF ITEM 617. ALL MATERIALS, LABOR, EQUIPMENT, TOOLS AND INCIDENTALS NECESSARY TO COMPLETE THE WORK SHALL BE INCLUDED IN THE UNIT PRICE BID FOR ITEM 617 COMPACTED AGGREGATE, AS PER PLAN.

MODIFIED GRADATION SHALL APPLY:

SIEVE	TOTAL PERCENT PASSING
1-1/2"	100
3/4"	50-100
NO. 4	35-70
NO. 30	9-33
NO. 200	0-13

ITEM 203 - EXCAVATION

THIS ITEM OF WORK SHALL CONSIST OF REMOVING AND DISPOSING OF ALL UNSUITABLE MATERIAL BY EXCAVATING THE EXISTING SUBGRADE AND SUBBASE TO AN AVERAGE DEPTH OF 6 INCHES OR AS DIRECTED BY THE ENGINEER. EXACT LIMITS OF REMOVAL SHALL BE DETERMINED BY THE ENGINEER. ALL EQUIPMENT, LABOR, TOOLS, AND INCIDENTALS NECESSARY TO COMPLETE THIS ITEM SHALL BE INCLUDED IN THE UNIT PRICE BID FOR ITEM 203 EXCAVATION. THE FOLLOWING ESTIMATED QUANTITY HAS BEEN CARRIED TO THE GENERAL SUMMARY:

203, EXCAVATION 25 CU YD

ITEM 304 - AGGREGATE BASE

THE FOLLOWING ESTIMATED QUANTITY HAS BEEN PROVIDED AND SHALL BE USED AS DIRECTED BY THE ENGINEER TO BACKFILL AREAS WHICH WERE EXCAVATED UNDER ITEM 203 EXCAVATION NOT INCLUDING EMBANKMENT CONSTRUCTION. THE FOLLOWING ESTIMATED QUANTITY HAS BEEN CARRIED TO THE GENERAL SUMMARY:

304, AGGREGATE BASE 25 CU YD

CATCH BASIN RECONSTRUCTED TO GRADE

THE FOLLOWING QUANTITY HAS BEEN CARRIED TO THE GENERAL SUMMARY AND IS TO BE USED AS DIRECTED BY THE ENGINEER TO RECONSTRUCT EXISTING CATCH BASINS.

604, CATCH BASIN RECONSTRUCTED TO GRADE 7 EACH

ITEM 251 - PARTIAL DEPTH PAVEMENT REPAIR

A QUANTITY OF THIS ITEM SHALL BE PROVIDED FOR USE AS DIRECTED BY THE ENGINEER. THE ITEM SHALL CONSIST OF REPAIRING EXISTING LOCATIONS EXHIBITING SURFACE DETERIORATION AND PLACING ITEM 448 ASPHALT CONCRETE, TYPE 2. THE ASPHALT CONCRETE SHALL BE COMPACTED WITH A TYPE I PNEUMATIC TIRE ROLLER AND A STEEL WHEEL ROLLER AS PER 401.13. IT IS NOT THE INTENT TO REPAIR EVERY DETERIORATED AREA WITHIN THE PROJECT. THE ENGINEER SHALL DETERMINE WHICH AREAS ARE TO BE REPAIRED. UNLESS OTHERWISE DIRECTED BY THE ENGINEER, THIS ITEM SHALL BE PERFORMED AFTER THE COMPLETION OF MAINLINE PAVEMENT PLANING. ALSO, THIS ITEM SHALL COMMENCE WITHIN 7 DAYS OF THE COMPLETION OF MAINLINE PAVEMENT PLANING. PAYMENT SHALL BE BASED ON THE ACTUAL NUMBER OF SQUARE YARDS OF PAVEMENT REPAIR. THE FOLLOWING ESTIMATED QUANTITY HAS BEEN CARRIED TO THE GENERAL SUMMARY:

251, PARTIAL DEPTH PAVEMENT REPAIR, 500 SQ. YD (MAINLINE)
251, PARTIAL DEPTH PAVEMENT REPAIR, 300 SQ. YD (RAMPS)

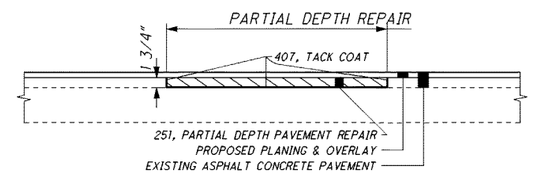

FENCE REPAIR

THE FOLLOWING QUANTITY HAS BEEN CARRIED TO THE GENERAL SUMMARY AND IS TO BE USED TO REPAIR ANY FENCE AS DIRECTED BY THE ENGINEER, BETWEEN SLM 0.00 TO SLM 4.03.

607, FENCE REBUILT, TYPE CL 1000 FT

REPAIR DAMAGED GUARDRAIL

THE FOLLOWING QUANTITY HAS BEEN CARRIED TO THE GENERAL SUMMARY AND IS TO BE USED TO REPAIR ANY DAMAGED GUARDRAIL AS DIRECTED BY THE ENGINEER BETWEEN SLM 0.00 TO SLM 4.03.

202, GUARDRAIL REMOVED 438 FT
606, GUARDRAIL, TYPE 5 438 FT
626, BARRIER REFLECTORS 5 EACH

ITEM 253 - PAVEMENT REPAIR

A QUANTITY OF THIS ITEM SHALL BE PROVIDED FOR USE AS DIRECTED BY THE ENGINEER. THIS ITEM SHALL CONSIST OF CUTTING AND REMOVING DETERIORATED PAVEMENT FULL DEPTH AND PLACING 12"± 301 ASPHALT CONCRETE BASE, PG64-22. THE MAXIMUM COMPACTED DEPTH OF ANY ONE LAYER SHALL BE 6 INCHES. UNLESS OTHERWISE DIRECTED BY THE ENGINEER, THIS ITEM SHALL BE PERFORMED AFTER THE COMPLETION OF MAINLINE PAVEMENT PLANING. ALSO, THIS ITEM SHALL COMMENCE WITHIN 7 DAYS OF THE COMPLETION OF MAINLINE PAVEMENT PLANING. IT IS NOT THE INTENT TO REPAIR EVERY DETERIORATED AREA WITHIN THE PROJECT. THE ENGINEER SHALL DETERMINE WHICH AREAS ARE TO BE REPAIRED. PAYMENT SHALL BE BASED ON THE ACTUAL NUMBER OF SQUARE YARDS OF PAVEMENT REMOVED AND REPLACED TO THE LIMITS DESIGNATED BY THE ENGINEER. THE FOLLOWING ESTIMATED QUANTITY HAS BEEN CARRIED TO THE GENERAL SUMMARY:

252, PAVEMENT SAWING, 1368 FT
253, PAVEMENT REPAIR, 150 SQ YD

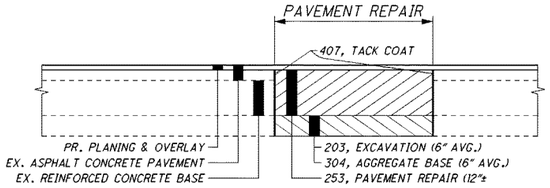

PAVEMENT MARKING DETAILS

THE PAVEMENT MARKING DETAIL SHEETS WILL BE SUPPLIED TO THE CONTRACTOR AT THE PRE-CONSTUCTION MEETING.

CATCH BASIN AND HEADWALL REPAIR AT SLM 1.20

REPAIR THE CATCH BASIN AND REMOVE THE HEADWALL AT SLM 1.20, LEFT AS PER ITEM 603. REPLACE 16' OF THE CULVERT PIPE.

ALL MATERIALS, LABOR, EQUIPMENT, TOOLS, AND INCIDENTALS NECESSARY TO COMPLETE THIS WORK SHALL BE INCLUDED IN THE UNIT PRICE FOR THE PERTINENT BID ITEM. THE FOLLOWING QUANTITIES HAVE BEEN CARRIED TO THE GENERAL SUMMARY:

202, HEADWALL REMOVED, 1 EACH
202, PIPE REMOVED, 24" AND UNDER, 16 FT
602, CONCRETE MASONRY, 0.43 CU YD
603, 24" CONDUIT, TYPE C, 16 FEET

MONUMENT BOX ADJUSTED TO GRADE

ADJUST TO GRADE THE MONUMENT BOX IN THE EB DRIVING LANE NEAR BELLE VISTA OFF-RAMP.

604, MONUMENT BOX ADJUSTED TO GRADE 1 EACH

CALCULATED JMW
CHECKED

GENERAL NOTES

MAH-680-0.00

I:\Projects\MAH\76328_680_0.00\76328\roadway\sheets\76328GN001.dgn 16-MAR-2009 8:38AM dyard

WETLANDS AVOIDANCE

UNDER NO CIRCUMSTANCES SHALL THE CONTRACTOR IMPACT THE FOLLOWING EXISTING WETLANDS AS INDICATED ON THE PLANS.

WETLANDS 1 & 2 (SE & NE QUADRANTS) MAH-680-0.40L
WETLANDS 3 &3A (SE QUADRANTS) MAH-680-0.20L
WETLANDS 1 & 4 (NE & SW QUADRANTS) MAH-680-0.40R

UNDER NO CIRCUMSTANCES SHALL THE CONTRACTOR STORE EQUIPMENT AND/OR MATERIALS WITHIN THESE WETLANDS AREAS. TO PROTECT AND DELINEATE THE BOUNDARIES OF THESE EXISTING WETLANDS, AS APPROPRIATE, FILTER FABRIC FENCE AND TEMPORARY CONSTRUCTION FENCE SHALL BE INSTALLED AROUND THE PERIMETER OF THE WETLANDS WITHIN AND ADJACENT TO THE LIMITED ACCESS RIGHT-OF-WAY, MAINTAINING A MINIMUM ONE (1) FOOT BUFFER BETWEEN THE FILTER FABRIC FENCE/TEMPORARY CONSTRUCTION FENCE AND THE WETLANDS BOUNDARIES, OR AT THE PROPOSED CONSTRUCTION LIMITS WITHIN THE WETLANDS AREAS, AS APPLICABLE. THIS FILTER FABRIC FENCE AND TEMPORARY CONSTRUCTION FENCE SHALL BE INSTALLED BY THE CONTRACTOR PRIOR TO THE START OF ANY CONSTRUCTION ACTIVITIES WITHIN THESE LIMITS AND ADJACENT AREAS, INCLUDING ANY NECESSARY CLEARING AND GRUBBING ACTIVITIES, AND MAINTAINED BY THE CONTRACTOR THROUGHOUT PROJECT CONSTRUCTION.

STREAM AVOIDANCE

NO EXCAVATION, GRADING, OR FILLING OPERATIONS SHALL BE PERFORMED IN THE TRIBUTARY TO MAHONING RIVER AT MAH-680-3.43L/R & IN THE TRIBUTARY TO FOUR MILE RUN AT MAH-680-0.40R. UNDER NO CIRCUMSTANCES SHALL THE CONTRACTOR STORE EQUIPMENT AND/OR MATERIALS IN ANY STREAMS OR OTHER WATERS OF THE UNITED STATES.

JURISDICTIONAL DITCH

NO EXCAVATION, GRADING, OR FILLING OPERATIONS SHALL BE PERFORMED IN THE DITCH CONECTING WETLAND (1) AND THE TRIBUTARY TO FOUR MILE RUN BENEATH MAH-680-0.40R . UNDER NO CIRCUMSTANCES SHALL THE CONTRACTOR STORE EQUIPMENT AND/OR MATERIALS IN ANY WETLANDS OR OTHER WATERS OF THE UNITED STATES.

ITEM SPECIAL - MISC.: VERTICAL CLEARANCE

AFTER ALL CONSTRUCTION HAS BEEN COMPLETED, A REGISTERED SURVEYOR WILL TAKE VERTICAL CLEARANCE MEASUREMENTS AT LOCATIONS INDICATED ON THE APPROVED ODOT FORM (AVAILABLE IN THE DISTRICT 4 STRUCTURES AND PAVEMENT OFFICE). THE FINAL MEASUREMENTS SHALL BE RECORDED ON THE FORM AND SUBMITTED TO THE PROJECT ENGINEER AND THE DISTRICT 4 STRUCTURES AND PAVEMENT ENGINEER. THE RECORD SHALL BEAR THE SEAL OF THE LECENSED SURVEYOR WHO HAS TAKEN THE MEASUREMENTS. THIS WORK SHALL BE PERFORMED AT THE FOLLOWING STRUCTURES:

MAH-680-0067
MAH-680-0109
MAH-680-0282
MAH-680-0315
MAH-680-0373
MAH-680-0386
MAH-711-0026

THE FOLLOWING QUANTITY HAS BEEN CARRIED TO THE GENERAL SUMMARY:

SPECIAL - MISC.: VERTICAL CLEARANCE, 7 EACH

IMPACT ATTENUATOR REPLACEMENT

THE FOLLOWING ESTIMATED QUANTITES ARE TO BE USED TO REMOVE AND REPLACE THE ATTENUATOR, TENSION STRUT BACKUP, AND THE CONCRETE PAD AT SLM 2.36 RT. ON SOUTHBOUND I-680 THE FOLLOWING QUANTITIES HAVE BEEN CARRIED TO THE GENERAL SUMMARY.

ITEM 606 - IMPACT ATTENUATOR, TYPE 2-98 (UNIDIRECTIONAL)(70 MPH, 69"), 1 EACH

ITEM 202 - REMOVAL MISC.: IMPACT ATTENUATOR WITH TENSION STRUT BACKUP, LUMP SUM

ITEM 202 - REMOVAL MISC.: CONCRETE PAD, LUMP SUM

PAVEMENT TRANSITION DETAILS

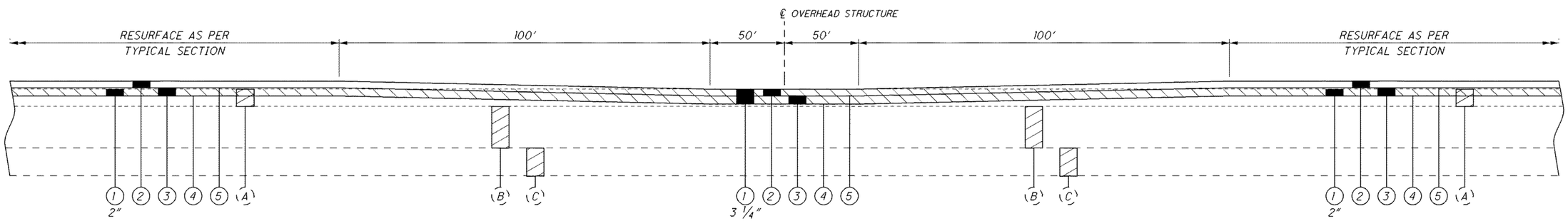

PAVEMENT TRANSITION AT OVERHEAD BRIDGE

DETAIL APPLIES AT STRUCTURES:
MAH-680-0067
MAH-680-0109
MAH-680-0282
MAH-680-0315
MAH-680-0373
MAH-680-0386
MAH-711-0026

LEGEND

1. 254, PAVEMENT PLANING, ASPHALT CONCRETE
2. 442, 1½" ASPHALT CONCRETE SURFACE COURSE, 12.5 MM, TYPE B (448), AS PER PLAN
3. 442, 1¾" ASPHALT CONCRETE INTERMEDIATE COURSE, 19MM, TYPE B (448)
4. 407, TACK COAT
5. 407, TACK COAT FOR INTERMEDIATE COURSE

(A) EXISTING ±5 ½" ASPHALT CONCRETE
(B) EXISTING ±9" REINFORCED PORTLAND CEMENT CONCRETE PAVEMENT
(C) EXISTING ±6" SUBBASE

254, PAVEMENT PLANING, ASPHALT CONCRETE

CALCULATED JMW
CHECKED

GENERAL NOTES

MAH-680-0.00

I:\Projects\MAH\76328_680_0.00\76328\roadway\sheets\76328GN001.dgn 26-MAR-2009 11:12AM dyard

MAINTENANCE OF TRAFFIC

THIS ITEM SHALL CONSIST OF MAINTENANCE OF TRAFFIC ON EXISTING ROADWAYS AND RAMPS IN ACCORDANCE WITH THE OHIO MANUAL OF UNIFORM TRAFFIC CONTROL DEVICES FOR STREETS AND HIGHWAYS, CURRENT EDITION, LATEST REVISION, THE SPECIFICATIONS AND THE FOLLOWING:

1. A MINIMUM OF ONE ELEVEN FOOT LANE IN EACH DIRECTION SHALL BE MAINTAINED ON THE EXISTING PAVEMENT COMPLETED PAVEMENT DURING CONSTRUCTION OF THE WORK.

2. THE CONTRACTOR SHALL INFORM THE DISTRICT OFFICE (330) 786-2211, EIGHTEEN (18) DAYS PRIOR TO THE BEGINNING OF WORK.

3. CONES SHALL NOT BE ACCEPTABLE TRAFFIC CONTROL DEVICES FOR LANE RESTRICTIONS OR LANE REDUCTIONS THAT ARE IN OPERATION ONE-HALF HOUR AFTER SUNSET OR ONE HALF-HOUR BEFORE SUNRISE. ALL NIGHTTIME LANE RESTRICTIONS SHALL REQUIRE DRUMS OR BARRICADES AT A MAXIMUM SPACING OF FIFTY (50) FEET. WEIGHTED CHANNELIZERS MAY BE USED IN ACCORDANCE WITH THE ADDITIONAL NOTE HEREIN.

4. LANE RESTRICTIONS OR LANE REDUCTIONS SHALL NOT BE PERMITTED AFTER NORMAL WORKING HOURS. NORMAL WORKING HOURS SHALL BE THOSE HOURS DURING WHICH THE CONTRACTOR HAS A FULL COMPLEMENT OF EMPLOYEES AND EQUIPMENT ACTIVELY REMOVING AND/OR PLACING PAVEMENT MATERIALS.

5. THE CONTRACTOR SHALL FURNISH, ERECT, MAINTAIN AND SUBSEQUENTLY REMOVE ALL FLAGS, BARRICADES, SIGNS, SIGN SUPPORTS AND FURNISH AND MAINTAIN ALL FLAGGERS, WATCHERS AND INCIDENTALS RELATED THERETO.

6. ALL FULL DEPTH PAVEMENT REMOVAL AND REPLACEMENT OPERATIONS SHALL BE COMPLETED THE SAME DAY THE EXCAVATION IS MADE. IF THE CONTRACTOR CANNOT COMPLETE THE WORK, THE EXCAVATION SHALL BE BACKFILLED OR PROTECTED.

7. UNDER NO CIRCUMSTANCES SHALL THE CONTRACTOR BE PERMITTED TO HAVE SUCCESSIVE WORK ZONES UNLESS THE DISTANCE BETWEEN THE DRUMS, BARRICADES OR CONES EXCEEDS ONE [1] MILE URBAN.

8. ONLY DURING OFF-PEAK PERIODS (ie ANY PERIOD OTHER THAN 6-8AM AND 3-6PM) SHALL THE CONTRACTOR INSTALL AND SUBSEQUENTLY RESET ALL TRAFFIC CONTROL NECESSARY FOR THE WORK ZONE FOR EACH CONSTRUCTION PHASE.

9. IN ADDITION TO THE REQUIREMENTS OF 614.11 WORK ZONE PAVEMENT MARKINGS, AT THE END OF EACH DAY OF WORK, THE CONTRACTOR SHALL REPLACE (WITH WORK ZONE MARKINGS) ALL LANE, CENTER, STOP OR CHANNELIZING LINES THAT WERE REMOVED OR COVERED DURING THE PAVEMENT REMOVAL OR PLACEMENT OPERATIONS. QUANTITIES FOR SUCH PLACEMENT ARE CARRIED AS PART OF THE ITEMS LISTED UNDER 614 WORK ZONE PAVEMENT MARKINGS.

10. A QUANTITY OF 50 CU. YDS. OF 614 ASPHALT CONCRETE FOR MAINTAINING TRAFFIC SHALL BE PROVIDED FOR USE IN MAINTAINING PAVEMENT, SHOULDERS AND OTHER LOCATIONS AS DIRECTED BY THE ENGINEER.

11. PRIOR TO OPENING TO TRAFFIC EACH LANE SHALL BE IN A SAFE, PASSABLE CONDITION. ALL TRANSVERSE JOINTS SHALL EXTEND ACROSS THE FULL LANE AND SHOULDER WIDTH AND EACH LANE SHALL BE FREE FROM UNEVEN LONGITUDINAL JOINTS. THE CONTRACTOR SHALL PROVIDE ASPHALT WEDGES FOR TRANSVERSE JOINTS WHEREVER THERE ARE PAVEMENT ELEVATION DIFFERENCES.

12. A QUANTITY OF ITEM 614 WORK ZONE MARKING SIGN HAS BEEN INCLUDED IN THE PLAN. THIS QUANTITY SHALL INCLUDE, BUT NOT BE LIMITED TO, THE FOLLOWING SIGNS: W8-1 [BUMP], W6-3 [TWO-WAY TRAFFIC], W8-H13 [NO EDGE LINES], R4-1 [DO NOT PASS], R4-2 [PASS WITH CARE], W8-11 [UNEVEN LANES]. THESE QUANTITIES SHALL BE AS PER 614.04.

THE FOLLOWING QUANTITIES SHALL BE USED FOR THE MAINTENANCE OF TRAFFIC ON THIS PROJECT:

614, WORK ZONE MARKING SIGN, 15 EACH

PHASE I PLANNED SURFACE

614, WORK ZONE LANE LINE, CLASS II, 8.68 MILE
614, WORK ZONE CHANNELIZING LINE, CLASS 1, 5161 FT

PHASE II INTERMEDIATE COURSE SURFACE

614, WORK ZONE LANE LINE, CLASS II, 8.68 MILE
614, WORK ZONE CHANNELIZING LINE, CLASS 1, 5161 FT

PHASE III SURFACE COURSE

614, WORK ZONE LANE LINE, CLASS II, 8.68 MILE
614, WORK ZONE CHANNELIZING LINE, CLASS II, 5161 FT

ADVANCED NOTICE TO PAVE

THE CONTRACTOR SHALL SUBMIT FOR APPROVAL TO THE DISTRICT CONSTRUCTION ENGINEER A DETAILED SCHEDULE 15 DAYS PRIOR TO THE PLACEMENT OF THE OVERLAY COURSES, ON HOW THEY PROPOSE TO PROSECUTE THE PAVING OPERATIONS. THE DETAILS SHALL SHOW THE ORDER OF PERFORMANCE OF EACH STAGE (START TO FINISH) OF THE WORK INCLUDING THE MAINTENANCE OF TRAFFIC THAT WILL BE USED.

CONTRACTOR'S EQUIPMENT - OPERATION AND STORAGE

A QUALIFIED FLAGGER SHALL BE EMPLOYED WHERE THE CONTRACTOR'S EQUIPMENT MUST MERGE WITH THE TRAFFIC STREAM. THE CONTRACTOR'S EQUIPMENT SHALL BE EQUIPPED WITH AT LEAST ONE AMBER FLASHING LIGHT. PAVERS, ROLLERS AND OTHER EQUIPMENT MAY BE PARKED IN AREAS ALONG THE HIGHWAY WHEN PAVING OPERATIONS ARE SCHEDULED TO CONTINUE WITHIN THE NEXT WORKDAY. OTHERWISE THE EQUIPMENT SHALL BE STORED AT A STORAGE AREA OUTSIDE THE R/W, THE LOCATION OF WHICH SHALL HAVE PRIOR APPROVAL OF THE ENGINEER. WHEN PARKING ALONG THE HIGHWAY THE EQUIPMENT SHALL BE PLACED AND DELINEATED AS PER 614.03. NO EQUIPMENT SHALL BE PARKED IN THE MEDIAN OF THE HIGHWAY. ADEQUATE BARRICADES AND LIGHTS SHALL BE PLACED ON THE PAVEMENT SIDE OF THE EQUIPMENT TO IDENTIFY THE LIMITS OF THE EQUIPMENT. ALL OTHER EQUIPMENT, INCLUDING PRIVATE VEHICLES, SHALL BE STORED AT THE APPROVED CONTRACTOR'S STORAGE AREA. NO EQUIPMENT SHALL BE PARKED ON PRIVATE PROPERTY UNLESS PRIOR APPROVAL OF THE OWNER AND THE PROJECT ENGINEER/ SUPERVISOR HAS BEEN GRANTED.

TRAFFIC CONTROL INSPECTOR

THE CONTRACTOR SHALL DESIGNATE AN INDIVIDUAL OTHER THAN THE SUPERINTENDENT AND SUBJECT TO THE APPROVAL OF THE ENGINEER, TO CONTINUOUSLY INSPECT ALL TRAFFIC CONTROL DEVICES WHENEVER CONSTRUCTION WORK IS BEING PERFORMED WITHIN THE WORK LIMITS OF THE PROJECT. THE DESIGNATED INDIVIDUAL SHALL ALSO INSPECT ALL TRAFFIC DEVICES AT THE BEGINNING AND AT THE END OF EACH WORK DAY. THE DESIGNATED INDIVIDUAL OR A QUALIFIED REPRESENTATIVE SHALL ALSO BE AVAILABLE ON AN AROUND THE CLOCK BASIS TO REPAIR AND/OR REPLACE DAMAGED OR MISSING TRAFFIC CONTROL DEVICES. THESE INDIVIDUALS SHALL BE EQUIPPED WITH CELLULAR PHONES AND THEIR NAMES AND PHONE NUMBERS SHALL BE GIVEN TO THE PROJECT ENGINEER AT THE PRE-CONSTRUCTION MEETING. THE DESIGNATED INDIVIDUAL MAY HAVE OTHER CONSTRUCTION RELATED DUTIES AS LONG AS IMMEDIATE ATTENTION IS GIVEN TO TRAFFIC CONTROL. PAYMENT FOR THE SERVICES OF THE TRAFFIC CONTROL INSPECTOR SHALL BE INCLUDED IN THE LUMP SUM PRICE BID FOR ITEM 614 MAINTAINING TRAFFIC.

HOLIDAY LANE CLOSURES

NO WORK SHALL BE PERFORMED AND ALL EXISTING LANES SHALL BE OPENED TO TRAFFIC AND ALL SIGNALS IN OPERATION DURING THE FOLLOWING DESIGNATED HOLIDAYS OR EVENTS:

CHRISTMAS	NEW YEARS
MEMORIAL DAY	FOURTH OF JULY
LABOR DAY	THANKSGIVING

DAY OF THE WEEK	TIMES ALL LANES MUST BE OPEN TO TRAFFIC
SUNDAY	12:00N FRIDAY THROUGH 12:00N MONDAY
MONDAY	12:00N FRIDAY THROUGH 12:00N TUESDAY
TUESDAY	12:00N MONDAY THROUGH 12:00N WEDNESDAY
WEDNESDAY	12:00N TUESDAY THROUGH 12:00N THURSDAY
THURSDAY	12:00N WEDNESDAY THROUGH 12:00N MONDAY
FRIDAY	12:00N THURSDAY THROUGH 12:00N MONDAY
SATURDAY	12:00N FRIDAY THROUGH 12:00N MONDAY

THERE SHALL NOT BE ANY EXTENSIONS DUE TO WEATHER OR MATERIAL DELAYS WHATSOEVER.

SHALL THE CONTRACTOR FAIL TO MEET ANY OF THESE REQUIREMENTS, DISINCENTIVES OF $1300 SHALL BE ASSESSED TO THE CONTRACTOR FOR EACH CALENDAR DAY THAT THE LANES REMAIN CLOSED TO TRAFFIC BEYOND THE SPECIFIED LIMIT.

LANE CLOSURES

DURATION OF LANE CLOSURES AND RESTRICTIONS SHALL BE AS PER THE PERMITTED LANE CLOSURE CHART. THE PERMITTED LANE CLOSURE CHART USED FOR THIS PROJECT SHALL BE THE MOST CURRENT CHART AVAILABLE ON THE DATE THIS PROJECT SELLS.

THE CHART CAN BE FOUND AT:
http://plcm.dot.state.oh.us

SHOULD THE CONTRACTOR FAIL TO MEET ANY OF THE REQUIREMENTS IN THE CHART, THE CONTRACTOR SHALL BE ASSESSED LIQUIDATED DAMAGES IN THE AMOUNT OF $1,300 PER HOUR OR PORTION THEREOF THAT THE LANE REDUCTION REMAINS BEYOND THE SPECIFIED LIMIT.

WEIGHTED CHANNELIZERS

THE WEIGHTED CHANNELIZER SHALL BE PREDOMINATELY ORANGE IN COLOR AND SHALL BE MADE OF A LIGHTWEIGHT, FLEXIBLE, AND DEFORMABLE MATERIAL. THEY SHALL BE AT LEAST 42 INCHES IN HEIGHT WITH A WEIGHTED BASE. THEY MAY HAVE A "HANDLE" OR LIFTING DEVICE WHICH EXTENDS ABOVE THE 42 INCH MINIMUM HEIGHT.

THE MARKINGS ON THE WEIGHTED CHANNELIZER SHALL BE HORIZONTAL, CIRCUMFERENTIAL, ALTERNATING ORANGE AND WHITE RETROREFLECTIVE STRIPES 6 INCHES WIDE. EACH WEIGHTED CHANNELIZER SHALL HAVE A MINIMUM OF TWO ORANGE AND TWO WHITE STRIPES. ANY NON-RETROREFLECTIVE SPACES BETWEEN THE HORIZONTAL ORANGE AND WHITE STRIPES SHALL NOT EXCEED 2 INCHES WIDE. THE WEIGHTED CHANNELIZER SHALL HAVE A 4-INCH MINIMUM WIDTH, REGARDLESS OF ORIENTATION.

ON FREEWAYS AND MULTILANE HIGHWAYS:
USE OF WEIGHTED CHANNELIZERS ON FREEWAYS AND MULTILANE HIGHWAYS SHALL BE LIMITED TO SHORT-TERM OPERATION, GENERALLY TWELVE HOURS OR LESS, FOR EITHER DAY OR NIGHT. UPON COMPLETION OF WORK WITHIN THE ABOVE NOTED TIME PERIOD, THE WEIGHTED CHANNELIZERS SHALL BE REMOVED. THE WEIGHTED CHANNELIZERS MAY AGAIN BE PLACED ON THE HIGHWAY WHEN THE WORK IS TO RESUME ON THE FOLLOWING DAY OR NIGHT. ANY LANE CLOSURE USING CHANNELIZATION DEVICES, EXPECTED TO REMAIN FOR MORE THAN TWELVE HOURS, SHALL REQUIRE THE USE OF DRUMS OR BARRIERS.

WHEN USED AT NIGHT, WEIGHTED CHANNELIZERS SHALL ONLY BE PLACED IN THE "TANGENT AREA". THE "TANGENT AREA" IS DEFINED AS THE AREA AFTER THE TRANSITION TAPER WHERE THE WORK TAKES PLACE. DRUMS SHALL BE USED IN THE TRANSITION TAPERS FOR NIGHT OPERATIONS.

ON OTHER HIGHWAYS:
THERE ARE NO DURATIONS OF WORK RESTRICTIONS FOR USE OF WEIGHTED CHANNELIZERS ON ALL OTHER TYPES OF HIGHWAYS, DAY OR NIGHT. ON THESE ROADWAYS THE WEIGHTED CHANNELIZER MAY BE USED IN THE TRANSITION TAPERS AS WELL AS IN THE TANGENT AREAS, DAY OR NIGHT.

MAXIMUM SPACING OF THE WEIGHTED CHANNELIZER SHALL BE 40 FEET.

STEPS SHOULD BE TAKEN TO ENSURE THAT THE WEIGHTED CHANNELIZERS WILL NOT BE BLOWN OVER OR DISPLACED BY WIND OR MOVING TRAFFIC. BALLASTS SHOULD NOT PRESENT A HAZARD IF THE WEIGHTED CHANNELIZERS ARE INADVERTENTLY STRUCK, NOR SHOULD THEY AFFECT THE VISIBILITY OF THE WEIGHTED CHANNELIZERS. ALL BALLASTS USED SHOULD BE IN ACCORDANCE WITH THE MANUFACTURER'S SPECIFICATIONS.

CALCULATED JMW
CHECKED

MAINTENANCE OF TRAFFIC NOTES

MAH-680-0.00

I:\Projects\MAH\76328_680_0.00\76328\roadway\sheets\76328MN001.dgn 16-MAR-2009 8:39AM dyard

ITEM 614 - MODIFIED AMERICAN RECOVERY AND REINVESTMENT ACT (ARRA) SIGN, FREEWAY/EXPRESSWAY

THIS ITEM SHALL CONSIST OF THE FURNISHING AND INSTALLING, AND SUBSEQUENT REMOVAL, OF MODIFIED AMERICAN RECOVERY AND REINVESTMENT ACT (ARRA) SIGNS ON YIELDING POST SUPPORTS.

INSTALL ONE ARRA SIGN NEAR THE BEGINNING OF THE PROJECT IN EACH ROUTE DIRECTION IN A LOCATION AS APPROVED BY THE ENGINEER. THE ARRA SIGN CONSISTS OF ONE 120" X 84" WHITE ON GREEN EXTRUSHEET SIGN WITH PICTOGRAPHS, ONE 120" X 24" BLACK ON ORANGE EXTRUSHEET SIGN, AND ONE 24" X 24" DIAMOND FLAT SHEET SIGN. THE SIGN FABRICATION DETAILS ARE FOUND AT:

HTTP://WWW.DOT.STATE.OH.US/DIVISIONS/HIGHWAYOPS/TRAFFIC/PAGES/OTEHOMEPAGE.ASPX

INSTALL THE SIGN ON THREE NO. 3 YIELDING POSTS AS PER STANDARD DRAWING TC-41.20, WITH ONE POST ON SIGN CENTERLINE AND ONE POST 12" FROM EACH END. SIGNS IN PROTECTED LOCATIONS MAY BE INSTALLED ON OTHER SUPPORTS AS APPROVED BY THE ENGINEER. USED SIGNS ARE ALLOWED PROVIDED THEY ARE IN A CONDITION ACCEPTABLE TO THE ENGINEER. REMOVE THE ARRA SIGNS AND SUPPORTS AT THE END OF THE PROJECT. REMOVED ARRA SIGNS AND SUPPORTS ARE THE PROPERTY OF THE CONTRACTOR.

PAYMENT SHALL BE INCLUDED IN THE CONTRACT LUMP SUM BID PRICE FOR ITEM 614 MAINTAINING TRAFFIC AND SHALL INCLUDE ALL LABOR, EQUIPMENT, MATERIALS (INCLUDING SUPPORTS), TOOLS AND OTHER INCIDENTALS TO PROVIDE FOR A COMPLETE AND ACCEPTED ITEM OF WORK.

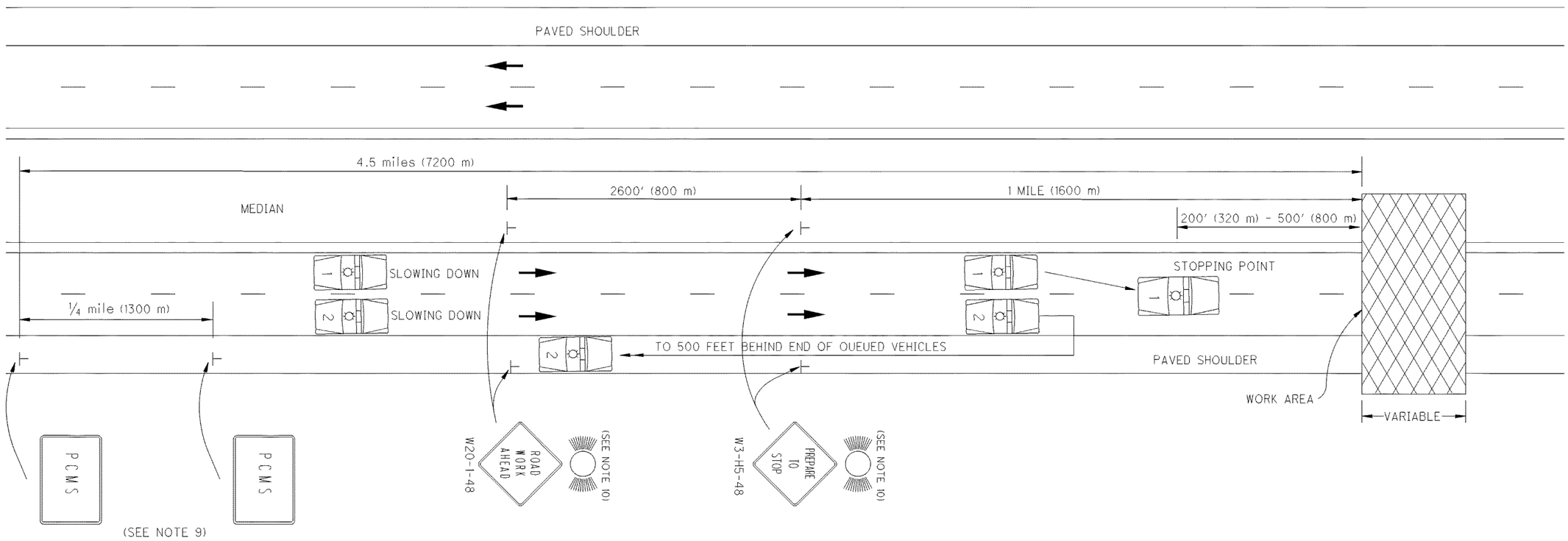

1. This type of highway closure shall be used for all construction, maintenance and utility operations when the duration of closure will not exceed 15 minutes.

2. A minimum of two Law Enforement Officers (LEO) with patrol cars per direction shall be provided to block traffic and pace motorists to a stop. The number of patrol cars shall equal the number of lanes closed on the highway.

3. Patrol cars, with lights flashing, should enter the stream of traffic at approximately three (3) miles before the point of closure. At approximately two (2) miles before the point of closure, they should begin the gradual slow down. Traffic shall be brought to a complete stop a safe distance, between 200 feet and 500 feet, from the work area. This slowing operation shall take no more than ten (10) minutes. After traffic has been stopped, one patrol car shall travel along the roadway shoulder 500 feet behind the end of the queued vehicles.

4. The contractor shall not begin work until traffic has been brought to a complete stop.

5. All entrance ramps located between the stopped traffic and the work area shall be closed.

6. After the highway has been closed and reopened via this procedure, both of the following requirements shall have been met before implementation of another short duration closure, except with the approval of the engineer:
   A. A minimum period of 15 minutes shall have elapsed
   B. The queued traffic shall have dissipated

7. The time frame for stopping traffic shall be specified in the plans or by the District District Deputy Director.

8. The public shall be given advance notice of the upcomming closure by providing Portable Changeable Message signs at the site at least one week in advance of the scheduled closing. Closure information should also be provided through the news media.

9. Two ODOT approved Portable Changeable Messge Signs, Class 1, shall be provided. The first messge sign shall be placed at approximately 4.5 miles in advance of the closure or as directed by the engineer. The second messge sign shall be placed at approximately one quarter mile beyond the first message sign. The first message sign shall read ROAD CLOSED AHEAD (0.8 sec.), PREPARE TO STOP (0.8 sec.), (Black screen for 0.3 sec.) The second message sign shall read ROAD CLOSED AHEAD (0.8 sec.), "EXPECT 30 MIN. DELAY" (0.8 sec.), (Black screen for 0.3 sec.)

10. The contractor shall erect and maintian 48 inch "ROAD WORK AHEAD" and "PREPARE TO STOP" signs on each side of the highway. During night operations, each sign shall be illuminated with one (1) Type A flashing warning light or two (2) flares. The flares shall be replaced if if they burn out.

OFFICE OF TRAFFIC ENGINEERING

SHORT-DURATION CLOSURE OF MULTI-LANE DIVIDED HIGHWAY

MAH-680-0.00

6B
23

I:\Projects\MAH\76328_680_0.00\76328\roadway\sheets\76328MN002.dgn 27-APR-2009 9:26AM lshevetz

SHEET NUMBER 4	5	6	8	9	10	ITEM	ITEM EXT	GRAND TOTAL	UNIT	DESCRIPTION	SEE SHEET NO.
										ROADWAY	
1						202	20010	1	EACH	HEADWALL REMOVED	
			736			202	23500	736	SQ YD	WEARING COURSE REMOVED	
16						202	35100	16	FT	PIPE REMOVED, 24" AND UNDER	
438						202	38000	438	FT	GUARDRAIL REMOVED	
	LUMP					202	98000	LUMP		REMOVAL MISC.:IMPACT ATTENUATOR WITH TENSION STRUT BACKUP	
	LUMP					202	98000	LUMP		REMOVAL MISC.:CONCRETE PAD	
25						203	10000	25	CU YD	EXCAVATION	
1						604	39500	1	EACH	MONUMENT BOX ADJUSTED TO GRADE	
438						606	13000	438	FT	GUARDRAIL, TYPE 5	
	1					606	60020	1	EACH	IMPACT ATTENUATOR, TYPE 2-98 (UNIDIRECTIONAL)(70 MPH, 69")	
1000						607	22000	1000	FT	FENCE REBUILT, TYPE CL	
	7					SPEC	69098000	7	EACH	MISC.: VERTICAL CLEARANCE	5
										EROSION CONTROL	
						832	30000	1000	EACH	EROSION CONTROL	
										DRAINAGE	
0.43						602	20000	0.43	CU YD	CONCRETE MASONRY	
16						603	10600	16	FT	24" CONDUIT, TYPE C	
7						604	09500	7	EACH	CATCH BASIN RECONSTRUCTED TO GRADE	
										PAVEMENT	
800						251	01000	800	SQ YD	PARTIAL DEPTH PAVEMENT REPAIR	
675						252	01500	675	FT	FULL DEPTH PAVEMENT SAWING	
150						253	01000	150	SQ YD	PAVEMENT REPAIR	
			238421			254	01000	238421	SQ YD	PAVEMENT PLANING, ASPHALT CONCRETE	
25						304	20000	25	CU YD	AGGREGATE BASE	
			35764			407	10000	35764	GALLON	TACK COAT	
			7566			407	14000	7566	GALLON	TACK COAT FOR INTERMEDIATE COURSE	
			10702			408	10001	10702	GALLON	PRIME COAT, AS PER PLAN	4
			9935			442	20050	9935	CU YD	ASPHALT CONCRETE SURFACE COURSE, 12.5MM, TYPE B (448)	
			9195			442	20250	9195	CU YD	ASPHALT CONCRETE INTERMEDIATE COURSE, 19MM, TYPE B (448)	
			1247			617	10101	1247	CU YD	COMPACTED AGGREGATE, AS PER PLAN	4
										TRAFFIC CONTROL	
				360		621	10010	360	EACH	RPM, LOW PROFILE, WHITE	
				110		621	10020	110	EACH	RPM, LOW PROFILE WHITE/RED	
				219		621	10030	219	EACH	RPM, LOW PROFILE YELLOW/RED	
				1918		621	54000	1918	EACH	RAISED PAVEMENT MARKER REMOVED	
5						626	00100	5	EACH	BARRIER REFLECTOR	
					24.26	644	00100	24.26	MILE	EDGE LINE	
					8.68	644	00200	8.68	MILE	LANE LINE	
					5161	644	00400	5161	FT	CHANNELIZING LINE	
					575	644	00700	575	FT	TRANSVERSE/DIAGONAL LINE	
										STRUCTURES	
										FOR STRUCTURE ESTIMATED QUANTITIES	15 & 16
										MAINTENANCE OF TRAFFIC	
		15				614	12460	15	EACH	WORK ZONE MARKING SIGN	
		50				614	13000	50	CU YD	ASPHALT CONCRETE FOR MAINTAINING TRAFFIC	
		26.04				614	20400	26.04	MILE	WORK ZONE LANE LINE, CLASS II	
		15483				614	23660	15483	FT	WORK ZONE CHANNELIZING LINE, CLASS II, 642 PAINT	
						614	11000	LUMP		MAINTAINING TRAFFIC	
						619	16010	6	MONTH	FIELD OFFICE, TYPE B	
						623	10000	LUMP		CONSTRUCTION LAYOUT STAKES	
						624	10000	LUMP		MOBILIZATION	

CALCULATED JMW CHECKED

GENERAL SUMMARY

MAH-680-0.00

I:\Projects\MAH\76328_680_0.00\76328\roadway\sheets\76328GG001.dgn 26-MAR-2009 11:12AM dyord

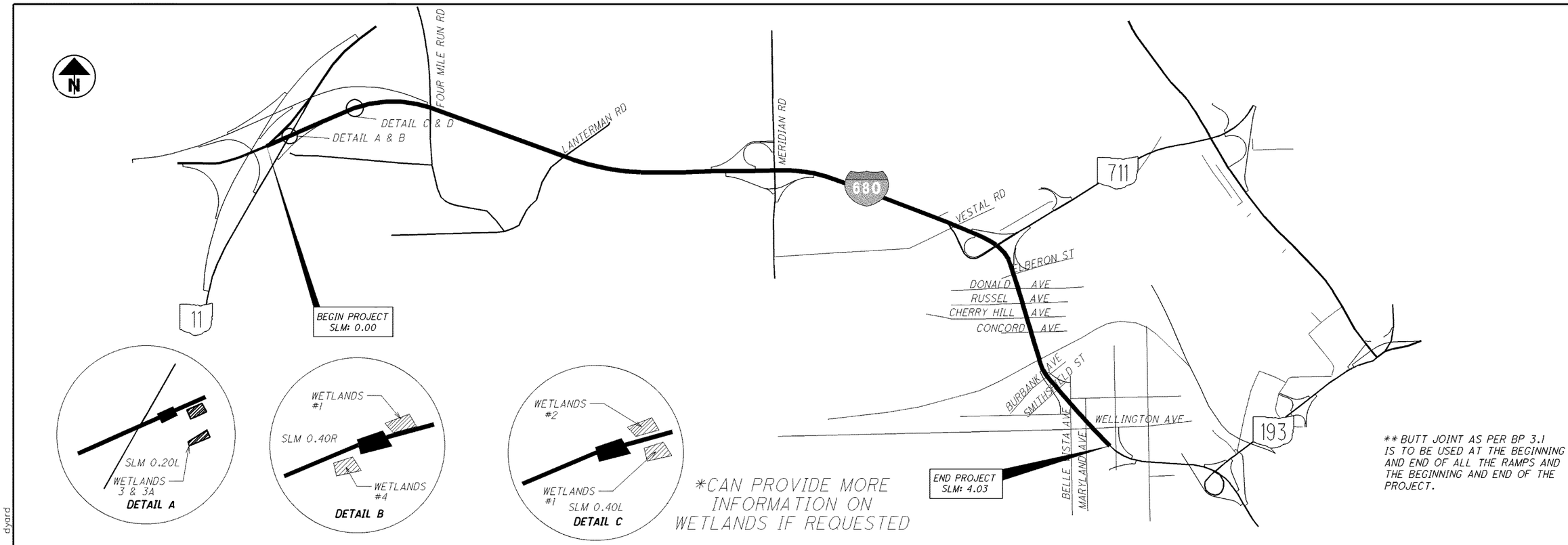

SLM RANGE			TYPICAL SECTION	SIDE	DISTANCE (D)	AVERAGE WIDTH (W)	SURFACE AREA (A) A=DxW/9	CADD GENERATED AREA	202 WEARING COURSE REMOVED	254 PAVEMENT PLANING, ASPHALT CONCRETE (T = 2")	254 PAVEMENT PLANING, ASPHALT CONCRETE (T = 1 1/4")		407 TACK COAT @ 0.15 GAL/SY	407 TACK COAT FOR INTERMEDIATE COURSE @ 0.04 GAL/SY	408 PRIME COAT, AS PER PLAN @ 0.4 GAL/SY		442 ASPHALT CONCRETE SURFACE COURSE, 12.5 MM, TYPE B (448), AS PER PLAN (T = 1 1/2")	442 ASPHALT CONCRETE INTERMEDIATE COURSE, 19MM, TYPE B (448) (T = 1 3/4")	617 COMPACTED AGGREGATE, AS PER PLAN
					FT	FT	SQ YD	SQ YD	SQ YD	SQ YD	SQ YD		GALLON	GALLON	GALLON		CU YD	CU YD	CU YD
0.00	TO	4.03		SB	21278.40	40.00	94570.67		88.89	94570.67			14185.60	3782.83	3782.83		3940.44	4597.19	525.39
0.00	TO	4.03		NB	21278.40	40.00	94570.67		88.89	94570.67			14185.60	3782.83	3782.83		3940.44	4597.19	525.39
RAMPS																			
SB680 OFF TO MERIDAN					1900.00	24.00	5066.67		53.33		5066.67		760.00		337.78		211.11		23.46
MERIDAN ON TO SB680					1600.00	24.00	4266.67		53.33		4266.67		640.00		284.44		177.78		19.75
NB680 OFF TO MERIDIAN					2160.00	25.00	6000.00		55.56		6000.00		900.00		384.00		250.00		26.67
MERIDAN ON TO NB680					1926.00	25.00	5350.00		55.56		5350.00		802.50		342.40		222.92		23.78
SB680 OFF TO SR711					2200.00	26.00	6355.56		57.78		6355.56		953.33		391.11		264.81		13.58
SR711 ON TO SB680					1520.00	25.00	4222.22		55.56		4222.22		633.33		270.22		175.93		18.77
NB680 OFF TO SR711					1430.00	23.00	3654.44		51.11		3654.44		548.17		254.22		152.27		8.83
SR711 ON TO NB680					2000.00	25.00	5555.56		55.56		5555.56		833.33		355.56		231.48		24.69
SB OFF TO BELLE VISTA					1870.00	28.00	5817.78		62.22		5817.78		872.67		332.44		242.41		23.09
BELLE VISTA ON TO NB680					1035.00	26.00	2990.00		57.78		2990.00		448.50		184.00		124.58		12.78
NB680 TO SR11 SB					295.00	26.00	852.22		57.78		852.22		127.83		52.44		35.51		3.64
SR11NB TO SB 680					2047.00	24.68	5613.33		54.84		5613.33		842.00		363.91		233.89		25.27
								SUBTOTALS	848.18	189141.33	55744.44		36732.87	7565.65	11118.19		10203.57	9194.37	1275.08
								TOTALS CARRIED TO GENERAL SUMMARY	849	189142	55745		36733	7566	11119		10204	9195	1276

CALCULATED JMW
CHECKED

ASPHALT CONCRETE SUBSUMMARY

MAH-680-0.00

\Projects\MAH\76328_680_0.00\76328\roadway\sheets\763286A001.dgn 08-JUL-2009 12:14PM dyard

LOCATION								621	621	621	621		621	
COUNTY	ROUTE	SECTION (S.L.M.)						RPM, LOW PROFILE, YELLOW/YELLOW	RPM, LOW PROFILE WHITE/RED	RPM, LOW PROFILE, WHITE	RPM, LOW PROFILE YELLOW/RED		RAISED PAVEMENT MARKER REMOVED	REMARKS
		FROM	TO					EACH	EACH	EACH	EACH		EACH	
MAH	680	0.00	4.03							360			1400	I-680 SB./NB. REPLACE LANE LINE ONLY (REMOVE EDGE LINES, DO NOT REPLACE)
														(REMOVE ALL WHITE EDGE LINE MARKINGS ON RAMPS, DO NOT REPLACE)
MAH	680	RAMPS AT	MERIDIAN						15		24		63	SB. I-608 OFF TO MERIDIAN (GORE MARKINGS AND YELLOW EDGE LINES ONLY)
									9		26		61	NB. I-680 OFF TO MERIDIAN (GORE MARKINGS AND YELLOW EDGE LINES ONLY)
									12		20		32	MERIDIAN ON TO SB. I-680 (GORE MARKINGS AND YELLOW EDGE LINES ONLY)
									9		24		57	MERIDIAN ON TO NB. I-680 (GORE MARKINGS AND YELLOW EDGE LINES ONLY)
MAH	680	RAMPS AT	SR 711						11		27		65	SB. I-680 OFF TO SR 711 (GORE MARKINGS AND YELLOW EDGE LINES ONLY)
									11		18		47	NB. I-680 OFF TO SR 711 (GORE MARKINGS AND YELLOW EDGE LINES ONLY)
									10		19		48	SR 711 ON TO SB. I-680 (GORE MARKINGS AND YELLOW EDGE LINES ONLY)
									10		25		60	SR 711 ON TO NB. I-680 (GORE MARKINGS AND YELLOW EDGE LINES ONLY)
MAH	680	RAMPS AT	BELLE VISTA AVE.						13		23		59	SB. I-680 OFF TO BELLE VISTA (GORE MARKINGS AND YELLOW EDGE LINES ONLY)
									10		13		26	BELLE VISTA ON TO NB. I-680 (GORE MARKINGS AND YELLOW EDGE LINES ONLY)
TOTALS CARRIED TO GENERAL SUMMARY				0	0	0	0	0	110	360	219	0	1918	

CALCULATED KG
CHECKED LB

RAISED PAVEMENT MARKINGS

MAH-680-0.00

I:\Projects\MAH\76328_680_0.00\76328\roadway\sheets\76328RPM001.dgn 16-MAR-2009 8:39AM dyard

GENERAL SPEC:	640
MATERIAL TYPE:	646

CALCULATED TJD CHECKED

CENTER LINE

CTY	ROUTE	TRUE LOG	FROM	TRUE LOG	TO	TOTAL MILES	EQUIVALENT SOLID LINE	COMMENTS
TOTAL								

LANE LINE

CTY	ROUTE	TRUE LOG	FROM	TRUE LOG	TO	TOTAL MILES	4" LANE LINE DASHED	4" LANE LINE SOLID	COMMENTS
MAH	680	0.00	BEGIN I-680	4.03	JCT. STEELE ST.	8.68			
TOTAL						8.68			

EDGE LINE

CTY	ROUTE	TRUE LOG	FROM	TRUE LOG	TO	WHITE EDGE LINE TOTAL	WHITE EDGE LINE HIGHWAY	WHITE EDGE LINE RAMP	YELLOW EDGE LINE TOTAL	YELLOW EDGE LINE HIGHWAY	YELLOW EDGE LINE RAMP	COMMENTS
MAH	680	0.00	BEGIN I-680	4.03	JCT. STEELE ST.	13.02	8.06	4.96	11.24	8.06	3.18	
TOTAL						13.02	8.06	4.96	11.24	8.06	3.18	

AUXILIARY

CTY	ROUTE LOCATION	TRUE LOG	CHANNEL LINE	STOP LINE	TRANSVERSE DIAGONAL LINES WHITE	TRANSVERSE DIAGONAL LINES YELLOW	CROSS WALK LINES	WORD ON PVMT ONLY 72"	WORD ON PVMT ONLY 96"	LANE ARROWS TURN LEFT	LANE ARROWS TURN RIGHT	LANE ARROWS THRU	LANE ARROWS COMB.	SYMBOL MARKINGS RxR	SYMBOL MARKINGS SCHOOL 72"	SYMBOL MARKINGS SCHOOL 96"	ISLAND MARKING	DOTTED LINES	COMMENTS
			FT	FT	FT	FT	FT	EACH	EACH	EACH	EACH	EACH	EACH	EACH	EACH	EACH	SQ FT	FT	
MAH	I-680 EB @ I-80 EB	0.000	366		150														
MAH	I-680 WB TO SR 11 SB	0.012	422		175														
MAH	I-680 EB FROM SR 11 NB	0.330	360																
MAH	I-680 EB TO MERIDIAN RD.	1.873	360																
MAH	I-680 WB FROM MERIDIAN RD.	1.763	358																
MAH	I-680 EB FROM MERIDIAN RD.	2.331	463																
MAH	I-680 WB TO MERIDIAN RD.	2.003	292																
MAH	I-680 EB TO SR 711	2.791	272		125														
MAH	I-680 WB FROM SR 711	2.816	373																
MAH	I-680 EB FROM SR 711	2.986	311																
MAH	I-680 WB TO SR 711	3.107	260		125														
MAH	I-680 EB TO BELLE VISTA	3.527	468																
MAH	I-680 EB FROM BELLE VISTA	3.488	374																
MAH	I-680 WB TO BELLE VISTA	4.041	482																
TOTAL			5161		575														

PAVEMENT MARKING SUB-SUMMARY

MAH-680-0.00

I:\Projects\MAH\76328_680_0.00\76328\roadway\sheets\76328PM001.dgn 16-MAR-2009 8:39AM dyord

STANDARD DRAWINGS AND SUPPLEMENTAL SPECIFICATIONS

REFER TO THE FOLLOWING STANDARD BRIDGE DRAWING(S):

GSD-1-96	DATED/REVISED	7-19-02
VPF-1-90	DATED/REVISED	7-19-02
HW-2.1	DATED/REVISED	4-21-06
GR-1.1	DATED/REVISED	7-16-04
GR-2.1	DATED/REVISED	1-16-04
GR-4.2	DATED/REVISED	1-19-07
GR-5.2	DATED/REVISED	1-16-04
GR-5.3	DATED/REVISED	1-16-04
GR-6.1	DATED/REVISED	4-18-03

AND TO THE FOLLOWING SUPPLEMENTAL SPECIFICATION(S):

843 DATED 4-18-03

DESIGN SPECIFICATIONS

THIS STRUCTURE CONFORMS TO "STANDARD SPECIFICATIONS FOR HIGHWAY BRIDGES" ADOPTED BY THE AMERICAN ASSOCIATION OF STATE HIGHWAY AND TRANSPORTATION OFFICIALS, 17TH EDITION, INCLUDING THE 2002 INTERIM SPECIFICATIONS AND THE ODOT BRIDGE DESIGN MANUAL.

DECK PROTECTION METHOD

MAH-680-0009R: SRS CONCRETE TREATMENT
MAH-680-0020L: SRS CONCRETE TREATMENT
MAH-680-0040L: SRS CONCRETE TREATMENT
MAH-680-0040R: SRS CONCRETE TREATMENT
MAH-680-0067: 3" ASPHALT CONCRETE OVERLAY
MAH-680-0109: 3" ASPHALT CONCRETE OVERLAY
MAH-680-0207L: 3" ASPHALT CONCRETE OVERLAY
MAH-680-0207R: 3" ASPHALT CONCRETE OVERLAY
MAH-680-0333L: 3" ASPHALT CONCRETE OVERLAY
MAH-680-0333R: 3" ASPHALT CONCRETE OVERLAY
MAH-680-0343L: 3" ASPHALT CONCRETE OVERLAY
MAH-680-0343R: 3" ASPHALT CONCRETE OVERLAY
MAH-680-0373: 3" ASPHALT CONCRETE OVERLAY
MAH-711-0026: SRS CONCRETE TREATMENT

EXISTING STRUCTURE VERIFICATION

DETAILS AND DIMENSIONS SHOWN ON THESE PLANS PERTAINING TO THE EXISTING STRUCTURE HAVE BEEN OBTAINED FROM PLANS OF THE EXISTING STRUCTURE AND FROM FIELD OBSERVATIONS AND MEASUREMENTS. CONSEQUENTLY, THEY ARE INDICATIVE OF THE EXISTING STRUCTURE AND THE PROPOSED WORK BUT THEY SHALL BE CONSIDERED TENTATIVE AND APPROXIMATE. THE CONTRACTOR IS REFERRED TO CMS SECTIONS 102.05, 105.02 AND 513.04.

BASE CONTRACT BID PRICES UPON A RECOGNITION OF THE UNCERTAINTIES DESCRIBED ABOVE AND UPON A PREBID EXAMINATION OF THE EXISTING STRUCTURE. HOWEVER, THE DEPARTMENT WILL PAY FOR ALL PROJECT WORK BASED UPON ACTUAL DETAILS AND DIMENSIONS WHICH HAVE BEEN VERIFIED IN THE FIELD.

PROPOSED WORK

MAH-680-0009R (EB I680 OVER SR11 NB)
- -SEAL WEARING SURFACE AND APPROACH SLABS WITH SRS CONCRETE TREATMENT
- -PATCH ALL UNSOUND CONCRETE OF SUBSTRUCTURE
- -SEAL ALL CONCRETE SURFACES OF PARAPETS, ABUTMENTS, WINGWALLS, AND PIERS WITH EPOXY-URETHANE
- -CLEARING AND GRUBBING 15' AROUND ABUTMENTS FOR SEALING OPERATIONS
- -REPAIR EROSION OF THE EMBANKMENT AT THE REAR RIGHT
- -NEW STRUCTURE IDENTIFICATION SIGN

MAH-680-0020L (WB I680 OVER I80EB AND SR11 NB)
- -SEAL WEARING SURFACE AND APPROACH SLABS WITH SRS CONCRETE TREATMENT
- -PATCH ALL UNSOUND CONCRETE OF SUBSTRUCTURE AND PARAPETS
- -SEAL ALL CONCRETE SURFACES OF PARAPETS, ABUTMENTS, WINGWALLS, AND PIERS WITH EPOXY-URETHANE
- -CLEARING AND GRUBBING 15' AROUND ABUTMENTS FOR SEALING OPERATIONS
- -NEW STRUCTURE IDENTIFICATION SIGN AND OBJECT MARKERS

MAH-680-0040L (WB I680 OVER WATER MAIN R/W MVS)
- -SEAL WEARING SURFACE AND APPROACH SLABS WITH SRS CONCRETE TREATMENT
- -SEAL ALL CONCRETE SURFACES OF PARAPETS, ABUTMENTS, WINGWALLS, AND PIERS WITH EPOXY-URETHANE
- -CLEARING AND GRUBBING 15' AROUND ABUTMENTS FOR SEALING OPERATIONS
- -NEW STRUCTURE IDENTIFICATION SIGN AND OBJECT MARKERS

MAH-680-0040R (EB I680 OVER WATER MAIN R/W MVS)
- -SEAL WEARING SURFACE AND APPROACH SLABS WITH SRS CONCRETE TREATMENT
- -SEAL ALL CONCRETE SURFACES OF PARAPETS, ABUTMENTS, WINGWALLS, AND PIERS WITH EPOXY-URETHANE
- -CLEARING AND GRUBBING 15' AROUND ABUTMENTS FOR SEALING OPERATIONS
- -NEW STRUCTURE IDENTIFICATION SIGN AND OBJECT MARKERS

MAH-680-0067 (FOUR MILE RUN ROAD OVER I680)
- -PATCH ALL VISIBLY UNSOUND AREAS OF CONCRETE WEARING SURFACE
- -PLACE TYPE 3 WATERPROOFING AND A 3" ASPHALT CONCRETE OVERLAY
- -REMOVE AND REPLACE ASPHALT ON APPROACH SLABS
- -PLACE A POLYMER MODIFIED ASPHALT EXPANSION JOINT SYSTEM
- -PATCH ALL UNSOUND CONCRETE OF SUBSTRUCTURE AND PARAPETS
- -REMOVE ALL SPALLS ON THE FLOOR OF THE DECK AND SEAL WITH EPOXY-URETHANE
- -REPAIR DAMAGED CURB
- -SEAL ALL CONCRETE SURFACES OF PARAPETS, ABUTMENTS, WINGWALLS, AND PIERS WITH EPOXY-URETHANE
- -CLEARING AND GRUBBING 15' AROUND ABUTMENTS FOR SEALING OPERATIONS
- -REPLACE APPROACH GUARDRAIL AND UPGRADE BRIDGE TERMINAL ASSEMBLIES
- -REPAIR EROSION AT THE REAR RIGHT SIDE OF STRUCTURE
- -NEW STRUCTURE IDENTIFICATION SIGNS

MAH-680-0109 (LANTERMAN ROAD OVER I680)
- -PATCH ALL VISIBLY UNSOUND AREAS OF CONCRETE WEARING SURFACE
- -PLACE TYPE 3 WATERPROOFING AND A 3" ASPHALT CONCRETE OVERLAY
- -REMOVE AND REPLACE ASPHALT ON APPROACH SLABS
- -PLACE A POLYMER MODIFIED ASPHALT EXPANSION JOINT SYSTEM
- -PATCH ALL UNSOUND CONCRETE OF SUBSTRUCTURE AND PARAPETS
- -REMOVE ALL SPALLS ON THE FLOOR OF THE DECK AND SEAL WITH EPOXY-URETHANE
- -REPAIR DAMAGED CURB
- -SEAL ALL CONCRETE SURFACES OF PARAPETS, ABUTMENTS, WINGWALLS, AND PIERS WITH EPOXY-URETHANE
- -CLEARING AND GRUBBING 15' AROUND ABUTMENTS FOR SEALING OPERATIONS
- -REPLACE APPROACH GUARDRAIL AND UPGRADE BRIDGE TERMINAL ASSEMBLIES
- -NEW STRUCTURE IDENTIFICATION SIGNS

MAH-680-0207L (I680 OVER MERIDIAN ROAD)
- -PATCH ALL VISIBLY UNSOUND AREAS OF CONCRETE WEARING SURFACE
- -PLACE TYPE 3 WATERPROOFING AND A 3" ASPHALT CONCRETE OVERLAY
- -REMOVE AND REPLACE ASPHALT ON APPROACH SLABS
- -PLACE A BITUMINOUS CONCRETE JOINT
- -PATCH ALL UNSOUND CONCRETE OF SUBSTRUCTURE
- -REMOVE ALL SPALLS ON THE FLOOR OF THE DECK AND SEAL WITH EPOXY-URETHANE
- -REPAIR SLOPE PROTECTION
- -SEAL ALL CONCRETE SURFACES OF PARAPETS, ABUTMENTS, WINGWALLS, AND PIERS WITH EPOXY-URETHANE
- -CLEARING AND GRUBBING 15' AROUND ABUTMENTS FOR SEALING OPERATIONS
- -NEW STRUCTURE IDENTIFICATION SIGNS AND OBJECT MARKERS

MAH-680-0207R (I680 OVER MERIDIAN ROAD)
- -PATCH ALL VISIBLY UNSOUND AREAS OF CONCRETE WEARING SURFACE
- -PLACE TYPE 3 WATERPROOFING AND A 3" ASPHALT CONCRETE OVERLAY
- -REMOVE AND REPLACE ASPHALT ON APPROACH SLABS
- -PLACE A BITUMINOUS CONCRETE JOINT
- -PATCH ALL UNSOUND CONCRETE OF SUBSTRUCTURE
- -REMOVE ALL SPALLS ON THE FLOOR OF THE DECK AND SEAL WITH EPOXY-URETHANE
- -REPAIR SLOPE PROTECTION
- -REPAIR EROSION AT THE CORNERS OF THE STRUCTURE
- -SEAL ALL CONCRETE SURFACES OF PARAPETS, ABUTMENTS, WINGWALLS, AND PIERS WITH EPOXY-URETHANE
- -CLEARING AND GRUBBING 15' AROUND ABUTMENTS FOR SEALING OPERATIONS
- -NEW STRUCTURE IDENTIFICATION SIGNS AND OBJECT MARKERS

MAH-680-0315 (PEDESTRIAN BRIDGE OVER I680)
- -REMOVE STRUCTURE
- -CLEARING AND GRUBBING
- -SEEDING AND MULCHING

MAH-680-0333L (I680 OVER CHERRY HILL ROAD)
- -PATCH ALL VISIBLY UNSOUND AREAS OF CONCRETE WEARING SURFACE
- -PLACE TYPE 3 WATERPROOFING AND A 3" ASPHALT CONCRETE OVERLAY
- -REMOVE AND REPLACE ASPHALT ON APPROACH SLABS
- -PLACE A BITUMINOUS CONCRETE JOINT
- -PATCH ALL UNSOUND CONCRETE OF SUBSTRUCTURE
- -REMOVE ALL SPALLS ON THE FLOOR OF THE DECK AND SEAL WITH EPOXY-URETHANE
- -REPAIR DAMAGED CURB
- -REPAIR SLOPE PROTECTION
- -SEAL ALL CONCRETE SURFACES OF PARAPETS, ABUTMENTS, WINGWALLS, AND PIERS WITH EPOXY-URETHANE
- -CLEARING AND GRUBBING 15' AROUND ABUTMENTS FOR SEALING OPERATIONS
- -NEW STRUCTURE IDENTIFICATION SIGNS AND OBJECT MARKERS

MAH-680-0333R (I680 OVER CHERRY HILL ROAD)
- -PATCH ALL VISIBLY UNSOUND AREAS OF CONCRETE WEARING SURFACE
- -PLACE TYPE 3 WATERPROOFING AND A 3" ASPHALT CONCRETE OVERLAY
- -REMOVE AND REPLACE ASPHALT ON APPROACH SLABS
- -PLACE A BITUMINOUS CONCRETE JOINT
- -PATCH ALL UNSOUND CONCRETE OF SUBSTRUCTURE
- -REMOVE ALL SPALLS ON THE FLOOR OF THE DECK AND SEAL WITH EPOXY-URETHANE
- -REPAIR DAMAGED CURB
- -SEAL ALL CONCRETE SURFACES OF PARAPETS, ABUTMENTS, WINGWALLS, AND PIERS WITH EPOXY-URETHANE
- -CLEARING AND GRUBBING 15' AROUND ABUTMENTS FOR SEALING OPERATIONS
- -NEW STRUCTURE IDENTIFICATION SIGNS AND OBJECT MARKERS

MAH-680-0343L (I680 OVER YOUNGSTOWN & AUSTINTOWN RR)
- -PATCH ALL VISIBLY UNSOUND AREAS OF CONCRETE WEARING SURFACE
- -PLACE TYPE 3 WATERPROOFING AND A 3" ASPHALT CONCRETE OVERLAY
- -REMOVE AND REPLACE ASPHALT ON APPROACH SLABS
- -PLACE A BITUMINOUS CONCRETE JOINT
- -PATCH ALL UNSOUND CONCRETE OF SUBSTRUCTURE
- -REMOVE ALL SPALLS ON THE FLOOR OF THE DECK AND SEAL WITH EPOXY-URETHANE
- -REPAIR DAMAGED CURB
- -SEAL ALL CONCRETE SURFACES OF PARAPETS, ABUTMENTS, WINGWALLS, AND PIERS WITH EPOXY-URETHANE
- -CLEARING AND GRUBBING 15' AROUND ABUTMENTS FOR SEALING OPERATIONS
- -NEW STRUCTURE IDENTIFICATION SIGNS AND OBJECT MARKERS

MAH-680-0343R (I680 OVER YOUNGSTOWN & AUSTINTOWN RR)
- -PATCH ALL VISIBLY UNSOUND AREAS OF CONCRETE WEARING SURFACE
- -PLACE TYPE 3 WATERPROOFING AND A 3" ASPHALT CONCRETE OVERLAY
- -REMOVE AND REPLACE ASPHALT ON APPROACH SLABS
- -PLACE A BITUMINOUS CONCRETE JOINT
- -PATCH ALL UNSOUND CONCRETE OF SUBSTRUCTURE
- -REMOVE ALL SPALLS ON THE FLOOR OF THE DECK AND SEAL WITH EPOXY-URETHANE
- -REPAIR DAMAGED CURB
- -REPAIR EROSION AT THE FORWARD RIGHT
- -SEAL ALL CONCRETE SURFACES OF PARAPETS, ABUTMENTS, WINGWALLS, AND PIERS WITH EPOXY-URETHANE
- -CLEARING AND GRUBBING 15' AROUND ABUTMENTS FOR SEALING OPERATIONS
- -NEW STRUCTURE IDENTIFICATION SIGNS AND OBJECT MARKERS

I:\Projects\MAH\76328_680_0.00\76328\structures\MAH680_0009R\sheets\680_0009RGN001.dgn 27-APR-2009 9:26AM lstivetz

PROPOSED WORK (CONTINUED)

MAH-680-0373 (BELLA VISTA AVE OVER I680)
- -PATCH ALL VISIBLY UNSOUND AREAS OF CONCRETE WEARING SURFACE
- -PLACE TYPE 3 WATERPROOFING AND A 3" ASPHALT CONCRETE OVERLAY
- -REMOVE AND REPLACE ASPHALT ON APPROACH SLABS
- -PLACE A POLYMER MODIFIED ASPHALT EXPANSION JOINT SYSTEM
- -REPLACE THE EXISTING DAMAGED RAILING AT THE FORWARD LEFT
- -PATCH ALL UNSOUND CONCRETE OF SUBSTRUCTURE
- -REMOVE ALL SPALLS ON THE FLOOR OF THE DECK AND SEAL WITH EPOXY-URETHANE
- -REPAIR EXISTING BACKWALLS
- -REPAIR SIDEWALK AT CORNERS OF STRUCTURE
- -REPAIR EROSION OF THE EMBANKMENT AT THE REAR LEFT
- -SEAL ALL CONCRETE SURFACES OF PARAPETS, ABUTMENTS, WINGWALLS, AND PIERS WITH EPOXY-URETHANE
- -CLEARING AND GRUBBING 15' AROUND ABUTMENTS FOR SEALING OPERATIONS
- -NEW STRUCTURE IDENTIFICATION SIGNS

MAH-711-0026 (SR711 OVER I680)
- -SEAL WEARING SURFACE AND APPROACH SLABS WITH SRS CONCRETE TREATMENT
- -INSTALL VANDAL PROTECTION FENCE
- -REPLACE DAMAGED CROSSFRAMES
- -SEAL ALL CONCRETE SURFACES OF PARAPETS, ABUTMENTS, WINGWALLS, AND PIERS WITH EPOXY-URETHANE
- -CLEARING AND GRUBBING 15' AROUND ABUTMENTS FOR SEALING OPERATIONS
- -NEW STRUCTURE IDENTIFICATION SIGNS

CLEARING AND GRUBBING

ALTHOUGH THERE ARE NO TREES OR STUMPS SPECIFICALLY MARKED FOR REMOVAL WITHIN THE LIMITS OF THE PROJECT, A LUMP SUM QUANTITY IS INCLUDED IN THE GENERAL SUMMARY FOR ITEM 201, CLEARING AND GRUBBING. ALL PROVISIONS AS SET FORTH IN THE SPECIFICATIONS UNDER THIS ITEM ARE INCLUDED IN THE LUMP SUM PRICE BID FOR ITEM 201, CLEARING AND GRUBBING.

DITCH REPAIR

THIS WORK WILL CONSIST OF REPAIRING THE EROSION AT THE REAR RIGHT SIDE OF STRUCTURE MAH-680-0067. THE DITCH AT THE REAR RIGHT WILL BE ENCLOSED FROM THE DRIVEWAY TO THE EMBANKMENT WITH A 15" CONDUIT AND BORROW. THIS WORK WILL BE DONE PRIOR TO GUARDRAIL PLACEMENT AT THIS CORNER OF THE STRUCTURE.

A HEADWALL PER STANDARD CONSTRUCTION DRAWING HW-2.1 WILL BE CONSTRUCTED AT THE OUTLET END OF THE 15" CONDUIT. ROCK CHANNEL PROTECTION, WITH GROUT, TYPE B WILL BE PLACED AT THE OUTLET OF THE CONDUIT DOWN THE SLOPE OF THE EMBANKMENT.

ESTIMATED QUANTITES TO PREFORM THIS WORK ARE CARRIED TO THE GENERAL SUMMARY:

203, BORROW 75 CU YD
601, ROCK CHANNEL PROTECTION, WITH GROUT, TYPE B 15 CU YD
602, CONCRETE MASONRY 0.27 CU YD
603, 15" CONDUIT, TYPE C 160 FT

ITEM 202 - WALK REMOVED
ITEM 608 - 4" CONCRETE WALK

THESE ITEMS WILL BE USED AT LOCATIONS AS DIRECTED BY THE ENGINEER TO REPLACE THE EXISTING CONCRETE WALK THAT HAS DROPPED LOCATED ADJACENT TO THE APPROACH SLABS AT STRUCTURE MAH-680-0373.

ITEM 511, CONCRETE MISC.: BACKWALL REPAIR (MAH-680-0373)

THIS ITEM CONSISTS OF THE REMOVAL OF ALL VISIBLY UNSOUND CONCRETE OF THE BACKWALLS TO THE LIMITS SHOWN BELOW OR AS DIRECTED BY THE ENGINEER, THE PREPARATION OF THE SURFACE, FORMS, TEMPORARY SUPPORTS OF THE EXPANSION JOINT AND PROVIDING AND PLACING OF CLASS FS (PER CMS 499) CONCRETE WITH NO. 8 AGGREGATE.

TEMPORARY SUPPORT OF THE EXPANSION JOINT WILL BE USED TO MAINTAIN THE PROPER ALIGNMENT AND GRADE OF THE JOINT DURING REMOVAL AND REPLACEMENT OF THE BACKWALL CONCRETE. THE COST OF THIS TEMPORARY SUPPORT WILL BE INCIDENTAL TO THIS ITEM.

PAYMENT WILL BE MADE AT THE CONTRACT PRICE PER CU.YD. FOR ITEM 511, CONCRETE MISC.: BACKWALL REPAIR WHICH WILL INCLUDE ALL MATERIALS AND LABOR INCLUDING REMOVAL AND DISPOSAL OF THE EXISTING CONCRETE REQUIRED TO MAKE THIS ITEM COMPLETE.

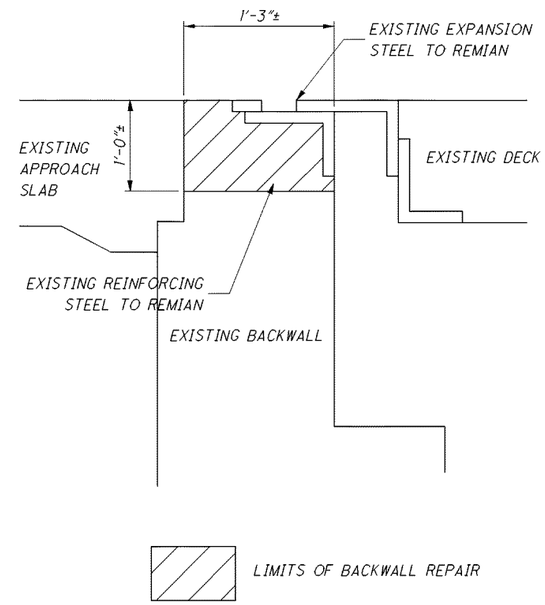

ITEM 513 - STRUCTURAL STEEL, MISC.: REPLACEMENT OF DAMAGED CROSSFRAMES

THIS WORK CONSISTS OF REPLACING DAMAGED CROSSFRAMES THAT ARE BENT OF HAVE SECTION LOSS. THIS ITEM WILL INCLUDE SUPPLYING NEW CROSSFRAMES AND WELDING THEM BACK TO THE ORIGINAL POSITIONS OF THE CROSSFRAMES THAT ARE BEING REPLACED. AFTER REMOVAL, ALL WELDS WILL BE GROUND SMOOTH IN PREPARATION OF WELDING THE NEW CROSSFRAMES IN PLACE. ALL CROSSFRAMES TO BE REPLACED WILL BE FIELD MEASURED TO VERIFY SIZE AND LENGTHS PRIOR TO ORDERING MATERIAL. THE NEW CROSSFRAMES WILL BE WELDED TO THE GIRDERS OR BEAMS ON BOTH SIDES OF THE VERTICAL LEG AND ON THE TOP SIDE OF THE HORIZONTAL LEG. THE ANGLE WILL BE WELDED USING A 1/4" CONTINUOUS FILLET WELD. STEEL MEMBERS TO BE FABRICATED UNDER THIS ITEM WILL NOT REQUIRE SHOP DRAWINGS PRIOR TO FABRICATION. AISC CERTIFICATION IS NOT REQUIRED. THE CONTRACTOR WILL TAKE THE NECESSARY FIELD MEASUREMENTS TO VERIFY MEASUREMENTS BEFORE ORDERING MATERIALS. THE ENGINEER WILL HAVE THE AUTHORITY AND THE RESPONSIBILITY FOR ENSURING THAT THE STEEL IS ACCEPTABLE. AFTER FABRICATION THE PAY WEIGHTS SHALL BE COMPUTED IN COMPLIANCE WITH ITEM 513 OF THE CONSTRUCTION AND MATERIAL SPECIFICATIONS AND SUBMITTED TO THE ENGINEER FOR REVIEW AND APPROVAL.

ALL LABOR, MATERIALS, EQUIPMENT, AND INCIDENTALS NECESSARY TO COMPLETE THIS ITEM EXCEPT FOR PAINT WILL BE INCLUDED FOR PAYMENT UNDER ITEM 513 - STRUCTURAL STEEL MISC.: REPLACEMENT OF DAMAGED CROSSFRAMES.

MAH-711-0026:
513, STRUCTURAL STEEL, MISC.: REPLACEMENT OF DAMAGED CROSSFRAMES 2 EACH

ITEM 514 - FIELD PAINTING, MISC.; NEW CROSSFRAMES ((MAH-711-0026)

ALL NEW CROSSFRAMES SHALL BE PAINTED AS FOLLOWS.

CMS 514.07 THROUGH 514.09 APPLY. CLEAN NEW CROSSFRAMES ACCORDING TO SSPC-SP3, POWER AND HAND TOOL CLEANING, AS SHOWN ON THE PICTORAL SURFACE PREPARATION STANDARDS FOR PAINTING STEEL SURFACES SHOWN IN SSPC-VIS 3. THE ENGINEER WILL USE THE SSPC-VIS 3 TO DETERMINE THE ACCEPTANCE FOR THE POWER TOOL CLEANING. CONTAIN AND DISPOSE OF WASTE GENERATED BY THE CLEANING ACCORDING TO CMS 514.13D.

APPLY THE THREE-COAT PAINT SYSTEM, CMS 708.02, ACCORDING TO CMS 514.14 THROUGH 514.17. TINT THE FINISH COAT TO APPROXIMATELY THE SAME COLOR AS THE EXISTING FINISH COLOR. THE ENGINEER WILL DETERMINE THE PRIME COAT THICKNESS; PRIME AND INTERMEDIATE COAT THICKNESS; AND PRIME, INTERMEDIATE, AND FINISH COAT THICKNESS USING A TYPE 2 MAGNETIC GAGE AT SPOT LOCATIONS. EACH COAT OF PAINT SHALL MEET THE MINIMUM DRY FILM THICKNESS REQUIREMENTS OF CMS 514.20.

THE CONTRACTOR SHALL PROVIDE THE ENGINEER WITH ALL NECESSARY EQUIPMENT TO INSPECT THIS WORK.

ITEM 517 - RAILING, MISC.: REPLACE TUBULAR RAILING

THIS WORK WILL CONSIST OF REMOVING THE DAMAGED TUBULAR RAILING AND SUPPORTS AT THE FORWARD LEFT CORNER AND REPLACING WITH 2 NEW TUBULAR RAILING SECTIONS AND 2 SUPPORTS SPACED AT 8'-0" ON STRUCTURE MAH-680-0373. ALL RAILING TO BE REPLACED WILL BE FIELD MEASURED TO VERIFY SIZE AND LENGTHS PRIOR TO ORDERING MATERIALS. REPLACING TUBULAR RAILING AND SUPPORTS WILL BE PAID FOR AT THE UNIT PRICE BID FOR ITEM 517 RAILING, MISC.; REPLACE TUBULAR RAILING. THIS PRICE WILL INCLUDE THE COST FOR MATERIALS, LABOR, EQUIPMENT, AND ALL INCIDENTALS REQUIRED TO COMPLETE THE REPLACEMENT OF THE TUBULAR RAILING.

ITEM 519 - PATCHING CONCRETE STRUCTURES, AS PER PLAN

PRIOR TO THE SURFACE CLEANING SPECIFIED IN 519.04 AND WITHIN 24 HOURS OF PLACING PATCHING MATERIAL, BLAST CLEAN ALL SURFACES TO BE PATCHED INCLUDING THE EXPOSED REINFORCING STEEL. ACCEPTABLE METHODS INCLUDE HIGH-PRESSURE WATER BLASTING WITH OR WITHOUT ABRASIVES IN THE WATER, ABRASIVE BLASTING WITH CONTAINMENT, OR VACUUM ABRASIVE BLASTING.

SPECIAL - PATCHING CONCRETE STRUCTURE, MISC.: CURB REPAIR

THIS ITEM SHALL BE USED TO REPAIR THE DETERIORATED FACE OF THE CURB ON THE BRIDGE DECK AND/OR APPROACH SLABS. THIS WORK SHALL BE PERFORMED IN ACCORDANCE WITH ITEM 519 - PATCHING CONCRETE STRUCTURES AND AS MODIFIED HEREIN.

PRIOR TO THE SURFACE CLEANING SPECIFIED IN 519.04 AND WITHIN 24 HOURS OF PLACING PATCHING MATERIAL, BLAST CLEAN ALL SURFACES TO BE PATCHED INCLUDING THE EXPOSED REINFORCING STEEL. ACCEPTABLE METHODS INCLUDE HIGH-PRESSURE WATER BLASTING WITH OR WITHOUT ABRASIVES IN THE WATER, ABRASIVE BLASTING WITH CONTAINMENT, OR VACUUM ABRASIVE BLASTING.

PAYMENT FOR ALL OF THE ABOVE DESCRIBED LABOR AND MATERIALS WILL BE MADE AT THE CONTRACT PRICE BID FOR SPECIAL - PATCHING CONCRETE STRUCTURE, MISC.: CURB REPAIR AND WILL BE PAID FOR PER FOOT.

MAH-680-0067: 25 FT
MAH-680-0109: 25 FT
MAH-680-0333L: 35FT
MAH-680-0333R: 25 FT
MAH-680-0343L: 25 FT
MAH-680-0343R: 25 FT

SPECIAL - STRUCTURE MISC.: CONCRETE SPALL REMOVAL

THIS WORK WILL CONSIST OF REMOVING ALL VISIBLY SPALLED AREAS OF THE DECK FLOOR OF STRUCTURES MAH-680-0067, MAH-680-0109, MAH-680-0207L, MAH-680-0207R, MAH-680-0333L, MAH-680-0333R, MAH-680-0343L, MAH-680-0343R, AND MAH-680-0373 WITHOUT SOUNDING. AFTER SPALLED CONCRETE AREAS HAVE BEEN REMOVED SEAL WITH ITEM 512, SEALING OF CONCRETE SURFACES (EPOXY-URETHANE).

CONCRETE SPALL REMOVAL WILL BE PAID FOR AT THE UNIT PRICE BID FOR SPECIAL - STRUCTURE MISC.: CONCRETE SPALL REMOVAL. THIS PRICE WILL INCLUDE THE COST FOR LABOR, EQUIPMENT, AND ALL INCIDENTALS REQUIRED TO COMPLETE THIS WORK.

ITEM 601 - DUMP ROCK FILL, TYPE D (MAH-680-0009R)

THIS ITEM WILL BE USED TO REPAIR THE EROSION AT THE REAR RIGHT EMBANKMENT OF STRUCTURE MAH-680-0009R. PLACE THE ROCK FROM THE OUTLET OF THE UNDERDRAIN DOWN THE SLOPE TO REPAIR EXISTING EROSION AND TO PREVENT FUTURE EROSION FROM THIS OUTLET PIPE. ALL LABOR, MATERIALS, AND EQUIPMENT NECESSARY TO DO THIS WORK WILL BE INCIDENTAL TO ITEM 601 - DUMP ROCK FILL, TYPE D AND WILL BE PAID FOR BY THE CUBIC YARD.

ITEM 601 - DUMP ROCK FILL, TYPE D (MAH-680-0373)

THIS ITEM WILL BE USED TO REPAIR THE EROSION AT THE REAR LEFT EMBANKMENT OF STRUCTURE MAH-680-0373. THE ROCK WILL BE PLACE AS DIRECTED BY THE ENGINEER. ALL LABOR, MATERIALS, AND EQUIPMENT NECESSARY TO DO THIS WORK WILL BE INCIDENTAL TO ITEM 601 - DUMP ROCK FILL, TYPE D AND WILL BE PAID FOR BY THE CUBIC YARD.

ITEM 601 - DUMP ROCK FILL, TYPE C (MAH-680-0343R)

THIS ITEM WILL BE USED TO REPAIR THE EROSION AT THE FORWARD RIGHT EMBANKMENT BEHIND THE GUARDRAIL AND THE FORWARD RIGHT SLOPE PROTECTION OF STRUCTURE MAH-680-0343R. THE ROCK WILL BE PLACE AS DIRECTED BY THE ENGINEER. ALL LABOR, MATERIALS, AND EQUIPMENT NECESSARY TO DO THIS WORK WILL BE INCIDENTAL TO ITEM 601 - DUMP ROCK FILL, TYPE C AND WILL BE PAID FOR BY THE CUBIC YARD.

CONCRETE SLOPE PROTECTION REPAIR

THIS WORK WILL CONSIST OF REPAIRING THE CONCRETE SLOPE PROTECTION UNDER STRUCTURES MAH-680-0207L, MAH-680-0207R, AND MAH-680-0333L WITH ITEM 613, LOW STRENGTH MORTAR BACKFILL AND ITEM 601, CONCRETE SLOPE PROTECTION.

PLACE THE LOW STRENGTH MORTAR BACKFILL TO FILL ALL EROSION UNDER THE OLD CONCRETE SLOPE PROTECTION AND THEN PLACE NEW CONCRETE SLOPE PROTECTION SLABS PER CMS 601.07 AS DIRECTED BY THE PROJECT ENGINEER.

CONCRETE SLOPE PROTECTION REPAIR WILL BE PAID FOR AT THE UNIT PRICE BID FOR ITEM 601 - CONCRETE SLOPE PROTECTION AND ITEM 613, LOW STRENGTH MORTAR BACKFILL. THE PRICE FOR EACH ITEM WILL INCLUDE THE COST OF LABOR, EQUIPMENT, AND ALL INCIDENTALS REQUIRED TO COMPLETE THIS WORK.

ITEM 607 - VANDAL PROTECTION FENCE 6' STRAIGHT, COATED FABRIC

PRIOR TO ORDERING MATERIALS THE CONTRACTOR WILL LAYOUT THE POST LOCATIONS AND THE PROJECT ENGINEER WILL APPROVE THE POST SPACING TO BE USED. THE POST SPACING WILL BE AS PER STANDARD DRAWING VPF-1-90. THE FENCE WILL NOT EXTEND PAST THE END OF THE DECK (ONTO THE APPROACH SLAB PARAPET).

MAH-711-0026:
POST SECTION PS-4 AND BASE PLATE BP-5 WILL BE USED.

203, BORROW
613, LOW STRENGTH MORTAR BACKFILL

THESE ITEMS WILL BE USED TO REPAIR THE EROSION AT THE TOP CORNERS OF STRUCTURE MAH-680-0009R SLOPE PROTECTION. PLACE THE LOW STRENGTH MORTAR BACKFILL TO FILL ALL EROSION UNDER THE OLD CONCRETE SLOPE PROTECTION THEN PLACE BORROW TO FILL ALL OTHER VOIDS AROUND THE SLOPE PROTECTION. THE PRICE FOR EACH ITEM WILL INCLUDE THE COST OF LABOR, EQUIPMENT, AND ALL INCIDENTALS REQUIRED TO COMPLETE THIS WORK.

CORRECTING BRIDGE IDENTIFICATION SIGN NUMBERS:

SOME OF THE EXISTING BRIDGE NUMBER SIGNS HAVE INCORRECT BRIDGE NUMERS ON THEM. THE FOLLOWING BRIDGE NUMBERS ARE THE CORRECT ONES AND WILL BE USED ON THE NEW BRIDGE IDENTIFICATIONS SIGNS.

STRUCTURE MAH-680-0009R (SFN:5006309) THE EXISTING SIGN SHOWS 0007. THE CORRECT BRIDGE IDENTIFICATION NUMBER IS 0009R.

STRUCTURE MAH-680-0040R (SFN:5006368) THE EXISTING SIGN SHOWS 0033. THE CORRECT BRIDGE IDENTIFICATION NUMBER IS 0040R.

STRUCTURE MAH-680-0109 (SFN:5006422) THE EXISTING SIGN SHOWS 0123. THE CORRECT BRIDGE IDENTIFICATION NUMBER IS 0109.

STRUCTURE MAH-680-0207L (SFN: 5006457) THE EXISTING SIGN SHOWS 0206. THE CORRECT BRIDGE IDENTIFICAITON NUMBER IS 0207L.

STRUCTURE MAH-680-0207R (SFN: 5006481) THE EXISTING SIGN SHOWS 0206. THE CORRECT BRIDGE IDENTIFICATION NUMBER IS 0207R.

STRUCTURE MAH-680-0333L (SFN: 5006600) THE EXISTING SIGN SHOWS 0332. THE CORRECT BRIDGE IDENTIFICATION NUMBER IS 0333L.

STRUCTURE MAH-680-0333R (SFN: 5006635) THE EXISTING SIGN SHOWS 0332. THE CORRECT BRIDGE IDENTIFICATION NUMBER IS 0333R.

STRUCTURE MAH-680-0343L (SFN:5006694) THE EXISTING SIGN SHOWS 0342. THE CORRECT BRIDGE IDENTIFICATION NUMBER IS 0343L.

STRUCTURE MAH-680-0343R (SFN:5006724) THE EXISTING SIGN SHOWS 0342. THE CORRECT BRIDGE IDENTIFICATION NUMBER IS 0343R.

STRUCTURE MAH-680-0373 (SFN:5006759) THE EXISTING SIGN SHOWS 0374. THE CORRECT BRIDGE IDENTIFICATION NUMBER IS 0373.

STRUCTURE IDENTIFICATION SIGNS

STRUCTURE IDENTIFICATION SIGNS (1-H25a) WILL BE PLACED ON EACH APPROACH OFF THE RIGHT SHOULDER, FACING TRAFFIC, AND BEHIND THE GUARDRAIL IF APPLICABLE. A QUANTITY OF ONE SIGN PER APPROACH WILL BE INSTALLED. THE SIGNS WILL BE HAVE A NON-REFLECTIVE WHITE SHEETING BACKGROUND.

THE SIGNS WILL BE MOUNTED ON NEW NO. 2 POSTS AND WILL BE INSTALLED AS PER STANDARD CONSTRUCTION DRAWING TC-41.20, MOST CURRENT REVISION. EACH POST WILL BE 7.5' IN LENGTH.

INSTALL SIGNS FOR THE FOLLOWING STRUCTURES:
MAH-680-0009R (1 APPROACH), MAH-680-0067 (2 APPROACHES), MAH-680-0109 (2 APPROACHES), MAH-680-0373 (2 APPROACHES), & MAH-711-0026 (2 APPROACHES: MAH-711-0026 & 2 APPROACHES: MAH-680-0302)

THE FOLLOWING QUANTITIES HAVE BEEN INCLUDED FOR EACH APPROACH:

- ITEM 630 - SIGN, FLAT SHEET, 730.20, 1 SQ FT
- ITEM 630 - GROUND MOUNTED SUPPORT, NO. 2 POST, 7.5 FT
- ITEM 630 - REMOVAL OF GROUND MOUNTED SIGN AND DISPOSAL, 1 EACH
- ITEM 630 - REMOVAL OF GROUND MOUNTED POST SUPPORT AND DISPOSAL, 1 EACH

OBJECT MARKERS AND STRUCTURE IDENTIFICATION SIGNS

OBJECT MARKERS WILL BE PLACED ON EACH APPROACH OFF THE LEFT AND RIGHT SHOULDER, FACING TRAFFIC, AND BEHIND THE GUARDRAIL IF APPLICABLE. ONE OM-3L AND ONE OM-3R WILL BE INSTALLED AT EACH APPROACH. THE SIGNS WILL BE MOUNTED ON NEW NO. 2 POSTS AND SHALL BE INSTALLED AS PER STANDARD CONSTRUCTION DRAWING TC-41.20, MOST CURRENT REVISION. EACH POST WILL BE 10.5 FT IN LENGTH.

STRUCTURE IDENTIFICATION SIGNS (1-H25a) WILL BE INSTALLED ON THE SAME POST AND DIRECTLY BELOW THE OBJECT MARKER OFF THE RIGHT SHOULDER ON EACH APPROACH. A QUANTITY OF ONE SIGN WILL BE INSTALLED AT EACH APPROACH. THE SIGNS WILL BE HAVE A NON-REFLECTIVE WHITE SHEETING BACKGROUND.

INSTALL SIGNS FOR THE FOLLOWING STRUCTURES:
MAH-680-0020L (1 APPROACH), MAH-680-0040L (1 APPROACH), MAH-680-0040R (1 APPROACH), MAH-680-0207L (1 APPROACH), MAH-680-0207R (1 APPROACH), MAH-680-0333L (1 APPROACH), MAH-680-0333R (1 APPROACH), MAH-680-0343L (1 APPROACH), & MAH-680-0343R (1 APPROACH)

THE FOLLOWING QUANTITIES HAVE BEEN INCLUDED FOR EACH APPROACH:

- ITEM 630 - SIGN, FLAT SHEET, 730.20, 1 SQ FT
- ITEM 630 - SIGN, FLAT SHEET, 6 SQ FT
- ITEM 630 - GROUND MOUNTED SUPPORT, NO. 2 POST, 21 FT
- ITEM 630 - REMOVAL OF GROUND MOUNTED SIGN AND DISPOSAL, 3 EACH
- ITEM 630 - REMOVAL OF GROUND MOUNTED POST SUPPORT AND DISPOSAL, 2 EACH

CALC:	LMS	DATE: 12/27/2008
CHECKED:	TJP	DATE: 1/13/2009

ESTIMATED QUANTITIES

BRIDGE NO. / STRUCTURE FILE NO.								ITEM	EXTENSION	UNIT	DESCRIPTION	SEE SHEET
MAH-680-0009R SFN 5006309	MAH-680-0020L SFN 5006279	MAH-680-0040L SFN 5006333	MAH-680-0040R SFN 5006368	MAH-680-0067 SFN 5006392	MAH-680-0109 SFN 5006422	MAH-680-0207L SFN 5006457	MAH-680-0207R SFN 5006481					
LUMP	LUMP	LUMP	LUMP	LUMP	LUMP	LUMP	LUMP	201	11000		CLEARING AND GRUBBING	
				747	723	265	221	202	23500	SQ YD	WEARING COURSE REMOVED	
				212.5	537.5			202	38000	FT	GUARDRAIL REMOVED	
				75			4	203	40000	CU YD	BORROW	
				112	109	40	34	407	10000	GALLON	TACK COAT	
				68	69	42	35	407	14000	GALLON	TACK COAT FOR INTERMEDIATE COURSE	
						44	37	442	20051	CU YD	ASPHALT CONCRETE SURFACE COURSE, 12.5 MM, TYPE B (448), AS PER PLAN	
						57	47	442	20250	CU YD	ASPHALT CONCRETE INTERMEDIATE COURSE, 19MM, TYPE B (448)	
				88	92			448	46050	CU YD	ASPHALT CONCRETE INTERMEDIATE COURSE, TYPE 2, PG64-22	
				70	72			448	47020	CU YD	ASPHALT CONCRETE SURFACE COURSE, TYPE 1, PG64-22	
862	1173	1201	1305	1074	1225	638	648	512	10100	SQ YD	SEALING OF CONCRETE SURFACES (EPOXY-URETHANE)	
1109	2043	1241	1862					512	10400	SQ YD	TREATING OF CONCRETE BRIDGE DECK WITH SRS	
				933	987	803	668	512	33010	SQ YD	TYPE 3 WATERPROOFING	
						96	80	SPEC	51631200	FT	SAWING AND SEALING BITUMINOUS CONCRETE JOINTS	9
				56	52			SPEC	51631300	FT	POLYMER MODIFIED ASPHALT EXPANSION JOINT SYSTEM	10
100	125			150	175	100	100	519	11101	SQ FT	PATCHING CONCRETE STRUCTURE, AS PER PLAN	3
				25	25			SPEC	51911720	FT	PATCHING CONCRETE STRUCTURE, MISC.: CURB REPAIR	3
				53	57	53	44	SPEC	51912304	SQ YD	PATCHING CONCRETE BRIDGE DECK - TYPE C	
				LUMP	LUMP	LUMP	LUMP	SPEC	53000200		STRUCTURE, MISC.: CONCRETE SPALL REMOVAL	3
						10	12	601	21000	SQ YD	CONCRETE SLOPE PROTECTION	
3								601	28000	CU YD	DUMPED ROCK FILL, TYPE D	
				15				601	34400	CU YD	ROCK CHANNEL PROTECTION, WITH GROUT, TYPE B	
				0.27				602	20000	CU YD	CONCRETE MASONRY	
				160				603	06100	FT	15" CONDUIT, TYPE C	
				100	487.5			606	13000	FT	GUARDRAIL, TYPE 5	
				3	3			606	22010	EACH	ANCHOR ASSEMBLY, TYPE E-98	
				1	1			606	26500	EACH	ANCHOR ASSEMBLY, TYPE T	
				4	4			606	32500	EACH	BRIDGE TERMINAL ASSEMBLY, TYPE F	
						3	6	613	41200	CU YD	LOW STRENGTH MORTAR BACKFILL	
7.5	21	21	21	15	15	21	21	630	02100	FT	GROUND MOUNTED SUPPORT, NO. 2 POST	
	6	6	6			6	6	630	80100	SQ FT	SIGN, FLAT SHEET	
1	1	1	1	2	2	1	1	630	80100	SQ FT	SIGN, FLAT SHEET, 730.20	
1	3	3	3	2	2	3	3	630	84900	EACH	REMOVAL OF GROUND MOUNTED SIGN AND DISPOSAL	
1	2	3	3	2	2	3	3	630	86002	EACH	REMOVAL OF GROUND MOUNTED POST SUPPORT AND DISPOSAL	
50	75			100	100	50	50	843	50000	SQ FT	PATCHING CONCRETE STRUCTURES WITH TROWELABLE MORTAR	

DESIGN AGENCY
ODOT --- DISTRICT 4
PRODUCTION

DESIGNED	DRAWN	REVIEWED	DATE
LMS	LMS	TJP	01-13-09
CHECKED	REVISED	STRUCTURE FILE NUMBER	

STRUCTURE ESTIMATED QUANTITIES
MAH-680-0009R, MAH-680-0020L, MAH-680-0040L, MAH-680-0040R, MAH-680-0067, MAH-680-0109, MAH-680-0207L, AND MAH-680-0207R

MAH-680-0.00
PID No. 76328

I:\Projects\MAH\76328_680_0.00\76328\structures\MAH680_0009R\sheets\680_0009REQ001.dgn 16-MAR-2009 8:40AM dyord

CALC:	LMS	DATE:	12/29/2008
CHECKED:	TJP	DATE:	1/13/2009

ESTIMATED QUANTITIES

BRIDGE NO. / STRUCTURE FILE NO.							ITEM	EXTENSION	UNIT	DESCRIPTION	SEE SHEET
MAH-680-0315 SFN 5006570	MAH-680-0333L SFN 5006600	MAH-680-0333R SFN 5006635	MAH-680-0343L SFN 5006694	MAH-680-0343R SFN 5006724	MAH-680-0373 SFN 5006759	MAH-711-0026 SFN 5008166					
LUMP	LUMP	LUMP	LUMP	LUMP	LUMP	LUMP	201	11000		CLEARING AND GRUBBING	
LUMP							202	11000		STRUCTURE REMOVED	
	221	221	290	265	1250		202	23500	SQ YD	WEARING COURSE REMOVED	
					275		202	30000	SQ FT	WALK REMOVED	
	34	34	44	40	188		407	10000	GALLON	TACK COAT	
	33	31	55	51	76		407	14000	GALLON	TACK COAT FOR INTERMEDIATE COURSE	
	34	33	58	53			442	20051	CU YD	ASPHALT CONCRETE SURFACE COURSE, 12.5 MM, TYPE B (448), AS PER PLAN	
	45	43	72	66			442	20250	CU YD	ASPHALT CONCRETE INTERMEDIATE COURSE, 19MM, TYPE B (448)	
					114		448	46050	CU YD	ASPHALT CONCRETE INTERMEDIATE COURSE, TYPE 2, PG64-22	
					79		448	47020	CU YD	ASPHALT CONCRETE SURFACE COURSE, TYPE 1, PG64-22	
					7		511	71100	CU YD	CONCRETE, MISC.:BACKWALL REPAIR	
	680	632	1037	1037	1594	1467	512	10100	SQ YD	SEALING OF CONCRETE SURFACES (EPOXY-URETHANE)	
						1425	512	10400	SQ YD	TREATING OF CONCRETE BRIDGE DECK WITH SRS	
	594	550	1082	990	646		512	33010	SQ YD	TYPE 3 WATERPROOFING	
						2	513	95030	EACH	STRUCTURAL STEEL, MISC.:REPLACEMENT OF DAMAGED CROSSFRAMES	2
						45	514	27700	SQ FT	FIELD PAINTING, MISC.: NEW CROSSFRAMES	2
	80	80	105	96			SPEC	51631200	FT	SAWING AND SEALING BITUMINOUS CONCRETE JOINTS	9
					60		SPEC	51631300	FT	POLYMER MODIFIED ASPHALT EXPANSION JOINT SYSTEM	10
					16		517	76300	FT	RAILING, MISC.:REPLACE TUBULAR RAILING	3
	125	125	125	125	100		519	11101	SQ FT	PATCHING CONCRETE STRUCTURE, AS PER PLAN	3
	35	25	25	25			SPEC	51911720	FT	PATCHING CONCRETE STRUCTURE, MISC.: CURB REPAIR	3
	41	39	69	63	47		SPEC	51912304	SQ YD	PATCHING CONCRETE BRIDGE DECK - TYPE C	
	LUMP	LUMP	LUMP	LUMP	LUMP		SPEC	53000200		STRUCTURE, MISC.: CONCRETE SPALL REMOVAL	3
	30						601	21000	SQ YD	CONCRETE SLOPE PROTECTION	
				20			601	27000	CU YD	DUMPED ROCK FILL, TYPE C	
					3		601	28000	CU YD	DUMPED ROCK FILL, TYPE D	
100							607	20000	FT	FENCE, TYPE CL	
						484	607	39900	FT	VANDAL PROTECTION FENCE, 6' STRAIGHT, COATED FABRIC	
					275		608	10000	SQ FT	4" CONCRETE WALK	
	25						613	41200	CU YD	LOW STRENGTH MORTAR BACKFILL	
	21	21	21	21	15	30	630	02100	FT	GROUND MOUNTED SUPPORT, NO. 2 POST	
	6	6	6	6			630	80100	SQ FT	SIGN, FLAT SHEET	
	1	1	1	1	2	4	630	80100	SQ FT	SIGN, FLAT SHEET, 730.20	
	3	3	3	3	2	3	630	84900	EACH	REMOVAL OF GROUND MOUNTED SIGN AND DISPOSAL	
	3	3	3	3	2	3	630	86002	EACH	REMOVAL OF GROUND MOUNTED POST SUPPORT AND DISPOSAL	
200							659	10000	SQ YD	SEEDING AND MULCHING	
	75	75	75	75	50		843	50000	SQ FT	PATCHING CONCRETE STRUCTURES WITH TROWELABLE MORTAR	

DESIGN AGENCY
ODOT --- DISTRICT 4
PRODUCTION

DESIGNED	DRAWN	REVIEWED	DATE
LMS	LMS	TJP	01-13-09
CHECKED	REVISED	STRUCTURE FILE NUMBER	

STRUCTURE ESTIMATED QUANTITIES
MAH-680-0315, MAH-680-0333L, MAH-680-0333R, MAH-680-0343L, MAH-680-0343R, MAH-680-0373, AND MAH-711-0026

MAH-680-0.00
PID No. 76328

I:\Projects\MAH\76328_680_0.00\76328\structures\MAH680_0009R\sheets\680_0009REQ001.dgn 27-APR-2009 9:26AM lstrevetz

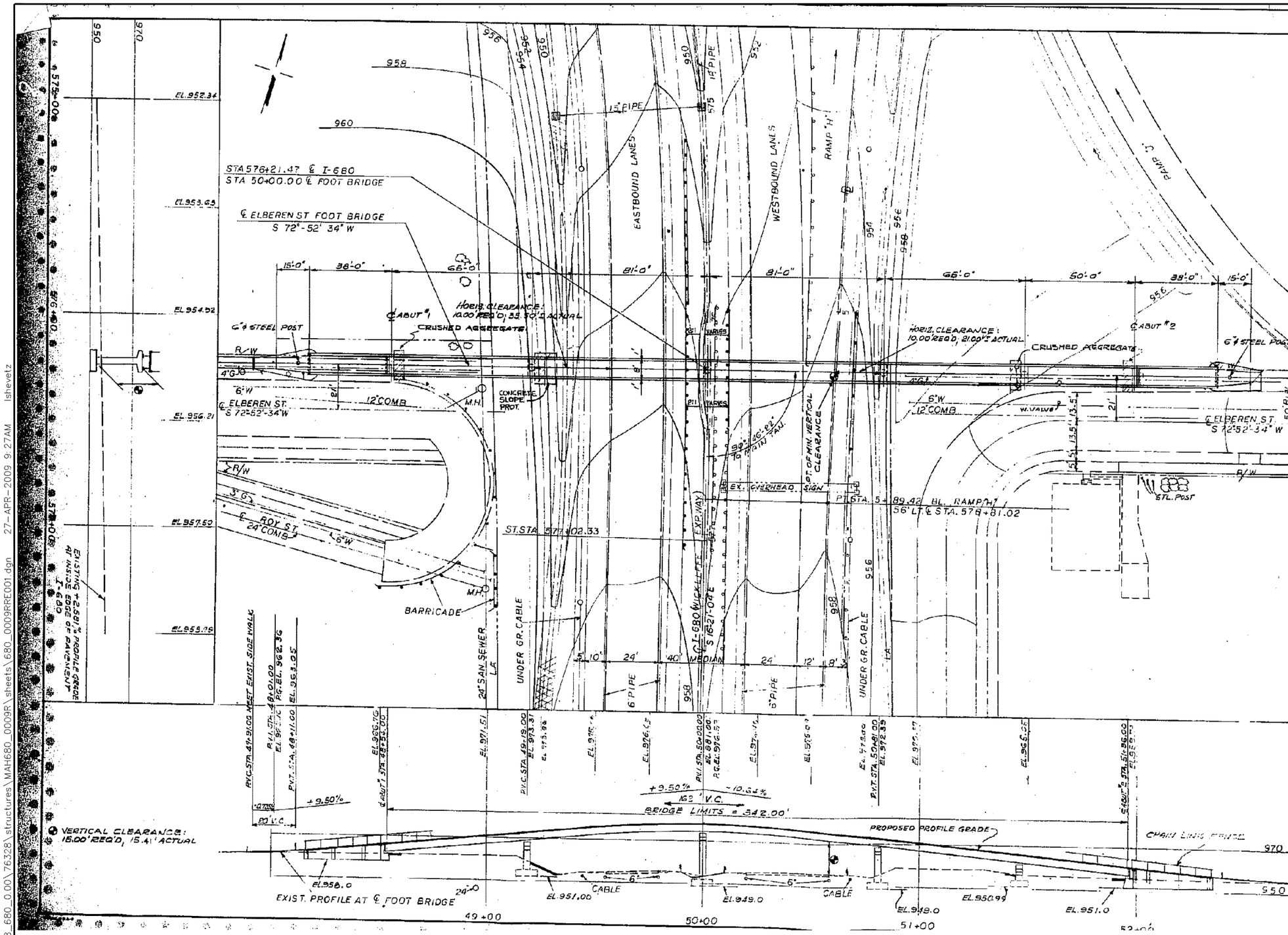

FED. RD.	STATE	PROJECT	
2	OHIO		

7/12

MAH-680-3.16.

CURVE DATA

℄ I-680	℄ RAMP "H"
ST. STA. 577+02.33	PT STA. 5+89.42
L_S = 400.30'	Δ = 13° 25'-34"
ϕ_S = 11°-00'-00"	D_C = 4°-00'-00"
LT = 267.18'	℄ = 1432.40'
S_T = 133.80'	T = 158.32'
T_S = 715.33'	= 1335.55'

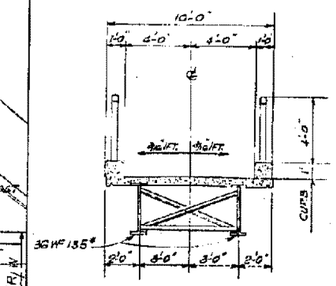

TYPICAL SECTION

PROPOSED STRUCTURE

TYPE: CONTINUOUS STEEL BEAMS, WITH REINFORCED CONCRETE DECK AND SUBSTRUCTURE.
SKEW: 00°-00'-00"
SPANS: 65'-0", 81'-0", 81'-0", 65'-0", 50'-0"

ALIGNMENT: TANGENT.
SUPERELEVATION: NONE.
LOADING: 85 P.S.F. LIVE LOAD.
SLOPE PROTECT. CRUSHED AGGREGATE & CONCRETE SLOPE PROT. @ PIER #1 ONLY

STATE OF OHIO
DEPARTMENT OF HIGHWAYS
BUREAU OF BRIDGES

12/7

DALTON · DALTON · ASSOCIATES

SITE PLAN
BRIDGE NO. MAH-680-0316.
PEDESTRIAN BRIDGE OVER WICKLIFFE EXPWY.
AT ELBEREN ST.
YOUNGSTOWN, MAHONING COUNTY
STA. 576+21.47

DESIGNED	DRAWN	TRACED	CHECKED	REVIEWED	DATE	REVISED

DESIGN AGENCY: ODOT --- DISTRICT 4 PRODUCTION

DESIGNED	DRAWN	REVIEWED	DATE
LMS	LMS	TJP	04-27-09
CHECKED	REVISED	STRUCTURE FILE NUMBER	

STRUCTURE REMOVAL
BRIDGE NO.: MAH-680-0315
PEDESTRIAN BRIDGE OVER I680

MAH-680-0.00
PID No. 76328

6A/13

16A/23

EXISTING PLANS: EXISTING PLANS CAN BE INSPECTED IN THE LOCAL ODOT DISTRICT OFFICE: PROJECT 432 (68) - MAH-680-3.16

ITEM 607 - FENCE, TYPE CL: THIS ITEM WILL BE USED AS DIRECTED BY THE ENGINEER FOR THE R/W FENCE AROUND STRUCTURE MAH-680-0315. THIS ITEM IS TO REPLACE THE EXISTING FENCE TO ITS ORIGINAL LOCATION AFTER THE DEMOLITION OF THE STRUCTURE.

I:\Projects\MAH\76328_680_0.00\76328\structures\MAH680_0009R\sheets\680_0009RPE001.dgn 27-APR-2009 9:27AM lshevetz

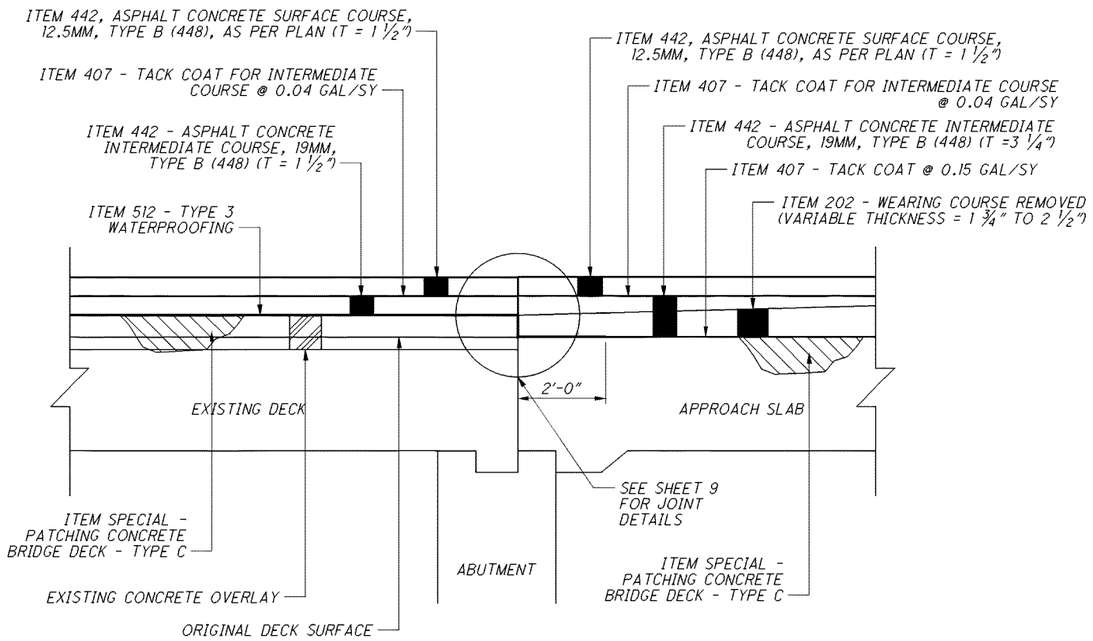

MAH-680-0207L/R

APPROACH SHOWN
TRAILING SIMILAR

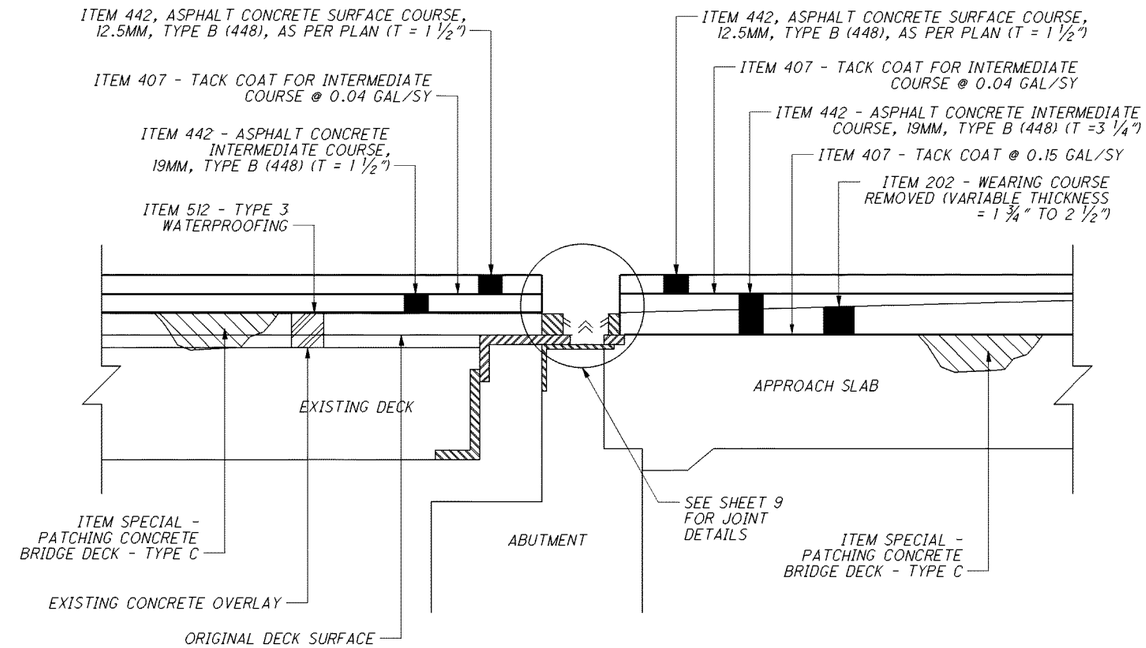

MAH-680-0333L/R & MAH-680-0343L/R

APPROACH SHOWN
TRAILING SIMILAR

BRIDGE NUMBER	BRIDGE DECK												APPROACH SLABS												
	LENGTH (BRIDGE LIMITS)	BRIDGE WIDTH	DECK AREA	407 TACK COAT FOR INTERMEDIATE COURSE @ 0.04 GAL/SY	442 ASPHALT CONCRETE SURFACE COURSE, 12.5 MM, TYPE B (448), AS PER PLAN (T = 1 1/2")	442 ASPHALT CONCRETE INTERMEDIATE COURSE, 19MM, TYPE B (448) (T = 1 1/2")			512 TREATING OF CONCRETE BRIDGE DECK WITH SRS	512 TYPE 3 WATERPROOFING	SPEC SAWING AND SEALING BITUMINOUS CONCRETE JOINTS	SPEC PATCHING CONCRETE BRIDGE DECK - TYPE C	LENGTH (APPROACH SLABS)	APPROACH SLAB WIDTH	APPROACH SLAB AREA	APPROACH (FORWARD / REAR)	202 WEARING COURSE REMOVED (VAR. T = 1 3/4" TO 2 1/2")	407 TACK COAT @ 0.15 GAL/SY	407 TACK COAT FOR INTERMEDIATE COURSE @ 0.04 GAL/SY	442 ASPHALT CONCRETE SURFACE COURSE, 12.5 MM, TYPE B (448), AS PER PLAN (T = 1 1/2")	442 ASPHALT CONCRETE INTERMEDIATE COURSE, 19MM, TYPE B (448) (T = 3 1/4")	512 TREATING OF CONCRETE BRIDGE DECK WITH SRS	512 TYPE 3 WATERPROOFING	SPEC PATCHING CONCRETE BRIDGE DECK - TYPE C	
	FT	FT	SQ YD	GALLON	CU YD	CU YD			SQ YD	SQ YD	FT	SQ YD	FT	FT	SQ YD		SQ YD	GALLON	GALLON	CU YD	CU YD	SQ YD	SQ YD	SQ YD	
MAH-680-0009R	193.35	41.00	880.82						880.82				25.00	41.00	113.89	REAR						113.89			
													25.00	41.00	113.89	FWD						113.89			
MAH-680-0020L	296.84	53.00	1748.06						1748.06				25.00	53.00	147.22	REAR						147.22			
													25.00	53.00	147.22	FWD						147.22			
MAH-680-0040L	229.14	40.00	1018.40						1018.40				25.00	40.00	111.11	REAR						111.11			
													25.00	40.00	111.11	FWD						111.11			
MAH-680-0040R	217.70	62.60	1514.22						1514.22				25.00	63.27	175.75	REAR						175.75			
													25.00	61.92	172.00	FWD						172.00			
MAH-680-0207L	147.50	47.67	781.26	31.25	32.55	32.55				781.26	96.00	39.06	25.00	47.67	132.42	REAR	132.42	19.86	5.30	5.52	11.95		10.59	6.62	
													25.00	47.67	132.42	FWD	132.42	19.86	5.30	5.52	11.95		10.59	6.62	
MAH-680-0207R	147.50	39.67	650.15	26.01	27.09	27.09				650.15	80.00	32.51	25.00	39.67	110.19	REAR	110.19	16.53	4.41	4.59	9.95		8.82	5.51	
													25.00	39.67	110.19	FWD	110.19	16.53	4.41	4.59	9.95		8.82	5.51	
MAH-680-0333L	134.66	39.67	593.55	23.74	24.73	24.73				593.55	80.00	29.68	25.00	39.67	110.19	REAR	110.19	16.53	4.41	4.59	9.95			5.51	
													25.00	39.67	110.19	FWD	110.19	16.53	4.41	4.59	9.95			5.51	
MAH-680-0333R	124.66	39.67	549.47	21.98	22.89	22.89				549.47	80.00	27.47	25.00	39.67	110.19	REAR	110.19	16.53	4.41	4.59	9.95			5.51	
													25.00	39.67	110.19	FWD	110.19	16.53	4.41	4.59	9.95			5.51	
MAH-680-0343L	186.89	52.06	1081.05	43.24	45.04	45.04				1081.05	105.00	54.05	25.00	49.56	137.67	REAR	137.67	20.65	5.51	5.74	12.43			6.88	
													25.00	54.56	151.56	FWD	151.56	22.73	6.06	6.31	13.68			7.58	
MAH-680-0343R	186.89	47.67	989.89	39.60	41.25	41.25				989.89	96.00	49.49	25.00	47.67	132.42	REAR	132.42	19.86	5.30	5.52	11.95			6.62	
													25.00	47.67	132.42	FWD	132.42	19.86	5.30	5.52	11.95			6.62	
MAH-711-0026	241.35	44.00	1179.93						1179.93				25.00	44.00	122.22	REAR						122.22			
													25.00	44.00	122.22	FWD						122.22			

DESIGN AGENCY
ODOT --- DISTRICT 4
PRODUCTION

DESIGNED	DRAWN	REVIEWED	DATE
LMS	LMS	TJP	01-13-09
CHECKED	REVISED	STRUCTURE FILE NUMBER	

SUPERSTRUCTURE DETAILS

MAH-680-0009R, MAH-680-0020L, MAH-680-0040L, MAH-680-0040R, MAH-680-0207L
MAH-680-0207R, MAH-680-0332L, MAH-680-0333R, MAH-680-0343L, MAH-680-0343R, & MAH-711-0026

MAH-680-0.00
PID No. 76328

I:\Projects\MAH\76328_680_0.00\76328\structures\MAH680_0009R\sheets\680_0009RSD001.dgn 16-MAR-2009 8:40AM dyord

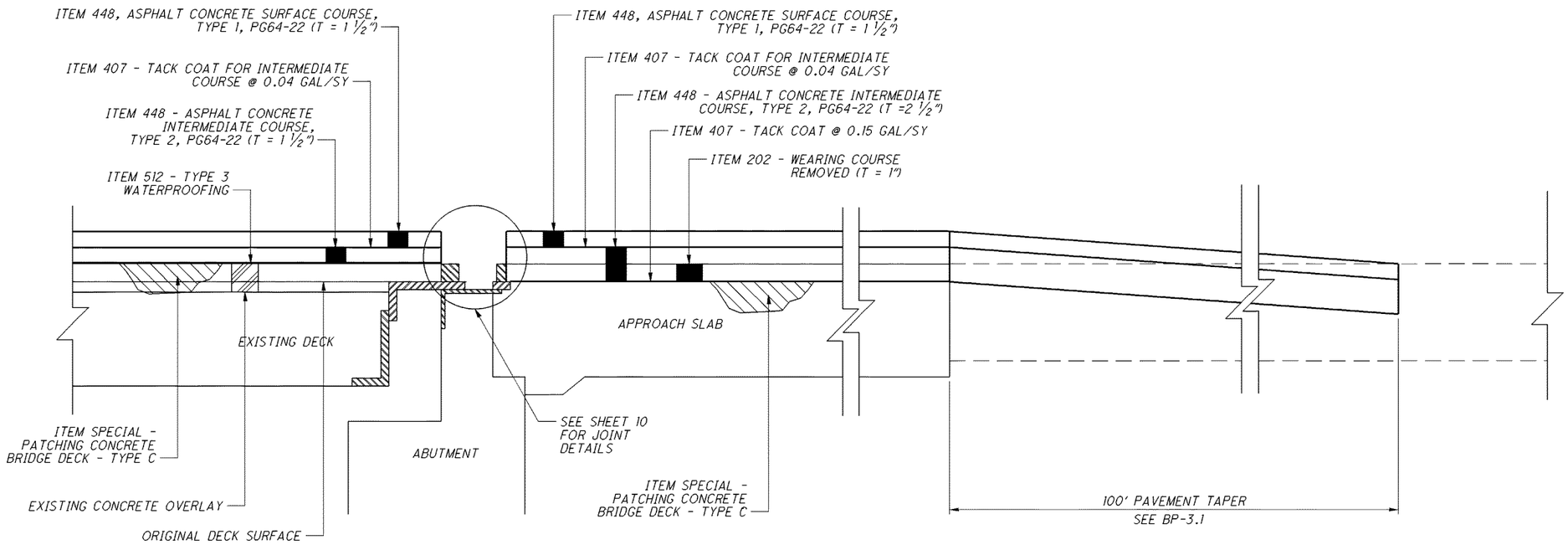

MAH-680-0067, MAH-680-0109, & MAH-680-0373

APPROACH SHOWN
TRAILING SIMILAR

BRIDGE NUMBER	BRIDGE DECK									APPROACH SLABS										PAVEMENT TAPERS								
	LENGTH (BRIDGE LIMITS)	BRIDGE WIDTH	DECK AREA	407 TACK COAT FOR INTERMEDIATE COURSE @ 0.04 GAL/SY	448 ASPHALT CONCRETE INTERMEDIATE COURSE, TYPE 2, PG64-22 (T = 1 1/2")	448 ASPHALT CONCRETE SURFACE COURSE, TYPE 1, PG64-22 (T = 1 1/2")	512 TYPE 3 WATERPROOFING	SPEC POLYMER MODIFIED ASPHALT EXPANSION JOINT SYSTEM	SPEC PATCHING CONCRETE BRIDGE DECK - TYPE C	LENGTH (APPROACH SLABS)	APPROACH SLAB WIDTH	APPROACH SLAB AREA	APPROACH (FORWARD / REAR)	202 WEARING COURSE REMOVED (T = 1"±)	407 TACK COAT @ 0.15 GAL/SY	407 TACK COAT FOR INTERMEDIATE COURSE @ 0.04 GAL/SY	448 ASPHALT CONCRETE INTERMEDIATE COURSE, TYPE 2, PG64-22 (T = 2 1/2")	448 ASPHALT CONCRETE SURFACE COURSE, TYPE 1, PG64-22 (T = 1 1/2")	SPEC PATCHING CONCRETE BRIDGE DECK - TYPE C	PAVEMENT TAPER LENGTH	PAVEMENT TAPER WIDTH	PAVEMENT TAPER AREA	PAVEMENT TAPER (FORWARD \ REAR)	202 WEARING COURSE REMOVED (VAR. THICKNESS = 1" TO 4")	407 TACK COAT @ 0.15 GAL/SY	407 TACK COAT FOR INTERMEDIATE COURSE @ 0.04 GAL/SY	448 ASPHALT CONCRETE INTERMEDIATE COURSE, TYPE 2, PG64-22 (T = 2 1/2")	448 ASPHALT CONCRETE SURFACE COURSE, TYPE 1, PG64-22 (T = 1 1/2")
	FT	FT	SQ YD	GALLON	CU YD	CU YD	SQ YD	FT	SQ YD	FT	FT	SQ YD		SQ YD	GALLON	GALLON	CU YD	CU YD	SQ YD	FT	FT	SQ YD		SQ YD	GALLON	GALLON	CU YD	CU YD
MAH-680-0067	299.76	28.00	932.59	37.30	38.86	38.86	932.59	56.00	46.63	20.00	28.00	62.22	REAR	62.22	9.33	2.49	4.32	2.59	3.11	100.00	28.00	311.11	REAR	311.11	46.67	12.44	21.60	12.96
										20.00	28.00	62.22	FWD	62.22	9.33	2.49	4.32	2.59	3.11	100.00	28.00	311.11	FWD	311.11	46.67	12.44	21.60	12.96
MAH-680-0109	341.42	26.00	986.32	39.45	41.10	41.10	986.32	52.00	49.32	25.00	26.00	72.22	REAR	72.22	10.83	2.89	5.02	3.01	3.61	100.00	26.00	288.89	REAR	288.89	43.33	11.56	20.06	12.04
										25.00	26.00	72.22	FWD	72.22	10.83	2.89	5.02	3.01	3.61	100.00	26.00	288.89	FWD	288.89	43.33	11.56	20.06	12.04
MAH-680-0373	193.58	30.00	645.27	25.81	26.89	26.89	645.27	60.00	32.26	25.00	30.00	83.33	REAR	83.33	12.50	3.33	5.79	3.47	4.17	100.00	30.00	333.33	REAR	333.33	50.00	13.33	23.15	13.89
										25.00	VAR.	211.11	FWD	211.11	31.67	8.44	14.66	8.80	10.56	100.00	30.00	333.33	FWD	333.33	50.00	13.33	23.15	13.89
																				100.00	26.00	288.89	FWD	288.89	43.33	11.56	20.06	12.04

DESIGN AGENCY
ODOT --- DISTRICT 4
PRODUCTION

DESIGNED	DRAWN	REVIEWED	DATE
LMS	LMS	TJP	01-13-09
CHECKED	REVISED	STRUCTURE FILE NUMBER	

SUPERSTRUCTURE DETAILS

MAH-680-0067, MAH-680-0109, & MAH-680-0373
FOUR MILE RUN ROAD OVER I680, LANTERMAN ROAD OVER I680, & BELLA VISTA AVENUE OVER I680

MAH-680-0.00
PID No. 76328

I:\Projects\MAH\76328_680_0.00\76328\structures\MAH680_0009R\sheets\680_0009RSD001.dgn 16-MAR-2009 8:40AM dyord

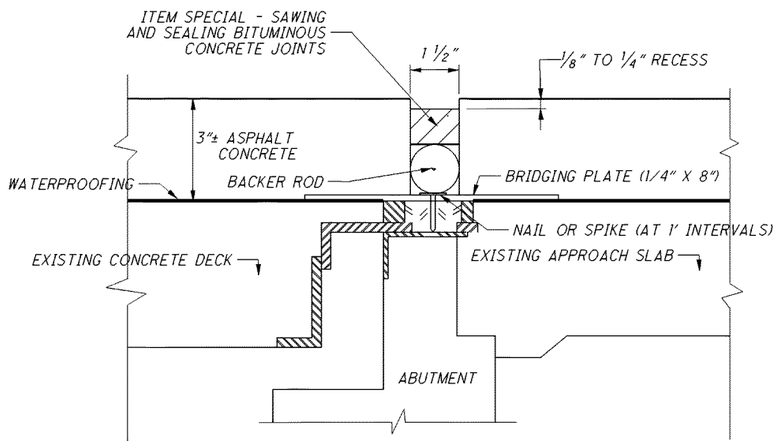

SEALING OF JOINTS AT ABUTMENTS

ITEM SPECIAL - SAWING AND SEALING BITUMINOUS CONCRETE JOINTS

1) DESCRIPTION:

THIS WORK WILL CONSIST OF CUTTING AND SEALING TRANSVERSE JOINTS IN THE NEW BITUMINOUS CONCRETE OVERLAY OF CONTIUOUS STEEL BEAM OR GIRDER BRIDGES. BITUMINOUS CONCRETE JOINTS WILL BE CONSTRUCTED DIRECTLY OVER, AND IN LINE WITH, THE EXISTING UNDERLYING TRANSVERSE ABUTMENT JOINT. ANY EXISTING STRIP SEALS WILL BE LEFT IN PLACE WITH BITUMINOUS CONCRETE JOINT PLACED OVER IT.

2) MATERIALS:

THE BRIDGING PLATE WILL BE A MILD STEEL 1/4" THICK PLATE, 8" WIDE.

THE BACKER ROD WILL BE A CLOSED CELL FOAM EXPANSION JOINT FILLER CAPABLE OF WITHSTANDING THE PLACEMENT TEMPERATURE OF THE HOT-POUR SEALANT.

THE JOINT SEALANT SHALL MEET THE REQUIREMENTS OF ITEM 705.04, JOINT SEALANTS, HOT-POURED, FOR CONCRETE AND ASPHALT PAVEMENTS, ACCEPTABLE ALTERNATE MATERIALS ARE:

3) CONSTRUCTION DETAILS:

A) PLACE THE BRIDGING PLATE PRIOR TO PAVING OPERATIONS. THIS WILL BE DONE AS SOON AS PRACTICAL BEFORE PAVING. TRAFFIC WILL NOT BE PERMITTED TO RUN ON THE BRIDGING PLATE.

SPREAD BINDER OVER SURFACE AREA WHERE THE METAL BRIDGING PLATE WILL BE PLACED. CENTER THE BRIDGING PLATE OVER THE EXISTING JOINT AND BED INTO THE HOT BINDER. BUTT JOINT THE BRIDGING PLATES TO ACCOMODATE THE ENTIRE JOINT LENGTH. SPIKE HOLES WILL BE DRILLED AT 1 FOOT INTERVALS ALONG THE LONGITUDINAL CENTERLINE OF THE PLATES. SECURE BRIDGING PLATE WITH NAILS OR SPIKES. SEAL BUTT JOINTS WITH HOT BINDER AND ALLOW BINDER TO SETUP BEFORE NEXT OPERATION.

B) THE CONTRACTOR WILL CONDUCT HIS OPERATIONS SO THAT THE CUTTING, CLEANING, AND SEALING OF TRANSVERSE JOINTS IS A CONTINUOUS OPERATION THAT WILL BE PERFORMED AS SOON AS PRACTICAL AFTER THE PAVING, BUT NO LATER THAN FOUR (4) DAYS AFTER PLACEMENT OF THE ASPHALT CONCRETE SURFACE COURSE. TRAFFIC WILL NOT BE ALLOWED TO KNEAD TOGETHER OR DAMAGE JOINT CUT PRIOR TO SEALING.

C) THE CONTRACTOR WILL SAW OR ROUT TRANSVERSE JOINTS FULL DEPTH TO THE BRIDGING PLATE AS SHOWN ON THE DETAIL. THE CUT JOINTS WILL LIE DIRECTLY ABOVE EACH ABUTMENT JOINT.

THE BLADE OR BLADES WILL BE OF SUCH SIZE THAT THE FULL WIDTH AND DEPTH OF THE CUT CAN BE MADE WITH ONE PASS. DRY OR WET CUTTING WILL BE ALLOWED. JOINTS WILL EXTEND THE FULL WIDTH OF THE BRIDGE.

D) DRY SAWED JOINTS WILL BE THOROUGHLY CLEANED WITH A SUFFICIENT AMOUNT OF COMPRESSED AIR TO REMOVE ANY DIRT, DUST, OR DELETERIOUS MATTER. WET SAWED JOINTS WILL BE WASHED CLEAN OF ALL CUTTINGS BY FLUSHING WITH A JET OF WATER AND WITH OTHER TOOLS AS NECESSARY. AFTER FLUSHING, THE JOINT WILL BE BLOWN OUT WITH COMPRESSED AIR. WHEN THE SURFACES ARE THOROUGHLY CLEAN AND DRY, AND JUST PRIOR TO PLACING THE JOINT SEALER, COMPRESSED AIR HAVING A PRESSURE OF AT LEAST 90 P.S.I. WILL BE USED TO BLOW OUT THE JOINT AND REMOVE ALL TRACES OF DUST.

IN THE EVENT FRESHLY CUT JOINTS BECOME CONTAMINATED BEFORE THEY ARE SEALED, THEY WILL BE RECLEANED OF ALL FOREIGN MATERIAL BY HIGH PRESSURE WATER JET.

E) THE JOINT WILL BE THOROUGLY DRY WHEN THE SEALANT IS PLACED. AFTER CLEANING AND DRYING A BACKER ROD WILL BE PLACED AT THE BOTTOM OF THE GROOVE.

HOT-POURED JOINT SEALANT MATERIAL WILL BE HEATED IN A KETTLE OR MELTED CONSTRUCTED AS A DOUBLE BOILER, WITH THE SPACE BETWEEN THE INNER AND OUTER SHELLS FILLED WITH OIL OR OTHER HEAT TRANSFER MEDIUM. POSITIVE TEMPERATURE CONTROL AND MECHANICAL AGITATION WILL BE PROVIDED. HEATING MUST BE IN STRICT ACCORDANCE WITH THE MANUFACTURER'S RECOMMENDATION. JOINT SEALER MATERIAL WILL NEVER BE KEPT HEATED AT THE POURING TEMPERATURE FOR MORE THAN FOUR (4) HOURS AND WILL NEVER BE REHEATED. SEALER LEFT IN THE APPLICATOR AT THE END OF A DAY'S WORK WILL NOT BE USED.

HOT-POURED SEALANT WILL BE APPLED IMMEDIATELY THROUGH A NOZZLE, WHICH MUST PROJECT INTO THE SAWED JOINT, FILLING FROM THE BOTTOM UP. THE SEALANT SHALL COMPLETELY FILL THE JOINT IN SUCH A MANNER THAT, AFTER COOLING, THE LEVEL OF THE SEALANT WILL NOT BE HIGHER THAN 1/8" BELOW THE PAVEMENT SURFACE. ANY DEPRESSION IN THE COOLED SEAL GREATED THAN 3/16" SHALL BE BROUGHT UP TO THE SPECIFIED LIMIT BY FURTHER ADDITION OF HOT-POURED SEALANT. CARE WILL BE TAKEN IN THE SEALING OF THE JOINTS SO THAT THE FINAL APPEARANCE WILL PRESENT A NEAT FINE LINE.

THE COLD APPLED SEALANT MATERIALS (POLYURETHANE, SILICONE, AND POLYMERIC COMPOUNDS) WILL BE INSTALLED AS PER MANUFACTURERS' RECOMMENDATIONS. EXCEPT AS MODIFIED BY THIS DRAWING. THE SEALANT WILL BE INSTALLED WHEN THE AMBIENT TEMPERATURE IS 40 DEGREES F OR HIGHER. TRAFFIC WILL NOT BE ALLOWED ON THE JOINT FOR ONE HOUR AFTER APPLICATION OF THE SEALANT.

4) METHOD OF MEASUREMENT:

THE QUANTITY TO BE PAID FOR UNDER THIS ITEM WILL BE THE NUMBER OF LINEAR FEET OF JOINTS SAWED AND SEALED AS PER THE ABOVE REQUIREMENTS.

5) BASIS OF PAYMENT:

THE UNIT PRICE PER LINEAR FOOT FOR ITEM SPECIAL - SAWING AND SEALING BITUMINOUS CONCRETE JOINTS, WILL INCLUDE THE COST OF ALL LABOR, MATERIALS, AND EQUIPMENT NECESSARY TO COMPLETE THE WORK. INCLUDING BRIDGING PLATE AND FURNISHING AND PLACING OF THE JOINT SEALER MATERIAL.

DESIGN AGENCY
ODOT --- DISTRICT 4
PRODUCTION

DESIGNED	DRAWN	REVIEWED	DATE
LMS	LMS	TJP	01-13-09
CHECKED	REVISED	STRUCTURE FILE NUMBER	

SAWING AND SEALING BITUMINOUS CONCRETE JOINTS
MAH-680-0207L, MAH-680-0207R, MAH-680-0333L, MAH-680-0333R, MAH-680-0343L, & MAH-680-0343R
I680 OVER MERIDIAN ROAD, I680 OVER CHERRY HILL, & I680 OVER YOUNGSTOWN & AUSTINTOWN RR

MAH-680-0.00
PID No. 76328

I:\Projects\MAH\76328_680_0.00\76328\structures\MAH680_0009R\sheets\680_0009REX001.dgn 16-MAR-2009 8:40AM dyard

GENERAL NOTES AND DETAILS FOR POLYMER MODIFIED ASPHALT EXPANSION JOINT SYSTEM

ITEM SPECIAL - POLYMER-MODIFIED ASPHALT EXPANSION JOINT SYSTEM

THIS ITEM WILL BE USED TO SEAL THE EXPANSION/CONTRACTION JOINTS AS PER THESE DETAILS AND THE MANUFACTURER'S REQUIREMENTS USING A POLYMER-MODIFIED ASPHALT SYSTEM. THE PRIME CONTRACTOR WILL OBTAIN THE SERVICES OF ONE OF THE FOLLOWING APPROVED APPLICATORS WHO WILL FURNISH AND INSTALL THE NEW BRIDGE EXPANSION JOINT SYSTEM AFTER ALL PAVING ON THE AFFECTED BRIDGE(S) HAS BEEN COMPLETED.

PRODUCT NAME	SUPPLIER	ADDRESS	PHONE NO.
THORMA-JOINT	DYNAMIC SURFACE APPLICATIONS, LTD	373 VILLAGE RD. PENNSDALE, PA 17756	(570)546-6041
MATRIX 502	CRAFCO INC.	420 N. ROOSEVELT AVE. CHANDLER, AZ 85226	(800)528-8242
EXPANDEX JOINT SYSTEM	WATSON-BOWMAN ACME	95 PINEVIEW DR. AMHERST, NY 14228	(716)691-7566
APJ ASPHALTIC PLUG EXPANSION JOINT	WYOMING EQUIPMENT SALES	281 SIXTH STREET P.O. BOX 287 WEST WYOMING, PA 18644	(570)693-2810

MATERIALS:

BRIDGING PLATE:

MILD STEEL 1/8" OR 1/4" THICK PLATE, 8" WIDE OR 18 GAUGE ALUMINUM, 8" WIDE.

BINDER:

TYPE:	POLYMER MODIFIED ASPHALT
SOFTENING POINT:	180 DEGREES F. MIN.
FLOW:	3 mm. MAX. AT 140 DEGREES F.
PENETRATION:	9 mm. MAX. AT 77 DEGREES F. 1 mm. MIN AT 0 DEGREES F. ASTM D 3407
DUCTILITY:	40 cm. MIN. ASTM D 113
RESILIENCE:	60% MIN. AT 77 DEGREES F.
TENSILE ADHESION:	700% MIN.
SPECIFIC GRAVITY:	1.10 * 0.05
POURING TEMP:	350 - 390 DEGREES F.

AGGREGATE:

TYPE:	CRUSHED, DOUBLE WASHED, AND DRIED GRANITE OR BASALT
GRADATION:	THE GRADATION OF THE AGGREGATE VARIES BY MANUFACTURER AND WILL BE AS PER THE MANUFACTURER'S RECOMMENDATIONS FOR THE SYSTEM BEING USED ON THIS PROJECT.

BACKER ROD:

THE BACKER SHALL BE A CLOSED CELL FOAM EXPANSION JOINT FILLER CAPABLE OF WITHSTANDING THE PLACEMENT TEMPERATURE OF THE POLYMER MODIFIED ASPHALT.

NOTE: PRIOR TO PLACEMENT OF ANY PORTION OF THE JOINT SYSTEM, THE PROJECT ENGINEER MUST HAVE CERTIFIED TEST DATA MEETING ALL THE MINIMUM REQUIREMENTS OF ALL THE MATERIALS OF THE JOINT SYSTEM.

INSTALLATION PROCEDURES:

SAWING AND SURFACE PREPARATION:

AFTER ALL PAVING OPERATIONS ARE COMPLETE, THE OVERLAY IS TO BE TRANSVERSELY SAW CUT FULL DEPTH NO LESS THAN TWO INCHES DEEP (20" CENTERED OVER JOINT OPENING, UNLESS OTHERWISE NOTED). REMOVE ALL MATERIAL, INCLUDING WATER-PROOFING MATERIAL, BETWEEN SAW CUTS. THOROUGHLY CLEAN AND DRY EXPOSED CONCRETE, STEEL, AND CUT SURFACES USING COMPRESSED AIR AND A HOT COMPRESSED AIR (HCA) LANCE. THE LANCE MUST PRODUCE A FLAME RETARDED AIR STREAM TEMPERATURE OF 3000 DEGREES F. AT A VELOCITY OF 3,000 FEET PER SECOND WITH 15 PSIG CHAMBER PRESSURE. IF THERE IS AN INTERRUPTION DUE TO WEATHER OR OTHER CAUSES, THE OPERATION WILL BE REPEATED WITH THE HCA LANCE IMMEDIATELY BEFORE THE BINDER COAT OPERATION. ALSO, 6 INCHES OF THE ROAD SURFACE ON EITHER SIDE OF THE JOINT WILL BE DRIED SO THAT A SUITABLE SURFACE FOR BITUMEN ADHESION IS OBTAINED.

SEALING OF EXPANSION JOINT: (PRE-STRESSED BOX OR CONCRETE SLAB)

THE EXPANSION JOINT GAP IS TO BE SEALED AND A BRIDGING PLATE CENTERED ALONG IT. A VERY NARROW GAP WILL BE SEALED BY POURING HOT BINDER INTO THE GAP. GAPS OF 1/8" OR MORE WILL FIRST BE FILLED WITH AN APPROPRIATELY SIZED BACKER ROD. THE BACKER ROD WILL BE INSTALLED SO THAT IT IS BETWEEN 1/8" AND 1 1/8" BELOW THE TOP OF THE EXISTING GAP. THE GAP WILL THEN BE FILLED WITH BINDER.

BOND BREAKER:

SPREAD BINDER OVER SURFACE AREA WHERE THE METAL BRIDGING PLATE WILL BE PLACED. CENTER THE BRIDGING PLATE OVER THE EXISTING JOINT AND BED INTO THE HOT BINDER. BUTT JOINT THE BRIDGING PLATES TO ACCOMODATE THE ENTIRE JOINT LENGTH. SPIKE HOLES WILL BE DRILLED AT 1 FOOT INTERVALS ALONG THE LONGITUDINAL CENTERLINE OF THE PLATES. SECURE BRIDGING PLATE WITH NAILS OR SPIKES. SEAL BUTT JOINTS WITH HOT BINDER AND ALLOW BINDER TO SETUP BEFORE NEXT OPERATION. WHEN ALUMINUM BRIDGING PLATES ARE USED, ONLY THE BINDER IS REQUIRED TO SECURE THE INDIVIDUAL PLATES.

BINDER COAT:

SEAL ALL PREPARED, EXPOSED SURFACES OF THE JOINT WITH BINDER. POUR THE HOT BINDER OVER THE FLOOR AREA OF THE JOINT AND SPREAD TO COAT ALL EXPOSED SURFACES. THE BINDER WILL BE A MINIMUM OF 1/32" THICK ON THE BOTTOM OF THE JOINT CAVITY, WITH POOLS OF GREATER THICKNESS WHERE SURFACE IRREGULARITIES EXIST. THE BINDER APPLICATION TEMPERATURE WILL BE BETWEEN 350 AND 390 DEGREES F. THE BINDER WILL NOT BE ALLOWED TO BE HEATED ABOVE 410 DEGREES F. NOR ALLOWED TO EXCEED 390 DEGREES F. FOR MORE THAN 1 HOUR. A DOUBLE JACKETED OIL MELTER WILL BE USED TO HEAT THE BINDER. THE MELTER WILL BE EQUIPPED WITH A CONTINUOUS AGITATION SYSTEM, TEMPERATURE CONTROLS, AND A CALIBRATED THERMOMETER. ALSO A SYSTEM FOR ACCURATELY MEASURING THE WEIGHTS OF THE BINDER AND THE AGGREGATE WILL BE REQUIRED.

BUILD-UP OF JOINT LAYERS:

AGGREGATE PREPARATION:

HEAT THE AGGREGATE TO A TEMPERATURE OF 275 TO 325 DEGREES F., WITH A SUITABLE ROTATING DRUM WITH ATTACHED HEAT SOURCE OR A HOT COMPRESSED AIR LANCE, TO REMOVE DUST AND MOISTURE.

AGGREGATE PROPORTION AND LAYER THICKNESS:

MIX THE AGGREGATE WITH THE BINDER SUCH THAT THE MINIMUM AGGREGATE CONTENT BY WEIGHT WILL BE 68%. THE HEATED AGGREGATE AND BINDER WILL BE COMBINED IN LAYERS, UNLESS PATENTED INSTALLATION REQUIRES DIFFERENTLY, NOT LESS THAN 3/4 OF AN INCH NOR EXCEEDING 2-1/2 INCHES. THE THICKNESS OF EACH LAYER CAN BE VARIED WITHIN THESE LIMITS, TO ACHIEVE THE REQUIRED JOINT THICKNESS (MIN. 2 INCHES). THE OBJECTIVE IS TO COAT EACH STONE AND FILL THE VOIDS WHILE AVOIDING AN EXCESS OF BINDER. THIS WILL ACHIEVE THE MAXIMUM CONTENT OF STONE CONSISTENT WITH ALL STONES BEING COATED WITH BINDER. RAKE THE MIXTURE TO MIX AND LEVEL.

THE TOP LAYER THICKNESS WILL VARY BETWEEN 1/2 INCH AND ONE (1) INCH. IN PREPARING THE TOP LAYER, THE RATIO OF AGGREGATE TO BINDER WILL BE APPROXIMATELY 6:1 BY WEIGHT. OVERFILL THE TOP LAYER AND COMPACT TO THE LEVEL OF THE ADJACENT SURFACES USING A ROLLER OR VIBRATORY PLATE COMPACTOR. IMMEDIATELY AFTER COMPLETION OF THE COMPACTION, POUR SUFFICIENT BINDER OVER THE JOINT TO FILL THE SURFACE VOIDS AND COAT THE SURFACE STONE. DUST THE FINISHED JOINT WITH A FINE, DRY AGGREGATE TO PREVENT TACKINESS.

MAINTENANCE OF TRAFFIC:

IF NECESSARY TO FACILITATE TRAFFIC MAINTENANCE, THE JOINT WILL BE INSTALLED IN TWO (2) HALF-WIDTH PHASES. DURING PHASE 1 APPROXIMATELY HALF OF THE TOTAL JOINT WILL BE INSTALLED. DURING PHASE 2, A MINIMUM OF TWO (2) INCHES OF THE PHASE 1 JOINT WILL BE REMOVED, AT OR NEAR THE CENTERLINE, WITH THE REMAINDER OF THE JOINT INSTALLED. IN ALL CASES, OPERATIONS WILL BE SCHEDULED SO THAT ALL LANES CAN BE OPEN TO TRAFFIC DURING ALL NON-WORKING HOURS.

TESTING:

CERTIFICATION WILL BE SUPPLIED FOR EACH PROJECT SHOWING BINDER COMPLIANCE WITH REQUIRED PROPERTIES. A ONE QUART SAMPLE OF BINDER WILL BE RETRIEVED FROM EACH BRIDGE FOR FURTHER TESTING BY THE O.D.O.T OFFICE OF MATERIALS MANAGEMENT.

METHOD OF MEASUREMENT AND BASIS OF PAYMENT:

THE DEPARTMENT WILL MEASURE THE JOINT BY THE NUMBER OF FEET AND WILL PAY FOR ACCEPTED QUANTITIES AT THE CONTRACT PRICE AS: ITEM SPECIAL, FEET, POLYMER MODIFIED ASPHALT EXPANSION JONT SYSTEM.

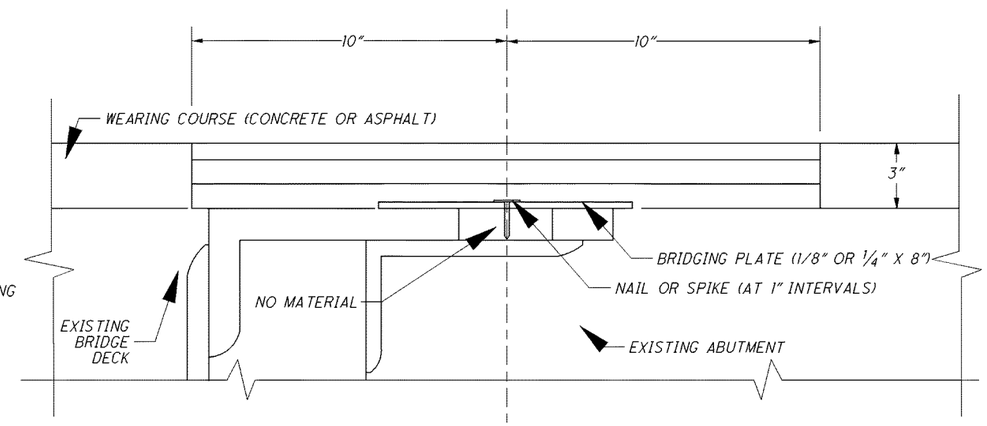

TYPICAL STEEL BEAM EXPANSION JOINT

DESIGN AGENCY
OFFICE OF STRUCTURAL ENGINEERING

REVIEWED | DATE | STRUCTURE FILE NUMBER

PLAN INSERT SHEET

POLYMER MODIFIED ASPHALT EXPANSION JOINT SYSTEM
MAH-680-0067, MAH-680-0109, AND MAH-680-0373
FOUR MILE RUN ROAD OVER 1680, LANTERMAN RD. OVER 1680, AND BELLA VISTA AVE. OVER 1680

MAH-680-0.00
PID No. 76328

I:\Projects\MAH\76328_680_0.00\76328\structures\MAH680_0009R\sheets\680_0009REX002.dgn 16-MAR-2009 8:41AM dyard

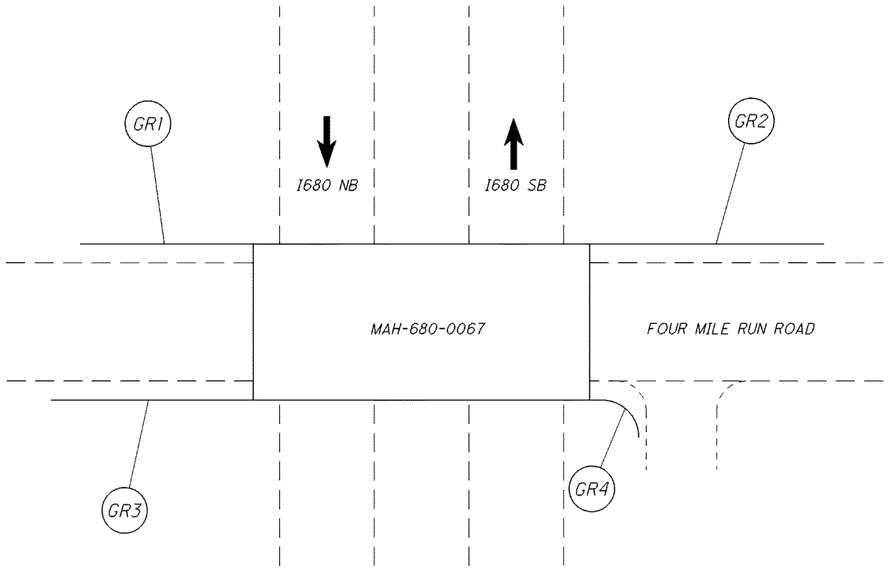

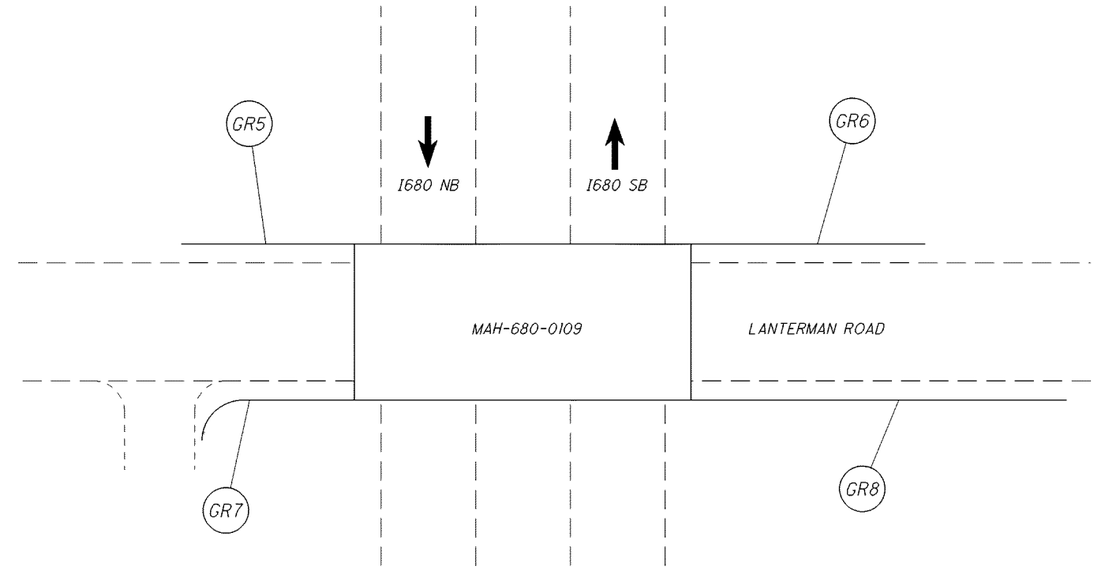

REF NO.	SHEET NO.	STRUCTURE	GUARDRAIL REMOVED		GUARDRAIL, TYPE 5	ANCHOR ASSEMBLY, TYPE E-98	ANCHOR ASSEMBLY, TYPE T	BRIDGE TERMINAL ASSEMBLY, TYPE F
			202		606	606	606	606
			FT		FT	EACH	EACH	EACH
GR1		MAH-680-0067	50		12.5	1		1
GR2		MAH-680-0067	100		50	1		1
GR3		MAH-680-0067	50		25	1		1
GR4		MAH-680-0067	12.5		12.5		1	1
GR5		MAH-680-0109			25	1		1
GR6		MAH-680-0109	112.5		62.5	1		1
GR7		MAH-680-0109	25		50		1	1
GR8		MAH-680-0109	400		350	1		1
TOTALS CARRIED TO GENERAL SUMMARY			750		588	6	2	8

DESIGN AGENCY
ODOT --- DISTRICT 4
PRODUCTION

DESIGNED LMS | DRAWN LMS | REVIEWED TJP | DATE 01-13-09
CHECKED | REVISED | STRUCTURE FILE NUMBER

STRUCTURE APPROACH GUARDRAIL

MAH-680-0067 AND MAH-680-0109
FOUR MILE RUN ROAD OVER I680 AND LANTERMAN ROAD OVER I680

MAH-680-0.00
PID No. 76328

I:\Projects\MAH\76328_680_0.00\76328\structures\MAH680_0009R\sheets\680_0009RGR001.dgn 16-MAR-2009 8:41AM dyord

NOTES

PAYMENT: Payment for Item 606 - Bridge Terminal Assembly, Type F, Each, shall include the additional cost in excess of normal guardrail cost, such as: additional or heavier posts, concrete encasement, extra rail, steel box, curb, embankment, terminal connector, anchors and other hardware, etc.

DETAILS NOT SHOWN: See SCD GR-1.1 and other Drawings pertaining to the design of specific guardrail types.

GUARDRAIL TERMINATION: As directed by the Engineer. The 12'-6" [3.81 m] normal rail section may vary as shown to facilitate connection of or reconstruction of existing approach guardrail. The 1'-2" [356] terminal connector location dimension may be increased to avoid existing parapet steel.

STEEL BOX: Appropriate size steel box, galvanized after welding any two opposite corners, shall be mounted on the the parapet so the top of rail is 27¾" [706] above the bridge deck. See Detail on Sheet 2 for Type F.

SPACER BLOCK: Block size may be increased if necessary to locate post beyond wide approach slab.

POSTS: Shall be 6"x8" [150x200] wood or W6x15 [W150 x22.5] steel (except Note 1 post) of the same material type as used on approach guardrail, with 4" [100] min. concrete encasement.

NOTE 1: Use the inlet mounted post detail as shown on SCD GR-1.1. Use a W6x9 [W150x13.5] post instead, with the length needed to mount top of rail at 273#4" [706] above bridge deck.

NOTE 2: Place one additional encased post halfway between adjacent posts when the 12'-6" [3.81 m] normal rail section is increased.

SELF-DRILLING ANCHORS: Meeting requirements of CMS 712.01, or Group VIII Type 1 anchor per FF-S-325, with 7#8"x11#2" [22x38] bolts with washers may be substituted for the 7#8"x14" [22x355] bolt shown in the parapet for Type F .

Anchor installations not satisfactory to the Engineer shall be replaced with bolts as shown extending through the parapet or as directed by the Engineer.

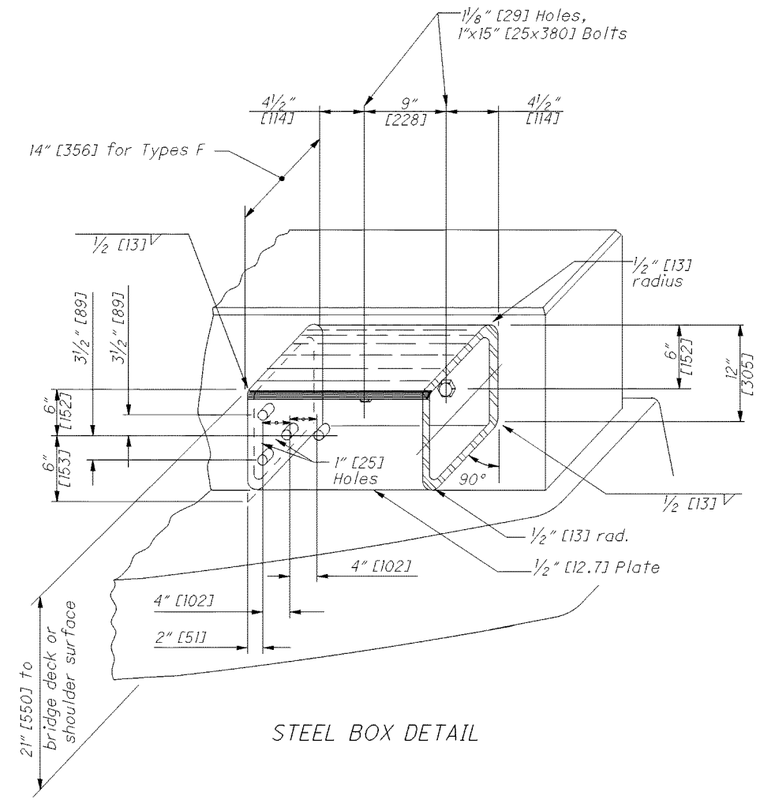

STEEL BOX DETAIL

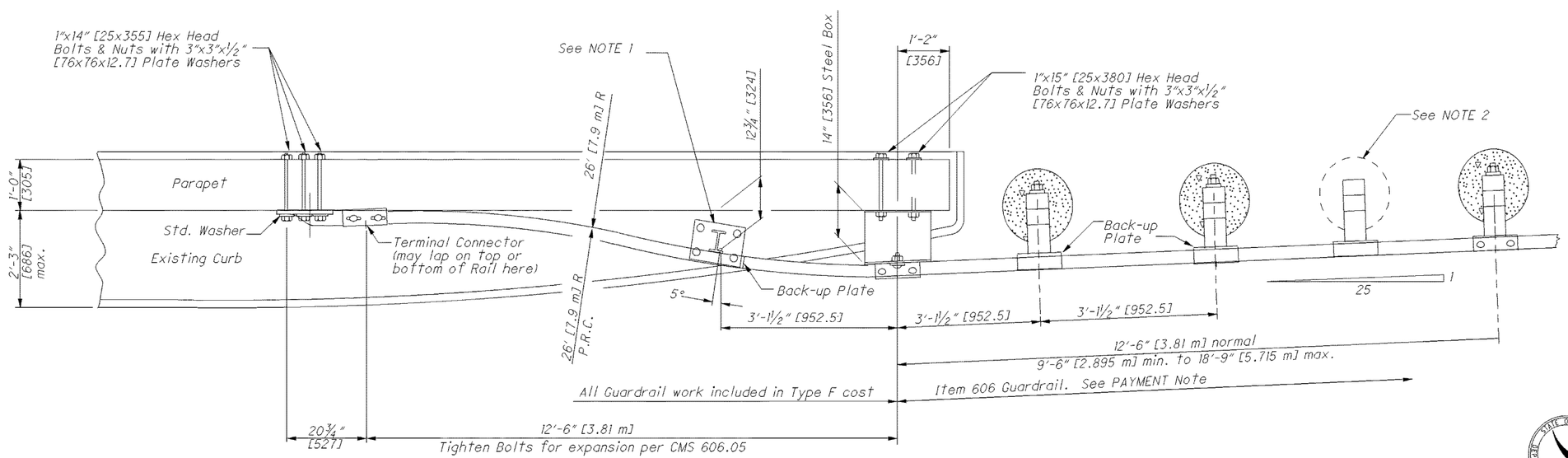

TYPE F
(Two-Way Cross Road)

All metric dimensions (in brackets [ ]) are in millimeters unless otherwise noted.

OFFICE OF ROADWAY ENGINEERING

DESIGNED | REVIEWED | REVISION DATE 10-20-06 | CHECKED

PLAN INSERT SHEET

BRIDGE TERMINAL ASSEMBLY, Types F

MAH-680-0.00

12/13

22/23

I:\Projects\MAH\76328_680_0.00\76328\structures\MAH680_0009R\sheets\680_0009RGR002.dgn 16-MAR-2009 8:41AM dyard

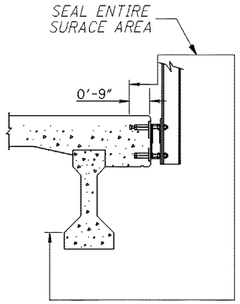

DETAIL A
CONCRETE DECKS WITH
OVER THE SIDE DRAINAGE

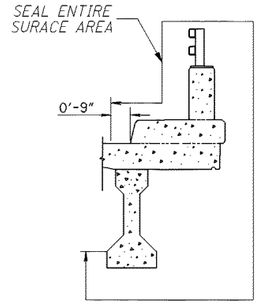

DETAIL B
CONCRETE DECKS WITH CURBS,
SIDEWALKS AND PARAPET

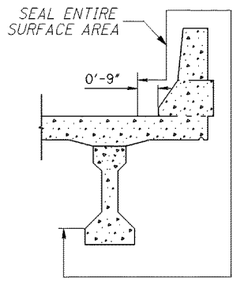

DETAIL C
CONCRETE DECK WITH
DEFLECTOR PARAPET

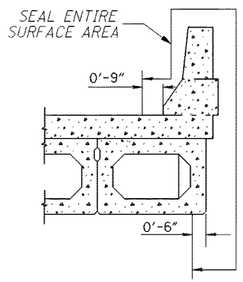

DETAIL D
PRESTRESSED BOX BEAM DECK
WITH DEFLECTOR PARAPET

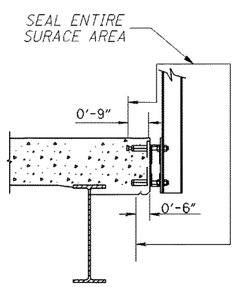

DETAIL E
CONCRETE DECKS WITH
OVER THE SIDE DRAINAGE

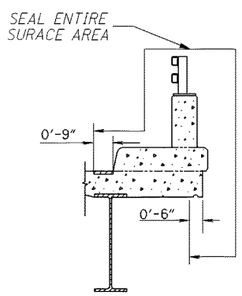

DETAIL F
CONCRETE DECKS WITH CURBS,
SIDEWALKS AND PARAPET

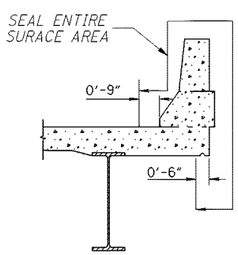

DETAIL G
CONCRETE DECK WITH
DEFLECTOR PARAPET

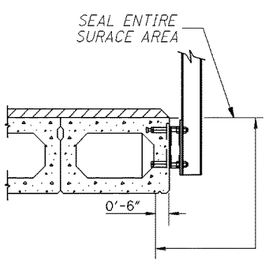

DETAIL H
PRESTRESSED BOX BEAM DECK
WITH OVER THE SIDE DRAINAGE

BRIDGE NO.	STRUCTURE TYPE	PROPOSED SEALING	FEDERAL COLOR NUMBER	ESTIMATED QUANTITIES ABUT SQ YD	PIER SQ YD	SUPER SQ YD	* GEN SQ YD	TOTAL SQ YD
MAH-680-0009R	3 SPAN CONTINUOUS STEEL BEAM	SEAL PARAPETS PER DETAIL G SEAL ALL EXPOSED CONCRETE AT ABUTMENTS SEAL ALL EXPOSED CONCRETE AT PIERS	PER CMS	216	189	457		862
MAH-680-0020L	3 SPAN CONTINUOUS STEEL BEAM	SEAL PARAPETS PER DETAIL G SEAL ALL EXPOSED CONCRETE AT ABUTMENTS SEAL ALL EXPOSED CONCRETE AT PIERS	PER CMS	263	208	702		1173
MAH-680-0040L	3 SPAN CONTINUOUS STEEL BEAM	SEAL PARAPETS PER DETAIL G SEAL ALL EXPOSED CONCRETE AT ABUTMENTS SEAL ALL EXPOSED CONCRETE AT PIERS	PER CMS	167	492	542		1201
MAH-680-0040R	3 SPAN CONTINUOUS STEEL BEAM	SEAL PARAPETS PER DETAIL G SEAL ALL EXPOSED CONCRETE AT ABUTMENTS SEAL ALL EXPOSED CONCRETE AT PIERS	PER CMS	162	628	515		1305
MAH-680-0067	4 SPAN CONTINUOUS STEEL BEAM	SEAL PARAPETS PER DETAIL F SEAL ALL EXPOSED CONCRETE AT ABUTMENTS SEAL ALL EXPOSED CONCRETE AT PIERS	PER CMS	102	270	687	15	1074
MAH-680-0109	4 SPAN CONTINUOUS STEEL BEAM	SEAL PARAPETS PER DETAIL F SEAL ALL EXPOSED CONCRETE AT ABUTMENTS SEAL ALL EXPOSED CONCRETE AT PIERS	PER CMS	170	254	786	15	1225
MAH-680-0207L	4 SPAN CONTINUOUS CONCRETE SLAB	SEAL PARAPETS PER DETAIL F SEAL ALL EXPOSED CONCRETE AT ABUTMENTS SEAL ALL EXPOSED CONCRETE AT PIERS	PER CMS	66	305	252	15	638
MAH-680-0207R	4 SPAN CONTINUOUS CONCRETE SLAB	SEAL PARAPETS PER DETAIL F SEAL ALL EXPOSED CONCRETE AT ABUTMENTS SEAL ALL EXPOSED CONCRETE AT PIERS	PER CMS	62	319	252	15	648
MAH-680-0333L	3 SPAN CONTINUOUS STEEL BEAM	SEAL PARAPETS PER DETAIL F SEAL ALL EXPOSED CONCRETE AT ABUTMENTS SEAL ALL EXPOSED CONCRETE AT PIERS	PER CMS	147	264	254	15	680
MAH-680-0333R	3 SPAN CONTINUOUS STEEL BEAM	SEAL PARAPETS PER DETAIL F SEAL ALL EXPOSED CONCRETE AT ABUTMENTS SEAL ALL EXPOSED CONCRETE AT PIERS	PER CMS	147	235	235	15	632
MAH-680-0343L	3 SPAN CONTINUOUS STEEL BEAM	SEAL PARAPETS PER DETAIL F SEAL ALL EXPOSED CONCRETE AT ABUTMENTS SEAL ALL EXPOSED CONCRETE AT PIERS	PER CMS	117	559	346	15	1037
MAH-680-0343R	3 SPAN CONTINUOUS STEEL BEAM	SEAL PARAPETS PER DETAIL F SEAL ALL EXPOSED CONCRETE AT ABUTMENTS SEAL ALL EXPOSED CONCRETE AT PIERS	PER CMS	117	559	346	15	1037
MAH-680-0373	2 SPAN CONTINUOUS STEEL BEAM	SEAL PARAPETS PER DETAIL F SEAL ALL EXPOSED CONCRETE AT ABUTMENTS SEAL ALL EXPOSED CONCRETE AT PIERS	PER CMS	814	162	603	15	1594
MAH-711-0026	4 SPAN CONTINUOUS STEEL BEAM	SEAL PARAPETS PER DETAIL G SEAL ALL EXPOSED CONCRETE AT ABUTMENTS SEAL ALL EXPOSED CONCRETE AT PIERS	PER CMS	176	401	890		1467

NOTES:
* GENERAL AREAS ARE FOR CONCRETE SPALL REMOVAL OF THE DECK FLOOR
- EPOXY-URETHANE SEALER SHALL BE USED UNLESS SHOWN OTHERWISE
- DETAILS E, F, G AND H ALSO APPLY TO CONCRETE SLAB BRIDGES

SEALING OF BEAM SEATS

SEALING OF BEAM SEATS: IF THE BEAMS SEATS ARE SEALED WITH AN EPOXY OR NON-EPOXY SEALER PRIOR TO SETTING THE BEARINGS, DO NOT APPLY SEALER TO THE CONCRETE SURFACES UNDER THE PROPOSED BEARING LOCATIONS. IF THESE LOCATIONS ARE SEALED, REMOVE THE SEALER TO THE SATISFACTION OF THE ENGINEER PRIOR TO SETTING THE BEARINGS. THE DEPARTMENT WILL NOT PAY FOR THIS REMOVAL.

DESIGN AGENCY
ODOT --- DISTRICT 4
PRODUCTION

DESIGNED LMS | CHECKED | DRAWN LMS | REVISED | REVIEWED TJP | DATE 01-13-09 | STRUCTURE FILE NUMBER

CONCRETE SEALING DETAILS
MAH-680-0009R, MAH-680-0020L, MAH-680-0040L/R, MAH-680-0067, MAH-680-0109, MAH-680-0207L, MAH-680-0207R, MAH-680-0315, MAH-680-0333L/R, MAH-680-0343L/R, MAH-680-0373, & MAH-711-0026

MAH-680-0.00
PID No. 76328

I:\Projects\MAH\76328_680_0.00\76328\structures\MAH680_0009R\streets\680_0009RMD001.dgn 16-MAR-2009 8:41AM dyord