STATE OF OHIO
DEPARTMENT OF TRANSPORTATION

MAH-680-4.58
PART 2

CITY OF YOUNGSTOWN

MAHONING COUNTY

FOR PART 1, SEE MAH-680-4.58 PART 1

LOCATION MAP

LATITUDE: 41°06'15" LONGITUDE: 80°40'35"

PORTION TO BE IMPROVED
INTERSTATE HIGHWAY
FEDERAL ROUTES
STATE ROUTES
COUNTY & TOWNSHIP ROADS
OTHER ROADS

DESIGN DESIGNATION

SEE PART 1

DESIGN EXCEPTIONS

SEE PART 1

ADA DESIGN WAIVERS

SEE PART 1

INDEX OF SHEETS:

TITLE SHEET	*P.1*
GENERAL NOTES	*P.2*
MAINTENANCE OF TRAFFIC	*P.3 - P.5*
GENERAL SUMMARY	*P.6*
PAVEMENT MARKINGS	*P.7*
STRUCTURES	*P.8 - P.20*

FEDERAL PROJECT NUMBER

E250327

RAILROAD INVOLVEMENT

NONE

PROJECT DESCRIPTION

MINOR BRIDGE WORK TO 14 STRUCTURES ON IR 680 IN MAHONING COUNTY.

EARTH DISTURBED AREAS

PROJECT EARTH DISTURBED AREA:	*0.0 ACRES*
ESTIMATED CONTRACTOR EARTH DISTURBED AREA:	*0.0 ACRES*
NOTICE OF INTENT EARTH DISTURBED AREA:	*N/A (MAINTENANCE PROJECT)*

LIMITED ACCESS

THIS IMPROVEMENT IS ESPECIALLY DESIGNED FOR THROUGH TRAFFIC AND HAS BEEN DECLARED A LIMITED ACCESS HIGHWAY OR FREEWAY BY ACTION OF THE DIRECTOR IN ACCORDANCE WITH THE PROVISIONS OF SECTION 5511.02 OF THE OHIO REVISED CODE.

2023 SPECIFICATIONS

THE STANDARD SPECIFICATIONS OF THE STATE OF OHIO, DEPARTMENT OF TRANSPORTATION, INCLUDING SUPPLEMENTAL SPECIFICATIONS LISTED IN THE PLANS, CHANGES LISTED IN THE PROPOSAL, AND THE SUPPLEMENTAL SPECIFICATION 800 VERSION INDICATED ON THE PROPOSAL SHALL GOVERN THIS IMPROVEMENT.

I HEREBY APPROVE THESE PLANS AND DECLARE THAT THE MAKING OF THIS IMPROVEMENT WILL NOT REQUIRE THE CLOSING TO TRAFFIC OF THE HIGHWAY AND THAT PROVISIONS FOR THE MAINTENANCE AND SAFETY OF TRAFFIC WILL BE AS SET FORTH ON THE PLANS AND ESTIMATES.

Arthur G. Noirot Jr., P.E.
District 04 Deputy Director

Pamela Boratyn
Director, Department of Transportation

UNDERGROUND UTILITIES
Contact Two Working Days Before You Dig
OHIO811.org Before You Dig
OHIO811, 8-1-1, or 1-800-362-2764
(Non members must be called directly)

PLAN PREPARED BY:
ODOT DISTRICT 4 - CAPITAL PROGRAMS
2088 S. ARLINGTON RD
AKRON, OHIO 44319

STANDARD CONSTRUCTION DRAWINGS	*SUPPLEMENTAL SPECIFICATIONS*	*SPECIAL PROVISIONS*
		ASBESTOS REPORT
		SFN 5003350
		ASBESTOS REPORT
		SFN 5006864
SEE PART 1	*SEE PART 1*	

ENGINEER'S SEAL

STATE OF OHIO
THOMAS J. POWELL
E-61151
REGISTERED
PROFESSIONAL ENGINEER

TITLE SHEET

DESIGN AGENCY

DESIGNER JF
REVIEWER MJA 08-08-25
PROJECT ID 121474
SHEET P.1 TOTAL 20

MAH-680-4.58

MODEL: Sheet PAPERSIZE: 34x22 (in.) DATE: 1/20/2026 TIME: 9:43:10 AM PLTDRV: OHDOT_PDF_E+.pltcfg PENTBL: OHDOT_Pen.tbl USER: Joel.Fitzsimmons@dot.ohio.gov WORKSPACE: OHDOTCEv02 WORKSET: 121474 PRODUCT: OpenRoadsDesigner 24.00.00.205
pw:\\ohiodot-pw.bentley.com:ohiodot-pw-02\Documents\01 Active Projects\District 04\Mahoning\121474\400-Engineering\Roadway\Sheets\121474_GT001.dgn

WORK LIMITS

THE WORK LIMITS SHOWN ON THESE PLANS ARE FOR PHYSICAL CONSTRUCTION ONLY. PROVIDE THE INSTALLATION AND OPERATION OF ALL WORK ZONE TRAFFIC CONTROL AND WORK ZONE TRAFFIC CONTROL DEVICES REQUIRED BY THESE PLANS WHETHER INSIDE OR OUTSIDE THESE WORK LIMITS.

UTILITIES

THE CONTRACTOR SHALL USE THE FOLLOWING PROCEDURE AT EACH LOCATION WHERE WORK IS PERFORMED, IN ACCORDANCE WITH SECTIONS 105.07 AND 107.16 IN THE CONSTRUCTION AND MATERIALS SPECIFICATIONS.

THE CONTRACTOR SHALL NOTIFY THE PROJECT ENGINEER, OHIO811, THE OHIO DEPARTMENT OF TRANSPORTATION DISTRICT 4 HEADQUARTERS (MICHELLE CHANEY AT 330-786-2267) AND ALL NON REGISTERED UTILITY OWNERS AT LEAST TWO (2) WORKING DAYS PRIOR TO COMMENCING CONSTRUCTION OPERATIONS IN ALL AREAS.

THE LOCATION OF EXISTING UNDERGROUND UTILITIES ARE NOT SHOWN ON THE PLANS, BUT CAN BE OBTAINED FROM THE OWNERS OF THE UTILITIES. THE CONTRACTOR IS RESPONSIBLE FOR ANY DAMAGE TO UTILITIES.

ITEM SPECIAL - AS-BUILT CONSTRUCTION PLANS

PRIOR TO FINAL ACCEPTANCE OF THE WORK, THE CONTRACTOR SHALL FURNISH THE DEPARTMENT FORMAL AS-BUILT CONSTRUCTION PLANS. THE FORMAL AS-BUILT CONSTRUCTION PLANS SHALL INCLUDE ALL RED-LINED CHANGES. RED-LINE CHANGE SHALL BE DENOTED UTILIZING CLOUDING IN MICROSTATION (OR OTHER CAD SOFTWARE) OR CLOUDING IN PDF EDITING SOFTWARE. THE AS-BUILT CONSTRUCTION PLANS SHALL HAVE A SIGNED VERIFICATION ON THE TITLE SHEET FROM THE CONTRACTOR INDICATING THAT ALL RED-LINED AND FIELD CHANGES HAVE BEEN INCORPORATED INTO AS-BUILT CONSTRUCTION PLANS.

THE CONTRACTORS VERIFICATION STATEMENT INDICATES ALL KNOWN FIELD MODIFICATIONS MADE HAVE BEEN INCLUDED IN THE FORMAL AS-BUILT CONSTRUCTION PLANS. THE CONTRACTORS VERIFICATION STATEMENT SHALL BE SIGNED BY THE CONTRACTORS PROJECT MANAGER (OR ACCEPTABLE REPRESENTATIVE).

IN ADDITION TO THE INFORMATION SHOWN ON THE CONSTRUCTION PLANS, THE AS-BUILT CONSTRUCTION PLANS SHALL SHOW THE FOLLOWING:

1. ALL DEVIATIONS FROM THE ORIGINAL APPROVED CONSTRUCTION PLANS WHICH RESULT IN A CHANGE OF LOCATION, MATERIAL, TYPE OR SIZE OF WORK.
2. ANY UTILITIES, PIPES, WELLHEADS, ABANDONED PAVEMENTS, FOUNDATIONS OR OTHER MAJOR OBSTRUCTIONS DISCOVERED AND REMAINING IN PLACE WHICH ARE NOT SHOWN, OR DO NOT CONFORM TO LOCATIONS OR DEPTHS SHOWN IN THE PLANS. UNDERGROUND FEATURES SHALL BE SHOWN AND LABELED ON THE AS-BUILT CONSTRUCTION PLANS IN TERMS OF STATION, OFFSET AND ELEVATION.
3. THE FINAL OPTION AND SPECIFICATION NUMBER SELECTED FOR THOSE ITEMS WHICH ALLOW SEVERAL MATERIAL OPTIONS UNDER THE SPECIFICATION (E.G., CONDUIT).
4. CHANGES TO THE PAY ITEMS AND FINAL QUANTITIES AS PAID SHALL BE SHOWN ON THE GENERAL SUMMARY AND SUBSUMMARIES.
5. ADDITIONAL PLAN SHEETS MAY BE NEEDED IF NECESSARY TO SHOW WORK NOT INCLUDED IN THE CONSTRUCTION PLANS. IF ADDITIONAL PLAN SHEETS ARE NEEDED, THEY ARE REQUIRED TO BE PREPARED IN CONFORMANCE WITH THE LOCATION AND DESIGN MANUAL, VOLUME 3, SECTION 1200 - PLAN PREPARATION.

ITEM SPECIAL - AS-BUILT CONSTRUCTION PLANS CONT...

NOTATION SHALL ALSO BE MADE OF LOCATIONS AND THE EXTENT OF USE OF MATERIALS, OTHER THAN SOIL, FOR EMBANKMENT CONSTRUCTION (ROCK, BROKEN CONCRETE WITHOUT REINFORCING STEEL, ETC.).

THE PLAN INDEX SHALL SHOW THE PLAN SHEETS WHICH HAVE CHANGES APPEARING ON THEM.

TWO COPIES OF THE AS-BUILT CONSTRUCTION PLANS SHALL BE DELIVERED TO THE PROJECT ENGINEER FOR APPROVAL UPON COMPLETION OF THE PHYSICAL WORK BUT PRIOR TO THE REQUEST FOR FINAL PAYMENT. AFTER THE DEPARTMENT HAS APPROVED THE AS-BUILT CONSTRUCTION PLANS, THE ASSOCIATED ELECTRONIC FILES SHALL BE DELIVERED TO THE DISTRICT CAPITAL PROGRAMS ADMINISTRATOR. ACCEPTANCE OF THESE PLANS AND DELIVERY OF THE ASSOCIATED ELECTRONIC FILES IS REQUIRED PRIOR TO THE WORK BEING ACCEPTED AND THE FINAL ESTIMATE APPROVED.

PAYMENT FOR ALL THE ABOVE SHALL BE LUMP SUM UPON PROPER EXECUTION OF ALL WORK OF THIS ITEM AS DETERMINED BY THE PROJECT ENGINEER.

ITEM 619 FIELD OFFICE, TYPE C, AS PER PLAN

THIS WORK CONSISTS OF PROVIDING, MAINTAINING, AND SUBSEQUENTLY REMOVING A FIELD OFFICE FOR THE EXCLUSIVE USE OF THE DEPARTMENT FOR THE DURATION OF THE CONTRACT AT A LOCATION APPROVED BY THE ENGINEER. FURNISH A COMPLETELY FUNCTIONAL FIELD OFFICE OF THE TYPE SPECIFIED IN THE CONTRACT PRIOR TO BEGINNING WORK.

THE FIELD OFFICE WILL BE A SUITE TYPE OFFICE (NO TRAILER OR MODULAR OFFICE) WITH A MINIMUM OF 2,500 SQUARE FEET AND AT GROUND LEVEL WITH A MINIMUM CEILING HEIGHT OF EIGHT (8) FEET. PROVIDE TWO (2) OUTSIDE DOORS, LOCKABLE VANDAL PROOF CYLINDER TYPE DEAD BOLTS AND LOCKABLE WINDOWS. THE FLOOR SPACE WILL BE DIVIDED INTO A RESTROOM, ONE GENERAL OFFICE AREA (MINIMUM 400 SQUARE FEET), NOT LESS THAN THREE INDIVIDUAL OFFICES (MINIMUM 300 SQUARE FEET EACH), AND ONE CONFERENCE ROOM (MINIMUM 500 SQUARE FEET), AS DEEMED NECESSARY BY THE ENGINEER.

FURNISH EACH FIELD OFFICE WITH A MEANS FOR MAINTAINING ROOM TEMPERATURE BETWEEN 68ºF AND 80ºF.

FURNISH ELECTRIC SERVICE FOR EACH FIELD OFFICE.

FURNISH NEAT, SANITARY, ENCLOSED TOILET ACCOMMODATIONS CONNECTED TO AN EXISTING SANITARY SEWER LINE FOR THE USE OF THE OCCUPANTS OF THE FIELD OFFICE, MEETING APPLICABLE STATE AND LOCAL CODES AND ORDINANCES. FURNISH ASSOCIATED LAVATORY AND SANITARY SUPPLIES. POTABLE HOT AND COLD RUNNING WATER WILL BE PROVIDED IN THE RESTROOM FOR SANITARY PURPOSES.

FURNISH TRASH COLLECTION SERVICE / DUMPSTER.

FURNISH PROFESSIONAL, BONDED AND INSURED JANITORIAL SERVICE WITH A WEEKLY CLEANING OF THE ENTIRE OFFICE TO INCLUDE THE RESTROOM FACILITIES FOR THE DURATION OF THE PROJECT.

FURNISH BOTTLED DRINKING WATER SERVICE WITH A HOT AND COLD DISPENSER AND ASSOCIATED SUPPLIES.

PROVIDE A LOCKABLE WOOD OR METAL STORAGE BOX OF SUFFICIENT SIZE TO STORE A NUCLEAR DENSITY GAUGE AND AN ELECTRICAL CONNECTION FOR THE GAUGE. THE STORAGE BOX MUST BE AT LEAST 15 FEET FROM ANY OCCUPIED WORK AREA.

ITEM 619 FIELD OFFICE, TYPE C, AS PER PLAN CONT...

PROVIDE A BROADBAND INTERNET CONNECTION CAPABLE OF MINIMUM DOWNLOAD SPEEDS GREATER THAN 100 MBPS, UPLOAD SPEEDS GREATER THAN 30 MBPS, AND THE NETWORK LATENCY LESS THAN 50 MILLISECONDS. WHEN MULTIPLE BROADBAND SERVICES ARE AVAILABLE, THE FOLLOWING IS THE PREFERRED ORDER: CABLE, DSL, CELLULAR, AND WIRELESS RADIO. SATELLITE COMMUNICATION IS NOT COMPATIBLE WITH ODOT VPN CONNECTION AND WILL NOT BE ACCEPTED. SUPPLY ALL WIRING, ROUTERS, MODEMS (CAPABLE TO BE CONFIGURED IN BRIDGE MODE), SOFTWARE, AND INCIDENTALS NECESSARY TO CONNECT SIX (6) PERSONAL COMPUTERS, WEBCAM, TELEVISION AND MULTI-FUNCTION COPIER AT SEPARATE LOCATIONS, DESIGNATED BY THE PROJECT ENGINEER, THROUGHOUT THE OFFICE, TO THE SYSTEM.

PROVIDE THE FOLLOWING OFFICE FURNITURE AND EQUIPMENT:

1. ONE (1) TELEPHONE LINE WITH VOICEMAIL CAPABILITY AND ONE (1) PHONE WITH SPEAKER PHONE FOR CONFERENCE ROOM
2. ONE (1) CONFERENCE ROOM WEBCAM WITH SPEAKER FOR THE CONFERENCE ROOM WITH THE FOLLOWING SPECIFICATIONS:
   a. RESOLUTION: 1080p
   b. FRAME RATE: 30fps
   c. AUDIO: 8-mic
   d. PAN/TILT/ZOOM: AUTO, DIGITAL
   e. FIELD OF VIEW: 360 degrees
   f. COMPATIBLE WITH MICROSOFT TEAMS
   g. ALL ACCESSORIES NECESSARY TO OPERATE
3. ONE MULTI -FUNCTION COLOR COPIER THAT IS SET UP FOR SCANNING, PRINTING, AND COPYING WITH THE FOLLOWING SPECIFICATIONS:
   a. COLOR PRINT/COPY/SCAN
   b. COPY/PRINT SPEED: 30 PPM (LETTER), 15 PPM (LEGAL), 15 PPM (LEDGER), OR HIGHER
   c. DUPLEX PRINTING
   d. AUTOMATIC DOCUMENT FEEDER WITH 50 SHEET DUPLEXING DOCUMENT FEEDER
   e. COPIER MEMORY: 1 GB
   f. INSTALLED HDD: 40 GB
   g. DATA ENCRYPTION AND HDD ERASE SUPPORT INCLUDED WITH MACHINE
   h. INTERNAL STAPLER
   i. PAPER CAPACITY: 250 SHEET X 2 TRAYS, 50 SHEET BYPASS TRAY
   j. NETWORK INTERFACE: ETHERNET PORT 10/100 BASE-TX, 1000 BASE-TX
   k. COLOR SCANNING WITH THE FOLLOWING REQUIREMENTS:
   i. RESOLUTION: UP TO 600 X 600 DPI
   ii. SCAN AREA UP TO 11-1/2" X 17-1/2"
   iii. SCANNING PROTOCOL SUPPORT - TCP/IP, SMTP, SMB, FTP, POP3, NCP
   iv. FILE SCAN TYPES SUPPORTED: SINGLE PAGE TIFF, JPEG, PDF, MULTI-PAGE TIFF, PDF, AND OCR PDF
   v. SCANNING SUPPORT FOR SCAN-TO-EMAIL, HDD, SMB (FOLDER), URL, AND TWAIN
   l. NETWORK PROTOCOL SUPPORT FOR TCP/IP
   m. SUPPORT KERBEROS AUTHENTICATION
   n. SUPPORT TLS 1.2
   o. SUPPORT SNMPv3
   p. SUPPORTS AT LEAST THE BELOW WEB ENCRYPTION CIPHERS:
   i. AES256-GCM-SHA384
   ii. AES256-SHA256
   iii. AES256-SHA
   iv. AES128-GCM-SHA256
   v. AES128-SHA256
   vi. AES128-SHA
   q. SUPPORTS FIPS 140 COMPLIANCE LIBRARY
   r. CLIENT AND SERVER PRINT DRIVER SUPPORT FOR PCL PRINT DRIVERS
   s. SERVER OPERATING SYSTEM SUPPORT FOR WINDOWS SERVER 2016 AND LATER (32 BIT/64BIT)
   t. CLIENT PRINT DRIVER SUPPORT FOR WINDOWS 10 AND LATER (BOTH PCL/ (32 BIT/64 BIT))
   u. MINIMUM PRINT/COPY RESOLUTION OF 600 X 600 DPI
   v. PREFERRED PRINT UNIT: ONE OF THE FOLLOWING MFC MACHINES/SERIES:
   i. M776dn - #T3U55A
   ii. Flow M776z - #3WT91A
   iii. Flow M776zs - #T3U56A

ITEM 619 FIELD OFFICE, TYPE C, AS PER PLAN CONT...

   w. PROVIDE THE COPIER WITH ALL NECESSARY TONER, PAPER, AND MISCELLANEOUS SUPPLIES NECESSARY FOR ITS PROPER FUNCTION, AND A SERVICE CONTRACT WITH RESPONSE TIME OF 24 HOURS OR LESS FOR MAINTENANCE AND SUPPLIES OF THE COPY MACHINE.
4. EIGHT (8) DESK AND CHAIR SETS.
5. TEN (10) STACKABLE/FOLDABLE CHAIRS (CONFERENCE ROOM).
6. FOUR (4) WORKTABLES, 30" X 60"
7. FOUR (4) WORKTABLES, 30" X 72"
8. TWO (2), 4-DRAWER, LOCKABLE, LEGAL SIZE METAL FILING CABINETS.
9. THREE (3), 2-DRAWER, LOCKABLE, LEGAL SIZE METAL FILING CABINETS.
10. TWO (2) PORTABLE, TYPE 2-A:10-B:C, FIVE POUND SIZE FIRE EXTINGUISHERS.
11. THREE (3) PLAN RACKS, EACH CAPABLE OF HANDLING THE BREAKDOWN OF 22 X 34 INCH SIZED PLANS INTO TEN SECTIONS.
12. TWENTY (20) ALL-WEATHER PARKING SPACES.
13. EIGHT (8) 24-OUART WASTE BASKETS WITH APPROPRIATELY SIZED TRASH BAGS.
14. ONE (1) NEW LED TELEVISION (WALL MOUNTED IN CONFERENCE ROOM) WITH THE FOLLOWING SPECIFICATIONS:
   a. DIAGONAL SCREEN SIZE - 55"
   b. NATIVE RESOLUTION 4K(2160p)
   c. HDMI PORTS 3
   d. VIDEO INTERFACES - COMPOSITE, HDMI, USB
   e. ALL ACCESSORIES NECESSARY TO OPERATE
   f. ALL HARDWARE NECESSARY TO HANG TELEVISION ON THE WALL

EXPENSES FOR THE OPERATION OF THE FIELD OFFICE TO INCLUDE BUT NOT BE LIMITED TO ELECTRICAL SERVICE, HEATING/COOLING, RUNNING SERVICE, SEWER SERVICE, TELEPHONE SERVICE, JANITORIAL SERVICE, BOTTLED WATER SERVICE, HIGH SPEED ONLINE SERVICE, ETC. WILL BE THE RESPONSIBILITY OF THE CONTRACTOR. THE CONTRACTOR WILL ALSO PROVIDE ALL NECESSARY SUPPLIES AND MAINTENANCE FOR ALL EQUIPMENT THAT THE CONTRACTOR IS REQUIRED TO FURNISH.

THE CONTRACTOR WILL RETAIN RESPONSIBILITY FOR RISK OF LOSS OR DAMAGE TO SAID FIELD OFFICE, FURNISHINGS, AND EQUIPMENT WHILE THE OFFICE IS IN USE FOR THIS CONTRACT.

THE FIELD OFFICE WILL BE APPROVED IN ADVANCE BY THE ENGINEER AND FULLY OPERATIONAL WITHIN 30 DAYS AFTER THE SIGNING AND EXECUTION OF THE CONTRACT OR PRIOR TO THE START OF ANY CONSTRUCTION WORK, WHICHEVER COMES FIRST.

THE DEPARTMENT WILL MEASURE FIELD OFFICE, TYPE C, AS PER PLAN BY THE NUMBER OF MONTHS THE OFFICE IS MAINTAINED. A PARTIAL MONTH AT THE END OF THE PROJECT WILL BE PAID AS A FULL MONTH.

THE DEPARTMENT WILL PAY FOR ACCEPTED QUANTITIES AT THE CONTRACT PRICE FOLLOWS:

ITEM	UNIT	DESCRIPTION
619	MONTH	FIELD OFFICE, TYPE C, AS PER PLAN

GENERAL NOTES

DESIGN AGENCY

DESIGNER JF

REVIEWER MJA 08-08-25

PROJECT ID 121474

SHEET P.2 TOTAL 20

MODEL: Sheet PAPERSIZE: 34x22 (in.) DATE: 1/20/2026 TIME: 9:43:24 AM PLTDRV: OHDOT_PDF_E+.pltcfg PENTBL: OHDOT_Pen.tbl USER: Joel.Fitzsimmons@dot.ohio.gov WORKSPACE: OHDOTCEv02 WORKSET: 121474 PRODUCT: OpenRoadsDesigner 24.00.00.205
pw:\\ohiodot-pw.bentley.com:ohiodot-pw-02\Documents\01 Active Projects\District 04\Mahoning\121474\400-Engineering\Roadway\Sheets\121474_GN001.dgn

MAINTENANCE OF TRAFFIC

THIS ITEM SHALL CONSIST OF MAINTENANCE OF TRAFFIC ON EXISTING ROADWAYS AND RAMPS IN ACCORDANCE WITH THE OHIO MANUAL OF UNIFORM TRAFFIC CONTROL DEVICES FOR STREETS AND HIGHWAYS, CURRENT EDITION, LATEST REVISION, THE SPECIFICATIONS AND THE FOLLOWING:

1. A MINIMUM OF ONE TEN FOOT LANE PER DIRECTION SHALL BE MAINTAINED ON THE EXISTING PAVEMENT OR COMPLETED PAVEMENT DURING CONSTRUCTION OF THE WORK.

2. THE CONTRACTOR SHALL INFORM THE DISTRICT OFFICE (330) 786-2208, EIGHTEEN (18) DAYS PRIOR TO THE BEGINNING OF WORK.

3. LANE RESTRICTIONS OR LANE REDUCTIONS SHALL NOT BE PERMITTED AFTER NORMAL WORKING HOURS. NORMAL WORKING HOURS SHALL BE THOSE HOURS DURING WHICH THE CONTRACTOR HAS A FULL COMPLEMENT OF EMPLOYEES AND EQUIPMENT ACTIVELY REMOVING AND/OR PLACING PAVEMENT MATERIALS.

4. TRUCK MOUNTED ATTENUATORS [TMA'S] SHALL BE USED AS SHOWN IN THE STANDARD CONSTRUCTION DRAWINGS.

5. UNDER NO CIRCUMSTANCES SHALL THE CONTRACTOR BE PERMITTED TO HAVE SUCCESSIVE WORK ZONES UNLESS THE DISTANCE BETWEEN THE DRUMS, BARRICADES OR CONES EXCEEDS TWO (2) MILES RURAL OR ONE [1] MILE URBAN.

6. FOR ROUTES NOT ON THE PERMITTED LANE CLOSURE CHART, ONLY DURING OFF-PEAK PERIODS (ie ANY PERIOD OTHER THAN 6-8AM AND 3-6PM) SHALL THE CONTRACTOR INSTALL AND SUBSEQUENTLY RESET ALL TRAFFIC CONTROL NECESSARY FOR THE WORK ZONE FOR EACH CONSTRUCTION PHASE.

7. IN ADDITION TO THE REQUIREMENTS OF 614.11 WORK ZONE PAVEMENT MARKINGS, AT THE END OF EACH DAY OF WORK, THE CONTRACTOR SHALL REPLACE (WITH WORK ZONE MARKINGS) ALL LANE, CENTER, STOP OR CHANNELIZING LINES THAT WERE REMOVED OR COVERED DURING THE PAVEMENT REMOVAL OR PLACEMENT OPERATIONS. QUANTITIES FOR SUCH PLACEMENT ARE CARRIED AS PART OF THE ITEMS LISTED UNDER 614 WORK ZONE PAVEMENT MARKINGS.

8. PRIOR TO OPENING TO TRAFFIC EACH LANE SHALL BE IN A SAFE, PASSABLE CONDITION. ALL TRANSVERSE JOINTS SHALL EXTEND ACROSS THE FULL LANE AND SHOULDER WIDTH AND EACH LANE SHALL BE FREE FROM UNEVEN LONGITUDINAL JOINTS. THE CONTRACTOR SHALL PROVIDE ASPHALT WEDGES FOR TRANSVERSE JOINTS WHEREVER THERE ARE PAVEMENT ELEVATION DIFFERENCES.

9. THE CONTRACTOR SHALL INSTALL, MAINTAIN AND SUBSEQUENTLY REMOVE WORK ZONE MARKING SIGNS AND THEIR SUPPORTS WITHIN THE WORK LIMITS. THESE SIGNS INCLUDE "NO EDGE LINES", "DO NOT PASS" AND "PASS WITH CARE". ALL OTHER SIGNS WILL BE INCIDENTAL TO THE LUMP SUM PAY ITEM 614 MAINTAINING TRAFFIC UNLESS SEPARATELY ITEMIZED IN THE PLANS. A QUANTITY OF ITEM 614 WORK ZONE MARKING SIGNS HAS BEEN INCLUDED IN THE PLANS AS PER CMS 614.04.

11. TO ENSURE THAT WEIGHTED CHANNELIZERS WILL NOT BE BLOWN OVER OR DISPLACED BY WIND AND MOVING TRAFFIC, ALL WEIGHTED CHANNELIZERS UTILIZED ON INTERSTATES AND FREEWAYS SHALL BE FROM MANUFACTURERS ON THE OHIO DEPARTMENT OF TRANSPORTATION, OFFICE OF MATERIAL MANAGEMENT'S QUALIFIED PRODUCTS LIST (QPL) WHICH UTILIZE A MINIMUM OF A 30 POUND BALLAST.

12. DRUMS UTILIZED ON THE HIGH SIDE OF A SUPERELEVATED INTERSTATE OR FREEWAYS SHALL BE FROM MANUFACTURERS ON THE OFFICE OF MATERIAL MANAGEMENT'S QUALIFIED PRODUCTS LIST (QPL) WITH A MINIMUM BALLAST WEIGHT OF 30 POUNDS. ALL BALLASTS USED SHALL BE IN ACCORDANCE WITH THE MANUFACTURER'S SPECIFICATIONS.

THE FOLLOWING QUANTITIES SHALL BE USED FOR THE MAINTENANCE OF TRAFFIC ON THIS PROJECT:

614, WORK ZONE CENTERLINE, CLASS III, 642 PAINT, 0.14 MILES
614, WORK ZONE LANE LINE, CLASS III, 6", 642 PAINT, 0.64 MILES
614, WORK ZONE CHANNELIZING LINE, CLASS III, 8", 642 PAINT, 386 FEET
614, WORK ZONE CHANNELIZING LINE, CLASS III, 12", 642 PAINT, 300 FEET
614, WORK ZONE MARKING SIGN (ALL PHASES), 6 EACH

TO BE USED AS DIRECTED BY THE ENGINEER
614, WORK ZONE EDGE LINE, CLASS III, 6", 642 PAINT, 1.06 MILES

ALL WORK AND TRAFFIC CONTROL DEVICES SHALL BE IN ACCORDANCE WITH C&MS 614 AND OTHER APPLICABLE PORTIONS OF THE SPECIFICATIONS, AS WELL AS THE OHIO MANUAL OF UNIFORM TRAFFIC CONTROL DEVICES. PAYMENT FOR ALL LABOR, EQUIPMENT AND MATERIALS SHALL BE INCLUDED IN THE LUMP SUM CONTRACT PRICE FOR ITEM 614, MAINTAINING TRAFFIC, UNLESS SEPARATELY ITEMIZED IN THE PLAN.

TRAFFIC CONTROL INSPECTOR

THE CONTRACTOR SHALL DESIGNATE AN INDIVIDUAL OTHER THAN THE SUPERINTENDENT AND SUBJECT TO THE APPROVAL OF THE ENGINEER, TO CONTINUOUSLY INSPECT ALL TRAFFIC CONTROL DEVICES WHENEVER CONSTRUCTION WORK IS BEING PERFORMED WITHIN THE WORK LIMITS OF THE PROJECT. THE DESIGNATED INDIVIDUAL SHALL ALSO INSPECT ALL TRAFFIC DEVICES AT THE BEGINNING AND AT THE END OF EACH WORK DAY. THE DESIGNATED INDIVIDUAL OR A QUALIFIED REPRESENTATIVE SHALL ALSO BE AVAILABLE ON AN AROUND THE CLOCK BASIS TO REPAIR AND/OR REPLACE DAMAGED OR MISSING TRAFFIC CONTROL DEVICES. THESE INDIVIDUALS SHALL BE EQUIPPED WITH CELLULAR PHONES AND THEIR NAMES AND PHONE NUMBERS SHALL BE GIVEN TO THE PROJECT ENGINEER AT THE PRE-CONSTRUCTION MEETING. THE DESIGNATED INDIVIDUAL MAY HAVE OTHER CONSTRUCTION RELATED DUTIES AS LONG AS IMMEDIATE ATTENTION IS GIVEN TO TRAFFIC CONTROL. PAYMENT FOR THE SERVICES OF THE TRAFFIC CONTROL INSPECTOR SHALL BE INCLUDED IN THE LUMP SUM PRICE BID FOR ITEM 614 MAINTAINING TRAFFIC.

PERMITTED LANE CLOSURE SCHEDULE (PLCS)

LANE CLOSURE(S) SHALL CONFORM TO THE PLCS. PUBLISHED PLCS INFORMATION CAN BE FOUND ON THE ODOT WEBSITE AT: HTTPS://WWW.TRANSPORTATION.OHIO.GOV/WPS/PORTAL/GOV/ODOT/WORKING/DATA-TOOLS/RESOURCES/PERMITTED-LANE-CLOSURE

THE MONTHLY PUBLISHED SCHEDULES REQUIRED TO BE USED, FOR EACH PLCS SEGMENT WITHIN THE PROJECT AREA, ARE THOSE THAT COMPRISE THE CONSECUTIVE 12-MONTH PERIOD BEGINNING 15 MONTHS PRIOR TO THE MONTH AND YEAR OF SALE AND ENDING 4 MONTHS PRIOR TO THE MONTH AND YEAR OF SALE. THESE SAME 12 MONTHS APPLY FOR THE LIFE OF THE PROJECT AND SHALL BE APPLIED TO EACH RESPECTIVE MONTH OF CONSTRUCTION (MONTH OF LANE CLOSURE(S) SHALL MATCH MONTH OF PLCS USED). LANE CLOSURE(S) IN PLACE FOR MULTIPLE MONTHS SHALL ALWAYS COMPLY WITH THE CURRENT RESPECTIVE MONTH.

(FOR EXAMPLE: IF THE SALE DATE FOR THE PROJECT WAS MARCH OF 2021, THE MONTHLY PUBLISHED SCHEDULES FOR EACH APPLICABLE PLCS SEGMENT WOULD BE DECEMBER 2019 TO NOVEMBER 2020. IF THIS WAS A THREE-YEAR PROJECT, YEAR THREE WOULD STILL BE USING THE DECEMBER 2019 TO NOVEMBER 2020 MONTHLY SCHEDULES. IF THE PROJECT DESIRED TO CLOSE TWO LANES IN JUNE 2021, REFERENCE WOULD BE MADE TO THE JUNE 2020 SCHEDULE(S) FOR THE RESPECTIVE PLCS SEGMENT(S). IF THE SAME TWO LANES WERE DESIRED TO BE CLOSED AGAIN IN JULY 2021, REFERENCE WOULD BE MADE TO THE JULY 2020 SCHEDULE(S) FOR THE RESPECTIVE PLCS SEGMENT(S).)

MORE RESTRICTIVE CHANGES TO THE ALLOWABLE LANE CLOSURE HOURS ARE AT THE DISCRETION OF THE ENGINEER IN ORDER TO COMPLY WITH THE TRAFFIC MANAGEMENT IN WORK ZONES POLICY (21-008(P)) AND STANDARD PROCEDURE (123-001(SP)).

LESS RESTRICTIVE CHANGES TO THE ALLOWABLE LANE CLOSURE HOURS ARE SUBJECT TO THE TRAFFIC MANAGEMENT IN WORK ZONES POLICY (21-008(P)) AND STANDARD PROCEDURE (123-001(SP)) AND SHALL NOT BE IMPLEMENTED UNTIL, AND UNLESS, APPROVED BY THE PROPER ODOT AUTHORITY. [EXISTING MOT EXCEPTIONS THAT HAVE ALREADY BEEN APPROVED IN ACCORDANCE TO THE TRAFFIC MANAGEMENT IN WORK ZONES POLICY AND STANDARD PROCEDURE ARE DETAILED IN THE APPROVED MAINTENANCE OF TRAFFIC (MOT) POLICY EXCEPTION(S) PLAN NOTE.]

ALLOWABLE LANE CLOSURE HOURS FOR FACILITIES NOT COVERED BY THE PLCS, IF ANY, SHALL BE AS SPECIFIED ELSEWHERE IN THE PLANS.

FLOODLIGHTING

FLOODLIGHTING OF THE WORK SITE FOR OPERATIONS CONDUCTED DURING NIGHTTIME PERIODS SHALL BE ACCOMPLISHED SO THAT THE LIGHTS DO NOT CAUSE GLARE TO THE DRIVERS ON THE ROADWAY. TO ENSURE THE ADEQUACY OF THE FLOODLIGHT PLACEMENT, THE CONTRACTOR AND THE ENGINEER SHALL DRIVE THROUGH THE WORK SITE EACH NIGHT WHEN THE LIGHTING IS IN PLACE AND OPERATIVE PRIOR TO COMMENCING ANY WORK. IF GLARE IS DETECTED, THE LIGHT PLACEMENT AND SHIELDING SHALL BE ADJUSTED TO THE SATISFACTION OF THE ENGINEER BEFORE WORK PROCEEDS.

PAYMENT FOR ALL LABOR, EQUIPMENT AND MATERIALS SHALL BE INCLUDED IN THE LUMP SUM CONTRACT PRICE FOR ITEM 614, MAINTAINING TRAFFIC.

ITEM 614, MAINTAINING TRAFFIC (LANES OPEN DURING HOLIDAYS OR SPECIAL EVENTS)

NO WORK SHALL BE PERFORMED AND ALL EXISTING LANES SHALL BE OPEN TO TRAFFIC DURING THE FOLLOWING DESIGNATED HOLIDAYS OR SPECIAL EVENTS:

NEW YEAR'S (OBSERVED) — GENERAL/REGULAR ELECTION DAY (NOV)
THANKSGIVING — CHRISTMAS (OBSERVED)
MEMORIAL DAY — LABOR DAY
FOURTH OF JULY (OBSERVED)

THE PERIOD OF TIME THAT THE LANES ARE TO BE OPEN DEPENDS ON THE DAY OF THE WEEK ON WHICH THE HOLIDAY OR SPECIAL EVENT FALLS. THE FOLLOWING SCHEDULE SHALL BE USED TO DETERMINE THIS PERIOD:

DAY OF HOLIDAY OR SPECIAL EVENT — TIME ALL LANES MUST BE OPEN TO TRAFFIC

SUNDAY — 12:00N FRIDAY THROUGH 6:00 AM MONDAY
MONDAY — 12:00N FRIDAY THROUGH 6:00 AM TUESDAY
MONDAY (TOTAL SOLAR ECLIPSE) — 12:00N MONDAY THROUGH 6:00 AM WEDNESDAY
TUESDAY — 12:00N MONDAY THROUGH 6:00 AM WEDNESDAY
TUESDAY (GEN./REG. ELECTION) — 5:00 AM TUESDAY THROUGH 12:00 AM WEDNESDAY
WEDNESDAY — 12:00N TUESDAY THROUGH 6:00 AM THURSDAY
THURSDAY — 12:00N WEDNESDAY THROUGH 6:00 AM FRIDAY
THURSDAY (THANKSGIVING ONLY) — 6:00 AM WEDNESDAY THROUGH 6:00 AM MONDAY
FRIDAY — 12:00N THURSDAY THROUGH 6:00 AM MONDAY
SATURDAY — 12:00N FRIDAY THROUGH 6:00 AM MONDAY

DURING THE SAME PERIODS, MAINTAIN PEDESTRAIN ACCESS IF PEDESTRIAN ACCESS WAS PRESENT PRIOR TO CONSTRUCTION.

SHOULD THE CONTRACTOR FAIL TO MEET ANY OF THESE REQUIREMENTS, THE CONTRACTOR SHALL BE ASSESSED A DISINCENTIVE PER THE LANE VALUE CONTRACT (PN 127).

LANE VALUE CONTRACT			
DESCRIPTION OF CRITICAL LANE/ RAMP TO BE MAINTAINED	**RESTRICTED TIME PERIOD**	**TIME UNIT**	**DISINCENTIVE $ PER TIME PERIOD**
SOUTH AVE	AS PER MAINTAINING TRAFFIC (LANES OPEN DURING HOLIDAYS OR SPECIAL EVENTS) NOTE ABOVE	PER LANE/ PER MINUTE	$50

ADDITIONAL MAINTENANCE OF TRAFFIC DETAILS

THE CONTRACTOR SHALL REFER TO PART 1 FOR ADDITIONAL DETAILS REGARDING MAINTENANCE OF TRAFFIC.

MAINTENANCE OF TRAFFIC NOTES

DESIGN AGENCY

DESIGNER JF
REVIEWER MJA 08-08-25
PROJECT ID 121474
SHEET P.3 TOTAL 20

MAH-680-4.58 PART 2

MODEL: Sheet PAPERSIZE: 34x22 (in.) DATE: 1/20/2026 TIME: 9:43:30 AM PLTDRV: OHDOT_PDF_E+.pltcfg PENTBL: OHDOT_Pen.tbl USER: Joel.Fitzsimmons@dot.ohio.gov WORKSPACE: OHDOTCEv02 WORKSET: 121474 PRODUCT: OpenRoadsDesigner 24.00.00.205
pw:\\ohiodot-pw.bentley.com:ohiodot-pw-02\Documents\01 Active Projects\District 04\Mahoning\121474\400-Engineering\MOT\Sheets\121474_MN001.dgn

ITEM 614, LAW ENFORCEMENT OFFICER (WITH PATROL CAR) FOR ASSISTANCE DURING CONSTRUCTION OPERATIONS

USE OF LAW ENFORCEMENT OFFICERS (LEOS) BY CONTRACTORS OTHER THAN THE USES SPECIFIED BELOW SHALL NOT BE PERMITTED AT PROJECT COST NOR TIME COMPENSATION. LEOS SHOULD NOT BE USED WHERE THE OMUTCD INTENDS THAT FLAGGERS BE USED.

IN ADDITION TO THE REQUIREMENTS OF C&MS 614 AND THE OMUTCD, A UNIFORMED LEO WITH AN OFFICIAL PATROL CAR (CAR WITH TOP-MOUNTED EMERGENCY FLASHING LIGHTS AND COMPLETE MARKINGS OF THE APPROPRIATE LAW ENFORCEMENT AGENCY) SHALL BE PROVIDED FOR THE FOLLOWING TRAFFIC CONTROL TASKS:

DURING THE ENTIRE ADVANCE PREPARATION AND CLOSURE SEQUENCE WHERE COMPLETE BLOCKAGE OF TRAFFIC IS REQUIRED.

DURING A TRAFFIC SIGNAL INSTALLATION WHEN IMPACTING THE NORMAL FUNCTION OF THE SIGNAL OR THE FLOW OF TRAFFIC, OR WHEN TRAFFIC NEEDS TO BE DIRECTED THROUGH AN ENERGIZED TRAFFIC SIGNAL CONTRARY TO THE SIGNAL DISPLAY (E.G., DIRECTING MOTORISTS THROUGH A RED LIGHT).

DURING PERIODS WHERE TRAFFIC NEEDS TO BE DIRECTED CONTRARY TO A TRAFFIC CONTROL DEVICE (FLAGGER, SIGN [E.G. STOP SIGN, STREET OR HIGHWAY SIGNS, ETC], SIGNAL OR OTHER DEVICE USED TO REGULATE, WARN OR GUIDE TRAFFIC). TRAFFIC IN THIS INSTANCE INCLUDES VEHICULAR, PEDESTRIAN AND/OR SHARED USE PATH USERS.

IN ADDITION TO THE REQUIREMENT OF C&MS 614 AND THE OMUTCD, A UNIFORMED LEO WITH AN OFFICIAL PATROL CAR (CAR WITH TOP-MOUNTED EMERGENCY FLASHING LIGHTS AND COMPLETE MARKINGS OF THE APPROPRIATE LAW ENFORCEMENT AGENCY) SHOULD BE PROVIDED FOR THE FOLLOWING TRAFFIC CONTROL TASKS AS APPROVED BY THE ENGINEER:

FOR LANE CLOSURES THAT MEET ALL OF THE CRITERIA LISTED BELOW: DURING INITIAL SET-UP PERIODS, TEAR DOWN PERIODS, SUBSTANTIAL SHIFTS OF A CLOSURE POINT OR WHEN NEW LANE CLOSURE ARRANGEMENTS ARE INITIATED FOR LONG-TERM LANE CLOSURES/SHIFTS (FOR THE FIRST AND LAST DAY OF MAJOR CHANGES IN TRAFFIC CONTROL SETUP).

CRITERIA

. ON A MULTI-LANE DIVIDED INTERSTATE, OTHER FREEWAY OR EXPRESSWAY; AND
. AN AUTHORIZED SPEED LIMIT OF 45 MPH OR GREATER THAT IS IN EFFECT AT THE TIME OF THE OPERATION; AND,
. AADT OF 50,000 (OR AADT OF 30,000 WITH 25% OR HIGHER PERCENT TRUCKS)

IN GENERAL, LEOS SHOULD BE POSITIONED IN ADVANCE OF AND ON THE SAME SIDE AS THE LANE RESTRICTION (OR AT THE POINT OF ROAD CLOSURE), AND TO MANUALLY CONTROL TRAFFIC MOVEMENTS THROUGH SIGNALIZED INTERSECTIONS AND/OR IN CONTRARY TO OTHER TRAFFIC CONTROL DEVICE IN WORK ZONES.

LEOS SHOULD NOT FORGO THEIR TRAFFIC CONTROL RESPONSIBILITIES TO APPREHEND MOTORISTS FOR ROUTINE TRAFFIC VIOLATIONS. HOWEVER, IF A MOTORIST'S ACTIONS ARE CONSIDERED TO BE RECKLESS, THEN PURSUIT OF THE MOTORIST IS APPROPRIATE.

THE LEOS WORK AT THE DIRECTION OF THE CONTRACTOR. THE CONTRACTOR IS RESPONSIBLE FOR SECURING THE SERVICES OF THE LEOS WITH THE APPROPRIATE AGENCIES AND COMMUNICATING THE INTENTIONS OF THE PLANS WITH RESPECT TO DUTIES OF THE LEOS. THE ENGINEER SHALL HAVE FINAL CONTROL OVER THE LEOS' DUTIES AND PLACEMENT, AND WILL RESOLVE ANY ISSUES THAT MAY ARISE BETWEEN THE TWO PARTIES.

ENSURE PROVIDED LEOS HAVE BEEN TRAINED APPROPRIATE TO THE JOB DECISIONS THEY ARE REQUIRED TO MAKE WHILE ON THE PROJECT, IN ACCORDANCE WITH C&MS 614.03.

THE LEO SHALL REPORT IN TO THE CONTRACTOR PRIOR TO THE START OF THE SHIFT, IN ORDER TO RECEIVE INSTRUCTIONS REGARDING SPECIFIC WORK ASSIGNMENTS DURING HIS/HER SHIFT. THE SHIFT DURATION SHALL NOT BE LESS THAN THE LEO'S MINIMUM SHOW-UP TIME REQUIRED BY THEIR LAW ENFORCEMENT AGENCY.THE LEO IS EXPECTED TO STAY AT THE PROJECT SITE FOR THE ENTIRE DURATION OF HIS/HER SHIFT. THE LEO SHALL REPORT TO THE CONTRACTOR AT THE END OF HIS/HER SHIFT.SHOULD IT BE NECESSARY TO LEAVE THE PROJECT SITE, THE LEO SHALL NOTIFY THE ENGINEER. THE CONTRACTOR SHALL PROVIDE THE LEO WITH A TWO-WAY COMMUNICATION DEVICE THAT SHALL BE RETURNED TO THE CONTRACTOR AT THE END OF HIS/HER SHIFT.

LEOS (WITH PATROL CAR) REQUIRED BY THE TRAFFIC MAINTENANCE TASKS ABOVE SHALL BE PAID FOR ON A UNIT PRICE (HOURLY) BASIS UNDER ITEM 614, LAW ENFORCEMENT OFFICER (WITH PATROL CAR) FOR ASSISTANCE. THE FOLLOWING ESTIMATED QUANTITIES HAVE BEEN CARRIED TO THE GENERAL SUMMARY.

ITEM 614, LAW ENFORCEMENT OFFICER WITH PATROL CAR
FOR ASSISTANCE 20 HOURS

THE HOURS PAID SHALL INCLUDE ANY MINIMUM SHOW-UP TIME REQUIRED BY THE LAW ENFORCEMENT AGENCY INVOLVED.

ANY ADDITIONAL COSTS (ADMINISTRATIVE OR OTHERWISE) INCURRED BY THE CONTRACTOR TO OBTAIN THE SERVICES OF A LEO ARE INCLUDED WITH THE BID UNIT PRICE FOR ITEM 614, LAW ENFORCEMENT OFFICER WITH PATROL CAR FOR ASSISTANCE.

ITEM 614, PORTABLE CHANGEABLE MESSAGE SIGNS, AS PER PLAN

THE CONTRACTOR SHALL FURNISH, INSTALL, MAINTAIN AND REMOVE, WHEN NO LONGER NEEDED, A CHANGEABLE MESSAGE SIGN. THE SIGN SHALL BE OF A TYPE SHOWN ON A LIST OF APPROVED PCMS UNITS AVAILABLE ON THE OFFICE OF MATERIALS MANAGEMENT WEB PAGE. THE LIST CONTAINS CLASS A AND B UNITS WITH MINIMUM LEGIBILITY DISTANCES OF 800 FEET AND 650 FEET, RESPECTIVELY.

EACH SIGN SHALL BE TRAILER-MOUNTED AND EQUIPPED WITH A FUNCTIONAL DIMMING MECHANISM, TO DIM THE SIGN DURING DARKNESS, AND A TAMPER AND VANDAL PROOF ENCLOSURE. EACH SIGN SHALL BE PROVIDED WITH APPROPRIATE TRAINING AND OPERATION INSTRUCTIONS TO ENABLE ON-SITE PERSONNEL TO OPERATE AND TROUBLESHOOT THE UNIT. THE SIGN SHALL ALSO BE CAPABLE OF BEING POWERED BY AN ELECTRICAL SERVICE DROP FROM A LOCAL UTILITY COMPANY. THE PCMS SHALL BE DELINEATED IN ACCORDANCE WITH C&MS 614.03.

PLACEMENT, OPERATION, MAINTENANCE AND ALL ACTIVATION OF THE SIGNS BY THE CONTRACTOR SHALL BE AS DIRECTED BY THE ENGINEER. THE PCMS SHALL BE LOCATED IN A HIGHLY VISIBLE POSITION YET PROTECTED FROM TRAFFIC. THE CONTRACTOR SHALL, AT THE DIRECTION OF THE ENGINEER, RELOCATE THE PCMS TO IMPROVE VISIBILITY OR ACCOMMODATE CHANGED CONDITIONS. WHEN NOT IN USE, THE PCMS SHALL BE TURNED OFF. ADDITIONALLY, WHEN NOT IN USE FOR EXTENDED PERIODS OF TIME, THE PCMS SHALL BE TURNED AWAY FROM ALL TRAFFIC.

THE ENGINEER SHALL BE PROVIDED ACCESS TO EACH SIGN UNIT AND SHALL BE PROVIDED WITH APPROPRIATE TRAINING AND OPERATION INSTRUCTIONS TO ENABLE ODOT PERSONNEL TO OPERATE AND TROUBLESHOOT THE UNIT, AND TO REVISE SIGN MESSAGES, IF NECESSARY.

ALL MESSAGES TO BE DISPLAYED ON THE SIGN WILL BE PROVIDED BY THE ENGINEER. A LIST OF ALL REQUIRED PRE-PROGRAMMED MESSAGES WILL BE GIVEN TO THE CONTRACTOR AT THE PROJECT PRECONSTRUCTION CONFERENCE. THE SIGN SHALL HAVE THE CAPABILITY TO STORE UP TO 99 MESSAGES. MESSAGE MEMORY OR PRE-PROGRAMMED DISPLAYS SHALL NOT BE LOST AS A RESULT OF POWER FAILURES TO THE ON-BOARD COMPUTER. THE SIGN LEGEND SHALL BE CAPABLE OF BEING CHANGED IN THE FIELD. THREE-LINE PRESENTATION FORMATS WITH UP TO SIX MESSAGE PHASES SHALL BE SUPPORTED. PCMS FORMAT SHALL PERMIT THE COMPLETE MESSAGE FOR EACH PHASE TO BE READ AT LEAST TWICE.

THE PCMS SHALL CONTAIN AN ACCURATE CLOCK AND PROGRAMMING LOGIC WHICH WILL ALLOW THE SIGN TO BE ACTIVATED, DEACTIVATED OR MESSAGES CHANGED AUTOMATICALLY AT DIFFERENT TIMES OF THE DAY FOR DIFFERENT DAYS OF THE WEEK.

(THE PCMS SHALL CONTAIN A CELLULAR TELEPHONE DATA LINK WHICH WILL (IN ACTIVE CELLULAR PHONE AREAS) ALLOW REMOTE SIGN ACTIVATION, MESSAGE CHANGES, MESSAGE ADDITIONS AND REVISIONS TO TIME OF DAY PROGRAMS. THE SYSTEM SHALL ALSO PERMIT VERIFICATION OF CURRENT AND PROGRAMMED MESSAGES. ONE REMOTE DATA INPUT DEVICE (LAPTOP COMPUTER PLUS MODEM OR EQUIVALENT) SHALL BE FURNISHED FOR USE BY THE DISTRICT TRAFFIC ENGINEER, OR EQUIVALENT, AND SHALL BE INSURED AGAINST THEFT.) THE PCMS UNIT SHALL BE MAINTAINED IN GOOD WORKING ORDER BY THE CONTRACTOR IN ACCORDANCE WITH THE PROVISIONS OF C&MS 614.07. THE CONTRACTOR SHALL, PRIOR TO ACTIVATING THE UNIT, MAKE ARRANGEMENTS, WITH AN AUTHORIZED SERVICE AGENT FOR THE PCMS, TO ASSURE PROMPT SERVICE IN THE EVENT OF FAILURE. ANY FAILURE SHALL NOT RESULT IN THE SIGN BEING OUT OF SERVICE FOR MORE THAN 12 HOURS, INCLUDING WEEKENDS. FAILURE TO COMPLY MAY RESULT IN AN ORDER TO STOP WORK AND OPEN ALL TRAFFIC LANES AND/OR IN THE DEPARTMENT TAKING APPROPRIATE ACTION TO SAFELY CONTROL TRAFFIC. THE ENTIRE COST TO CONTROL TRAFFIC, ACCRUED BY THE DEPARTMENT DUE TO THE CONTRACTOR'S NONCOMPLIANCE, WILL BE DEDUCTED FROM MONEYS DUE, OR TO BECOME DUE THE CONTRACTOR ON HIS CONTRACT.

THE CONTRACTOR SHALL BE RESPONSIBLE FOR 24-HOUR-PER-DAY OPERATION AND MAINTENANCE OF THESE SIGNS ON THE PROJECT FOR THE DURATION OF THE PHASES WHEN THE PLAN REQUIRES THEIR USE.

PAYMENT FOR THE ABOVE DESCRIBED ITEM SHALL BE AT THE CONTRACT UNIT PRICE. PAYMENT SHALL INCLUDE ALL LABOR, MATERIALS, EQUIPMENT, FUELS, LUBRICATING OILS, SOFTWARE, HARDWARE AND INCIDENTALS TO PERFORM THE ABOVE DESCRIBED WORK.

ITEM 614, PORTABLE CHANGEABLE MESSAGE SIGN, AS PER
PLAN 4 SIGN MONTH ASSUMING 2 PCMS
SIGNS FOR 2 MONTHS

MAINTENANCE OF TRAFFIC NOTES

DESIGN AGENCY

DESIGNER
JF

REVIEWER
MJA 08-08-25

PROJECT ID
121474

SHEET P.4 TOTAL 20

MODEL: Sheet 2 PAPERSIZE: 34x22 (in.) DATE: 1/20/2026 TIME: 9:43:31 AM PLTDRV: OHDOT_PDF_E+.pltcfg PENTBL: OHDOT_Pen.tbl USER: Joel.Fitzsimmons@dot.ohio.gov WORKSPACE: OHDOTCEv02 WORKSET: 121474 PRODUCT: OpenRoadsDesigner 24.00.00.205
pw:\\ohiodot-pw.bentley.com:ohiodot-pw-02\Documents\01 Active Projects\District 04\Mahoning\121474\400-Engineering\MOT\Sheets\121474_MN001.dgn

NOTIFICATION OF TRAFFIC RESTRICTIONS

THROUGHOUT THE DURATION OF THE PROJECT, THE CONTRACTOR SHALL NOTIFY THE PROJECT ENGINEER IN WRITING OF ALL TRAFFIC RESTRICTIONS AND UPCOMING MAINTENANCE OF TRAFFIC CHANGES. THE CONTRACTOR SHALL ENSURE THE WRITTEN NOTIFICATION IS SUBMITTED IN A TIMELY MANNER TO ALLOW THE PROJECT ENGINEER TO MEET THE REQUIRED TIME FRAMES SET FORTH IN THE TABLE BELOW TO INFORM THE SPECIAL HAULING PERMITS SECTION (HAULING.PERMITS@DOT.OHIO.GOV) AND THE DISTRICT PUBLIC INFORMATION OFFICE (PIO). THIS NOTIFICATION SHALL BE RECEIVED BY THE PROJECT ENGINEER PRIOR TO THE PHYSICAL SETUP OF ANY APPLICABLE SIGNS OR MESSAGE BOARDS.

INFORMATION SHOULD INCLUDE, BUT IS NOT LIMITED TO, ALL CONSTRUCTION ACTIVITIES THAT IMPACT OR INTERFERE WITH TRAFFIC AND SHALL LIST THE SPECIFIC LOCATION, TYPE OF WORK, ROAD STATUS, DATE AND TIME OF RESTRICTION, DURATION OF RESTRICTION, NUMBER OF LANES MAINTAINED, NUMBER OF LANES CLOSED, MINIMUM VERTICAL CLEARANCE, MINIMUM WIDTH OF DRIVABLE PAVEMENT, DETOUR ROUTES, IF APPLICABLE, AND ANY OTHER INFORMATION REQUESTED BY THE PROJECT ENGINEER.

NOTIFICATION TIME TABLE		
ITEM	DURATION OF CLOSURE	NOTICE DUE TO PERMITS & PIO
ROAD & RAMP CLOSURES	>= 2WEEKS	21 CALENDAR DAYS PRIOR TO CLOSURE
	> 12 HOURS & < 2 WEEKS	14 CALENDAR DAYS PRIOR TO CLOSURE
	<12 HOURS	4 BUSINESS DAYS PRIOR TO CLOSURE
LANE CLOSURES & RESTRICTIONS	>=2 WEEKS	14 CALENDAR DAYS PRIOR TO CLOSURE
	< 2 WEEKS	5 BUSINESS DAYS PRIOR TO CLOSURE
START OF CONSTRUCTION & TRAFFIC PATTERNS CHANGES	N/A	14 CALENDAR DAYS PRIOR TO IMPLEMENTATION

ANY UNFORESEEN CONDITIONS NOT SPECIFIED IN THE PLANS REQUIRING TRAFFIC RESTRICTIONS SHALL ALSO BE REPORTED TO THE PROJECT ENGINEER USING THE NOTIFICATION TIME TABLE.

STRUCTURE EXPANSION JOINT REPLACEMENTS AT MAH-680-7.126 (SOUTH AVE)

THE EXPANSION JOINT REPLACEMENT WORK AT THE ABUTMENTS ON MAH-680-7.126 SHALL BE PERFORMED ONE DIRECTIONAL BOUND AT A TIME USING WEEKEND CLOSURES BETWEEN 6 PM FRIDAY AND 6 AM MONDAY. TWO WEEKEND CLOSURES PER DIRECTION ARE ANTICIPATED FOR THIS WORK (FOUR TOTAL WEEKENDS).

THE CENTERLINE EXPANSION JOINT REPLACEMENT WORK ON MAH-680-7.126 SHALL BE PERFORMED BY CLOSING BOTH SOUTH AVENUE INSIDE LANES AND THE LEFT TURNING LANE SIMULTANEOUSLY FOR A DURATION NOT TO EXCEED 7 CALENDAR DAYS. THE EXPANSION JOINT REPLACEMENTS AT THE CENTERLINE AND AT THE ABUTMENTS SHALL NOT BE PERFORMED AT THE SAME TIME. TO PROTECT TRAFFIC BELOW SOUTH AVENUE, THE CONTRACTOR SHALL CLOSE LANES AND/OR SHIFT I-680 TRAFFIC AS NECESSARY AND IN COMPLIANCE WITH THE PERMITTED LANE CLOSURE SCHEDULE. THE MAINTENANCE OF TRAFFIC FOR THE REPLACEMENT OF THE SOUTH AVENUE CENTERLINE EXPANSION JOINT SHALL BE COORDINATED WITH THE PART 1 WORK AND SHALL NOT BE CONCURRENT WITH PART 1, PHASES 2A-2C.

THE MAINTENANCE OF TRAFFIC FOR THE EXPANSION JOINT WORK SHALL BE COORDINATED WITH PART 1.

THE FOLLOWING QUANTITIES ARE PROVIDED FOR THE SUGGESTED CENTERLINE EXPANSION JOINT REPLACEMENT MOT:

- *614, WORK ZONE IMPACT ATTENUATOR, 24" WIDE HAZARDS, (BIDIRECTIONAL), 2 EACH*
- *614, OBJECT MARKER, ONE-WAY, 14 EACH*
- *614, BARRIER REFLECTOR, TYPE 1, ONE-WAY, 14 EACH*
- *614, WORK ZONE EDGE LINE, CLASS III, 6", 642 PAINT, 0.24 MILE*
- *622, PORTABLE BARRIER, UNANCHORED, 680 FT*

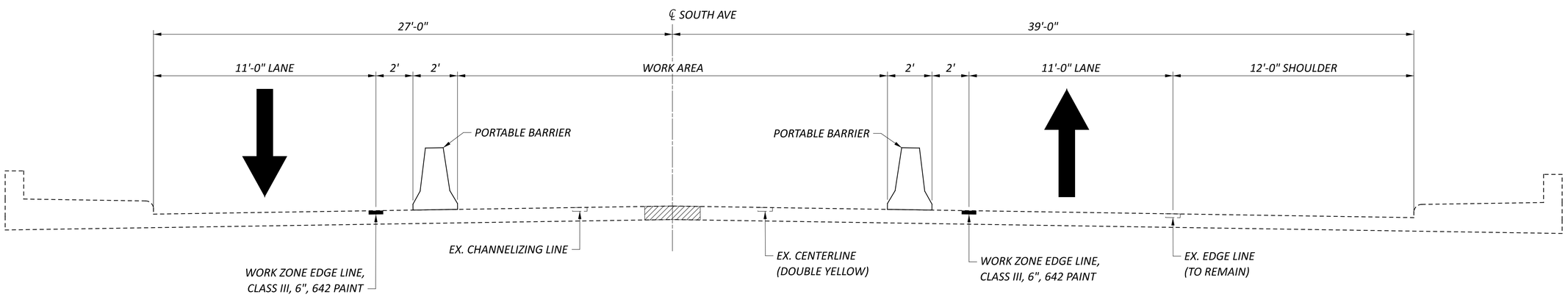

MAINTENANCE OF TRAFFIC - TYPICAL SECTION

MAH-680-7.126 CENTERLINE EXPANSION JOINT REPLACEMENT

MAINTENANCE OF TRAFFIC NOTES

DESIGN AGENCY

DESIGNER JF

REVIEWER MJA 08-08-25

PROJECT ID 121474

SHEET P.5 TOTAL 20

MAH-680-4.58 PART 2

MODEL: Sheet 3 PAPERSIZE: 34x22 (in.) DATE: 1/20/2026 TIME: 9:43:32 AM PLTDRV: OHDOT_PDF_E+.pltcfg PENTBL: OHDOT_Pen.tbl USER: Joel.Fitzsimmons@dot.ohio.gov WORKSPACE: OHDOTCEv02 WORKSET: 121474 PRODUCT: OpenRoadsDesigner 24.00.00.205
pw:\\ohiodot-pw.bentley.com:ohiodot-pw-02\Documents\01 Active Projects\District 04\Mahoning\121474\400-Engineering\MOT\Sheets\121474_MN001.dgn

SHEET NUMBER								PART.			ITEM	ITEM EXT	GRAND TOTAL	UNIT	DESCRIPTION	SEE SHEET NO.
P.2	P.3	P.4	P.5	P.7	P.8	P.9	P.10	01/IMS	02/IMS	03/IMS						
															ROADWAY	
LS										LS	SPECIAL	69091000	LS		AS-BUILT CONSTRUCTION PLANS	P.2
															EROSION CONTROL	
										3,000	832	30000	3,000	EACH	EROSION CONTROL	
															TRAFFIC CONTROL	
					354	303	250			907	630	02100	907	FT	GROUND MOUNTED SUPPORT, NO. 2 POST	
					72	54	60			186	630	80100	186	SF	SIGN, FLAT SHEET	
					30	31	18			79	630	80100	79	SF	SIGN, FLAT SHEET, 730.20	
					24	20	16			60	630	84900	60	EACH	REMOVAL OF GROUND MOUNTED SIGN AND DISPOSAL	
					18	16	14			48	630	86002	48	EACH	REMOVAL OF GROUND MOUNTED POST SUPPORT AND DISPOSAL	
				0.18						0.18	646	10010	0.18	MILE	EDGE LINE, 6"	
				0.22						0.22	646	10110	0.22	MILE	LANE LINE, 6"	
				0.27						0.27	646	10200	0.27	MILE	CENTER LINE	
				289						289	646	10300	289	FT	CHANNELIZING LINE, 8"	
															STRUCTURE REPAIRS	
															FOR MAH-62-17.499 ESTIMATED QUANTITIES	P.15
															FOR MAH-680-4.734 ESTIMATED QUANTITIES	P.15
															FOR MAH-680-4.955 ESTIMATED QUANTITIES	P.15
															FOR MAH-680-5.132 ESTIMATED QUANTITIES	P.15
															FOR MAH-680-5.601 ESTIMATED QUANTITIES	P.15
															FOR MAH-680-5.815 ESTIMATED QUANTITIES	P.15
															FOR MAH-680-6.037 ESTIMATED QUANTITIES	P.15
															FOR MAH-680-6.116 ESTIMATED QUANTITIES	P.15
															FOR MAH-680-6.347SE ESTIMATED QUANTITIES	P.15
															FOR MAH-680-6.377 ESTIMATED QUANTITIES	P.15
															FOR MAH-680-6.421 ESTIMATED QUANTITIES	P.15
															FOR MAH-680-6.933 ESTIMATED QUANTITIES	P.15
															FOR MAH-680-6.983 ESTIMATED QUANTITIES	P.15
															FOR MAH-680-7.126 ESTIMATED QUANTITIES	P.15
															FOR MAH-680-7.297 ESTIMATED QUANTITIES	P.15
															MAINTENANCE OF TRAFFIC	
		20								20	614	11110	20	HOUR	LAW ENFORCEMENT OFFICER WITH PATROL CAR FOR ASSISTANCE	
	6									6	614	12460	6	EACH	WORK ZONE MARKING SIGN	
			2							2	614	12384	2	EACH	WORK ZONE IMPACT ATTENUATOR, 24" WIDE HAZARDS, (BIDIRECTIONAL)	
			14							14	614	13310	14	EACH	BARRIER REFLECTOR, TYPE 1 (ONE-WAY)	
			14							14	614	13350	14	EACH	OBJECT MARKER, ONE WAY	
		4								4	614	18601	4	SNMT	PORTABLE CHANGEABLE MESSAGE SIGN, AS PER PLAN	P.4
	0.64									0.64	614	20560	0.64	MILE	WORK ZONE LANE LINE, CLASS III, 6", 642 PAINT	
	0.14									0.14	614	21550	0.14	MILE	WORK ZONE CENTER LINE, CLASS III, 642 PAINT	
	1.06		0.24							1.3	614	22360	1.3	MILE	WORK ZONE EDGE LINE, CLASS III, 6", 642 PAINT	
	386									386	614	23680	386	FT	WORK ZONE CHANNELIZING LINE, CLASS III, 8", 642 PAINT	
	300									300	614	23690	300	FT	WORK ZONE CHANNELIZING LINE, CLASS III, 12", 642 PAINT	
			680							680	622	41100	680	FT	PORTABLE BARRIER, UNANCHORED	
															INCIDENTALS	
										LS	614	11000	LS		MAINTAINING TRAFFIC	
										28	619	16021	28	MNTH	FIELD OFFICE, TYPE C, AS PER PLAN	P.2
										LS	623	10000	LS		CONSTRUCTION LAYOUT STAKES AND SURVEYING	
										LS	624	10000	LS		MOBILIZATION	

GENERAL SUMMARY

DESIGN AGENCY

DESIGNER
JF

REVIEWER
MJA 08-08-25

PROJECT ID
121474

SHEET P.6 TOTAL 20

MAH-680-4.58 PART 2

MODEL: Sheet PAPERSIZE: 34x22 (in.) DATE: 1/20/2026 TIME: 9:43:37 AM PLTDRV: OHDOT_PDF_E+.pltcfg PENTBL: OHDOT_Pen.tbl USER: JoelFitzsimmons@dot.ohio.gov WORKSPACE: OHDOTCEv02 WORKSET: 121474 PRODUCT: OpenRoadsDesigner 24.00.00.205
pw:\\ohiodot-pw.bentley.com:ohiodot-pw-02\Documents\01 Active Projects\District 04\Mahoning\121474\400-Engineering\Roadway\Sheets\121474_GG001.dgn

GENERAL SPEC:	640
MATERIAL TYPE:	646

EDGE LINE

CTY	ROUTE	TRUE LOG	FROM	TRUE LOG	TO	WHITE EDGE LINE, 6" TOTAL	WHITE EDGE LINE, 6" HIGHWAY	WHITE EDGE LINE, 6" RAMP	YELLOW EDGE LINE, 6" TOTAL	YELLOW EDGE LINE, 6" HIGHWAY	YELLOW EDGE LINE, 6" RAMP	COMMENTS
MAH	680	6.35	STRUCTURE: MAH-680-6.347 SE		CARRYING RAMP TO US-62 NORTH	0.09		0.09	0.09		0.09	
TOTAL						0.09		0.09	0.09		0.09	

LANE LINE

CTY	ROUTE	TRUE LOG	FROM	TRUE LOG	TO	TOTAL MILES	6" LANE LINE DASHED	6" LANE LINE SOLID	COMMENTS
MAH	680	6.12	STRUCTURE: MAH-680-6.116		CARRYING MARKET ST	0.06	0.06		
MAH	680	7.13	STRUCTURE: MAH-680-7.126		CARRYING SOUTH AVE	0.06	0.06		
MAH	680	7.30	STRUCTURE: MAH-680-7.297		CARRYING GIBSON AVE	0.10	0.10		
TOTAL						0.22	0.22		

CENTER LINE

CTY	ROUTE	TRUE LOG	FROM	TRUE LOG	TO	TOTAL MILES	EQUIVALENT SOLID LINE	COMMENTS
MAH	680	4.73	STRUCTURE: MAH-680-4.734		CARRYING MAHONING AVE	0.06	0.12	
MAH	680	4.96	STRUCTURE: MAH-680-4.955		CARRYING GLENWOOD AVE	0.04	0.16	
MAH	680	6.04	STRUCTURE: MAH-680-6.037		CARRYING W WOODLAND AVE	0.03	0.06	
MAH	680	6.12	STRUCTURE: MAH-680-6.116		CARRYING MARKET ST	0.03	0.10	
MAH	680	6.58	STRUCTURE: MAH-680-6.584		CARRYING YOUNGSTOW-SALEM RD	0.03	0.10	
MAH	680	7.13	STRUCTURE: MAH-680-7.126		CARRYING SOUTH AVE	0.03	0.06	
MAH	680	7.30	STRUCTURE: MAH-680-7.297		CARRYING GIBSON AVE	0.05	0.10	
TOTAL						0.27	0.70	

AUXILIARY

CTY	ROUTE LOCATION	TRUE LOG	CHANNEL LINE, 8"	CHANNEL LINE, 12"	STOP LINE	CROSS WALK LINES	TRANSVERSE DIAGONAL LINES WHITE	TRANSVERSE DIAGONAL LINES YELLOW	ISLAND MARKING	SYMBOL MARKINGS RxR	SYMBOL MARKINGS SCHOOL 72"	SYMBOL MARKINGS SCHOOL 96"	LANE ARROWS TURN LEFT	LANE ARROWS TURN RIGHT	LANE ARROWS THRU	LANE ARROWS COMB.	REDUCT. ARROW	WORD ON PVMT ONLY 72"	WORD ON PVMT ONLY 96"	DOTTED LINES, 6"	COMMENTS
			FT	FT	FT	FT	FT	FT	SF	EACH	EACH	EACH	EACH	EACH	EACH	EACH	EACH	EACH	EACH	FT	
MAH	STRUCTURE: MAH-680-6.116	6.12	25																		
MAH	STRUCTURE: MAH-680-7.126	7.13	264																		
TOTAL			289																		

PAVEMENT MARKINGS

DESIGN AGENCY

DESIGNER
JF

REVIEWER
MJA 08-08-25

PROJECT ID
121474

SHEET P.7 TOTAL 20

MAH-680-4.58 PART 2

MODEL: Sheet PAPERSIZE: 34x22 (in.) DATE: 1/20/2026 TIME: 9:43:43 AM PLTDRV: OHDOT_PDF_E+.pltcfg PENTBL: OHDOT_Pen.tbl USER: JoelFitzsimmons@dot.ohio.gov WORKSPACE: OHDOTCEv02 WORKSET: 121474 PRODUCT: OpenRoadsDesigner 24.00.00.205
pw:\\ohiodot-pw.bentley.com:ohiodot-pw-02\Documents\01 Active Projects\District 04\Mahoning\121474\400-Engineering\Roadway\Sheets\121474_GS001.dgn

STRUCTURE FILE NO. (SFN)	EXPRESSWAY / FREEWAY STRUCTURE ID INFO	INTERSECTING ROADWAY STRUCTURE ID INFO	APPROACH DIRECTION (NB, SB, EB, WB)	SIDE OF ROADWAY (LT, RT)	GENERAL		MAINLINE FREEWAY/EXPRESSWAY				ROADWAY OVER EXPRESSWAY/FREEWAY					ROADWAY UNDER EXPRESSWAY/FREEWAY			
					630	630	630	630	630	630	630	630	630	630	630	630	630	630	630
					REMOVAL OF GROUND MOUNTED SIGN AND DISPOSAL	REMOVAL OF GROUND MOUNTED POST SUPPORT AND DISPOSAL	SIGN, FLAT SHEET, 730.20	SIGN, FLAT SHEET	SIGN, FLAT SHEET	GROUND MOUNTED SUPPORT, NO. 2 POST	SIGN, FLAT SHEET, 730.20	SIGN, FLAT SHEET, 730.20	SIGN, FLAT SHEET	SIGN, FLAT SHEET	GROUND MOUNTED SUPPORT, NO. 2 POST	SIGN, FLAT SHEET, 730.20	SIGN, FLAT SHEET	SIGN, FLAT SHEET	GROUND MOUNTED SUPPORT, NO. 2 POST
					EACH	EACH	SF	SF	SF	FT	SF	SF	SF	SF	FT	SF	SF	SF	FT
5006864	MAH-680-4.734	MAHONING AVE	NB	RT	1	1	1			7.5									
5006864	MAH-680-4.734	MAHONING AVE	SB	RT	1	1	1			7.5									
5006864	MAH-680-4.734	MAHONING AVE	EB	LT									3		11				
5006864	MAH-680-4.734	MAHONING AVE	EB	RT							1	1		3	11				
5006864	MAH-680-4.734	MAHONING AVE	WB	LT									3		11				
5006864	MAH-680-4.734	MAHONING AVE	WB	RT							1	1		3	11				
5006902	MAH-680-4.955	GLENWOOD AVE	NB	LT									3		11				
5006902	MAH-680-4.955	GLENWOOD AVE	NB	RT							1	1		3	11				
5006902	MAH-680-4.955	GLENWOOD AVE	SB	LT									3		11				
5006902	MAH-680-4.955	GLENWOOD AVE	SB	RT							1	1		3	11				
5006902	MAH-680-4.955	GLENWOOD AVE	EB	RT	1	1	1			7.5									
5006902	MAH-680-4.955	GLENWOOD AVE	WB	RT	1	1	1			7.5									
5006937	MAH-680-5.132	EDWARDS ST	NB	RT												1			7.5
5006937	MAH-680-5.132	EDWARDS ST	SB	RT												1			7.5
5006937	MAH-680-5.132	EDWARDS ST	EB	LT	1	1		3		11									
5006937	MAH-680-5.132	EDWARDS ST	EB	RT	2	1	1		3	11									
5006937	MAH-680-5.132	EDWARDS ST	WB	LT	1	1		3		11									
5006937	MAH-680-5.132	EDWARDS ST	WB	RT	2	1	1		3	11									
5006961	MAH-680-5.601	OAK HILL AVE	NB	RT												1			7.5
5006961	MAH-680-5.601	OAK HILL AVE	SB	RT												1			7.5
5006961	MAH-680-5.601	OAK HILL AVE	EB	LT	1	1		3		11									
5006961	MAH-680-5.601	OAK HILL AVE	EB	RT	2	1	1		3	11									
5006961	MAH-680-5.601	OAK HILL AVE	WB	LT	1	1		3		11									
5006961	MAH-680-5.601	OAK HILL AVE	WB	RT	2	1	1		3	11									
5007054	MAH-680-5.815	RIDGE AVE	NB	RT	1	1	1			7.5									
5007054	MAH-680-5.815	RIDGE AVE	SB	RT	1	1	1			7.5									
5007054	MAH-680-5.815	RIDGE AVE	EB	LT									3		11				
5007054	MAH-680-5.815	RIDGE AVE	EB	RT							1	1		3	11				
5007054	MAH-680-5.815	RIDGE AVE	WB	LT									3		11				
5007054	MAH-680-5.815	RIDGE AVE	WB	RT							1	1		3	11				
TOTALS CARRIED TO GENERAL SUMMARY					18	14	10	12	12	133	6	6	18	18	132	4			30
							NOTE 1	**NOTE 2**	**NOTE 3**		**NOTE 1**	**NOTE 4**	**NOTE 2**	**NOTE 3**		**NOTE 1**	**NOTE 2**	**NOTE 3**	

NOTE 1	I-h25b, MOUNTED UNDER OM-3R IF SPECIFIED, USE EXPRESSWAY / FREEWAY STRUCTURE INFO
NOTE 2	OM-3L
NOTE 3	OM-3R
NOTE 4	I-h25b, MOUNTED UNDER MAINLINE STRUCTURE ID SIGN, USE INTERSECTING ROADWAY STRUCTURE INFO

STRUCTRURE ID SUBSUMMARY

DESIGN AGENCY

DESIGNER
SBD

REVIEWER
MJA 08-08-25

PROJECT ID
121474

SHEET P.8 TOTAL 20

MAH-680-4.58

MODEL: Sheet 1 PAPERSIZE: 34x22 (in.) DATE: 1/20/2026 TIME: 9:43:48 AM PLTDRV: OHDOT_PDF_E+.pltcfg PENTBL: OHDOT_Pen.tbl USER: Joel.Fitzsimmons@dot.ohio.gov WORKSPACE: OHDOTCEv02 WORKSET: 121474 PRODUCT: OpenRoadsDesigner 24.00.00.205
pw:\\ohiodot-pw.bentley.com:ohiodot-pw-02\Documents\01 Active Projects\District 04\Mahoning\121474\400-Engineering\Roadway\Sheets\121474_GS002.dgn

STRUCTRURE ID SUBSUMMARY

STRUCTURE FILE NO. (SFN)	EXPRESSWAY / FREEWAY STRUCTURE ID INFO	INTERSECTING ROADWAY STRUCTURE ID INFO	APPROACH DIRECTION (NB, SB, EB, WB)	SIDE OF ROADWAY (LT, RT)	GENERAL		MAINLINE FREEWAY/EXPRESSWAY				ROADWAY OVER EXPRESSWAY/FREEWAY					ROADWAY UNDER EXPRESSWAY/FREEWAY			
					630	630	630	630	630	630	630	630	630	630	630	630	630	630	630
					REMOVAL OF GROUND MOUNTED SIGN AND DISPOSAL	REMOVAL OF GROUND MOUNTED POST SUPPORT AND DISPOSAL	SIGN, FLAT SHEET, 730.20	SIGN, FLAT SHEET	SIGN, FLAT SHEET	GROUND MOUNTED SUPPORT, NO. 2 POST	SIGN, FLAT SHEET, 730.20	SIGN, FLAT SHEET, 730.20	SIGN, FLAT SHEET	SIGN, FLAT SHEET	GROUND MOUNTED SUPPORT, NO. 2 POST	SIGN, FLAT SHEET, 730.20	SIGN, FLAT SHEET	SIGN, FLAT SHEET	GROUND MOUNTED SUPPORT, NO. 2 POST
					EACH	EACH	SF	SF	SF	FT	SF	SF	SF	SF	FT	SF	SF	SF	FT
5007089	MAH-680-6.037	W WOODLAND AVE	NB	RT	1	1	1			7.5									
5007089	MAH-680-6.037	W WOODLAND AVE	SB	RT	1	1	1			7.5									
5007089	MAH-680-6.037	W WOODLAND AVE	EB	LT									3		11				
5007089	MAH-680-6.037	W WOODLAND AVE	EB	RT							1	1		3	11				
5007089	MAH-680-6.037	W WOODLAND AVE	WB	LT									3		11				
5007089	MAH-680-6.037	W WOODLAND AVE	WB	RT							1	1		3	11				
5001986	MAH-680-6.116	MARKET ST	NB	RT	1	1	1			7.5									
5001986	MAH-680-6.116	MARKET ST	SB	RT	1	1	1			7.5									
5001986	MAH-680-6.116	MARKET ST	EB	RT							1	1			7.5				
5001986	MAH-680-6.116	MARKET ST	WB	RT							1	1			7.5				
5007119	MAH-680-6.347SE	MAH-94-0.175 RAMP	NB	RT	1	1	1			7.5									
5007119	MAH-680-6.347SE	MAH-94-0.175 RAMP	SB	RT	1	1	1			7.5									
5007119	MAH-680-6.347SE	MAH-94-0.175 RAMP	EB	LT	1	1							3		11				
5007119	MAH-680-6.347SE	MAH-94-0.175 RAMP	EB	RT	1	1					1			3	11				
5007143	MAH-680-6.377	MAH-62-0.340	NB	LT	1	1		3		11									
5007143	MAH-680-6.377	MAH-62-0.340	NB	RT	2	2	1		3	11									
5007143	MAH-680-6.377	MAH-62-0.340	SB	LT	1	1		3		11									
5007143	MAH-680-6.377	MAH-62-0.340	SB	RT	2	2	1		3	11									
5007143	MAH-680-6.377	MAH-62-0.340	EB	RT							1				7.5				
5007143	MAH-680-6.377	MAH-62-0.340	WB	RT							1				7.5				
5007178	MAH-680-6.421	WAYNE AVE	NB	RT	1	1	1			7.5									
5007178	MAH-680-6.421	WAYNE AVE	SB	RT	1	1	1			7.5									
5007178	MAH-680-6.421	WAYNE AVE	EB	LT									3		11				
5007178	MAH-680-6.421	WAYNE AVE	EB	RT							1	1		3	11				
5007178	MAH-680-6.421	WAYNE AVE	WB	LT									3		11				
5007178	MAH-680-6.421	WAYNE AVE	WB	RT							1	1		3	11				
5007208	MAH-680-6.584	WILLIAMSON AVE	NB	RT	1		1			7.5									
5007208	MAH-680-6.584	WILLIAMSON AVE	SB	RT	1		1			7.5									
5007208	MAH-680-6.584	WILLIAMSON AVE	EB	LT									3		11				
5007208	MAH-680-6.584	WILLIAMSON AVE	EB	RT	1						1	1		3	11				
5007208	MAH-680-6.584	WILLIAMSON AVE	WB	LT									3		11				
5007208	MAH-680-6.584	WILLIAMSON AVE	WB	RT	1						1	1		3	11				
TOTALS CARRIED TO GENERAL SUMMARY					20	16	12	6	6	119	11	8	21	21	184				
							NOTE 1	**NOTE 2**	**NOTE 3**		**NOTE 1**	**NOTE 4**	**NOTE 2**	**NOTE 3**		**NOTE 1**	**NOTE 2**	**NOTE 3**	

NOTE 1	I-h25b, MOUNTED UNDER OM-3R IF SPECIFIED, USE EXPRESSWAY / FREEWAY STRUCTURE INFO
NOTE 2	OM-3L
NOTE 3	OM-3R
NOTE 4	I-h25b, MOUNTED UNDER MAINLINE STRUCTURE ID SIGN, USE INTERSECTING ROADWAY STRUCTURE INFO

DESIGN AGENCY

DESIGNER SBD

REVIEWER MJA 08-08-25

PROJECT ID 121474

SHEET P.9 TOTAL 20

MAH-680-4.58

MODEL: Sheet 2 PAPERSIZE: 34x22 (in.) DATE: 1/20/2026 TIME: 9:43:48 AM PLTDRV: OHDOT_PDF_E+.pltcfg PENTBL: OHDOT_Pen.tbl USER: Joel.Fitzsimmons@dot.ohio.gov WORKSPACE: OHDOTCEv02 WORKSET: 121474 PRODUCT: OpenRoadsDesigner 24.00.00.205
pw:\\ohiodot-pw.bentley.com:ohiodot-pw-02\Documents\01 Active Projects\District 04\Mahoning\121474\400-Engineering\Roadway\Sheets\121474_GS002.dgn

STRUCTRURE ID SUBSUMMARY

STRUCTURE FILE NO. (SFN)	EXPRESSWAY / FREEWAY STRUCTURE ID INFO	INTERSECTING ROADWAY STRUCTURE ID INFO	APPROACH DIRECTION (NB, SB, EB, WB)	SIDE OF ROADWAY (LT, RT)	GENERAL		MAINLINE FREEWAY/EXPRESSWAY				ROADWAY OVER EXPRESSWAY/FREEWAY					ROADWAY UNDER EXPRESSWAY/FREEWAY			
					630	630	630	630	630	630	630	630	630	630	630	630	630	630	630
					REMOVAL OF GROUND MOUNTED SIGN AND DISPOSAL	REMOVAL OF GROUND MOUNTED POST SUPPORT AND DISPOSAL	SIGN, FLAT SHEET, 730.20	SIGN, FLAT SHEET	SIGN, FLAT SHEET	GROUND MOUNTED SUPPORT, NO. 2 POST	SIGN, FLAT SHEET, 730.20	SIGN, FLAT SHEET, 730.20	SIGN, FLAT SHEET	SIGN, FLAT SHEET	GROUND MOUNTED SUPPORT, NO. 2 POST	SIGN, FLAT SHEET, 730.20	SIGN, FLAT SHEET	SIGN, FLAT SHEET	GROUND MOUNTED SUPPORT, NO. 2 POST
					EACH	EACH	SF	SF	SF	FT	SF	SF	SF	SF	FT	SF	SF	SF	FT
5007232	MAH-680-6.933	DELASON/BELLEVIEW AVE	NB	LT	1	1		3		11									
5007232	MAH-680-6.933	DELASON/BELLEVIEW AVE	NB	RT	2	2	1		3	11									
5007232	MAH-680-6.933	DELASON/BELLEVIEW AVE	SB	LT				3		11									
5007232	MAH-680-6.933	DELASON/BELLEVIEW AVE	SB	RT	2	2	1		3	11									
5007232	MAH-680-6.933	DELASON/BELLEVIEW AVE	EB	LT				3		11									
5007232	MAH-680-6.933	DELASON/BELLEVIEW AVE	EB	RT			1		3	11									
5007232	MAH-680-6.933	DELASON/BELLEVIEW AVE	WB	LT				3		11									
5007232	MAH-680-6.933	DELASON/BELLEVIEW AVE	WB	RT			1		3	11									
5007267	MAH-680-6.983	YOUNGSTOWN RR	NB	LT	1	1		3		11									
5007267	MAH-680-6.983	YOUNGSTOWN RR	NB	RT	2	2	1		3	11									
5007267	MAH-680-6.983	YOUNGSTOWN RR	SB	LT				3		11									
5007267	MAH-680-6.983	YOUNGSTOWN RR	SB	RT	2	2	1		3	11									
5003350	MAH-680-7.126	SOUTH AVE	NB	LT									3		11				
5003350	MAH-680-7.126	SOUTH AVE	NB	RT							1	1		3	11				
5003350	MAH-680-7.126	SOUTH AVE	SB	LT									3		11				
5003350	MAH-680-7.126	SOUTH AVE	SB	RT							1	1		3	11				
5003350	MAH-680-7.126	SOUTH AVE	EB	RT	2	1	1			7.5									
5003350	MAH-680-7.126	SOUTH AVE	WB	RT	2	1	1			7.5									
5007291	MAH-680-7.297	GIBSON ST	NB	LT									3		11				
5007291	MAH-680-7.297	GIBSON ST	NB	RT							1	1		3	11				
5007291	MAH-680-7.297	GIBSON ST	SB	LT									3		11				
5007291	MAH-680-7.297	GIBSON ST	SB	RT							1	1		3	11				
5007291	MAH-680-7.297	GIBSON ST	EB	RT	1	1	1			7.5									
5007291	MAH-680-7.297	GIBSON ST	WB	RT	1	1	1			7.5									
TOTALS CARRIED TO GENERAL SUMMARY					16	14	10	18	18	162	4	4	12	12	88				
							NOTE 1	**NOTE 2**	**NOTE 3**		**NOTE 1**	**NOTE 4**	**NOTE 2**	**NOTE 3**		**NOTE 1**	**NOTE 2**	**NOTE 3**	

NOTE 1	I-h25b, MOUNTED UNDER OM-3R IF SPECIFIED, USE EXPRESSWAY / FREEWAY STRUCTURE INFO
NOTE 2	OM-3L
NOTE 3	OM-3R
NOTE 4	I-h25b, MOUNTED UNDER MAINLINE STRUCTURE ID SIGN, USE INTERSECTING ROADWAY STRUCTURE INFO

DESIGN AGENCY

DESIGNER SBD

REVIEWER MJA 08-08-25

PROJECT ID 121474

SHEET P.10 TOTAL 20

MAH-680-4.58

MODEL: Sheet 3 PAPERSIZE: 34x22 (in.) DATE: 1/20/2026 TIME: 9:43:49 AM PLTDRV: OHDOT_PDF_E+.pltcfg PENTBL: OHDOT_Pen.tbl USER: Joel.Fitzsimmons@dot.ohio.gov WORKSPACE: OHDOTCEv02 WORKSET: 121474 PRODUCT: OpenRoadsDesigner 24.00.00.205
pw:\\ohiodot-pw.bentley.com:ohiodot-pw-02\Documents\01 Active Projects\District 04\Mahoning\121474\400-Engineering\Roadway\Sheets\121474_GS002.dgn

STANDARD DRAWINGS AND SUPPLEMENTAL SPECIFICATIONS

REFER TO THE FOLLOWING STANDARD BRIDGE DRAWING(S):

AS-2-15 REVISED 7/21/2023

AND TO THE FOLLOWING SUPPLEMENTAL SPECIFICATION(S):

844 REVISED 1/17/2025
848 REVISED 7/19/2024

EXISTING STRUCTURE VERIFICATION

DETAILS AND DIMENSIONS SHOWN ON THESE PLANS PERTAINING TO THE EXISTING STRUCTURE HAVE BEEN OBTAINED FROM PLANS OF THE EXISTING STRUCTURE AND FROM FIELD OBSERVATIONS AND MEASUREMENTS. CONSEQUENTLY, THEY ARE INDICATIVE OF THE EXISTING STRUCTURE AND THE PROPOSED WORK BUT THEY SHALL BE CONSIDERED TENTATIVE AND APPROXIMATE. THE CONTRACTOR IS REFERRED TO C&MS, SECTIONS 102.05, 105.02, AND 513.04. BASE CONTRACT BID PRICES UPON A RECOGNITION OF THE UNCERTAINTIES DESCRIBED ABOVE AND UPON A PREBID EXAMINATION OF THE EXISTING STRUCTURE. HOWEVER, THE DEPARTMENT WILL PAY FOR ALL PROJECT WORK BASED UPON ACTUAL DETAILS AND DIMENSIONS THAT HAVE BEEN VERIFIED IN THE FIELD.

PROPOSED WORK

MAH-680-4.734 (SFN 5006864), MAHONING AVE
- SEAL EXISTING CONCRETE WEARING SURFACE WITH GRAVITY FED RESIN, INCLUDING THE APPROACH SLABS
- PATCH ALL UNSOUND AREAS OF THE CONCRETE WEARING SURFACE, INCLUDING THE APPROACH SLABS
- REPLACE IN-KIND THE NEOPRENE TROUGH GLAND AT THE FORWARD EXPANSION JOINT
- PATCH ALL UNSOUND AREAS OF THE CONCRETE PIERS
- SEAL THE CONCRETE PIERS WITH EPOXY-URETHANE SEALER (MATCH EXISTING COLOR)
- SPALL REMOVAL IN THE DECK UNDERSIDE BEAM HAUNCHES OVER TRAFFIC LANES

MAH-680-4.955 (SFN 5006902), GLENWOOD AVE
- PATCH ALL UNSOUND AREAS OF THE CONCRETE WEARING SURFACE, INCLUDING THE APPROACH SLABS
- RESET AND REFURBISH ABUTMENT BEARINGS
- PATCH ALL UNSOUND AREAS OF THE CONCRETE PIERS AND ABUTMENTS, SEAL PATCHES WITH EPOXY-URETHANE SEALER (MATCH EXISTING COLOR)
- SPALL REMOVAL IN THE DECK UNDERSIDE BEAM HAUNCHES OVER TRAFFIC LANES

MAH-680-5.132 (SFN 5006937), OVER EDWARDS ST
- SEAL EXISTING CONCRETE WEARING SURFACE WITH GRAVITY FED RESIN, INCLUDING THE APPROACH SLABS
- OVERLAY THE APPROACH SLABS WITH A MICRO SILICA FIBER REINFORCED CONCRETE OVERLAY
- REMOVE AND REPLACE THE ELASTOMERIC STRIP SEALS
- PATCH ALL UNSOUND AREAS OF THE CONCRETE PIERS, SEAL PATCHES WITH EPOXY-URETHANE SEALER (MATCH EXISTING COLOR)
- RESET AND REFURBISH ABUTMENT BEARINGS
- SPALL REMOVAL IN THE DECK UNDERSIDE BEAM HAUNCHES OVER TRAFFIC LANES

PROPOSED WORK CONT...

MAH-680-5.601 (SFN 5006961), OVER OAK HILL AVE
- SEAL EXISTING CONCRETE WEARING SURFACE WITH GRAVITY FED RESIN, INCLUDING THE APPROACH SLABS
- PATCH ALL UNSOUND AREAS OF THE CONCRETE WEARING SURFACE, INCLUDING THE APPROACH SLABS
- PATCH ALL UNSOUND AREAS OF THE CONCRETE PIERS AND ABUTMENTS, SEAL PATCHES WITH EPOXY-URETHANE SEALER (MATCH EXISTING COLOR)
- RESET AND REFURBISH ABUTMENT BEARINGS

MAH-680-6.037 (SFN 5007089), W WOODLAND AVE
- PATCH ALL UNSOUND AREAS OF THE CONCRETE PIERS, SEAL PATCHES WITH EPOXY-URETHANE SEALER (MATCH EXISTING COLOR)

MAH-680-6.116 (SFN 5001986), MARKET ST
- PATCH ALL UNSOUND AREAS OF THE CONCRETE PIERS, SEAL PATCHES WITH EPOXY-URETHANE SEALER (MATCH EXISTING COLOR)
- PATCH UNSOUND AREAS OF THE CONCRETE RETAINING WALL ADJACENT TO THE STRUCTURE
- SEAL THE RETAINING WALLS ADJACENT TO THE STRUCTURE WITH NON-EPOXY SEALER

MAH-680-6.377 (SFN 5007143), OVER US 62D & SR 7D
- SEAL EXISTING CONCRETE WEARING SURFACE WITH GRAVITY FED RESIN, INCLUDING THE APPROACH SLABS
- PATCH ALL UNSOUND AREAS OF THE CONCRETE PIERS, SEAL PATCHES WITH EPOXY-URETHANE SEALER (MATCH EXISTING COLOR)

MAH-680-6.421 (SFN 5007178), WAYNE AVE
- PATCH ALL UNSOUND AREAS OF THE CONCRETE PIERS, SEAL PATCHES WITH EPOXY-URETHANE SEALER (MATCH EXISTING COLOR)

MAH-62-17.499 (SFN 5007208), OVER IR 680
- SEAL EXISTING CONCRETE WEARING SURFACE WITH GRAVITY FED RESIN, INCLUDING THE APPROACH SLABS
- PATCH ALL UNSOUND AREAS OF THE CONCRETE PIERS, SEAL PATCHES WITH EPOXY-URETHANE SEALER (MATCH EXISTING COLOR)

MAH-680-6.933 (SFN 5007232), OVER DELASON AVE
- SEAL EXISTING CONCRETE WEARING SURFACE WITH GRAVITY FED RESIN, INCLUDING THE APPROACH SLABS
- SEAL THE CONCRETE PARAPETS WITH EPOXY-URETHANE SEALER (MATCH EXISTING COLOR)

MAH-680-6.983 (SFN 5007267), OVER YOUNGSTOWN & SE RR
- SEAL EXISTING CONCRETE WEARING SURFACE WITH GRAVITY FED RESIN, INCLUDING THE APPROACH SLABS
- SEAL THE CONCRETE PARAPETS WITH EPOXY-URETHANE SEALER (MATCH EXISTING COLOR)

MAH-680-7.126 (SFN 5003350), SOUTH AVE
- REMOVE THE EXISTING FORWARD AND REAR SLIDING PLATE EXPANSION JOINTS AND REPLACE WITH AN ADHESIVE JOINT SEAL SYSTEM
- REMOVE THE EXISTING CENTERLINE EXPANSION JOINT AND REPLACE WITH AN ADHESIVE JOINT SEAL SYSTEM.
- PATCH ALL UNSOUND AREAS OF THE CONCRETE WEARING SURFACE, INCLUDING THE APPROACH SLABS
- SEAL EXISTING CONCRETE WEARING SURFACE WITH GRAVITY FED RESIN, INCLUDING THE APPROACH SLABS
- RESET AND REFURBISH ABUTMENT BEARINGS
- PATCH ALL UNSOUND AREAS OF THE CONCRETE PIERS, ABUTMENTS AND BACKWALLS, SEAL PATCHES WITH EPOXY-URETHANE SEALER (MATCH EXISTING COLOR)

MAH-680-7.297 (SFN 5007291), GIBSON ST
- PATCH ALL UNSOUND AREAS OF THE CONCRETE PIERS, SEAL PATCHES WITH EPOXY-URETHANE SEALER (MATCH EXISTING COLOR)

PROPOSED WORK CONT...

MAH-680-6.347SE (SFN 5007119), RAMP IR 680 SB TO US 62 EB
- SEAL EXISTING CONCRETE WEARING SURFACE WITH GRAVITY FED RESIN, INCLUDING THE APPROACH SLABS
- PATCH ALL UNSOUND AREAS OF THE CONCRETE PIERS, SEAL PATCHES WITH EPOXY-URETHANE SEALER (MATCH EXISTING COLOR) AND COMPOSITE FIBER WRAP

ITEM 202, PORTIONS OF STRUCTURE REMOVED, AS PER PLAN

THIS ITEM SHALL INCLUDE THE ELEMENTS INDICATED IN THE PLANS AND GENERAL NOTES AND THAT ARE NOT SEPARATELY LISTED FOR PAYMENT, EXCEPT FOR WEARING COURSE REMOVAL. ITEMS TO BE REMOVED INCLUDE ALL EXISTING MATERIALS BEING REPLACED BY NEW CONSTRUCTION AND MISCELLANEOUS ITEMS THAT ARE NOT SHOWN TO BE INCORPORATED INTO THE FINAL CONSTRUCTION AND ARE DIRECTED TO BE REMOVED BY THE ENGINEER. THE USE OF EXPLOSIVES, HEADACHE BALLS AND/OR HOE-RAMS WILL NOT BE PERMITTED. THE METHOD OF REMOVAL AND THE WEIGHT OF HAMMER SHALL BE APPROVED BY THE ENGINEER. PERFORM ALL WORK IN A MANNER THAT WILL NOT CUT, ELONGATE OR DAMAGE THE EXISTING REINFORCING STEEL TO BE PRESERVED. CHIPPING HAMMERS SHALL NOT BE HEAVIER THAN THE NOMINAL 90-POUND CLASS. PNEUMATIC HAMMERS SHALL NOT BE PLACED IN DIRECT CONTACT WITH REINFORCING STEEL THAT IS TO BE RETAINED IN THE REBUILT STRUCTURE. SUBMIT CONSTRUCTION PLANS ACCORDING TO C&MS 501.05.

CUT LINE CONSTRUCTION JOINT PREPARATION

PRIOR TO REMOVING THE DECK EDGE, PLACE A 1-IN (+0-IN,-1/4-IN) DEEP SAW CUT AT THE BOUNDARIES OF PROPOSED CONCRETE REMOVALS. IF THERE ARE INTEGRAL CONCRETE PIER CAPS WITHIN THE PROPOSED REMOVAL LIMITS, ALSO SAWCUT THE DECK CONCRETE ALONG THE INTERFACE OF THE DECK AND PIER CAP. REMOVE CONCRETE TO A ROUGH SURFACE.LEAVE THE EXISTING REINFORCING STEEL, IF REQUIRED IN THE PLANS, IN PLACE. INSTALL DOWEL BARS IF SPECIFIED. PRIOR TO CONCRETE PLACEMENT ABRASIVELY CLEAN JOINT SURFACES AND EXISTING EXPOSED REINFORCEMENT TO REMOVE LOOSE AND DISINTEGRATED CONCRETE AND LOOSE RUST. THOROUGHLY CLEAN THE JOINT SURFACE AND EXPOSED REINFORCEMENT OF ALL DIRT, DUST, RUST OR OTHER FOREIGN MATERIAL BY THE USE OF WATER, AIR UNDER PRESSURE, OR OTHER METHODS THAT PRODUCE SATISFACTORY RESULTS. EXISTING REINFORCING STEEL DOES NOT HAVE TO HAVE A BRIGHT STEEL FINISH BUT REMOVE ALL PACK AND LOOSE RUST. THOROUGHLY DRENCH EXISTING CONCRETE SURFACES WITH CLEAN WATER AND ALLOW TO DRY TO A DAMP CONDITION BEFORE PLACING CONCRETE.

ITEM 509 - REINFORCING STEEL, REPLACEMENT OF EXISTING REINFORCING STEEL, AS PER PLAN

REPLACE ALL EXISTING REINFORCING BARS DEEMED BY THE ENGINEER TO BE UNUSABLE BECAUSE OF CORROSION. THE DEPARTMENT WILL MEASURE THE REPLACEMENT REINFORCING STEEL BY THE NUMBER OF POUNDS ACCEPTED IN PLACE. REPLACE ALL EXISTING REINFORCING STEEL BARS WHICH ARE TO BE INCORPORATED INTO THE NEW WORK AND ARE DEEMED BY THE ENGINEER TO BE MADE UNUSABLE BY CONCRETE REMOVAL OPERATIONS WITH NEW REINFORCING STEEL OF THE SAME SIZE AND COATING AT NO COST TO THE DEPARTMENT.

ITEM 516 - REFURBISHING BEARING DEVICES, AS PER PLAN

THIS ITEM SHALL INCLUDE ALL WORK NECESSARY TO PROPERLY ALIGN BRIDGE ABUTMENT BEARINGS, AS WELL AS THEIR CLEARNING AND PAINTING. INCLUDED SHALL BE THE DISASSEMBLY OF THE BEARINGS, HAND TOOL CLEANING (GRINDING IF NECESSARY), PAINTING ACCORDING TO ITEM 514, REPLACEMENT OF ANY DAMAGED SHEET LEAD WITH PREFORMED BEARING PADS (C&MS 711.21), INSTALLATION OF ANY NECESSARY STEEL SHIMS OF THE SAME SIZE AS THE BEARINGS TO PROVIDE A SNUG FIT, REALIGNMENT O FTHE UPPER BEARING PLATE BY REMOVING EXISTING WELDS AND REWELDING SO THAT THE BEARINGS ARE VERTICALLY ALIGNED AT 60 DEGREES FARENHEIT, LUBRICATING SLIDING SURFACES, AND REASSEMBLY OF THE BEARINGS. ASSURE ALL BEARINGS ARE SHIMMED ADEQUATELY AND THAT NO BEAMS AND/OR BEARING DEVICES ARE "FLOATING". AT NO ADDITIONAL COST TO THE STATE, THE CONTRACTOR MAY INSTALL NEW BEARINGS OF THE SAME TYPE AS THE EXISTING IN PLACE OF REFURBISHING THE BEARINGS. ALL WORK SHALL BE TO THE SATIFACTION OF THE ENGINEER. PAYMENT FOR ALL OF THE ABOVE DESCRIBED LABOR AND MATERIALS WILL BE MADE AT THE CONTRACT PRICE BID FOR ITEM 516 - REFURBISH BEARING DEVICES, AS PER PLAN.

ITEM 516 - JACKING AND TEMPORARY SUPPORT OF SUPERSTRUCTURE, AS PER PLAN

THIS WORK CONSISTS OF RAISING OR RE-POSITIONING EXISTING STRUCTURES TO THE DIMENSIONS AND REQUIREMENTS DEFINED IN THE PROJECT PLANS. SUBMIT CONSTRUCTION PLANS IN ACCORDANCE WITH C&MS 501.05. IF, DURING THE JACKING OPERATIONS, CRACKING OF THE CONCRETE SUPERSTRUCTURE, SEPARATION OF THE CONCRETE DECK FROM THE STEEL STRINGERS, OR OTHER DAMAGE TO THE STRUCTURE IS VISUALLY OBSERVED, IMMEDIATELY CEASE THE JACKING OPERATION AND INSTALL SUPPORTS TO THE SATISFACTION OF THE ENGINEER. ANALYZE THE DAMAGE AND SUBMIT A METHOD OF CORRECTION TO THE ENGINEER FOR APPROVAL. EPOXY INJECT ALL BEAMS THAT SEPARATE FROM THE DECK FOR A DISTANCE OF THE SEPARATION IN ACCORDANCE WITH C&MS 512.07. THE DEPARTMENT WILL NOT PAY FOR THE COST OF THIS EPOXY INJECTION OR OTHER REQUIRED REPAIRS. THE BRIDIGE BEARINGS SHALL BE FULLY SEATED ALL CONTACT AREAS. IF FULL SEATING IS NOT ATTAINED, SUBMIT A REPAIR PLAN TO THE ENGINEER. THE DEPARTMENT WILL NOT PAY FOR THE REPAIR COSTS TO ENSURE FULL SEATING ON BEARINGS. THE DEPARTMENT WILL MEASURE THIS WORK ON A LUMP SUM BASIS. THE DEPARTMENT WILL PAY FOR THE ACCEPTED QUANTITIES AT THE CONTRACT PRICE FOR ITEM 516, JACKING AND TEMPORARY SUPPORT OF SUPERSTRUCTURE, AS PER PLAN.

ITEM 516 - ARMORLESS PREFORMED JOINT SEAL

THIS ITEM OF WORK CONSISTS OF CLEANING, INSPECTING, REMOVING AND INSTALLING NEW ARMORLESS PREFORMED JOINT SEALS. PRIOR TO REMOVING THE EXISTING SEAL THE CONTRACTOR SHALL CLEANOUT AND INSPECT EACH JOINT. ALL DAMAGED OR TORN JOINT SEALS SHALL BE REPLACED UPON THE DIRECTION OF THE ENGINEER. FOR ADDITIONAL NOTES AND DETAILS, SEE SCD AS-2-15.

STRUCTURE NOTES
VARIOUS STRUCTURES ON IR 680
IN MAHONING COUNTY

SFN VARIOUS
DESIGN AGENCY

DESIGNER	CHECKER
JF	MJA

REVIEWER TJP 08-08-25
PROJECT ID 121474
SUBSET 1 TOTAL 10
SHEET P.11 TOTAL 20

MODEL: Sheet 1 PAPERSIZE: 34x22 (in.) DATE: 1/20/2026 TIME: 9:43:54 AM PLTDRV: OHDOT_PDF_E+.pltcfg PENTBL: OHDOT_Pen.tbl USER: Joel.Fitzsimmons@dot.ohio.gov WORKSPACE: OHDOTCEv02 WORKSET: 121474 PRODUCT: OpenRoadsDesigner 24.00.00.205
pw:\\ohiodot-pw.bentley.com:ohiodot-pw-02\Documents\01 Active Projects\District 04\Mahoning\121474\400-Engineering\Roadway\Sheets\121474_SN001.dgn

ITEM 519 - PATCHING CONCRETE STRUCTURES, AS PER PLAN

PRIOR TO THE SURFACE CLEANING SPECIFIED IN C&MS 519.04 AND WITHIN 24 HOURS OF PLACING PATCHING MATERIAL, BLAST CLEAN ALL SURFACES TO BE PATCHED INCLUDING THE EXPOSED REINFORCING STEEL. ACCEPTABLE METHODS INCLUDE: HIGH-PRESSURE WATER BLASTING WITH, OR WITHOUT, ABRASIVES IN THE WATER, ABRASIVE BLASTING WITH CONTAINMENT OR VACUUM ABRASIVE BLASTING.

REPAIR CONCRETE SHALL BE HYDRAULIC CEMENT-BASED MATERIAL WITH AN ELECTRICAL RESISTIVITY LESS THAN 50,000 OHM-CM ACCORDING TO ASTM C 1760. DO NOT USE NON- CONDUCTIVE REPAIR MATERIALS SUCH AS MAGNESIUM AMMONIUM PHOSPHATE CONCRETE AND EPOXY MORTARS OR BONDING AGENTS. CONCRETE MIXES CONTAINING HIGH LEVELS OF SUPPLEMENTARY CEMENTITIOUS MATERIALS SUCH AS SILICA FUME, GROUND-GRANULATED BLAST FURNACE SLAG, LATEX, FLY ASH OR METAKAOLIN MAY NOT MEET THE RESISTIVITY REQUIREMENT.

MAH-680-4.734 (SFN 5006864), PIERS
ITEM 519 - PATCHING CONCRETE STRUCTURES, AS PER PLAN, 100 SF

MAH-680-4.955 (SFN 5006902), PIERS & ABUTMENTS
ITEM 519 - PATCHING CONCRETE STRUCTURES, AS PER PLAN, 205 SF

MAH-680-5.132 (SFN 5006937), PIERS
ITEM 519 - PATCHING CONCRETE STRUCTURES, AS PER PLAN, 75 SF

MAH-680-5.601 (SFN 5006961), PIERS & ABUTMENTS
ITEM 519 - PATCHING CONCRETE STRUCTURES, AS PER PLAN, 265 SF

MAH-680-6.037 (SFN 5007089), PIERS
ITEM 519 - PATCHING CONCRETE STRUCTURES, AS PER PLAN, 75 SF

MAH-680-6.116 (SFN 5001986), PIERS
ITEM 519 - PATCHING CONCRETE STRUCTURES, AS PER PLAN, 50 SF

MAH-680-6.116 (SFN 5001986), RETAINING WALL ADJACENT TO STRUCTURE
ITEM 519 - PATCHING CONCRETE STRUCTURES, AS PER PLAN, 600 SF

MAH-680-6.377 (SFN 5007143), PIERS
ITEM 519 - PATCHING CONCRETE STRUCTURES, AS PER PLAN, 200 SF

MAH-680-6.421 (SFN 5007178), PIERS
ITEM 519 - PATCHING CONCRETE STRUCTURES, AS PER PLAN, 200 SF

MAH-62-17.499 (SFN 5007208), PIERS
ITEM 519 - PATCHING CONCRETE STRUCTURES, AS PER PLAN, 150 SF

MAH-680-7.126 (SFN 5003350), PIERS, ABUTMENTS & BACKWALLS
ITEM 519 - PATCHING CONCRETE STRUCTURES, AS PER PLAN, 100 SF

MAH-680-7.297 (SFN 5007291), PIERS
ITEM 519 - PATCHING CONCRETE STRUCTURES, AS PER PLAN, 50 SF

MAH-680-6.347SE (SFN 5007119), PIERS
ITEM 519 - PATCHING CONCRETE STRUCTURES, AS PER PLAN, 220 SF

SPECIAL - STRUCTURES: CONCRETE SPALL REMOVAL

THIS WORK WILL CONSIST OF REMOVING ALL VISIBLY SPALLED AREAS OF THE UNDERSIDE OF THE DECK WITHOUT SOUNDING.

AFTER SPALLED CONCRETE IS REMOVED THE EXISTING EXPOSED REINFORCING STEEL SHALL BE BLAST CLEANED. ACCEPTABLE METHODS INCLUDE HIGH PRESSURE WATER BLASTING WITH OR WITHOUT ABRASIVES IN THE WATER, ABRASIVES WITH CONTAINMENT, OR VACUUM BLASTING.

THE DEPARTMENT WILL MEASURE THIS WORK AS THE ACTUAL AREA IN SQUARE YARDS OF CONCRETE SPALLS REMOVED.

CONCRETE SPALL REMOVAL WILL BE PAID AT THE UNIT BID PRICE FOR SPECIAL STRUCTURE MISC.: CONCRETE SPALL REMOVAL. THIS PRICE WILL INCLUDE THE COST OF LABOR, EQUIPMENT, AND ALL INCIDENTALS REQUIRED TO COMPLETE THIS WORK.

SPALL REMOVAL ON STRUCTURES MAH-680-4.734, MAH-680-4.955 & MAH-680-5.132 OVER TRAVEL LANES AND PAVED SHOULDERS

THE FOLLOWING WORK AND QUANTITIES SHALL BE USED ON THIS STRUCTURE TO REPAIR THE CONCRETE SPALLS IN THE BEAM HAUNCHES OVER TRAVEL LANES AND PAVED SHOULDERS:

MAH-680-4.734 (SFN 5006864), MAHONING AVE: BEAM HAUNCHES
ITEM SPECIAL - STRUCTURES: CONCRETE SPALL REMOVAL, 5 SY

MAH-680-4.955 (SFN 5006902), GLENWOOD AVE: BEAM HAUNCHES
ITEM SPECIAL - STRUCTURES: CONCRETE SPALL REMOVAL, 5 SY

MAH-680-5.132 (SFN 5006937), OVER EDWARDS ST: BEAM HAUNCHES
ITEM SPECIAL - STRUCTURES: CONCRETE SPALL REMOVAL, 5 SY

ITEM 844 - CONCRETE PATCHING WITH GALVANIC ANODE PROTECTION

THE GALVANIC ANODE SIZE AND SPACING IS BASED ON ACHIEVING A CURRENT DENSITY FOR THE EXTREMELY HIGH CORROSION RISK CATEGORY WITH A 20 YEAR INSTALLATION. SUPPLY ANODES WITH A MINIMUM CORE OF 200 GRAMS OF ZINC. SEE THIS SHEET FOR DISTRIBUTION.

THE FOLLOWING QUANTITIES AND ANODE SPACINGS HAVE BEEN PROVIDED FOR EACH STRUCTURE.

MAH-680-7.126 (SFN 5003350)
BRIDGE DECK: ANODE SPACING @ 12 IN C/C
ITEM 844, GALVANIC ANODE PROTECTION, 204 EACH

MAH-680-6.347SE (SFN 5003350)
PIERS: ANODE SPACING @ 12 IN C/C
ITEM 844, GALVANIC ANODE PROTECTION, 440 EACH

844 - GALAVNIC ANODES: SALVAGED REINFORCEMENT

PRIOR TO RECASTING DECK EDGES, GALVANIC ANODES SHALL BE ADDED TO SALVAGED REINFORCEMENT.

ITEM SPECIAL - PATCHING CONCRETE STRUCTURES, MISC.: VES-LMC (VERY EARLY STRENGTH LATEX MODIFIED CONCRETE)

DESCRIPTION:
THIS ITEM WILL CONSIST OF FURNISHING THE NECESSARY LABOR, MATERIALS, AND EQUIPMENT TO REPAIR CONCRETE BRIDGE DECKS, APPROACH SLABS AND TOPS OF THE BACKWALLS, INCLUDING THE REMOVAL OF LOOSE AND UNSOUND CONCRETE, BITUMINOUS PATCHES, SURFACE PREPARATION, BONDING COAT, AND THE MIXING, PLACING, FINISHING, CURING, COMPRESSIVE STRENGTH TESTING, AND SEALING OF ALL THE PATCHES AS DIRECTED BY THE ENGINEER.

RESTRICTIONS:
THE VES-LMC WILL NOT BE PLACED WHEN RAIN IS FORECAST WITHIN THE PERIOD OF TIME WHEN THE REPAIR WILL BE PERFORMED, INCLUDING PREPARATION, INSTALLATION OF THE PATCH AND CURING. IF RAIN OCCURS DURING THE PLACING OF THE MATERIAL, ALL OPERATIONS WILL CEASE. DURING DELAYS IN THE PATCH PLACEMENT OPERATIONS OF MORE THAN 10 MINUTES, THE WORK FACE OF THE PLACED PATCH MATERIAL AND ANY BONDING GROUTED AREAS WILL BE TEMPORARILY COVERED WITH WET BURLAP. IF AN EXCESSIVE DELAY IS ANTICIPATED, A BULKHEAD WILL BE INSTALLED AT THE WORK FACE AND THE PATCHING PLACEMENT OPERATION TERMINATED

THE VES-LMC PATCHING MATERIAL WILL BE PLACED ONLY WHEN THE LOCAL AMBIENT TEMPERATURE IS ABOVE 45°F AND IS FORECAST TO REMAIN ABOVE 45°F FOR THE CURING PERIOD. THE TEMPERATURE AT THE PATCH SURFACE WILL BE MAINTAINED ABOVE 35°F UNTIL THE CURING PERIOD IS COMPLETE.

DO NOT BEGIN OPERATIONS IF EVAPORATION RATES ARE PREDICTED TO BE MORE THAN 0.1 POUND PER SQUARE FOOT PER HOUR AS DETERMINED ACCORDING TO CMS 511.10, FIGURE 1, ACI 308, WITHIN 12 HOURS OF COMMENCEMENT.

UNLESS OTHERWISE AUTHORIZED BY THE ENGINEER, PATCHES WILL NOT BE PLACED ADJACENT TO A PREVIOUS PATCH WHICH HAS CURED FOR LESS THAN 4 HOURS.

IF PLACEMENT OF PATCHES IS TO BE MADE AT NIGHT, THE CONTRACTOR WILL SUBMIT A PLAN WHICH PROVIDES ADEQUATE LIGHTING FOR WORK AREA. THE PLAN WILL BE SUBMITTED AT LEAST 15 CALENDAR DAYS IN ADVANCE AND BE APPROVED BY THE ENGINEER BEFORE CONCRETE IS PLACED. THE LIGHTS WILL BE DIRECTED SO THAT THEY DO NOT AFFECT OR DISTRACT APPROACHING TRAFFIC.

REMOVAL OF UNSOUND CONCRETE:
THE ENGINEER WILL SOUND THE WEARING SURFACE AND BACKWALL TOPS AND OUTLINE THE AREAS TO BE REMOVED. SOUNDING MAY HAVE TO BE DELAYED UNTIL THE DECK IS SUFFICENTLY DRY TO PERMIT DETECTION OF ALL AREAS OF DELAMINATION. BACKWALL REMOVAL AND DEPTH WILL BE AS DIRECTED THE ENGINEER AND WILL NOT GO BELOW THE EXISTING APPROACH SLAB SEAT. THE PERIMETER OF ALL REMOVAL AREAS WILL BE SAWED TO A DEPTH OF 2 INCHES TO PRODUCE A VERTICAL OR SLIGHTLY UNDERCUT FACE. ADDITIONAL SAW CUTS MAY BE REQUIRED TO FACILITATE REMOVAL. SAW CUTS WILL NOT EXTEND BEYOND THE LIMITS OF THE PATCH. COOLING WATER FROM WET SAWING AND DUST FROM DRY SAWING WILL NOT BE ALLOWED TO CONTAMINATE THE EXPOSED PATCH HOLES. ALL PATCHES OTHER THAN SOUND CONCRETE AND ALL OBIVOUSLY LOOSE AND DISINTEGRATED CONCRETE WILL BE REMOVED. THE UNSOUND CONCRETE MAY BE REMOVED BY CHIPPING, AND DRES- SING, OR HYDRODEMOLITION (AS PER SS848). THE REMOVAL OF AN UNSOUND EXISTING CONCRETE OVERLAY MAY BE PERFORMED AS PER SS847.17. CHIPPING HAMMERS WILL NOT BE HEAVIER THAN THE NORMAL 35-POUND CLASS AND WILL BE OPERATED AT AN ANGLE LESS THAN 45 DEGREES MEASURED FROM THE SURFACE OF THE DECK.

CONCRETE WILL BE REMOVED IN A MANNER THAT PREVENTS CUTTING, ELONGATING, OR DAMAGING REINFORCING STEEL, WHERE THE BOND BETWEEN THE CONCRETE AND PRIMARY REINFORCING BAR HAS BEEN DESTROYED, OR WHERE MORE THAN HALF OF THE PERIPHERY OF SUCH A BAR HAS BEEN EXPOSED, THE ADJACENT CONCRETE WILL BE REMOVED TO A DEPTH THAT WILL PROVIDE A MINIMUM 3#4 INCH CLEARANCE AROUND THE BAR EXCEPT WHERE OTHER REINFORCING BARS MAKE THIS IMPRACTICABLE, REINFORCEMENT WHICH HAS BECOME LOOSE WILL BE ADEQUATELY SUPPORTED AND TIED BACK INTO PLACE.

SURFACE PREPARATION:
CLEANING WILL CLOSELY PRECEDE APPLICATION OF THE BONDING GROUT OR THE PATCHING MATERIAL. THE SURFACE TO BE PATCHED AND THE EXPOSED REINFORCING STEEL WILL BE THOROUGHLY CLEANED WITHIN 24 HOURS PRIOR TO PATCHING BY ABRASIVE BLASTING FOLLOWED BY AN AIR BLAST. BLASTING ABRASIVES CONTAINING MORE THAN 1% FREE SILICA WILL NOT BE ALLOWED. IT MAY BE NECESSARY TO USE HAND TOOLS TO REMOVE SCALE FROM THE REINFORCING STEEL.

CONTAMINATION OF THE AREA TO BE PATCHED BY CONSTRUCTION EQUIPMENT OR FROM ANY OTHER SOURCE WILL BE PREVENTED BY PLACEMENT OF A CLEAN 4-MIL POLYETHYLENE SHEET (OR ANY OTHER COVERINGS AS APPROVED BY THE ENGINEER) ON THE SURFACE OF THE DECK FOLLOWING THE AIR BLAST CLEAINIG. WHERE REINFORCING STEEL IS EXPOSED, THE CONTRACTOR WILL PROVIDE ADEQUATE SUPPORT FOR THE CONCRETE MIXER SO THAT REINFORCING STEEL AND ITS BOND WITH THE CONCRETE WILL NOT BE DAMAGED BY THE WEIGHT AND MOVEMENT OF THE CONCRETE MIXER, OR WILL PROVIDE MEANS TO CONVEY CONCRETE FROM THE MIXER THE PATCH LOCATIONS.

MATERIALS:
MATERIALS WILL CONFORM TO THE FOLLOWING REQUIREMENTS:
FINE AGGREGATE (NATURAL SAND)
COARSE AGGREGATE (NO. 8)
RAPID HARDENING HYDRAULIC CEMENT
WATER
LATEX EMULSION
CURING MATERIAL 705.05,OR 705.06, WHITE OPAQUE
REPLACEMENT REINFORCING STEEL

POSSOLONIC MATERIAL OR PORTLAND POZZOLAN CEMENTS WILL NOT BE USED.

ANTI-FOAM ADDITIVES AS RECOMMENDED BY THE LATEX EMULSION MANUFACTURER MAY BE REQUIRED IF THE CONCRETE MIXTURE ENTRAINED AIR IS ABOVE THE SPECIFIED AMOUNT.

AIR-ENTRAINING ADMIXTURES WILL NOT BE USED

A SET CONTROL IN ACCORDANCE WITH THE CEMENT MANUFACTURER'S RECOMMENDATION MAY BE CONSIDERED.

ADMIXTURES CONTAINIG CALCIUM CHLORIDE WILL NOT BE USED.

(NOTE 1): DELETRIOUS MATERIAL WILL NOT EXCEED ONE HALF THE REQUIREMENTS FOR THE SUPERSTRUCTURE AGGREGATE, AND THE SODIUM SULFATE SOUNDNESS LOSS WILL NOT EXCEED THAT SPECIFIED FOR SUPERSTRUCTURE CONCRETE IN 703.02.

(NOTE 2): CEMENT WILL BE APPROXIMATELY 1#3 CALCIUM SULFOALUMINATE (C4A3S) AND 2#3 DICALCIUM SILICATE (CS2) OR OTHER HYDRAULIC CEMENT THAT WILL PROVIDE A LATEX MODIFIED CONCRETE THAT MEETS THE PHYSICAL REQUIREMENTS FOR VERY EARLY STRENGTH LATEX MODIFIED CONCRETE LISTED BELOW:

STRUCTURE NOTES
VARIOUS STRUCTURES ON IR 680
IN MAHONING COUNTY

SFN
VARIOUS

DESIGN AGENCY

DESIGNER	CHECKER
JF	MJA

REVIEWER
TJP 08-08-25

PROJECT ID
121474

SUBSET	TOTAL
2	10

SHEET	TOTAL
P.12	20

MODEL: Sheet 2 PAPERSIZE: 34x22 (in.) DATE: 1/20/2026 TIME: 9:43:55 AM PLTDRV: OHDOT_PDF_Ex.pltcfg PENTBL: OHDOT_Pen.tbl USER: Joel.Fitzsimmons@dot.ohio.gov WORKSPACE: OHDOTCEv02 WORKSET: 121474 PRODUCT: OpenRoadsDesigner 24.00.00.205
pw:\\ohiodot-pw.bentley.com:ohiodot-pw-02\Documents\01 Active Projects\District 04\Mahoning\121474\400-Engineering\Roadway\Sheets\121474_SN001.dgn

ITEM SPECIAL - PATCHING CONCRETE STRUCTURES, MISC.:
VES-LMC (VERY EARLY STRENGTH LATEX MODIFIED CONCRETE) CONT...

1.COMPRESSIVE STRENGth, MINIMUM, CONCRETE ASTM C39:
3 HOURS: 2500 PSI
1 DAY: 3500 PSI
7 DAYS: 5000 PSI

2. PRIOR TO PLACING PATCHES THE CONCRETE WILL DEMSTRATE THAT THE CONCRETE MIXTURE WILL OBTAIN A COMPRESSIVE STRENGHT OF AT LEAST 2500 PSI WITHIN THE CURING PERIOD AND AT THE CURING TEMPERATURES IN WHICH THE PATCHES WILL BE PLACED.

3.PERMEABILITY, MAXIMUM AT 28 DAYS, AASHTO T277: 1000 COULOMBS. PERMEABILITY SAMPLES WILL BE MOIST CURED 2 DAYS IN THE MOLDS (1 DAY AT THE JOB SITE AND 1 DAY IN THE LAB). AIR CURED 5 DAYS IN THE MOLDS IN THE LABORATORY, AND 21 DAYS OUT OF THE MOLDS AT 100°F AIR TEMP.

4.BOND STRENGHT, MINIMUM AT 7 DAYS, ASTM C1583 USING TYPE 1, SELF-ALIGNMENT ADHESION TESTER PER ASTM D4541 = 150 PSI.

(NOTE 3): THE LATEX EMULSION WILL BE PROTECTED FROM FREEZING AND PROLONGED EXPOSURE TO TEMPERATURES IN EXCESS OF 85°F. EMULSIONS IN STORAGE FACILITIES WILL BE RE-CIRCULATED IN ACCORDANCE WITH THE MANUFACTURER'S RECOMMENDATIONS.

PROPORTIONING AND MIXING:
ALL MIXING OF MATERIALS WILL BE DONE ON SITE IN A CONTINUOUS MOBILE MIXER. PRIOR TO EACH DAY'S PLACEMENT, EACH MIXER WILL BE CHECKED TO ASSURE THAT SPECIFIED AIR CONTENT, SLUMP, AND YEILD HAVE BEEN ATTAINED. TRIAL CONCRETE WILL NOT BE INCORPORATED INTO THE WORK. PROPORTIONING AND ALL OTHER REQUIRED CHARACTERISTICS OF THE MIX WILL BE ADJUSTED OFF THE DECK BEFORE PLACEMENT OF THE PATCHES BEGIN.

THE MIXTURE WILL CONSIST OF A WORKABLE MIXTURE OF UNIFORM COMPOSITION AND CONSISTENCY WITH THE FOLLOWING QUANTITIES OF MATERIALS PER CUBIC YARD (DRY WEIGHT):

QUANTITIES OF MATERIALS PER CUBIC YARD (DRY WEIGHT):

TYPE OF COARSE AGGREGATE	FINE AGGREGATE (LB)	COARSE AGGREGATE (LB)	CEMENT (LB)	LATEX EMULSION (GAL)	MAX. NET WATER (GAL)
GRAVEL	1645	1300	658	24.5	17.5
LIMESTONE	1645	1315	658	24.5	17.5
SLAG	1645	1140	658	24.5	17.5

SLUMP: 4 TO 6 INCHES
AIR CONTENT OF PLASTIC MIX WILL NOT EXCEED 7 PERCENT

NOTE: THE SPECIFIC GRAVITY USED FOR DETERMINING THE ABOVE WEIGHTS ARE: NATURAL SAND 2.62, GRAVEL 2.62, LIMESTONE 2.65, AND SLAG 2.30.

NOTE: THE DRY WEIGHTS ARE APPROXIMATE. THIS PROPORTION SHOULD PRODUCE GOOD WORKABILITY, BUT DUE TO GRADATION VARIABILITY, THE FINE AGGREGATE CONTENT MAY BE INCREASED WITH APPROVAL BY THE ENGINEER, AS MUCH AS 8 PERCENT BY WEIGHT IF THE COARSE AGGREGATE IS REDUCED AN EQUAL VOLUME.

NOTE: THE SLUMP WILL NOT BE MEASURED UNTIL AFTER THE CONCRETE HAS BEEN DISCHARGED FROM THE MIXER AND LEFT UNDISTURBED FOR 4 TO 5 MINUTES. THE WATER CONTENT MAY BE ADJUSTED TO CONTROL THE SLUMP WITHIN THE PRESCRIBED LIMITS.

CONTINUOUS MOBILE MIXER:
REQUIREMENTS FOR CONTINUOUS MOBILE MIXERS FOR LATEX MODIFIED CONCRETE ARE AS FOLLOWS: THE PROPORTIONING AND MIXING EQUIPEMENT WILL BE AN INTEGRAL MOBILE UNIT HAVING CAPACITY AND CONTINUOUS MIXING CAPABILITY TO PERMIT THE FINISHING OPERATIONS TO PROCEED AT A CONSTANT RATE SO THAT THE FINAL FINISHING CAN BE COMPLETED PRIOR TO THE FORMATION OF A PLASTIC FILM ON THE VES-LMC SURFACE. IT WILL CONSISTENTLY PRODUCE UNIFORMLY BLENDED MIXTURE WITH THE SPECIFIED AIR CONTENT AND SLUMP LIMITS.

THE MIXER WILL ALSO:
-BE CAPABLE OF PRODUCING NOT LESS THAN 6 CUBIC YARDS OF VES-LMC WITHOUT RECHARGING
-BE EQUIPED WITH A RECORDING METER WITH A TICKET PRINTOUT DEVICE TO RECORD AN INDICATION OF THE CEMENT QUANTITY BEING INTRODUCED INTO THE MIX. THE METERING DEVICE WILL BE ACCURATE WITHIN A TOLERANCE OF -1 TO +3 PERCENT.
-BE EQUIPED WITH A LATEX METERING DEVICE TO INDICATE VOLUME DISPENSED. THE METERING DEVICE WILL BE ACCURATE TO WITHIN A TOLERANCE OF -1 TO +2 PERCENT. IN ADDITION THE LATEX TANK WILL HAVE A STAND PIPE MARKED GALLONS.
-BE EQUIPPED WITH A WATER FLOW INDICATOR AND HAVE A WATER FLOW CONTROL THAT IS READILY ADJUSTABLE TO PROVIDE FOR MINOR VARIATIONS IN AGGREGATE MOISTURE CONTENT. THE FLOW INDICATOR WILL BE ACCURATE WITHIN A TOLERANCE OF +1 PERCENT IN THE RANGE OF EXPECTED USE.
-BE EQUIPPED WITH A CONTROL TO REGULATE THE QUANTITY OF EACH OF THE VES-LMC COMPONENTS TO PERMIT THE PRODUCTION OF THE MIX HAVING THE SPECIFIED COMPOSITION. TO ENSURE THAT THE MIXER CAN ACCURATELY PROPORTION AND BLEND ALL COMPONENTS OF THE VES-LMC ON A CONTINUOS OR INTERMITTENT BASIS. THE MIXER WILL BE CALIBRATED PRIOR TO THE PRODUCTION OF THE MATERIAL.
-THE ENGINEER MAY REQUIRE RE-CALIBRATION OF THE CEMENT, LATEX AND WATER METERING DEVICES AS HE DEEMS NECESSARY.
-BE CAPABLE OF DISCHARGING MIXED VES-LMC THROUGH A CONVENTIONAL CHUTE DIRECTLY IN FRONT OF THE FINISHING MACHINE.
-BE KEPT CLEAN, FREE OF PARTIALLY DRIED OR HARDENED MATERIALS, AND PROPERLY OPERATED AT ALL TIMES.

PLACING, CONSOLIDATING AND FINISHING:
IMMEDIATELY PRIOR TO PLACING THE PATCHES, CLEAN AND WET ALL EXPOSED CONCRETE SURFACES.

CONTINUOUSLY FOG THE VES-LMC MATERIAL FROM THE TIME OF PLACING UNTIL COVERED WITH WET BURLAP. APPLY THE FOG UNIFORMLY OVER THE ENTIRE SURFACE OF THE PATCH AREA WITHOUT PRODUCING STANDING WATER.

SCREEDING:
THE PATCHING MATERIAL WILL BE PLACED, CONSOLIDATED, AND FINISHED TO THE ADJACENT GRADE. PATCHES EXCEEDING 50 SQ FT (4.6 SQ M) WILL BE LEVELED AND CONSOLIDATED WITH A MECHANICAL VIBRATING SCREED. SMALLER PATCHES WILL BE HAND VIBRATED AND LEVELED WITH A STRAIGHTEDGE. THE SCREED WILL BE PLACED PARALLEL TO THE BRIDGE CENTERLINE SO THAT THE DECK PROFILE REMAINS CONSISTENT WITH THE WORN SURFACE.

DO NOT ADD WATER TO AID THE FINISHING AND AN EVAPORATION RETARDANT MAY NOT BE USED.

AFTER THE PATCHES HAVE BEEN CONSOLIDATED AND FINISHED THEY WILL BE TEXTURED IN ACCORDANCE WITH 451.09. THE CONCTRACTOR WILL TEST THE SURFACE OF THE PLASTIC CONCRETE FOR TRUENESS AND FOR BEING FLUSH WITH THE EDGES OF THE ADJACENT SURFACES BY USE OF A STRAIHT EDGE. THE STRAIGHTEDGE WILL BE DONE BY PLACING THE STRAIGHTEDGE PARALLEL TO THE BRIDGE CENTERLINE WITH THE ENDS RESTING ON THE EXISTING WEARING SURFACE ADJACENT TO THE PATCH AND DRAWING THE STRAIGHT EDGE ACROSS THE PATCH. ANY HIGH OR LOW AREAS EXCEEDING 1/8 INCH IN 10 FEET (3 MM IN 3 M) WILL BE CORRECTED. IF ANY CORRECTIONS ARE MADE, THE SURFACE WILL BE RECHECKED.

CURING:
COVER THE FINISHED PATCHED SURFACES WITH A SINGLE LAYER OF CLEAN WET BURLAP AND COVER THE BURLAP WITH A 4-MIL WHITE OPAQUE POLYETHYLENE FILM FOR A MINIMUM OF 4 HOURS FOLLOWED BY A MEMBRANE CURE PER 511.17 METHOD (B).

ADEQUATE PRECAUTIONS WILL BE TAKEN TO PROTECT THE FRESHLY PLACED VES-LMC FROM RAIN.

THE CONTRACTOR WILL SUPPLY A PROPERLY CALIBRATED IMPACT REBOUND HAMMER TO VERIFY THAT THE PATCHES HAVE REACHED 3000 PSI COMPRESSIVE STRENGTH PRIOR TO OPENING TO TRAFFIC.

INSPECTION AND SOUNDING OF CONCRETE PATCHES:
AFTER CURING AND BEFORE FINAL ACCEPTANCE, ALL PATCHED AREAS WILL BE SOUNDED. ALL DELAMINATED AREAS WILL BE REMOVED AND REPATCHED ACCORDING TO THIS NOTE. ALL PATCHES WHICH ARE SOUND BUT SHOW SIGNS OF CRACKING WILL BE SEALED AND THE PERIMETER OF ALL PATCHES WILL ALSO BE SEALED WITH GRAVITY FED RESIN.

ALL SOUNDING AND REPLACEMENT OF REJECTED AREAS WILL BE THE RESPONSIBILITY OF THE CONCTRACTOR AND INCLUDED IN THE UNIT BID PRICE FOR THIS ITEM.

METHOD OF MEASUREMENT:
PAYMENT WILL BE MADE AT THE CONTRACTOR PRICE PER CUBIC YARD FOR ITEM SPECIAL - PATCHING CONCRETE STRUCTURES, MISC.: VES-LMC (VERY EARLY STRENGTH LATEX MODIFIED CONCRETE) WHICH WILL INCLUDE ALL MATERIALS AND LABOR REQUIRED TO PERFORM THIS WORK INCLUDING REMOVAL AND DISPOSAL OF THE EXISTING MATERIAL.

NEOPRENE TROUGH GLAND REPLACEMENT

REPLACE IN KIND THE NEOPRENE TROUGH GLAND UNDER THE FORWARD ABUTMENT EXPANSION JOINT OF STRUCTURE MAH-680-4.734. THE CONTRACTOR SHALL REMOVE THE EXISTING BOLTS AND COVER PLATES PRIOR TO REMOVING AND REPLACING THE NEOPRENE GLAND AND INSTALL NEW BOLTS AND COVER PLATES ONCE THE NEW NEOPRENE GLAND HAS BEEN INSTALLED PER THE DETAIL BELOW. NEW BOLTS AND COVER PLATES SHALL MATCH THE EXISTING TYPE AND DIMENSIONS. ALL MATERIALS, LABOR AND EQUIPMENT REQUIRED TO COMPLETE THE WORK SHALL BE INCLUDED IN THE UNIT BID PRICE FOR ITEM 516 - STRUCTURAL JOINT OR JOINT SEALER, MISC.: NEOPRENE TROUGH.

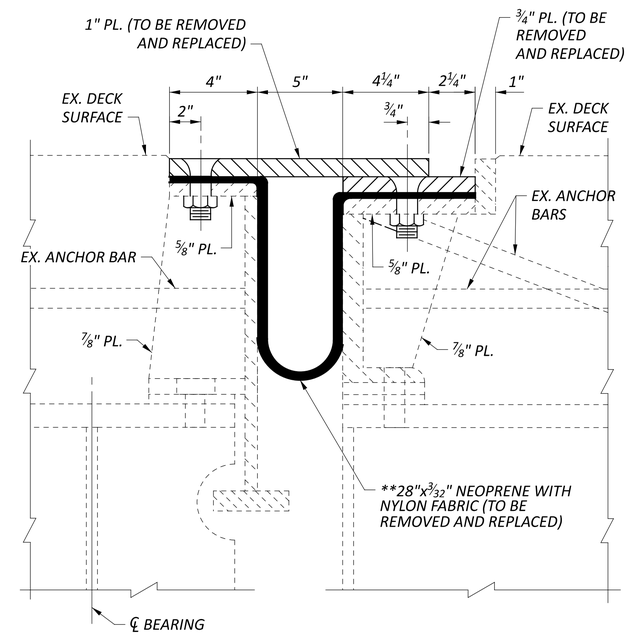

**FABRIC REINFORCED NEOPRENE TROUGH SHALL BE A WATSON BOWMAN WABO GUTTERFLEX OR AN APPROVED EQUAL.

STRUCTURE NOTES
VARIOUS STRUCTURES ON IR 680
IN MAHONING COUNTY

SFN
VARIOUS
DESIGN AGENCY

DESIGNER	CHECKER
JF	MJA
REVIEWER	
TJP 08-08-25	
PROJECT ID	
121474	
SUBSET	TOTAL
3	10
SHEET	TOTAL
P.13	20

MAH-680-4.58 PART 2

MODEL: Sheet 3 PAPERSIZE: 34x22 (in.) DATE: 1/20/2026 TIME: 9:43:56 AM PLTDRV: OHDOT_PDF_Ex.pltcfg PENTBL: OHDOT_Pen.tbl USER: Joel.Fitzsimmons@dot.ohio.gov WORKSPACE: OHDOTCEv02 WORKSET: 121474 PRODUCT: OpenRoadsDesigner 24.00.00.205
pw:\\ohiodot-pw.bentley.com:ohiodot-pw-02\Documents\01 Active Projects\District 04\Mahoning\121474\400-Engineering\Roadway\Sheets\121474_SN001.dgn

ASBESTOS NOTIFICATION (MAH-680-4.734)

A CERTIFIED ASBESTOS HAZARD EVALUATION SPECIALIST INSPECTED THE BRIDGE STRUCTURE SCHEDULED FOR DEMOLITION AND/OR REHABILITATION;

THE SURVEY DETERMINED THAT NO ASBESTOS IS PRESENT ON THE STRUCTURES:

MAH-680-4.734

THE DEPARTMENT HAS PROVIDED A COPY OF THE OHIO ENVIRONMENTAL PROTECTION AGENCY (OEPA) NOTIFICATION OF DEMOLITION AND RENOVATION FORM (PARTIALLY COMPLETED) AND THE ASBESTOS I INSPECTION REPORT IN THE REFERENCE FILES FOR THIS PROJECT. THE CONTRACTOR SHALL COMPLETE THE FORM AND SUBMIT IT TO THE OEPA AT LEAST TEN (10) WORKING DAYS PRIOR TO THE START OF ANY DEMOLITION AND/OR RENOVATION. ONLINE SUBMISSION IS AVAILABLE AT http://www.epa.ohio.gov/asbestos AND IS ENCOURAGED, OR THE CONTRACTOR SHALL SUBMIT IT TO ONE OF THE ADDRESSES BELOW:

ASBESTOS PROGRAM
OHIO EPA, DAPC
P.O. BOX 1049
COLUMBUS, OH 43216-1049

OR

ASBESTOS PROGRAM
OHIO EPA, DAPC
50 W. TOWN ST., SUITE 700
COLUMBUS, OH 43215

THE FORM SHALL INCLUDE:

1. *THE CONTRACTOR'S NAME AND ADDRESS*
2. *THE SCHEDULED DATES FOR THE START AND COMPLETION OF THE STRUCTURE DEMOLITION AND/OR RENOVATION*
3. *DESCRIPTION OF THE PLANNED DEMOLITION WORK AND METHODS BE USED*
4. *ALL NECESSARY FEES*

THE CONTRACTOR SHALL PROVIDE A COPY OF THE COMPLETED NOTICATION OF DEMOLITION AND RENOVATION FORM TO THE PROJECT ENGINEER AT LEAST TEN (10) WORKING DAYS PRIOR TO THE START OF ANY DEMOLITION AND/OR RENOVATION

THE CONTRACTOR SHALL FURNISH ALL FEES, LABOR, AND MATERIALS NECESSARY TO COMPLETE AND SUBMIT THE OEPA NOTIFICATION FORM. PAYMENT FOR THIS WORK SHALL BE INCLUDED IN ITEM 202 - PORTIONS OF STRUCTURE REMOVED, AS PER PLAN.

ASBESTOS NOTIFICATION (MAH-680-7.126)

A CERTIFIED ASBESTOS HAZARD EVALUATION SPECIALIST INSPECTED THE BRIDGE STRUCTURE SCHEDULED FOR DEMOLITION AND/OR REHABILITATION;

THE INSPECTION DETERMINED THAT MAH-680-7.126 CONTAINS ASBESTOS. THE ASBESTOS CONTAINING MATERIAL SHALL BE REMOVED AND DISPOSED OF BY THE CONTRACTOR. THE CONTRACTOR SHALL ENSURE THAT THE ABATEMENT, TRANSPORT, AND DISPOSAL OF ASBESTOS CONTAINING MATERIAL IS CONDUCTED IN ACCORDANCE WITH ALL FEDERAL, STATE, AND LOCAL REGULATIONS. THE CONTRACTOR SHALL ENSURE THAT ALL DOCUMENTATION RELATED TO THE ABATEMENT, TRANSPORT, AND DISPOSAL OF ASBESTOS CONTAINING MATERIALS IS SUBMITTED TO THE PROJECT ENGINEER FOR RECORD KEEPING WITHIN 2 WEEKS OF COMPLETION.

THE DEPARTMENT HAS PROVIDED A COPY OF THE OHIO ENVIRONMENTAL PROTECTION AGENCY (OEPA) NOTIFICATION OF DEMOLITION AND RENOVATION FORM (PARTIALLY COMPLETED) AND THE ASBESTOS I INSPECTION REPORT IN THE REFERENCE FILES FOR THIS PROJECT. THE CONTRACTOR SHALL COMPLETE THE FORM AND SUBMIT IT TO THE OEPA AT LEAST TEN (10) WORKING DAYS PRIOR TO THE START OF ANY DEMOLITION AND/OR RENOVATION. ONLINE SUBMISSION IS AVAILABLE AT http://www.epa.ohio.gov/asbestos AND IS ENCOURAGED, OR THE CONTRACTOR SHALL SUBMIT IT TO ONE OF THE ADDRESSES BELOW:

ASBESTOS PROGRAM
OHIO EPA, DAPC
P.O. BOX 1049
COLUMBUS, OH 43216-1049

OR

ASBESTOS PROGRAM
OHIO EPA, DAPC
50 W. TOWN ST., SUITE 700
COLUMBUS, OH 43215

THE FORM SHALL INCLUDE:

1. *THE CONTRACTOR'S NAME AND ADDRESS*
2. *THE SCHEDULED DATES FOR THE START AND COMPLETION OF THE STRUCTURE DEMOLITION AND/OR RENOVATION*
3. *DESCRIPTION OF THE PLANNED DEMOLITION WORK AND METHODS BE USED*
4. *ALL NECESSARY FEES*

THE CONTRACTOR SHALL PROVIDE A COPY OF THE COMPLETED NOTICATION OF DEMOLITION AND RENOVATION FORM TO THE PROJECT ENGINEER AT LEAST TEN (10) WORKING DAYS PRIOR TO THE START OF ANY DEMOLITION AND/OR RENOVATION

THE CONTRACTOR SHALL FURNISH ALL FEES, LABOR, AND MATERIALS NECESSARY TO COMPLETE AND SUBMIT THE OEPA NOTIFICATION FORM. PAYMENT FOR THIS WORK SHALL BE INCLUDED IN ITEM SPECIAL - REMOVAL OF ASBESTOS CONTAINING MATERIAL.

THE CONTRACTOR SHALL FURNISH ALL THE LABOR, EQUIPMENT, AND MATERIALS NECESSARY TO PROPERLY ABATE, TRANSPORT, AND DISPOSE OF ASBESTOS CONTAINING MATERIALS IN A LANDFILL LICENSED BY THE LOCAL HEALTH DEPARTMENT AND PERMITTED BY THE OHIO ENVIRONMENTAL PROTECTION AGENCY - DIVISION OF AIR POLLUTION CONTROL TO ACCEPT ASBESTOS CONTAINING MATERIAL. PAYMENT FOR THIS WORK SHALL BE INCLUDED IN ITEM SPECIAL – STRUCTURES, REMOVAL OF ASBESTOS CONTAINING MATERIAL

STRUCTURE NOTES
VARIOUS STRUCTURES ON IR 680
IN MAHONING COUNTY

CALC:	JF	DATE:	5/29/2025
CHECKED:	MJA	DATE:	9/8/2025

ESTIMATED QUANTITIES

BRIDGE NO. / STRUCTURE FILE NO.															ITEM	EXTENSION	UNIT	DESCRIPTION	SEE SHEET
MAH-680-4.734 5006864 03/IMS	MAH-680-4.955 5006902 03/IMS	MAH-680-5.132 5006937 03/IMS	MAH-680-5.601 5006961 03/IMS	MAH-680-5.815 5007054 03/IMS	MAH-680-6.037 5007089 03/IMS	MAH-680-6.116 5001986 03/IMS	MAH-680-6.377 5007143 03/IMS	MAH-680-6.421 5007178 03/IMS	MAH-62-17.499 5007208 03/IMS	MAH-680-6.933 5007232 03/IMS	MAH-680-6.983 5007267 03/IMS	MAH-680-7.126 5003350 03/IMS	MAH-680-7.297 5007291 03/IMS	MAH-680-6.3475E 5007119 03/IMS					
												LS			202	11201		PORTIONS OF STRUCTURE REMOVED, AS PER PLAN	1 / 10
												4088			509	10000	LB	EPOXY COATED REINFORCING STEEL	
												100			509	20001	LB	REINFORCING STEEL, REPLACEMENT OF EXISTING REINFORCING STEEL, AS PER PLAN	1 / 10
				292	845	1352									512	10050	SY	SEALING OF CONCRETE SURFACES (NON-EPOXY)	
354	23	9	30		9	6	23	23	17	329	349	12	6	25	512	10100	SY	SEALING OF CONCRETE SURFACES (EPOXY-URETHANE)	
1171		1707	2141				2643		1317	2401	2586	1413		1551	512	73500	SY	TREATING CONCRETE BRIDGE DECKS WITH GRAVITY FED RESIN	
										329	349				512	74000	SY	REMOVAL OF EXISTING COATINGS FROM CONCRETE SURFACES	
625		1477	1386				1566		247	1674	1861	965		1001	512	74500	FT	REMOVAL OF EXISTING PAVEMENT MARKING	
		192										128			516	10010	FT	ARMORLESS PREFORMED JOINT SEAL	
	16	28	24									24			516	45305	EACH	REFURBISH BEARING DEVICE, AS PER PLAN	1 / 10
	LS	LS	LS									LS			516	47001		JACKING AND TEMPORARY SUPPORT OF SUPERSTRUCTURE, AS PER PLAN	1 / 10
														454	SPECIAL	51900100	SF	COMPOSITE FIBER WRAP SYSTEM	
7	10		23									9			SPECIAL	51910000	SY	PATCHING CONCRETE BRIDGE DECK OVERLAY WITH MICRO-SILICA MODIFIED CONCRETE	
100	205	75	265		75	50	200	200	150			100	50	220	519	11101	SF	PATCHING CONCRETE STRUCTURE, AS PER PLAN	2 / 10
												26			SPECIAL	51911900	CY	PATCHING CONCRETE STRUCTURE: VES-LMC (VERY EARLY STRENGTH-LATEX MODIFIED CONCRETE)	2 / 10
												LS			SPECIAL	51960000		PATCHING CONCRETE STRUCTURE: TRIAL BATCH VES-LMC	2 / 10
5	5	5													SPECIAL	53000800	SY	STRUCTURES: CONCRETE SPALL REMOVAL	2 / 10
												582		440	844	20000	EACH	GALVANIC ANODE PROTECTION	2 / 10
		532													848	10000	SY	MICRO SILICA MODIFIED CONCRETE OVERLAY USING HYDRODEMOLITION (T = 1 1/4")	
		532													848	20000	SY	SURFACE PREPARATION USING HYDRODEMOLITION (T = 1 1/4")	
		9													848	30000	CY	MICRO SILICA MODIFIED CONCRETE OVERLAY (VARIABLE THICKNESS), MATERIAL ONLY	
		16													848	50000	SY	HAND CHIPPING	
		LS													848	50100		TEST SLAB	
33															516	14600	FT	STRUCTURAL JOINT OR JOINT SEALER, MISC.: NEOPRENE TROUGH	3 / 10
												133			516	14600	FT	STRUCTURAL JOINT OR JOINT SEALER, MISC.: CENTERLINE EXPANSION JOINT	
												40			SPECIAL	53000600	SF	STRUCTURES: REMOVAL OF ASBESTOS CONTAINING MATERIAL	4 / 10

STRUCTURE ESTIMATED QUANTITIES
VARIOUS STRUCTURES ON IR 680
IN MAHONING COUNTY

SFN
VARIOUS

DESIGN AGENCY

DESIGNER	CHECKER
JF	MJA

REVIEWER
TJP 08-08-25

PROJECT ID
121474

SUBSET	TOTAL
5	10

SHEET	TOTAL
P.15	20

MAH-680-4.58 PART 2

MODEL: Sheet PAPERSIZE: 34x22 (in.) DATE: 1/20/2026 TIME: 9:44:03 AM PLTDRV: OHDOT_PDF_E+.pltcfg PENTBL: OHDOT_Pen.tbl USER: Joel.Fitzsimmons@dot.ohio.gov WORKSPACE: OHDOTCEv02 WORKSET: 121474 PRODUCT: OpenRoadsDesigner 24.00.00.205
pw:\\ohiodot-pw.bentley.com:ohiodot-pw-02\Documents\01 Active Projects\District 04\Mahoning\121474\400-Engineering\Roadway\Sheets\121474_SQ001.dgn

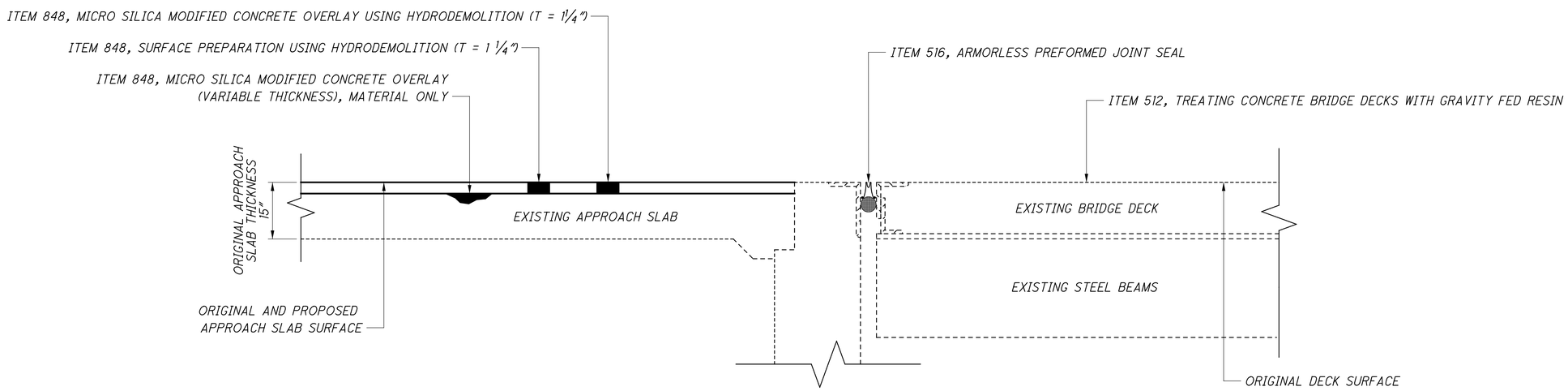

MAH-680-5.132

APPROACH SHOWN, TRAILING SIMILAR

BRIDGE NUMBER	BRIDGE DECK												APPROACH SLABS												
				512	512		SPECIAL										512	512	516	SPECIAL	848	848	848	848	848
	LENGTH (BRIDGE LIMITS)	BRIDGE WIDTH	DECK AREA	TREATING CONCRETE BRIDGE DECKS WITH GRAVITY FED RESIN	REMOVAL OF EXISTING PAVEMENT MARKING		PATCHING CONCRETE BRIDGE DECK OVERLAY WITH MICRO- SILICA MODIFIED CONCRETE						LENGTH (APPROACH SLABS)	APPROACH SLAB WIDTH	APPROACH SLAB AREA	APPROACH (FORWARD / REAR)	TREATING CONCRETE BRIDGE DECKS WITH GRAVITY FED RESIN	REMOVAL OF EXISTING PAVEMENT MARKING	ARMORLESS PREFORMED JOINT SEAL	PATCHING CONCRETE BRIDGE DECK OVERLAY WITH MICRO- SILICA MODIFIED CONCRETE	MICRO SILICA MODIFIED CONCRETE OVERLAY USING HYDRODEMOLITION (T = 1 1/4")	SURFACE PREPARATION USING HYDRODEMOLITION (T = 1 1/4")	MICRO SILICA MODIFIED CONCRETE OVERLAY (VARIABLE THICKNESS), MATERIAL ONLY	HAND CHIPPING	TEST SLAB
	FT	FT	SQ YD	SY	FT		SY						FT	FT	SQ YD		SY	FT	FT	SY	SY	SY	CY	SY	
MAH-680-4.734	266.50	32.92	974.70	975	575		5						25.00	32.92	91.44	REAR	92	25		1					
													25.00	32.92	91.44	FWD	92	25		1					
MAH-680-4.955	186.18	48.00	992.96				5						20.00	48.00	106.67	REAR				3					
													20.00	48.00	106.67	FWD				2					
MAH-680-5.132	161.50	100.00	1794.44	1795	1127								25.00	100.00	277.78	REAR		175	100		278	278	4.6	2.0	LS
													25.00	100.00	277.78	FWD		175	100		278	278	4.6	2.0	
MAH-680-5.601	180.14	88.00	1761.37	1762	1086		17						25.00	88.00	244.44	REAR	245	150		3					
													25.00	88.00	244.44	FWD	245	150		3					
MAH-680-6.377	211.00	82.00	1922.44	1923	1266								25.00	116.00	322.22	REAR	323	150							
													25.00	160.00	444.44	FWD	445	150							
MAH-62-17.499	206.75	48.00	1102.67	1103	207								20.00	48.00	106.67	REAR	107	20							
													20.00	48.00	106.67	FWD	107	20							
MAH-680-6.933	136.11	116.00	1754.37	1755	1224								25.00	116.00	322.22	REAR	323	225							
													25.00	116.00	322.22	FWD	323	225							
MAH-680-6.983	141.23	121.65	1908.88	1909	1361								25.00	116.00	322.22	REAR	323	225							
													25.00	127.29	353.59	FWD	354	275							
MAH-680-7.126	132.58	66.00	972.28	973	665		5						30.00	66.00	220.00	REAR	220	150		2					
													30.00	66.00	220.00	FWD	220	150		2					
MAH-680-6.347SE	450.20	25.58	1279.57	1280	901								25.00	27.00	75.00	REAR	75	50							
													25.00	27.00	75.00	FWD	75	50							

SUPERSTRUCTURE DETAILS

MAH-680-4.734, MAH-680-4.955, MAH-680-5.132, MAH-680-5.601, MAH-680-6.377
MAH-680-6.584, MAH-680-6.933, MAH-680-6.983, MAH-680-7.126 & MAH-680-6.347SE

SFN: VARIOUS

DESIGN AGENCY

DESIGNER: JF | CHECKER: MJA

REVIEWER: TJP 08-08-25

PROJECT ID: 121474

SUBSET: 6 | TOTAL: 10

SHEET: P.16 | TOTAL: 20

MAH-680-4.58 PART 2

MODEL: Sheet PAPERSIZE: 34x22 (in.) DATE: 1/20/2026 TIME: 9:44:09 AM PLTDRV: OHDOT_PDF_E+.pltcfg PENTBL: OHDOT_Pen.tbl USER: Joel.Fitzsimmons@dot.ohio.gov WORKSPACE: OHDOTCEv02 WORKSET: 121474 PRODUCT: OpenRoadsDesigner 24.00.00.205
pw:\\ohiodot-pw.bentley.com:ohiodot-pw-02\Documents\01 Active Projects\District 04\Mahoning\121474\400-Engineering\Roadway\Sheets\121474_SD001.dgn

NOTES:

1. ITEM 202 - PORTIONS OF STRUCTURE TO BE REMOVED

2. REMOVAL OF EXISTING JOINTS, DECK CONCRETE AND BACK-WALL CONCRETE WILL BE PAID FOR UNDER ITEM 202 PORTIONS OF STRUCTURE REMOVED, AS PER PLAN. REMOVAL LIMITS WILL BE FROM TOE TO TOE OF SIDEWALK OF BRIDGE DECK AND BACKWALL FOR THE LENGTH SHOWN IN THE DETAIL BELOW AT EACH ABUTMENT. CARE WILL BE TAKEN TO SALVAGE ALL EXISTING LONGITUDINAL DECK AND BACKWALL U-SHAPED REINFORCING STEEL DURING CONCRETE REMOVAL.

3. REBUILD PORTION OF DECK AND ABUTMENT BACKWALL PER THE DETAIL SHOWN BELOW. ALL MATERIAL, LABOR, EQUIPMENT, AND INCIDENTALS REQUIRED TO PERFORM THIS WORK WILL BE INCLUDED IN THE UNIT BID PRICE FOR ITEM SPECIAL -- PATCHING CONCRETE STRUCTURE, MISC.: VES-LMC (VERY EARLY STRENGTH - LATEX MODIFIED CONCRETE).

4. ALL REINFORCING STEEL REQUIRED TO COMPLETE THE CONSTRUCTION OF THE NEW JOINT WILL BE PAID FOR UNDER ITEM 509 -- EPOXY COATED REINFORCING STEEL.

5. FOR ADDITIONAL NOTES SEE SHEET 8/14 OF SCD AS-2-15.

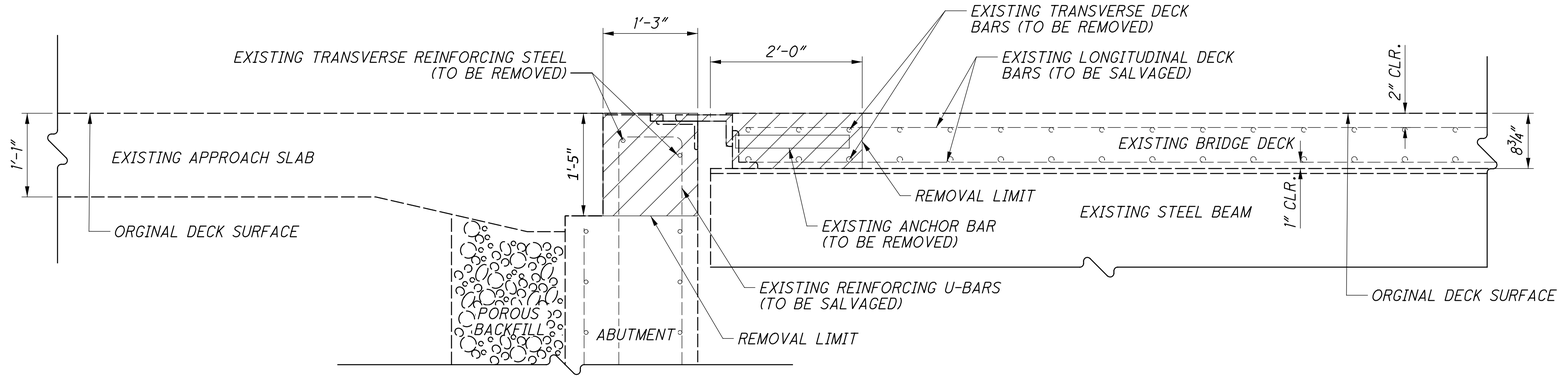

MAH-680-7.126
REMOVAL DETAILS

APPROACH SHOWN
TRAILING SIMILAR

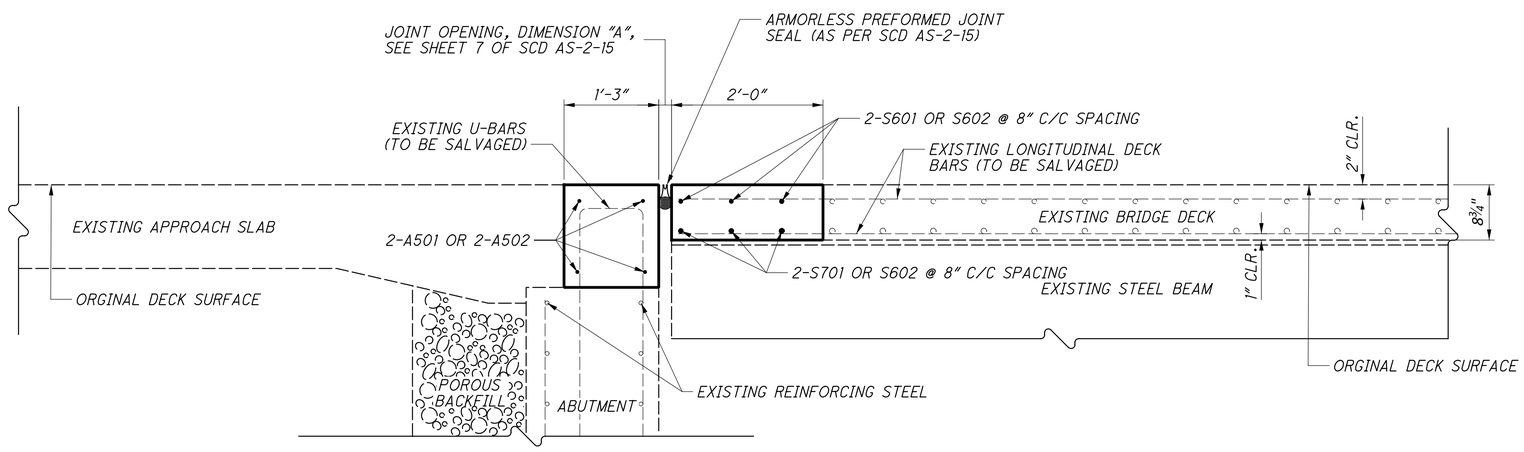

MAH-680-7.126
PROPOSED WORK DETAIL

APPROACH SHOWN
TRAILING SIMILAR

EXPANSION JOINT REMOVAL AND REPLACEMENT DETAILS
MAH-680-7.126
SOUTH AVE

SFN 5003350	
DESIGN AGENCY	
DESIGNER JF	CHECKER MJA
REVIEWER TJP 08-08-25	
PROJECT ID 121474	
SUBSET 7	TOTAL 10
SHEET P.17	TOTAL 20

MODEL: Sheet 1 PAPERSIZE: 34x22 (in.) DATE: 1/20/2026 TIME: 9:44:14 AM PLTDRV: OHDOT_PDF_E+.pltcfg PENTBL: OHDOT_Pen.tbl USER: Joel.Fitzsimmons@dot.ohio.gov WORKSPACE: OHDOTCEv02 WORKSET: 121474 PRODUCT: OpenRoadsDesigner 24.00.00.205
pw:\\ohiodot-pw.bentley.com:ohiodot-pw-02\Documents\01 Active Projects\District 04\Mahoning\121474\400-Engineering\Roadway\Sheets\121474_SX001.dgn

NOTES:

1. ITEM 202 - PORTIONS OF STRUCTURE TO BE REMOVED

2. REMOVAL OF THE EXISTING CENTERLINE JOINT AND DECK CONCRETE WILL BE PAID FOR UNDER ITEM 202 PORTIONS OF STRUCTURE REMOVED, AS PER PLAN. CARE WILL BE TAKEN TO SALVAGE ALL EXISTING TRANSVERSE DECK BARS DURING CONCRETE REMOVAL.

3. REBUILD PORTION OF DECK PER THE DETAIL SHOWN ON THIS SHEET. ALL MATERIAL, LABOR, EQUIPMENT AND INCIDENTALS REQUIRED TO PERFORM THIS WORK WILL BE INCLUDED IN THE UNIT BID PRICE FOR ITEM SPECIAL - PATCHING CONCRETE STRUCTURE, MISC.: VES-LMC (VERY EARLY STRENGTH - LATEX MODIFIED CONCRETE).

4. A NEW WABO TRANSFLEX MODEL 200A JOINT SYSTEM BY THE WATSON BOWMAN ACME CORP. WILL BE INSTALLED PER MANUFACTURERS SPECIFICATIONS. ALL MATERIAL, LABOR, EQUIPMENT, AND INCIDENTIALS WILL BE PAID FOR AT THE UNIT BID PRICE FOR ITEM 516, STRUCTURAL JOINT OR JOINT SEALER, MISC.: CENTERLINE EXPANSION JOINT.

5. ALL REINFORCING STEEL REQUIRED TO COMPLETE THE CONSTRUCTION OF THE NEW JOINT WILL BE PAID FOR UNDER ITEM 509 -- EPOXY COATED REINFORCING STEEL.

6. GALVANIC ANODES SHALL BE APPLIED TO ALL SALVAGED REINFORCING STEEL AS PER SS 844.

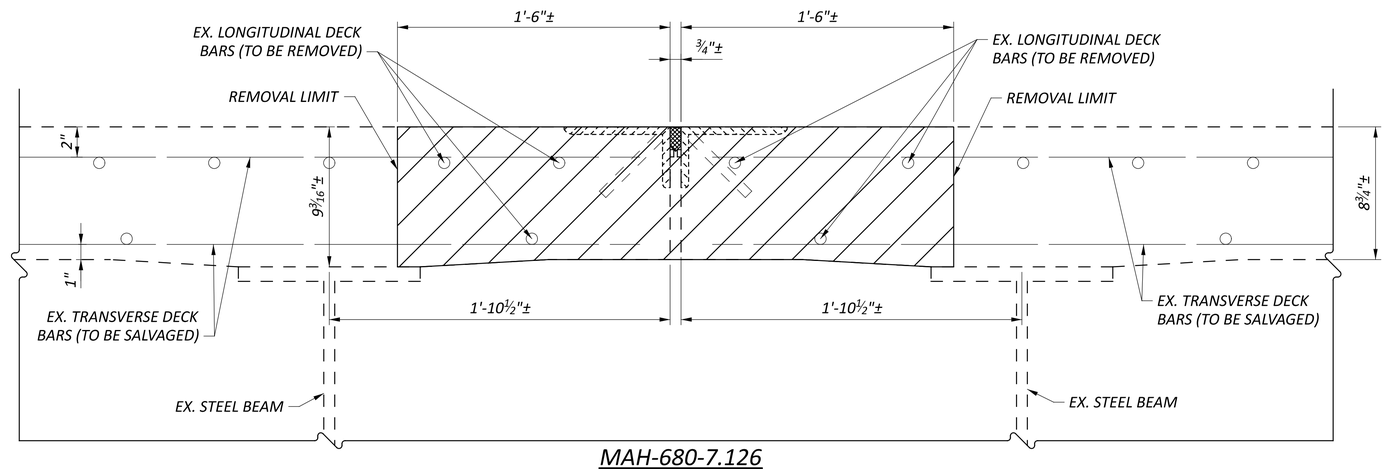

MAH-680-7.126
EXISITNG CENTERLINE EXPANSION JOINT DETAIL

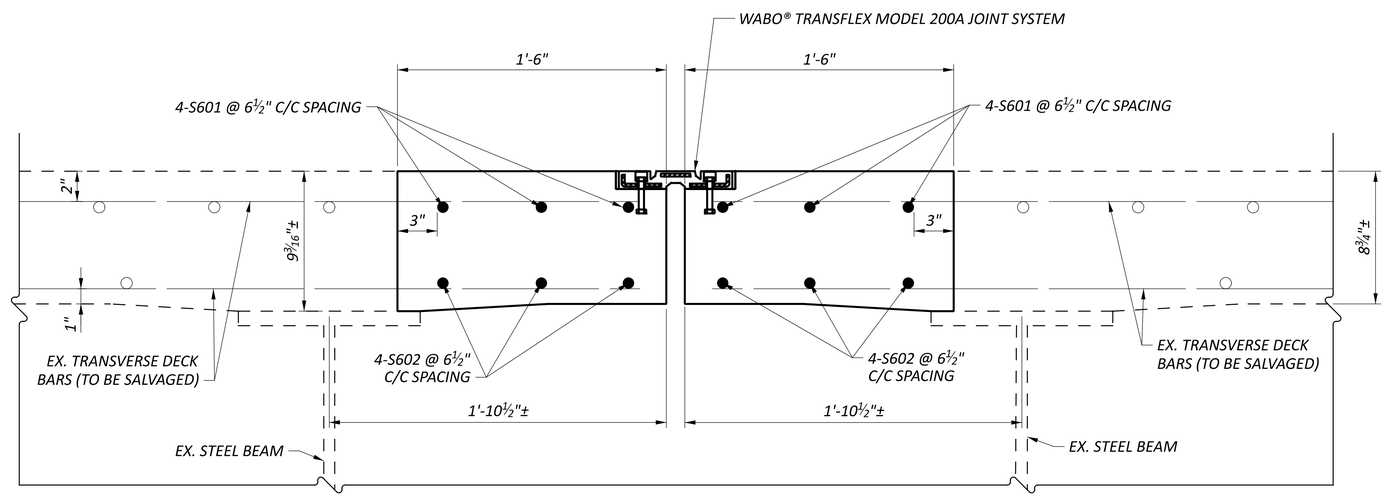

MAH-680-7.126
PROPOSED CENTERLINE EXPANSION JOINT DETAIL

CENTERLINE EXPANSION JOINT REMOVAL AND REPLACEMENT DETAILS
MAH-680-7.126
SOUTH AVE

SFN	5003350
DESIGN AGENCY	
DESIGNER	JF
CHECKER	MJA
REVIEWER	TJP 08-08-25
PROJECT ID	121474
SUBSET	8
TOTAL	10
SHEET	P.18
TOTAL	20

MAH-680-4.58 PART 2

MODEL: Sheet 2 PAPERSIZE: 34x22 (in.) DATE: 1/20/2026 TIME: 9:44:15 AM PLTDRV: OHDOT_PDF_Ex.pltcfg PENTBL: OHDOT_Pen.tbl USER: Joel.Fitzsimmons@dot.ohio.gov WORKSPACE: OHDOTCEv02 WORKSET: 121474 PRODUCT: OpenRoadsDesigner 24.00.00.205
pw:\\ohiodot-pw.bentley.com:ohiodot-pw-02\Documents\01 Active Projects\District 04\Mahoning\121474\400-Engineering\Roadway\Sheets\121474_SX001.dgn

MAH-680-7.126
EXPANSION JOINT SCHEDULE, DETAIL ON SHEET P.16

MARK	NUMBER				LENGTH	WEIGHT	TYPE	DIMENSIONS				
	REAR ABUT	FWD ABUT	SUPER	TOTAL		(LBS)		A	B	C	D	E
S601			12	12	20'-7"	371	STR					
S602			6	6	25'-6"	230	STR					
S701			12	12	20'-10"	511	STR					
S702			6	6	25'-6"	313	STR					
	SUPERSTRUCTURE SUB-TOTAL					1425						
A501	8	8		16	20'-0"	334	STR					
A502	4	4		8	25'-6"	213	STR					
	ABUTMENT SUB-TOTAL					547						
	GRAND TOTAL					1972						

THE BAR SIZE NUMBER IS SPECIFIED ON THE PLANS IN THE BAR MARK COLUMN. THE FIRST DIGIT WHERE THREE DIGITS ARE USED, THE FIRST TWO DIGITS WHERE FOUR ARE USED, INDICATES THE BAR SIZE NUMBER. FOR EXAMPLE, P601 IS A NO. 6 BAR. BAR DIMENSIONS SHOWN ARE OUT TO OUT UNLESS OTHERWISE INDICATED. R INDICATES INSIDE RADIUS, UNLESS OTHERWISE NOTED. "STD." WRITTEN IN PLACE OF A DIMENSION INDICATES A STANDARD BEND AT THE END OF THE BAR.

MAH-680-7.126
CENTERLINE EXPANSION JOINT SCHEDULE, DETAIL ON SHEET P.17

MARK	NUMBER				LENGTH	WEIGHT	TYPE	DIMENSIONS				
	REAR ABUT	FWD ABUT	SUPER	TOTAL		(LBS)		A	B	C	D	E
S601			24	24	35'-0"	824	STR					
S602			24	24	35'-10"	1292	STR					
	SUPERSTRUCTURE SUB-TOTAL					2116						
	GRAND TOTAL					2116						

THE BAR SIZE NUMBER IS SPECIFIED ON THE PLANS IN THE BAR MARK COLUMN. THE FIRST DIGIT WHERE THREE DIGITS ARE USED, THE FIRST TWO DIGITS WHERE FOUR ARE USED, INDICATES THE BAR SIZE NUMBER. FOR EXAMPLE, P601 IS A NO. 6 BAR. BAR DIMENSIONS SHOWN ARE OUT TO OUT UNLESS OTHERWISE INDICATED. R INDICATES INSIDE RADIUS, UNLESS OTHERWISE NOTED. "STD." WRITTEN IN PLACE OF A DIMENSION INDICATES A STANDARD BEND AT THE END OF THE BAR.

ALL REINFORNCING STEEL TO BE EPOXY COATED

EXPANSION JOINT STEEL REBAR SCHEDULES
MAH-680-7.126
SOUTH AVE

SFN 5003350
DESIGN AGENCY

DESIGNER	CHECKER
JF	MJA

REVIEWER TJP 08-08-25
PROJECT ID 121474

SUBSET	TOTAL
9	10

SHEET	TOTAL
P.19	20

MAH-680-4.58 PART 2

MODEL: Sheet 3 PAPERSIZE: 34x22 (in.) DATE: 1/20/2026 TIME: 9:44:15 AM PLTDRV: OHDOT_PDF_E+.pltcfg PENTBL: OHDOT_Pen.tbl USER: Joel.Fitzsimmons@dot.ohio.gov WORKSPACE: OHDOTCEv02 WORKSET: 121474 PRODUCT: OpenRoadsDesigner 24.00.00.205
pw:\\ohiodot-pw.bentley.com:ohiodot-pw-02\Documents\01 Active Projects\District 04\Mahoning\121474\400-Engineering\Roadway\Sheets\121474_SX001.dgn

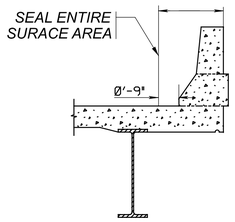

DETAIL A
CONCRETE DECK WITH
DEFLECTOR PARAPET

BRIDGE NUMBER	SEALING PAY ITEM	STRUCTURE TYPE	PROPOSED SEALING	FEDERAL COLOR NUMBER	ESTIMATED QUANTITIES				
					ABUT (SQ YD)	PIER (SQ YD)	SUPER (SQ YD)	GENERAL (SQ YD)	TOTAL (SQ YD)
MAH-680-4.734	ITEM 512 - SEALING OF CONCRETE SURFACES (EPOXY-URETHANE)	STEEL CONTINUOUS MULTI-BEAM	SEAL THE PIERS AND PIER CAPS SEAL PATCHES	MATCH EXISTING			342	12	354
MAH-680-4.955	ITEM 512 - SEALING OF CONCRETE SURFACES (EPOXY-URETHANE)	STEEL CONTINUOUS MULTI-BEAM	SEAL PATCHES	MATCH EXISTING				23	23
MAH-680-5.132	ITEM 512 - SEALING OF CONCRETE SURFACES (EPOXY-URETHANE)	STEEL CONTINUOUS MULTI-BEAM	SEAL PATCHES	MATCH EXISTING				9	9
MAH-680-5.601	ITEM 512 - SEALING OF CONCRETE SURFACES (EPOXY-URETHANE)	STEEL CONTINUOUS MULTI-BEAM	SEAL PATCHES	MATCH EXISTING				30	30
MAH-680-6.037	ITEM 512 - SEALING OF CONCRETE SURFACES (EPOXY-URETHANE)	STEEL CONTINUOUS MULTI-BEAM	SEAL PATCHES	MATCH EXISTING				9	9
MAH-680-6.116	ITEM 512 - SEALING OF CONCRETE SURFACES (EPOXY-URETHANE)	STEEL CONTINUOUS MULTI-BEAM	SEAL PATCHES	MATCH EXISTING				6	6
MAH-680-6.377	ITEM 512 - SEALING OF CONCRETE SURFACES (EPOXY-URETHANE)	STEEL CONTINUOUS MULTI-BEAM	SEAL PATCHES	MATCH EXISTING				23	23
MAH-680-6.421	ITEM 512 - SEALING OF CONCRETE SURFACES (EPOXY-URETHANE)	STEEL CONTINUOUS MULTI-BEAM	SEAL PATCHES	MATCH EXISTING				23	23
MAH-680-6.584	ITEM 512 - SEALING OF CONCRETE SURFACES (EPOXY-URETHANE)	STEEL CONTINUOUS MULTI-BEAM	SEAL PATCHES	MATCH EXISTING				17	17
MAH-680-6.933	ITEM 512 - SEALING OF CONCRETE SURFACES (EPOXY-URETHANE)	STEEL CONTINUOUS MULTI-BEAM	SEAL PARAPETS AS PER DETAIL A	MATCH EXISTING			329		329
MAH-680-6.983	ITEM 512 - SEALING OF CONCRETE SURFACES (EPOXY-URETHANE)	STEEL CONTINUOUS MULTI-BEAM	SEAL PARAPETS AS PER DETAIL A	MATCH EXISTING			349		349
MAH-680-7.126	ITEM 512 - SEALING OF CONCRETE SURFACES (EPOXY-URETHANE)	STEEL CONTINUOUS MULTI-BEAM	SEAL PATCHES	MATCH EXISTING				12	12
MAH-680-7.297	ITEM 512 - SEALING OF CONCRETE SURFACES (EPOXY-URETHANE)	STEEL CONTINUOUS MULTI-BEAM	SEAL PATCHES	MATCH EXISTING				6	6
MAH-680-6.347SE	ITEM 512 - SEALING OF CONCRETE SURFACES (EPOXY-URETHANE)	STEEL CONTINUOUS MULTI-BEAM	SEAL PATCHES	MATCH EXISTING				25	25
MAH-680-5.815	ITEM 512 - SEALING OF CONCRETE SURFACES (NON-EPOXY)	RETAINING WALL	SEAL THE ENITRE RETAINING WALL ADJACENT TO THE STRUCTURE ALONG THE ON RAMP (RAMP L) FROM MARKET ST TO 680 WB	CLEAR				292	292
MAH-680-6.037	ITEM 512 - SEALING OF CONCRETE SURFACES (NON-EPOXY)	RETAINING WALL	SEAL THE ENITRE RETAINING WALL ADJACENT TO THE STRUCTURE ALONG THE EXIT RAMP (RAMP K) FROM 680 EB TO MARKET ST SB	CLEAR				845	845
MAH-680-6.116	ITEM 512 - SEALING OF CONCRETE SURFACES (NON-EPOXY)	RETAINING WALL	SEAL THE ENITRE RETAINING WALL ADJACENT TO THE STRUCTURE ALONG 680 WB (RAMP N). WALL IS LOCATED BETWEEN STRUCTURES MAH-680-6.037 & MAH-680-6.116.	CLEAR				1180	1180
MAH-680-6.116	ITEM 512 - SEALING OF CONCRETE SURFACES (NON-EPOXY)	RETAINING WALL	SEAL THE ENITRE RETAINING WALL ADJACENT TO THE STRUCTURE ALONG THE EXIT RAMP (RAMP M) FROM 680 EB TO MARKET ST NB	CLEAR				172	172

STRUCTURE SEALING DETAILS
VARIOUS STRUCTURES ON IR 680
IN MAHONING COUNTY

SFN
VARIOUS

DESIGN AGENCY

DESIGNER	CHECKER
JF	MJA

REVIEWER
TJP 08-08-25

PROJECT ID
121474

SUBSET	TOTAL
10	10

SHEET	TOTAL
P.20	20

MAH-680-4.58 PART 2

MODEL: Sheet PAPERSIZE: 34x22 (in.) DATE: 1/20/2026 TIME: 9:44:20 AM PLTDRV: OHDOT_PDF_E+.pltcfg PENTBL: OHDOT_Pen.tbl USER: Joel.Fitzsimmons@dot.ohio.gov WORKSPACE: OHDOTCEv02 WORKSET: 121474 PRODUCT: OpenRoadsDesigner 24.00.00.205
pw:\\ohiodot-pw.bentley.com:ohiodot-pw-02\Documents\01 Active Projects\District 04\Mahoning\121474\400-Engineering\Roadway\Sheets\121474_SS001.dgn