FED. RD. DIVISION	STATE	PROJECT	
2	OHIO		

1/7

MAH-680-0476

PLAN NO. BR-5 (72)

STATE OF OHIO
DEPARTMENT OF HIGHWAYS

MAH-680-0476

BRIDGE OVER MILL CREEK POND
CITY OF YOUNGSTOWN
MAHONING COUNTY

BRIDGE REPAIR

CONVENTIONAL SIGNS

County Line
Township Line
Section Line
Corporation Line or
Fence Line (existing) (proposed)
Center Line 352 353
Trees , Stumps , (to be removed)
Utility Poles: Telephone , Power , Light

Limited Access (only) LA
Right of Way (only) RW
Limited Access & Right of Way LA&RW
Existing Right of Way
Property Line (in existing fence)
Railroad
Guardrail (existing) (proposed)

INDEX OF SHEETS

Title Sheet ____ 1
Typical Section ____ 2
General Plan, Estimated Quantities ____ 3
General Notes, Proposed Work ____ 3
West Abutment Plan ____ 4
West Abutment Detail ____ 5
Approach Slab ____ 6
Traffic Control ____ 7

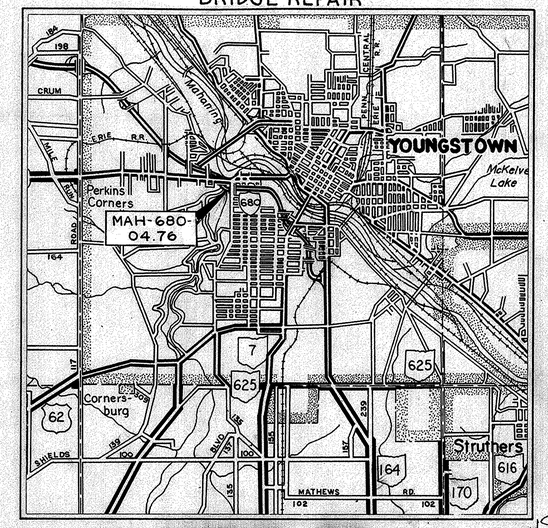

LOCATION MAP

SCALE OF MILES 0 1 2 3 4

LINE DATA

Begin Project ____ Sta. 961+00
End Project ____ Sta. 969+60
Net Length of Project 841 L.F. = 0.16 Miles

Begin Work ____ Sta.
End Work ____ Sta.

Portion to be improved
State Roads
Other Roads

SCALES

Plan
Profile: Horizontal
Profile: Vertical

1971 SPECIFICATIONS

The standard specifications of the State of Ohio, Department of Highways, including changes and supplemental specifications listed in the proposal shall govern this improvement.

The right of way for this improvement will be provided by the State of Ohio.

I hereby approve these plans and declare that the making of this improvement will not require the closing to traffic of the Highway and that provisions for the maintenance and safety of Traffic will be as set forth on the plans and estimates.

Approved Francis V. Sinko
Date 30 JUNE 72 Division Deputy Director

Approved H. R. Krause
Date 7-11-72 Engineer of Bridges

Approved R. L. Zook
Date 8-21-72 Engineer of Maintenance

Approved D. Carson Barklow
Date 8-22-72 Deputy Director of Operations

Approved
Date Deputy Director of Right of Way

Approved William Sunkley
Date 8-22-72 Deputy Director of Planning & Programming

Approved William P. McKenna
Date 8-22-72 First Assistant Director

Approved John Rhodes
Date 8/23/72 Director of Highways

SUPPLEMENTAL PRINTS OF STANDARD CONSTRUCTION DRAWINGS			
BP-2	12-1-68		
BP-3	1-1-71		
BP-4	1-1-71		
BP-7	1-1-66		
GR-2B	11-9-71		
AS-1-67	6-12-69		

SUPPLEMENTAL SPECIFICATIONS
55-836 1-1-71

Plan Prepared By J.A. Mesojedec

SEAL

Project:
Date of Letting ____ 19__, Contract No. ____

LD 0300
12-29-67

TYPICAL SECTION

FED. RD. DIVISION	STATE	PROJECT	
2	OHIO		

2/7

MAH-680-0476

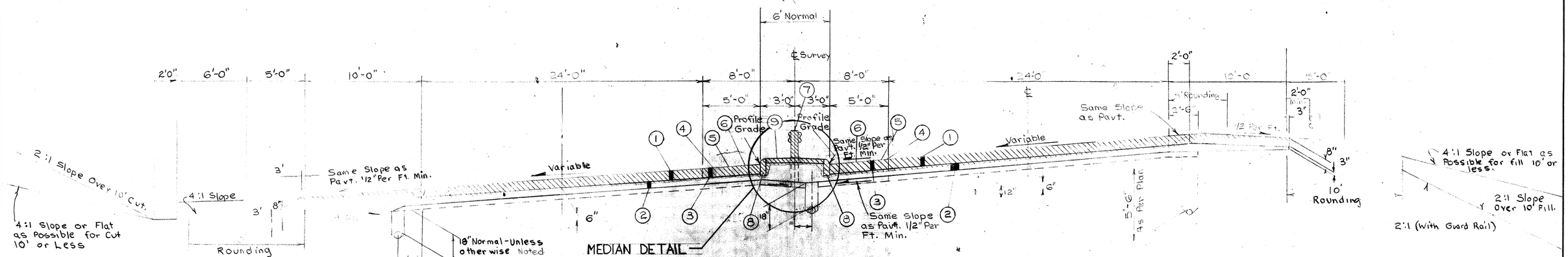

SUPERELEVATED SECTION
16 FT. MEDIAN
SCALE 1/4" = 1'-0"
Sta. 961+00.00 — STA 962+48.25

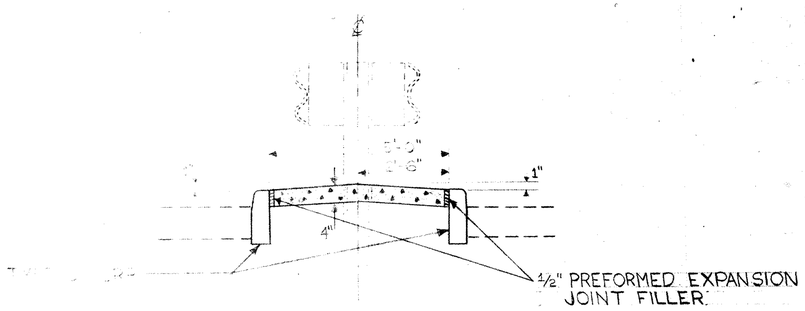

CONCRETE MEDIAN DETAIL

1. 451 10" Reinforced Portland Cement Concrete Pavement
2. 310 Subbase (Variable Depth)
3. 304 8" Aggregate Base (or 703.10 Screenings)
4. 408 Bituminous Prime Coat: RT-2 or RT-3 At 0.40 Gal. Per Sq Yd.
5. 409 Seal Coat Bituminous Material: RT-9 or RT-10 At 0.30 Gal. Per Sq. Yd
6. 409 Seal Coat Cover Aggregate No. 8 at 0.008 Cu.Yd. Per Sq Yd
7. 606 Standard Barrier Rail, Steel Beam (Deep).
8. 609 Standard Type 6 Curb
9. 612 Concrete Median

Note: Hashed areas on typical section indicate items included in whole or part for proposed work. See General Plan sheet for station limitations for individual Items.

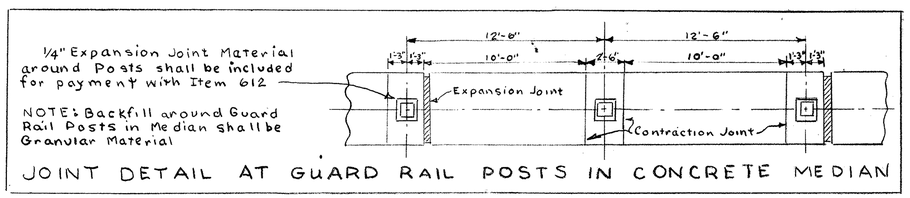

JOINT DETAIL AT GUARD RAIL POSTS IN CONCRETE MEDIAN

FED. RD. DIVISION	STATE	PROJECT	
2	OHIO		

MAH.-680-0476

3/7

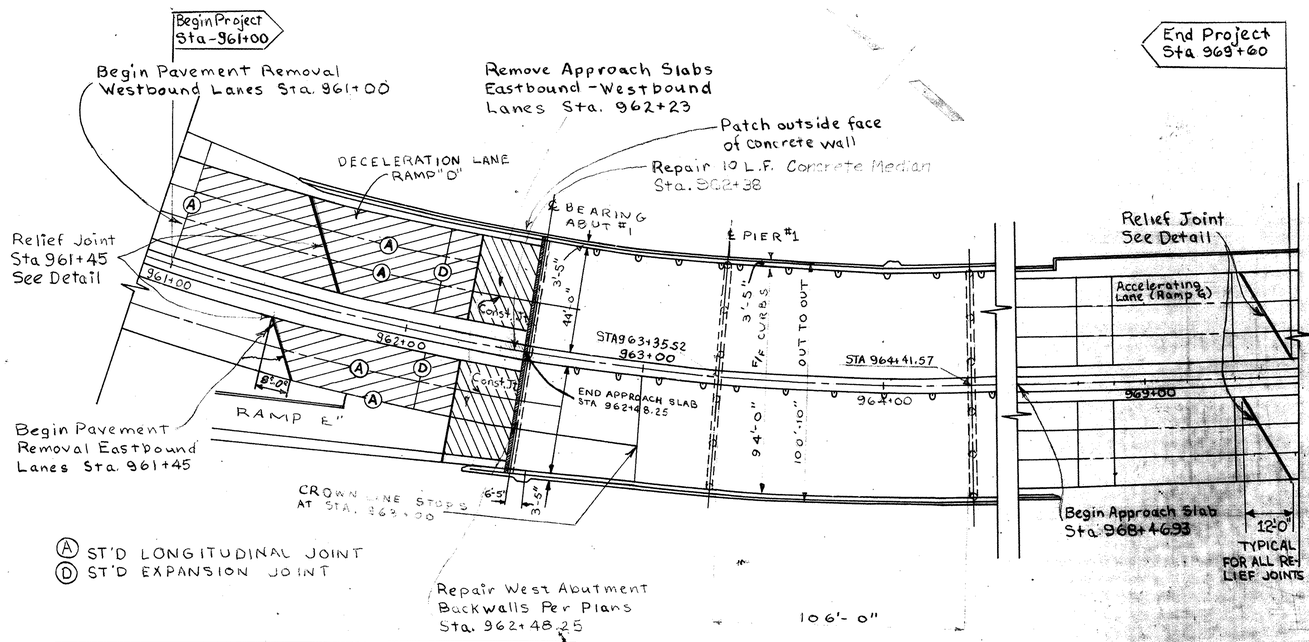

ESTIMATED QUANTITIES			
ITEM	TOTAL	UNIT	DESCRIPTION
202	10	L.F.	Guardrail Removed For Re-use
202	20	L.F.	Curb Removed
202	6	S.Y.	Concrete Median Removed
202	694	S.Y.	Pavement Removed
202	218	S.Y.	Remove Approach Slabs (1'-1")
202	23	C.Y.	Portions of Structure Removed
203	46	C.Y.	Excavation
304	46	C.Y.	Aggregate Base
310	50	C.Y.	Subbase.
408	84	Gal.	Bituminous Prime Coat: RT2 or RT3
409	63	Gal.	Seal Coat Bituminous Material: RT9 or RT10
409	1.6	C.Y.	Seal Coat Cover Aggregate No. 8
451	694	S.Y.	Reinforced Portland Cement Concrete Pavement (10")
509	2105	Lbs.	Reinforcing Steel
511	23	C.Y.	Class "C" Concrete, abutments
516	2956	Lbs.	Expansion and Contraction Joints
516	8	S.F.	1" Preformed Expansion Joint Filler
503	19	C.Y.	Unclassified, Excavation
518	19	C.Y.	Porous Backfill
606	10	L.F.	Guardrail Rebuilt; Type 5; Barrier Design
609	20	L.F.	Curb; Type 6
611	218	S.Y.	Reinforced Concrete Approach Slabs; as per plan
612	6	S.Y.	Concrete Mediam; as per plan
614		Lump	Maintaining Traffic
519	10	S.F.	Patching concrete structures
503		Lump	Cofferdams, cribs & sheeting
619		Lump	Field Office
Special	Each	4	Pressure Relief Joints
Special		Lump	Raise, Support, & Lower Superstructure as per plan

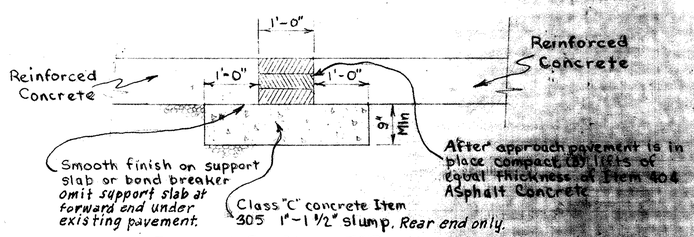

Pavement For Items 305 and 404, shall be included in Lump Sum price for Item Special, Relief Joint (as per plan)

SPECIAL RELIEF JOINT

PART-SUPERELEVATION TABLE
CURVE Nº 3
Δ=60°43'03"LT

℄ STATION	LEFT LANE			RIGHT LANE		
	EDGE LANE	℄	RIGHT EDGE	LEFT EDGE	℄	RIGHT LANE
961+00	881.56	882.60	883.64			
961+50	882.04	883.07	884.10	884.80	885.74	886.67
962+00	882.53	883.54	884.56	885.33	886.30	887.27
962+50	883.02	884.02	885.02	885.86	886.86	887.86

GENERAL NOTES

Specifications: All material and items of work shall conform to the Construction and Materials Specifications, State of Ohio, Department of Highways, dated Jan. 1, 1971

Plans of the Existing Structure: May be inspected in the Division Office in Ravenna, or in the Central Office at Columbus.

Design Data: Concrete Class C - unit stress 1333 P.S.I. for substructure. Reinforcing Steel ASTM - A615, A 616, or A-617, unit stress 20,000 P.S.I. If bars in accordance with ASTM A616 are provided they shall be subject to bend tests as per AASHO Desionation M42 - 70. New Structural Steel A-36 basic unit stress 20,000 P.S.I.

Removed Material: Shall become the property of the Contractor and shall be removed from the work site by him.

Item 516 Expansion and Contraction Joint: This item shall include all angles, plates, straps, hardware, etc. necessary to repair expansion joints as per plan, and painting as specified.

Dimensions: The Contractor shall verify all dimensions of the existing structure in the field before ordering structural steel, etc., required for this construction.

Roadway Finish: Shall be in accordance with Sec. 451.09

Item 619, Field Office: The contractor shall provide a minimum of 150 Sq. Ft. for floor space of the field office and in addition to the requirements of Item 619, shall provide and maintain sanitary provisions. All the above is included in the lump sum price bid for Item 619 Field Office.

Schedule of Work: Before construction is started, Contractor's schedule of repair work shall be submitted by the Contractor to the Department of Highways.

Jacking: Approximate load at abutment is 125 tons, each half. The details of jacking procedure (3 sets) shall be submitted to the Director 15 days prior to the jacking operation and work shall not commence before approval is given.

Maintenance of Traffic: Traffic control shall be required as described and shown herein and in conformance with the latest edition of the Manual of Traffic Control for Construction and Maintenance Operations.

PROPOSED REPAIR WORK

1. Close entrance ramps "E" and "G" to oncoming traffic.
2. Provide for maintenance of traffic on Interstate Route 680, channelizing westbound and eastbound through traffic into the westbound and eastbound passing lanes, as indicated on the plans.
3. Remove concurrently portions of west abutment backwall, approach slab, and approach pavement of westbound deceleration lane Ramp "D", westbound cruising lane I.R. 680, eastbound acceleration lane Ramp "E", and eastbound cruising lane I.R. 680.
4. Rebuild partial west abutment backwall, including new roadway end dam sections.
5. Place concurrently partial reinforced concrete approach slabs and pavement for westbound deceleration lane Ramp "D", westbound cruising lane I.R. 680, eastbound acceleration lane Ramp "E", and eastbound cruising lane I.R. 680. Rebuild berms adjacent to new pavement
6. Construct partial pressure relief joints per plan.
7. Channelize eastbound and westbound through traffic I.R. 680 into the eastbound and westbound cruising lanes as indicated on the plans.
8. Remove 10 L.F. median section adjacent to west abutment, sections of backwall, approach slabs, and approach pavement at eastbound and westbound passing lanes I.R. 680.
9. Complete repair of west abutment backwall.
10. Place reinforced concrete approach slabs and pavement for eastbound and westbound passing lanes I.R. 680.
11. Rebuild median section.
12. Rebuild berms adjacent to new pavement.
13. Complete pressure relief joints.
14. Restore normal traffic flow.

Item Special, Raise, Support, and Lower Superstructure, as per plan: shall include all labor, equipment and incidentals necessary to jack the superstructure at the west abutment to permit repair of the end dams and other work on the abutments, and including resetting of the structural steel rockers as directed by the Engineer.

PART-GENERAL PLAN
BRIDGE NO MAH 680-0476
OVER MILL CREEK POND
YOUNGSTOWN, MAHONING COUNTY

FED. RD. DIVISION	STATE	PROJECT	
2	OHIO		

MAH-680-04 76

PLAN NO. BR-5 (72)

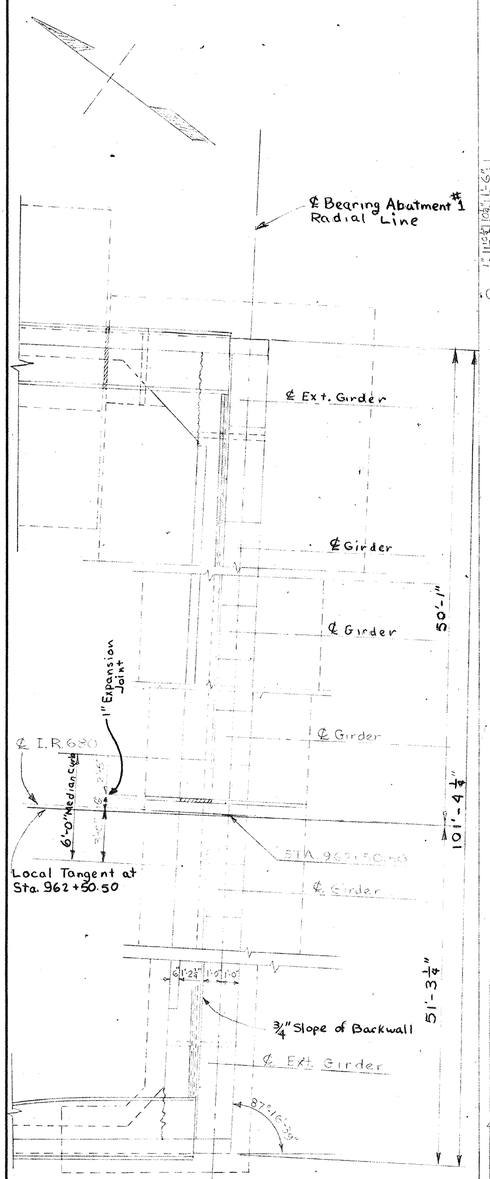

PART PLAN OF ABUTMENT #1

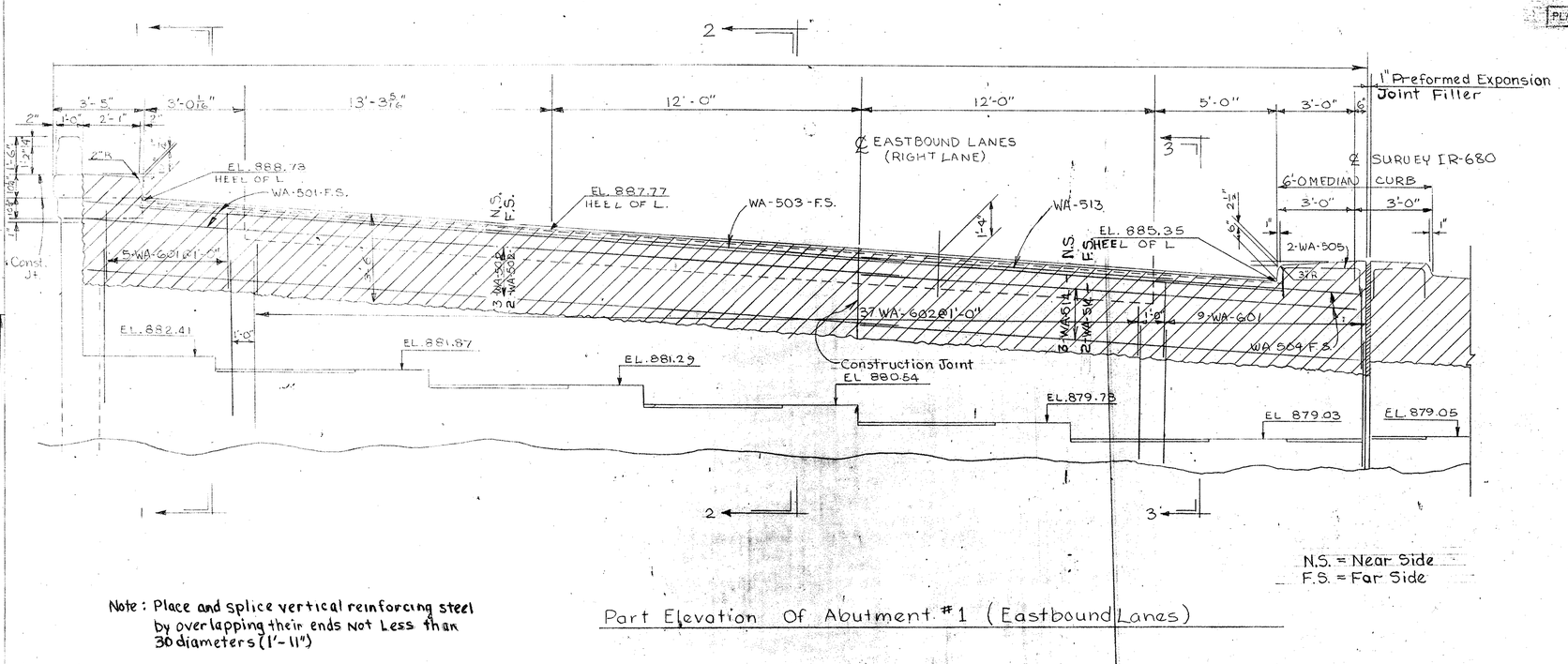

Note: Place and splice vertical reinforcing steel by overlapping their ends Not Less than 30 diameters (1'-11")

Part Elevation Of Abutment #1 (Eastbound Lanes)

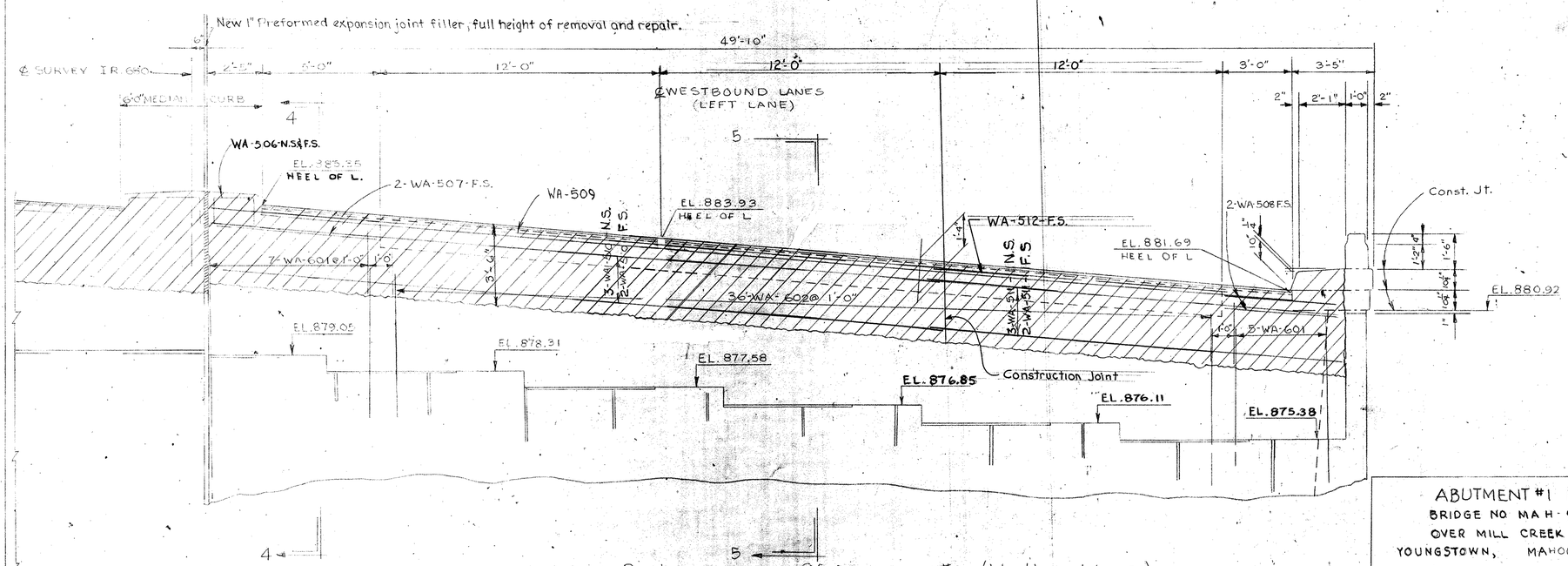

Part Elevation Of Abutment #1 (Westbound Lanes)

ABUTMENT #1 PLAN
BRIDGE NO. MAH-680-0476
OVER MILL CREEK POND
YOUNGSTOWN, MAHONING COUNTY

FED. RD. DIVISION	STATE	PROJECT	
2	OHIO		

5/7

M A H.-680-0476

PLAN NO. 8R-5 (78)

The end dam portion attached to the backwall shall be placed in segments not less than 6'-0" in length. These shall be closely butted but shall not be welded

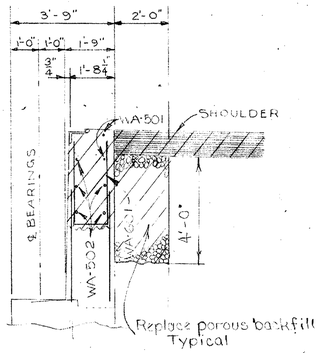

SECTION 1-1

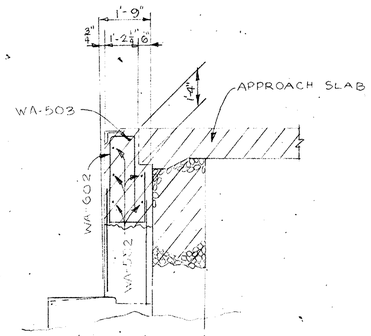

SECTION 2-2

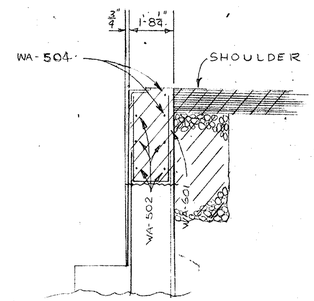

SECTION 3-3

This contact surface shall not be painted and shall be lubricated with flake graphite prior to placing of backwall concrete.

5/8" x 2" bolts at not more than 2'-0 c/c with nuts tack-welded to under side of lower angle. 1 1/16" holes in upper angle. Center 5/8" bolts in 1 1/16" holes. Apply flake graphite between washers and angle. Turn nuts tight and release one-half turn. Remove bolts as soon as concrete has set, preferably within two hours after placing, to avoid damage due to temperature expansion and contraction of superstructure. Fill holes with bituminous material.

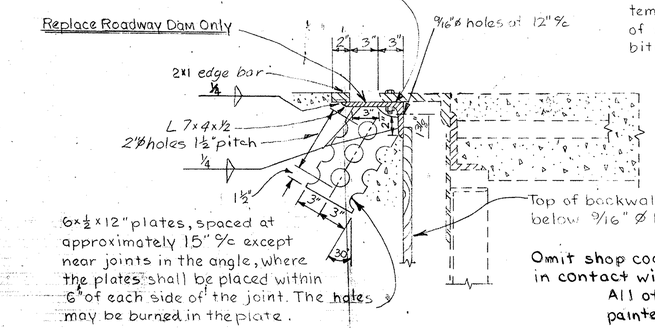

Curb plates to be removed, cleaned, and reused.

Omit shop coat on all portions of end dam in contact with steel or concrete. All other portions shall be cleaned and painted in accordance with Item 514.

END DAM DETAIL

SCALE 1½" = 1'-0"

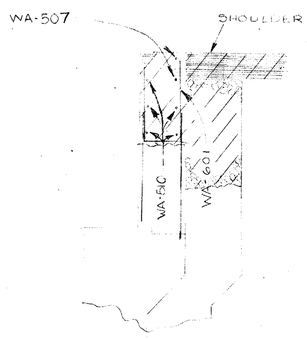

SECTION 4-4

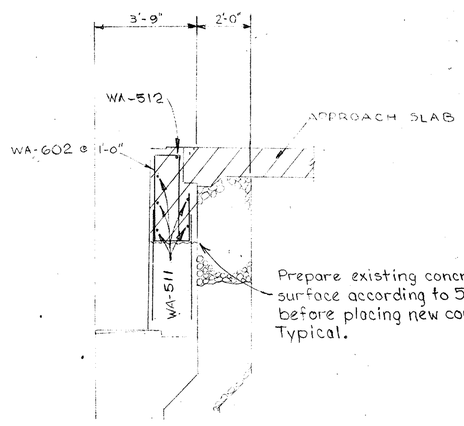

SECTION 5-5

REINFORCING STEEL SCHEDULE

MARK	NO.	LENGTH	WEIGHT	SHAPE
WEST ABUTMENT				
WA-501	2	5'-4"	12	ST
WA-502	5	32'-0"	172	ST
WA-503	1	27'-0"	29	ST
WA-504	2	8'-2"	17	ST
WA-505	2	5'-11"	12	BT
WA-506	2	4'-10"	10	BT
WA-507	2	7'-1"	15	ST
WA-508	2	5'-0"	11	ST
WA-509	1	26'-0"	27	ST
WA-510	5	31'-0"	163	ST
WA-511	5	19'-0"	99	ST
WA-512	1	14'-0"	15	ST
WA-513	1	14'-0"	15	ST
WA-514	5	20'-0"	104	ST
WA-601	26	7'-11"	309	BT
WA-602	73	10'-0"	1095	BT
TOTAL WEST ABUTMENT			2105 Lbs.	

Note: Bar size is indicated in the Bar Mark. The first digit indicates the bar size number. For example, WA-501 is a No. 5 size bar.

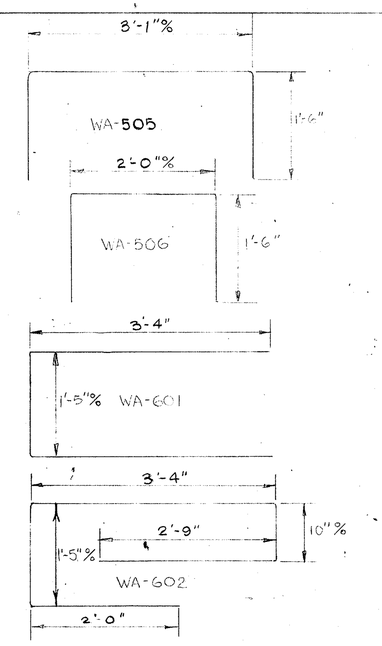

ABUTMENT #1 DETAILS

BRIDGE NO. MAH-680-0476

OVER MILL CREEK POND

YOUNGSTOWN, MAHONING COUNTY

MAH-680-0476

PLAN NO. BR-5 (72)

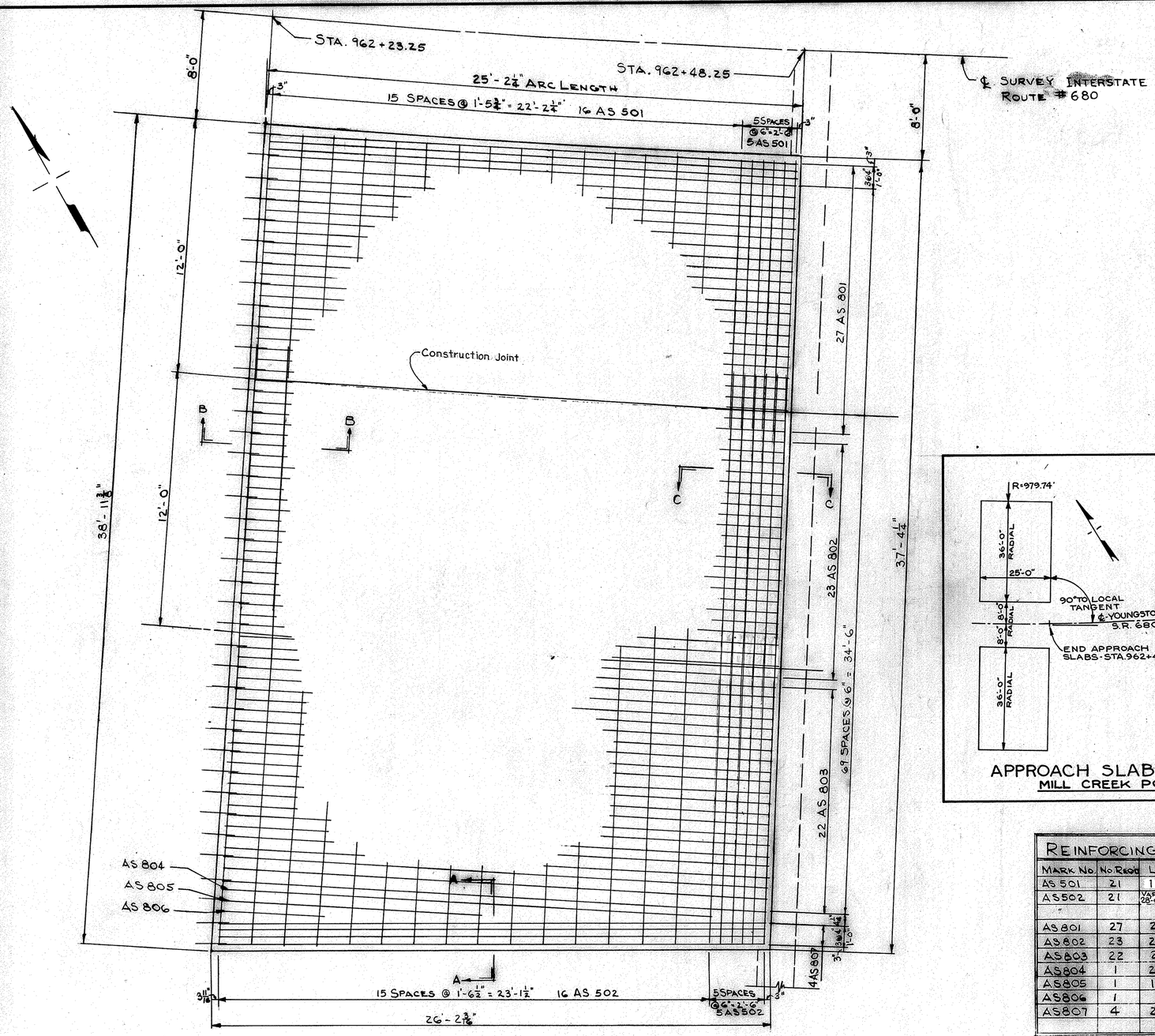

PLAN

PLAN OF APPROACH SLAB FOR WEST ABUTUMENT OF MILL CREEK POND STRUCTURE, SOUTH HALF ONLY IS SHOWN. NORTH HALF SIMILAR.

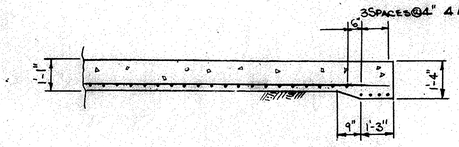

SECTION A-A

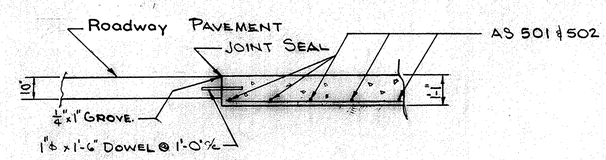

SECTION B-B

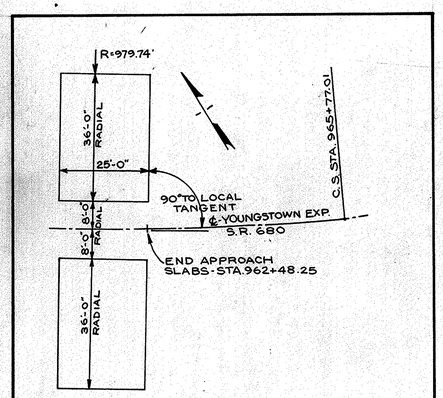

APPROACH SLAB DETAIL
MILL CREEK POND

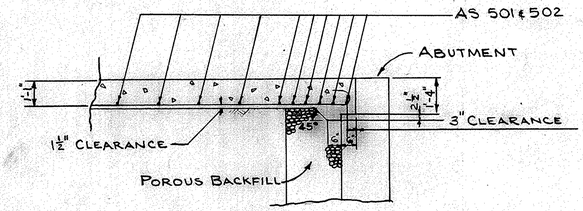

SECTION C-C

REINFORCING BAR SCHEDULE				
MARK NO.	NO. REQD.	LENGTH	WEIGHT	SHAPE
AS 501	21	11'-9"	258	ST.
AS 502	21	VARIES 26'-8" TO 28'-9" INC. OF 1'	602	ST.
AS 801	27	25'-9"	1856	BT.
AS 802	23	26'-1"	1602	BT.
AS 803	22	26'-4"	1547	BT.
AS 804	1	23'-0"	61	ST.
AS 805	1	12'-6"	33	ST.
AS 806	1	5'-0"	14	ST.
AS 807	4	26'-9"	286	BT.

TOTAL WEIGHT 6259

109 SQ. YDS CLASS "C" CONCRETE
39-1" ϕ x 1'-6" DOWELS = 156 LBS

Note:
The Surface shall be Textured to provide a uniformly gritty texture with longitudinal striations and with depth of approximately 1/16 inch.

NOTE:
BAR SIZE IS INDICATED IN THE BAR MARK. THE FIRST DIGIT INDICATES THE BAR SIZE NUMBER. FOR EXAMPLE, AS 801 IS A No. 8 SIZE BAR.

PAVEMENT JACKING HOLES, OTHER DETAILS, PER AS-1-67

AS 801	24'-8"	1'-1"
AS 802	25'-0"	1'-1"
AS 803	25'-3"	1'-1"
AS 807	25'-8"	1'-1"

APPROACH SLAB

BRIDGE NO. MAH-680-0476
OVER MILL CREEK POND
YOUNGSTOWN, MAHONING COUNTY

FED. RD. DIVISION	STATE	PROJECT	
2	OHIO		

7 / 7

MAH-680-04.76

PLAN NO. BR-5 (72)

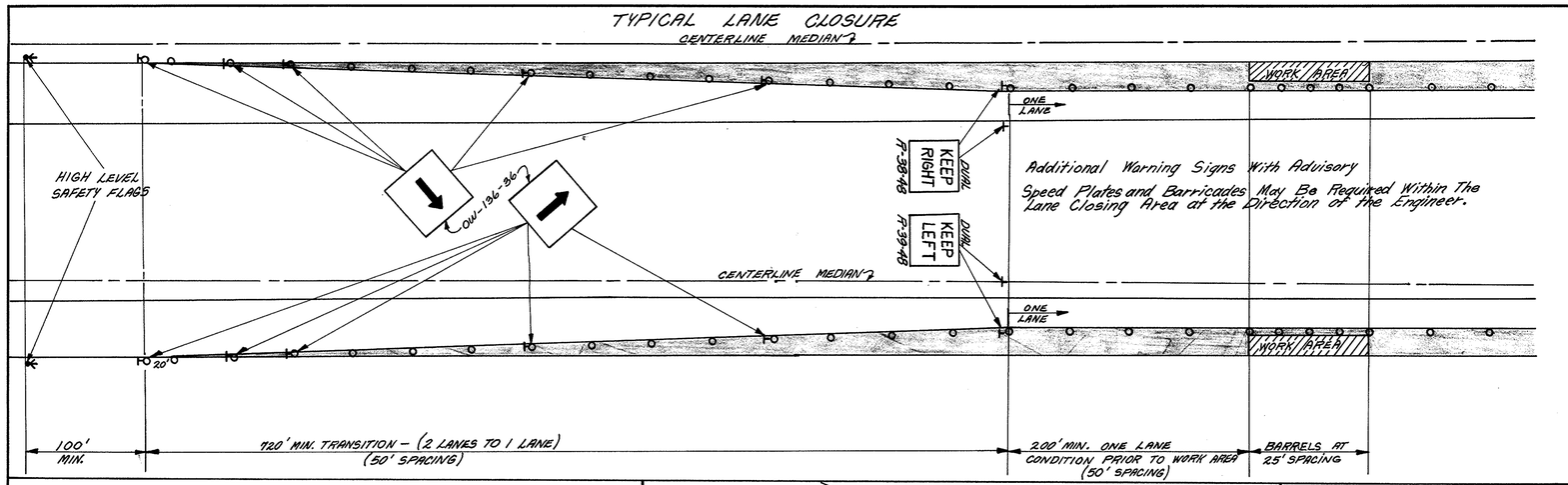

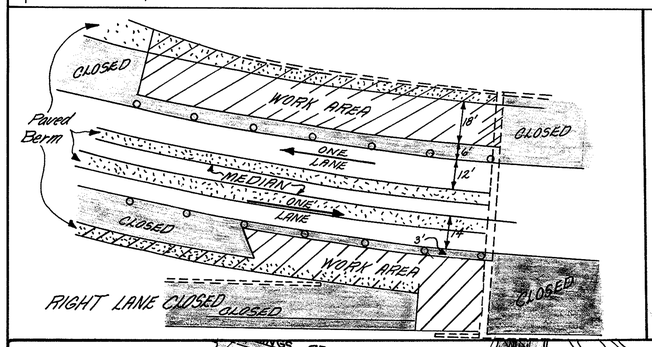

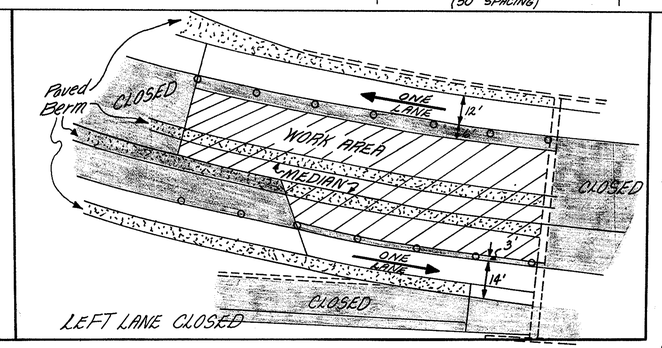

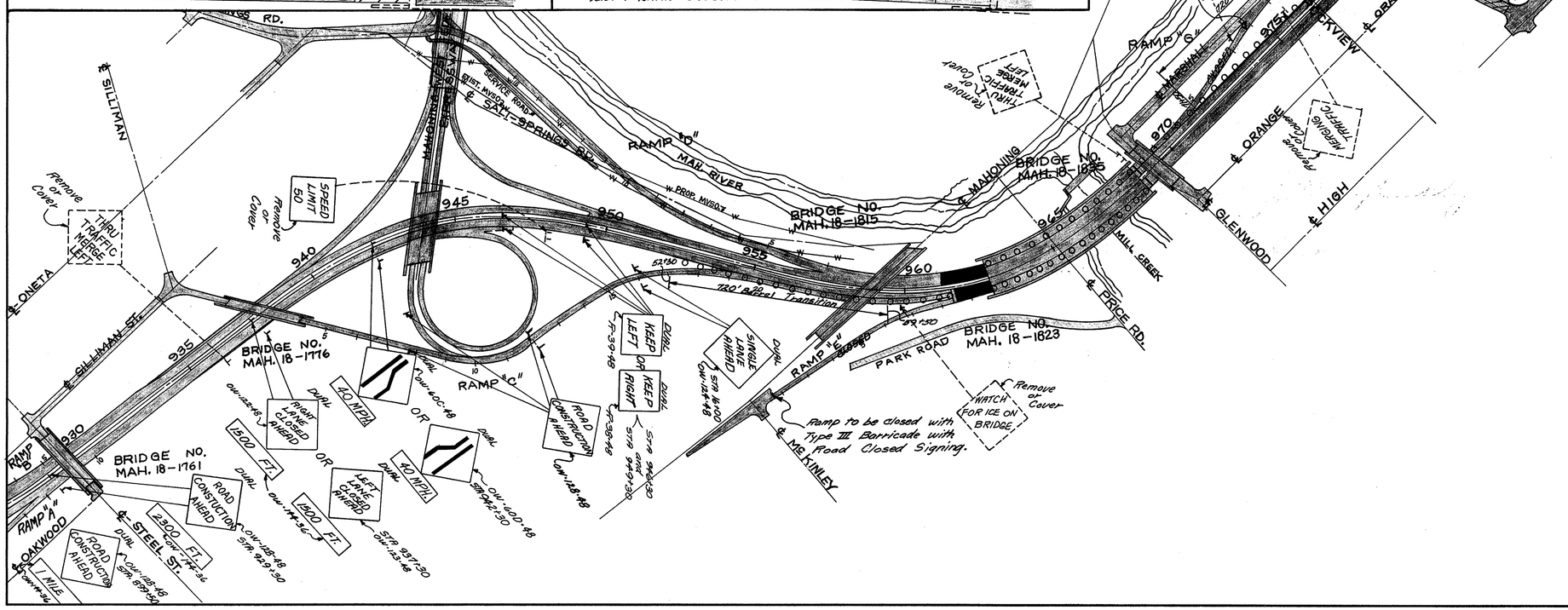

TRAFFIC NOTES:

1. One Lane Traffic in Each Direction Shall be Maintained at All Times and the Contractor Shall Arrange His Operation as to Prevent Any Interference to the Continuous Flow of Traffic in the Area and to Hold the One Lane Traffic Condition to a Minimum Period of Time.
2. One Lane Traffic Zones Shall be Controlled with Temporary Traffic Control as Indicated within the Plan and Proposal as Directed by the Engineer.
3. All Signs, Barrels and Barricades That are to Convey Their Messages During Hours of Darkness Shall be Reflectorized or Illuminated. All Signs Shall be Post Mounted Unless Otherwise Directed by the Engineer.
4. Class II Barricades or 55 Gal. Steel Drums Shall be used for Lane Tapers and Shall be Supplemental by Yellow Delineators and Yellow Lights.
5. All Traffic Control Devices Shall be Kept in Proper Position, Clean, Legible and in Good Working Condition at all Times.
6. Any Existing Signs within the Temporary Traffic Zones Which are Misleading or are Superfluous Shall be Removed or Covered During the Construction Period. Any Sign That is Removed Shall be Replaced Upon Completion of the Project.
7. The Contractor Shall Provide the Service of One Special Duty Police Officer for the Exclusive Purpose of Controlling the Through Lane Traffic for Each One Lane Zone, Except During the Period when the Contractor is not Performing Work.
8. All Vehicles, Equipment, Men and Their Activities are Restricted at All Times to One Side of the Pavement Unless Otherwise Authorized by the Engineer.
9. Payment for Providing, Erecting, Maintaining and Removing Signs, Barricades, Cones, Markers and Incidentals Required for the Maintenance of Traffic for the Construction Project Shall Be Included in the Lump Sum Bid for ITEM 614 "Maintaining Traffic".