MICROFILMED
FEB 26 1996

HAMMONTREE & ASSOCIATES

CALC. BY EHW DATE 7/10/92	MAH-680-4.88	OHIO	1 / 36
CHK'D BY RRC DATE 7/29/92		FHWA REGION 5	
FEDERAL PROJECT		STATE PROJECT	

STATE OF OHIO
DEPARTMENT OF TRANSPORTATION
MAH-680-4.88
CITY OF YOUNGSTOWN
MAHONING COUNTY

IM – 680 – 9(37)

1993 SPECIFICATIONS

THE STANDARD SPECIFICATIONS OF THE STATE OF OHIO, DEPARTMENT OF TRANSPORTATION INCLUDING CHANGES AND SUPPLEMENTAL SPECIFICATIONS LISTED IN THE PROPOSAL SHALL GOVERN THIS IMPROVEMENT.

CONVENTIONAL SIGNS

CENTERLINE — ℄
RIGHT-OF-WAY (EXISTING) — EXIST. R/W
LIMITED ACCESS — LA
FENCE LINE (EXISTING) — X
POLES — POWER, TELEPHONE, LIGHT
GAS LINES — G
WATER LINES — W
SEWERS — STORM S, SAN. SAN
FIRE HYDRANT — EXISTING
VALVE — G, W
SIGNS
CATCH BASINS — EXISTING, PROPOSED
MANHOLES — EXISTING

(GLENWOOD AVE.) DESIGN DESIGNATION

CURRENT A.D.T. (1993)	= 4530
DESIGN YEAR A.D.T. (2013)	= 6340
D.H.V. (2013)	= 635
D	= 50%
T	= 4%
DESIGN SPEED	= 35 M.P.H.
LEGAL SPEED	= 35 M.P.H.
FUNCTIONAL CLASSIFICATION	= URBAN ARTERIAL

DESIGN EXCEPTION	APPROVAL DATE
VERTICAL CLEARANCE	

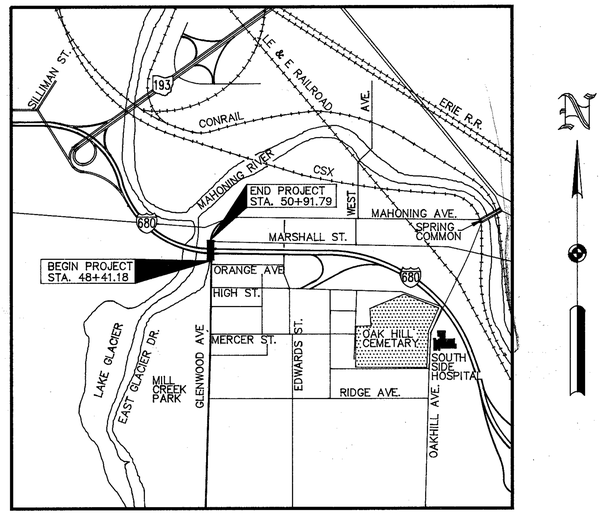

LOCATION MAP
SCALE IN MILES
0 1/4 1/2 3/4 1

PORTION TO BE IMPROVED
STATE ROUTES
INTERSTATE
OTHER ROADS

I HEREBY APPROVE THESE PLANS AND DECLARE THAT THE MAKING OF THIS IMPROVEMENT WILL REQUIRE THE CLOSING TO TRAFFIC OF THE HIGHWAY AND THAT PROVISIONS FOR THE MAINTENANCE AND SAFETY OF TRAFFIC WILL BE AS SET FORTH IN THE PLAN.

APPROVED David R Dreyer
DATE 8-12-93 DISTRICT DEPUTY DIRECTOR OF TRANSPORTATION

APPROVED B.D. Hankhammer/EH
DATE 2-25-94 ENGINEER, BUREAU OF BRIDGES AND STRUCTURAL DESIGN.

APPROVED Christopher L. Runyan
DATE 5-20-94 DEPUTY DIRECTOR, PLANNING AND DESIGN

APPROVED Jerry Wray
DATE 5-20-94 DIRECTOR DEPARTMENT OF TRANSPORTATION

INDEX

TITLE SHEET 1
TYPICAL SECTIONS 2–3
GENERAL NOTES 4–5
CALCULATIONS AND DETOUR MAP 6
GENERAL SUMMARY 7
PLAN SHEET & ESTIMATED QUANTITIES 8–9
CROSS SECTIONS 10–12
STORM SEWER PROFILE 12
PAVEMENT JOINT DETAILS 13–14
TRAFFIC CONTROL PLAN 15–16
MAINTENANCE OF TRAFFIC PLAN . . . . . 17–20 & 20A
LIGHTING PLAN . . . . . 21 & 21A
STRUCTURE OVER 20'. 22–36

LINE DATA

BEGIN PROJECT . . . . . STA. 48+41.61
END PROJECT . . . . . STA. 50+91.79
NET LENGTH OF PROJECT . . . . . 250.18 LIN. FT. (0.047 MI.)
BEGIN WORK . . . . . STA. 45+10.00
END WORK . . . . . STA. 52+77.00
NET LENGTH OF WORK . . . . . 767.00 LIN. FT. (0.145 MI.)

STRUCTURE PLANS REVIEWED BY:
Burgess & Niple, Limited
Engineers and Architects

SCALES IN FEET

PLAN 0 10 20 40
PROFILE: VERTICAL 0 5 10
PROFILE: HORIZONTAL 0 10 20 40
CROSS SECTIONS: VERT. 0 5 10
CROSS SECTIONS: HORIZ. 0 5 10

UNDERGROUND UTILITIES

TWO WORKING DAYS
BEFORE YOU DIG
CALL 800-362-2764 (TOLL FREE)
OHIO UTILITIES PROTECTION SERVICE
NON-MEMBERS
MUST BE CALLED DIRECTLY

REVISED 7/15/94

STANDARD CONSTRUCTION DRAWINGS																SUPPLEMENTAL SPECIFICATIONS			
HL-30.33	5-1-87	CB-3A	5-1-79	MT-99.10	11-14-86	HL-10.12	5-1-87	HL-30.31	5-1-87	TC-52.10	4-3-79	EXJ-2-81	4-24-84	802	4-13-90	910	5-20-91
BP-2.1	2-21-92	MC-4	7-26-76	MT-99.20	4-29-88	HL-10.13	5-1-87	HL-50.21	5-1-87	TC-52.20	4-3-79	SD-1-69	6-12-69	849	12-24-85	820	3-18-92
BP-2.2	2-21-92	MC-9.2	5-6-91	MT-101.60	7-1-92	HL-20.11	5-1-87	HL-60.11	5-1-87	TC-71.10	9-10-91	VPF-1-90	2-1-92	949	9-26-86		
BP-2.3	2-21-92	MC-11	8-1-78	MT-105.10	7-1-92	HL-20.14	5-1-87	HL-60.12	5-1-87	AS-1-81	11-27-81	TC-41.10	8-29-84	931	3-18-92		
BP-3.1	2-21-92	MT-95.31	10-10-88	MT-105.11	7-1-92	HL-20.15	5-1-87	TC-35.10	8-29-84	PCB-91	4-24-92	TC-52.10	4-3-79	942	3-18-92		
BP-5.1	2-21-92	MT-95.32	8-25-89	HL-10.11	5-1-87	HL-30.11	5-1-87	TC-41.20	3-26-79	BR-2-82	11-1-82	TC-52.20	4-3-79	944	5-2-94		
												TC-18.24	4-25-79				

PROJECT: MAH-680-4.88

DATE OF LETTING 9-13-94

CONTRACT NO. 648

PLANS PREPARED BY
HAMMONTREE & ASSOCIATES, LIMITED
CONSULTING ENGINEERS, PLANNERS, SURVEYORS
CANTON AND AKRON, OHIO
BY: Bruce M. Bair REGISTERED ENGINEER NO. 36072

STATE OF OHIO BRUCE M. BAIR 36072 REGISTERED PROFESSIONAL ENGINEER

DEPARTMENT OF TRANSPORTATION
FEDERAL HIGHWAY ADMINISTRATION
APPROVED:

DIVISION ADMINISTRATOR DATE

HAMMONTREE & ASSOCIATES, LIMITED

TYPICAL SECTIONS

TYPE 611

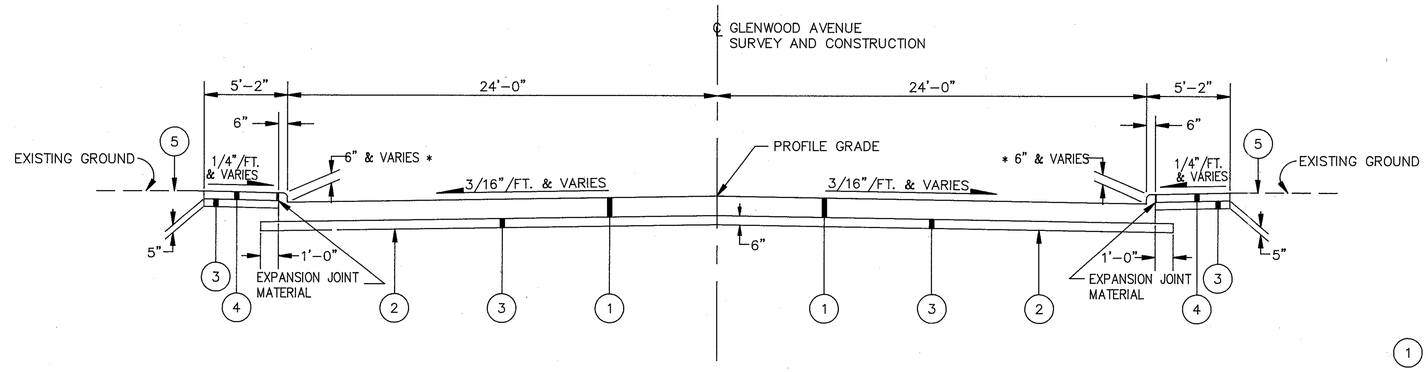

APPROACH SLAB TYPICAL SECTION

STATION 48+50.86 TO STATION 48+70.86	L=	20	LIN.FT.
STATION 50+57.04 TO STATION 50+77.04	L=	20	LIN.FT.
		40	LIN.FT.

* THE INTEGRAL CURBS SHALL VARY FROM 6" TYPE 2-B AT THE PAVEMENT END OF THE APPROACH SLABS TO MATCH THE 10" STRUCTURE CURB AT THE BRIDGE END OF THE APPROACH SLABS.

NOTE:
THE FORWARD APPROACH SLAB HAS AN UNDERDRAIN LOCATED UNDER THE UPSTATION EDGE. SEE SHEET 14 FOR ADDITIONAL DETAILS

LEGEND

1	ITEM 611	REINFORCED CONCRETE APPROACH SLAB, (T=13") WITH INTEGRAL CURB
2	ITEM 203	SUBGRADE COMPACTION
3	ITEM 304	AGGREGATE BASE, AS PER PLAN
4	ITEM 608	5" CONCRETE WALK
5	ITEM 659	SEEDING AND MULCHING
A		EXISTING 5" CONCRETE WALK AND SUBBASE
B		EXISTING 13" CONCRETE APPROACH SLAB

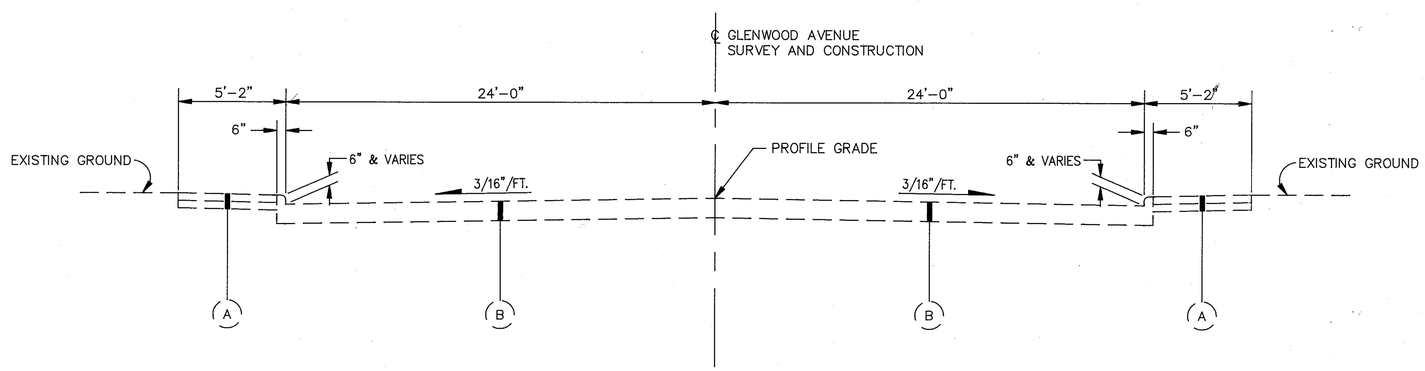

EXISTING APPROACH SLAB TYPICAL SECTION

TYPICAL SECTIONS

TYPE 404

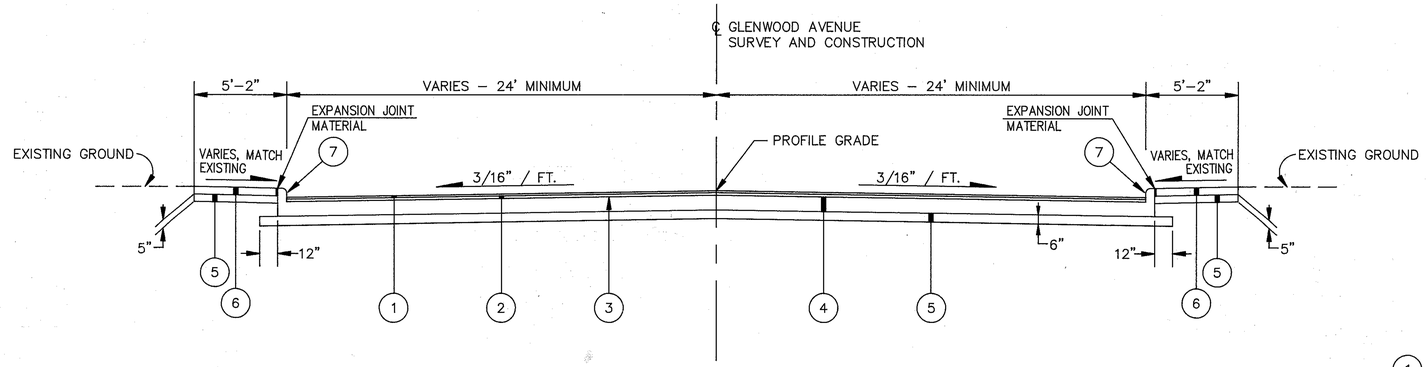

NORMAL CROSS SECTION

STATION 50+85.04 TO STATION 50+91.79 L= 6.75 LIN.FT.

FOR STA. 48+41.61 TO STA. 48+50.86 SECTIONS, SEE SHEET NO. 14
FOR STA. 50+77.04 TO STA. 50+85.04 SECTIONS, SEE SHEET NO. 14

LEGEND

1. ITEM 404 1 1/4" ASPHALT CONCRETE, AC-20
2. ITEM 402 1 3/4" ASPHALT CONCRETE, AC-20
3. ITEM 407 TACK COAT
4. ITEM 305 10" CONCRETE BASE
5. ITEM 304 AGGREGATE BASE, AS PER PLAN
6. ITEM 608 5" CONCRETE WALK
7. ITEM 609 CURB, TYPE 2-B

A. EXISTING 3" ASPHALT CONCRETE ON 9" CONCRETE BASE ON 6" SUBBASE
B. EXISTING COMBINATION CURB AND GUTTER
C. EXISTING 5" CONCRETE WALK AND SUBBASE

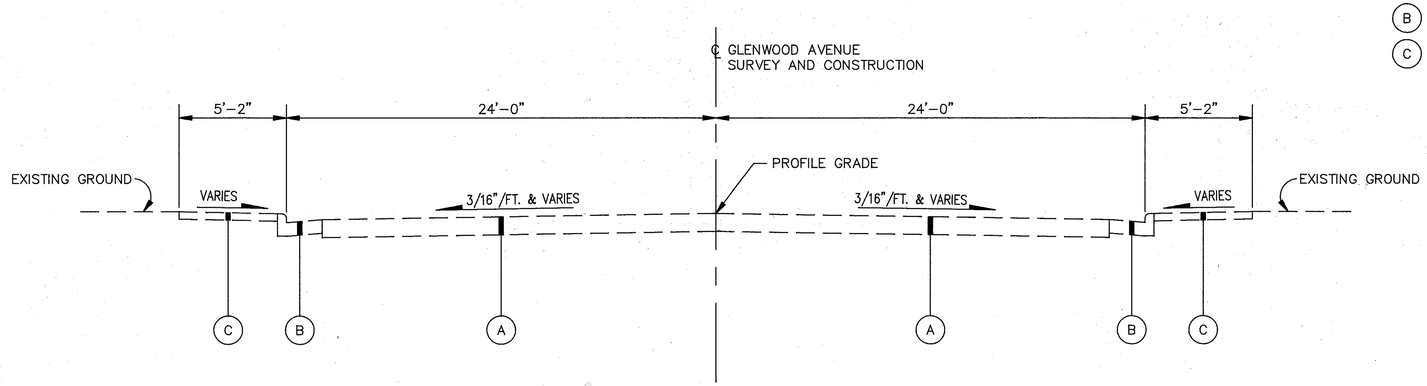

EXISTING TYPICAL SECTION

GENERAL NOTES

GLENWOOD AVE. MAINTENANCE OF TRAFFIC

THIS ITEM SHALL CONSIST OF MAINTENANCE OF TRAFFIC ON EXISTING ROADWAYS AND RAMPS IN ACCORDANCE WITH THE OHIO MANUAL OF UNIFORM TRAFFIC CONTROL DEVICES FOR STREETS AND HIGHWAYS, CURRENT EDITION LATEST REVISION, THE SPECIFICATIONS AND THE FOLLOWING.

TWO–WAY TRAFFIC SHALL BE MAINTAINED AT ALL TIMES BY THE USE OF THE PAVEMENT AND BRIDGE. THE SEQUENCE OF OPERATIONS FOR THE REMOVAL OF THE EXISTING BRIDGE AND CONSTRUCTION OF THE REPLACEMENT STRUCTURE IS DETAILED IN THE STRUCTURE PLANS. THE EAST SIDE OF THE REPLACEMENT STRUCTURE SHALL BE BUILT FIRST. THE COST OF SUPPLYING, ERECTING, OPERATING AND REMOVING ALL NECESSARY SIGNING, BARRICADES, PAVEMENT MARKINGS AND INCIDENTALS SHALL BE INCLUDED IN THE LUMP SUM BID FOR ITEM 614, MAINTAINING TRAFFIC.

I–680 MAINTENANCE OF TRAFFIC

IT SHALL BE THE RESPONSIBILITY OF THE CONTRACTOR TO MAINTAIN ONE LANE OF TRAFFIC IN EACH DIRECTION ON I–680 UNDER THE GLENWOOD AVE. BRIDGE DEMOLITION AND RECONSTRUCTION AREA IN ACCORDANCE WITH STANDARD DRAWINGS MT–95.31, MT–95.32, MT–105.10, MT–95.31, AND PLAN INSERT SHEET, SHEET NO. 20A FOR I–680 ENTRANCE RAMP TREATMENT.

THE CONTRACTOR SHALL SUBMIT A PLAN FOR THE MAINTENANCE OF TRAFFIC ON I–680 TO THE DISTRICT CONSTRUCTION ENGINEER THIRTY (30) CALENDER DAYS BEFORE CLOSING ANY LANES ON I–680.

THE SEQUENCE OF OPERATIONS FOR THE REMOVAL OF THE EXISTING BRIDGE AND CONSTRUCTION OF THE REPLACEMENT STRUCTURE IS DETAILED IN THE STRUCTURE PLANS. THE EAST SIDE OF THE REPLACEMENT STRUCTURE SHALL BE BUILT FIRST. THE COST OF SUPPLYING, ERECTING, OPERATING AND REMOVING ALL NECESSARY SIGNING, BARRICADES, PAVEMENT MARKINGS AND INCIDENTALS SHALL BE INCLUDED IN THE LUMP SUM BID FOR ITEM 614, MAINTAINING TRAFFIC.

NO DEMOLITION OR CONSTRUCTION SHALL BE PERFORMED OVER AN OPEN LANE OF TRAFFIC. LANE RESTRICTIONS OR LANE REDUCTIONS ON I–680 SHALL NOT BE PERMITTED AFTER NORMAL WORKING HOURS. NORMAL WORKING HOURS SHALL BE THOSE HOURS DURING WHICH THE CONTRACTOR HAS A FULL COMPLEMENT OF EMPLOYEES AND EQUIPMENT ACTIVELY REMOVING AND/OR PLACING BRIDGE MATERIALS.

A SAFETY NET OR PLATFORM SHALL BE REQUIRED TO PROTECT THE I–680 ROADWAY DURING THE DECK DEMOLITION AND CONSTRUCTION. THE CONTRACTOR SHALL PROVIDE A SAFTEY NET OR PLATFORM OF SUITABLE STRENGTH ON THE UNDERSIDE OF THE DECK. THE DESIGN OF THE NET OR PLATFORM SHALL CONFORM WITH THE OSHA REQUIREMENTS AND THE APPROVAL OF THE ENGINEER AND SHALL REMAIN IN PLACE UNTIL THE WORK HAS BEEN COMPLETED AND ACCEPTED OR AS DIRECTED BY THE ENGINEER.

THE CONTRACTOR SHALL SUBMIT A DEMOLITION PLAN AND SAFTEY NET OR PLATFORM DESIGN 10 DAYS PRIOR TO COMMENCING ANY DEMOLITION FOR APPROVAL BY THE ENGINEER. THE SUBMITTAL SHALL BE IN WRITING TO THE DISTRICT CONSTRUCTION ENGINEER WITH A COPY TO THE PROJECT ENGINEER.

NOTICE OF CLOSURE SIGNS

THESE SIGNS SHALL BE ERECTED BY THE CONTRACTOR AT LEAST ONE WEEK IN ADVANCE OF THE SCHEDULED ROAD OR RAMP CLOSURE. THE SIGNS SHALL BE ERECTED ON THE RIGHT HAND SIDE OF THE ROAD/RAMP FACING TRAFFIC. THEY SHALL BE LOCATED IN THE FIELD SO AS NOT TO INTERFERE WITH ANY PERMANENT SIGNS. ON ROADWAYS THEY SHOULD BE ERECTED AT THE POINT OF CLOSURE. ON RAMPS THE SIGNS MAY BE ERECTED ANYWHERE ALONG IT; AS LONG AS IT IS VISIBLE TO THE MOTORISTS USING THE RAMP. ON ENTRANCE RAMPS THE SIGNS MAY BE ERECTED WELL IN ADVANCE OF THE MERGE AREA TO AVOID DISTRACTING THE MOTORISTS. THE SIGN SHALL BE REMOVED TEN(10) CONSECUTIVE DAYS AFTER CLOSURE.

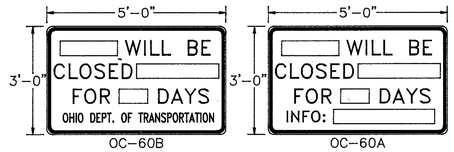

OC–60B OC–60A

PAYMENT FOR THIS WORK SHALL BE INCLUDED IN THE LUMP SUM BID FOR ITEM 614 MAINTAINING TRAFFIC AND SHALL INCLUDE FURNISHING, ERECTING, MAINTAINING AND REMOVING THE SIGNS INCLUDING SUPPORTS.

LAW ENFORCEMENT OFFICER

THE CONTRACTOR SHALL PROVIDE THE SERVICE OF LAW ENFORCEMENT OFFICERS (L.E.O.) WITH A PATROL CAR, AT THE ENGINEER'S REQUEST, FOR THE PURPOSE OF CONTROLLING THROUGH TRAFFIC. THE L.E.O. WITH A PATROL CAR SHALL BE UTILIZED DURING INSTALLATION AND REMOVAL OF TRAFFIC CONTROL DEVICES FOR LANE CLOSURES AND AS AUTHORIZED BY THE ENGINEER.

INFORMATION REGARDING ARRANGEMENTS AND PAYMENTS BY THE CONTRACTOR FOR THE L.E.O. MAY BE OBTAINED BY CONTACTING:

CITY OF YOUNGSTOWN
POLICE DEPARTMENT
ATTENTION : SGT. HART
116 WEST BOARDMAN ST.
YOUNGSTOWN, OHIO 44503
TELEPHONE: (216)–742–8940

OR

OHIO HIGHWAY PATROL
660 EAST MAIN STREET
COLUMBUS, OHIO 43205
TELEPHONE: (614) 466–2300

THIS REQUIREMENT DOES NOT PRECLUDE THE CONTRACTORS USE OF AN L.E.O. FOR OTHER PURPOSES OF CONTROLLING TRAFFIC AS APPROVED BY THE ENGINEER. THE L.E.O. SHALL BE CONSIDERED AN EMPLOYEE OF THE CONTRACTOR AND THE CONTRACTOR SHALL BE RESPONSIBLE FOR HIS/HER ACTIONS. ALTHOUGH EMPLOYED BY THE CONTRACTOR, THE PROJECT ENGINEER SHALL HAVE CONTROL OVER THE L.E.O. PLACEMENT AND HIS/HER ACTIVITIES. PAYMENT SHALL BE AT THE UNIT PRICE BID FOR THE ACTUAL NUMBER OF HOURS FOR ITEM 614 – LAW ENFORCEMENT OFFICER WITH PATROL CAR.

614 LAW ENFORCEMENT OFFICER WITH PATROL CAR 100 HOURS

LIGHTS AND SIGNS AT ADJACENT ROAD INTERSECTIONS

THE CONTRACTOR SHALL, IN ADDITION TO THE GENERAL REQUIREMENTS OF ITEM 614 ON THE PROJECT PERFORM THE FOLLOWING:

PROVIDE, ERECT, AND MAINTAIN STANDARD 48"X30" SIZE "ROAD CLOSED" SIGN SUPPORTS, AND LIGHTS AT THE FOLLOWING LOCATIONS DURING PERIOD(S) IN WHICH THE AFFECTED ROADS ARE CLOSED TO TRAFFIC:

1) ORANGE ST. & GLENWOOD AVE.
2) MARSHALL ST. & ENTRANCE RAMP

SIGN SUPPORTS AND LIGHTS FOR "ROAD CLOSED" SIGNS SHALL BE AS DETAILED IN THE OHIO MANUAL OF UNIFORM TRAFFIC CONTROL DEVICES. PAYMENT FOR PROVIDING, ERECTING, MAINTAINING, AND REMOVING LIGHTS, SIGNS, AND SIGN SUPPORTS SHALL BE INCLUDED IN THE LUMP SUM PRICE BID FOR ITEM 614 MAINTAINING TRAFFIC.

DETOUR SIGNS

THE CONTRACTOR WILL PROVIDE AND THE CITY WILL ERECT, MAINTAIN AND REMOVE THE DETOUR SIGNS AND SUPPORTS AS SHOWN ON THE DETOUR MAP, SHEET NO. 6. THE CONTRACTOR SHALL NOTIFY THE CITY OF YOUNGSTOWN TRAFFIC COORDINATOR 10 DAYS PRIOR TO NEEDING THE DETOUR SIGNS ERECTED. UPON REMOVAL, THE SIGNS AND SUPPORTS SHALL BECOME THE PROPERTY OF THE CITY. THIS WORK SHALL BE INCLUDED IN THE PRICE BID FOR ITEM 614–MAINTAINING TRAFFIC.

CITY OF YOUNGSTOWN TRAFFIC COORDINATOR
CITY HALL
26 S. PHELPS ST.
YOUNGSTOWN, OHIO 44503
TELEPHONE: (216) 742–8816

PORTABLE CONCRETE BARRIER

AN ESTIMATED QUANTITY OF 450 LIN. FT. OF ITEM 622 PORTABLE CONCRETE BARRIER, AND 550 LIN. FT. OF ITEM 622 PORTABLE CONCRETE BARRIER, BRIDGE MOUNTED, SHALL BE FURNISHED, INSTALLED, MAINTAINED AND SUBSEQUENTLY REMOVED BY THE CONTRACTOR. THE PORTABLE CONCRETE BARRIER SHALL BE USED TO CLOSE ONE LANE OF ROADWAY DURING BRIDGE OPERATIONS. SEE SHEETS 1/–20 FOR ADDITIONAL DETAILS. THE PORTABLE CONCRETE BARRIER, BRIDGE MOUNTED, SHALL BE PINNED TO THE DECK. FOR PINNING DETAILS, SEE STANDARD DRAWING PCB–91. NUMBER OF ANCHORS PER SECTION SHALL BE 2.

THE PORTABLE CONCRETE BARRIER SHALL BE USED ON THE BRIDGE LISTED BELOW:

BRIDGE NO. MAH–680–0488

THIS ITEM SHALL BE PAID FOR BY THE ACTUAL LINEAL FEET OF ITEM 622 PORTABLE CONCRETE BARRIER INSTALLED AT A PARTICULAR LOCATION.

LANE WIDTH RESTRICTION, DETOUR NOTIFICATION

THE CONTRACTOR SHALL NOTIFY THE DISTRICT TRAFFIC ENGINEER 18 DAYS PRIOR TO THE LANE RESTRICTION AND/OR ROAD CLOSURE.

BARRIER REFLECTORS and Object Markers

THESE REFLECTORS and Object Markers AND THERE MOUNTINGS SHALL CONFORM TO ~~SUPPLEMENT~~ PROPOSAL NOTE 142-92 and SPACING SHALL BE 25 FT. C/C.

614 BARRIER REFLECTOR, TYPE B	40 EACH
614 Object Markers	40 EACH

WORK ZONE PAVEMENT MARKING

THE FOLLOWING QUANTITIES ARE PROVIDED FOR USE "AS DIRECTED BY THE ENGINEER"

614 TEMPORARY CENTERLINES, CLASS I	0.42 MILES
614 TEMPORARY EDGE LINES, CLASS I	0.10 MILES
614 TEMPORARY CHANNELIZATION LINE, CLASS I	68 LIN.FT.
614 TEMPORARY LANE ARROW, CLASS I	1 EACH
614 TEMPORARY WORD "ONLY" ON PAVEMENT	1 EACH

NONE OF THE ABOVE MATERIALS SHALL BE ORDERED BY THE CONTRACTOR UNTIL AUTHORIZED BY THE ENGINEER.

PAYMENT FOR ALL OF THE ABOVE EXCEPT ITEM 622 SHALL BE INCLUDED IN THE PRICE BID FOR ITEM 614, MAINTAINING TRAFFIC.

GENERAL NOTES

PART WIDTH CONSTRUCTION

BECAUSE OF THE NECESSITY OF BUILDING PORTIONS OF THIS PROJECT UNDER TRAFFIC AND CONSTRUCTING THE FULL PAVEMENT WIDTH IN STAGES, EXTREME CARE SHALL BE TAKEN TO PREVENT THE CONSTRUCTION OF A BUTT JOINT ON CENTERLINE IN THE BASE COURSES. LONGITUDINAL JOINTS SHALL BE LAPPED AS SHOWN ON STANDARD CONSTRUCTION DRAWING BP–3.1

CONTINGENCY QUANTITIES

THE CONTRACTOR SHALL NOT ORDER MATERIALS OR PERFORM WORK LISTED IN THE GENERAL SUMMARY FOR ITEMS DESIGNATED BY PLAN NOTE TO BE USED "AS DIRECTED BY THE ENGINEER" UNLESS AUTHORIZED BY THE ENGINEER. THE ACTUAL WORK LOCATIONS AND QUANTITIES USED AT THE ENGINEER'S DISCRETION SHALL BE MADE A MATTER OF RECORD BY INCORPORATION INTO THE FINAL CHANGE ORDER GOVERNING COMPLETION OF THIS PROJECT.

DUST CONTROL

THE FOLLOWING ESTIMATED QUANTITIES HAVE BEEN CARRIED TO THE GENERAL SUMMARY FOR USE AS DIRECTED BY THE ENGINEER FOR DUST CONTROL:

616 WATER 2 M. GAL.

UNDERGROUND UTILITIES

THE LOCATIONS OF THE UNDERGROUND UTILITIES SHOWN ON THE PLANS ARE AS OBTAINED FROM THE OWNERS OF THE UTILITY AS REQUIRED BY SECTION 153.64 ORC.

UTILITY OWNERSHIP

THE FOLLOWING UTILITIES AND OWNERS ARE LOCATED WITHIN THE WORK LIMITS OF THIS PROJECT:

SANITARY SEWERS . . . . CITY OF YOUNGSTOWN
ENGINEERS DEPARTMENT
26 SOUTH PHELPS STREET
YOUNGSTOWN, OHIO 44503
TELEPHONE: (216)742–8800

NATURAL GAS . . . . . EAST OHIO GAS COMPANY
1165 WEST RAYEN AVENUE
YOUNGSTOWN, OHIO 44502–1394
TELEPHONE: (216)742–8140

WATER. . . . . YOUNGSTOWN WATER DEPARTMENT
P.O. BOX 6219
YOUNGSTOWN, OHIO 44501–6219
TELEPHONE: (216)742–8746

POWER. . . . . OHIO EDISON COMPANY
76 SOUTH MAIN STREET
AKRON, OHIO 44308
TELEPHONE: (216)384–4631

COOPERATION BETWEEN CONTRACTORS

THE CONTRACTOR SHALL BE ADVISED THAT OTHER PROJECTS MAY BE ONGOING IN AREAS IMMEDIATELY ADJACENT TO AND WITHIN THE PROJECT LIMITS OF THIS PROJECT. THE CONTRACTOR SHALL SCHEDULE HIS WORK SO AS TO CAUSE A MINIMUM OF DELAY OR CONFLICT WITH THE OTHER PROJECT OR PROJECTS. IN ACCORDANCE WITH 106.07 THE CONTRACTOR SHALL ARRANGE WITH THE OTHER CONTRACTORS, A MUTUALLY ACCEPTABLE WORK SCHEDULE, SUBJECT TO THE APPROVAL OF THE ENGINEER. THE CONTRACTOR SHALL RECEIVE DAILY APPROVAL FROM THE ENGINEER PRIOR TO COMMENCING ANY OPERATIONS. ANY CONFLICT BETWEEN CONTRACTORS INVOLVING WORK SCHEDULES, WORK AREA OR COOPERATION SHALL BE RESOLVED BY THE ENGINEER. COMPENSATION FOR THE ABOVE COOPERATION SHALL BE INCIDENTAL TO THE VARIOUS PAY ITEMS INCLUDED WITHIN THIS PROJECT.

SEEDING

QUANTITIES FOR SEEDING ARE CALCULATED FOR THE SOIL AREAS 5' OUTSIDE OF THE BACK OF SIDEWALK BOTH SIDE.

WATERING PERMANENT SEEDED AREAS

THE FOLLOWING ESTIMATED QUANTITIES ARE TO BE USED AS DIRECTED BY THE ENGINEER TO PROMOTE GROWTH AND TO CARE FOR THE PERMANENT SEEDED AREAS, AS PER 659.09:

659 WATER 1 M. GAL.

TEMPORARY SOIL EROSION AND SEDIMENT CONTROL

THE FOLLOWING ESTIMATED QUANTITIES ARE TO BE USED AS DIRECTED BY THE ENGINEER, FOR TEMPORARY EROSION AND SEDIMENT CONTROL MEASURES.

207 STRAW OR HAY BALES 50 EACH

CLEARING AND GRUBBING

ALTHOUGH THERE ARE NO TREES AND/OR STUMPS SPECIFICALLY MARKED FOR REMOVAL WITHIN THE LIMITS OF THIS PROJECT, A LUMP SUM QUANTITY HAS BEEN INCLUDED IN THE GENERAL SUMMARY FOR ITEM 201, CLEARING AND GRUBBING. ALL PROVISIONS AS SET FORTH IN THE SPECIFICATIONS UNDER THIS ITEM SHALL BE INCLUDED IN THE LUMP SUM PRICE BID FOR ITEM 201, CLEARING AND GRUBBING.

ITEM 304 – AGGREGATE BASE, AS PER PLAN

MATERIALS FURNISHED FOR THIS ITEM SHALL EXCLUDE ALL SLAG EXCEPT GRANULATED SLAG OR CRUSHED GRANULATED SLAG OR CRUSHED AIR–COOLED BLAST FURNACE SLAG.[THE MAXIMUM TOTAL PERCENT PASSING THE NO. 200 SEIVE FOR 304 SHALL BE 8 PERCENT AS OPPOSED TO THE 13 PERCENT SHOWN IN 304.02.]

REVIEW OF DRAINAGE FACILITIES

BEFORE ANY WORK IS STARTED ON THE PROJECT, AND AGAIN BEFORE FINAL ACCEPTANCE BY THE STATE, REPRESENTATIVES OF THE STATE AND THE CONTRACTOR, ALONG WITH LOCAL REPRESENTATIVES, SHALL MAKE AN INSPECTION OF THE EXISTING SEWERS WITHIN THE WORK LIMITS WHICH ARE TO REMAIN IN SERVICE AND WHICH MAY BE AFFECTED BY THE WORK. THE CONDITION OF THE EXISTING CONDUITS AND THEIR APPURTENANCES SHALL BE DETERMINED FROM FIELD OBSERVATIONS. RECORDS OF THE INSPECTIONS SHALL BE KEPT IN WRITING BY THE STATE.

ALL NEW CONDUITS, INLETS, CATCH BASINS, AND MANHOLES CONSTRUCTED AS A PART OF THE PROJECT SHALL BE FREE OF ALL FOREIGN MATTER AND IN A CLEAN CONDITION BEFORE THE PROJECT WILL BE ACCEPTED BY THE STATE.

ALL EXISTING SEWERS INSPECTED INITIALLY BY THE ABOVE–MENTIONED PARTIES SHALL BE MAINTAINED AND LEFT IN A CONDITION REASONABLY COMPARABLE TO THAT DETERMINED BY THE ORIGINAL INSPECTION. ANY CHANGE IN THE CONDITION RESULTING FROM THE CONTRACTOR'S OPERATIONS SHALL BE CORRECTED BY THE CONTRACTOR TO THE SATISFACTION OF THE ENGINEER.

PAYMENT FOR ALL OPERATIONS DESCRIBED ABOVE SHALL BE INCLUDED IN THE UNIT PRICE BID FOR THE PERTINENT 603 CONDUIT ITEMS OF THE CONTRACT.

ITEM 407 – TACK COAT

THE RATE OF APPLICATION OF 407 TACK COAT SHALL BE SUBJECT TO ADJUSTMENT, AS DIRECTED BY THE ENGINEER. PLAN QUANTITIES INDICATE AVERAGE APPLICATION RATES OF 0.075 GALLONS PER SQ. YD. OF TACK COAT FOR ESTIMATING PURPOSES ONLY.

CONNECTION TO EXISTING CATCH BASIN

WHERE THE PLANS PROVIDE FOR PROPOSED CONDUIT TO BE CONNECTED TO THE EXISTING CATCH BASIN, IT SHALL BE THE RESPONSIBILITY OF THE CONTRACTOR TO LOCATE THE EXISTING CATCH BASIN BOTH HORIZONTALLY AND VERTICALLY BEFORE HE STARTS TO LAY THE PROPOSED CONDUIT.

CONNECTION TO EXISTING PIPE

WHERE THE PLANS PROVIDE FOR PROPOSED CONDUIT TO BE CONNECTED TO, OR TO CROSS EITHER OVER OR UNDER AN EXISTING SEWER, IT SHALL BE THE RESPONSIBILITY OF THE CONTRACTOR TO LOCATE THE EXISTING PIPE BOTH AS TO LINE AND GRADE BEFORE HE STARTS TO LAY THE PROPOSED CONDUIT.

PAYMENT FOR ALL OPERATIONS DESCRIBED ABOVE SHALL BE INCLUDED IN THE UNIT PRICE BID FOR THE PERTINENT 603 CONDUIT ITEMS.

ITEM SPECIAL – PRECAST REINFORCED CONCRETE OUTLET

THE CONCRETE OUTLET SHALL MEET THE REQUIREMENTS OF ITEM 604 IN THE CONSTRUCTION & MATERIALS SPECIFICATIONS. PAYMENT SHALL BE MADE ON AN EACH BASIS. PAYMENT SHALL INCLUDE THE COST OF THE SOD & WIRE CLOTH.

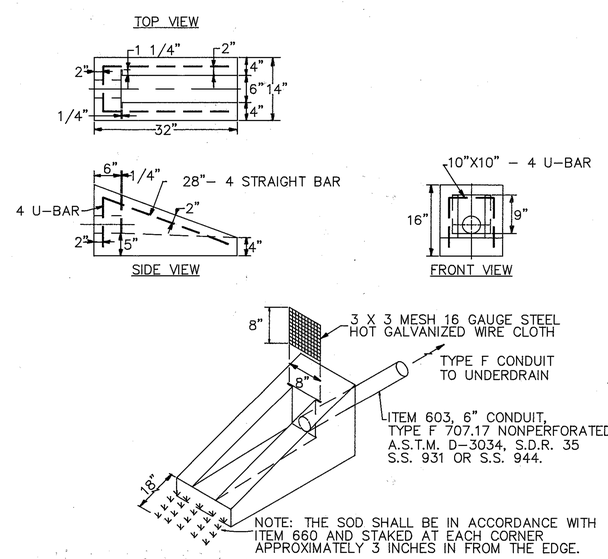

CALCULATIONS

PAVEMENT AREAS:

STA. 48+41.61 TO STA. 48+42.86
(48)(1.25) = 60.0 SQ.FT.

STA. 50+85.04 TO STA. 50+91.79
(48)(6.75) = 324.0 SQ.FT.
384.0 SQ.FT.

APPROACH SLAB AREAS:

AS-1 STA. 48+50.86 TO STA. 48+70.86
(49)(20) = 980 SQ.FT.

AS-2 STA. 50+57.04 TO STA. 50+77.04
(49)(20) = 980 SQ.FT.
1960 SQ.FT.

ADDITIONAL AREAS FOR ITEM 304 - AGGREGATE BASE

STA. 48+41.61 TO STA. 48+42.86
2[(1.25)(1.5)] = 3.8 SQ.FT.

STA. 48+50.86 TO STA. 48+70.86
2[(20)(1)] = 40.0 SQ.FT.

STA. 50+57.04 TO STA. 50+77.04
2[(20)(1)] = 40.0 SQ.FT.

STA. 50+85.04 TO STA. 50+91.79
2[(6.75)(1.5)] = 22.3 SQ.FT.

= 106.1 SQ.FT.

ITEM 404 - ASPHALT CONCRETE, AC-20

(384.0)(1.25/12)(1/27) = 1.5 CU.YD.

ITEM 402 - ASPHALT CONCRETE, AC-20

(384.0)(1.75/12)(1/27) = 2.1 CU.YD.

ITEM 305 - CONCRETE BASE

PAVEMENT AREA + AREA UNDER TYPE 2-B CURB
[(384.0)+(2)(22)(0.5)](10/12)(1/9) = 37.6 SQ.YD.

ITEM 304 - AGGREGATE BASE, AS PER PLAN

PAVEMENT AREA + APPROACH SLABS + ADD AREAS FOR 304
(384.0+1960+106.1)(6/12)(1/27) = 47.3 CU.YD.

ITEM 407 - TACK COAT

PAVEMENT AREA + ADD AREAS FOR 304
(328.0)(1/9)(0.075) = 2.7 GAL.
USE 3 GAL.

ITEM 203 - SUBGRADE COMPACTION

PAVEMENT AREA + APPROACH SLAB AREAS + CURB AREA
[(328.0+1960+(2)(22)(0.5)](1/9) = 262.9 SQ.YD.

ITEM 611 - REINFORCED CONCRETE APPROACH SLAB, T=13"

AS-1 (980 SQ.FT.)(1/9) = 109 SQ.YD.

AS-2 (980 SQ.FT.)(1/9) = 109 SQ.YD.
218 SQ.YD.

ITEM 659 - SEEDING AND MULCHING

= 70 SQ.YD.

ITEM 659 - COMMERCIAL FERTILIZER

SEEDING AREA = 70 SQ.YD.
(70)(9)(20/1000)(1/2000) = 0.006 TON
USE : 0.01 TON

ITEM 659 - AGRICULTURAL LIMING

SEEDING AREA = 70 SQ.YD.
(70)(9)(100/1000)(1/2000) = 0.03 TON

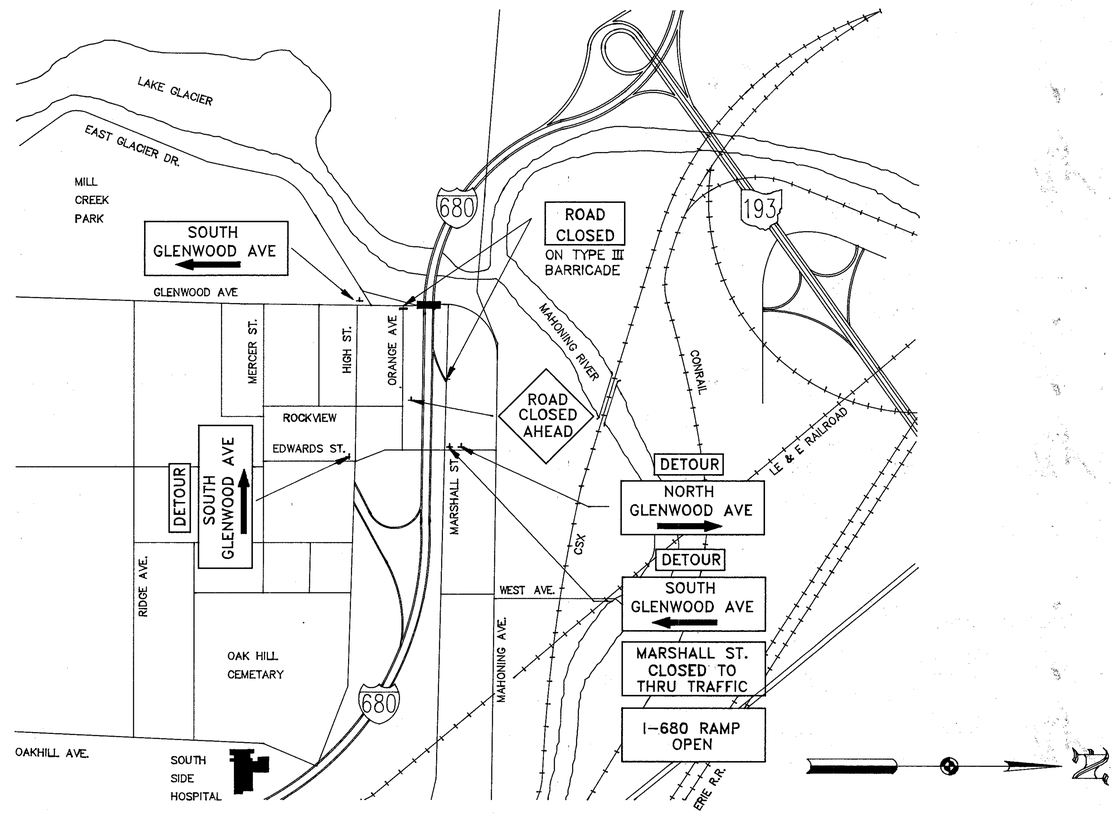

DETOUR MAP

NOT TO SCALE

GENERAL SUMMARY

ITEM	SHEET NUMBER 5	6	8	9	15	21	ITEM	ITEM EXT.	GRAND TOTAL	UNIT	DESCRIPTION
											ROADWAY
202				272			202	22900	272	SQ.YD.	APPROACH SLAB REMOVED
202				623			202	30000	623	SQ.FT.	WALK REMOVED
202				18			202	32000	18	LIN.FT.	CURB REMOVED
202				13			202	32500	13	LIN.FT.	CURB AND GUTTER REMOVED
203			72				203	12000	72	CU.YD.	EXCAVATION, NOT INCLUDING EMBANKMENT CONSTRUCTION
203		263					203	50000	263	SQ.YD.	SUBGRADE COMPACTION
608				598			608	12000	598	SQ.FT.	5" CONCRETE WALK
											EROSION CONTROL
207	50						207	70000	50	EACH	STRAW OR HAY BALES
659			70				659	10000	70	SQ.YD.	SEEDING AND MULCHING
659		0.01					659	20000	0.01	TON	COMMERCIAL FERTILIZER
659		0.03					659	30000	0.03	TON	AGRICULTURAL LIMING
659	1						659	35000	1	M.GAL.	WATER
											DRAINAGE
603						20	603	00406	20	LIN.FT.	4" CONDUIT, TYPE F
603				52			603	01500	52	LIN.FT.	6" CONDUIT, TYPE F 707.17 NONPERFORATED
											ASTM D-3034, SDR-35, SS931 OR SS944
603				48			603	04400	48	LIN.FT.	12" CONDUIT, TYPE B
603				53			603	04600	53	LIN.FT.	12" CONDUIT, TYPE C, 707.13
604				2			604	00800	2	EACH	CATCH BASIN, NO. 3A
604				1			604	09500	1	EACH	CATCH BASIN RECONSTRUCTED TO GRADE
605				101			605	11100	101	LIN.FT.	6" SHALLOW PIPE UNDERDRAIN, 707.01 TYPE III,
											707.21 TYPE III OR 707.17
SPECIAL				1			SPECIAL	60436600	1	EACH	PRECAST REINFORCED CONCRETE OUTLET
											PAVEMENT
304		47		9			304	20001	56	CU.YD.	AGGREGATE BASE, AS PER PLAN (SEE SHEET NO. 5)
305		38					305	14000	38	SQ.YD.	10" CONCRETE BASE
402		2					402	20000	2	CU.YD.	ASPHALT CONCRETE, AC-20
404		2					404	20000	2	CU.YD.	ASPHALT CONCRETE, AC-20
407		3					407	10000	3	GAL.	TACK COAT
609				22			609	16000	22	LIN.FT.	CURB, TYPE 2-B
611		218					611	15000	218	SQ.YD.	REINFORCED CONCRETE APPROACH SLAB (T=13")
SPECIAL				100			SPECIAL	45130000	100	LIN.FT.	PRESSURE RELIEF JOINT, TYPE A
											TRAFFIC CONTROL
630					14		630	03100	14	LIN.FT.	GROUND MOUNTED SUPPORT, NO. 3 POST
630					15		630	04100	15	LIN.FT.	GROUND MOUNTED SUPPORT, NO. 4 POST
630					7		630	80100	7	SQ. FT.	SIGN, FLAT SHEET
630					1		630	85100	1	EACH	REMOVAL OF GROUND MOUNTED SIGN AND REERECTION
630					1		630	86002	1	EACH	REMOVAL OF GROUND MOUNTED POST SUPPORT AND DISPOSAL
630					5		630	87100	5	EACH	REMOVAL OF OVERHEAD MOUNTED SIGN AND REERECTION
630					3		630	89600	3	EACH	REMOVAL OF OVERHEAD SIGN SUPPORT AND REERECTION, TYPE TC-18.24
631					3		631	84300	3	EACH	SIGN WIRED
631					6		631	94100	6	EACH	REMOVAL OF LUMINAIRE AND REERECTION
642					0.26		642	00302	0.26	MILE	CENTERLINES, TYPE 2
642					50		642	00902	50	SQ.FT.	ISLAND MARKING, TYPE 2
642					4		642	01302	4	EACH	LANE ARROW, TYPE 2

ITEM	SHEET NUMBER 4	5	21		ITEM	ITEM EXT.	GRAND TOTAL	UNIT	DESCRIPTION
									MAINTENANCE OF TRAFFIC
SPECIAL	100				SPECIAL	61411100	100	HOUR	LAW ENFORCMENT OFFICER WITH PATROL CAR
614	40				614	13300	40	EACH	BARRIER REFLECTOR, TYPE B
614	0.42				614	21000	0.42	MILE	TEMPORARY CENTER LINE, CLASS I
614	0.10				614	22000	0.10	MILE	TEMPORARY EDGE LINE, CLASS I
614	68				614	23000	68	LIN.FT.	TEMPORARY CHANNELIZATION LINE, CLASS I
614	1				614	30000	1	EACH	TEMPORARY LANE ARROW, CLASS I
614	1				614	31000	1	EACH	TEMPORARY WORD ON PAVEMENT, 72" CLASS I
616		2			616	10000	2	M.GAL.	WATER
622	450				622	40020	450	LIN.FT.	PORTABLE CONCRETE BARRIER, 32"
622	550				622	40040	550	LIN.FT.	PORTABLE CONCRETE BARRIER, 32", BRIDGE MOUNTED
614	40				614	13350	40	EACH	OBJECT MARKERS
									LIGHTING
625			1		625	00500	1	EACH	CONNECTOR KIT, TYPE II
625			1		625	00600	1	EACH	CONNECTOR KIT, TYPE III
625			1		625	10500	1	EACH	LIGHT POLE, DESIGN ST 10B 29.5
625			4		625	10600	4	EACH	LIGHT POLE ANCHOR L-BOLTS
625			452		625	23000	452	LIN.FT.	NO. 4 AWG 600 VOLT DISTRIBUTION CABLE
625			90		625	23400	90	LIN.FT.	NO. 10 AWG POLE AND BRACKET CABLE
625			237		625	25400	237	LIN.FT.	CONDUIT, 2", 713.04
625			1		625	26151	1	EACH	LUMINAIRE, STYLE B, TYPE II, 150 WATT HIGH PRESSURE SODIUM, AS PER PLAN 713.11, 120 VOLT,
625			24		625	29002	24	LIN.FT.	TRENCH, 24" DEEP
625			2		625	29911	2	EACH	TRANSITION JUNCTION BOX, AS PER PLAN (SEE SHEET NO.21 & NO 21A)
625			1		625	29920	1	EACH	STRUCTURE JUNCTION BOX
625			1		625	30500	1	EACH	PULLBOX, 713.09, 18"
625			1		625	32000	1	EACH	GROUND ROD
625			1		625	33000	1	EACH	STRUCTURE GROUNDING SYSTEM
625			1		625	34001	1	EACH	POWER SERVICE, AS PER PLAN
625			1		625	34900	1	EACH	LIGHT POLE REMOVED
625			1		625	35090	1	EACH	LUMINAIRE REMOVED
625			LUMP		625	38000	LUMP		HIGH VOLTAGE TEST
									FOR STRUCTURE QUANTITIES, SEE SHEET NO. 25
614	LUMP				614	11000	LUMP		MAINTAINING TRAFFIC
619					619	15010	LUMP		FIELD OFFICE, TYPE B
623					623	10000	LUMP		CONSTRUCTION LAYOUT STAKES
624					624	10000	LUMP		MOBILIZATION

CALC. BY E.H.W. DATE 2/5/93 CHK'D BY MDM DATE 4/1/93	MAH-680-4.88	OHIO FHWA REGION 5	8 / 36

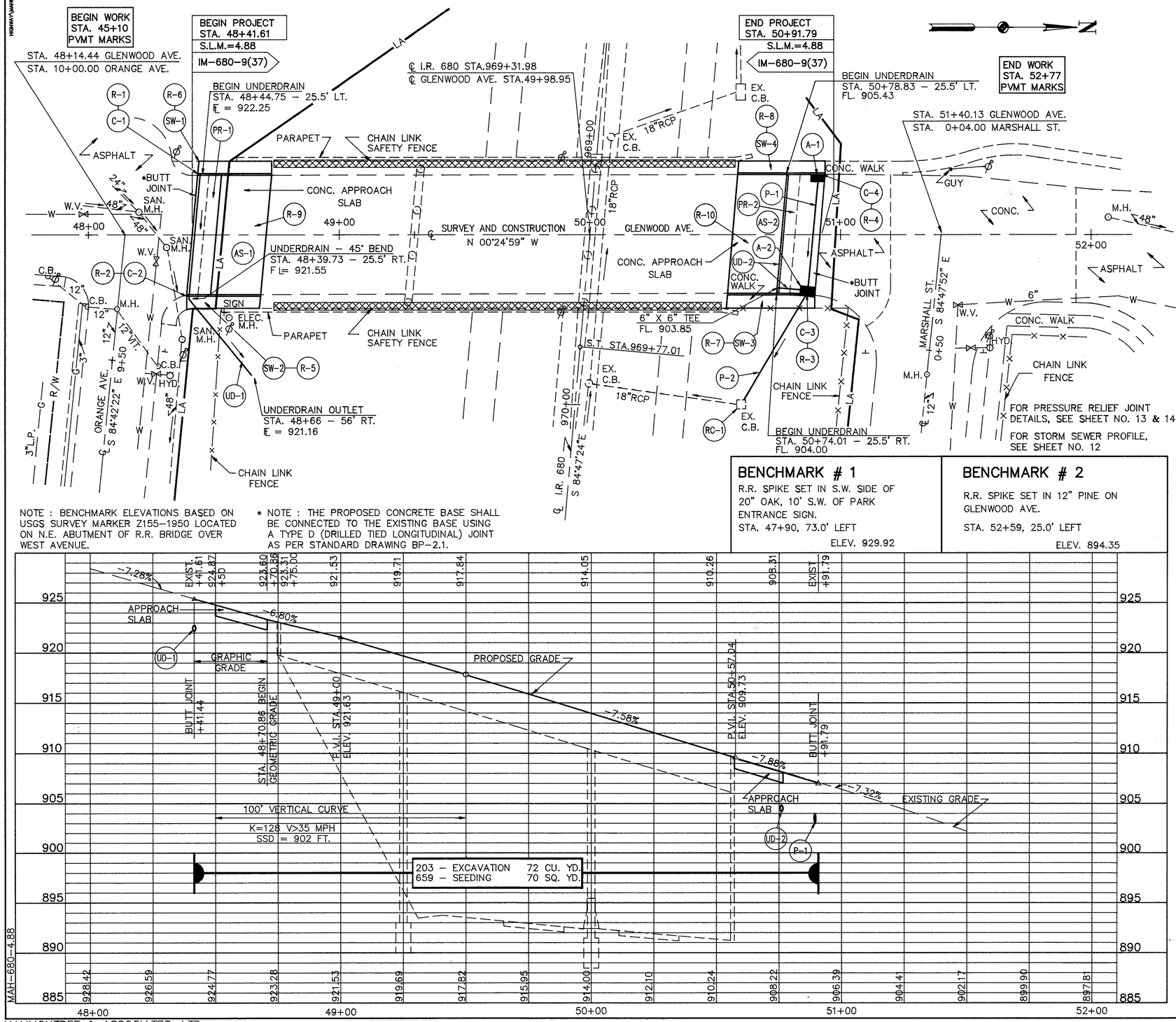

NOTE : BENCHMARK ELEVATIONS BASED ON USGS SURVEY MARKER Z155-1950 LOCATED ON N.E. ABUTMENT OF R.R. BRIDGE OVER WEST AVENUE.

* NOTE : THE PROPOSED CONCRETE BASE SHALL BE CONNECTED TO THE EXISTING BASE USING A TYPE D (DRILLED TIED LONGITUDINAL) JOINT AS PER STANDARD DRAWING BP-2.1.

BENCHMARK # 1

R.R. SPIKE SET IN S.W. SIDE OF 20" OAK, 10' S.W. OF PARK ENTRANCE SIGN.
STA. 47+90, 73.0' LEFT
ELEV. 929.92

BENCHMARK # 2

R.R. SPIKE SET IN 12" PINE ON GLENWOOD AVE.
STA. 52+59, 25.0' LEFT
ELEV. 894.35

CENTERLINE REFERENCES

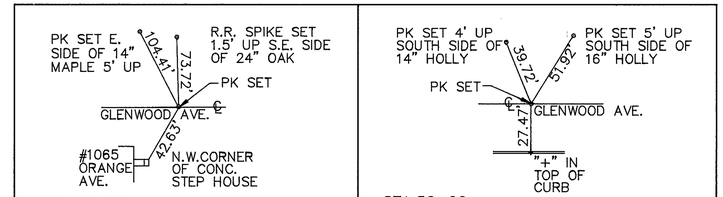

PROPOSED STRUCTURE DATA

TYPE: EXISTING CONTINUOUS STEEL BEAM WITH NEW REINFORCED CONCRETE DECK AND REHABILITATED CONCRETE SUBSTRUCTURES.
SPAN: 56'-0"±, 70'-0"±, 56'-0"± C/C BRGS.
ROADWAY: 48'-0" F/F CURB
SIDEWALKS: 5'-2" BOTH SIDES
LOADING: HS 20-44 (CASE II) AND THE ALTERNATE MILITARY LOADING
SKEW: 5°37'35"± L.F.
WEARING SURFACE: MONOLITHIC CONCRETE
APPROACH SLABS: AS-1-81 20'-0"
ALIGNMENT: TANGENT
CROWN: 3/16"/FT.

EXISTING STRUCTURE DATA

TYPE: CONTINUOUS STEEL BEAM, WITH REINFORCED CONCRETE DECK AND SUBSTRUCTURES.
SPAN. 56'-0"±, 70'-0"±, 56'-0"± C/C BRGS.
ROADWAY: 48'± – F/F CURB – 5'-2"± SIDEWALK BOTH SIDES
SKEW: 5°37'35"± L.F.
APPROACH SLABS: 25' LONG
WEARING SURFACE: ASPHALT CONCRETE
ALIGNMENT: TANGENT
DATE BUILT: 1962

ESTIMATED QUANTITIES

REF. NO.	STATION TO STATION	SIDE	
			TOTAL

FOR ESTIMATED QUANTITIES, SEE SHEET NO. 9

STA. 48+00 TO STA. 52+00

MAH-680-4.88

HAMMONTREE & ASSOCIATES, LTD.

ESTIMATED QUANTITIES

REF. NO.	STATION TO STATION	SIDE	202 CURB AND GUTTER REMOVED (LIN.FT.)	202 CURB REMOVED (LIN.FT.)	202 WALK REMOVED (SQ.FT.)	202 APPROACH SLAB REMOVED (SQ.YD.)			304 AGGREGATE BASE, AS PER PLAN (CU.YD.)		603 6" CONDUIT TYPE F, 707.17 NONPERFORATED ASTM D-3034 SDR-35, SS931 OR SS944 (LIN.FT.)	603 12" CONDUIT TYPE B (LIN.FT.)	603 12" CONDUIT TYPE C, 707.13 (LIN.FT.)		604 CATCH BASIN NO. 3A (EACH)	604 CATCH BASIN RECONSTRUCTED TO GRADE (EACH)	605 6" SHALLOW PIPE UNDERDRAIN, 707.01 TYPE III, 707.17 OR 707.21 (LIN.FT.)		SPECIAL PRECAST REINFORCED CONCRETE OUTLET (EACH)	SPECIAL PRESSURE RELIEF JOINT, TYPE A (LIN.FT.)		608 5" CONCRETE WALK (SQ.FT.)	609 CURB, TYPE 2-B (LIN.FT.)							
R-1	48+43.42 TO 48+48.87	LT.	5.5																											
R-2	48+39.47 TO 48+47.27	RT.	7.6																											
R-3	50+80 TO 50+90	RT.		10																										
R-4	50+85 TO 50+93	LT.		8.0																										
R-5	48+39.5 TO 48+69.5	RT.			144.0																									
R-6	48+43.7 TO 48+74	LT.			145.4																									
R-7	50+55 TO 50+90	RT.			168.0																									
R-8	50+59 TO 50+93.5	LT.			165.6																									
R-9	48+45.86 TO 48+70.86	℄				136.1																								
R-10	50+57.04 TO 50+82.04	℄				136.1																								
C-1	48+43.97 TO 48+47.22	LT.																					3.3							
C-2	48+39.25 TO 48+42.55	RT.																					3.3							
C-3	50+82.85 TO 50+90.51	RT.																					7.7							
C-4	50+87.75 TO 50+95.51	LT.																					7.8							
SW-1	48+44.20 TO 48+73.43	LT.							2.1													136.5								
SW-2	48+39.02 TO 48+68.27	RT.							2.1													136.6								
SW-3	50+54.45 TO 50+89.20	RT.							2.5													162.3								
SW-4	50+59.63 TO 50+94.38	LT.							2.5													162.3								
A-1	50+91.68	LT.													1															
A-2	50+86.68	RT.													1															
P-1	50+91.68 TO 50+86.68	L/R										48																		
P-2	50+86.68 RT. TO 969+93 LT.																													
	℄ I 680	RT.											53																	
UD-1	48+44.50 TO 48+39.5	L/R									40						50		1											
UD-2	50+75.00 TO 50+86.68	L/R									12						51													
RC-1	969+93	RT.														1														
PR-1	48+42.86 TO 48+50.86	℄																		50										
PR-2	50+77.04 TO 50+85.04	℄																		50										
	TOTAL		13	18	623	272			9		52	48	53		2	1	101		1	100		598	22							

HIGHWAY\MAH680\MAXSECT1

CALC. BY E.H.W. DATE 2/8/93	MAH-680-4.88	OHIO	10
CHK'D BY M.D.M. DATE 3/8/93		FHWA REGION 5	36

SEEDING

END WIDTH	AREA
0	
10	
	22
10	
	10
10	
0	

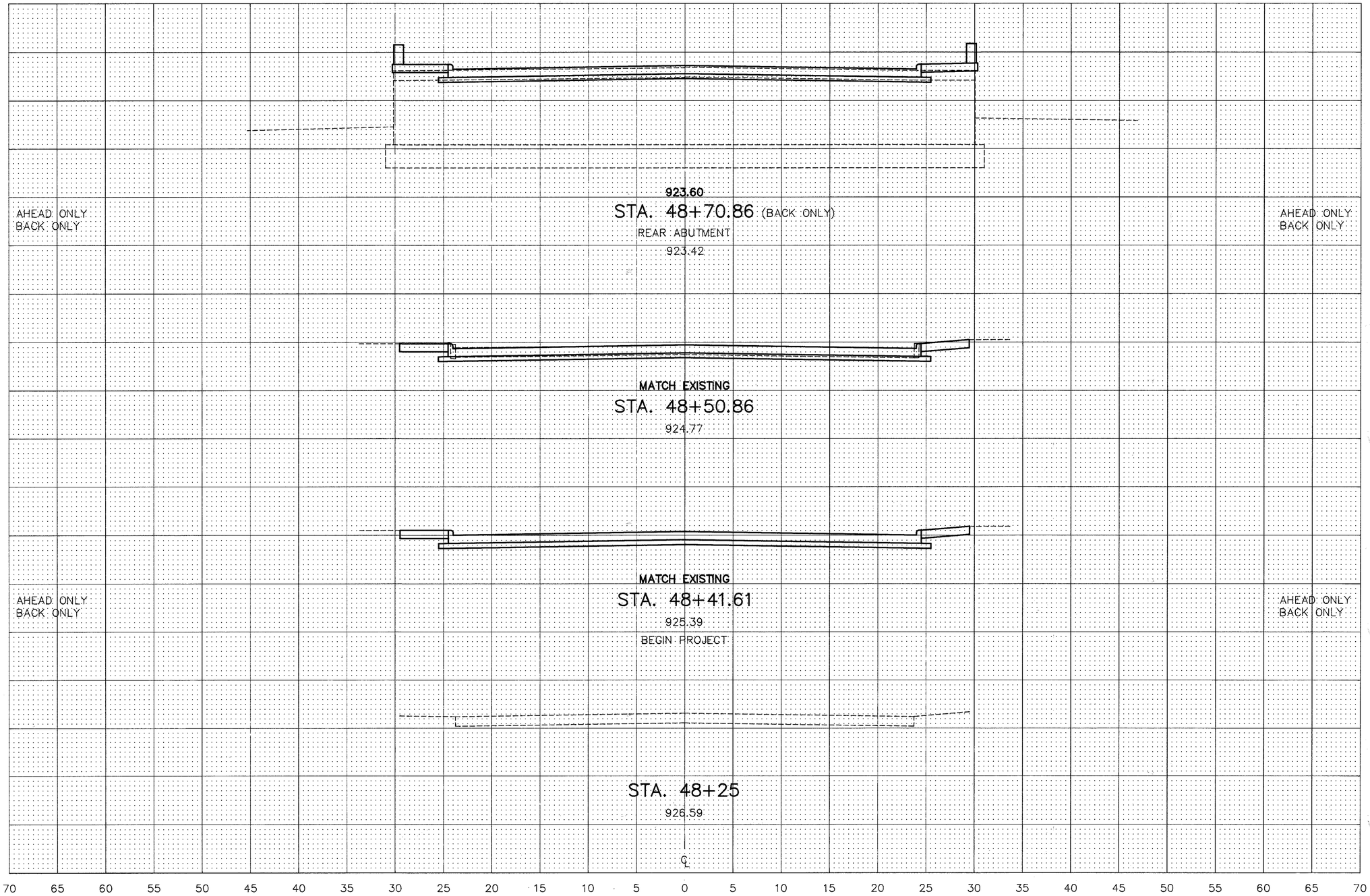

EARTHWORK

CUT AREA	FILL AREA	CUT VOL.	FILL VOL.
0	0		
33	0		
		23	0
29	0		
		10	0
29	0		
0	0		

MAH-680-4.88

HAMMONTREE & ASSOCIATES, LIMITED

STA.48+25 TO STA. 48+70.69

ROADWAY CROSS SECTIONS

HIGHWAY\MAH680\MAXSECT2

CALC. BY E.H.W. DATE 2/8/93 CHK'D BY M.O.M. DATE 3/8/93	MAH-680-4.88	OHIO FHWA REGION 5	11 / 36

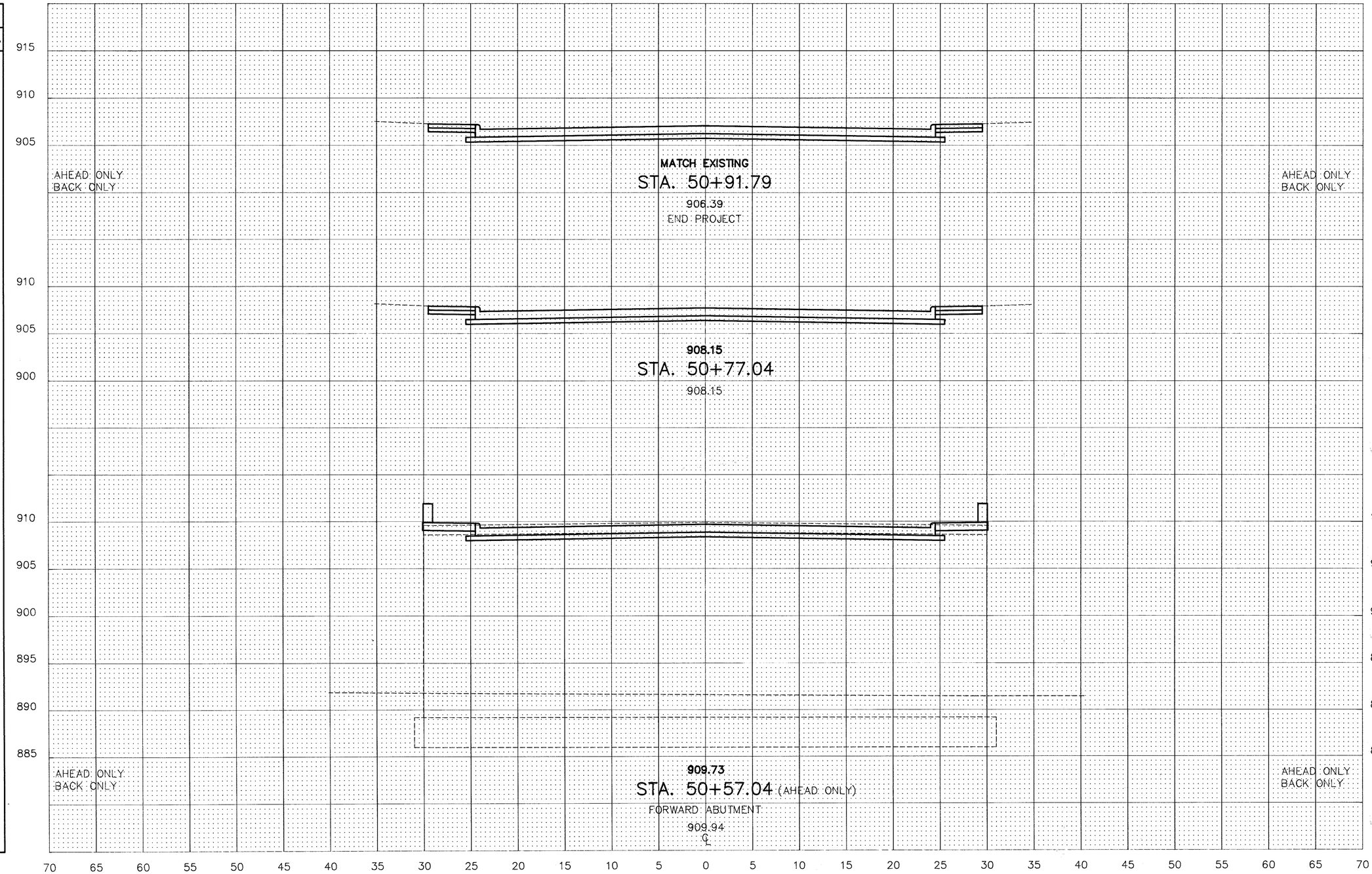

SEEDING

END WIDTH	AREA
0	
10	
	16
10	
	22
10	
0	

EARTHWORK

CUT AREA	FILL AREA	CUT VOL.	FILL VOL.
0	0		
29	0		
		16	0
29	0		
		23	0
33	0		
0	0		

MAH-680-4.88

STA.50+57.21 TO STA.50+90.68

HAMMONTREE & ASSOCIATES, LTD.

CALC. BY E.H.W. DATE 2/8/93 CHK'D BY M.D.M. DATE 3/8/93	MAH-680-4.88	OHIO FHWA REGION 5	12 / 36

SEWER PROFILE

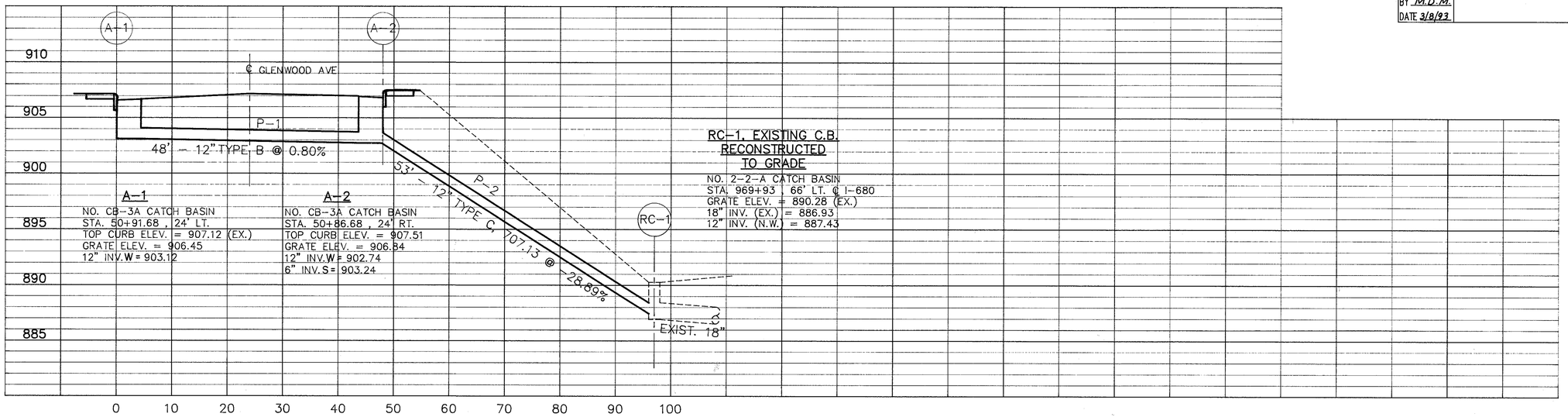

CROSS SECTIONS

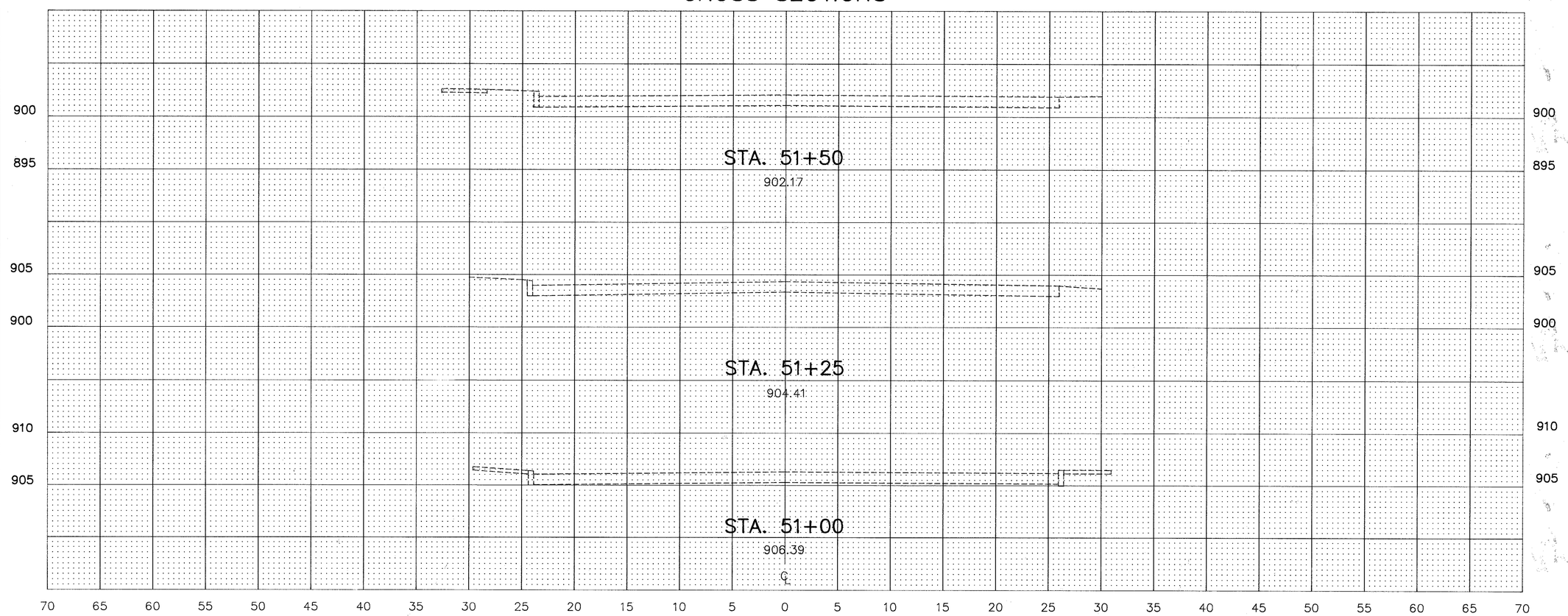

SEEDING	
END WIDTH	AREA

EARTHWORK			
CUT AREA	FILL AREA	CUT VOL.	FILL VOL.

MAH-680-4.88
HAMMONTREE & ASSOCIATES, LIMITED

STA.51+00 TO STA.51+50
SEWER PROFILE AND ROADWAY CROSS SECTIONS

HIGHWAY\MAH680\MAXSECT3

PAVEMENT JOINT DETAILS

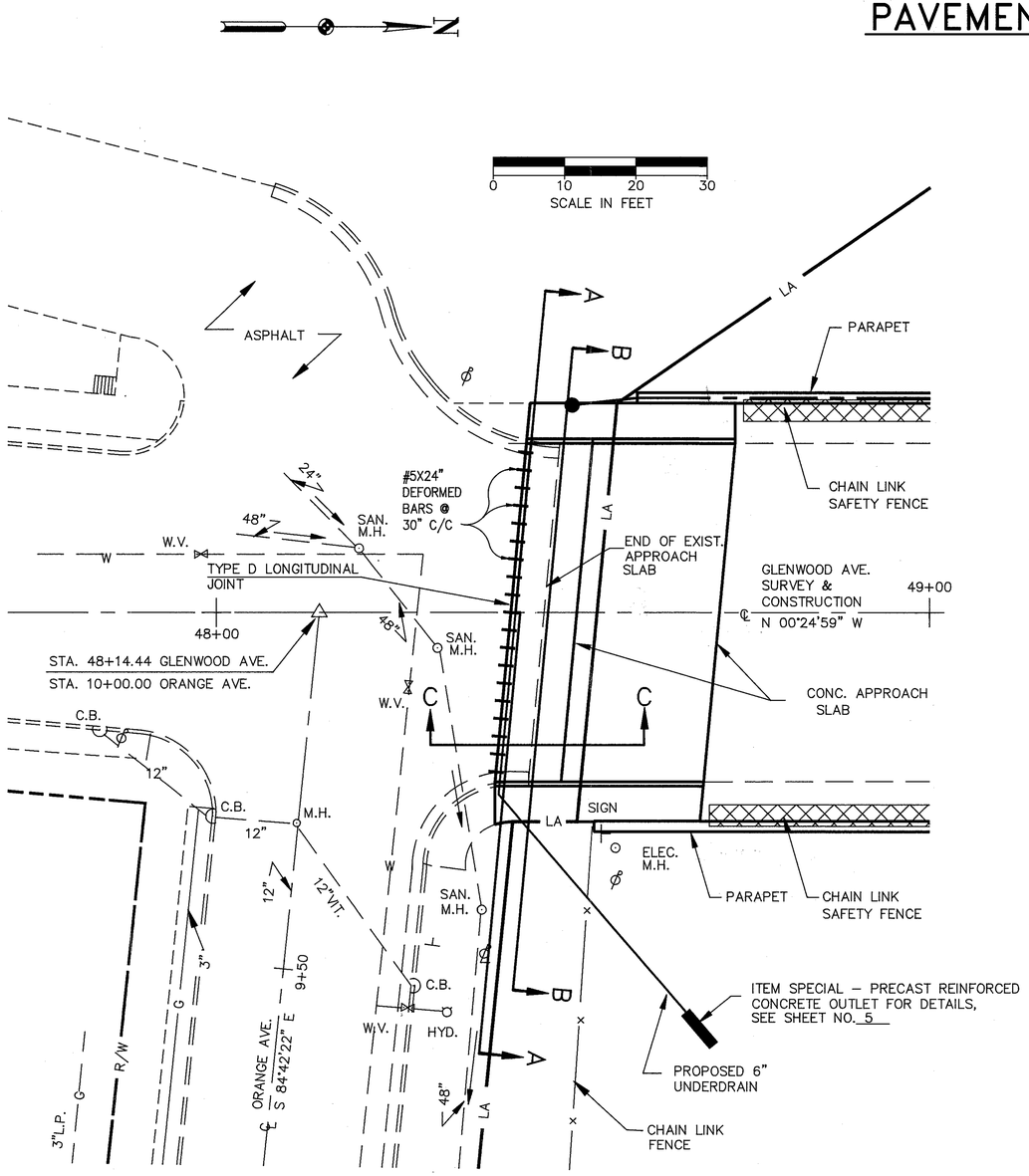

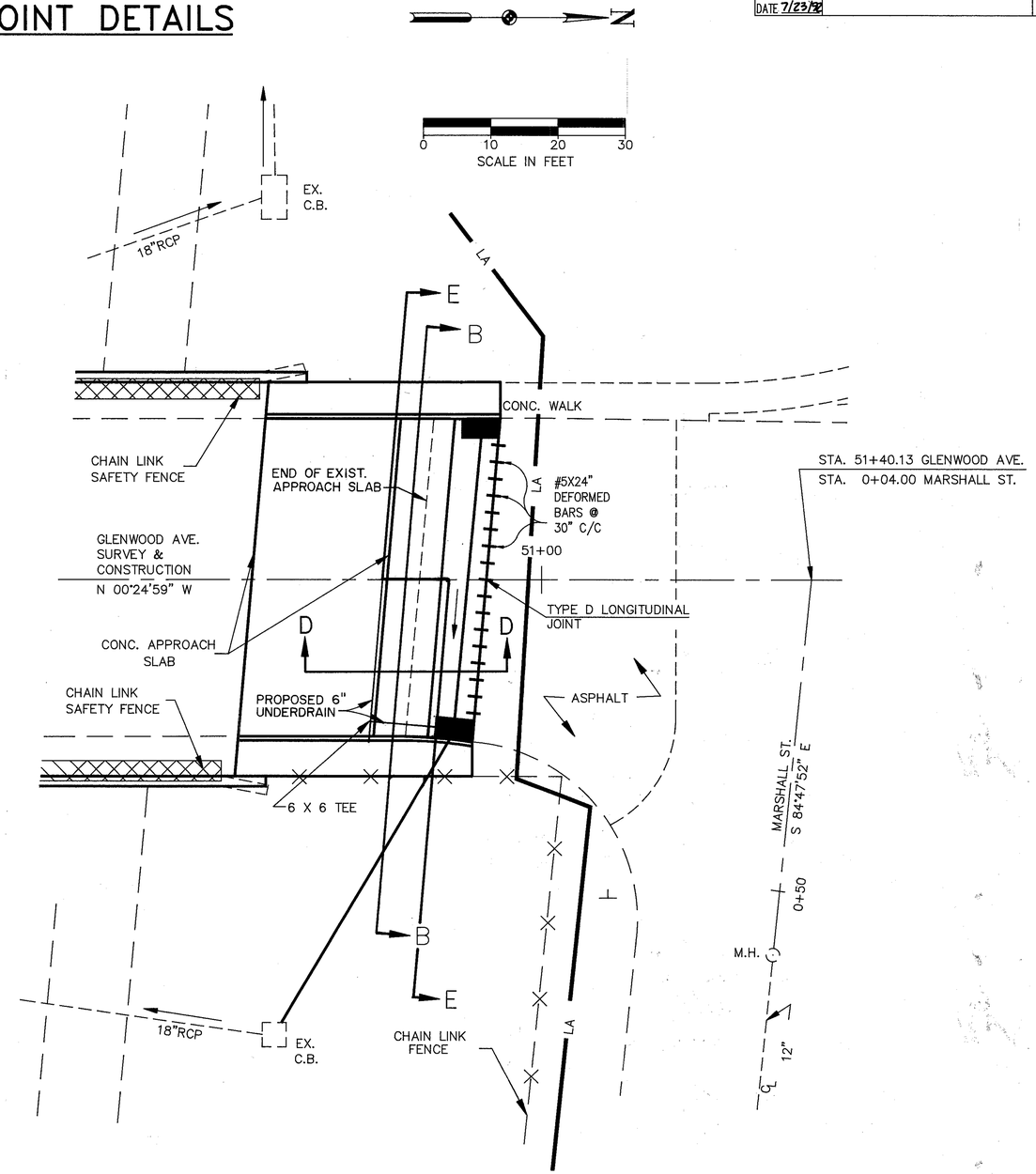

PAVEMENT JOINT DETAILS

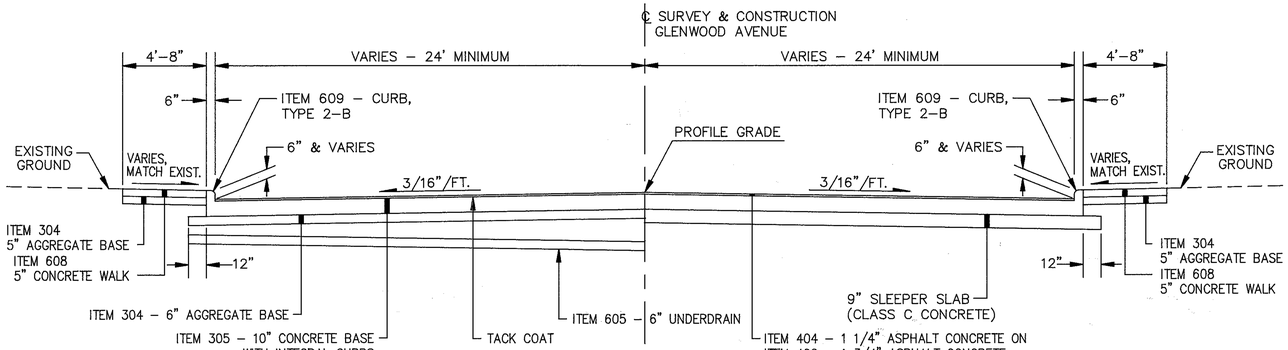

SECTION A–A

STA. 48+41.61 TO STA. 48+44.86

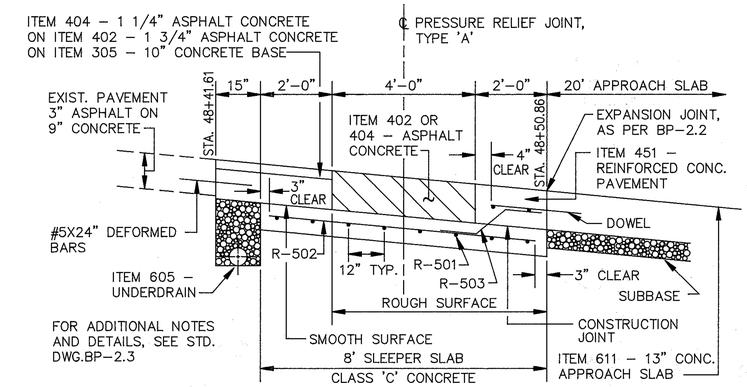

SECTION C–C

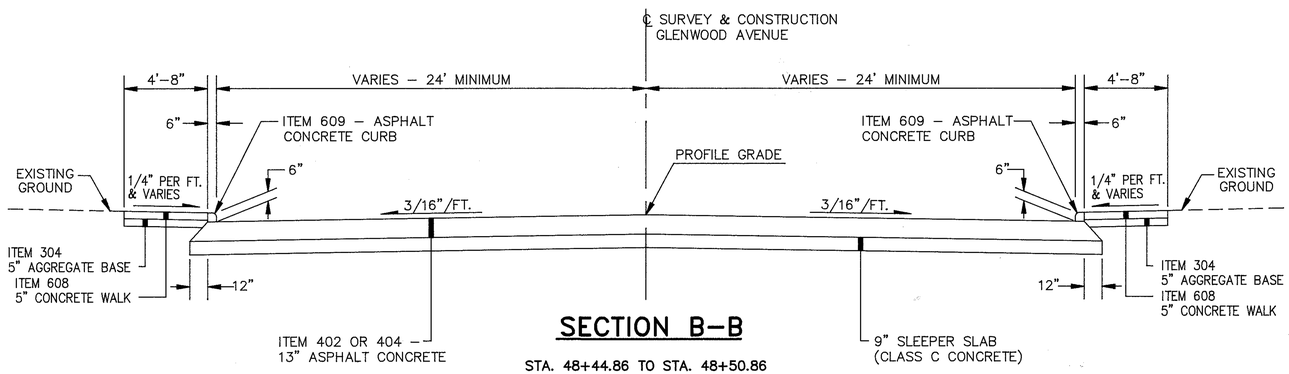

SECTION B–B

STA. 48+44.86 TO STA. 48+50.86
STA. 50+77.04 TO STA. 50+83.04

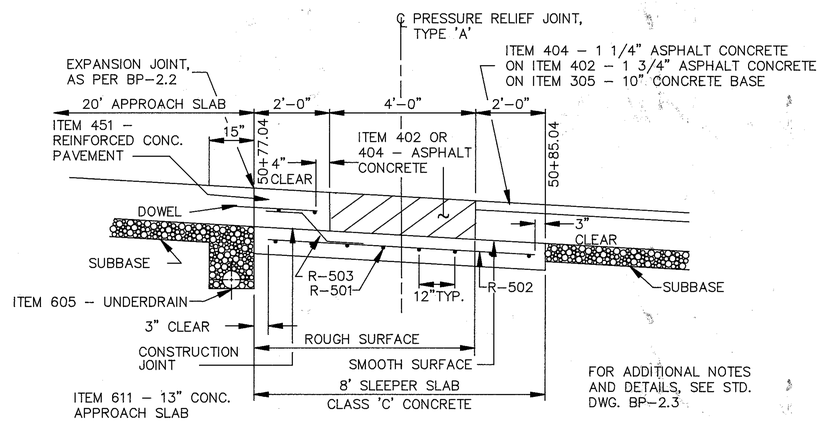

SECTION D–D

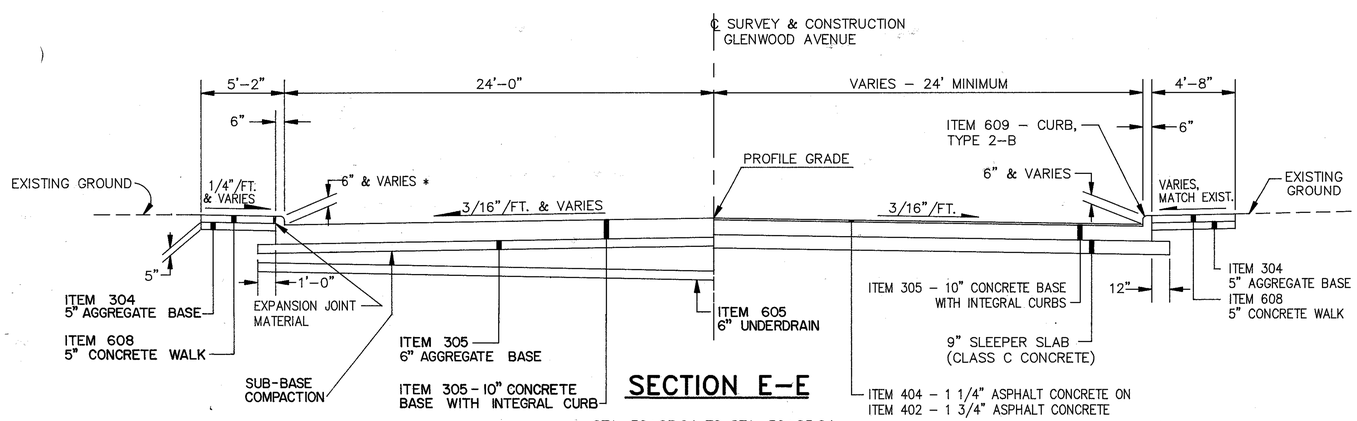

SECTION E–E

STA. 50+83.04 TO STA. 50+85.04
STA. 50+76.42 (UNDERDRAIN)

REINFORCING STEEL LIST 5/8" Ø				
MARK	SHAPE	NO.	LENGTH	BENDING DIAGRAM
R501	ST.	8	S–6"	1'-0" 9" 1'-7"
R502	ST.	⊛S	7'-6"	9" 15" R503
R503	BT.	⊛S–2	3'-8"	

⊛S = LENGTH OF SLEEPER SLAB (IN FEET).
R501 BARS MAY BE FURNISHED IN SEGMENTS WITH A 1'-0" BAR LAP BETWEEN SEGMENTS.

CALC. BY EHW	MAH-680-4.88	OHIO
DATE 6/10/92		
CHK'D BY RRC		FHWA REGION 5
DATE 7/27/92		

15/36

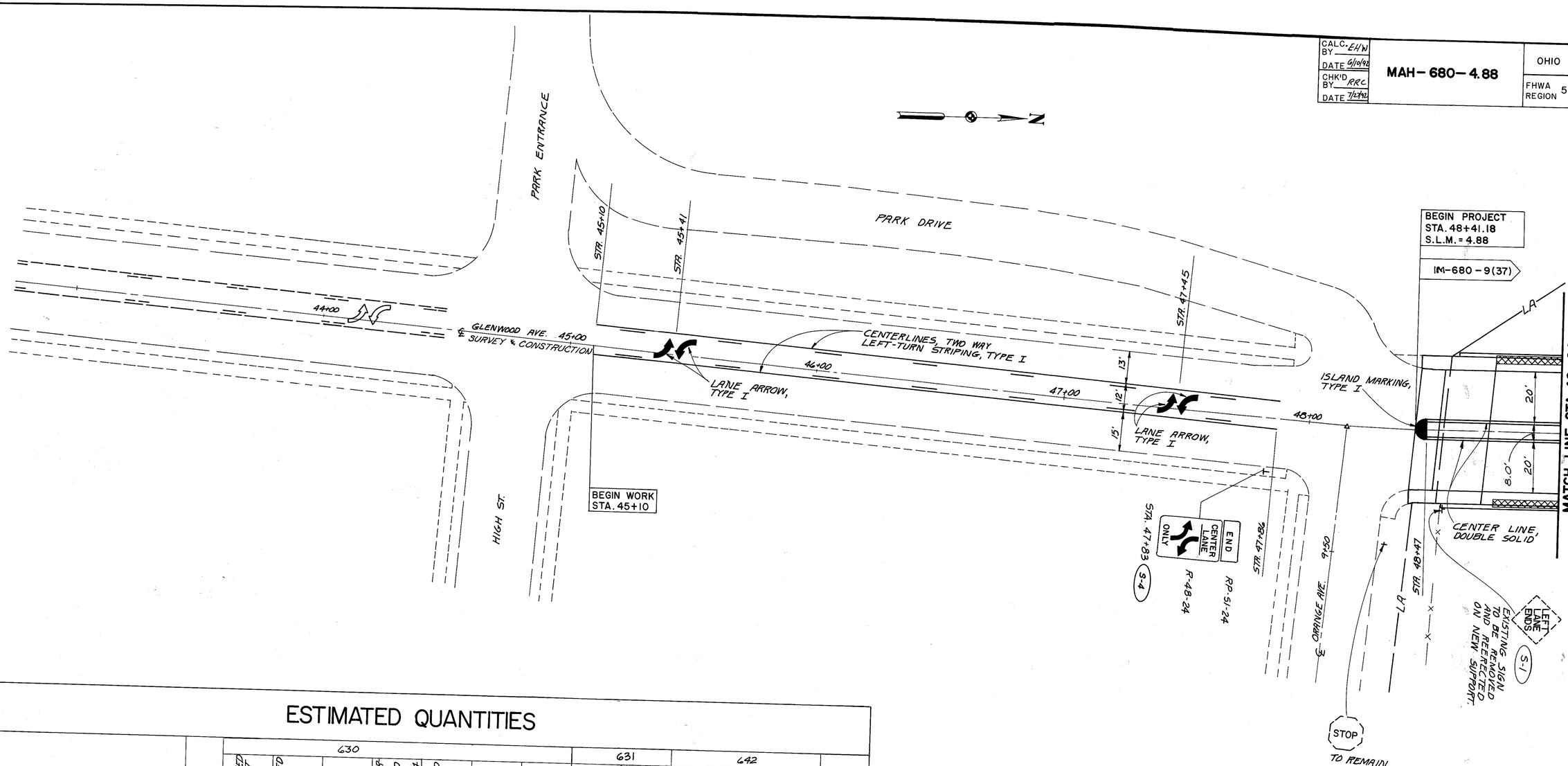

ESTIMATED QUANTITIES

REF. NO.	STATION TO STATION	SIDE	630 REMOVAL OF GROUND MOUNTED POST SUPPORT AND DISPOSAL	630 GROUND MOUNTED SUPPORT, NO. 4 POST	630 REMOVAL OF OVERHEAD MOUNTED SIGN AND REERECTION	630 REMOVAL OF OVERHEAD MOUNTED SIGN SUPPORT AND REERECTION, TYPE TC-18.24	630 REMOVAL OF GROUND MOUNTED SIGN AND REERECTION	630 SIGN FLAT SHEET	630 GROUND MOUNTED SIGN SUPPORT, NO. 3 POST	631 SIGN WIRED	631 REMOVAL OF LUMINAIRE AND REERECTION	642 CENTERLINES, TYPE 2	642 LANE ARROW, TYPE 2	642 ISLAND MARKING, TYPE 2
			EACH	LIN. FT.	EACH	EACH	EACH	SQ. FT.	LIN. FT.	EACH	EACH	MILE	EACH	SQ. FT.
S-1	48+54	RT.	1	15			1							
S-2	49+53 TO 49+87	LT.			3	2				2	4			
S-3	50+35	RT.			2	1				1	2			
	45+10 TO 47+86	L. & R.												
	48+47 TO 52+77	L. & R.										0.10		
												0.16		
	45+41	℄												
	47+45	℄											2	
	48+42 TO 48+46	L. & R.											2	
S-4	47+83	RT.												
								7	14					50
	TOTALS		1	15	5	3	1	7	14	3	6	0.26	4	50

MAH-680-4.88

HAMMONTREE & ASSOCIATES, LIMITED

SIGNING AND PAVEMENT MARKING PLAN

CALC BY EHW	MAH- 680- 4.88	OHIO	16
DATE 6/10/92		FHWA REGION 5	36
CHK'D BY RRC			
DATE 7/27/92			

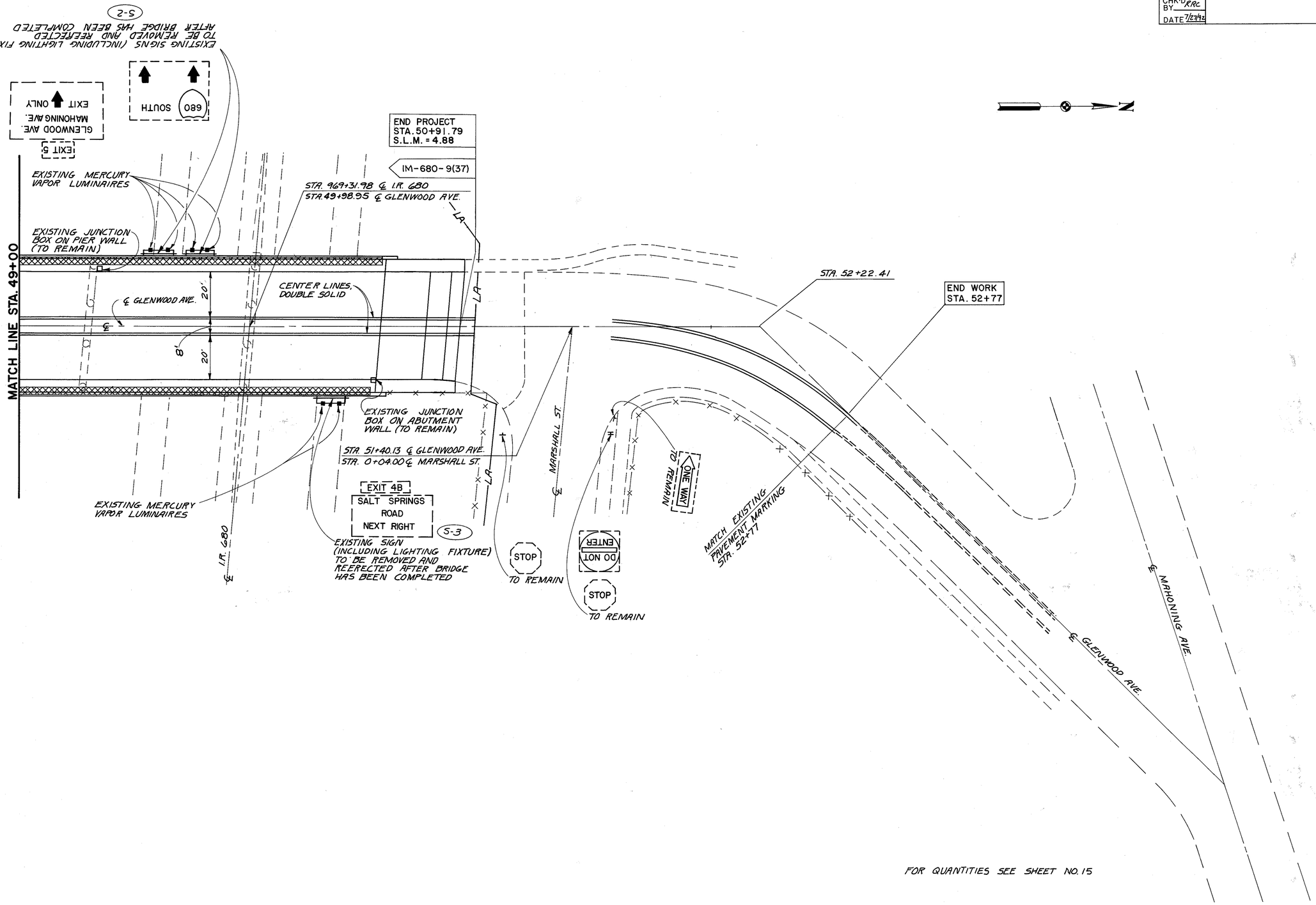

FOR QUANTITIES SEE SHEET NO. 15

CALC. BY APG	MAH- 680-4.88	OHIO	17
DATE 5/26/87			36
CHK'D BY EHW		FHWA REGION 5	
DATE 7/13/87			

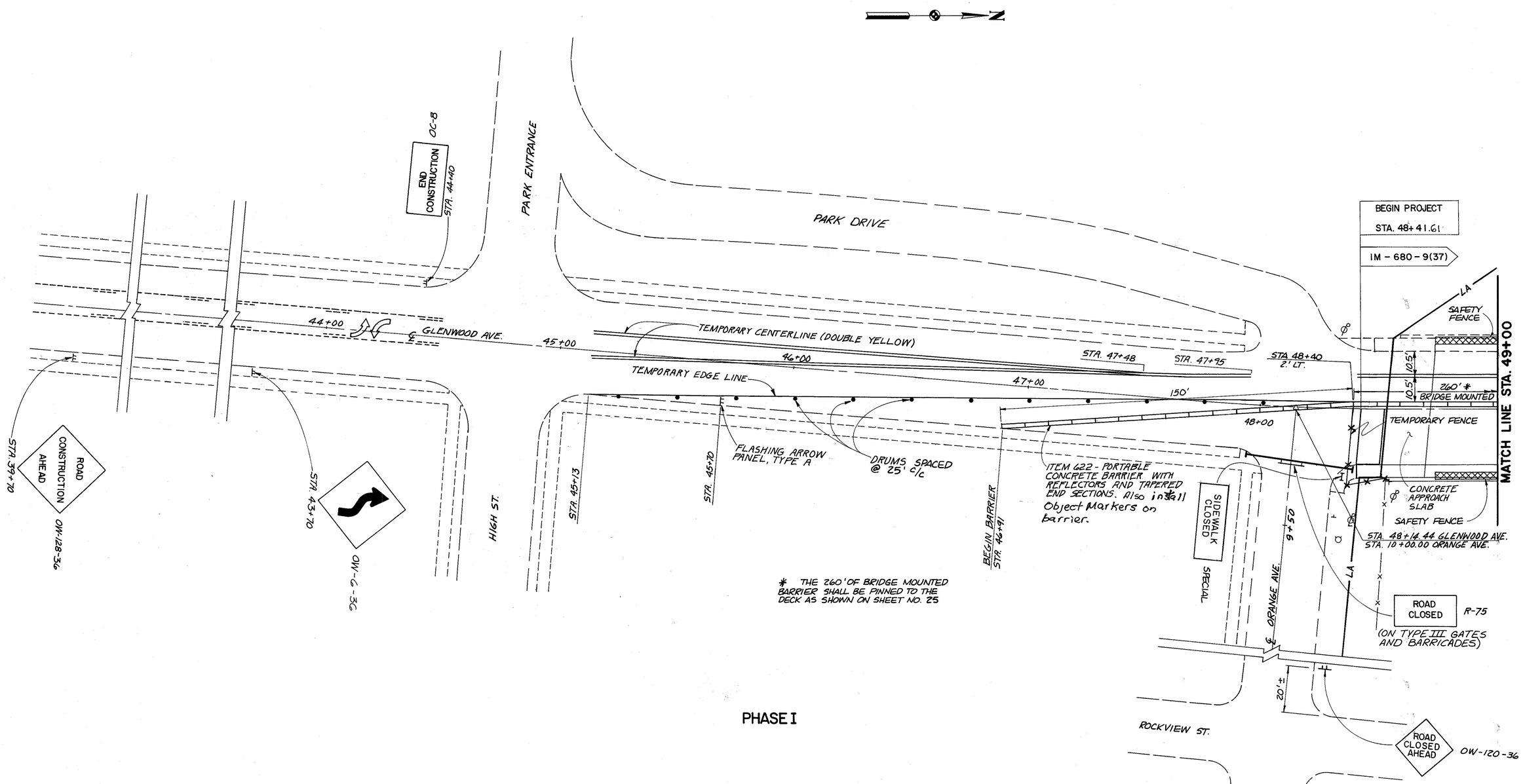

MAH-680-4.88

HAMMONTREE & ASSOCIATES, LIMITED

MAINTENANCE OF TRAFFIC PLAN

CALC BY APG	MAH- 680-4.88	OHIO	18
DATE 5/26/92			36
CHK'D BY EAW		FHWA REGION 5	
DATE 7/13/92			

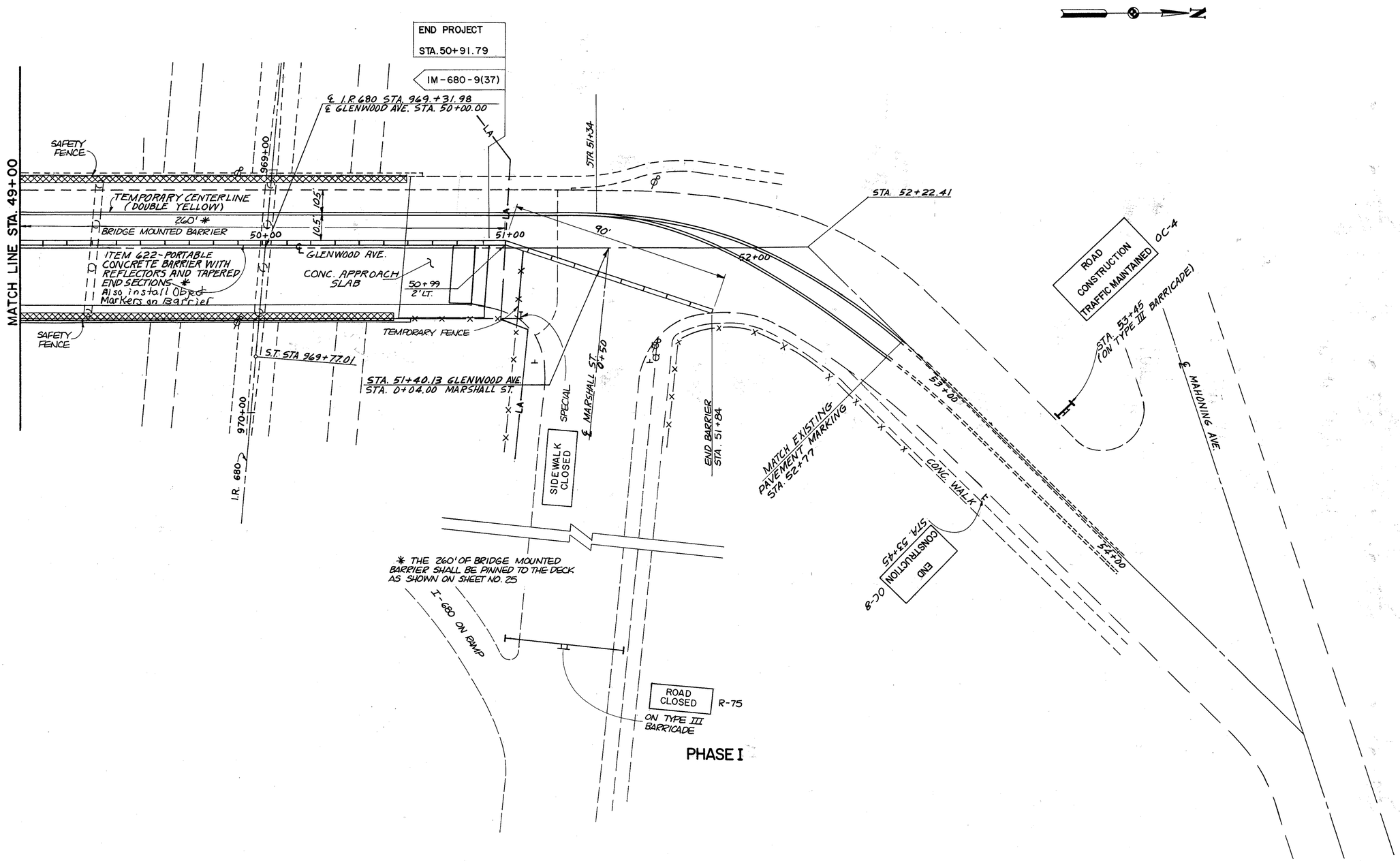

MAH-680-4.88

HAMMONTREE & ASSOCIATES, LIMITED

MAINTENANCE OF TRAFFIC PLAN

CALC BY APG	MAH-680-4.88	OHIO	19
DATE 5/26/92		FHWA REGION 5	36
CHK'D BY EHW			
DATE 7/13/92			

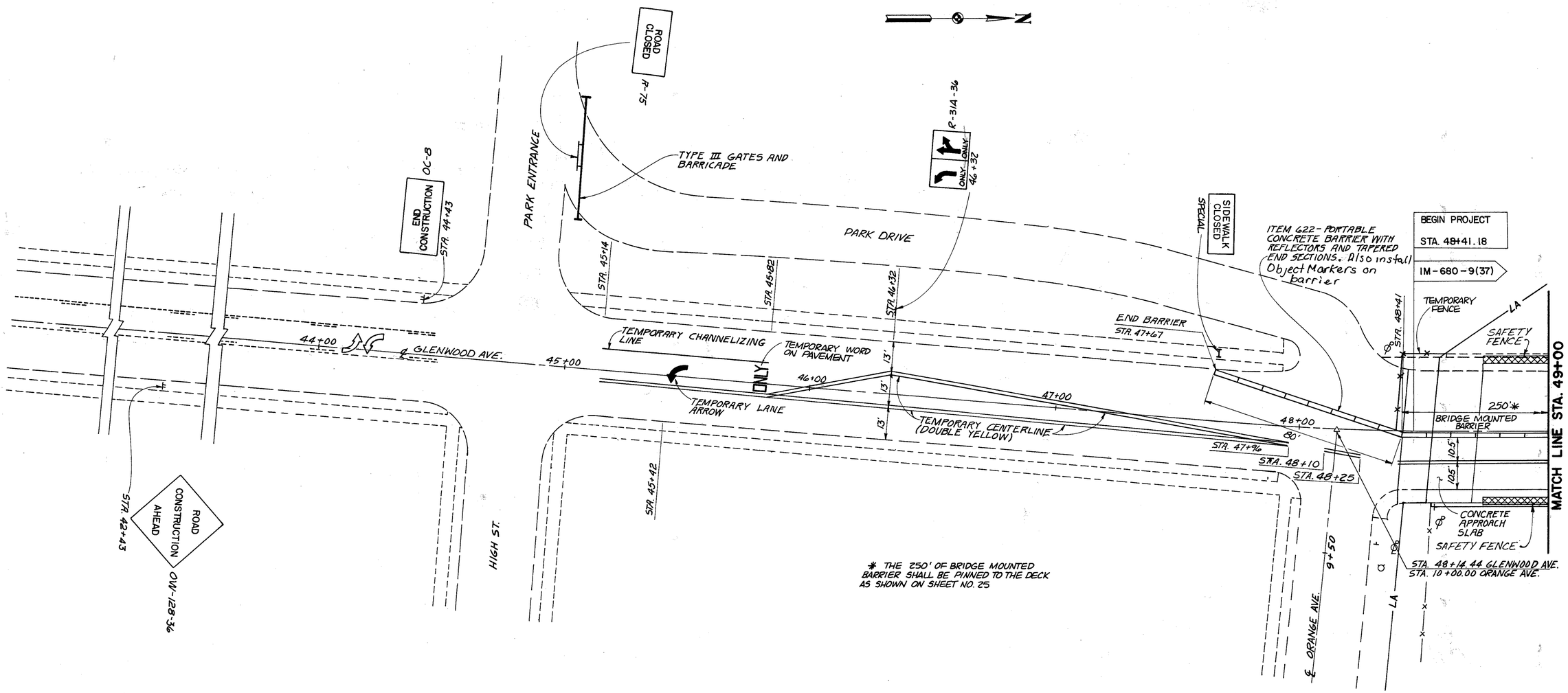

PHASE II

MAH-680-4.88

HAMMONTREE & ASSOCIATES, LIMITED

MAINTENANCE OF TRAFFIC PLAN

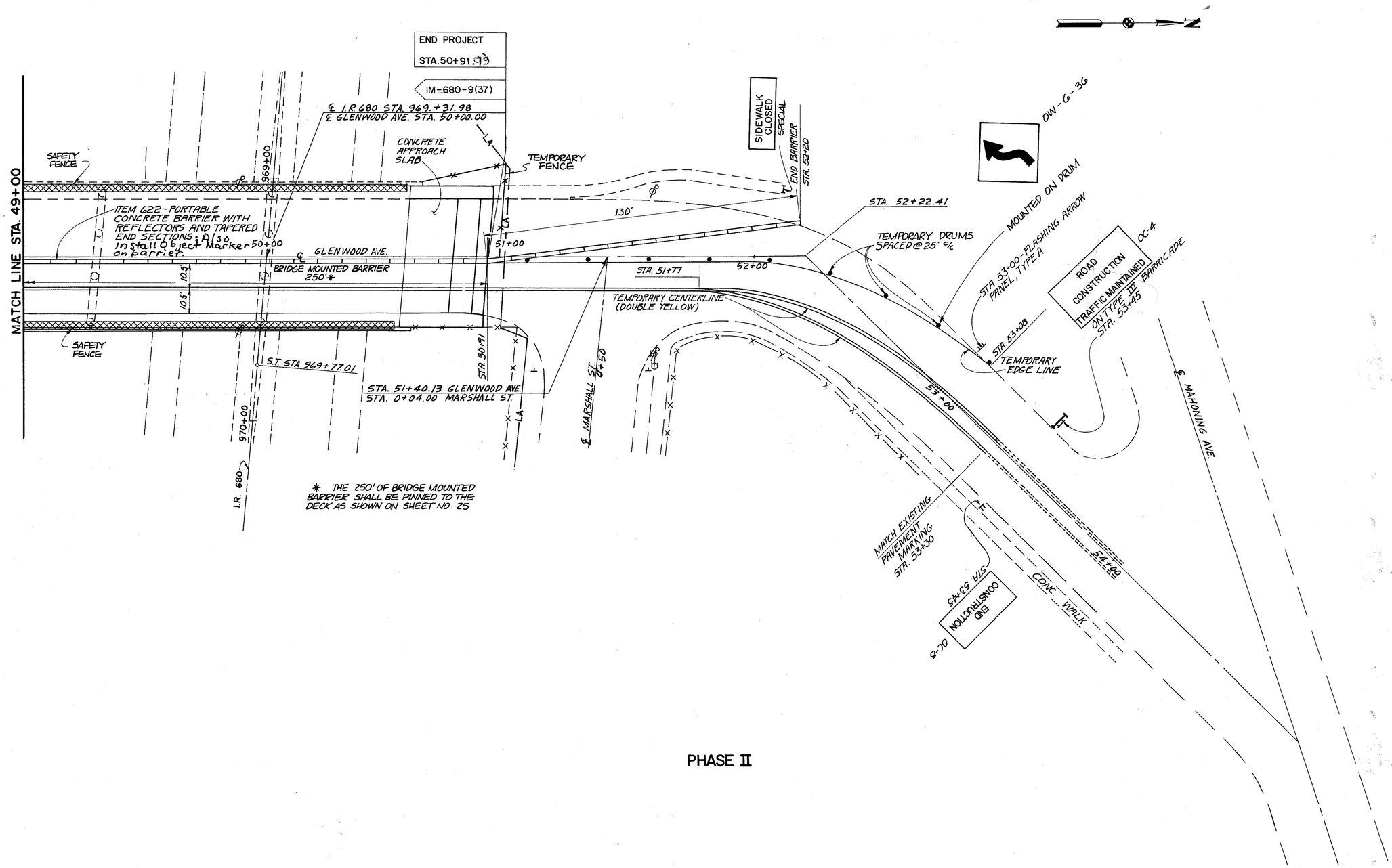

PHASE II

MAINTENANCE OF TRAFFIC PLAN

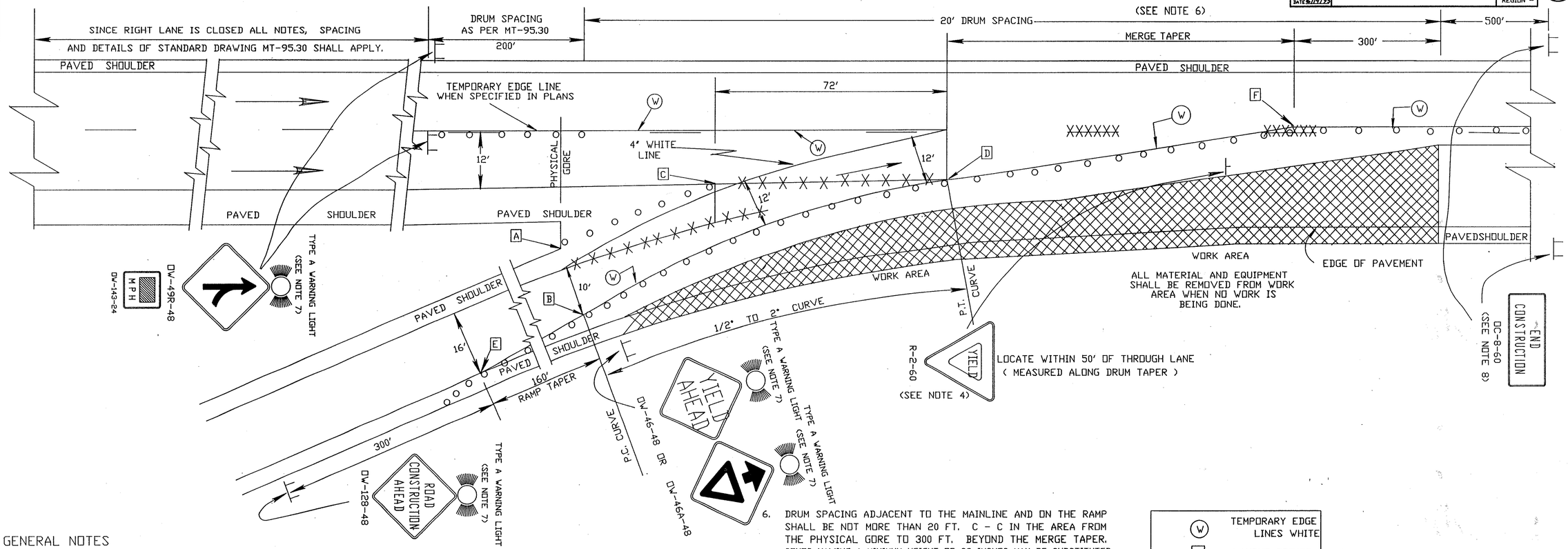

GENERAL NOTES

1. THIS WORK AREA TRAFFIC CONTROL APPLICATION SHALL BE EMPLOYED WHEN: (1) THE LATERAL CLEARANCE BETWEEN CHANNELIZING DEVICES AT THE RIGHT EDGE OF THE WORK AREA AND THE EDGE OF PAVEMENT IS LESS THAN 10 FT. (12 FT. IF THE SHOULDER PAVEMENT IS USED) AS SHOWN ON DRAWING MT-98.15, AND (2) THE REQUIRED RAMP TAPERS AND CURVES CAN BE PROVIDED AS SHOWN. IN THE EVENT THE WORK ZONE CONDITION WOULD PERMIT THE USE OF EITHER MT-98.15 OR MT-98.16, MT-98.15 SHALL BE USED. THIS TRAFFIC CONTROL MEASURE SHALL NOT BE PLACED IN EFFECT UNTIL IMMEDIATELY BEFORE THE CONTRACTOR IS FULLY PREPARED TO PERFORM THE WORK ON THE RAMP OR LANE ADJACENT TO IT. ONCE THIS MEASURE IS PLACED INTO EFFECT, THE CONTRACTOR SHALL EXPEDITIOUSLY PURSUE THE WORK (WORKING CONTINUOUSLY WITH FULL CREW IN THE RAMP AREA ON ALL NORMAL WORKING DAYS) UNTIL IT IS COMPLETED AND SHALL IMMEDIATELY OPEN THE AREA TO NORMAL TRAFFIC OR, AS A MINIMUM, REVERT TO THE METHODS SHOWN ON MT-98.15. IT IS THE INTENT THAT THE LONGEST MERGING TAPER LENGTH POSSIBLE SHALL BE CHOSEN, COMMENSURATE WITH THE REQUIREMENTS OF CONSTRUCTION.

2. THE RAMP TAPER SHALL DESIRABLY BE LOCATED TO PROVIDE A 10' MINIMUM PATH BETWEEN DRUMS AND THE PAVED SHOULDER IN THE GORE. THE RAMP TRAFFIC MAY BE PLACED ON THE PAVED GORE AS SHOWN ABOVE ONLY IF (1) THE TRAFFIC WILL USE THE PAVED SHOULDER PAVEMENT LESS THAN ONE DAY AND THE SHOULDER PAVEMENT IS IN GOOD CONDITION AND IS LEVEL AND SMOOTH OR (2) IF THE SHOULDER PAVEMENT IS ADEQUATELY STRENGTHENED, LEVELED AND SMOOTHED TO CARRY THE ANTICIPATED LOAD. A MINIMUM OF 3 DRUMS SHALL BE USED IN THE RAMP SHOULDER TAPER.

3. WHEN THE RAMP IS NOT LONG ENOUGH TO ALLOW PLACEMENT AS SPECIFIED ABOVE, THE SIGNS MAY BE SPACED PROPORTIONATELY WITHIN THE SPACE AVAILABLE AS DETERMINED BY THE ENGINEER (A 200 FOOT MINIMUM SPACING MUST BE MAINTAINED).

4. IT WILL BE NECESSARY TO MOVE THE LOCATION OF ANY EXISTING YIELD CONDITION. IN THESE CASES, THE PERMANENT R-2 SIGN INSTALLATION SHALL BE COVERED AND THE TEMPORARY INSTALLATION SHALL BE MOUNTED APPROPRIATELY. IF THE REQUIRED DISTANCES (RAMP TAPER, CURVE AND MERGE TAPER) CANNOT BE OBTAINED, THE ENGINEER MAY APPROVE SLIGHTLY LOWER VALUES FOR A SHORT TIME, IN WHICH CASE THE YIELD SIGN SHALL BE REMOVED AND A 36" STOP SIGN PLACED APPROPRIATELY TO BE VISIBLE TO RAMP TRAFFIC BUT NOT BE OBTRUSIVE TO MAINLINE TRAFFIC.

5. IF THE CONSTRUCTION OPERATION REQUIRES THE LANE CLOSURE FOR MORE THAN ONE DAY THEN THE EXISTING CONFLICTING PAVEMENT MARKINGS AND REFLECTORS FROM THE RAISED PAVEMENT MARKERS (RPM'S) SHALL BE REMOVED AND THE APPROPRIATE COLOR TEMPORARY EDGE LINES SHALL BE APPLIED ALONG THE TAPER. TEMPORARY EDGE LINES WHICH WOULD CONFLICT WITH FINAL TRAFFIC LANES SHALL BE REMOVABLE (945.03 TYPE-C) TAPE UNLESS THE AREA WILL BE RESURFACED IN THE NEXT WORK PHASE. AFTER COMPLETION OF THE WORK, TEMPORARY MARKINGS SHALL BE REMOVED IN ACCORDANCE WITH 641.10 AND THE ORIGINAL MARKINGS AND RAISED PAVEMENT MARKER REFLECTORS SHALL BE RESTORED.

6. DRUM SPACING ADJACENT TO THE MAINLINE AND ON THE RAMP SHALL BE NOT MORE THAN 20 FT. C - C IN THE AREA FROM THE PHYSICAL GORE TO 300 FT. BEYOND THE MERGE TAPER. CONES HAVING A MINIMUM HEIGHT OF 28 INCHES MAY BE SUBSTITUTED FOR DRUMS FOR DAYTIME LANE CLOSURES. PROVISIONS SHALL BE MADE TO SAFELY STABILIZE THE CONES TO PREVENT THEM FROM BLOWING OVER. IF THIS CANNOT BE ACHIEVED, DRUMS SHALL BE USED. TYPE C STEADY BURNING WARNING LIGHTS SHALL BE ERECTED ON EACH DRUM FOR NIGHT LANE CLOSURE.

7. TYPE A FLASHING WARNING LIGHTS ARE REQUIRED ON THE ROAD CONSTRUCTION AHEAD (DW-128-48), MERGE (DW-49R-48), AND THE YIELD AHEAD (DW-46-48) SIGNS WHENEVER A NIGHT LANE CLOSURE IS NECESSARY.

8. THE DC-8 SIGNS ARE ONLY REQUIRED FOR LANE CLOSURES OF MORE THAN ONE DAY AND MAY BE OMITTED IF THEY FALL WITHIN THE LIMITS OF A CONSTRUCTION PROJECT.

9. FROM THE END OF THE GORE AREA GRADED SHOULDER (POINT A), LOCATE THE PC OF THE CURVE BY MEASURING PERPENDICULAR TO THE RAMP CENTERLINE 10' OF RAMP PAVEMENT, NOT INCLUDING PAVED SHOULDER WIDTH (POINT B). FROM THE END OF THE GORE AREA PAVED SHOULDER (POINT C), LOCATE THE PT OF THE CURVE BY MEASURING 72' FROM POINT C ALONG THE EDGE OF PAVEMENT EXTENDED (POINT D).

10. PLACEMENT OF DRUMS SHALL BEGIN AT (POINT E) 160' UPSTREAM FROM THE PREVIOUSLY LOCATED PC (POINT B) AND AT THE RIGHT EDGE OF RAMP PAVEMENT. FROM THIS POINT A DRUM TAPER SHALL BE PLACED TO THE PC (POINT B) AND THEN ALONG A CURVE AS SHOWN TO THE PT (POINT D) WHERE A 48:1 (MIN.) MERGE TAPER SHALL MEET MAINLINE TRAFFIC CONTROL (POINT F).

(W)	TEMPORARY EDGE LINES WHITE
[A]	LAYOUT POINTS
XXXXXXXXXX	MARKINGS REMOVED

ALL WORK AND TRAFFIC CONTROL DEVICES SHALL BE IN ACCORDANCE WITH 614 AND OTHER APPLICABLE PORTIONS OF THE C & M SPECIFICATIONS AS WELL AS IN ACCORDANCE WITH PART 7 OF THE OMUTCD. PAYMENT FOR ALL LABOR, EQUIPMENT AND MATERIALS TO PROVIDE THIS METHOD OF TRAFFIC CONTROL SHALL BE INCLUDED IN THE LUMP SUM BID FOR 614 MAINTAINING TRAFFIC, UNLESS SEPARATELY ITEMIZED IN THE PLAN.

REVISED BY: LAJ DATE: 8/13/91

209816

DATE 05/07/90 8/13/91

LANE CLOSURE
AT ENTRANCE RAMP
PLAN B

PLAN INSERT SHEET

WCC

LIGHTING NOTES

POWER SERVICE, AS PER PLAN

THE POWER SUPPLYING AGENCY FOR THIS PROJECT IS:

OHIO EDISON COMPANY
76 SOUTH MAIN STREET
AKRON, OHIO 44308

THE CONTRACTOR SHALL FURNISH AND INSTALL ALL OF THE LIGHTING EQUIPMENT FROM THE WEATHERHEAD AT THE TOP OF THE EXISTING POWER POLE AT STA. 48+35 TO THE NORTH END OF THE BRIDGE.

IT SHALL BE THE CONTRACTOR'S RESPONSIBILITY, AFTER ALL LIGHTING EQUIPMENT IS INSTALLED, TO CONTACT THE POWER COMPANY TO MAKE THE NECESSARY CONNECTION BETWEEN EXISTING AND PROPOSED POWER LINES.

ELECTRICAL ENERGY FROM THE EXISTING POWER SERVICE SHALL CONTINUE TO BE CHARGED TO THE MAINTAINING AGENCY. THE CONTRACTOR SHALL PAY ELECTRICAL CHARGES FOR THE NEW POWER SERVICE ESTABLISHED BY THIS PROJECT. AFTER ACCEPTANCE OF THIS PROJECT, POWER SERVICE ELECTRICAL ENERGY ACCOUNTS SHALL BE TRANSFERRED TO THE MAINTAINING AGENCY WHICH IS THE CITY OF YOUNGSTOWN.

625.07 - 713.11 LUMINAIRE , AS PER PLAN

STYLE A LUMINAIRES SHALL HAVE SINGLE RATED 120 VOLT 150 WATT INTEGRAL REGULATOR BALLASTS FOR USE WITH HIGH PRESSURE SODIUM LAMPS AND SHALL BE GENERAL ELECTRIC M250R2, CROUSE HINDS OVS, AMERICAN 13/14, OR EQUAL APPROVED BY THE ENGINEER.

THE LUMINAIRES SHALL BE PROVIDED WITH AN INTEGRAL PHOTO-ELECTRIC CELL.

713.14 LAMPS

HIGH PRESSURE SODIUM LAMPS SHALL BE GENERAL ELECTRIC "LUCALOX", PHILIPS "CERAMALUX", SYLVANIA "LUMALUX", OR EQUAL APPROVED BY THE ENGINEER.

150 WATT HPS LAMPS SHALL BE OF THE 100 VOLT DESIGN PER ANSI S56.

625 - TRANSITION JUNCTION BOX, AS PER PLAN

THE TRANSITION JUNCTION BOX TO BE INSTALLED AT EACH END OF THE LEFT BRIDGE PARAPET IS SHOWN ON SHEET NUMBER 21-A.

UNDERDRAINS FOR PULL BOXES

REFERENCE IS MADE TO STANDARD DRAWING HL-30.11 FOR DETAILS OF DRAINING PULL BOXES. UNDERDRAINS FOR PULL BOXES SHALL BE USED AS DIRECTED BY THE ENGINEER AND SHALL BE PROVIDED WHERE THE LENGTH REQUIRED FOR A SATISFACTORY OUTLET DOES NOT EXCEED APPROXIMATELY 20 FEET. AN ESTIMATED QUANTITY OF ITEM 605, 4" SHALLOW PIPE UNDERDRAINS IS PROVIDED FOR THIS PURPOSE.

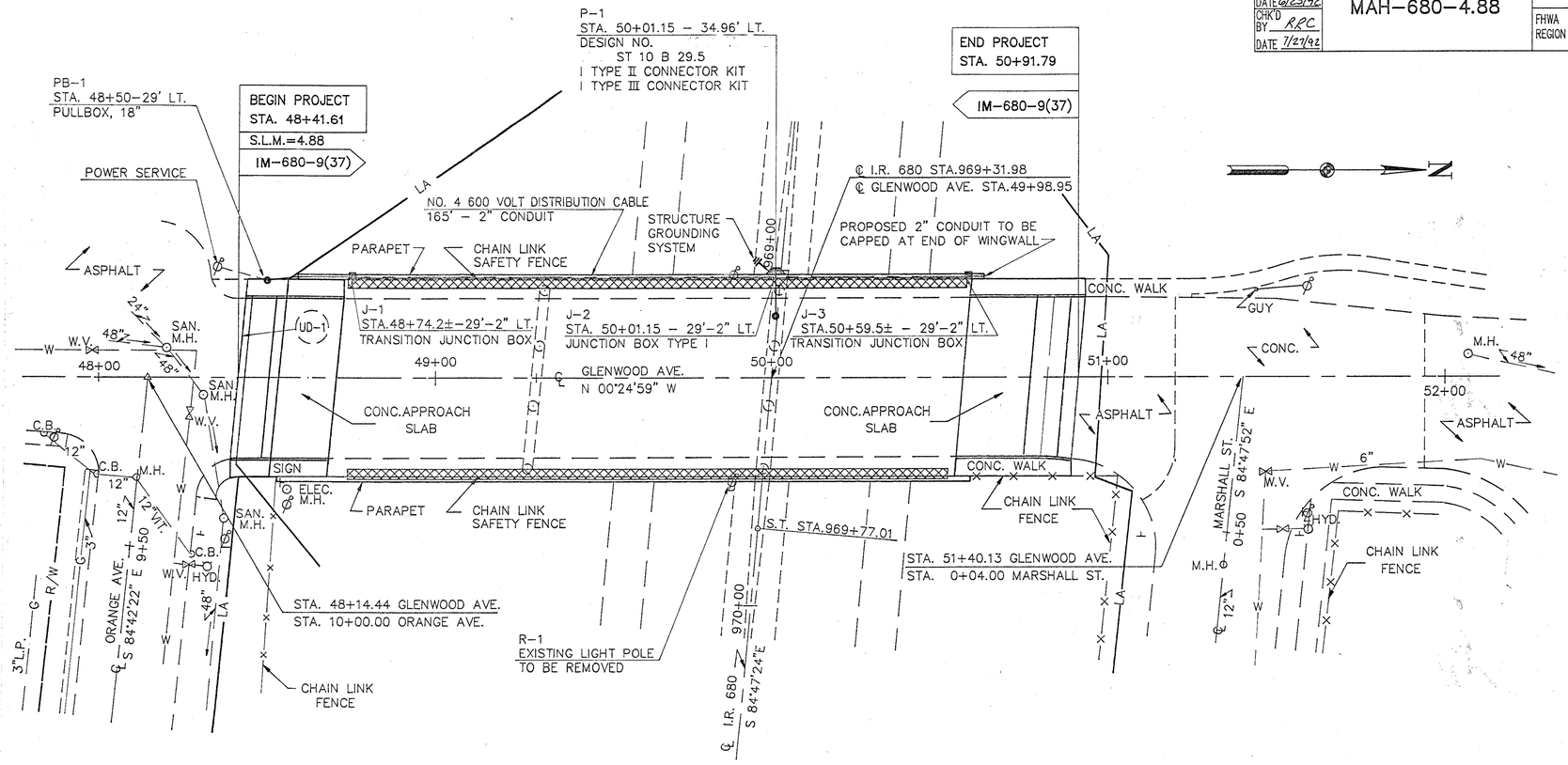

LIGHTING SUB-SUMMARY

REFERENCE NUMBER	SIDE	LOCATION (STA. TO STA.)	625 CONNECTOR KIT, TYPE II EACH	625 CONNECTOR KIT, TYPE III EACH	625 LIGHT POLE, DESIGN ST 10 B 29.5 EACH	625 LIGHT POLE ANCHOR L-BOLTS EACH	625 NO. 10 AWG POLE AND BRACKET CABLE LIN.FT.	625 NO. 4 600 VOLT DISTRIBUTION CABLE LIN.FT.	625 CONDUIT, 2", 713.04 LIN.FT.	625 LUMINAIRE, STYLE B, TYPE II, 150 WATT HIGH PRESSURE SODIUM, 713.11, 120 VOLT, A.P.P. EACH	625 STRUCTURE JUNCTION BOX EACH	625 TRANSITION JUNCTION BOX, AS PER PLAN EACH	625 TRENCH, 24" DEEP LIN.FT.	625 PULL BOX, 713.09, 18" EACH	603 4" CONDUIT, TYPE E EACH	625 STRUCTURE GROUNDING SYSTEM EACH	625 GROUND ROD EACH	625 POWER SERVICE, AS PER PLAN EACH	625 HIGH VOLTAGE TEST LUMP	625 LIGHT POLE REMOVED EACH	625 LUMINAIRE REMOVED EACH			
PS-1	LT.	48+35 (EXIST. POLE)															1	1	LUMP						
	LT.	48+35 TO 48+50						110	15				15												
PB-1	LT.	48+50												1	20										
	LT.	48+50 TO 48+74.2						68	24				9												
J-1	LT.	48+74.2										1													
	LT.	48+74.2 TO 50+01.15						274	136																
J-2	LT.	50+01.15									1														
P-1	LT.	50+01.15	1	1	1	4	90			1						1									
	LT.	50+01.15 TO 50+59.5							58																
J-3	LT.	50+59.5										1													
	LT.	50+59.5 TO 50+63							4																
R-1	RT.	49+88																		1	1				
		TOTAL	1	1	1	4	90	452	237	1	1	2	24	1	20	1	1	1	LUMP	1	1				

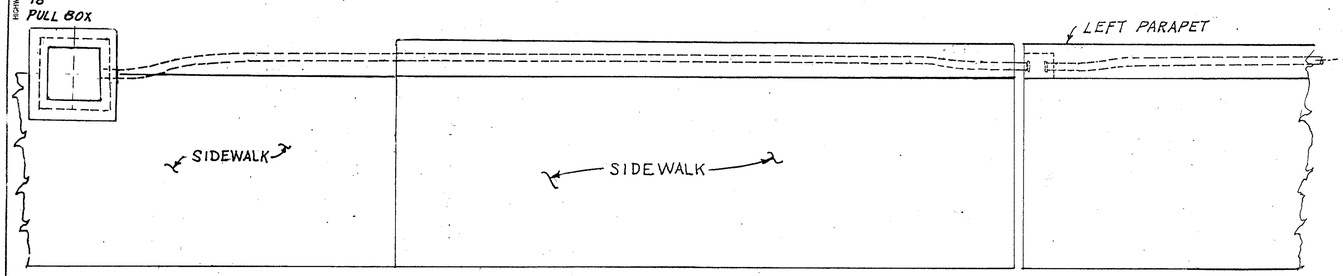

PART PLAN OF PARAPET & SIDEWALK AT REAR ABUTMENT EXPANSION JOINT

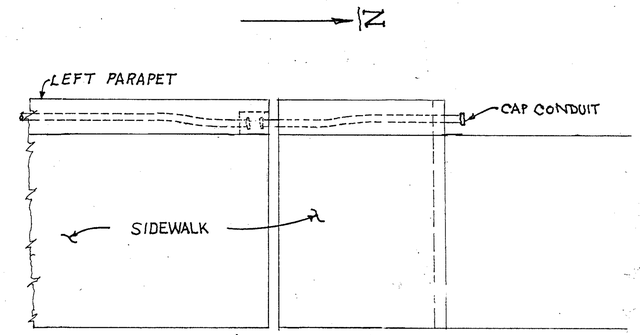

PART PLAN OF PARAPET & SIDEWALK AT FORWARD ABUTMENT EXPANSION JOINT

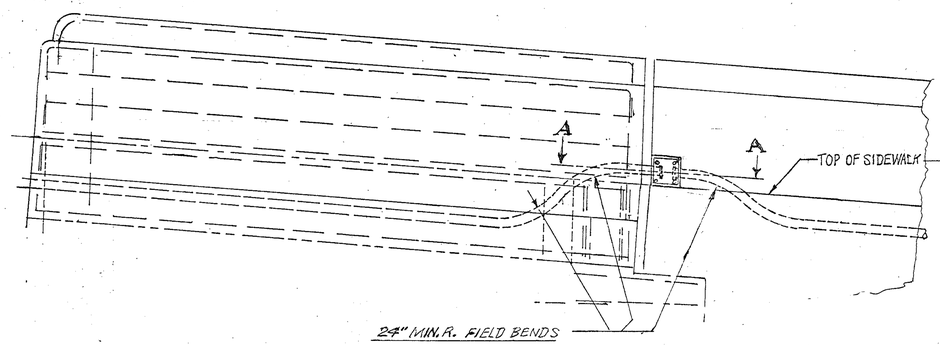

ELEVATION AT REAR ABUTMENT EXPANSION JOINT

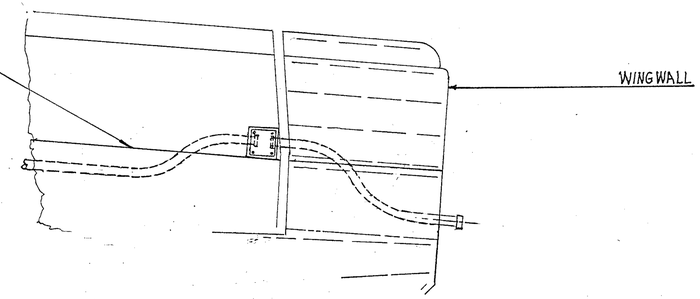

ELEVATION AT FORWARD ABUTMENT EXPANSION JOINT

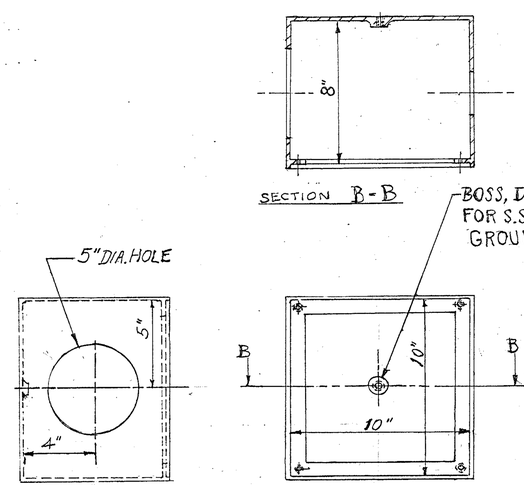

713.10-TRANSITION JUNCTION BOX, AS PER PLAN
INTERNAL RECESS FLANGED, CAST IRON, HOT DIPPED GALVANIZE FINISH. WITH STEEL COVER 5/16" THICK. THE COVER SHALL CONFORM TO ASTM- A-242 OR A-36.

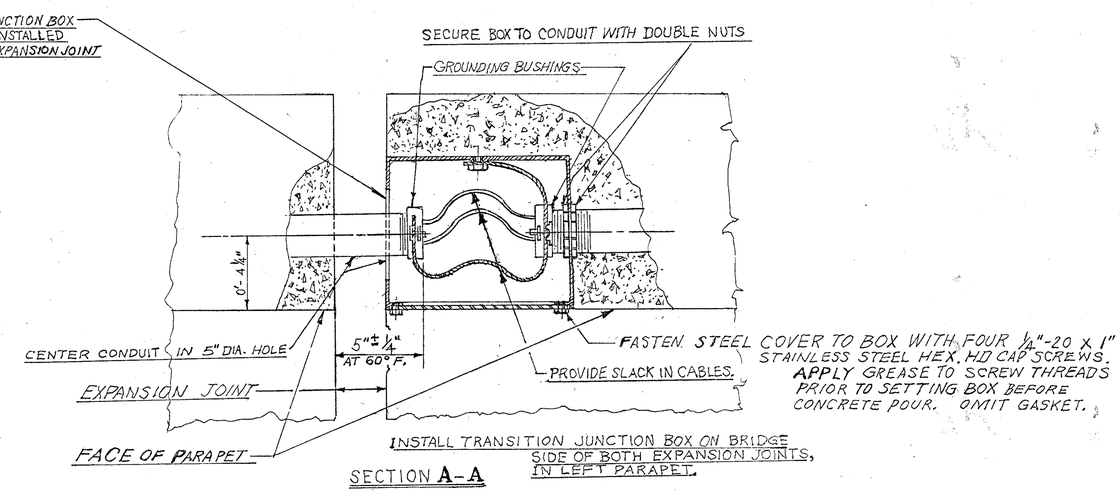

SECTION A-A

CALC. BY	MAH-680-4.88	OHIO	22/36
DATE		FHWA REGION 5	
CHK'D BY			
DATE			
FEDERAL PROJECT		STATE PROJECT	

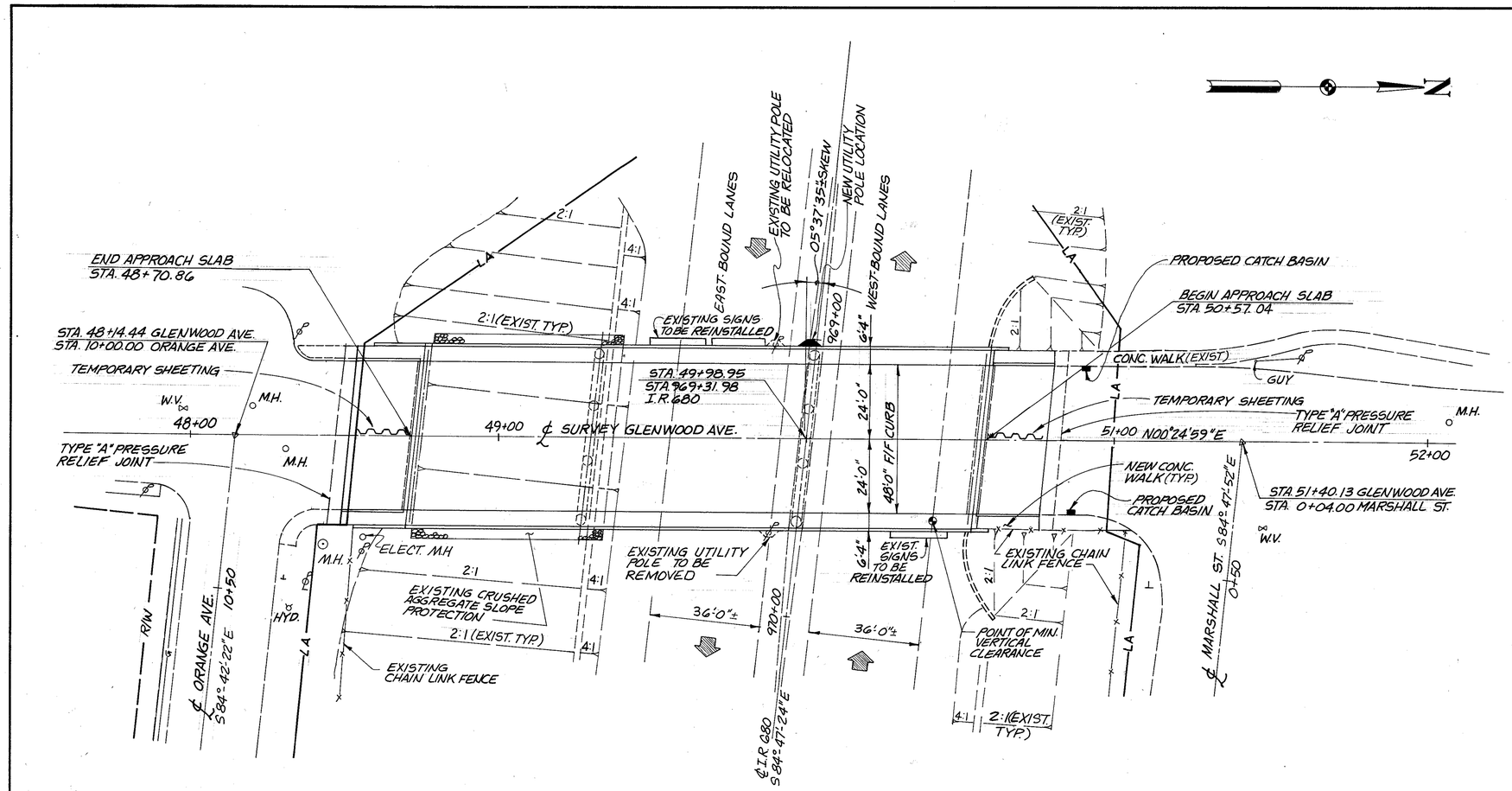

PLAN

BENCHMARK #1
R.R. SPIKE SET IN S.W. SIDE OF 20" OAK 10' SW OF PARK ENTRANCE SIGN STA. 47+90, 73.0' LEFT
ELEV. 929.92

BENCHMARK #2
R.R. SPIKE SET IN 12" PINE ON GLENWOOD AVE. STA. 52+59, 25.0' LEFT
ELEV. 894.35

EARTHWORK LIMITS SHOWN ARE APPROXIMATE. ACTUAL SLOPES SHALL CONFORM TO PLAN CROSS SECTIONS.

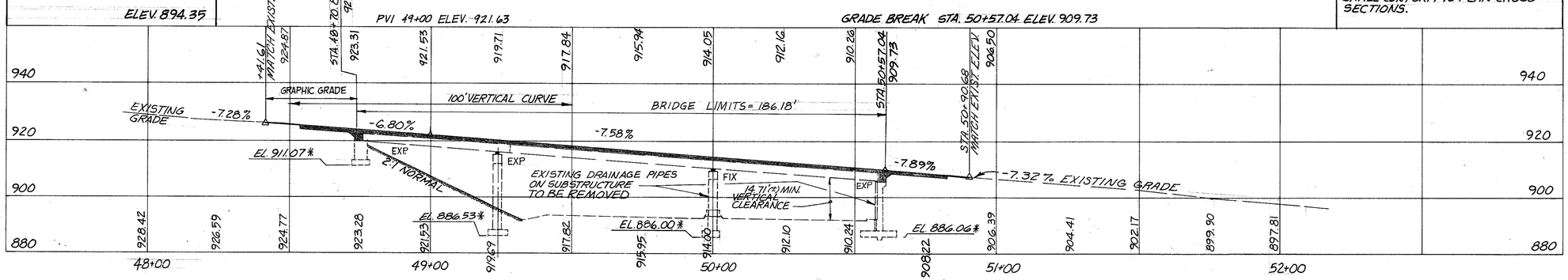

PROFILE ALONG ℄ SURVEY

* INFORMATION TAKEN FROM EXISTING BRIDGE PLANS. ELEVATIONS WERE NOT FIELD VERIFIED.

REVIEWED BY BURGESS & NIPLE, LTD.
M.P.B. 3-22-93

DESIGN INFORMATION

$ADT_{1993} = 4530$
$ADT_{2013} = 6340$
ADTT = 254
DESIGN SPEED = 35 M.P.H.

EXISTING STRUCTURE

TYPE: CONTINUOUS STEEL BEAM, WITH REINFORCED CONCRETE DECK AND SUBSTRUCTURES
SPAN: 55'-10"± 70'-0"± 55'-10"± ℄ BRGS.
ROADWAY: 48'± - F/F CURB - 5'2"± SIDEWALK BOTH SIDES
SKEW: 5°37'35"± L.F.
APPROACH SLABS: 25' LONG
WEARING SURFACE: ASPHALT CONCRETE
ALIGNMENT: TANGENT
DATE BUILT: 1962
STRUCTURE FILE NUMBER: 5006902

PROPOSED STRUCTURE

TYPE: EXISTING CONTINUOUS STEEL BEAM WITH NEW REINFORCED COMPOSITE CONCRETE DECK AND REHABILITATED CONCRETE SUBSTRUCTURES
SPAN: 55'-10"±, 70'-0"±, 55'-10"± ℄ BRGS.
ROADWAY: 48'-0" F/F CURB
SIDEWALKS: 5'-2" BOTH SIDES
LOADING: HS 20-44 (CASE II) AND THE ALTERNATE MILITARY LOADING
SKEW: 5°37'35"± L.F.
WEARING SURFACE: MONOLITHIC CONCRETE
APPROACH SLABS: AS-1-81 (20'-0" LONG)
ALIGNMENT: TANGENT
CROWN: 3/16"/FT.

HAMMONTREE & ASSOCIATES, LTD. 1/15
ENGINEERS · PLANNERS · SURVEYORS
CANTON · ORLANDO · PITTSBURGH · AKRON

SITE PLAN

BRIDGE NO. MAH-680-0488
GLENWOOD AVE. OVER IR 680
MAHONING COUNTY
STA. 48+70.86
STA. 50+57.04

DESIGNED	DRAWN	CHECKED	REVIEWED DATE	REVISED
KJO	EAB	KAB	MEF 2/26/93	

A A BLUE Print, Akron

CALC. BY	MAH-680-4.88	OHIO	23/36
DATE		FHWA REGION 5	
CHK'D BY			
DATE			
FEDERAL PROJECT	STATE PROJECT		

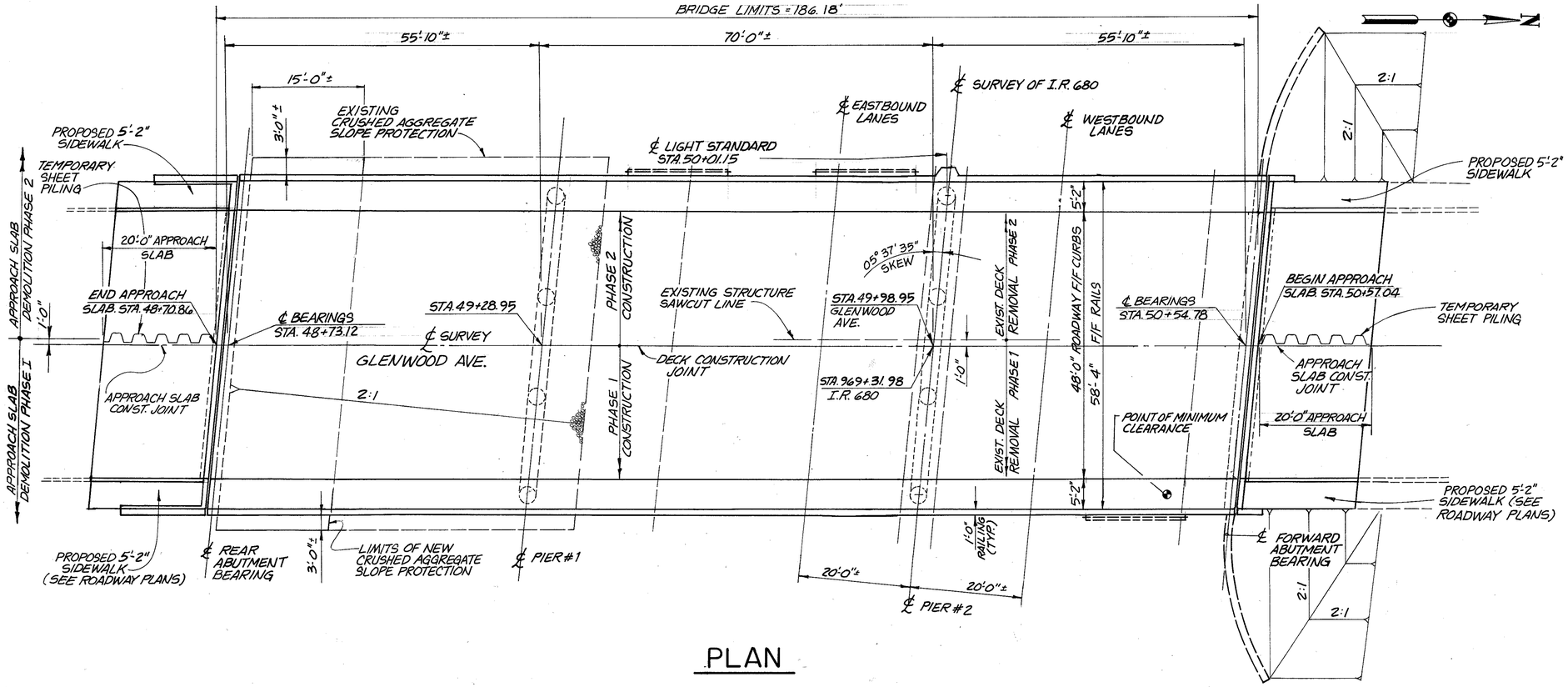

PLAN

EXISTING LIGHTED OVERHEAD SIGNS TO BE, REMOVED PRIOR TO BRIDGE DECK DEMOLITION, STORED DURING DECK CONSTRUCTION, AND REMOUNTED AFTER CONSTRUCTION IS COMPLETED. (SEE SIGNING AND LIGHTING PLAN FOR DETAILS) THIS WORK IS INCLUDED IN ITEM 630 OF THE ROADWAY PLANS FOR PAYMENT.

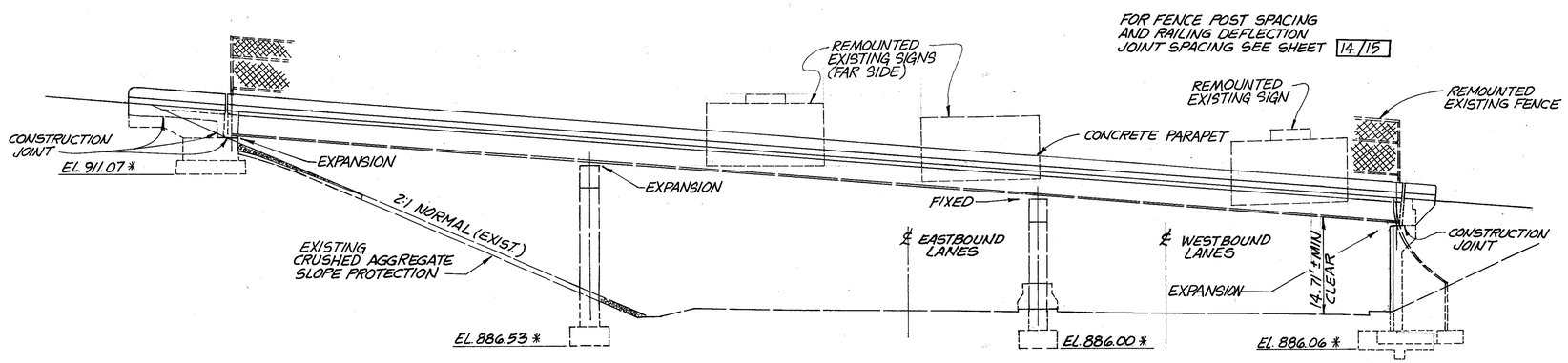

ELEVATION

* INFORMATION TAKEN FROM EXISTING PLANS. ELEVATIONS NOT FIELD VERIFIED.

HAMMONTREE & ASSOCIATES, LTD. 2/15
ENGINEERS, PLANNERS, SURVEYORS
CANTON - ORLANDO - PITTSBURGH - AKRON

GENERAL PLAN & ELEVATION

BRIDGE NO. MAH.-680-0488
GLENWOOD AVE. OVER I.R. 680

DESIGNED	DRAWN	CHECKED	REVIEWED	DATE	REVISED
KJO	EAB	CJP	KAB	2/26/93	

HAMMONTREE & ASSOCIATES, LIMITED

GENERAL NOTES

STANDARD DRAWINGS AND SUPPLEMENTAL SPECIFICATIONS
REFERENCE SHALL BE MADE TO STANDARD DRAWINGS:

AS-1-81	DATED 11-27-81
BR-2-82	DATED 11-1-82
EXJ-2-81	DATED 4-24-84
PCB-91	DATED 4-24-92
SD-1-69	DATED 6-12-69
VPF-1-90	DATED 2-1-92

AND TO SUPPLEMENTAL SPECIFICATIONS:

849	DATED 12-24-85
949	DATED 9-26-86

DESIGN SPECIFICATIONS
THIS STRUCTURE CONFORMS TO "STANDARD SPECIFICATIONS FOR HIGHWAY BRIDGES" ADOPTED BY THE AMERICAN ASSOCIATION OF STATE HIGHWAY AND TRANSPORTATION OFFICIALS, 1992, AND THE OHIO "SUPPLEMENT" TO THESE SPECIFICATIONS.

DESIGN LOADING
DESIGN LOADING – HS20-44 AND THE ALTERNATE MILITARY LOADING.

DESIGN STRESSES

CONCRETE CLASS S – COMPRESSIVE STRENGTH 4500 P.S.I.

CONCRETE CLASS C – COMPRESSIVE STRENGTH 4000 P.S.I.

REINFORCING STEEL – ASTM A615, A616, A617, GRADE 60 MINIMUM YIELD STRENGTH 60,000 P.S.I.

DECK PROTECTION METHOD – EPOXY COATED REINFORCING STEEL TOP AND BOTTOM MAT
– SEALING OF CONCRETE SURFACES

MONOLITHIC WEARING SURFACE IS ASSUMED, FOR DESIGN PURPOSES, TO BE 1" THICK.

EXISTING STRUCTURE VERIFICATION: DETAILS AND DIMENSIONS SHOWN ON THESE PLANS PERTAINING TO THE EXISTING STRUCTURE HAVE BEEN OBTAINED FROM PLANS OF THE EXISTING STRUCTURE AND/OR FROM FIELD OBSERVATIONS AND MEASUREMENTS. CONSEQUENTLY, THEY ARE INDICATIVE OF THE EXISTING STRUCTURE AND THE PROPOSED WORK BUT THEY SHALL BE CONSIDERED TENTATIVE AND APPROXIMATE. THE CONTRACTOR IS REFERRED TO CMS SECTIONS 102.05, 105.02 AND 513.02.

CONTRACT BID PRICES SHALL BE BASED UPON A RECOGNITION OF THE UNCERTAINTIES DESCRIBED ABOVE AND UPON A PREBID EXAMINATION OF THE EXISTING STRUCTURE BY THE CONTRACTOR. HOWEVER, ALL PROJECT WORK SHALL BE BASED UPON ACTUAL DETAILS AND DIMENSIONS WHICH HAVE BEEN VERIFIED BY THE CONTRACTOR IN THE FIELD.

REPLACEMENT OF EXISTING REINFORCING STEEL: ANY EXISTING REINFORCING BARS WHICH ARE TO BE INCORPORATED INTO THE NEW WORK AND WHICH ARE MADE UNUSABLE BY THE CONTRACTOR'S CONCRETE REMOVAL OPERATIONS SHALL BE REPLACED WITH NEW STEEL AT HIS COST. ANY EXISTING REINFORCING BARS DEEMED BY THE ENGINEER TO BE UNUSABLE BECAUSE OF CORROSION SHALL BE REPLACED WITH NEW STEEL AN ALLOWANCE OF 100 POUNDS IS INCLUDED IN ITEM 509 FOR THIS PURPOSE.

PAINTING OF STRUCTURAL STEEL: NEW STRUCTURAL STEEL SHALL BE CLEANED AND PRIME PAINTED IN THE SHOP AND FIELD PAINTED WITH AN INTERMEDIATE AND FINISH COAT OF PAINT USING SYSTEM IZEU. THE COSTS FOR THIS WORK SHALL BE PAID FOR AS SPECIFIED IN THE PROPOSAL NOTE "PAINTING OF NEW STEEL, SYSTEM IZEU." EXISTING STEEL SHALL BE CLEANED AND PAINTED WITH A PRIME, INTERMEDIATE, AND FINISH COAT OF PAINT IN THE FIELD USING SYSTEM OZEU. THE COST OF THIS WORK SHALL BE INCLUDED IN THE SEVERAL SPECIAL OZEU PAINTING ITEMS FOR PAYMENT. THE SURFACE AREA PAY QUANTITY FOR SYSTEM OZEU IS BASED ON THE SURFACE AREA OF THE EXISTING MAIN MEMBERS INCREASED BY 11 PERCENT TO ACCOUNT FOR THE AREA OF EXISTING CROSSFRAMES, BEARINGS, AND OTHER STEEL INCIDENTALS TO BE CLEANED AND PAINTED.

ITEM SPECIAL – SEALING OF CONCRETE SURFACES:
A CONCRETE SEALER SHALL BE APPLIED TO THE CONCRETE SURFACES SHOWN ON SHEETS 7/15, 9/15, 10/15, 11/15, & 12/15

SEE THE PROPOSAL FOR SURFACE PREPARATION REQUIREMENTS, APPLICATION RATES, MATERIAL REQUIREMENTS, AND APPLICATION PROCEDURES.

REINFORCING BAR SPLICE LENGTHS SHALL CONFORM TO THE MINIMUM LENGTHS SPECIFIED IN 509.08 UNLESS OTHERWISE NOTED ON THE PLANS.

ITEM 511– CLASS S CONCRETE, SUPERSTRUCTURE, AS PER PLAN &
ITEM 517–RAILING, MISC.: FENCE REMOVED FOR REINSTALLATION MEMBRANE CURING PER SUPPLEMENTAL SPECIFICATION 836 WILL NOT BE PERMITTED. CONCRETE SHALL BE CURED BY METHOD (A), WATER CURING.

ITEM 517– RAILING, MISC.: FENCE REMOVED FOR REISTALLATION, USING SHRINKAGE COMPENSATING CEMENT SHALL CONFORM TO THE PERTINENT SECTIONS OF THE PROPOSAL NOTE FOR SHRINKAGE COMPENSATING CEMENT AND TO 517 OF THE CMS. PAYMENT FOR RAILING SHALL CONFORM WITH 517.07 OF THE CMS.

STRUCTURE EXCAVATION: EXCAVATION NOT MADE AS PART OF 202 OR 518 AND ALL NECESSARY BACKFILL SHALL BE INCLUDED IN THE LUMP SUM BID ITEM "UNCLASSIFIED EXCAVATION" FOR PAYMENT.

MECHANICAL CONNECTORS:
AN APPROVED TYPE OF MECHANICAL CONNECTORS FOR REINFORCING BARS SHALL BE PROVIDED. INSTALLATION OF CONNECTORS SHALL CONFORM WITH MANUFACTURER'S RECOMMENDED PROCEDURES. IF A DOWEL BAR SPLICE TYPE OF CONNECTOR IS FURNISHED, THE MINIMUM DOWEL BAR LENGTH TO BE INCLUDED WITH THE CONNECTOR SHALL BE GIVEN BY THE DIMENSION "L" SHOWN ON THE PLANS.

CONNECTORS AND DOWEL BARS USED WITH EPOXY COATED BARS SHALL BE EPOXY COATED. COATING FOR BOTH CONNECTORS AND BARS SHALL CONFORM TO THE SAME SPECIFICATIONS. COATINGS WHICH HAVE BEEN DAMAGED OR WHICH OTHERWISE DO NOT MEET SPECIFICATIONS WITH RESPECT TO COLOR, CONTINUITY AND UNIFORMITY MAY BE REPAIRED AS DIRECTED BY THE ENGINEER OR THEY SHALL BE REPLACED WITH MATERIAL WHICH MEETS THE SPECIFICATIONS.

CONNECTORS AND DOWEL BAR EXTENSIONS SHALL CONFORM WITH ITEM 509 AND BE INCLUDED IN THE BID PRICE PER POUND FOR ITEM 509.

CONSTRUCTION CLEARANCES: THE EXISTING MINIMUM VERTICAL CLEARANCE SHOWN IN THE PLANS SHALL BE MAINTAINED UNDER THE STRUCTURE EXCEPT FOR SHORT PERIODS WHERE TRAFFIC CONTROL IS APPROVED BY THE DIRECTOR AND PROVIDED BY THE CONTRACTOR. THE FULL EXISTING ROADWAY WIDTH SHALL BE MAINTAINED CLEAR AT ALL TIMES. ALL COSTS ASSOCIATED WITH MAINTAINING TRAFFIC UNDER THE STRUCTURE SHALL BE INCLUDED WITH ROADWAY QUANTITIES FOR PAYMENT.

STRUCTURAL STEEL, REPLACEMENT OF DETERIORATED END CROSSFRAMES, AS PER PLAN
STEEL MEMBERS TO BE FABRICATED UNDER THIS ITEM WILL NOT REQUIRE SHOP DRAWINGS PRIOR TO FABRICATION. THE CONTRACTOR SHALL MAKE NECESSARY MEASUREMENTS AND PREPARE SKETCHES, DRAWINGS, TABLES, ETC. THE ENGINEER SHALL HAVE AUTHORITY AND RESPONSIBILITY FOR ENSURING THAT THE FABRICATED STEEL IS ACCEPTABLE. TECHNICAL ASSISTANCE WILL BE PROVIDED ON REQUEST BY THE BUREAU OF BRIDGES. MILL TEST REPORTS AND SHIPPING DOCUMENTS SHALL BE SUBMITTED TO THE ENGINEER FOR REVIEW AND APPROVAL PRIOR TO INCORPORATING STEEL ITEMS INTO THE WORK, AS REQUIRED BY 501.07. AFTER FABRICATION, THE CONTRACTOR SHALL SUBMIT SHOP DRAWINGS TO THE ENGINEER FOR REVIEW AND APPROVAL TO ENSURE THAT THE DRAWINGS DEPICT THE STEEL AS ACTUALLY INCORPORATED INTO THE WORK. THE ENGINEER WILL THEN SEND ONE APPROVED SET TO THE BUREAU OF BRIDGES FOR INFORMATION. PAY WEIGHTS SHALL BE COMPUTED IN COMPLIANCE WITH 513 OF THE CONSTRUCTION AND MATERIAL SPECIFICATIONS AND SUBMITTED TO THE ENGINEER FOR HIS REVIEW AND APPROVAL. THE FABRICATOR SHALL FURNISH A 35 MILLIMETER MICROFILM COPY OF EACH SHOP DRAWING, WHICH SHALL BE MOUNTED ON AN APERATURE CARD AS SPECIFIED IN 501.05.

SURFACE PREPARATION AND SHOP PRIME PAINTING SHALL BE IN ACCORDANCE WITH AND BE PAID FOR AS SPECIFIED IN THE PROPOSAL NOTE "PAINTING OF NEW STEEL, SYSTEM IZEU."

STEEL MEMBERS INCLUDED IN THIS ITEM INCLUDE END CROSSFRAMES.

REMOVAL OF PORTIONS OF EXISTING STRUCTURE: WHEN NO LONGER NEEDED TO MAINTAIN TRAFFIC, PORTIONS OF THE EXISTING STRUCTURE SHALL BE REMOVED AND REPLACED.

MAINTENANCE OF TRAFFIC: TWO LANES, TWO WAY TRAFFIC SHALL BE MAINTAINED ON THE STRUCTURE AT ALL TIMES. TWO WAY TRAFFIC UNDER THE STRUCTURE SHALL BE MAINTAINED AT ALL TIMES (SEE ROADWAY PLANS).

PROTECTION OF TRAFFIC: PRIOR TO ANY DEMOLITION, ERECTION AND/OR CONSTRUCTION OVER ACTIVE TRAFFIC, THE CONTRACTOR SHALL SUBMIT HIS PLANS FOR THE PROTECTION OF THAT TRAFFIC TO THE DIRECTOR FOR APPROVAL. THESE PLANS SHALL INCLUDE PROVISIONS FOR ANY DEVICES AND STRUCTURES THAT MAY BE NECESSARY TO ENSURE SUCH PROTECTION. THE COST FOR THIS PROTECTION SHALL BE INCLUDED WITH ITEM 202 FOR PAYMENT.

UTILITY LINES: ALL EXPENSE INVOLVED IN RELOCATING THE AFFECTED UTILITY LINES SHALL BE BORNE BY THE OWNERS. THE CONTRACTOR AND OWNERS ARE REQUESTED TO COOPERATE BY ARRANGING THEIR WORK IN SUCH A MANNER THAT INCONVENIENCE TO EITHER WILL BE HELD TO A MINIMUM.

TEMPORARY RAILING: FURNISHING, INSTALLING, MAINTAINING, AND REMOVING TEMPORARY RAILING, INCLUDING THE COMPLETE OR PARTIAL REMOVAL OF ANCHOR HARDWARE AND THE FILLING OF THE ANCHOR VOIDS WITH NON-SHRINKING GROUT, SHALL BE INCLUDED IN ITEM 614 (ROADWAY PLANS) FOR PAYMENT.

CRUSHED AGGREGATE SLOPE PROTECTION, AS PER PLAN: AFTER COMPLETION OF MAJOR MODIFICATION ITEMS, EXISTING EMBANKMENT SURFACES SHALL BE RESTORED TO A UNIFORM PLANE SURFACE WITH CRUSHED AGGREGATE SLOPE PROTECTION. PROTECTION SHALL EXTEND 15'-0" LONGITUDINALLY FROM THE FACE OF THE REAR ABUTMENT AND LATERALLY TO AT LEAST 3'-0" BEYOND DECK FASCIAS. THE MINIMUM TOTAL THICKNESS OF PROPOSED PROTECTION SHALL BE 1'-0".

PORTION OF STRUCTURE REMOVED, OVER 20-FOOT SPAN, AS PER PLAN (CONCRETE DECKS)

DESCRIPTION: THIS WORK SHALL CONSIST OF THE REMOVAL OF CONCRETE DECKS INCLUDING SIDEWALKS, PARAPETS, RAILINGS, DECK JOINTS AND OTHER APPURTENANCES FROM STEEL SUPPORTING SYSTEMS (BEAMS, GIRDERS, CROSSFRAMES, ETC.). CARE SHALL BE TAKEN DURING DECK REMOVALS TO PROTECT PORTIONS OF SUCH SYSTEMS THAT ARE TO BE SALVAGED AND INCORPORATED INTO THE PROPOSED STRUCTURE. IN THIS RESPECT, THE USE OF EXPLOSIVES, HEADACHE BALLS AND HOE RAM TYPE OF EQUIPMENT IS PROHIBITED.

PROTECTION OF STEEL SUPPORT SYSTEMS: BEFORE DECK SLAB CUTTING IS PERMITTED, THE OUTLINE OF PRIMARY STEEL MEMBERS IN CONTACT WITH THE BOTTOM OF THE DECK SHALL BE DRAWN ON THE SURFACE OF DECK. SMALL DIAMETER PILOT HOLES SHALL BE DRILLED 2 INCHES OUTSIDE THESE LINES TO CONFIRM THE LOCATION OF FLANGE EDGES. DECK CUTS OVER OR WITHIN 2 INCHES OF FLANGE EDGES SHALL NOT EXTEND LOWER THAN THE BOTTOM LAYER OF DECK SLAB REINFORCING STEEL. CUTS MADE OUTSIDE 2 INCHES OF FLANGE EDGES MAY EXTEND THE FULL DEPTH OF THE DECK SLAB, CARE SHALL BE TAKEN NOT TO DAMAGE STEEL MEMBERS THAT ARE TO BE INCORPORATED INTO THE PROPOSED STRUCTURE.

REMOVAL METHODS: CONCRETE MAY BE REMOVED BY CUTTING AND BY MEANS OF HAND OPERATED PNEUMATIC HAMMERS EMPLOYING POINTED OR BLUNTED CHISEL TYPE TOOLS. FOR REMOVALS ABOVE STEEL MEMBERS, LIGHT HAMMERS APPROVED BY THE ENGINEER SHALL BE USED TO ENSURE ADEQUATE DEPTH CONTROL AND TO PREVENT NICKING OR GOUGING PRIMARY STEEL MEMBERS.

DECK REMOVALS: DUE TO THE POSSIBLE PRESENCE OF WELDED ATTACHMENTS TO EXISTING STRUCTURAL STEEL (FINISHING MACHINE, SCUPPER AND FORM SUPPORTS, ETC.), CARE SHALL BE TAKEN DURING DECK REMOVAL TO AVOID DAMAGING STRINGERS WHICH ARE TO REMAIN. STRINGERS DAMAGED BY THE CONTRACTOR'S REMOVAL OPERATIONS SHALL, AT NO COST TO THE PROJECT, BE REPLACED OR REPAIRED. PROPOSED REPAIRS, DEVELOPED BY A REGISTERED PROFESSIONAL ENGINEER, SHALL BE SUBMITTED IN WRITING FOR REVIEW AND APPROVAL BY THE DIRECTOR.

EXTRANEOUS MEMBERS: EXISTING EXTRANEOUS MEMBERS (I.E., FINISHING MACHINE AND FORM SUPPORS, ETC., AND THE SUPPORT FOR SCUPPERS AND BULB ANGLES WHICH ARE TO BE REMOVED) ATTACHED BY WELDED CONNECTIONS TO PORTIONS OF THE TOP FLANGES DESIGNATED "TENSION" SHALL BE REMOVED AND THE FLANGE SURFACES GROUND SMOOTH. GRINDING SHALL BE CAREFULLY DONE AND PARALLEL TO THE FLANGES.

LOADING LIMITATIONS: NO PART OF THE STRUCTURE SHALL BE SUBJECTED TO UNIT STRESSES THAT EXCEED BY MORE THAN ONE-THIRD THE ALLOWABLE STRESSES GIVEN IN THE AASHTO STANDARD SPECIFICATIONS FOR HIGHWAY BRIDGES DUE EITHER TO DEMOLITION, ERECTION OR CONSTRUCTION METHODS, OR TO THE USE OR MOVEMENT OF DEMOLITION OR ERECTION EQUIPMENT ON OR ACROSS THE STRUCTURE. STRUCTURAL ANALYSIS COMPUTATIONS, BY AN ENGINEER REGISTERED BY THE STATE OF OHIO, SHOWING THE ALLOWABLE STRESSES AND THE MAXIMUM STRESSES PRODUCED BY THE CONTRACTOR'S METHODS OR EQUIPMENT SHALL BE SUBMITTED TO THE DIRECTOR FOR REVIEW AND APPROVAL AT LEAST TWO WEEKS PRIOR TO THE START OF THE WORK.

PAYMENT: THIS WORK WILL BE PAID FOR AT THE CONTRACT LUMP SUM PRICE BID, WHICH PRICE AND PAYMENT SHALL BE FULL COMPENSATION FOR ALL LABOR, EQUIPMENT, MATERIALS AND INCIDENTALS NECESSARY TO COMPLETE THE WORK IN CONFORMANCE WITH THESE REQUIREMENTS, WITH PERTINENT PROVISIONS OF 202, AND TO THE SATISFACTION OF THE ENGINEER

INSPECTION OF STRUCTURAL STEEL: THE ENGINEER SHALL BE GIVEN THE OPPORTUNITY TO VISUALLY INSPECT ALL EXISTING BUTT-WELDED TOP FLANGE SPLICES AND/OR TOP FLANGE COVER PLATE FILLET WELDS TO ENSURE THAT THEY ARE FREE OF DEFECTS. THE DECK SLAB HAUNCH FORMS IMMEDIATELY ADJACENT TO SUCH WELDS SHALL NOT BE ERECTED UNTIL AFTER THE ENGINEER HAS COMPLETED THIS INSPECTION. THIS INSPECTION SHALL NOT TAKE PLACE UNTIL AFTER THE TOP FLANGES ARE CLEANED AS SPECIFIED IN 511.08, BUT IT SHALL BE DONE BEFORE THE DECK SLAB REINFORCEMENT IS INSTALLED. THE COST ASSOCIATED WITH THIS INSPECTION SHALL BE INCLUDED WITH ITEM 511, SUPERSTRUCTURE CONCRETE FOR PAYMENT.

ITEM 516 – BEARING DEVICE, MISC.:
THE ABUTMENT BEARINGS SHALL BE REMOVED AND REPLACED WITH NEW BEARINGS PER THE NOTES & DETAILS ON SHEET 15/15 . PAYMENT FOR REMOVAL OF THE EXISTING BEARINGS AND THE EXISTING ANCHOR BOLTS SHALL BE INCLUDED IN ITEM 202 FOR PAYMENT. PATCHING THE AREAS AROUND THE EXISTING ANCHOR BOLTS WITH NON-SHRINKING GROUT SHALL ALSO BE INCLUDED IN ITEM 202. THE COST OF THE BEARINGS SHALL INCLUDE ALL LABOR, MATERIALS AND INCIDENTALS REQUIRED TO FURNISH AND INSTALL THE BEARINGS. THIS WILL INCLUDE THE COSTS OF THE NEW ANCHOR BOLTS, BEARING PADS, FIELD CONNECTION TO THE EXISTING BEAMS, AND PAINTING THE NEW BEARING ASSEMBLIES. THE BEARINGS SHALL BE SHOP CLEANED AND WRAPPED TO PROTECT THEM UNTIL THEY ARE PAINTED IN THE FIELD. THE BEARINGS SHALL RECEIVE FINAL COMPLETE FIELD PAINTING IN ACCORDANCE WITH THE REQUIREMENTS OF THE PAY ITEMS FOR SYSTEM OZEU.

CALC. BY KJO DATE 9/16/92	MAH-680-4.88	OHIO	25/36
CHK'D. BY CJP DATE 1/7/93		FHWA REGION 5	
FEDERAL PROJECT		STATE PROJECT	

REINFORCING STEEL LIST

BENDING DIAGRAMS

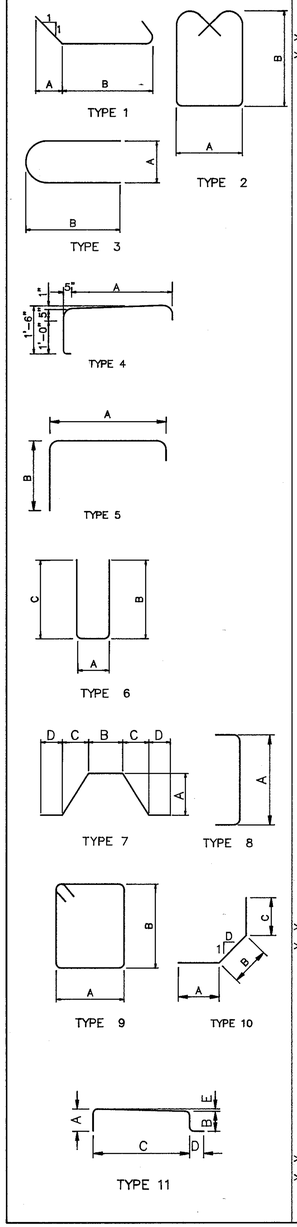

	MARK	NO.	LENGTH	WEIGHT	TYPE	A	B	C	D	E
			ABUTMENTS							
*	A501	16	30'-3"	505	S					
*	A502	16	30'-1"	502	S					
	A503	36	4'-5"	166	6	1'-4"	1'-8"	1'-8"		
	A504	8	16'-10"	141	S					
	A505	8	8'-7"	72	11	1'-4"	1'-2"	5'-8"	0'-10"	1 3/4"
	A506	20	3'-6"	73	S					
	A507	8	2'-5"	21	S					
	A508	16	4'-5"	74	S					
	A509	4	6'-3"	26	S					
	A510	4	6'-2"	26	S					
	A511	4	5'-8"	24	S					
	A513	12	2'-7"	33	S					
	A514	4	4'-4"	18	S					
	A515	4	3'-7"	15	S					
	A601	98	7'-8"	1,129	6	0'-11"	3'-6"	3'-6"		
	A602	98	5'-2"	761	6	1'-5"	2'-0"	2'-0"		
	A603	8	5'-1"	61	S					
	A604	4	7'-6"	45	10	1'-9"	2'-8"	3'-1"	1	
	A605	28	7'-10"	330	6	1'-5"	3'-4"	3'-4"		
	A606	8	3'-6"	42	S					
	A607	5	10'-6"	79	10	2'-0"	6'-6"	2'-0"	0.9	
	A608	5	7'-5"	56	10	2'-0"	4'-5"	1'-0"	0.9	
	A609	5	10'-10"	81	10	2'-0"	6'-10"	2'-0"	1.1	
	A610	5	7'-9"	58	10	2'-0"	4'-9"	1'-0"	1.1	
	D801	33	4'-1"	360	1	1'-0"	1'-7"			
	D802	33	4'-4"	382	1	1'-0"	1'-10"			
			TOTAL=	5080						
			RAILING							
	R501	40	3'-3"	136	3	6 1/2"	1'-6"			
	R502	4	6'-7"	28	4	4'-0"				
	R503	4	8'-11"	38	5	4'-8"	3'-6"			
	R504	40	8'-3"	345	2	8"	3'-6"			
	R505	4	4'-7"	20	S					
	R506	4	4'-6"	19	S					
	R507	4	4'-5"	19	S					
	R508	12	16'-11"	212	S					
	R509	4	20'-8"	87	5	16'-9"	3'-6"			
	R510	4	19'-1"	80	4	16'-6"				
	R511	143	7'-0"	1044	S					
	R512	72	15'-2"	1139	S					
	R513	2	3'-0"	6	S					
			TOTAL=	3173	(INCLUDE WITH ITEM 517 FOR PAYMENT)					
			SUPERSTRUCTURE							
	S401	456	32'-2"	9798	S					
*	S501	304	30'-2"	9565	S					
*	S502	304	30'-2"	9565	S					
	S503	456	32'-2"	15,299	S					
	S504	382	7'-5'	2955	2	0'-8"	3'-1"			
	S507	6	8'-0"	50	7	2'-1"	1'-4"	2'-1"	0'-6"	
	S508	4	4'-0"	17	S					
	S509	4	3'-1"	13	6	2'-1"	0'-7"	0'-7"		
	S510	4	9'-2"	38	6	2'-1"	3'-8"	3'-8"		
	S511	304	4'-8"	1480	S					
	S512	304	2'-3"	714	8	1'-3"				
	S513	304	2'-4"	740	8	1'-4"				
	S514	304	2'-5"	766	8	1'-5"				
*	S601	304	30'-2"	13,775	S					
*	S602	304	30'-2"	13,775	S					
	S603	148	28'-0"	6225	S					
			TOTAL=	84,775						

* BARS UTILIZING MECHANICAL CONNECTORS

ALL REINFORCING TO BE EPOXY COATED.

ESTIMATED QUANTITIES

	ITEM	ITEM EXT.	TOTAL	UNIT	DESCRIPTION	ABUT.	PIERS	SUPER.	GEN.	ITEM
	202	11203	LUMP	SUM	PORTIONS OF STRUCTURE REMOVED,OVER 20 FOOT SPAN, AS PER PLAN.				LUMP	
	503	11100	LUMP	SUM	COFFERDAMS, CRIBS, AND SHEETING				LUMP	
	503	21300	LUMP	SUM	UNCLASSIFIED EXCAVATION				LUMP	
	509	15830	89,855	LB.	EPOXY COATED REINFORCING STEEL, GRADE 60	5080		84,775	100	
	510	11100	8	EA.	DOWEL HOLE	8				
	511	31505	391	CU. YD.	CLASS S CONCRETE, SUPERSTRUCTURE, AS PER PLAN			391		
*	511	33404	391	CU. YD.	CLASS S CONCRETE, SUPERSTRUCTURE (USING SHRINKAGE COMPENSATING CEMENT)(SEE PROPOSAL NOTE)			391		
*	511	33410	LUMP	SUM	CLASS S CONCRETE, USING SHRINKAGE COMPENSATING CEMENT, FOR PRE-PLACEMENT TESTING (SEE PROPOSAL NOTE)			LUMP		
	511	45700	42	CU. YD.	CLASS C CONCRETE, ABUTMENT	42				
	SPECIAL	51267500	667	SQ. YD.	SEALING OF CONCRETE SURFACES (SEE PROPOSAL NOTE)	56		611		
	SPECIAL	51267502	282	SQ. YD.	SEALING OF CONCRETE SURFACES (EPOXY) (SEE PROPOSAL NOTE)	282				
	SPECIAL	51267504	280	SQ. YD.	SEALING OF CONCRETE SURFACES (NON-EPOXY) (SEE PROPOSAL NOTE)		280			
	513	15901	1988	LB	STRUCTURAL STEEL REPLACEMENT OF DETERIORATED END CROSS FRAMES, AS PER PLAN.			1988		
	513	20000	3720	EA.	WELDED STUD SHEAR CONNECTORS			3720		
	513	21000	16	EA.	TRIMMING OF BEAM END			16		
	SPECIAL	51400050	14,000	SQ. FT.	SURFACE PREPARATION OF EXISTING STEEL, SYSTEM OZEU Ø			14,000		
	SPECIAL	51400056	14,000	SQ. FT.	FIELD PAINTING OF EXISTING STEEL, PRIME COAT, SYSTEM OZEU Ø			14,000		
	SPECIAL	51400060	14,000	SQ. FT.	FIELD PAINTING OF EXISTING STEEL, INTERMEDIATE COAT, SYSTEM OZEU Ø			14,000		
	SPECIAL	51400066	14,000	SQ. FT.	FIELD PAINTING OF EXISTING STEEL, FINISH COAT, SYSTEM OZEU Ø			14,000		
⊗	SPECIAL	51400500	5	LIN. FT.	CAULKING Ø			5		
⊗	SPECIAL	51400504	40	MAN HR.	GRINDING FINS, TEARS, SLIVERS Ø			40		
⊗	SPECIAL	51400508	120	LIN. FT.	GRINDING FLANGE EDGES Ø			120		
	514	00610	1988	LB.	△PAINTING OF NEW STEEL, SYSTEM IZEU Ø △ FIELD			1988		
	516	10501	121	LIN. FT.	STRUCTURAL EXPANSION JOINT INCLUDING ELASTOMERIC COMPRESSION SEAL, AS PER PLAN			121		
	516	46900	16	EA.	BEARING DEVICE, MISC.	16				
	517	76300	410	LIN. FT.	RAILING, MISC.:FENCE REMOVED FOR REINSTALLATION	43		367		
+	517	76300	410	LIN. FT.	RAILING, MISC.:FENCE REMOVED FOR REINSTALLATION, USING SHRINKAGE COMPENSATING CEMENT, AS PER PLAN (SEE PROPOSAL NOTE)	43		367		
	518	21200	40	CU. YD.	POROUS BACKFILL WITH FILTER FABRIC	40				
	519	11100	475	SQ. FT.	PATCHING CONCRETE STRUCTURE	255	220			
	601	20001	124	SQ. YD.	CRUSHED AGGREGATE SLOPE PROTECTION, AS PER PLAN				124	
	SPECIAL	60740300	364	LIN. FT.	VANDAL PROTECTION FENCE REMOVED AND REBUILT			364		

* ALTERNATE BID ITEM: THESE TWO ITEMS SHALL CONSTITUTE ONE ALTERNATE BID TO CLASS S CONCRETE, SUPERSTRUCTURE, AS PER PLAN

+ ALTERNATE BID ITEM

⊗ ITEMS TO BE USED AS DIRECTED BY THE ENGINEER.

Ø SEE PROPOSAL NOTE

HAMMONTREE & ASSOCIATES, LTD. 4/15
ENGINEERS, PLANNERS, SURVEYORS
CANTON ORLANDO PITTSBURGH AKRON

ESTIMATED QUANTITIES & REINFORCING STEEL LIST
BRIDGE NO. MAH-680-0488
GLENWOOD AVE. OVER I.R. 680

DESIGNED	DRAWN	CHECKED	REVIEWED DATE	REVISED
KJO	EAB	CJP	KAB 2/26/93	

CALC. BY	MAH-680-4.88	OHIO	26/36
DATE		FHWA REGION 5	
CHK'D BY			
DATE			
FEDERAL PROJECT		STATE PROJECT	

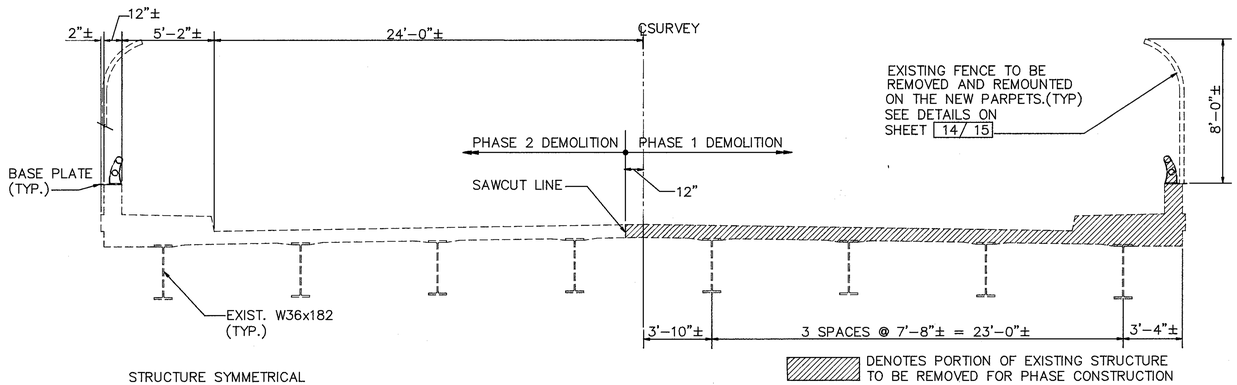

STRUCTURE SYMMETRICAL ABOUT ℄ SURVEY

DEMOLITION DETAIL

(LOOKING UPSTATION)

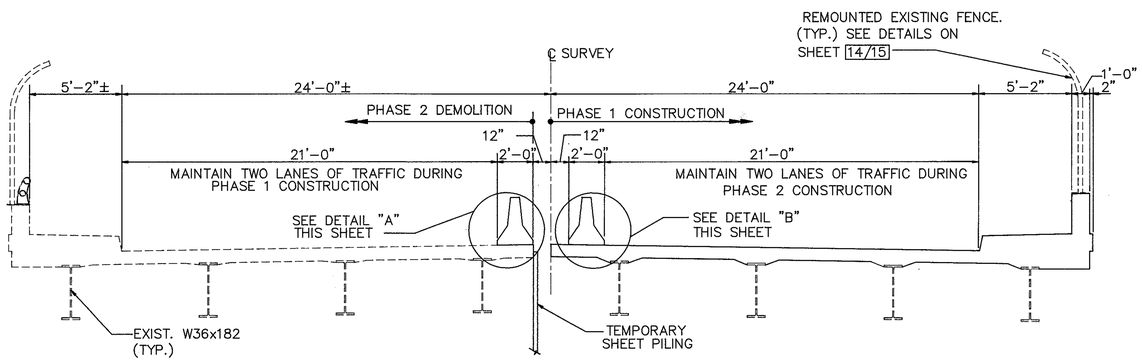

PART WIDTH CONSTRUCTION DETAIL

(LOOKING UPSTATION)

CONSTRUCTION STAGING NOTES

1.) TRAFFIC SHALL BE MAINTAINED ONE LANE EACH DIRECTION.

2.) SET PORTABLE CONCRETE BARRIER AS SHOWN IN DETAIL "A" AND MAINTAIN TRAFFIC ON THE LEFT HALF OF STRUCTURE.

3.) PLACE SHEET PILING PARALLEL TO ℄ SURVEY BEHIND EXISTING ABUTMENTS AT BOTH ENDS OF BRIDGE (SEE SHEET 2/15).

4.) CAREFULLY REMOVE AND STORE THE EXISTING STRUCTURE MOUNTED SIGNS, AND FENCING.

5.) DEMOLISH AND REMOVE PORTIONS OF STRUCTURE AND APPROACHES TO THE RIGHT OF SAWCUT LINE (SEE SHEET 2/15).

6.) REMOVE END CROSSFRAMES AND TRIM BEAM ENDS TO THE RIGHT OF THE SAWCUT LINE.

7.) REPLACE THE BEARINGS (SEE SHEET 15/15).

8.) INSTALL NEW END CROSSFRAMES, END DAMS AND WELDED STUD SHEAR CONNECTORS (SEE SHEET 13/15).

9.) PLACE CONCRETE DECK OVER TO CONSTRUCTION JOINT, SIDEWALK, PARAPET, AND SIDEWALK RAILING FOR PHASE 1 STRUCTURE AND APPROACHES.

10.) CONSTRUCT THE RIGHT PORTION OF THE BACKWALLS AND WINGWALLS TO THE CONSTRUCTION JOINT.

11.) BACKFILL ABUTMENTS AND PLACE APPROACH SLABS TO CONSTRUCTION JOINT.

12.) MOUNT NEW UTILITY POLE, REMOUNT EXISTING SIGNS AND FENCING.

13.) SET PORTABLE CONCRETE BARRIER ALONG CONSTRUCTION JOINT ON RIGHT HALF OF BRIDGE.

14.) OPEN RIGHT HALF OF BRIDGE TO TRAFFIC AND CLOSE LEFT HALF OF BRIDGE TO TRAFFIC.

15.) REPEAT STEPS 4 THRU 12 FOR THE LEFT HALF OF THE BRIDGE.

16.) PAINT STRUCTURAL STEEL AND PATCH EXISTING ABUTMENTS AND PIERS AS SHOWN ON SHEETS 6/15 AND 7/15

17.) REMOVE PORTABLE CONCRETE BARRIER.

18.) INSTALL ELASTOMERIC COMPRESSION SEAL AT ABUTMENTS IN ONE CONTINUOUS PIECE.

19.) ALLOW NORMAL TRAFFIC.

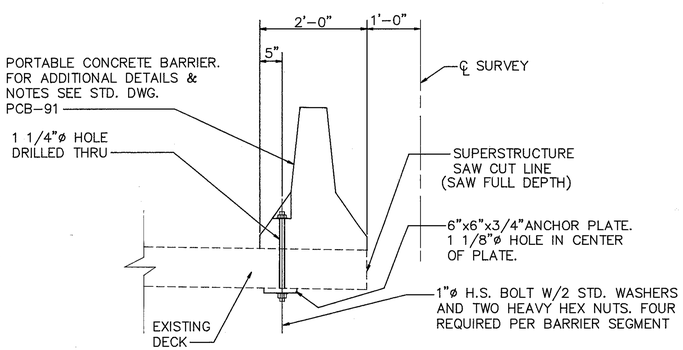

DETAIL "A"

TEMPORARY BARRIER FOR PHASE 1 CONSTRUCTION

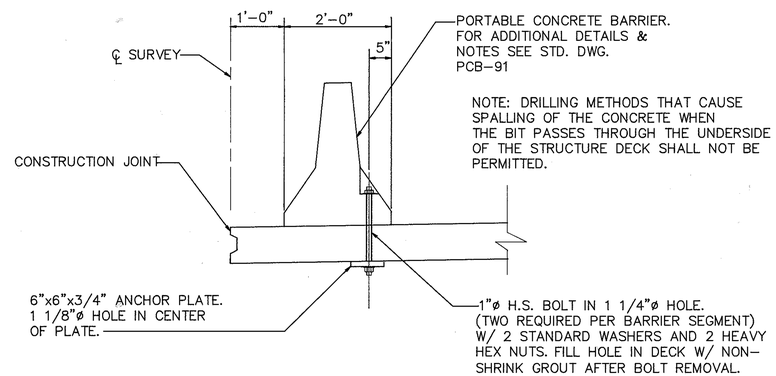

DETAIL "B"

TEMPORARY BARRIER FOR PHASE 2 CONSTRUCTION

HAMMONTREE & ASSOCIATES, LTD. 5/15
ENGINEERS, PLANNERS, SURVEYORS
CANTON ORLANDO PITTSBURGH AKRON

CONSTRUCTION DETAILS

BRIDGE NO. MAH-680-0488
GLENWOOD AVE. OVER I.R. 680

DESIGNED	DRAWN	CHECKED	REVIEWED DATE	REVISED
KJO	EAB	CJP	KAB 2/26/93	

CALC. BY	MAH-680-4.88	OHIO	27 / 36
DATE		FHWA REGION 5	
CHK'D BY			
DATE			
FEDERAL PROJECT		STATE PROJECT	

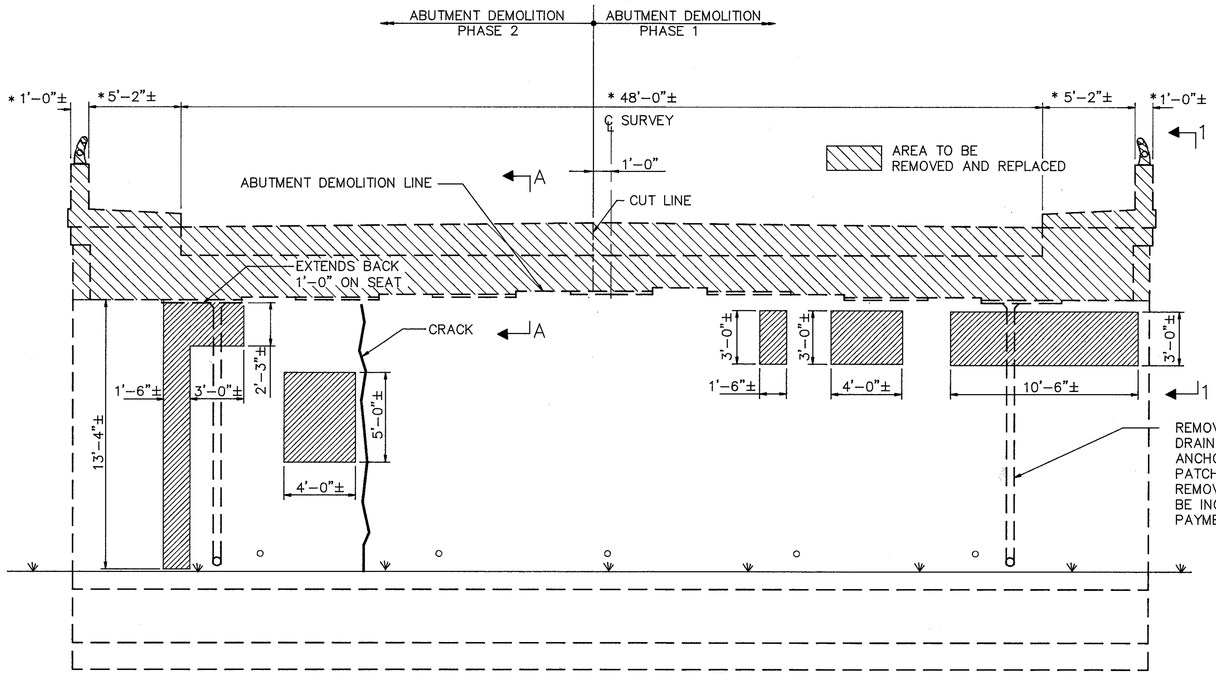

ELEVATION OF FORWARD ABUTMENT

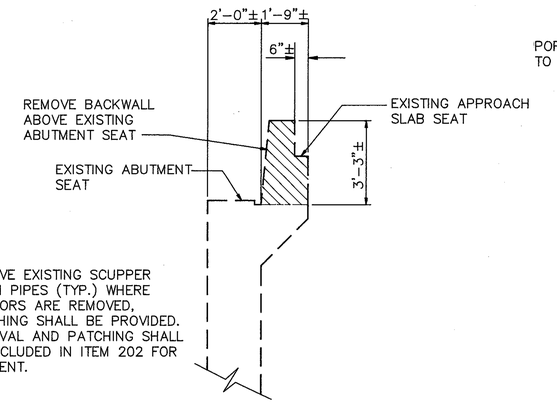

SECTION A–A

FORWARD ABUTMENT

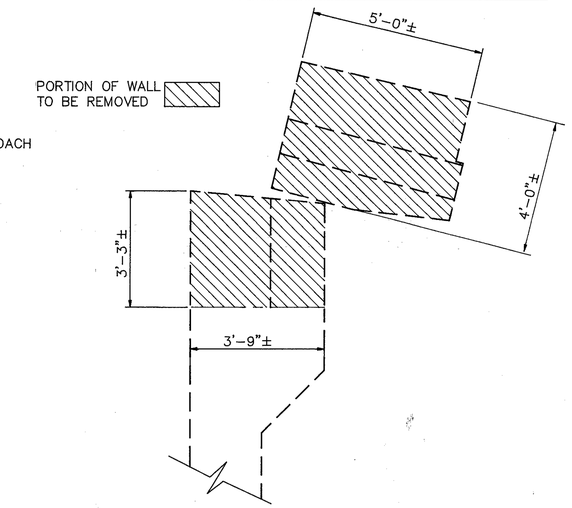

VIEW 1–1

FORWARD ABUTMENT WINGWALL

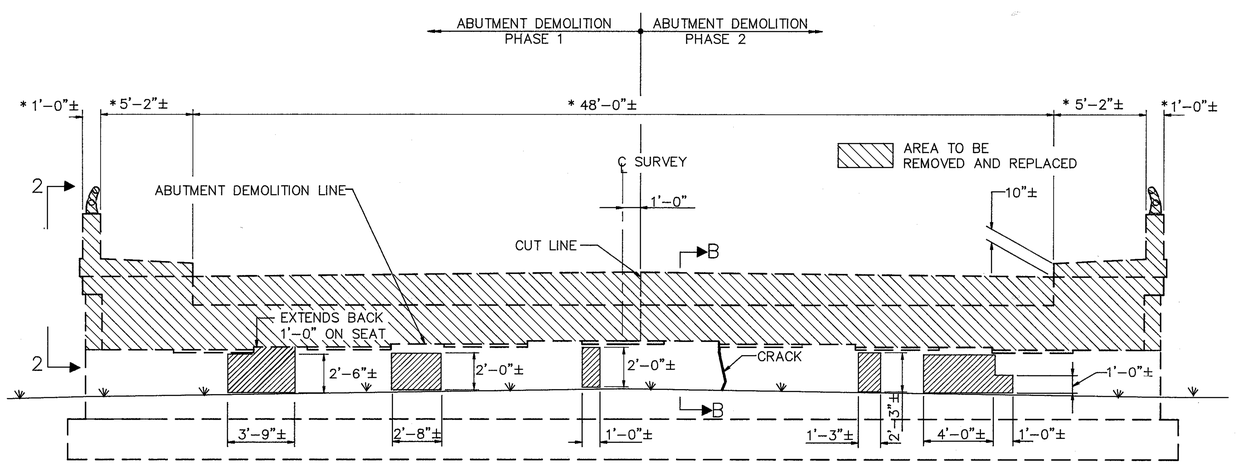

ELEVATION OF REAR ABUTMENT

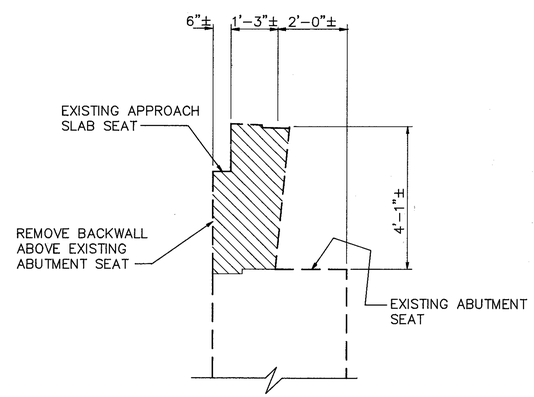

SECTION B–B

REAR ABUTMENT

NOTE: SEE SHEETS 7 / 15 THRU 11 / 15 FOR NOTES PERTAINING TO EXISTING REINFORCING.

NOTE: FOR ADDITIONAL NOTES AND DETAILS SEE SHEET 7 / 15

EXISTING RAILING NOT SHOWN FOR CLARITY

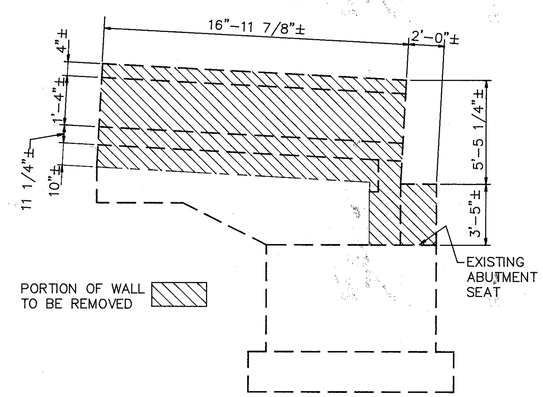

VIEW 2–2

REAR ABUTMENT WINGWALL

HAMMONTREE & ASSOCIATES, LTD. 6 / 15
ENGINEERS, PLANNERS, SURVEYORS
CANTON ORLANDO PITTSBURGH AKRON

DEMOLITION & CONCRETE REPAIR DETAILS 1

BRIDGE NO. MAH.–680–0488
GLENWOOD AVE. OVER I.R. 680

DESIGNED	DRAWN	CHECKED	REVIEWED	DATE	REVISED
KJO	EAB	CJP	KAB	2/26/93	

CALC. BY	MAH–680–4.88	OHIO	28 / 36
DATE		FHWA REGION 5	
CHK'D BY			
DATE			
FEDERAL PROJECT		STATE PROJECT	

INDICATES PORTIONS TO BE REMOVED IN ACCORDANCE WITH ITEM 202.

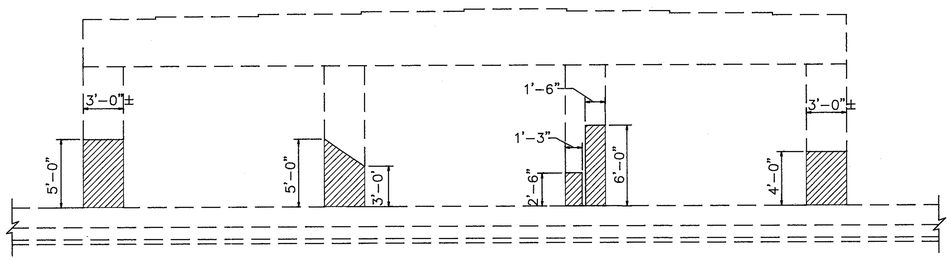

PIER 2 ELEVATION LOOKING REAR

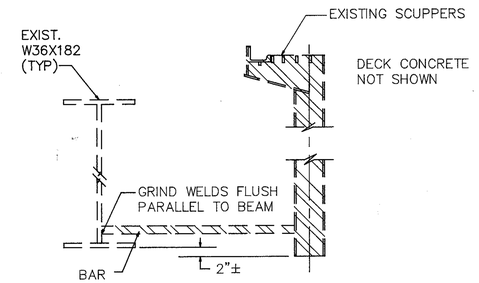

SCUPPER REMOVAL DETAIL
(12 LOCATIONS)

INDICATES AREAS TO BE PATCHED IN ACCORDANCE WITH ITEM 519. (NO PATCHING REQUIRED ON PIER 1)

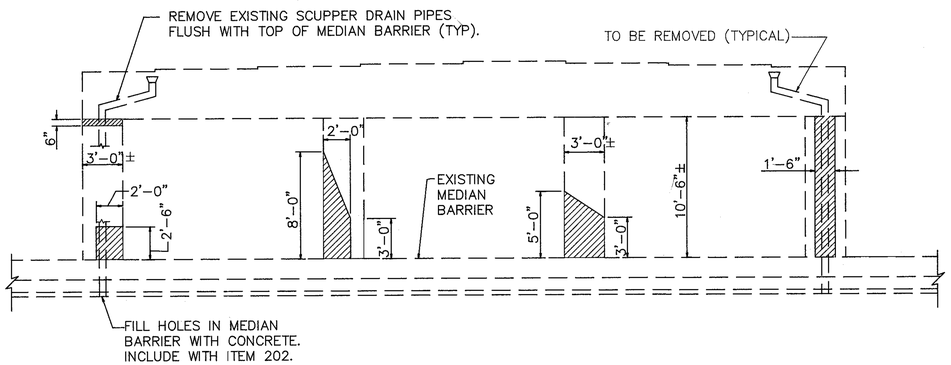

PIER 2 ELEVATION LOOKING FORWARD

DEMOLITION NOTES

CUT LINE CONSTRUCTION JOINT PREPARATION: SAW CUT BOUNDARIES OF PROPOSED CONCRETE REMOVALS 1" DEEP. REMOVE CONCRETE TO A ROUGH SURFACE. WHERE PRACTICABLE, AT LEAST 2'–0" LENGTH OF PROTRUDING REINFORCING STEEL SHALL BE LEFT IN PLACE. INSTALL DOWEL BARS AS SPECIFIED. PRIOR TO CONCRETE PLACEMENT, ABRASIVELY CLEAN JOINT SURFACE AND EXPOSED REINFORCEMENT TO REMOVE LOOSE AND DISINTEGRATED CONCRETE AND LOOSE RUST. THEN, THE JOINT SURFACE AND EXPOSED REINFORCEMENT SHALL BE THOROUGHLY CLEANED OF ALL DIRT, DUST OR OTHER FOREIGN MATERIAL BY THE USE OF WATER, AIR UNDER PRESSURE, OR OTHER METHODS THAT PRODUCE SATISFACTORY RESULTS. CONCRETE BONDING SURFACES SHALL BE WET WITHOUT FREE WATER AS CONCRETE IS PLACED.

SUBSTRUCTURE CONCRETE REMOVAL: SHALL BE BY MEANS OF APPROVED PNEUMATIC HAMMERS EMPLOYING POINTED AND BLUNT CHISEL TOOLS. HYDRAULIC HOERAM TYPE HAMMERS WILL NOT BE PERMITTED. THE WEIGHT OF THE HAMMER SHALL NOT BE MORE THAN 35 POUNDS FOR REMOVAL WITHIN 18–INCHES OF PORTIONS TO BE PRESERVED. OUTSIDE THE 18–INCH LIMIT, A HAMMER HEAVIER THAN 35 POUNDS, BUT NOT TO EXCEED 85 POUNDS, MAY BE USED AT THE APPROVAL OF THE ENGINEER. PNEUMATIC HAMMERS SHALL NOT BE PLACED IN DIRECT CONTACT WITH REINFORCING STEEL THAT IS TO BE RETAINED IN THE REBUILT STRUCTURE.

EXISTING REINFORCING STEEL: PARTIALLY EXPOSED BY CONCRETE REMOVAL SHOULD BE LEFT IN PLACE, EXCEPT THAT IT SHALL BE BENT AS NECESSARY TO CLEAR PROPOSED CONCRETE SURFACES BY AT LEAST 2–INCHES.

THE CONTRACTOR SHALL HAVE THE OPTION OF COMPLETELY REMOVING THE EXISTING REINFORCING STEEL WITHIN THE PORTIONS OF THE STRUCTURE TO BE REMOVED AND REPLACED. IF THE REINFORCING STEEL IS REMOVED COMPLETELY, THE CONTRACTOR SHALL PROVIDE DOWEL BARS PER ITEM 510. THESE DOWELS SHALL BE THE SAME SIZE AND SPACING AS THE REINFORCING STEEL REMOVED. THE COST ASSOCIATED WITH FURNISHING AND INSTALLING THESE DOWELS SHALL BE INCLUDED IN ITEM 202 FOR PAYMENT. EMBEDMENT LENGTH FOR DOWEL BARS SHALL BE 18" FOR #6 BARS, 15" FOR #5 BARS, AND 12" FOR #4 BARS.

SEALING OF CONCRETE SURFACE: THE ENTIRE PIER CAP AND COLUMNS FOR BOTH PIER 1 AND PIER 2 SHALL BE SEALED WITH A NON–EPOXY SEALER.

EXISTING DRAIN PIPE REMOVAL: REMOVE EXISTING SCUPPER DRAIN PIPES AND PIPE SUPPORT ANCHORS A MIN. OF 1" BELOW THE SURFACE OF THE CONCRETE. PATCHING OF SURFACES MUST BE PROVIDED WHERE PIPE SUPPORT ANCHORS WERE REMOVED AND IN HOLES IN MEDIAN. INCLUDE REMOVAL AND PATCHING WITH ITEM 202, STRUCTURE REMOVED, FOR PAYMENT.

HAMMONTREE & ASSOCIATES, LTD. 7 / 15
ENGINEERS, PLANNERS, SURVEYORS
CANTON ORLANDO PITTSBURGH AKRON

DEMOLITION & CONCRETE REPAIR DETAILS 2
BRIDGE NO. MAH–680–0488
GLENWOOD AVE. OVER I.R. 680

DESIGNED	DRAWN	CHECKED	REVIEWED DATE	REVISED
KJO	EAB	CJP	KAB 2/26/93	

CALC. BY	MAH–680–4.88	OHIO	29/36
DATE		FHWA REGION 5	
CHK'D BY			
DATE			
FEDERAL PROJECT	STATE PROJECT		

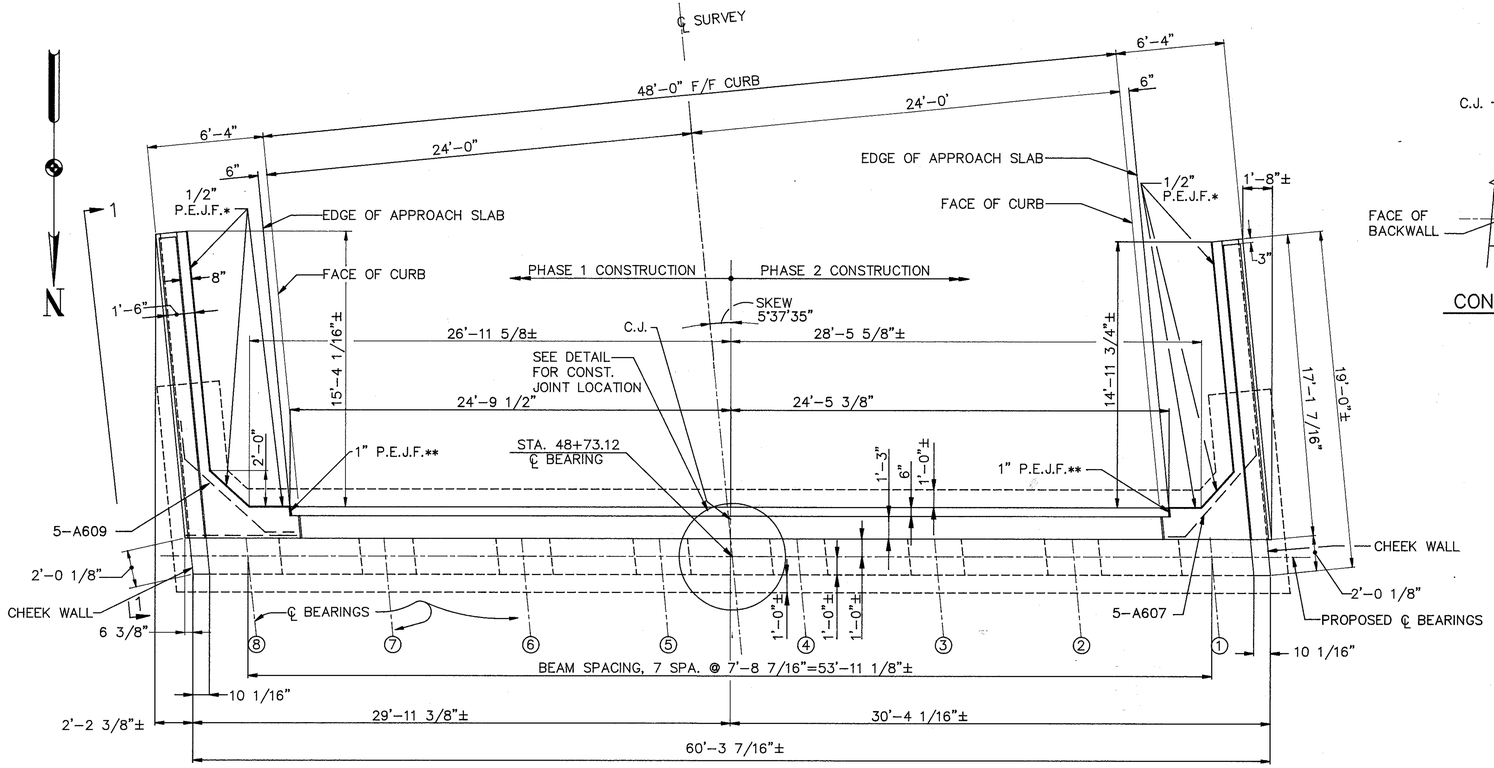

PLAN

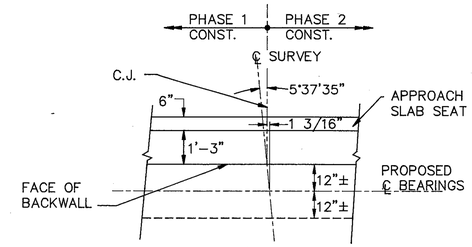

CONSTRUCTION JOINT DETAIL

NOTES:

1. POROUS BACKFILL, 2'–0" THICK, SHALL EXTEND UP TO THE PLANE OF THE SUBGRADE, AND LATERALLY TO THE ENDS OF THE WINGWALLS. (SEE NOTE ON SHEET 9/15)
2. GEOTEXTILE FABRIC, TYPE A, SHALL CONFORM TO 712.09 AND SHALL BE INCLUDED WITH POROUS BACKFILL FOR PAYMENT. THE FILTER SHALL TURN UNDER THE BOTTOM OF THE POROUS BACKFILL AND RETURN UP 6" AGAINST THE BACKFACE OF THE ABUTMENT.
3. VERTICAL AND HORIZONTAL REINFORCING PARALLEL TO A CONSTRUCTION JOINT SHOULD CLEAR THE JOINT BY 2" MINIMUM.
4. DIMENSIONS DENOTED WITH ± ARE BASED ON EXISTING PLAN DIMENSIONS. MINOR DEVIATIONS MAY BE NECESSARY SO THAT NEW BACKWALL AND WINGWALLS CONFORM TO EXISTING ABUTMENTS.
5. COMPRESSION SEALS FOR EACH JOINT SHALL BE INSTALLED IN ONE CONTINUOUS PIECE.
6. BACKWALL CONCRETE: IN ADDITION TO THE PROVISIONS OF 511.08, BACKWALL CONCRETE ABOVE THE OPPTIONAL CONSTRUCTION JOINT AT THE APPROACH SEAT SHALL NOT BE PLACED UNTIL AFTER THE DECK CONCRETE IN THE SPAN ADJACENT TO THE ABUTMENT HAS BEEN PLACED.
7. FOR EXPANSIONS JOINT DETAIL SEE SHEET 13/15
8. FOR VIEW 1–1 & SECTION A–A SEE SHEET 9/15
9. FOR CONCRETE PATCHING DETAILS SEE SHEET 6/15

LEGEND

P.E.J.F.–PREFORMED EXPANSION JOINT FILLER

C.J.–CONSTRUCTION JOINT

② –EXISTING BEAM NUMBER

* INCLUDED WITH ROADWAY QUANTITIES FOR PAYMENT

** INCLUDED WITH APPROACH SLAB FOR PAYMENT

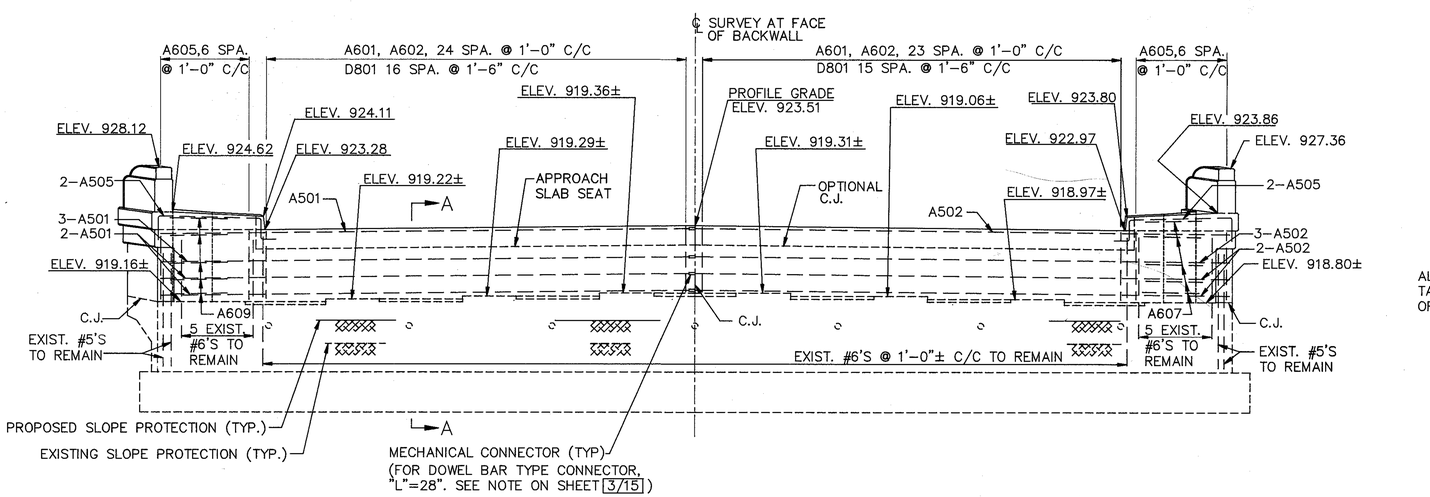

ELEVATION

ALL ELEVATIONS TAKEN AT FACE OF BACKWALL

THE CONTRACTOR SHALL LOCATE THE EXISTING REINFORCING IN THE VICINITY OF THE NEW ANCHOR BOLTS PRIOR TO DRILLING. NON–DESTRUCTIVE METHODS SHALL BE USED. ANY INTERFERENCE SHALL BE BROUGHT TO THE ATTENTION OF THE ENGINEER.

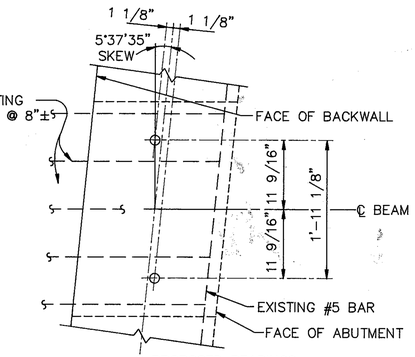

* EXISTING ANCHOR BOLTS NOT SHOWN FOR CLARITY

ANCHOR BOLT LAYOUT DETAIL

HAMMONTREE & ASSOCIATES, LTD. 8/15
ENGINEERS, PLANNERS, SURVEYORS
CANTON ORLANDO PITTSBURGH AKRON

REAR ABUTMENT
PLAN & ELEVATION

BRIDGE NO. MAH.–680–0488
GLENWOOD AVE. OVER I.R. 680

DESIGNED	DRAWN	CHECKED	REVIEWED DATE	REVISED
KJO	EAB	CJP	KAB 2/26/93	

CALC. BY	MAH-680-4.88	OHIO	30/36
DATE		FHWA REGION 5	
CHK'D BY			
DATE			
FEDERAL PROJECT		STATE PROJECT	

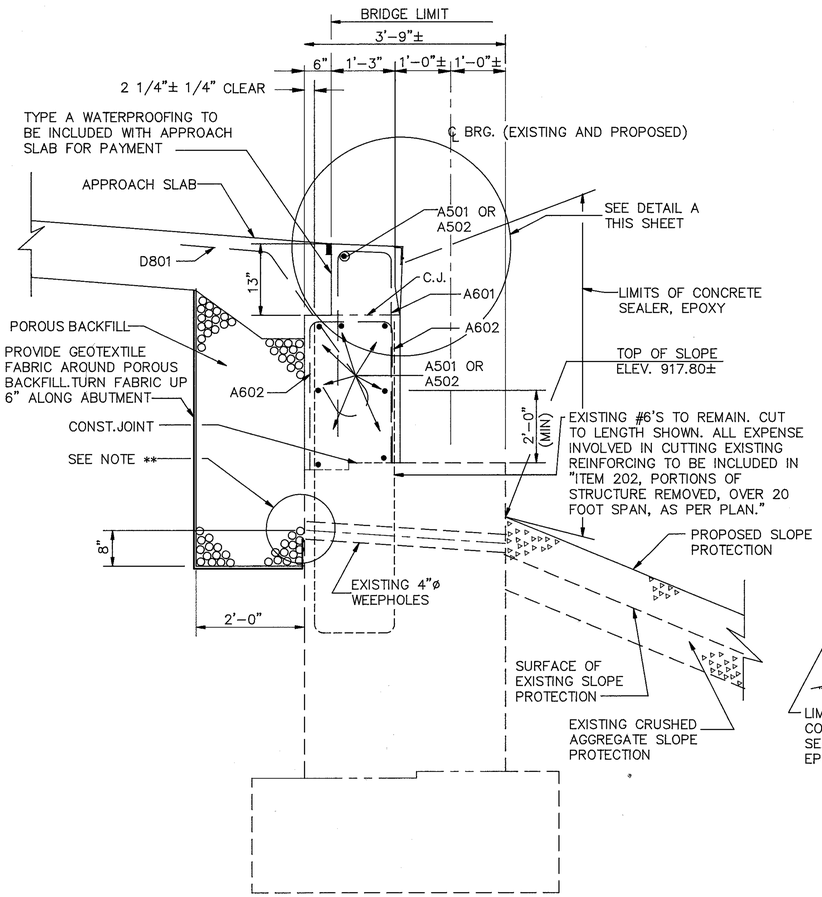

** THE CONTRACTOR SHALL EXCAVATE EXISTING POROUS BACKFILL TO A MINIMUM OF 6" BELOW THE WEEPHOLES, CLEAN OUT WEEPHOLES, AND BACKFILL WITH NEW POROUS BACKFILL. ALL LABOR, EQUIPMENT, MATERIALS, AND INCIDENTALS NECESSARY TO COMPLETE THE WORK SHALL BE INCLUDED IN "ITEM 518, POROUS BACKFILL, AS PER PLAN."

SECTION A–A

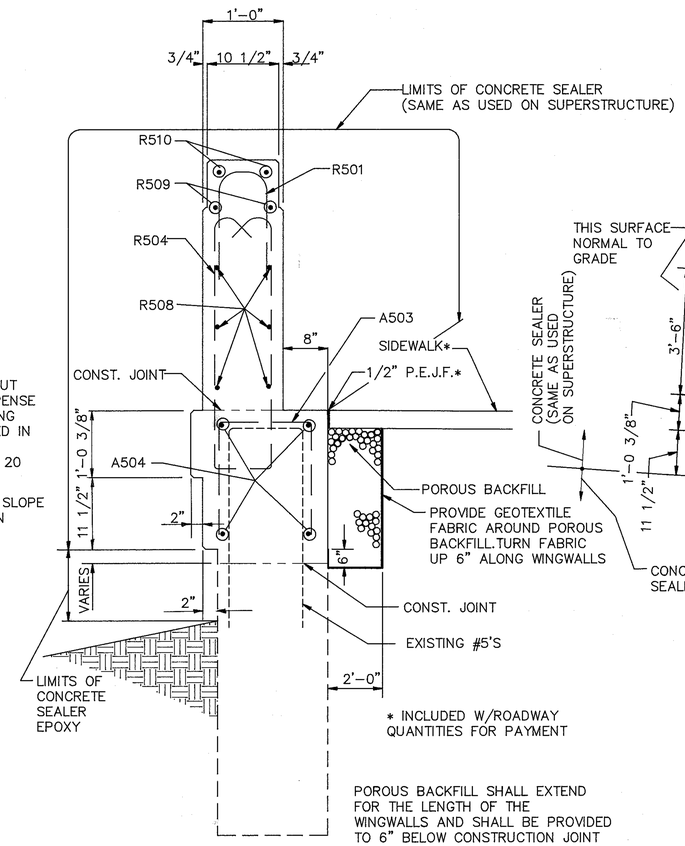

* INCLUDED W/ROADWAY QUANTITIES FOR PAYMENT

POROUS BACKFILL SHALL EXTEND FOR THE LENGTH OF THE WINGWALLS AND SHALL BE PROVIDED TO 6" BELOW CONSTRUCTION JOINT

SECTION B–B

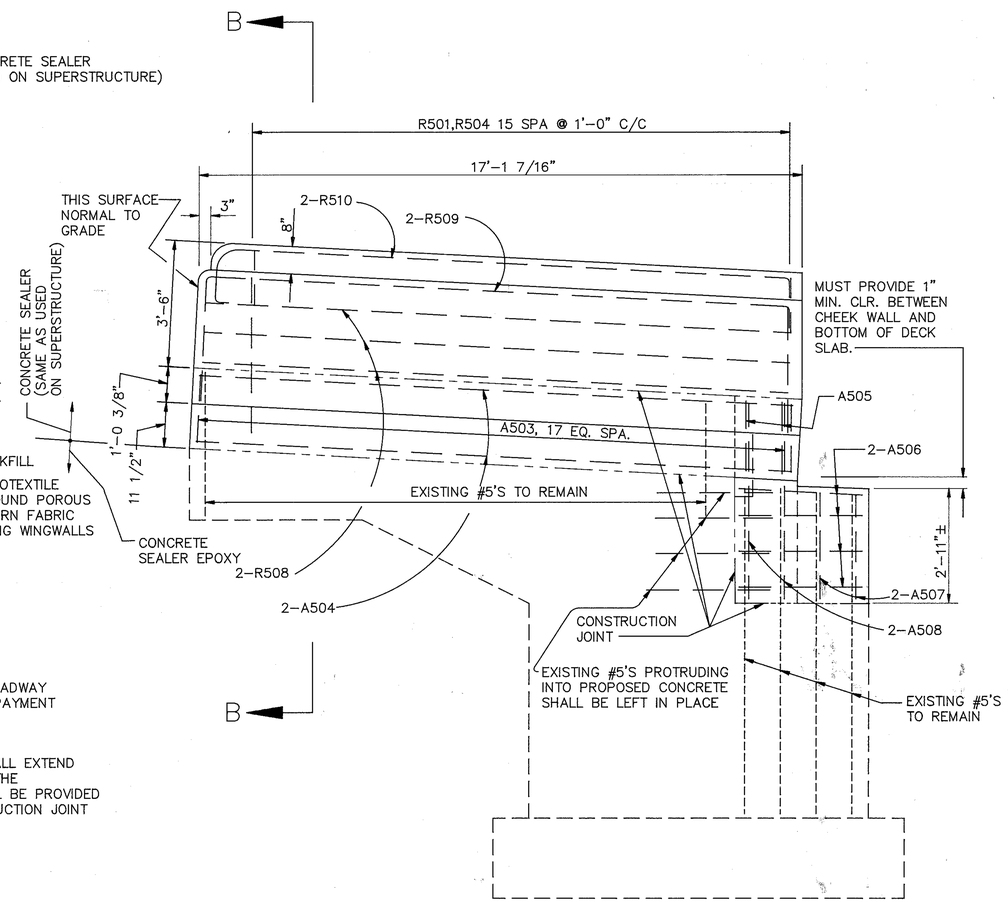

VIEW 1–1

(OPPOSITE WINGWALL SIMILAR)

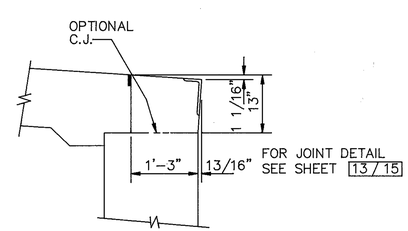

DETAIL 'A'

HAMMONTREE & ASSOCIATES, LTD. 9/15
ENGINEERS, PLANNERS, SURVEYORS
CANTON ORLANDO PITTSBURGH AKRON

REAR ABUTMENT DETAILS

BRIDGE NO. MAH.–680–0488
GLENWOOD AVE. OVER I.R. 680

DESIGNED	DRAWN	CHECKED	REVIEWED	DATE	REVISED
KJO	EAB	CJP	KAB	2/26/93	

CALC. BY	MAH-680-4.88	OHIO	31/36
DATE		FHWA REGION 5	
CHK'D BY			
DATE			
FEDERAL PROJECT		STATE PROJECT	

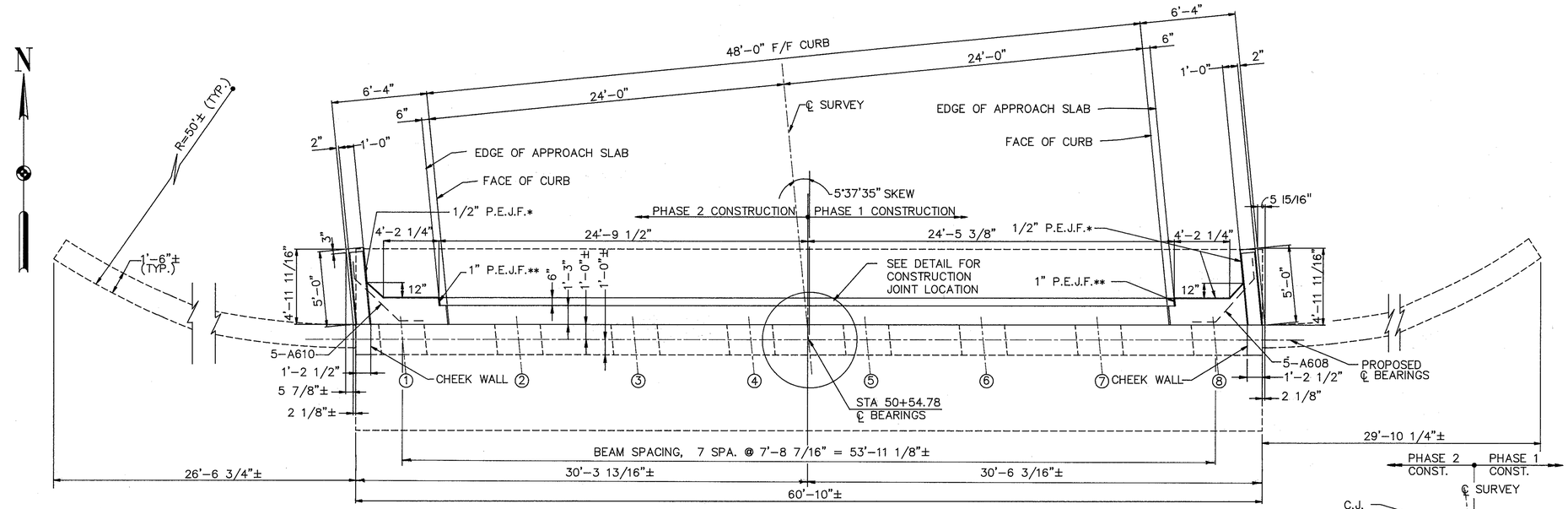

PLAN

NOTES:

1. FOR ADDITIONAL NOTES SEE SHEET 8/15
2. FOR VIEW 1-1 AND SECTION A-A SEE SHEET 11/15
3. FOR CONCRETE PATCHING DETAILS SEE SHEET 6/15

LEGEND

P.E.J.F.-PREFORMED EXPANSION JOINT FILLER

C.J.-CONSTRUCTION JOINT

② -EXISTING BEAM NUMBER

* INCLUDED WITH ROADWAY QUANTITIES FOR PAYMENT

** INCLUDED WITH APPROACH SLAB FOR PAYMENT

SEALING OF CONCRETE SURFACES :

THE EXPOSED PORTIONS OF THE RETAINING WALLS SHALL BE SEALED WITH AN EPOXY SEALER. SEE SHEET 11/15 FOR SEALING DETAILS ON ABUTMENT.

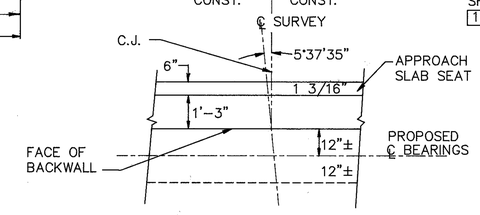

CONSTRUCTION JOINT DETAIL

THE CONTRACTOR SHALL LOCATE THE EXISTING REINFORCING IN THE VICINITY OF THE NEW ANCHOR BOLTS PRIOR TO DRILLING. NON-DESTRUCTIVE METHODS SHALL BE USED. ANY INTERFERENCE SHALL BE BROUGHT TO THE ATTENTION OF THE ENGINEER.

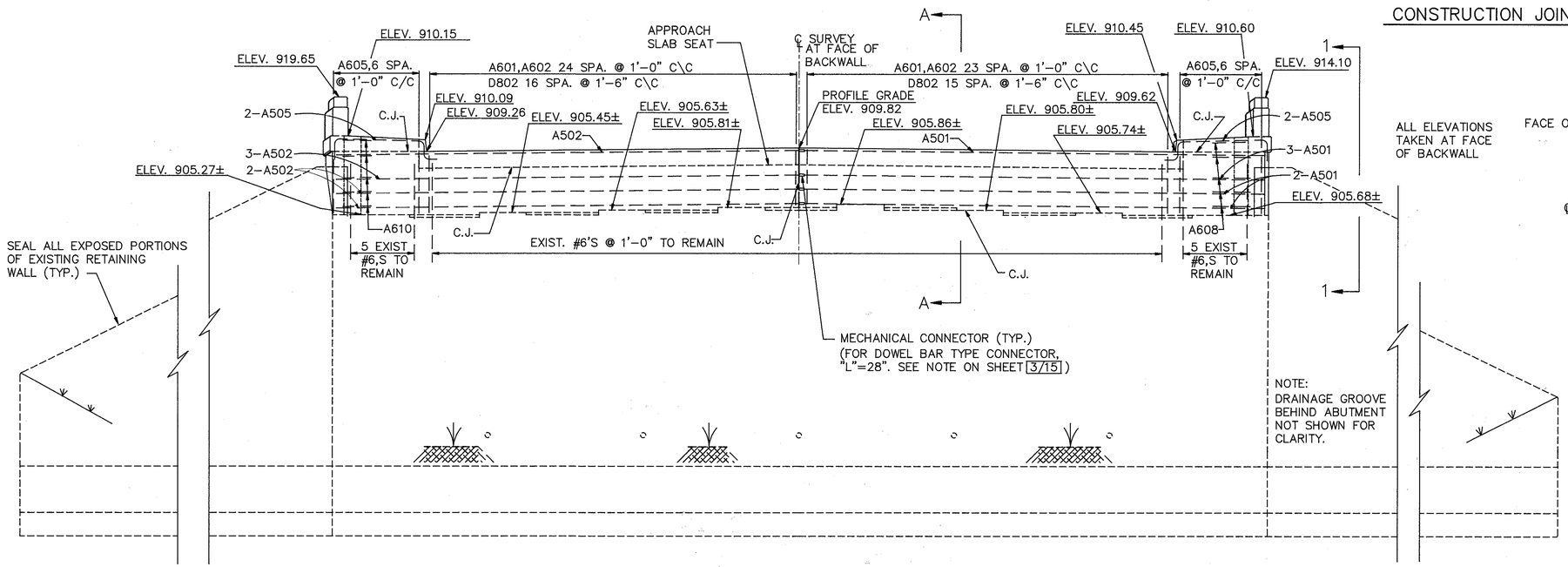

ELEVATION

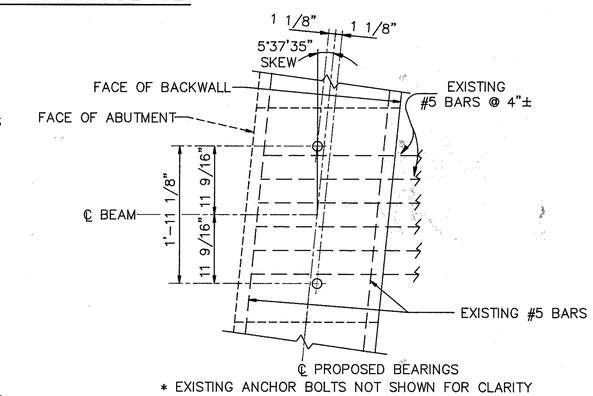

* EXISTING ANCHOR BOLTS NOT SHOWN FOR CLARITY

ANCHOR BOLT LAYOUT DETAIL

HAMMONTREE & ASSOCIATES, LTD. 10/15
ENGINEERS, PLANNERS, SURVEYORS
CANTON ORLANDO PITTSBURGH AKRON

FORWARD ABUTMENT
PLAN & ELEVATION

BRIDGE NO. MAH.-680-0488
GLENWOOD AVE. OVER I.R. 680

DESIGNED	DRAWN	CHECKED	REVIEWED DATE	REVISED
KJO	EAB	CJP	KAB 2/26/93	

CALC. BY	MAH-680-4.88	OHIO	32/36
DATE		FHWA REGION 5	
CHK'D BY			
DATE			
FEDERAL PROJECT		STATE PROJECT	

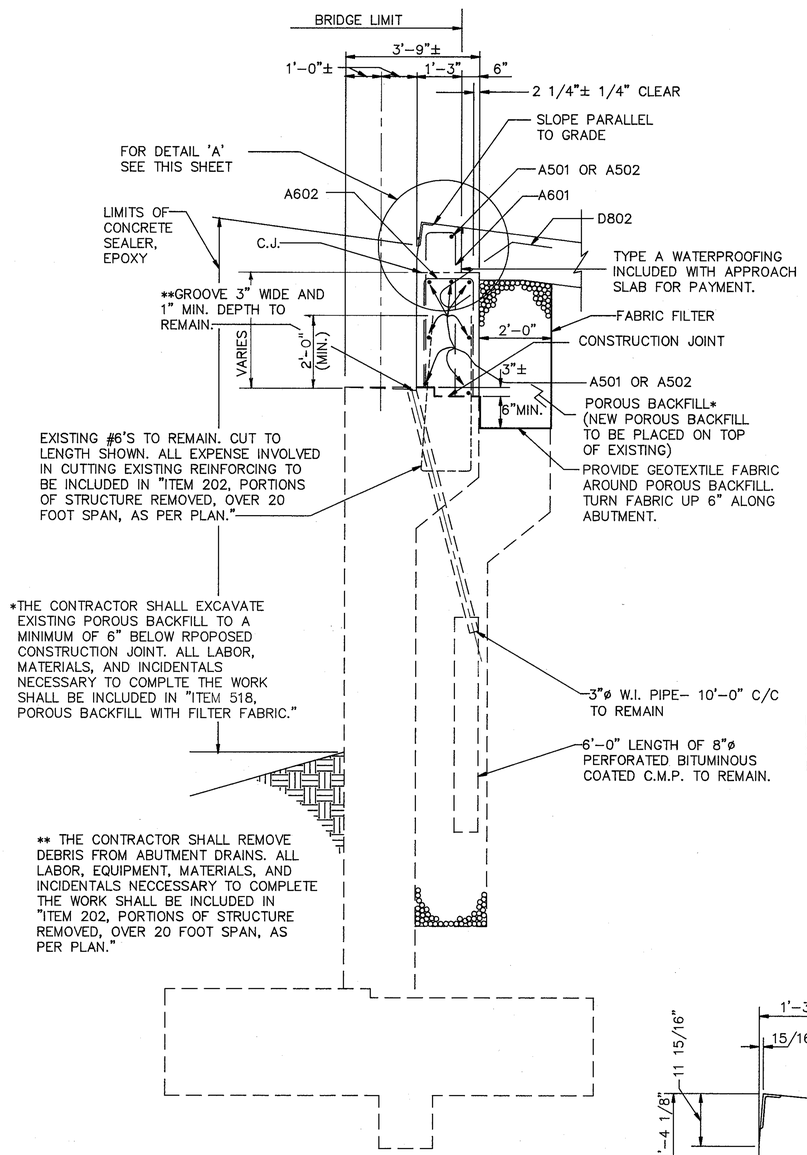

SECTION A–A

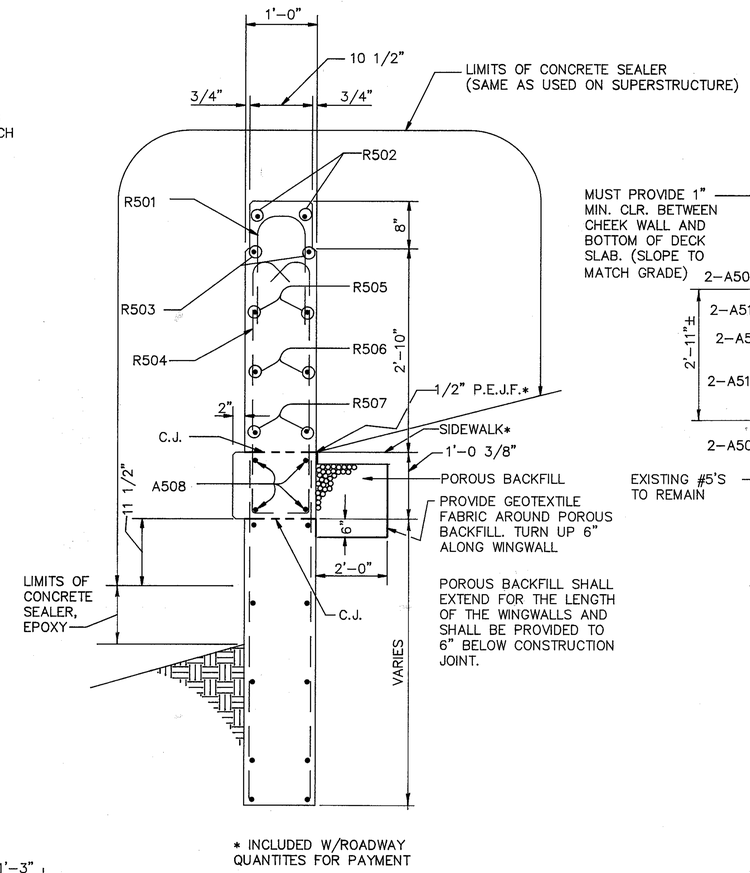

* INCLUDED W/ROADWAY QUANTITES FOR PAYMENT

SECTION B–B

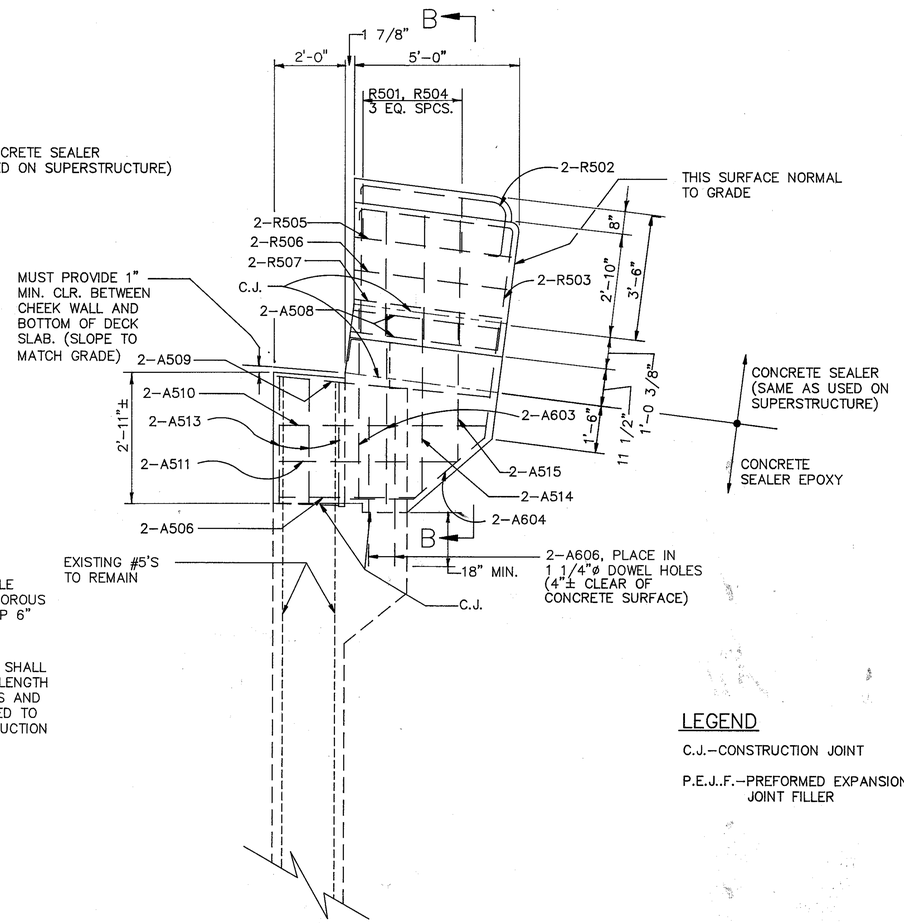

VIEW 1–1
(OPPOSITE WINGWALL SIMILAR)

LEGEND

C.J.–CONSTRUCTION JOINT

P.E.J.F.–PREFORMED EXPANSION JOINT FILLER

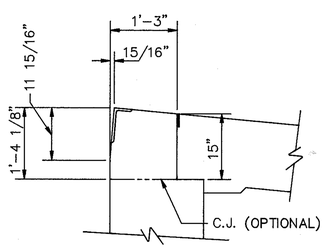

DETAIL 'A'
FOR JOINT DETAIL SEE SHEET 12/14

HAMMONTREE & ASSOCIATES, LTD. 11/15
ENGINEERS, PLANNERS, SURVEYORS
CANTON ORLANDO PITTSBURGH AKRON

FORWARD ABUTMENT DETAILS

BRIDGE NO. MAH.–680–0488
GLENWOOD AVE. OVER I.R. 680

DESIGNED	DRAWN	CHECKED	REVIEWED	DATE	REVISED
KJO	EAB	CJP	KAB	2/26/93	

CALC. BY	MAH–680–4.88	OHIO	33 / 36
DATE		FHWA REGION 5	
CHK'D BY			
DATE			
FEDERAL PROJECT		STATE PROJECT	

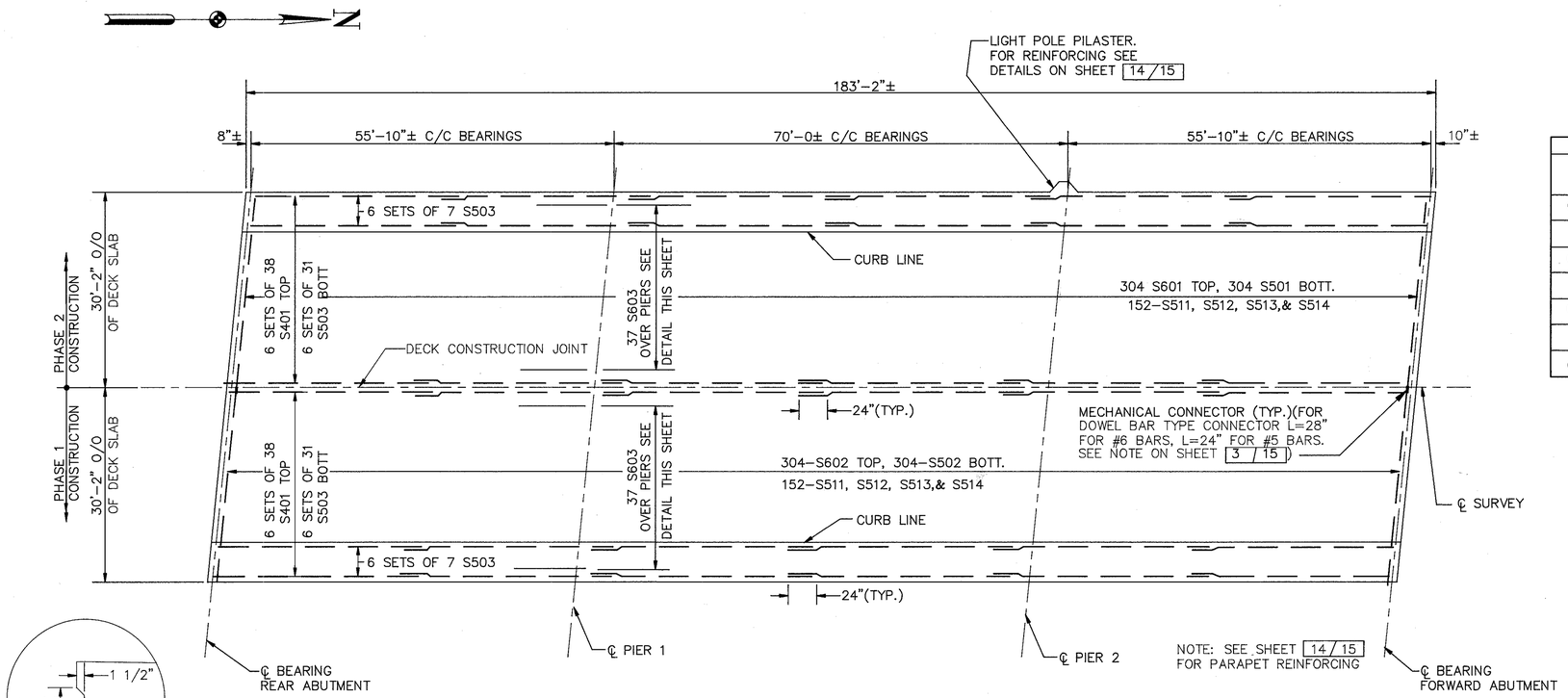

SLAB PLAN

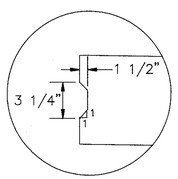

DETAIL "A"
CONSTRUCTION JOINT

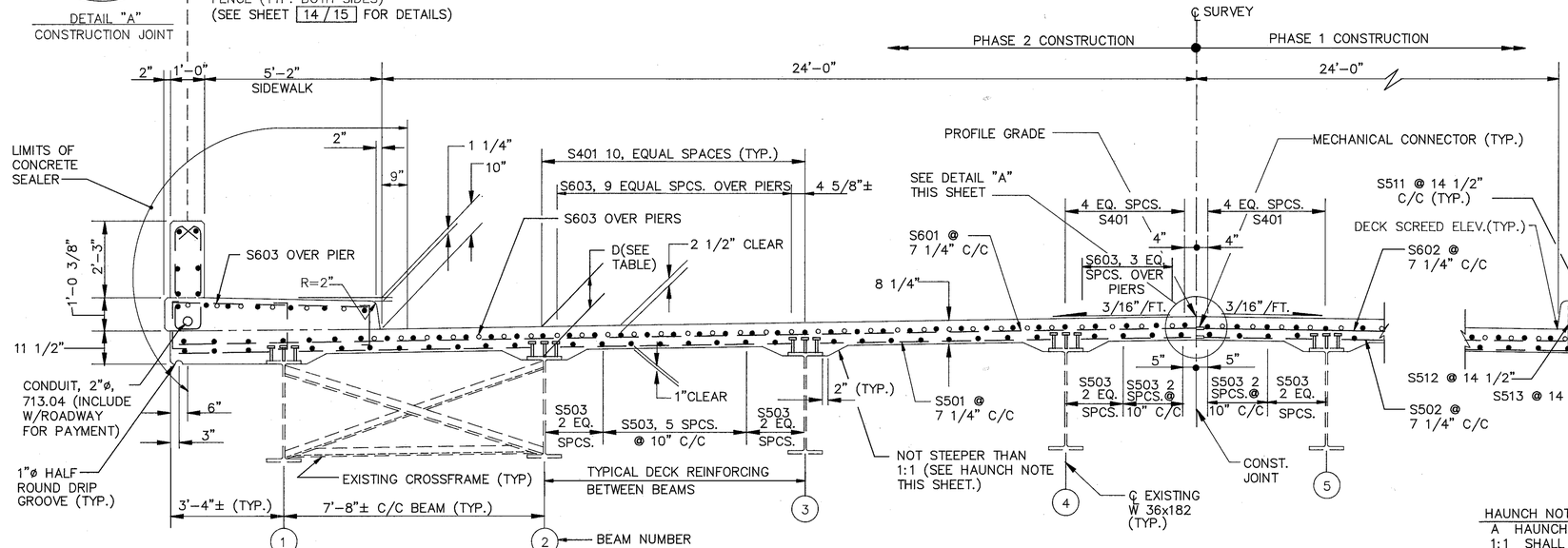

TRANSVERSE SECTION

(LOOKING FORWARD)

REINFORCING AND DIMENSIONS SYMMETRICAL ABOUT ℄ SURVEY

HAUNCH NOTE:
A HAUNCH WIDTH BASED ON A SLOPE OF 1:1 SHALL BE USED FOR COMPUTING THE QUANTITY OF CONCRETE. THE SLOPE OF THE HAUNCH MAY BE LESS AT THE CONTRACTOR'S OPTION.

DECK SLAB DEPTHS, "D" (INCHES)									
LOCATION	BEAM NUMBER								
	1	2	3	4	5	6	7	8
℄ BRG. REAR ABUT.	11 5/8	11 1/2	11 1/2	11 3/8	11 1/2	11 5/8	11 1/2	11 1/2
MID PT. SPAN 1	11 1/8	10 1/8	11 1/4	11 1/4	11 3/8	11 3/8	11 1/4	11
℄ BRG. PIER 1	10 3/4	10 7/8	11 1/8	11 1/8	11 1/4	11 1/8	11 1/8	10 5/8
MID PT. SPAN 2	10 5/8	10 5/8	10 5/8	10 3/4	10 7/8	10 5/8	11 1/4	10 3/8
℄ BRG. PIER 2	10 5/8	10 3/8	10 1/4	10 3/8	10 1/2	10 1/4	11 3/8	10 1/4
MID PT. SPAN 3	10 1/2	10 1/2	10 3/8	10 1/2	10 1/2	10 3/8	10 7/8	10 3/8
℄ BRG. FWD ABUT.	10 1/2	10 5/8	10 1/2	10 5/8	10 5/8	10 1/2	10 1/2	10 1/2

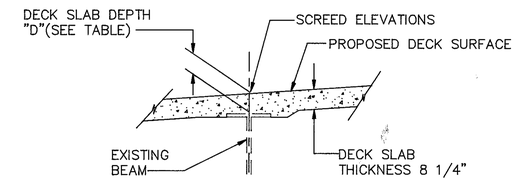

DECK SLAB DEPTH OVER BEAM

DECK SLAB DEPTH: THE ANTICIPATED DECK SLAB DEPTHS, D, OVER THE BEAMS ARE GIVEN IN THE TABLE OF DECK SLAB DEPTHS. THE ACTUAL SLAB DEPTHS MAY BE MORE. THEY SHOULD NOT BE LESS THAN THE DECK SLAB THICKNESS, 8 1/4".

AFTER COMPLETE REMOVAL OF THE EXISTING DECK SLAB, THE CONTRACTOR SHALL DETERMINE, AT VARIOUS LOCATIONS ALONG THE SPANS, ACTUAL TOP OF BEAM ELEVATIONS. THESE SHOULD BE DEDUCTED FROM THE SCREED ELEVATIONS FOR THE SAME LOCATIONS (OR PROPOSED SCREED ELEVATIONS DETERMINED FROM ADJACENT SCREED ELEVATIONS) TO OBTAIN ACTUAL SLAB DEPTHS. FOR DEPTHS LESS THAN 8 1/4", THE DIRECTOR SHALL BE NOTIFIED TO ESTABLISH THE SUITABILITY OF THE PROPOSED WORK PRIOR TO DECK FORMING AND CONCRETE PLACEMENT.

THE QUANTITY OF DECK CONCRETE TO BE PAID FOR SHALL BE BASED ON THE AVERAGE DECK SLAB DEPTH 10 7/8± INCHES.

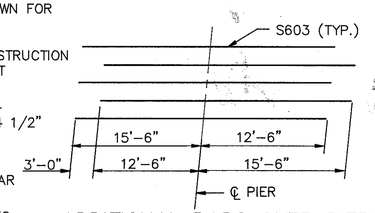

ADDITIONAL BARS OVER PIERS

HAMMONTREE & ASSOCIATES, LTD. 12/15
ENGINEERS, PLANNERS, SURVEYORS
CANTON ORLANDO PITTSBURGH AKRON

SUPERSTRUCTURE DETAILS SLAB PLAN AND SECTION

BRIDGE NO. MAH–680–0488
GLENWOOD AVE. OVER IR 680

DESIGNED	DRAWN	CHECKED	REVIEWED	DATE	REVISED
KJO	EAB	CJP	KAB	2/26/93	

CALC. BY	MAH-680-4.88	OHIO	34/36
DATE		FHWA REGION 5	
CHK'D BY			
DATE			
FEDERAL PROJECT		STATE PROJECT	

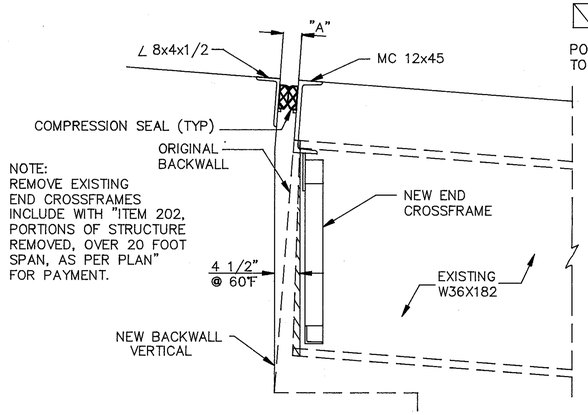

PORTION OF BEAM TO BE REMOVED

FOR ADDITIONAL EXPANSION JOINT DETAILS SEE STD. DRAWING EXJ-2-81.

SECTION AT REAR ABUTMENT

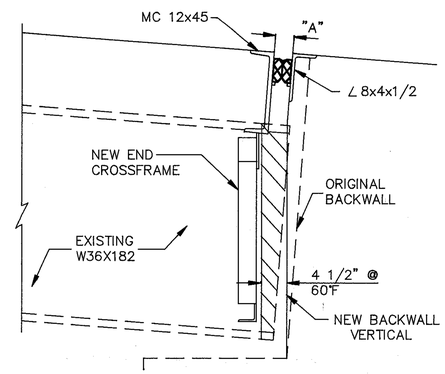

SECTION AT FORWARD ABUTMENT

BEAM END DETAILS

DIMENSION "A"		
TEMP.(°F)	REAR	FORWARD
30	3 1/4"	3 1/8"
40	3 1/4"	3 1/8"
50	3 1/8"	3"
60	3"	3"
70	2 7/8"	3"
80	2 3/4"	2 7/8"
90	2 3/4"	2 7/8"

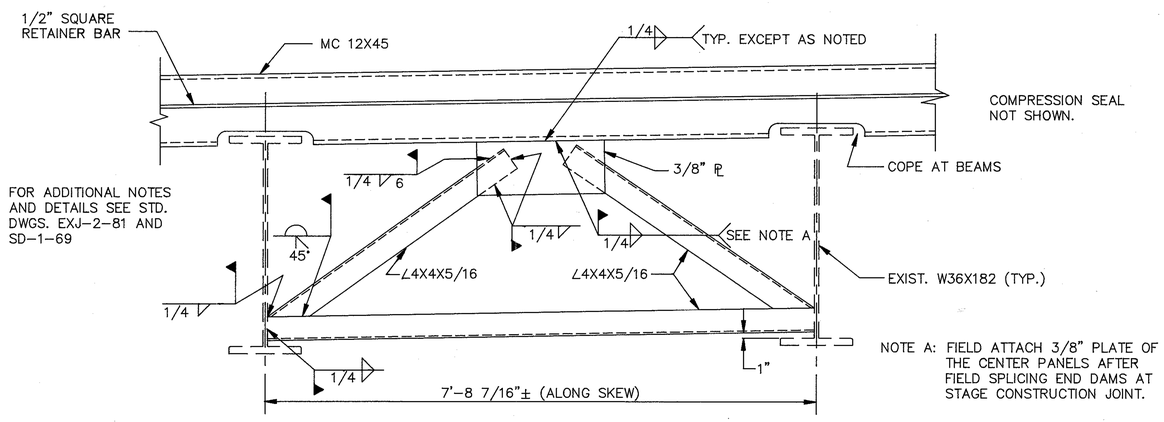

NOTE A: FIELD ATTACH 3/8" PLATE OF THE CENTER PANELS AFTER FIELD SPLICING END DAMS AT STAGE CONSTRUCTION JOINT.

END CROSSFRAME

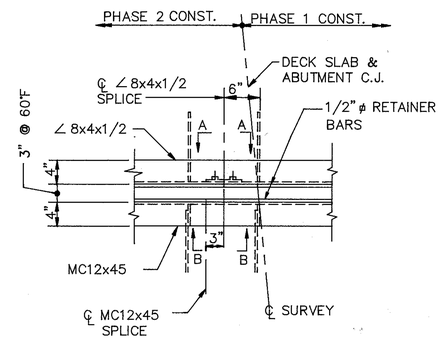

SPLICE PLAN

FORWARD ABUTMENT SHOWN, REAR ABUTMENT SIMILAR.

FOR ADDITIONAL EXPANSION JOINT DETAILS SEE STD. DWG. EXJ-2-81.

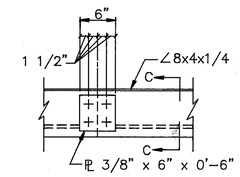

VIEW A-A

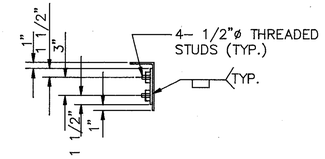

SECTION C-C

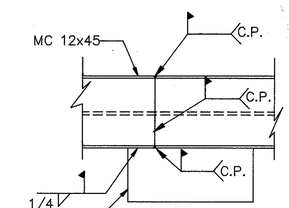

3/8" PL FIELD ATTACH AFTER COMPLETING MC 12x45 SPLICE.

VIEW B-B

JOINT ARMOR FIELD SPLICE

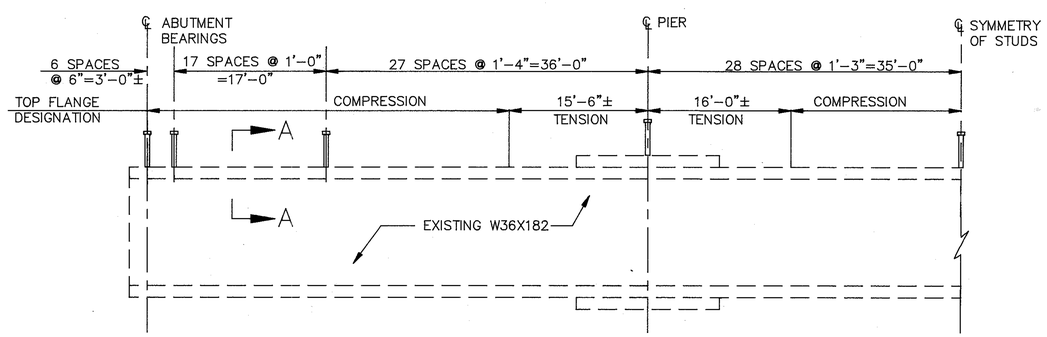

SHEAR CONNECTOR SPACING

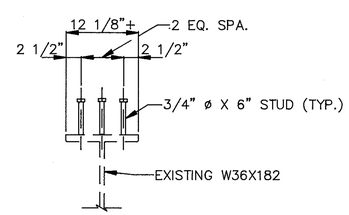

SECTION A-A

SHEAR CONNECTOR DETAILS

WELDED ATTACHMENT OF SUPPORTS FOR CONCRETE DECK FINISHING MACHINE MAY BE MADE TO AREAS OF THE FASCIA STRINGER FLANGES DESIGNATED "COMPRESSION". ATTACHMENTS SHALL NOT BE MADE TO AREAS DESIGNATED "TENSION". FILLET WELDS TO COMPRESSION FLANGES SHALL NOT BE CLOSER THAN 1" FROM EDGE OF FLANGE, BE NOT MORE THAN 2" LONG, AND BE NOT SMALLER THAN THE MINIMUM SIZE REQUIRED BY AASHTO.

HAMMONTREE & ASSOCIATES, LTD. 13/15
ENGINEERS, PLANNERS, SURVEYORS
CANTON ORLANDO PITTSBURGH AKRON

SUPERSTRUCTURE STEEL REPAIRS

BRIDGE NO. MAH.-680-0488
GLENWOOD AVE. OVER I.R. 680

DESIGNED	DRAWN	CHECKED	REVIEWED	DATE	REVISED
KJO	EAB	CJP	KAB	2/26/93	

CALC. BY	MAH-680-4.88	OHIO	35 / 36
DATE		FHWA REGION 5	
CHK'D BY			
DATE			
FEDERAL PROJECT		STATE PROJECT	

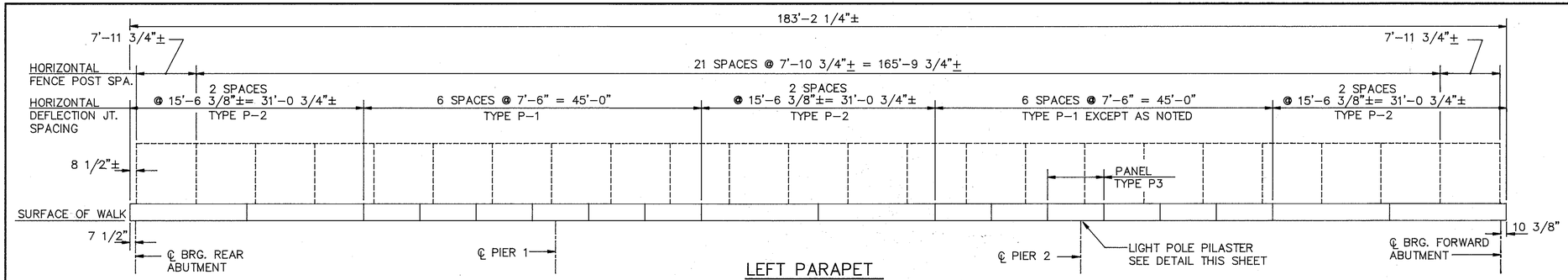

LEFT PARAPET
(INSIDE ELEVATION)

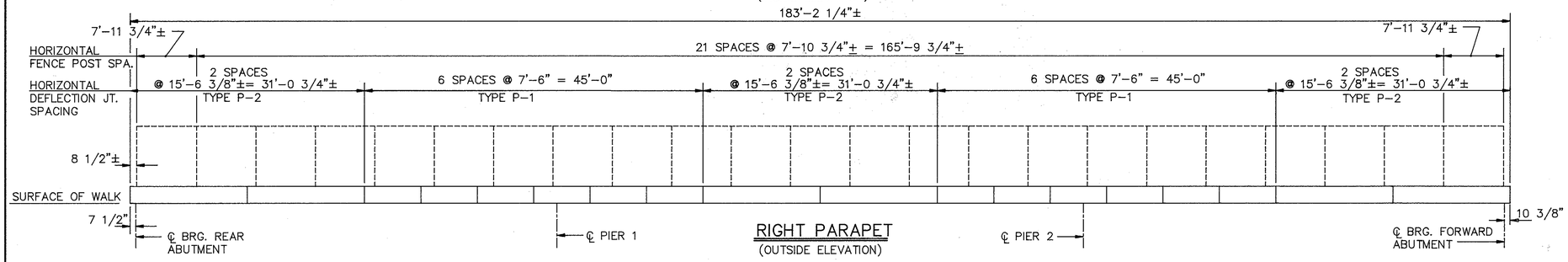

RIGHT PARAPET
(OUTSIDE ELEVATION)

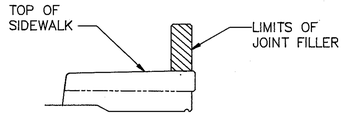

SECTION THRU DEFLECTION JOINT

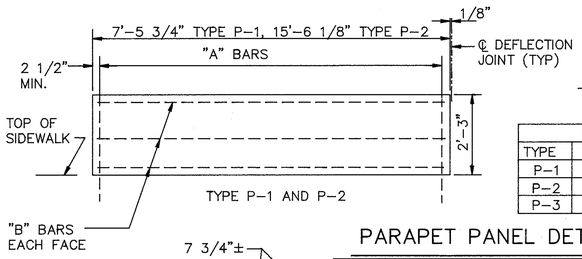

RAILING PANEL REINFORCING		
TYPE	"A" BARS	"B" BARS
P-1	8 S504 @ 1'-0'	R511
P-2	16 S504 @ 1'-0"	R512
P-3	6 S504 @ 1'-3"	R511 & R513

PARAPET PANEL DETAILS

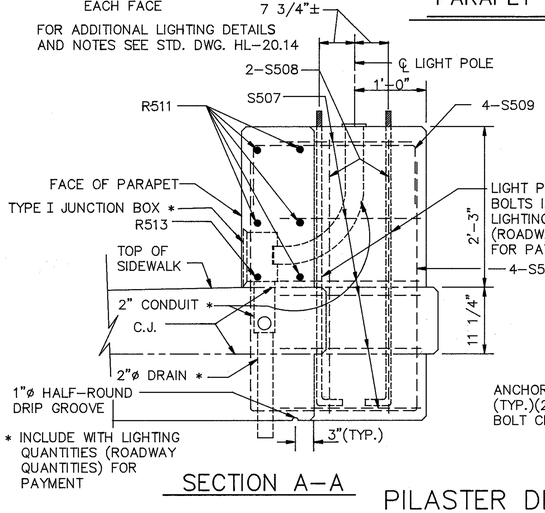

SECTION A-A

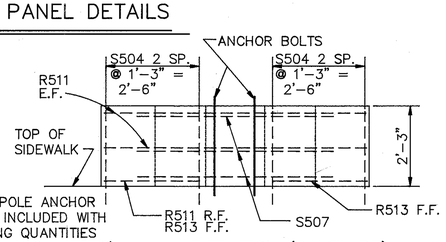

ELEVATION (PANEL P3)

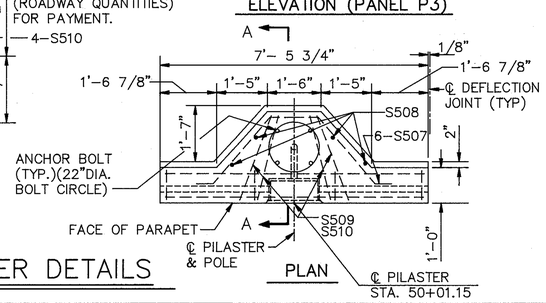

PLAN

PILASTER DETAILS

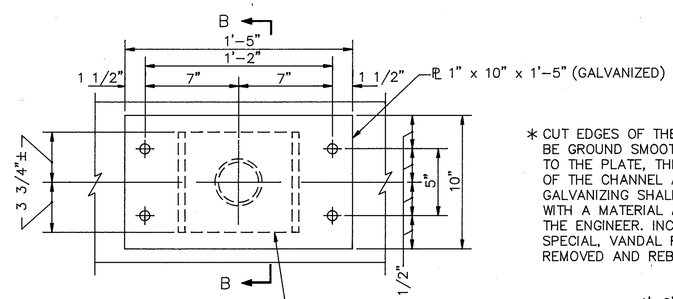

PLAN

* CUT EDGES OF THE CHANNEL SHALL BE GROUND SMOOTH. AFTER WELDING TO THE PLATE, THE EXPOSED ENDS OF THE CHANNEL AND ANY DAMAGED GALVANIZING SHALL BE REGALVANIZED WITH A MATERIAL ACCEPTABLE TO THE ENGINEER. INCLUDE WITH "ITEM SPECIAL, VANDAL PROTECTION FENCE REMOVED AND REBUILT" FOR PAYMENT.

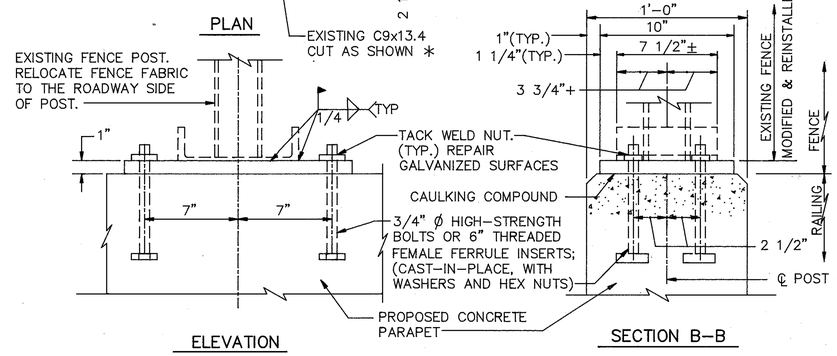

ELEVATION

SECTION B-B

FENCE POST CONNECTION DETAILS

VANDAL PROTECTION FENCE NOTES

THIS ITEM SHALL CONSIST OF FURNISHING ALL MATERIALS, LABOR, EQUIPMENT AND INCIDENTALS NECESSARY TO PROVIDE FOR FENCE RELOCATIONS AND NEW FENCE INSTALLATIONS. FENCE SHALL BE PROVIDED IN REASONABLY CLOSE CONFORMANCE WITH LINES, GRADES AND LOCATIONS SPECIFIED ON THE PLANS OR ESTABLISHED BY THE PROJECT ENGINEER. CONSTRUCTION SHALL BE ACCOMPLISHED IN A MANNER THAT PROVIDES A RIGID, TAUT FENCE WHICH CLOSELY CONFORMS TO THE SURFACES OF THE CONCRETE PARAPET. ANY EXISTING MATERIALS OR HARDWARE DAMAGED OR MADE UNUSABLE DURING REMOVAL OR STORAGE SHALL BE REPLACED IF NECESSARY AT THE CONTRACTORS EXPENSE.

BASE PLATES SHALL BE ASTM A36 STEEL GALVANIZED AS PER . 711.02.

THREE-QUARTERS (3/4)" DIA. GALVANIZED HIGH STRENGTH BOLTS, NUTS AND WASHERS SHALL CONFORM TO THE PHYSICAL PROPERTIES OF ASTM A325. ALL HARDWARE SHALL BE GALVANIZED PER 711.02 ANCHORS SHALL BE CAST IN PLACE WITH 7 INCHES OF EMBEDMENT OR INSTALLED IN LOOP-TYPE THREADED CONCRETE INSERTS (GALVANIZED). THE INSERTS SHALL BE APPROVED BY THE DIRECTOR.

FILLET WELDS SHALL CONFORM TO 513.17.

SHIM PLATES SHALL BE MADE FROM ANY MULTI-POLYMER PLASTIC WITH A MINIMUM COMPRESSIVE STRENGTH OF 5,000 P.S.I.

CAULKING COMPOUND SHALL MEET FEDERAL SPECIFICATION TT-S-00230C TYPE II, CLASS A, ALUMINUM GRAY.

CONSTRUCTION PROCEDURE:

1. CAREFULLY REMOVE EXISTING FENCE, POSTS, AND RAILS.
2. FIELD VERIFY ALL PLAN BASE PLATE LOCATIONS AND MARK PARAPET FORMS
3. PLACE 3/4-INCH H.S. THREADED ANCHOR BOLTS USING A BASE PLATE TEMPLATE.
4. PLACE PARAPET CONCRETE.
5. COAT BOTTOM OF POST BASE PLATE WITH CAULKING COMPOUND.
6. INSTALL AND SHIM (IF NECESSARY) POSTS & BASE PLATES.
7. SEAL EDGES OF BASE PLATES WITH CAULKING COMPOUND.
8. REINSTALL FENCE.

METHOD OF MEASUREMENT: FENCE SHALL BE MEASURED BY THE LINEAR FOOT, COMPLETE IN PLACE. MEASUREMENT SHALL BE ALONG THE TOP OF FENCE FROM OUTSIDE TO OUTSIDE OF END POSTS.

BASIS OF PAYMENT: THE ACCEPTED QUANTITIES OF FENCE MEASURED WILL BE PAID FOR UNDER:

ITEM	UNIT	DESCRIPTION
SPECIAL	LIN. FT.	VANDAL PROTECTION FENCE REMOVED AND REBUILT

PARAPET NOTES

1/4" PREFORMED EXPANSION JOINT FILLER, GRAY SPONGE RUBBER OR GRAY CELLULAR POLYVINYL CHLORIDE SPONGE. FILLER SHALL CONFORM TO AASHTO M-153, TYPE 1, EXCEPT DENSITY OF PVC SPONGE SHALL NOT BE LESS THAN 20 LBS. PER CU. FT. INCLUDE WITH RAILING FOR PAYMENT.

CONCRETE PARAPETS SHALL BE PLACED IN ALTERNATE SECTIONS BY THE USE OF BULKHEADS. CLOSING SECTIONS SHALL BE PLACED AFTER REMOVAL OF BULKHEADS AND AFTER PLACEMENT OF SPONGE FILLER. FILLER SHALL BE FLUSH WITH SURFACE OF CONCRETE AND EXPOSED EDGES SHALL BE FREE OF MORTAR.

HAMMONTREE & ASSOCIATES, LTD. 14/15
ENGINEERS, PLANNERS, SURVEYORS
CANTON ORLANDO PITTSBURGH AKRON

SUPERSTRUCTURE
RAILING AND FENCE DETAILS

BRIDGE NO. MAH-680-0488
GLENWOOD AVE. OVER I.R. 680

DESIGNED	DRAWN	CHECKED	REVIEWED	DATE	REVISED
KJO	EAB	CJP	KAB	2/26/93	

CALC. BY	MAH-680-4.88	OHIO	36/36
DATE		FHWA REGION 5	
CHK'D BY			
DATE			
FEDERAL PROJECT		STATE PROJECT	

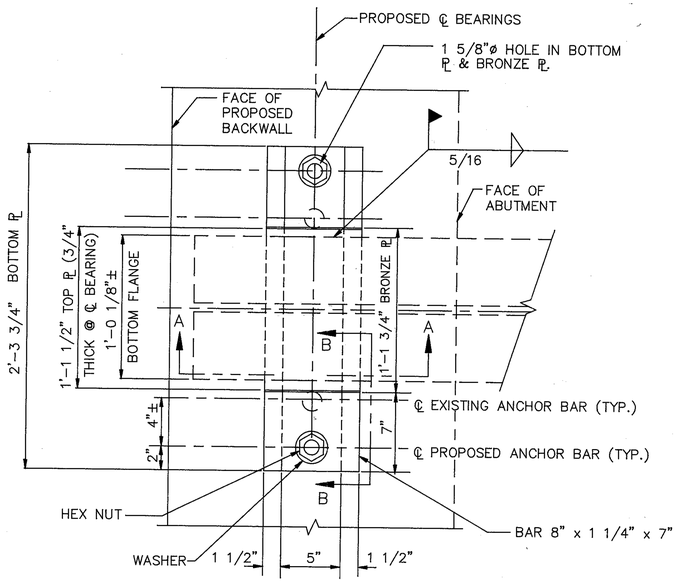

PLAN

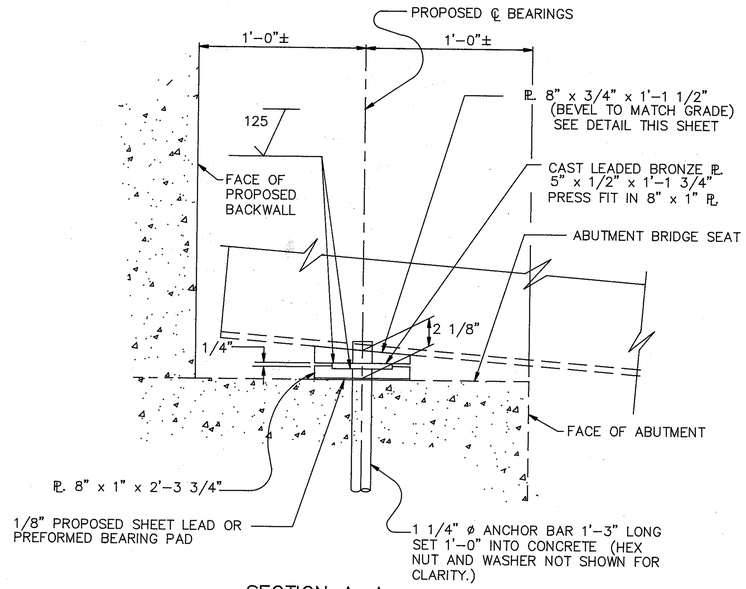

SECTION A–A

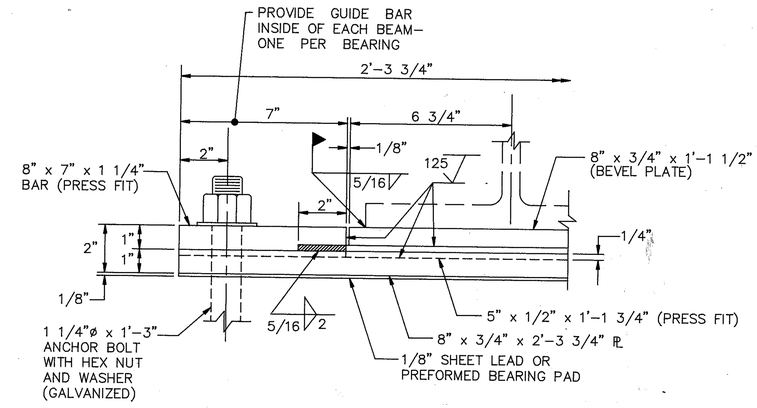

SECTION B–B

PROPOSED ABUTMENT BEARING DETAILS

(REAR ABUTMENT SHOWN, FORWARD ABUTMENT SIMILAR)

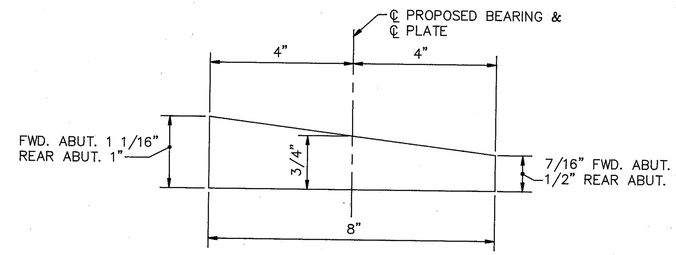

TOP PLATE BEVEL DETAIL

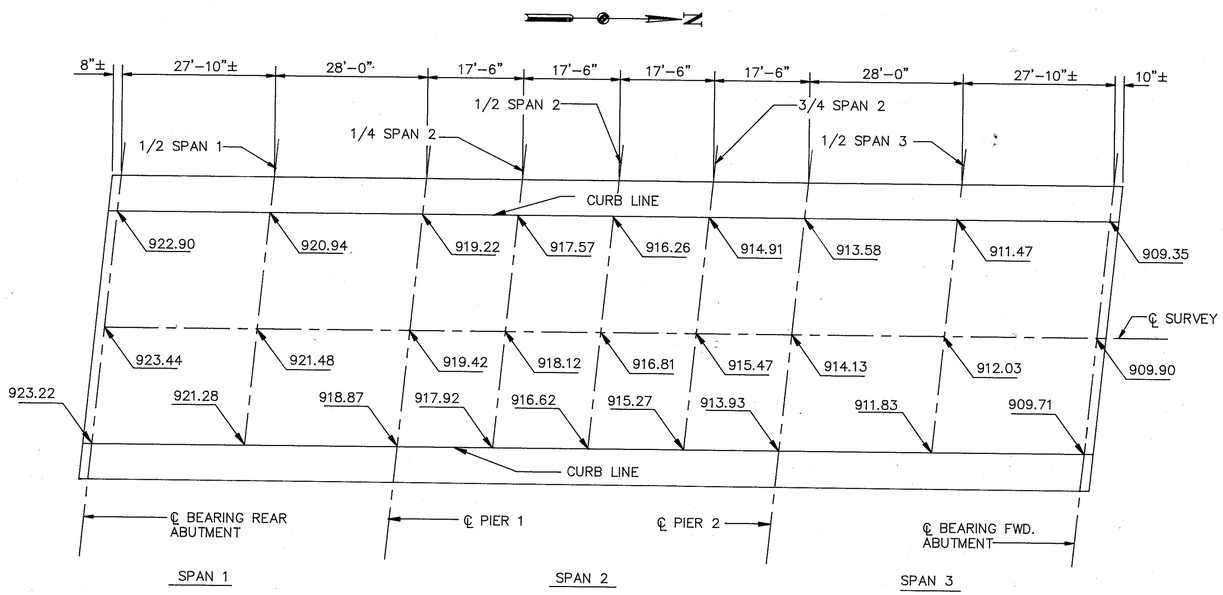

SCREED ELEVATIONS

SCREED ELEVATIONS SHOWN ARE FOR THE DECK SLAB SURFACE PRIOR TO CONCRETE PLACEMENT. ALLOWANCE HAS BEEN MADE FOR ANTICIPATED DEAD LOAD DEFLECTIONS.

BEARING REPLACEMENT NOTES

THE EXISTING ABUTMENT BEARINGS SHALL BE REPLACED IN ACCORDANCE WITH THE FOLLOWING:

1. THE TOP PLATE OF THE BEARING SHALL HAVE ITS WELDS TO THE BEAM FLANGE REMOVED IN SUCH A MANNER AS NOT TO DAMAGE THE BOTTOM FLANGE.
2. THE BEAM ENDS SHALL BE RAISED UNTIL THE BEARINGS CAN BE REMOVED. THE CONTRACTOR SHALL SUBMIT HIS JACKING AND SHORING PLANS TO ENGINEER FOR APPROVAL.
3. THE BEARING SHALL BE REMOVED, AND THE BOTTOM FLANGE AND BEARING SEAT SHALL BE ABRASIVELY CLEANED. THE EXISTING ANCHOR BARS SHALL BE REMOVED 1" BELOW THE EXISTING CONCRETE SEAT. THIS AREA SHALL BE PATCHED WITH NON-SHRINKING GROUT.
4. THE BEARINGS SHALL BE ASSEMBLED SUCH THAT THE TOP PLATE IS CENTERED OVER THE BOTTOM PLATE AT 60° F. BEARINGS SHALL BE CENTERED ON THE PROPOSED ℄ BEARINGS. AFTER BEARING PLACEMENT, ANCHOR BARS SHALL BE SET IN GROUT FILLED HOLES.
5. NEW SHEET LEAD OR PREFORMED BEARING PADS SHALL BE PROVIDED FOR ALL BEARINGS. THE COST OF CLEANING THE EXISTING BEARING SEAT AND PROVIDING THE NEW LEAD OR PAD SHALL BE INCLUDED WITH THE BEARING FOR PAYMENT.
6. THE COSTS FOR LABOR, MATERIAL AND INCIDENTALS REQUIRED FOR JACKING AND SHORING THE BEAM ENDS SHALL BE INCLUDED IN THE COST FOR THE BEARINGS.
7. FOR PAINTING REQUREMENTS SEE SHEET 3/15

HAMMONTREE & ASSOCIATES, LTD. 15/15
ENGINEERS, PLANNERS, SURVEYORS
CANTON ORLANDO PITTSBURGH AKRON

BEARING DETAILS AND SCREED ELEVATIONS

BRIDGE NO. MAH-680-0488
GLENWOOD AVE. OVER I.R. 680

DESIGNED	DRAWN	CHECKED	REVIEWED DATE	REVISED
KJO	EAB	CJP	KAB 2/26/93	

MAH 680 0488 - 4.88 PID 14126