STATE OF OHIO
DEPARTMENT OF TRANSPORTATION

OHIO	1 / 31
FHWA REGION 5	
FEDERAL PROJECT	

PLAN NO. BR-50-85

MAH-680-0628
MAH-62-VARIOUS

MICROFILMED
DEC 17 1991

MAHONING COUNTY
CITY OF YOUNGSTOWN
BRIDGE DECK REPAIR

CONVENTIONAL SIGNS

County Line
Township Line
Section Line
Corporation Line or
Fence Line (existing) (proposed)
Center Line
Trees, Stumps, (to be removed)
Utility Poles: Telephone, Power, Light.

Limited Access (only) — LA
Right of Way (only) — RW
Limited Access & Right of Way — LA & RW
Existing Right of Way
Property Line (in existing fence)
Railroad or
Guardrail (existing) (proposed)

INDEX OF SHEETS

TITLE SHEET	1
GENERAL NOTES	2-3
GENERAL SUMMARY	4
BRIDGE DETAILS	5-15
RETROFIT DETAILS	16-24
DETAILS	25-27
TRAFFIC CONTROL	28-31

MAH-680-0628 MAH-62 D.A.-0054 L MAH-62 D.A.-0054 R MAH-62-1823

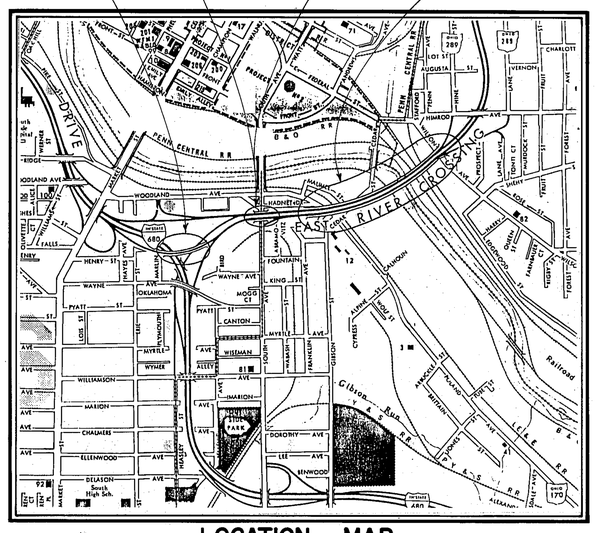

LOCATION MAP

SCALE IN FEET
0 1000 2000 3000 4000

Portion to be improved
State & Federal Routes
Other Roads

1985 SPECIFICATIONS

The standard specifications of the State of Ohio, Department of Transportation, including changes and supplemental specifications listed in the proposal shall govern this improvement.

I hereby approve these plans and declare that the making of this improvement will NOT REQUIRE THE CLOSING TO TRAFFIC OF THE HIGHWAY.

Approved Richard A. Monsiro
Date 3/4/85 Deputy Director of Public Works, City of Youngstown

Approved Francis V. Fischer
Date 2-28-85 District Deputy Director of Transportation

Approved Walter J. Jestings
Date 6-5-85 Engineer, Bureau of Bridges and Structural Design

Approved James R. Longenecker
Date 6-12-85 Chief Engineer, Operations

Approved Warren J. Smith
Date 6-12-85 Director, Department of Transportation

LINE DATA

PROJECT LIMITS = 2704.66' - ONE WAY
WORK LENGTH = 5259.12'

UNDERGROUND UTILITIES
48 HOURS
BEFORE YOU DIG
Call ··· 800-362-2764 (Toll free)
OHIO UTILITIES PROTECTION SERVICE
NON-MEMBERS
MUST BE CALLED DIRECTLY

SCALES

Plan
Profile: Horizontal, Vertical
Cross Section: Horizontal, Vertical

SUPPLEMENTAL SPECIFICATIONS	
845	01-13-84
824	10-08-82
956	06-26-78
836	03-12-75

SUPPLEMENTAL PRINTS OF STANDARD CONSTRUCTION DRAWINGS					
BP-5	01-11-85	TC-72.2	02-26-82		
BP-7	12-06-76				
BP-11	01-30-84				
BR-1	05-29-79				
GR-1	01-11-85				
GR-2B	02-05-82				
GR-3	01-21-85				
GR-3A	02-05-82				
GR-3B	1-21-85				

Rev. 8-27-85 RLE
Rev. 7-17-85 RLE

Plan Prepared By:
OHIO DEPARTMENT OF TRANSPORTATION
DISTRICT 04

SEAL

DEPARTMENT OF TRANSPORTATION
FEDERAL HIGHWAY ADMINISTRATION
APPROVED:
DIVISION ADMINISTRATOR DATE

Project:
Date of Letting 19__, Contract No.

LD0300 Rev. 1-1-81

GENERAL NOTES

STATE SAFETY REQUIREMENTS

STATE SAFETY REQUIREMENTS OUTLINED IN THE CONSTRUCTION CODE FOR THIS TYPE OF WORK WILL BE ENFORCED AND THE CONTRACTOR SHALL COMPLY WITH THE PROVISIONS OF BULLETIN IC-3, ISSUED AS A GENERAL ORDER BY THE INDUSTRIAL COMMISSION OF OHIO.

ITEM 619 - FIELD OFFICE

THE CONTRACTOR SHALL PROVIDE A SUITABLE FIELD OFFICE HAVING A MINIMUM OF 400 SQUARE FEET OF FLOOR SPACE WHICH SHALL BE IN ACCORDANCE WITH 619.01 AND 619.02

ORIGINAL CONSTRUCTION PLANS

FOR MORE INFORMATION THESE ORIGINAL CONSTRUCTION PLANS MAY BE EXAMINED IN THE DISTRICT 4 OFFICE OF THE DEPARTMENT OF TRANSPORTATION, RAVENNA, OHIO AND IN THE CENTRAL OFFICE, COLUMBUS, OHIO.

EXISTING STRUCTURES VERIFICATION

DETAILS AND DIMENSIONS SHOWN ON THESE PLAN PERTAINING TO THE EXISTING STRUCTURES HAVE BEEN OBTAINED FROM PLANS OF THE EXISTING STRUCTURES AND/OR FROM FIELD OBSERVATIONS AND MEASUREMENTS. CONSEQUENTLY, THEY ARE INDICATIVE OF THE EXISTING STRUCTURES AND THE PROPOSED WORK, BUT, THEY SHALL BE CONSIDERED TENTATIVE AND APPROXIMATE. THE CONTRACTOR IS REFERRED TO CMS SECTIONS 102.05, 105.02, AND 513.02.

CONTRACTOR BID PRICES SHALL BE BASED UPON A RECOGNITION OF THE UNCERTAINIES DESCRIBED ABOVE AND UPON A PRE-BID EXAMINATION OF THE EXISTING STRUCTURES BE THE CONTRACTOR. HOWEVER, ALL PROJECT WORK SHALL BE BASED UPON ACTUAL DETAILS AND DIMENSIONS WHICH HAVE BEEN VERIFIED BY THE CONTRACTOR IN THE FIELD.

STORAGE OF MATERIALS, EQUIPMENT AND VEHICLES

THE CONTRACTOR'S MATERIALS AND EQUIPMENT SHALL BE STORED IN A STAGING AREA. ALL PRIVATE VEHICLES SHALL BE PARKED IN A STORAGE AREA. TEMPORARY STORAGE OF EQUIPMENT NAD MATERIALS MAY BE APPROVED BY THE ENGINEER IF THEY ARE TO BE PARKED BEHIND THE GUARDRAIL.

ESTIMATED QUANTITIES

SPECIFIC LOCATIONS AND USAGE OF ESTIMATED QUANTITIES SET UP ON THIS PLAN TO BE USED AS DIRECTED BY THE ENGINEER SHALL BE A MATTER OF RECORD BY INCORPORATION INTO THE FINAL CHANGE ORDER GOVERNING COMPLETION OF THIS PROJECT. ESTIMATED QUANTITIES OF MATERIALS SHALL NOT BE ORDERED FOR DELIVERY TO THE PROJECT UNLESS AUTHORIZED BY THE ENGINEER.

ITEM 404 ASPHALT CONCRETE AC-20, MAINTAINING TRAFFIC

A QUANTITY OF 30 C.Y. OF 404 ASPHALT CONCRETE FOR MAINTAINING TRAFFIC IS CARRIED TO THE GENERAL SUMMARY TO BE USED AS THE DIRECTION OF THE ENGINEER. IN AREAS WHERE THE EXISTING PAVED BERM IS TO BE USED FOR THRU TRAFFIC AND THE PAVED BERM IS MORE THAN 1" BELOW THE EXISTING PAVEMENT THE ABOVE MATERIAL MAY BE USED TO MAINTAIN THE BERMS IN A SAFE CONDITION.

STEEL BAR STOCK

BAR STOCK UTILIZED FOR VERTICAL EXTENSION JOINTS MAY BE ANY WELDABLE GRADE OF LOW OR MILD CARBON STEEL AVAILABLE COMMERCIALLY. THIS MATERIAL IS TO BE EXCLUDED FROM THE REQUIREMENTS OF 501.07 FOR TEST REPORTS.

VERTICAL EXTENSION BARS SHALL BE INSTALLED ACROSS THE STRUCTURE IN SECTIONS SUFFICIENT TO PLACE THE OVERLAY, BUT NOT BEYOND THE PORTION OF THE STRUCTURE CLOSED FOR THE OVERLAY OPERATION.

PRESSURE RELIEF JOINTS

THE ACTUAL LOCATIONS OF THE PRESSURE RELIEF JOINTS, TYPE C WILL BE AT THE DIRECTION OF THE ENGINEER.

404 ASPHALT CONCRETE

AN ADDITIONAL QUANTITY OF 20 OF ASPHALT CONCRETE HAS BEEN PROVIDED IN THE GENERAL SUMMARY FOR CORRECTING IRREGULARITIES IN THE APPROACH PAVEMENT GRADE WHERE FOUND NECESSARY. FOR THE SAKE OF QUANTITY CALCULATIONS A DISTANCE OF 50 FT. WAS USED FOR THE ASPHALT FEATHER AREAS. THE ACTUAL LENGTH OF THE FEATHERS SHALL BE DETERMINED IN THE FIELD BY THE ENGINEER. THE WIDTH OF THE PAVED AREAS SHALL INCLUDE RESURFACING THE PAVED BERM WHERE NECESSARY.

TACK COAT

THE TACK COAT OPERATION SHALL BE DETERMINED AT THE PRE-CONTRUCTION CONFERENCE AS PER 407.05. A RATE OF 0.10 GALS PER SQ. YD. WAS USED TO TO CALCULATE THE QUANTITY.

PLACING ASPHALT CONCRETE FEATHERS ON APPROACHED BRIDGES

SPECIAL CARE SHALL BE TAKEN TO EFFECT A SMOOTH TRANSITION FROM THE EXISTING APPROACH PAVEMENT TO THE BRIDGE DECK. THE CONTRACTOR'S ATTENTION IS CALLED TO SECTION 404.16 OF THE CMS AND TO STARDARD DRAWING BP-5 DATED 7-16-81 FOR REQUIRED TOLERANCES.

EXISTING JUNCTION BOXES

ON BRIDGES MAH-680-0628 AND MAH-62DA-0054 L & R, THERE ARE EXISTING LIGHTING JUNCTION BOXES. THE NEW PARAPET RETROFITTING SECTION SHALL BE TRANSITIONED TO MEET THE EXISTING JUNCTION BOXES AT THE DIRECTION OF THE ENGINEER. A MINIMUM OF FOUR (4") INCHES OF CONCRETE SHALL BE PLACED IN THESE AREAS.

DECK OVERLAY LIMITATIONS

NO SCARIFICATION SHALL BE PERFORMED AFTER NOVEMBER 1. DECKS THAT ARE SCARIFIED PRIOR TO NOVEMBER 1 SHALL BE POURED NO LATER THAN NOVEMBER 10. NO 24 HOUR LANE CLOSURES SHALL BE PERMITTED BETWEEN NOVEMBER 15 AND MARCH 15. IF THE CONTRACTOR FAILS TO HAVE BRIDGE DECKS OPEN BY NOVEMBER 15, HE SHALL PLACE ITEM 404 ASPHALT CONCRETE ON THESE BRIDGE DECKS TO ALLOWS THE SAFE TRAVEL OF THE PUBLIC. THIS WORK SHALL BE PERFORMED AT THE DIRECTION OF THE ENGINEER AT THE CONTRACTOR'S EXPENSE.

BRIDGE DECK OVERLAY (VARIABLE THICKNESS)

THE CONTRACTOR SHALL MAKE AVAILABLE TO THE ENGINEER SUFFICIENT SPRAY PAINT TO OUTLINE REMOVAL AREAS. THE COST OF THE SPRAY PAINT SHALL BE INCLUDED IN THE BID FOR BRIDGE DECK OVERLAY AND/OR VARIABLE THICKNESS. IN THE EVENT OF RAIN, THE FINAL SOUNDING SHALL BE DONE NO SOONER THAN 24 HOURS AFTER THE RAIN, WHICH SHALL INCLUDE 8 HOURS OF GOOD DRYING WEATHER. IN NO CASE SHALL THE FINAL SOUNDING BE MADE WHEN THE DECK IS DAMP. FINAL SOUNDING MAY INCLUDE ONE OR MORE ATTEMPTS TO ASSURE THAT ALL DETERIORATED CONCRETE HAS BEEN REMOVED.

FULL DEPTH REPAIR

A QUANTITY OF 1 C.Y. HAS BEEN INCLUDED FOR FULL DEPTH REPAIRS ON EVERY BRIDGE THAT REQUIRES CONCRETE OVERLAY WORK. THIS ITEM SHALL BE NON-PERFORMED IF FOUND NECESSARY. 9 HAS BEEN CARRIED TO THE GENERAL SUMMARY.

GUARD RAIL

ON THE APPROACHES TO THE BRIDGES TO BE REPAIRED, SOME EXISTING GUARD RAIL IS ALSO IN NEED OF REPAIR. THE FOLLOWING QUANTITIES ARE TO BE USED AT THE DIRECTION OF THE ENGINEER TO REPAIR THESE AREAS:

ITEM	DESCRIPTION	QUANTITY	UNIT
202	GUARD RAIL REMOVED	400	L.F.
606	GUARD RAIL, TYPE 5	400	L.F.
606	ANCHOR ASSEMBLY, TYPE T	2	EA.
606	ANCHOR ASSEMBLY, TYPE A	2	EA.

ITEM 621 - PAVEMENT MARKING

THE LIMITS OF THE PAVEMENT MARKING WILL BE APPROXIMATELY 500 FEET EAST OF BRIDGE MAH-62-1823 TO 500 FEET WEST OF BRIDGE MAH-62DA-0054 AND 500 FEET WEST OF BRIDGE MAH-680-0628.

THE GORE MARKINGS WILL BE ACCORDING TO STANDARD DRAWING TC-72.20.

THE FOLLOWING QUANTITIES ARE TO BE USED TO PERFORM THIS WORK:

ITEM	DESCRIPTION	QUANTITY	UNIT
621	EDGE LINES	4.26	MI.
621	LANE LINES, 4"	1.70	MI.
621	CHANNELIZING LINES	600	L.F.
621	TRANSVERSE LINES		

GENERAL NOTES

ITEM 202 - PORTIONS OF STRUCTURES REMOVED.

THE CONTRACTOR SHALL CAREFULLY REMOVE THE EXISTING ALUMINUM RAILING AND STACK NEATLY ALONG THE RIGHT-OF-WAY FOR SUBSEQUENT PICK-UP BY THE CITY OF YOUNGSTOWN FORCES. THE CONCRETE CURB AND PARAPET SHALL BE REMOVED AS SHOWN USING CHIPPING HAMMERS NOT HEAVIER THAN THE 60 POUND CLASS. SALVAGE ALL REINFORCING STEEL AS SHOWN ON THE PLANS. ANY DAMAGE TO EXISTING STEEL WHICH IS TO BE SALVAGED, SHALL BE REPAIRED AT THE FULL EXPENSE OF THE CONTRACTOR, INCLUDING ALL LABOR, EQUIPMENT, AND MATERIALS. ALL REINFORCING STEEL TO BE REPLACED SHALL BE EPOXY COATED. SUCH REPAIRS SHALL MEET THE APPROVAL OF THE ENGINEER BEFORE WORK PROCEEDS.
PAYMENT FOR THIS ITEM SHALL INCLUDE ALL LABOR, EQUIPMENT, AND MATERIALS NECESSARY TO PERFORM THE WORK SHOWN ON THE PLANS AND THE SPECIFICATIONS, AND SHALL BE INCLUDED IN THE LUMP SUM PRICE FOR:
ITEM 202 - PORTIONS OF STRUCTURES REMOVED.

ITEM 510 - DOWEL HOLES, AS PER PLAN.

ONE (1") INCH DIAMETER HOLES SHALL BE DRILLED AS SHOWN ON THE PLANS. THE HOLES SHALL BE THOROUGHLY CLEANED OF ALL DUST AND OTHER DELETERIOUS MATERIAL. THE GROUT SHALL BE AS PER SS 853 AND SS 956. NO DOWEL HOLES SHALL BE DRILLED THROUGH EXISTING REINFORCING STEEL: TO AVOID THIS CONFLICT, THE HOLES MAY BE OFFSET AS REQUIRED TO OBTAIN THE NECESSARY CLEARANCE.

PAYMENT FOR THIS ITEM SHALL INCLUDE ALL LABOR, EQUIPMENT, AND MATERIALS NECESSARY TO PERFORM THIS ITEM OF WORK, AND SHALL BE INCLUDED IN THE UNIT BID PRICE FOR:
ITEM 510 - EACH - DOWEL HOLES, AS PER PLAN.

ITEM 517 - RAILING, FACED, AS PER PLAN.

ALL LOOSE AND UNSOUND CONCRETE IN THE AREA OF THE PARAPET TO BE FACED, SHALL BE REMOVED. ALL REMAINING SOUND CONCRETE SHALL BE SCABBLED. THE MINIMUM THICKNESS FOR THE PROPOSED FACING SHALL BE FOUR (4") INCHES. THIS WORK WILL BE INCLUDED IN ITEM 202 - PORTIONS OF STRUCTURES REMOVED.

ALL REINFORCING STEEL INCLUDING DOWELS SHALL BE EPOXY COATED AS PER SS 824. EPOXY COATED RESTEEL WHICH IS DAMAGED DUE TO CUTTING, BENDING, ETC., SHALL BE REPAIRED AS PER SS 824. CONCRETE COVER OVER ALL RESTEEL SHALL BE TWO (2") INCHES MINIMUM. THE CONCRETE SURFACES TO BE FACED SHALL BE THOROUGHLY DRENCHED WITH CLEAN WATER AND ALLOWED TO DRY TO A DAMP CONDITION JUST BEFORE PLACING THE CONCRETE.

THE EXISTING DEFLECTION JOINTS SHALL BE EXTENDED INTO THE PROPOSED FACING ABOVE THE UPPER CONSTRUCTION JOINT. THE CONCRETE PARAPET ABOVE THE UPPER CONSTRUCTION JOINT SHALL BE PLACED IN ALTERNATE SECTIONS BY USE OF BULKHEADS. CLOSING SECTIONS SHALL BE PLACED AFTER THE REMOVAL OF THE BULKHEADS AND AFTER CUTTING AND PLACING OF THE EXPANSION JOINT MATERIAL. FOR ADDITIONAL DETAILS, SEE STANDARD DRAWING BR-1.

THE EXTENSION OF THE EXISTING EXPANSION JOINTS AT THE END DAMS AND HINGE JOINTS SHALL BE INCLUDED IN THIS ITEM FOR PAYMENT. THE BAR STOCK MAY BE ANY WELDABLE GRADE STEEL OF LOW OR MILD CARBON STEEL AVAILABLE COMMERCIALLY. THE MATERIAL IS TO BE EXCLUDED FROM THE REQUIREMENTS OF 501.07 FOR TEST REPORTS. SEE SHEETS 18, 20, & 22 OF 31. ALL WORK SHALL BE PERFORMED ACCORDING TO ITEM 516 AND STANDARD DRAWING BP-5.

MATERIALS

ALL CONCRETE SHALL BE AS PER 511, CLASS 'S'; REINFORCING STEEL SHALL BE AS PER 509 AND SS 824; AND PREFORMED EXPANSION JOINT FILLER FOR DEFLECTION JOINTS MAY BE EITHER 1/4" GRAY SPONGE RUBBER OR 1/4" GRAY CELLULAR POLYVINYL CHLORIDE (PVC) SPONGE. IF RUBBER IS USED, IT SHALL MEET THE REQUIREMENTS OF AASHTO M-153.

ALL OF THE ABOVE WORK INCLUDING REINFORCING STEEL SHALL BE INCLUDED IN THE UNIT BID PRICE FOR: ITEM 517 - L.F. - RAILING, FACED, AS PER PLAN.

ITEM 516 - JOINT SEALER, 705.01

SURFACE PREPARATION SHALL COMPLY WITH 516.03, 516.04, AND STANDARD CONSTRUCTION DRAWING BP-5. THE MATERIAL SHALL MEET THE REQUIREMENTS OF 705.01.

HOT APPLIED JOINT SEALER SHALL BE APPLIED AT THE END DAM EXPANSION JOINTS AND ALL HINGE JOINTS ON BRIDGE NO. MAH-62-1823 L & R.

PAYMENT SHALL INCLUDE ALL LABOR, EQUIPMENT, AND MATERIALS AND SHALL BE PAID FOR AS: ITEM 516 - L.F. - JOINT SEALER, 705.01.

MAINTAINANCE OF TRAFFIC

THE SAFETY OF THE TRAVELING PUBLIC AND MINIMIZING THE INCONVENIENCE TO THE HIGHWAY USER SHALL BE OF THE UTMOST CONCERN TO THE CONTRACTOR WHILE PERFORMING THE NECESSARY WORK. WITH THIS IN MIND, THE FOLLOWING CONDITIONS AND RESTRICTIONS SHALL BE ENFORCED AND WILL BE ADHERED TO DURING THE SCOPE OF THIS PROJECT. THESE ITEMS ARE TO INCLUDED IN ITEM 614 MAINTAINING TRAFFIC.

1) A FLASHING ARROW BARRICADE (TC-35.10) SHALL BE USED FOR THE TRAFFIC CONTROL WHENEVER THERE IS A LANE RESTRICTION.

2) ALL TRAFFIC CONTROL DEVICES, WARNING, AND INFORMATIONAL SIGNS REQUIRED INSIDE THE WORK LIMIT, EXCEPT REGULATORY SIGNS, SHALL BE FURNISHED, ERECTED, AND MAINTAINED BY THE CONTRACTOR. ANY TEMPORARY SIGN COVERS REQUIRED DURING PERIODS OF THE PROJECT CONSTRUCTION SHALL BE FURNISHED AND PLACED BY THE CONTRACTOR.
3) ALL SIGNS, CONES, BARRICADES, AND FLAGMEN SHALL BE UTILIZED IN CONFORMANCE WITH THE OHIO MANUAL OF UNIFORM TRAFFIC CONTROL DEVICES FOR STREETS AND HIGHWAYS, CURRENT EDITION, LATEST REVISION. TRAFFIC MAINTENANCE FOR THIS PROJECT SHALL BE IN ACCORDANCE WITH THIS PLAN IN ADDITION TO THE ABOVE REQUIREMENTS. TYPE, LOCATION, AND SPACING OF TRAFFIC CONTROL DEVICES SHALL BE APPROVED BE THE ENGINEER. EXISTING SIGNS IN THE TRAFFIC CONTROL ZONES WHICH BECOME UNNECESSARY OR CONFLICT WITH TRAFFIC MOVEMENT SHALL BE COVERED AS DIRECTED BY THE ENGINEER.

4) A MINIMUM OF 11' OF ROADWAY (PLUS ADJACENT BERM,APPLICABLE) SHALL BE KEPT OPEN TO TRAFFIC AT ALL TIMES.

5) DURING CONSTRUCTION OF THIS PROJECT, SOME MODIFICATIONS OF OVERHEAD STRUCTURES MAY BE REQUIRED. IT SHALL BE THE RESPONSIBILITY OF THE CONTRACTOR TO MAKE THE NECESSARY MODIFICATIONS AND WHEN NO LONGER NECESSARY, RETURN SIGNS TO ORIGINAL LEGENDS.
6) DURING THE TIME OF LANE CLOSURES FOR 24 HOURS OR MORE THE CONTRACTOR SHALL HAVE A WATCHMAN ON CALL 24 HOURS A DAY TO MAINTAIN SIGNS AND WARNING DEVICES.
7) IN AREAS OF LANE CLOSURES THE CONTRACTOR SHALL BE RESPONSIBLE FOR GRADING THE SHOULDER TO AN ELEVATION NOT LESS THAN ONE (1") INCH BELOW EXISTING PAVEMENT ELEVATION AND MAINTAINING THE SHOULDERS IN A SAFE CONDITION DURING THE DURATION OF THE LANE CLOSURING OR OTHER LANE RESTRICTION.
8) THE CITY OF YOUNGSTOWN TRAFFIC DEPARTMENT SHALL BE NOTIFIED ONE (1) WEEK PRIOR TO ANY LANE CLOSURES OR CHANGES IN TRAFFIC PATTERNS.
9) DRUMS SHALL BE USED FOR ALL TRANSITIONS AND CHANNELIZING APPLICATIONS FOR LANE CLOSURES OF TWENTY FOUR (24) HOURS OR MORE.
10. SEE SHEET 28 OF 31 FOR TRAFFIC CONTROL AND CONSTRUCTION PHASING FOR MAH-62-1823 LEFT - UNIT NO. 5.

ITEM SPECIAL - LAW ENFORCEMENT OFFICER (LEO) WITH PATROL CAR

THE CONTRACTOR SHALL PROVIDE THE SERVICES OF A SPECIAL LEO WITH PATROL CAR FOR THE PURPOSE OF CONTROLLING THRU TRAFFIC. THE LEO WITH PATROL CAR SHALL BE UTILIZED DURING INSTALLATION AND REMOVAL OF TRAFFIC CONTROL DEVICES FOR LANE RESTRICTIONS, AND AS AUTHORIZED BY THE ENGINEER. IF IT IS NECESSARY TO EMPLOY MORE THAN ONE LEO WITH PATROL CAR TO ADEQUATELY CONTROL TRAFFIC, THE PROJECT ENGINEER SHALL DETERMINE WHEN AND HOW MANY OFFICERS AND CARS SHALL BE REQUIRED.

INFORMATION REGARDING ARRANGEMENTS FOR PAYMENTS BY THE CONTRACTOR FOR THE SPECIAL DUTY LEO SERVICES MAY BE OBTAINED BY CONTACTING THE CITY OF YOUNGSTOWN POLICE DEPARTMENT, TELEPHONE NO. (216) 747-5631.

A QUANTITY OF 400 HOURS HAS BEEN CARRIED TO THE GENERAL SUMMARY FOR THIS PURPOSE.

ITEM SPECIAL - SEALING OF CONCRETE SURFACES.

A CONCRETE SEALER, EITHER A SILANE OR AN EPOXY SEALER, SHALL BE APPLIED TO THE CONCRETE SURFACES SHOWN ON SHEET 27 OF 31. SEE THE PROPOSAL FOR SURFACE PREPARATION REQUIREMENTS, APPLICATION RATES, MATERIALS REQUIREMENTS AND APPLICATION PROCEDURES.

DUE TO THE SEVERITY OF THE EXISTING BRIDGE DECKS, BRIDGES MAH-62DA-0054 L & R, AND MAH-680-0628 SHALL BE COMPLETED FIRST. NO WORK MAY START ON BRIDGE MAH-62-1823 UNTIL WORK IS COMPLETED ON BRIDGES MAH-62DA-0054 AND MAH-680-0628.

GENERAL SUMMARY

Type Code: MAH-680-0628 X-732
MAH-62-0054 L/R X-232
MAH-62-1823 X-932

F.H.W.A. REGION	STATE	PROJECT	
5	OHIO		

PLAN NO. BR-50-85

ITEM	SHEET NUMBER IR Funding	FR Funding	2	3	5	6	7	15	26	28	TOTAL	UNIT	ITEM	DESCRIPTION
202		370						205	100	65	370	L.F.	202	CURB REMOVED, AS PER PLAN
202		25							25		25	S.Y.	202	MEDIAN REMOVED, AS PER PLAN
202	160	590	400		100	75	75	100			750	L.F.	202	GUARDRAIL REMOVED
202	4	10			4	3	3	4			14	EA.	202	BRIDGE TERMINAL ASSEMBLY REMOVED
202	LUMP	LUMP			LUMP	LUMP	LUMP				LUMP	LUMP	202	PORTIONS OF STRUCTURES REMOVED
606	160	590	400		100	75	75	100			750	L.F.	606	GUARDRAIL, TYPE 5
606	2	3			2	1	2				5	EA.	606	BRIDGE TERMINAL ASSEMBLY, TYPE A
606		2						2			2	EA.	606	BRIDGE TERMINAL ASSEMBLY, TYPE D
606	2	5			2	2	1	2			7	EA.	606	BRIDGE TERMINAL ASSEMBLY, TYPE J
606	1	1	2								2	EA.	606	ANCHOR ASSEMBLY, TYPE A
606	1	1	2								2	EA.	606	ANCHOR ASSEMBLY, TYPE T
615		LUMP								LUMP	LUMP	LUMP	615	TEMPORARY ROADS
615		35								35	35	S.Y.	615	TEMPORARY PAVEMENT, CLASS B
605	20	120			20	30	30	60			140	L.F.	605	AGGREGATE DRAINS
SPEC.	32	272			32	72	56	144			304	L.F.	SPECIAL	PRESSURE RELIEF JOINTS, TYPE C
609	—	100							100		100	L.F.	609	CURB, TYPE 6, AS PER PLAN
612		22							22		22	S.Y.	612	MEDIAN, AS PER PLAN
404	5	25	30								30	C.Y.	404	ASPHALT CONCRETE, AC-20, MAINTAINING TRAFFIC
404	13	52	20		10	18	17				65	C.Y.	404	ASPHALT CONCRETE, AC-20
407	27	103			27	53	50				130	GAL.	407	TACK COAT
510	1204	834			1204	424	410				2038	EA.	510	DOWEL HOLES, AS PER PLAN
517	848	655			848	320	335				1503	L.F.	517	RAILING, FACED, AS PER PLAN
SPEC.	793	5518			793	300	313	4905			6311	S.Y.	SPECIAL	SEALING OF CONCRETE SURFACES (SEE PROPOSAL NOTE)
516	101	356			101	172	184				457	L.F.	516	VERTICAL EXTENSION OF STRUCTUAL EXPANSION JOINTS
516		589						589			589	L.F.	516	JOINT SEALER, 705.01
845	1335	22,824			1335	737	710	21,377			24,159	S.Y.	845	LATEX MODIFIED CONCRETE OVERLAY (1¼" THICK), AS PER PLAN
845	85	393			85	50	40	303			478	C.Y.	845	LATEX MODIFIED CONCRETE OVERLAY (VARIABLE THICKNESS)
845	1	8			1	1	1	6			9	C.Y.	845	FULL DEPTH REPAIR
621	0.25	1.45	1.70								1.70	Mi.	621	LANE LINES
621	.64	3.62	4.26								4.26	Mi.	621	EDGE LINES
621	90	510	600								600	L.F.	621	CHANNELIZING LINES
SPEC.	60	340		400							400	HRS.	SPECIAL	LAW ENFORCEMENT OFFICIER WITH CAR
624											LUMP	LUMP	624	MOBILIZATION
619	LUMP	LUMP	LUMP								LUMP	LUMP	619	FIELD OFFICE
614	LUMP	LUMP	LUMP								LUMP	LUMP	614	MAINTAINING TRAFFIC

F.H.W.A. REGION	STATE	PROJECT	
5	OHIO		

5
31

PLAN NO. BR-50-85

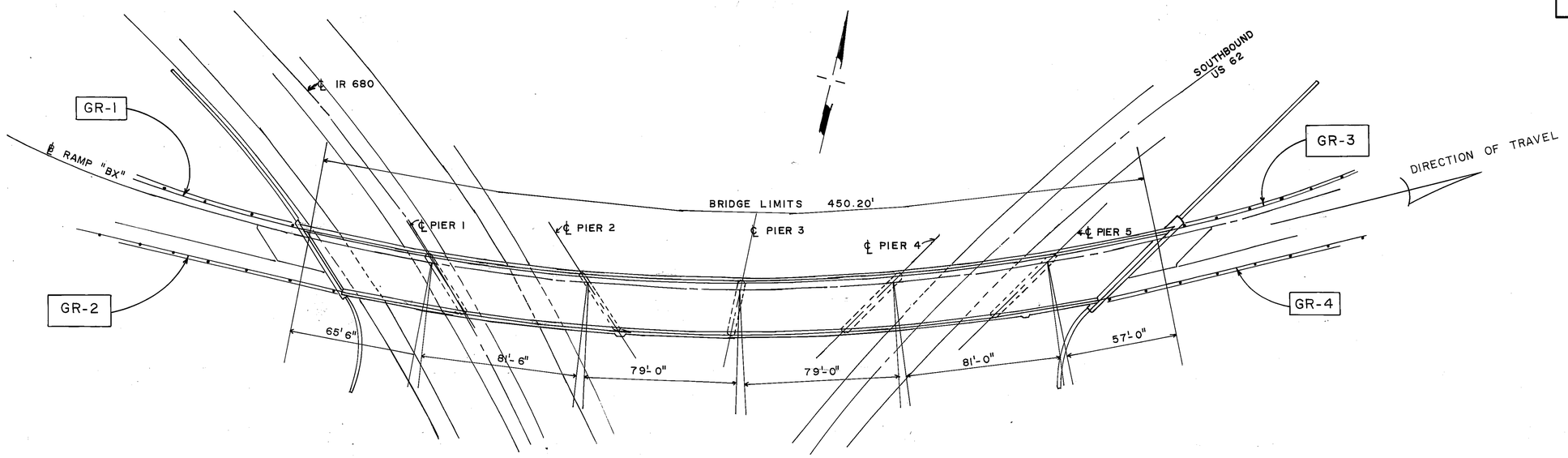

PLAN VIEW

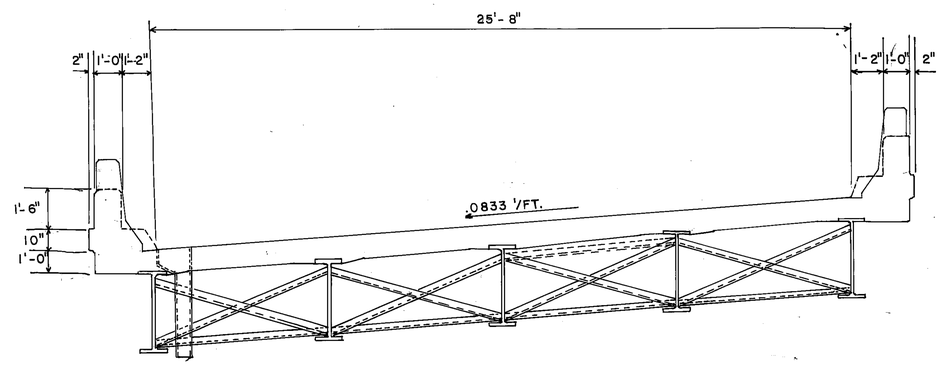

TRANSVERSE SECTION

GENERAL PLAN
&
TRANSERSE SECTION

MAH-680-0628

UNDER RAMP BX

STRUCTURE QUANTITIES SUB-SUMMARY

404 ASPHALT CONCRETE C.Y.	407 TACK COAT GAL.	SPEC. PRESSURE RELIEF JOINTS TYPE 'C' L.F.	516 VERTICAL EXT. OF STRUC'L EXP. JOINTS L.F.	605 AGG. DRAINS L.F.	845 BRIDGE DECK OVERLAY 1-1/4" AS PER PLAN S.Y.	VAR. DEPTH C.Y.	FULL DEPTH C.Y.	SPEC. SEALING OF CONCRETE SURFACES S.Y.	517 RAILING, FACED, AS PER PLAN L.F.	510 DOWEL HOLES AS PER PLAN EA.	202 PORTIONS OF STRUCTURES REMOVED L.S.
10	27	32	101	20	1335	85	1	793	848	1204	LUMP

GUARD RAIL SUB-SUMMARY

CODE	202 GUARD RAIL REMOVED L.F.	202 BRIDGE TERMINAL ASSEMBLY REMOVED EA.	606 GUARD RAIL TYPE 5 L.F.	606 BRIDGE TERMINAL ASSEMBLY TYPE A EA.	606 BRIDGE TERMINAL ASSEMBLY TYPE J EA.	606 BRIDGE TERMINAL ASSEMBLY TYPE ___ EA.
GR-1	25	1	25	1		
GR-2	25	1	25	1		
GR-3	25	1	25		1	
GR-4	25	1	25		1	
TOTAL	100	4	100	2	2	

33770

F.H.W.A. REGION	STATE	PROJECT	
5	OHIO		

6
31

PLAN NO. BR-50-85

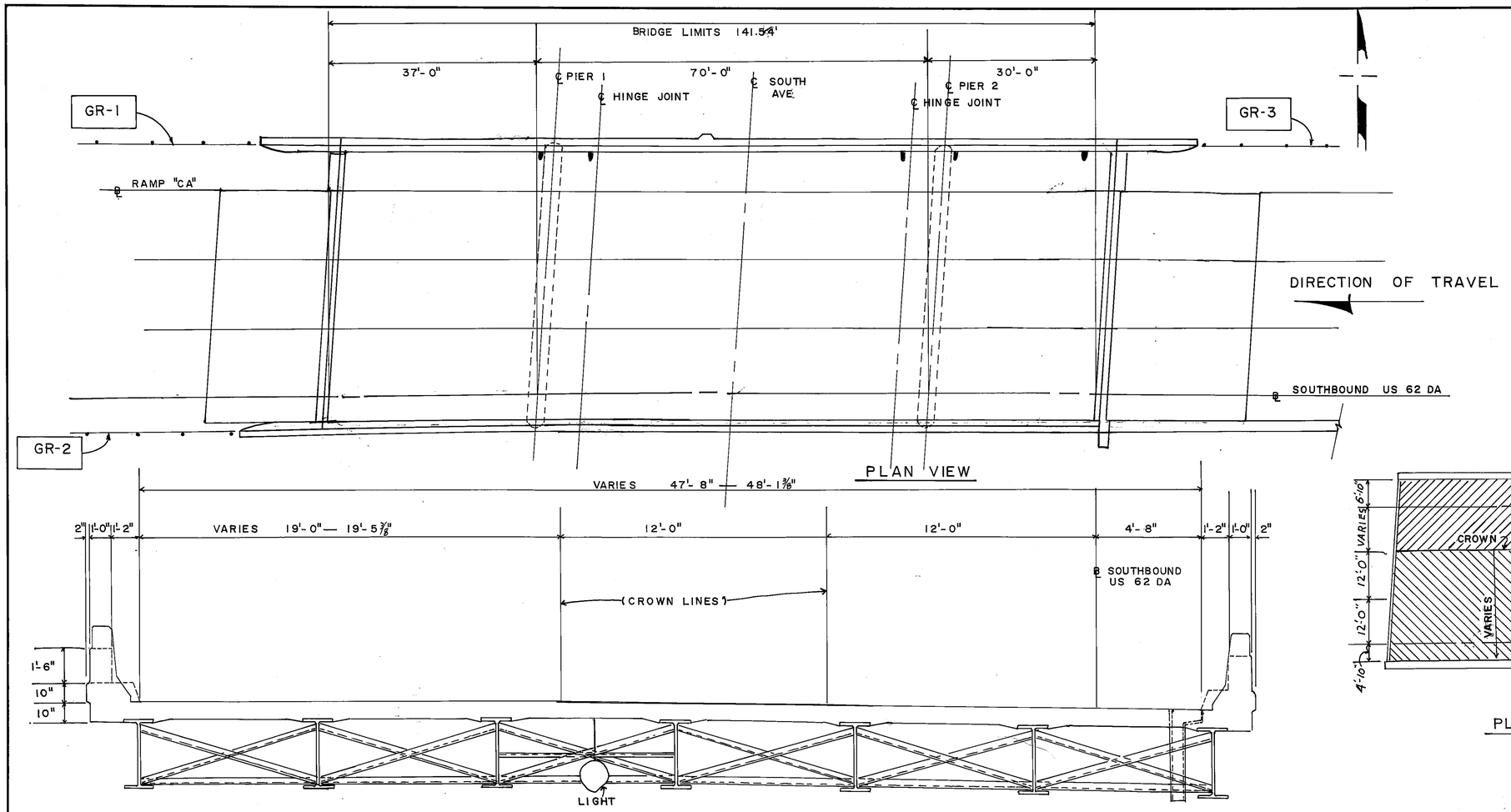

PLAN VIEW

TRANSVERSE SECTION

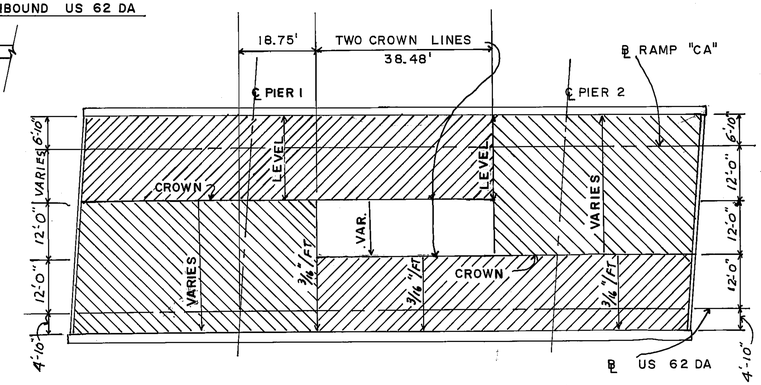

PLAN INDICATING SLOPE OF SLAB

GENERAL PLAN
&
TRANSVERSE SECTION
BRIDGE MAH.-62DA-0054 L
OVER
SOUTH AVE.

STRUCTURE QUANTITIES SUB-SUMMARY

404 ASPHALT CONCRETE C.Y.	407 TACK COAT GAL.	SPEC. PRESSURE RELIEF JOINTS TYPE 'C' L.F.	516 VERTICAL EXT. OF STRUC'L EXP. JOINTS L.F.	605 AGG. DRAINS L.F.	845 BRIDGE DECK OVERLAY 1-1/4" AS PER PLAN S.Y.	VARIABLE DEPTH C.Y.	FULL DEPTH C.Y.	SPEC. SEALING OF CONCRETE SURFACES S.Y.	517 RAILING, FACED, AS PER PLAN L.F.	510 DOWEL HOLES AS PER PLAN EA.	202 PORTIONS OF STRUCTURES REMOVED L.S.
18	53	72	172	30	737	50	1	300	320	424	LUMP

GUARD RAIL SUB-SUMMARY

CODE	202 GUARD RAIL REMOVED L.F.	202 BRIDGE TERMINAL ASSEMBLY REMOVED EA.	606 GUARD RAIL TYPE 5 L.F.	606 BRIDGE TERMINAL ASSEMBLY TYPE A EA.	TYPE J EA.	TYPE ___ EA.
GR-1	25	1	25		1	
GR-2	25	1	25		1	
GR-3	25	1	25	1		
TOTAL	75	3	75	1	2	

33770

F.H.W.A. REGION	STATE	PROJECT	
5	OHIO		

7 / 31

PLAN NO. BR-50-85

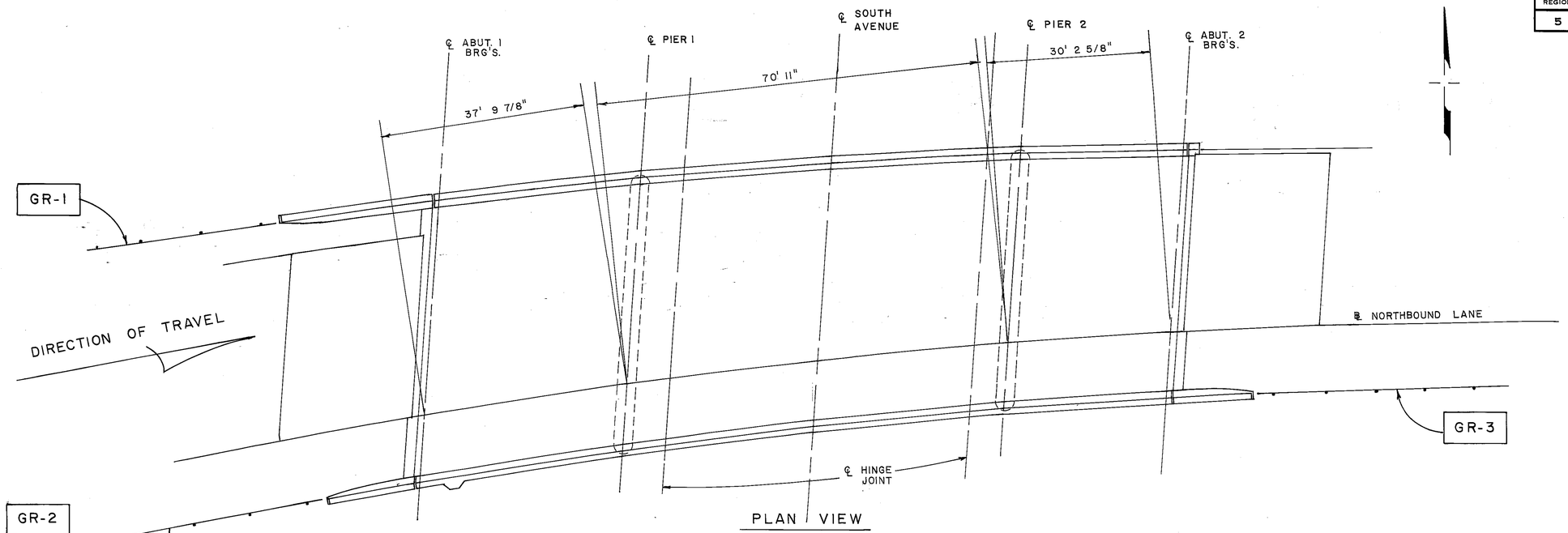

PLAN VIEW

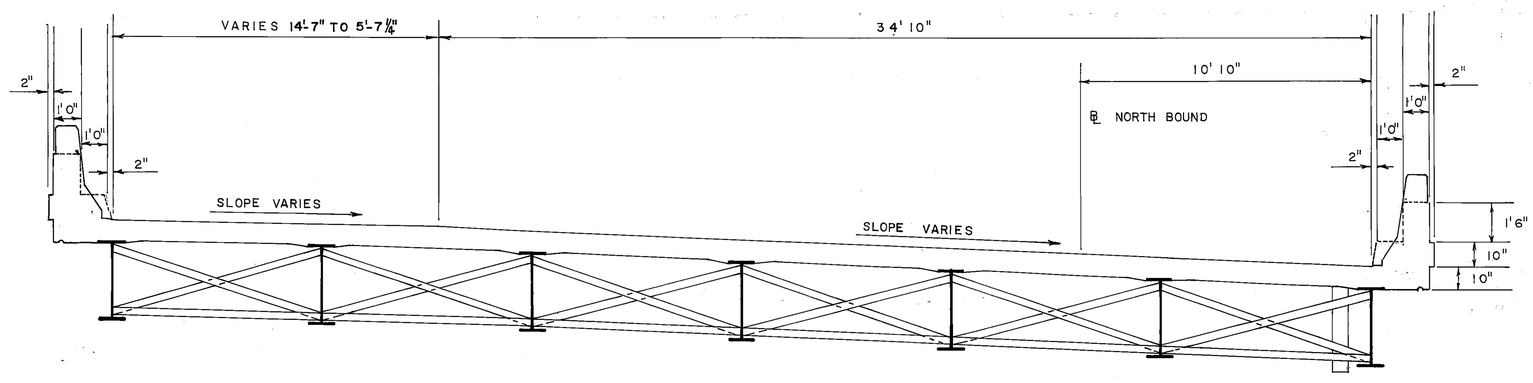

TRANSVERSE SECTION

GENENAL PLAN
&
TRANSVERSE SECTION
MAH-62 DA-0054 R
OVER SOUTH AVE.

STRUCTURE QUANTITIES SUB-SUMMARY

404	407	SPEC.	516	605	845 BRIDGE DECK OVERLAY			SPEC.	517	510	202
ASPHALT CONCRETE	TACK COAT	PRESSURE RELIEF JOINTS TYPE 'C'	VERTICAL EXT. OF STRUC'L EXP. JOINTS	AGG. DRAINS	1-1/4" AS PER PLAN	VARIABLE DEPTH	FULL DEPTH	SEALING OF CONCRETE SURFACES	RAILING, FACED, AS PER PLAN	DOWEL HOLES AS PER PLAN	PORTIONS OF STRUCTURES REMOVED
C.Y.	GAL.	L.F.	L.F.	L.F.	S.Y.	C.Y.	C.Y.	S.Y.	L.F.	EA.	L.S.
17	50	56	184	30	710	40	1	313	335	410	LUMP

GUARD RAIL SUB-SUMMARY

CODE	202	202	606	606		
	GUARD RAIL REMOVED	BRIDGE TERMINAL ASSEMBLY REMOVED	GUARD RAIL TYPE 5	BRIDGE TERMINAL ASSEMBLY		
				TYPE A	TYPE J	TYPE ___
	L.F.	EA.	L.F.	EA.	EA.	EA.
GR-1	25	1	25	1		
GR-2	25	1	25	1		
GR-3	25	1	25		1	
TOTAL	75	3	75	2	1	

33270

F.H.W.A. REGION	STATE	PROJECT	
5	OHIO		

8
31

PLAN NO. BR-50-85

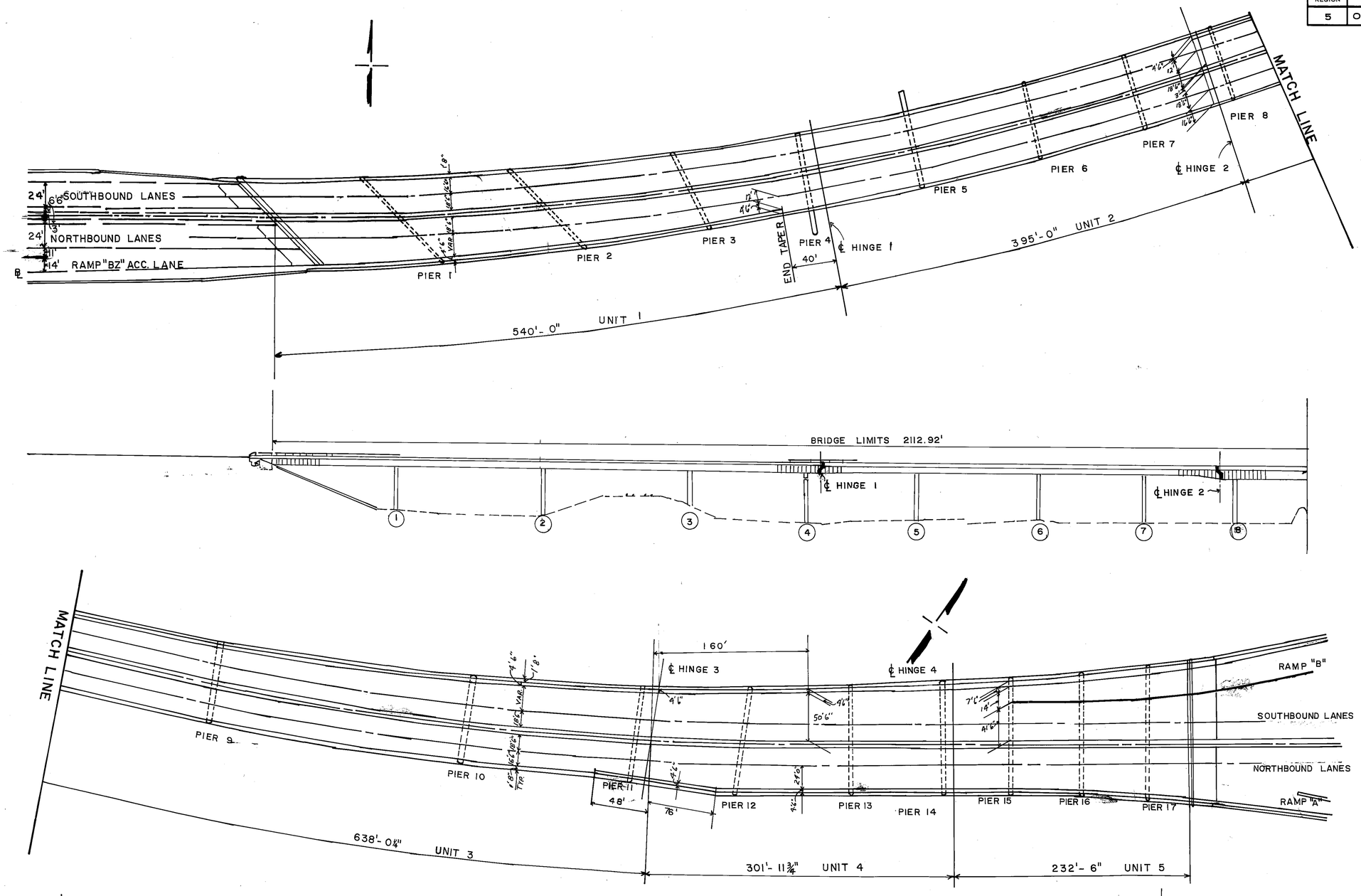

GENERAL PLAN
&
ELEVATION

BRIDGE MAH.-62-1823
OVER
POLAND AVE., R.R.,
MAHONING RIVER, AND
WILSON AVE.

UNIT 1

F.H.W.A. REGION	STATE	PROJECT	
5	OHIO		

9
31

PLAN NO. BR-50-85

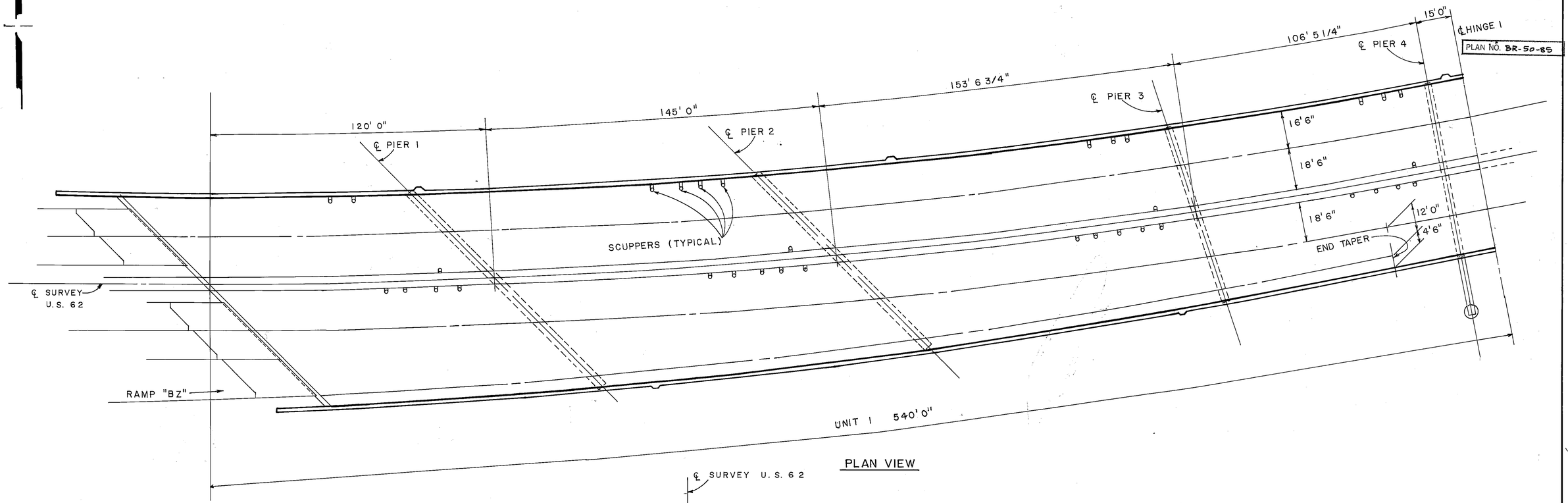

PLAN VIEW

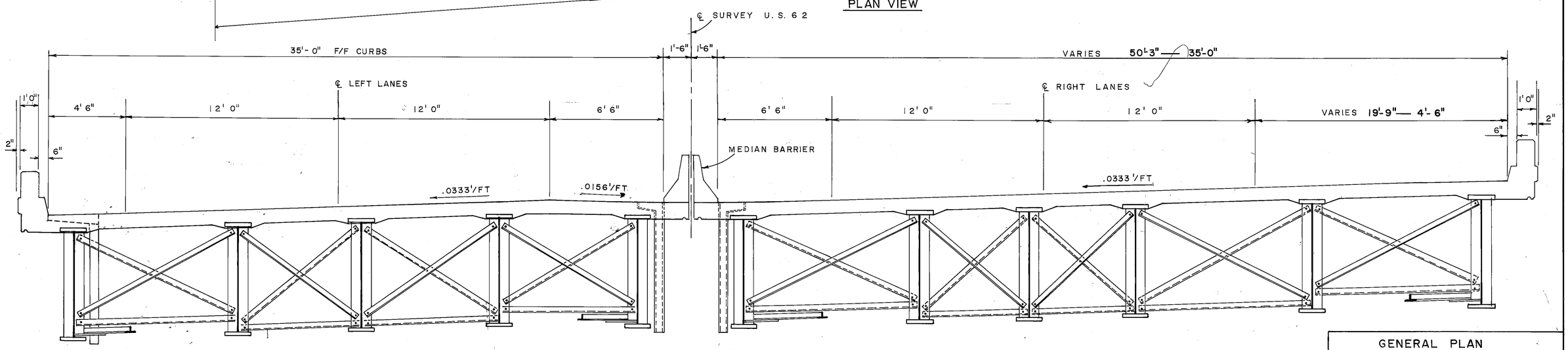

TRANSVERSE SECTION

GENERAL PLAN
&
TRANSVERSE SECTION
UNIT 1
BRIDGE MAH-62-18.23
OVER
POLAND AVE, R.R.
MAHONING RIVER AND
WILSON AVE.

33770

F.H.W.A. REGION	STATE	PROJECT	
5	OHIO		

10
31

PLAN NO. BR-50-85

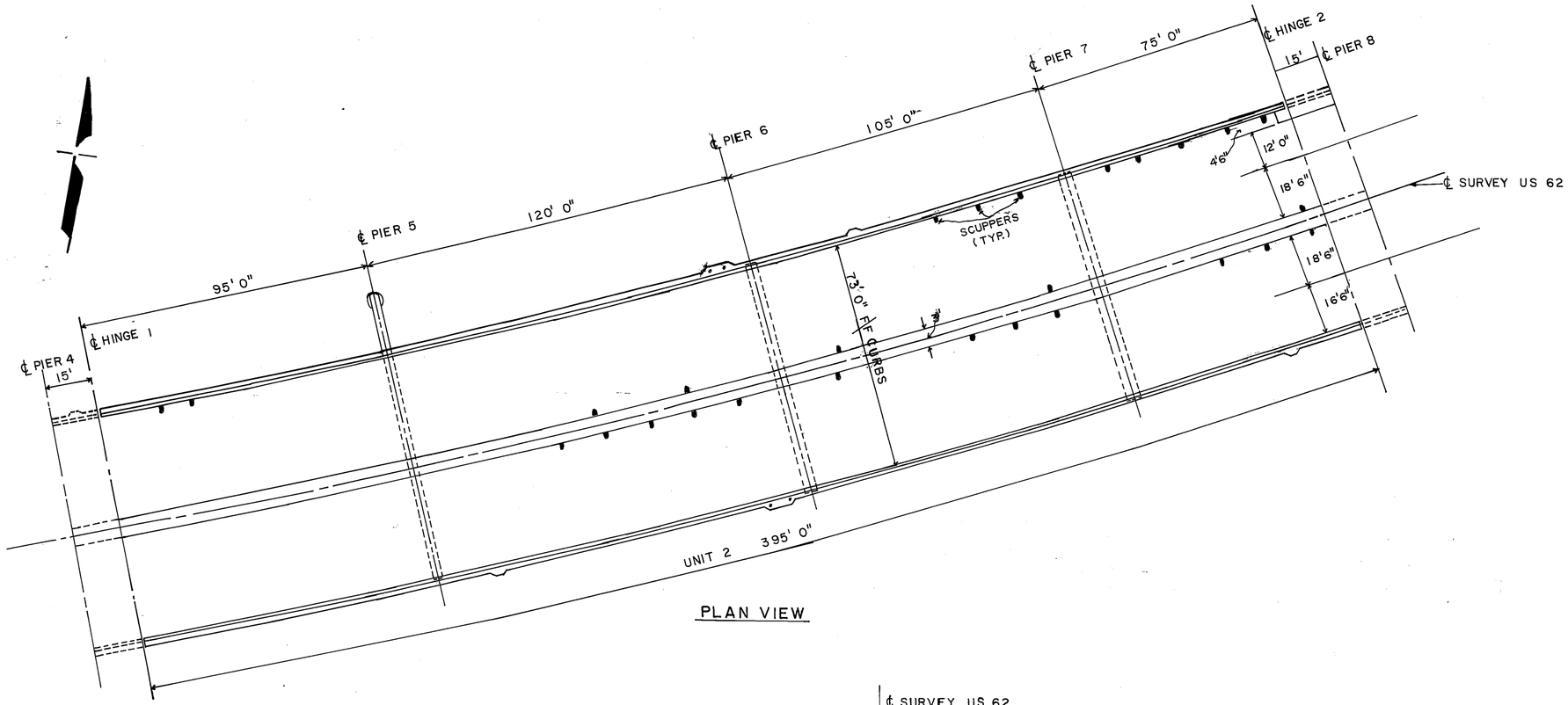

PLAN VIEW

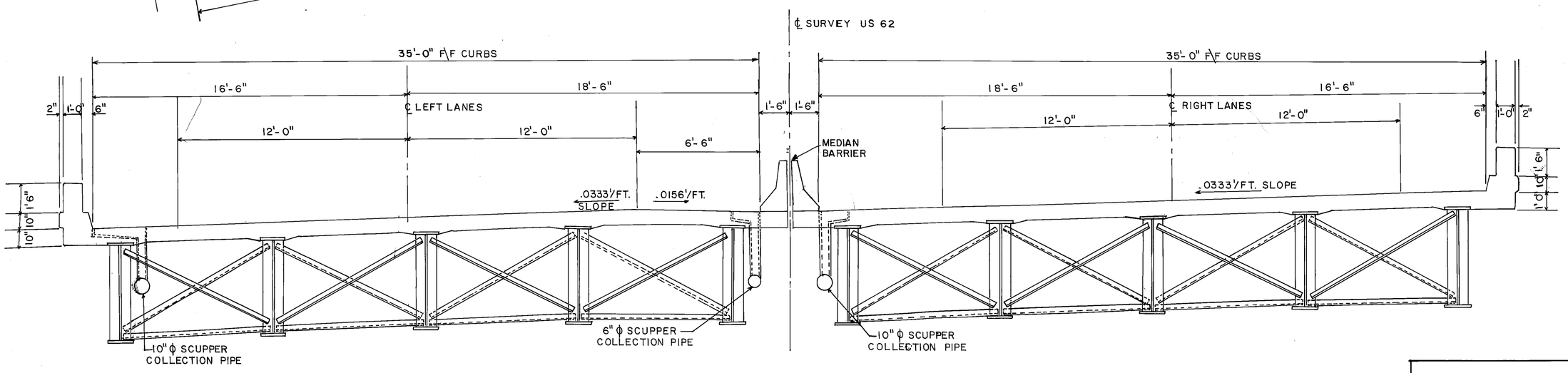

TRANSVERSE SECTION

GENERAL PLAN
&
TRANSVERSE SECTION
UNIT 2
BRIDGE MAH.-62-1823
OVER
POLAND AVE., R.R.
MAHONING RIVER, AND
WILSON AVE.

F.H.W.A. REGION	STATE	PROJECT	
5	OHIO		

11
31

PLAN NO. BR-50-85

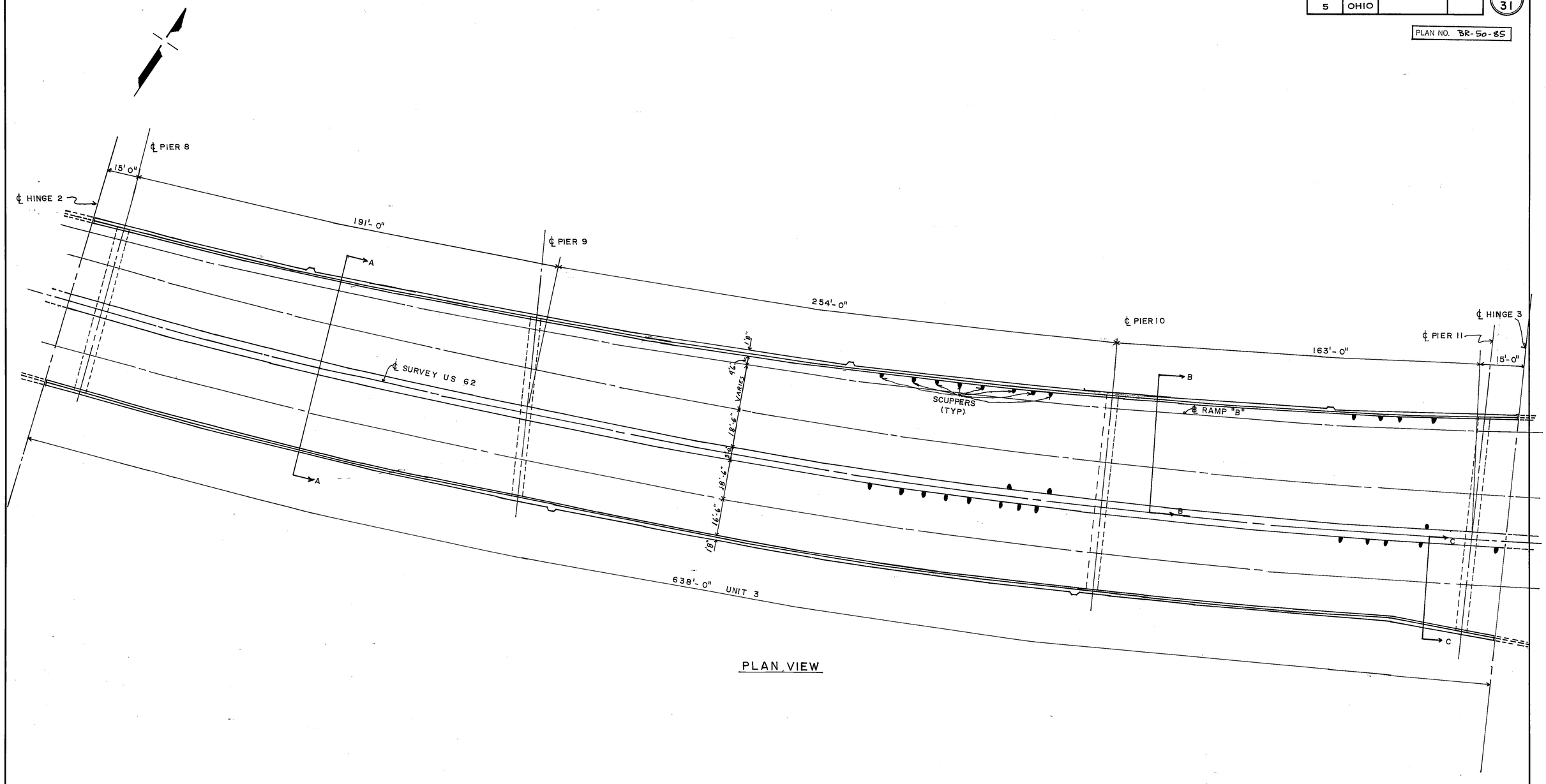

PLAN VIEW

GENERAL PLAN

UNIT 3
BRIDGE MAH. - 62 - 1823
OVER
POLAND AVE., R.R.,
MAHONING RIVER, AND
WILSON AVE.

F.H.W.A. REGION	STATE	PROJECT	
5	OHIO		

12
31

PLAN NO. BR-50-85

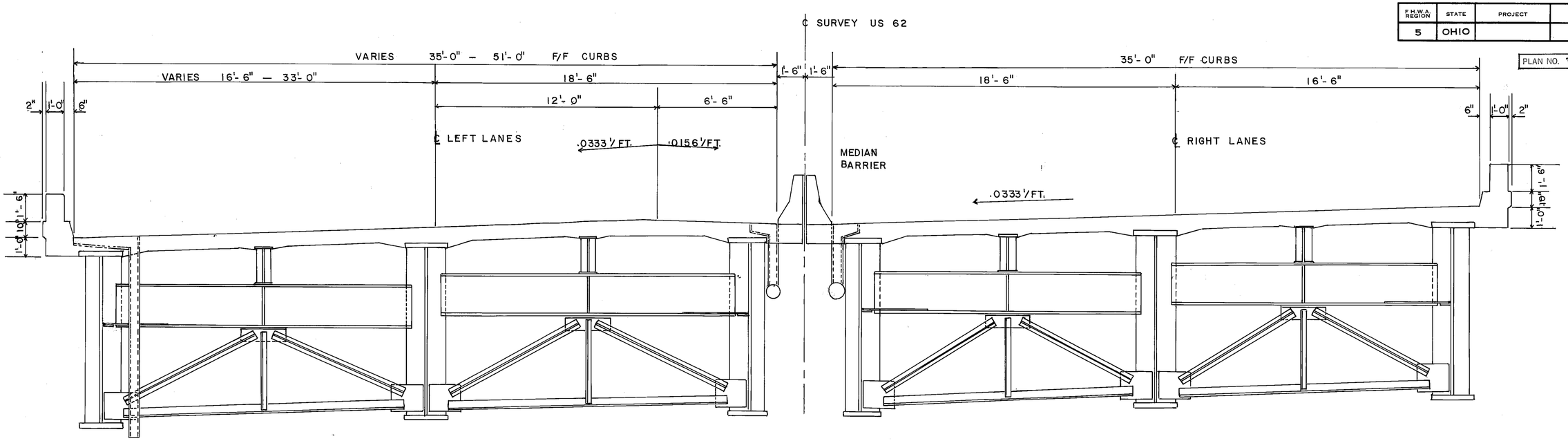

TRANSVERSE SECTION 'A-A'

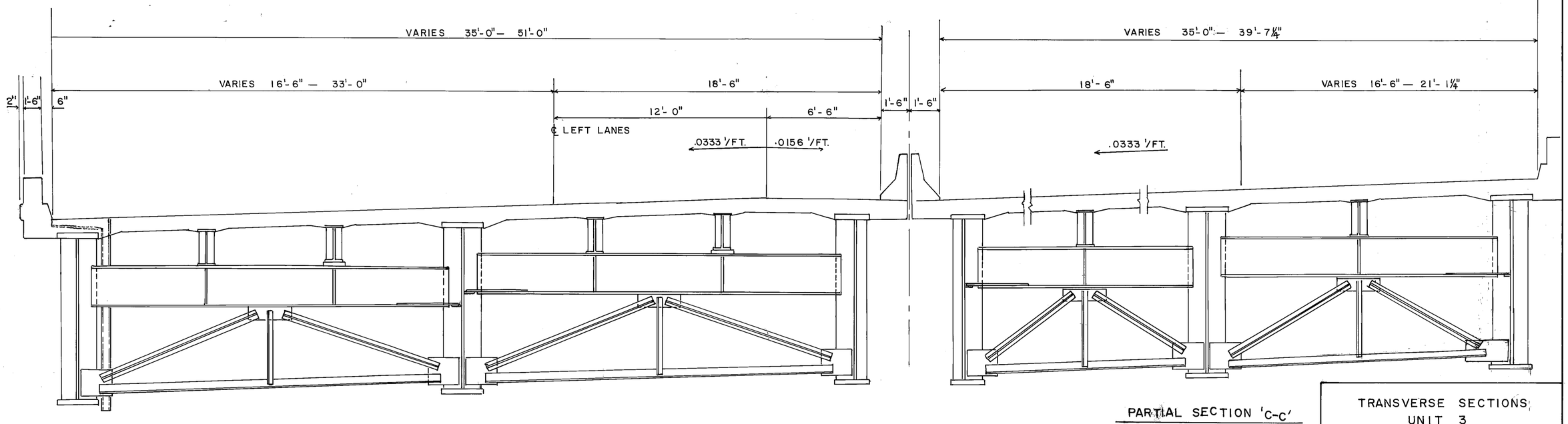

SECTION 'B-B'

PARTIAL SECTION 'C-C'

TRANSVERSE SECTIONS
UNIT 3
BRIDGE MAH.- 62 - 1823
OVER
POLAND AVE., R.R.,
MAHONING RIVER, AND
WILSON AVE.

F.H.W.A. REGION	STATE	PROJECT	
5	OHIO		

13/31

PLAN NO. BR-50-85

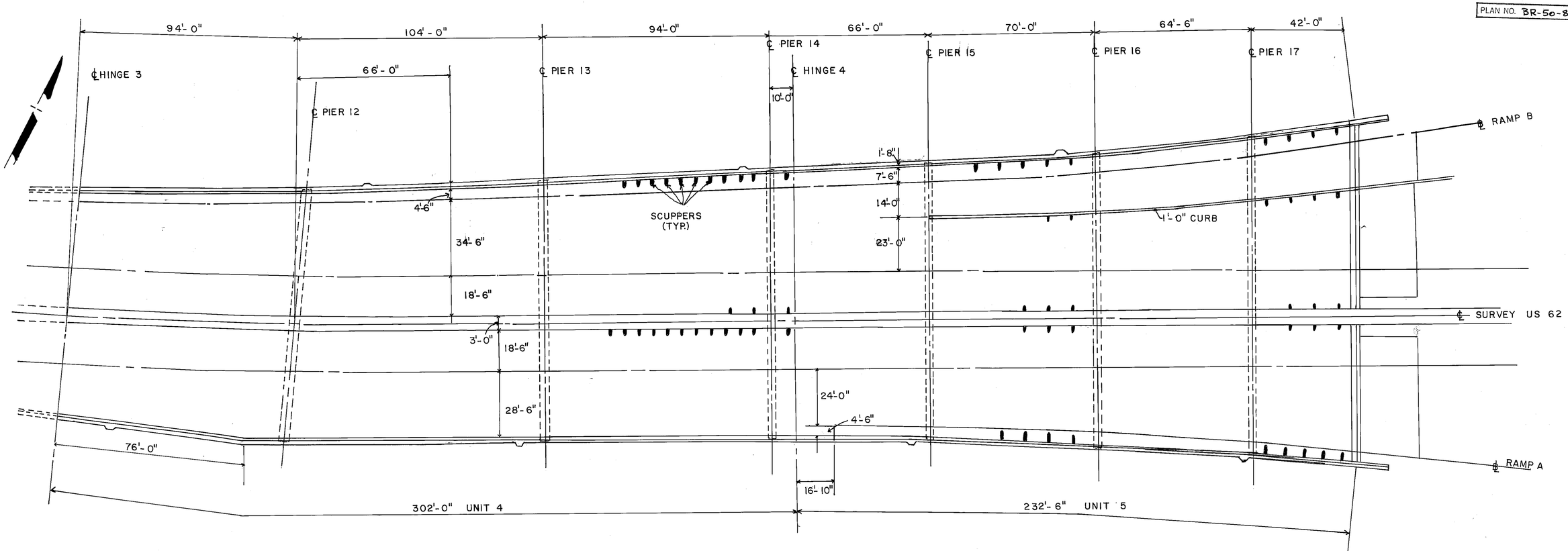

PLAN VIEW

GENERAL PLAN
UNITS 4 & 5
BRIDGE MAH.-62-1823
OVER
POLAND AVE., R.R.,
MAHONING RIVER, AND
WILSON AVE.

33770

F.H.W.A. REGION	STATE	PROJECT	
5	OHIO		

14/31

PLAN NO. BR-50-85

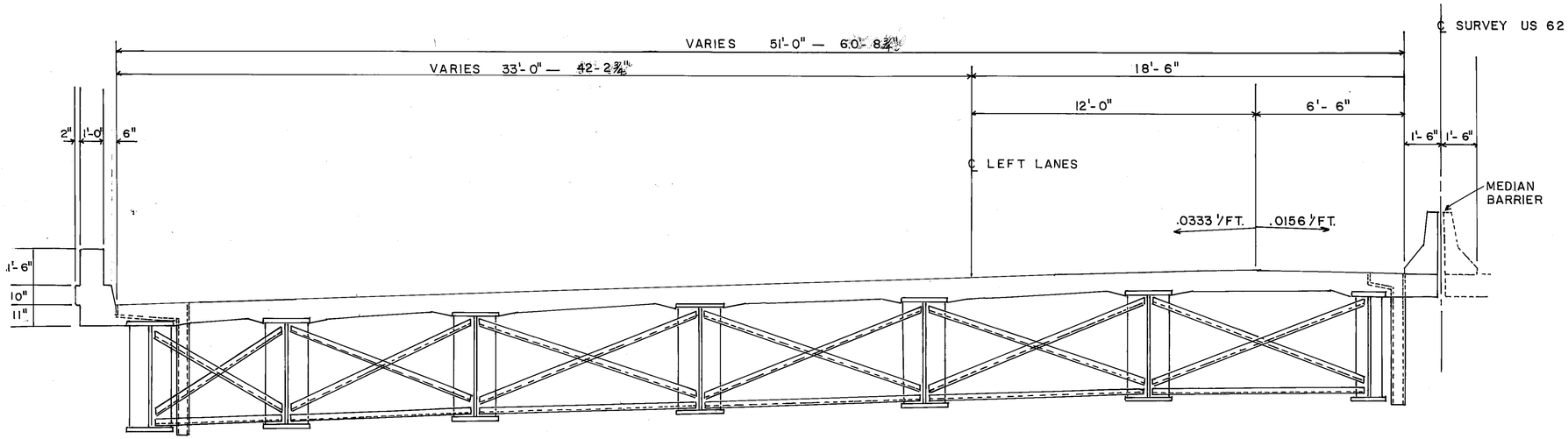

TRANSVERSE SECTION LEFT LANES

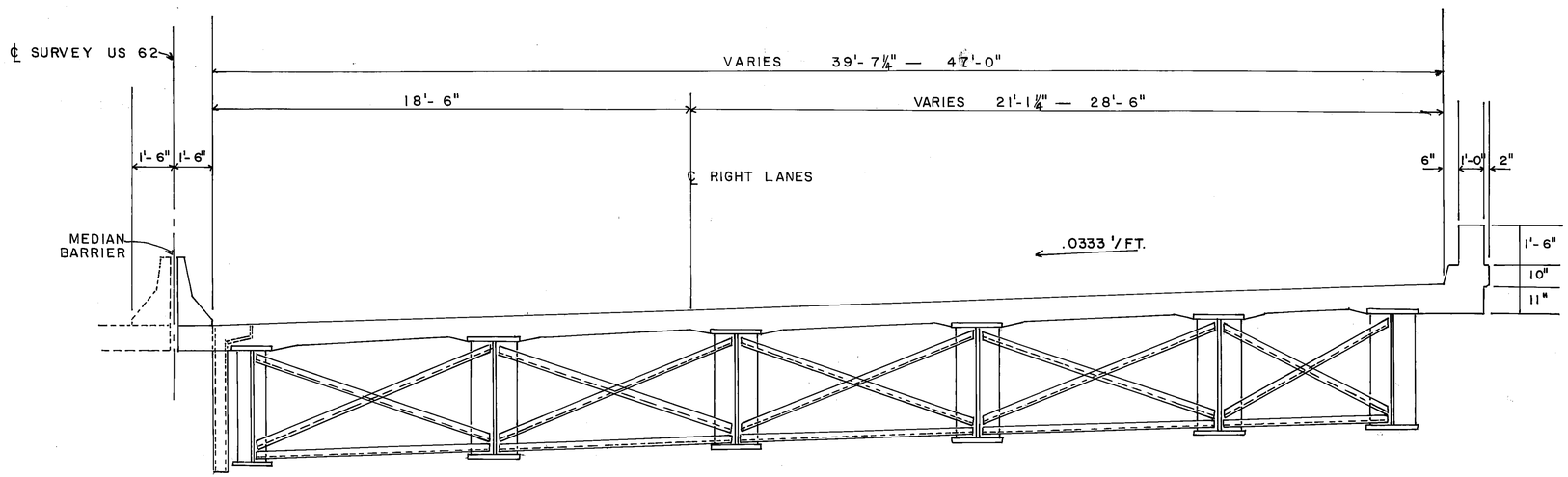

TRANSVERSE SECTION RIGHT LANES

TRANSVERSE SECTIONS
UNIT 4
BRIDGE MAH - 62 - 1823
OVER
POLAND AVE., R.R.,
MAHONING RIVER, AND
WILSON AVE.

33770

F.H.W.A. REGION	STATE	PROJECT	
5	OHIO		

15/31

PLAN NO. BR-50-85

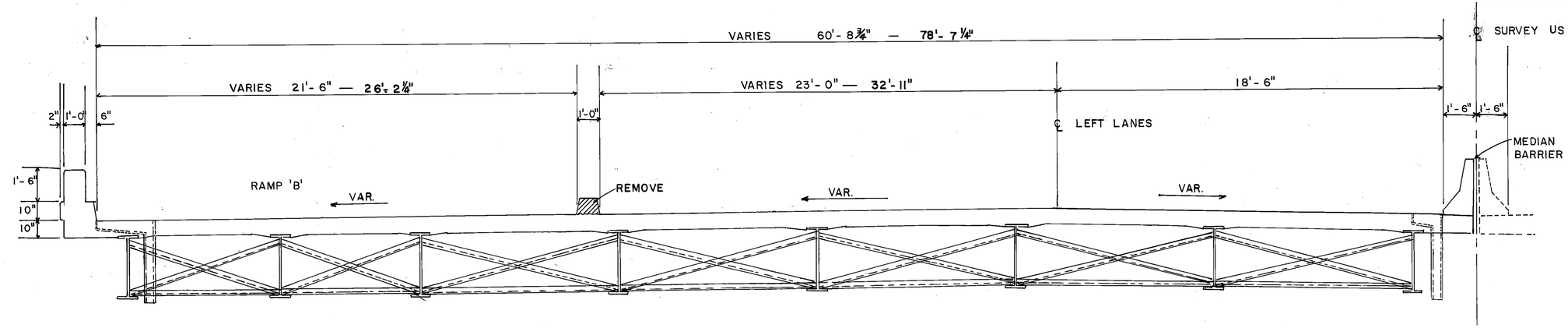

TRANSVERSE SECTION LEFT LANES

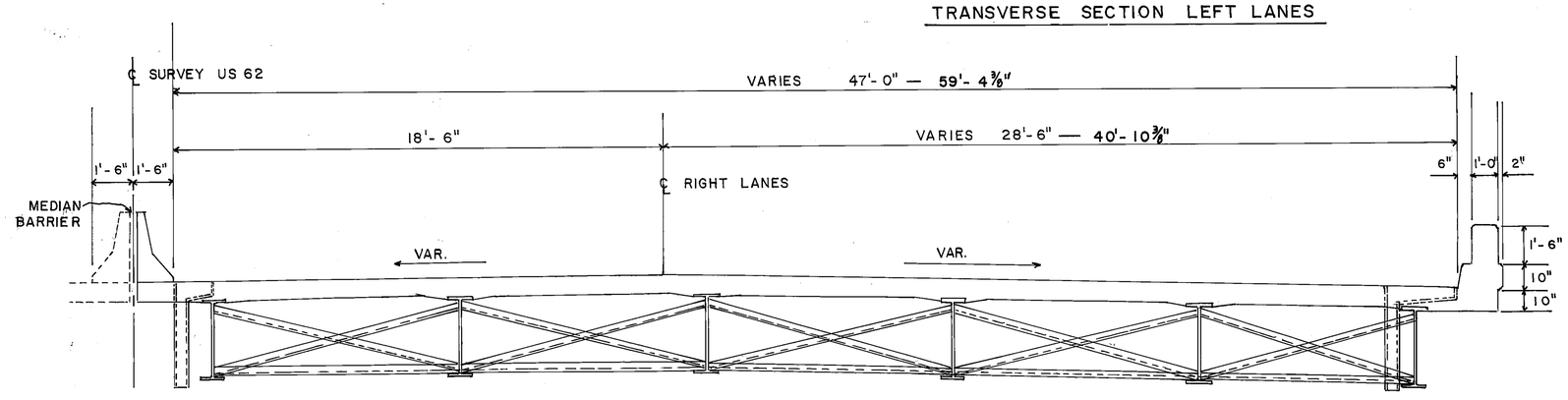

TRANSVERSE SECTION RIGHT LANES

TRANSVERSE SECTIONS
UNIT 5
BRIDGE MAH-62-1823
OVER
POLAND AVE., R.R.,
MAHONING RIVER, AND
WILSON AVE.

STRUCTURE QUANTITIES SUB-SUMMARY

LOCATION	845 BRIDGE DECK OVERLAY			605	SPEC.	SPEC.	202	516		
UNIT:	1 1/4" AS PER PLAN S.Y.	VAR. DEPTH C.Y.	FULL DEPTH C.Y.	AGG. DRAINS L.F.	PRESSURE RELIEF JOINTS TYPE "C" L.F.	SEALING OF CONCRETE SURFACES S.Y.	CURB REMOVED, AS PER PLAN L.F.	HOT APPLIED JOINT SEALER L.F.		
1 L	2100	18		15	24	642		85		
1 R	2525	42	1	15	38	640		105		
2 L	1537	13				453		35		
2 R	1537	12				453		35		
3 L	3049	25	1			732		48		
3 R	4085	51	1			732		36		
4 L	1855	31	1			347		61		
4 R	1546	51	1			347		47		
5 L	1780	15		15	44	279	205	78		
5 R	1363	45	1	15	38	280		59		
TOTALS:	21,377	303	6	60	144	4,905	205	589		

GUARD RAIL SUB-SUMMARY

CODE	202	202	606	606			
	GUARD RAIL REMOVED L.F.	BRIDGE TERMINAL ASSEMBLY REMOVED EA.	GUARD RAIL TYPE 5 L.F.	BRIDGE TERMINAL ASSEMBLY TYPE D EA.	TYPE J EA.	TYPE ___ EA.	
	25	1	25	1			
	25	1	25	1			
	25	1	25		1		
	25	1	25		1		
	100	4	100	2	2		

F.H.W.A. REGION	STATE	PROJECT	
5	OHIO		

16/31

PLAN NO. BR-50-85

** EXACT LENGTHS TO BE DETERMINED IN THE FIELD.

REMOVE SUPPORTED END POST AS SHOWN BELOW BY REMOVAL LINES, AND ALLOW CLEARENCE FOR THE ADDITION OF THE YE 505 BARS & DOWELS

BRIDGE MAH.-680-0628

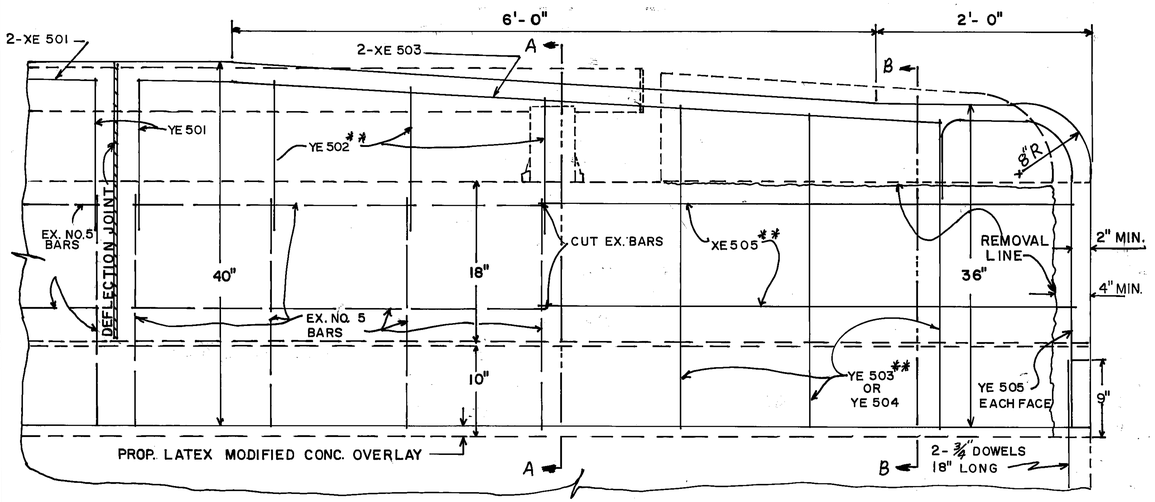

PROFILE VIEW

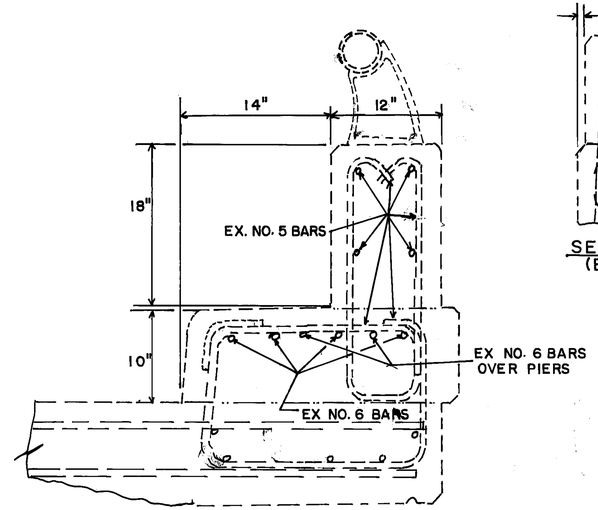

SECTION A-A (EXISTING)

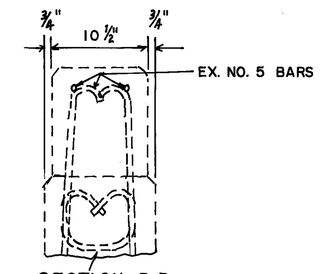

SECTION B-B (EXISTING)

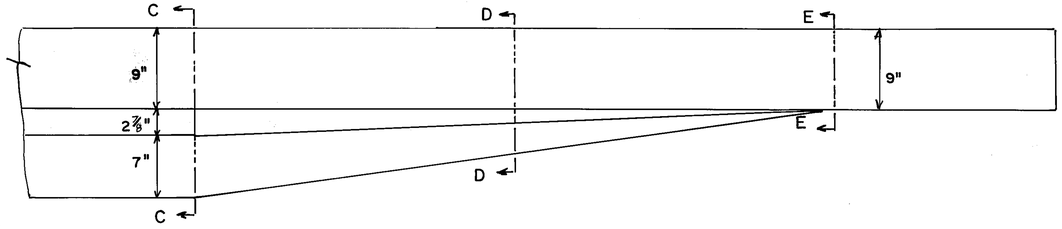

DIRECTION OF TRAFFIC

PLAN VIEW APPROACH END

FOR SECTIONS C-C, D-D, E-E, D_1-D_1, E_1-E_1 - SEE SHEET 16 OF 31.

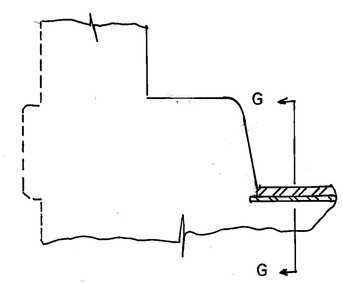

EXISTING CURB AT ABUT.

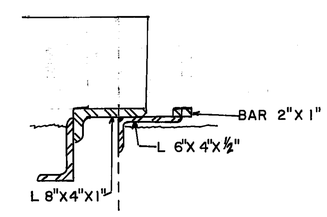

SECTION G-G

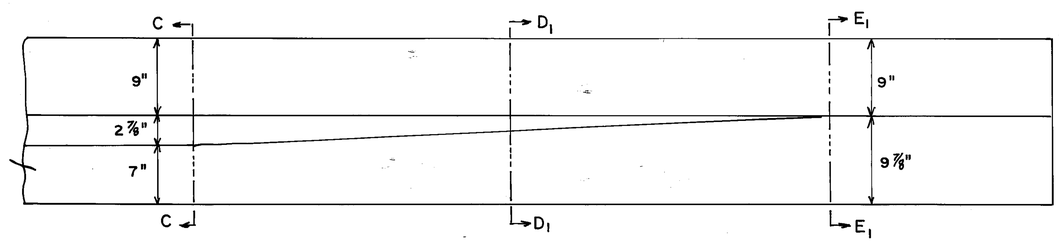

DIRECTION OF TRAFFIC

PLAN VIEW TRAILING END

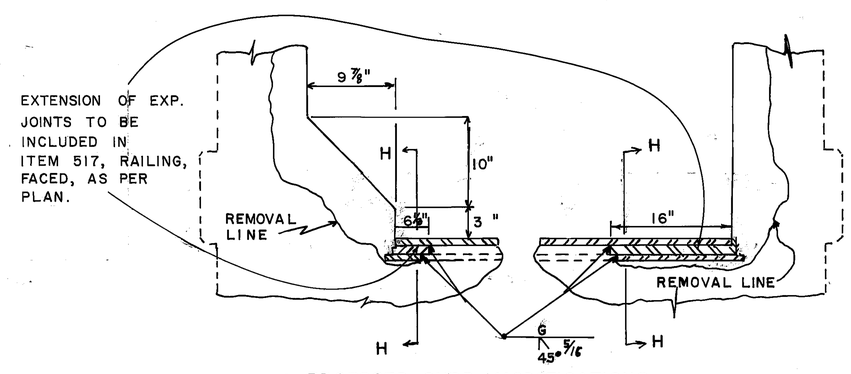

PROPOSED CURB MODIFICATIONS

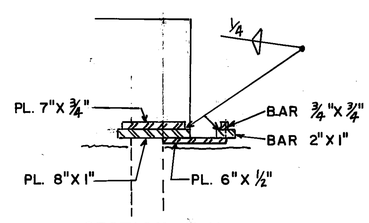

SECTION H-H

RETROFITTED STRUCTURES

BRIDGE MAH-680-0628

F.H.W.A. REGION	STATE	PROJECT	
5	OHIO		

17/31

PLAN NO. BR-50-85

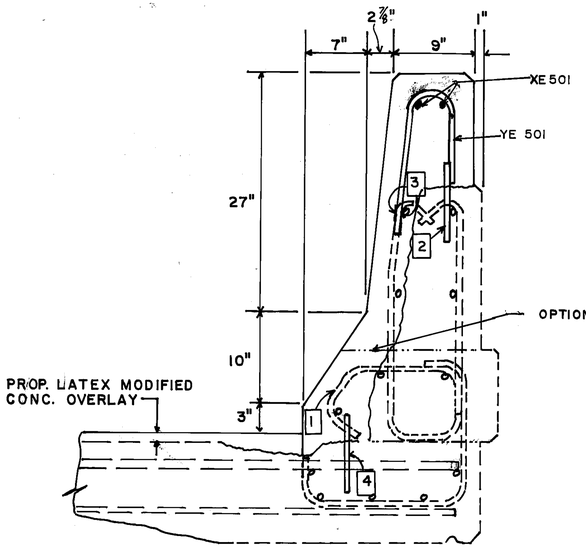

SECTION C-C

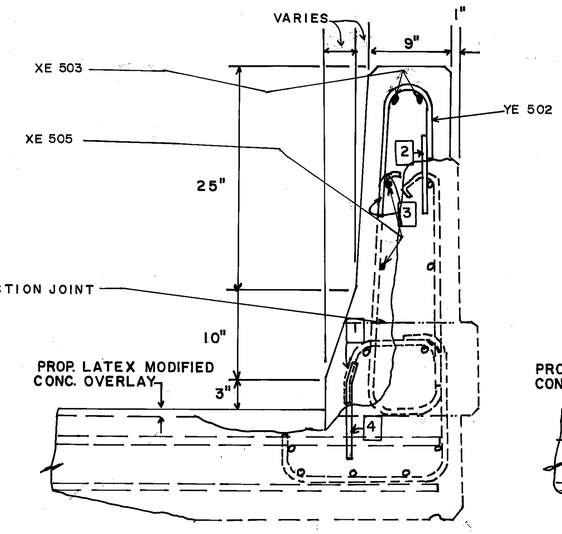

SECTION D-D

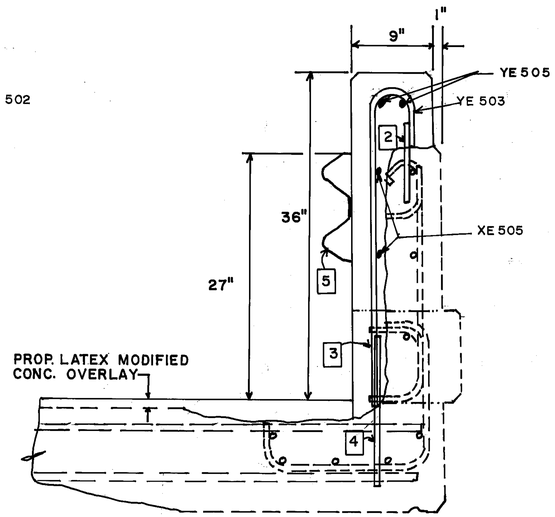

SECTION E-E

DEFLECTION JOINTS

LENGTH OF END PANELS

RIGHT (SOUTH) SIDE = 8'-11 7/8"
LEFT (NORTH) SIDE = 9'-1 7/8"

INTERMEDIATE PANELS

RIGHT (SOUTH) SIDE = 24 at 15'-7"
LEFT (NORTH) SIDE = 28 at 15'-7"

1. CUT EXISTING NO. 5 REBAR, BEND AND TIE TO 3/4" DOWEL BARS.
2. 3/4" X 12" DOWEL BARS SET IN EXISTING CONCRETE TO A DEPTH OF 6" AND 20" c/c MAX. (XE 601)
3. TIE TO EXISTING STEEL
4. 3/4" X 18" DOWEL BARS SET IN EXISTING CONCRETE TO A DEPTH OF 9" AND 20" c/c MAX. BEND IN THE FIELD WHERE NECESSARY. (XE 602)
5. BOTH TYPE A & TYPE J TERMINAL CONNECTORS SHALL BE FASTENED TO THE PROPOSED RETROFITTED PARAPET WITH 4-7/8" DIA. HEX HEAD BOLTS THROUGH THE PARAPET WITH 3"X3"X1/2" PLATE WASHERS AND HEX NUTS ON BACK OF PARAPET.

SEE GR-3 & GR-3B

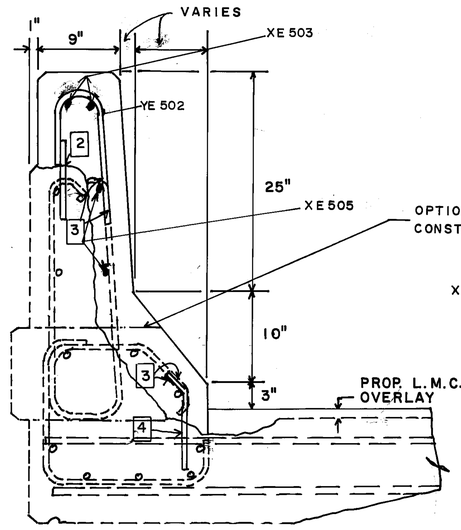

SECTION D_1-D_1

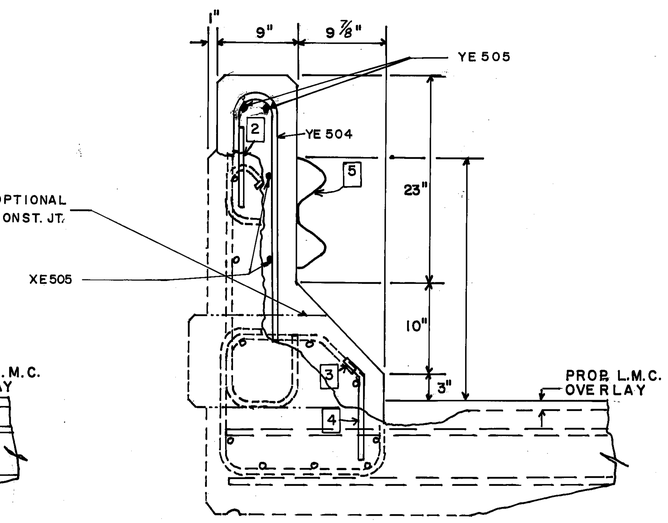

SECTION E_1-E_1

RETROFIT SECTIONS

F.H.W.A. REGION	STATE	PROJECT	
5	OHIO		

18
31

PLAN NO. BR-50-85

BRIDGE MAH.-62DA-0054 LT. & RT.

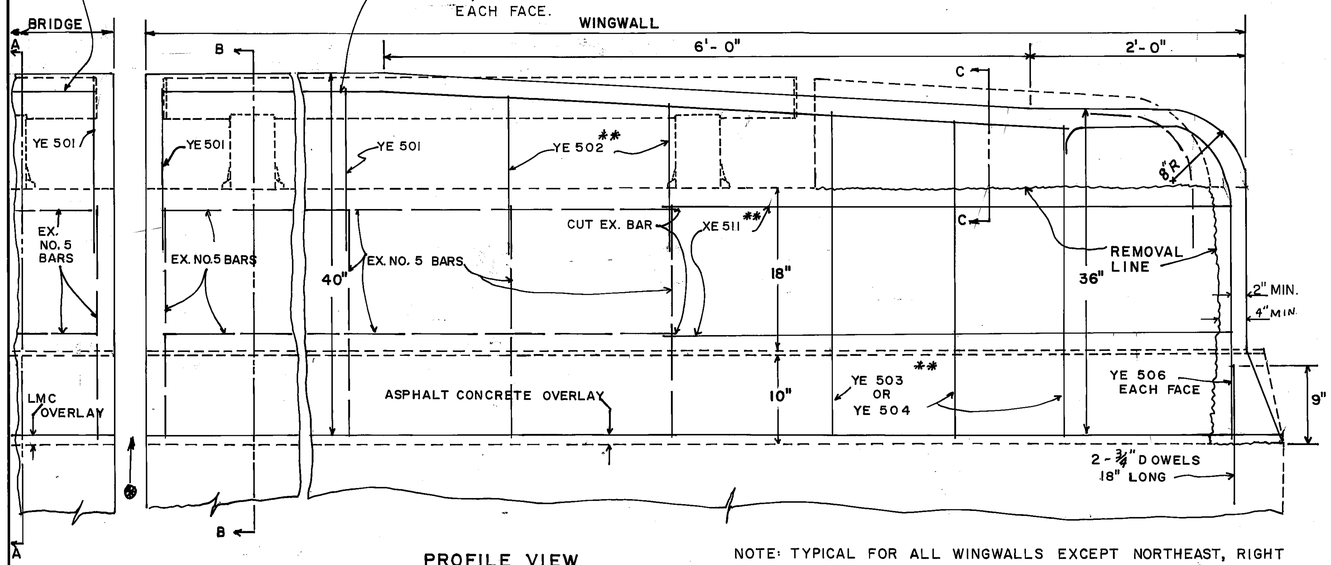

PROFILE VIEW

NOTE: TYPICAL FOR ALL WINGWALLS EXCEPT NORTHEAST, RIGHT & SOUTHEAST, LEFT WINGWALLS.
FOR DETAILS, SEE SHEETS 20 & 22 OF 31.

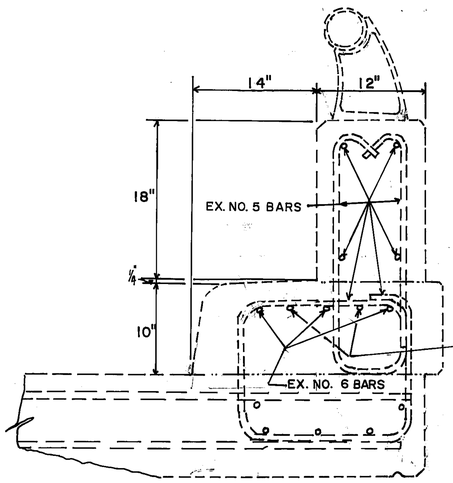

SECTION A-A (EXISTING)

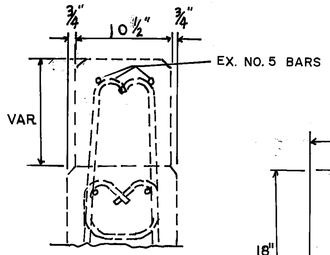

SECTION C-C (EXISTING)

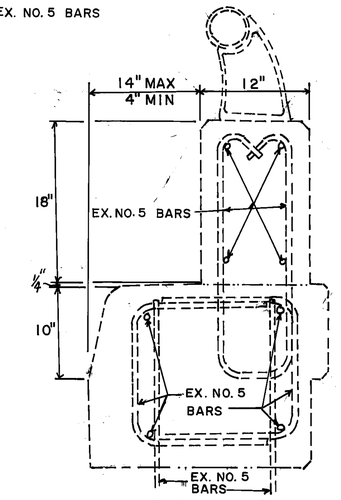

SECTION B-B (EXISTING)

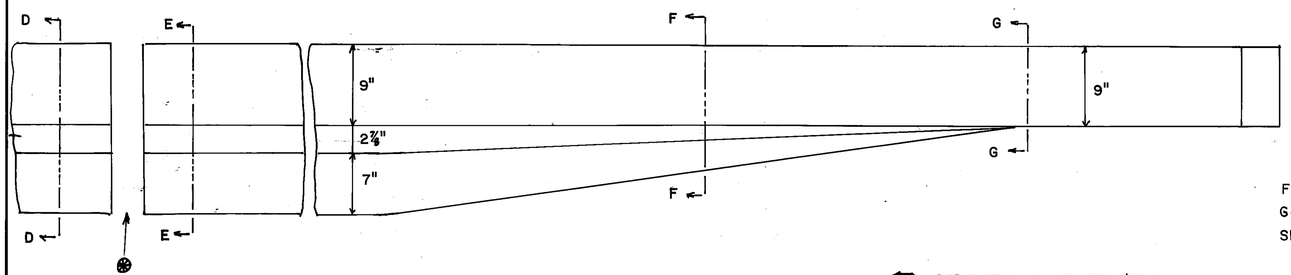

PLAN VIEW APPROACH END

DIRECTION OF TRAFFIC

FOR SECTIONS D-D, E-E, F-F, G-G, F_1-F_1, & G_1-G_1 SEE SHEET 19 OF 31.

NOTE: SEE CURB PLATE DETAILS

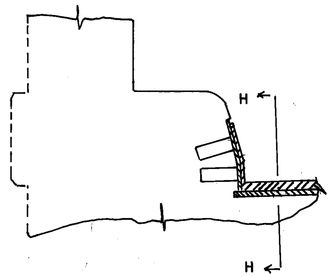

EXISTING CURB PLATE

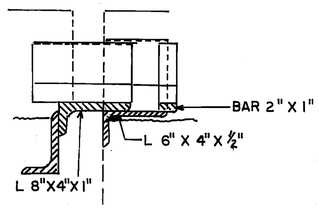

SECTION H-H

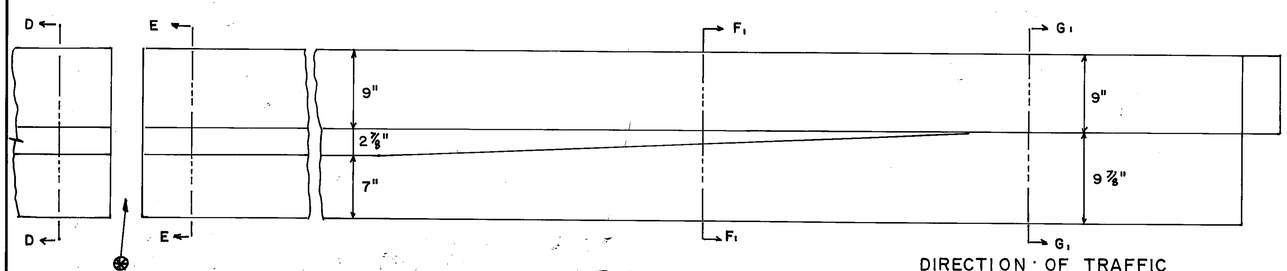

PLAN VIEW TRAILING END

DIRECTION OF TRAFFIC

EXTENSION OF EXP. JOINTS TO BE INCLUDED IN ITEM 517, RAILING, FACED, AS PER PLAN.

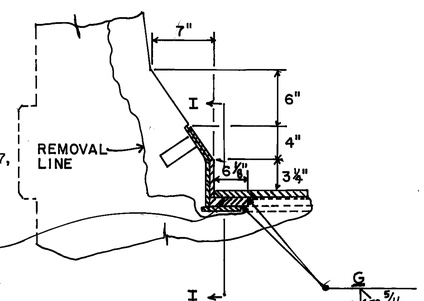

PROPOSED CURB PLATE MODIFICATIONS

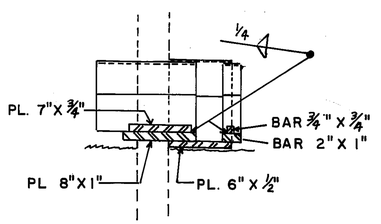

SECTION I-I

RETROFITTED STRUCTURES

BRIDGE MAH.-62DA-0054 LT. & RT.

F.H.W.A. REGION	STATE	PROJECT	
5	OHIO		

PLAN NO. BR-50-85

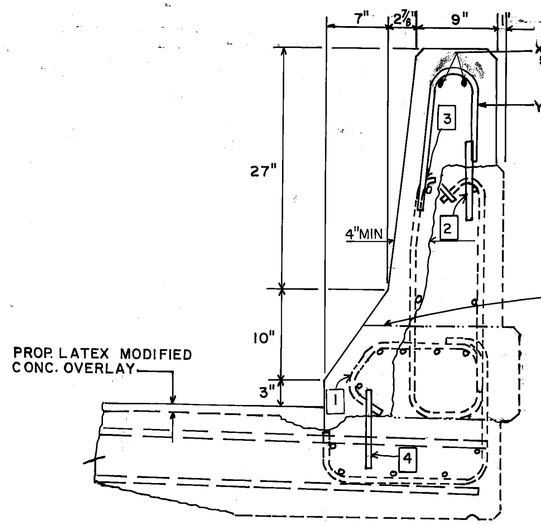

SECTION D-D

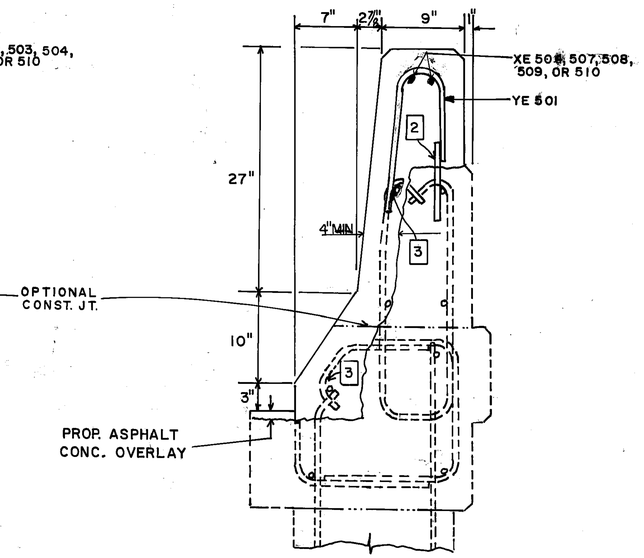

SECTION E-E

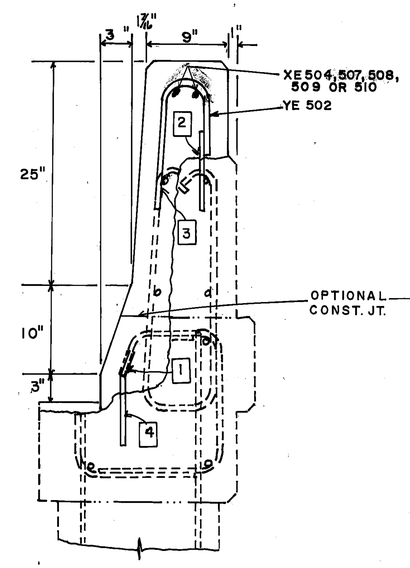

SECTION F-F

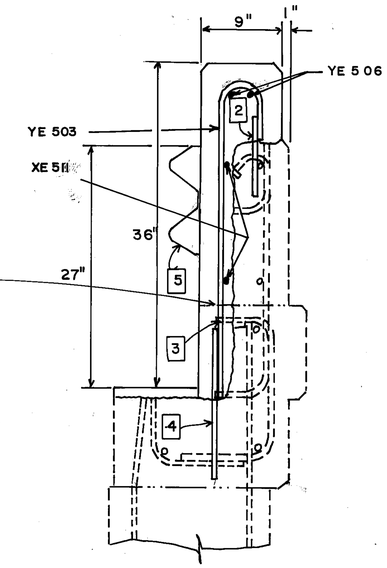

SECTION G-G

DEFLECTION JOINTS					
PANEL LOCATION FROM WEST TO EAST	RIGHT STRUCTURE			LEFT STRUCTURE	
	RT.(SOUTH) SIDE	LT.(NORTH) SIDE		RT.(SOUTH) SIDE	LT.(NORTH) SIDE
WINGWALL	15'-0 3/4"	27'-8 1/2" 16'-2 1/2" 11'-6"		13'-0"	14'-3 3/4"
1st. PANEL	14'-0"	13'-9 1/4"		13'-7 1/4"	13'-7 1/4"
2nd. PANEL	17'-0"	17'-0"		16'-10"	16'-10"
3rd. PANEL	14'-0"	13'-9 1/4"		13'-7 1/4"	13'-7 1/4"
HINGE	—	—		—	—
4th. PANEL	13'-7 3/4"	13'-4 1/2"		13'-3"	13'-3"
5th. PANEL	16'-6"	16'-6"		16'-6"	16'-6"
6th. PANEL	16'-6"	16'-6"		16'-6"	16'-6"
7th. PANEL	13'-7 3/4"	13'-4 1/2"		13'-3"	13'-3"
HINGE	—	—		—	—
8th. PANEL	13'-5"	13'-4"		13'-3 1/2"	13'-3 1/2"
9th. PANEL	16'-6"	16'-6"		16'-5"	16'-5"
10th. PANEL	5'-2"	5'-1"		5'-1"	5'-1"
WINGWALL	10'-9 3/4"	SEE DETAIL PG. 20		13'-0"	SEE DETAIL PG. 22

XE 501 THRU 510 BARS ARE TO BE APPROX. 6" SHORTER THAN THE DEFLECTION JOINT PANELS i.e. A MINIMUM OF 3" COVER SHALL BE MAINTAINED ON EACH END. BARS SHALL BE CUT TO MAINTAIN THE NECESSARY COVER. SEE SHEET 24/31 FOR LOCATIONS.

1. CUT EXISTING NO. 5 REBAR, BEND AND TIE TO 3/4" DOWEL BARS.
2. 3/4" X 12" DOWEL BARS SET IN EXISTING CONCRETE TO A DEPTH OF 6" AND 20" C/C MAX. (XE 601)
3. TIE TO EXISTING STEEL
4. 3/4" X 18" DOWEL BARS SET IN EXISTING CONCRETE TO A DEPTH OF 9" AND 20" C/C MAX. BEND IN THE FIELD WHERE NECESSARY. (XE 602)
5. BOTH TYPE A & TYPE J TERMINAL CONNECTORS SHALL BE FASTENED TO THE PROPOSED RETROFITTED PARAPET WITH 4-7/8" DIA. HEX HEAD BOLTS THROUGH THE PARAPET WITH 3"X3"X1/2" PLATE WASHERS AND HEX NUTS ON BACK OF PARAPET.

SEE GR-3 & GR-3B

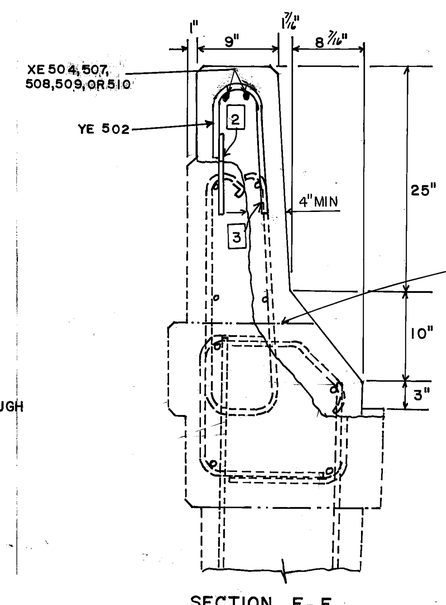

SECTION F_1-F_1

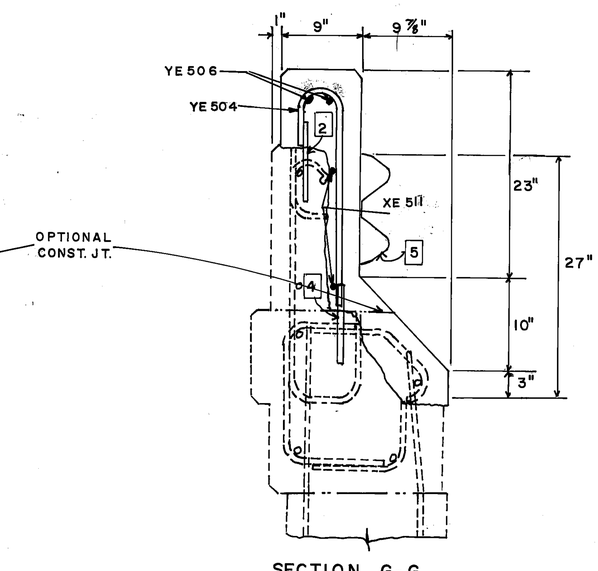

SECTION G_1-G_1

RETROFIT SECTIONS

F.H.W.A. REGION	STATE	PROJECT	
5	OHIO		

20/31

PLAN NO. BR-50-85

BRIDGE MAH.-62DA-0054 RT.

** EXACT LENGTHS TO BE DETERMINED IN THE FIELD

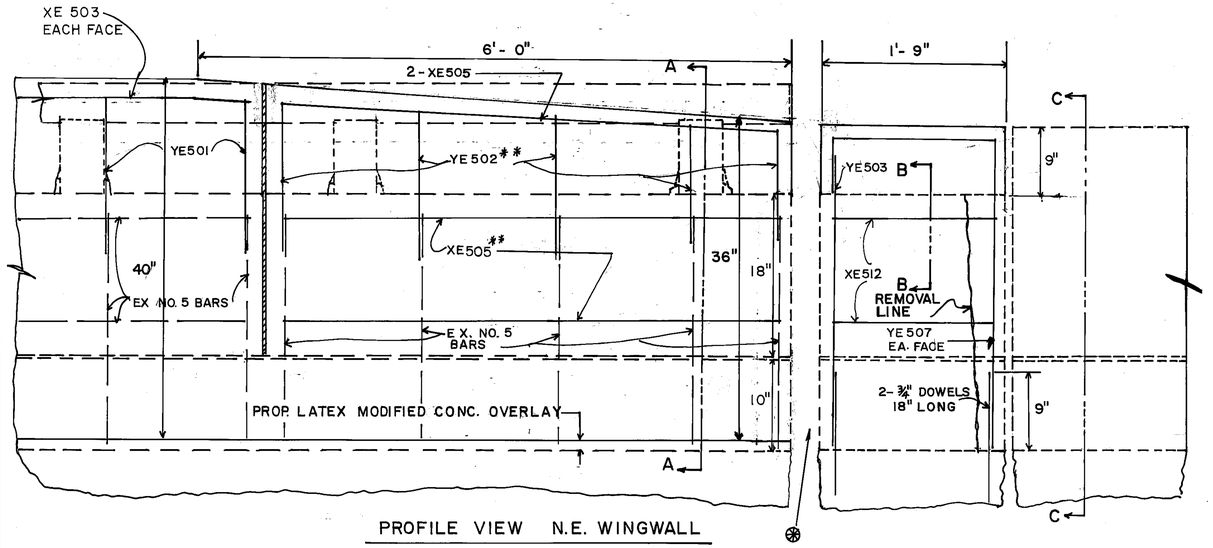

PROFILE VIEW N.E. WINGWALL

⊛ NOTE: SEE CURB PLATE DETAILS

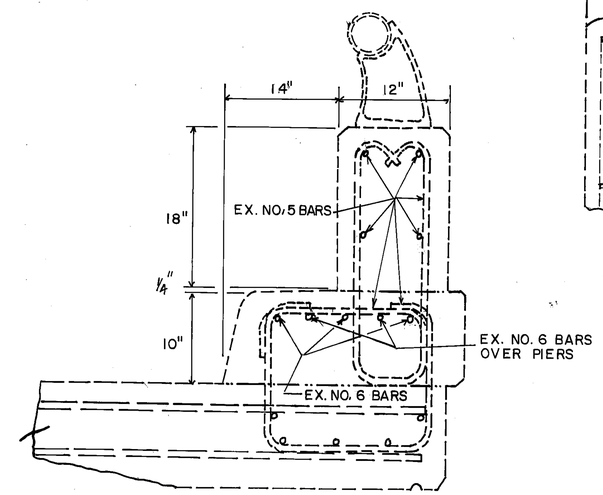

SECTION A-A
(EXISTING)

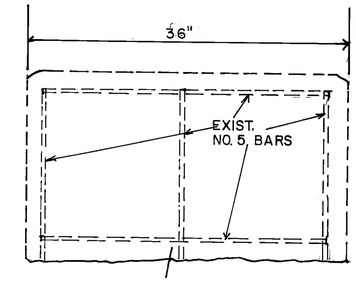

SECTION B-B
(EXISTING)

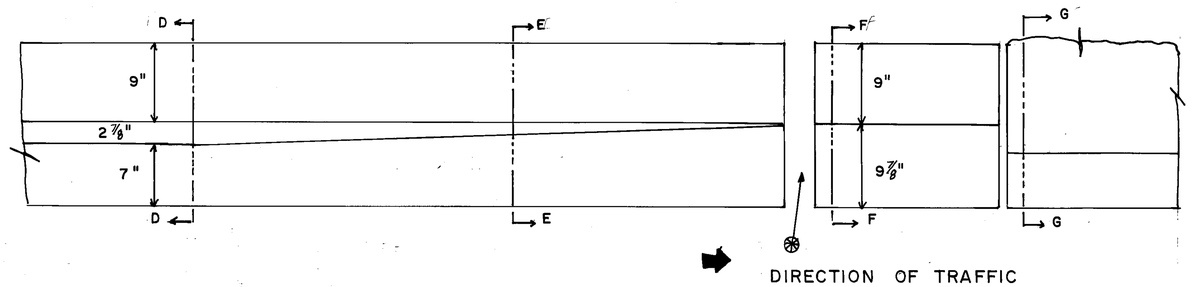

PLAN VIEW

DIRECTION OF TRAFFIC

FOR SECTIONS D-D, E-E, F-F, & G-G, SEE SHEET 21 OF 31.

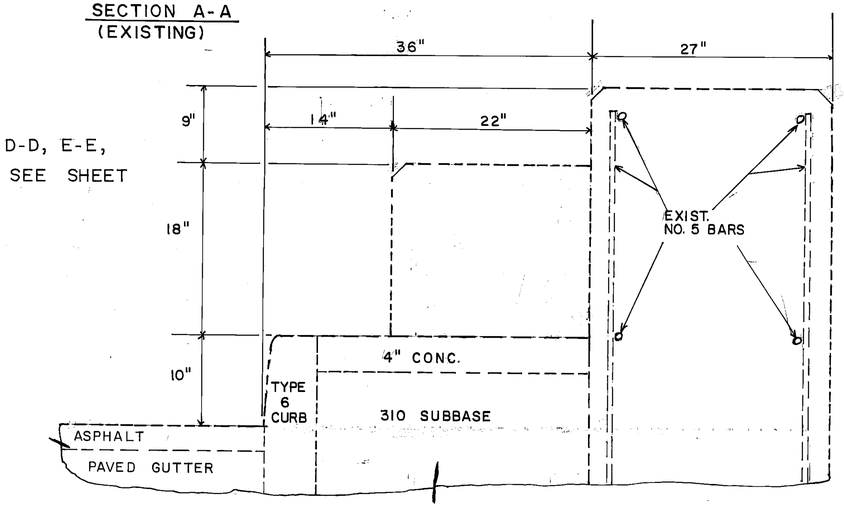

SECTION C-C
(EXISTING)

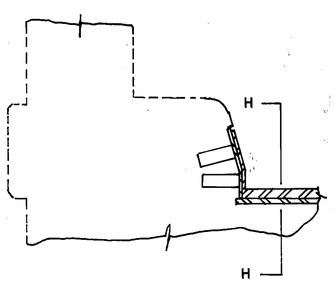

EXISTING CURB PLATE

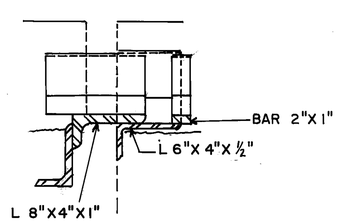

SECTION H-H

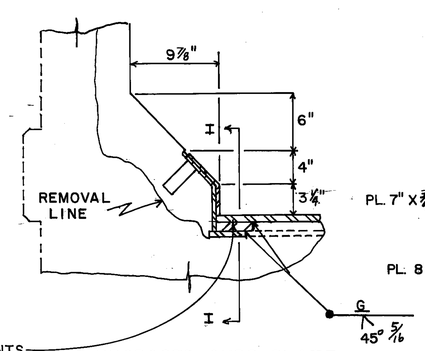

EXTENSION OF EXP. JOINTS TO BE INCLUDED IN ITEM 517, RAILING, FACED, AS PER PLAN.

PROPOSED CURB PLATE MODIFICATION

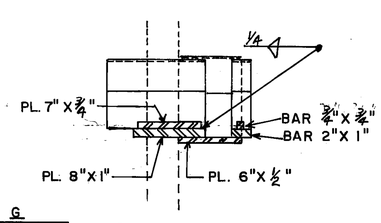

SECTION I-I

RETROFITTED STRUCTURE

F.H.W.A. REGION	STATE	PROJECT	
5	OHIO		

21/31

PLAN NO. BR-50-85

BRIDGE MAH.-62DA-0054 RT.
N.E. WINGWALL

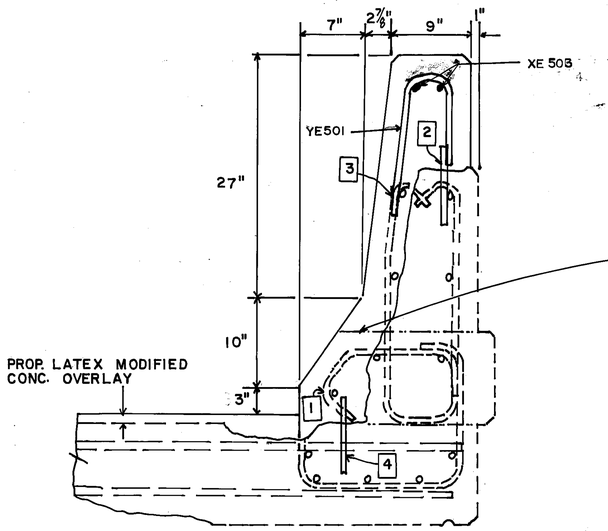

SECTION D-D

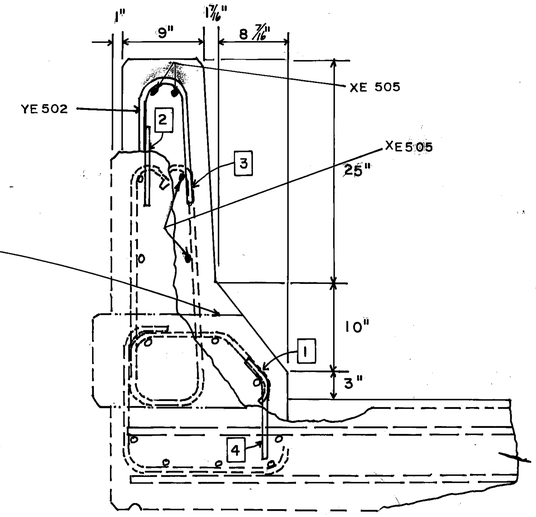

SECTION E-E

OPTIONAL CONST. J.T.

1. CUT EXISTING NO. 5 REBAR, BEND AND TIE TO 3/4" DOWEL BARS.
2. 3/4" X 12" DOWEL BARS SET IN EXISTING CONCRETE TO A DEPTH OF 6" AND 20" c/c MAX. (XE601)
3. TIE TO EXISTING STEEL
4. 3/4" X 18" DOWEL BARS SET IN EXISTING CONCRETE TO A DEPTH OF 9" AND 20" c/c MAX. BEND IN THE FIELD WHERE NECESSARY. (XE 602)

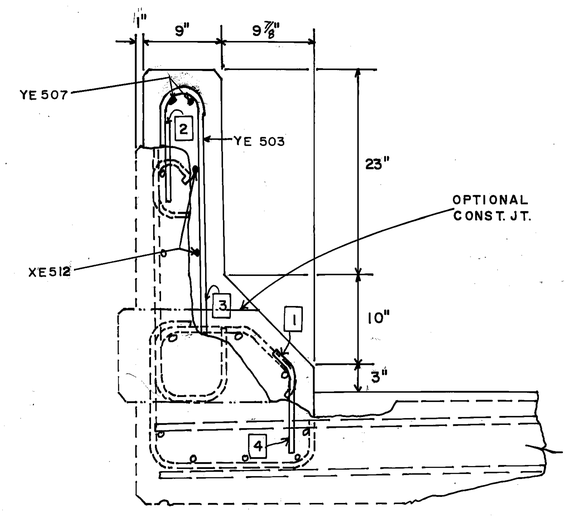

SECTION F-F

SEE SHEET NO. 26 FOR MEDIAN DETAILS AND QUANTITIES

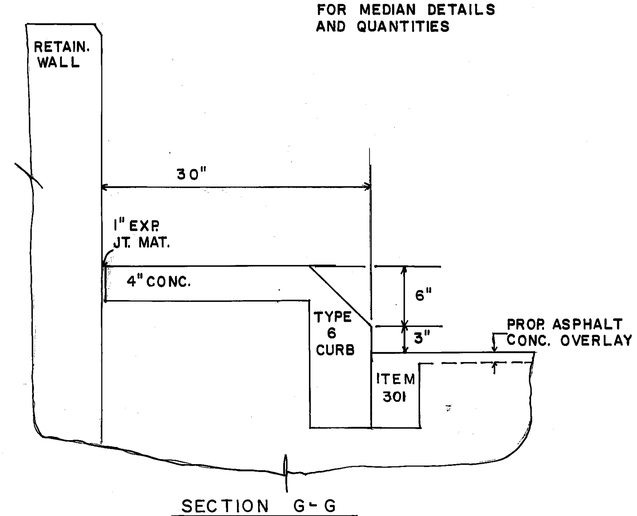

SECTION G-G

RETROFIT SECTIONS

F.H.W.A. REGION	STATE	PROJECT	
5	OHIO		

22/31

PLAN NO. BR-50-85

BRIDGE MAH.-62DA-0054 LT.

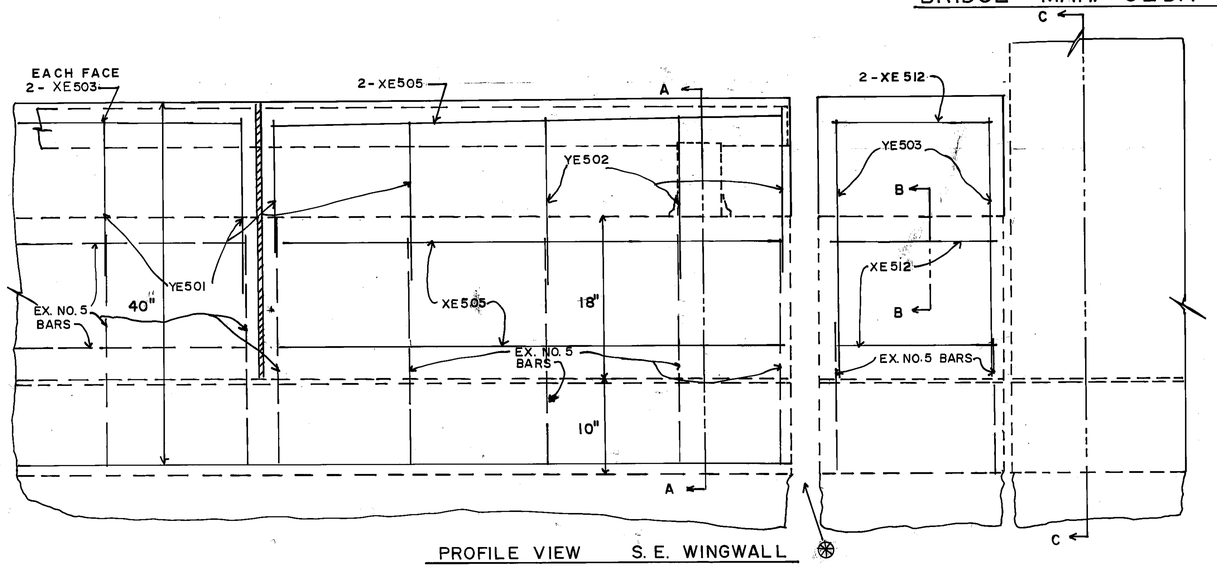

PROFILE VIEW S. E. WINGWALL

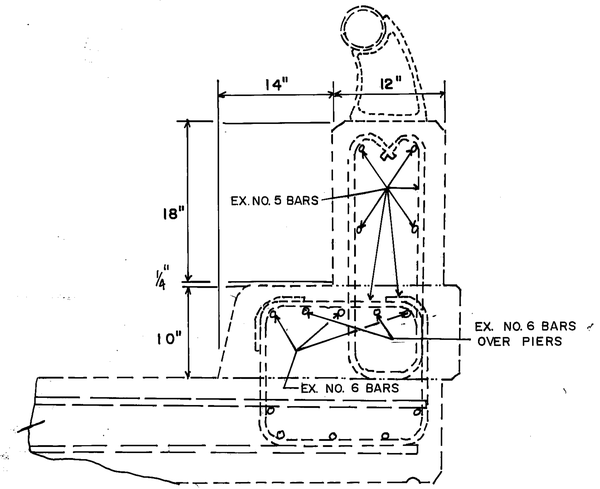

SECTION A-A
(EXISTING)

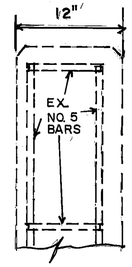

SECTION B-B
(EXISTING)

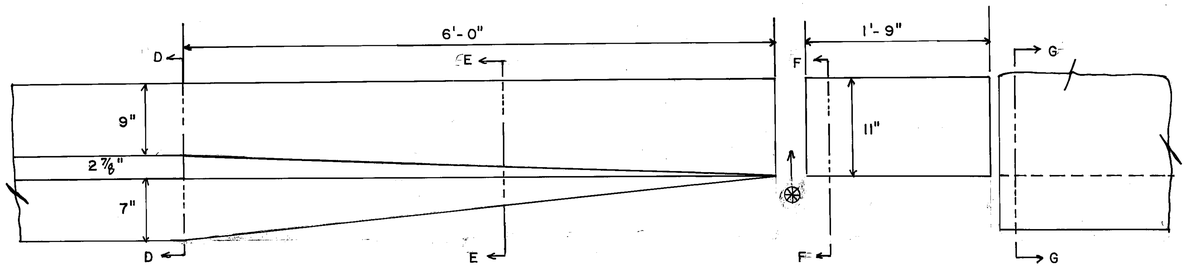

PLAN VIEW

NOTE SEE CURB PLATE DETAILS

FOR DETAILS OF SECTIONS D-D, E-E, F-F, AND G-G, SEE SHEET 23/31.

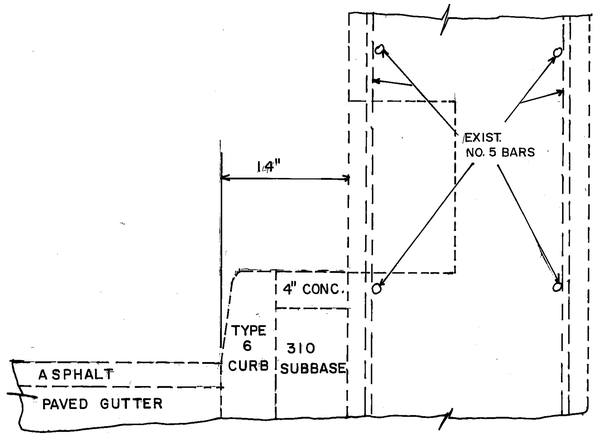

SECTION C-C
(EXISTING)

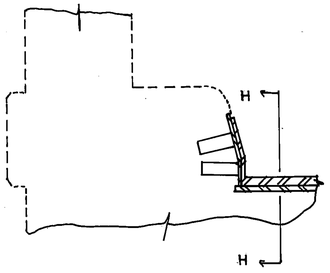

EXISTING CURB PLATE

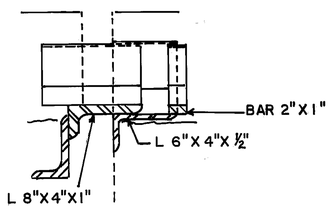

SECTION H-H

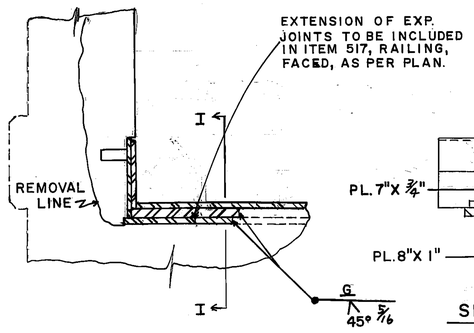

PROPOSED CURB PLATE MODIFICATION

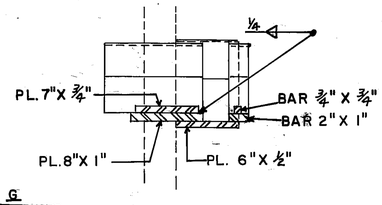

SECTION I-I

RETROFITTED STRUCTURE

F.H.W.A. REGION	STATE	PROJECT	
5	OHIO		

23/31

PLAN NO. BR-50-85

BRIDGE MAH.-62DA-0054 LT.

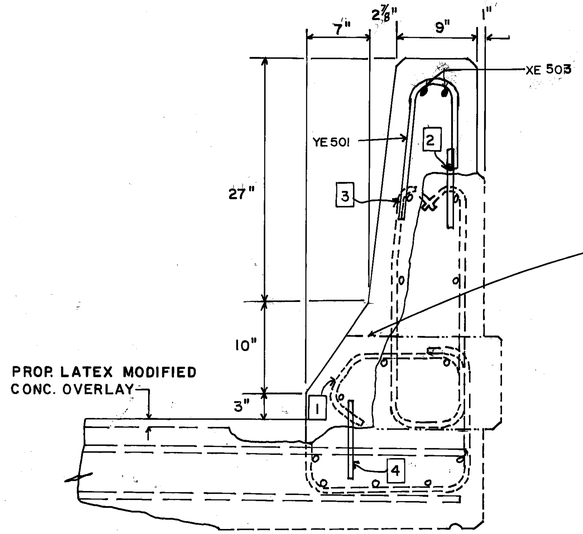

SECTION D-D

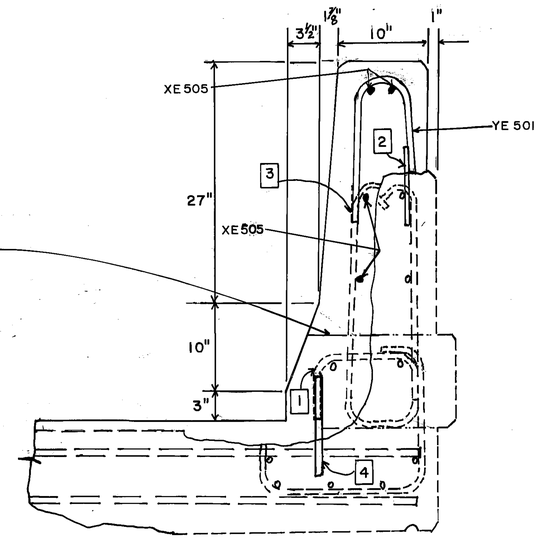

SECTION E-E

1 CUT EXISTING NO. 5 REBAR, BEND AND TIE TO ¾" DOWEL BARS.

2 ¾"X 12" DOWEL BARS SET IN EXISTING CONCRETE TO A DEPTH OF 6" AND 20" C/C MAX. (XE 601)

3 TIE TO EXISTING STEEL.

4 ¾" X 18" DOWEL BARS SET IN EXISTING CONCRETE TO A DEPTH OF 9" AND 20" C/C MAX. BEND IN THE FIELD WHERE NECESSARY. (XE 602)

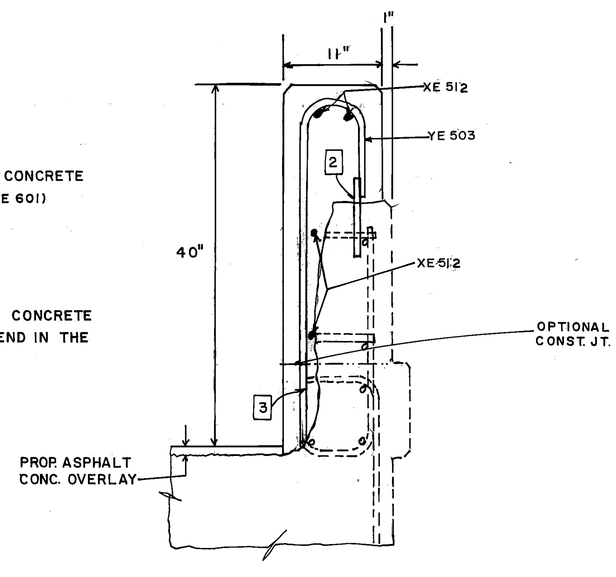

SECTION F-F

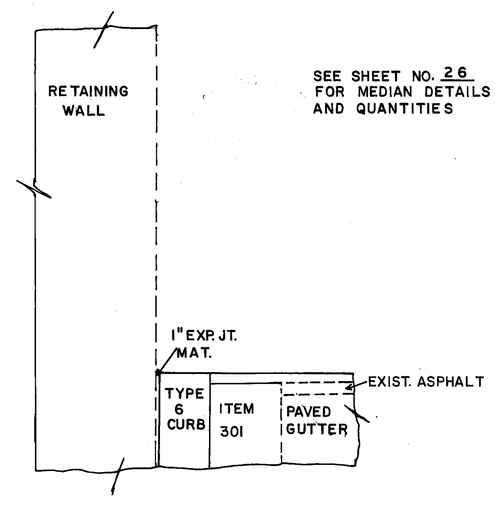

SEE SHEET NO. 26 FOR MEDIAN DETAILS AND QUANTITIES

SECTION G-G

RETROFIT SECTIONS

F.H.W.A. REGION	STATE	PROJECT	
5	OHIO		

24/31

PLAN NO. BR-50-85

BRIDGE MAH-680-0628 UNDER RAMP BX

	MARK	NO.	LENGTH	WEIGHT	SHAPE
	XE501	104	15'-1"	1636	STR.
	XE503	8	7'-4"	61	STR.
	XE505	8	6'-0"	50	STR.
	YE501	560	2'-11"	1712	BENT
	YE502	8	2'-11"	24	BENT
	YE503	6	4'-3"	27	BENT
	YE504	6	3'-5"	21	BENT
	YE505	8	6'-4"	53	BENT
XE601	DOWELS	600	12"	901	STR.
XE602	DOWELS	604	18"	1361	STR.
			TOTAL	5846	

BRIDGE MAH-62DA-0054 RT. OVER SOUTH AVE.

	MARK	NO.	LENGTH	WEIGHT	SHAPE
	XE501	4	13'-6"	56	STR.
	XE502	4	16'-6"	69	STR.
	XE503	12	16'-0"	200	STR.
	XE504	12	13'-3"	166	STR.
	XE505	8	4'-8"	39	STR.
	XE506	6	12'-10"	80	STR.
	XE507	2	11'-1"	23	STR.
	XE508	2	8'-10"	18	STR
	XE509	2	14'-3"	30	STR
	XE511	6	6'-0"	38	STR
	XE512	2	1'-3	3	STR.
	YE501	188	2'-11"	572	BENT
	YE502	11	2'-11"	34	BENT
	YE503	6	4'-3"	27	BENT
	YE504	3	3'-5"	11	BENT
	YE506	6	6'-4"	40	BENT
	YE507	2	6'-2"	13	BENT
XE601	DOWELS	201	12"	302	STR.
XE602	DOWELS	209	18"	471	STR.
			TOTAL	2192	

BRIDGE MAH.-62DA-0054 LT. OVER SOUTH AVE.

	MARK	NO.	LENGTH	WEIGHT	SHAPE
	XE502	4	16'-6"	69	STR.
	XE503	12	16'-0"	200	STR.
	XE504	8	13'-3"	111	STR
	XE505	8	4'-8"	39	STR
	XE507	4	11'-1"	46	STR
	XE510	14	12'-9"	186	STR
	XE511	6	6'-0"	38	STR
	XE512	4	1'-3"	6	STR
	YE501	195	2'-11"	594	BENT
	YE502	8	2'-11"	24	BENT
	YE503	5	4'-3"	27	BENT
	YE504	6	3'-5"	21	BENT
	YE506	6	6'-4"	40	BENT
XE601	DOWELS	209	12"	314	STR
XE602	DOWELS	215	18"	485	STR
			TOTAL	2200	

BRIDGE MAH-62DA-0054 LT. & RT.

LOCATIONS OF XE5__ BARS FOR DEFLECTION JOINTS

PANEL LOCATION FROM WEST TO EAST	RIGHT STRUCTURE		LEFT STRUCTURE	
	RT. (SOUTH) SIDE	LT. (NORTH) SIDE	RT. (SOUTH) SIDE	LT. (NORTH) SIDE
WINGWALL	504	509 507	507	510
1st. PANEL	501	504	504	504
2nd. PANEL	502	502	502	502
3rd. PANEL	501	504	504	504
HINGE				
4th. PANEL	504	506	510	510
5th. PANEL	503	503	503	503
6th. PANEL	503	503	503	503
7th. PANEL	504	506	510	510
HINGE				
8th. PANEL	504	506	510	510
9th. PANEL	503	503	503	503
10th. PANEL	505	505	505	505
WINGWALL	508	512	507	512

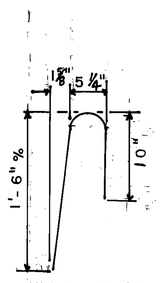

YE501 & YE502

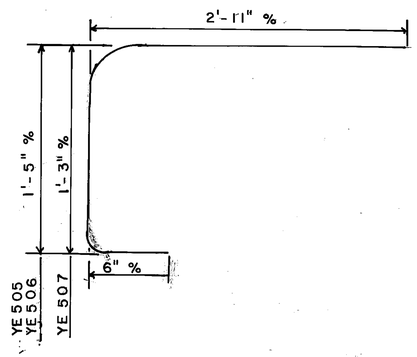

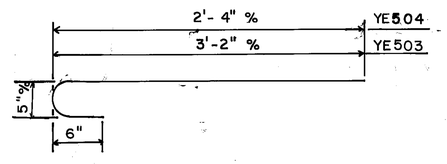

ALL REINFORCING STEEL INCLUDING DOWELS SHALL BE EPOXY COATED AS PER SS 824 AND SHALL BE INCLUDED WITH ITEM 517, RAILING, FACED, AS PER PLAN, FOR PAYMENT.

THE ABOVE REBAR WEIGHTS ARE FOR INFORMATION ONLY THE ACTUAL AMOUNT NECESSARY WILL BE DETERMINED IN THE FIELD

REINFORCING STEEL SAMPLES: Refer to CMS Sections 106.03, 700, 709.01 through 709.05 and 709.08. Sufficient additional reinforcing steel shall be provided for sampling. Random samples shall be replaced in the structure by the additional steel, spliced in accordance with 509.08.

REINFORCING STEEL & BENDING DIAGRAMS

F.H.W.A. REGION	STATE	PROJECT	
5	OHIO		

25
31

PLAN NO. BR-50-85

DETAILS BRIDGE MAH. 62-1823

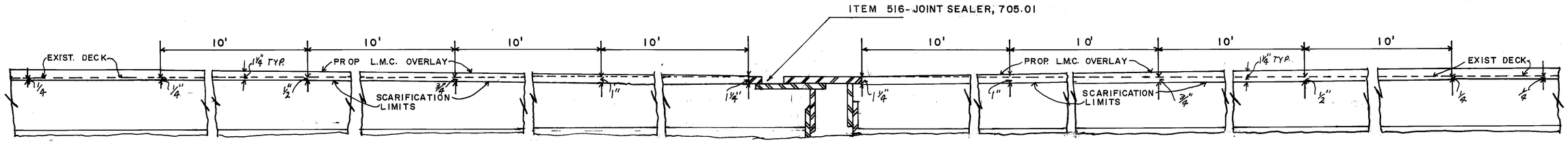

SCARIFICATION AND OVERLAY PLACEMENT AT HINGES NOS. 1, 2, 3, & 4

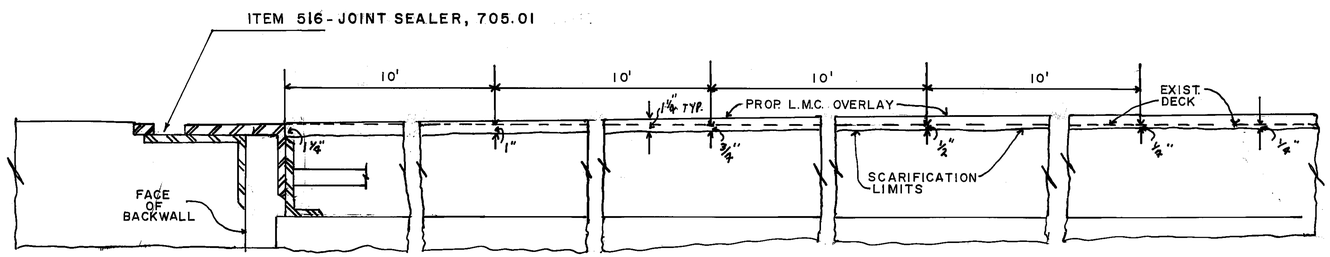

SCARIFICATION AND OVERLAY PLACEMENT
ABUTMENTS 1 & 2

ADDITIONAL SCARIFICATION AT THE HINGES AND THE ABUTMENTS SHALL BE PERFORMED AS SHOWN. AND IS INCLUDED IN ITEM 845, BRIDGE DECK OVERLAY, 1¼" THICK, AS PER PLAN, FOR PAYMENT.

THE L.M.C. OVERLAY SHALL BE A MIN. OF 1¼" IN ALL AREAS.

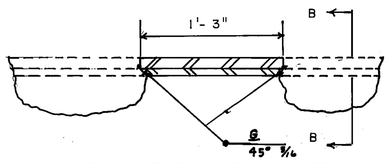

PROPOSED CURB PLATE MODIFICATIONS

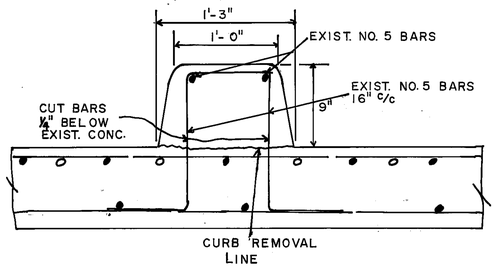

CURB REMOVAL

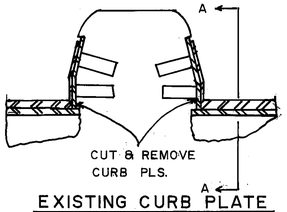

EXISTING CURB PLATE

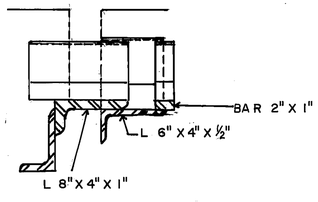

SECTION A-A

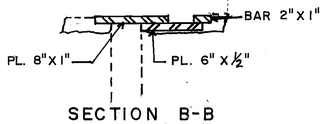

SECTION B-B

THE REMOVAL OF THE EXISTING CURB PLATES AND THE WELDING OF THE PROPOSED PLATES AS SHOWN ABOVE SHALL BE INCLUDED FOR PAYMENT IN ITEM 202, CURB REMOVED, AS PER PLAN. THE BAR STOCK UTILIZED FOR THIS ITEM MAY BE ANY WELDABLE GRADE OF LOW OR MILD CARBON STEEL AVAILABLE COMMERCIALLY. THIS MATERIAL IS TO BE EXCLUDED FROM THE REQUIREMENTS OF 501.07 FOR TEST REPORTS.

F.H.W.A. REGION	STATE	PROJECT	
5	OHIO		

26/31

PLAN NO. BR-50-85

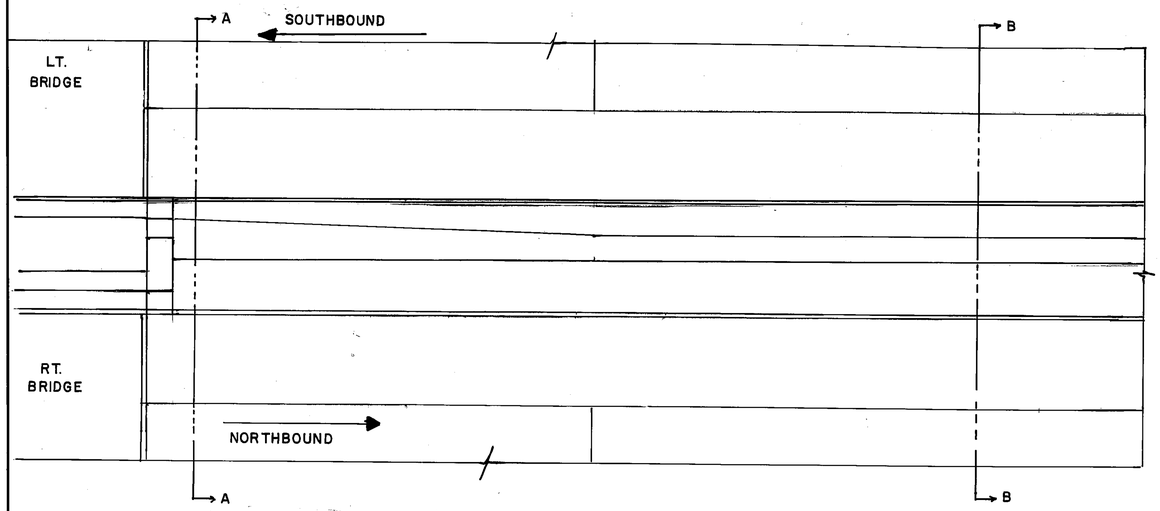

PLAN VIEW
(EXISTING)

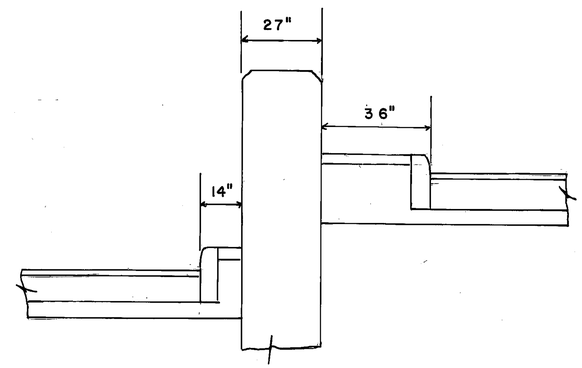

SECTION A-A
(EXISTING)

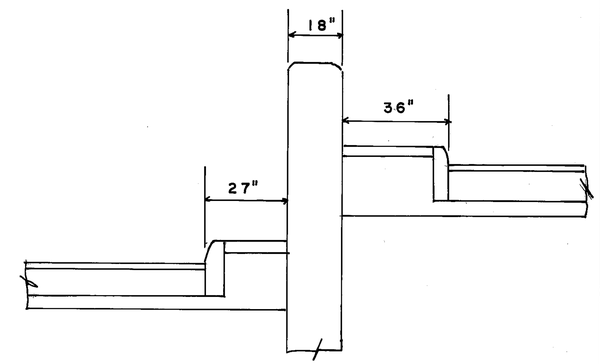

SECTION B-B
(EXISTING)

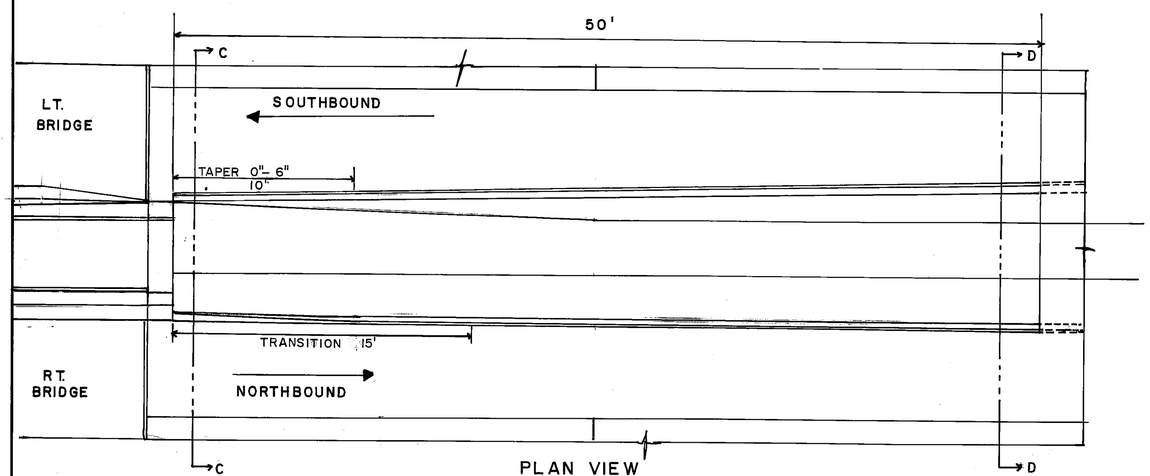

PLAN VIEW
(PROPOSED)

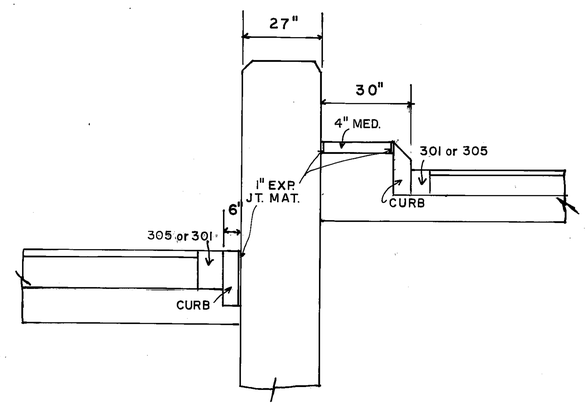

SECTION C-C
(PROPOSED)

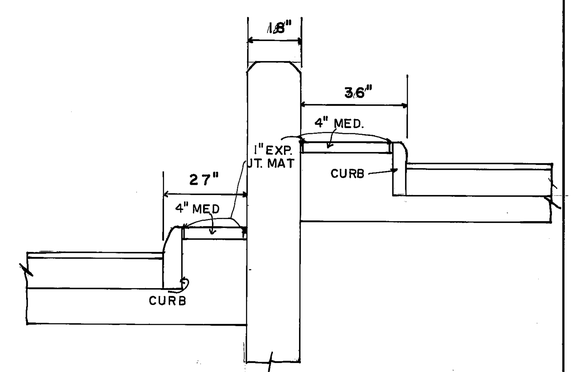

SECTION D-D
(PROPOSED)

ITEM 301, BITUMINOUS AGGREGATE BASE OR ITEM 305, PORTLAND CEMENT CONCRETE BASE SHALL BE PLACED IN THE AREA BETWEEN THE EXISTING BERM AND THE NEW CURB. THE COST SHALL BE INCLUDED IN ITEM 202, CURB REMOVED, AS PER PLAN.

THE NEW CURB AND MEDIAN SHALL BE A SMOOTH TRANSITION FROM THE NEW PARAPET WALL ON THE BRIDGE TO THE EXISTING MEDIAN CURB. 50 FT. ON EACH SIDE HAS BEEN SET UP TO ACCOMPLISH THIS. THE ACTUAL LENGTH SHALL BE DETERMINED BY THE ENGINEER.

THE CURB ON THE SOUTHBOUND LANES SHALL BE TAPERED FROM 6" TO 0" IN 10 FT.

THE SHAPE OF THE NORTHBOUND CURB SHALL BE TRANSITIONED FROM THE PARAPET SHAPE TO THE TYPE 6 CURB SHAPE IN 15 FT.

ITEM	DESCRIPTION	QUANTITY
202	CURB REMOVED, AS PER PLAN	100 L.F
202	MEDIAN REMOVED	25 S.Y.
609	TYPE 6 CURB, AS PER PLAN	100 L.F.
612	CONCRETE MEDIAN, AS PER PLAN	22 S.Y.

3370

BRIDGE MAH.-62DA-0054 L & R MEDIAN DETAILS

F.H.W.A. REGION	STATE	PROJECT	
5	OHIO		

27/31

PLAN NO. BR-50-85

ITEM SPECIAL - SEALING OF CONCRETE SURFACES

A CONCRETE SEALER, EITHER SILANE OR AN EPOXY SEALER, SHALL BE APPLIED TO THE CONCRETE SURFACES AS SHOWN BELOW. THE EXPOSED SURFACE OF CURBS AND PARAPETS SHALL BE SEALED. THE ENTIRE LENGTH OF THE BRIDGE INCLUDING THE WINGWALLS. SEE THE PROPOSAL FOR SURFACE PREPARATION REQUIREMENTS, APPLICATION RATES, MATERIAL REQUIREMENTS, AND APPLICATION PROCEDURES.

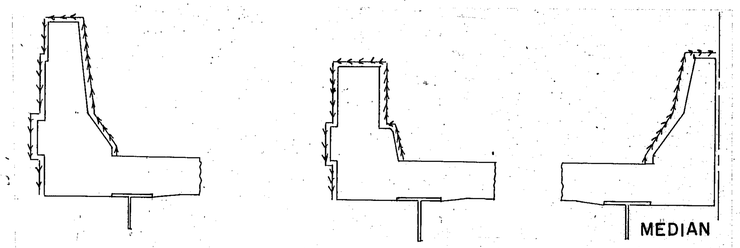

BRIDGES
MAH 62DA-0054 L & R
MAH 680-0628

BRIDGE MAH-62-1823

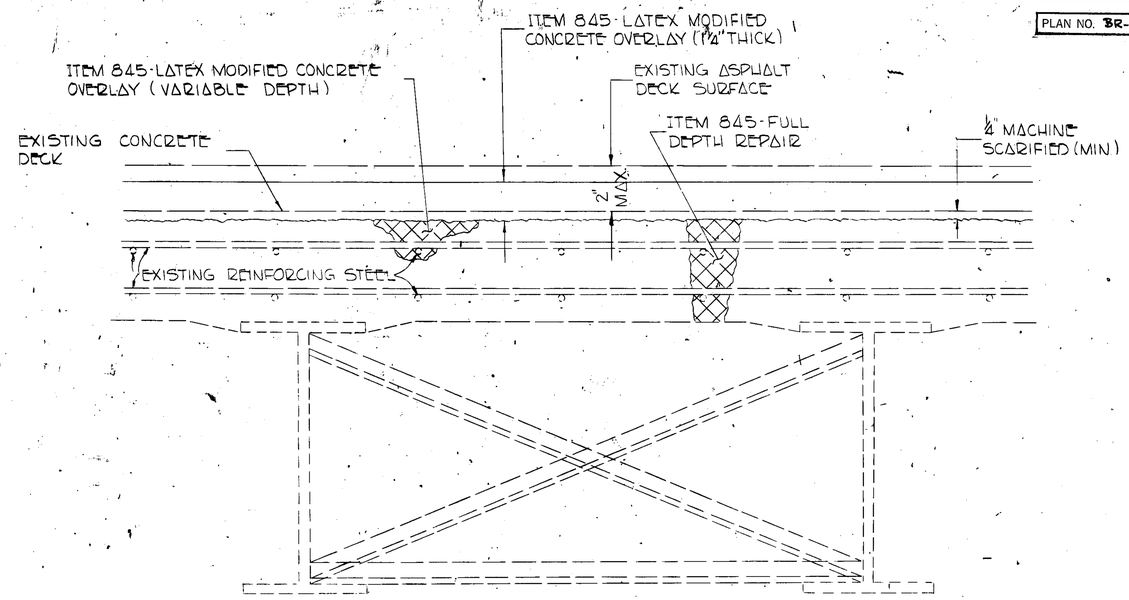

LATEX MODIFIED CONCRETE OVERLAY

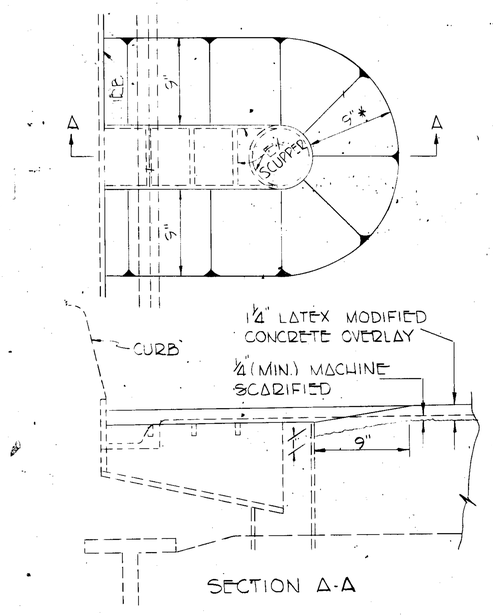

TYPICAL OVERLAY DETAIL AT SCUPPERS

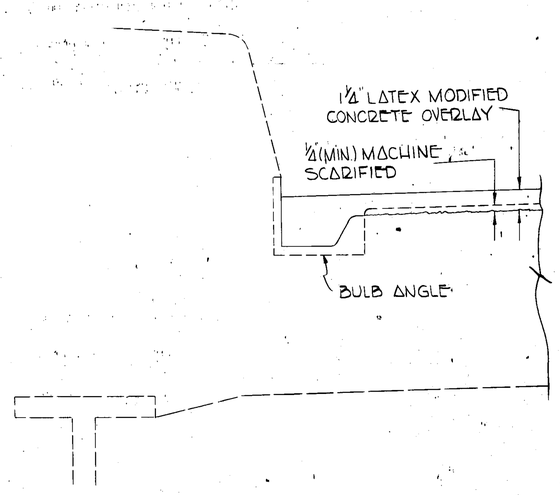

TYPICAL OVERLAY DETAIL AT BULB ANGLES

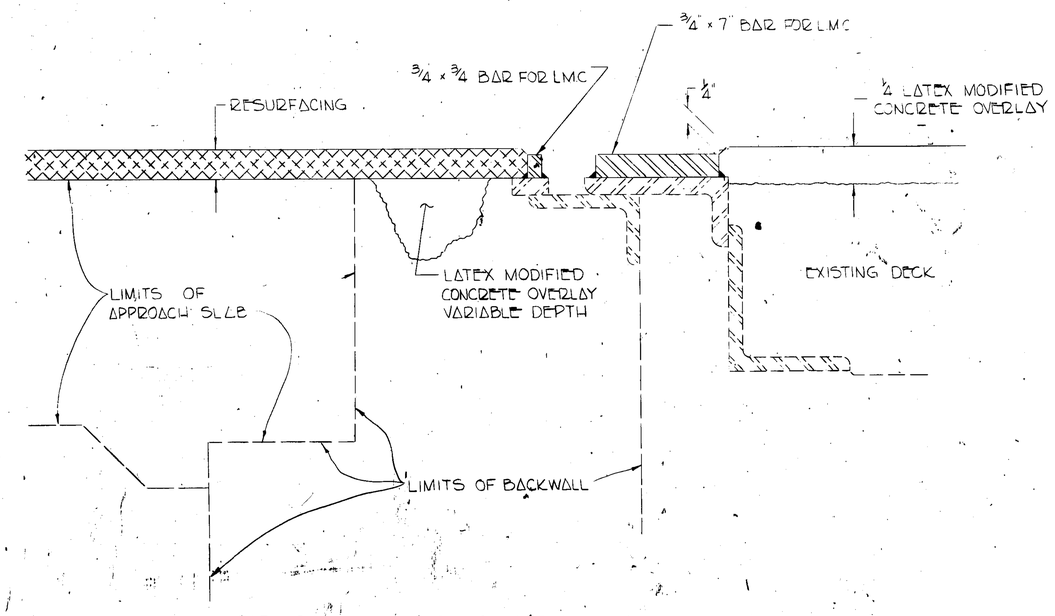

VERTICAL EXTENSION OF STRUCTURAL EXPANSION JOINT

F.H.W.A. REGION	STATE	PROJECT	
5	OHIO		

28
31

PLAN NO. BR-50-65

TRAFFIC CONTROL
BRIDGE MAH. - 62 - 1823
SOUTHBOUND UNIT NO. 5

PHASE 1

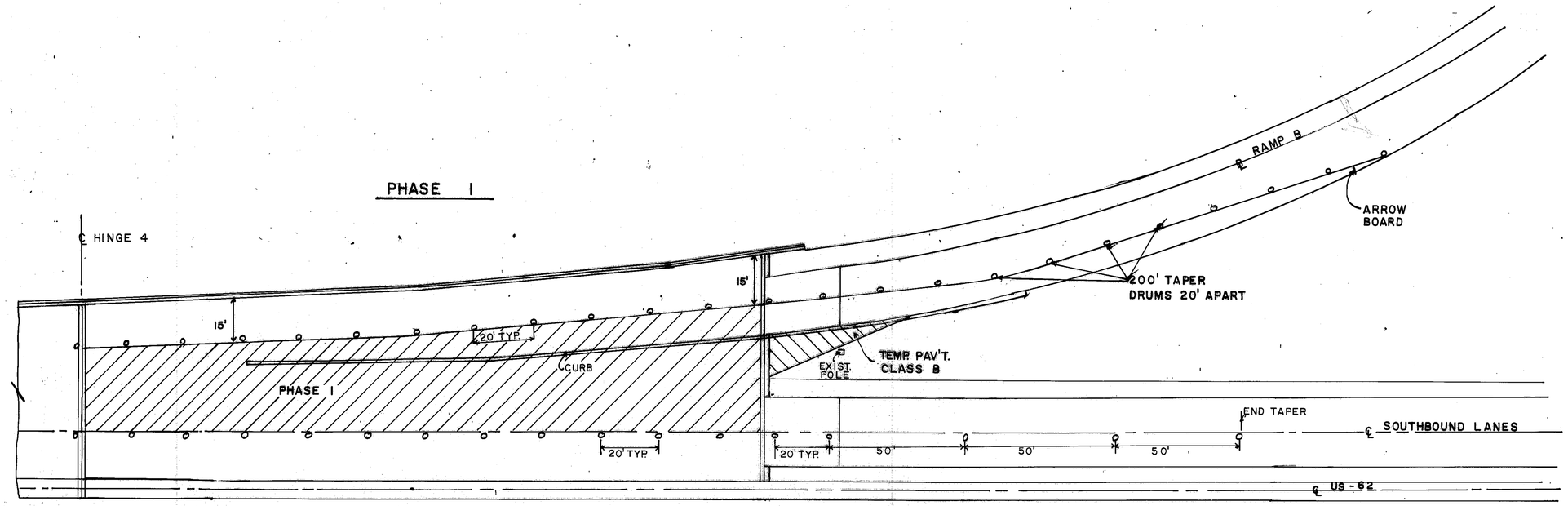

SEQUENCE OF OPERATIONS

ALL SIGNS AND LOCATIONS WILL BE ACCORDING TO THE OMUTC, OR AS DIRECTED BY THE ENGINEER. ALL DRUMS FOR PHASES 1 AND 2 SHALL BE EQUIPPED WITH LIGHTS.

PHASE 1

1. CLOSE THE SOUTHBOUND DRIVING LANE AND PART OF RAMP 'B' AS SHOWN.
2. REMOVE CURB AND PERFORM ALL RELATED DECK CONSTRUCTION AS SHOWN ON THE PLANS.
3. PLACE TEMPORARY CLASS 'B' PAVEMENT AS SHOWN.
4. PROCEED TO PHASE 2.

PHASE 2

1. CLOSE PORTION OF RAMP 'B' AS SHOWN, AND SOUTHBOUND TRAVEL LANE, AS SHOWN.
2. PERFORM ALL RELATED DECK CONSTRUCTION AS SHOWN ON THE PLANS.

PHASE 3

1. CLOSE SOUTHBOUND PASSING LANE.
2. PERFORM ALL RELATED DECK CONSTRUCTION AS SHOWN ON THE PLANS.
3. THE ENTIRE SOUTHBOUND PASSING LANE MAY BE CLOSED IF THE CONTRACTOR DESIRES AND THE ENGINEER CONCURS.

ITEM	DESCRIPTION	QUANTITY
202	CURB REMOVED, AS PER PLAN	65 L.F.
615	TEMPORARY PAVEMENT, CLASS B	35 S.Y.
615	~~TEMPORARY ROADS~~	LUMP

PHASES 2 & 3

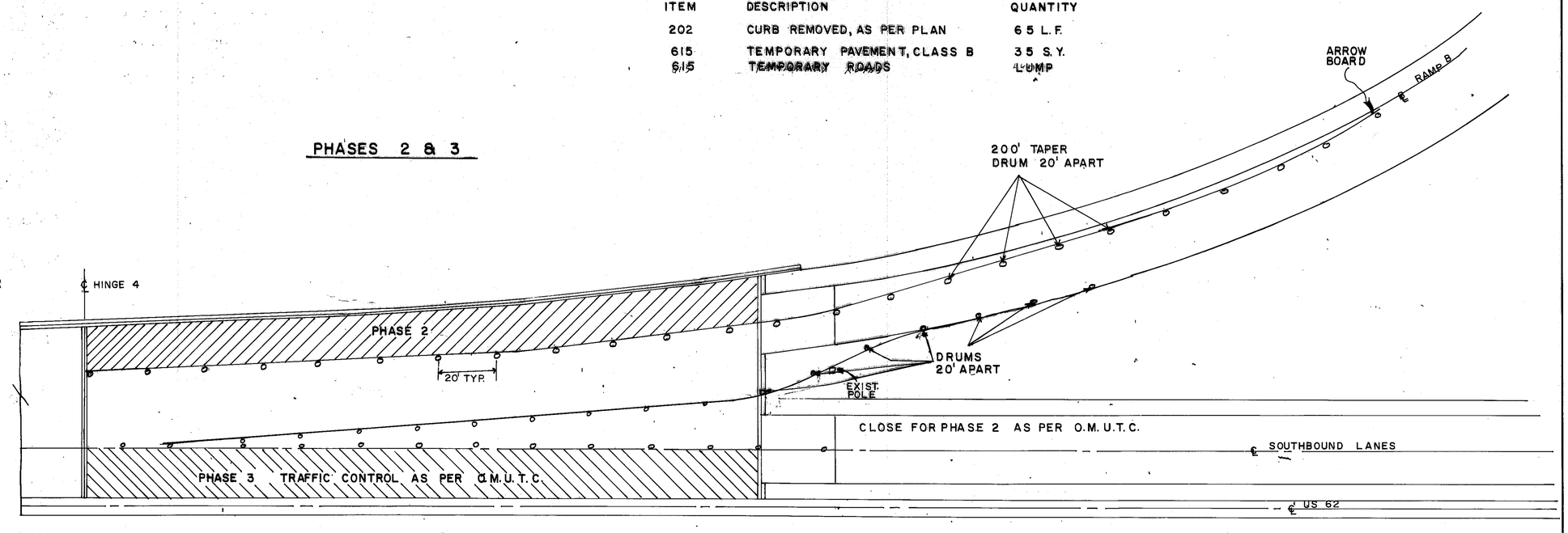

TRAFFIC CONTROL

PLAN NO.			
FHWA REGION	STATE	PROJECT	
5	OHIO		

29/31

PLAN NO. BR-50-85

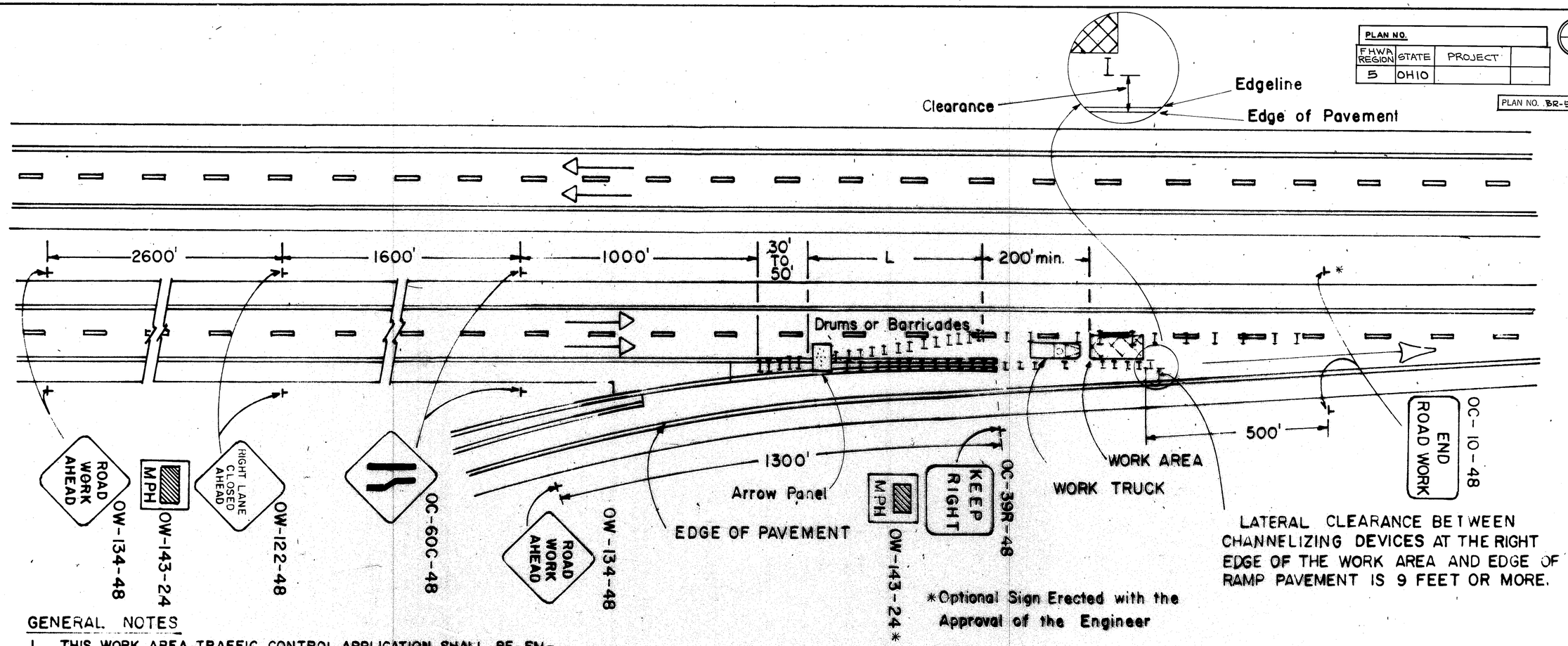

GENERAL NOTES

1. THIS WORK AREA TRAFFIC CONTROL APPLICATION SHALL BE EMPLOYED WHEN THE LATERAL CLEARANCE BETWEEN THE CHANNELIZING DEVICES AT THE RIGHT EDGE OF THE WORK AREA AND THE EDGE OF THE RAMP PAVEMENT IS 9 FEET OR MORE. WHEN THE CLEARANCE IS LESS THAN 9 FEET, THE TRAFFIC CONTROL ON "LANE CLOSURE AT ENTRANCE RAMP: PLAN B" SHOULD BE USED, OR THE RAMP SHOULD BE CLOSED, OR ALLOWING RAMP TRAFFIC TO USE THE BERM SHOULD BE CONSIDERED PROVIDED THE OPERATION IS "SHORT" IN DURATION. WHEN THE RAMP IS CLOSED, APPROPRIATE DETOUR SIGNS SHALL BE PROVIDED.

2. THIRTEEN (13) DRUMS OR BARRICADES SHALL BE USED TO FORM THE LANE TRANSITION TAPER IN ADVANCE OF THE WORK AREA. FIVE (5) CHANNELIZING DEVICES SHALL BE USED TO FORM THE TAPER ON THE SHOULDER. CONES, DRUMS, OR BARRICADES SHALL BE SPACED AT 50 FOOT CENTERS. CONES MAY BE SUBSTITUTED FOR BARRICADES OR DRUMS FOR THE LANE CLOSURES DURING DAYLIGHT HOURS ONLY.

3. RAMP SIGNS SHALL BE DUAL MOUNTED ON MULTILANE RAMPS.

4. THE FLASHING ARROW PANEL SHALL BE IN ACCORDANCE WITH OMUTCD, SECTION 7G-8.

5. THE WORK TRUCK SHOWN AT THE BEGINNING OF THE WORK AREA SHALL BE IN PLACE AND UNOCCUPIED WHENEVER MEN ARE WORKING WITHIN THE WORK AREA. THIS TRUCK SHALL BE MOVED FROM THE PAVEMENT WHENEVER WORKMAN ARE NOT IN THE WORK AREA. OTHER PROTECTIVE DEVICES MAY BE USED IN LIEU OF WORK TRUCK SHOWN WHEN APPROVED BY THE ENGINEER. A TRUCK MOUNTED IMPACT ATTENUATOR MAY BE EMPLOYED.

6. TYPE C STEADY BURNING BARRICADE WARNING LIGHTS SHALL BE ERECTED ON DRUMS OR BARRICADES FOR NIGHT LANE CLOSURES. MAXIMUM SPACING SHALL BE 50' CENTER TO CENTER IN ADVANCE OF THE WORK AREA AND 200' CENTER TO CENTER WITHIN THE LIMITS OF THE WORK AREA.

7. CONES MAY BE SUBSTITUTED FOR DRUMS OR BARRICADES AT NIGHT FOR SHORT-TERM LANE CLOSURES. CONES USED AT NIGHT SHALL BE REFLECTORIZED OR EQUIPPED WITH LIGHTING DEVICES FOR MAXIMUM VISIBILITY.

8. FOR NIGHT CLOSURES EACH OF THE FIRST TWO SIGNS IN THE SEQUENCE (ROAD WORK AHEAD AND CENTER LANE CLOSED AHEAD) IS REQUIRED TO BE SUPPLEMENTED BY A TYPE A FLASHING BARRICADE WARNING LIGHT.

9. WORK VEHICLES SHALL BE EQUIPPED WITH A 360° ROTATING OR FLASHING AMBER BEACON CLEARLY VISIBLE A MINIMUM OF 1/4 MILE.

10. THE SPACINGS BETWEEN CONSTRUCTION AND MAINTENANCE SIGNS SHOWN ON THIS DETAIL MAY REQUIRE ADJUSTMENTS (INCREASES OR DECREASES) TO ASSURE THAT THEY ARE POSITIONED NO CLOSER TNAN 200 FEET TO EXISTING SIGNS AS DETERMINED BY THE ENGINEER.

OHIO DEPARTMENT OF TRANSPORTATION

LANE CLOSURE AT ENTRANCE RAMP: PLAN A

DATE 8-3-79

PLAN NO.			
FHWA REGION	STATE	PROJECT	
5	OHIO		

30/31

PLAN NO. BR-50-85

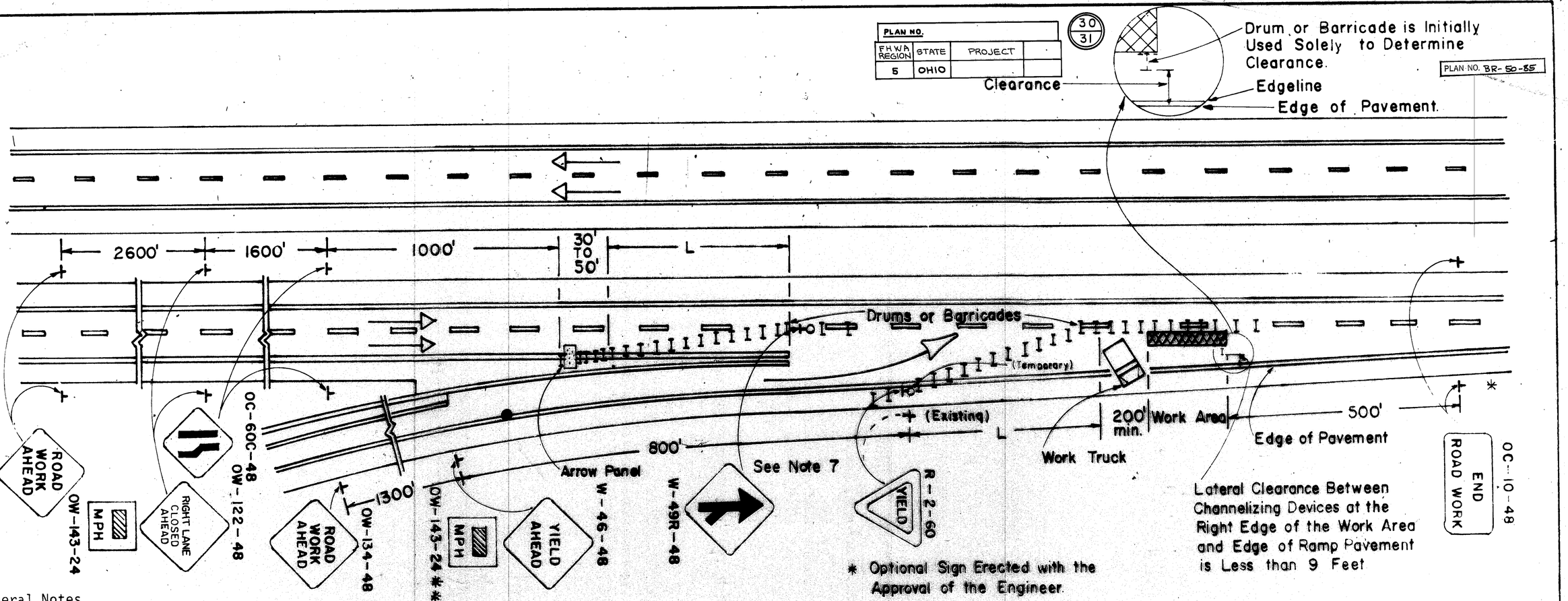

General Notes

1. This work area traffic control application shall be employed when the lateral clearance between channelizing devices at the right edge of the work area and the edge of the ramp pavement is less than 9 feet. When the clearance is more than 9 feet, the traffic control on "Lane Closure at Entrance Ramp: Plan A" should be used, or the ramp should be closed. When the ramp is closed, appropriate detour signs shall be provided.

2. Thirteen (13) drums or barricades shall be used to form the lane transition taper in advance of the work area. Five (5) channelizing devices shall be used to form the taper on the shoulder. Cones, drums, or barricades shall be spaced at 50 foot centers. Cones may be substituted for barricades or drums for the lane closures during daylight hours only.

3. Ramp signs shall be dual mounted on multi-lane ramps. When the ramp is not long enough to allow placement as specified above, the signs may be spaced proportionately within the space available as determined by the Engineer (a 200' minimum spacing must be maintained).

4. The flashing arrow panel shall be in accordance with OMUTCD, Section 7G-8.

5. The work truck shown at the beginning of the work area shall be in place and unoccupied whenever men are working within the work area. This truck shall be moved from the pavement whenever workmen are not in the work area. Other protective devices may be used in lieu of work truck shown when approved by the Engineer.

6. Type C steady burning barricade warning lights shall be erected on drums or barricades for night lane closures. Maximum spacing shall be 50' center to center in advance of the work area and 200' center to center within the limits of the work area.

7. It may be necessary to move the location of an existing Yield condition In these cases, the permanent R-2 sign installation shall be covered and the temporary installation shall be mounted upon a drive post which shall be banded to a drum with stainless steel strapping material or other techniques subject to the approval of the Engineer.

8. Taper Formula Shall Be In Accordance With OMUTCD, Section 7F-17.

9. CONES MAY BE SUBSTITUTED FOR DRUMS OR BARRICADES AT NIGHT FOR SHORT-TERM LANE CLOSURES. CONES USED AT NIGHT SHALL BE REFLECTORIZED OR EQUIPPED WITH LIGHTING DEVICES FOR MAXIMUM VISIBILITY.

10. FOR NIGHT CLOSURES EACH OF THE FIRST TWO SIGNS IN THE SEQUENCE (ROAD WORK AHEAD AND CENTER LANE CLOSED AHEAD) IS REQUIRED TO BE SUPPLEMENTED BY A TYPE A FLASHING BARRICADE WARNING LIGHT.

11. THE SPACINGS BETWEEN CONSTRUCTION AND MAINTENANCE SIGNS SHOWN ON THIS DETAIL MAY REQUIRE ADJUSTMENTS (INCREASES OR DECREASES) TO ASSURE THAT THEY ARE POSITIONED NO CLOSER THAN 200 FEET TO EXISTING SIGNS AS DETERMINED BY THE ENGINEER.

12. WORK VEHICLES SHALL BE EQUIPPED WITH A 360° ROTATING OR FLASHING AMBER BEACON CLEARLY VISIBLE A MINIMUM OF 1/4 MILE.

OHIO DEPARTMENT OF TRANSPORTATION

LANE CLOSURE AT ENTRANCE RAMP PLAN B

DATE 8-3-79

HOP-HAM-28

FED. RD. DIVISION	STATE	PROJECT	
5	OHIO		

PLAN NO.

31 / 31

PLAN NO. BR-50-85

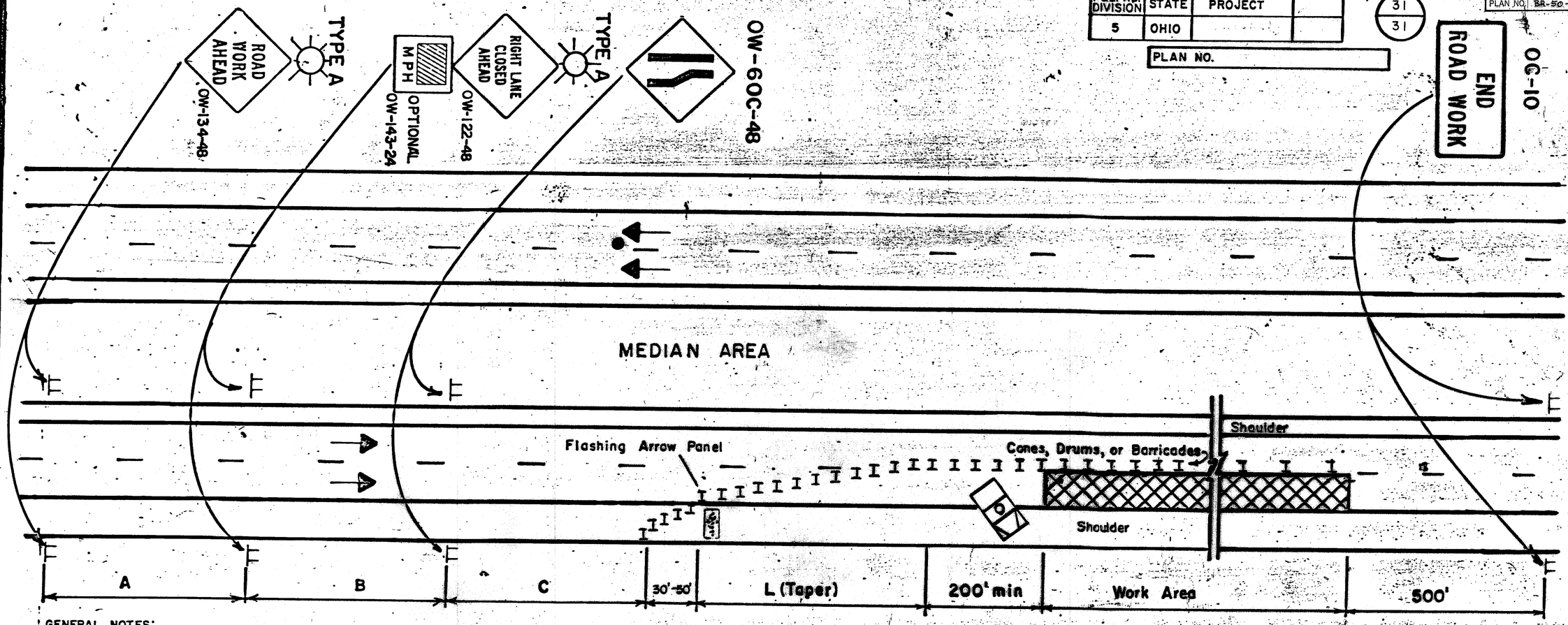

GENERAL NOTES:

1. The taper length (L) shall be in accordance with Section 7F-17 of the OMUTCD. The location of the transition taper and location of the advance warning signs should be adjusted to provide for adequate sight distance for the existing vertical and horizontal roadway alignment. In order to determine the minimum number of channelizing devices for the transition taper see Table 7-5 OMUTCD. For a 55 MPH prevailing speed and a 12 ft. lane, not less than thirteen (13) cones, drums or barricades shall be used to form the lane transition taper in advance of the work area. Not less than five (5) cones, drums or barricades shall be used to form the taper on the shoulder. Cones, drums or barricades shall be spaced approximately 50' to 60' center to center for the first 1000 feet of the work area and at a maximum of 100 to 120 feet for the balance of the work area. Cones may be substituted for barricades or drums for short term lane closures. Cones shall be reflectorized, delineated or internally illuminated for short term night lane closures.

2. The major standard level warning sign sizes may be used on divided streets or highways that are not classified as freeways or expressways.

3. When work is being performed in the lane adjacent to the median on a divided highway an OW-123-48 sign(s) shall be substituted for the OW-122-48 sign(s) and an OW-60D-48 sign(s) shall be substituted for the OW-60C sign(s).

4. The work vehicle shown at the beginning of the work area shall be in place and unoccupied whenever workers are in the work area. This work vehicle shall be removed from the pavement whenever workers are not in the work area. Other protective devices may be used in lieu of the work vehicle shown when approved by the Engineer. The vehicle shall be equipped with a 360° rotating or flashing amber beacon clearly visible a minimum of a ½ mile.

5. The flashing arrow panel shall meet requirements contained in Section 7G-8, OMUTCD.

6. Type C steady burning barricade warning lights shall be erected on drums or barricades for night lane closures. The maximum spacing shall be identical to the channelizing device spacing requirements described in Note 1.

MINIMUM DISTANCE	A	B	C
MAJOR STANDARD	500'	500'	500'
URBAN FREEWAY & EXPRESSWAY	500' TO 1000'	500' TO 1000'	500' TO 1000'
RURAL FREEWAY & EXPRESSWAY	2600'	1600'	1000'

7. Type A flashing barricade warning lights shown on the "Road Work Ahead" and the "Right Lane Closed Ahead" signs are required whenever a night lane closure is necessary.

8. Some work area locations may require more than just static or conventional signs to enhance communication with the driver. At these locations Portable Changeable Message Signs (PCMS) units are recommended. These devices should be located approximately 2000-4000 ft. in advance of a lane closure or other point of required action. See Section 7G-8.1, OMUTCD for further guidance on use of PCMS units.

OHIO DEPARTMENT OF TRANSPORTATION

CLOSING ONE LANE OF A FOUR LANE DIVIDED HIGHWAY

DATE 2/82

7I-1a

Rev. EEF 9/84