STATE OF OHIO

DEPARTMENT OF TRANSPORTATION

MAH-680-6.98

PART 2

CITY OF YOUNGSTOWN

MAHONING COUNTY

FOR PART 1, SEE MAH-680-4.06

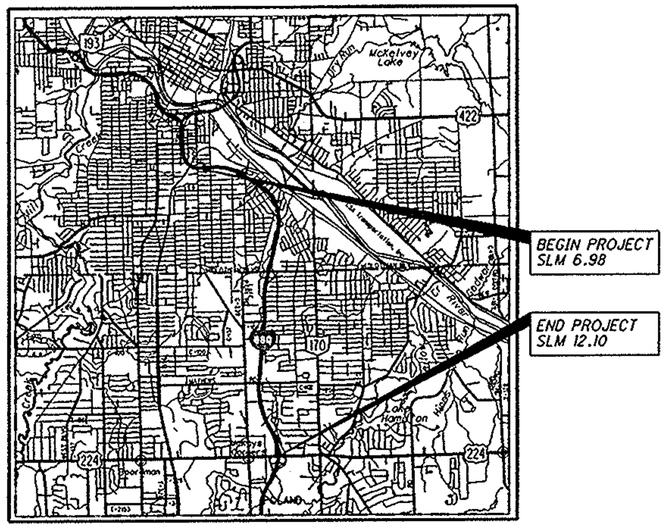

LOCATION MAP

LATITUDE: 41°3'24" LONGITUDE: 80°37'46"

SCALE IN MILES

0 1 2 3 4

N

PORTION TO BE IMPROVED
INTERSTATE HIGHWAY
STATE & FEDERAL ROUTES
COUNTY & TOWNSHIP ROADS
OTHER ROADS

INDEX OF SHEETS:

TITLE SHEET	1
SCHEMATIC PLAN	2-3
TYPICAL SECTIONS	4
GENERAL NOTES	5-6
MAINTENANCE OF TRAFFIC	7-9
GENERAL SUMMARY	10
PAVEMENT SUBSUMMARY	11
RAISED PAVEMENT MARKERS	12
TRAFFIC CONTROL	13-16

PROJECT DESCRIPTION

IMPROVEMENT OF I-680 BY 5.12 MILES OF RESURFACING. INCLUDES RESURFACING OF SR 224 RAMPS AND PARTIAL & FULL DEPTH REPAIR.

PROJECT EARTH DISTURBED AREA:	0 ACRES
ESTIMATED CONTRACTOR EARTH DISTRUBED AREA:	N/A (MAINTENANCE PROJECT)
NOTICE OF INTENT EARTH DISTURBED AREA:	N/A (MAINTENANCE PROJECT)

LIMITED ACCESS

THIS IMPROVEMENT IS ESPECIALLY DESIGNED FOR THROUGH TRAFFIC AND HAS BEEN DECLARED A LIMITED ACCESS HIGHWAY OR FREEWAY BY ACTION OF THE DIRECTOR IN ACCORDANCE WITH THE PROVISIONS OF SECTION 5511.02 OF THE OHIO REVISED CODE.

2008 SPECIFICATIONS

THE STANDARD SPECIFICATIONS OF THE STATE OF OHIO, DEPARTMENT OF TRANSPORTATION, INCLUDING CHANGES AND SUPPLEMENTAL SPECIFICATIONS LISTED IN THE PROPOSAL SHALL GOVERN THIS IMPROVEMENT.

I HEREBY APPROVE THESE PLANS AND DECLARE THAT THE MAKING OF THIS IMPROVEMENT WILL NOT REQUIRE THE CLOSING TO TRAFFIC OF THE HIGHWAY AND THAT PROVISIONS FOR THE MAINTENANCE AND SAFETY OF TRAFFIC WILL BE AS SET FORTH ON THE PLANS AND ESTIMATES.

DESIGN SPEED	60
LEGAL SPEED	60
DESIGN FUNCTIONAL CLASSIFICATION: INTERSTATE	
NHS PROJECT	YES

DESIGN EXCEPTIONS

NONE

UNDERGROUND UTILITIES

CONTACT BOTH SERVICES
CALL TWO WORKING DAYS
BEFORE YOU DIG

CALL
1-800-362-2764
(TOLL FREE)

OHIO UTILITIES PROTECTION SERVICE
NON-MEMBERS
MUST BE CALLED DIRECTLY

OIL & GAS PRODUCERS PROTECTIVE SERVICE CALL: 1-800-925-0988

PLAN PREPARED BY:

ODOT - DISTRICT 4 - PRODUCTION
2088 S. ARLINGTON ST.
AKRON, OH 44306

ENGINEERS SEAL:

STATE OF OHIO
DOUGLAS A. YARD
E-58044
REGISTERED
PROFESSIONAL ENGINEER

SIGNED:
DATE: 7/11/08

STANDARD CONSTRUCTION DRAWINGS					SUPPLEMENTAL SPECIFICATIONS
					SEE PART 1
		SEE PART 1			
					SPECIAL PROVISIONS
					SEE PART 1

APPROVED Eric M. Zetti
DATE 7-11-08 DISTRICT DEPUTY DIRECTOR

APPROVED James G. Beasley III
DATE 7-21-08 DIRECTOR, DEPARTMENT OF TRANSPORTATION

FEDERAL PROJECT NO. E080(523)

PID NO. 82802

CONSTRUCTION PROJECT NO.

RAILROAD INVOLVEMENT NONE

MAH-680-6.98

I:\Projects\MAH\84117\roadway\sheets\84117GT001.dgn 11-JUL-2008 9:00AM rbisesi

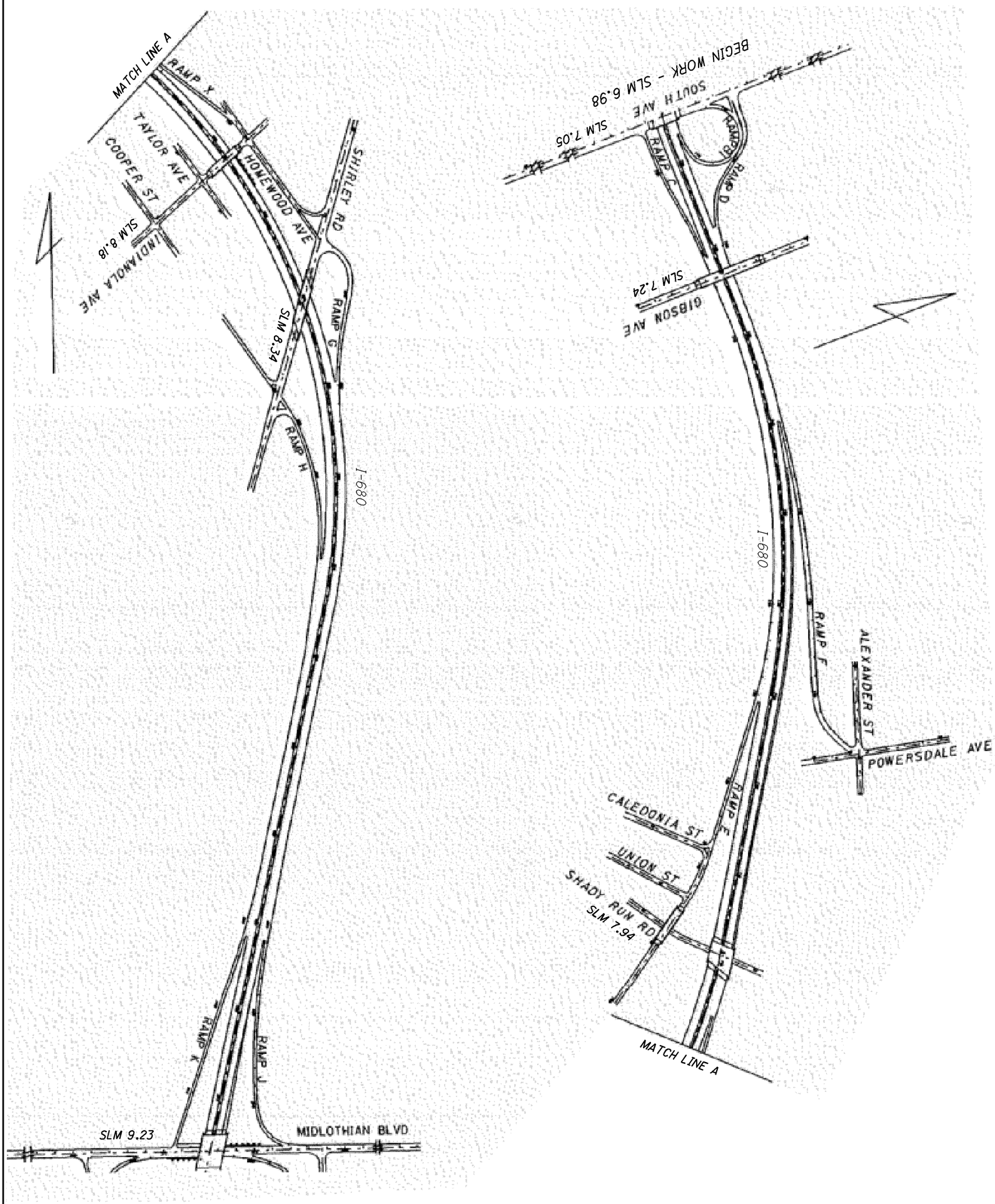

2 / 16	MAH-680-6.98	SCHEMATIC PLAN

CALCULATED RMB
CHECKED

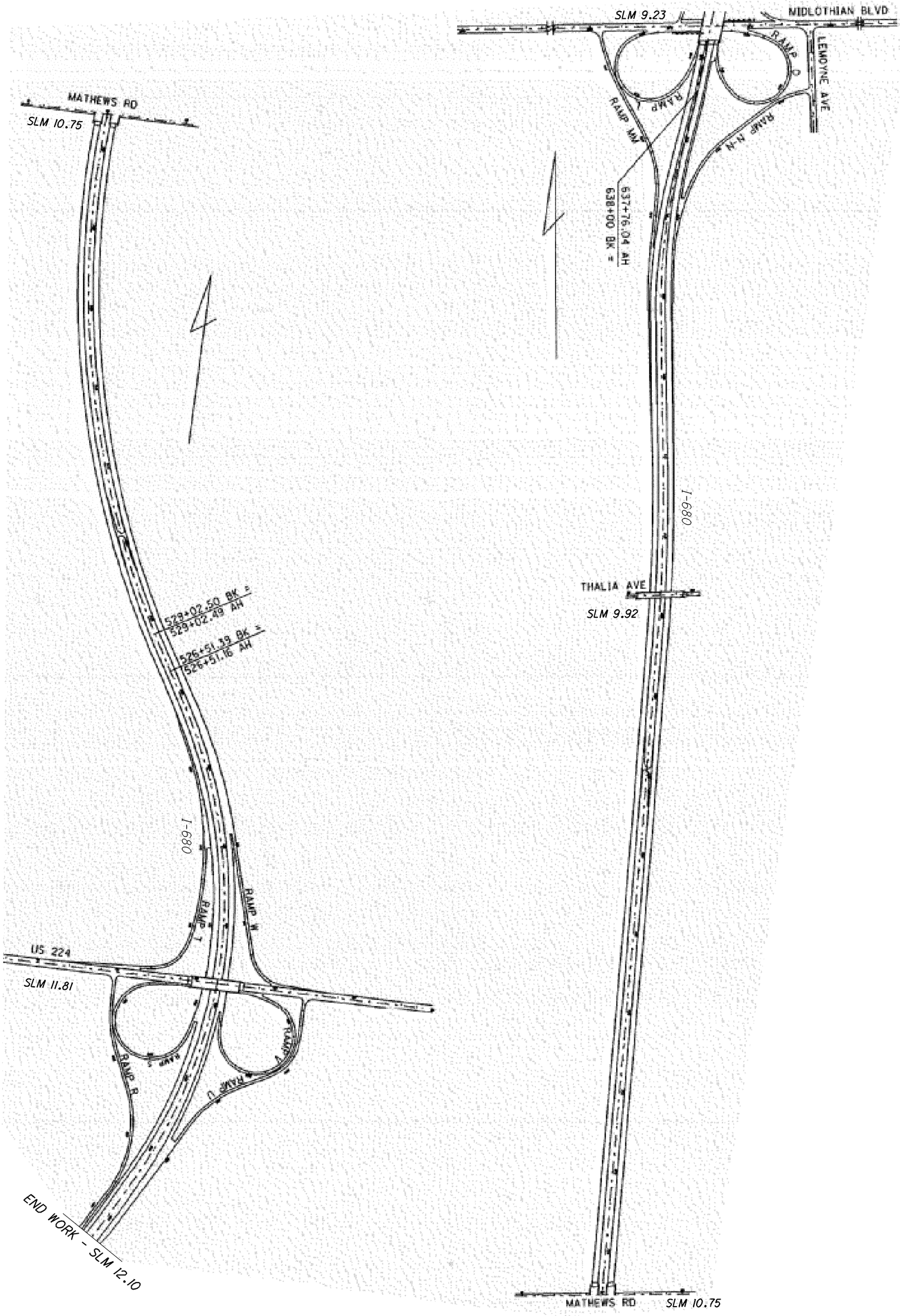

3 / 16	MAH-680-6.98	SCHEMATIC PLAN

CALCULATED RMB
CHECKED

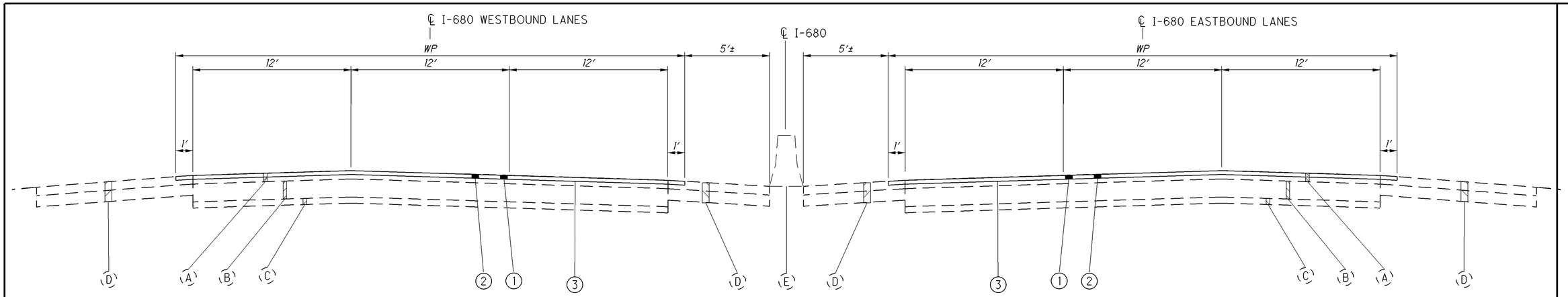

SECTION APPLIES				
ROUTE	SLM		LENGTH (MILES)	WP WB LANES
	FROM	TO		
680	6.98	7.2	0.22	38
680	7.2	7.47	0.27	50
680	7.47	7.95	0.48	38
680	7.98	8.45	0.47	38
680	8.45	9.1	0.65	50
680	9.1	9.25	0.15	38
680	9.28	10.76	1.48	38
680	10.78	11.90	1.12	38
680	11.90	12.04	0.14	26
680	12.04	12.10	0.06	38
TOTAL			5.04	

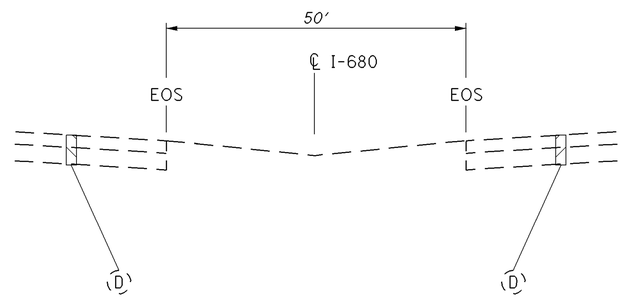

GRASS MEDIAN APPLIES FROM SLM 9.50 TO SLM 12.10

SECTION APPLIES				
ROUTE	SLM		LENGTH (MILES)	WP EB LANES
	FROM	TO		
680	6.98	7.16	0.18	38
680	7.16	7.68	0.52	50
680	7.68	7.95	0.27	38
680	7.98	8.57	0.59	38
680	8.57	9.03	0.46	50
680	9.03	9.25	0.22	38
680	9.28	10.76	1.48	38
680	10.78	11.87	1.09	38
680	11.87	12.10	0.23	26
TOTAL			5.04	

LEGEND

1. 254, 1″ PAVEMENT PLANING, ASPHALT CONCRETE
2. 424, 1″ FINE GRADED POLYMER ASPHALT CONCRETE TYPE B
3. 407, TACK COAT

- (A) EXISTING ASPHALT CONCRETE
- (B) EXISTING CONCRETE PAVEMENT
- (C) EXISTING SUBBASE
- (D) EXISTING SHOULDERS
- (E) EXISTING CONCRETE BARRIER

APPLIES TO SR 224 RAMPS

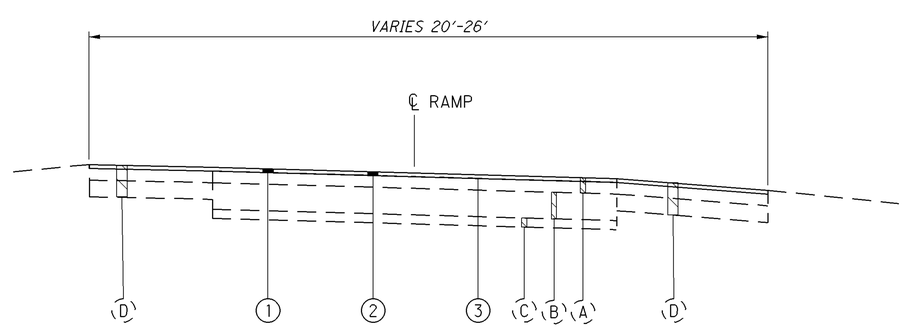

TYPICAL SECTIONS

MAH-860-6.98

I:\Projects\MAH\84117\roadway\sheets\84117GY001.dgn 14-JUL-2008 10:42AM dyard

UTILITIES

THE CONTRACTOR SHALL USE THE FOLLOWING PROCEDURE AT EACH LOCATION WHERE WORK IS PERFORMED, IN ACCORDANCE WITH SECTIONS 105.07 AND 107.16 IN THE CONSTRUCTION AND MATERIALS SPECIFICATIONS.

THE CONTRACTOR SHALL NOTIFY THE PROJECT ENGINEER, THE OHIO UTILITIES PROTECTION SERVICE (OUPS), THE OHIO & GAS PROCEDURES UNDERGROUND PROTECTION SERVICE (OGPUPS), THE OHIO DEPARTMENT OF TRANSPORTATION DISTRICT 4 HEAD-QUARTERS AND ALL NON REGISTERED UTILITY OWNERS AT LEAST TWO (2) WORKING DAYS PRIOR TO COMMENCING CONSTRUCTION IN ALL AREAS.

OUPS 1-800-362-2764 (CONTACT LIMITED BASIS PARTICIPANTS DIRECTLY)
OGPUPS 1-800-925-0988
ODOT 330-786-3145 KEN GREENE
CITY OF YOUNGSTOWN 330-742-8803

THE LOCATION OF EXISTING UNDERGROUND UTILITIES ARE NOT SHOWN ON THE PLANS, BUT CAN BE OBTAINED FROM THE OWNERS OF THE UTILITIES. THE CONTRACTOR IS RESPONSIBLE FOR ANY DAMAGE TO UTILITIES.

WORK LIMITS

THE WORK LIMITS SHOWN ON THESE PLANS ARE FOR PHYSICAL CONSTRUCTION ONLY. PROVIDE THE INSTALLATION AND OPERA-TION OF ALL WORK ZONE TRAFFIC CONTROL AND WORK ZONE TRAFFIC CONTROL DEVICES REQUIRED BY THESE PLANS WHETHER INSIDE OR OUTSIDE THESE WORK LIMITS.

CLEARING AND GRUBBING

ALTHOUGH THERE ARE NO TREES OR STUMPS SPECIFICALLY MARKED FOR REMOVAL WITHIN THE LIMITS OF THE PROJECT, A LUMP SUM QUANTITY IS INCLUDED IN THE GENERAL SUMMARY FOR ITEM 201, CLEARING AND GRUBBING. ALL PROVISIONS AS SET FORTH IN THE SPECIFICATIONS UNDER THIS ITEM ARE INCLUDED IN THE LUMP SUM PRICE BID FOR ITEM 201, CLEARING AND GRUBBING.

PART-WIDTH CONSTRUCTION

BECAUSE OF THE NECESSITY TO BUILD THIS PROJECT UNDER TRAFFIC AND TO CONSTRUCT THE FULL PAVEMENT WIDTH IN STAGES, EXERCISE CARE TO PREVENT THE CONSTRUCTION OF A BUTT JOINT IN THE BASE COURSES. LAP LONGITUDINAL JOINTS AS SHOWN ON STANDARD CONSTRUCTION DRAWING BP-3.1.

PROFILE AND ALIGNMENT

PLACE THE PROPOSED PAVEMENT TO FOLLOW THE ALIGNMENT AND PROFILE OF THE EXISTING PAVEMENT.

PAVEMENT MARKING LANE WIDTHS

THE NORMAL LANE WIDTH FOR THE PAVEMENT MARKINGS ON THIS PROJECT SHALL BE AS FOLLOWS:
ROUTE I-680 S.L.M. 6.98 TO S.L.M. 12.10 LANE WIDTHS 12'

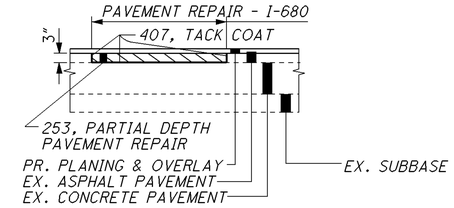

ITEM 251 - PARTIAL DEPTH PAVEMENT REPAIR

A QUANTITY OF THIS ITEM SHALL BE PROVIDED FOR USE AS DIRECTED BY THE ENGINEER. THE ITEM SHALL CONSIST OF REPAIRING EXISTING LOCATIONS EXHIBITING SURFACE DETERIORATION AND PLACING 3" OF ITEM 448 ASPHALT CONCRETE, TYPE 2. THE ASPHALT CONCRETE SHALL BE COMPACTED WITH A TYPE I PNEUMATIC TIRE ROLLER AND A STEEL WHEEL ROLLER AS PER 401.13. IT IS NOT THE INTENT TO REPAIR EVERY DETERIORATED AREA WITHIN THE PROJECT. THE ENGINEER SHALL DETERMINE WHICH AREAS ARE TO BE REPAIRED. UNLESS OTHERWISE DIRECTED BY THE ENGINEER, THIS ITEM SHALL BE PERFORMED AFTER THE COMPLETION OF MAINLINE PAVEMENT PLANING. ALSO, THIS ITEM SHALL COMMENCE WITHIN 7 DAYS OF THE COMPLETION OF MAINLINE PAVEMENT PLANING. PAYMENT SHALL BE BASED ON THE ACTUAL NUMBER OF SQUARE YARDS OF PAVEMENT REPAIR. THE FOLLOWING ESTIMATED QUANTITY HAS BEEN CARRIED TO THE GENERAL SUMMARY.

251, PARTIAL DEPTH PAVEMENT REPAIR, 500 SQ. YD.

CALCULATED RMB CHECKED

GENERAL NOTES

MAH-680-6.98

I:\Projects\MAH\84117\roadway\sheets\84117GN001.dgn 14-JUL-2008 10:42AM dyard

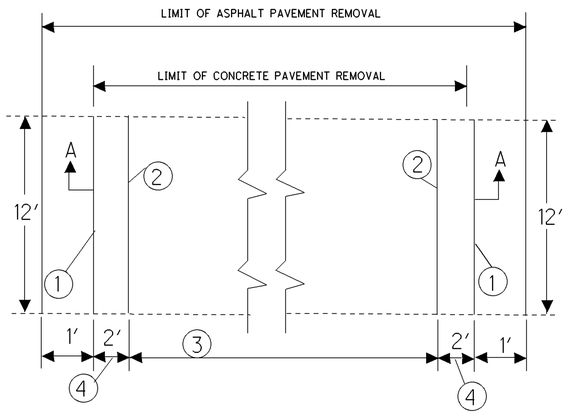

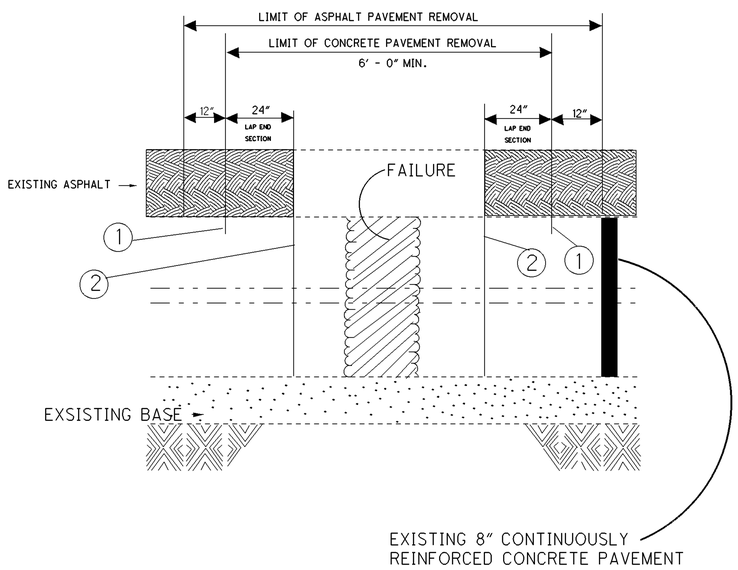

ITEM 202 - PAVEMENT REMOVED, AS PER PLAN

SEQUENCE OF OPERATION

(1) PARTIAL - DEPTH SAW CUTS (APPROX.DEPTH 1") SHALL BE MADE ALONG THE OUT BOUNDARIES OF THE AREA TO BE REPAIRED, AS OUTLINED BY THE ENGINEER. THE PARTIAL - DEPTH SAW CUTS SHALL BE LOCATED AT LEAST 18 INCHES FROM THE NEAREST TIGHT TRANSVERSE CRACK AND SHALL NOT CROSS AN EXISITING CRACK. C ARE SHALL BE TAKEN NOT TO CUT THE REINFORCEMENT

(2) FULL - DEPTH SAW CUTS SHALL BE MADE PARALLEL TO AND 24" INSIDE OF THE PARTIAL - DEPTH SAW CUTS WHICH DEFINE THE BOUNDARIES

(3) AFTER THE AREA IS SAWED COMPLETELY AROUND THE PERIMETER, THE SLAB SHALL BE REMOVED, USING THE LIFT - OUTMETHOD ONLY.

(4) CONCRETE IN THE TWO END LAP AREAS SHALL BE CAREFULLY REMOVED BY USING ONLY JACKHAMMERS (MAX. 35 POUNDS CLASS), PRY BARS, PICKS, SHOVELS, AND OTHER HAND TOOLS.

THE REINFORCEMENT SHALL NOT BE BENT UP TO FACILITATE REMOVAL OF CONCRETE UNDERNEATH.

FOLLOWING THE REMOVAL OF PAVEMENT FROM THE AREA, THE EXISTING BASE AND SUBGRADE SHALL BE EXAMINED BY THE ENGINEER AND RESTORED TO GRADE AND COMPACTED IF NECESSARY. A QUANTITY OF 10 CU. YD. OF ITEM 301 - ASPHALT CONCRETE BASE HAS BEEN PROVIDED AND CARRIED TO THE GENERAL SUMMARY FOR THIS PURPOSE

IT IS IMPORTANT THAT THE ENTIRE OPERATION IS EXECUTED IN THIS ORDER TO AVOID DISTURBING OR DAMAGING THE REMAINING GOOD PAVEMENT.

ALL THE ABOVE SHALL BE INCLUDED IN THE UNIT PRICE BID FOR THE ITEM 202 - PAVEMENT REMOVED, AS PER PLAN.
50 SQ.YD. OF ITEM 202 - PAVEMENT REMOVED, AS PER PLAN HAS BEEN CARRIED OVER TO THE GENERAL SUMMARY.

ITEM 255 -FULL DEPTH REMOVAL RIGID REPLACEMENT, CLASS FS, AS PER PLAN

(A) SPLICE IN DEFORMED LOOSE BARS (709.01), BAR MAT (709.09), OR DEFORMED WIRE FABIC (709.10) WITH EACH MEMBER OF REINFORCEMENT WHICH EXTENDS INTO THE PATCH AREA. THE TYPE OF NEW REINFORCEMENT USED SHALL MATCH THE ORIGINAL IN GRADE AND SIZE, ALL REQUIREMENTS SHALL BE AS PER STANDARD CONSTRUCTION DRAWING BP-1.1

THE NEW REINFORCEMENT SHALL BE CUT SO THAT THEIR ENDS ARE AT LEAST 2 INCHES FROM THE JOINT FACES.

TIED SPLICES IN THE LAP END SECTIONS SHALL BE A MINIMUM OF 20 INCHES. THE LAP SHALL BE SECURED WITH WIRE TIES. NO WELDING IS PERMITTED.

THE REINFORCEMENT SHALL BE FIRMLY SUPPORTED AT THE PROPER ELEVATION ABOVE THE BASE BY APPROVED MENTAL HIGH CHAIRS.

IF MOVEMENT OF THE PAVEMENT CAUSED BY EXPANSON CAUSES THE REINFORCEMENT TO BUCKLE, THIS SHALL BE CORRECTED JUST PRIOR TO PLACING CONCRETE BY REMOVING AND REPLACING THE WIRE TIE AT LAPS.

(B) THE USE OF SIDE FORMS AT THE EDGE OF PAVEMENT IS OPTIONAL UNLESS SHOULDER AREA IS EXCESSIVELY DISTURBED, OR AS REQUESTED BY THE ENGINEER. STANDARD LONGITUDINAL JOINT SIMILAR TO THE ONE IN THE ORIGINAL PAVEMENT SHALL BE USED REFER TO STANDARD CONSTRUCTION DRAWING BP-2.1.

(C) IN FINAL PREPERATION FOR CONCRETE PLACEMENT, ALL LOOSE MATERIAL SHALL BE REMOVED FROM THE EXCAVATED AREA BY MEAN OF COMPRESSED AIR. THE BASE, JOINT FACES, AND STEEL SHALL BE WETTED IMMEDIATLY BEFORE CONCRETE PLACEMENT.

(D) PLACE CONCRETE IN PATCH AREA, USING EXTREME CARE TO CONSOLIDATE CONCRETE AROUND EDGES AND BENEATH THE REINFORCEMENT BY INTERNAL VIBRATION.

(E) FINISHING OF CONCRETE SURFACE SHALL BE IN ACCORDANCE WITH 255.06 EXCEPT THAT TEXTURING AND STENCILING OF STATION ARE NOT REQUIRED. CARE SHALL BE TAKEN NOT TO OVER-FINISH THE SURFACE.

ALL OF THE ABOVE SHALL BE INCLUDED IN THE UNIT PRICE BID FOR ITEM 255-FULL DEPTH PAVEMENT REMOVAL AND RIGID REPLACEMENT, CLASS FS, AS PER PLAN.
50 SQ.YD. OF ITEM 255 FULL DEPTH PAVEMENT REMOVAL AND RIGID REPLACEMENT, CLASS FS, AS PER PLAN HAS BEEN CARRIED OVER TO THE GENERAL SUMMARY.

CALCULATED RMB
CHECKED

GENERAL NOTES

MAH-680-6.98

I:\Projects\MAH\84117\roadway\sheets\84117GN001.dgn 14-JUL-2008 10:42AM dyard

MAINTENANCE OF TRAFFIC

THIS ITEM SHALL CONSIST OF MAINTENANCE OF TRAFFIC ON EXISTING ROADWAYS AND RAMPS IN ACCORDANCE WITH THE OHIO MANUAL OF UNIFORM TRAFFIC CONTROL DEVICES FOR STREETS AND HIGHWAYS, CURRENT EDITION, LATEST REVISION, THE SPECIFICATIONS AND THE FOLLOWING:

1. A MINIMUM OF ONE ELEVEN FOOT LANE IN EACH DIRECTION SHALL BE MAINTAINED ON THE EXISTING PAVEMENT (COMPLETED PAVEMENT AND TEMPORARY PAVEMENT) DURING CONSTRUCTION OF THE WORK.

2. THE CONTRACTOR SHALL INFORM THE DISTRICT OFFICE (330) 786-2211, EIGHTEEN (18) DAYS PRIOR TO THE BEGINNING OF WORK.

3. CONES SHALL NOT BE ACCEPTABLE TRAFFIC CONTROL DEVICES FOR LANE RESTRICTIONS OR LANE REDUCTIONS THAT ARE IN OPERATION ONE-HALF HOUR AFTER SUNSET OR ONE HALF-HOUR BEFORE SUNRISE. ALL NIGHTTIME LANE RESTRICTIONS SHALL REQUIRE DRUMS OR BARRICADES AT A MAXIMUM SPACING OF FIFTY (50) FEET. WEIGHTED CHANNELIZERS MAY BE USED IN ACCORDANCE WITH THE ADDITIONAL NOTE HEREIN.

4. LANE RESTRICTIONS OR LANE REDUCTIONS SHALL NOT BE PERMITTED AFTER NORMAL WORKING HOURS. NORMAL WORKING HOURS SHALL BE THOSE HOURS DURING WHICH THE CONTRACTOR HAS A FULL COMPLEMENT OF EMPLOYEES AND EQUIPMENT ACTIVELY REMOVING AND/OR PLACING PAVEMENT MATERIALS.

5. THE CONTRACTOR SHALL FURNISH, ERECT, MAINTAIN AND SUBSEQUENTLY REMOVE ALL FLAGS, BARRICADES, SIGNS, SIGN SUPPORTS AND FURNISH AND MAINTAIN ALL FLAGGERS, WATCHERS AND INCIDENTALS RELATED THERETO.

6. ALL FULL DEPTH PAVEMENT REMOVAL AND REPLACEMENT OPERATIONS SHALL BE COMPLETED THE SAME DAY THE EXCAVATION IS MADE. IF THE CONTRACTOR CANNOT COMPLETE THE WORK, THE EXCAVATION SHALL BE BACKFILLED OR PROTECTED WITH A FIRM AND UNYEILDING MATERIAL. ALL LABOR, EUQIPMENT, MATERIALS, AND INCIDENTALS TO PROVIDE AND SUBSEQUENTLY REMOVE THE FIRM AND UNYEILDING MATERIAL SHALL BE INCLUDED AND PAID UNDER THE LUMP SUM BID FOR ITEM 614 MAINTAINING TRAFFIC.

7. UNDER NO CIRCUMSTANCES SHALL THE CONTRACTOR BE PERMITTED TO HAVE SUCCESSIVE WORK ZONES UNLESS THE DISTANCE BETWEEN THE DRUMS, BARRICADES OR CONES EXCEEDS TWO (2) MILES RURAL OR ONE (1) MILE URBAN.

8. ONLY DURING OFF-PEAK PERIODS (ie ANY PERIOD OTHER THAN 6-8AM AND 3-6PM) SHALL THE CONTRACTOR INSTALL AND SUBSEQUENTLY RESET ALL TRAFFIC CONTROL NECESSARY FOR THE WORK ZONE FOR EACH CONSTRUCTION PHASE.

9. IN ADDITION TO THE REQUIREMENTS OF 614.11 WORK ZONE PAVEMENT MARKINGS, AT THE END OF EACH DAY OF WORK, THE CONTRACTOR SHALL REPLACE (WITH WORK ZONE MARKINGS) ALL LANE, CENTER, STOP OR CHANNELIZING LINES THAT WERE REMOVED OR COVERED DURING THE PAVEMENT REMOVAL OR PLACEMENT OPERATIONS. QUANTITIES FOR SUCH PLACEMENT ARE CARRIED AS PART OF THE ITEMS LISTED UNDER 614 WORK ZONE PAVEMENT MARKINGS.

10. A QUANTITY OF 20 CU. YDS. OF 614 ASPHALT CONCRETE FOR MAINTAINING TRAFFIC SHALL BE PROVIDED FOR USE IN MAINTAINING PAVEMENT, SHOULDERS AND OTHER LOCATIONS AS DIRECTED BY THE ENGINEER.

11. PRIOR TO OPENING TO TRAFFIC EACH LANE SHALL BE IN A SAFE, PASSABLE CONDITION. ALL TRANSVERSE JOINTS SHALL EXTEND ACROSS THE FULLLANE AND SHOULDER WIDTH AND EACH LANE SHALL BE FREE FROM UNEVEN LONGITUDINAL JOINTS. THE CONTRACTOR SHALL PROVIDE ASPHALT WEDGES FOR TRANSVERSE JOINTS WHEREVER THERE ARE PAVEMENT ELEVATION DIFFERENCES.

12. A QUANTITY OF ITEM 614 WORK ZONE MARKING SIGN HAS BEEN INCLUDED IN THE PLAN. THIS QUANTITY SHALL INCLUDE, BUT NOT BE LIMITED TO, THE FOLLOWING SIGNS: W8-1 [BUMP], W8-H13 [NO EDGE LINES], W8-11 [UNEVEN LANES SYMBOL]. THESE QUANTITIES SHALL BE AS PER 614.04.

THE FOLLOWING QUANTITIES SHALL BE USED FOR THE MAINTENANCE OF TRAFFIC ON THIS PROJECT:

614, WORK ZONE LANE LINE, CLASS II, 21.4 MILE
614, WORK ZONE STOP LINE, CLASS 1, 60 FT
614, WORK ZONE CHANNELIZING LINE, CLASS 1, 2756 FT
614, WORK ZONE MARKING SIGN, 24 EACH

ALL WORK AND TRAFFIC CONTROL DEVICES SHALL BE IN ACCORDANCE WITH CMS 614 AND OTHER APPLICABLE PORTIONS OF THE SPECIFICATIONS, AS WELL AS THE OHIO MANUAL OF UNIFORM TRAFFIC CONTROL DEVICES. PAYMENT FOR ALL LABOR, EQUIPMENT AND MATERIALS SHALL BE INCLUDED IN THE LUMP SUM CONTRACT PRICE FOR ITEM 614, MAINTAINING TRAFFIC, UNLESS SEPARATELY ITEMIZED IN THE PLAN.

CONTRACTOR'S EQUIPMENT - OPERATION AND STORAGE

A QUALIFIED FLAGGER SHALL BE EMPLOYED WHERE THE CONTRACTOR'S EQUIPMENT MUST MERGE WITH THE TRAFFIC STREAM. THE CONTRACTOR'S EQUIPMENT SHALL BE EQUIPPED WITH AT LEAST ONE AMBER FLASHING LIGHT. PAVERS, ROLLERS AND OTHER EQUIPMENT MAY BE PARKED IN AREAS ALONG THE HIGHWAY WHEN PAVING OPERATIONS ARE SCHEDULED TO CONTINUE WITHIN THE NEXT WORKDAY. OTHERWISE THE EQUIPMENT SHALL BE STORED AT A STORAGE AREA OUTSIDE THE R/W, THE LOCATION OF WHICH SHALL HAVE PRIOR APPROVAL OF THE ENGINEER. WHEN PARKING ALONG THE HIGHWAY THE EQUIPMENT SHALL BE PLACED AND DELINEATED AS PER 614.03.A. NO EQUIPMENT SHALL BE PARKED IN THE MEDIAN OF THE HIGHWAY. ADEQUATE BARRICADES AND LIGHTS SHALL BE PLACED ON THE PAVEMENT SIDE OF THE EQUIPMENT TO IDENTIFY THE LIMITS OF THE EQUIPMENT. ALL OTHER EQUIPMENT, INCLUDING PRIVATE VEHICLES, SHALL BE STORED AT THE APPROVED CONTRACTOR'S STORAGE AREA. NO EQUIPMENT SHALL BE PARKED ON PRIVATE PROPERTY UNLESS PRIOR APPROVAL OF THE OWNER AND THE PROJECT ENGINEER/ SUPERVISOR HAS BEEN GRANTED.

WINTER TRAFFIC LIMITATIONS

ALL EXISTING LANES SHALL BE OPEN TO TRAFFIC BETWEEN NOVEMBER 15 AND APRIL 1. NOVEMBER 14 SHALL BE CONSIDERED TO CONSTITUTE AN INTERIM COMPLETION DATE AND LIQUIDATED DAMAGES AS SPECIFIED IN 108.07 SHALL BE ASSESSED FOR EACH CALENDAR DAY THAT THE ROADWAY REMAINS CLOSED TO TRAFFIC BEYOND THE SPECIFIED LIMIT. THE CONTRACTOR MAY CLOSE LANES PRIOR TO APRIL 1 WITH WRITTEN APPROVAL FROM THE DISTRICT CONSTRUCTION ENGINEER.

ITEM 614 - LAW ENFORCEMENT OFFICER WITH PATROL CAR

IN ADDITION TO THE REQUIREMENTS OF 614 AND THE LATEST EDITION OF THE OHIO MANUAL OF UNIFORM TRAFFIC CONTROL DEVICES (OMUTCD). A UNIFORMED LAW ENFORCEMENT OFFICER AND OFFICIAL PATROL CAR WITH WORKING TOP MOUNTED EMERGENCY FLASHING LIGHTS SHALL BE PROVIDED FOR CONTROLLING TRAFFIC AS DIRECTED BY ENGINEER FOR THE FOLLOWING TASKS:

1. FOR LANE CLOSURES: DURING INITIAL SET-UP PERIODS, TEAR DOWN PERIODS, SUBSTANTIAL SHIFTS OF A CLOSURE POINT OR WHEN NEW LANE CLOSURE ARRANGEMENTS ARE INITIATED.

2. DURING THE ENTIRE ADVANCE PREPARATION AND CLOSURE SEQUENCE WHERE COMPLETE BLOCKAGE OF TRAFFIC IS REQUIRED. LAW ENFORCEMENT OFFICERS (L.E.O.'S) SHOULD NOT BE USED WHERE THE OMUTCD INTENDS THAT FLAGGERS BE USED. THE LEO'S ARE CONSIDERED TO BE EMPLOYED BY THE CONTRACTOR AND THE CONTRACTOR SHALL BE RESPONSIBLE FOR THEIR ACTIONS. ALTHOUGH THEY ARE EMPLOYED BY THE CONTRACTOR, THE PROJECT ENGINEER SHALL HAVE CONTROL OVER THEIR PLACEMENT. THE OFFICIAL PATROL CAR SHALL BE A PUBLIC SAFETY VEHICLE AS REQUIRED BY THE OHIO REVISED CODE.

THE CONTRACTOR SHALL MAKE ARRANGEMENTS FOR THESE SERVICES WITH:

Canfield Patrol Post
500 South Broad Street
Canfield, OH 44406
Phone: (330) 533-6866
Fax: (330) 533-2872

IF AFTER CONTACTING THE OHIO HIGHWAY PATROL, IT IS DETERMINED THAT THEY CANNOT SUPPLY THE LEO, THEN AN AUTHORIZED MUNICIPAL OR COUNTY POLICE OFFICER WITH A MARKED AND FLASHER-LIGHT EQUIPPED OFFICIAL POLICE OR PATROL CAR SHALL BE PROVIDED.

LAW ENFORCEMENT OFFICERS WITH PATROL CAR REQUIRED BY THE TRAFFIC MAINTENANCE TASKS ABOVE SHALL BE PAID FOR ON A UNIT PRICE (HOURLY) BASIS UNDER ITEM 614 LAW ENFORCEMENT OFFICER WITH PATROL CAR. THE FOLLOWING ESTIMATED QUANTITIES HAVE BEEN CARRIED TO THE GENERAL SUMMARY:

614, LAW ENFORCEMENT OFFICER WITH PATROL CAR, 80 HOURS

THE HOURS PAID SHALL INCLUDE MINIMUM SHOW-UP TIME REQUIRED BY THE LAW ENFORCEMENT AGENCY INVOLVED.

IF THE CONTRACTOR WISHES TO UTILIZE LEO'S FOR FLAGGING AND TRAFFIC CONTROL OTHER THAN FOR THAT REQUIRED IN THESE PLANS, HE MAY DO SO AT THIS OWN EXPENSE. PAYMENT FOR THE EXCESS ABOVE THE CONTRACT REQUIREMENTS WILL BE INCLUDED UNDER ITEM 614 MAINTAINING TRAFFIC.

TRAFFIC CONTROL INSPECTOR

THE CONTRACTOR SHALL DESIGNATE AN INDIVIDUAL OTHER THAN THE SUPERINTENDENT AND SUBJECT TO THE APPROVAL OF THE ENGINEER, TO CONTINUOUSLY INSPECT ALL TRAFFIC CONTROL DEVICES WHENEVER CONSTRUCTION WORK IS BEING PERFORMED WITHIN THE WORK LIMITS OF THE PROJECT. THE DESIGNATED INDIVIDUAL SHALL ALSO INSPECT ALL TRAFFIC DEVICES AT THE BEGINNING AND AT THE END OF EACH WORK DAY. THE DESIGNATED INDIVIDUAL OR A QUALIFIED REPRESENTATIVE SHALL ALSO BE AVAILABLE ON AN AROUND THE CLOCK BASIS TO REPAIR AND/OR REPLACE DAMAGED OR MISSING TRAFFIC CONTROL DEVICES. THESE INDIVIDUALS SHALL BE EQUIPPED WITH CELLULAR PHONES AND THEIR NAMES AND PHONE NUMBERS SHALL BE GIVEN TO THE PROJECT ENGINEER AT THE PRE-CONSTRUCTION MEETING. THE DESIGNATED INDIVIDUAL MAY HAVE OTHER CONSTRUCTION RELATED DUTIES AS LONG AS IMMEDIATE ATTENTION IS GIVEN TO TRAFFIC CONTROL. PAYMENT FOR THE SERVICES OF THE TRAFFIC CONTROL INSPECTOR SHALL BE INCLUDED IN THE LUMP SUM PRICE BID FOR ITEM 614 MAINTAINING TRAFFIC.

BRIDGE PAINTING EQUIPMENT ON SHOULDERS

IF BRIDGE PAINTING EQUIPMENT IS TO REMAIN ON THE SHOULDERS WHEN THE CONTRACTOR IS NOT WORKING, IT SHALL BE PLACED BEHIND PORTABLE CONCRETE BARRIER (PCB) AND A WORK ZONE IMPACT ATTENUATOR (WZIA) SHALL PROTECT THE LEADING BLUNT END OF THE PCB (SEE OMUTCD, FIGURE 6H-5 "SHOULDER CLOSURE ON FREEWAY" (TYPICAL APPLICATION 5)). IF THE CONTRACTOR CHOOSES TO PROTECT PAINTING EQUIPMENT WITH PCB AND A WZIA, THE COST SHALL BE CONSIDERED INCIDENTAL TO THE LUMP SUM BID FOR MAINTAINING TRAFFIC.

LANE CLOSURES

DURATION OF LANE CLOSURES AND RESTRICTIONS SHALL BE AS PER THE PERMITTED LANE CLOSURE CHART. THE PERMITTED LANE CLOSURE CHART USED FOR THIS PROJECT SHALL BE THE MOST CURRENT CHART AVAILABLE ON THE DATE THIS PROJECT SELLS.

THE CHART CAN BE FOUND AT:
http://plcm.dot.state.oh.us

SHOULD THE CONTRACTOR FAIL TO MEET ANY OF THE REQUIREMENTS IN THE CHART, THE CONTRACTOR SHALL BE ASSESSED LIQUIDATED DAMAGES IN THE AMOUNT OF $1000 PER HOUR OR PORTION THEREOF THAT THE LANE REDUCTION REMAINS BEYOND THE SPECIFIED LIMIT.

I:\Projects\MAH\84117\roadway\sheets\84117MN001.dgn 04-AUG-2008 7:46AM rbisesi

ITEM 614 - PORTABLE CHANGEABLE MESSAGE SIGN, AS PER PLAN

THE CONTRACTOR SHALL FURNISH, INSTALL, MAINTAIN AND REMOVE, WHEN NO LONGER NEEDED, 2 PORTABLE CHANGEABLE MESSAGE SIGNS [PCMS], ON SITE, FOR THE DURATION OF TIME SPECIFIED IN THIS NOTE, EACH SIGN SHALL BE OF A TYPE SHOWN ON A LIST OF APPROVED PCMS UNITS MAINTAINED BY THE DIRECTOR. THIS LIST IS AVAILABLE ON THE ODOT WEBSITE AT HTTP://WWW.DOT.STATE.OH.US/TESTLAB/APPLISTS/MISC/PCMS.HTM THE CLASS A UNITS SHALL HAVE A MINIMUM LEGIBILITY DISTANCE OF 650 FEET.

EACH SIGN SHALL BE TRAILER MOUNTED AND EQUIPPED WITH A FUNCTIONAL DIMMING MECHANISM TO DIM THE SIGN DURING DARKNESS AND A TAMPER AND VANDAL PROOF ENCLOSURE. EACH SIGN SHALL BE PROVIDED WITH APPROPRIATE TRAINING AND OPERATION INSTRUCTIONS TO ENABLE ON-SITE PERSONNEL TO OPERATE AND TROUBLESHOOT THE UNIT. THE SIGN SHALL ALSO BE CAPABLE OF BEING POWERED BY AN ELECTRICAL SERVICE DROP FROM A LOCAL UTILITY COMPANY. PCMS TRAILERS SHOULD BE DELINEATED ON A PERMANENT BASIS BY AFFIXING RETROREFLECTIVE MATERIAL, IN A CONTINUOUS LINE ON THE FACE OF THE TRAILER AS SEEN BY ONCOMING ROAD USERS.

PLACEMENT, OPERATION, MAINTENANCE AND ALL ACTIVATION OF THE SIGNS BY THE CONTRACTOR SHALL BE AS DIRECTED BY THE ENGINEER. THE PCMS SHALL BE LOCATED IN A HIGHLY VISIBLE POSITION YET PROTECTED FROM TRAFFIC. THE PCMS SHOULD NOT BE LOCATED IN THE MEDIAN OF THE HIGHWAY UNLESS IT IS PROTECTED FROM BOTH DIRECTIONS OF TRAFFIC. THE PCMS SHOULD BE LOCATED BEHIND GUARDRAIL WHEREVER POSSIBLE. THE CONTRACTOR SHALL, AT THE DIRECTION OF THE ENGINEER, RELOCATE THE PCMS TO IMPROVE THE VISIBILITY OR ACCOMMODATE CHANGED CONDITIONS. WHEN NOT IN USE, THE PCMS WILL BE OFF, FACING AWAY FROM ALL TRAFFIC AND SHALL DISPLAY ONE OR MORE HIGH INTENSITY YELLOW REFLECTIVE SHEETING SURFACES OF 9-INCH BY 15-INCH MINIMUM SIZE FACING TRAFFIC.

THE ENGINEER SHALL BE PROVIDED ACCESS TO EACH SIGN UNIT AND SHALL BE PROVIDED WITH APPROPRIATE TRAINING AND OPERATION INSTRUCTIONS TO ENABLE PERSONNEL TO OPERATE AND TROUBLESHOOT THE UNIT AND TO REVISE SIGN MESSAGES, IF NECESSARY.

ALL MESSAGES TO BE DISPLAYED ON THE SIGN WILL BE PROVIDED BY THE CONTRACTOR. A LIST OF ALL PROPOSED PREPROGRAMMED MESSAGES WILL BE GIVEN TO THE ENGINEER PRIOR TO CONSTRUCTION. THE SIGN SHALL HAVE TWO DIFFERENT MEMORIES [PROM AND RAM] AND CAPABILITY TO STORE UP TO 99 MESSAGES IN EACH MEMORY. MESSAGE MEMORY OR PREPROGRAMMED DISPLAYS SHALL NOT BE LOST AS A RESULT OF POWER FAILURES TO THE ON-BOARD COMPUTER. THE SIGN LEGEND SHALL BE CAPABLE OF BEING CHANGED IN THE FIELD. IN ORDER TO CONVEY A MAXIMUM OF INFORMATION AT A SINGLE GLANCE, ONLY THREE LINE PRESENTATION FORMATS WITH A MAXIMUM OF SIX MESSAGE PHASES WILL BE PERMITTED. NORMALLY, ONLY A MAXIMUM OF THREE MESSAGE PHASES SHOULD BE EMPLOYED. PCMS FORMAT SHALL PERMIT THE COMPLETE MESSAGE FOR EACH PHASE TO BE READ AT LEAST ONCE.

THE PCMS SHALL CONTAIN AN ACCURATE CLOCK AND PROGRAMMING LOGIC WHICH WILL ALLOW THE SIGN TO BE ACTIVATED, DE-ACTIVATED OR MESSAGES CHANGED AUTOMATICALLY AT DIFFERENT TIMES OF THE DAY FOR DIFFERENT DAYS OF THE WEEK.

THE PCMS SHALL CONTAIN A CELLULAR TELEPHONE DATA LINK WHICH WILL [IN ACTIVE CELLULAR AREAS] ALLOW REMOTE SIGN ACTIVATION, DEACTIVATION, MESSAGE CHANGES, MESSAGE ADDITIONS AND REVISIONS TO TIME OF DAY PROGRAMS. THE SYSTEM SHALL ALSO PERMIT VERIFICATION OF CURRENT AND PROGRAMMED MESSAGES.

THE PCMS UNIT SHALL BE MAINTAINED IN GOOD WORKING ORDER BY THE CONTRACTOR IN ACCORDANCE WITH THE PROVISIONS OF 614. THE CONTRACTOR SHALL PRIOR TO ACTIVATING THE UNIT, MAKE ARRANGEMENTS WITH AN AUTHORIZED SERVICE AGENT FOR THE PCMS TO ASSURE PROMPT SERVICE IN THE EVENT OF FAILURE. ANY FAILURE SHALL NOT RESULT IN THE SIGN BEING OUT OF SERVICE FOR MORE THAN 12 HOURS INCLUDING WEEKENDS. FAILURE TO COMPLY MAY RESULT IN AN ORDER TO STOP WORK AND OPEN ALL TRAFFIC LANES AND/OR IN THE DEPARTMENT TAKING APPROPRIATE ACTION TO SAFELY CONTROL TRAFFIC AND THE ENTIRE COST TO CONTROL TRAFFIC ACCRUED BY THE DEPARTMENT WILL BE DEDUCTED FROM MONEYS DUE, OR TO BECOME DUE THE CONTRACTOR ON HIS CONTRACT.

THE CONTRACTOR SHALL BE RESPONSIBLE FOR 24 HOURS PER DAY OPERATION AND MAINTENANCE OF THESE SIGNS ON THE PROJECT FOR THE DURATION OF THE PHASES. THE REQUIREMENT TO FURNISH, INSTALL, MAINTAIN AND REMOVE A PCMS UNIT ON THIS PROJECT SHALL NOT IN ANY WAY RELIEVE THE CONTRACTOR OF HIS RESPONSIBILITIES AS OUTLINED IN 614.02.

PAYMENT FOR THE ABOVE DESCRIBED ITEM SHALL BE AT THE CONTRACT UNIT PRICE BID FOR EACH SIGN MONTH OF ITEM 614 PORTABLE CHANGEABLE MESSAGE SIGN, AS PER PLAN AND SHALL INCLUDE ALL LABOR, MATERIALS, EQUIPMENT, FUELS, LUBRICATING OILS, SOFTWARE, HARDWARE AND INCIDENTALS TO PERFORM THE ABOVE DESCRIBED WORK.

614 PORTABLE CHANGEABLE MESSAGE SIGN, AS PER PLAN, 8 SIGN MONTH

ADVANCED NOTICE TO PAVE

THE CONTRACTOR SHALL SUBMIT FOR APPROVAL TO THE DISTRICT CONSTRUCTION ENGINEER A DETAILED SCHEDULE 15 DAYS PRIOR TO THE PLACEMENT OF THE OVERLAY COURSES, ON HOW THEY PROPOSE TO PROSECUTE THE PAVING OPERATIONS. THE DETAILS SHALL SHOW THE ORDER OF PERFORMANCE OF EACH STAGE (START TO FINISH) OF THE WORK INCLUDING THE MAINTENANCE OF TRAFFIC THAT WILL BE USED.

WEIGHTED CHANNELIZERS

THE WEIGHTED CHANNELIZER SHALL BE PREDOMINATELY ORANGE IN COLOR AND SHALL BE MADE OF A LIGHTWEIGHT, FLEXIBLE, AND DEFORMABLE MATERIAL. THEY SHALL BE AT LEAST 42 INCHES IN HEIGHT WITH A WEIGHTED BASE. THEY MAY HAVE A "HANDLE" OR LIFTING DEVICE WHICH EXTENDS ABOVE THE 42 INCH MINIMUM HEIGHT.

THE MARKINGS ON THE WEIGHTED CHANNELIZER SHALL BE HORIZONTAL, CIRCUMFERENTIAL, ALTERNATING ORANGE AND WHITE RETROREFLECTIVE STRIPES 6 INCHES WIDE. EACH WEIGHTED CHANNELIZER SHALL HAVE A MINIMUM OF TWO ORANGE AND TWO WHITE STRIPES. ANY NON-RETROREFLECTIVE SPACES BETWEEN THE HORIZONTAL ORANGE AND WHITE STRIPES SHALL NOT EXCEED 2 INCHES WIDE. THE WEIGHTED CHANNELIZER SHALL HAVE A 4-INCH MINIMUM WIDTH, REGARDLESS OF ORIENTATION.

ON FREEWAYS AND MULTILANE HIGHWAYS:

USE OF WEIGHTED CHANNELIZERS ON FREEWAYS AND MULTILANE HIGHWAYS SHALL BE LIMITED TO SHORT-TERM OPERATION, GENERALLY TWELVE HOURS OR LESS, FOR EITHER DAY OR NIGHT. UPON COMPLETION OF WORK WITHIN THE ABOVE NOTED TIME PERIOD, THE WEIGHTED CHANNELIZERS SHALL BE REMOVED. THE WEIGHTED CHANNELIZERS MAY AGAIN BE PLACED ON THE HIGHWAY WHEN THE WORK IS TO RESUME ON THE FOLLOWING DAY OR NIGHT. ANY LANE CLOSURE USING CHANNELIZATION DEVICES, EXPECTED TO REMAIN FOR MORE THAN TWELVE HOURS, SHALL REQUIRE THE USE OF DRUMS OR BARRIERS.

WHEN USED AT NIGHT, WEIGHTED CHANNELIZERS SHALL ONLY BE PLACED IN THE "TANGENT AREA". THE "TANGENT AREA" IS DEFINED AS THE AREA AFTER THE TRANSITION TAPER WHERE THE WORK TAKES PLACE. DRUMS SHALL BE USED IN THE TRANSITION TAPERS FOR NIGHT OPERATIONS.

ON OTHER HIGHWAYS:

THERE ARE NO DURATIONS OF WORK RESTRICTIONS FOR USE OF WEIGHTED CHANNELIZERS ON ALL OTHER TYPES OF HIGHWAYS, DAY OR NIGHT. ON THESE ROADWAYS THE WEIGHTED CHANNELIZER MAY BE USED IN THE TRANSITION TAPERS AS WELL AS IN THE TANGENT AREAS, DAY OR NIGHT.

MAXIMUM SPACING OF THE WEIGHTED CHANNELIZER SHALL BE 40 FEET.

STEPS SHOULD BE TAKEN TO ENSURE THAT THE WEIGHTED CHANNELIZERS WILL NOT BE BLOWN OVER OR DISPLACED BY WIND OR MOVING TRAFFIC. BALLASTS SHOULD NOT PRESENT A HAZARD IF THE WEIGHTED CHANNELIZERS ARE INADVERTENTLY STRUCK, NOR SHOULD THEY AFFECT THE VISIBILITY OF THE WEIGHTED CHANNELIZERS. ALL BALLASTS USED SHOULD BE IN ACCORDANCE WITH THE MANUFACTURER'S SPECIFICATIONS.

GENERAL NOTES

1. It is intended that this drawing be used for treatment of drop-offs that develop during construction operations, and that are not otherwise provided for in the construction plans. Where the plans do not provide specific items for labor, equipment, or materials to implement the drop-off treatments specified herein, they shall be included for payment in the lump sum bid for Item 614 - Maintaining Traffic.

2. While the need for certain advisory signing is noted herein, it is not intended that this be indicative of all signing that may be required to advise or warn motorist, and all requirements of the Ohio Manual of Uniform Traffic Control Devices (OMUTCD) must be fulfilled.

3. In urban or otherwise heavily developed areas where pedestrians and/or bicyclists may be present in significant numbers, additional signing and protective measures other than those shown herein may be required.

4. The drop-off treatment selected for use at any given location shall be appropriate for the prevailing conditions at the site.

5. Where concrete barrier is specified, it shall be in accordance with Standard Construction Drawing PCB - 9.1, RM-4.2 and Item 622.

6. When drums are specified for a drop-off condition, a minimum number of four drums shall be used. Spacing shall be as indicated in the plans or as specified in the OMUTCD.

7. When W8-9 (Low Shoulder) signs or W8-11 (Uneven Lanes) and R4-9 (Stay in Lane) signs are required, they shall be placed 750′ in advance of the condition, on all intersecting entrance ramps within the limits of the condition and immediately beyond all intersecting roadways within the limits of the condition. When the drop-off condition extends more than one-half mile, additional signs shall be erected at intervals of a maximum of one mile.

8. For locations, such as at ramps, lane shifts, lane closures, etc., where traffic is required to negotiate any difference in elevation between pavements, the Optional Wedge Treatment shall be provided.

9. Portable concrete barrier shall be placed on the same level as the traffic surface and shall not encroach on lane width(s) designated as the minimum required for traffic use. Where drums are used, and their presence would reduce traveled lane widths to less than 10′, drums may be placed on the opposite level from that of traffic provided the drop-off depth does not exceed 5″ and approval is granted by the Project Engineer.

10. Pavement Repairs (or similar work):

a. Lengths greater than 60 feet - utilize appropriate treatment from Condition I.

b. Lengths of 60 feet or less - repairs shall be affected in accordance with Item 255.08. Drums may be used as a separator adjacent to the traveled lane.

CONDITION I

1. These treatments are to be used for resurfacing, pavement planing excavation, etc., between, beside or within traveled lanes.

Distance From Traveled Lane	D (in)	Treatment
1FT-12FT	≤ 1½	Erect W8-11.
1FT-12FT	1½-3	1. Lane closure utilizing drums* as shown below. (use only on 3 or more lanes) - or - 2. Optional Wedge Treatment.
1FT-12FT	3 - 5	Lane closure utilizing drums as shown below
1FT-12FT	5 - 12	Lane closure utilizing portable concrete barrier as shown below.
>12FT-20FT	12 - 24	Lane closure utilizing drums as shown below
>12FT-20FT	>24	Lane closure utilizing portable concrete barrier as shown below.

*Cones may be used for daytime only conditions.

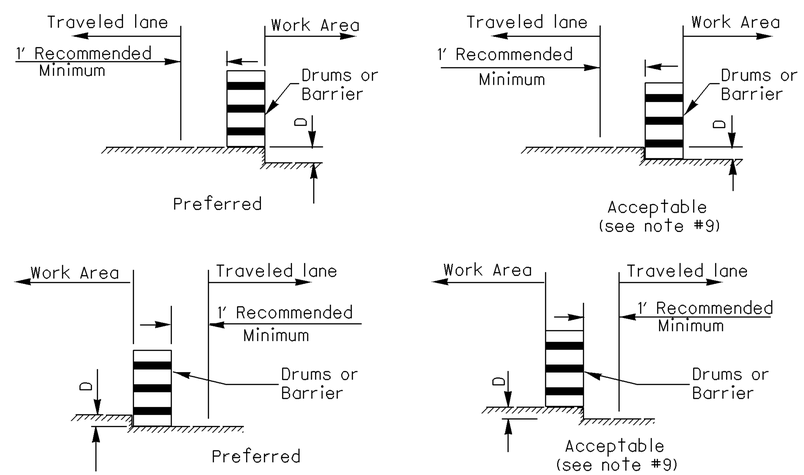

OPTIONAL WEDGE TREATMENT

(MILLING OR RESURFACING)

1. This treatment may be used when permitted for Condition I only.

2. W8-11 and R4-9 signs required.

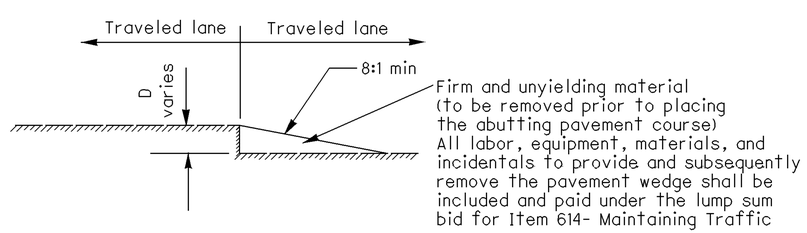

CONDITION II

DROPOFFS WITHIN GRADED SHOULDER AREA
[except for linear grading areas]

The treatments indicated below are for use in conjunction with resurfacing, planing, or excavation within the graded shoulder area.

Distance From Traveled Lane	D (in)	Treatment
1FT-12FT	≤ 1½	1.) If edgelines are present, no treatment necessary. or 2.) Erect W8-11 and R4-9 signs
1FT-12FT	1½- 5	1) If min. lane widths* requirements can be met, maintain lanes utilizing drums as shown below. - or - 2) If min. lane width* requirements cannot be met, close adjacent lane utilizing drums. (use only on 3 or more lanes) - or - 3) Optional shoulder treatment
>12FT-30FT	<= 24	Shoulder closure utilizing drums as shown below
>12FT-30FT	>24	Shoulder closure utilizing portable concrete barrier as shown below.

*Minimum lane widths shall be 10′ unless otherwise specified in the plans.

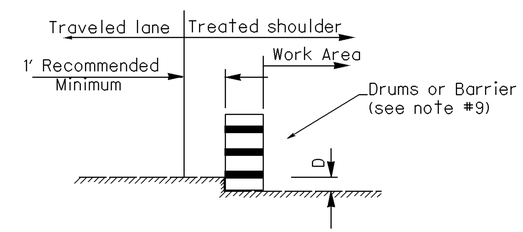

OPTIONAL SHOULDER TREATMENT

1. This treatment shall not be used within a bituminous shoulder where a hot longitudinal joint per 401.17 is required.

2. W8-9 signs required.

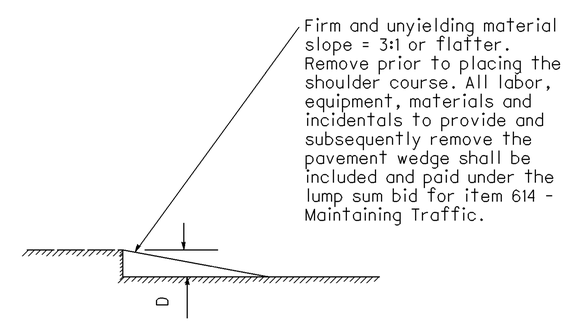

DROPOFFS IN WORK ZONES

MAH-680-6.98

I:/D4STD/TRAFFIC/NOTES/MOT/DROPOFF.DGN REVISED 4/23/04
I:@Projects@MAH@8417T@roadway@sheets@8417MN001.dgn 14-JUL-2008 10:42AM dyard

SHEET NUMBER												PART.		ITEM	ITEM EXT	GRAND TOTAL	UNIT	DESCRIPTION	SEE SHEET NO.
					5	6	7	8	11	12	13	PROJECT	SAFETY						
																		ROADWAY	
												LUMP		201	11000	LUMP		CLEARING AND GRUBBING	
						50						50		202	23001	50	SQ YD	PAVEMENT REMOVED, AS PER PLAN	6
																		EROSION CONTROL	
												1000		832	30000	1000	EACH	EROSION CONTROL	
																		PAVEMENT	
					500							500		251	01000	500	SQ YD	PARTIAL DEPTH PAVEMENT REPAIR	
									266301			266301		254	01000	266301	SQ YD	PAVEMENT PLANING, ASPHALT CONCRETE, T = 1"	
						50						50		255	10101	50	SQ YD	FULL DEPTH PAVEMENT REMOVAL AND RIGID REPLACEMENT, CLASS FS, AS PER PLAN	6
						10						10		301	46000	10	CU YD	ASPHALT CONCRETE BASE, PG64-22	
									39946			39946		407	10000	39946	GALLON	TACK COAT	
									7398			7398		424	12000	7398	CU YD	FINE GRADED POLYMER ASPHALT CONCRETE, TYPE B	
									106445				106445	618	40100	106445	FT	RUMBLE STRIPS, (ASPHALT CONCRETE)	
																		TRAFFIC CONTROL	
										905		905		621	10010	905	EACH	RPM, LOW PROFILE, WHITE	
										68		68		621	10020	68	EACH	RPM, LOW PROFILE WHITE/RED	
										136		136		621	10030	136	EACH	RPM, LOW PROFILE YELLOW/RED	
										973		973		621	54000	973	EACH	RAISED PAVEMENT MARKER REMOVED	
											24.46	24.46		646	10000	24.46	MILE	EDGE LINE	
											21.4	21.4		646	10100	21.4	MILE	LANE LINE	
											2756	2756		646	10300	2756	FT	CHANNELIZING LINE	
											60	60		646	10400	60	FT	STOP LINE	
																		MAINTENANCE OF TRAFFIC	
							80					80		614	11100	80	HOUR	LAW ENFORCEMENT OFFICER WITH PATROL CAR	
							24					24		614	12460	24	EACH	WORK ZONE MARKING SIGN	
							20					20		614	13000	20	CU YD	ASPHALT CONCRETE FOR MAINTAINING TRAFFIC	
								8				8		614	18601	8	SIGN MNTH	PORTABLE CHANGEABLE MESSAGE SIGN, AS PER PLAN	8
							21.4					21.4		614	20400	21.4	MILE	WORK ZONE LANE LINE, CLASS II	
							2756					2756		614	23000	2756	FT	WORK ZONE CHANNELIZING LINE, CLASS I	
							60					60		614	26000	60	FT	WORK ZONE STOP LINE, CLASS I	
												LUMP		614	11000	LUMP		MAINTAINING TRAFFIC	
												3		619	16010	3	MONTH	FIELD OFFICE, TYPE B	
												LUMP		623	10000	LUMP		CONSTRUCTION LAYOUT STAKES	
												LUMP		624	10000	LUMP		MOBILIZATION	

CALCULATED RMB
CHECKED

GENERAL SUMMARY

MAH-680-6.98

I:\Projects\MAH\84117\roadway\sheets\84117GG001.dgn 14-AUG-2008 3:48PM rbisesi

SLM RANGE			TYPICAL SECTION	SIDE	DISTANCE (D)	AVERAGE WIDTH (W)	SURFACE AREA (A) A=DxW/9	CADD GENERATED AREA			254 PAVEMENT PLANING, ASPHALT CONCRETE, T=1"			407 TACK COAT				424 FINE GRADED POLYMER ASPHALT CONCRETE, TYPE B		618 RUMBLE STRIPS, (ASPHALT CONCRETE)						
					FT	FT	SQ YD	SQ YD			SQ YD			GALLON				CU YD		FT						
	TO																									
6.98		7.16		EB	950.40	38.00	4012.80				4012.80			601.92				111.47		1900.80						
7.16		7.68		EB	2745.60	50.00	15253.33				15253.33			2288.00				423.70		5491.20						
7.68		7.95		EB	1425.60	38.00	6019.20				6019.20			902.88				167.20		2851.20						
7.98		8.57		EB	3115.20	38.00	13153.07				13153.07			1972.96				365.36		6230.40						
8.57		9.03		EB	2428.80	50.00	13493.33				13493.33			2024.00				374.81		4857.60						
9.03		9.25		EB	1161.60	38.00	4904.53				4904.53			735.68				136.24		2323.20						
9.28		10.76		EB	7814.40	38.00	32994.13				32994.13			4949.12				916.50		15628.80						
10.78		11.87		EB	5755.20	38.00	24299.73				24299.73			3644.96				674.99		11510.40						
11.87		12.10		EB	1214.40	26.00	3508.27				3508.27			526.24				97.45		2428.80						
6.98		7.20		WB	1161.60	38.00	4904.53				4904.53			735.68				136.24		2323.20						
7.20		7.47		WB	1425.60	50.00	7920.00				7920.00			1188.00				220.00		2851.20						
7.47		7.95		WB	2534.40	38.00	10700.80				10700.80			1605.12				297.24		5068.80						
7.98		8.45		WB	2481.60	38.00	10477.87				10477.87			1571.68				291.05		4963.20						
8.45		9.10		WB	3432.00	50.00	19066.67				19066.67			2860.00				529.63		6864.00						
9.10		9.25		WB	792.00	38.00	3344.00				3344.00			501.60				92.89		1584.00						
9.28		10.76		WB	7814.40	38.00	32994.13				32994.13			4949.12				916.50		15628.80						
10.78		11.90		WB	5913.60	38.00	24968.53				24968.53			3745.28				693.57		11827.20						
11.90		12.04		WB	739.20	26.00	2135.47				2135.47			320.32				59.32		1478.40						
12.04		12.10		WB	316.80	38.00	1337.60				1337.60			200.64				37.16		633.60						
RAMP R					2050.00	23.00	5238.89	630.00			5868.89			880.33				163.02								
RAMP S					1660.00	26.00	4795.56	513.89			5309.44			796.42				147.48								
RAMP T					1430.00	25.00	3972.22	555.56			4527.78			679.17				125.77								
RAMP U					1700.00	25.00	4722.22	400.00			5122.22			768.33				142.28								
RAMP V					1555.00	23.00	3973.89	158.89			4132.78			619.92				114.80								
RAMP W					2411.00	20.00	5357.78	493.78			5851.56			877.73				162.54								
								SUBTOTALS	0.00	0.00	266300.7	0.00	0.00	39945.10	0.00	0.00	0.00	7397.24	0.00	106444.8	0.00	0.00	0.00	0.00	0.00	0.00
								TOTALS CARRIED TO GENERAL SUMMARY	0	0	266301	0	0	39946	0	0	0	7398	0	106445	0	0	0	0	0	0

CALCULATED RMB
CHECKED

ASPHALT CONCRETE SHEET

MAH-680-6.98

I:\Projects\MAH\84117\roadway\sheets\84117G0001.dgn 14-JUL-2008 10:42AM dyard

LOCATION								621	621	621	621		621	
COUNTY	ROUTE	SECTION (S.L.M.) FROM	SECTION (S.L.M.) TO					RPM, LOW PROFILE, YELLOW/YELLOW	RPM, LOW PROFILE WHITE/RED	RPM, LOW PROFILE, WHITE	RPM, LOW PROFILE YELLOW/RED		RAISED PAVEMENT MARKER REMOVED	REMARKS
								EACH	EACH	EACH	EACH		EACH	
MAH	680	6.98	12.10							905			905	I-680 NB. AND SB. (LANE LINES)
MAH	680	SB 680 FROM US 224							6		26		6	YELLOW EDGE LINE AND GORE MARKINGS
MAH	680	NB 680 TO US 224							15		21		15	YELLOW EDGE LINE AND GORE MARKINGS
MAH	680	SB 680 TO WB US 224							17		18		17	YELLOW EDGE LINE AND GORE MARKINGS
MAH	680	NB 680 FROM WB US 224							5		30		5	YELLOW EDGE LINE AND GORE MARKINGS
MAH	680	SB 680 TO EB US 224							19		21		19	YELLOW EDGE LINE AND GORE MARKINGS
MAH	680	NB 680 FROM EB US 224							6		20		6	YELLOW EDGE LINE AND GORE MARKINGS
TOTALS CARRIED TO GENERAL SUMMARY				0	0	0	0	0	68	905	136	0	973	

CALCULATED KG
CHECKED LB

RAISED PAVEMENT MARKERS

MAH-680-6.98

I:\Projects\MAH\84117\roadway\sheets\84117RPM.dgn 14-JUL-2008 10:43AM dyard

GENERAL SPEC:	640
MATERIAL TYPE:	646

CALCULATED RMB CHECKED

CENTER LINE

CTY	ROUTE	TRUE LOG	FROM	TRUE LOG	TO	TOTAL MILES	EQUIVALENT SOLID LINE	COMMENTS
TOTAL								

LANE LINE

CTY	ROUTE	TRUE LOG	FROM	TRUE LOG	TO	TOTAL MILES	4" LANE LINE DASHED	4" LANE LINE SOLID	COMMENTS
MAH	680	6.98	SOUTH AVE.	12.10	US 224	21.40			
TOTAL						21.40			

EDGE LINE

CTY	ROUTE	TRUE LOG	FROM	TRUE LOG	TO	WHITE EDGE LINE TOTAL	WHITE EDGE LINE HIGHWAY	WHITE EDGE LINE RAMP	YELLOW EDGE LINE TOTAL	YELLOW EDGE LINE HIGHWAY	YELLOW EDGE LINE RAMP	COMMENTS
MAH	680	6.98	SOUTH AVE.	12.10	US 224	12.72	10.24	2.48	11.74	10.24	1.50	
TOTAL						12.72	10.24	2.48	11.74	10.24	1.50	

AUXILIARY

CTY	ROUTE LOCATION	TRUE LOG	CHANNEL LINE	STOP LINE	TRANSVERSE DIAGONAL LINES WHITE	TRANSVERSE DIAGONAL LINES YELLOW	CROSS WALK LINES	WORD ON PVMT ONLY 72"	WORD ON PVMT ONLY 96"	LANE ARROWS TURN LEFT	LANE ARROWS TURN RIGHT	LANE ARROWS THRU	LANE ARROWS COMB.	SYMBOL MARKINGS RxR	SYMBOL MARKINGS SCHOOL 72"	SYMBOL MARKINGS SCHOOL 96"	ISLAND MARKING	DOTTED LINES	COMMENTS
			FT	FT	FT	FT	FT	EACH	EACH	EACH	EACH	EACH	EACH	EACH	EACH	EACH	SQ FT	FT	
MAH	I-680 NB TO US 224	12.170	610	60															
MAH	I-680 SB FROM US 224	12.190	215																
MAH	I-680NB FROM US 224 WB	11.580	159																
MAH	I-680SB TO US 224 WB	11.650	674																
MAH	I-680SB TO US 224 EB	11.860	884																
MAH	I680NB FROM US 224 EB	11.800	214																
TOTAL			2756	60															

PAVEMENT MARKING SUBSUMMARY

MAH-680-6.98

I:\Projects\MAH\84117\roadway\sheets\841177S001.dgn 14-JUL-2008 10:43AM dyard

DISTRICT 4

N

COUNTY MAHONING ROUTE 680

Total This Route = Yellow: Solid _____, Yellow: Dash _____, White: Dash _____

Equivalent Yellow _____

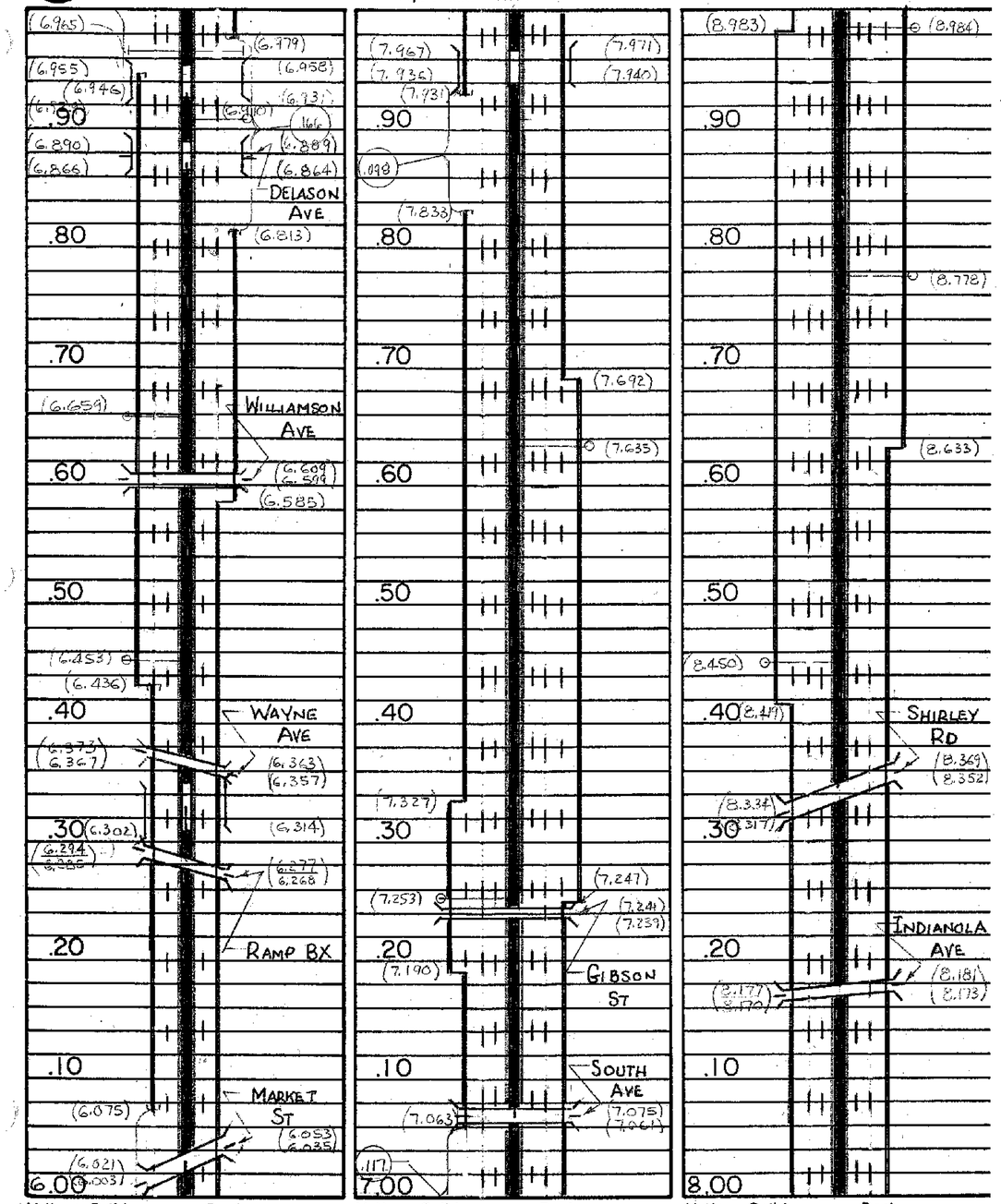

Yellow: Solid _____ Dash _____ Yellow: Solid _____ Dash _____ Yellow: Solid _____ Dash _____

TOTAL YELLOW THIS PAGE: SOLID _____, DASH _____, EQUIVALENT LINE _____

DISTRICT 4

N

COUNTY MAHONING ROUTE 680

Total This Route = Yellow: Solid _____, Yellow: Dash _____, White: Dash _____

Equivalent Yellow _____

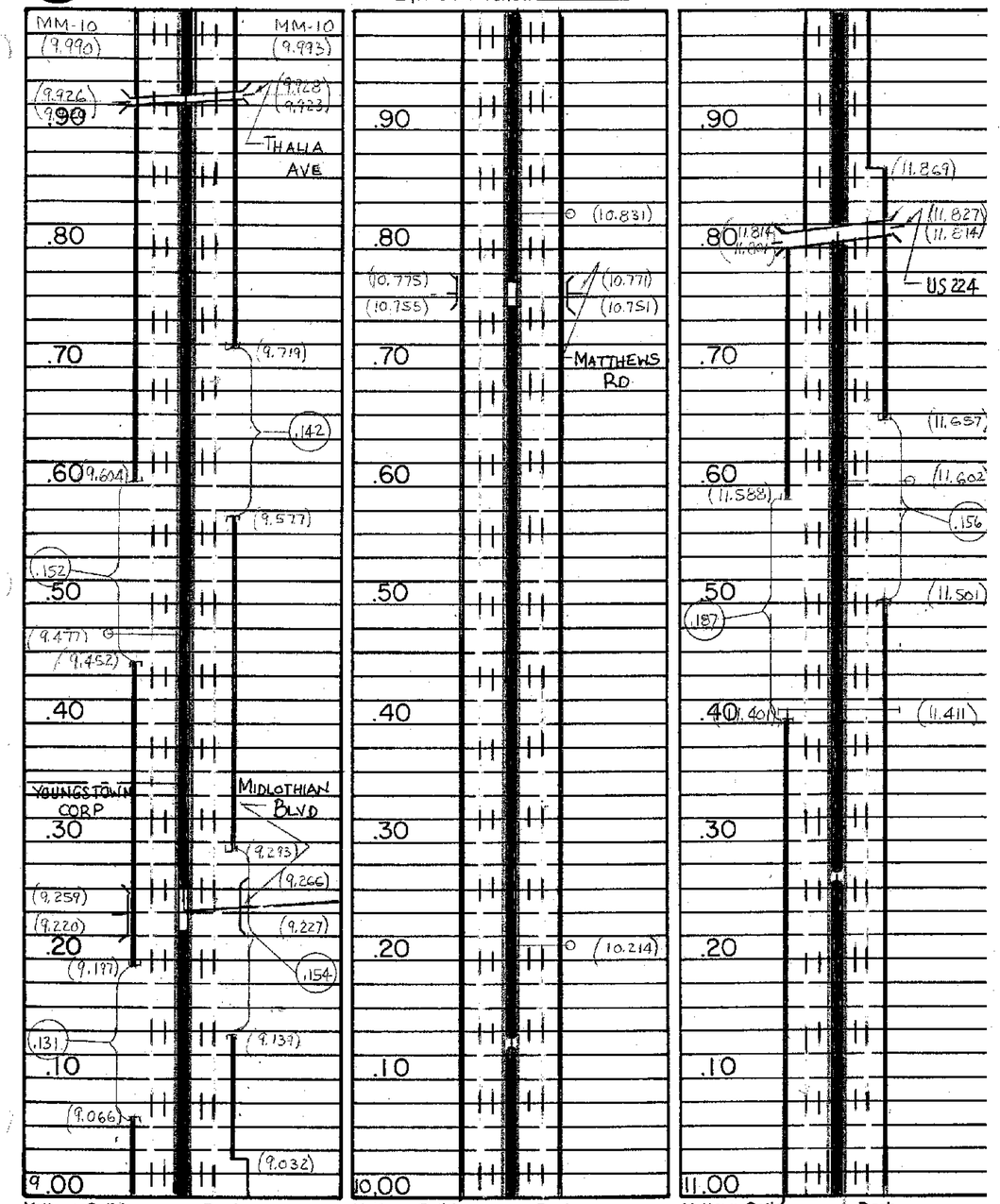

Yellow: Solid _____ Dash _____ Yellow: Solid _____ Dash _____ Yellow: Solid _____ Dash _____

TOTAL YELLOW THIS PAGE: SOLID _____, DASH _____, EQUIVALENT LINE _____

CALCULATED TJD

CHECKED

PAVEMENT MARKING PLAN

MAH-680-6.98

I:\Projects\MAH\84117\roadway\sheets\84117TP001.dgn 14-JUL-2008 10:43AM dyard

DISTRICT 4

N

COUNTY MAHONING ROUTE 680

Total This Route = Yellow: Solid _____, Yellow: Dash _____, White: Dash _____

Equivalent Yellow _____

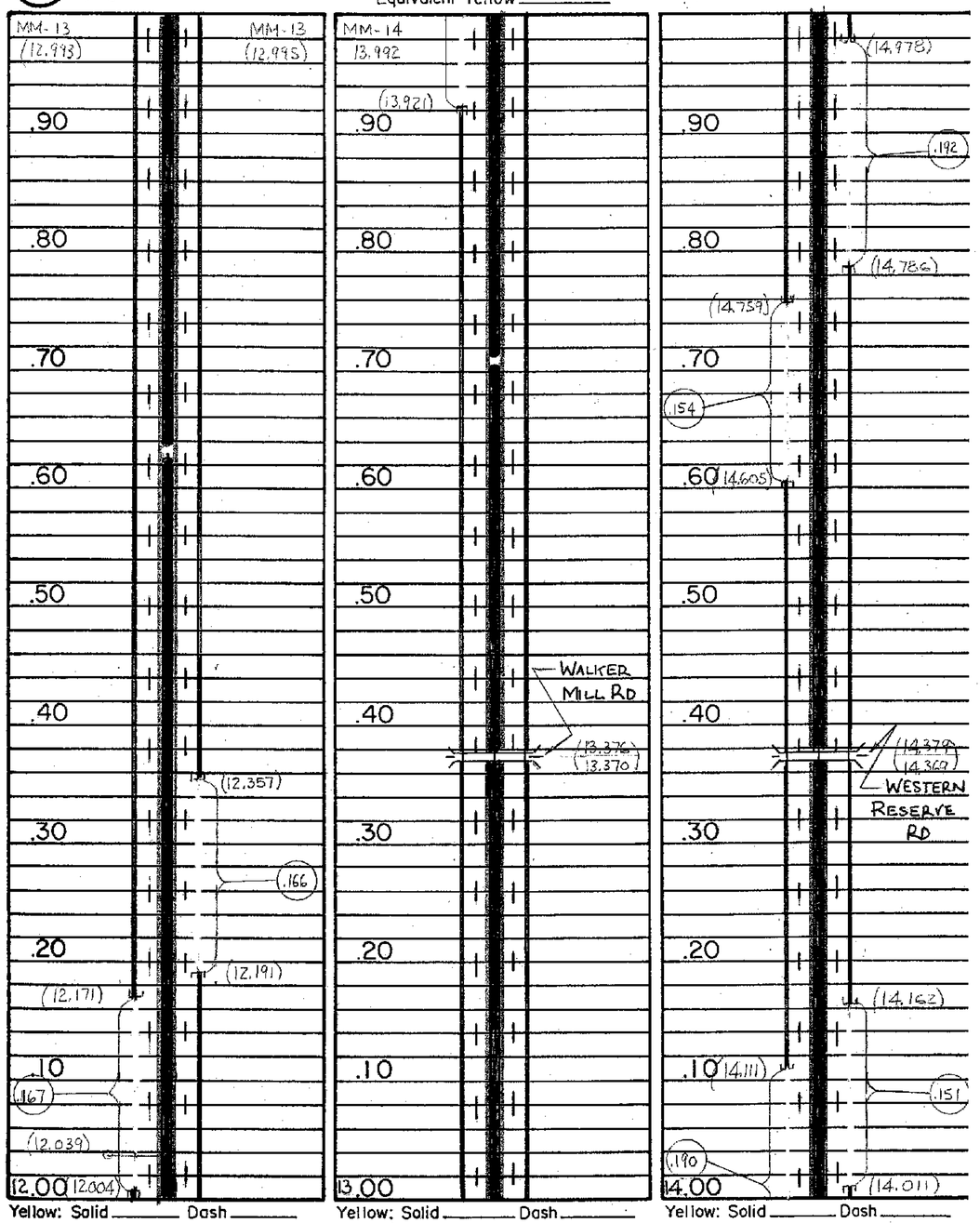

Yellow: Solid _____ Dash _____ Yellow: Solid _____ Dash _____ Yellow: Solid _____ Dash _____

TOTAL YELLOW THIS PAGE: SOLID _____, DASH _____, EQUIVALENT LINE _____

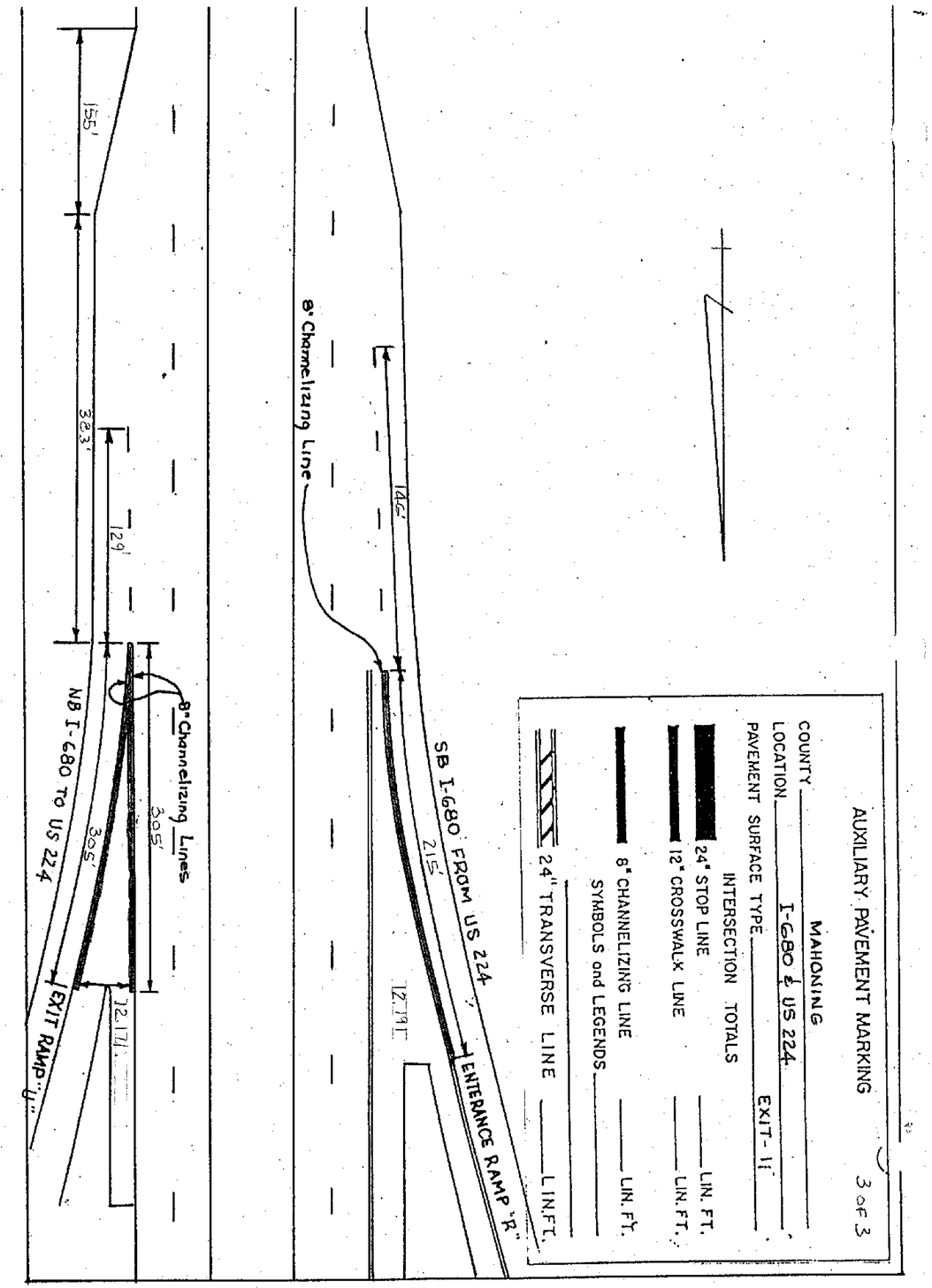

CALCULATED TJD CHECKED

PAVEMENT MARKING PLAN

MAH-680-6.98

I:\Projects\MAH\84117\roadway\sheets\84117TP001.dgn 14-JUL-2008 10:43AM dyard

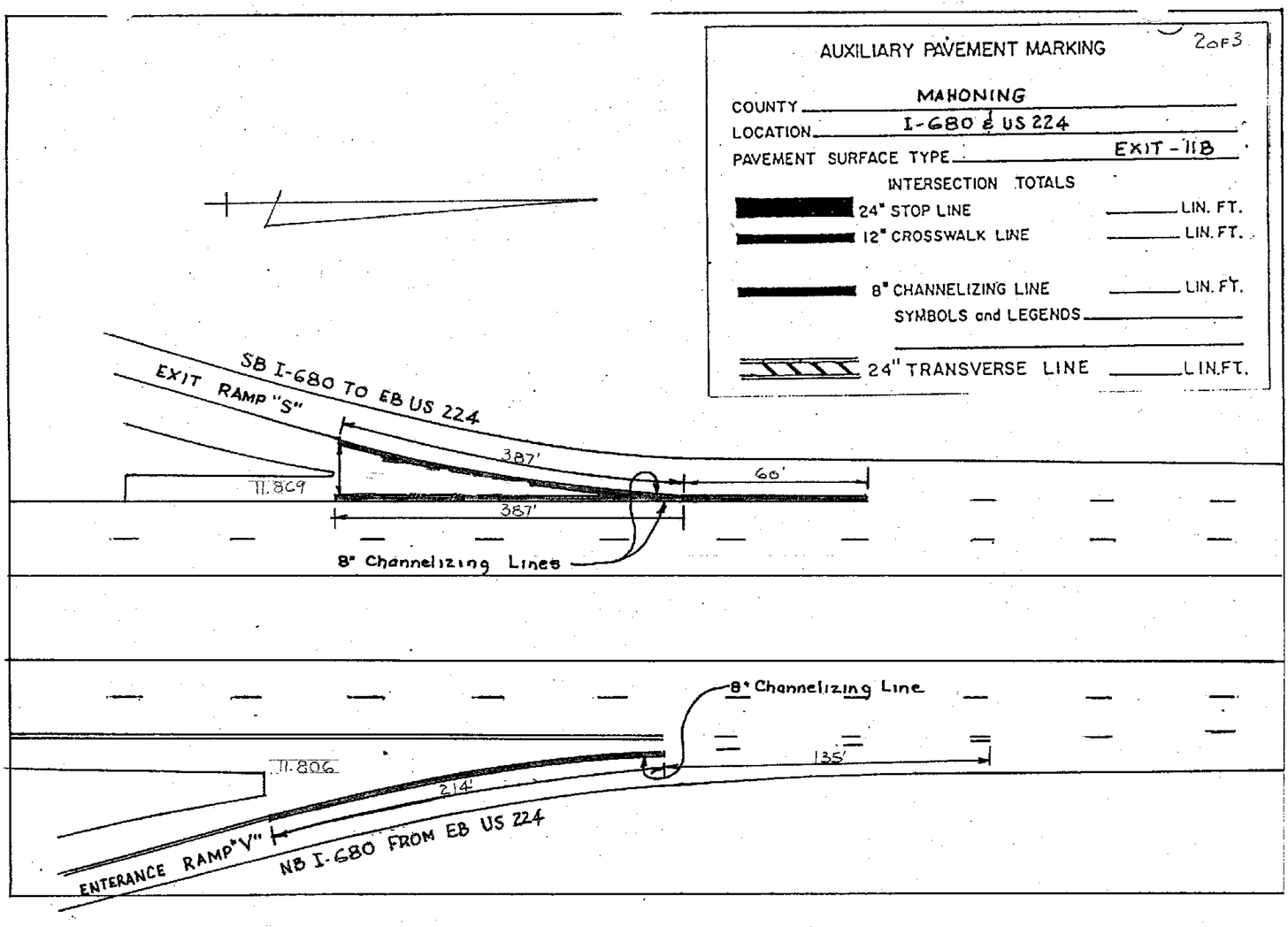
AUXILIARY PAVEMENT MARKING
2 OF 3
COUNTY MAHONING
LOCATION I-680 & US 224
PAVEMENT SURFACE TYPE EXIT-11B
INTERSECTION TOTALS
24" STOP LINE LIN. FT.
12" CROSSWALK LINE LIN. FT.
8" CHANNELIZING LINE LIN. FT.
SYMBOLS and LEGENDS
24" TRANSVERSE LINE LIN.FT.
SB I-680 TO EB US 224
EXIT RAMP "S"
387'
60'
11.869
387'
8" Channelizing Lines
8" Channelizing Line
135'
11.806
214'
ENTERANCE RAMP "V"
NB I-680 FROM EB US 224

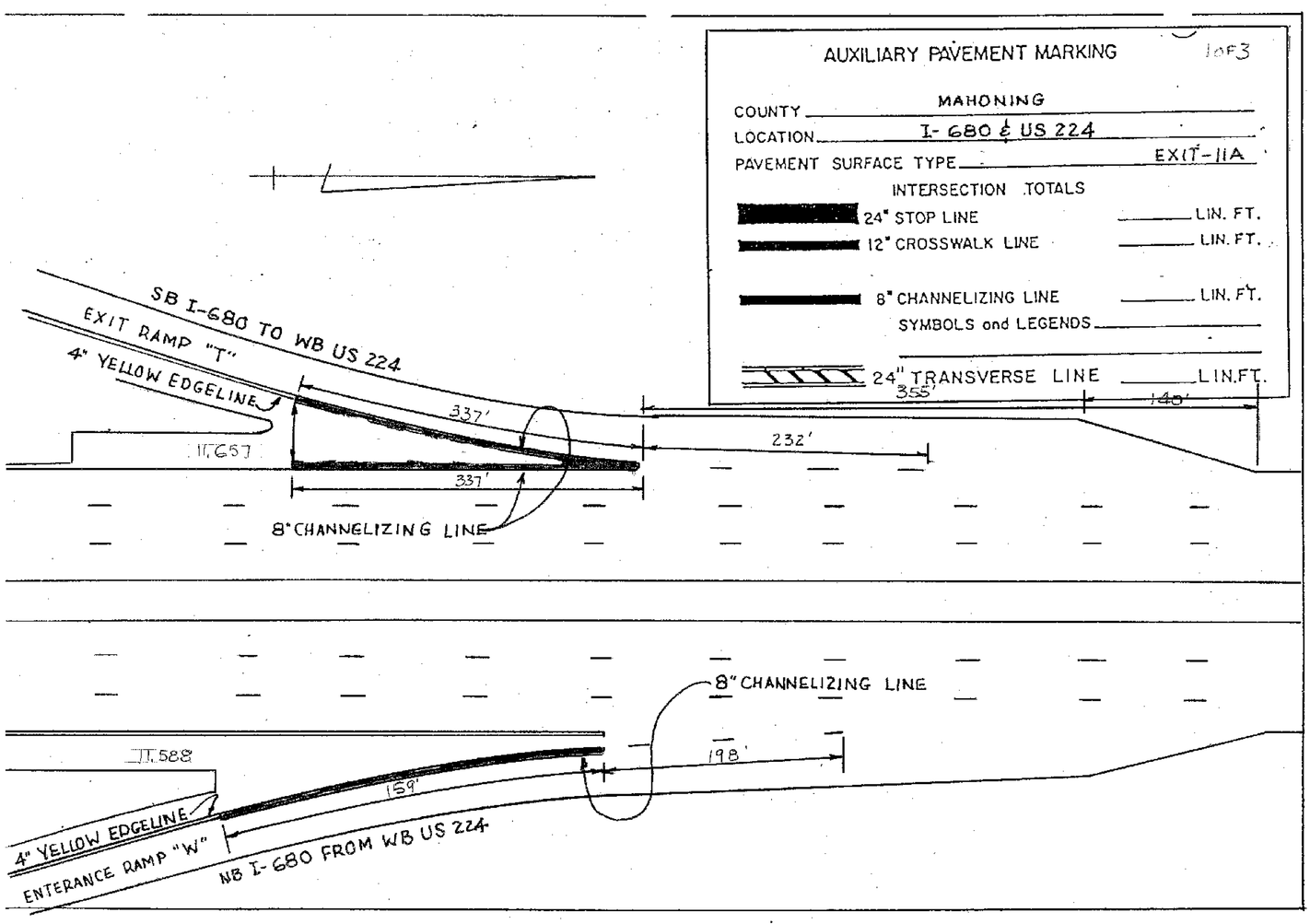
AUXILIARY PAVEMENT MARKING
1 OF 3
COUNTY MAHONING
LOCATION I-680 & US 224
PAVEMENT SURFACE TYPE EXIT-11A
INTERSECTION TOTALS
24" STOP LINE LIN. FT.
12" CROSSWALK LINE LIN. FT.
8" CHANNELIZING LINE LIN. FT.
SYMBOLS and LEGENDS
24" TRANSVERSE LINE LIN.FT.
SB I-680 TO WB US 224
EXIT RAMP "T"
4" YELLOW EDGELINE
337'
355'
140'
232'
11.657
337'
8" CHANNELIZING LINE
8" CHANNELIZING LINE
198'
11.588
159'
4" YELLOW EDGELINE
ENTERANCE RAMP "W"
NB I-680 FROM WB US 224