S W I S S Version 1.2.3

Span Wire Signal Support Design

PROJECT DETAIL

MAR-423-7.40

Project Date: 04/01/2021

Last Revision Date: 11/25/2021

Author: C. David Spisak

Filename: MAR-423-7.40.xml

Comments: SR 423 & BARKS RD

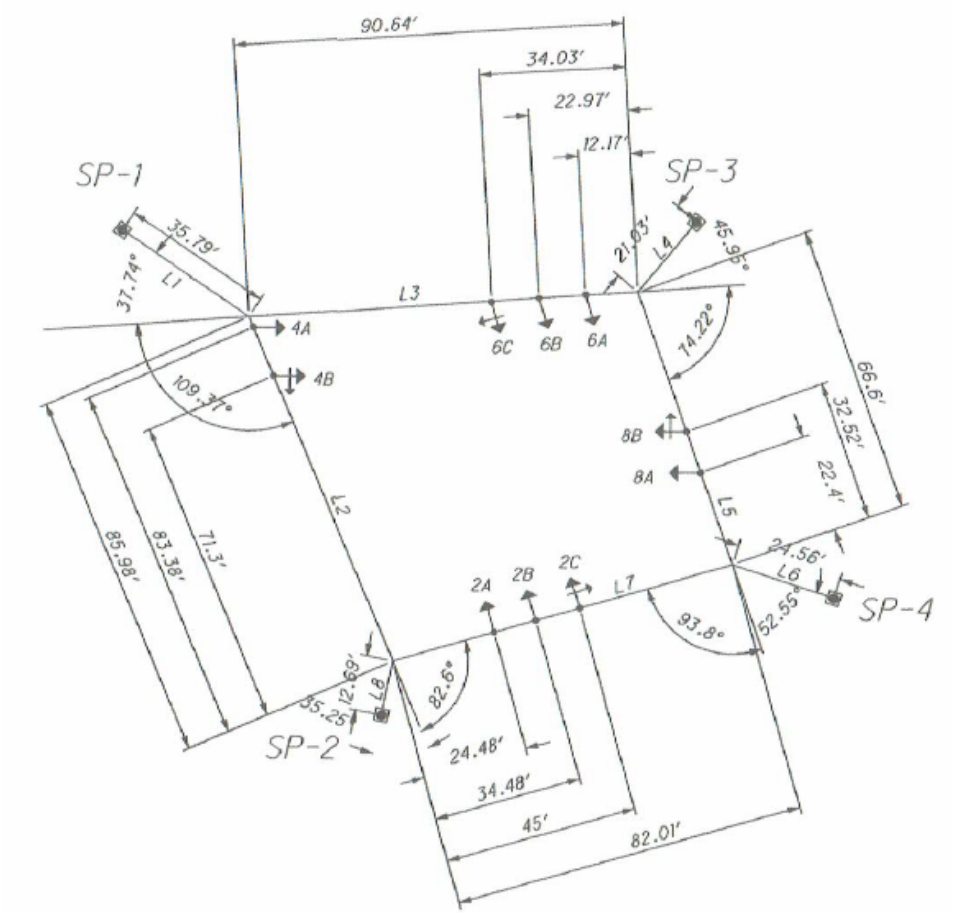

S W I S S Version 1.2.3

Span Wire Signal Support Design

INPUT VALUES

Sequence #: 1

Configuration Type: Box

Problem Identification: Box

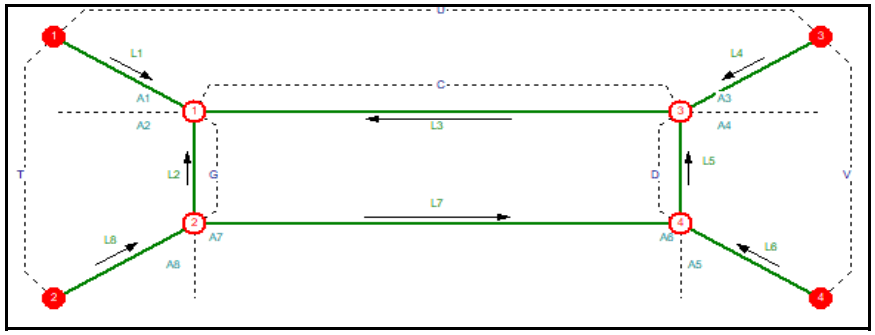

Angles (Degrees)

[A 1]	[A 2]	[A 3]	[A 4]	[A 5]	[A 6]	[A 7]	[A 8]
37.74	109.37	45.98	74.22	52.55	93.80	82.60	35.25

Span Lengths (ft)

[L 1]	[L 2]	[L 3]	[L 4]	[L 5]	[L 6]	[L 7]	[L 8]
35.79	85.98	90.64	21.03	66.60	24.56	82.01	12.69

Elevation Differences (ft)

[T]	[U]	[V]
1.49	0.01	0.29

Base Elevations (ft)

[Pavement]	[Pole 1]	[Pole 2]	[Pole 3]	[Pole 4]
976.15	975.36	973.87	974.58	974.29

Signals and Signs

{Distance (ft) / Weight (lbs)}

Span 1	No signals or signs attached at this span.
Span 2	(71.30/73.00), (83.38/49.30)
Span 3	(12.17/49.30), (22.97/49.30), (34.03/73.00)
Span 4	No signals or signs attached at this span.
Span 5	(22.40/49.30), (32.52/73.00)
Span 6	No signals or signs attached at this span.
Span 7	(24.48/49.30), (34.48/49.30), (45.00/73.00)
Span 8	No signals or signs attached at this span.

Wire Weights (lbs)

(Assumed)

35.79	**Span 1**
85.98	**Span 2**
90.64	**Span 3**
21.03	**Span 4**
66.60	**Span 5**
24.56	**Span 6**
82.01	**Span 7**
12.69	**Span 8**

Design Data

Min. SAG (ft):	5.58	**Max. SAG (ft):**	9.30	**Minimum Clearance (ft):**	20.60	**Wire Weight (lbs/ft):**	1.00
Sum of Loads (lbs):	587.80	**Sum of Areas (ft):**	50.60	**Wind Pressure (psf):**	42.00	**Box Warp Enabled:**	No

S W I S S Version 1.2.3

Span Wire Signal Support Design

RESULT OF FINAL CALCULATION [MAX SAG]

Sequence #: 1 **Configuration Type:** Box **Problem Identification:** Box

Span Results

	[SPAN 1]	[SPAN 2]	[SPAN 3]	[SPAN 4]	[SPAN 5]	[SPAN 6]	[SPAN 7]	[SPAN 8]
Tension Relations:	1.73729	1.12716	1.00000	1.11343	0.83202	1.49823	1.19204	1.53145
Elevation Differences (ft)	4.25	3.49	-0.19	4.46	1.37	3.37	2.32	2.25
Reaction at the end of the span (lbs)	197.60	-103.52	-94.07	235.80	-67.63	202.63	-81.36	277.01
Distance from end to low point (ft)	0.00	14.68	56.61	0.00	34.08	0.00	37.01	0.00
SAG below end of span (ft)	0.00	0.69	3.57	0.00	1.98	0.00	1.87	0.00

Pole Results

	[POLE 1]	[POLE 2]	[POLE 3]	[POLE 4]
Stringing Tension (lbs):	1814.08	1599.15	1162.65	1564.45
Attachment Height above pole base (ft)	29.21	32.19	30.00	30.58
Attachment Elevation (ft)	1004.57	1006.06	1004.58	1004.87
Base Moment (ft/lbs)	218632.	212392.	143912.	197390.

Other information

Calculated Design Factor : 4.13

For system balance rotate pole two 15.27 degree(s) clockwise

Distance between Highest and Lowest Point (ft) : 9.31

Max. Wire Load (lbs): 7547.30

Height of each signal or sign attachment point above the lowest (ft)

Span 1 No signals or signs attached at this span.
Span 2 (2.87), (3.34)
Span 3 (1.48), (0.43), (0.00)
Span 4 No signals or signs attached at this span.
Span 5 (1.91), (1.39)
Span 6 No signals or signs attached at this span.
Span 7 (3.91), (3.16), (2.87)
Span 8 No signals or signs attached at this span.

S W I S S Version 1.2.3

Span Wire Signal Support Design

RESULT OF FINAL CALCULATION [MIN SAG]

Sequence #: 1 **Configuration Type:** Box **Problem Identification:** Box

Span Results

	[SPAN 1]	[SPAN 2]	[SPAN 3]	[SPAN 4]	[SPAN 5]	[SPAN 6]	[SPAN 7]	[SPAN 8]
Tension Relations:	1.73729	1.12716	1.00000	1.11343	0.83202	1.49823	1.19204	1.53145
Elevation Differences (ft)	2.15	2.34	-0.17	2.33	0.88	1.74	1.63	1.30
Reaction at the end of the span (lbs)	186.64	-91.22	-95.42	230.80	-63.98	195.13	-70.21	300.47
Distance from end to low point (ft)	0.00	14.68	56.61	0.00	34.08	0.00	37.01	0.00
SAG below end of span (ft)	0.00	0.29	1.94	0.00	0.98	0.00	0.82	0.00

Pole Results

	[POLE 1]	[POLE 2]	[POLE 3]	[POLE 4]
Stringing Tension (lbs):	3398.14	2995.52	2177.88	2930.54
Attachment Height above pole base (ft)	25.49	28.47	26.28	26.86
Attachment Elevation (ft)	1000.85	1002.34	1000.86	1001.15
Base Moment (ft/lbs)	357375.	351867.	236142.	324764.

Other information

Calculated Design Factor : 4.13

For system balance rotate pole two 15.27 degree(s) clockwise

Distance between Highest and Lowest Point (ft) : 5.59

Max. Wire Load (lbs): 14052.05

Height of each signal or sign attachment point above the lowest (ft)

Span 1 No signals or signs attached at this span.
Span 2 (1.65), (1.84)
Span 3 (0.78), (0.22), (0.00)
Span 4 No signals or signs attached at this span.
Span 5 (1.09), (0.79)
Span 6 No signals or signs attached at this span.
Span 7 (2.49), (2.04), (1.84)
Span 8 No signals or signs attached at this span.