STATE OF OHIO DEPARTMENT OF TRANSPORTATION

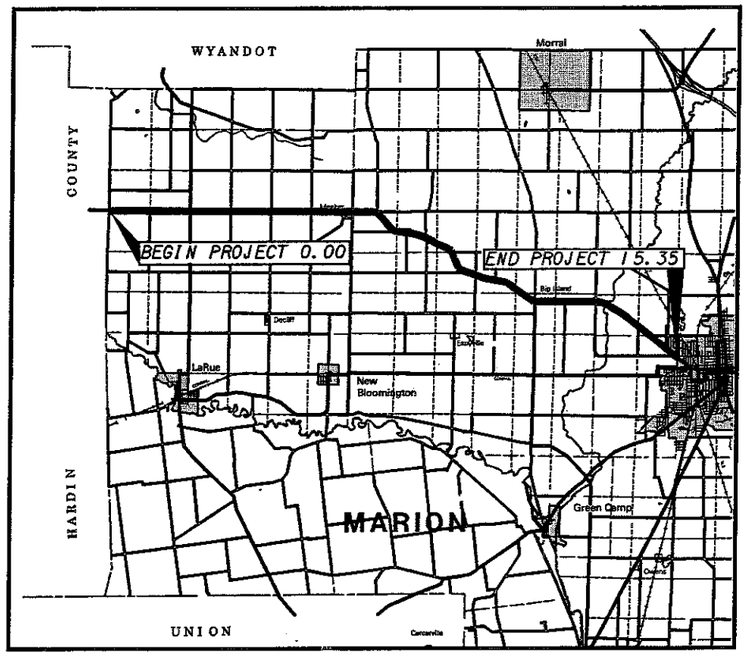

PORTION TO BE IMPROVED

LOC	COUNTY	ROUTE	SECTION	PROJECT TERMINI BEGIN SLM	PROJECT TERMINI END SLM	NET LENGTH MILE	CITY
1	MAR	309	(0.00 - 12.82)	0.00	15.35	15.35	

INDEX OF SHEETS

TITLE	1
STRIAGHT LINE DIAGRAM	2
GENERAL NOTES & MAINTENANCE OF TRAFFIC	3-7
GENERAL SUMMARY	8
PAVEMENT SUB-SUMMARY AND DETAILS	9-11
STRUCTURE DETAILS	12-13
PAVEMENT MARKINGS & RPM DETAILS	14-17
DROP DETAIL	18

PROJECT DESCRIPTION

THIS PROJECT CONSISTS OF THE RESURFACING OF15.35 MILES OF SR-309 IN MARION COUNTY. AND THE TREATING OF SEVEN BRIDGE DECKS WITH GRAVITY FED RESIN.

2002 SPECIFICATIONS

I HEREBY APPROVE THESE PLANS AND DECLARE THAT THE MAKING OF THESE IMPROVEMENTS WILL NOT REQUIRE THE CLOSING TO TRAFFIC OF THE HIGH-WAY AND THAT PROVISIONS FOR THE MAINTENANCE AND SAFETY OF TRAFFIC WILL BE AS SET FORTH ON THE PLANS AND ESTIMATES.

THE STANDARD SPECIFICATIONS OF THE STATE OF OHIO, DEPARTMENT OF TRANSPORTATION, INCLUDING CHANGES AND SUPPLEMENTAL SPECIFICATIONS LISTED IN THE PROPOSAL SHALL GOVERN THIS PROJECT.

LATITUDE & LONGITUDE

MAR-309 LAT.: N 40 DEG. 35 MIN. 30 SEC. / LONG.: W 83 DEG. 9 MIN. 00 SEC.

DESIGN EXCEPTION

NONE REQUIRED

STANDARD DRAWINGS						SUPPLEMENTAL SPECIFICATIONS	
BP-3.1	7/28/00					908	4/18/03
BP-4.1	7/28/00					832	2/12/03
TC-71.10	4/19/02					833	2/12/03
TC-73.10	1/19/01						
TC-82.10	4/19/02						
TC-65.10	10/19/01						
TC-65.12	10/19/01						
MT-95.61	4/19/02						
MT-97.10	4/19/02						
MT-97.12	4/19/02						
MT-99.20	1/30/95						
MT-105.10	10/18/02						
MT-105.11	10/18/02						

STATE OF OHIO
DAVID P. POLING
56872
REGISTERED PROFESSIONAL ENGINEER

Signed: David P. Poling
Date: 10-16-03

PLAN PREPARED BY:
O.D.O.T.
DISTRICT SIX
IN-HOUSE DESIGN

UNDERGROUND UTILITIES
TWO WORKING DAYS
BEFORE YOU DIG
CALL 1-800-362-2764 (TOLL FREE)
OHIO UTILITIES PROTECTION SERVICE
NON-MEMBERS
MUST BE CALLED DIRECTLY

PLANS CERTIFIED BY:
NAME Hugh G. Garner DATE 10/16/03
DISTRICT 6
OHIO DEPT. OF TRANSPORTATION

Approved Jack R. Marchbanks
Date 10/17/03 District Deputy Director of Transportation

Approved Gordon Proctor Jr.
Date 2-19-04 Director, Department of Transportation

FEDERAL PROJECT NO. E036(586)
PID NO. 24576
CONSTRUCTION PROJECT NO.
RAILROAD INVOLVEMENT NONE
MAR-309-0.00

MAR - SR 309-0.00
040363 PID - 24576
Dist 6 6/2/2004

hgarner 16-OCT-2003 8:24AM
k:\Projects\mar\309\0000.005\DGN\gt101.dgn

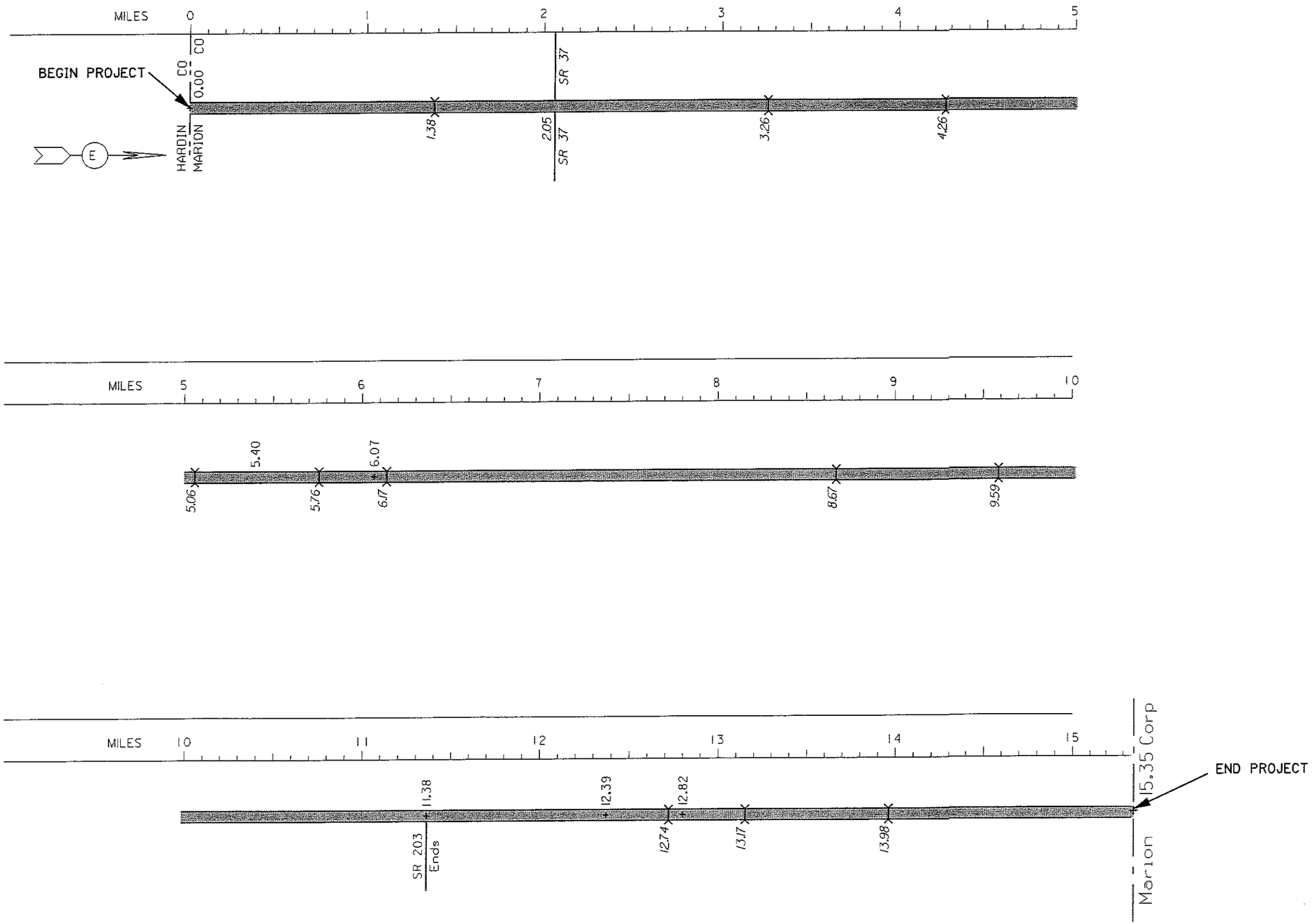

STRAIGHT LINE DIAGRAMS

MAR-309-0.00

:\Projects\mar\309\0000.005\DGN\gyl01.dgn 16-OCT-2003 8:25AM hgarner

CONSTRUCTION INITIATION:
THE CONTRACTOR SHALL ADVISE THE DISTRICT OFFICE OF COMMUNICATIONS AT 740-363-1251, EXT 469 OR BY FAX AT 740-369-7437, AND THE DISTRICT TRAFFIC MANAGEMENT ENGINEER AT 740-363-1251, EXT 323 FOURTEEN (14) DAYS PRIOR TO THE START OF CONSTRUCTION ACTIVITIES. THE CONTRACTOR WILL IMMEDIATELY INFORM THE DISTRICT OFFICE OF COMMUNICATIONS AND THE DISTRICT TRAFFIC MANAGEMENT ENGINEER OF ANY AND ALL DELAYS AND / OR CHANGES REGARDING THE CONSTRUCTION PROJECT. THE PROJECT ENGINEER WILL PROVIDE CLARIFICATION FOR ANY QUESTIONS ABOUT THIS NOTIFICATION REQUIREMENT.

COORDINATION WITH O.D.O.T.?S CENTRAL OHIO TRAFFIC MANAGEMENT PROGRAM (COTMP):
THE CONTRACTOR SHALL NOTIFY THE PROJECT ENGINEER IN WRITING OF ALL TRAFFIC RESTRICTIONS AND UPCOMING MAINTENANCE OF TRAFFIC CHANGES ON A WEEKLY BASIS. WHEN DETOURS ARE PLANNED, THIS NOTIFICATION SHALL BE AT THE PRE CONSTRUCTION MEETING OR 30 DAYS IN ADVANCE ONCE CONSTRUCTION HAS BEGUN. LANE AND RAMP CLOSURES FOR TWO OR MORE WEEKS SHALL BE REPORTED TWO WEEKS IN ADVANCE OF CLOSURE. LANE AND RAMP CLOSURES OF LESS THAN TWO WEEKS DURATION AND MORE THAN TWO DAYS SHALL BE REPORTED AT LEAST 3 WORKING DAYS IN ADVANCE. FOR SHORT TERM LANE OR RAMP CLOSURES (TWO DAYS OR LESS) THE CONTRACTOR SHALL NOTIFY THE PROJECT ENGINEER AT LEAST ONE WORKING DAY IN ADVANCE. INFORMATION SHALL INCLUDE BUT NOT BE LIMITED TO ALL CONSTRUCTION ACTIVITIES THAT IMPACT TRAFFIC AT PRESENT AND IN THE NEXT 30 DAYS. THE CONTRACTOR SHALL DESIGNATE AN INDIVIDUAL WHO WILL BE RESPONSIBLE FOR PREPARING THIS REPORT AT THE PRE CONSTRUCTION MEETING. ANY UNFORESEEN IMPACTS TO TRAFFIC SHALL BE REPORTED TO THE PROJECT ENGINEER AS SOON AS POSSIBLE. THE PROJECT ENGINEER SHALL PROVIDE THIS INFORMATION TO COTMP. ALL CONSTRUCTION ACTIVITIES THAT INTERFERE WITH TRAFFIC SHALL BE REPORTED TO COTMP. THIS INFORMATION SHALL BE PROVIDED TO COTMP AT (740) 363-1251 (EXT. 323) OR BY FAX AT (740) 363-6831.

GENERAL:
THE CONTRACTOR SHALL SUBMIT IN WRITING A SCHEDULE OF OPERATIONS TO THE ENGINEER (SEE 101.18) AND RECEIVE APPROVAL IN WRITING BEFORE WORK IS STARTED ON THIS PROJECT. ALL TRAFFIC CONTROL DEVICES SHALL BE FURNISHED, ERECTED, MAINTAINED, AND REMOVED BY THE CONTRACTOR IN ACCORDANCE WITH THE OHIO MANUAL OF UNIFORM TRAFFIC CONTROL DEVICES.

UTILITIES OWNERSHIP:
LISTED BELOW ARE ALL UTILITIES LOCATED WITHIN THE PROJECT CONSTRUCTION LIMITS TOGETHER WITH THEIR RESPECTIVE OWNERS.

Alltel Ohio
Pat Thomas
225 West Columbus Street
Kenton, Ohio 43326
419-674-1122

Mr. Barth Smith
Columbia Gas of Ohio
1120 West Fourth Street
Mansfield, OH 44906
419.528.1114

Mr. Greg Newman
Marathon-Ashland Pipe Line Company
245 Mill Street
Lexington, OH 44904
419.884.0800 - extension 236

Mr. Stacy Hoffman
Ohio American Water Company
365 East Center Street
Marion, OH 43302
740.387.2293

Mr. Jeffrey B. Hall
First Energy (Ohio Edison Company)
1040 South Prospect Street
Marion, OH 43302
740.382.7104

Mr. Larry Gibson
Ameritech
150 East Gay Street - Room 6C
Columbus, OH 43215
614.223.7162

Mr. Aaron Roll
Suburban Natural Gas, Inc.
2626 Lewis Center Road
Lewis Center, OH 43035-9206
740.548.2450

Mr. William Muether
Verizon
550 Leader Street
Marion, OH 43302
740.383.0527

Mr. Gary Vanderhoff
Mid Ohio Energy Cooperative, Inc.
2859 Marion Upper Sandusky Road
PO Box 501
Marion, OH 43302
1.888.362.6732

Mr. Scott Osterholt
AEP - Communications
1 Riverside Plaza
Columbus, OH 43215
614.223.2531

Mr. Mark Gamble
Adelphia Cable
160 North Greenwood Street
Marion, OH 43302
740.387.3187

Mr. Bob Moran
Ohio Oil Gathering
P O Box 430
Frazeysburg, OH 43822
740.828.2892

UNDERGROUND UTILITIES:
IT IS THE CONTRACTOR?S RESPONSIBILITY TO HAVE ANY UNDERGROUND UTILITIES MARKED.

OHIO UTILITY PROTECTION SERVICE 1-800-362-2764
NON-MEMBERS MUST BE CALLED DIRECTLY.

ALIGNMENT AND PROFILE:
THE WORK PROPOSED BY THIS PROJECT IS FOR THE RESURFACING OF THE EXISTING PAVEMENT. THE ALIGNMENT OF THE EXISTING PAVEMENT WILL NOT BE CHANGED, AND THE PROFILE OF THE PROPOSED SURFACE WILL BE SIMILAR TO THAT OF THE EXISTING PAVEMENT.

CONTRACTORS EQUIPMENT - OPERATION AND STORAGE:
THE CONTRACTORS EQUIPMENT SHALL BE OPERATED IN THE DIRECTION OF TRAFFIC WHERE PRACTICAL. EQUIPMENT SHALL HAVE AT LEAST ONE AMBER FLASHING LIGHT. WHEN PARKED ALONG THE HIGHWAY, THE EQUIPMENT SHALL BE LOCATED EITHER A MINIMUM OF THIRTY FEET FROM THE EDGE OF PAVEMENT OR SIX FEET BEHIND GUARDRAIL WITH A MINIMUM OF 125 FEET OF GUARDRAIL PRECEDING THE EQUIPMENT. ALL OTHER EQUIPMENT, INCLUDING PRIVATE VEHICLES, SHALL BE STORED AT AN APPROVED CONTRACTOR?S STORAGE AREA.

ITEM 253 PAVEMENT REPAIR,AS PER PLAN:
ALL AREAS TO BE REPAIRED SHALL BE LOCATED AS DETAILED BELOW AND THE WORK PREFORMED PRIOR TO THE PLACEMENT OF THE 422 CHIP SEAL WITH POLYMER BINDER MISC. THESE PAVEMENT REPAIRS SHALL CONSIST OF COMPLETELY REMOVING OF ANY EXISTING DAMAGED PAVEMENT TO DEPTH DETERMINED BY THE ENGINEER. THE REPAIR AREA SHALL BE REFILLED WITH ITEM 301 - ASPHALT CONCRETE BASE. TACK COAT SHALL BE APPLIED TO ALL VERTICAL SURFACES AT A RATE OF 0.075 PER SY. PRIOR TO THE PLACING ITEM 301 - ASPHALT CONCRETE BASE. NO MORE PAVEMENT REPAIR SHALL BE PERFORMED THAN CAN BE COMPLETED IN THE SAME WORKING DAY. THE FOLLOWING QUANTITY HAS BEEN PROVIDED AND THE TOTAL HAS BEEN CARRIED TO THE GENERAL SUMMARY.
PAVEMENT REPAIR LOCTIONS:

MAR 309 0.76 OVER CULVERT

MAR 309 0.92 OVER CULVERT

MAR 309 1.47 OVER CULVERT

ITEM 253 PAVEMENT REPAIR,AS PER PLAN: = 200 CY.

ITEM 254 - PAVEMENT PLANING, ASPHALT CONCRETE:
THE CONTRACTOR SHALL BE TOTALLY RESPONSIBLE FOR ANY AND ALL DAMAGE THAT MAY RESULT FROM THE PLANING OPERATION, INCLUDING CASTINGS AND LOOP DETECTORS. THE DEPTH OF PLANING CLOSE TO THE CASTINGS SHALL BE AS DIRECTED, TO ACHIEVE A SMOOTH RIDING FINISHED PAVEMENT. GREAT CARE SHALL BE TAKEN TO PREVENT THE REMOVAL THE EXISTING PAVEMENT CROSS-SLOPE (CROWN) DURING THE PLANING OPERATIONS.

NO PLANED PAVEMENT SHALL BE LEFT EXPOSED TO TRAFFIC FOR MORE THAN FIVE CONSECUTIVE DAYS PRIOR TO THE PLACEMENT OF THE INTERMEDIATE COURSE OR ITEM 448 - ASPHALT CONCRETE SURFACE COURSE, TYPE 1, PG 64-22. FAILURE TO COMPLY SHALL SUBJECT THE CONTRACTOR TO LIQUIDATED DAMAGES AS PER SECTION 108.07 OF CMS.

:\Projects\mar\309\0000.005\DGN\gn01.dgn 16-OCT-2003 9:28AM hgarner

ITEM 407 - TACK COAT:
THE RATE OF APPLICATION OF THE 407 TACK COAT SHALL BE SUBJECT TO ADJUSTMENT AS DIRECTED BY THE ENGINEER. FOR ESTIMATING PURPOSES ONLY, THE PLAN INDICATES AN AVERAGE APPLICATION RATE OF TACK COAT AT 0.075 GALLON PER SQUARE YARD. A COVER AGGREGATE SHALL BE USED IF HEAVY TRACKING OF THE TACK COAT ON TO THE EXISTING PAVEMENT SHOULD OCCUR DURING THE PAVING OPERATIONS. THE COST OF THE COVER AGGREGATE SHALL BE INCLUDED IN THE COST OF THIS ITEM.

ITEM 422 - CHIP SEAL WITH POLYMER BINDER MISC., MULTI-SEAL SURFACING, TYPE 12 INTERLAYER:

DESCRIPTION

THIS WORK SHALL CONSIST OF FURNISHING ALL MATERIALS, EQUIPMENT, LABOR AND PREPARATION NECESSARY FOR THE APPLICATION OF SURFACE TREATMENT OR INTERLAYER OF MULTI-SEAL SURFACING. MULTI-SEAL SURFACING SHALL CONSIST OF A LAYER OF POLYMER MODIFIED SEALANT, POLYMER MODIFIED ASPHALT EMULSION AND COURSE AGGREGATE PROPERLY DESIGNED / PROPORTIONED AND APPLIED TO A PREPARED SURFACE IN A CONTINUOUS AND SEQUENTIAL MANNER. THE THREE LAYERS OF MATERIALS SHALL BE APPLIED IN A CONTINUOUS SEQUENCE AND BY ONE UNIT OPERATED IN A CONTINUOUS MOTION.

MATERIALS

COARSE AGGREGATE FOR COVER MATERIAL THE COARSE AGGREGATE SHALL BE CERTIFIED BY THE MANUFACTURER AND SHALL BE INCLUDED AS PART OF THE PRODUCT DESIGN. AGGREGATE GRADATION AND PHYSICAL PROPERTIES SHALL BE STATED IN THE DESIGN.

MULTI-SEAL TYPE	AGGREGATE REQUIREMENTS
SINGLE COURSE SURFACE	2-A FOR COVER AGGREGATE
DOUBLE COURSE SURFACE	2-A FOR COVER AGGREGATE
INTERLAYER 12 MM	2-A FOR COVER AGGREGATE
INTERLAYER 18 MM	3-A FOR COVER AGGREGATE

PHYSICAL REQUIREMENTS FOR COARSE AGGREGATES

TEST	VALUE	VALUE (1)
L.A. ABRASION RESISTANCE	45% MAX LOSS	25% MAX LOSS
LOSS, SODIUM SULFATE SOUNDNESS	15%	15%
WEIGHT OF CRUSHED PIECES	95%	100%
DELETERIOUS PARTICLES IN AGGREGATE (1)	5.0%	3.0%

(1) INCLUDES THE SUM OF SHALE, SILTSTONE, STRUCTURALLY WEAK AND CLAY IRONSTONE.

SIEVE ANALYSIS
(PERCENT PASSING BY WEIGHT)

MULTI-SEAL TYPE	¾	½	3/8	NO.4	NO.8	NO.200
2-A	100	95-100	60-90	5-30	0-13	0-2
3-A	90-100	50-75		0-10		0-2

POLYMER MODIFIED ASPHALT EMULSION
THE EMULSION SHALL BE CERTIFIED BY THE MANUFACTURER AND MEET THE FOLLOWING REQUIREMENTS. EMULSION PROPERTIES LISTED SHALL BE STATED IN THE DESIGN.

TEST	MINIMUM	MAXIMUM	METHOD
EMULSION			
VISCOSITY, SAYBOLT FUROL, 50°+/- C	25	200	ASTM D244
STORAGE STABILITY, 24HR.	NA	1%	ASTM D244
SIEVE TEST, % MAX (DISTILLED WATER)	NA	0.1%	ASTM D244
DISTILLATION RESIDUE, %	65	NA	ASTM D244
DEMULSIBILITY, %	60	NA	ASTM D244
EMULSION RESIDUE*			
PENETRATION 25°+/-C, 100G, 5 SEC.DMM	50	NA	ASTM D 5
SOFTENING POINT, RING & BALL, 10 +/- C	70	NA	ASTM D 36
ELASTIC RECOVERY, 4°+/-C, 10 CM, %	65	NA	ASTM D 6084
FORCE DUCTILITY, 4° +/-C, 10 CM	1.59 KG/CM	NA	ASTM D 113
FORCE DUCTILITY, 4° C, PEAK YIELD STRESS	3.63 KG/CM	NA	ASTM D 113

*BY DISTILLATION OR EVAPORATION

POLYMER MODIFIED ASPHALT SEALANT
THE SEALANT SHALL BE CERTIFIED BY THE MANUFACTURER AND MEET THE FOLLOWING REQUIREMENTS. SEALANT PROPERTIES LISTED SHALL BE STATED IN THE DESIGN.

TEST	MINIMUM	MAXIMUM	METHO
ELASTIC RECOVERY, 25°C, 10 CM, %	85	N/A	ASTM D 113
DUCTILITY, 25°C, 5 CM/MIN., CM	40	N/A	ASTM D 113
SOFTENING POINT, RING & BALL, 25°C	80	N/A	ASTM D 36
FORCE DUCTILITY, 25°C, PEAK YIELD STRESS	0.90 KG/CM	N/A	ASTM D 113

THE TEST SPECIMENS SHALL BE PRODUCED BY SAMPLING THE PMAC SEALANT FROM THE STORAGE TANK AND COMBINING IN THE LABORATORY ALL ADDITIVES AS IDENTIFIED IN THE PROJECT DESIGN. THE ADDITIVES SHALL BE UNIFORMLY MIXED WITH THE PMAC SEALANT PRIOR TO TESTING.

EQUIPMENT

EQUIPMENT SHALL BE SAFE, ENVIRONMENTALLY ACCEPTABLE AND CAPABLE OF PRODUCING A CONSISTENT QUALITY PRODUCT.

MULTI-SEAL SURFACING APPLICATOR
THE MULTI-SEAL SURFACING UNIT SHALL BE CAPABLE OF RECEIVING ALL RAW MATERIALS, STORING THOSE MATERIALS IN ADEQUATE QUANTITY AND APPLYING ALL MATERIALS WITHOUT STOPPING TO RELOAD.

THE UNIT SHALL INCLUDE A SPEED CONTROL USED BY THE OPERATOR TO CONTROL THE TRAVEL SPEED OF PRODUCT APPLICATION. A METHOD FOR THE DRIVER TO CONTROL THE PRODUCT PLACEMENT EDGE FROM EITHER SIDE OF THE UNIT. A DIGITAL READ-OUT IN FEET PER MINUTE THAT OPERATES CONTINUOUSLY AND LOCATED IN THE OPERATOR'S VIEW.

SEALANT SYSTEM
THE SEALANT SYSTEM SHALL INCLUDE AS PART OF THE CONTINUOUS APPLICATOR THE FOLLOWING A MINIMUM TANK CAPACITY OF 400 GALLONS, INSULATED AND CAPABLE OF HEATING THE SEALANT TO THE DESIRED TEMPERATURE, APPLICATION RATE CONTROL OF THE SEALANT THAT IS CONTROLLED BY THE OPERATOR TO ADJUST TO TRAVEL SPEED, SEALANT SYSTEM CAPABLE OF COMPLETELY AND UNIFORMLY APPLYING THE SEALANT AND AT THE RATE OF 75 TO 200 FPM, SEALANT SYSTEM SHALL FILL ALL CRACKS AND SURFACE VOIDS, AND STRIKE-OFF THE SEALANT UNIFORMLY ACROSS THE PAVEMENT. THE SEALANT SYSTEM SHALL BE CAPABLE OF APPLYING SEALANT AT AN APPLICATION RATE RANGE OF 0.10 TO 0.30 GAL. /SQ YD, SEALANT APPLICATOR SHALL BE CAPABLE OF PLACING SEALANT IN WIDTHS OF 1 TO 16 FEET AND IN ANY VARIABLE WIDTH WHILE PLACING MATERIAL AND THE SEALANT SYSTEM SHALL BE CAPABLE OF CONTINUOUSLY MIXING THE SEALANT.

EMULSION SYSTEM
THE EMULSION SYSTEM SHALL INCLUDE AS PART OF THE CONTINUOUS APPLICATOR THE FOLLOWING A MINIMUM TANK CAPACITY OF 600 GALLONS, INSULATED AND CAPABLE OF HEATING THE EMULSION TO THE DESIRED TEMPERATURE, GROUND SPEED CONTROL DEVICE INTERCONNECTED WITH THE EMULSION APPLICATOR COMPUTERIZED APPLICATION RATE CONTROL OF THE EMULSION THAT AUTOMATICALLY ADJUSTS TO THE TRAVEL SPEED, EMULSION SYSTEM CAPABLE OF ACCURATELY AND UNIFORMLY APPLYING THE EMULSION TO THE PAVEMENT AND AT A FORWARD TRAVEL RATE OF 75 TO 200 FPM, THE EMULSION APPLICATION SHALL PRODUCE A UNIFORM THICKNESS ACROSS THE PAVEMENT AND THE SHUTOFF SHALL BE INSTANTANEOUS WITH NO DRIPPING, THE EMULSION SYSTEM SHALL BE CAPABLE OF MAINTAINING THE SPECIFIED APPLICATION RATE WITHIN +/- 0.02 GAL. /SQ YD, AND THE EMULSION SYSTEM SHALL CAPABLE OF PLACING EMULSION IN WIDTHS OF 1 TO 16 FEET AND ADJUSTABLE WHILE PLACING MATERIAL.

AGGREGATE SYSTEM
THE AGGREGATE SYSTEM SHALL INCLUDE AS PART OF THE CONTINUOUS APPLICATOR THE FOLLOWING A MINIMUM HOPPER CAPACITY OF 4 CUBIC YARDS, GROUND SPEED CONTROL DEVICE INTERCONNECTED WITH THE AGGREGATE APPLICATOR, COMPUTERIZED APPLICATION RATE CONTROL OF THE AGGREGATE THAT AUTOMATICALLY ADJUSTS TO THE TRAVEL SPEED. THE AGGREGATE SYSTEM SHALL BE CAPABLE OF ACCURATELY AND UNIFORMLY APPLYING THE AGGREGATE AND AT THE RATE OF 75 TO 200 FPM. THE AGGREGATE SYSTEM SHALL PRODUCE A UNIFORM APPLICATION, AND SHALL BE ADJUSTABLE TO PROPERLY COVER EXPOSED EMULSION. THE AGGREGATE SYSTEM SHALL BE CAPABLE OF MAINTAINING THE SPECIFIED APPLICATION RATE WITHIN +/- 1.0 LBS./SQ. YD. A SCREEN TO REMOVE OVERSIZED AGGREGATE AND A AGGREGATE HANDLING SYSTEM CAPABLE OF DELIVERING AT A

I:\Projects\mar\309\0000.005\DGN\gn02.dgn 16-OCT-2003 9:29AM hgarner

MINIMUM 180 TONS PER HOUR. THE AGGREGATE APPLICATOR SHALL BE CAPABLE OF PLACING AGGREGATE IN WIDTHS OF 1 TO 16 FEET AND IN ANY VARIABLE WIDTH WHILE PLACING MATERIAL. THE AGGREGATE SYSTEM SHALL BE CAPABLE OF APPLYING AGGREGATE AT AN APPLICATION RATE RANGE OF 70 TO 5 LBS./SQ. YD.

COMPACTING EQUIPMENT
SELF-PROPELLED PNEUMATIC-TIRED ROLLERS, WEIGHING NOT LESS THAN 8 TONS SHALL BE USED.

MISCELLANEOUS

ALL EQUIPMENT INCLUDING HAND TOOLS, THERMOMETERS, ETC., SHALL BE PROVIDED. ALL EQUIPMENT USED ON THE ROADWAY SHALL BE EQUIPPED WITH AT LEAST ONE APPROVED FLASHING, ROTATING OR OSCILLATING AMBER LIGHT VISIBLE FROM ALL SIDES. ALL MATERIAL STORAGE TANKS AND MATERIAL HANDLING UNITS SHALL BE CAPABLE OF HEATING AND STORING MATERIALS SUCH NOT TO CAUSE DAMAGE.

PRODUCT DESIGN

THE COMPLETED PRODUCT DESIGN SHALL CONTAIN PRESCRIBED INFORMATION IN THE FOLLOWING FORMAT IDENTIFIED BELOW. HIGHWAY PRESERVATION SYSTEMS, LTD. SHALL PERFORM THE COMPLETED PRODUCT DESIGN AND SHALL APPROVE ALL COMPONENT MATERIALS.

SOURCE OF EACH COMPONENT MATERIAL

SEALANT
EMULSION
AGGREGATE

COMPLETED PRODUCT DESIGN TESTS

STRIPPING TEST
LOSS BY ABRASION
AGGREGATE AND BINDER COMPATIBILITY
EMULSION RATE - FLUSHING UNDER TEMPERATURE AND LOAD
SEALANT, APPLICATION TEMPERATURE
EMULSION, APPLICATION TEMPERATURE
MOISTURE CONTENT OF AGGREGATE
PRODUCT SET TIME

AGGREGATE

GRADATION
PHYSICAL PROPERTIES

SEALANT AND EMULSION PROPERTIES
MAXIMUM EXPECTED PAVEMENT TEMPERATURE AND AVERAGE DAILY TRAFFIC COUNT INCLUDING PERCENT COMMERCIAL TRAFFIC FOR THE PAVEMENT SECTION THAT THE DESIGN WILL BE USED FOR.

PRE-PAVING ON-SITE MEETING
A PRE-PAVING MEETING BETWEEN THE ENGINEER AND CONTRACTOR WILL BE HELD PRIOR TO BEGINNING WORK. THE AGENDA FOR THIS MEETING WILL INCLUDE A OF REVIEW THE WORK SCHEDULE, A REVIEW OF THE TRAFFIC CONTROL PLAN, A REVIEW OF THE EQUIPMENT CALIBRATION AND ADJUSTMENTS, A REVIEW OF THE CONDITION OF MATERIALS AND EQUIPMENT, INCLUDING TRANSPORT UNITS AND A PRODUCT DESIGN WHICH WILL INCLUDE COARSE AGGREGATE GRADATIONS AND APPLICATION RATES FOR SEALANT AND EMULSION ALONG WITH A REVIEW OF THE QUALITY CONTROL PLAN (YIELD CHECK METHODS, ETC.)

QUALITY CONTROL
THE CONTRACTOR SHALL PRODUCE A COMPLETED PRODUCT THAT WILL COMPLY WITH THE PRODUCT DESIGN AND THE QUALITY CONTROL TOLERANCES. THE METHODS DESCRIBED IN THIS SECTION SHALL BE USED BY THE CONTRACTOR TO MEASURE COMPLIANCE. THE CONTRACTOR SHALL MAINTAIN ALL QUALITY CONTROL DOCUMENTATION AND MAKE AVAILABLE TO THE ENGINEER UPON REQUEST OR AT COMPLETION OF WORK.

DURING THE PROGRESS OF WORK IF ANY OF THE QUALITY CONTROL TEST RESULTS EXCEED THE IDENTIFIED QUALITY CONTROL TOLERANCES, THE CONTRACTOR SHALL IDENTIFY THE CAUSE AND DOCUMENT IN DETAIL WHAT CORRECTIVE ACTION WAS TAKEN.

AGGREGATE
THE CONTRACTOR SHALL SAMPLE FROM THE PROJECT STOCKPILE AND TEST FOR GRADATION AT A RATE OF ONE PER 500 TONS OF AGGREGATE USED, OR A MINIMUM OF ONE PER DAY OF PRODUCT APPLICATION. THE QUALITY CONTROL TOLERANCES FROM THE PRODUCT DESIGN ARE LISTED BELOW.

QUALITY CONTROL TOLERANCES

SIEVE SIZE	TOLERAN
3/4	+/- 5.
1/2	+/-5.0
3/8	+/-7.0
NO.4	+/-7.0
NO.8	+/-7.0

UPON REQUEST BY THE ENGINEER, A SAMPLE OF THE SEALANT AND EMULSION SHALL BE TAKEN FOR THE DEPARTMENTAL TESTING.

TEMPERATURE LIMITATIONS
THE MULTI-SEAL SURFACING SHALL BE PLACED WHEN THE PAVEMENT AND ATMOSPHERIC TEMPERATURE IS 50°F OR ABOVE. PLACEMENT IS NOT PERMITTED IF THERE IS THREATENING WEATHER AND TEMPERATURES ARE FORECASTED TO BE BELOW 40°F WITHIN 24 HOURS FROM THE TIME OF WORK. PLACEMENT IS NOT PERMITTED IF VISIBLE SIGNS OF MOISTURE EXIST ON THE PAVEMENT SURFACE.

CONSTRUCTION

THE CONTRACTOR IS RESPONSIBLE FOR ALL SURFACE PREPARATION INCLUDING CLEANING, REMOVAL OF ANY FOREIGN MATERIALS AND ANY OTHER PREPARATION THAT MAY AFFECT THE ADHESION OF THE MULTI-SEAL SURFACING.

THE CONTRACTOR SHALL REMOVE ALL LOOSE DEBRIS FROM THE PAVEMENT CRACKS OR JOINTS LARGER THE ONE-QUARTER INCH WIDTH AND CLEAN THE PAVEMENT SURFACE WITH A MOTORIZED POWER BROOM TO REMOVE ANY LOOSE MATERIAL. ANY DEPRESSIONS NOT REACHED BY THE POWER BROOM SHALL BE CLEANED USING OTHER METHODS.

THE LONGITUDINAL CONSTRUCTION JOINTS AND LANE EDGES SHALL COINCIDE WITH THE PROPOSED PAINTED LANE LINES. LONGITUDINAL JOINTS SHALL BE CONSTRUCTED WITH LESS THAN A 3-INCH OVERLAP ON ADJACENT PASSES AND NO MORE THAN 0.25-INCH OVERLAY THICKNESS AS MEASURED WITH A 3 FOOT STRAIGHT EDGE. IF APPLICABLE, PLACE OVERLAPPING PASSES ON THE UPHILL SIDE TO PREVENT ANY PONDING OF WATER. CONSTRUCT NEAT AND UNIFORM TRANSVERSE JOINTS WITH NO MORE THAN A 0.12-INCH DIFFERENCE IN ELEVATION ACROSS THE JOINT AS MEASURED WITH A 3 FOOT STRAIGHT EDGE. THE EDGE SHALL BE NEAT AND UNIFORM WITH NO MORE THAT 4-INCH HORIZONTAL VARIANCE IN ANY 30 METERS.

WHEN A DOUBLE SEAL IS SPECIFIED IN THE PROPOSAL THE CONTRACTOR SHALL INCORPORATE THE SEALANT APPLICATION ON THE FIRST COURSE. PRIOR TO APPLYING THE SECOND COURSE, THE FIRST COURSE SHALL BE PROPERLY SWEPT AND SHOW NO DEFICIENCIES. A CURE PERIOD OF A MINIMUM ONE-HOUR SHALL OCCUR BEFORE PLACING THE SECOND COURSE.

THE MULTI-SEAL SURFACE WHEN USED AS AN INTERLAYER SHALL BE SUFFICIENTLY CURED PRIOR TO PLACING A BITUMINOUS OVERLAY, MICRO-SURFACING OR OTHER ASPHALT SURFACING. THE STATUS OF CURED, SHALL BE DETERMINED BY THE ABILITY TO SWEEP ALL LOOSE AGGREGATE FROM THE SURFACE WITHOUT REMOVING AGGREGATE ADHERED TO THE BINDER.

THE FIRST ROLLING PASS SHALL BE PERFORMED WITHIN THREE MINUTES OF PLACING THE COARSE AGGREGATE AND BEFORE THE EMULSION HAS SET UP. A MINIMUM OF TWO COMPLETE ROLLING TRIPS OVER THE TREATED SURFACE WILL BE REQUIRED. A COMPLETE TRIP IS ONE PASS FORWARD AND BACKWARD OVER THE SAME PATH. EACH ADDITIONAL TRIP SHALL OVERLAP THE PREVIOUS TRIP BY ABOUT ONE-HALF THE WIDTH OF THE ROLLER. A MINIMUM OF TWO ROLLERS SHALL BE USED AND THE ROLLERS SHALL PROCEED IN A LONGITUDINAL DIRECTION AT A SPEED NOT GREATER THAN FIVE MILES/HOUR. NO TRACKING OF THE EMULSION SHALL OCCUR BY THE ROLLERS.

THE CONTRACTOR SHALL USE THE APPROPRIATE EQUIPMENT AND PERFORM AN INITIAL SWEEPING OF THE COMPLETED SURFACE TO REMOVE ANY EXCESS LOOSE AGGREGATE PRIOR TO OPENING TO UNCONTROLLED TRAFFIC AND BY THE END OF EACH DAY'S WORK. A FINAL SWEEPING SHALL OCCUR WITHIN 24 HOURS AFTER THE PAVEMENT HAS BEEN OPEN TO TRAFFIC. A PICKUP TYPE SWEEPER SHALL BE USED IN LAWN AND CURBED AREAS WERE AN AGGREGATE SHOULDER DOES NOT EXIST. LOOSE AGGREGATE SHALL NOT BE SWEPT INTO LAWNS, CURBED AREAS AND INTERSECTIONS. WATER SHALL BE USED DURING ALL SWEEPING OPERATIONS TO CONTROL DUST.

BEFORE OPENING TO TRAFFIC, THE CONTRACTOR SHALL POST THE ROADWAY WITH "LOOSE GRAVEL" SIGNS, FHWA (W8-7) AND A 35 MPH SPEED PLAQUE MOUNTED BELOW THE SIGN. THESE SIGNS SHALL BE SPACED AT A MAXIMUM OF TWO-MILE INTERVALS.

THE CONTRACTOR SHALL INSPECT THE MULTI-SEAL SURFACING DURING THE APPLICATION PROCESS FOR DEFICIENCIES. THIS INCLUDES WORKMANSHIP, OVERLAP ON LONGITUDINAL AND TRANSVERSE CONSTRUCTION JOINTS, FLUSHING, SURFACE PATTERNS, COMPLETE FILL OF CRACKS AND JOINTS, LOSS OF AGGREGATE AND SWEEPING. THE CONTRACTOR SHALL CORRECT ANY AND ALL DEFICIENCIES FOUND. SETTLING OR SHRINKAGE OF SEALANT IN CRACKS LARGER THAN ONE HALF-INCH WIDTH SHALL NOT BE CONSIDERED A DEFICIENCY.

CONTRACTOR SHALL PROTECT ALL UTILITY CASTINGS, RAISED PAVEMENT MARKERS USING TARPAPER OR OTHER APPROVED

:\Projects\mar\309\0000.005\DGN\gn03.dgn 16-OCT-2003 8:22AM hgarner

MATERIAL. CASTING COVERS SHALL BE REMOVED PRIOR TO SWEEPING AND OPENING TO FULL USE.

THE CONTRACTOR SHALL PROTECT THE NEW SURFACE FROM POTENTIAL DAMAGE AT INTERSECTIONS AND DRIVEWAYS. ANY DAMAGE BY TRAFFIC TO THE MULTI-SEAL SURFACE SHALL BE REPAIRED BY, AND AT THE CONTRACTOR'S EXPENSE.

THE CONTRACTOR SHALL NOTIFY IN ADVANCE OF PERFORMING THE WORK ALL RESIDENTS AND BUSINESSES ON THE PAVEMENT SECTION THAT THE PAVEMENT WILL BE OVERLAID WITH A BITUMINOUS TREATMENT.

APPLICATION

THE CONTRACTOR SHALL APPLY THE SEALANT, EMULSION AND AGGREGATE WITHIN A TOTAL TIME LAPSE OF 10 SECONDS OVER A SPECIFIC POINT. THE SEALANT SHALL BE APPLIED TO PROVIDE FULL WIDTH COVERAGE AND AS REQUIRED TO FILL THE PAVEMENT VOIDS AND CRACKS AND AT A TEMPERATURE BETWEEN 300? F AND 390? F. THE EMULSION SHALL FOLLOW AT THE DESIGNED RATE AND AT A TEMPERATURE BETWEEN 130? F AND 200? F. A UNIFORM APPLICATION OF COARSE AGGREGATE SHALL COVER THE EMULSION PRIOR TO EMULSION BREAK AND PROVIDE COMPLETE COVERAGE. STREAKING IN THE MULTI-SEAL SURFACE WILL NOT BE PERMITTED. IF STREAKING OCCURS, THE CONTRACTOR SHALL CEASE OPERATION UNTIL THE DEFICIENCIES HAVE BEEN CORRECTED.

AREAS NOT ACCESSIBLE TO THE EQUIPMENT SHALL BE PERFORMED BY APPLYING THE EMULSION AND AGGREGATE BY HAND SPRAYING AND SPREADING. ANY CRACKS THAT EXIST IN THESE AREAS SHALL BE FILLED WITH THE EMULSION PRIOR TO SEALING THE PAVEMENT SURFACE. COMPACTION SHALL BE USED FOLLOWING THE STANDARD METHOD.
AREAS OF THE PAVEMENT SURFACE SHALL NOT BE TREATED WITH THE SEALANT WHEN THE UNDERLAYING MIXTURE IS POORLY BONDED AND TWO SWEEPING PASSES CANNOT REMOVE LOOSE MATERIAL OR IS AN EXPOSED AGGREGATE. THESE AREAS SHALL BE TREATED WITH THE EMULSION AND AGGREGATE ONLY AND AT AN ADJUSTED RATE TO ACHIEVE THE DESIGNED TOTAL RATE OF BINDER RESIDUE. WHEN THE AMOUNT OF PAVEMENT AREA IN THIS CONDITION EXCEEDS 5 PERCENT OF THE TOTAL SURFACE AREA THE ENTIRE PAVEMENT SHALL BE TREATED WITH THE EMULSION AND AGGREGATE ONLY.

EMULSION

THE CONTRACTOR SHALL SUBMIT A DESIGN THAT IDENTIFIES THE EMULSION APPLICATION RATE BASED ON THE GRADATION OF THE COARSE AGGREGATE AND THE APPLICATION RATE RANGE OF SEALANT. IF DURING THE PROGRESS OF WORK THE CONTRACTOR DETERMINES THE DESIGN RATE OF THE EMULSION APPLICATION REQUIRES CHANGE, THE CHANGE SHALL BE DOCUMENTED.

COARSE AGGREGATE

THE COARSE AGGREGATE SHALL BE APPLIED AT A RATE NECESSARY TO PROVIDE FULL COVERAGE OF THE EMULSION. NO TRACKING OF THE EMULSION SHALL OCCUR BY THE ROLLERS. CONTRACTOR SHALL ADJUST THE RATE OF AGGREGATE PLACED TO PROVIDE A MINIMUM OF LOOSE AGGREGATE.

DOCUMENTATION

THE CONTRACTOR SHALL PROVIDE THE ENGINEER A DAILY REPORT WITH THE FOLLOWING INFORMATION LISTED, CONTROL SECTION / PROJECT NUMBER / COUNTY / ROUTE / ENGINEER / DATE / AIR TEMPERATURE / PAVEMENT TEMPERATURE / HUMIDITY / SEALANT AND ASPHALT EMULSION TEMPERATURE / BEGINNING AND ENDING STATIONS OF THE COMPLETED WORK / YIELD CHECKS ON ALL MATERIALS RATES (3 PER DAY, MINIMUM) / AGGREGATE GRADATION (1 PER DAY, MINIMUM) / LENGTH / WIDTH / TOTAL SQUARE YARDS AND THE CONTRACTOR'S FOREMAN'S SIGNATURE.

MEASUREMENT AND PAYMENT

THE COMPLETED WORK AS MEASURED WILL BE PAID FOR AT THE CONTRACT UNIT PRICE FOR THE FOLLOWING CONTRACT ITEM 422 - CHIP SEAL WITH POLYMER BINDER MISC: MULTI-SEAL SURFACING TYPE 12 INTERLAYER IN SQUARE YARDS.

PAYMENT FOR MULTI-SEAL SURFACING (TYPE 12 INTERLAYER) INCLUDES ALL MATERIALS, EQUIPMENT, LABOR, PREPARATION OF THE EXISTING PAVEMENT, PRODUCT DESIGN, QUALITY CONTROL, DOCUMENTATION, PUBLIC NOTIFICATION AND PLACING THE INTERLAYER TREATMENT AS DESIGNATED.

ITEM 604 - MONUMENT ASSEMBLY, AS PER PLAN:
THIS WORK SHALL CONSIST OF FURNISHING AND PLACING CENTERLINE MONUMENTS AT THE FOLLOWING INTERSECTIONS.

SR 309 AND TWP RD 19 (ROBINSON RD)

SR 309 AND CO RD 28 (DRY LANE RD)

SR 309 AND TWP RD 29 (DECLIFF RD)

SR 309 AND CO RD 64 (CRAMER RD)

SR 309 AND CO RD 87 (LEE RD)

THE FOLLOWING ESTIMATED QUANTITIES HAS BEEN PROVIDED FOR PAVEMENT RESTORATION FOLLOWING INSTALLATION OF ITEM 604 MONUMENT ASSEMBLIES.

ITEM 448- ASPHALT CONCRETE SURFACE COURSE, TYPE 1, PG64-22: = 0.1 CU YD

ITEM 301- ASPHALT CONCRETE BASE, PG 64-22: = 0.5 CU YD

THE ABOVE QUANTITY IS BASED ON A 448 THICKNESS OF 1.5 INCHES AND A 301 THICKNESS OF 6 INCHES. THIS QUANTITY IS BASED ON A WIDTH OF TWO FEET AROUND THE PERIMETER OF THE MONUMENT ASSEMBLIES. IT SHALL BE THE CONTRACTORS REASPONSABILITY TO PROVIDE ANY MATERIALS USED OUTSIDE THE LIMITS STATED ABOVE AT NO ADDITIONAL COST.

A REGISTERED SURVEYOR FROM DISTRICT 6 SURVEY DEPARTMENT SHALL BE RESPONSIBLE FOR REFERENCING AND VERIFYING THE LOCATIONS OF THE CENTERLINE MONUMENTS. THE CONTRACTOR SHALL NOTIFY THE SURVEY DEPARTMENT (1-740-363-1251)EXT 120 48 HOURS PRIOR TO START OF MONUMENT WORK. PAYMENT FOR THIS ITEM SHALL INCLUDE ALL NECESSARY LABOR, MISCELLANEOUS HARDWARE, AND EQUIPMENT REQUIRED FOR PLACEMENT AND INCLUDE ALL ASPHALT QUANTITIES LISTED ABOVE FOR PAVEMENT RESTORATIONFOR MONUMENT ASSEMBLY INSTALLATIONS. PAYMENT WILL BE AT CONTRACT BID PRICE PER EACH. THE FOLLOWING QUANTITY HAS BEEN PROVIDED AND THE TOTAL CARRIED TO THE GENERAL SUMMARY.
ITEM 604 - MONUMENT ASSEMBLY,APP: = 5 EACH

ITEM 604 - MONUMENT BOX ADJUSTED TO GRADE:
THIS ITEM OF WORK WILL PROVIDE ALL MATERIAL, LABOR, EQUIPMENT, AND HARDWARE NECESSARY TO ADJUST TO GRADE THE EXISTING MONUMENT BOX TO ½ INCH BELOW THE PROPOSED ASPHALT ELEVATION AT THE FOLLOWING LOCATIONS.

SR 309 AND THE MARION-HARDIN CO LINE

SR 309 AND TWP RD 62 (BUMFORD RD)

SR 309 AND SR 203

SR 309 AND CO RD 96 (WATERWORKS RD)

SR 309 AND SR 37

SR 309 AND CO RD 30 (OSBUM RD)

THE FOLLOWING QUANTITY HAS BEEN PROVIDED AND THE TOTAL HAS BEEN CARRIED TO THE GENERAL SUMMARY.
ITEM 604 - MONUMENT BOX ADJUSTED TO GRADE: = 6 EACH

ITEM 623 - CONSTRUCTION LAYOUT STAKES, AS PER PLAN:
THIS ITEM SHALL CONSIST OF STATIONING USING 3 FT LATH STAKES OR PAINT MARKINGS. THE STAKES OR PAINT MARKINGS SHALL BE SPACED AT 100 FT INTERVALS AND EXTEND THROUGHOUT THE LENGTH OF THE PROJECT. PLACEMENT OF THE STAKES OR PAINT MARKINGS SHALL BE AS DIRECTED BY THE ENGINEER. THE CONTRACTOR IS RESPONSIBLE FOR REPLACING ANY DAMAGED, MISSING STAKES, OR PAINT MARKINGS. PAINT MARKINGS SHALL BE PLACED ON CURBS AND USED IN AREAS WERE THE PLACEMENT OF STAKES IS NOT POSSIBLE AND APPROVED BY THE PROJECT ENGINEER.

CONSTRUCTION LAYOUT STAKES, AS PER PLAN WILL BE PAID FOR AT THE CONTRACT LUMP SUM BID, WHICH PRICE SHALL BE FULL COMPENSATION FOR ALL SERVICES, MATERIALS, LABOR, EQUIPMENT, TOOLS, AND INCIDENTALS, INCLUDING THE REMOVAL, NECESSARY TO COMPLETE THIS ITEM.

ITEM 642 - CENTER LINE:
THE PROPER PLACEMENT OF ALL PASSING AND NO PASSING ZONES AS SHOWN ON SHEET 14/18 AND 15/18 SHALL BE CONFIRMED BY THE CONTRACTOR AND PLACED BY USING THE CONTROL POINTS ON SHEET 16 CLOSEST TO THE ZONE. THIS COULD BE DIFFERENT THAN THE SID'S SHOWN ON SHEET 2/18. ALL START AND STOP SLM LOCATIONS SHALL BE WITHIN 0.005 MILES OF THE LOCATIONS SHOWN ON THE PLAN. A LETTER OF VERIFICATION OF ALL PASSING AND NO PASSING ZONES SHALL BE SUBMITTED TO THE PROJECT ENGINNER FOR PLACEMENT IN THE PROJECT RECORDS. ANY IMPROPERLY PLACED NO PASSING OR PASSING ZONES SHALL BE IMMEDIATELY CORRECTED.

:\Projects\mar\309\0000.005\DGN\gni04.dgn 16-OCT-2003 9:45AM hgarner

ITEM 614-WORK ZONE MARKING SIGN, APP:

THE FOLLOWING ESTIMATED QUANTITIES HAVE BEEN CARRIED TO THE GENERAL SUMMARY FOR USE AT LOCATIONS IDENTIFIED BY THE ENGINEER FOR WORK ZONE MARKING SIGNS PER THE REQUIREMENTS 614.04 AND 614.11. THESE SIGNS SHALL BE PLACED TO REFLECT THE EXISTING PASSING AND NO PASSING ZONES. THESE SIGNS SHALL BE COVED OR REWMOVED WITHIN 24 HRS OF THE PLACEMENT OR THE CORRECTED CENTERLINE MARKINGS SHOWN ON PLAN SHEET. THE FOLLOWING QUANTITIES HAVE BEEN PROVIDED AND THE TOTALS HAVE BEEN CARRIED TO THE GENERAL SUMMARY.

OW-167-36 "NO EDGE LINES" = 40 EACH

R-33-30 "DO NOT PASS" = 38 EACH

R-34-30 "PASS WITH CARE" = 38 EACH

THE FOLLOWING QUANTITY HAS BEEN PROVIDED AND THE TOTAL HAS BEEN CARRIED TO THE GENERAL SUMMARY.

ITEM 614- WORK ZONE MARKING SIGN, APP = 116 EACH

ITEM 614-WORK ZONE MARKING SIGN

ITEM 614 - MAINTAINING TRAFFIC:

THE CONTRACTOR SHALL SUBMIT FOR APPROVAL, TO THE DISTRICT SIX MAINTENANCE OF TRAFFIC COORDINATOR, THE CONTRACTOR'S MAINTENANCE OF TRAFFIC PLAN WITH CONSTRUCTION PHASING DESCRIPTIONS, PRIOR TO BEGINNING WORK.

TWO WAY TRAFFIC SHALL BE MAINTAINED AT ALL TIMES EXCEPT THAT FOR MINIMUM PERIODS OF TIME CONSISTENT WITH THE REQUIREMENTS OF THE SPECIFICATIONS FOR PROTECTION OF THE COMPLETED ASPHALT CONCRETE COURSES. WORK ZONES SHALL BE LIMITED IN LENGTH TO THE AMOUNT OF WORK THAT CAN BE PERFORMED THAT DAY.

LENGTH AND DURATION OF LANE CLOSURES AND RESTRICTIONS SHALL BE AT THE APPROVAL OF THE ENGINEER. IT IS THE INTENT TO MINIMIZE THE IMPACT TO THE TRAVELING PUBLIC. LANE CLOSURES OR RESTRICTIONS OVER SEGMENTS OF THE PROJECT IN, WHICH NO WORK IS ANTICIPATED WITHIN A REASONABLE TIME FRAME, AS DETERMINED BY THE ENGINEER, SHALL NOT BE PERMITTED. THE LEVEL OF UTILIZATION OF MAINTENANCE OF TRAFFIC DEVICES SHALL BE COMMENSURATE WITH THE WORK IN PROGRESS.

NO WORK SHALL BE PERFORMED AND ALL EXISTING LANES SHALL BE OPEN TO TRAFFIC DURING THE FOLLOWING DESIGNATED HOLIDAYS OR EVENTS:

HOLIDAYS

CHRISTMAS
NEW YEARS
MEMORIAL DAY
FOURTH OF JULY
LABOR DAY
THANKSGIVING

THE PERIOD OF TIME THAT THE LANES ARE TO BE OPEN DEPENDS ON THE DAY OF THE WEEK ON WHICH THE HOLIDAY OR EVENT FALLS. THE FOLLOWING SCHEDULE SHALL BE USED TO DETERMINE THIS PERIOD.

DAY OF THE WEEK	TIME ALL LANES MUST BE OPEN TO TRAFFIC
SUNDAY	12:00N FRIDAY THROUGH 12:00N MONDAY
MONDAY	12:00N FRIDAY THROUGH 12:00N TUESDAY
TUESDAY	12:00N MONDAY THROUGH 12:00N WEDNESDAY
WEDNESDAY	12:00N TUESDAY THROUGH 12:00N THURSDAY
THURSDAY	12:00N WEDNESDAY THROUGH 12:00N MONDAY
FRIDAY	12:00N THURSDAY THROUGH 12:00N MONDAY
SATURDAY	12:00N FRIDAY THROUGH 12:00N MONDAY

NO EXTENSIONS OF TIME SHALL BE GRANTED FOR DELAYS IN MATERIAL DELIVERIES, UNLESS SUCH DELAYS ARE INDUSTRY WIDE, OR FOR LABOR STRIKES, UNLESS SUCH STRIKES ARE AREA WIDE.

SHOULD THE CONTRACTOR FAIL TO MEET ANY OF THESE REQUIREMENTS, THE CONTRACTOR SHALL BE ASSESSED LIQUIDATED DAMAGES IN ACCORDANCE WITH 108.07.

ITEM 626 - BARRIER REFLECTOR, TYPE A
THIS ITEM SHALL CONSIST OF INSTALLING BARRIER REFLECTORS ON THE GALVANISED STEEL GARDRAIL. THE REMOVAL AND DISPOSAL OF EXISTING BARRIER REFLECTORS SHALL BE INCIDENTAL TO THE BID FOR THIS ITEM. THE FOLLOWING QUANTITY HAS BEEN CARRIED TO THE GENERAL SUMMARY.

ITEM 626 -BARRIER REFLECTOR, TYPE A = 98 EACH

WORK ZONE MARKINGS:
THE FOLLOWING ESTIMATED QUANTITIES HAVE BEEN CARRIED TO THE GENERAL SUMMARY FOR USE AT LOCATIONS IDENTIFIED BY THE ENGINEER FOR WORK ZONE PAVEMENT MARKINGS PER THE REQUIREMENTS 614.04 AND 614.11. THE FOLLOWING QUANTITIES HAVE BEEN PROVIDED AND THE TOTALS HAVE BEEN CARRIED TO THE GENERAL SUMMARY.

ITEM 614 - WORK ZONE CENTER LINE CLASS II:

SR - 309 (15.35 X 1 APPLICATIONS) = 15.35 MI.

ITEM 251 - PARTIAL DEPTH PAVEMENT REPAIR, A.P.P.:
ALL AREAS TO BE REPAIRED SHALL BE LOCATED BY THE ENGINEER AND THE WORK PERFORMED PRIOR TO THE PLACEMENT OF THE ITEM 448 - ASPHALT CONCRETE SURFACE COURSE, TYPE 1, PG 64-22. THE REPAIR AREAS SHALL BE (2)TWO FEET IN WIDTH ALONG BOTH EDGES OF THE PAVEMENT FOR THE INTIRE LENGTH OF THE PROJECT. THE DEPTH OF REPAIRS SHALL NOT EXCEED AN AVERAGE DEPTH OF 3 INCHES. ALL AREAS SHALL BE REFILLED WITH 3 INCHES OF ITEM 301 - ASPHALT CONCRETE BASE. NO MORE PARTIAL DEPTH PAVEMENT REPAIR SHALL BE PREFORMED THAN CAN BE COMPLETED IN THE SAME WORKING DAY.

ITEM SPECIAL 517 - TREATING CONCRETE BRIDGE DECKS WITH GRAVITY-FED RESIN:

SEE PROPOSAL NOTE TREATING CONCRETE BRIDGE DECKS WITH GRAVITY-FED RESIN.

CONTINGENCY QUANTITIES:
THE CONTRACTOR SHALL NOT ORDER MATERIALS OR PERFORM WORK FOR ITEMS DESIGNATED BY PLAN NOTE TO BE USED AS DIRECTED BY THE ENGINEER UNLESS AUTHORIZED BY THE ENGINEER. THE ACTUAL WORK LOCATIONS AND QUANTITIES USED FOR SUCH ITEMS SHALL BE INCORPORATED INTO THE FINAL CHANGE ORDER GOVERNING COMPLETION OF THIS PROJECT.

ITEM 203 - EMBANKMENT:
THIS ITEM IS A CONTINGENCY QUANTITY TO BE USED AS DIRECTED BY THE PROJECT ENGINEER AT VARIOUS LOCATIONS. THE CONTRACTOR SHALL PROVIDE ALL MATERIAL, LABOR, EQUIPMENT, AND HARDWARE NECESSARY TO PLACE AND COMPACT THE EMBANKMENT. THE FOLLOWING QUANTITY HAS BEEN PROVIDED AND THE TOTAL CARRIED TO THE GENERAL SUMMARY.

"AS DIRECTED BY THE ENGINEER" = 1 CY.YD.

I:\Projects\mar\309\0000.005\DGN\gn105.dgn 16-OCT-2003 9:35AM hgarner

SHEET NUMBER 3-7	9-11	12-13	14-17					PARTICIPATION		ITEM	ITEM EXT.	GRAND TOTAL	UNIT	DESCRIPTION	SEE SHEET NO.
														ROADWAY	
			1,139							202	54100	1,139	EACH	RAISED PAVEMENT MARKER REMOVED FOR STORAGE	
	133									203	10000	133	CU YD	EXCAVATION	
1										203	20000	1	CU YD	EMBANKMENT	7
5										604	38501	5	EACH	MONUMENT ASSEMBLY, AS PER PLAN	6
6										604	39500	6	EACH	MONUMENT BOX ADJUSTED TO GRADE	6
														PAVEMENT	
	35689									251	01001	35,689	SQ YD	PARTIAL DEPTH PAVEMENT REPAIR, AS PER PLAN	6
200										253	02001	200	CU YD	PAVEMENT REPAIR, AS PER PLAN	3
	8,221									254	01000	8,221	SQ YD	PAVEMENT PLANING, ASPHALT CONCRETE	3
	311									407	10000	311	GALLON	TACK COAT	4
	224,169									422	98000	224,169	SQ YD	CHIP SEAL WITH POLYMER BINDER, MISC.: MULTI-SEAL INTERLAYER 12	4
	9									448	46020	9	CU YD	ASPHALT CONCRETE INTERMEDIATE COURSE, TYPE 1, PG64-22	
	9,755									448	47020	9,755	CU YD	ASPHALT CONCRETE SURFACE COURSE, TYPE 1, PG64-22	
	3,058									617	10100	3,058	CU YD	COMPACTED AGGREGATE, TYPE A	
														TRAFFIC CONTROL	
			1,139							621	00200	1,139	EACH	RPM, INSTALLATION ONLY	
98										626	00100	98	EACH	BARRIER REFLECTOR, TYPE A	
			30.70							642	00090	30.70	MILE	EDGE LINE	
			15.36							642	00290	15.36	MILE	CENTER LINE	
			25							644	00500	25	FT	STOP LINE	
														MAINTENANCE OF TRAFFIC	
116										614	12401	116	EACH	WORK ZONE MARKING SIGN, AS PER PLAN	
30.70										614	21400	30.70	MILE	WORK ZONE CENTER LINE, CLASS II	6
														STRUCTURE	
		2108								SPECIAL	51273500	2,108	SQ YD	TREATING CONCRETE BRIDGE DECKS WITH GRAVITY FED RESIN	7
		326								SPECIAL	51631200	326	FT	SAWING AND SEALING BITUMINOUS CONCRETE JOINTS	13
LUMP										614	11000	LUMP		MAINTAINING TRAFFIC	
										619	16000	3	MONTH	FIELD OFFICE, TYPE A	
										623	10001	LUMP		CONSTRUCTION LAYOUT STAKES, AS PER PLAN	
										624	10000	LUMP		MOBILIZATION	

JOHN 3/16/1
JOHN 1/16/1

GENERAL SUMMARY

MAR-309-0.00

I:\Projects\mar\309\0000.005\DGN\ggl.dgn 06-NOV-2003 3:53PM hgarner

TYPICAL SECTION

* NOTES

MAINTAIN THE EXISTING PAVEMENT CROSS SLOPE

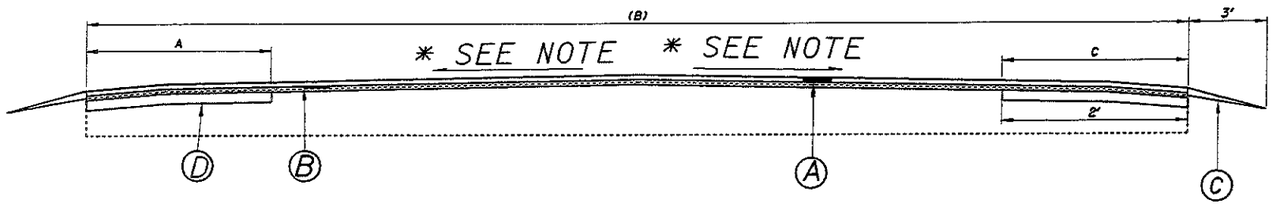

SHOULDER DETAIL

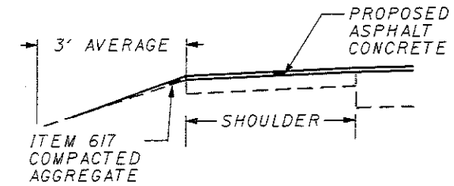

(A) ITEM 448 - 1.5" ASPHALT CONCRETE SURFACE COURSE, TYPE 1, PG64-22

(B) ITEM 422- CHIP SEAL WITH POLYMER BINDER MISC.: MULTI-SEAL SURFACING, TYPE 12 INTERLAYER (SEE GENERAL NOTES)

(C) ITEM 617 - COMPACTED AGGREGATE, TYPE A

(D) ITEM 251-PARTIAL DEPTH PAVEMENT REPAIR, AS PER PLAN

LOCATION						PAVEMENT WIDTH				QUANTITIES									REMARKS
LOCATION	COUNTY	ROUTE	SLM	SLM	TYPICAL	LENGTH	LEFT SHOULDER A	PAVEMENT B	RIGHT SHOULDER C	251 PARTIAL DEPTH PAVEMENT REPAIR AS PER PLAN 3" DEPTH	254 PAVEMENT PLANING ASPHALT 1.5"DEPTH	448 ASPHALT INTERMED. COURSE TYPE 1 PG64-22 1.5"DEPTH	422 CHIP SEAL WITH POLYMER BINDER MISC.:	407 TACK COAT 0.075 GAL. PER SQ YD	448 ASPHALT SURFACE COURSE TYPE 1 PG64-22 1.5"DEPTH	617 COMPACT AGG. TYPE A 2"DEPTH			
						FT	FT	FT	FT	SQ YD	SQ YD	CU YD	SQ YD	GAL	CU YD	CU YD			
1	MAR	309	0.00	15.35	1	81048'		25'					225,133		9,381	3,062			PROVIDE BUTT JOINT (BP-3.1)
1	MAR	309	0.00	15.35	1	81048'	2.0'		2.0'	36,021									
1	MAR	309	1.38	1.39	1	74'		24'		-33			-197		-8				DEDUCT MAR-309-0138
1	MAR	309	3.26	3.28	1	116'		24'		-51			-308		-13				DEDUCT MAR-309-0326
1	MAR	309	4.26	4.27	1	71'		24'		-31			-189		-8				DEDUCT MAR-309-0426
1	MAR	309	5.06	5.07	1	71'		24'		-31			-189		-8				DEDUCT MAR-309-0506
1	MAR	309	5.76	5.79	1	180'		24'		-80			-480		-20				DEDUCT MAR-309-0576
1	MAR	309	9.59	9.61		80'		25'		-35	221	9		33					SEE SHEET 12 (MAR-309-0959)
1	MAR	309	10.87	10.87	1	18'		24'		-8			-48		-2				DEDUCT MAR-309-1087
1	MAR	309	12.74	12.74	1	13'		24'		-6			-35		-1				DEDUCT MAR-309-1274
1	MAR	309	13.17	13.19	1	126'		24'		-56			-336		-14				DEDUCT MAR-309-1317
1	MAR	309	1.38			40'	4.0'						71		2				EXTRA AREA
1	MAR	309	3.26			40'	4.0'						71		3				EXTRA AREA
1	MAR	309	4.26			40'	4.0'						71		3				EXTRA AREA
1	MAR	309	5.06			25'	12.0'						33		1				EXTRA AREA
1	MAR	309	5.06			40'	4.0'		4.0'				142		6				EXTRA AREA
1	MAR	309	5.76			60'	5.0'		4.0'				240		10				EXTRA AREA
1	MAR	309	9.42			4'	3.0'		3.0'				11		1				EXTRA AREA
1	MAR	309	12.74			50'	8.0'						178		7				EXTRA AREA
1	MAR	309	6.55			125'		20'							23				EXTRA AREA
1	MAR	309	11.38			100'		10'							5				EXTRA AREA
1	MAR	309				3'		12'							10				ASPHALT DRIVES
1	MAR	309				150'		24'			8,000				8				BUTT JOINTS BP 3.1 (20)
1	MAR	309				10'		40'							59				INTERSECTIONS
1	MAR	309				5'		12'								56			GRAVEL DRIVES
TOTALS CARRIED TO GENERAL SUMMARY										35,689	8,221	9	224,169	33	9,446	3,058			

PAVEMENT SUBSUMMARY AND DETAILS

MAR-309-0.00

I:\Projects\mar\309\0000.005\DGN\gd10L.dgn 16-OCT-2003 10:14AM hgarner

LOCATION						DESIGN				PAVEMENT QUANTITIES			REMARKS
LOCATION	COUNTY	ROUTE	SLM	SIDE	MAIL BOX ADDRESS	TYPICAL	OFFSET (W)	DRIVE WIDTH (D)	MAIL BOX APPROACH TYPE	203 EXCAVATION 1.5" DEPTH CU.YD.	407 TACK COAT 0.075 GAL. PER SQ. YD. GAL.	448 ASPHALT SURFACE COURSE TYPE 1 PG64-22 1.5" DEPTH CU.YD.	
1	MAR	309	0.270	LT	610	1	3'		TYPICAL	0.63	1.13	1.25	GRAVEL DRIVE
1	MAR	309	1.070	RT	9965	1	5'		TYPICAL	1.04	1.88	2.08	GRAVEL DRIVE
1	MAR	309	1.230	RT	9868	1	3'		TYPICAL	0.63	1.13	1.25	GRAVEL DRIVE
1	MAR	309	1.300	RT	9808	1	6'	15'	COMBINED	1.67	3.00	3.33	GRAVEL DRIVE
1	MAR	309	1.380	RT	9767	1	6'		TYPICAL	1.25	2.25	2.50	GRAVEL DRIVE
1	MAR	309	1.410	RT	9723	1	6'		TYPICAL	1.25	2.25	2.50	GRAVEL DRIVE
1	MAR	309	1.470	RT	9696	1	6'	15'	COMBINED	1.67	3.00	3.33	GRAVEL DRIVE
1	MAR	309	1.510	RT	9667	1	6'		TYPICAL	1.25	2.25	2.50	GRAVEL DRIVE
1	MAR	309	1.620	RT		1	6'		TYPICAL	1.25	2.25	2.50	GRAVEL DRIVE
1	MAR	309	2.260	LT	9155	1	3'	15'	COMBINED	0.83	1.50	1.67	GRAVEL DRIVE
1	MAR	309	2.660	LT	8865	1	6'		TYPICAL	1.25	2.25	2.50	GRAVEL DRIVE
1	MAR	309	2.820	LT		1	6'		TYPICAL	1.25	2.25	2.50	GRAVEL DRIVE
1	MAR	309	3.160	RT	8506	1	6'	15'	COMBINED	1.67	3.00	3.33	GRAVEL DRIVE
1	MAR	309	3.250	RT	8446	1	6'	15'	COMBINED	1.67	3.00	3.33	GRAVEL DRIVE
1	MAR	309	3.630	RT	8186	1	6'	15'	COMBINED	1.67	3.00	3.33	GRAVEL DRIVE
1	MAR	309	3.810	RT	8058	2	6'		TYPICAL		2.25	2.50	ASPHALT DRIVE
1	MAR	309	4.080	LT		1	3'		TYPICAL	0.63	1.13	1.25	GRAVEL DRIVE
1	MAR	309	4.120	LT	7826	1	1'		TYPICAL	0.21	0.38	0.42	GRAVEL DRIVE
1	MAR	309	4.340	LT	7686	1	5'		TYPICAL	1.04	1.88	2.08	GRAVEL DRIVE
1	MAR	309	4.830	LT	7345	1	6'	15'	COMBINED	1.67	3.00	3.33	GRAVEL DRIVE
1	MAR	309	4.930	LT	7280	1	6'		TYPICAL	1.25	2.25	2.50	GRAVEL DRIVE
1	MAR	309	5.170	LT	7111	1	6'	15'	COMBINED	1.67	3.00	3.33	GRAVEL DRIVE
1	MAR	309	5.250	LT	7032	1	2'		TYPICAL	0.42	0.75	0.83	GRAVEL DRIVE
1	MAR	309	5.270	LT	7032	1	2'		TYPICAL	0.42	0.75	0.83	GRAVEL DRIVE
1	MAR	309	5.360	LT	6978	1	2'		TYPICAL	0.42	0.75	0.83	GRAVEL DRIVE
1	MAR	309	5.380	LT	6972	1	4'		TYPICAL	0.83	1.50	1.67	GRAVEL DRIVE
1	MAR	309	5.450	LT	6961	1	5'	15'	COMBINED	1.39	2.50	2.78	GRAVEL DRIVE
1	MAR	309	5.770	LT	6661	1	5'	15'	COMBINED	1.39	2.50	2.78	GRAVEL DRIVE
1	MAR	309	5.820	LT	6645	1	3'	15'	COMBINED	0.83	1.50	1.67	GRAVEL DRIVE
1	MAR	309	5.860	LT	6623	1	2'	15'	COMBINED	0.56	1.00	1.11	GRAVEL DRIVE
1	MAR	309	5.880	LT	6601	1	2'		TYPICAL	0.42	0.75	0.83	GRAVEL DRIVE
1	MAR	309	5.960	LT		1	2'		TYPICAL	0.42	0.75	0.83	GRAVEL DRIVE
1	MAR	309	5.970	LT	6550	1	2'		TYPICAL	0.42	0.75	0.83	GRAVEL DRIVE
1	MAR	309	5.990	LT	6532	1	2'		TYPICAL	0.42	0.75	0.83	GRAVEL DRIVE
1	MAR	309	6.060	LT	6479	1	2'	15'	COMBINED	0.56	1.00	1.11	GRAVEL DRIVE
1	MAR	309	6.070	LT	6471	1	2'	15'	COMBINED	0.56	1.00	1.11	GRAVEL DRIVE
1	MAR	309	6.290	RT	6322	1	6'		TYPICAL	1.25	2.25	2.50	GRAVEL DRIVE
1	MAR	309	6.700	RT	6053	1	4'		TYPICAL	0.83	1.50	1.67	GRAVEL DRIVE
1	MAR	309	6.750	RT	6030	1	4'	15'	COMBINED	1.11	2.00	2.22	GRAVEL DRIVE
1	MAR	309	7.370	RT	5693	1	2'		TYPICAL	0.42	0.75	0.83	GRAVEL DRIVE
1	MAR	309	7.640	RT	5512	1	6'	15'	COMBINED	1.67	3.00	3.33	GRAVEL DRIVE
1	MAR	309	7.870	RT		1	6'		TYPICAL	1.25	2.25	2.50	GRAVEL DRIVE
1	MAR	309	8.180	RT	5146	1	6'	15'	COMBINED	1.67	3.00	3.33	GRAVEL DRIVE
1	MAR	309	8.360	RT	3033	1	5'	15'	COMBINED	1.39	2.50	2.78	GRAVEL DRIVE
1	MAR	309	8.420	RT	5002	1	6'		TYPICAL	1.25	2.25	2.50	GRAVEL DRIVE
1	MAR	309	8.600	RT	4874	1	3'	15'	COMBINED	0.83	1.50	1.67	GRAVEL DRIVE
1	MAR	309	9.010	LT	4767	1	6'	15'	COMBINED	1.67	3.00	3.33	GRAVEL DRIVE
1	MAR	309	9.250	LT		1	6'		TYPICAL	1.25	2.25	2.50	GRAVEL DRIVE
1	MAR	309	9.780	LT		1	6'		TYPICAL	1.25	2.25	2.50	GRAVEL DRIVE
1	MAR	309	9.920	LT	4190	1	6'	15'	COMBINED	1.67	3.00	3.33	GRAVEL DRIVE
1	MAR	309	9.950	LT		1	6'			1.25	2.25	2.50	GRAVEL DRIVE
1	MAR	309	10.130	LT	4044	2	6'	15'	COMBINED		3.00	3.33	ASPHALT DRIVE
1	MAR	309	10.160	LT	4025	1	6'		TYPICAL	1.25	2.25	2.50	GRAVEL DRIVE
1	MAR	309	10.270	LT	3942	2	6'	15'	COMBINED		3.00	3.33	ASPHALT DRIVE
1	MAR	309	10.480	LT		2	6'		TYPICAL		2.25	2.50	ASPHALT DRIVE
TOTALS CARRIED TO GENERAL SUMMARY										54	109	121	

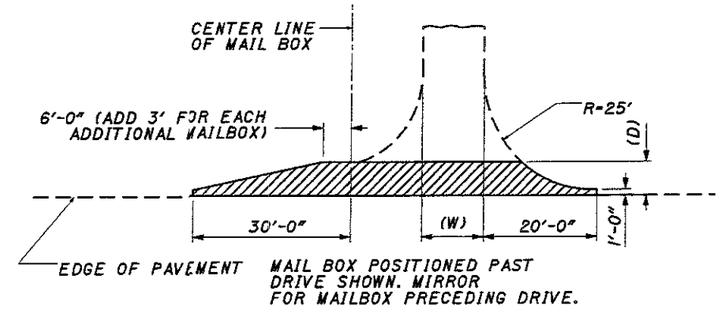

COMBINED DRIVEWAY & MAIL BOX APPROACH DETAIL

THE EXISTING MAIL BOX POSITION SHALL REMAIN. DIMENSION (D) SHALL NOT EXCEED 6'.

*FOR TYPICAL MAIL BOX APPROACH AND OTHER ADDITIONAL INFORMATION SEE STA. DWG. BP 4.1 (7/28/00)

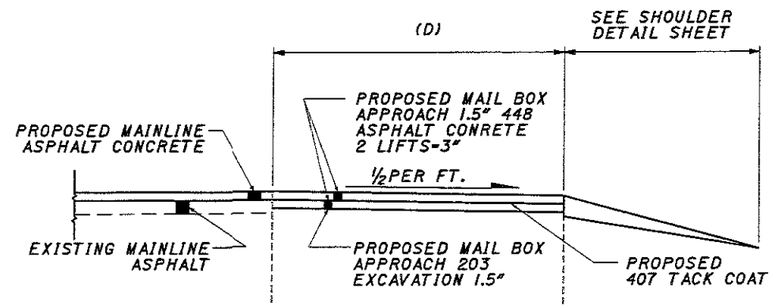

TYPICAL #1
MAIL BOX APPROACH

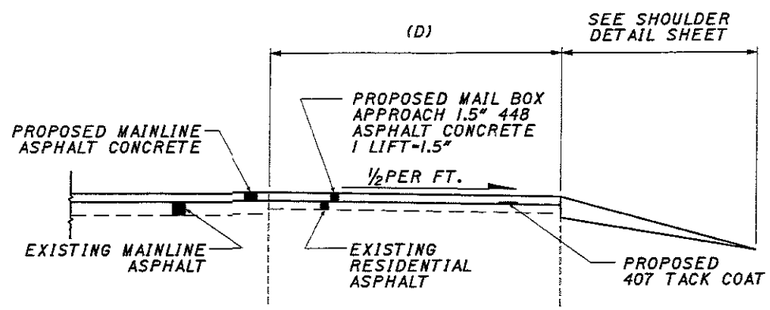

TYPICAL #2
MAIL BOX APPROACH

LEGEND

▨ PORTION TO BE IMPROVED

[X] VARIABLE DIMENSION. SEE CHART

PAVEMENT SUBSUMMARY AND DETAILS

MAR-309-0.00

:\Projects\mar\309\0000.005\DGN\gal04.dgn 16-OCT-2003 10:35AM hgarner

:\Projects\mar\309\0000.005\DGN\gal05.dgn 16-OCT-2003 8:44AM hgarner

LOCATION						DESIGN				PAVEMENT QUANTITIES			REMARKS
LOCATION	COUNTY	ROUTE	SLM	SIDE	MAIL BOX ADDRESS	TYPICAL	OFFSET (W)	DRIVE WIDTH (D)	MAIL BOX APPROACH TYPE	203 EXCAVATION 1.5" DEPTH CU.YD.	407 TACK COAT 0.075 GAL. PER SQ. YD. SQ. YD.	448 ASPHALT SURFACE COURSE TYPE 1 PG64-22 1.5" DEPTH CU.YD.	
1	MAR	309	10.690	LT	3685	1	6'		TYPICAL	1.25	2.25	2.50	GRAVEL DRIVE
1	MAR	309	10.740	LT	3634	1	6'		TYPICAL	1.25	2.25	2.50	GRAVEL DRIVE
1	MAR	309	10.790	LT	3620	1	6'		TYPICAL	1.25	2.25	2.50	GRAVEL DRIVE
1	MAR	309	10.970	LT	3509	1	6'		TYPICAL	1.25	2.25	2.50	GRAVEL DRIVE
1	MAR	309	11.080	LT		1	6'		TYPICAL	1.25	2.25	2.50	GRAVEL DRIVE
1	MAR	309	11.210	LT	3375	1	6'		TYPICAL	1.25	2.25	2.50	GRAVEL DRIVE
1	MAR	309	11.310	LT		1	6'		TYPICAL	1.25	2.25	2.50	GRAVEL DRIVE
1	MAR	309	11.320	LT	3302	2	6'	18'	COMBINED		3.15	3.50	ASPHALT DRIVE
1	MAR	309	11.410	LT	3233	1	5'		TYPICAL	1.04	1.88	2.08	GRAVEL DRIVE
1	MAR	309	11.430	LT	3234	1	6'		TYPICAL	1.25	2.25	2.50	GRAVEL DRIVE
1	MAR	309	11.520	LT	3177	1	6'		TYPICAL	1.25	2.25	2.50	GRAVEL DRIVE
1	MAR	309	11.530	LT	3163	1	6'		TYPICAL	1.25	2.25	2.50	GRAVEL DRIVE
1	MAR	309	11.550	LT	3152	1	6'	15'	COMBINED	1.67	3.00	3.33	GRAVEL DRIVE
1	MAR	309	11.560	LT	3142	1	6'	15'	COMBINED	1.67	3.00	3.33	
1	MAR	309	11.570	LT	3124	1	6'	15'	COMBINED	1.67	3.00	3.33	
1	MAR	309	11.620	LT	3109	2	6'	15'	COMBINED		3.00	3.33	
1	MAR	309	11.620	LT	3096	1	6'		TYPICAL	1.25	2.25	2.50	
1	MAR	309	11.650	LT		2	6'	15'	COMBINED		3.00	3.33	ASPHALT DRIVE
1	MAR	309	11.740	LT	3106	2	6'	15'	COMBINED		3.00	3.33	ASPHALT DRIVE
1	MAR	309	11.760	LT	3004	2	6'	15'	COMBINED		3.00	3.33	ASPHALT DRIVE
1	MAR	309	11.770	LT	3003	2	5'	15'	COMBINED		2.50	2.78	ASPHALT DRIVE
1	MAR	309	11.800	LT	2974	1	5'	15'	COMBINED	1.39	2.50	2.78	GRAVEL DRIVE
1	MAR	309	11.820	LT	2962	2	6'	15'	COMBINED		3.00	3.33	ASPHALT DRIVE
1	MRW	309	11.850	LT	2946	1	6'		TYPICAL	1.25	2.25	2.50	GRAVEL DRIVE
1	MRW	309	11.890	LT	2916	1	6'		TYPICAL	1.25	2.25	2.50	GRAVEL DRIVE
1	MRW	309	11.910	LT	2900	2	6'	15'	COMBINED		3.00	3.33	ASPHALT DRIVE
1	MRW	309	11.950	LT		1	6'	15'	COMBINED	1.67	3.00	3.33	GRAVEL DRIVE
1	MRW	309	11.990	LT	2862	1	6'	15'	COMBINED	1.67	3.00	3.33	GRAVEL DRIVE
1	MRW	309	12.010	LT	2835	1	6'		TYPICAL	1.25	2.25	2.50	GRAVEL DRIVE
1	MRW	309	12.070	LT		1	6'	15'	COMBINED	1.67	3.00	3.33	GRAVEL DRIVE
1	MRW	309	12.090	LT	2776	1	6'	15'	COMBINED	1.67	3.00	3.33	GRAVEL DRIVE
1	MRW	309	12.110	LT	2760	1	6'		TYPICAL	1.25	2.25	2.50	GRAVEL DRIVE
1	MRW	309	12.150	LT	2742	1	6'	15'	COMBINED	1.67	3.00	3.33	GRAVEL DRIVE
1	MRW	309	12.220	LT	2694	1	6'	15'	COMBINED	1.67	3.00	3.33	GRAVEL DRIVE
1	MRW	309	12.260	LT	2674	1	6'	15'	COMBINED		3.00	3.33	GRAVEL DRIVE
1	MRW	309	12.280	LT	2638	1	6'	15'	COMBINED	1.67	3.00	3.33	GRAVEL DRIVE
1	MRW	309	12.310	LT	2614	1	6'		TYPICAL	1.25	2.25	2.50	GRAVEL DRIVE
1	MRW	309	12.340	LT	2604	1	6'	15'	COMBINED	1.67	3.00	3.33	GRAVEL DRIVE
1	MRW	309	12.360	LT	2564	1	6'	15'	COMBINED	1.67	3.00	3.33	GRAVEL DRIVE
1	MRW	309	12.390	LT	2564	1	6'	15'	COMBINED	1.67	3.00	3.33	GRAVEL DRIVE
1	MRW	309	12.550	LT	2469	1	6'		TYPICAL	1.25	2.25	2.50	GRAVEL DRIVE
1	MRW	309	12.930	LT	2199	1	6'		TYPICAL	1.25	2.25	2.50	GRAVEL DRIVE
1	MRW	309	12.940	LT		1	6'		TYPICAL	1.25	2.25	2.50	GRAVEL DRIVE
1	MRW	309	13.000	LT	2135	1	6'		TYPICAL	1.25	2.25	2.50	GRAVEL DRIVE
1	MRW	309	13.060	LT	2109	1	6'		TYPICAL	1.25	2.25	2.50	GRAVEL DRIVE
1	MRW	309	23.347	RT	7187	1	6'		TYPICAL	1.25	2.25	2.50	GRAVEL DRIVE
1	MRW	309	13.200	LT		1	6'	15'	COMBINED	1.67	3.00	3.33	GRAVEL DRIVE
1	MRW	309	13.260	LT	1981	1	6'		TYPICAL	1.25	2.25	2.50	GRAVEL DRIVE
1	MRW	309	13.290	LT	1949	1	6'		TYPICAL	1.25	2.25	2.50	GRAVEL DRIVE
1	MRW	309	13.360	LT	1897	1	6'		TYPICAL	1.25	2.25	2.50	GRAVEL DRIVE
1	MRW	309	13.100	LT	1863	1	6'		TYPICAL	1.25	2.25	2.50	GRAVEL DRIVE
1	MRW	309	13.480	LT	1817	1	6'		TYPICAL	1.25	2.25	2.50	GRAVEL DRIVE
1	MRW	309	13.580	LT		1	6'		TYPICAL	1.25	2.25	2.50	GRAVEL DRIVE
1	MRW	309	13.740	LT	1665	1	6'		TYPICAL	1.25	2.25	2.50	GRAVEL DRIVE
1	MRW	309	13.900	LT	1569	1	6'		TYPICAL	1.25	2.25	2.50	GRAVEL DRIVE
1	MRW	309	13.920	LT	1569	1	6'		TYPICAL	1.25	2.25	2.50	GRAVEL DRIVE
1	MRW	309	14.160	LT	1436	1	6'		TYPICAL	1.25	2.25	2.50	GRAVEL DRIVE
1	MRW	309	14.290	LT	1387	1	6'		TYPICAL	1.25	2.25	2.50	GRAVEL DRIVE
1	MRW	309	14.320	LT	1370	1	6'		TYPICAL	1.25	2.25	2.50	GRAVEL DRIVE
1	MRW	309	14.510	LT	1275	1	4'		TYPICAL	0.83	1.50	1.67	GRAVEL DRIVE
1	MRW	309	12.540	LT	1244	1	4'		TYPICAL	0.83	1.50	1.67	GRAVEL DRIVE
1	MRW	309	14.590	LT	1241	1	6'	15'	COMBINED	1.67	3.00	3.33	GRAVEL DRIVE
1	MRW	309	14.629	RT	1210	1	4'	12'	COMBINED	1.06	1.90	2.11	GRAVEL DRIVE
1	MRW	309	14..65	RT	1203	1	6'		TYPICAL	1.25	2.25	2.50	GRAVEL DRIVE
1	MRW	309	14.870	RT	1096	1	5'	12'	COMBINED	1.32	2.38	2.64	GRAVEL DRIVE
1	MRW	309	14.910	RT	1085	1	6'		TYPICAL	1.25	2.25	2.50	GRAVEL DRIVE
1	MRW	309		RT	992	1	6'	12'	COMBINED	1.58	2.85	3.17	GRAVEL DRIVE
1	MRW	309	15.250	RT	980	1	6'		TYPICAL	1.25	2.25	2.50	GRAVEL DRIVE
TOTALS CARRIED TO GENERAL SUMMARY										79	169	188	

MAR-309-0.00

PAVEMENT SUBSUMMARY AND DETAILS

JOHN 3:16
JOHN 1:16

STRUCTURE GENERAL NOTES

* MAR-309-0138
PROVIDE A BUTT JOINT AS CALLED FOR IN STANDARD DRAWING BP-3.1. TREAT EXISTING CONCRETE BRIDGE DECK WITH ITEM SPECIAL GRAVITY FED RESIN.

* MAR-309-0326
PROVIDE A BUTT JOINT AS CALLED FOR IN STANDARD DRAWING BP-3.1. TREAT EXISTING CONCRETE BRIDGE DECK WITH ITEM SPECIAL GRAVITY FED RESIN.

* MAR-309-0426
PROVIDE A BUTT JOINT AS CALLED FOR IN STANDARD DRAWING BP-3.1. TREAT EXISTING CONCRETE BRIDGE DECK WITH ITEM SPECIAL GRAVITY FED RESIN.

* MAR-309-0506
PROVIDE A BUTT JOINT AS CALLED FOR IN STANDARD DRAWING BP-3.1. TREAT EXISTING CONCRETE BRIDGE DECK WITH ITEM SPECIAL GRAVITY FED RESIN.

* MAR-309-0576
PROVIDE A BUTT JOINT AS CALLED FOR IN STANDARD DRAWING BP-3.1. TREAT EXISTING CONCRETE BRIDGE DECK WITH ITEM SPECIAL GRAVITY FED RESIN.

* MAR-309-1087
PROVIDE A BUTT JOINT AS CALLED FOR IN STANDARD DRAWING BP-3.1.

* MAR-309-1274
PROVIDE A BUTT JOINT 1' SHORT OF EXISTING PMJ. EXTEND INTERMEDIATE COURSE TO PMJ. TREAT EXISTING BRIDGE DECK WITH ITEM SPECIAL GRAVITY FED RESIN.

* MAR-309-13.17
PROVIDE A BUTT JOINT AS CALLED FOR IN STANDARD DRAWING BP-3.1. TREAT EXISTING CONCRETE BRIDGE DECK WITH ITEM SPECIAL GRAVITY FED RESIN.

* ALL QUANTITIES CARRIED TO THE GENERAL SUMMARY

STRUCTURE QUANTITIES

SFN	GRAVITY FED RESIN ITEM SPECIAL SQ. YD.
MAR-309-0138 5101263	117
MAR-309-0326 5101298	323
MAR-309-0426 5101328	103
MAR-309-0506 5101352	103
MAR-309-0576 5101387	635
MAR-309-1274 5101654	323
MAR-309-1317 5101697	504
TOTALS CARRIED TO GENERAL SUMMARY	2108

STRUCTURE DETAIL
(MAR-309-0138,0326,0426, 0506, 0576, 1317)

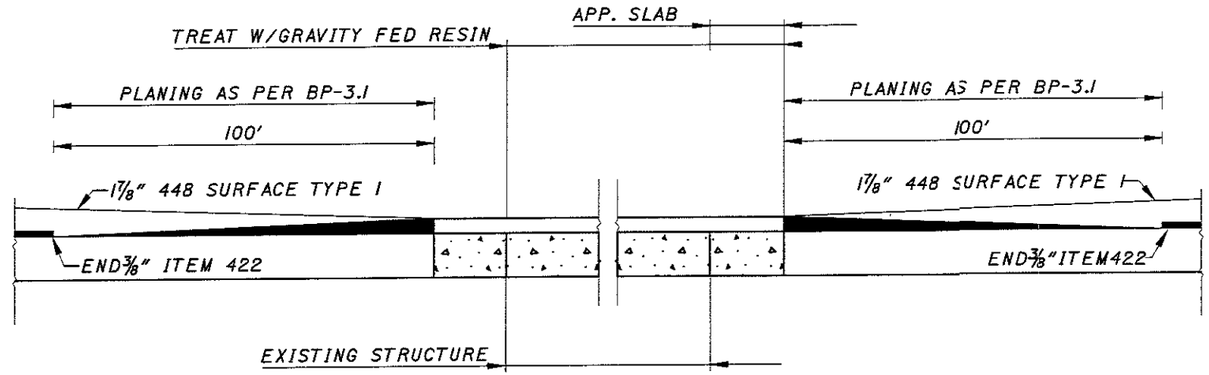

STRUCTURE DETAIL
(MAR-309-9.59)

STRUCTURES MAR 309 0617, 0867, 0942, AND 1398 SHALL BE PAVED OVER WITH SAME TREATMENT AS ROADWAY

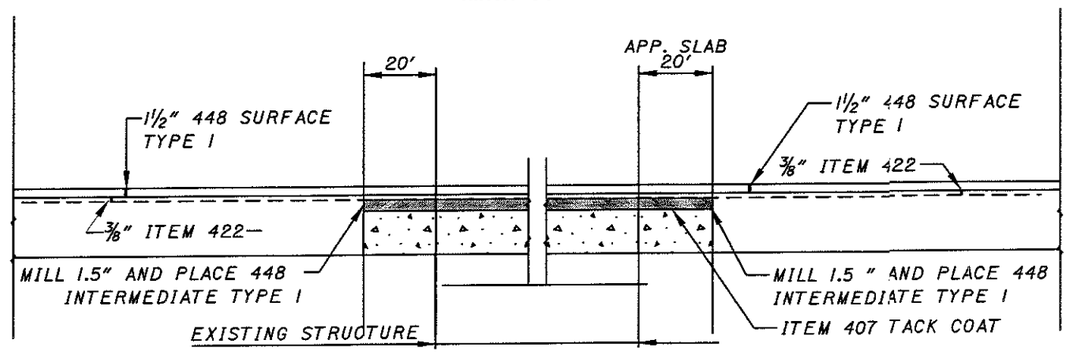

STRUCTURE DETAIL
(MAR-309-12.74)

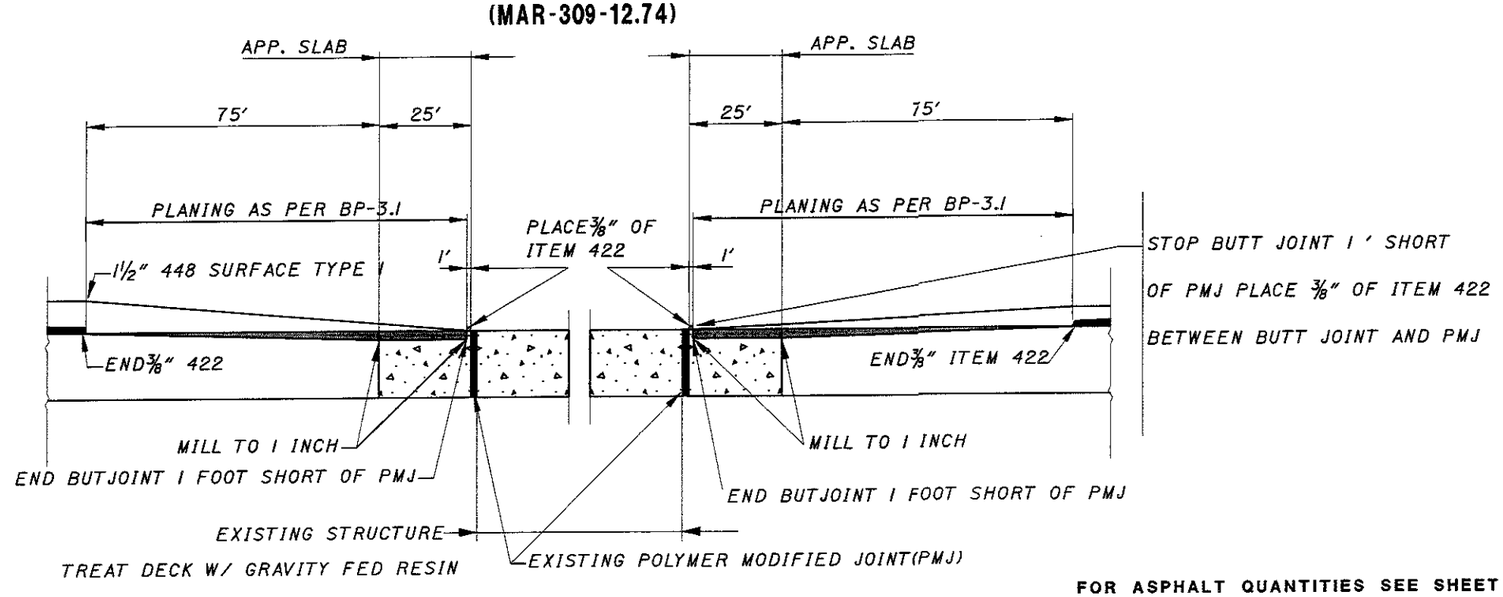

FOR ASPHALT QUANTITIES SEE SHEET 9

STRUCTURE DETAILS

MAR-309-0.00

:\Projects\mar\309\0000.005\DGN\sm2.dgn 16-OCT-2003 3:21PM hgarner

ITEM SPECIAL-SAWING AND SEALING BITUMINOUS CONCRETE JOINTS

1) DESCRIPTION:

THIS WORK SHALL CONSIST OF CUTTING AND SEALING TRANSVERSE JOINTS IN THE NEW BITUMINOUS CONCRETE OVERLAY OF BRIDGES. BITUMINOUS CONCRETE JOINTS SHALL BE CONSTRUCTED DIRECTLY OVER, AND IN LINE WITH, THE EXISTING UNDERLYING TRANSVERSE ABUTMENT AND APPROACH SLAB JOINTS.

2) MATERIALS:

THE JOINT SEALANT SHALL MEET THE REQUIREMENTS OF ITEM 705.04, JOINT SEALANTS, HOT-POURED, FOR CONCRETE AND ASPHALT PAVEMENTS. ACCEPTABLE ALTERNATE MATERIALS ARE:

A SILICONE SEALANT MEETING FEDERAL SPECIFICATIONS TT-S-001543A CLASS A (ONE-PART SILICONE SEALANTS) AND TT-S-00230C CLASS A (ONE-COMPONENT SEALANTS), SUCH AS THOSE MANUFACTURED BY GENERAL ELECTRIC, SILICONE PRODUCTS DIVISION, 4015 EXECUTIVE PARK DRIVE, CINCINNATI, OHIO 45242 (513-243-1953) OR DOW CORNING, 400 TECHNE CENTER, SUITE 103, MILFORD, OHIO 45150 (513-831-3586); OR SOF-SEAL, A COLD-APPLIED, LOW-MODULUS, TWO-COMPONENT POLYMERIC COMPOUND HORIZONTAL SEALANT AS MANUFACTURED BY W. R. MEADOWS, INC., P.O. BOX 543, ELGIN, ILLINOIS 60121 (800-342-5976).

3) CONSTRUCTION DETAILS:

A) GENERAL: THE CONTRACTOR SHALL CONDUCT HIS OPERATION SO THAT THE CUTTING, CLEANING AND SEALING OF TRANSVERSE JOINTS IS A CONTINUOUS OPERATION THAT WILL BE PERFORMED AS SOON AS PRACTICAL AFTER THE PAVING, BUT NO LATER THAN FOUR (4) DAYS AFTER PLACEMENT OF THE ASPHALT CONCRETE SURFACE COURSE. TRAFFIC SHALL NOT BE ALLOWED TO KNEAD TOGETHER OR DAMAGE JOINT CUT PRIOR TO SEALING.

B) CUTTING OF TRANSVERSE JOINTS: THE CONTRACTOR SHALL SAW OR ROUT TRANSVERSE JOINTS TO THE DIMENSIONS SHOWN IN THE DETAILS ON THIS SHEET. THE CUT JOINTS SHALL LIE DIRECTLY ABOVE EACH TRANSVERSE JOINT.

THE BLADE OR BLADES SHALL BE OF SUCH SIZE THAT THE FULL WIDTH AND DEPTH OF THE CUT CAN BE MADE WITH ONE PASS. DRY OR WET CUTTING WILL BE ALLOWED. JOINTS SHALL EXTEND THE FULL WIDTH OF THE BRIDGE.

C) CLEANING JOINTS: DRY SAWED JOINTS SHALL BE THOROUGHLY CLEANED WITH A SUFFICIENT AMOUNT OF COMPRESSED AIR TO REMOVE ANY DIRT, DUST, OR DELETERIOUS MATTER. WET SAWED JOINTS SHALL BE WASHED CLEAN OF ALL CUTTINGS BY FLUSHING WITH A JET OF WATER AND WITH OTHER TOOLS AS NECESSARY. AFTER FLUSHING, THE JOINT SHALL BE BLOWN OUT WITH COMPRESSED AIR. WHEN THE SURFACES ARE THOROUGHLY CLEAN AND DRY, AND JUST PRIOR TO PLACING THE JOINT SEALER, COMPRESSED AIR HAVING A PRESSURE OF AT LEAST 90 PSI SHALL BE USED TO BLOW OUT THE JOINT AND REMOVE ALL TRACES OF DUST.

IN THE EVENT FRESHLY CUT JOINTS BECOME CONTAMINATED BEFORE THEY ARE SEALED, THEY SHALL BE RE-CLEANED OF ALL FOREIGN MATERIAL BY HIGH PRESSURE WATER JET.

D) SEALING JOINTS: THE JOINT SHALL BE THOROUGHLY DRY WHEN THE SEALANT IS PLACED. AFTER CLEANING AND DRYING, A BOND-BREAKER MATERIAL SHALL BE APPLIED TO THE BOTTOM OF THE GROOVE.

HOT-POURED JOINT SEALANT MATERIAL SHALL BE HEATED IN A KETTLE OR MELTER CONSTRUCTED AS A DOUBLE BOILER, WITH THE SPACE BETWEEN THE INNER AND OUTER SHELLS FILLED WITH OIL OR OTHER HEAT TRANSFER MEDIUM. POSITIVE TEMPERATURE CONTROL AND MECHANICAL AGITATION SHALL BE PROVIDED. HEATING MUST BE IN STRICT ACCORDANCE WITH THE MANUFACTURER'S RECOMMENDATION. JOINT SEALER MATERIAL SHALL NEVER BE KEPT HEATED AT THE POURING TEMPERATURE FOR MORE THAN FOUR (4) HOURS AND SHALL NEVER BE REHEATED. SEALER LEFT IN THE APPLICATOR AT THE END OF A DAY'S WORK SHALL NOT BE USED.

HOT-POURED SEALANT SHALL BE APPLIED IMMEDIATELY THROUGH A NOZZLE, WHICH MUST PROJECT INTO THE SAWED JOINT, FILLING FROM THE BOTTOM UP. THE SEALANT SHALL COMPLETELY FILL THE JOINT IN SUCH A MANNER THAT, AFTER COOLING, THE LEVEL OF THE SEALANT WILL NOT BE HIGHER THAN 1/8" BELOW THE PAVEMENT SURFACE. ANY DEPRESSION IN THE COOLED SEAL GREATER THAN 1/4" SHALL BE BROUGHT UP TO THE SPECIFIED LIMIT BY FURTHER ADDITION OF HOT-POURED SEALANT. CARE SHALL BE TAKEN IN THE SEALING OF THE JOINTS SO THAT THE FINAL APPEARANCE WILL PRESENT A NEAT FINE LINE.

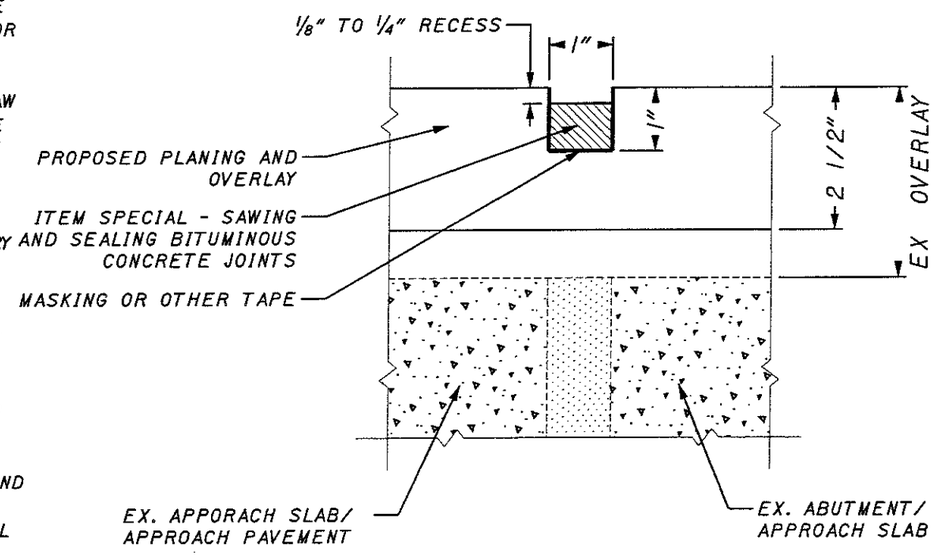

THE COLD APPLIED SEALANT MATERIALS (POLYURETHANE, SILICONE, AND POLYMERIC COMPOUNDS) SHALL BE INSTALLED AS PER MANUFACTURERS' RECOMMENDATIONS, EXCEPT AS MODIFIED BY THIS DRAWING. THE SEALANT SHALL BE INSTALLED WHEN THE AMBIENT TEMPERATURE IS 40 DEGREES F OR HIGHER. TRAFFIC SHALL NOT BE ALLOWED ON THE JOINT FOR ONE HOUR AFTER APPLICATION OF THE SEALANT.

4) METHOD OF MEASUREMENT:

THE QUANTITY TO BE PAID FOR UNDER THIS ITEM WILL BE THE NUMBER OF LINEAR FEET OF JOINTS SAWED AND SEALED AS PER THE ABOVE REQUIREMENTS.

5) BASIS OF PAYMENT:

THE UNIT PRICE PER LINEAR FOOT FOR ITEM SPECIAL - "SAWING AND SEALING BITUMINOUS CONCRETE JOINTS" SHALL INCLUDE THE COST OF ALL LABOR, MATERIALS, AND EQUIPMENT NECESSARY TO COMPLETE THE WORK, INCLUDING THE FURNISHING AND PLACING OF THE JOINT SEALER MATERIAL.

6) QUANTITY PROVIDED:

* MAR-309-0617 SFN 5101417
2 EXPANSION JOINTS
BRIDGE AND APPROACH SLAB WIDTH = 25'
25' x 2 JOINTS = 50 LF.

* MAR-309-0867 SFN 5101468
2 EXPANSION JOINTS
BRIDGE AND APPROACH SLAB WIDTH = 40'
40' x 2 JOINTS = 80 LF.

* MAR-309-0942 SFN 5101484
2 EXPANSION JOINTS
BRIDGE AND APPROACH SLAB WIDTH = 30'
30' x 2 JOINTS = 60 LF.

* MAR-309-0959 SFN 5101514
2 EXPANSION JOINTS
BRIDGE AND APPROACH SLAB WIDTH = 32'
32' x 2 JOINTS = 64 LF.

* MAR-309-1398 SFN 5101727
2 EXPANSION JOINTS
BRIDGE AND APPROACH SLAB WIDTH = 36'
36' x 2 JOINTS = 72 LF.

* QUANTITIES CARRIED TO THE GENERAL SUMMARY
ITEM SPECIAL"SAWING AND SEALING BITUMINOUS CONCRETE JOINTS" = 326'

SAWING AND SEALING BITUMINOUS CONCRETE JOINTS

MAR-309-0.00

:\Projects\mar\309\0000.005\DGN\sdl01.dgn 16-OCT-2003 8:25AM hgarner

LOCATION									LONG LINES					AUXILIARY MARKINGS											
									642					644							644					
									CENTER LINE		EDGE LINE		LANE LINE	TRANSVERSE LINE		ISLAND (BULL-NOSE)	CHANL LINE	STOP LINE	CROSS WALK LINE	SCHOOL MARKING	ARROWS					WORD ON PAVE 96"
LOCATION	COUNTY	ROUTE	LOG BEG	LOG END	LENGTH		SIDE	DESCRIPTION		EQUIV SOLID LINE	WHT	YEL		WHT	YEL						LT	LT/STR	STR	RT STR	RT	
			MI	MI	MI	LF			MI	MI	MI	MI	MI	LF	LF	SF	LF	LF	LF	EACH	EACH	EACH	EACH	EACH	EACH	EACH
1	MAR	309	0.00	0.99	0.99	5243	CL	DASH	0.99	0.25																
1	MAR	309	0.99	1.09	0.10	533	CL	EB NO PASSING	0.10	0.13																
1	MAR	309	1.09	1.16	0.07	364	CL	DASH	0.07	0.02																
1	MAR	309	1.16	1.26	0.10	533	CL	WB NO PASSING	0.10	0.13																
1	MAR	309	1.26	1.99	0.73	3849	CL	DASH	0.73	0.18																
1	MAR	309	1.98	2.04	0.06	301	CL	EB NO PASSING	0.06	0.07																
1	MAR	309	2.04	2.05	0.01	69	CL	DASH	0.01	0.00																
1	MAR	309	2.05	2.11	0.06	301	CL	WB NO PASSING	0.06	0.07																
1	MAR	309	2.11	2.57	0.46	2408	CL	DASH	0.46	0.11																
1	MAR	309	2.57	2.66	0.10	517	CL	EB NO PASSING	0.10	0.12																
1	MAR	309	2.66	2.74	0.07	380	CL	DASH	0.07	0.02																
1	MAR	309	2.74	2.79	0.06	306	CL	WB NO PASSING	0.06	0.07																
1	MAR	309	2.79	2.83	0.04	211	CL	DOUBLE YELLOW	0.04	0.08																
1	MAR	309	2.83	2.89	0.05	290	CL	EB NO PASSING	0.05	0.07																
1	MAR	309	2.89	2.97	0.08	407	CL	DASH	0.08	0.02																
1	MAR	309	2.97	3.02	0.05	269	CL	WB NO PASSING	0.05	0.06																
1	MAR	309	3.02	3.06	0.04	232	CL	DOUBLE YELLOW	0.04	0.09																
1	MAR	309	3.06	3.11	0.05	269	CL	EB NO PASSING	0.05	0.06																
1	MAR	309	3.11	3.23	0.11	597	CL	DASH	0.11	0.03																
1	MAR	309	3.23	3.32	0.09	502	CL	WB NO PASSING	0.09	0.12																
1	MAR	309	3.32	3.33	0.01	32	CL	DOUBLE YELLOW	0.01	0.01																
1	MAR	309	3.33	3.42	0.09	502	CL	EB NO PASSING	0.09	0.12																
1	MAR	309	3.42	3.55	0.13	676	CL	DASH	0.13	0.03																
1	MAR	309	3.55	3.64	0.10	502	CL	WB NO PASSING	0.10	0.12																
1	MAR	309	3.64	5.31	1.66	8775	CL	DASH	1.66	0.42																
1	MAR	309	5.31	5.40	0.09	502	CL	EB NO PASSING	0.09	0.12																
1	MAR	309	5.40	5.51	0.11	576	CL	DASH	0.11	0.03																
1	MAR	309	5.51	5.61	0.10	502	CL	WB NO PASSING	0.10	0.12																
1	MAR	309	5.61	6.19	0.58	3084	CL	DASH	0.58	0.15																
1	MAR	309	6.19	6.28	0.09	502	CL	EB NO PASSING	0.09	0.12																
1	MAR	309	6.28	6.36	0.08	401	CL	DASH	0.08	0.02																
1	MAR	309	6.36	6.42	0.06	333	CL	WB NO PASSING	0.06	0.08																
1	MAR	309	6.42	6.46	0.03	169	CL	DOUBLE YELLOW	0.03	0.06																
1	MAR	309	6.46	6.59	0.14	729	CL	EB NO PASSING	0.14	0.17																
1	MAR	309	6.59	6.73	0.14	723	CL	DOUBLE YELLOW	0.14	0.27																
1	MAR	309	6.73	6.90	0.17	898	CL	WB NO PASSING	0.17	0.21																
1	MAR	309	6.90	7.05	0.15	781	CL	DASH	0.15	0.04																
1	MAR	309	7.05	7.22	0.17	898	CL	EB NO PASSING	0.17	0.21																
1	MAR	309	7.22	7.33	0.11	565	CL	DOUBLE YELLOW	0.11	0.21																
1	MAR	309	7.33	7.47	0.14	750	CL	WB NO PASSING	0.14	0.18																
1	MAR	309	7.47	7.50	0.03	148	CL	DOUBLE YELLOW	0.03	0.06																
1	MAR	309	7.50	7.57	0.07	391	CL	EB NO PASSING	0.07	0.09																
1	MAR	309	7.57	7.64	0.07	359	CL	DASH	0.07	0.02																
1	MAR	309	7.64	7.74	0.10	539	CL	WB NO PASSING	0.10	0.13																
1	MAR	309	7.74	8.04	0.30	1563	CL	DASH	0.30	0.07																
1	MAR	309	8.04	8.13	0.10	502	CL	EB NO PASSING	0.10	0.12																
1	MAR	309	8.13	8.21	0.08	417	CL	DASH	0.08	0.02																
1	MAR	309	8.21	8.30	0.10	502	CL	WB NO PASSING	0.10	0.12																
1	MAR	309	8.30	8.58	0.27	1441	CL	DASH	0.27	0.07																
1	MAR	309	8.58	8.75	0.17	898	CL	EB NO PASSING	0.17	0.21																
1	MAR	309	8.75	8.82	0.07	375	CL	DOUBLE YELLOW	0.07	0.14																
1	MAR	309	8.82	8.99	0.17	898	CL	WB NO PASSING	0.17	0.21																
1	MAR	309	8.99	9.08	0.09	496	CL	DASH	0.09	0.02																
1	MAR	309	9.08	9.25	0.17	898	CL	EB NO PASSING	0.17	0.21																
TOTALS CARRIED TO GENERAL SUMMARY									9.26																	

PAVEMENT MARKING SUBSUMMARY

MAR-309-0.00

:\Projects\mar\309\0000.005\DGN\tsl01.dgn 16-OCT-2003 8:27AM hgarner

PAVEMENT MARKING SUBSUMMARY

LOCATION									LONG LINES					AUXILIARY MARKINGS											
									642					644							644					
									CENTER LINE		EDGE LINE		LANE LINE	TRANSVERSE LINE		ISLAND (BULL-NOSE)	CHANL LINE	STOP LINE	CROSS WALK LINE	SCHOOL MARKING	ARROWS					WORD ON PAVE 96"
										EQUIV SOLID LINE	WHT	YEL		WHT	YEL						LT	LT/ STR	STR	RT STR	RT	
LOCATION	COUNTY	ROUTE	LOG BEG	LOG END	LENGTH		SIDE	DESCRIPTION																		
			MI	MI	MI	LF			MI	MI	MI	MI	MI	LF	LF	SF	LF	LF	LF	EACH	EACH	EACH	EACH	EACH	EACH	EACH
1	MAR	309	9.25	9.46	0.21	1093	CL	DOUBLE YELLOW	0.21	0.41																
1	MAR	309	9.46	9.63	0.17	898	CL	WB NO PASSING	0.17	0.21																
1	MAR	309	9.63	9.84	0.21	1098	CL	DASH	0.21	0.05																
1	MAR	309	9.84	9.96	0.12	628	CL	EB NO PASSING	0.12	0.15																
1	MAR	309	9.96	10.01	0.05	269	CL	DASH	0.05	0.01																
1	MAR	309	10.01	10.13	0.12	628	CL	WB NO PASSING	0.12	0.15																
1	MAR	309	10.13	10.36	0.23	1220	CL	DASH	0.23	0.06																
1	MAR	309	10.36	10.53	0.17	898	CL	EB NO PASSING	0.17	0.21																
1	MAR	309	10.53	10.64	0.12	607	CL	DOUBLE YELLOW	0.12	0.23																
1	MAR	309	10.64	10.81	0.17	898	CL	WB NO PASSING	0.17	0.21																
1	MAR	309	10.81	11.22	0.40	2128	CL	DASH	0.40	0.10																
1	MAR	309	11.22	11.35	0.13	702	CL	EB NO PASSING	0.13	0.17																
1	MAR	309	11.35	11.47	0.12	649	CL	DOUBLE YELLOW	0.12	0.25																
1	MAR	309	11.47	11.60	0.13	702	CL	WB NO PASSING	0.13	0.17																
1	MAR	309	11.60	11.84	0.24	1257	CL	DASH	0.24	0.06																
1	MAR	309	11.84	11.94	0.09	502	CL	EB NO PASSING	0.09	0.12																
1	MAR	309	11.94	12.02	0.08	428	CL	DASH	0.08	0.02																
1	MAR	309	12.02	12.11	0.09	502	CL	WB NO PASSING	0.09	0.12																
1	MAR	309	12.11	12.20	0.09	454	CL	DASH	0.09	0.02																
1	MAR	309	12.20	12.33	0.13	676	CL	EB NO PASSING	0.13	0.16																
1	MAR	309	12.33	12.37	0.04	222	CL	DASH	0.04	0.01																
1	MAR	309	12.37	12.50	0.13	676	CL	WB NO PASSING	0.13	0.16																
1	MAR	309	12.50	12.82	0.32	1700	CL	DASH	0.32	0.08																
1	MAR	309	12.82	12.99	0.17	898	CL	EB NO PASSING	0.17	0.21																
1	MAR	309	12.99	13.12	0.13	681	CL	DOUBLE YELLOW	0.13	0.26																
1	MAR	309	13.12	13.29	0.17	898	CL	WB NO PASSING	0.17	0.21																
1	MAR	309	13.29	15.35	2.06	10887	CL	DASH	2.06	0.52																
1	MAR	309	0.00	15.35	15.35	81048		EDGE LINE-11' LANES			30.70															
1	MAR	309	2.05					SR 37										25								
TOTALS CARRIED TO GENERAL SUMMARY									6.10		30.70							25								

MAR-309-0.00

:\Projects\mar\309\0000.005\DGN\ts02.dgn 16-OCT-2003 8:27AM hgarner

LOCATION

LOCATION	COUNTY	ROUTE	LOG POINT	DESCRIPTION
1	MAR	309	0.000	CO 255
1	MAR	309	0.002	MP 0
1	MAR	309	0.996	MP 1
1	MAR	309	1.046	CO 19 ROBINSON
1	MAR	309	1.373	BRIDGE
1	MAR	309	1.992	MP 2
1	MAR	309	2.047	SR 37
1	MAR	309	2.988	MP 3
1	MAR	309	3.048	TWP 28 DRY LANE
1	MAR	309	3.257	BRIDGE
1	MAR	309	3.987	MP 4
1	MAR	309	4.045	CO 29 DECLIFF
1	MAR	309	4.270	BRIDGE
1	MAR	309	4.987	MP 5
1	MAR	309	5.046	CO 30 OSBURN
1	MAR	309	5.056	BRIDGE
1	MAR	309	5.701	CO 213 MAIN ST
1	MAR	309	5.759	BRIDGE
1	MAR	309	5.981	MP 6
1	MAR	309	6.035	CO 213 MAIN ST
1	MAR	309	6.046	CO 31 AGOSTA
1	MAR	309	6.553	CO66 KENTON GALON
1	MAR	309	6.709	CO 25 MEEKER UPPER SANDUSKY
1	MAR	309	7.213	TWP 64A FRAME
1	MAR	309	7.334	TWP 64 FRAME
1	MAR	309	7.598	TWP 65 CRAMER
1	MAR	309	7.985	MP 8
1	MAR	309	8.098	TWP 63 CONLEY TOMPSON L
1	MAR	309	8.123	TWP 63 CONLEY TOMPSON R
1	MAR	309	8.680	BRIDGE
1	MAR	309	8.853	CO 88 PLEASANT HILL
1	MAR	309	8.974	MP 9
1	MAR	309	9.461	CO 33 WILDCAT
1	MAR	309	9.595	BRIDGE
1	MAR	309	9.731	TWP 62 BUMFORD
1	MAR	309	10.248	TWP 87 LEE
1	MAR	309	10.917	BRIDGE
1	MAR	309	10.996	MP 11
1	MAR	309	11.291	SPEED LIMIT 45
1	MAR	309	11.391	SR 203
1	MAR	309	11.897	TRON
1	MAR	309	11.989	MP 12
1	MAR	309	12.142	TWP 98 HERR
1	MAR	309	12.149	SPEED LIMIT 55
1	MAR	309	12.744	BRIDGE
1	MAR	309	12.894	CO 95 HOLLAND
1	MAR	309	13.005	MP 13
1	MAR	309	13.172	BRIDGE
1	MAR	309	13.978	BRIDGE
1	MAR	309	13.995	MP 14
1	MAR	309	14.123	TEP 96 WATERWORKS
1	MAR	309	14.520	CO 175 FAIRGROUNDS
1	MAR	309	14.972	CO 94 CHAGE
1	MAR	309	15.005	MP 15
1	MAR	309	15.309	CO 95 HOLLAND MP 13
1	MAR	309	15.356	MARION CORP

JOHN SHIE
JOHN HAG

CENTERLINE CONTROL POINTS

MAR-309-0.00

16
18

:\Projects\mar\309\0000.005\DGN\tsl02A.dgn 16-OCT-2003 8:28AM hgarner

MATERIALS SUPPLIED BY THE DEPARTMENT:
ALL MATERIALS ARE TO BE CONTRACTOR FURNISHED, EXCEPT THAT THE DEPARTMENT SHALL SUPPLY RPM MATERIALS IN THE QUANTITIES SHOWN HEREIN TO THE CONTRACTOR. PAY ITEMS FOR THE DEPARTMENT SUPPLIED MATERIALS SHALL BE INDICATED AS "INSTALLATION ONLY". THE QUANTITY AND TYPE OF DEPARTMENT SUPPLIED MATERIALS ARE SHOWN ON THIS SHEET.

THE CONTRACTOR SHALL PICK UP THE DEPARTMENT SUPPLIED RPM MATERIALS AT THE OPI WAREHOUSE, 315 PHILLIPI ROAD, COLUMBUS, OHIO 43228. FOR SOME PROJECTS HAVING QUANTITIES OF LESS THAN 20 RPMS, THE CONTRACTOR MAY PICK UP RPM MATERIALS AT THE DISTRICT OFFICES. QUANTITIES OVER 20 RPMS WILL BE PICKED UP AT THE RECYCLER'S WAREHOUSE OR AS ARRANGED WITH THE DISTRICT. THE CONTRACTOR SHALL PICK UP DEPARTMENT SUPPLIED RPM MATERIALS AT THE SPECIFIED LOCATION(S) FOR TRANSPORT TO THE WORK SITE OR TO THE CONTRACTOR'S STORAGE FACILITY. THE RECYCLED RAISED PAVEMENT MARKER (RPM) AUTHORIZATION FORM IS TO BE SIGNED BY THE DISTRICT CONSTRUCTION ENGINEER PRIOR TO PICK UP OF THE RPMS. THE CONTRACTOR SHALL NOTIFY THE DISTRICT AND/OR THE PARTIES LISTED ON THE AUTHORIZATION FORM IN WRITING AT LEAST FIVE (5) CALENDAR DAYS PRIOR TO PICK UP OF THE DEPARTMENT SUPPLIED MATERIALS. THE CONTRACTOR SHALL STORE THE RPMS WITHOUT DAMAGE OR CONTAMINATION WITH FOREIGN MATTER. A DEDUCTION IN THE AMOUNT OF THE ACTUAL COST TO THE DEPARTMENT SHALL BE MADE FOR MATERIALS DAMAGED BY THE CONTRACTOR OR FOR CASTINGS RECEIVED BY THE CONTRACTOR WHICH WERE NOT INSTALLED AND WERE NOT RETURNED TO THE DEPARTMENT.

RETURN OF NON-PERFORMED RAISED PAVEMENT MARKER MATERIALS SUPPLIED BY THE DEPARTMENT:
RAISED PAVEMENT MARKER MATERIALS SUPPLIED BY THE DEPARTMENT, THAT ARE NON-PERFORMED SHALL BE CAREFULLY REPACKED OR PACKED IN THE BOXES IN THE SAME STYLE AND QUANTITY AS ORIGINALLY RECEIVED FROM THE DEPARTMENT. CASTING STYLES SHALL NOT BE MIXED WITHIN ANY ONE CONTAINER. THE CONTRACTOR SHALL CLEARLY MARK ON THE OUTSIDE OF EACH CONTAINER, THE COLOR OF THE PRISMATIC RETRO-REFLECTOR, THE STYLE OF CASTING. BOXES SHALL BE PLACED ON SKIDS OR PALLETS IN THE SAME STYLE (LOW PROFILE OR CONVENTIONAL, REFLECTORISED OR NON REFLECTORISED) AND NO MORE THAN 420 RPMS (OR 21 BOXES) ON ONE SKID.

ONLY USE THE BOXES SUPPLIED BY THE RAISED PAVEMENT MARKER RECYCLER. BOXES MUST BE MARKED WITH THE RECYCLER'S PART OR CATALOG NUMBER AND THE PROJECT NUMBER. THE RECYCLER'S CATALOG OR PART NUMBERS MAY BE OBTAINED FROM THE OFFICE OF TRAFFIC ENGINEERING IN COLUMBUS, OHIO OR FROM THE RECYCLER. BOXES NOT MARKED WITH THE PROPER RECYCLER'S CATALOG OR PART NUMBERS, AND THE DEPARTMENT'S PROJECT NUMBER WILL NOT BE ACCEPTED AT THE RECYCLER'S WAREHOUSE.

NON PERFORMED MATERIALS WILL BE RETURNED TO THE LOCATION AS SPECIFIED BY THE DISTRICT CONSTRUCTION ENGINEER WITHIN 30 DAYS OF THE COMPLETION OF THE PROJECT.

THE ABOVE WORK INCLUDING ALL LABOR, EQUIPMENT AND MATERIAL NEEDED TO PERFORM THE WORK, SHALL BE CONSIDERED INCIDENTAL TO THE RESPECTIVE PAY ITEM.

IF THE DEPARTMENT HAS TO REPACKAGE THE RPMS CORRECTLY, THE CONTRACTOR WILL BE ASSESSED THE ACTUAL COST FOR REPACKAGING THE MATERIALS BY THE DEPARTMENT'S FORCES.

LOADING OF MATERIALS SUPPLIED BY THE DEPARTMENT AT THE RECYCLER'S WAREHOUSE:

TRUCKS SHALL HAVE A LOADING HEIGHT OF 48 INCHES AND BE ABLE TO BACK UP FLUSH TO THE LOADING DOCK.
TRUCKS SHALL NOT HAVE ANY OBSTRUCTIONS OR PROTRUSIONS THAT PREVENT THE LOADING BY A STANDARD FORKLIFT OR LIFT TRUCK.

SEMI TRUCKS OR 20 FOOT COMMERCIAL TRUCKS ARE THE MOST APPROPRIATE TRUCKS FOR LOADS IN EXCESS OF 4 PALLETS (ONE PALLET = 21 BOXES = 2100 LBS).

STAKE BODY TRUCKS ARE APPROPRIATE TO LOAD LESS THAN 4 PALLETS, PROVIDED THE TRUCK IS RATED FOR THE LOAD AND THE LOAD CAN BE SAFELY SECURED FOR TRANSPORT BY CHAINING OR STRAPPING DOWN AS NEEDED.

PICKUP TRUCKS ARE APPROPRIATE FOR LOADS OF APPROXIMATELY ONE PALLET, PROVIDED THE PICKUP TRUCK IS RATED FOR THE LOAD AND THE LOAD CAN BE SAFELY SECURED FOR TRANSPORT.

THE RECYCLERS WAREHOUSE WILL NOT LOAD DUMP TRUCKS, TILT BED TRUCKS, AND NON COMMERCIAL MOVING VANS.
THE WAREHOUSE SUPERVISOR WILL REFUSE TO LOAD ANY TRUCK THAT IS UNSAFE TO LOAD OR UNSUITABLE FOR THE LOAD BEING PLACED ON THE TRUCK.

DETAIL		DETAIL	
1	TYPICAL CENTER LINE	7	ONE LANE BRIDGE
2	ACCELERATION LANE	8	STOP APPROACH
3	DECELERATION LANE	9	TWO WAY LEFT TURN LANE
4	4 LANE DIVIDED TO 2 LANE TRANSITION	10	APPROACH W/LEFT TURN LANE
5	4 LANE UNIDIVIDED TO 2 LANE TRANSITION	11	HORIZONTAL CURVE W/RADIUS LESS THAN 1250'
6	MULTILANE DIVIDED-CONTROLLED ACCESS	12	HORIZONTAL CURVE W/RADIUS LESS THAN 820'

LOCATION						REFLECTOR TYPE													TOTAL		REMARKS
						ONE-WAY				TWO-WAY									202	521	
						WHITE			YELLOW	WHITE WHITE	WHITE RED				YELLOW RED	YELLOW YELLOW			RAISED PVMT MARKER RMVD FOR STORAGE	RAISED PVMT MARKER INSTALL ONLY	
						RIGHT EDGE LINE		LANE LINE	LEFT EDGE LINE	RIGHT EDGE LINE	RIGHT EDGE LINE	CHANNELIZING LINE		LANE LINE	LEFT EDGE LINE	CENTER LINE					
LOCATION	COUNTY	ROUTE	LOG BEG	LOG END	DETAIL	40'	80'	120'	80'	40'	80'	40'	80'	80'	80'	20'	40'	80'	EACH	EACH	
			MI	MI																	
1	MAR	309	0.00	1.88	1													124	124	124	
1	MAR	309	1.88	2.22	8	10	22											44	76	76	
1	MAR	309	2.22	6.46	1													280	280	280	
1	MAR	309	6.46	6.82	11													48	48	48	
1	MAR	309	6.82	7.10	1													18	18	18	
1	MAR	309	7.10	7.46	11													48	48	48	
1	MAR	309	7.46	8.61	1													76	76	76	
1	MAR	309	8.61	8.93	11													42	42	42	
1	MAR	309	8.93	9.11	1													12	12	12	
1	MAR	309	9.11	9.56	11													59	59	59	
1	MAR	309	9.56	9.89	1													22	22	22	
1	MAR	309	9.89	10.10	11													28	28	28	
1	MAR	309	10.10	10.39	1													19	19	19	
1	MAR	309	10.39	10.66	12												48		48	48	
1	MAR	309	10.66	11.21	1													36	36	36	
1	MAR	309	11.21	11.55	8	10	22											44	76	76	
1	MAR	309	11.55	15.36	1													251	251	251	
TOTALS CARRIED TO THE GENERAL SUMMARY																			1139	1139	

RAISED PAVEMENT MARKER SUBSUMMARY AND DETAILS

MAR-309-0.00

:\Projects\mar\309\0000.005\DGN\tsl03.dgn 16-OCT-2003 8:30AM hgarner

GENERAL NOTES

1. It is intended that this drawing be used for treatment of drop-offs that develop during construction operations, and that are not otherwise provided for in the construction plans. Where the plans do not provide specific items for labor, equipment, or materials to implement the drop-off treatments specified hereon, they shall be included for payment in the lump sum bid for Item 614 - Maintaining Traffic.
2. While the need for certain advisory signing is noted hereon, it is not intended that this be indicative of all signing that may be required to advise or warn motorists, and all requirements of the Ohio Manual of Uniform Traffic Control Devices (OMUTCD) must be fulfilled.
3. In urban or otherwise heavily developed areas where pedestrians and/or bicyclists may be present in significant numbers, additional signing and protective measures other than those shown hereon may be required.
4. The drop-off treatment selected for use at any given location shall be as appropriate for the prevailing conditions at the site.
5. Where concrete barrier is specified, it shall be in accordance with Standard Construction Drawing MC-9.2 and Item 622.
6. When drums are specified for a dropoff condition, a minimum number of four drums shall be used. Spacing shall be as indicated in the plans or as specified in the OMUTCD.
7. When OW-151 (Low Shoulder) signs or OW-171 (Uneven Lanes) and OWP-171 signs are required, they shall be placed 750' in advance of the condition, on all intersecting entrance ramps within the limits of the condition and immediately beyond all intersecting roadways within the limits of the condition. When the dropoff condition extends more than one-half mile, additional signs should be erected at intervals of one mile or less.
8. For locations, such as at ramps, lane shifts, lane closures, etc., where traffic is required to negotiate any difference in elevation between pavements, a 3:1 slope treatment similar to the Optional Wedge Treatment shall be provided.
9. Portable concrete barrier shall be placed on the same level as the traffic surface and shall not encroach on lane width(s) designated as the minimum required for traffic use. Where drums are used, and their presence would reduce traveled lane widths to less than 10', drums may be placed on the opposite level from that of traffic provided the dropoff depth does not exceed 5" and approval is granted by the Project Engineer.
10. Pavement Repairs (or similar work):
    a. Lengths greater than 60 feet - utilize appropriate treatment from Condition I.
    b. Lengths of 60 feet or less - repairs shall be effected in accordance with 255.08. Drums may be used as a separator adjacent to the traveled lane.

OPTIONAL WEDGE TREATMENT
(MILLING OR RESURFACING)

1. This treatment may be used when permitted for Condition I only.
2. OW-171 and OWP-171 signs required.

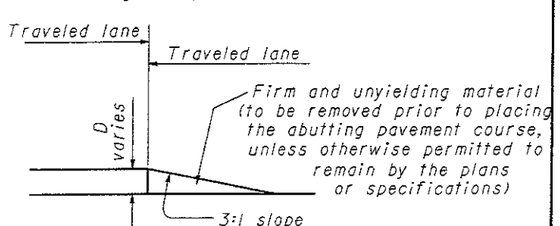

CONDITION I
DROPOFFS BETWEEN TRAVELED LANES

1. These treatments are to be used for resurfacing, pavement planing, excavation, etc. between or within traveled lanes.

D (In.)	Treatment
≤1½	Erect OW-171 and OWP-171 signs.
>1½-3	1) Lane closure utilizing drums* as shown below OR 2) Optional Wedge Treatment
>3-5	Lane closure utilizing drums as shown below.
>5	Lane closure utilizing portable concrete barrier as shown below.

*Cones may be used for daytime only conditions.

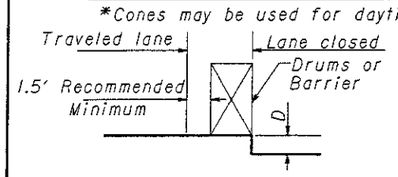

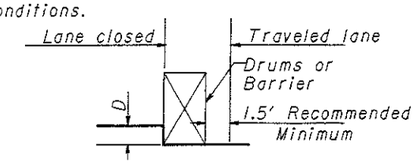

CONDITION II
DROPOFFS WITHIN GRADED SHOULDER AREA

1. The treatments indicated below are for use in conjunction with resurfacing, planing, or excavations within the graded shoulder area.
2. The graded shoulder area is that flat or gradually sloping area between the edge of a normally traveled lane and the more steeply sloping ditch foreslope or embankment slope. Its surface may be soil or turf, and/or it may be inclusive of a "treated" area (improved with aggregates, asphaltic materials, or concrete). For the purposes herein, its maximum width shall be considered to be twelve (12) feet.

D (In.)	Treatment
≤1½	1) If edgelines are present, no treatment necessary OR 2) Erect OW-171 and OWP-171 signs.
>1½-5	1) If min. lane width* requirements can be met, maintain lanes utilizing drums as shown below OR 2) If min. lane width* requirements cannot be met, close adjacent lane utilizing drums OR 3) Optional Shoulder Treatment.
>5-12 Daylight only	If min. lane width* requirements can be met, maintain lanes utilizing drums as shown below.
>5-24	1) If min. lane width* requirements can be met, maintain lanes utilizing portable concrete barrier as shown below. OR 2) If min. lane width* requirements cannot be met, close adjacent lane utilizing drums.
>24	Lane closure utilizing portable concrete barrier as shown below.

* Minimum lane widths shall be 10' unless otherwise specified in the plans.

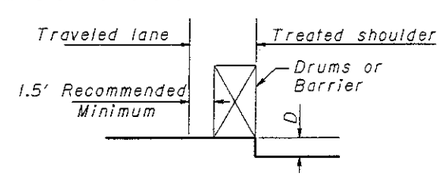

OPTIONAL SHOULDER TREATMENT

1. This treatment may not be used within a bituminous shoulder where a hot longitudnal joint per 401.15 is required.
2. OW-151 signs required.

CONDITION III
DROPOFFS BEYOND GRADED SHOULDER OR BACK OF CURB

1. See Note 2 under Condition II.
2. Use Chart A or B below, as applicable.

CHART A

USE FOR: 1. Uncurbed Facilities.
2. Curbed Facilities, where:
   a. Curbs are less than 6" in height.
   b. Curbs are 6" or greater in height and the legal speed is greater than 40 mph.

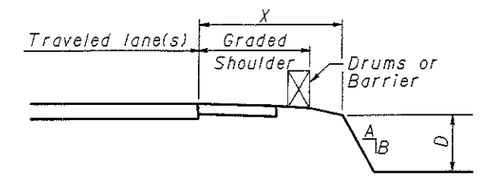

X (Ft.)	D (In.)	A/B	Treatment Required	
			Day	Night
0-4	Any	Any	(a)	(a)
4-30	Any	3:1 or Flatter	None	None
4-12	≤3	Steeper than 3:1	None	None
4-12	>3-≤12	Steeper than 3:1	Drums	Drums
4-12	>12	Steeper than 3:1	Drums	Barrier
>12-20	≤12	Steeper than 3:1	None	None
>12-20	>12-≤24	Steeper than 3:1	Drums	Drums
>12-20	>24	Steeper than 3:1	Drums	Barrier
>20-30	≤24	Steeper than 3:1	None	Drums
>20-30	>24	Steeper than 3:1	Drums	Barrier
>30	Any	Any	None	None

(a) Use treatment specified under Condition II.

CHART B

USE FOR: Curbed facilities, where the curb is 6" or greater in height and the legal speed is 40 mph or less.

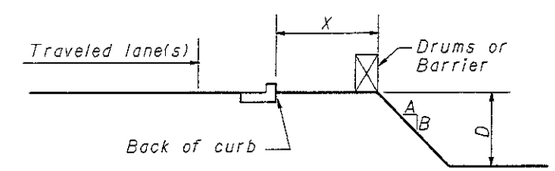

X (Ft.)	D (In.)	A/B	Treatment Required	
			Day	Night
0-10	<12	Any	None	Drums
0-10	>12	Any	Drums	Drums
>10	Any	Any	None	None

DROPOFFS IN WORK ZONES

MAR-309-0.00

18 / 18

:\Projects\mar\309\0000.005\DGN\dropoff.dgn 16-OCT-2003 8:08AM hgarner
JOHN 1946-1 JOHN 1946-1