LOCATION MAP

LATITUDE: N 40°38'37" LONGITUDE: W 83°18'09"

SCALE IN MILES

0 1 2

N

PORTION TO BE IMPROVED
INTERSTATE HIGHWAY
STATE & FEDERAL ROUTES
COUNTY & TOWNSHIP ROADS
OTHER ROADS

STATE OF OHIO
DEPARTMENT OF TRANSPORTATION

MAR-309-6.13

BIG ISLAND TOWNSHIP
SALT ROCK TOWNSHIP
MARION COUNTY

INDEX OF SHEETS:

TITLE	1
SCHEMATIC PLAN	2
TYPICAL SECTIONS	3
GENERAL NOTES	4-7
MAINTENANCE OF TRAFFIC NOTES	8
MAINTENANCE OF TRAFFIC	9
GENERAL SUMMARY	10-11
SUBSUMMARIES	12-14
PLAN AND PROFILE	15
CROSS SECTIONS - SR 309	16-18
GUARDRAIL PLAN	19
STORM SEWER PROFILE	20
STRUCTURE (UNDER 20')	21-25
RIGHT OF WAY	26-27
SOILS INFORMATION	

PROJECT DESCRIPTION

THIS PROJECT CONSISTS OF THE REMOVAL OF AN EXISTING SLAB BRIDGE OVER LEWIS DITCH AND ITS REPLACEMENT. THERE IS GUARDRAIL AND DITCH WORK ON SR 309.

PROJECT EDA	0.30 ACRES
CONTRACTOR EDA	0.25 ACRES
NOTICE OF INTENT EDA	N/A

2010 SPECIFICATIONS

THE STANDARD SPECIFICATIONS OF THE STATE OF OHIO, DEPARTMENT OF TRANSPORTATION, INCLUDING CHANGES AND SUPPLEMENTAL SPECIFICATIONS LISTED IN THE PROPOSAL SHALL GOVERN THIS IMPROVEMENT.

I HEREBY APPROVE THESE PLANS AND DECLARE THAT THE MAKING OF THESE IMPROVEMENTS WILL REQUIRE THE CLOSING TO TRAFFIC OF THE HIGHWAY AND THAT DETOURS WILL BE PROVIDED AS INDICATED ON SHEET 9.

DESIGN DESIGNATION

CURRENT ADT (2011)	2,000
DESIGN YEAR ADT (2031)	2,200
DESIGN HOURLY VOLUME (2031)	242
DIRECTIONAL DISTRIBUTION	55%
TRUCKS (24 HOUR B&C)	14%
Td	8%
DESIGN SPEED	60
LEGAL SPEED	55

DESIGN FUNCTIONAL CLASSIFICATION:
MAR-309 RURAL MINOR ARTERIAL

DESIGN EXCEPTIONS

DESIGN FEATURE	APPROVAL DATE
NONE REQUIRED	N/A

UNDERGROUND UTILITIES

CONTACT BOTH SERVICES
CALL TWO WORKING DAYS
BEFORE YOU DIG

CALL
1-800-362-2764
(TOLL FREE)
OHIO UTILITIES PROTECTION SERVICE
NON-MEMBERS
MUST BE CALLED DIRECTLY

OIL & GAS PRODUCERS PROTECTIVE SERVICE CALL: **1-800-925-0988**

PLAN PREPARED BY:

OHIO DEPARTMENT OF TRANSPORTATION DISTRICT SIX

ENGINEERS SEAL:

STATE OF OHIO
LAURA L. WRIGHT
E-71233
REGISTERED PROFESSIONAL ENGINEER

SIGNED: Laura L Wright
DATE: 02-28-11

STANDARD CONSTRUCTION DRAWINGS

BP-3.1	10/19/07	CB-1.1	07/15/05					800	01/21/11
BP-4.1	07/16/04	CB-4.2	07/19/02					832	05/05/09
GR-1.1	07/16/04	DM-1.1	01/21/11						
GR-2.1	01/16/04	DM-1.4	04/21/06						
GR-2.2	01/20/06								
GR-3.4	10/16/09								
GR-4.2	01/19/07								
MT-97.12	10/15/10								
MT-101.60	04/17/09								
MT-101.70	10/18/02								
MT-105.10	01/16/09								
TC-41.20	01/19/01								
TC-42.20	01/21/11								
TC-52.20	01/19/07								
TC-65.10	01/21/05								
TC-65.11	01/21/05								

SUPPLEMENTAL SPECIFICATIONS

SPECIAL PROVISIONS

PLANS CERTIFIED BY:

NAME Laura L Wright DATE 02-28-11
DISTRICT 6
OHIO DEPARTMENT OF TRANSPORTATION

APPROVED Leslie Ros
DATE 2-28-11 DISTRICT DEPUTY DIRECTOR

APPROVED Jerry Wray
DATE 3-9-11 DIRECTOR, DEPARTMENT OF TRANSPORTATION

FEDERAL PROJECT NO. **E080 (320)**

PID NO. **83957**

CONSTRUCTION PROJECT NO.

RAILROAD INVOLVEMENT **NONE**

MAR-309-6.13

MAR - SR-309-6.13
110317 PID - 83957
Dist 6 5/19/2011
02-MAR-2011 6:34AM lwright1
SHEET_GT001
33957\Production\roadway\sheets\general.dgn
Contract Proposal available
@www.contracts.dot.state.oh.us/home.do

CENTERLINE REFERENCES

BM #	STATION	OFFSET	ELEVATION	FEATURE	NORTHING	EASTING
1	0+00.02	0.00' RT	895.28	PKF	356966.02	1745221.01
2	2+31.52	22.71' RT	892.38	IPIPE	356947.16	1745452.86
3	5+10.25	28.16' LT	893.08	PKS	357002.65	1745730.71
4	9+99.86	30.00' LT	894.62	CMON	357012.61	1746220.25
5	14+99.68	30.00' LT	902.58	CMON	357020.91	1746719.97

BM 1

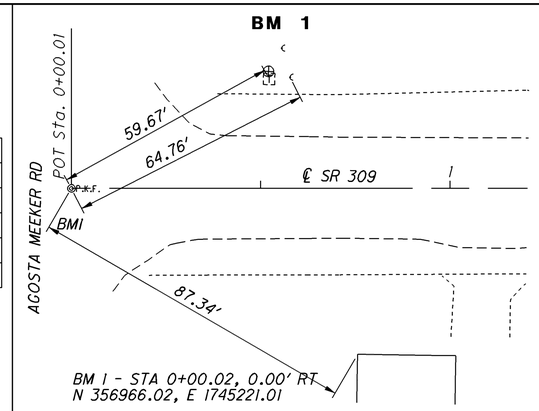

BM 1 - STA 0+00.02, 0.00' RT
N 356966.02, E 1745221.01

BM 2

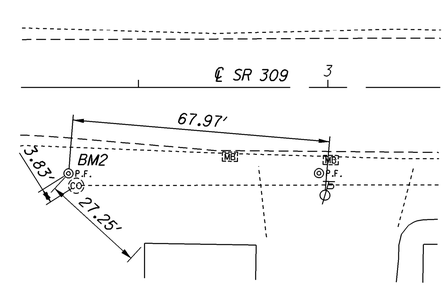

BM 2 - STA 2+31.52, 22.71' RT
N 356947.16, E 1745452.86

BM 3

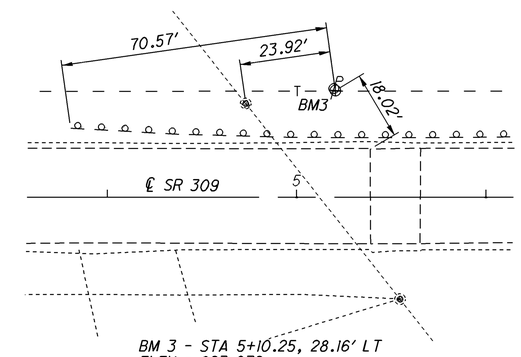

BM 3 - STA 5+10.25, 28.16' LT
ELEV = 893.079
DESCRIPTION - NAIL AND TAG IN PP

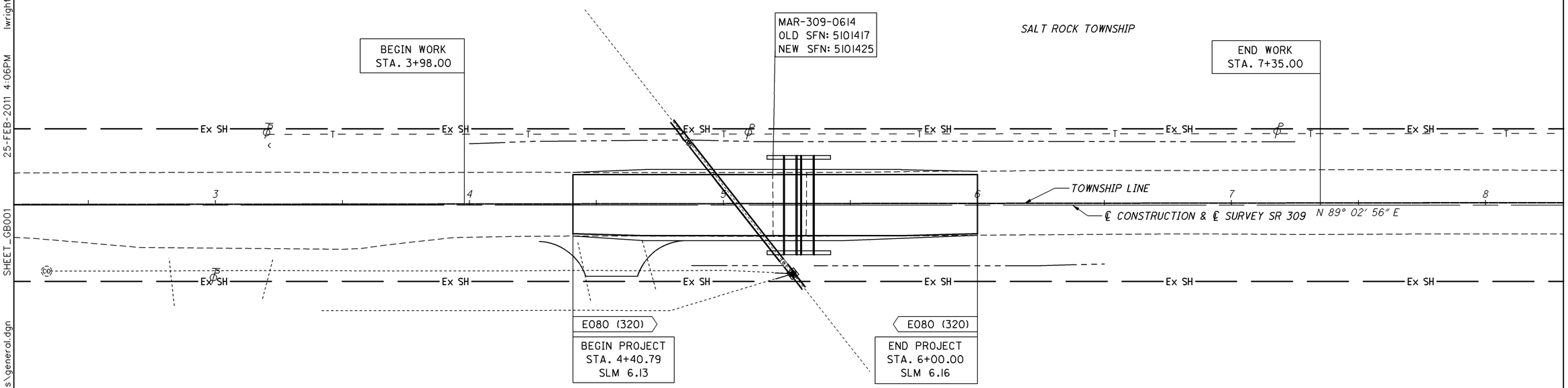

BM 4

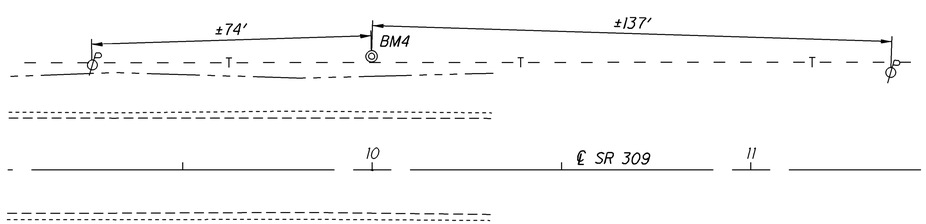

BM 4 - STA 9+99.86, 30.00' LT
N 357012.61, E 1746220.25

BM 5

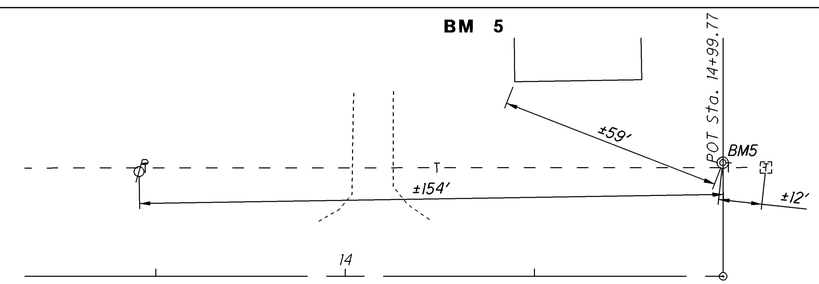

BM 5 - STA 14+99.68, 30.00' LT
N 357020.91, E 1746719.97

HORIZONTAL SCALE IN FEET
0 10 20 40

CALCULATED
CHECKED

SCHEMATIC PLAN & CENTERLINE REFERENCES

MAR-309-6.13

I:\Projects\mar\309\0617.011\83957\Production\roadway\sheets\general.dgn SHEET_GB001 25-FEB-2011 4:06PM lwright1

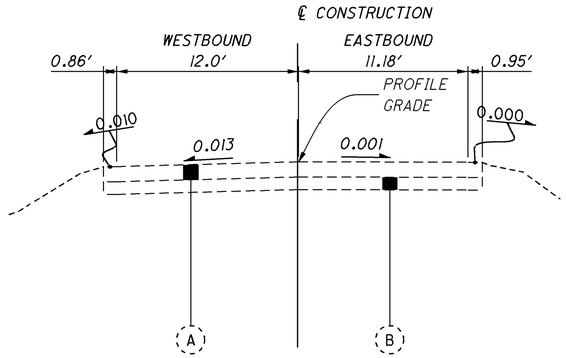

ADJOINING TYPICAL

STA. 4+40.79

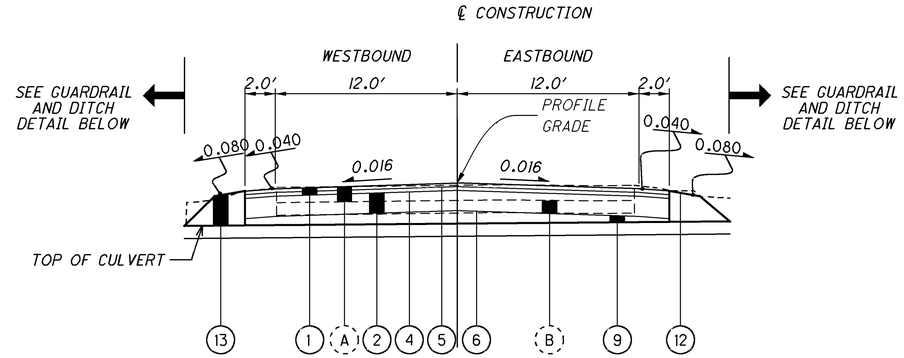

TYPICAL SECTION ALONG MAR-309-6.17 STRUCTURE

STA. 5+17.34 TO STA.5+42.10 = 24.76 FT.

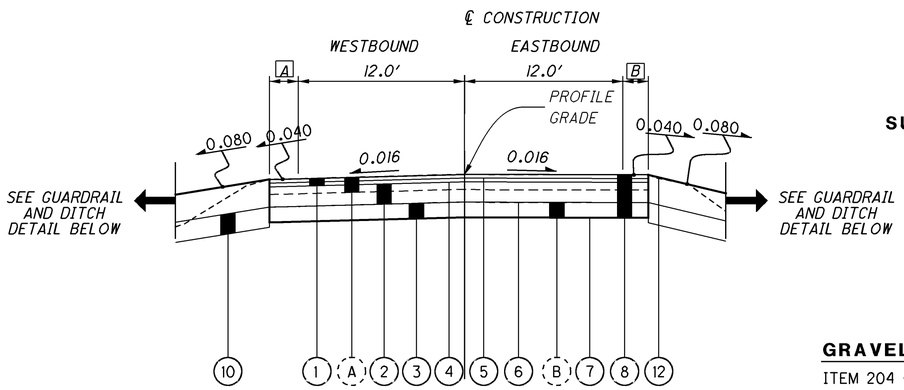

TYPICAL SECTION

STA. 4+40.79 TO STA. 5+17.34 = 76.55 FT.
(STA. 5+17.34 TO STA.5+42.10 STRUCTURE MAR-309-6.17 LIMITS)
STA. 5+42.10 TO STA. 6+00.00 = 57.9 FT.
TOTAL = 134.45 FT.

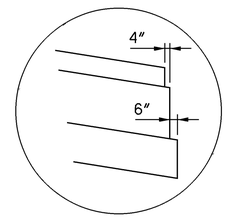

BASE AND SUBBASE STEP DETAIL

GRAVEL DRIVE PAVEMENT BUILDUP

ITEM 204 - SUBGRADE COMPACTION

ITEM 304 - 8″ ASPHALT CONCRETE BASE, PG 64-22

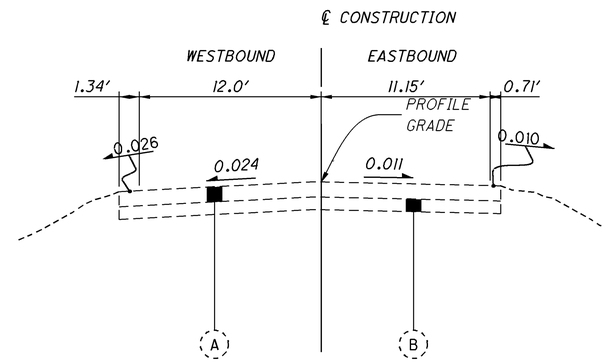

ADJOINING TYPICAL

STA. 6+00.00

TABLE 1

TYPICAL SECTION			A		B	
STATION		LENGTH	SHOULDER WIDTH		SHOULDER WIDTH	
FROM	TO	FT	FROM	TO	FROM	TO
4+40.79	4+69.17	28.38	0.86	2	0.95	2
4+69.17	5+46.48	77.31	2	2	2	2
5+46.48	5+70.00	23.52	2	2	2	1.06
5+70.00	6+00.00	30	2	1.34	1.06	0.71
TOTAL		159.21				

GUARDRAIL DETAILS AND QUANTITIES SEE SHEET 19.

FOR SHOULDER WIDTHS, A - D , SEE TABLE 1.

FOR AGGREGATE DRAIN DETAILS AND QUANTITIES SEE SHEET 6.

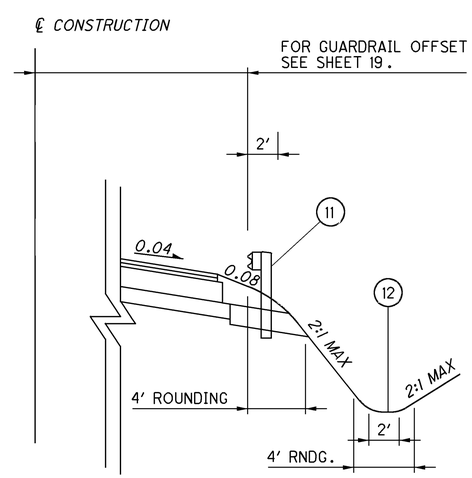

GUARDRAIL AND DITCH DETAIL

LEGEND

1. ITEM 448 - 3.0″ ASPHALT CONCRETE SURFACE COURSE, TYPE 1, PG64-22 (2 EQUAL LIFTS)
2. ITEM 301 - 8″ ASPHALT CONCRETE BASE, PG 64-22
3. ITEM 304 - 6″ AGGREGATE BASE
4. ITEM 407 - TACK COAT @ 0.075 GAL. PER SQ. YD.
5. ITEM 407 - TACK COAT FOR INTERMEDIATE COURSE @ 0.05 GAL. PER SQ. YD.
6. ITEM 408 - PRIME COAT @ 0.04 GAL. PER SQ. YD.
7. ITEM 204 - SUBGRADE COMPACTION
8. ITEM 203 - EXCAVATION
9. ITEM 304 - 6″ AVG. AGGREGATE BASE
10. ITEM 605 - AGGREGATE DRAINS
11. ITEM 606 - GUARDRAIL
12. ITEM 659 - SEEDING AND MULCHING
13. ITEM 203 - EMBANKMENT - FOR INFORMATION ONLY - PAYMENT INCLUDED IN ITEM 603

A. 6″ ± ASPHALT CONCRETE

B. 5″ ± AGGREGATE BASE

CALCULATED

CHECKED

TYPICAL SECTIONS

MAR-309-6.13

I:\Projects\mar\309\0617.011\83957\Production\roadway\sheets\TYPICALS.dgn SHEET_GY001 25-FEB-2011 4:06PM lwright1

NOTIFICATION OF CONSTRUCTION INITIATION
AT LEAST FOURTEEN DAYS PRIOR TO STARTING INITIAL CONSTRUCTION ACTIVITIES, THE CONTRACTOR SHALL ADVISE THE DISTRICT OFFICE OF COMMUNICATIONS VIA EMAIL AT D06.PIO@DOT.STATE.OH.US AND THE DISTRICT WORK ZONE TRAFFIC MANAGER VIA EMAIL AT D06.MOT@DOT.STATE.OH.US OF THE ANTICIPATED START DATE OF ANY CONSTRUCTION ACTIVITIES, INCLUDING BUT NOT LIMITED TO THE PLACING OF WORK ZONE SIGNS. THE NOTIFICATION SHALL ALSO INCLUDE THE PROJECT NUMBER, PID, NAME AND PHONE NUMBER OF THE CONTRACTOR, A POINT OF CONTACT AND THE ANTICIPATED IMPACT ON TRAFFIC. THE CONTRACTOR WILL IMMEDIATELY INFORM THE DISTRICT OFFICE OF COMMUNICATIONS AND THE DISTRICT WORK ZONE TRAFFIC MANAGER OF ANY AND ALL DELAYS AND/OR CHANGES REGARDING THE CONSTRUCTION INITIATION DATE.

PUBLIC OUTREACH AND NOTIFICATION:
THE CONTRACTOR SHALL BE RESPONSIBLE FOR CONTACTING THE DISTRICT 6 PUBLIC INFORMATION OFFICE AT (740) 833-8260 TO COORDINATE EFFORTS TO NOTIFY ALL LOCAL COUNTY, STATE AND FEDERAL EMERGENCY SERVICES, SCHOOL DISTRICTS AND ADJACENT RESIDENTS AND BUSINESSES OF THE UPCOMING CLOSURE. ADVANCE NOTIFICATION SHALL OCCUR NO LATER THAN FOURTEEN (14) DAYS PRIOR TO CLOSING THE ROAD.

IF, SUBSEQUENT TO THE ADVANCE NOTIFICATION, THE START DATE IS CHANGED, THEN A NEW SEVEN (7) DAY NOTIFICATION WILL BE REQUIRED.

THE ROAD CANNOT BE CLOSED UNLESS PRIOR NOTIFICATION HAS BEEN ACCOMPLISHED.

THE SAME PARTIES SHALL BE NOTIFIED WHEN THE CLOSURE HAS CONCLUDED AND THE ROAD IS BACK OPEN TO TRAFFIC.

PAYMENT SHALL BE INCLUDED IN THE LUMP SUM CONTRACT PRICE FOR ITEM 614 MAINTAINING TRAFFIC.

GENERAL:
THE CONTRACTOR SHALL SUBMIT IN WRITING A SCHEDULE OF OPERATIONS TO THE ENGINEER AND RECEIVE APPROVAL IN WRITING BEFORE WORK IS STARTED ON THIS PROJECT. ALL TRAFFIC CONTROL DEVICES SHALL BE FURNISHED, ERECTED, MAINTAINED, AND REMOVED BY THE CONTRACTOR IN ACCORDANCE WITH THE OHIO MANUAL OF UNIFORM TRAFFIC CONTROL DEVICES.

CLEARING AND GRUBBING:
ALTHOUGH THERE ARE NO TREES OR STUMPS SPECIFICALLY MARKED FOR REMOVAL WITHIN THE LIMITS OF THE PROJECT, A LUMP SUM QUANTITY HAS BEEN INCLUDED IN THE GENERAL SUMMARY FOR ITEM 201, CLEARING AND GRUBBING. ALL PROVISIONS AS SET FORTH IN THE SPECIFICATIONS UNDER THIS ITEM SHALL BE INCLUDED IN THE LUMP SUM PRICE BID FOR ITEM 201 CLEARING AND GRUBBING.

NOTIFICATION OF TRAFFIC RESTRICTIONS:
THROUGHOUT THE DURATION OF THE PROJECT, THE CONTRACTOR SHALL NOTIFY THE PROJECT ENGINEER IN WRITING OF ALL TRAFFIC RESTRICTIONS AND UPCOMING MAINTENANCE OF TRAFFIC CHANGES. THE CONTRACTOR SHALL ENSURE THE WRITTEN NOTIFICATION IS SUBMITTED IN A TIMELY MANNER TO ALLOW THE PROJECT ENGINEER TO MEET THE REQUIRED TIME FRAMES SET FORTH IN THE TABLE BELOW. THIS NOTIFICATION SHALL BE RECEIVED BY THE PROJECT ENGINEER PRIOR TO THE PHYSICAL SETUP OF ANY APPLICABLE SIGNS OR MESSAGE BOARDS.

INFORMATION SHOULD INCLUDE BUT IS NOT LIMITED TO ALL CONSTRUCTION ACTIVITIES THAT IMPACT OR INTERFERE WITH TRAFFIC AND SHOULD LIST THE SPECIFIC LOCATION, TYPE OF WORK, ROAD STATUS, DATE AND TIME OF RESTRICTION, DURATION OF RESTRICTION, NUMBER OF LANES MAINTAINED, DETOUR ROUTES IF APPLICABLE, AND ANY OTHER INFORMATION REQUESTED BY THE PROJECT ENGINEER.

NOTIFICATION TIME FRAME TABLE

ITEM	*DURATION OF CLOSURE*	*NOTIFICATION DUE TO DISTRICT 6 COMMUNICATIONS OFFICE*
RAMP AND ROAD CLOSURES	>= 2 weeks	14 business days prior to closure
	> 12 hours and < 2 weeks	7 business days prior to closure
	< 12 hours	2 business days prior to closure
LANE CLOSURES/RESTRICTIONS	>= 2 weeks	7 business days prior to closure
	< 2 weeks	2 business days prior to closure

ANY UNFORESEEN CONDITIONS NOT SPECIFIED IN THE PLANS REQUIRING TRAFFIC RESTRICTIONS SHALL ALSO BE REPORTED TO THE PROJECT ENGINEER USING THE NOTIFICATION TIME FRAME TABLE.

WORK LIMITS:
THE WORK LIMITS SHOWN ON THESE PLANS ARE FOR PHYSICAL CONSTRUCTION ONLY. THE INSTALLATION AND OPERATION OF ALL TEMPORARY TRAFFIC CONTROL AND TEMPORARY TRAFFIC CONTROL DEVICES REQUIRED BY THESE PLANS SHALL BE PROVIDED BY THE CONTRACTOR WHETHER INSIDE OR OUTSIDE THESE WORK LIMITS.

CONTINGENCY QUANTITIES:
THE CONTRACTOR SHALL NOT ORDER MATERIALS OR PERFORM WORK FOR ITEMS DESIGNATED BY PLAN NOTE TO BE USED AS DIRECTED BY THE ENGINEER UNLESS AUTHORIZED BY THE ENGINEER. THE ACTUAL WORK LOCATIONS AND QUANTITIES USED FOR SUCH ITEMS SHALL BE INCORPORATED INTO THE FINAL CHANGE ORDER GOVERNING COMPLETION OF THIS PROJECT.

SURVEYING POSITIONAL PARAMETERS
USE THE FOLLOWING VERTICAL AND HORIZONTAL POSITIONING PARAMETERS FOR ALL SURVEYING:

VERTICAL POSITIONING
ORTHOMETRIC HEIGHT DATUM: NAVD 1988
GEOID: GEOID 03

HORIZONTAL POSITIONING
REFERENCE FRAME: NAD83 (CORS)
ELLIPSOID: WGS84
MAP PROJECTION: LAMBERT CONFORMAL CONIC
COORDINATE SYSTEM: OHIO STATE PLANE NORTH

UTILITIES OWNERSHIP:
LISTED BELOW ARE ALL UTILITIES LOCATED WITHIN THE PROJECT CONSTRUCTION LIMITS TOGETHER WITH THEIR RESPECTIVE OWNERS.

AEP
850 TECH CENTER DRIVE
GAHANNA, OH 43230
1-614-883-6829

VERIZON
550 LEADER STREET
MARION, OH 43302
1-740-383-0527

THE LOCATION OF THE UNDERGROUND UTILITIES SHOWN ON THE PLANS ARE AS OBTAINED FROM THE OWNERS AS REQUIRED BY SECTION 153.64 O.R.C.

REVIEW OF DRAINAGE FACILITIES:
BEFORE ANY WORK IS STARTED ON THE PROJECT AND AGAIN BEFORE FINAL ACCEPTANCE BY THE STATE, REPRESENTATIVES OF THE STATE AND THE CONTRACTOR, ALONG WITH LOCAL REPRESENTATIVES, SHALL MAKE AN INSPECTION OF ALL EXISTING SEWERS WHICH ARE TO REMAIN IN SERVICE AND WHICH MAY BE AFFECTED BY THE WORK. THE CONDITION OF THE EXISTING CONDUITS AND THEIR APPURTENANCE SHALL BE DETERMINED FROM FIELD OBSERVATIONS. RECORDS OF THE INSPECTION SHALL BE KEPT IN WRITING BY THE STATE.

ALL NEW CONDUITS, INLETS, CATCH BASINS, AND MANHOLES CONSTRUCTED AS A PART OF THE PROJECT SHALL BE FREE OF ALL FOREIGN MATTER AND IN A CLEAN CONDITION BEFORE THE PROJECT WILL BE ACCEPTED BY THE STATE.

ALL EXISTING SEWERS INSPECTED INITIALLY BY THE ABOVE MENTIONED PARTIES SHALL BE MAINTAINED AND LEFT IN A CONDITION REASONABLY COMPARABLE TO THAT DETERMINED BY THE ORIGINAL INSPECTION. ANY CHANGE IN THE CONDITION RESULTING FROM THE CONTRACTOR'S OPERATIONS SHALL BE CORRECTED BY THE CONTRACTOR TO THE SATISFACTION OF THE ENGINEER.

PAYMENT FOR ALL OPERATIONS DESCRIBED ABOVE SHALL BE INCLUDED IN THE CONTRACT PRICE FOR THE PERTINENT 603 CONDUIT ITEMS.

I:\Projects\mar\309\0617.011\83957\Production\roadway\sheets\general notes.dgn SHEET_GN001 25-FEB-2011 4:06PM lwright1

ITEM 606 - GUARDRAIL, TYPE 5:
THE LOCATION OF GUARDRAIL RUNS AS SHOWN IN THESE PLANS, ARE SUBJECT TO ADJUSTMENT TO ASSURE THAT THE PLANNED INSTALLATION WILL AFFORD THE MAXIMUM PROTECTION FOR TRAFFIC.

GUARDRAIL POST HOLES:
ALL HOLES REMAINING AFTER REMOVAL OF GUARDRAIL POSTS SHALL BE FILLED WITH GRANULAR MATERIAL, EXCESS MATERIAL RESULTING FROM GUARDRAIL RECONSTRUCTION, OR EXCESS MATERIAL FROM BERM RESHAPING. FILL MATERIAL CONTAINING SOD SHALL NOT BE USED. ALL FILL MATERIAL SHALL BE APPROVED BY THE ENGINEER. MATERIAL PLACED IN HOLES SHALL BE THROUGHLY COMPACTED AND LEVELED OFF AS DIRECTED BY THE ENGINEER. PAVEMENT FOR THE ABOVE SHALL BE INCLUDED IN THE UNIT PRICE FROM ITEM 202, GUARDRAIL REMOVED.

ITEM 606 - ANCHOR ASSEMBLY, TYPE E
THIS ITEM SHALL CONSIST OF FURNISHING AND INSTALLING EITHER OF THE FOLLOWING GUARDRAIL END TERMINALS, OR AN APPROVED EQUAL AS LISTED ON ROADWAY ENGINEERING'S WEB PAGE AT WWW.DOT.STATE.OH.US/DRRC/ UNDER ROADSIDE SAFETY DEVICES FOR APPROVED GUARDRAIL END TREATMENTS:

1) THE ET-2000 (1997) MANUFACTURED BY TRINITY INDUSTRY, 1170 N. STATE STREET, GIRARD, OHIO 44420 (TELEPHONE: 330-545-4373).

   THE LENGTH OF THE ET-2000 (1997) SYSTEM IS CONSIDERED TO BE 50'-0" [15.24 m], INCLUSIVE OF TWO 25'-0" [7.62 m] LONG RAIL ELEMENTS. INSTALLATION SHALL BE AT THE LOCATIONS SPECIFIED IN THE PLANS, IN ACCORDANCE WITH THE MANUFACTURER'S SPECIFICATIONS AS DETAILED ON THE FOLLOWING PRE-APPROVED SHOP DRAWINGS:

DWG. #	DRAWING NAME	DWG./REV DATE	ODOT APPROVAL DATE
SS142	ET2000 PLUS 50'-0" PLAN, ELEVATION & SECTION 25'-0" RAIL, SLEEVE W/PL POSTS 1-4	4/12/00	7/31/00
SS141	ET2000 PLUS PLAN, ELEVATION & SECTION 25'-0" RAIL, HBA POSTS 1-4	2/29/00	7/31/00
SS158	ET2000 PLUS 50'-0" WITH 12'-6" PANELS & HBA POSTS 1-4 PLAN, ELEVATION & SECTION	5/22/00	7/31/00
SS330	ET2000 PLUS 50'-0" WITH FOUR FOUNDATION TUBES AND FOUR CRT POSTS	3/28/06	3/29/06
SS373	ET2000 PLUS 50'-0" WITH 7 SYT POSTS AND ONE HBA POST	6/20/09	1/20/09

ITEM 606 - ANCHOR ASSEMBLY, TYPE E (CONTINUED):
2) THE SKT-350 MANUFACTURED BY ROAD SYSTEMS, INC., 2516 MALLORY LANE, STOW, OHIO, 44224, (TELEPHONE: 330-346-0721).

THE LENGTH OF THE SKT-350 SYSTEM IS CONSIDERED TO BE 50'-0" [15.24 m], INCLUSIVE OF FOUR 12'-6" [3.81 m] LONG RAIL ELEMENTS. INSTALLATION SHALL BE AT THE LOCATIONS SPECIFIED IN THE PLANS, IN ACCORDANCE WITH THE MANUFACTURER'S SPECIFICATIONS AS DETAILED ON THE FOLLOWING PRE-APPROVED SHOP DRAWINGS:

DWG. #	DRAWING NAME	DWG./REV DATE	ODOT APPROVAL DATE
SKT-4M	SEQUENTIAL KINKING TERMINAL (SKT-350) ASSEMBLY WITH 4 FOUNDATION TUBES	12/11/97	3/6/98
SKT Hinged CRT	SEQUENTIAL KINKING TERMINAL (SKT-350) FOUR POSTS ARE STEEL HINGED AND FIVE POSTS ARE CRT	4/30/06	5/23/06
SKT-SP	SEQUENTIAL KINKING TERMINAL (SKT-350) A SEVEN POST OPTION USING STANDARD STEEL POST	3/30/09	3/4/09

THE FACE OF THE TYPE E IMPACT HEAD SHALL BE COVERED WITH A SHEET OF TYPE G REFLECTIVE SHEETING, PER CMS 730.19,

APPROXIMATELY 18" X 18" [450 mm X 450 mm.], OR 12" [30 mm] X 18" [450 mm] IF APPLIED TO A RECTANGULAR ET-2000 "PLUS" EXTRUDER HEAD.

REFER TO THE MANUFACTURER'S INSTRUCTION REGARDING THE INSTALLATION OF, AND THE GRADING AROUND, THE FOUNDATION TUBES AND GROUND STRUT. THE TOP OF ANY FOUNDATION TUBE SHOULD BE LESS THAN 4-INCHES [100 mm] ABOVE THE GROUND. THE PLACEMENT OF THE FOUNDATION TUBES SHOULD BE AN APPROPRIATE DEPTH BELOW THE LEVEL LINE IN ORDER TO MAINTAIN THE FINISHED GUARDRAIL HEIGHT OF 27-3/4-INCHES [706 mm] FROM THE EDGE OF THE SHOULDER.

ON-SITE GRADING IS REQUIRED IF THE TOP OF THE FOUNDATION TUBES OR TOP OF THE GROUND STRUT DOES PROJECT MORE THAN 4-INCHES [100 mm] ABOVE THE GROUND LINE.

PAYMENT FOR THE ABOVE WORK SHALL BE MADE AT THE UNIT PRICE BID FOR ITEM 606, ANCHOR ASSEMBLY, TYPE E, EACH, AND SHALL INCLUDE ALL LABOR, TOOLS, EQUIPMENT AND MATERIALS NECESSARY TO CONSTRUCT A COMPLETE AND FUNCTIONAL ANCHOR ASSEMBLY SYSTEM, INCLUDING ALL RELATED TRANSITIONS, REFLECTIVE SHEETING, HARDWARE, GRADING, EMBANKMENT AND EXCAVATION NOT SEPARATELY SPECIFIED, AS REQUIRED BY THE MANUFACTURER.

CONTRACTORS EQUIPMENT - OPERATION AND STORAGE:
THE CONTRACTOR'S EQUIPMENT SHALL BE OPERATED IN THE DIRECTION OF TRAFFIC WHERE PRACTICAL. EQUIPMENT SHALL HAVE AT LEAST ONE AMBER FLASHING LIGHT. WHEN PARKED ALONG THE HIGHWAY, THE EQUIPMENT SHALL BE LOCATED EITHER A MINIMUM OF THIRTY FEET FROM THE EDGE OF PAVEMENT OR SIX FEET BEHIND GUARDRAIL WITH A MINIMUM OF 125 FEET OF GUARDRAIL PRECEDING THE EQUIPMENT. ALL OTHER EQUIPMENT, INCLUDING PRIVATE VEHICLES, SHALL BE STORED AT AN APPROVED CONTRACTOR'S STORAGE AREA.

ITEM 407 - TACK COAT:
THE RATE OF APPLICATION OF ITEM 407 TACK COAT SHALL BE SUBJECT TO ADJUSTMENT AS DIRECTED BY THE ENGINEER. FOR ESTIMATING PURPOSES ONLY, THE PLAN INDICATES AN AVERAGE APPLICATION RATE OF TACK COAT AT 0.075 GALLON PER SQUARE YARD. THE APPLICATION RATE OF TACK COAT FOR INTERMEDIATE COURSE IS 0.05 GALLON PER SQUARE YARD. THIS ITEM IS FOR USE WITH ITEM 448 AS DIRECTED BY THE ENGINEER. A COVER AGGREGATE SHALL BE USED IF HEAVY TRACKING OF THE TACK COAT ON TO THE EXISTING PAVEMENT SHOULD OCCUR DURING THE PAVING OPERATIONS. THE COST OF THE COVER AGGREGATE SHALL BE INCLUDED IN THE COST OF THIS ITEM.

ITEM 630 - SIGN, FLAT SHEET:
ITEM 630 - GROUND MOUNTED SUPPORT, NO. 2 POST:
THESE ITEMS SHALL BE USED TO PLACE NEW STRUCTURE IDENTIFICATION SIGNS AT THE FOLLOWING STRUCTURES:

MAR-309-0614

THE SIGN SHALL BE POST MOUNTED TO ONE NEW NO. 2 POST AS PER STANDARD CONSTRUCTION DRAWING TC-41.20 (MOST CURRENT REVISION) USING TWO 5/16" ALUMINUM BOLTS 2 1/2" IN LENGTH. THE POST SHALL BE 7'-0" LONG.

SIGNS SHALL BE SIZED AS PER SIGN I-H25a AS GIVEN IN THE ODOT SIGN DESIGN MANUAL (MOST CURRENT VERSION). ALL INCIDENTALS WILL BE INCLUDED IN THE UNIT BID PRICE FOR ITEM 630 - SIGN, FLAT SHEET.

THE FOLLOWING ITEMS HAVE BEEN CARRIED TO THE GENERAL SUMMARY.

ITEM 630 - SIGN, FLAT SHEET = 1.0 SQFT
ITEM 630 - GROUND MOUNTED SUPPORT, NO. 2 POST = 7 FT

ITEM 659 - SEEDING AND MULCHING:
SEEDING AND MULCHING SHALL BE APPLIED TO ALL AREAS OF EXPOSED SOIL BETWEEN THE RIGHT-OF-WAY LINES, AND WITHIN THE CONSTRUCTION LIMITS, FOR AREAS OUTSIDE THE RIGHT-OF-WAY LINES THAT ARE COVERED BY WORK AGREEMENT OR SLOPE EASEMENT. QUANTITY CALCULATIONS FOR SEEDING AND MULCHING ARE BASED ON THESE LIMITS. THE QUANTITIES LISTED IN THE PLANS ARE PROVIDED TO PROMOTE GROWTH AND CARE OF PERMANENT SEEDED AREAS.

I:\Projects\mar\309\0617.011\83957\Production\roadway\sheets\general notes.dgn SHEET_GN002 25-FEB-2011 4:06PM lwright1

ITEM 623 - CONSTRUCTION LAYOUT STAKES:
THIS ITEM SHALL CONSIST OF STATIONING USING 3 FT LATH STAKES OR PAINT MARKINGS. THE STAKES OR PAINT MARKINGS SHALL BE SPACED AT 50 FT INTERVALS AND EXTEND THROUGHOUT THE LENGTH OF THE PROJECT. PLACEMENT OF THE STAKES OR PAINT MARKINGS SHALL BE AS DIRECTED BY THE ENGINEER. THE CONTRACTOR IS RESPONSIBLE FOR REPLACING ANY DAMAGED, MISSING STAKES, OR PAINT MARKINGS. PAINT MARKINGS SHALL BE PLACED ON CURBS AND USED IN AREAS WERE THE PLACEMENT OF STAKES IS NOT POSSIBLE AND APPROVED BY THE PROJECT ENGINEER.

CONSTRUCTION LAYOUT STAKES WILL BE PAID FOR AT THE CONTRACT LUMP SUM BID, WHICH PRICE SHALL BE FULL COMPENSATION FOR ALL SERVICES, MATERIALS, LABOR, EQUIPMENT, TOOLS, AND INCIDENTALS, INCLUDING THE REMOVAL, NECESSARY TO COMPLETE THIS ITEM.

ITEM 605 - AGGREGATE DRAINS:
PLACEMENT OF AGGREGATE DRAINS SHALL BEGIN ON MAR-309 AT STA. 4+40.79 AND END AT STA. 6+00.00. THE AGGREGATE DRAINS SHALL BE PLACED AT 50 FOOT INTERVALS ON EACH SIDE OF NORMAL CROWNED SECTIONS, STAGGERED SO THAT EACH DRAIN IS 25 FEET FROM THE ADJACENT DRAIN ON THE OPPOSITE SIDE. THE CONTRACTOR WILL MARK THE LOCATIONS OF THE PROPOSED AGGREGATE DRAINS. THE PROPOSED LOCATIONS SHALL THEN BE VERIFIED BY THE ENGINEER PRIOR TO ANY EXCAVATION WORK.

AGGREGATE DRAINS SHALL ONLY BE INSTALLED WHERE SLOPE WILL PROMOTE DRAINAGE TO DITCH. IN THE EVENT THAT A PROPOSED AGGREGATE DRAIN FALLS IN AN AREA THAT DOES NOT LEAD TO AN OPEN DITCH (SUCH AS A RESIDENTIAL PROPERTY, MAILBOX POST, OR DRIVEWAY) THE CONTRACTOR SHALL ADJUST THE LOCATION TO AVOID THE OBSTACLE. IF THE CONTRACTOR CANNOT AVOID THE OBSTACLE BY MOVING THE DRAIN LESS THAN 10 FEET IN EITHER DIRECTION, THE AGGREGATE DRAIN WILL BE OMITTED.

THIS ITEM INCLUDES ALL LABOR, EQUIPMENT AND MATERIAL NECESSARY TO COMPLETE AGGREGATE DRAINS AS DETAILED IN THIS PLAN. THE DEPARTMENT WILL PAY FOR ACTUAL LENGTH OF AGGREGATE DRAINS PLACED AS MEASURED AND APPROVED BY THE ENGINEER. AN ESTIMATED QUANTITY OF 7 AGGREGATE DRAINS AT AN AVERAGE LENGTH OF 8 FEET EACH HAS BEEN PROVIDED AND THE TOTAL HAS BEEN CARRIED TO THE GENERAL SUMMARY.

ITEM 605 - AGGREGATE DRAINS (4 * 8 FT AVG) = 32 FT

CROSSINGS AND CONNECTIONS TO EXISTING PIPES AND UTILITIES:
WHERE PLANS PROVIDE FOR A PROPOSED CONDUIT TO BE CONNECTED TO, OR CROSS OVER OR UNDER AN EXISTING SEWER OR UNDERGROUND UTILITY, THE CONTRACTOR SHALL LOCATE THE EXISTING PIPES OR UTILITIES BOTH AS TO LINE AND GRADE BEFORE STARTING TO LAY THE PROPOSED CONDUIT.

IF IT IS DETERMINED THAT THE ELEVATION OF THE EXISTING CONDUIT, OR EXISTING APPURTENANCE TO BE CONNECTED, DIFFERS FROM THE PLAN ELEVATION OR RESULTS IN A CHANGE IN THE PLAN CONDUIT SLOPE, THE ENGINEER SHALL BE NOTIFIED BEFORE STARTING CONSTRUCTION OF ANY PORTION OF THE PROPOSED CONDUIT WHICH WILL BE AFFECTED BY THE VARIANCE IN THE EXISTING ELEVATIONS.

IF IT IS DETERMINED THAT THE PROPOSED CONDUIT WILL INTERSECT AN EXISTING SEWER OR UNDERGROUND UTILITY IF CONSTRUCTED AS SHOWN ON THE PLAN, THE ENGINEER SHALL BE NOTIFIED BEFORE STARTING CONSTRUCTION OF ANY PORTION OF THE PROPOSED CONDUIT WHICH WOULD BE AFFECTED BY THE INTERFERENCE WITH AN EXISTING FACILITY.

PAYMENT FOR ALL THE OPERATIONS DESCRIBED ABOVE SHALL BE INCLUDED IN THE CONTRACT PRICE FOR THE PERTINENT 603 CONDUIT ITEM.

TREATED NON-STORMWATER DRAINAGE
FURNISH A CONTINUANCE FOR ALL TREATED NON-STORMWATER DRAINAGE, SUCH AS TREATED SEPTIC, TREATED WASTEWATER, TREATED CURTAIN/GRADIENT DRAINS, AND TREATED FOUNDATION FLOOR DRAINS DISTURBED BY THE WORK. FURNISH EITHER AN OPEN CONTINUANCE OR AN UNOBSTRUCTED CONTINUANCE BY CONNECTING A CONDUIT INTO A DRAINAGE STRUCTURE. THE LOCATION, TYPE, SIZE AND GRADE OF THE NEEDED CONDUIT TO REPLACE OR EXTEND AN EXISTING DRAIN WILL BE DETERMINED BY THE ENGINEER. ALL SUCH CONTINUANCE REQUIRES A RIGHT OF WAY USE PERMIT. A CONTINUANCE MAY ALSO REQUIRE A NPDES PERMIT FROM THE OHIO ENVIRONMENTAL PROTECTION AGENCY.

REPORT ALL CONTINUANCE TO THE LOCAL HEALTH DEPARTMENT. WHERE MAKING A CONNECTION INTO A HIGHWAY DRAINAGE CONDUIT, AN INSPECTION WELL SHALL BE PROVIDED IN ACCORDANCE WITH STANDARD CONSTRUCTION DRAWING DM-3.1. THE FOLLOWING ESTIMATED QUANTITIES HAVE BEEN INCLUDED IN THE GENERAL SUMMARY FOR USE AS DIRECTED BY THE ENGINEER IN MAKING THE ABOVE CONTINUANCE:

ITEM 603 - 8" CONDUIT, TYPE C = 10 FT.

FARM DRAINS:
ALL FARM DRAINS, WHICH ARE ENCOUNTERED DURING CONSTRUCTION, SHALL BE PROVIDED WITH UNOBSTRUCTED OUTLETS. EXISTING COLLECTORS WHICH ARE LOCATED BELOW THE ROADWAY DITCH ELEVATIONS, AND WHICH CROSS THE ROADWAY, SHALL BE REPLACED WITHIN THE CONSTRUCTION LIMITS BY ITEM 603 CONDUIT, TYPE B, ONE COMMERCIAL SIZE LARGER THAN THE EXISTING CONDUIT.

EXISTING COLLECTORS AND ISOLATED FARM DRAINS, WHICH ARE ENCOUNTERED ABOVE THE ELEVATION OF ROADWAY DITCHES, SHALL BE OUTLETTED INTO THE ROADWAY DITCH BY 603 TYPE F CONDUIT. THE OPTIMUM OUTLET ELEVATION SHALL BE ONE FOOT ABOVE THE FLOWLINE ELEVATION OF THE DITCH. LATERAL FIELD TILES WHICH CROSS THE ROADWAY SHALL BE INTERCEPTED BY 603, TYPE E CONDUIT, AND CARRIED IN A LONGITUDINAL DIRECTION TO AN ADEQUATE OUTLET OR ROADWAY CROSSING.

THE LOCATION, TYPE, SIZE AND GRADE OF REPLACEMENTS SHALL BE DETERMINED BY THE ENGINEER AND PAYMENT SHALL BE MADE ON FINAL MEASUREMENTS.

EROSION CONTROL PADS AND ANIMAL GUARDS SHALL BE PROVIDED AT THE OUTLET END OF ALL FARM DRAINS AS PER STANDARD CONSTRUCTION DRAWING DM -1.1, EXCEPT WHEN THEY OUTLET INTO A DRAINAGE STRUCTURE.

PAYMENT FOR THE EROSION CONTROL PADS AND ANIMAL GUARDS AND ANY NECESSARY BENDS OR BRANCHES SHALL BE INCLUDED FOR PAYMENT IN THE PERTINENT CONDUIT ITEMS.

THE FOLLOWING ESTIMATED QUANTITIES HAVE BEEN INCLUDED IN THE GENERAL SUMMARY FOR THE WORK NOTED ABOVE:

ITEM 603 - 12" CONDUIT, TYPE B = 20 FT.
ITEM 603 - 12" CONDUIT, TYPE E = 20 FT.
ITEM 603 - 6" CONDUIT, TYPE F = 20 FT.

CALCULATED
CHECKED

GENERAL NOTES

MAR-309-6.13

I:\Projects\mar\309\0617.011\83957\Production\roadway\sheets\general notes.dgn 25-FEB-2011 4:06PM lwright1 SHEET_GN003

UNRECORDED STORM WATER DRAINAGE

FURNISH A CONTINUANCE FOR ALL UNRECORDED STORM WATER DRAINAGE, SUCH AS ROOF DRAINS, FOOTER DRAINS, OR YARD DRAINS, DISTURBED BY THE WORK. FURNISH EITHER AN OPEN CONTINUANCE OR AN UNOBSTRUCTED CONTINUANCE BY CONNECTING A CONDUIT INTO A DRAINAGE STRUCTURE BY FIELD CORING, COST INCLUDED IN CONDUIT. THE LOCATION, TYPE, SIZE AND GRADE OF THE NEEDED CONDUIT TO REPLACE OR EXTEND AN EXISTING DRAIN WILL BE DETERMINED BY THE ENGINEER. ALL SUCH CONTINUANCE REQUIRES A RIGHT OF WAY USE PERMIT.

THE FOLLOWING CONDUIT TYPES MAY BE USED: 707.33, 707.41 NON-PERFORATED, 707.42, 707.43, 707.45, 707.46, 707.47, 707.51, 707.52 SDR35.

THE FOLLOWING ESTIMATED QUANTITIES HAVE BEEN INCLUDED IN THE GENERAL SUMMARY FOR USE AS DIRECTED BY THE ENGINEER FOR THE WORK NOTED ABOVE:

ITEM 603 - 4" CONDUIT, TYPE F, FOR DRAINAGE CONNECTION = 20 FT.
ITEM 603 - 6" CONDUIT, TYPE F, FOR DRAINAGE CONNECTION = 20 FT.

WATERSHED PROTECTION NOTE:

THE WORK ASSOCIATED WITH THIS PROJECT IS BEING PERFORMED WITHIN A SOURCE WATER PROTECTION AREA. IT IS ESSENTIAL THAT ALL ACTIVITIES ASSOCIATED WITH THIS WORK BE PERFORMED IN A MANNER CONSISTENT WITH BEST WATERSHED MANAGEMENT PRACTICES INCLUDING, BUT NOT LIMITED TO:

AREAS OF DISTURBED GROUND SHALL HAVE APPROPRIATE EROSION AND SEDIMENT CONTROLS. IF HAZARDOUS/TOXIC MATERIALS INCLUDING BUT NOT LIMITED TO FUELS, OILS, BITUMEN'S PAINTS, SEALANTS, OR OTHER CHEMICALS, ARE STORED ON SITE, THEY SHALL BE STORED IN A DOUBLE-CONTAINMENT MANNER. ALL EQUIPMENT REPAIRS, MAINTENANCE, AND MECHANICAL WORK THAT COULD RESULT IN THE RELEASE OF HAZARDOUS/TOXIC MATERIALS SHALL BE PERFORMED IN AN APPROPRIATELY CONTAINED AREA, PREFERABLY OFF SITE OR AN APPROPRIATE OFF -SITE FACILITY.

IN THE EVENT THAT ANY HAZARDOUS/TOXIC MATERIALS INCLUDING, BUT NOT LIMITED TO FUELS, OILS, BITUMEN'S PAINTS, SEALANTS, OR OTHER CHEMICALS ARE SPILLED, THE CONTRACTOR SHALL IMMEDIATELY NOTIFY THE OHIO EPA @(800)282-9378 AND THE OHIO-AMERICAN WATER CO. TIFFIN DISTRICT @(614)645-8270. THE CONTRACTOR SHOULD BE PREPARED TO PROVIDE DETAILED INFORMATION RELATIVE TO THE TYPE AND QUANTITY OF MATERIAL THAT HAS BEEN SPILLED AS WELL AS THE EXACT LOCATION AND THE EXACT TIME AT WHICH THE SPILL OCCURRED.

THE CONTRACTOR SHALL BE SOLELY RESPONSIBLE FOR INFORMING ALL SUBCONTRACTORS AND OTHER AGENTS OF THESE RESPONSIBILITIES, PRECAUTIONS, AND PROHIBITIONS.

ITEM 603 - 18" CONDUIT, TYPE B, AS PER PLAN:

ALL NECESSARY REDUCERS, AS SHOWN ON SHEET 20, SHALL BE PAID FOR UNDER ITEM 603, 18" CONDUIT, TYPE B, AS PER PLAN.

INLET, SIDE DITCH, AS PER PLAN DETAIL

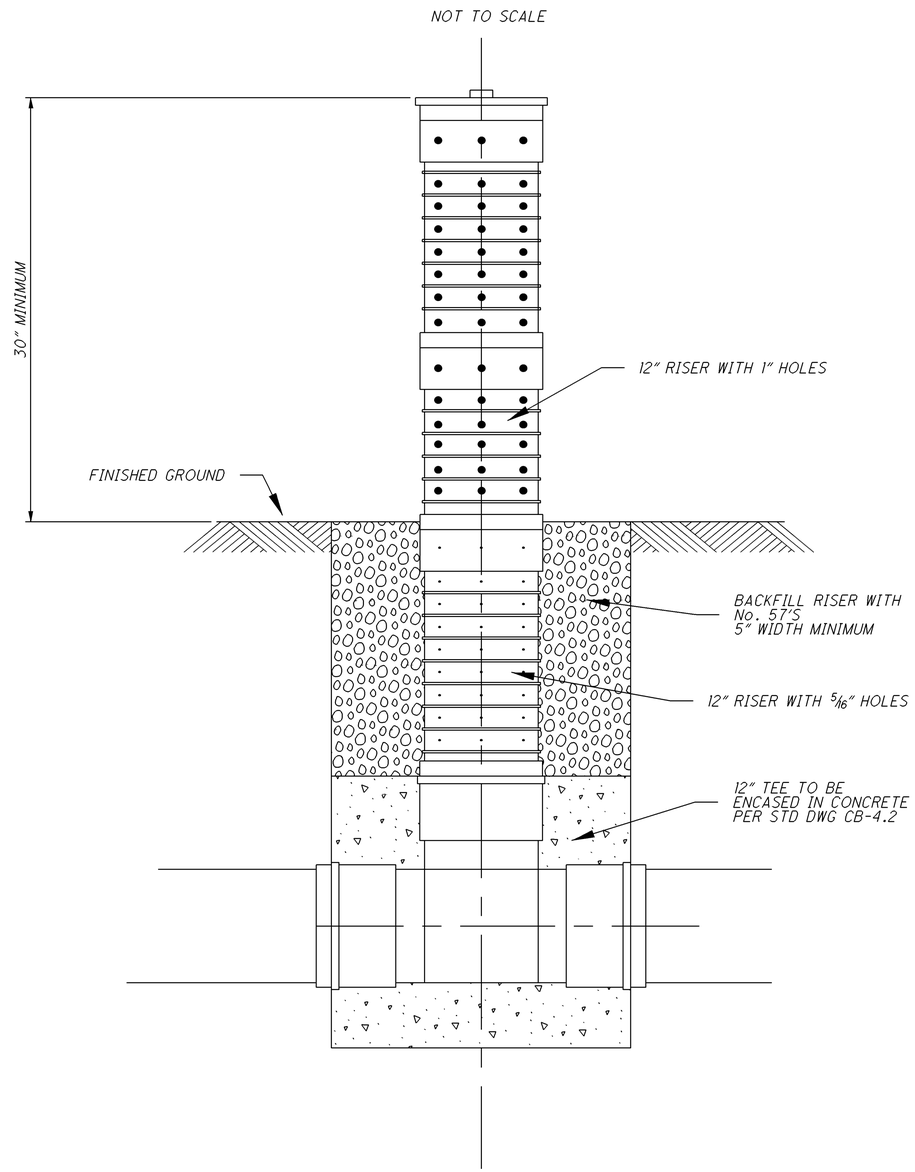

ALL MATERIALS AND LABOR, INCLUDING EXCAVATION AND BACKFILLING, SHALL BE PAID FOR UNDER ITEM 604 INLET, SIDE DITCH, AS PER PLAN

CALCULATED
CHECKED

GENERAL NOTES

MAR-309-6.13

I:\Projects\mar\309\0617.011\83957\Production\roadway\sheets\general notes.dgn SHEET_GN004 25-FEB-2011 4:06PM lwright1

GENERAL:
ALL TRAFFIC CONTROL DEVICES SHALL BE FURNISHED, ERECTED, MAINTAINED, AND REMOVED BY THE CONTRACTOR IN ACCORDANCE WITH THE OHIO MANUAL OF UNIFORM TRAFFIC CONTROL DEVICES (CURRENT EDITION). COPIES ARE AVAILABLE FROM:

THE OHIO DEPARTMENT OF TRANSPORTATION
BUREAU OF TRAFFIC,
1980 WEST BROAD STREET
COLUMBUS, OHIO 43223.

THE CONTRACTOR SHALL NOT ORDER MATERIALS OR PERFORM WORK LISTED IN THE GENERAL SUMMARY FOR ITEMS DESIGNATED BY PLAN NOTE TO BE USED "AS DIRECTED BY THE ENGINEER" UNLESS AUTHORIZED BY THE ENGINEER.

ITEM 614 - MAINTAINING TRAFFIC:
WORK ZONES SHALL BE IN ACCORDANCE WITH THE OHIO MANUAL OF UNIFORM TRAFFIC CONTROL DEVICES, APPLICABLE STANDARD DRAWINGS, AND PROCEDURES DETAILED IN THIS PLAN.

LENGTH AND DURATION OF LANE CLOSURES AND RESTRICTIONS SHALL BE AT THE APPROVAL OF THE ENGINEER. IT IS THE INTENT TO MINIMIZE THE IMPACT TO THE TRAVELING PUBLIC. LANE CLOSURES OR RESTRICTIONS OVER SEGMENTS OF THE PROJECT IN, WHICH NO WORK IS ANTICIPATED WITHIN A REASONABLE TIME FRAME, AS DETERMINED BY THE ENGINEER, SHALL NOT BE PERMITTED. THE LEVEL OF UTILIZATION OF MAINTENANCE OF TRAFFIC DEVICES SHALL BE COMMENSURATE WITH THE WORK IN PROGRESS.

ALL WORK AND TRAFFIC CONTROL DEVICES SHALL BE IN ACCORDANCE WITH 614 AND OTHER APPLICABLE PORTIONS OF THE SPECIFICATIONS, AS WELL AS THE OHIO MANUAL OF UNIFORM TRAFFIC CONTROL DEVICES. PAYMENT FOR ALL LABOR, EQUIPMENT, AND MATERIALS SHALL BE INCLUDED IN THE LUMP SUM CONTRACT PRICE FOR ITEM 614 - MAINTAINING TRAFFIC, UNLESS SEPARATELY ITEMIZED IN THE PLAN.

ACCESS TO PRIVATE PROPERTY:
MAINTAIN ACCESS TO RESIDENTIAL PROPERTIES AT ALL TIMES. WHEN A RESIDENTIAL DRIVE IS CLOSED FOR CONSTRUCTION, MAINTAIN ALTERNATE ACCESS TO THE PROPERTY.

SUCCESSFULLY NOTIFY THE OCCUPANTS/OWNERS OF RESIDENTIAL DRIVES TO BE CLOSED AND COORDINATE THE CLOSURE AT LEAST 48 HOURS BEFORE THE CLOSURE BEGINS (SIMPLY LEAVING A WRITTEN NOTICE OR PHONE MESSAGE IS NOT SUFFICIENT). COORDINATE ALTERNATE ACCESS TO RESIDENTIAL PROPERTIES WITH THE OWNER/OCCUPANT.

ITEM 614 - MAINTAINING TRAFFIC (NOTICE OF CLOSURE SIGNS):
NOTICE OF CLOSURE SIGNS, AS DETAILED BELOW, SHALL BE ERECTED BY THE CONTRACTOR AT LEAST ONE WEEK IN ADVANCE OF THE SCHEDULED ROAD OR RAMP CLOSURE. THE SIGNS SHALL BE ERECTED ON THE RIGHTHAND SIDE OF THE ROAD/RAMP FACING TRAFFIC. THEY SHALL BE PLACED SO AS NOT TO INTERFERE WITH THE VISIBILITY OF ANY OTHER TRAFFIC CONTROL SIGNS. ON ROADWAYS, THEY SHOULD BE ERECTED AT THE POINT OF CLOSURE. THE SIGN SHALL BE BLACK LEGEND ON A REFLECTIVE ORANGE BACKGROUND. PAYMENT SHALL BE INCLUDED IN THE LUMP SUM COST OF ITEM 614 - DETOUR SIGNING.

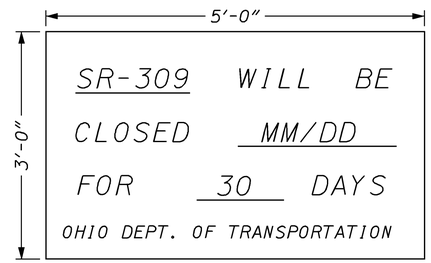

W20-H14-60

ITEM 614 - MAINTENANCE OF TRAFFIC:
THE CONTRACTOR SHALL PROVIDE, ERECT AND MAINTAIN STANDARD 60" X 30" "ROAD CLOSED" SIGNS, SIGN SUPPORTS, BARRICADES, AND LIGHTS, AT THE LOCATIONS SHOWN IN THE DETOUR PLAN, ON SHEET 9, DURING PERIODS IN WHICH THE AFFECTED ROADS ARE CLOSED TO TRAFFIC. PAYMENT SHALL BE INCLUDED IN THE LUMP SUM COST OF ITEM 614 - DETOUR SIGNING.

ITEM 614 - MAINTAINING TRAFFIC (TIME LIMITATION ON A DETOUR):
A MINIMUM OF ONE LANE OF TRAFFIC IN EACH DIRECTION SHALL BE MAINTAINED AT ALL TIMES, EXCEPT FOR A PERIOD NOT TO EXCEED 30 CONSECUTIVE CALENDAR DAYS, WHEN THROUGH TRAFFIC MAY BE DETOURED AS SHOWN ON SHEET 9. A DISINCENTIVE SHALL BE ASSESSED IN THE AMOUNT OF $1,000.00 PER DAY FOR EACH CALENDAR DAY THE ROADWAY REMAINS CLOSED TO TRAFFIC BEYOND THE SPECIFIED LIMIT.

SEQUENCE OF CONSTRUCTION
PREPARE TO CLOSE SR-309 EAST OF 6471 HARDING HWY AND WEST OF 6322 HARDING HWY TO TRAFFIC BY ERECTING TEMPORARY TRAFFIC CONTROL. PERFORM ANY OTHER WORK THAT CAN REDUCE THE TIME REQUIRED TO DETOUR TRAFFIC. SEE MAINTENANCE OF TRAFFIC DETOUR PLAN FOR DETAILS.

BEGIN CONSTRUCTION BY REMOVING THE EXISTING MAR-309-6.14 STRUCTURE AND REPLACE WITH THE PROPOSED CONCRETE CULVERT AND WING WALLS. PERFORM NECESSARY STEPS TO OPEN THE STRUCTURE TO TRAFFIC. COMPLETE ADDITIONAL PAVEMENT TO CORRECT PROFILE. COMPLETE FINAL PAVEMENT MARKINGS AND COMPLETE ALL DITCH GRADING AND SEEDING.

REMOVE TEMPORARY TRAFFIC CONTROL AND ALL ITEMS ASSOCIATED WITH TEMPORARY TRAFFIC CONTROL.

DESIGNATED LOCAL DETOUR ROUTE:
IN ADDITION TO THE OFFICIAL, SIGNED DETOUR ROUTE, A LOCAL ROUTE HAS BEEN DETERMINED TO BE THE SECONDARY, UNSIGNED DETOUR ROUTE OR "DESIGNATED LOCAL DETOUR ROUTE." THIS ROUTE IS SHOWN ON THE DETOUR PLAN SHEET. DURING THE TIME THAT TRAFFIC IS DETOURED, THE CONTRACTOR SHALL MAINTAIN THIS ROUTE IN A CONDITION WHICH IS REASONABLY SMOOTH AND FREE FROM HOLES, RUTS, RIDGES, BUMPS, DUST AND STANDING WATER.

THE FOLLOWING ESTIMATED QUANTITIES ARE PROVIDED FOR USE AS DIRECTED BY THE ENGINEER TO MAINTAIN THE DESIGNATED LOCAL DETOUR ROUTE.

ITEM 614 - ASPHALT CONCRETE FOR MAINTAINING TRAFFIC = 20 CU YD

ONCE THE DETOUR IS REMOVED AND TRAFFIC RETURNED TO ITS NORMAL PATTERN, THE DESIGNATED LOCAL DETOUR ROUTE SHALL BE RESTORED TO A CONDITION THAT IS EQUIVALENT TO THAT WHICH EXISTED PRIOR TO ITS USE FOR THIS PURPOSE. ALL SUCH WORK SHALL BE PERFORMED USING ONE OF THE FOLLOWING METHODS WHEN, AND AS DIRECTED BY THE ENGINEER.

1. BY LOCAL FORCES - TO BE REIMBURSED BY ODOT
2. BY ODOT FORCES
3. BY CONTRACTOR FORCE ACCOUNT

CALCULATED
CHECKED

MAINTENANCE OF TRAFFIC GENERAL NOTES

MAR-309-6.13

I:\Projects\mar\309\0617.011\83957\Production\roadway\sheets\MOT_NOTES.dgn SHEET_MN001 25-FEB-2011 4:06PM lwright1

DETOUR PLAN - SR309 OVER LEWIS DITCH

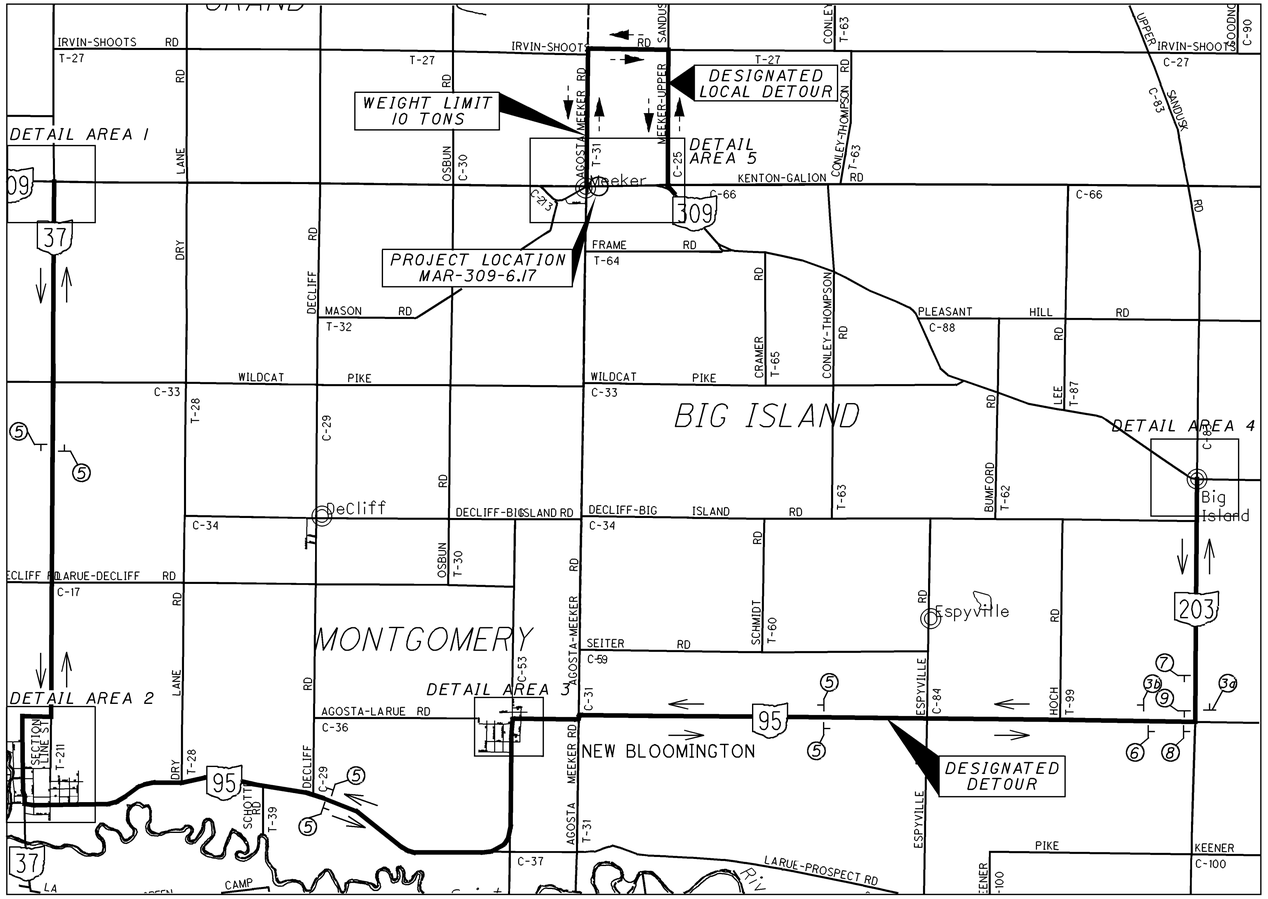

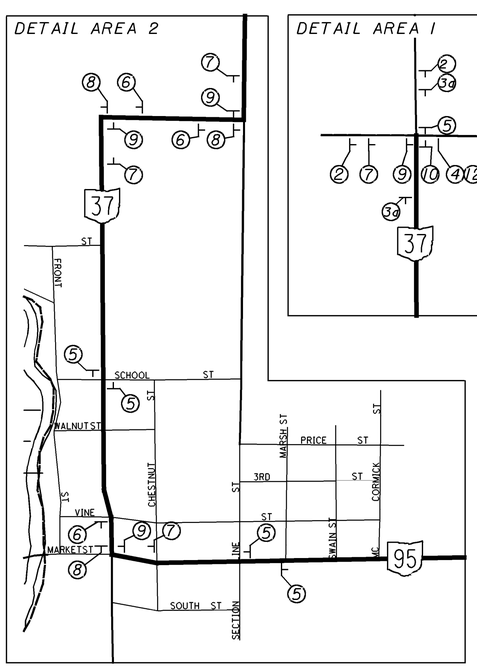

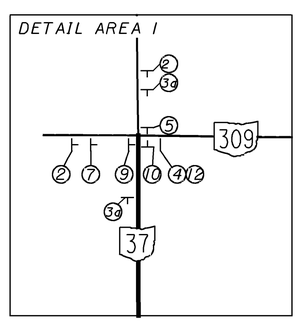

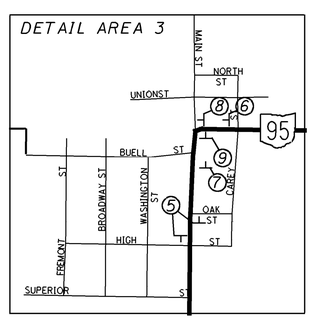

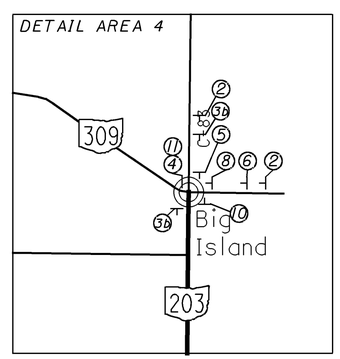

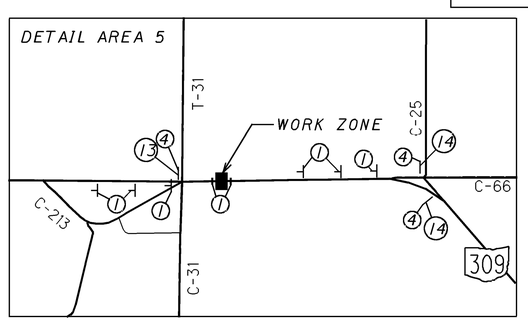

① ROAD CLOSURE PER SCD MT-101.60

② DETOUR AHEAD — W20-2-48; 309 — MI-5-30-3 (37.5" X 30")

③a DETOUR — M4-8-30 (30" X 15"); EAST — M3-2-30 (30" X 15"); 309 — MI-5-30-3 (37.5" X 30")

③b DETOUR — M4-8-30 (30" X 15"); WEST — M3-4-30 (30" X 15"); 309 — MI-5-30-3 (37.5" X 30")

④ TYPE B YELLOW LIGHTS REQUIRED AT NIGHT

R11-3A-60 (60" X 30") SEE NOTE BELOW

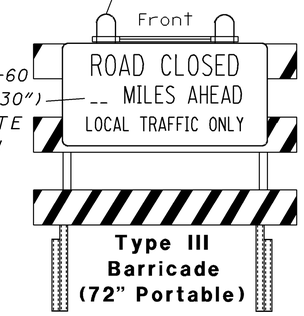

See Section 6F.63 and Figure 6F-7 of the OMUTCD.

⑤ DETOUR — M4-8-30 (30" X 15"); 309 — MI-5-30-3 (37.5" X 30")

⑥ DETOUR — M4-8-30 (30" X 15"); 309 — MI-5-30-3 (37.5" X 30"); M5-1-30 (30" X 24")

⑦ DETOUR — M4-8-30 (30" X 15"); 309 — MI-5-30-3 (37.5" X 30"); M5-1-30 (30" X 24")

⑧ DETOUR — M4-8-30 (30" X 15"); 309 — MI-5-30-3 (37.5" X 30"); M6-1-30 (30" X 24")

⑨ DETOUR — M4-8-30 (30" X 15"); 309 — MI-5-30-3 (37.5" X 30"); M6-1-30 (30" X 24")

⑩ END DETOUR — M4-8A-30 (30" X 24")

⑪ DETOUR — M4-10-48 (48" X 18")

⑫ DETOUR — M4-10-48 (48" X 18")

⑬ WEIGHT LIMIT 10 TONS — R12-1-36 (36" X 48"); M6-1-30 (30" X 24")

⑭ WEIGHT LIMIT 10 TONS — R12-1-36 (36" X 48"); M6-1-30 (30" X 24")

NOTES:

THE CONTRACTOR SHALL ERECT, MAINTAIN AND REMOVE ALL DETOUR SIGNING. ALL LABOR AND MATERIALS ARE TO BE INCLUDED IN ITEM 614 - DETOUR SIGNING FOR PAYMENT. ALL SIGNS, EXCEPT MI-5, M3-2 AND M3-4 ARE TO BE BLACK ON ORANGE CONSTRUCTION SIGNS, ON TYPE 2 POSTS, ON EXISTING ROUTE MARKING SIGN SUPPORTS WHERE PRACTICAL.

R11-3A-60

SR 309 AND AGOSTA MEEKER RD (T-31) INTERSECTION: 0.1 MILES AHEAD
SR 309 AND MEEKER-UPPER SANDUSKY RD (C-25) INTERSECTION: 0.5 MILES AHEAD
SR 309 AND SR 37 INTERSECTION: 4.1 MILES AHEAD
SR 309 AND SR 203 INTERSECTION: 5.3 MILES AHEAD

LEGEND:
DETOUR ROUTE:
LOCAL DETOUR ROUTE:

HORIZONTAL SCALE IN FEET 0 1500 3000 6000

CALCULATED NJF
CHECKED LLM

MAINTENANCE OF TRAFFIC
DETOUR PLAN

MAR-309-6.13

I:\Projects\mar\309\0617.011\83957\Production\roadway\sheets\mot.dgn Sheet_MD001 25-FEB-2011 4:06PM lwright1

SHEET NUMBER														ITEM	ITEM EXT.	GRAND TOTAL	UNIT	DESCRIPTION	SEE SHEET NO.
4-7	12	13	14	19	20														
																		ROADWAY	
LUMP														201	11000	LUMP		CLEARING AND GRUBBING	
			374											202	23010	374	SQ YD	PAVEMENT REMOVED, ASPHALT	
					84									202	35100	84	FT	PIPE REMOVED, 24" AND UNDER	
				199										202	38000	199	FT	GUARDRAIL REMOVED	
				3										202	42000	3	EACH	ANCHOR ASSEMBLY REMOVED, TYPE A	
					2									202	58100	2	EACH	CATCH BASIN REMOVED	
			195											203	10000	195	CU YD	EXCAVATION	
			54											203	20000	54	CU YD	EMBANKMENT	
	455													204	10000	455	SQ YD	SUBGRADE COMPACTION	
				137.5										606	13000	137.5	FT	GUARDRAIL, TYPE 5	
				50										606	13040	50	FT	GUARDRAIL, NESTED TYPE 5 WITH TUBULAR BACKUP	
				3										606	26100	3	EACH	ANCHOR ASSEMBLY, TYPE E	
				1										606	26500	1	EACH	ANCHOR ASSEMBLY, TYPE T	
				4										606	35140	4	EACH	BRIDGE TERMINAL ASSEMBLY, TYPE 4	
																		EROSION CONTROL	
			167											659	00300	167	CU YD	TOPSOIL	
			1,468											659	10000	1,468	SQ YD	SEEDING AND MULCHING	
			73											659	14000	73	SQ YD	REPAIR SEEDING AND MULCHING	
			73											659	15000	73	SQ YD	INTER-SEEDING	
			0.20											659	20000	0.20	TON	COMMERCIAL FERTILIZER	
			0.30											659	31000	0.30	ACRE	LIME	
			8											659	35000	8	M GAL	WATER	
														832	30000	1,000	EACH	EROSION CONTROL	
																		DRAINAGE	
20														603	00406	20	FT	4" CONDUIT, TYPE F	
40														603	01500	40	FT	6" CONDUIT, TYPE F	
10														603	02000	10	FT	8" CONDUIT, TYPE C	
20														603	04400	20	FT	12" CONDUIT, TYPE B	
20														603	05100	20	FT	12" CONDUIT, TYPE E	
					13									603	06700	13	FT	15" CONDUIT, TYPE F	
					66									603	07400	66	FT	18" CONDUIT, TYPE B	
					6									603	07401	6	FT	18" CONDUIT, TYPE B, AS PER PLAN	7
					1									604	04500	1	EACH	CATCH BASIN, NO. 2-2B	
					2									604	10101	2	EACH	INLET, SIDE DITCH, AS PER PLAN	7 , 20
32														605	31100	32	FT	AGGREGATE DRAINS	
																		PAVEMENT	
	113													301	46000	113	CU YD	ASPHALT CONCRETE BASE, PG64-22	
	97													304	20000	97	CU YD	AGGREGATE BASE	
	41													407	10000	41	GALLON	TACK COAT	
	29													407	14000	29	GALLON	TACK COAT FOR INTERMEDIATE COURSE	
	23													408	10000	23	GALLON	PRIME COAT	
	46													448	47020	46	CU YD	ASPHALT CONCRETE SURFACE COURSE, TYPE 1, PG64-22	
																		TRAFFIC CONTROL	
		3												621	00100	3	EACH	RPM	
		3												621	54000	3	EACH	RAISED PAVEMENT MARKER REMOVED	
				6										626	00100	6	EACH	BARRIER REFLECTOR	
7														630	02100	7	FT	GROUND MOUNTED SUPPORT, NO. 2 POST	
1														630	80100	1.0	SQ FT	SIGN, FLAT SHEET	
		0.08												646	10000	0.08	MILE	EDGE LINE	
		0.04												646	10200	0.04	MILE	CENTER LINE	

CALCULATED

CHECKED

GENERAL SUMMARY

MAR-309-6.13

I:\Projects\mar\309\0617.011\83957\Production\roadway\sheets\summaries.dgn SHEET_GG001 25-FEB-2011 4:11PM lwright1

SHEET NUMBER														ITEM	ITEM EXT.	GRAND TOTAL	UNIT	DESCRIPTION	SEE SHEET NO.
4-7	8																		
																		STRUCTURES (UNDER 20')	
																		SFN: 5101425 MAR-309-6.14	
																		STRUCTURE OVER LEWIS DITCH SEE SHEET 22 / 27.	
																		MAINTENANCE OF TRAFFIC	
	LUMP													614	12420	LUMP		DETOUR SIGNING	
	20													614	13000	20	CU YD	ASPHALT CONCRETE FOR MAINTAINING TRAFFIC	
	LUMP													614	11000	LUMP		MAINTAINING TRAFFIC	
														619	16000	3	MONTH	FIELD OFFICE, TYPE A	
LUMP														623	10000	LUMP		CONSTRUCTION LAYOUT STAKES	
														624	10000	LUMP		MOBILIZATION	

CALCULATED

CHECKED

GENERAL SUMMARY

MAR-309-6.13

I:\Projects\mar\309\0617.011\83957\Production\roadway\sheets\summaries.dgn SHEET_GG002 25-FEB-2011 4:06PM lwright1

REFERENCE SHEET	STATION FROM	STATION TO	SIDE	LENGTH FT	CADD GENERATED AREA SQ FT	204 SUBGRADE COMPACTION (L * W)/9 AVG. WIDTH FT	204 AREA SQ YD	301 8" ASPHALT CONCRETE BASE, PG 64-22 (L*W) * (8.0/12)/27 AVG. WIDTH FT	301 VOLUME CU YD	304 6" AGGREGATE BASE (L*W) * (6.0/12)/27 AVG. WIDTH FT	304 VOLUME CU YD	304 6" AVG. AGGREGATE BASE (L*W) * (6.0/12)/27 AVG. WIDTH FT	304 VOLUME CU YD	304 8" AGGREGATE BASE (CADD)*(8.0/12)/27 AVG. AREA SQ FT	304 VOLUME CU YD	407 TACK COAT (0.075 GAL/SQ. YD.) (L * W)/9 * 0.075 AVG. WIDTH FT	407 GALLON	407 TACK COAT FOR INTERMEDIATE COURSE (0.05 GAL/SQ. YD.) (L * W)/9 * 0.05 AVG. WIDTH FT	407 GALLON	408 PRIME COAT (0.04 GAL/SQ. YD.) (L * W)/9 * 0.04 AVG. WIDTH FT	408 GALLON	448 3.0" ASPHALT CONCRETE SURFACE COURSE, TYPE 1, PG64-22 (L*W) * (3.0/12)/27 AVG. WIDTH FT	448 VOLUME CU YD	REMARKS
15	4+40.79	4+69.17	LT	28.38	381.21	13.43	43	13.43	10	13.43	8.0					13.43	4	13.43	3	13.43	2	13.43	4	
15	4+40.79	4+69.17	RT	28.38	370.86	13.07	42	13.07	10	13.07	7.0					13.07	4	13.07	3	13.07	2	13.07	4	
15	4+69.17	5+17.34	LT	48.17	674.38	14.00	75	14.00	17	14.00	13.0					14.00	6	14.00	4	14.00	3	14.00	7	
15	4+69.17	5+17.34	RT	48.17	674.38	14.00	75	14.00	17	14.00	13.0					14.00	6	14.00	4	14.00	3	14.00	7	
15	5+17.34	5+42.10	LT	24.76	346.64			14.00	9			14.00	7.0			14.00	3	14.00	2	14.00	2	14.00	4	
15	5+17.34	5+42.10	RT	24.76	346.64			14.00	9			14.00	7.0			14.00	3	14.00	2	14.00	2	14.00	4	
15	5+42.10	± 5+70.00	LT	27.90	390.60	14.00	44	14.00	10	14.00	8.0					14.00	4	14.00	3	14.00	2	14.00	4	
15	5+42.10	5+46.48	RT	4.38	61.32	14.00	7	14.00	2	14.00	2.0					14.00	1	14.00	1	14.00	1	14.00	1	
15	5+46.48	6+00.00	RT	53.52	691.99	12.93	77	12.93	18	12.93	13.0					12.93	6	12.93	4	12.93	4	12.93	7	
15	5+70.00	6+00.00	LT	30.00	410.16	13.67	46	13.67	11	13.67	8.0					13.67	4	13.67	3	13.67	2	13.67	4	
15	4+27.53	4+85.29	RT	57.76	409.10	7.08	46							409.10	11									DR-1 GRAVEL FIELD DRIVE
											72		14		11									
TOTALS CARRIED TO GENERAL SUMMARY							455		113				97				41		29		23		46	

CALCULATED

CHECKED

PAVEMENT SUBSUMMARY

MAR-309-6.13

I:\Projects\mar\309\0617.011\83957\Production\roadway\sheets\summaries.dgn SHEET_GS001 25-FEB-2011 4:06PM lwright1

RAISED PAVEMENT MARKERS SUBSUMMARY

DETAIL	STANDARD DRAWING TC-65.10
1	EDGE LINE
2	CHANNELIZING LINE
3	LANE LINE
4	CENTER LINE

DETAIL	STANDARD DRAWING TC-65.11
5	ENTRANCE RAMP
6	EXIT RAMP
7	4 LANE DIVIDED TO 2 LANE TRANSITION
8	4 LANE UNDIVIDED TO 2 LANE TRANSITION
9	MULTI-LANE DIVIDED HIGHWAY

DETAIL	STANDARD DRAWING TC-65.11
10	APPROACH W/ LEFT TURN LANE
11	STOP APPROACH
12	TWO WAY LEFT TURN LANE
13	ONE LANE BRIDGE
14	HORIZONTAL CURVE

LOCATION							REFLECTOR TYPE													TOTAL		REMARKS
							ONE WAY				TWO WAY									621	621	
SHEET NO	COUNTY	ROUTE	START LOG POINT	END LOG POINT	LENGTH	DETAIL	W			Y	W W	W R				Y R	Y Y			RPM REMOVED	RPM	
							RIGHT EDGE LINE		LANE LINE	LEFT EDGE LINE	RIGHT EDGE LINE	RIGHT EDGE LINE	CHANNEL-IZING LINE		LANE LINE	LEFT EDGE LINE	CENTER LINE					
			Station	Station	FT		40	80	120	80	40	80	40	80	80	80	20	40	80	EACH	EACH	
15	MAR	309	4+40.79	6+00.00	159.21	4														3		BEGIN TO END WORK
15	MAR	309	4+40.79	6+00.00	159.21	4													3		3	CENTER LINE
				SUBTOTAL															3			
TOTALS CARRIED TO GENERAL SUMMARY																				3	3	

TRAFFIC CONTROL SUBSUMMARY

SHEET NO.	REFERENCE NO.	STATION FROM	STATION TO	SIDE	LENGTH	646 EDGE LINE	646 CENTER LINE	646 EQUIV. SOLID LINE														REMARKS
					FT	MILE	MILE	MILE														
15	EL-1	4+40.79	6+00.00	LT	159	0.04																
15	EL-2	4+40.79	6+00.00	RT	159	0.04																
15	CL-1	4+40.79	6+00.00		159		0.04	0.01														PASSING ZONE
SUBTOTAL								0.01														
TOTALS CARRIED TO GENERAL SUMMARY						0.08	0.04															

CALCULATED

CHECKED

RAISED PAVEMENT MARKERS SUBSUMMARY
AND TRAFFIC CONTROL SUBSUMMARY

MAR-309-6.13

I:\Projects\mar\309\0617.011\83957\Production\roadway\sheets\summaries.dgn SHEET_GS002 25-FEB-2011 4:06PM lwright1

REFERENCE SHEET	STATION FROM	STATION TO	LENGTH FT	SIDE	203 EXCAVATION CU YD	203 EMBANKMENT CU YD	202 PAVEMENT REMOVED, ASPHALT (L*W) / 9 AVG. WIDTH FT	202 PAVEMENT REMOVED, ASPHALT (L*W) / 9 AREA SQ YD	659 SEEDING AND MULCHING SQ YD	REMARKS
16	4+00.00	4+75.00	75.00		64	10			308	QUANTITIES FROM REFERENCE SHEET
17	4+75.00	6+00.00	125.00		168	23			672	QUANTITIES FROM REFERENCE SHEET
18	6+00.00	7+25.00	125.00		25	21			488	QUANTITIES FROM REFERENCE SHEET
	4+40.79	5+17.34	76.55		-35		25	213		DEDUCT FOR PAVEMENT REMOVED (6" ASPHALT)
	5+42.10	6+00.00	57.90		-27		25	161		DEDUCT FOR PAVEMENT REMOVED (6" ASPHALT)
TOTALS CARRIED TO GENERAL SUMMARY					195	54	374		1,468	

THE TOTAL QUANTITY OF SEEDING
AND MULCHING 1,468 SQ YD

ITEM 659 - TOPSOIL:
THE APPLICATION RATE FOR THIS ITEM IS
111 CU YDS PER 1000 SQ YDS OF SEEDING AND SODDING.

1468 SQ YD / 1000 = 1.5

1.5 X 111 CU YDS = 167 CU YDS

TOTAL CARRIED TO GENERAL SUMMARY:
ITEM 659 - TOPSOIL = 167 CU YD

ITEM 659 - COMMERCIAL FERTILIZER:
THE APPLICATION RATE FOR THIS ITEM IS
30 POUNDS PER 1000 SQ FT OF SEEDING AND SODDING.

1,468 SQ YD OF SEEDING AND
MULCHING (FROM TABLE)
1468 X 9 SQ FT / SQ YD = 13,212 SQ FT

13212 / 1,000 = 13.2

13.2 X 30 POUNDS = 396 POUNDS = 0.20 TONS

TOTAL CARRIED TO GENERAL SUMMARY:
ITEM 659 - COMMERCIAL FERTILIZER = 0.20 TON

ITEM 659 - LIME:
THE APPLICATION RATE FOR THIS ITEM IS
BASED ON THE AREA OF SEEDING AND SODDING.

1,468 SQ YD OF SEEDING AND
MULCHING (FROM TABLE)
1468 X 9 SQ FT / SQ YD = 13,212 SQ FT

13212 / 43,560 SQ FT / ACRE = 0.30 ACRE

TOTAL CARRIED TO GENERAL SUMMARY:
ITEM 659 - LIME = 0.30 ACRE

ITEM 659 - REPAIR SEEDING AND MULCHING:
THE APPLICATION RATE FOR THIS ITEM IS
5% OF THE SEEDING AREA.

1,468 SQ YD OF SEEDING AND
MULCHING (FROM TABLE)
1468 SQ YD X 0.05 = 73 SQ YDS

TOTAL CARRIED TO GENERAL SUMMARY:
ITEM 659 - REPAIR SEEDING = 73 SQ YD
AND MULCHING

ITEM 659 - INTER-SEEDING:
THE APPLICATION RATE FOR THIS ITEM IS
5% OF THE SEEDING AREA.

1,468 SQ YD OF SEEDING AND
MULCHING (FROM TABLE)
1468 SQ YD X 0.05 = 73 SQ YDS

TOTAL CARRIED TO GENERAL SUMMARY:
ITEM 659 - INTER-SEEDING = 73 SQ YD

ITEM 659 - WATER:
THE APPLICATION RATE FOR THIS ITEM IS
2 APPLICATIONS OF 300 GALLONS PER 1000
SQ FT OF SEEDING

1,468 SQ YD OF SEEDING AND
MULCHING (FROM TABLE)
1468 X 9 SQ FT / SQ YD = 13,212 SQ FT

13212 / 1,000 = 13.2

13.2 X 300 GAL. X 2 = 7,920 GALLONS = 8 M GAL

TOTAL CARRIED TO GENERAL SUMMARY:
ITEM 659 - WATER = 8 M GAL

CALCULATED
CHECKED

EARTHWORK AND SEEDING SUBSUMMARY

MAR-309-6.13

I:\Projects\mar\309\0617.011\83957\Production\roadway\sheets\summaries.dgn SHEET_GC001 25-FEB-2011 4:06PM lwright1

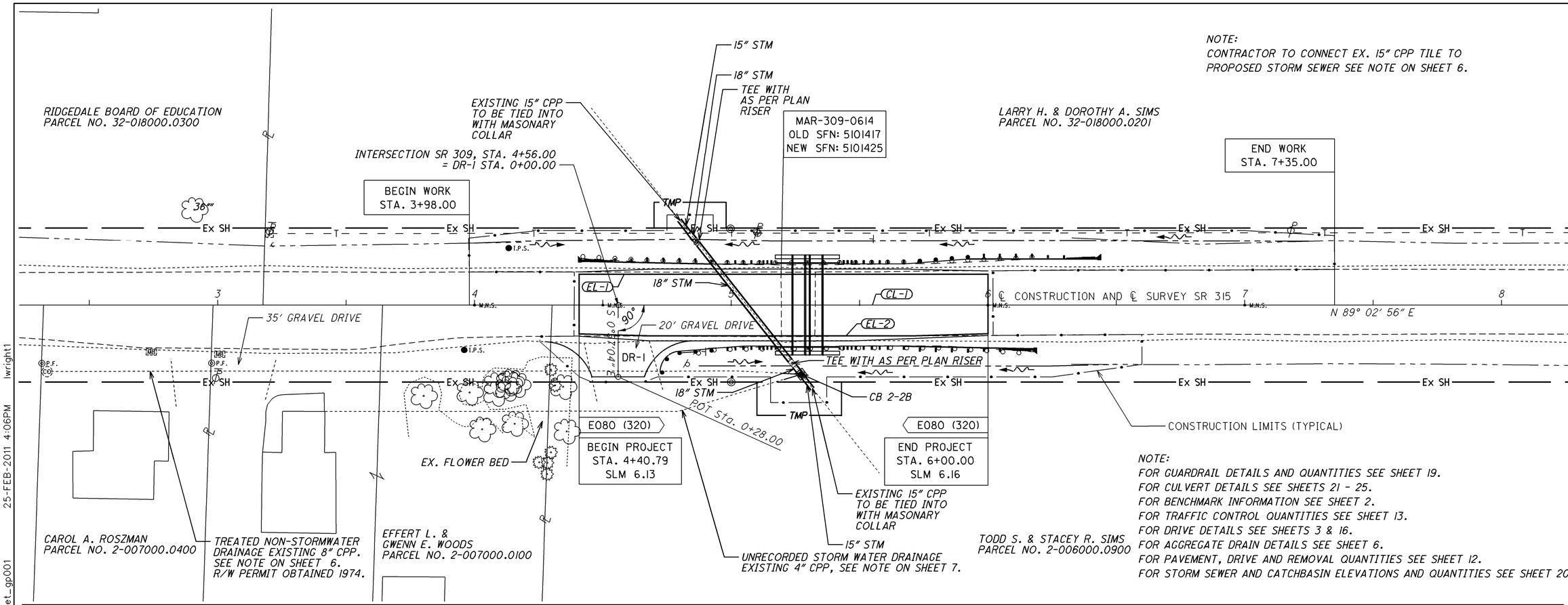
RIDGEDALE BOARD OF EDUCATION
PARCEL NO. 32-018000.0300
EXISTING 15" CPP TO BE TIED INTO WITH MASONARY COLLAR
INTERSECTION SR 309, STA. 4+56.00 = DR-1 STA. 0+00.00
15" STM
18" STM
TEE WITH AS PER PLAN RISER
MAR-309-0614
OLD SFN: 5101417
NEW SFN: 5101425
LARRY H. & DOROTHY A. SIMS
PARCEL NO. 32-018000.0201
END WORK
STA. 7+35.00
BEGIN WORK
STA. 3+98.00
NOTE:
CONTRACTOR TO CONNECT EX. 15" CPP TILE TO PROPOSED STORM SEWER SEE NOTE ON SHEET 6.
Ex SH
TMP
EL-1
CL-1
EL-2
℄ CONSTRUCTION AND ℄ SURVEY SR 315
N 89° 02' 56" E
S 0° 17' 04" E
90°
20' GRAVEL DRIVE
35' GRAVEL DRIVE
DR-1
TEE WITH AS PER PLAN RISER
CB 2-2B
POT STA. 0+28.00
E080 (320)
BEGIN PROJECT
STA. 4+40.79
SLM 6.13
END PROJECT
STA. 6+00.00
SLM 6.16
EX. FLOWER BED
CONSTRUCTION LIMITS (TYPICAL)
EXISTING 15" CPP TO BE TIED INTO WITH MASONARY COLLAR
15" STM
UNRECORDED STORM WATER DRAINAGE EXISTING 4" CPP, SEE NOTE ON SHEET 7.
CAROL A. ROSZMAN
PARCEL NO. 2-007000.0400
TREATED NON-STORMWATER DRAINAGE EXISTING 8" CPP. SEE NOTE ON SHEET 6. R/W PERMIT OBTAINED 1974.
EFFERT L. & GWENN E. WOODS
PARCEL NO. 2-007000.0100
TODD S. & STACEY R. SIMS
PARCEL NO. 2-006000.0900
NOTE:
FOR GUARDRAIL DETAILS AND QUANTITIES SEE SHEET 19.
FOR CULVERT DETAILS SEE SHEETS 21 - 25.
FOR BENCHMARK INFORMATION SEE SHEET 2.
FOR TRAFFIC CONTROL QUANTITIES SEE SHEET 13.
FOR DRIVE DETAILS SEE SHEETS 3 & 16.
FOR AGGREGATE DRAIN DETAILS SEE SHEET 6.
FOR PAVEMENT, DRIVE AND REMOVAL QUANTITIES SEE SHEET 12.
FOR STORM SEWER AND CATCHBASIN ELEVATIONS AND QUANTITIES SEE SHEET 20.
894.54 894.58 894.62 894.66 894.71 894.75 894.79 894.83 894.88
901 899 897 895 893 891 889 887
0.13 %
0.21 %
0.05 %
PROPOSED DUAL ELLIPTICAL 34" X 53", TYPE A, 706.04
EXISTING 10' X 4' SLAB BRIDGE
894.63 894.58 894.54 894.50 894.46 894.47 894.48 894.49 894.50 894.51 894.54 894.59 894.61 894.61 894.60 894.67 894.75 894.85 894.88 894.89 894.91 894.95 894.99 895.10 895.21 895.33 895.48 895.63 895.74
3 4 5 6 7 8
HORIZONTAL SCALE IN FEET
0 10 20 40
CALCULATED
CHECKED
PLAN AND PROFILE
STA. 2+40.00 TO STA. 8+00.00
MAR-309-6.13
15
27
I:\Projects\mar\309\0617.011\83957\Production\roadway\sheets\plan_profile.dgn
sheet_gp001
25-FEB-2011 4:06PM
lwright1

SEEDING END WIDTH	SEEDING SQ. YDS.	END AREA CUT	END AREA FILL	VOLUME CUT	VOLUME FILL
50.2		46	4		
	102			31	4
46.8		42	6		
	83			22	3
51.4		37	5		
	75			11	2
34.3		1	2		
	48			0	1
0		0	0		
	308			64	10

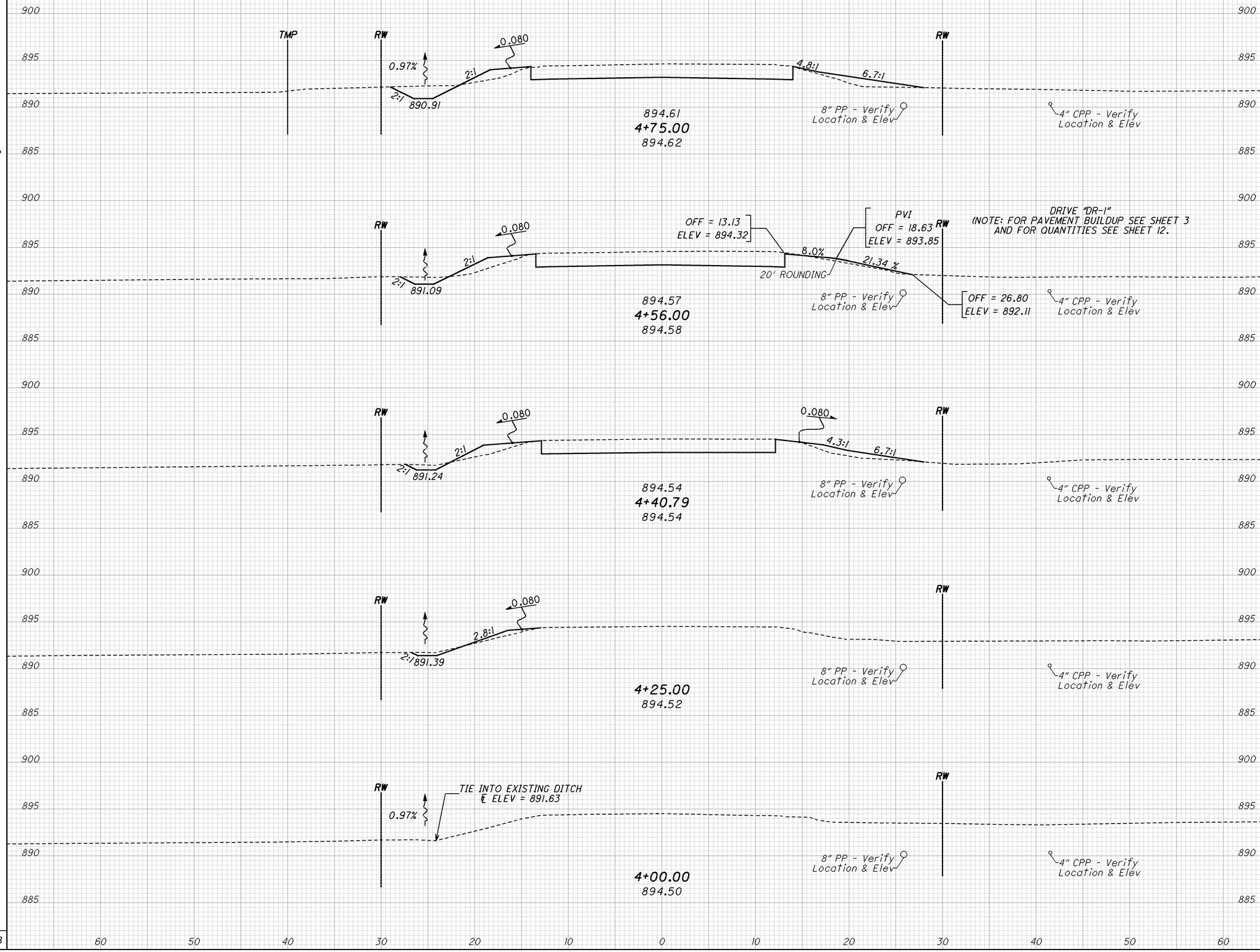

CALCULATED

CHECKED

CROSS SECTIONS
STA. 4+00.00 TO STA. 4+75.00

MAR-309-6.13

16
27

I:\Projects\mar\309\0617.011\83957\Production\roadway\sheets\Xsection.dgn SHEET_XS001 25-FEB-2011 4:06PM lwright1

SEEDING END WIDTH	SEEDING SQ. YDS.	END AREA CUT	END AREA FILL	VOLUME CUT	VOLUME FILL
48.5		39	8		
	134			80	13
47.7		44	5		
	132			42	5
47.1		AHEAD 47	6		
	268				
49.2		BACK 54	6		
	138			46	5
	672			168	23

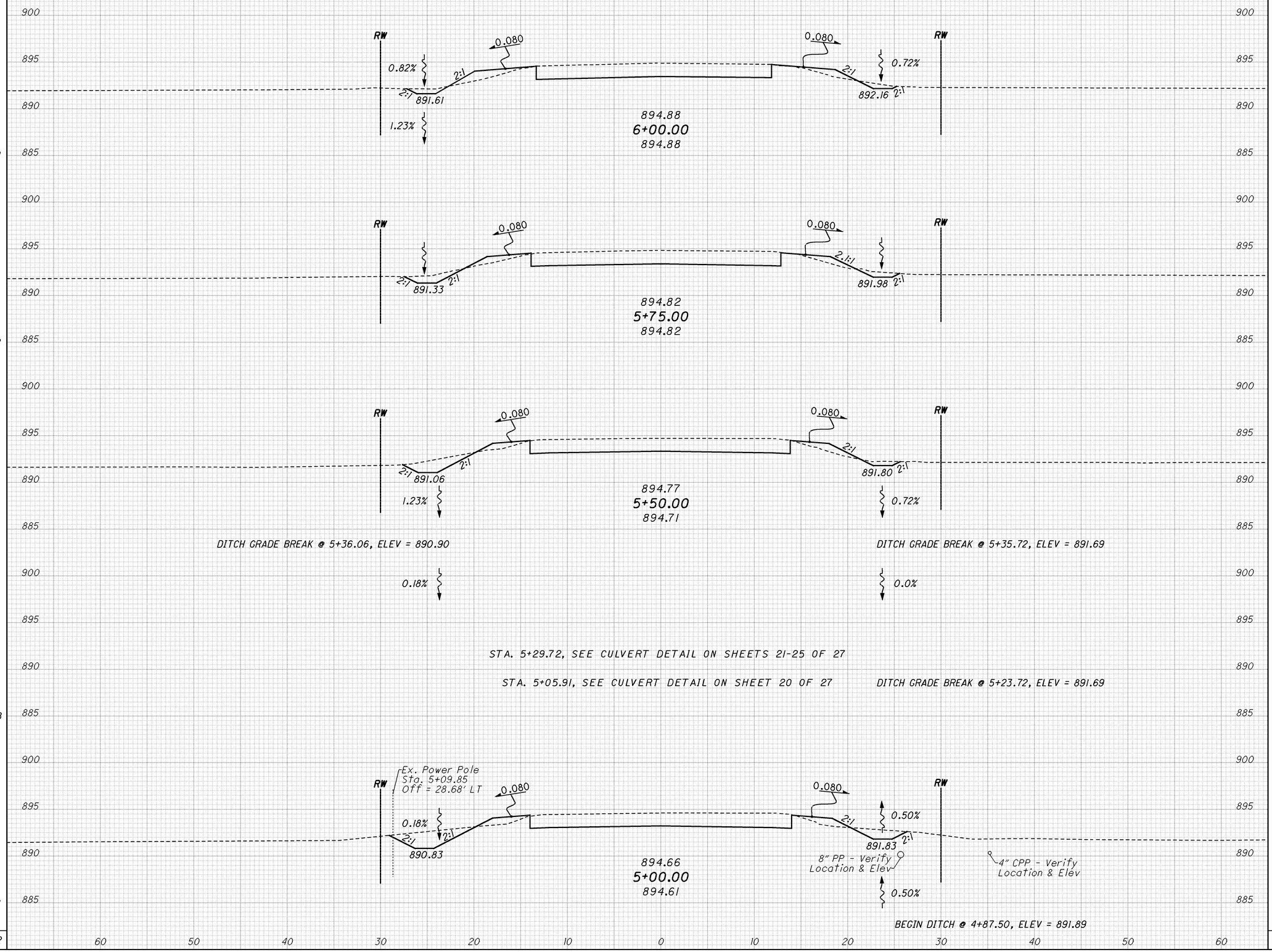

CALCULATED

CHECKED

CROSS SECTIONS

STA. 5+00.00 TO STA. 6+00.00

MAR-309-6.13

17
27

I:\Projects\mar\309\0617.011\83957\Production\roadway\sheets\Xsection.dgn SHEET_XS002 25-FEB-2011 4:06PM lwright1

SEEDING END WIDTH	SEEDING SQ. YDS.	END AREA CUT	END AREA FILL	VOLUME CUT	VOLUME FILL
0		0	0		
	47			0	2
33.7		1	5		
	94			1	5
34.3		1	5		
	96			1	4
34.5		1	4		
	116			3	4
48.8		5	4		
	135			20	6
	488			25	21

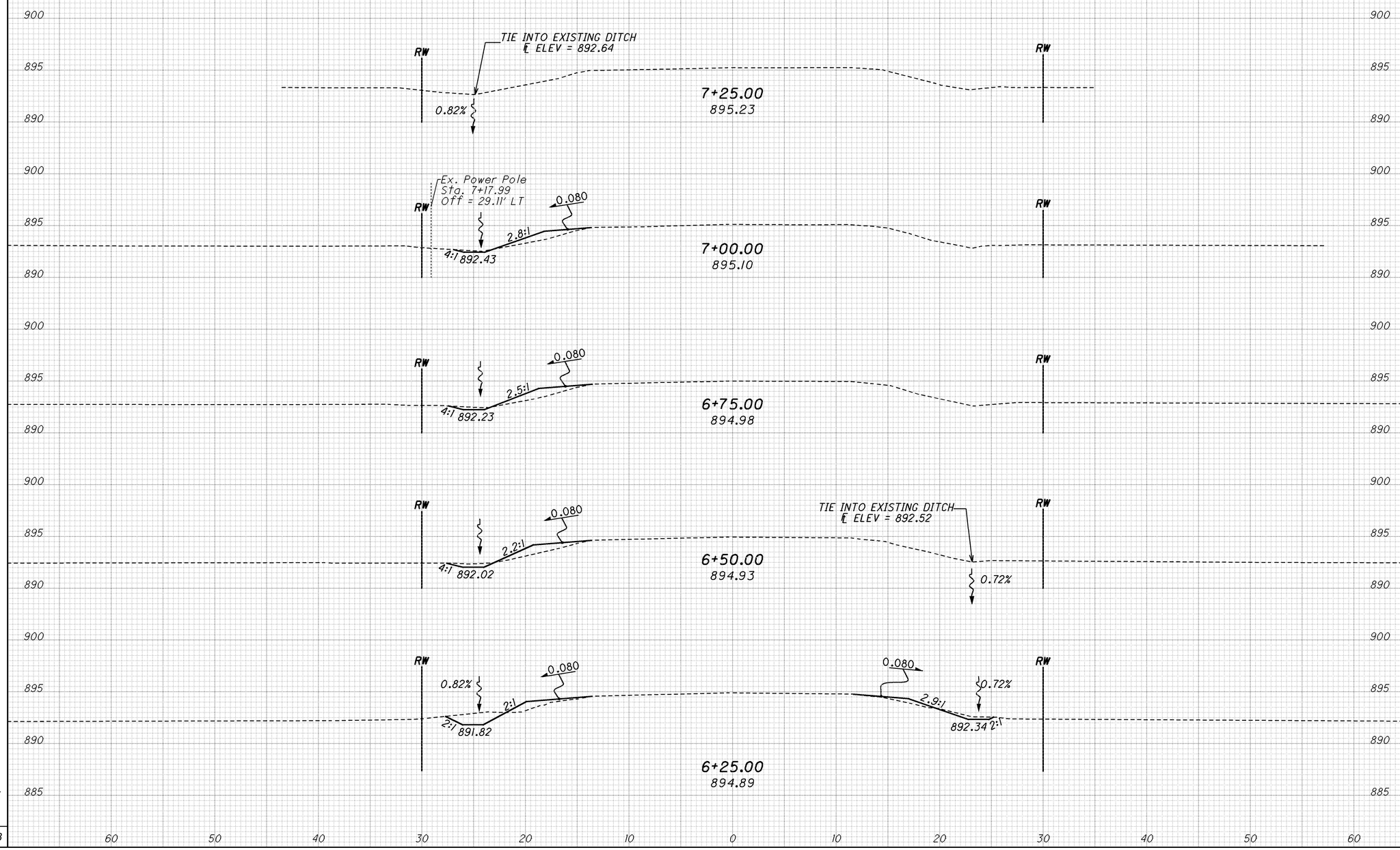

CALCULATED

CHECKED

CROSS SECTIONS
STA. 6+25.00 TO STA. 7+25.00

MAR-309-6.13

18
27

25-FEB-2011 4:06PM lwright1

SHEET_XS003

I:\Projects\mar\309\0617.011\83957\Production\roadway\sheets\Xsection.dgn

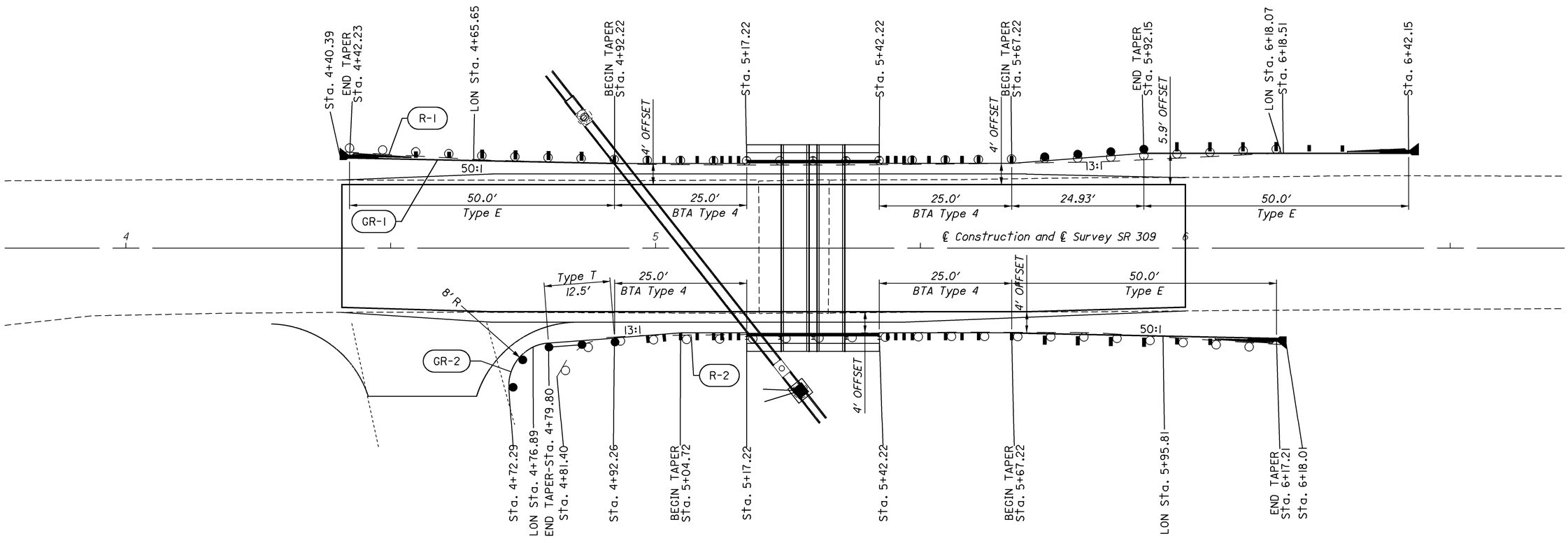

REF. NO.	STATION	TO STATION	SIDE	202 GUARDRAIL REMOVED	202 ANCHOR ASSEMBLY REMOVED, TYPE A	606 GUARDRAIL, TYPE 5	606 GUARDRAIL NESTED TYPE 5, WITH TUBULAR BACKUP	606 BRIDGE TERMINAL ASSEMBLY, TYPE 4	606 ANCHOR ASSEMBLY, TYPE E	606 ANCHOR ASSEMBLY, TYPE T	626 BARRIER REFLECTOR, TYPE A2	REMARKS
				FT	EACH	FT	FT	EACH	EACH	EACH	EACH	
R-1	4+40.39	6+18.51	LT	101	2							
R-2	4+81.40	6+18.01	RT	98	1							
GR-1	4+42.23	4+92.22	LT						1			
GR-1	4+92.22	5+17.22	LT			25.0		1				
GR-1	5+17.22	5+42.22	LT				25.0					
GR-1	5+42.22	5+67.22	LT			25.0		1				
GR-1	5+67.22	5+92.15	LT			25.0						
GR-1	5+92.15	6+42.15	LT						1			
GR-1	4+42.23	6+42.15	LT								3	
GR-2	4+72.29	4+79.80	RT			12.5						1 - 8' RADIUS PANEL
GR-2	4+79.80	4+92.26	RT							1		
GR-2	4+92.26	5+17.22	RT			25.0		1				
GR-2	5+17.22	5+42.22	RT				25.0					
GR-2	5+42.22	5+67.22	RT			25.0		1				
GR-2	5+67.22	6+17.21	RT						1			
GR-2	4+72.29	6+17.21	RT								3	
TOTALS CARRIED TO GENERAL SUMMARY				199	3	137.5	50.0	4	3	1	6	

HORIZONTAL SCALE IN FEET 0 5 10 20

CALCULATED

CHECKED

GUARDRAIL PLAN

MAR-309-6.13

I:\Projects\mar\309\0617.011\83957\Production\roadway\sheets\guardrail.dgn SHEET_GR001 25-FEB-2011 4:06PM lwright1

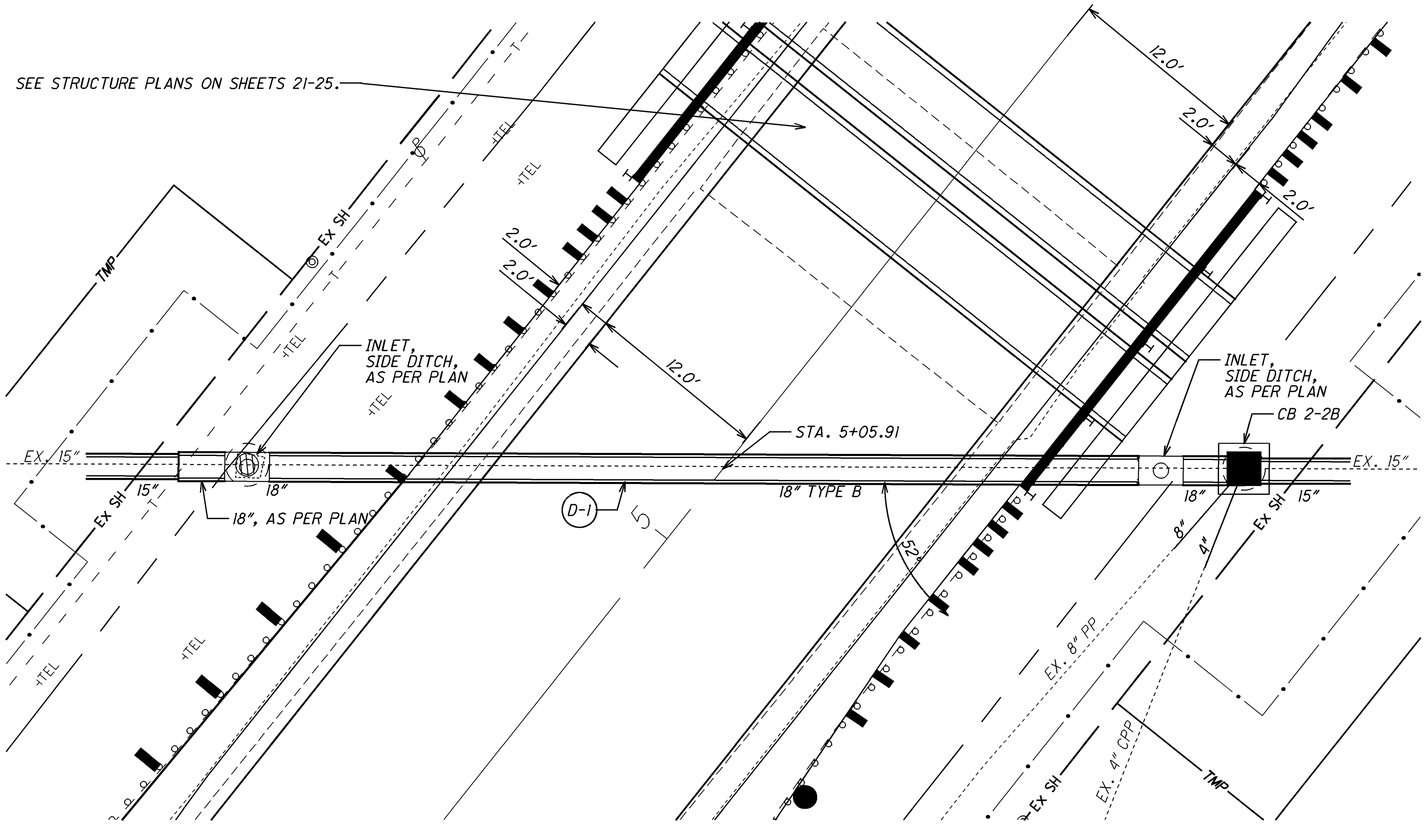

REF. NO.	STATION FROM	STATION TO	SIDE																				
				603 15" CONDUIT, TYPE F	603 18" CONDUIT, TYPE B	603 18" CONDUIT, TYPE B, 706.02	604 CB NO. 7, AS PER PLAN	604 CB NO. 2-2B	202 PIPE REMOVED, 24" AND UNDER	202 CATCH-BASIN REMOVED													
				FT	FT	FT	EACH	EACH	FT	EACH													
D-1	4+80.02	531.66	LT/RT	13	17	58	2	1	84	2													
TOTALS CARRIED TO GENERAL SUMMARY				13	17	58	2	1	84	2													

NOTE:
CONTRACTOR TO TAKE ALL NECESSARY PRECAUTIONS TO ENSURE SEDIMENT DOES NOT ENTER THE FIELD TILE SYSTEM DURING CONSTRUCTION.

PROPOSED CONDUIT
TYPE: 18", TYPE B CONDUIT SKEW: 52°

EXISTING CONDUIT
TYPE: 15" CPP SKEW: 52°

NOTE:
CONTRACTOR SHALL NOT BE REQUIRED TO REMOVE ANY SEDIMENT THAT ACCUMULATES IN THE CULVERT DURING OR AFTER CONSTRUCTION.

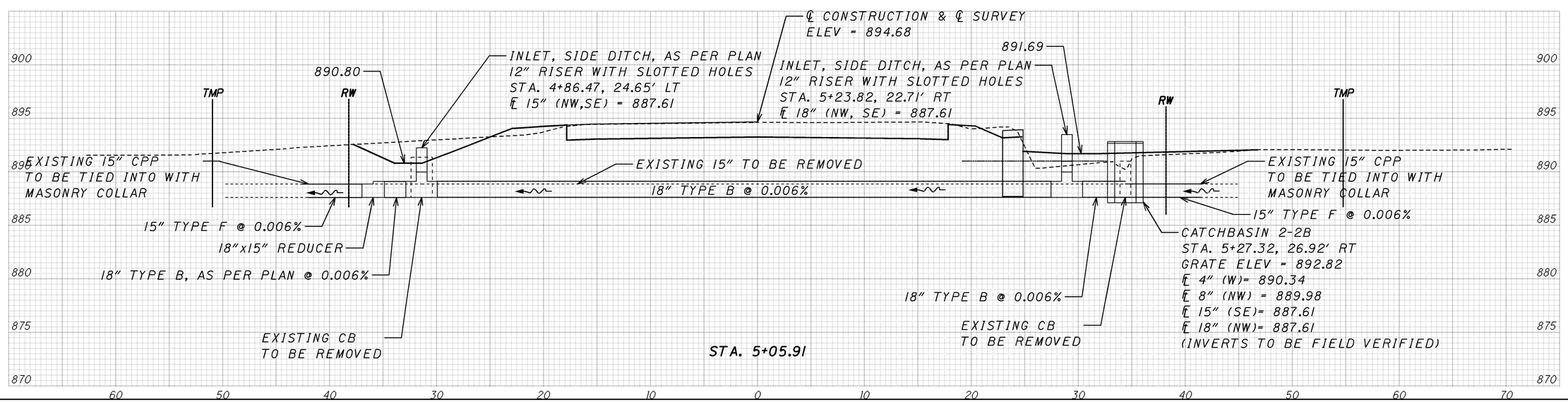

HORIZONTAL SCALE IN FEET
0 2.5 5 10

CALCULATED
CHECKED

STORM SEWER PROFILE AND QUANTITIES
STA. 5+05.91

MAR-309-6.13

20
27

I:\Projects\mar\309\0617.011\83957\Production\roadway\sheets\CULVERT_DETAIL.dgn SHEET_DC002 25-FEB-2011 4:06PM lwright1

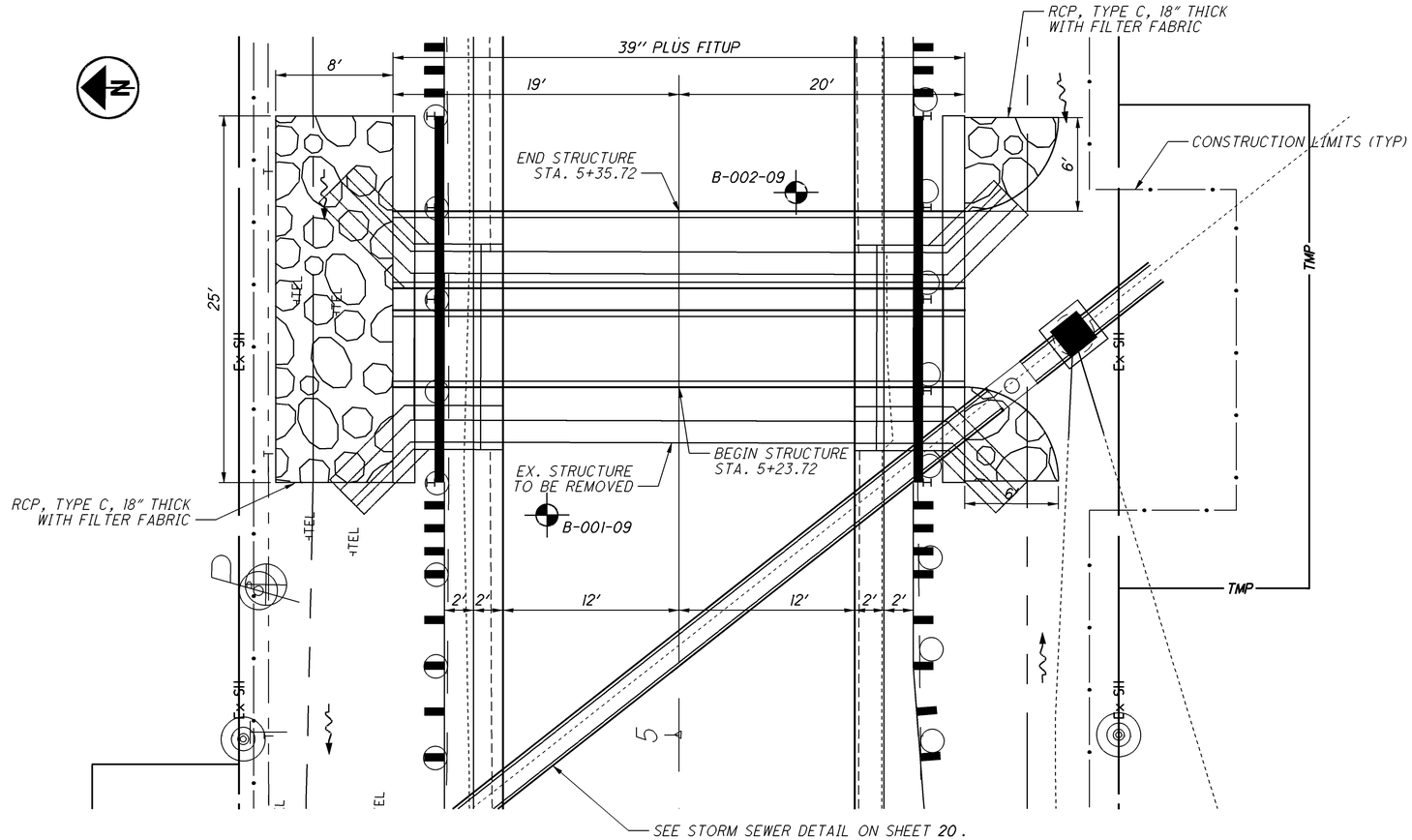

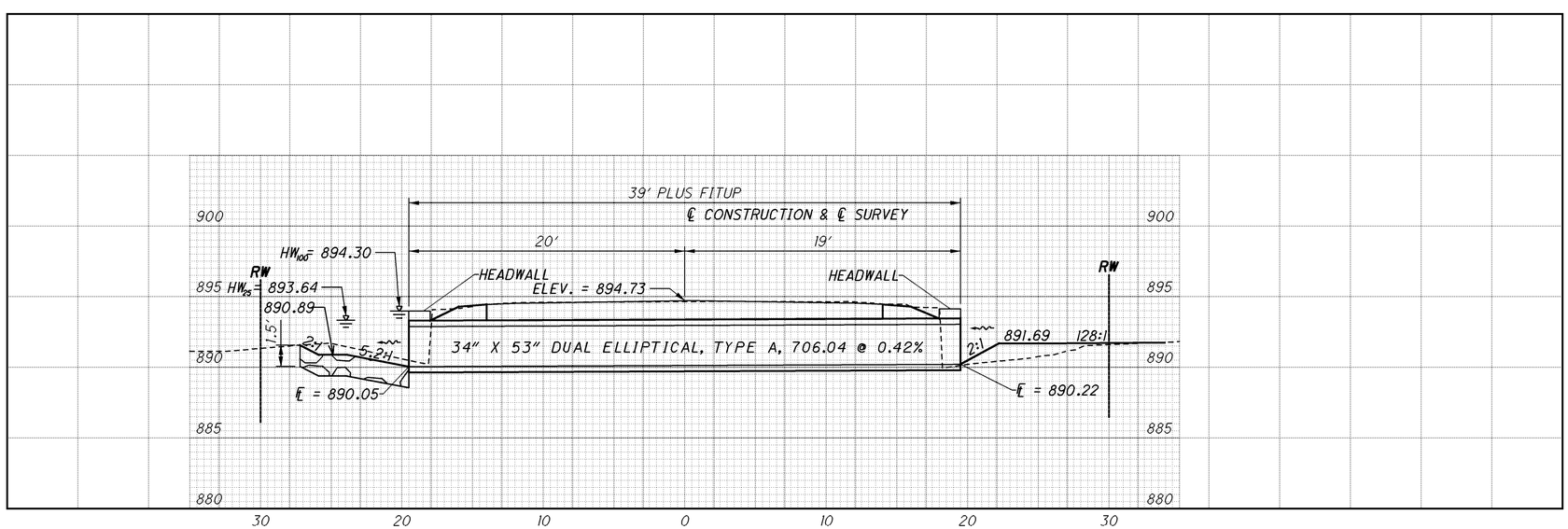

BENCHMARK DATA

BM #1 STA. 0+00.02,	ELEV. 895.28	OFFSET 0.00' RT
BM #2 STA. 2+31.52,	ELEV. 892.38,	OFFSET 22.71' RT
BM #3 STA. 5+10.25,	ELEV. 893.08,	OFFSET 28.16' LT
BM #4 STA. 9+99.86,	ELEV. 894.62,	OFFSET 30.00' LT

FOR ADDITIONAL BENCHMARK INFORMATION. SEE ROADWAY PLAN SHEET 2/21

NOTES

EARTHWORK LIMITS SHOWN ARE APPROXIMATE. ACTUAL SLOPES SHALL CONFORM TO PLAN CROSS SECTIONS.

DESIGN TRAFFIC:
2011 ADT = 2,000 2031 ADTT = 280
2031 ADT = 2,200 2031 ADTT = 308
DIRECTIONAL DISTRIBUTION = 55%

LEGEND

BORING LOCATION

HYDRAULIC DATA

DRAINAGE AREA = 0.22 SQ. MILES

Q (25) =	25.20 CFS	V (25) =	5.39 FT/S
Q (100) =	32.10 CFS	V (100) =	6.87 FT/S
HW (25) =	893.64 FT		
HW (100) =	894.30 FT		

EXISTING STRUCTURE

TYPE: REINFORCED CONCRETE SLAB BRIDGE
SPANS: 10 FEET
ROADWAY: 32 FEET F/F GUARDRAIL
SKEW: 0°
APPROACH SLABS: NONE
ALIGNMENT: TANGENT
CROWN: NORMAL
STRUCTURAL FILE NUMBER: 5101417
DATE BUILT: 1932
DISPOSITION: TO BE REPLACED

PROPOSED STRUCTURE

TYPE: 34" X 53" DUAL ELLIPTICAL, TYPE A CONDUIT
ROADWAY: 32 FEET F/F GUARDRAIL
LOADING: HL-93 AND ALTERNATE MILITARY
SKEW: 0°
APPROACH SLABS: NONE
ALIGNMENT: TANGENT
CROWN: 0.016 FT/FT
COORDINATES: LATITUDE N 40°38'37"
LONGITUDE W 83°18'09"

DESIGN AGENCY
ODOT DISTRICT SIX
IN-HOUSE DESIGN

DESIGNED	DRAWN	REVIEWED	DATE
LLW	LLW		
CHECKED	REVISED	STRUCTURE FILE NUMBER	
MK		5101425	

MARION COUNTY
STA. 5+17.34
STA. 5+42.10

SITE PLAN
BRIDGE NO. MAR-309-614
OVER LEWIS DITCH

MAR-309-6.13
PID No. 83957

I:\Projects\mar\309\0617.011\83957\Production\bridge\MAR309_0617S\sheets\CULVERT_DETAIL.dgn SHEET_SP01 25-FEB-2011 4:06PM lwright1

GENERAL NOTES

DESIGN SPECIFICATIONS:
THIS STRUCTURE CONFORMS TO THE "LRFD BRIDGE DESIGN SPECIFICATIONS" ADOPTED BY THE AMERICAN ASSOCIATION OF STATE HIGHWAY AND TRANSPORTATION OFFICIALS, 4TH EDITION, INCLUDING THE 2008 INTERIM SPECIFICATIONS AND THE ODOT BRIDGE DESIGN MANUAL, 2007.

DESIGN DATA:
THE FOLLOWING DESIGN DATA IS ASSUMED:
- INTERNAL ANGLE OF FRICTION = 30 DEGREES
- COEFFICIENT OF FRICTION = 0.30
- UNIT WEIGHT OF SOIL = 0.120 KCF
- UNIT WEIGHT OF CONCRETE = 0.150 KCF
- SLOPE OF BACKFILL = 2:1
- MAXIMUM FOUNDATION BEARING PRESSURE = 2.0 K.S.F.

FOOTINGS, WINGWALLS, AND FORESLOPE WALLS:
CONCRETE - CONCRETE SHALL BE CLASS C. COMPRESSIVE STRENGTH 4 KSI (FOOTING, WINGWALLS, FORESLOPE WALLS)

REINFORCING STEEL - BARS SHALL BE #5 AND EPOXY COATED. ASTM A615 OR A996GRADE 60 MINIMUM YIELD STRENGTH 60 KSI

FOUNDATION - WHERE THE SOIL BORINGS INDICATE A BEARING CAPACITY OF LESS THAN 2,600 POUNDS PER SQUARE FOOT, IT WILL BE NECESSARY TO INCREASE THE WIDTH OF THE FOOTING.

PRECAST CONCRETE:
AT THE OPTION OF THE CONTRACTOR, PRECAST WINGWALLS AND FORESLOPE WALLS MAY BE FURNISHED PER ITEM 602.03 PRECAST STRUCTURES, PROVIDED THEY ARE SIZED TO MEET THE SOIL LOADING AND RESISTANCE PARAMETERS, AND MEET OR EXCEED THE MATERIAL STRENGTHS AND WALL LIMITS AS SHOWN AND SPECIFIED. FULL COMPENSATION FOR THE PRECAST SUBSTITUTION IS BASED ON THE NUMBER OF CUBIC YARDS REQUIRED FOR THE CORRESPONDING CAST-IN-PLACE STRUCTURE.

UTILITY DISPOSITION:
THE FOLLOWING UTILITIES ARE KNOWN TO BE IN CLOSE PROXIMITY TO THE STRUCTURE. BELOW IS A LIST OF THESE UTILITIES ALONG WITH THE DISPOSITION OF EACH:

- AMERICAN ELECTRIC POWER: AERIAL POWER LINE RUNS ALONG THE NORTH SIDE OF SR-309.

- VERIZON: UNDERGROUND TELEPHONE LINE RUNS ALONG THE NORTH SIDE OF SR-309.

FOR A COMPLETE LISTING OF ALL UTILITIES WITHIN THE PROJECT LIMITS, INCLUDING CONTACT INFORMATION, SEE THE GENERAL NOTES SHEETS 4 OF 27 .

BACKFILL LIMITATION:
WHEN THE DESIGN HEIGHT IS GREATER THAN 10 FT, THE BACKFILL BEHIND THE WINGWALLS SHALL NOT BE PLACED HIGHER THAN THE ELEVATION OF THE SOIL ABOVE THE TOE. WHEN THE SOIL ABOVE THE TOE IS AT ITS FINISHED ELEVATION, THE REMAINDER OF THE BACKFILL MAY BE PLACED.

BASIS OF PAYMENT:
ALL MATERIAL, LABOR, EQUIPMENT, AND INCIDENTALS REQUIRED TO CONSTRUCT THE FOOTING, CUTOFF WALL, WINGWALLS AND FORESLOPE WALL SHALL BE INCLUDED WITH ITEM 602 - CONCRETE MASONRY. PAYMENT FOR REINFORCING STEEL SHALL BE INCLUDED WITH ITEM 602 - CONCRETE MASONRY.

ESTIMATED QUANTITIES

ITEM	EXT	TOTAL	UNIT	DESCRIPTION	INLET	OUTLET	SUPER.	GEN.	SEE SHT.
202	11000	LUMP		STRUCTURE REMOVED				LUMP	
503	21300	LUMP		UNCLASSIFIED EXCAVATION				LUMP	
601	32204	15	CU YD	ROCK CHANNEL PROTECTION, TYPE C WITH FABRIC FILTER	3	12			
602	20000	22.2	CU YD	CONCRETE MASONRY	11.1	11.1			
603	52900	78	FT	34" X 53" CONDUIT, TYPE A, 706.04				78	

DESIGN AGENCY
ODOT DISTRICT SIX
IN-HOUSE DESIGN

DESIGNED	DRAWN	REVIEWED	DATE
LLW	LLW		
CHECKED	REVISED	STRUCTURE FILE NUMBER	
MK		5101425	

STRUCTURE NOTES #1
BRIDGE NO. MAR-309-614
OVER LEWIS DITCH

MAR-309-6.13
PID No. 83957

I:\Projects\mar\309\0617.011\83957\Production\bridge\MAR309_0617S\sheets\CULVERT_DETAIL.dgn Sheet_gn01 25-FEB-2011 4:17PM lwright1

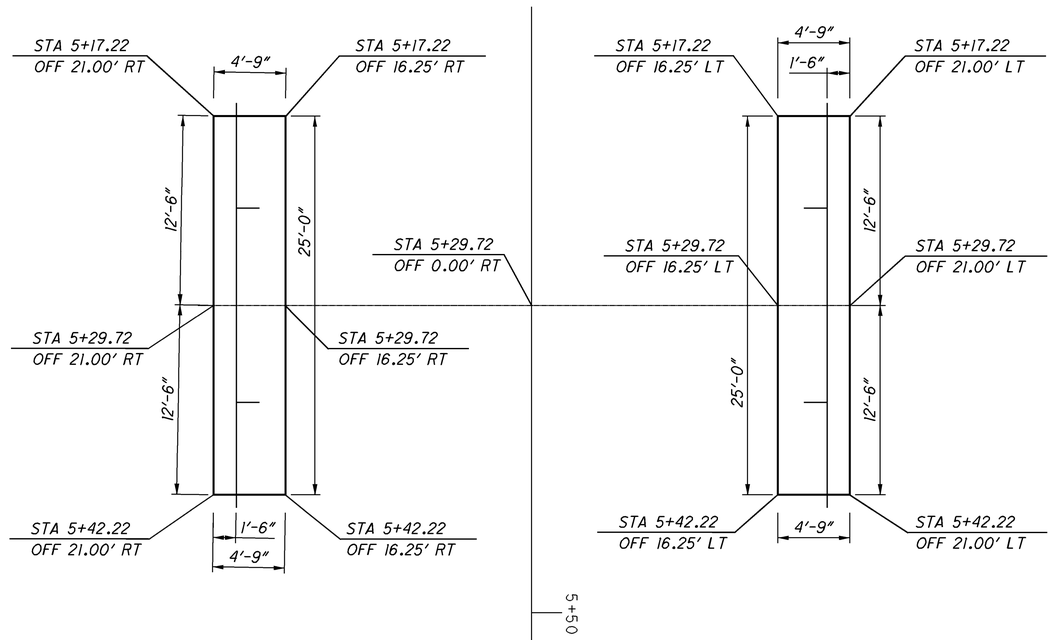

FOOTING LAYOUT PLAN

N

DESIGN AGENCY
ODOT DISTRICT SIX
IN-HOUSE DESIGN

DESIGNED	DRAWN	REVIEWED	DATE
LLW	LLW		
CHECKED	REVISED	STRUCTURE FILE NUMBER	
		5101425	

FOOTING LAYOUT DETAILS
BRIDGE NO. MAR-309-614
OVER LEWIS DITCH

MAR-309-6.13
PID No. 83957

I:\Projects\mar\309\0617.011\83957\Production\bridge\MAR309_0617S\sheets\CULVERT_DETAIL.dgn Sheet_md02 25-FEB-2011 4:06PM lwright1

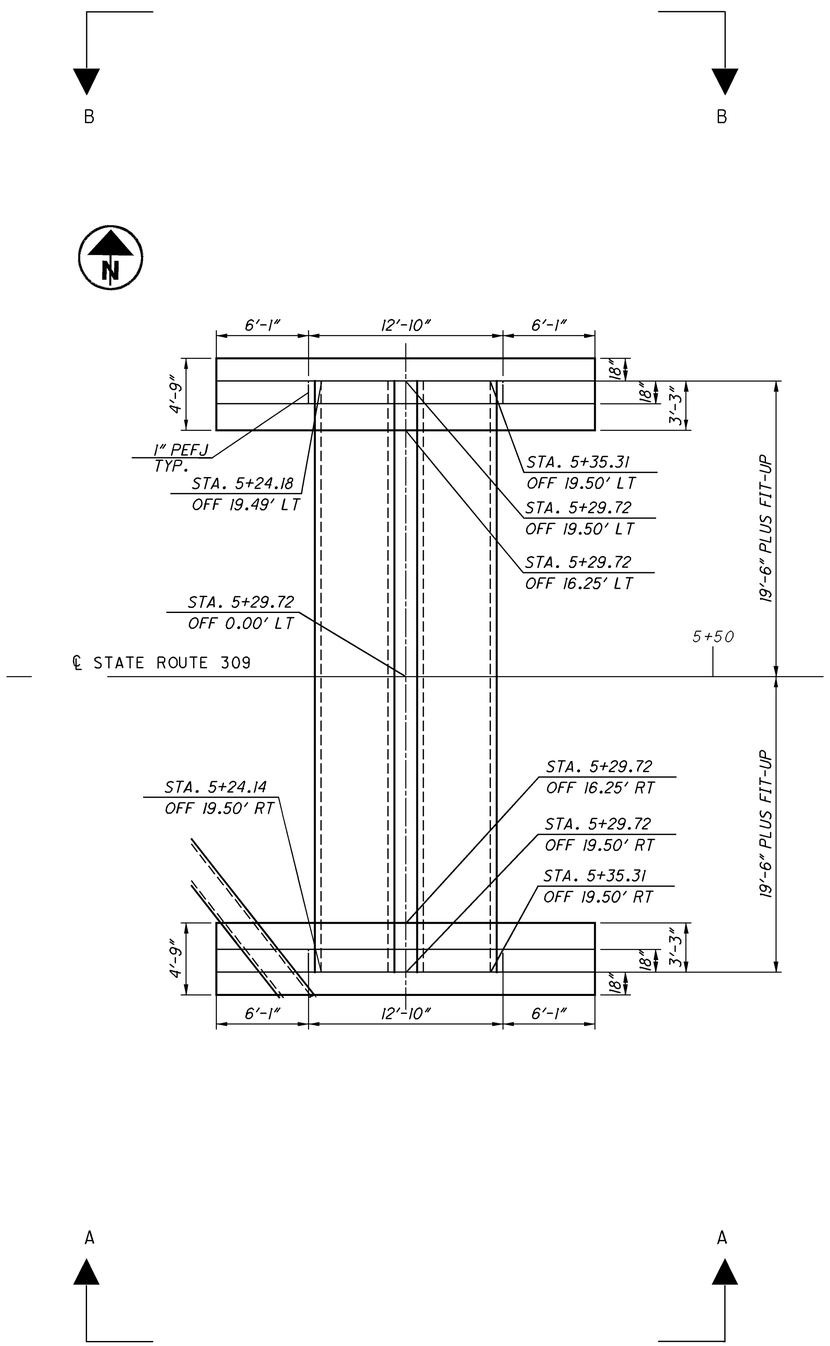

CULVERT AND WINGWALL LAYOUT

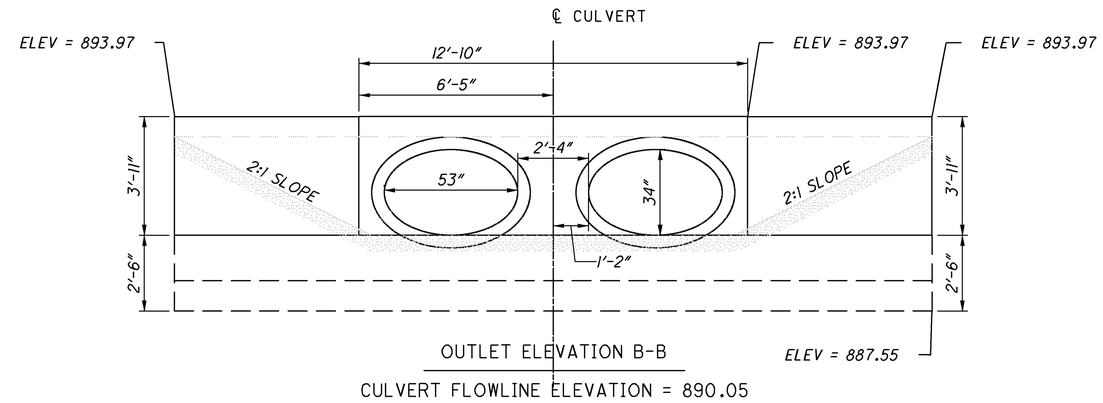

OUTLET ELEVATION B-B

CULVERT FLOWLINE ELEVATION = 890.05

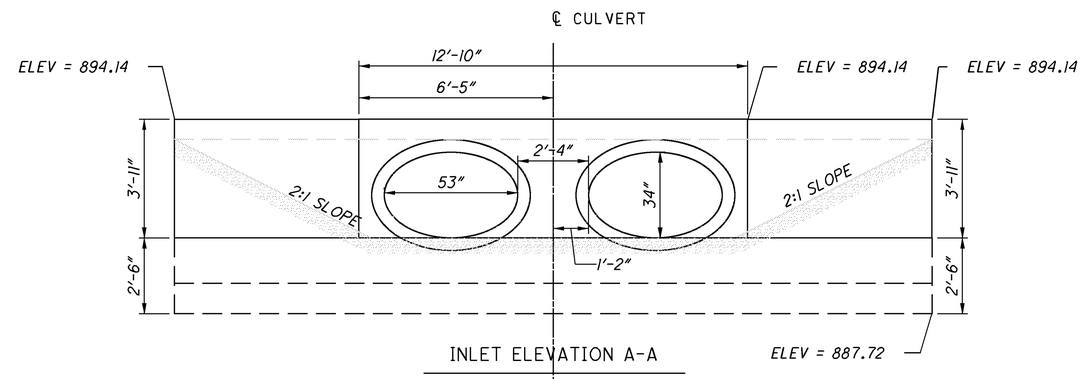

INLET ELEVATION A-A

CULVERT FLOWLINE ELEVATION = 890.22

DESIGN AGENCY
ODOT DISTRICT SIX
IN-HOUSE DESIGN

DESIGNED	DRAWN	REVIEWED	DATE
LLW	LLW		
CHECKED	REVISED	STRUCTURE FILE NUMBER	
		5101425	

CULVERT LAYOUT AND WINGWALL ELEVATIONS

BRIDGE NO. MAR-309-614
OVER LEWIS DITCH

MAR-309-6.13
PID No. 83957

4 / 5

24 / 27

I:\Projects\mar\309\0617.011\83957\Production\bridge\MAR309_0617S\sheets\CULVERT_DETAIL.dgn Sheet_md01 25-FEB-2011 4:06PM lwright1

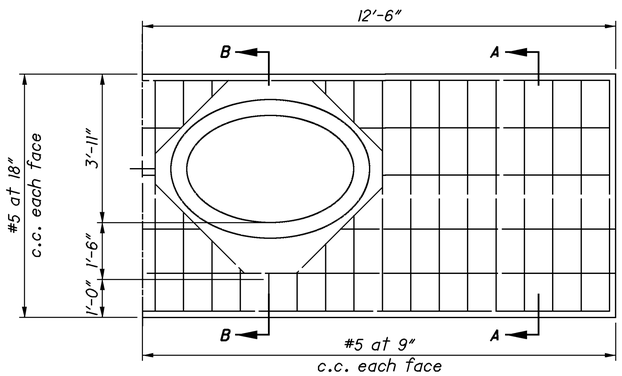

WINGWALL ELEVATION

(SHOWN AS OPPOSITE HAND - SEE FOOTING LAYOUT PLAN FOR CORRECT ORIENTATION)
(HALF VIEW SHOWN)

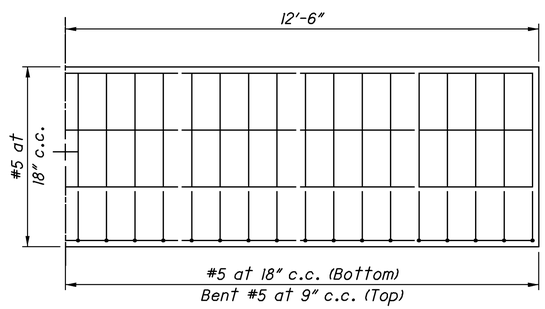

FOOTING PLAN

(SHOWN AS OPPOSITE HAND - SEE FOOTING LAYOUT PLAN FOR CORRECT ORIENTATION)
(HALF VIEW SHOWN)

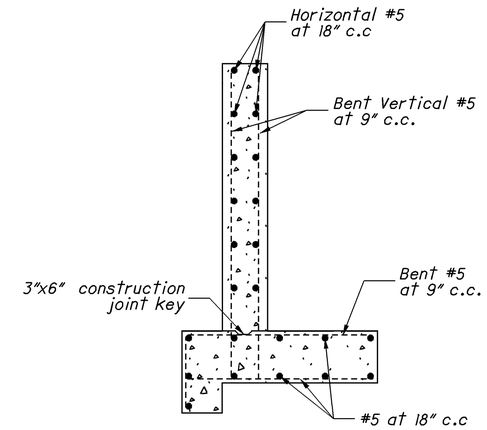

SECTION A-A

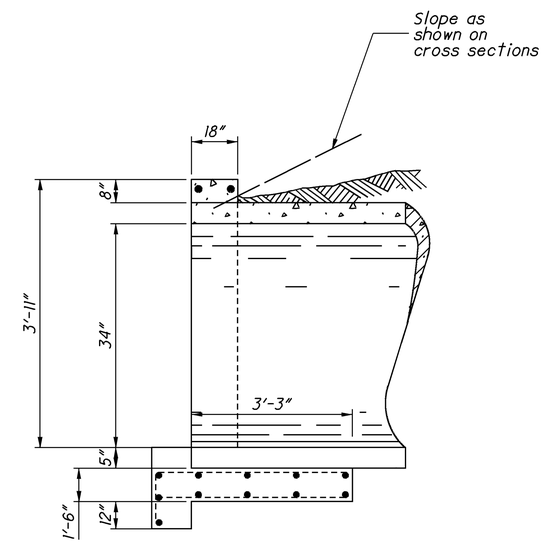

SECTION B-B

NOTES

1. FOR CULVERT LOCATION PLAN, SEE SHEET 24/27.
2. THE LAP SPLICE LENGTHS USED IN THESE DETAILS ARE AS FOLLOWS: 2'-5" FOR #5 BARS; 2'-11" FOR #6 BARS.

LEGEND:

C.J.	CONSTRUCTION JOINT	N.F.	NEAR FACE
CLR.	CLEAR	SER.	SERIES
DIA.	DIAMETER	STR.	STRAIGHT
E.F.	EACH FACE	(T)	TOP
F.F.	FAR FACE	(B)	BOTTOM
MAX.	MAXIMUM	T&B	TOP AND BOTTOM
MIN.	MINIMUM	TYP.	TYPICAL
PEJF	PREFORMED EXPANSION JOINT FILLER	INC.	INCREMENT

DESIGN AGENCY
ODOT DISTRICT SIC
IN-HOUSE DESIGN

DESIGNED	DRAWN	REVIEWED	DATE
LLW	LLW		
CHECKED	REVISED	STRUCTURE FILE NUMBER	
		5101425	

RESTEEL DETAILS
BRIDGE NO. MAR-309-614
OVER LEWIS DITCH

MAR-309-6.13
PID No. 83957

I:\Projects\mar\309\0617.011\83957\Production\bridge\MAR309_0617S\sheets\CULVERT_DETAIL.dgn Sheet_md03 25-FEB-2011 4:06PM lwright1

RIGHT OF WAY LEGEND SHEET
MAR-309-6.13

MARION COUNTY
BIG ISLAND TOWNSHIP
RANGE 14E, TWP 5S, SECTION 6
SALT ROCK TOWNSHIP
RANGE 14E, TWP 4S, SECTION 31

UTILITY OWNERS	
TYPE	NAME & ADDRESS
TELEPHONE	VERIZON 550 LEADER ST MARION, OH 43302-2228 1-740-383-0551
ELECTRIC	AEP 850 TECH CENTER DR GAHANNA, OH 43230-6605 1-614-883-6829
CABLE TV	TIME WARNER CABLE 3760 INTERCHANGE DRIVE COLUMBUS, OH 43204 1-614-255-6349

NOTE:
THE LOCATION OF THE UNDERGROUND UTILITIES SHOWN ON THE PLANS ARE OBTAINED FROM THE OWNER OF THE UTILITIES AS REQUIRED BY SECTION 153.64 O.R.C.

PROJECT DESCRIPTION

THIS PROJECT CONSISTS OF THE REMOVAL OF AN EXISTING SLAB BRIDGE OVER LEWIS DITCH AND ITS REPLACEMENT. THERE IS GUARDRAIL AND DITCH WORK ON SR 309.

PROJECT CONTROL

STATE PLANE GROUND - OHIO NORTH NAVD88
PROJECT ADJUSTMENT FACTOR - 0.999952186

PLANS PREPARED BY:

FIRM NAME:	ODOT DISTRICT 6 PRODUCTION
PLANS PREPARED BY:	LAURA L. WRIGHT
FIELD REVIEW BY:	R. DALE MEAD
DATE COMPLETED:	12/07/2009
OWNERSHIP VERIFIED BY:	LAURA WRIGHT
DATE COMPLETED:	12/22/2009
DATE COMPLETED:	12/22/2009

INDEX OF SHEETS:

LEGEND SHEET	1
R/W DETAIL	2

STRUCTURE KEY

- RESIDENTIAL
- COMMERCIAL
- OUT-BUILDING

LEGEND

WD = WARRANTY DEED
SH = STANDARD HIGHWAY EASEMENT
SL = SLOPE EASEMENT
CH = CHANNEL EASEMENT
PR = PROPERTY RIGHT
T = TEMPORARY

CONVENTIONAL SYMBOLS

County Line
Township Line
Section Line
Corporation Line or
Fence Line (Ex) (Pr)
Center Line
Right of Way (Ex) Ex R/W
Right of Way (Pr) R/W
Standard Highway Ease.(Ex) Ex SH
Temporary Right of Way TMP
Channel Ease. (Pr) CH
Utility Ease. (Ex) Ex U
Railroad or
Guardrail (Ex) (Pr)
Construction Limits
Edge of Pavement (Ex)
Edge of Pavement (Pr)
Edge of Shoulder (Ex)
Edge of Shoulder (Pr)
Ditch / Creek (Ex) (Pr)
Gas Line (Ex)
Tree Line (Ex)
Ownership Hook Symbol , Ex.
Property Line Symbol , Ex.
Break Line Symbol , Ex.
Tree (Pr), Tree (Ex)
Tree (Remove)
Shrub (Ex), Shrub (Remove)
Stump , Stump (Remove)
Wetland (Pr) , Grass (Pr)
Post (Ex), Light (Ex)
Mailbox (Ex), Mailbox (Pr)
Telephone Marker (Ex)
Fire Hydrant (Ex)
Water Meter (Ex)
Water Valve (Ex)
Utility Valve Unknown (Ex.)
Telephone Pole (Ex)
Power Pole (Ex)
Light Pole (Ex)

I, James A. Stafa, P. S. have conducted a survey of the existing conditions for the Ohio Department of Transportation in MONTH, YEAR. The results of that survey are contained herein. Underground utility locations are shown for informational purposes only. Though they are believed to be accurate, their location is as marked on the ground by the utility company per OUPS Confirmation Number A910401832,and those markings subsequently being surveyed as a part of this project. The horizontal coordinates expressed herein are based on the Ohio State Plane Coordinates system, North Zone.
The Project Adjustment Factor used for this project is 0.999952186. As a part of this project I have reestablished the locations of the existing property lines and centerline of existing Right of Way for property takes contained herein. As a part of this project I have established the proposed property lines, calculated the Gross Take, present roadway occupied (PRO), Net Take and Net Residue; as well as prepared the legal descriptions necessary to acquire the parcels as shown herein. As a part of this work I have set monuments at the proposed property corners shown herein upon notification by the Ohio Department of Transportation, District 6. The iron pins and caps will be set after completion of construction. This work will be done in accordance with OAC 4733-37 as cited below. All of my work contained herein was conducted in accordance with Ohio Administrative Code 4733-37 commonly known as "A Minimum Standards for Boundary Surveys in the State of Ohio" unless so noted. The words I and my as used herein are to mean that either myself or someone working under my direct supervision.

James A. Stafa, Professional Land Surveyor #7968

SURVEYORS SEAL
STATE OF OHIO
JAMES A. STAFA
7968
REGISTERED
PROFESSIONAL LAND SURVEYOR

SIGNED:
DATE: 12-22-2009

FEDERAL PROJECT NO. E080 (320)
PID NO. 83957
CALCULATED LLW
CHECKED RDM

RIGHT OF WAY LEGEND SHEET
MAR-309-6.13

I:\Projects\mar\309\0617.011\83957\Production\row\sheets\RW.dgn SHEET_RL001 25-FEB-2011 4:06PM lwright1

PARCEL: 2-T					
LABEL	START		BEARING	LENGTH (FT)	END	
	STATION	OFFSET			STATION	OFFSET
A	4+70.00	30.00	N 0° 57′ 04″ W	10.00	4+70.00	40.00
B	4+70.00	40.00	N 89° 02′ 56″ E	28.00	4+98.00	40.00
C	4+98.00	40.00	S 0° 57′ 04″ E	10.00	4+98.00	30.00
D	4+98.00	30.00	S 89° 02′ 56″ W	28.00	4+70.00	30.00

PARCEL: 3-T					
LABEL	START		BEARING	LENGTH (FT)	END	
	STATION	OFFSET			STATION	OFFSET
E	5+10.00	30.00	N 89° 02′ 56″ E	33.00	5+43.00	30.00
F	5+43.00	30.00	S 0° 57′ 04″ E	13.00	5+43.00	43.00
G	5+43.00	43.00	S 89° 02′ 56″ W	33.00	5+10.00	43.00
H	5+10.00	43.00	N 0° 57′ 04″ W	13.00	5+10.00	30.00

MAR-309-6.13
BIG ISLAND AND SALT ROCK TOWNSHIPS
RANGE 14, TWP 4, SECTION 31
RANGE 14, TWP 5, SECTION 6

MONUMENT LEGEND

- EXISTING R/W MONUMENT BOX
- PROPOSED R/W MONUMENT BOX
- EXISTING CONCRETE MONUMENT
- PROPOSED CONCRETE MONUMENT
- RAILROAD SPIKE FOUND
- RAILROAD SPIKE SET
- I.R.F. IRON PIN FOUND
- I.R.F. IRON PIN FOUND W/ ID CAP
- I.R.S. IRON PIN SET W/ ID CAP
- P.F. IRON PIPE FOUND
- P.S. IRON PIPE SET
- P.K.F. P.K. NAIL FOUND
- P.K.S. P.K. NAIL SET

REV. BY	DATE	DESCRIPTION

DATE COMPLETED

STRUCTURE KEY

- RESIDENTIAL
- COMMERCIAL
- OUT-BUILDING

HORIZONTAL SCALE IN FEET 0 10 20 40

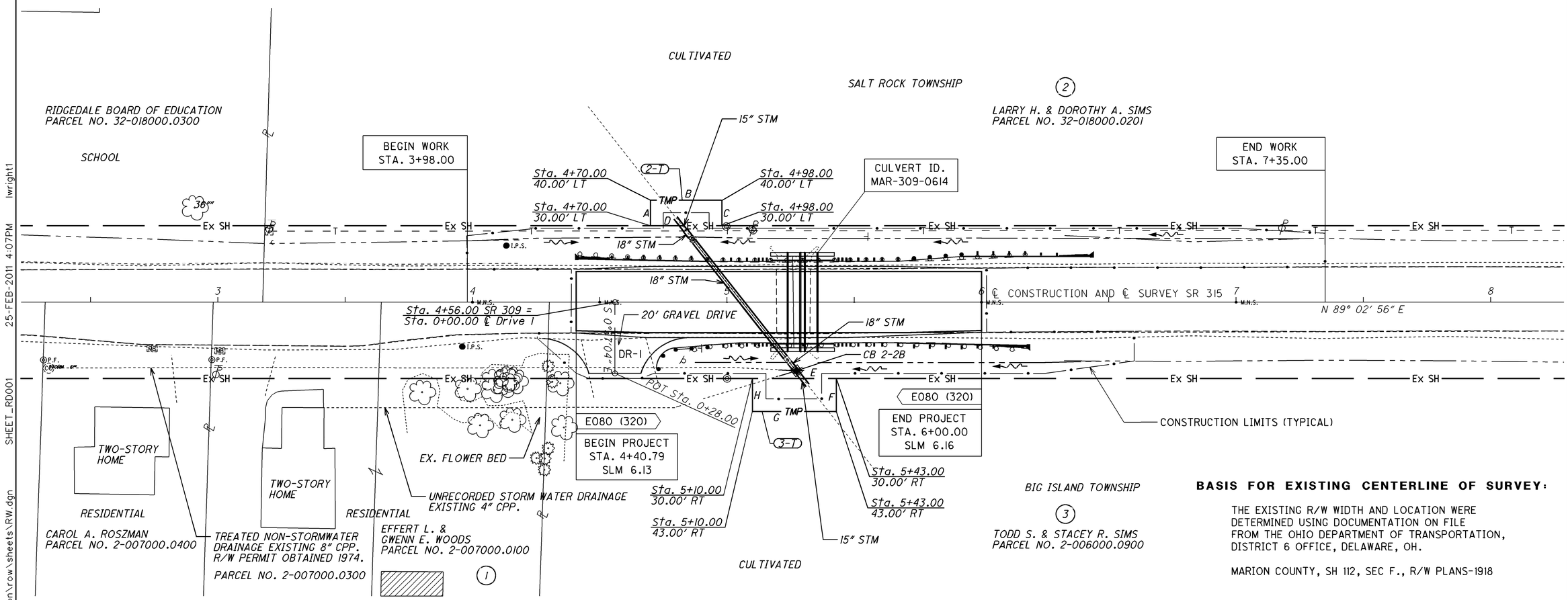

BASIS FOR EXISTING CENTERLINE OF SURVEY:

THE EXISTING R/W WIDTH AND LOCATION WERE DETERMINED USING DOCUMENTATION ON FILE FROM THE OHIO DEPARTMENT OF TRANSPORTATION, DISTRICT 6 OFFICE, DELAWARE, OH.

MARION COUNTY, SH 112, SEC F., R/W PLANS-1918

NOTE:
FOR CENTERLINE REFERENCES SEE SHEET 2.

ALL AREAS IN ACRES

* DENOTES RIGHT OF WAY ENCROACHMENT

PARCEL NO.	OWNER	SHEET NO.	OWNERS RECORD BOOK	OWNERS RECORD PAGE	AUDITOR'S PARCEL	RECORD AREA	TOTAL P.R.O.	GROSS TAKE	P.R.O. IN TAKE	NET TAKE	STRUCTURE	NET RESIDUE LEFT	NET RESIDUE RIGHT	TYPE FUND	REMARKS	AS ACQUIRED BOOK	AS ACQUIRED PAGE
1	EFFERT L. WOODS & GWENN E. WOODS	2	525	587	2-007000.0100	0.250	0.046	0.0000	0.000	0.0000	NO	--	0.204	STATE	*1 SHRUB,*FLOWER BED		
					2-007000.0200	0.400	0.000	0.0000	0.000	0.0000	NO	--	0.400				
					2-007000.0300	0.650	0.046	0.0000	0.000	0.0000	NO	--	0.604				
2-T	LARRY H. SIMS AND DOROTHY A. SIMS	2	OR 332	826	32-018000.0201	66.000	1.687	0.0064	0.000	0.0064	NO	64.313	--	STATE	TEMP. FOR DRAINAGE TIE-IN AND GRADING		
3-T	TODD S. SIMS and STACEY R. SIMS	2	OR 376	949	2-006000.0900	71.001	1.054	0.0098	0.000	0.0098	NO	--	69.947	STATE	TEMP. FOR DRAINAGE TIE-IN AND GRADING		

PID NO. 83957

R/W DESIGNER LLW
R/W REVIEWER RDM

RIGHT OF WAY PLAN

MAR-309-6.13

2/2

27/27

I:\Projects\mar\309\0617.011\83957\Production\row\sheets\RW.dgn SHEET_RD001 25-FEB-2011 4:07PM lwright1