MAR - SR 309 - 1.38

020277 PID - 24371

Dist 6 6/5/2002

LOCATION MAP

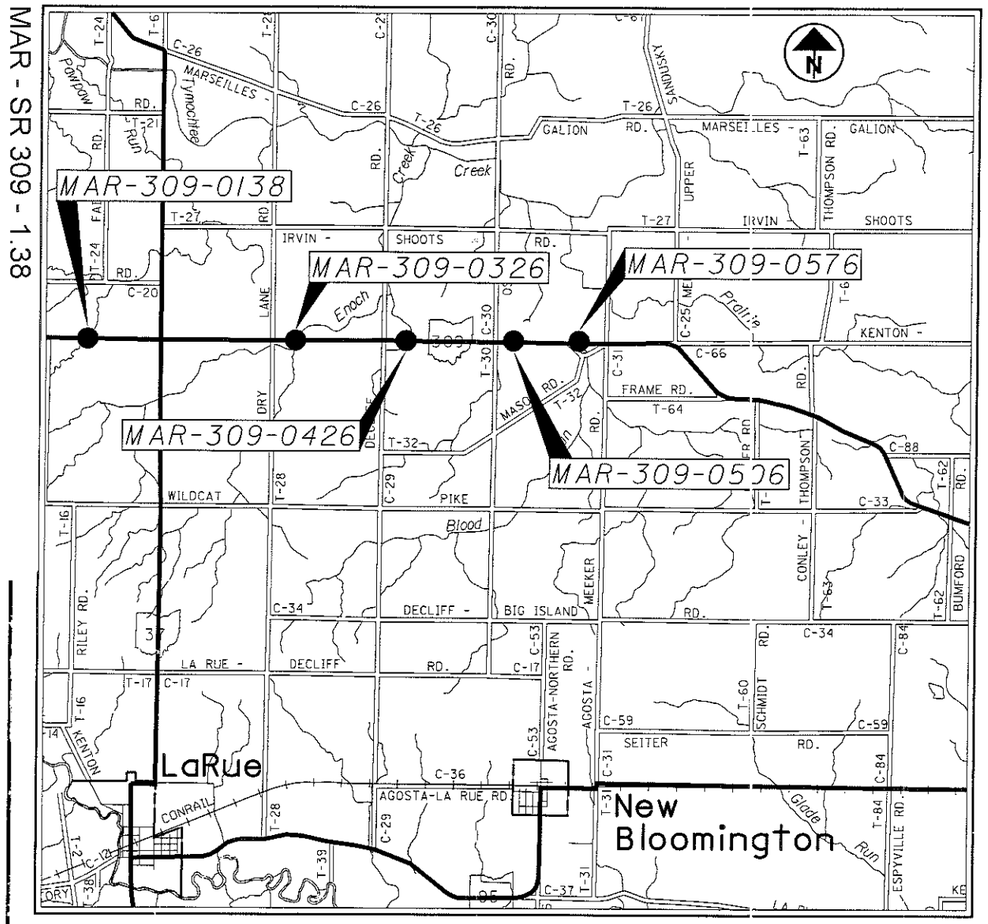

OHIO DEPARTMENT OF TRANSPORTATION
MAR-309-1.38

LOCATION	COUNTY	ROUTE	BRIDGE NO.	PROJECT TERMINII		NET LENGTH MILES	CITY	VILLAGE
				BEGIN	END			
1	MAR	SR 309	0138					
2	MAR	SR 309	0326					
3	MAR	SR 309	0426					
4	MAR	SR 309	0506					
5	MAR	SR 309	0576					

INDEX OF SHEETS:

TITLE SHEET	1
STRUCTURE NOTES	2-3
MAINTENANCE OF TRAFFIC NOTES	4
GENERAL SUMMARY/ESTIMATED QUANTITES	5
BRIDGE DETAILS	6-10

INTERSTATE & DIVIDED HIGHWAY
UNDIVIDED STATE & FEDERAL ROUTES
OTHER ROADS

PROJECT DESCRIPTION:
OVERLAY FIVE BRIDGE DECKS WITH MICRO-SILICA CONCRETE USING HYDRODEMOLITION.

1997 SPECIFICATIONS

The standard specificatons of the State of Ohio, Department of Transportation, including changes and supplemental specifications listed in the proposal shall govern this improvement.

I hereby approve these plans and declare that the making of this improvement will not require the closing to traffic of the highway and that provisions for the maintenance and safety of traffic will be as set forth on the plans and estimates.

APPROVED Jack R Marshall
DATE 3/7/02 DISTRICT DEPUTY DIRECTOR OF TRANSPORTATION

APPROVED Gordon Proctor
DATE 3-25-02 DIRECTOR, DEPARTMENT OF TRANSPORTATION

LATITUDE: 40°-38'-40" *LONGITUDE: 83°-23'-35" @ MAR-309-1.38*
LATITUDE: 40°-38'-40" *LONGITUDE: 83°-21'-45" @ MAR-309-3.26*
LATITUDE: 40°-38'-40" *LONGITUDE: 83°-20'-15" @ MAR-309-4.26*
LATITUDE: 40°-38'-40" *LONGITUDE: 83°-19'-17" @ MAR-309-5.06*
LATITUDE: 40°-38'-40" *LONGITUDE: 83°-18'-45" @ MAR-309-5.76*

SCALE IN MILES
0 1 2 3 4

PLANS CERTIFIED BY:
NAME: DATE: 02.07.02
DISTRICT SIX
OHIO DEPARTMENT OF TRANSPORTATION

ENGINEER'S SEAL:
STATE OF OHIO
David P Poling
56872
REGISTERED
PROFESSIONAL ENGINEER
Signed: David P Poling
Date: 3-7-02

TWO WORKING DAYS
BEFORE YOU DIG
Call... 800-362-2764
TOLL FREE
OHIO UTILITIES PROTECTION SERVICE
NON-MEMBERS MUST BE CALLED DIRECTLY

PLAN PREPARED BY:
DISTRICT SIX
PRODUCTION DEPARTMENT
IN-HOUSE DESIGN SECTION

STANDARD CONSTRUCTION DRAWINGS

						SUPPLEMENTAL SPECIFICATIONS	
AS-1-81	04-20-01	MT-96.10M	01-30-95			806	09-09-97
CS-1-93	06-30-95	MT-96.20M	01-30-95			841	10-12-99
DS-1-92	12-15-94	MT-96.26	04-20-01			848	06-30-98
SB-06-94	12-19-94	MT-105.10M	04-25-94			954	09-09-97
		MT-105.11M	04-25-94				

FEDERAL PROJECT NO. NONE-FEDERAL

PID NO. 24371

CONSTRUCTION PROJECT NO.

RAILROAD INVOLVEMENT NONE

MAR-309-1.38

I:\Projects\mar309\1038\bridge\dgn\T-MAR309MAR4BRIDGE02 2:48:44 lsilvnya

EXISTING STRUCTURE VERIFICATION:

DETAILS AND DIMENSIONS SHOWN ON THESE PLANS PERTAINING TO THE EXISTING STRUCTURE HAVE BEEN OBTAINED FROM PLANS OF THE EXISTING STRUCTURE AND FROM FIELD OBSERVATIONS AND MEASUREMENTS. CONSEQUENTLY, THEY ARE INDICATIVE OF THE EXISTING STRUCTURE AND THE PROPOSED WORK BUT THEY SHALL BE CONSIDERED TENTATIVE AND APPROXIMATE. THE CONTRACTOR IS REFERRED TO CMS SECTIONS 102.05, 105.02 AND 513.02. CONTRACT BID PRICES SHALL BE BASED UPON A RECOGNITION OF THE UNCERTAINTIES DESCRIBED ABOVE AND UPON A PREBID EXAMINATION OF THE EXISTING STRUCTURE BY THE CONTRACTOR. HOWEVER, ALL PROJECT WORK SHALL BE BASED UPON ACTUAL DETAILS AND DIMENSIONS THAT HAVE BEEN VERIFIED BY THE CONTRACTOR IN THE FIELD.

UTILITIES:

LISTED BELOW ARE ALL UTILITIES LOCATED WITHIN THE PROJECT CONSTRUCTION LIMITS TOGETHER WITH THEIR RESPECTIVE OWNERS:

VERIZON

550 LEADER STREET
MARION, OH 43302
740.383.0527

FIRST ENERGY (OHIO EDISON COMPANY)

1040 SOUTH PROSPECT STREET
MARION, OH 43302
740.382.7104
740.382.7108 - FAX
HALLJB@FIRSTENERGYCORP.COM

MID OHIO ENERGY COOPERATIVE, INC.

2859 MARION UPPER SANDUSKY ROAD
PO BOX 501
MARION, OH 43302
740-382-1234

MID OHIO ENERGY COOPERATIVE, INC

55 WEST FRANKLIN STREET
KENTON, OH 43326
419-673-7289

AEP(OHIO POWER)

525 BOYLES STREET
MT. VERNON, OH 43050
1-800-672-2231

CONVERSION OF METRIC STANDARD DRAWINGS:

SEVERAL STANDARD DRAWINGS REFERENCED IN THIS PLAN ARE METRIC. ANY CONVERSION OF DIMENSIONS REQUIRED TO CONSTRUCT THE ITEMS SHOWN ON THE STANDARDS SHALL BE THE RESPONSIBILITY OF THE CONTRACTOR. CONVERSIONS SHALL BE MADE USING THE S.I. (METRIC) TO ENGLISH CONVERSION FACTORS PROVIDED IN SECTION 109.011 OF THE 1997 CONSTRUCTION AND MATERIALS SPECIFICATIONS. THE APPENDIX OF ASTM E 380 SHALL BE UTILIZED FOR ANY ADDITIONAL CONVERSION FACTORS REQUIRED. CONVERSIONS SHALL BE APPROPRIATELY PRECISE AND SHALL REFLECT STANDARD INDUSTRY ENGLISH VALUES WHERE SUITABLE.

ITEM 202 - WEARING COURSE REMOVED

THE PURPOSE OF THIS ITEM IS TO REMOVE THE EXISTING ¼" EPOXY OVERLAY ON EACH OF THE BRIDGES. EVEN THOUGH THE OVERLAY HAS FLAKED OFF ON ITS OWN IN PLACES, THE PAY QUANTITITY WILL INCLUDE THE ENTIRE DECK AREA FOR EACH BRIDGE.

ITEM 642 - EDGE LINE, TYPE2:

MAR-309-1.38	0.028 MILE
MAR-309-3.26	0.044 MILE
MAR-309-4.26	0.026 MILE
MAR-309-5.06	0.026 MILE
MAR-309-5.76	0.068 MILE
TOTAL:	0.192 MILE

THE FOLLOWING QUANTITY HAS BEEN CARRIED TO THE GENERAL SUMMARY:

ITEM 642 - EDGE LINE, TYPE 2
=0.192 MILE

ITEM 642 - CENTER LINE, TYPE2:

MAR-309-1.38	0.014 MILE
MAR-309-3.26	0.022 MILE
MAR-309-4.26	0.013 MILE
MAR-309-5.06	0.013 MILE
MAR-309-5.76	0.034 MILE
TOTAL:	0.096 MILE

THE FOLLOWING QUANTITY HAS BEEN CARRIED TO THE GENERAL SUMMARY:

ITEM 642 - CENTER LINE, TYPE2
=0.096 MILE

ITEM SPECIAL - POLYMER MODIFIED EXPANSION JOINT SYSTEM:

THIS ITEM WILL BE USED TO SEAL THE EXPANSION/CONTRACTION JOINTS AS PER THESE DETAILS AND THE MANUFACTURER'S REQUIREMENTS USING A POLYMER MODIFIED ASPHALT SYSTEM. THE PRIME CONTRACTOR WILL OBTAIN THE SERVICES OF ONE OF THE FOLLOWING APPROVED APPLICATORS WHO WILL FURNISH AND INSTALL THE NEW BRIDGE EXPANSION JOINT SYSTEM AFTER ALL PAVING ON THE AFFECTED BRIDGE(S) HAS BEEN COMPLETED.

D. S. Brown Company
300 E. Cherry St.
North Baltimore, OH 45872
(419) 257-3561
Linear Dynamics Incorporated
79 Montgomery St.
Montgomery, PA 17752
(570) 547-1621

Silicone Specialties Inc. (S.S.I.)
P. O. Box 50009
Tulsa, OK 74150
(918) 587-5567 or
(800) 888-8909

Watson Bowman Acme
95 Pineview Dr.
Amherst, NY 14228
(716) 691-7566 or
(800) 253-9226

MATERIALS:

BRIDGING PLATE: MILD STEEL 1/8" OR 1/4" THICK PLATE, 8" WIDE OR 18 GAUGE ALUMINUM, 8" WIDE.
BINDER:

TYPE: POLYMER MODIFIED ASPHALT
SOFTENING POINT: 180 DEGREES F MIN.
FLOW: 3 mm MAX. AT 140 DEGREES F
PENETRATION: 9 mm MAX. AT 77 DEGREES F
1 mm MIN. AT 0 DEGREES F
ASTM D 3407
DUCTILITY: 40 cm MIN. ASTM D 113
RESILIENCE: 60% MIN. AT 77 DEGREES F
TENSILE ADHESION: 700% MIN.
SPECIFIC GRAVITY: 1.10 * 0.05
POURING TEMP.: 350-390 DEGREES F

AGGREGATE:

TYPE: CRUSHED, DOUBLE WASHED, AND DRIED GRANITE OR BASALT
GRADATION: THE GRADATION OF THE AGGREGATE VARIES BY MANUFACTURER AND WILL BE AS PER THE MANUFACTURER'S RECOMMENDATIONS FOR THE SYSTEM MEETING USED ON THIS PROJECT
BACKER ROD: THE BACKER SHALL BE A CLOSED CELL FOAM EXPANSION JOINT FILLER CAPABLE OF WITHSTANDING THE PLACEMENT TEMPERATURE OF THE POLYMER MODIFIED ASPHALT.

NOTE: PRIOR TO PLACEMENT OF ANY PORTION OF THE JOINT SYSTEM, THE PROJECT ENGINEER MUST HAVE CERTIFIED TEST DATA MEETING ALL THE MINIMUM REQUIREMENTS OF ALL THE MATERIALS OF THE JOINT SYSTEM.

INSTALLATION PROCEDURES:

SAWING AND SURFACE PREPARATION: AFTER ALL PAVING OPERATIONS ARE COMPLETE, THE ASPHALT OVERLAY IS TO BE TRANSVERSELY SAW CUT FULL DEPTH NO LESS THAN TWO INCHES DEEP (20" CENTERED OVER JOINT OPENING, UNLESS OTHERWISE NOTED), REMOVE ALL MATERIAL, INCLUDING WATER PROOFING MATERIAL, BETWEEN SAW CUTS. THOROUGHLY CLEAN AND DRY EXPOSED CONCRETE, STEEL, AND CUT SURFACES USING COMPRESSED AIR AND A HOT COMPRESSED AIR (HCA) LANCE. THE LANCE MUST PRODUCE A FLAME RETARDED AIR STREAM TEMPERATURE OF 3000 DEGREES F AT A VELOCITY OF 3000 FEET PER SECOND WITH 15 PSIG CHAMBER PRESSURE. IF THERE IS AN INTERRUPTION DUE TO WEATHER OR OTHER CAUSES, THE OPERATION WILL BE REPEATED WITH THE HCA LANCE IMMEDIATELY BEFORE THE BINDER COAT OPERATION. ALSO, 6 INCHES OF THE ROAD SURFACE ON EITHER SIDE OF THE JOINT WILL BE DRIED SO THAT A SUITABLE SURFACE FOR BITUMEN ADHESION IS OBTAINED.

SEALING OF EXPANSION JOINT: THE EXPANSION JOINT GAP IS TO BE SEALED AND A BRIDGING PLATE CENTERED ALONG IT. A VERY NARROW GAP WILL BE SEALED BY POURING HOT BINDER INTO THE GAP. GAPS OF 1/8" OR MORE WILL FIRST BE FILLED WITH AN APPROPRIATELY SIZED BACKER ROD. THE BACKER ROD WILL BE INSTALLED SO THAT IT IS BETWEEN 1/8" AND 1-1/8" BELOW THE TOP OF THE EXISTING GAP. THE GAP WILL THEN BE FILLED WITH BINDER.

BOND BREAKER: SPREAD BINDER OVER SURFACE AREA WHERE THE METAL BRIDGING PLATE WILL BE PLACED. CENTER THE BRIDGING PLATE OVER THE EXISTING JOINT AND BED INTO THE HOT BINDER. BUTT JOINT THE BRIDGING PLATES TO ACCOMMODATE THE ENTIRE JOINT LENGTH. SPIKE HOLES WILL BE DRILLED AT 1 FOOT INTERVALS ALONG THE LONGITUDINAL CENTERLINE OF THE PLATES. SECURE BRIDGING PLATE WITH NAILS OR SPIKES. SEAL BUTT JOINTS WITH HOT BINDER AND ALLOW BINDER TO SETUP BEFORE NEXT OPERATION. WHEN ALUMINUM BRIDGING PLATES ARE USED, ONLY THE BINDER IS REQUIRED TO SECURE THE INDIVIDUAL PLATES.

I:\Projects\mar\309\0138.002\gnl.dgn 07-MAR-2002 2:18PM lslivnyo

BINDER COAT: SEAL ALL PREPARED, EXPOSED SURFACES OF THE JOINT WITH BINDER. POUR THE HOT BINDER OVER THE FLOOR AREA OF THE JOINT AND SPREAD TO COAT ALL EXPOSED SURFACES. THE BINDER WILL BE A MINIMUM OF 1/32" THICK ON THE BOTTOM OF THE JOINT CAVITY, WITH POOLS OF GREATER THICKNESS WHERE SURFACE IRREGULARITIES EXIST. THE BINDER APPLICATION TEMPERATURE WILL BE BETWEEN 350 AND 390 DEGREES F. THE BINDER WILL NOT BE ALLOWED TO BE HEATED ABOVE 410 DEGREES F NOR ALLOWED TO EXCEED 390 DEGREES F FOR MORE THAN 1 HOUR. A DOUBLE JACKETED OIL MELTER WILL BE USED TO HEAT THE BINDER. THE MELTER WILL BE EQUIPPED WITH A CONTINUOUS AGITATION SYSTEM, TEMPERATURE CONTROLS, AND A CALIBRATED THERMOMETER. ALSO A SYSTEM FOR ACCURATELY MEASURING THE WEIGHTS OF THE BINDER AND THE AGGREGATE WILL BE REQUIRED.

BUILD-UP OF JOINT LAYERS:

AGGREGATE PREPARATION: HEAT THE AGGREGATE TO A TEMPERATURE OF 275 TO 325 DEGREES F, WITH A SUITABLE ROTATING DRUM WITH ATTACHED HEAT SOURCE OR A HOT COMPRESSED AIR LANCE, TO REMOVE DUST AND MOISTURE.

AGGREGATE PROPORTION AND LAYER THICKNESS: MIX THE AGGREGATE WITH THE BINDER SUCH THAT THE MINIMUM AGGREGATE CONTENT BY WEIGHT WILL BE 68%. THE HEATED AGGREGATE AND BINDER WILL BE COMBINED IN LAYERS, UNLESS PATENTED INSTALLATION REQUIRES DIFFERENTLY, NOT LESS THAN 3/4 OF AN INCH NOR EXCEEDING 2-1/2 INCHES. THE THICKNESS OF EACH LAYER CAN BE VARIED WITHIN THESE LIMITS, TO ACHIEVE THE REQUIRED JOINT THICKNESS (MIN. 2 INCHES). THE OBJECTIVE IS TO COAT EACH STONE AND FILL THE VOIDS WHILE AVOIDING AN EXCESS OF BINDER. THIS WILL ACHIEVE THE MAXIMUM CONTENT OF STONE CONSISTENT WITH ALL STONES BEING COATED WITH BINDER. RAKE THE MIXTURE TO MIX AND LEVEL. THE TOP LAYER THICKNESS WILL VARY BETWEEN ½ INCH AND ONE (1) INCH. IN PREPARING THE TOP LAYER, THE RATIO OF AGGREGATE TO BINDER WILL BE APPROXIMATELY 6:1 BY WEIGHT. OVERFILL THE TOP LAYER AND COMPACT TO THE LEVEL OF THE ADJACENT SURFACES USING A ROLLER OR VIBRATORY PLATE COMPACTOR. IMMEDIATELY AFTER COMPLETION OF THE COMPACTION, POUR SUFFICIENT BINDER OVER THE JOINT TO FILL THE SURFACE VOIDS AND COAT THE SURFACE STONE. DUST THE FINISHED JOINT WITH A FINE, DRY AGGREGATE TO PREVENT TACKINESS.

MAINTENANCE OF TRAFFIC: IF NECESSARY TO FACILITATE TRAFFIC MAINTENANCE, THE JOINT WILL BE INSTALLED IN TWO (2) HALF-WIDTH PHASES. DURING PHASE 1 APPROXIMATELY HALF OF THE TOTAL JOINT WILL BE INSTALLED. DURING PHASE 2, A MINIMUM OF TWO (2) INCHES OF THE PHASE 1 JOINT WILL BE REMOVED, AT OR NEAR THE CENTERLINE, WITH THE REMAINDER OF THE JOINT INSTALLED.

TESTING: CERTIFICATION WILL BE SUPPLIED FOR EACH PROJECT SHOWING BINDER COMPLIANCE WITH REQUIRED PROPERTIES. A ONE QUART SAMPLE OF BINDER WILL BE RETRIEVED FROM EACH BRIDGE FOR FURTHER TESTING BY THE O.D.O.T. TESTING LABORATORY.

PAYMENT: PAYMENT FOR ALL THE ABOVE WILL BE AT THE UNIT PRICE BID PER LINEAR FOOT OF SEALED JOINT IN PLACE FOR ITEM SPECIAL 516 31300, POLYMER MODIFIED ASPHALT EXPANSION JOINT SYSTEM (2.00 INCHES THICK). THIS WILL INCLUDE ALL LABOR, EQUIPMENT, MATERIALS, AND INCIDENTALS NECESSARY TO COMPLETE THE ABOVE WORK. THE FOLLOWING QUANTITIES HAVE BEEN PROVIDED:
MAR-309-3.26:
44.00 FT.(LENGTH) X 2 (JOINTS) = 88.00 LF.

ITEM 516 - STRUCTURAL JOINT OR JOINT SEALER, MISC.: DOW CORNING 902 RCS:

DESCRIPTION: REMOVE EXISTING EXPANSION JOINT MATERIAL AND SANDBLAST STEEL ARMOR THAT WILL BE IN CONTACT WITH PROPOSED SEALER MATERIAL TO WHITE ARMOR. BLOW JOINT OPENING WITH OIL-FREE COMPRESSED AIR TO REMOVE LAITANCE AND DEBRIS FROM SANDBLASTING OPERATIONS. PRIME FACES OF JOINT WITH A LIGHT SPRAY COATING OF DOW CORNING 1205 PRIMER AND ALLOW TO DRY. FILL STRUCTURAL JOINT WITH DOW CORNING 902 RCS, ACCORDING TO MANUFACTURER'S DIRECTIONS.

THE FOLLOWING QUANTITY HAS BEEN PROVIDED:

MAR-309-5.76:
62.23 FT.(LENGTH) X 2(JOINTS) = 124.46 LF.

CALCULATED
CHECKED

STRUCTURE NOTES

MAR-309-1.38

3
10

i:\Projects\mar\309\0138.002\gn2.dgn 07-MAR-2002 2:18PM lsilvnyo

ITEM 614 MAINTENANCE OF TRAFFIC AS PER PLAN:

TRAFFIC WILL BE MAINTAINED FOR THE DURATION OF THE PROJECT. PHASE 1 & 2 WILL MAINTAIN ONE 10 FOOT LANE WITH BI-DIRECTIONAL TRAFFIC UTILIZING ACTUATED TRAFFIC SIGNALS (5 TOTAL).

PHASE 1:WORK WILL BE PERFORMED ON THE NORTH SIDE OF C/L ON ALL STRUCTURES. TRAFFIC IS TO BE MAINTAINED AS SHOWN ON SCD-MT-96.10M, EXCEPT THAT TRAFFIC WILL BE SHIFTED TO THE SOUTH SIDE TO MAINTAIN A 10' LANE ON EXISTING ROADWAY WIDTH. THE NORTH PORTIONS OF DECKS WILL BE OVERLAYED AND APPROACH SLABS WILL BE PATCHED.

PHASE 2:WORK WILL BE PERFORMED ON THE SOUTH SIDE OF C/L.ON ALL STRUCTURES. TRAFFIC WILL BE MAINTAINED AS SHOWN ON SCD-MT-96-10M, EXCEPT THAT TRAFFIC WILL BE SHIFTED TO THE NORTH TO MAINTAIN A 10' LANE ON EXISTING ROADWAY WIDTH. TRAFFIC IS TO BE MAINTAINED ON THE NEWLY OVERLAYED PORTION WHILE THE REMAINING PORTION OF THE DECKS ARE OVERLAYED AND APPROACH SLABS ARE PATCHED.

CHECKING OF ACTUATED SIGNAL:
ALL ACTUATION SIGNALS SHALL BE ROUTINELY CHECKED; IN ORDER TO MAKE SURE THE MICROWAVE SENSOR IS PROPERLY READING THE APPROACH DIRECTION OF TRAFFIC.

4 PHASE ACTUATED SIGNAL PHASING FOR ALL SIGNALS

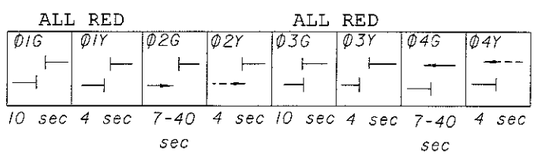

Ø2 GREEN AND Ø4 GREEN SHALL BE ACTUATED BY DETECTORS AT APPROACH TO THE WORK ZONE. Ø1 AND Ø3 ARE DUMMY PHASES TO TIME ALL RED INTERVAL. TIMING INITIALIZES ON PHASE ONE

BASIS OF PAYMENT:

ALL WORK AND TRAFFIC CONTROL DEVICES SHALL BE IN ACCORDANCE WITH 614 AND MT-96.10M AND OTHER APPLICABLE PORTIONS OF THE SPECIFICATIONS, AS WELL AS THE OHIO MANUAL OF UNIFORM TRAFFIC CONTROL DEVICES. PAYMENT FOR ALL LABOR, EQUIPMENT AND MATERIALS SHALL BE INCLUDED IN THE LUMP SUM CONTRACT PRICE FOR 614, MAINTAINING TRAFFIC, AS PER PLAN UNLESS SEPARATELY ITEMIZED IN THE PLAN.

SHOULDER STRENGTHENING

THE FOLLOWING QUANTITIES ARE BEING PROVIDED TO REBUILD THE SHOULDERS AT BRIDGE APPROACHES.
A 50' X 4' STRIP IS USED FOR ESTIMATING PURPOSES.

ITEM 203 - EXCAVATION NOT INCLUDING EMBANKMENT CONSTRUCTION:

14.80 CU YD X 5 = 74.0 CU YD

ITEM 301 - BITUMINOUS AGGREGATE BASE, PG64-22:

7.40 CU YD X 5 = 37.0 CU YD

ITEM 304 - AGGREGATE BASE:

7.40 CU YD X 5 = 37.0 CU YD

ITEM 614: BITUMINOUS CONCRETE FOR MAINTAINING TRAFFIC

THE FOLLOWING QUANTITIES HAVE BEEN INCLUDED IN THE GENERAL SUMMARY (SH.5/10) FOR USE AS DIRECTED BY THE ENGINEER FOR THE MAINTENANCE OF TRAFFIC.

614, BITUMINOUS CONCRETE FOR MAINTAINING TRAFFIC:
4 CU YD x 5 BRIDGES = 20.0 CU. YD.

MAINTENANCE OF TRAFFIC QUANTITIES:

THE FOLLOWING QUANTITIES HAS BEEN PROVIDED TO BE USED AS DIRECTED BY SCD MT-96.10M:
ITEM 614 - TEMPORARY RAISED PAVEMENT MARKERS

MAR-309-1.38	144 EACH
MAR-309-3.26	176 EACH
MAR-309-4.26	140 EACH
MAR-309-5.06	140 EACH
MAR-309-5.76	224 EACH
TOTAL:	824 EACH

THE FOLLOWING QUANTITY HAS BEEN CARRIED TO THE GENERAL SUMMARY:

ITEM 614 - TEMPORARY RAISED PAVEMENT MARKERS =824 EACH

ITEM 614 - TEMPORARY EDGE LINE, CLASS 1

(100.75' X 2 PHASES) X5 BRIDGES = 1007.5 L.F. = 0.191 MILE
ITEM 614 - TEMPORARY STOP LINE, CLASS 1

(12' X 2 SIDES X 2 PHASES) X5 BRIDGES = 240 L.F.

ITEM SPECIAL - REPLACEMENT DRUM:

DRUMS FURNISHED BY THE CONTRACTOR IN ACCORDANCE WITH THE REQUIREMENTS OF THE PLANS, SPECIFICATIONS AND PROPOSAL WHICH BECOME DAMAGED BY TRAFFIC FOR REASONS BEYOND THE CONTROL OF THE CONTRACTOR SHALL BE REPLACED IN KIND WHEN ORDERED BY THE ENGINEER. REPLACEMENT DRUMS SHALL BE NEW.

PAYMENT FOR THE NEW DRUMS SHALL BE MADE AT THE CONTRACT PRICE PER EACH FOR ITEM SPECIAL, REPLACEMENT DRUM, AND SHALL INCLUDE THE COST OF REMOVING AND DISPOSING OF THE DAMAGED DRUM, AND PROVIDING AND MAINTAINING THE REPLACEMENT DRUM IN ACCORDANCE WITH THE CONTRACT REQUIREMENTS FOR THE ORIGINAL DRUM.

THE FOLLOWING QUANTITY HAS BEEN CARRIED TO THE GENERAL SUMMARY:
4 EACH x 5 BRIDGES = 20 EACH

CONSTRUCTION INITIATION:

THE CONTRACTOR SHALL ADVISE THE DISTRICT OFFICE OF COMMUNICATIONS AT 740-363-1251 EXT.469 OR BY FAX AT 740-369-7437 AND THE DISTRICT TRAFFIC MANAGEMENT ENGINEER AT 740-363-1251, EXT. 323, FOURTEEN (14) DAYS PRIOR TO THE START OF CONSTRUCTION ACTIVITIES. THE CONTRACTOR WILL IMMEDIATELY INFORM THE DISTRICT OFFICE OF COMMUNICATIONS AND THE DISTRICT TRAFFIC MANAGEMENT ENGINEER OF ANY AND ALL DELAYS AND/OR CHANGES REGARDING THE CONSTRUCTION PROJECT. THE PROJECT ENGINEER WILL PROVIDE CLARIFICATION FOR ANY QUESTIONS ABOUT THIS NOTIFICATION REQUIREMENT.

COORDINATION WITH O.D.O.T.'S CENTRAL OHIO TRAFFIC MANAGEMENT PROGRAM (COTMP):

THE CONTRACTOR SHALL NOTIFY THE PROJECT ENGINEER IN WRITING OF ALL TRAFFIC RESTRICTIONS AND UPCOMING MAINTENANCE OF TRAFFIC CHANGES ON A WEEKLY BASIS. WHEN DETOURS ARE PLANNED, THIS NOTIFICATION SHALL BE AT THE PRE-CONSTRUCTION MEETING OR 30 DAYS IN ADVANCE ONCE CONSTRUCTION HAS BEGUN. LANE AND RAMP CLOSURES FOR 2 OR MORE WEEKS SHALL BE REPORTED 2 WEEKS IN ADVANCE OF CLOSURE. LANE AND RAMP CLOSURES OF LESS THAN 2 WEEKS DURATION AND MORE THAN 2 DAYS SHALL BE REPORTED AT LEAST 3 WORKING DAYS IN ADVANCE. FOR SHORT TERM LANE OR RAMP CLOSURES (2 DAYS OR LESS) NOTIFICATION SHALL BE MADE AT LEAST 1 WORKING DAY IN ADVANCE. INFORMATION SHALL INCLUDE BUT NOT BE LIMITED TO ALL CONSTRUCTION ACTIVITIES THAT IMPACT TRAFFIC AT PRESENT AND IN THE NEXT 30 DAYS. THE CONTRACTOR SHALL DESIGNATE AN INDIVIDUAL WHO WILL BE RESPONSIBLE FOR PREPARING THIS REPORT AT THE PRECONSTRUCTION MEETING. ANY UNFORESEEN IMPACTS TO TRAFFIC SHALL BE REPORTED TO THE PROJECT ENGINEER AS SOON AS POSSIBLE. THE PROJECT ENGINEER SHALL PROVIDE THIS INFORMATION TO COTMP. ALL CONSTRUCTION ACTIVITIES THAT INTERFERE WITH TRAFFIC SHALL BE REPORTED TO COTMP. THIS INFORMATION SHALL BE PROVIDED TO COTMP AT (614) 644-8309 OR BY FAX AT (614) 466-1768.

CALCULATED
CHECKED

MAINTENANCE OF TRAFFIC NOTES

MAR-309-1.38

I:\Projects\mar\309\0138.002\gn3.dgn 07-MAR-2002 2:18PM tsilvnyg

ESTIMATED BRIDGE QUANTITES

ITEM	EXTENSION	TOTAL	UNIT	DESCRIPTION	SFN: / BRIDGE NO.:	5101263 / MAR-309-0138	5101298 / MAR-309-0326	5101328 / MAR-309-0426	5101352 / MAR-309-0506	5101387 / MAR-309-0576	SEE SHEET NUMBER
202	23500	1274.5	SQ YD	WEARING COURSE REMOVED		112.6	325.1	101.0	101.0	634.8	
516	10000	294.5	LIN FT	PREFORMED ELASTOMERIC COMPRESSION JOINT SEAL (705.11)		107.3		93.6	93.6		
516	14600	124.5	LIN FT	STRUCTURAL JOINT OR JOINT SEALER, MISC.: DOW CORNING 902 RCS						124.5	
SPECIAL	51631300	88.0	LIN FT	POLYMER MODIFIED ASPHALT EXPANSION JOINT SYSTEM			88.0				7/10
SPECIAL	51822300	603.4	LIN FT	STEEL DRIP STRIP		52.1	155.0	47.3	47.3	301.7	SCD-DS-1-92
519	11100	278.3	SQ FT	PATCHING CONCRETE STRUCTURE		15.0	15.0	35.0	22.6	190.7	
841	10000	1274.5	SQ YD	TREATING OF CONCRETE SURFACES WITH SRS		112.6	325.1	101.0	101.0	634.8	
848	10000	1274.5	SQ YD	MICRO SILICA MODIFIED CONCRETE OVERLAY USING HYDRODEMOLITION (1 1/4")		112.6	325.1	101.0	101.0	634.8	
848	20000	1274.5	SQ YD	SURFACE PREPARATION USING HYDRODEMOLITION		112.6	325.1	101.0	101.0	634.8	
848	30000	43.0	CU YD	MICRO SILICA MODIFIED CONCRETE OVERLAY (VARIABLE THICKNESS), MATERIAL ONLY		2.8	9.5	2.1	2.1	26.5	
848	50000	51.5	SQ YD	HAND CHIPPING		3.4	11.4	2.5	2.5	31.7	
848	50200	30.8	CU YD	FULL-DEPTH REPAIR		2.3	13.5			15.0	

GENERAL SUMMARY

SHEET NUMBER ITEM	2	4	10	ITEM	ITEM EXT.	GRAND TOTAL	UNIT	DESCRIPTION	SEE SHEET #
								ROADWAY	
203		74.0		203	12000	74.0	CU YD	EXCAVATION NOT INCLUDING EMBANKMENT CONSTRUCTION	
								PAVEMENT	
301		37.0		301	46000	37.0	CU YD	BITUMINOUS AGGREGATE BASE, PG64-22	
304		37.0		304	20000	37.0	CU YD	AGGREGATE BASE	
								TRAFFIC CONTROL	
630			1	630	79600	1	EACH	SIGN SUPPORT ASSEMBLY, BRIDGE MOUNTED	
630			1	630	80102	1.0	SQ FT	SIGN, FLAT SHEET, TYPE G	
642	0.192			642	00102	0.192	MILE	EDGE LINE, TYPE 2	
642	0.096			642	00302	0.096	MILE	CENTER LINE, TYPE 2	
								MAINTENANCE OF TRAFFIC	
SPECIAL		20		SPECIAL	61412600	20	EACH	REPLACEMENT DRUM	
614		824.0		614	12800	824	EACH	TEMPORARY RAISED PAVEMENT MARKER	
614		20.0		614	13000	20.0	CU YD	BITUMINOUS CONCRETE FOR MAINTAINING TRAFFIC	
614		0.191		614	22000	0.191	MILE	TEMPORARY EDGE LINE, CLASS I	
614		240.0		614	26000	240.0	LIN FT	TEMPORARY STOP LINE, CLASS I	
614				614	11001	LUMP		MAINTAINING TRAFFIC, AS PER PLAN	
623				623	10000	LUMP		CONSTRUCTION LAYOUT STAKES	
624				624	10000	LUMP		MOBILIZATION	
806				806	16000	2.0	MONTH	FIELD OFFICE, TYPE A	

DESIGN AGENCY: DISTRICT SIX PRODUCTION

DESIGNED | DRAWN | REVIEWED | DATE | STRUCTURE FILE NUMBER
CHECKED | REVISED

ESTIMATED BRIDGE QUANTITIES/ GENERAL SUMMARY

MAR-309-1.38

I:\Projects\mar\309\0138.002\sgl.dgn 07-MAR-2002 2:18PM lsilvnya

PLAN VIEW - MAR-309-1.38

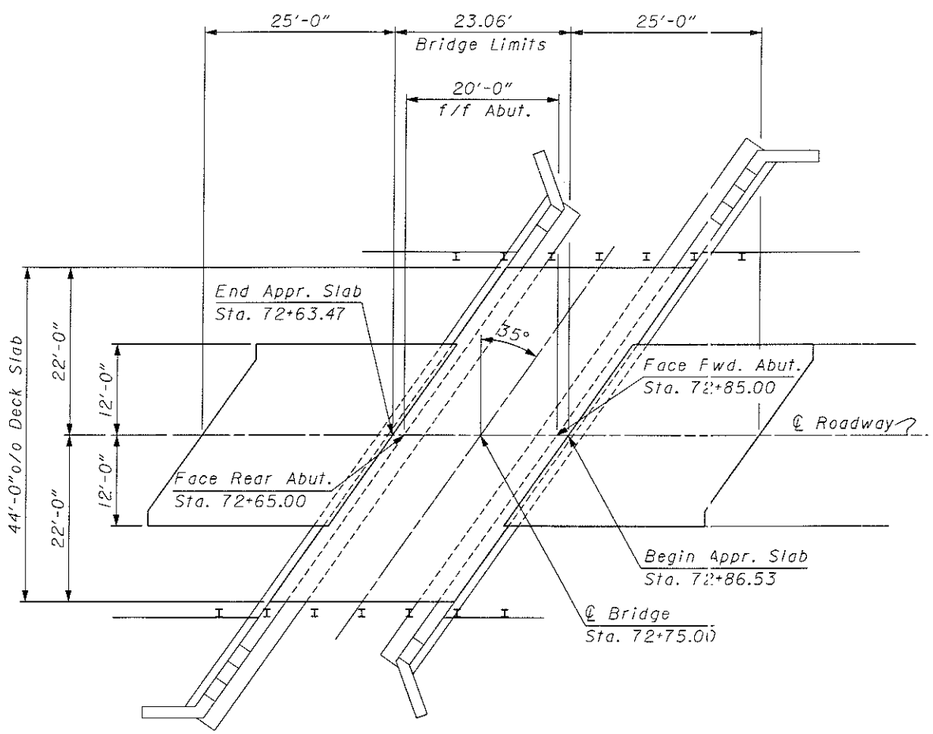

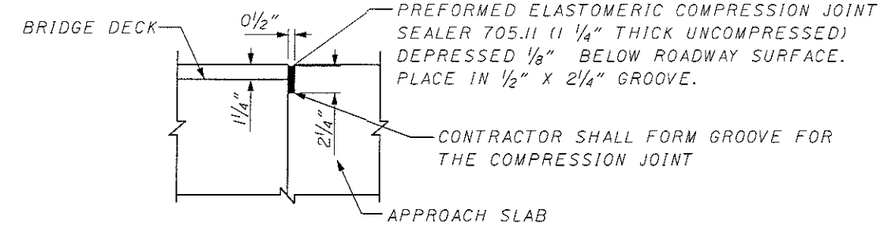

DETAIL A

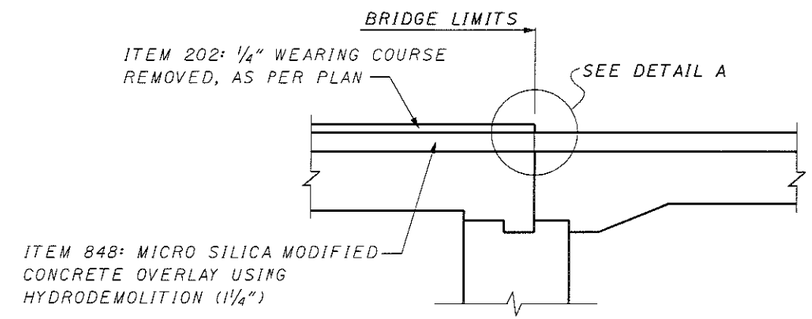

INDEX OF STRUCTURAL WORK ITEMS

1. DECK: REMOVE ¼" EPOXY OVERLAY. REMOVE 1¼" OF ORIGINAL DECK BY HYDRO-DEMOLITION METHOD. REPLACE WITH MICRO SILICA CONCRETE OVERLAY (30% VARIABLE DEPTH AND 5% FULL DEPTH.)

2. APPROACH SLABS: CONCRETE PATCHING - 10 S.F. ON WEST APPROACH AND 5 S.F. ON EAST APPROACH.

3. INSTALL STEEL DRIP STRIP.

4. INSTALL PREFORMED ELASTOMERIC COMPRESSION JOINT SEALER.

ITEM	ITEM EXT.	TOTAL	UNIT	DESCRIPTION	FWD.	REAR	SUPER.
202	23500	112.62	SQ YD	WEARING COURSE REMOVED			112.62
516	10000	107.3	LIN FT	PREFORMED ELASTOMERIC COMPRESSION JOINT SEAL (705.11)	53.66	53.66	
SPECIAL	51822300	52.12	LIN FT	STEEL DRIP STRIP			52.12
519	11100	15.0	SQ FT	PATCHING CONCRETE STRUCTURE	10.0	5.0	
841	10000	112.62	SQ YD	TREATING OF CONCRETE SURFACES WITH SRS			112.62
848	10000	112.62	SQ YD	MICRO SILICA MODIFIED CONCRETE OVERLAY USING HYDRODEMOLITION (1 1/4")			112.62
848	20000	112.62	SQ YD	SURFACE PREPARATION USING HYDRODEMOLITION			112.62
848	30000	2.8	CU YD	MICRO SILICA MODIFIED CONCRETE OVERLAY (VARIABLE THICKNESS), MATERIAL ONLY			2.8
848	50000	3.4	SQ YD	HAND CHIPPING			3.4
848	50200	2.3	CU YD	FULL-DEPTH REPAIR			2.3
				TOTALS CARRIED TO THE ESTIMATED QUANTITY SHEET 5/10			

EXISTING STRUCTURE

TYPE: SINGLE SPAN REINFORCED CONCRETE SLAB WITH REINFORCED CONCRETE ABUTMENTS
SPAN: 20'-0" F/F ABUT.
LOAD FREQUENCY: CF-400(57)
ROADWAY: 42'-8" F/F GUARDRAIL
SKEW: 35° L.F.
WEARING SURFACE: ¼" EPOXY OVERLAY ON 1" MONOLITHIC CONCRETE
APPROACH SLAB: AS-1-54 (25' LONG)
TYPE OF JOINTS: ½" PREFORMED EXPANSION JOINT FILLER
ALIGNMENT: TANGENT

PROPOSED STRUCTURE

TYPE: NO CHANGE FROM EXISTING
SPAN: NO CHANGE FROM EXISTING
LOAD FREQUENCY RATING: NO CHANGE FROM EXISTING
ROADWAY: NO CHANGE FROM THE EXISTING
SKEW: NO CHANGE FROM THE EXISTING
WEARING SURFACE: 1¼" MICRO SILICA MODIFIED CONCRETE OVERLAY
APPROACH SLABS: NO CHANGE FROM EXISTING
TYPE OF JOINTS: PREFORMED ELASTOMERIC COMPRESSION JOINT SEAL (705.11)
ALIGNMENT: NO CHANGE FROM EXISTING

DESIGN AGENCY: DISTRICT SIX PRODUCTION
STRUCTURE FILE NUMBER: 5101263
DRAWN | REVISED
DESIGNED | CHECKED
PLAN VIEW
BRIDGE NO. MAR-309-0138 (OVER HOLLAND RUN)
MAR-309-1.38
1/5
6/10

I:\Projects\mar\309\0138.002\sel.dgn 07-MAR-2002 2:18PM lsilvnya

PLAN VIEW - MAR-309-3.26

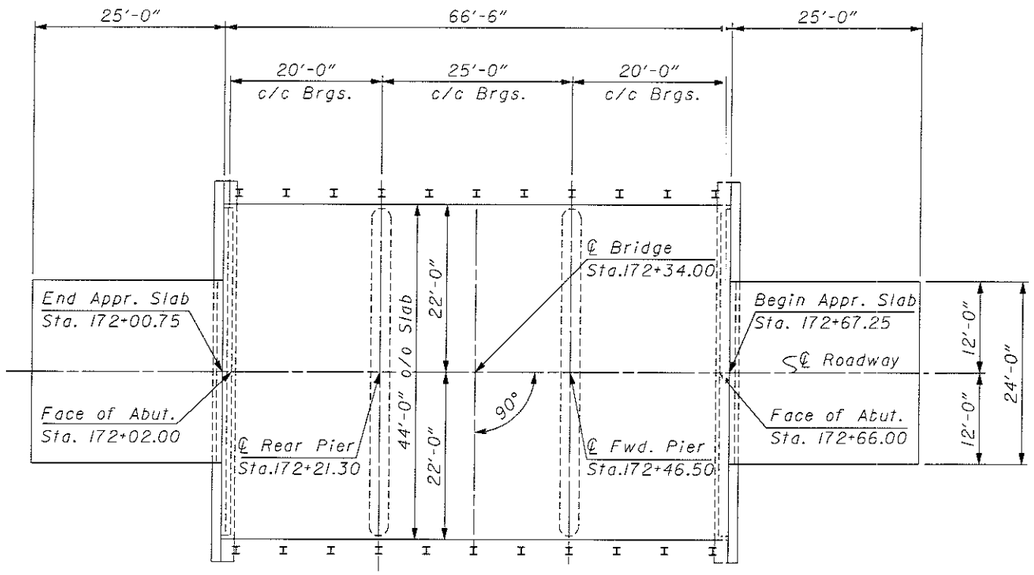

INDEX OF STRUCTURAL WORK ITEMS

1. DECK: REMOVE 1/4" EPOXY OVERLAY. REMOVE 1 1/4" OF ORIGINAL DECK BY HYDRO-DEMOLITION METHOD. REPLACE WITH MICRO SILICA CONCRETE OVERLAY (35% VARIABLE DEPTH AND 10% FULL DEPTH.)

2. APPROACH SLABS: CONCRETE PATCHING - 10 S.F. ON WEST APPROACH AND 5 S.F. ON EAST APPROACH.

3. INSTALL STEEL DRIP STRIP.

4. INSTALL PREFORMED ELASTOMERIC COMPRESSION JOINT SEALER BETWEEN DECK AND APPROACH SLABS.

5. INSTALL POLYMER MODIFIED EXPANSION JOINT ON THE EAST END OF THE EAST APPROACH BETWEEN THE APPROACH SLAB AND THE ROADWAY PAVEMENT.

ITEM	ITEM EXT.	TOTAL	UNIT	DESCRIPTION	FWD.	REAR	SUPER.
202	23500	325.1	SQ YD	WEARING COURSE REMOVED			325.1
SPECIAL	51631300	88.0	LIN FT	POLYMER MODIFIED ASPHALT EXPANSION JOINT SYSTEM	44.0	44.0	
SPECIAL	51822300	155.0	LIN FT	STEEL DRIP STRIP			155.0
519	11100	15.0	SQ FT	PATCHING CONCRETE STRUCTURE	10.0	5.0	
841	10000	325.1	SQ YD	TREATING OF CONCRETE SURFACES WITH SRS			325.10
848	10000	325.1	SQ YD	MICRO SILICA MODIFIED CONCRETE OVERLAY USING HYDRODEMOLITION (1 1/4")			325.10
848	20000	325.1	SQ YD	SURFACE PREPARATION USING HYDRODEMOLITION			325.10
848	30000	9.5	CU YD	MICRO SILICA MODIFIED CONCRETE OVERLAY (VARIABLE THICKNESS), MATERIAL ONLY			9.5
848	50000	11.4	SQ YD	HAND CHIPPING			11.4
848	50200	13.5	CU YD	FULL-DEPTH REPAIR			13.5
				TOTALS CARRIED TO THE ESTIMATED QUANTITY SHEET 5/10			

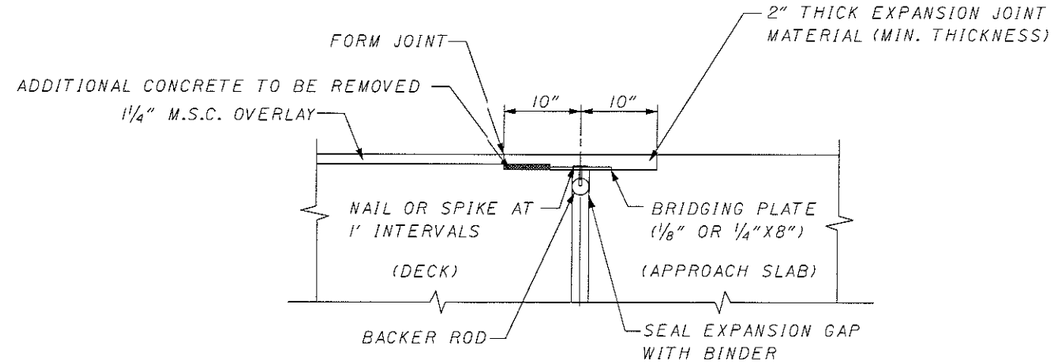

POLYMER MODIFIED ASPHALT EXPANSION JOINT DETAIL

EXISTING STRUCTURE

TYPE: CONTINUOUS REINFORCED CONCRETE SLAB WITH CAPPED PILE SUBSTRUCTURE
SPANS: 20'-25'-20' C/C BRGS.
LOAD FREQUENCY: CF-400(57)
ROADWAY: 42'-8" F/F GUARDRAIL
SKEW: NONE
WEARING SURFACE: 1/4" EPOXY OVERLAY ON 1" MONOLITHIC CONCRETE
APPROACH SLAB: AS-1-54 (25' LONG)
TYPE OF JOINTS: 1/2" PREFORMED EXPANSION JOINT FILLER
ALIGNMENT: TANGENT

PROPOSED STRUCTURE

TYPE: NO CHANGE FROM EXISTING
SPAN: NO CHANGE FROM EXISTING
LOAD FREQUENCY RATING: NO CHANGE FROM EXISTING
ROADWAY: NO CHANGE FROM THE EXISTING
SKEW: NO CHANGE FROM THE EXISTING
WEARING SURFACE: 1 1/4" MICRO SILICA MODIFIED CONCRETE OVERLAY
APPROACH SLABS: NO CHANGE FROM EXISTING
TYPE OF JOINTS: PREFORMED ELASTOMERIC COMPRESSION JOINT SEAL (705.11)
ALIGNMENT: NO CHANGE FROM EXISTING

DESIGN AGENCY: DISTRICT SIX PRODUCTION
STRUCTURE FILE NUMBER: 5101298
DRAWN | REVISED
DESIGNED | CHECKED

PLAN VIEW
BRIDGE NO. MAR-309-0326 (ENOCH CREEK)

MAR-309-1.38

2/5

7/10

I:\Projects\mar\309\0138.002\se2.dgn 07-MAR-2002 2:18PM lsilvnya

PLAN VIEW - MAR-309-4.26

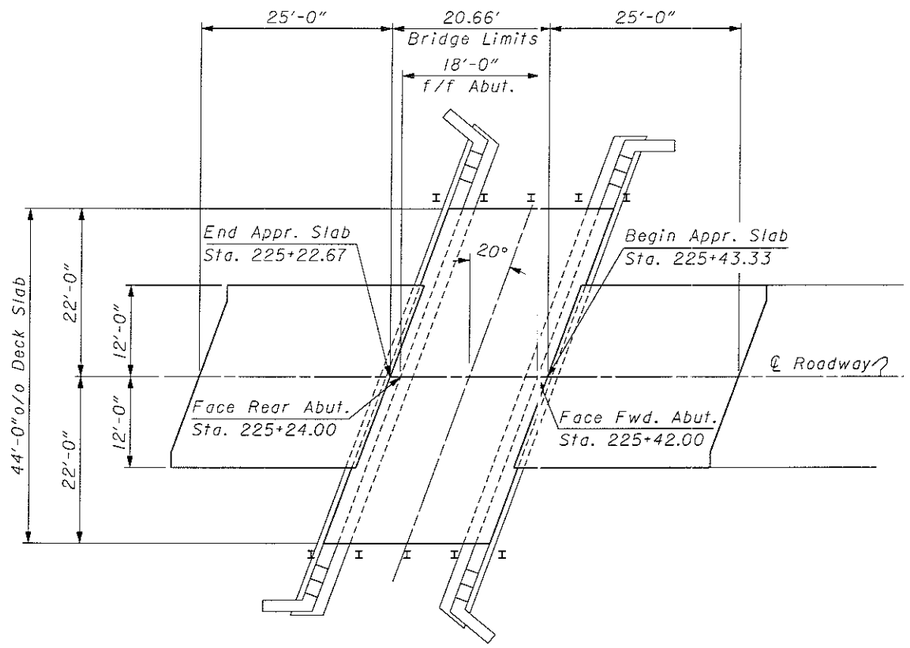

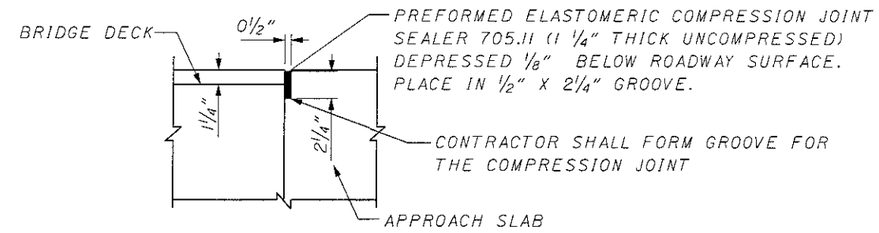

DETAIL A

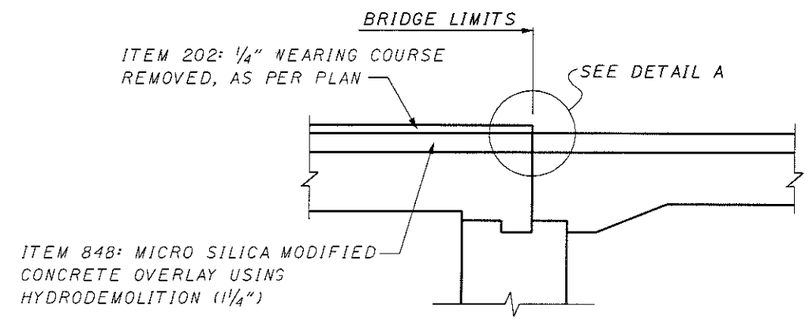

INDEX OF STRUCTURAL WORK ITEMS

1. DECK: REMOVE ¼" EPOXY OVERLAY. REMOVE 1¼" OF ORIGINAL DECK BY HYDRO-DEMOLITION METHOD. REPLACE WITH MICRO SILICA CONCRETE OVERLAY (25% VARIABLE DEPTH .)

2. APPROACH SLABS: CONCRETE PATCHING - 35 S.F. ON WEST APPROACH (ENTIRE LENGTH OF APPROACH ALONG JOINT) AND 0 S.F. ON EAST APPROACH.

3. INSTALL STEEL DRIP STRIP.

4. INSTALL PREFORMED ELASTOMERIC COMPRESSION JOINT SEALER.

ITEM	ITEM EXT.	TOTAL	UNIT	DESCRIPTION	FWD.	REAR	SUPER.
202	23500	101.0	SQ YD	WEARING COURSE REMOVED			101.0
516	10000	93.62	LIN FT	PREFORMED ELASTOMERIC COMPRESSION JOINT SEAL (705.11)	46.81	46.81	
SPECIAL	51822300	47.32	LIN FT	STEEL DRIP STRIP			47.32
519	11100	35.0	SQ FT	PATCHING CONCRETE STRUCTURE	35.0		
841	10000	101.0	SQ YD	TREATING OF CONCRETE SURFACES WITH SRS			101.0
848	10000	101.0	SQ YD	MICRO SILICA MODIFIED CONCRETE OVERLAY USING HYDRODEMOLITION (1 1/4")			101.0
848	20000	101.0	SQ YD	SURFACE PREPARATION USING HYDRODEMOLITION			101.0
848	30000	2.1	CU YD	MICRO SILICA MODIFIED CONCRETE OVERLAY (VARIABLE THICKNESS), MATERIAL ONLY			2.1
848	50000	2.5	SQ YD	HAND CHIPPING			2.5
TOTALS CARRIED TO THE ESTIMATED QUANTITY SHEET 5/10							

EXISTING STRUCTURE

TYPE: SINGLE SPAN REINFORCED CONCRETE SLAB WITH REINFORCED CONCRETE ABUTMENTS
SPAN: 18'-0" F/F ABUT.
LOAD FREQUENCY: CF-400(57)
ROADWAY: 42'-8" F/F GUARDRAIL
SKEW: 20° L.F.
WEARING SURFACE: ¼" EPOXY OVERLAY ON 1" MONOLITHIC CONCRETE
APPROACH SLAB: AS-1-54 (25' LONG)
TYPE OF JOINTS: ½" PREFORMED EXPANSION JOINT FILLER
ALIGNMENT: TANGENT

PROPOSED STRUCTURE

TYPE: NO CHANGE FROM EXISTING
SPAN: NO CHANGE FROM EXISTING
LOAD FREQUENCY RATING: NO CHANGE FROM EXISTING
ROADWAY: NO CHANGE FROM THE EXISTING
SKEW: NO CHANGE FROM THE EXISTING
WEARING SURFACE: 1¼" MICRO SILICA MODIFIED CONCRETE OVERLAY
APPROACH SLABS: NO CHANGE FROM EXISTING
TYPE OF JOINTS: PREFORMED ELASTOMERIC COMPRESSION JOINT SEAL (705.11)
ALIGNMENT: NO CHANGE FROM EXISTING

DESIGN AGENCY: DISTRICT SIX PRODUCTION
STRUCTURE FILE NUMBER: 5101328
DRAWN | REVISED
DESIGNED | CHECKED

PLAN VIEW
BRIDGE NO. MAR-309-0426 (BROWN DITCH)

MAR-309-1.38

3/5

8/10

I:\Projects\mar\309\0138.002\se3.dgn 07-MAR-2002 2:18PM lsilvnya

PLAN VIEW - MAR-309-5.06

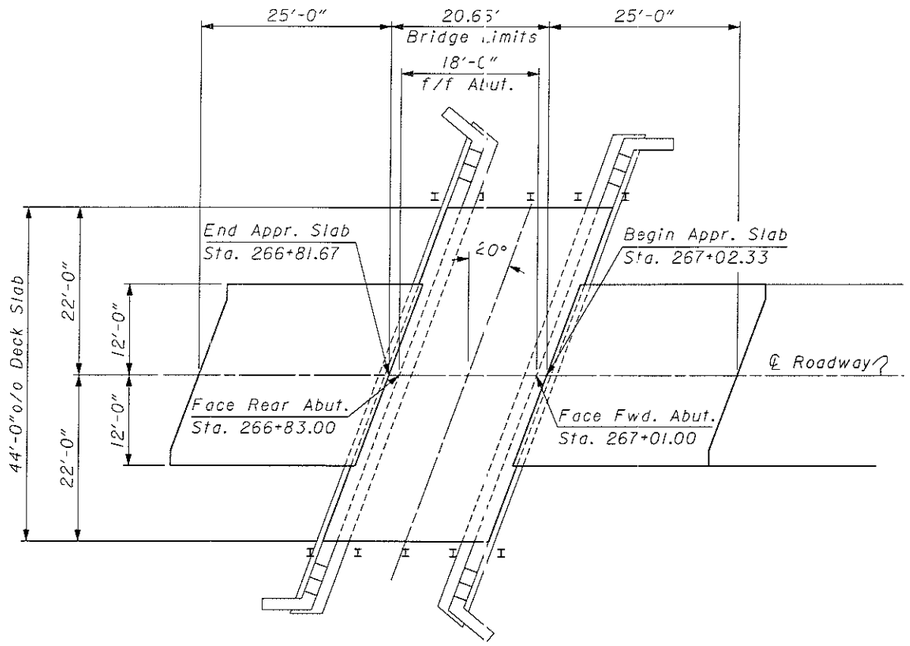

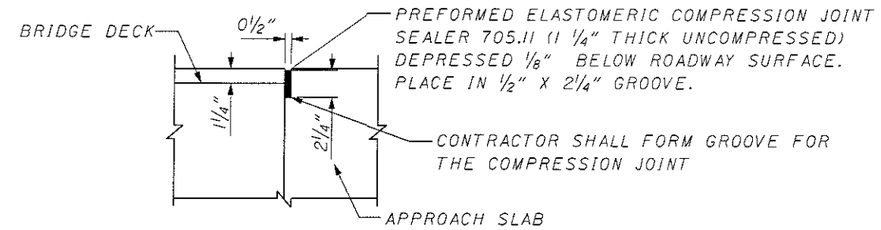

DETAIL A

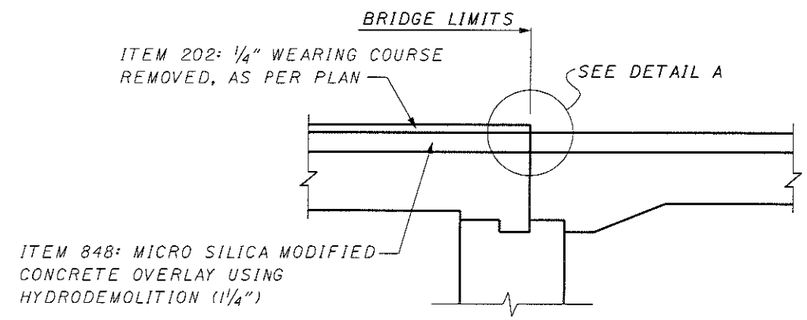

INDEX OF STRUCTURAL WORK ITEMS

1. DECK: REMOVE ¼" EPOXY OVERLAY. REMOVE 1¼" OF ORIGINAL DECK BY HYDRO-DEMOLITION METHOD. REPLACE WITH MICRO SILICA CONCRETE OVERLAY (25% VARIABLE DEPTH.)

2. APPROACH SLABS: CONCRETE PATCHING - 5 S.F. ON WEST APPROACH AND 5 S.F. ON EAST APPROACH.

3. INSTALL STEEL DRIP STRIP.

4. INSTALL PREFORMED ELASTOMERIC COMPRESSION JOINT SEALER.

5. PATCH 10 L.F. OF DECK EDGE ON NORTH EDGE OF THE DECK

ITEM	ITEM EXT.	TOTAL	UNIT	DESCRIPTION	FWD.	REAR	SUPER.
202	23500	101.0	SQ YD	WEARING COURSE REMOVED		101.0	
516	10000	93.62	LIN FT	PREFORMED ELASTOMERIC COMPRESSION JOINT SEAL (705.11)	46.81		46.81
SPECIAL	51822300	47.32	LIN FT	STEEL DRIP STRIP		47.32	
519	11100	22.6	SQ FT	PATCHING CONCRETE STRUCTURE	5.0	12.6	5.0
841	10000	101.0	SQ YD	TREATING OF CONCRETE SURFACES WITH SRS		101.0	
848	10000	101.0	SQ YD	MICRO SILICA MODIFIED CONCRETE OVERLAY USING HYDRODEMOLITION (1 1/4")		101.0	
848	20000	101.0	SQ YD	SURFACE PREPARATION USING HYDRODEMOLITION		101.0	
848	30000	2.1	CU YD	MICRO SILICA MODIFIED CONCRETE OVERLAY (VARIABLE THICKNESS), MATERIAL ONLY		2.1	
848	50000	2.5	SQ YD	HAND CHIPPING			
				TOTALS CARRIED TO THE ESTIMATED QUANTITY SHEET 5/10			

EXISTING STRUCTURE

TYPE: SINGLE SPAN REINFORCED CONCRETE SLAB WITH REINFORCED CONCRETE ABUTMENTS
SPAN: 18'-0" F/F ABUT.
LOAD FREQUENCY: CF=400(57)
ROADWAY: 42'-8" F/F GUARDRAIL
SKEW: 20° L.F.
WEARING SURFACE: ¼" EPOXY OVERLAY ON 1" MONOLITHIC CONCRETE
APPROACH SLAB: AS-1-54 (25' LONG)
TYPE OF JOINTS: ½" PREFORMED EXPANSION JOINT FILLER
ALIGNMENT: TANGENT

PROPOSED STRUCTURE

TYPE: NO CHANGE FROM EXISTING
SPAN: NO CHANGE FROM EXISTING
LOAD FREQUENCY RATING: NO CHANGE FROM EXISTING
ROADWAY: NO CHANGE FROM THE EXISTING
SKEW: NO CHANGE FROM THE EXISTING
WEARING SURFACE: 1¼" MICRO SILICA MODIFIED CONCRETE OVERLAY
APPROACH SLABS: NO CHANGE FROM EXISTING
TYPE OF JOINTS: PREFORMED ELASTOMERIC COMPRESSION JOINT SEAL (705.11)
ALIGNMENT: NO CHANGE FROM EXISTING

DESIGN AGENCY: DISTRICT SIX PRODUCTION
STRUCTURE FILE NUMBER: 5101352
DRAWN / REVISED / DESIGNED / CHECKED

PLAN VIEW
BRIDGE NO. MAR-309-0506 (DRAKE DITCH)

MAR-309-1.38

4/5

9/10

I:\Projects\mar\309\0138.002\se4.dgn 07-MAR-2002 2:18PM lslivnya

PLAN VIEW - MAR-309-5.76

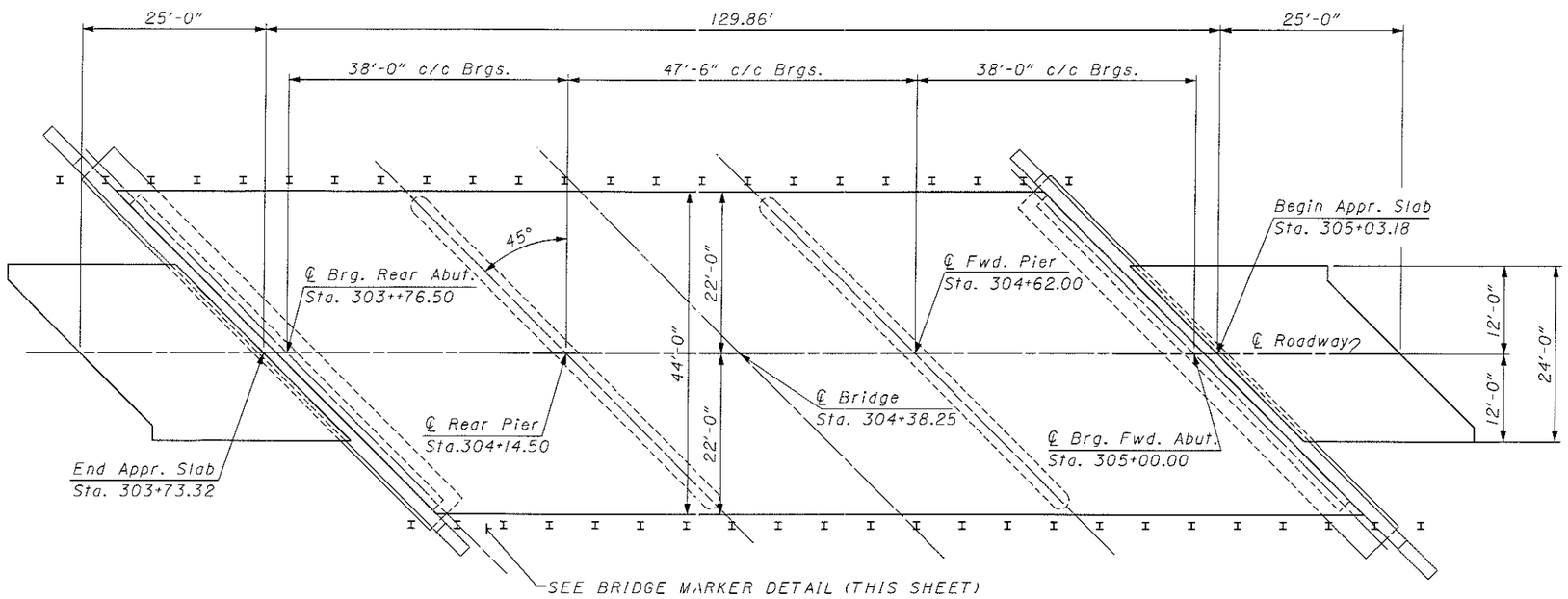

ITEM 516 - STRUCTURAL JOINT OR JOINT SEALER, MISC. (DOW CORNING 902 RCS®)

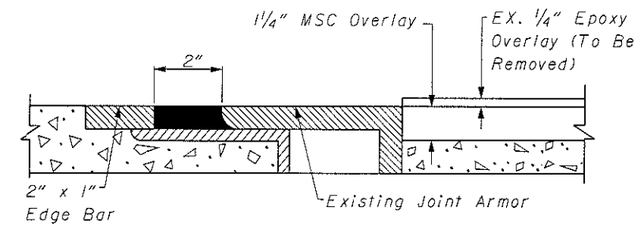

JOINT DETAIL

LEGEND:

Item 516: Proposed Dow Corning 902 RCS®Joint Sealer

INDEX OF STRUCTURAL WORK ITEMS

1. DECK: REMOVE ¼" EPOXY OVERLAY. REMOVE 1¼" OF ORIGINAL DECK BY HYDRO-DEMOLITION METHOD. REPLACE WITH MICRO SILICA CONCRETE OVERLAY (50% VARIABLE DEPTH AND 10% FULL DEPTH.)

2. APPROACH SLABS: CONCRETE PATCHING - 25 S.F. ON WEST APPROACH AND 10 S.F. ON EAST APPROACH.

3. INSTALL STEEL DRIP STRIP.

4. CLEAN AND REPLACE THE SEAL IN THE EXPANSION JOINTS.

5. PATCH 40% OF DECK EDGE ON BOTH THE NORTH AND SOUTH SIDES OF THE DECK.

6. ADD NEW SIGN "MAR-309-0576".

BRIDGE MARKER DETAIL

MAR-
309-
0576

FLAT SHEET SIGN SPECIAL

12"X 12"

NOTES:

Remove existing expansion joint material and sandblaststeel armor that will be in contact with proposed sealer material to white armor. Blow joint opening with oil-free compressed air to remove laitance and debris from sandblasting operations. Prime faces of joint with a light spray coating of DOW CORNING 1205 Primer and allow to dry. Fill structural joint with DOW CORNING 902 RCS,according to manufacturer's directions.

All labor, equip., and materials required for this work will be included in Item 516.

ITEM	ITEM EXT.	TOTAL	UNIT	DESCRIPTION	FWD.	REAR	SUPER.
202	23500	634.8	SQ YD	WEARING COURSE REMOVED			634.8
516	14600	124.46	LIN FT	STRUCTURAL JOINT OR JOINT SEALER, MISC.: DOW CORNING 902 RCS	62.23	62.23	
SPECIAL	51822300	301.72	LIN FT	STEEL DRIP STRIP			301.72
519	11100	190.7	SQ FT	PATCHING CONCRETE STRUCTURE	25.0	10.0	155.7
630	79600	1	EACH	SIGN SUPPORT ASSEMBLY, BRIDGE MOUNTED (*)			
630	80102	1.0	SQ FT	SIGN, FLAT SHEET, TYPE G (*)			
841	10000	634.8	SQ YD	TREATING OF CONCRETE SURFACES WITH SRS			634.8
848	10000	634.8	SQ YD	MICRO SILICA MODIFIED CONCRETE OVERLAY USING HYDRODEMOLITION (1 1/4")			634.8
848	20000	634.8	SQ YD	SURFACE PREPARATION USING HYDRODEMOLITION			634.8
848	30000	26.5	CU YD	MICRO SILICA MODIFIED CONCRETE OVERLAY (VARIABLE THICKNESS), MATERIAL ONLY			26.5
848	50000	31.7	SQ YD	HAND CHIPPING			31.7
848	50200	15.0	CU YD	FULL-DEPTH REPAIR			15.0

(*) TOTALS CARRIED TO THE GENERAL SUMMARY SHEET 5/10

TOTALS CARRIED TO THE ESTIMATED QUANTITY SHEET 5/10

EXISTING STRUCTURE

TYPE: CONTINUOUS STEEL BEAMS WITH REINFORCED CONCRETE DECK AND SUBSTRUCTURE
SPAN: 38'-0", 47'-6", 38'-0"
LOAD FREQUENCY: CF-400(57)
ROADWAY: 42'-8" F/F GUARDRAIL
SKEW: 45°R.F.
WEARING SURFACE: ¼" EPOXY OVERLAY ON 1" MONOLITHIC CONCRETE
APPROACH SLAB: AS-1-54 (25' LONG)
TYPE OF JOINTS: SLIDING PLATE
ALIGNMENT: TANGENT

PROPOSED STRUCTURE

TYPE: NO CHANGE FROM EXISTING
SPAN: NO CHANGE FROM EXISTING
LOAD FREQUENCY RATING: NO CHANGE FROM EXISTING
ROADWAY: NO CHANGE FROM THE EXISTING
SKEW: NO CHANGE FROM THE EXISTING
WEARING SURFACE: 1¼" MICRO SILICA MODIFIED CONCRETE OVERLAY
APPROACH SLABS: NO CHANGE FROM EXISTING
TYPE OF JOINTS: DOW CORNING 902 RCS
ALIGNMENT: NO CHANGE FROM EXISTING

DESIGN AGENCY: DISTRICT SIX PRODUCTION
STRUCTURE FILE NUMBER: 5101387
DRAWN | REVISED
DESIGNED | CHECKED

PLAN VIEW
BRIDGE NO. MAR-309-0576 (TYMOCHTEE CREEK)

MAR-309-1.38

5/5

10/10

I:\Projects\mar\309\0138.002\se5.dgn 07-MAR-2002 2:18PM lsilvnya