OHIO DEPARTMENT OF TRANSPORTATION
DIVISION OF HIGHWAYS

FHWA REGION	STATE	FEDERAL PROJECT	
5	OHIO		

PLAN NO. BR-47-89

Project 96-90 Dtr

PART	COUNTY	ROUTE	STRUCTURE No. ~~SECTION~~	PROJECT TERMINII BEGIN	PROJECT TERMINII END	NET LENGTH MILES	TOWNSHIP	CITY	VILLAGE
1	MAR	23	0185 L&R						
2	MAR	23	0205 L&R						
3	MAR	23	0766 L&R						
4	DEL	23	1988 R						

BRIDGE DECK REPAIR

The Standard 1989 Specifications of the State of Ohio, Department of Transportation, including changes and Supplemental Specifications listed in the plans and proposal shall govern these improvements.

I hereby approve these plans and declare that the making of these improvements will require the closing of the highways to traffic on Parts No. _____ and that detours will be provided by State forces. The closing to traffic of the highways will not be required on Parts No. 1-4 and provisions for the maintenance and safety of traffic will be as indicated in the proposal.

Approved Date 9-6-89 — W Howard Tweed, District Deputy Director of Transportation

FFE Approved Date 10-5-89 — B. D. Hamilton FFE, Engineer of Bridges

Approved Date _____ — [redacted]

JB Approved Date 11-7-89 — James R. Longenecker, [redacted], Operations, Deputy Director

Approved Date _____ — [redacted]

Approved Date _____ — [redacted]

Approved Date _____ — [redacted]

Approved Date _____ — [redacted]

Approved Date 11-7-89 — Bernard C. Hirst, Director, Department of Transportation

DEPARTMENT OF TRANSPORTATION
FEDERAL HIGHWAY ADMINISTRATION

APPROVED:

DIVISION ADMINISTRATOR DATE

STANDARD DRAWINGS		SUPPLEMENTAL SPECIFICATIONS	
TC-35.10	8-29-84	SS 853	6-26-78
SD-1-69	6-12-69	SS 956	6-26-78
BR-1	5-29-79		

LOCATION MAP

TWO WORKING DAYS BEFORE YOU DIG
Call... 800-362-2764
TOLL FREE
OHIO UTILITIES PROTECTION SERVICE
NON-MEMBERS MUST BE CALLED DIRECTLY

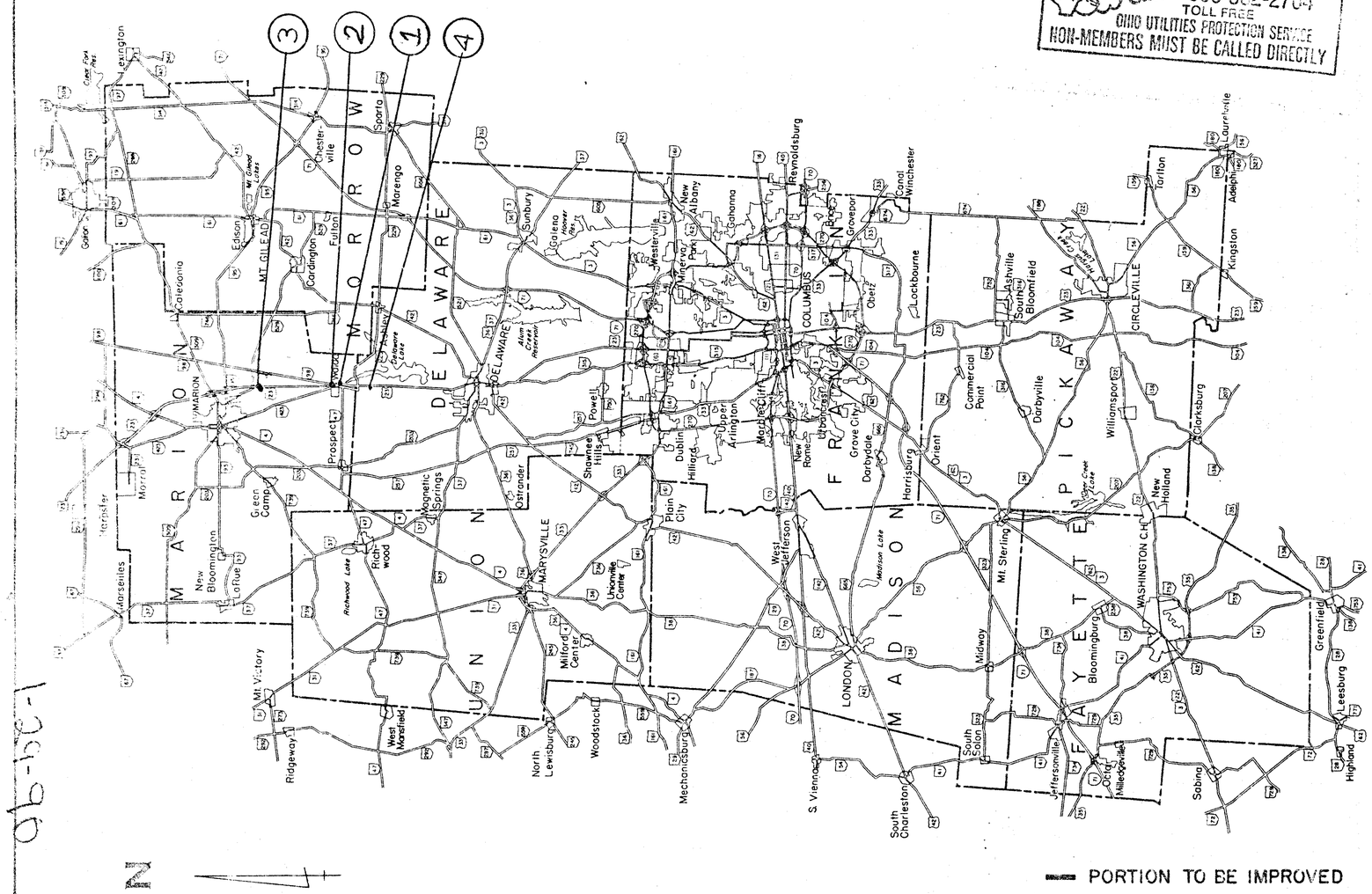

PORTION TO BE IMPROVED

96-90-1

DEPARTMENT OF TRANSPORTATION
M& R 712 REV. 9-1-83

2/8

PLAN NO.
BR-17-87

ITEM	DECRIPTION	UNIT	MAR-23 0185 L	MAR-23 0185 R	MAR-23 0205 L	MAR-23 0205 R	MAR-23 0766 L	MAR-23 0766 R	DEL-23 1988 R	TOTAL
202	Wearing Course Removed	Sq. Yd.	793	793	747	598	441	441	71	3884
517	Railing, Faced as per plan	Lin. Ft.	419	421	-	-	-	-	-	840
520	Pneumatically Placed Mortar as per plan	Sq. Ft.	-	100	-	-	300	100	200	700
621	Edge Lines	Mile	.03	.03	.04	.04	.02	.02	.01	.19
621	Center Lines	Mile	.01	.01	.02	.02	.01	.01	.01	.09
Special	Micro-Silica Modified Concrete Overlay (See Proposal Note)	Sq. Yd.	793	793	747	598	441	441	71	3884
Special	Micro-Silica Modified Concrete Overlay (varible thickness)(See Proposal Note)	Cu. Yd.	23	46	15	17	13	30	4	148
Special	Sealing of Concrete Surfaces (See proposal note)	Sq. Yd.	525	526	67	67	53	53	8	1299
614	Maintaining Traffic	Lump	Lump	Lump	Lump	Lump	Lump	Lump	Lump	Lump
624	Mobilization	Lump	Lump	Lump	Lump	Lump	Lump	Lump	Lump	Lump

ITEM 520- PNEIMATICALLY PLACED MORTAR as per plan: Work under thes Item shall consist of patching deteriorated concrete on sides and underneath bridge deck, and the abutments at the direction of the Engineer.

ITEM 202- WEARING COURSE REMOVED: This item shall consist of removing existing 1½ Latex Modified Concrete Overlay

ITEM 614- Maintaining Traffic: No work or lane closure shall be permitted from 12PM on the day preceding a holiday weekend until 9AM the day after a holiday weekend. Traffic Control shall be in accordance with plan sheet# 8.

STATE OF OHIO
DEPARTMENT OF TRANSPORTATION
DIVISION OF HIGHWAYS
DISTRICT 6 BRIDGE DEPARTMENT

ESTIMATED QUANTITES & GENERAL NOTES

DESIGN	DRAWN	TRACED	CHECKED	REVIEW	DATE	REVISED
	OFM	DJM		Ja J	9-5-17	

DOT 1925

3/8

PLAN NO. BR-47-89

ITEM 517 - Railing, Faced as per plan
The contractor shall carefully removed the existing aluminum railing and stack neatly along the right-of-way for subsequent pick-up by state forces. The concrete safety curb shall be removed. 1" dia. holes, 6" deep (min.), shall be drilled at 15" c/c and at 2'-6" c/c as shown on the drawing. The holes shall be thoroughly cleaned of all dust and other deleterious material.
The grout shall consist of cement and water using Type I, Type III, or shrinkage compensating cement. Clean holes shall be saturated thoroughly with water for a minimum of 5 minutes prior to placing grout. Immediately prior to grouting, all free standing water shall be removed from holes. After initial mixing, thinning or retempering of grout with extra water shall not be allowed. Hardened or set grout which has become too stiff or dry to provide a good bond shall be discarded. Dowels shall not be installed if the mean air or grout temperatures are less than 45 F. Furthermore, after placing, the fresh grout shall be maintained at a temperature of not less than 45 F for 72 hours, and at not less than 40 F for an additional 4 days. The temperature of the mixed grout, immediately before placing, shall not be less than 50 F nor more than 90 F. The cement grout shall be cured continuously with wet rags for a minimum period of 3 days without disturbing the dowels.
Grout anchoring using epoxy as per SS 853 and 956 may be used in lieu of the above requirements with the exception that the hole size will remain at 1" dia.
All loose and unsound concrete in the area of the parapet to be faced, shall be removed. All remaining sound concrete shall then be mechanically scarified 1/4" deep. the minimum thickness for the proposed facing shall be 4". All resteel shall be epoxy coated as per 509. Epoxy coated resteel which is damaged due to cutting, bending, ect. shall be repaired as per 509 Concrete cover over all resteel shall be 2". The concrete surfaces to be faced shall be thoroughly drenched with clean water and allowed to dry to a damp condition just before placing the concrete.
The existing deflection joints shall be extended completely through the proposed facing and shall be made by forming or sawcutting the hardened concrete within 3 days after pouring. The 1/4" joints shall be sealed 3/4" deep (min.) with an impregnated precompressed expanding foam sealant tape known as Will-Seal, manufactured by Illbruck/USA Inc., Minneapolis or a low density, closed cell, crosslinked ethylene vinyl acetate foam known as Evasote 50, manufactured by E-poxy Industries. Inc., Ravena, New York.

Materials shall be: Concrete as per 511, Class S
Reinforcing Steel as per 509 Epoxy Coated

All of the above work and relevant plan notes shall be included in the price bid for Item 517,-Railing, Faced as per plan.

STATE OF OHIO
DEPARTMENT OF TRANSPORTATION
DIVISION OF HIGHWAYS
DISTRICT 6 BRIDGE DEPARTMENT

GENERAL NOTES

DESIGN	DRAWN	TRACED	CHECKED	REVIEW	DATE	REVISED
	RBM			JaJ	9-5-89	

DEPARTMENT OF TRANSPORTATION
M&R 712 REV. 9-1-83

4/8

PLAN NO.
BR-47-89

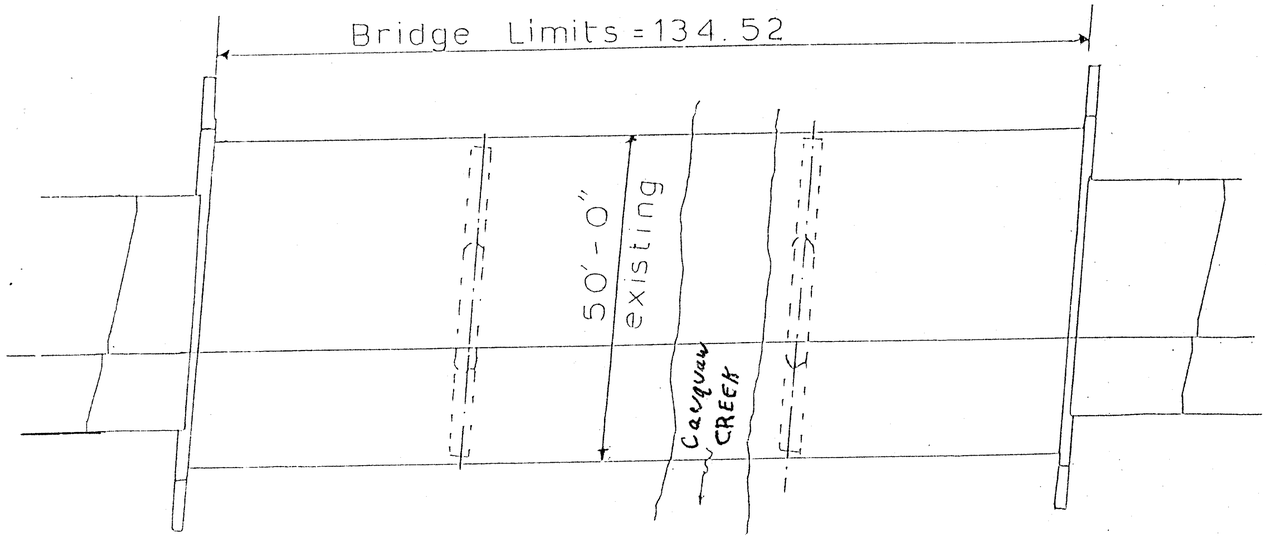

PLAN VIEW
MAR-23-0205 L
Skew = 5°-0'-0" L.F

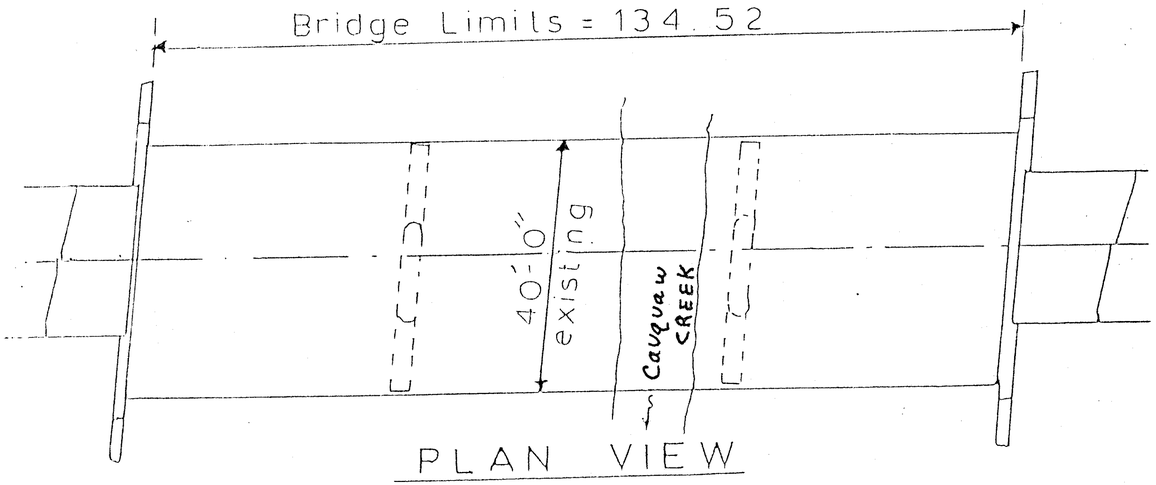

PLAN VIEW
MAR-23-0205 R
Skew = 5°-0'-0" L.F.

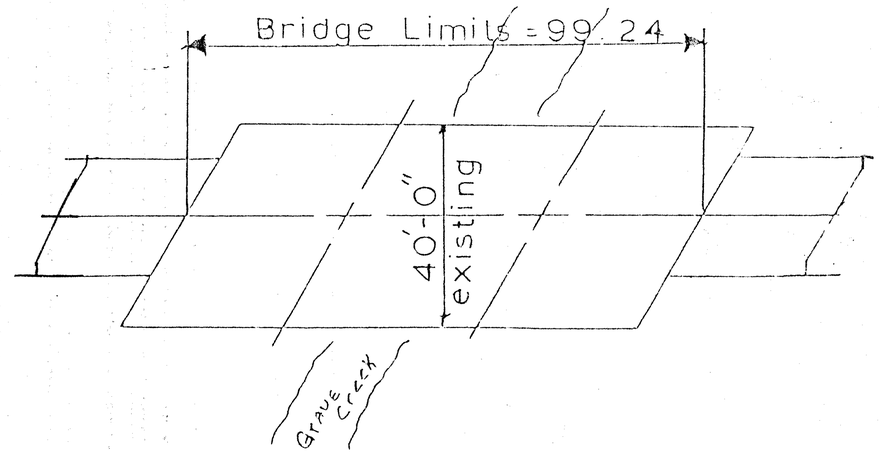

PLAN VIEW
MAR-23-0766 R
Skew = 30°-0'-0" L.F.

STATE OF OHIO
DEPARTMENT OF TRANSPORTATION
DIVISION OF HIGHWAYS
DISTRICT 6 BRIDGE DEPARTMENT

PLAN VIEWS

DESIGN	DRAWN	TRACED	CHECKED	REVIEW	DATE	REVISED
	DJM	DJM		Da	9-5-89	

DOT 1025

DEPARTMENT OF TRANSPORTATION
MA-R 712 REV. 9-1-83

5/8

PLAN NO. BR-47-89

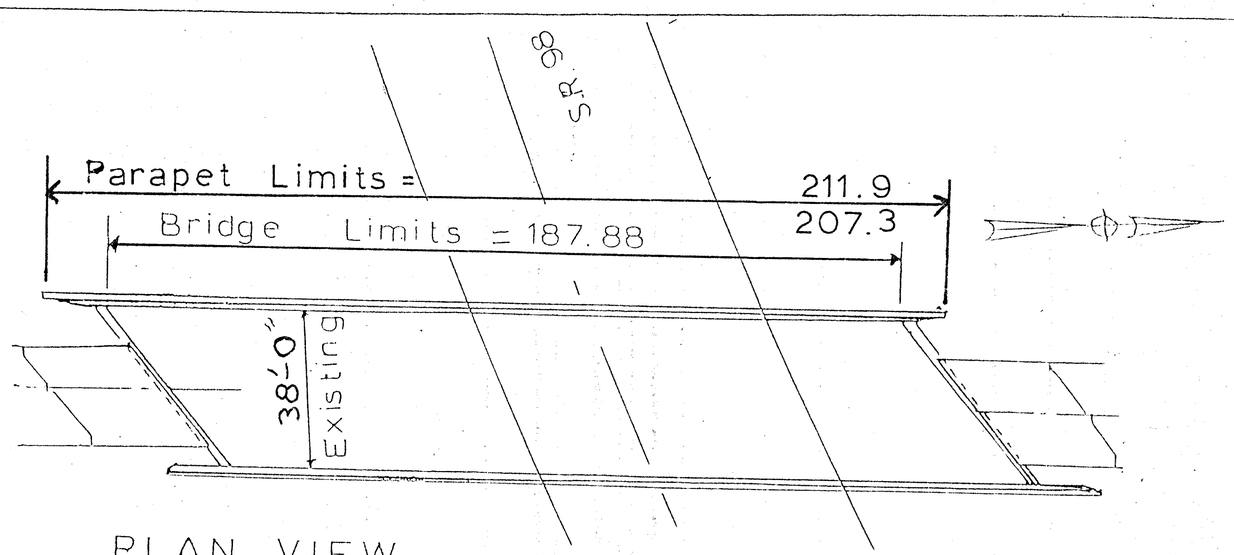

PLAN VIEW
MAR-23-0185 L
Skew = 40°-0'-0" R.F.

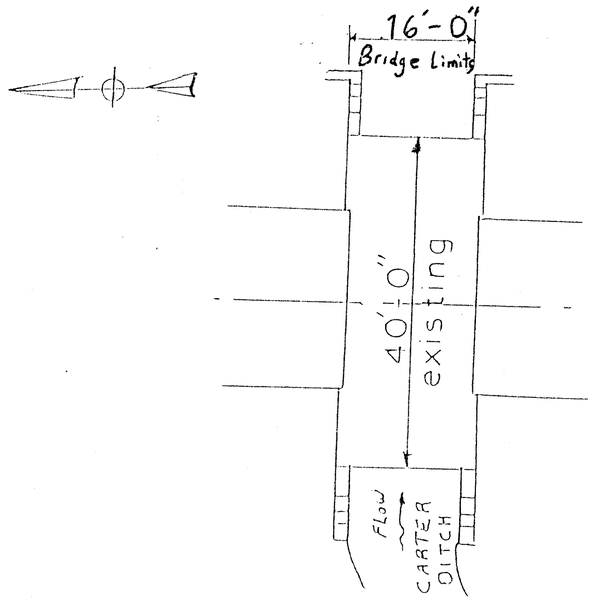

PLAN VIEW
DEL-23-1988 R
Skew = none

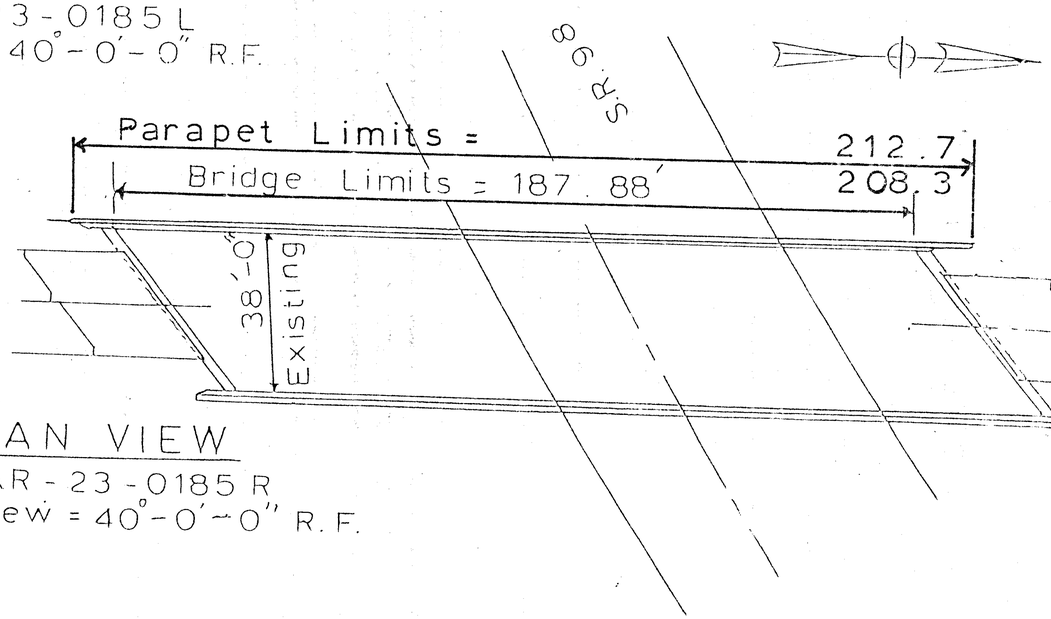

PLAN VIEW
MAR-23-0185 R
Skew = 40°-0'-0" R.F.

STATE OF OHIO
DEPARTMENT OF TRANSPORTATION
DIVISION OF HIGHWAYS
DISTRICT 6 BRIDGE DEPARTMENT

PLAN VIEWS

DESIGN	DRAWN	TRACED	CHECKED	REVIEW	DATE	REVISED
	DG	DA		JAG	7-5-89	

DOT 1975

DEPARTMENT OF TRANSPORTATION
M& R 712 REV. 9-1-83

6/8

PLAN NO.
BR-47-89

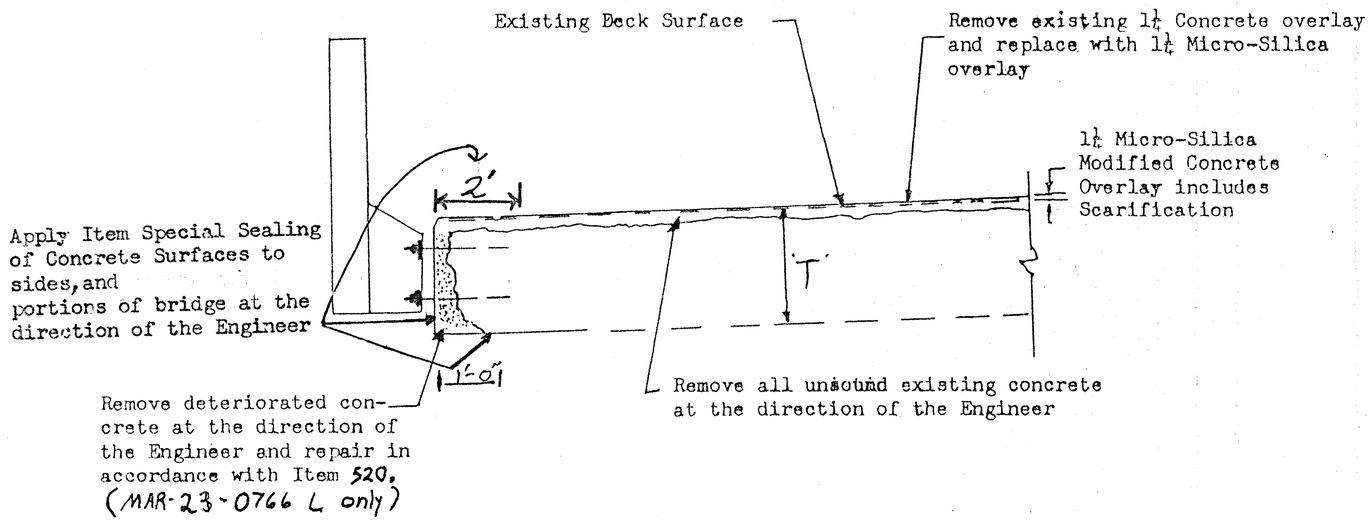

TYPICAL SECTION

MAR-23-0766 L&R T=16¾"
MAR-23-0205 L&R T=9"
DEL-23-1988 R T=12½"

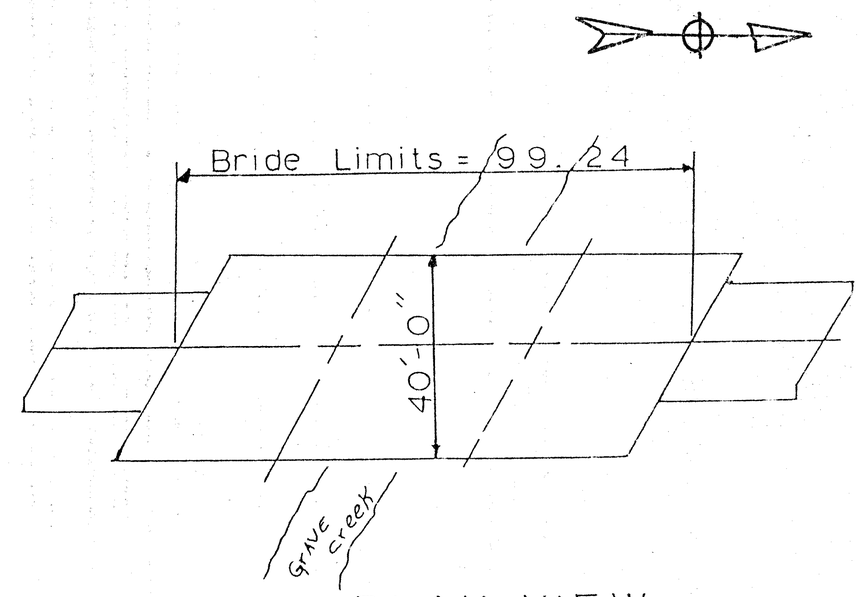

PLAN VIEW

MAR-23-0766 L
Skew = 30°-0'-0"

STATE OF OHIO
DEPARTMENT OF TRANSPORTATION
DIVISION OF HIGHWAYS
DISTRICT 6 BRIDGE DEPARTMENT

TYPICAL SECTION & PLAN VIEW

DESIGN	DRAWN	TRACED	CHECKED	REVIEW	DATE	REVISED
	DJM	DJM		JaJ	9-5-89	

DCT 1925

AE501 30'-0" Straight
AE601 2'-0" Bent
AE602 1'-3" Bent
AE603 2'-4" Bent

Bend AE601 where necessary to fit 6' transition Contractor shall cut AE501 bars as necessary to accommodate expansion joints

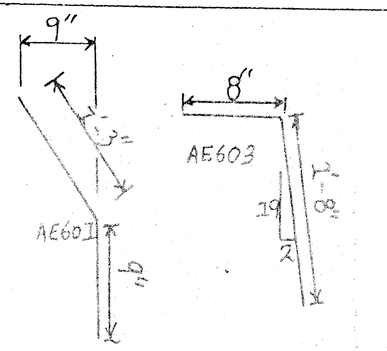

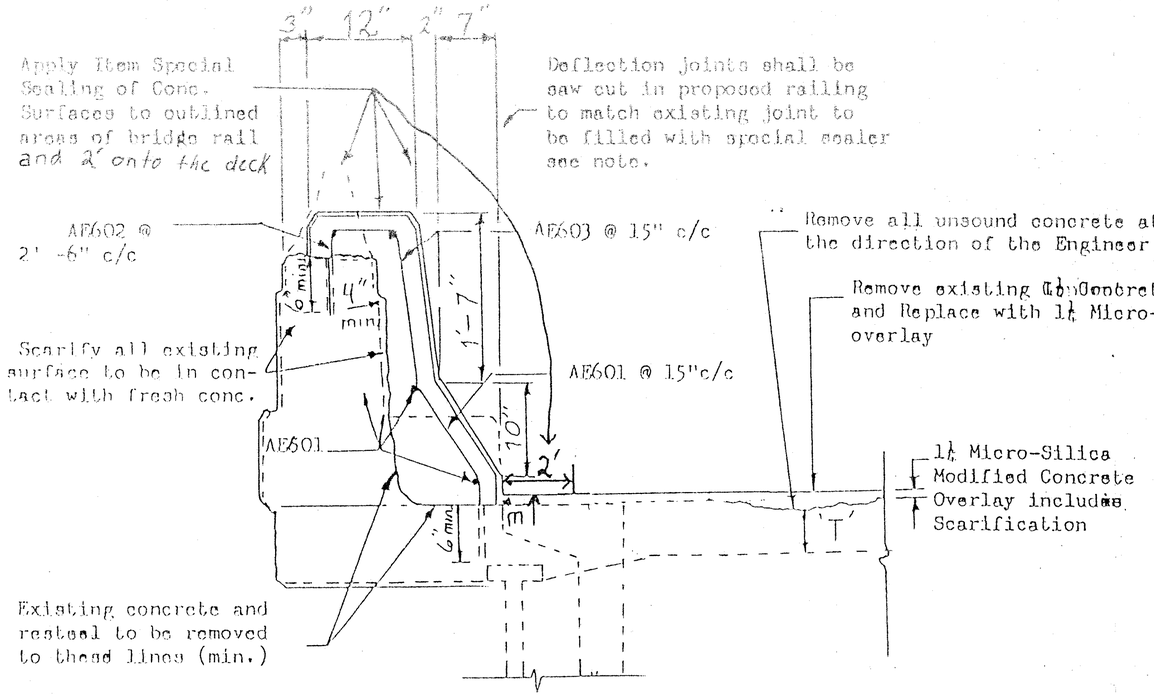

Remove all unsound concrete at the direction of the Engineer

Remove existing Concrete overlay and Replace with 1½ Micro-Silica overlay

TYPICAL SECTION

MAR - 23 - 0185 L & R T = 9"

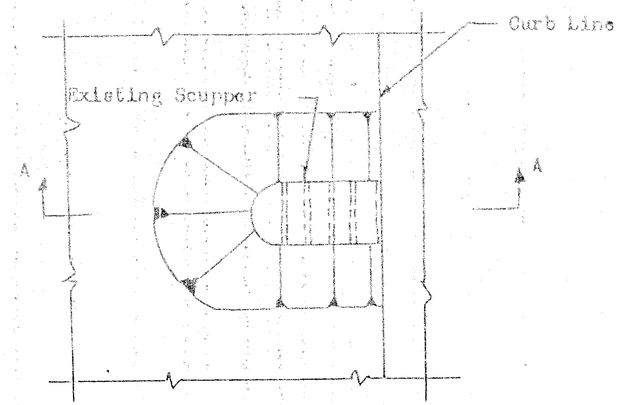

Plan View

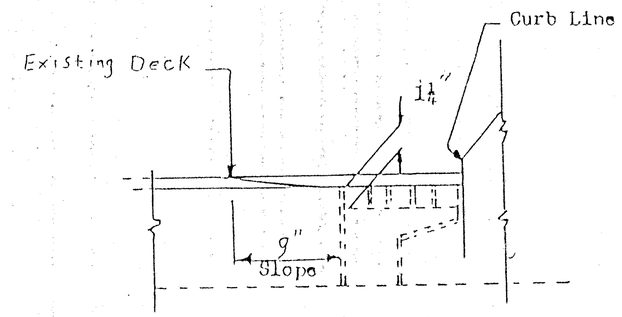

Section A-A

OVERLAY DETAIL AT SCUPPERS

MAR-23 - 0185 L & R

Modify dimensions shown above as necessary to form 6" proposed railing transition shown in BR-1. AE601, AE602 and AE603 bars shall be spaced as shown above except they shall be also install 6" from both sides of existing deflection joints, For plate and curb detail see standard drawing SD-1-69

STATE OF OHIO
DEPARTMENT OF TRANSPORTATION
DIVISION OF HIGHWAYS
DISTRICT 6 BRIDGE DEPARTMENT

TYPICAL SECTION
&
OVERLAY DETAIL
AT SCUPPER

DESIGN	DRAWN	TRACED	CHECKED	REVIEW	DATE	REVISED
	[illegible]	[illegible]		[illegible]	9-5-89	

BR-47-89 (8/8)

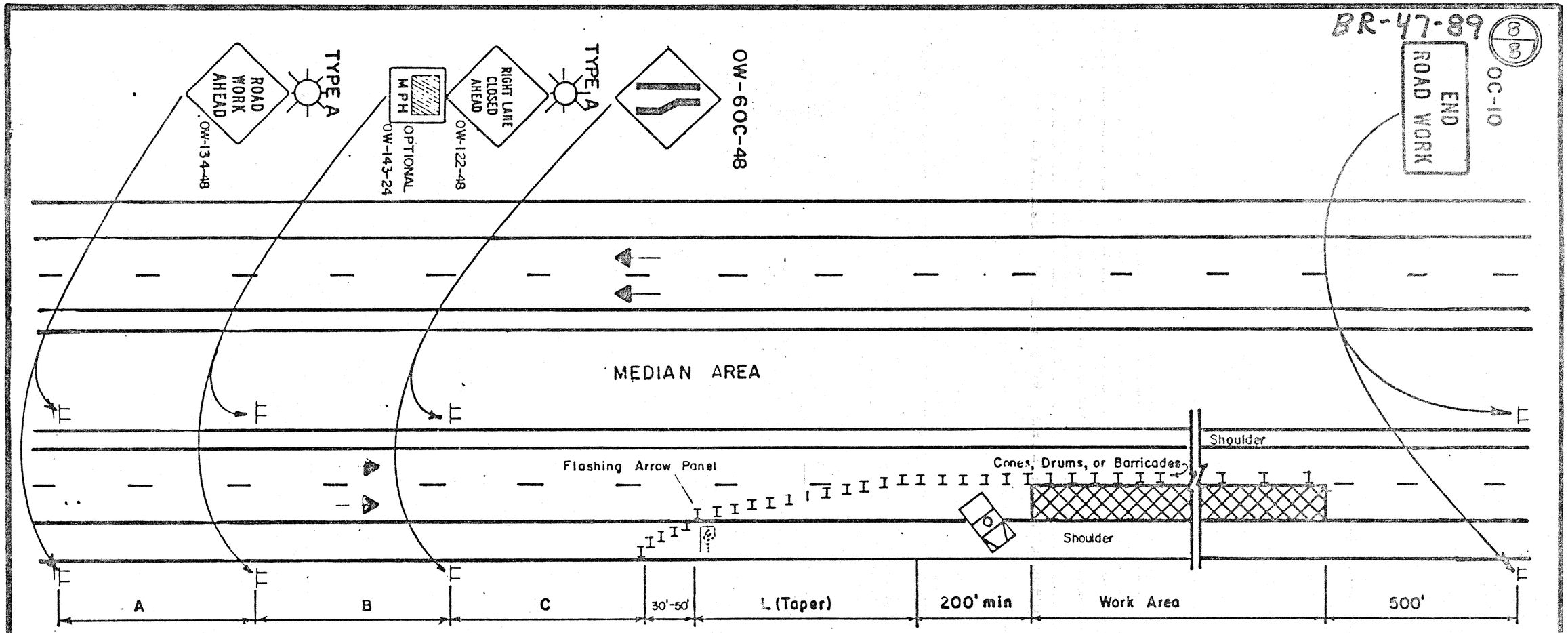

GENERAL NOTES:

1. The taper length (L) shall be in accordance with Section 7F-17 of the OMUTCD. The location of the transition taper and location of the advance warning signs should be adjusted to provide for adequate sight distance for the existing vertical and horizontal roadway alignment. In order to determine the minimum number of channelizing devices for the transition taper see Table 7-5 OMUTCD. For a 55 MPH prevailing speed and a 12 ft. lane, not less than thirteen (13) cones, drums or barricades shall be used to form the lane transition taper in advance of the work area. Not less than five (5) cones, drums or barricades shall be used to form the taper on the shoulder. Cones, drums or barricades shall be spaced approximately 50' to 60' center to center for the first 1000 feet of the work area and at a maximum of 100 to 120 feet for the balance of the work area. Cones may be substituted for barricades or drums for short term lane closures during daylight hours only.

2. The major standard level warning sign sizes may be used on divided streets or highways that are not classified as freeways or expressways.

3. When work is being performed in the lane adjacent to the median on a divided highway an OW-123-48 sign(s) shall be substituted for the OW-122-48 sign(s) and an OW-60D-48 sign(s) shall be substituted for the OW-60C sign(s).

4. The work vehicle shown at the beginning of the work area shall be in place and unoccupied whenever workers are in the work area. This work vehicle shall be removed from the pavement whenever workers are not in the work area. Other protective devices may be used in lieu of the work vehicle shown when approved by the Engineer. The vehicle shall be equipped with a 360° rotating or flashing amber beacon clearly visible a minimum of a ½ mile.

5. The flashing arrow panel shall meet requirements contained in TC-35.10.

6. Type C steady burning barricade warning lights shall be erected on drums or barricades for night lane closures. The maximum spacing shall be identical to the channelizing device spacing requirements described in Note 1.

MINIMUM DISTANCE	A	B	C
MAJOR STANDARD	500'	500'	500'
URBAN FREEWAY & EXPRESSWAY	500' TO 1000'	500' TO 1000'	500' TO 1000'
RURAL FREEWAY & EXPRESSWAY	2600'	1600'	1000'

7. Type A flashing barricade warning lights shown on the "Road Work Ahead" and the "Right Lane Closed Ahead" signs are required whenever a night lane closure is necessary.

8. Some work area locations may require more than just static or conventional signs to enhance communication with the driver. At these locations Portable Changeable Message Signs (PCMS) units are recommended. These devices should be located approximately 3/4 mile in advance of a lane closure or other point of required action. See Section 7G-8.1, OMUTCD for further guidance on use of PCMS units.

OHIO DEPARTMENT OF TRANSPORTATION

CLOSING ONE LANE OF A FOUR LANE DIVIDED HIGHWAY

DATE 2/82