MARION COUNTY MAR-739-3.53	OHIO	1 / 17
BRF-770(1)	FHWA REGION 5 / FEDERAL PROJECT	

STATE OF OHIO
DEPARTMENT OF TRANSPORTATION
MAR-739-3.53
GREEN CAMP TOWNSHIP
MARION COUNTY

BRF-770(1)

ALL REFERENCES TO FEDERAL NUMBER BRS-770(1) APPEARING IN THESE PLANS SHALL BE CONSIDERED TO READ BRF-770(1).

D&P Office Copy #1056-92

DESIGN DESIGNATION

Current ADT (1991)	2400
Design Year ADT (2011)	3120
DHV	312
D	55 %
T	2 %
V-Design	55 mph
V-Legal	55 mph
Functional Classification	Major Collector (Rural)

DESIGN EXCEPTION REQUIRED — NONE

CONVENTIONAL SIGNS

County Line
Township Line
Section Line
Corporation Line — or
Fence Line (existing) — (proposed)
Center Line 352 353
Trees, Stumps, (to be removed)
Utility Poles: Telephone, Power, Light

Limited Access (only) — LA
Right of Way (only) — RW
Limited Access & Right of Way — LA & RW
Existing Right of Way
Property Line — (in existing fence)
Railroad — or
Guardrail (existing) (proposed)

INDEX OF SHEETS

Title Sheet	1
Typical Section	2
General Notes & Calculations	3, 3A, 3B
General Summary	4
Plan & Profile	5
Cross Sections	6-7
Structure Over 20' Span	8-13
Right-of-Way	14-17

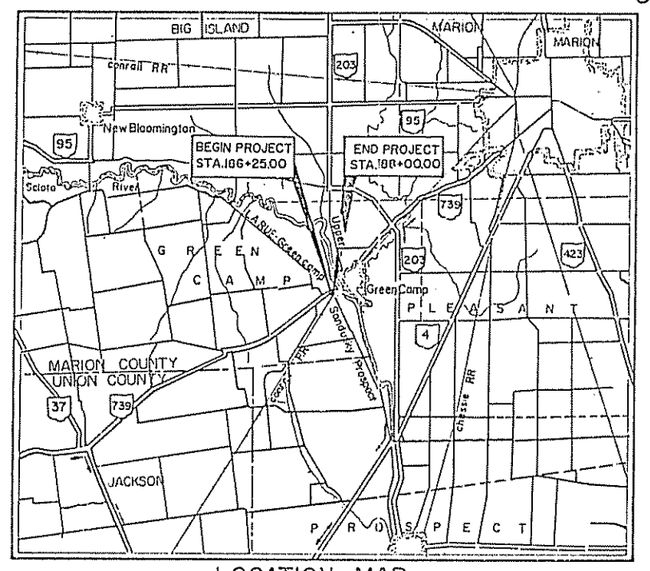

LOCATION MAP

SCALE IN MILES

0 1 2 4 6

Portion to be improved
State & Federal Routes
Other Roads

SCALES

Plan 0' 20' 40'

Profile: Horizontal 0' 20' 40', Vertical 0' 2' 4'

Cross Section: Horizontal 0' 5' 10', Vertical 0' 5' 10'

1991 SPECIFICATIONS

The standard specifications of the State of Ohio, Department of Transportation, including changes and supplemental specifications listed in the proposal shall govern this improvement

I hereby approve these plans and declare that the making of this improvement will require the closing to traffic of the highway and that detours will be provided as indicated on the plans.

Approved Michael C Flynn
Date 3/5/92 District Deputy Director of Transportation

Approved B.D. Hankhammer/HEH
Date 6-24-92 Engineer, Bureau of Bridges and Structural Design

Approved
Date 8/4/92 Deputy Director, Planning & Design

Approved
Date 8-4-92 Director, Department of Transportation

LINE DATA

PROJECT LENGTH
Begin Project Sta.186+25.00
End Project Sta.188+00.00
Total Length of Project = 175.0 L.F. = 0.033 Mi.

WORK LENGTH
Begin Work Sta.185+25.00
End Work Sta.188+40.00
Total Length of Work = 315.00 L.F. = 0.060 Mi.

UNDERGROUND UTILITIES

2 WORKING DAYS
BEFORE YOU DIG
Call 800-362-2764 (Toll free)
OHIO UTILITIES PROTECTION SERVICE

NON-MEMBERS MUST BE CALLED DIRECTLY

SUPPLEMENTAL SPECIFICATIONS		
802	4-13-90	
836	11-12-85	

STRUCTURE PLANS REVIEWED BY:
Burgess & Niple, Limited
Engineers and Architects

Plan Prepared By:
Franklin Consultants Inc
2999 E. Granville Road
Columbus, Ohio 43231

SEAL

SUPPLEMENTAL PRINTS OF STANDARD CONSTRUCTION DRAWINGS

STD. DWG.	DATE	STD. DWG.	DATE	STD. DWG.	DATE	STD. DWG.	DATE	STD. DWG.	DATE
✓ GR-1.1	5-6-91	MT-99.10	11-14-86						
GR-1.2	5-6-91								
GR-2.1	5-6-91	AS-1-81	11-27-81						
GR-3.4	5-6-91	PSBD-1-81	6-20-69						
GR-4.1	5-6-91	DBR-2-73	4-10-73						
GR-1.3	2-21-92	BR-2-82	11-1-82						
MC-1 ✓	6-13-69								
MC-11	8-1-78								
BP-5	10-1-87								

DEPARTMENT OF TRANSPORTATION
FEDERAL HIGHWAY ADMINISTRATION

APPROVED:

DIVISION ADMINISTRATOR DATE

ct: MAR-739-3.53
of Letting ____ 19__, Contract No. ____
00 Rev. 1-1-81

TYPICAL SECTIONS
TYPE 404 on 301

MARION COUNTY MAR-739-3.53	OHIO FHWA REGION 5	2 17
	FEDERAL PROJECT	

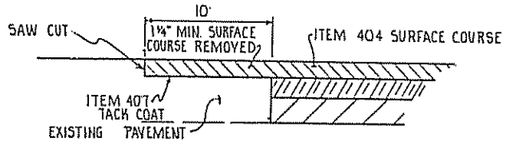

PAVEMENT END JOINT DETAIL

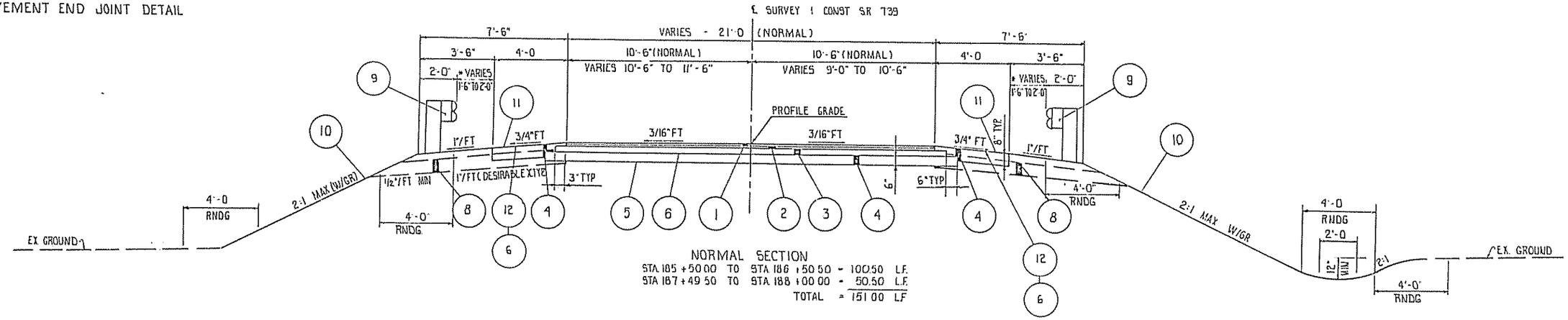

NORMAL SECTION
STA 185 +50.00 TO STA 186 +50.50 = 100.50 L.F.
STA 187 +49.50 TO STA 188 +00.00 = 50.50 L.F.
TOTAL = 151.00 L.F.

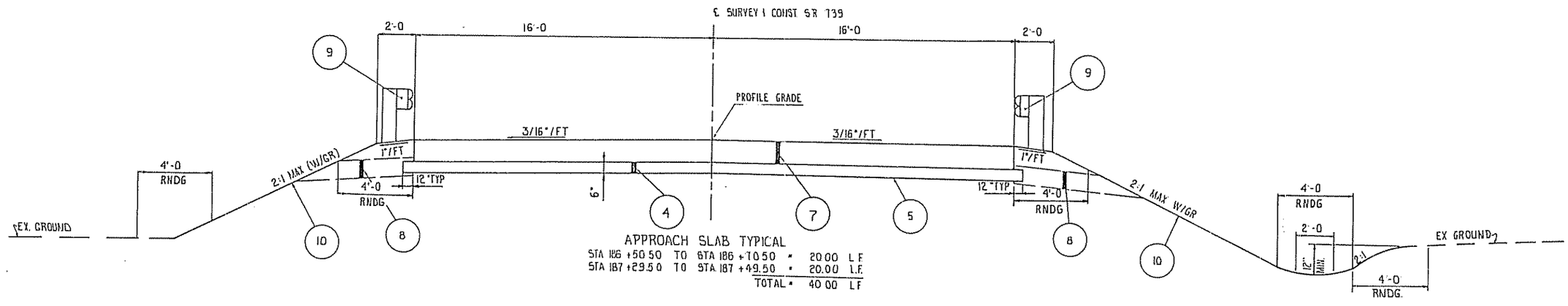

APPROACH SLAB TYPICAL
STA 186 +50.50 TO STA 186 +70.50 = 20.00 L.F.
STA 187 +29.50 TO STA 187 +49.50 = 20.00 L.F.
TOTAL = 40.00 L.F.

LEGEND

1. ITEM 404 1¼" ASPHALT CONCRETE, AC-20
2. ITEM 402 1¾" ASPHALT CONCRETE, AC-20
3. ITEM 301 3" BITUMINOUS AGGREGATE BASE, AC-20
4. ITEM 304 AGGREGATE BASE, AS PER PLAN (SEE GENERAL NOTES)
5. ITEM 203 SUBGRADE COMPACTION
6. ITEM 408 BITUMINOUS PRIME COAT APPLIED @ 0.40 GAL PER S.Y.
7. ITEM 611 REINFORCED CONCRETE APPROACH SLAB (T=13")
8. ITEM 605 AGGREGATE DRAIN
9. ITEM 606 GUARDRAIL TYPE 5
10. ITEM 659 SEEDING & MULCHING
11. ITEM 409 SEAL COAT BITUMINOUS MATERIAL. APPLIED @ 0.30 GAL PER S.Y.
12. ITEM 409 SEAL COAT COVER AGGREGATE No. 8, APPLIED @ 0.008 C.Y. PER S.Y.

NOTES:
1. TYPICAL SECTIONS ARE INTENDED TO SHOW GENERAL ROADWAY AND PAVEMENT FEATURES ONLY. FOR FURTHER DETAILS SEE THE PLAN & PROFILE AND CROSS SECTION SHEETS.
2. SLOPE CONDITIONS AND GUARDRAIL LOCATIONS ARE GENERAL AND DO NOT NECESSARILY CONFORM TO THE LIMITING STATIONS SHOWN ON TYPICAL

* SEE PLAN & PROFILE FOR GUARDRAIL OFFSETS

GENERAL NOTES

ROUNDING OF CORNERS SHOWN ON CROSS SECTIONS
THE ROUNDED CORNERS SHOWN ON THE TYPICAL SECTIONS, APPLY TO ALL CROSS SECTIONS EVEN THOUGH OTHERWISE SHOWN ON THESE PLANS.

UNDERGROUND UTILITIES
THE LOCATIONS OF THE UNDERGROUND UTILITIES SHOWN ON THE PLANS ARE AS OBTAINED FROM THE OWNERS OF THE UTILITY AS REQUIRED BY SECTION 153.64 ORC.

UTILITY OWNERSHIP
THE FOLLOWING UTILITIES AND OWNERS ARE LOCATED WITHIN THE WORK LIMITS OF THIS PROJECT:

OHIO EDISON CO.
76 SOUTH MAIN STREET
AKRON, OHIO 44308
PHONE: (216)384-4631

GENERAL TELEPHONE CO.
550 LEADER STREET
MARION, OHIO 43302
PHONE: (614)383-0509

MARION RURAL ELECTRIC COOP, INC.
2859 MARION-U. SANDUSKY RD.
MARION, OHIO 43302
PHONE: (614) 382-1234

WARNER CABLE COMPANY
930 KINNEAR ROAD
COLUMBUS, OHIO 43212
PHONE (800) 331-6772

CONTINGENCY QUANTITIES
THE CONTRACTOR SHALL NOT ORDER MATERIALS OR PERFORM WORK LISTED IN THE GENERAL SUMMARY FOR ITEMS DESIGNATED BY PLAN NOTE TO BE USED "AS DIRECTED BY THE ENGINEER" UNLESS AUTHORIZED BY THE ENGINEER. THE ACTUAL WORK LOCATIONS AND QUANTITIES USED AT THE ENGINEER'S DISCRETION SHALL BE MADE A MATTER OF RECORD BY INCORPORATION INTO THE FINAL CHANGE ORDER GOVERNING COMPLETION OF THIS PROJECT.

LOCATION OF GUARDRAIL
THE LOCATIONS OF GUARDRAIL RUNS, AS SHOWN IN THESE PLANS, ARE SUBJECT TO ADJUSTMENT PRIOR TO FINAL ACCEPTANCE. THE ENGINEER SHALL BE SATISFIED THAT ALL INSTALLATIONS WILL AFFORD MAXIMUM PROTECTION FOR TRAFFIC.

DUST CONTROL
A QUANTITY OF CALCIUM CHLORIDE AND WATER IS PROVIDED FOR DUST CONTROL AS DIRECTED BY THE ENGINEER.

ITEM 616 CALCIUM CHLORIDE ---------- 2 TONS
ITEM 616 WATER ---------- 10 M GALS

WATERING PERMANENT SEEDED AREAS
THE FOLLOWING ESTIMATED QUANTITIES ARE TO BE USED AS DIRECTED BY THE ENGINEER TO PROMOTE GROWTH AND TO CARE FOR THE PERMANENT SEEDED AREAS, AS PER 659.09:

ITEM 659 WATER 1 M GAL.

TEMPORARY SOIL EROSION AND SEDIMENT CONTROL
THE FOLLOWING ESTIMATED QUANTITIES ARE TO BE USED AS DIRECTED BY THE ENGINEER, FOR TEMPORARY EROSION AND SEDIMENT CONTROL MEASURES:

ITEM 207 FILTER FABRIC FENCE 550 LF
ITEM 207 STRAW OR HAY BALES 50 EACH

ITEM 207 FILTER FABRIC FENCE
MATERIALS
FILTER FABRIC SHALL MEET THE REQUIREMENTS OF ITEM 207.02.

CONSTRUCTION
THE BOTTOM OF THE FENCE SHALL BE BURIED 6" BELOW THE GROUND. THE FENCE SHALL BE HIGH ENOUGH TO RETAIN SEDIMENT LADEN WATER AND ADEQUATELY SUPPORTED TO PREVENT COLLAPSE OR BURSTING THE GROUND ELEVATION OF THE FENCE SHALL BE HELD CONSTANT WITH THE EXCEPTION OF THE END ELEVATIONS WHICH SHALL BE RAISED TO PREVENT FLOW AROUND THE END OF THE FENCE.

MAINTENANCE
THE FILTER FABRIC FENCE SHALL BE MAINTAINED TO BE FUNCTIONAL. THIS SHALL INCLUDE REMOVAL OF TRAPPED SEDIMENT AND REQUIRED CLEANING, REPAIR AND/OR REPLACEMENT OF THE FILTER FABRIC.

PAYMENT
THE COST OF ALL MATERIALS, CONSTRUCTION, MAINTENANCE AND REMOVAL REQUIRED SHALL BE PAID FOR UNDER ITEM 207-LIN. FT. FILTER FABRIC FENCE.

ITEM 605 AGGREGATE DRAINS
AGGREGATE DRAINS SHALL BE PLACED AT FIFTY (50) FOOT INTERVALS ON EACH SIDE OF NORMAL CROWNED SECTIONS AT THE FOLLOWING LOCATIONS:

STA.185+60 STA.186+60 STA.187+90
STA.186+10 STA.187+40

MONUMENTS
MONUMENTS SHALL BE CONSTRUCTED IN ACCORDANCE WITH DETAILS SHOWN ON STANDARD CONSTRUCTION DRAWING MC-1. FOR LOCATIONS SEE SHEET 14.

ITEM 304 AGGREGATE BASE, AS PER PLAN
MATERIALS FURNISHED FOR THIS ITEM SHALL EXCLUDE ALL SLAG EXCEPT GRANULATED SLAG OR CRUSHED AIR-COOLED BLAST FURNANCE SLAG.

AT THE CONTRACTOR'S OPTION, CRUSHED CONCRETE OBTAINED FROM CONCRETE PAVEMENT ON THIS PROJECT OR PROJECTS CONSTRUCTED UNDER ODOT SPECIFICATIONS MAY BE USED FOR ITEM 304 AGGREGATE BASE. ALL CRUSHED CONCRETE PASSING THE No. 4 SIEVE SHALL BE REPLACED BY MATERIAL OBTAINED FROM APPROVED SOURCES. THE RECYCLED CONCRETE PAVEMENT SHALL NOT CONTAIN MORE THAN 1.0% RECYCLED ASPHALT PAVEMENT. ALL OTHER REQUIREMENTS OF 304 AND 703.04 SHALL APPLY.

EROSION CONTROL
ITEM 601, IS PROVIDED IN THE PLANS FOR EROSION CONTROL. ROCK OF A STABLE NATURE WILL NOT BE REMOVED IN ORDER TO PLACE THIS ITEM, AND TURF OF A STABLE NATURE WILL NOT BE REMOVED IN ORDER TO PLACE ITEM 601. THE ENGINEER SHALL CHECK AND NON-PERFORM QUANTITIES OR ADJUST LOCATIONS AND QUANTITIES FOR THIS ITEM WHERE INDICATED BY FIELD CONDITIONS DURING CONSTRUCTION.

ITEM 407 TACK COAT
THE RATE OF APPLICATION OF ITEM 407 TACK COAT SHALL BE SUBJECT TO ADJUSTMENT, AS DIRECTED BY THE ENGINEER. PLAN QUANTITIES INDICATE AVERAGE APPLICATION RATES OF 0.075 GALLONS PER SQUARE YARD OF TACK COAT FOR ESTIMATING PURPOSES ONLY.

SEEDING
QUANTITIES FOR SEEDING ARE CALCULATED FOR THE SOIL AREAS BETWEEN TEN (10) FEET OUTSIDE THE WORK LIMITS, AS SHOWN ON THE CROSS SECTIONS, OR TO THE RIGHT-OF-WAY LINE, IF SUCH LINE IS LESS THAN TEN (10) FEET FROM THE WORK LIMITS.

CLEARING AND GRUBBING
ALTHOUGH THERE ARE NO TREES AND/OR STUMPS SPECIFICALLY MARKED FOR REMOVAL WITHIN THE LIMITS OF THIS PROJECT, A LUMP SUM QUANTITY HAS BEEN INCLUDED IN THE GENERAL SUMMARY FOR ITEM 201, CLEARING AND GRUBBING. ALL PROVISIONS AS SET FORTH IN THE SPECIFICATIONS UNDER THIS ITEM SHALL BE FOLLOWED AND ALL COSTS SHALL BE INCLUDED IN THE LUMP SUM PRICE BID FOR ITEM 201, CLEARING AND GRUBBING.

PAVEMENT MARKINGS, PERMANENT AND TEMPORARY
ALL PAVEMENT MARKINGS SHALL BE APPLIED IN ACCORDANCE WITH ITEM 642 OF "THE STATE OF OHIO, DEPARTMENT OF TRANSPORTATION, CONSTRUCTION AND MATERIAL SPECIFICATIONS". THE FOLLOWING QUANTITIES HAVE BEEN INCLUDED IN THE GENERAL SUMMARY FOR THE ABOVE MENTIONED WORK.

ITEM 614 TEMPORARY CENTERLINE, CLASS II ---------- 0.05 MI
ITEM 642 CENTERLINES: BROKEN & SOLID DOUBLE ---------- 0.05 MI
ITEM 642 EDGE LINE (WHITE) ---------- 0.10 MI

THE CENTERLINE AND EDGE LINES SHALL BEGIN AT STATION 185+40.00 AND END AT STATION 188+10.00.

CONNECTIONS BETWEEN EXISTING AND PROPOSED GUARDRAIL
WHEN IT IS NECESSARY TO SPLICE PROPOSED GUARDRAIL TO EXISTING GUARDRAIL, ONLY THE EXISTING GUARDRAIL SHALL BE CUT, DRILLED OR PUNCHED. THE CONNECTION SHALL BE MADE USING A "BEAM RAIL SPLICE" AS SHOWN ON STANDARD DRAWING GR-1.1. PAYMENT SHALL BE INCLUDED IN THE UNIT PRICE BID FOR ITEM 606 GUARDRAIL, TYPE 5.

DETOUR LIMITATIONS & MAINTAINING TRAFFIC
TWO-WAY TRAFFIC SHALL BE MAINTAINED AT ALL TIMES, EXCEPT FOR A SINGLE PERIOD NOT TO EXCEED 90 CONSECUTIVE CALENDAR DAYS, THROUGH TRAFFIC WILL BE DETOURED AS SHOWN ON SHEET 3 . LIQUIDATED DAMAGES SHALL BE ASSESSED IN ACCORDANCE WITH SECTION 108.07 OF THE CONSTRUCTION AND MATERIAL SPECIFICATIONS FOR EACH CALENDAR DAY THAT THE ROADWAY REMAINS CLOSED TO TRAFFIC BEYOND THE SPECIFIED LIMIT.

THE CONTRACTOR SHALL NOTIFY THE DISTRICT TRAFFIC ENGINEER IN WRITING A MINIMUM OF SEVEN (7) DAYS IN ADVANCE OF THE DATE THE DETOUR IS NEEDED. THE STATE OF OHIO WILL INSTALL, MAINTAIN AND SUBSEQUENTLY REMOVE THE DETOUR SIGNING.

THE CONTRACTOR SHALL BE RESPONSIBLE FOR TRAFFIC MAINTENANCE AT ALL TIMES IN ACCORDANCE WITH THE REQUIREMENTS OF ITEM 614 - MAINTAINING TRAFFIC.

BENCHING OF FOUNDATION SLOPES
ALTHOUGH CROSS SECTIONS ON THIS PLAN INDICATE SPECIFIC WIDTHS AND DEPTHS OF PROPOSED BENCHING OF THE EMBANKMENT FOUNDATION IN CERTAIN AREAS, NO WAVIER OF THE SPECIFICATIONS IS INTENDED, AND ALL OTHER SLOPED FOUNDATION AREAS SHALL BE BENCHED AS SET FORTH IN 203.09. NO ADDITIONAL PAYMENT WILL BE MADE FOR BENCHING REQUIRED BY THE PROVISIONS OF 203.09.

CALCULATIONS

PAVEMENT AREA A=[(250-99)21-1/2(75X1.5)+1/2(50X1)]	=	3,139.75 SF
SHOULDER AREA A=[4(250-99)2]	=	1,208.00 SF
ITEM 404 ASPHALT CONCRETE V=[(3139.75X0.104)1/27]	=	12.12 CY
TOTAL ITEM 404 TO GENERAL SUMMARY	=	12 CY
ITEM 402 ASPHALT CONCRETE 3V=[(3139.75X0.146)1/27]	=	16.96 CY
TOTAL ITEM 402 TO GENERAL SUMMARY	=	17 CY
ITEM 301 BITUMINOUS AGGREGATE BASE, AC-20 V={[3139.75+(0.25X151)2]0.25}1/27	=	29.77 CY
TOTAL ITEM 301 TO GENERAL SUMMARY	=	30 CY
ITEM 304 AGGREGATE BASE, AS PER PLAN V={[3139.75 +(0.75X151)2]0.5 +[(20X34)0.5]2 +(1208X0.6667)-[(0.25X0.25X151)2] -[(0.75X0.167X151)2]}1/27	=	115.25 CY
TOTAL ITEM 304 TO GENERAL SUMMARY	=	116 CY
ITEM 203 SUBGRADE COMPACTION [3139.75 +(20X32X2)]1/9	=	491.08 SY
TOTAL ITEM 203 TO GENERAL SUMMARY	=	491 SY
ITEM 408 BITUMINOUS PRIME COAT V=[(3139.75+1208)0.40]1/9	=	193.23 GAL
TOTAL ITEM 408 TO GENERAL SUMMARY	=	194 GAL
ITEM 611 REINFORCED CONCRETE APPROACH SLAB V=[(20X32X2.0)1/9]	=	142.22 SY
TOTAL ITEM 611 TO GENERAL SUMMARY	=	142 SY
ITEM 605 AGGREGATE DRAIN LENGTH = (10 X 8)	=	80.00 LF
TOTAL ITEM 605 TO GENERAL SUMMARY	=	80 LF
ITEM 409 SEAL COAT BITUMINOUS MATERIAL V=[(1208X0.30)1/9]	=	40.27 GAL
TOTAL ITEM 409 TO GENERAL SUMMARY	=	41 GAL
ITEM 409 SEAL COAT COVER AGGREGATE, No. 8 V=[(1208X0.008)1/9]	=	1.07 GAL
TOTAL ITEM 409 TO GENERAL SUMMARY	=	1 GAL
ITEM 659 COMMERCIAL FERTILIZER V=[(1098X9X20)/(1000X2000)]	=	0.10 TON
TOTAL ITEM 659 TO GENERAL SUMMARY	=	0.10 TON

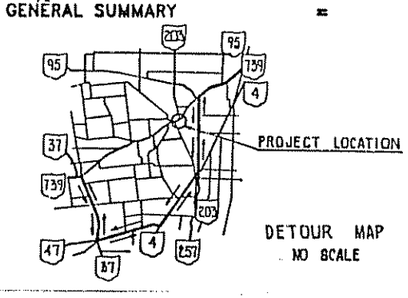

DETOUR MAP
NO SCALE

REVISED 10-26-92

TEMPORARY SIGN SUPPORT REQUIREMENTS

A. PLACEMENT OF SIGNS WHICH WILL REMAIN MORE THAN ONE DAY:

1) LATERAL PLACEMENT TO NEAREST EDGE OF SIGNS SHALL BE AS FOLLOWS:

a) ON THE RIGHT SIDE OF THE ROAD FOR APPROACHING TRAFFIC (EXCEPT FOR DUAL MOUNTED SIGNS AND SIGNS DESIGNATED IN THE PLANS FOR LEFT SIDE MOUNTING).

b) CURBED ROADWAY - PREFERABLY 2 FT. (MINIMUM 1 FT.) BEHIND FACE OF CURB.

c) UNCURBED ROADWAY-12 FT. FROM EDGE OF TRAFFIC LANE OR 6 FT. FROM EDGE OF PAVED OR USEABLE SHOULDER, WHICHEVER IS GREATER.

d) BEHIND GUARDRAIL OR BARRIER - PREFERABLY 2 FT. BEHIND FACE OF GUARDRAIL (MINIMUM 1 FT.) FOR SIGNS ON CLASS A SUPPORTS; 4 FT. FOR CLASS B OR C SUPPORTS 1 FT. BEHIND FACE OF CONCRETE BARRIER UNLESS BARRIER TOP MOUNTING IS REQUIRED BY THE PLAN.

2) VERTICAL CLEARANCE OF SIGNS, MEASURED ABOVE ROADWAY ELEVATION; SHALL BE AS FOLLOWS:

a) RURAL - 5 FT. WHEN PARKED CARS, CONSTRUCTION EQUIPMENT, ETC WILL NOT OBSCURE SIGN VISIBILITY.

b) RURAL AREAS WITH PARKED CARS OR CONSTRUCTION EQUIPMENT - 7 FT.

c) URBAN - 7 FT.

d) CARE SHALL BE TAKEN TO ASSURE THAT SIGNS WILL NOT BE OBSCURED BY CONSTRUCTION EQUIPMENT, TREES, WEEDS OR OTHER OBSTACLES. BRUSH, WEEDS OR GRASS WITHIN THE RIGHT OF WAY SHALL BE TRIMMED AS NECESSARY. SIGNS SHALL NORMALLY BE VISIBLE TO TRAFFIC 400 TO 600 FT. IN ADVANCE OF THE SIGN.

3) SUPPORTS FOR SIGNS WHICH WILL REMAIN IN PLACE MORE THAN ONE DAY SHALL BE FIXED RATHER THAN PORTABLE EXCEPT IN SITUATIONS WHERE THE SIGN MUST REST ON PERMANENT PAVEMENT OR OTHER SURFACE WHICH WOULD BE DAMAGED BY INSERTION OF POST TYPE SUPPORTS.

B. PLACEMENT OF SIGNS WHICH WILL REMAIN FOR ONE DAY OR LESS:

1) SAME AS A-1 ABOVE EXECPT THAT SIGNS MAY BE PLACED ON THE ROADWAY ONLY IF THEY DO NOT INTRUDE INTO A TRAFFIC LANE IN USE.

2) MINIMUM OF 1 FT. ABOVE ROADWAY

C. CLASSES OF SUPPORTS:

ALL TEMPORARY SIGN SUPPORTS SHALL BE OF THE FOLLOWING TYPES:

1) CLASS A:

SUPPORTS SHALL BE USED FOR EXPOSED LOCATIONS ON HIGHWAYS WHERE TRAFFIC APPROACH SPEEDS OF 40 MPH AND HIGHER ARE ENCOUNTERED. THEY ARE ALSO SUITABLE FOR USE IN ALL OTHER LOCATIONS.

2) CLASS B:

SUPPORTS SHALL BE USED FOR EXPOSED LOCATIONS ON HIGHWAYS WHERE TRAFFIC APPROACH SPEEDS OF LESS THAN 40 MPH ARE ENCOUNTERED. THEY ARE ALSO SUITABLE FOR USE IN ALL APPLICATIONS DEFINED FOR CLASS C SUPPORTS.

3) CLASS C:

SUPPORTS MAY ONLY BE USED WHERE FULLY PROTECTED BY GUARDRAIL, CONCRETE BARRIER AND IN LOCATIONS POSITIVELY PROTECTED FROM TRAFFIC SUCH AS ON RETAINING WALLS OR WHERE TRAFFIC APPROACH SPEEDS ARE LESS THAN 25 MPH.

D. TRAFFIC APPROACH SPEEDS:

TRAFFIC APPROACH SPEEDS SHALL BE THE LOCALLY POSTED SPEED (NOT ADVISORY SPEED SIGNS) OR THE MEASURED ACTUAL (85TH PERCENTILE) SPEED (IF AVAILABLE) OF APPROACHING TRAFFIC, WHICHEVER IS HIGHER, ADJACENT TO THE SIGN LOCATION.

TABLE

APPROACH SPEED (MPH)	COMPLETELY PROTECTED BY GUARDRAIL OR BARRIER	PARTLY PROTECTED BY GUARDRAIL OR BARRIER *	GREATER THAN 30' FROM EDGE OF PAVEMENT	WITHIN 30' FROM EDGE OF PAVEMENT
40 AND HIGHER	A, B OR C	A OR B	A OR B **	A ONLY
26 TO 39	A, B OR C	A OR B	A OR B	A OR B
0 TO 25	A, B OR C	A, B OR C	A, B OR C	A, B OR C

* IF SUPPORTS ARE BEHIND GUARDRAIL BUT NOT FULLY 5.5' BEHIND FACE OF RAIL OR IF SIGN IS NOT 1' BEHIND FACE OF CONCRETE BARRIER.

** 30' CRITERION IS BASED UPON STRAIGHT ROADWAY AND A SLOPE OF 6:1 OR FLATTER. SUPPORTS ON THE OUTSIDE OF CURVES OR LOCATED DOWN A SLOPE (STEEPER THAN 6:1) WILL REQUIRE USE OF CLASS A SUPPORTS.

E. BALLASTING

BALLASTING OF PORTABLE SUPPORTS SHALL BE WITH SANDBAGS PLACED WITHIN 1 FT. OF THE GROUND. IN NO CASE SHALL HARD OBJECTS BE USED FOR BALLAST.

F. STRENGTH OF SIGN SUPPORTS

THE CONTRACTOR SHALL CHOOSE SIGN SUPPORTS OF ADEQUATE STRENGTH AND WITH ADEQUATE FOUNDATIONS AND ANCHORAGE TO SUPPORT THE SIGN SIZES ERECTED. PROPRIETARY DEVICES SHALL NOT BE LOADED BEYOND THE LIMITS RECOMMENDED BY THE MANUFACTURER. SLIP BASE TYPE BREAKAWAY BEAM CONNECTIONS SHALL BE AT LEAST PARTIALLY EMBEDDED IN CONCRETE CONSISTING OF A 1 FT. DEEP BY 12" DIAMETER COLLAR. SIGN SUPPORTS WHICH FAIL UNDER TYPICAL WIND LOAD CONDITIONS SHALL BE IMMEDIATELY MODIFIED OR REPLACED WITH A SUPPORT OF ADEQUATE STRENGTH.

G. PROHIBITED SUPPORTS

THE FOLLOWING SUPPORT TYPES SHALL NOT BE PERMITTED ON PROJECTS:

1) SUPPORTS FABRICATED FROM AUTOMOTIVE AXLE DIFFERENTIAL ASSEMBLIES AND SIMILARLY HEAVY ASSEMBLIES WHICH CANNOT BE CONSIDERED BREAKAWAY TYPE.

2) SUPPORTS CONSISTING OF VERTICAL POSTS WITH ANGLED BRACES MADE FROM DRIVEPOST OR OTHER RIGID ELEMENTS.

CLASS A SUPPORTS

FIXED SUPPORTS

1) ALL #2, #3, AND #4 POST WHEN INSTALLED SINGLY OR IN PAIRS ACCORDING TO THE DETAILS OF TC-41.20. THE NUMBER OF SUPPORTS SHALL BE AS SHOWN ON TC-52.10 AND TC-52.20.

2) THE FOLLOWING POST TYPES, WHEN INSTALLED SINGLY, BY IMBEDMENT OR DRIVING INTO EARTH TO A DEPTH OF ABOUT 42 INCHES:

a) - UP TO 4" X 4" WOOD

b) - UP TO 2 INCH DIAMETER SCHEDULE 40 STEEL PIPE

c) - UP TO 3 INCH DIAMETER SCHEDULE 40 ALUMINUM PIPE

d) - UP TO 2¼ INCH SQUARE, 12 GAUGE WALL, PUNCHED STEEL POST

e) - UP TO 6" X 8" WOOD WITH BREAKAWAY HOLES SHOWN BELOW

3) THE FOLLOWING POST TYPES WHEN INSTALLED IN PAIRS WITH LESS THAN 7 FT. BETWEEN POSTS, BY IMBEDMENT OR DRIVING INTO EARTH TO A DEPTH OF ABOUT 42 INCHES:

a) - UP TO 4" X 4" WOOD

b) - UP TO 2 INCH DIAMETER SCHEDULE 40 STEEL PIPE

c) - UP TO 3 INCH DIAMETER SCHEDULE 40 ALUMINUM PIPE

d) - UP TO 2 INCH SQUARE, 14 GAUGE WALL, PUNCHED STEEL POST

4) FIXED TYPE III BARRICADES:

5) ALL BREAKAWAY CONNECTION BEAM SUPPORTS, WHEN INSTALLED ACCORDING TO THE PROPER DETAILS SHOWN ON TC-41.10 WITH A MINIMUM CLEAR DISTANCE BETWEEN SUPPORTS OF 7 FT. FOR SUPPORTS LARGER THAN W6 X 9.

6) ANY BREAKAWAY POST OR POST AND CONNECTION WHICH HAS BEEN CRASH TESTED AND APPROVED BY THE FHWA AS SATISFYING THE BREAKAWAY CRITERIA DESCRIBED IN 630.06.

(CONTINUED ON SHEET 3B)

ALL WORK AND TRAFFIC CONTROL DEVICES SHALL BE IN ACCORDANCE WITH 614 AND OTHER APPLICABLE PORTIONS OF THE C & M SPECIFICATIONS AS WELL AS IN ACCORDANCE WITH PART 7 OF THE OMUTCD. PAYMENT FOR ALL LABOR, EQUIPMENT AND MATERIALS TO PROVIDE THIS METHOD OF TRAFFIC CONTROL SHALL BE INCLUDED IN THE LUMP SUM BID FOR 614 MAINTAINING TRAFFIC, UNLESS SEPARATELY ITEMIZED IN THE PLAN.

CALC BY ____ DATE ____	MAR-739-3.53	OHIO	3.B
CHKD BY ____ DATE ____		FHWA REGION 5	17

CLASS A SUPPORTS

FIXED

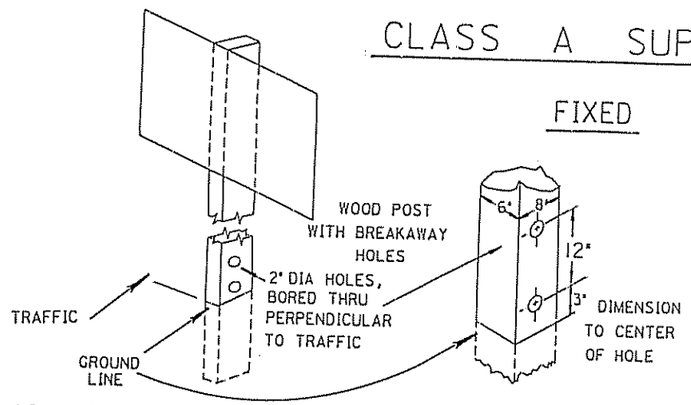

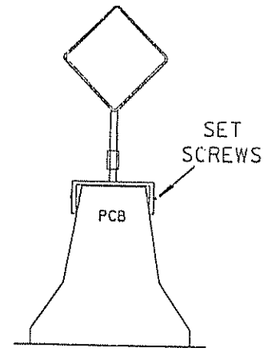

PORTABLE

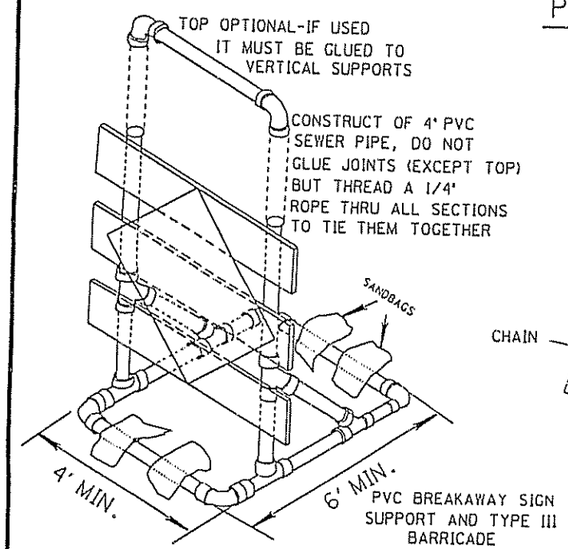

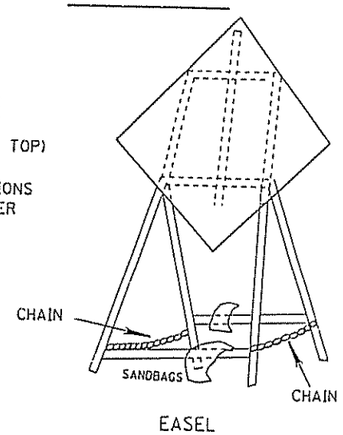

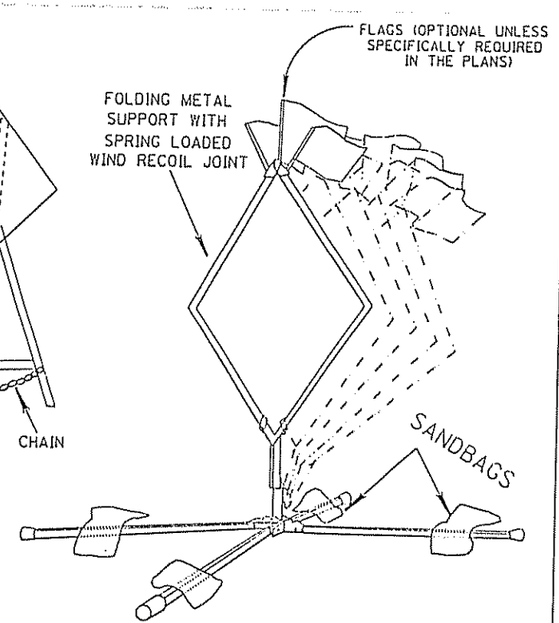

STUBBING STANDARD

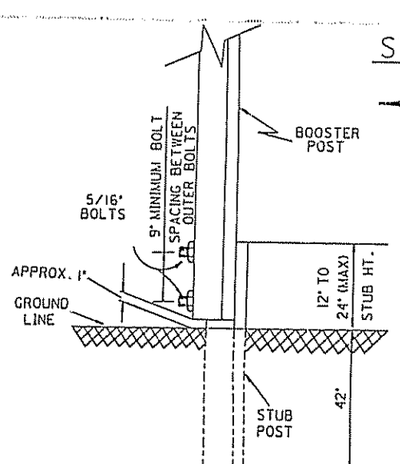

NOTES

1. FOR USE WITH #3 POST OR SMALLER ONLY
2. BOLTS SHALL BE STEEL OR ALUMINUM
3. A MINIMUM OF TWO FASTENERS SHALL BE USED PER ASSEMBLY
4. BOOSTER POST SHALL BE MOUNTED BEHIND STUB POST
5. BOOSTER POST SHALL BE THE SAME OR 1 LB./FT. LESS THAN STUB POST

CLASS B SUPPORTS

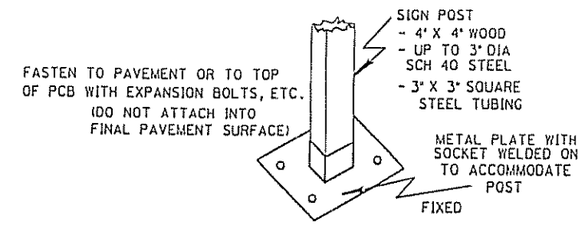

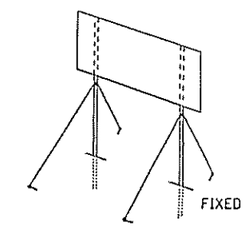

ANY CLASS A SIGN POST WITH GUY WIRES ADDED TO INCREASE SIGN CARRYING ABILITY. (GUY WIRES SHALL NOT BE HEAVIER THAN 1/8" DIA. BRAIDED CABLE. GUY ANCHORS SHALL NOT EXTEND MORE THAN 6" ABOVE GROUND SURFACE).

CLASS C SUPPORTS

1. ALL BEAM TYPE SUPPORTS WITHOUT BREAKAWAY CONNECTIONS.
2. SUPPORTS SIMILAR TO BUT LARGER THAN PERMITTED FOR CLASS A OR B.
3. THE STEEL DRUM(S) SHOWN BELOW MAY BE USED ONLY WHEN LOCATED BEHIND GUARDRAIL OR BARRIER.

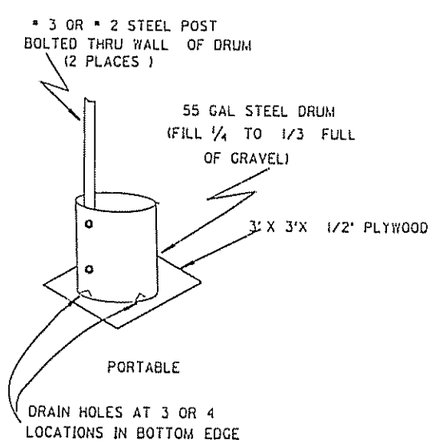

ALL WORK AND TRAFFIC CONTROL DEVICES SHALL BE IN ACCORDANCE WITH 614 AND OTHER APPLICABLE PORTIONS OF THE C & M SPECIFICATIONS AS WELL AS IN ACCORDANCE WITH PART 7 OF THE OMUTCD. PAYMENT FOR ALL LABOR, EQUIPMENT AND MATERIALS TO PROVIDE THIS METHOD OF TRAFFIC CONTROL SHALL BE INCLUDED IN THE LUMP SUM BID FOR 614 MAINTAINING TRAFFIC, UNLESS SEPARATELY ITEMIZED IN THE PLAN.

REVISED BY:	DATE:
210511	DATE 05/07/90
TEMPORARY SIGN SUPPORT	
PLAN INSERT SHEET	

WCC

GENERAL SUMMARY

ITEMS	SHEET NUMBER 3	SHEET NUMBER 5	SHEET NUMBER R/W	PARTICIPATION	ITEMS	ITEM EXT.	GRAND TOTAL	UNIT	DESCRIPTION
									ROADWAY
201	LUMP				201	11000	LUMP		CLEARING AND GRUBBING
202		62			202	23000	62	SQ YD	PAVEMENT REMOVED
202		46			202	23500	46	SQ YD	WEARING COURSE REMOVED
202		440			202	38000	440	LIN FT	GUARDRAIL REMOVED
203		620			203	12000	620	CU YD	EXCAVATION, NOT INCLUDING EMBANKMENT CONSTRUCTION
203		769			203	20000	769	CU YD	EMBANKMENT
203	491				203	50000	491	SQ YD	SUBGRADE COMPACTION
604			4		604	40500	4	EACH	REFERENCE MONUMENT
606		412.5			606	13000	412.5	LIN FT	GUARDRAIL, TYPE 5
606		1			606	25000	1	EACH	ANCHOR ASSEMBLY, TYPE A
606		4			606	35140	4	EACH	BRIDGE TERMINAL ASSEMBLY, TYPE 4
									EROSION
207	550				207	30000	550	LIN FT	FILTER FABRIC FENCE
207	50				207	70000	50	EACH	STRAW OR HAY BALES
601		149			601	34301	149	CU YD	ROCK CHANNEL PROTECTION, TYPE D, WITHOUT FILTER, AS PER PLAN
659		1098			659	10000	1098	SQ YD	SEEDING AND MULCHING
659	0.10				659	20000	0.10	TON	COMMERCIAL FERTILIZER
659	1				659	35000	1	M GAL	WATER
									DRAINAGE
605	80				605	31100	80	LIN FT	AGGREGATE DRAIN
									PAVEMENT
301	30				301	10002	30	CU YD	BITUMINOUS AGGREGATE BASE, AC-20
304	116				304	20001	116	CU YD	AGGREGATE BASE, AS PER PLAN
402	17				402	20000	17	CU YD	ASPHALT CONCRETE, AC-20
404	12	2			404	20000	14	CU YD	ASPHALT CONCRETE, AC-20
407		4			407	10000	4	GAL	TACK COAT
408	194				408	10000	194	GAL	BITUMINOUS PRIME COAT
409	1				409	12000	1	CU YD	SEAL COAT COVER AGGREGATE, No. 8
409	41				409	20000	41	GAL	SEAL COAT BITUMINOUS MATERIAL
611	142				611	15000	142	SQ YD	REINFORCED CONCRETE APPROACH SLAB (T=13")
									TRAFFIC CONTROL
642	0.10				642	00102	0.10	MILE	EDGE LINE, TYPE 2
642	0.05				642	00302	0.05	MILE	CENTER LINE, TYPE 2
802		8			802	00100	8	EACH	BARRIER REFLECTOR, TYPE A
									MAINTENANCE OF TRAFFIC
614	0.05				614	21400	0.05	MILE	TEMPORARY CENTER LINE, CLASS II
616	10				616	10000	10	M GAL	WATER
616	2				616	20000	2	TON	CALCIUM CHLORIDE
									FOR STRUCTURE QUANTITIES SEE SHEET 9-10
614	LUMP				614	11000	LUMP		MAINTAINING TRAFFIC
619					619	15000	LUMP		FIELD OFFICE, TYPE A
623					623	10000	LUMP		CONSTRUCTION LAYOUT STAKES
624					624	10000	LUMP		MOBILIZATION

FEDERAL DIVISION	STATE	PROJECT	
5	OHIO		

MARION COUNTY
MAR - 739 - 3.53

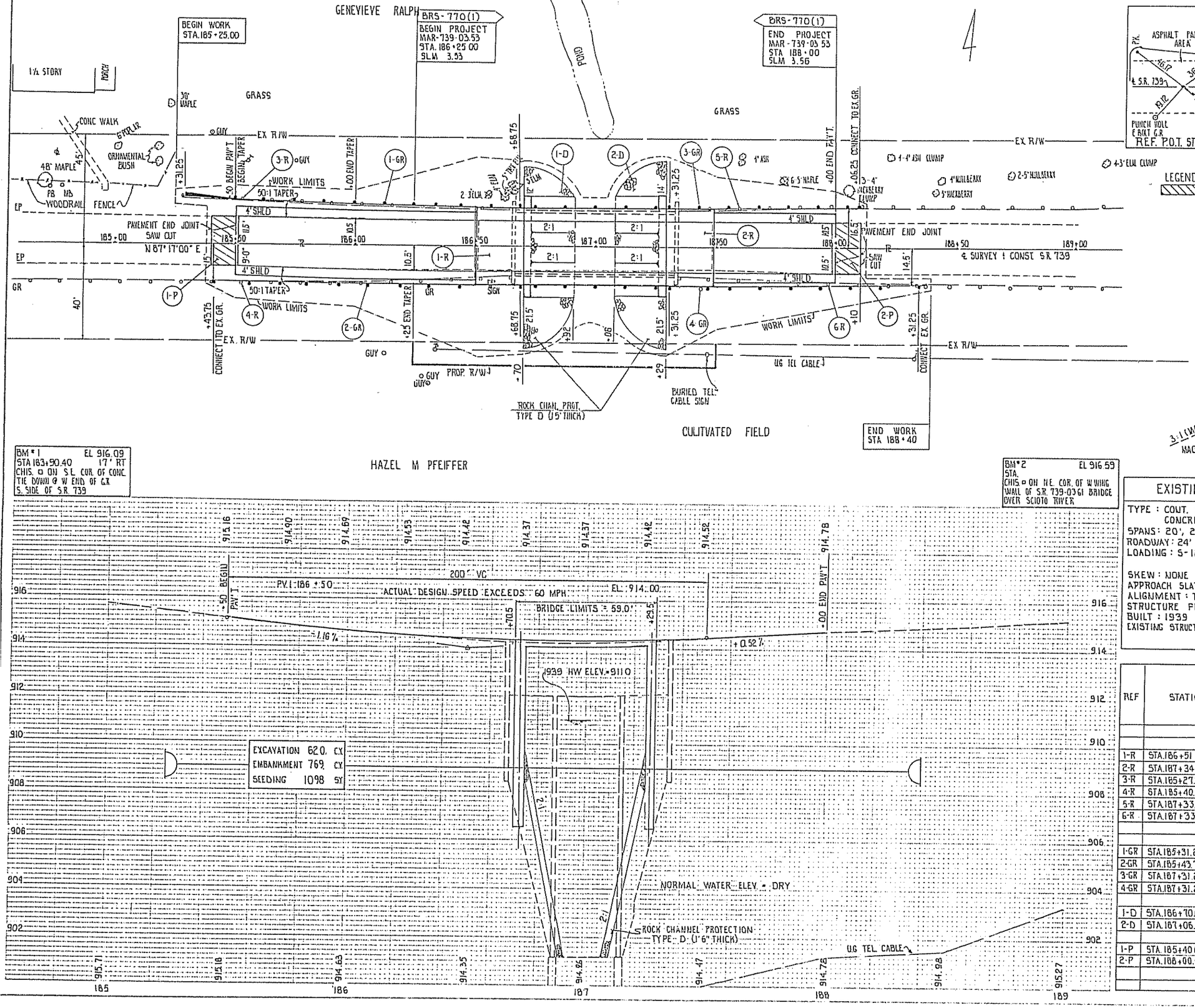

CALCULATIONS

1-R ITEM 202 [(20 x 14) ⅓] = 31.1 S.Y.
2-R ITEM 202 [(20 x 14) ⅓] = 31.1 S.Y.
1-D ITEM 601 {[(18.5 x 42.0) + ½(π)(21.5)² + ½(22 x 11) + ½(12 x 10)] 1.5} ÷27 = 73.39 C.Y.
2-D ITEM 601 {[(18.5 x 42) + ½π(21.5)² + ½(21.5 x 12) + ½(14 x 12)] 1.5} ÷27 = 75.17 C.Y.
1-P ITEM 202 [(20.6 x 10) ⅓] = 22.8 S.Y.
ITEM 404 [(20.5 x 10 x 0.1042) ÷27] = 0.79 C.Y.
ITEM 407 [(20.5 x 10 x 0.075) ⅓] = 1.7 GAL
2-P ITEM 202 [(21 x 10) ⅓] = 23.3 S.Y.
ITEM 404 [(21 x 10 x 0.1042) ÷27] = 0.81 C.Y.
ITEM 407 [(21 x 10 x 0.075) ⅓] = 1.75 GAL

NOTES:

1. FOR CROSS SECTIONS SEE SHEETS 6 & 7
2. FOR STRUCTURE DETAILS SEE SHEETS 8-
3. FOR PAVEMENT END JOINT DETAIL SEE SHEET 2.
4. STA 187+00.00 ON THIS SET OF PLANS EQUALS STA 188+62.50 ON THE EXISTING HIGHWAY PLANS OF MARION COUNTY SH. 863 SEC. A ROUTE 739 AS RECORDED IN 1939 AND STA 186+62.40 ON THE MAR-739-35B PLANS AS RECORDED IN 1957

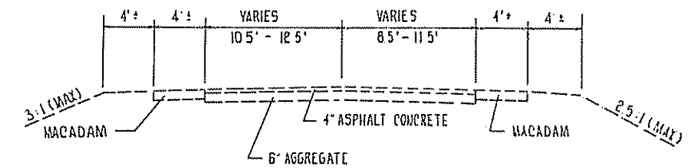

EXISTING STRUCTURE

TYPE: CONT. STEEL BEAM BRIDGE WITH CONCRETE DECK AND SUBSTRUCTURE
SPANS: 20', 25', 20' ℄ BEARINGS
ROADWAY: 24'
LOADING: S-12-96

SKEW: NONE
APPROACH SLAB: 14' LONG, 20' WIDE
ALIGNMENT: TANGENT
STRUCTURE FILE No 5103754
BUILT: 1939
EXISTING STRUCTURE CONDITION: POOR

PROPOSED STRUCTURE

TYPE: SIMPLE SPAN COMPOSITE BOX BEAM BRIDGE WITH INTEGRAL TYPE ABUTS
SPAN: 56'-0"
ROADWAY: 32'-0" ℄/℄ GUARDRAILS
LOADING: HS 20-44 + ALT. MIL. LOADING
WEARING: MONO. CONC.
SKEW: 0°
APPROACH SLAB: AS-1-81 (20'-0" LONG)
ALIGNMENT: TANGENT
CROWN: 3/16"/FT.
ADT: 2400 (1991) 3120 (2011)
ADTT: 48 (1991) 62 (2011)

* AS PER PLAN.

REF	STATION TO STATION	SIDE	202 PAVEMENT REMOVED S.Y.	202 GUARDRAIL REMOVED L.F.	202 WEARING COURSE REMOVED S.Y.		601 ROCK CHAN. PROT. TYPE D C.Y.		404 ASPHALT CONCRETE AC20 C.Y.	407 TACK COAT GAL.		606 GUARDRAIL TYPE 5 L.F.	606 ANCHOR ASSEM. TYPE A EA.	606 BRIDGE TERM. ASSEM. TYPE 4 EA.				802 BARRIER REFL. TYPE A EA.
1-R	STA.186+51 TO STA.186+65	L&R	31															
2-R	STA.187+34 TO STA.187+46	L&R	31															
3-R	STA.185+27.3 TO STA.186+65.0	LT.		137.7														
4-R	STA.185+40.63 TO STA.186+65.0	RT.		124.4														
5-R	STA.187+33.3 TO STA.188+09.38	LT.		76.1														
6-R	STA.187+33.3 TO STA.188+34.38	RT.		101.1														
1-GR	STA.185+31.25 TO STA.186+68.75	LT.										112.5	1	1				2
2-GR	STA.185+43.75 TO STA.186+68.75	RT.										12.5		1				2
3-GR	STA.187+31.25 TO STA.188+06.25	LT.										7.5		1				2
4-GR	STA.187+31.25 TO STA.188+31.25	RT.										10.0		1				2
1-D	STA.186+70.00 TO STA.186+92.00	L&R					73.4											
2-D	STA.187+06.00 TO STA.187+29.00	L&R					75.2											
1-P	STA.185+40.00 TO STA.185+50.00	L&R			22.8				0.79	1.7								
2-P	STA.188+00.00 TO STA.188+10.00	L&R			23.3				0.81	1.75								
	TOTAL		62	440	46		149		2	4		412.5	1	4				8

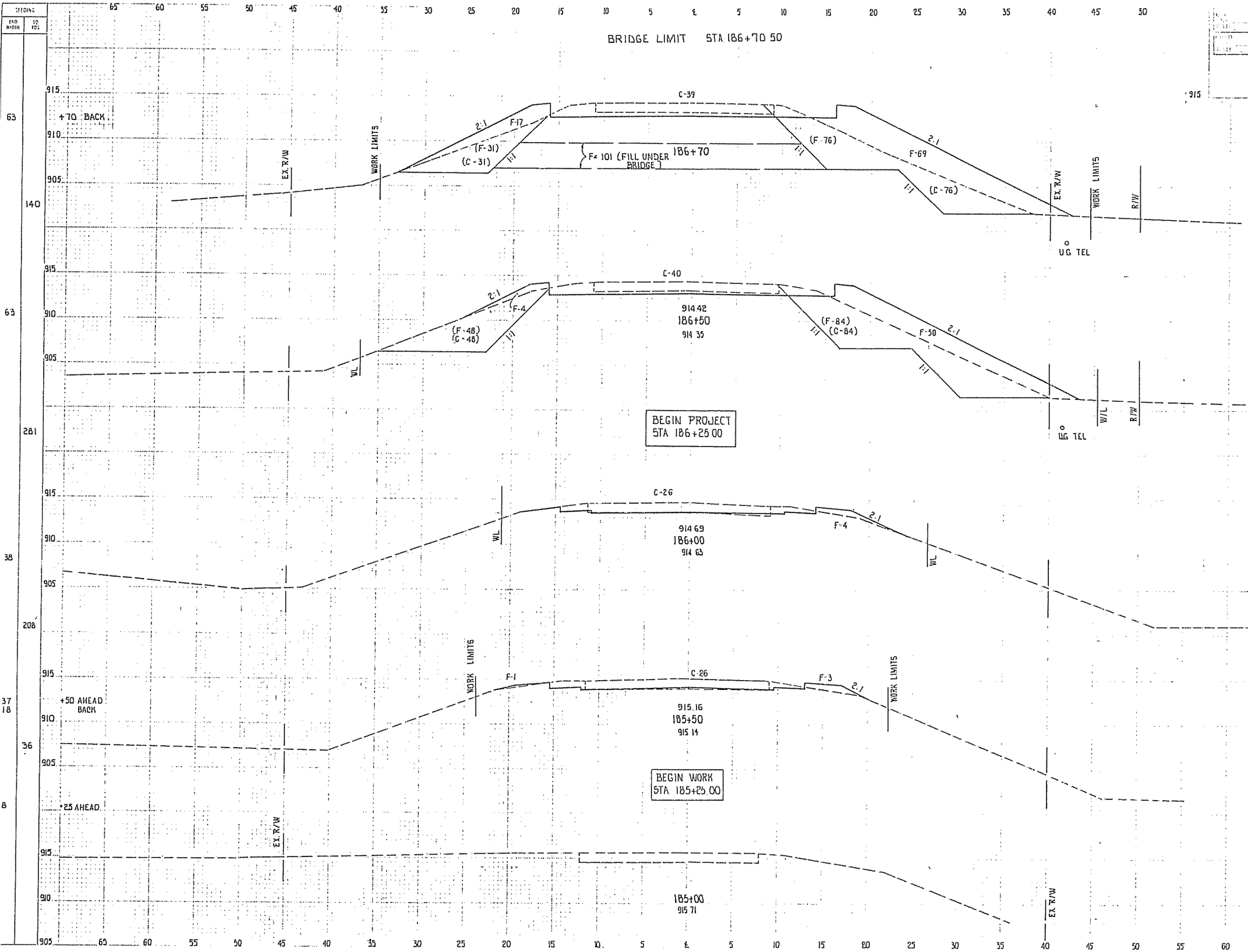

						910	(0)	(0)	
					+ 92 BACK		0	0	
									(44) (44)
					AHEAD		0	86	0 35
					+70 BACK & AHEAD		(107)	(107)	
					BACK	905	39	86	
					ADD FILL UNDER BRIDGE STA 186+73 TO 186+92 V = (101 x 19) ÷ 27 = 71.1 CY				71
									29 51 (89) (89)
						915			
					+50.5 AHEAD		40	54	
					DEDUCT EARTHWORK FOR EXISTING APPROACH SLAB CUT - (20 x 14 x 1.1) ÷ 27 = 11.40	910			-11
						905	(132)	(132)	
									62 55 (122) (122)
					+ 00 AHEAD	915	(0)	(0)	
							26	4	
						910			
						905			48 7
					+ 50 AHEAD BACK	915	26	4	
							0	4	
						910			0 2
						905			
					+ 25 AHEAD		0	0	
						915			
						910			
						905			

MARION COUNTY
MAR - 739 - 03.53

7
17

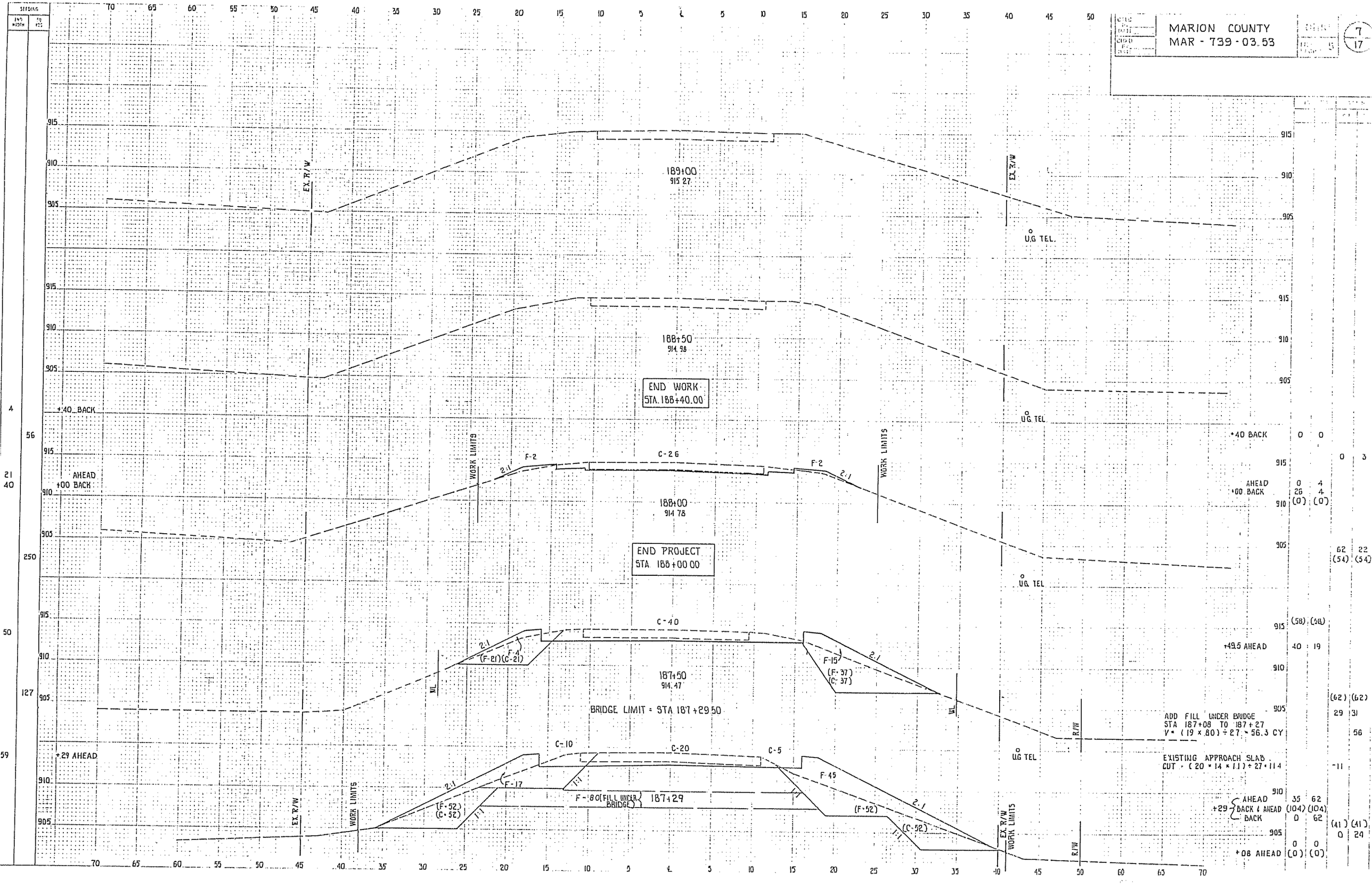

FHWA REGION	STATE	PROJECT	
5	OHIO		

8 / 17

MARION COUNTY
MAR-739-3.53

B.M. #1 STA 183+90.40 EL. 916.09
CHISELED □ ON S.E. CORNER OF CONCRETE TIE DOWN AT WEST END OF GUARDRAIL SOUTH SIDE OF S.R. 739.

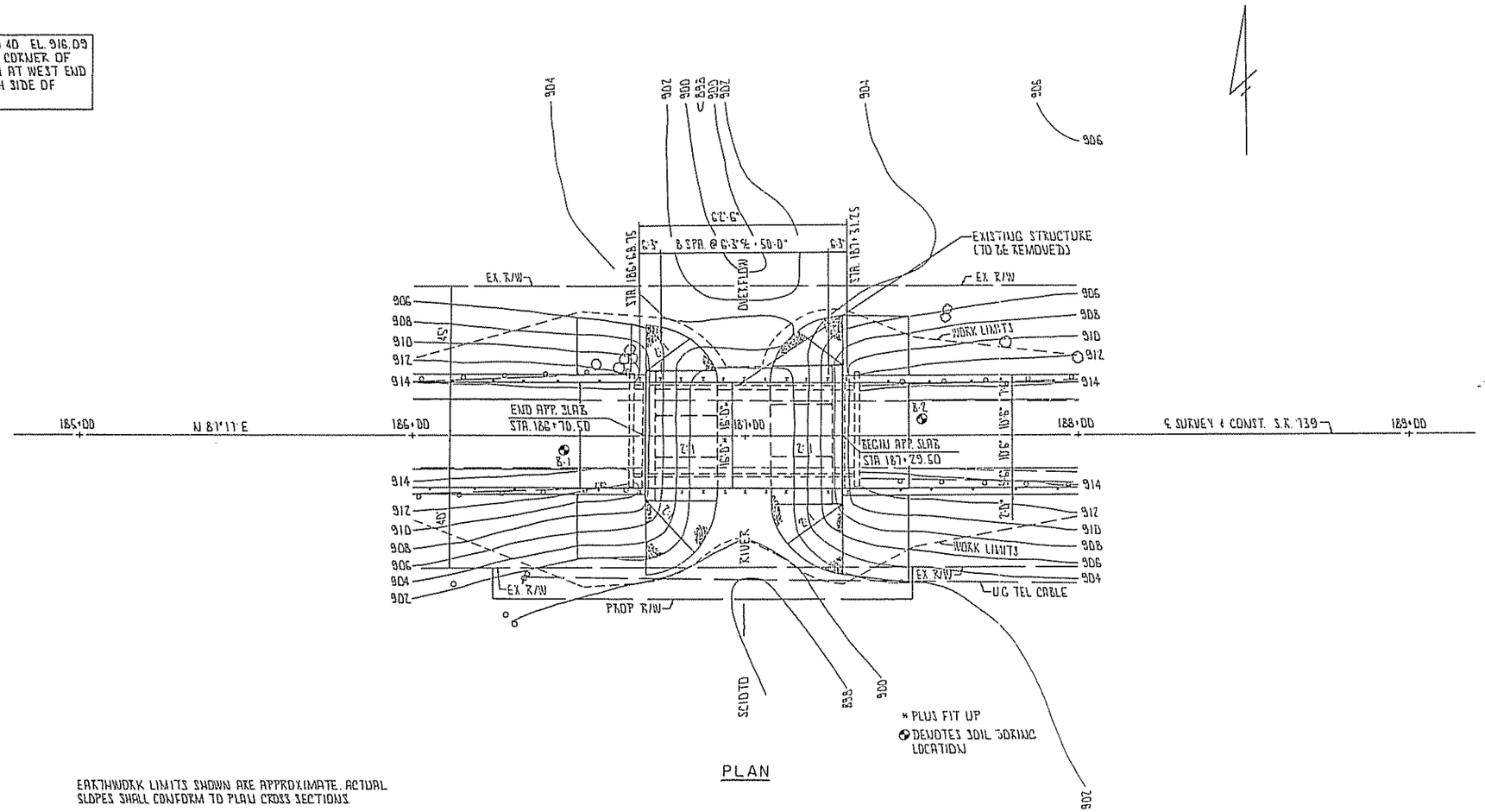

PLAN

EARTHWORK LIMITS SHOWN ARE APPROXIMATE. ACTUAL SLOPES SHALL CONFORM TO PLAN CROSS SECTIONS.

EXISTING AND PROPOSED WATERWAY OPENING 350 SQ FT; PREVIOUS ARCH OPENING 61.30 FT

ABUTMENT PILES: HP10×42
EST AVG PAY LENGTH = 40'-0"

HIGH WATER 1939 AT EL 911.0
WITH STONE ARCH OVERFLOW STRUCTURE

DRAINAGE AREA OF THE SCIOTO RIVER AT GREENCAMP 409.30 MI.

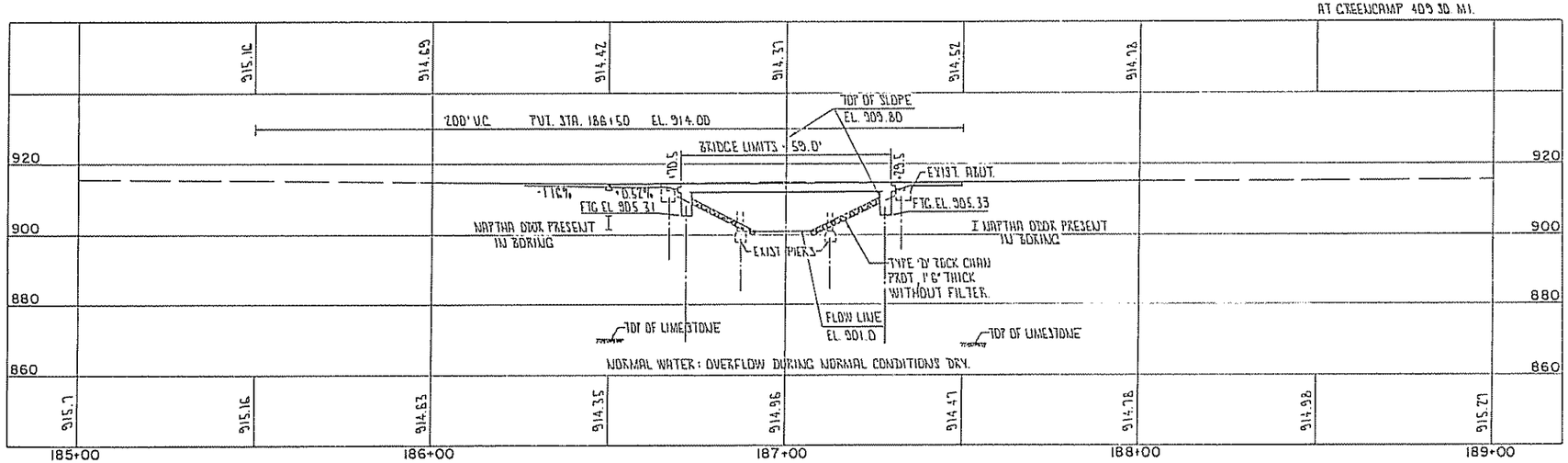

PROFILE ON ℄ SURVEY & CONSTRUCTION S.R. 739

REVIEWED BY BURGESS & NIPLE, LTD.
T.D.T. 12-91

EXISTING STRUCTURE

TYPE: CONT. STEEL BEAM BRIDGE WITH CONCRETE DECK AND SUBSTRUCTURE

SPANS: 20', 25', 20' C/C BEARINGS
ROADWAY: 24'
LOADING: S-12-9.6
WEARING SURFACE: 1/4" ASPH CONC
SKEW: NONE
APPROACH SLAB: 14' LONG, 20' WIDE
ALIGNMENT: TANGENT
STRUCTURE FILE NO. 5103754
BUILT: 1940

PROPOSED STRUCTURE

TYPE: SIMPLE SPAN COMPOSITE BOX BEAM BRIDGE WITH INTEGRAL TYPE ABUTS.

SPAN: 56'-0"
ROADWAY: 32'-0" F/F GUARDRAILS
LOADING: HS20-44 & ALT. MIL. LOADING
WEARING SURFACE: MONO CONCRETE
SKEW: 0°
APPROACH SLAB: AS-1-81 (20'-0" LONG)
ALIGNMENT: TANGENT
CROWN: 3/16"/FT
ADT: 2400 (1991) 3120 (2011)
ADTT: 48 (1991) 62 (2011)

FRANKLIN CONSULTANTS INC. 1 / 6
Consulting Engineers
COLUMBUS, OHIO

SITE PLAN

BRIDGE NO. MAR-739-0353
S.R. 739 OVER
SCIOTO RIVER OVERFLOW
STA 186+70.50
TO 187+29.50

MARION COUNTY

DESIGNED	DRAWN	TRACED	CHECKED	REVIEWED	DATE	REVISED
FA	MK	MK	HT	PF	12-91	

GENERAL NOTES

REFERENCE SHALL BE MADE TO STANDARD DRAWINGS:

AS-1-81 -------- DATED -------- 11-27-81
DBR-2-73 -------- DATED -------- 4-10-73
PSBD-1-81 ------ DATED -------- 6-20-89
BR-2-82 ——— ——— ——— ——— — 11-1-82

AND TO SUPPLEMENTAL SPECIFICATIONS:

836 ---------- DATED -------- 11-12-85

DESIGN SPECIFICATIONS: THIS STRUCTURE CONFORMS TO "STANDARD SPECIFICATIONS FOR HIGHWAY BRIDGES" ADOPTED BY THE AMERICAN ASSOCIATION OF STATE HIGHWAY AND TRANSPORTATION OFFICIALS, 1989 INCLUDING THE 1990 AND 1991 INTERIM SPECIFICATIONS AND THE OHIO "SUPPLEMENT" TO THESE SPECIFICATIONS.

DESIGN DATA: BRIDGE COMPUTATIONS ARE BASED ON SERVICE LOAD DESIGN:

DESIGN LOADING: HS20-44 AND THE ALTERNATE MILITARY LOADING.

DESIGN STRESSES:

CONCRETE CLASS S – UNIT STRESS 1500 P.S.I. (SUPERSTRUCTURE)

CONCRETE CLASS C – UNIT STRESS 1333 P.S.I. (SUBSTRUCTURE)

REINFORCING STEEL ASTM A615, A616 OR A617
GRADE 60 – UNIT STRESS 24,000 P.S.I.
GRADE 40 – UNIT STRESS 20,000 P.S.I. (MILD REINFORCING STEEL IN PRESTRESSED BOX BEAMS SHALL BE EITHER GRADE 40 OR GRADE 60)

CONCRETE FOR PRESTRESSED BEAMS – UNIT STRESS 2200 P.S.I. COMPRESSION, 444 P.S.I. TENSION

PRESTRESSING STRAND ASTM A416
F'S = 270,000 P.S.I.

INITIAL STRESS = 0.70 F'S

DECK PROTECTION METHOD: EPOXY COATED REINFORCING STEEL MAT IN DECK, 1" MONOLITHIC WEARING SURFACE, STEEL DRIP STRIP, AND SEALING OF CONCRETE SURFACES.

MONOLITHIC WEARING SURFACE IS ASSUMED, FOR DESIGN PURPOSES, TO BE 1" THICK.

REMOVAL OF EXISTING STRUCTURE: WHEN NO LONGER NEEDED TO MAINTAIN TRAFFIC THE EXISTING STRUCTURE SHALL BE REMOVED. SUITABLE WASTE MASONRY MAY BE PLACED AS BANK PROTECTION AS DIRECTED BY THE ENGINEER.

EMBANKMENT CONSTRUCTION: THE EMBANKMENTS SHALL BE CONSTRUCTED TO THE LEVEL OF THE SUB-GRADE. EXCAVATION MAY THEN BE MADE FOR THE ABUTMENTS.

PILES SHALL BE DRIVEN TO REFUSAL ON BEDROCK. REFUSAL SHALL BE CONSIDERED AS ATTAINED BY PENETRATING SOFT BEDROCK WITH A MINIMUM RESISTANCE OF 20 BLOWS PER INCH, OR REFUSAL SHALL BE CONSIDERED AS ATTAINED AFTER THE PILE HAS CONTACTED HARD BEDROCK AND THE PILE HAS THEN RECEIVED AT LEAST 20 BLOWS.

THE DESIGN LOAD IS 35 TONS PER PILE FOR THE ABUTMENT PILES.

PILE POINTS: STEEL PILE POINTS SHALL BE USED TO PROTECT THE TIPS OF THE PROPOSED PILING. THE STEEL POINTS SHALL BE FURNISHED BY ASSOCIATED PILE AND FITTING CORPORATION, 62 RUTHERFORD BOULEVARD, CLIFTON, NEW JERSEY 07014; INTERNATIONAL CONSTRUCTION EQUIPMENT INC., 301 WAREHOUSE DRIVE, MATTHEWS, NORTH CAROLINA 28015; DOUGHERTY FOUNDATION PRODUCTS, INC., P. O. BOX 688, FRANKLIN LAKES, NEW JERSEY 07417; VERSA STEEL, INC., 3601 N.W. YEAN AVE. P.O. BOX 10559, PORTLAND, OREGON 97210 OR BY A MANUFACTURER THAT CAN FURNISH A STEEL POINT THAT IS ACCEPTABLE TO THE DIRECTOR. THE PILE POINTS SHALL SATISFY OR EXCEED THE REQUIREMENTS OF ASTM A27 (GRADE 65/30) OR ASTM A148 (GRADE 90/60).

UTILITY LINES: ALL EXPENSE INVOLVED IN RELOCATING OR INSTALLING THE AFFECTED UTILITY LINES SHALL BE BORNE BY THE OWNERS. THE CONTRACTOR AND OWNERS ARE REQUESTED TO COOPERATE BY ARRANGING THEIR WORK IN SUCH A MANNER THAT INCONVENIENCE TO EITHER WILL BE HELD TO A MINIMUM.

PRESTRESSED CONCRETE COMPOSITE BOX BEAM, AS PER PLAN, SHALL HAVE THE TOP FLANGE OF EXTERIOR BEAMS (FASCIA BEAMS) THICKENED TO 5 INCHES AND SHALL HAVE ALL BEAM ENDS DETAILED AS SHOWN ON SHEET 5/6.

ABUTMENT PILING
ABUTMENT PILING BENDING STRESS MAY APPROACH, REACH OR EXCEED YIELD STRESS.

SEALING OF CONCRETE SURFACES: FOR LIMITS SEE SHEETS 4/6 & 5/6. SEE THE APPROVAL NOTE FOR SURFACE PREPARATION REQUIREMENTS, APPLICATION RATES, MATERIAL REQUIREMENTS AND APPLICATION PROCEDURES.

POROUS BACKFILL: POROUS BACKFILL 1'-6" THICK SHALL EXTEND UP TO THE PLANE OF THE SUBGRADE TO 1'-0" BELOW PROPOSED GROUND SURFACE AND LATERALLY TO THE ENDS OF THE WINGWALLS. GEOTEXTILE FABRIC SHALL BE PLACED BETWEEN POROUS BACKFILL AND SOIL BACKFILL. GEOTEXTILE FABRIC (712.09, TYPE A) SHALL BE INCLUDED WITH POROUS BACKFILL FOR PAYMENT.

CONSTRUCTION JOINTS SHALL HAVE ROUGH SURFACES. PRIOR TO CONCRETE PLACEMENT, JOINT SURFACES SHALL BE THOROUGHLY CLEANED OF ALL DIRT, DUST OR OTHER FOREIGN MATERIAL BY THE USE OF WATER, AIR UNDER PRESSURE OR OTHER METHOD THAT PRODUCES RESULTS SATISFACTORY TO THE ENGINEER. BONDING SURFACES SHALL BE WET WITHOUT FREE STANDING WATER AS CONCRETE IS PLACED. CARE SHALL BE TAKEN TO PROTECT EPOXY COATING ON EXPOSED REINFORCEMENT DURING CLEANING.

ENDS OF PRESTRESSED BOX BEAMS SHALL BE CLEAN AND DAMP PRIOR TO CONCRETE PLACEMENT. BEAM ENDS SHALL BE GIVEN A MEDIUM SANDBLAST AT THE PLANT WITHIN FOUR (4) DAYS PRIOR TO THE BEAMS LEAVING THE PLANT. BEFORE CONCRETE PLACEMENT, CONCRETE AND METAL SURFACES SHALL BE CLEANED OF ALL DIRT, DUST OR OTHER FOREIGN MATERIAL BY THE USE OF WATER, AIR UNDER PRESSURE OR OTHER METHOD THAT PRODUCES RESULTS SATISFACTORY TO THE ENGINEER. SURFACES SHALL BE WET WITHOUT FREE STANDING WATER AS CONCRETE IS PLACED. CARE SHALL BE TAKEN (TEMPORARY WRAPPING, ETC.) TO PROTECT EPOXY COATING ON EXPOSED REINFORCEMENT DURING CLEANING.

ERECTION STRIP SHALL BE 3/4" X 4" FOR THE FULL LENGTH OF THE BRIDGE SEAT. STRIP SHALL BE 50 OR 60 DUROMETER ELASTOMER MEETING THE REQUIREMENTS OF 711.23, JOINTS IN STRIP SHALL BE LOCATED NEAR BEAM CENTERS AND BE TIGHTLY BUTTED TOGETHER.

DRIP STRIP SHALL BE 20 GAUGE STAINLESS STEEL, ASTM A167, TYPE 304, MILL FINISH. STRIPS SHALL EXTEND THE FULL LENGTH OF THE DECK. AT FIELD SPLICES, INDIVIDUAL PIECES SHALL BE TIGHTLY BUTTED TOGETHER AND LAP SPLICED WITH A 4" LENGTH OF BENT DRIP STRIP FASTENED WITH 3/16" THREADED STAINLESS STEEL FASTENERS. STRIPS SHALL BE RIGIDLY ANCHORED WITHIN THE FORMS UNTIL AFTER DECK SLAB CONCRETE HAS BEEN PLACED AND CONSOLIDATED. AFTER FORM REMOVAL, STRIPS SHALL BE BENT INTO THE POSITION SHOWN. PAYMENT SHALL BE FOR ITEM SPECIAL, LINEAL FOOT, STEEL DRIP STRIP, WHICH PAYMENT SHALL BE FULL COMPENSATION FOR ALL MATERIALS, LABOR, TOOLS AND INCIDENTALS NECESSARY TO COMPLETE AN ACCEPTABLE INSTALLATION AS SHOWN AND SPECIFIED.

SUPERSTRUCTURE CONCRETE OF SEGMENT 4 SHALL BE PLACED DURING STABLE OR RAISING AMBIENT TEMPERATURES AND BE CONCLUDED AT LEAST FOUR HOURS PRIOR TO THE DAY'S PEAK AMBIENT TEMPERATURE.

ITEM 511, CLASS S CONCRETE, SUPERSTRUCTURE, AS PER PLAN:
MEMBRANE CURING PER SUPPLEMENTAL SPECIFICATION 836 WILL NOT BE PERMITTED. CONCRETE SHALL BE CURED BY METHOD (A), WATER CURING.

FHWA REGION	STATE	PROJECT	
5	OHIO		

10/17

MARION COUNTY
MAR-739-353

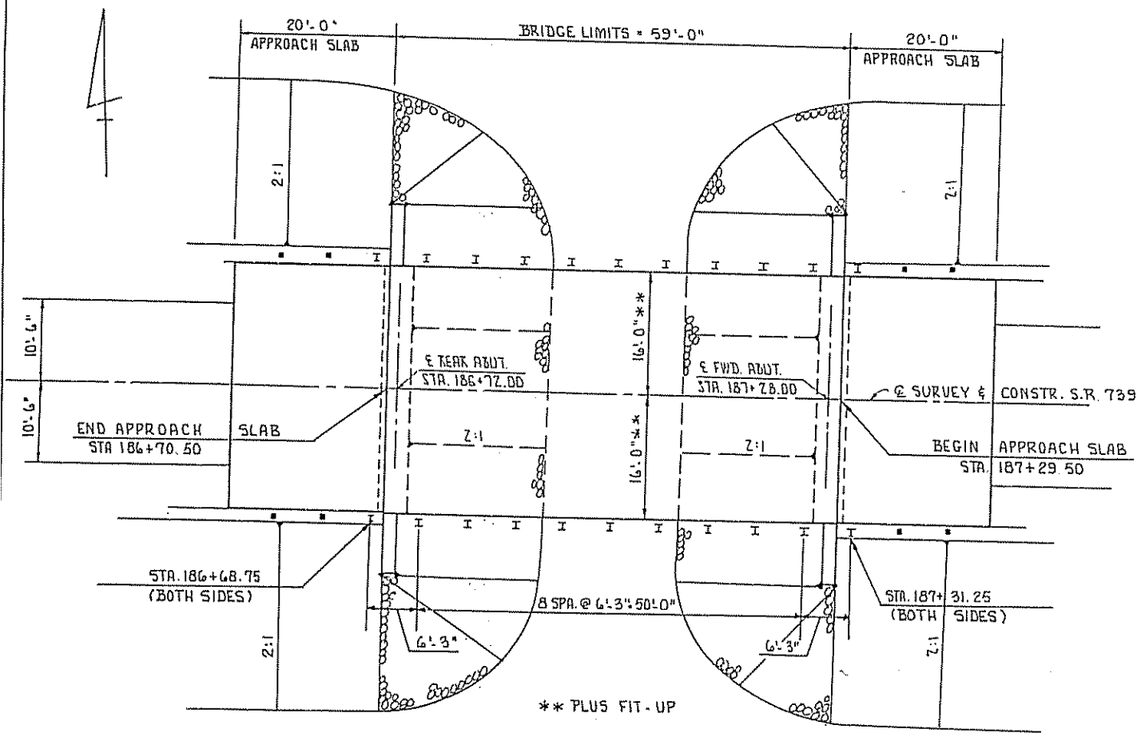

PLAN

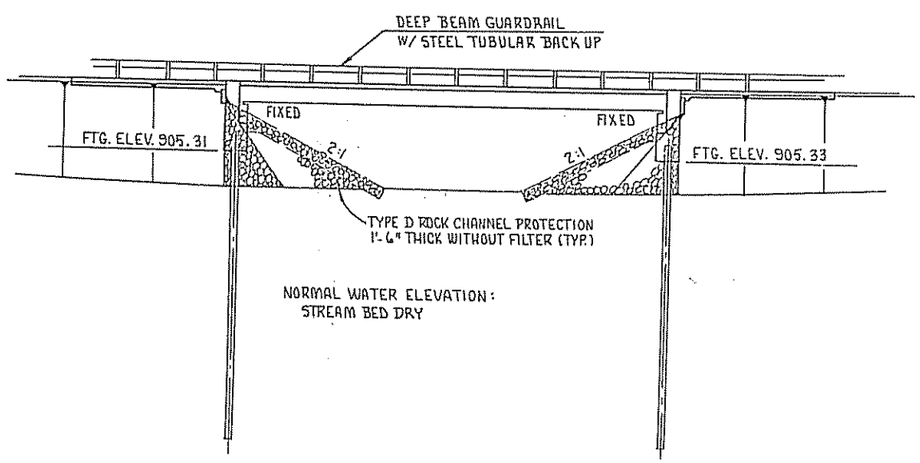

ELEVATION

CALCULATED BY: FR	DATE: 8-91
CHECKED BY: CAG	DATE: 11-91

ESTIMATED QUANTITIES

ITEM	ITEM EXT.	TOTAL	UNIT	DESCRIPTIONS	SUPER.	ABUT.		GEN'L		
202	11002	LUMP		STRUCTURE REMOVED, OVER 20 FOOT SPAN				LUMP	SUM	
503	21100	97	CU YD	UNCLASSIFIED EXCAVATION		97				
505	11100	LUMP		PILE DRIVING EQUIPMENT MOBILIZATION				LUMP	SUM	
507	11100	640	LIN FT	STEEL PILES HP 10×42		640				
507	93300	16	EACH	STEEL POINT (OR SHOE)		16				
509	15800	13995	POUND	EPOXY COATED REINFORCING STEEL, GRADE 60	5072	8923				
# 511	33404	54	CU YD	CLASS S CONCRETE, SUPERSTRUCTURE (USING SHRINKAGE COMPENSATING CEMENT) *	54					
# 511	33410	LUMP		CLASS S CONCRETE, SUPERSTRUCTURE (USING SHRINKAGE COMPENSATING CEMENT, FOR PRE-PLACEMENT TESTING *				LUMP	SUM	
511	34001	54	CU YD	CLASS S CONCRETE, SUPERSTRUCTURE, AS PER PLAN	54					
511	44000	61	CU YD	CLASS C CONCRETE, ABUTMENT INCLUDING FOOTING		61				
SPECIAL	512 67500	50	SQ YD	SEALING OF CONCRETE SURFACES *	50					
SPECIAL	512 67502	44	SQ YD	SEALING OF CONCRETE SURFACES (EPOXY) *		44				
515	54841	8	EACH	PRESTRESSED CONCRETE COMPOSITE BOX BEAM (55'-6" LENGTH) (CB27-48) AS PER PLAN *	8					
516	42600	66	LIN FT	ELASTOMERIC BEARING PAD, MISC.: 3/4" × 4"		66				
517	72300	125	LIN FT	RAILING (DEEP BEAM RAIL WITH STEEL TUBULAR BACKUP AND TYPE 2 STEEL POSTS AND ANCHOR BOLTS)	125					
518	21200	28	CU YD	POROUS BACKFILL WITH FILTER FABRIC		28				
SPECIAL	518 22300	111	LIN FT	STEEL DRIP STRIP	111					
518	41100	96	LIN FT	6" PERFORATED HELICAL CORRUGATED STEEL PIPE, 707.01		96				
518	41200	28	LIN FT	6" NON-PERFORATED HELICAL CORRUGATED STEEL PIPE, INCLUDING SPECIALS, 707.01		28				

* SPECIAL, SEE PROPOSAL NOTE
\# ALTERNATE BID ITEM: THESE TWO ITEMS SHALL CONSTITUTE ONE ALTERNATE BID TO CLASS S CONCRETE, SUPERSTRUCTURE, AS PER PLAN

FRANKLIN CONSULTANTS INC. 2/6
Consulting Engineers
COLUMBUS, OHIO

GENERAL PLAN & ELEVATION
ESTIMATED QUANTITIES
BRIDGE NO. MAR-739-0353
S.R. 739 OVER
SCIOTO RIVER OVERFLOW

MARION COUNTY

DESIGNED	DRAWN	TRACED	CHECKED	REVIEWED	DATE	REVISED
FR	FF	FF	CAG	JF	9/18-91	

FHWA REGION	STATE	PROJECT	
5	OHIO		

11/17

MARION COUNTY
MAR-739-3.53

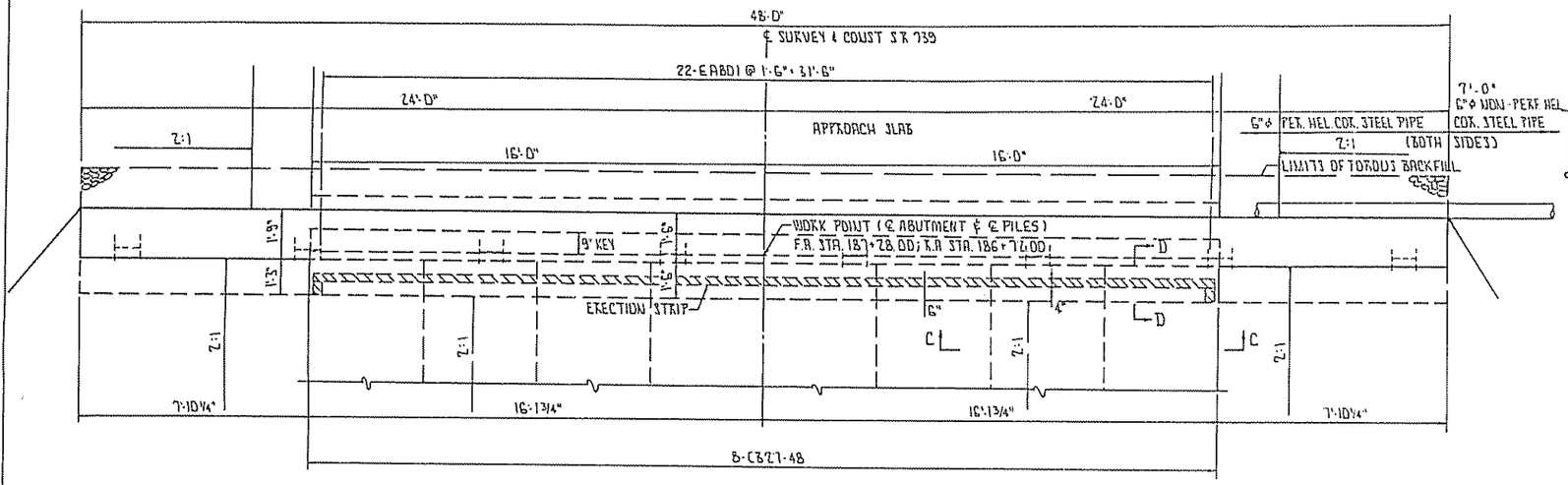

PLAN

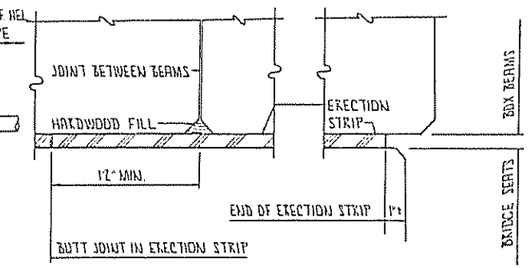

SECTION C-C

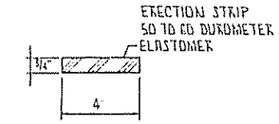

SECTION D-D

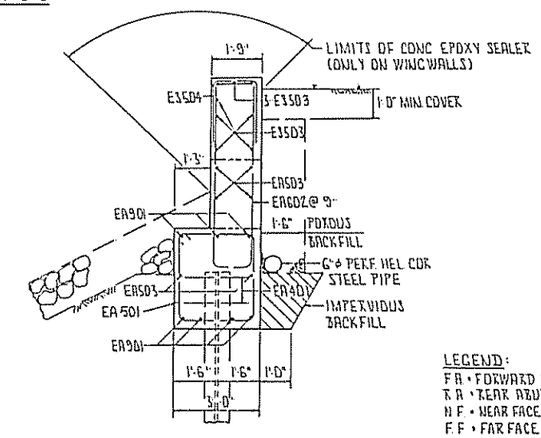

SECTION B-B

LEGEND:
F.R. = FORWARD ABUTMENT
R.R. = REAR ABUTMENT
N.F. = NEAR FACE
F.F. = FAR FACE

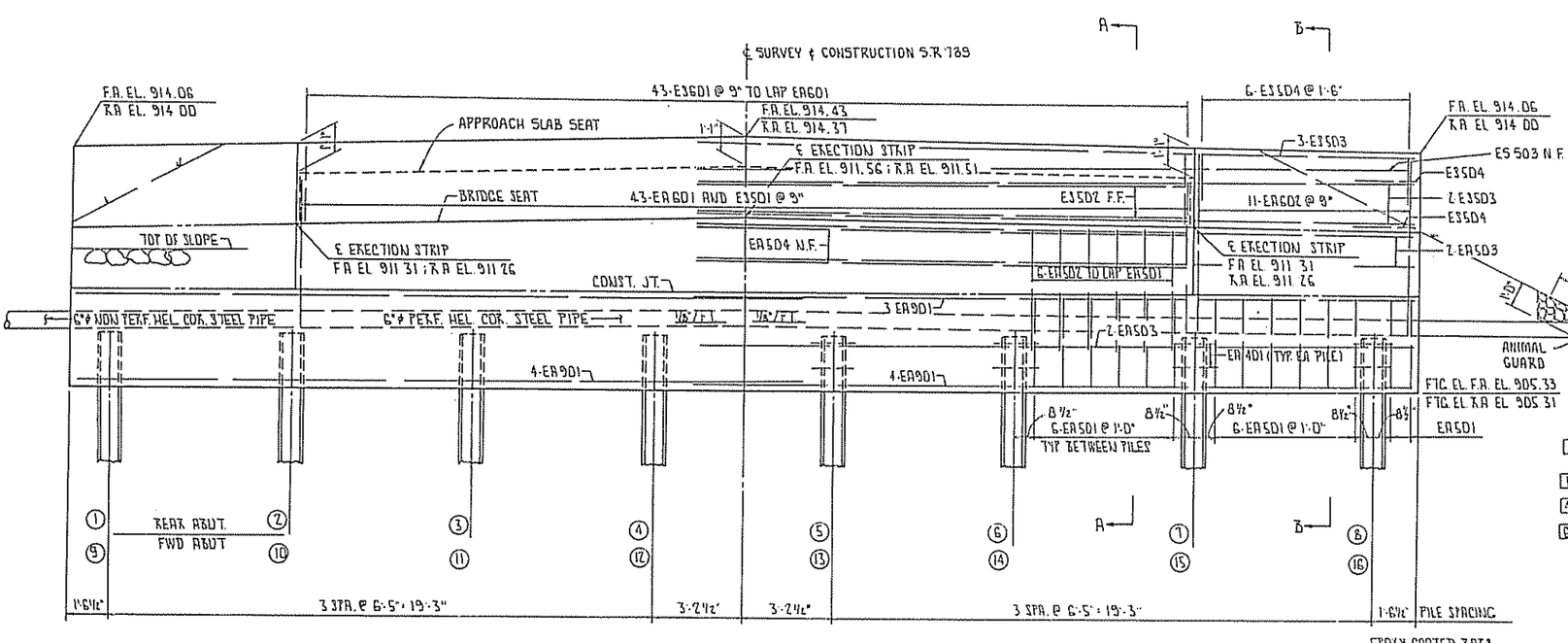

ELEVATION

REINFORCING STEEL SYMMETRICAL AROUND ℄ CONSTRUCTION

EPOXY COATED BARS
MIN LAP LENGTH
#5 = 2'-2"
#6 = 2'-7"
#9 = 5'-4"

CRUSHED AGGREGATE SLOPE PROTECTION SHOULD BE INCLUDED FOR PAYMENT UNDER ITEM 601 ROCK CHANNEL PROTECTION TYPE D, W/O FILTER AS PER PLAN.

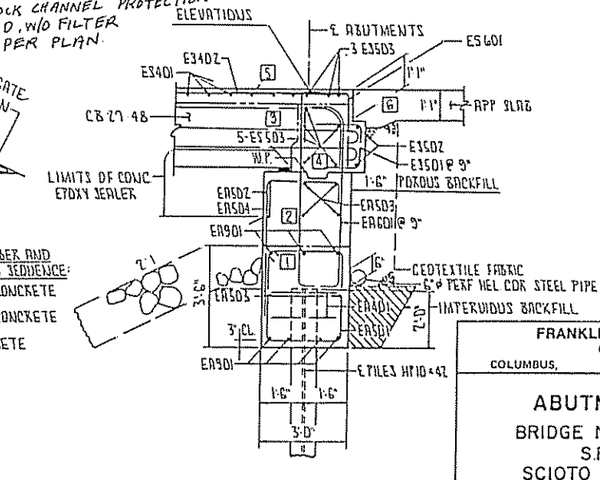

SECTION A-A

☐ SEGMENT NUMBER AND CONSTRUCTION SEQUENCE:
1 2 CLASS C CONCRETE
4 5 CLASS S CONCRETE
6 CLASS C CONCRETE

○ PILE NUMBERING

FRANKLIN CONSULTANTS INC. 4 / 6
Consulting Engineers
COLUMBUS, OHIO

ABUTMENT DETAILS

BRIDGE NO. MAR-739-0353
S.R. 739 OVER
SCIOTO RIVER OVERFLOW

MARION COUNTY

DESIGNED	DRAWN	TRACED	CHECKED	REVIEWED	DATE	REVISED
FA	FA	NK	CAB	JF	7/16-71	

FHWA REGION	STATE	PROJECT	
5	OHIO		

12/17

MARION COUNTY
MAR-739-3 53

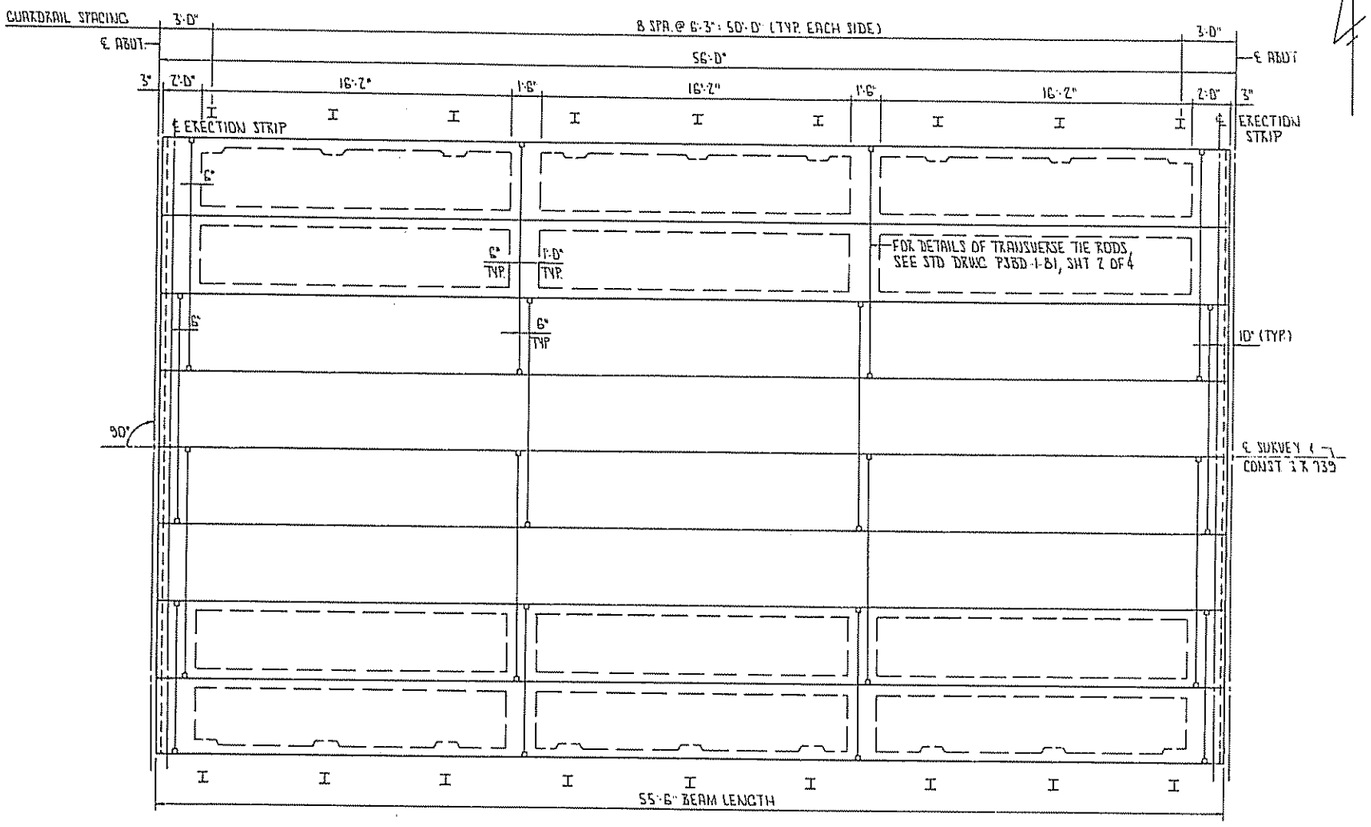

BEAM LAYOUT PLAN

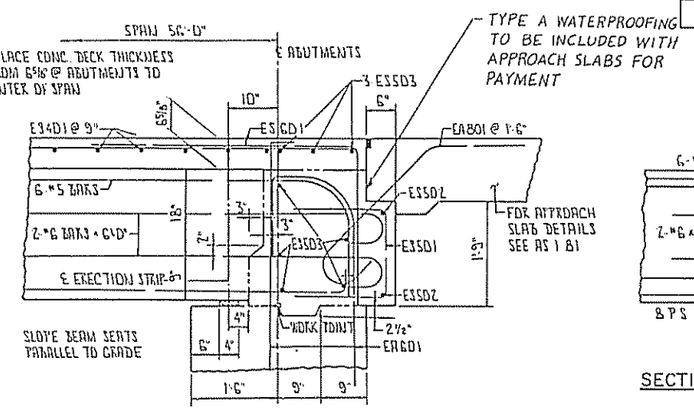

ABUTMENT DETAIL

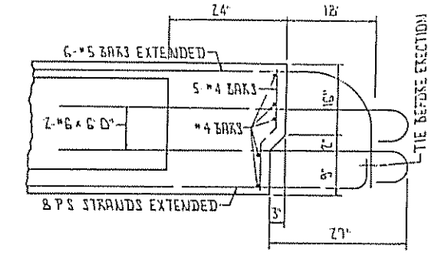

SECTION THROUGH END BLOCK

* EXTEND AND BEND BARS AS SHOWN IN "SECTION THROUGH END BLOCK."

NOTE: OMIT KEY IN OUTSIDE FACE OF FASCIA BEAM ONLY

LEGEND
- ○ BARS TO BE EXTENDED
- △ DEBOND 5'-0" FROM EACH END

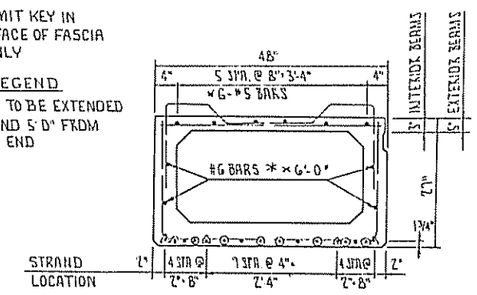

NOTE: ALL STRAND 1/2" DIA. 270 K SEVEN WIRE, UNCOATED STRESS RELIEVED STRANDS

SEE STANDARD DRAWING PSBD-1-81 FOR SHAPES AND LOCATIONS OF REGULAR REINFORCING STEEL

STRAND LOCATIONS
(CB27-48 WITH 16 STRANDS)

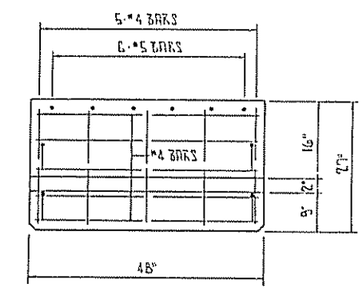

DETAILS AND REIN. OF BEAM ENDS

COMPOSITE CONCRETE DECK SLAB: CALCULATED CAMBER OF BEAMS AT TIME OF PAVING, INCLUDING ALLOWANCE FOR CAMBER GROWTH DUE TO CREEP IS +1" ESTIMATED DEFLECTION OF BEAMS DUE TO WEIGHT OF DECK SLAB AND RAILING IS +1/4". NET CAMBER IS +3/4". MIDDLE ORDINATE OF VERTICAL CURVE IS +3/8". NET CURVATURE IS +1/8", WHICH IS MORE THAN NECESSARY TO PLACE THE DECK SLAB SURFACE PARALLEL TO THE PROPOSED ROADWAY SURFACE. TO COMPENSATE FOR THIS EXCESS CURVATURE, THE DECK SLAB SHALL BE THICKENED FROM 5 1/2" AT MID SPAN TO 6 5/8" AT SPAN ENDS

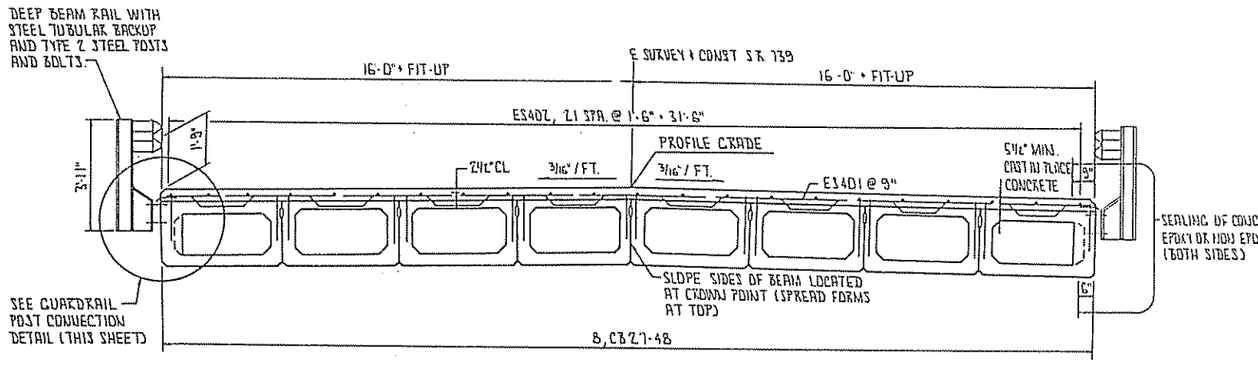

NOTE: ERECTION LIVE LOADS SHALL NOT BE PLACED ON THE SUPERSTRUCTURE PRIOR TO PLACEMENT AND CURING OF THE COMPOSITE DECK SLAB, EXCEPT AS PERMITTED BY THE DIRECTOR

TRANSVERSE SECTION

EPOXY COATED BARS, MIN. LAP LENGTH: #4 = 2'-3"

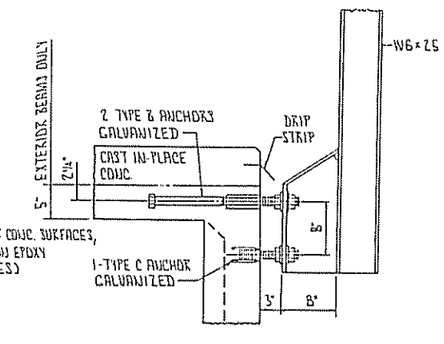

GUARDRAIL CONNECTION DETAIL

PROVIDE SLOTTED HOLES, 1 1/2" WIDTH x 2 1/2" VERTICAL IN RAILING POST ANCHORAGE FOR VERTICAL ADJUSTMENT

SEE STD DWG. DBR-2-73 FOR DETAILS OF ANCHOR BOLTS AND RAILING.

FOR DRIP STRIP DETAIL, SEE SHEET 6 / 6

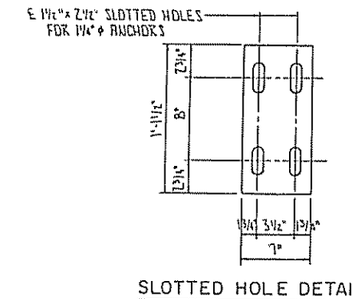

SLOTTED HOLE DETAIL FOR PLATE ON RAIL POST

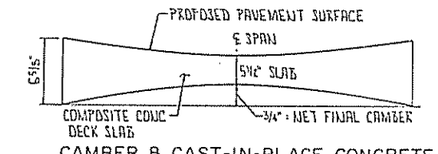

CAMBER & CAST-IN-PLACE CONCRETE DECK SLAB THICKNESS DIAGRAM

FRANKLIN CONSULTANTS INC. 5 / 6
Consulting Engineers
COLUMBUS, OHIO

SUPERSTRUCTURE DETAILS
BRIDGE NO. MAR-739-0353
S.R. 739 OVER
SCIOTO RIVER OVERFLOW

MARION COUNTY

DESIGNED	DRAWN	TRACED	CHECKED	REVIEWED	DATE	REVISED
FA	FA	MK	CAG	JF	8/16-71	

FHWA REGION	STATE	PROJECT	
5	OHIO		

13/17

MARION COUNTY
MAR-739-3 53

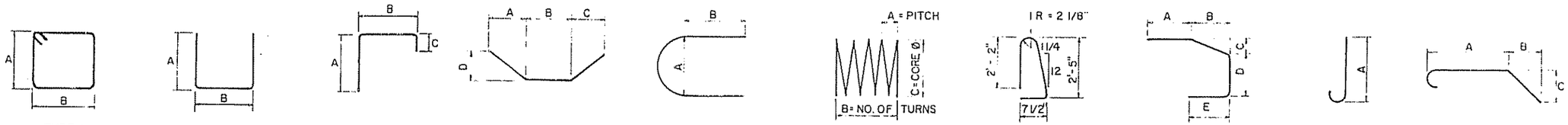

TYPE 1 TYPE 2 TYPE 3 TYPE 4 TYPE 5 TYPE 6 TYPE 7 TYPE 8 TYPE 9 TYPE 10

SUPERSTRUCTURE (EPOXY COATED)

MARK	NO.	LENGTH	WEIGHT	TYPE	A	B	C	D	E
ES401	76	31'-6"	1599	STR					
ES402	44	30'-7"	899	STR					
ES501	86	4'-4"	389	2	1'-7"	1'-5"			
ES502	8	16'-11"	141	STR					
ES503	32	24'-11"	832	STR					
ES504	32	5'-8"	189	2	2'-3"	1'-5"			
ES601	86	7'-11"	1023	3	2'-6"	5'-7"	—		
		TOTAL	5072	LBS	EPOXY	COATED	BARS		

ABUTMENTS (EPOXY COATED)

MARK	NO.	LENGTH	WEIGHT	TYPE	A	B	C	D	E
EA401	32	7'-11"	169	1	1'-3"	2'-6"			
EA501	92	11'-7"	1112	1	3'-1"	2'-6"			
EA502	60	8'-0"	501	3	4'-11"	2'-6"	0'-10"		
EA503	24	24'-11"	624	STR					
EA504	8	16'-11"	141	STR					
EA601	86	17'-8"	2282	11	1'-5"	6'-6"	7'-0"		
EA602	44	15'-1"	997	2	7'-0"	1'-5"			
EA801	44	4'-9"	558	10	2'-5"	1'-0"	1'-0"		
EA901	28	26'-8"	2539	STR					
		TOTAL	8923	LBS	EPOXY	COATED	BARS		

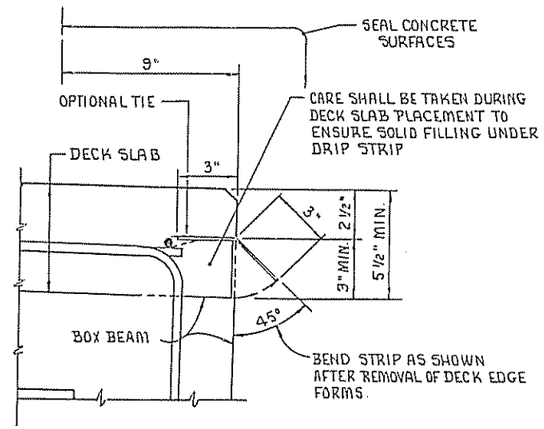

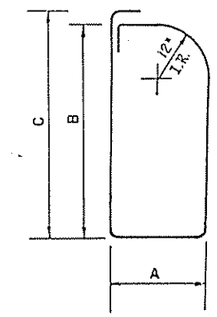

TYPE 11

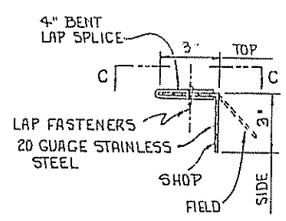

SECTION AT LAP SPLICE

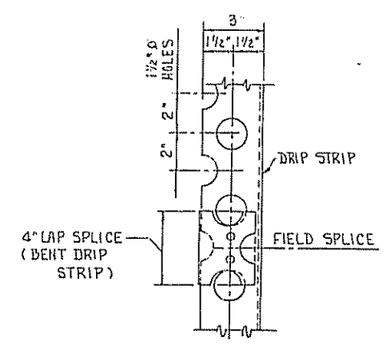

SECTION C-C

DRIP STRIP DETAIL

BAR MARKS FOR EPOXY COATED BARS BEGIN WITH THE PREFIX 'E'

ALL DIMENSIONS SHOWN ARE OUT TO OUT

FRANKLIN CONSULTANTS INC. 6/6
Consulting Engineers
COLUMBUS, OHIO

REINFORCING STEEL
& SUPERSTRUCTURE DETAILS
BRIDGE NO. MAR-739-0353
S.R. 739 OVER
SCIOTO RIVER OVERFLOW

MARION COUNTY

DESIGNED	DRAWN	TRACED	CHECKED	REVIEWED	DATE	REVISED
FR	FF	FF	CAB	JF	7/12-91	

MARION COUNTY MAR-739-3.53	OHIO FHWA REGION 5	14/17
BR5 - 770 (1)	FEDERAL PROJECT	1/4

CENTERLINE SURVEY PLAT
MAR-739-3.53
MARION COUNTY
GREEN CAMP TWP.
VIRGINIA MILITARY SURVEY No. 9967

The bearings and station equation of Sta 187+00.00 (1991) = Sta. 186+62.40 (1957) are based upon the MAR-739-3.58 plans as recorded in 1957.

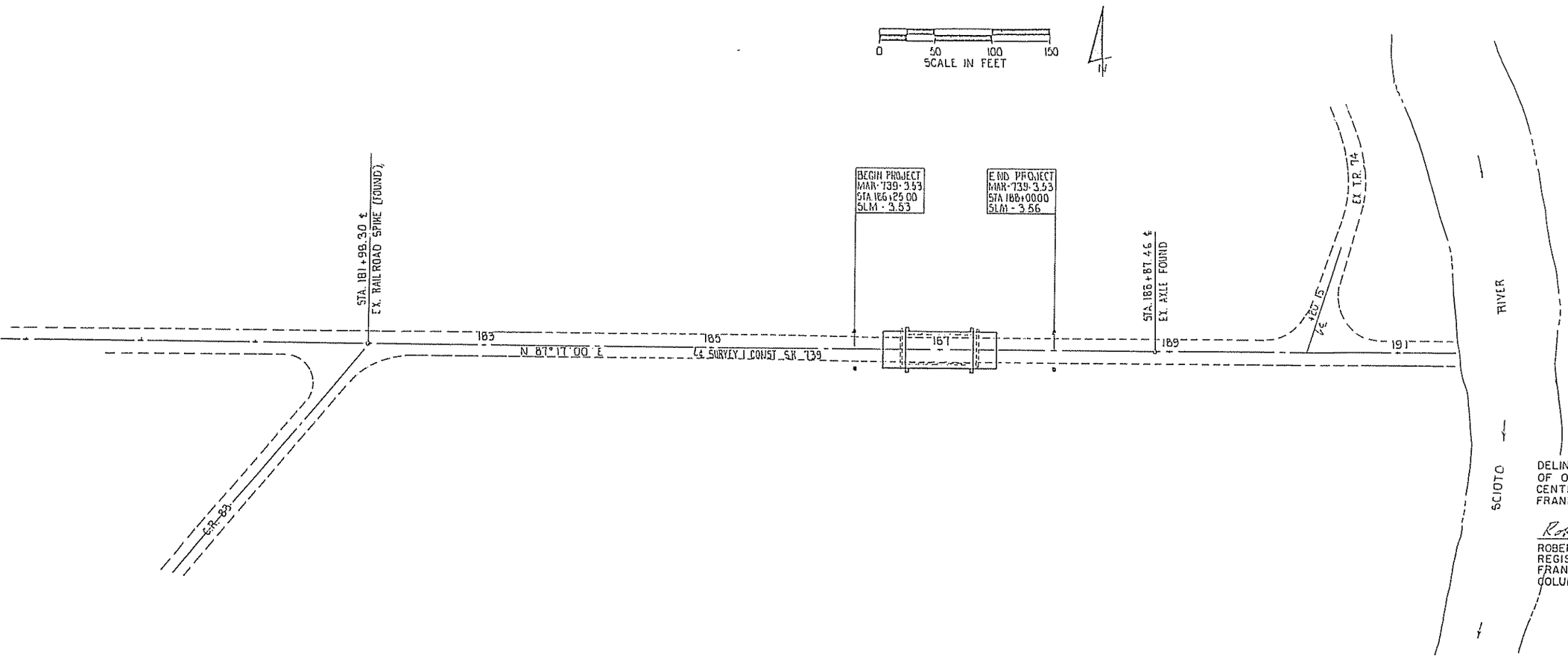

RECEIVED DATE
RECORDED DATE
BOOK PAGE
COUNTY RECORDER MARION COUNTY

I HEREBY CERTIFY THAT THIS PLAT IS A TRUE DELINEATION OF A SURVEY MADE BY THE STATE OF OHIO DEPARTMENT OF TRANSPORTATION IN 1989 BY CENTRAL SURVEYING CO. UNDER THE DIRECTION OF FRANKLIN CONSULTANTS, INC

Robert O. Brenner
ROBERT O. BRENNER
REGISTERED SURVEYOR No. 5987
FRANKLIN CONSULTANTS, INC.
COLUMBUS, OHIO 43231

June 3, 91
DATE

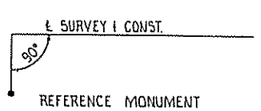

LEGEND

● INDICATES CENTERLINE REFERENCE MONUMENT (TO BE SET)

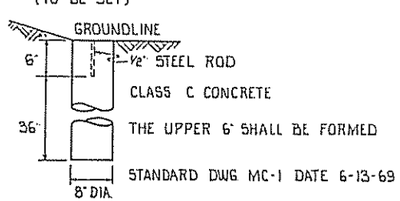

CENTERLINE REFERENCE MONUMENTS
TO BE PLACED ON CENTERLINE OF CONSTRUCTION AT THE FOLLOWING LOCATIONS DURING CONSTRUCTION

STA. 186+25.00, 15.25', L&R	
STA. 188+00.00, 15.25', L&R	

MARION COUNTY MAR-739-3.53	OHIO	15/17
	FHWA REGION 5	
BRS-770(1)	FEDERAL PROJECT	2/4

PROPERTY MAP

MARION COUNTY
GREEN CAMP TOWNSHIP
VIRGINIA MILITARY SURVEY No 9967

0 200 400 800
SCALE IN FEET

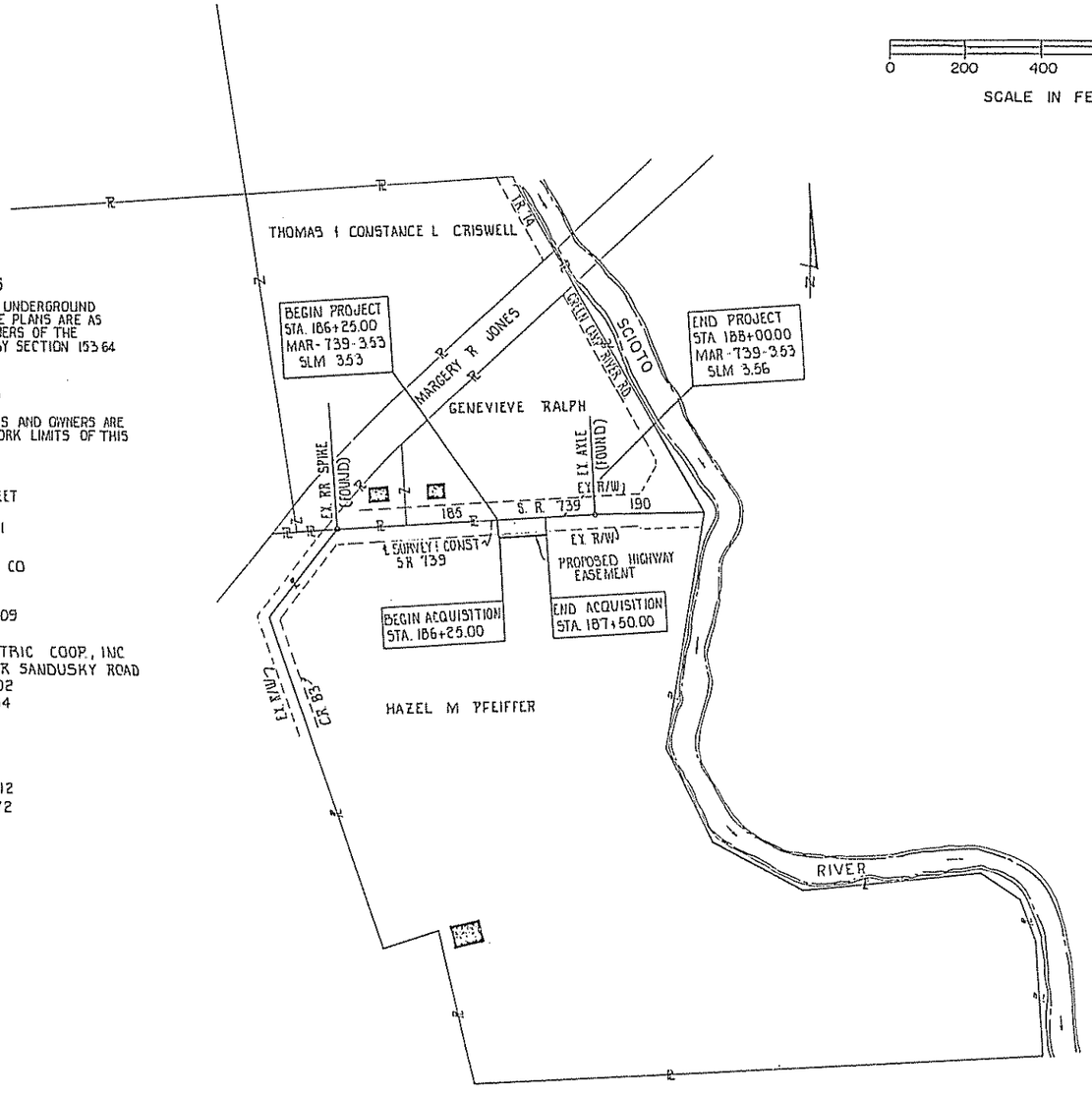

UNDERGROUND UTILITIES

THE LOCATIONS OF THE UNDERGROUND UTILITIES SHOWN ON THE PLANS ARE AS OBTAINED FROM THE OWNERS OF THE UTILITY AS REQUIRED BY SECTION 153.64

UTILITY OWNERSHIP

THE FOLLOWING UTILITIES AND OWNERS ARE LOCATED WITHIN THE WORK LIMITS OF THIS PROJECT:

OHIO EDISON CO.
76 SOUTH MAIN STREET
AKRON, OHIO 44308
PHONE: (216) 384-4631

GENERAL TELEPHONE CO
550 LEADER ST.
MARION OHIO 43302
PHONE: (614) 383-0509

MARION RURAL ELECTRIC COOP., INC
2859 MARION-UPPER SANDUSKY ROAD
MARION, OHIO 43302
PHONE: (614) 382-1234

WARNER CABLE CO.
930 KINNEAR ROAD
COLUMBUS, OHIO, 43212
PHONE: 1-800-331-6772

PLAN COMPLETION DATE:

REV	DATE	COMPLETION DATE DESCRIPTION

TOTAL NUMBER OF
1 OWNERSHIPS
0 TOTAL TAKES
0 OWNERSHIPS WITH STRUCTURES INVOLVED
0 OWNERSHIPS WITH "P" ITEMS

SUMMARY OF ADDITIONAL RIGHT OF WAY

NOTE: RECORD AREA MINUS GROSS TAKE EQUALS NET RESIDUE

CALC BY ____ DATE ____
CHKD BY ____ DATE ____

MARION COUNTY
MAR-739-3.53

OHIO
FHWA REGION 5

16/17
3/4

FEDERAL PROJECT BRS-770(1) STATE PROJECT 06654(0)

PARCEL	OWNER	AUDITOR'S PARCEL No.	SHEET NO.	OWNERS RECORD BOOK	OWNERS RECORD PAGE	RECORD AREA	TOTAL P.R.O.	GROSS TAKE	P.R.O. IN TAKE	NET TAKE	STRUCTURE	NET RESIDUE LEFT	NET RESIDUE RIGHT	TYPE FUND	REMARKS AND PERSONALTY	AS ACQUIRED BOOK	AS ACQUIRED PAGE
1	HAZEL M. PFEIFFER	10-019000-1200	4	532	939-942	39.50 Ac	1.60 Ac	0.144 Ac	0.115 Ac	0.029 Ac	NO		39.500 Ac	STATE	PROPOSED HIGHWAY EASEMENT		
2	GENEVIEVE R. RALPH	10-019000-1100	4	517	85-86	6.425 Ac.									NO R/W REQUIRED		

PLAN COMPLETION DATE:

REV | DATE

0305 Rev 7-16-75

MARION COUNTY MAR-739-03.53	OHIO	17/17
	FHWA REGION 5	
BRS-770(1)	FEDERAL PROJECT	4/4

MARION COUNTY
GREEN CAMP TWP.
VIRGINIA MILITARY SURVEY No.9967

The bearings for this project are based upon the MAR-739-3.58 plans prepared by the Ohio Department of Transportation in 1957.

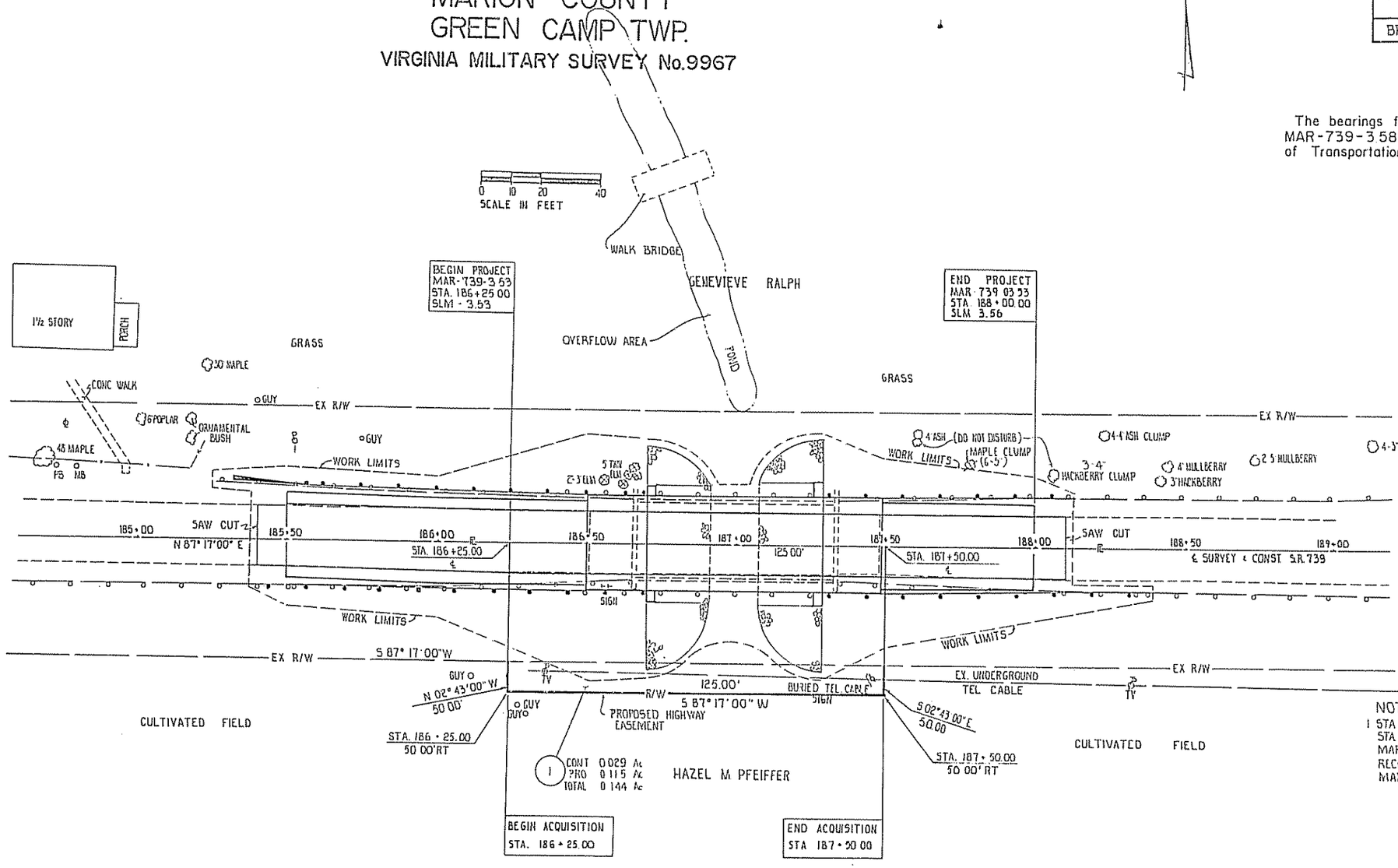

NOTES:

1 STA 187+00.00 ON THIS SET OF PLANS EQUALS STA 186+62.50 ON THE EXISTING HIGHWAY PLANS OF MARION COUNTY SH. 893 SEC A ROUTE 739 AS RECORDED IN 1939 AND STA. 186+62.40 ON THE MAR-739-3.58 PLANS AS RECORDED IN 1957

PLAN COMPLETION DATE:

REV	DATE	COMPLETION DATE / DESCRIPTION

GEOLOGY OF THE SITE

GEOLOGICALLY, THE SITE IS LOCATED IN THE GLACIATED MISSISSIPPI VALLEY PLAIN, AS BOTH THE ILLINOIAN AND WISCONSIN ICE SHEETS PASSED OVER THE AREA. THE DRIFT IS LARGELY TILL, RANGING IN THICKNESS FROM APPROXIMATELY 50.0 TO 100.0 FEET. THE UNDERLYING BEDROCK IS THIN TO MEDIUM-BEDDED DOLOMITES OF THE PUT-IN-BAY MEMBER OF THE MONROE FORMATION.

EXPLORATION

THE EXPLORATION CONSISTED OF FOUR (4) DRIVE SAMPLE-CORE BORINGS, MADE BY MEANS OF A MECHANICALLY-POWERED HOLLOW STEM AUGER MOUNTED ON A MOBILE PLATFORM, PERFORMED BETWEEN DECEMBER 11, 1990 AND DECEMBER 13, 1990.

INVESTIGATIONAL FINDINGS AND OBSERVATIONS

TEST BORINGS B-3 AND B-4, DRILLED THROUGH THE EXISTING APPROACH PAVEMENT, EXHIBITED APPROXIMATELY 2.5 TO 5.0 INCHES OF ASPHALT OVERLYING 5.0 TO 7.0 INCHES OF BASE MATERIAL. UNDERLYING THIS, STIFF, BROWNISH-GRAY, SILTY CLAYS WITH LITTLE COARSE TO FINE SANDS AND FINE GRAVELS. TEST RESULTS INDICATE THIS MATERIAL IS OF THE A-4A AND A-6A CATEGORIES, ACCORDING TO THE ODOT CLASSIFICATION SYSTEM.

TEST BORING B-1 EXHIBITED PREDOMINANTLY COHESIVE SOILS OVERLYING BEDROCK. THE COHESIVE SOILS ARE GENERALLY DESCRIBED AS STIFF, BROWN CHANGING TO GRAY, SILTY CLAYS WITH VARYING AMOUNTS OF COARSE TO FINE SANDS AND GRAVELS. A GRANULAR LAYER, CONSISTING OF BROWN, FINE GRAVEL AND SOME FINE TO COARSE SAND AND CLAYEY SILT, EXISTS FROM ELEVATION 903.5 FEET TO 901.0 FEET. TEST RESULTS INDICATE THAT THE COHESIVE SOILS ARE OF THE A-4A, A-6A AND A-7-5 CATEGORIES, AND THE GRANULAR SOIL IS OF THE A-1-B CATEGORY.

TEST BORING B-2 EXHIBITED COHESIVE SOILS, OVERLYING GRANULAR SOILS, OVERLYING BEDROCK. THE COHESIVE SOILS ARE GENERALLY DESCRIBED AS STIFF, BROWN, SILTY CLAYS (AND/OR CLAYEY SILTS) WITH VARYING AMOUNTS OF COARSE TO FINE SANDS AND GRAVELS AND EXTEND APPROXIMATELY TO ELEVATION 885.5 FEET. THE GRANULAR SOILS ARE GENERALLY DESCRIBED AS DENSE, GRAY COARSE TO FINE GRAVELS AND SANDS WITH LITTLE CLAYEY SILTS. TEST RESULTS INDICATE THAT THE COHESIVE SOILS ARE OF THE A-4A, A-6A, AND A-6B CATEGORIES, AND THE GRANULAR SOILS ARE OF THE A-3, A-1-A, AND A-1-B CATEGORIES.

STANDARD PENETRATION BLOWCOUNTS RANGED FROM 4 (S-5, B-1) TO 37 (S-2, B-3) BLOWS PER FOOT (BPF) IN THE COHESIVE SOILS AND FROM 23 (S-12, B-2) TO 61 BPF (S-3, B-1) IN THE GRANULAR SOILS.

BEDROCK WAS ENCOUNTERED IN BORING B-1 AT A DEPTH OF 44.0 FEET (ELEVATION 865.5 FEET) AND IN BORING B-2 AT A DEPTH OF 45.5 FEET (ELEVATION 864.5 FEET). THE RELATIVELY FLAT ROCK IS DESCRIBED IN BORING B-1 AS HARD, GRAY, LAMINATED LIMESTONE WITH OCCASIONAL SHALE PARTINGS, AND CHERT AND QUARTZITIC INCLUSIONS. IN BORING B-2 THE ROCK IS DESCRIBED AS HARD, GRAY, LIMESTONE WITH PYRITIC AND QUARTZITIC INCLUSIONS, AND IRREGULAR BEDDING.

WATER SEEPAGE WAS OBSERVED IN BOTH BORINGS IN THE GRANULAR SOILS. A FINAL WATER ELEVATION WAS NOT AVAILABLE SINCE WATER WAS USED DURING THE ROCK CORING PROCESS. IT IS LIKELY THAT THE WATER LEVEL AT THE SITE IS AFFECTED BY SEASONAL FLUCTUATIONS IN PRECIPITATION AND IS RELATED TO THE STREAM LEVEL.

LEGEND

Press and/or Drive Sample and/or Core Boring Location - Plan View.

Horizontal Bar on Boring Log Indicates the Depth the Sample was Taken.

X/Y/Z — Figures beside the Boring Log in Profile Indicate the Number of Blows for Standard Penetration Test.

- X= Number of Blows for First 6 Inches
- Y= Number of Blows for Second 6 Inches
- Z= Number of Blows for Third 6 Inches

W — Indicates Free Water Elevation.

Footing

Particle Size Definition

Boulders	Cobbles	Gravel	C. Sand	F. Sand	Silt	Clay
12"	3"	20 mm	0.42mm	0.074mm	0.005mm	
		No.10	No.40	No.200		

General Information

Borings are made by means of a rotary type drill rig, employing a 2-inch O.D., 1-3/8 inch I.D. sampler, at 2-1/2 and/or 5-foot depth intervals, driven by means of a 140 pound drop hammer with a free fall of 30 inches. The number of blows required to drive the sampler the last 12 inches is considered the Standard Penetration Test.

The boring log sheet shows graphic plot of the information obtained, including depth and elevation of the sample, number of blows for the Standard Penetration Tests in the three 6-inch increments, field sample number, and sample description based on laboratory tests and the Ohio Department of Transportation Classification System. Results of strength and consolidation testing, if performed, appear on separate enclosures.

At depth where materials are bouldery or gravelly to the extent that the sample cannot be driven, a wash sample is procured for visual classification to determine the general character of the material. These samples are not considered sufficiently representative to warrant laboratory testing.

Note--All available soil and bedrock information which can be conveniently shown on the structure foundation investigation sheets has been so reported. Additional subsurface investigations may have been made to study some special aspect of the project. Copies of data, if any, may be inspected in the District Deputy Director's Office, the pavement and soils section of the Bureau of Location and Design or in the Bridge Bureau at 25 South Front Street.

The purpose of this subsurface investigation is to develop soils information for foundation design which will limit uncertainty and establish risk potential. This investigation has been performed specifically for foundation design purposes and is not intended to be used for construction estimating or bidding. Information shown was obtained for use in establishing design criteria for the project: the accuracy of data presented is not guaranteed by the State of Ohio or consultant and is not to be construed as part of the plans governing construction of the project.

RESOURCE INTERNATIONAL, INC.
281 ENTERPRISE DRIVE
WESTERVILLE OHIO 43081
(614)-885-1959

STRUCTURE FOUNDATION INVESTIGATION
BRIDGE NO. MAR - 739 - 3.53
OVER SCIOTO RIVER OVERFLOW

DATE: [illegible] | DRAWN: [illegible] | CHECKED

MAR - 739 - 3 53	OHIO
	FHWA REGION 5
	FEDERAL PROJECT

2/3

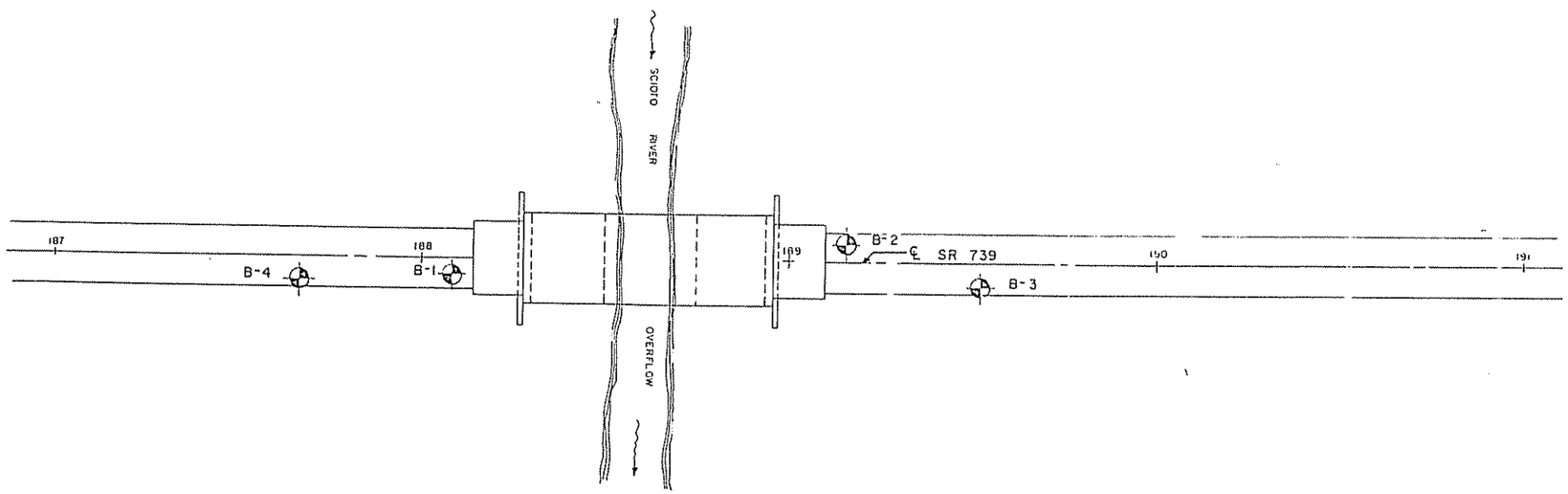

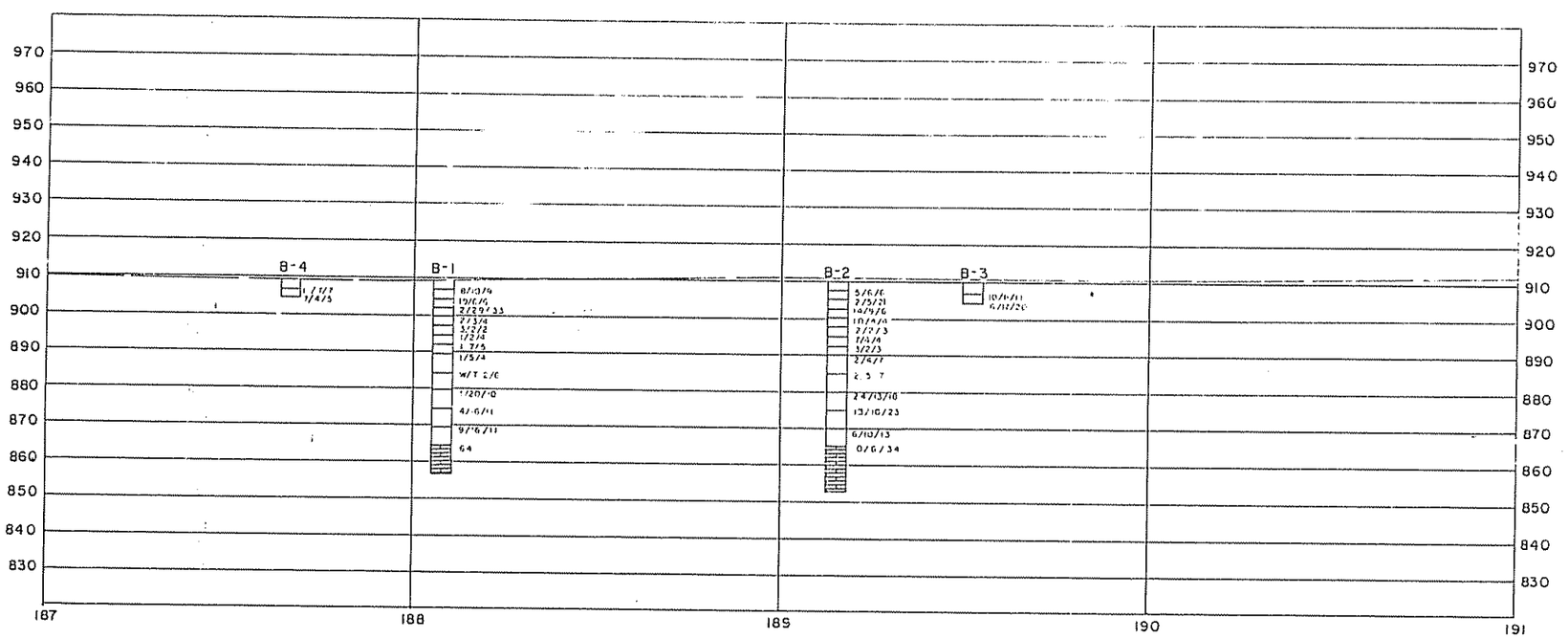

RESOURCE INTERNATIONAL, INC.
281 ENTERPRISE DRIVE
WESTERVILLE OHIO 43081
(614)-885-1959

STRUCTURE FOUNDATION INVESTIGATION
BRIDGE NO. MAR - 739 - 3 53
OVER SCIOTO RIVER OVERFLOW

DATE: | DRAWN: | CHECKED:

MAR - 739-3.53	OHIO FHWA REGION 5 FEDERAL PROJECT

3/3

BORING LOG: B-1
STATION AND OFFSET: 188+08 4.5' RT.
SURFACE ELEVATION: 909.5'
WATER ENCOUNTERED: -
DATE STARTED: DECEMBER 11, 1990
DATE FINISHED: DECEMBER 12, 1990
SAMPLER TYPE: HSA/RC

ELEV.	SAMPLE NUMBER	BLOWS PER 6"	REC	DEPTH	SOIL DESCRIPTION	WC	ATT LIMITS LL	ATT LIMITS PI	PHYSICAL CHARACTERISTIC % AGG	% CS	% FS	% SI	% CL	ODOT CLASS
					ASPHALT 0.3'									
907.0	S-1	8-10-9			COARSE TO FINE SAND AND GRAVEL 1.0'	14	26	11	11	6	12	31	40	A-6A (8)
904.5	S-2	19-6-6		5	BROWN SILTY CLAY, LITTLE COARSE TO FINE SAND AND GRAVEL. 6.0'	16	27	13	5	7	12	34	42	A-6A (9)
902.0	S-3	3-29-33			BROWN FINE GRAVEL, SOME FINE TO COARSE SAND AND CLAYEY SILT. 8.5'	5			45	19	12	13	11	A-1-b
899.5	S-4	2-3-4		10	BROWN SILTY CLAY, TRACE OF FINE SAND AND GRAVEL.									VISUAL
897.0	S-5	3-2-2			NOTE: ODOR PRESENT IN S-4 & S-5 UPON DRILLING AND VISUAL CLASSIFICATION. 16.0'									VISUAL
894.5	S-6	1-2-4		15		24	34	14	2	3	8	8	7	A-6A (10)
892.0	S-7	1-7-5			DARK GRAY SILTY CLAY, TRACE OF COARSE TO FINE SAND.	47	56	26	-	1	4	9	5	A-7-5 (18)
889.5	S-8	1-5-4		20	23.5'	25	32	13	-	4	14	8	2	A-6A (9)
884.5	S-9	HT-2-6		25	DARK GRAY SILTY CLAY, SOME COARSE TO FINE SAND AND GRAVEL.	15			-	3	30	6	7	VISUAL
879.5	S-10	1-20-10		30		14	21	9	4	8	12	7	6	A-4A (8)
874.5	S-11	4-16-11		35		16	22	9	13	9	17	6	1	A-4A (5)
869.5	S-12	9-16-11		40		12								VISUAL
865.5	N.R.	64/0.5'			TOP OF ROCK 44.0'									
				45	LIGHT TO DARK GRAY, HARD, LAMINATED LIMESTONE WITH OCCASIONAL SHALE PARTINGS, CHERT INCLUSIONS AND QUARTZ INCLUSIONS.									
856.5	RC-1	RQD 8%	45%	50										
				55	BOTTOM OF BORING = 53.0'									

BORING LOG: B-2
STATION AND OFFSET: 189+16 5.0' LT.
SURFACE ELEVATION: 910.0'
WATER ENCOUNTERED: -
DATE STARTED: DECEMBER 13, 1990
DATE FINISHED: DECEMBER 13, 1990
SAMPLER TYPE: HSA/RC

ELEV.	SAMPLE NUMBER	BLOWS PER 6"	REC	DEPTH	SOIL DESCRIPTION	WC	ATT LIMITS LL	ATT LIMITS PI	PHYSICAL CHARACTERISTIC % AGG	% CS	% FS	% SI	% CL	ODOT CLASS
					ASPHALT 0.4'									
907.5	S-1	5-6-6			BROWN SAND AND GRAVEL 1.0'	16	30	12	2	8	14	34	42	A-6A (9)
905.0	S-2	2-5-21		5	BROWN SILTY CLAY, LITTLE COARSE TO FINE SAND AND GRAVEL	20	30	13	6	6	14	37	37	A-6A (9)
902.5	S-3	14-9-6			NOTE: ODOR PRESENT IN S-4 & S-5 UPON DRILLING AND VISUAL CLASSIFICATION 11.0'	11	20	7	15	19	14	27	25	A-4A (3)
900.0	S-4	10-4-4		10	DARK GRAY SILTY CLAY, LITTLE FINE SAND 13.0'	13			39	12	8	19	22	A-4A
897.5	S-5	2-2-3												VISUAL
895.0	S-6	7-4-4		15	BROWN CLAYEY SILT, TRACE OF FINE SAND 17.5'	24	38	16	0	0	8	49	43	A-6B (10)
892.5	S-7	3-2-3			BROWN CLAYEY SILT AND FINE TO COARSE SAND 21.5'	26	33	3	0	1	14	8	6	A-6A (9)
890.0	S-8	2-4-7		20	BROWN CLAYEY SILT, SOME COARSE TO FINE SAND, TRACE OF GRAVEL 24.5'	20			0	41	3	37	19	A-4A
885.0	S-9A			25	GRAY COARSE TO FINE SAND, TRACE OF CLAYEY SILT 26.5'	20			8	8	18	6	6	A-4A
	S-9B	2-5-7				20			5	34	53	-	8-	A-3
880.0	S-10	24-13-18		30	GRAY COARSE TO FINE GRAVEL, SOME FINE TO COARSE SAND, LITTLE CLAYEY SILT.	11			64	12	9	1	5	A-1-a
875.0	S-11	13-10-23		35		10			40	48	5	-	7-	A-1-b
870.0	S-12	6-10-13		40		12			30	32	15	2	3	A-1-b
865.0	S-13	10-6-34		45	TOP OF ROCK 45.5'	11			41	21	17	2	1	A-1-b
	RC-1	RQD 0%	30%	50	HARD, GRAY LIMESTONE WITH PYRITIC INCLUSIONS, QUARTZITIC LENSES, IRREGULAR BEDDING									
854.5														
853.0	RC-2	RQD 0%	80%	55	BOTTOM OF BORING = 57.0'									

BORING LOG: B-3
STATION AND OFFSET: 189+52 6.5' RT.
SURFACE ELEVATION: 910.2'
WATER ENCOUNTERED: DRY
DATE STARTED: DECEMBER 13, 1990
DATE FINISHED: DECEMBER 13, 1990
SAMPLER TYPE: HSA

ELEV.	SAMPLE NUMBER	BLOWS PER 6"	REC	DEPTH	SOIL DESCRIPTION	WC	ATT LIMITS LL	ATT LIMITS PI	PHYSICAL CHARACTERISTIC % AGG	% CS	% FS	% SI	% CL	ODOT CLASS
					ASPHALT 0.4'									
907.7	S-1	10-8-11			FINE TO COARSE SAND AND GRAVEL 1.0'	17	31	10	2	5	12	32	49	A-4A (8)
905.2	S-2	6-17-20		5	BROWNISH-GRAY SILTY CLAY, LITTLE COARSE TO FINE SAND, TRACE FINE GRAVEL.	18	29	13	5	5	22	29	39	A-6A (8)
					BOTTOM OF BORING = 5.0'									

BORING LOG: B-4
STATION AND OFFSET: 187+66 6.0' RT.
SURFACE ELEVATION: 909.5'
WATER ENCOUNTERED: DRY
DATE STARTED: DECEMBER 13, 1990
DATE FINISHED: DECEMBER 13, 1990
SAMPLER TYPE: HSA

ELEV.	SAMPLE NUMBER	BLOWS PER 6"	REC	DEPTH	SOIL DESCRIPTION	WC	ATT LIMITS LL	ATT LIMITS PI	PHYSICAL CHARACTERISTIC % AGG	% CS	% FS	% SI	% CL	ODOT CLASS
					ASPHALT 0.2'									
907.0	S-1	11-7-7			FINE TO COARSE SAND AND GRAVEL 0.6'	15	28	14	8	5	12	33	42	A-6A (10)
904.5	S-2	7-4-5		5	BROWNISH-GRAY SILTY CLAY, COARSE TO FINE SAND, TRACE FINE GRAVEL	18	30	13	5	6	13	34	42	A-6A (9)
					BOTTOM OF BORING = 5.0'									

RESOURCE INTERNATIONAL, INC.
281 ENTERPRISE DRIVE
WESTERVILLE OHIO 43081
(614)-885-1959

STRUCTURE FOUNDATION INVESTIGATION
BRIDGE NO. MAR - 739-3.53
OVER SCIOTO RIVER OVERFLOW

DATE: 2-8-91 | DRAWN: [illegible] | CHECKED: