STATE OF OHIO
DEPARTMENT OF TRANSPORTATION

MAR-739-0.00

VILLAGE OF GREEN CAMP
GREEN CAMP TOWNSHIP, MARION TOWNSHIP
MARION COUNTY

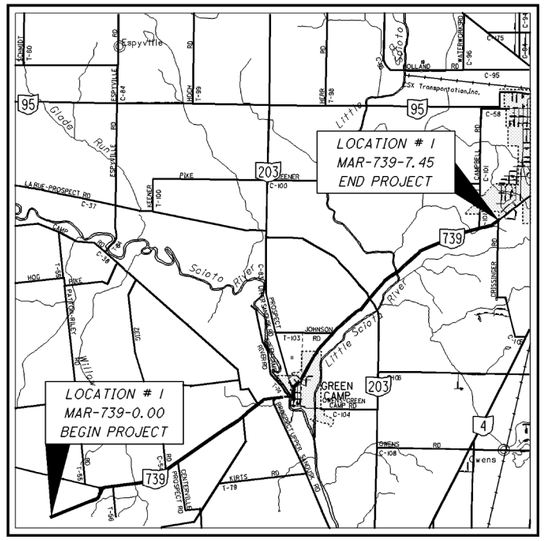

LOCATION MAP

MAR-739 LAT.: N 40° 31′ 51″ / LONG.: W 83° 12′ 39″
LAT / LONG = CENTER OF PRIMARY ROUTE

0 1 2 3 4 5
SCALE OF MILES

N

PORTION TO BE IMPROVED
INTERSTATE & DIVIDED HIGHWAY
UNDIVIDED STATE & FEDERAL ROUTES
OTHER ROADS

DESIGN DESIGNATION

CURRENT ADT (2007)	3,579
DESIGN YEAR ADT (2017)	4,363
DESIGN HOURLY VOLUME (2017)	182
DIRECTIONAL DISTRIBUTION	50%
TRUCKS (24 HOUR B & C)	4%
DESIGN SPEED	60
LEGAL SPEED	55
LANE ADTT	86

INDEX OF SHEETS:

TITLE	1
STRAIGHT LINE DIAGRAM	2
TYPICAL SECTIONS	3-4
GENERAL NOTES	5-10
MAINTENANCE OF TRAFFIC GENERAL NOTES	11-12
GENERAL SUMMARY	13-14
PAVEMENT DETAILS	15-21
PLAN INSERT SHEETS	22-24
PAVEMENT MARKING & RPM'S	25-30
STRUCTURE DETAILS	31-33
DROP OFF DETAILS	34

EARTH DISTURBANCE AREA

PROJECT EARTH DISTURBED AREA
N/A MAINTENANCE PROJECT
EST. CONTRACTOR EARTH DISTURBED AREA
N/A MAINTENANCE PROJECT
NOTICE OF INTENT EARTH DISTURBED AREA
N/A MAINTENANCE PROJECT

DESIGN EXCEPTION

DESIGN FUNCTIONAL CLASSIFICATION

MAR-739-0.00 RURAL MAJOR COLLECTOR
URBAN MINOR ARTERIAL

PROJECT DESCRIPTION

THIS PROJECT CONSISTS OF THE RESURFACING A TOTAL OF 7.45 MILES OF SR-739 FROM THE UNION COUNTY LINE TO THE WESTERN CORPORATION LIMIT OF THE CITY OF MARION.

UNDERGROUND UTILITIES
TWO WORKING DAYS
BEFORE YOU DIG
CALL 1-800-362-2764 (TOLL FREE)
OHIO UTILITIES PROTECTION SERVICE
NON-MEMBERS
MUST BE CALLED DIRECTLY

PLANS CERTIFIED BY:
NAME Robert Kimella DATE
DISTRICT 6
OHIO DEPT. OF TRANSPORTATION

2005 SPECIFICATIONS

THE STANDARD SPECIFICATIONS OF THE STATE OF OHIO, DEPARTMENT OF TRANSPORTATION, INCLUDING CHANGES AND SUPPLEMENTAL SPECIFICATIONS LISTED IN THE PROPOSAL SHALL GOVERN THIS PROJECT.

I HEREBY APPROVE THESE PLANS AND DECLARE THAT THE MAKING OF THESE IMPROVEMENTS WILL NOT REQUIRE THE CLOSING TO TRAFFIC OF THE HIGHWAY AND THAT PROVISIONS FOR THE MAINTENANCE AND SAFETY OF TRAFFIC WILL WILL BE AS SET FORTH ON THE PLANS AND ESTIMATES.

STANDARD DRAWINGS								SUPPLEMENTAL SPECIFICATIONS	
BP-3.1	7/16/2004							800	10/19/2007
BP-4.1	7/16/2004							832	4/25/2006
BP-5.1	7/28/2000								
MT-97.10	9/5/2006								
MT-97.12	9/5/2006								
MT-99.20M	1/30/1995								
MT-105.10	10/18/2002								
MT-105.11	10/18/2002								
TC-41.20	1/19/2001								
TC-52.10	1/19/2007								
TC-52.20	1/19/2007								
TC-65.10	1/21/2005								
TC-65.11	1/21/2005								
TC-71.10	1/19/2007								
TC-73.10	1/19/2001							SPECIAL PROVISIONS	
TC-82.10	4/19/2002								

STATE OF OHIO
DAVID P. POLING
56872
REGISTERED PROFESSIONAL ENGINEER

Signed: David P. Poling
Date: 7-17-07

PLAN PREPARED BY:
O.D.O.T.
DISTRICT SIX
IN-HOUSE DESIGN

Approved Thomas J. Wester
Date 8-16-07 District Deputy Director
Transportation

Approved _____
Date _____ Director, Department of
Transportation

FEDERAL PROJECT NO. E031(889)
PID NO. 25896
CONSTRUCTION PROJECT NO.
RAILROAD INVOLVEMENT NONE
MAR-739-0.00
1/34

28-AUG-2007 11:18AM rkinsell
SHEET_GT001
I:\Projects\mar\739\0000.008\25896\roadway\sheets\TITLE SHEETS.DGN

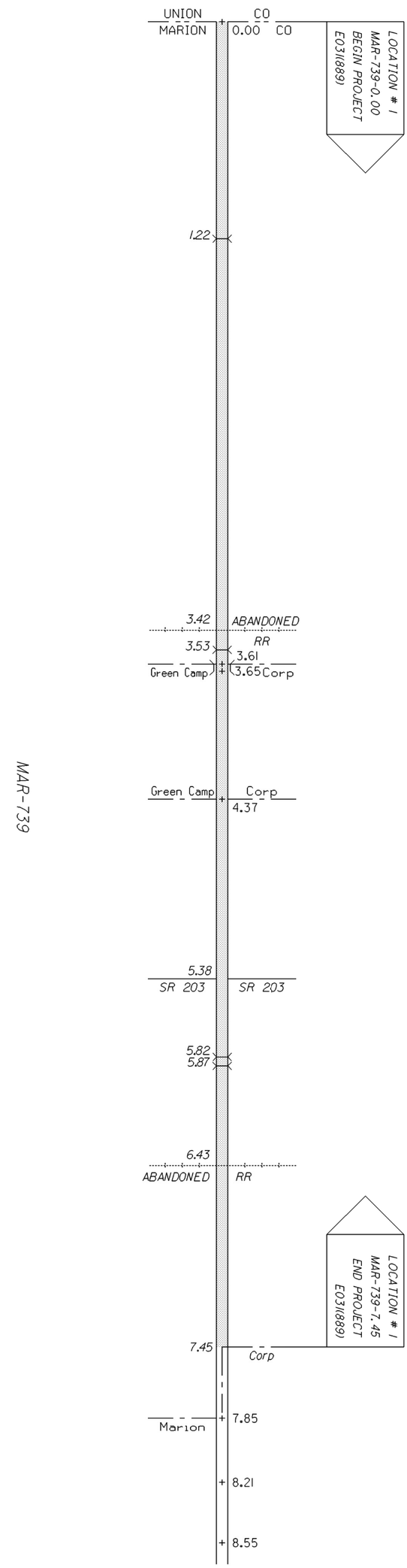

2 / 34	**MAR-739-0.00**	**STRAIGHT LINE DIAGRAM**

CALCULATED RDK
CHECKED

TYPICAL NOTES

* MAINTAIN THE EXISTING PAVEMENT CROSS SLOPE

SW = SHOULDER WIDTH

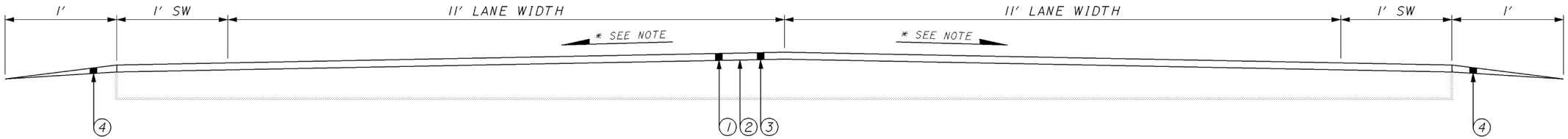

TYPICAL #1

MAR-739 SLM 0.00 TO SLM 3.61

MAR-739 SLM 4.02 TO SLM 7.45

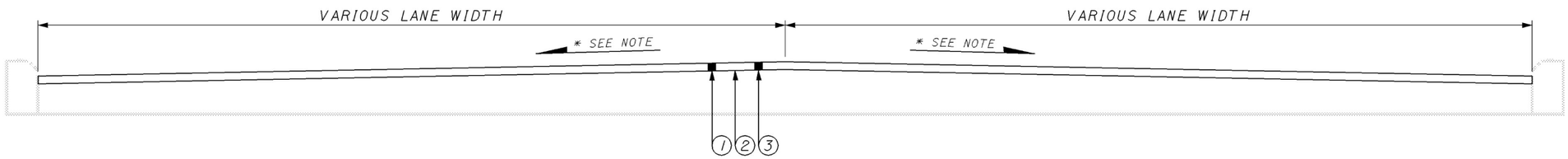

TYPICAL #2

WITHIN THE VILLAGE GREEN CAMP

MAR-739 SLM 3.61 / STA. 204+15 TO SLM 4.02 / STA. 226+55

TYPICAL LEGEND

- ITEM 254 - 1.5" DEPTH PAVEMENT PLANING, ASPHALT CONCRETE
- ITEM 407 - TACK COAT @ 0.075 PER SY. YD.
- ITEM 448 - 1.5" ASPHALT CONCRETE SURFACE COURSE, TYPE 1, PG64-22
- ITEM 617 - SHOULDER RECONDITIONING MISC. RESHAPING SHOULDER

CALCULATED RDK

CHECKED CK

TYPICAL SECTIONS

MAR-739-0.00

I:\Projects\mar\739\0000.008\25896\roadway\sheets\TYPICALS.DGN Sheet_GY101 28-AUG-2007 11:18AM rkinsell

PARTIAL DEPTH
PAVEMENT REPAIR
A.P.P.

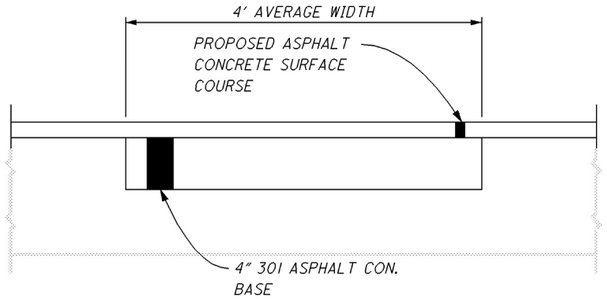

SHOULDER DETAIL

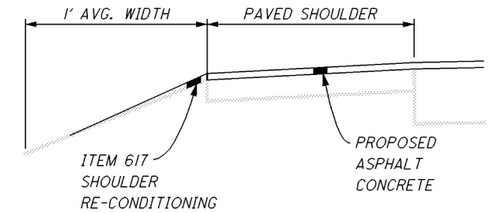

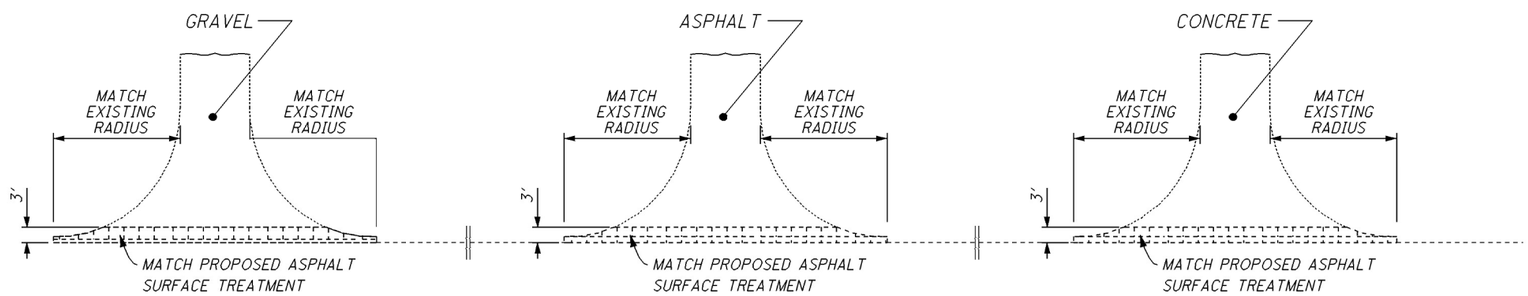

TYPICAL DRIVEWAY APPROACH DETAILS
FOR MORE INFORMATION INVOLVING
TAPERS AND FEATHERING SEE
STANDARD DRAWING BP-3.1
AND GENERAL NOTES

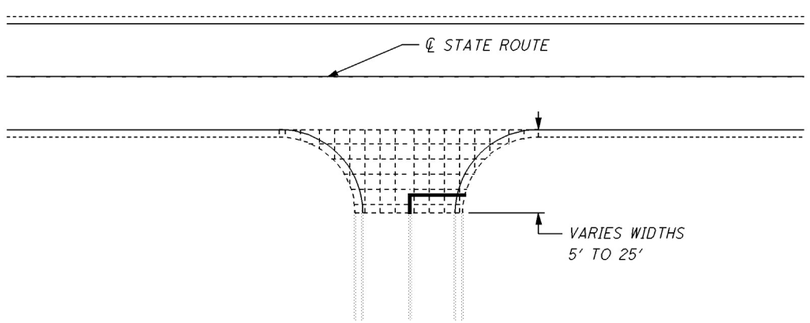

WITHIN THE VILLAGE OF GREEN CAMP

CHESTNUT STREET
SECTION STREET
MARSH STREET
SWAIN AVENUE
McCORMISH STREET
VARIOUS ALLEYS

OUTSIDE OF THE VILLAGE OF GREEN CAMP

COUNTY ROAD 81 (GREEN CAMP ESSEX ROAD)
COUNTY ROAD 45 (MOUNT OLIVE GREEN CAMP ROAD)
TOWNSHIP ROAD 56 (CENTERVILLE ROAD)
COUNTY ROAD 54 (RUTH ROAD)
TOWNSHIP ROAD 56 (CENTERVILLE ROAD)
TOWNSHIP ROAD 75 (CENTERVILLE PROSPECT ROAD)
TOWNSHIP ROAD 77 (CENTERVILLE GREEN CAMP ROAD)
COUNTY ROAD 38 (LARUE GREEN CAMP ROAD)
COUNTY ROAD 83 (PROSPECT UPPER SANDUSKY ROAD)
TOWNSHIP ROAD 74 (GREEN CAMP RIVER ROAD)
TOWNSHIP ROAD 103 (JOHNSON ROAD)
STATE ROUTE 203 (LARUE PROSPECT RAD)
COUNTY ROAD 101 (CAMPBELL ROAD)
COUNTY ROAD 105 (CRISSINGER ROAD)

TYPICAL INTERSECTION DETAIL

CALCULATED RDK
CHECKED CK

TYPICAL SECTIONS

MAR-739-0.00

I:\Projects\mar\739\0000.008\25896\roadway\sheets\TYPICALS.DGN Sheet_GY102 28-AUG-2007 11:18AM rkinsell

CONSTRUCTION INITIATION:
THE CONTRACTOR SHALL ADVISE THE DISTRICT OFFICE OF COMMUNICATIONS AT (740-833-8260) OR FAX AT (740-833-8100), THE DISTRICT TRAFFIC MANAGEMENT ENGINEER AT (740-833-8323), AND THE VILLAGE OF GREEN CAMP AT (740-528-2108) FOURTEEN (14) DAYS PRIOR TO THE START OF CONSTRUCTION ACTIVITIES. THE CONTRACTOR WILL IMMEDIATELY INFORM THE DISTRICT OFFICE OF COMMUNICATIONS AND THE DISTRICT TRAFFIC MANAGEMENT ENGINEER OF ANY AND ALL DELAYS AND/OR CHANGES REGARDING THE CONSTRUCTION PROJECT. THE PROJECT ENGINEER WILL PROVIDE CLARIFICATION FOR ANY QUESTIONS ABOUT THIS NOTIFICATION REQUIREMENT.

COORDINATION WITH O.D.O.T.'S CENTRAL OHIO TRAFFIC MANAGEMENT PROGRAM (COTMP):
THE CONTRACTOR SHALL NOTIFY THE PROJECT ENGINEER IN WRITING OF ALL TRAFFIC RESTRICTIONS AND UPCOMING MAINTENANCE OF TRAFFIC CHANGES ON A WEEKLY BASIS. WHEN DETOURS ARE PLANNED, THIS NOTIFICATION SHALL BE AT THE PRE-CONSTRUCTION MEETING OR 30 DAYS IN ADVANCE ONCE CONSTRUCTION HAS BEGUN. LANE AND RAMP CLOSURES FOR 2 OR MORE WEEKS SHALL BE REPORTED 2 WEEKS IN ADVANCE OF CLOSURE. LANE AND RAMP CLOSURES OF LESS THAN 2 WEEKS DURATION AND MORE THAN 2 DAYS SHALL BE REPORTED AT LEAST 3 WORKING DAYS IN ADVANCE. FOR SHORT TERM, LANE OR RAMP CLOSURES (2 DAYS OR LESS) NOTIFICATION SHALL BE MADE AT LEAST 1 WORKING DAY IN ADVANCE. INFORMATION SHALL INCLUDE BUT NOT BE LIMITED TO ALL CONSTRUCTION ACTIVITIES THAT IMPACT TRAFFIC AT PRESENT AND IN THE NEXT 30 DAYS. THE CONTRACTOR SHALL DESIGNATE AN INDIVIDUAL WHO WILL BE RESPONSIBLE FOR PREPARING THIS REPORT AT THE PRE-CONSTRUCTION MEETING. ANY UNFORESEEN IMPACTS TO TRAFFIC SHALL BE REPORTED TO THE PROJECT ENGINEER AS SOON AS POSSIBLE. THE PROJECT ENGINEER SHALL PROVIDE THIS INFORMATION TO COTMP. ALL CONSTRUCTION ACTIVITIES THAT INTERFERE WITH TRAFFIC SHALL BE REPORTED TO COTMP. THIS INFORMATION SHALL BE PROVIDED TO COTMP AT 740-833-8323 OR BY FAX AT 740-833-8090.

GENERAL:
THE CONTRACTOR SHALL SUBMIT IN WRITING A SCHEDULE OF OPERATIONS TO THE ENGINEER (SEE 101.18) AND RECEIVE APPROVAL IN WRITING BEFORE WORK IS STARTED ON THIS PROJECT. ALL TRAFFIC CONTROL DEVICES SHALL BE FURNISHED, ERECTED, MAINTAINED, AND REMOVED BY THE CONTRACTOR IN ACCORDANCE WITH THE OHIO MANUAL OF UNIFORM TRAFFIC CONTROL DEVICES.

ALIGNMENT AND PROFILE:
THE WORK PROPOSED BY THIS PROJECT IS FOR THE RESURFACING OF THE EXISTING PAVEMENT. THE ALIGNMENT OF THE EXISTING PAVEMENT WILL NOT BE CHANGED, AND THE PROFILE OF THE PROPOSED SURFACE WILL BE SIMILAR TO THAT OF THE EXISTING PAVEMENT.

CONTRACTORS EQUIPMENT - OPERATION AND STORAGE:
THE CONTRACTOR'S EQUIPMENT SHALL BE OPERATED IN THE DIRECTION OF TRAFFIC WHERE PRACTICAL. EQUIPMENT SHALL HAVE AT LEAST ONE AMBER FLASHING LIGHT. WHEN PARKED ALONG THE HIGHWAY, THE EQUIPMENT SHALL BE LOCATED EITHER A MINIMUM OF THIRTY FEET FROM THE EDGE OF PAVEMENT OR SIX FEET BEHIND GUARDRAIL WITH A MINIMUM OF 125 FEET OF GUARDRAIL PRECEDING THE EQUIPMENT. ALL OTHER EQUIPMENT, INCLUDING PRIVATE VEHICLES, SHALL BE STORED AT AN APPROVED CONTRACTOR'S STORAGE AREA.

CONTINGENCY QUANTITIES:
THE CONTRACTOR SHALL NOT ORDER MATERIALS OR PERFORM WORK FOR ITEMS DESIGNATED BY PLAN NOTE TO BE USED "AS DIRECTED BY THE ENGINEER" UNLESS AUTHORIZED BY THE ENGINEER. THE ACTUAL WORK LOCATIONS AND QUANTITIES USED FOR SUCH ITEMS SHALL BE INCORPORATED INTO THE FINAL CHANGE ORDER GOVERNING COMPLETION OF THIS PROJECT.

PART-WIDTH CONSTRUCTION:
BECAUSE OF THE NECESSITY TO BUILD THIS PROJECT UNDER TRAFFIC AND TO CONSTRUCT THE FULL PAVEMENT WIDTH IN STAGES, EXTREME CARE SHALL BE TAKEN TO PREVENT THE CONSTRUCTION OF A BUTT JOINT IN THE BASE COURSES. LONGITUDINAL JOINTS SHALL BE LAPPED AS SHOWN ON STANDARD CONSTRUCTION DRAWING BP-3.1.

WORK LIMITS:
THE WORK LIMITS SHOWN ON THESE PLANS ARE FOR PHYSICAL CONSTRUCTION ONLY. THE INSTALLATION AND OPERATION OF ALL TEMPORARY TRAFFIC CONTROL AND TEMPORARY TRAFFIC CONTROL DEVICES REQUIRED BY THESE PLANS SHALL BE PROVIDED BY THE CONTRACTOR WHETHER INSIDE OR OUTSIDE THESE WORK LIMITS.

CONVERSION OF STANDARD CONSTRUCTION DRAWINGS:
THE METRIC STANDARD DRAWINGS REFERENCED IN THIS PLAN SHALL BE CONVERTED TO ENGLISH UNITS USING THE SI (METRIC) TO ENGLISH CONVERSION FACTORS PROVIDED IN SECTION 109.02 OF THE 2005 CONSTRUCTION AND MATERIAL SPECIFICATIONS. CONVERSIONS SHALL BE APPROPRIATELY PRECISE AND SHALL REFLECT STANDARD INDUSTRY ENGLISH VALUES WHERE SUITABLE.

DRAINAGE AT INTERSECTING STREETS:
AT INTERSECTING STREETS WHERE THE DRAINAGE IS TOWARD OR INTO THE PROJECT, SPECIAL CARE SHALL BE TAKEN BY THE CONTRACTOR TO MAINTAIN PROPER GRADE ALONG THE EDGE OF PAVEMENT SO THAT WATER WILL NOT POND. AT INTERSECTING STREETS, WHERE THE EDGE OF PAVEMENT CONTINUES ACROSS THE STREET, CARE SHALL BE TAKEN TO FEATHER DOWN AND FORM A NEAT SEAM WITH THE PROPER GRADE.

REVIEW OF DRAINAGE FACILITIES:
BEFORE ANY WORK IS STARTED ON THE PROJECT AND AGAIN BEFORE FINAL ACCEPTANCE OF THE PROJECT BY THE STATE, REPRESENTATIVES OF THE STATE AND THE CONTRACTOR, ALONG WITH LOCAL REPRESENTATIVES, SHALL INSPECT ALL EXISTING SEWERS WHICH ARE TO REMAIN IN SERVICE AND WHICH MAY BE AFFECTED BY THE WORK. THE CONDITION OF THE EXISTING CONDUITS AND THEIR APPURTENANCE SHALL BE DETERMINED FROM FIELD OBSERVATIONS. RECORDS OF THE INSPECTION SHALL BE KEPT IN WRITING BY THE STATE.

ALL NEW CONDUITS, INLETS, CATCH BASINS, AND MANHOLES CONSTRUCTED, AS A PART OF THE PROJECT SHALL BE FREE OF ALL FOREIGN MATTER AND IN A CLEAN CONDITION BEFORE THE PROJECT WILL BE ACCEPTED BY THE STATE.

ALL EXISTING SEWERS INSPECTED INITIALLY BY THE ABOVE MENTIONED PARTIES SHALL BE MAINTAINED AND LEFT IN A CONDITION REASONABLY COMPARABLE TO THAT DETERMINED BY THE ORIGINAL INSPECTION. THE CONTRACTOR TO THE SATISFACTION OF THE ENGINEER SHALL CORRECT ANY CHANGE IN THE CONDITION RESULTING FROM THE CONTRACTOR'S OPERATIONS.

DRAIN PIPES:
AT ALL DRAIN PIPES LOCATED IN THE CURB AND THAT DRAIN INTO THE GUTTER, SPECIAL CARE SHALL BE TAKEN BY THE CONTRACTOR SO THAT THESE DRAINS WILL NOT BE CLOSED OR OTHERWISE RENDERED INOPERATIVE. ANY DAMAGE DONE TO THE DRAIN PIPE WILL BE REPLACED AT THE CONTRACTOR'S EXPENSE.

MANHOLES AND OTHER CASTINGS:
THE CASTING TOPS OF MANHOLES, VALVE BOXES, AND OTHER STRUCTURES OWNED BY PUBLIC SERVICE CORPORATIONS OTHER THAN THE VILLAGE OF GREEN CAMP WILL BE ADJUSTED TO GRADE BY THEIR RESPECTIVE OWNERS. THE WORK MAY BE DONE PRIOR TO THE CONSTRUCTION OF THE SURFACE COURSE. THE CONTRACTOR SHALL NOTIFY SUCH PUBLIC SERVICE CORPORATIONS AT LEAST ONE WEEK IN ADVANCE OF WORK OPERATIONS SO THAT WORK MAY BE PROPERLY SCHEDULED. CASTINGS OWNED BY THE VILLAGE OF GREEN CAMP SHALL BE ADJUSTED TO GRADE BY THE CONTRACTOR. THESE INCLUDE SEWER, WATER, AND TRAFFIC MANHOLES. HOWEVER, ANY ADDITIONAL CASTINGS IDENTIFIED DURING THE VARIOUS CONSTRUCTION OPERATIONS BY THE PROJECT ENGINEER AND/OR CONTRACTOR SHALL BE RAISED BY THE CONTRACTOR AND WILL BE PAID FOR AT THE CONTRACT UNIT PRICE FOR THAT RESPECTIVE ITEM.

FIRE HYDRANTS:
THE CONTRACTOR SHALL BE RESPONSIBLE FOR OBTAINING ANY PERMITS AND FEES THAT ARE REQUIRED FOR THE USE OF ANY FIRE HYDRANTS. A SIAMESE VALVE IS TO BE USED ON THE HYDRANT OUTLET IF A HOSE IS TO BE LEFT CONNECTED AND UNATTENDED. THIS PERMIT CAN BE OBTAINED FROM THE VILLAGE OF GREEN CAMP.

WATER VALVES ON PLANED STREETS:
BEFORE ANY MILLING BEGINS ON A STREET, THE PROJECT ENGINEER WILL IDENTIFY ALL THE WATER VALVE CASTINGS BY MARKING THE CASTINGS OR CREATING A LIST OF THE CASTINGS THAT WILL NEED TO BE ADJUSTED TO GRADE AFTER THE RESURFACING IS COMPLETE, ANY CASTINGS THAT NEED TO BE ADJUSTED TO GRADE THAT WERE NOT IDENTIFIED TO BE RAISED PRIOR TO THE RESURFACING SHALL BE ADJUSTED TO GRADE BY THE CONTRACTOR AT THE CONTRACTOR'S EXPENSE THIS DOES NOT APPLY TO BURIED WATER VALVES.

BURIED WATER VALVES:
THE VILLAGE OF GREEN CAMP MUST APPROVE IN WRITING ANY BURIED WATER VALVES TO BE ADJUSTED TO GRADE BY THE CONTRACTOR. IF THE CONTRACTOR RAISES ANY BURIED WATER VALVES WITHOUT WRITTEN APPROVAL FROM THE VILLAGE OF GREEN CAMP THE WORK COMPLETED WILL BE AT THE CONTRACTOR'S EXPENSE.

THE CONTRACTOR SHALL REVIEW THE PROJECT ENGINEER'S LIST OF CASTINGS TO BE ADJUSTED TO GRADE BEFORE RESURFACING. ANY DISPUTES SHOULD BE BROUGHT TO THE PROJECT ENGINEER'S ATTENTION BEFORE THE PAVEMENT MILLING BEGINS; OTHERWISE THE CONTRACTOR ACCEPTS FULL RESPONSIBILITY FOR RAISING THE CASTINGS (EXCEPT THE BURIED WATER VALVES) THAT DO NOT MEET THE TOLERANCES DESCRIBED ABOVE.

ADJUSTING CASTINGS:
THE CONTRACTOR MAY USE AN EXTENSION RING OF THE TYPE APPROVED BY THE CITY TO RAISE MANHOLES THESE EXTENSION RINGS SHALL BE SECURED IN PLACE BY ASPHALT MASTIC. PROBLEM SITUATIONS, SUCH AS BROKEN CASTINGS OR CASTINGS FOR WHICH THERE ARE NO RINGS AVAILABLE, WILL BE RESOLVED BY ADJUSTING THE STRUCTURE TO GRADE WITHOUT A RING AFTER THE RESURFACING PROCESS. FOR A CASTING THAT IS ADJUSTED TO GRADE AFTER THE RESURFACING IS COMPLETED, THE PAVEMENT REPLACEMENT SHALL BE PORTLAND CEMENT CONCRETE BASE WITH 2 INCHES OF ASPHALT WEARING COURSE. THE FINISHED SURFACE AFTER THE ADJUSTMENT HAS BEEN COMPLETED SHALL BE HEAT - WELDED AS PER VILLAGE OF GREEN CAMP REQUIREMENTS. PAYMENT FOR THESE ITEMS IS TO BE INCLUDED IN THE PRICE BID FOR THE RESPECTIVE ITEM 604.

CALCULATED RDK
CHECKED CK

GENERAL NOTES

MAR-739-0.00

I:\Projects\mar\739\0000.008\25896\roadway\sheets\GENERAL NOTES.DGN SHEET_GN101 28-AUG-2007 11:18AM rkinsell

VALVE BOXES:
THE MINIMUM DIMENSION FOR SAW CUTTING THE PROPOSED VALVE BOX IS TWO FEET (WIDTH) BY FOUR FEET (LENGTH) ALL SAW CUTTING NECESSARY TO PERFORM THIS TASK WILL BE PAID FOR AT THE CONTRACT UNIT PRICE BID FOR THE ITEM NECESSITATING THE WORK. THE PRICE SHALL INCLUDE ALL SERVICES, MATERIALS, LABOR, EQUIPMENT, TOOLS, AND INCIDENTALS NECESSARY TO COMPLETE THIS ITEM OF WORK.

ALL CASTINGS THAT ARE IN THE PROCESS OF BEING RAISED SHALL BE PLATED OR OTHERWISE BE MADE SUITABLE TO CARRY TRAFFIC DURING NON - WORKING HOURS. IT IS THE RESPONSIBILITY OF THE CONTRACTOR TO POINT OUT ANY ADDITIONAL MANHOLES AND WATER VALVES TO THE PROJECT ENGINEER THAT ARE OUT OF TOLERANCE PRIOR TO MILLING OR THE COST OF ADJUSTING THESE WILL BE AT THE CONTRACTOR'S EXPENSE.

A TOLERANCE OF MINUS 1/2" WILL BE THE ACCEPTED TOLERANCE ON ALL MANHOLES AND WATER VALVES ADJUSTED TO GRADE PRIOR TO THE RESURFACING PROCESS. A TOLERANCE OF MINUS 1/4" WILL BE THE ACCEPTED TOLERANCE ON ALL MANHOLES AND WATER VALVES ADJUSTED TO GRADE AFTER THE RESURFACING PROCESS AS PART OF THIS CONTRACT.

A.D.A. RAMPS:
A.D.A. RAMPS ARE BEING CONSTRUCTED AS PART OF THIS PLAN. THE CONTRACTOR SHALL EXERCISE CAUTION WHEN WORKING OR OPERATING AROUND EXISTING ADA COMPLIANT RAMPS. IF THE CONTRACTOR DAMAGES ANY EXISTING A.D.A. CURB RAMPS OR RENDERS AN EXISTING A.D.A. COMPLIANT RAMP TO BE NON-COMPLIANT AS A RESULT OF NEGLIGENCE OR INADEQUATE CONSTRUCTION PRACTICE, THEN THE CONTRACTOR SHALL BE RESPONSIBLE FOR THE CORRECTION OF THE DEFICIENCY AT THE CONTRACTORS EXPENSE. THIS MAY INCLUDE, BUT IS NOT LIMITED TO, FULL REMOVAL AND REPLACEMENT OF THE RAMP, MILLING AND RESURFACING, ETC. NO EXCEPTIONS WILL BE GRANTED.

EXISTING MAILBOXES AND MAILBOX POSTS:
GREAT CARE SHALL BE TAKEN TO PREVENT DAMAGE TO ANY OF THE EXISTING MAILBOXES OR MAILBOX POSTS DURING THE PAVING OPERATIONS. ANY MAILBOX OR MAILBOX POST WHICH BECOMES DAMAGED BY THE CONTRACTOR'S PAVING OPERATIONS SHALL BE REMOVED AND REPLACED AT THE CONTRACTOR'S EXPENSE.

WATERSHED PROTECTION:
THE WORK ASSOCIATED WITH THIS PROJECT IS BEING PERFORMED WITHIN A SOURCE WATER PROTECTION AREA. IT IS ESSENTIAL THAT ALL ACTIVITIES ASSOCIATED WITH THIS WORK BE PERFORMED IN A MANNER CONSISTENT WITH BEST WATERSHED MANAGEMENT PRACTICES INCLUDING, BUT NOT LIMITED TO:

AREAS OF DISTURBED GROUND SHALL HAVE APPROPRIATE EROSION AND SEDIMENT CONTROLS. IF HAZARDOUS/TOXIC MATERIALS INCLUDING BUT NOT LIMITED TO FUELS, OILS, BITUMEN'S, PAINTS, SEALANTS OR OTHER CHEMICALS, ARE STORED ON SITE, THEY SHALL BE STORED IN A DOUBLE-CONTAINMENT MANNER. ALL EQUIPMENT REPAIRS, MAINTENANCE, AND MECHANICAL WORK THAT COULD RESULT IN THE RELEASE OF HAZARDOUS/TOXIC MATERIALS SHALL BE PERFORMED IN AN APPROPRIATELY CONTAINED AREA, PREFERABLY OFF SITE OR AN APPROPRIATE OFF-SITE FACILITY.

IN THE EVENT THAT ANY HAZARDOUS/TOXIC MATERIALS INCLUDING BUT NOT LIMITED TO FUELS, OILS, BITUMEN'S, PAINTS, SEALANTS, OR OTHER CHEMICALS ARE SPILLED, THE CONTRACTOR SHALL IMMEDIATELY NOTIFY THE OHIO EPA AND THE OHIO AMERICAN WATER COMPANY MARION. THE CONTRACTOR SHOULD BE PREPARED TO PROVIDE DETAILED INFORMATION RELATIVE TO THE TYPE AND QUANTITY OF MATERIAL THAT HAS BEEN SPILLED AS WELL AS THE EXACT LOCATION AND THE EXACT TIME AT WHICH THE SPILL OCCURRED.

THE CONTRACTOR SHALL BE SOLELY RESPONSIBLE FOR INFORMING ALL SUBCONTRACTORS AND OTHER AGENTS OF THESE RESPONSIBILITIES, PRECAUTIONS, AND PROHIBITIONS.

WATER QUALITY PROTECTION:
NO TOXIC OR HAZARDOUS MATERIALS SUCH AS SEALANTS, PAINT, SOLVENTS, CLEANING AGENTS, EARTHEN MATERIALS, WASTE-WATER, FUELS OR DEBRIS OF ANY KIND SHALL BE DISCHARGED TO ANY STREAMS, DRAINAGE COURSES, OR BODIES OF WATER. ALL ASPHALT OR CONCRETE GRINDINGS, EXCESS ASPHALTIC OR CONCRETE MATERIALS OR ANY OTHER DEBRIS GENERATED DURING RESURFACING OR OTHER SIMILAR ACTIVITIES SHALL BE NOT BE DISPOSED OF WITHIN A FLOOD PLAIN BELOW THE 100-YEAR FLOOD ELEVATION. THE CONTRACTOR SHALL TAKE GREAT CARE TO MINIMIZE THE POTENTIAL TO CONTAMINATE THE PUBLIC DRINKING WATER SUPPLY, ALL PROJECT RELATED REFUELING AND MAINTENANCE ACTIVITIES SHALL BE PERFORMED IN AN ENVIRONMENTALLY RESPONSIBLE MANNER AND ALL PRECAUTIONS NECESSARY TO PREVENT LIQUIDS USED TO REPAIR, CLEAN, SEAL, OR TREAT ANY BRIDGE STRUCTURE (I.E. PAINT, SEALER, SOLVENT) FROM ENTERING STREAMS, WETLANDS OR OTHER WATERS OF THE UNITED STATES AND TAKE THE APPROPRIATE ACTIONS IN THE EVENT OF A RELEASE. THE CONTRACTOR IS REQUIRED AND SHALL BE HELD RESPONSIBLE FOR THE CLEAN UP AND REMEDIATION OF ANY AND ALL SPILLS.

FIELD DRIVES AND OIL WELL DRIVES:
AN ESTIMATED QUANTITY OF GRAVEL HAS BEEN PROVIDED FOR THIS WORK UNDER ITEM 617 - SHOULDER RECONDITIONING MISC: RESHAPING SHOULDER ON PLAN SHEET 15/34 TO BE USED AS DIRECTED BY THE PROJECT ENGINEER TO PROVIDE A REASONABLE TRANSITION BETWEEN THE EXISTING DRIVEWAY AND THE PROPOSED ITEM 448 - ASPHALT CONCRETE, TYPE I, PG64-22. NO FIELD OR OIL WELL DRIVES SHALL BE PAVED. ALL GRADING, LABOR, MATERIAL, TOOLS, EQUIPMENT, AND INCIDENTALS NEEDED TO COMPLETE THE DRIVEWAY APPROACHES SHALL BE INCLUDED IN THE UNIT BID PRICE FOR ITEM 617 - SHOULDER RECONDITIONING MISC: RESHAPING SHOULDER.

SIDE STREETS, COUNTY AND TOWNSHIP ROADS, RESIDENCE AND COMMERCIAL DRIVEWAYS:
AN ESTIMATED QUANTITY OF ITEM 448 - ASPHALT CONCRETE SURFACE COURSE, TYPE I, PG64-22 HAS BEEN PROVIDED ON PLAN SHEET 15/34 TO BE USED AS DIRECTED BY THE PROJECT ENGINEER TO PAVE THE EXISTING DRIVE APPROACH AREAS AS SHOWN ON PLAN SHEET 4/34. THE APPROACH PAVING SHALL EXTEND A MINIMUM OF THREE FEET OR A DISTANCE GREATER THAN THREE FEET WHICH, SHALL BE DETERMINED BY THE PROJECT ENGINEER, TO PROVIDE A SMOOTH TRANSITION BETWEEN THE EXISTING DRIVEWAY AND THE PROPOSED ITEM 448 - ASPHALT CONCRETE, TYPE I, PG64-22. THE CONTRACTOR SHALL PROVIDE A BUTT JOINT AT ALL EXISTING ASPHALT OR CONCRETE DRIVEWAYS. SHOULD AN EXISTING ASPHALT DRIVEWAY APPROACH BE CONSIDERED BY THE PROJECT ENGINEER TO BE IN TO POOR CONDITION (LOOSE AND BROKEN UP MATERIAL) TO BE NORMALLY PAVED OVER. THE CONTRACTOR SHALL REMOVE AND REPLACE THE MINIMAL AMOUNT OF UNACCEPTABLE ASPHALT (LOOSE AND BROKEN UP MATERIAL) TO PROVIDE A REASONABLE TRANSITION BETWEEN THE EXISTING DRIVEWAY AND THE PROPOSED ITEM 448 - ASPHALT CONCRETE, TYPE I, PG64-22. ALL GRADING, TACK COAT, LABOR, MATERIAL, TOOLS, EQUIPMENT, INCIDENTALS AND THE REMOVAL OF LOOSE AND BROKEN UP MATERIAL TO COMPLETE THE DRIVEWAY APPROACHES SHALL BE INCLUDED IN THE UNIT BID PRICE FOR ITEM 448 - ASPHALT CONCRETE, TYPE I, PG64-22.

ITEM 202 - WALK REMOVED:
THIS ITEM IS A CONTINGENCY QUANTITY HAS BEEN PROVIDED AND SHALL BE USED AS DIRECTED BY THE PROJECT ENGINEER AT VARIOUS LOCATIONS IN CONJUNCTION WITH THE PLACEMENT OF THE A.D.A. RAMPS. THE CONTRACTOR SHALL PROVIDE ALL MATERIAL, LABOR, EQUIPMENT, AND HARDWARE NECESSARY TO REMOVE THE EXISTING SIDEWALK.

ITEM 202 - CURB REMOVED:
THIS ITEM IS A CONTINGENCY QUANTITY HAS BEEN PROVIDED AND SHALL BE USED AS DIRECTED BY THE PROJECT ENGINEER AT VARIOUS LOCATIONS IN CONJUNCTION WITH THE PLACEMENT OF THE A.D.A. RAMPS. THE CONTRACTOR SHALL PROVIDE ALL MATERIAL, LABOR, EQUIPMENT, AND HARDWARE NECESSARY TO REMOVE THE EXISTING CURB.

ITEM 251 - PARTIAL DEPTH PAVEMENT REPAIR, A.P.P.:
ALL AREAS TO BE REPAIRED SHALL BE LOCATED BY THE ENGINEER AND THE WORK PERFORMED PRIOR TO THE PERFORMANCE OF ITEM 254 - PAVEMENT PLANING OR THE PLACEMENT OF ITEM 448 - ASPHALT CONCRETE SURFACE COURSE, TYPE 1, PG64-22. THE REPAIR AREAS SHALL BE OF VARYING LENGTH AND THE AVERAGE WIDTH SHALL NOT BE LESS THAN 4 FEET IN WIDTH. THE DEPTH OF REPAIRS SHALL NOT EXCEED AN AVERAGE DEPTH OF 4 INCHES. ALL AREAS SHALL BE REFILLED WITH 5.5 INCHES OF ITEM 301 - ASPHALT CONCRETE BASE. IF BRICK PAVEMENT IS ENCOUNTERED AT DEPTH LESS THAN 4 INCHES THE CONTRACTOR SHALL USE GREAT CARE SO AS TO NOT DISTURB THE EXISTING BRICK PAVEMENT AND SHALL ADJUST THE DEPTH OF THE PAVEMENT REPAIR TO A DEPTH LESS THAN 4 INCHES. NO MORE PARTIAL DEPTH PAVEMENT REPAIR SHALL BE STARTED AND PERFORMED THAN CAN BE COMPLETED IN THE SAME WORKING DAY.

MAR-739
NORTHBOUND

SLM 1.11 TO SLM 1.15 X 4 FEET IN WIDTH	= 93.87 SQ.YD.
SLM 1.32 TO SLM 1.45 X 4 FEET IN WIDTH	= 305.07 SQ.YD.
SLM 1.55 TO SLM 1.71 X 4 FEET IN WIDTH	= 375.47 SQ.YD.
SLM 1.83 TO SLM 1.89 X 4 FEET IN WIDTH	= 140.80 SQ.YD.
SLM 2.00 TO SLM 2.03 X 4 FEET IN WIDTH	= 70.40 SQ.YD.
SLM 2.28 TO SLM 2.31 X 4 FEET IN WIDTH	= 70.40 SQ.YD.
SLM 2.55 TO SLM 2.73 X 4 FEET IN WIDTH	= 422.40 SQ.YD.
SLM 3.18 TO SLM 3.32 X 4 FEET IN WIDTH	= 328.53 SQ.YD.
SLM 4.80 TO SLM 4.85 X 4 FEET IN WIDTH	= 117.33 SQ.YD.
SLM 5.69 TO SLM 5.70 X 4 FEET IN WIDTH	= 23.47 SQ.YD.
SLM 6.36 TO SLM 6.40 X 4 FEET IN WIDTH	= 93.87 SQ.YD.

SOUTHBOUND

SLM 0.65 TO SLM 0.68 X 4 FEET IN WIDTH	= 70.40 SQ.YD.
SLM 1.45 TO SLM 1.48 X 4 FEET IN WIDTH	= 70.40 SQ.YD.
"AS DIRECTED BY THE ENGINEER"	= 517.60 SQ.YD.
ITEM 251 - PARTIAL DEPTH PAVEMENT REPAIR, A.P.P.:	= 2,700 SQ.YD.

ITEM 254 - PAVEMENT PLANING, ASPHALT CONCRETE:
THE CONTRACTOR SHALL BE TOTALLY RESPONSIBLE FOR ANY AND ALL DAMAGE TO THE CONTRACTORS EQUIPMENT THAT MAY RESULT FROM THE PLANING OPERATION, INCLUDING DAMAGE CAUSED BY CASTINGS AND LOOP DETECTORS. THE DEPTH OF PLANING CLOSE TO THE CASTINGS SHALL BE AS DIRECTED; TO ACHIEVE A SMOOTH RIDING FINISHED PAVEMENT. GREAT CARE SHALL BE TAKEN TO PREVENT THE REMOVAL OF THE EXISTING PAVEMENT CROSS-SLOPE (CROWN) DURING THE PLANING OPERATIONS.

ITEM 407 - TACK COAT:
THE RATE OF APPLICATION OF THE 407 TACK COAT SHALL BE SUBJECT TO ADJUSTMENT AS DIRECTED BY THE ENGINEER. FOR ESTIMATING PURPOSES ONLY, THE PLAN INDICATES AN AVERAGE APPLICATION RATE OF TACK COAT AT 0.075 GALLON PER SQUARE YARD. A COVER AGGREGATE SHALL BE USED IF HEAVY TRACKING OF THE TACK COAT ONTO THE EXISTING PAVEMENT SHOULD OCCUR DURING THE PAVING OPERATIONS. THE COST OF THE COVER AGGREGATE SHALL BE INCLUDED IN THE COST OF THIS ITEM.

ITEM 448 - ASPHALT CONCRETE SURFACE COURSE, TYPE 1, PG64-22:
GREAT CARE SHALL BE TAKEN TO MAINTAIN THE EXISTING PAVEMENT CROSS-SLOPE (CROWN) AND INTERSECTION CROSS-SLOPES (CROWN) DURING THE PAVING OPERATIONS.

ITEM 604 - MANHOLE ADJUSTED TO GRADE:
THIS ITEM IS A CONTINGENCY QUANTITY TO BE USED AS DIRECTED BY THE PROJECT ENGINEER AT VARIOUS LOCATIONS AND PROVIDE ALL MATERIAL, LABOR, EQUIPMENT, AND HARDWARE NECESSARY TO ADJUST TO GRADE THE EXISTING MANHOLE TO THE PROPOSED ASPHALT ELEVATION. THE FOLLOWING QUANTITY HAS BEEN PROVIDED AND THE TOTAL CARRIED TO THE GENERAL SUMMARY.

"AS DIRECTED BY THE ENGINEER" = 5 EACH

ITEM 604 - MANHOLE ADJUSTED TO GRADE: = 5 EACH

ITEM 604 - CATCH BASIN ADJUSTED TO GRADE:
THIS ITEM IS A CONTINGENCY QUANTITY TO BE USED AS DIRECTED BY THE PROJECT ENGINEER AT VARIOUS LOCATIONS AND PROVIDE ALL MATERIAL, LABOR, EQUIPMENT, AND HARDWARE NECESSARY TO ADJUST TO GRADE THE EXISTING CATCH BASIN TO THE PROPOSED ASPHALT ELEVATION. THE FOLLOWING QUANTITY HAS BEEN PROVIDED AND THE TOTAL CARRIED TO THE GENERAL SUMMARY.

"AS DIRECTED BY THE ENGINEER" = 5 EACH

ITEM 604 - CATCH BASIN ADJUSTED TO GRADE: = 5 EACH

ITEM 604 - MONUMENT ASSEMBLY:
THIS WORK SHALL CONSIST OF FURNISHING AND PLACING CENTERLINE MONUMENTS AT THE FOLLOWING INTERSECTIONS:

SR-739 AND TOWNSHIP RD. 75 (CENTERVILLE PROSPECT RD.)
SR-739 AND TOWNSHIP RD. 77 (CENTERVILLE GREEN CAMP RD.)
SR-739 AND COUNTY RD. 38 (LARUE GREEN CAMP RD.)
SR-739 AND COUNTY RD. 83 (PROSPECT UPPER SANDUSKY RD.)
SR-739 AND TOWNSHIP RD. 103 (JOHNSON RD.)
SR-739 AND SR-203
SR-739 AND COUNTY RD. 101 (CAMPBELL RD.)

A REGISTERED SURVEYOR FROM DISTRICT 6 SURVEY DEPARTMENT SHALL BE RESPONSIBLE FOR REFERENCING AND VERIFYING THE LOCATIONS OF THE CENTERLINE MONUMENTS. THE CONTRACTOR SHALL NOTIFY THE SURVEY DEPARTMENT (740-833-8250) 48 HOURS PRIOR TO START OF MONUMENT WORK. PAYMENT FOR THIS ITEM SHALL INCLUDE ALL NECESSARY LABOR, MISCELLANEOUS HARDWARE, AND EQUIPMENT REQUIRED FOR PLACEMENT. PAYMENT WILL BE AT CONTRACT BID PRICE PER EACH.

ITEM 604 - MONUMENT ASSEMBLY: = 7 EACH

ITEM 604 - MONUMENT BOX ADJUSTED TO GRADE:
THIS ITEM OF WORK WILL PROVIDE ALL MATERIAL, LABOR, EQUIPMENT, AND HARDWARE NECESSARY TO ADJUST TO GRADE THE EXISTING MONUMENT BOX TO 1/4 INCH BELOW THE PROPOSED ASPHALT ELEVATION AT THE FOLLOWING LOCATIONS.

SR-739 AND THE MARION AND UNION COUNTY LINE
SR-739 AND TOWNSHIP RD. 56 (CENTERVILLE RD.)
SR-739 AND COUNTY RD. 54 (RUTH RD.)

ITEM 604 - MONUMENT BOX ADJUSTED TO GRADE: = 3 EACH

ITEM 608 - 4" CONCRETE WALK:
THIS ITEM IS A CONTINGENCY QUANTITY TO BE USED AS DIRECTED BY THE PROJECT ENGINEER AT VARIOUS LOCATIONS TO PROVIDE ADEQUATE TRANSITIONS BETWEEN THE EXISTING SIDEWALK AND THE PROPOSED CURB RAMP. THIS ITEM SHALL INCLUDE THE COST OF FURNISHING ALL MATERIALS, GRADING, FORMING AND FINISHING OF THE SIDEWALK AT VARIOUS LOCATIONS AS SPECIFIED BY PLAN SHEETS 16/34 TO 21/34.

ITEM 609 - CURB, MISC. (VARIOUS TYPES OF CURBS):
THIS ITEM OF WORK SHALL CONSIST OF REPLACING VARIOUS TYPES OF CURB AND OR CURB AND GUTTER THAT ARE REMOVED BY THIS PROJECT FOR THE PLACEMENT OF THE PROPOSED A.D.A. CURB RAMPS. THIS ITEM SHALL BE USED TO PROVIDE ADEQUATE TRANSITIONS BETWEEN THE EXISTING CURB TYPE OR CURB AND GUTTER AND THE PROPOSED A.D.A. CURB RAMP. THIS ITEM SHALL INCLUDE THE COST OF FURNISHING ALL MATERIALS, GRADING, FORMING AND FINISHING OF THE CURB AT VARIOUS LOCATIONS AS SPECIFIED BY PLAN SHEETS 16/34 TO 21/34.

ITEM 617 - SHOULDER RECONDITIONING, MISC, (RESHAPING SHOULDER):
THIS ITEM OF WORK SHALL CONSIST OF LOOSENING THE EXISTING AGGREGATE SHOULDER TO DEPTH OF 1 TO 2 INCHES AND A AVERAGE WIDTH OF 1 FEET. RESHAPING AND COMPACTING THE LOOSENED MATERIAL AS NECESSARY TO MATCH THE PROPOSED ASPHALT SURFACE COURSE. THE FOLLOWING QUANTITIES HAVE BEEN PROVIDED TO ASSURE THAT THERE IS NO DROP-OFF AND SHALL BE USED AS DIRECTED BY THE PROJECT ENGINEER.

ITEM 617 - COMPACTED AGGREGATE:
"AS DIRECTED BY THE ENGINEER" = 496 CU. YDS.

ITEM 617 - WATER:
"AS DIRECTED BY THE ENGINEER" = 1 M/GAL.

ITEM 630 - REMOVAL OF GROUND MOUNTED POST SUPPORT AND DISPOSAL:
THIS ITEM OF WORK SHALL REMOVE THE EXISTING GROUND MOUNTED POST SUPPORT.

"AS DIRECTED BY THE PROJECT ENGINEER ON VARIOUS SIDE STREETS" = 6 EACH

ITEM 630 - REMOVAL OF GROUND MOUNTED POST SUPPORT AND DISPOSAL: = 6 EACH

ITEM 630 - REMOVAL OF GROUND MOUNTED SIGN AND REERECTION:
THIS ITEM OF WORK SHALL REMOVE THE EXISTING GROUND MOUNTED SIGNS AND REPLACE THE EXISTING SIGN.

"AS DIRECTED BY THE PROJECT ENGINEER ON VARIOUS SIDE STREETS" = 6 EACH

ITEM 630 - REMOVAL OF GROUND MOUNTED SIGN AND REERECTION: = 6 EACH

ITEM 630 - GROUND MOUNTED SUPPORT, NO. 3 POST:
THIS ITEM IS TO BE USED IN CONNECTION WITH ITEM 630 REMOVAL OF GROUND MOUNTED SIGN AND REERECTION.

"AS DIRECTED BY THE PROJECT ENGINEER ON VARIOUS SIDE STREETS" = 84 FEET

ITEM 630 - GROUND MOUNTED SUPPORT, NO. 3 POST: = 84 FEET

ITEM 623 - CONSTRUCTION LAYOUT STAKES, AS PER PLAN:
THIS ITEM SHALL CONSIST OF STATIONING USING 3 FT LATH STAKES OR PAINT MARKINGS. THE STAKES OR PAINT MARKINGS SHALL BE SPACED AT 100 FT INTERVALS AND EXTEND THROUGHOUT THE LENGTH OF THE PROJECT. PLACEMENT OF THE STAKES OR PAINT MARKINGS SHALL BE AS DIRECTED BY THE ENGINEER. THE CONTRACTOR IS RESPONSIBLE FOR REPLACING ANY DAMAGED, MISSING STAKES, OR PAINT MARKINGS. PAINT MARKINGS SHALL BE PLACED ON CURBS AND USED IN AREAS WERE THE PLACEMENT OF STAKES IS NOT POSSIBLE AND APPROVED BY THE PROJECT ENGINEER.

CONSTRUCTION LAYOUT STAKES, AS PER PLAN WILL BE PAID FOR AT THE CONTRACT LUMP SUM BID, WHICH PRICE SHALL BE FULL COMPENSATION FOR ALL SERVICES, MATERIALS, LABOR, EQUIPMENT, TOOLS, AND INCIDENTALS, INCLUDING THE REMOVAL, NECESSARY TO COMPLETE THIS ITEM.

ITEM 632 - DETECTOR LOOP:
THE LOCATIONS, SIZES AND SHAPES OF PROPOSED LOOP DETECTORS WILL BE THE SAME AS EXISTING. IT IS THE CONTRACTOR'S RESPONSIBILITY TO VERIFY THE LOCATION, SIZE AND SHAPE OF THE EXISTING LOOP DETECTORS LISTED IN THE PLAN BEFORE THE PAVEMENT PLANING DESTROYS THEM. ALL LOOP WIRE SHALL BE IDENTIFIED WITH A PLASTIC TAG (WBLT, EBRT, ETC.) AT THE SPLICE POINT OR AT ENTRANCE TO THE CONTROL CABINET. WHEN A PULLBOX IS NOT USED, THE SOLDERED SPLICE SHALL BE MADE IN AN ANCHOR BASE, STRAIN POLE OR A CONDUIT RISER SPECIFIED BY THE PROJECT ENGINEER, EXCEPT WHERE A CONTROLLER CABINET IS MOUNTED ON THAT POLE IN WHICH CASE THE LOOP WIRE SHALL BE ROUTED DIRECTLY INTO THE CABINET. THE CONTRACTOR SHALL PROVIDE THE PROJECT ENGINEER PRIOR TO THE COMMENCEMENT OF WORK, A COPY OF THE IMSA CERTIFICATION PAPERS FOR ALL SIGNAL TECHNICIANS WORKING ON THIS PROJECT. THE CONTRACTOR SHALL ALSO CONTACT THE TRANSPORTATION DIVISION SIGNALS MANAGEMENT ENGINEER AT LEAST FORTY-EIGHT HOURS (EXCLUDING SAT & SUN) IN ADVANCE OF THIS ITEM OF WORK. ALL DETECTOR LOOPS SHALL BE REPLACED AND FUNCTIONAL WITHIN 48 HOURS OF BEING REMOVED. THE CONTRACTOR SHALL ALSO PROTECT ANY INLET OR CATCH BASIN FROM FOREIGN MATERIAL OR CONSTRUCTION DEBRIS ENTERING THE INLET OR CATCH BASIN WHILE CUTTING DETECTOR LOOPS.

OHIO DEPARTMENT OF TRANSPORTATION
TOM JACOBY
400 EAST WILLIAM STREET
DELAWARE, OHIO 43015
1-740-833-8332

"AS DIRECTED BY THE ENGINEER" = 4 EACH

ITEM 632 - DETECTOR LOOP: = 4 EACH

ITEM 632 - LOOP DETECTOR TIE IN:
THIS ITEM SHALL BE USED TO CONNECT AND SPLICE THE PROPOSED LOOP DETECTORS TO THE APPROPRIATE EXISTING LEAD IN CABLE INSIDE THE PULL BOX.

"AS DIRECTED BY THE ENGINEER" = 4 EACH

ITEM 632 - LOOP DETECTOR TIE IN: = 4 EACH

ITEM 638 - VALVE BOX ADJUSTED TO GRADE:
THIS ITEM IS A CONTINGENCY QUANTITY TO BE USED AS DIRECTED BY THE PROJECT ENGINEER AT VARIOUS LOCATIONS AND PROVIDE ALL MATERIAL, LABOR, EQUIPMENT, AND HARDWARE NECESSARY TO ADJUST TO GRADE THE EXISTING VALVE BOX TO THE PROPOSED ASPHALT ELEVATION. THE FOLLOWING QUANTITY HAS BEEN PROVIDED AND THE TOTAL CARRIED TO THE GENERAL SUMMARY.

"AS DIRECTED BY THE ENGINEER" = 5 EACH

ITEM 638 - VALVE BOX ADJUSTED TO GRADE: = 5 EACH

ITEM 642 - CENTER LINE:
THE PROPER PLACEMENT OF ALL PASSING AND NO PASSING ZONES AS SHOWN ON PLAN SHEETS 25/34 THROUGH 30/34 AND SHALL BE CONFIRMED BY THE CONTRACTOR AND PLACED BY USING THE CONTROL POINTS SHOWN ON THE PLAN SHEETS LISTED ABOVE. THIS COULD BE DIFFERENT THAN THE SLD'S SHOWN ON SHEET 2/34. ALL START AND STOP SLM LOCATIONS SHALL BE WITHIN 0.005 MILES OF THE LOCATIONS SHOWN ON THE PLAN SHEETS LISTED ABOVE. A LETTER OF VERIFICATION OF ALL PASSING AND NO PASSING ZONES SHALL BE SUBMITTED TO THE PROJECT ENGINEER FOR PLACEMENT IN THE PROJECT RECORDS. ANY IMPROPERLY PLACED PASSING OR NO PASSING ZONES SHALL BE IMMEDIATELY CORRECTED.

ITEM 644 - THERMOPLASTIC PAVEMENT MARKING:
THE LOCATIONS, SIZES AND SHAPES OF PROPOSED PAVEMENT MARKINGS WILL BE THE SAME AS EXISTING. IT IS THE CONTRACTOR'S RESPONSIBILITY TO VERIFY THE LOCATION, SIZE AND SHAPE OF THE EXISTING PAVEMENT MARKINGS BEFORE THE PAVEMENT PLANING AND RESURFACING OBLITERATES THEM. ANY PAVEMENT MARKING WHICH IS PLACED AT THE WRONG LOCATION SHALL BE REMOVED AND REPLACED AT THE CONTRACTORS EXPENSE.

ITEM 653 - TOPSOIL FURNISHED AND PLACED:
THIS ITEM OF WORK SHALL BE USED TO REPAIR ANY DAMAGED GRASSY AREAS DUE TO THE PLACEMENT OF THE A.D.A. CURB RAMPS AND SHALL BE USED AS DIRECTED BY THE PROJECT ENGINEER. THE FOLLOWING QUANTITY HAS BEEN PROVIDED AND THE TOTAL HAS BEEN CARRIED TO THE GENERAL SUMMARY.

A.D.A. CURB RAMP AREAS
15 CU.YD. PER LOCATION X 15 LOCATIONS = 15 CU.YDS.

ITEM 653 - TOPSOIL FURNISHED AND PLACED: = 15 CU.YDS.

ITEM 659 - SEEDING AND MULCHING, CLASS 1:
THIS ITEM SHALL BE USED TO REPAIR ANY DAMAGED AREAS AROUND THE A.D.A. CURB RAMP REPLACEMENT AREAS. THE FOLLOWING QUANTITY HAS BEEN PROVIDED AND THE TOTAL HAS BEEN CARRIED TO THE GENERAL SUMMARY.

"AS DIRECTED BY THE PROJECT ENGINEER" = 780 SQ.YDS.

ITEM 659 - SEEDING AND MULCHING = 780 SQ.YDS.

ITEM 659 - COMMERCIAL FERTILIZER:
THIS ITEM SHALL BE USED TO REPAIR ANY DAMAGED AREAS AROUND THE CURB RAMP REPLACEMENT AREAS. THE FOLLOWING QUANTITY HAS BEEN PROVIDED AND THE TOTAL HAS BEEN CARRIED TO THE GENERAL SUMMARY.

AREA OF SEEDING AND MULCHING = 780 SQ.YDS.
APPLICATION #1
780 / 1,000 X 20 / 2,000 = 0.01 TON

APPLICATION #2
780 / 1,000 X 10 / 2,000 = 0.01 TON

ITEM 659 - COMMERCIAL FERTILIZER: = 0.02 TON

ITEM 659 - WATER:
THIS ITEM SHALL BE USED TO REPAIR ANY DAMAGED AREAS AROUND THE CURB RAMP REPLACEMENT AREAS. THE FOLLOWING QUANTITY HAS BEEN PROVIDED AND THE TOTAL HAS BEEN CARRIED TO THE GENERAL SUMMARY.

AREA OF SEEDING AND MULCHING = 780 SQ.YDS.
780 SQ.YDS. / 1,000 X 300 GAL = 234 GALLONS
234 GALLONS X 2 APPLICATIONS = 468 GALLONS

ITEM 659 - WATER: = 0.5 M/GAL

CALCULATED RDK
CHECKED CK

GENERAL NOTES

MAR-739-0.00

I:\Projects\mar\739\0000.008\25896\roadway\sheets\GENERAL NOTES.DGN SHEET_GN104 28-AUG-2007 11:20AM rkinsell

UNDERGROUND UTILITIES AND UTILITIES OWNERSHIP:
THE IDENTITY AND THE LOCATION OF SOME OF THE EXISTING UNDERGROUND FACILITIES KNOWN TO BE LOCATED IN THE CONSTRUCTION AREA HAVE BEEN IDENTIFIED. THE CONTRACTOR SHALL GIVE NOTICE OF INTENT TO CONSTRUCT TO THE OHIO UTILITIES PROTECTION SERVICE, PRODUCERS UNDERGROUND PROTECTION SERVICE, AND OWNERS OF UNDERGROUND FACILITIES THAT ARE NOT MEMBERS OF A REGISTERED PROTECTION SERVICE IN ACCORDANCE WITH SECTION 153.64 OF THE OHIO REVISED CODE. THE ABOVE, MENTIONED NOTICE SHALL BE GIVEN AT LEAST TWO WORKING DAYS PRIOR TO THE START OF CONSTRUCTION THE FOLLOWING UTILITIES ARE LOCATED WITHIN THE WORK LIMITS OF THE PROJECT AND THE OWNERS SUBSCRIBE TO REGISTERED UNDERGROUND PROTECTION SERVICE.

OHIO UTILITY PROTECTION SERVICE 1-800-362-2764
PRODUCERS UNDERGROUND PROTECTION SERVICE 1-614-587-0486
NON-MEMBERS MUST BE CALLED DIRECTLY.

LISTED BELOW ARE THE KNOWN UTILITIES LOCATED WITHIN THE PROJECT CONSTRUCTION LIMITS TOGETHER WITH THEIR RESPECTIVE OWNERS.

AEP
850 TECH CENTER DRIVE
GAHANNA, OH 43230-6605
614.883.6829
614.883.6868 - FAX

AEP
2622 SOUTH STATE ROUTE 100
TIFFIN, OH 44883
419.443.4606

AEP - COMMUNICATIONS
1 RIVERSIDE PLAZA
COLUMBUS, OH 43215
614.716.2531

AEP(COLUMBUS SOUTHERN POWER/OHIO POWER)
700 MORRISON ROAD
GAHANNA, OH 43230
614.552.1180
614.552.1818 - FAX

AEP
1 RIVERSIDE PLAZA - 12TH FLOOR
COLUMBUS, OH 43215
614.716.5884

AT&T COMMUNICATIONS (LONG DISTANCE)
705-F LAKEVIEW PLAZA BOULEVARD
WORTHINGTON, OH 43085
630.552.4677
847.244.9597

AT&T LOCAL NETWORK SERVICES
2152 SOUTH 114TH STREET - SUITE A
WEST ALLIS, WI 53227
414.290.9827

AT&T
111 NORTH FOURTH STREET - 8TH FLOOR
COLUMBUS, OH 43215
614.223.7162
614.223.5579 - FAX

AT&T
111 NORTH FOURTH STREET - 8TH FLOOR
COLUMBUS, OH 43215
614.223.4078
614.223.4105 - FAX

BP OIL COMPANY (BP/STANDARD/SOHIO)
4421 BRADLEY ROAD
CLEVELAND, OH 44109
216.912.2563

BRIGHT ENERGY
5255 STATE ROUTE 95
PO BOX 111
MT. GILEAD, OH 43338-0111
419.947.3055

BUCKEYE PIPELINE COMPANY, LP
5002 BUCKEYE ROAD
PO BOX 368
EMMAUS, PA 18049
610.770.5215
1.800.523.9420

CITY OF COLUMBUS (DIVISION OF COMMUNICATIONS)
220 GREENLAWN AVENUE
COLUMBUS, OH 43223
614.645.7345 - EXTENSION 124
614.645.4819 - FAX

CITY OF COLUMBUS (DIVISION OF ELECTRICITY)
DIVISION OF POWER AND WATER
3500 INDIANOLA AVENUE
COLUMBUS, OH 43214
614.645.7534
614.645.5814 - FAX

CITY OF COLUMBUS (DIVISION OF SEWERAGE AND DRAINAGE)
1250 FAIRWOOD AVENUE
COLUMBUS, OH 43206
614.645.7175
614.645.1840 - FAX

CITY OF COLUMBUS (DIVISION OF TELECOMMUNICATIONS)
90 WEST BROAD STREET - 3D FLOOR
COLUMBUS, OH 43215
614.645.1501
614.645.5880 - FAX

CITY OF COLUMBUS (DIVISION OF POWER AND WATER)
910 DUBLIN ROAD
COLUMBUS, OH 43215
614.645.7677
614.645.6165 - FAX

CITY SIGNAL COMMUNICATIONS, INC.
5 GREAT VALLEY PARKWAY - SUITE 180
MALVERN, PA 19355
484.527.0140 - EXT. 279
484.527.0150 - FAX

CITYNET LLC
779 BROOKSEDGE BOULEVARD
WESTERVILLE, OH 43081
614.364.7826
304.848.5410 - FAX

COLUMBIA GAS OF OHIO
920 WEST GOODALE BOULEVARD
COLUMBUS, OH 43212
614.460.2121
614.365.3406 - FAX

COLUMBIA GAS OF OHIO
920 WEST GOODALE BOULEVARD
COLUMBUS, OH 43212
614.460.2170
614.365.3406 - FAX

COLUMBIA GAS OF OHIO
920 WEST GOODALE BOULEVARD
COLUMBUS, OH 43212
614.460.2172
614.365.3406 - FAX

COLUMBIA GAS OF OHIO
920 WEST GOODALE BOULEVARD
COLUMBUS, OH 43212
614.460.2169
614.365.3406 - FAX

COLUMBIA GAS OF OHIO
920 WEST GOODALE BOULEVARD
COLUMBUS, OH 43212
614.460.2240

COLUMBIA GAS OF OHIO
843 PIATT AVENUE
CHILLICOTHE, OH 45601
740.772.9131

COLUMBIA GAS OF OHIO
902 WEST GOODALE BOULEVARD
COLUMBUS, OH 43212
614.460.2120

COLUMBIA GAS TRANSMISSION CORPORATION
301 MAPLE STREET
SUGAR GROVE, OH 43155
740.746.2297

COLUMBUS FIBERNET LLC
1810 WALCUTT ROAD
COLUMBUS, OH 43228
614.274.8100
614.274.6795

CONSOLIDATED ELECTRIC COOPERATIVE, INC.
5255 STATE ROUTE 95
PO BOX 111
MT. GILEAD, OH 43338-0111
419.947.3055 OR 1.800.421.5863

THE DAYTON POWER AND LIGHT COMPANY
1900 DRYDEN ROAD
DAYTON, OH 45439
937.331.4497
937.331.4173 - FAX

DEL-CO WATER COMPANY
6773 OLENTANGY RIVER ROAD
DELAWARE, OH 43015-8872
740.548.7746
740.548.6203 - FAX

DOMINION TRANSMISSION
445 WEST MAIN STREET
PO BOX 2450
CLARKSBURG, WV 26302-2450
304.627.3439
304.627.3492 - FAX

DUBLINK DEVELOPMENT COMPANY, LLC
1810 ARLINGATE LANE
COLUMBUS, OH 43228
614.274.8100
614.274.6795 - FAX

EARNHART HILL REGIONAL WATER AND SEWER
P. O. BOX 151
CIRCLEVILLE, OH 43113
740.474.3114

DUKE ENERGY
(PANHANDLE EASTERN PIPE LINE COMPANY)
(TEXAS EASTERN TRANSMISSION CORPORATION/TRUNKLINE GAS COMPANY)
5444 WESTHEIMER - WT 610
PO 1642
HOUSTON, TX 77251-1642
713.989.2232
713.989.2260 - FAX

EMBARQ
15 EAST GAMBIER
MT. VERNON, OH 43050
740.397.3610

EMBARQ
441 WEST BROAD STREET
PATASKALA, OH 43062
740.927.8282
740.964.0145 - FAX

EMBARQ
127 NORTH MAIN STREET
BELLEFONTAINE, OH 43311
937.599.9285
937.599.1812 - FAX

FIBERTECH NETWORKS
140 ALLENSCREEK ROAD
ROCHESTER, NY 14618
585.697.5145
585.242.9807 - FAX

FIRST ENERGY (OHIO EDISON COMPANY)
420 SOUTH YORK STREET
SPRINGFIELD, OH 45505
937.327.1235
937.327.1228 - FAX

FRANKLIN COUNTY SANITARY ENGINEER
280 EAST BROAD - 2D FLOOR
COLUMBUS, OH 43215
614.462.3940

HIGHLAND COUNTY WATER COMPANY
P. O. BOX 940
HILLSBORO, OH 45133
937.393.4281

HORIZON TELEPHONE COMPANY
P. O. BOX 480
CHILLICOTHE, OH 45601
740.772.8287

ICG COMMUNICATIONS
4500 ROCKSIDE WOOD BOULEVARD - SUITE 130
INDEPENDENCE, OH 43227
216.377.3010

INSIGHT COMMUNICATIONS
3770 EAST LIVINGSTON AVENUE
COLUMBUS, OH 43227
614.501.9432 EXTENSION 211
614.236.1737 - FAX

LEVEL 3 COMMUNICATIONS
226 NORTH FIFTH - SUITE 100
COLUMBUS, OH 43215
614.469.9657

LEVEL 3 COMMUNICATIONS
100 SOUTH CINCINNATI AVENUE
TULSA, OK 74103
918.547.9919
918.547.8018 - FAX

MADISON ENERGY COOPERATIVE ASSOCIATION
5900 MAYFAIR ROAD, NW
NORTH CANTON, OH 44720
330.498.9130
330.498.9137 - FAX

MARATHON-ASHLAND PIPE LINE COMPANY
539 SOUTH MAIN STREET - ROOM 183M
FINDLAY, OH 45840-3295
419.421.2211

VERIZON BUSINESS
DEPT 42864 LOC 107
2400 NORTH GLENVILLE
RICHARDSON, TX 75082
972.729.6016
972.729.6240 - FAX

MID OHIO ENERGY COOPERATIVE, INC.
2859 MARION UPPER SANDUSKY ROAD
PO BOX 501
MARION, OH 43302
1.888.362.6732

NATIONWIDE ENERGY PARTNERS
2800 CORPORATE EXCHANGE DRIVE - SUITE 400
COLUMBUS, OH 43231
614.918.2108

OHIO AMERICAN WATER COMPANY
5481 BUENOS AIRES BOULEVARD
WESTERVILLE, OH 43081
614.882.6586

PIONEER RURAL ELECTRIC COOPERATIVE, INC.
344 WEST UNITED STATES ROUTE 36
PO BOX 604
PIQUA, OH 45356
937.773.2523

VILLAGE OF PROSPECT - ELECTRIC DEPARTMENT
139 NORTH MAIN STREET
PROSPECT, OH 43342
740.494.2115

QWEST COMMUNICATIONS
1860 LINCOLN STREET - SUITE 200
DENVER, CO 80295-1001
303.837.3928

SHELL PIPELINE CORPORATION
PO BOX 68099
INDIANAPOLIS, IN 46268
317.872.7440

SOUTH CENTRAL POWER COMPANY
2780 COONPATH ROAD
LANCASTER, OH 43130
740.689.6119

SOUTH EASTERN NATURAL GAS
OHIO OIL GATHERING
PO BOX 430
FRAZEYSBURG, OH 43822
740.828.2892

SPRINT COMMUNICATIONS (LONG DISTANCE TELECOMMUNICATIONS)
11815 HIGHWAY DRIVE - SUITE 400
CINCINNATI, OH 45241
513.459.5761
513.254.4348 - FAX

SUBURBAN NATURAL GAS, INC.
2626 LEWIS CENTER ROAD
LEWIS CENTER, OH 43035-9206
740.548.2450

TEPPCO (TEXAS EASTERN PRODUCTS PIPELINE CORPORATION)
PO BOX 426
SEYMOUR, IN 47274-0426
812.522.2569
812.522.1298 - FAX

LEVEL 3 COMMUNICATIONS
580 NORTH 4TH STREET - SUITE 100
COLUMBUS, OH 43215
614.441.0005
614.441.0101 - FAX

TIME WARNER COMMUNICATIONS
1266 DUBLIN ROAD
PO BOX 2553
COLUMBUS, OH 43216-2553
614.481.5263
614.481.5283 - FAX

TIME WARNER TELECOM
250 W. OLD WILSON BRIDGE RD - SUITE 130
WORTHINGTON, OH 43085
614.255.2127
614.255.2665 - FAX

UNION RURAL ELECTRIC COOPERATIVE, INC.
15461 US 36 E
PO BOX 393
MARYSVILLE, OH 43040-4239
937.642.1826
937.644.4239 - FAX

VECTREN
20 N. W. FOURTH STREET
EVANSVILLE, IN 44708-1724
812.491.4765
812.491.4656 - FAX

VERIZON
550 LEADER STREET
MARION, OH 43302
740.383.0527

VERIZON
100 IOWA STREET
GEORGETOWNE, OH 45121
937.378.4163

VERIZON
500 LANCASTER PIKE
CIRCLEVILLE, OH 43113
740.474.7197

WOW! INTERNET AND CABLE
3675 CORPORATE DRIVE
COLUMBUS, OH 43231
614.948.4653
614.948.4620 - FAX

XO COMMUNICATIONS
10 WEST BROAD STREET - SUITE 310
COLUMBUS, OH 43215
614.416.1169
614.416.9269 - FAX

CALCULATED RDK
CHECKED CK

UTILITY NOTES

MAR-739-0.00

I:\Projects\mar\739\0000.008\25896\roadway\sheets\GENERAL NOTES.DGN SHEET_UN102 28-AUG-2007 11:21AM rkinsell

GENERAL:
ALL TRAFFIC CONTROL DEVICES SHALL BE FURNISHED, ERECTED, MAINTAINED, AND REMOVED BY THE CONTRACTOR IN ACCORDANCE WITH THE OHIO MANUAL OF UNIFORM TRAFFIC CONTROL DEVICES (CURRENT EDITION). COPIES ARE AVAILABLE FROM,

THE OHIO DEPARTMENT OF TRANSPORTATION
THE OFFICE OF TRAFFIC ENGINEERING,
1980 WEST BROAD STREET
COLUMBUS, OHIO 43223

THE CONTRACTOR SHALL NOT ORDER MATERIALS OR PERFORM WORK LISTED IN THE GENERAL SUMMARY FOR ITEMS DESIGNATED BY PLAN NOTE TO BE USED "AS DIRECTED BY THE ENGINEER" UNLESS AUTHORIZED BY THE ENGINEER.

CONSTRUCTION OPERATIONS SHALL NOT BEGIN UNTIL ALL TRAFFIC CONTROL IS IN PLACE AND APPROVED BY ODOT PERSONNEL. THE CONSTRUCTION INSPECTOR SHALL APPROVE ALL TEMPORARY TRAFFIC CONTROL DEVICES FOR CONDITION AND LOCATION BEFORE THE CONTRACTOR WILL BE ALLOWED TO BEGIN WORK. IF THE CONTRACTOR DOES NOT COMPLY WITH THE STANDARDS, HIS PERMIT SHALL BE REVOKED AND ALL WORK SHALL BE TERMINATED.

USE OF STANDARD DRAWINGS:
FOR THE PURPOSE OF THIS PROJECT, "MOVING OPERATION" SHALL BE LIMITED TO PAVEMENT MARKING STRIPING.

IT MAY BE NECESSARY TO EXTEND THE ADVANCE WARNING AND BUFFER ZONES BEYOND THE MINIMUM DISTANCES SHOWN ON THE STANDARD DRAWINGS. THIS MAY BE DUE TO HORIZONTAL ALIGNMENT, VERTICAL ALIGNMENT, RAMP LOCATIONS, OR OTHER SIGHT OBSTRUCTIONS. LOCATIONS OF THE TAPER ZONES MAY BE ADJUSTED AS DIRECTED BY THE ENGINEER, BUT TAPER LENGTHS MUST MEET THE MINIMUM STANDARDS. TAPERS SHOULD BE PLACED IN TANGENT SECTIONS WHENEVER POSSIBLE. ADDITIONAL YIELD SIGNS MAY BE REQUIRED FOR RAMPS WITHIN 1,000 FEET OF A WORK ZONE. PAYMENT SHALL BE INCLUDED IN THE LUMP SUM CONTRACT PRICE FOR ITEM 614 - MAINTAINING TRAFFIC.

FOR ANY MULTILANE HIGHWAY, DEVICE SPACING SHALL BE A MAXIMUM OF 40' CENTER ON CENTER IN THE TAPERS AND 80' CENTER ON CENTER IN THE TANGENT SECTIONS.

PUBLIC NOTIFICATION:
THE CONTRACTOR IS TO BE RESPONSIBLE FOR NOTIFYING, BY LETTER WITH HIS COMPANY LETTERHEAD, RESIDENTS, AND BUSINESSES ON STREETS TO BE RESURFACED. ADVANCED NOTICE SHALL BE TWO WEEKS PRIOR TO THE FIRST DAY OF WORK ON THAT STREET. A COPY OF THE LETTER TO BE CIRCULATED SHALL BE PRESENTED AT THE PRE-CONSTRUCTION MEETING. THE CONTRACTOR IS TO NOTIFY THE PROJECT ENGINEER OF THE DATES WHEN THIS NOTIFICATION IS DISTRIBUTED.

THE CONTRACTOR IS RESPONSIBLE TO POST "EMERGENCY - NO PARKING" SIGNS, PER VILLAGE OF GREEN CAMP, 72 HOURS PRIOR TO BEGINNING ANY WORK ON THE STREET. THE "EMERGENCY - NO PARKING" SIGNS CAN BE POSTED FOR A MAXIMUM DURATION OF FOUR DAYS IF THE WORK IS NOT COMPLETED WITHIN THE FOUR DAY PERIOD, THE CONTRACTOR IS RESPONSIBLE FOR REMOVING THE SIGNS AND REPOSTING THEM AT A LATER DATE. ALL COSTS FOR REPOSTING THE SIGNS SHALL BE PAID FOR BY THE CONTRACTOR.

STREET EXCAVATION / OCCUPATION PERMIT:
PRIOR TO THE CLOSURE OF ANY PORTION OF THE ROADWAYS WITHIN THE VILLAGE OF GREEN CAMP, THE CONTRACTOR SHALL OBTAIN AND SUBMIT "THE PERMIT FOR STREET OPENING AND/OR BARRICADING" PERMIT TO THE VILLAGE OF GREEN CAMP ENGINEER FOR COMPLETION AND ISSUING. THE ABOVE SUBMISSION SHALL BE MADE A MINIMUM OF FIVE WORKING DAYS PRIOR TO THE ANTICIPATED DATE OF BARRICADING. THE PERMIT SHOWS THE REQUIREMENTS FOR SPECIAL DUTY POLICE. A COPY OF THIS PERMIT SHALL ALSO BE GIVEN TO THE PROJECT ENGINEER.

STREET EXCAVATION / OCCUPATION PERMITS MUST BE OBTAINED BY THE CONTRACTOR AT LEAST FIVE DAYS PRIOR TO BEGINNING WORK FROM THE VILLAGE OF GREEN CAMP (740-528-2108). DETAILED MAINTENANCE OF TRAFFIC DRAWINGS MAY BE REQUIRED AS PART OF THE PERMIT PROCESS.

USE OF WEIGHTED CHANNELIZER:
THE WEIGHTED CHANNELIZER MAY BE USED IN ACCORDANCE WITH THIS SECTION. THE WEIGHTED CHANNELIZER SHALL BE PREDOMINANTLY ORANGE IN COLOR AND SHALL BE MADE OF LIGHTWEIGHT, FLEXIBLE, AND DEFORMABLE MATERIAL. THEY SHALL BE AT LEAST 42 INCHES IN HEIGHT WITH A WEIGHTED BASE. THEY MAY HAVE A HANDLE OR LIFTING DEVICE, WHICH EXTENDS ABOVE THE 42" MINIMUM HEIGHT.

THE MARKINGS ON THE WEIGHTED CHANNELIZER SHALL BE HORIZONTAL, CIRCUMFERENTIAL, ALTERNATING ORANGE AND WHITE RETRO REFLECTIVE STRIPES 6 INCHES WIDE. EACH WEIGHTED CHANNELIZER SHALL HAVE A MINIMUM OF TWO ORANGE AND TWO WHITE STRIPES. ANY NON-RETRO REFLECTIVE SPACES BETWEEN THE HORIZONTAL ORANGE AND WHITE STRIPES SHALL NOT EXCEED 2 INCHES WIDE. THE WEIGHTED CHANNELIZER SHALL HAVE A 4-INCH MINIMUM WIDTH, REGARDLESS OF ORIENTATION.

USE OF WEIGHTED CHANNELIZERS ON FREEWAYS AND MULTILANE HIGHWAYS SHALL BE LIMITED TO SHORT-TERM OPERATION FOR EITHER DAY OR NIGHT. UPON COMPLETION OF WORK, THE WEIGHTED CHANNELIZERS SHALL BE REMOVED. THE WEIGHTED CHANNELIZERS MAY AGAIN BE PLACED ON THE HIGHWAY WHEN THE WORK IS TO RESUME ON THE FOLLOWING DAY OR NIGHT. ANY LANE CLOSURE USING CHANNELIZATION DEVICES, EXPECTED TO REMAIN FOR MORE THAN TWELVE HOURS, SHALL REQUIRE THE USE OF DRUMS OR BARRIERS. WORK IS TO RESUME ON THE FOLLOWING DAY OR NIGHT.

WHEN USED AT NIGHT, WEIGHTED CHANNELIZERS SHALL ONLY BE PLACED IN THE TANGENT AREA. THE TANGENT AREA IS DEFINED AS THE AREA AFTER THE TRANSITION TAPER WHERE THE WORK TAKES PLACE. DRUMS SHALL BE USED IN THE TRANSITION TAPERS FOR NIGHT OPERATIONS. MAXIMUM SPACING OF THE WEIGHTED CHANNELIZER SHALL BE 40 FEET.

STEPS SHOULD BE TAKEN TO ENSURE THAT THE WEIGHTED CHANNELIZERS WILL NOT BE BLOWN OVER OR DISPLACED BY WIND OR MOVING TRAFFIC. BALLASTS SHOULD NOT PRESENT A HAZARD IF THE WEIGHTED CHANNELIZERS ARE INADVERTENTLY STRUCK, NOR SHOULD THEY AFFECT THE VISIBILITY OF THE WEIGHTED CHANNELIZERS. ALL BALLASTS USED SHOULD BE IN ACCORDANCE WITH THE MANUFACTURER'S SPECIFICATIONS.

ITEM 614 - MAINTAINING TRAFFIC:
THE CONTRACTOR SHALL SUBMIT FOR APPROVAL, TO THE DISTRICT SIX MAINTENANCE OF TRAFFIC COORDINATOR, THE CONTRACTOR'S MAINTENANCE OF TRAFFIC PLAN WITH CONSTRUCTION PHASING DESCRIPTIONS, PRIOR TO BEGINNING WORK.

URBAN PAVING AREA (WITHIN THE VILLAGE OF GREEN CAMP):
TWO WAY TRAFFIC SHALL BE MAINTAINED AT ALL TIMES EXCEPT THAT FOR MINIMUM PERIODS OF TIME CONSISTENT WITH THE REQUIREMENTS OF THE SPECIFICATIONS FOR PROTECTION OF THE COMPLETED ASPHALT CONCRETE COURSES. WORK ZONES SHALL BE LIMITED IN LENGTH TO THE AMOUNT OF WORK THAT CAN BE PERFORMED THAT DAY.

LENGTH AND DURATION OF LANE CLOSURES AND RESTRICTIONS SHALL BE AT THE APPROVAL OF THE ENGINEER. IT IS THE INTENT TO MINIMIZE THE IMPACT TO THE TRAVELING PUBLIC. LANE CLOSURES OR RESTRICTIONS OVER SEGMENTS OF THE PROJECT IN, WHICH NO WORK IS ANTICIPATED WITHIN A REASONABLE TIME FRAME, AS DETERMINED BY THE ENGINEER, SHALL NOT BE PERMITTED. THE LEVEL OF UTILIZATION OF MAINTENANCE OF TRAFFIC DEVICES SHALL BE COMMENSURATE WITH THE WORK IN PROGRESS.

RURAL PAVING AREA:
TWO WAY TRAFFIC SHALL BE MAINTAINED AT ALL TIMES EXCEPT THAT FOR MINIMUM PERIODS OF TIME CONSISTENT WITH THE REQUIREMENTS OF THE SPECIFICATIONS FOR PROTECTION OF THE COMPLETED ASPHALT CONCRETE COURSES. WORK ZONES SHALL BE LIMITED IN LENGTH TO THE AMOUNT OF WORK THAT CAN BE PERFORMED THAT DAY.

LENGTH AND DURATION OF LANE CLOSURES AND RESTRICTIONS SHALL BE AT THE APPROVAL OF THE ENGINEER. IT IS THE INTENT TO MINIMIZE THE IMPACT TO THE TRAVELING PUBLIC. LANE CLOSURES OR RESTRICTIONS OVER SEGMENTS OF THE PROJECT IN, WHICH NO WORK IS ANTICIPATED WITHIN A REASONABLE TIME FRAME, AS DETERMINED BY THE ENGINEER, SHALL NOT BE PERMITTED. THE LEVEL OF UTILIZATION OF MAINTENANCE OF TRAFFIC DEVICES SHALL BE COMMENSURATE WITH THE WORK IN PROGRESS.

SIDE STREETS:
ALL SIDE STREETS SHALL REMAIN OPEN TO TRAFFIC DURING THE PLACEMENT OF THE A.D.A. RAMPS AND PAVING OPERATIONS.

CALCULATED RDK
CHECKED CK

MAINTENANCE OF TRAFFIC NOTES

MAR-739-0.00

I:\Projects\mar\739\0000.008\25896\roadway\sheets\GENERAL NOTES.DGN SHEET_MN101 28-AUG-2007 11:21AM rkinsell

PERIODS OF NO WORK:
NO WORK SHALL BE PERFORMED AND ALL EXISTING LANES SHALL BE OPEN TO TRAFFIC DURING THE FOLLOWING DESIGNATED HOLIDAYS OR EVENTS:

HOLIDAYS

CHRISTMAS
NEW YEARS
MEMORIAL DAY
FOURTH OF JULY
LABOR DAY
THANKSGIVING

THE PERIOD OF TIME THAT THE LANES ARE TO BE OPEN DEPENDS ON THE DAY OF THE WEEK ON WHICH THE HOLIDAY OR EVENT FALLS. THE FOLLOWING SCHEDULE SHALL BE USED TO DETERMINE THIS PERIOD.

DAY OF THE WEEK	TIME ALL LANES MUST BE OPEN TO TRAFFIC
SUNDAY	12:00 PM FRIDAY THROUGH 12:00 PM MONDAY
MONDAY	12:00 PM FRIDAY THROUGH 12:00 PM TUESDAY
TUESDAY	12:00 PM MONDAY THROUGH 12:00 PM WEDNESDAY
WEDNESDAY	12:00 PM TUESDAY THROUGH 12:00 PM THURSDAY
THURSDAY	12:00 PM WEDNESDAY THROUGH 12:00 PM FRIDAY
FRIDAY	12:00 PM THURSDAY THROUGH 12:00 PM SATURDAY
SATURDAY	12:00 PM FRIDAY THROUGH 12:00 PM SUNDAY

SHOULD THE CONTRACTOR FALL TO MEET THESE REQUIREMENTS, THE CONTRACTOR SHALL BE ASSESSED LIQUIDATED DAMAGES IN ACCORDANCE WITH CMS 108.07

NO EXTENSIONS OF TIME SHALL BE GRANTED FOR DELAYS IN MATERIAL DELIVERIES, UNLESS SUCH DELAYS ARE INDUSTRY WIDE, OR FOR LABOR STRIKES, UNLESS SUCH STRIKES ARE AREA WIDE.

ALL WORK AND TRAFFIC CONTROL DEVICES SHALL BE IN ACCORDANCE WITH 614 AND OTHER APPLICABLE PORTIONS OF THE SPECIFICATIONS, AS WELL AS THE OHIO MANUAL OF UNIFORM TRAFFIC CONTROL DEVICES. PAYMENT FOR ALL LABOR, EQUIPMENT, AND MATERIALS SHALL BE INCLUDED IN THE LUMP SUM CONTRACT PRICE FOR 614, MAINTAINING TRAFFIC, UNLESS SEPARATELY ITEMIZED IN THE PLAN.

ITEM 614 - ASPHALT CONCRETE FOR MAINTAINING TRAFFIC:
THE FOLLOWING ESTIMATED QUANTITIES HAVE BEEN INCLUDED IN THE GENERAL SUMMARY.

"AS DIRECTED BY THE ENGINEER = 10 CU.YDS.

ITEM 614 - ASPHALT CONCRETE FOR MAINTAINING TRAFFIC: = 10 CU.YD.

ITEM 614 - WORK ZONE MARKING SIGN:
THE FOLLOWING ESTIMATED QUANTITIES HAVE BEEN CARRIED TO THE GENERAL SUMMARY FOR USE AT LOCATIONS IDENTIFIED BY THE ENGINEER FOR WORK ZONE MARKING SIGNS PER THE REQUIREMENTS OF THE DROPOFFS IN WORK ZONES PLAN INSERT SHEET, 614.04 AND 614.11.

W8-H13-36	"NO EDGE LINES"	= 10 EACH
R4-2-36	"PASS WITH CARE"	= 12 EACH
R4-1-36	"DO NOT PASS"	= 12 EACH

ITEM 614 - WORK ZONE MARKING SIGN = 34 EACH

WORK ZONE MARKINGS:
WHENEVER YELLOW CENTERLINES OR TURN-LANE LINES ARE PAVED OVER, REMOVED, OR OTHERWISE UNSERVICEABLE, THE CONTRACTOR SHALL INSTALL CLASS I TEMPORARY STRIPING. TEMPORARY TAPE SHALL BE USED ON ALL FINAL COURSES OF ASPHALT.

CLASS I TEMPORARY STRIPING SHALL BE AS PER ITEM 614 - WORK ZONE PAVEMENT MARKING AND SHALL BE PLACED IN COMPLIANCE WITH 614.11D OF THE CONSTRUCTION AND MATERIAL SPECIFICATIONS. CLASS I TEMPORARY STRIPING SHALL BE OF THE APPROPRIATE COLOR AND SPACED A MAXIMUM OF FORTY FEET CENTER TO CENTER.

THE FOLLOWING ESTIMATED QUANTITIES HAVE BEEN CARRIED TO THE GENERAL SUMMARY FOR USE AT LOCATIONS IDENTIFIED BY THE ENGINEER FOR WORK ZONE PAVEMENT MARKINGS PER THE REQUIREMENTS 614.04 AND 614.11.

ITEM 614 - WORK ZONE CENTER LINE CLASS II:

TO BE USED ON PLANED PAVEMENT
7.80 X 1 APPLICATION = 7.80 MI.

ITEM 614 - WORK ZONE CENTER LINE CLASS II: = 7.80 MI.

ITEM 614 - WORK ZONE CENTER LINE CLASS II, 740.06, TYPE 1:

TO BE USED ON SURFACE COURSE
7.80 X 1 APPLICATION = 7.80 MI.

ITEM 614 - WORK ZONE CENTER LINE CLASS II, 740.06, TYPE 1: = 7.80 MI.

ITEM 614 - WORK ZONE STOP LINE CLASS I:

TO BE USED ON PLANED PAVEMENT
364 X 1 APPLICATION = 364 FT.

ITEM 614 - WORK ZONE STOP LINE CLASS I: = 364 FT.

ITEM 614 - WORK ZONE STOP LINE CLASS I, 740.06, TYPE 1:

TO BE USED ON SURFACE COURSE
364 X 1 APPLICATION = 364 FT.

ITEM 614 - WORK ZONE STOP LINE CLASS I, 740.06, TYPE 1: = 364 FT.

SHEET NUMBER						PARTICIPATION			ITEM	ITEM EXT.	GRAND TOTAL	UNIT	DESCRIPTION	SEE SHEET NO.
5-10	11-12	15-21	25-30	31-33			80% FED. 20% STATE							
													ROADWAY	
				270			270		202	23500	270	SQ YD	WEARING COURSE REMOVED	
		484					484		202	30000	484	SQ FT	WALK REMOVED	
		110					110		202	32000	110	FT	CURB REMOVED	
			347				347		202	54000	347	EACH	RAISED PAVEMENT MARKER REMOVED	
5							5		604	09000	5	EACH	CATCH BASIN ADJUSTED TO GRADE	
5							5		604	34500	5	EACH	MANHOLE ADJUSTED TO GRADE	
7							7		604	38500	7	EACH	MONUMENT ASSEMBLY	
3							3		604	39500	3	EACH	MONUMENT BOX ADJUSTED TO GRADE	
		828					828		608	10000	828	SQ FT	4" CONCRETE WALK	
		312					312		608	52001	312	SQ FT	CURB RAMP, AS PER PLAN	
													EROSION CONTROL	
15							15		653	10000	15	CU YD	TOPSOIL FURNISHED AND PLACED	
780							780		659	00500	780	SQ YD	SEEDING AND MULCHING, CLASS I	
0.02							0.02		659	20000	0.02	TON	COMMERCIAL FERTILIZER	
0.5							0.5		659	35000	0.5	M GAL	WATER	
							1,000		832	30000	1,000	EACH	EROSION CONTROL	
													PAVEMENT	
2,700							2,700		251	01001	2,700	SQ YD	PARTIAL DEPTH PAVEMENT REPAIR, AS PER PLAN	6
		107,717					107,717		254	01000	107,717	SQ YD	PAVEMENT PLANING, ASPHALT CONCRETE (1.5" DEPTH)	
		8,076		20			8,096		407	10000	8,096	GALLON	TACK COAT	
		4,491		11			4,502		448	47020	4,502	CU YD	ASPHALT CONCRETE SURFACE COURSE, TYPE I, PG64-22	
		130					130		609	98000	130	FT	CURB, MISC.: (VARIOUS TYPES OF CURB)	
496							496		617	10100	496	CU YD	COMPACTED AGGREGATE	
1							1		617	25000	1	M GAL	WATER	
		8,931					8,931		617	98000	8,931	SQ YD	SHOULDER RECONDITIONING, MISC.: (RESHAPING SHOULDER)	7
													WATER WORK	
5							5		638	10800	5	EACH	VALVE BOX ADJUSTED TO GRADE	

CALCULATED RDK
CHECKED CK

GENERAL SUMMARY

MAR-739-0.00

I:\Projects\mar\739\0000.008\25896\roadway\sheets\SUMMARY SHEETS.DGN Sheet_GG101 28-AUG-2007 11:22AM rkinsell

SHEET NUMBER 5-10	11-12	15-21	25-30	31-33		PARTICIPATION	80% FED. 20% STATE		ITEM	ITEM EXT.	GRAND TOTAL	UNIT	DESCRIPTION	SEE SHEET NO.
													TRAFFIC CONTROL	
			555				555		621	00100	555	EACH	RPM	
84							84		630	03100	84	FT	GROUND MOUNTED SUPPORT, NO. 3 POST	
6							6		630	85100	6	EACH	REMOVAL OF GROUND MOUNTED SIGN AND REERECTION	
6							6		630	86002	6	EACH	REMOVAL OF GROUND MOUNTED POST SUPPORT AND DISPOSAL	
			15.56				15.56		642	00090	15.56	MILE	EDGE LINE	
			7.80				7.80		642	00290	7.80	MILE	CENTER LINE	
			364				364		644	00500	364	FT	STOP LINE	
			359				359		644	00600	359	FT	CROSSWALK LINE	
													TRAFFIC SIGNALS	
4							4		632	26500	4	EACH	DETECTOR LOOP	
4							4		632	27200	4	EACH	LOOP DETECTOR TIE IN	
													MAINTENANCE OF TRAFFIC	
	34						34		614	12460	34	EACH	WORK ZONE MARKING SIGN	
	10						10		614	13000	10	CU YD	ASPHALT CONCRETE FOR MAINTAINING TRAFFIC	
	7.80						7.80		614	21400	7.80	MILE	WORK ZONE CENTER LINE, CLASS II	
	7.80						7.80		614	21600	7.80	MILE	WORK ZONE CENTER LINE, CLASS II, 740.06, TYPE I	
	364						364		614	26000	364	FT	WORK ZONE STOP LINE, CLASS I	
	364						364		614	26400	364	FT	WORK ZONE STOP LINE, CLASS I, 740.06, TYPE I	
													STRUCTURE	
				750			750		512	10400	750	SQ YD	TREATING OF CONCRETE BRIDGE DECK WITH SRS	
				450			450		SPECIAL	51631200	450	FT	SAWING AND SEALING BITUMINOUS CONCRETE JOINTS	
	LUMP								614	11000	LUMP		MAINTAINING TRAFFIC	
									619	16000	2	MONTH	FIELD OFFICE, TYPE A	
LUMP									623	10001	LUMP		CONSTRUCTION LAYOUT STAKES, AS PER PLAN	7
									624	10000	LUMP		MOBILIZATION	

CALCULATED RDK
CHECKED CK

GENERAL SUMMARY

MAR-739-0.00

I:\Projects\mar\739\0000.008\25896\roadway\sheets\SUMMARY SHEETS.DGN Sheet_GG102 28-AUG-2007 11:22AM rkinsell

LOCATION						PAVEMENT				QUANTITIES									REMARKS
LOCATION	COUNTY	ROUTE	SLM	SLM	TYPICAL	LENGTH	LEFT SHOULDER	PAVEMENT	RIGHT SHOULDER	254 PAVEMENT PLANING ASPHALT CONCRETE 1.5" DEPTH	407 TACK COAT 0.075 GAL. PER SQ. YD.	448 ASPHALT SURFACE COURSE TYPE I PG64-22 1.5" DEPTH	617 SHOULDER RECON MISC: RESHAPING SHOULDER	202 WALK REMOVED	202 CURB REMOVED	608 4" CONCRETE WALK	608 CURB RAMP AS PER PLAN	609 CURB MISC.: (VARIOUS TYPES OF CURB)	
						FT.	FT.	FT.	FT.	SQ. YD.	GAL.	CU. YD.	SQ. YD.	SQ.FT.	FT.	SQ.FT.	SQ.FT.	FT.	
1	MAR	739	0.00	3.65	1	19,259'	1'	22'	1'	51,358	3,852	2,140	4,280						MAINLINE
		SEE	PLAN	SHEET	16					321	24	14	15						WITHIN THE VILLAGE GREEN CAMP
		SEE	PLAN	SHEET	17					1,037	78	43	79	80	20	256	96	40	WITHIN THE VILLAGE GREEN CAMP
		SEE	PLAN	SHEET	18					2,018	151	85		240	60	384	144	60	WITHIN THE VILLAGE GREEN CAMP
		SEE	PLAN	SHEET	19					2,072	155	87		80	20	128	48	20	WITHIN THE VILLAGE GREEN CAMP
		SEE	PLAN	SHEET	20					1,415	106	59	111	84	10	60	24	10	WITHIN THE VILLAGE GREEN CAMP
		SEE	PLAN	SHEET	21					350	26	14	30						WITHIN THE VILLAGE GREEN CAMP
			4.02	7.45	1	18,110'	1'	22'	1'	48,294	3,622	2,012	4,025						MAINLINE
						25'		25'		552	40	24	44						COUNTY ROAD INTERSECTIONS
						25'		25'		414	30	18	33						TOWNSHIP ROAD INTERSECTIONS
						15'		3'		555	42	23	370						VARIOUS DRIVEWAYS
1	MAR	739	3.53	3.54	1	59'	1'	22'	1'	-157	-12	-7	-13						DEDUCT FOR MAR-739-3.53
1	MAR	739	5.87	5.91	1	192'	1'	22'	1'	-512	-38	-21	-43						DEDUCT FOR MAR-739-5.87
TOTALS CARRIED TO GENERAL SUMMARY										107,717	8,076	4,491	8,931	484	110	828	312	130	

CALCULATED RDK
CHECKED CK

PAVEMENT CALCULATIONS AND DETAILS

MAR-739-0.00

I:\Projects\mar\739\0000.008\25896\roadway\sheets\SUMMARY SHEETS.DGN Sheet_GA101 28-AUG-2007 11:22AM rkinsell

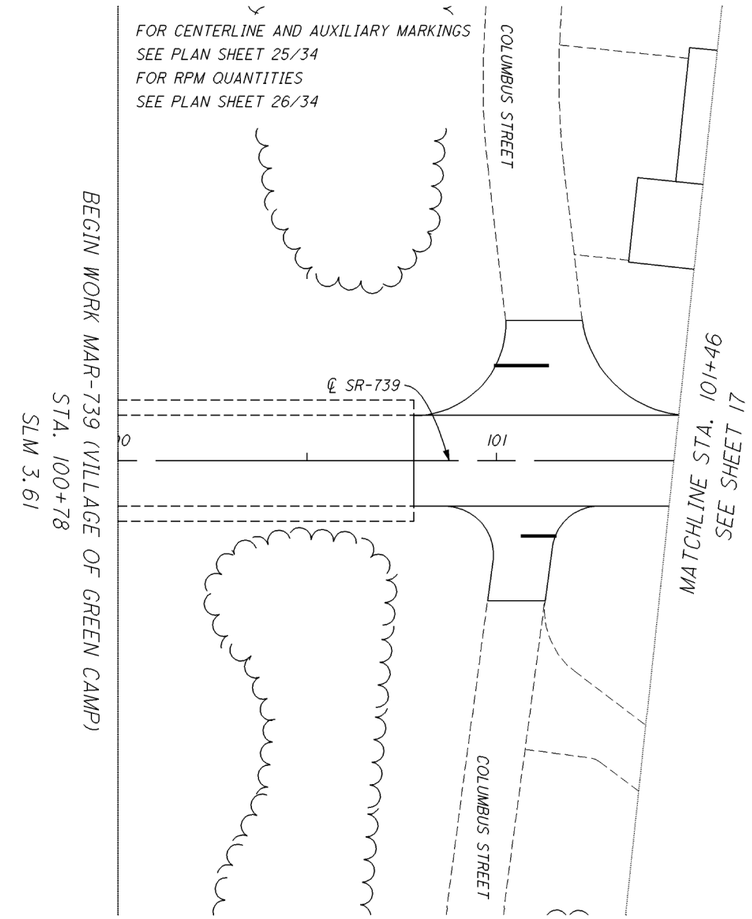

LOCATION							QUANTITES											REMARKS
LOCATION	COUNTY	ROUTE	STATION	STATION	TYPICAL	PAVEMENT AND SHOULDER WIDTH	254 PAVEMENT PLANING ASPHALT CONCRETE 1.5" DEPTH	407 TACK COAT 0.075 GAL. PER SQ. YD.	448 ASPHALT SURFACE COURSE TYPE 1, PG64-22 1.5"DPTH	617 SHOULDER RECON MISC: RESHAPING SHOULDER								
							SQ. YD.	GAL.	CU. YD.	SQ. YD.								
1	MAR	739	100+78	101+46	1	24'	181	14	8	15								MAINLINE
			SIDE	STREET	1	CADD	50	4	2									SIDE STREET (LT)
			SIDE	STREET	1	CADD	89	7	4									SIDE STREET (RT)
TOTALS CARRIED TO SUB SUMMARY							321	24	14	15								

HORIZONTAL SCALE IN FEET 0 10 20 40

CALCULATED RDK
CHECKED -CK

PLAN VIEW
STA. 100+78 TO STA. 101+46
MAR-739 (MARION ST.)

MAR-739-0.00

I:\Projects\mar\739\0000.008\25896\roadway\sheets\PLAN VIEW SHEETS.DGN Sheet_gp101 28-AUG-2007 11:22AM rkinsell

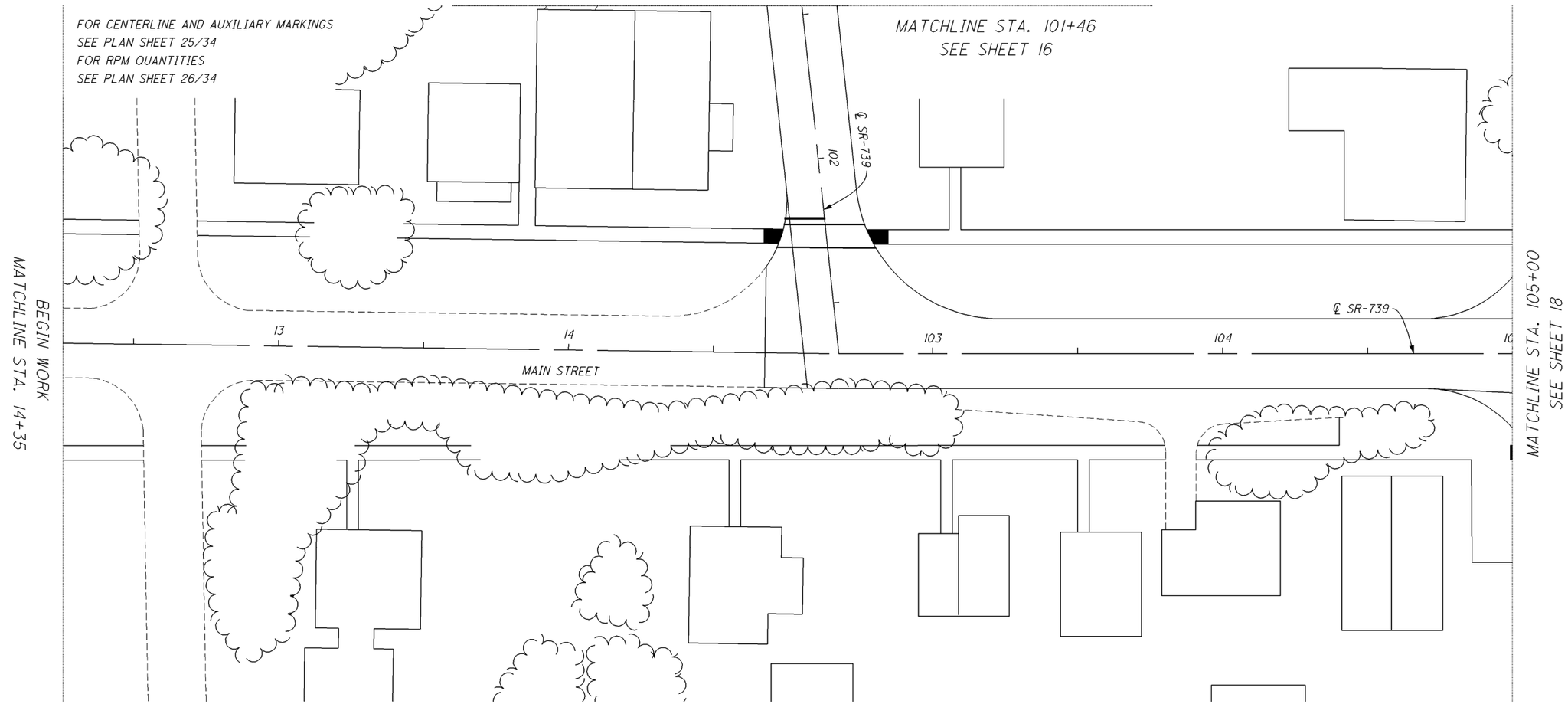

LOCATION							QUANTITES												REMARKS
LOCATION	COUNTY	ROUTE	STATION	STATION	TYPICAL	PAVEMENT AND SHOULDER WIDTH	202 WALK REMOVED	202 CURB REMOVED	254 PAVEMENT PLANING ASPHALT CONCRETE 1.5" DEPTH	407 TACK COAT 0.075 GAL. PER SQ. YD.	448 ASPHALT SURFACE COURSE TYPE I, PG64-22 1.5"DPTH	608 4" CONCRETE WALK	608 CURB RAMP, AS PER PLAN	609 CURB MISC. VARIOUS TYPES	617 SHOULDER RECON MISC: RESHAPING SHOULDER				
							SQ. FT.	FT.	SQ. YD.	GAL.	CU. YD.	SQ. FT.	SQ. FT.	FT.	SQ. YD.				
1	MAR	739	101+46	105+00	1	24'			944	71	39				79				MAINLINE
			SIDE	STREET	1	CADD			66	5	3								MAIN STREET (RT)
			SIDE	STREET	1	CADD			15	1	1	128	48	20					BROADWAY STREET (LT)
			SIDE	STREET	1	CADD			12	1	1								BROADWAY STREET (RT)
			CURB	RAMPS			80	20				128	48	20					ESTIMATED QUANTITIES
TOTALS CARRIED TO SUB SUMMARY							80	20	1,037	78	43	256	96	40	79				

HORIZONTAL SCALE IN FEET 0 10 20 40

CALCULATED RDK
CHECKED CK

PLAN VIEW MAR-739 (MARION ST.) STA. 101+46 TO STA. 105+00

MAR-739-0.00

I:\Projects\mar\739\0000.008\25896\roadway\sheets\PLAN VIEW SHEETS.DGN Sheet_gp102 28-AUG-2007 11:22AM rkinsell

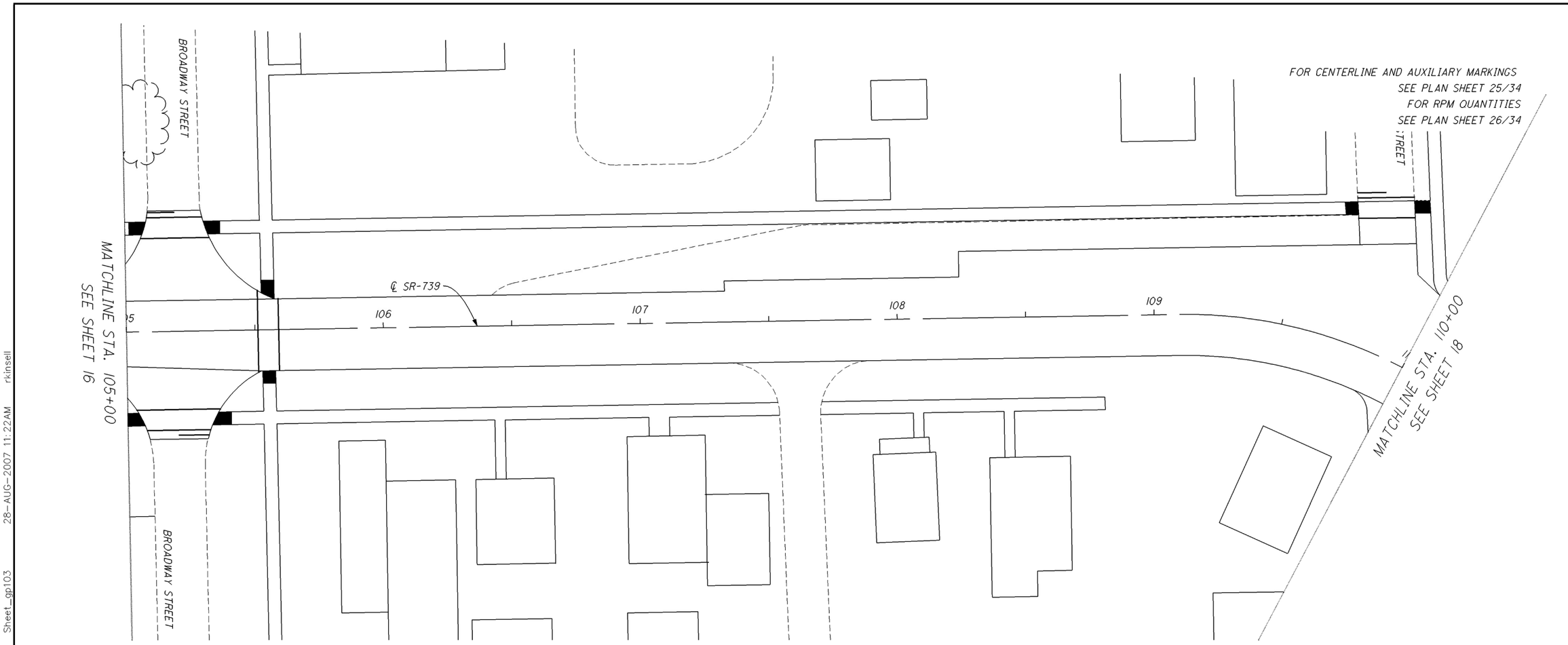

LOCATION							QUANTITES												REMARKS
LOCATION	COUNTY	ROUTE	STATION	STATION	TYPICAL	PAVEMENT AND SHOULDER WIDTH	202 WALK REMOVED	202 CURB REMOVED	254 PAVEMENT PLANING ASPHALT CONCRETE 1.5" DEPTH	407 TACK COAT 0.075 GAL. PER SQ. YD.	448 ASPHALT SURFACE COURSE TYPE I, PG64-22 1.5"DPTH	608 4" CONCRETE WALK	608 CURB RAMP, AS PER PLAN	609 CURB MISC. VARIOUS TYPES					
							SQ. FT.	FT.	SQ. YD.	GAL.	CU. YD.	SQ. FT.	SQ. FT.	FT.					
1	MAR	739	105+00	105+50	1	24'			133	10	6								MAINLINE
			105+50	107+35	1	27'			555	42	23								EXTRA PAVEMENT WIDTH
			107+35	108+25	1	29'			290	22	12								EXTRA PAVEMENT WIDTH
			108+25	110+00	1	38'			739	55	31								EXTRA PAVEMENT WIDTH
			SIDE	STREET	1	CADD			137	10	6								BROADWAY STREET (LT)
			SIDE	STREET	1	CADD			110	8	5								BROADWAY STREET (RT)
			SIDE	STREET	1	CADD			41	3	2								MILL STREET (LT)
			SIDE	STREET	1	CADD			13	1	1								MILL STREET (RT)
			CURB	RAMPS			240	60				384	144	60					ESTIMATED QUANTITIES
TOTALS CARRIED TO SUB SUMMARY							240	60	2,018	151	85	384	144	60					

PLAN VIEW MAR-739 (MARION ST.) STA. 105+00 TO STA. 110+00

HORIZONTAL SCALE IN FEET 0 10 20 40

CALCULATED RDK
CHECKED CK

MAR-739-0.00

18
34

I:\Projects\mar\739\0000.008\25896\roadway\sheets\PLAN VIEW SHEETS.DGN Sheet_gp103 28-AUG-2007 11:22AM rkinsell

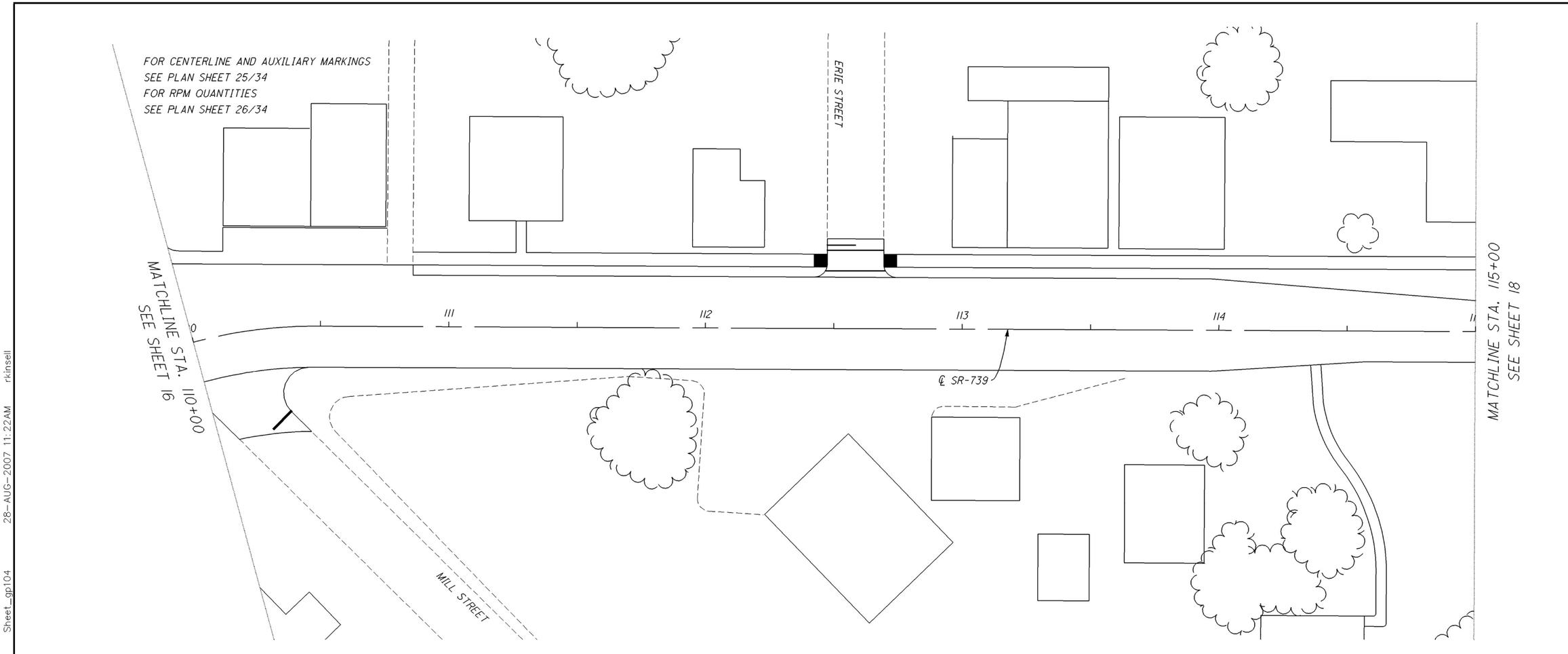

LOCATION							QUANTITES												REMARKS
LOCATION	COUNTY	ROUTE	STATION	STATION	TYPICAL	PAVEMENT AND SHOULDER WIDTH	202 WALK REMOVED	202 CURB REMOVED	254 PAVEMENT PLANING ASPHALT CONCRETE 1.5" DEPTH	407 TACK COAT 0.075 GAL. PER SQ. YD.	448 ASPHALT SURFACE COURSE TYPE 1, PG64-22 1.5"DPTH	608 4" CONCRETE WALK	608 CURB RAMP, AS PER PLAN	609 CURB MISC. VARIOUS TYPES					
							SQ. FT.	FT.	SQ. YD.	GAL.	CU. YD.	SQ. FT.	SQ. FT.	FT.					
1	MAR	739	110+00	110+85	1	38'			359	27	15								MAINLINE
			110+85	114+00	1	36'			1,260	95	53								EXTRA PAVEMENT WIDTH
			114+00	115+00	1	30'			333	25	14								TAPERED EXTRA WIDTH
			SIDE	STREET	1	CADD			82	6	3								MILL STREET (RT)
			SIDE	STREET	1	CADD			38	3	2								ERIE STREET (LT)
			CURB	RAMPS			80	20				128	48	20					ESTIMATED QUANTITIES
TOTALS CARRIED TO SUB SUMMARY							80	20	2,072	155	87	128	48	20					

HORIZONTAL SCALE IN FEET 0 10 20 40

CALCULATED RDK
CHECKED CK

PLAN VIEW MAR-739 (MARION ST.) STA. 110+00 TO STA. 115+00

MAR-739-0.00

I:\Projects\mar\739\0000.008\25896\roadway\sheets\PLAN VIEW SHEETS.DGN Sheet_gp104 28-AUG-2007 11:22AM rkinsell

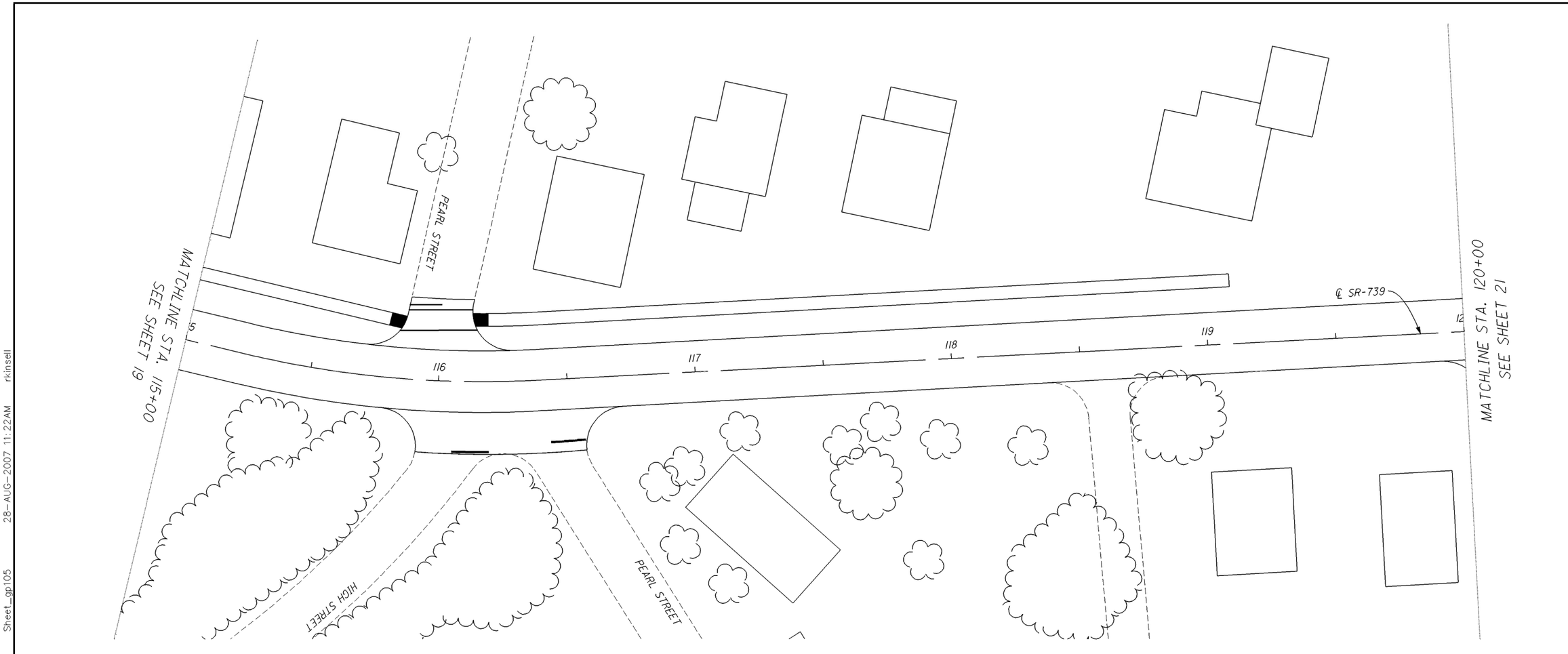

LOCATION							QUANTITES												REMARKS
LOCATION	COUNTY	ROUTE	STATION	STATION	TYPICAL	PAVEMENT AND SHOULDER WIDTH	202 WALK REMOVED	202 CURB REMOVED	254 PAVEMENT PLANING ASPHALT CONCRETE 1.5" DEPTH	407 TACK COAT 0.075 GAL. PER SQ. YD.	448 ASPHALT SURFACE COURSE TYPE 1, PG64-22 1.5"DPTH	608 4" CONCRETE WALK	608 CURB RAMP, AS PER PLAN	609 CURB MISC. VARIOUS TYPES	617 SHOULDER RECON MISC: RESHAPING SHOULDER				
							SQ. FT.	FT.	SQ. YD.	GAL.	CU. YD.	SQ. FT.	SQ. FT.	FT.	SQ. YD.				
1	MAR	739	115+00	116+50	1	24'			400	30	17				33				MAINLINE
			116+50	120+00	1	21'			817	61	34				78				SIDE STREET (LT)
			SIDE	STREET	1	CADD			67	5	3								PEARL STREET (LT)
			SIDE	STREET	1	CADD			130	10	5								PEARL & HIGH STREET (RT)
			CURB	RAMPS			84	10				60	24	10					ESTIMATED QUANTITIES
TOTALS CARRIED TO SUB SUMMARY							84	10	1,415	106	59	60	24	10	111				

PLAN VIEW MAR-739 (MARION ST.)
STA. 115+00 TO STA. 120+00

CALCULATED RDK
CHECKED CK

HORIZONTAL SCALE IN FEET
0 10 20 40

MAR-739-0.00

I:\Projects\mar\739\0000.008\25896\roadway\sheets\PLAN VIEW SHEETS.DGN Sheet_gp105 28-AUG-2007 11:22AM rkinsell

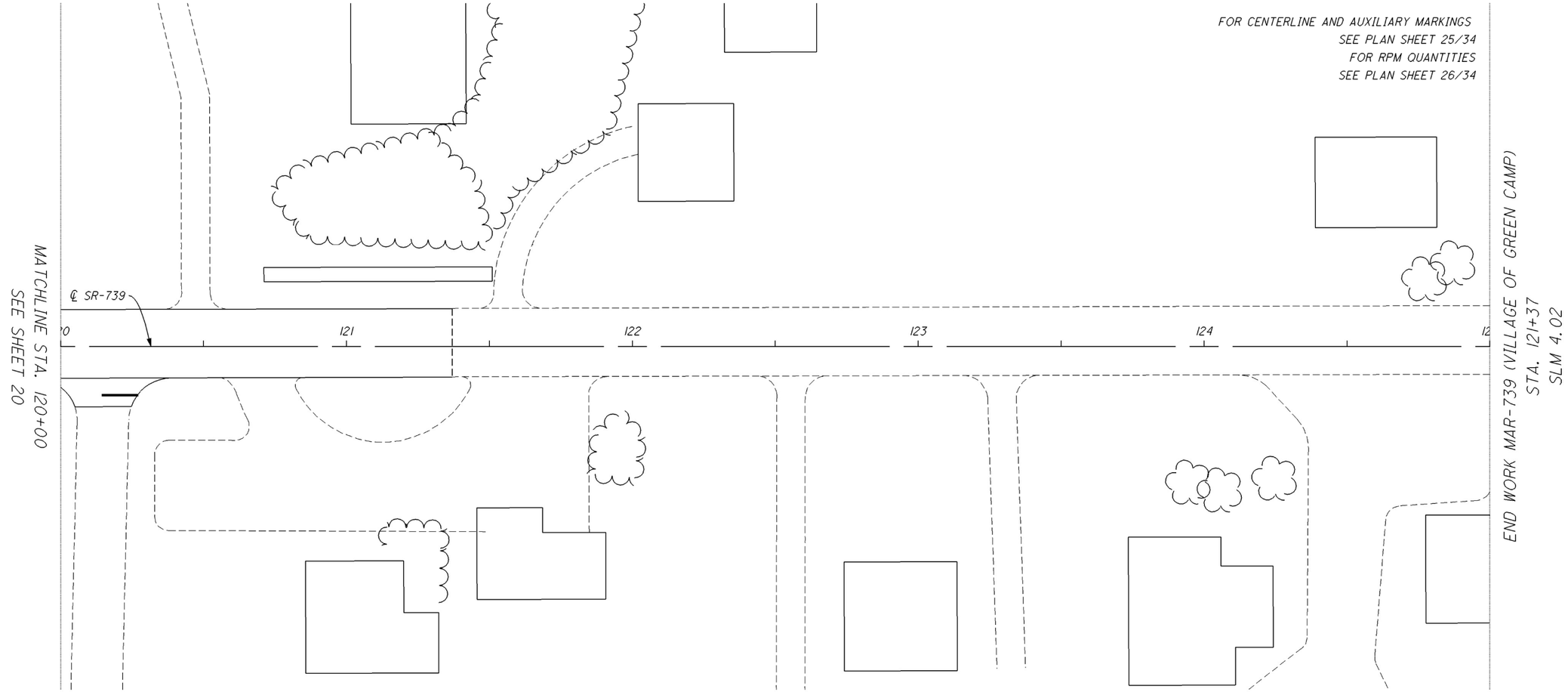

LOCATION							QUANTITES											REMARKS
LOCATION	COUNTY	ROUTE	STATION	STATION	TYPICAL	PAVEMENT AND SHOULDER WIDTH	254 PAVEMENT PLANING ASPHALT CONCRETE 1.5" DEPTH	407 TACK COAT 0.075 GAL. PER SQ. YD.	448 ASPHALT SURFACE COURSE TYPE 1, PG64-22 1.5"DPTH	617 SHOULDER RECON MISC: RESHAPING SHOULDER								
							SQ. YD.	GAL.	CU. YD.	SQ. YD.								
1	MAR	739	120+00	121+37	1	21'	320	24	13	30								MAINLINE
			SIDE	STREET	1	CADD	30	2	1									SIDE STREET (RT)
TOTALS CARRIED TO SUB SUMMARY							350	26	14	30								

HORIZONTAL SCALE IN FEET 0 10 20 40

CALCULATED RDK
CHECKED CK

PLAN VIEW STA. 120+00 TO STA. 121+37

MAR-739 (MARION ST.)

MAR-739-0.00

I:\Projects\mar\739\0000.008\25896\roadway\sheets\PLAN VIEW SHEETS.DGN Sheet_gp106 28-AUG-2007 11:22AM rkinsell

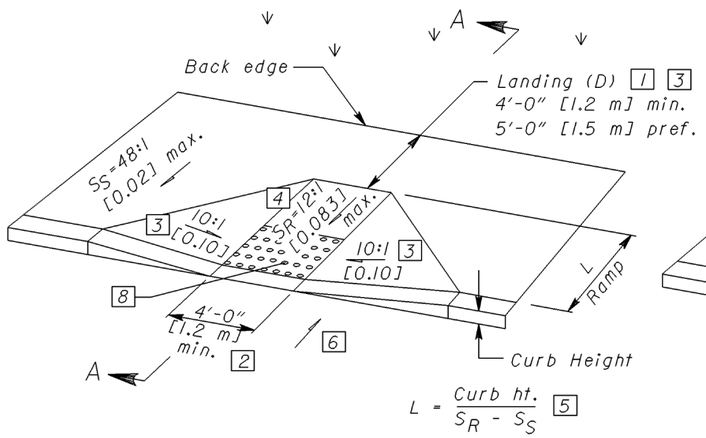

See Sht. 3/3 for SECTION A-A

PERPENDICULAR CURB RAMP DETAIL

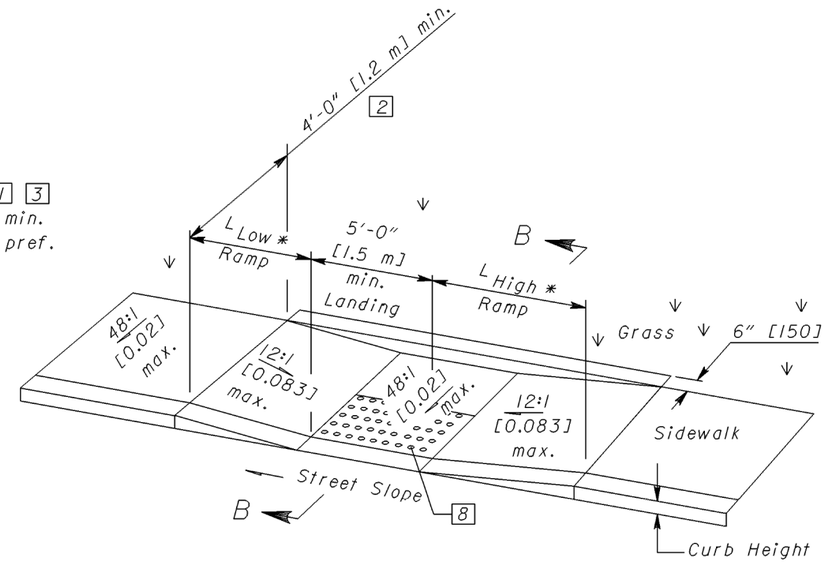

See Sht. 3/3 for SECTION B-B

PARALLEL CURB RAMP DETAIL (DOUBLE)

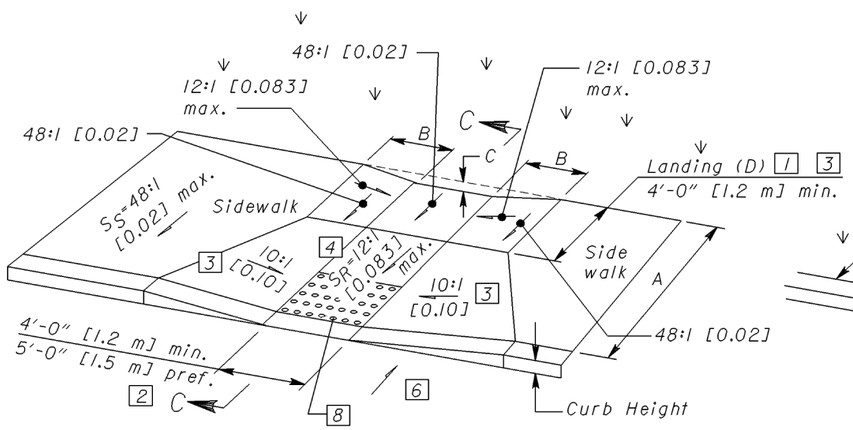

See Sht. 3/3 for SECTION C-C

COMBINED CURB RAMP DETAIL

$B = C / 0.083$

$C = [\text{Curb ht.} + A(S_S)] - [(A-D)S_R + D(0.02)]$

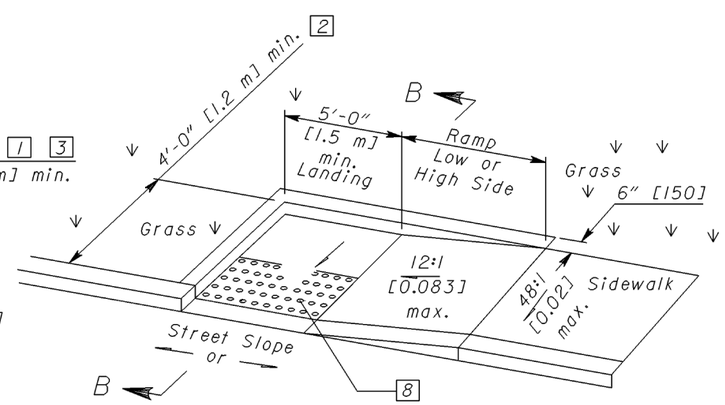

See Sht. 3/3 for SECTION B-B

PARALLEL CURB RAMP DETAIL (SINGLE)

Street Slope	Ramp Length @ 1"/ft [0.083]	
	$L_{LOW\ SIDE}$ *	$L_{HIGH\ SIDE}$ *
0.01	5'-6" [1.7 m]	7'-2" [2.2 m]
0.02	5'-0" [1.5 m]	8'-4" [2.5 m]
0.03	4'-6" [1.4 m]	10'-0" [3.0 m]
0.04	4'-2" [1.3 m]	12'-6" [3.8 m]
0.05	3'-10" [1.2 m]	16'-8" [5.1 m]

* Measured along the back of a 6" [150] high curb.

$$L_{HIGH} = \frac{\text{Curb ht.}}{0.083 - \text{Street Slope}} \quad 7$$

$$L_{LOW} = \frac{\text{Curb ht.}}{0.083 + \text{Street Slope}} \quad 7$$

LEGEND

1. May be reduced to 3'-0" [915] in existing sidewalks if the landing is unconstrained along the back edge.
2. May be reduced to 3'-4" [1.02 m] in existing sidewalks to better fit the walk configuration or where site conditions are restricted by narrow walks, pole foundations, drainage inlets, etc. The width may be tapered.
3. Where landing width (D) has been reduced to 3'-0" [915] the flared sides shall have a maximum slope of 12:1 [0.083].

   Flared sides are not required where the edges of a curb ramp are protected by landscaping or other barriers to travel by wheel chair users or pedestrians across the edge of the curb ramp. However, if the flared sides are used in these areas, they may be of any slope.

   The slope of the ramp toward the curb is preferred to be 12:1 [0.083] or flatter related to the horizontal, but the maximum slope shall be 12:1 [0.083] relative to the existing or proposed walk slope.

   In existing sidewalks, where the maximum ramp slope (S_R) is not feasible, it may be reduced as follows:

   A) 10:1 [0.10] for a max. rise of 6" [150],
   B) 8:1 [0.125] for a max. rise of 3" [75],
   C) 6:1 [0.167] over a max. run of 2'-0" [610] for historic areas where a flatter slope is not feasible.
5. The minimum length of a perpendicular ramp is 6' [2.0 m] from the back of a 6" [150] curb and may be increased where feasible to obtain a flatter ramp slope or to better blend with the walk configuration.
6. Gutter counter slopes at the foot of perpendicular curb ramps should not exceed 20:1 [0.05] over a distance of 2'-0" [610] from the curb.
7. Dimensions derived by equation are nominal. Construct ramps to meet required slopes and existing conditions.
8. Detectable Warnings (truncated domes) are to be installed in the location shown. Dimensions of the domes are 24" [610] from the back of the curb by the width of the ramp. See NOTES on sheet 3.

CALCULATED RDK
CHECKED CK

CURB RAMPS WITH TRUNCATED DOMES

MAR-739-0.00

I:\Projects\mar\739\0000.008\25896\roadway\sheets\PLAN INSERT SHEETS.DGN Sheet_CURB_RAMP_101 28-AUG-2007 11:22AM rkinsell

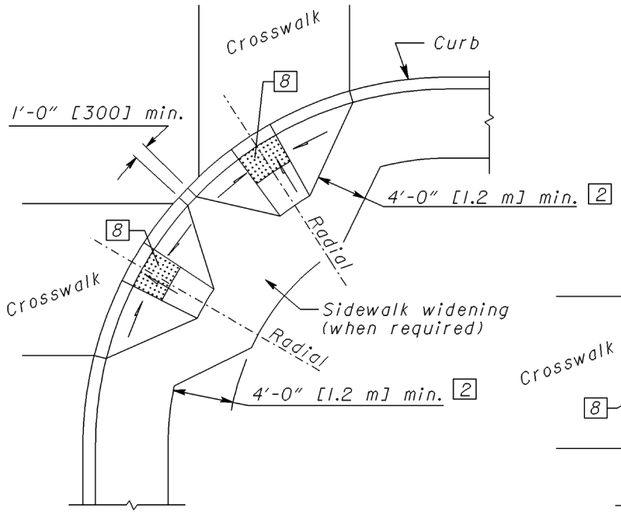

DESIGN A
PERPENDICULAR RAMP

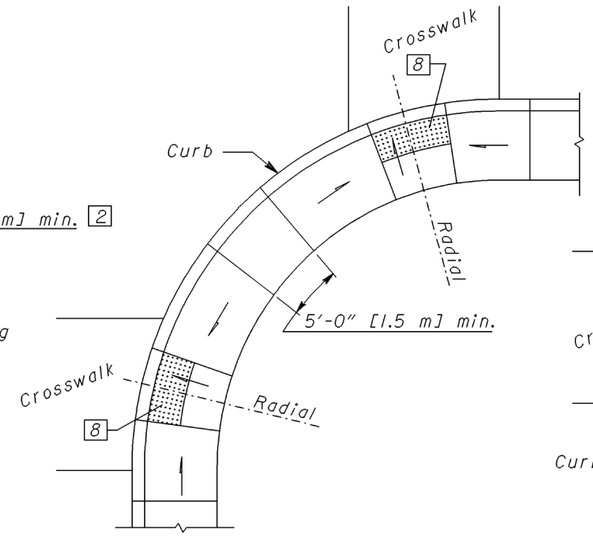

DESIGN B
PARALLEL RAMP

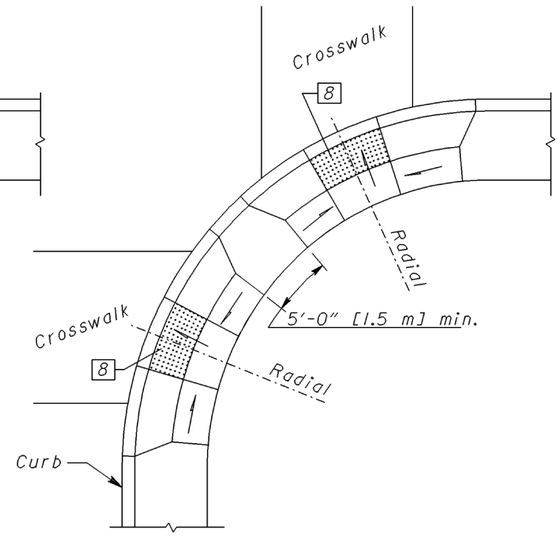

DESIGN C
COMBINATION RAMP

CORNER CURB RAMP DESIGNS

(See Curb Ramp Details on Sht. 1/3
for additional requirements.)

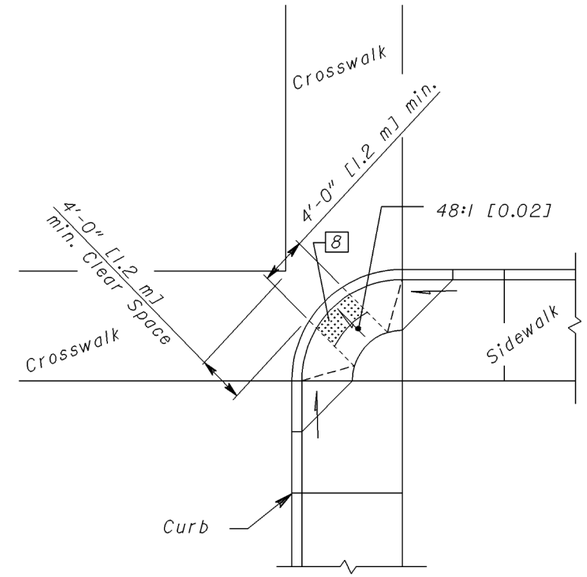

DESIGN D
DIAGONAL RAMP

Use in existing walks only and when site constraints prohibit other designs. The diagonal ramp may be perpendcular, parallel or combination.

Avoid using where curb radii are less than 20'-0" [6.0 m].

For LEGEND, See sheet 1.

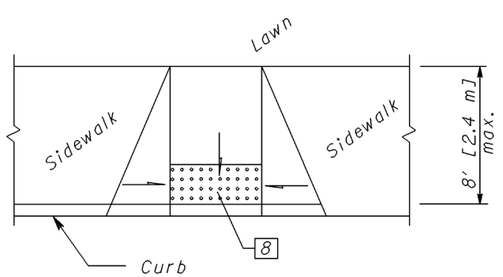

DESIGN E
PERPENDICULAR RAMP

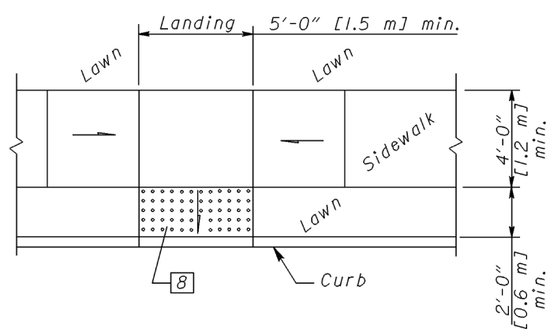

DESIGN F
PARALLEL RAMP

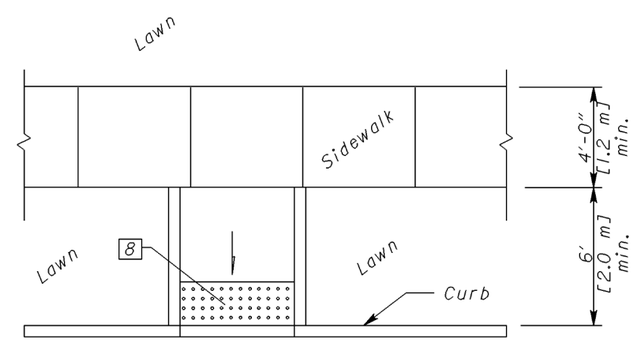

DESIGN G
PERPENDICULAR RAMPS
w/o FLARES

MID BLOCK CURB RAMP DESIGNS

(See Curb Ramp Details on Sht. 1/3
for additional requirements.)

CALCULATED RDK
CHECKED CK

CURB RAMPS WITH TRUNCATED DOMES

MAR-739-0.00

I:\Projects\mar\739\0000.008\25896\roadway\sheets\PLAN INSERT SHEETS.DGN Sheet_CURB_RAMP_102 28-AUG-2007 11:22AM rkinsell

NOTES

SURFACE TEXTURE: Texture of concrete surfaces shall be obtained by coarse brooming transverse to the ramp slopes and shall be rougher than adjacent walk.

TRUNCATED DOMES: Install detectable warnings (truncated domes) for a distance of 24" [610] from the back of the curb for the entire width of the ramp opening as shown on details on Sheet 1.

Pavers will meet ASTM C 902 Class SX, Type 1, or C 936, or C 1272 Type R.

Acceptable manufacturers and products are:
1) Whitacre-Greer Fireproofing Company, 1400 S. Mahoning Ave, Alliance, OH, 44601, ADA Paver, 4"x8"x2-1/4", Clear Red (Rustic) #30.
2) Hanover Architectural Products, 240 Bender Rd., Hanover, PA. 17331, Detectable Warning Paver, 4"x8"x2", Red or Quarry Red.
3) Endicott Clay Products, PO Box 17, Fairbury, NE, 68352, Handicap Detectable Warning Paver, 4"x8"x2-1/4", Red Blend.

Pavers will laid on top of a 4" [100] unreinforced concrete base. Setting bed and joints to be mortared in accordance with manufacturer's instruction, or with a maximum 1/2" [13] thick bed of latex modified cement mortar. Mortar joints to a width not greater than 5/32" [4] and not less than 1/16" [1.5]. Pavers shall not be directly touching each other unless they have spacing bars.

Mortared joints are to be flush with top surface and struck so as to give a smooth surface. Pavers shall be laid such that joints are level with adjoining joints so as to provide a smooth transition from brick to brick and brick to concrete surface.

The surface of any two adjacent units should not differ by more than 1/8" [3] in height. Bricks shall be placed in a running bond pattern. Face of all brick shall be clean of cement and protected so as to avoid chipping during constructionn.

EXPANSION JOINTS: shall be provided in the curb ramp as extensions of walk joints and consistent with Item 608.03 requirements for a new concrete walk. A 1/2" [13] Item 705.03 expansion joint filler shall be provided around the edge of ramps built in existing concrete walk. Lines shown on this drawing indicate the ramp edge and slope changes and are not necessarily joint lines.

PAYMENT: Walk and curb, Items 608 and 609, shall be measured through the curb ramp area paid for under their respective Items. Item 608 - Curb Ramp, As Per Plan, Each constructed in new curb and walk shall include the cost of any additional materials and installation (including truncated domes), grading, forming and finishing. Item 608 - Curb Ramp. As Per Plan, Square Foot [Meter], constructed in existing curb and walk shall include the cost of furnishing and installing all materials (including truncated domes), grading, forming, and finishing of the curb and walk of the curb ramp. Removal of existing curb and walk shall be paid for under Item 202.

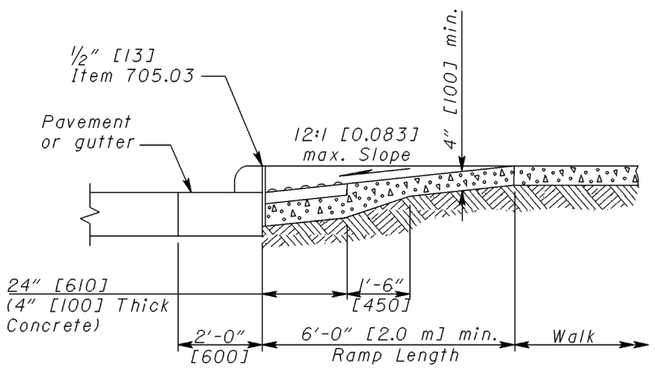

SECTION A-A
NORMAL DETAIL
See Sheet 1 of 3.
(Gutter shown)

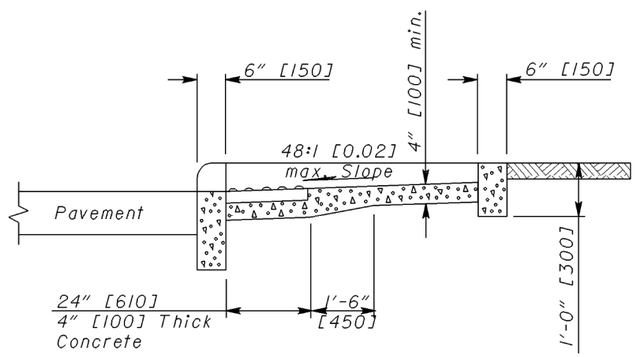

SECTION B-B
See Sheet 1 of 3.

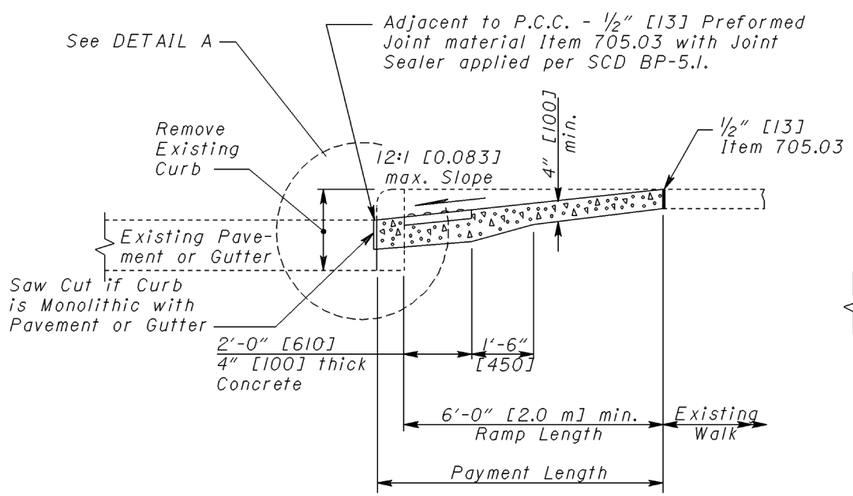

SECTION A-A
EXISTING WALK DETAIL
See Sheet 1 of 3.

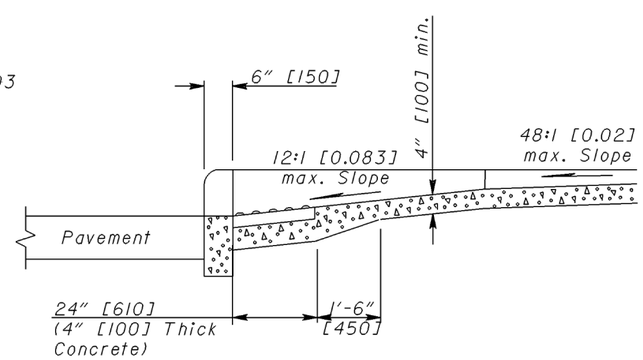

SECTION C-C
See Sheet 1 of 3.

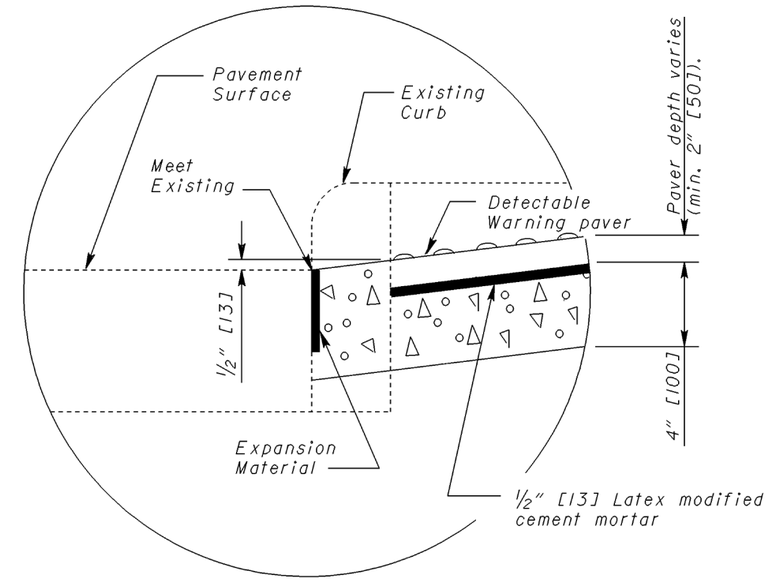

DETAIL A

CALCULATED RDK
CHECKED CK

CURB RAMPS WITH TRUNCATED DOMES

MAR-739-0.00

I:\Projects\mar\739\0000.008\25896\roadway\sheets\PLAN INSERT SHEETS.DGN Sheet_CURB_RAMP_103 28-AUG-2007 11:22AM rkinsell

LOCATION							LONG LINES					AUXILIARY MARKINGS												
							642					644												
SHEET #	BEGIN	END	LENGTH	LENGTH	SIDE	DESCRIPTION	EDGE LINE YELLOW	EDGE LINE WHITE	CENTER LINE SINGLE BROKEN	CENTER LINE DOUBLE SOLID BROKEN	CENTER LINE DOUBLE SOLID SOLID	CHANNELIZING LINE	STOP LINE	CROSS WALK	TRANSVERSE LINE YELLOW	TRANSVERSE LINE WHITE	RAIL ROAD MARKING	SCHOOL ZONE MARKING	LANE ARROWS LT	LANE ARROWS LT THRU	LANE ARROWS THRU	LANE ARROWS RT / LT	LANE ARROWS RT	WORD ON PAVEMENT 96"
	SLM	SLM	MILE	FT			MILE	MILE	MILE	MILE	MILE	FT.	FT.	FT.	FT.	FT.	EACH	EACH	EACH	EACH	EACH	EACH	EACH	EACH
27	0.00	2.00	2.00	10,560	℄	EDGE & CENTERLINE (RURAL)		4.00	1.15	0.67	0.18													
28	2.00	4.00	2.00	10,560	℄	EDGE & CENTERLINE (URBAN & RURAL)		4.00	1.10	0.33	0.58													
29	4.00	6.00	2.00	10,560	℄	EDGE & CENTERLINE (RURAL)		4.00	0.56	0.34	1.11													
30	6.00	7.78	1.78	9,409	℄	EDGE & CENTERLINE (RURAL)		3.56	0.91	0.86	0.01													
						COUNTY ROAD & TOWNSHIP ROAD STOP LINES							196											
						WITHIN THE VILLAGE OF GREEN CAMP AUXILIARY MARKINGS																		
16													28											
17													14	62										
18													28	165										
19													14	44										
20													28	44										
21													42	44										
													14											
						SUB TOTALS			3.72	2.21	1.88													
								15.56		7.80			364	359										

CALCULATED RDK
CHECKED CK

PAVEMENT MARKING SUBSUMMARY

MAR-739-0.00

I:\Projects\mar\739\0000.008\25896\roadway\sheets\TRAFFIC CONTROL SHEETS.DGN Sheet_TS101 28-AUG-2007 11:23AM rkinsell

RAISED PAVEMENT MARKERS DETAILS (STANDARD DRAWING TC-65.11)

1	TYPICAL CENTERLINE	7	ONE LANE BRIDGE
2	ACCELERATION LANE	8	STOP APPROACH
3	DECELERATION LANE	9	TWO WAY LEFT TURN LANE
4	FOUR LANE DIVIDED TO TWO LANE TRANSITION	10	APPROACH WITH LEFT TURN LANE
5	FOUR LANE UNDIVIDED TO TWO LANE TRANSITION	11	HORIZONTAL CURVE OF FIVE DEGREES OR GREATER.
6	MULTILANE DIVIDED - CONTROLLED ACCESS	12	HORIZONTAL CURVE OF TEN DEGREES OR GREATER.

LOCATION					REFLECTOR TYPE													TOTALS		REMARKS
SHEET #	REF #	BEGIN	END	DETAIL	ONE-WAY RIGHT EDGE LINE WHITE	ONE-WAY RIGHT EDGE LINE WHITE	ONE-WAY LANE LINE WHITE	ONE-WAY LEFT EDGE LINE YELLOW	TWO-WAY RIGHT EDGE LINE WHITE RED	TWO-WAY RIGHT EDGE LINE WHITE RED	TWO-WAY CHANNELIZING LINE WHITE RED	TWO-WAY CHANNELIZING LINE WHITE RED	TWO-WAY LANE LINE WHITE RED	TWO-WAY LEFT EDGE LINE YELLOW RED	TWO-WAY CENTER LINE YELLOW YELLOW	TWO-WAY CENTER LINE YELLOW YELLOW	TWO-WAY CENTER LINE YELLOW YELLOW	202 RPM REMOVED	621 RPM	
		SLM	SLM		40'	80'	120'	80'	40'	80'	40'	80'	80'	40'	20'	40'	80'	EACH	EACH	
27		0.00	0.53	1													35		35	CENTERLINE (RURAL)
		0.53	0.62	12												12			12	CENTERLINE (14 DEGREE CURVE APPROACH)
		0.62	0.70	12											21				21	CENTERLINE (14 DEGREE CURVE)
		0.70	0.74	12												5			5	CENTERLINE (MAINTAIN 40 FOOT SPACING)
		0.74	0.86	11												16			16	CENTERLINE (9 DEGREE CURVE APPROACH)
		0.86	1.44	1													38		38	CENTERLINE (RURAL)
		1.44	1.50	11												8			8	CENTERLINE (9 DEGREE CURVE APPROACH)
28		1.50	3.25	1													116		116	CENTERLINE (RURAL)
29		3.25	3.31	11												8			8	CENTERLINE (9 DEGREE CURVE APPROACH)
30		3.31	3.69	1													25		25	CENTERLINE (RURAL)
		3.53	3.69	8	11	5													16	RIGHT EDGE LINE STOP APPROACH (WITH IN GREEN CAMP)
		3.69	7.35	1													242		242	CENTERLINE (9 DEGREE CURVE APPROACH)
		7.30	7.35	11												7			7	CENTERLINE (9 DEGREE CURVE APPROACH)
		7.35	7.45	1													7		7	CENTERLINE (RURAL)
																		347		REMOVAL QUANTITIES
																		347	555	

CALCULATED RDK
CHECKED CK

RAISED PAVEMENT MARKER SUBSUMMARY

MAR-739-0.00

I:\Projects\mar\739\0000.008\25896\roadway\sheets\TRAFFIC CONTROL SHEETS.DGN Sheet_TS102 28-AUG-2007 11:23AM rkinsell

PAVEMENT MARKING CENTERLINE LOG
MAR-739-0.00 TO MAR-739-7.45

ODOT Dist 6 - Marion Co - FINAL
No Passing Zone Log (MAR)

Route: 0739R
Length: 7.782 Direction: East
From: 0.000 *LEAVE UNI CO*
To: 7.782 *ENTER MARION*

Scale: 1.00 mile/page

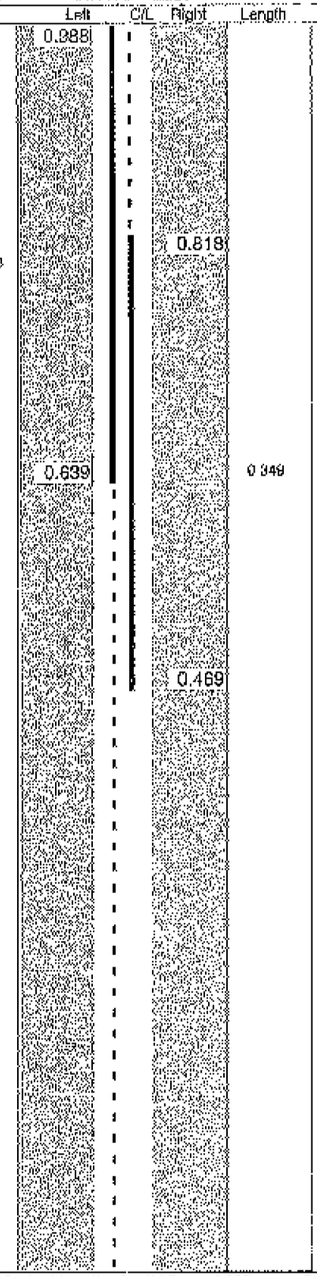

Control Points

0.937 T0056 CENTERVILLE RT

0.835 C0045 MOUNT OLIVE GREEN CAMP LT

0.727 C0081 GREEN CAMP ESSEX LT

0.000 LEAVE UNI CO

Sheet total equivalent length of solid line: 0.903 Accum. total: 0.903

© 2002 - MasterMind Systems, Inc - Traffic Safety Suite

ODOT Dist 6 - Marion Co - FINAL
No Passing Zone Log (MAR)

Route: 0739R
Length: 7.782 Direction: East
From: 0.000 *LEAVE UNI CO*
To: 7.782 *ENTER MARION*

Scale: 1.00 mile/page

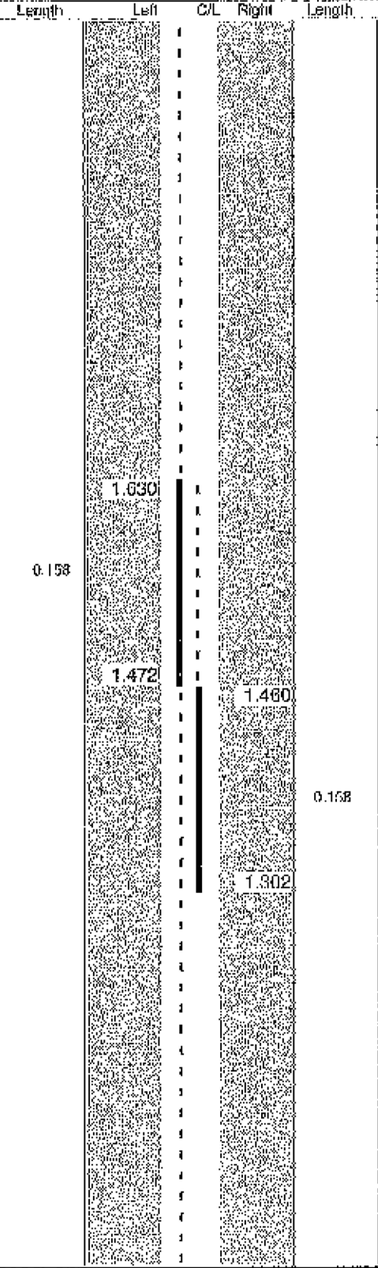

Control Points

1.899 T0075 CENTERVILLE PROSPECT RT

1.682 C0054 RUTH LT

1.220 BRIDGE

Sheet total equivalent length of solid line: 0.566 Accum. total: 1.469

© 2002 - MasterMind Systems, Inc - Traffic Safety Suite

CALCULATED RDK
CHECKED CK

PAVEMENT MARKING CENTERLINE LOGS

MAR-739-0.00

I:\Projects\mar\739\0000.008\25896\roadway\sheets\TRAFFIC CONTROL SHEETS.DGN Sheet_TS103 28-AUG-2007 11:23AM rkinsell

PAVEMENT MARKING CENTERLINE LOG
MAR-739-0.00 TO MAR-739-7.45

ODOT Dist 6 - Marion Co - FINAL
No Passing Zone Log (MAR)

Route: 0739R
Length: 7.782 Direction: East
From: 0.000 *LEAVE UNI CO*
To: 7.782 *ENTER MARION*

Length	Left	C/L	Right	Length	Control Points	Scale: 1.00 mile/page
					2.983	Mile Post = 003
					2.925	T0077 CENTERVILLE GREEN CAMP RT

Sheet total equivalent length of solid line: 0.250 Accum. total: 1.719

© 2002 - MasterMind Systems, Inc - Traffic Safety Suite

ODOT Dist 6 - Marion Co - FINAL
No Passing Zone Log (MAR)

Route: 0739R
Length: 7.782 Direction: East
From: 0.000 *LEAVE UNI CO*
To: 7.782 *ENTER MARION*

Length	Left	C/L	Right	Length	Control Points	Scale: 1.00 mile/page
	4.000		4.000			
				0.460		
0.736						
					3.588	T0074 GREEN CAMP RIVER LT
					3.586	↑ 55mph
			3.540		3.518	BRIDGE
					3.428	C0083 PROSPECT UPPER SANDUSKY RT
			3.381			
	3.265			0.288		
					3.173	C0038 LARUE GREEN CAMP LT
			3.095			

Sheet total equivalent length of solid line: 1.507 Accum. total: 3.306

© 2002 - MasterMind Systems, Inc - Traffic Safety Suite

CALCULATED RDK
CHECKED CX

PAVEMENT MARKING CENTERLINE LOGS

MAR-739-0.00

I:\Projects\mar\739\0000.008\25896\roadway\sheets\TRAFFIC CONTROL SHEETS.DGN Sheet_TS104 28-AUG-2007 11:23AM rkinsell

PAVEMENT MARKING CENTERLINE LOG
MAR-739-0.00 TO MAR-739-7.45

ODOT Dist 6 - Marion Co - FINAL
No Passing Zone Log (MAR)

Route: 0739R
Length: 7.762 Direction: East
From: 0.000 *LEAVE UNI CO*
To: 7.762 *ENTER MARION*

Scale: 1.00 mile/page

Length	Left	C/L	Right	Length	Control Points	
	5.000		5.000		4.980	Mile Post = 005
0.140						
	4.860			0.310		
			4.690		4.671	T0103 JOHNSON LT
	4.348		4.348		4.350 4.348	LEAVE GREEN CAMP ↑ 35mph
0.348				0.348		
	4.000		4.000			

Sheet total equivalent length of solid line: 1.274 Accum. total: 4.580

© 2002 - MasterMind Systems, Inc. - Traffic Safety Suite

ODOT Dist 6 - Marion Co - FINAL
No Passing Zone Log (MAR)

Route: 0739R
Length: 7.762 Direction: East
From: 0.000 *LEAVE UNI CO*
To: 7.762 *ENTER MARION*

Scale: 1.00 mile/page

Length	Left	C/L	Right	Length	Control Points	
					5.838	BRIDGE
	5.787				5.796	BRIDGE
			5.617			
0.787					5.354	S0203R LARUE PROSPECT
				0.617		
	5.000		5.000			

Sheet total equivalent length of solid line: 1.500 Accum. total: 6.080

© 2002 - MasterMind Systems, Inc. - Traffic Safety Suite

CALCULATED RDK
CHECKED CK

PAVEMENT MARKING CENTERLINE LOGS

MAR-739-0.00

I:\Projects\mar\739\0000.008\25896\roadway\sheets\TRAFFIC CONTROL SHEETS.DGN Sheet_TS105 28-AUG-2007 11:23AM rkinsell

PAVEMENT MARKING CENTERLINE LOG
MAR-739-0.00 TO MAR-739-7.45

ODOT Dist 6 - Marion Co - FINAL
No Passing Zone Log (MAR)

Route: 0739R
Length: 7.782 Direction: East
From: 0.000 *LEAVE UNI CO*
To: 7.782 *ENTER MARION*

Length	Left	C/L	Right	Length	Control Points
	7.000				
0.083					
	6.917				
			6.796		
				0.095	
			6.701		
	6.462				
0.135					
	6.326				
			6.292		
				0.136	
			6.156		

Scale: 1.00 mile/page

Sheet total equivalent length of solid line: 0.700 Accum. total: 6.780

© 2002 - MasterMind Systems, Inc - Traffic Safety Suite

ODOT Dist 6 - Marion Co - FINAL
No Passing Zone Log (MAR)

Route: 0739R
Length: 7.782 Direction: East
From: 0.000 *LEAVE UNI CO*
To: 7.782 *ENTER MARION*

Length	Left	C/L	Right	Length	Control Points	
	7.782				7.782	ENTER MARION
0.036					7.759	UNDERWOOD SOUTH LT
	7.746					
					7.673	QUAKER LT
			7.624		7.624	SHELLBARK RT
				0.095		
			7.529		7.514	COLONIAL LT
					7.477	HICKORY RT
	7.428				7.428	↑ 45mph
					7.384	C0105 CRISSINGER RT
0.142						
	7.286		7.295			
				0.142		
			7.153			
					7.107	C0101 CAMPBELL LT
					7.098	↑ 55mph
					7.039	Mile Post = 007
0.012	7.012					

Scale: 1.00 mile/page

Sheet total equivalent length of solid line: 0.621 Accum. total: 7.401

© 2002 - MasterMind Systems, Inc. - Traffic Safety Suite

CALCULATED RDK
CHECKED CK

PAVEMENT MARKING CENTERLINE LOGS

MAR-739-0.00

I:\Projects\mar\739\0000.008\25896\roadway\sheets\TRAFFIC CONTROL SHEETS.DGN Sheet_TS106 28-AUG-2007 11:23AM rkinsell

STRUCTURE GENERAL NOTES

* MAR-739-1.22 (SFN# 5103673)
MILL AND PAVE OVER WITH THE SAME TREATMENT AS ROADWAY.
SAW AND SEAL BETWEEN PAVEMENT AND APPROACH SLABS AND
APPROACH SLABS AND DECK.

* MAR-739-3.61 (SFN# 5103789)
MILL AND PAVE OVER WITH THE SAME TREATMENT AS ROADWAY.
SAW AND SEAL BETWEEN PAVEMENT AND APPROACH SLABS AND
APPROACH SLABS AND DECK.

* MAR-739-5.82 (SFN# 5103827)
MILL AND PAVE OVER WITH THE SAME TREATMENT AS ROADWAY.
SAW AND SEAL BETWEEN PAVEMENT AND APPROACH SLABS AND
APPROACH SLABS AND DECK.

ITEMS 202, 407 AND 448 HAVE BEEN PROVIDED FOR THE EXTRA WIDTH AT EACH STRUCTURE IN ADDTION TO THOSE PROVIDED ON THE PAVEMENT CALCULATIONS PLAN SHEET.

STRUCTURE DETAIL
MAR-739-1.22, MAR-739-3.61, MAR-739-5.82
(SFN # 5103673), (SFN # 5103789), (SFN # 5103827)

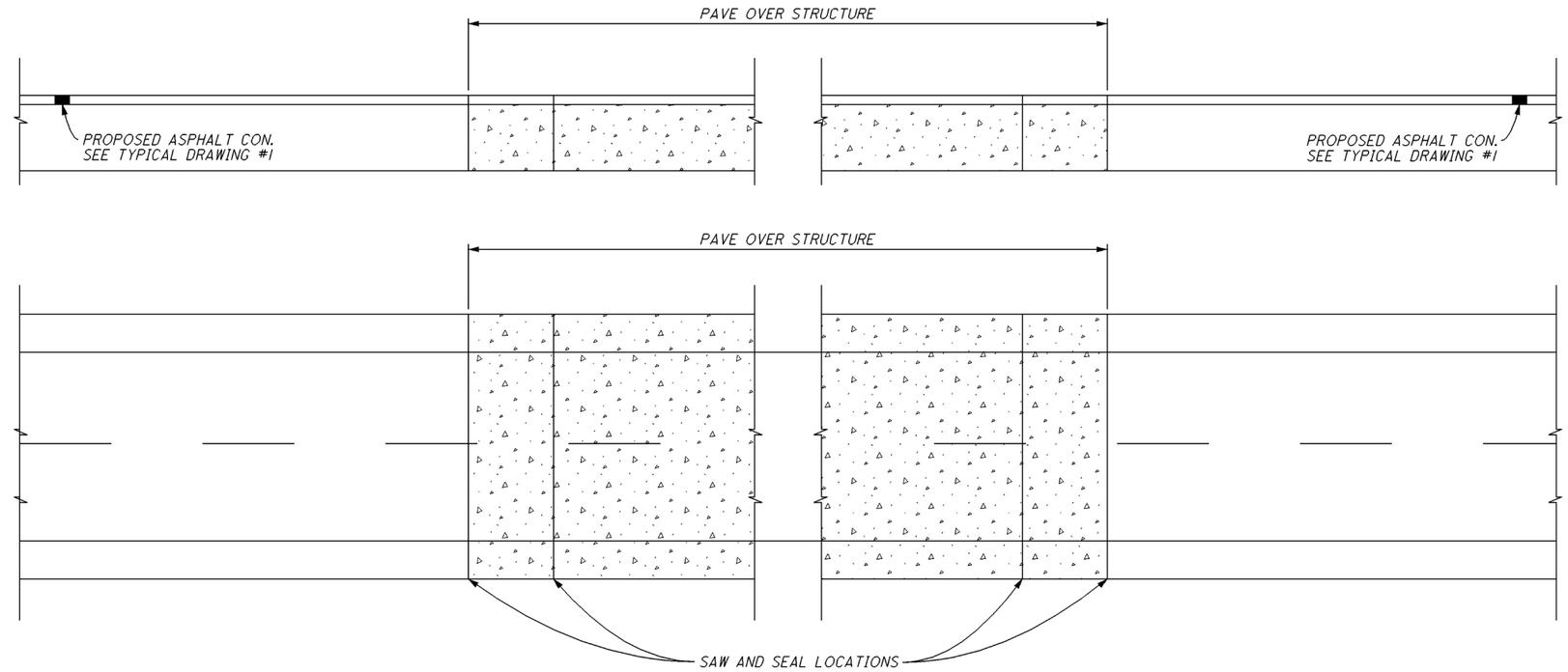

MAR-739-1.22, MAR-739-3.61, MAR-739-5.82 ESTIMATED QUANTITIES

LENGTH	WIDTH	202 WEARING COURSE REMOVED	407 TACK COAT 0.075 GAL. PER SQ. YD.	448 ASPHALT SURFACE COURSE TYPE I PG64-22 1.5" DEPTH	516 SAWING AND SEALING BITUMINOUS CONCRETE JOINTS			REMARKS
		SQ. YD.	GAL.	CU. YD.	FT.			
31'	8'	28	2	1				MAR-739-1.22 (SFN# 5103673)
4	JOINTS				128			PAVEMENT & APPROACH
								APPROACH & DECK
199'	8.5'	188	14	8				MAR-739-3.61 (SFN# 5103789)
4	JOINTS				130			PAVEMENT & APPROACH
								APPROACH & DECK
61'	8'	54	4	2				MAR-739-5.82 (SFN# 5103827)
4	JOINTS				128			PAVEMENT & APPROACH
								APPROACH & DECK
		270	20	11	386			

* ALL QUANTITIES CARRIED TO THE GENERAL SUMMARY

CALCULATED RDK | CHECKED -CK
DESIGN AGENCY DIST. #6 IN-HOUSE DESIGN
DATE 10/13/2007 | REVIEWED RDK | STRUCTURE FILE NUMBER (VARIOUS SFN#s)
DRAWN RDK | REVISED -CK
DESIGNED RDK | CHECKED -CK

STRUCTURE DETAILS

MAR-739-0.00
PID. # 25896

1 / 2

31 / 34

I:\Projects\mar\739\0000.008\25896\roadway\sheets\STRUCTURE SHEETS.DGN Sheet_SM101 28-AUG-2007 11:23AM rkinsell

STRUCTURE GENERAL NOTES

* MAR-739-3.53 (SFN# 5103762)
DO NOT PAVE OVER WITH THE STRUCTURE.
SEAL EXISTING DECK WITH SRS.
SAW AND SEAL BETWEEN PAVEMENT AND APPROACH SLABS

* MAR-739-5.87 (SFN# 5103851)
DO NOT PAVE OVER WITH THE STRUCTURE OR APPROACH SLABS.
SEAL EXISTING DECK AND APPROACH SLABS WITH SRS.

STRUCTURE DETAIL
MAR-739-3.53, MAR-739-5.87
(SFN # 5103762), (SFN # 5103851)

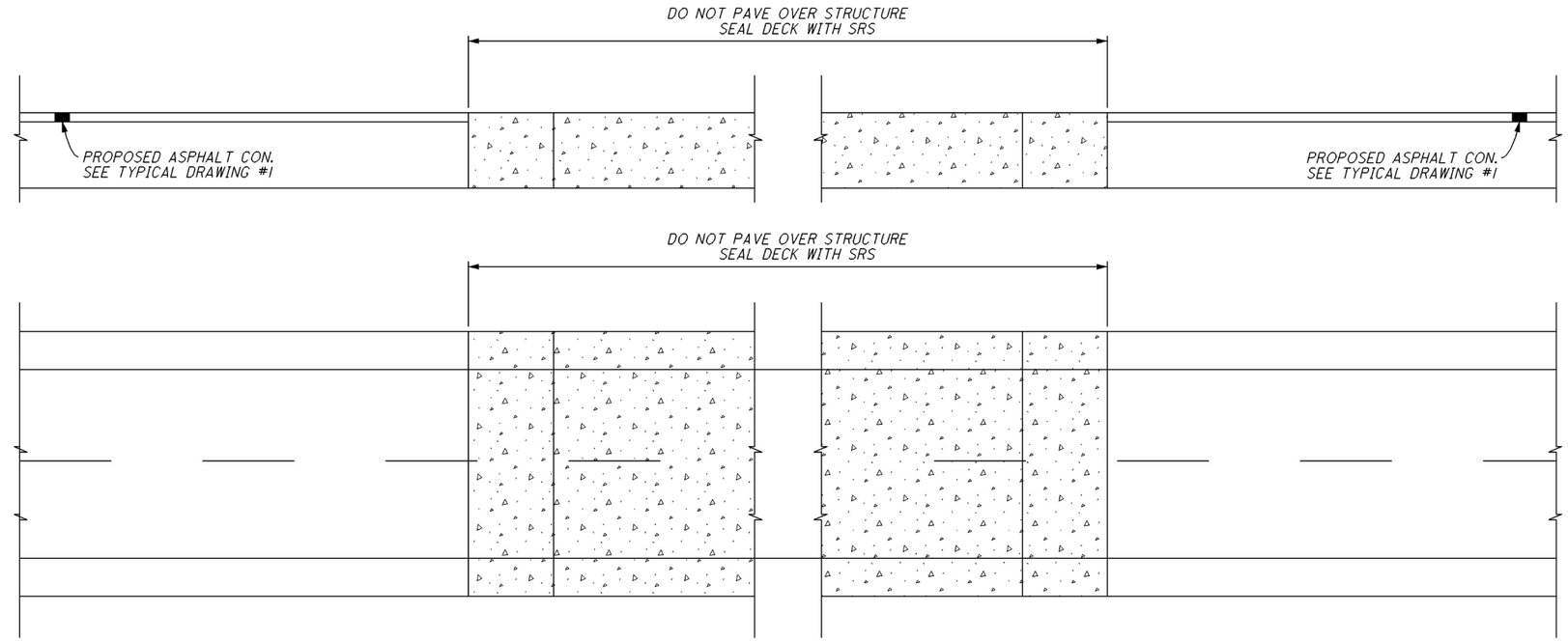

MAR-739-3.53, MAR-739-5.87 ESTIMATED QUANTITIES

LENGTH	WIDTH	512 TREATMENT OF CONCRETE BRIDGE DECK WITH SRS	516 SAWING AND SEALING BITUMINOUS CONCRETE JOINTS					REMARKS
		SQ. YD.	FT.					
59'	32'	210						MAR-739-3.53 (SFN# 5103762)
2	JOINTS		64					PAVEMENT & APPROACH
152'	32'	540						MAR-739-5.87 (SFN# 5103851)
		750	64					

* ALL QUANTITIES CARRIED TO THE GENERAL SUMMARY

CALCULATED RDK | CHECKED CX
DESIGN AGENCY DIST. #6 IN-HOUSE DESIGN
REVIEWED RDK | DATE 10/13/2007 | STRUCTURE FILE NUMBER (VARIOUS SFN#s)
DRAWN RDK | REVISED CX
DESIGNED RDK | CHECKED CX

STRUCTURE DETAILS

MAR-739-0.00
PID. # 25896

2 / 2

32 / 34

I:\Projects\mar\739\0000.008\25896\roadway\sheets\STRUCTURE SHEETS.DGN Sheet_SM102 28-AUG-2007 11:23AM rkinsell

ITEM SPECIAL-SAWING AND SEALING BITUMINOUS CONCRETE JOINTS

1) DESCRIPTION:

THIS WORK SHALL CONSIST OF CUTTING AND SEALING TRANSVERSE JOINTS IN THE NEW BITUMINOUS CONCRETE OVERLAY OF BRIDGES. BITUMINOUS CONCRETE JOINTS SHALL BE CONSTRUCTED DIRECTLY OVER, AND IN LINE WITH, THE EXISTING UNDERLYING TRANSVERSE ABUTMENT AND APPROACH SLAB JOINTS.

2) MATERIALS:

THE JOINT SEALANT SHALL MEET THE REQUIREMENTS OF ITEM 705.04, JOINT SEALANTS, HOT-POURED, FOR CONCRETE AND ASPHALT PAVEMENTS. ACCEPTABLE ALTERNATE MATERIALS ARE:

A SILICONE SEALANT MEETING FEDERAL SPECIFICATIONS TT-S-001543A CLASS A (ONE-PART SILICONE SEALANTS) AND TT-S-00230C CLASS A (ONE-COMPONENT SEALANTS), SUCH AS THOSE MANUFACTURED BY GENERAL ELECTRIC, SILICONE PRODUCTS DIVISION, 4015 EXECUTIVE PARK DRIVE, CINCINNATI, OHIO 45242 (513-243-1953)OR DOW CORNING, 400 TECHNE CENTER, SUITE 103, MILFORD, OHIO 45150 (513-831-3586); OR SOF-SEAL, A COLD-APPLIED, LOW-MODULUS, TWO-COMPONENT POLY-MERIC COMPOUND HORIZONTAL SEALANT AS MANUFACTURED BY W.R.MEADOWS, INC., P.O. BOX 543,ELGIN,ILLINOIS 60121 (800-342-5976).

3) CONSTRUCTION DETAILS:

A) GENERAL: THE CONTRACTOR SHALL CONDUCT HIS OPERATION SO THAT THE CUTTING, CLEANING AND SEALING OF TRANSVERSE JOINTS IS A CONTINUOUS OPERATION THAT WILL BE PERFORMED AS SOON AS PRACTICAL AFTER THE PAVING, BUT NO LATER THAN FOUR (4) DAYS AFTER PLACEMENT OF THE ASPHALT CONCRETE SURFACE COURSE. TRAFFIC SHALL NOT BE ALLOWED TO KNEAD TOGETHER OR DAMAGE JOINT CUT PRIOR TO SEALING.

B) CUTTING OF TRANSVERSE JOINTS: THE CONTRACTOR SHALL SAW OR ROUT TRANSVERSE JOINTS TO THE DIMENSIONS SHOWN IN THE DETAILS ON THIS SHEET. THE CUT JOINTS SHALL LIE DIRECTLY ABOVE EACH TRANSVERSE JOINT.

THE BLADE OR BLADES SHALL BE OF SUCH SIZE THAT THE FULL WIDTH AND DEPTH OF THE CUT CAN BE MADE WITH ONE PASS. DRY OR WET CUTTING WILL BE ALLOWED. JOINTS SHALL EXTEND THE FULL WIDTH OF THE BRIDGE.

C) CLEANING JOINTS: DRY SAWED JOINTS SHALL BE THOROUGHLY CLEANED WITH A SUFFICIENT AMOUNT OF COMPRESSED AIR TO REMOVE ANY DIRT, DUST, OR DELETERIOUS MATTER. WET SAWED JOINTS SHALL BE WASHED CLEAN OF ALL CUTTINGS BY FLUSHING WITH A JET OF WATER AND WITH OTHER TOOLS AS NECESSARY. AFTER FLUSHING, THE JOINT SHALL BE BLOWN OUT WITH COMPRESSED AIR. WHEN THE SURFACES ARE THOROUGHLY CLEAN AND DRY, AND JUST PRIOR TO PLACING THE JOINT SEALER, COMPRESSED AIR HAVING A PRESSURE OF AT LEAST 90 PSI SHALL BE USED TO BLOW OUT THE JOINT AND REMOVE ALL TRACES OF DUST.

IN THE EVENT FRESHLY CUT JOINTS BECOME CONTAMINATED BEFORE THEY ARE SEALED, THEY SHALL BE RE-CLEANED OF ALL FOREIGN MATERIAL BY HIGH PRESSURE WATER JET.

D) SEALING JOINTS: THE JOINT SHALL BE THOROUGHLY DRY WHEN THE SEALANT IS PLACED. AFTER CLEANING AND DRYING, A BOND-BREAKER MATERIAL SHALL BE APPLIED TO THE BOTTOM OF THE GROOVE.

HOT-POURED JOINT SEALANT MATERIAL SHALL BE HEATED IN A KETTLE OR MELTER CONSTRUCTED AS A DOUBLE BOILER, WITH THE SPACE BETWEEN THE INNER AND OUTER SHELLS FILLED WITH OIL OR OTHER HEAT TRANSFER MEDIUM. POSITIVE TEMPERATURE CONTROL AND MECHANICAL AGITATION SHALL BE PROVIDED. HEATING MUST BE IN STRICT ACCORDANCE WITH THE MANUFACTURER'S RECOMMENDATION. JOINT SEALER MATERIAL SHALL NEVER BE KEPT HEATED AT THE POURING TEMPERATURE FOR MORE THAN FOUR (4) HOURS AND SHALL NEVER BE REHEATED. SEALER LEFT IN THE APPLICATOR AT THE END OF A DAY'S WORK SHALL NOT BE USED.

HOT-POURED SEALANT SHALL BE APPLIED IMMEDIATELY THROUGH A NOZZLE, WHICH MUST PROJECT INTO THE SAWED JOINT, FILLING FROM THE BOTTOM UP. THE SEALANT SHALL COMPLETELY FILL THE JOINT IN SUCH A MANNER THAT, AFTER COOLING, THE LEVEL OF THE SEALANT WILL NOT BE HIGHER THAN 1/8" BELOW THE PAVEMENT SURFACE. ANY DEPRESSION IN THE COOLED SEAL GREATER THAN 1/4" SHALL BE BROUGHT UP TO THE SPECIFIED LIMIT BY FURTHER ADDITION OF HOT-POURED SEALANT. CARE SHALL BE TAKEN IN THE SEALING OF THE JOINTS SO THAT THE FINAL APPEARANCE WILL PRESENT A NEAT FINE LINE.

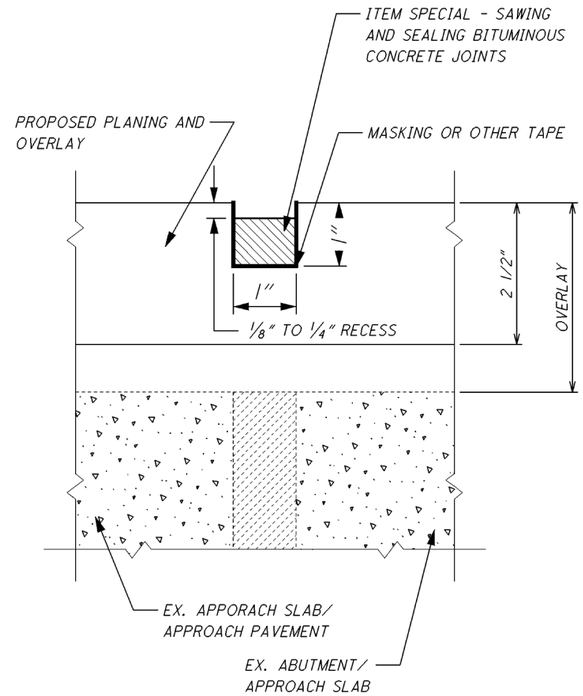

THE COLD APPLIED SEALANT MATERIALS (POLYURETHANE, SILICONE, AND POLYMERIC COMPOUNDS) SHALL BE INSTALLED AS PER MANUFACTURERS' RECOMMENDATIONS, EXCEPT AS MODIFIED BY THIS DRAWING. THE SEALANT SHALL BE INSTALLED WHEN THE AMBIENT TEMPERATURE IS 40 DEGREES F OR HIGHER. TRAFFIC SHALL NOT BE ALLOWED ON THE JOINT FOR ONE HOUR AFTER APPLICATION OF THE SEALANT.

4) METHOD OF MEASUREMENT:

THE QUANTITY TO BE PAID FOR UNDER THIS ITEM WILL BE THE NUMBER OF LINEAR FEET OF JOINTS SAWED AND SEALED AS PER THE ABOVE REQUIREMENTS.

5) BASIS OF PAYMENT:

THE UNIT PRICE PER LINEAR FOOT FOR ITEM SPECIAL - "SAWING AND SEALING BITUMINOUS CONCRETE JOINTS" SHALL INCLUDE THE COST OF ALL LABOR, MATERIALS, AND EQUIPMENT NECESSARY TO COMPLETE THE WORK, INCLUDING THE FURNISHING AND PLACING OF THE JOINT SEALER MATERIAL.

CALCULATED RDK
CHECKED CK

SAWING AND SEALING BITUMINOUS CONCRETE JOINTS

MAR-739-0.00

I:\Projects\mar\739\0000.008\25896\roadway\sheets\PLAN INSERT SHEETS.DGN Sheet_SAWING_AND_SEALING 28-AUG-2007 11:23AM rkinsell

GENERAL NOTES

1. It is intended that this drawing be used for treatment of drop-offs that develop during construction operations, and that are not otherwise provided for in the construction plans. Where the plans do not provide specific items for labor, equipment, or materials to implement the drop-off treatments specified hereon, they shall be included for payment in the lump sum bid for Item 614 - Maintaining Traffic.
2. While the need for certain advisory signing is noted hereon, it is not intended that this be indicative of all signing that may be required to advise or warn motorists, and all requirements of the Ohio Manual of Uniform Traffic Control Devices (OMUTCD) must be fulfilled.
3. In urban or otherwise heavily developed areas where pedestrians and/or bicyclists may be present in significant numbers, additional signing and protective measures other than those shown hereon may be required.
4. The drop-off treatment selected for use at any given location shall be as appropriate for the prevailing conditions at the site.
5. Where concrete barrier is specified, it shall be in accordance with Standard Construction Drawing MC-9.2 and Item 622.
6. When drums are specified for a dropoff condition, a minimum number of four drums shall be used. Spacing shall be as indicated in the plans or as specified in the OMUTCD.
7. When OW-151 (Low Shoulder) signs or OW-171 (Uneven Lanes) and OWP-171 signs are required, they shall be placed 750′ in advance of the condition, on all intersecting entrance ramps within the limits of the condition and immediately beyond all intersecting roadways within the limits of the condition. When the dropoff condition extends more than one-half mile, additional signs should be erected at intervals of one mile or less.
8. For locations, such as at ramps, lane shifts, lane closures, etc., where traffic is required to negotiate any difference in elevation between pavements, a 3:1 slope treatment similar to the Optional Wedge Treatment shall be provided.
9. Portable concrete barrier shall be placed on the same level as the traffic surface and shall not encroach on lane width(s) designated as the minimum required for traffic use. Where drums are used, and their presence would reduce traveled lane widths to less than 10′, drums may be placed on the opposite level from that of traffic provided the dropoff depth does not exceed 5″ and approval is granted by the Project Engineer.
10. Pavement Repairs (or similar work):
    a. Lengths greater than 60 feet - utilize appropriate treatment from Condition I.
    b. Lengths of 60 feet or less - repairs shall be effected in accordance with 255.08. Drums may be used as a separator adjacent to the traveled lane.

OPTIONAL WEDGE TREATMENT

(MILLING OR RESURFACING)

1. This treatment may be used when permitted for Condition I only.
2. OW-171 and OWP-171 signs required.

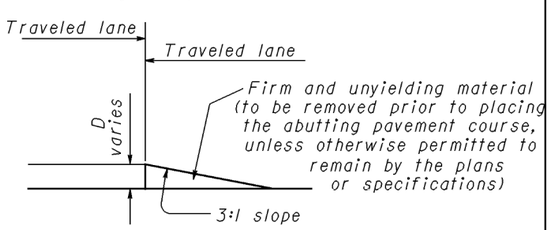

CONDITION I

DROPOFFS BETWEEN TRAVELED LANES

1. These treatments are to be used for resurfacing, pavement planing, excavation, etc. between or within traveled lanes.

D (In.)	Treatment
≤1½	Erect OW-171 and OWP-171 signs.
>1½-3	1) Lane closure utilizing drums* as shown below OR 2) Optional Wedge Treatment
>3-5	Lane closure utilizing drums as shown below.
>5	Lane closure utilizing portable concrete barrier as shown below.

*Cones may be used for daytime only conditions.

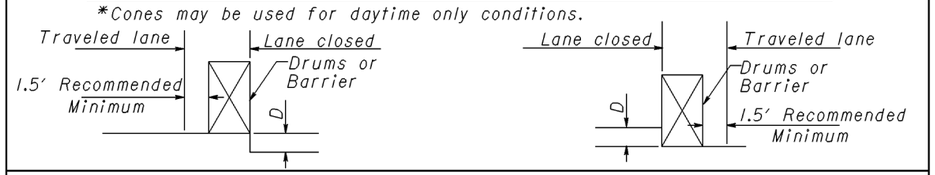

CONDITION II

DROPOFFS WITHIN GRADED SHOULDER AREA

1. The treatments indicated below are for use in conjunction with resurfacing, planing, or excavations within the graded shoulder area.
2. The graded shoulder area is that flat or gradually sloping area between the edge of a normally traveled lane and the more steeply sloping ditch foreslope or embankment slope. Its surface may be soil or turf, and/or it may be inclusive of a "treated" area (improved with aggregates, asphaltic materials, or concrete). For the purposes herein, its maximum width shall be considered to be twelve (12) feet.

D (In.)	Treatment
≤1½	1) If edgelines are present, no treatment necessary OR 2) Erect OW-171 and OWP-171 signs.
>1½-5	1) If min. lane width* requirements can be met, maintain lanes utilizing drums as shown below OR 2) If min. lane width* requirements cannot be met, close adjacent lane utilizing drums OR 3) Optional Shoulder Treatment.
>5-12 Daylight only	If min. lane width* requirements can be met, maintain lanes utilizing drums as shown below.
>5-24	1) If min. lane width* requirements can be met, maintain lanes utilizing portable concrete barrier as shown below. OR 2) If min. lane width* requirements cannot be met, close adjacent lane utilizing drums.
>24	Lane closure utilizing portable concrete barrier as shown below.

*Minimum lane widths shall be 10′ unless otherwise specified in the plans.

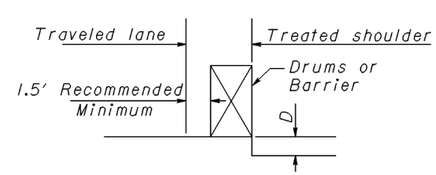

OPTIONAL SHOULDER TREATMENT

1. This treatment may not be used within a bituminous shoulder where a hot longitudnal joint per 401.15 is required.
2. OW-151 signs required.

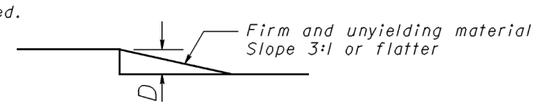

CONDITION III

DROPOFFS BEYOND GRADED SHOULDER OR BACK OF CURB

1. See Note 2 under Condition II.
2. Use Chart A or B below, as applicable.

CHART A

USE FOR:
1. Uncurbed Facilities.
2. Curbed Facilities, where:
   a. Curbs are less than 6″ in height.
   b. Curbs are 6″ or greater in height and the legal speed is greater than 40 mph.

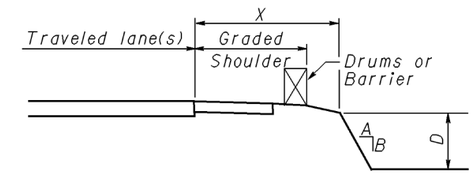

X (Ft.)	D (In.)	A/B	Treatment Required	
			Day	Night
0-4	Any	Any	(a)	(a)
4-30	Any	3:1 or Flatter	None	None
4-12	≤3	Steeper than 3:1	None	None
4-12	>3-≤12	Steeper than 3:1	Drums	Drums
4-12	>12	Steeper than 3:1	Drums	Barrier
>12-20	≤12	Steeper than 3:1	None	None
>12-20	>12-≤24	Steeper than 3:1	Drums	Drums
>12-20	>24	Steeper than 3:1	Drums	Barrier
>20-30	≤24	Steeper than 3:1	None	Drums
>20-30	>24	Steeper than 3:1	Drums	Barrier
>30	Any	Any	None	None

(a) Use treatment specified under Condition II.

CHART B

USE FOR: Curbed facilities, where the curb is 6″ or greater in height and the legal speed is 40 mph or less.

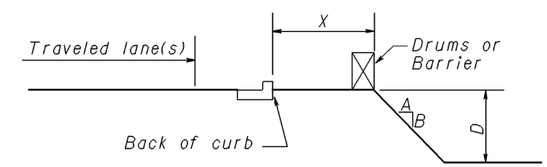

X (Ft.)	D (In.)	A/B	Treatment Required	
			Day	Night
0-10	<12	Any	None	Drums
0-10	>12	Any	Drums	Drums
>10	Any	Any	None	None

CALCULATED RDK
CHECKED CK

DROPOFFS IN WORK ZONES

MAR-739-0.00

I:\Projects\mar\739\0000.008\25896\roadway\sheets\PLAN INSERT SHEETS.DGN Sheet_DROP_OFF 28-AUG-2007 11:23AM rkinsell