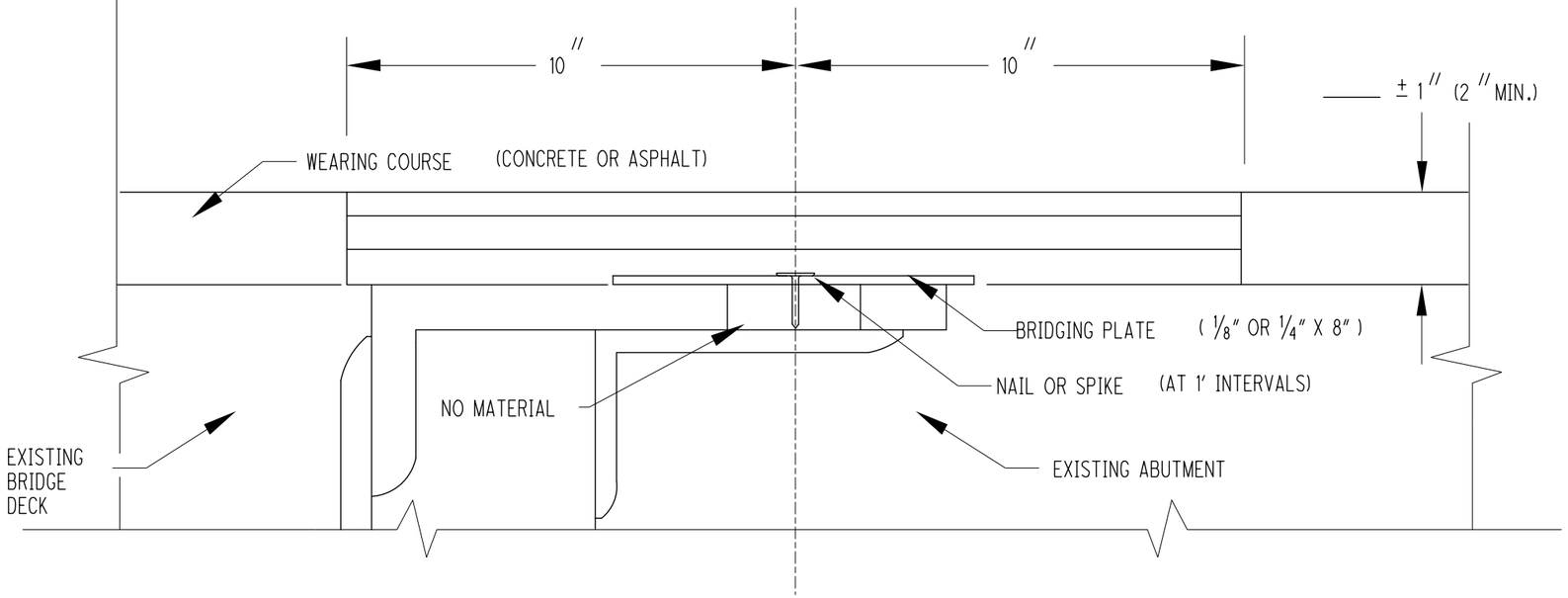

POLYMER MODIFIED EXPANSION JOINT

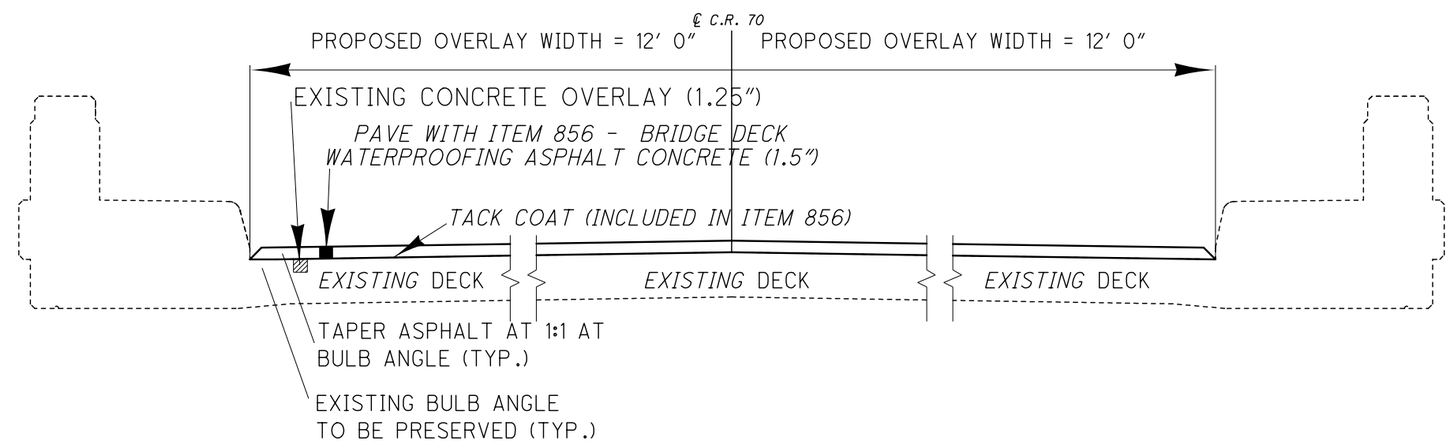

DECK OVERLAY DETAIL

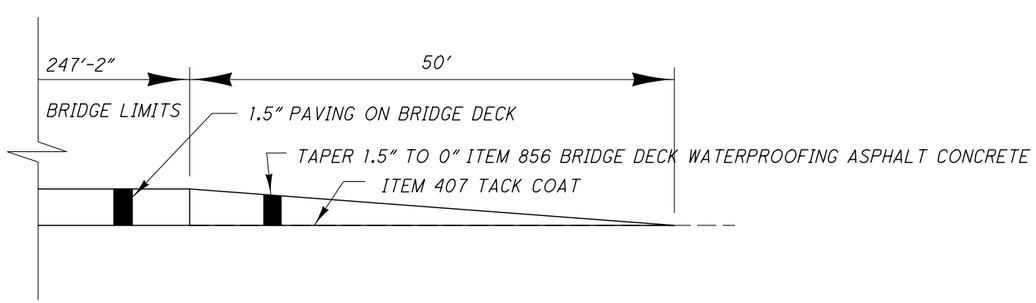

APPROACH PAVING DETAIL

DESIGN FILE:ii:\projects\86728\structures\WAY-585-16.49\WAY-585-16.49.dgn MODELNAME: Design
WORKSTATION:salay DATE:3/27/2015

DESIGN AGENCY
ODOT DISTRICT THREE
OFFICE OF
PLANNING AND ENGINEERING

DESIGNED	DRAWN	REVIEWED	DATE
MKP	MKP	KRB	11-25-14
CHECKED	REVISED	STRUCTURE FILE NUMBER	
		8506213	

PLAN VIEW
WAY-585-1649
OVER SR 585

WAY-94-14.16
MED-94-0.00
WAY-585-(11.96)(14.78)