NOTES

GENERAL: Components shown on this drawing are used in a variety of guardrail systems. See individual guardrail drawing for specific applications.

See CMS 606 for guardrail specifications not covered on these drawings.

Refer to AASHTO M 180 for dimensional details of W-Beam and Thrie-Beam rail elements, related buffer and end sections, beam splices, post and splice bolts, nuts, and Type 1 W-Beam to Thrie-Beam Transition sections.

RAIL ELEMENTS: W-Beam Rail has an effective length of 12'-6" unless otherwise specified, with ¾" x 2½" post bolt slots on 6'-3" centers regardless of post spacing. Field punch or drill bolt holes or slots for irregularly spaced posts as specified in CMS 606.04.

RAIL SPLICES: Lap splices between two rail elements or between a rail and terminal connector in the direction of traffic. Lap the buffer or flared end sections in the direction of traffic.

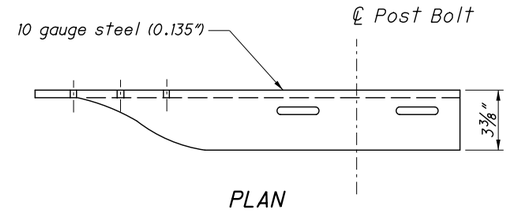

PLAN

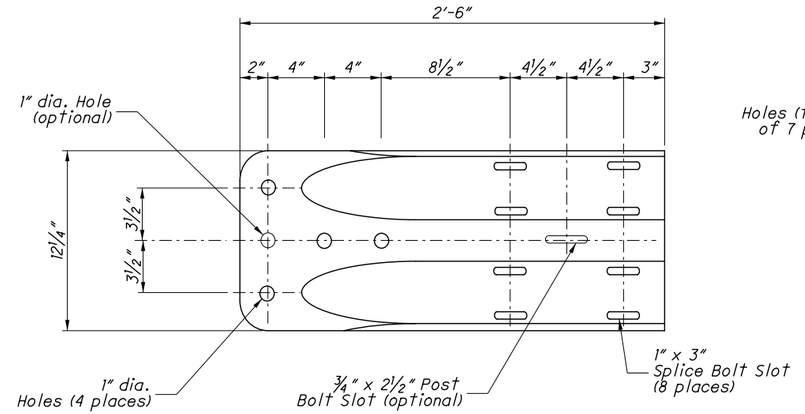

ELEVATION

W-BEAM TERMINAL CONNECTOR

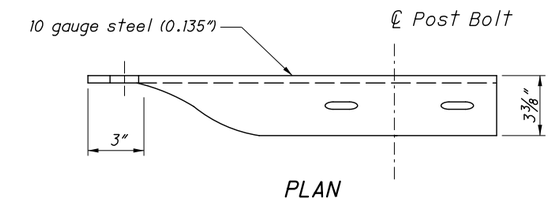

PLAN

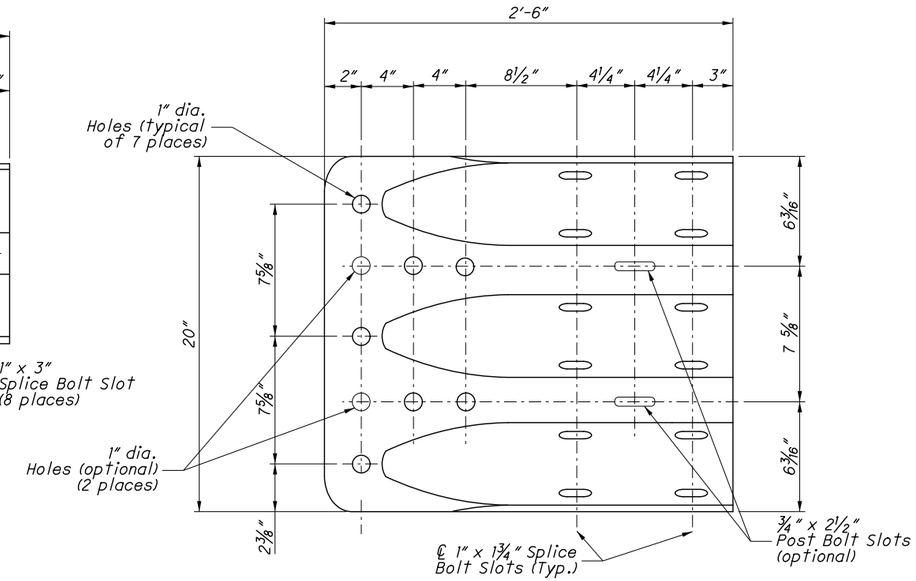

ELEVATION

THRIE-BEAM TERMINAL CONNECTOR

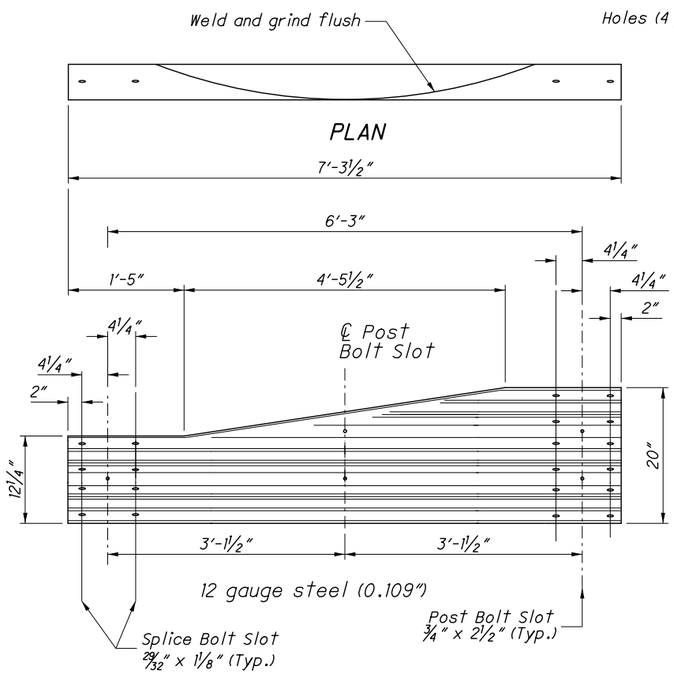

ELEVATION

TYPE 2 TRANSITION SECTION

(Asymmetric W to Thrie-Beam)

For details of Type 1 Transition Section (Symmetric), refer to AASHTO M 180, Figure 4.

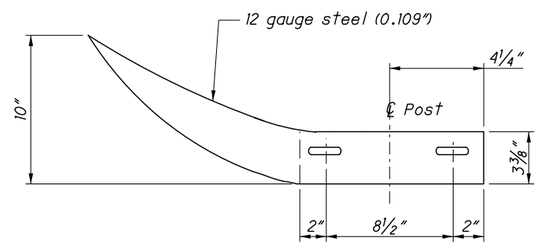

PLAN

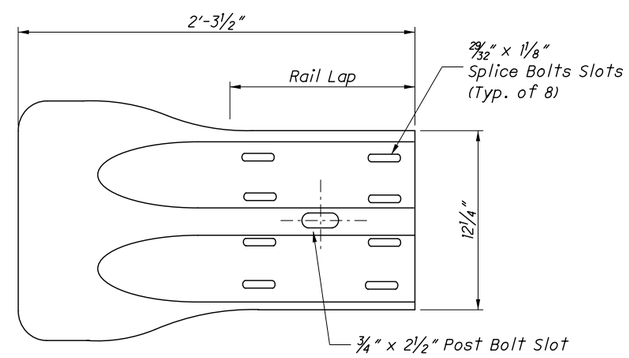

ELEVATION

W-BEAM FLARED END SECTION

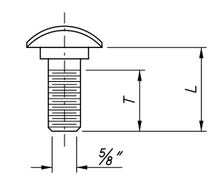

GUARDRAIL BOLT (For Post and Splice Bolts)		
L	T min.	Bolt Use
18" (Standard Rail)	4"	Type 5: WP/WB, PB
26" (Barrier Rail)		
10"	4"	Type 5: SP/WB, PB
1¼"	1⅛"	Splice Bolt

WP = Wood Post WB = Wood Blockout
SP = Steel Post PB = Plastic Blockout

Longer Bolt may be needed for round Wood Post larger than 8" dia.

OFFICE OF ROADWAY ENGINEERING

DESIGNED | REVIEWED | REVISION DATE | CHECKED | PIS NUMBER

PLAN INSERT SHEET

GUARDRAIL DETAILS (Rail Components)

WAY-94-14.16
MED-94-0.00
WAY-585-(11.96)(14.78)

1 / 3

52 / 59

DESIGN FILE: i:\projects\86728\roadway\sheets\PIS_GR-1.1_1-18-2013.dgn
WORKSTATION: mpeters
DATE: 12/1/2014
MODELNAME: Sheet