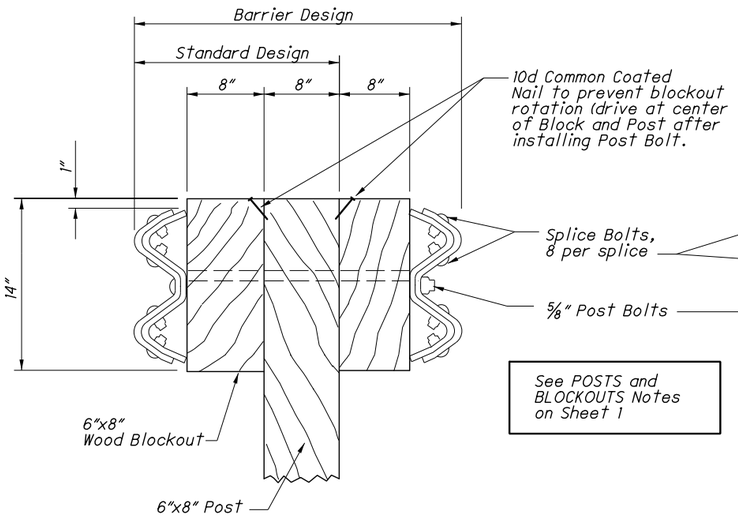

SQUARE WOOD POST

See POSTS and BLOCKOUTS Notes on Sheet 1

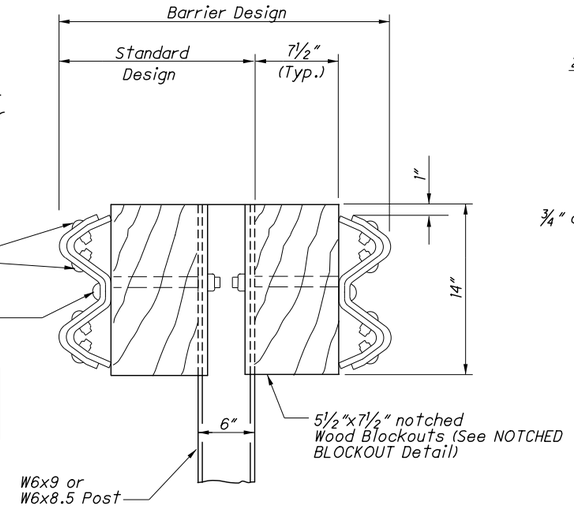

STEEL POST

See POSTS Note, Sheet 1

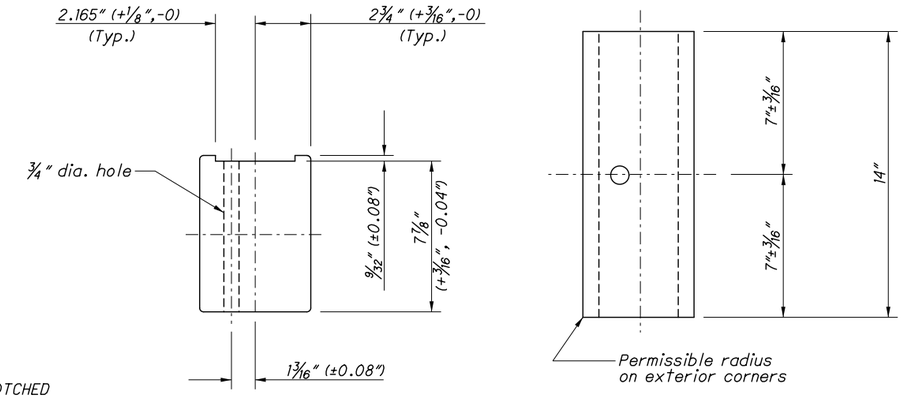

PLAN

ELEVATION

NOTCHED BLOCKOUTS FOR STEEL POSTS

See BLOCKOUTS Note on Sheet 1

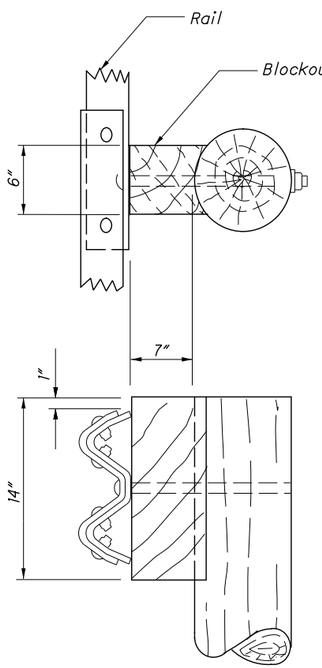

Method 1
Routed Blockout

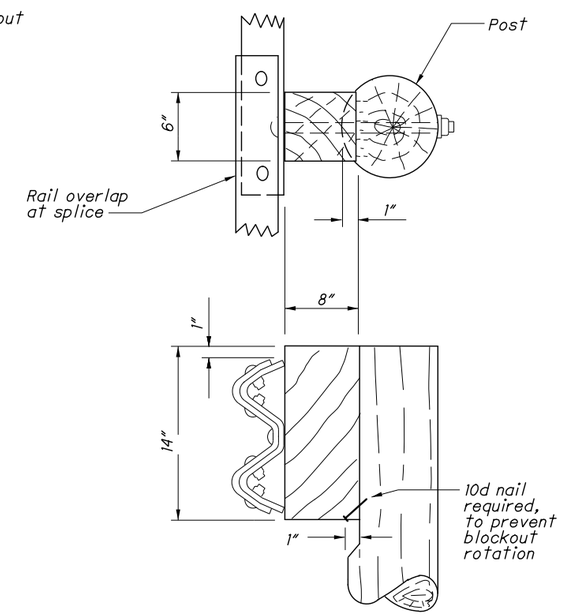

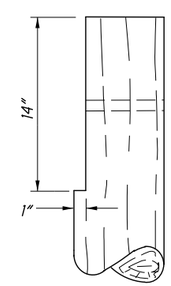

Toenail not required if post is cut as shown

Method 2
Notched Post

Alternate methods of placing the Blockouts on round Posts may be submitted for consideration and approved by the Engineer.

ROUND WOOD POSTS

Single Sided runs only (Standard Design)

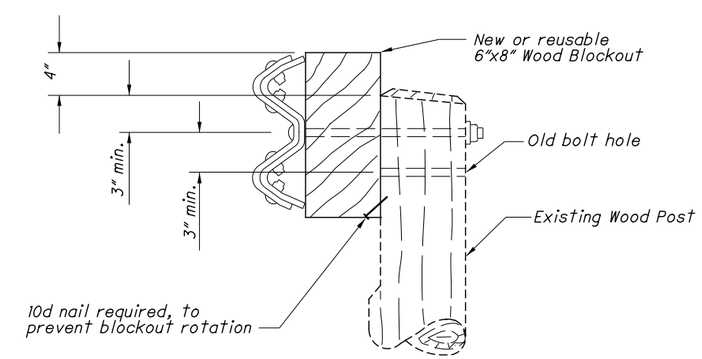

WOOD POSTS WITH WOOD BLOCK RAISING EXISTING GUARDRAIL HEIGHT

OFFICE OF ROADWAY ENGINEERING

DESIGNED | REVIEWED | REVISION DATE | CHECKED | PIS NUMBER

PLAN INSERT SHEET

GUARDRAIL TYPE 5 & 5A

WAY-94-14.16
MED-94-0.00
WAY-585-(11.96)(14.78)

2 / 2

56 / 59

DESIGN FILE:i:\projects\86728\roadway\sheets\PIS_GR-2.1_1-18-2013.dgn
WORKSTATION:mpeters DATE:12/1/2014 MODELNAME: Sheet