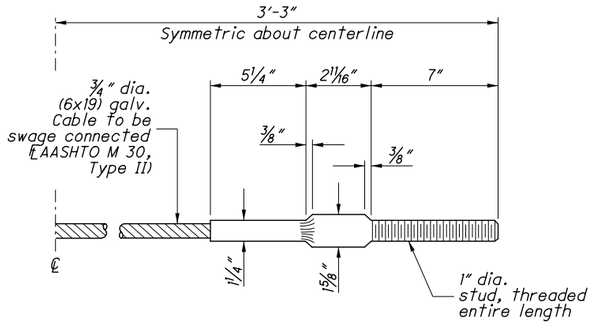

STANDARD SWAGED FITTING AND STUD

CABLE ANCHOR

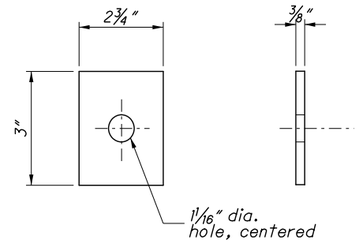

END PLATE

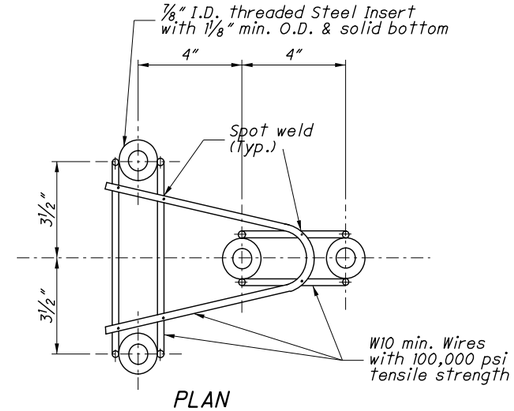

PLAN

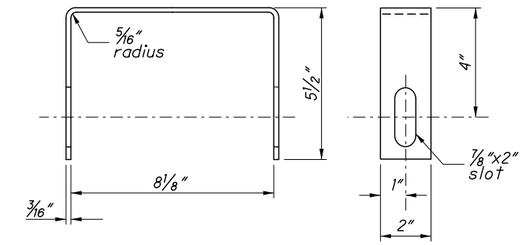

YOKE

Two required in Assembly

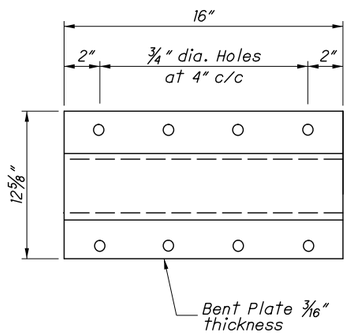

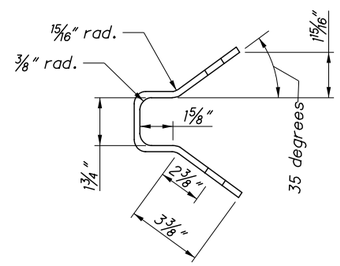

ANCHOR BRACKET

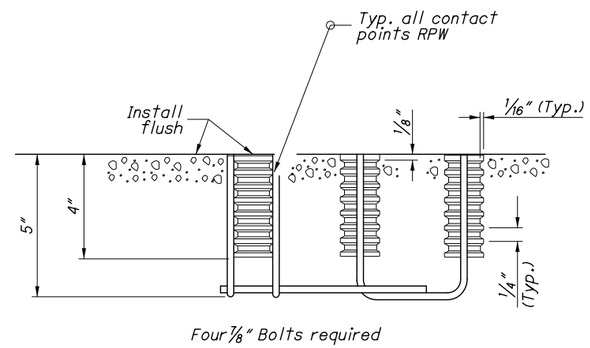

Four ⅞" Bolts required

ELEVATION

CONCRETE INSERT ANCHOR ASSEMBLY (W-BEAM ONLY)

See ANCHORS and PROTECTIVE COATINGS Notes on Sheet 2

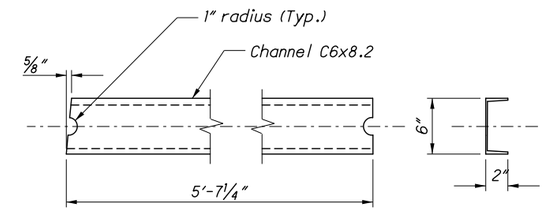

STRUT

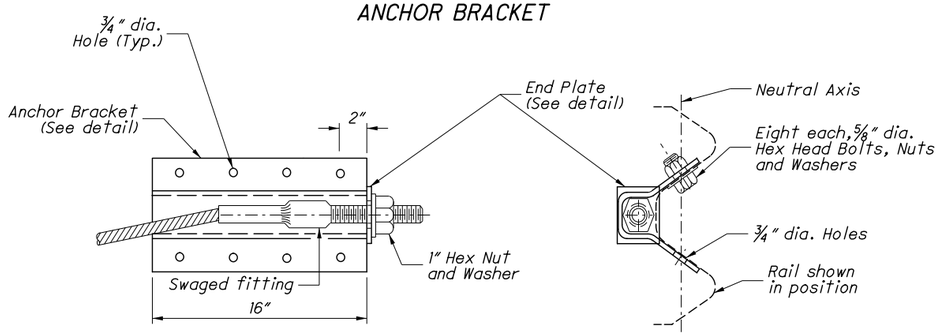

ANCHOR BRACKET ASSEMBLY DETAILS

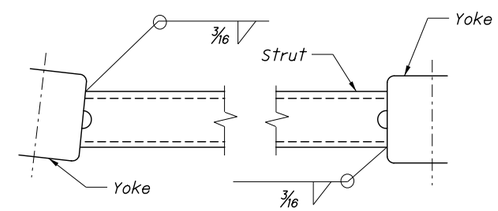

Channel legs shown down. For opposite hand, install Channel legs up.

STRUT AND YOKE ASSEMBLY

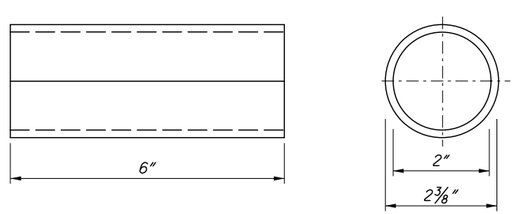

POST SLEEVE

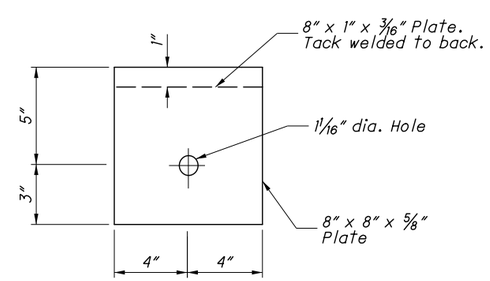

BEARING PLATE

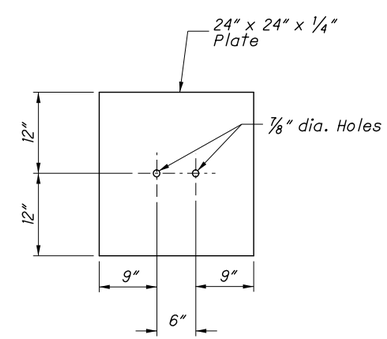

SOIL PLATE

DESIGN FILE:i:\projects\86728\roadway\sheets\PIS_GR-1.1_1-18-2013.dgn
WORKSTATION:mpeters DATE:12/1/2014 MODELNAME: Sheet

OFFICE OF ROADWAY ENGINEERING

DESIGNED | REVIEWED | REVISION DATE | CHECKED | PIS NUMBER

PLAN INSERT SHEET

GUARDRAIL DETAILS (Rail Components)

WAY-94-14.16
MED-94-0.00
WAY-585-(11.96)(14.78)

3 / 3

54 / 59