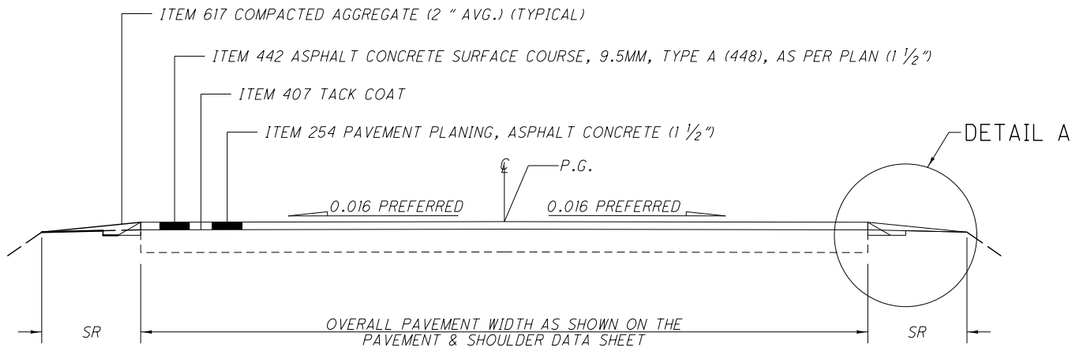

TYPICAL 5

WAY-585-14.78 TO 17.39

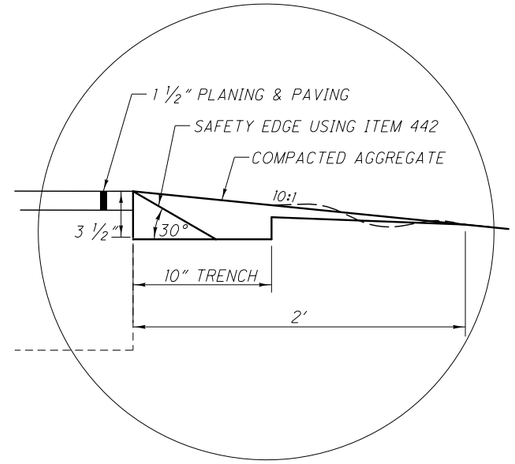

DETAIL A
SAFETY EDGE

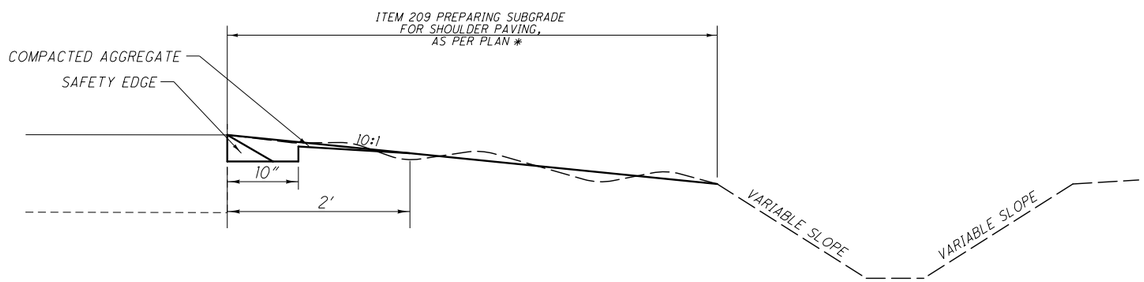

ITEM 209 PREPARING SUBGRADE
FOR SHOULDER PAVING, AS PER PLAN

WAY-585-14.78 TO 18.70
MED-94-0.00 TO 1.16

* SEE ITEM 209 PREPARING SUBGRADE FOR SHOULDER PAVING, AS PER PLAN NOTE FOR ADDITIONAL DETAILS

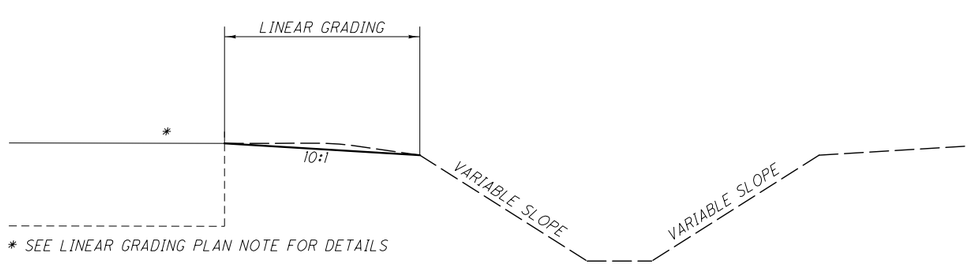

* SEE LINEAR GRADING PLAN NOTE FOR DETAILS

LINEAR GRADING DETAIL

WAY-94-14.16 TO 15.01
WAY-94-15.08 TO 21.48
WAY-585-11.96 TO 13.92

DESIGN FILE: I:\projects\86728\roadway\sheets\86728GY001.dgn
WORKSTATION: PATH: 12/18/2014

CALCULATED MKP
CHECKED KRB

TYPICAL SECTIONS

WAY-94-14.16
MED-94-0.00
WAY-585-(11.96)(14.78)