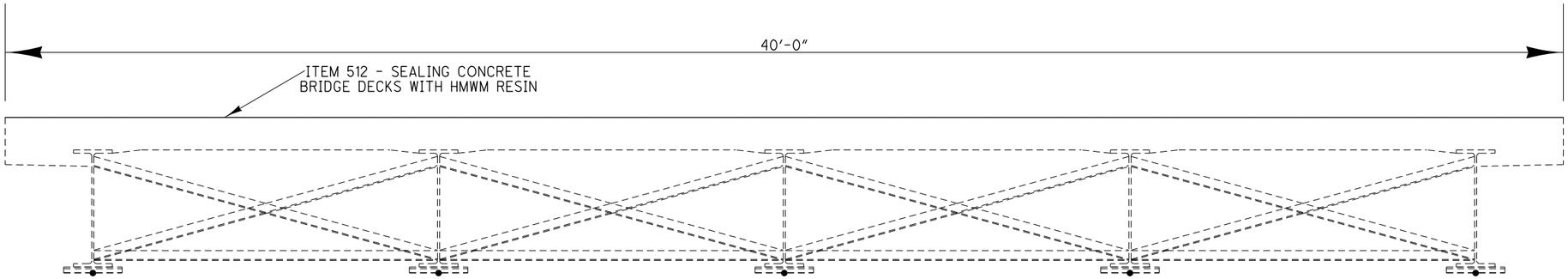

DECK SEALING

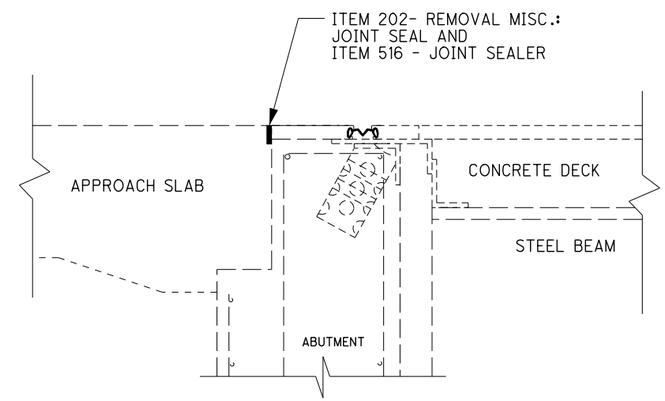

EXPANSION JOINT
DETAIL

ITEM	QUANTITY	UNITS	DESCRIPTION
202	80	FT	REMOVAL MISC.: JOINT SEALER
512	713	SY	SEALING CONCRETE BRIDGE DECKS WITH HMWM RESIN
516	80	FT	JOINT SEALER

ALL QUANTITIES CARRIED TO SHEET 1/4

DESIGN FILE:I:\projects\86728\structures\WAY-94-18.30.dgn MODELNAME: Design
WORKSTATION:mpeters DATE:12/1/2014

DESIGN AGENCY
ODOT DISTRICT THREE
OFFICE OF
PLANNING AND ENGINEERING

DESIGNED	DRAWN	REVIEWED	DATE
MKP	MKP	KRB	11-25-14
CHECKED	REVISED	STRUCTURE FILE NUMBER	
		8504083	

DECK SEALING DETAILS
WAY-94-18.30
OVER CHIPPEWA CREEK

WAY-94-14.16
MED-94-0.00
WAY-585-(11.96)(14.78)