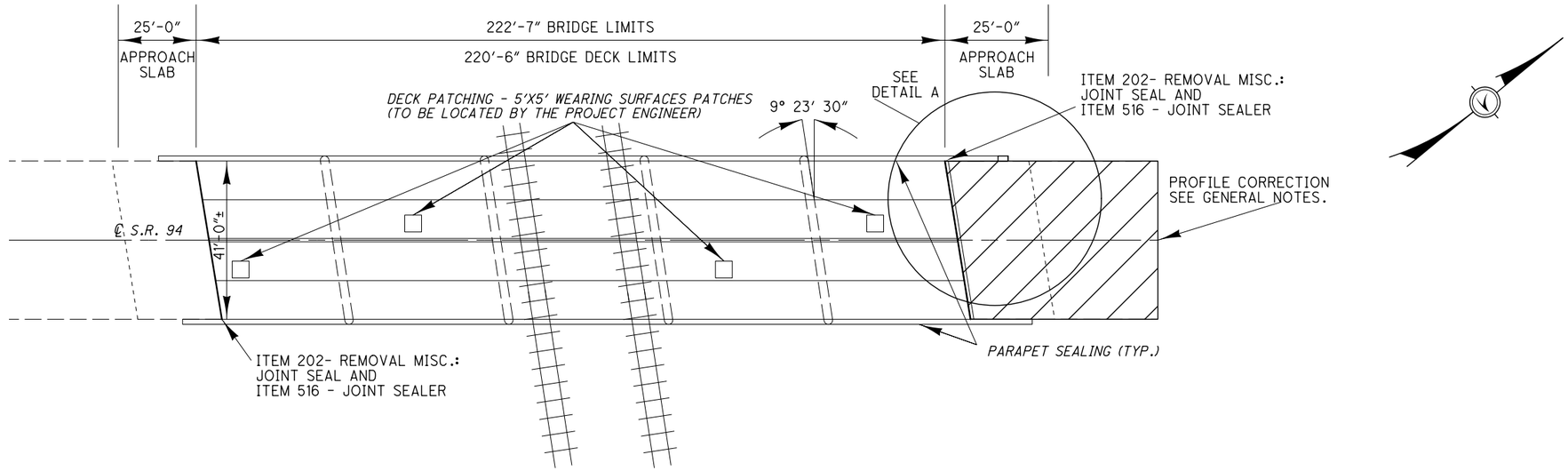

PLAN VIEW

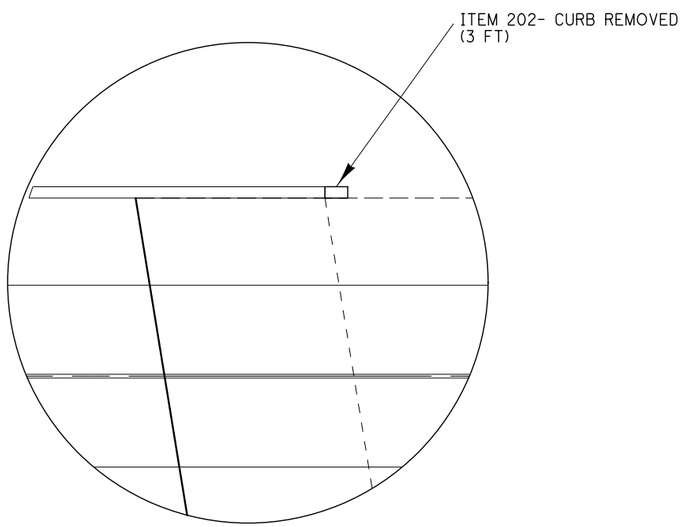

DETAIL A

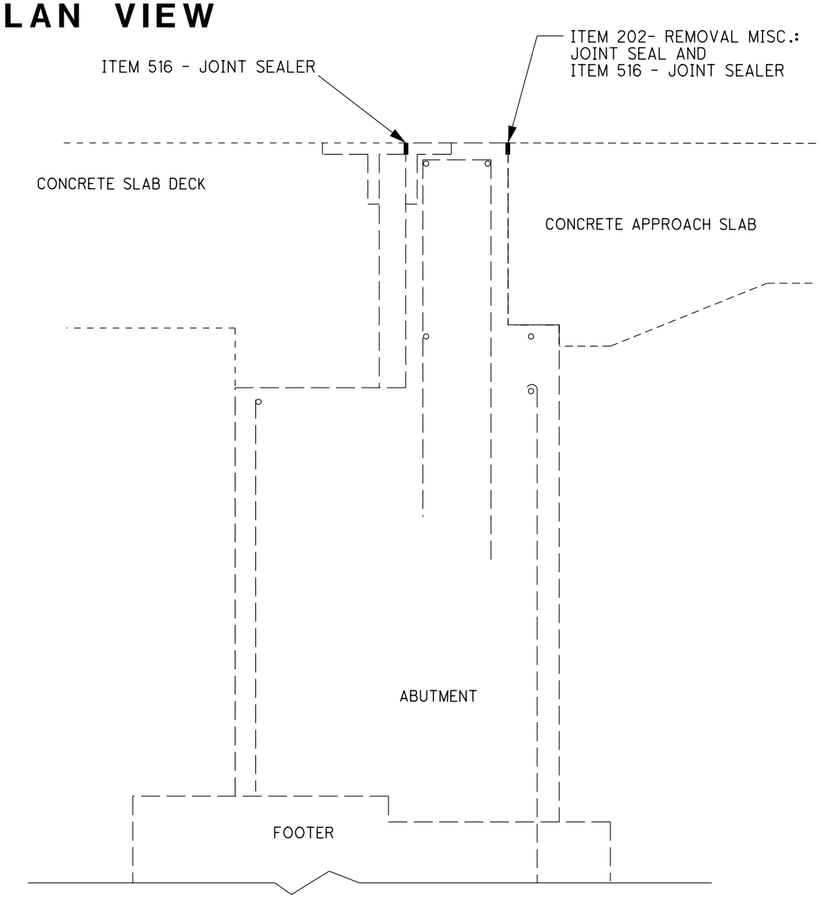

EXPANSION JOINT REPAIRS

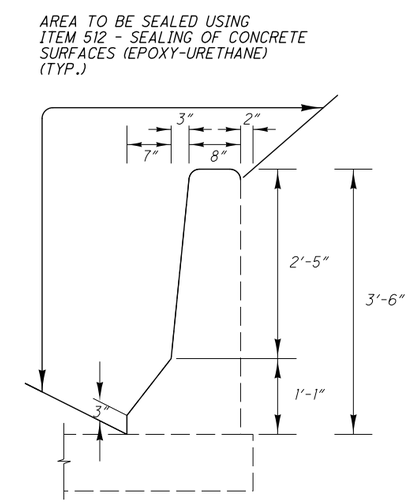

PARAPET SEALING

ITEM	QUANTITY	UNITS	DESCRIPTION
202	83	FT	REMOVAL MISC.: JOINT SEALER
202	3	FT	CURB REMOVED
512	229	SY	SEALING OF CONCRETE SURFACES (EPOXY-URETHANE)
SPECIAL	11	SY	PATCHING CONCRETE BRIDGE DECK OVERLAY WITH MICRO- SILICA MODIFIED CONCRETE
516	166	FT	JOINT SEALER

ALL QUANTITIES CARRIED TO STRUCTURE SUMMARY SHEET (04/STR/BR)

DESIGN FILE:i:\projects\86728\structures\WAY-94-19.00\WAY-94-19.00.dgn MODELNAME: Design
WORKSTATIONmpeters DATE:12/1/2014

DESIGN AGENCY
ODOT DISTRICT THREE
OFFICE OF PLANNING AND ENGINEERING

DESIGNED	DRAWN	REVIEWED	DATE
MKP	MKP	KRB	11-25-14
CHECKED	REVISED	STRUCTURE FILE NUMBER	
		8504113	

PLAN VIEW
WAY-94-1900
OVER CSXT RAILROAD

WAY-94-14.16
MED-94-0.00
WAY-585-(11.96)(14.78)