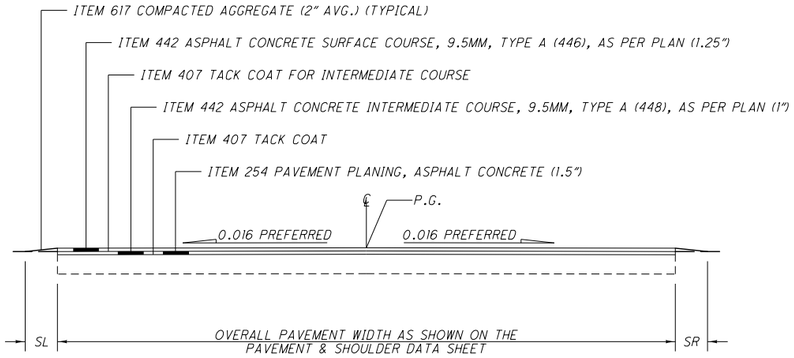

TYPICAL 1

WAY-585-11.96 TO 13.92

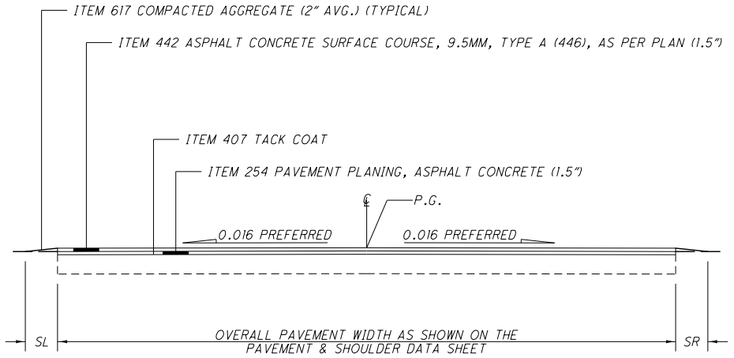

TYPICAL 4

WAY-94-14.16 TO 15.01
WAY-94-15.08 TO 21.48
MED-94-0.00 TO 1.16

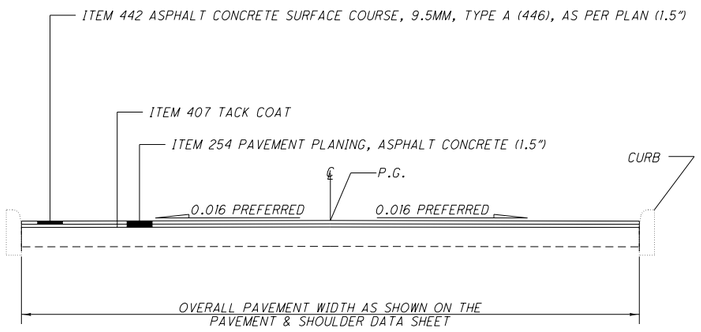

TYPICAL 2

WAY-94-15.01 TO 15.08

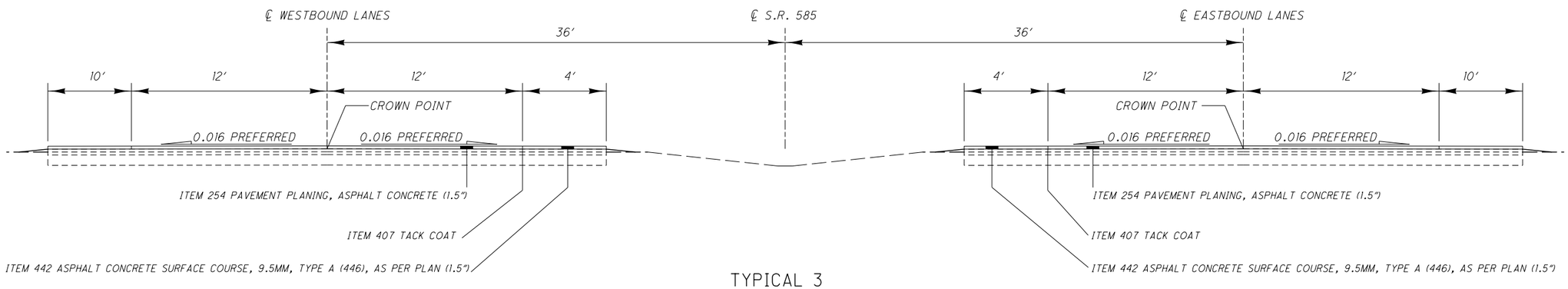

TYPICAL 3

WAY-585-17.39 TO 18.70

CALCULATED MKP
CHECKED KRB

TYPICAL SECTIONS

WAY-94-14.16
MED-94-0.00
WAY-585-(11.96)(14.78)

DESIGN FILE: I:\projects\86728\roadway\sheets\86728GY001.dgn
WORKSTATION: roadway\sheets\86728GY001.dgn
PLOT DATE: 3/27/2015