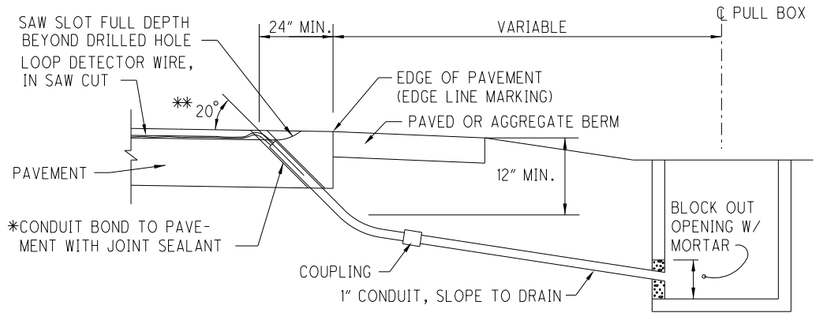

DRILLED HOLE LOCATION DETAIL WITH PAVED OR AGGREGATE BERM

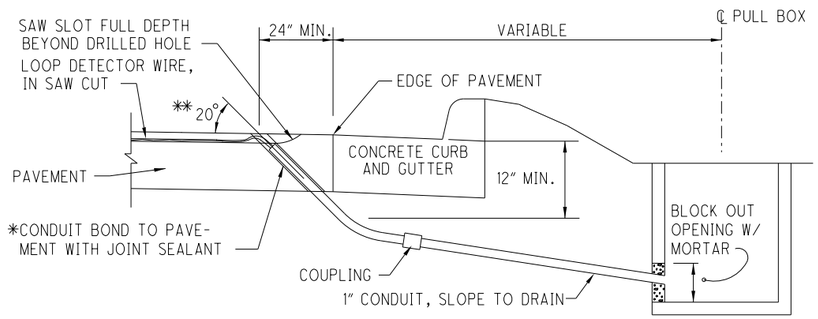

DRILLED HOLE LOCATION DETAIL WITH CONCRETE CURB AND GUTTER

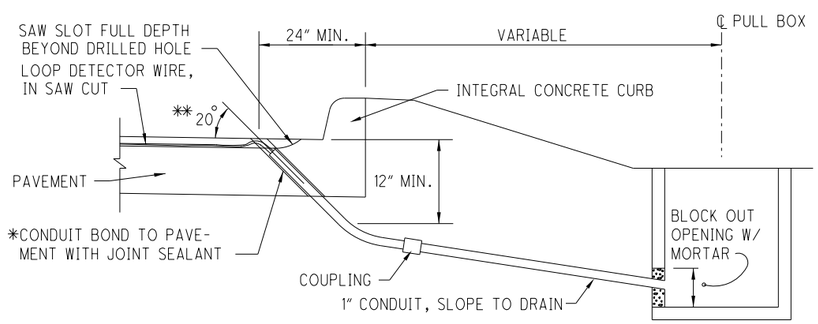

DRILLED HOLE LOCATION DETAIL WITH INTEGRAL CONCRETE CURB

*CONDUIT SHALL BE 1" DIAMETER 725.04.

** THE RANGE OF THIS ANGLE SHALL BE FROM 15 TO 30 DEGREES.

NOTE: SEE STANDARD DRAWING TC-82.10 FOR ADDITIONAL NOTES AND DETAILS

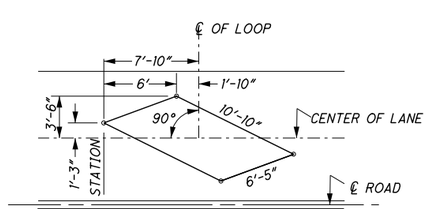

ANGULAR DESIGN DETECTION (ADD) LOOP DETAIL FOR LANE WIDTH 11' & LARGER

ITEM 632- DETECTOR LOOP, AS PER PLAN

AN ESTIMATED QUANTITY OF ITEM 632, DETECTOR LOOP, AS PER PLAN, HAS BEEN PROVIDED FOR THE PURPOSE OF REPLACING DAMAGED DETECTOR LOOPS AND/OR UPGRADING DETECTOR LOOPS TO IMPROVE MOTORCYCLE DETECTION. IT IS IMPERATIVE THAT REPLACEMENT OF DETECTOR LOOPS BE INSTALLED AND FULLY FUNCTIONAL IN THE SHORTEST POSSIBLE TIME. THE CONTRACTOR SHALL HAVE REPLACEMENT DETECTOR LOOPS INSTALLED AND FULLY FUNCTIONAL WITHIN 7 CALENDAR DAYS OF DESTRUCTION OF THE EXISTING DETECTOR LOOPS.

THE CONTRACTOR SHALL NOTIFY MATT BLANKENSHIP, ODOT DISTRICT 3 ROADWAY SERVICES MANAGER, (PHONE 419-207-7045) 5 WORKING DAYS IN ADVANCE OF ANY PLANING OPERATIONS OR PAVEMENT REPAIR WORK. THIS NOTIFICATION IS NEEDED FOR DISTRICT 3 TO SCHEDULE TEMPORARY SIGNAL TIMING MODIFICATIONS FOR THE TIME PERIOD WHEN THE DETECTOR LOOPS ARE OUT OF OPERATION. THE CONTRACTOR SHALL THEN RENOTIFY MR. BLANKENSHIP WITHIN 2 WORKING DAYS AFTER THE NEW DETECTOR LOOPS ARE REPLACED SO THAT HE CAN RESCHEDULE DISTRICT CREWS TO RESTORE SIGNAL TIMINGS TO THE ORIGINAL SETTINGS. IN ADDITION, THE CONTRACTOR SHALL ALSO NOTIFY CRAIG DEVORE, ODOT DISTRICT 3 PLANNING AND ENGINEERING DEPT. (PHONE 419-207-7169) WHEN THE NEW LOOPS ARE INSTALLED.

FAILURE TO COMPLY WITH THE ABOVE STATED REQUIREMENTS WILL RESULT IN THE ASSESSMENT OF A DISINCENTIVE FEE OF $500.00 PER DAY TO THE CONTRACTOR FOR EACH CALENDAR DAY BEYOND THE SPECIFIED LIMIT.

THE NEW DETECTOR LOOPS SHALL BE PLACED PER THE PLAN DETAILS AFTER THE PLANING AND PAVEMENT REPAIR OPERATIONS ARE COMPLETED WITHIN THE AFFECTED AREAS. THE DETECTOR LOOPS SHALL NOT BE CUT INTO THE SURFACE COURSE.

IN ADDITION TO THE REQUIREMENTS OF CMS 632.11, THE CONTRACTOR SHALL PROVIDE A POSITIVE AND EFFECTIVE MEANS FOR REMOVAL OF SOLID RESIDUE RESULTING FROM THE DRY SAW BLADE CUTTING OF LOOP DETECTOR SLOTS IN THE PAVEMENT. THE RESIDUE SHALL BE REMOVED BY VACUUM OR OTHER EFFECTIVE MEANS, BEFORE IT IS BLOWN BY TRAFFIC ACTION OR WIND. RESIDUE FROM DRY CUTTING SHALL NOT BE REMOVED BY COMPRESSED AIR. AS AN ALTERNATE, THE CONTRACTOR MAY USE WET CUTTING.

LOOP DETECTOR WIRE TO LEAD-IN CABLE SPLICES WITHIN EPOXY ENCAPSULATED SPLICE ENCLOSURES SHALL BE JOINED BY AN APPROVED CONNECTOR AND SOLDERED PER CMS 632.23 & 725.15. ALL COSTS ASSOCIATED WITH THE SOLDERED SPLICE CONNECTION AND EPOXY SPLICE KIT SHALL BE INCLUDED WITH THE DETECTOR LOOP.

IF THE PULL BOX IS NOT SPECIFIED IN THE PLANS, THE SPLICE SHALL BE MADE IN THE FIRST ENTERED POLE OR PEDESTAL, EXCEPT WHERE THE CONTROLLER CABINET IS MOUNTED ON THE POLE OR PEDESTAL, IN WHICH CASE THE LOOP WIRES SHALL BE ROUTED DIRECTLY INTO THE CABINET UNLESS SPECIFIED DIFFERENTLY IN THE PLANS. LOOP DETECTOR WIRE ROUTED THROUGH CONDUIT, PULL BOXES, POLES, AND PEDESTALS SHALL BE TWISTED PER CMS 632.23.

FURNISH ALL MATERIALS ACCORDING TO THE DEPARTMENT'S QUALIFIED PRODUCTS LIST (QPL).

SEE DETAILS ON THIS SHEET FOR ADDITIONAL REQUIREMENTS.

PAYMENT FOR ALL OF THE ABOVE SHALL BE INCLUDED IN THE UNIT PRICE BID PER EACH FOR ITEM 632, DETECTOR LOOP, AS PER PLAN.

(01/STR/PV)	
ITEM 632 - DETECTOR LOOP, AS PER PLAN	10 EACH
(03/NHS/PV)	
ITEM 632 - DETECTOR LOOP, AS PER PLAN	16 EACH

CALCULATED KRB
CHECKED MKP

DETECTOR LOOP GENERAL NOTES

WAY-94-14.16
MED-94-0.00
WAY-585-(11.96)(14.78)

DESIGN FILE:i:\projects\86728\roadway\sheets\86728TM001.dgn
WORKSTATION:ksalay
DATE:3/27/2015
MODELNAME: Default