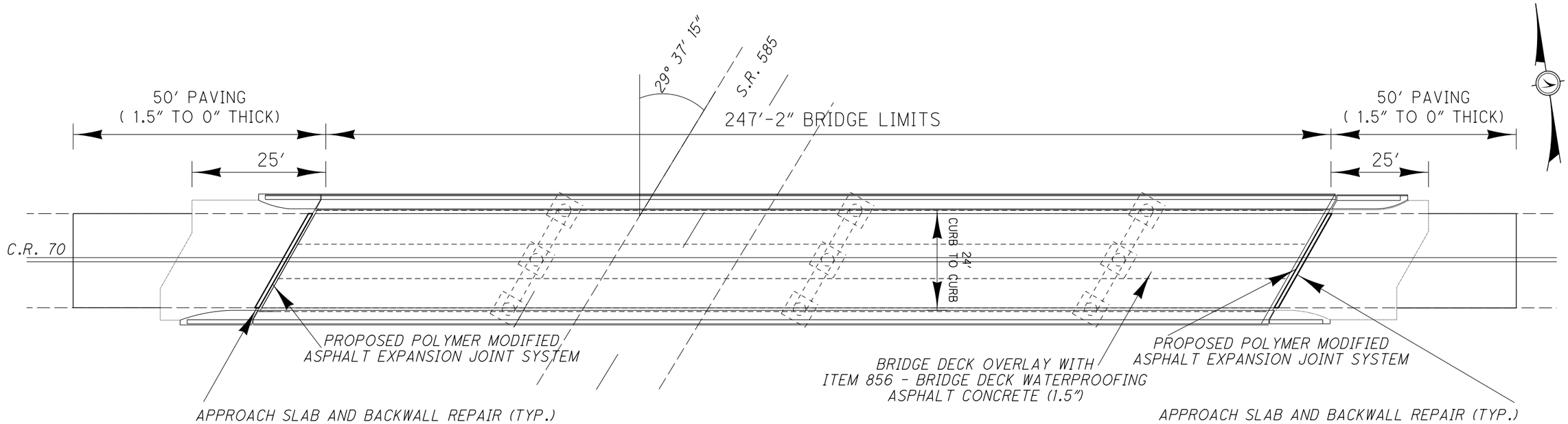

PLAN VIEW

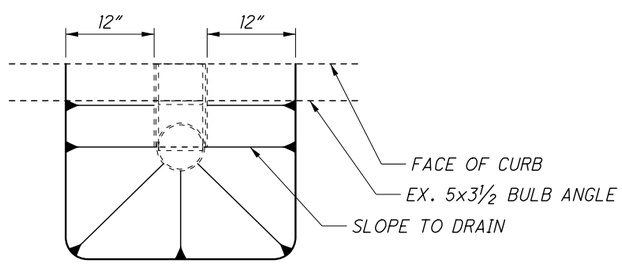

TYPICAL PLAN VIEW AT SCUPPER

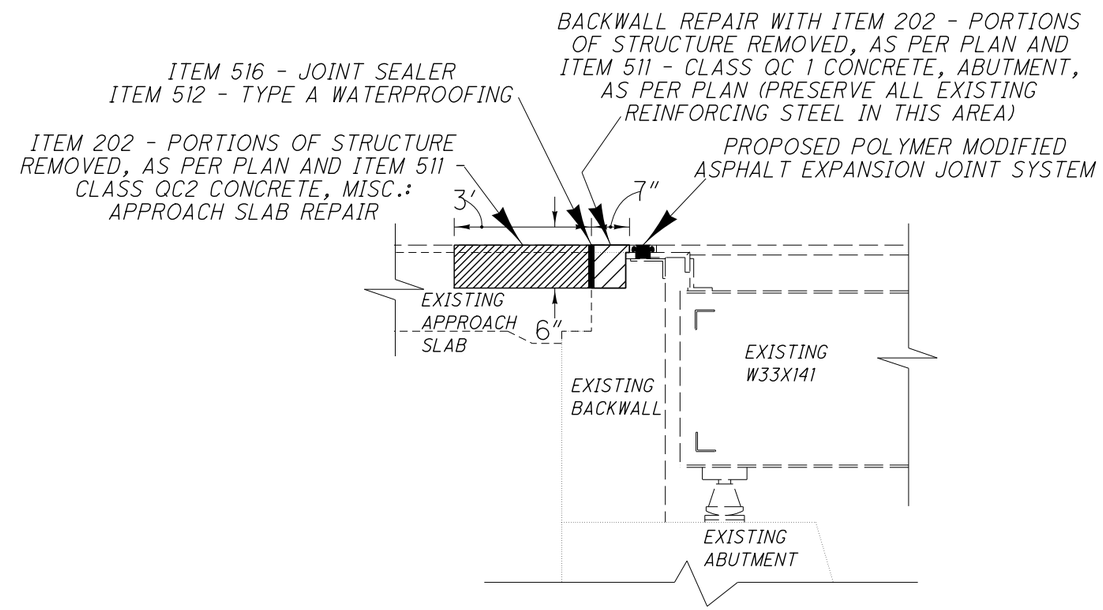

BACKWALL/APPROACH SLAB REPAIR

ITEM	QUANTITY	UNITS	DESCRIPTION
202	4	CY	PORTIONS OF STRUCTURE REMOVED, AS PER PLAN
511	1	CY	CLASS QC1 CONCRETE, ABUTMENT, AS PER PLAN
511	3	CY	CLASS QC2 CONCRETE MISC.: APPROACH SLAB REPAIR
512	3	SY	TYPE A WATERPROOFING
516	55	FT	JOINT SEALER
846	55	FT	POLYMER MODIFIED ASPHALT EXPANSION JOINT SYSTEM
856	33	CY	BRIDGE DECK WATERPROOFING ASPHALT CONCRETE

ALL QUANTITIES CARRIED TO STRUCTURE SUMMARY (05/NHS/BR)

NOTES:

1) ALL EXISTING REINFORCING STEEL TO BE PRESERVED.

2) EXISTING VANDAL FENCE NOT SHOWN.

DESIGN AGENCY
ODOT DISTRICT THREE
OFFICE OF
PLANNING AND ENGINEERING

DESIGNED	DRAWN	REVIEWED	DATE
MKP	MKP	KRB	11-25-14
CHECKED	REVISED	STRUCTURE FILE NUMBER	
		8506213	

PLAN VIEW
WAY-585-1649
OVER SR 585

WAY-94-14.16
MED-94-0.00
WAY-585-(11.96)(14.78)

1 / 2

48
59

DESIGN FILE:\\D03FS005\I-Drive\projects\86728\structures\WAY-585-16.49\WAY-585-16.49.dgn
MODELNAME: Design
WORKSTATIONmpeters DATE:12/18/2014