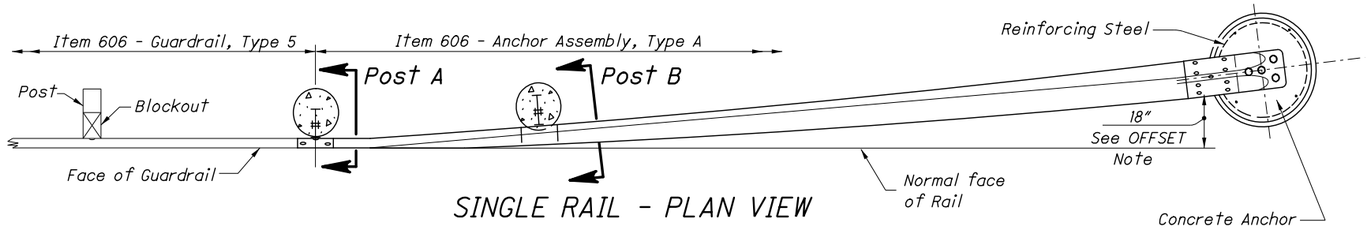

SINGLE RAIL - PLAN VIEW

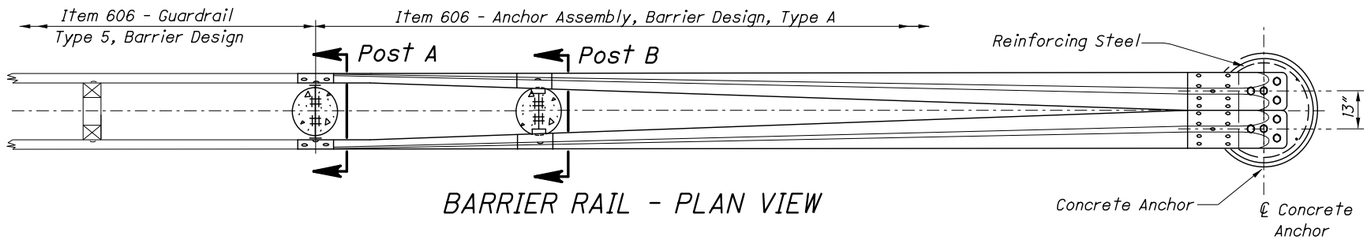

BARRIER RAIL - PLAN VIEW

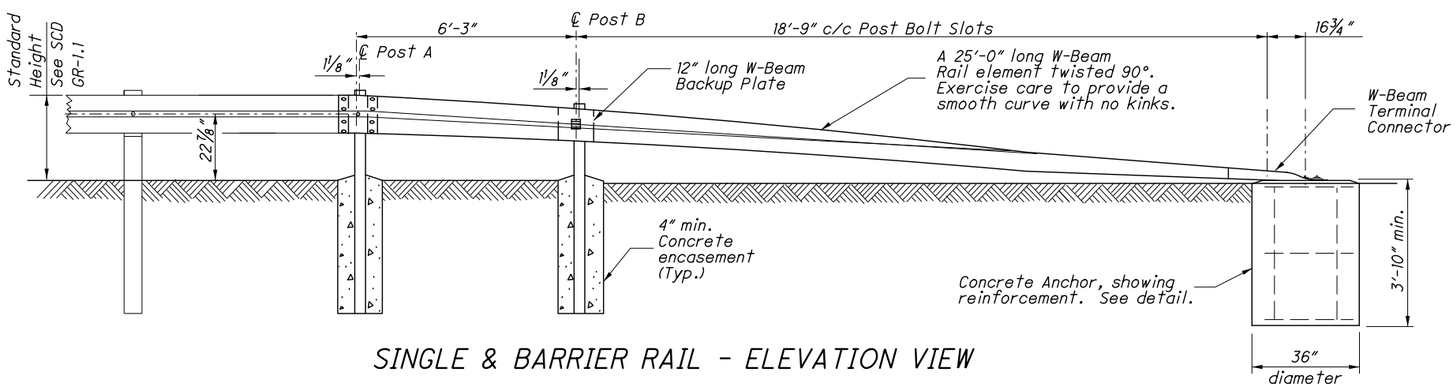

SINGLE & BARRIER RAIL - ELEVATION VIEW

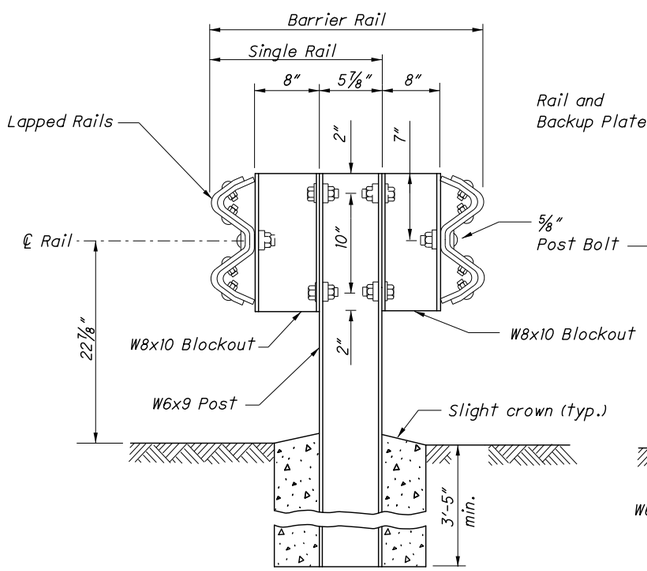

POST A

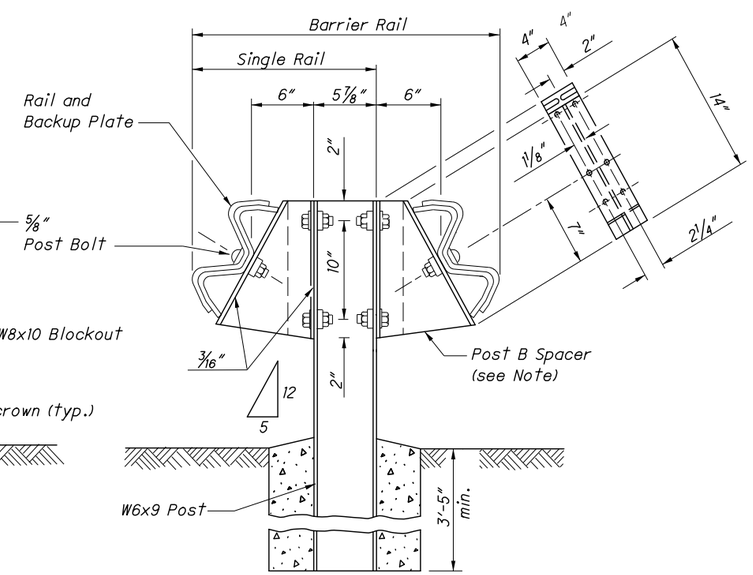

POST B

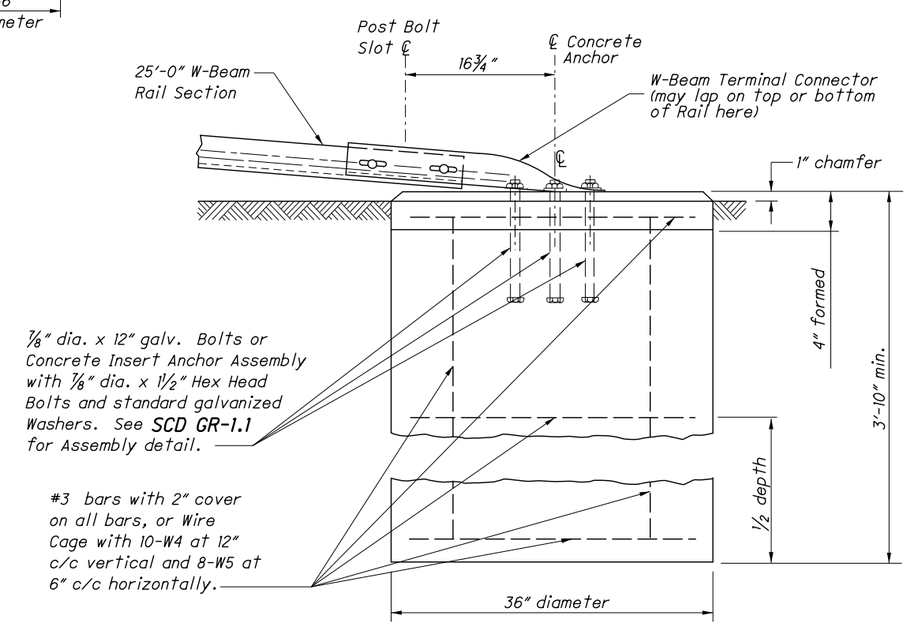

CONCRETE ANCHOR

NOTES

APPLICATION: On Non-NHS roadways it may be used in the clear zone, with restrictions. See Section 603. **Location & Design Manual, Volume 1.**

GENERAL: For details not shown, see **SCD GR-1.1** and other Drawings pertaining to specific guardrail type. Galvanize all steel parts.

OFFSETS: See **SCD GR-5.1** for Standard Guardrail Flare. The 18" flare offset from normal face of rail, shown in the plan view (for single rail installations) will be utilized only where shoulder is insufficient for providing standard flares.

POSTS: Steel posts W6x9 are shown, but W6x8.5 posts are also permitted. See **SCD GR-1.1** for additional embedment details.

SPACERS: Post B Spacers shall be made of 3⁄16" Steel Plate as specified in CMS 710.15 or tow sections of W6x9 or W8x10 cut in the web (see dashed line on POST B Detail) and welded together on both sides.

All steel spacers and posts may be provided with additional bolt holes so that these items will not be required to be made right and left handed.

Spacers shall be fastened to Posts with two ⅝" hex head bolts and nuts with standard washers on both sides.

WASHERS: All washers indicated on this drawing are standard galvanized steel of the appropriate size.

CONCRETE ANCHOR: Form top 4" of anchor and slope the top to conform to slope of the adjacent ground. The 36" diameter anchor may be replaced by a 2'-6" square anchor at the contractor's option.

PAYMENT: include all materials and labor for the 25'-0" Single Rail, Type A Anchor Assembly in the unit price bid for **Item 606 - Anchor Assembly, Type A, Each.** Pay for all materials and labor for the 25'-0" Barrier Rail under the unit bid price **Item 606 - Anchor Assembly, Barrier Design, Type A, Each.**

OFFICE OF ROADWAY ENGINEERING

DESIGNED | REVIEWED | REVISION DATE | CHECKED | PIS NUMBER

PLAN INSERT SHEET

TYPE A ANCHOR ASSEMBLY

WAY-94-14.16
MED-94-0.00
WAY-585-(11.96)(14.78)

1/1

59/59

DESIGN FILE: I:\projects\86728\roadway\sheets\PIS_GR-4.1_1-18-2013.dgn MODELNAME: Sheet
WORKSTATION: mpeters DATE: 12/1/2014