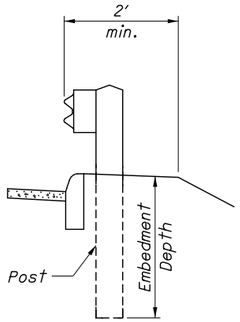

DETAIL A

See POST EMBEDMENT DEPTH Note

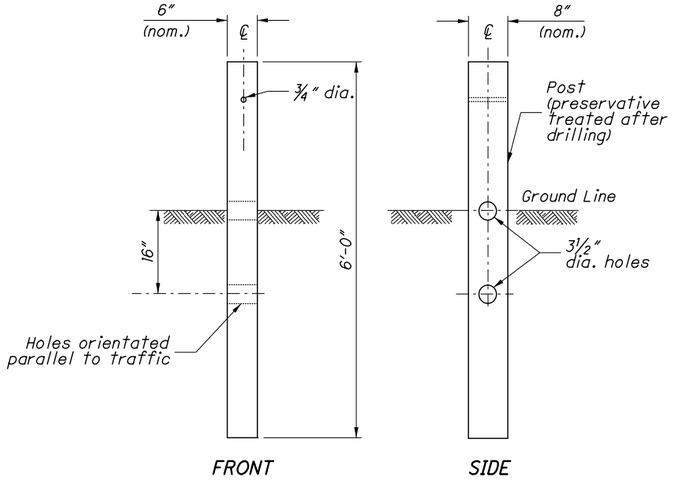

TYPE 1 BREAKAWAY CRT POST

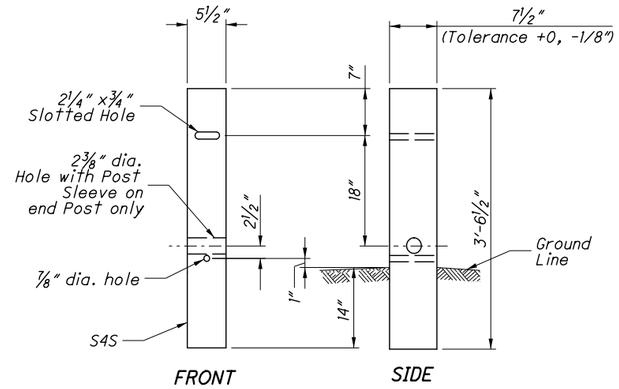

TYPE 2 BREAKAWAY CRT POST

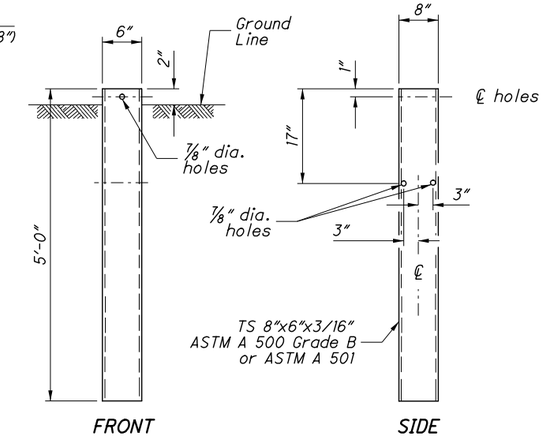

STEEL GROUND TUBE

NOTES

GUARDRAIL HEIGHT: For initial installation, construct the guardrail within ± 1″ of the standard height, h, or **29″** to the top of W-Beam rail. (See MEASURING GUARDRAIL HEIGHT Detail.)

When subsequent projects, such as resurfacings, affect the height of existing guardrail, the finished height is to be within ±2.5″ of the standard height.

POST EMBEDMENT DEPTH: Standard embedment is 3′-5″ min. Where less than 2′ of graded shoulder width (10:1 or flatter) exists, measured from the face of the guardrail (see DETAIL "A"), use longer posts so that a minimum of 5′-5″ embedment depth is provided. Payment for the longer posts will be made at the unit price bid for **ITEM 606 - GUARDRAIL POST, 9′, Each.**

SPECIAL POST MOUNTINGS: Install posts located over a drainage inlet or structure as shown in the FOOTING ANCHOR Detail, or anchor per the details shown on **SCD GR-2.2.**

Install posts located over a footing with a cover of less than 2′-6″ with a footing anchor as detailed here. (A plate, as detailed on SECTION B-B of **SCD GR-2.2**, may be used as an alternative attachment method.) Where the cover is between 2′-6″ and 3′-5″, the footing anchor may be omitted and the post encased instead with 4″ (min.) of concrete.

Do not drive posts located over a culvert with less than 4′-3″ of cover; instead set in drilled or dug holes. Where the available post embedment depth is less than 3′-5″, encase the post with a minimum of 4″ concrete.

All costs associated with special post mountings are included in the unit price bid of Item 606 Guardrail of the type specified in the plans.

ANCHORS: Holes and grouting shall comply with CMS 510. Use either cement or non-shrink, nonmetallic grout.

Expansion shield anchors as specified in CMS 712.01 may be substituted except where concrete deterioration has occurred, as determined by the Engineer. Where self-drilling anchors are used, drill the holes with the expansion shield (not by a drill bit) and install the shield flush with the concrete surface.

PROTECTIVE COATING: In lieu of the complying with CMS 710.06, coat expansion shields, anchors and concrete insert anchor assemblies embedded in concrete in accordance with ASTM A 153 or be of stainless steel. Any bolts screwed into these devices shall meet CMS 710.06. (See sheet 3 for Concrete Insert Anchor Assembly Detail.)

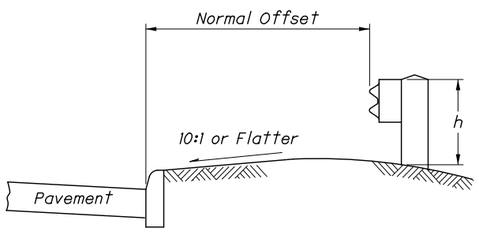

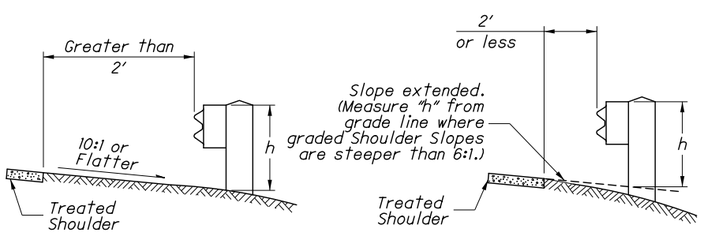

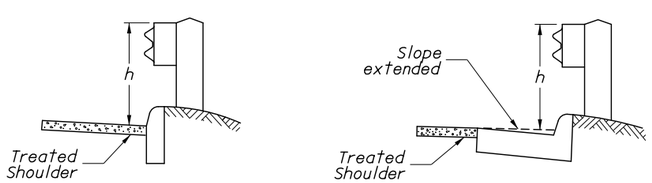

h = Standard Height (See GUARDRAIL HEIGHT Note)

MEASURING GUARDRAIL HEIGHT

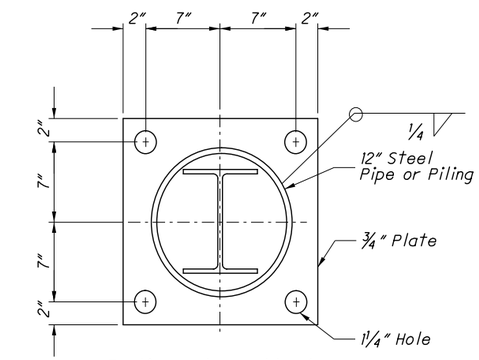

Footing Anchor and hardware need not be galvanized

SECTION A-A

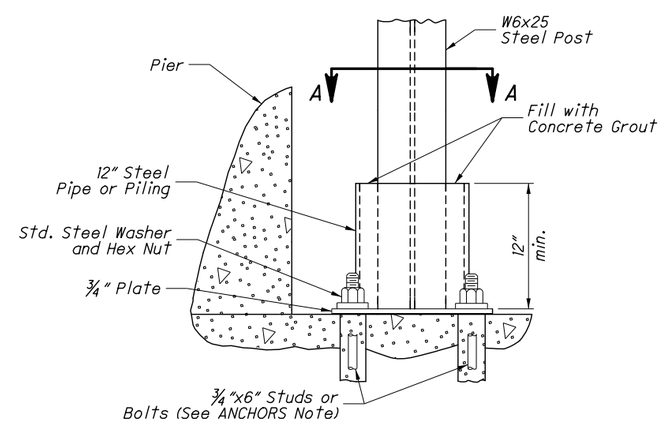

ELEVATION
FOOTING ANCHOR

See SPECIAL POST MOUNTINGS Note.

OFFICE OF ROADWAY ENGINEERING

DESIGNED | REVIEWED | REVISION DATE | CHECKED | PIS NUMBER

PLAN INSERT SHEET

GUARDRAIL DETAILS (Rail Components)

WAY-94-14.16
MED-94-0.00
WAY-585-(11.96)(14.78)

2 / 3

53 / 59

DESIGN FILE:i:\projects\86728\roadway\sheets\PIS_GR-1.1_1-18-2013.dgn
WORKSTATION:mpeters DATE:12/1/2014 MODELNAME: Sheet