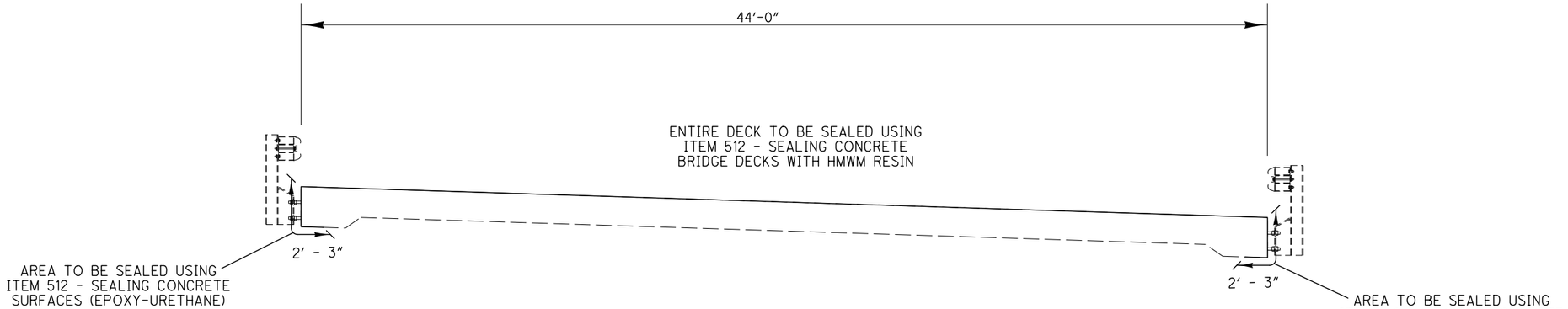

DECK SEALING

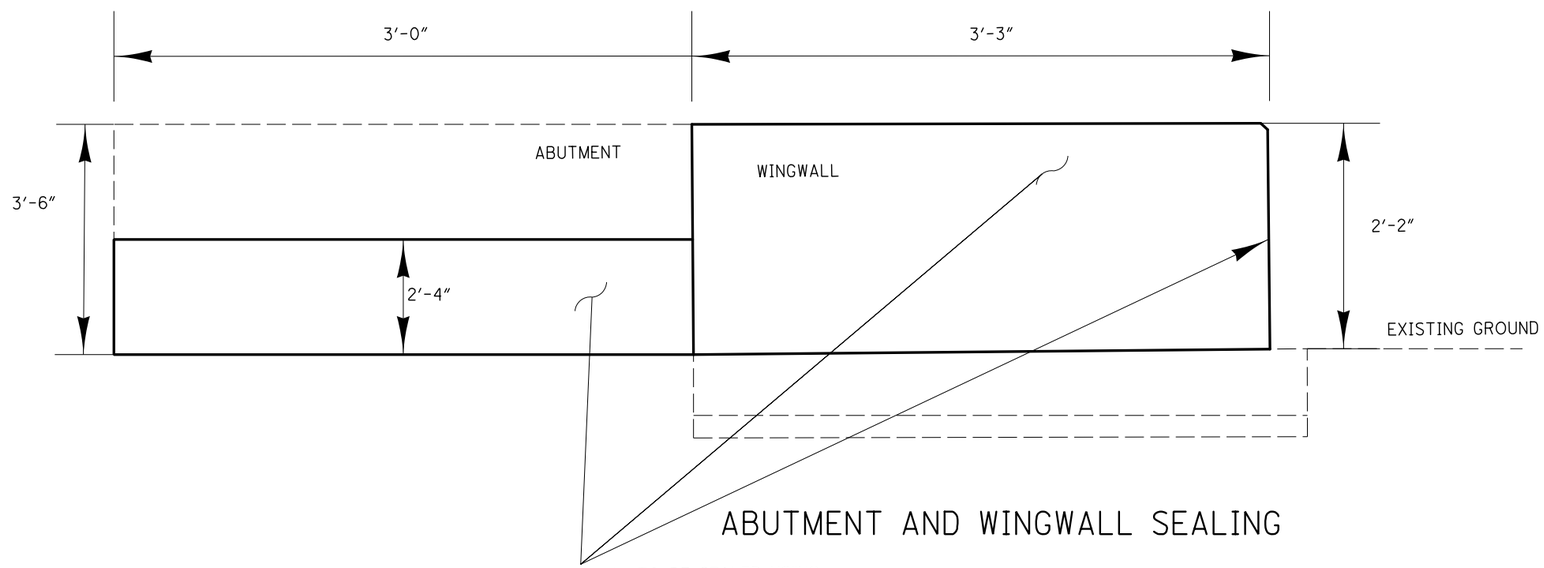

ABUTMENT AND WINGWALL SEALING

ITEM	QUANTITY	UNITS	DESCRIPTION
512	63	SQ YD	SEALING OF CONCRETE SURFACES (EPOXY-URETHANE)
512	452	SQ YD	SEALING CONCRETE BRIDGE DECKS WITH HMWM RESIN

ALL QUANTITIES CARRIED TO SHEET 1/4

DESIGN FILE:I:\projects\86728\structures\WAY-585-15.15\WAY-585-15.12.dgn
WORKSTATION:mpeters DATE:12/1/2014 MODELNAME: Design

DESIGN AGENCY
ODOT DISTRICT THREE
OFFICE OF PLANNING
AND ENGINEERING

DESIGNED	DRAWN	REVIEWED	DATE
MKP	MKP	KRB	11-25-14
CHECKED	REVISED	STRUCTURE FILE NUMBER	
		8506124	

PLAN VIEW
WAY-585-1512
OVER MILL CREEK

WAY-94-14.16
MED-94-0.00
WAY-585-(11.96)(14.78)