ITEM SPECIAL, MAILBOX SUPPORT SYSTEM

THIS ITEM OF WORK SHALL CONSIST OF THE REMOVAL OF EXISTING NON-STANDARD MAILBOX SUPPORTS AND FURNISHING AND ERECTING MAILBOX SUPPORTS AND ANY ASSOCIATED HARDWARE IN ACCORDANCE WITH THE DETAILS SHOWN, AND ATTACHING AN OWNER SUPPLIED MAILBOX, AT LOCATIONS DETERMINED BY THE ENGINEER.

IN ABSENCE OF A NEW BOX SUPPLIED BY THE OWNER THE CONTRACTOR SHALL SALVAGE THE EXISTING BOX AND PLACE IT ON THE NEW SUPPORT. DUE CARE SHALL BE EXERCISED IN SUCH AN OPERATION, THE CONTRACTOR SHALL BE RESPONSIBLE FOR REPAIRING OR REPLACING ANY BOX DAMAGED BY IMPROPER HANDLING, AS JUDGED AND DIRECTED BY THE ENGINEER.

THE BOX SHALL BE SECURELY AND NEATLY ATTACHED BY THE CONTRACTOR TO THE NEW SUPPORT. THE CONTRACTOR SHALL SUPPLY ALL NECESSARY ATTACHMENT HARDWARE (NUTS, BOLTS, PLATES, SPACERS AND WASHERS) AS NECESSARY TO ACCOMMODATE THE COMPLETE INSTALLATION. SUPPORT HARDWARE SHALL ACCOMMODATE EITHER A SINGLE OR A DOUBLE MAILBOX INSTALLATION, AND NO MORE THAN TWO MAILBOXES MAY BE MOUNTED ON A SINGLE POST. [HARDWARE SHALL BE COMMERCIAL GRADE GALVANIZED STEEL.]

WOOD POSTS SHALL BE NOMINAL 4 IN. x 4 IN. (S4S) OR 4½IN. DIAMETER ROUND, AND CONFORM TO 710.14. STEEL POSTS SHALL BE NOMINAL PIPE SIZE 2 IN. I.D., AND CONFORM TO AASHTO M 181.

POSTS SHALL BE SET AS PER THE FIRST PARAGRAPH OF 606.03, AND SHALL IN NO INSTANCE BE ENCASED IN CONCRETE.

THE CONTRACTOR SHALL BE RESPONSIBLE FOR COORDINATING WORK WITH THE LOCAL POST MASTER AND NOTIFYING THE PROPERTY OWNERS PRIOR TO WORK.

GROUP MAILBOX SUPPORTS SHALL BE PLACED ON 3 FT. CENTERS AND THE TURNOUT LENGTHENED TO ACCOMMODATE THE GROUPING.

WHERE GUARDRAIL EXISTS, MAILBOXES AND THEIR SUPPORTS SHALL BE PLACED BEHIND THE GUARDRAIL. SUPPORTS MUST STILL MEET THE BREAKAWAY REQUIREMENTS LISTED ABOVE.

THE FOLLOWING ESTIMATED QUANTITIES HAVE BEEN CARRIED TO THE GENERAL SUMMARY TO BE USED AS DESCRIBED ABOVE.

ITEM SPECIAL-MAILBOX SUPPORT SYSTEM, SINGLE	
S.R. 94 (01/STR/PV)	1 EACH
S.R. 94 (02/S<2/PV)	1 EACH

MAILBOX APPROACHES

THE MAILBOX APPROACHES SHALL BE PAVED WITH THE CORRESPONDING MAINLINE PAVEMENT TREATMENT COURSE(S). THEY SHALL CONFORM AS MUCH AS PRACTICAL TO STANDARD DRAWING BP-4.1 OR AS DIRECTED BY THE ENGINEER.

GRADING SHALL BE PERFORMED IN THESE AREAS TO OBTAIN A BASE WHICH WILL ALLOW THE FINISHED GRADE TO BE FLUSH WITH ADJACENT PAVEMENT. A QUANTITY OF ITEM 617 COMPACTED AGGREGATE HAS BEEN PROVIDED FOR AREAS WHERE THE SHOULDER IS LOW PRIOR TO GRADING AND/OR LOW AREAS CAUSED BY THE REMOVAL OF UNSUITABLE MATERIAL. QUANTITIES TO PERFORM THIS WORK HAVE BEEN INCLUDED IN THE GENERAL SUMMARY AND ARE ESTIMATED AS FOLLOWS.

ITEM 209 - GRADING MAILBOX APPROACHES:	
(01/STR/PV)	10 EACH
(02/S<2/PV)	10 EACH
ITEM 617 - COMPACTED AGGREGATE	
(01/STR/PV)	20 CU YD
(01/S<2/PV)	20 CU YD

LOCATIONS OF MAILBOX SUPPORT SYSTEM TO BE REPLACED

ADDRESSES AND/OR LOCATIONS OF MAILBOX SUPPORT SYSTEM TO BE REPLACED:

SR 94 - NEAR SLM 16.00 (01/STR/PV)
SR 94 - NEAR SLM 20.00 DRIVE (02/S<2/PV)

FOR DETAILS NOT SHOWN SEE STANDARD DRAWING BP-4.1

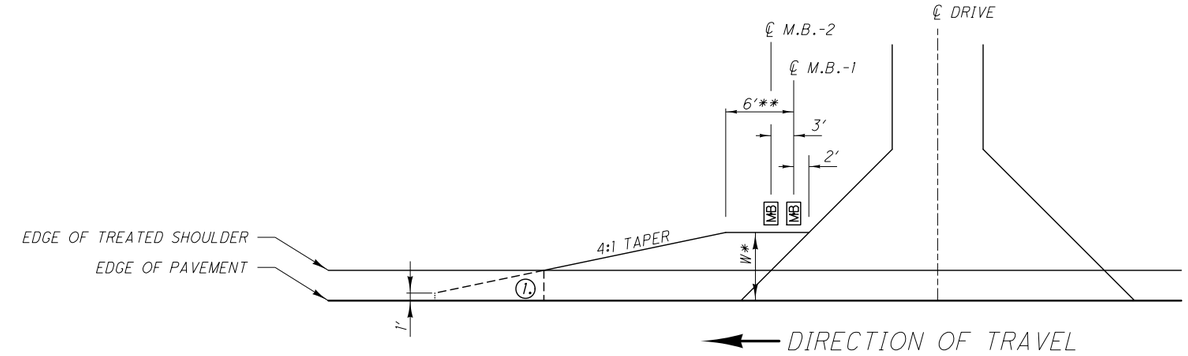

1. END MAILBOX TURNOUT AT EDGE OF ASPHALT CONCRETE SHOULDER OR 1' FROM EDGE OF PAVEMENT IF TREATED SHOULDER IS AGGREGATE.

W* NOTES
1) WHERE EXISTING STANDARD MAILBOX POSTS ARE BEHIND GUARDRAIL AND ARE TO REMAIN IN PLACE, TURNOUT WIDTH SHALL EXTEND TO FACE OF GUARDRAIL.
2) WHERE NO GUARDRAIL IS REQUIRED, TURNOUT WIDTH SHALL BE 6 FT MAXIMUM OR TO FACE OF EXISTING STANDARD MAILBOX IF IT IS LESS THAN 6 FT.
3) IF THE MAILBOX SUPPORT IS SPECIFIED TO BE REMOVED AND REERECTED OR REPLACED, WHERE GUARDRAIL IS REQUIRED, TURNOUT WIDTH SHALL EXTEND TO FACE OF GUARDRAIL AND MAILBOX SHALL BE INSTALLED BEHIND THE GUARDRAIL.
4) IF THE MAILBOX SUPPORT IS SPECIFIED TO BE REMOVED AND REERECTED OR REPLACED, WHERE NO GUARDRAIL IS REQUIRED, TURNOUT WIDTH SHALL BE 6 FT. MAXIMUM.

** NOTE
1) 6 FT FOR ONE MAILBOX SUPPORT, ADD 3 FT. FOR EACH ADDITIONAL MAILBOX SUPPORT.

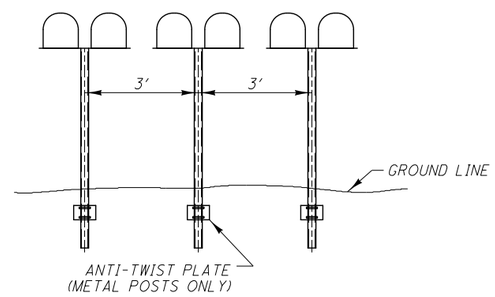

GROUP MAILBOX INSTALLATION

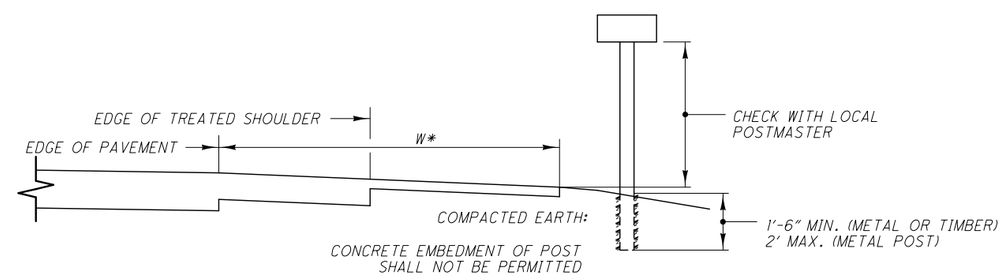

CROSS SECTION / ELEVATION VIEW

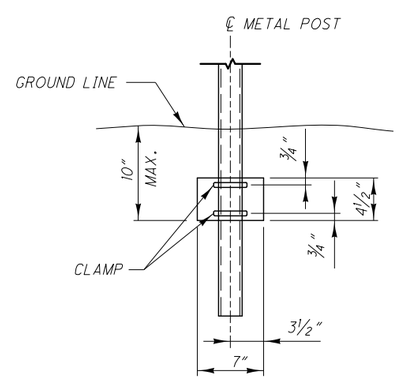

ANTI-TWIST PLATE

CALCULATED MKP
CHECKED KRB

MAILBOX FACILITIES

WAY-94-14.16
MED-94-0.00
WAY-585-(11.96)(14.78)

DESIGN FILE:i:\projects\86728\roadway\sheets\86728GM001.dgn MODELNAME: Sheet
WORKSTATION:mpeters DATE:12/18/2014