STATE OF OHIO
DEPARTMENT OF TRANSPORTATION

MEG-124-12.52

RUTLAND TOWNSHIP
MEIGS COUNTY

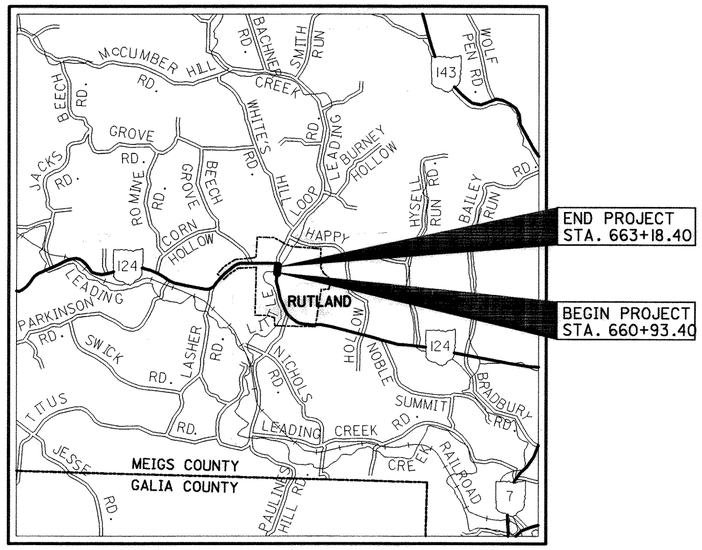

LOCATION MAP

LATITUDE: N 39°02'42" LONGITUDE: W 82°07'54"

SCALE IN MILES

0 1 2 3 4

N

PORTION TO BE IMPROVED
INTERSTATE & DIVIDED HIGHWAY
UNDIVIDED STATE & FEDERAL ROUTES
OTHER ROADS

DESIGN DESIGNATION

CURRENT ADT (2001)	5,300
DESIGN YEAR ADT (2021)	8,100
DESIGN HOURLY VOLUME (2021)	810
DIRECTIONAL DISTRIBUTION	55%
TRUCKS (24 HOUR B&C)	4%
DESIGN SPEED	30 MPH
LEGAL SPEED	25 MPH

DESIGN FUNCTIONAL CLASSIFICATION - URBAN, MAJOR COLLECTOR

DESIGN EXCEPTIONS

NONE

INDEX OF SHEETS:

PROJECT DESCRIPTION

IMPROVEMENT OF 0.04 MILES OF STATE ROUTE 124 BY REPLACING THE EXISTING STRUCTURE OVER LITTLE LEADING CREEK, INCLUDING APPROACH RECONSTRUCTION.

1997 SPECIFICATIONS

THE STANDARD SPECIFICATIONS OF THE STATE OF OHIO, DEPARTMENT OF TRANSPORTATION, INCLUDING CHANGES AND SUPPLEMENTAL SPECIFICATIONS LISTED IN THE PROPOSAL SHALL GOVERN THIS IMPROVEMENT.

I HEREBY APPROVE THESE PLANS AND DECLARE THAT THE MAKING OF THIS IMPROVEMENT WILL NOT REQUIRE THE CLOSING TO TRAFFIC OF THE HIGHWAY AND THAT PROVISIONS FOR THE MAINTENANCE AND SAFETY OF TRAFFIC WILL BE AS SET FORTH ON THE PLANS AND ESTIMATES.

ENGINEER'S SEAL:

STATE OF OHIO
ROBERT BRYAN BEASLEY
E-57770
REGISTERED
PROFESSIONAL ENGINEER

SIGNED: Robert B. Beasley
DATE: 4-17-00

ENGINEER'S SEAL:

STATE OF OHIO
JAMES STEPHEN BOWLING JR.
#E-62179
REGISTERED
PROFESSIONAL ENGINEER

SIGNED: James S. Bowling Jr.
DATE: 4/14/00

STANDARD CONSTRUCTION DRAWINGS

MT-96.11M	01/30/95	BP-2.1M	04/08/97	RM-1.1M	04/29/99		
MT-96.20M	01/30/95	BP-2.2M	10/21/97	RM-4.2M	10/21/97		
MT-96.21M	01/30/95	BP-2.4M	10/28/94				
MT-97.11M	01/30/95	BP-3.1M	10/28/94				
MT-101.20M	03/01/96	BP-5.1M	10/28/94				
MT-101.60M	04/25/94	BP-7.1M	10/28/94				
MT-105.10M	04/25/94						
		CB-2.1M	07/12/95				
AS-1-81M	10/25/94						
BR-2-82M	12/19/94	DM-1.1M	10/21/97				
CPA-5-94M	10/25/94	DM-1.2M	10/21/97				
CPP-2-94M	12/19/94	DM-4.4	04/29/99				
CS-1-93M	06/30/95						
PCB-91M	07/06/99	HW-2.1M	07/12/95				
BS-1-93M	12/15/94	HW-2.2M	07/12/95				

SUPPLEMENTAL SPECIFICATIONS

1047	5/31/95
806	09/09/97
814	06/02/98
830	10/21/98
842	01/06/99
870	08/10/99
877	04/13/99
899	10/21/98
894	10/12/99
844	01/06/99
846	09/09/97
954	09/09/97

SPECIAL PROVISIONS

NWP-3&14 06/05/00

UNDERGROUND UTILITIES
TWO WORKING DAYS
BEFORE YOU DIG
CALL 1-800-362-2764 (TOLL FREE)
OHIO UTILITIES PROTECTION SERVICE
NON-MEMBERS
MUST BE CALLED DIRECTLY

PLAN PREPARED BY:

FINKBEINER, PETTIS & STROUT, INC.
CONSULTING ENGINEERS
520 SOUTH MAIN STREET, SUITE 2400
AKRON, OHIO 44311-1010

APPROVED George M. Collins
DATE 5-26-00 DISTRICT DEPUTY DIRECTOR

APPROVED Gordon Proctor
DATE 7-31-00 DIRECTOR, DEPARTMENT OF TRANSPORTATION

FEDERAL PROJECT NO. TE21-G000(562)

PID NO. 13204

CONSTRUCTION PROJECT NO.

RAILROAD INVOLVEMENT NONE

MEG-124-12.52

MEG - SR 124 - 12.52
000503
PID# 13204
10/25/00
DIST 10

MEG_TITL

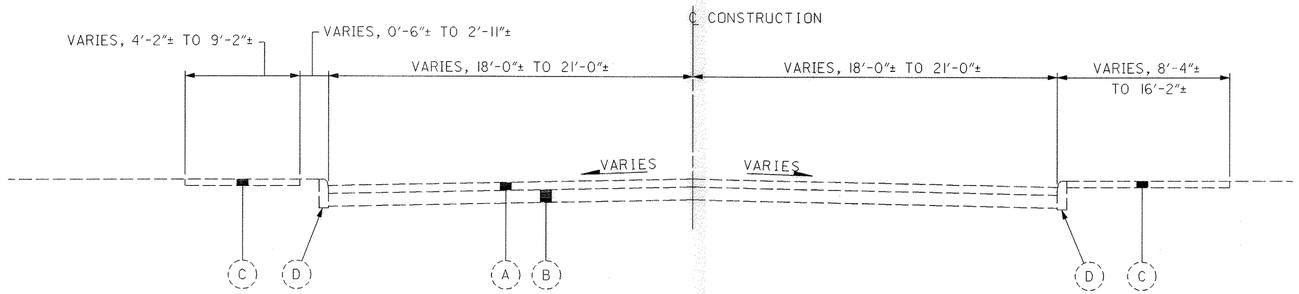

EXISTING TYPICAL SECTION

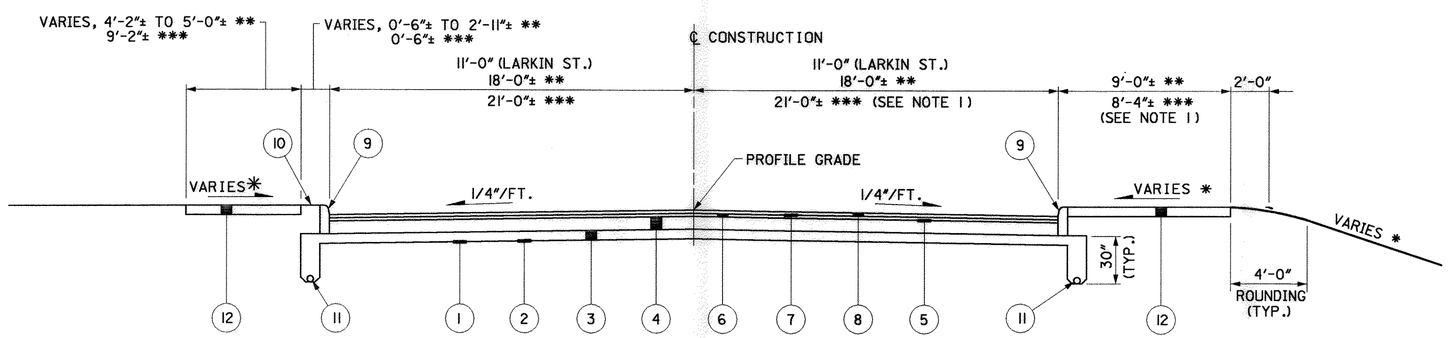

PROPOSED TYPICAL SECTION - RECONSTRUCTION

** STA. 660+93.40 TO STA. 661+38.91 = 45.51 LIN. FT.
*** STA. 662+71.17 TO STA. 663+18.40 = 47.23 LIN. FT.
STA.9+50 TO STA. 10+00 = 50.00 LIN. FT. (LARKIN ST.)
TOTAL = 142.74 LIN. FT.

* SEE CROSS SECTIONS

PROPOSED LEGEND:

1. ITEM 203 - SUBGRADE COMPACTION
2. ITEM 203 - PROOF ROLLING
3. ITEM 304 - 6" AGGREGATE BASE
4. ITEM 305 - 8" CONCRETE BASE
5. ITEM 407 - TACK COAT
6. ITEM 448 - 1¾" ASPHALT CONCRETE, INTERMEDIATE COURSE, TYPE 2, PG64-22
7. ITEM 407 - TACK COAT FOR INTERMEDIATE COURSE
8. ITEM 448 - 1¼" ASPHALT CONCRETE, SURFACE COURSE, TYPE 1, PG64-22
9. ITEM 830 - CURB, TYPE 6
10. ITEM 659 - SEEDING AND MULCHING
11. ITEM 605 - 4" SHALLOW PIPE UNDERDRAIN
12. ITEM 608 - 6" CONCRETE WALK
13. ITEM 611 - REINFORCED CONCRETE APPROACH SLAB (t=13")
14. ITEM 254 - PAVEMENT PLANING, BITUMINOUS, 3"

EXISTING LEGEND:

- (A) EXISTING ASPHALT CONCRETE (t=5"±)
- (B) EXISTING CONCRETE BASE (t = 8"±)
- (C) EXISTING CONCRETE WALK
- (D) EXISTING CONCRETE CURB

NOTE:

1. PAVEMENT TRANSITIONS FROM 18'-0" AT STA. 662+66.27 TO 21'-0" AT STA. 662+87.74. WALK TRANSITIONS FROM 10'-3"± AT STA. 662+66.27, RT. TO 8'-4"± AT STA. 662+87.74, RT..

TYPICAL SECTIONS

MEG-124-12.52

MEG_TYPI

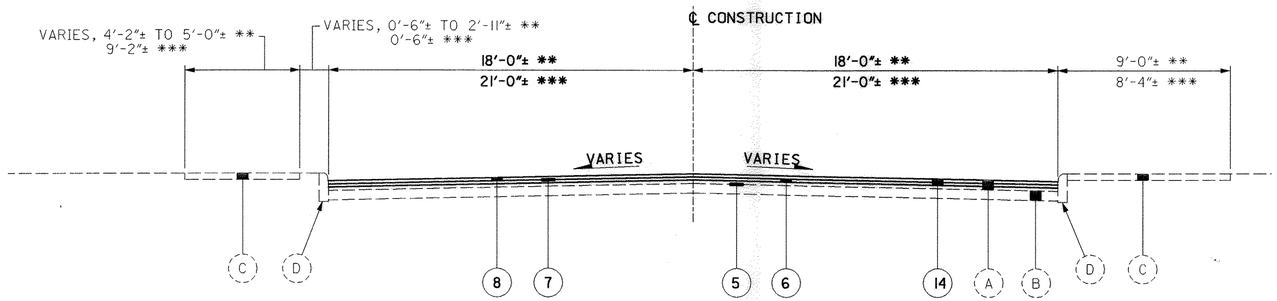

PROPOSED TYPICAL SECTION - RESURFACING

** STA. 660+83.40 TO STA. 660+93.40 = 10.00 LIN. FT.
*** STA. 663+18.40 TO STA. 663+28.40 = 10.00 LIN. FT.

TOTAL = 20.00 LIN. FT.

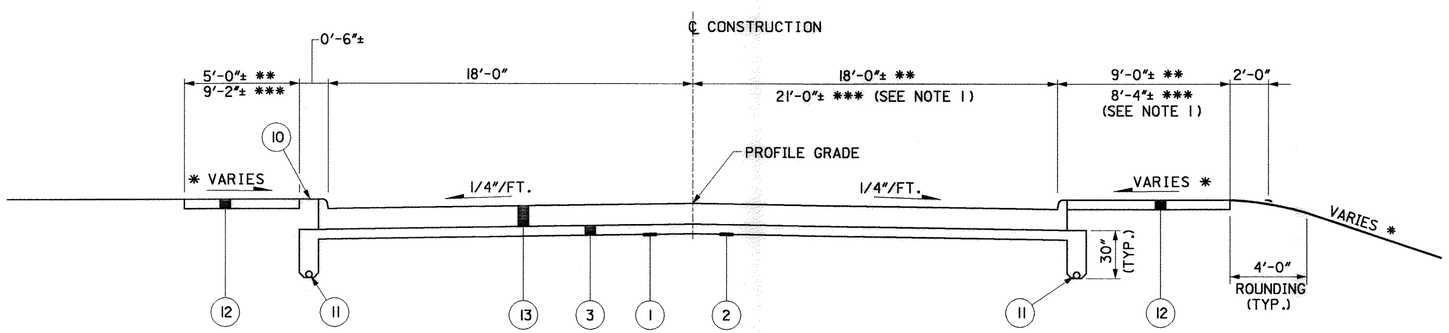

PROPOSED APPROACH SLAB SECTION

** STA. 661+38.91 TO STA. 661+58.91 = 20.00 LIN. FT.
*** STA. 662+51.17 TO STA. 662+71.17 = 20.00 LIN. FT.

TOTAL = 40.00 LIN. FT.

* SEE CROSS SECTIONS

PROPOSED BRIDGE LIMITS

STA. 661+58.91 TO STA. 662+51.17 = 92.26 LIN. FT.

PROPOSED LEGEND:

1. ITEM 203 - SUBGRADE COMPACTION
2. ITEM 203 - PROOF ROLLING
3. ITEM 304 - 6" AGGREGATE BASE
4. ITEM 305 - 8" CONCRETE BASE
5. ITEM 407 - TACK COAT
6. ITEM 448 - 1¾" ASPHALT CONCRETE, INTERMEDIATE COURSE, TYPE 2, PG64-22
7. ITEM 407 - TACK COAT FOR INTERMEDIATE COURSE
8. ITEM 448 - 1¼" ASPHALT CONCRETE, SURFACE COURSE, TYPE 1, PG64-22
9. ITEM 830 - CURB, TYPE 6
10. ITEM 659 - SEEDING AND MULCHING
11. ITEM 605 - 4" SHALLOW PIPE UNDERDRAIN
12. ITEM 608 - 6" CONCRETE WALK
13. ITEM 611 - REINFORCED CONCRETE APPROACH SLAB (t=13")
14. ITEM 254 - PAVEMENT PLANING, BITUMINOUS, 3"

EXISTING LEGEND:

- (A) EXISTING ASPHALT CONCRETE (t=5"±)
- (B) EXISTING CONCRETE BASE (t = 8"±)
- (C) EXISTING CONCRETE WALK
- (D) EXISTING CONCRETE CURB

NOTE:

1. PAVEMENT TRANSITIONS FROM 18'-0" AT STA. 662+66.27 TO 21'-0" AT STA. 662+87.74. WALK TRANSITIONS FROM 10'-3"± AT STA. 662+66.27, RT. TO 8'-4"± AT STA. 662+87.74, RT..

TYPICAL SECTIONS

MEG-124-12.52

MEG_TYP2

ROUNDING

THE ROUNDING AT SLOPE BREAKPOINTS SHOWN ON THE TYPICAL SECTIONS APPLY TO ALL CROSS-SECTIONS EVEN THOUGH OTHERWISE SHOWN.

UTILITIES

LISTED BELOW ARE ALL UTILITIES LOCATED WITHIN THE PROJECT CONSTRUCTION LIMITS TOGETHER WITH THEIR RESPECTIVE OWNERS:

SEWER
VILLAGE OF RUTLAND
RUTLAND CIVIC CENTER
P.O. BOX 420
RUTLAND, OH. 45775-0420
(740) 742-3136
ATTN: MR. DAVID DAVIS

POWER
AMERICAN ELECTRIC POWER
95 EAST MAIN STREET
P.O. BOX 468
CHILLICOTHE, OH. 45601-0468
(740) 774-7136
ATTN: MR. STEVE BELANGER

GAS
NATIONAL GAS AND OIL CORP.
1500 GRANVILLE ROAD
P.O. BOX 4970
NEWARK, OH. 43058-4970
(740) 344-2102 (x 1254)
ATTN: MR. GREG WILSON

CABLE
CHARTER COMMUNICATIONS
1410 JEFFERSON BOULEVARD
P.O. BOX 106
PT. PLEASENT, W. VA. 25550
(304) 675-3398
ATTN: MR. DWAIN HENDRICK

TELEPHONE
GTE
754 WESTERN UNION STREET
ATHENS, OH. 45701
(740) 594-5318
ATTN: MR. GREG SIGMAN

THE LOCATION OF THE UNDERGROUND UTILITIES SHOWN ON THE PLANS ARE OBTAINED FROM THE OWNERS AS REQUIRED BY SECTION 153.64 O.R.C..

CONSTRUCTION NOISE

ACTIVITIES AND LAND USE ADJACENT TO THIS PROJECT MAY BE AFFECTED BY CONSTRUCTION NOISE. IN ORDER TO MINIMIZE ANY ADVERSE CONSTRUCTION NOISE IMPACTS, ANY POWER-OPERATED CONSTRUCTION-TYPE DEVICE SHALL NOT BE OPERATED BETWEEN THE HOURS OF 8:00 P.M. AND 7:00 A.M.. IN ADDITION, ANY SUCH DEVICE SHALL NOT BE OPERATED AT ANY TIME IN SUCH A MANNER THAT THE NOISE CREATED SUBSTANTIALLY EXCEEDS THE NOISE CUSTOMARILY AND NECESSARILY ATTENDANT TO THE REASONABLE AND EFFICIENT PERFORMANCE OF SUCH EQUIPMENT.

ELEVATION DATUM

ALL ELEVATIONS ARE BASED ON NAVD88 VERTICAL DATUM. C&GS BENCHMARK V207 (ELEV.=577.78) WAS USED.

CROSSINGS AND CONNECTIONS TO EXISTING PIPES AND UTILITIES

WHERE PLANS PROVIDE FOR A PROPOSED CONDUIT TO BE CONNECTED TO, OR CROSS OVER OR UNDER AN EXISTING SEWER OR UNDERGROUND UTILITY, THE CONTRACTOR SHALL LOCATE THE EXISTING PIPES OR UTILITIES BOTH AS TO LINE AND GRADE BEFORE STARTING TO LAY THE PROPOSED CONDUIT.

IF IT IS DETERMINED THAT THE ELEVATION OF THE EXISTING CONDUIT, OR EXISTING APPURTENANCE TO BE CONNECTED, DIFFERS FROM THE PLAN ELEVATION OR RESULTS IN A CHANGE IN THE PLAN CONDUIT SLOPE, THE ENGINEER SHALL BE NOTIFIED BEFORE STARTING CONSTRUCTION OF ANY PORTION OF THE PROPOSED CONDUIT WHICH WILL BE AFFECTED BY THE VARIANCE IN THE EXISTING ELEVATIONS.

IF IT IS DETERMINED THAT THE PROPOSED CONDUIT WILL INTERSECT AN EXISTING SEWER OR UNDERGROUND UTILITY IF CONSTRUCTED AS SHOWN ON THE PLAN, THE ENGINEER SHALL BE NOTIFIED BEFORE STARTING CONSTRUCTION OF ANY PORTION OF THE PROPOSED CONDUIT WHICH WOULD BE AFFECTED BY THE INTERFERENCE WITH AN EXISTING FACILITY.

PAYMENT FOR ALL THE OPERATIONS DESCRIBED ABOVE SHALL BE INCLUDED IN THE CONTRACT PRICE FOR THE PERTINENT 603 CONDUIT ITEM.

ITEM 870 - SEEDING AND MULCHING

SEEDING AND MULCHING SHALL BE APPLIED TO ALL AREAS OF EXPOSED SOIL BETWEEN THE RIGHT OF WAY LINES, AND WITHIN THE CONSTRUCTION LIMITS FOR AREAS OUTSIDE THE RIGHT OF WAY LINES COVERED BY WORK AGREEMENT OR SLOPE EASEMENT. QUANTITY CALCULATIONS FOR ITEM 870, SEEDING AND MULCHING, ARE BASED ON THESE LIMITS.

THE FOLLOWING ESTIMATED QUANTITY HAS BEEN CARRIED TO THE GENERAL SUMMARY:

870, SEEDING AND MULCHING	60 SQ. YD.

CONTRACTION AND/OR EXPANSION JOINTS

ALTHOUGH SPECIFIC LOCATIONS OF CERTAIN CONTRACTION AND EXPANSION JOINTS HAVE BEEN DETAILED ON THIS PLAN, NO WAIVER OF THE SPECIFICATIONS IS INTENDED. PROVISION OF EXPANSION JOINTS AT ALL MAJOR STRUCTURES AND THE MAXIMUM SPACING BETWEEN CONTRACTION JOINTS SHALL, IN ALL CASES, BE IN ACCORDANCE WITH STANDARD CONSTRUCTION DRAWING BP-2.2M AND THE SPECIFICATIONS.

MEDIAN AND/OR CURBING ON APPROACH SLABS

THE SHAPE OF THE MEDIAN AND/OR CURBING ON APPROACH SLABS SHALL BE TRANSITIONED, FROM THE STANDARD SECTION ON THE APPROACHES TO THE SECTION USED ON THE BRIDGE, WITHIN THE LIMITS OF THE APPROACH SLAB.

ITEM 407 - TACK COAT AND ITEM 407 - TACK COAT FOR INTERMEDIATE COURSE

THE RATE OF APPLICATION OF THE 407 TACK COAT SHALL BE SUBJECT TO ADJUSTMENT AS DIRECTED BY THE ENGINEER. FOR ESTIMATING PURPOSES ONLY, THE PLAN QUANTITIES INDICATE AN AVERAGE APPLICATION RATE OF 0.075 GAL./SQ. YD..

THE FOLLOWING ESTIMATED QUANTITIES HAVE BEEN CARRIED TO THE GENERAL SUMMARY:

407, TACK COAT	42 GAL.
407, TACK COAT FOR INTERMEDIATE COURSE	42 GAL.

CONVERSION OF STANDARD CONSTRUCTION DRAWINGS

THE METRIC STANDARD DRAWINGS REFERENCED IN THIS PLAN SHALL BE CONVERTED TO ENGLISH UNITS USING THE SI (METRIC) TO ENGLISH CONVERSION FACTORS PROVIDED IN SECTION 109.01 OF THE 1997 CONSTRUCTION AND MATERIALS SPECIFICATIONS. THE APPENDIX OF ASTM E 380 SHALL BE UTILIZED FOR ANY ADDITIONAL CONVERSION FACTORS REQUIRED. CONVERSIONS SHALL BE APPROPRIATELY PRECISE AND SHALL REFLECT STANDARD INDUSTRY ENGLISH VALUES WHERE SUITABLE.

MONUMENTS

RIGHT-OF-WAY MONUMENTS SHALL BE CONSTRUCTED IN ACCORDANCE WITH DETAILS AS SHOWN ON STANDARD CONSTRUCTION DRAWING RM-1.1M AND AT THE LOCATIONS SHOWN ON SHEET NO. 34. THE RIGHT-OF-WAY MONUMENTS AT STATION 662+90.00, 30 FEET LEFT AND 30 FEET RIGHT SHALL BE CONSTRUCTED PRIOR TO THE CONSTRUCTION OF THE PROPOSED WALK. THE PROPOSED WALK SHALL BE CONSTRUCTED AROUND THESE MONUMENTS.

THE FOLLOWING ESTIMATED QUANTITY HAS BEEN CARRIED TO THE GENERAL SUMMARY:

604, REFERENCE MONUMENT	4 EACH

ITEM SPECIAL - 2" FORCE MAIN, RESTRAINED JOINTS

THIS ITEM SHALL BE GOVERNED BY SECTION 638 OF THE CONSTRUCTION AND MATERIAL SPECIFICATIONS. THE PROPOSED FORCE MAIN SHALL BE POLYVINYL CHLORIDE (P.V.C.) PIPE, WHICH SHALL MEET 748.02. JOINTS SHALL BE BOLTLESS RESTRAINED JOINTS AND SHALL MEET ANSI/AWWA CIII/A21.11 AND 748.01 OR APPROVED EQUAL.

ALL EXCAVATION, BEDDING, LAYING PIPE, JOINTING, BACKFILLING, HYDROSTATIC TESTING AND RESTORATION OF DISTURBED SURFACES SHALL CONFORM TO 638. TRACER TAPE SHALL BE INSTALLED PER 638.06 AND BE MARKED "SANITARY". FORCE MAIN SHALL BE MEASURED IN ACCORDANCE WITH 638.20.

THIS ITEM SHALL ALSO INCLUDE CONNECTIONS TO THE EXISTING 2" SANITARY FORCE MAIN.

PAYMENT FOR ALL LABOR, EQUIPMENT AND MATERIALS REQUIRED TO PERFORM THE ABOVE WORK SHALL BE INCLUDED IN THE UNIT PRICE BID FOR ITEM SPECIAL - 2" FORCE MAIN, RESTRAINED JOINTS.

RESIDENTIAL AND COMMERCIAL DRAINAGE CONNECTIONS

EXISTING ROOF DRAINS, FOOTER DRAINS, OR YARD DRAINS DISTURBED BY THE WORK SHALL BE PROVIDED WITH UNOBSTRUCTED OUTLETS BY CONNECTING A CONDUIT THROUGH THE CURB OR INTO A DRAINAGE STRUCTURE. THE LOCATION, TYPE, SIZE AND GRADE OF THE NEW CONDUIT REQUIRED TO REPLACE OR EXTEND THE EXISTING DRAIN WILL BE DETERMINED BY THE ENGINEER.

THE FOLLOWING CONDUIT TYPES MAY BE USED: 707.33, 707.41 NON-PERFORATED, 707.42, 707.43, 707.45, 707.46, 707.47, 707.51, 707.52 PS46 MIN.

THE FOLLOWING ESTIMATED QUANTITIES HAVE BEEN INCLUDED IN THE GENERAL SUMMARY FOR USE AS DIRECTED BY THE ENGINEER FOR THE WORK NOTED ABOVE:

603, 6" CONDUIT, TYPE B, FOR DRAINAGE CONNECTION	50 LIN. FT.
603, 6" CONDUIT, TYPE C, FOR DRAINAGE CONNECTION	50 LIN. FT.
603, 6" CONDUIT, TYPE E, FOR DRAINAGE CONNECTION	50 LIN. FT.

CLEARING AND GRUBBING

ALL TREES AND STUMPS SPECIFICALLY MARKED FOR REMOVAL WITHIN THE CONSTRUCTION LIMITS SHALL BE REMOVED UNDER THE LUMP SUM BID FOR ITEM 201, CLEARING AND GRUBBING. THE FOLLOWING IS AN APPROXIMATE ESTIMATE OF THE NUMBER OF TREES AND STUMPS TO BE REMOVED:

SIZES	NO. TREES	NO. STUMPS	TOTAL
15"	2	-	2
48"	1	-	1

ITEM SPECIAL - MISCELLANEOUS METAL

EXISTING CASTINGS MAY PROVE TO BE UNSUITABLE FOR REUSE, AS DETERMINED BY THE ENGINEER. IT SHALL BE THE CONTRACTOR'S RESPONSIBILITY TO PROVIDE THE CASTINGS OF THE REQUIRED TYPE, SIZE AND STRENGTH (HEAVY OR LIGHT DUTY) FOR THE PARTICULAR STRUCTURE IN QUESTION. ALL MATERIAL SHALL MEET ITEM 604 OF THE SPECIFICATIONS AND SHALL HAVE THE PRIOR APPROVAL OF THE ENGINEER.

THE FOLLOWING ESTIMATED QUANTITY HAS BEEN CARRIED TO THE GENERAL SUMMARY FOR USE AS DIRECTED BY THE ENGINEER:

SPECIAL, MISCELLANEOUS METAL 250 POUNDS

THE CONTRACTOR IS CAUTIONED TO USE EXTREME CARE IN THE REMOVAL, STORAGE AND REPLACEMENT OF ALL EXISTING CASTINGS. CASTINGS DAMAGED BY THE NEGLIGENCE OF THE CONTRACTOR, AS DETERMINED BY THE ENGINEER, SHALL BE REPLACED WITH THE PROPER NEW CASTINGS AT THE EXPENSE OF THE CONTRACTOR.

UNRECORDED SANITARY CONNECTIONS

ANY UNRECORDED ACTIVE CONNECTION TO A SANITARY SEWER ENCOUNTERED DURING CONSTRUCTION SHALL BE RECONNECTED TO THE EXISTING SANITARY SEWER TO THE SATISFACTION OF THE ENGINEER.

THE FOLLOWING CONDUIT TYPES MAY BE USED: 707.42, 707.43, 707.44, 707.45, 707.46, 707.47, 707.51, 707.52 PS46 MIN., 706.01, 706.02, OR 706.08 WITH JOINTS AS PER 706.11 OR 706.12.

THE FOLLOWING ESTIMATED QUANTITIES HAVE BEEN INCLUDED IN THE GENERAL SUMMARY FOR USE AS DIRECTED BY THE ENGINEER FOR THE WORK NOTED ABOVE:

603, 6" CONDUIT, TYPE B, FOR SANITARY	50 LIN. FT.
603, 6" CONDUIT, TYPE C, FOR SANITARY	50 LIN. FT

TEMPORARY SOIL EROSION AND SEDIMENT CONTROL

THE FOLLOWING ESTIMATED QUANTITIES ARE TO BE PLACED BY THE CONTRACTOR WITH THE ENGINEER'S CONCURRENCE FOR TEMPORARY EROSION AND SEDIMENT CONTROL MEASURES:

877, TEMPORARY SEEDING AND MULCHING	12.0 SQ. YD.
877, TEMPORARY PERIMETER FILTER FABRIC FENCE	200 LIN. FT.
877, TEMPORARY INLET PROTECTION FILTER FABRIC FENCE	120 LIN. FT.
877. SEDIMENT REMOVAL	12 CU. YD.
601, ROCK CHANNEL PROTECTION, TYPE C WITH FABRIC FILTER	8 CU. YD.
870, MOWING	0.13 M. SQ. FT.
870, COMMERCIAL FERTILIZER	0.01 TON
870, REPAIR SEEDING AND MULCHING	3.0 SQ. YD.
870, WATER	0.03 M. GAL.
870, SOIL ANALYSIS TEST	1 EACH

EROSION CONTROL

ITEM 601 IS PROVIDED IN THE PLANS FOR EROSION CONTROL. ROCK OF A STABLE NATURE SHALL NOT BE REMOVED IN ORDER TO PLACE ANY OF THIS ITEM. THE ENGINEER SHALL CHECK AND NON-PERFORM QUANTITIES OR ADJUST LOCATIONS AND QUANTITIES OF THESE ITEMS WHERE INDICATED BY FIELD CONDITIONS DURING CONSTRUCTION. IN ADDITION, THESE ITEMS SHALL MEET THE REQUIREMENT OF 108.04.

UNTREATED SEPTIC CONNECTIONS

THIS PLAN MAKES NO PROVISION FOR CONNECTION, NOR SHALL THE ENGINEER OR CONTRACTOR CONNECT, ANY UNTREATED SEPTIC DRAINAGE INTO THE HIGHWAY DRAINAGE SYSTEM. ANY PIPE CARRYING UNTREATED SEPTIC FLOW SHALL BE PLUGGED WITH CLASS C CONCRETE AT THE RIGHT OF WAY LINE. PAYMENT FOR PLUGGING SHALL BE INCLUDED IN THE CONTRACT PRICE FOR ITEM 203, EXCAVATION, NOT INCLUDING EMBANKMENT CONSTRUCTION.

ITEM 203 - PROOF ROLLING

AN ESTIMATED QUANTITY FOR THIS ITEM HAS BEEN PROVIDED IN THE GENERAL SUMMARY FOR USE AS DIRECTED BY THE ENGINEER.

REVIEW OF DRAINAGE FACILITIES

BEFORE ANY WORK IS STARTED ON THE PROJECT AND AGAIN BEFORE FINAL ACCEPTANCE BY THE STATE, REPRESENTATIVES OF THE STATE AND THE CONTRACTOR, ALONG WITH LOCAL REPRESENTATIVES, SHALL MAKE AN INSPECTION OF ALL EXISTING SEWERS WHICH ARE TO REMAIN IN SERVICE AND WHICH MAY BE AFFECTED BY THE WORK. THE CONDITION OF THE EXISTING CONDUITS AND THEIR APPURTENANCES SHALL BE KEPT IN WRITING BY THE STATE.

ALL NEW CONDUITS, INLETS, CATCH BASINS AND MANHOLES CONSTRUCTED AS A PART OF THE PROJECT SHALL BE FREE OF ALL FOREIGN MATTER AND IN A CLEAN CONDITION BEFORE THE PROJECT WILL BE ACCEPTED BY THE STATE.

ALL EXISTING SEWERS INSPECTED INITIALLY BY THE ABOVE MENTIONED PARTIES SHALL BE MAINTAINED AND LEFT IN A CONDITION REASONABLY COMPARABLE TO THAT DETERMINED BY THE ORIGINAL INSPECTION. ANY CHANGE IN THE CONDITION RESULTING FROM THE CONTRACTOR'S OPERATIONS SHALL BE CORRECTED BY THE CONTRACTOR TO THE SATISFACTION OF THE ENGINEER.

PAYMENT FOR ALL OPERATIONS DESCRIBED ABOVE SHALL BE INCLUDED IN THE CONTRACT PRICE FOR THE PERTINENT 603 CONDUIT ITEMS.

CONTINGENCY QUANTITIES

THE CONTRACTOR SHALL NOT ORDER MATERIALS OR PERFORM WORK FOR ITEMS DESIGNATED BY PLAN NOTE TO BE USED "AS DIRECTED BY THE ENGINEER" UNLESS AUTHORIZED BY THE ENGINEER. THE ACTUAL WORK LOCATIONS AND TITLES USED FOR SUCH ITEMS SHALL BE INCORPORATED INTO THE FINAL CHANGE ORDER GOVERNING COMPLETION OF THIS PROJECT.

WORK LIMITS

THE WORK LIMITS SHOWN ON THESE PLANS ARE FOR PHYSICAL CONSTRUCTION ONLY. THE INSTALLATION AND OPERATION OF ALL TEMPORARY TRAFFIC CONTROL AND TEMPORARY TRAFFIC CONTROL DEVICES REQUIRED BY THESE PLANS SHALL BE PROVIDED BY THE CONTRACTOR WHETHER INSIDE OR OUTSIDE THESE WORK LIMITS.

STREAM CHANNEL EXCAVATION

THE CONTRACTOR SHALL TAKE ALL PRECAUTIONS NECESSARY TO PREVENT ANY INCIDENTAL DISCHARGES ASSOCIATED WITH THE EXCAVATION AND HAULING OF MATERIAL FROM THE STREAM CHANNEL. THIS PERTAINS TO ANY EXCAVATION OPERATIONS SUCH AS, FOUNDATION PIER OR ABUTMENT EXCAVATION, CHANNEL CLEANOUT, EXCAVATION FOR ROCK CHANNEL PROTECTION AND REMOVAL OF ANY TEMPORARY FILL ASSOCIATED WITH CONSTRUCTION OPERATIONS.

ADDITIONAL SOIL INFORMATION

THE SOIL PROFILE AND/OR STRUCTURE FOUNDATION INVESTIGATION SHEETS CONTAIN ALL AVAILABLE SOIL AND BEDROCK INFORMATION WHICH CAN BE CONVENIENTLY SHOWN. ADDITIONAL SUBSURFACE INVESTIGATIONS MAY HAVE BEEN MADE TO STUDY SOME ASPECT OF THE PROJECT. MORE INFORMATION, IF ANY, MAY BE OBTAINED IN DISTRICT 10, THE OFFICE OF MATERIALS MANAGEMENT OR THE OFFICE OF STRUCTURAL ENGINEERING.

ITEM 203 - EXCAVATION, INCLUDING EMBANKMENT CONSTRUCTION

IF UNSUITABLE FOUNDATION SOILS ARE ENCOUNTERED IN THE AREAS OF THE PROPOSED ROADBED, THEY SHALL BE REMOVED AND REPLACED WITH SUITABLE MATERIAL MEETING THE REQUIREMENTS OF 203.08. THE LOCATIONS AND DIMENSIONS WILL BE DETERMINED BY THE ENGINEER.

A CONTINGENCY QUANTITY OF 100 CUBIC YARDS OF ITEM 203, EXCAVATION INCLUDING EMBANKMENT CONSTRUCTION HAS BEEN INCLUDED IN THE GENERAL SUMMARY TO BE USED AS DIRECTED BY THE ENGINEER.

ITEM 611, REINFORCED CONCRETE APPROACH SLAB, AS PER PLAN (T=13")

APPROACH SLABS SHALL BE CONSTRUCTED AS PER STANDARD DRAWING AS-1-81 EXCEPT AS SHOWN ON SHEET 20 OF 38. MECHANICAL CONNECTORS SHALL MEET THE REQUIREMENTS AS STATED IN THE "STRUCTURAL GENERAL NOTES" EXCEPT MECHANICAL CONNECTORS SHALL BE INCLUDED WITH APPROACH SLABS FOR PAYMENT.

C&GS BENCHMARK NO. V207

THE EXISTING C&GS BENCHMARK NO. V207 (SECOND ORDER CLASS 0) SHALL NOT BE MOVED UNTIL THE ELEVATION CAN BE TRANSFERRED TO A TEMPORARY BENCHMARK. THE NEW BENCHMARK (TO BE PROVIDED BY OTHERS) IS TO BE RESET BY THE CONTRACTOR AT THE SAME ELEVATION AND TO SECOND ORDER VERTICAL ACCURACY.

DEMOLITION DEBRIS

THE CONTRACTOR SHALL TAKE PRECAUTIONS TO AVOID AND/OR LIMIT DEMOLITION DEBRIS FROM ENTERING THE STREAM. ANY MATERIAL THAT DOES FALL INTO THE STREAM SHALL BE REMOVED AS SOON AS POSSIBLE. INCLUDE WITH ITEM 202 FOR PAYMENT.

IRON PINS FOR RIGHT-OF-WAY

AT THE TERMINATION OF THE PROJECT, THE CONTRACTOR SHALL SET ALL MISSING OR OBLITERATED IRON PINS SHOWN BY THE RIGHT-OF-WAY PLAN. THE IRON PINS SHALL BE SET UNDER THE SUPERVISION OF A REGISTERED SURVEYOR HIRED BY THE CONTRACTOR. THE IRON PINS SHALL BE 3/4" x 30" REINFORCING ROD WITH AN ALUMINUM CAP STAMPED WITH THE SURVEYOR'S NAME AND REGISTRATION NUMBER.

CALCULATED JSB
CHECKED AMF

GENERAL NOTES

MEG-124-12.52

CAD FILE : MEG_GNT2
PLOT SCALE : 1:1

ITEM 614. MAINTAINING TRAFFIC

A MINIMUM OF ONE LANE OF TRAFFIC SHALL BE MAINTAINED AT ALL TIMES BY USE OF THE EXISTING PAVEMENT, THE COMPLETED PAVEMENT, OR ITEM 615, TEMPORARY PAVEMENT.

LENGTH AND DURATION OF LANE CLOSURES SHALL BE AT THE APPROVAL OF THE ENGINEER. THE INTENT IS TO MINIMIZE THE IMPACT TO THE TRAVELING PUBLIC. LANE CLOSURES OR RESTRICTIONS OVER SEGMENTS OF THE PROJECT IN WHICH NO WORK IS ANTICIPATED WITHIN A REASONABLE TIME FRAME, AS DETERMINED BY THE ENGINEER, SHALL NOT BE PERMITTED. THE LEVEL OF UTILIZATION OF MAINTENANCE OF TRAFFIC DEVICES SHALL BE COMMESURATE WITH THE WORK IN PROGRESS.

THIS ITEM SHALL CONSIST OF MAINTENANCE OF TRAFFIC ON EXISTING ROADWAYS IN ADDITION TO THE PLAN DETAILS AND IN ACCORDANCE WITH THE OHIO MANUAL OF UNIFORM TRAFFIC CONTROL DEVICES FOR STREETS AND HIGHWAYS, CURRENT EDITION, LATEST REVISION, THE SPECIFICATIONS AND THE FOLLOWING:

ALL TRAFFIC CONTROL DEVICES INCLUDING FLAGS, FLAGGERS, DRUMS, BARRICADES, SIGNS, SIGN SUPPORTS AND INCIDENTALS SHALL BE FURNISHED BY THE CONTRACTOR AND SHALL BE ERECTED, MAINTAINED, AND SUBSEQUENTLY REMOVED BY THE CONTRACTOR IN COMPLIANCE WITH THE OHIO MANUAL OF UNIFORM TRAFFIC CONTROL DEVICES, CURRENT EDITION, LATEST REVISION. THE CONTRACTOR SHALL BE RESPONSIBLE AT ALL TIMES FOR PROVIDING AND MAINTAINING THE ABOVE ITEMS FOR THE MAINTENANCE OF TRAFFIC AND SAFETY OF HIS/HER WORK AT THE LOCATIONS SHOWN ON THESE PLANS OR AS DIRECTED BY THE ENGINEER. ANY REPAIRS TO TRAFFIC CONTROL DEVICES SHALL BE PERFORMED WITHIN 24 HOURS OF NOTIFICATION.

THE TEMPORARY TRAFFIC SIGNAL SHALL BE PLACED IN ACCORDANCE WITH PLAN SHEETS 7-10 AND MT-96.11M AND MT-96.20M. AN ACTUATED CONTROLLER IS NEEDED WITH THE INITIAL TIMING FOR THE BRIDGE AS SHOWN ON PLAN SHEET 6. ALL LABOR, EQUIPMENT AND INCIDENTALS NEEDED TO PERFORM THIS WORK SHALL BE PAID FOR UNDER ITEM 614 - MAINTENANCE OF TRAFFIC.

THE MAINTENANCE OF TRAFFIC PLANS INDICATE THE USE OF TEMPORARY POLES AS PER MT-96.21M. THE CONTRACTOR SHALL DESIGN THE POLES' DIAMETER AND MATERIAL. THE DESIGN SHALL BE SUBMITTED FOR REVIEW AND APPROVAL PRIOR TO ANY INSTALLATION OF TEMPORARY POLES. THIS WORK SHALL BE INCLUDED IN THE LUMP SUM PRICE BID FOR ITEM 614 MAINTAINING TRAFFIC.

ALL WORK AND TRAFFIC CONTROL DEVICES SHALL BE IN ACCORDANCE WITH 614 AND OTHER APPLICABLE PORTIONS OF THE SPECIFICATIONS, AS WELL AS THE OHIO MANUAL OF UNIFORM TRAFFIC CONTROL DEVICES. PAYMENT FOR ALL LABOR, EQUIPMENT AND MATERIALS SHALL BE INCLUDED IN THE LUMP SUM CONTRACT PRICE FOR 614, MAINTAINING TRAFFIC, UNLESS SEPARATELY ITEMIZED IN THE PLAN.

CONTINGENCY QUANTITIES

THE FOLLOWING ESTIMATED QUANTITIES HAVE BEEN INCLUDED IN THE GENERAL SUMMARY FOR USE AS DIRECTED BY THE ENGINEER FOR THE MAINTENANCE OF TRAFFIC:

410, TRAFFIC COMPACTED SURFACE, TYPE A OR B	15 CU. YD.
614, BITUMINOUS CONCRETE FOR MAINTAINING TRAFFIC	15 CU. YD.
616, CALCIUM CHLORIDE	1 TON
616, WATER	1 M. GAL.

PRIOR NOTICE

SEVENTY-TWO HOURS PRIOR TO IMPLEMENTATION OF ANY MAINTENANCE OF TRAFFIC MEASURE, THE CONTRACTOR SHALL PROVIDE WRITTEN NOTIFICATION TO THE PROJECT ENGINEER AND THE DISTRICT TRAFFIC ENGINEER OF THE TYPE TO BE DONE, THE MAINLINE LANE CLOSURES, WIDTH RESTRICTIONS AND ANY OTHER PERTINENT MAINTENANCE OF TRAFFIC INFORMATION.

INSTALLATION AND RESETTING CONSTRUCTION PHASES

ONLY DURING OFF-PEAK PERIODS (ie. ANY PERIOD OTHER THAN 7-9 A.M. AND 4-6 P.M.) SHALL THE CONTRACTOR INSTALL AND SUBSEQUENTLY RESET ALL TRAFFIC CONTROL DEVICES NECESSARY FOR MAINTAINING TRAFFIC DURING EACH CONSTRUCTION PHASE.

SUSPENSION OF WORK

IF THE CONTRACTOR FAILS TO COMPLY WITH THE PROVISIONS FOR TRAFFIC CONTROL AS SET FORTH IN THESE PLANS OR WITH PROVISIONS OF THE OHIO MANUAL OF UNIFORM TRAFFIC CONTROL DEVICES, THE ENGINEER SHALL SUSPEND WORK UNTIL THE CONTRACTOR COMPLIES WITH THE NECESSARY REQUIREMENTS.

NIGHT WORK

UNLESS OTHERWISE REQUIRED BY SPECIFIED PLAN NOTE, NO WORK SHALL BE DONE AT NIGHT UNLESS WRITTEN APPROVAL BY THE PROJECT ENGINEER HAS BEEN RECEIVED. THE CONTRACTOR'S REQUEST FOR USE OF NIGHT WORK SHALL INCLUDE THE TYPE OF WORK TO BE DONE, THE DURATION OF THE WORK, LOCATION OF THE INTENDED WORK AND THE CONTRACTOR'S TEMPORARY LIGHTING PLAN. ALL TEMPORARY LIGHTING REQUIRED FOR NIGHT WORK SHALL BE AT THE CONTRACTOR'S EXPENSE.

TEMPORARY WORK ZONE MARKINGS AND SIGNS

THE FOLLOWING ESTIMATED QUANTITIES HAVE BEEN CARRIED TO THE GENERAL SUMMARY FOR USE AS DIRECTED BY THE ENGINEER FOR TEMPORARY WORK ZONE PAVEMENT MARKINGS AND SIGNS PER THE REQUIREMENTS 614.04 AND 614.10:

614, TEMPORARY EDGE LINE, CLASS I	0.02 MI.
614, TEMPORARY CENTERLINE, CLASS I	0.10 MI.
614, TEMPORARY STOP LINE, CLASS I	63 LIN. FT.

ITEM 622, PORTABLE CONCRETE BARRIER, 50", AS PER PLAN

THIS WORK SHALL CONSIST OF FURNISHING, INSTALLING, MAINTAINING, AND SUBSEQUENTLY REMOVING A 50-INCH PORTABLE CONCRETE BARRIER AT THE LOCATIONS SHOWN ON THE PLANS. FOR DETAILS, SEE STANDARD CONSTRUCTION DRAWING RM-4.1M.

PORTABLE CONCRETE BARRIER, 32 INCH HIGH WITH A 18-INCH MINIMUM HEIGHT GLARE SCREEN MAY BE USED AT THE OPTION OF THE CONTRACTOR. THE GLARE SCREEN SHALL BE CONSTRUCTED USING ONE OF THE FOLLOWING SYSTEMS OR AN APPROVED EQUAL:

CARSONITE MODULAR GLARE SCREEN
CARSONITE INTERNATIONAL
2900 LOCKHEED WAY, CARSON CITY, NEVADA 89701
702-883-5104 OR 800-648-7974

SYRO GLAREFOIL
SYRO STEEL INCORP.
SUBSIDIARY OF TRINITY INDUSTRY
1170 N. STATE STREET, GIRARD, OHIO 44420
330-545-4373

PADDLE OR INTERMITTENT TYPE GLARE SCREEN SHALL BE DESIGNED USING A 20 DEGREE CUTOFF ANGLE BASED ON TANGENT ALIGNMENT. THAT SPACING SHALL BE USED THROUGHOUT THE BARRIER LENGTH WITHOUT REGARD TO BARRIER CURVATURE.

THE GLARE SCREEN SYSTEM SHALL BE SECURELY FASTENED TO THE 32-INCH PORTABLE CONCRETE BARRIER USING THE HARDWARE AND PROCEDURES SPECIFIED BY THE MANUFACTURER.

PAYMENT SHALL INCLUDE ALL LABOR, MATERIAL, AND EQUIPMENT NECESSARY TO PERFORM THE WORK AND SHALL BE PAID FOR AT THE CONTRACT PRICE PER LIN. FT. FOR ITEM 622, PORTABLE CONCRETE BARRIER, 50", AS PER PLAN.

622, PORTABLE CONCRETE BARRIER, 50", AS PER PLAN	797 LIN. FT.

ITEM 614. BARRIER REFLECTORS AND OBJECT MARKERS

BARRIER REFLECTORS AND OBJECT MARKERS SHALL BE INSTALLED ON ALL PORTABLE CONCRETE BARRIERS USED FOR TRAFFIC CONTROL. OBJECT MARKERS SHALL BE BI-DIRECTIONAL AND SHALL MEET OR EXCEED REQUIREMENTS UNDER 703.19 OR 703.192. BARRIER REFLECTORS SHALL MEET OR EXCEED REQUIREMENTS UNDER 720.04. BARRIER REFLECTORS, OBJECT MARKERS AND THEIR INSTALLATION SHALL CONFORM TO THE APPROPRIATE PROPOSAL NOTE AND ITEM 626 EXCEPT THAT THE SPACING SHALL BE AS PER STANDARD DRAWING MT-96.11M. AN ESTIMATED QUANTITY OF 65 EACH OF ITEM 614 BARRIER REFLECTOR, TYPE B-2, AND 37 EACH OF ITEM 614 OBJECT MARKERS HAVE BEEN PROVIDED AND CARRIED TO THE GENERAL SUMMARY.

CONTRACTOR'S EQUIPMENT OPERATION AND STORAGE

THE CONTRACTOR'S EQUIPMENT SHALL BE OPERATED IN THE DIRECTION OF TRAFFIC WHERE PRACTICAL. A QUALIFIED FLAGGER SHALL BE EMPLOYED WHERE THE CONTRACTOR'S EQUIPMENT MUST MERGE WITH THE TRAFFIC STREAM. THE CONTRACTORS EQUIPMENT SHALL BE EQUIPPED WITH AT LEAST ONE AMBER FLASHING LIGHT. PAVERS, ROLLERS AND OTHER EQUIPMENT MAY BE PARKED IN AREAS ALONG SIDE THE HIGHWAY WHEN PAVING OPERATIONS ARE SCHEDULED TO CONTINUE WITHIN THE NEXT WORKDAY. OTHERWISE THE EQUIPMENT SHALL BE STORED AT A STORAGE AREA, THE LOCATION OF WHICH SHALL HAVE PRIOR APPROVAL OF THE ENGINEER. WHEN PARKING ALONG THE HIGHWAY, THE EQUIPMENT SHALL BE PARKED EITHER SIX (6) FEET FROM THE EDGE OF PAVEMENT OR BEHIND THE GUARDRAIL/PORTABLE CONCRETE BARRIER. ADEQUATE BARRICADES AND LIGHTS SHALL BE PLACED ON THE PAVEMENT SIDE OF THE EQUIPMENT TO IDENTIFY THE LIMITS OF THE EQUIPMENT. ALL OTHER EQUIPMENT SHALL BE STORED AT THE APPROVED CONTRACTOR'S STORAGE AREA.

PRIVATE VEHICLES

NO PRIVATELY OWNED VEHICLES (BELONGING TO THE CONTRACTOR'S EMPLOYEES OR TO ODOT PERSONNEL ASSIGNED TO THE PROJECT) SHALL BE PARKED WITHIN THE ROADWAY TRAVEL PORTION (TO FACE OF CURB) OF THE PROJECT LIMITS.

PLACEMENT OF SURFACE COURSE

THE PROPOSED SURFACE COURSE, ITEM 448 - ASPHALT CONCRETE, SURFACE COURSE, TYPE 1, PG 64-22, SHALL NOT BE PLACED UNTIL THE ENTIRE UNDERLYING COURSES HAVE BEEN PLACED. NO LONGITUDINAL JOINTS SHALL BE PERMITTED IN THE SURFACE COURSE.

OVERNIGHT TRENCH CLOSING

ALL TRENCHES SHALL BE COMPLETED TO A DEPTH OF NO MORE THAN 3" BELOW THE EXISTING PAVEMENT BY THE END OF EACH WORK DAY. NO TRENCH SHALL BE OPEN OVERNIGHT EXCEPT FOR SHORT LENGTHS (25 FEET OR LESS) OF A WORK SECTION AT THE END OF A TRENCH. IN CASE WORK MUST BE SUSPENDED BECAUSE OF INCLEMENT WEATHER OR OTHER REASONS, THE TRENCH SHALL BE BACKFILLED AT THE DIRECTION OF THE PROJECT ENGINEER.

ALTERNATE METHODS

IF THE CONTRACTOR ELECTS, HE MAY SUBMIT AN ALTERNATE METHOD FOR THE MAINTENANCE OF TRAFFIC PROVIDED THE PLAN INTENT IS FOLLOWED AND NO ADDED INCONVENIENCE TO THE PUBLIC RESULTS. NO ALTERNATE METHOD SHALL BE PLACED INTO EFFECT WITHOUT THE WRITTEN APPROVAL OF THE PROJECT ENGINEER.

SIDE ROADS

IT IS THE INTENT OF THIS PROJECT TO CLOSE LARKIN STREET AT SR 124 DURING THE DURATION OF CONSTRUCTION. ACCESS TO LARKIN STREET WILL BE MAINTAINED THROUGH SALEM STREET.

SEQUENCE OF CONSTRUCTION

REFER TO BRIDGE SHEET 5/15 FOR SEQUENCE OF OPERATIONS AND TRANSVERSE SECTIONS.

PHASE 1:

1) ERECT TEMPORARY SIGNS, TRAFFIC SIGNALS AND COVER ANY EXISTING SIGNS.

2) REMOVE CONFLICTING EXISTING PAVEMENT MARKINGS AND INSTALL TEMPORARY PAVEMENT MARKINGS AND PORTABLE CONCRETE BARRIER.

3) CONSTRUCT THE EAST SIDE OF THE PROPOSED BRIDGE AND ROADWAY. THIS WILL INCLUDE ALL THE ASSOCIATED ROADWORK EXCEPT FOR PLACEMENT OF ITEM 448 - ASPHALT CONCRETE SURFACE COURSE.

PHASE 2:

1) REMOVE CONFLICTING TEMPORARY AND EXISTING PAVEMENT MARKINGS. INSTALL TEMPORARY PAVEMENT MARKINGS AND PORTABLE CONCRETE BARRIER.

2) CONSTRUCT THE WEST SIDE OF THE PROPOSED BRIDGE AND ROADWAY. THIS WILL INCLUDE ALL THE ASSOCIATED ROADWORK EXCEPT FOR PLACEMENT OF ITEM 448 - ASPHALT CONCRETE SURFACE COURSE.

PHASE 3:

1) UPON COMPLETION OF PHASE 2 THE MAINTENANCE OF TRAFFIC WILL BE AS DETAILED ON STANDARD DRAWING MT-97.10M.

2) REMOVE ALL CONFLICTING TEMPORARY PAVEMENT MARKING, PORTABLE CONCRETE BARRIER, TEMPORARY SIGNS, TEMPORARY TRAFFIC SIGNALS AND UNCOVER EXISTING SIGNS.

3) PLACE ITEM 448 - ASPHALT CONCRETE SURFACE COURSE.

FULLY ACTUATED OPERATION OF TEMPORARY TRAFFIC SIGNAL

THE TEMPORARY TRAFFIC SIGNAL CONTROL REQUIRED FOR THIS PROJECT AND SHOWN ON SHEETS 7-10 AND STANDARD DRAWING MT-96.11M, MT-96.21M AND MT-96.26M SHALL BE FULLY TRAFFIC ACTUATED AND OPERATE IN A MANNER SIMILAR TO THAT DESCRIBED IN SECTION 733.02 OF THE CONSTRUCTION AND MATERIAL SPECIFICATIONS.

THE INITIAL CONTROLLER TIMING SHALL BE AS FOLLOWS:

	PHASE *			
	1	2	3	4
INITIAL	8	8	6	6
VEHICLE	2	2	2	--
MAXIMUM	16	16	8	6
YELLOW	3	3	3	3
ALL RED	17.5	2	17.5	3
RECALL	ON	OFF	OFF	OFF

THE CONTRACTOR SHALL ALSO DESIGN, FURNISH AND MAINTAIN A TRAFFIC DETECTOR ON EACH TRAFFIC APPROACH WHICH WILL RELIABLY DETECT ALL LEGAL TRAFFIC APPROACHING (BUT NOT LEAVING) THE SIGNAL AS IT PASSES OR WAITS IN THE DESIGNATED DETECTOR ZONE SHOWN IN THE PLANS. DETECTOR DESIGNS WHICH DO NOT PROVIDE RELIABLE DETECTION, FREE FROM FALSE CALLS, SHALL BE IMMEDIATELY REPLACED BY THE CONTRACTOR.

CALCULATED AMF CHECKED JSB

MAINTENANCE OF TRAFFIC GENERAL NOTES

MEG-124-12.52

MEG_MOTN

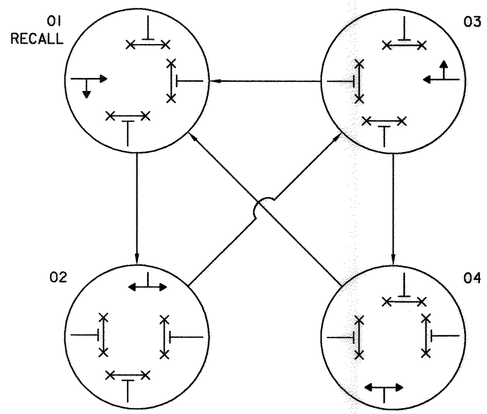

PHASING DIAGRAM

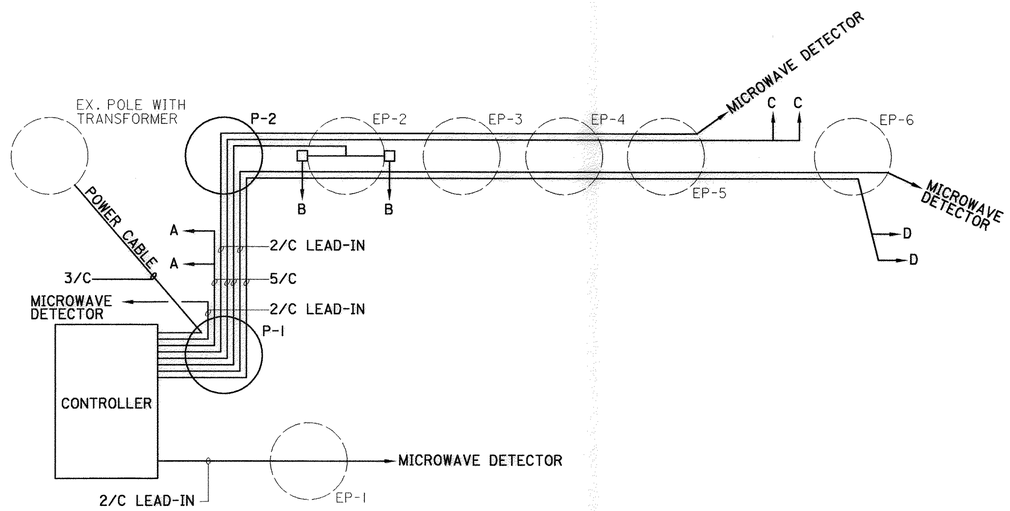

WIRING DIAGRAM

CALCULATED JSB
CHECKED JPG

TEMPORARY TRAFFIC SIGNAL DETAILS

MEG-124-12.52

CAD FILE : MEG_SIG1
PLOT SCALE : 1:1

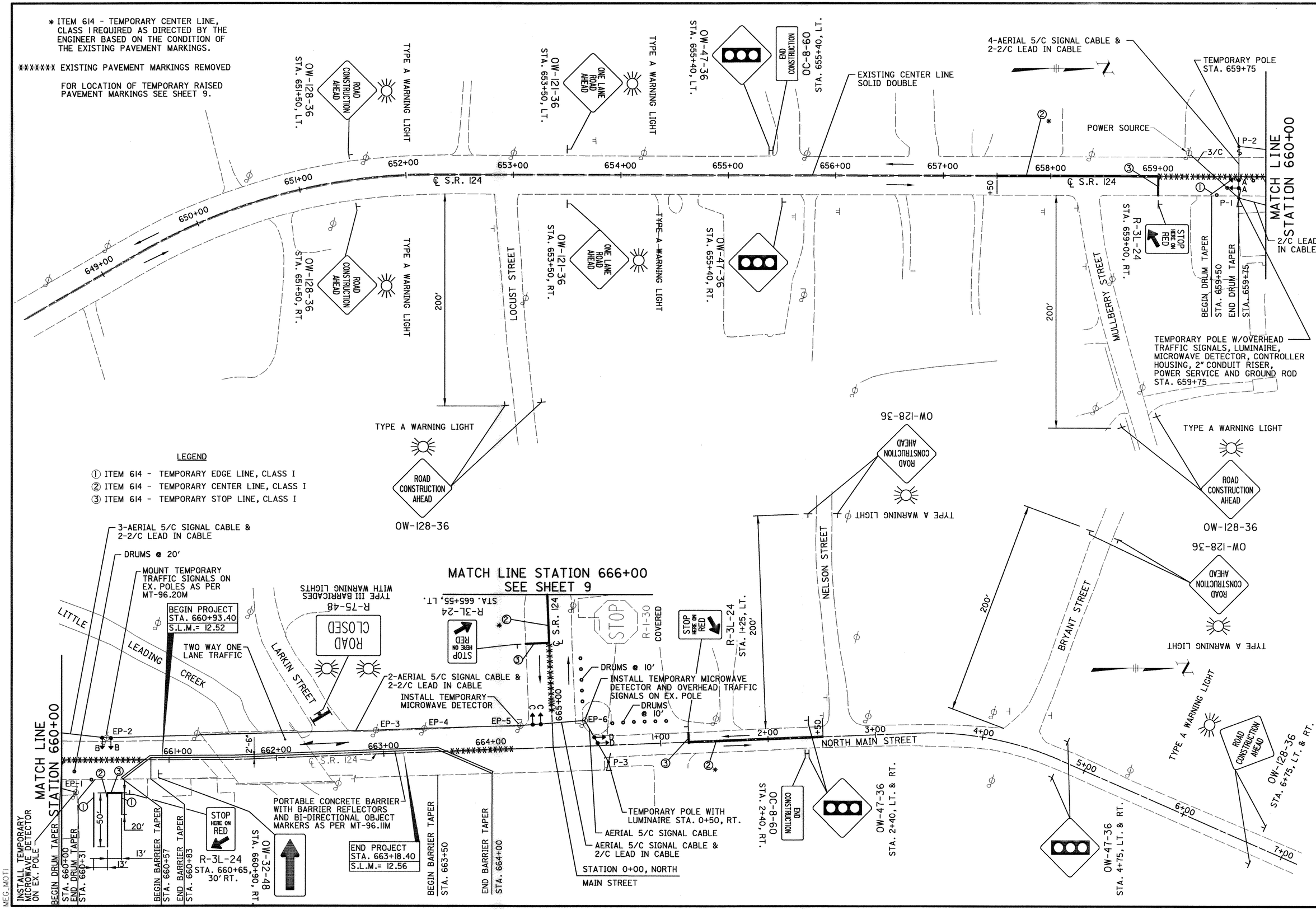
* ITEM 614 - TEMPORARY CENTER LINE, CLASS I REQUIRED AS DIRECTED BY THE ENGINEER BASED ON THE CONDITION OF THE EXISTING PAVEMENT MARKINGS.
******* EXISTING PAVEMENT MARKINGS REMOVED
FOR LOCATION OF TEMPORARY RAISED PAVEMENT MARKINGS SEE SHEET 9.
LEGEND
① ITEM 614 - TEMPORARY EDGE LINE, CLASS I
② ITEM 614 - TEMPORARY CENTER LINE, CLASS I
③ ITEM 614 - TEMPORARY STOP LINE, CLASS I
MATCH LINE STATION 660+00
MATCH LINE STATION 666+00
SEE SHEET 9
℄ S.R. 124
649+00
650+00
651+00
652+00
653+00
654+00
655+00
656+00
657+00
658+00
659+00
661+00
662+00
663+00
664+00
665+00
NORTH MAIN STREET
LITTLE LEADING CREEK
LARKIN STREET
LOCUST STREET
MULLBERRY STREET
NELSON STREET
BRYANT STREET
200'
OW-128-36 STA. 651+50, LT.
OW-128-36 STA. 651+50, RT.
OW-121-36 STA. 653+50, LT.
OW-121-36 STA. 653+50, RT.
OW-47-36 STA. 655+40, LT.
OW-47-36 STA. 655+40, RT.
OC-8-60 STA. 655+40, LT.
OC-8-60 STA. 2+40, RT.
OW-47-36 STA. 2+40, LT. & RT.
OW-47-36 STA. 4+75, LT. & RT.
OW-128-36 STA. 6+75, LT. & RT.
OW-32-48 STA. 660+90, RT.
R-3L-24 STA. 659+00, RT.
R-3L-24 STA. 660+65, 30' RT.
R-3L-24 STA. 665+55, LT.
R-3L-24 STA. 1+25, LT. 200'
R-75-48
R-1-30 COVERED
TYPE A WARNING LIGHT
TYPE III BARRICADES WITH WARNING LIGHTS
ROAD CONSTRUCTION AHEAD
ONE LANE ROAD AHEAD
END CONSTRUCTION
ROAD CLOSED
STOP HERE ON RED
STOP
4-AERIAL 5/C SIGNAL CABLE & 2-2/C LEAD IN CABLE
EXISTING CENTER LINE SOLID DOUBLE
TEMPORARY POLE STA. 659+75
POWER SOURCE
3/C
P-1
P-2
2/C LEAD IN CABLE
BEGIN DRUM TAPER STA. 659+50
END DRUM TAPER STA. 659+75
TEMPORARY POLE W/OVERHEAD TRAFFIC SIGNALS, LUMINAIRE, MICROWAVE DETECTOR, CONTROLLER HOUSING, 2" CONDUIT RISER, POWER SERVICE AND GROUND ROD STA. 659+75
3-AERIAL 5/C SIGNAL CABLE & 2-2/C LEAD IN CABLE
DRUMS @ 20'
MOUNT TEMPORARY TRAFFIC SIGNALS ON EX. POLES AS PER MT-96.20M
BEGIN PROJECT STA. 660+93.40 S.L.M.= 12.52
TWO WAY ONE LANE TRAFFIC
2-AERIAL 5/C SIGNAL CABLE & 2-2/C LEAD IN CABLE
INSTALL TEMPORARY MICROWAVE DETECTOR
DRUMS @ 10'
INSTALL TEMPORARY MICROWAVE DETECTOR AND OVERHEAD TRAFFIC SIGNALS ON EX. POLE
EP-1
EP-2
EP-3
EP-4
EP-5
EP-6
PORTABLE CONCRETE BARRIER WITH BARRIER REFLECTORS AND BI-DIRECTIONAL OBJECT MARKERS AS PER MT-96.11M
END PROJECT STA. 663+18.40 S.L.M.= 12.56
TEMPORARY POLE WITH LUMINAIRE STA. 0+50, RT.
AERIAL 5/C SIGNAL CABLE
AERIAL 5/C SIGNAL CABLE & 2/C LEAD IN CABLE
STATION 0+00, NORTH MAIN STREET
INSTALL TEMPORARY MICROWAVE DETECTOR ON EX. POLE
BEGIN DRUM TAPER STA. 660+00
END DRUM TAPER STA. 660+31
BEGIN BARRIER TAPER STA. 660+57
END BARRIER TAPER STA. 660+83
BEGIN BARRIER TAPER STA. 663+50
END BARRIER TAPER STA. 664+00
50'
20'
13'
2'-6"
HORIZONTAL SCALE IN FEET
0 20 40 80
CALCULATED CWF
CHECKED JSB
MAINTENANCE OF TRAFFIC PHASE 1
MEG-124-12.52
8
38
MEG_MOT1

* ITEM 614 - TEMPORARY CENTER LINE, CLASS I REQUIRED AS DIRECTED BY THE ENGINEER BASED ON THE CONDITION OF THE EXISTING PAVEMENT MARKINGS.

LEGEND

① ITEM 614 - TEMPORARY EDGE LINE, CLASS I
② ITEM 614 - TEMPORARY CENTER LINE, CLASS I
③ ITEM 614 - TEMPORARY STOP LINE, CLASS I

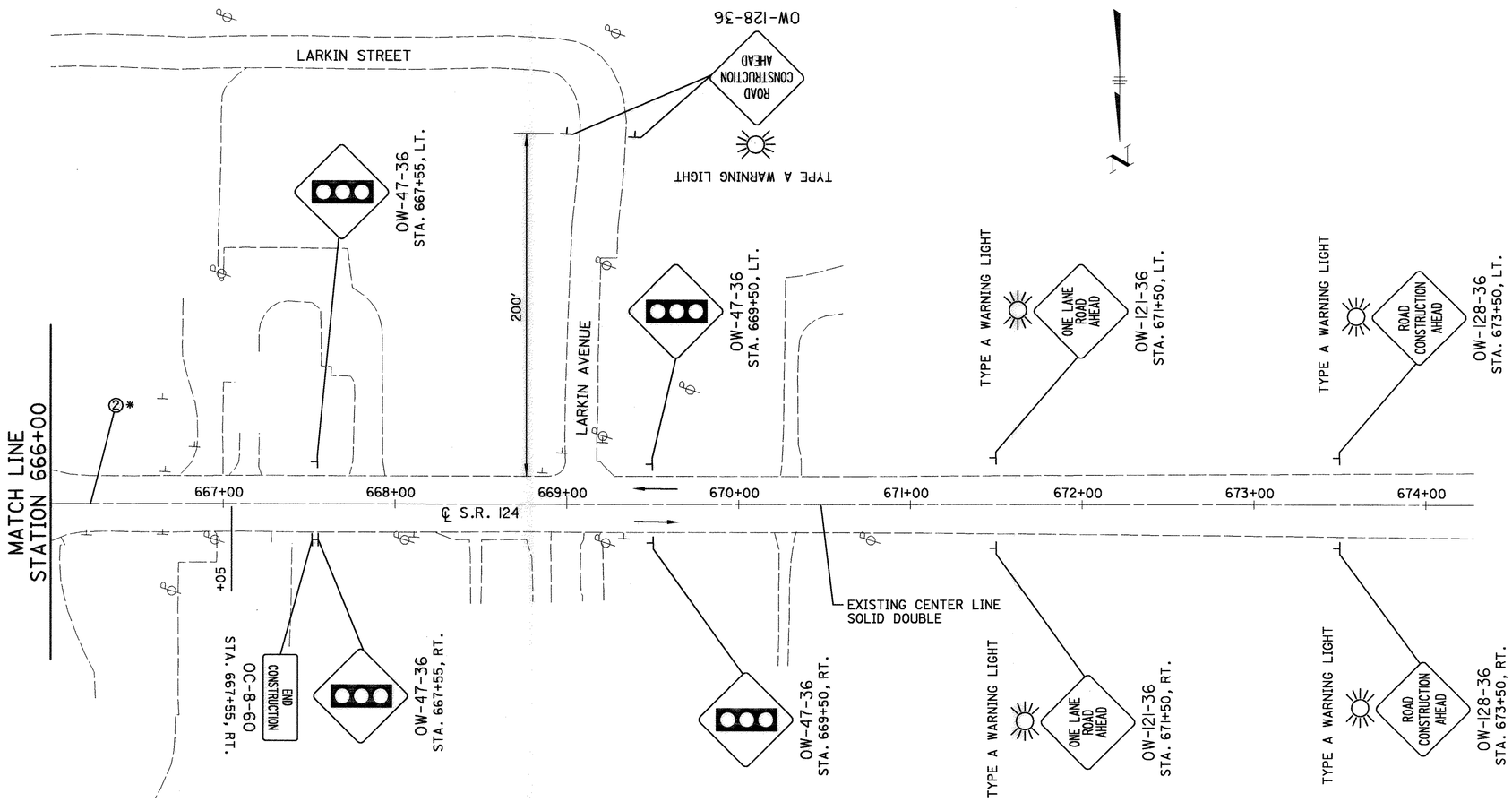

ITEM 614 - TEMPORARY RAISED PAVEMENT MARKER						
STATIONS		SIDE	OFFSET	SPACING	TYPE A	
FROM	TO		(FT.)	(FT.)	W	Y
PHASE 1						
660+83	663+50	LT.	5	5	54	54
659+00	663+50	LT.	17	5	91	91
653+50	654+30	LT.	17	5	17	--
PHASE 2						
660+50	663+50	RT.	5	5	61	61
659+00	660+50	RT.	17	5	31	--
660+50	664+30	RT.	17	5	77	77
** TOTALS					331	283

** QUANTITIES CARRIED TO GENERAL SUMMARY

HORIZONTAL SCALE IN FEET 0 20 40 80

CALCULATED CWF
CHECKED JSB

MAINTENANCE OF TRAFFIC
PHASE 1

MEG-124-12.52

MEG_MOT2

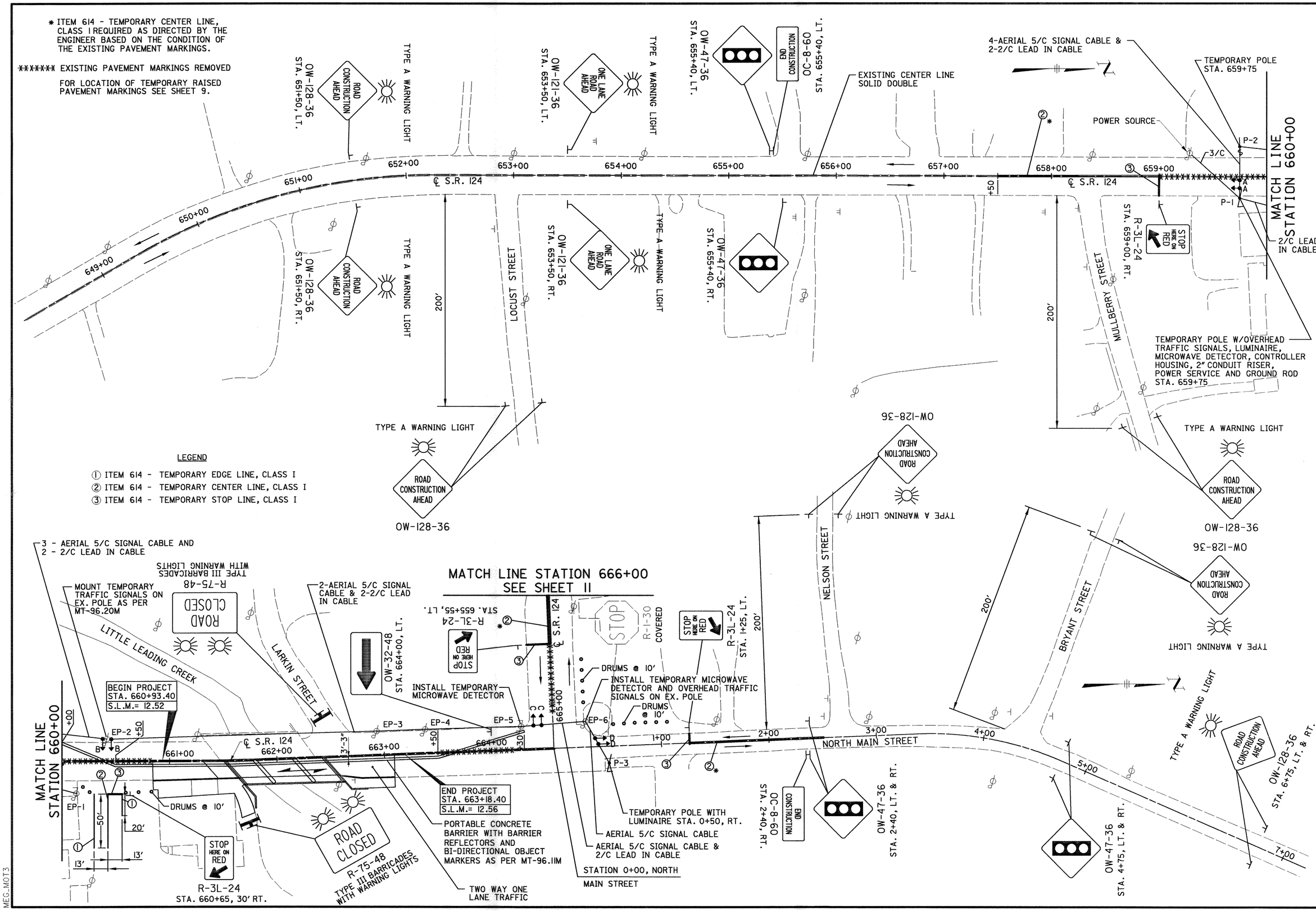
* ITEM 614 - TEMPORARY CENTER LINE, CLASS I REQUIRED AS DIRECTED BY THE ENGINEER BASED ON THE CONDITION OF THE EXISTING PAVEMENT MARKINGS.
******* EXISTING PAVEMENT MARKINGS REMOVED
FOR LOCATION OF TEMPORARY RAISED PAVEMENT MARKINGS SEE SHEET 9.
LEGEND
① ITEM 614 - TEMPORARY EDGE LINE, CLASS I
② ITEM 614 - TEMPORARY CENTER LINE, CLASS I
③ ITEM 614 - TEMPORARY STOP LINE, CLASS I
OW-128-36 STA. 651+50, LT.
ROAD CONSTRUCTION AHEAD
TYPE A WARNING LIGHT
OW-121-36 STA. 653+50, LT.
ONE LANE ROAD AHEAD
OW-47-36 STA. 655+40, LT.
END CONSTRUCTION
OC-8-60 STA. 655+40, LT.
EXISTING CENTER LINE SOLID DOUBLE
4-AERIAL 5/C SIGNAL CABLE & 2-2/C LEAD IN CABLE
TEMPORARY POLE STA. 659+75
POWER SOURCE
3/C
P-2
P-1
MATCH LINE STATION 660+00
2/C LEAD IN CABLE
R-3L-24 STA. 659+00, RT.
STOP HERE ON RED
MULLBERRY STREET
TEMPORARY POLE W/OVERHEAD TRAFFIC SIGNALS, LUMINAIRE, MICROWAVE DETECTOR, CONTROLLER HOUSING, 2" CONDUIT RISER, POWER SERVICE AND GROUND ROD STA. 659+75
OW-128-36 STA. 651+50, RT.
OW-121-36 STA. 653+50, RT.
OW-47-36 STA. 655+40, RT.
LOCUST STREET
200'
℄ S.R. 124
649+00
650+00
651+00
652+00
653+00
654+00
655+00
656+00
657+00
658+00
659+00
OW-128-36
NELSON STREET
BRYANT STREET
OW-47-36 STA. 2+40, LT. & RT.
OC-8-60 STA. 2+40, RT.
OW-47-36 STA. 4+75, LT. & RT.
OW-128-36 STA. 6+75, LT. & RT.
NORTH MAIN STREET
1+00
2+00
3+00
4+00
5+00
7+00
MATCH LINE STATION 666+00 SEE SHEET 11
3 - AERIAL 5/C SIGNAL CABLE AND 2 - 2/C LEAD IN CABLE
MOUNT TEMPORARY TRAFFIC SIGNALS ON EX. POLE AS PER MT-96.20M
R-75-48 TYPE III BARRICADES WITH WARNING LIGHTS
ROAD CLOSED
LITTLE LEADING CREEK
LARKIN STREET
2-AERIAL 5/C SIGNAL CABLE & 2-2/C LEAD IN CABLE
OW-32-48 STA. 664+00, LT.
R-3L-24 STA. 655+55, LT.
STOP HERE ON RED
R-1-30 COVERED
STOP
R-3L-24 STA. 1+25, LT.
BEGIN PROJECT STA. 660+93.40 S.L.M.= 12.52
INSTALL TEMPORARY MICROWAVE DETECTOR
DRUMS @ 10'
INSTALL TEMPORARY MICROWAVE DETECTOR AND OVERHEAD TRAFFIC SIGNALS ON EX. POLE
EP-1
EP-2
EP-3
EP-4
EP-5
EP-6
661+00
662+00
663+00
664+00
665+00
END PROJECT STA. 663+18.40 S.L.M.= 12.56
PORTABLE CONCRETE BARRIER WITH BARRIER REFLECTORS AND BI-DIRECTIONAL OBJECT MARKERS AS PER MT-96.11M
TEMPORARY POLE WITH LUMINAIRE STA. 0+50, RT.
AERIAL 5/C SIGNAL CABLE
AERIAL 5/C SIGNAL CABLE & 2/C LEAD IN CABLE
STATION 0+00, NORTH MAIN STREET
TWO WAY ONE LANE TRAFFIC
R-3L-24 STA. 660+65, 30' RT.
R-75-48 TYPE III BARRICADES WITH WARNING LIGHTS
50'
20'
13'
30'
3'-3"
HORIZONTAL SCALE IN FEET
0 20 40 80
CALCULATED CWF
CHECKED JSB
MAINTENANCE OF TRAFFIC PHASE 2
MEG-124-12.52
10
38
MEG_MOT3

* ITEM 614 - TEMPORARY CENTER LINE, CLASS I REQUIRED AS DIRECTED BY THE ENGINEER BASED ON THE CONDITION OF THE EXISTING PAVEMENT MARKINGS.

LEGEND

① ITEM 614 - TEMPORARY EDGE LINE, CLASS I
② ITEM 614 - TEMPORARY CENTER LINE, CLASS I
③ ITEM 614 - TEMPORARY STOP LINE, CLASS I

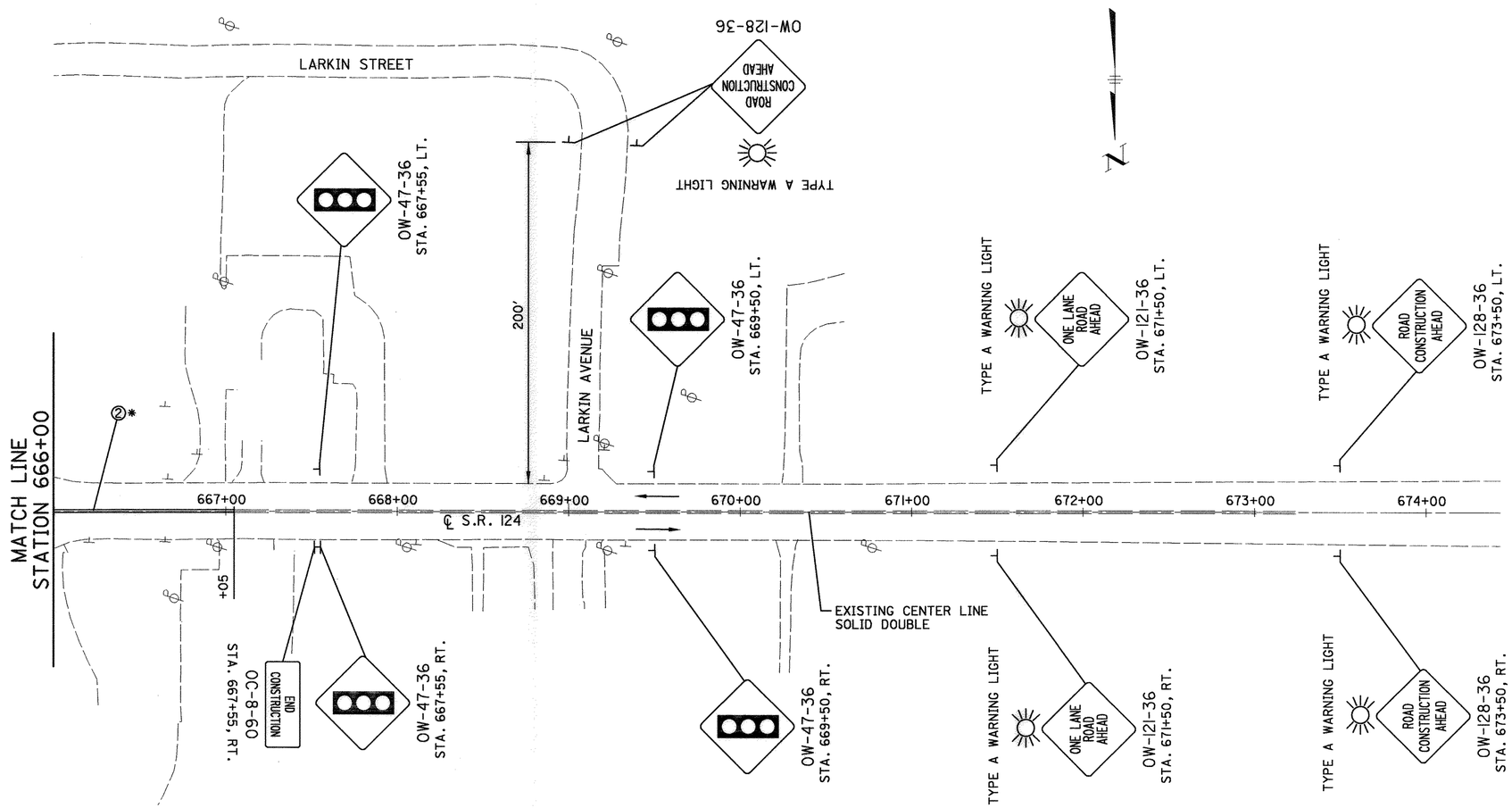

HORIZONTAL SCALE IN FEET
0 20 40 80

CALCULATED AMF
CHECKED JSB

MAINTENANCE OF TRAFFIC
PHASE 2

MEG-124-12.52

38

MEG_MOT4

SHEET NUMBER 4	5	6	9	13	14	18	ITEM	ITEM EXT.	GRAND TOTAL	UNIT	DESCRIPTION	SEE SHEET NO.
											ROADWAY	
				146			202	22900	146	SQ. YD.	APPROACH SLAB REMOVED	
				53	507		202	23000	560	SQ. YD.	PAVEMENT REMOVED	
				2042			202	30000	2042	SQ. FT.	WALK REMOVED	
				323			202	32000	323	LIN. FT.	CURB REMOVED	
				129			202	35100	129	LIN. FT.	PIPE REMOVED, 24" AND UNDER	
				25			202	38000	25	LIN. FT.	GUARDRAIL REMOVED	
	100						203	11000	100	CU. YD.	EXCAVATION, INCLUDING EMBANKMENT CONSTRUCTION	
						23	203	12000	23	CU. YD.	EXCAVATION NOT INCLUDING EMBANKMENT CONSTRUCTION	
						27	203	20000	27	CU. YD.	EMBANKMENT	
					1.0		203	45000	1	HOUR	PROOF ROLLING	
					662		203	50000	662	SQ. YD.	SUBGRADE COMPACTION	
					87		254	01000	87	SQ. YD.	PAVEMENT PLANING, BITUMINOUS, 3"	
4							604	40500	4	EACH	REFERENCE MONUMENT	
				1961			608	13000	1961	SQ. FT.	6" CONCRETE WALK	
				2			608	50000	2	EACH	CURB RAMP, TYPE 1	
											EROSION CONTROL	
8				643			601	32204	651	CU. YD.	ROCK CHANNEL PROTECTION, TYPE C WITH FABRIC FILTER	
1							870	00100	1	EACH	SOIL ANALYSIS TEST	
60							870	10000	60	SQ. YD.	SEEDING AND MULCHING	
3							870	14000	3	SQ. YD.	REPAIR SEEDING AND MULCHING	
0.01					0.01		870	20000	0.02	TON	COMMERCIAL FERTILIZER	
					0.03		870	30000	0.03	TON	AGRICULTURAL LIME	
0.03					0.13		870	35000	1	M. GAL.	WATER	
0.13					0.5		870	40000	1	M.SQ.FT.	MOWING	
12							877	10000	12	SQ. YD.	TEMPORARY SEEDING AND MULCHING	
200							877	30100	200	LIN. FT.	TEMPORARY PERIMETER FILTER FABRIC FENCE	
120							877	30300	120	LIN. FT.	TEMPORARY INLET PROTECTION FILTER FABRIC FENCE	
12							877	60000	12	CU. YD.	SEDIMENT REMOVAL	
											DRAINAGE	
				0.5			602	20000	0.5	CU. YD.	CONCRETE MASONRY	
				30			603	00406	30	LIN. FT.	4" CONDUIT, TYPE F	
50							603	00900	50	LIN. FT.	6" CONDUIT, TYPE B, FOR DRAINAGE CONNECTION	
50							603	00900	50	LIN. FT.	6" CONDUIT, TYPE B, FOR SANITARY	
50							603	01100	50	LIN. FT.	6" CONDUIT, TYPE C, FOR DRAINAGE CONNECTION	
50							603	01100	50	LIN. FT.	6" CONDUIT, TYPE C, FOR SANITARY	
50							603	01400	50	LIN. FT.	6" CONDUIT, TYPE E, FOR DRAINAGE CONNECTION	
				8			603	05900	8	LIN. FT.	15" CONDUIT, TYPE B, 706.02	
				95			603	10400	95	LIN. FT.	24" CONDUIT, TYPE B	
				2			604	00400	2	EACH	CATCH BASIN, NO. 3	
				1			604	34500	1	EACH	MANHOLE ADJUSTED TO GRADE	
250							604	50000	250	POUND	SPECIAL - MISCELLANEOUS METAL	4
				73			605	05100	73	LIN. FT.	4" SHALLOW PIPE UNDERDRAIN	
				147			605	05200	147	LIN. FT.	4" UNCLASSIFIED PIPE UNDERDRAIN	
				27			680	44300	27	LIN. FT.	SPECIAL - 2" FORCE MAIN, RESTRAINED JOINT	4/19
											PAVEMENT	
				2			301	48000	2	CU. YD.	BITUMINOUS AGGREGATE BASE, PG64-22 (DRIVEWAYS)	
				6	110		304	20000	116	CU. YD.	AGGREGATE BASE	
					475		305	12000	475	SQ. YD.	8" CONCRETE BASE	
42							407	10000	42	GAL.	TACK COAT	
42							407	14000	42	GAL.	TACK COAT FOR INTERMEDIATE COURSE	
					27		448	46050	27	CU. YD.	ASPHALT CONCRETE INTERMEDIATE COURSE, TYPE 2, PG64-22	
				1	20		448	47020	21	CU. YD.	ASPHALT CONCRETE SURFACE COURSE, TYPE 1, PG64-22	
				80			451	31000	80	LIN. FT.	SPECIAL - PRESSURE RELIEF JOINT, TYPE B	
				53			452	12000	53	SQ. YD.	8" PLAIN CONCRETE PAVEMENT	

SHEET NUMBER 4	5	6	9	13	14	18	ITEM	ITEM EXT.	GRAND TOTAL	UNIT	DESCRIPTION	SEE SHEET NO.
											PAVEMENT CONT.	
				182			611	15001	182	SQ. YD.	REINFORCED CONCRETE APPROACH SLAB (T=13"), AS PER PLAN	20
				266			830	26000	266	LIN. FT.	CURB, TYPE 6	
											TRAFFIC CONTROL	
				13.5			630	02100	13.5	LIN. FT.	GROUND MOUNTED SUPPORT, NO. 2 POST	
				16.5			630	04100	16.5	LIN. FT.	GROUND MOUNTED SUPPORT, NO. 4 POST	
				4			630	85100	4	EACH	REMOVAL OF GROUND MOUNTED SIGN AND REERECTION	
				3			630	86002	3	EACH	REMOVAL OF GROUND MOUNTED POST SUPPORT AND DISPOSAL	
				0.05			642	00302	0.05	MILE	CENTER LINE, TYPE 2	
				14			642	00502	14	LIN. FT.	STOP LINE, TYPE 2	
				74			642	00602	74	LIN. FT.	CROSSWALK LINE, TYPE 2	
											STRUCTURE (OVER 20' SPAN) (FOR QUANTITIES SEE SHEET 23 OF 38)	
											MAINTENANCE OF TRAFFIC	
		15					410	12000	15	CU. YD.	TRAFFIC COMPACTED SURFACE, TYPE A OR B	
			614				614	12800	614	EACH	TEMPORARY RAISED PAVEMENT MARKER	
		15					614	13000	15	CU. YD.	BITUMINOUS CONCRETE FOR MAINTAINING TRAFFIC	
		65					614	13302	65	EACH	BARRIER REFLECTOR, TYPE B2	
		37					614	13350	37	EACH	OBJECT MARKER (BI-DIRECTIONAL)	
		0.10					614	21000	0.10	MILE	TEMPORARY CENTER LINE, CLASS I	
		0.02					614	22000	0.02	MILE	TEMPORARY EDGE LINE, CLASS I	
		63					614	26000	63	LIN. FT.	TEMPORARY STOP LINE, CLASS I	
		1					616	10000	1	M. GAL.	WATER	
		1					616	20000	1	TON	CALCIUM CHLORIDE	
		797					622	40031	797	LIN. FT.	PORTABLE CONCRETE BARRIER, 50", AS PER PLAN	6
							614	11000	LUMP	LUMP	MAINTAINING TRAFFIC	
							623	10000	LUMP	LUMP	CONSTRUCTION LAY OUT STAKES	
							624	10000	LUMP	LUMP	MOBILIZATION	
							806	16000	9	MONTH	FIELD OFFICE, TYPE A	

CALCULATED JSB CHECKED AMF

GENERAL SUMMARY

MEG-124-12.52

CAD FILE : MEG-GSUM
PLOT SCALE : 1:1

REF. NO.	STATION FROM	STATION TO	SIDE	202 GUARDRAIL REMOVED LIN. FT.	202 PIPE REMOVED, 24" AND UNDER LIN. FT.	202 CURB REMOVED LIN. FT.	202 WALK REMOVED SQ. FT.	202 APPROACH SLAB REMOVED SQ. YD.	202 PAVEMENT REMOVED (DRIVEWAYS) SQ. YD.	301 BITUMINOUS AGGREGATE BASE (DRIVEWAYS) CU. YD.	304 AGGREGATE BASE (DRIVEWAYS) CU. YD.	448 ASPHALT CONCRETE, SURFACE COURSE, TYPE I, PG 64-22 (DRIVEWAYS) CU. YD.	SPECIAL PRESSURE RELIEF JOINT, TYPE B LIN. FT.	452 8" PLAIN CONCRETE PAVEMENT SQ. YD.	601 ROCK CHANNEL PROTECTION, TYPE C, WITH FABRIC FILTER CU. YD.	602 CONCRETE MASONRY CU. YD.	603 4" CONDUIT, TYPE F LIN. FT.	603 15" CONDUIT, TYPE B, 706.02 LIN. FT.	603 24" CONDUIT, TYPE B LIN. FT.	604 CATCH BASIN, NO. 3 EACH	604 MANHOLE ADJUSTED TO GRADE EACH	605 4" SHALLOW PIPE UNDERDRAINS LIN. FT.	605 4" UNCLASSIFIED PIPE UNDERDRAINS LIN. FT.	608 6" CONCRETE WALK SQ. FT.	608 CURB RAMP, TYPE I EACH	611 REINFORCED CONCRETE APPROACH SLAB (T=13"), AS PER PLAN SQ. YD.	SPECIAL 2" FORCE MAIN, RESTRAINED JOINT LIN. FT.	830 CURB, TYPE 6 LIN. FT.
AD-1	662+35	--	LT.																			1							
AS-1	661+38.91	661+58.91	--					73.1																				82.2	
AS-2	662+51.17	662+71.17	--					73.1																				100.1	
C-1	660+93.40	661+74.0	RT.			82																							80.6
C-2	660+93.40	661+43.8	LT.			51.5																							50.4
C-3	662+35	9+50(LARKIN ST.)	LT.			59																							24
C-4	9+62.7(LARKIN ST.)	663+18.4	LT.			60																							58.9
C-5	662+66.30	663+18.4	RT.			70.5																							52.1
D-1	662+76	663+10	RT.													0.51			45.0	1									
D-2	663+10.00	--	--																42.0	1									
D-3	663+10.00	663+18.00	LT.																8.0										
D-4	661+38.9	661+46.9	LT.															8.0											
D-5	662+96	663+17	RT.																									27	
DR-1	661+16	--	RT.						31.4					31.4															
DR-2	661+52.5	--	RT.						21.9		6.0			21.9															
DR-3	9+50(LARKIN ST.)	9+62.7(LARKIN ST.)	LT.							1.77		0.73																	
E-1	661+00	663+00	--												643														
P-1	661+05	--	CL										37											37					
P-2	663+00	--	CL										43										43						
R-1	661+77	661+90	RT.	25																									
R-2	662+63	663+10	RT.		45																								
R-3	662+26	663+10	LT.		84																								
UD-1	660+93.4	661+73	RT.														10							69.60					
UD-2	9+62.7(LARKIN ST.)	663+10	LT.														10							40.5					
UD-3	662+70	663+10	RT.														10						30						
W-1	660+93.40	661+70	RT.				782																		782				
W-2	660+93.40	661+44	LT.				225																		253				
W-3	662+33	9+54(LARKIN ST.)	LT.				88																		80				
W-4	662+67	663+18.4	RT.				572																		416				
W-5	662+51.17	663+18.4	LT.				375																		430	2			
TOTALS CARRIED TO GENERAL SUMMARY				25	129	323	2,042	146	53	2	6.0	1	80	53	643	0.5	30	8	95	2	1	73	147	1,961	2	182	27	266	

REF. NO.	STATION FROM	STATION TO	SIDE	630 REMOVAL OF GROUND MOUNTED SIGN AND REERECTION EACH	630 REMOVAL OF GROUND MOUNTED POST SUPPORT AND DISPOSAL EACH	630 GROUND MOUNTED SUPPORT, NO. 2 POST LIN. FT.	630 GROUND MOUNTED SUPPORT, NO. 4 POST LIN. FT.	642 CENTERLINE, TYPE II MILE	642 STOP LINE, TYPE II LIN. FT.	642 CROSSWALK LINE, TYPE II LIN. FT.
PM-1	660+83.40	663+28.40	CL					0.05		
PM-2	9+68	--	--							74
PM-3	9+63	--	--						14	
S-1	9+55(LARKIN ST.)	9+57(LARKIN ST.)	RT.	1	1	13.5				
S-2	662+65	--	RT.	1	1					
S-3	662+82	--	RT.	2	1					
S-4	663+00	--	RT.				16.5			
TOTALS CARRIED TO GENERAL SUMMARY				4	3	13.5	16.5	0.05	14	74

CALCULATED JSB
CHECKED AMF

SUB-SUMMARY

MEG-124-12.52

CAD FILE : MEG-RSUB
PLOT SCALE : 1:1

PROOF ROLLING

*AREA OF SUBGRADE COMPACTION

(* 661.8 SQ. YD.)(1 HR./3000 SQ. YD.) = 0.22 HRS.

TOTAL = 1 HR.

SUBGRADE COMPACTION

*AREA FROM CAD

STA. 660+93.40 TO STA. 661+58.91
(65.51')(37')/9 = 269.3 SQ. YD.

STA. 662+51.17 TO STA. 663+18.40
(* 3532 SQ. FT.)/9 = 392.5 SQ. YD.

TOTAL = 661.8 SQ. YD.

ITEM 202 - PAVEMENT REMOVED

STA. 660+93.40 TO STA. 661+38.91
(45.51')(36')/9 = 182.0 SQ. YD.

STA. 662+60.00 TO STA. 663+18.40
(2920.8 SQ. FT.)/9 = 324.5 SQ. YD.

TOTAL = 506.5 SQ. YD.

ITEM 254 - PAVEMENT PLANING, BITUMINOUS, 3"

STA. 660+83.40 TO STA. 660+93.40
(10.0')(36)/9 = 40.00 SQ. YD.

STA. 663+18.40 TO STA. 663+28.40
(10.0')(42')/9 = 46.67 SQ. YD.

TOTAL = 86.67 SQ. YD.

ITEM 304-6" AGGREGATE BASE

*AREA FROM CAD

STA. 660+93.40 TO STA. 661+58.91
(65.51')(37')(6"/12)/27 = 44.9 CU. YD.

STA. 662+51.17 TO STA. 663+18.40
(* 3532 SQ. FT.)(6"/12)/27 = 65.4 CU. YD.

TOTAL = 110.3 CU. YD.

ITEM 305 - CONCRETE BASE, 8"

*TOTAL AREA NORTH OF BRIDGE
**AREA OF NORTH APPROACH SLAB

STA. 660+93.40 TO STA. 661+38.91
(45.51')(36')/9 = 182.04 SQ. YD.

STA. 662+71.17 TO STA. 663+18.40
(* 392.5 SQ. YD.) - (** 100.1 SQ. YD.) = 292.40 SQ. YD.

TOTAL = 474.4 SQ. YD.

ITEM 407 - TACK COAT (CARRIED TO THE GENERAL NOTES)

*CONCRETE BASE, 8"
**PAVEMENT PLANING, BITUMINOUS, 3"

[(* 474.4 SQ. YD.)+(** 86.7 SQ. YD.)](0.075 GAL./SQ.YD.) = 42.1 GAL.

TOTAL = 42.1 GAL.

ITEM 407 - TACK COAT FOR INTERMEDIATE COURSE

(CARRIED TO THE GENERAL NOTES)

*CONCRETE BASE, 8"
**PAVEMENT PLANING, BITUMINOUS, 3"

[(* 474.4 SQ. YD.)+(** 86.7 SQ. YD.)](0.075 GAL./SQ.YD.) = 42.1 GAL.

TOTAL = 42.1 GAL.

ITEM 448 - 1 3/4" ASPHALT CONCRETE, INTERMEDIATE COURSE, TYPE 2, PG 64-22

*CONCRETE BASE, 8"
**PAVEMENT PLANING, BITUMINOUS, 3"

[(* 474.4 SQ. YD.)+(** 86.7 SQ. YD.)](1.75"/12)(1/3) = 27.3 CU. YD.

TOTAL = 27.3 CU. YD.

ITEM 448 - 1 1/4" ASPHALT CONCRETE, SURFACE COURSE, TYPE 1, PG 64-22

*CONCRETE BASE, 8"
**PAVEMENT PLANING, BITUMINOUS, 3"

[(* 474.4 SQ. YD.)+(** 86.7 SQ. YD.)](1.25"/12)(1/3) = 19.5 CU. YD.

TOTAL = 19.5 CU. YD.

ITEM 870 - COMMERCIAL FERTILIZER

*AREA OF SEEDING AND MULCHING

(* 60.1 SQ. YD.)(9 SQ. FT./1 SQ. YD.)(20 LBS./1000 SQ. FT.)(1 TON/2000 LBS.) = 0.01 TON

TOTAL = 0.01 TON

ITEM 870 - AGRICULTURAL LIME

*AREA OF SEEDING AND MULCHING

(* 60.1 SQ. YD.)(9 SQ. FT./1 SQ. YD.)(46 LBS./1000 SQ. FT.)(220%)(1 TON/2000 LBS.) = 0.03 TON

TOTAL = 0.03 TON

ITEM 870 - WATER

*AREA OF SEEDING AND MULCHING

(* 60.1 SQ. YD.)(9 SQ. FT./1 SQ. YD.)(120 GAL./1000 SQ. FT.)(2)(1 M. GAL./1000 GAL.) = 0.13 M. GAL.

TOTAL = 0.13 M. GAL.

ITEM 870 - MOWING

*AREA OF SEEDING AND MULCHING

(* 60.1 SQ. YD.)(9 SQ. FT./1 SQ. YD.)(1 M. SQ. FT./1000 SQ. FT.) = 0.5 M. SQ. FT.

TOTAL = 0.5 M. SQ. FT.

CALCULATED JSB CHECKED AMF

CALCULATIONS

MEG-124-12.52

CAD FILE : MEG_ CALC
PLOT SCALE : 1:1

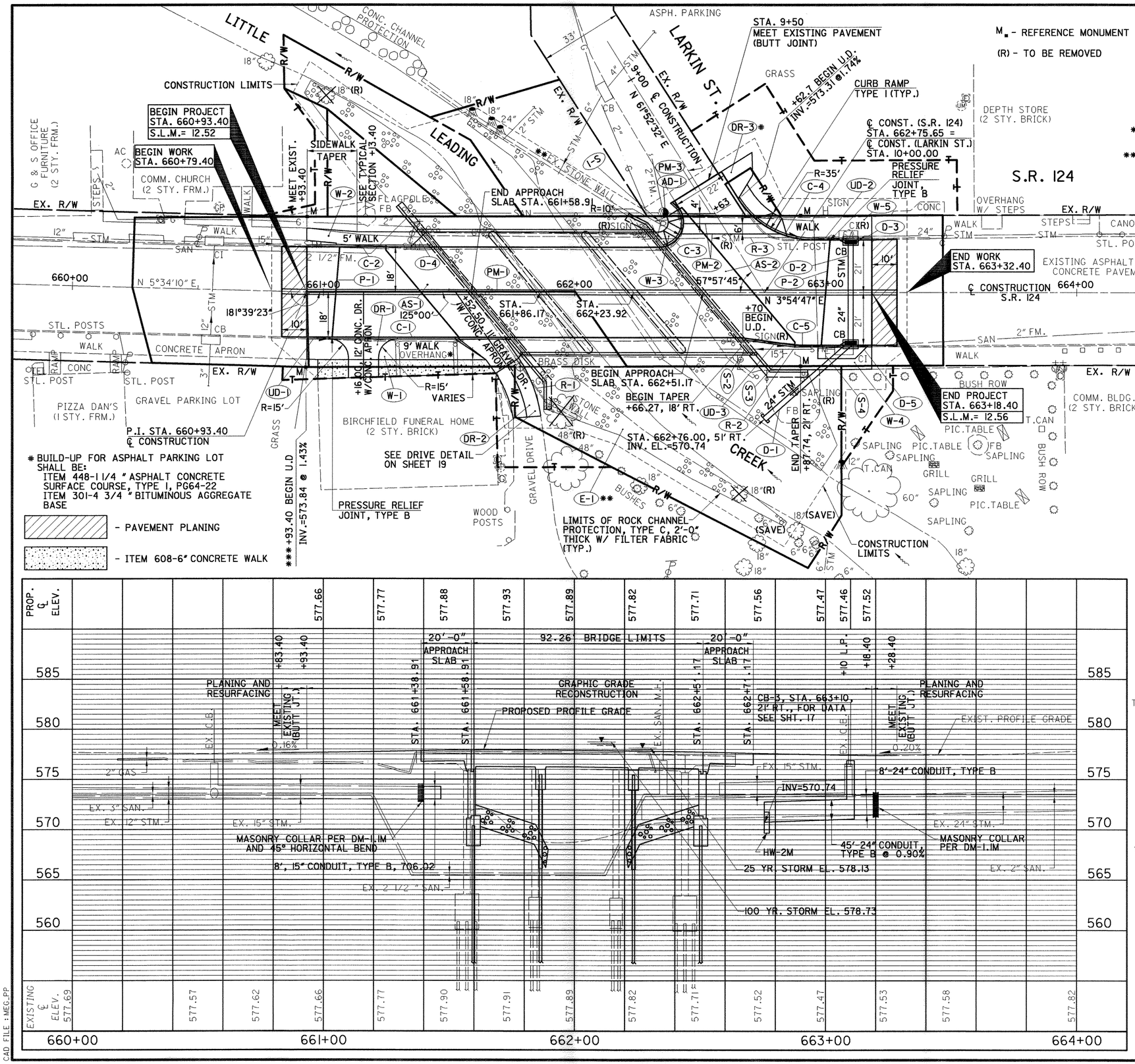

SEWER PROFILE AND DATA CROSS REFERENCES	
REF. NO.	SHT. NO.
D-1	--
D-2	17
D-3	--
D-4	--
D-5	19

S-1 STOP R-1-30 STA. 9+57, RT. REMOVE AND RESET TO STA. 9+55, 19' RT.

S-2 R-123-24 STA. 662+65, RT. REMOVE AND RESET TO STA. 663+00, 24' RT.

S-3 M-2-24-3 M-2-1-21 STA. 662+82, RT. REMOVE AND RESET TO STA. 663+00, 24' RT.

S-4 M-2-24-3 M-2-1-21 R-124-24 STA. 663+00, 24' RT.

CURRENT ADT (2001)	= 5,300
DESIGN ADT (2021)	= 8,100
DESIGN ADTT (2021)	= 324

BENCHMARK NO. 1
SOUTHWEST CORNER OF THE CONCRETE PORCH SLAB AT RUTLAND BOTTLE GAS COMPANY.
STA. 658+74.67, 29.3' RT. EL. = 580.30

BENCHMARK NO. 2
SOUTHEAST CORNER OF THE CONCRETE ENTRANCE SLAB AT RESIDENT NO. 53.
STA. 663+82.41, 28.7' LT. EL. = 578.62

BENCHMARK NO. 3
EXISTING BRASS DISK, STAMPED C&GS 1958, SET IN CONCRETE ON SOUTHEAST WINGWALL OF BRIDGE.
STA. 661+78, 30' RT., ELEV. = 577.78

HYDRAULIC DATA

DRAINAGE AREA = 21.2 SQ. MILES
Q25 = 2,587 CFS, ELEV. = 578.13, V = 4.43 FPS
Q100 = 3,410 CFS, ELEV. = 578.73, V = 3.22 FPS
NORMAL WATER SURFACE ELEV. = 569.0±
EXISTING WATERWAY OPENING = 451.47 SQ. FT.
PROPOSED WATERWAY OPENING = 448.35 SQ. FT.

EXISTING STRUCTURE

TYPE: THREE-SPAN REINFORCED CONCRETE SLAB WITH REINFORCED CONCRETE GIRDER RAIL ON REINFORCED CONCRETE ABUTMENTS AND PIERS
SPANS: 25'-0"±, 30'-0"± AND 25'-0"±
ROADWAY: 36'-0"± F/F CURB WITH 5'-0"± SIDEWALK AND CONCRETE RAILING
ALIGNMENT: TANGENT
SKEW: 35°00'± R.F.
WEARING SURFACE: ASPHALT CONCRETE (4"±)
APPROACH SLABS: 17'-9½"± LONG
BUILT: 1932
CONDITION: FAIR
STRUCTURE FILE NO.: 5301386

PROPOSED STRUCTURE

TYPE: THREE-SPAN REINFORCED CONCRETE SLAB ON REINFORCED CONCRETE CAPPED-PILE PIERS AND STUB ABUTMENTS
SPANS: 26'-5 3/8", 37'-9" AND 26'-5 1/4" C/C BEARINGS
ROADWAY: 36'-0" F/F CURB W/6'-0" SIDEWALKS AND CONCRETE RAILING
ALIGNMENT: TANGENT
SKEW: 40°00' R.F.
WEARING SURFACE: MONOLITHIC CONCRETE
APPROACH SLABS: 20'-0" (AS-1-81), AS PER PLAN
LOADING: HS20-44 AND ALTERNATE MILITARY LOADING
CROWN: 1/4" PER FT.
LONGITUDE: W 82° 07' 54"
LATITUDE: N 39° 02' 42"

HORIZONTAL SCALE IN FEET 0 10 20 40

CALCULATED CAF CHECKED JSB

PLAN AND PROFILE
STA. 660+00 TO STA. 664+00

MEG-124-12.52

CAD FILE : MEG_PP

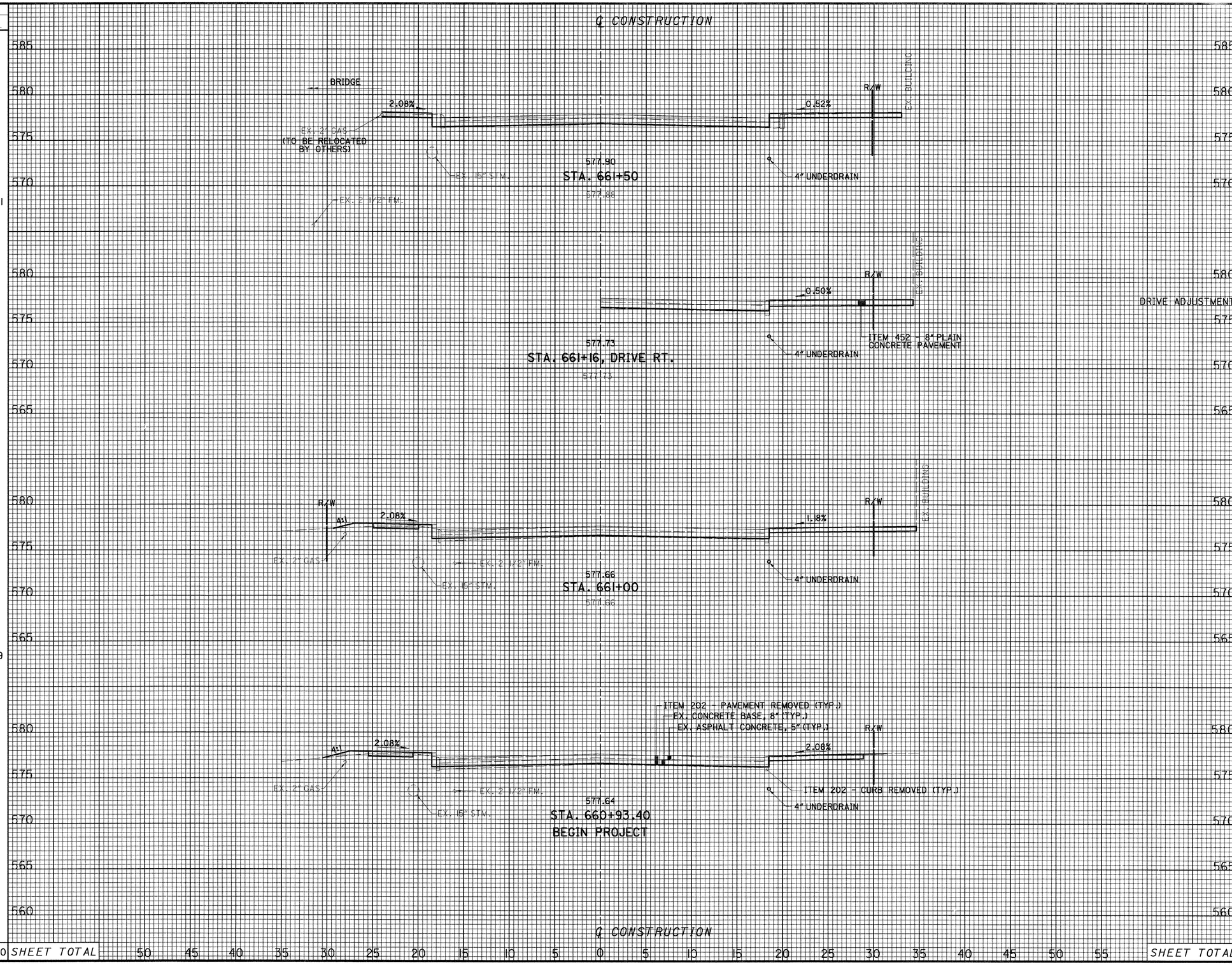

SEEDING END WIDTH	SEEDING SQ. YDS.		END AREA CUT	END AREA FILL	VOLUME CUT	VOLUME FILL
0.0			1.5	1.5		
	18.1				1.9	4.5
		DRIVE ADJUSTMENT			7.0	0.0
6.5			0.6	3.4		
	5.9				0.2	1.8
9.5			0.7	11.6		
--	24.0	SHEET TOTAL	--	--	9.1	6.3

CALCULATED JSB
CHECKED AMF

CROSS SECTIONS
STA. 660+93.40 TO STA. 661+50

MEG-124-12.52

16/38

MEGXSECI.DGN

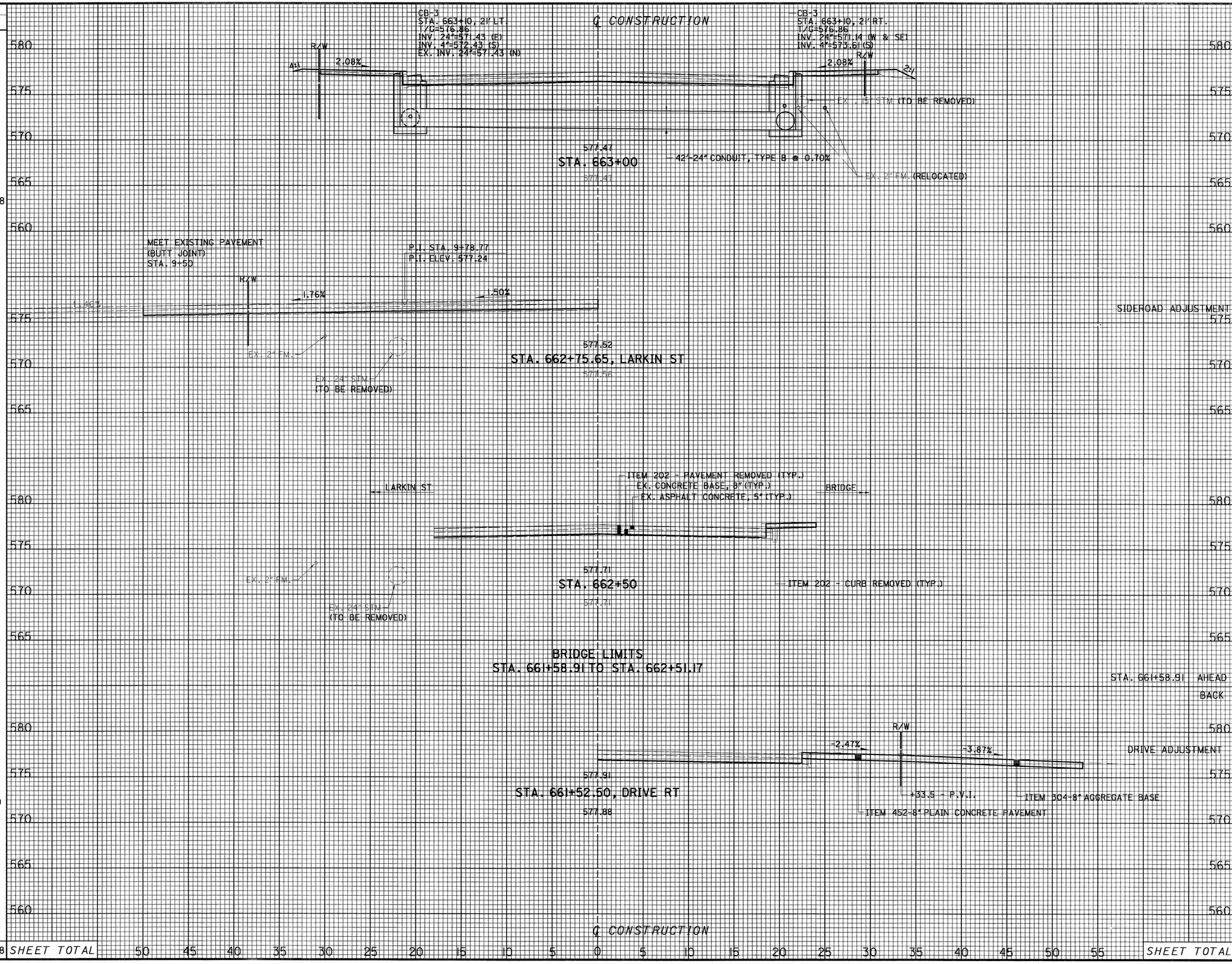

SEEDING END WIDTH	SEEDING SQ. YDS.	END AREA CUT	END AREA FILL	VOLUME CUT	VOLUME FILL
7.5		0.0	9.1		
	20.8			0.0	9.7
				2.7	3.7
0.0		0.0	1.4		
0.0		STA. 661+58.91 AHEAD 0	0		
		BACK 1.5	1.5		
				10.8	0.0
0.0				0.5	0.5
		1.5	1.5		
--	20.8 SHEET TOTAL	SHEET TOTAL --	--	14.0	13.9

CALCULATED JSB
CHECKED AMF

CROSS SECTIONS
STA. 661+52.50 TO STA. 663+00

MEG-124-12.52

MEGXSEC2.DGN

SEEDING	
END WIDTH	SQ. YDS.
7.5	
	15.3
--	15.3
--	60.1

SHEET TOTAL
GRAND TOTAL

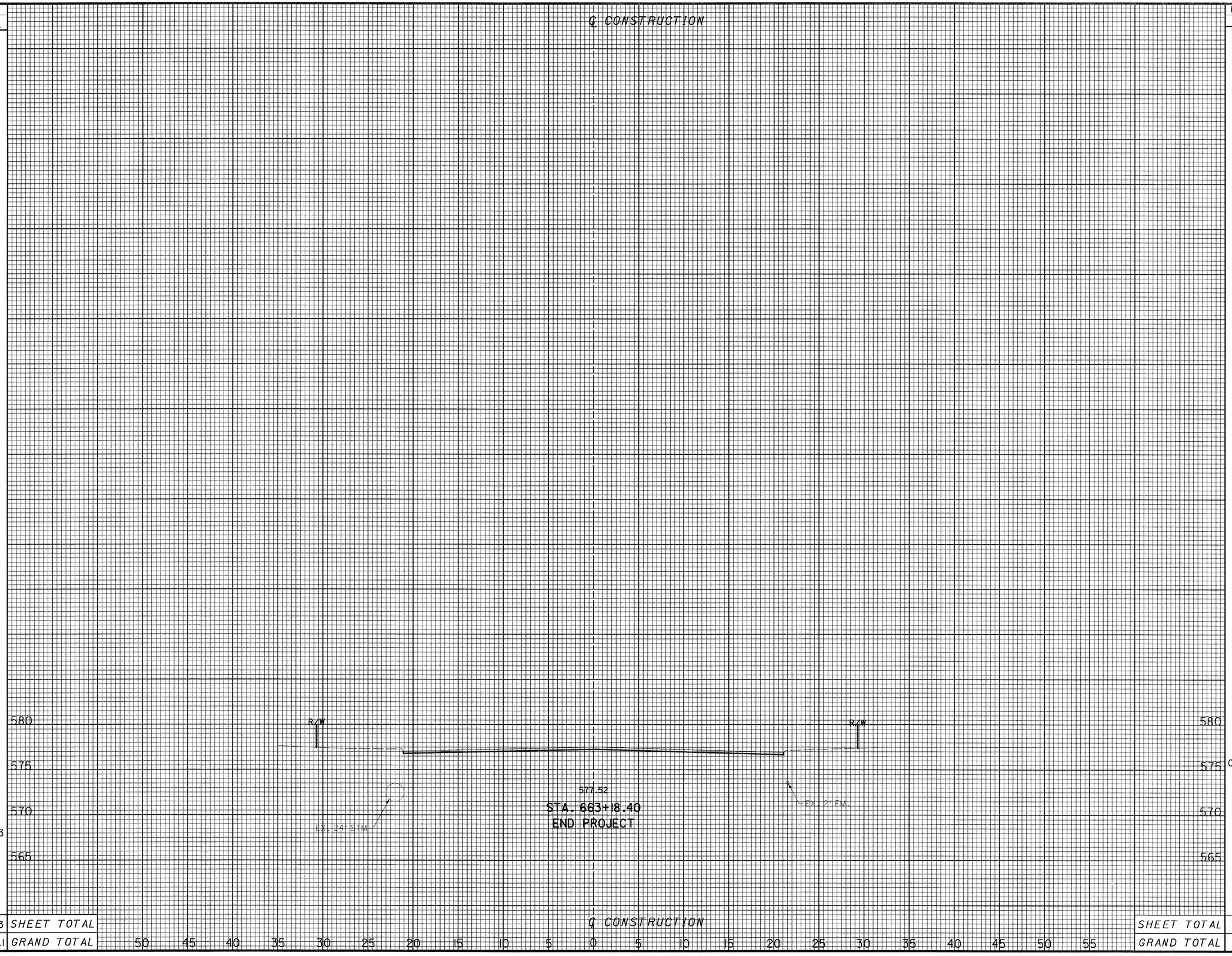

END AREA		VOLUME	
CUT	FILL	CUT	FILL
0.0	9.1		
		0.0	6.2
SHEET TOTAL	--	--	0.0	6.2
GRAND TOTAL	--	--	23.1	26.4

CALCULATED JSB
CHECKED AMF

CROSS SECTIONS
STA. 663+18.40

MEG-124-12.52

MEGXSEC3.DGN

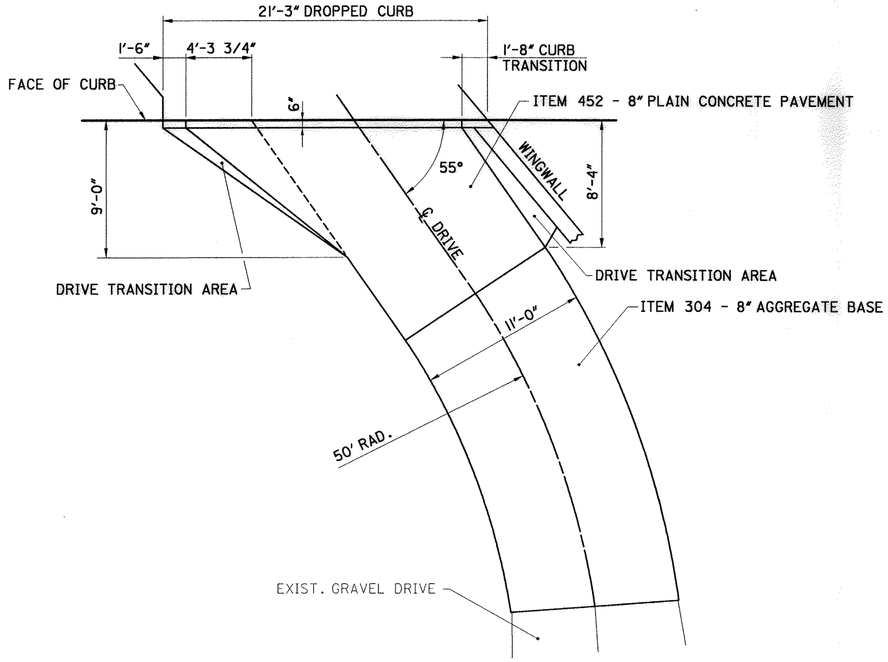

DRIVE DETAIL STATION 661+52.50

SCALE 1" = 5'

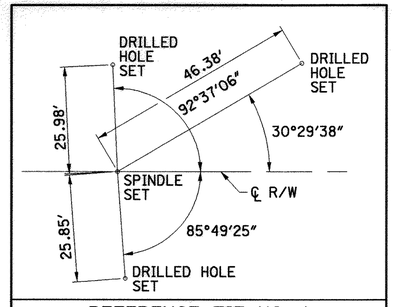

REFERENCE TIE NO. 1

STA. 660+00.00

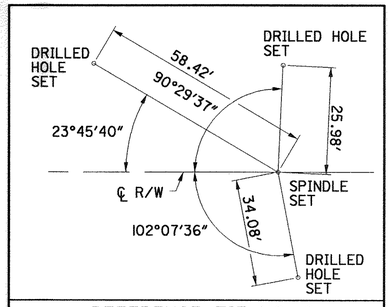

REFERENCE TIE NO. 2

STA. 660+93.43

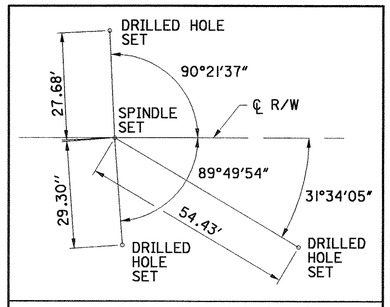

REFERENCE TIE NO. 3

STA. 663+50.00

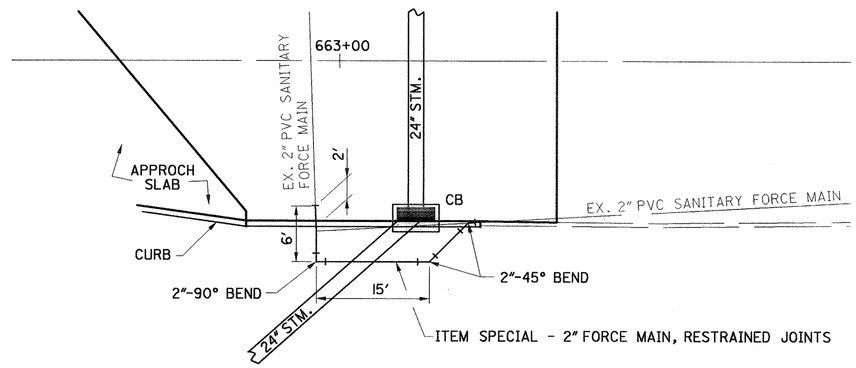

SANITARY SEWER FORCE MAIN RELOCATION

PLAN VIEW

SCALE 1" = 10'

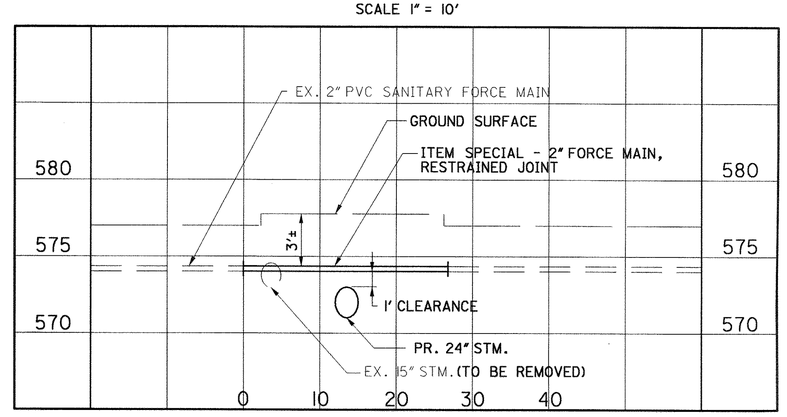

SANITARY SEWER FORCE MAIN RELOCATION

PROFILE VIEW

HORIZONTAL SCALE 1" = 10'
VERTICAL SCALE 1" = 5'

NOTE

ALL ELEVATIONS ARE PAVEMENT/GUTTER ELEVATIONS UNLESS OTHERWISE NOTED.

① CURVE DATA

Δ = 122°02'15"
D_C = 572°57'28"
R = 10'
T = 18.05'
L = 21.30'
E = 10.64'
P.C. = STA. 662+33.35, 18' LT.
P.T. = STA. 9+53.83, 11' RT.

② CURVE DATA

Δ = 57°57'45"
D_C = 163°42'08"
R = 35'
T = 19.39'
L = 35.41'
E = 5.01'
P.C. = STA.9+62.72, 11' RT.
P.T. = STA. 662+94.87, 21' LT.

* TRANSITION CURB HEIGHT FROM 6" TO 0" IN 5'-0"

** TRANSITION CURB HEIGHT FROM 6" TO 0" IN 4'-0"
4:1 HORIZONTAL CURB TAPER

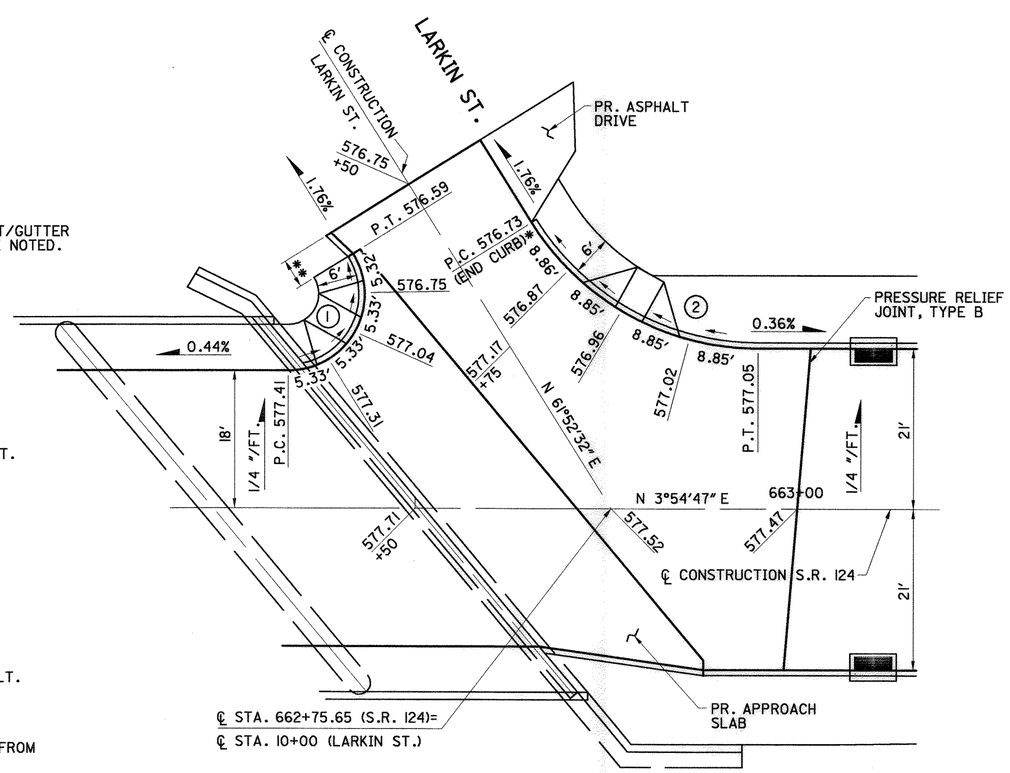

S.R. 124 AND LARKIN STREET

INTERSECTION DETAIL

SCALE 1" = 10'

CALCULATED CAF
CHECKED JSB

MISCELLANEOUS DETAILS

MEG-124-12.52

MEG_DRV

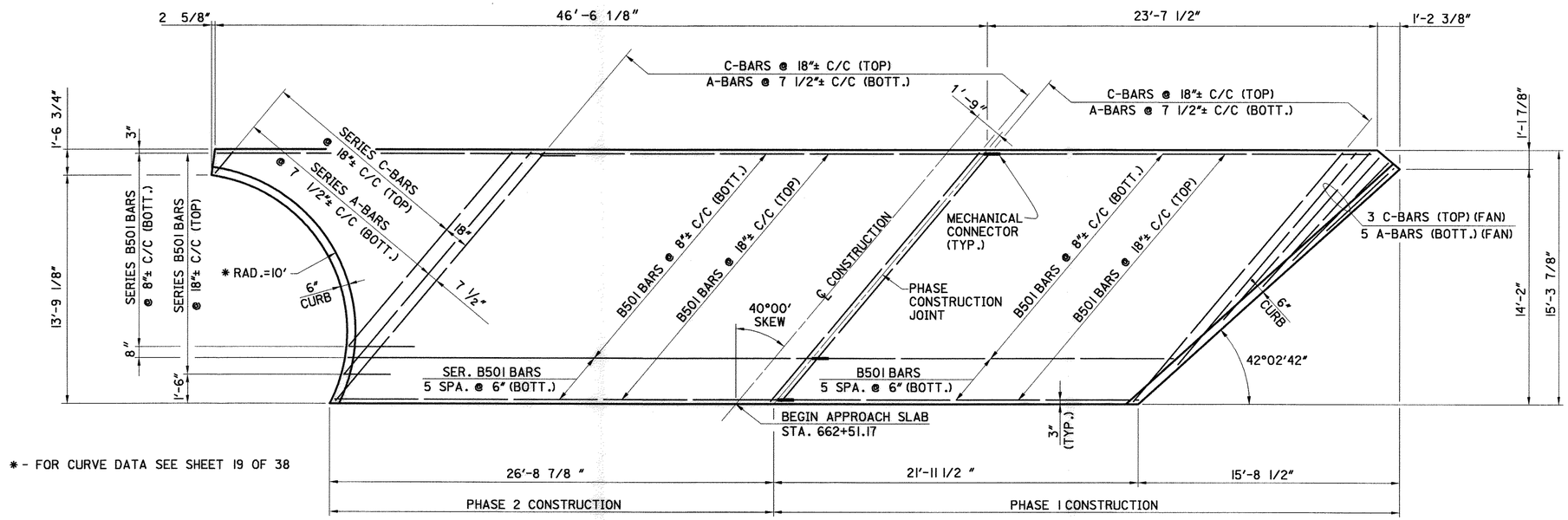

* - FOR CURVE DATA SEE SHEET 19 OF 38

FORWARD APPROACH SLAB

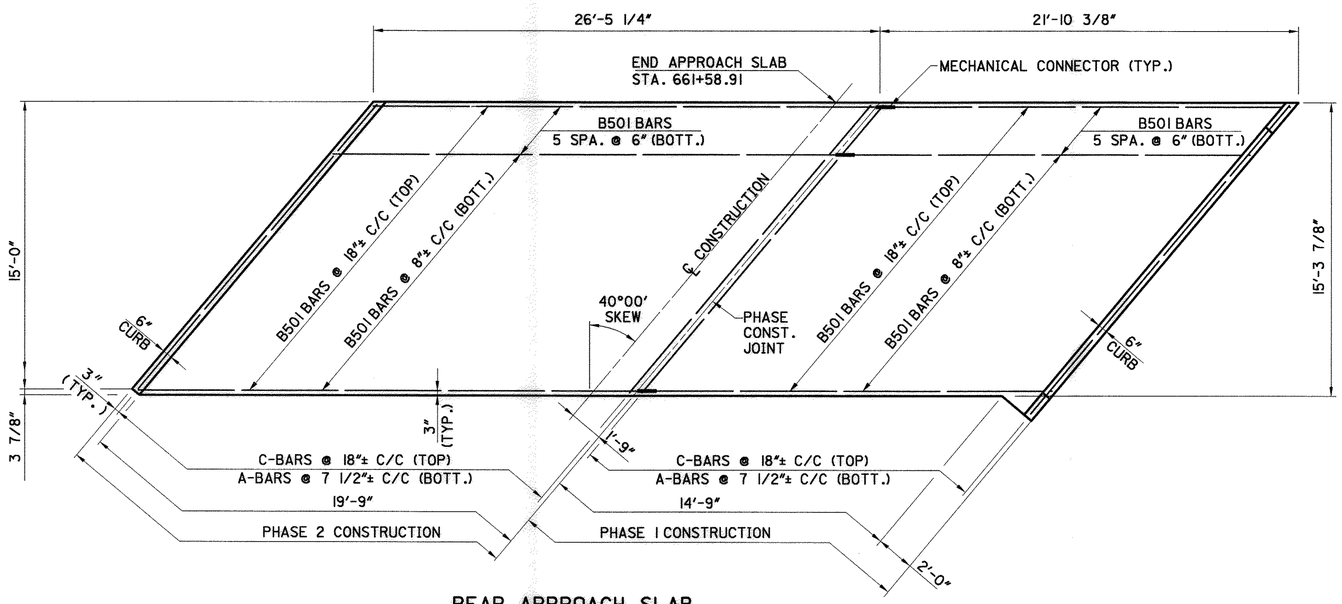

REAR APPROACH SLAB

NOTES

1. FOR ADDITIONAL NOTES AND DETAILS, SEE STANDARD DRAWING AS-1-81 M.
2. CURB HEIGHT SHALL TRANSITION FROM 8" AT THE BRIDGE TO 6" AT THE ROADWAY EXCEPT AS NOTED IN NOTE 3.
3. CURB HEIGHT SHALL TRANSITION FROM 8" AT THE BRIDGE TO 2" AT THE PROPOSED DRIVE APRON AT THE REAR APPROACH SLAB. FOR DETAILS SEE SHEET 19 OF 38.
4. MINIMUM BAR LAPS ARE AS FOLLOWS:

   #5 BARS = 24"
   #10 BARS = 75"

5. REINFORCING STEEL SHOULD BE EPOXY COATED IN CONFORMANCE WITH ITEM 509.

HORIZONTAL SCALE IN FEET 0 2 4 8

CALCULATED

CHECKED

APPROACH SLAB DETAILS

MEG-124-12.52

FILE: MEG.APP
SCALE: 1=4

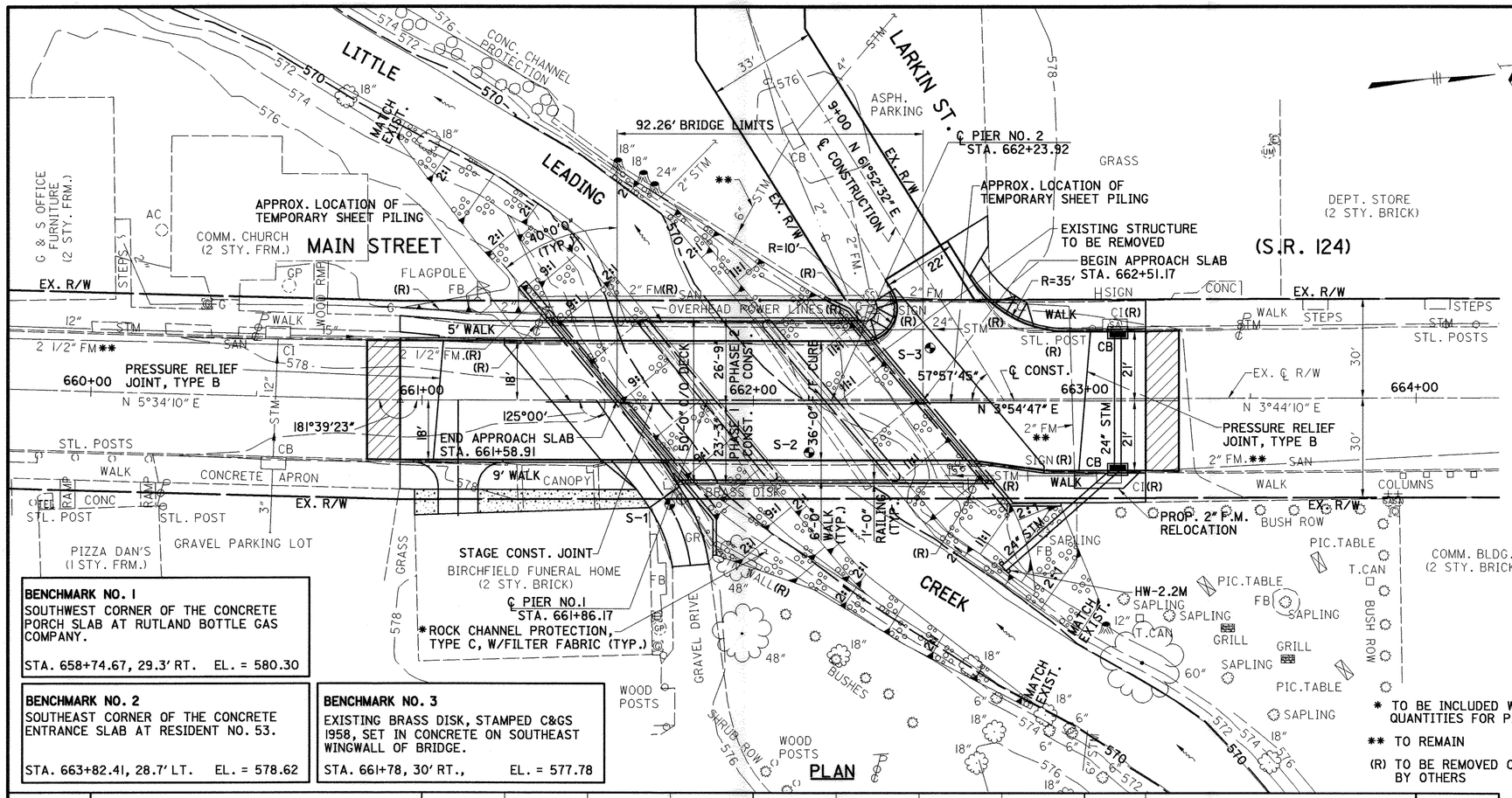

BENCHMARK NO. 1
SOUTHWEST CORNER OF THE CONCRETE PORCH SLAB AT RUTLAND BOTTLE GAS COMPANY.
STA. 658+74.67, 29.3' RT. EL. = 580.30

BENCHMARK NO. 2
SOUTHEAST CORNER OF THE CONCRETE ENTRANCE SLAB AT RESIDENT NO. 53.
STA. 663+82.41, 28.7' LT. EL. = 578.62

BENCHMARK NO. 3
EXISTING BRASS DISK, STAMPED C&GS 1958, SET IN CONCRETE ON SOUTHEAST WINGWALL OF BRIDGE.
STA. 661+78, 30' RT., EL. = 577.78

* TO BE INCLUDED WITH ROADWAY QUANTITIES FOR PAYMENT

** TO REMAIN

(R) TO BE REMOVED OR RELOCATED BY OTHERS

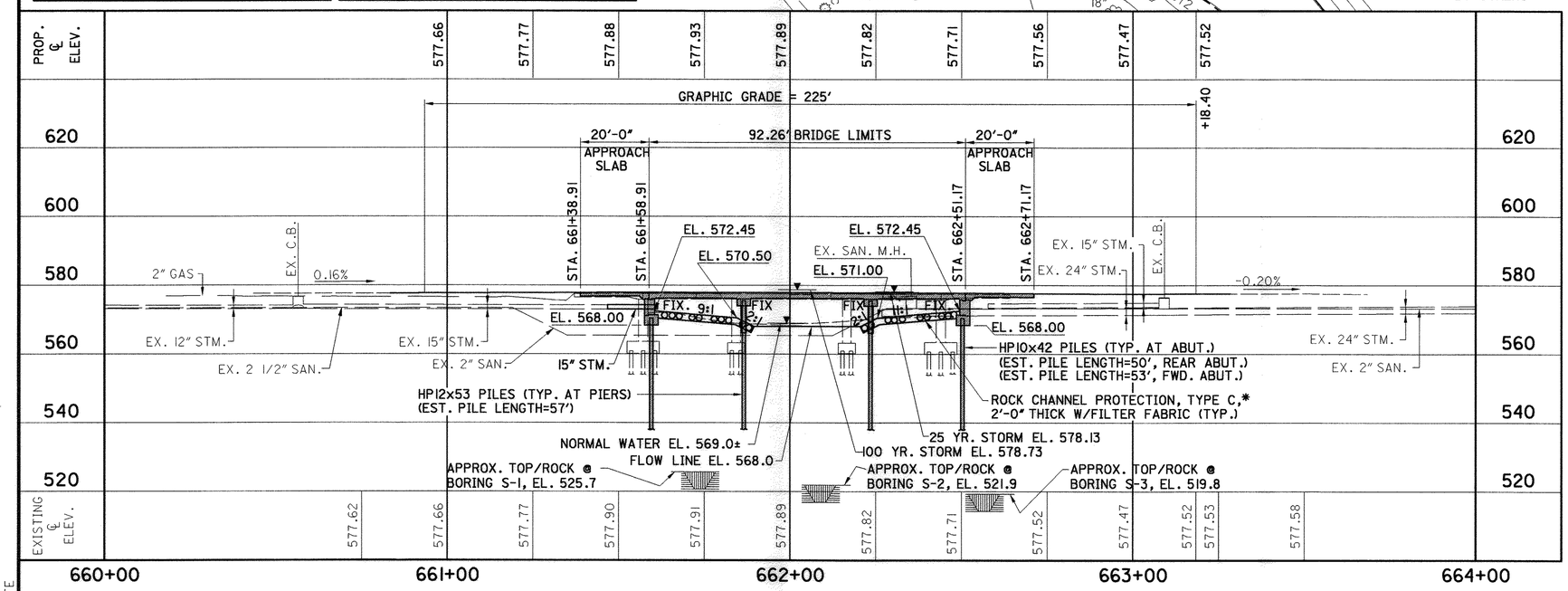

PROFILE ALONG ℄ CONSTRUCTION

NOTES

1. EARTHWORK LIMITS SHOWN ARE APPROXIMATE. ACTUAL SLOPES SHALL CONFORM TO PLAN CROSS SECTIONS.
2. THE OVERTOPPING FREQUENCY IS 5 YEARS.

SOIL BORING LOCATIONS		
LOCATION	STATION	OFFSET
S-1	661+74.78	31.40' RT.
S-2	662+16.84	15.59' RT.
S-3	662+53.30	15.99' LT

- PAVEMENT PLANING
- ITEM 608-6" CONCRETE WALK

HYDRAULIC DATA

DRAINAGE AREA = 21.2 SQ. MILES
Q25 = 2,587 CFS, ELEV. = 578.13, V = 4.43 FPS
Q100 = 3,410 CFS, ELEV. = 578.73, V = 3.22 FPS
NORMAL WATER SURFACE ELEV. = 569.0±
EXISTING WATERWAY OPENING = 451.47 SQ. FT.
PROPOSED WATERWAY OPENING = 448.35 SQ. FT.

DESIGN DESIGNATION

CURRENT ADT (2001):	5,300
DESIGN ADT (2021):	8,100
DESIGN ADTT (2021):	324

EXISTING STRUCTURE

TYPE: THREE-SPAN REINFORCED CONCRETE SLAB WITH REINFORCED CONCRETE GIRDER RAIL ON REINFORCED CONCRETE ABUTMENTS AND PIERS
SPANS: 25'-0"± 30'-0"± AND 25'-0"±
ROADWAY: 36'-0"± F/F CURB WITH 5'-0"± SIDEWALK AND CONCRETE RAILING
ALIGNMENT: TANGENT
SKEW: 35°00'± R.F.
WEARING SURFACE: ASPHALT CONCRETE (4"±)
APPROACH SLABS: 17'-9 1/2"± LONG
BUILT: 1932
CONDITION: FAIR
STRUCTURE FILE NO.: 5301386

PROPOSED STRUCTURE

TYPE: THREE-SPAN REINFORCED CONCRETE SLAB ON REINFORCED CONCRETE CAPPED-PILE PIERS AND ABUTMENTS
SPANS: 26'-5 3/8", 37'-9" AND 26'-5 1/4" C/C BEARINGS
ROADWAY: 36'-0" F/F CURB W/6'-0" SIDEWALKS AND CONCRETE RAILING
ALIGNMENT: TANGENT
SKEW: 40°00' R.F.
WEARING SURFACE: MONOLITHIC CONCRETE
APPROACH SLABS: 20'-0" (AS-1-81), AS PER PLAN
LOADING: HS20-44 AND ALTERNATE MILITARY LOADING
CROWN: 1/4" PER FT.
LONGITUDE: W 82° 07' 54"
LATITUDE: N 39° 02' 42"

DESIGN AGENCY
FINKBEINER, PETTIS & STROUT, INC.
520 S. MAIN STREET, SUITE 2400
AKRON, OHIO 44311-1010

DESIGNED	DRAWN	REVIEWED	DATE
MJH	CAF	RBB	2/00
CHECKED	REVISED	STRUCTURE FILE NUMBER	
CMD		5301394	

MEIGS COUNTY
STA. 661+58.91 TO STA. 662+51.17

SITE PLAN
BRIDGE NO. MEG-124-1253
OVER LITTLE LEADING CREEK

MEG-124-12.52

MEG_SITE

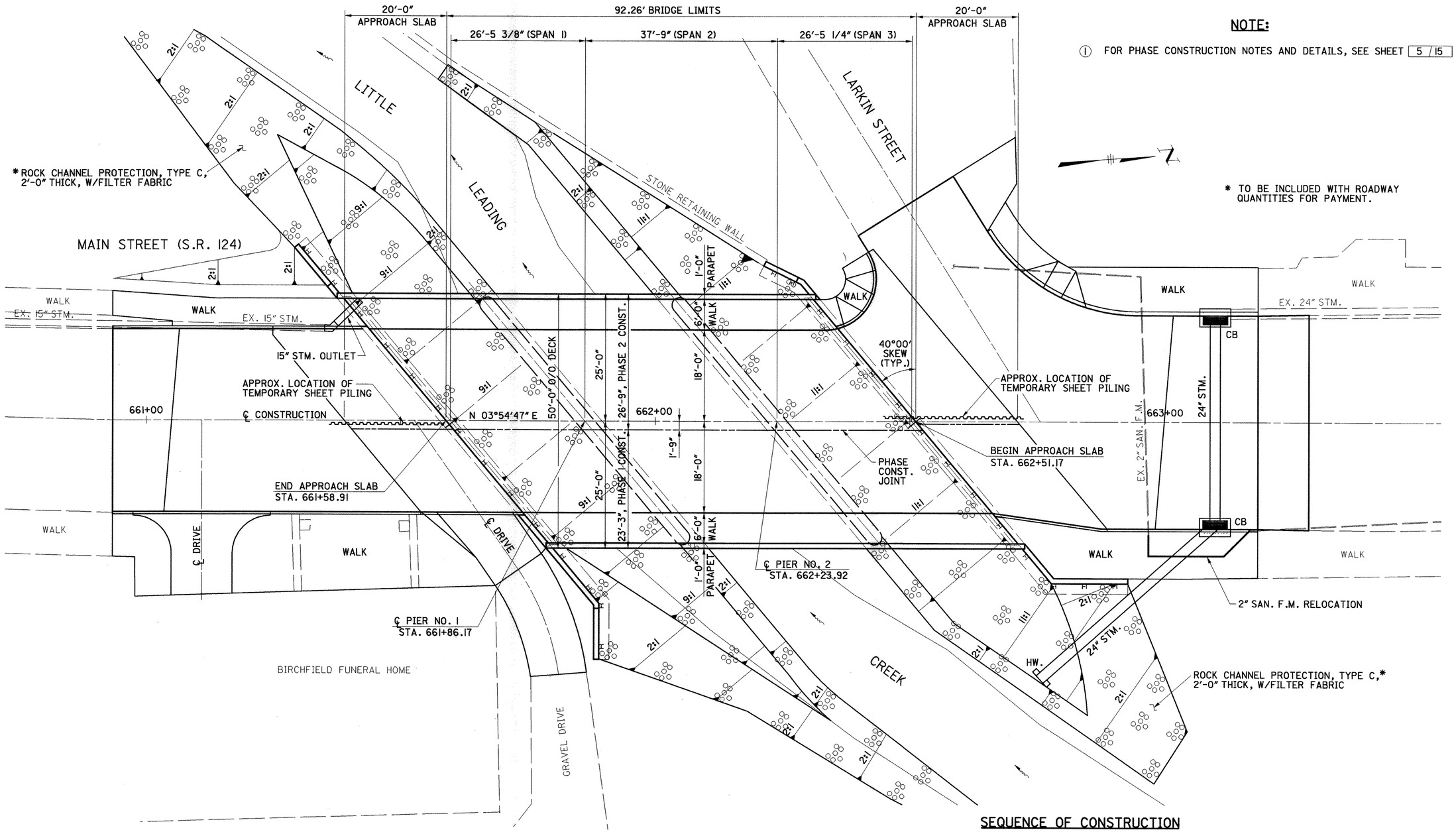

NOTE:

(1) FOR PHASE CONSTRUCTION NOTES AND DETAILS, SEE SHEET 5/15.

* TO BE INCLUDED WITH ROADWAY QUANTITIES FOR PAYMENT.

SEQUENCE OF CONSTRUCTION

PHASE 1 CONSTRUCTION

1. DIRECT TRAFFIC TO SOUTHBOUND LANE AND INSTALL PORTABLE CONCRETE BARRIER AS PER MAINTENANCE OF TRAFFIC PLANS.
2. INSTALL TEMPORARY DECK SUPPORT.
3. SAW CUT AND REMOVE NORTHBOUND PORTIONS OF APPROACH SLABS AND BRIDGE DECK INCLUDING SIDEWALK AND RAILING.
4. REMOVE PORTIONS OF ABUTMENTS AND PIERS.
5. CONSTRUCT PHASE 1 ABUTMENTS AND PIERS.
6. CONSTRUCT PHASE 1 DECK SLAB INCLUDING SIDEWALK AND RAILING.
7. CONSTRUCT PHASE 1 APPROACH SLABS.

PHASE 2 CONSTRUCTION

1. DIRECT TRAFFIC TO NORTHBOUND LANE AND INSTALL PORTABLE CONCRETE BARRIER AS PER MAINTENANCE OF TRAFFIC PLANS.
2. REMOVE TEMPORARY SUPPORT.
3. REMOVE SOUTHBOUND PORTIONS OF APPROACH SLABS AND BRIDGE DECK INCLUDING SIDEWALK AND RAILING.
4. REMOVE REMAINING PORTIONS OF ABUTMENTS AND PIERS.
5. CONSTRUCT PHASE 2 ABUTMENTS AND PIERS.
6. CONSTRUCT PHASE 2 DECK SLAB INCLUDING SIDEWALK AND RAILING.
7. CONSTRUCT PHASE 2 APPROACH SLABS.
8. REMOVE PORTABLE BARRIER AND RESUME NORMAL TRAFFIC.

DESIGN AGENCY
FINKBEINER, PETTIS & STROUT, INC.
520 S. MAIN STREET, SUITE 2400
AKRON, OHIO 44311-1010

DESIGNED	DRAWN	REVIEWED	DATE
MJH	CAF	RBB	2/00
CHECKED	REVISED	STRUCTURE FILE NUMBER	
CMD		5301394	

GENERAL PLAN
BRIDGE NO. MEG-124-1253
OVER LITTLE LEADING CREEK

MEG-124-12.52

MEG.GPLN
PLOT SCALE:1:10

ESTIMATED QUANTITIES

CALC. BY: MJH DATE: 2/00
CHKD. BY: MPB DATE: 2/00

ITEM	ITEM EXT.	TOTAL	UNIT	DESCRIPTION	ABUTS.	PIERS	SUPER	GEN'L.	AS BUILT ABUTS.	AS BUILT PIERS	AS BUILT SUPER	AS PER PLAN SHEET NO.
202	11003	LUMP	LUMP	STRUCTURE REMOVED, OVER 20 FOOT SPAN, AS PER PLAN				LUMP				3
202	98100	12	EACH	REMOVAL MISC.: TIMBER ABUTMENT PILES	12							
202	98100	10	EACH	REMOVAL MISC.: TIMBER PIER PILES		10						
503	11101	LUMP	LUMP	COFFERDAMS, CRIBS AND SHEETING, AS PER PLAN				LUMP				4
503	21301	LUMP	LUMP	UNCLASSIFIED EXCAVATION, AS PER PLAN				LUMP				4
505	11100	LUMP	LUMP	PILE DRIVING EQUIPMENT MOBILIZATION				LUMP				
507	00100	1,442	LIN.FT.	STEEL PILES HP10x42, FURNISHED	1,442							
507	00150	1,442	LIN.FT.	STEEL PILES HP10x42, DRIVEN	1,442							
507	00200	1,140	LIN.FT.	STEEL PILES HP12x53, FURNISHED		1,140						
507	00250	1,140	LIN.FT.	STEEL PILES HP12x53, DRIVEN		1,140						
507	50500	24	EACH	STEEL PILES SPLICES	14	10						
SPECIAL	50771200	173	LIN.FT.	PILE ENCASEMENT		173						
512	44400	5	SQ.YD.	TYPE B WATERPROOFING	5							
SPECIAL	51267502	90	SQ.YD.	SEALING OF CONCRETE SURFACES (EPOXY) (SEE PROPOSAL NOTE)	90							
SPECIAL	51267504	322	SQ.YD.	SEALING OF CONCRETE SURFACES (NON-EPOXY) (SEE PROPOSAL NOTE)			322					
517	75124	188	LIN.FT.	RAILING (CONCRETE PARAPET WITH TWIN STEEL TUBE RAILING), USING HIGH PERFORMANCE CONCRETE			188					
518	21200	70	CU.YD.	POROUS BACKFILL WITH FILTER FABRIC	70							
518	40000	200	LIN.FT.	6" PERFORATED CORRUGATED PLASTIC PIPE	200							
518	40010	36	LIN.FT.	6" NON-PERFORATED CORRUGATED PLASTIC PIPE, INCLUDING SPECIALS	36							
842	42500	27	CU.YD.	CLASS C CONCRETE, PIER CAP		27						
842	43500	138	CU.YD.	CLASS C CONCRETE, ABUTMENT INCLUDING FOOTING	138							
894	10000	332	CU.YD.	HIGH PERFORMANCE CONCRETE, FOR BRIDGE DECK with WARRANTY			332					
863	95020	LUMP	LUMP	STRUCTURAL STEEL, MISC.: TEMPORARY SUPPORT BEAM, INCLUDING INCIDENTALS, AS PER PLAN			LUMP					6

STRUCTURAL GENERAL NOTES

REFERENCE SHALL BE MADE TO STANDARD DRAWINGS:

AS-1-81M	REVISED 09-15-94	CPP-2-94M	DATED 12-19-94
BR-2-98M	DATED 12-29-98	CS-1-93M	REVISED 06-30-95
BS-1-93M	DATED 12-19-94	PCB-91M	DATED 04-24-92
CPA-5-94M	DATED 10-25-94		

AND TO SUPPLEMENTAL SPECIFICATIONS:

842	DATED 01-06-99	899	DATED 10-21-98
844	DATED 01-06-99	954	DATED 09-09-97
846	DATED 09-09-97		
894	DATED 10-12-99		

DESIGN SPECIFICATIONS:

THE STRUCTURE CONFORMS TO THE "STANDARD SPECIFICATIONS FOR HIGHWAY BRIDGES" ADOPTED BY THE AMERICAN ASSOCIATION OF STATE HIGHWAY AND TRANSPORTATION OFFICIALS, 1996, INCLUDING THE 1997 AND 1998 INTERIM SPECIFICATIONS AND THE O.D.O.T. BRIDGE DESIGN MANUAL.

DESIGN DATA:

HIGH PERFORMANCE CONCRETE - COMPRESSIVE STRENGTH 4500 P.S.I. FOR SUPERSTRUCTURE

CLASS C CONCRETE - COMPRESSIVE STRENGTH 4000 P.S.I. FOR SUBSTRUCTURES

REINFORCING STEEL - ASTM A615, A616 OR A617, GRADE 60, MINIMUM YIELD STRENGTH 60,000 P.S.I.

DECK PROTECTION METHOD - EPOXY COATED REINFORCING STEEL
2 1/2" COVER
SEALING OF CONCRETE SURFACES

DESIGN LOADING - HS20-44 AND THE ALTERNATE MILITARY LOADING
FUTURE WEARING SURFACE (FWS) OF 60 P.S.F.

MONOLITHIC WEARING SURFACE IS ASSUMED, FOR DESIGN PURPOSES, TO BE 1" THICK

REMOVAL OF EXISTING STRUCTURE:

WHEN NO LONGER NEEDED TO MAINTAIN TRAFFIC, THE EXISTING STRUCTURE SHALL BE REMOVED. AS INDICATED IN THE PLANS, THE REMOVAL WORK SHALL BE DONE PART-WIDTH IN TWO PHASES. FOR PHASE REMOVAL AND CONSTRUCTION DETAILS, SEE SHEETS 5/15 AND 6/15. REMOVAL SHALL CONFORM TO ITEM 202.

UTILITY LINES:

ALL EXPENSE INVOLVED IN RELOCATING THE AFFECTED UTILITY LINES SHALL BE BORNE BY THE UTILITIES. THE CONTRACTOR AND UTILITIES ARE TO COOPERATE BY ARRANGING THEIR WORK IN SUCH A MANNER THAT INCONVENIENCE TO EITHER WILL BE HELD TO A MINIMUM.

PLANS OF EXISTING BRIDGE:

PLANS OF THE EXISTING BRIDGE MAY BE EXAMINED AT THE DISTRICT 10 OFFICE OF THE OHIO DEPARTMENT OF TRANSPORTATION:

338 MUSKINGUM DRIVE
MARIETTA, OHIO 45750

STATE SAFETY REQUIREMENTS:

THE CONTRACTOR IS REQUIRED TO MEET THE APPLICABLE SAFETY REQUIREMENTS OF THE OHIO INDUSTRIAL COMMISSION.

DESIGN AGENCY
FINKBEINER, PETTIS & STROUT, INC.
520 S. MAIN STREET, SUITE 2400
AKRON, OHIO 44311-1010

DATE 2/00 | REVIEWED RBB | STRUCTURE FILE NUMBER 5301394
DRAWN CAF | REVISED
DESIGNED MJH | CHECKED CMD

ESTIMATED QUANTITIES AND STRUCTURAL GENERAL NOTES
BRIDGE NO. MEG-124-1253
OVER LITTLE LEADING CREEK

MEG-124-12.52

MEG_QUAN
PLOT SCALE: 1=1

STRUCTURAL GENERAL NOTES

CONCRETE PARAPETS:

AS SOON AS A CONCRETE SAW CAN BE OPERATED WITHOUT DAMAGING THE FRESHLY PLACED CONCRETE, 1" DEEP CONTROL JOINTS SHALL BE SAWED INTO THE PERIMETER OF THE CONCRETE PARAPET. THE SAW CUT SHALL BE MADE IN THE COMPLETE CIRCUMFERENCE OF THE PARAPET, STARTING AND ENDING AT THE ELEVATION OF THE SIDEWALK. THE SAWCUTS SHALL BE PLACED AT A MINIMUM OF 6' AND A MAXIMUM OF 10' CENTERS. THE USE OF AN EDGE GUIDE, FENCE OR JIG IS REQUIRED TO INSURE THAT THE CUT JOINT IS STRAIGHT, TRUE, AND ALIGNED ON ALL FACES OF THE PARAPET. THE JOINT WIDTH SHALL BE THE WIDTH OF THE SAW BLADE, A NOMINAL WIDTH OF 1/4 INCH. THE PERIMETER OF THE DEFLECTION CONTROL JOINT SHALL BE SEALED WITH A CAULKING MATERIAL CONFORMING TO FEDERAL SPECIFICATION, TT-S-00227E TO A MINIMUM DEPTH OF 1". THE BOTTOM 1/2" OF THE INSIDE AND OUTSIDE FACE SHOULD BE LEFT UNSEALED TO ALLOW WATER TO ESCAPE.

MAINTENANCE OF TRAFFIC:

FOR MAINTENANCE OF TRAFFIC NOTES AND DETAILS, REFER TO SHEETS 6 THRU 11 OF 38.

ITEM 503, UNCLASSIFIED EXCAVATION, AS PER PLAN:

STRUCTURE EXCAVATION IN ADDITION TO THAT NECESSARY TO REMOVE PORTIONS OF THE EXISTING STRUCTURE AND ALL NECESSARY BACKFILL IS INCLUDED IN THE LUMP SUM BID ITEM, "UNCLASSIFIED EXCAVATION, AS PER PLAN" FOR PAYMENT.

UNCLASSIFIED EXCAVATION SHALL BE IN ACCORDANCE WITH 503 EXCEPT THAT THE BACKFILL MATERIAL BEHIND THE ABUTMENTS SHALL BE 203 MATERIAL PLACED IN LIFTS NOT TO EXCEED A THICKNESS OF SIX (6) INCHES.

EXISTING STRUCTURE VERIFICATION:

DETAILS AND DIMENSIONS SHOWN ON THESE PLANS PERTAINING TO THE EXISTING STRUCTURE HAVE BEEN OBTAINED FROM PLANS OF THE EXISTING STRUCTURE AND FROM FIELD OBSERVATIONS AND MEASUREMENTS. CONSEQUENTLY, THEY ARE INDICATIVE OF THE EXISTING STRUCTURE AND THE PROPOSED WORK BUT THEY SHALL BE CONSIDERED TENTATIVE AND APPROXIMATE. THE CONTRACTOR IS REFERRED TO CMS SECTIONS 102.05 AND 105.02.

CONTRACT BID PRICES SHALL BE BASED UPON A RECOGNITION OF THE UNCERTAINTIES DESCRIBED ABOVE AND UPON A PREBID EXAMINATION OF THE EXISTING STRUCTURE BY THE CONTRACTOR. HOWEVER, ALL PROJECT WORK SHALL BE BASED UPON ACTUAL DETAILS AND DIMENSIONS WHICH HAVE BEEN VERIFIED BY THE CONTRACTOR IN THE FIELD.

PILES DRIVEN TO BEDROCK:

PILES SHALL BE DRIVEN TO REFUSAL ON BEDROCK. REFUSAL SHALL BE CONSIDERED AS OBTAINED BY PENETRATING SOFT BEDROCK FOR SEVERAL INCHES WITH A MINIMUM RESISTANCE OF 20 BLOWS PER INCH OR REFUSAL SHALL BE CONSIDERED AS OBTAINED AFTER THE PILE HAS CONTACTED HARD BEDROCK AND THE PILE HAS THEN RECEIVED AT LEAST 20 BLOWS.

THE ULTIMATE BEARING VALUE IS 135 KIPS PER PILE FOR THE ABUTMENT PILES. THE ULTIMATE BEARING VALUE IS 235 KIPS PER PILE FOR THE PIER PILES.

REAR ABUTMENT PILES: (HP10x42)

14 PILES 50 FEET LONG, ESTIMATED LENGTH
14 PILES OF ORDER LENGTH 50 FEET
7 SPLICES

FORWARD ABUTMENT PILES: (HP10x42)

14 PILES 53 FEET LONG, ESTIMATED LENGTH
14 PILES OF ORDER LENGTH 53 FEET
7 SPLICES

PIER PILES: (HP12x53)

20 PILES 57 FEET LONG, ESTIMATED LENGTH
20 PILES OF ORDER LENGTH 57 FEET
10 SPLICES

CONSTRUCTION JOINTS:

CONSTRUCTION JOINTS SHALL HAVE ROUGH SURFACES. PRIOR TO CONCRETE PLACEMENT, ALL CONCRETE BONDING SURFACES SHALL BE THOROUGHLY CLEANED OF ALL DIRT, DUST, OR OTHER FOREIGN MATERIAL BY THE USE OF WATER, AIR UNDER PRESSURE, OR OTHER METHOD THAT PRODUCES RESULTS SATISFACTORY TO THE ENGINEER. CARE SHALL BE TAKEN TO PROTECT EPOXY COATING ON EXPOSED REINFORCEMENT DURING CLEANING. BONDING SURFACES SHALL BE WET WITHOUT FREE WATER AS CONCRETE IS PLACED.

COFFERDAMS, CRIBS AND SHEETING, AS PER PLAN

TEMPORARY SHORING SHALL BE USED TO ACCOMPLISH THE PROPOSED CONSTRUCTION IN STAGES. THE DESIGN OF THE TEMPORARY SHORING SHALL BE THE RESPONSIBILITY OF THE CONTRACTOR, BE DESIGNED BY A REGISTERED PROFESSIONAL ENGINEER AND CONFORM WITH 501.05. FOR APPROVAL, FIVE COPIES OF THE DRAWINGS SHALL BE SUBMITTED TO THE DIRECTOR AND CONCURRENTLY, ONE COPY TO THE OFFICE OF STRUCTURAL ENGINEERING. CONSTRUCTION OF THE SHORING SHALL NOT BEGIN UNTIL AFTER WRITTEN APPROVAL HAS BEEN RECEIVED FROM THE DIRECTOR. PORTIONS OF THE TEMPORARY SHORING COMPOSED OF STEEL OR CONCRETE MAY BE LEFT IN PLACE AT THE DISCRETION OF THE ENGINEER. PORTIONS COMPOSED OF OTHER MATERIALS SHALL BE REMOVED PRIOR TO COMPLETION OF THE WORK.

PILE REMOVAL:

WHERE AN EXISTING PILE INTERFERES WITH DRIVING OF PROPOSED PILES, AS DETERMINED BY THE ENGINEER, THE EXISTING PILE SHALL BE REMOVED. TWO ITEMS HAVE BEEN PROVIDED TO PAY FOR THIS WORK. HOWEVER, IT IS PROBABLE THAT PORTIONS OF THESE ITEMS MAY BE NONPERFORMED. TO AVOID INTERFERENCE WITH DRIVING A PROPOSED PILE, AT THE DIRECTION OF THE ENGINEER, AN EXISTING PILE SHALL BE ENTIRELY REMOVED. THE VOID LEFT BY PILE REMOVAL SHALL IMMEDIATELY BE COMPLETELY FILLED WITH GRANULAR MATERIAL SUITABLE TO THE ENGINEER. COST FOR PILE REMOVAL AND VOID FILLING SHALL BE INCLUDED FOR PAYMENT IN THE UNIT PRICE BID FOR THE APPLICABLE PILE REMOVAL ITEM.

ITEM 202, REMOVAL MISCELLANEOUS: TIMBER ABUTMENT PILES:

THE PROPOSED ABUTMENT PILES HAVE BEEN SPACED IN AN ATTEMPT TO CLEAR THE EXISTING PILES. HOWEVER, IN AREAS THAT MAY INTERFERE, A QUANTITY OF 12 EACH HAS BEEN INCLUDED TO BE USED FOR REMOVAL OF THE EXISTING ABUTMENT PILES.

ITEM 202, REMOVAL MISCELLANEOUS: TIMBER PIER PILES:

THE PROPOSED PIER PILES HAVE BEEN SPACED IN AN ATTEMPT TO CLEAR THE EXISTING PILES. HOWEVER, IN AREAS THAT MAY INTERFERE, A QUANTITY OF 10 EACH HAS BEEN INCLUDED TO BE USED FOR REMOVAL OF THE EXISTING PIER PILES.

TEMPORARY CONCRETE BARRIER:

FURNISHING, INSTALLING, MAINTAINING AND REMOVING TEMPORARY BARRIER SHALL BE INCLUDED IN ITEM 614 OF THE ROADWAY QUANTITIES FOR PAYMENT.

PILE DRIVING

PRIOR TO AND DURING PILE DRIVING OPERATIONS, THE CONTRACTOR SHALL MONITOR THE NEARBY BUILDINGS TO ENSURE NO DAMAGE IS BORNE BY THEM FROM THE VIBRATIONS.

MECHANICAL CONNECTORS:

AN APPROVED TYPE OF MECHANICAL CONNECTOR FOR REINFORCING BARS SHALL BE PROVIDED. INSTALLATION OF CONNECTORS SHALL CONFORM WITH MANUFACTURER'S RECOMMENDED PROCEDURES. LENGTHS FOR BARS WITH MECHANICAL CONNECTORS ARE DIMENSIONED TO THE CONSTRUCTION JOINT. CONNECTORS USED WITH EPOXY COATED BARS SHALL BE EPOXY COATED. COATING FOR CONNECTORS SHALL CONFORM TO THE SAME SPECIFICATIONS. COATINGS WHICH HAVE BEEN DAMAGED OR WHICH OTHERWISE DO NOT MEET SPECIFICATIONS WITH RESPECT TO COLOR, CONTINUITY AND UNIFORMITY MAY BE REPAIRED AS DIRECTED BY THE ENGINEER OR THEY SHALL BE REPLACED WITH MATERIAL WHICH MEETS THE SPECIFICATIONS. CONNECTORS SHALL BE INCLUDED IN THE BID PRICE FOR ITEM 842 OR ITEM 844.

ABBREVIATIONS:

N.F. = NEAR FACE
F.F. = FAR FACE
E.F. = EACH FACE
APPR. = APPROACH
EL. = ELEVATION
MID. = MIDDLE
TYP. = TYPICAL
MIN. = MINIMUM
STA. = STATION
SPA. = SPACES
CONST. = CONSTRUCTION
INV. = INVERT
MECH. = MECHANICAL
FWD. = FORWARD
P.E.J.F. = PREFORMED EXPANSION JOINT FILLER
C.P.P. = CORRUGATED PLASTIC PIPE
CONC. = CONCRETE
BOTT. = BOTTOM
EA. = EACH

REINFORCING STEEL:

ALL REINFORCING STEEL SHALL HAVE A MINIMUM OF 2" INCHES OF CONCRETE COVER UNLESS OTHERWISE NOTED.

SEALING WITH HMWM RESIN:

AFTER DECK SLAB CONCRETE HAS BEEN DRY-AIR CURED FOR NOT LESS THAN 7 DAYS, AND IMMEDIATELY AFTER A MINIMUM 48 HOUR PERIOD WITHOUT PRECIPITATION, VERTICAL CONSTRUCTION JOINTS IN THE DECK SLAB, HORIZONTAL JOINTS AT AND ADJACENT TO THE ROADWAY SURFACE (AT THE BASE OF SIDEWALKS, CURBS, BARRIERS, ETC.), AND CRACKS IN THE ROADWAY SURFACE THAT ARE VISIBLE TO THE UNAIDED EYE, SHALL BE SEALED WITH A HIGH MOLECULAR WEIGHT METHACRYLATE (HMWM) RESIN AS DESCRIBED IN THE HMWM PROPOSAL NOTE. SEALANT SHALL BE APPLIED BY BRUSH, SPRAY OR OTHER SUITABLE APPLICATOR ALONG THE SURFACE OF JOINTS AND CRACKS. IF NECESSARY, MULTIPLE APPLICATIONS SHALL BE MADE UNTIL COMPLETE PENETRATION HAS BEEN ACHIEVED. AFTER SEALANT HAS BEEN CURED, IT SHALL BE SANDED AS SPECIFIED TO ROUGHEN THE SEALANT SURFACE AND RESTORE ITS SUITABILITY FOR VEHICULAR TRAFFIC. FOR OVERCOATING WITH A CONCRETE SURFACE SEALANT OR AS PREPARATION FOR A CONCRETE OVERLAY, TREATED SURFACES SHALL BE ROUGHENED BY ABRASIVE BLASTING AND OTHERWISE CLEANED AS SPECIFIED FOR THE SUBSEQUENT APPLICATION. SEALING CONSTRUCTION JOINTS AND CRACKS, AS DESCRIBED ABOVE, SHALL BE INCLUDED WITH THE DECK SLAB CONCRETE FOR PAYMENT.

PROPOSED WORK:

PROPOSED WORK SHALL INCLUDE BUT NOT BE LIMITED TO:

- INSTALL TEMPORARY SUPPORT BEAM
- REMOVE SUPERSTRUCTURE AND PORTION OF THE SUBSTRUCTURE AND WINGWALLS.
- CONSTRUCT ABUTMENT AND WINGWALLS.
- CONSTRUCT PIERS.
- CONSTRUCT DECK SLAB.
- CONSTRUCT DECK SIDEWALKS AND RAILING.
- CONSTRUCT APPROACH SLABS.

DESIGN AGENCY
FINKBEINER, PETTIS & STROUT, INC.
520 S. MAIN STREET, SUITE 2400
AKRON, OHIO 44311-1010

DESIGNED MJH | DRAWN CAF | REVIEWED RBB | DATE 2/00
CHECKED CMD | REVISED | STRUCTURE FILE NUMBER 5301394

STRUCTURAL GENERAL NOTES
BRIDGE NO. MEG-124-1253
OVER LITTLE LEADING CREEK

MEG-124-12.52

MEG_NOTE
PLOT SCALE: 1=2

NOTE:

① SEE SHEET 6 / 15 FOR ADDITIONAL REMOVAL DETAILS.

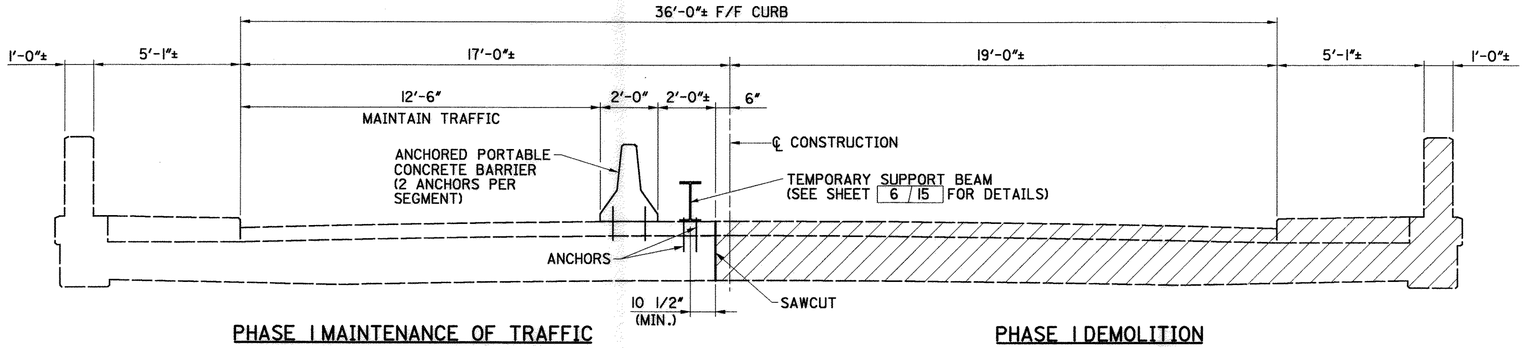

PHASE 1 MAINTENANCE OF TRAFFIC

LOOKING UPSTATION

PHASE 1 DEMOLITION

LOOKING UPSTATION

LEGEND

AREAS OF EXISTING STRUCTURE TO BE REMOVED

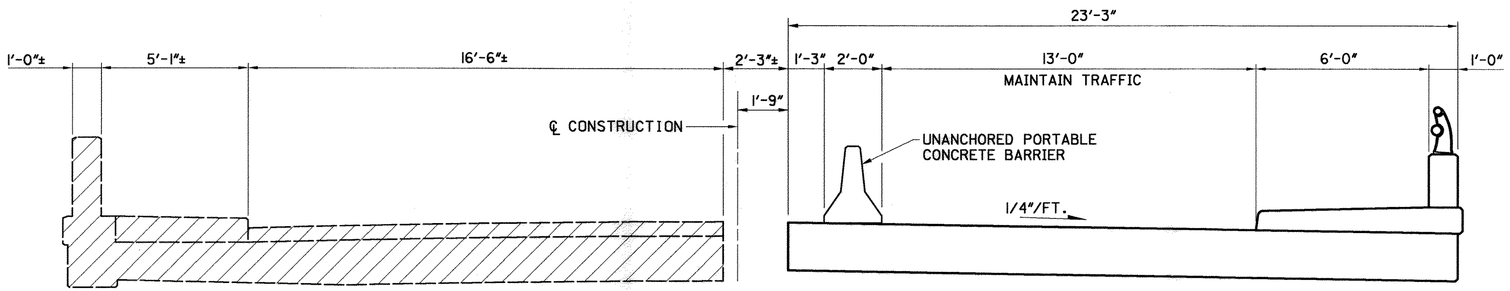

PHASE 2 DEMOLITION

LOOKING UPSTATION

PHASE 1 CONSTRUCTION & PHASE 2 MAINTENANCE OF TRAFFIC

LOOKING UPSTATION

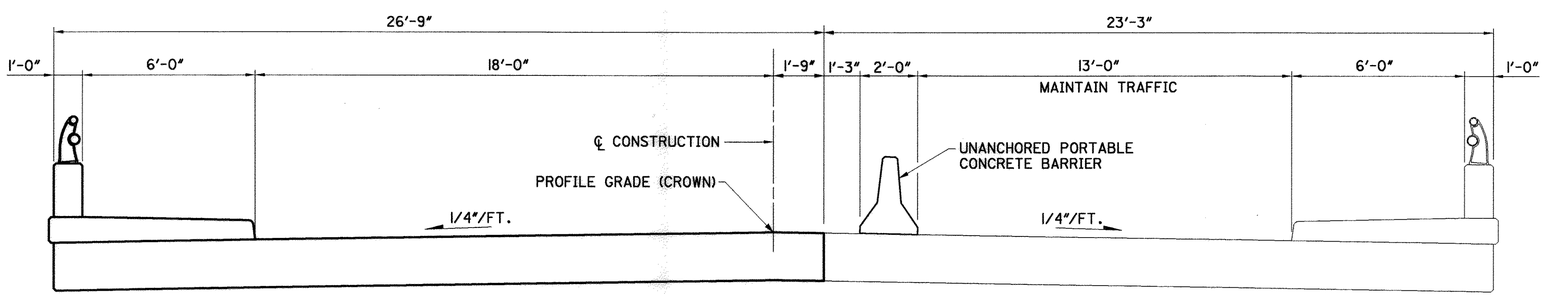

PHASE 2 CONSTRUCTION

LOOKING UPSTATION

PHASE 2 MAINTENANCE OF TRAFFIC

LOOKING UPSTATION

MEG_PHASE.DGN
SCALE 1:1=2.67

DESIGN AGENCY
FINKBEINER, PETTIS & STROUT, INC.
520 S. MAIN STREET, SUITE 2400
AKRON, OHIO 44311-1010

DESIGNED	DRAWN	REVIEWED	DATE
MJH	CAF	RBB	2/00
CHECKED	REVISED	STRUCTURE FILE NUMBER	
CMD		5301394	

PHASE CONSTRUCTION DETAILS

BRIDGE NO. MEG-124-1253
OVER LITTLE LEADING CREEK

MEG-124-12.52

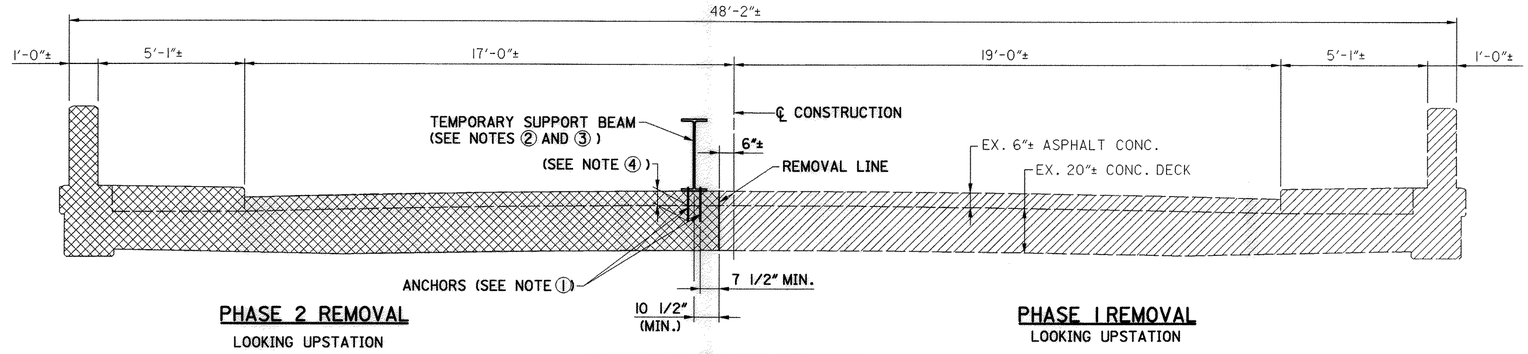

SUPERSTRUCTURE REMOVAL

NOTES

① ANCHORS SHALL BE 1" DIA. HILTI HAS STANDARD RODS WITH HVA ADHESIVE SYSTEM OR APPROVED EQUAL. EMBEDMENT DEPTHS ARE BASED ON HILTI ANCHORS ONLY. INCLUDE WITH ITEM 863, STRUCTURAL STEEL, MISC.: TEMPORARY SUPPORT BEAM INCLUDING INCIDENTALS, FOR PAYMENT.

② THE TEMPORARY SUPPORT BEAM SHALL BE A W30x124 WITH A YIELD STRENGTH fy = 36,000 PSI OR APPROVED EQUAL.

③ THE TEMPORARY SUPPORT BEAM SHALL BE PUT IN PLACE PRIOR TO ANY DECK REMOVAL.

④ EMBEDMENT DEPTHS ARE AS SHOWN IN TEMPORARY SUPPORT BEAM PLAN THIS SHEET AND DO NOT INCLUDE THE ASPHALT THICKNESS.

⑤ TEMPORARY SUPPORT BEAM INSTALLATION PROCEDURE SHALL BE AS FOLLOWS OR AS APPROVED BY THE ENGINEER.

1. THE CONTRACTOR SHALL LAYOUT AND DRILL ANCHOR HOLES IN EXISTING DECK. CONTRACTOR SHALL TAKE CARE TO AVOID EXISTING SLAB REINFORCING STEEL
2. CONTRACTOR SHALL INSTALL ANCHORS INTO DECK AS PER MANUFACTURERS RECOMMENDATIONS.
3. CONTRACTOR SHALL LAYOUT ACTUAL HOLE LOCATION ON BEAM AND DRILL HOLES.
4. CONTRACTOR SHALL PLACE BEAM OVER ANCHORS AND TIGHTEN AS PER MANUFACTURERS RECOMMENDATIONS.

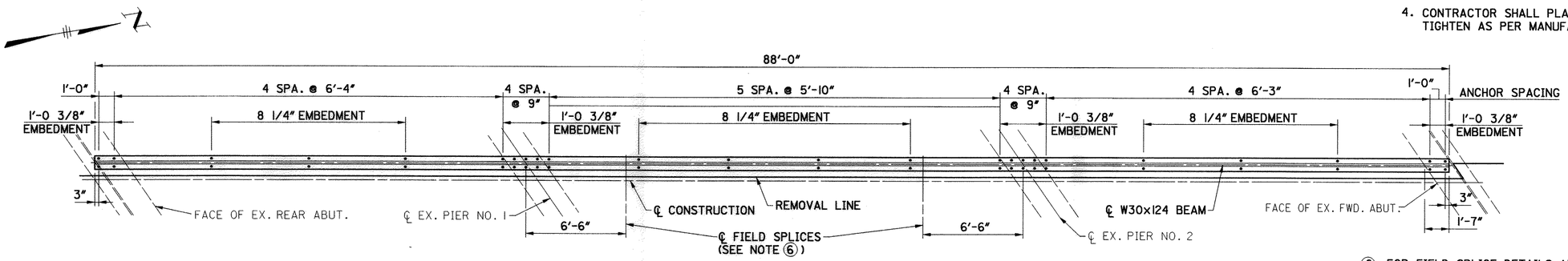

TEMPORARY SUPPORT BEAM PLAN

⑥ FOR FIELD SPLICE DETAILS AND NOTES SEE O.D.O.T. STANDARD DRAWING BS-1-93, SHEETS 1 AND 3 OF 3.

⑦ THE CONTRACTOR HAS THE OPTION OF SUBMITTING AN ALTERNATE SUPPORT DETAIL TO BE APPROVED BY THE ENGINEER.

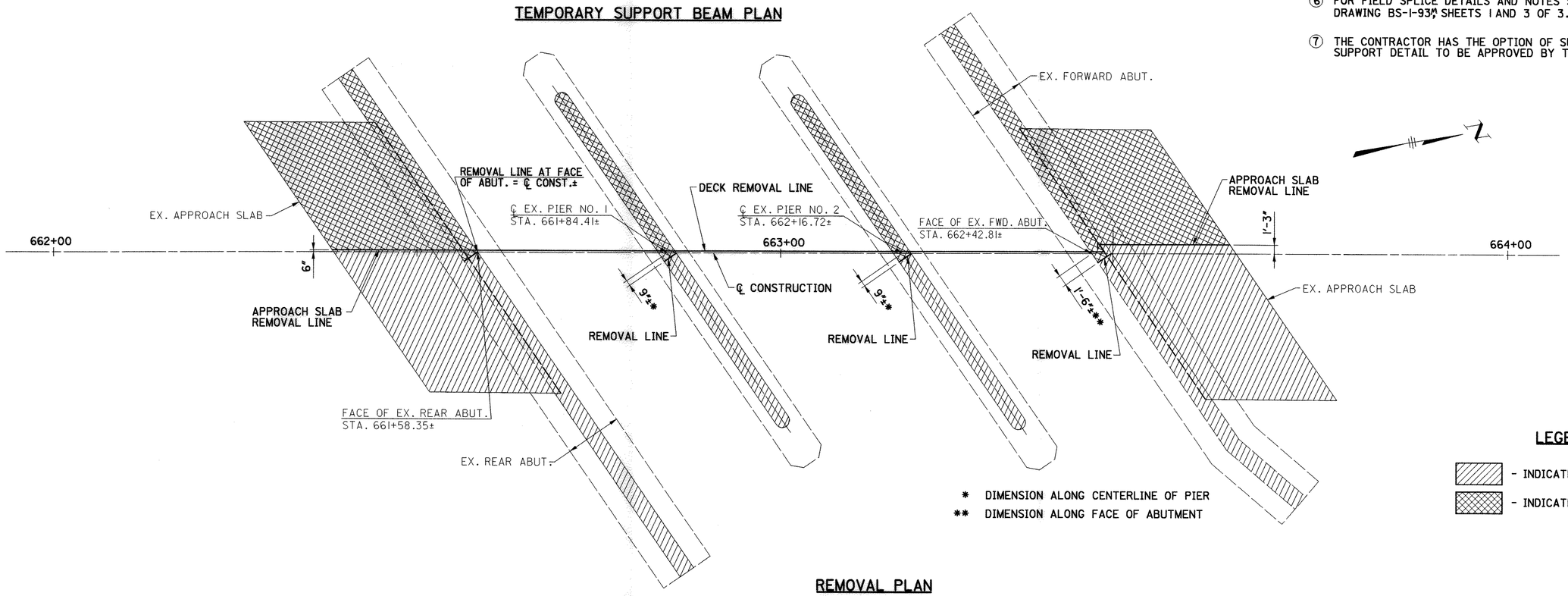

REMOVAL PLAN

LEGEND

- INDICATES PHASE 1 REMOVAL
- INDICATES PHASE 2 REMOVAL

DESIGN AGENCY
FINKBEINER, PETTIS & STROUT, INC.
520 S. MAIN STREET, SUITE 2400
AKRON, OHIO 44311-1010

DESIGNED	DRAWN	REVIEWED	DATE
MJH	CAF	RBB	2/00
CHECKED	REVISED	STRUCTURE FILE NUMBER	
CMD		5301394	

REMOVAL DETAILS
BRIDGE NO. MEG-124-1253
OVER LITTLE LEADING CREEK

MEG-124-12.52

MEG_DEMO
PLOT SCALE:1=8

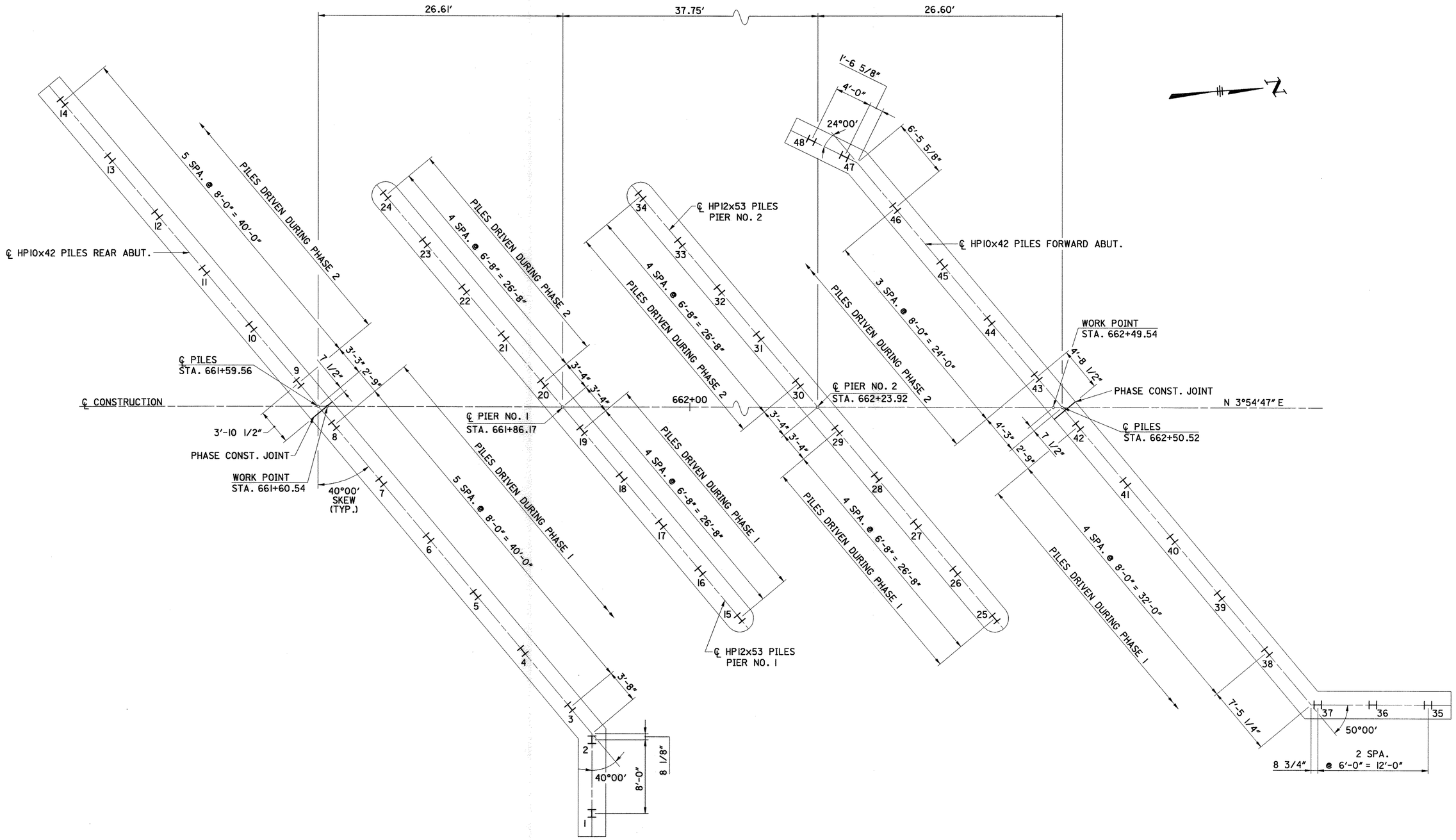

PILE PLAN

DESIGNED MJH	CHECKED CMD	DRAWN CAF	REVISED
REVIEWED RBB	DATE 2/00	STRUCTURE FILE NUMBER 5301394	

DESIGN AGENCY
FINKBEINER, PETTIS & STROUT, INC.
520 S. MAIN STREET, SUITE 2400
AKRON, OHIO 44311-1010

PILE PLAN
BRIDGE NO. MEG-124-1253
OVER LITTLE LEADING CREEK

MEG-124-12.52

MEG_PILE
SCALE: 1=5.33

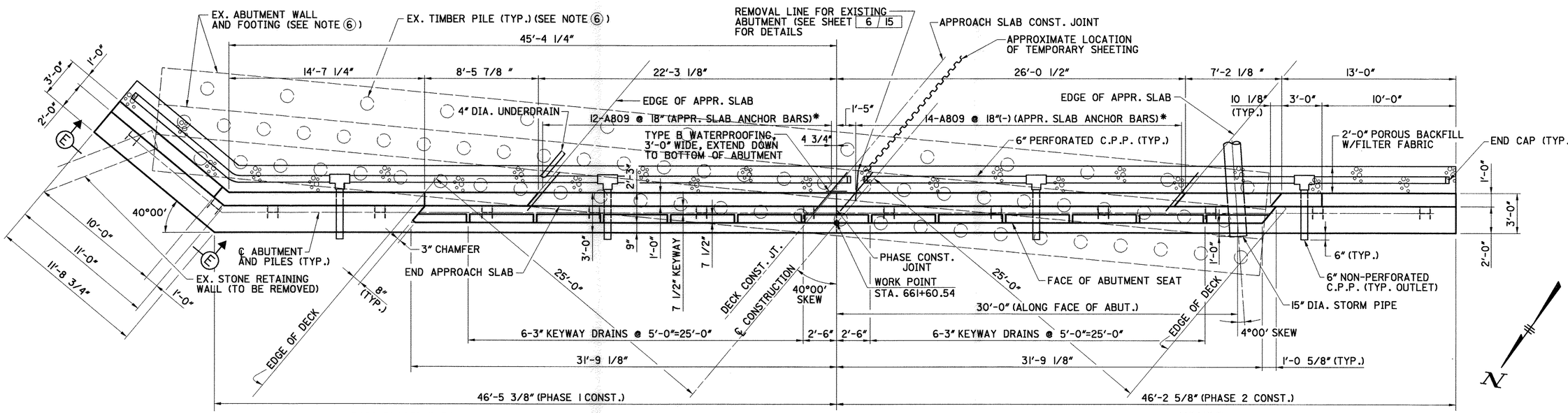

* - BARS PLACED PARALLEL TO CENTERLINE CONSTRUCTION

PLAN

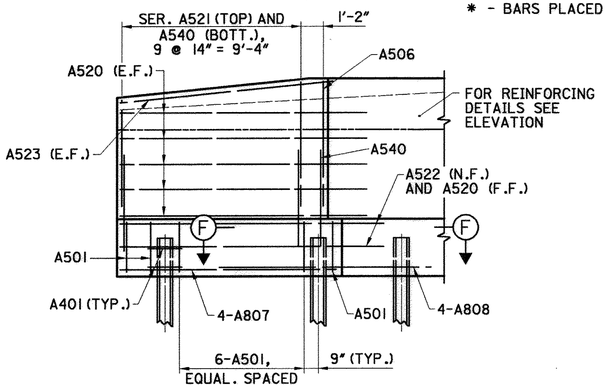

VIEW E-E

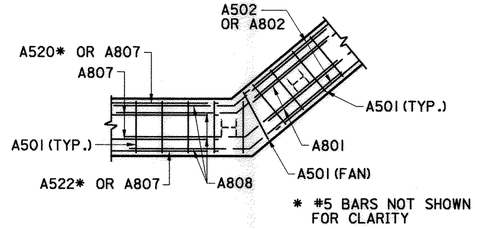

* #5 BARS NOT SHOWN FOR CLARITY

SECTION F-F

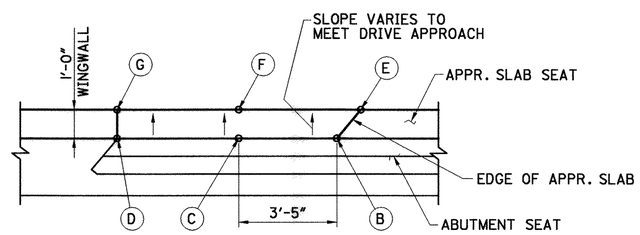

VIEW K-K

NOTES

① MINIMUM BAR LAPS ARE AS FOLLOWS:
#5 BARS = 35" #10 BARS = 111"
#8 BARS = 69"

② FOR FOUNDATION PILE PLAN SEE SHEET 7/15.

③ FOR FORWARD ABUTMENT DETAILS SEE SHEET 9/15.

④ FOR SECTIONS A-A AND B-B AND ADDITIONAL NOTES SEE SHEET 10/15.

⑤ THE ACTUAL INVERT ELEVATION OF THE 15" DIAMETER STORM OUTLET SHALL BE DETERMINED BY THE ENGINEER IN THE FIELD. THE PIPE SHOULD HAVE A MINIMUM SLOPE OF 2.00%.

⑥ THE EXISTING SUBSTRUCTURE IS SHOWN FOR INFORMATIONAL PURPOSES. THE ACTUAL LOCATION SHALL BE VERIFIED BY THE CONTRACTOR.

ELEVATION TABLE

A	B	C	D	E	F
575.66	578.23	578.28	578.34	577.89	577.89
G	H	J	K	L	M
577.94	577.34	578.15	578.25	574.75	568.00

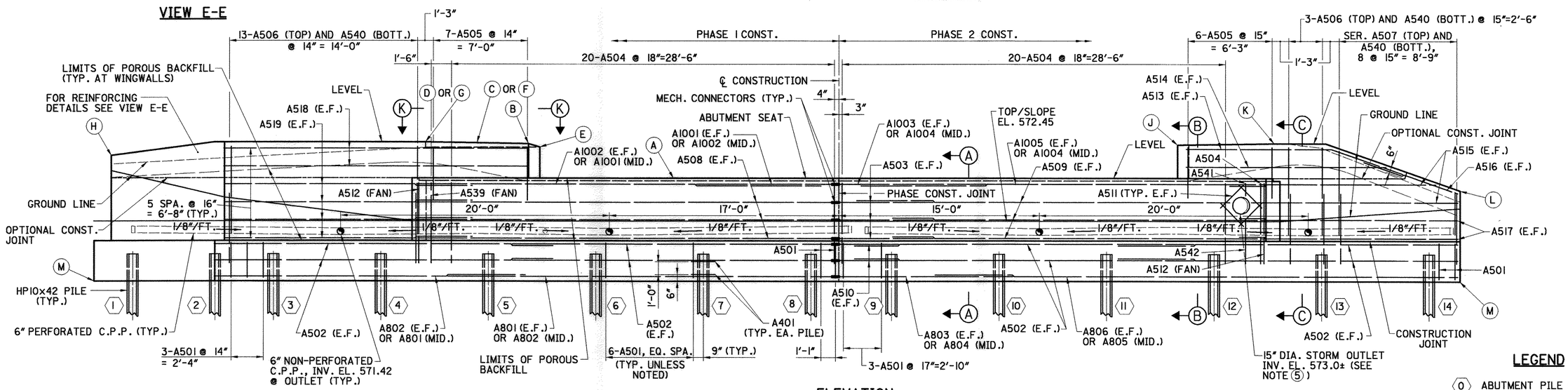

ELEVATION

LEGEND

⟨0⟩ ABUTMENT PILE NUMBERS

DESIGN AGENCY
FINKBEINER, PETTIS & STROUT, INC.
520 S. MAIN STREET, SUITE 2400
AKRON, OHIO 44311-1010

DESIGNED	DRAWN	REVIEWED	DATE
MJH	CAF	RBB	2/00
CHECKED	REVISED	STRUCTURE FILE NUMBER	
CMD		5301394	

REAR ABUTMENT DETAILS

BRIDGE NO. MEG-124-1253
OVER LITTLE LEADING CREEK

MEG-124-12.52

8/15

27/38

MEG.ABT1
PLOT SCALE: 1=4

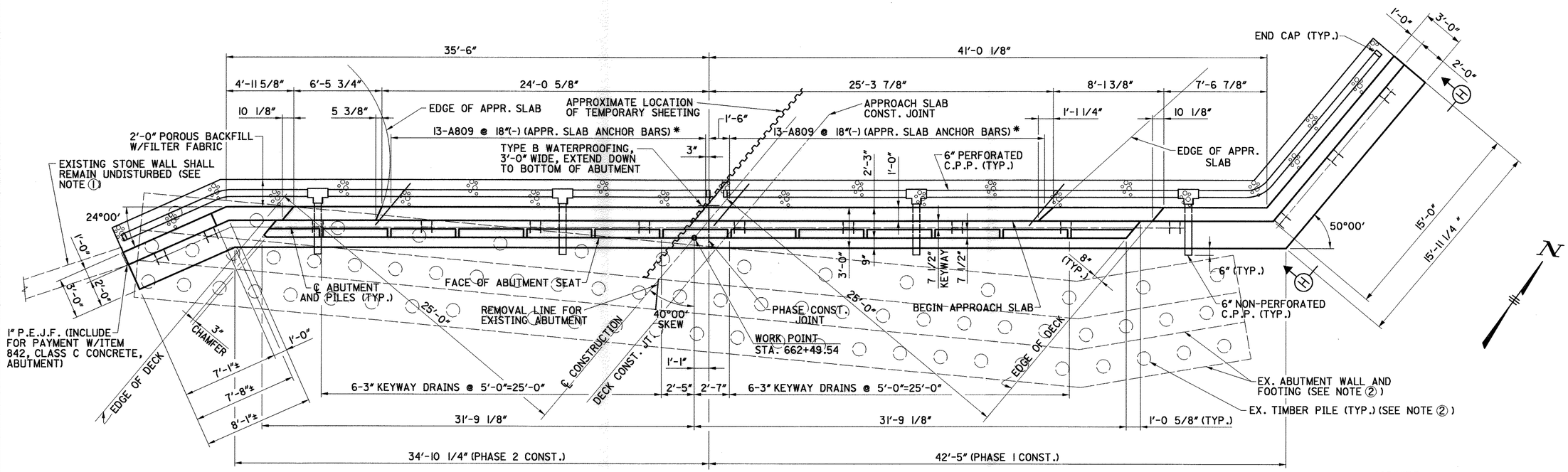

* - BARS PLACED PARALLEL TO CENTERLINE CONSTRUCTION

PLAN

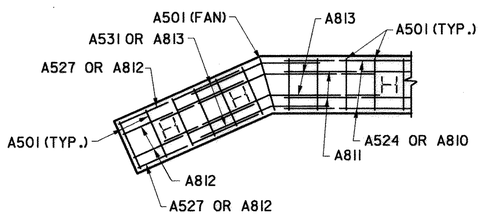

SECTION G-G

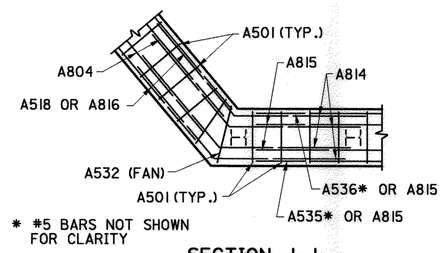

* #5 BARS NOT SHOWN FOR CLARITY

SECTION J-J

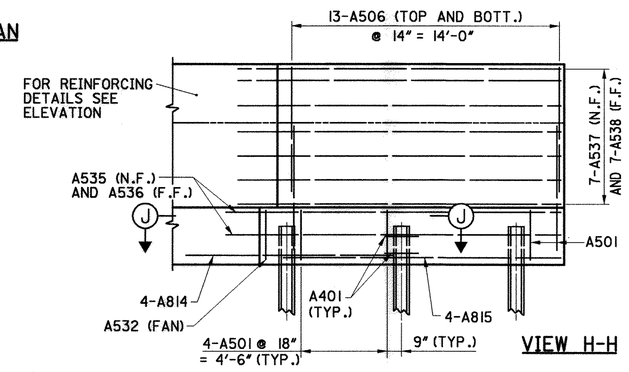

VIEW H-H

NOTES

1. DURING CONSTRUCTION OF THE ABUTMENT AND PLACEMENT OF ROCK CHANNEL PROTECTION THE CONTRACTOR SHALL NOT DISTURB THE STRUCTURAL INTEGRITY OR ANY FEATURES OF THE EXISTING STONE WALL. SPECIAL CARE AND EFFORT SHALL BE TAKEN TO PRESERVE THE HISTORICAL NATURE OF THE WALL.
2. THE EXISTING SUBSTRUCTURE IS SHOWN FOR INFORMATIONAL PURPOSES. THE ACTUAL LOCATION SHALL BE VERIFIED BY THE CONTRACTOR.
3. FOR FOUNDATION PILE PLAN SEE SHEET 7 / 15 .
4. FOR REAR ABUTMENT DETAILS SEE SHEET 8 / 15 .
5. FOR SECTIONS A-A, B-B, C-C AND D-D AND ADDITIONAL NOTES SEE SHEET 10 / 15 .

ELEVATION TABLE

N	P	Q	R	S	T	U	V
575.40	578.07	578.21	576.71	577.91	578.02	578.50	568.00

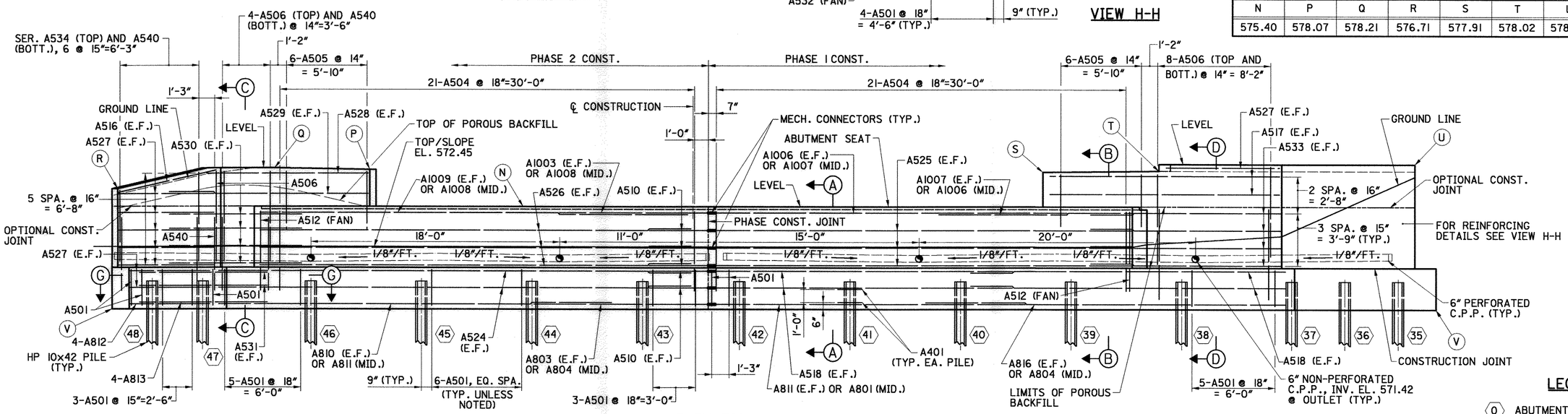

ELEVATION

LEGEND

(0) ABUTMENT PILE NUMBERS

MEG-ABT2
PLOT SCALE:1=4

DESIGN AGENCY
FINKBEINER, PETTIS & STROUT, INC.
520 S. MAIN STREET, SUITE 2400
AKRON, OHIO 44311-1010

DESIGNED	DRAWN	REVIEWED	DATE
MJH	CAF	RBB	2/00
CHECKED	REVISED	STRUCTURE FILE NUMBER	
CMD		5301394	

FORWARD ABUTMENT DETAILS

BRIDGE NO. MEG-124-1253
OVER LITTLE LEADING CREEK

MEG-124-12.52

9 / 15

28 / 38

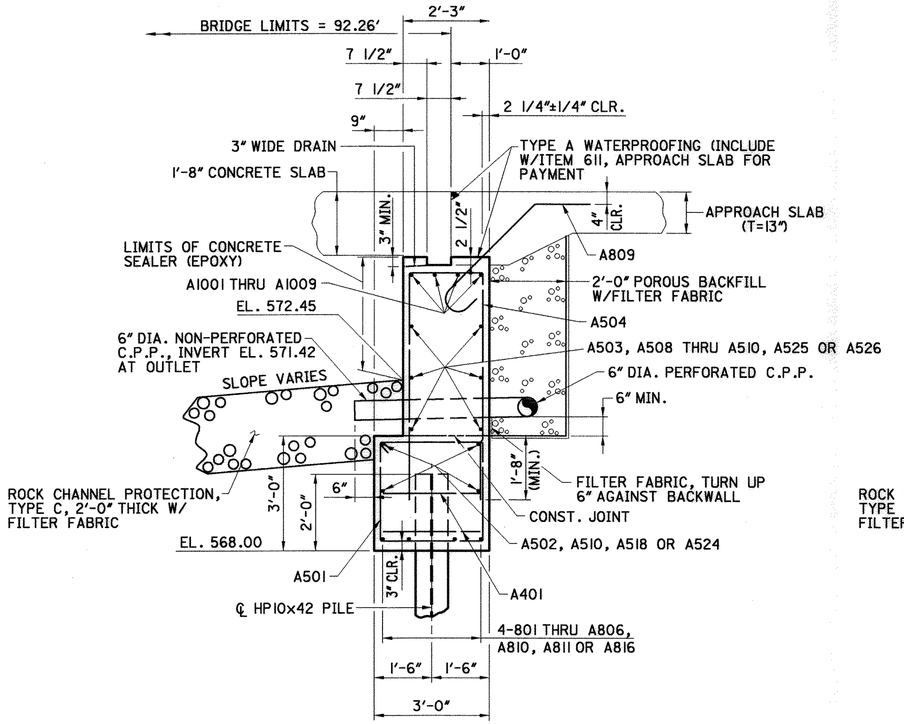

SECTION A-A

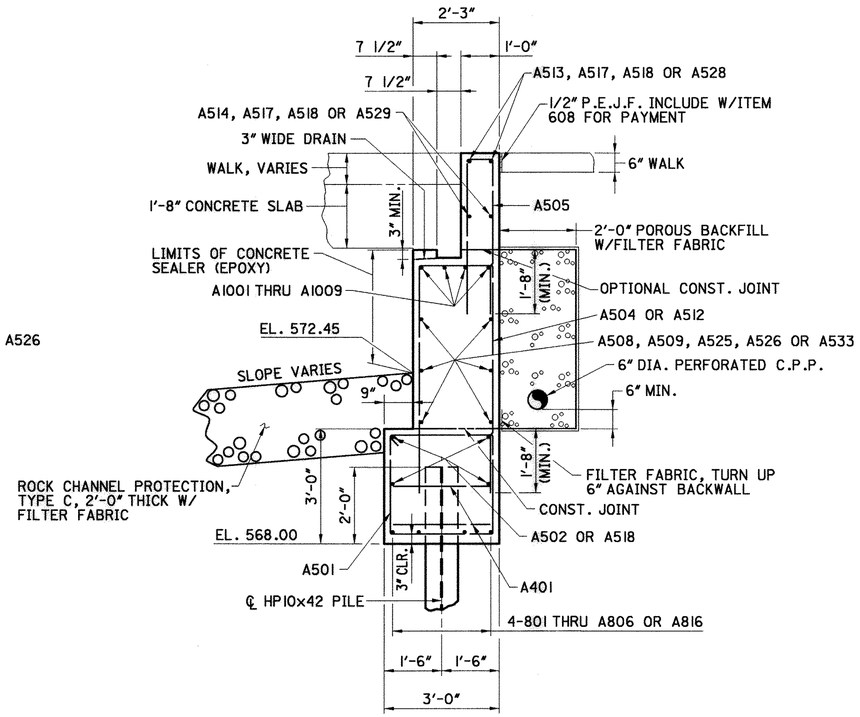

SECTION B-B

NOTES

1. POROUS BACKFILL WITH FILTER FABRIC, TWO (2) FEET THICK SHALL EXTEND UP TO THE PLANE OF THE SUBGRADE, TO ONE (1) FOOT BELOW THE EMBANKMENT SURFACE, AND LATERALLY TO THE ENDS OF THE WINGWALLS. FILTER FABRIC SHALL CONFORM WITH 712.09, TYPE A. FILTER FABRIC IS INCLUDED WITH POROUS BACKFILL FOR PAYMENT.
2. FOR FORWARD ABUTMENT DETAILS SEE SHEET 9 / 15 .
3. FOR REAR ABUTMENT DETAILS SEE SHEET 8 / 15 .

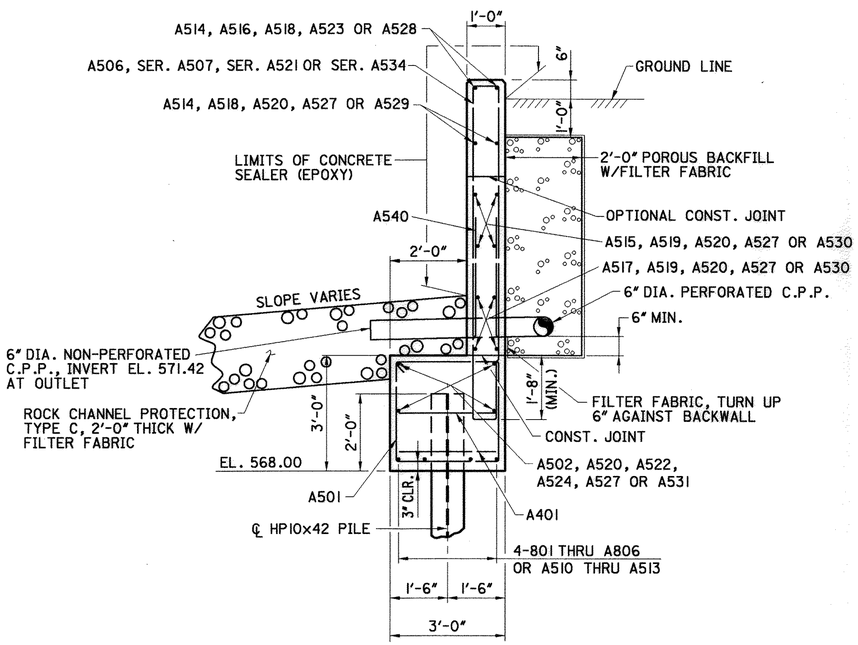

SECTION C-C

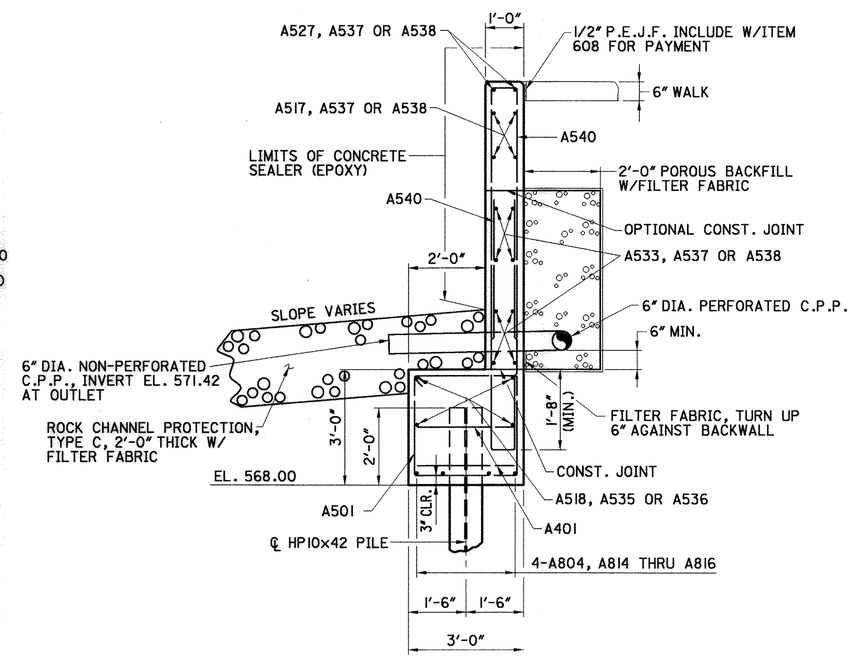

SECTION D-D

DESIGN AGENCY
FINKBEINER, PETTIS & STROUT, INC.
520 S. MAIN STREET, SUITE 2400
AKRON, OHIO 44311-1010

DESIGNED	DRAWN	REVIEWED	DATE
MJH	CAF	RBB	2/00
CHECKED	REVISED	STRUCTURE FILE NUMBER	
CMD		5301394	

ABUTMENT DETAILS
BRIDGE NO. MEG-124-1253
OVER LITTLE LEADING CREEK

MEG-124-12.52

MEG_ABT3
PLOT SCALE: 1=2

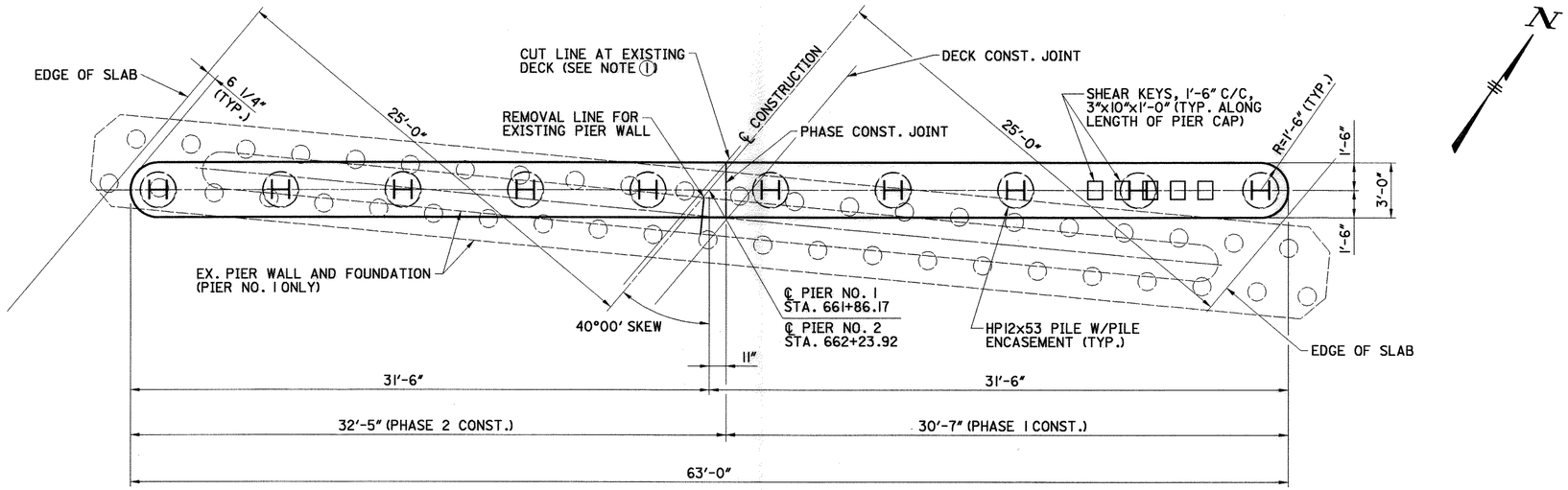

PLAN

(PIER NO. 1 SHOWN, PIER NO. 2 SIMILAR)

ELEVATION TABLE		
LOCATION	A	B
PIER NO. 1	575.70	573.70
PIER NO. 2	575.57	573.57

ELEVATIONS TAKEN ALONG CENTERLINE PIER CAP

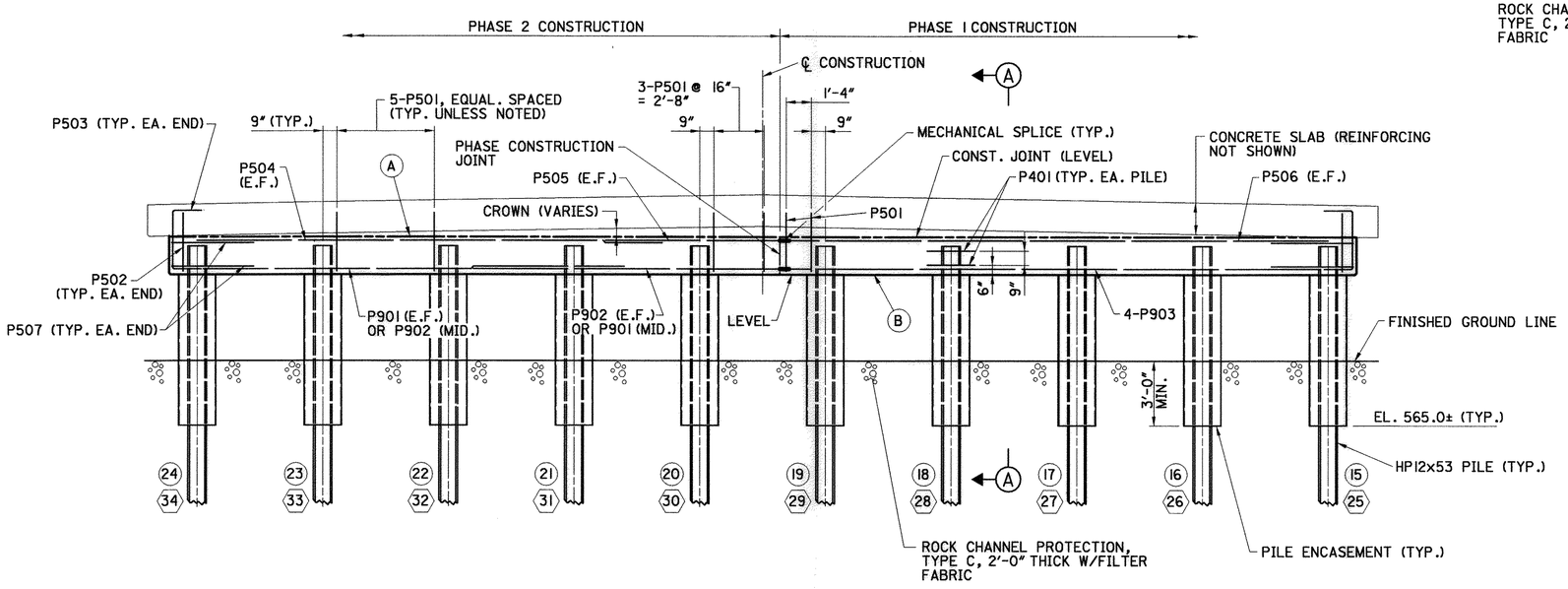

ELEVATION

(PIER NO. 1 SHOWN, PIER NO. 2 SIMILAR)

NOTES

1. EXISTING DECK CONCRETE MAY NEED TO BE NOTCHED OUT TO ALLOW ROOM FOR PHASE 1 PIER CONSTRUCTION FORMWORK.
2. MINIMUM BAR LAPS ARE AS FOLLOWS:

   #5 BARS = 35"
   #9 BARS = 96"

   FOR NO. 9 BARS, A STAGGERED LAP SPLICE ARRANGEMENT SHALL BE USED.
3. FOR ADDITIONAL DETAILS, SEE STANDARD DRAWING CPP-2-94.

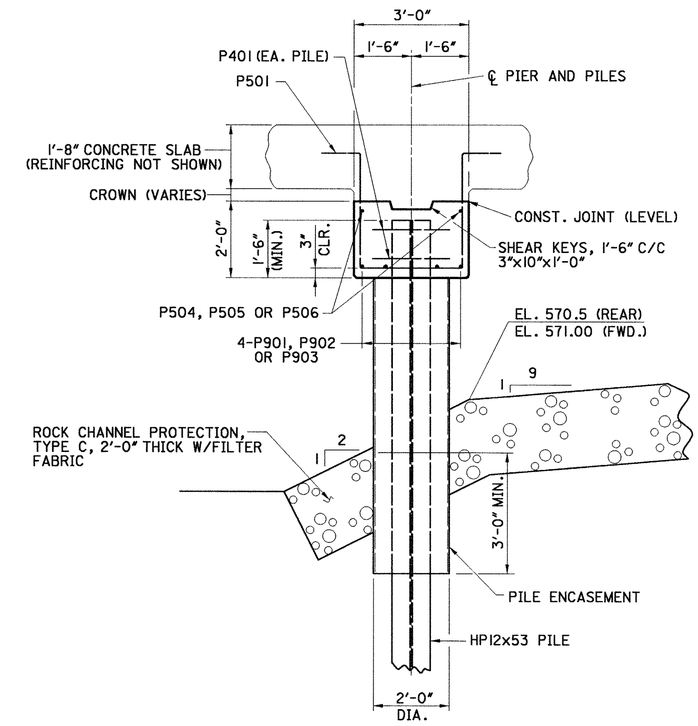

SECTION A-A

LEGEND

(0) PIER NO. 1 PILE NUMBERS
⟨0⟩ PIER NO. 2 PILE NUMBERS

DESIGN AGENCY
FINKBEINER, PETTIS & STROUT, INC.
520 S. MAIN STREET, SUITE 2400
AKRON, OHIO 44311-1010

DESIGNED	CHECKED	DRAWN	REVISED	REVIEWED	DATE	STRUCTURE FILE NUMBER
MJH	CMD	CAF		RBB	2/00	5301394

PIER DETAILS

BRIDGE NO. MEG-124-1253
OVER LITTLE LEADING CREEK

MEG-124-12.52

MEG_PIER
PLOT SCALE: 1=4

NOTES

1. MINIMUM BAR LAPS ARE AS FOLLOWS:

   #5 BARS = 24"
   #7 BARS = 44"
   #8 BARS = 66"

2. FOR TOP OF SLAB REINFORCING AND ADDITIONAL DETAILS AND NOTES SEE SHEET 13 / 15 .
3. DRIP GROOVES SHALL TERMINATE 2 (TWO) FEET FROM FACE OF ABUTMENTS.
4. FOR SIDEWALK AND PARAPET DETAILS AND REINFORCING SEE SHEET 13 / 15 .

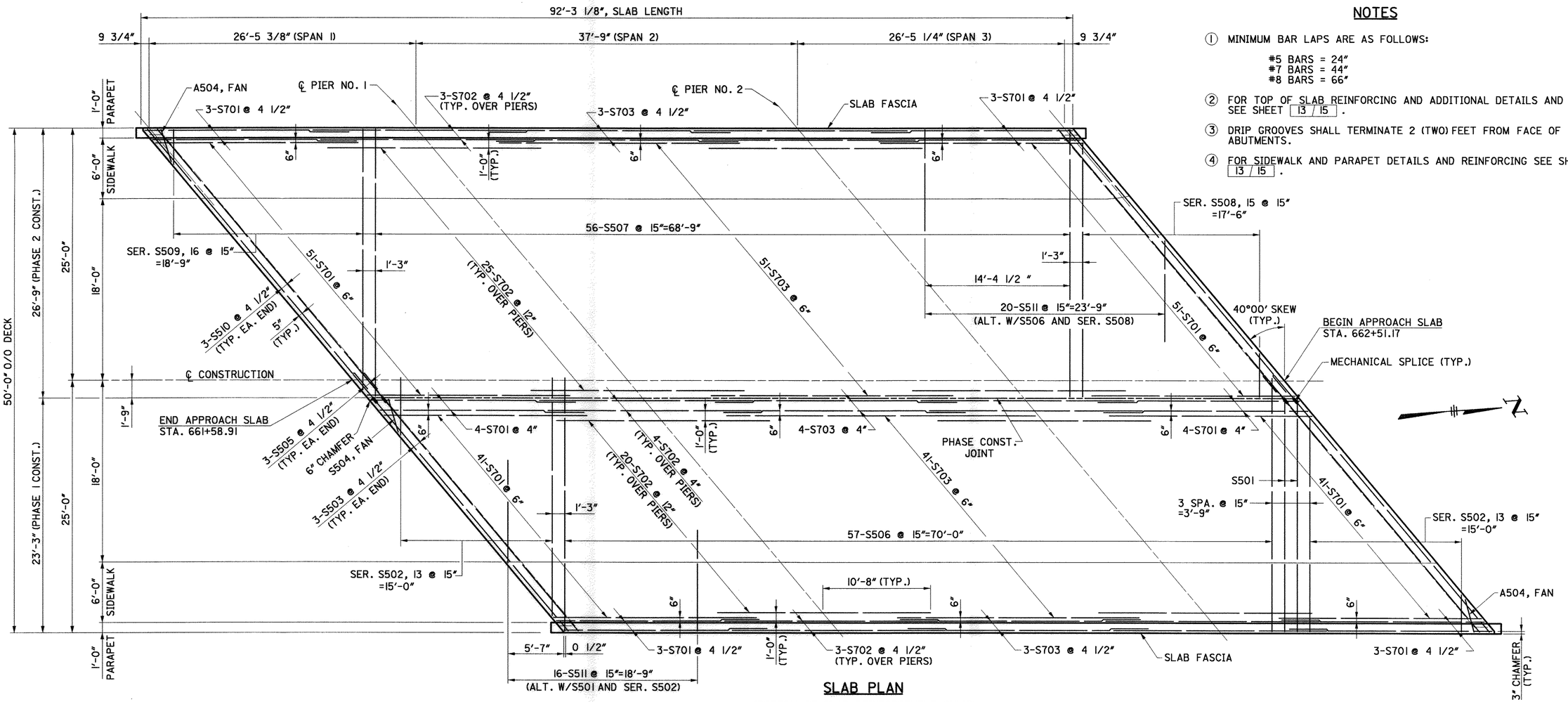

SLAB PLAN

(BOTTOM OF SLAB REINFORCEMENT ONLY)

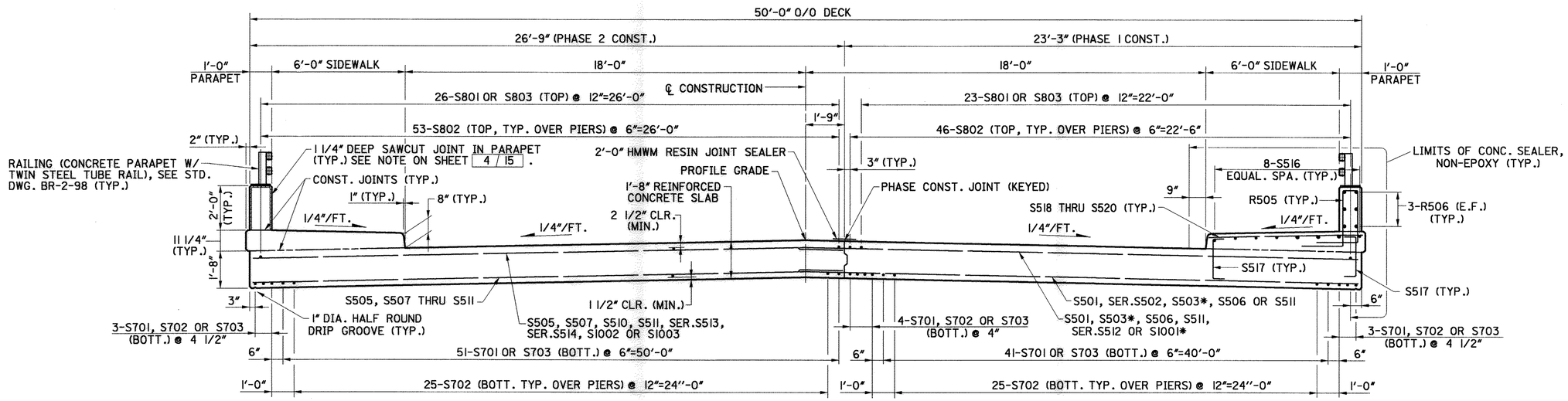

TRANSVERSE SECTION

* - BARS WITH MECHANICAL SPLICES

DESIGN AGENCY
FINKBEINER, PETTIS & STROUT, INC.
520 S. MAIN STREET, SUITE 2400
AKRON, OHIO 44311-1010

DESIGNED	DRAWN	REVIEWED	DATE
MJH	CAF	RBB	2/00
CHECKED	REVISED	STRUCTURE FILE NUMBER	
CMD		5301394	

SLAB PLAN
BRIDGE NO. MEG-124-1253
OVER LITTLE LEADING CREEK

MEG-124-12.52

12 / 15

31 / 38

MEG_SLAB1
PLOT SCALE: 1=5.33

NOTES

1. MINIMUM BAR LAPS ARE AS FOLLOWS:

   #5 BARS = 24"
   #7 BARS = 44"
   #8 BARS = 66"
   #10 BARS = 90"

2. FOR BOTTOM OF SLAB REINFORCEMENT AND ADDITIONAL DETAILS AND NOTES SEE SHEET 12 / 15.
3. FOR TRANSVERSE SECTION SEE SHEET 12 / 15.
4. ESTIMATED DEFLECTION DUE TO WEIGHT OF CONCRETE SLAB, WALK AND PARAPET IS 0" AT THE 1/2 SPAN OF SPAN 1 AND 3 AND 3/4" AT THE 1/2 SPAN OF SPAN 2. THIS DEFLECTION IS ACCOUNTED FOR IN THE SCREED ELEVATION TABLE.
5. CONCRETE DECK SLAB: CAMBER PROVIDED TO COMPENSATE FOR DEAD LOAD DEFLECTIONS. ALLOWANCE SHALL BE MADE FOR THE DEFELECTION OF ANY FALSEWORK MEMBERS SUPPORTING THE ACTUAL CONCRETE PLACEMENT.

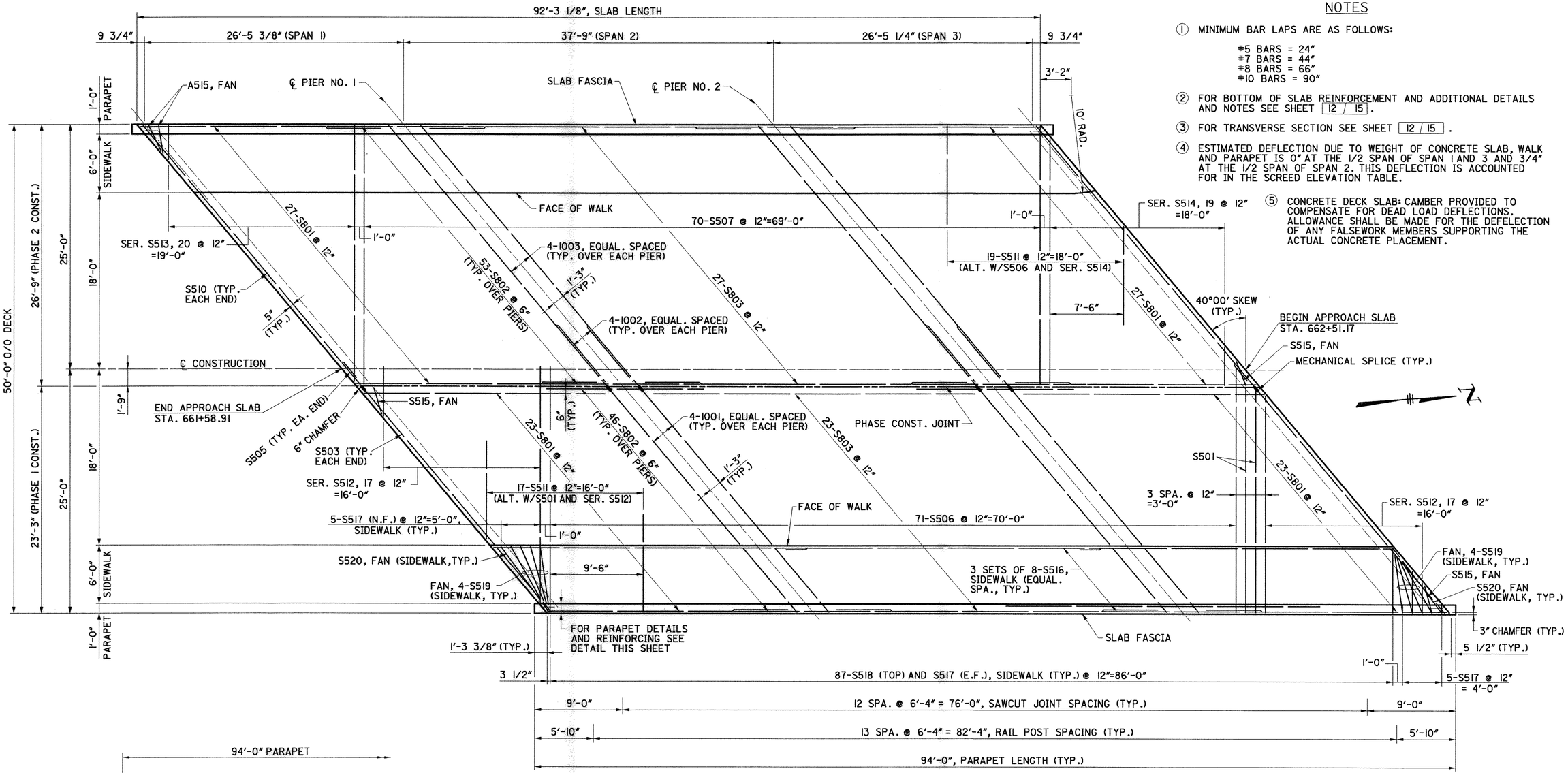

SLAB PLAN

(TOP OF SLAB, SIDEWALK AND PARAPET REINFORCEMENT ONLY)

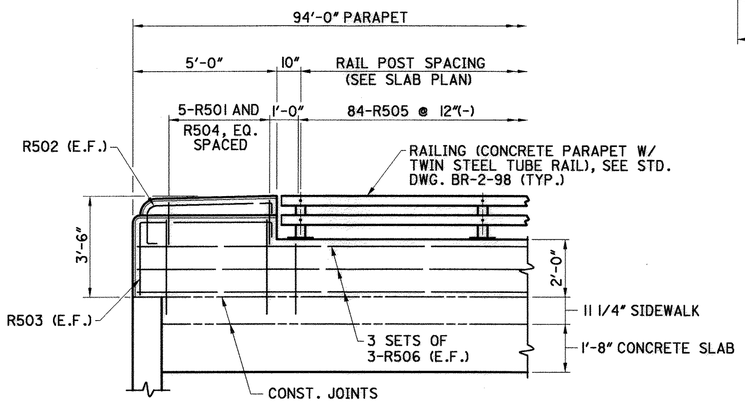

END POST AND PARAPET DETAIL

LOCATION	A	B	C	D
END APPR. SLAB	577.48	577.90	577.86	577.56
1/2 SPAN	577.52	577.93	577.89	577.53
℄ PIER NO. 1	577.55	577.91	577.87	577.52
1/2 SPAN	577.54	577.88	577.83	577.46
℄ PIER NO. 2	577.49	577.82	577.78	577.38
1/2 SPAN	577.45	577.76	577.72	577.32
BEGIN APPR. SLAB	577.40	577.70	577.66	577.24

SCREED ELEVATION TABLE

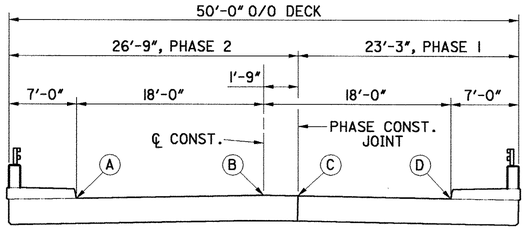

KEY

DESIGN AGENCY
FINKBEINER, PETTIS & STROUT, INC.
520 S. MAIN STREET, SUITE 2400
AKRON, OHIO 44311-1010

DESIGNED	DRAWN	REVIEWED	DATE
MJH	CAF	RBB	2/00
CHECKED	REVISED	STRUCTURE FILE NUMBER	
CMD		5301394	

SLAB PLAN
BRIDGE NO. MEG-124-1253
OVER LITTLE LEADING CREEK

MEG-124-12.52

13 / 15

32 / 38

MEG_SLAB2
PLOT SCALE:1=5.33

REINFORCING SCHEDULE

MARK	PHASE 1	PHASE 2	TOTAL REQ'D SEE NOTE 2	LENGTH	TYPE	DIMENSIONS A	B	C	D	E	INCR.	WEIGHT LBS.
			REAR ABUTMENT									
A401	16	12	28	9'-0"	2	1'-9"	2'-6"					168
A501	44	35	79	11'-0"	2	2'-8"	2'-7"					906
A502	8 (4)	8	16 (4)	24'-2"	ST.							403
A503		6 (6)	6 (6)	6'-0"	ST.							38
A504	20	21	41	14'-0"	1	1'-11"	6'-2"					599
A505	7	6	13	8'-10"	1	8"	4'-3"					120
A506	14	3	17	13'-5"	1	8"	6'-6"					238
SERIES A507		1 SET OF 8	1 SET OF 8	6'-9" TO 12'-11"	1	8"	3'-2" TO 6'-3"				10 5/8"	82
A508	6 (6)		6 (6)	31'-4"	ST.							196
A509		6	6	28'-8"	ST.							179
A510		4 (4)	4 (4)	3'-6"	ST.							15
A511		8	8	2'-5"	ST.							20
A512	1	1	2	14'-7"	1	2'-6"	6'-2"					30
A513		2	2	16'-4"	3	10'-5"	5'-8"	2'-0"				34
A514		2	2	14'-10"	ST.							31
A515		4	4	15'-4"	ST.							64
A516		2	2	7'-4"	ST.							15
A517		4	4	16'-9"	ST.							70
A518	4		4	22'-8"	ST.							95
A519	8		8	17'-9"	ST.							148
A520	12		12	13'-5"	3	10'-8"	2'-2"	1'-10"				168
SERIES A521	1 SET OF 9		1 SET OF 9	11'-5" TO 13'-1"	1	8"	5'-6" TO 6'-4"				2 1/2"	115
A522	2		2	15'-3"	3	11'-5"	3'-0"	2'-6"				32
A523	2		2	11'-2"	ST.							23
A539	1		1	14'-3"	1	2'-2"	6'-2"					15
A540	23	11	34	10'-11"	1	8"	5'-3"					387
A541		1	1	3'-6"	1	1'-11"	11"					4
A542		1	1	8'-4"	1	1'-11"	3'-4"					9
A801	4 (2)		4 (2)	30'-0"	ST.							320
A802	4 (2)		4 (2)	20'-3"	ST.							216
A803		2 (2)	2 (2)	12'-0"	ST.							64
A804		2 (2)	2 (2)	16'-9"	ST.							89
A805		2	2	35'-0"	ST.							187
A806		2	2	39'-10"	ST.							213
A807	4		4	10'-0"	ST.							107
A808	4		4	14'-10"	3	7'-3"	5'-10"	4'-11"				158
A809	12	14	26	5'-3"	4	2'-11"						364
A1001	4 (2)		4 (2)	10'-7"	ST.							182
A1002	4 (2)		4 (2)	30'-0"	ST.							516
A1003		2 (2)	2 (2)	10'-0"	ST.							86
A1004		4 (2)	4 (2)	21'-0"	ST.							361
A1005		2	2	32'-0"	ST.							275
			FORWARD ABUTMENT									
A401	16	12	28	9'-0"	2	1'-9"	2'-6"					168
A501	41	32	73	11'-0"	2	2'-8"	2'-7"					838
A504	21	21	42	14'-0"	1	1'-11"	6'-2"					613
A505	6	6	12	9'-5"	1	8"	4'-3"					118
A506	42	5	47	13'-5"	1	8"	6'-6"					658
A510		10	10	3'-6"	ST.							37
A512	1	1	2	14'-7"	1	2'-6"	6'-2"					30
A516		2	2	7'-4"	ST.							15
A517	4		4	16'-9"	ST.							70
A518	8 (4)		8 (4)	22'-8"	ST.							189
A524		4	4	34'-3"	ST.							143
A525	6 (6)		6 (6)	30'-8"	ST.							192

REINFORCING SCHEDULE

MARK	PHASE 1	PHASE 2	TOTAL REQUIRED (SEE NOTE 2)	LENGTH	TYPE	DIMENSIONS A	B	C	D	E	INCR.	WEIGHT LBS.
			FORWARD ABUTMENT (CONT.)									
A526		6	6	31'-11"	ST.							200
A527	2	14	16	7'-6"	ST.							125
A528		2	2	11'-10"	3	10'-10"	1'-0"	5"				25
A529		2	2	14'-4"	3	10'-10"	3'-3"	1'-5"				30
A530		8	8	9'-11"	3	6'-7"	3'-3"	1'-5"				83
A531		4	4	7'-0"	3	3'-6"	3'-3"	1'-7"				29
A532	1		1	11'-10"	2	3'-1"	2'-7"					12
A533	8		8	12'-0"	ST.							100
SERIES A534		1 SET OF 6	1 SET OF 6	10'-9" TO 13'-5"	1	8"	5'-2" TO 6'-6"				6 3/8"	76
A535	2		2	19'-10"	3	15'-8"	2'-9"	3'-3"				41
A536	2		2	17'-4"	3	14'-6"	1'-11"	2'-2"				36
A537	7		7	18'-0"	3	14'-9"	2'-6"	2'-2"				131
A538	7		7	17'-5"	3	14'-6"	2'-4"	1'-11"				127
A540		11	11	10'-11"	1	8"	5'-3"					125
A801	2 (2)		2 (2)	30'-0"	ST.							160
A803		2 (2)	2 (2)	12'-0"	ST.							64
A804	2	2 (2)	4 (2)	16'-9"	ST.							179
A809	13	13	26	5'-3"	4	2'-11"						364
A810		2	2	28'-7"	ST.							153
A811	2 (2)	2	4 (2)	23'-11"	ST.							255
A812		4	4	7'-6"	ST.							80
A813		4	4	12'-9"	3	6'-5"	5'-10"	2'-7"				136
A814	4		4	14'-1"	3	7'-1"	4'-6"	5'-5"				150
A815	4		4	14'-6"	ST.							155
A816	2		2	27'-2"	ST.							145
A1003		2 (2)	2 (2)	10'-0"	ST.							86
A1006	4 (2)		4 (2)	26'-0"	ST.							448
A1007	4 (2)		4 (2)	15'-10"	ST.							273
A1008		4 (2)	4 (2)	20'-11"	ST.							360
A1009		2	2	31'-9"	ST.							273
			PIER NO. 1									
P401	10	10	20	9'-6"	2	2'-6"	2'-0"					127
P501	22	23	45	10'-4"	6	1'-0"	2'-8"	3'-1"				485
P502	1	1	2	10'-2"	6	1'-0"	2'-6"	3'-1"				21
P503	1	1	2	4'-10"	1	3'-1"	1'-0"					10
P504		2	2	25'-4"	ST.							53
P505		2 (2)	2 (2)	8'-6"	ST.							18
P506	2 (2)		2 (2)	29'-1"	ST.							61
P507	2	2	4	9'-11"	5	2'-6"	4'-3"					41
P901		4 (2)	4 (2)	23'-11"	ST.							325
P902		4 (2)	4 (2)	15'-0"	ST.							204
P903	4 (4)		4 (4)	29'-1"	ST.							396
			PIER NO. 2									
P401	10	10	20	9'-6"	2	2'-6"	2'-0"					127
P501	22	23	45	10'-4"	6	1'-0"	2'-8"	3'-1"				485
P502	1	1	2	10'-2"	6	1'-0"	2'-6"	3'-1"				21
P503	1	1	2	4'-10"	1	3'-1"	1'-0"					10
P504		2	2	25'-4"	ST.							53
P505		2 (2)	2 (2)	8'-6"	ST.							18
P506	2 (2)		2 (2)	29'-1"	ST.							61
P507	2	2	4	9'-11"	5	2'-6"	4'-3"					41
P901		4 (2)	4 (2)	23'-11"	ST.							325
P902		4 (2)	4 (2)	15'-0"	ST.							204
P903	4 (4)		4 (4)	29'-1"	ST.							396

NOTES

1. ALL REINFORCING BARS SHALL BE EPOXY COATED.
2. "TOTAL REQ'D" MEANS THE NUMBER OF BARS REQUIRED, INCLUDING BARS WHICH HAVE MECHANICAL CONNECTORS "( )" INDICATES THE NUMBER OF BARS HAVING MECHANICAL CONNECTORS.

* R-BARS SHALL BE INCLUDED WITH ITEM 517 FOR PAYMENT.

BAR MARK LEGEND:

A = ABUTMENT S = SUPERSTRUCTURE
P = PIER R = RAILING

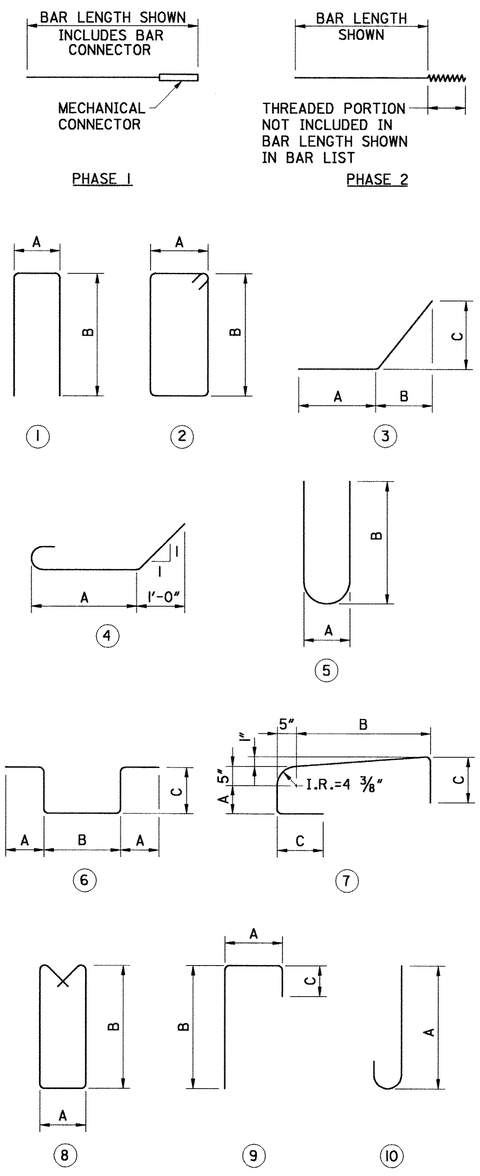

DESIGN AGENCY
FINKBEINER, PETTIS & STROUT, INC.
520 S. MAIN STREET, SUITE 2400
AKRON, OHIO 44311-1010

DESIGNED	DRAWN	REVIEWED	DATE
MJH	CAF	RBB	2/00
CHECKED	REVISED	STRUCTURE FILE NUMBER	
CMD		5301394	

REINFORCING SCHEDULE
BRIDGE NO. MEG-124-1253
OVER LITTLE LEADING CREEK

MEG-124-12.52

MEG_ABT3
PLOT SCALE: 1:2

REINFORCING SCHEDULE

MARK	PHASE 1	PHASE 2	TOTAL REQ'D SEE NOTE 2	LENGTH	TYPE	DIMENSIONS A	B	C	D	E	INCR.	WEIGHT LBS.
			SUPERSTRUCTURE									
S501	4		4	23'-1"	ST.							96
SERIES S502	2 SETS OF 13		2 SETS OF 13	5'-10" TO 23'-8"	ST.						1'-5 7/8"	400
S503	8 (8)		8 (8)	30'-1"	ST.							251
S504	2	1	3	3'-4"	ST.							10
S505		8 (8)	8 (8)	3'-0"	ST.							25
S506	128		128	25'-3"	ST.							3,353
S507		126	126	26'-5"	ST.							3,490
SERIES S508		1 SET OF 15	1 SET OF 15	4'-3" TO 25'-1"	ST.						1'-5 7/8"	220
SERIES S509		1 SET OF 16	1 SET OF 16	3'-5" TO 25'-9"	ST.						1'-5 7/8"	243
S510		8	8	33'-9"	ST.							282
S511	33	39	72	10'-0"	ST.							751
SERIES S512	2 SETS OF 17		2 SETS OF 17	5'-3" TO 24'-4"	ST.						1'-2 3/8"	523
SERIES S513		1 SET OF 20	1 SET OF 20	3'-6" TO 26'-1"	ST.						1'-2 1/4"	309
SERIES S514		1 SET OF 19	1 SET OF 19	3'-11" TO 25'-1"	ST.						1'-2 1/8"	287
S515	2	3	5	2'-10"	ST.							15
S516	24	24	48	32'-0"	ST.							1,602
S517	184	184	368	3'-6"	1	1'-9"	1'-0"					1,343
S518	87	87	174	6'-8"	ST.							1,210
S519	8	8	16	6'-0"	ST.							100
S520	2	2	4	8'-3"	ST.							34
S701	96	108	204	20'-11"	10	20'-1"						8,722
S702	54	56	110	21'-4"	ST.							4,797
S703	48	54	102	23'-11"	ST.							4,986
S801	46	54	100	24'-7"	ST.							6,564
S802	92	106	198	16'-0"	ST.							8,459
S803	23	27	50	32'-9"	ST.							4,372
S1001	8 (8)		8 (8)	30'-1"	ST.							1,036
S1002		8 (8)	8 (8)	8'-0"	ST.							275
S1003		8	8	34'-3"	ST.							1,179
*R501	10	10	20	3'-7"	5	6 1/2"	1'-8"					75
*R502	4	4	8	7'-6"	7	1'-5"	4'-0"	9"				63
*R503	4	4	8	7'-11"	9	4'-8"	2'-8"	10"				66
*R504	10	10	20	9'-4"	8	3'-0"	3'-2"					195
*R505	84	84	168	7'-8"	8	2'-2"	2'-4"					1,343
*R506	18	18	36	32'-7"	ST.							1,223

NOTES

1. ALL REINFORCING BARS SHALL BE EPOXY COATED.
2. "TOTAL REQ'D" MEANS THE NUMBER OF BARS REQUIRED, INCLUDING BARS WHICH HAVE MECHANICAL CONNECTORS "( )" INDICATES THE NUMBER OF BARS HAVING MECHANICAL CONNECTORS.

* R-BARS SHALL BE INCLUDED WITH ITEM 517 FOR PAYMENT.

BAR MARK LEGEND:

A = ABUTMENT S = SUPERSTRUCTURE
P = PIER R = RAILING

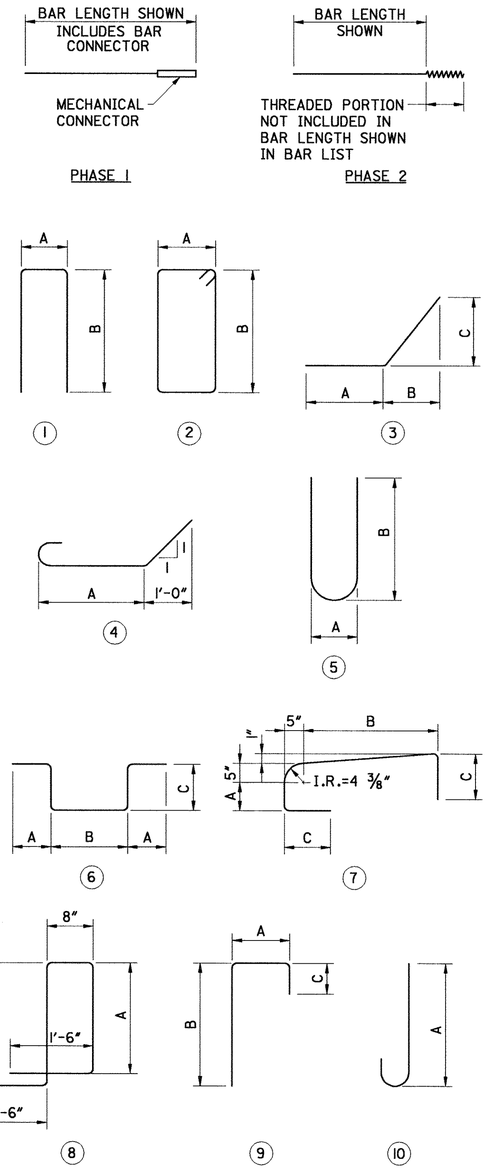

DESIGN AGENCY: FINKBEINER, PETTIS & STROUT, INC. 520 S. MAIN STREET, SUITE 2400 AKRON, OHIO 44311-1010

DATE 2/00 | REVIEWED RBB | STRUCTURE FILE NUMBER 5301394

DRAWN CAF | REVISED

DESIGNED MJH | CHECKED CMD

REINFORCING SCHEDULE
BRIDGE NO. MEG-124-1253
OVER LITTLE LEADING CREEK

MEG-124-12.52

15/15

33A/38

MEG_BAR2
PLOT SCALE: 1=1

STATE OF OHIO

DEPARTMENT OF TRANSPORTATION

MEG-124-12.52

VILLAGE OF RUTLAND

RUTLAND TOWNSHIP

MEIGS COUNTY

RIGHT-OF-WAY

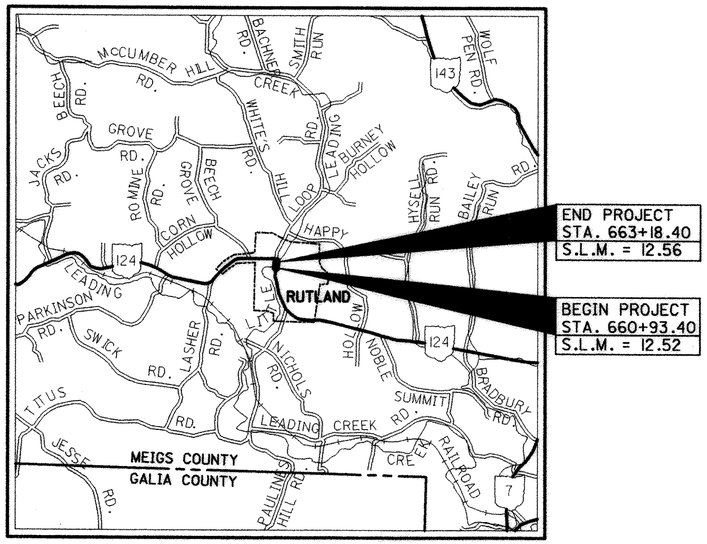

LOCATION MAP

LATITUDE: N 39°02'42" LONGITUDE: W 82°07'54"

SCALE IN MILES

0 1 2 3 4

N

PORTION TO BE IMPROVED

INTERSTATE & DIVIDED HIGHWAY

UNDIVIDED STATE & FEDERAL ROUTES

OTHER ROADS

CONVENTIONAL SIGNS

COUNTY LINE

TOWNSHIP LINE

SECTION LINE

CORPORATION LINE

FENCE LINE EXIST. PROP.

TREES STUMPS (TO BE REMOVED)

CENTERLINE 1+00 1+20

POLES: TELEPHONE POWER LIGHT

EXIST. LIMITED ACCESS L/A R/W

EXIST. RIGHT-OF-WAY EX. R/W

PROPERTY LINE

RAILROAD OR

GUARDRAIL : EXIST. PROP.

CONSTRUCTION LIMITS

CONST. LIMITS

UNDERGROUND UTILITIES

TWO WORKING DAYS

BEFORE YOU DIG

CALL **1-800-362-2764** (TOLL FREE)

OHIO UTILITIES PROTECTION SERVICE

NON-MEMBERS

MUST BE CALLED DIRECTLY

PLAN PREPARED BY:

FINKBEINER, PETTIS & STROUT, INC.

CONSULTING ENGINEERS

520 SOUTH MAIN STREET, SUITE 2400

AKRON, OHIO 44311-1010

(330) 434-1995 - FAX (330) 374-1095

FPS

INDEX OF SHEETS:

PROJECT DESCRIPTION

IMPROVEMENT OF 0.04 MILES OF STATE ROUTE 124 BY REPLACING THE EXISTING STRUCTURE OVER LITTLE LEADING CREEK, INCLUDING APPROACH RECONSTRUCTION.

1997 SPECIFICATIONS

THE STANDARD SPECIFICATIONS OF THE STATE OF OHIO, DEPARTMENT OF TRANSPORTATION, INCLUDING CHANGES AND SUPPLEMENTAL SPECIFICATIONS LISTED IN THE PROPOSAL SHALL GOVERN THIS IMPROVEMENT.

I HEREBY APPROVE THESE PLANS AND DECLARE THAT THE MAKING OF THIS IMPROVEMENT WILL NOT REQUIRE THE CLOSING TO TRAFFIC OF THE HIGHWAY AND THAT PROVISIONS FOR THE MAINTENANCE AND SAFETY OF TRAFFIC WILL BE AS SET FORTH ON THE PLANS AND ESTIMATES.

ACQUIRING AGENCY

STATE OF OHIO IN THE NAME OF THE STATE OF OHIO.

APPROVED _____

DATE _____ ASSISTANT DEPUTY DIRECTOR, OFFICE OF REAL ESTATE ADMINISTRATION

APPROVED _____

DATE _____ DIRECTOR, DEPARTMENT OF TRANSPORTATION

FEDERAL PROJECT NO. STP (O)

PID NO. 13204

STATE JOB. NO. 100190

RAILROAD INVOLVEMENT NONE

MEG-124-12.52

MEG-124-12.52

VILLAGE OF RUTLAND
T-6-N, R-14-W - FRACTION 1 AND 7, SECTION 8
RUTLAND TOWNSHIP
MEIGS COUNTY, OHIO

RIGHT-OF-WAY MONUMENTS ARE SHOWN ON STANDARD CONSTRUCTION DRAWING RM 1.1 (REV. 4-29-99) OF THE OHIO DEPARTMENT OF TRANSPORTATION. THE PLACING OF THE MONUMENTS SHALL BE UNDER THE DIRECTION OF A REGISTERED SURVEYOR AND ARE TO BE SET, AS SHOWN BY THE HIGHWAY CONTRACTOR AT THE TIME OF CONSTRUCTION. ANY ALTERATIONS, WITH PRIOR APPROVAL OF THE OHIO DEPARTMENT OF TRANSPORTATION, SHALL BE NOTED AND O.D.O.T. SHALL BE NOTIFIED OF THE NEW LOCATIONS.

NOTE: THE EXISTING R/W WIDTH AND LOCATION WERE DETERMINED USING:

1. O.D.O.T. S.H. No. 395, SEC. RUTLAND BR. PLANS - 1931
2. MERRILL'S 1ST ADDITION TO RUTLAND, PLAT VOL. 2, PAGE 44
3. RUTLAND PLAT OF INCORPORATION, PLAT VOL. 3, PAGE 25.
4. SURVEYOR'S AFFIDAVIT, O.R. 59, PAGE 887
5. DEED VOL. 3, PAGE 13-16.
6. DEED VOL. 330, PAGE 623.

BASIS FOR BEARINGS:

BEARINGS ARE BASED ON THE OHIO COORDINATE SYSTEM, NAD83(95), SOUTH ZONE.

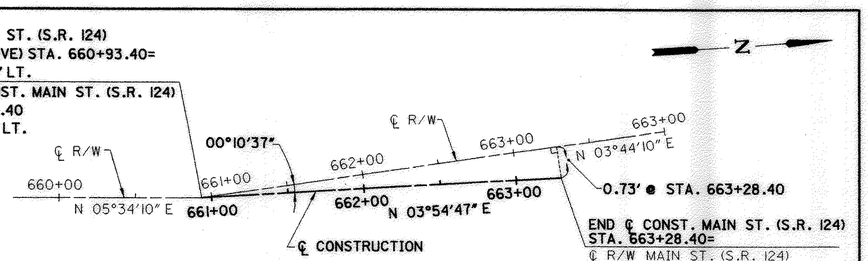

℄ CONSTRUCTION DETAIL

NOT TO SCALE

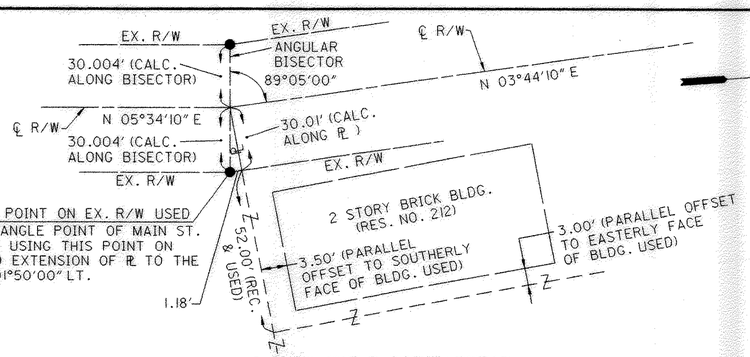

℄ R/W ANGLE POINT DETAIL

NOT TO SCALE
(REFER TO DEED VOL. 330, PAGE 623)

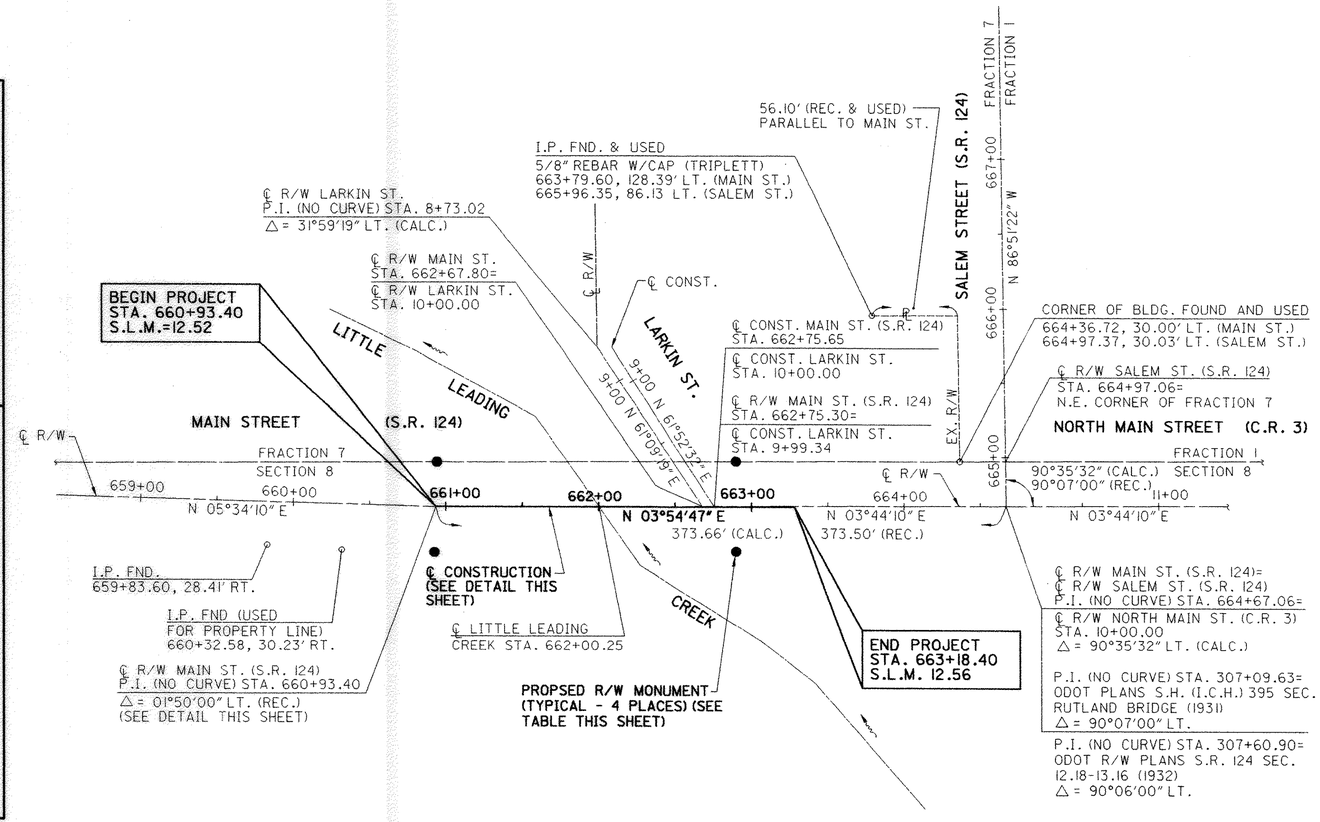

LEGEND

- R.R. SPK. FOUND
- IRON PIN FOUND
- P.K. NAIL FOUND
- PROPOSED RIGHT-OF-WAY MONUMENT (TO BE SET)

STATIONING

THE PROPOSED RIGHT-OF-WAY WILL BE REFERENCED FROM THE CENTERLINE OF RIGHT-OF-WAY. ALL STATIONS AND OFFSETS LISTED ARE FROM THE CENTERLINE OF RIGHT-OF-WAY UNLESS OTHERWISE NOTED.

* STATION AND OFFSETS ARE FOR REFERENCE ONLY. R/W MONUMENTS ARE TO BE SET ON THE ANGULAR BISECTOR. SEE R/W ANGLE POINT DETAIL ABOVE.

RIGHT-OF-WAY MONUMENTS ARE TO BE SET ON THE EXISTING R/W OF MAIN ST. (S.R. 124) DURING CONSTRUCTION AT THE FOLLOWING STATIONS:

STATION	DISTANCE FROM ℄ R/W		RIGHT-OF-WAY MONUMENT	STATE PLANE COORDINATES (METRIC) NAD83(95) GRID COORDINATES, OHIO SOUTH ZONE	
	LEFT	RIGHT		NORTHING (Y)	EASTING (X)
660+93.40*	30.004*		1	116011.9733	631968.5398
660+93.40*		30.004*	1	116010.4897	631986.7699
662+90.00	30.00		1	116071.6225	631972.4347
662+90.00		30.00	1	116070.4309	631990.6839
		TOTALS	4		

PROJECT ADJUSTMENT FACTOR (METRIC GRID TO ENGLISH GROUND) = 3.281076879

ADDITIONAL COORDINATES FOR CENTERLINE POINTS

STATION	DESCRIPTION	STATE PLANE COORDINATES (METRIC) NAD83(95) GRID COORDINATES, OHIO SOUTH ZONE	
		NORTHING (Y)	EASTING (X)
660+93.40	POINT OF INTERSECTION (NO CURVE)	116011.2315	631977.6548
664+67.06	INTERSECTION ℄ R/W MAIN STREET AND SALEM STREET	116124.8819	631985.0759

PROJECT ADJUSTMENT FACTOR (METRIC GRID TO ENGLISH GROUND) = 3.281076879

RECEIVED Feb 2, 2000
RECORDED Feb 2, 2000
ENVELOPE ~~BOOK~~ 18 PAGE B
Loretta K. Hill-Deputy
COUNTY RECORDER

I HEREBY CERTIFY THAT THIS PLAT IS A TRUE DELINEATION OF A SURVEY MADE FOR THE OHIO DEPARTMENT OF TRANSPORTATION IN 1999 BY FINKBEINER, PETTIS & STROUT, INC.

THE ESTABLISHMENT OF THE PROPERTY LINES AND EXISTING RIGHT OF WAY LINES SHOWN ON THIS PLAN AS OF THIS DATE WAS PERFORMED BY ME OR UNDER MY DIRECT SUPERVISION.

BY C. William Faust
C. WILLIAM FAUST, III
SURVEYOR NO. 7789 DATE 1/12/00

STATE OF OHIO C. WILLIAM FAUST III S-7789 REGISTERED PROFESSIONAL SURVEYOR

SCALE IN FEET 0 25 50 100

PID NO. 13204

R/W DESIGNER RJG
R/W REVIEWER CWF

CENTERLINE PLAT

MEG-124-12.52

1/5

34/38

MEG-124-12.52

VILLAGE OF RUTLAND
T-6-N, R-14-W - FRACTION 1 AND 7, SECTION 8
RUTLAND TOWNSHIP
MEIGS COUNTY, OHIO

CONVENTIONAL SIGNS

COUNTY LINE
TOWNSHIP LINE
SECTION LINE
CORPORATION LINE
FENCE LINE EXIST. PROP.
TREES STUMPS (TO BE REMOVED)
CENTERLINE 1+000 1+020
POLES: TELEPHONE POWER LIGHT
EXIST. LIMITED ACCESS L/A R/W
EXIST. RIGHT-OF-WAY EX. R/W
PROPERTY LINE
RAILROAD OR
GUARDRAIL : EXIST. PROP.
CONSTRUCTION LIMITS
CONST. LIMITS

UTILITY OWNERS

TYPE:	NAME AND ADDRESS:
GAS	NATIONAL GAS AND OIL CORPORATION 1500 GRANVILLE ROAD, PO BOX 4970 NEWARK, OHIO 43058-4970 (740) 344-2102 EXT. 1254 OR (740) 732-2336
ELECTRIC	AMERICAN ELECTRIC POWER 95 EAST MAIN STREET, PO BOX 468 CHILLICOTHE, OHIO 45601-0468 (740) 774-7136
TELEPHONE	GTE TELEPHONE OPERATIONS-NORTH AREA 754 WEST UNION STREET ATHENS, OHIO 45701 (740) 594-5318
CABLE	CABLEVISION 1410 JEFFERSON BLVD., PO BOX 106 PT. PLEASANT, WV 25550 (304) 675-3398
VILLAGE	VILLAGE OF RUTLAND RUTLAND CIVIC CENTER, PO BOX 420 RUTLAND, OHIO 45775-0420 (740) 742-2121

NOTE:
THE LOCATION OF THE UNDERGROUND UTILITIES SHOWN ON THE PLANS ARE AS OBTAINED FROM THE OWNERS OF THE UTILITIES AS REQUIRED BY SECTION 153.64 O.R.C.

STRUCTURE LEGEND

- COMMERCIAL BUILDING
- RESIDENTIAL BUILDING

PROPERTY OWNERS

1. COMMUNITY CHURCH, INC.
2. ALICE Y. LEVINGSTON
3. JAMES C. BIRCHFIELD
4. TRUSTEES OF RUTLAND BIBLE METHODIST CHURCH
5. UNKNOWN OWNER
6. VILLAGE OF RUTLAND
7. FRED H. GEORGE AND AVANELL GEORGE
8. RUTLAND VOLUNTEER FIRE DEPARTMENT, INC.
9. VILLAGE OF RUTLAND
10. GRATE INVESTMENTS LIMITED PARTNERSHIP
11. ORLANDO ANDREONI
12. MAUREEN T. BURNS
13. DAVID WILLIAMS AND CAROL L. WILLIAMS
14. UNKNOWN OWNER

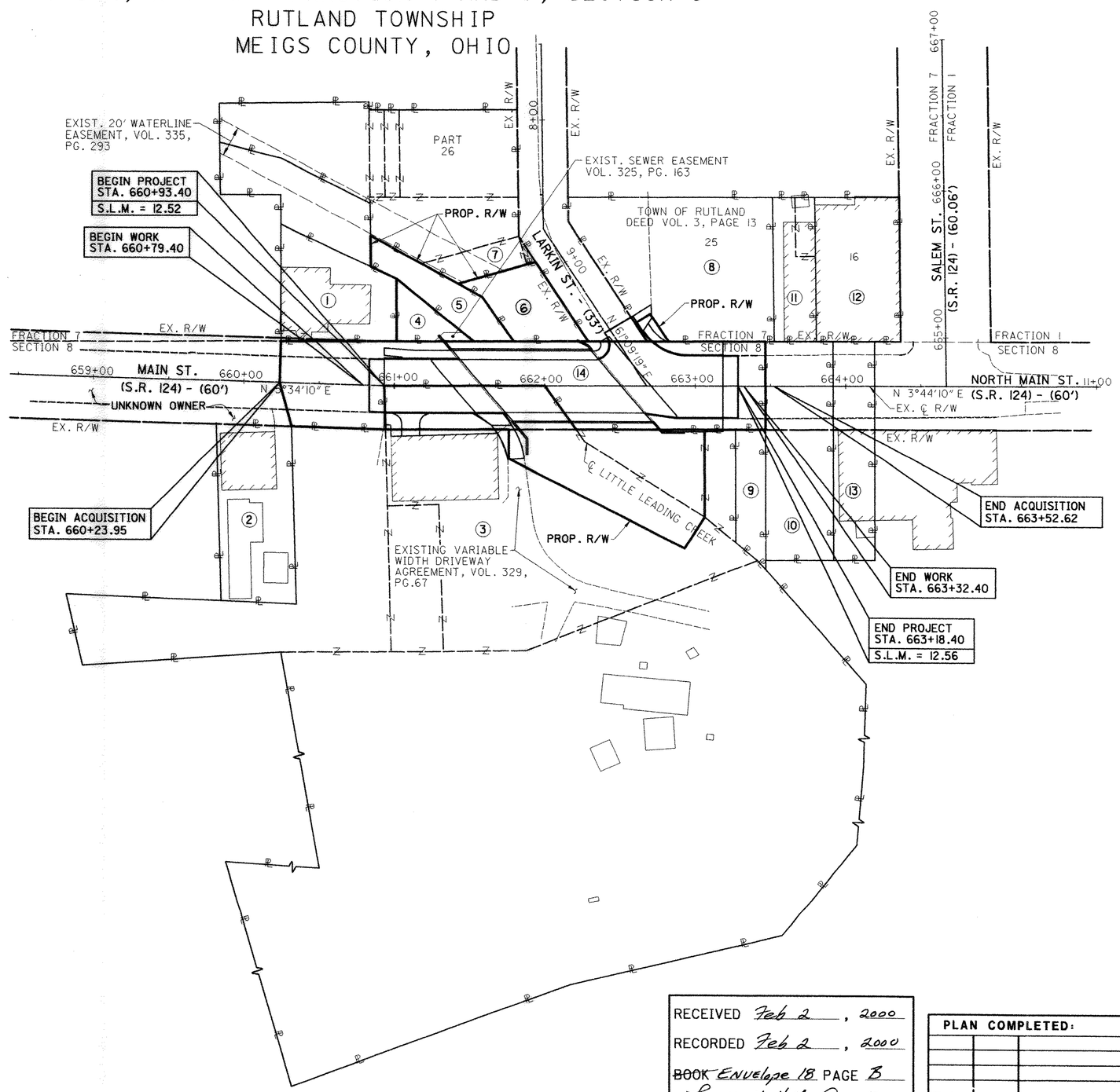

RECEIVED Feb 2, 2000
RECORDED Feb 2, 2000
~~BOOK~~ Envelope 18 PAGE B
Loretta K. Hill - Deputy
COUNTY RECORDER

PLAN COMPLETED:	1/12/00
REV	DATE	DESCRIPTION

SCALE IN FEET 0 20 40 80

PID NO. 13204

R/W DESIGNER RJG
R/W REVIEWER CWF

PROPERTY MAP

MEG-124-12.52

2/5

35/38

TOTAL NUMBER OF :
14 OWNERSHIPS 0 OWNERSHIPS WITH STRUCTURES INVOLVED
2 TOTAL TAKES 2 OWNERSHIPS WITH "P" ITEMS

NET RESIDUE = RECORD AREA - TOTAL PRO - NET TAKE

ALL AREAS IN ACRES

GRANTEE:
ALL RIGHT OF WAY ACQUIRED IN THE NAME OF STATE OF OHIO UNLESS OTHERWISE SHOWN.

PARCEL	OWNER	SHEET No.	OWNERS RECORD BOOK	OWNERS RECORD PAGE	RECORD AREA	AUDITORS PARCEL NO.	TOTAL P.R.O. (C)	GROSS TAKE	P.R.O. IN TAKE	NET TAKE	STRUCT.	NET RESIDUE LEFT	NET RESIDUE RIGHT	TYPE FUND	REMARKS AND PERSONALTY	AS ACQUIRED BOOK	AS ACQUIRED PAGE
1-T	COMMUNITY CHURCH, INC.	4,5	O.R. 76	763	0.100	12-00439.000		0.008	0.000	0.008				STATE	TO GRADE AND SEED		
2	ALICE Y. LEVINGSTON	4,5	329	297	0.130	12-00224.000		NO TAKE		NO TAKE							
	(OBTAINED TITLE IN VOL. 290, PG. 685)																
3-WD	JAMES C. BIRCHFIELD	4,5	O.R. 74	87	0.063(C)	12-00133.000	0.000	0.063	0.000	0.063	NO		0.000		FLOWER BED (TAKE); AUDITOR'S TAX RECORD SHOWS 0.20 ACRES; TOTAL TAKE OF 12-00133.000.		
			322	685	0.076	12-00182.000	0.000	0.000	0.000	0.000			0.076				
			330	623	0.344	12-00343.000	0.000	0.000	0.000	0.000			0.344				
			O.R. 74	87	0.040	12-00401.000	0.000	0.000	0.000	0.000			0.040				
			322	685	0.380	12-00409.000	0.080	0.173	0.080	0.093	NO		0.207				
			322	685	3.500	12-00183.000	0.000	0.000	0.000	0.000			3.500				
	TOTAL				4.403		0.080	0.236	0.080	0.156			4.167				
3-T		4,5				12-00343.000		0.001	0.000	0.001					TO GRADE AND SEED		
						12-00409.000		0.022	0.000	0.022					TO CONSTRUCT DRIVES AND TO GRADE AND SEED		
	TOTAL							0.023	0.000	0.023							
3-TI		4,5				12-00401.000		0.012	0.000	0.012					TO GRADE AND SEED		
4-WD	TRUSTEES OF RUTLAND BIBLE METHODIST CHURCH	4,5	294	983	0.025(C)	12-00132.000	0.000	0.025	0.000	0.025	NO	0.000			TOTAL TAKE; * FLOWER BOX; FLAGPOLE (TAKE); AUDITOR'S TAX RECORD SHOWS 0.03 ACRES.		
5-WD	UNKNOWN OWNER	4,5	-	-	0.138(C)	-	0.000	0.051	0.000	0.051	NO	0.087			TITLE TRACED TO CLARISSA BENEDICT-VOL. 69, PAGE 160 (1888) NO CURRENT OWNER OR AUDITOR'S PARCEL NUMBER FOUND		
6-WD	VILLAGE OF RUTLAND	4,5	275	581	0.057(C)	12-00442.000	0.000	0.057	0.000	0.057	NO	0.000			TOTAL TAKE; AUDITOR'S TAX RECORD SHOWS 0.10 ACRES.		
7	FRED H. GEORGE AND AVANELL GEORGE	4,5	324	731	0.031	12-00028.000		NO TAKE		NO TAKE							
			326	435													
8-WD	RUTLAND VOLUNTEER FIRE DEPARTMENT, INC.	4,5	322	721	0.259(C)	12-00119.000	0.000	0.005	0.000	0.005	NO	0.254			* STEEL POST; AUDITOR'S TAX RECORD SHOWS NO RECORD AREA.		
8-T		4,5				12-00119.000		0.061	0.000	0.061					TO CONSTRUCT PARKING LOT AND GRADE AND SEED		
9	VILLAGE OF RUTLAND	4,5	O.R. 75	585	0.030	12-00421.000		NO TAKE		NO TAKE							
10	GRATE INVESTMENTS LIMITED PARTNERSHIP	4,5	O.R. 74	83	0.160	12-00405.000		NO TAKE		NO TAKE							
11	ORLANDO ANDREONI	4,5	300	363	0.012(C)	12-00392.000		NO TAKE		NO TAKE							
					0.051(C)	12-00414.000		NO TAKE		NO TAKE							
12	MAUREEN T. BURNS	4,5	O.R. 83	401	0.127(C)	12-00418.000		NO TAKE		NO TAKE							
13	DAVID WILLIAMS AND CAROL L. WILLIAMS	4,5	O.R. 19	45	0.100	12-00413.000		NO TAKE		NO TAKE							
14	UNKNOWN OWNER	4,5	-	-	-	-	0.359	0.359	0.359	0.000		0.000	0.000	STATE	NO TITLE FOUND FOR EXISTING ROAD RIGHT-OF-WAY; NO CURRENT OWNER OR AUDITOR'S PARCEL NUMBER FOUND.		

(C) - CALCULATED

* DENOTES RIGHT OF WAY ENCROACHMENT

NOTE:
THE TEMPORARY RIGHT-OF-WAY TAKES SHALL EXTINGUISH AT THE TERMINATION OF THE PROJECT IN CONJUNCTION WITH A DOCUMENT FILED IN THE MEIGS COUNTY RECORDER'S OFFICE, VOLUME _____, PAGE _____, DATED _____.

UNDER NO CIRCUMSTANCES ARE TEMPORARY EASEMENTS ACQUIRED FOR THE PURPOSE OF STRUCTURE REMOVAL TO BE USED FOR STORAGE OF MATERIAL OR EQUIPMENT BY THE CONTRACTOR. UPON COMPLETION OF THE WORK REQUIRED FOR SUCH REMOVAL AND SUBSEQUENT RECLAMATION, THE EASEMENT SHALL BE VACATED IMMEDIATELY.

RECEIVED Feb 2, 2000
RECORDED Feb 2, 2000
~~BOOK~~ Envelope 18 PAGE B
Loretta K. Hill - Deputy
COUNTY RECORDER

PLAN COMPLETED: 1/12/00		
REV	DATE	DESCRIPTION

FEDERAL PROJECT NO. STP (O)
PID NO. 13204
STATE JOB NO. 100190
R/W DESIGNER RJG
R/W REVIEWER CWF

SUMMARY OF ADDITIONAL RIGHT OF WAY

MEG-124-12.52

MEG-124-12.52

VILLAGE OF RUTLAND
T-6-N, R-14-W OHIO COMPANY'S PURCHASE - FRACTION 1 AND 7, SECTION 8
RUTLAND TOWNSHIP
MEIGS COUNTY, OHIO

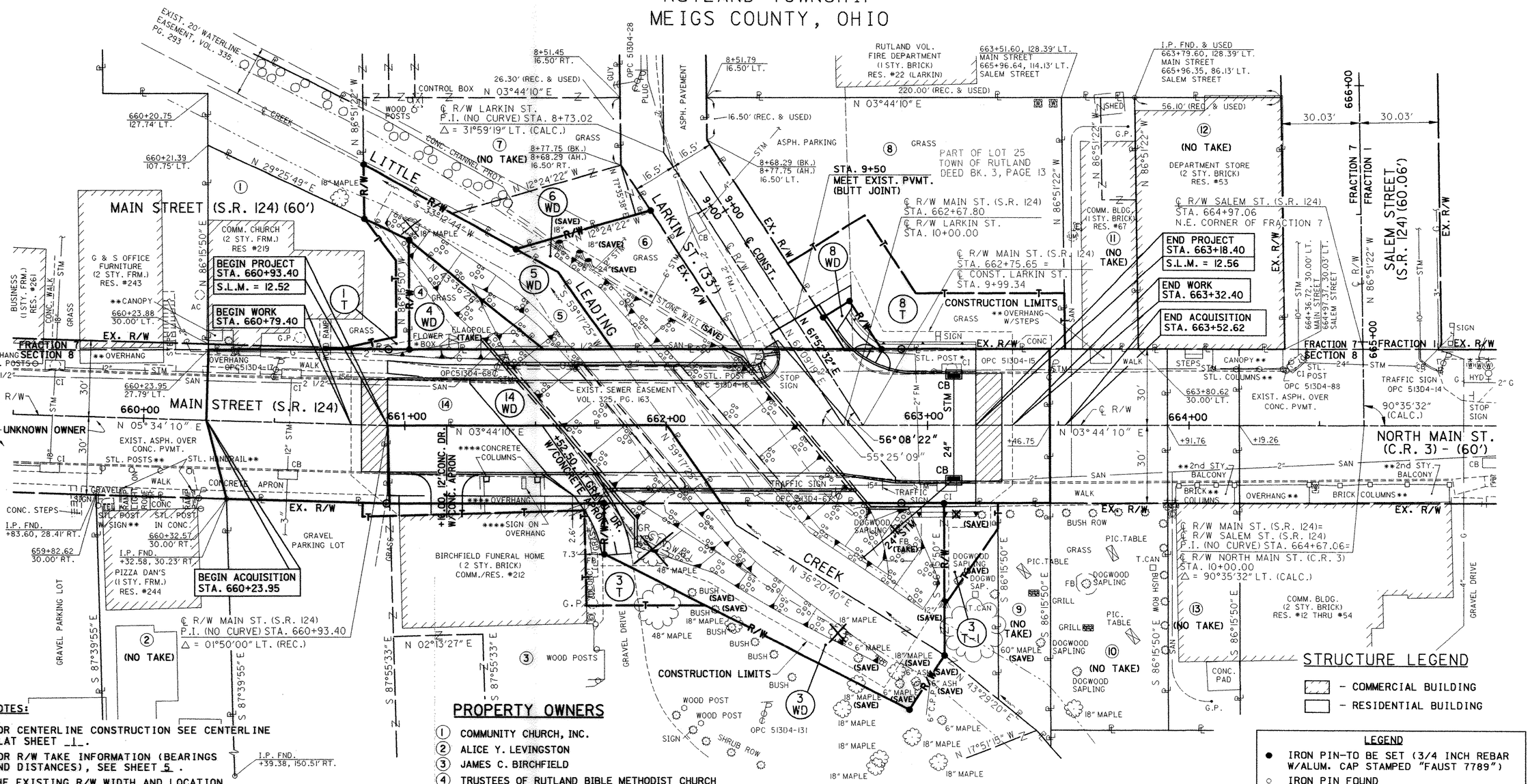

NOTES:

FOR CENTERLINE CONSTRUCTION SEE CENTERLINE PLAT SHEET 1.

FOR R/W TAKE INFORMATION (BEARINGS AND DISTANCES), SEE SHEET 5.

THE EXISTING R/W WIDTH AND LOCATION WERE DETERMINED USING:

1. O.D.O.T. S.H. No. 395, SEC. RUTLAND BR. PLANS - 1931
2. MERRILL'S 1ST ADDITION TO RUTLAND, PLAT VOL. 2, PAGE 44
3. RUTLAND PLAT OF INCORPORATION, PLAT VOL. 3, PAGE 25.
4. SURVEYOR'S AFFIDAVIT, O.R. 59, PAGE 887
5. DEED VOL. 3, PAGE 13-16.
6. DEED VOL. 330, PAGE 623.

BASIS FOR BEARINGS

BEARINGS ARE BASED ON THE OHIO COORDINATE SYSTEM, NAD83(95), SOUTH ZONE

PROPERTY OWNERS

1. COMMUNITY CHURCH, INC.
2. ALICE Y. LEVINGSTON
3. JAMES C. BIRCHFIELD
4. TRUSTEES OF RUTLAND BIBLE METHODIST CHURCH
5. UNKNOWN OWNER
6. VILLAGE OF RUTLAND
7. FRED H. GEORGE AND AVANELL GEORGE
8. RUTLAND VOLUNTEER FIRE DEPARTMENT, INC.
9. VILLAGE OF RUTLAND
10. GRATE INVESTMENTS LIMITED PARTNERSHIP
11. ORLANDO ANDREONI
12. MAUREEN T. BURNS
13. DAVID WILLIAMS AND CAROL L. WILLIAMS
14. UNKNOWN OWNER

* ENCROACHMENT - TO BE REMOVED

** DO NOT DISTURB

*** THE CONTRACTOR, IN PLACING ROCK CHANNEL PROTECTION, SHALL NOT DISTURB THE FEATURES OR THE INTEGRITY OF THE EXISTING STONE WALL

**** THE CONTRACTOR SHALL NOT DISTURB ANY OF THE STRUCTURAL FEATURES OF THE TWO STORY BIRCHFIELD FUNERAL HOME, INCLUDING THE BUILDING, CONCRETE COLUMNS AND OVERHANG.

RECEIVED _____, _____

RECORDED _____, _____

BOOK _____ PAGE _____

COUNTY RECORDER

LEGEND

- ● IRON PIN-TO BE SET (3/4 INCH REBAR W/ALUM. CAP STAMPED "FAUST 7789")
- ○ IRON PIN FOUND
- ◦ P.K. NAIL FOUND
- ⊙ PROPOSED RIGHT-OF-WAY MONUMENT-TO BE SET (SEE CENTERLINE PLAT SHEET 1)

PLAN COMPLETED: 1/12/00

REV	DATE	DESCRIPTION

SCALE IN FEET

PID NO. 13204

R/W DESIGNER RJG

R/W REVIEWER CWF

RIGHT OF WAY PLAN
STA. 659+50 TO STA. 666+00

MEG-124-12.52

4 / 5

37 / 38

MEG-124-12.52

VILLAGE OF RUTLAND
T-6-N, R-14-W OHIO COMPANY'S PURCHASE
FRACTION 1 AND 7, SECTION 8
RUTLAND TOWNSHIP
MEIGS COUNTY, OHIO

1-T

1	661+01.78	30.00' LT.
2	660+92.92 (BK.) 660+93.89 (AH.)	30.00' LT.
3	660+75.81	30.00' LT.
4	660+96.78	34.91' LT.
5	660+96.78	64.91' LT.
6	660+82.10	80.90' LT.
7	661+01.78	73.00' LT.

4-WD

1	661+01.78	30.00' LT.
7	661+01.78	73.00' LT.
8	661+53.26	30.00' LT.

5-WD

6	660+82.10	80.90' LT.
7	661+01.78	73.00' LT.
8	661+53.26	30.00' LT.

8-T

C	S 28°50'41" E	12.00'
D	S 61°09'19" W	22.67'
E	S 61°09'19" W	25.00'
9	662+82.45	30.00' LT.
11	9+59.94	16.50' LT.
12	9+59.94	28.50' LT.

8-WD

A	S 03°44'10" W	14.24'
B	S 61°09'19" W	15.00'
C	N 28°50'41" W	12.00'
D	N 61°09'19" E	22.67'
9	662+82.45	30.00' LT.
10	662+68.21 MAIN STREET 9+74.94 LARKIN STREET	30.00' LT. 16.50' LT.
11	9+59.94	16.50' LT.
12	9+59.94	28.50' LT.

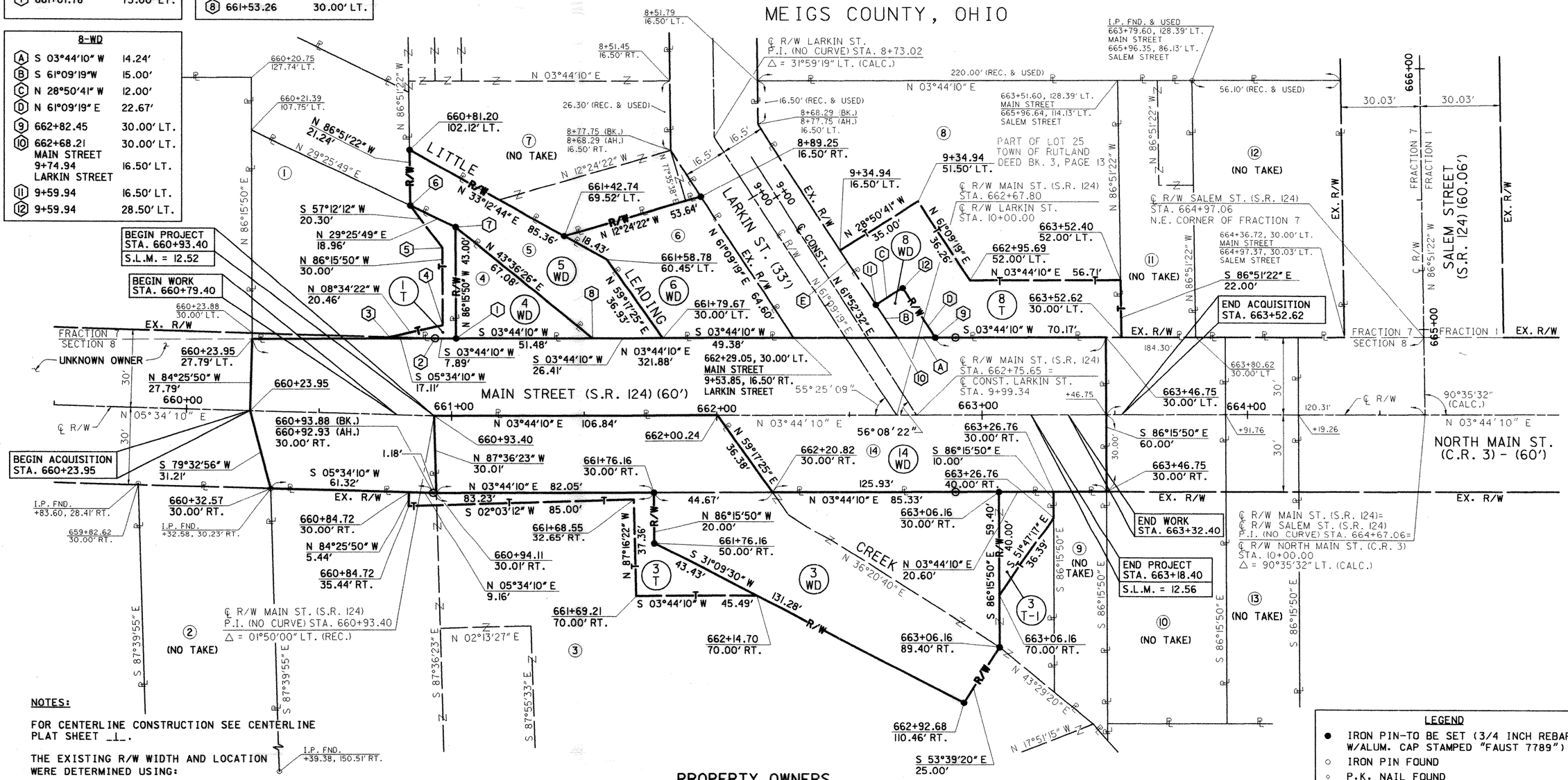

NOTES:

FOR CENTERLINE CONSTRUCTION SEE CENTERLINE PLAT SHEET 1.

THE EXISTING R/W WIDTH AND LOCATION WERE DETERMINED USING:

1. O.D.O.T. S.H. No. 395, SEC. RUTLAND BR. PLANS - 1931
2. MERRILL'S 1ST ADDITION TO RUTLAND, PLAT VOL. 2, PAGE 44
3. RUTLAND PLAT OF INCORPORATION, PLAT VOL. 3, PAGE 25.
4. SURVEYOR'S AFFIDAVIT, O.R. 59, PAGE 887
5. DEED VOL. 3, PAGE 13-16.
6. DEED VOL. 330, PAGE 623.

BASIS FOR BEARINGS

BEARINGS ARE BASED ON THE OHIO COORDINATE SYSTEM, NAD83(95), SOUTH ZONE

PROPERTY OWNERS

1. COMMUNITY CHURCH, INC.
2. ALICE Y. LEVINGSTON
3. JAMES C. BIRCHFIELD
4. TRUSTEES OF RUTLAND BIBLE METHODIST CHURCH
5. UNKNOWN OWNER
6. VILLAGE OF RUTLAND
7. FRED H. GEORGE AND AVANELL GEORGE
8. RUTLAND VOLUNTEER FIRE DEPARTMENT, INC.
9. VILLAGE OF RUTLAND
10. GRATE INVESTMENTS LIMITED PARTNERSHIP
11. ORLANDO ANDREONI
12. MAUREEN T. BURNS
13. DAVID WILLIAMS AND CAROL L. WILLIAMS
14. UNKNOWN OWNER

LEGEND

- ● IRON PIN-TO BE SET (3/4 INCH REBAR W/ALUM. CAP STAMPED "FAUST 7789")
- ○ IRON PIN FOUND
- ◦ P.K. NAIL FOUND
- ⊙ PROPOSED RIGHT-OF-WAY MONUMENT-TO BE SET (SEE CENTERLINE PLAT SHEET 1)

RECEIVED Feb 2, 2000
RECORDED Feb 2, 2000
BOOK Envelope 18 PAGE B
Loretta K. Hill - Deputy
COUNTY RECORDER

DATE OF COMPLETION		1/12/00
REV	DATE	DESCRIPTION

PID NO. 13204

R/W DESIGNER RJG
R/W REVIEWER CWF

RIGHT OF WAY DETAIL
STA. 659+50 TO STA. 666+00

MEG-124-12.52

5/5

38/38

SITE INFORMATION

GEOLOGY OF THE SITE

THIS STRUCTURE SITE IS LOCATED ON A FLOOD PLAIN, UNAFFECTED OR MINIMALLY AFFECTED BY GLACIATION. THE SITE IS AT AN ELEVATION OF APPROXIMATELY 577 FEET WHERE THE EXISTING BRIDGE SPANS THE LITTLE LEADING CREEK. BASED ON LIMITED GEOLOGICAL INFORMATION IN THE VICINITY OF THE SITE BEDROCK OF CONEMAUGH FORMATION SHALES ARE EXPECTED TO BE FOUND AT AN ELEVATION OF 520 FEET.

EXPLORATION

THE EXPLORATION CONSISTED OF THREE DRIVE SAMPLE–CORE BORINGS, MADE BY MEANS OF A MECHANICALLY HOLLOW–STEM ROTARY AUGER MOUNTED ON A MOBILE PLATFORM, PERFORMED IN MARCH, 1999.

INVESTIGATIONAL FINDINGS AND OBSERVATIONS

TEST BORINGS S–1 (MADE IN THE VICINITY OF THE REAR ABUTMENT) AND S–2 (MADE IN THE VICINITY OF THE PROPOSED CENTER PIER) AND S–3 (MADE IN THE VICINITY OF THE FORWARD ABUTMENT) WERE ADVANCED FOR THE PURPOSE OF BRIDGE FOUNDATION SOIL INVESTIGATION AND DESIGN. TEST BORING S–1 WAS ADVANCED THROUGH IN A GRAVEL DRIVE AREA. TEST BORING S–2 WAS ADVANCED THROUGH 5 INCH THICK ASPHALTIC CONCRETE AND A 21 INCH THICK REINFORCED CONCRETE BRIDGE DECK. TEST BORING S–3 WAS ADVANCED THROUGH 5 INCH THICK ASPHALTIC CONCRETE AND 8 INCH THICK CONCRETE BASE. INTERVALS OF GRAVEL AND ROCK FRAGMENTS (A–1–a), GRAVEL AND ROCK FRAGMENTS WITH SAND (A–1–b), COARSE AND FINE SAND (A–3a), FINE SAND (A–3), SANDY SILT (A–4a), SILT (A–4b), AND SILT AND CLAY (A–6a). COARSE AND FINE SAND (A–3a) WAS THE PREDOMINANT SOIL DEPOSIT IN ALL THREE TEST BORINGS. RELATIVELY DENSITY OF NONCOHESIVE SOILS WAS FOUND TO RANGE FROM "VERY LOOSE" TO "MEDIUM DENSE" BUT WAS PREDOMINANTLY "LOOSE."

BEDROCK WAS ENCOUNTERED IN ALL THREE TEST BORINGS. TN TEST BORING S–1, MEDIUM HARD SANDSTONE WAS ENCOUNTERED AT A DEPTH OF 51.5 FEET (ELEV. 525.7). IN TEST BORING S–2, MEDIUM HARD TO HARD SANDY SHALE WAS ENCOUNTERED BETWEEN DEPTHS OF 51.5 AND 55.7 FEET (ELEV. 526.0 AND 521.9), AND MEDIUM HARD TO HARD SANDSTONE WAS ENCOUNTERED AT A DEPTH OF 55.7 FEET (ELEV. 521.9). IN TEST BORING S–3, MEDIUM HARD SANDY SHALE WAS ENCOUNTERED BETWEEN DEPTHS OF 51.2 AND 57.5 FEET (ELEV. 526.1 AND 519.8), AND MEDIUM HARD TO HARD SANDSTONE WAS ENCOUNTERED AT A DEPTH OF 57.5 FEET (ELEV. 519.8).

UNCONFINED COMPRESSIVE STRENGTH OF TESTED ROCK WAS FOUND TO RANGE FROM 2264 TO 3118 PSI. D50 VALUES WHICH HAVE BEEN CALCULATED FOR SCOUR ANALYSIS CAN BE FOUND ON SHEET 3.

FREE WATER WAS ENCOUNTERED DURING DRILLING OPERATIONS AT ELEVATIONS OF 566.2 TO 571.3.

FOR SPECIFIC SUBSURFACE CONDITIONS AT VARIOUS DEPTHS, REFER TO THE INDIVIDUAL TEST BORING LOGS WHICH FORM A PART OF THESE PLANS.

SYMBOLS OF ROCK TYPES

- COAL
- WEATHERED MUDSTONE
- MUDSTONE
- WEATHERED SHALE
- SHALE
- CLAYSTONE
- SILTSTONE
- WEATHERED SANDSTONE
- SANDSTONE
- LEACHED DOLOMITE
- DOLOMITE
- LEACHED LIMESTONE
- LIMESTONE
- BOULDERS or COBBLES

PARTICLE SIZE DEFINITIONS

BOULDERS	COBBLES	GRAVEL	COARSE SAND	FINE SAND	SILT	CLAY

300 mm | 75 mm | 2.0 mm | 0.42 mm | 0.074 mm | 0.005 mm

No. 10 SIEVE | No. 40 SIEVE | No. 200 SIEVE

NOTES

ALL AVAILABLE SOIL AND BEDROCK INFORMATION WHICH CAN BE CONVENIENTLY SHOWN ON THE STRUCTURE FOUNDATION INVESTIGATIONS SHEETS HAS BEEN SO REPORTED. ADDITIONAL SUBSURFACE INVESTIGATIONS MAY HAVE BEEN MADE TO STUDY SOME SPECIAL ASPECT OF THE PROJECT. COPIES OF THIS DATA, IF ANY, MAY BE INSPECTED IN THE DISTRICT DEPUTY DIRECTOR'S OFFICE, THE OFFICE OF MATERIALS MANAGEMENT AT 1600 WEST BROAD STREET, THE OFFICE OF ROADWAY ENGINEERING OR THE OFFICE OF STRUCTURAL ENGINEERING AT 25 SOUTH FRONT STREET, COLUMBUS, OHIO 43215.

GENERAL INFORMATION

DRIVE SAMPLES

DRIVE SAMPLE BORINGS ARE MADE BY MEANS OF A MECHANICALLY–POWERED, ROTARY–TYPE DRILL RIG EMPLOYING A 2.0 in O.D., 1.4 in I.D., SPLIT–SPOON SAMPLER, AT CONTINUOUS, 2.5 ft AND/OR 5.0 ft DEPTH INTERVALS, DRIVEN BY MEANS OF A 140 lb HAMMER WITH A FREE FALL OF 2.5 ft. THE NUMBER OF BLOWS REQUIRED TO DRIVE THE SAMPLER THREE 0.5 ft INCREMENTS IS CONSIDERED THE STANDARD PENETRATION TEST.

PRESS SAMPLES

PRESS SAMPLES ARE TAKEN BY MEANS OF MECHANICALLY POWERED, ROTARY–TYPE DRILL RIG, EMPLOYING A 3 in O.D. THIN–WALL PRESS SAMPLING TUBE. THE PRESS SAMPLING TUBE IS ADVANCED BY CONTINUOS UNIFORM PRESSURE APPLIED BY THE DRILL RIG.

CORE BORINGS

CORE BORINGS ARE MADE BY MEANS OF A MECHANICALLY–POWERED, ROTARY–TYPE DRILL RIG, EMPLOYING AN NX, NW AND/OR HX CORE BARREL WITH AN INDUSTRIAL DIAMOND CUTTING HEAD.

SAMPLING AND TESTING

THE BORING LOG SHEETS SHOW A GRAPHIC PLOT OF THE INFORMATION OBTAINED, INCLUDING DEPTH AND ELEVATION OF THE SAMPLE, TYPE OF SAMPLE, NUMBER OF BLOWS FOR THE STANDARD PENETRATION TEST IN THREE 0.5 ft INCREMENTS, AND A SAMPLE DESCRIPTION BASED ON LABORATORY TEST RESULTS, UTILIZING THE ODOT CLASSIFICATION SYSTEM. RESULTS OF STRENGTH AND CONSOLIDATION TESTING, IF PERFORMED ON UNDISTURBED SAMPLES, APPEAR GRAPHICALLY ON SEPARATE ENCLOSURES. ROCK SAMPLES ARE DISPLAYED ON THE LOG SHEETS, INCLUDING DEPTH AND ELEVATION OF THE SAMPLE, AMOUNT OF RECOVERY, AND A VISUAL CLASSIFICATION BASED ON THE TYPE, COLOR, DEGREE OF HARDNESS, GRAIN SIZE, DETERIORATION, BEDDING, ACID REACTION, AND OTHER QUALIFYING FACTORS.

AT DEPTHS WHERE MATERIALS ARE BOULDERY OR GRAVELY TO THE EXTENT THAT A SAMPLER CANNOT BE UTILIZED, A WASH SAMPLE IS PROCURED AND VISUALLY CLASSIFIED, IN ORDER TO DETERMINE THE GENERAL CHARACTERISTIC OF THE MATERIAL. THESE SAMPLES ARE NOT CONSIDERED SUFFICIENTLY REPRESENTATIVE TO WARRANT LABORATORY TESTING.

LEGEND

- AUGER BORING LOCATION–PLAN VIEW.
- PRESS AND/OR DRIVE SAMPLE AND/OR CORE BORING LOCATION–PLAN VIEW.
- TR — TOP OF ROCK
- CAPPED PILE
- FOOTING
- FOOTING ON PILE
- ST — SHELBY TUBE
- SS — SPLIT SPOON
- HORIZONTAL BAR ON BORING LOG INDICATES THE DEPTH THE SAMPLE WAS TAKEN.
- X/Y/Z — FIGURES BESIDE THE BORING LOG IN PROFILE INDICATE THE NUMBER OF BLOWS FOR STANDARD PENETRATION TEST.

  X = NO. OF BLOWS FOR FIRST 0.5 ft
  Y = NO. OF BLOWS FOR SECOND 0.5 ft
  Z = NO. OF BLOWS FOR THIRD 0.5 ft
- W — INDICATES FREE WATER ELEVATION
- INDICATES STATIC WATER ELEVATION

J&L LABORATORIES, INC.
GEOTECHNICAL CONSULTING & TESTING
215 RAINBOW STREET
WADSWORTH, OH 44281-1444

DRAWN	REVIEWED	DATE	CALCULATED	CHECKED
LLC	JX	5/7/99	--	JX

STRUCTURE FOUNDATION INVESTIGATION
BRIDGE MEG–124–1253

MEG–124–1253

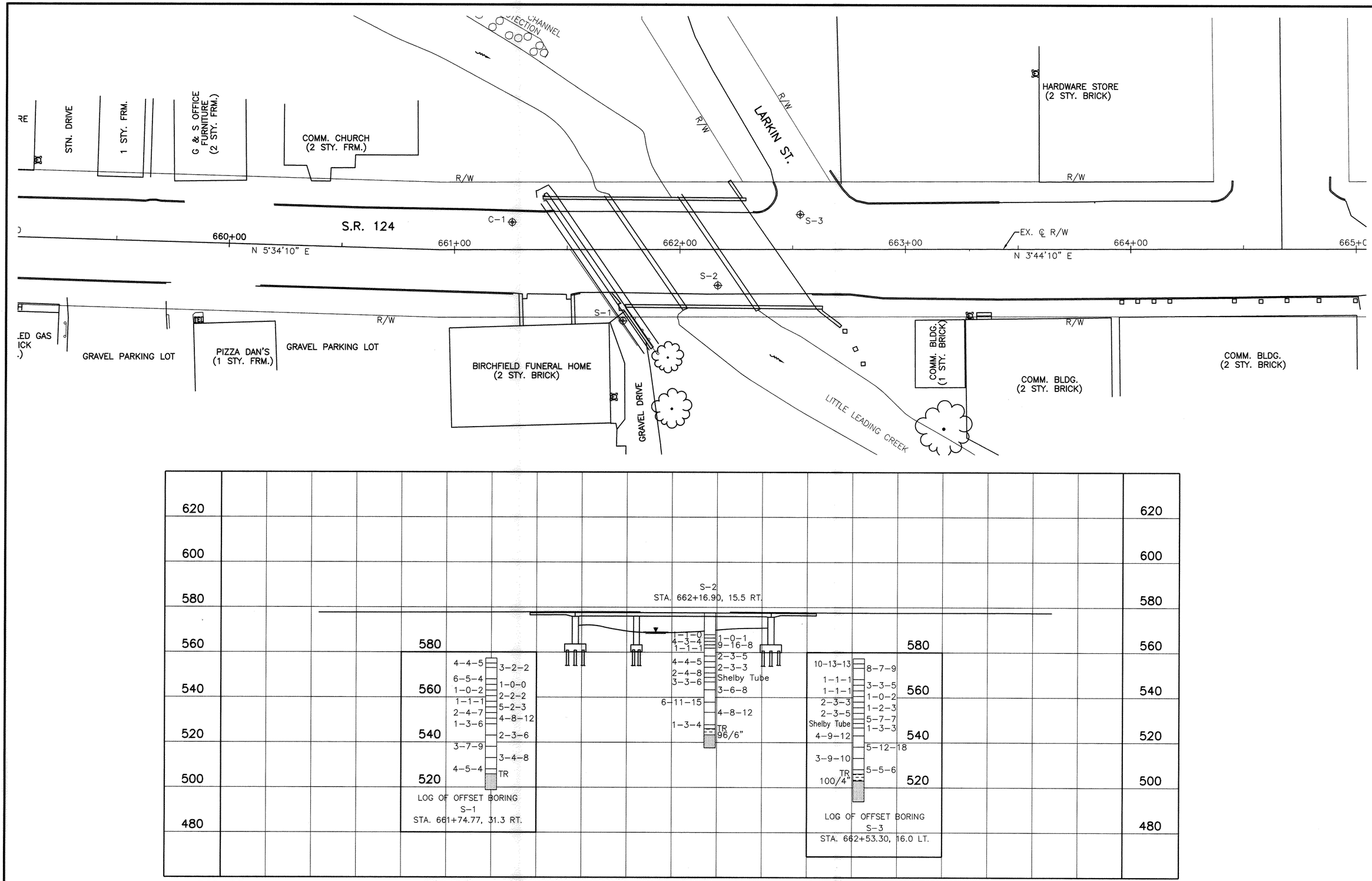

PROFILE ALONG ℄ CONSTRUCTION

HORIZONTAL AND VERTICAL SCALE 1" = 20'

CALCULATED	CHECKED
---	JX

DATE	REVIEWED	DRAWN
5/6/99	JX	LLC

STRUCTURE FOUNDATION INVESTIGATION
MEG-124-1253

MEG-124-1253

2/4

LOG OF BORING

Date Started: 3/17/99
Date Completed: 3/17/99
Boring No.: S–1

Sampler Type: Split Spoon, (SS)
Sampler Dia.: 2.0 in
Auger Type: 3.25" HSA Augers

Surface Elev.: 577.2 (ft)
Water Elev.: 566.2 (ft)
Station & Offset: 661+74.77, 31.3 RT

Elev. (ft)	Depth (ft)	Std. Pen./ RQD	Rec. (ft)	Loss (ft)	Description	Sample No.	% Agg.	% C.S.	% F.S.	% Silt	% Clay	L.L.	P.I.	W.C.	ODOT Class
577.2	0.0				*CRUSHED LIMESTONE*										
		4–4–5			*Brown COARSE AND FINE SAND, little fines, trace gravel, moist.*	1	–	–	–	–	–	–	–	17	Visual
	5.0	3–2–2				2	5	16	54	–	25	–	–	18	A–3a
566.7	10.0	6–5–4				3	–	–	–	–	–	–	–	–	--
		1–0–0			*Brown/gray COARSE AND FINE SAND little fines, trace gravel, moist.*	4	–	–	–	–	–	–	–	28	Visual
	15.0	1–0–2				5	–	–	–	–	–	–	–	27	Visual
		2–2–2				6	5	26	43	–	26	–	–	23	A–3a
	20.0	1–1–1				7	–	–	–	–	–	–	–	34	Visual
		5–2–3				8	–	–	–	–	–	–	–	23	Visual
553.4	25.0	2–4–7				9	–	–	–	–	–	–	–	26	Visual
		4–8–12			*Gray, SILT AND CLAY, trace sand, wet.*	10	0	1	3	39	57	–	–	26	A–6a
548.0	30.0	1–3–6				11	–	–	–	–	–	–	–	25	Visual
					Gray, COARSE AND FINE SAND, wet.										
	35.0	2–3–6				12	–	–	–	–	–	–	–	23	Visual
540.7															
	40.0	3–7–9			*Gray, SILT, trace sand, wet.*	13	–	–	–	–	–	–	–	25	Visual
	45.0	3–4–8				14	0	1	10	53	36	–	–	24	A–4b
530.2															
	50.0	4–5–4			*Gray, COARSE AND FINE SAND, wet.*	15	–	–	–	–	–	–	–	20	Visual
525.7															
	55.0	98	4.9	0.1	*Gray, medium hard to hard, moderate cementation, medium grained SANDSTONE, trace to little interbedded shale from 57.5' to 58.5'.*										
518.7															

TERMINATION DEPTH: 58.5 (ft)

LOG OF BORING

Date Started: 3/17/99
Date Completed: 3/17/99
Boring No.: S–2

Sampler Type: Split Spoon, (SS)
Sampler Dia.: 2.0 in
Auger Type: 3.25" HSA Augers

Surface Elev.: 577.6 (ft)
Water Elev.: 570.1 (ft)
Station & Offset: 662+16.90, 15.5 RT.

Elev. (ft)	Depth (ft)	Std. Pen./ RQD	Rec. (ft)	Loss (ft)	Description	Sample No.	% Agg.	% C.S.	% F.S.	% Silt	% Clay	L.L.	P.I.	W.C.	ODOT Class
577.6	0.0														
575.5					*Bridge Deck*										
	5.0				*AIR: Suspended augers below bridge deck.*										
568.6	10.0	1–1–0			*Brown, GRAVEL AND STONE FRAG. WITH SAND, trace fines, wet.*	1	15	45	37	–	3	–	–	35	A–1–b
565.6		1–0–1				2	31	32	35	–	2	–	–	31	A–1–b
564.6		4–3–4			*Brown, GRAVEL AND ROCK FRAG.*	3	68	6	15	–	11	–	–	13	A–1–a
	15.0	9–16–8			*Gray, COARSE AND FINE SAND FRAGMENTS, trace fines, wet.*	4	–	–	–	–	–	–	–	NR	--
		1–1–1				5	1	16	61	–	22	–	–	28	A–3a
	20.0	2–3–5				6	–	–	–	–	–	–	–	26	Visual
		4–4–5				7	–	–	–	–	–	–	–	23	Visual
553.1	25.0	2–3–3				8	0	0	5	49	46	–	–	25	A–4a
		2–4–8			*Gray, SANDY SILT, wet.*	9	–	–	–	–	–	–	–	28	Visual
	30.0	Shelby Tube				10	–	–	–	–	–	–	–	NR	--
546.6		3–3–6				11	–	–	–	–	–	–	–	31	Visual
	35.0	3–6–8			*Gray, FINE SAND, little fines, wet.*	12	3	20	68	–	9	–	–	25	A–3
538.6	40.0	6–11–15			*Gray SANDY SILT, wet.*	13	–	–	–	–	–	–	–	27	Visual
532.1	45.0	4–8–12				14	–	–	–	–	–	–	–	19	Visual
	50.0	1–3–4			*Gray, COARSE AND FINE SAND little fines, wet.*	15	0	4	80	–	16	–	–	20	A–3a
526.1															
521.9	55.0	96/6"			*Gray, SANDY SHALE.*	16	–	–	–	–	–	–	–	–	Visual
517.6	60.0	90	4.5	0.5	*Gray, medium hard to hard, moderate cementation, medium grained SANDSTONE, trace to little interbedded shale from 55.0 to 55.7 feet.*										

TERMINATION DEPTH: 60.0(ft)

PAVEMENT INFORMATION
AT LOCATION C–1
ASPHALT CONCRETE: 3.50 IN CONCRETE BASE: 6.25 IN

D_{50} *VALUES*
TEST BORING S–2
SAMPLE NO. 1 = 0.501mm SAMPLE NO. 2 = 0.558mm SAMPLE NO. 3 = 13.20mm SAMPLE NO. 4 = NR SAMPLE NO. 5 = 0.224mm

UNCONFINED COMPRESSIVE STRENGTH OF ROCK

BORING NO.	ELEV.	(PSI)
S–1	523.3	2,680
S–1	519.7	3,009
S–2	522.4	2,674
S–2	518.5	3,118
S–3	523.2	2,264
S–3	520.3	2,966

J&L LABORATORIES, INC.
GEOTECHNICAL CONSULTING & TESTING
215 RAINBOW STREET
WADSWORTH, OH 44281–1444

CALCULATED LLC
CHECKED JX
DATE 5/6/99
REVIEWED JX
DRAWN LLC

STRUCTURE FOUNDATION INVESTIGATION
BRIDGE MEG–124–1253

MEG–124–1253

LOG OF BORING

Date Started: 3/16/99
Date Completed: 3/16/99
Boring No.: S-3

Sampler Type: Split Spoon, (SS)
Sampler Dia.: 2.0 in
Auger Type: 3.25" HSA Augers

Surface Elev.: 577.3 (ft)
Water Elev.: 571.3 (ft)
Station & Offset: 662+53.30, 16.0 LT

Elev. (ft)	Depth (ft)	Std. Pen./ RQD	Rec. (ft)	Loss (ft)	Description	Sample No.	Physical Characteristics								
							% Agg.	% C.S.	% F.S.	% Silt	% Clay	L.L.	P.I.	W.C.	ODOT Class
577.3	0.0														
576.2		10-13-13			PAVEMENT: Asphalt/Concrete	1	–	–	–	–	–	–	–	12	Visual
	5.0	8-7-9			Brown, SANDY SILT, little rock fragments, moist. (FILL)	2	–	–	–	–	–	–	–	15	Visual
568.8	10.0	1-1-1			Brown/gray COARSE AND FINE SAND, some fines, trace org., wet.	3	0	0	68	–	32	–	–	28	A-3a
		3-3-5				4	–	–	–	–	–	–	–	69	Visual
	15.0	1-1-1				5	–	–	–	–	–	–	–	92	Visual
561.3		1-0-2			Brown/gray COARSE AND FINE SAND little fines, wet.	6	–	–	–	–	–	–	–	29	Visual
	20.0	2-3-3				7	2	27	48	–	23	–	–	26	A-3a
		1-2-3				8	–	–	–	–	–	–	–	26	Visual
	25.0	2-3-5				9	–	–	–	–	–	–	–	22	Visual
550.1		5-7-7				10	–	–	–	–	–	–	–	19	Visual
	30.0	Shelby Tube			Gray COARSE AND FINE SAND, some fines, wet.	11	–	–	–	–	–	–	–	–	–
		1-3-3				12	2	16	49	–	33	–	–	25	A-3a
	35.0	4-9-12				13	–	–	–	–	–	–	–	19	Visual
538.1	40.0	5-12-18				14	–	–	–	–	–	–	–	31	Visual
	45.0	3-9-10			Gray COARSE AND FINE SAND, trace fines, wet.	15	0	5	83	–	12	–	–	24	A-3a
	50.0	5-5-6				16	–	–	–	–	–	–	–	24	Visual
526.1	55.0	100/4"			Gray, SANDY SHALE.	17	–	–	–	–	–	–	–	–	Visual
519.8	60.0	100	5.0	0.0	Gray, medium hard to hard, moderate cementation, medium grained SANDSTONE, trace to little interbedded shale from 57.5' to 58.5'.										
513.8															

TERMINATION DEPTH: 63.5 (ft)

J&L LABORATORIES, INC.
GEOTECHNICAL CONSULTING & TESTING
215 RAINBOW STREET
WADSWORTH, OH 44281-1444

DRAWN	REVIEWED	DATE	CALCULATED	CHECKED
LLC	JX	5/6/99	LLC	JX

STRUCTURE FOUNDATION INVESTIGATION
BRIDGE MEG-124-1253

MEG-124-1253