SEE SHEET 2 FOR LOCATION MAP

STATE OF OHIO

DEPARTMENT OF TRANSPORTATION

MER-49/219-3.52/1.09

VILLAGE OF FORT RECOVERY
TOWNSHIPS OF RECOVERY AND WASHINGTON
MERCER COUNTY

PROJECT DESCRIPTION

OVERLAY SR-49 AND SR-219 WITH FINE GRADED POLYMER ASPHALT CONCRETE IN MERCER COUNTY.

PROJECT EARTH DISTURBED AREA: *N/A
ESTIMATED CONTRACTOR EARTH DISTURBED AREA: *N/A
NOTICE OF INTENT EARTH DISTURBED AREA: *N/A
*MAINTENANCE PROJECT

INDEX OF SHEETS:

TITLE SHEET	1
LOCATION MAP	2
TYPICAL SECTIONS	3
GENERAL NOTES	4 - 5
GENERAL SUMMARY	6
PAVEMENT SUBSUMMARY	7
DRIVE DETAILS	8-9
TRAFFIC CONTROL SUBSUMMARIES	10-11
STRUCTURES	12-13

2016 SPECIFICATIONS

THE STANDARD SPECIFICATIONS OF THE STATE OF OHIO, DEPARTMENT OF TRANSPORTATION, INCLUDING CHANGES LISTED IN THE PROPOSAL SHALL GOVERN THIS IMPROVEMENT.

I HEREBY APPROVE THESE PLANS AND DECLARE THAT THE MAKING OF THIS IMPROVEMENT WILL NOT REQUIRE THE CLOSING TO TRAFFIC OF THE HIGHWAY AND THAT PROVISIONS FOR THE MAINTENANCE AND SAFETY OF TRAFFIC WILL BE AS SET FORTH ON THE PLANS AND ESTIMATES.

UNDERGROUND UTILITIES

CONTACT BOTH SERVICES TWO WORKING DAYS BEFORE YOU DIG.

OHIO Utilities Protection SERVICE — Call Before You Dig 1-800-362-2764

(Non-members must be called directly)

OIL & GAS PRODUCERS UNDERGROUND PROTECTION SERVICE 1-800-925-0988

PLAN PREPARED BY:
OHIO DEPT. OF TRANSPORTATION
DISTRICT 7 PLANNING & ENGINEERING
SIDNEY, OH

ENGINEERS SEAL:

STATE OF OHIO — RYAN P. HANKE No. 75841 — REGISTERED PROFESSIONAL ENGINEER

SIGNED: Ryan P. Hanke
DATE: 2-10-17

STANDARD CONSTRUCTION DRAWINGS							SUPPLEMENTAL SPECIFICATIONS		SPECIAL PROVISIONS
BP-3.1	7/18/14	TC-64.10	1/20/17				800	1/19/18	
BP-7.1	7/18/14	TC-65.10	1/17/14				832	1/17/14	
		TC-65.11	7/15/16				897	1/16/15	
DM-4.3	1/15/16	TC-71.10	1/20/17						
DM-4.4	1/15/16								
MT-97.10	7/18/14								
MT-97.12	1/20/17								
MT-99.20	7/19/13								
MT-101.90	7/17/15								
MT-105.10	7/19/13								
TC-41.20	10/18/13								
TC-42.20	10/18/13								
TC-52.10	10/18/13								
TC-52.20	7/15/16								

APPROVED Randy Chevalley PE PS/ssw
DATE 2/10/17 DISTRICT DEPUTY DIRECTOR

APPROVED [signature]
DATE 12-21-17 DIRECTOR, DEPARTMENT OF TRANSPORTATION

FEDERAL PROJECT NO. E161 (407)

PID NO. 100937

CONSTRUCTION PROJECT NO.

RAILROAD INVOLVEMENT R. J. CORMAN

MER-49/219-3.52/1.09

MER - SR 49/SR 219-03.52/01.09
180172 PID - 100937
Dist 7 3/8/2018

Contract Proposal Available @ www.contracts.dot.state.oh.us/home

i:\ProjectData\MER\100937_SR49_SR219\D

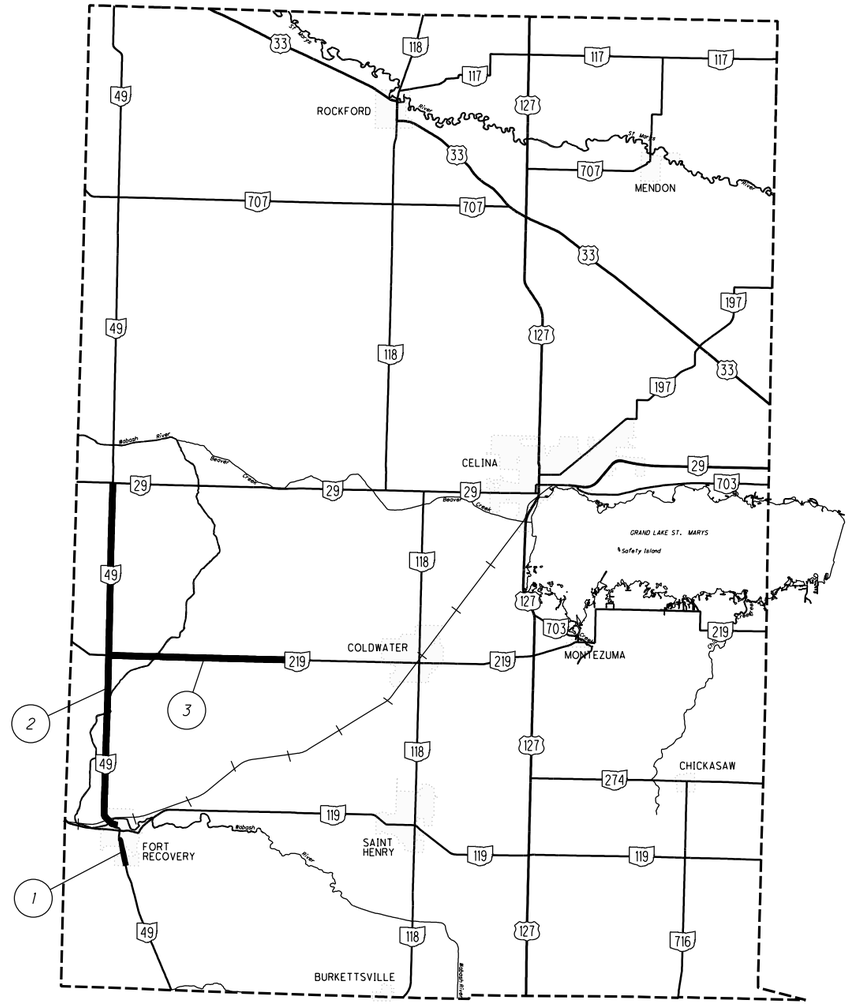

MERCER COUNTY

PROJECT LOCATIONS

1 MER-49-03.52 TO 04.22

2 MER-49-04.70 TO 13.91

3 MER-219-01.09 TO 06.12

LATITUDE: 40° 28′ 47″ N LONGITUDE: 84° 46′ 01″ W

SCALE IN MILES

0 2 4 6 8

N

PORTION TO BE IMPROVED

INTERSTATE HIGHWAY

FEDERAL ROUTES

STATE ROUTES

OTHER ROADS

LOCATION MAP

MER-49/219-3.52/1.09

I:\ProjectData\MER\100937_SR49_SR219\Design\Roadway\Sheets\100937_GT002.dgn Sheet 2/13/2017 1:35:05 PM ikohli

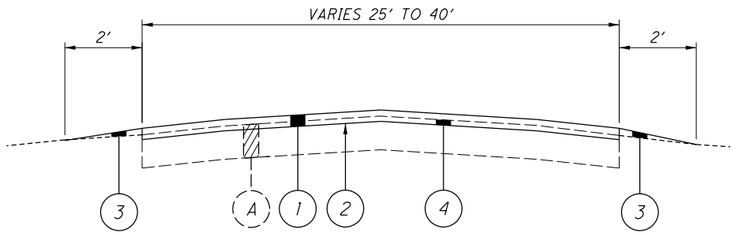

TYPICAL 1

1/2" PLANING AND 1" OVERLAY SECTION

SR 49	SLM	3.52	TO	4.09
SR 49	SLM	4.99	TO	7.81
SR 49	SLM	7.85	TO	13.91
SR 219	SLM	1.09	TO	2.32
SR 219	SLM	2.36	TO	2.58
SR 219	SLM	2.59	TO	6.12

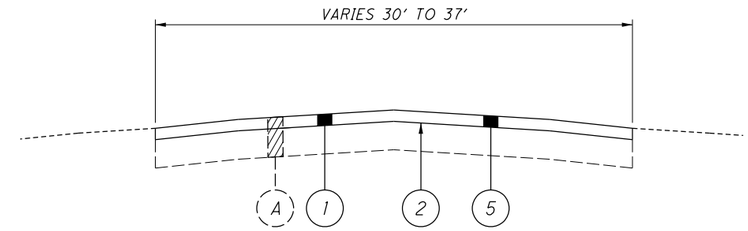

TYPICAL 2

1" MILL/FILL OF UNCURBED SECTION

SR 49	SLM	4.09	TO	4.22
SR 49	SLM	4.82	TO	4.88
SR 49	SLM	4.92	TO	4.99

LEGEND

- (A) EXISTING ASPHALT PAVEMENT
- (1) ITEM 424 - 1" FINE GRADED POLYMER ASPHALT CONCRETE, TYPE B
- (2) ITEM 407 - TACK COAT (.085 GAL/SY.)
- (3) ITEM 617 - COMPACTED AGGREGATE (1" AVG.)
- (4) ITEM 897 - PAVEMENT PLANING, ASPHALT CONCRETE, CLASS A, 1/2" DEPTH
- (5) ITEM 897 - PAVEMENT PLANING, ASPHALT CONCRETE, CLASS A, 1" DEPTH

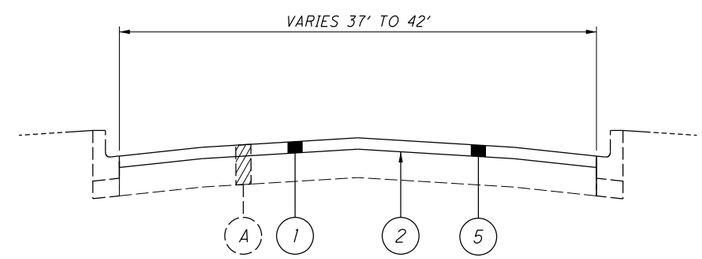

TYPICAL 3

1" MILL/FILL OF CURBED SECTION

SR 49 SLM 4.70 TO 4.82

TYPICAL SECTIONS

MER-49/219-
3.52/1.09

I:\ProjectData\MER\100937_SR49_SR219\Design\Roadway\Sheets\100937_GY001.dgn Sheet 2/13/2017 1:35:07 PM ikohli

NOTIFICATION OF TRAFFIC RESTRICTIONS

THROUGHOUT THE DURATION OF THE PROJECT, THE CONTRACTOR SHALL NOTIFY THE PROJECT ENGINEER IN WRITING OF ALL TRAFFIC RESTRICTIONS AND UPCOMING MAINTENANCE OF TRAFFIC CHANGES. THE CONTRACTOR SHALL ENSURE THE WRITTEN NOTIFICATION IS SUBMITTED IN A TIMELY MANNER TO ALLOW THE PROJECT ENGINEER TO MEET THE REQUIRED TIME FRAMES SET FORTH IN THE TABLE BELOW TO INFORM SPECIAL HAULING PERMITS SECTION (HAULING.PERMITS@DOT.OHIO.GOV) AND THE DISTRICT PUBLIC INFORMATION OFFICE (PIO). THIS NOTIFICATION SHALL BE RECEIVED BY THE PROJECT ENGINEER PRIOR TO THE PHYSICAL SETUP OF ANY APPLICABLE SIGNS OR MESSAGE BOARDS.

INFORMATION SHOULD INCLUDE, BUT IS NOT LIMITED TO, ALL AND SHALL LLIST THE SPECIFIC LOCATION, TYPE OF WORK, ROAD STATUS, DATE AND TIME OF RESTRICTION, DURATION OF RESTRICTION, NUMBER OF LANES MAINTAINED, NUMBER OF LANES CLOSED, MINIMUM VERTICAL CLEARANCE, MINIMUM WIDTH OF DRIVEABLE PAVEMENT DETOUR ROUTES, IF APPLICABLE, AND ANY OTHER INFORMATION REQUESTED BY THE PROJECT ENGINEER.

NOTIFICATION TIME TABLE		
ITEM	DURATION OF CLOSURE	NOTICE DUE TO D7 PERMITS & PIO
RAMP & ROAD CLOSURES	>= 2 WKS	21 CALENDAR DAYS PRIOR TO CLOSURE
	> 12 HRS & < 2 WKS	14 CALENDAR DAYS PRIOR TO CLOSURE
	< 12 HRS	4 BUSINESS DAYS PRIOR TO CLOSURE
LANE CLOSURES AND RESTRICTIONS	>= 2 WKS	14 CALENDAR DAYS PRIOR TO CLOSURE
	< 2 WKS	5 BUSINESS DAYS PRIOR TO CLOSURE
START OF CONSTRUCTION & TRAFFIC PATTERN CHANGES	N/A	14 CALENDAR DAYS PRIOR TO IMPLEMENTATION

ANY UNFORESEEN CONDITIONS NOT SPECIFIED IN THE PLANS REQUIRING TRAFFIC RESTRICTIONS SHALL ALSO BE REPORTED TO THE PROJECT ENGINEER USING THE NOTIFICATION TIME TABLE.

ALIGNMENT AND PROFILE

THE WORK PROPOSED BY THIS PROJECT CONSISTS OF RESURFACING OF THE EXISTING PAVEMENT. THE ALIGNMENT OF THE EXISTING PAVEMENT WILL NOT BE CHANGED AND THE PROFILE OF THE PROPOSED SURFACE WILL BE SIMILAR TO THAT OF THE EXISTING PAVEMENT.

ITEM 253 - PAVEMENT REPAIR, AS PER PLAN

PAVEMENT REPAIR SHALL BE IN ACCORDANCE WITH ITEM 253 - PAVEMENT REPAIR, WITH THE FOLLOWING ADDITIONS:

THE PAVEMENT REPAIR AREAS SHALL BE ROUGHLY RECTANGULAR IN SHAPE AND SAWED OR MILLED TO A NEAT LINE. THE DEPTH OF REMOVAL, AS DIRECTED BY THE ENGINEER, SHALL BE SUFFICIENT TO REMOVE ALL DETERIORATED PAVEMENT. THE REPLACEMENT MATERIAL SHALL BE ITEM 301 - ASPHALT CONCRETE BASE, PG64-22.

THE ESTIMATED PAVEMENT REPAIR AREAS SHALL BE A MINIMUM OF FOUR FEET (4.0') IN WIDTH AND FOUR INCHES (4") IN DEPTH OR AS DIRECTED BY THE ENGINEER AND SHALL BE FINISHED TO ACCOMMODATE THE PROPOSED OVERLAY.

A QUANTITY OF 2000 SQ YDS FOR SR 49 AND 250 SQ. YDS FOR SR 219 HAS BEEN CARRIED TO THE GENERAL SUMMARY TO BE USED AS DIRECTED BY THE ENGINEER.

ITEM 253 - PAVEMENT REPAIR, AS PER PLAN = 2250 SQ YD

COOPERATION WITH RAILROAD (R.J. CORMAN)

THE CONTRACTOR SHALL COORDINATE ALL WORK ON, OVER OR ADJACENT TO THE RAILROAD WITHIN PROJECT LIMITS. THE CONTRACTOR SHALL CONTACT THE FOLLOWING, AT LEAST 30 DAYS IN ADVANCE, IN ORDER TO COORDINATE THE NECESSARY WORK. UNDER NO CIRCUMSTANCES SHALL THERE BE ANY WORK PERFORMED WITHIN THE RAILROAD RIGHT-OF-WAY WITHOUT THE PROPER WRITTEN AUTHORIZATION AND/OR FLAGGING PROTECTION FROM THE RAILROAD. SEE "PAVING AT RAILROAD CROSSINGS" NOTE FOR ADDITIONAL DETAILS.

CROSSING LOCATIONS: MER-49-4.99

R.J. CORMAN RAILROAD COMPANY
ATTENTION: MS. DEBBIE HAWLEY, PROPERTY MANAGER
PHONE: (859) 881-2499

PAVING AT RAILROAD CROSSINGS

THE RAILROAD CROSSING AT MER-49-4.99: SUSPEND AND RESUME RESURFACING AT THE EXISTING RAILROAD CROSSING MATERIALS, APPROXIMATELY 2 FEET FROM NEAREST RAIL. THE CONTRACTOR SHALL VERIFY THE ACTUAL JOINT LOCATIONS WITH THE ENGINEER BEFORE PERFORMING WORK.

ITEM 897 - PAVEMENT PLANING, ASPHALT CONCRETE

AN ESTIMATED QUANTITY OF ITEM 897 - PAVEMENT PLANING, ASPHALT CONCRETE HAS BEEN CARRIED TO THE GENERAL SUMMARY AND INCLUDED IN THE PLANS TO BE USED AS DIRECTED BY THE ENGINEER.

THE APPROXIMATE DEPTH OF PAVEMENT PLANING WILL VARY FROM ONE-HALF INCH (1/2") TO ONE INCH (1").

THE APPROXIMATE WIDTH OF THE PAVEMENT PLANING VARIES FROM TWENTY-FIVE FEET (25') TO FORTY-TWO FEET (42').

THE CONTRACTOR SHALL BEGIN PLACEMENT OF ITEM 424 - FINE GRADED POLYMER ASPHALT CONCRETE, TYPE B WITHIN SEVEN (7) DAYS AFTER ITEM 897 - PAVEMENT PLANING, ASPHALT CONCRETE IS COMPLETED ON A DAILY OPERATION.

THERE ARE TWNETY-EIGHT (28) INTERSECTIONS WITHIN THE LIMITS AND QUANTITY OF THE PAVEMENT PLANING.

THERE ARE APPROXIMATELY TWENTY-SEVEN (27) CASTINGS WITHIN THE PLANING AREA. THE CONTRACTOR SHALL BE RESPONSIBLE FOR FURNISHING ALL LABOR AND EQUIPMENT NECESSARY TO MAINTAIN TRAFFIC AROUND THE CASTINGS AND SHALL INCLUDE THE COST IN THE UNIT PRICE BID FOR: ITEM 614 - MAINTAINING TRAFFIC.

ITEM 611 - MANHOLE ADJUSTED TO GRADE = 12 EACH
ITEM 638 - VALVE BOX ADJUSTED TO GRADE = 15 EACH

ANY CASTINGS THAT REQUIRE ADJUSTING DURING CONSTRUCTION ARE THE RESPONSIBILITY OF THE CONTRACTOR. ALL LABOR, MATERIAL, AND EQUIPMENT NECESSARY FOR THE ADJUSTMENTS OF CASTINGS SHALL BE INCLUDED IN ITEM 611 AND ITEM 638. ANY NEW CASTINGS REQUIRED SHALL BE FURNISHED TO THE CONTRACTOR BY THE VILLAGE OF FORT RECOVERY.

ADJUSTING DEVICES ON MANHOLE COVERS ARE PROHIBITED.

ITEM 897 - PATCHING PLANED SURFACE

PAVEMENT AREAS DESIGNATED FOR PATCHING AFTER PAVEMENT PLANING OPERATION SHALL BE MILLED TWO INCHES (2") IN DEPTH.

AN ESTIMATED QUANTITY OF 200 SQ YDS FOR SR 49 AND 50 SQ YDS FOR SR 219 HAS BEEN CARRIED TO THE GENERAL SUMMARY TO BE USED AS DIRECTED BY THE ENGINEER.

ITEM 897 - PATCHING PLANED SURFACE = 250 SQ YD

ITEM 301 - ASPHALT CONCRETE BASE, PG 64-22, AS PER PLAN

THE CONTRACTOR SHALL BE RESPONSIBLE FOR EXCAVATING OF MATERIAL FROM ALL EXISTING STONE DRIVEWAYS AND MAILBOX APPROACHES TO A DEPTH OF FOUR INCHES (4") BELOW THE EXISTING PAVEMENT ELEVATION. ALL DRIVEWAY AND MAILBOX APPROACHES SHALL BE CONSTRUCTED AS PER THE APPROACH TYPICALS SHOWN IN THE PLAN. EXCAVATED MATERIAL SHALL BE USED TO BACKUP THE NEW PAVEMENT OR REMOVED FROM THE PROJECT SITE AS DIRECTED BY THE PROJECT ENGINEER.

A QUANTITY OF ITEM 301 - ASPHALT CONCRETE BASE, PG 64-22, AS PER PLAN HAS BEEN INCLUDED IN THE GENERAL SUMMARY TO BE USED IN THOSE AREAS EXCAVATED FOR DRIVEWAY AND MAILBOX APPROACHES.

ALL WORK, MATERIALS, LABOR AND EQUIPMENT NECESSARY TO COMPLETE THE ABOVE DESCRIBED WORK SHALL BE INCIDENTAL TO THE PLACEMENT AND INCLUDED IN THE COST OF ITEM 301 - ASPHALT CONCRETE BASE, PG-22, AS PER PLAN.

ITEM 301 - ASPHALT CONCRETE BASE, PG 64-22,
AS PER PLAN = 25 CU. YD.

ESTIMATED NUMBER OF APPROACHES:
5 MAILBOX APPROACHES
2 DRIVE APPROACHES

ITEM 690 - SPECIAL, MAILBOX REMOVED AND RESET

THIS WORK SHALL CONSIST OF REMOVING AND RESETTING EXISTING MAILBOX SUPPORTS. THE CONTRACTOR SHALL TAKE GREAT CARE IN REMOVING AND RESETTING MAILBOX SUPPORTS TO THE CORRECT DISTANCE FROM THE EDGE OF PAVEMENT AS SHOWN ON THE APPROACH TYPICAL SHEET OR AS DIRECTED BY THE ENGINEER.

THE CONTRACTOR SHALL BE RESPONSIBLE FOR REPAIR OR REPLACEMENT FOR DAMAGED OR IMPROPER HANDLING ON THEIR PART AS DIRECTED BY THE ENGINEER.

THE CONTRACTOR SHALL BE RESPONSIBLE FOR COORDINATING WITH THE LOCAL POSTMASTER REGARDING THE TIMING OF THE MOVEMENT OF ANY MAILBOX TO BE REMOVED AND RESET. TEMPORARY INSTALLATIONS SHALL BE IN ACCORDANCE WITH 107.10.

MAILBOXES REMOVED AND RESET SOLELY FOR THE CONVENIENCE OF THE CONTRACTOR'S OPERATION OF CONSTRUCTING THE ASPHALT CONCRETE APPROACH IN JUDGMENT OF THE ENGINEER SHALL NOT BE PAID FOR.

PAYMENT SHALL BE FOR FINAL PERMANENT INSTALLATIONS ONLY. ALL LABOR, MATERIAL AND EQUIPMENT NEEDED TO COMPLETE THEIR WORK SHALL BE INCLUDED IN ITEM 690 - SPECIAL, MAILBOX REMOVED AND RESET.

A QUANTITY OF FIVE (5) EACH OF ITEM SPECIAL, MAILBOX REMOVED AND RESET HAS BEEN CARRIED TO THE GENERAL SUMMARY.

ITEM 690 - SPECIAL - MAILBOX REMOVED AND RESET = 5 EACH

CALCULATED TMK
CHECKED IMK

GENERAL NOTES

MER-49/219-
3.52/1.09

I:\ProjectData\MER\100937_SR49_SR219\Design\Roadway\Sheets\100937_GN001.dgn Sheet 12/12/2017 7:43:57 AM rhanke

SAFETY EDGE NOTE FOR THIN OVERLAYS

IN ADDITION TO THE REQUIREMENTS OF 401.12, ATTACH A DEVICE TO THE SCREED OF THE PAVER THAT CONFINES THE MATERIAL AT THE END GATE AND EXTRUDES THE ASPHALT MATERIAL IN SUCH A WAY THAT RESULTS IN A COMPACTED WEDGE SHAPE PAVEMENT EDGE OF APPROXIMATELY 30 DEGREES (NOT STEEPER THAN 40 DEGREES). ENSURE THE DEVICE MAINTAINS CONTACT WITH THE EXISTING SURFACE, AND ALLOW FOR AUTOMATIC TRANSITION TO CROSS ROADS, DRIVEWAYS AND OBSTRUCTIONS. DO NOT USE CONVENTIONAL SINGLE PLATE STRIKE OFF.

PROJECTS WITH VARYING CONDITIONS SHOULD USE SAFETY EDGE WHERE POSSIBLE. PLAN PREPARATION HAS MADE EVERY REASONABLE ATTEMPT TO IDENTIFY POSSIBLE SAFETY EDGE LOCATIONS.

USE THE TRANSTECH SHOULDER WEDGE MAKER, THE CARLSON SAFETY EDGE END GATE, THE ADVANT-EDGER, THE TROXLER SAFETSLOPE OR A SIMILAR APPROVED-EQUAL DEVICE THAT PRODUCES THE SAME WEDGE CONSOLIDATION RESULTS. CONTACT INFORMATION FOR THESE WEDGE SHAPE COMPACTION DEVICES IS THE FOLLOWING:

TRANSTECH SYSTEMS, INC., 1594 STATE STREET SCHENECTADY, NY 12304 1-800-724-6306 WWW.TRANSTECHSYS.COM

CARLSON SAFETY EDGE END GATE, 18425 50TH AVENUE EAST TACOMA, WA 98446 253-875-8000

ADVANT-EDGE PAVING EQUIPMENT LLC, P.O. BOX 9163 NISKAYUNA, NY 12309-0163 518-280-6090 WWW.ADVANTAEDGEPAVING.COM

IF ELECTING TO USE A SIMILAR DEVICE, PROVIDE PROOF THAT THE DEVICE HAS BEEN USED ON PREVIOUS PROJECTS WITH ACCEPTABLE RESULTS OR CONSTRUCT A TEST SECTION PRIOR TO THE BEGINNING OF WORK AND DEMONSTRATE WEDGE COMPACTION TO THE SATISFACTION OF THE ENGINEER. SHORT SECTIONS OF HANDWORK WILL BE ALLOWED WHEN NECESSARY FOR TRANSITIONS AND TURNOUTS OR OTHERWISE AUTHORIZED BY THE ENGINEER.

IN ADDITION TO THE REQUIREMENTS OF 401.16, MAKE THE FIRST ROLLER PASS 8 TO 12 INCHES (200 TO 300 MM) AWAY FROM TAPERED EDGE. DO NOT ROLL THE TAPER.

ALL EQUIPMENT, LABOR, AND MATERIALS TO CONSTRUCT A SAFETY EDGE AS DETAILED SHALL BE INCIDENTAL TO THE PAVING OPERATION AND ALL COSTS ASSOCIATED SHALL BE INCLUDED IN ITEM 424 - FINE GRADED POLYMER ASPHALT CONCRETE, TYPE B.

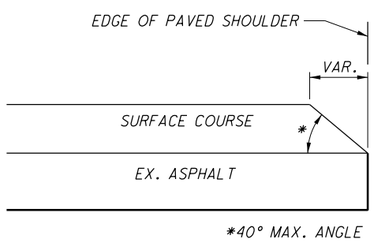

SAFETY EDGE DETAIL

ITEM 614 - MAINTAINING TRAFFIC

TRAFFIC SHALL BE MAINTAINED AT ALL TIMES. THE LENGTH OF RESTRICTED TRAFFIC ZONES SHALL BE KEPT TO A MINIMUM CONSISTENT WITH THE SPECIFICATION REQUIREMENTS FOR PROTECTION OF COMPLETED COURSES.

ALL WORK AND TRAFFIC CONTROL DEVICES SHALL BE IN ACCORDANCE WITH CMS 614 AND OTHER APPLICABLE PORTIONS OF THE SPECIFICATIONS, AS WELL AS THE OHIO MANUAL OF UNIFORM TRAFFIC CONTROL DEVICES.

THE CONTRACTOR SHALL BE REQUIRED TO FURNISH AND ERECT "GROOVED PAVEMENT" SIGNS FOR ANY PLANED SURFACE OF THE ROADWAY REMAINING OPENED AT THE CONCLUSION OF A WORK DAY.

PAYMENT FOR ALL LABOR, EQUIPMENT AND MATERIALS SHALL BE INCLUDED IN THE LUMP SUM CONTRACT PRICE FOR ITEM 614, MAINTAINING TRAFFIC, UNLESS SEPARATELY ITEMIZED IN THE PLAN.

COORDINATION OF WORK AND SEQUENCE OF WORK

THE CONTRACTOR IS ADVISED THAT CONSTRUCTION OPERATIONS MAY IMPACT THE PROJECT SCHEDULE, SEQUENCE OF CONSTRUCTION AND/OR TRAFFIC CONTROL BETWEEN ADJACENT CONSTRUCTION ZONES. THE CONTRACTOR IS REQUIRED TO COORDINATE ALL MAINTENANCE OF TRAFFIC OPERATIONS WITH THOSE ADJACENT CONSTRUCTION PROJECTS.

ODOT WILL HAVE A TWO (2) CONCURRENT PROJECTS WITH ADJACENT CONSTRUCTION ZONES, AS FOLLOWS:

PID 98637:
MER-49-4.90, BRIDGE REPAIR, INCLUDING NEW RIGID OVERLAY. THE ESTIMATED DURATION OF CLOSURE IS TWENTY-EIGHT (28) DAYS.

MER-29-03.21, BRIDGE REPAIR, INCLUDING NEW RIGID OVERLAY. THE ESTIMATED DURATION OF CLOSURE IS TWENTY-EIGHT (28) DAYS. WHILE THIS BRIDGE CLOSURE IS NOT WITHIN THE RESURFACING LIMITS, THE DETOUR ROUTE FOR THIS CLOSURE WILL USE PORTIONS OF SR 49 AND SR 219.

PID 99377:
MER-49-6.52, REMOVE AND REPLACE EXISTING CULVERT. THE ESTIMATED DURATION OF CLOSURE IS SEVEN (7) DAYS.

NO WORK SHALL BEGIN ALONG SR 49 FROM SLM 4.70 TO SR 219 (SLM 9.36) UNTIL AFTER THE WORK IS COMPLETED AT THE MER-49-4.90 AND MER-49-6.52 SITES. THE CONCURRENT PROJECTS HAVE A PROPOSED COMPLETION DATE OF JUNE 30TH, 2018 FOR WORK WITHIN THE LIMITS OF RESURFACING.

PAVEMENT MARKINGS

IT SHALL BE THE RESPONSIBILITY OF THE CONTRACTOR TO DOCUMENT THE LAYOUT OF THE EXISTING PAVEMENT MARKINGS.

THE CONTRACTOR SHALL COORDINATE AND CORROBORATE THE LAYOUT OF ALL PAVEMENT MARKINGS WITH THE ENGINEER.

ITEM 618 - EDGE LINE, RUMBLE STRIPE (ASPHALT CONCRETE)

CONSTRUCT RUMBLE STRIPES ACCORDING TO TRAFFIC STANDARD DRAWING TC-64.10.

RUMBLE STRIPES ARE NOT TO BE USED AT LOCATIONS WHERE THE LANE WIDTH IS LESS THAN 11 FEET AND THE POSTED SPEED LIMIT IS LESS THAN 50 MPH. RUMBLE STRIPES ARE NOT TO BE USED WHERE THE SHOULDER WIDTH IS LESS THAN 2 FEET, NOR GREATER THAN 4 FEET. DISCONTINUE RUMBLE STRIPES AT INTERSECTIONS, RIGHT TURN LANES, DRIVEWAYS, STRUCTURES AND 650 FEET FROM URBAN AND/OR RESIDENTIAL AREAS. DISCONTINUE RUMBLE STRIPES AT THE INTERSECTION OF TWO STATE ROUTES WHERE RAISED PAVEMENT MARKERS BEGIN OR END.

THE DEPARTMENT WILL MEASURE RUMBLE STRIPES IN THE UNIT OF MILES (KILOMETERS) COMPLETED IN PLACE. THE DEPARTMENT WILL MEASURE QUANTITIES AS THE LENGTH OF COMPLETED GRINDING, INCLUDING THE GAPS, INTERSECTIONS AND OTHER SECTIONS OF PAVEMENT NOT BEING GROUND BETWEEN THE BEGINNING STRAIGHT LINE MILEAGE AND THE ENDING STRAIGHT LINE MILEAGE LISTED IN THE PLANS.

THE DEPARTMENT WILL PAY FOR THE PAVEMENT MARKINGS SEPARATELY. THE RUMBLE STRIPES SHALL BE DUST-FREE AND DRY WHEN THE PAVEMENT MARKINGS ARE APPLIED.

THE LOCATIONS ARE:

MER-49 FROM SLM 5.16 TO SLM 11.25
MER-49 FROM SLM 11.75 TO SLM 13.91

THE FOLLOWING ESTIMATED QUANTITIES HAVE BEEN CARRIED TO THE GENERAL SUMMARY:

ITEM 618 EDGE LINE,
RUMBLE STRIPE (ASPHALT CONCRETE) = 16.5 MILE

CALCULATED TMK
CHECKED IMK

GENERAL NOTES

MER-49/219-
3.52/1.09

I:\ProjectData\MER\10937_SR49_SR219\Design\Roadway\Sheets\10937_GN002.dgn Sheet 2/13/2017 1:35:10 PM ikohli

SHEET NUM. 4	7	10	11	13	PART. 01/STR/PV	ITEM	ITEM EXT	GRAND TOTAL	UNIT	DESCRIPTION	SEE SHEET NO.
										ROADWAY	
	3,133				3,133	202	23500	3,133	SY	WEARING COURSE REMOVED	
5					5	SPECIAL	69050350	5	EACH	MAILBOX REMOVED AND RESET	4
										DRAINAGE	
12					12	611	99654	12	EACH	MANHOLE ADJUSTED TO GRADE	
										PAVEMENT	
2,250					2,250	253	01001	2,250	SY	PAVEMENT REPAIR, AS PER PLAN	4
25					25	301	46001	25	CY	ASPHALT CONCRETE BASE, PG64-22, AS PER PLAN	4
	21,239				21,239	407	20000	21,239	GAL	NON-TRACKING TACK COAT	
	6,940				6,940	424	12000	6,940	CY	FINE GRADED POLYMER ASPHALT CONCRETE, TYPE B	
	940				940	617	10100	940	CY	COMPACTED AGGREGATE	
					16.5	618	41000	16.5	MILE	EDGE LINE, RUMBLE STRIPE (ASPHALT CONCRETE)	
	9,552				9,552	897	01010	9,552	SY	PAVEMENT PLANING, ASPHALT CONCRETE, CLASS A, 1" DEPTH	
	230,623				230,623	897	01010	230,623	SY	PAVEMENT PLANING, ASPHALT CONCRETE, CLASS A, 1/2" DEPTH	
250					250	897	02000	250	SY	PATCHING PLANED SURFACE	
										WATER WORK	
15					15	638	10800	15	EACH	VALVE BOX ADJUSTED TO GRADE	
										TRAFFIC CONTROL	
			943		943	621	00100	943	EACH	RPM	
			975		975	621	54000	975	EACH	RAISED PAVEMENT MARKER REMOVED	
		29.66			29.66	642	00094	29.66	MILE	EDGE LINE, 6"	
		14.94			14.94	642	00290	14.94	MILE	CENTER LINE	
		184			184	644	00500	184	FT	STOP LINE	
		559			559	644	00600	559	FT	CROSSWALK LINE	
		2			2	644	01000	2	EACH	RAILROAD SYMBOL MARKING	
		112			112	644	01200	112	FT	PARKING LOT STALL MARKING	
										STRUCTURE REPAIR (MER-219-0258)	
				72	72	516	31001	72	FT	JOINT SEALER, AS PER PLAN, 1" DEPTH	12
										MAINTENANCE OF TRAFFIC	
		126			126	614	12460	126	EACH	WORK ZONE MARKING SIGN	
		29.88			29.88	614	21100	29.88	MILE	WORK ZONE CENTER LINE, CLASS I, 642 PAINT	
		368			368	614	26610	368	FT	WORK ZONE STOP LINE, CLASS III, 642 PAINT	
		4			4	614	32210	4	EACH	WORK ZONE RAILROAD SYMBOL MARKING, CLASS III, 642 PAINT	
										INCIDENTALS	
					LS	614	11000	LS		MAINTAINING TRAFFIC	
					LS	624	10000	LS		MOBILIZATION	

CALCULATED TMK
CHECKED IMK

GENERAL SUMMARY

MER-49/219-
3.52/1.09

I:\ProjectData\MER\100937_SR49_SR219\Design\Roadway\Sheets\100937_GG001.dgn Sheet 2/13/2017 3:36:18 PM ikohli

PARTICIPATION	ROUTE	TYPICAL SECTION	STATION RANGE			LENGTH (L)		AVERAGE WIDTH (W)	SURFACE AREA (A) A=L×W	WEARING COURSE REMOVED (BT JT)		NON-TRACKING TACK COAT AT 0.085GAL/SY		FINE GRADED POLYMER ASPHALT CONCRETE, TYPE B (1" THICK)		COMPACTED AGGREGATE (AVG. 1" THICK)		PAVEMENT PLANING, ASPHALT CONCRETE, CLASS A, 1/2" DEPTH	PAVEMENT PLANING, ASPHALT CONCRETE, CLASS A, 1" DEPTH
										202		407		424		617		897	897
			SLM			MILE	FT	FT	SY	SY		GAL		CY		CY		SY	SY
1	SR 49	1	3.52	TO	4.09	0.57	3010	25.5	8527	142		725		237		37		8527	
1	SR 49	2	4.09	TO	4.15	0.06	317	37.0	1302	206		111		36					1302
1	SR 49	2	4.15	TO	4.22	0.07	370	30.0	1232			105		34					1232
1	SR 49	3	4.70	TO	4.76	0.06	317	42.0	1478			126		41					1478
1	SR 49	3	4.76	TO	4.82	0.06	317	37.0	1302			111		36					1302
1	SR 49	2	4.82	TO	4.88	0.06	317	30.0	1056			90		29					1056
1	SR 49	STR	4.88	TO	4.92														
1	SR 49	2	4.92	TO	4.99	0.07	370	30.0	1232			105		34					1232
1	SR 49	RRX	4.99	TO	4.99														
1	SR 49	1	4.99	TO	7.81	2.82	14890	28.5	47150	317		4008		1310		184		47150	
1	SR 49	STR	7.81	TO	7.85														
1	SR 49	1	7.85	TO	11.33	3.48	18375	28.5	58186	159		4946		1616		227		58186	
1	SR 49	1	11.33	TO	11.38	0.05	265	40.0	1173			100		33		3		1173	
1	SR 49	1	11.38	TO	13.91	2.53	13359	28.5	42302	159		3596		1175		165		42302	
1	SR 49	INT							4700	440		400		131					1950
1	SR 49	DR/MB							2800	552		238		78					
1	SR 219	1	1.09	TO	2.32	1.23	6495	25.0	18040	238		1533		501		80		18040	
1	SR 219	STR	2.32	TO	2.36														
1	SR 219	1	2.36	TO	2.58	0.22	1162	25.0	3227	139		274		90		14		3227	
1	SR 219	STR	2.58	TO	2.59							21		7				245	
1	SR 219	1	2.59	TO	6.12	3.53	18639	25.0	51773	139		4401		1438		230		51773	
1	SR 219	INT							1400	240		119		39					
1	SR 219	DR/MB							2700	402		230		75					
TOTALS CARRIED TO GENERAL SUMMARY										3133		21239		6940		940		230623	9552

LEGEND FOR AUXILLARY AREAS IN "TYPICAL" COLUMN

STR: SEE STRUCTURE SHEETS FOR DETAILS
RRX: RAILROAD CROSSING. SEE PLAN NOTES FOR DETAILS
INT: INTERSECTIONS
DR/MB: DRIVES AND MAILBOX APPROACHES

CALCULATED TMK
CHECKED IMK

PAVEMENT SUBSUMMARY

MER-49/219-
3.52/1.09

I:\ProjectData\MER\100937_SR49_SR219\Design\Roadway\Sheets\100937_GS001.dgn Sheet 2/13/2017 1:35:17 PM ikohli

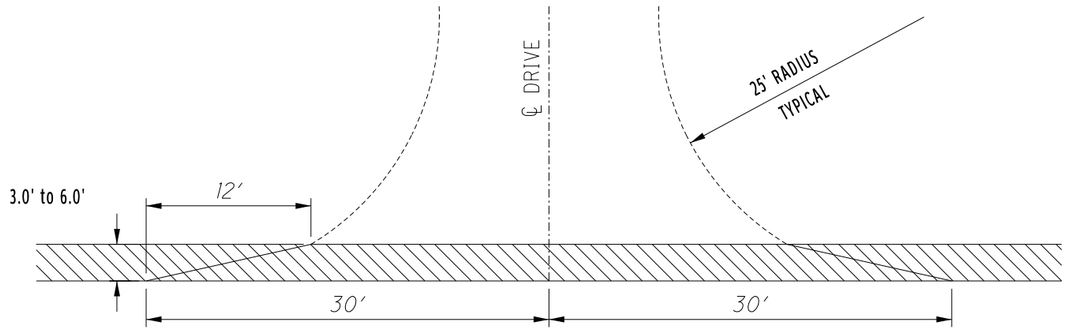

TYPICAL ASPHALT DRIVEWAY

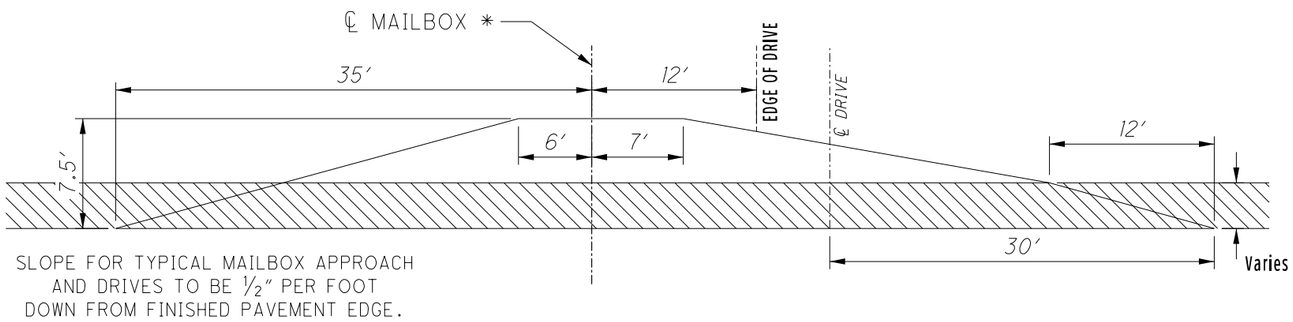

SLOPE FOR TYPICAL MAILBOX APPROACH AND DRIVES TO BE ½" PER FOOT DOWN FROM FINISHED PAVEMENT EDGE.

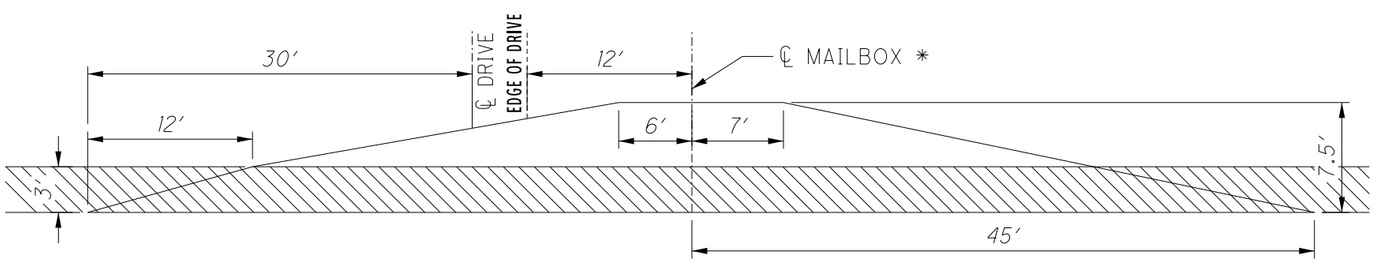

TYPICAL COMBINATION DRIVE & MAILBOX APPROACHES

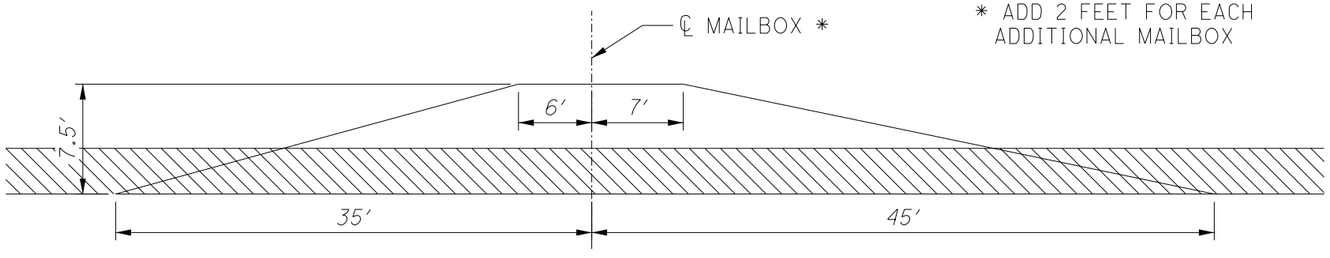

TYPICAL MAILBOX APPROACH

* ADD 2 FEET FOR EACH ADDITIONAL MAILBOX

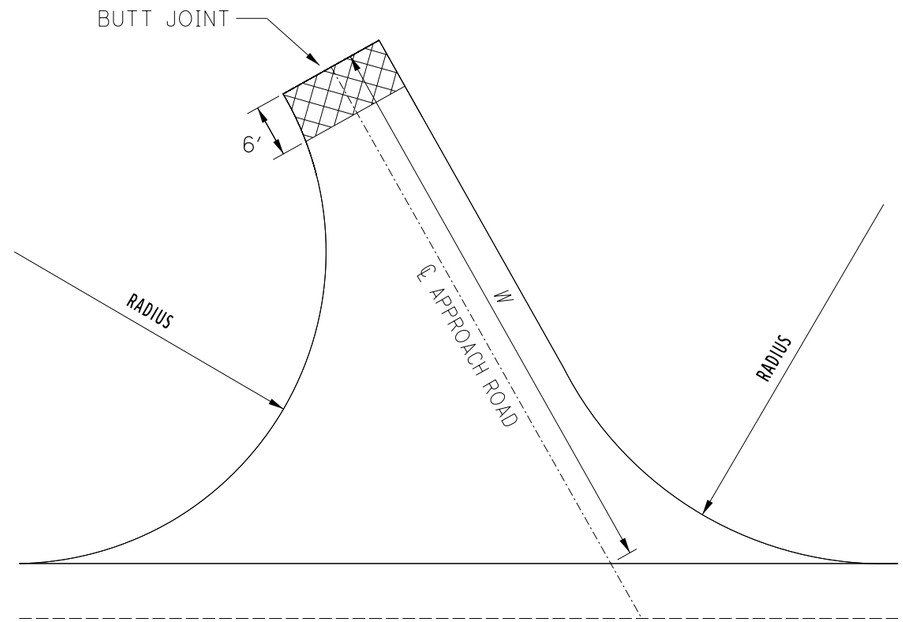

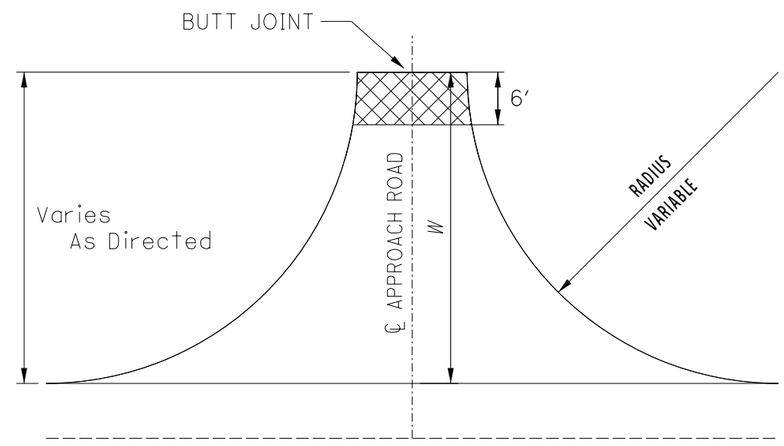

TYPICAL APPROACH ROAD PAVING

W = To Back of Radius or As Directed By the Engineer

OHIO DEPARTMENT OF TRANSPORTATION
DISTRICT SEVEN

TYPICAL APPROACHES FOR ROADS, DRIVES, AND MAILBOXES

CALCULATED TMK
CHECKED IMK

DRIVEWAY DETAILS

MER-49/219-3.52/1.09

8
13

E:\ProjectData\MER\100937_SR49_SR219\Design\Roadway\Sheets\100937_GD001.dgn Sheet 2/13/2017 1:35:19 PM ikohli

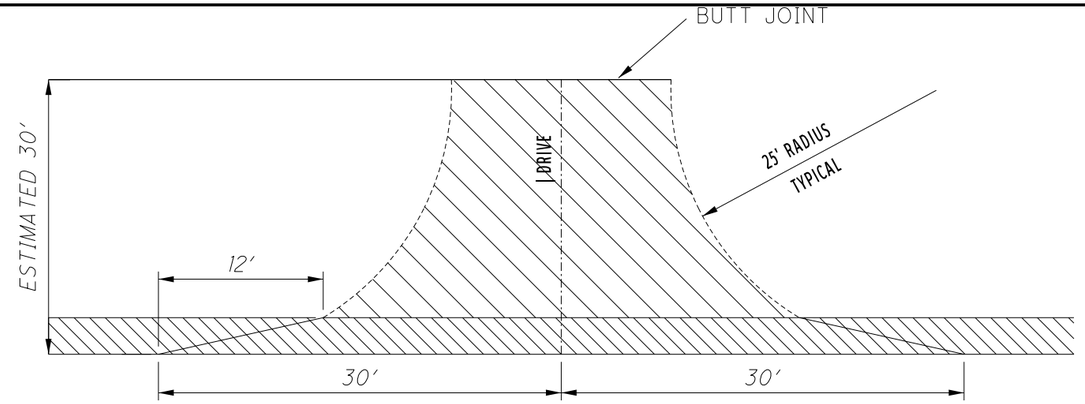

TYPICAL DRIVEWAY

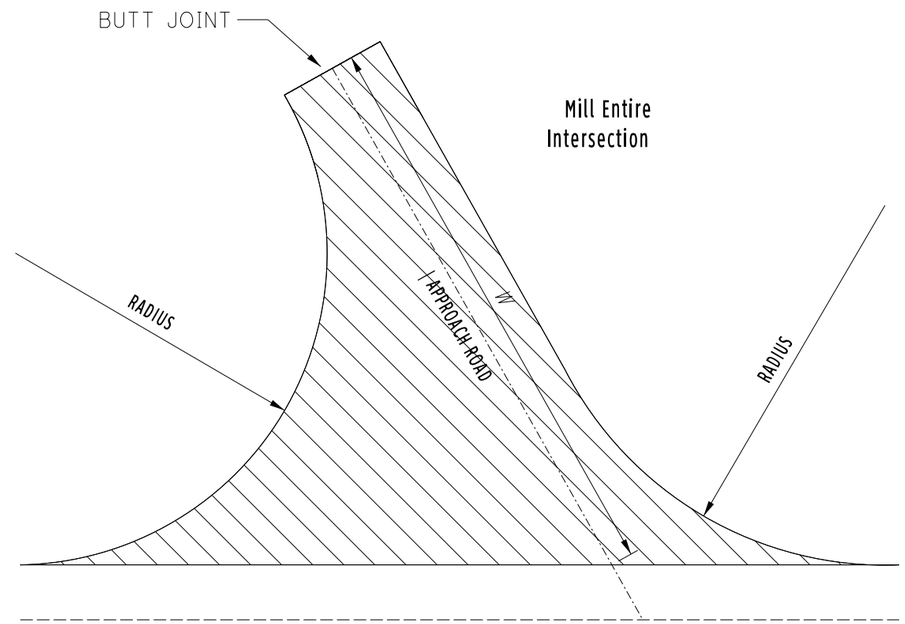

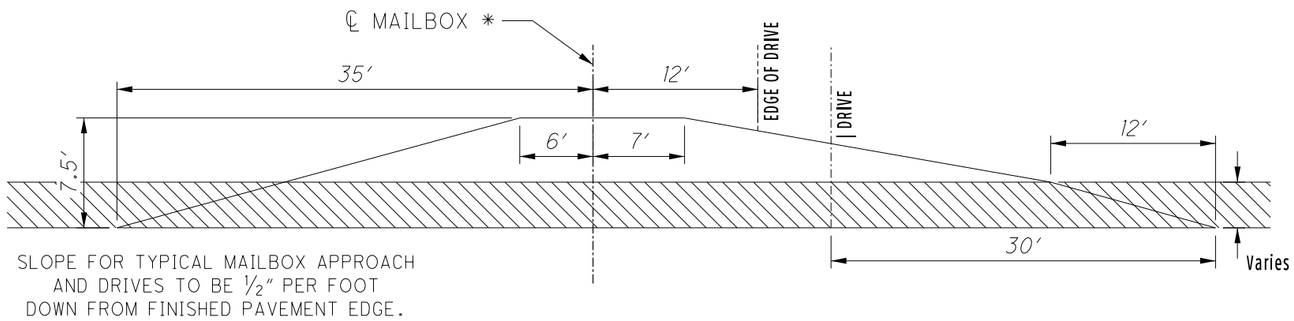

SLOPE FOR TYPICAL MAILBOX APPROACH
AND DRIVES TO BE ½" PER FOOT
DOWN FROM FINISHED PAVEMENT EDGE.

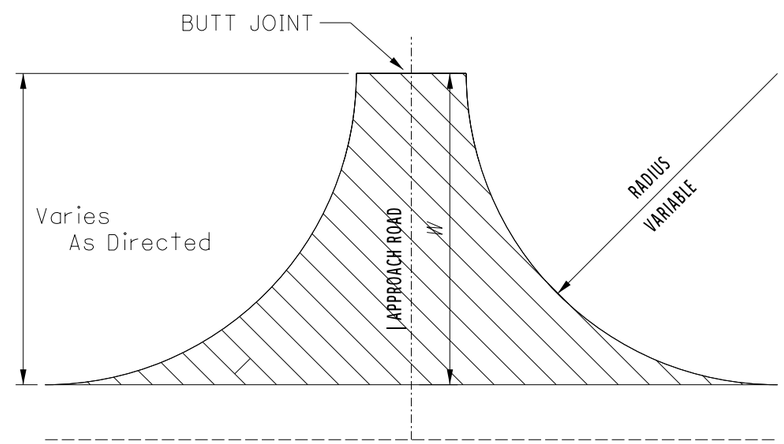

TYPICAL APPROACH ROAD PAVING

W = To Back of Radius or As Directed By the Engineer

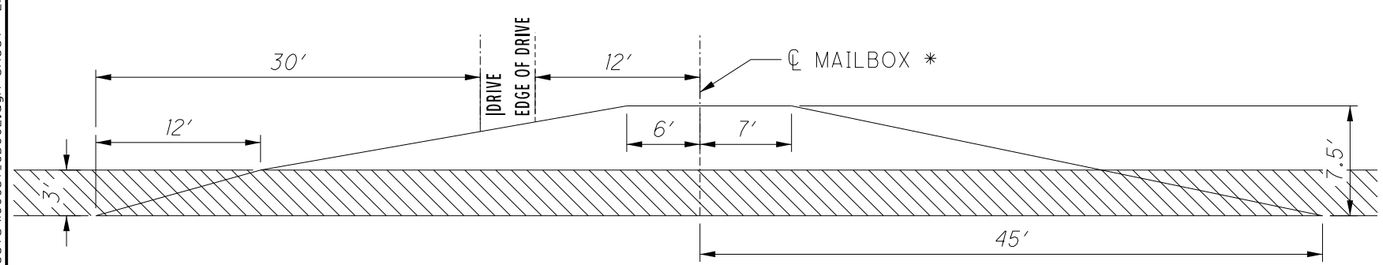

TYPICAL COMBINATION DRIVE & MAILBOX APPROACHES

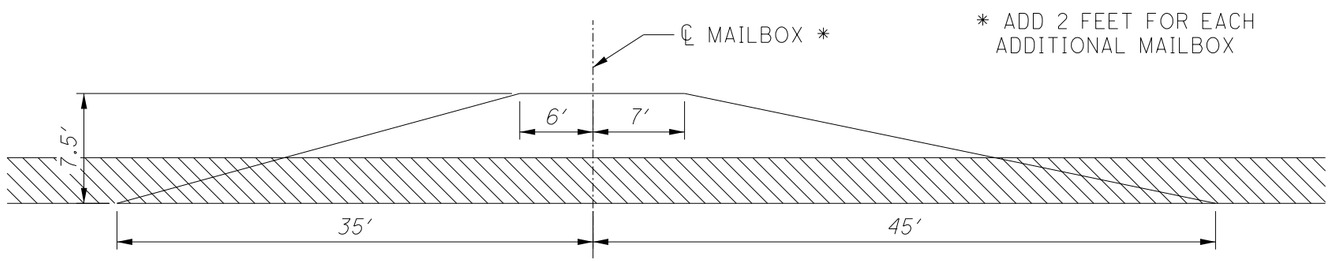

TYPICAL MAILBOX APPROACH

* ADD 2 FEET FOR EACH
ADDITIONAL MAILBOX

OHIO DEPARTMENT OF TRANSPORTATION
DISTRICT SEVEN

TYPICAL APPROACHES FOR ROADS,
DRIVES, AND MAILBOXES

CALCULATED TMK
CHECKED IMK

DRIVEWAY DETAILS

MER-49/219-
3.52/1.09

I:\ProjectData\MER\100937_SR49_SR219\Design\Roadway\Sheets\100937_GD002.dgn Sheet 2/13/2017 1:35:20 PM ikohli

PARTICIPATION	ROUTE	STATION FROM	STATION TO	LANE WIDTH	SOLID LINE EQUIVALENT	614 WORK ZONE MARKING SIGN	614 WORK ZONE CENTER LINE, CLASS 1, 642 PAINT	614 WORK ZONE RAILROAD SYMBOL MARKING, CLASS III, 642 PAINT	614 WORK ZONE STOP LINE, CLASS III, 642 PAINT	642 EDGE LINE, 6"	642 CENTER LINE		644 STOP LINE	644 CROSSWALK LINE		644 RAILROAD SYMBOL MARKING		644 PARKING LOT STALL MARKINGS			
				FT	MILE	EACH	MILE	EACH	FT	MILE	MILE		FT	FT		EACH		FT			
01/STR/PV	MER-49	3.52	4.22	10.5	0.34	12	1.4			1.4	0.7										
		4.22 @ E MILLIGAN ST							52				26	96							
01/STR/PV	MER-49	4.70	13.91	12	6.7	67	18.42			18.2	9.21										
		4.70 @ W BOUNDRY ST							50				25	156				16			
		4.70	4.76															96			
		4.76 @ E BROADWAY ST							118				59	307							
		4.99 @ RAILROAD						4								2					
		9.36 @ SR-219							70				35								
		13.91 @ SR-29							78				39								
01/STR/PV	MER-219	1.09	6.12	10	4.42	47	10.06			10.06	5.03										
TOTALS CARRIED TO GENERAL SUMMARY						126	29.88	4	368	29.66	14.94		184	559		2		112			

CALCULATED TMK
CHECKED IMK

TRAFFIC CONTROL SUBSUMMARY (1 OF 2)

MER-49/219-
3.52/1.09

I:\ProjectData\MER\100937_SR49_SR219\Design\Roadway\Sheets\100937_TS001.dgn Sheet 2/13/2017 1:35:21 PM ikohli

PARTICIPATION	ROUTE	SLM FROM	SLM TO	RPM DETAIL	621 RPM ONE-WAY WHITE	621 RPM ONE-WAY YELLOW	621 RPM TWO-WAY WHITE/WHITE	621 RPM TWO-WAY YELLOW/YELLOW	621 RPM TWO-WAY WHITE/RED	621 RPM TWO-WAY YELLOW/RED	621 RPM	621 RAISED PAVEMENT MARKER REMOVED	REMARKS
					EACH						EACH	EACH	
01/STR/PV	MER-49	3.52	4.22									32	RPMS WILL BE REMOVED AND NOT INSTALLED
		SUBTOTAL	**MER-49**									**32**	
01/STR/PV	MER-49	5.04	9.21	GAP				274			274	274	
		9.21	9.51	8				22			22	22	SR-219
		9.65	13.76	GAP				271			271	271	
		13.76	13.91	6	16			11			27	27	SR-29
		SUBTOTAL	**MER-49**		**16**			**578**			**594**	**594**	
01/STR/PV	MER-219	1.09	1.24	6	16			11			27	27	
		1.24	6.12	GAP				322			322	322	
		SUBTOTAL	**MER-219**		**16**			**333**			**349**	**349**	
	TOTAL FOR 01/STR/PV				**32**			**911**			**943**	**975**	
TOTALS CARRIED TO GENERAL SUMMARY											**943**	**975**	

RAISE PAVEMENT MARKER DETAIL No.:

1 - TYPICAL SPACING/MULTILANE DIVIDED
2 - TAPERED ACCELERATION LANE
3 - DECELERATION LANE
4 - PARALLEL ACCELERATION LANE
5 - MULTILANE DIVIDED/EXPRESSWAY
6 - STOP APPROACH
7 - 1-LANE APPROACH W/ LEFT TURN LANE
8 - THRU APPROACH
9 - 2-LANE APPROACH W/ LEFT TURN LANE
10 - 4-LANE DIVIDED TO 2 LANE TRANSITION
11 - 4-LANE UNDIVIDED TO 2 LANE TRANSITION
12 - 2-LANE NARROW BRIDGE
13 - TWO-WAY LEFT TURN LANE
14 - 1-LANE BRIDGE
15 - HORIZONTAL CURVE
16 - HORIZONTAL CURVE, ALT.
17 - STOP APPROACH, ALT.

GAP - CENTERLINE AT 80 FT (TYPICAL)

CALCULATED TMK
CHECKED IMK

TRAFFIC CONTROL SUBSUMMARY (2 OF 2)

MER-49/219-3.52/1.09

I:\ProjectData\MER\00937_SR49_SR219\Design\Roadway\Sheets\00937_TS002.dgn Sheet 2/13/2017 1:35:23 PM ikohli

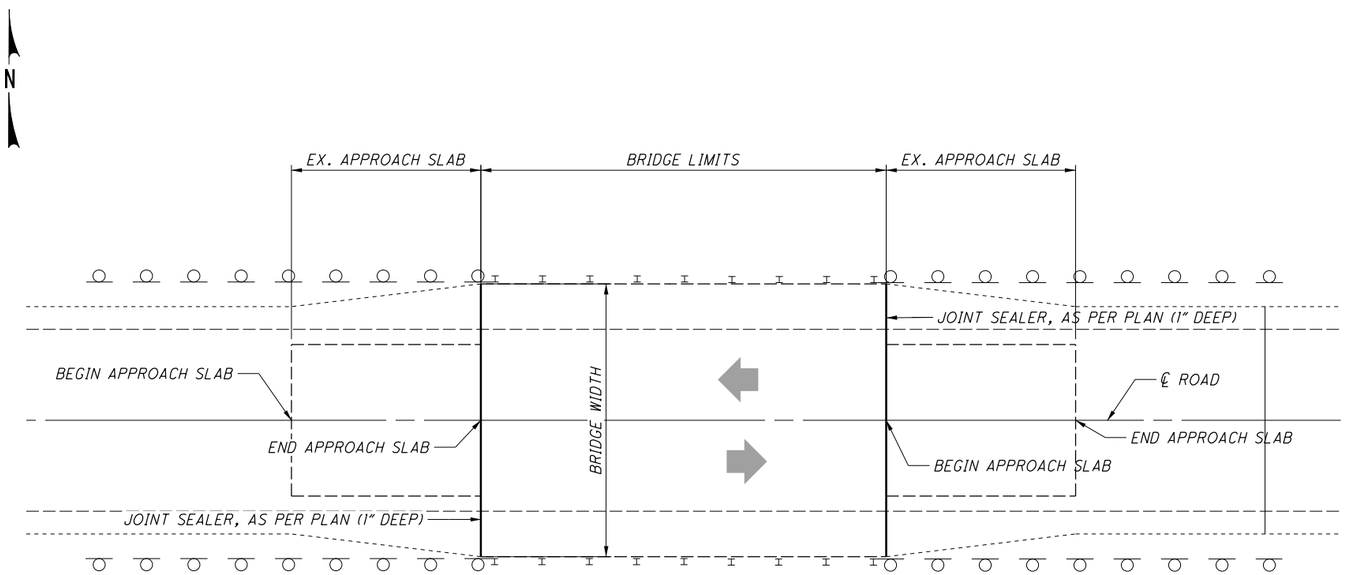

PLAN VIEW MER-219-0258

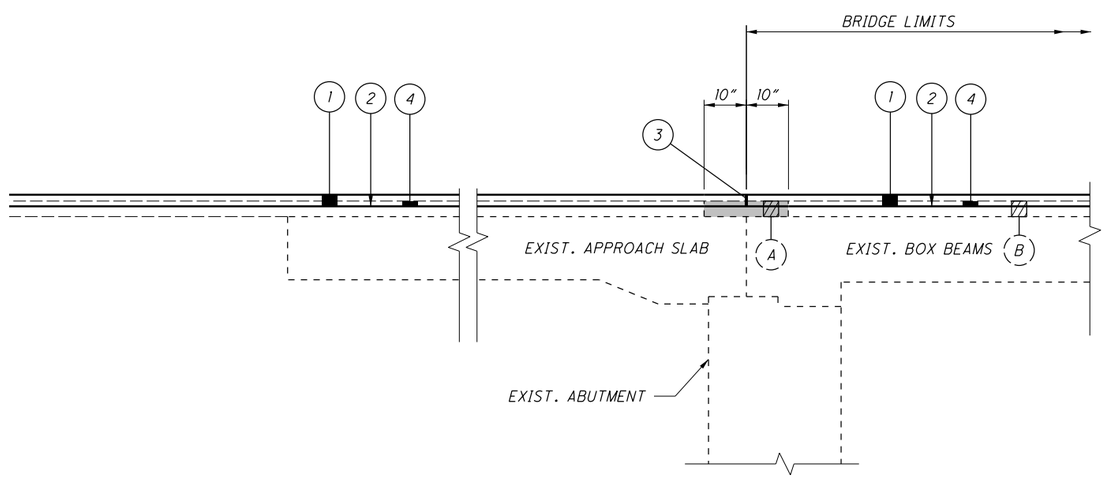

PROFILE VIEW MER-219-0258

(REAR SHOWN, FORWARD SIMILAR)

EXISTING STRUCTURE VERIFICATION

DETAILS AND DIMENSIONS SHOWN IN THESE PLANS PERTAINING TO THE EXISTING STRUCTURE HAVE BEEN OBTAINED FROM THE PLANS OF THE EXISTING STRUCTURE AND FROM FIELD OBSERVATION AND MEASUREMENTS. CONSEQUENTLY, THEY ARE INDICATIVE OF THE STRUCTURE AND PROPOSED WORK, BUT THEY SHALL BE CONSIDERED TENTATIVE AND APPROXIMATE. THE CONTRACTOR IS REFERRED TO THE CMS SECTIONS 102.05 AND 105.02.

CONTRACT BID PRICES SHALL BE BASED UPON A RECOGNITION OF THE UNCERTAINTIES DESCRIBED ABOVE AND UPON A PREBID EXAMINATION OF THE EXISTING STRUCTURES BY THE CONTRACTOR. HOWEVER, ALL PROJECT WORK SHALL BE BASED UPON ACTUAL DETAILS AND DIMENSIONS, WHICH HAVE BEEN VERIFIED BY THE CONTRACTOR IN THE FIELD. PLANS OF THE EXISTING STRUCTURES MAY BE EXAMINED AT THE DISTRICT SEVEN OFFICE IN SIDNEY, OHIO OR THE OFFICE OF STRUCTURAL ENGINEERING IN COLUMBUS, OHIO.

ITEM 516 - JOINT SEALER, AS PER PLAN (1" DEEP)

A 1" DEEP X ½" WIDE STRIP SHALL BE SAWCUT OUT OF THE THE PROPOSED OVERLAY. CENTER THE SAWCUT IN THE CENTER OF THE EXISTING POLYMER MODIFIED ASPHALT EXPANSION JOINT SYSTEM THAT WAS COVERED UP BY THE PROPOSED OVERLAY. JOINT SEALER AS PER 705.04 SHALL BE USED TO SEAL THE JOINT CREATED. THE CONTRACTOR SHALL MARK AND VERIFY THE LOCATIONS WITH THE ENGINEER PRIOR TO ANY MILLING OR PAVING. A QUANTITY FOR EACH STRUCTURE HAS BEEN INCLUDED IN THE ESTIMATED QUANTITIES.

LEGEND

- (1) ITEM 424 - 1" FINE GRADED POLYMER ASPHALT CONCRETE, TYPE B
- (2) ITEM 407 - TACK COAT (.085 GAL/SY.)
- (3) ITEM 516 - JOINT SEALER, AS PER PLAN (1" DEEP)
- (4) ITEM 897 - PAVEMENT PLANING, ASPHALT CONCRETE, CLASS A, 1/2" DEPTH
- (A) EXISTING POLYMER MODIFIED ASPHALT EXPANSION JOINT
- (B) EXISTING 2"-3" ASPHALT PAVEMENT

EXISTING STRUCTURE

TYPE: PRETRESSED CONCRETE BOX BEAM

SPANS: 58'-0" c/c brgs.
ROADWAY WIDTH: 36'-0" F/F GUARDRAIL
LOADING: HS 20-44 AND ALTERNATE MILITARY LOADING
WEARING SURFACE: 2"-3" ASPHALT
SKEW: 0°
STRUCTURAL FILE NUMBER: 5403049
DATE BUILT: 1989
DISPOSITION: TO BE RESURFACED

PROPOSED WORK

1) MARK AND VERIFY LOCATIONS OF JOINT WITH THE ENGINEER. REMOVE ½" OF ASPHALT FROM THE BRIDGE DECK, THE APPROACH SLABS, AND THE POLYMER MODIFIED ASPHALT EXPANSION JOINT.

2) OVERLAY THE BRIDGE DECK, THE APPROACH SLABS, AND THE POLYMER MODIFIED ASPHALT EXPANSION JOINT WITH 1" OF FINE GRADED POLYMER ASPHALT CONCRETE, TYPE B.

3) SAW CUT PER ITEM 516, JOINT SEALER, AS PER PLAN. THE SAW CUT SHALL BE LOCATED OVER THE CENTER OF THE EXISTING POLYMER JOINT.

CALCULATED TMK
CHECKED IMK

BRIDGE NO.: MER-219-0258

MER-49/219-3.52/1.09

I:\ProjectData\MER\100937_SR49_SR219\Design\Roadway\Sheets\100937_GM001.dgn Sheet 2/13/2017 1:35:24 PM ikohli

ESTIMATED QUANTITIES

BRIDGE NO. / STRUCTURE FILE NO.								ITEM	EXTENSION	UNIT	DESCRIPTION	SEE SHEET
							MER-219-0258 5403049 01/STR/PV					
							72	516	31001	FT	JOINT SEALER, AS PER PLAN, 1" DEPTH	12
								QUANTITIES CARRIED TO GENERAL SUMMARY				

BRIDGE No.	LENGTH (BRIDGE LIMITS)	WIDTH	BRIDGE DECK AREA	SKEW ANGLE	COMMENTS	APPROACH SLAB LENGTH	APPROACH SLAB AREA
	FT.	FT.	SQ. YD.	DEGREE		FT.	SQ. YD.
MER-49-0490	119.67	40	532	0°	SUSPEND / RESUME ±50' OUTSIDE OF BRIDGE LIMITS OR AS DIRECTED BY THE ENGINEER. VERIFY LOCATION WITH ENGINEER.	25	112
MER-49-0784	160.51	40	714	15° RF	SKIP APPROACH SLAB AND BRIDGE DECK	25	112
MER-49-1045	14	36	56	0°	PAVE OVER AS ROADWAY	N/A	N/A
MER-219-0233	172.06	36	689	35° LF	SKIP APPROACH SLAB AND BRIDGE DECK	25	100
MER-219-0258	61.16	36	245	0°	EXISITNG 2"-3" ASPHALT ON BOX BEAM BRIDGE	25	100

CALCULATED TMK
CHECKED IMK

BRIDGE SUBSUMMARY

MER-49/219-3.52/1.09

I:\ProjectData\MER\100937_SR49_SR219\Design\Roadway\Sheets\100937_GS002.dgn Sheet 2/13/2017 4:35:26 PM ikohli