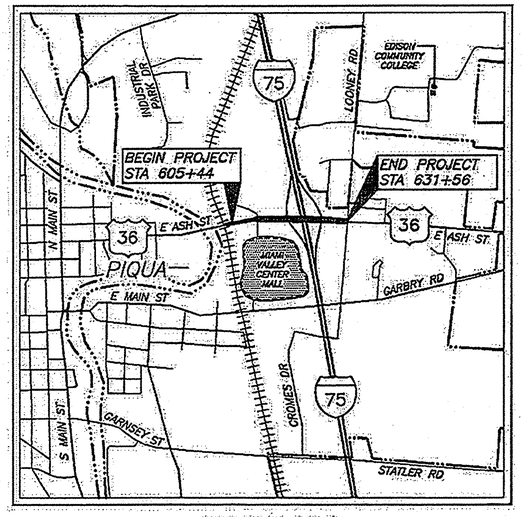

LOCATION MAP

LATITUDE: 40°09'04" LONGITUDE: 84°13'13"

SCALE IN MILES

0 1 2

N

PORTION TO BE IMPROVED
INTERSTATE & DIVIDED HIGHWAY
STATE & FEDERAL ROUTE
OTHER ROADS

DESIGN DESIGNATION

DESIGN SPEED ..... 45 MPH
LEGAL SPEED ..... 40 MPH
CURRENT ADT (2012) 18,630

DESIGN EXCEPTIONS

NONE REQUIRED

PLAN PREPARED BY:

EDSALL & ASSOCIATES LLC
754 NEIL AVENUE
COLUMBUS, OHIO 43215

MS CONSULTANTS, INC.
8101 N. HIGH STREET, STE. 150
COLUMBUS, OHIO 43235

BURTON PLANNING SERVICES, LLC
252 ELECTRIC AVENUE
WESTERVILLE, OHIO 43081

MAY 15, 2013

UNDERGROUND UTILITIES

CONTACT BOTH SERVICES
CALL TWO WORKING DAYS
BEFORE YOU DIG

CALL
1-800-362-2764
(TOLL FREE)
OHIO UTILITIES PROTECTION SERVICE
NON-MEMBERS
MUST BE CALLED DIRECTLY

OIL & GAS PRODUCERS PROTECTIVE
SERVICE CALL: 1-800-925-0988

ENGINEER'S SEAL:

STATE OF OHIO
AMY L. HAVENAR
E-66123
REGISTERED
PROFESSIONAL ENGINEER

SIGNED: Amy L. Havenar
DATE: 05-15-13
SHEETS: E1-E5

ENGINEER'S SEAL:

STATE OF OHIO
KIMBERLY BURTON
E-65333
REGISTERED
PROFESSIONAL ENGINEER

SIGNED: K. C. B.
DATE: 05-15-13
SHEETS: 40-46

LANDSCAPE ARCHITECT'S SEAL:

STATE OF OHIO
D. C. EDSALL 012
J. F. EDSALL 103
REGISTERED
LANDSCAPE ARCHITECTS

SIGNED: John F. Edsall
DATE: 05-15-13
SHEETS: 1-39

STATE OF OHIO
DEPARTMENT OF TRANSPORTATION
MIA-36-11.55
U.S. ROUTE 36 CORRIDOR BEAUTIFICATION PROJECT
CITY OF PIQUA
SPRINGCREEK TOWNSHIP
MIAMI COUNTY

INDEX OF SHEETS:

TITLE SHEET	1
GENERAL SUMMARY	2-3
DEMOLITION/EXISTING CONDITIONS/UTILITIES PLAN	4-6
LAYOUT PLAN	7-9
LAYOUT PLAN/POINT TABLE	10
GRADING PLAN	11-17
CURB OPENING COORDINATE TABLE	18
TOPSOIL PLAN	19-21
PLANTING PLAN	22-25
PLANT LIST/PLANTING DETAILS	26
SIGN AND PAVEMENT MARKING PLAN	27-29
PAVEMENT MARKING SUBSUMMARY	30
SITE DETAILS	31-32
LANDSCAPING GENERAL NOTES	33-39
STREET LIGHTING PLAN	39A, 39B, 39C
STREET LIGHTING GENERAL SUMMARY & DETAILS	39D
STREET LIGHTING DETAILS	39E
MAINTENANCE OF TRAFFIC GENERAL NOTES	40
MAINTENANCE OF TRAFFIC - PHASE 2	41 - 44
MAINTENANCE OF TRAFFIC - PHASE 4	45
MAINTENANCE OF TRAFFIC SUBSUMMARY	46

STANDARD CONSTRUCTION DRAWINGS

BP - 3.1 4-20-12	MH - 1.2 7-20-12	MT - 99.20 7-20-12
BP - 5.1 7-28-00	DM - 1.4 7-15-11	MT - 101.90 10-19-12
BP - 7.1 10-15-10	DM - 4.4 7-20-12	MT - 105.10 7-20-12
RM - 1.1 7-15-11	TC - 41.20 01-19-01	MT - 110.10 7-20-12
LA - 1.1 10-15-10	TC - 42.20 01-21-11	
LA - 1.2 1-16-09	TC - 52.10 01-19-07	
CB - 2.1 7-20-12	TC - 52.20 01-19-07	
CB - 2.2 7-20-12	MT - 95.30 7-20-12	

SUPPLEMENTAL SPECIFICATIONS

800 4-19-13
802 1-20-12

SPECIAL PROVISIONS

PROJECT DESCRIPTION

THE PROJECT SITE INCLUDES AREAS ON BOTH SIDES OF US ROUTE 36 WITHIN THE EXISTING RIGHT-OF-WAY FROM THE RAILROAD OVERPASS AT THE WEST END TO LOONEY ROAD AT THE EAST END. AREAS WITHIN THE INTERCHANGE AT I-75 AND US ROUTE 36 ARE LIMITED TO THE US ROUTE 36 RIGHT-OF-WAY AND THE BRIDGE OVER I-75. THIS DOES NOT INCLUDE ON OR OFF RAMPS OR THE INFIELD AREAS RELATED TO THOSE RAMPS. NO ADDITIONAL RIGHT-OF-WAY OR EASEMENT ACQUISITIONS ARE ANTICIPATED.

KEY PROGRAM ELEMENTS OF THE PROJECT INCLUDE THE FOLLOWING ITEMS OR COMPONENTS.

- REMOVAL OF ALL EXISTING UTILITY TYPE RIGHT-OF-WAY FENCE TO BE DONE BY CITY OF PIQUA. INSTALLATION OF MONUMENTS AT END AND DEFLECTION POINTS TO BE DONE BY CONTRACTOR.
- INSTALL CURBING AROUND EXISTING GRASS MEDIANS EAST AND WEST OF THE INTERSTATE BRIDGE.
- REMOVE/EXCAVATE THE PAINTED MEDIAN EAST OF THE BRIDGE. INSTALL NEW CURBS AND BACKFILL WITH TOPSOIL TO CREATE A PLANTING AREA.
- PLANT SHOULDER EMBANKMENT AREAS WITH NATIVE TREE SPECIES AND PLANT MEDIAN AREAS WITH SHRUB SPECIES THAT ARE APPROPRIATE FOR THE AVAILABLE SPACES.

EARTH DISTURBED AREAS

PROJECT EARTH DISTURBED AREA R.O.W.: 4.53 ACRES
ESTIMATED CONTRACTOR EARTH DISTURBED AREA: 4.53 ACRES
NOTICE OF INTENT EARTH DISTURBED AREA: (NOI SUBMITTED)

2010 SPECIFICATIONS

THE STANDARD SPECIFICATIONS OF THE STATE OF OHIO, DEPARTMENT OF TRANSPORTATION, INCLUDING CHANGES AND SUPPLEMENTAL SPECIFICATIONS LISTED IN THE PROPOSAL SHALL GOVERN THIS IMPROVEMENT ALONG WITH THE FOLLOWING SPECIAL DETAILS AND LANDSCAPING GENERAL NOTES.

ENVIRONMENTAL COMMITMENTS MADE AND RESOURCES TO BE AVOIDED

THE PROJECT IS LOCATED WITHIN THE BOUNDARIES OF A DESIGNATED SOLE SOURCE AQUIFER. BEST CONSTRUCTION PRACTICES ARE TO BE IMPLEMENTED TO MINIMIZE WATER QUALITY IMPACTS. ON-SITE STORAGE OF PETROLEUM PRODUCTS/CHEMICALS IS TO BE MINIMIZED. A SPILL CONTAINMENT KIT IS TO BE MAINTAINED ON-SITE THROUGHOUT CONSTRUCTION ACTIVITIES. SPILLS OF FUELS, OILS, CHEMICALS, OR OTHER MATERIALS WHICH COULD POSE A THREAT TO GROUNDWATER SHALL BE CLEANED UP IMMEDIATELY. IF THE SPILL IS A REPORTABLE AMOUNT, THE LOCAL FIRE DEPARTMENT IS TO BE CONTACTED.

I HEREBY APPROVE THESE PLANS AND DECLARE THAT THE MAKING OF THIS IMPROVEMENT WILL NOT REQUIRE THE CLOSING TO TRAFFIC OF THE HIGHWAY AND THAT PROVISIONS FOR THE MAINTENANCE AND SAFETY OF TRAFFIC WILL BE AS SET FORTH ON THE PLANS AND ESTIMATES.

APPROVED Amy L. Havenar
DATE 05-15-13 CITY ENGINEER, CITY OF PIQUA

APPROVED Randy Chrodlly, P.E., P.S. / PEW
DATE 5-17-13 DISTRICT DEPUTY DIRECTOR

APPROVED Jerry Wray
DATE 6-20-13 DIRECTOR, DEPARTMENT OF TRANSPORTATION

FEDERAL PROJECT NO. E110(338)
PID NO. 88222
CONSTRUCTION PROJECT NO. NONE
RAILROAD INVOLVEMENT NONE
MIA-36-11.55
1/46

MIA - US-36-11.55
130501 PID - 88222
Dist 7 8/15/2013
Contract Proposal Available @ www.contracts.dot.state.oh.us/home
01-Nov-2013 15:10:01 T.TTL.DWG

02_L02_GENR_SUMM.DWG 15-May-2013

SHEET NUMBER 4	5	6	7	8	9	11	12	13	14	15	19	20	21	22	23	24	25	26	27	28	29	30	ITEM	ITEM EXT.	GRAND TOTAL	UNIT	DESCRIPTION	SEE SHEET NO.
																											ROADWAY	
	1																						201	23000	1	EACH	TREE REMOVED, 30" SIZE	
190																							202	30000	190	SQ FT	CONCRETE WALK REMOVED	
25																							202	32000	25	FT	CURB REMOVED	
781	1,315	2,448																					202	98300	4,544	SQ YD	REMOVAL MISC.: COMPOSITE PAVEMENT	
4,240	28,447	938																					202	98400	33,625	SQ FT	REMOVAL MISC.: TREAT GRASS AND TILL	
			550	692	750																		204	10000	1,992	SQ YD	SUBGRADE COMPACTION	
			2	3	5																		604	40521	10	EACH	RIGHT-OF-WAY MONUMENT, AS PER PLAN	31
			1,052																				608	10001	1,052	SQ FT	4" CONCRETE WALK, AS PER PLAN	31
			5																				608	49001	5	EACH	CURB RAMP, AS PER PLAN	10
			80																				608	53021	80	SQ FT	DETECTABLE WARNING, AS PER PLAN	32
3,395	2,962	2,634																					644	30000	8,991	FT	REMOVAL OF PAVEMENT MARKING	
																											EROSION CONTROL	
											139	352	633										659	00301	1,124	CU YD	TOPSOIL, AS PER PLAN	19-21
														3	35		55						660	20000	93	SQ YD	SODDING REINFORCED	
																											DRAINAGE	
							234	7															603	04600	241	FT	12" CONDUIT, TYPE C	
						11																	603	06100	11	FT	15" CONDUIT, TYPE C	
							1																604	00400	1	EACH	CATCH BASIN, NO. 3	
						1		1															604	00800	2	EACH	CATCH BASIN, NO. 3A	
										1													604	09001	1	EACH	CATCH BASIN ADJUSTED TO GRADE, AS PER PLAN	15
							1																604	31500	1	EACH	MANHOLE, NO. 3	
						1																	604	34501	1	EACH	MANHOLE ADJUSTED TO GRADE, AS PER PLAN	11
						2	3	8	14	10													604	22500	37	EACH	INLET, MISC.: CURB PASS THROUGH	32
						2	3	8	14	10													604	22500	37	EACH	INLET, MISC.: CURB PASS THROUGH ALTERNATE #4	32
																											PAVEMENT	
			42	76	83																		301	46000	201	CU YD	ASPHALT CONCRETE BASE, PG64-22	
			61	76	86																		304	20000	223	CU YD	AGGREGATE BASE	
			53		31																		305	14001	84	SQ YD	10" CONCRETE BASE, AS PER PLAN	31
			15	28	31																		448	46040	74	CU YD	ASPHALT CONCRETE INTERMEDIATE COURSE, TYPE 2, PG64-28	
			15	28	31																		448	47020	74	CU YD	ASPHALT CONCRETE SURFACE COURSE, TYPE 1, PG64-22	
			702	1,412	1,715																		609	24511	3,829	FT	CURB, TYPE 4-C, AS PER PLAN	31
			178																				609	26000	178	FT	CURB, TYPE 6	
																											TRAFFIC CONTROL	
																			15	10	10		630	80100	35	SQ FT	SIGN, FLAT SHEET	
																						0.758	644	00100	0.758	MILE	EDGE LINE	
																						0.754	644	00200	0.754	MILE	LANE LINE	
																						0.127	644	00300	0.127	MILE	CENTER LINE	
																						2,566	644	00400	2,566	FT	CHANNELIZING LINE	
																						270	644	00500	270	FT	STOP LINE	
																						232	644	00601	232	FT	CROSSWALK LINE, AS PER PLAN	31
																						402	644	00700	402	FT	TRANSVERSE/DIAGONAL LINE	
																						48	644	00900	48	SQ FT	ISLAND MARKING	
																						12	644	01300	12	EACH	LANE ARROW	
																						4	644	01400	4	EACH	WORD ON PAVEMENT, 72"	
																						1,392	644	01500	1,392	FT	DOTTED LINE, 4"	
																											LANDSCAPING	
																	401						661	14001	401	EACH	PERENNIALS, AS PER PLAN	25

CALCULATED JAM
CHECKED JFE/DCE

GENERAL SUMMARY

MIA-36-11.55

EDSALL & ASSOCIATES LLC
754 NEIL AVENUE ▪ COLUMBUS, OHIO 43215
LANDSCAPE ARCHITECTS ▪ LAND PLANNERS ▪ PLANNING CONSULTANTS

03_L03_GENR_SUMM.DWG 03-June-2013

SHEET NUMBER 4	5	6	7	8	9	11	12	13	14	15	19	20	21	22	23	24	25	26				46	ITEM	ITEM EXT.	GRAND TOTAL	UNIT	DESCRIPTION	SEE SHEET NO.
																											LANDSCAPING (CONT.)	
																	188						661	20041	188	EACH	DECIDUOUS SHRUB, 24" HEIGHT, AS PER PLAN	25
																	208						661	30061	208	EACH	EVERGREEN SHRUB, 24" HEIGHT, AS PER PLAN	25
															17	16							661	40101	33	EACH	DECIDUOUS TREE, 2 1/2" CALIPER, AS PER PLAN	23–24
															16	11							661	99900	27	EACH	PLANTING, MISC.: DECIDUOUS TREE, 2 1/2" CALIPER, INSTALLATION ONLY (SEE NOTE 1)	23–24
														10	26	32							661	99900	68	EACH	PLANTING, MISC.: DECIDUOUS TREE, 3 1/2" CALIPER, INSTALLATION ONLY (SEE NOTE 1)	22–24
																	1,421						661	99900	1,421	EACH	PLANTING, MISC.: NO. 1 CONT. ORNAMENTAL GRASS	25
																	179						661	99900	179	EACH	PLANTING, MISC.: NO. 2 CONT. ORNAMENTAL GRASS	25
														10	59	59							661	99900	128	EACH	PLANTING, MISC.: 20 GALLON WATER BAG (SHADE TREES)	22–24
			477		275																		661	99920	752	SQ FT	PLANTING, MISC.: BRICK PAVERS (SEE NOTE 2)	31
														575	2,938	1,100							661	99930	4,613	SQ YD	PLANTING, MISC.: SEEDED LAWN	22–24
			19		11																		661	99950	30	FT	PLANTING, MISC.: PVC EDGE RESTRAINT	31
																											MAINTENANCE OF TRAFFIC	
																						6	614	12500	6	EACH	REPLACEMENT SIGN	
																						30	614	12600	30	EACH	REPLACEMENT DRUM	
																						1	614	18000	1	EACH	MAINTAINING TRAFFIC, MISC.: TEMPORARY CURB RAMP	
																						3,616	614	23000	3,616	FT	WORK ZONE CHANNELIZING LINE, CLASS 1	
																											ADDITIVE ALTERNATIVE BID ITEMS	
																											ALTERNATE #1	
																		535					661	14001	535	EACH	PERENNIALS, AS PER PLAN – CREEPING LILY TURF, BLACK EYED SUSAN	26
																		54					661	20041	54	EACH	DECIDUOUS SHRUB, 24" HEIGHT, AS PER PLAN – SCARLET MEIDILAND ROSE, WHITE MEIDILAND ROSE	26
																		80					661	30061	80	EACH	EVERGREEN SHRUB, 24" HEIGHT, AS PER PLAN – BROADMOOR JUNIPER	26
																		45					661	99900	45	EACH	PLANTING, MISC.: NO. 2 CONT. ORNAMENTAL GRASS – DWARF FOUNTAIN GRASS	26
																											ALTERNATE #2	
																		210					661	14001	210	EACH	PERENNIALS, AS PER PLAN – CREEPING LILY TURF, BLACK EYED SUSAN	26
																		19					661	20041	19	EACH	DECIDUOUS SHRUB, 24" HEIGHT, AS PER PLAN – WHITE MEIDILAND ROSE	26
																		32					661	30061	32	EACH	EVERGREEN SHRUB, 24" HEIGHT, AS PER PLAN – BROADMOOR JUNIPER	26
																											ALTERNATE #3	
															13	13							661	50121	26	EACH	EVERGREEN TREE, 6' HEIGHT, AS PER PLAN – COLORADO GREEN SPRUCE	23–24
															13	13							661	99900	26	EACH	PLANTING, MISC.: 15 GALLON WATER BAG (EVERGREEN TREES)	23–24
																							614	11000	LUMP		MAINTAINING TRAFFIC	
																							619	16000	4	MONTH	FIELD OFFICE, TYPE A	
																							623	10000	LUMP		CONSTRUCTION LAYOUT STAKES	
																							624	10000	LUMP		MOBILIZATION	

NOTE:
SEE SHEET E4 FOR STREET LIGHTING GENERAL SUMMARY

NOTES:
1. ODOT WILL BE PURCHASING SEPARATELY THE FOLLOWING TREES:
   38 SHINGLE OAK
   30 SHUMARD OAK
   27 PIONEER ELM
   THE CONTRACTOR, AS A PART OF THE MIA–36–11.55 PROJECT, WILL BE RESPONSIBLE FOR OFFLOADING AND PLANTING OF THESE TREES AS DIRECTED BY THE CITY OF PIQUA AND THE UNIT PRICE BID FOR THESE ITEMS SHOULD REFLECT THIS WORK, WITH THE EXCEPTION OF THE ACTUAL PURCHASE PRICE OF THOSE TREES.
2. PLANTING, MISC.: BRICK PAVERS – UNIT COST SHALL INCLUDE AGGREGATE AND CONCRETE BASE, EXPANSION JOINTS, PVC DRAINAGE PIPE, BITUMINOUS SETTING BED, JOINT FILLER AND BRICK.

CALCULATED JAM
CHECKED JFE/DCE

GENERAL SUMMARY

MIA-36-11.55

EDSALL & ASSOCIATES LLC
754 NEIL AVENUE ▪ COLUMBUS, OHIO 43215
LANDSCAPE ARCHITECTS ▪ LAND PLANNERS ▪ PLANNING CONSULTANTS

04_L04_EXST_DEMO.DWG 12-April-2013

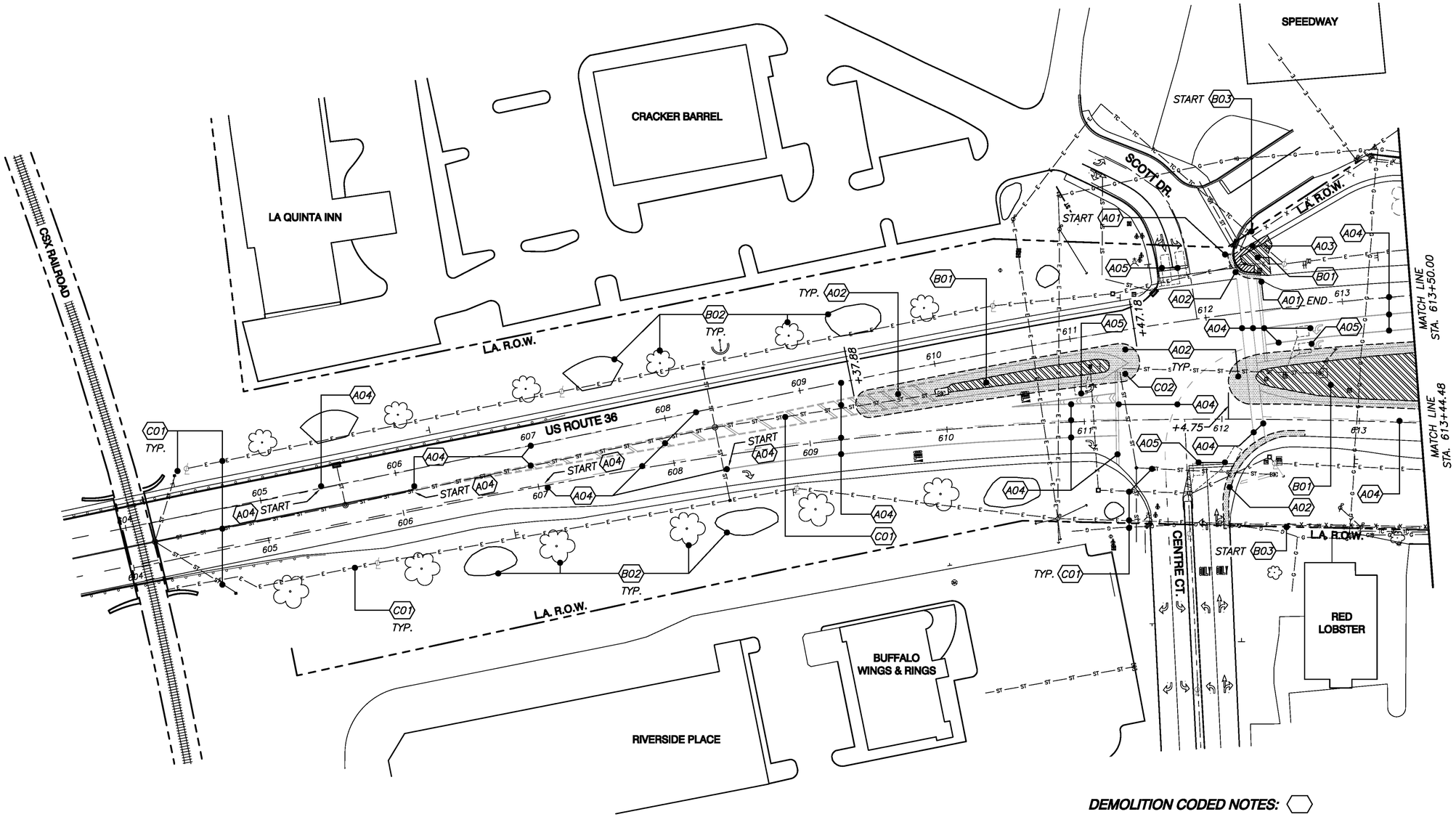

LEGEND

- EXISTING SHADE TREE
- EXISTING EVERGREEN TREE
- LIMITED ACCESS RIGHT-OF-WAY
- EXISTING FENCE
- EXISTING ROAD CENTERLINE
- EXISTING GAS LINE
- EXISTING STORM LINE
- EXISTING ELECTRIC LINE
- EXISTING SANITARY SEWER LINE
- EXISTING TELECOMMUNICATION LINE
- SAWCUT AND REMOVE EXISTING COMPOSITE PAVEMENT AND BASE MATERIAL
- SAWCUT AND REMOVE EXISTING CONCRETE WALK AND LANDING
- EXISTING GRASS TO BE TREATED WITH A PRE-EMERGENT AND TILLED PER LANDSCAPING GENERAL NOTES. SEE TOPSOIL PLAN FOR QUANTITIES.

ESTIMATED QUANTITIES

TOTAL	ITEM	ITEM EXTENSION	UNIT	DESCRIPTION
190	202	30000	SQ FT	CONCRETE WALK REMOVED
25	202	32000	FT	CURB REMOVED
781	202	98300	SQ YD	REMOVAL MISC.: COMPOSITE PAVEMENT
4,240	202	98400	SQ FT	REMOVAL MISC.: TREAT GRASS AND TILL
3,395	644	30000	FT	REMOVAL OF PAVEMENT MARKING

GENERAL NOTES:

1. ANY LAWN AREAS DISTURBED BY ANY CONTRACTOR SHALL BE RE-SEEDED PER ATTACHED LANDSCAPING GENERAL NOTES.
2. CONTRACTOR SHALL TAKE CARE NOT TO DAMAGE EXISTING STRUCTURES, PLANT MATERIAL, WALKS, DRIVES AND UTILITIES TO REMAIN INCLUDING ELEMENTS ON ADJACENT PROPERTIES.
3. EXISTING POLE BOXES MARKED "E"/"TR"/ETC. SHALL BE ADJUSTED TO FINISH GRADE AS REQUIRED.

DEMOLITION CODED NOTES:

ALL DEMOLITION SHALL BE PER PLANS AND LANDSCAPING GENERAL NOTES

A: PAVEMENTS

A01. REMOVE EXISTING CURB FULL DEPTH.
A02. REMOVE EXISTING COMPOSITE PAVEMENT AND BASE MATERIAL.
A03. SAWCUT AND REMOVE EXISTING CONCRETE WALK AND LANDING.
A04. REMOVE EXISTING PAVEMENT MARKING. SEE PAVEMENT MARKING PLAN FOR PROPOSED PAVEMENT MARKINGS.
A05. EXISTING DETECTOR LOOP. SEE MAINTENANCE OF TRAFFIC PLAN.

B: LANDSCAPE / FENCE

B01. EXISTING GRASS TO BE TREATED WITH A PRE-EMERGENT AND TILLED PER LANDSCAPING GENERAL NOTES.
B02. EXISTING VEGETATION TO REMAIN AND TO BE PROTECTED PER LANDSCAPING GENERAL NOTES.
B03. EXISTING CHAIN LINK FENCE REMOVAL BY CITY OF PIQUA.

C: UTILITIES

C01. ALL EXISTING UTILITIES TO REMAIN AND TO BE PROTECTED PER LANDSCAPING GENERAL NOTES.
C02. RAISE EXISTING UTILITY TO FINISH GRADE. SEE GRADING PLAN.

EDSALL & ASSOCIATES LLC
754 NEIL AVENUE ▪ COLUMBUS, OHIO 43215
LANDSCAPE ARCHITECTS ▪ LAND PLANNERS ▪ PLANNING CONSULTANTS

1"=40'
0 20 40 60
HORIZONTAL SCALE IN FEET

CALCULATED JAM
CHECKED JFE/DCE

DEMOLITION/EXISTING CONDITIONS/ UTILITIES PLAN

MIA-36-11.55

05_L05_EXST_DEMO.DWG 12-April-2013

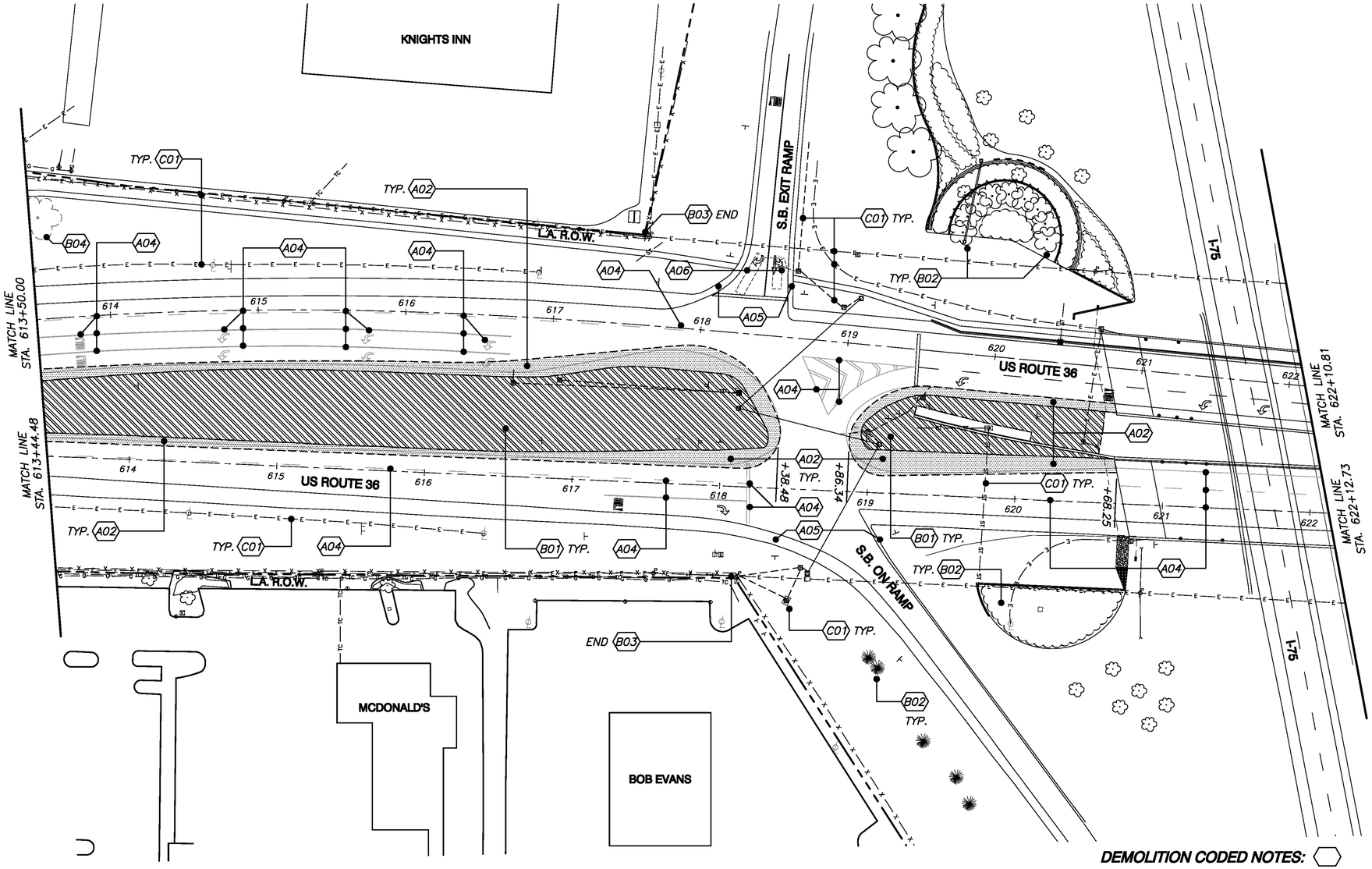

LEGEND

- EXISTING SHADE TREE
- EXISTING EVERGREEN TREE
- LIMITED ACCESS RIGHT-OF-WAY
- EXISTING FENCE
- EXISTING ROAD CENTERLINE
- EXISTING GAS LINE
- EXISTING STORM LINE
- EXISTING ELECTRIC LINE
- EXISTING SANITARY SEWER LINE
- EXISTING TELECOMMUNICATION LINE
- SAWCUT AND REMOVE EXISTING COMPOSITE PAVEMENT AND BASE MATERIAL
- SAWCUT AND REMOVE EXISTING CONCRETE WALK AND LANDING
- EXISTING GRASS TO BE TREATED WITH A PRE-EMERGENT AND TILLED PER LANDSCAPING GENERAL NOTES. SEE TOPSOIL PLAN FOR QUANTITIES.

ESTIMATED QUANTITIES

TOTAL	ITEM	ITEM EXTENSION	UNIT	DESCRIPTION
1	201	23000	EACH	TREE REMOVED, 30" SIZE
1,315	202	98300	SQ YD	REMOVAL MISC.: COMPOSITE PAVEMENT
28,447	202	98400	SQ FT	REMOVAL MISC.: TREAT GRASS AND TILL
2,962	644	30000	FT	REMOVAL OF PAVEMENT MARKING

GENERAL NOTES:

1. ANY LAWN AREAS DISTURBED BY ANY CONTRACTOR SHALL BE RE-SEEDED PER ATTACHED LANDSCAPING GENERAL NOTES.
2. CONTRACTOR SHALL TAKE CARE NOT TO DAMAGE EXISTING STRUCTURES, PLANT MATERIAL, WALKS, DRIVES AND UTILITIES TO REMAIN INCLUDING ELEMENTS ON ADJACENT PROPERTIES.
3. EXISTING POLE BOXES MARKED "E"/"TR"/ETC. SHALL BE ADJUSTED TO FINISH GRADE AS REQUIRED.

DEMOLITION CODED NOTES:

ALL DEMOLITION SHALL BE PER PLANS AND LANDSCAPING GENERAL NOTES

A: PAVEMENTS

A01. REMOVE EXISTING CURB FULL DEPTH.
A02. REMOVE EXISTING COMPOSITE PAVEMENT AND BASE MATERIAL.
A03. SAWCUT AND REMOVE EXISTING CONCRETE WALK AND LANDING.
A04. REMOVE EXISTING PAVEMENT MARKING. SEE PAVEMENT MARKING PLAN FOR PROPOSED PAVEMENT MARKINGS.
A05. NO MATERIAL SHALL BE PLACED ON ANY OF THE RAMP SHOULDERS FOR STORAGE.
A06. EXISTING DETECTOR LOOP. SEE MAINTENANCE OF TRAFFIC PLAN.

B: LANDSCAPE / FENCE

B01. EXISTING GRASS TO BE TREATED WITH A PRE-EMERGENT AND TILLED PER LANDSCAPING GENERAL NOTES.
B02. EXISTING VEGETATION TO REMAIN AND TO BE PROTECTED PER LANDSCAPING GENERAL NOTES.
B03. EXISTING CHAIN LINK FENCE REMOVAL BY CITY OF PIQUA.
B04. EXISTING TREE TO BE REMOVED.

C: UTILITIES

C01. ALL EXISTING UTILITIES TO REMAIN AND TO BE PROTECTED PER LANDSCAPING GENERAL NOTES.
C02. RAISE EXISTING UTILITY TO FINISH GRADE. SEE GRADING PLAN.

EDSALL & ASSOCIATES LLC
754 NEIL AVENUE ▪ COLUMBUS, OHIO 43215
LANDSCAPE ARCHITECTS ▪ LAND PLANNERS ▪ PLANNING CONSULTANTS

1"=40'
0 20 40 60
HORIZONTAL SCALE IN FEET

CALCULATED JAM
CHECKED JFE/DCE

DEMOLITION/EXISTING CONDITIONS/ UTILITIES PLAN

MIA-36-11.55

06_L06_EXST_DEMO.DWG 12-April-2013

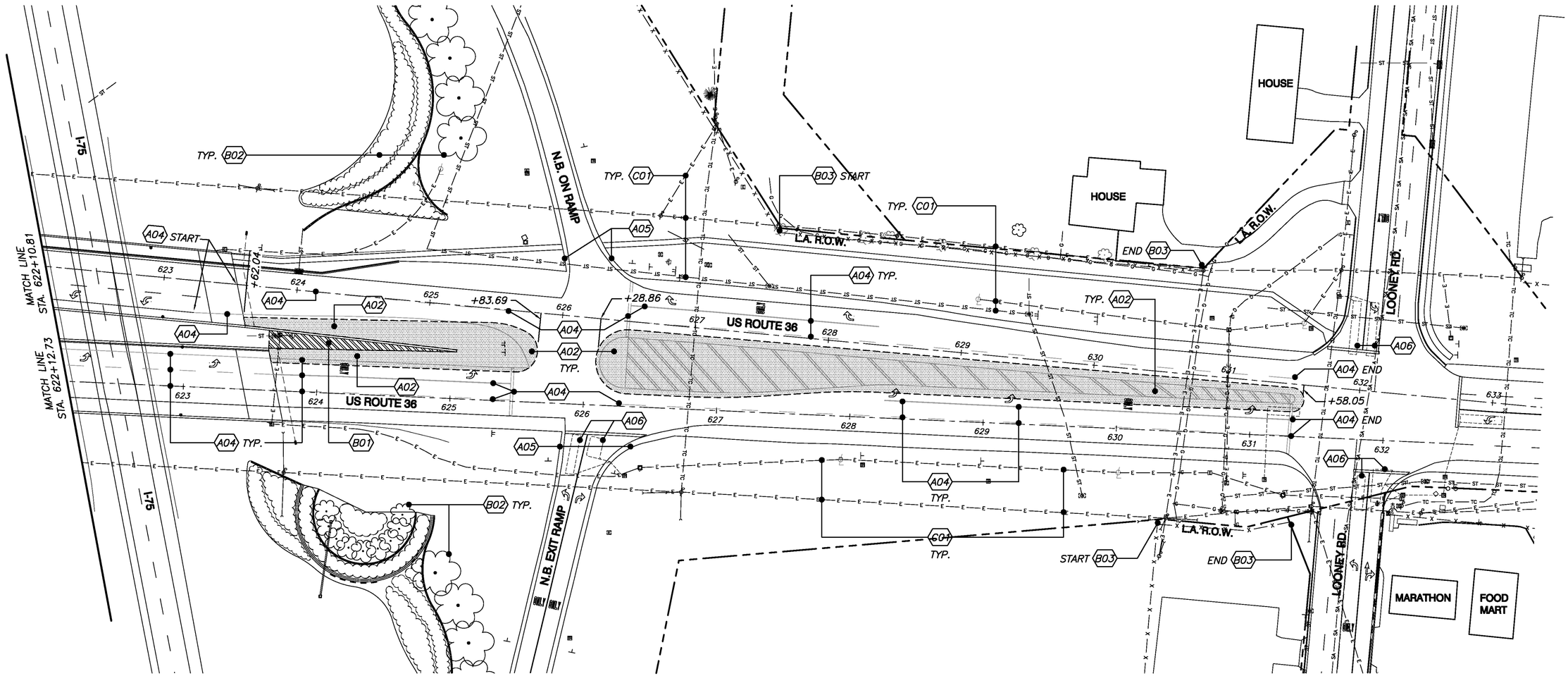

LEGEND

- EXISTING SHADE TREE
- EXISTING EVERGREEN TREE
- LIMITED ACCESS RIGHT-OF-WAY
- EXISTING FENCE
- EXISTING ROAD CENTERLINE
- EXISTING GAS LINE
- EXISTING STORM LINE
- EXISTING ELECTRIC LINE
- EXISTING SANITARY SEWER LINE
- EXISTING TELECOMMUNICATION LINE
- SAWCUT AND REMOVE EXISTING COMPOSITE PAVEMENT AND BASE MATERIAL
- SAWCUT AND REMOVE EXISTING CONCRETE WALK AND LANDING
- EXISTING GRASS TO BE TREATED WITH A PRE-EMERGENT AND TILLED PER LANDSCAPING GENERAL NOTES. SEE TOPSOIL PLAN FOR QUANTITIES.

ESTIMATED QUANTITIES

TOTAL	ITEM	ITEM EXTENSION	UNIT	DESCRIPTION
2,448	202	98300	SQ YD	REMOVAL MISC.: COMPOSITE PAVEMENT
938	202	98400	SQ FT	REMOVAL MISC.: TREAT GRASS AND TILL
2,634	644	30000	FT	REMOVAL OF PAVEMENT MARKING

GENERAL NOTES:

1. ANY LAWN AREAS DISTURBED BY ANY CONTRACTOR SHALL BE RE-SEEDED PER ATTACHED LANDSCAPING GENERAL NOTES.
2. CONTRACTOR SHALL TAKE CARE NOT TO DAMAGE EXISTING STRUCTURES, PLANT MATERIAL, WALKS, DRIVES AND UTILITIES TO REMAIN INCLUDING ELEMENTS ON ADJACENT PROPERTIES.
3. EXISTING POLE BOXES MARKED "E"/"TR"/ETC. SHALL BE ADJUSTED TO FINISH GRADE AS REQUIRED.

DEMOLITION CODED NOTES:

ALL DEMOLITION SHALL BE PER PLANS AND LANDSCAPING GENERAL NOTES

A: PAVEMENTS

A01. REMOVE EXISTING CURB FULL DEPTH.
A02. REMOVE EXISTING COMPOSITE PAVEMENT AND BASE MATERIAL.
A03. SAWCUT AND REMOVE EXISTING CONCRETE WALK AND LANDING.
A04. REMOVE EXISTING PAVEMENT MARKING. SEE PAVEMENT MARKING PLAN FOR PROPOSED PAVEMENT MARKINGS.
A05. NO MATERIAL SHALL BE PLACED ON ANY OF THE RAMP SHOULDERS FOR STORAGE.
A06. EXISTING DETECTOR LOOP. SEE MAINTENANCE OF TRAFFIC PLAN.

B: LANDSCAPE / FENCE

B01. EXISTING GRASS TO BE TREATED WITH A PRE-EMERGENT AND TILLED PER LANDSCAPING GENERAL NOTES.
B02. EXISTING VEGETATION TO REMAIN AND TO BE PROTECTED PER LANDSCAPING GENERAL NOTES.
B03. EXISTING CHAIN LINK FENCE REMOVAL BY CITY OF PIQUA.

C: UTILITIES

C01. ALL EXISTING UTILITIES TO REMAIN AND TO BE PROTECTED PER LANDSCAPING GENERAL NOTES.
C02. RAISE EXISTING UTILITY TO FINISH GRADE. SEE GRADING PLAN.

EDSALL & ASSOCIATES LLC
754 NEIL AVENUE ▪ COLUMBUS, OHIO 43215
LANDSCAPE ARCHITECTS ▪ LAND PLANNERS ▪ PLANNING CONSULTANTS

1"=40'
0 20 40 60
HORIZONTAL SCALE IN FEET

CALCULATED JAM
CHECKED JFE/DCE

DEMOLITION/EXISTING CONDITIONS/ UTILITIES PLAN

MIA-36-11.55

07_L07_LAYT.DWG 12-April-2013

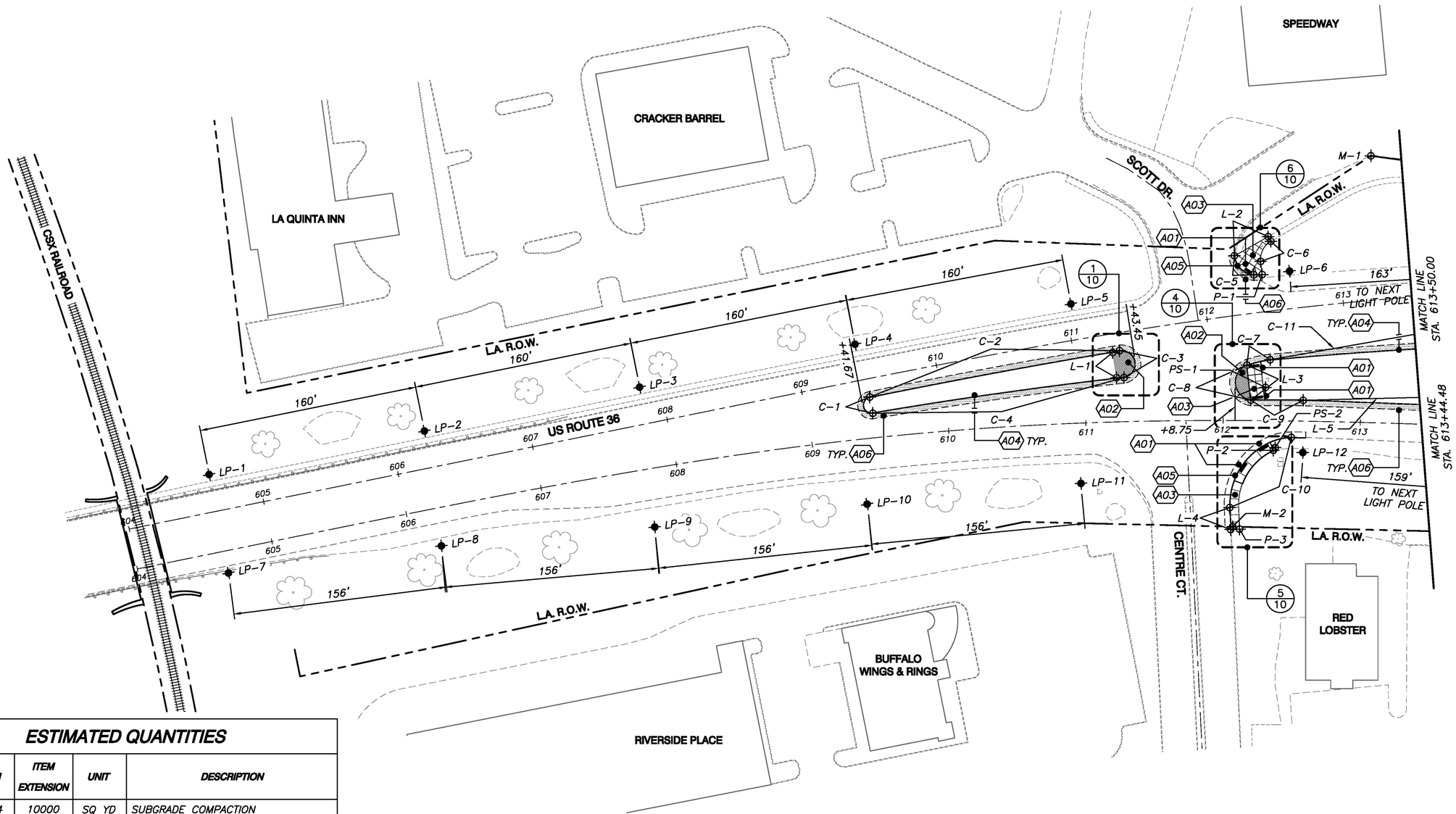

ESTIMATED QUANTITIES

TOTAL	ITEM	ITEM EXTENSION	UNIT	DESCRIPTION
550	204	10000	SQ YD	SUBGRADE COMPACTION
42	301	46000	CU YD	ASPHALT CONCRETE BASE, PG64-22
61	304	20000	CU YD	AGGREGATE BASE
53	305	14001	SQ YD	10" CONCRETE BASE, AS PER PLAN
15	448	46040	CU YD	ASPHALT CONCRETE INTERMEDIATE COURSE, TYPE 2, PG64-28
15	448	47020	CU YD	ASPHALT CONCRETE SURFACE COURSE, TYPE 1, PG64-22
2	604	40521	EACH	RIGHT-OF-WAY MONUMENT, AS PER PLAN
1,052	608	10001	SQ FT	4" CONCRETE WALK, AS PER PLAN
5	608	49001	EACH	CURB RAMP, AS PER PLAN
80	608	53021	SQ FT	DETECTABLE WARNING, AS PER PLAN
702	609	24511	FT	CURB, TYPE 4-C, AS PER PLAN
178	609	26000	FT	CURB, TYPE 6
	623	10000	LUMP	CONSTRUCTION LAYOUT STAKES
19	SPECIAL	69098100	FT	SPECIAL - MISC.: PVC EDGE RESTRAINT
477	SPECIAL	69098200	SQ FT	SPECIAL - MISC.: BRICK PAVERS

LEGEND

- EXISTING SHADE TREE
- EXISTING EVERGREEN TREE
- LIMITED ACCESS RIGHT-OF-WAY
- EXISTING FENCE
- EXISTING ROAD CENTERLINE
- PROPOSED LIGHT POLE - INSTALLED BY CITY - SEE SHEETS E1-E4
- PROPOSED BRICK PAVERS. SEE DETAIL 2/31
- 4' WIDE OR AS NOTED PROPOSED ASPHALT REPAIR. SEE DETAIL 5/31
- LAYOUT CURVE POINT OF TANGENCY, ENDPOINT AND/OR CENTER POINT
- P-# LAYOUT POINT, SEE POINT TABLE - SHEET 10
- C-# LAYOUT CURVE, SEE CURVE TABLE - SHEET 10
- M-# MONUMENTATION POINT, SEE L.A. R.O.W. MONUMENTATION POINT TABLE - SHEET 10 SEE DETAIL 6 & 7/31
- L-# LAYOUT LINE SEGMENT, SEE LINE SEGMENT TABLE - SHEET 10
- LP-# LAYOUT LIGHT POLE POINT, SEE UTILITY POINT TABLE - SHEET E1-E3
- PS-# PEDESTRIAN SIGNAL POINT, SEE PEDESTRIAN SIGNAL CONTROL POINT TABLE - SHEET 10

LAYOUT CODED NOTES:

A01. PROPOSED CURB RAMP. SEE SHEET 10
A02. PROPOSED BRICK PAVERS. SEE DETAIL 2/31
A03. PROPOSED CONCRETE WALK. SEE DETAIL 4/31
A04. PROPOSED TYPE 4-C CONCRETE CURB, AS PER PLAN. SEE DETAIL 8/31
A05. PROPOSED TYPE 6 CONCRETE CURB. ODOT STANDARD DRAWING BP-5.1
A06. PROPOSED ASPHALT CONCRETE REPAIR. SEE DETAIL 5/31

GENERAL NOTES:

1. ANY LAWN AREAS DISTURBED BY ANY CONTRACTOR SHALL BE RE-SEEDED PER ATTACHED LANDSCAPING GENERAL NOTES.
2. CONTRACTOR SHALL TAKE CARE NOT TO DAMAGE EXISTING STRUCTURES, PLANT MATERIAL, WALKS, DRIVES AND UTILITIES TO REMAIN INCLUDING ELEMENTS ON ADJACENT PROPERTIES.

EDSALL & ASSOCIATES LLC
754 NEIL AVENUE ▪ COLUMBUS, OHIO 43215
LANDSCAPE ARCHITECTS ▪ LAND PLANNERS ▪ PLANNING CONSULTANTS

1"=40'
0 20 40 60
HORIZONTAL SCALE IN FEET

CALCULATED JAM
CHECKED JFE/DCE

LAYOUT PLAN

MIA-36-11.55

08_L08_LAYT.DWG 12-April-2013

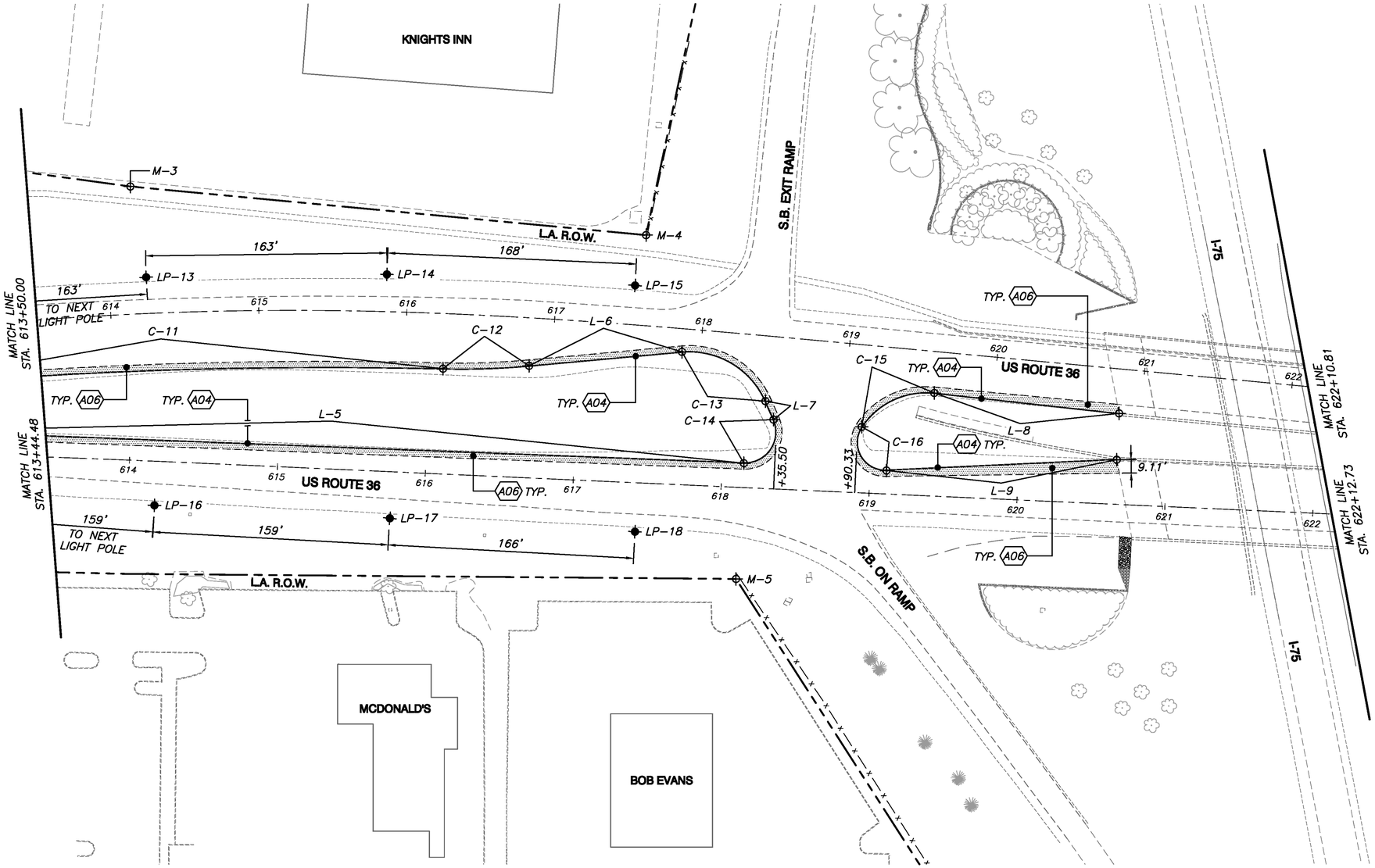

ESTIMATED QUANTITIES

TOTAL	ITEM	ITEM EXTENSION	UNIT	DESCRIPTION
692	204	10000	SQ YD	SUBGRADE COMPACTION
76	301	46000	CU YD	ASPHALT CONCRETE BASE, PG64-22
76	304	20000	CU YD	AGGREGATE BASE
28	448	46020	CU YD	ASPHALT CONCRETE INTERMEDIATE COURSE, TYPE 2, PG64-28
28	448	47020	CU YD	ASPHALT CONCRETE SURFACE COURSE, TYPE 1, PG64-22
3	604	40521	EACH	RIGHT-OF-WAY MONUMENT, AS PER PLAN
1,412	609	24511	FT	CURB, TYPE 4-C, AS PER PLAN
	623	10000	LUMP	CONSTRUCTION LAYOUT STAKES

LEGEND

- EXISTING SHADE TREE
- EXISTING EVERGREEN TREE
- LIMITED ACCESS RIGHT-OF-WAY
- EXISTING FENCE
- EXISTING ROAD CENTERLINE
- PROPOSED LIGHT POLE - INSTALLED BY CITY - SEE SHEETS E1-E4
- PROPOSED BRICK PAVERS. SEE DETAIL 2/31
- 4' WIDE OR AS NOTED PROPOSED ASPHALT REPAIR. SEE DETAIL 5/31
- LAYOUT CURVE POINT OF TANGENCY, ENDPOINT AND/OR CENTER POINT
- P-# LAYOUT POINT, SEE POINT TABLE - SHEET 10
- C-# LAYOUT CURVE, SEE CURVE TABLE - SHEET 10
- M-# MONUMENTATION POINT, SEE L.A. R.O.W. MONUMENTATION POINT TABLE - SHEET 10 SEE DETAIL 6 & 7/31
- L-# LAYOUT LINE SEGMENT, SEE LINE SEGMENT TABLE - SHEET 10
- LP-# LAYOUT LIGHT POLE POINT, SEE UTILITY POINT TABLE - SHEET E1-E3
- PS-# PEDESTRIAN SIGNAL POINT, SEE PEDESTRIAN SIGNAL CONTROL POINT TABLE - SHEET 10

LAYOUT CODED NOTES:

A01. PROPOSED CURB RAMP. SEE SHEET 10
A02. PROPOSED BRICK PAVERS. SEE DETAIL 2/31
A03. PROPOSED CONCRETE WALK. SEE DETAIL 4/31
A04. PROPOSED TYPE 4-C CONCRETE CURB, AS PER PLAN. SEE DETAIL 8/31
A05. PROPOSED TYPE 6 CONCRETE CURB. ODOT STANDARD DRAWING BP-5.1
A06. PROPOSED ASPHALT CONCRETE REPAIR. SEE DETAIL 5/31

GENERAL NOTES:

1. ANY LAWN AREAS DISTURBED BY ANY CONTRACTOR SHALL BE RE-SEEDED PER ATTACHED LANDSCAPING GENERAL NOTES.
2. CONTRACTOR SHALL TAKE CARE NOT TO DAMAGE EXISTING STRUCTURES, PLANT MATERIAL, WALKS, DRIVES AND UTILITIES TO REMAIN INCLUDING ELEMENTS ON ADJACENT PROPERTIES.

EDSALL & ASSOCIATES LLC
754 NEIL AVENUE ▪ COLUMBUS, OHIO 43215
LANDSCAPE ARCHITECTS ▪ LAND PLANNERS ▪ PLANNING CONSULTANTS

1"=40'
0 20 40 60
HORIZONTAL SCALE IN FEET

CALCULATED JAM
CHECKED JFE/DCE

LAYOUT PLAN

MIA-36-11.55

09_L09_LAYT.DWG 12-April-2013

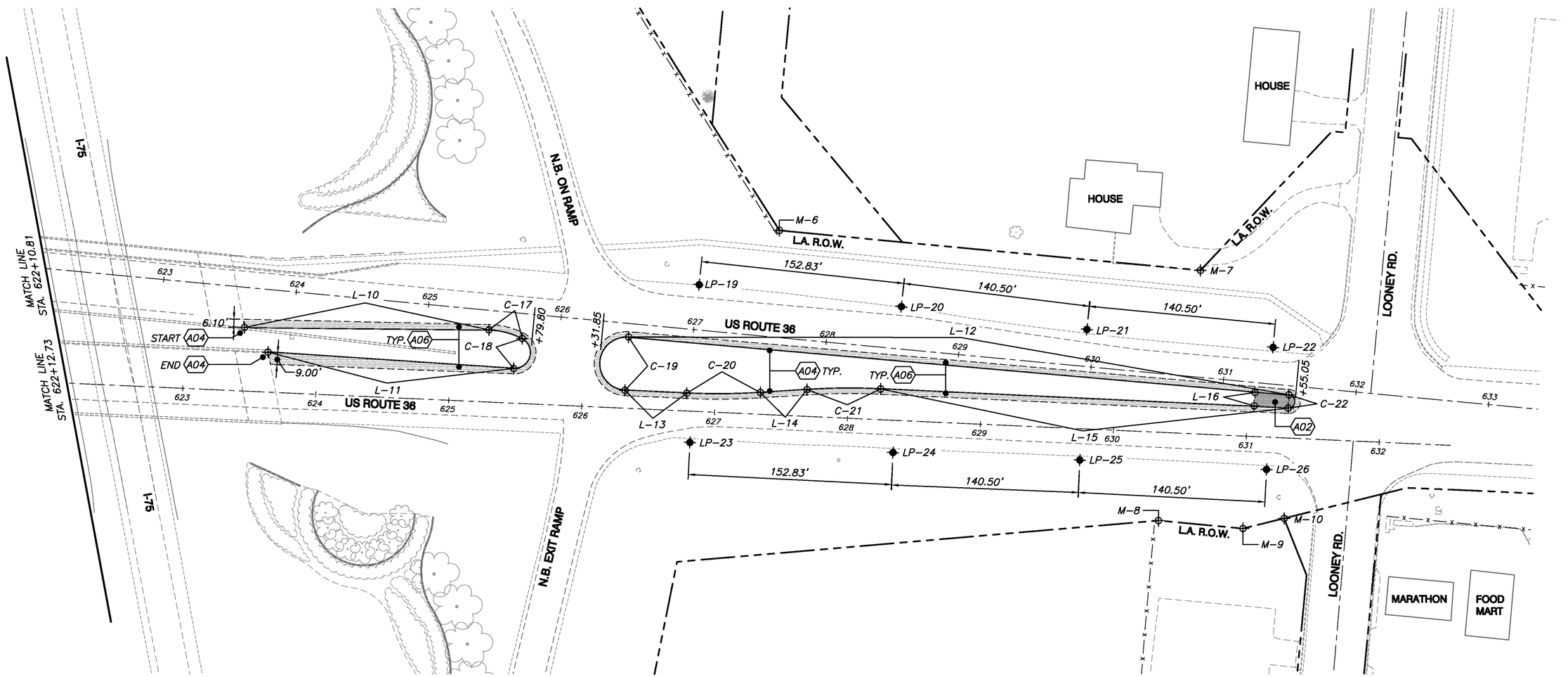

ESTIMATED QUANTITIES

TOTAL	ITEM	ITEM EXTENSION	UNIT	DESCRIPTION
750	204	10000	SQ YD	SUBGRADE COMPACTION
83	301	46000	CU YD	ASPHALT CONCRETE BASE, PG64-22
86	304	20000	CU YD	AGGREGATE BASE
31	305	14001	SQ YD	10" CONCRETE BASE, AS PER PLAN
31	448	46020	CU YD	ASPHALT CONCRETE INTERMEDIATE COURSE, TYPE 2, PG64-28
31	448	47020	CU YD	ASPHALT CONCRETE SURFACE COURSE, TYPE 1, PG64-22
5	604	40521	EACH	RIGHT-OF-WAY MONUMENT, AS PER PLAN
1,715	609	24511	FT	CURB, TYPE 4-C, AS PER PLAN
	623	10000	LUMP	CONSTRUCTION LAYOUT STAKES
11	SPECIAL	69098100	FT	SPECIAL - MISC.: PVC EDGE RESTRAINT
275	SPECIAL	69098200	SQ FT	SPECIAL - MISC.: BRICK PAVERS

LEGEND

- EXISTING SHADE TREE
- EXISTING EVERGREEN TREE
- LIMITED ACCESS RIGHT-OF-WAY
- EXISTING FENCE
- EXISTING ROAD CENTERLINE
- PROPOSED LIGHT POLE - INSTALLED BY CITY - SEE SHEETS E1-E4
- PROPOSED BRICK PAVERS. SEE DETAIL 2/31
- 4' WIDE OR AS NOTED PROPOSED ASPHALT REPAIR. SEE DETAIL 5/31
- LAYOUT CURVE POINT OF TANGENCY, ENDPOINT AND/OR CENTER POINT
- P-# LAYOUT POINT, SEE POINT TABLE - SHEET 10
- C-# LAYOUT CURVE, SEE CURVE TABLE - SHEET 10
- M-# MONUMENTATION POINT, SEE L.A. R.O.W. MONUMENTATION POINT TABLE - SHEET 10 SEE DETAIL 6 & 7/31
- L-# LAYOUT LINE SEGMENT, SEE LINE SEGMENT TABLE - SHEET 10
- LP-# LAYOUT LIGHT POLE POINT, SEE UTILITY POINT TABLE - SHEET E1-E3
- PS-# PEDESTRIAN SIGNAL POINT, SEE PEDESTRIAN SIGNAL CONTROL POINT TABLE - SHEET 10

LAYOUT CODED NOTES:

A01. PROPOSED CURB RAMP. SEE SHEET 10
A02. PROPOSED BRICK PAVERS. SEE DETAIL 2/31
A03. PROPOSED CONCRETE WALK. SEE DETAIL 4/31
A04. PROPOSED TYPE 4-C CONCRETE CURB, AS PER PLAN. SEE DETAIL 8/31
A05. PROPOSED TYPE 6 CONCRETE CURB. ODOT STANDARD DRAWING BP-5.1
A06. PROPOSED ASPHALT CONCRETE REPAIR. SEE DETAIL 5/31

GENERAL NOTES:

1. ANY LAWN AREAS DISTURBED BY ANY CONTRACTOR SHALL BE RE-SEEDED PER ATTACHED LANDSCAPING GENERAL NOTES.
2. CONTRACTOR SHALL TAKE CARE NOT TO DAMAGE EXISTING STRUCTURES, PLANT MATERIAL, WALKS, DRIVES AND UTILITIES TO REMAIN INCLUDING ELEMENTS ON ADJACENT PROPERTIES.

EDSALL & ASSOCIATES LLC
754 NEIL AVENUE ▪ COLUMBUS, OHIO 43215
LANDSCAPE ARCHITECTS ▪ LAND PLANNERS ▪ PLANNING CONSULTANTS

1"=40'
0 20 40 60
HORIZONTAL SCALE IN FEET

CALCULATED JAM
CHECKED JFE/DCE

LAYOUT PLAN

MIA-36-11.55

10-L10-LAYT_TABL.DWG 12-April-2013

CURVE TABLE

ID#	DELTA	RADIUS	LENGTH	TANGENT	CHORD	POINT OF CURVATURE	POINT OF TANGENCY
C-1	178d4'48"	6.00	18.65	358.08	12.00	N788103.15 E1486418.76	N788091.35 E1486420.96
C-2	2d1'59"	5216	185.07	92.54	185.06	N788103.15 E1486418.76	N788136.92 E1486600.71
C-3	180d0'0"	9.93	31.21	0	19.87	N788136.92 E1486600.71	N788117.33 E1486603.99
C-4	3d4'10"	3451.15	184.89	92.47	184.86	N788091.35 E1486420.96	N788117.33 E1486603.99
C-5	82d53'32"	15.00	21.70	13.24	19.85	N788206.09 E1486684.41	N788192.18 E1486698.58
C-6	65d59'28"	15.00	17.28	9.74	16.34	N788201.97 E1486703.55	N788216.56 E1486710.92
C-7	15d4'45"	66.00	17.37	11.55	22.75	N788126.45 E1486693.56	N788130.32 E1486710.44
C-8	152d27'14"	13.24	35.23	54.02	25.72	N788126.45 E1486693.56	N788100.93 E1486696.33
C-9	0d47'9"	2763.60	37.91	20.33	40.66	N788100.93 E1486696.33	N788100.79 E1486734.46
C-10	88d37'46"	50.00	75.30	47.53	68.02	N788022.66 E1486680.98	N788073.75 E1486725.88
C-11	6d41'20"	3236.40	377.83	189.13	377.61	N788130.32 E1486710.44	N788143.07 E1487087.84
C-12	6d37'43"	503.00	58.19	29.13	58.16	N788143.07 E1487087.84	N788145.00 E1487145.97
C-13	71d32'39"	56.00	69.93	40.35	65.47	N788154.43 E1487249.18	N788121.15 E1487305.56
C-14	115d53'43"	21.00	42.48	33.54	35.60	N788079.22 E1487291.00	N788108.64 E1487311.05
C-15	62d39'29"	52.00	56.87	31.65	54.07	N788103.77 E1487370.63	N788126.64 E1487419.63
C-16	126d19'44"	19.00	41.89	37.56	33.91	N788103.77 E1487370.63	N788074.26 E1487387.33
C-17	27d44'53"	54.00	26.15	13.34	25.90	N788084.83 E1488005.19	N788078.37 E1488030.27
C-18	155d29'45"	12.00	32.57	55.26	23.45	N788078.37 E1488030.27	N788055.83 E1488023.78
C-19	180d0'0"	20.00	63.94	0	41.07	N788039.46 E1488107.47	N788079.44 E1488110.14
C-20	6d20'36"	500.00	55.36	27.71	55.33	N788037.28 E1488153.89	N788037.75 E1488209.21
C-21	6d20'36"	500.00	55.36	27.71	55.33	N788039.99 E1488244.24	N788040.45 E1488299.56
C-22	177d58'9"	5.00	15.53	282.08	10.00	N788026.07 E1488605.80	N788036.05 E1488606.44

POINT TABLE

ID#	DESCRIPTION	LOCATION
P-1	CORNER OF CONCRETE WALK	N788192.36 E1486704.59
P-2	CORNER OF CONCRETE WALK	N788064.39 E1486712.76
P-3	CORNER OF CONCRETE WALK	N788006.96 E1486688.18

PEDESTRIAN SIGNAL CONTROL POINT TABLE

ID#	DESCRIPTION	LOCATION
PS-1	CENTER OF PED. SIGNAL	N788110.15 E1486707.09
PS-2	CENTER OF PED. SIGNAL	N788066.30 E1486714.08

LINE SEGMENT TABLE

ID#	START POINT	END POINT
L-1	N788135.58 E1486595.76	N788117.20 E1486598.51
L-2	N788206.09 E1486684.41	N788219.98 E1486708.95
L-3	N788126.45 E1486693.56	N788100.93 E1486696.33
L-4	N788022.66 E1486680.98	N788006.68 E1486681.69
L-5	N788100.79 E1486734.46	N788079.22 E1487291.00
L-6	N788145.00 E1487145.97	N788154.43 E1487249.18
L-7	N788121.15 E1487305.56	N788108.64 E1487311.05
L-8	N788126.64 E1487419.63	N788112.86 E1487544.44
L-9	N788074.26 E1487387.33	N788081.55 E1487542.84
L-10	N788086.65 E1487821.52	N788084.83 E1488005.19
L-11	N788068.13 E1487839.20	N788055.83 E1488023.78
L-12	N788079.44 E1488110.14	N788036.05 E1488606.44
L-13	N788039.46 E1488107.47	N788037.28 E1488153.89
L-14	N788037.75 E1488209.21	N788039.99 E1488244.24
L-15	N788040.45 E1488299.56	N788026.07 E1488605.80
L-16	N788027.77 E1488580.27	N788037.78 E1488580.91

L.A. R.O.W. MONUMENTATION POINT TABLE

ID#	DESCRIPTION	LOCATION
M-1	CENTER OF MONUMENT	N788278.86 E1486783.83
M-2	CENTER OF MONUMENT	N788008.76 E1486683.10
M-3	CENTER OF MONUMENT	N788266.16 E1486876.67
M-4	CENTER OF MONUMENT	N788233.30 E1487224.95
M-5	CENTER OF MONUMENT	N788001.01 E1487285.73
M-6	CENTER OF MONUMENT	N788159.49 E1488223.54
M-7	CENTER OF MONUMENT	N788129.50 E1488539.92
M-8	CENTER OF MONUMENT	N787941.64 E1488508.36
M-9	CENTER OF MONUMENT	N787935.65 E1488571.88
M-10	CENTER OF MONUMENT	N787943.27 E1488602.90

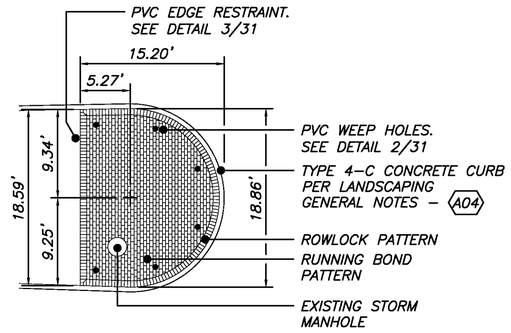

1/10 BRICK MEDIAN DETAIL
1/8" = 1'-0"

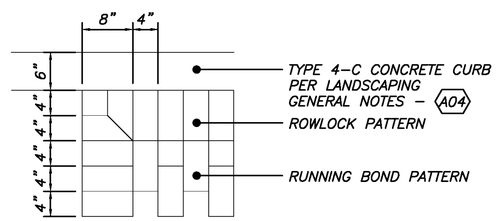

2/10 BRICK PAVER CORNER DETAIL
1" = 1'-0"

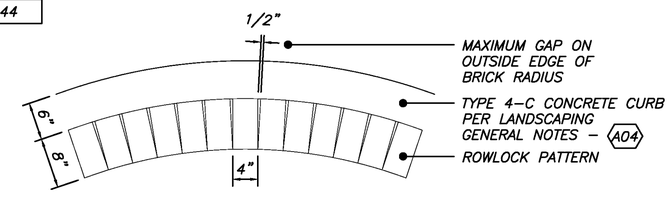

3/10 BRICK PAVER ROWLOCK RADIUS DETAIL
1" = 1'-0"

SEE DETAILS 2/10 & 3/10 FOR CORNER AND ROWLOCK PATTERNS RELATED TO DETAILS 1/10, 4/10 & 7/10. SEE DETAIL 2/31 FOR BRICK MEDIAN SECTION DETAIL. SEE LAYOUT CODED NOTES ON SHEETS 7-9.

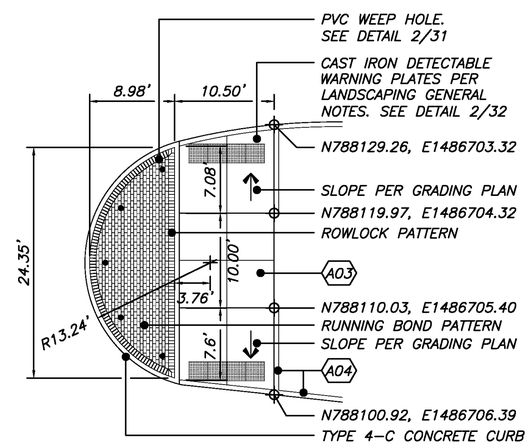

4/10 BRICK MEDIAN DETAIL
1/8" = 1'-0"

NOTE:
1. RAMPS TO BE A MODIFIED PERPENDICULAR CURB RAMP. SEE STANDARD CONSTRUCTION DRAWING BP-7.1

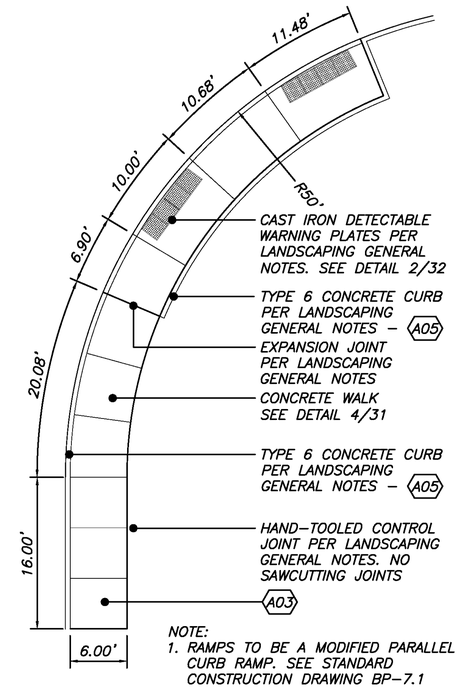

NOTE:
1. RAMPS TO BE A MODIFIED PARALLEL CURB RAMP. SEE STANDARD CONSTRUCTION DRAWING BP-7.1

5/10 CURB RAMP DETAIL
1/8" = 1'-0"

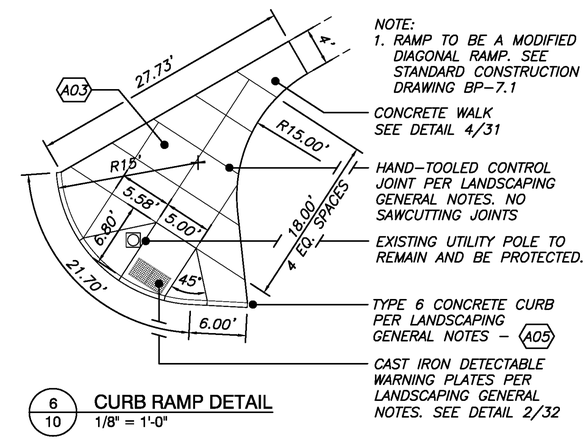

NOTE:
1. RAMP TO BE A MODIFIED DIAGONAL RAMP. SEE STANDARD CONSTRUCTION DRAWING BP-7.1

6/10 CURB RAMP DETAIL
1/8" = 1'-0"

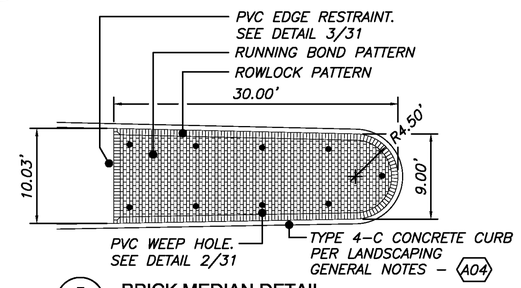

7/10 BRICK MEDIAN DETAIL
1/8" = 1'-0"

CALCULATED JAM
CHECKED JFE/DCE

LAYOUT PLAN/POINT TABLE

MIA-36-11.55

EDSALL & ASSOCIATES LLC
754 NEIL AVENUE ▪ COLUMBUS, OHIO 43215
LANDSCAPE ARCHITECTS ▪ LAND PLANNERS ▪ PLANNING CONSULTANTS

1L-11L-GRAD.DWG 12-April-2013

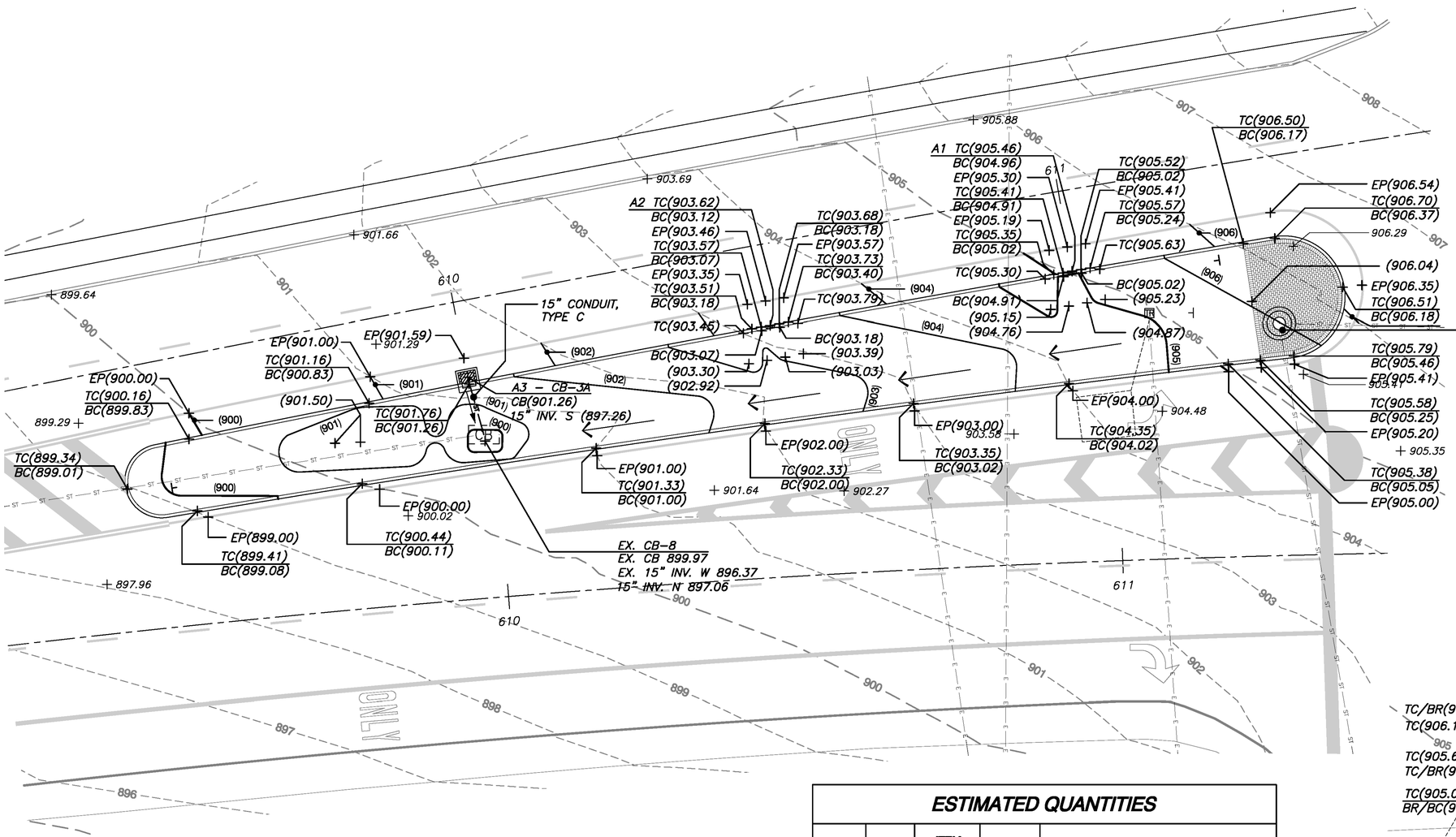

1/11 DETAIL GRADING PLAN
1" = 10'

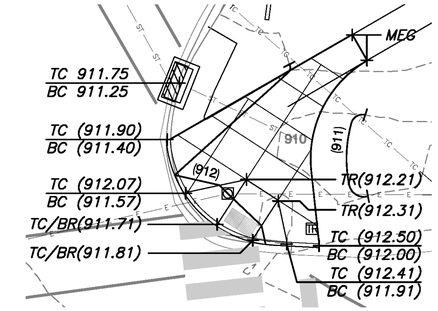

2/11 CURB RAMP GRADING PLAN
1" = 10'

ALL CONTOURS ARE BASED ON SURVEY INFO DERIVED FROM MIA-36-11.76 AND MIA-36-17.891. SPOT ELEVATIONS ARE INTERPOLATED FROM CONTOUR INFORMATION AND AS SUCH SHOULD BE CONSIDERED TO BE ± AND MUST BE FIELD CHECKED AND VERIFIED. ANY DISCREPENCIES SHALL BE BROUGHT TO THE ATTENTION OF THE CITY ENGINEER/OHIO DEPARTMENT OF TRANSPORTATION INSPECTOR BEFORE PROCEEDING WITH CONSTRUCTION.

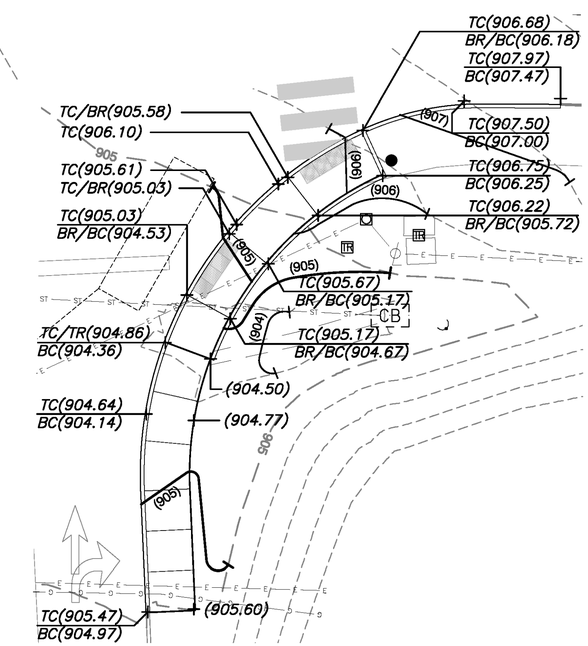

3/11 CURB RAMP GRADING PLAN
1" = 10'

ESTIMATED QUANTITIES				
TOTAL	ITEM	ITEM EXTENSION	UNIT	DESCRIPTION
11	603	06100	FT	15" CONDUIT, TYPE C
1	604	00800	EACH	CATCH BASIN, NO. 3A
2	604	22500	EACH	INLET, MISC.: CURB PASS THROUGH
2	604	22500	EACH	INLET, MISC.: CURB PASS THROUGH ALTERNATE #4
1	604	34501	EACH	MANHOLE ADJUSTED TO GRADE, AS PER PLAN

GRADING LEGEND

- EXISTING SHADE TREE
- EXISTING EVERGREEN TREE
- LIMITED ACCESS RIGHT–OF–WAY
- EXISTING FENCE
- EXISTING ROAD CENTERLINE
- EXISTING GAS LINE
- EXISTING STORM LINE
- EXISTING ELECTRIC LINE
- EXISTING SANITARY SEWER LINE
- EXISTING TELECOMMUNICATION LINE

TR	TOP OF RAMP
TC	TOP OF CURB
INV	INVERT ELEVATION
BC	BOTTOM OF CURB
BR	BOTTOM OF RAMP
MH	TOP OF MANHOLE
MEG	MEET EXISTING GRADE
CB	TOP OF CATCH BASIN
EP	EDGE OF PAVEMENT/PAINT LINE

—ST—ST—ST—	PROPOSED STORM LINE
+932.12	EXISTING SPOT ELEVATION
+(932.41)	PROPOSED SPOT ELEVATION
900	EXISTING 5' INDEX CONTOUR ELEVATION
901	EXISTING 1' INTERMEDIATE CONTOUR ELEVATION
(900)	PROPOSED 5' INDEX CONTOUR ELEVATION
(901)	PROPOSED 1' INTERMEDIATE CONTOUR ELEVATION

GENERAL NOTES:

1. ANY LAWN AREAS DISTURBED BY ANY CONTRACTOR SHALL BE RE–SEEDED PER ATTACHED LANDSCAPING GENERAL NOTES.
2. CONTRACTOR SHALL TAKE CARE NOT TO DAMAGE EXISTING STRUCTURES, PLANT MATERIAL, WALKS, DRIVES AND UTILITIES TO REMAIN INCLUDING ELEMENTS ON ADJACENT PROPERTIES.
3. EXISTING POLE BOXES MARKED "E"/"TR"/ETC. SHALL BE ADJUSTED TO FINISH GRADE AS REQUIRED.

1" = 10'
0 5 10 15
HORIZONTAL SCALE IN FEET

CALCULATED JAM
CHECKED JFE/DCE

GRADING PLAN

MIA-36-11.55

EDSALL & ASSOCIATES LLC
754 NEIL AVENUE ▪ COLUMBUS, OHIO 43215
LANDSCAPE ARCHITECTS ▪ LAND PLANNERS ▪ PLANNING CONSULTANTS

12_L12_GRAD.DWG 12-April-2013

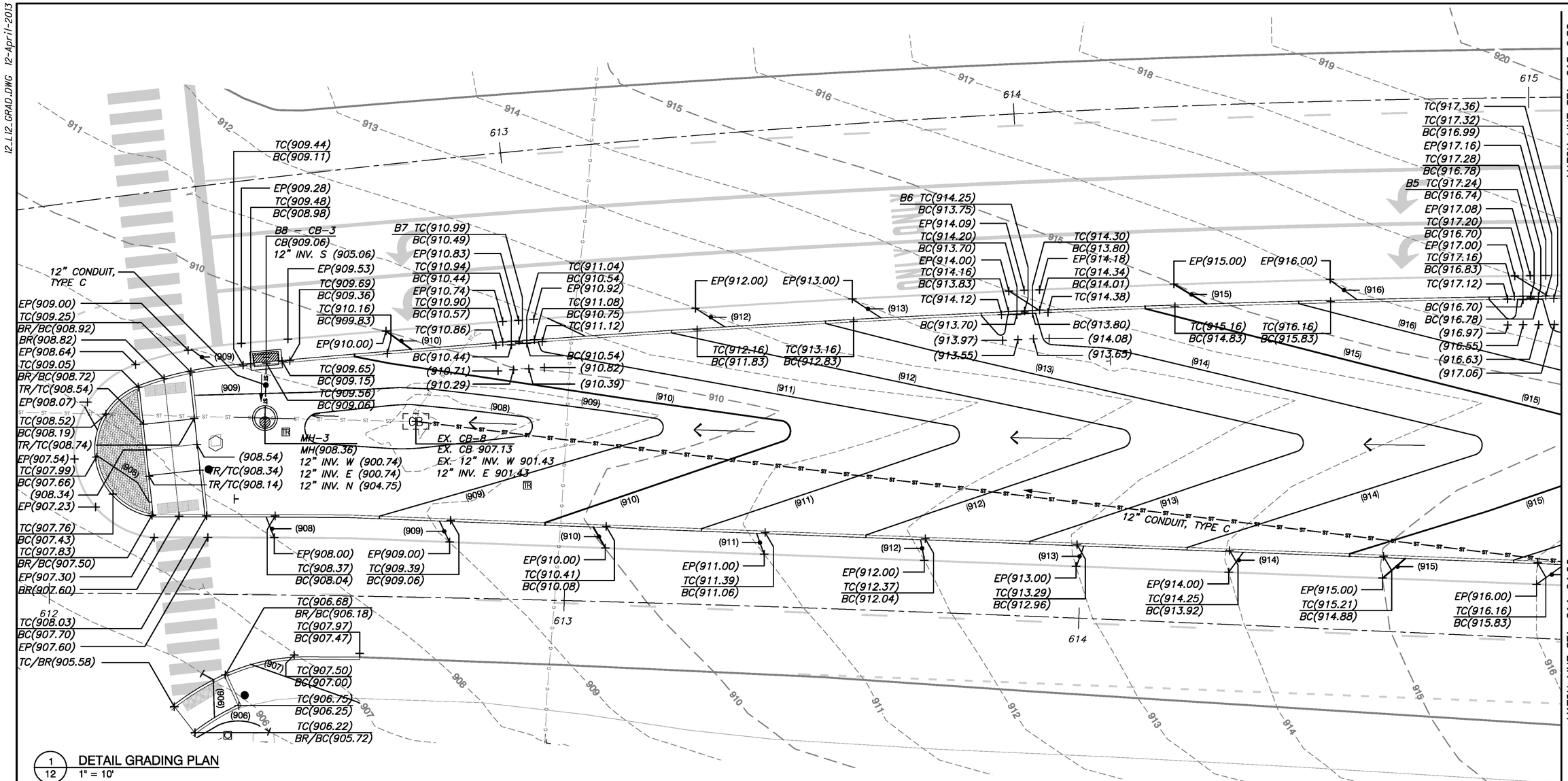

1/12 DETAIL GRADING PLAN
1" = 10'

ALL CONTOURS ARE BASED ON SURVEY INFO DERIVED FROM MIA-36-11.76 AND MIA-36-17.891. SPOT ELEVATIONS ARE INTERPOLATED FROM CONTOUR INFORMATION AND AS SUCH SHOULD BE CONSIDERED TO BE ± AND MUST BE FIELD CHECKED AND VERIFIED. ANY DISCREPENCIES SHALL BE BROUGHT TO THE ATTENTION OF THE CITY ENGINEER/OHIO DEPARTMENT OF TRANSPORTATION INSPECTOR BEFORE PROCEEDING WITH CONSTRUCTION.

GRADING LEGEND

EXISTING SHADE TREE			
EXISTING EVERGREEN TREE	TR	TOP OF RAMP	PROPOSED STORM LINE
LIMITED ACCESS RIGHT-OF-WAY	TC	TOP OF CURB	+932.12 EXISTING SPOT ELEVATION
EXISTING FENCE	INV	INVERT ELEVATION	+(932.41) PROPOSED SPOT ELEVATION
EXISTING ROAD CENTERLINE	BC	BOTTOM OF CURB	900 EXISTING 5' INDEX CONTOUR ELEVATION
EXISTING GAS LINE	BR	BOTTOM OF RAMP	901 EXISTING 1' INTERMEDIATE CONTOUR ELEVATION
EXISTING STORM LINE	MH	TOP OF MANHOLE	
EXISTING ELECTRIC LINE	MEG	MEET EXISTING GRADE	(900) PROPOSED 5' INDEX CONTOUR ELEVATION
EXISTING SANITARY SEWER LINE	CB	TOP OF CATCH BASIN	
EXISTING TELECOMMUNICATION LINE	EP	EDGE OF PAVEMENT/PAINT LINE	(901) PROPOSED 1' INTERMEDIATE CONTOUR ELEVATION

GENERAL NOTES:

1. ANY LAWN AREAS DISTURBED BY ANY CONTRACTOR SHALL BE RE-SEEDED PER ATTACHED LANDSCAPING GENERAL NOTES.
2. CONTRACTOR SHALL TAKE CARE NOT TO DAMAGE EXISTING STRUCTURES, PLANT MATERIAL, WALKS, DRIVES AND UTILITIES TO REMAIN INCLUDING ELEMENTS ON ADJACENT PROPERTIES.
3. EXISTING POLE BOXES MARKED "E"/"TR"/ETC. SHALL BE ADJUSTED TO FINISH GRADE AS REQUIRED.

ESTIMATED QUANTITIES

TOTAL	ITEM	ITEM EXTENSION	UNIT	DESCRIPTION
234	603	04600	FT	12" CONDUIT, TYPE C
1	604	00400	EACH	CATCH BASIN, NO. 3
3	604	22500	EACH	INLET, MISC.: CURB PASS THROUGH
3	604	22500	EACH	INLET, MISC.: CURB PASS THROUGH ALTERNATE #4
1	604	31500	EACH	MANHOLE, NO. 3

EDSALL & ASSOCIATES LLC
754 NEIL AVENUE ▪ COLUMBUS, OHIO 43215
LANDSCAPE ARCHITECTS ▪ LAND PLANNERS ▪ PLANNING CONSULTANTS

1" = 10'
HORIZONTAL SCALE IN FEET 0 5 10 15

CALCULATED JAM
CHECKED JFE/DCE

GRADING PLAN

MIA-36-11.55

13_L13_GRAD.DWG 12-April-2013

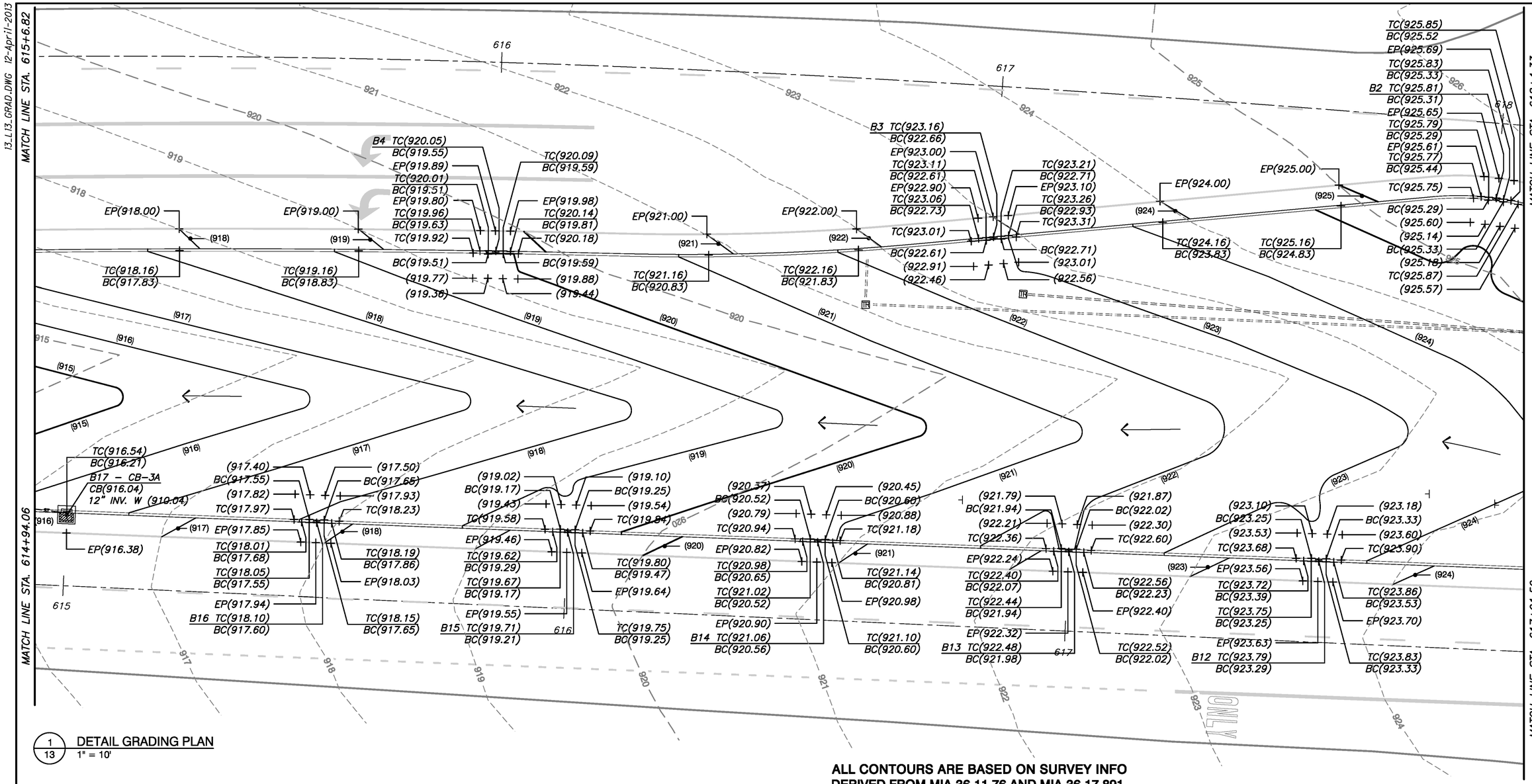

1/13 DETAIL GRADING PLAN
1" = 10'

ALL CONTOURS ARE BASED ON SURVEY INFO DERIVED FROM MIA-36-11.76 AND MIA-36-17.891. SPOT ELEVATIONS ARE INTERPOLATED FROM CONTOUR INFORMATION AND AS SUCH SHOULD BE CONSIDERED TO BE ± AND MUST BE FIELD CHECKED AND VERIFIED. ANY DISCREPENCIES SHALL BE BROUGHT TO THE ATTENTION OF THE CITY ENGINEER/OHIO DEPARTMENT OF TRANSPORTATION INSPECTOR BEFORE PROCEEDING WITH CONSTRUCTION.

GRADING LEGEND

- EXISTING SHADE TREE
- EXISTING EVERGREEN TREE
- LIMITED ACCESS RIGHT–OF–WAY
- EXISTING FENCE
- EXISTING ROAD CENTERLINE
- EXISTING GAS LINE
- EXISTING STORM LINE
- EXISTING ELECTRIC LINE
- EXISTING SANITARY SEWER LINE
- EXISTING TELECOMMUNICATION LINE

TR	TOP OF RAMP
TC	TOP OF CURB
INV	INVERT ELEVATION
BC	BOTTOM OF CURB
BR	BOTTOM OF RAMP
MH	TOP OF MANHOLE
MEG	MEET EXISTING GRADE
CB	TOP OF CATCH BASIN
EP	EDGE OF PAVEMENT/PAINT LINE

—ST—ST—ST—	PROPOSED STORM LINE
+932.12	EXISTING SPOT ELEVATION
+(932.41)	PROPOSED SPOT ELEVATION
900	EXISTING 5' INDEX CONTOUR ELEVATION
901	EXISTING 1' INTERMEDIATE CONTOUR ELEVATION
(900)	PROPOSED 5' INDEX CONTOUR ELEVATION
(901)	PROPOSED 1' INTERMEDIATE CONTOUR ELEVATION

GENERAL NOTES:

1. ANY LAWN AREAS DISTURBED BY ANY CONTRACTOR SHALL BE RE–SEEDED PER ATTACHED LANDSCAPING GENERAL NOTES.
2. CONTRACTOR SHALL TAKE CARE NOT TO DAMAGE EXISTING STRUCTURES, PLANT MATERIAL, WALKS, DRIVES AND UTILITIES TO REMAIN INCLUDING ELEMENTS ON ADJACENT PROPERTIES.
3. EXISTING POLE BOXES MARKED "E"/"TR"/ETC. SHALL BE ADJUSTED TO FINISH GRADE AS REQUIRED.

ESTIMATED QUANTITIES

TOTAL	ITEM	ITEM EXTENSION	UNIT	DESCRIPTION
7	603	04600	FT	12" CONDUIT, TYPE C
1	604	00800	EACH	CATCH BASIN, NO. 3A
8	604	22500	EACH	INLET, MISC.: CURB PASS THROUGH
8	604	22500	EACH	INLET, MISC.: CURB PASS THROUGH ALTERNATE #4

EDSALL & ASSOCIATES LLC
754 NEIL AVENUE ▪ COLUMBUS, OHIO 43215
LANDSCAPE ARCHITECTS ▪ LAND PLANNERS ▪ PLANNING CONSULTANTS

1" = 10'
0 5 10 15
HORIZONTAL SCALE IN FEET

CALCULATED JAM
CHECKED JFE/DCE

GRADING PLAN

MIA-36-11.55

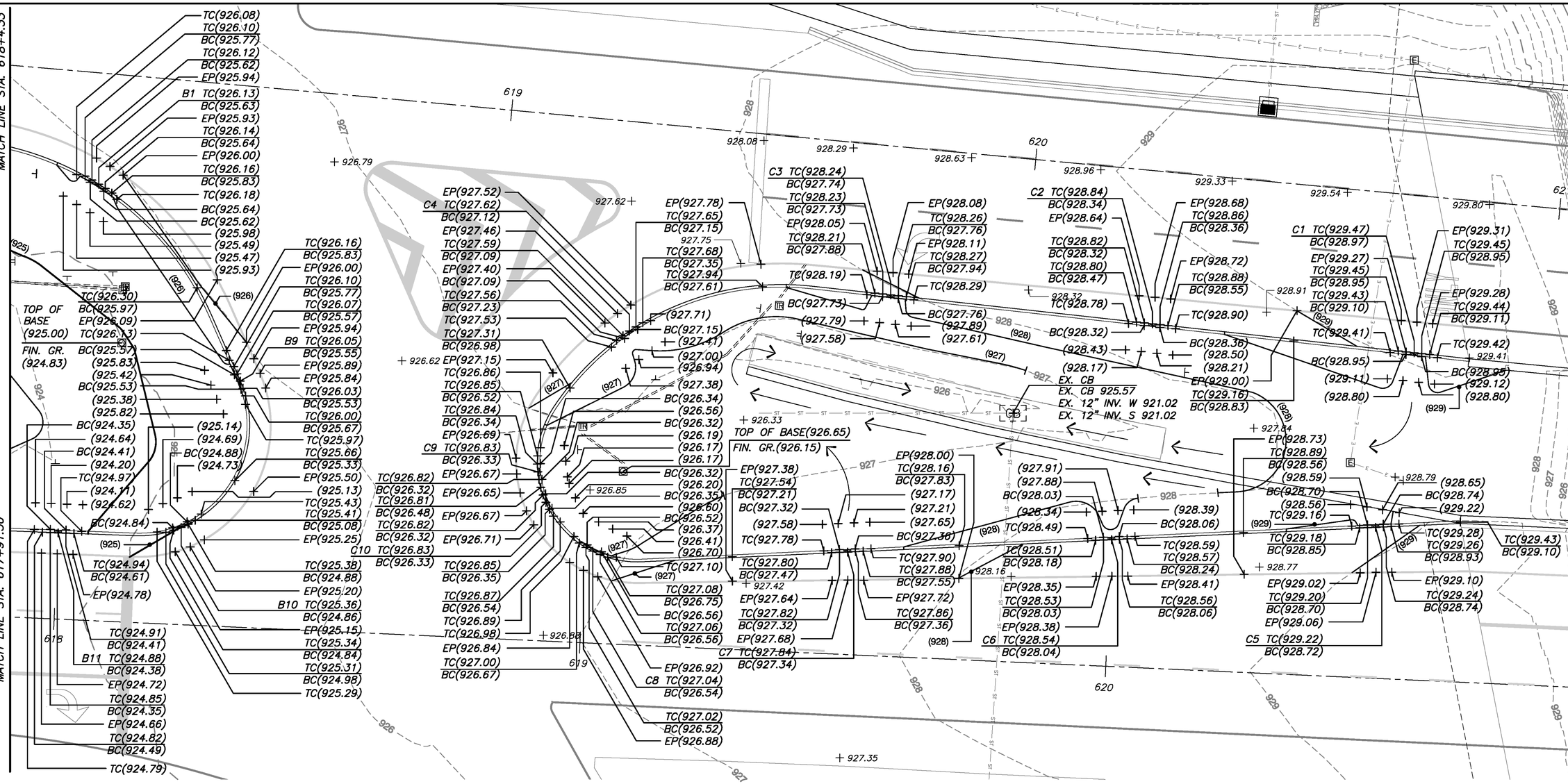

1/14 DETAIL GRADING PLAN
1" = 10'

GRADING LEGEND

	EXISTING SHADE TREE				
	EXISTING EVERGREEN TREE	TR	TOP OF RAMP	—ST—ST—ST—	PROPOSED STORM LINE
	LIMITED ACCESS RIGHT-OF-WAY	TC	TOP OF CURB	+932.12	EXISTING SPOT ELEVATION
—x—x—x—	EXISTING FENCE	INV	INVERT ELEVATION	+(932.41)	PROPOSED SPOT ELEVATION
	EXISTING ROAD CENTERLINE	BC	BOTTOM OF CURB	900	EXISTING 5' INDEX CONTOUR ELEVATION
—G—G—G—G—	EXISTING GAS LINE	BR	BOTTOM OF RAMP		
—ST—ST—ST—	EXISTING STORM LINE	MH	TOP OF MANHOLE	901	EXISTING 1' INTERMEDIATE CONTOUR ELEVATION
—E—E—E—E—	EXISTING ELECTRIC LINE	MEG	MEET EXISTING GRADE	(900)	PROPOSED 5' INDEX CONTOUR ELEVATION
—SA—SA—SA—	EXISTING SANITARY SEWER LINE	CB	TOP OF CATCH BASIN		
—TC—TC—TC—	EXISTING TELECOMMUNICATION LINE	EP	EDGE OF PAVEMENT/PAINT LINE	(901)	PROPOSED 1' INTERMEDIATE CONTOUR ELEVATION

ALL CONTOURS ARE BASED ON SURVEY INFO DERIVED FROM MIA-36-11.76 AND MIA-36-17.891. SPOT ELEVATIONS ARE INTERPOLATED FROM CONTOUR INFORMATION AND AS SUCH SHOULD BE CONSIDERED TO BE ± AND MUST BE FIELD CHECKED AND VERIFIED. ANY DISCREPENCIES SHALL BE BROUGHT TO THE ATTENTION OF THE CITY ENGINEER/OHIO DEPARTMENT OF TRANSPORTATION INSPECTOR BEFORE PROCEEDING WITH CONSTRUCTION.

GENERAL NOTES:

1. ANY LAWN AREAS DISTURBED BY ANY CONTRACTOR SHALL BE RE-SEEDED PER ATTACHED LANDSCAPING GENERAL NOTES.
2. CONTRACTOR SHALL TAKE CARE NOT TO DAMAGE EXISTING STRUCTURES, PLANT MATERIAL, WALKS, DRIVES AND UTILITIES TO REMAIN INCLUDING ELEMENTS ON ADJACENT PROPERTIES.
3. EXISTING POLE BOXES MARKED "E"/"TR"/ETC. SHALL BE ADJUSTED TO FINISH GRADE AS REQUIRED.

ESTIMATED QUANTITIES

TOTAL	ITEM	ITEM EXTENSION	UNIT	DESCRIPTION
14	604	22500	EACH	INLET, MISC.: CURB PASS THROUGH
14	604	22500	EACH	INLET, MISC.: CURB PASS THROUGH ALTERNATE #4

EDSALL & ASSOCIATES LLC
754 NEIL AVENUE ▪ COLUMBUS, OHIO 43215
LANDSCAPE ARCHITECTS ▪ LAND PLANNERS ▪ PLANNING CONSULTANTS

1" = 10'
HORIZONTAL SCALE IN FEET

CALCULATED JAM
CHECKED JFE/DCE

GRADING PLAN

MIA-36-11.55

14_L14_GRAD.DWG 12-April-2013

15-L15_GRAD.DWG 12-April-2013

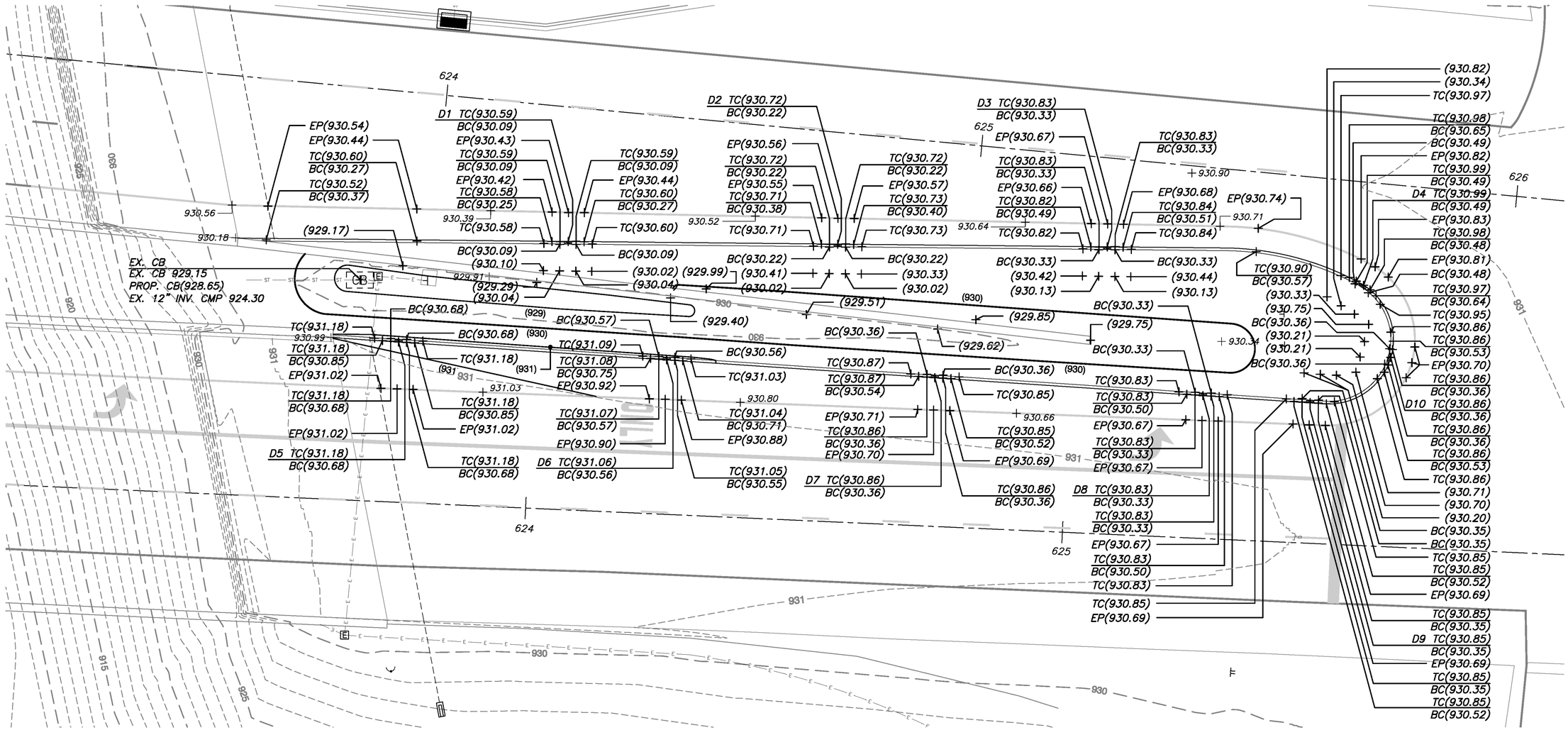

1/15 DETAIL GRADING PLAN
1" = 10'

GRADING LEGEND

	EXISTING SHADE TREE		
	EXISTING EVERGREEN TREE	TR	TOP OF RAMP
	LIMITED ACCESS RIGHT-OF-WAY	TC	TOP OF CURB
—x—x—x—	EXISTING FENCE	INV	INVERT ELEVATION
	EXISTING ROAD CENTERLINE	BC	BOTTOM OF CURB
—G—G—G—G—	EXISTING GAS LINE	BR	BOTTOM OF RAMP
—ST—ST—ST—	EXISTING STORM LINE	MH	TOP OF MANHOLE
—E—E—E—E—	EXISTING ELECTRIC LINE	MEG	MEET EXISTING GRADE
—SA—SA—SA—	EXISTING SANITARY SEWER LINE	CB	TOP OF CATCH BASIN
—TC—TC—TC—	EXISTING TELECOMMUNICATION LINE	EP	EDGE OF PAVEMENT/PAINT LINE

—ST—ST—ST—	PROPOSED STORM LINE
+932.12	EXISTING SPOT ELEVATION
+(932.41)	PROPOSED SPOT ELEVATION
900	EXISTING 5' INDEX CONTOUR ELEVATION
901	EXISTING 1' INTERMEDIATE CONTOUR ELEVATION
(900)	PROPOSED 5' INDEX CONTOUR ELEVATION
(901)	PROPOSED 1' INTERMEDIATE CONTOUR ELEVATION

ALL CONTOURS ARE BASED ON SURVEY INFO DERIVED FROM MIA-36-11.76 AND MIA-36-17.891. SPOT ELEVATIONS ARE INTERPOLATED FROM CONTOUR INFORMATION AND AS SUCH SHOULD BE CONSIDERED TO BE ± AND MUST BE FIELD CHECKED AND VERIFIED. ANY DISCREPENCIES SHALL BE BROUGHT TO THE ATTENTION OF THE CITY ENGINEER/OHIO DEPARTMENT OF TRANSPORTATION INSPECTOR BEFORE PROCEEDING WITH CONSTRUCTION.

GENERAL NOTES:

1. ANY LAWN AREAS DISTURBED BY ANY CONTRACTOR SHALL BE RE-SEEDED PER ATTACHED LANDSCAPING GENERAL NOTES.
2. CONTRACTOR SHALL TAKE CARE NOT TO DAMAGE EXISTING STRUCTURES, PLANT MATERIAL, WALKS, DRIVES AND UTILITIES TO REMAIN INCLUDING ELEMENTS ON ADJACENT PROPERTIES.
3. EXISTING POLE BOXES MARKED "E"/"TR"/ETC. SHALL BE ADJUSTED TO FINISH GRADE AS REQUIRED.

ESTIMATED QUANTITIES

TOTAL	ITEM	ITEM EXTENSION	UNIT	DESCRIPTION
1	604	09001	EACH	CATCH BASIN ADJUSTED TO GRADE, AS PER PLAN
10	604	22500	EACH	INLET, MISC.: CURB PASS THROUGH
10	604	22500	EACH	INLET, MISC.: CURB PASS THROUGH ALTERNATE #4

EDSALL & ASSOCIATES LLC
754 NEIL AVENUE ▪ COLUMBUS, OHIO 43215
LANDSCAPE ARCHITECTS ▪ LAND PLANNERS ▪ PLANNING CONSULTANTS

1"=10'
HORIZONTAL SCALE IN FEET 0 5 10 15

CALCULATED JAM
CHECKED JFE/DCE

GRADING PLAN

MIA-36-11.55

16_L16_GRAD.DWG 17-April-2013

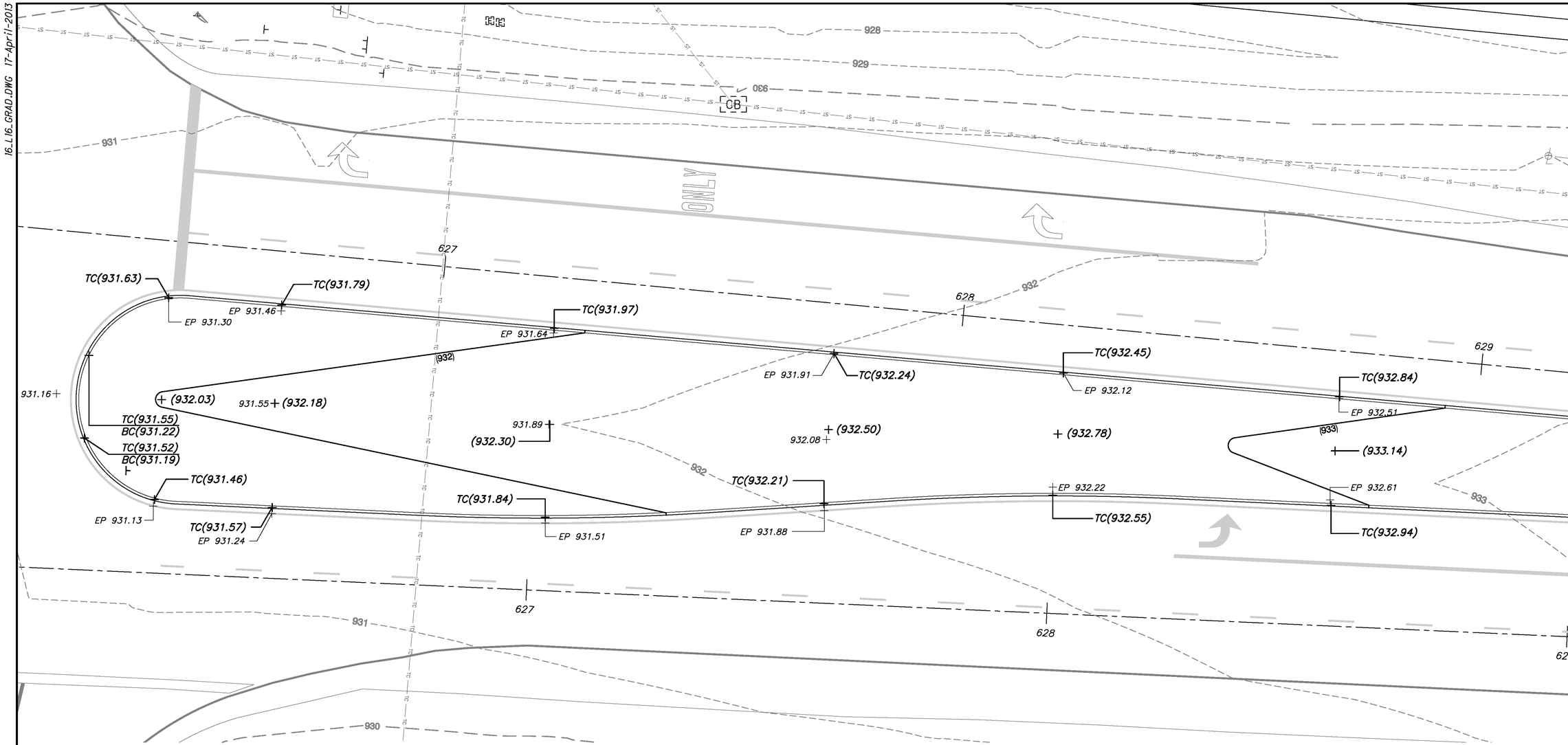

1/16 DETAIL GRADING PLAN
1" = 10'

GRADING LEGEND

	EXISTING SHADE TREE		
	EXISTING EVERGREEN TREE	TR	TOP OF RAMP
	LIMITED ACCESS RIGHT-OF-WAY	TC	TOP OF CURB
—x—x—x—	EXISTING FENCE	INV	INVERT ELEVATION
	EXISTING ROAD CENTERLINE	BC	BOTTOM OF CURB
—G—G—G—G—	EXISTING GAS LINE	BR	BOTTOM OF RAMP
—ST—ST—ST—	EXISTING STORM LINE	MH	TOP OF MANHOLE
—E—E—E—E—	EXISTING ELECTRIC LINE	MEG	MEET EXISTING GRADE
—SA—SA—SA—	EXISTING SANITARY SEWER LINE	CB	TOP OF CATCH BASIN
—TC—TC—TC—	EXISTING TELECOMMUNICATION LINE	EP	EDGE OF PAVEMENT/PAINT LINE

—ST—ST—ST—	PROPOSED STORM LINE
+932.12	EXISTING SPOT ELEVATION
+(932.41)	PROPOSED SPOT ELEVATION
900	EXISTING 5' INDEX CONTOUR ELEVATION
901	EXISTING 1' INTERMEDIATE CONTOUR ELEVATION
(900)	PROPOSED 5' INDEX CONTOUR ELEVATION
(901)	PROPOSED 1' INTERMEDIATE CONTOUR ELEVATION

ALL CONTOURS ARE BASED ON SURVEY INFO DERIVED FROM MIA-36-11.76 AND MIA-36-17.891. SPOT ELEVATIONS ARE INTERPOLATED FROM CONTOUR INFORMATION AND AS SUCH SHOULD BE CONSIDERED TO BE ± AND MUST BE FIELD CHECKED AND VERIFIED. ANY DISCREPENCIES SHALL BE BROUGHT TO THE ATTENTION OF THE CITY ENGINEER/OHIO DEPARTMENT OF TRANSPORTATION INSPECTOR BEFORE PROCEEDING WITH CONSTRUCTION.

GENERAL NOTES:

1. ANY LAWN AREAS DISTURBED BY ANY CONTRACTOR SHALL BE RE-SEEDED PER ATTACHED LANDSCAPING GENERAL NOTES.
2. CONTRACTOR SHALL TAKE CARE NOT TO DAMAGE EXISTING STRUCTURES, PLANT MATERIAL, WALKS, DRIVES AND UTILITIES TO REMAIN INCLUDING ELEMENTS ON ADJACENT PROPERTIES.
3. EXISTING POLE BOXES MARKED "E"/"TR"/ETC. SHALL BE ADJUSTED TO FINISH GRADE AS REQUIRED.

EDSALL & ASSOCIATES LLC
754 NEIL AVENUE ▪ COLUMBUS, OHIO 43215
LANDSCAPE ARCHITECTS ▪ LAND PLANNERS ▪ PLANNING CONSULTANTS

1" = 10'
0 5 10 15
HORIZONTAL SCALE IN FEET

CALCULATED JAM
CHECKED JFE/DCE

GRADING PLAN

MIA-36-11.55

17_L17_GRAD.DWG 12-April-2013

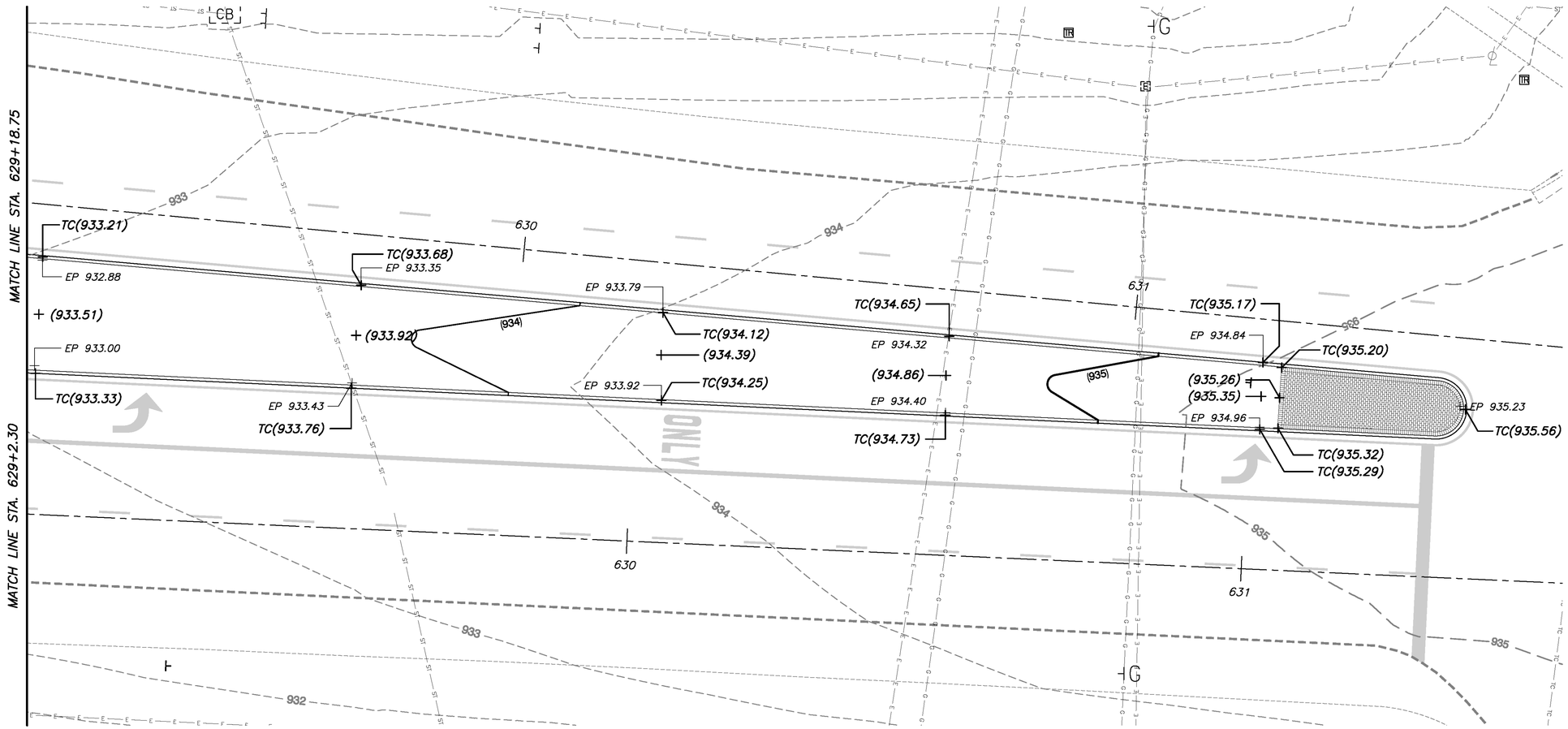

1/17 DETAIL GRADING PLAN
1" = 10'

GRADING LEGEND

	EXISTING SHADE TREE		
	EXISTING EVERGREEN TREE	TR	TOP OF RAMP
	LIMITED ACCESS RIGHT-OF-WAY	TC	TOP OF CURB
—x—x—x—	EXISTING FENCE	INV	INVERT ELEVATION
	EXISTING ROAD CENTERLINE	BC	BOTTOM OF CURB
—G—G—G—G—	EXISTING GAS LINE	BR	BOTTOM OF RAMP
—ST—ST—ST—	EXISTING STORM LINE	MH	TOP OF MANHOLE
—E—E—E—E—	EXISTING ELECTRIC LINE	MEG	MEET EXISTING GRADE
—SA—SA—SA—	EXISTING SANITARY SEWER LINE	CB	TOP OF CATCH BASIN
—TC—TC—TC—	EXISTING TELECOMMUNICATION LINE	EP	EDGE OF PAVEMENT/PAINT LINE

—ST—ST—ST—	PROPOSED STORM LINE
+932.12	EXISTING SPOT ELEVATION
+(932.41)	PROPOSED SPOT ELEVATION
900	EXISTING 5' INDEX CONTOUR ELEVATION
901	EXISTING 1' INTERMEDIATE CONTOUR ELEVATION
(900)	PROPOSED 5' INDEX CONTOUR ELEVATION
(901)	PROPOSED 1' INTERMEDIATE CONTOUR ELEVATION

ALL CONTOURS ARE BASED ON SURVEY INFO DERIVED FROM MIA-36-11.76 AND MIA-36-17.891. SPOT ELEVATIONS ARE INTERPOLATED FROM CONTOUR INFORMATION AND AS SUCH SHOULD BE CONSIDERED TO BE ± AND MUST BE FIELD CHECKED AND VERIFIED. ANY DISCREPENCIES SHALL BE BROUGHT TO THE ATTENTION OF THE CITY ENGINEER/OHIO DEPARTMENT OF TRANSPORTATION INSPECTOR BEFORE PROCEEDING WITH CONSTRUCTION.

GENERAL NOTES:

1. ANY LAWN AREAS DISTURBED BY ANY CONTRACTOR SHALL BE RE-SEEDED PER ATTACHED LANDSCAPING GENERAL NOTES.
2. CONTRACTOR SHALL TAKE CARE NOT TO DAMAGE EXISTING STRUCTURES, PLANT MATERIAL, WALKS, DRIVES AND UTILITIES TO REMAIN INCLUDING ELEMENTS ON ADJACENT PROPERTIES.
3. EXISTING POLE BOXES MARKED "E"/"TR"/ETC. SHALL BE ADJUSTED TO FINISH GRADE AS REQUIRED.

EDSALL & ASSOCIATES LLC
754 NEIL AVENUE ▪ COLUMBUS, OHIO 43215
LANDSCAPE ARCHITECTS ▪ LAND PLANNERS ▪ PLANNING CONSULTANTS

1" = 10'
0 5 10 15
HORIZONTAL SCALE IN FEET

CALCULATED JAM
CHECKED JFE/DCE

GRADING PLAN

MIA-36-11.55

18_L18_GRAD_TABL.DWG 12-April-2013

CURB OPENING POINT TABLE

ID#	DESCRIPTION	LOCATION
A1	CENTER OF CURB PASS THROUGH	N788131.08 E1486567.97
A2	CENTER OF CURB PASS THROUGH	N788122.30 E1486518.87
A3	CENTER OF CB-3A	N788113.67 E1486469.74
B1	CENTER OF CURB PASS THROUGH	N788145.83 E1487284.00
B2	CENTER OF CURB PASS THROUGH	N788153.91 E1487261.72
B3	CENTER OF CURB PASS THROUGH	N788146.17 E1487161.52
B4	CENTER OF CURB PASS THROUGH	N788143.35 E1487062.21
B5	CENTER OF CURB PASS THROUGH	N788143.49 E1486963.80
B6	CENTER OF CURB PASS THROUGH	N788140.65 E1486865.53
B7	CENTER OF CURB PASS THROUGH	N788134.82 E1486767.35
B8	CENTER OF CB-3	N788131.95 E1486718.18
B9	CENTER OF CURB PASS THROUGH	N788108.54 E1487310.81
B10	CENTER OF CURB PASS THROUGH	N788081.02 E1487299.68
B11	CENTER OF CURB PASS THROUGH	N788080.04 E1487276.41
B12	CENTER OF CURB PASS THROUGH	N788081.98 E1487226.35
B13	CENTER OF CURB PASS THROUGH	N788083.91 E1487176.48
B14	CENTER OF CURB PASS THROUGH	N788085.85 E1487126.42
B15	CENTER OF CURB PASS THROUGH	N788087.78 E1487076.56
B16	CENTER OF CURB PASS THROUGH	N788089.72 E1487026.50
B17	CENTER OF CB-3A	N788091.03 E1486976.61
B18	CENTER OF MH-3	N788120.11 E1486718.00

ID#	DESCRIPTION	LOCATION
C1	CENTER OF CURB PASS THROUGH	N788113.76 E1487533.99
C2	CENTER OF CURB PASS THROUGH	N788119.25 E1487484.29
C3	CENTER OF CURB PASS THROUGH	N788124.74 E1487434.59
C4	CENTER OF CURB PASS THROUGH	N788117.92 E1487385.07
C5	CENTER OF CURB PASS THROUGH	N788081.04 E1487526.69
C6	CENTER OF CURB PASS THROUGH	N788078.69 E1487476.53
C7	CENTER OF CURB PASS THROUGH	N788076.34 E1487426.37
C8	CENTER OF CURB PASS THROUGH	N788076.46 E1487378.11
C9	CENTER OF CURB PASS THROUGH	N788091.39 E1487367.79
C10	CENTER OF CURB PASS THROUGH	N788085.67 E1487369.30
D1	CENTER OF CURB PASS THROUGH	N788085.79 E1487882.96
D2	CENTER OF CURB PASS THROUGH	N788085.29 E1487933.13
D3	CENTER OF CURB PASS THROUGH	N788084.79 E1487983.30
D4	CENTER OF CURB PASS THROUGH	N788077.70 E1488030.88
D5	CENTER OF CURB PASS THROUGH	N788067.57 E1487851.44
D6	CENTER OF CURB PASS THROUGH	N788064.24 E1487901.34
D7	CENTER OF CURB PASS THROUGH	N788060.91 E1487951.24
D8	CENTER OF CURB PASS THROUGH	N788057.59 E1488001.14
D9	CENTER OF CURB PASS THROUGH	N788056.26 E1488021.10
D10	CENTER OF CURB PASS THROUGH	N788064.55 E1488035.86

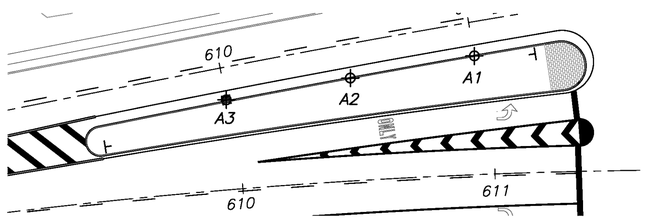

1/18 DRAINAGE AREA "A"
1" = 30'

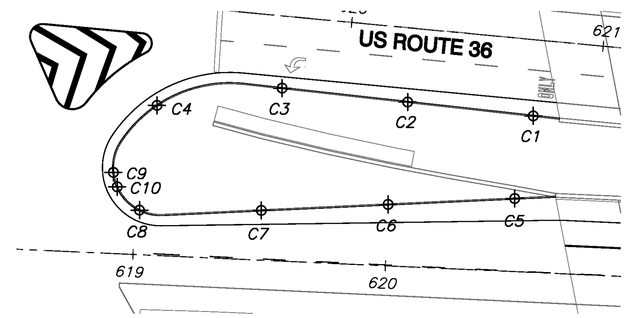

3/18 DRAINAGE AREA "C"
1" = 30'

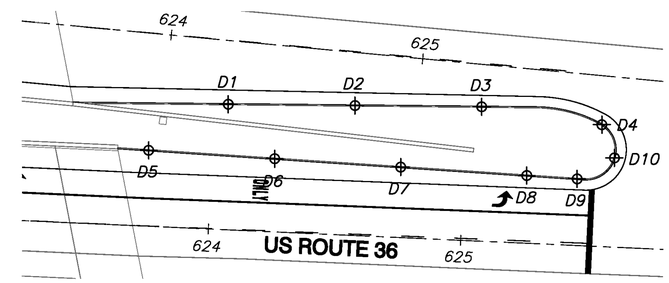

4/18 DRAINAGE AREA "D"
1" = 30'

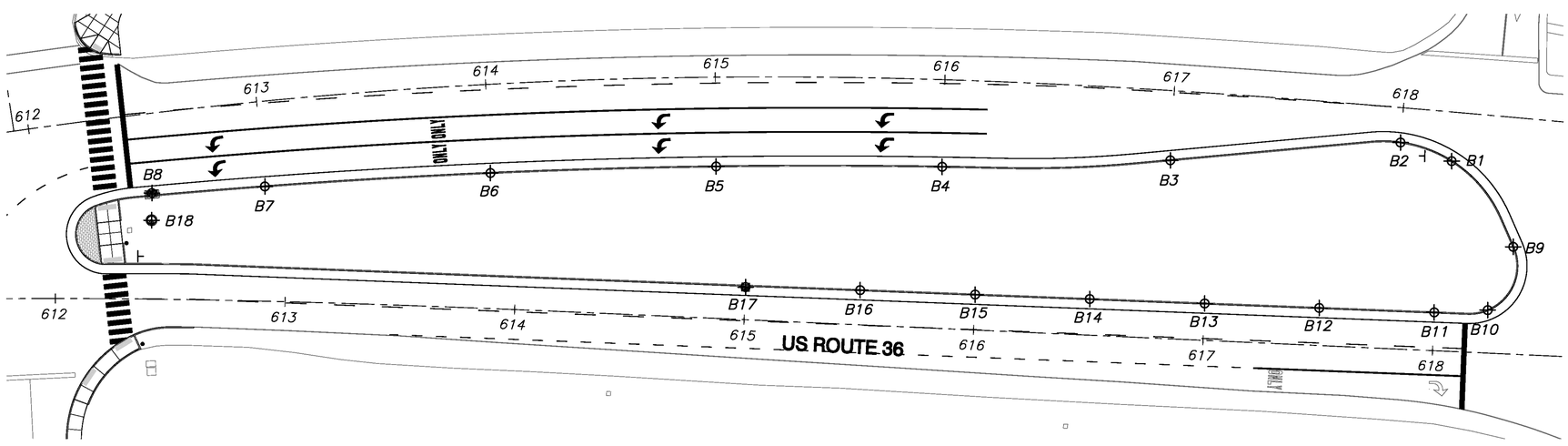

2/18 DRAINAGE AREA "B"
1" = 30'

EDSALL & ASSOCIATES LLC
754 NEIL AVENUE ▪ COLUMBUS, OHIO 43215
LANDSCAPE ARCHITECTS ▪ LAND PLANNERS ▪ PLANNING CONSULTANTS

1"=10'
0 5 10 15
HORIZONTAL SCALE IN FEET

CALCULATED JAM
CHECKED JFE/DCE

CURB OPENING COORDINATE TABLE

MIA-36-11.55

19_L19_SOIL.DWG 12-April-2013

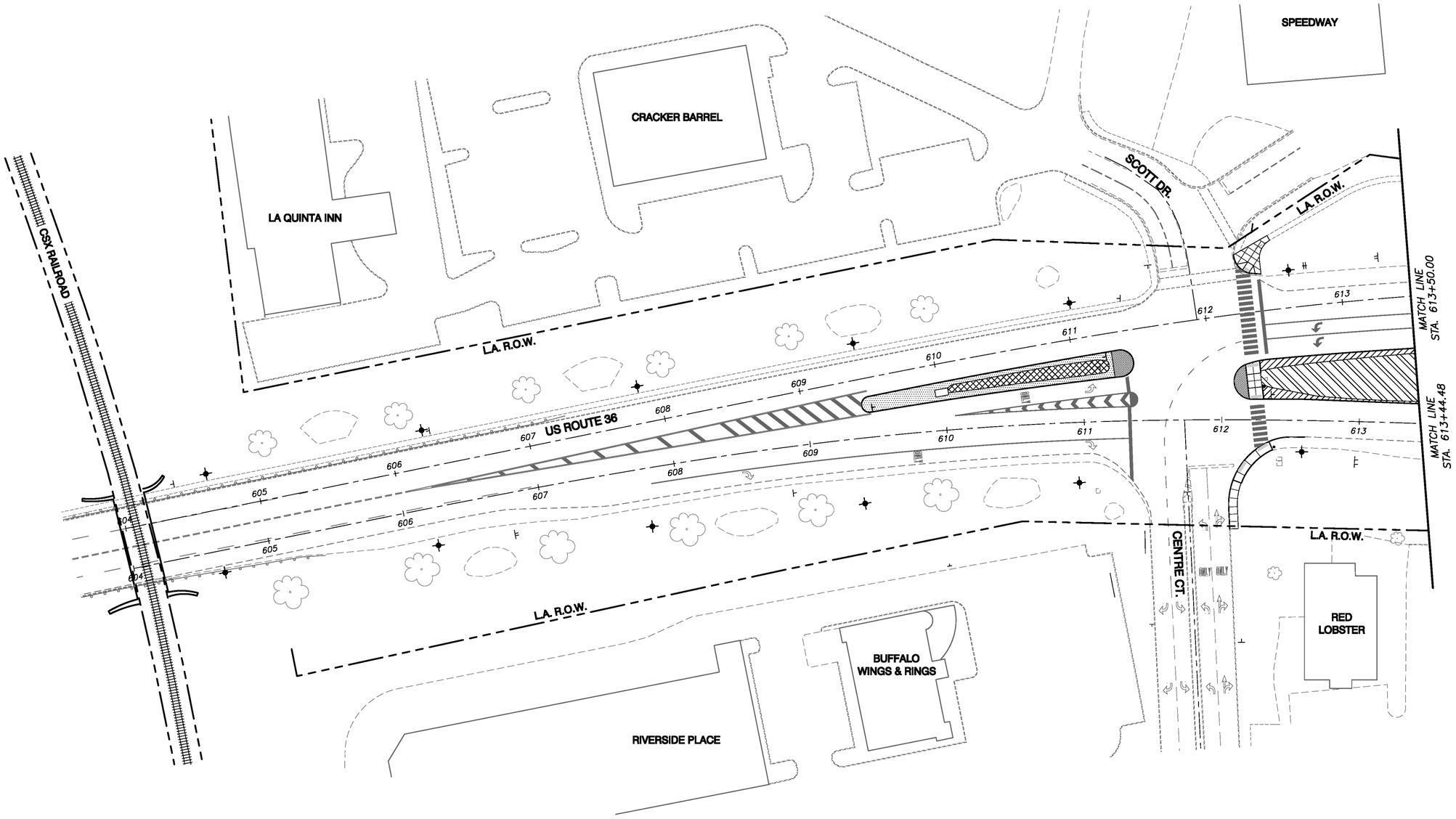

LEGEND:

- EXISTING SHADE TREE
- EXISTING EVERGREEN TREE
- PROPOSED LIGHT POLE – INSTALLED BY CITY – SEE SHEETS E1–E4
- EXISTING PAVEMENT REMOVED. ADD AVERAGE 16" OF TOPSOIL FOR PROPOSED PLANTING BED.
- EXISTING PAVEMENT REMOVED. ADD AVERAGE 15" OF TOPSOIL FOR PROPOSED TURF.
- EXISTING TURF TREATED AND TILLED. ADD AVERAGE 7" OF TOPSOIL FOR PROPOSED PLANTING BED.
- EXISTING TURF TREATED AND TILLED. ADD AVERAGE 2" OF TOPSOIL FOR PROPOSED TURF.

ESTIMATED QUANTITIES

TOTAL	ITEM	ITEM EXTENSION	UNIT	DESCRIPTION
139	659	00301	CU YD	TOPSOIL, AS PER PLAN

GENERAL NOTES:

1. ANY LAWN AREAS DISTURBED BY ANY CONTRACTOR SHALL BE RE–SEEDED PER LANDSCAPING GENERAL NOTES.
2. CONTRACTOR SHALL TAKE CARE NOT TO DAMAGE EXISTING STRUCTURES, FENCING, PLANT MATERIAL, WALKS, DRIVES AND UTILITIES TO REMAIN INCLUDING ELEMENTS ON ADJACENT PROPERTIES.

EDSALL & ASSOCIATES LLC
754 NEIL AVENUE ▪ COLUMBUS, OHIO 43215
LANDSCAPE ARCHITECTS ▪ LAND PLANNERS ▪ PLANNING CONSULTANTS

1"=40'
0 20 40 60
HORIZONTAL SCALE IN FEET

CALCULATED JAM
CHECKED JFE/DCE

TOPSOIL PLAN

MIA-36-11.55

20_L20_SOIL.DWG 12-April-2013

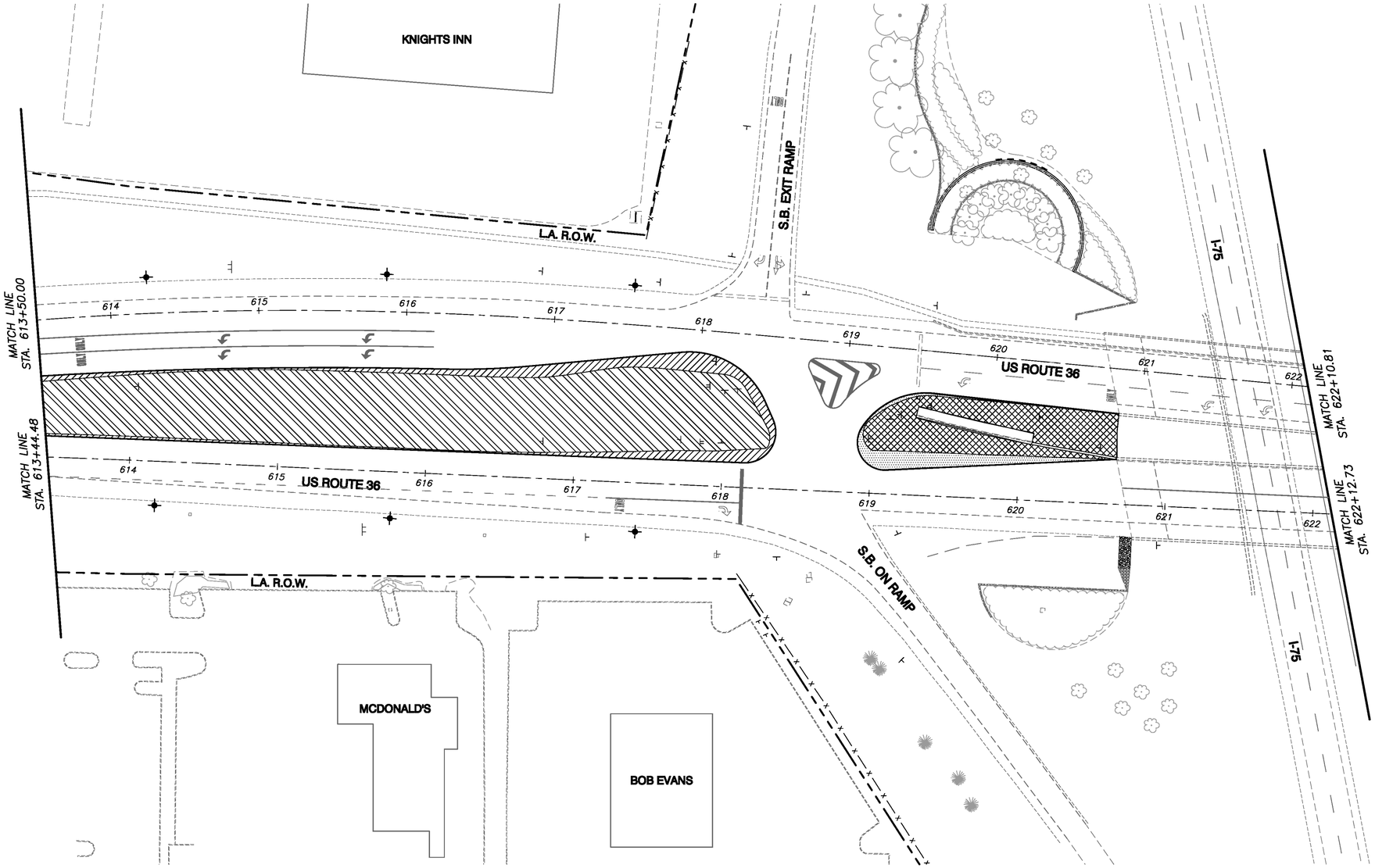

LEGEND:

- EXISTING SHADE TREE
- EXISTING EVERGREEN TREE
- PROPOSED LIGHT POLE – INSTALLED BY CITY – SEE SHEETS E1–E4
- EXISTING PAVEMENT REMOVED. ADD AVERAGE 13" OF TOPSOIL FOR PROPOSED PLANTING BED.
- EXISTING PAVEMENT REMOVED. ADD AVERAGE 15" OF TOPSOIL FOR PROPOSED TURF.
- EXISTING TURF TREATED AND TILLED. ADD AVERAGE 1/2" OF TOPSOIL FOR PROPOSED PLANTING BED.
- EXISTING TURF TREATED AND TILLED. ADD AVERAGE 2" OF TOPSOIL FOR PROPOSED TURF.

ESTIMATED QUANTITIES

TOTAL	ITEM	ITEM EXTENSION	UNIT	DESCRIPTION
352	659	00301	CU YD	TOPSOIL, AS PER PLAN

GENERAL NOTES:

1. ANY LAWN AREAS DISTURBED BY ANY CONTRACTOR SHALL BE RE–SEEDED PER LANDSCAPING GENERAL NOTES.
2. CONTRACTOR SHALL TAKE CARE NOT TO DAMAGE EXISTING STRUCTURES, FENCING, PLANT MATERIAL, WALKS, DRIVES AND UTILITIES TO REMAIN INCLUDING ELEMENTS ON ADJACENT PROPERTIES.

EDSALL & ASSOCIATES LLC
754 NEIL AVENUE ▪ COLUMBUS, OHIO 43215
LANDSCAPE ARCHITECTS ▪ LAND PLANNERS ▪ PLANNING CONSULTANTS

1"=40'
0 20 40 60
HORIZONTAL SCALE IN FEET

CALCULATED JAM
CHECKED JFE/DCE

TOPSOIL PLAN

MIA-36-11.55

2LL2LSOIL.DWG 17-April-2013

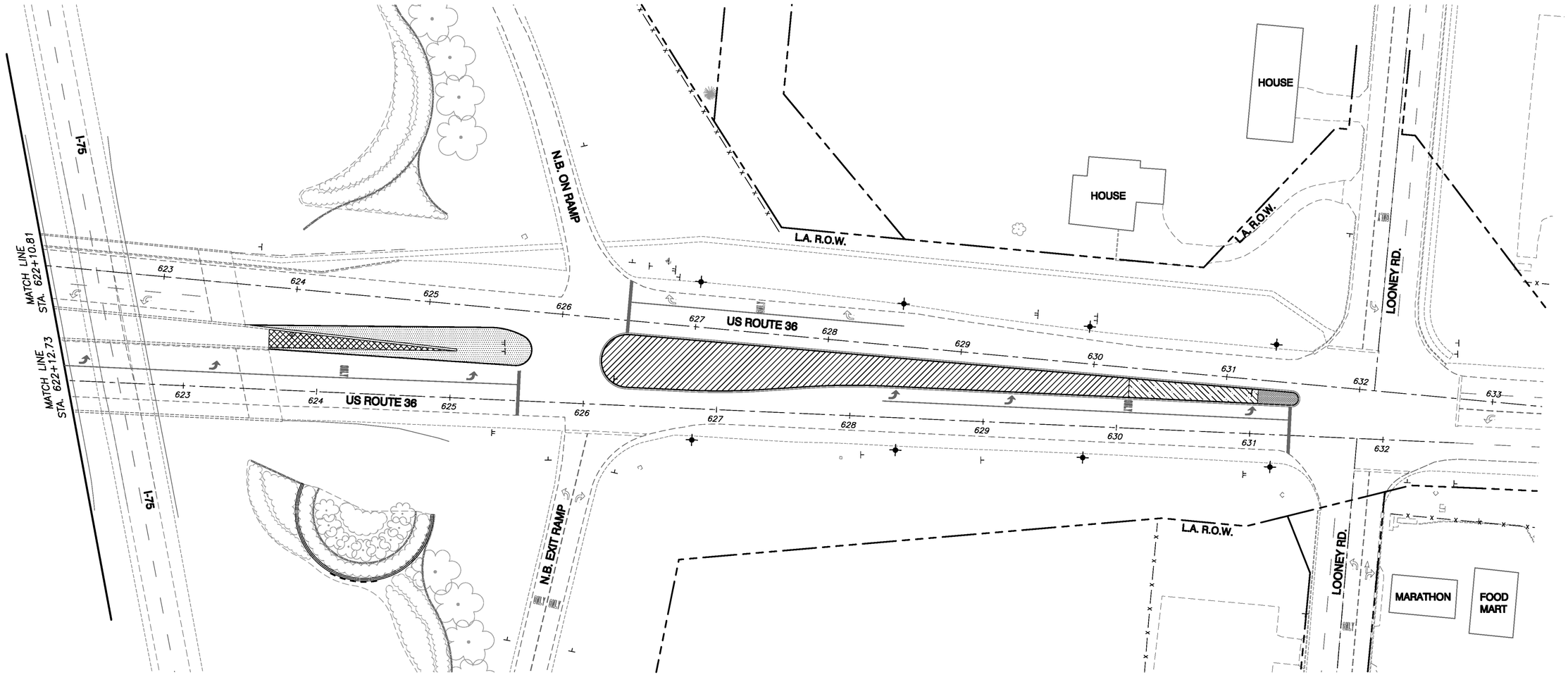

LEGEND:

- EXISTING SHADE TREE
- EXISTING EVERGREEN TREE
- PROPOSED LIGHT POLE – INSTALLED BY CITY – SEE SHEETS E1–E4
- EXISTING PAVEMENT REMOVED. ADD AVERAGE 13" OF TOPSOIL FOR PROPOSED PLANTING BED.
- EXISTING PAVEMENT REMOVED. ADD AVERAGE 15" OF TOPSOIL FOR PROPOSED TURF.
- EXISTING PAVEMENT REMOVED. ADD AVERAGE 13–1/2" OF TOPSOIL FOR PROPOSED PLANTING BED.
- EXISTING TURF TREATED AND TILLED. ADD AVERAGE 1/2" OF TOPSOIL FOR PROPOSED PLANTING BED.

ESTIMATED QUANTITIES

TOTAL	ITEM	ITEM EXTENSION	UNIT	DESCRIPTION
633	659	00301	CU YD	TOPSOIL, AS PER PLAN

GENERAL NOTES:

1. ANY LAWN AREAS DISTURBED BY ANY CONTRACTOR SHALL BE RE–SEEDED PER LANDSCAPING GENERAL NOTES.
2. CONTRACTOR SHALL TAKE CARE NOT TO DAMAGE EXISTING STRUCTURES, FENCING, PLANT MATERIAL, WALKS, DRIVES AND UTILITIES TO REMAIN INCLUDING ELEMENTS ON ADJACENT PROPERTIES.

EDSALL & ASSOCIATES LLC
754 NEIL AVENUE ▪ COLUMBUS, OHIO 43215
LANDSCAPE ARCHITECTS ▪ LAND PLANNERS ▪ PLANNING CONSULTANTS

1"=40'

0 20 40 60 HORIZONTAL SCALE IN FEET

CALCULATED JAM
CHECKED JFE/DCE

TOPSOIL PLAN

MIA-36-11.55

22_L22_PLNT.DWG 16-May-2013

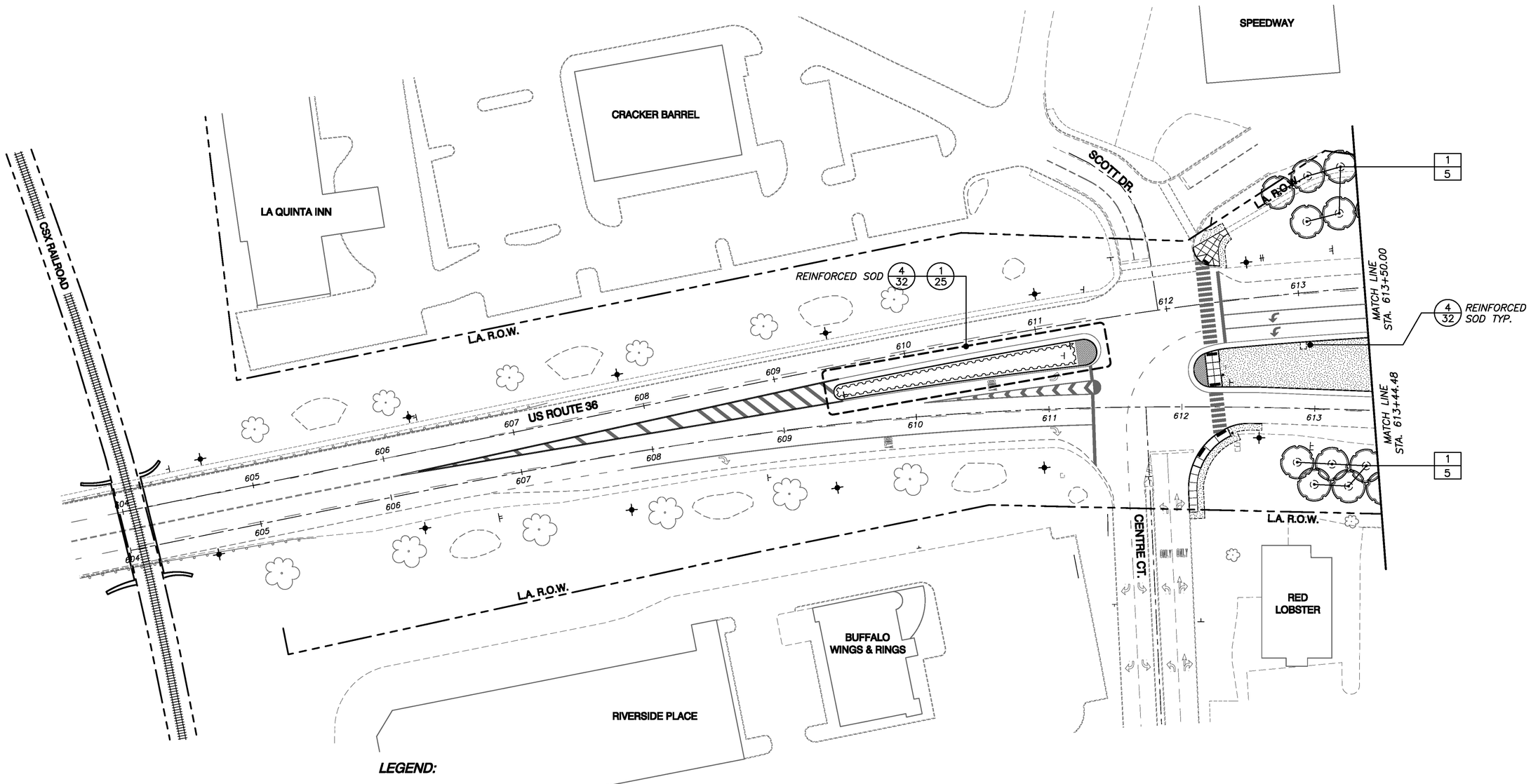

LEGEND:

- EXISTING SHADE TREE
- EXISTING EVERGREEN TREE
- PROPOSED SHADE TREE
- PROPOSED EVERGREEN TREE
- PROPOSED PLANTING BED
- PROPOSED SEEDED LAWN
- PROPOSED LIGHT POLE – INSTALLED BY CITY – SEE SHEETS E1–E4
- KEY NUMBER / QUANTITY NUMBER

ESTIMATED QUANTITIES

TOTAL	ITEM	ITEM EXTENSION	UNIT	DESCRIPTION
3	660	20000	SQ YD	SODDING REINFORCED
10	661	99900	EACH	PLANTING, MISC.: DECIDUOUS TREE, 3 1/2" CALIPER, INSTALLATION ONLY (SEE NOTE 1)
10	SPECIAL	69098000	EACH	MISC.: 20 GALLON WATER BAG (SHADE TREES)
575	SPECIAL	69098300	SQ YD	MISC.: SEEDED LAWN

GENERAL NOTES:

1. ODOT WILL BE PURCHASING SEPARATELY THE FOLLOWING TREES:
   38 SHINGLE OAK
   30 SHUMARD OAK
   27 PIONEER ELM
   THE CONTRACTOR, AS A PART OF THE MIA–36–11.55 PROJECT, WILL BE RESPONSIBLE FOR OFFLOADING AND PLANTING OF THESE TREES AS DIRECTED BY THE CITY OF PIQUA AND THE UNIT PRICE BID FOR THESE ITEMS SHOULD REFLECT THIS WORK, WITH THE EXCEPTION OF THE ACTUAL PURCHASE PRICE OF THOSE TREES.
2. ANY LAWN AREAS DISTURBED BY ANY CONTRACTOR SHALL BE RE–SEEDED PER LANDSCAPING GENERAL NOTES.
3. CONTRACTOR SHALL TAKE CARE NOT TO DAMAGE EXISTING STRUCTURES, FENCING, PLANT MATERIAL, WALKS, DRIVES AND UTILITIES TO REMAIN INCLUDING ELEMENTS ON ADJACENT PROPERTIES.
4. SEE PLANTING DETAILS AND PLANT LIST ON PAGE 26

EDSALL & ASSOCIATES LLC
754 NEIL AVENUE ▪ COLUMBUS, OHIO 43215
LANDSCAPE ARCHITECTS ▪ LAND PLANNERS ▪ PLANNING CONSULTANTS

1"=40'
0 20 40 60
HORIZONTAL SCALE IN FEET

CALCULATED JAM
CHECKED JFE/DCE

PLANTING PLAN

MIA-36-11.55

23_L23_PLNT.DWG 16-May-2013

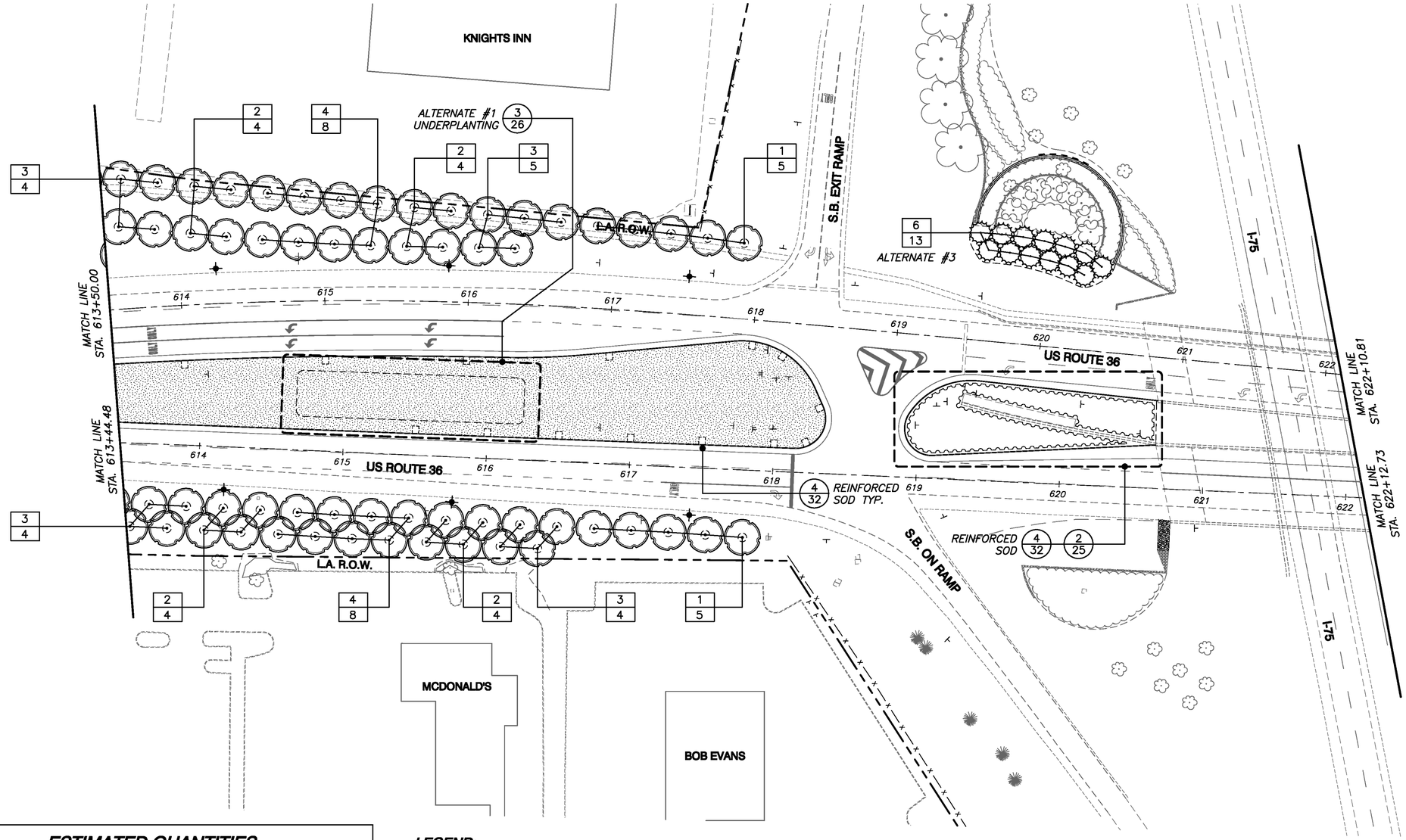

ESTIMATED QUANTITIES

TOTAL	ITEM	ITEM EXTENSION	UNIT	DESCRIPTION
35	660	20000	SQ YD	SODDING REINFORCED
17	661	40101	EACH	DECIDUOUS TREE, 2 1/2" CALIPER, AS PER PLAN
13	661	50121	EACH	EVERGREEN TREE, 6' HEIGHT, AS PER PLAN – COLORADO GREEN SPRUCE – ALTERNATE #3
16	661	99900	EACH	PLANTING, MISC.: DECIDUOUS TREE, 2 1/2" CALIPER, INSTALLATION ONLY (SEE NOTE 1)
26	661	99900	EACH	PLANTING, MISC.: DECIDUOUS TREE, 3 1/2" CALIPER, INSTALLATION ONLY (SEE NOTE 1)
13	SPECIAL	69098300	EACH	MISC.: 15 GALLON WATER BAG (EVERGREEN TREES ALTERNATE #3)
59	SPECIAL	69098300	EACH	MISC.: 20 GALLON WATER BAG (SHADE TREES)
2,938	SPECIAL	69098300	SQ YD	MISC.: SEEDED LAWN

LEGEND:

- EXISTING SHADE TREE
- EXISTING EVERGREEN TREE
- PROPOSED SHADE TREE
- PROPOSED EVERGREEN TREE
- PROPOSED PLANTING BED
- PROPOSED SEEDED LAWN
- PROPOSED LIGHT POLE – INSTALLED BY CITY – SEE SHEETS E1–E4
- KEY NUMBER / QUANTITY NUMBER

GENERAL NOTES:

1. ODOT WILL BE PURCHASING SEPARATELY THE FOLLOWING TREES:
   38 SHINGLE OAK
   30 SHUMARD OAK
   27 PIONEER ELM
   THE CONTRACTOR, AS A PART OF THE MIA–36–11.55 PROJECT, WILL BE RESPONSIBLE FOR OFFLOADING AND PLANTING OF THESE TREES AS DIRECTED BY THE CITY OF PIQUA AND THE UNIT PRICE BID FOR THESE ITEMS SHOULD REFLECT THIS WORK, WITH THE EXCEPTION OF THE ACTUAL PURCHASE PRICE OF THOSE TREES.
2. ANY LAWN AREAS DISTURBED BY ANY CONTRACTOR SHALL BE RE–SEEDED PER LANDSCAPING GENERAL NOTES.
3. CONTRACTOR SHALL TAKE CARE NOT TO DAMAGE EXISTING STRUCTURES, FENCING, PLANT MATERIAL, WALKS, DRIVES AND UTILITIES TO REMAIN INCLUDING ELEMENTS ON ADJACENT PROPERTIES.
4. SEE PLANTING DETAILS AND PLANT LIST ON PAGE 26

EDSALL & ASSOCIATES LLC
754 NEIL AVENUE ▪ COLUMBUS, OHIO 43215
LANDSCAPE ARCHITECTS ▪ LAND PLANNERS ▪ PLANNING CONSULTANTS

1"=40'
0 20 40 60
HORIZONTAL SCALE IN FEET

CALCULATED JAM
CHECKED JFE/DCE

PLANTING PLAN

MIA-36-11.55

24_L24_PLNT.DWG 16-May-2013

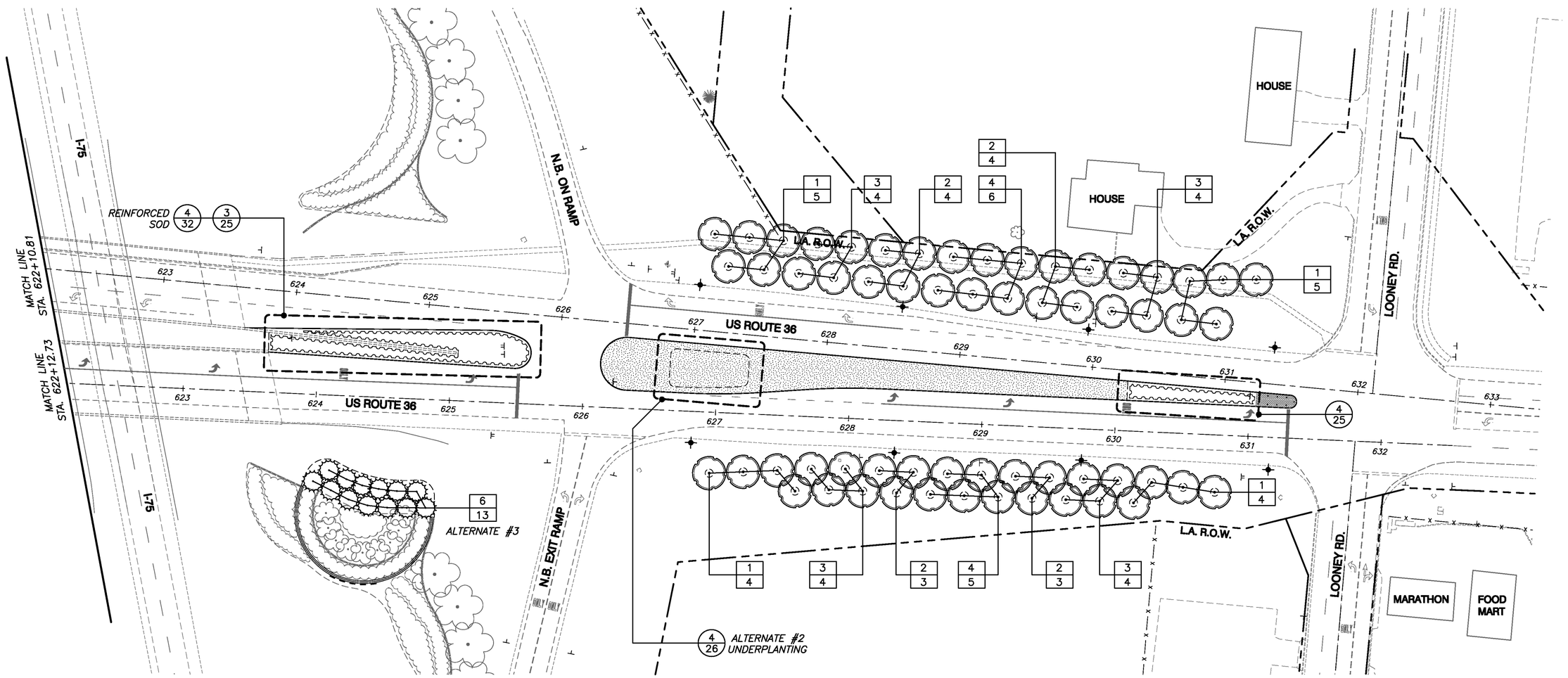

ESTIMATED QUANTITIES

TOTAL	ITEM	ITEM EXTENSION	UNIT	DESCRIPTION
16	661	40101	EACH	DECIDUOUS TREE, 2 1/2" CALIPER, AS PER PLAN
13	661	50121	EACH	EVERGREEN TREE, 6' HEIGHT, AS PER PLAN – COLORADO GREEN SPRUCE – ALTERNATE #3
11	661	99900	EACH	PLANTING, MISC.: DECIDUOUS TREE, 2 1/2" CALIPER, INSTALLATION ONLY (SEE NOTE 1)
32	661	99900	EACH	PLANTING, MISC.: DECIDUOUS TREE, 3 1/2" CALIPER, INSTALLATION ONLY (SEE NOTE 1)
13	SPECIAL	69098300	EACH	MISC.: 15 GALLON WATER BAG (EVERGREEN TREES ALTERNATE #3)
59	SPECIAL	69098300	EACH	MISC.: 20 GALLON WATER BAG (SHADE TREES)
1,100	SPECIAL	69098300	SQ YD	MISC.: SEEDED LAWN

LEGEND:

- EXISTING SHADE TREE
- EXISTING EVERGREEN TREE
- PROPOSED SHADE TREE
- PROPOSED EVERGREEN TREE
- PROPOSED PLANTING BED
- PROPOSED SEEDED LAWN
- PROPOSED LIGHT POLE – INSTALLED BY CITY – SEE SHEETS E1–E4
- # / # KEY NUMBER / QUANTITY NUMBER

GENERAL NOTES:

1. ODOT WILL BE PURCHASING SEPARATELY THE FOLLOWING TREES:
   38 SHINGLE OAK
   30 SHUMARD OAK
   27 PIONEER ELM
   THE CONTRACTOR, AS A PART OF THE MIA–36–11.55 PROJECT, WILL BE RESPONSIBLE FOR OFFLOADING AND PLANTING OF THESE TREES AS DIRECTED BY THE CITY OF PIQUA AND THE UNIT PRICE BID FOR THESE ITEMS SHOULD REFLECT THIS WORK, WITH THE EXCEPTION OF THE ACTUAL PURCHASE PRICE OF THOSE TREES.
2. ANY LAWN AREAS DISTURBED BY ANY CONTRACTOR SHALL BE RE–SEEDED PER LANDSCAPING GENERAL NOTES.
3. CONTRACTOR SHALL TAKE CARE NOT TO DAMAGE EXISTING STRUCTURES, FENCING, PLANT MATERIAL, WALKS, DRIVES AND UTILITIES TO REMAIN INCLUDING ELEMENTS ON ADJACENT PROPERTIES.
4. SEE PLANTING DETAILS AND PLANT LIST ON PAGE 26

EDSALL & ASSOCIATES LLC
754 NEIL AVENUE ▪ COLUMBUS, OHIO 43215
LANDSCAPE ARCHITECTS ▪ LAND PLANNERS ▪ PLANNING CONSULTANTS

1"=40'
0 20 40 60
HORIZONTAL SCALE IN FEET

CALCULATED JAM
CHECKED JFE/DCE

PLANTING PLAN

MIA-36-11.55

25_L25_PLNT_DETL.DWG 16-May-2013

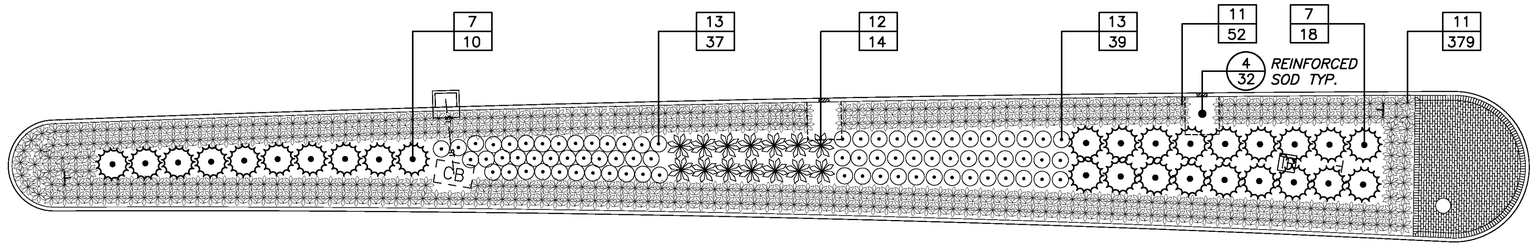

1/25 DETAIL PLANTING PLAN (WEST OF SCOTT DR.)
1" = 10'

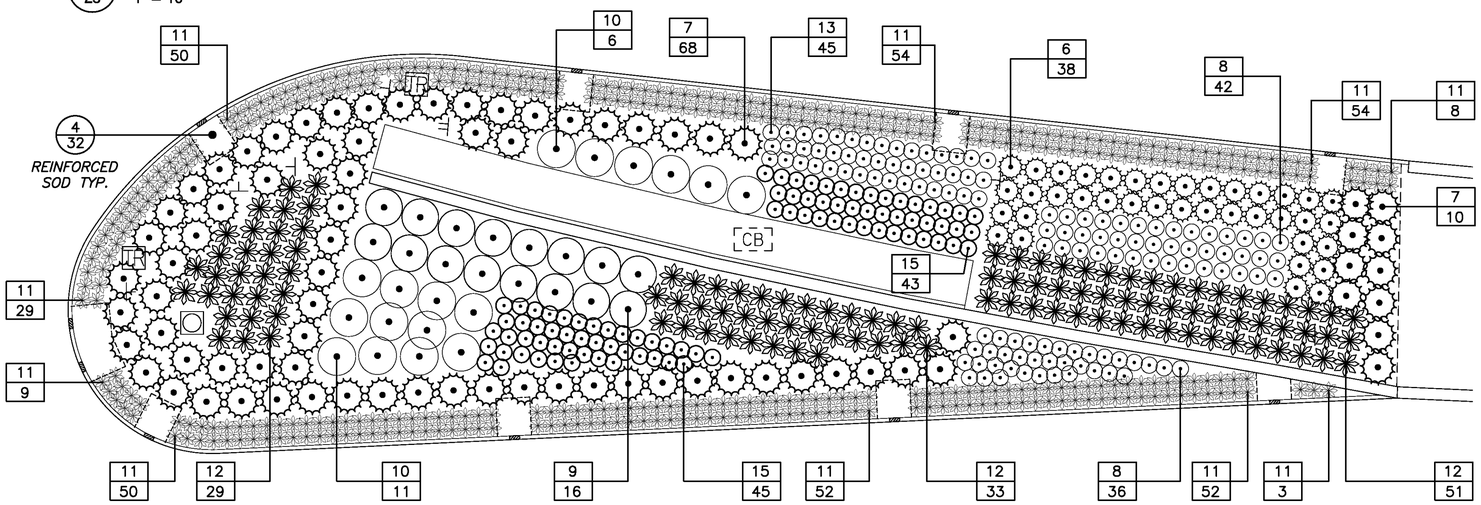

2/25 DETAIL PLANTING PLAN (WEST OF BRIDGE)
1" = 10'

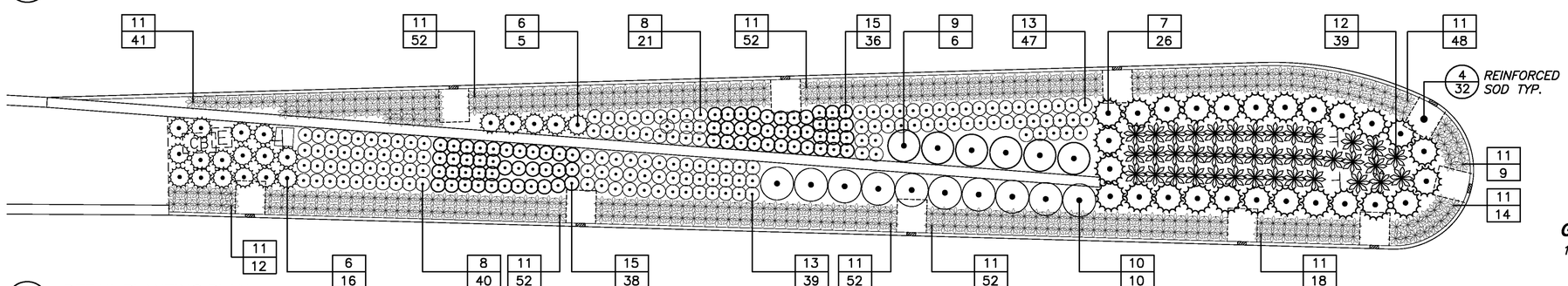

3/25 DETAIL PLANTING PLAN
1" = 10'

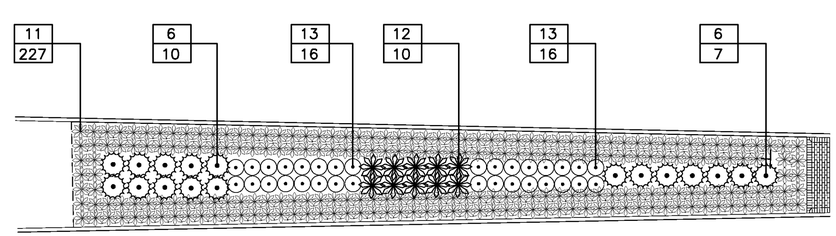

4/25 DETAIL PLANTING PLAN
1" = 10'

ESTIMATED QUANTITIES

TOTAL	ITEM	ITEM EXTENSION	UNIT	DESCRIPTION
55	660	20000	SQ YD	SODDING REINFORCED
401	661	14001	EACH	PERENNIALS, AS PER PLAN
188	661	20041	EACH	DECIDUOUS SHRUB, 24" HEIGHT, AS PER PLAN
208	661	30061	EACH	EVERGREEN SHRUB, 24" HEIGHT, AS PER PLAN
1,421	661	99900	EACH	PLANTING, MISC.: NO. 1 CONT. ORNAMENTAL GRASS
179	661	99900	EACH	PLANTING, MISC.: NO. 2 CONT. ORNAMENTAL GRASS

LEGEND:

- PROPOSED SHADE TREE
- PROPOSED DECIDUOUS SHRUB
- PROPOSED EVERGREEN SHRUB
- PROPOSED PERENNIAL
- PROPOSED ORNAMENTAL GRASS
- # / # — KEY NUMBER / QUANTITY NUMBER

GENERAL NOTES:

1. ODOT WILL BE PURCHASING SEPARATELY THE FOLLOWING TREES:
   38 SHINGLE OAK
   30 SHUMARD OAK
   27 PIONEER ELM
   THE CONTRACTOR, AS A PART OF THE MIA-36-11.55 PROJECT, WILL BE RESPONSIBLE FOR OFFLOADING AND PLANTING OF THESE TREES AS DIRECTED BY THE CITY OF PIQUA AND THE UNIT PRICE BID FOR THESE ITEMS SHOULD REFLECT THIS WORK, WITH THE EXCEPTION OF THE ACTUAL PURCHASE PRICE OF THOSE TREES.
2. ANY LAWN AREAS DISTURBED BY ANY CONTRACTOR SHALL BE RE-SEEDED PER LANDSCAPING GENERAL NOTES.
3. CONTRACTOR SHALL TAKE CARE NOT TO DAMAGE EXISTING STRUCTURES, FENCING, PLANT MATERIAL, WALKS, DRIVES AND UTILITIES TO REMAIN INCLUDING ELEMENTS ON ADJACENT PROPERTIES.
4. SEE PLANTING DETAILS AND PLANT LIST ON PAGE 26

EDSALL & ASSOCIATES LLC
754 NEIL AVENUE ▪ COLUMBUS, OHIO 43215
LANDSCAPE ARCHITECTS ▪ LAND PLANNERS ▪ PLANNING CONSULTANTS

CALCULATED JAM
CHECKED JFE/DCE

PLANTING PLAN

MIA-36-11.55

26_L26_PLNT_DETL_LIST.DWG 16-May-2013

PLANT LIST:

KEY NO.	QUAN. BASE BID	QUAN. ALT. #1	QUAN. ALT. #2	QUAN. ALT. #3	SIZE	SCIENTIFIC NAME	COMMON NAME
SHADE TREES: (1) (3) (7) (SEE GENERAL NOTE 1)							
1	38				3 1/2"	Quercus imbricaria	Shingle Oak
2	30				3 1/2"	Quercus shumardii	Shumard Oak
3	33				2 1/2	Tilia tomentosa 'Sterling Silver'	Sterling Silver Linden
4	27				2 1/2"	Ulmus 'Pioneer'	Pioneer Elm
EVERGREEN TREES: (6)							
5				26	6'	Picea pungens	Colorado Green Spruce
SHRUBS: (5)							
6	76				24"	Juniperus procumbens 'Nana'	Dwarf Japanese Garden Juniper
7	132	80	32		24"	Juniperus sabina 'Broadmoor'	Broadmoor Juniper
8	139				24"	Rosa 'Baby Love'	Baby Love Rose
9	22	12			24"	Rosa Meidiland 'Scarlet'	Scarlet Meidiland Rose
10	27	42	19		24"	Rosa Meidiland 'White'	White Meidiland Rose
ORNAMENTAL GRASSES: (5)							
11	1,421				No. 1 Cont.	Carex morrowii 'Ice Dance'	Japanese Sedge Grass
12	179	45			No. 2 Cont.	Pennisetum alopecuroides 'Hameln'	Dwarf Fountain Grass
PERENNIALS: (5)							
13	239				No. 2 Cont.	Achillea filipendulina 'Terra Cotta'	Russet Yarrow
14		455	194		No. 2 Cont.	Liriope spicata	Creeping Lily Turf
15	162	80	16		No. 2 Cont.	Rudbeckia fulgida 'Goldsturm'	Black Eyed Susan

NOTES:

(1) All plant materials shall be from locations in compliance with the United States Department of Agriculture Plant Hardiness Zones 1–5 and grown in Ohio or states north of the southern limit of Ohio.
(2) All plant material to be Balled and Burlapped (B&B) or Container grown unless otherwise noted. All B&B materials to have a minimum ball of 11" per caliper inch.
(3) All trees to conform to the American Association of Nurserymen's Standards: Section 1.1.2 – Height of Branching. All trees to be matched.
(4) All shade trees shall have one (1) central leader.
(5) All plant materials to be full, heavy specimens.
(6) Branched to ground.
(7) Sizes of trees at maturity shall be considered to be as follows:
- Diameter at breast height (DBH) – 12"
- Height – 40'–45'
- Spread – 25'–30'

LEGEND:

PROPOSED SHADE TREE

PROPOSED DECIDUOUS SHRUB

PROPOSED EVERGREEN SHRUB

PROPOSED PERENNIAL

PROPOSED ORNAMENTAL GRASS

/ # — KEY NUMBER / QUANTITY NUMBER

GENERAL NOTES:

1. ODOT WILL BE PURCHASING SEPARATELY THE FOLLOWING TREES: 38 SHINGLE OAK, 30 SHUMARD OAK, 27 PIONEER ELM. THE CONTRACTOR, AS A PART OF THE MIA–36–11.55 PROJECT, WILL BE RESPONSIBLE FOR OFFLOADING AND PLANTING OF THESE TREES AS DIRECTED BY THE CITY OF PIQUA AND THE UNIT PRICE BID FOR THESE ITEMS SHOULD REFLECT THIS WORK, WITH THE EXCEPTION OF THE ACTUAL PURCHASE PRICE OF THOSE TREES.
2. ANY LAWN AREAS DISTURBED BY ANY CONTRACTOR SHALL BE RE–SEEDED PER LANDSCAPING GENERAL NOTES.
3. CONTRACTOR SHALL TAKE CARE NOT TO DAMAGE EXISTING STRUCTURES, FENCING, PLANT MATERIAL, WALKS, DRIVES AND UTILITIES TO REMAIN INCLUDING ELEMENTS ON ADJACENT PROPERTIES.

ESTIMATED QUANTITIES

TOTAL	ITEM	ITEM EXTENSION	UNIT	DESCRIPTION
535	661	14001	EACH	PERENNIALS, AS PER PLAN – CREEPING LILY TURF, BLACK EYED SUSAN – ALTERNATE #1
210	661	14001	EACH	PERENNIALS, AS PER PLAN – CREEPING LILY TURF, BLACK EYED SUSAN – ALTERNATE #2
54	661	20041	EACH	DECIDUOUS SHRUB, 24" HEIGHT, AS PER PLAN – SCARLET MEIDILAND ROSE, WHITE MEIDILAND ROSE – ALTERNATE #1
19	661	20041	EACH	DECIDUOUS SHRUB, 24" HEIGHT, AS PER PLAN – WHITE MEIDILAND ROSE – ALTERNATE #2
80	661	30061	EACH	EVERGREEN SHRUB, 24" HEIGHT, AS PER PLAN – BROADMOOR JUNIPER – ALTERNATE #1
32	661	30061	EACH	EVERGREEN SHRUB, 24" HEIGHT, AS PER PLAN – BROADMOOR JUNIPER – ALTERNATE #2
45	661	99900	EACH	PLANTING, MISC.: NO. 2 CONT. ORNAMENTAL GRASS – DWARF FOUNTAIN GRASS – ALTERNATE #1

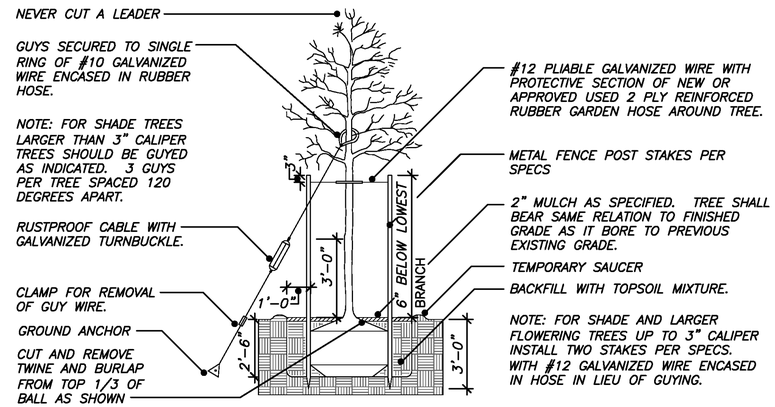

1/26 TREE PLANTING & STAKING OR GUYING DETAIL
N.T.S.

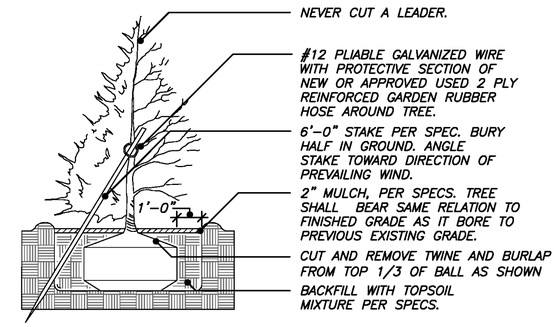

2/26 EVERGREEN / SMALL FLOWERING TREE PLANTING & STAKING DETAIL
N.T.S.

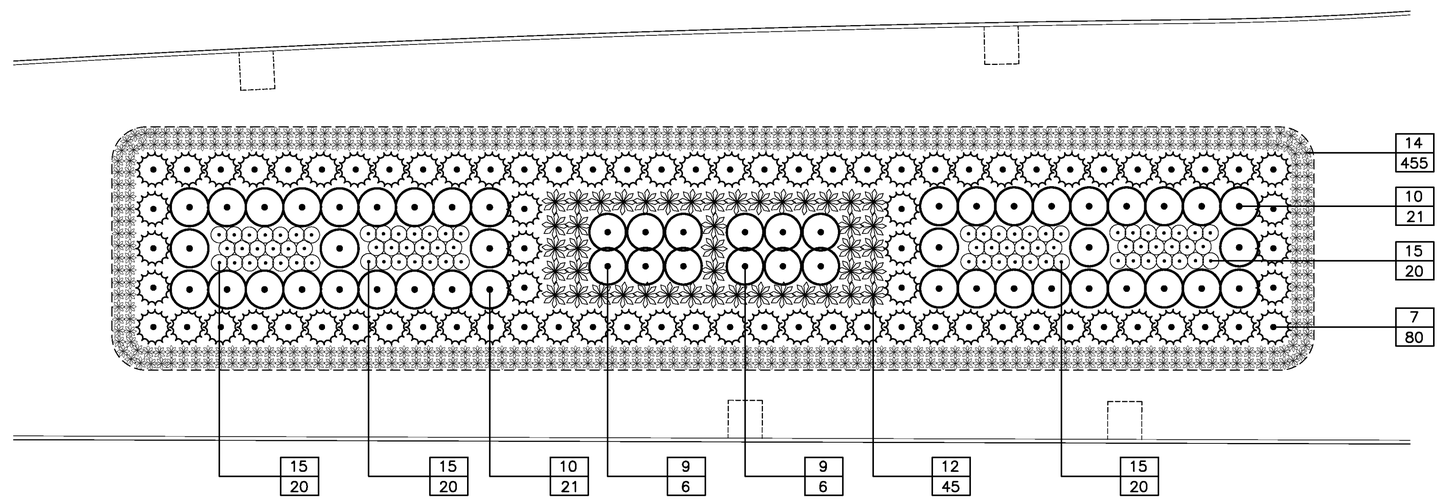

3/26 DETAIL PLANTING PLAN - ALTERNATE #1
1" = 10'

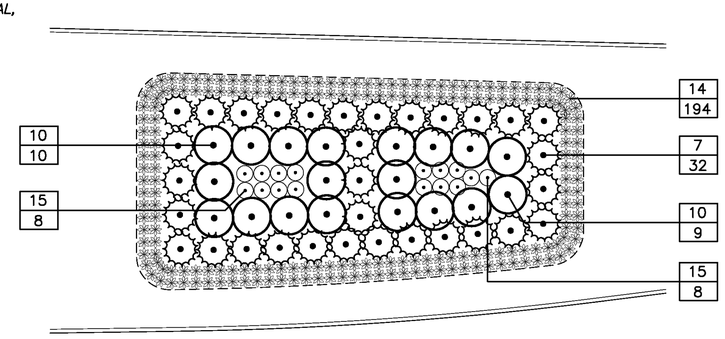

4/26 DETAIL PLANTING PLAN - ALTERNATE #2
1" = 10'

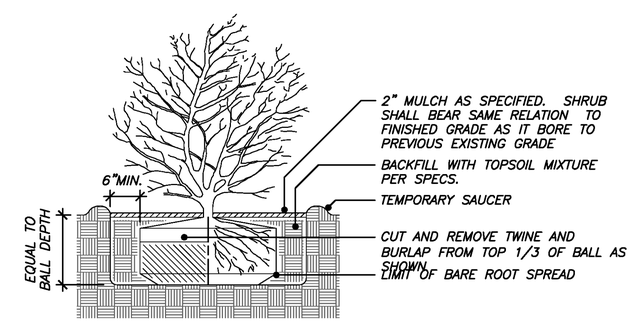

5/26 SHRUB PLANTING DETAIL FOR DECIDUOUS, EVERGREEN & BROADLEAF SHRUBS
N.T.S.

EDSALL & ASSOCIATES LLC
754 NEIL AVENUE ▪ COLUMBUS, OHIO 43215
LANDSCAPE ARCHITECTS ▪ LAND PLANNERS ▪ PLANNING CONSULTANTS

CALCULATED JAM
CHECKED JFE/DCE

PLANT LIST/PLANTING DETAILS

MIA-36-11.55

27_L27_SIGN_PAVE.DWG 15-May-2013

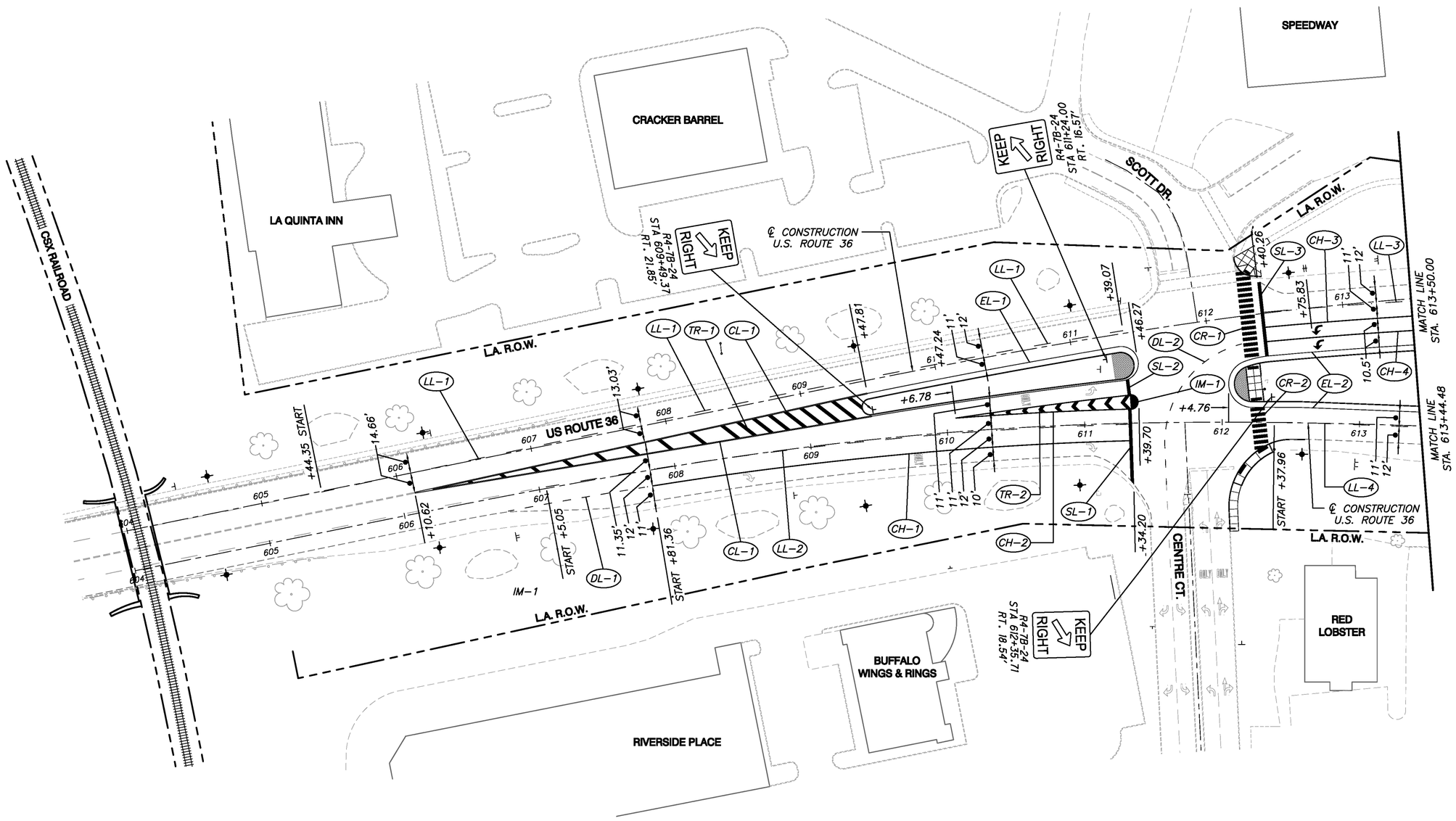

LEGEND

- EXISTING SHADE TREE
- EXISTING EVERGREEN TREE
- LIMITED ACCESS RIGHT-OF-WAY
- EXISTING FENCE
- EXISTING ROAD CENTERLINE
- PROPOSED LIGHT POLE – INSTALLED BY CITY – SEE SHEETS E1–E4
- PROPOSED BRICK PAVERS. SEE DETAIL 2/31

EL–#	EDGE LINE
LL–#	LANE LINE
CL–#	CENTER LINE
CH–#	CHANNELIZING LINE
SL–#	STOP LINE
CR–#	CROSSWALK LINE
TR–#	TRANSVERSE/DIAGONAL LINE
IM–#	ISLAND MARKING
DL–#	DOTTED LINE

GENERAL NOTES:

1. SEE SHEET 30 FOR PAVEMENT MARKING SUBSUMMARY.
2. NO SIGNS TO BE RELOCATED ON THIS SHEET.

ESTIMATED QUANTITIES

TOTAL	ITEM	ITEM EXTENSION	UNIT	DESCRIPTION
15	630	80100	SQ FT	SIGN, FLAT SHEET

EDSALL & ASSOCIATES LLC
754 NEIL AVENUE ▪ COLUMBUS, OHIO 43215
LANDSCAPE ARCHITECTS ▪ LAND PLANNERS ▪ PLANNING CONSULTANTS

1"=40'
0 20 40 60
HORIZONTAL SCALE IN FEET

CALCULATED JAM
CHECKED JFE/DCE

SIGN AND PAVEMENT MARKING PLAN

MIA-36-11.55

28_L28_SIGN_PAVE.DWG 15-May-2013

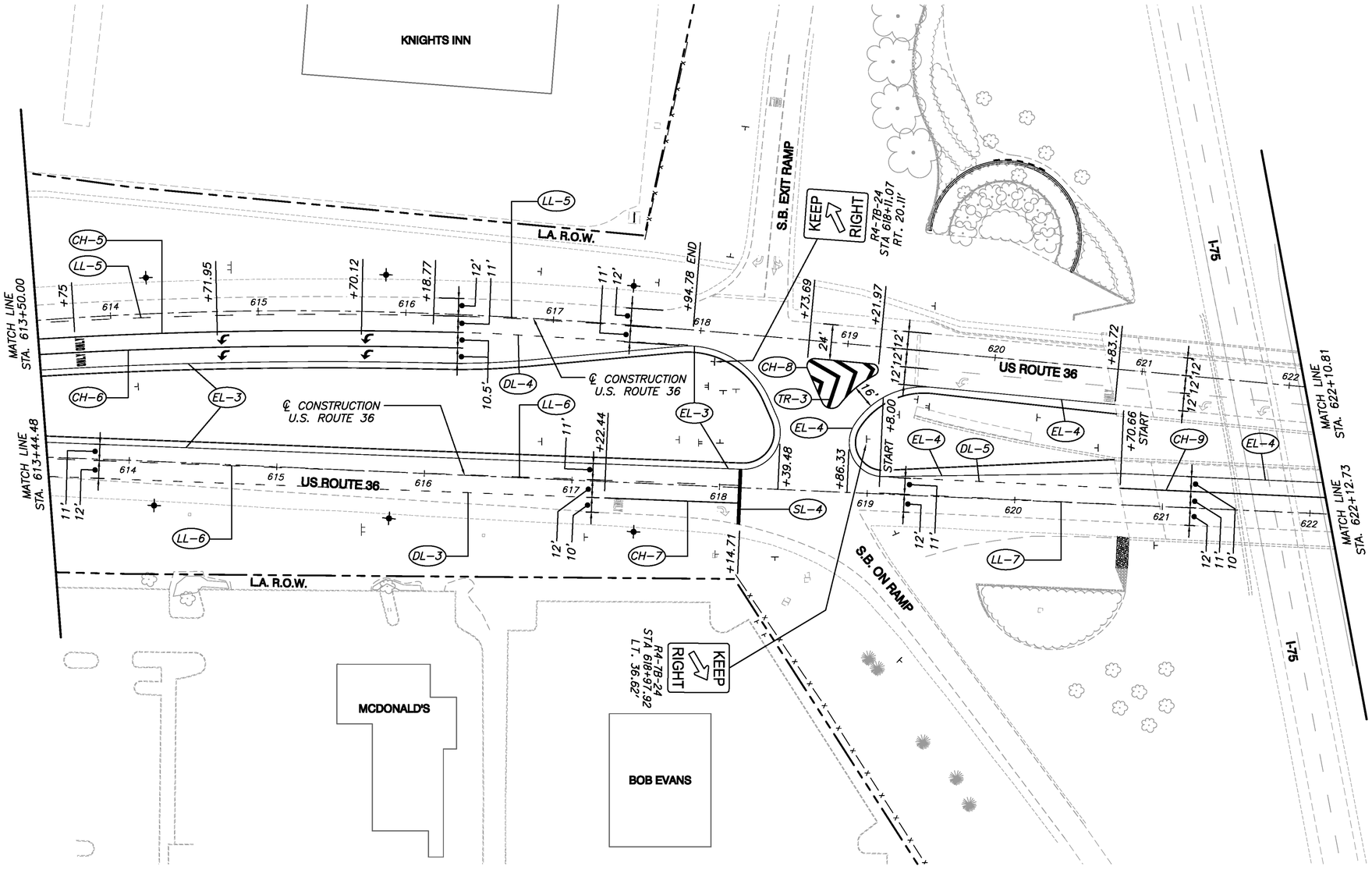

LEGEND

- EXISTING SHADE TREE
- EXISTING EVERGREEN TREE
- LIMITED ACCESS RIGHT-OF-WAY
- EXISTING FENCE
- EXISTING ROAD CENTERLINE
- PROPOSED LIGHT POLE – INSTALLED BY CITY – SEE SHEETS E1–E4
- PROPOSED BRICK PAVERS. SEE DETAIL 2/31

EL-#	EDGE LINE
LL-#	LANE LINE
CL-#	CENTER LINE
CH-#	CHANNELIZING LINE
SL-#	STOP LINE
CR-#	CROSSWALK LINE
TR-#	TRANSVERSE/DIAGONAL LINE
IM-#	ISLAND MARKING
DL-#	DOTTED LINE

GENERAL NOTES:

1. SEE SHEET 30 FOR PAVEMENT MARKING SUBSUMMARY.
2. NO SIGNS TO BE RELOCATED ON THIS SHEET.

ESTIMATED QUANTITIES

TOTAL	ITEM	ITEM EXTENSION	UNIT	DESCRIPTION
10	630	80100	SQ FT	SIGN, FLAT SHEET

EDSALL & ASSOCIATES LLC
754 NEIL AVENUE ▪ COLUMBUS, OHIO 43215
LANDSCAPE ARCHITECTS ▪ LAND PLANNERS ▪ PLANNING CONSULTANTS

1"=40'
HORIZONTAL SCALE IN FEET
0 20 40 60

CALCULATED JAM
CHECKED JFE/DCE

SIGN AND PAVEMENT MARKING PLAN

MIA-36-11.55

29_L29_SIGN_PAVE.DWG 15-May-2013

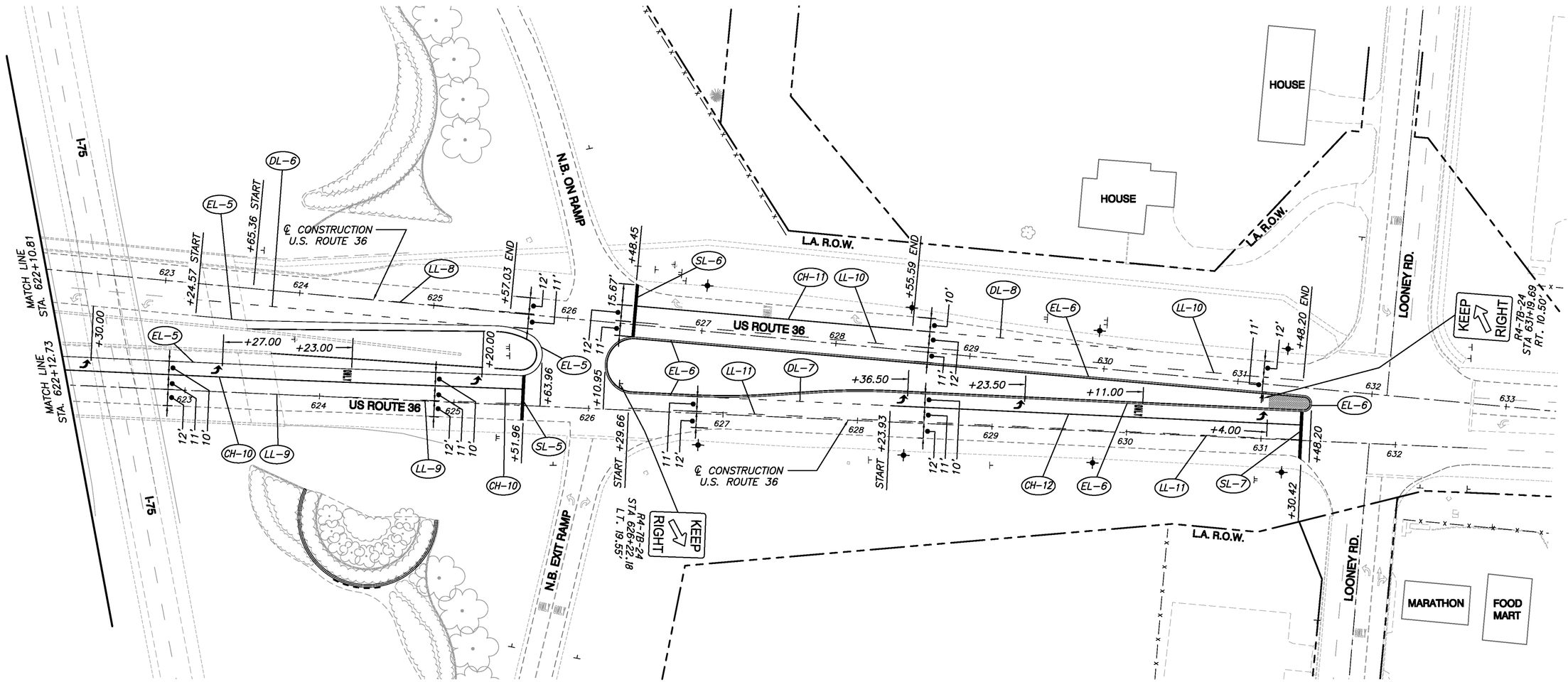

LEGEND

- EXISTING SHADE TREE
- EXISTING EVERGREEN TREE
- LIMITED ACCESS RIGHT-OF-WAY
- EXISTING FENCE
- EXISTING ROAD CENTERLINE
- PROPOSED LIGHT POLE – INSTALLED BY CITY – SEE SHEETS E1–E4
- PROPOSED BRICK PAVERS. SEE DETAIL 2/31

EL-#	EDGE LINE
LL-#	LANE LINE
CL-#	CENTER LINE
CH-#	CHANNELIZING LINE
SL-#	STOP LINE
CR-#	CROSSWALK LINE
TR-#	TRANSVERSE/DIAGONAL LINE
IM-#	ISLAND MARKING
DL-#	DOTTED LINE

GENERAL NOTES:

1. SEE SHEET 30 FOR PAVEMENT MARKING SUBSUMMARY.
2. NO SIGNS TO BE RELOCATED ON THIS SHEET.

ESTIMATED QUANTITIES

TOTAL	ITEM	ITEM EXTENSION	UNIT	DESCRIPTION
10	630	80100	SQ FT	SIGN, FLAT SHEET

EDSALL & ASSOCIATES LLC
754 NEIL AVENUE ▪ COLUMBUS, OHIO 43215
LANDSCAPE ARCHITECTS ▪ LAND PLANNERS ▪ PLANNING CONSULTANTS

1"=40'
0 20 40 60
HORIZONTAL SCALE IN FEET

CALCULATED JAM
CHECKED JFE/DCE

SIGN AND PAVEMENT MARKING PLAN

MIA-36-11.55

30_L30_PAVE_MARK_SSUM.DWG 15-May-2013

SHEET NO.	REFERENCE NO.	LOCATION	STATION FROM	STATION TO	SIDE	EDGE LINE, 4" (YELLOW)	LANE LINE, 4"	CENTER LINE, (SOLID DOUBLE)	CHANNELIZING LINE, 8"	STOP LINE	CROSSWALK LINE, AS PER PLAN	TRANSVERSE/ DIAGONAL LINE (YELLOW)	TRANSVERSE/ DIAGONAL LINE (WHITE)	ISLAND MARKING, (WHITE)	LANE ARROW	WORD ON PAVEMENT, 72"	DOTTED LINE, 4"
						644											
						MILE	MILE	MILE	FT	FT	FT	FT	FT	SQ FT	EACH	EACH	FT
27	EL-1	℄ Const. U.S. ROUTE 36	609+47.81	611+46.27	LT. & RT.	0.078											
27	EL-2	℄ Const. U.S. ROUTE 36	612+4.76	613+50.00	LT. & RT.	0.056											
28	EL-3	℄ Const. U.S. ROUTE 36	613+50.00	618+39.48	LT. & RT.	0.198											
28	EL-4	℄ Const. U.S. ROUTE 36	618+86.33	622+12.73	LT. & RT.	0.101											
29	EL-5	℄ Const. U.S. ROUTE 36	622+12.73	625+63.96	LT. & RT.	0.120											
29	EL-6	℄ Const. U.S. ROUTE 36	626+10.95	631+48.20	LT. & RT.	0.205											
27	LL-1	℄ Const. U.S. ROUTE 36 Westbound	605+44.35	611+39.07	LT.		0.113										
27	LL-2	℄ Const. U.S. ROUTE 36 Eastbound	607+5.05	611+32.20	℄		0.081										
27	LL-3	℄ Const. U.S. ROUTE 36 Westbound	612+42.26	613+50.00	℄		0.020										
27	LL-4	℄ Const. U.S. ROUTE 36 Eastbound	612+37.96	613+44.48	℄		0.020										
28	LL-5	℄ Const. U.S. ROUTE 36 Westbound	613+50.00	617+94.78	℄		0.084										
28	LL-6	℄ Const. U.S. ROUTE 36 Eastbound	613+44.48	618+12.71	℄		0.089										
28	LL-7	℄ Const. U.S. ROUTE 36 Eastbound	619+8.00	622+12.73	℄		0.058										
29	LL-8	℄ Const. U.S. ROUTE 36 Westbound	623+65.36	625+57.03	℄		0.036										
29	LL-9	℄ Const. U.S. ROUTE 36 Eastbound	622+12.73	625+49.96	℄		0.064										
29	LL-10	℄ Const. U.S. ROUTE 36 Westbound	626+50.45	631+48.20	LT.		0.094										
29	LL-11	℄ Const. U.S. ROUTE 36 Eastbound	626+29.66	631+28.42	℄		0.095										
27	CL-1	℄ Const. U.S. ROUTE 36	606+10.62	609+47.81	LT. & RT.			0.127									
27	CH-1	℄ Const. U.S. ROUTE 36 Eastbound	607+81.36	611+32.20	RT.				350								
27	CH-2	℄ Const. U.S. ROUTE 36 Eastbound	610+6.78	611+34.20	LT.				256								
27	CH-3	℄ Const. U.S. ROUTE 36 Westbound	612+42.26	613+50.00	RT.				107								
27	CH-4	℄ Const. U.S. ROUTE 36 Westbound	612+42.26	613+50.00	RT.				107								
28	CH-5	℄ Const. U.S. ROUTE 36 Westbound	613+50.00	616+18.77	RT.				267								
28	CH-6	℄ Const. U.S. ROUTE 36 Westbound	613+50.00	616+18.77	RT.				266								
28	CH-7	℄ Const. U.S. ROUTE 36 Eastbound	617+22.44	618+12.71	RT.				91								
28	CH-8	℄ Const. U.S. ROUTE 36 Westbound	618+73.69	619+21.97	RT.				131								
28	CH-9	℄ Const. U.S. ROUTE 36 Eastbound	620+70.66	622+12.73	LT.				140								
29	CH-10	℄ Const. U.S. ROUTE 36 Eastbound	622+12.73	625+49.96	LT.				340								
29	CH-11	℄ Const. U.S. ROUTE 36 Westbound	626+50.45	628+55.59	LT.				206								
29	CH-12	℄ Const. U.S. ROUTE 36 Eastbound	628+23.93	631+28.42	LT.				305								
27	SL-1	℄ Const. U.S. ROUTE 36 Eastbound	611+34.20		LT. & RT.					55							
27	SL-2	℄ Const. U.S. ROUTE 36 Eastbound	611+34.20		LT.					13							
27	SL-3	℄ Const. U.S. ROUTE 36 Westbound	612+40.26		LT. & RT.					54							
28	SL-4	℄ Const. U.S. ROUTE 36 Eastbound	618+14.71		LT. & RT.					38							
29	SL-5	℄ Const. U.S. ROUTE 36 Eastbound	625+51.96		LT. & RT.					34							
29	SL-6	℄ Const. U.S. ROUTE 36 Westbound	626+48.45		LT. & RT.					40							
29	SL-7	℄ Const. U.S. ROUTE 36 Eastbound	631+30.42		LT. & RT.					36							
27	CR-1	℄ Const. U.S. ROUTE 36 Westbound	612+25.34	612+35.34	LT. & RT.						155						
27	CR-2	℄ Const. U.S. ROUTE 36 Eastbound	612+21.80	612+31.80	LT. & RT.						77						
27	TR-1	℄ Const. U.S. ROUTE 36	606+49.87	609+42.16	LT. & RT.							214					
27	TR-2	℄ Const. U.S. ROUTE 36 Eastbound	610+31.37	611+34.20	LT.								72				
28	TR-3	℄ Const. U.S. ROUTE 36 Westbound	618+73.69	619+21.97	RT.								116				
27	IM-1	℄ Const. U.S. ROUTE 36 Eastbound	611+34.20	611+39.70	LT.									48			
27		℄ Const. U.S. ROUTE 36 Westbound	612+75.83												2		
28		℄ Const. U.S. ROUTE 36 Westbound	613+75.00													2	
28		℄ Const. U.S. ROUTE 36 Westbound	614+71.95												2		
28		℄ Const. U.S. ROUTE 36 Westbound	615+70.12												2		
29		℄ Const. U.S. ROUTE 36 Eastbound	622+30.00												1		
29		℄ Const. U.S. ROUTE 36 Eastbound	623+27.00												1		
29		℄ Const. U.S. ROUTE 36 Eastbound	624+23.00													1	
29		℄ Const. U.S. ROUTE 36 Eastbound	625+20.00												1		
29		℄ Const. U.S. ROUTE 36 Eastbound	628+36.50												1		
29		℄ Const. U.S. ROUTE 36 Eastbound	629+23.50												1		
29		℄ Const. U.S. ROUTE 36 Eastbound	630+11.00													1	
29		℄ Const. U.S. ROUTE 36 Eastbound	631+4.00												1		
27	DL-1	℄ Const. U.S. ROUTE 36 Eastbound	606+74.66	607+75.84	RT.												101
27	DL-2	℄ Const. U.S. ROUTE 36	611+58.75	612+23.45	LT. & RT.												129
28	DL-3	℄ Const. U.S. ROUTE 36 Eastbound	613+44.48	617+16.79	RT.												371
28	DL-4	℄ Const. U.S. ROUTE 36 Westbound	616+31.29	617+91.89	RT.												161
28	DL-5	℄ Const. U.S. ROUTE 36 Eastbound	619+14.35	620+65.01	LT.												151
29	DL-6	℄ Const. U.S. ROUTE 36 Westbound	623+33.48	625+27.19	RT.												194
29	DL-7	℄ Const. U.S. ROUTE 36 Eastbound	626+95.32	628+18.28	LT.												123
29	DL-8	℄ Const. U.S. ROUTE 36 Westbound	628+61.09	630+22.96	LT.												162
SUBTOTALS						0.758	0.754	0.127	2,566	270	232	214	188	48	12	4	1,392
TOTALS CARRIED TO GENERAL SUMMARY						0.758	0.754	0.127	2,566	270	232	402		48	12	4	1,392

CALCULATED JAM
CHECKED JFE/DCE

PAVEMENT MARKING SUBSUMMARY

MIA-36-11.55

31LL31DETL.DWG 12-April-2013

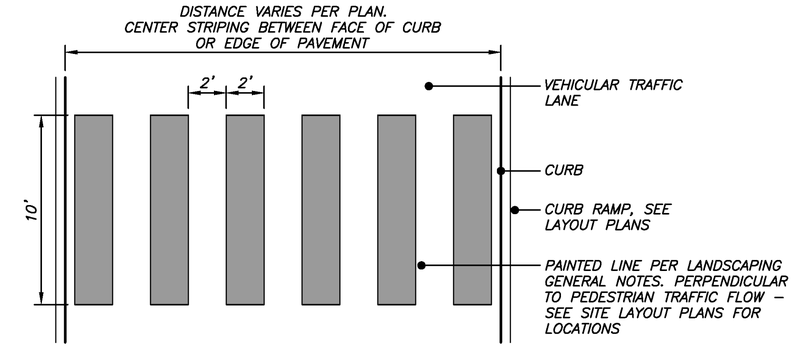

NOTE: ALL PAINTED LINES SHALL BE STRAIGHT AND PARALLEL TO EACH OTHER UNLESS OTHERWISE SHOWN ON THE LAYOUT PLANS.

1/31 CROSSWALK LINE STRIPING
1/4" = 1'-0"

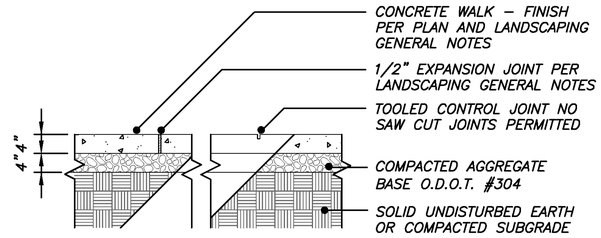

4/31 CONCRETE WALK SECTION
3/4" = 1'-0"

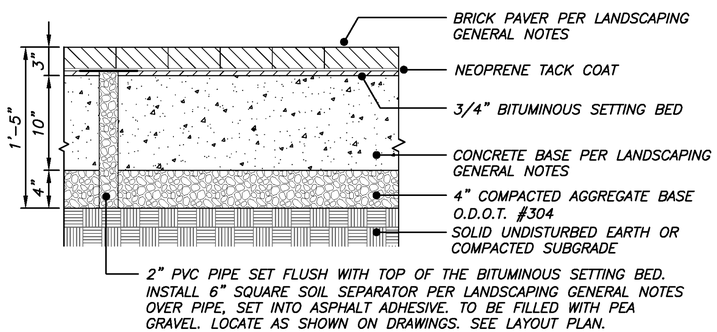

2/31 BRICK MEDIAN PAVER SECTION
1 1/2" = 1'-0"

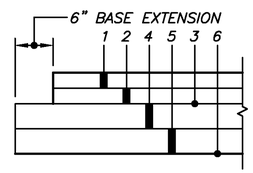

1. ITEM 448 ASPHALT CONCRETE SURFACE COURSE, TYPE 1, PG64–22, 1–1/2" THICK
2. ITEM 448 ASPHALT CONCRETE INTERMEDIATE COURSE, TYPE 2, PG64–28, 1–1/2" THICK
3. ITEM 408 BITUMINOUS PRIME COAT, .40 GAL./SQ.YD.
4. ITEM 301 ASPHALT CONCRETE BASE, PG64–22, 4" THICK
5. ITEM 304 COMPACTED AGGREGATE BASE, 4" THICK
6. ITEM 204 COMPACTED SUBGRADE

NOTE: ALL PAVEMENT THICKNESSES SHOWN ARE AFTER COMPACTION.

5/31 ASPHALTIC CONCRETE PAVEMENT
NOT TO SCALE

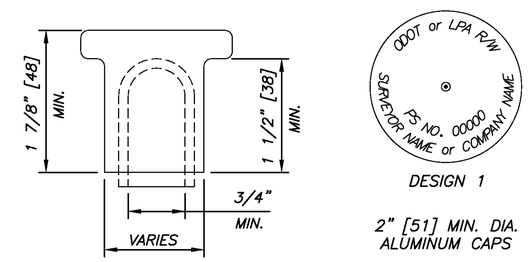

SIDE VIEW OF CAP

PLAN VIEW

7/31 MONUMENT CAP DETAIL
ACTUAL SIZE

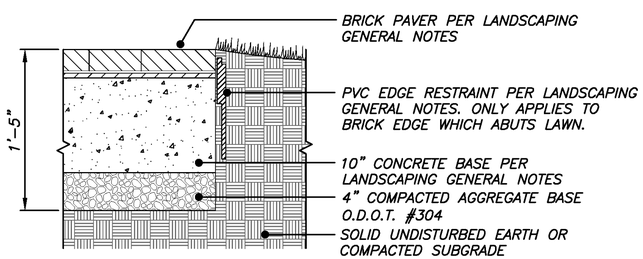

3/31 PVC EDGE RESTRAINT
1 1/2" = 1'-0"

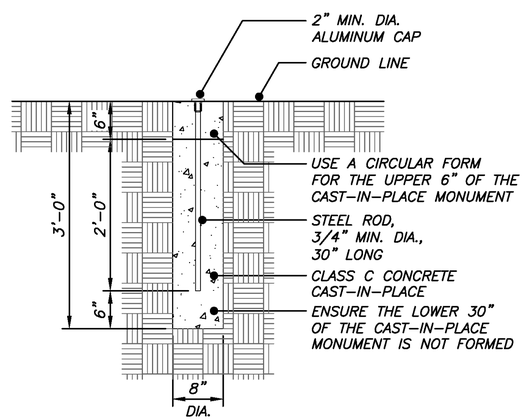

6/31 MONUMENT DETAIL
1" = 1'-0"

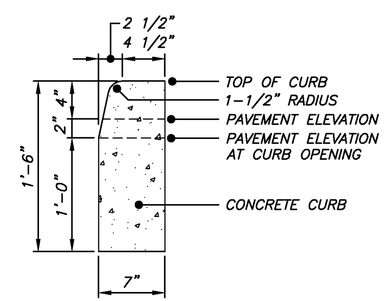

8/31 TYPE 4-C CONCRETE CURB
1 1/2" = 1'-0"

EDSALL & ASSOCIATES LLC
754 NEIL AVENUE ▪ COLUMBUS, OHIO 43215
LANDSCAPE ARCHITECTS ▪ LAND PLANNERS ▪ PLANNING CONSULTANTS

CALCULATED JAM
CHECKED JFE/DCE

SITE DETAILS

MIA-36-11.55

32.L32.DETL.DWG 12-April-2013

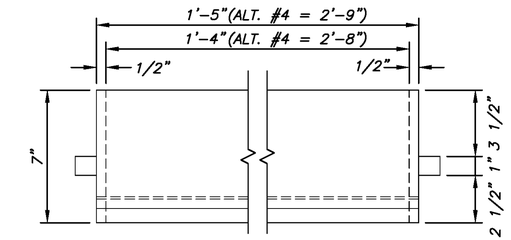

PLAN

NOTE:
ALL DIMENSIONS FOR THE CURB PASS THROUGH STURCTURE ARE THE SAME FOR THE BASE AND ALTERNATE #4 STRUCTURE EXCEPT THE LENGTH AS NOTED.

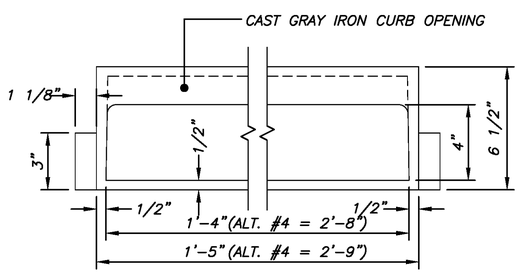

ELEVATION

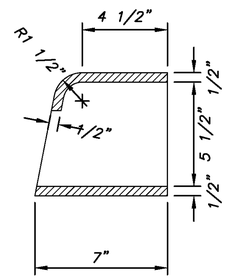

SECTION

1/32 CURB PASS THROUGH DETAIL (BASE & ALTERNATE #4)
3" = 1'-0"

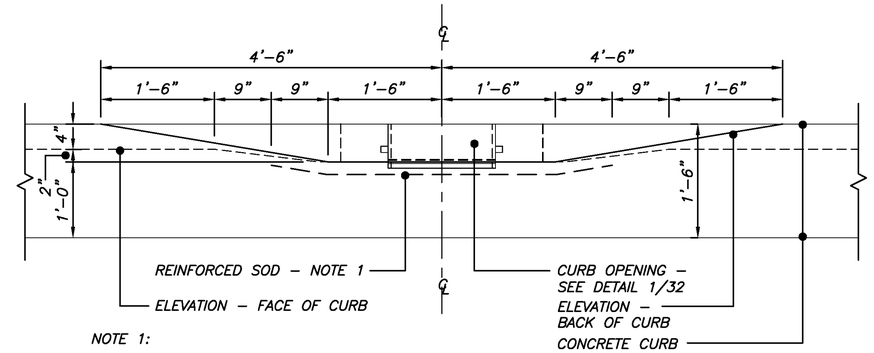

NOTE 1:
FURNISH AND INSTALL REINFORCED SOD: ODOT ITEM 660. SOD TURF BLEND TO MATCH THAT SPECIFIED FOR SEEDED LAWNS IN THE LANDSCAPING GENERAL NOTES ON PAGES 35–36/38. INSTALL REINFORCED SOD RELATED TO CURB OPENINGS PER PLAN AND DETAIL 4/32.

3/32 BACK OF CURB ELEVATION/SECTION AT CURB PASS THROUGH
1" = 1'-0"

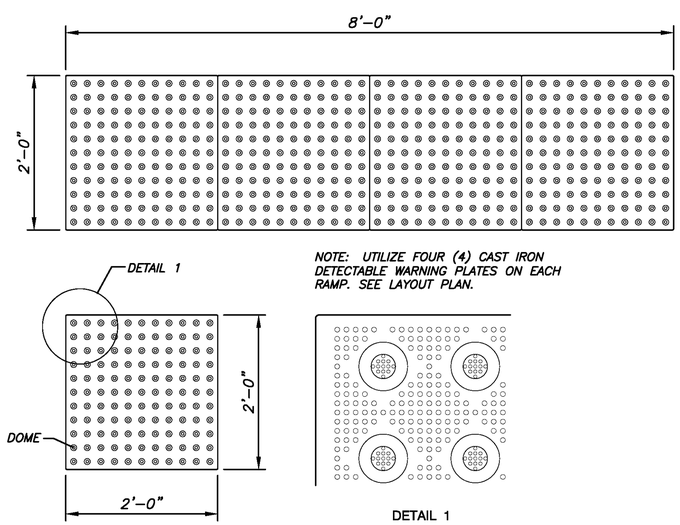

NOTE: UTILIZE FOUR (4) CAST IRON DETECTABLE WARNING PLATES ON EACH RAMP. SEE LAYOUT PLAN.

NOTE: CAST IRON DETECTABLE WARNING PLATES PER LANDSCAPING GENERAL NOTES

2/32 2'x4' CAST IRON DETECTABLE WARNING PLATE
N.T.S.

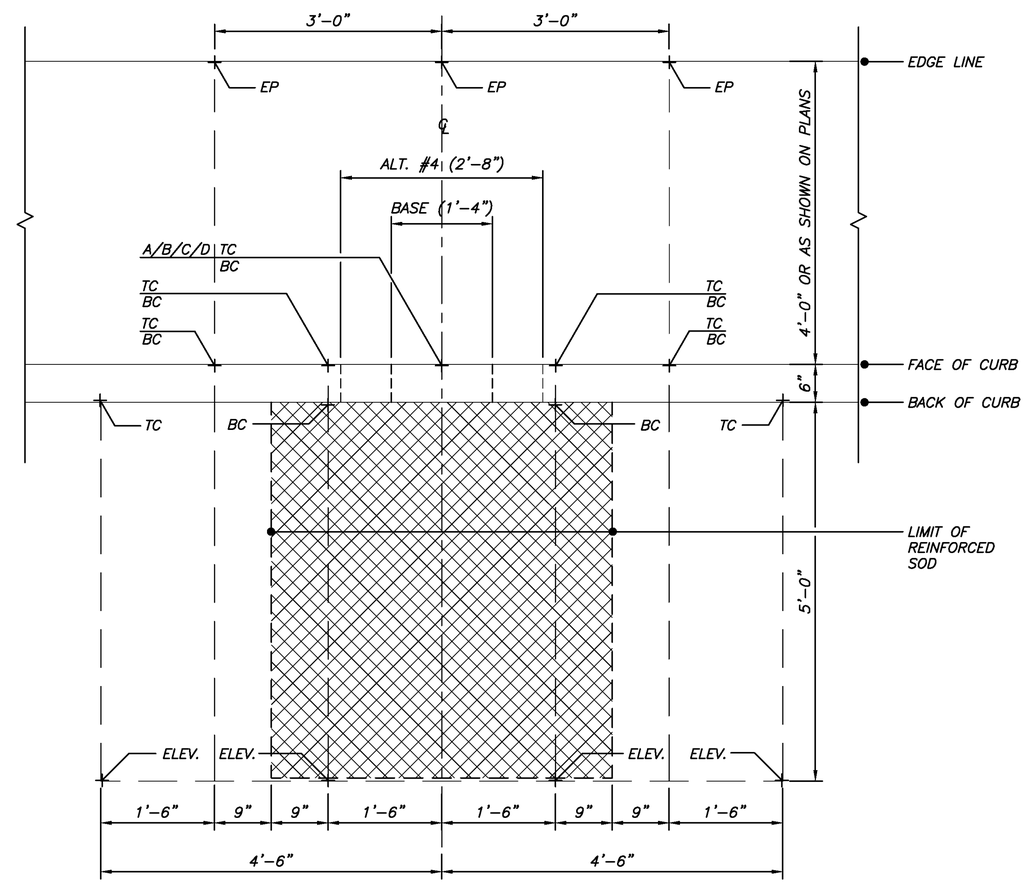

4/32 BACK OF CURB ELEVATION/SECTION AT CURB PASS THROUGH
1" = 1'-0"

EDSALL & ASSOCIATES LLC
754 NEIL AVENUE ▪ COLUMBUS, OHIO 43215
LANDSCAPE ARCHITECTS ▪ LAND PLANNERS ▪ PLANNING CONSULTANTS

CALCULATED JAM
CHECKED JFE/DCE

SITE DETAILS

MIA-36-11.55

33_L33_NOTE.DWG 12-April-2013

LANDSCAPING GENERAL NOTES

SITE DEMOLITION

PART 1 GENERAL

1.01 DESCRIPTION

A. Site demolition work is as shown on the drawings and as specified, including existing concrete walks, curbing, grass and related soil, line striping and asphalt pavement and related base

B. Work includes:

1. Preparation and layout.
2. Relocate existing signs per plans.
3. Remove existing line striping per plans.
4. Removal of existing pavements full depth, including base.
5. Verify the precise location of all underground utilities prior to proceeding with demolition operations.
6. Maintain existing utilities indicated to remain, keep in service and protect against damage during site demolition operations.
7. Protect all existing buildings, lawns, pavements, signage, shrubs and trees within and outside the limit of construction designated to remain.
8. Repair of damages caused to existing facilities damaged by Contractors demolition operations at no cost to the City/Property Owners/Ohio Department of Transportation.
9. Where existing pavements are to be removed immediately adjacent to existing pavements, Contractor shall remove all designated areas by saw cutting along pavement edge lines before removing pavements.

1.02 QUALITY ASSURANCE

A. Do not disturb existing utilities to remain.

B. Ensure safe passage of persons around area of demolition/construction.

C. Provide alternate routes around closed or obstructed traffic ways when required.

D. Comply with all Local, State and Federal requirements regarding materials, method of work and disposal of materials.

E. Do not close or obstruct streets, walks or other occupied facilities in use without prior written permission of the City Engineer/Ohio Department of Transportation Inspector.

F. Buildings within the project area are expected to be occupied during the period of construction. Do not interrupt existing utilities and vehicular/pedestrian access serving occupied buildings.

1.03 SUBMITTALS

A. Submit delivery certificates for all topsoil used on the project related to bed preparation.

B. Schedule: Submit proposed methods and operations of demolition to the City Engineer/Ohio Department of Transportation Inspector for review prior to the start of work. Include the coordination for shutoff, capping and continuation of utility services as required.

PART 2 PRODUCTS – Not Applicable

PART 3 EXECUTION

3.01 DISPOSAL OF DEMOLITION MATERIALS

A. All demolition materials shall be disposed of off the site.

B. Haul demolition materials from project area regularly. Accumulation not permitted.

C. Store materials to be relocated or reused in such a manner that they are protected from dirt and damage.

3.02 DEMOLITION

A. Limit dust and dirt rising and/or scattering.

B. Return adjacent areas to condition existing prior to the start of work.

C. Comply with governing regulations pertaining to environmental protection.

D. Clean areas of dust, dirt and debris caused by demolition operations as directed by the City Engineer/Ohio Department of Transportation Inspector.

F. Use temporary enclosures of openings as required to protect vehicles and persons from harm during demolition operations. All protection methods shall comply with OSHA standards.

E. Excessive dirt on pavements shall be removed by hand shoveling or swept by automatic self–contained sweepers as directed by the City Engineer/Ohio Department of Transportation Inspector.

3.03 PROTECTION OF EXISTING TREES

A. Protect existing trees and vegetation indicated to remain in place, against unnecessary cutting, breaking, skinning or bruising of roots and bark and smothering of trees by stockpiling construction materials within drip line. Vehicular traffic or parking of vehicles within drip line shall be prohibited.

B. Replacement of plantings significantly damaged or loss of trees due to lack of adequate protection during work operations shall be at Contractor's expense.

C. Replacement value of each shrub designated to remain or existing shrubs damaged within or outside of the construction limit shall be $100.00.

D. Replacement value of each tree designated to remain or existing trees damaged within or outside of the construction limit shall be $500.00.

E. Avoid trenching in vicinity of existing trees to prevent damage of tree roots.

F. No root splitting of existing trees designated to remain shall be permitted.

3.04 PREPARATION AND LAYOUT

A. The Contractor shall coordinate the work of all subcontractors.

B. The Contractor shall have a superintendent responsible for the project coordination of all work related to this project.

C. The Contractor shall employ a Registered Surveyor to lay out and verify the location of all site improvements and the existing right–of–way.

D. The Contractor shall notify the Utility Protection Service (800–362–2764) and all utility companies represented on the project prior to the start of construction.

E. The Contractor shall notify the City Engineer/Ohio Department of Transportation Inspector immediately if any discrepancy in the drawings and field measurements occur.

F. The Contractor shall verify the existing and proposed horizontal and vertical control points for all site improvements prior to the start of demolition, relocation or installation of specified items. Ignoring this requirement shall not warrant any potential request by Contractor for change orders.

G. Whenever any reference point or monument is lost or destroyed or requires relocation, the Contractor shall at their own expense accurately relocate and replace all such points so lost, destroyed or moved. This includes any property corner pins or permanent survey markers disturbed during construction. All lost survey points shall be reset by a Registered Surveyor.

H. The Contractor shall permanently mark the location of all underground utilities prior to the start of any work. The Contractor shall be responsible for the accuracy of all lines and elevations related to grading the site and all site improvements. <u>This responsibility includes maintaining all horizontal and vertical control points throughout the entire period of construction</u>.

3.05 TOPSOIL/BACKFILL

A. Material

1. Fertile, loamy, friable, clay loam or sandy loam free of heavy or stiff clay lumps, stones, cinders, concrete, brick, roots, sticks, brush, litter, plastics, metals, refuse or other deleterious materials in accordance with ASTM D 5286–92. The soil shall be free of herbicides, petroleum–based materials or other substances of a hazardous or toxic nature which may inhibit plant growth. The soil shall be free of noxious weeds, seeds or vegetative parts of weedy plants that cannot be selectively controlled in the planting.

2. Topsoil shall be taken from a well–drained site and have a USDA soil texture classification of a clay loam or sandy loam with the following particle size distribution:

Particle	Size (mm)	Allowable Limit
Gravel	2.00 – 4.75	Less than 5%
Sand	0.05 – 2.00	25 – 50%
Silt	0.002 – 0.05	25 – 50%
Clay	minus 0.002	15 – 35%

3. Allowable Percentages:

a. Sandy Loam: The allowable analysis for percentages shall be sand 25%–65%, silt 15%–50% and clay 10%–25%.

b. Clay Loam: The allowable analysis for percentages shall be sand 25%–50%, silt 25%–50% and clay 15%–35%.

4. All topsoil to be new and obtained from off site, without admixture of subsoil or slag.

5. Topsoil shall contain 3 to 6 percent by weight organic matter.

6. Topsoil shall have a pH between 6.5 and 8.0.

B. Topsoil Submittal

1. All topsoil materials shall be tested by a horticultural or agricultural laboratory. The laboratory shall conduct physical and chemical tests in accordance with these specifications.

a. Submit tests for topsoil to the City Engineer/Ohio Department of Transportation Inspector at least sixty (60) days prior to installation.

b. The laboratory shall use the appropriate procedures for testing soils, sands and organic amendments as published in ASTM Methods or Chemical Soil Testing Procedures for the North Central Region (NCR–221) or the U.S. Compost Councils Test Methods for Compost and Composting (TMECC).

2. Tests to be conducted shall include but are not limited to the following:

a. Physical tests to include: Soil texture analysis with U.S.D.A. Soil Classification (ASTM D–422) and soil organic matter (ASTM D–2974 Method C).

b. Chemical tests to include: Soil pH, SMP Buffer pH or other Lime Test Index for soils with a pH <6.3, available phosphorus (Bray 1), exchangeable potassium, calcium and magnesium, with calculated values for cation exchange capacity (CEC) and percent base saturations.

3. Submit a minimum of one (1) pound samples of all topsoils proposed to be used for the project to the laboratory. Samples shall be labeled to include the location of the source of the material, date sampled and the name of the person taking the sample.

4. If test results of the topsoil fail to meet the specified mix criteria, the mix ratio shall be adjusted and the mix re–tested. Mixing recommendations may be provided by the laboratory to avoid trial and error mixing.

5. Submit to City Engineer/Ohio Department of Transportation Inspector <u>all</u> delivery certificates for all approved topsoil delivered to the project site.

6. Fertilizer and lime recommendations shall be developed from soil tests by a qualified agronomist or horticulturist.

3.06 MEASUREMENT OF QUANTITIES/BASIS OF PAYMENT

A. Payment shall be made based on:

1. Topsoil: Per Cubic Yard
2. Remove Line Striping: Per Foot
3. Remove Existing Curb: Per Foot
4. Remove Existing Grass: Per Square Foot
5. Concrete Walk and Base Removed: Per Square Foot
6. Asphalt Pavement and Base Removed: Per Square Yard

3.07 ADJUST AND CLEAN

A. Keep premises free of debris and unusable materials. As work progresses or at the request of the City Engineer/Ohio Department of Transportation Inspector remove waste materials from the site.

SITE IMPROVEMENTS

PART 1 GENERAL

1.01 DESCRIPTION

A. Furnish and install cast iron detectable warning plates as designated on the drawings.

B. Contractor to submit catalog cut sheets prior to delivery and installation to the City Engineer/Ohio Department of Transportation Inspector for approval.

C. All cast iron plates shall be permanently embedded in the new concrete walks. Installation as shown on the drawings and per manufacturers instructions.

EDSALL & ASSOCIATES LLC
754 NEIL AVENUE ▪ COLUMBUS, OHIO 43215
LANDSCAPE ARCHITECTS ▪ LAND PLANNERS ▪ PLANNING CONSULTANTS

CALCULATED JAM
CHECKED JFE/DCE

LANDSCAPING GENERAL NOTES

MIA-36-11.55

1.02 QUALITY ASSURANCE

A. All cast iron plates shall be corrosion resistant.

B. Keep wet concrete off of the top surface of the plates at all times.

C. All plates shall be compliant with the ADA Accessibility Guidelines.

D. Plate manufacturer to provide a five (5) year guarantee against defects under normal use when installed in accordance with the manufacturers specifications.

PART 2 PRODUCTS

A. Cast Iron Plates

1. Manufacturers standard: Or Approved Equal

a. East Jordan Iron Works
301 Spring Street – P.O. Box 439
East Jordan, Michigan 49727
800–874–4100
#00700582P01

b. Neenah Foundry Company
2121 Brooks Avenue
Neenah, Wisconsin 54956
800–558–5075
#R–4984

c. All plates shall have a brick red powder coated finish.

PART 3 EXECUTION

3.01 INSTALLATION

A. All plates shall be installed per manufacturers instructions and as shown on the drawings.

B. All coatings shall be free of defects, bubbles or imperfections. Contractor shall repair or replace any defective plates.

3.02 MEASUREMENT OF QUANTITIES/BASIS OF PAYMENT

A. Payment shall be made based on the following:

1. Cast Iron Plates: Per Square Foot

3.03 ADJUST AND CLEAN

A. Keep premises free of debris and unusable materials. As work progresses or at the request of the City Engineer/Ohio Department of Transportation Inspector remove waste materials from the site.

PLANTING OPERATIONS

PART 1 GENERAL

1.01 DESCRIPTION

A. Rake smooth all planting beds before installing specified mulch.

B. Furnish and install hardwood mulch as designated on the drawings and per this specification.

C. Furnish and install Treegator 20 gallon slow release watering bag for each shade tree and 15 gallon slow release watering bag for each evergreen tree. Include installation and filling each bag with water through Provisional Acceptance.

D. Provide all plant materials required by plans. Surpluses or shortages on plant list shall not be used for claims for additional compensation.

E. Verify the precise location of all underground utilities, including underground conduit and sleeves for electric and irrigation, prior to proceeding with planting operations.

F. All shade trees have been purchased by the Ohio Department of Transportation and shall be delivered to the project site. The Contractor shall arrange delivery to the site, off load and plant the trees. Replace any trees damaged by Contractor.

G. Stake the location of all trees and planting bed outlines for City Engineers/Ohio Department of Transportation Inspectors review and approval prior to planting. Stakes for trees shall include plant key numbers.

H. Notify the City Engineer/Ohio Department of Transportation Inspector at least forty–eight (48) hours prior to the start of planting operations. Once planting operations commence, notify the City Engineer/Ohio Department of Transportation Inspector of the intended weekly planting schedule.

1.02 QUALITY ASSURANCE

A. Plants shall be subject to the City Engineers/Ohio Department of Transportation Inspectors inspection and approval at place of growth and upon delivery for conformity to specification requirements. Such approval shall preclude neither right of inspection upon delivery at the site or during progress of work, nor right of rejection at the site due to damage suffered in handling or transportation. The cost of tagging any plants shall be related to the cost of the plant materials and shall be at the Contractor's expense.

B. Size, quality, handling, planting and maintenance of plant materials shall be in accordance with "USA Standard of Nursery Stock", American Association of Nurserymen, Inc. Minimum acceptable sizes of all plants, measured before pruning with branches in normal position, shall conform to measurements specified in the plant list.

C. It shall be the Contractor's responsibility to protect all balls from freezing during transport and/or until planted. If adequate protection of exposed balls is not performed by the Contractor, the City Engineer/Ohio Department of Transportation Inspector reserves the right to reject such plants.

D. Installation of planting shall be done by a Landscape Contractor with a minimum of five (5) years of experience on completed projects of comparable size. All contractors shall be subject to approval by the City Engineer/Ohio Department of Transportation Inspector.

E. Plants shall conform to names given on the plan and plant list and shall conform to the nomenclature as listed in the American Joint Committee on Horticultural Nomenclature's "Standardized Plant Names", latest edition.

F. Protect plant materials from drying out on site until planted. Keep all balls moist by watering and mulching at the direction of the City Engineer/Ohio Department of Transportation Inspector.

G. Cut all twine from the trunk of trees and cut away from the root ball before Substantial Completion inspection by the City Engineer/Ohio Department of Transportation Inspector.

H. Plants shall be handled so that roots and balls are adequately protected at all times. Any roots injured in transit shall be pruned to make clean ends before planting.

I. Tree trunks shall be protected during transport with cardboard sheath or plastic guard. Upon planting, remove this protection before installing tree wrap.

J. Minimum ball size for trees shall be eleven (11") inches per caliper inch.

K. Do not deliver or use topsoil in frozen or muddy condition.

L. Deliver plants with legible waterproof identification labels.

M. All shade trees shall have one (1) straight central leader.

N. The use of plastic or synthetic burlap is prohibited.

O. Cracked or mushroomed balls are not acceptable.

P. Cover all plants while transporting to the site.

1.03 SCHEDULING

A. Plant Material

1. Balled & Burlapped Material

a. March 15 to May 15.

b. October 1 to December 15.

2. Planting operations may be conducted at other times without additional compensation only at the option and full responsibility of the Contractor unless otherwise directed.

3. If planting operations vary, plant early in the day. If planting occurs in the summer, apply anti–desiccant spray to plantings after leaves become full size.

1.04 SUBMITTALS

A. Submit complete written maintenance instructions to the City Engineer/Ohio Department of Transportation Inspector at least ten (10) days prior to Substantial Completion, including all requirements for proper care, development and maintenance of plantings. Submission requirements shall be as noted under Provisional Acceptance.

B. Within four (4) months prior to the installation of plant materials, the Contractor shall submit photographs of all plant materials along with a list of suppliers for each plant type to the City Engineer/Ohio Department of Transportation Inspector for approval.

C. Submit sample of hardwood mulch to be used in planting beds to the City Engineer/Ohio Department of Transportation Inspector for review and approval prior to installation.

D. Submit to the City Engineer/Ohio Department of Transportation Inspector prior to plant installation certificate of inspection of plant material by state or federal authorities.

E. Submit to the City Engineer/Ohio Department of Transportation Inspector a label from the manufacturer's container certifying fertilizer content.

1.05 GUARANTEE

A. During guarantee period, replace plants that die or are, in the City Engineers/Ohio Department of Transportation Inspectors opinion, in an unhealthy, unsightly, or badly impaired condition. Make no replacements in any season unfavorable for planting. All replacements shall be plants of the same kind and size as specified in the plant list, and shall meet all requirements of these specifications.

B. Guarantee unconditionally all labor and plant materials for a period of one (1) year after City Engineers/Ohio Department of Transportation Inspectors Provisional Acceptance. Replace at no cost to the City any plant materials which die or are in a state of decline during this period.

C. At end of guarantee period, replace any material not showing definite and satisfactory life and growth.

D. Trees shall be straightened by the Landscape Contractor for one (1) year after Provisional Acceptance.

PART 2 PRODUCTS

2.01 MATERIALS

A. Backfill/Topsoil

1. Fertile, loamy, friable, clay loam or sandy loam free of heavy or stiff clay lumps, stones, cinders, concrete, brick, roots, sticks, brush, litter, plastics, metals, refuse or other deleterious materials in accordance with ASTM D 5286–92. The soil shall be free of herbicides, petroleum–based materials or other substances of a hazardous or toxic nature which may inhibit plant growth. The soil shall be free of noxious weeds, seeds or vegetative parts of weedy plants that cannot be selectively controlled in the planting.

2. Topsoil shall be taken from a well–drained site and have a USDA soil texture classification of a clay loam or sandy loam with the following particle size distribution:

Particle	Size (mm)	Allowable Limit
Gravel	2.00 – 4.75	Less than 5%
Sand	0.05 – 2.00	25 – 50%
Silt	0.002 – 0.05	25 – 50%
Clay	minus 0.002	15 – 35%

3. Allowable Percentages:

a. Sandy Loam: The allowable analysis for percentages shall be sand 25%–65%, silt 15%–50% and clay 10%–25%.

b. Clay Loam: The allowable analysis for percentages shall be sand 25%–50%, silt 25%–50% and clay 15%–35%.

4. Topsoil shall contain 3 to 6 percent by weight organic matter.

5. Topsoil shall have a pH between 6.5 and 8.0.

B. Plant Materials

1. Obtain the City Engineers/Ohio Department of Transportation Inspectors specific written approval for substitution of plants other than those named in the plant list four (4) months prior to installation. Proposed substitutions shall have essentially the same characteristics as plants specified in appearance, ultimate height, shape, habit of growth, general soil and other requirements. Plants of greater value may be accepted without additional cost to the City/Ohio Department of Transportation.

2. Healthy, sound, vigorous, free from plant diseases, insect pests, or their eggs, with healthy well–developed root systems; freshly dug, nurserygrown, well–branched, densely foliated when in leaf, and well–proportioned, particularly with respect to the width–height relationship, hardy under climatic conditions similar to those in project.

3. City of Piqua shall direct Contractor to inspect plant material upon delivery and prior to offloading. Any damaged or broken branches, broken ball and loose top in ball are not acceptable and shall be rejected by the Contractor. Replace any tree damaged by the Contractor. Balled and burlapped plants, designated B&B shall be adequately balled with firm natural balls as set forth in the USA Standard for Nursery Stock. Balls shall be firmly wrapped with burlap or approved cloth.

4. All plant materials shall be from locations in compliance with the United States Department of Agriculture Plant Hardiness Zones 1–5 and grown in Ohio or states north of the southern limit of Ohio.

5. Container–grown stock shall have root system sufficiently developed to hold soil together, firm and whole. No plants shall be loose in containers; nor pot–bound.

EDSALL & ASSOCIATES LLC
754 NEIL AVENUE ▪ COLUMBUS, OHIO 43215
LANDSCAPE ARCHITECTS ▪ LAND PLANNERS ▪ PLANNING CONSULTANTS

6. No plant material shall be accepted if grown in Michigan.

C. Mulch

1. Shredded hardwood bark mulch, containing no sticks larger than 1/4" in diameter, stones, clay, or other foreign material that will prevent eventual decay of the mulch necessary for its complete effectiveness.

D. Commercial Fertilizer

1. Trees and Planting Beds: Dry, free flowing; 12% nitrogen, 12% phosphorus and 12% potash by weight, with 50% organic nitrogen by weight or agriform tablets per manufacturer's recommendations.

E. Anti-desiccant Standard: A natural product derived from the resin of pine trees, delivered in manufacturers containers. Use according to manufacturer's instructions.

F. Water: Furnished by Contractor.

PART 3 EXECUTION

3.01 BED PREPARATION

A. Test drain plant beds and pits by filling with water twice in succession. Conditions permitting retention of water in planting beds for more than 24 hours shall be brought to the City Engineers/Ohio Department of Transportation Inspectors attention. Notify City Engineer/Ohio Department of Transportation Inspector in writing of condition considered detrimental to growth of plant materials, and submit proposal for correcting condition, if feasible, including change in cost, if any.

B. Excavate plant pits with vertical sides. Make tree pits two (2') feet greater in diameter than ball of earth or spread of roots of trees and deep enough to allow for depth of ball. Make shrub pits 1' greater than spread of roots and 18" deep below finished grade.

C. Remove any rock or other underground obstruction encountered in any plant pit excavation to a depth of not less than three (3') feet below grade and no less than 6" below bottom of ball or roots.

D. Unless otherwise directed by the City Engineer/Ohio Department of Transportation Inspector, incorporate five (5) pounds of specified fertilizer per cubic yard of backfill.

E. Where applicable, strip and remove all existing sod from all planting bed and tree well areas.

3.02 PLANT INSTALLATION

A. Prune each tree in accordance with the American Association of Nurserymen's Standard to preserve natural character of plant. Remove all dead wood or suckers and all broken or badly bruised branches. Remove 1/4 to 1/3 of wood by thinning out and shortening branches to balance root loss due to transplanting. Make all cuts flush, leaving no stubs. Paint cuts over 1" diameter with tree paint, covering all exposed cambium and other exposed living tissue.

B. Thoroughly compact and water topsoil around balls. To compensate for shrinkage, fix finished grade of topsoil prior to watering at an elevation 10% of fill depth higher than desired finished grade. To facilitate watering, form shallow saucer approximately 3" deep around each plant by placing a ridge of topsoil around the edge of each filled-in pit. After planting, cultivate soil in shrub beds between shrub pits, rake smooth and neatly outline.

C. Water plantings during and immediately after planting and once every three (3) weeks for a period of six (6) weeks or until Provisional Acceptance. Mulch, weed, prune, spray, fertilize, cultivate. Reset settled plants to proper grade and position with planting saucer restored and dead material removed.

D. Set plants in center of pits plumb and straight and at such a level that after settlement plants will bear same relation to finished grade of surrounding group as to grade of ground from which plants were dug. In setting balled and burlapped trees, compact topsoil around bases of ball to fill all voids.

E. Within two (2) days after planting, cover all tree, shrub and groundcover pits and/or beds with a minimum two (2") inches layer of mulch. Limit of mulch for trees shall be area of pit and for shrubs and groundcover in beds, entire area of bed.

F. If settling occurs remove mulch, add additional soil to level of finished grade and re-mulch.

3.03 PROVISIONAL ACCEPTANCE

A. At the time Provisional Acceptance is requested by the Contractor, the Contractor shall provide the City Engineer/Ohio Department of Transportation Inspector five (5) copies of plant maintenance manuals which shall cover the following:

1. Pest control required

2. Care/cutting of ornamental grasses

3. Removal of dead, diseased and broken branches

4. Selective pruning required and timing by plant type

5. Fertilization required including application rate quantities, techniques and types for project plants. Include time of application.

B. Work shall be inspected for Provisional Acceptance by the City Engineer/Ohio Department of Transportation Inspector upon Contractor's written request submitted to the City Engineer/Ohio Department of Transportation Inspector at least ten (10) days before anticipated date of inspection.

C. Repairs or replacements must be completed before Provisional Acceptance/Payment is made.

3.04 FINAL ACCEPTANCE

A. At end of guarantee period, Final Inspection shall be made by the City Engineer/Ohio Department of Transportation Inspector upon Contractor's written request submitted at least ten (10) days before anticipated date. Contractor shall remove all tree wrap prior to final inspection. Any plant required under this contract that is dead, not true to name or size as specified or not in satisfactory growth, as determined by the City Engineer/Ohio Department of Transportation Inspector, shall be removed from the site.

B. Any plants missing due to Contractor's negligence shall be replaced. In case of any question regarding condition and satisfactory establishment of a rejected plant and with the approval of the City Engineer/Ohio Department of Transportation Inspector, Contractor may elect to allow such a plant to remain through another complete planting season at which time the rejected plant, if found to be dead, in an unhealthy or badly impaired condition, shall be replaced. Contractor shall not be required to replace a plant more than once.

3.05 BASIS OF PAYMENT

A. Final payment shall be made upon completion of planting and once all Provisional Acceptance items have been completed.

B. Progress/partial payments shall be made for accepted planting quantities exclusive of final payment based on the contract unit prices as follows:

1. Shrubs: Each

2. Perennials: Each

3. Evergreen Trees: Each

4. Mulch: Per Cubic Yard

5. Ornamental Grasses: Each

6. Tree Watering Bags: Each

7. Shade Trees Planted: Each

3.06 ADJUST AND CLEAN

A. Upon completion of planting and prior to Provisional Acceptance, remove excess soil and debris from site and repair any damage to structures, lawns, etc., resulting from planting operations.

B. Sweep and hose down paved surfaces affected by planting operations.

SEEDED LAWNS

PART 1 GENERAL

1.01 DESCRIPTION

A. Provide drill seeded lawns as shown on the drawings and specified herein.

B. Verify location of all underground utilities prior to the start of seeded lawn work.

C. This specification shall be followed for all lawn renovation work disturbed by any Contractor.

D. Any request for substitutions of specified seed blends must be submitted to the City Engineer/Ohio Department of Transportation Inspector no later than thirty (30) days prior to installation.

E. Work includes:

1. Seed and mulch designated lawn areas.

2. Repair of site improvements damaged during seeded lawn operations.

3. Seed all exposed soil surfaces within twenty-one (21) days after final grades are established.

4. Establish fine grading for seeding and planting areas per grading plan and site demolition section.

5. Establish lawn area per specifications including watering, mowing and establishment fertilizer prior to requesting 100% payment.

6. Verify location and extent of underground utilities. Protect existing utilities and other facilities from potential damage caused by lawn work operations.

7. Treat all lawn areas with specified pre-emergent at the rate of 1.5 quarts/acre concentration of a chemical pre-emergent herbicide with ionic surfactant at label rate, applied by spray application. Pre-emergent shall be applied two (2) weeks prior to seeding.

8. Once finished grades are established and after soil has been cultivated to the specified depth of four (4") inches per Seed Bed Preparation operations, rock hound all seed bed areas in two (2) directions to ensure no foreign materials, including stones over one (1") inch in diameter, exist in the top four (4") inches of the final seed bed. Remove all materials from rock hounding operations off-site.

1.02 QUALITY ASSURANCE

A. Mulch and seed shall be free of weeds, annual bluegrass, nimblewill, bentgrass, annual ryegrass, tall fescue, orchardgrass, quackgrass, nutsedge and other objectionable foreign matter detrimental to establishment of lawns. Mulch materials shall be original manufacturer grade, green in color.

B. Deliver fertilizer to job site dry, mixed as specified, in standard size, original, unopened containers showing weight analysis and name of manufacturer. Store in a weatherproof place. Keep dry.

C. Store materials at site in an orderly manner at location approved by the City Engineer/Ohio Department of Transportation Inspector.

D. Restrict vehicular traffic from lawn areas until grass is established.

E. The use of annual ryegrass shall not be permitted.

F. Do not use seed which is wet, moldy or damaged.

G. Do not use topsoil in frozen or muddy condition.

1.03 SUBMITTALS

A. Provide the City Engineer/Ohio Department of Transportation Inspector with all seed tags from seed used in seeded lawn operations.

B. Submit to the City Engineer/Ohio Department of Transportation Inspector in writing the seed analysis certification and fertilizer analysis for approval at least thirty (30) days prior to the start of seeding operations.

C. Submit complete written lawn maintenance instructions to the City Engineer/Ohio Department of Transportation Inspector at least ten (10) days prior to end of contractual maintenance period, including all requirements for proper care, development and maintenance of all lawns. Submission requirements shall include:

1. Insect and crabgrass control measures.

2. Mowing heights, including spring, summer and fall periods.

3. Fertilization required including application rates, type, quantities and timing of applications.

1.04 SCHEDULING

A. Seeded Lawn

1. Seed and/or Overseed:

a. Spring Seeding: March 15 to June 1.

b. Fall Seeding: August 15 to October 15.

1.05 GUARANTEE

A. Contractor shall provide a uniform stand of grass until acceptance by the City Engineer/Ohio Department of Transportation Inspector.

B. Reseed areas, per specifications, which are not accepted or uniform until all areas are accepted by the City Engineer/Ohio Department of Transportation Inspector.

PART 2 PRODUCTS

2.01 MATERIALS

A. Seed

1. Fresh, clean, new crop grass seed of certified blue tag label (unless otherwise noted) composed of the following species and cultivars mixed in proportions by weight shown, meeting specified minimum percentages of purity and germination. Test for germination made within preceding 6 months. Not to exceed 0.25% weed seed. Seeding rates shall be determined by the percent live seed, where PLS = % pure seed X % germination X 100.

Adjust the seeding rate according to the calculated PLS. For example, if the PLS is 76% and the recommended rate for the seed is 10 pounds per 1,000 square feet, the calculation of 10 pounds divided by .76% PLS results in 13.2 pounds of seed per 1,000 square feet.

Kind of Seed	% by Weight	% Purity	% Germination	% Pure Live Seed
Perennial Ryegrass	10%	98	85	82

Perennial Ryegrass: To be either Caddieshack II or Top Gun II.

Kind of Seed	% by Weight	% Purity	% Germination	% Pure Live Seed
Kentucky Bluegrass	10%	98	85	82

Kentucky Bluegrass: To be either Blue Chip or Nu Blue.

Kind of Seed	% by Weight	% Purity	% Germination	% Pure Live Seed
Tall Fescue	80%	98	85	82

Tall Fescue: To be a blend of two (2) cultivars of equal percentages of Arid 3, Inferno or Quest.

2. Substitutions may be used if they exceed a quality and wear tolerance value as noted below, as published by the National Turfgrass Evaluation Program (NTEP). Submit the NTEP Quality and Wear Tolerance rating along with request for substitution to the City Engineer for review and approval.

	Quality	Wear Tolerance
Improved Kentucky Blue	≥6.0	≥5.3
Turftype Tall Fescue	≥6.0	≥6.5
Perennial Ryegrass	≥6.0	≥5.0

3. Seeding rate shall be eight (8) pounds per 1,000 square feet of the above specified mixture.

B. Lawn Mulch

1. Straw shall not be permitted as a mulch material.

2. A wood fiber and polysaccharide polymer adhesive shall be used.

3. Hydromulch fiber shall be applied with hydraulic mulching equipment at the rate of 3,000–4,000 pounds per acre.

C. Commercial Fertilizer

1. Lawns: Dry, delivered to the job site mixed as specified, in standard size, original unopened containers showing weight analysis and name of manufacturer. Store in a weatherproof storage place, in such a manner that it will be kept dry and its effectiveness not impaired.

2. Fertilizer shall have a 2–1–2 (20–10–20) analysis. Fertilizer shall be a slow release (insoluble) form. The nitrogen source shall be ammonium sulfate or sulfurcoated urea rather than urea in a uniformly granular or pelletized form.

3. Starter fertilizer shall have a 18–24–12 analysis.

D. Water

1. Furnished by Contractor.

PART 3 EXECUTION

3.01 EXAMINATION

A. Examine finish surfaces, grades, topsoil quality and depth.

B. Do not start lawn work until unsatisfactory conditions have been corrected.

3.02 SEEDED LAWN BED PREPARATION

A. Cultivate soil to provide firm bed six (6") inches deep, free of clods, stones, or foreign matter over one (1") inch in diameter from top six (6") inches of soil. Remove all stones greater than 1–1/2" in diameter during cultivation. Level undulations and irregularities in surface. Areas shall have a smooth and continual grade between existing or fixed controls such as walks and curbs before seeding.

B. Apply starter fertilizer at the rate of one (1) pound actual nitrogen per 1000 square feet. Apply fertilizers to lawn area by mechanical distributor, thoroughly and evenly incorporated with the soil to a depth of six (6") inches by discing. Fertilizer may be applied with seed in areas inaccessible to power equipment; incorporated with the soil by hand tools.

C. Once finished grades are established, power rake, Land Pride PR1572 or PR2572 series or equivalent all seed bed areas in two (2) directions to ensure no foreign materials, including stones over one (1") inch in diameter, exist in the top six (6") inches of the final seed bed. Remove all debris and clods.

D. If seed bed has become muddy, hard or excessively dry, re–till to a smooth, friable, uniform condition; free from stones or lumps. Regrade any settling prior to seeding. Seed immediately after bed preparation.

E. Do not move heavy objects over lawn areas after soil is prepared unless it is again loosened and graded.

F. Do not seed any lawn areas that are not a consistent uniform grade.

G. Maintain lawn areas in a smooth, friable and uniform condition.

3.03 SEEDED LAWN OPERATIONS

A. Restore prepared areas to specified condition, if eroded, settled or otherwise disturbed after fine grading and before installing seeding materials.

B. Slit/Drill Seeding

1. Apply seed with slit/drill seeder.

2. Seed immediately after preparation of seed bed.

3. Perform seeding operations when the soil is dry and tillable.

4. Seed evenly with proper overlap. After seeding, gently drag mat surface of soil. Roll with light lawn roller or cultipacker after seeding.

C. In a separate operation hydromulch all seeded areas with a bonded fiber matrix wood fiber mulch at the minimum rates noted below. The bonded fiber matrix shall be mixed at the rate of 60 pounds of fiber per 150 gallons of water. Apply the admixture in successive layers from two (2) directions to cover 100% of the soil surface.

1:1 slopes	4,000 pounds/acre
2:1 slopes	3,300–3,600 pounds/acre
3:1 slopes and less	3,000 pounds/acre

1. Hydromulch immediately upon the completion of the seeding operation and prior to any weathering and wind transferral of the seeded area.

2. Keep hydromulch from non–target areas including pavements, plant materials, curbing, signs and structures. IF THESE ITEMS ARE HIT DURING HYDROMULCHING OPERATIONS WASH SURFACES IMMEDIATELY.

D. Summer Seeding: If seeding is approved by the City Engineer/Ohio Department of Transportation Inspector between June 1 and August 15 sow one (1) of the improved cultivars of perennial ryegrass such as Manhattan or Pennant, along with specified seed mixture. Seed shall not comprise more than 20% of weight of mixture. Sow at the rate of 2 pounds per 1000 square feet. Use culti–packer or similar approved equipment to cover seed and to firm seed bed in one (1) operation. In areas inaccessible to culti–packer, lightly rake and roll seeded ground in two (2) directions with water ballast roller. Take care during seeding and raking to insure that seed is not raked from one (1) spot to another.

E. If infestation of weeds or crabgrass develops, treat infestation by hand weeding or Siduron or Bromoxynil. Furnish and install weed chemical control as recommended by manufacturer. Any herbicidal controls, including renovation prior to seeding operations, shall be approved by the City Engineer/Ohio Department of Transportation Inspector.

F. Do not attempt first mowing until the seed is firmly rooted and secure in place. Set mower blades at a minimum of 2" – 2 1/2" high. Not more than 30% of the grass leaf shall be removed at the initial or subsequent mowing. Mow all lawns before turf reaches a height of 3".

G. During germination period, protect, water and mow seeded areas, keeping top 1/2" to 1" soil moist. Continue watering for a minimum of four (4) weeks. If the area is allowed to dry once it has been watered much of the seed will be lost.

H. When the seedlings have reached approximately 2", add an additional 0.75 pounds of nitrogen per 1000 square feet. A fertilizer with a 2:1:2 or 3:1:2 or similar ratio shall be acceptable for this application.

3.04 MAINTENANCE AND PROTECTION

A. Maintenance of seeded lawn areas by Contractor shall begin immediately after each area is seeded and shall include:

1. All temporary protection fences, barriers and signs.

2. All maintenance shall continue until Substantial Completion of lawn area is acceptable to the City Engineer/Ohio Department of Transportation Inspector, but for not less than the following periods.

a. Sixty (60) days after date of substantial completion. If full maintenance period has not elapsed before end of scheduled seeding time or,

b. If lawn is not fully established within the specified time period noted above, Contractor shall continue maintenance during the next season.

B. Maintenance of installed, established and accepted lawn shall be performed by the Owner.

3.05 INSPECTION AND ACCEPTANCE

A. Lawns shall be inspected for acceptance and accepted providing all requirements, including maintenance, have been complied with and a healthy, uniform, close stand of the specified grass is established, free of weeds, bare spots and surface irregularities.

B. Inspection to determine acceptance of lawn areas shall be made by the City Engineer/Ohio Department of Transportation Inspector upon Contractor's written request. Provide notification at least ten (10) working days before requested inspection date.

C. No individual area of lawn shall have bare spots or unacceptable cover totaling more than two (2%) percent of the individual lawn area, in areas requested to be inspected.

3.06 MEASUREMENT OF QUANTITIES/BASIS OF PAYMENT

A. Payment shall be made for accepted seeded lawn quantities based on the following:

1. Established Lawn: Per Square Yard (Includes fertilizer, watering and mowing to achieve establishment).

3.07 ADJUST AND CLEAN

A. Keep premises free of debris and unusable materials. As work progresses or at the request of the City Engineer/Ohio Department of Transportation Inspector remove waste materials from the site.

B. Sweep and hose down paved surfaces affected by seeded lawn operations.

BRICK MEDIANS

PART 1 GENERAL

1.01 DESCRIPTION

A. Furnish and install concrete base: Item ODOT 305.

B. Furnish and install aggregate base: Item ODOT 304.

C. Furnish and install brick pavers as designated on the drawings and as specified.

D. Allow concrete to cure for seven (7) days prior to installing bituminous setting bed.

E. Work includes:

1. The secure storage of all pavers shall be the Contractors responsibility.

2. Furnish and install pre–manufactured edge restraint where brick median abuts lawn and/or planting area.

3. Furnish and install two (2") inch PVC pipe filled with pea gravel with square of soil separator over top where brick is installed over a concrete base as detailed on the plans.

4. Furnish and install asphalt adhesive and setting bed materials, backer rod, expansion joint, expansion joint sealant and joint filler per this specification and as detailed on the plans.

1.02 QUALITY ASSURANCE

A. Use a diamond bladed saw for all cuts.

B. Dust collection is required. Wet cutting shall be required.

C. Comply with ASTM Standard Specifications, latest edition.

D. All brick shall be palletized when delivered to the project site.

E. Do not change installers during the implementation of this project.

F. Installer shall have the ability to provide a five (5) year Maintenance Performance Bond against defects and workmanship.

G. Brick which arrives on site which is cracked, broken or defective, as determined by the City Engineer/Ohio Department of Transportation Inspector, shall be replaced by the Contractor.

EDSALL & ASSOCIATES LLC
754 NEIL AVENUE ▪ COLUMBUS, OHIO 43215
LANDSCAPE ARCHITECTS ▪ LAND PLANNERS ▪ PLANNING CONSULTANTS

37_L37_NOTE.DWG 12-April-2013

H. Any cuts which deviate from the paving pattern depicted on the drawings shall be reviewed and approved by the City Engineer/Ohio Department of Transportation Inspector prior to cuts being made.

I. Installation of brick pavers to be done by a skilled craftsman with a minimum of five (5) years experience on completed projects of comparable size, quality and pavement system design. Contractor to submit a minimum of ten (10) bituminous setting bed installations prior to contract award.

J. Prior to the installation of brick paving, provide a sample panel using materials, pattern and joints indicated for project including joint sealants for City Engineers/Ohio Department of Transportation Inspectors review and approval. Provide range of color, texture and workmanship proposed for the work. Correct and rebuild sample panel until approved by the City Engineer/Ohio Department of Transportation Inspector. The approved sample panel may be a portion of the work and remain in place.

K. Keep <u>all</u> pavers clean of joint filler. Do not permit joint filler to remain on paver units. If pavers become discolored during installation, the following is a suggested method to clean the pavers.

1. Thoroughly wet down the surface.

2. A small mechanical paver wash or sprayer may be used.

3. Clean pavers with specified masonry cleaning compound.

4. Protect adjacent buildings, lawns, pavements and plantings during cleaning operations.

1.03 SUBMITTALS

A. Prior to the start of construction, Contractor shall submit the following for approval by the City Engineer/Ohio Department of Transportation Inspector. No work shall commence until all submittals have been approved by the City Engineer/Ohio Department of Transportation Inspector.

1. Sand joint filler.

2. Cut sheet for edge restraint.

3. Bituminous setting bed mix design.

4. Joint sealant color sample for final approval.

5. Cut sheet for expansion joint sealant for approval.

6. Submit brick sample and color, test reports for compressive strength, modulus of rupture and absorption rate for brick pavers thirty (30) days prior to delivery

1.04 PRODUCT DELIVERY, STORAGE AND HANDLING

A. Store brick under waterproof covers and on planking clear of the ground. Label each pallet of brick with the manufacturer's name, pallet identification number, quantity of brick and shipping date.

B. Protect partially completed brick paving against weather when work is not in progress. Cover with strong waterproof, non-staining membrane anchored securely in place.

C. Handle and store brick masonry materials in a manner that prevents damage or inclusion of any foreign and/or deleterious material.

D. Do not build on frozen work. Remove and replace brick paving damaged by frost or freezing.

E. Do not use frozen materials or materials mixed or coated with ice or frost.

PART 2 PRODUCTS

2.01 MATERIALS

A. Aggregate Base

1. ODOT 304. Depths as shown on the plans.

B. Concrete Base

1. ODOT 305. Depths as shown on the plans.

C. Masonry Cleaning Compound

1. Sure Klean No. 600 Detergent as manufactured by ProSoCo, Inc., Kansas City, Kansas 66104, or 101 WN Wood Neutralize as manufactured by Dietrich Chemicals Inc., Oak Creek, Wisconsin 53154 or approved equal.

D. Joint Filler

1. HP polymeric jointing sand. Color: Tan.

2. High-tech mix of graded sand (ASTM C-144) and binder.

E. Edge Restraint

1. Flexible 100% PVC edging, two (2) piece component system consisting of ten (10') foot vertical flex strips, back supports and edging connector pipes.

2. Install 10" x 3/8" diameter steel spikes a minimum of every support, section and per manufacturers instructions.

F. Expansion Joint Sealant

1. The expansion joint sealant shall meet the following specifications.

a. The expansion joint sealant shall match the brick used for this project.

b. Multi-component self leveling, slope grade elastomeric polyurethane sealant.

2. Install backer rod as shown on the drawings and per manufacturer's instructions.

G. Premolded Expansion Joint Filler: Non-extruding and resilient filler, conforming to ASTM D1751-83.

1. Flexcell by Celotex Corporation.

2. Elastite by Philip Carey Company.

3. Corkfill or Fibre Joint by W. R. Meadows.

4. Kork Pak by Servicized Products Corporation.

H. Brick Pavers

1. The Contractor shall not order or deliver any brick pavers until approved by the City Engineer/Ohio Department of Transportation Inspector.

2. The brick pavers shall match that used in downtown Piqua. Whitacre Greer Clear Red Rustic #30 or approved equal and as approved by the City Engineer/Ohio Department of Transportation Inspector.

3. Products:

a. Nominal size 4"W x 8"L x 2 1/4"H with square edge.

b. All brick pavers shall meet the following specifications.

1) Have a minimum compressive strength of 8,000 psi.
2) Have an average modulus of rupture of 2,000 or above.
3) Conform to ASTM C902, Class SX, Type 1 Application PS.
4) Square edge clay pavers with no frogs, cores or laminations.
5) Have an average initial absorption rate of eight (8%) percent in a twenty-four (24) hour cold water absorption rate.

I. Setting Bed Materials

1. Bituminous Setting Bed

a. Fine Aggregate

1) Clean, hard sand with durable particles and free from adherent coatings, lumps of clay, alkali salts and organic matter. Uniformly graded from coarse to fine and passing the No. 4 sieve and meeting gradation requirements of ASTM C-1436-6%.

b. Hot Asphalt Cement

1) The dried fine aggregates shall be combined with hot asphalt cement and the mix shall be heated to approximately 300 degrees Fahrenheit at asphalt plant.

2) The appropriate proportion of materials shall be seven (7%) percent asphalt and ninety-three (93%) percent by weight in the approximate ratio of 145 pounds asphalt to 1,855 pounds of sand. The Contractor shall determine the exact proportions to produce the best possible mixture for construction of the bituminous setting bed to meet construction requirements.

c. Soil Separator

1) Fabric to meet the following requirements:

a) Apparent Opening Size ASTM D4751.
b) CBR Puncture Strength ASTM D6241.
c) Trapezoid Tear Strength ASTM D4533.
d) Permittivity and Flow Rate ASTM D4491.
e) UV Resistance at 500 hours ASTM D4355.
f) Grab Tensile Strength and Elongation ASTM D4632.

2) Non-woven geotextile fabric, four (4) ounce weight.

3) Installation per manufacturers instructions and as noted on the drawings.

J. Asphalt Adhesive

1. Install asphalt adhesive over bituminous setting bed. All surfaces shall be clean, free from oil, grease or other foreign matter.

a. The asphalt adhesive shall meet the following specifications and shall be approved by the City Engineer/Ohio Department of Transportation Inspector.

b. Products:

1) 230-2% AF Neo-Asphalt

a) Cold applied, rubberized asphalt cement.
b) Mechanically mix thoroughly, prior to installation.
c) Apply with a serrated trowel at the rate of two (2) gallons per 100 square feet.
d) Allow a minimum of two (2) to three (3) hours open air time or until material becomes tacky and just skins over, prior to embedding pavers.
e) Physical properties to include:
- Viscosity @ 25°C 30,000-40,000 C.P.S.
- % Solids by weight 60
- % Inorganic material 18%
- Specific gravity @ 25°C 1.02
- Weight per gallon @ 25°C 8.5lbs.
- Softening point of rubber blend 150°F

2) 237-2% AF Neo-Asphalt (Brush Grade)

a) Cold applied, rubberized asphalt cement.
b) Apply with a brush or squeegee at the rate of one (1) gallon per 30-50 square feet.
c) Mechanically mix thoroughly, prior to installation. Blacktop surfaces shall be cured prior to installation of 237-2% Neo-Asphalt.
d) Allow a minimum of two (2) to three (3) hours open air time or until material becomes tacky and just skins over, prior to embedding pavers.
e) Physical properties to include:
- Viscosity @ 25°C 12,000 - 18,000 C.P.S.
- % Solids by weight 70
- % Inorganic material 6.5%
- Specific gravity @ 25°C 1.02
- Weight per gallon @ 25°C 8.1 lbs.
- Softening point of rubber blend 150°F

3) Either 230-2% or 237-2% neo-asphalt material as noted above shall be acceptable. Installation per manufacturers instructions and as noted on the drawings.

PART 3 EXECUTION

3.01 BRICK PAVERS

A. Install brick pavers per plans. Review any deviation in final arrangement with the City Engineer/Ohio Department of Transportation Inspector.

B. Place the pavers by hand when the modified asphalt adhesive is dry to the touch. Place pavers, controlled by accurately placed string lines, with hand-tight joints and uniform top surface. Keep good alignment in the pattern that is shown on the plans.

C. Protect newly laid pavers at all times by panels of plywood on which the installer stands. Advance these panels of plywood as work progresses. Keep the plywood protection in areas which will be subjected to continued movement of materials and equipment.

3.02 CONCRETE BASE

A. Installation as noted on the drawings.

B. Finish concrete base with an even, bull float finish.

C. Install two (2") inch PVC pipe for drainage before concrete pour or core drill after concrete has cured. Fill PVC pipe with pea gravel. Install squares of specified soil separator over gravel filled PVC pipe prior to placement of bituminous setting bed.

D. Prior to placement of the bituminous setting bed, the existing concrete pavement being used as a base for the brick pavement shall be swept completely clean and shall be leveled to the proper uniform grade required by planing down concrete patches that protrude higher than three-eighths (3/8") inch above the otherwise uniform surface and by filling in depressions and holes in the concrete surface with a sand and cement grout consisting of 1 part portland cement to 1 1/2 parts of sand. No additional payment shall be allowed for this work.

EDSALL & ASSOCIATES LLC
754 NEIL AVENUE ▪ COLUMBUS, OHIO 43215
LANDSCAPE ARCHITECTS ▪ LAND PLANNERS ▪ PLANNING CONSULTANTS

CALCULATED JAM
CHECKED JFE/DCE

LANDSCAPING GENERAL NOTES

MIA-36-11.55

3.03 GENERAL INSTALLATION

A. Do not begin installation of bituminous setting bed until provisions for curing of concrete have been completed.

B. Do not use paving units with chips, cracks, voids and discolorations or other defects which might be visible or cause staining in the finished work.

C. Place no bituminous setting bed when surfaces are wet or when the temperature of either the air or the concrete base surface is forty (40°) F or lower.

D. Install continuous joint sealant at all expansion joints with joint filler with 3/8" maximum width and 3/4" maximum depth as shown on the drawings.

E. Caulk all expansion joints where shown on the plans per specified sealant and as approved by the City Engineer/Ohio Department of Transportation Inspector.

F. Take extra precautions in drying the aggregate, controlling the temperature of the delivered material and compacting the setting bed when the air temperature falls below fifty (50°) F.

G. Saw cut brick pavers to fit tightly per the pattern around all obstacles. Provide a surface area greater than one-third a full-size brick unless otherwise depicted on the drawings. Meet jointing tolerance of hand-tight joints. Fit pavers around circular objects with circular or arch form, not angular.

H. Cut brick paving units with motor-driven saw equipment designed to cut masonry with clean, sharp unchipped edges. Cut units as required to provide pattern shown and to fit adjoining work neatly. Use full units without cutting wherever possible. Where cutting is required, use the largest size units possible. Avoid the use of small pieces of brick. Review with the City Engineer/Ohio Department of Transportation Inspector.

3.04 BITUMINOUS SETTING BED

A. Permit no pedestrian or vehicular traffic on the completed surface prior to brick placement.

B. Clean existing dry concrete base of all surface debris, dirt, oil and other foreign materials. Cover adjacent surfaces with polyethylene film prior to placement of setting bed.

C. Place only that quantity of bituminous setting bed that is required for brick paver placement on the same day. Apply the asphalt adhesive to the setting bed only as required for brick paver placement on the same day.

D. Roll, while hot, with a 1 ton power roller, to a uniform three-quarter (3/4") inch nominal depth firm bed. Adjust the elevation so that when the bricks are placed, the top surface of the pavers is at the required finished grade.

E. Apply a coating of two (2) percent neoprene-modified asphalt adhesive by mopping or squeegeeing or troweling over the top surface of the bituminous setting bed to provide a bond under the pavers. If troweled, the trowel shall be serrated. Serrations may not exceed one-sixteenth (1/16") inch.

F. After surface preparation of base, a tack coat shall be applied to the base at the rate of 0.05 gallons per square yard, in accordance with Item 407 Tack Coat. The tack coat shall be applied by hand. Curbs and concrete surfaces shall be shielded with plastic sheeting as protection from splashing or contamination by airborne bituminous particles.

G. Place three-quarter (3/4") inch deep control bars directly over the base. Set wood chocks under depth control bars to set proper grade if grade is adjusted. Set two (2) bars parallel to each other approximately eleven (11') feet apart to serve as guides for striking board (twelve [12'] feet long by two [2"] inches by six [6"] inches board). Set the depth control bars carefully to bring the pavers to proper finished grade.

H. Place some bituminous bed between the parallel depth control bars. Pull this bed with the striking board over these bars several times. After each passage, shower low porous spots with fresh bituminous material to produce smooth, firm and even setting bed. As soon as this initial panel is completed, advance the first bar to the next position in readiness for striking the next panel. Carefully fill any depressions that remain after removing the depth control bars and wood chocks.

3.05 JOINT TREATMENT

A. Vary hand-tight joints from zero (0") inches to a maximum one-sixteenth (1/16") inch to one-eighth (1/8") inch.

B. Polymeric Jointing Sand

1. When installing, temperature should be above 40° F.

2. Install jointing sand only under dry weather and when there is no rain forecasted for twenty-four (24) hours.

3. Submit polymeric sand joint filler certification and color sample to the City Engineer/Ohio Department of Transportation Inspector for final approval prior to installation.

4. Store product in its original packaging in a dry place and away from U.V. rays. Bags may be stored outside at the Contractors risk and if they are properly protected with an opaque and waterproof tarp.

5. Keep all pavers clean of joint filler. Do not permit joint filler to remain on paver units. If pavers become discolored during installation, the following is a suggested method to clean the pavers.

a. Thoroughly wet down the surface.

b. A small mechanical paver wash or sprayer may be used.

c. Clean pavers with specified masonry cleaning compound.

d. Protect adjoining pavements and/or plants during cleaning operation.

C. Polymeric Sand Joint Filler Installation

1. <u>The brick surface must be completely dry!</u>

2. Spread the joint filler uniformly over the surface.

3. Using a push broom, sweep the product to fill all joints completely to their full depth.

4. Avoid sweeping the joint filler over long distances, to preserve the integrity of the mix.

5. Pass a plate vibrator over the entire surface to obtain solid, durable joints after sweeping.

6. Repeat steps B, C, D and E until the joints are completely packed. Joints must be filled up to the top of the pavers.

7. Important: To avoid having the product stick to the surface of pavers, the <u>brick surface must be free of the joint filler material. Contractor shall sweep the surface with a fine bristle brush and remove all joint filler residue with a leaf blower</u>.

8. Once the surface is cleaned of joint filler, wetting shall be done in sections no larger than 500 square feet at a time. Contractor shall complete the wetting of one (1) section before another section is started. Produce a fine mist so the water falls gently without displacing the polymeric jointing sand.

9. Drying and Protection: To ensure optimal cohesion and long-term stability, polymeric jointing sand must dry completely before being exposed to water. If the surface could be exposed to water before the recommended drying time, Contractor shall protect the surface with a waterproof tarp. Remove the tarp as soon as the risk of exposure has passed.

10. Moisten each 500 square foot section lightly and in a continuous manner. Avoid flooding the surface and causing a runoff. Using a small screwdriver, verify the progress of the wetness in several areas by emptying a small portion of the polymeric jointing sand. Once the joints are moistened 1 1/2 inches deep, stop watering the section and move on to the next section. Too much water shall cause the binder to run off and prevent the sand from solidifying.

11. Surface Cleaning

a. Clean brick surfaces with masonry cleaning compound in accordance with manufacturer's recommendations and procedures. Pre-wet brick surfaces, with prepared cleaning solution full strength, freely using a densely packed, soft fibered masonry washing brush. Allow cleaning solution to remain on the brick surface as directed by the manufacturer before rinsing thoroughly with potable water, removing all cleaning compound, dirt, free sand and other contaminates.

b. Clean brick with high-pressure water cleaning equipment in addition to or in conjunction with the masonry cleaning compound as approved by the City Engineer/Ohio Department of Transportation Inspector.

c. Check brick paving when completed for a surface completely free from any surface or impregnated stains, cement, oils or other foreign material.

3.06 PROTECTION OF FINISHED WORK

A. Permit no pedestrian or vehicular traffic after brick placement, for a minimum of twenty-four (24) hours.

3.07 MEASUREMENT OF QUANTITIES/BASIS OF PAYMENT

A. Payment shall be made based on the following:

1. Item 304 Aggregate Base: Per Square Foot.

2. Concrete base with expansion joints, gravel filled PVC pipe and soil separator: Per Square Foot.

3. Brick Median including asphalt adhesive bituminous setting bed materials, backer rods, edge restraint, expansion joint sealant and expansion joint filler: Per Square Foot.

3.08 ADJUST AND CLEAN

A. Keep premises free of debris and unusable materials. As work progresses or at the request of the City Engineer/Ohio Department of Transportation Inspector remove waste materials from the site.

CURB PASS THROUGH DRAINAGE STRUCTURES

PART 1 GENERAL

A. Furnish and install cast gray iron curb pass through as shown in detail 1/32. Install per manufacturer's instructions.

B. The base and Alternate #3 structures are the same except for the length as noted.

PART 2 PRODUCTS

A. Standard as manufactured by Neenah Foundry Company, 2121 Brooks Avenue, Neenah, Wisconsin 54956 or approved equal. Contact: Linetta Haywood at 614-572-7056. Drawing Number:
- Base – 32620450
- Alternate #3 – 3262T03

B. Contractor to submit catalog cut sheets prior to delivery and installation to the City Engineer/Ohio Department of Transportation Inspector for approval.

PART 3 EXECUTION

3.01 INSTALLATION

A. All curb pass through drainage structures shall be installed per manufacturer's instructions and as shown on the drawings.

B. All coatings shall be free of defects, bubbles or imperfections. Contractor shall repair or replace any defective curb pass through drainage structures.

3.02 MEASUREMENT OF QUANTITIES/BASIS OF PAYMENT

A. Payment shall be made based on the following:

1. Curb Pass Through Drainage Structures: Each

UTILITIES

PART 1 GENERAL

A. Existing utilities are as shown on sheets 4-6/39. Information was provided by the City of Piqua and utility types and locations are as depicted on previous projects including MIA-36-17.891 dated 08/14/1996 and MIA-36-11.76 dated 02/25/2010. Utility locations shall be verified before digging by contacting the two services identified in the box titled Underground Utilities on Sheet 1/39 of the construction drawings for this project.

B. Additional existing utility information and verification may be obtained by contacting:

1. <u>Cable</u>
Time Warner Cable
1450 Experiment Farm Road
Troy, OH 45373
937-440-6656

2. <u>Electric</u>
City of Piqua Power System
123 Bridge St.
Piqua, OH 45356
937-778-2077

3. <u>Telephone</u>
AT&T
3233 Woodman Dr.
Dayton, OH 45420
937-296-3888

4. <u>Water, Sanitary Sewer & Storm</u>
City of Piqua Underground Utility Department
121 Bridge St.
Piqua, OH 45356
937-778-2018

5. <u>Gas</u>
Vectren
1300 Experiment Farm Road
Troy, OH 45373
937-440-1830

EDSALL & ASSOCIATES LLC
754 NEIL AVENUE ▪ COLUMBUS, OHIO 43215
LANDSCAPE ARCHITECTS ▪ LAND PLANNERS ▪ PLANNING CONSULTANTS

39_L39_NOTE.DWG 15-May-2013

6. Traffic Control
ODOT District 7 – Responsible for traffic control at on/off ramps from I–75.
1001 Saint Marys Avenue
Sidney, OH 45365
937–497–6841

Piqua Street Department – Responsible for traffic control at all other locations exclusive of on/off ramps from I–75.
859 S. Main St.
Piqua, OH 45356
937–778–2095

7. Lighting
ODOT – Responsible for high mast lighting in interchange infield.
1001 Saint Marys Avenue
Sidney, OH 45365
937–492–1141

City of Piqua Municipal Power System – Responsible for lighting at all other locations exclusive of high mast lighting in interchange infield.
123 Bridge St.
Piqua, OH 45356
937–778–2077

C. Proposed utilities are as shown on Sheets 11–15 & 18/39. Proposed utilities relate to storm drainage structures and piping only as tabulated in the Estimated Quantities shown in subsummaries on each plan sheet as well as in the General Summary on Sheet 2/39.

D. Proposed storm drainage utilities shall be constructed in accordance with ODOT "Construction and Material Specifications" dated 01/01/10 including Items 603 and 604 as well as Standard Drawings and Special Provisions listed on Sheet 1/39.

E. Proposed Street Lighting shall be as shown on Sheets E1–E5. The City shall provide all poles, fixtures and related appurtenances to the Contractor for installation. Contractor shall provide materials and labor to construct/install conduits, wiring, pole foundations, control devices and related appurtenances as may be required to complete the installation. Materials shall be as listed in the Estimated Quantities tabulations on Sheets E1–E3 as well as the Street Lighting General Summary on Sheet E4. All costs for Street Lighting work to be billed to and paid by the City of Piqua. Questions regarding street lighting should be directed to Mr. Nick Berger, City of Piqua Power System at 937–778–2077.

PROJECT MILESTONE DATES

The following milestone dates represent a preliminary schedule for the U.S. Route 36 Corridor Beautification Project. The Contractor shall prepare and present a more definitive schedule for review and approval at the Preconstruction Meeting.

05/20/13	Plan File
08/15/13	Sale Date
08/26/13	Award Date
08/26/13	Preconstruction Meeting/Contractor Project Schedule Submittal/ Commence Construction
08/28/13–10/18/13	Construction of Concrete Curbing/ Storm Drainage Structures and Piping/Street Lighting
10/01/13–10/22/13	Construction of Concrete Sidewalks/Brick Pavement
10/01/13–10/22/13	Seeded Lawn Operations
10/21/13–11/18/13	Complete Pavement Construction and Line Striping
10/29/13–11/25/13	Landscape Planting Operations
11/25/13–12/13/13	Project Closeout

CALCULATED JAM
CHECKED JFE/DCE

LANDSCAPING GENERAL NOTES

MIA-36-11.55

01LEOLECTR.DWG 05-June-2013

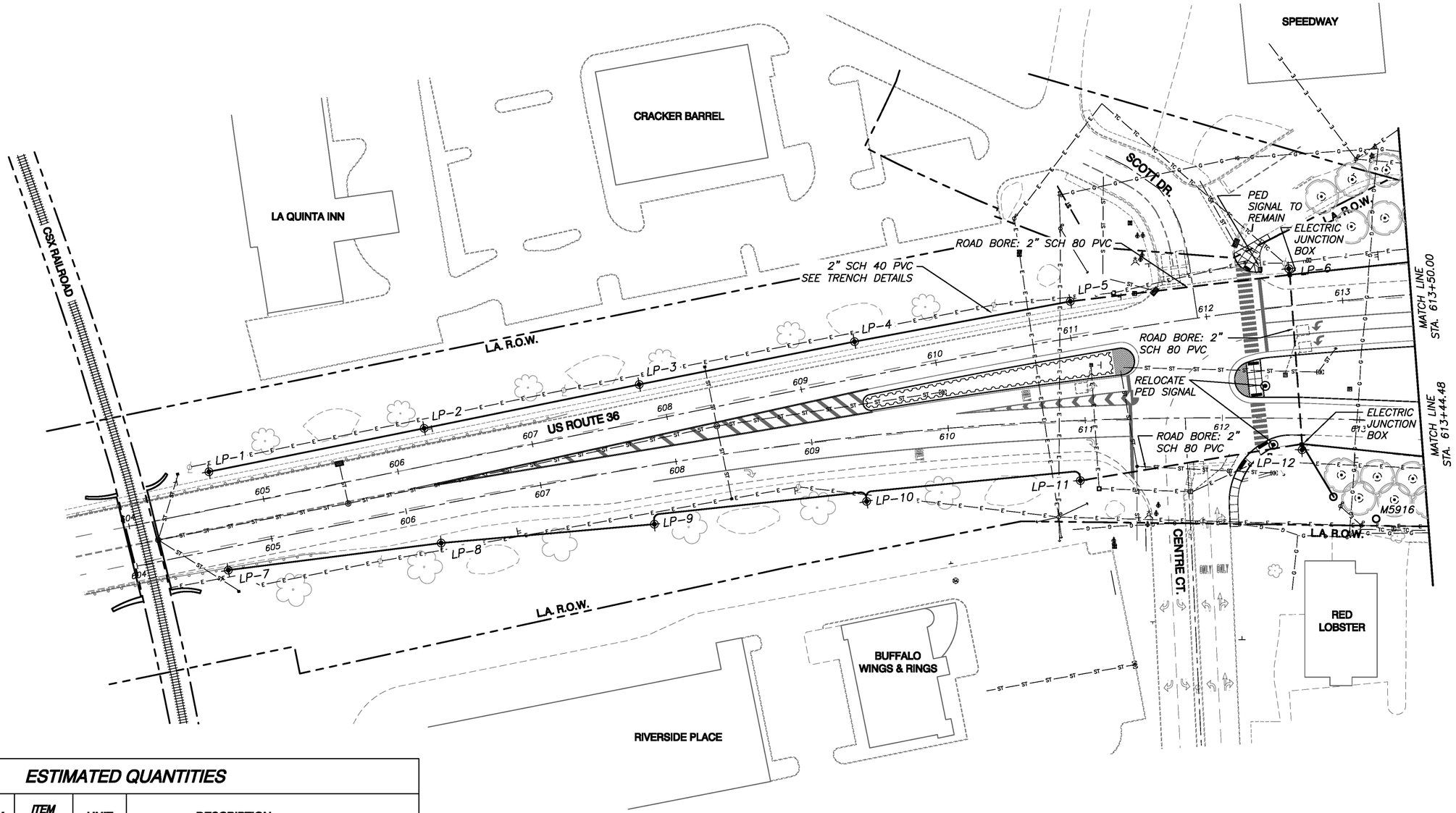

ESTIMATED QUANTITIES

TOTAL	ITEM	ITEM EXTENSION	UNIT	DESCRIPTION
12	625	14501	EACH	LIGHT POLE FOUNDATION, AS PER PLAN
48	625	23308	FT	DISTRIBUTION CABLE, MISC.: NO. 6 AWG COPPER GROUND CABLE
60	625	25104	FT	CONDUIT, 1", 725.051
1,350	625	25408	FT	CONDUIT, 2", 725.051
470	625	25906	FT	CONDUIT, JACKED OR DRILLED, 725.051
12	625	25930	EACH	CONDUIT MISC.: 1" SHORT SWEEP 90° ELBOWS, LIGHT POLE FOUNDATIONS
38	625	25930	EACH	CONDUIT, MISC.: 2" PVC LONG SWEEP 90° ELBOW
1,350	625	29010	FT	TRENCH, 30" DEEP
20	625	29700	FT	TRENCH, MISC.: 18" DEEP, TRAFFIC PED
2	625	31600	EACH	PULL BOX, MISC.: PROVIDED BY PMPS, INSTALLATION ONLY
12	625	32001	EACH	GROUND ROD, 8', AS PER PLAN
2	632	64021	EACH	PEDESTAL FOUNDATION, AS PER PLAN
2	632	90010	EACH	PEDESTAL, MISC.: REUSE PEDESTAL WITH TRANSFORMER BASE

LEGEND:

- EXISTING SHADE TREE
- EXISTING EVERGREEN TREE
- PROPOSED SHADE TREE
- PROPOSED PLANTING BED
- PROPOSED LIGHT POLE – INSTALLED BY CITY
- LIMITED ACCESS RIGHT-OF-WAY
- EXISTING FENCE
- EXISTING ROAD CENTERLINE
- EXISTING GAS LINE
- EXISTING STORM LINE
- EXISTING ELECTRIC LINE
- EXISTING SANITARY SEWER LINE
- EXISTING TELECOMMUNICATION LINE

UTILITY POINT TABLE

ID#	DESCRIPTION	LOCATION	TOP OF FOUNDATION ELEV.
LP-1	CENTER OF LIGHT POLE	N788046.74 E1485937.48	879.50
LP-2	CENTER OF LIGHT POLE	N788078.42 E1486094.31	888.50
LP-3	CENTER OF LIGHT POLE	N788110.37 E1486251.09	894.70
LP-4	CENTER OF LIGHT POLE	N788141.62 E1486408.01	900.50
LP-5	CENTER OF LIGHT POLE	N788170.99 E1486565.29	906.72
LP-6	CENTER OF LIGHT POLE	N788194.81 E1486724.53	913.22
LP-7	CENTER OF LIGHT POLE	N787975.00 E1485951.59	879.28
LP-8	CENTER OF LIGHT POLE	N787994.76 E1486106.72	885.60
LP-9	CENTER OF LIGHT POLE	N788008.51 E1486262.13	892.06
LP-10	CENTER OF LIGHT POLE	N788025.14 E1486416.84	896.89
LP-11	CENTER OF LIGHT POLE	N788040.28 E1486572.63	901.50
LP-12	CENTER OF LIGHT POLE	N788062.75 E1486734.23	907.80

1"=40'
HORIZONTAL SCALE IN FEET
0 20 40 60

CALCULATED
CHECKED

STREET LIGHTING PLAN

MIA-36-11.55

02_E02_ECTR.DWG 15-May-2013

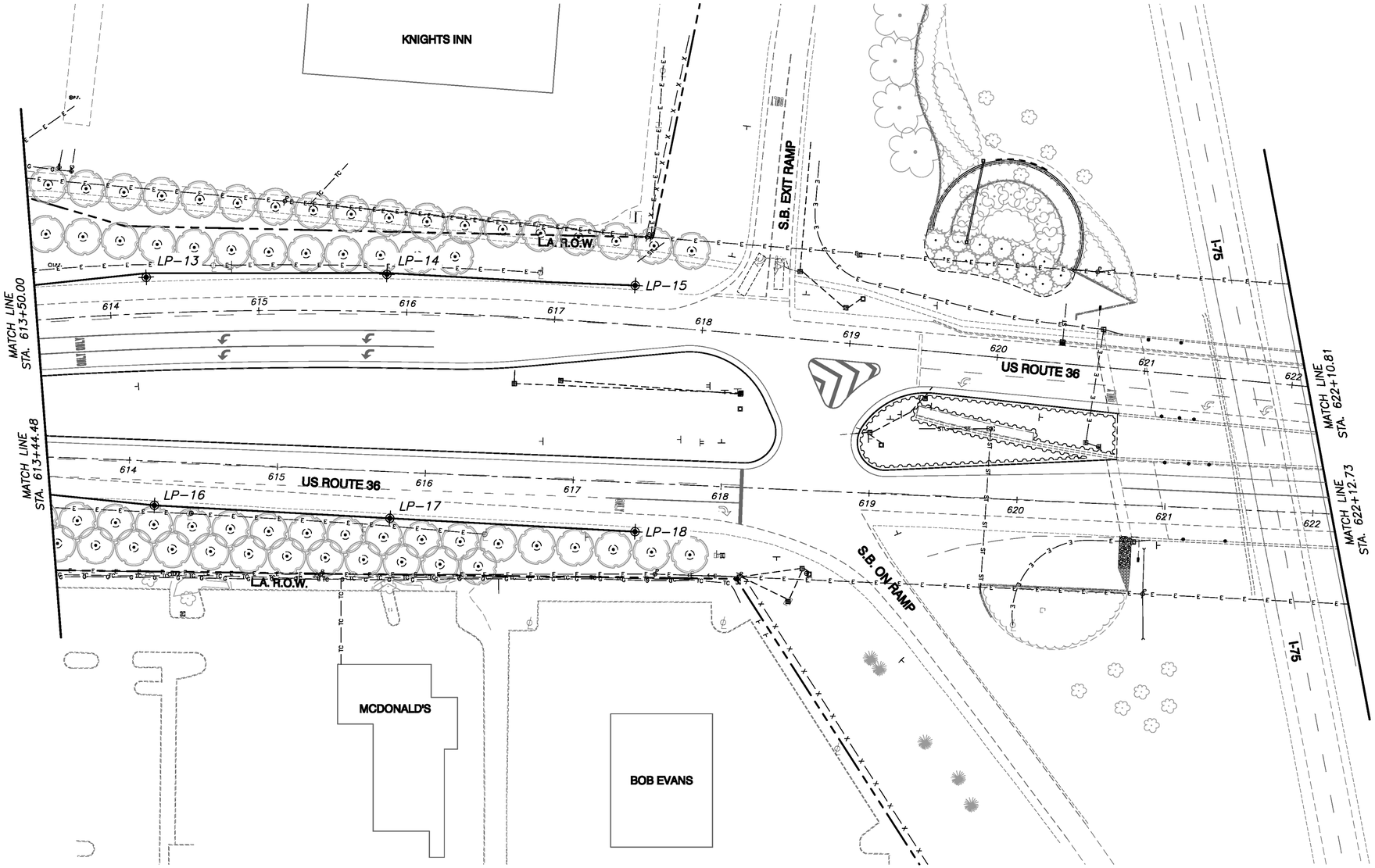

ESTIMATED QUANTITIES

TOTAL	ITEM	ITEM EXTENSION	UNIT	DESCRIPTION
6	625	14501	EACH	LIGHT POLE FOUNDATION, AS PER PLAN
24	625	23308	FT	DISTRIBUTION CABLE, MISC.: NO. 6 AWG COPPER GROUND CABLE
30	625	25104	FT	CONDUIT, 1", 725.051
1,000	625	25408	FT	CONDUIT, 2", 725.051
6	625	25930	EACH	CONDUIT MISC.: 1" SHORT SWEEP 90° ELBOWS, LIGHT POLE FOUNDATIONS
16	625	25930	EACH	CONDUIT, MISC.: 2" PVC LONG SWEEP 90° ELBOW
1,000	625	29010	FT	TRENCH, 30" DEEP
6	625	32001	EACH	GROUND ROD, 8', AS PER PLAN

LEGEND:

- EXISTING SHADE TREE
- EXISTING EVERGREEN TREE
- PROPOSED SHADE TREE
- PROPOSED PLANTING BED
- PROPOSED LIGHT POLE – INSTALLED BY CITY
- LIMITED ACCESS RIGHT-OF-WAY
- EXISTING FENCE
- EXISTING ROAD CENTERLINE
- EXISTING GAS LINE
- EXISTING STORM LINE
- EXISTING ELECTRIC LINE
- EXISTING SANITARY SEWER LINE
- EXISTING TELECOMMUNICATION LINE

UTILITY POINT TABLE

ID#	DESCRIPTION	LOCATION	TOP OF FOUNDATION ELEV.
LP-13	CENTER OF LIGHT POLE	N788204.83 E1486887.36	919.00
LP-14	CENTER OF LIGHT POLE	N788206.78 E1487049.94	923.00
LP-15	CENTER OF LIGHT POLE	N788199.30 E1487217.58	926.00
LP-16	CENTER OF LIGHT POLE	N788050.73 E1486892.90	913.36
LP-17	CENTER OF LIGHT POLE	N788041.98 E1487051.91	919.05
LP-18	CENTER OF LIGHT POLE	N788032.91 E1487217.46	923.90

1"=40'
0 20 40 60
HORIZONTAL SCALE IN FEET

CALCULATED
CHECKED

STREET LIGHTING PLAN

MIA-36-11.55

03_E03_ECTR.DWG 15-May-2013

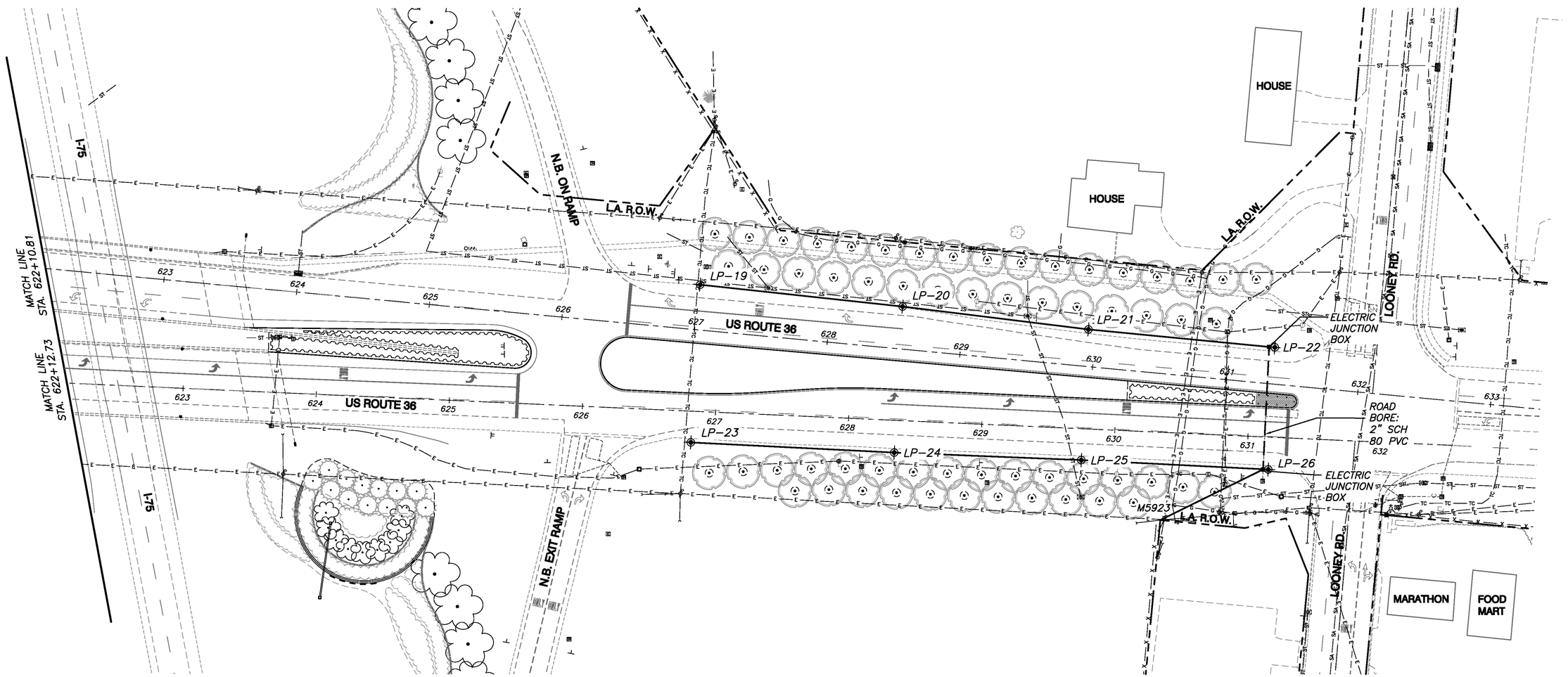

ESTIMATED QUANTITIES

TOTAL	ITEM	ITEM EXTENSION	UNIT	DESCRIPTION
8	625	14501	EACH	LIGHT POLE FOUNDATION, AS PER PLAN
32	625	23308	FT	DISTRIBUTION CABLE, MISC.: NO. 6 AWG COPPER GROUND CABLE
40	625	25104	FT	CONDUIT, 1", 725.051
1,800	625	25408	FT	CONDUIT, 2", 725.051
110	625	25906	FT	CONDUIT, JACKED OR DRILLED, 725.051
8	625	25930	EACH	CONDUIT MISC.: 1" SHORT SWEEP 90° ELBOWS, LIGHT POLE FOUNDATIONS
26	625	25930	EACH	CONDUIT, MISC.: 2" PVC LONG SWEEP 90° ELBOW
1,800	625	29010	FT	TRENCH, 30" DEEP
2	625	31600	EACH	PULL BOX, MISC.: PROVIDED BY PMPS, INSTALLATION ONLY
8	625	32001	EACH	GROUND ROD, 8', AS PER PLAN

LEGEND:

- EXISTING SHADE TREE
- EXISTING EVERGREEN TREE
- PROPOSED SHADE TREE
- PROPOSED PLANTING BED
- PROPOSED LIGHT POLE – INSTALLED BY CITY
- LIMITED ACCESS RIGHT-OF-WAY
- EXISTING FENCE
- EXISTING ROAD CENTERLINE
- EXISTING GAS LINE
- EXISTING STORM LINE
- EXISTING ELECTRIC LINE
- EXISTING SANITARY SEWER LINE
- EXISTING TELECOMMUNICATION LINE

UTILITY POINT TABLE

ID#	DESCRIPTION	LOCATION	TOP OF FOUNDATION ELEV.
LP-19	CENTER OF LIGHT POLE	N788118.72 E1488163.22	931.50
LP-20	CENTER OF LIGHT POLE	N788102.33 E1488315.17	932.40
LP-21	CENTER OF LIGHT POLE	N788085.17 E1488454.63	933.65
LP-22	CENTER OF LIGHT POLE	N788071.71 E1488594.53	935.05
LP-23	CENTER OF LIGHT POLE	N788000.30 E1488156.23	931.22
LP-24	CENTER OF LIGHT POLE	N787992.69 E1488308.86	932.15
LP-25	CENTER OF LIGHT POLE	N787987.06 E1488449.25	933.50
LP-26	CENTER OF LIGHT POLE	N787979.98 E1488589.55	935.00

1"=40'

0 20 40 60 HORIZONTAL SCALE IN FEET

CALCULATED

CHECKED

STREET LIGHTING PLAN

MIA-36-11.55

04_E04_ECTR.DWG 15-May-2013

SHEET NUMBER											TOTAL	ITEM	ITEM EXT.	UNIT	DESCRIPTION	SEE SHEET NO.
								E1	E2	E3						
															LIGHTING	
								12	6	8	26	625	14501	EACH	LIGHT POLE FOUNDATION, AS PER PLAN	E5
								48	24	32	104	625	23308	FT	DISTRIBUTION CABLE MISC.: NO. 6 AWG COPPER GROUND CABLE	
								60	30	40	130	625	25104	FT	CONDUIT, 1", 725.051	
								1,350	1,000	1,800	4,150	625	25408	FT	CONDUIT, 2", 725.051	
								470		110	580	625	25906	FT	CONDUIT, JACKED OR DRILLED, 725.051	
								12	6	8	26	625	25930	EACH	CONDUIT, MISC.: 1" SHORT SWEEP 90° ELBOWS, LIGHT POLE FOUNDATIONS	
								38	16	26	80	625	25930	EACH	CONDUIT, MISC.: 2" PVC LONG SWEEP 90° ELBOW	
								1,350	1,000	1,800	4,150	625	29010	FT	TRENCH, 30" DEEP	
								20			20	625	29700	FT	TRENCH, MISC.: 18" DEEP, TRAFFIC PED	
								2		2	4	625	31600	EACH	PULL BOX, MISC.: PROVIDED BY PMPS, INSTALLATION ONLY	
								12	6	8	26	625	32001	EACH	GROUND ROD, 8', AS PER PLAN	E5
								2			2	632	64021	EACH	PEDESTAL FOUNDATION, AS PER PLAN	E4
								2			2	632	90010	EACH	PEDESTAL, MISC.: REUSE PEDESTAL WITH TRANSFORMER BASE	

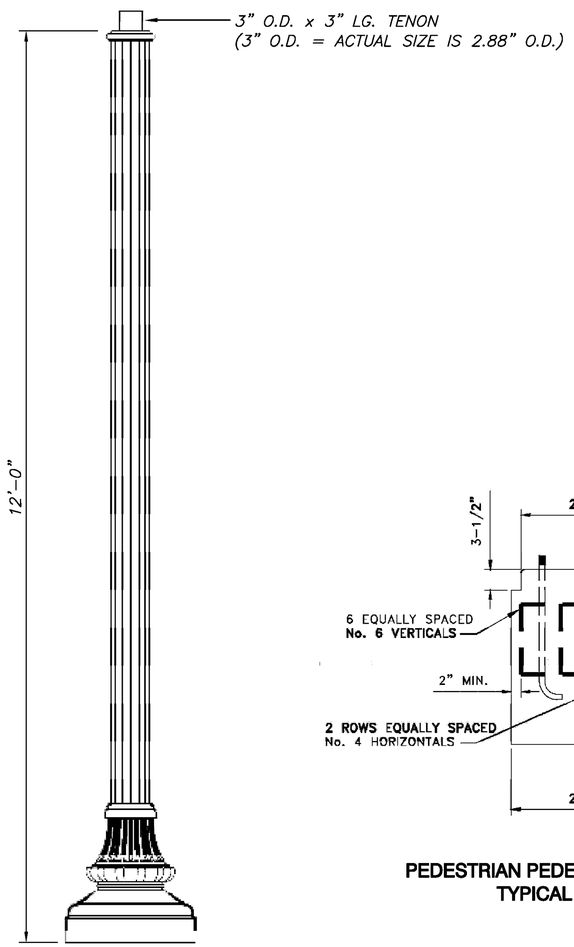

HOLOPHANE #: WDA12F5J17P07ABKBK
–Wadsworth 12' Cast Aluminum Pole,
17" Base, Black Finish

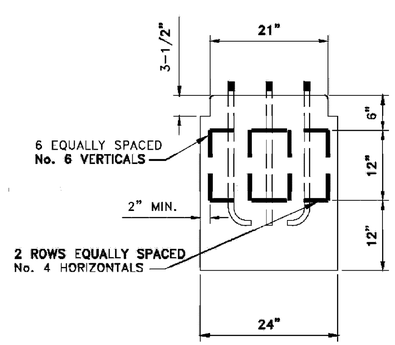

PEDESTRIAN PEDESTAL FOUNDATION
TYPICAL SECTION

SHAFT STYLE:

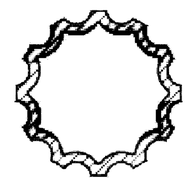

5" DIA. FLUTED F5J
0.25" WALL

BASE:

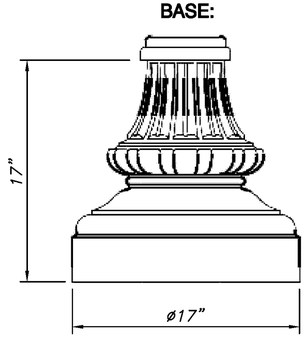

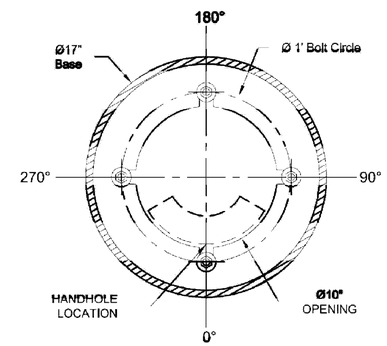

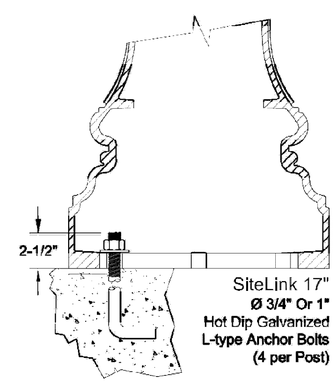

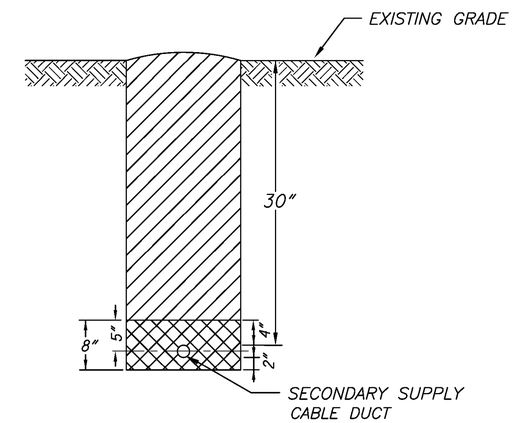

UNDISTURBED EARTH
COMPACTED BACKFILL
SAND OR CLEAN SOIL

TYPICAL TRENCH FOR
BURIED CONDUITS

NOTES:
1. CITY TO PURCHASE LIGHT POLES AND PROVIDE LIGHT POLE SPECIFICATIONS. CONTRACTOR WILL CONSTRUCT THE LIGHT POLE FOUNDATIONS TO ODOT OR MANUFACTURER'S SPECIFICATIONS.
2. CITY TO PROVIDE ANCHOR BOLTS AND THE ANCHOR BOLTS LAYOUT TEMPLATE FOR LIGHT POLE FOUNDATIONS.
3. ANCHOR BOLTS SHALL BE SECURED TO THE REINFORCING STEEL PRIOR TO THE PLACEMENT OF CONCRETE FOUNDATIONS
4. CONTRACTOR IS RESPONSIBLE FOR ANY ADJUSTMENT, PLACEMENT, REPAIRS, ETC. OF ANY ELECTRIC COMPONENT (TRAFFIC LIGHT BOXES, ELECTRIC PULL BOXES, ETC...)
5. CONTRACTOR IS RESPONSIBLE FOR REMOVING EXISTING LIGHT POLES AND THEIR FOUNDATIONS ONCE THE PROPOSED LIGHTS ARE IN SERVICE.

CALCULATED
CHECKED

STREET LIGHTING GENERAL SUMMARY & DETAILS

MIA-36-11.55

05_E05_ECTR.DWG 15-May-2013

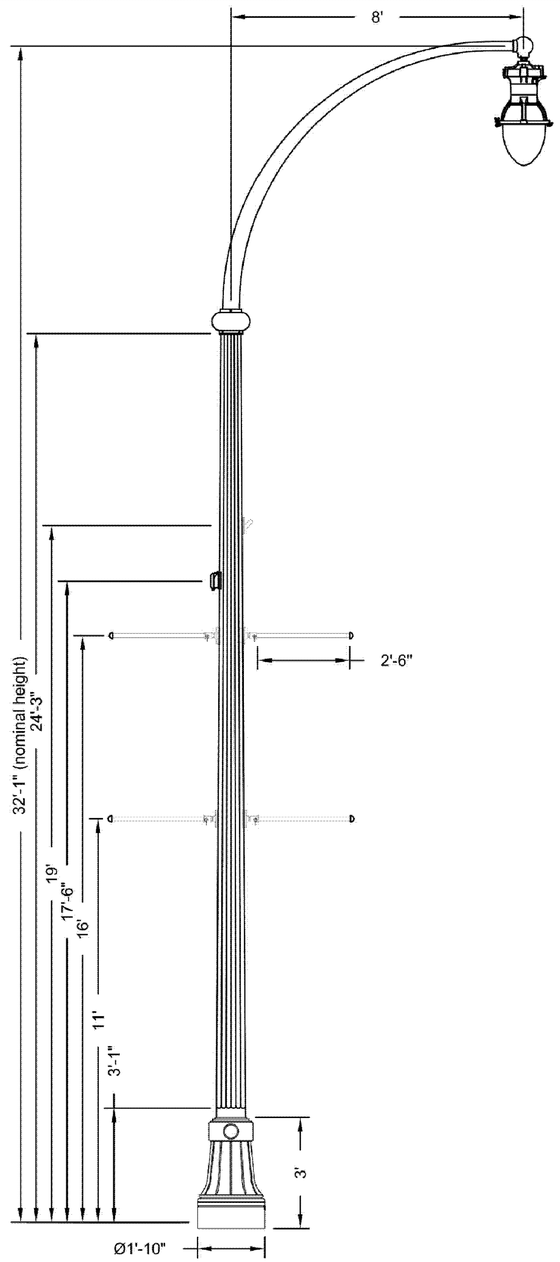

Specifications

POST DESCRIPTION
The lighting post shall consist of a one-piece fluted tapered pole, pole top tenon, anchor bolts and base plate. The post shall be welded to the square steel base plate. The post shall be provided with (1) receptacle, (1) flag pole holder, and (4) 33" breakaway banner arms.

MATERIALS
The lighting pole shall be formed from tubes conforming to ASTM A595 process, and have a constant linear taper of .14 in/ft. The tube's seam will have a smooth full length longitudinal high frequency resistance weld and will have no visual appearance. The flutes shall run the entire length of the shaft and be oriented to accept the cast steel base.

DIMENSIONS
The post shall be 24'-3" in height with a 15" square base. The poles handhole will be 5.13" x 10.50". The tenon will be Ø4-1/2" x 10" long for arm mounting.

INSTALLATION
The pole shall be provided with four 1" diameter L-type anchor bolts to be installed on a Ø15" bolt circle, and shall include double nuts, two flat washers, and one lock washer, per bolt.

LUMINAIRE DESCRIPTION
- Crystalite Style Luminaire
- 400W High Pressure Sodium, 480V

For complete specifications see LUM_CRYSTALITE.

Accessory Mounting Detail

	Orientation	Height
FLAG POLE HOLDER		19'-0"
RECEPTACLE		17'-6"
(2) BANNER ARM		16'-0"
(2) BANNER ARM		11'-0"

FILL OUT CHART DURING APPROVAL PROCESS

Anchorage Detail

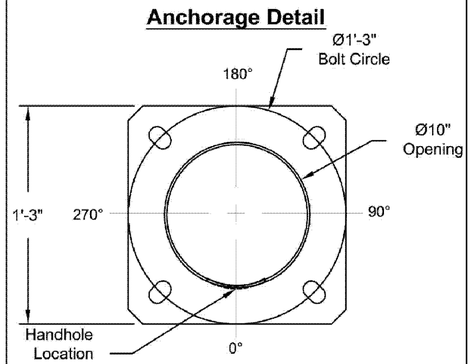

DO NOT USE TO SET ANCHOR BOLTS
CONTACT CUSTOMER SERVICE FOR TEMPLATE

Catalog #'s:
RTS2401 - ATCSB - GFI - FPH - (4)BBA30 - BHLF200 - ATC96/1 - RFD124038 - CRYSTALITE

PROPOSED STREET LIGHT

HOLOPHANE CATALOG #S:
RTS2401–ATCSB–GFI–FPH–(4)BBA30–BHLF200–ATC96/1–RFD124038–CRYSTALITE

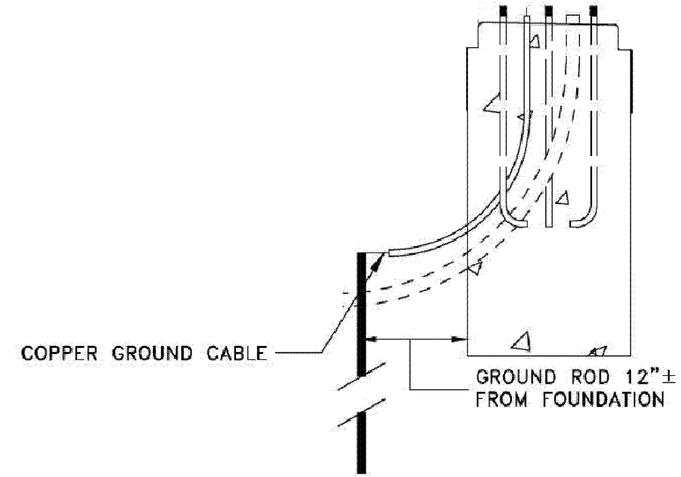

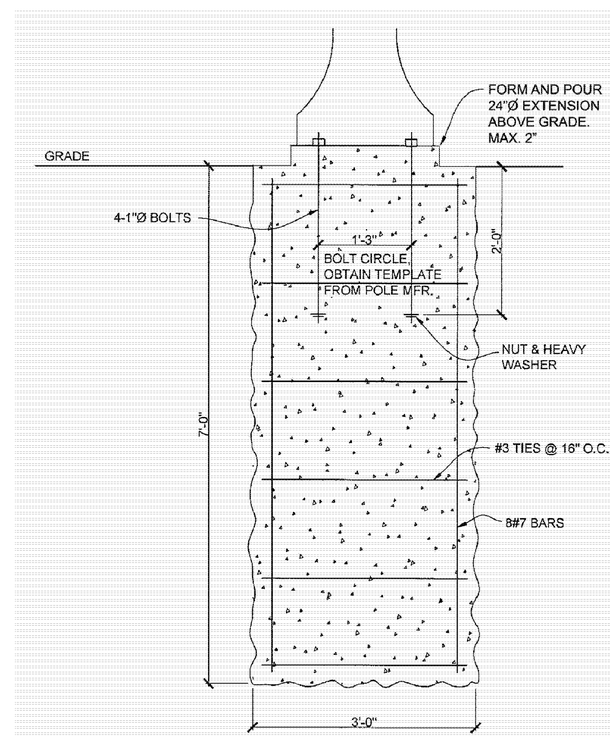

DESIGN PARAMETERS

DESIGN WIND SPEED 90 MPH
ASSUMED NOMINAL DENSE SOIL *
SOIL BEARING 1500 PSF
LATERAL SOIL PRESS IN 150 PSF

MAX LATERAL FORCE 744#

MAX VERTICAL FORCE 1000#

SEE LIGHT POLE FOR ASSUMED MAXIMUM FLAG & BANNER & LIGHT FIXTURE AREAS.

*NOTE: IF LOOSE SOIL IS ENCOUNTERED THE DESIGN WILL HAVE TO BE MODIFIED TO ACCOUNT FOR POOR SOIL, EITHER BY INCREASING THE DIAMETER OR DEPTH.

LIGHT POLE FOUNDATION
TYPICAL SECTION

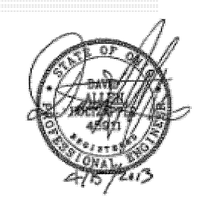

CALCULATED
CHECKED

STREET LIGHTING DETAILS

MIA-36-11.55

39E
46

MAINTENANCE OF TRAFFIC PLAN - GENERAL NOTES

GENERAL

The work activities involve construction of new center medians with landscaping, reduction in lane widths, new pavement markings for through and turn lanes, an updated north–south crosswalk on the east side of the US 36 and Scott Dr./Centre Ct. intersection, construction of associated new curb ramps for the crosswalk, and some updated signage. Additional landscaping installations will occur outside of the roadway on both the north and south sides at a minimum 16–foot setback from US 36. Signal timing changes will be required (City of Piqua and ODOT signals) to compensate for reducing the number of lanes on US 36 from two to one during construction.

There will be no activities associated with the ramps or modifications to the I–75 bridge structure. Centre Dr. will have a new curb ramp installed at its northeast corner. Scott Dr. will have a new curb ramp installed at its southeast corner. No intersection modifications are part of this project – neither horizontal nor vertical. Existing utilities will remain in place and will not be disturbed as part of this project; new utilities in the form of stormwater drainage will be constructed as part of the median construction. No overhead work will be needed for this project. The asphalt pavement will remain the same.

The contractor shall notify the engineer at least 48 hours in advance of closing lanes for this project.

Although there will be reductions in lane capacity during construction and there will be partial lane closures, at least one lane in both directions on all roads shall be maintained.

Payment for all working required for traffic control, including providing, erecting, maintaining, and removing all lights, signs, drums, regulatory signs, and all other traffic control devices shall be included in the lump sum bid for Item 614, Maintaining Traffic.

SEQUENCE OF CONSTRUCTION

It is the intent of the following sequence of construction to provide a work area for the contractor while also maintaining traffic in a manner which is safe for the traveling public; therefore, all phases shall have strict adherence.

All temporary or permanent pavement markings shall be in place before any pavement is opened to traffic.

PHASE ONE: PAVEMENT MARKINGS

The contractor shall remove all pavement markings (via sand, shot or water blasting) which are identified for removal for the project (including crosswalks); install all new permanent pavement lines except for new median edge lines and the left turn channelizing triangle (at the I–75 southbound ramps intersection); and stripe the outside lane portion of new crosswalks. Removal of pavement markings shall follow section 614.11.G of the ODOT Construction and Material Specifications manual. The contractor shall perform this work at night during non–peak hours. For the mobile operations, the contractor shall follow mobile operations standards as per Typical Application #35 in the OMUTCD. Perform this work at night (estimated 6 nights – 3 nights per side of US 36).

PHASE TWO: MEDIAN CONSTRUCTION

The contractor shall install drums, signs and temporary pavement markings necessary for closing the median and performing the median work. See Plan Sheets 41–44/46 for details on locations and quantities of the drums, temporary signs, temporary pavement markings, and closures for this phase of work. For the mobile operations when striping the temporary pavement lines, the contractor shall follow mobile operations standards as per Typical Application #35 in the OMUTCD. Perform this work at night (estimated 4 nights – 2 nights per side of US 36).

Once median construction is complete, the contractor shall stripe the new median center and edge lines and remaining crosswalk length in the closed off area.

PHASE THREE: FINALIZATION OF PAVEMENT MARKINGS

The contractor shall remove the drums, temporary signs and temporary pavement markings, install the final new striping of the left turn channelizing triangle (at the I–75 southbound ramps intersection), and install the remaining new pavement markings. The contractor shall perform this work at night during non–peak hours. For these mobile operations, the contractor shall follow mobile operations standards as per Typical Application #35 in the OMUTCD. Perform this work at night (estimated 2 nights – 1 night per side of US 36).

At the commencement of Phase Three, initiate work on all tree plantings shown on Sheets 22/46, 23/46, and 24/46 and as referenced in Phase Five below. This includes the Picea Pungens evergreen trees in Alternative #3 if this alternative is selected.

PHASE FOUR: CURB RAMP CONSTRUCTION

The contractor shall install drums and temporary signs for closing the shoulders, portions of travel lanes, and portions of the sidewalk for curb ramp construction. A temporary sidewalk detour shall be installed, and the temporary sidewalk shall be slip–resistant for wheelchairs. Pedestrian traffic signal displays controlling closed crosswalks shall be covered or deactivated. Remove drums, signs and temporary sidewalk detour upon completion. See Plan Sheet 45/46 for details on locations and quantities of the drums, signs, sidewalk detour and closures for this phase of work. Perform this work in conjunction with the construction; MOT setup is estimated at less than 1 day.

At the commencement of Phase Four, initiate work on all planting shown in Details 1, 2, 3 and 4/25 on Sheet 25/46 and as referenced in Phase Five below. This includes Alternatives #1 and #2 shown in Details 3 and 4/26 on Sheet 26/46 if these alternatives are selected. This work could also be initiated at the commencement of Phase Three if areas are completed and ready to receive planting.

PHASE FIVE: PLANTINGS

Maintenance of traffic will be involved with temporary staging areas to drop off materials. For work outside the roadway, the contractor shall the standards as per Typical Application #1 in the OMUTCD. For work requiring temporary shoulder closure for short–term duration staging areas, the contractor shall follow the standards as per Typical Application #4 in the OMUTCD.

This Phase of work shall be done in relation to Phases Three and/or Four as noted above. It is described separately only due to the unique character of the work.

ADDITIONAL DETAILS:

Pavement Marking Installation Procedures will be conducted as per Standard Drawing MT–99.20. Temporary Sign Details will follow Standard Drawing MT–105.10. Drum Details will follow standards in OMUTCD Section 6F.67.

All temporary traffic control devices shall be retroreflective or illuminated if work is performed during nighttime hours. Drums will have 40' spacing on US 36, 10' spacing around curves, and 20' spacing on side roads. Where there are no temporary lines indicated in the MOT plan sheets, use proposed lane striping as the guide lines.

The circled existing signs in the MOT Plans indicate covering the existing sign and affixing the temporary MOT sign on them. For new temporary MOT signs, place them 6' from the edge of pavement, except for those on structure.

Burton Planning Services, LLC
252 Electric Avenue, Westerville, OH 43081

CALCULATED KB
CHECKED KB

MAINTENANCE OF TRAFFIC GENERAL NOTES

MIA-36-11.55

41_L41_MOTR_PHS2.DWG 15-May-2013

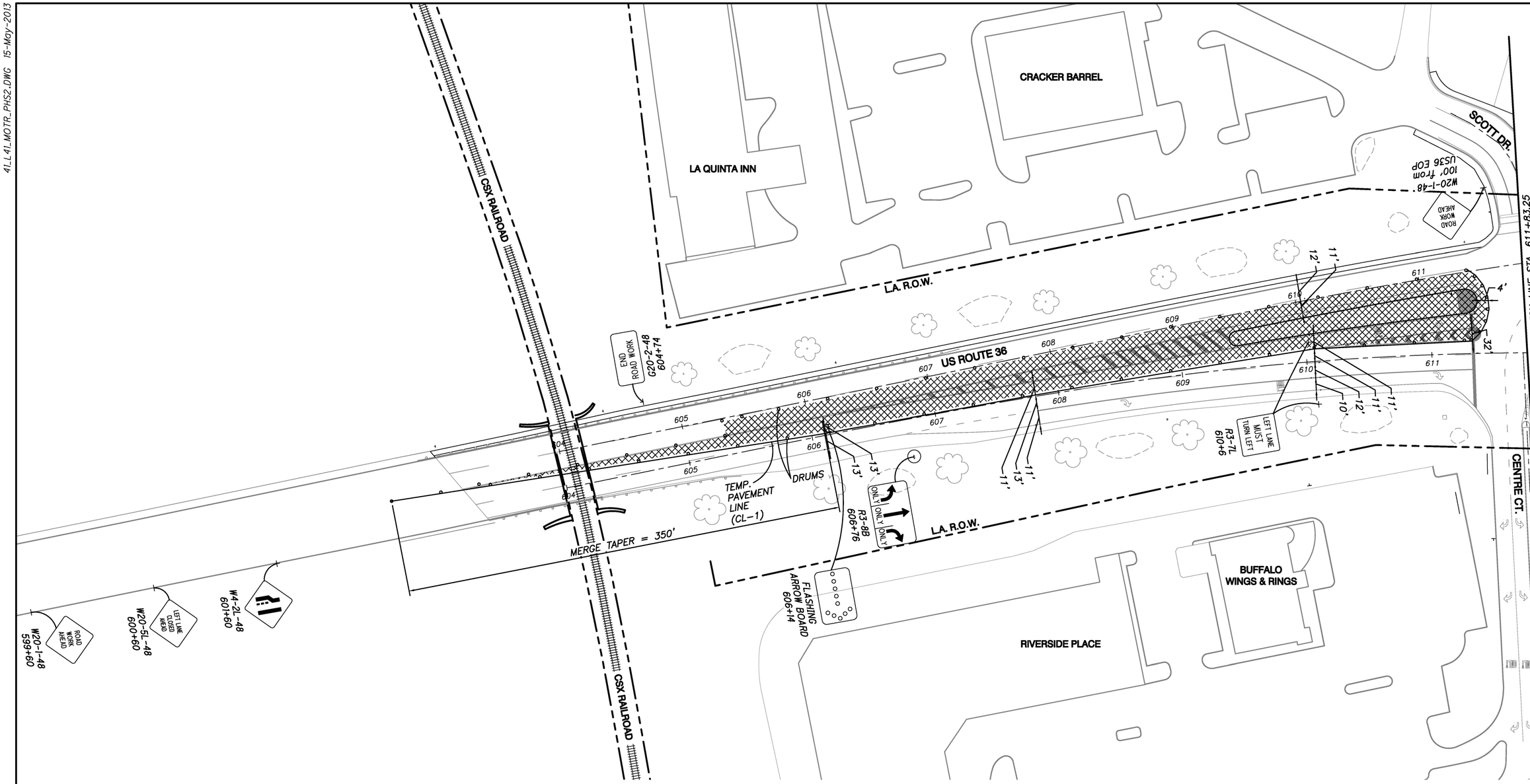

MAINTENANCE OF TRAFFIC LEGEND

- EXISTING SHADE TREE
- EXISTING EVERGREEN TREE
- LIMITED ACCESS RIGHT-OF-WAY
- EXISTING FENCE
- EXISTING ROAD CENTERLINE
- DRUMS
- AREA TO BE CONSTRUCTED

ESTIMATED QUANTITIES

REF NO.	STATION TO STATION	SIDE	614		
			REPLACEMENT SIGN	REPLACEMENT DRUM	WORK ZONE CHANNELIZING LINE, CLASS 1
			EACH	EACH	FT
CL-1	602+60 TO 611+50	LT.			942
TOTALS CARRIED TO SUB-SUMMARY			1	6	942

N

1"=40'

0 20 40 60 HORIZONTAL SCALE IN FEET

CALCULATED KB
CHECKED KB

MAINTENANCE OF TRAFFIC - PHASE 2

MIA-36-11.55

Burton Planning Services, LLC
252 Electric Avenue, Westerville, OH 43081

42_L42_MOTR_PHS2.DWG 15-May-2013

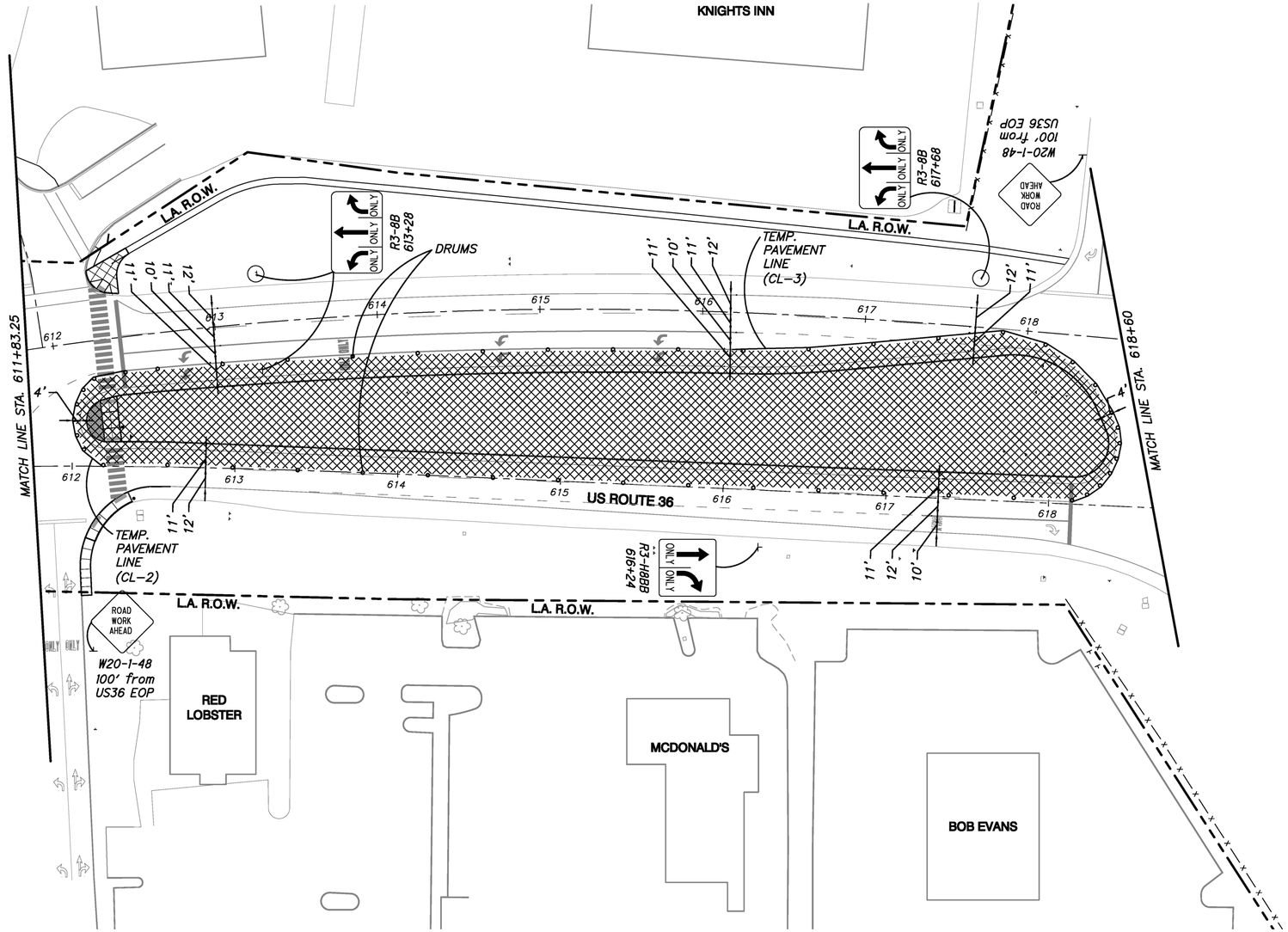

MAINTENANCE OF TRAFFIC LEGEND

- EXISTING SHADE TREE
- EXISTING EVERGREEN TREE
- LIMITED ACCESS RIGHT-OF-WAY
- EXISTING FENCE
- EXISTING ROAD CENTERLINE
- DRUMS
- AREA TO BE CONSTRUCTED

ESTIMATED QUANTITIES

REF NO.	STATION TO STATION	SIDE	614		
			REPLACEMENT SIGN	REPLACEMENT DRUM	WORK ZONE CHANNELIZING LINE, CLASS 1
			EACH	EACH	FT
CL-2	612+00 TO 612+50	LT.			86
CL-3	616+00 TO 618+60	LT.			325
TOTALS CARRIED TO SUB-SUMMARY			1	6	411

Burton Planning Services, LLC
252 Electric Avenue, Westerville, OH 43081

1"=40'
HORIZONTAL SCALE IN FEET
0 20 40 60

CALCULATED KB
CHECKED KB

MAINTENANCE OF TRAFFIC - PHASE 2

MIA-36-11.55

43_L43_MOTR_PHS2.DWG 15-May-2013

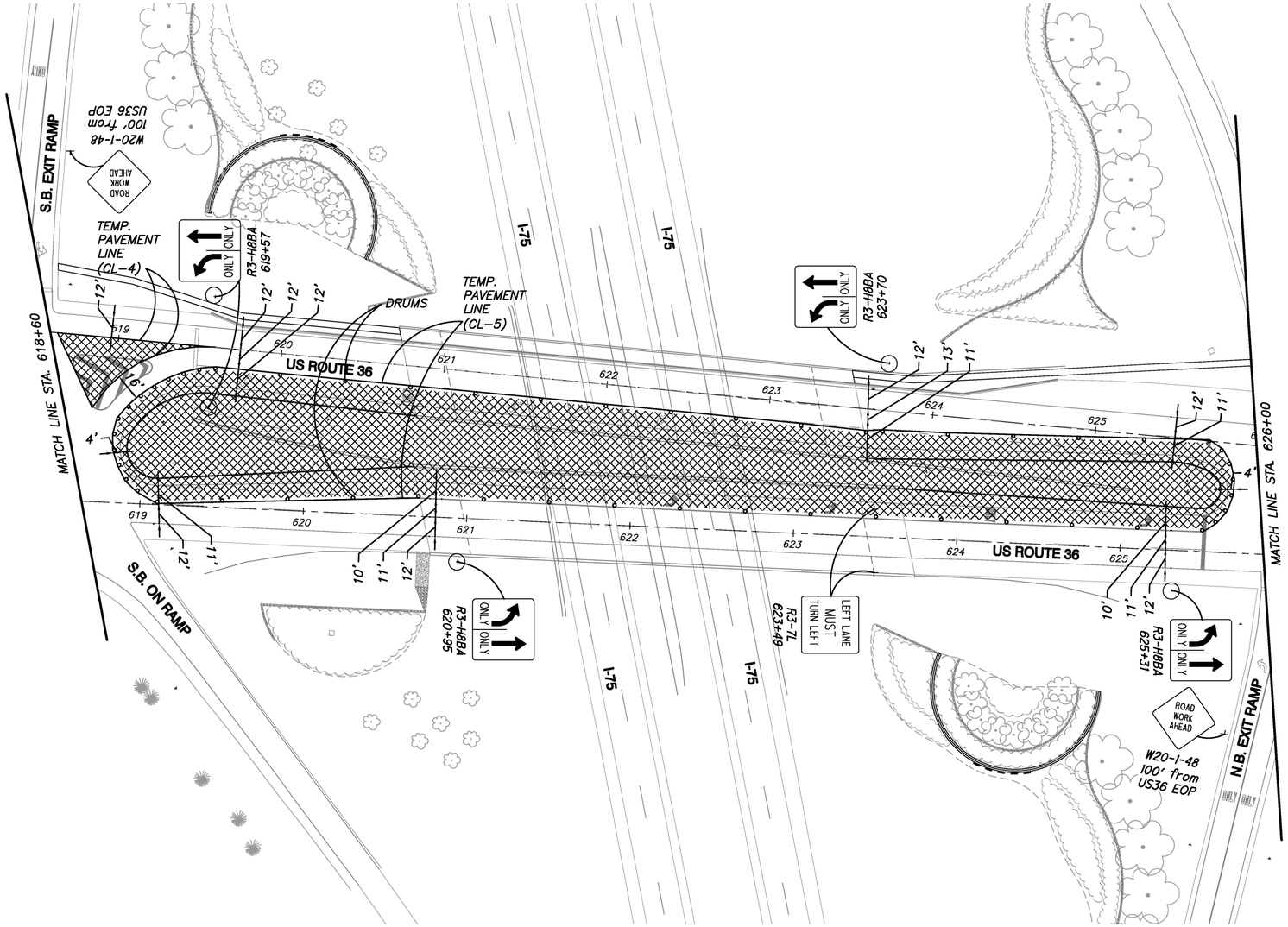

MAINTENANCE OF TRAFFIC LEGEND

- EXISTING SHADE TREE
- EXISTING EVERGREEN TREE
- LIMITED ACCESS RIGHT-OF-WAY
- EXISTING FENCE
- EXISTING ROAD CENTERLINE
- DRUMS
- AREA TO BE CONSTRUCTED

ESTIMATED QUANTITIES

REF NO.	STATION TO STATION	SIDE	614 REPLACEMENT SIGN	614 REPLACEMENT DRUM	614 WORK ZONE CHANNELIZING LINE, CLASS 1
			EACH	EACH	FT
CL-4	618+60 TO 619+60	LT.			234
CL-5	619+00 TO 626+00	LT.			976
TOTALS CARRIED TO SUB-SUMMARY			1	6	1,210

Burton Planning Services, LLC
252 Electric Avenue, Westerville, OH 43081

1"=40'

0 20 40 60
HORIZONTAL SCALE IN FEET

CALCULATED KB
CHECKED KB

MAINTENANCE OF TRAFFIC - PHASE 2

MIA-36-11.55

44_L44_MOTR_PHS2.DWG 15-May-2013

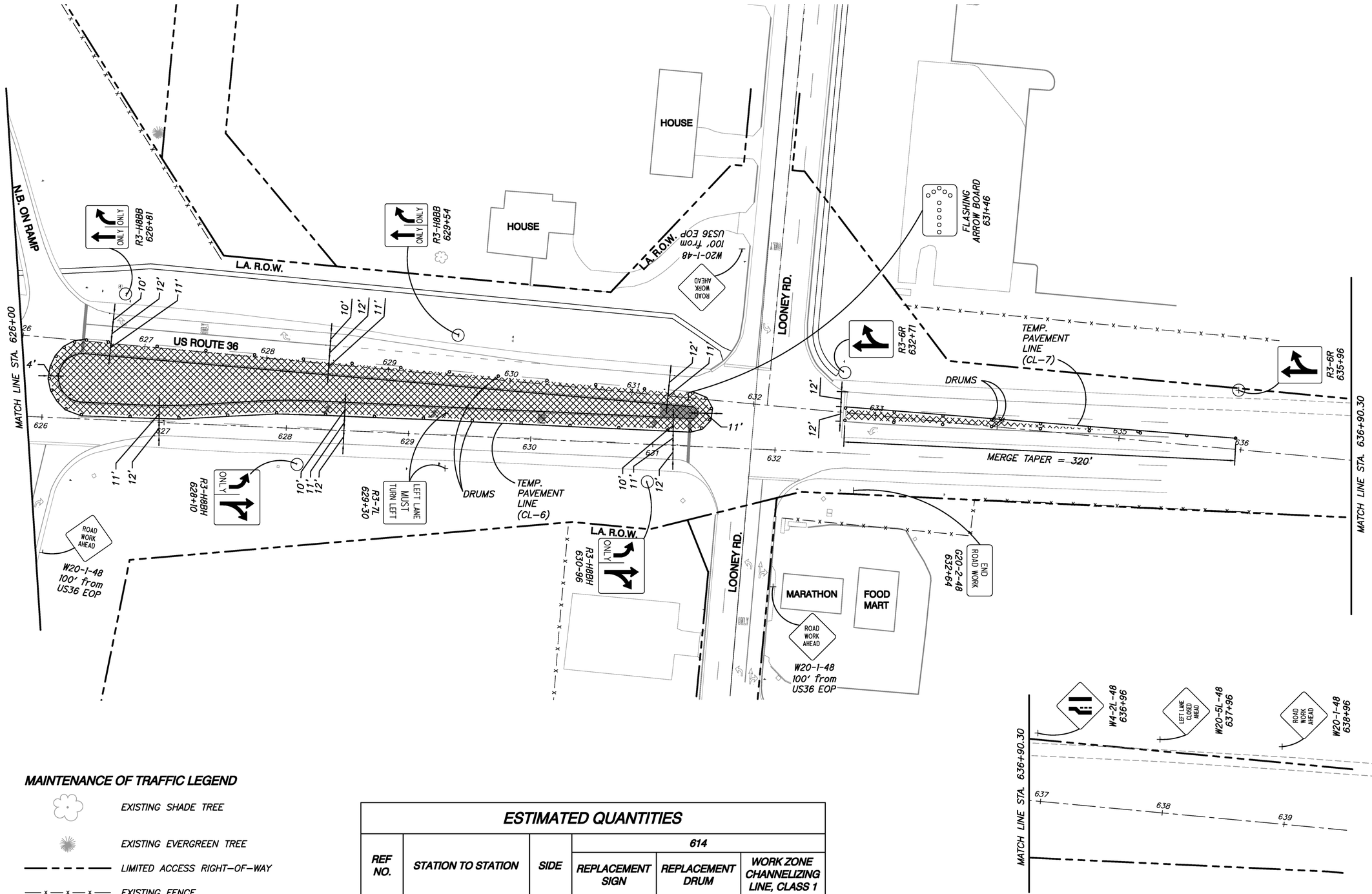

MAINTENANCE OF TRAFFIC LEGEND

- EXISTING SHADE TREE
- EXISTING EVERGREEN TREE
- LIMITED ACCESS RIGHT-OF-WAY
- EXISTING FENCE
- EXISTING ROAD CENTERLINE
- DRUMS
- AREA TO BE CONSTRUCTED

ESTIMATED QUANTITIES

REF NO.	STATION TO STATION	SIDE	614 REPLACEMENT SIGN	614 REPLACEMENT DRUM	614 WORK ZONE CHANNELIZING LINE, CLASS 1
			EACH	EACH	FT
CL-6	626+20 TO 631+70	LT.			645
CL-7	632+75 TO 636+00	LT.			320
TOTALS CARRIED TO SUB-SUMMARY			2	6	965

Burton Planning Services, LLC
252 Electric Avenue, Westerville, OH 43081

1"=40'
HORIZONTAL SCALE IN FEET

CALCULATED KB
CHECKED KB

MAINTENANCE OF TRAFFIC - PHASE 2

MIA-36-11.55

45_L45_MOTR_PHS4.DWG 15-May-2013

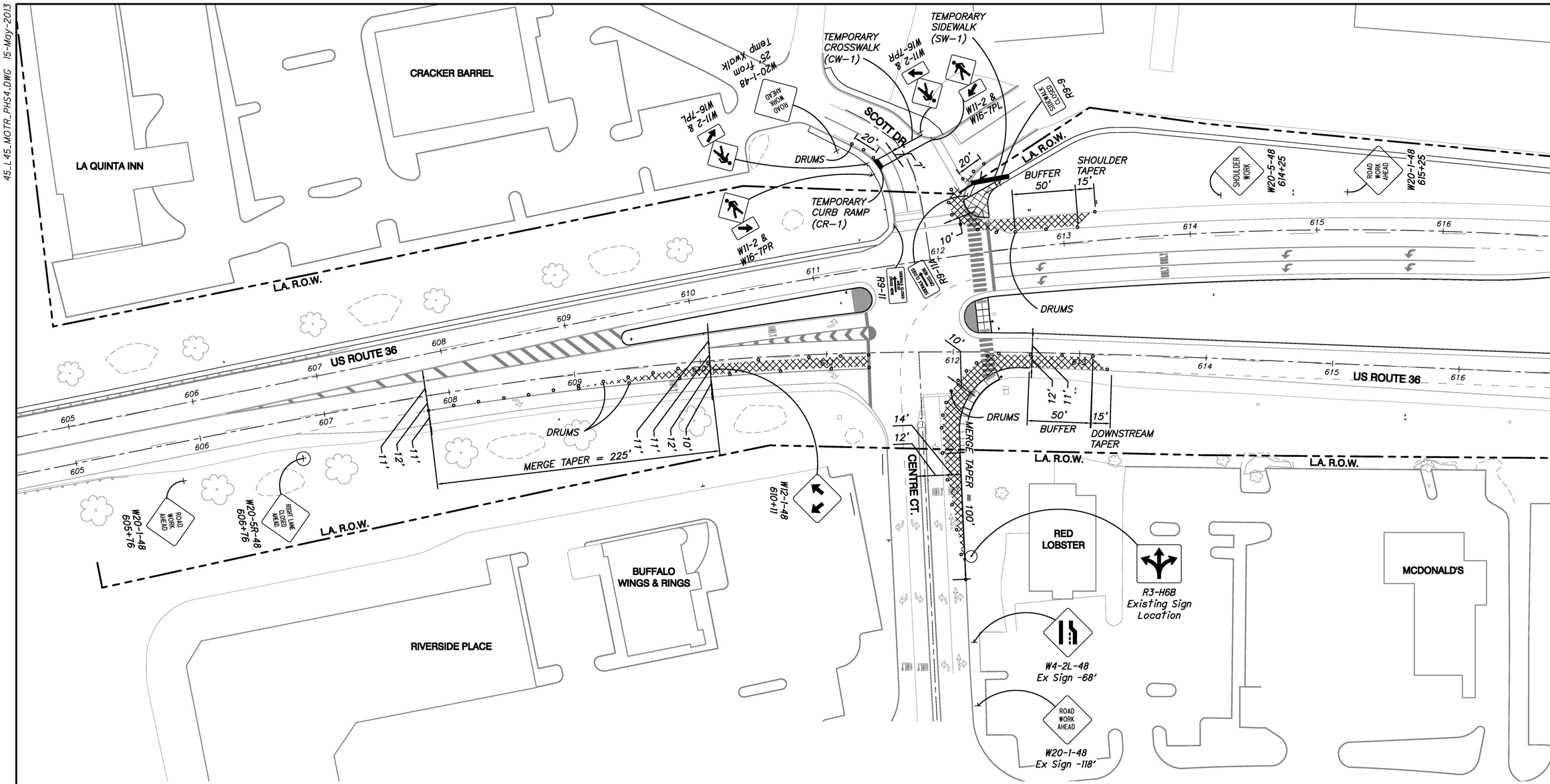

1"=40'

HORIZONTAL SCALE IN FEET 0 20 40 60

CALCULATED KB

CHECKED KB

MAINTENANCE OF TRAFFIC - PHASE 4

MAINTENANCE OF TRAFFIC LEGEND

- EXISTING SHADE TREE
- EXISTING EVERGREEN TREE
- LIMITED ACCESS RIGHT-OF-WAY
- EXISTING FENCE
- EXISTING ROAD CENTERLINE
- DRUMS
- AREA TO BE CONSTRUCTED

ESTIMATED QUANTITIES

REF NO.	STATION TO STATION	SIDE	614			
			REPLACEMENT SIGN	REPLACEMENT DRUM	WORK ZONE CHANNELIZING LINE, CLASS 1	TEMPORARY CURB RAMP
			EACH	EACH	FT	EACH
CW-1	CENTRE DR.	CENTER			88	
CR-1	CENTRE DR.	RT.				1
TOTALS CARRIED TO SUB-SUMMARY			1	6	88	1

Burton Planning Services, LLC
252 Electric Avenue, Westerville, OH 43081

MIA-36-11.55

46_I_46_MOTR_SSUM.DWG 15-May-2013

SHEET NO.	PHASE	614														
		REPLACEMENT SIGN	REPLACEMENT DRUM	WORK ZONE CHANNELIZING LINE, CLASS 1	MAINTAINING TRAFFIC, MISC.: TEMPORARY CURB RAMP											
		EACH	EACH	FT	EACH											
41	2	1	6	942												
42	2	1	6	411												
43	2	1	6	1,210												
44	2	2	6	965												
45	4	1	6	88	1											
TOTALS CARRIED TO GENERAL SUMMARY		6	30	3,616	1											

CALCULATED KB
CHECKED KB

MAINTENANCE OF TRAFFIC SUBSUMMARY

MIA-36-11.55

Burton Planning Services, LLC
252 Electric Avenue, Westerville, OH 43081