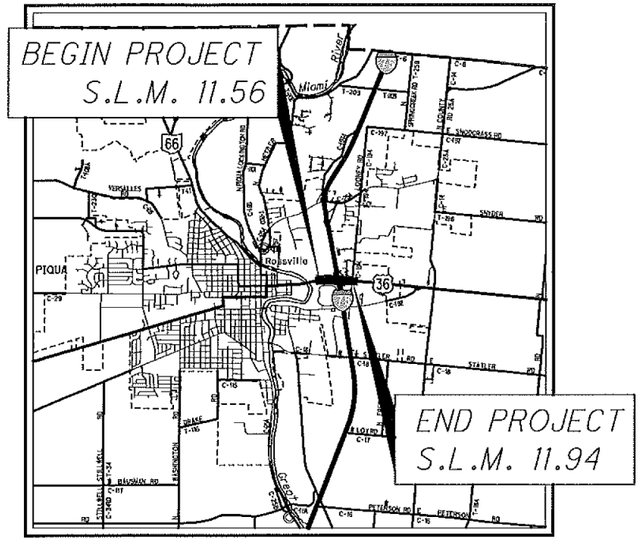

LOCATION MAP

LATITUDE: 40° 09′ 04″ LONGITUDE: -84° 13′ 11″

SCALE IN MILES

0 1 2 3 4

N

PORTION TO BE IMPROVED
INTERSTATE HIGHWAY
FEDERAL ROUTES
STATE ROUTES
COUNTY & TOWNSHIP ROADS
OTHER ROADS

DESIGN DESIGNATION

CURRENT ADT (2014) 10150
DESIGN SPEED 45 MPH
LEGAL SPEED 40 MPH
DESIGN FUNCTIONAL CLASSIFICATION:
URBAN PRINCIPAL ARTERIAL
NHS PROJECT YES

DESIGN EXCEPTIONS

NONE

UNDERGROUND UTILITIES

CONTACT BOTH SERVICES
CALL TWO WORKING DAYS
BEFORE YOU DIG

CALL
1-800-362-2764
(TOLL FREE)
OHIO UTILITIES PROTECTION SERVICE
NON-MEMBERS
MUST BE CALLED DIRECTLY

OIL & GAS PRODUCERS UNDERGROUND
PROTECTION SERVICE CALL: **1-800-925-0988**

PLAN PREPARED BY:
Ohio Department of Transportation
District 7 - Planning & Engineering
Sidney, Ohio

STATE OF OHIO
DEPARTMENT OF TRANSPORTATION

MIA-36-11.56

CITY OF PIQUA
MIAMI COUNTY

INDEX OF SHEETS:

TITLE SHEET	1
SCHEMATIC	2
GENERAL NOTES	3 - 5
MAINTENANCE OF TRAFFIC NOTES	6, 7
GENERAL SUMMARY	8, 9
TRAFFIC CONTROL SUBSUMMARY	10
MISC. DETAILS	11 - 14
PLAN SHEETS	15 - 19
TRAFFIC SIGNAL COORDINATION	20
TRAFFIC SIGNAL SHEETS - SCOTT/CENTRE	21 - 25
TRAFFIC SIGNAL SHEETS - SOUTHBOUND IR 75 RAMPS	26 - 30
TRAFFIC SIGNAL SHEETS - NORTHBOUND IR 75 RAMPS	31 - 35
TRAFFIC SIGNAL SHEETS - LOONEY RD	36 - 40

PROJECT DESCRIPTION

PROJECT TO INCLUDE TRAFFIC SIGNAL AND PEDESTRIAN FACILITY UPGRADES AT INTERSECTIONS OF U.S. 36/ASH ST & SCOTT/CENTRE, U.S. 36/ASH & INTERSTATE RAMPS, AND U.S. 36/ASH & LOONEY. STRAIN POLES WILL BE REPLACED WITH MAST ARMS AND VEHICLE DETECTION WILL BE UPGRADED TO VIDEO AND RADAR.

PROJECT EARTH DISTURBED AREA: *
ESTIMATED CONTRACTOR EARTH DISTURBED AREA: *
NOTICE OF INTENT EARTH DISTURBED AREA: *

*PROJECT IS CONSIDERED MAINTENANCE, NOI NOT REQUIRED.

2013 SPECIFICATIONS

THE STANDARD SPECIFICATIONS OF THE STATE OF OHIO, DEPARTMENT OF TRANSPORTATION, INCLUDING CHANGES AND SUPPLEMENTAL SPECIFICATIONS LISTED IN THE PROPOSAL SHALL GOVERN THIS IMPROVEMENT.

I HEREBY APPROVE THESE PLANS AND DECLARE THAT THE MAKING OF THIS IMPROVEMENT WILL NOT REQUIRE THE CLOSING TO TRAFFIC OF THE HIGHWAY EXCEPT AS NOTED ON SHEET 6, AND THAT PROVISIONS FOR THE MAINTENANCE AND SAFETY OF TRAFFIC WILL BE AS SET FORTH ON THE PLANS AND ESTIMATES.

ENGINEERS SEAL:

STATE OF OHIO
SHERRY SUSAN WAMPLER-LEY
No. 62199
REGISTERED
PROFESSIONAL ENGINEER

SIGNED: Sherry Susan Wampler-Ley
DATE: 10/20/14

STANDARD CONSTRUCTION DRAWINGS								SUPPLEMENTAL SPECIFICATIONS		SPECIAL PROVISIONS
BP-5.1	7/19/13	TC-81.21	1/17/14					800	1/16/15	
BP-7.1	7/18/14	TC-83.10	1/17/14							
		TC-83.20	10/18/13					815	1/19/07	
MT-95.31	7/18/14	TC-85.10	10/18/13							
MT-95.50	7/19/13	TC-85.20	10/18/13					816	1/20/12	
MT-101.90	7/18/14									
MT-105.10	7/19/13							821	4/20/12	
TC-9.30	1/17/14							832	1/17/14	
TC-12.30	10/18/13									
TC-21.20	10/18/13							907	1/20/12	
TC-41.20	10/18/13									
TC-42.20	10/18/13							921	4/20/12	
TC-52.10	10/18/13									
TC-52.20	7/18/14									
TC-71.10	1/17/14									

APPROVED Randall J. Chinnadley PE, PS
DATE 10-20-14 DISTRICT DEPUTY DIRECTOR

APPROVED
DATE DIRECTOR, DEPARTMENT OF TRANSPORTATION

FEDERAL PROJECT NO. NON-FEDERAL

P.I.D. NO. 94757

CONSTRUCTION PROJECT NO.

RAILROAD INVOLVEMENT NONE

MIA-36-11.56

I:\PROJECTS\Mia\036\1169\94757\design\sheets\94757gt01.dgn 20-OCT-2014 12:23PM jbertke

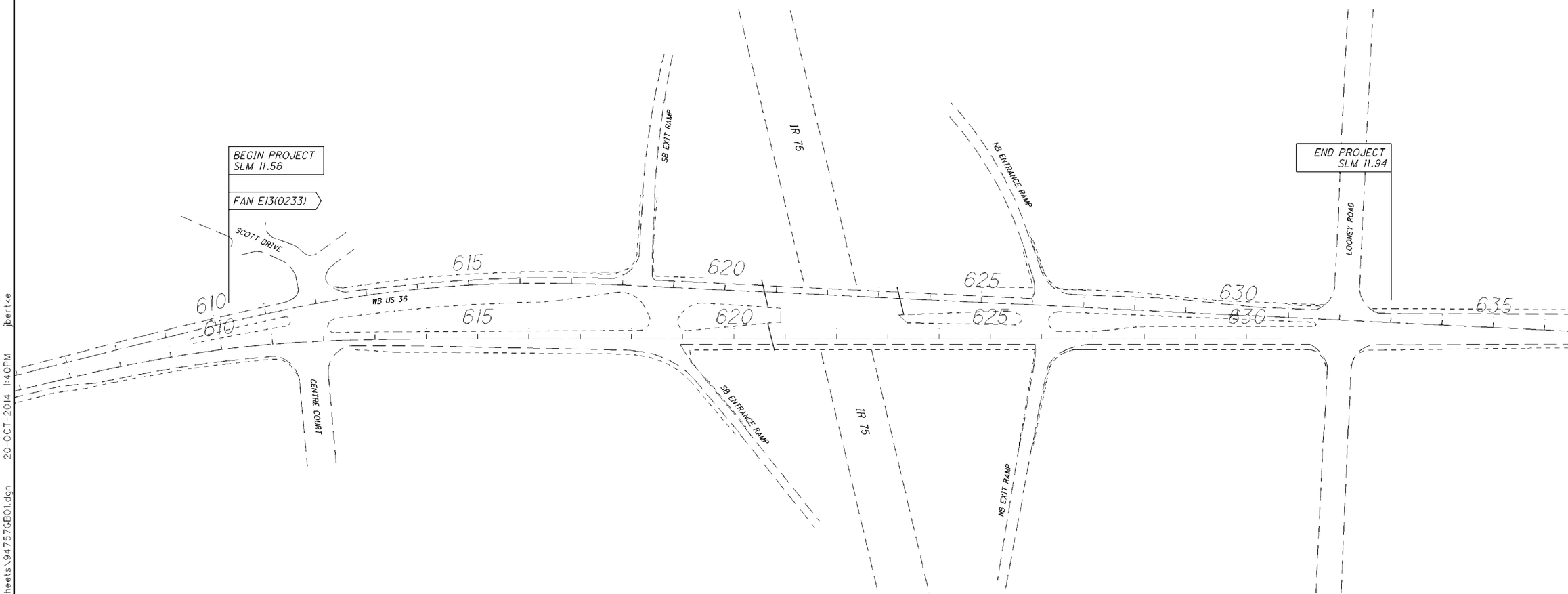

HORIZONTAL SCALE IN FEET
0 50 100 200

CALCULATED JAB
CHECKED

SCHEMATIC PLAN

MIA-36-11.56

I:\PROJECTS\Mia\036\169\94757\design\sheets\94757GB01.dgn 20-OCT-2014 1:40PM jbertke

UTILITIES

LISTED BELOW ARE ALL UTILITIES LOCATED WITHIN THE PROJECT CONSTRUCTION LIMITS TOGETHER WITH THEIR RESPECTIVE OWNERS:

AT&T OHIO
3233 WOODMAN DR.
DAYTON, OHIO 45420
JESSE WEAD
937.296.3894
jw1291@att.com

TIME WARNER CABLE
3691 TURNER ROAD
DAYTON, OHIO 45415
TIM KUSS
937.425.8850
tim.kuss.@twcable.com

CITY OF PIQUA - ELECTRIC, WATER, SEWER, & HIGHWAY LIGHTING
201 W. WATER STREET
PIQUA, OHIO 45356
DAVID T. BURTNER
937.778.8300
dburtner@piquaoh.org

OHIO DEPARTMENT OF TRANSPORTATION - TRAFFIC
1001 ST. MARYS ROAD
SIDNEY, OHIO 45365
CRAIG ELEY
937.497.6832
craig.eley@dot.state.oh.us

VECTREN OF OHIO
1300 EXPERIMENT FARM RD
TROY, OHIO 45373
BRENT VANSKIVER
937.440.1966
bavanskiver@vectren.com

THE LOCATION OF THE UNDERGROUND UTILITIES SHOWN ON THE PLANS ARE OBTAINED FROM THE OWNERS AS REQUIRED BY SECTION 153.64 O.R.C.

WORK LIMITS

THE WORK LIMITS SHOWN ON THESE PLANS ARE FOR PHYSICAL CONSTRUCTION ONLY. PROVIDE THE INSTALLATION AND OPERATION OF ALL WORK ZONE TRAFFIC CONTROL AND WORK ZONE TRAFFIC CONTROL DEVICES REQUIRED BY THESE PLANS WHETHER INSIDE OR OUTSIDE THESE WORK LIMITS.

APPROVAL OF FIELD LOCATIONS

AFTER STAKING THE LOCATIONS OF ALL SIGNALS, POLES, AND CONTROLLERS, AND BEFORE INSTALLATION OF SAME, THE CONTRACTOR WILL BE RESPONSIBLE TO CONTACT THE ODOT DISTRICT 7 TRAFFIC ENGINEER, CRAIG ELEY, P.E. BY PHONE AT 937.497.6832 WITH AT LEAST THREE DAYS NOTICE TO VERIFY AND APPROVE THE LOCATIONS PRIOR TO THE PLACEMENT OF ANY FACILITIES. FAILURE TO NOTIFY THE ODOT DISTRICT 7 TRAFFIC ENGINEER MAY REQUIRE THE CONTRACTOR TO REALIGN, RECONSTRUCT, OR RESET PORTIONS OF THE INSTALLATION AT THE CONTRACTOR'S EXPENSE TO CORRECT IMPROPERLY LOCATED WORK ITEMS.

SURVEYING PARAMETERS

USE THE FOLLOWING PROJECT CONTROL, VERTICAL POSITIONING, AND HORIZONTAL POSITIONING PARAMETERS FOR ALL SURVEYING:

PROJECT CONTROL

VERTICAL POSITIONING
ORTHOMETRIC HEIGHT DATUM: NAVD88
GEOID: 09

SURVEYING PARAMETERS ...CONTINUED

HORIZONTAL POSITIONING
REFERENCE FRAME: NAD83
ELLIPSOID: GRS 80
MAP PROJECTION: LAMBERT CONIC CONFORMAL
COORDINATE SYSTEM: OHIO SOUTH 3402
COMBINED SCALE FACTOR: FACTORS PROVIDED ARE GRID

USE THE POSITIONING METHODS AND MONUMENT TYPE USED IN THE ORIGINAL SURVEY TO RESTORE ALL MONUMENTS RELATED TO PRIMARY PROJECT CONTROL THAT ARE DAMAGED OR DESTROYED BY CONSTRUCTION ACTIVITIES. RESTORE THE DAMAGED OR DESTROYED MONUMENTS IN ACCORDANCE WITH SUPPLEMENTAL SPECIFICATION 823.

UNITS ARE IN U.S. SURVEY FEET. USE THE FOLLOWING CONVERSION FACTOR: 1 METER = 3.280833333 U.S. SURVEY

DUE TO THE NATURE OF THE PROJECT AND WORK, PLAN SHEET ELECTRONIC COORDINATES MAY NOT BE ACCURATE. WORK SHALL BE BASED ON PHYSICAL LOCATIONS OF EXISTING TRAFFIC CONTROL AND INTERSECTIONS. THE CONTRACTOR SHALL VERIFY THAT THE LOCATION OF THE PROPOSED SIGNAL ITEMS DO NOT CONFLICT WITH EXISTING OBJECTS PRIOR TO BEGINNING CONSTRUCTION.

POWER SUPPLY FOR TRAFFIC SIGNALS

ELECTRIC POWER SHALL BE OBTAINED FROM THE PIQUA ELECTRIC COMPANY AT THE LOCATION INDICATED ON THE PLANS. POWER SUPPLIED SHALL BE 120 VOLTS UNLESS OTHERWISE SPECIFIED.

POWER SERVICE SHALL BE AS PER CMS 632 & SCD TC-83.10 WITH THE FOLLOWING EXCEPTIONS:

1. THE METER BASE AND DISCONNECT SWITCH ENCLOSURE SHALL BE MOUNTED AT THE LOCATION(S) SHOWN IN THE PLANS.

2. THE METER BASE MOUNTING HEIGHT SHALL BE NO MORE THAT 5 FEET HIGH TO THE CENTER OF THE METER BASE FROM THE GROUND.

3. POWER SERVICE CABLE AND CONDUIT SHALL BE PROVIDED AS PER 632.23 BETWEEN THE CONTROLLER CABINET AND THE POWER TAP-IN LOCATION TO BE PROVIDED BY PIQUA ELECTRIC COMPANY. A QUANTITY OF POWER CABLE HAS BEEN PROVIDED FOR THE CONNECTION BETWEEN THE REMOTE POWER SOURCE AND THE CONTROLLER CABINET.

THE CONTRACTOR SHALL CONTACT THE METER SECTION OF THE POWER COMPANY FOR INFORMATION REGARDING THE METER BASE INSTALLATION PRIOR TO ORDERING POLES. THE CONTRACTOR WILL BE RESPONSIBLE FOR REQUESTING AND SCHEDULING ANY INSPECTIONS THE POWER COMPANY MAY REQUIRE FOR THE POWER SERVICE HOOK UP. THE CONTRACTOR SHALL BE RESPONSIBLE TO CONTACT THE POWER COMPANY FOR THE ELECTRICAL SERVICE CONNECTIONS.

GROUNDING AND BONDING

THE REQUIREMENTS OF THE CONSTRUCTION AND MATERIAL SPECIFICATIONS (CMS) AND THE TC SERIES OF STANDARD CONSTRUCTION DRAWINGS ARE MODIFIED AS FOLLOWS:

1. ALL METALLIC PARTS CONTAINING ELECTRICAL CONDUCTORS SHALL BE PERMANENTLY JOINED TO FORM AN EFFECTIVE GROUND FAULT CURRENT PATH BACK TO THE GROUNDED CONDUCTOR IN THE POWER SERVICE DISCONNECT SWITCH.

   A. PROVIDE AN EQUIPMENT GROUNDING CONDUCTOR IN METALLIC CONDUITS (725.04) IN ADDITION TO THE CONDUCTORS SPECIFIED AND BOND THE CONDUIT TO THIS GROUNDING CONDUCTOR.

GROUNDING AND BONDING ...CONTINUED

   B. WHEN AN EQUIPMENT GROUNDING CONDUCTOR IS REQUIRED IN PLASTIC CONDUIT (725.05), THE INSTALLATION SHALL INCLUDE A SEPARATE EQUIPMENT GROUNDING CONDUCTOR IN ADDITION TO THE CONDUCTORS SPECIFIED.

   C. METALLIC CONDUIT CARRYING THE LOOP WIRES FROM IN THE PAVEMENT TO THE PULL BOX SPLICE LOCATION WILL ONLY BE BONDED AT THE PULL BOX END, AND WILL NOT CONTAIN AN EQUIPMENT GROUNDING CONDUCTOR.

   D. IF MULTIPLE CONDUIT RUNS BEGIN AND END AT THE SAME POINTS, ONLY ONE EQUIPMENT GROUNDING CONDUCTOR IS REQUIRED.

   E. IF AN EQUIPMENT GROUNDING CONDUCTOR IS NEEDED IN CONDUIT BETWEEN SIGNALIZED INTERSECTIONS FOR UNDERGROUND INTERCONNECT CABLE, THE GROUNDING SYSTEM FOR EACH SIGNALIZED INTERSECTION WILL BE SEPARATED ABOUT MIDWAY BETWEEN THE INTERSECTIONS.

   F. THE MESSENGER WIRE AT SIGNALIZED INTERSECTIONS WILL BE USED AS THE CONDUCTIVE PATH FROM CORNER TO CORNER IF CONDUIT IS NOT PROVIDED UNDER THE ROADWAY. WHEN CONDUIT CONNECTS THE CORNERS OF AN INTERSECTION, AN EQUIPMENT GROUNDING CONDUCTOR SHALL BE USED IN THE CONDUIT.

2. CONDUITS.

   A. THE 725.04 CONDUIT SHALL HAVE GROUNDING BUSHINGS INSTALLED AT ALL TERMINATION POINTS. THE BUSHING MATERIAL SHALL BE COMPATIBLE WITH GALVANIZED STEEL CONDUIT AND THE GROUNDING LUG MATERIAL SHALL BE COMPATIBLE FOR USE WITH COPPER WIRE. THREADED OR COMPRESSION TYPE BUSHINGS MAY BE USED.

   B. THE 725.05 CONDUIT SHALL HAVE THE INSIDE AND OUTSIDE DIAMETERS OF THE CONDUIT DEBURRED AT ALL TERMINATION POINTS.

   C. BOTH ENDS OF METALLIC CONDUIT SHALL BE BONDED TO THE EQUIPMENT GROUNDING CONDUCTOR.

   D. METALLIC CONDUIT MAY BE BONDED TO METALLIC BOXES THROUGH THE USE OF CONDUIT FITTINGS UL APPROVED FOR THIS TYPE OF CONNECTION, WITH THE BOX BONDED TO THE EQUIPMENT GROUNDING CONDUCTOR.

3. WIRE FOR GROUNDING AND BONDING.

   A. USE INSULATED, COPPER WIRE FOR THE EQUIPMENT GROUNDING CONDUCTOR. BONDING JUMPERS IN BOXES AND ENCLOSURES MAY BE BARE OR INSULATED COPPER WIRE. WIRE SIZE SHALL BE AS FOLLOWS:

      I. USE 4 AWG BETWEEN THE POWER SERVICE AND SUPPORTS, POLES, PEDESTALS, CONTROLLER OR FLASHER CABINETS.

      II. USE A MINIMUM 8 AWG BETWEEN LOOP DETECTOR PULL BOXES AND THE FIRST CONDUIT THAT REQUIRES A LARGER SIZE AS SPECIFIED IN 3.A.I ABOVE.

      III. USE A MINIMUM 8 AWG BETWEEN THE "PREPARE TO STOP WHEN FLASHING" INSTALLATION (INCLUDING SUPPORT) AND THE FIRST CONDUIT THAT REQUIRES A LARGER SIZE AS SPECIFIED IN 3.A.I ABOVE.

      IV. THE INSULATION SHALL BE GREEN OR GREEN WITH YELLOW STRIPE(S). FOR 4 AWG OR LARGER, INSULATION MAY ALSO BE BLACK WITH GREEN TAPE/LABELS INSTALLED AT ALL ACCESS POINTS.

GROUNDING AND BONDING ...CONTINUED

   B. IN A HIGHWAY LIGHTING SYSTEM, THE EQUIPMENT GROUNDING CONDUCTOR SHALL BE THE SAME WIRE SIZE AS THE DUCT CABLE OR DISTRIBUTION CABLE CIRCUIT CONDUCTORS, WITH THE MINIMUM CONDUCTOR SIZE OF 4 AWG. BONDING JUMPERS WILL BE MINIMUM SIZE 4 AWG.

4. GROUND ROD.

   A. A 3/4 INCH SCHEDULE 40 PVC CONDUIT WILL BE USED IN FOUNDATIONS AND CONCRETE WALLS FOR THE GROUNDING CONDUCTOR (GROUND WIRE) RACEWAY TO THE GROUND ROD. SHOULD METALLIC CONDUIT BE USED, BOTH ENDS OF THE CONDUIT SHALL BE BONDED TO THE GROUNDING CONDUCTOR.

   B. THE TYPICAL GROUNDING CONDUCTOR (GROUND WIRE) SHALL BE 4 AWG INSULATED, COPPER.

5. THE GREEN CONDUCTOR IN SIGNAL CABLES (CONDUCTOR #4) SHALL NOT BE USED TO SUPPLY POWER TO A SIGNAL INDICATION. IT WILL BE CONNECTED TO THE SIGNAL BODY AS AN EQUIPMENT GROUND IN ALUMINUM HEADS AND IT WILL BE UNUSED IN PLASTIC HEADS. UNUSED CONDUCTORS SHALL BE GROUNDED IN THE CABINET. TYPICAL USE OF CONDUCTORS IS AS FOLLOWS:

COND. NO.	COLOR	VEHICLE SIGNAL	PEDESTRIAN SIGNAL
1	BLACK	GREEN BALL	#1 WALK
2	WHITE	AC NEUTRAL	AC NEUTRAL
3	RED	RED BALL	#1 DW/FDW
4	GREEN	EQUIPMENT GROUND	EQUIPMENT GROUND
5	ORANGE	YELLOW BALL	#2 DW/FDW
6	BLUE	GREEN ARROW	#2 WALK
7	WHITE/BLACK STRIPE	YELLOW ARROW	NOT USED

6. POWER SERVICE AND DISCONNECT SWITCH.

   A. AT THE POWER SERVICE LOCATION, THE GROUNDING CONDUCTOR (GROUND WIRE) FROM THE DISCONNECT SWITCH NEUTRAL (AC-) BAR TO THE GROUND ROD SHALL BE A CONTINUOUS, UNSPLICED CONDUCTOR. IF SPLICED, IT SHALL BE AN EXOTHERMIC WELD BUTT SPLICE.

   B. THE SERVICE NEUTRAL (AC-) SHALL ONLY BE CONNECTED TO GROUND AT THE PRIMARY POWER SERVICE DISCONNECT SWITCH.

      I. NEMA CONTROLLER CABINETS: IF A POWER SERVICE DISCONNECT SWITCH IS LOCATED BEFORE THE CONTROLLER CABINET, THE NEUTRAL (AC-) AND THE GROUNDING BARS IN THE CONTROLLER CABINET SHALL NOT BE CONNECTED TOGETHER AS SHOWN IN NEMA TS-2, FIGURE 5-4.

      II. IF SECONDARY DISCONNECT SWITCHES ARE CONNECTED AFTER THE PRIMARY DISCONNECT SWITCH, THE NEUTRAL (AC-) SHALL ONLY BE GROUNDED AT THE PRIMARY SWITCH. EQUIPMENT GROUNDING CONDUCTORS SHALL BE BROUGHT TO THE PRIMARY SWITCH, BUT SHALL BE GROUNDED AT BOTH SECONDARY AND PRIMARY SWITCHES.

7. PAYMENT - ALL MATERIALS AND WORK REQUIRED TO COMPLETE THE EFFECTIVE GROUND FAULT CURRENT PATH SYSTEM ARE INCIDENTAL TO THE CONDUCTORS INSTALLED BY CONTRACT.

CALCULATED jab
CHECKED

GENERAL NOTES 1/3

MIA-36-11.56

I:\PROJECTS\Mia\036\1169\94757\design\sheets\94757GN01.dgn 20-OCT-2014 1:40PM jbertke

SIGNAL POLE AND PEDESTRIAN PEDESTAL FOUNDATION ELEVATIONS

ELEVATIONS SHOWN IN THE PLANS FOR SIGNAL POLE AND PEDESTRIAN FOUNDATIONS ARE FOR COMPUTATION PURPOSES ONLY. THE ACTUAL ELEVATION OF THE FOUNDATION SHALL BE IN ACCORDANCE WITH SCD TC-21.20 PROVIDED THE EXISTING SLOPE IS LESS THAN 6:1.

AT LOCATIONS WHERE THE EXISTING SLOPE IS 6:1 OR GREATER, THE BURIED DEPTH OF THE FOUNDATION, AS SHOWN IN SCD TC-21.20 SHALL APPLY TO THE LOW SIDE OF THE SLOPE. THE TOP OF THE FOUNDATION SHALL BE SET 2 INCHES ABOVE THE EXISTING SURFACE ON THE HIGH SIDE OF THE SLOPE. THE ADDITIONAL DEPTH OF FOUNDATION NECESSARY TO MEET THESE REQUIREMENTS SHALL BE ADDED TO THE FORMED TOP.

WHERE PLANS PROVIDE FOR A PROPOSED FOUNDATION TO BE WITHIN 5 FEET OF AN EXISTING SEWER OR UNDERGROUND UTILITY, THE CONTRACTOR SHALL LOCATE THE EXISTING UTILITY BOTH AS TO LINE AND GRADE PRIOR TO COMPLETING THE EXCAVATION REQUIRED FOR THE FOUNDATION.

IF IT IS DETERMINED THAT THE PROPOSED FOUNDATION WILL INTERSECT AN EXISTING SEWER OR UNDERGROUND UTILITY IF CONSTRUCTED AS SHOWN ON THE PLAN, THE ENGINEER SHALL BE NOTIFIED. IF REQUIRED, THE ENGINEER MAY DIRECT AN ADJUSTMENT TO THE FOUNDATION LOCATION ALONG THE INDEX LINE WITHIN A TOLERANCE OF 2' WITHOUT ALTERING THE LATERAL SIGNAL HEAD LOCATIONS, AS LONG AS NO NEW CONSTRUCTIBILITY ISSUES RESULT.

202 WALK REMOVED, AS PER PLAN

ALL SPECIFICATIONS IN CMS SECTION 202.05 SHALL APPLY, EXCEPT THAT IF THERE IS AN EXISTING JOINT WITHIN 1' OF THE LOCATION SPECIFIED IN THE PLANS, THE CONTRACTOR SHALL REMOVE WALK ALONG THAT JOINT. IF NO JOINT IS WITHIN 1', THEN CUT A NEAT JOINT. CARE MUST BE TAKEN DURING REMOVAL TO PREVENT DAMAGE TO WALK TO REMAIN.

202 CURB REMOVED, AS PER PLAN

THE CONTRACTOR SHALL REMOVE A MINIMUM WIDTH OF 1 FOOT OF EXISTING PAVEMENT WHERE DIRECTED TO REMOVE THE EXISTING CURB. PRICE PAID FOR CURB REMOVAL SHALL INCLUDE ALL LABOR, MATERIALS, AND EQUIPMENT REQUIRED TO PROVIDE A CLEAN SAWCUT PAVEMENT FACE, REMOVAL OF CURB AS PER CMS 202.05, AND DISPOSAL OF ALL DEBRIS MATERIAL.

608 DETECTABLE WARNING, AS PER PLAN

IN ADDITION TO THE REQUIREMENTS AND SPECIFICATIONS LISTED IN CMS 608, THE DETECTABLE WARNINGS TO BE INSTALLED SHALL BE CAST IRON PLATES. PRODUCTS SHALL BE CORROSION RESISTANT AND COMPLIANT WITH ADA ACCESSIBILITY GUIDELINES. ALL PLATES SHALL HAVE A BRICK RED POWDER COATED FINISH AND BE OBTAINED FROM EAST JORDAN IRON WORKS, NEENAH FOUNDRY COMPANY, OR AN APPROVED EQUAL MANUFACTURER. THE MANUFACTURER SHALL PROVIDE A FIVE (5) YEAR GUARANTEE AGAINST DEFECTS UNDER NORMAL USE WHEN INSTALLED WITH ACCORDANCE TO THE MANUFACTURERS' SPECIFICATIONS.

608 CURB RAMP TYPE A1, AS PER PLAN

ALL CURB RAMPS SHALL BE CONSTRUCTED AS DETAILED IN THESE PLANS. DETECTABLE WARNINGS WILL NOT BE INCLUDED IN THIS ITEM. THE REQUIRED IRON PLATEAS ARE PAID UNDER ITEM 608 DETECTABLE WARNING, AS PER PLAN. FOR OTHER DETAILS NOT SHOWN IN THESE PLANS AND LOCATION DRAWINGS, THE CONTRACTOR SHALL REFER TO STD. DRWG. BP-7.1. ALL PAVEMENT REPLACEMENT, EARTHWORK, SEEDING AND MULCHING REQUIRED FOR RESTORATION OF AREA ADJACENT TO PROPOSED CURB RAMP SHALL BE INCLUDED. **THIS NOTE APPLIES TO ALL ITEM 608 CURB RAMPS REGARDLESS OF TYPE.**

609 CURB TYPE 6, AS PER PLAN

THE PROPOSED LABOR, MATERIALS, AND EQUIPMENT NECESSARY TO REPLACE IN KIND EXISTING PAVEMENT (REMOVED AS PART OF ITEM 202 CURB REMOVED, AS PER PLAN) AND NEW CURB SHALL BE INCLUDED AND PAID IN THE PRICE BID FOR ITEM 609 CURB TYPE 6, AS PER PLAN.

609 COMBINATION CURB AND GUTTER, TYPE 2, AS PER PLAN

THE PROPOSED LABOR, MATERIALS, AND EQUIPMENT NECESSARY TO REPLACE IN KIND EXISTING PAVEMENT (REMOVED AS PART OF ITEM 202 CURB REMOVED, AS PER PLAN) AND NEW CURB SHALL BE INCLUDED AND PAID IN THE PRICE BID FOR ITEM 609 COMBINATION CURB AND GUTTER, TYPE 2, AS PER PLAN

611 4" CONDUIT, TYPE E

REFERENCE IS MADE TO THE STANDARD CONSTRUCTION DRAWING FOR DETAILS OF DRAINING PULL BOXES. UNDERDRAINS FOR PULL BOXES SHALL BE USED AS DIRECTED BY THE ENGINEER AND SHALL BE PROVIDED WHERE THE LENGTH REQUIRED FOR A SATISFACTORY OUTLET DOES NOT EXCEED 20 FEET. THE FOLLOWING ESTIMATED QUANTITY IS CARRIED TO THE GENERAL SUMMARY FOR THIS PURPOSE.

611 - 4" CONDUIT, TYPE E 500 FT

625 TRENCH, 24" DEEP, AS PER PLAN

WHEN PLANS DIRECT FOR A PROPOSED TRENCH AND CONDUIT TO CROSS OVER OR UNDER AN EXISTING UNDERGROUND UTILITY, THE CONTRACTOR SHALL EXPOSE THE EXISTING PIPES OR UTILITY TO DETERMINE BOTH LINE AND GRADE BEFORE STARTING TO INSTALL THE PROPOSED CONDUIT.

IF IT IS DETERMINED THAT THE PROPOSED CONDUIT WILL INTERSECT AN EXISTING UNDERGROUND UTILITY IF CONSTRUCTED AS SHOWN ON THE PLAN, THE ENGINEER SHALL BE NOTIFIED BEFORE STARTING CONSTRUCTION OF ANY PORTION OF THE PROPOSED CONDUIT WHICH WOULD BE AFFECTED BY THE INTERFERENCE. THE ENGINEER WILL APPROVE DEPTH ADJUSTMENTS IF REQUIRED, PRIOR TO INSTALLATION.

PAYMENT FOR ALL OPERATIONS DESCRIBED ABOVE SHALL BE INCLUDED IN THE CONTRACT PRICE BID FOR ITEM 625 TRENCH, 24" DEEP, AS PER PLAN.

625 CONDUIT, JACKED OR DRILLED, 725.051, AS PER PLAN (3" OR 4")

WHEN PLANS DIRECT FOR A PROPOSED CONDUIT TO CROSS OVER OR UNDER AN EXISTING UNDERGROUND UTILITY, THE CONTRACTOR SHALL EXPOSE THE EXISTING PIPES OR UTILITY TO DETERMINE BOTH LINE AND GRADE BEFORE STARTING TO INSTALL THE PROPOSED CONDUIT.

IF IT IS DETERMINED THAT THE PROPOSED CONDUIT WILL INTERSECT AN EXISTING UNDERGROUND UTILITY IF CONSTRUCTED AS SHOWN ON THE PLAN, THE ENGINEER SHALL BE NOTIFIED BEFORE STARTING CONSTRUCTION OF ANY PORTION OF THE PROPOSED CONDUIT WHICH WOULD BE AFFECTED BY THE INTERFERENCE. THE ENGINEER WILL APPROVE DEPTH ADJUSTMENTS IF REQUIRED, PRIOR TO INSTALLATION.

THIS ITEM OF WORK SHALL INCLUDE ALL COSTS ASSOCIATED WITH THE HORIZONTAL DIRECTIONAL DRILLING OF THE CONDUIT. THIS INCLUDES ANY REQUIRED BORING PITS, DEWATERING, BACKFILLING OF PITS, ASPHALT, GRAVEL AND CONCRETE REPAIR, SEEDING AND MULCHING, LANDSCAPING REPAIR, ETC. NECESSARY TO RESTORE THE AREA TO EQUAL OR BETTER CONDITIONS.

PAYMENT FOR ITEM 625 CONDUIT, JACKED OR DRILLED, 725.051, AS PER PLAN, (3" OR 4") SHALL INCLUDE ALL OPERATIONS DESCRIBED ABOVE, NECESSARY LABOR, EQUIPMENT, AND MATERIALS TO COMPLETE THIS ITEM OF WORK.

632 REUSE OF TRAFFIC CONTROL ITEM: UNINTERRUPTIBLE POWER SUPPLY (UPS)

THIS ITEM OF WORK SHALL INCLUDE ALL SPECIFICATIONS LISTED IN CMS 632.27. ALL LABOR, EQUIPMENT, AND MATERIALS REQUIRED TO RESTORE THE UNINTERRUPTIBLE POWER SUPPLY TO OPERATIONAL CONDITION, INCLUDING NEW CONDUIT AND CABLE TO THE NEW CONTROLLER, GROUNDING, AND CONNECTION INTO THE NEW CABINET SHALL BE CONSIDERED PART OF THIS ITEM.

PAYMENT WILL BE MADE AT THE CONTRACT UNIT PRICE BID PER EACH OF THE ITEM 632, REUSE OF TRAFFIC CONTROL ITEM: UNINTERRUPTIBLE POWER SUPPLY.

632 REMOVAL OF TRAFFIC SIGNAL INSTALLATION FOR STORAGE, AS PER PLAN

TRAFFIC SIGNAL INSTALLATIONS, INCLUDING SIGNAL HEADS, CABLE, MESSENGER WIRE, STRAIN POLES, CABINET, CONTROLLER, ETC., SHALL BE REMOVED IN ACCORDANCE WITH CMS 632.26 AND AS INDICATED ON THE PLANS. REMOVED ITEMS SHALL BE REUSED AS PART OF A NEW INSTALLATION ON THE PROJECT OR STORED ON THE PROJECT FOR SALVAGE BY THE CITY OF PIQUA OR ODOT DEPENDING ON THE INTERESTECTION, IN ACCORDANCE WITH THE LISTING GIVEN HEREIN.

ITEMS TO BE REUSED-
PEDESTRIAN PUSH BUTTONS AT SCOTT/ CENTRE CT AND U.S. 36 INTERSECTION IN MEDIAN

ITEMS TO BE STORED-
CONTROLLERS AND SIGNAL HEADS

CITY OF PIQUA WILL HAVE AUTHORITY OVER REMOVED ITEMS AT SCOTT/CENTER AND LOONEY ROAD INTERSECTIONS. ODOT WILL HAVE AUTHORITY OVER ITEMS AT BOTH INTERSTATE RAMPS. IN THE EVENT THE ITEMS STORED ON THE PROJECT FOR SALVAGE BY THE LOCAL AGENCY ARE NOT REMOVED, THE CONTRACTOR SHALL, WHEN DIRECTED BY THE ENGINEER IN WRITING, REMOVE AND DISPOSE OF THE ITEMS AT NO ADDITIONAL COST TO THE PROJECT.

632 VEHICULAR SIGNAL HEAD, (LED), BLACK, 3-SECTION, (WITH BACKPLATE), AS PER PLAN OR VEHICULAR SIGNAL HEAD, (LED), BLACK, 5-SECTION, (WITH BACKPLATE), AS PER PLAN

IN ADDITION TO THE REQUIREMENTS OF CMS ITEM 632 AND CMS 732, THE FOLLOWING REQUIREMENTS SHALL APPLY:

1. SIGNAL HEADS AND VISORS SHALL BE CONSTRUCTED OF BLACK POLYCARBONATE PLASTIC WITH VISORS AS SPECIFIED AND MEET ITE SPECIFICATION.
2. PROPER EXTERIOR COLORS SHALL BE OBTAINED BY USE OF COLORED PLASTIC MATERIAL RATHER THAN PAINTING.
3. ALL SIGNAL HEADS WHERE DROP DOWN PIPES ARE NOT SPECIFIED SHALL BE RIGIDLY MOUNTED TO THE MAST ARM WITH RED LENS ALIGNED IN FRONT OF THE MAST ARM.
4. ALL UPPER SIGNAL SUPPORT HARDWARE AND PIPING UP TO AND INCLUDING THE WIRE INLET FITTING SHALL BE FERROUS METAL FOR SIGNAL DISPLAYS OF TWO OR MORE SECTIONS.
5. THE ENTRANCE FITTING SHALL BE OF THE TRI-STUD DESIGN WITH SERRATED RINGS IN ORDER TO ACHIEVE POSITIVE LOCKING.
6. ALUMINUM BACKPLATES WITH REFLECTIVE BORDER WILL BE IN ACCORDANCE WITH CMS 732.22.
7. THE LIGHT EMITTING DIODE (LED) SIGNAL LAMP UNITS SHALL MEET THE REQUIREMENTS OF CMS 732.04(C). THE CONTRACTOR SHALL PROVIDE ODOT DISTRICT 7 TRAFFIC ENGINEER, CRAIG ELEY, P.E. WITH THE LED MANUFACTURER NAME, SERIAL NUMBER, PART NUMBER, DESCRIPTION OF LAMP, AND DATE OF MANUFACTURER FOR ALL LED UNITS THAT ARE TO BE USED IN THE SIGNAL HEAD PRIOR TO INSTALLATION, FOR ACCEPTANCE AND WARRANTY PURPOSES.
8. SIGNAL HEADS SHALL HAVE A MINIMUM WALL THICKNESS OF 0.117 MM.

PAYMENT FOR ITEM 632, VEHICULAR SIGNAL HEAD, LED (BY TYPE), WITH BACKPLATE, AS PER PLAN, SHALL BE MADE FOR COMPLETE SIGNAL HEAD FURNISHED AND INSTALLED, INCLUDING ALL LABOR, EQUIPMENT, MATERIALS, DROP DOWN PIPES, AND ATTACHMENTS.

632 PEDESTRIAN SIGNAL, LED, COUNTDOWN, TYPE D2, AS PER PLAN

IN ADDITION TO THE REQUIREMENTS OF CMS 632 AND 732, THE FOLLOWING REQUIREMENTS SHALL ALSO APPLY:

1. SIGNAL HEADS AND VISORS SHALL BE CONSTRUCTED OF POLYCARBONATE PLASTIC AND MEET ITE SPECIFICATIONS.
2. PIPE, SPACERS AND FITTINGS CONSTRUCTED OF GALVANIZED STEEL OR ALUMINUM.
3. PROPER EXTERIOR COLORS SHALL BE OBTAINED BY USE OF COLORED PLASTIC MATERIAL RATHER THAN PAINTING.

THE DEPARTMENT WILL MEASURE ITEM 632 PEDESTRIAN SIGNAL HEAD, LED, COUNTDOWN, TYPE D2, AS PER PLAN BY THE NUMBER OF COMPLETE UNITS FURNISHED AND INSTALLED, AND WILL INCLUDE ALL SUPPORT AND MOUNTING HARDWARE, CLOSURE CAPS, AND LAMPS AS SPECIFIED.

630 REMOVAL OF OVERHEAD MOUNTED SIGN AND REERECTION, AS PER PLAN

IN ADDITION TO THE REQUIREMENTS OF CMS 630.12, THE FOLLOWING SHALL APPLY:

REMOVAL OF THE EXISTING SUPPORT AND FOUNDATION SHALL BE INCLUDED IN THIS ITEM.

ALL LABOR, MATERIALS, AND EQUIPMENT NECESSARY TO REERECT THE SIGN INCLUDING ATTACHMENT ASSEMBLIES WILL BE INCLUDED IN PAYMENT FOR ITEM 630 REMOVAL OF OVERHEAD MOUNTED SIGN AND REERECTION, AS PER PLAN.

633 CONTROLLER UNIT, TYPE TS2/A1, WITH CABINET, TYPE TS2, AS PER PLAN

THE CONTROLLER UNIT SHALL BE AN ECONOLITE NEMA ASC/3 CONTROLLER, WITH CABINET, TYPE TS2. IT SHALL INCORPORATE OR BE FURNISHED WITH ALL THE DESIGN FEATURES, AUXILIARY EQUIPMENT, ACCESSORIES, AND PREWIRED CABINET FEATURES AS REQUIRED IN THE STANDARD BID ITEM. THE CONTROLLER SHALL ALSO INCLUDE AN ETHERNET PORT AND ALL NECESSARY ACCESSORIES AND WIRING REQUIRED FOR ITS FUNCTION. THE CONTRACTOR SHALL ALSO INPUT COORDINATION AND TIME OF DAY PARAMETERS INTO CONTROLLER AS PART OF THIS ITEM. INFORMATION TO BE INPUT IS PROVIDED ON COORDINATION DATA SHEET.

PAYMENT WILL BE AT THE CONTRACTED UNIT PRICE BID FOR EACH, IN PLACE, ALL CONNECTIONS MADE AND WIRING COMPLETED, TESTED AND ACCEPTED.

633 PREEMPTION, AS PER PLAN

THIS ITEM OF WORK SHALL CONSIST OF FURNISHING AND INSTALLING PREEMPTION EQUIPMENT IN THE INTERSECTIONS SHOWN IN THE PLANS. THE EQUIPMENT SHALL CONFORM TO CMS SECTION 633 AND SHALL UTILIZE COMMUNICATIONS TO IDENTIFY THE PRESENCE OF AN EMERGENCY PRIORITY VEHICLE. IT SHALL CAUSE THE TRAFFIC SIGNAL CONTROLLER TO SELECT A PRE-PROGRAMMED PREEMPTION PLAN THAT WILL DISPLAY AND HOLD THE DESIRED SIGNAL PHASE FOR THE DIRECTION OF THE EMERGENCY VEHICLE.

THE COMMUNICATION MEDIUM SHALL EMPLOY EITHER SOUND, LIGHT, OR RADIO DETECTION TECHNIQUES TO DETERMINE AND LOG THE PRESENCE OF AN EMERGENCY VEHICLE THROUGH AN EMITTING DEVICE LOCATED ON THE VEHICLE. THE SYSTEM SHALL ACTIVATE THE PREEMPTION SEQUENCE BY APPLYING A SIGNAL TO ONE OF THE CONTROLLER'S PREEMPT DISCRETE INPUTS. THE SYSTEM SHALL BE COMPLETELY COMPATIBLE WITH THE CONTROLLER.

THE EQUIPMENT SHALL BE SHELF OR RACK MOUNTED AND EASILY REMOVABLE AND REPLACEABLE WITHIN THE CABINET. THE EQUIPMENT SHALL BE SUPPLIED COMPLETELY WIRED IN THE CONTROLLER CABINET AND TESTED. THE SYSTEM SHALL BE CAPABLE OF PREEMPTING AND RECEIVING PRIORITY FOR ALL APPROACHES TO THE INTERSECTION. IT SHALL BE POSSIBLE TO DETECT EMERGENCY VEHICLES 1200 FEET OR LESS FROM THE INTERSECTION.

FOR EACH INTERSECTION SHOWN IN THE PLANS, THE CITY SHALL BE SUPPLIED WITH THE FOLLOWING COMPONENTS, EACH BID SEPARATELY:

1. PREEMPTION RECEIVING UNIT
2. PREEMPTION DETECTOR CABLE
3. CONFIRMATION LIGHT
4. PREEMPTION PHASE SELECTOR

I:\PROJECTS\Mia\036\1169\94757\design\sheets\94757GN02.dgn 20-OCT-2014 1:40PM jbertke

633 PREEMPTION, AS PER PLAN ...CONTINUED

WHATEVER MEDIUM EMPLOYED FOR DETECTION, THE PRICE BID PER SYSTEM SHALL INCLUDE ALL EQUIPMENT NECESSARY FOR FUNCTION WITH CITY'S EMERGENCY VEHICLES INCLUDING UPGRADES OR REPLACEMENT OF EXISTING EMITTERS. THE CONTRACTOR WILL INVENTORY EXISTING EMITTERS AND DETERMINE COMPATIBILITY WITH THE SYSTEM PROPOSED. IF THE EXISTING EMITTERS ARE NOT COMPATIBLE, THEN THE CITY SHALL BE SUPPLIED NEW EMITTERS, TRANSMITTERS, SWITCHES, WIRING, AND ALL REQUIRED VEHICLE EQUIPMENT FOR THE EMERGENCY VEHICLES. THE CITY WILL BE RESPONSIBLE FOR INSTALLING VEHICLE EQUIPMENT.

THE CITY SHALL BE SUPPLIED WITH SOFTWARE REQUIRED TO CALIBRATE, LOG, AND OPERATE THE SYSTEM. THE SOFTWARE SHALL BE CAPABLE OF OPERATING UNDER WINDOWS 7, 32-BIT OPERATING SYSTEM OR NEWER. TWO (2) OPERATING AND INSTRUCTION MANUALS SHALL BE SUPPLIED WITH THE SOFTWARE.

THE CONTRACTOR SHALL THOROUGHLY TEST THE INSTALLED SYSTEM, TO FUNCTION AND AS DESCRIBED BELOW. TESTING SHALL VERIFY THAT ALL CONNECTIONS ARE PROPERLY MADE TO THE CONTROLLER CABINETS. THE CONTRACTOR SHALL CHECK THAT THE RANGE SETTING IS PROPER FOR EACH INTERSECTION. FUNCTION OF ALL PHASE SELECTORS SHALL BE VERIFIED FOR APPROPRIATE ASSOCIATION OF PHASE AND ACCURATE TIMING. THE CONTRACTOR SHALL VERIFY THAT ALL VEHICLE EMITTERS ARE BEING PROPERLY DETECTED.

IF THE PROPOSED PREEMPTION SYSTEM IS NOT COMPATIBLE WITH THE EXISTING SYSTEM, THE CONTRACTOR SHALL PROVIDE TRAINING FOR UP TO FIFTEEN (15) PERSONS IN OPERATION OF THE SYSTEM. IT SHALL BE PROVIDED WITHIN 48 HOURS OF THE INSTALLATION OF THE SYSTEM. IT SHALL CONSIST OF HANDS-ON INSTRUCTION FOR A MINIMUM OF SIXTEEN (16) HOURS. THE CONTRACTOR SHALL PROVIDE TRAINING FOR UP TO FOUR (4) PERSONS IN THE INSTALLATION AND MAINTENANCE OF THE SYSTEM. IT SHALL BE SUPPLIED WITHIN SEVEN (7) DAYS OF THE SYSTEM INSTALLATION. ALL TRAINING SHALL BE HELD IN A CITY SUPPLIED LOCATION. TRAINING SHALL BE CONDUCTED BY AN EXPERIENCED TRAINER, ONE WHO HAS CONDUCTED SIMILAR TRAININGS WITH MUNICIPALITIES ON THE PROPOSED SYTEM WITHIN THE LAST YEAR. THE COST OF THE TRAINING, INCLUDING COURSE REFERENCE MATERIAL, TRAVEL, AND OTHER PAYMENT TO THE TRAINER SHALL BE PAID ENTIRELY BY THE CONTRACTOR AND SHALL BE INCLUDED IN THE COST OF THE SYSTEM.

PAYMENT FOR ITEM 633 PREEMPTION, AS PER PLAN SHALL BE MADE AT THE CONTRACT UNIT PRICE FOR EACH PREEMPTION SYSTEM IN PLACE AND FULLY OPERATIONAL AS SHOWN IN THE PLANS, EXCEPT FOR THOSE ITEMS BID SEPARATELY.

633 PREEMPTION RECEIVING UNIT, AS PER PLAN

RECEIVING UNITS SHALL CONSIST OF A LIGHTWEIGHT, WEATHER-PROOF, AND DIRECTIONAL ASSEMBLY. EACH RECEIVNING UNIT SHALL BE 360 DEGREE ADJUSTABLE. THE RECEIVING UNIT SHALL BE CAPABLE OF SENDING THE PROPER ELECTRICAL SIGNAL TO THE TRAFFIC SIGNAL CONTROLLER VIA THE PREEMPTION DETECTOR CABLE.

RECEIVING UNITS SHALL BE SUPPLIED WITH MAST ARM MOUNTING HARDWARE AS RECOMMENDED BY MANUFACTURER. FURNISH PREEMPTION UNITS WITH 60-MONTH WARRANTIES OR THE MANUFACTURER'S STANDARD WARRANTY WHICHEVER IS GREATER. ENSURE THAT THE WARRANTY PERIOD IS TO BEING ON THE DATE OF SHIPMENT TO THE PROJECT. EACH UNIT SHALL HAVE A PERMANENT LABEL OR STAMP INDICATING THE DATE OF SHIPMENT.

PAYMENT FOR ITEM 633 PREEMPTION RECEIVING UNIT, AS PER PLAN SHALL BE AT THE CONTRACT UNIT PRICE BID FOR EACH UNIT IN PLACE, COMPLETELY INSTALLED AND FUNCTIONING, WIRED, TESTED, AND ACCEPTED.

633 PREEMPTION DETECTION CABLE, AS PER PLAN

THIS ITEM SHALL CONSIST OF FURNISHING AND INSTALLING PREEMPTION DETECTOR HOME RUN CABLE. IT SHALL CONNECT THE PREEMPTION RECEIVING UNITS TO THE PHASE SELECTORS IN THE LOCAL CONTROLLER CABINET.

PREEMPTION DETECTOR CABLE SHALL CONFORM TO CMS SECTION 632. ONLY ONE EXTERNAL SPLICE SHALL BE PERMITTED BETWEEN THE PREEMPTION RECEIEVER UNIT AND CONTROLLER CABINET. THE SPLICE SHALL MEET REQUIREMENTS OF CMS 632.23 USING A WATERPROOF EPOXY SPLICE KIT. THE CABLE SHALL BE APPROVED FOR BOTH OVERHEAD AND UNDERGROUND USE. THE JACKET SHALL WITHSTAND EXPOSURE TO SUNLIGHT AND ATMOSPHERIC TEMPERATURES AND STRESSES REASONABLY EXPECTED IN NORMAL INSTALLATIONS.

PAYMENT FOR ITEM 633 PREEMPTION DETECTOR CABLE, AS PER PLAN SHALL BE AT THE CONTRACT UNIT PRICE BID PER FOOT IN PLACE, COMPLETELY INSTALLED AND FUNCTIONING, WIRED, TESTED, AND ACCEPTED.

633 PREEMPTION CONFIRMATION LIGHT, AS PER PLAN

THIS ITEM SHALL CONSIST OF FURNISHING AND INSTALLING PREEMPTION CONFIRMATION LIGHTS INCLUDING HARDWARE AND OTHER ACCESSORIES THAT ARE NECESSARY TO MAKE IT COMPLETELY FUNCTIONAL.

A CONFIRMATION LIGHT SHALL BE SUPPLIED FOR EACH INTERSECTION TO INDICATE THAT THE EMERGENCY VEHICLE HAS ACHIEVED CONTROL OF THE TRAFFIC SIGNAL.

THE CONFIRMATION LIGHT SHALL BE A VAPOR TIGHT ALUMINUM LIGHTING FIXTURE. IT SHALL BE SUPPLIED WITH A CLEAR GLOBE, 150 WATT LAMP (OR LED EQUIVALENT) AND MOUNTING HARDWARE TO ATTACH TO THE TRAFFIC SIGNAL MAST ARM.

THE CONFIRMATION LIGHT SHALL BE POWERED BY A LOAD SWITCH IN THE TRAFFIC SIGNAL CONTROLLER, OR AS DIRECTED BY MANUFACTURER. SIGNAL CABLE CONFORMING TO 732.19 SHALL BE USED FOR CONFIRMATION LIGHTS. A MINIMUM OF 4-CONDUCTOR CABLE SHOULD BE USED WITH THE GREEN WIRE SERVING AS THE SAFETY GROUND CONDUCTOR, AND BE CONSIDERED INCIDENTAL TO THE PREEMPTION CONFIRMATION LIGHT.

PAYMENT FOR ITEM 633 PREEMPTION CONFIRMATION LIGHT, AS PER PLAN SHALL BE AT THE CONTRACT UNIT PRICE BID FOR EACH LIGHT IN PLACE, COMPLETELY INSTALLED AND FUNCTIONING, WIRED, TESTED, AND ACCEPTED.

633 PREEMPTION PHASE SELECTOR, AS PER PLAN

THIS ITEM SHALL CONSIST OF FURNISHING AND INSTALLING PREEMPTION PHASE SELECTORS INCLUDING WIRING INTERFACE PANELS IN THE LOCAL CONTROLLER CABINET AND ALL OTHER ACCESSORIES THAT ARE NECESSARY TO MAKE THE PREEMPTION PHASE SELECTORS COMPLETELY FUNCTIONAL AND OPERATIONAL. THIS ITEM SHALL INCLUDE THE EXTRA CABINET SPACE NECESSARY TO BE LOCATED IN THE LOCAL CABINET.

THE PHASE SELECTORS SHALL CONSIST OF THE MODULE OR MODULES THAT WILL PROVIDE THE NECESSARY INPUTS TO THE CONTROLLER. PHASE SELECTORS SHALL BE SUPPLIED WITH SUFFICIENT QUANTITIES OF CHANNELS TO PROVIDE PREEMPTION FOR ALL APPROACHES TO THE INTERSECTION SEPARATELY. POWER SHALL BE OBTAINED FROM THE PHASE SELECTOR OR PHASE SELECTOR POWER SUPPLY AND NOT THE LOCAL CONTROLLER TIMER. THE PHASE SELECTORS SHALL HAVE FRONT PANEL INDICATORS FOR ACTIVE PREEMPTION CHANNEL STATUS. IT SHALL HAVE TEST SWITCHES TO ACTIVATE ALL PREEMPTION CHANNELS. FURNISH PREEMPTION PHASE SELECTORS WITH A 60-MONTH WARRANTY OR THE STANDARD MANUFACTURERS' WARRANTY WHICHEVER IS GREATER. ENSURE THAT THE WARRANTY PERIOD

633 PREEMPTION PHASE SELECTOR, AS PER PLAN ...CONTINUED

BEGINS ON THE DATE OF SHIPMENT TO THE PROJECT AND EACH UNIT HAS PERMANENT LABEL OR STAMP INDICATING THE DATE OF SHIPMENT.

PAYMENT FOR ITEM 633 PREEMPTION PHASE SELECTOR, AS PER PLAN SHALL BE AT THE CONTRACT UNIT PRICE BID FOR EACH SELECTOR IN PLACE, COMPLETELY INSTALLED AND FUNCTIONING, WIRED, TESTED, AND ACCEPTED.

633 CABINET FOUNDATION, AS PER PLAN

THIS ITEM SHALL INCLUDE THE ADDITIONAL EXCAVATION AND CONCRETE NECESSARY TO EXTEND THE CONTROLLER CABINET FOUNDATION IN ORDER TO SUPPORT THE UNINTERRUPTIBLE POWER SUPPLY (UPS) CABINET. THE CONTROLLER AND UPS CABINET FOUNDATION SHALL BE IN ACCORDANCE WITH CMS 633, SCD TC-83.20, AND PLAN INSERT SHEETS UNINTERRUPTIBLE POWER SUPPLY (UPS) FOUNDATION (PIS 208320) AND UNINTERRUPTIBLE POWER SUPPLY (UPS) FOUNDATION RETROFIT (PIS 208321).

PAYMENT FOR ITEM 633 CABINET FOUNDATION, AS PER PLAN SHALL INCLUDE ALL EQUIPMENT, LABOR, AND MATERIALS NECESSARY TO INSTALL THE FOUNDATION FOR A NEW CONTROLLER OR EXTENSION TO AN EXISTING FOUNDATION WITH UPS RETROFIT, INCLUDING CONDUIT ELLS AND ANCHOR BOLTS, RESTORATION OF DISTURBED AREA AND DISPOSAL OF SURPLUS MATERIAL AS PER CMS 104.04.

633 CONTROLLER WORK PAD, AS PER PLAN

THIS ITEM SHALL INCLUDE THE ADDITIONAL EXCAVATION AND CONCRETE NECESSARY TO EXTEND THE CONTROLLER CABINET WORK PAD FOR THE UNINTERRUPTIBLE POWER SUPPLY (UPS) CABINET.

IN ADDITION TO THE REQUIREMENTS OF CMS 633 & SCD TC-83.20, THE CONTRACTOR SHALL CONSTRUCT THE WORK PAD AS FOLLOWS:

-EXCAVATE A MINIMUM OF 9" BELOW GRADE
-PLACE COMPACT 6" OF MATERIAL CONFORMING TO 304.02
-INSTALL A CAST-IN-PLACE WORK PAD THAT IS A MINIMUM OF 4" THICK

PAYMENT FOR ITEM 633 CONTROLLER WORK PAD, AS PER PLAN SHALL INCLUDE ALL EQUIPMENT, LABOR, AND MATERIALS NECESSARY TO INSTALL A NEW CONCRETE WORK PAD OR EXTENSION TO AN EXISTING WORK PAD.

659 SEEDING AND MULCHING

SEEDING AND MULCHING SHALL BE APPLIED TO EXPOSED SOIL TWO FEET BEYOND THE DISTRESSED EARTH FOR INSTALLATION OF ALL PULL BOXES, SIGNAL POLES, AND CABINET FOUNDATIONS. THE FOLLOWING QUANTITY HAS BEEN CARRIED TO THE GENERAL SUMMARY FOR THE WORK NOTED ABOVE:

ITEM 659 SEEDING AND MULCHING 93 SQ YD

815 SPREAD SPECTRUM RADIO, AS PER PLAN

THIS WORK SHALL CONSIST OF OF FURNISHING AND INSTALLING SPREAD SPECTRUM RADIO EQUIPMENT AS DESCRIBED IN SUPPLEMENTAL SPECIFICATION 815 AND 906. IN ADDITION, INSTALLATION AND PAYMENT SHALL BE FOR EACH RADIO INSTALLED IN PLACE FULLY FUNCTIONAL INCLUDING ALL NECESSARY HARDWARE, CABLES, CONNECTORS, ATTACHMENT ASSEMBLIES ETC. ETHERNET SPREAD SPECTRUM RADIOS WILL BE INSTALLED AT THE FOLLOWING LOCATIONS:

U.S. 36 AND SCOTT DR./CENTRE COURT
U.S. 36 AND SOUTHBOUND I.R. 75 EXIT AND ENTRANCE RAMPS
U.S. 36 AND NORTHBOUND I.R. 75 EXIT AND ENTRANCE RAMPS
U.S. 36 AND LOONEY ROAD INTERSECTION

ALTERNATE BID ITEMS

632 PEDESTRIAN PUSHBUTTON, AS PER PLAN (BULL DOG BRAND) ALTERNATE BID

THE PEDESTRIAN PUSHBUTTON SHALL BE A "BULL DOG BDLM2-X" BRAND PUSHBUTTON, AS SUPPLIED BY BALDWIN AND SOURS OR PATHMASTER AND SHALL BE FURNISHED WITH APPLICABLE FEATURES AND ACESSORIES, AS REQUIRED IN THE STANDARD BID ITEM.

PAYMENT WILL BE MADE AT THE CONTRACT UNIT PRICE BID FOR EACH, IN PLACE, INCLUDING ALL CONNECTIONS TESTED AND ACCEPTED.

633 PREEMPTION, AS PER PLAN (SONEM) ALTERNATE BID

THE EMERGENCY VEHICLE PREEMPTION EQUIPMENT SHALL BE A "SONEM-2000" BRAND OR NEWER, AS SUPPLIED BY PATH MASTER, INC. IT SHALL BE FURNISHED WITH ALL APPLICABLE FEATURES AND ACCESSORIES AS REQUIRED IN THE STANDARD BID ITEM.

PAYMENT WILL BE MADE AT THE CONTRACT UNIT PRICE BID FOR EACH, IN PLACE AND ACCEPTED.

633 PREEMPTION RECEIVING UNIT, AS PER PLAN (SONEM) ALTERNATE BID

THE EMERGENCY VEHICLE PREEMPTION RECEIVING EQUIPMENT SHALL BE "SONEM-2000" BRAND OR NEWER, AS SUPPLIED BY PATH MASTER, INC. IT SHALL BE FURNISHED WITH ALL APPLICABLE FEATURES AND ACCESSORIES AS REQUIRED IN THE STANDARD BID ITEM.

PAYMENT WILL BE MADE AT THE CONTRACT UNIT PRICE BID FOR EACH, IN PLACE AND ACCEPTED.

633 PREEMPTION PHASE SELECTOR, AS PER PLAN (SONEM) ALTERNATE BID

THE EMERGENCY VEHICLE PREEMPTION PHASE SELECTOR EQUIPMENT SHALL BE "SONEM-2000" BRAND OR NEWER, AS SUPPLIED BY PATH MASTER, INC. IT SHALL BE FURNISHED WITH ALL APPLICABLE FEATURES AND ACCESSORIES AS REQUIRED IN THE STANDARD BID ITEM.

PAYMENT WILL BE MADE AT THE CONTRACT UNIT PRICE BID FOR EACH, IN PLACE AND ACCEPTED.

816 VIDEO DETECTION SYSTEM, AS PER PLAN (ENCORE) ALTERNATE BID

THE VIDEO DETECTION SYSTEM SHALL BE AN "AUTOSCOPE ENCORE" BRAND, AS SUPPLIED BY PATH MASTER, INC. IT SHALL BE FURNISHED WITH ALL APPLICABLE FEATURES AND ACCESSORIES AS REQUIRED IN THE STANDARD BID ITEM.

PAYMENT WILL BE MADE AT THE CONTRACT UNIT PRICE BID FOR EACH, IN PLACE, INCLUDING ALL CONNECTIONS TESTED AND ACCEPTED.

CALCULATED jab CHECKED

GENERAL NOTES 3/3

MIA-36-11.56

I:\PROJECTS\Mia\036\1169\94757\design\sheets\94757GN03.dgn 20-OCT-2014 1:40PM jberlke

ITEM 614 MAINTAINING TRAFFIC

A MINIMUM OF 2 LANES OF TRAFFIC IN EACH DIRECTION SHALL BE MAINTAINED AT ALL TIMES BY USE OF THE EXISTING PAVEMENT EXCEPT AS NOTED BELOW.

LENGTH AND DURATION OF LANE CLOSURES AND RESTRICTIONS SHALL BE AT THE APPROVAL OF THE ENGINEER. IT IS THE INTENT TO MINIMIZE THE IMPACT TO THE TRAVELING PUBLIC. LANE CLOSURES OR RESTRICTIONS OVER SEGMENTS OF THE PROJECT, IN WHICH NO WORK IS ANTICIPATED WITHIN A REASONABLE TIME FRAME, AS DETERMINED BY THE ENGINEER, SHALL NOT BE PERMITTED. THE LEVEL OF UTILIZATION OF MAINTENANCE OF TRAFFIC DEVICES SHALL BE COMMENSURATE WITH THE WORK IN PROGRESS.

LANE CLOSURES AND RESTRICTIONS SHALL NOT BE PERMITTED DURING 6:00 AM TO 9:00 AM AND 4:00 PM TO 6:00PM WEEKDAYS.

IF IS NECESSARY TO STOP ALL TRAFFIC FOR THE ERECTION OF THE MAST ARM, THE WORK SHALL BE ARRANGED THAT THE STOPPAGE IS LESS THAN FIFTEEN (15) MINUTES IN ANY ONE (1) THIRTY MINUTE PERIOD AND OCCURRING AFTER 7:00 PM AND BEFORE 7:00 AM.

NO WORK SHALL BE PERFORMED AND ALL EXISTING LANES SHALL BE OPEN TO TRAFFIC DURING THE FOLLOWING DESIGNATED HOLIDAYS OR EVENTS:

CHRISTMAS	FOURTH OF JULY
NEW YEARS	LABOR DAY
MEMORIAL DAY	THANKSGIVING
(OTHER HOLIDAY OR EVENT)	

THE PERIOD OF TIME THAT THE LANES ARE TO BE OPEN DEPENDS ON THE DAY OF THE WEEK ON WHICH THE HOLIDAY OR EVENT FALLS. THE FOLLOWING SCHEDULE SHALL BE USED TO DETERMINE THIS PERIOD:

DAY OF HOLIDAY OR EVENT	TIME ALL LANES MUST BE OPEN TO TRAFFIC
SUNDAY	12:00N FRIDAY THROUGH 6:00 AM MONDAY
MONDAY	12:00N FRIDAY THROUGH 6:00 AM TUESDAY
TUESDAY	12:00N MONDAY THROUGH 6:00 AM WEDNESDAY
WEDNESDAY	12:00N TUESDAY THROUGH 6:00 AM THURSDAY
THURSDAY	12:00N WEDNESDAY THROUGH 6:00 AM FRIDAY
THURSDAY (THANKSGIVING ONLY)	12:00N WEDNESDAY THROUGH 6:00 AM MONDAY
FRIDAY	12:00N THURSDAY THROUGH 6:00 AM MONDAY
SATURDAY	12:00N FRIDAY THROUGH 6:00 AM MONDAY

NO EXTENSIONS OF TIME SHALL BE GRANTED FOR DELAYS IN MATERIAL DELIVERIES, UNLESS SUCH DELAYS ARE INDUSTRY-WIDE, OR FOR LABOR STRIKES, UNLESS SUCH STRIKES ARE AREA-WIDE.

SHOULD THE CONTRACTOR FAIL TO MEET ANY OF THESE REQUIREMENTS, THE CONTRACTOR SHALL BE ASSESSED A DISINCENTIVE IN THE AMOUNT OF $50 FOR EACH MINUTE THE ABOVE DESCRIBED LANE CLOSURE RESTRICTIONS ARE VIOLATED.

ITEM 614 MAINTAINING TRAFFIC ...CONTINUED

ALL WORK AND TRAFFIC CONTROL DEVICES SHALL BE IN ACCORDANCE WITH CMS 614 AND OTHER APPLICABLE PORTIONS OF THE SPECIFICATIONS, AS WELL AS THE OHIO MANUAL OF UNIFORM TRAFFIC CONTROL DEVICES. PAYMENT FOR ALL LABOR, EQUIPMENT AND MATERIALS SHALL BE INCLUDED IN THE LUMP SUM CONTRACT PRICE FOR ITEM 614, MAINTAINING TRAFFIC, UNLESS SEPARATELY ITEMIZED IN THE PLAN.

MAINTENANCE OF TRAFFIC SIGNAL/FLASHER INSTALLATION

THE CONTRACTOR SHALL BE RESPONSBLE FOR MAINTAINING TRAFFIC SIGNAL/FLASHER INSTALLATIONS WITHIN THE PROJECT UNDER THE FOLLOWING CONDITIONS:

1. EXISTING SIGNAL/FLASHER INSTALLATIONS WHICH THE PLANS REQUIRE THE CONTRACTOR TO ADJUST, MODIFY, ADD ONTO OR REMOVE, OR WHICH THE CONTRACTOR ACTUALLY ADJUSTS, MODIFIES OR OTHERWISE DISTURBS. THE CONTRACTOR SHALL BE RESPONSIBLE FOR THE ENTIRE INSTALLATION (AT AN INTERSECTION) FROM THE TIME HIS OPERATIONS FIRST DISTURB THE INSTALLATION UNTIL THE INSTALLATION HAS BEEN SUBSEQUENTLY REMOVED OR MODIFIED AND THE WORK ACCEPTED.

2. NEW OR REUSED SIGNAL/FLASHER INSTALLATIONS OR DEVICES, INSTALLED BY THE CONTRACTOR. THE CONTRACTOR SHALL BE RESPONSBILE FOR MAINTENANCE OF THESE FROM THE TIME OF INSTALLATION UNTIL THE WORK IS ACCEPTED.

THE CONTRACTOR SHALL CORRECT AS QUICKLY AS POSSIBLE ALL OUTAGES OR MALFUNCTIONS. HE SHALL PROVIDE THE MAINTAINING AGENCY AND THE ENGINEER SUCH ADDRESSES AND PHONE NUMBERS WHERE HIS MAINTENANCE FORCES CAN BE CONTACTED. THE CONTRACTOR SHALL PROVIDE ONE OR MORE PERSONS TO RECEIVE ALL CALLS AND DISPATCH THE NECESSARY MAINTENANCE FORCES TO CORRECT OUTAGES. SUCH A PERSON OR PERSONS MAY BE USED TO PERFORM OTHER DUTIES AS LONG AS PROMPT ATTENTION IS GIVEN TO THESE CALLS AND A PERSON IS READILY AVAILABLE CONTINUOUSLY 24 HOURS A DAY, 7 DAYS A WEEK. ALL LAMP OUTAGES, CABLE OUTAGES, ELECTRICAL FAILURES, EQUIPMENT MALFUNCTIONS AND MISALIGNED SIGNAL HEADS SHALL BE CORRECTED TO THE SATISFACTION OF THE ENGINEER WITH THE SIGNAL BACK TO SERVICE WITHIN FOUR HOURS AFTER THE CONTRACTOR HAS BEEN NOTIFIED OF THE OUTAGE.

IN THE EVENT NEW SIGNALS ARE DAMAGED PRIOR TO ACCEPTANCE, ALL DAMAGED EQUIPMENT EXCEPT POLES AND CONTROL EQUIPMENT SHALL BE REPLACED BY THE CONTRACTOR TO THE SATISFACTION OF THE ENGINEER WITH THE SIGNAL BACK IN SERVICE WITHIN 8 HOURS AFTER THE CONTRACTOR'S NOTIFICATION OF THE OUTAGE. THE CONTRACTOR SHALL ARRANGE FOR FULL TRAFFIC CONTROL UNTIL THE SIGNAL IS BACK IN OPERATION.

IF POLES AND/OR CONTROL EQUIPMENT ARE DAMAGED AND MUST BE REPLACED, THE CONTRACTOR SHALL MAKE TEMPORARY REPAIRS AS NECESSARY TO BRING THE SIGNAL BACK INTO FULL OPERATION WITHIN THE ALLOWED 8-HOUR PERIOD, AND SHALL MAKE PERMANENT REPAIRS OR REPLACEMENT AS SOON THEREAFTER AS POSSIBLE.

NONE OF THE ABOVE SHALL BE CONSTRUED AS COLLECTIVE OR CONSECUTIVE OUTAGE TIME PERIODS AT ANY ONE LOCATION. THAT IS, WHERE MORE THAN ONE OUTAGE OCCURS AT ANY ONE LOCATION THEN THE ALLOTTED TIME LIMIT SHALL BE FOR THE WORST SINGLE OUTAGE.

MAINTENANCE OF TRAFFIC SIGNAL/FLASHER INSTALLATION

WHERE OUTAGES ARE THE DIRECT RESULT OF A VEHICLE ACCIDENT, THE RESPONSE OF THE CONTRACTOR SHALL BE AS OUTLINED ABOVE. THE CONTRACTOR SHALL BE RESPONSIBLE FOR COLLECTION OF ANY COMPENSATION FOR THIS WORK FROM THOSE PARTIES RESPONSIBLE FOR THE DAMAGE.

WHERE THE CONTRACTOR HAS FAILED TO, OR CANNOT RESPOND TO, AN OUTAGE OR SIGNAL EQUIPMENT MALFUNCTION, AT THESE LOCATIONS WITHIN HIS RESPONSIBILITY, WITHIN PERIODS AS SPECIFIED ABOVE, THE ENGINEER MAY INVOKE THE PROVISIONS OF SECTION 105.15 AND ANY SUBSEQUENT BILLINGS TO

THE STATE OR THE CITY OF PIQUA FOR POLICE SERVICES AND MAINTENANCE SERVICES BY CITY FORCES SHALL BE DEDUCTED FROM MONIES DUE OR TO BECOME DUE THE CONTRACTOR IN ACCORDANCE WITH PROVISIONS OF SECTION 105.15.

THE CONTRACTOR SHALL PROVIDE THE MAINTENANCE SERVICE ENTIRELY WITH HIS FORCES OR HE MAY CHOOSE TO ENTER INTO A COOPERATIVE UNDERSTANDING WITH THE LOCAL MAINTAINING AGENCY TO PROVIDE THE MAINTENANCE. THE CONTRACTOR SHALL INFORM THE ENGINEER, IN WRITING, OF THE MAINTENANCE METHOD SELECTED.

THE CONTRACTOR SHALL BE RESPONSIBLE FOR ANY DAMAGE TO ANY TRAFFIC SIGNAL COMPONENTS REQUIRED TO BE HANDLED DURING THE RELOCATION OF POLES AND REVISIONS TO THE SIGNAL SYSTEM.

WHEN A TRAFFIC SIGNAL MUST BE TAKEN OUT OF SERVICE BY THE CONTRACTOR, DUE TO CONSTRUCTION PROCEDURES, THIS OUTAGE SHALL NOT EXCEED 6 HOURS AND SHALL NOT INCLUDE THE HOURS OF 6AM TO 6PM. ANY SIGNALIZED INTERSECTION, WHERE THE SIGNAL IS OUT OF SERVICE DUE TO CONSTRUCTION PROCEDURES, OR DUE TO AN OUTAGE OR MALFUNCTION OF EQUIPMENT AS DESCRIBED ABOVE, SHALL BE PROTECTED, BY THE CONTRACTOR, BY OFF-DUTY CITY OF PIQUA POLICE, HIRED BY THE CONTRACTOR.

ANY VEHICULAR TRAFFIC SIGNAL HEAD, EITHER NEW OR EXISTING WHICH WILL BE OUT OF OPERATION SHALL BE COVERED IN THE MANNER DESCRIBED IN 632.25.

THE CONTRACTOR SHALL MAINTAIN COMPLETE RECORDS OF MALFUNCTIONS INCLUDING:

1. TIME OF NOTIFICATION OF MALFUNCTION;
2. TIME OF WORK CREWS ARRIVAL TO CORRECT THE MALFUNCTION;
3. ACTIONS TAKEN TO CORRECT THE MALFUNCTION, INCLUDING A LIST OF PARTS REPAIRED OR REPLACED;
4. A DIAGNOSIS OF REASON FOR THE MALFUNCTION AND PROBABILITY OF REOCCURRENCE;
5. TIME OF COMPLETION OF THE REPAIR AND SYSTEM RESTORED TO FULL SERVICE.

A COPY OF THESE RECORDS SHALL BE PROVIDED TO THE ENGINEER WITHIN THREE (3) WORKING DAYS FOLLOWING COMPLETION OF EACH REPAIR.

ALL COSTS RESULTING FROM THE ABOVE REQUIREMENTS SHALL BE CONSIDERED TO BE INCLUDED IN THE LUMP SUM PRICE BID FOR ITEM 614, MAINTAINING TRAFFIC.

CALCULATED JAB
CHECKED

MAINTENANCE OF TRAFFIC NOTES 1/2

MIA-36-11.69

I:\PROJECTS\Mia\036\1169\94757\design\sheets\94757MN01.dgn 20-OCT-2014 1:40PM jbertke

ITEM 614 LAW ENFORCEMENT OFFICER (WITH PATROL CAR) FOR ASSISTANCE DURING CONSTRUCTION OPERATIONS

USE OF LAW ENFORCEMENT OFFICERS (LEOS) BY CONTRACTORS OTHER THAN THE USES SPECIFIED BELOW WILL NOT BE PERMITTED AT PROJECT COST. LEOS SHOULD NOT BE USED WHERE THE OMUTCD INTENDS THAT FLAGGERS BE USED.

IN ADDITION TO THE REQUIREMENTS OF CMS 614 AND THE OMUTCD, A UNIFORMED LEO WITH AN OFFICIAL PATROL CAR (CAR WITH TOP-MOUNTED EMERGENCY FLASHING LIGHTS AND COMPLETE MARKINGS OF THE APPROPRIATE LAW ENFORCEMENT AGENCY) SHALL BE PROVIDED FOR THE FOLLOWING TRAFFIC CONTROL TASKS:

DURING THE ENTIRE ADVANCE PREPARATION AND CLOSURE SEQUENCE WHERE COMPLETE BLOCKAGE OF TRAFFIC IS REQUIRED.

DURING A TRAFFIC SIGNAL INSTALLATION WHEN IMPACTING THE NORMAL FUNCTION OF THE SIGNAL OR THE FLOW OF TRAFFIC OR WHEN TRAFFIC NEEDS TO BE DIRECTED THROUGH AN ENERGIZED TRAFFIC SIGNAL CONTRARY TO THE SIGNAL DISPLAY (E.G., DIRECTING MOTORISTS THROUGH A RED LIGHT).

IN ADDITION TO THE REQUIREMENT OF CMS 614 AND THE OMUTCD, A UNIFORMED LEO WITH AN OFFICIAL PATROL CAR (CAR WITH TOP-MOUNTED EMERGENCY FLASHING LIGHTS AND COMPLETE MARKINGS OF THE APPROPRIATE LAW ENFORCEMENT AGENCY) SHOULD BE PROVIDED FOR THE FOLLOWING TRAFFIC CONTROL TASKS:

FOR LANE CLOSURES: DURING INITIAL SET-UP PERIODS, TEAR DOWN PERIODS, SUBSTANTIAL SHIFTS OF A CLOSURE POINT OR WHEN NEW LANE CLOSURE ARRANGEMENTS ARE INITIATED FOR LONG-TERM LANE CLOSURES/SHIFTS (FOR THE FIRST AND LAST DAY OF MAJOR CHANGES IN TRAFFIC CONTROL SETUP). IN GENERAL, LEOS SHOULD BE POSITIONED AT THE POINT OF LANE RESTRICTION OR ROAD CLOSURE AND TO MANUALLY CONTROL TRAFFIC MOVEMENTS THROUGH INTERSECTIONS IN WORK ZONES.

WHEN CONSTRUCTION VEHICLES ARE ENTERING/EXITING THE ZONE DIRECTLY FROM/INTO AN OPEN LANE OF TRAFFIC. IF A LANE HAS BEEN CLOSED TO PROVIDE AN ACCELERATION/DECELERATION LANE FOR THE VEHICLE, THE LEO WILL NOT BE REQUIRED.

LEOS SHOULD NOT FORGO THEIR TRAFFIC CONTROL RESPONSIBILITIES TO APPREHEND MOTORISTS FOR ROUTINE TRAFFIC VIOLATIONS. HOWEVER, IF A MOTORIST'S ACTIONS ARE CONSIDERED TO BE RECKLESS, THEN PURSUIT OF THE MOTORIST IS APPROPRIATE.

THE LEOS WORK AT THE DIRECTION OF THE CONTRACTOR. THE CONTRACTOR IS RESPONSIBLE FOR SECURING THE SERVICES OF THE LEOS WITH THE APPROPRIATE AGENCIES AND COMMUNICATING THE INTENTIONS OF THE PLANS WITH RESPECT TO DUTIES OF THE LEOS. THE ENGINEER SHALL HAVE FINAL CONTROL OVER THE LEOS' DUTIES AND PLACEMENT, AND WILL RESOLVE ANY ISSUES THAT MAY ARISE BETWEEN THE TWO PARTIES.

THE LEO SHALL REPORT IN TO THE CONTRACTOR PRIOR TO THE START OF THE SHIFT, IN ORDER TO RECEIVE INSTRUCTIONS REGARDING SPECIFIC WORK ASSIGNMENTS DURING HIS/HER SHIFT. THE LEO IS EXPECTED TO STAY AT THE PROJECT SITE FOR THE ENTIRE DURATION OF HIS/HER SHIFT. THE LEO SHALL REPORT TO THE CONTRACTOR AT THE END OF HIS/HER SHIFT. ONCE THE LEO HAS COMPLETED THE DUTIES DESCRIBED ABOVE AND STILL HAS TIME REMAINING ON HIS/HER SHIFT, THE LEO

ITEM 614 LAW ENFORCEMENT OFFICER (WITH PATROL CAR) FOR ASSISTANCE DURING CONSTRUCTION OPERATIONS ...CONTINUED

MAY BE ASKED TO PATROL THROUGH THE WORK ZONE (WITH FLASHING LIGHTS OFF) OR BE PLACED AT A LOCATION TO DETER MOTORISTS FROM SPEEDING. SHOULD IT BE NECESSARY TO LEAVE THE PROJECT SITE, THE LEO SHALL NOTIFY THE ENGINEER. THE CONTRACTOR SHALL PROVIDE THE LEO WITH A TWO-WAY COMMUNICATION DEVICE WHICH SHALL BE RETURNED TO THE CONTRACTOR AT THE END OF HIS/HER SHIFT.

LEOS (WITH PATROL CAR) REQUIRED BY THE TRAFFIC MAINTENANCE TASKS ABOVE SHALL BE PAID FOR ON A UNIT PRICE (HOURLY) BASIS UNDER ITEM 614, LAW ENFORCEMENT OFFICER (WITH PATROL CAR) FOR ASSISTANCE. THE FOLLOWING ESTIMATED QUANTITIES HAVE BEEN CARRIED TO THE GENERAL SUMMARY.

ITEM 614, LAW ENFORCEMENT OFFICER WITH PATROL CAR FOR ASSISTANCE 24 HOURS

THE HOURS PAID SHALL INCLUDE ANY MINIMUM SHOW-UP TIME REQUIRED BY THE LAW ENFORCEMENT AGENCY INVOLVED.

ANY ADDITIONAL COSTS (ADMINISTRATIVE OR OTHERWISE) INCURRED BY THE CONTRACTOR TO OBTAIN THE SERVICES OF AN LEO ARE INCLUDED WITH THE BID UNIT PRICE FOR ITEM 614, LAW ENFORCEMENT OFFICER WITH PATROL CAR FOR ASSISTANCE.

SHEET NUMBER							PARTICIPATION		ITEM	ITEM EXT	GRAND TOTAL	UNIT	DESCRIPTION	SEE SHEET NO.
5	7	10	25	30	35	40	01/SAF/OT	02/SAF/OT						
													ROADWAY	
		1161					583	578	202	30001	1161	SF	WALK REMOVED, AS PER PLAN	4
		88						88	202	32001	88	FT	CURB REMOVED, AS PER PLAN	4
		1736					1003	733	608	10000	1736	SF	4" CONCRETE WALK	
		134						134	608	52021	134	SF	CURB RAMP, TYPE A2, AS PER PLAN	4
		84						84	608	52041	84	SF	CURB RAMP, TYPE B2, APP	4
		264						264	608	52045	264	SF	CURB RAMP, TYPE B3, AS PER PLAN	4
		271						271	608	52061	271	SF	CURB RAMP, TYPE C2, AS PER PLAN	4
		232						232	608	53021	232	SF	DETECTABLE WARNING, AS PER PLAN	4
													EROSION CONTROL	
93							50	43	659	10000	93	SY	SEEDING AND MULCHING	5
													DRAINAGE	
		500					220	280	611	00400	500	FT	4" CONDUIT, TYPE E	
													PAVEMENT	
		18						18	609	12001	18	FT	COMBINATION CURB AND GUTTER, TYPE 2, AS PER PLAN	4
		15						15	609	26001	15	FT	CURB, TYPE 6, AS PER PLAN	4
													TRAFFIC CONTROL	
		26					13	13	630	03100	26	FT	GROUND MOUNTED SUPPORT, NO. 3 POST	
		39					13	26	630	08004	39	FT	ONE WAY SUPPORT, NO. 3 POST	
			18	6	8	12	14	30	630	79100	44	EACH	SIGN HANGER ASSEMBLY, MAST ARM	
		29	53	28	48	30	29	159	630	80100	188	SF	SIGN, FLAT SHEET	
		3					1	2	630	84900	3	EACH	REMOVAL OF GROUND MOUNTED SIGN AND DISPOSAL	
				2	2		4		630	87101	4	EACH	REMOVAL OF OVERHEAD MOUNTED SIGN AND REERECTION, AS PER PLAN	4
			3	1	1	2		7	631	90501	7	EACH	INTERNALLY ILLUMINATED FIXED MESSAGE SIGN, AS PER PLAN	13
		626					60	566	642	30000	626	FT	REMOVAL OF PAVEMENT MARKING	
		1						1	644	01300	1	EACH	LANE ARROW	
		192					36	156	644	00500	192	FT	STOP LINE	
		770					120	650	644	00700	770	FT	TRANSVERSE/DIAGONAL LINE	
													TRAFFIC SURVEILLANCE	
			1	1	1	1	2	2	809	69000	4	EACH	ADVANCE DETECTION	
			1	1	1	1	2	2	816	30000	4	EACH	VIDEO DETECTION SYSTEM	
													TRAFFIC SIGNALS	
			59	82	25	113	107	172	625	25400	279	FT	CONDUIT, 2", 725.04	
			4	35	36	23	71	27	625	25500	98	FT	CONDUIT, 3", 725.04	
			46	88		48	88	94	625	25600	182	FT	CONDUIT, 4", 725.04	
			94	127	69	25	196	119	625	25907	315	FT	CONDUIT, JACKED OR DRILLED, 725.051, AS PER PLAN (3")	4
			193	115	47	238	162	431	625	25907	593	FT	CONDUIT, JACKED OR DRILLED, 725.051, AS PER PLAN (4")	4
			81	205	61	161	266	242	625	29003	508	FT	TRENCH, 24" DEEP, AS PER PLAN	4
			7	6	3	5	9	12	625	30700	21	EACH	PULL BOX, 725.08, 18"	
			1	1	1	1	2	2	625	30706	4	EACH	PULL BOX, 725.08, 24"	
			7	4	5	10	9	17	625	32000	26	EACH	GROUND ROD	
			1	1	1	1	2	2	625	34000	4	EACH	POWER SERVICE	
			101	205	61	150	266	251	625	36000	517	FT	PLASTIC CAUTION TAPE	
			12	8	8	7	16	19	632	05007	35	EACH	VEHICULAR SIGNAL HEAD, (LED), BLACK, 3-SECTION, 12" LENS, 1-WAY, POLYCARBONATE, WITH BACKPLATE, AS PER PLAN	4
						3		3	632	05087	3	EACH	VEHICULAR SIGNAL HEAD, (LED), BLACK, 5-SECTION, 12" LENS, 1-WAY, POLYCARBONATE, WITH BACKPLATE, AS PER PLAN	4
			6	2	2	6	4	12	632	20731	16	EACH	PEDESTRIAN SIGNAL HEAD (LED) , (COUNTDOWN), TYPE D2, AS PER PLAN	4
			6	2		6	2	12	632	26000	14	EACH	PEDESTRIAN PUSHBUTTON	
			1650	1740	142	2002	1882	3652	632	40500	5534	FT	SIGNAL CABLE, 5 CONDUCTOR, NO. 14 AWG	
			934	819	703	1087	1522	2021	632	40700	3543	FT	SIGNAL CABLE, 7 CONDUCTOR, NO. 14 AWG	
			2	2	2	3	4	5	632	64010	9	EACH	SIGNAL SUPPORT FOUNDATION	
			4	2	2	5	4	9	632	64020	13	EACH	PEDESTAL FOUNDATION	
			38	33	38	47	71	85	632	68200	156	FT	POWER CABLE, 2 CONDUCTOR, NO. 6 AWG	
			50	96	158	53	254	103	632	69500	357	FT	SERVICE CABLE, 2 CONDUCTOR, NO. 6 AWG	
			1	2	2	3	4	4	632	70600	8	EACH	CONDUIT RISER, 3" DIAMETER	

CALCULATED

CHECKED

GENERAL SUMMARY

MIA-36-11.56

I:\PROJECTS\Mia\036\1169\94757\design\sheets\94757GG01.dgn 20-OCT-2014 1:40PM jbertke

SHEET NUMBER							PARTICIPATION		ITEM	ITEM EXT	GRAND TOTAL	UNIT	DESCRIPTION	SEE SHEET NO.
5	7	10	25	30	35	40	01/SAF/OT	02/SAF/OT						
					1		1		632	75172	1	EACH	SIGNAL SUPPORT, TYPE TC-12.30 DESIGN 6 POLE, WITH MAST ARMS TC-81.21 DESIGN 11 AND DESIGN 11	
			1	1			1	1	632	75484	2	EACH	SIGNAL SUPPORT, TYPE TC-12.30 DESIGN 10 POLE, WITH MAST ARMS TC-81.21 DESIGN 14 AND DESIGN 12	
			2	1	1	2	2	4	632	77230	6	EACH	SIGNAL SUPPORT, MECHANICAL DAMPER FOR TC-81.21 MAST ARM (GREATER THAN 59' IN LENGTH)	
						2		2	632	80628	2	EACH	SIGNAL SUPPORT, TYPE TC-81.21, DESIGN 14	
			1			1		2	632	80700	2	EACH	SIGNAL SUPPORT, MISC.:TYPE TC-12.30 DESIGN 11, WITH MAST ARMS TC-81.21 DESIGN 14 AND DESIGN 13	23
				1	1		2		632	80700	2	EACH	SIGNAL SUPPORT, MISC.:TYPE TC-9.30, DESIGN 1, SIGN AND SIGNAL SUPPORT WITH MAST ARM DESIGN 13	28
			4	2	2	5	4	9	632	90000	13	EACH	PEDESTAL, 11', TRANSFORMER BASE	
			1	1	1	1	2	2	632	90103	4	EACH	REMOVAL OF TRAFFIC SIGNAL INSTALLATION FOR STORAGE, AS PER PLAN	4
				1	1		2		632	90104	2	EACH	REUSE OF TRAFFIC CONTROL ITEM: UNINTERRUPTIBLE POWER SUPPLY (UPS)	
			2					2	632	90210	2	EACH	REUSE OF PEDESTRIAN PUSHBUTTON	
			1	1	1	1	2	2	633	01501	4	EACH	CONTROLLER UNIT, TYPE TS2/A1, WITH CABINET, TYPE TS2, AS PER PLAN	4
			1	1	1	1	2	2	633	67101	4	EACH	CABINET FOUNDATION, AS PER PLAN	5
			1	1	1	1	2	2	633	67201	4	EACH	CONTROLLER WORK PAD, AS PER PLAN	5
			4	3	3	4		14	633	67301	14	EACH	PREEMPTION, AS PER PLAN	4
			4	3	3	4		14	633	67311	14	EACH	PREEMPTION RECEIVING UNIT, AS PER PLAN	5
			904	649	163	4		1720	633	67321	1720	FT	PREEMPTION DETECTOR CABLE, AS PER PLAN	5
			1	1	2	1		5	633	67351	5	EACH	PREEMPTION PHASE SELECTOR, AS PER PLAN	5
			4	3	3	4		14	633	67401	14	EACH	PREEMPTION CONFIRMATION LIGHT, AS PER PLAN	5
			1	1	1	1	2	2	815	30001	4	EACH	SPREAD SPECTRUM RADIO, AS PER PLAN	5
													ALTERNATE BID ITEMS	
			6	2		6		14	632	26001	14	EACH	PEDESTRIAN PUSHBUTTON, AS PER PLAN (ALTERNATE BID)	5
					1			1	632	75173	1	EACH	SIGNAL SUPPORT, TYPE TC-12.30 DESIGN 6 POLE, WITH MAST ARMS TC-81.21 DESIGN 11 AND DESIGN 11, AS PER PLAN (ALTERNATE BID)	12
			1	1				2	632	75485	2	EACH	SIGNAL SUPPORT, TYPE TC-12.30 DESIGN 10 POLE, WITH MAST ARMS TC-81.21 DESIGN 14 AND DESIGN 12, AS PER PLAN (ALTERNATE BID)	12
						2		2	632	80629	2	EACH	SIGNAL SUPPORT, TYPE TC-81.21, DESIGN 14, AS PER PLAN (ALTERNATE BID)	12
			1			1		2	632	80700	2	EACH	SIGNAL SUPPORT, MISC.:TYPE TC-12.30 DESIGN 11, WITH MAST ARMS TC-81.21 DESIGN 14 AND DESIGN 13 (ALTERNATE BID)	12
				1	1			2	632	80700	2	EACH	SIGNAL SUPPORT, MISC.:TYPE TC-9.30, DESIGN 1, SIGN AND SIGNAL SUPPORT WITH MAST ARM DESIGN 13 (ALTERNATE BID)	12
			4	3	3	4		14	633	67301	14	EACH	PREEMPTION, AS PER PLAN (ALTERNATE BID)	4
			4	3	3	4		14	633	67311	14	EACH	PREEMPTION RECEIVING UNIT, AS PER PLAN (ALTERNATE BID)	5
			1	1	2	1		5	633	67351	5	EACH	PREEMPTION PHASE SELECTOR, AS PER PLAN (ALTERNATE BID)	5
			1	1	1	1		4	816	30001	4	EACH	VIDEO DETECTION SYSTEM, AS PER PLAN (ALTERNATE BID)	5
													INCIDENTALS	
									614	11000	LS		MAINTAINING TRAFFIC	
	24						24		614	11110	24	HOUR	LAW ENFORCEMENT OFFICER WITH PATROL CAR FOR ASSISTANCE	7
							6		619	16010	6	MNTH	FIELD OFFICE, TYPE B	
									623	10000	LS		CONSTRUCTION LAYOUT STAKES AND SURVEYING	
									624	10000	LS		MOBILIZATION	

CALCULATED

CHECKED

GENERAL SUMMARY 2/2

MIA-36-11.56

I:\PROJECTS\Mia\036\1169\94757\design\streets\94757GG02.dgn 20-OCT-2014 1:40PM jberlke

REF.	SHEET NO.	STATION FROM	STATION TO	OFFSET	SIDE	CODE	202 WALK REMOVED, AS PER PLAN (SF)	202 CURB REMOVED, AS PER PLAN (FT)	608 4" CONCRETE WALK (SF)	608 CURB RAMP, TYPE A2, AS PER PLAN (SF)	608 CURB RAMP, TYPE B2, APP (SF)	608 CURB RAMP, TYPE B3, AS PER PLAN (SF)	608 CURB RAMP, TYPE C2, AS PER PLAN (SF)	608 DETECTABLE WARNING, AS PER PLAN (SF)	609 COMBINATION CURB AND GUTTER, TYPE 2, AS PER PLAN (FT)	609 CURB, TYPE 6, AS PER PLAN (FT)	611 4" CONDUIT, TYPE E (FT)	630 GROUND MOUNTED SUPPORT, NO. 3 POST (FT)	630 ONE WAY SUPPORT, NO. 3 POST (FT)	630 SIGN, FLAT SHEET (SF)	630 REMOVAL OF GROUND MOUNTED SIGN AND DISPOSAL (EACH)	630 REMOVAL OF OVERHEAD MOUNTED SIGN AND REERECTION, AS PER PLAN (EACH)	644 LANE ARROW (EACH)	642 REMOVAL OF PAVEMENT MARKING (FT)	644 STOP LINE (FT)	644 TRANSVERSE/DIAGONAL LINE (FT)
SG- 1	15	611+21		113	RT	R9-3-24												13		4						
SL- 1	15	611+21	611+94	45	LT																				23	
R- 1	15	611+69	611+94	26	LT																			173		
W- 2	15	611+21			LT		84	17			84			8												
W- 3	15	612+27			LT		186	16	77			109		16												
TL- 3	15	611+69	612+29	30	LT																					100
R- 2	15	611+69	612+29	30	LT																			118		
W- 1	15	611+27		102	RT				87					16												
TL- 1	15	611+23	612+18	101	RT																					140
R- 3	15	611+55		103	RT																			14		
TL- 2	15	611+65		118	RT																					30
LA- 1	15	611+76		137	RT																		1			
SL- 2	15	611+65	612+04	118	RT																				31	
R- 4	15	611+76	612+05	118	RT																			97		
W- 4	16	617+69	618+11	30	LT		195		264					28												
TL- 4	16	618+11	618+61	25	LT																					80
R- 5	16	618+11	618+61	25	LT																			60		
SL- 3	16	618+21	618+56	38	LT																				36	
SG- 2	16	618+69		33	LT	R5-1-36													13	9	1					
SG- 2A	16	617+99		152'	RT	E6-2A-96																2				
W- 5	16	618+61	619+00	24	LT		150		303					16												
SG- 3	18	625+69		23	RT	R9-3-24												13		8						
W- 6	18	625+66	625+97	49	LT		116		214					16												
TL- 5	18	625+97	626+31	44	LT																					40
W- 7	18	626+31	626+60	44	LT		122		222					16												
SG- 4	18	626+75		46	LT	E6-2A-96																2				
SG- 5	19	631+47		65	RT	R9-3-24													13	4						
SG- 6	19	631+55		32	LT	R9-3-24													13	4						
W- 11	19	631+49	631+76	33	LT		135	28	82	134				16	18											
SL- 4	19	631+72	632+12	43	LT																				30	
TL- 6	19	631+72	632+53	28	LT																					130
R- 6	19	631+72	632+12	43	LT																			67		
W- 10	19	632+51	632+68	20	LT		173	27	95			155	271	36		15										
SL- 5	19	632+77																							37	
TL- 7	19	632+63																								110
R- 7	19	632+77																						44		
W- 9	19	632+47	632+68	46	RT				290					48												
SG- 7	19	632+50		62	RT																2					
SL- 6	19	632+00	632+37	67	RT																				35	
TL- 8	19	631+56	632+32	54	RT																					140
R- 8	19	632+00	632+37	67	RT																			53		
W- 8	19	631+56		60	RT				102					16												
		4" CONDUIT SEE NOTE FROM SHEET 4															500									
TOTALS CARRIED TO GENERAL SUMMARY							1161	88	1736	134	84	264	271	232	18	15	500	26	39	29	3	4	1	626	192	770

CALCULATED

CHECKED

ROADWAY SIGN AND PAVEMENT MARKING SUBSUMMARY

MIA-36-11.56

I:\PROJECTS\Mia\036\1169\94757\design\sheets\94757TS01.dgn 20-OCT-2014 1:40PM jbertke

CONTINENTAL TRANSVERSE CROSSWALK LINE

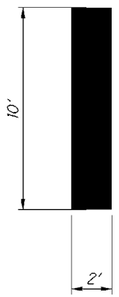

MARKINGS SHOWN ON THIS SHEET TYPICAL OF ALL CROSSWALKS IN PLANS. MAXIMUM GAP BETWEEN LINES TO BE 5'. ALL PROPOSED STOP BARS TO BE A MINIMUM OF 4' FROM NEAREST EDGE OF CROSSWALK.

REMOVAL OF EXISTING STOP BAR AND CHANNELIZING OR LANE LINES BEYOND PROPOSED STOP BAR SHOWN ONLY ON EAST APPROACH FOR CLARITY.

PAYMENT FOR CONTINENTAL TRANSVERSE LINES SHALL BE PAID BY ITEM 644 TRANSVERSE LINES.

WHERE INSIDE LANE IS LESS THAN 14'

CROSSWALK LINES TO BE PLACED BEGINNING PARALLEL TO CENTERLINE, THEN OFFSET HALF THE LANE WIDTH ACROSS THE APPROACHING TRAFFIC LANE, UNLESS DIRECTED OTHERWISE BY THE ENGINEER. (OFFSET IS MEASURED FROM CENTER TO CENTER OF LINE.) SPACING CAN BE HELD CONSTANT OVER OTHER LANES AS PLACED OUT FROM CENTER. LINES SHALL BE PARALLEL TO THE LANE AND CHANNELIZING LINES. THEY SHALL DIRECT PEDESTRIAN TRAFFIC FROM TRUNCATED DOME TO OTHER SECTION OF TRUNCATED DOMES.

WHERE INSIDE LANE IS GREATER THAN 14' OR INTERCHANGE RAMPS

CROSSWALK LINES TO BE PLACED BEGINNING AT CENTER OF LANE/RAMP THEN OFFSET 6 FEET AND PARALLEL TO EDGE LINE OR CHANNELIZING LINES, UNLESS DIRECTED OTHERWISE BY THE ENGINEER. (OFFSET IS MEASURED FROM CENTER TO CENTER OF LINE.) SPACING SHALL BE HELD CONSTANT OVER OTHER LANES OR RAMP, AS PLACED OUT FROM CENTER. LINES SHALL DIRECT PEDESTRIAN TRAFFIC FROM TRUNCATED DOME TO OTHER SECTION OF TRUNCATED DOMES.

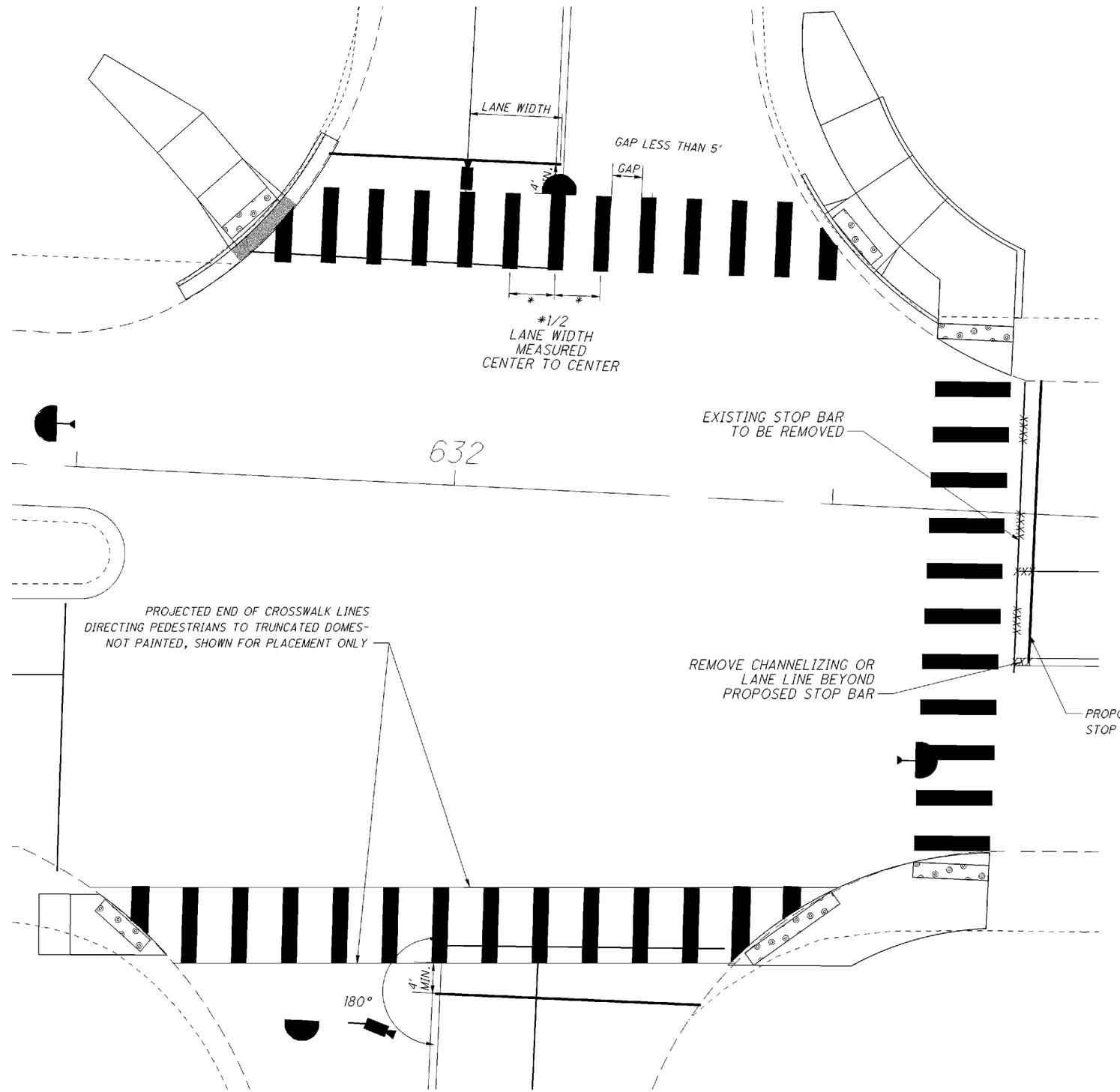

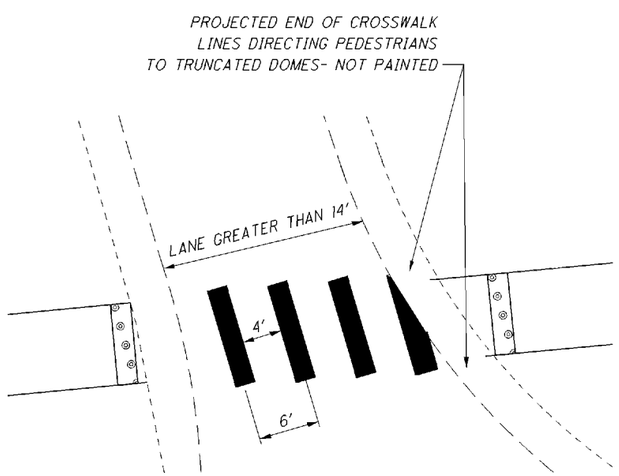

CALCULATED

CHECKED

CONTINENTAL CROSSWALK PAVEMENT MARKING DETAIL

MIA-36-11.56

I:\PROJECTS\Mia\036\1169\94757\design\sheets\94757TD01.dgn 20-OCT-2014 1:40PM jbertke

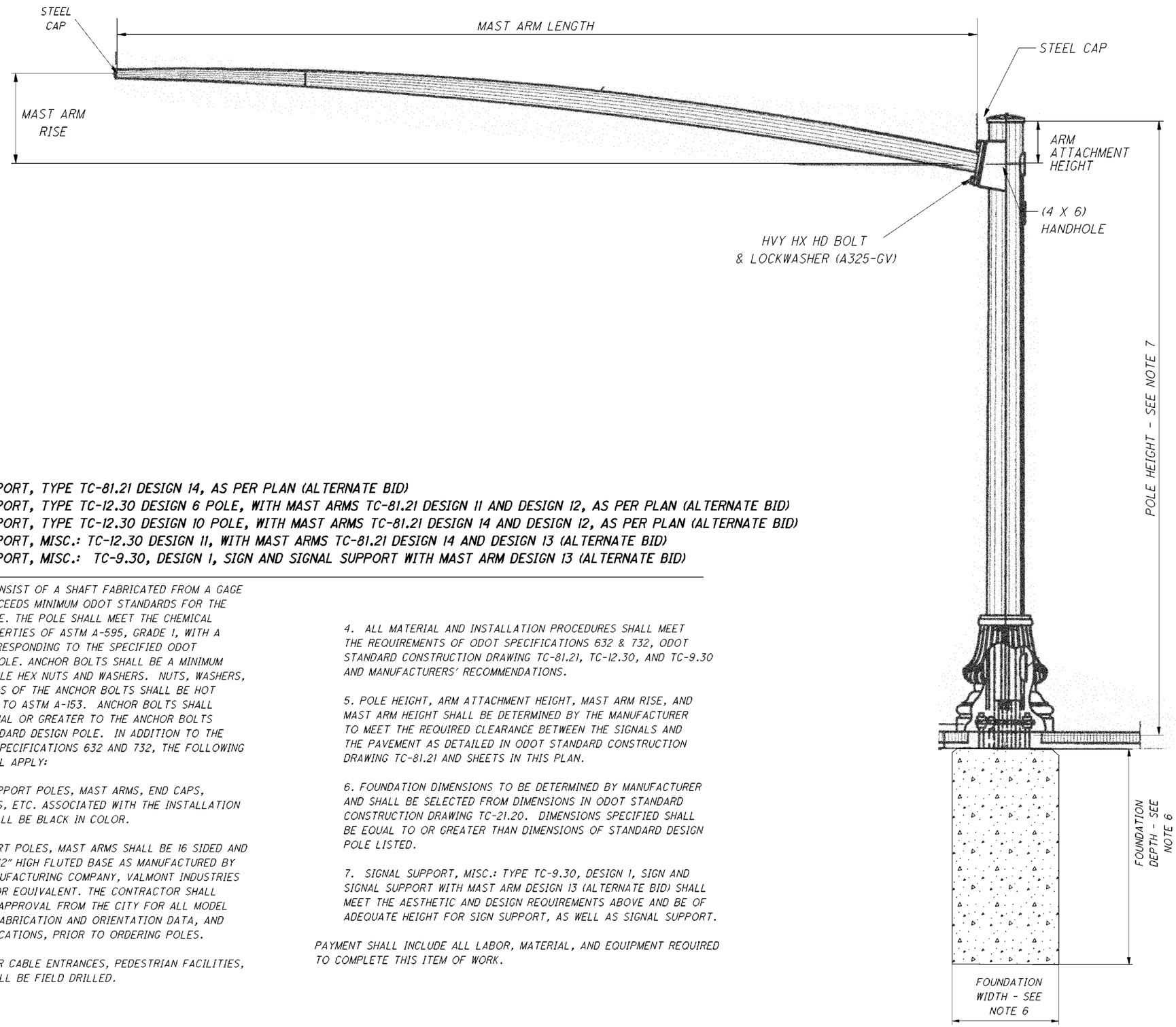

632 SIGNAL SUPPORT, TYPE TC-81.21 DESIGN 14, AS PER PLAN (ALTERNATE BID)
632 SIGNAL SUPPORT, TYPE TC-12.30 DESIGN 6 POLE, WITH MAST ARMS TC-81.21 DESIGN 11 AND DESIGN 12, AS PER PLAN (ALTERNATE BID)
632 SIGNAL SUPPORT, TYPE TC-12.30 DESIGN 10 POLE, WITH MAST ARMS TC-81.21 DESIGN 14 AND DESIGN 12, AS PER PLAN (ALTERNATE BID)
632 SIGNAL SUPPORT, MISC.: TC-12.30 DESIGN 11, WITH MAST ARMS TC-81.21 DESIGN 14 AND DESIGN 13 (ALTERNATE BID)
632 SIGNAL SUPPORT, MISC.: TC-9.30, DESIGN 1, SIGN AND SIGNAL SUPPORT WITH MAST ARM DESIGN 13 (ALTERNATE BID)

THE POLE SHALL CONSIST OF A SHAFT FABRICATED FROM A GAGE WHICH MEETS OR EXCEEDS MINIMUM ODOT STANDARDS FOR THE SPECIFIED POLE SIZE. THE POLE SHALL MEET THE CHEMICAL AND PHYSICAL PROPERTIES OF ASTM A-595, GRADE 1, WITH A MINIMUM YIELD CORRESPONDING TO THE SPECIFIED ODOT STANDARD DESIGN POLE. ANCHOR BOLTS SHALL BE A MINIMUM OF FOUR WITH DOUBLE HEX NUTS AND WASHERS. NUTS, WASHERS, AND THREADED AREAS OF THE ANCHOR BOLTS SHALL BE HOT DIPPED GALVANIZED TO ASTM A-153. ANCHOR BOLTS SHALL HAVE STRENGTH EQUAL OR GREATER TO THE ANCHOR BOLTS USED FOR THE STANDARD DESIGN POLE. IN ADDITION TO THE REQUIREMENTS OF SPECIFICATIONS 632 AND 732, THE FOLLOWING REQUIREMENTS SHALL APPLY:

1. ALL SIGNAL SUPPORT POLES, MAST ARMS, END CAPS, HANDHOLE COVERS, ETC. ASSOCIATED WITH THE INSTALLATION OF THIS ITEM SHALL BE BLACK IN COLOR.

2. SIGNAL SUPPORT POLES, MAST ARMS SHALL BE 16 SIDED AND FLUTED, WITH A 42" HIGH FLUTED BASE AS MANUFACTURED BY MILLERBERND MANUFACTURING COMPANY, VALMONT INDUSTRIES INCORPORATED, OR EQUIVALENT. THE CONTRACTOR SHALL OBTAIN WRITTEN APPROVAL FROM THE CITY FOR ALL MODEL NUMBERS, POLE FABRICATION AND ORIENTATION DATA, AND PAINTING SPECIFICATIONS, PRIOR TO ORDERING POLES.

3. ALL HOLES FOR CABLE ENTRANCES, PEDESTRIAN FACILITIES, RISERS, ETC. SHALL BE FIELD DRILLED.

4. ALL MATERIAL AND INSTALLATION PROCEDURES SHALL MEET THE REQUIREMENTS OF ODOT SPECIFICATIONS 632 & 732, ODOT STANDARD CONSTRUCTION DRAWING TC-81.21, TC-12.30, AND TC-9.30 AND MANUFACTURERS' RECOMMENDATIONS.

5. POLE HEIGHT, ARM ATTACHMENT HEIGHT, MAST ARM RISE, AND MAST ARM HEIGHT SHALL BE DETERMINED BY THE MANUFACTURER TO MEET THE REQUIRED CLEARANCE BETWEEN THE SIGNALS AND THE PAVEMENT AS DETAILED IN ODOT STANDARD CONSTRUCTION DRAWING TC-81.21 AND SHEETS IN THIS PLAN.

6. FOUNDATION DIMENSIONS TO BE DETERMINED BY MANUFACTURER AND SHALL BE SELECTED FROM DIMENSIONS IN ODOT STANDARD CONSTRUCTION DRAWING TC-21.20. DIMENSIONS SPECIFIED SHALL BE EQUAL TO OR GREATER THAN DIMENSIONS OF STANDARD DESIGN POLE LISTED.

7. SIGNAL SUPPORT, MISC.: TYPE TC-9.30, DESIGN 1, SIGN AND SIGNAL SUPPORT WITH MAST ARM DESIGN 13 (ALTERNATE BID) SHALL MEET THE AESTHETIC AND DESIGN REQUIREMENTS ABOVE AND BE OF ADEQUATE HEIGHT FOR SIGN SUPPORT, AS WELL AS SIGNAL SUPPORT.

PAYMENT SHALL INCLUDE ALL LABOR, MATERIAL, AND EQUIPMENT REQUIRED TO COMPLETE THIS ITEM OF WORK.

CALCULATED JAB
CHECKED

ALTERNATE BID ITEM DETAILS - AS PER PLAN DECORATIVE SIGNAL SUPPORTS

MIA-36-11.56

I:\PROJECTS\Mia\036\169\94757\design\sheets\94757TD02.dgn 20-OCT-2014 1:40PM jbertke

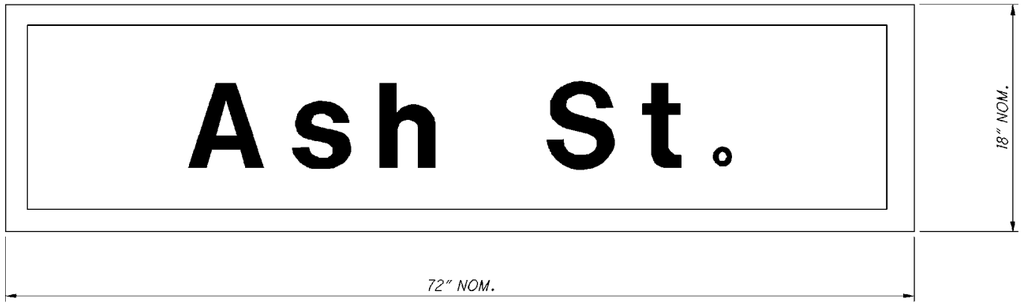

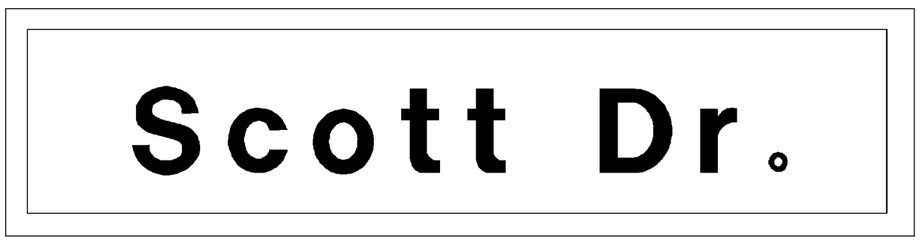

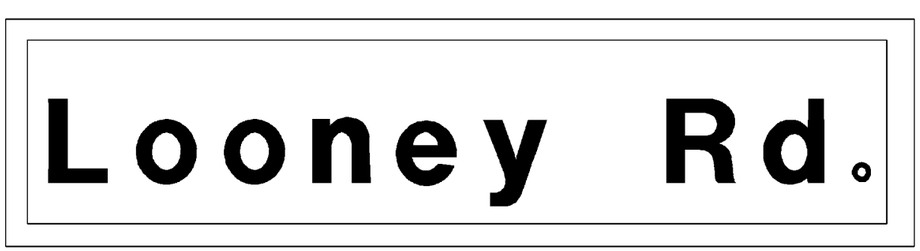

631 INTERNALLY ILLUMINATED FIXED MESSAGE SIGN, AS PER PLAN

THE CONTRACTOR SHALL FURNISH AND INSTALL INTERNALLY ILLUMINATED, DOUBLE FACED STREET SIGNS. THE SIGNS SHALL BE SUSPENDED FROM TRAFFIC SIGNAL MAST ARMS. THE SIGN HANGAR ATTACHMENT HARDWARE INCLUDING THE WIRING CONNECTION AND POWER SERVICE SHALL BE INCLUDED IN THIS ITEM. THE SIGN SHALL BE RIGIDLY MOUNTED.

THE SIGNS SHALL BE EDGE-LIT LED SIGNS SIZE 18" BY 72" WITH TEXT AND STREET NAMES AS SHOWN. LETTER HEIGHT SHALL BE 8 INCHES MINIMUM. THE LETTERS SHALL BE CLEARVIEW HIGHWAY FONT AND WHITE. THE SIGN FACE SHALL BE CONSTRUCTED OF A TRANSLUCENT SHATTERPROOF LENS. THE SIGN FACE LEGEND BACKGROUND SHALL BE A TRANSLUCENT STANDARD TRAFFIC BROWN FILM OR PAINT DARK BRONZE TO MATCH FEDERAL SPECIFICATION NO. 10075. A CLEAR COAT SHALL BE APPLIED TO ALL SIGN FACES TO PREVENT FADING AND PROTECT THE SURFACE. ALL SIGNS SHALL CARRY A 5 YEAR MANUFACTURERS' WARRANTY.

MAST ARM CLAMP BRACKETS AND HANGAR ASSEMBLIES SHALL BE OF THE TWO-ASSEMBLY TYPE, FOR MOUNTING ON PERPENDICULAR MAST ARMS. THE ATTACHMENT HARDWARE SHALL BE FORMED OF THE HEAT-TREATED ALUMINUM BAR STOCK OR GALVANIZED STEEL, OF ADEQUATE DESIGN AND STRENGTH. THE ATTACHMENTS SHALL PROVIDE FOR MINIMUM SWAY. ALL OF THE SIGN HANGING HARDWARE SHALL BE PAINTED TO BLEND IN WITH THE MAST ARM.

PRIOR TO ORDERING, THE CONTRACTOR SHALL SUBMIT THE PROPOSED SIGN DESIGN TO THE CITY OF PIQUA AND ODOT DISTRICT 7 TRAFFIC ENGINEER, CRAIG ELEY, P.E. FOR APPROVAL.

PAYMENT FOR THE INTERNALLY ILLUMINATED FIXED MESSAGE SIGN, AS PER PLAN SHALL BE AT THE CONTRACT PRICE BID PER EACH COMPLETE AND IN PLACE INCLUDING ALL SIGN WIRING, HARDWARE, GROUNDING, SURGE PROTECTION, PHOTO CELLS, CONNECTIONS MADE, TESTED, AND ACCEPTED.

CALCULATED
CHECKED

INTERNALLY ILLUMINATED FIXED MESSAGE SIGN, AS PER PLAN DETAILS

MIA-36-11.56

I:\PROJECTS\Miq\036\1169\94757\design\sheets\94757TD03.dgn 20-OCT-2014 1:40PM jbertke

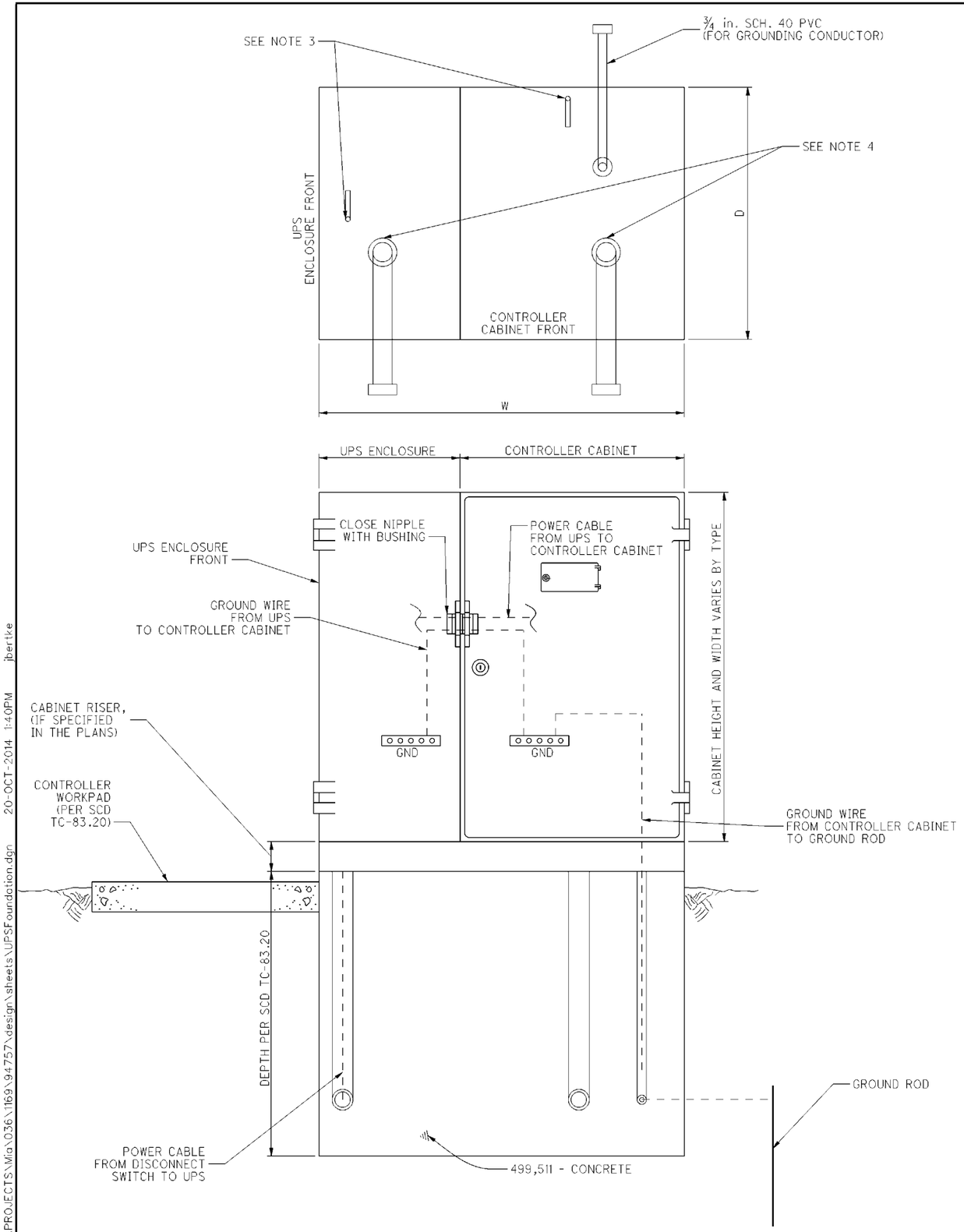

1. The Uninterruptible Power Supply (UPS) enclosure shall be mounted flush up against the traffic signal cabinet and sealed with silicone. The Contractor shall be responsible for providing the necessary power cable between the UPS unit and signal cabinet.

2. The UPS should be placed on the opposite side of the pull box on a 332/336 cabinet (per Standard Construction Drawing TC-83.20). The UPS placement for a NEMA cabinet varies, placement should provide adequate access with respect to slope, guardrail spacing, etc...

3. The size, number, and location of anchor bolts shall be in accordance with the manufacturer's recommendations.

4. The size, number, and orientation of conduit ells shall be as shown in the plan, except that a ¾ inch schedule 40 PVC shall be installed in each foundation.

5. ½ inch preformed joint filler as per CMS 705.03 shall be used between foundations and adjacent paved areas.

6. See Standard Construction Drawing TC-83.20 for further details.

TYPE	W (Inches)	D (Inches)	FOUNDATION CONCRETE (Cu. Yd.)
TS-1	60	24	1.23
TS-2	70	36	2.16
2070/170	50	36	1.54

OFFICE OF TRAFFIC ENGINEERING

DESIGNED RJL REVIEWED JMY

REVISION DATE 04/20/12 CHECKED

PID NUMBER 208320

PLAN INSERT SHEET

UNINTERRUPTIBLE POWER SUPPLY (UPS) AND CONTROLLER CABINET FOUNDATION

MIA-36-11.56

1/1

14/40

I:\PROJECTS\Mia\036\1169\94757\design\sheets\UPSFoundation.dgn 20-OCT-2014 1:40PM jbertke

LEGEND

- SIGN REMOVE
- SIGN REMOVE AND REERECT
- SIGN REMOVE AND REPLACE
- PROPOSED SIGN
- LA-1 LANE ARROW
- SL-1 STOP LINE
- TL-3 TRANSVERSE LINE
- W-1 WALK OR CURB RAMP
- R-1 REMOVAL

NOTES:

PRIOR TO ERECTING ANY SIGNS OR PERFORMING OTHER EXCAVATION, UTILITY LOCATION IS REQUIRED. SIGNS TO BE INSTALLED ON SIGNAL POLES, MAST ARMS, OR PEDESTALS ARE INCLUDED ON SIGNAL SHEETS. (ROADWAY SIGNS) WALK AND CURB RAMP DETAILS INCLUDED ON INTERSECTION SHEETS.

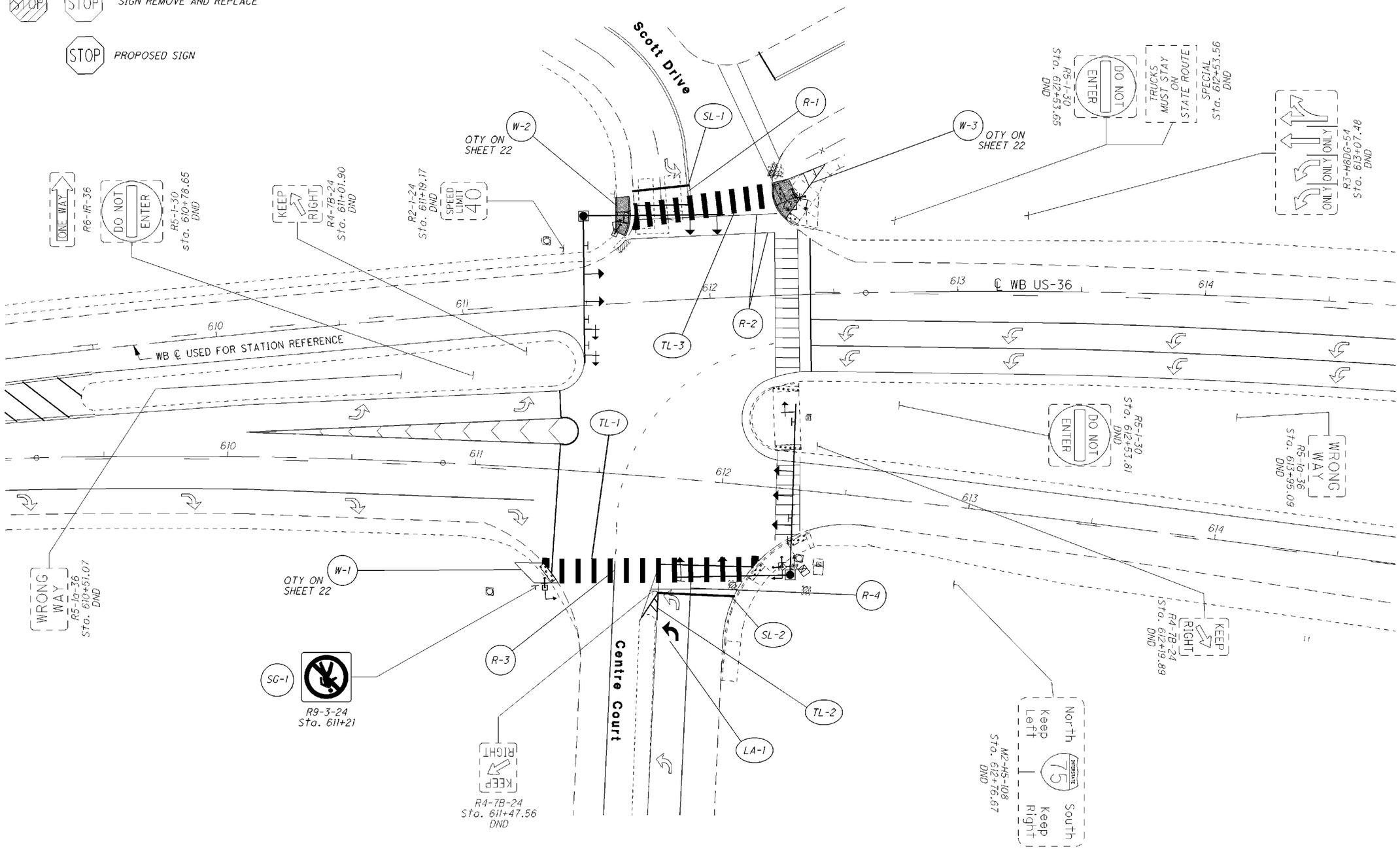

HORIZONTAL SCALE IN FEET 0 10 20 40

CALCULATED JAB
CHECKED

SIGN AND PAVEMENT MARKING PLAN SHEET - U.S. 36 STA. 610+00 TO 614+00

MIA-36-11.56

I:\PROJECTS\Mia\036\1169\94757\design\sheets\94757GP01.dgn 20-OCT-2014 1:40PM jbertke

NOTES:

PRIOR TO ERECTING ANY SIGNS OR PERFORMING OTHER EXCAVATION, UTILITY LOCATION IS REQUIRED. SIGNS TO BE INSTALLED ON SIGNAL POLES, MAST ARMS, OR PEDESTALS ARE INCLUDED ON SIGNAL SHEETS. (ROADWAY SIGNS) WALK AND CURB RAMP DETAILS INCLUDED ON INTERSECTION SHEETS.

SEE SHEET 15 FOR LEGEND.

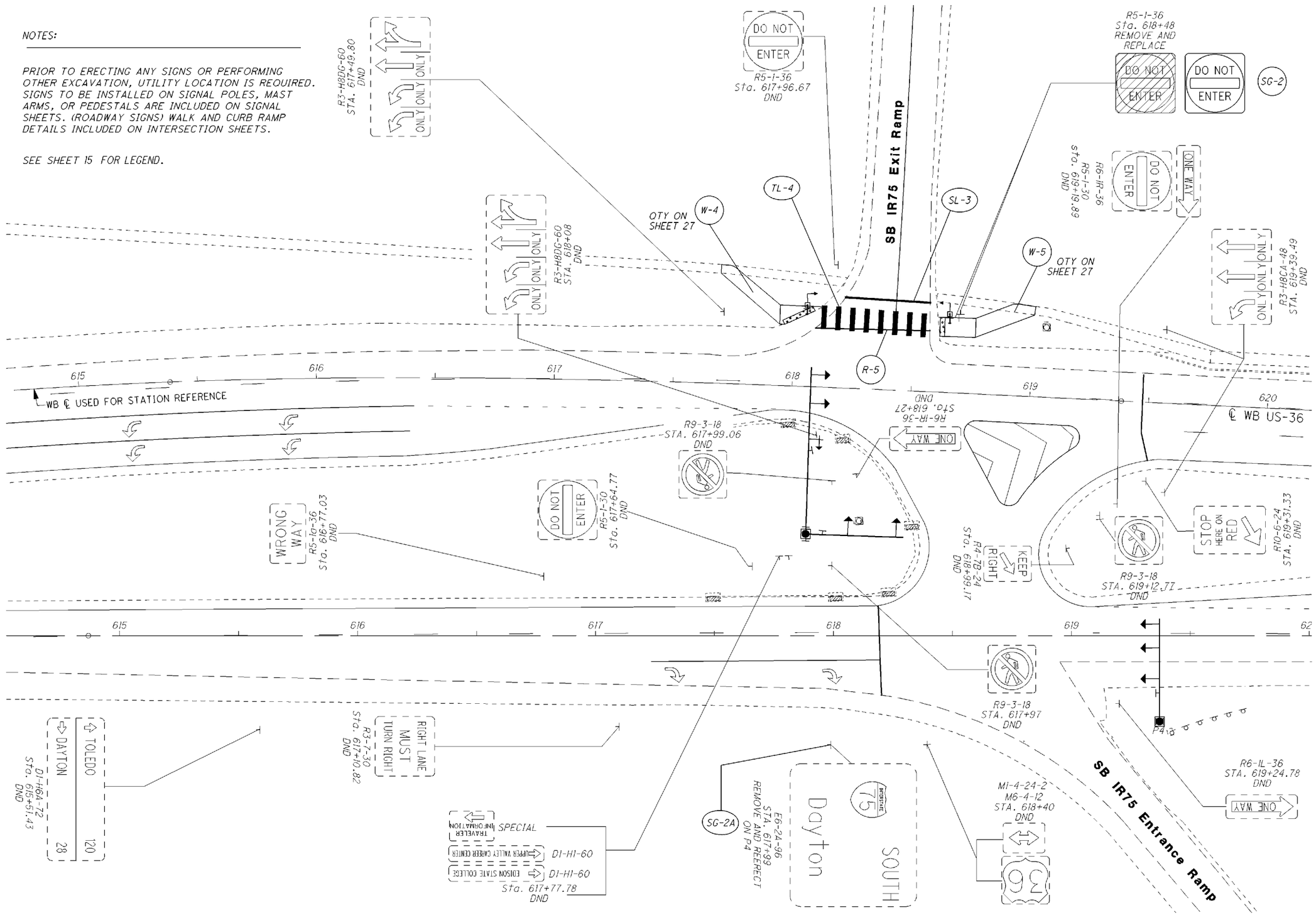

HORIZONTAL SCALE IN FEET
0 10 20 40

CALCULATED JAB
CHECKED

SIGN AND PAVEMENT MARKING PLAN SHEET - U.S. 36 STA. 614+50 TO 620+00

MIA-36-11.56

I:\PROJECTS\Mia\036\1169\94757\design\sheets\94757GP02.dgn 20-OCT-2014 1:40PM jbertke

NOTES:

PRIOR TO ERECTING ANY SIGNS OR PERFORMING OTHER EXCAVATION, UTILITY LOCATION IS REQUIRED. SIGNS TO BE INSTALLED ON SIGNAL POLES, MAST ARMS, OR PEDESTALS ARE INCLUDED ON SIGNAL SHEETS. (ROADWAY SIGNS) WALK AND CURB RAMP DETAILS INCLUDED ON INTERSECTION SHEETS.

SEE SHEET 15 FOR LEGEND.

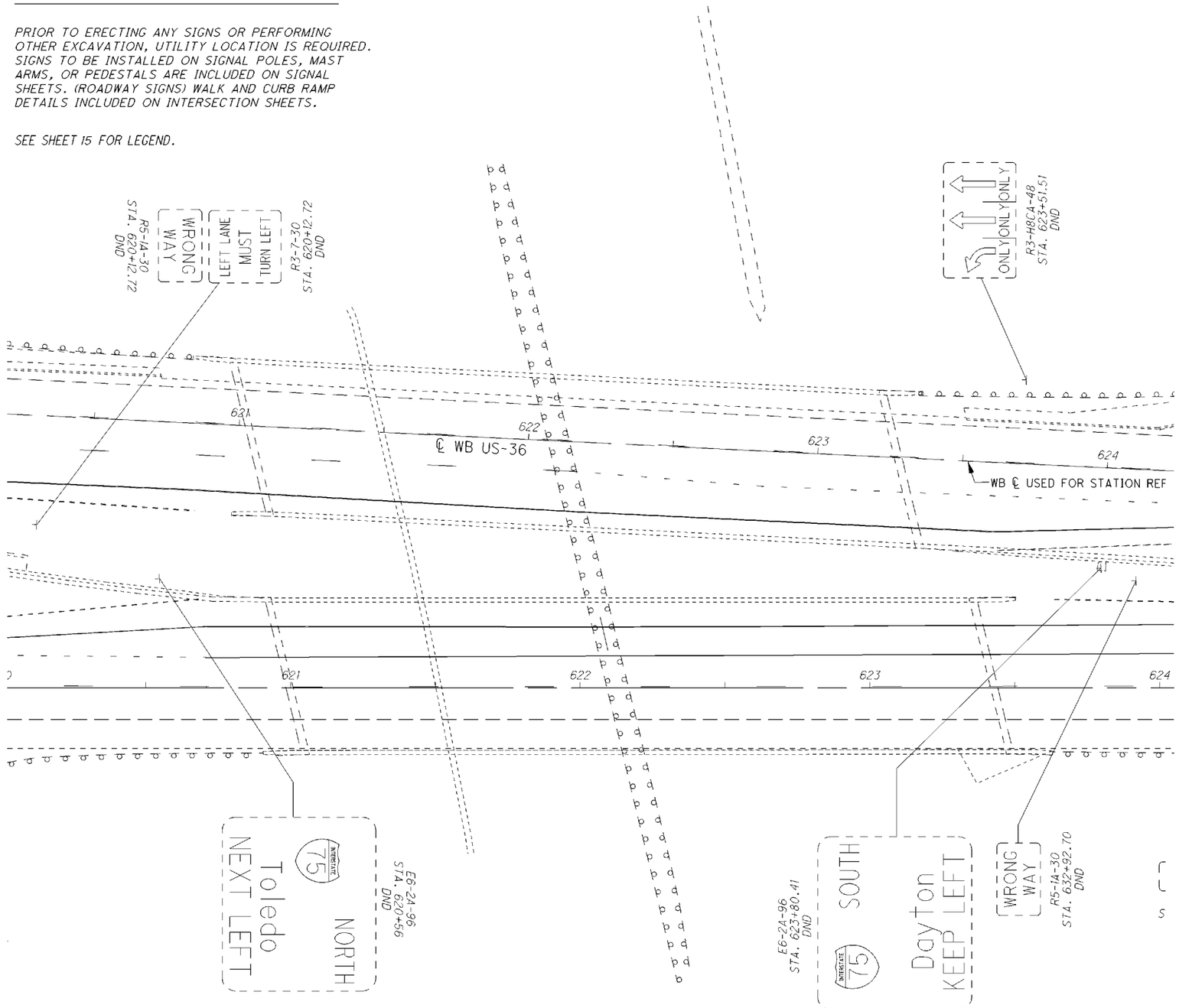

HORIZONTAL SCALE IN FEET 0 10 20 40

CALCULATED JAB
CHECKED

SIGN AND PAVEMENT MARKING PLAN SHEET - U.S. 36 STA. 620+00 TO 624+00.00

MIA-36-11.56

I:\PROJECTS\Mia\036\1169\94757\design\sheets\94757GP03.dgn 20-OCT-2014 1:40PM jbertke

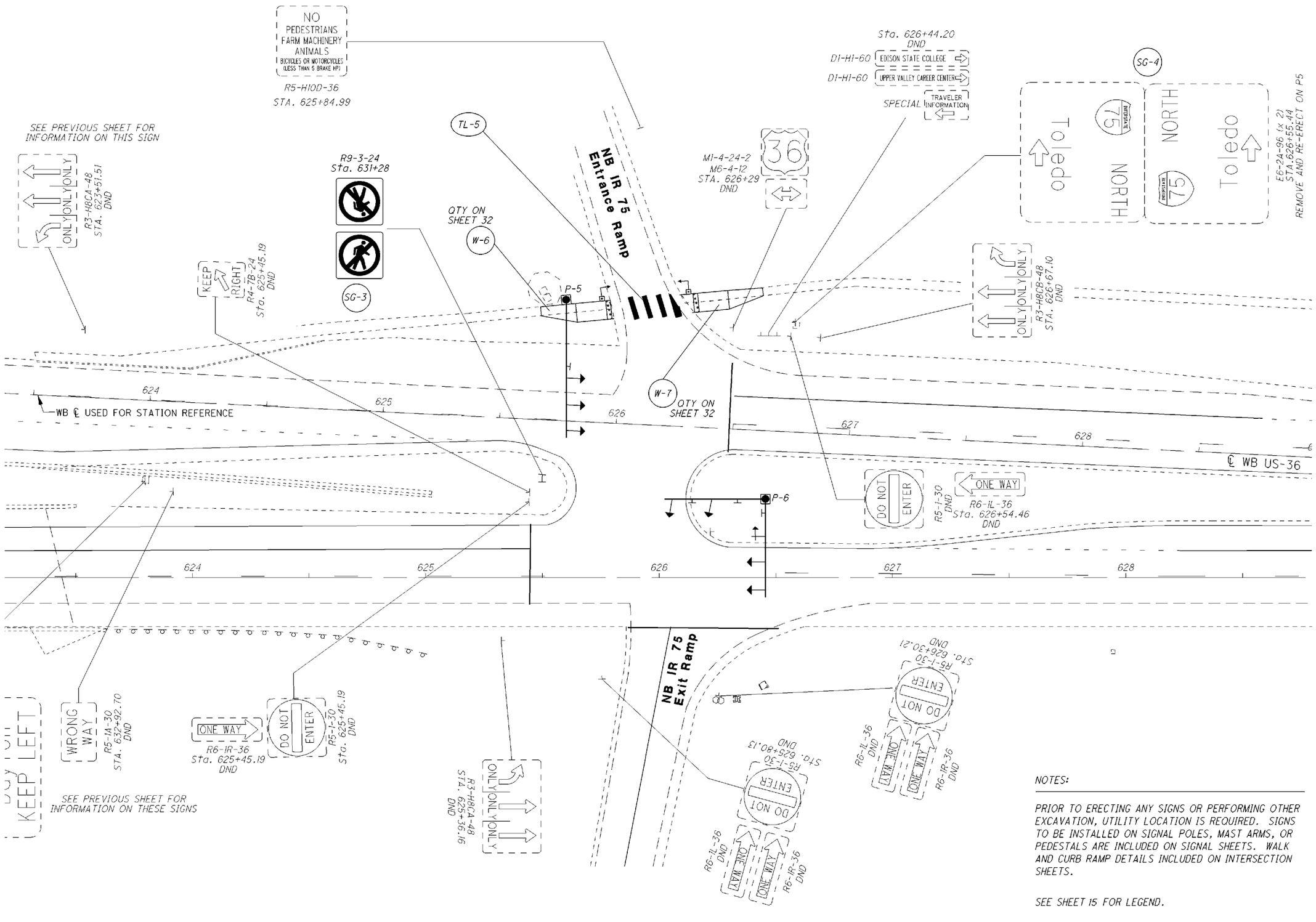

NOTES:

PRIOR TO ERECTING ANY SIGNS OR PERFORMING OTHER EXCAVATION, UTILITY LOCATION IS REQUIRED. SIGNS TO BE INSTALLED ON SIGNAL POLES, MAST ARMS, OR PEDESTALS ARE INCLUDED ON SIGNAL SHEETS. WALK AND CURB RAMP DETAILS INCLUDED ON INTERSECTION SHEETS.

SEE SHEET 15 FOR LEGEND.

HORIZONTAL SCALE IN FEET 0 10 20 40

CALCULATED JAB
CHECKED

SIGN AND PAVEMENT MARKING PLAN SHEET - U.S. 36 STA. 624+00 TO 629+00

MIA-36-11.56

I:\PROJECTS\Mia\036\1169\94757\design\sheets\94757GP04.dgn 20-OCT-2014 1:40PM jbertke

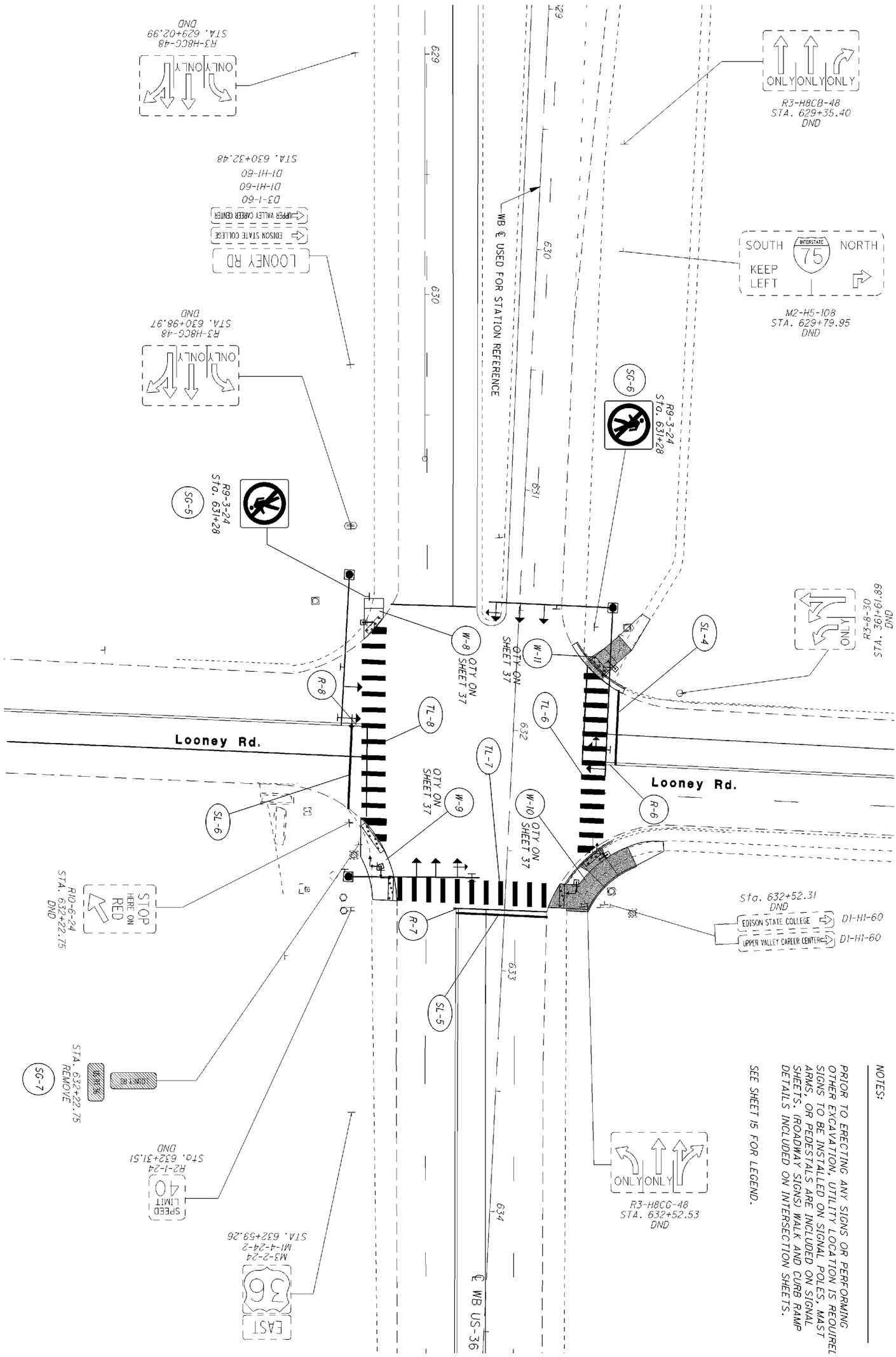

NOTES:

PRIOR TO ERECTING ANY SIGNS OR PERFORMING OTHER EXCAVATION, UTILITY LOCATION IS REQUIREL SIGNS TO BE INSTALLED ON SIGNAL POLES, MAST ARMS, OR PEDESTALS ARE INCLUDED ON SIGNAL SHEETS. (ROADWAY SIGNS) WALK AND CURB RAMP DETAILS INCLUDED ON INTERSECTION SHEETS.

SEE SHEET 15 FOR LEGEND.

19 / 40	MIA-36-11.56	SIGN AND PAVEMENT MARKING PLAN SHEET- U.S. 36 STA. 629+00 TO 634+00	CALCULATED JAB / CHECKED	0 10 20 40 HORIZONTAL SCALE IN FEET

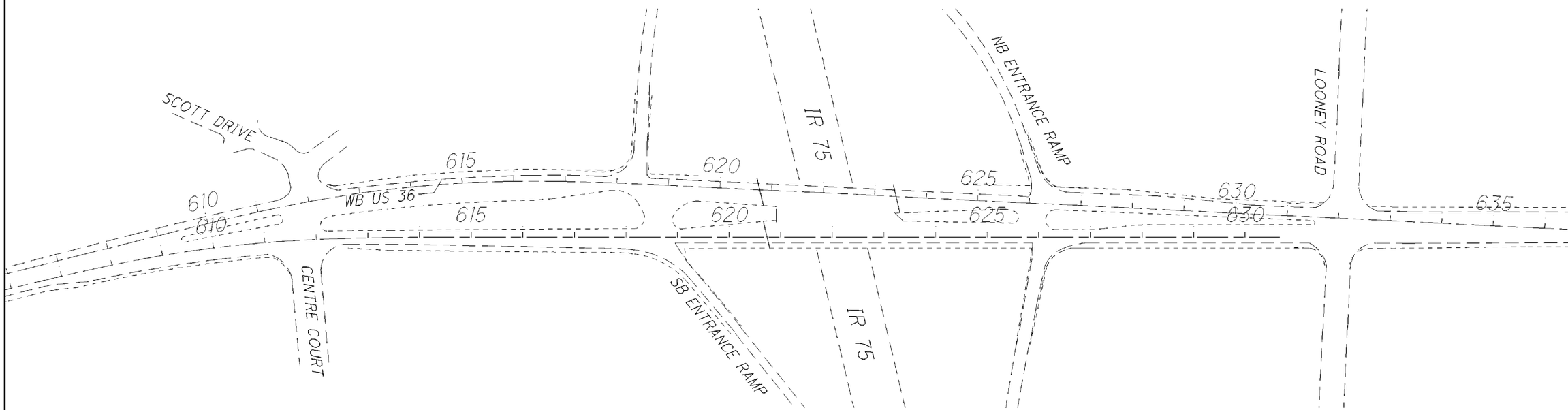

TO INCLUDE INFORMATION FROM JUSTIN CONCERNING COORIDATION AND TIME OF DAY PHASING

HORIZONTAL SCALE IN FEET 0

CALCULATED JAB
CHECKED

SIGNAL COORDINATION TIMING INFORMATION

MIA-36-11.56

20/40

I:\PROJECTS\Mia\036\1169\94757\design\sheets\94757CM01.dgn 20-OCT-2014 1:40PM jbertke

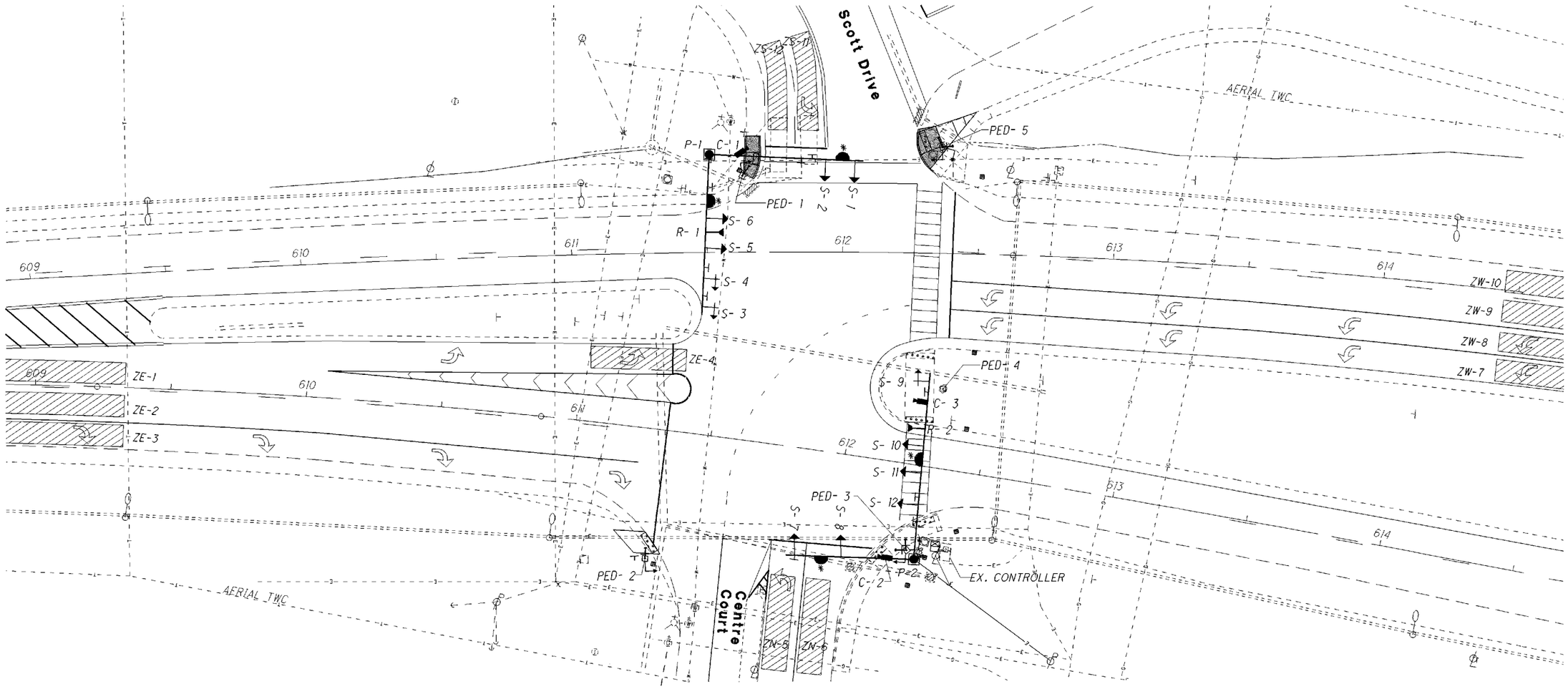

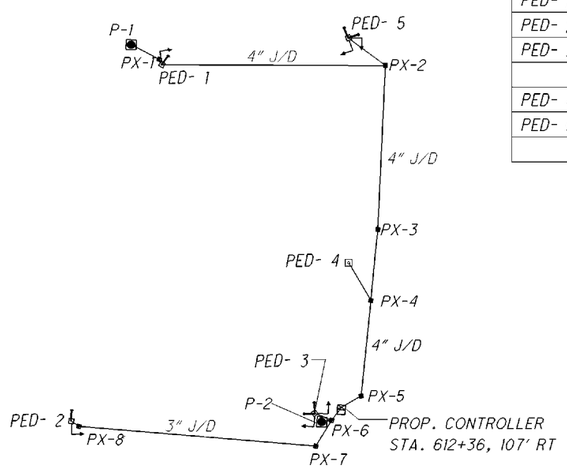

PEDESTRIAN FACILITIES				
PEDESTAL	STA.	OFFSET	PED. BUTTON	PED. SIGNAL
PED- 1	611+63	28' LT	PB- 1	PS- 1
PED- 2	611+25	112' RT	PB- 2	PS- 2
PED- 3	612+25	110' RT	PB- 3	PS- 3
			PB- 4	PS- 4
PED- 4	612+38	50' RT	2 EX.	
PED- 5	612+36	39' RT	PB- 7	PS- 5
			PB- 8	PS- 6

PROPOSED PULLBOX INFORMATION			
	STA.	OFFSET	SIZE
PX- 1	611+62	30' LT	18"
PX- 2	612+51	29' LT	18"
PX- 3	612+49	36' RT	18"
PX- 4	612+47	65' RT	18"
PX- 5	612+44	102' RT	18"
PX- 6	612+32	112' RT	18"
PX- 7	612+26	123' RT	18"
PX- 8	611+28	115' RT	18"

NOTES:

FOR ROADWAY SIGNING INFORMATION NOT SHOWN, SEE SHEETS 15-19.

STATIONING AND OFFSETS ARE FROM WESTBOUND ℄.

*LOCATION OF PREEMPTION NOT FINAL. PLACEMENT WILL BE AS RECOMMENDED BY MANUFACTURER AND CITY.

RADAR DETECTION AND CAMERA LOCATIONS ARE FOR REFERENCE ONLY, ACTUAL PLACEMENT WILL BE RECOMMENDED BY MANUFACTURER AND DISTRICT 7 TRAFFIC ENGINEER, CRAIG ELEY. NUMBERED RADAR AND CAMERA UNITS ARE FOR INFORMATION ONLY.

LEGEND

- 3 section signal head
- 5 section signal head
- existing signal pole
- proposed signal pole
- proposed video detection camera
- proposed preemption equipment
- conduit
- sign
- pedestrian button
- walk
- curb ramp
- advanced dilemma zone/ radar detection unit

DETECTION ZONE CHART				
	PHASE	STA.	SIZE	DEVICE
ZE- 1	2	609+34	100' x 8'	R- 2
ZE- 2	2	609+33	100' x 8'	R- 2
ZE- 3	2	609+32	100' x 8'	R- 2
ZE- 4	5	611+42	100' x 8'	C- 3
ZN- 5	4	611+73	35' x 9'	C- 2
ZN- 6	4	611+87	35' x 9'	C- 2
ZW- 7	1	614+45	100' x 8'	R- 1
ZW- 8	1	614+45	100' x 8'	R- 1
ZW- 9	6	614+45	100' x 8'	R- 1
ZW- 10	6	614+45	100' x 8'	R- 1
ZS- 11	8	611+73	33' x 8'	C- 1
ZS- 12	8	611+84	35' x 8'	C- 1

HORIZONTAL SCALE IN FEET 0 10 20 40

CALCULATED JAB
CHECKED

TRAFFIC SIGNAL PLAN - U.S. 36 AND SCOTT DRIVE / CENTRE COURT

MIA-36-11.56

I:\PROJECTS\Mia\036\1169\94757\design\sheets\94757CP01.dgn 20-OCT-2014 1:40PM jbertke

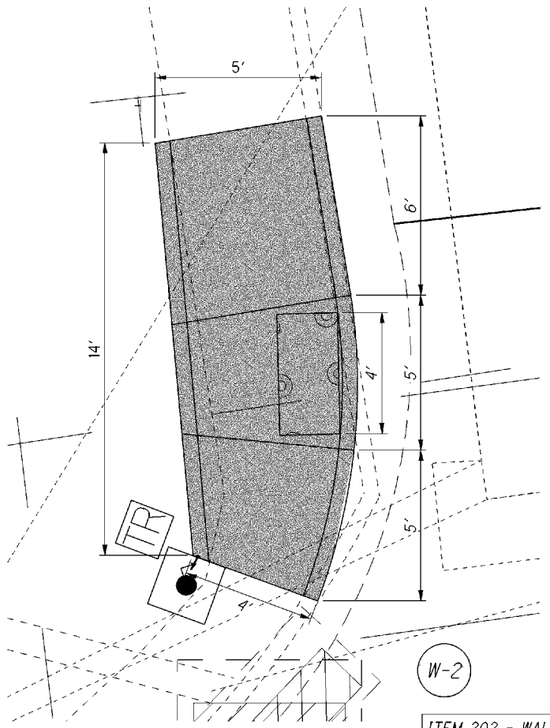

ITEM 202 - WALK REMOVED, AS PER PLAN	84 SF
ITEM 202 - CURB REMOVED	17 FT
ITEM 608 - CURB RAMP, TYPE B2, AS PER PLAN	84 SF
ITEM 608 - DETECTABLE WARNING, AS PER PLAN	8 SF

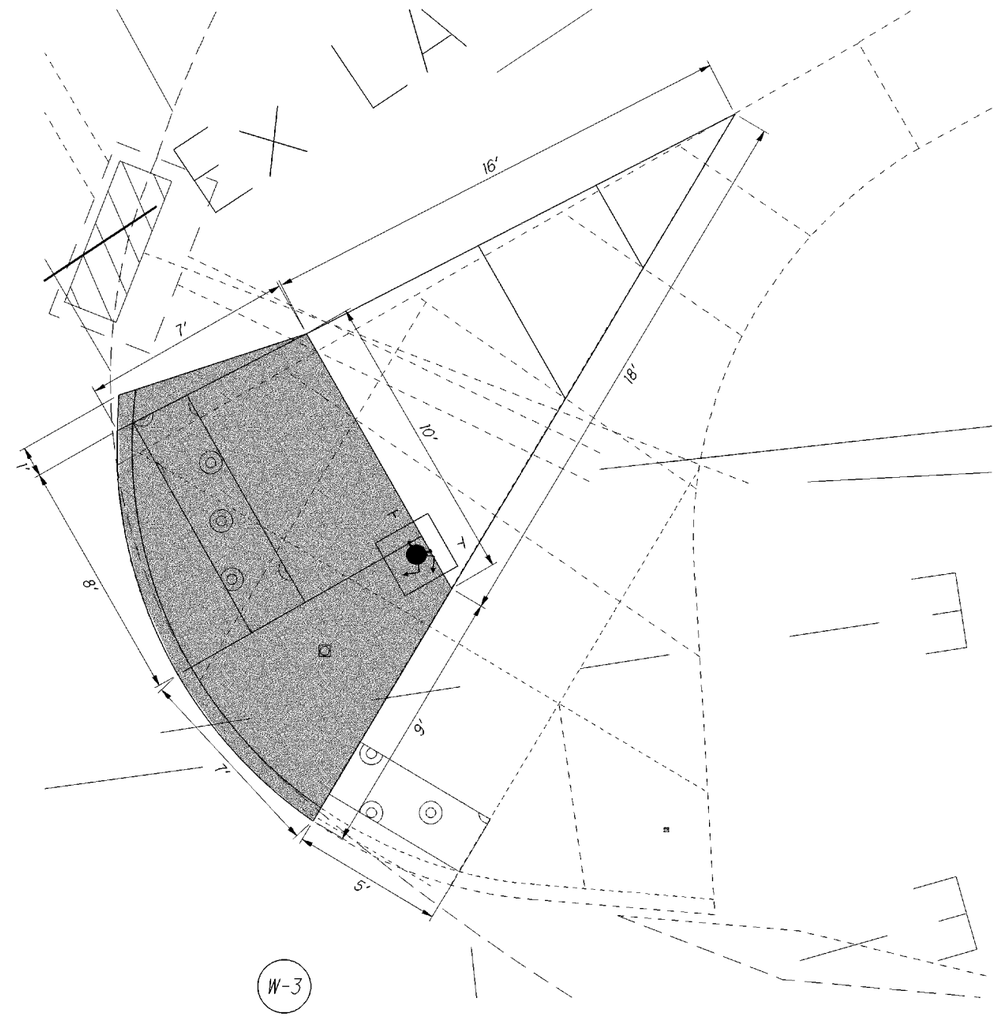

ITEM 202 - WALK REMOVED, AS PER PLAN	186 SF
ITEM 202 - CURB REMOVED	16 FT
ITEM 608 - 4" CONCRETE WALK	77 SF
ITEM 608 - CURB RAMP, TYPE B3, AS PER PLAN	109 SF
ITEM 608 - DETECTABLE WARNING, AS PER PLAN	16 SF

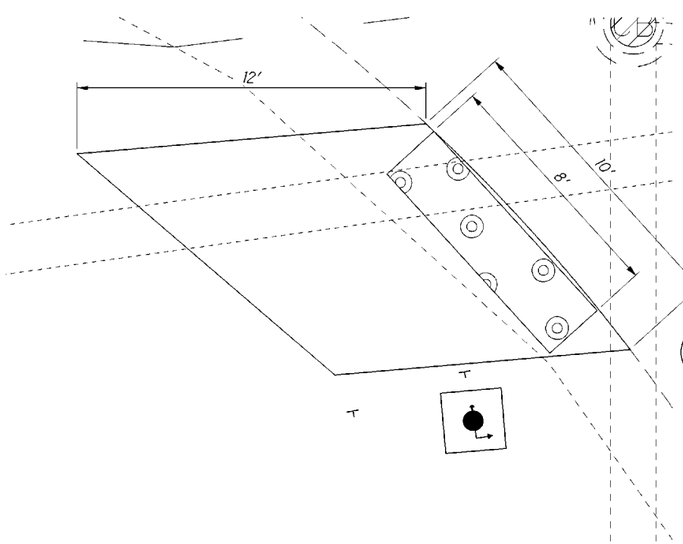

ITEM 608 - 4" CONCRETE WALK	87 SF
ITEM 608 - DETECTABLE WARNING, AS PER PLAN	16 SF

QUANTITIES CARRIED TO TRAFFIC CONTROL SUBSUMMARY (SHEET 10).

CALCULATED REB
CHECKED

CURB RAMP AND WALK DETAIL SHEET
U.S. 36 AND SCOTT DR./ CENTRE COURT

MIA-36-11.56

I:\PROJECTS\Mia\036\1169\94757\design\sheets\94757Gn01.dgn 20-OCT-2014 1:41PM jberlke

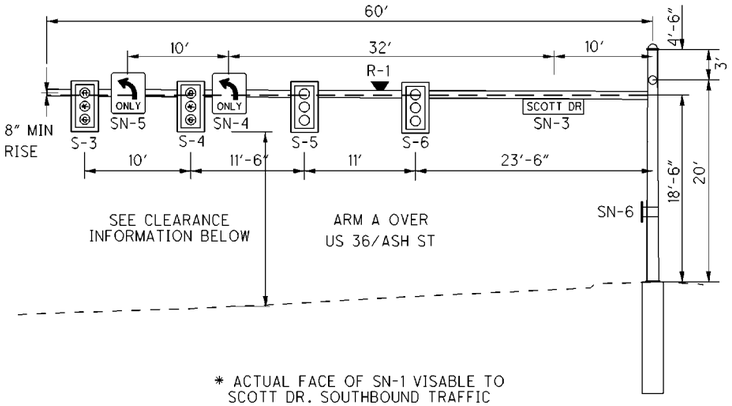

* ACTUAL FACE OF SN-1 VISABLE TO SCOTT DR. SOUTHBOUND TRAFFIC

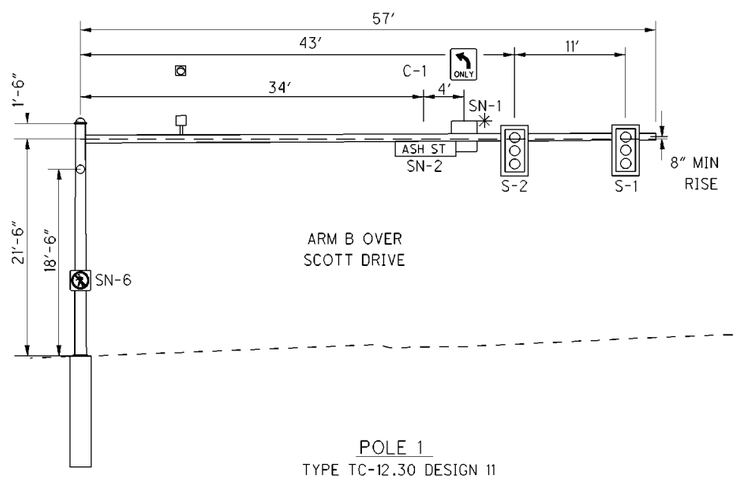

POLE 1
TYPE TC-12.30 DESIGN 11
ARM A TC-81.21 DESIGN 13
ARM B TC-81.21 DESIGN 14

R3-5L-30
SN-1, SN-4, SN-5, SN-7, AND SN-12

R3-5R-30
SN-11

R9-3-24
SN-3

CENTRE CT — TR0787A SN-8

ASH ST — TR0787A SN-2, SN-6

SCOTT DR — TR0787A SN-3

TR0787A SIGNS ARE PIQUA'S LIGHTED SIGNS.

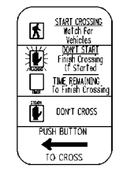

R10-3E-9
one per pushbutton
(with arrow aligned
correctly)

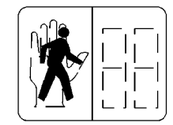

Proposed Pedestrian
Signal Head

PS-1, PS-2, PS-3,
PS-4, PS-5 AND PS-6

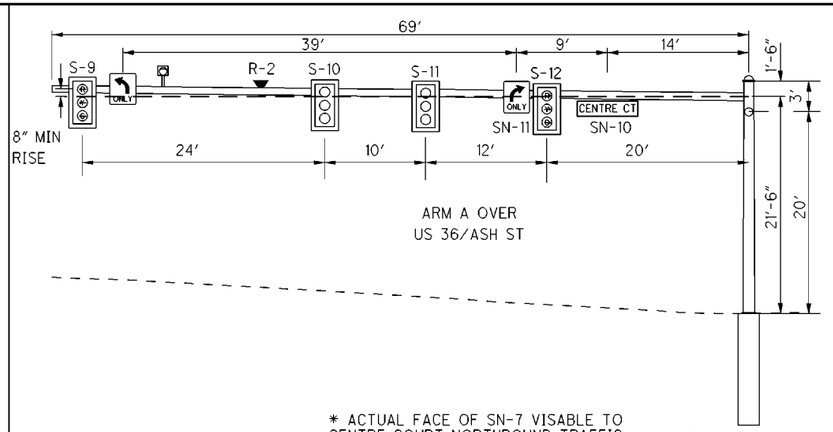

* ACTUAL FACE OF SN-7 VISABLE TO CENTRE COURT NORTHBOUND TRAFFIC

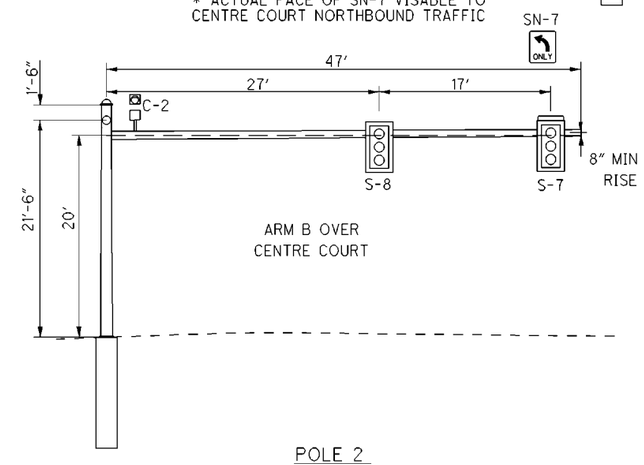

POLE 2
TYPE TC-12.30 DESIGN 10
ARM A TC-81.21 DESIGN 14
ARM B TC-81.21 DESIGN 12

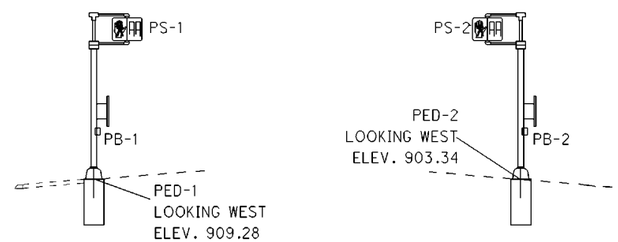

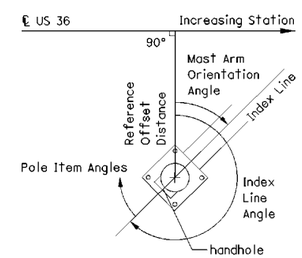

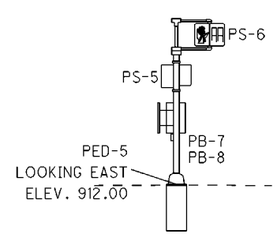

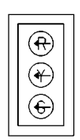

PROPOSED SIGNAL HEAD
12" LENS WITH 5" BACKPLATE
AND REFLECTIVE STRIP

S-3, S-4, AND S-9

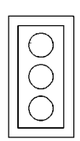

PROPOSED SIGNAL HEAD
12" LENS WITH 5" BACKPLATE
AND REFLECTIVE STRIP

S-1, S-2, S-5, S-6, S-7,
S-8, S-10, S-11, AND S-12

SIGNAL HEAD MOUNTING DATA

SIGNAL NO.	BOTTOM OF SIGNAL	PAVEMENT BELOW SIGNAL	CLEARANCE (FT)
S-1	925.78	909.71	16.07
S-2	925.42	909.17	16.25
S-3	922.81	905.06	17.75
S-4	922.76	905.46	17.30
S-5	922.72	906.00	16.72
S-6	922.67	906.44	16.23
S-7	920.47	904.37	16.10
S-8	920.53	904.27	16.26
S-9	922.35	907.38	14.97
S-10	922.05	906.02	16.03
S-11	921.94	905.40	16.54
S-12	921.69	904.73	16.96

POLE INFORMATION

REF.	POLE TYPE	DESIGN NO.	STA.	OFFSET	FOUNDATION ELEVATION TOP	FOUNDATION ELEVATION BOTTOM	INDEX LINE ANGLE	MAST ARM A ANGLE	MAST ARM B ANGLE
P-1	TC-12.30	11	611+27	20' LT	907.90	896.90	3 34 18	3 34 18	82 51 24
P-2	TC-12.30	10	612+04	118' RT	903.94	892.94	4 40 03	4 40 03	266 53 40

CALCULATED JAB
CHECKED

TRAFFIC SIGNAL DETAIL - US 36 AND SCOTT DR/CENTER CT

MIA-36-11.56

I:\PROJECTS\Mia\036\169\94757\design\sheets\94757CD01.dgn 20-OCT-2014 1:41PM jbertke

SIGNAL PHASING

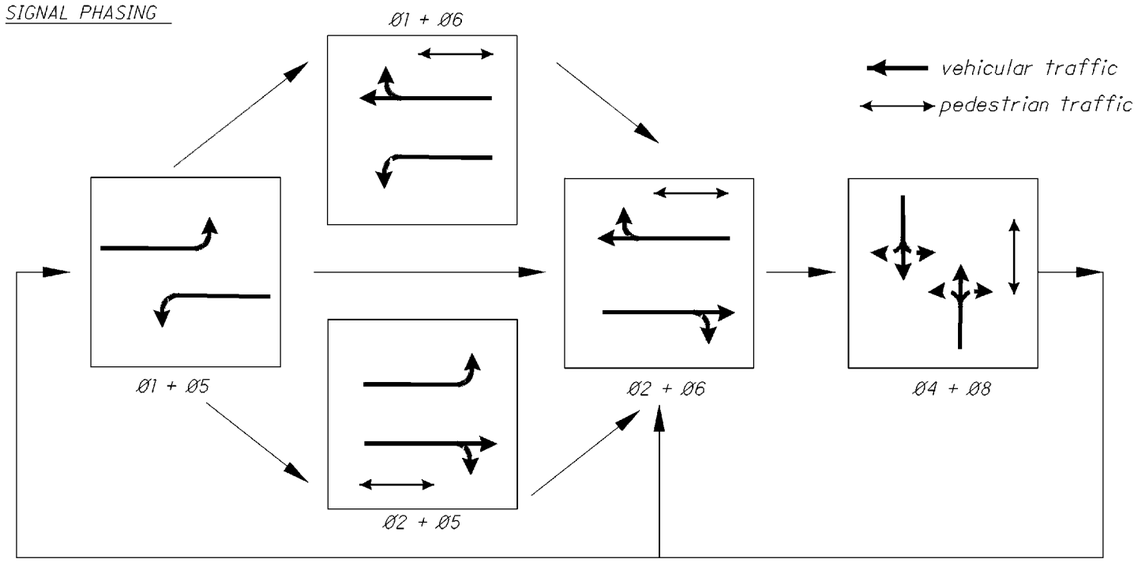

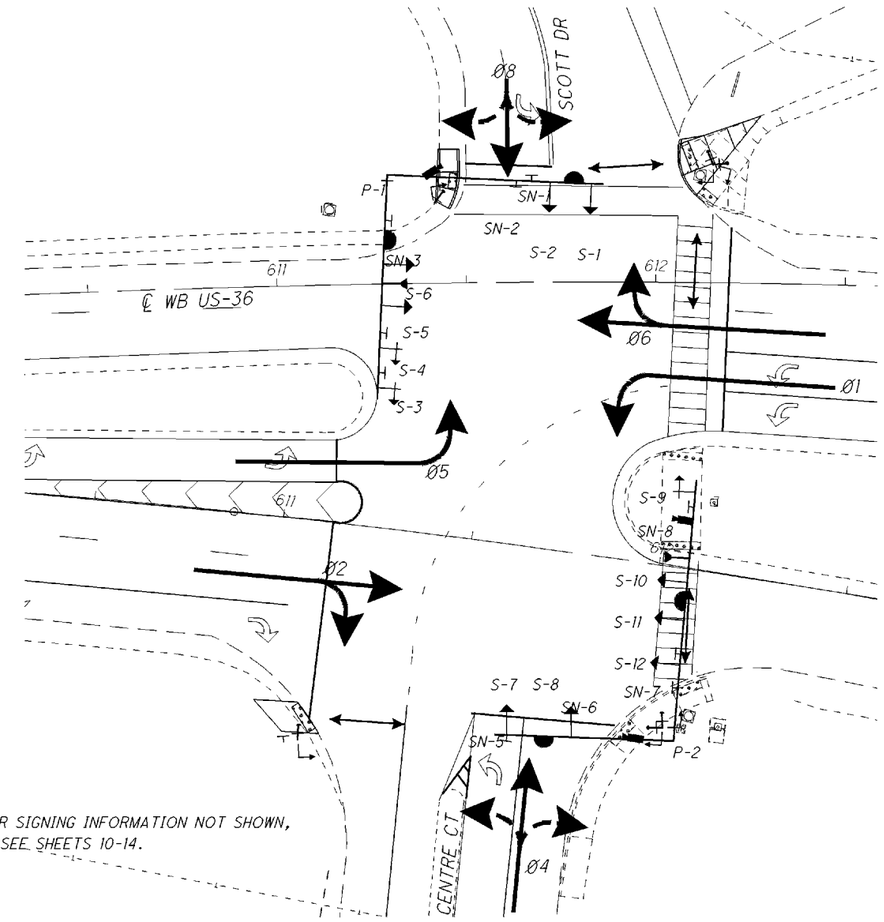

FOR SIGNING INFORMATION NOT SHOWN, SEE SHEETS 10-14.

Intersection:		US 36 & CENTRE COURT/ SCOTT DRIVE							
Maintaining Agency:		PIQUA							
Start In:	0 y/r flash or * all red	Dual Entry *							
Time for Flash or All Red:	10 sec	Rest In Red: Ring 1 * Ring 2 o							
First Phases (s):	**2 & **6	Overlap				A	B	C	D
Color Displayed:	*0 Green ; 0 Yellow	Phases							
Interval or Feature		Controller Movement No.							
Intersection Movement		1	2	3	4	5	6	7	8
Street Designation		US 36	US 36		CENTRE CT	US 36	US 36		SCOTT DR
Approach Designation		WB LT	EB		NB	EB LT	WB		SB
Minimum Green (Initial)	(Sec.)	7	24		7	7	24		7
Preset Gap	(Sec.)	3			3	3			3
Maximum Green I	(Sec.)	15	34		24	15	34		24
Time Before Reduction*	(Sec.)								
Minimum Gap*	(Sec.)								
Time to Reduce*	(Sec.)								
Yellow Change	(Sec.)	3	4		3	3	4		3
All Red Clearance	(Sec.)	2	2		3	2	2		3
Walk	(Sec.)		4		4		4		4
Pedestrian Clearance	(Sec.)		21		21		21		21
Recall: Maximum	(On/Off)								
Recall: Minimum	(On/Off)		ON				ON		
Recall: Pedestrian	(On/Off)								
Call to Non Actuated	No. 1		ON				ON		
	No. 2								
*Volume Density Controls									

SIGNAL DISPLAY SEQUENCE CHART

SIGNAL HEAD	1 INTERVAL 1	1 INTERVAL 2	1 INTERVAL 3	2 INTERVAL 1	2 INTERVAL 2	2 INTERVAL 3	3 INTERVAL 1	3 INTERVAL 2	3 INTERVAL 3	4 INTERVAL 1	4 INTERVAL 2	4 INTERVAL 3	5 INTERVAL 1	5 INTERVAL 2	5 INTERVAL 3	6 INTERVAL 1	6 INTERVAL 2	6 INTERVAL 3	7 INTERVAL 1	7 INTERVAL 2	7 INTERVAL 3	8 INTERVAL 1	8 INTERVAL 2	8 INTERVAL 3
S-1	R	R	R	R	R	R	R	R	R	G	Y	R	R	R	R	R	R	R	R	R	R	R	R	R
S-2	R	R	R	R	R	R	R	R	R	G	Y	R	R	R	R	R	R	R	R	R	R	R	R	R
S-3	~~G~~	~~Y~~	~~R~~	R	R	R	R	R	R	R	R	R	G	Y	R	R	R	R	R	R	R	R	R	R
S-4	~~G~~	~~Y~~	~~R~~	R	R	R	R	R	R	R	R	R	G	Y	R	R	R	R	R	R	R	R	R	R
S-5	R	R	R	R	R	R	R	R	R	R	R	R	R	R	R	G	Y	R	R	R	R	R	R	R
S-6	R	R	R	R	R	R	R	R	R	R	R	R	R	R	R	G	Y	R	R	R	R	R	R	R
S-7	R	R	R	R	R	R	R	R	R	R	R	R	R	R	R	R	R	R	R	R	R	G	Y	R
S-8	R	R	R	R	R	R	R	R	R	R	R	R	R	R	R	R	R	R	R	R	R	G	Y	R
S-9	R	R	R	R	R	R	R	R	R	R	R	R	~~G~~	~~Y~~	~~R~~	R	R	R	R	R	R	R	R	R
S-10	R	R	R	G	Y	R	R	R	R	R	R	R	R	R	R	R	R	R	R	R	R	R	R	R
S-11	R	R	R	G	Y	R	R	R	R	R	R	R	R	R	R	R	R	R	R	R	R	R	R	R
S-12	R	R	R	G	Y	R	R	R	R	R	R	R	R	R	R	R	R	R	R	R	R	R	R	R

HORIZONTAL SCALE IN FEET 0 10 20 40

CALCULATED JAB
CHECKED

TRAFFIC SIGNAL PLAN - U.S. 36 AND SCOTT/CENTRE DRIVE

MIA-36-11.56

I:\PROJECTS\Mia\036\1169\94757\design\sheets\94757CD20.dgn 20-OCT-2014 1:41PM jberlke

REF. NO. FROM	TO	HORIZONTAL DISTANCE BETWEEN (FT)	625 CONDUIT, 2", 725.04	625 CONDUIT, 3", 725.04	625 CONDUIT, 4", 725.04	625 CONDUIT, JACKED OR DRILLED, 725.051, AS PER PLAN (3")	625 CONDUIT, JACKED OR DRILLED, 725.051, AS PER PLAN (4")	625 TRENCH, 24" DEEP, AS PER PLAN	625 PULL BOX, 725.08, 18"	625 PULL BOX, 725.08, 24"	625 GROUND ROD	625 POWER SERVICE	625 PLASTIC CAUTION TAPE	630 SIGN, FLAT SHEET	631 INTERNALLY ILLUMINATED FIXED MESSAGE SIGN, AS PER PLAN	632 VEHICULAR SIGNAL HEAD, (LED), BLACK, 3-SECTION, 12" LENS, 1-WAY, POLYCARBONATE, WITH BACKPLATE, AS PER PLAN	632 PEDESTRIAN SIGNAL HEAD (LED) , (COUNTDOWN), TYPE D2, AS PER PLAN	632 PEDESTRIAN PUSHBUTTON	632 SIGNAL CABLE, 5 CONDUCTOR, NO. 14 AWG	632 SIGNAL CABLE, 7 CONDUCTOR, NO. 14 AWG	632 SIGNAL SUPPORT FOUNDATION	632 PEDESTAL FOUNDATION	632 POWER CABLE, 2 CONDUCTOR, NO. 6 AWG	632 SERVICE CABLE, 2 CONDUCTOR, NO. 6 AWG	632 CONDUIT RISER, 3" DIAMETER	632 SIGNAL SUPPORT, TYPE TC-12.30 DESIGN 10 POLE, WITH MAST ARMS TC-81.21 DESIGN 14 AND DESIGN 12	632 SIGNAL SUPPORT, MECHANICAL DAMPER FOR TC-81.21 MAST ARM (GREATER THAN 59" IN LENGTH)	632 SIGNAL SUPPORT, MISC.;TYPE TC-12.30 DESIGN 11, WITH MAST ARMS TC-81.21 DESIGN 14 AND DESIGN 13	632 PEDESTAL, 11", TRANSFORMER BASE	632 REMOVAL OF TRAFFIC SIGNAL INSTALLATION FOR STORAGE, AS PER PLAN	632 REUSE OF PEDESTRIAN PUSHBUTTON	633 CONTROLLER UNIT, TYPE TS2/A1, WITH CABINET, TYPE TS2, AS PER PLAN	633 CABINET FOUNDATION, AS PER PLAN	633 CONTROLLER WORK PAD, AS PER PLAN	633 PREEMPTION, AS PER PLAN	633 PREEMPTION RECEIVING UNIT, AS PER PLAN	633 PREEMPTION DETECTOR CABLE, AS PER PLAN	633 PREEMPTION PHASE SELECTOR, AS PER PLAN	633 PREEMPTION CONFIRMATION LIGHT, AS PER PLAN	809 ADVANCE DETECTION	815 SPREAD SPECTRUM RADIO, AS PER PLAN	816 VIDEO DETECTION SYSTEM
			FT	FT	FT	FT	FT	FT	EACH	EACH	EACH	EACH	FT	EACH	EACH	EACH	EACH	EACH	FT	FT	EACH	EACH	FT	FT	EACH	EACH	EACH	EACH	EACH	EACH	EACH	EACH	EACH	EACH	EACH	EACH	FT	EACH	EACH	EACH	EACH	EACH
																														1												
PED-2	PX-8	4	4					4	1		1		4				1	1	60			1							1													
PX-8	PX-7	94				94			1										198																							
PX-7	PX-6	11	11					11	1				11						32																							
S-7, S-8	P-2	42														2				62														1	1	52		1				
S-9, S-10, S-11, S-12	P-2	66														4				106														1	1	76		1				
PX-6	P-2	4		4				4			1		4								1		38				1	1								54			1	1	
PX-6	PED-3	6	6					6			1		6				2	2	128			1							1													
PX-6	controller	4			4			4			1		4						48	24												1	1	1								
PED-1	PX-1	2	2					2	1		1		2				1	1	56			1							1													
S-3, S-4, S-5, S-6	P-1	57														4				67				96			1	1						1	1	57		1				1
S-1, S-2	P-1	53														2				63														1	1	53		1				
P-1	PX-1	13									1									92	1				1											92	1					
PX-1	PX-2	90					90		1										190	190																190						
PED-5	PX-2	18	18					18			1						2	2	88			1							1													
PX-2	PX-3	65					65		1										280	140																140						
REUSE PED-4	PX-4	18	18					18	1				18																		2											
PX-3	PX-4	28			28														198	66																66						
PX-4	PX-5	38					38			1			38						258	86																86						
PX-5	controller	14			14			14					14						114	38																38						
												1																														
intersection signs														53	3																											
			59	4	46	94	193	81	7	1	7	1	101	53	3	12	6	6	1650	934	2	4	38	50	1	1	2	1	4	1	2	1	1	1	4	4	904	1	4	1	1	1

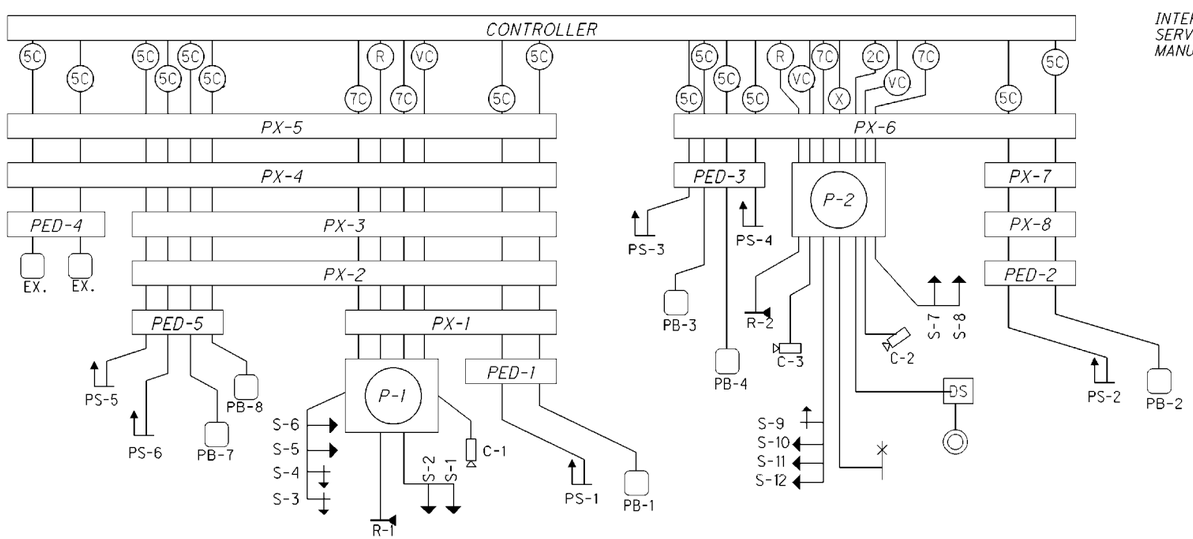

INTERNALLY ILLUMINATED FIXED MESSAGE SIGN AND PREEMPTION SYSTEM WIRING NOT SHOWN. ALL CABLE INCLUDING POWER SERVICE AND COMMUNICATION FOR THESE DEVICES SHALL BE INCLUDED IN CORRESPONDING ITEMS AND AS RECOMMENDED BY MANUFACTURER.

Legend

- pedestrian display
- signal display
- camera
- 2C 2/ C No. 6 AWG
- power service
- PB-1 pull box
- 7C 7/ C No. 14 AWG
- radar detection unit
- pedestrian push button
- DS disconnect switch
- radio interconnect
- X radio connection
- VC Video cable
- P-1 pole
- 5C 5/ C No. 14 AWG
- R radar connection

CALCULATED jab
CHECKED

SIGNAL SUBSUMMARY - US 36 AND SCOTT/CENTRE

MIA-36-11.56

I:\PROJECTS\Mia\036\1169\947577\design\sheets\947577S21.dgn 20-OCT-2014 1:41PM jbertke

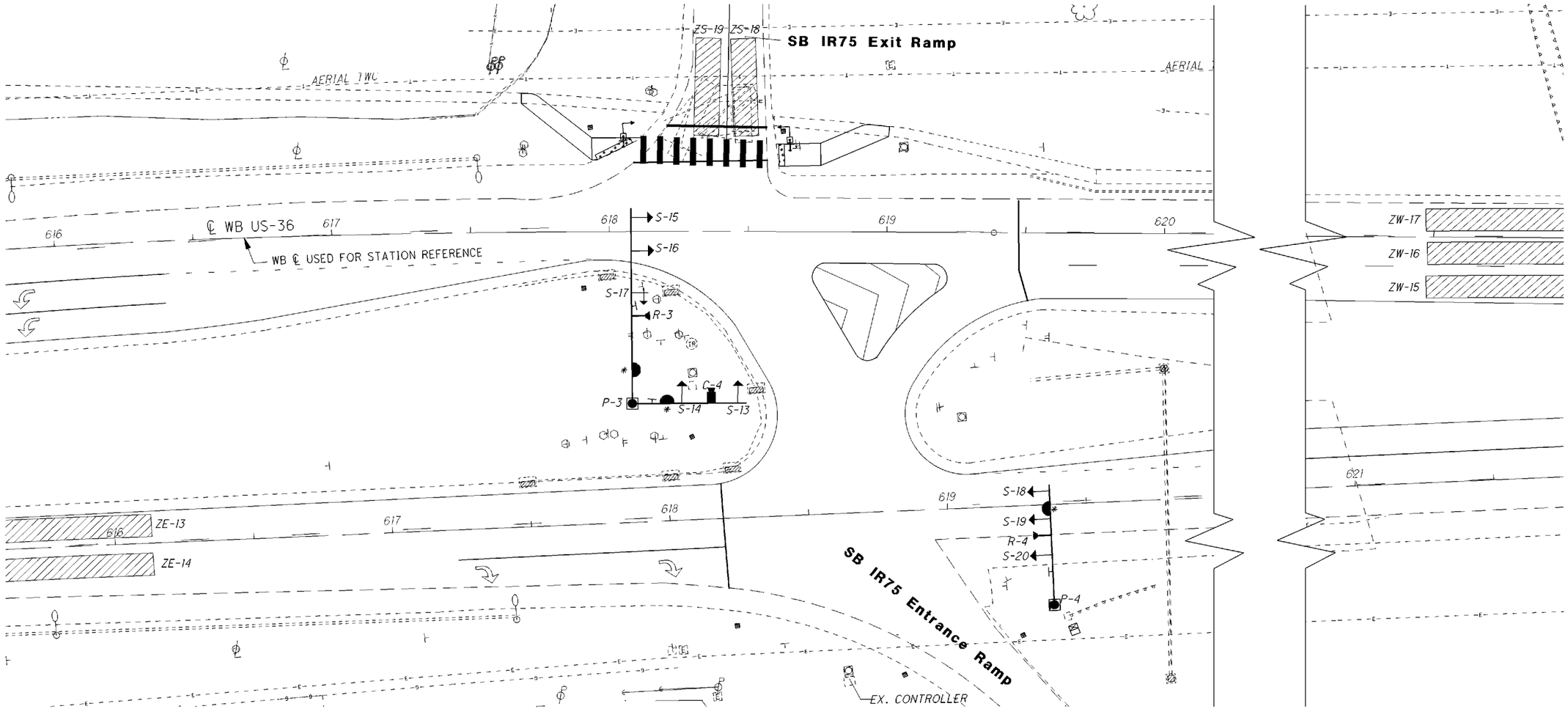

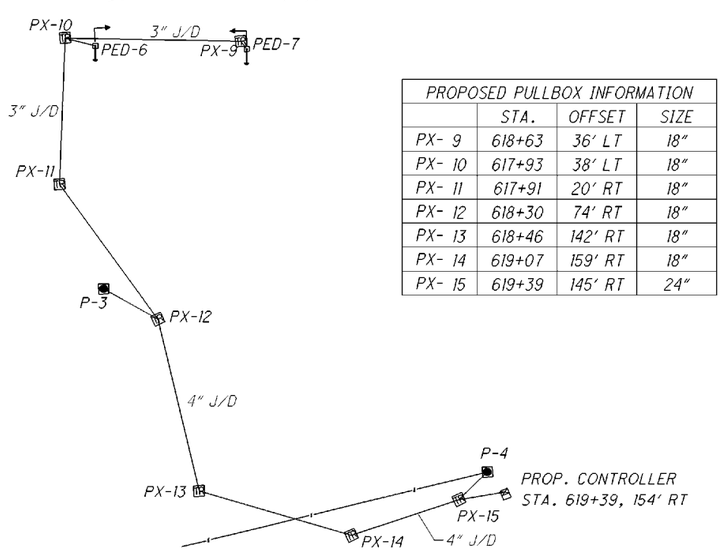

PROPOSED PULLBOX INFORMATION			
	STA.	OFFSET	SIZE
PX- 9	618+63	36' LT	18"
PX- 10	617+93	38' LT	18"
PX- 11	617+91	20' RT	18"
PX- 12	618+30	74' RT	18"
PX- 13	618+46	142' RT	18"
PX- 14	619+07	159' RT	18"
PX- 15	619+39	145' RT	24"

NOTES:

FOR SIGNING INFORMATION NOT SHOWN, SEE SHEETS 15-19.

STATIONING AND OFFSETS FROM WESTBOUND ℄.

*LOCATION OF PREEMPTION NOT FINAL. PLACEMENT WILL BE AS RECOMMENDED BY MANUFACTURER AND CITY.

RADAR DETECTION AND CAMERA LOCATIONS ARE FOR REFERENCE ONLY, ACTUAL PLACEMENT WILL BE RECOMMENDED BY MANUFACTURER AND DISTRICT 7 TRAFFIC ENGINEER, CRAIG ELEY. NUMBERED RADAR AND CAMERA UNITS ARE FOR INFORMATION ONLY.

PEDESTRIAN FACILITIES				
PEDESTAL	STA.	OFFSET	PED. BUTTON	PED. SIGNAL
PED- 6	618+05	34' LT	PB- 9	PS- 7
PED- 7	618+65	33' LT	PB- 10	PS- 8

LEGEND

- 3 section signal head
- 5 section signal head
- existing signal pole
- proposed signal pole
- proposed video detection camera
- conduit
- sign
- pedestrian button
- walk
- curb ramp
- advanced dilemma zone/ radar detection unit
- proposed preemption equipment

DETECTION ZONE CHART				
	PHASE	STA.	SIZE	DEVICE
ZE- 13	2	616+30	100' x 8'	R- 4
ZE- 14	2	616+30	100' x 8'	R- 4
ZW- 15	1	621+47	100' x 8'	R- 3
ZW- 16	6	621+47	100' x 8'	R- 3
ZW- 17	6	621+47	100' x 8'	R- 3
ZS- 18	8	618+45	33' x 8'	C- 4
ZS- 19	8	618+30	35' x 8'	C- 4

HORIZONTAL SCALE IN FEET 0 10 20 40

CALCULATED JAB
CHECKED

TRAFFIC SIGNAL PLAN - U.S. 36 AND SOUTHBOUND RAMPS

MIA-36-11.56

I:\PROJECTS\Mia\036\1169\94757\design\sheets\94757CP02.dgn 20-OCT-2014 1:41PM jberlke

QUANTITIES CARRIED TO TRAFFIC CONTROL SUBSUMMARY.

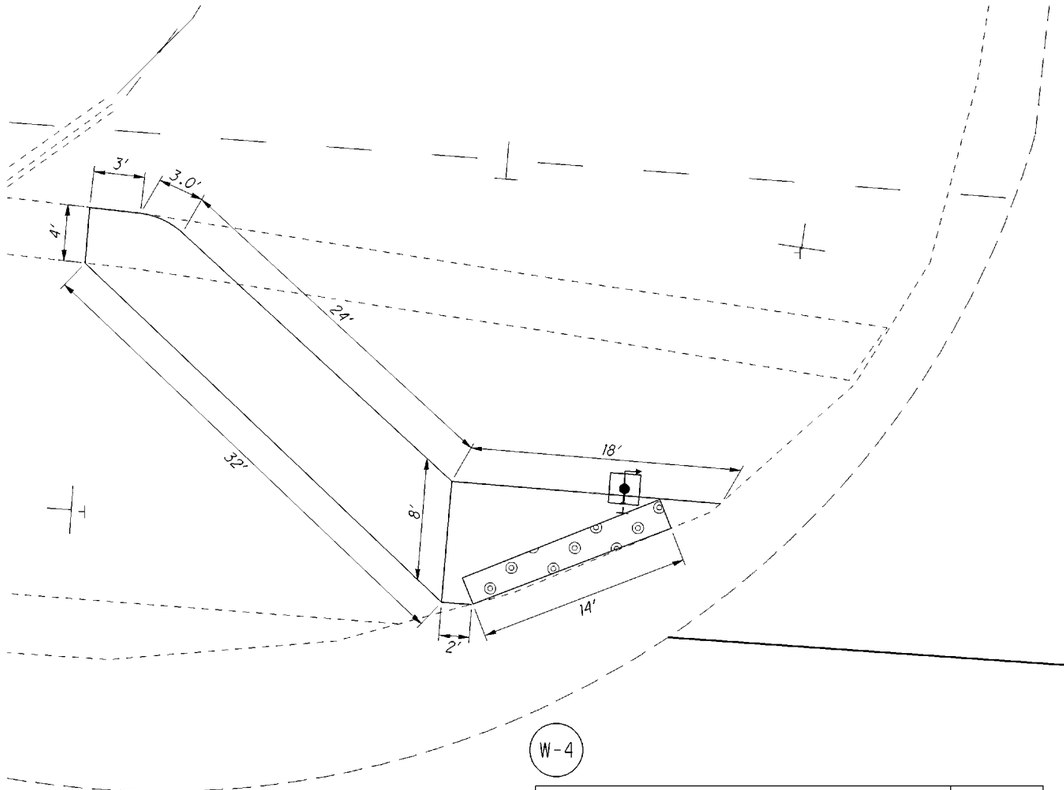

W-4

ITEM 202 - WALK REMOVED, AS PER PLAN	195 SF
ITEM 608 - 4" CONCRETE WALK	264 SF
ITEM 608 - DETECTABLE WARNING, AS PER PLAN	28 SF

W-5

ITEM 202 - WALK REMOVED, AS PER PLAN	150 SF
ITEM 608 - 4" CONCRETE WALK	303 SF
ITEM 608 - DETECTABLE WARNING, AS PER PLAN	16 SF

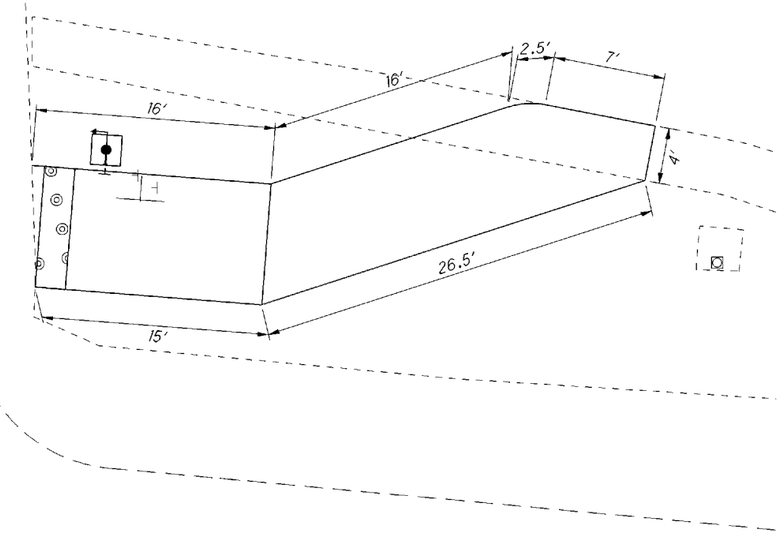

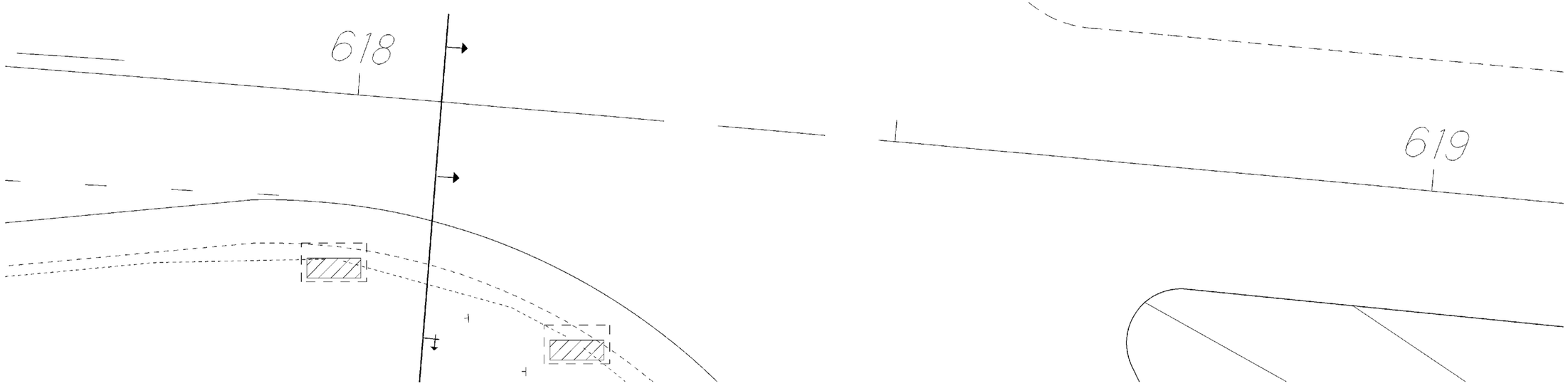

CALCULATED REB
CHECKED

CURB RAMP AND WALK DETAIL SHEET-
U.S. 36 AND SB I.R. 75 EXIT RAMP

MIA-36-11.56

I:\PROJECTS\Mia\036\1169\94757\design\sheets\94757Gn02.dgn 20-OCT-2014 1:41PM jbertke

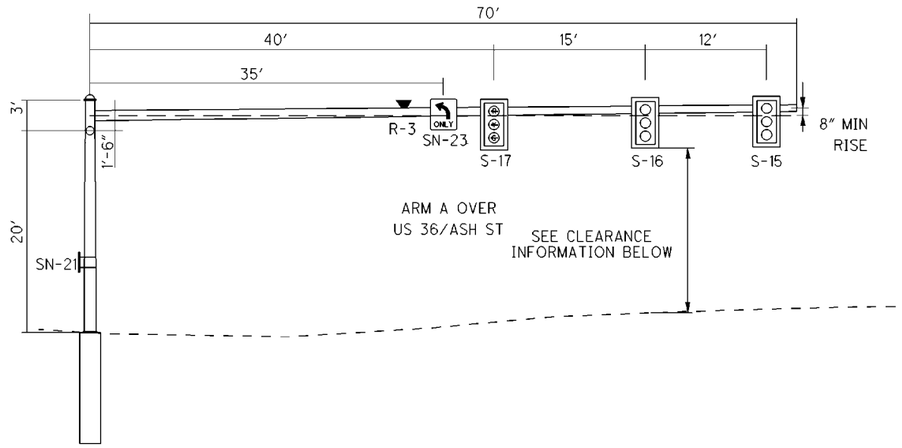

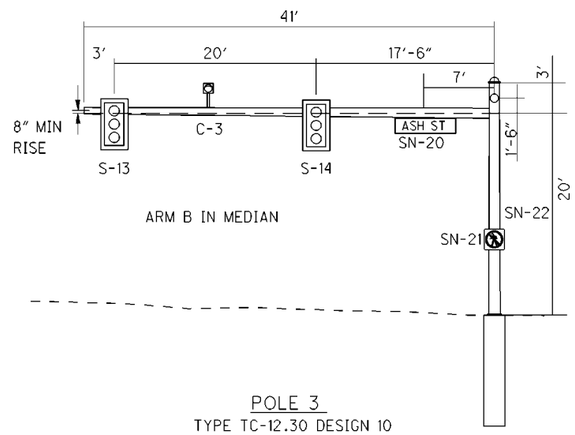

POLE 3
TYPE TC-12.30 DESIGN 10
ARM A TC-81.21 DESIGN 14
ARM B TC-81.21 DESIGN 11

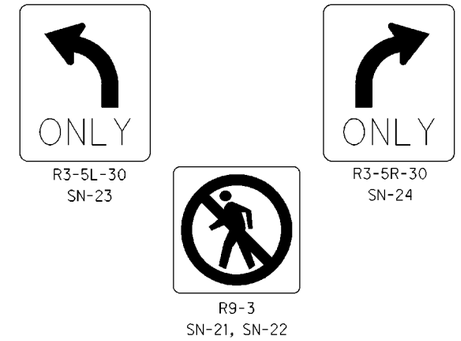

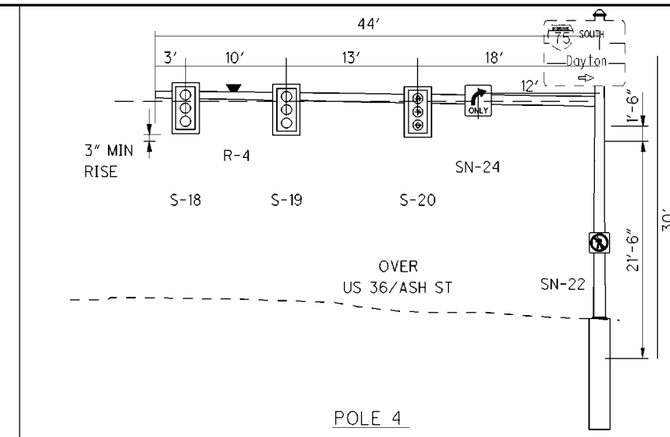

POLE 4
TYPE TC-9.30 DESIGN 1
ARM A TC-81.21 DESIGN 13

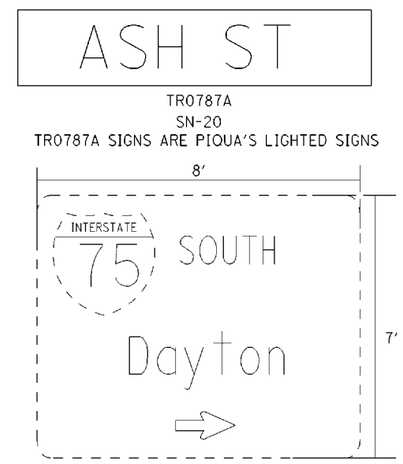

EXISTING SIGNS TO BE REMOVED AND REERECTED
PAID UNDER ROADWAY SIGNS FER. SG-2A. SEE NOTE ON SHEET 4.

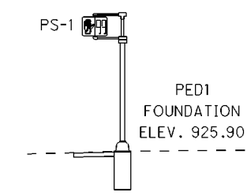

PROPOSED
PEDESTRIAN
SIGNAL HEAD

PS-1 AND PS-2

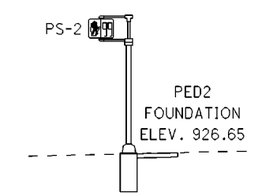

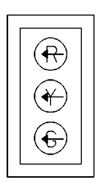

PROPOSED SIGNAL
HEAD 12″ LENS WITH
5″ BACKPLATE
AND REFLECTIVE STRIP

S-17

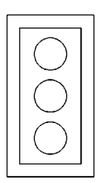

PROPOSED SIGNAL
HEAD 12″ LENS WITH
5″ BACKPLATE
AND REFLECTIVE STRIP

S-13, S-14, S-15, S-16,
S-18, S-19, AND S-20

SIGNAL HEAD MOUNTING DATA			
SIGNAL NO.	BOTTOM OF SIGNAL	PAVEMENT BELOW SIGNAL	CLEARANCE (FT)
S-13	939.63	923.85	15.78
S-14	939.75	924.51	15.24
S-15	941.74	925.65	16.09
S-16	941.62	925.30	16.32
S-17	941.08	923.16	17.92
S-18	943.50	927.16	16.34
S-19	943.34	926.92	16.42
S-20	943.14	925.83	17.31

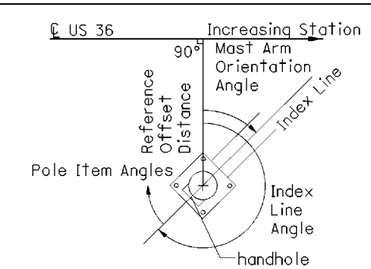

POLE INFORMATION									
					FOUNDATION ELEVATION				
REF.	POLE TYPE	DESIGN NO.	STA.	OFFSET	TOP	BOTTOM	INDEX LINE ANGLE	MAST ARM A ANGLE	MAST ARM B ANGLE
P-3	TC-12.30	11	617+89	75′ RT	922.91	911.91	0	0	90
P-4	TC-9.30	1	619+39	147′ RT	925.18	914.18	357 11 30	357 11 30	-

CALCULATED JAB
CHECKED

TRAFFIC SIGNAL DETAIL - US 36 AND IR 75 SOUTHBOUND RAMP

MIA-36-11.56

I:\PROJECTS\Mia\036\169\94757\design\sheets\94757CD02.dgn 20-OCT-2014 1:41PM jbertke

SIGNAL PHASING

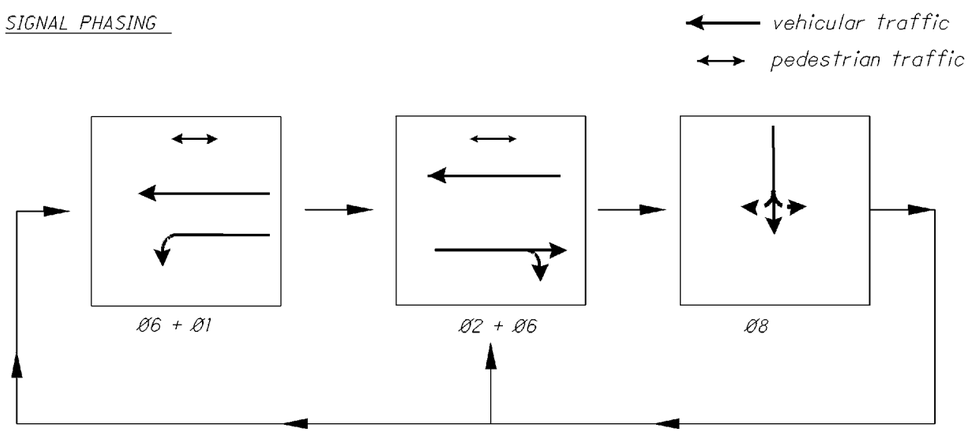

Intersection:		US 36 & SOUTHBOUND RAMPS							
Maintaining Agency:		ODOT							
Start In:	0 y/r flash or * all red	Dual Entry *							
Time for Flash or All Red:	10 sec	Rest In Red: Ring 1 * Ring 2 o							
First Phases (s):	**2 & **6	Overlap				A	B	C	D
Color Displayed:	*0 Green ; 0 Yellow	Phases							
Interval or Feature		Controller Movement No.							
Intersection Movement		1	2	3	4	5	6	7	8
Street Designation		US 36	US 36				US 36		SB RAMP
Approach Designation		WB LT	EB				WB		SB
Minimum Green (Initial)	(Sec.)	7	25				25		7
Preset Gap	(Sec.)	3							3
Maximum Green I	(Sec.)	10	30				30		7
Time Before Reduction*	(Sec.)								
Minimum Gap*	(Sec.)								
Time to Reduce*	(Sec.)								
Yellow Change	(Sec.)	3	4				4		3
All Red Clearance	(Sec.)	2	2				2		3
Walk	(Sec.)						4		
Pedestrian Clearance	(Sec.)						21		
Recall	Maximum (On/Off)								
	Minimum (On/Off)	OFF	ON				ON		OFF
	Pedestrian (On/Off)								
Call to Non Actuated	No. 1		ON				ON		
	No. 2								
*Volume Density Controls									

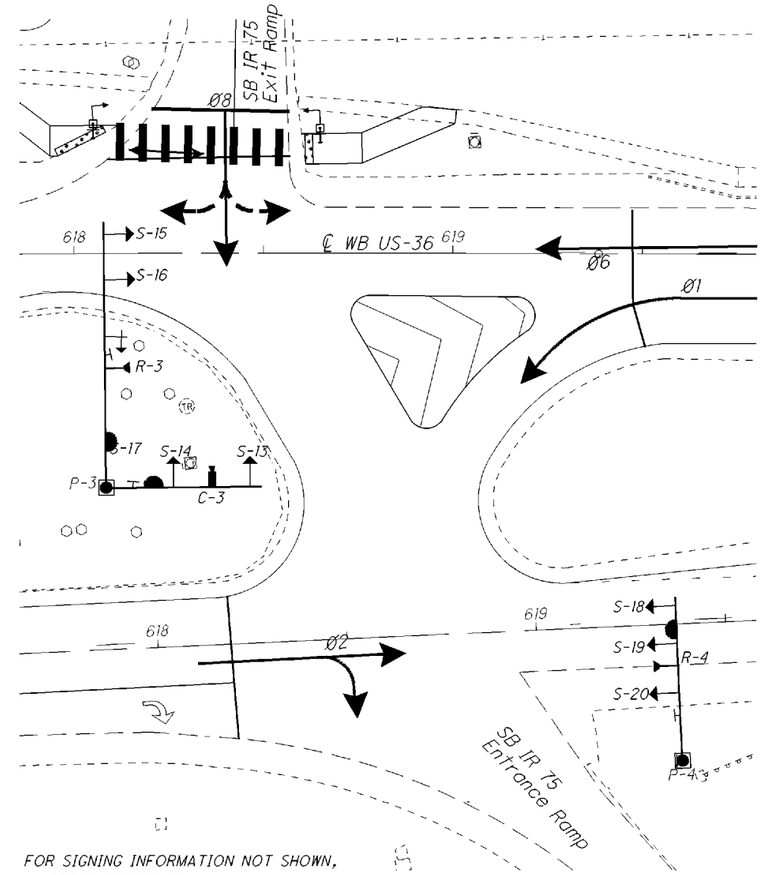

FOR SIGNING INFORMATION NOT SHOWN, SEE SHEETS 10-14.

SIGNAL DISPLAY SEQUENCE CHART

SIGNAL HEAD	1 INTERVAL			2 INTERVAL			3 INTERVAL			4 INTERVAL			5 INTERVAL			6 INTERVAL			7 INTERVAL			8 INTERVAL		
	1	2	3	1	2	3	1	2	3	1	2	3	1	2	3	1	2	3	1	2	3	1	2	3
S-13	R	R	R	R	R	R	R	R	R	R	R	R	R	R	R	R	R	R	R	R	R	G	Y	R
S-14	R	R	R	R	R	R	R	R	R	R	R	R	R	R	R	R	R	R	R	R	R	G	Y	R
S-15	R	R	R	G	Y	R	R	R	R	R	R	R	R	R	R	R	R	R	R	R	R	R	R	R
S-16	R	R	R	G	Y	R	R	R	R	R	R	R	R	R	R	R	R	R	R	R	R	R	R	R
S-17	R	R	R	R	R	R	R	R	R	R	R	R	G	Y	R	R	R	R	R	R	R	R	R	R
S-18	R	R	R	R	R	R	R	R	R	R	R	R	R	R	R	G	Y	R	R	R	R	R	R	R
S-19	R	R	R	R	R	R	R	R	R	R	R	R	R	R	R	G	Y	R	R	R	R	R	R	R
S-20	R	R	R	R	R	R	R	R	R	R	R	R	R	R	R	G	Y	R	R	R	R	R	R	R

HORIZONTAL SCALE IN FEET 0 10 20 40

CALCULATED JAB
CHECKED

TRAFFIC SIGNAL PHASING - U.S. 36 AND SOUTHBOUND RAMP

MIA-36-11.56

I:\PROJECTS\Mia\036\1169\947577\design\sheets\947577CD22.dgn 20-OCT-2014 1:41PM jbertke

REF. NO.		HORIZONTAL DISTANCE BETWEEN (FT)	625	625	625	625	625	625	625	625	625	625	625	630	630	631	632	632	632	632	632	632	632	632	632	632	632	632	632	632	633	633	633	633	633	633	633	633	809	815	816
			CONDUIT, 2", 725.04	CONDUIT, 3", 725.04	CONDUIT, 4", 725.04	CONDUIT, JACKED OR DRILLED, 725.051, AS PER PLAN (3")	CONDUIT, JACKED OR DRILLED, 725.051, AS PER PLAN (4")	TRENCH, 24" DEEP, AS PER PLAN	PULL BOX, 725.08, 18"	PULL BOX, 725.08, 24"	GROUND ROD	POWER SERVICE	PLASTIC CAUTION TAPE	SIGN, FLAT SHEET	COMBINATION OVERHEAD SIGN SUPPORT, TYPE TC-9.30, DESIGN 1	INTERNALLY ILLUMINATED FIXED MESSAGE SIGN, AS PER PLAN	VEHICULAR SIGNAL HEAD, (LED), BLACK, 3-SECTION, 12" LENS, 1-WAY, POLYCARBONATE, WITH BACKPLATE, AS PER PLAN	PEDESTRIAN SIGNAL HEAD (LED), (COUNTDOWN), TYPE D2, AS PER PLAN	PEDESTRIAN PUSHBUTTON	SIGNAL CABLE, 5 CONDUCTOR, NO. 14 AWG	SIGNAL CABLE, 7 CONDUCTOR, NO. 14 AWG	SIGNAL SUPPORT FOUNDATION	PEDESTAL FOUNDATION	POWER CABLE, 2 CONDUCTOR, NO. 6 AWG	SERVICE CABLE, 2 CONDUCTOR, NO. 6 AWG	CONDUIT RISER, 3" DIAMETER	SIGNAL SUPPORT, TYPE TC-12.30 DESIGN 10 POLE, WITH MAST ARMS TC-81.21 DESIGN 14 AND DESIGN 12	SIGNAL SUPPORT, MECHANICAL DAMPER FOR TC-81.21 MAST ARM (GREATER THAN 59' IN LENGTH)	PEDESTAL, 11', TRANSFORMER BASE	REMOVAL OF TRAFFIC SIGNAL INSTALLATION FOR STORAGE, AS PER PLAN	REUSE OF TRAFFIC CONTROL ITEM: UNINTERRUPTIBLE POWER SUPPLY (UPS)	CONTROLLER UNIT, TYPE TS2/A1, WITH CABINET, TYPE TS2, AS PER PLAN	CABINET FOUNDATION, AS PER PLAN	CONTROLLER WORK PAD, AS PER PLAN	PREEMPTION, AS PER PLAN	PREEMPTION RECEIVING UNIT, AS PER PLAN	PREEMPTION DETECTOR CABLE, AS PER PLAN	PREEMPTION PHASE SELECTOR, AS PER PLAN	PREEMPTION CONFIRMATION LIGHT, AS PER PLAN	ADVANCE DETECTION	SPREAD SPECTRUM RADIO, AS PER PLAN	VIDEO DETECTION SYSTEM
FROM	TO		FT	FT	FT	FT	FT	FT	EACH	EACH	EACH	EACH	FT	EACH	EACH	EACH	EACH	EACH	EACH	FT	FT	EACH	EACH	FT	FT	EACH	EACH	EACH	EACH	EACH	EACH	EACH	EACH	EACH	EACH	FT	EACH	EACH	EACH	EACH	EACH
PED-6	PX-10	12	12					12	1		1		12					1	1	76			1						1	1	1										
PED-7	PX-9	4	4					4	1		1		4					1	1	60			1						1												
PX-9	PX-10	69				69														296																					
PX-10	PX-11	58				58			1											252																					
PX-11	PX-12	66	66					66	1				66							284																					
S-15, S-16, S-17	P-3	67									1						3				97	1				1	1	1						2	2	77		2			
S-13, S-14	P-3	38															2				58															48					
P-3	PX-12	25			25			25	1				25								106																				
PX-12	PX-13	70					70		1											300	150															150					
PX-13	PX-14	63			63			63					63							272	136															136					
PX-14	PX-15	45					45			1										200	100															100					
S-18, S-19, S-20	P-4	41									1				1		3				71	1		33	96	1								1	1	51	1	1			
P-4	PX-15	16		16				16					16								49															42					
PX-15	CONTROLLER	19		19				19					19								52										1	1	1			45			1	1	1
												1																													
																1																										
intersection signs														28																											
			82	35	88	127	115	205	6	1	4	1	205	28	1	1	8	2	2	1740	819	2	2	33	96	2	1	1	2	1	1	1	1	1	3	3	649	1	3	1	1	1

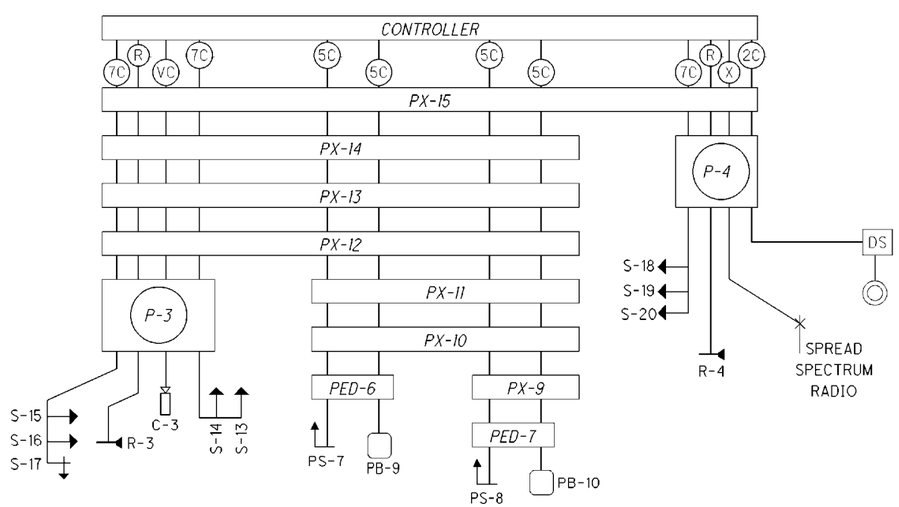

INTERNALLY ILLUMINATED FIXED MESSAGE SIGN AND PREEMPTION SYSTEM WIRING NOT SHOWN. ALL CABLE INCLUDING POWER SERVICE AND COMMUNICATION FOR THESE DEVICES SHALL BE INCLUDED IN CORRESPONDING ITEMS AND AS RECOMMENDED BY MANUFACTURER.

Legend

- pedestrian display
- pedestrian push button
- signal display
- DS disconnect switch
- camera
- radio interconnect
- 2C 2/ C No. 6 AWG
- X radio connection
- power service
- VC Video cable
- PB-1 pull box
- P-1 pole
- 7C 7/ C No. 14 AWG
- 5C 5/ C No. 14 AWG
- radar detection unit
- R radar connection

CALCULATED

CHECKED

SIGNAL SUBSUMMARY - US 36 AND SOUTHBOUND

MIA-36-11.56

I:\PROJECTS\Mia\036\1169\94757\design\sheets\94757TS22.dgn 20-OCT-2014 1:41PM jbertke

NOTES:
FOR SIGNING INFORMATION NOT SHOWN, SEE SHEETS 15-19.

RADAR DETECTION AND CAMERA LOCATIONS ARE FOR REFERENCE ONLY, ACTUAL PLACEMENT WILL BE RECOMMENDED BY MANUFACTURER AND DISTRICT 7 TRAFFIC ENGINEER, CRAIG ELEY. NUMBERED RADAR AND CAMERA UNITS ARE FOR INFORMATION ONLY.

*LOCATION OF PREEMPTION NOT FINAL. PLACEMENT WILL BE AS RECOMMENDED BY MANUFACTURER AND CITY.

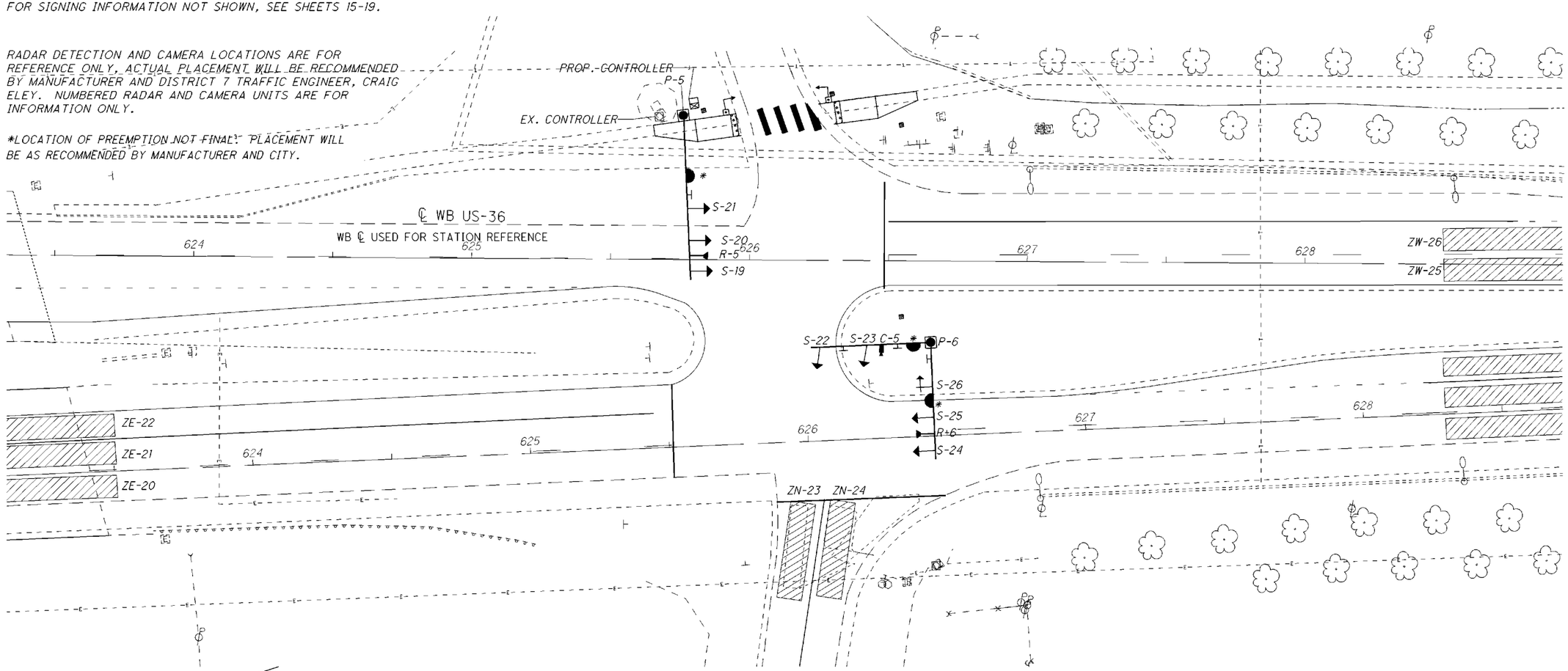

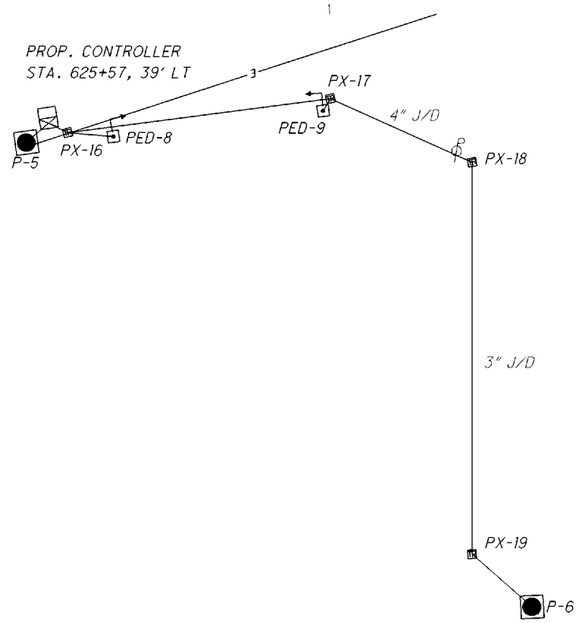

PROPOSED PULLBOX INFORMATION			
	STA.	OFFSET	SIZE
PX- 16	625+83	54' LT	24"
PX- 17	626+29	60' LT	18"
PX- 18	626+54	49' RT	18"
PX- 19	626+55	20' RT	18"

PEDESTRIAN FACILITIES			
PEDESTAL	STA.	OFFSET	PED. SIGNAL
PED- 8	625+91	53' LT	PS- 9
PED- 9	626+28	58' LT	PS- 10

LEGEND

- 3 section signal head
- 5 section signal head
- existing signal pole
- proposed signal pole
- proposed video detection camera
- conduit
- sign
- pedestrian button
- walk
- curb ramp
- advanced dilemma zone/ radar detection unit
- proposed preemption equipment

NOTE:
STATIONING AND OFFSETS FROM WESTBOUND ℄.

DETECTION ZONE CHART				
	PHASE	STA.	SIZE	DEVICE
ZE- 20	2	623+72	100' x 8'	R- 6
ZE- 21	2	623+72	100' x 8'	R- 6
ZE- 22	5	623+72	100' x 8'	R- 6
ZN- 23	4	625+93	35' x 9'	C- 5
ZN- 24	4	626+07	35' x 9'	C- 5
ZW- 25	1	628+50	100' x 8'	R- 5
ZW- 26	6	628+50	100' x 8'	R- 5

N

HORIZONTAL SCALE IN FEET 0 10 20 40

CALCULATED JAB
CHECKED

TRAFFIC SIGNAL PLAN - U.S. 36 AND NORTHBOUND RAMPS

MIA-36-11.56

I:\PROJECTS\Mia\036\1169\94757\design\sheets\94757CP03.dgn 20-OCT-2014 1:42PM jbertke

W-6

ITEM 202 - WALK REMOVED, AS PER PLAN	116 SF
ITEM 608 - 4" CONCRETE WALK	214 SF
ITEM 608 - DETECTABLE WARNING, AS PER PLAN	16 SF

W-7

ITEM 202 - WALK REMOVED, AS PER PLAN	122 SF
ITEM 608 - 4" CONCRETE WALK	222 SF
ITEM 608 - DETECTABLE WARNING, AS PER PLAN	16 SF

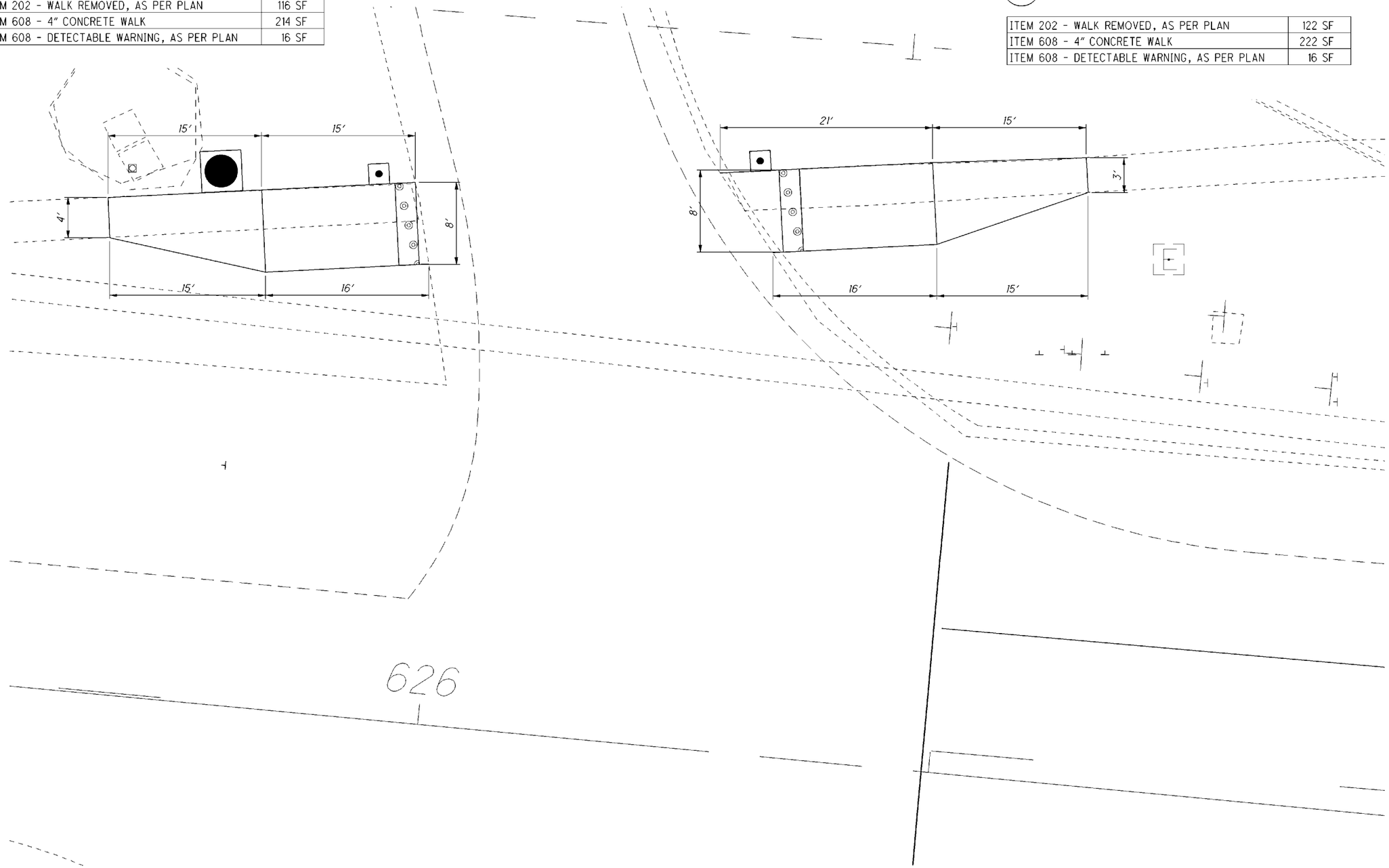

QUANTITIES CARRIED TO TRAFFIC CONTROL SUBSUMMARY.

CALCULATED REB
CHECKED

CURB RAMP AND WALK DETAIL SHEET-
U.S. 36 AND NB I.R. 75 ENTRANCE RAMP

MIA-36-11.56

I:\PROJECTS\Mia\036\169\94757\design\sheets\94757Grn03.dgn 20-OCT-2014 1:42PM jbertke

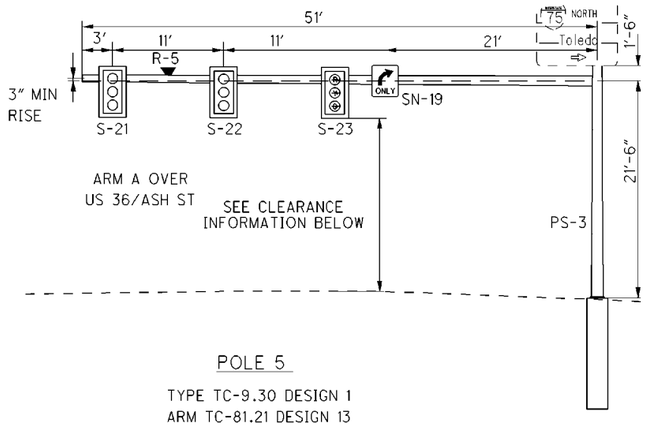

POLE 5

TYPE TC-9.30 DESIGN 1
ARM TC-81.21 DESIGN 13

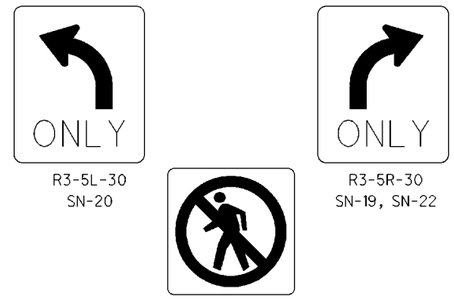

R3-5L-30
SN-20

R3-5R-30
SN-19, SN-22

R9-3
SN-23, SN-24

ASH ST

TR0787A SIGNS ARE PIQUA'S LIGHTED SIGNS
SN-21

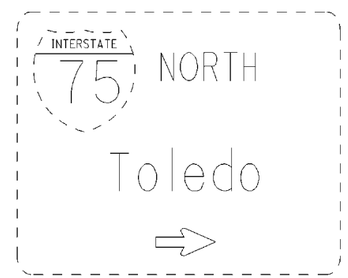

EXISTING SIGNS TO BE REMOVED AND
REERECTED ON P-5

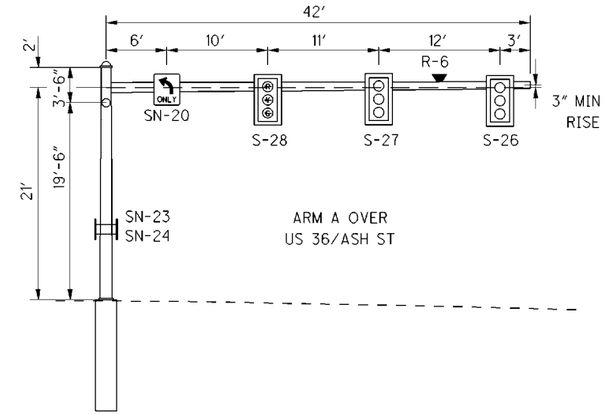

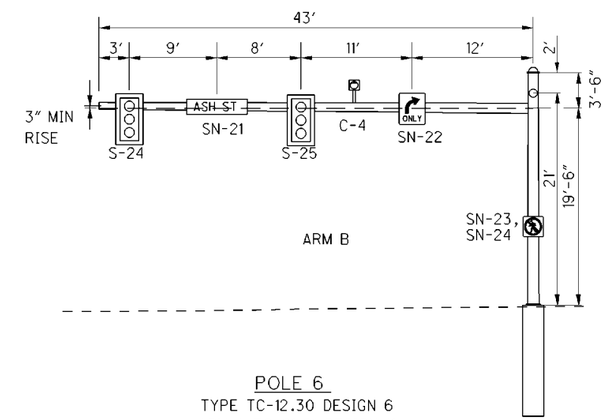

POLE 6

TYPE TC-12.30 DESIGN 6
ARM A TC-81.21 DESIGN 11
ARM B TC-81.21 DESIGN 11

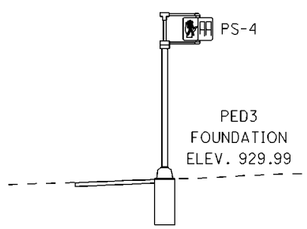

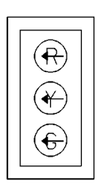

PROPOSED SIGNAL
HEAD 12" LENS WITH
5" BACKPLATE
AND REFLECTIVE STRIP

S-28

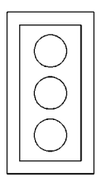

PROPOSED SIGNAL
HEAD 12" LENS WITH
5" BACKPLATE
AND REFLECTIVE STRIP

S-21, S-22, S-23,
S-24, S-25,
S-26, AND S-27

PROPOSED
PEDESTRIAN
SIGNAL HEAD

PS-3 AND PS-4

SIGNAL HEAD MOUNTING DATA			
SIGNAL NO.	BOTTOM OF SIGNAL	PAVEMENT BELOW SIGNAL	CLEARANCE (FT)
S-21	948.20	930.80	17.40
S-22	948.14	930.93	17.21
S-23	948.09	930.94	17.15
S-24	947.50	931.01	16.49
S-25	947.39	931.19	16.20
S-26*	948.76	930.76	18.00
S-27	948.93	931.04	17.89
S-28	948.85	931.25	17.60

* S-26 MAY REQUIRE A DROP DOWN
PIPE TO MOUNT APPROPRIATELY

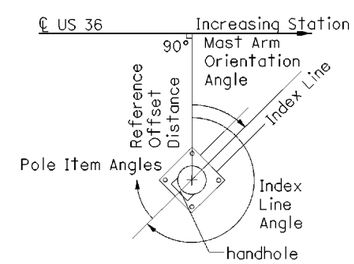

POLE INFORMATION									
					FOUNDATION ELEVATION				
REF.	POLE TYPE	DESIGN NO.	STA.	OFFSET	TOP	BOTTOM	INDEX LINE ANGLE	MAST ARM A ANGLE	MAST ARM B ANGLE
P-5	TC-9.30	1	625+60	32' LT	930.12	919.12	357 11 30	357 11 30	-
P-6	TC-12.30	6	626+46	42' RT	931.59	920.59	177 11 30	177 11 30	90

CALCULATED JAB
CHECKED

TRAFFIC SIGNAL DETAIL - US 36 AND IR 75 NORTHBOUND RAMP

MIA-36-11.56

I:\PROJECTS\Mia\036\1169\94757\design\sheets\94757CD03.dgn 20-OCT-2014 1:42PM jbertke

SIGNAL PHASING

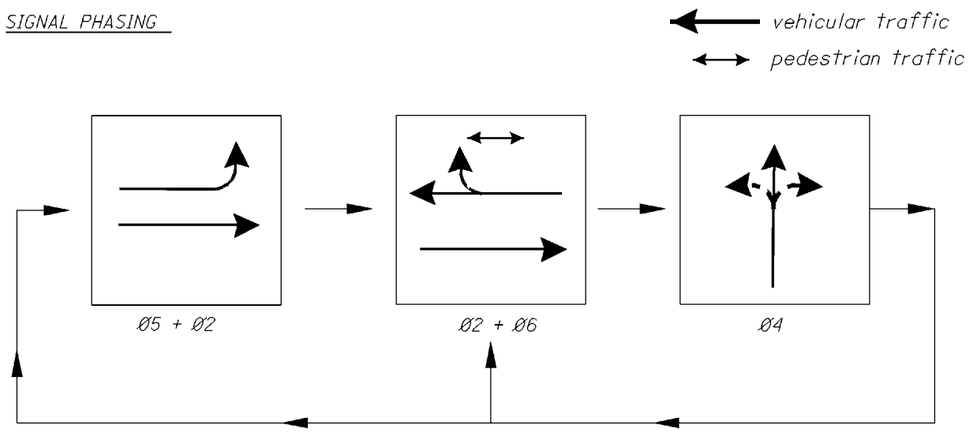

Intersection:	US 36 & NORTHBOUND IR 75 RAMPS
Maintaining Agency:	ODOT

Start In: 0 y/r flash or * all red		Dual Entry *						
Time for Flash or All Red: 10 sec		Rest In Red: Ring 1 * Ring 2 o						
First Phases (s): **2 & **6		Overlap			A	B	C	D
Color Displayed: * Green ; 0 Yellow		Phases						
Interval or Feature		Controller Movement No.						
Intersection Movement		1	2	3	4	5	6	7	8
Street Designation			US 36		NB RAMP		US 36		
Approach Designation			EB		NB		WB		
Minimum Green (Initial)	(Sec.)		30		7		30		
Preset Gap	(Sec.)				3				
Maximum Green I	(Sec.)		37		30		37		
Time Before Reduction*	(Sec.)								
Minimum Gap*	(Sec.)								
Time to Reduce*	(Sec.)								
Maximum Green I	(Sec.)								
Maximum Green II	(Sec.)								
Yellow Change	(Sec.)		4		3		4		
All Red Clearance	(Sec.)		1.5		2.5		1.5		
Walk	(Sec.)						4		
Pedestrian Clearance	(Sec.)						21		
Recall — Maximum	(On/Off)								
Recall — Minimum	(On/Off)		ON		OFF		ON		
Recall — Pedestrian	(On/Off)								
Call to Non Actuated	No. 1		ON				ON		
	No. 2								
*Volume Density Controls									

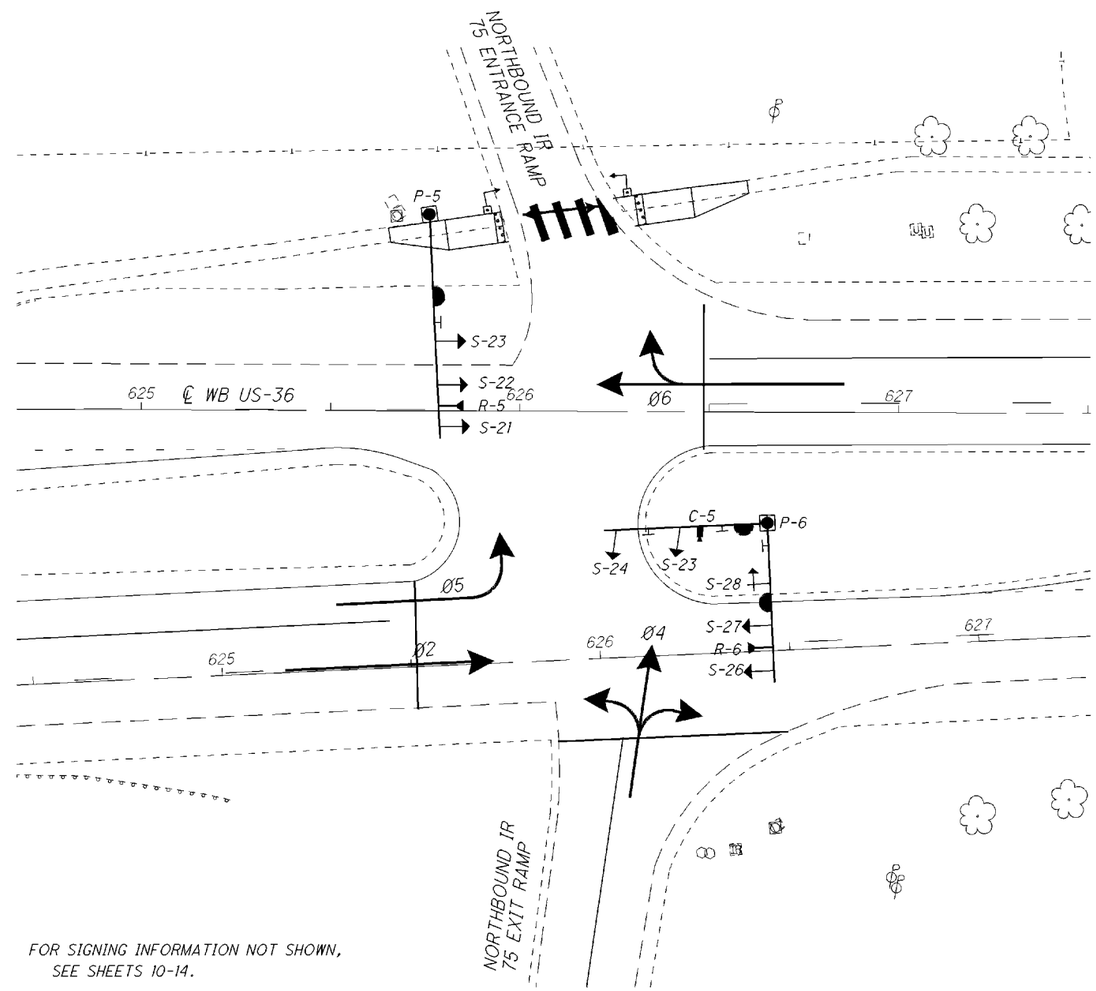

FOR SIGNING INFORMATION NOT SHOWN, SEE SHEETS 10-14.

SIGNAL DISPLAY SEQUENCE CHART

SIGNAL HEAD	1 INTERVAL			2 INTERVAL			3 INTERVAL			4 INTERVAL			5 INTERVAL			6 INTERVAL			7 INTERVAL			8 INTERVAL		
	1	2	3	1	2	3	1	2	3	1	2	3	1	2	3	1	2	3	1	2	3	1	2	3
S-19	R	R	R	G	Y	R	R	R	R	R	R	R	R	R	R	R	R	R	R	R	R	R	R	R
S-20	R	R	R	G	Y	R	R	R	R	R	R	R	R	R	R	R	R	R	R	R	R	R	R	R
S-21	R	R	R	G	Y	R	R	R	R	R	R	R	R	R	R	G	Y	R	R	R	R	R	R	R
S-22	R	R	R	R	R	R	R	R	R	G	Y	R	R	R	R	G	Y	R	R	R	R	R	R	R
S-23	R	R	R	R	R	R	R	R	R	G	Y	R	R	R	R	G	Y	R	R	R	R	R	R	R
S-24	R	R	R	R	R	R	R	R	R	G	Y	R	R	R	R	R	R	R	R	R	R	R	R	R
S-25	R	R	R	R	R	R	R	R	R	G	Y	R	R	R	R	R	R	R	R	R	R	R	R	R
S-26	R	R	R	G	Y	R	R	R	R	R	R	R	R	R	R	R	R	R	R	R	R	R	R	R
S-27	R	R	R	G	Y	R	R	R	R	R	R	R	R	R	R	R	R	R	R	R	R	R	R	R
S-28	R	R	R	R	R	R	R	R	R	R	R	R	G	Y	R	R	R	R	R	R	R	R	R	R

N

HORIZONTAL SCALE IN FEET 0 10 20 40

CALCULATED

CHECKED

TRAFFIC SIGNAL PLAN - U.S. 36 AND IR 75 NORTHBOUND RAMP

MIA-36-11.56

I:\PROJECTS\Mia\036\1169\94757\design\sheets\94757CD23.dgn 20-OCT-2014 1:42PM jbertke

REF. NO. FROM	REF. NO. TO	HORIZONTAL DISTANCE BETWEEN (FT)	625 CONDUIT, 2", T25.04	625 CONDUIT, 3", T25.04	625 CONDUIT, JACKED OR DRILLED, T25.051, AS PER PLAN (3")	625 CONDUIT, JACKED OR DRILLED, T25.051, AS PER PLAN (4")	625 TRENCH, 24" DEEP, AS PER PLAN	625 PULL BOX, T25.08, 18"	625 PULL BOX, T25.08, 24"	625 GROUND ROD	625 POWER SERVICE	625 PLASTIC CAUTION TAPE	630 SIGN, FLAT SHEET	630 COMBINATION OVERHEAD SIGN SUPPORT, TYPE TC-9.30, DESIGN 1	631 INTERNALLY ILLUMINATED FIXED MESSAGE SIGN, AS PER PLAN	632 VEHICULAR SIGNAL HEAD, (LED), BLACK, 3-SECTION, 12" LENS, 1-WAY, POLYCARBONATE, WITH BACKPLATE, AS PER PLAN	632 PEDESTRIAN SIGNAL HEAD (LED), (COUNTDOWN), TYPE D2, AS PER PLAN	632 SIGNAL CABLE, 5 CONDUCTOR, NO. 14 AWG	632 SIGNAL CABLE, 7 CONDUCTOR, NO. 14 AWG	632 SIGNAL SUPPORT FOUNDATION	632 PEDESTAL FOUNDATION	632 POWER CABLE, 2 CONDUCTOR, NO. 6 AWG	632 SERVICE CABLE, 2 CONDUCTOR, NO. 6 AWG	632 CONDUIT RISER, 3" DIAMETER	632 SIGNAL SUPPORT, TYPE TC-12.30 DESIGN 6 POLE, WITH MAST ARMS TC-81.21 DESIGN 11 AND DESIGN 11	632 SIGNAL SUPPORT, MECHANICAL DAMPER FOR TC-81.21 MAST ARM (GREATER THAN 59" IN LENGTH)	632 PEDESTAL, 11", TRANSFORMER BASE	632 REMOVAL OF TRAFFIC SIGNAL INSTALLATION FOR STORAGE, AS PER PLAN	632 REUSE OF TRAFFIC CONTROL ITEM: UNINTERRUPTIBLE POWER SUPPLY (UPS)	633 CONTROLLER UNIT, TYPE TS2/A1, WITH CABINET, TYPE TS2, AS PER PLAN	633 CABINET FOUNDATION, AS PER PLAN	633 CONTROLLER WORK PAD, AS PER PLAN	633 PREEMPTION, AS PER PLAN	633 PREEMPTION RECEIVING UNIT, AS PER PLAN	633 PREEMPTION DETECTOR CABLE, AS PER PLAN	633 PREEMPTION PHASE SELECTOR, AS PER PLAN	633 PREEMPTION CONFIRMATION LIGHT, AS PER PLAN	809 ADVANCE DETECTION	815 SPREAD SPECTRUM RADIO, AS PER PLAN	816 VIDEO DETECTION SYSTEM
			FT	FT	FT	FT	FT	EACH	EACH	EACH	EACH	FT	EACH	EACH	EACH	EACH	EACH	FT	FT	EACH	EACH	FT	FT	EACH	EACH	EACH	EACH	EACH	EACH	EACH	EACH	EACH	EACH	EACH	FT	EACH	EACH	EACH	EACH	EACH
S-24, S-25, S-26	P-6	39								1	1					3			100	1								1	1				2	2	79	1	2	1	1	1
S-22, S-23	P-6	40														2			91																					
P-6	PX-19	14	14				14	1				14			1				38					1	1															
PX-19	PX-18	69			69			1											148																					
PX-18	PX-17	27		27			27	1				27							65																					
PED-9	PX-17	3	3				3			1		3					1	29			1						1												
PX-17	PX-16	47				47			1									52	103																					
PED-8	PX-16	8	8				8			1		8					1	34			1						1												
PX-16	CONTROLLER	4		4			4			1		4						27	28											1	1	1								
S-19, S-20, S-21	P-5	56								1				1		3			114	1				1		1							1	1	84	1	1			
P-5	CONTROLLER	5		5			5					5							15																					
intersection signs													48									38	158																	
			25	36	69	47	61	3	1	5	1	61	48	1	1	8	2	142	703	2	2	38	158	2	1	1	2	1	1	1	1	1	3	3	163	2	3	1	1	1

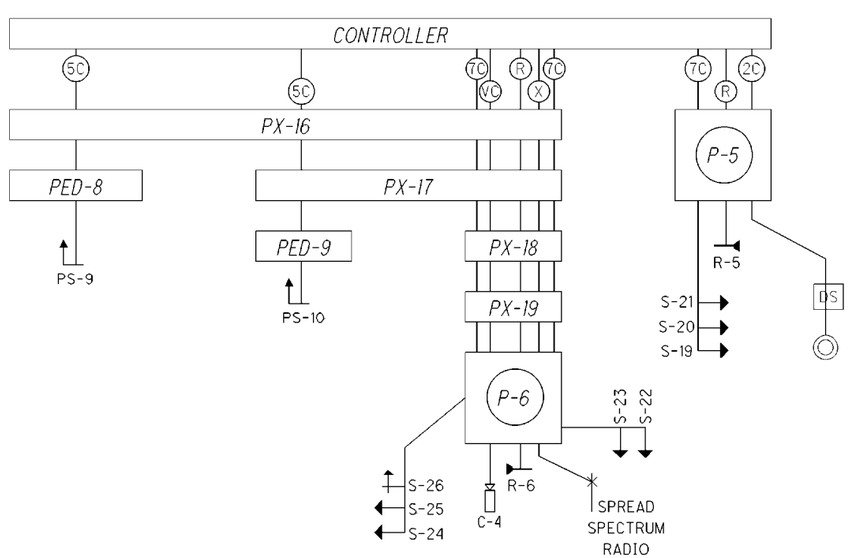

INTERNALLY ILLUMINATED FIXED MESSAGE SIGN AND PREEMPTION SYSTEM WIRING NOT SHOWN. ALL CABLE INCLUDING POWER SERVICE AND COMMUNICATION FOR THESE DEVICES SHALL BE INCLUDED IN CORRESPONDING ITEMS AND AS RECOMMENDED BY MANUFACTURER.

Legend

- pedestrian display
- pedestrian push button
- signal display
- DS disconnect switch
- camera
- radio interconnect
- 2C 2/ C No. 6 AWG
- X radio connection
- power service
- VC Video cable
- PB-1 pull box
- P-1 pole
- 7C 7/ C No. 14 AWG
- 5C 5/ C No. 14 AWG
- radar detection unit
- R radar connection

CALCULATED

CHECKED

SIGNAL SUBSUMMARY - US 36 AND NORTHBOUND

MIA-36-11.56

I:\PROJECTS\Mia\036\1169\94757\design\sheets\94757TS23.dgn 20-OCT-2014 1:42PM jberthe

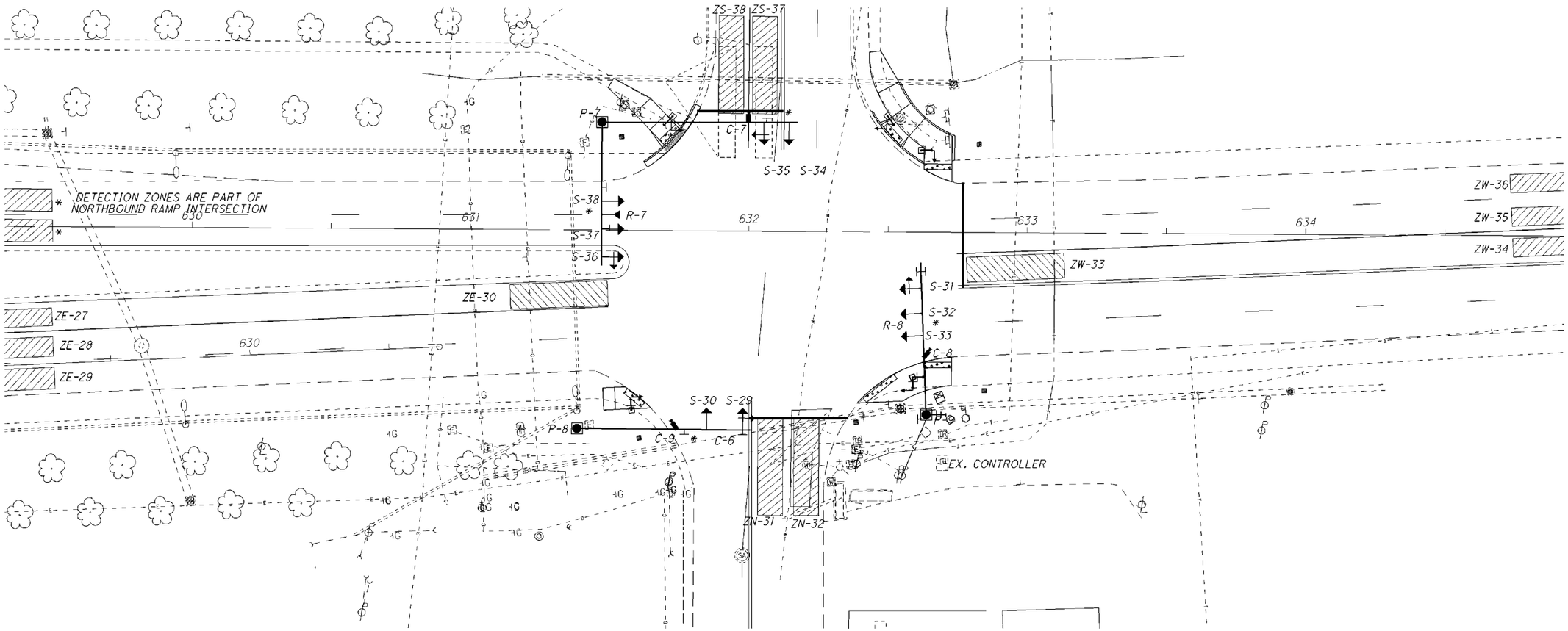

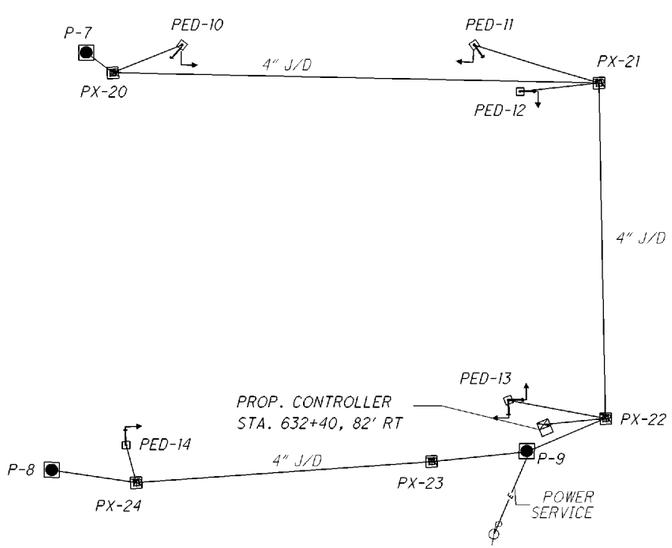

DETECTION ZONE CHART					
		PHASE	STA.	SIZE	DEVICE
ZE-	27	2	629+50	100' x 8'	R- 8
ZE-	28	2	629+50	100' x 8'	R- 8
ZE-	29	2	629+51	100' x 8'	R- 8
ZE-	30	5	631+49	35' x 9'	C- 9
ZN-	31	7	632+04	35' x 9'	C- 6
ZN-	32	4	632+17	100' x 8'	C- 6
ZW-	33	1	632+78	100' x 8'	C- 8
ZW-	34	6	634+74	35' x 9'	C- 7
ZW-	35	6	634+74	35' x 9'	R- 7
ZW-	36	6	634+73	35' x 9'	R- 7
ZS-	37	3	632+00	35' x 9'	C- 7
ZS-	38	8	631+89	35' x 9'	C- 7

PROPOSED PULLBOX INFORMATION			
	STA.	OFFSET	SIZE
PX- 20	631+54	34' LT	18"
PX- 21	632+83	32' LT	18"
PX- 22	632+84	57' RT	24"
PX- 23	632+39	68' RT	18"
PX- 24	631+61	75' RT	18"

LEGEND

- 3 section signal head
- 5 section signal head
- existing signal pole
- proposed signal pole
- proposed video detection camera
- conduit
- sign
- pedestrian push button
- walk
- curb ramp
- advanced dilemma zone/ radar detection unit
- proposed preemption equipment

NOTES:

FOR SIGNING INFORMATION NOT SHOWN, SEE SHEETS 15-19.

STATIONING AND OFFSETS FROM WESTBOUND ℄.

RADAR DETECTION AND CAMERA LOCATIONS ARE FOR REFERENCE ONLY, ACTUAL PLACEMENT WILL BE RECOMMENDED BY MANUFACTURER AND DISTRICT 7 TRAFFIC ENGINEER, CRAIG ELEY. NUMBERED RADAR AND CAMERA UNITS ARE FOR INFORMATION ONLY.

*LOCATION OF PREEMPTION NOT FINAL. PLACEMENT WILL BE AS RECOMMENDED BY MANUFACTURER AND CITY.

PEDESTRIAN FACILITIES				
PEDESTAL	STA.	OFFSET	PED. BUTTON	PED. SIGNAL
PED- 10	631+72	41' LT	PB- 10	PS- 9
PED- 11	632+50	42' LT	PB- 11	PS- 10
PED- 12	632+62	29' LT	PB- 12	PS- 11
PED- 13	632+59	52' RT	PB- 13	PS- 12
			PB- 14	PS- 13
PED- 14	631+58	65' RT	PB- 15	PS- 14

HORIZONTAL SCALE IN FEET 0 10 20 40

CALCULATED JAB CHECKED

TRAFFIC SIGNAL PLAN - U.S. 36 AND LOONEY

MIA-36-11.56

I:\PROJECTS\Mia\036\1169\94757\design\sheets\94757CP04.dgn 20-OCT-2014 1:42PM jbertke

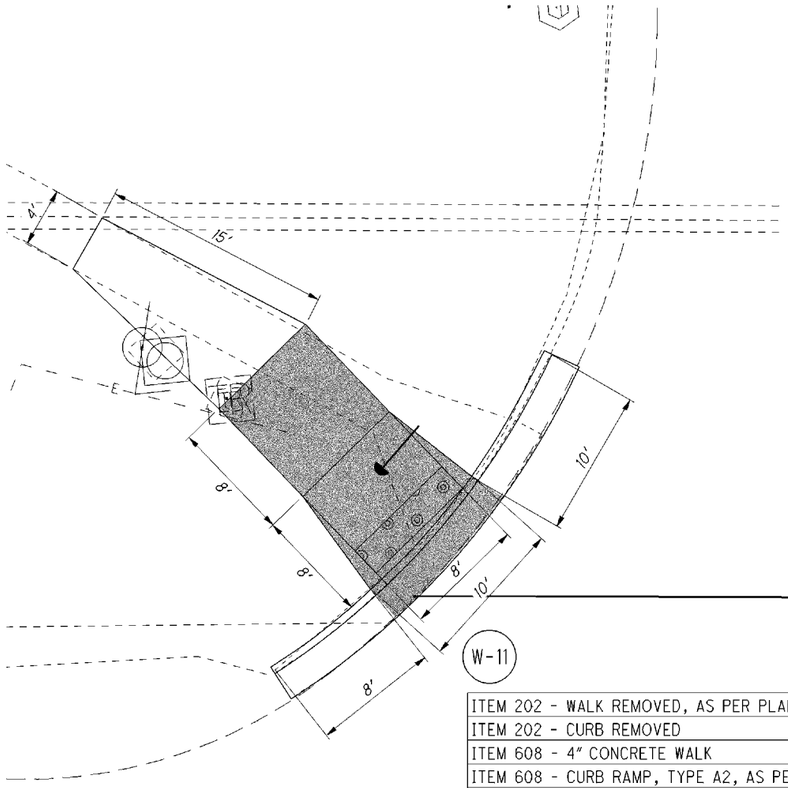

W-11

ITEM 202 - WALK REMOVED, AS PER PLAN	135 SF
ITEM 202 - CURB REMOVED	28 FT
ITEM 608 - 4" CONCRETE WALK	82 SF
ITEM 608 - CURB RAMP, TYPE A2, AS PER PLAN	134 SF
ITEM 608 - DETECTABLE WARNING, AS PER PLAN	16 SF
ITEM 609 - COMBINATION CURB AND GUTTER, TYPE 2, AS PER PLAN	18 SF

W-10

ITEM 202 - WALK REMOVED, AS PER PLAN	173 SF
ITEM 202 - CURB REMOVED	27 FT
ITEM 608 - 4" CONCRETE WALK	95 SF
ITEM 608 - CURB RAMP, TYPE B3, AS PER PLAN	155 SF
ITEM 608 - CURB RAMP, TYPE C2, AS PER PLAN	271 SF
ITEM 608 - DETECTABLE WARNING, AS PER PLAN	36 SF
ITEM 609 - CURB, TYPE 6, AS PER PLAN	15 FT

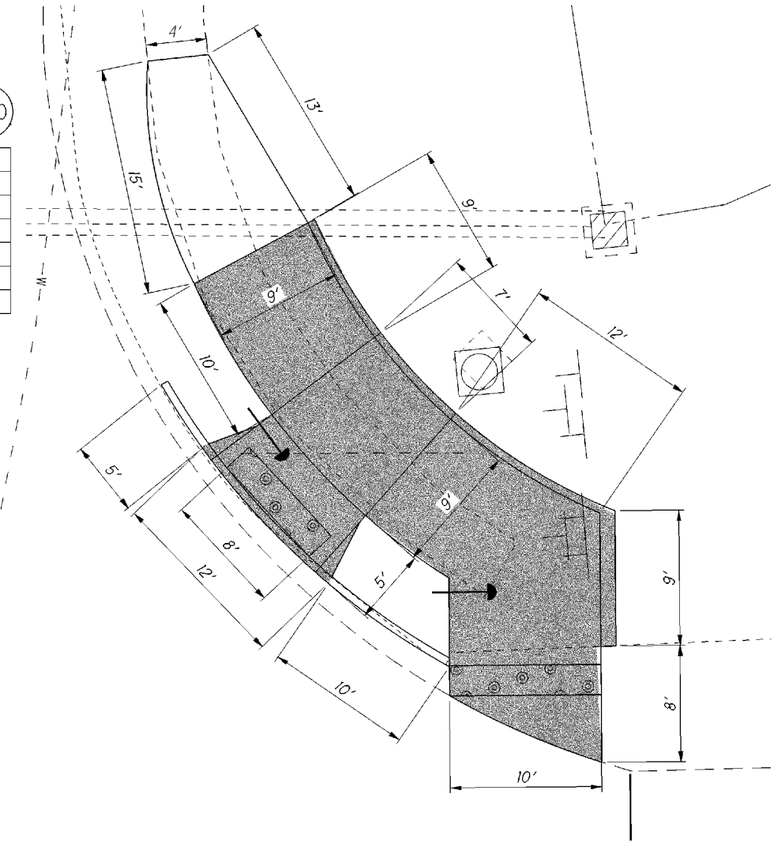

W-8

ITEM 608 - 4" CONCRETE WALK	102 SF
ITEM 608 - DETECTABLE WARNING, AS PER PLAN	16 SF

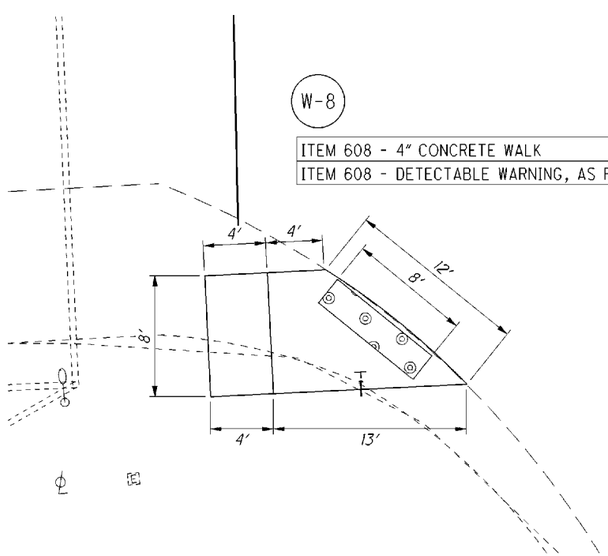

W-9

ITEM 608 - 4" CONCRETE WALK	290 SF
ITEM 608 - DETECTABLE WARNING, AS PER PLAN	48 SF

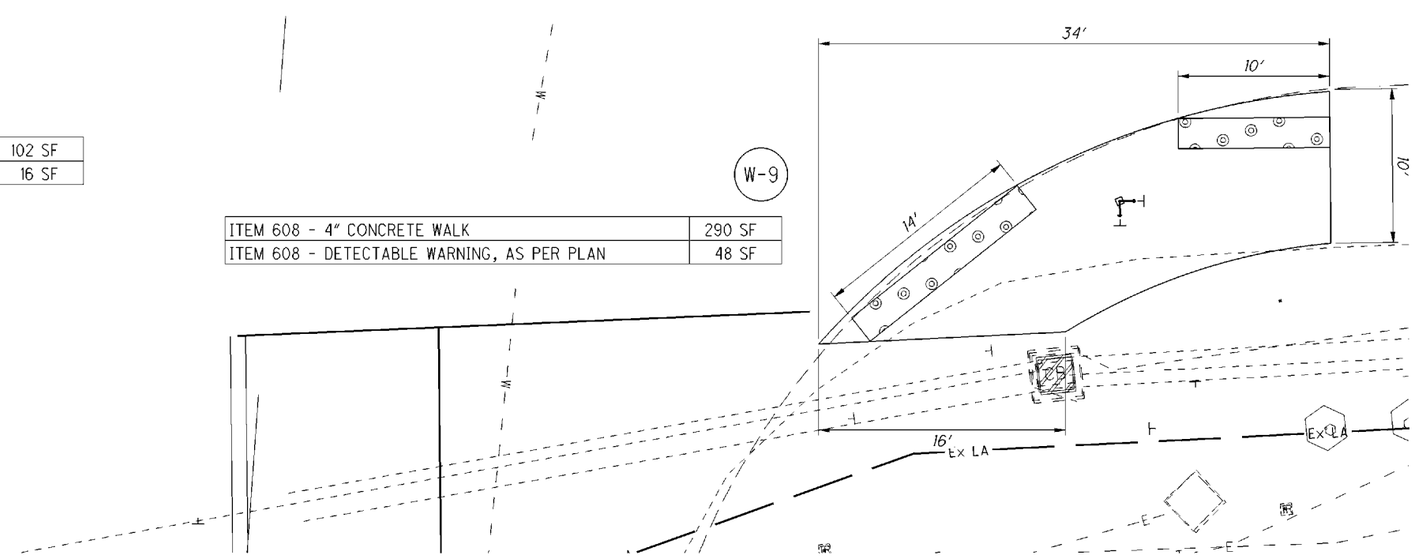

QUANTITIES CARRIED TO TRAFFIC CONTROL SUBSUMMARY.

CALCULATED REB
CHECKED

CURB RAMP AND WALK DETAIL SHEET - U.S. 36 AND LOONEY RD.

MIA-36-11.56

I:\PROJECTS\Mia\036\169\94757\design\sheets\94757Gm04.dgn 20-OCT-2014 1:42PM jbertke

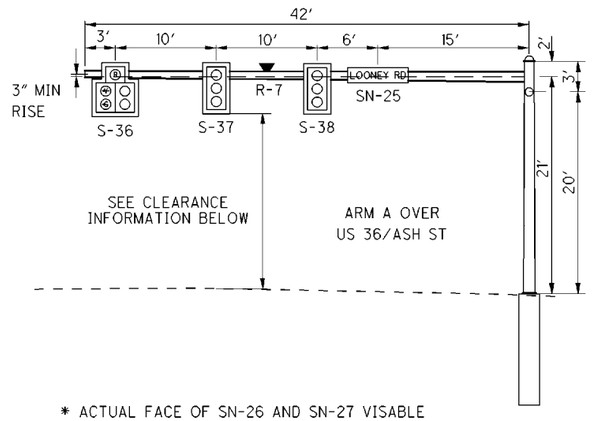

POLE 7
TYPE TC-12.30 DESIGN 10
ARM A TC-81.21 DESIGN 11
ARM B TC-81.21 DESIGN 14

* ACTUAL FACE OF SN-26 AND SN-27 VISABLE TO LOONEY ROAD SOUTHBOUND TRAFFIC

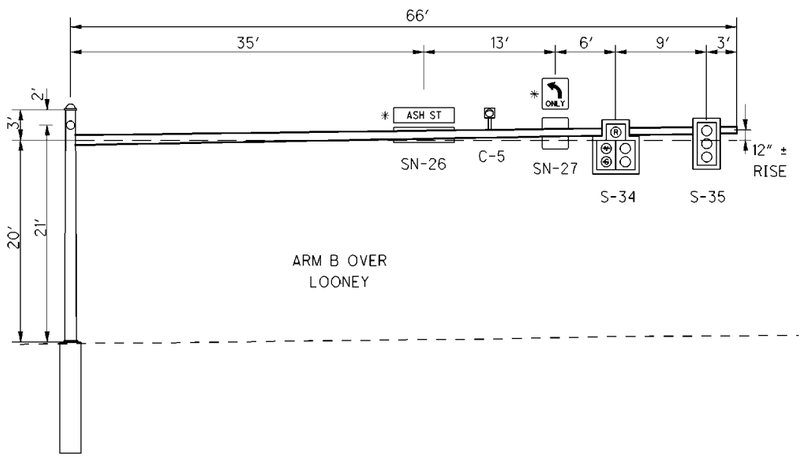

R3-5L-30
SN-27, SN-28,
SN-31, AND SN-34

ASH ST

TR0787A SIGNS ARE PIQUA'S LIGHTED SIGNS
SN-26, SN-29

R9-3
SN-30, SN-33
SN-35, SN-36

LOONEY RD

TR0787A SIGNS ARE PIQUA'S LIGHTED SIGNS
SN-25, SN-32

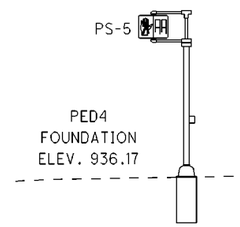

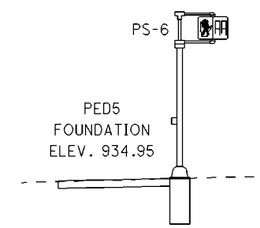

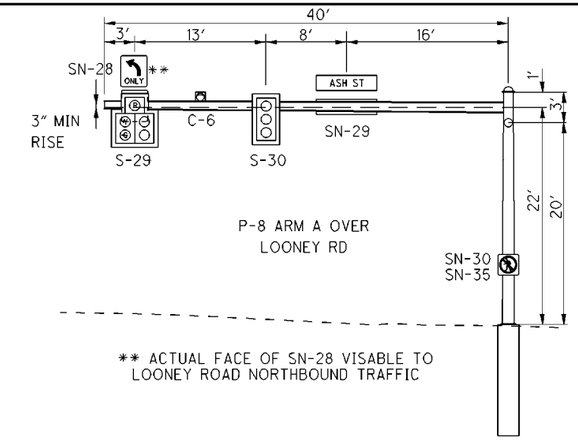

** ACTUAL FACE OF SN-28 VISABLE TO LOONEY ROAD NORTHBOUND TRAFFIC

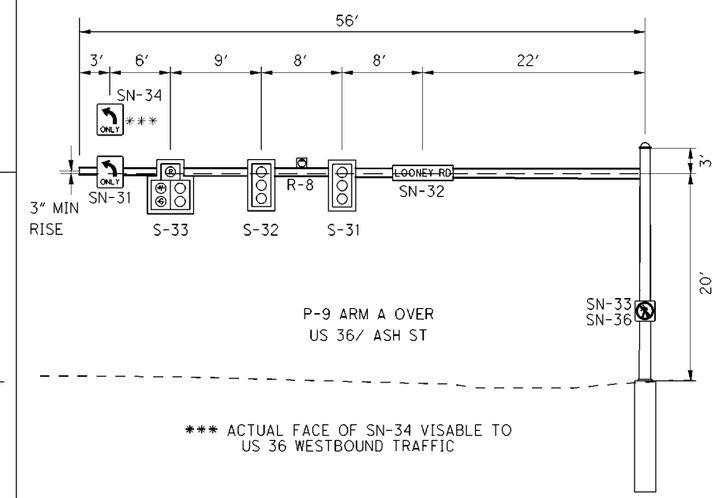

*** ACTUAL FACE OF SN-34 VISABLE TO US 36 WESTBOUND TRAFFIC

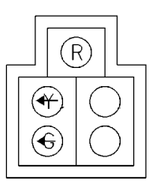

PROPOSED SIGNAL HEAD 12" LENS WITH 5" BACKPLATE AND REFLECTIVE STRIP

S-29, S-33, S-34, AND S-36

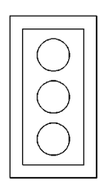

PROPOSED SIGNAL HEAD 12" LENS WITH 5" BACKPLATE AND REFLECTIVE STRIP

S-30, S-31, S-32
S-35, S-37,
AND S-38

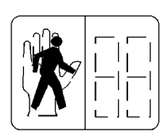

PROPOSED PEDESTRIAN SIGNAL HEAD

PS-5 AND PS-6

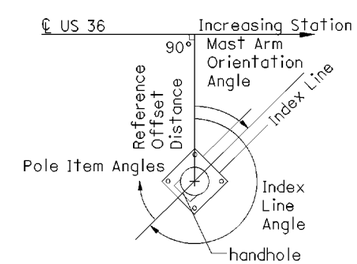

SIGNAL HEAD MOUNTING DATA			
SIGNAL NO.	BOTTOM OF SIGNAL	PAVEMENT BELOW SIGNAL	CLEARANCE (FT)
S-29	950.67	934.19	16.48
S-30	950.93	933.64	17.29
S-31	952.60	935.75	16.85
S-32	952.64	935.96	16.68
S-33	952.34	936.16	16.18
S-34	951.32	935.30	16.02
S-35	951.91	935.38	16.53
S-36	952.34	935.28	17.06

POLE INFORMATION									
					FOUNDATION ELEVATION				
REF.	POLE TYPE	DESIGN NO.	STA.	OFFSET	TOP	BOTTOM	INDEX LINE ANGLE	MAST ARM A ANGLE	MAST ARM B ANGLE
P-7	TC-12.30	10	631+39	19' LT	934.77	923.77	0	0	269 49 45
P-8	TC-81.21	2	631+42	84' RT	933.11	922.11	90 17 44	90 17 44	-
P-9	TC-81.21	13	632+45	80' RT	935.79	924.79	357 35 5	357 35 5	-

CALCULATED JAB
CHECKED

TRAFFIC SIGNAL DETAIL - US 36 AND LOONEY ROAD

MIA-36-11.56

I:\PROJECTS\Mia\036\1169\94757\design\sheets\94757CD04.dgn 20-OCT-2014 1:42PM jberlke

SIGNAL PHASING

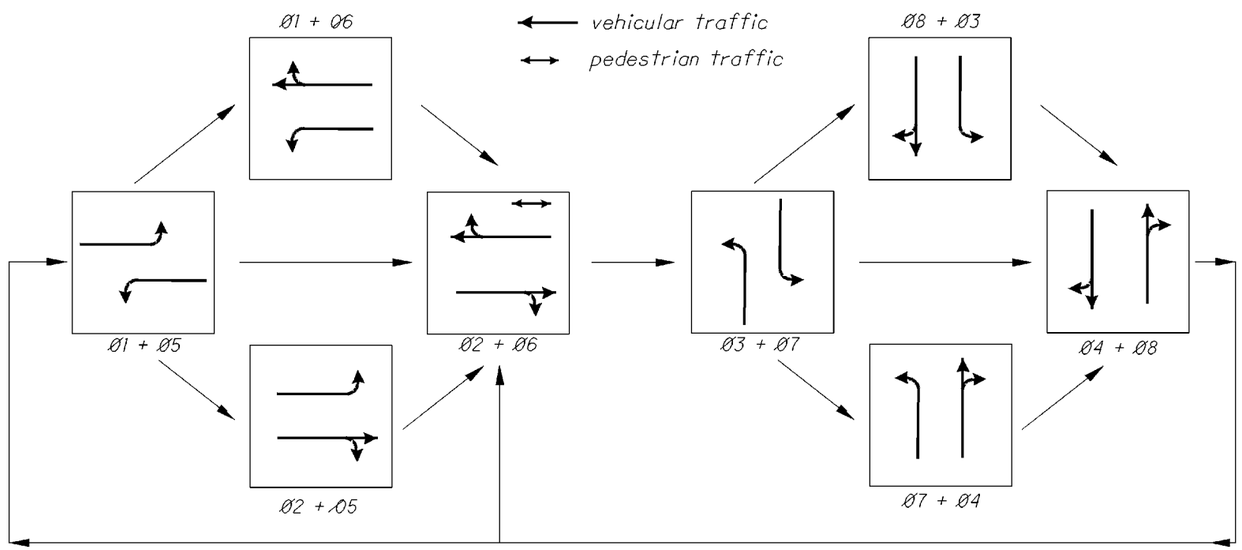

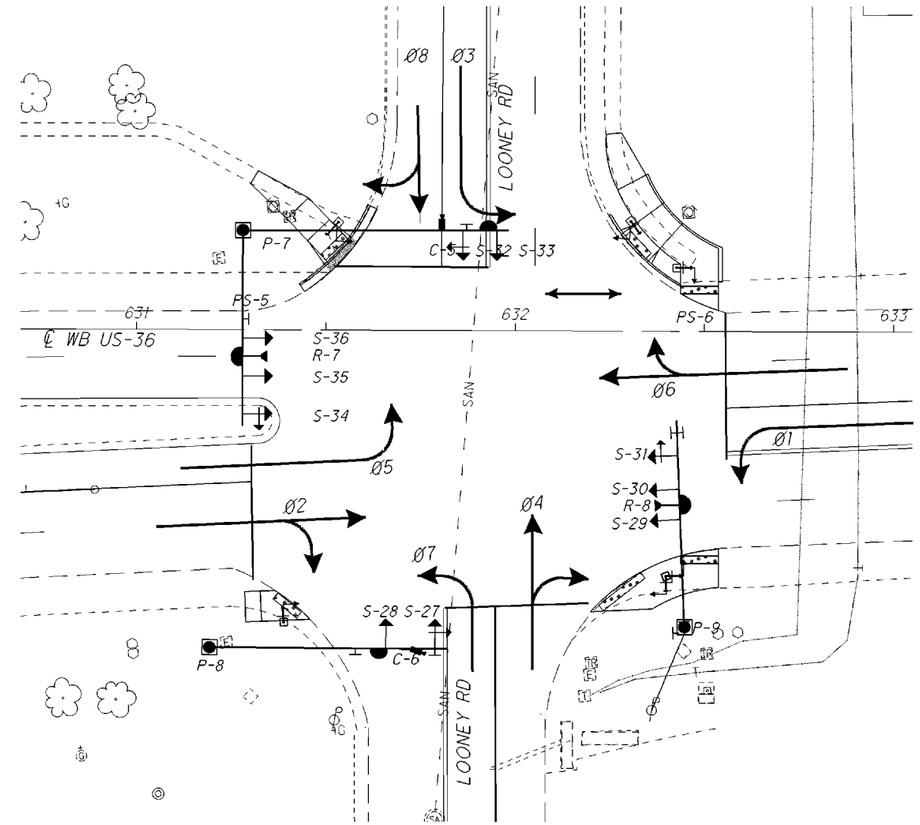

FOR SIGNING INFORMATION NOT SHOWN, SEE SHEETS 10-14.

Intersection:		US 36 & LOONEY							
Maintaining Agency:		PIQUA							
Start In:	0 y/r flash or * all red	Dual Entry *							
Time for Flash or All Red:	10 sec	Rest In Red: Ring 1 * Ring 2 o							
First Phases (s):	**2 & **6	Overlap				A	B	C	D
Color Displayed:	* Green ; O Yellow	Phases							
Interval or Feature		Controller Movement No.							
Intersection Movement		1	2	3	4	5	6	7	8
Street Designation		US 36	US 36	LOONEY	LOONEY	US 36	US 36	LOONEY	LOONEY
Approach Designation		WB LT	EB	SB LT	NB	EB LT	WB	NB LT	SB
Minimum Green (Initial)	(Sec.)	7	25	7	7	7	25	7	7
Preset Gap	(Sec.)	3		3	3	3		3	3
Maximum Green I	(Sec.)	10	29	10	20	10	29	10	10
Time Before Reduction*	(Sec.)								
Minimum Gap*	(Sec.)								
Time to Reduce*	(Sec.)								
Yellow Change	(Sec.)	3	3.7	3	3.9	3	3.7	3	3.9
All Red Clearance	(Sec.)	2	1.8	2.0	1.6	2	1.8	2	1.6
Walk	(Sec.)						4		
Pedestrian Clearance	(Sec.)						21		
Recall	Maximum (On/Off)								
	Minimum (On/Off)		ON				ON		
	Pedestrian (On/Off)								
Call to Non Actuated	No. 1		ON				ON		
	No. 2								
*Volume Density Controls									

SIGNAL DISPLAY SEQUENCE CHART

SIGNAL HEAD	1			2			3			4			5			6			7			8		
	INTERVAL			INTERVAL			INTERVAL			INTERVAL			INTERVAL			INTERVAL			INTERVAL			INTERVAL		
	1	2	3	1	2	3	1	2	3	1	2	3	1	2	3	1	2	3	1	2	3	1	2	3
S-27	R	R	R	R	R	R	G	Y	R	R	R	R	R	R	R	R	R	R	R	R	R	R	R	R
S-28	R	R	R	R	R	R	R	R	R	R	R	R	R	R	R	R	R	R	R	R	R	G	Y	R
S-29	R	R	R	R	R	R	R	R	R	R	R	R	R	R	R	G	Y	R	R	R	R	R	R	R
S-30	R	R	R	R	R	R	R	R	R	R	R	R	R	R	R	G	Y	R	R	R	R	R	R	R
S-31	G	Y	R	R	R	R	R	R	R	R	R	R	R	R	R	R	R	R	R	R	R	R	R	R
S-32	R	R	R	R	R	R	R	R	R	R	R	R	R	R	R	R	R	R	G	Y	R	R	R	R
S-33	R	R	R	R	R	R	R	R	R	G	Y	R	R	R	R	R	R	R	R	R	R	R	R	R
S-34	R	R	R	R	R	R	R	R	R	R	R	R	G	Y	R	R	R	R	R	R	R	R	R	R
S-35	R	R	R	G	Y	R	R	R	R	R	R	R	R	R	R	R	R	R	R	R	R	R	R	R
S-36	R	R	R	G	Y	R	R	R	R	R	R	R	R	R	R	R	R	R	R	R	R	R	R	R

HORIZONTAL SCALE IN FEET 0 10 20 40

CALCULATED

CHECKED

TRAFFIC SIGNAL PLAN - U.S. 36 AND LOONEY ROAD

MIA-36-11.56

I:\PROJECTS\Mia\036\1169\94757\design\sheets\94757CD24.dgn 20-OCT-2014 1:43PM jbertke

REF. NO.		HORIZONTAL DISTANCE BETWEEN (FT)	625	625	625	625	625	625	625	625	625	625	625	630	630	631	632	632	632	632	632	632	632	632	632	632	632	632	632	632	632	633	633	633	633	633	633	633	809	815	816
			CONDUIT, 2", 725.04	CONDUIT, 3", 725.04	CONDUIT, 4", 725.04	CONDUIT, JACKED OR DRILLED, 725.051, AS PER PLAN (3")	CONDUIT, JACKED OR DRILLED, 725.051, AS PER PLAN (4")	TRENCH, 24" DEEP, AS PER PLAN	PULL BOX, 725.08, 18"	PULL BOX, 725.08, 24"	GROUND ROD	POWER SERVICE	PLASTIC CAUTION TAPE	SIGN HANGER ASSEMBLY, MAST ARM	SIGN, FLAT SHEET	INTERNALLY ILLUMINATED FIXED MESSAGE SIGN, AS PER PLAN	VEHICULAR SIGNAL HEAD, (LED), BLACK, 3-SECTION, 12" LENS, 1-WAY, POLYCARBONATE, WITH BACKPLATE, AS PER PLAN	VEHICULAR SIGNAL HEAD, (LED), BLACK, 5-SECTION, 12" LENS, 1-WAY, POLYCARBONATE, WITH BACKPLATE, AS PER PLAN	PEDESTRIAN SIGNAL HEAD (LED), (COUNTDOWN), TYPE D2, AS PER PLAN	PEDESTRIAN PUSHBUTTON	SIGNAL CABLE, 5 CONDUCTOR, NO. 14 AWG	SIGNAL CABLE, 7 CONDUCTOR, NO. 14 AWG	SIGNAL SUPPORT FOUNDATION	PEDESTAL FOUNDATION	POWER CABLE, 2 CONDUCTOR, NO. 6 AWG	SERVICE CABLE, 2 CONDUCTOR, NO. 6 AWG	CONDUIT RISER, 3" DIAMETER	SIGNAL SUPPORT, MECHANICAL DAMPER FOR TC-81.21 MAST ARM (GREATER THAN 59' IN LENGTH)	SIGNAL SUPPORT, TYPE TC-81.21, DESIGN 14	SIGNAL SUPPORT, MISC.-TYPE TC-12.30 DESIGN 11, WITH MAST ARMS TC-81.21 DESIGN 14 AND DESIGN 13	PEDESTAL, 11', TRANSFORMER BASE	REMOVAL OF TRAFFIC SIGNAL INSTALLATION FOR STORAGE, AS PER PLAN	CONTROLLER UNIT, TYPE TS2/A1, WITH CABINET, TYPE TS2, AS PER PLAN	CABINET FOUNDATION, AS PER PLAN	CONTROLLER WORK PAD, AS PER PLAN	PREEMPTION, AS PER PLAN	PREEMPTION RECEIVING UNIT, AS PER PLAN	PREEMPTION DETECTOR CABLE, AS PER PLAN	PREEMPTION PHASE SELECTOR, AS PER PLAN	PREEMPTION CONFIRMATION LIGHT, AS PER PLAN	ADVANCE DETECTION	SPREAD SPECTRUM RADIO, AS PER PLAN	VIDEO DETECTION SYSTEM
FROM	TO		FT	FT	FT	FT	FT	FT	EACH	EACH	EACH	EACH	FT	EACH	EACH	EACH	EACH	EACH	EACH	EACH	FT	FT	EACH	EACH	FT	FT	EACH	EACH	EACH	EACH	EACH	EACH	EACH	EACH	EACH	EACH	FT	EACH	EACH	EACH	EACH	EACH
PED-10	PX-20	20	20					20	1		1		20						1	1	92			1							1	1	1	1	1							
S-36, S-37, S-38	P-7	41									1						2	1				71	1				1	1		1						2	2	2	1	2	1	1	1
S-34, S-35	P-7	64									1						2					84																				
P-7	PX-20	9			9			9	1				9									94																				
PX-20	PX-21	129					129		1												268	268																				
PED-11	PX-21	35	35					35			1		35						1	1	122			1							1											
PED-12	PX-21	21	21					21			1		21						1	1	94			1							1											
PX-21	PX-22	89					89		1												564	188																				
PED-13	PX-22	26	26					26			1		26						2	2	208			1							1											
PED-14	PX-24	11	11					11	1		1								1	1	70			1							1											
S-29, S-30	P-8	23									1						1	1				43	1				1		1							1	1	1		1			
P-8	PX-24	23		23				23			1		23									49						1														
P-9	PX-23	25				25				1	1										60	30	1						1							1	1	1		1			
PX-23	PX-24	20					20														50	25																				
S-31, S-32, S-33	P-9	47															2	1				77			47	53	1															
PX-22	P-9	23			23																186	62																				
PX-22	CONTROLLER	16			16			16				1	16								144	48																				
intersection signs														12	30																											
																2																										
			113	23	48	25	238	161	5	1	10	1	150	12	30	2	7	3	6	6	2002	1087	3	5	47	53	3	2	2	1	5	1	1	1	1	4	4	4	1	4	1	1	1

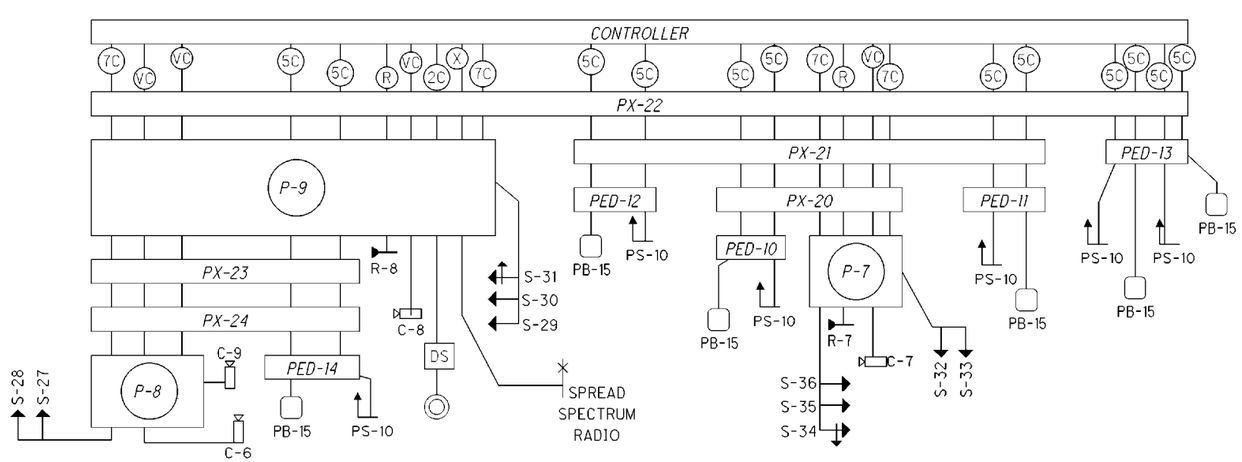

INTERNALLY ILLUMINATED FIXED MESSAGE SIGN AND PREEMPTION SYSTEM WIRING NOT SHOWN. ALL CABLE INCLUDING POWER SERVICE AND COMMUNICATION FOR THESE DEVICES SHALL BE INCLUDED IN CORRESPONDING ITEMS AND AS RECOMMENDED BY MANUFACTURER.

Legend

- pedestrian display
- pedestrian push button
- signal display
- DS disconnect switch
- camera
- radio interconnect
- 2C 2/ C No. 6 AWG
- X radio connection
- power service
- VC Video cable
- PB-1 pull box
- P-1 pole
- 7C 7/ C No. 14 AWG
- 5C 5/ C No. 14 AWG
- radar detection unit
- R radar connection

CALCULATED

CHECKED

SIGNAL SUBSUMMARY - US 36 AND LOONEY

MIA-36-11.56

I:\PROJECTS\Mia\036\169\94757\design\sheets\94757TS24.dgn 20-OCT-2014 1:43PM jbertke