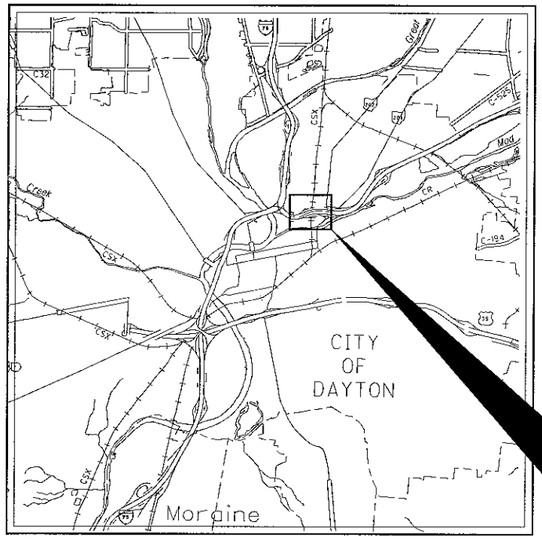

LOCATION MAP

LATITUDE: 39°46'18" N LONGITUDE: 84°10'44" W

SCALE IN MILES

0 1 2 3 4

N

PORTION TO BE IMPROVED
INTERSTATE & DIVIDED HIGHWAY
UNDIVIDED STATE & FEDERAL ROUTES
OTHER ROADS
DETOUR ROUTE
RAILROAD

STATE OF OHIO

MOT-XWAY

RECONSTRUCTION OF EXISTING SEPARATED CROSSING OF DAYTON EXPRESSWAY WITH CSX TRANSPORTATION INC. AND KEOWEE STREET

CITY OF DAYTON

MONTGOMERY COUNTY

DESIGN DESIGNATION

	DAYTON EXPRESSWAY OVER KEOWEE STREET
CURRENT ADT (2005)	38370
DESIGN YEAR ADT (2025)	39700
DESIGN HOURLY VOLUME (2025)	2382
DIRECTIONAL DISTRIBUTION	60%
TRUCKS (24 HOUR B&C)	8%
DESIGN SPEED	60 MPH
LEGAL SPEED	60 MPH

DESIGN FUNCTIONAL CLASSIFICATION
URBAN FREEWAY
(DAYTON EXPRESSWAY)

DESIGN EXCEPTIONS

NONE REQUIRED

UNDERGROUND UTILITIES
TWO WORKING DAYS
BEFORE YOU DIG
CALL 1-800-362-2764 (TOLL FREE)
OHIO UTILITIES PROTECTION SERVICE
NON-MEMBERS
MUST BE CALLED DIRECTLY

PLAN PREPARED BY:

RW ARMSTRONG

471 EAST BROAD STREET, SUITE 2010
COLUMBUS, OHIO 43215

ENGINEERS SEAL

STATE OF OHIO
CHARLES A. MITCHELL
E-54371
REGISTERED
PROFESSIONAL ENGINEER

SIGNED: Charles A. Mitchell
DATE: 14-FEB-2007

INDEX OF SHEETS:

TITLE SHEET	1
TYPICAL SECTIONS	2-3
GENERAL NOTES	4-5
MAINTENANCE OF TRAFFIC	6-35
GENERAL SUMMARY	36-37
SUB SUMMARIES	38-39
PROJECT SITE PLAN	40
PLAN AND PROFILE DAYTON EXPRESSWAY	41-44
CROSS SECTIONS DAYTON EXPRESSWAY	45-47
PLAN AND PROFILE RAMP D	48-49
CROSS SECTIONS RAMP D	50-51
SUPERELEVATION TABLE	52
SIGNING AND PAVEMENT MARKING	53-55
STRUCTURES OVER 20'	56-120

PROJECT EDA = 3.9 ACRES
CONTRACTOR EDA = 1.0 ACRES
NOI EDA = 4.9 ACRES

LIMITED ACCESS

THIS IMPROVEMENT IS ESPECIALLY DESIGNED FOR THROUGH TRAFFIC AND HAS BEEN DECLARED A LIMITED ACCESS HIGHWAY OR FREEWAY BY ACTION OF THE DIRECTOR IN ACCORDANCE WITH THE PROVISIONS OF SECTION 5511.02 OF THE OHIO REVISED CODE.

PROJECT DESCRIPTION

THE IMPROVEMENT CONSISTS OF THE RECONSTRUCTION OF THE DAYTON EXPRESSWAY BRIDGE OVER KEOWEE STREET, AND THE CSX TRANSPORTATION INC., INCLUDING SUPERSTRUCTURE REMOVAL AND REPLACEMENT, REHABILITATION OF PIERS AND ABUTMENTS AND NEW APPROACH SLABS. THE PROJECT LENGTH INCLUDING APPROACH ROADWAY RECONSTRUCTION IS 0.15 MILES.

2005 SPECIFICATIONS

THE STANDARD SPECIFICATIONS OF THE STATE OF OHIO, DEPARTMENT OF TRANSPORTATION, INCLUDING CHANGES AND SUPPLEMENTAL SPECIFICATIONS LISTED IN THE PROPOSAL SHALL GOVERN THIS IMPROVEMENT.

MAINTENANCE OF TRAFFIC ENDORSEMENT

I HEREBY APPROVE THESE PLANS AND DECLARE THAT MAKING OF THIS IMPROVEMENT WILL NOT REQUIRE THE CLOSING OF DAYTON EXPRESSWAY TO TRAFFIC AND THAT PROVISIONS FOR THE MAINTENANCE AND SAFETY OF TRAFFIC WILL BE SET FORTH ON THE PLANS AND ESTIMATES. THE MAKING OF THIS IMPROVEMENT WILL REQUIRE LIMITED CLOSING TO TRAFFIC OF THE EXIT RAMP TO U.S. 201 AND U.S. 202, AND DETOURING WILL BE PROVIDED AS INDICATED ON SHEET NO. 31.

PRIMA FACIE

UNDER AUTHORITY OF SECTION 4511.21, DIVISION (H) OF THE OHIO REVISED CODE, THE REVISED PRIMA FACIE SPEED LIMITS AS INDICATED HEREIN ARE DETERMINED TO BE REASONABLE AND SAFE, AND ARE HEREBY ESTABLISHED FOR THE DURATION OF THIS PROJECT. THE PRIMA FACIE SPEED LIMIT HEREBY ESTABLISHED SHALL BECOME EFFECTIVE WHEN APPROPRIATE SIGNS GIVING NOTICE THEREOF ARE ERECTED.

STANDARD CONSTRUCTION DRAWINGS

										TC-41.50	1-19-07
BP-2.2	7-16-04			HL-10.12	1-19-07	MT-35.10	4-20-01			TC-42.10	1-19-07
BP-3.1	7-16-04			HL-10.13	1-17-03	MT-95.30	9-5-06			TC-42.20	7-16-04
				HL-20.14	1-21-05	MT-95.31	9-5-06			TC-52.10	1-19-07
DM-4.1	7-19-02			HL-30.11	1-21-05	MT-95.32	9-5-06			TC-52.20	1-19-07
DM-4.2	1-21-05	GR-1.1	7-16-04			MT-95.70	4-19-02			TC-71.10	1-19-07
DM-4.3	7-19-02	GR-2.1	1-16-04	HL-30.31	1-21-05	MT-95.82	9-5-06			TC-73.10	1-19-01
DM-4.4	7-19-02	GR-3.1	1-19-07	HL-30.32	4-19-02	MT-98.19	10-18-02			TC-21.10	1-19-01
		GR-6.1	4-18-03	HL-50.21	1-19-07	MT-101.60	9-5-06			TC-15.115	1-19-07
						MT-101.70	10-18-02			TC-22.20	1-19-01
		RM-3.1	4-18-03	F-1.1	7-16-04	MT-102.10	10-20-06				
		RM-4.1	10-20-06	F-3.1	7-28-00	MT-102.20	9-5-06			A-1-69	7-19-02
		RM-4.2	10-20-06	F-3.2	7-28-00	MT-105.10	10-18-02			AS-1-81	7-19-02
		RM-4.5	1-19-07	F-3.3	7-28-00	MT-105.11	10-18-02			BR-1	7-19-02
		RM-4.6	1-16-04							EXJ-4-87	7-19-02
										GSD-1-96	7-19-02

SUPPLEMENTAL SPECIFICATIONS

800 1/19/07
832 4/25/06
843 4/18/03
885 11/04/05

SPECIAL PROVISIONS

GEPA RENO DEMO

APPROVED Ray H Lawson
DATE 2-16-07 CITY ENGINEER, CITY OF DAYTON

FEDERAL PROJECT NO. E041141

PID NO. 77774

CONSTRUCTION PROJECT NO.

RAILROAD INVOLVEMENT CSX RAILROAD

MOT-XWAY

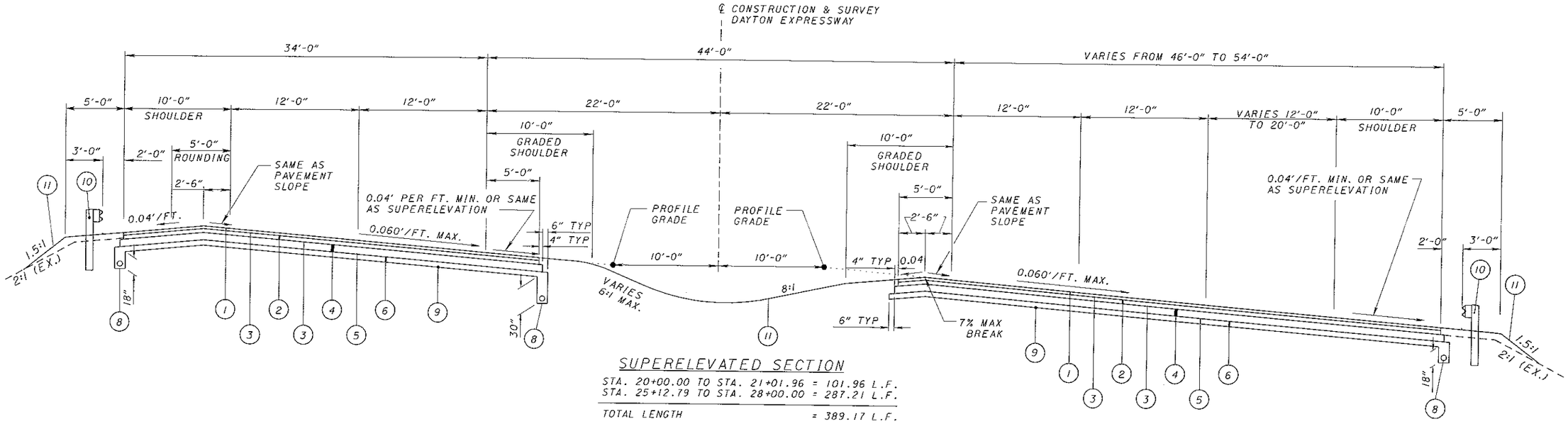

SUPERELEVATED SECTION

STA. 20+00.00 TO STA. 21+01.96 = 101.96 L.F.
STA. 25+12.79 TO STA. 28+00.00 = 287.21 L.F.

TOTAL LENGTH = 389.17 L.F.

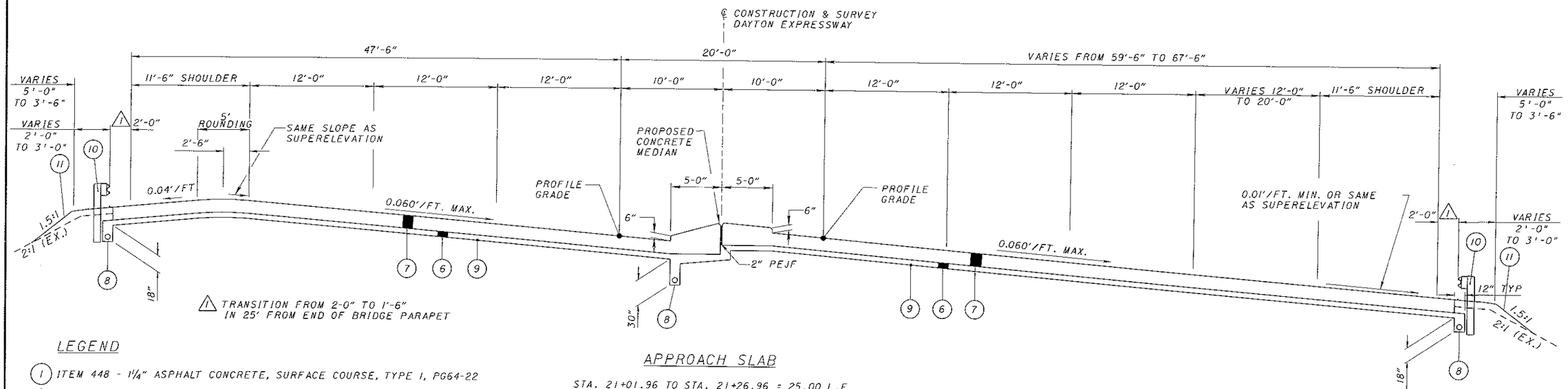

△1 TRANSITION FROM 2-0" TO 1'-6"
IN 25' FROM END OF BRIDGE PARAPET

LEGEND

1. ITEM 448 - 1¼" ASPHALT CONCRETE, SURFACE COURSE, TYPE I, PG64-22
2. ITEM 448 - 1¾" ASPHALT CONCRETE, INTERMEDIATE COURSE, TYPE I, PG64-22
3. ITEM 407 - TACK COAT (SEE GENERAL NOTE)
4. ITEM 302 - 8" ASPHALT CONCRETE AGGREGATE BASE
5. ITEM 408 - PRIME COAT (0.40 GAL PER SQ.YD.)
6. ITEM 304 - 8" AGGREGATE BASE
7. ITEM 526 - REINFORCED CONCRETE APPROACH SLAB (T=15")
8. ITEM 605 - 6" SHALLOW PIPE UNDERDRAIN
9. ITEM 204 - SUBGRADE COMPACTION
10. ITEM 606 - GUARDRAIL , TYPE 5A
11. ITEM 659 - SEEDING AND MULCHING

APPROACH SLAB

STA. 21+01.96 TO STA. 21+26.96 = 25.00 L.F.
STA. 24+87.79 TO STA. 25+12.79 = 25.00 L.F.

TOTAL LENGTH = 50.00 L.F.

STATION	SUPERELEVATION
20+00	0.0180
20+25	0.0215
20+50	0.0250
20+75	0.0285
21+00	0.0320
21+25	0.0355
21+50	0.0390
21+75	0.0425
22+00	0.0460
22+25	0.0495
22+50	0.0530
22+75	0.0565
23+00	0.0600
24+00	0.0600
25+00	0.0600
26+00	0.0600

TYPICAL SECTIONS

MOT-XWAY

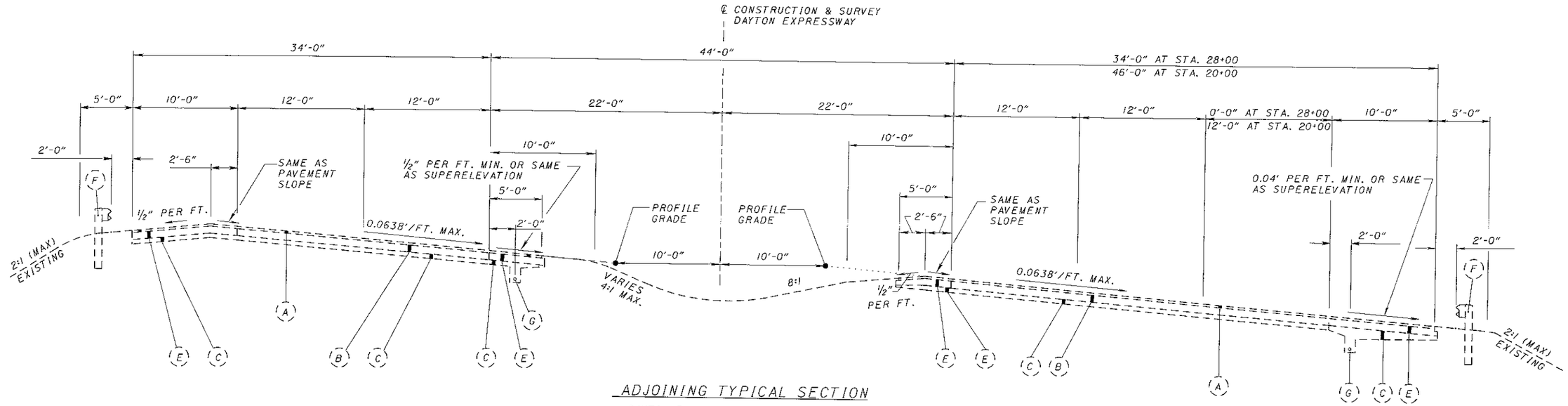

ADJOINING TYPICAL SECTION

DAYTON EXPRESSWAY STATION 20+00.00
DAYTON EXPRESSWAY STATION 28+00.00

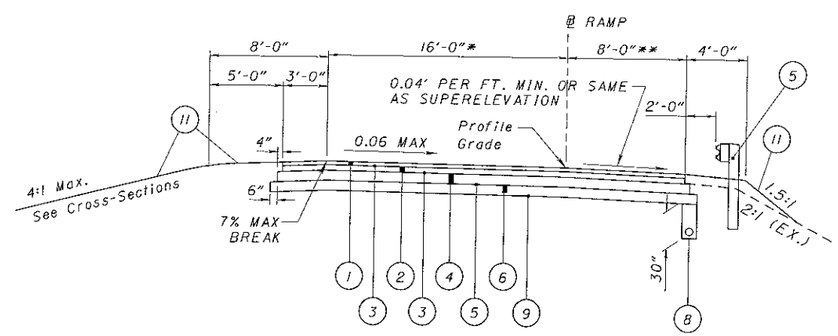

RAMP D TYPICAL SECTION

STA. 2+58.04 TO STA. 4+75.00 = 216.96'
TOTAL LENGTH = 216.96'

* VARIES FROM 18'-0" TO 16'-0" FROM STA. 2+58.04 TO STA. 3+58.04

** VARIES FROM 10'-0" TO 8'-0" FROM STA 2+58.04 TO STA. 3+58.04

STATION	SUPERELEVATION
2+50	0.0600
2+75	0.0545
3+00	0.0490
3+25	0.0435
3+50	0.0380
3+75	0.0325
4+00	0.0270
4+25	0.0215
4+50	0.0160

LEGEND

- (A) EXISTING ASPHALT CONCRETE OVERLAY
- (B) EXISTING 9" CONCRETE PAVEMENT
- (C) EXISTING 6" SUBBASE
- (D) EXISTING 3" AGGREGATE BASE COURSE
- (E) EXISTING 5" STABILIZED AGGREGATE SHOULDER MATERIAL
- (F) EXISTING GUARDRAIL
- (G) EXISTING 6" UNDERDRAIN

SEE SHEET 2 OF 120 FOR LEGEND OF PROPOSED ITEMS

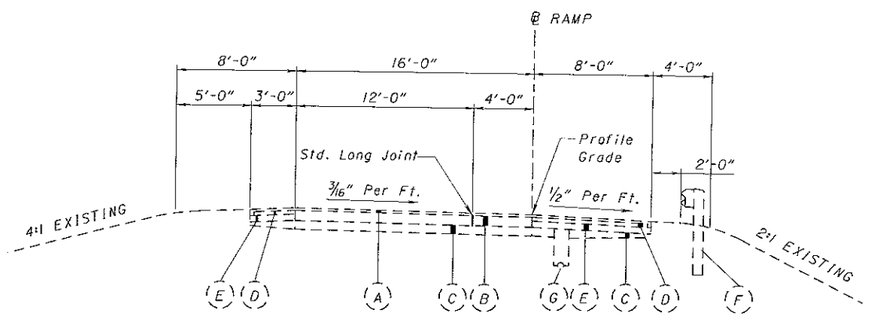

TYPICAL ADJOINING SECTION

RAMP D STATION 4+75.00

TYPICAL SECTIONS

MOT - XWAY

ROUNDING

THE ROUNDING AT SLOPE BREAKPOINTS SHOWN ON THE TYPICAL SECTIONS APPLY TO ALL CROSS-SECTIONS EVEN THOUGH OTHERWISE SHOWN.

UTILITIES

LISTED BELOW ARE ALL UTILITIES LOCATED WITHIN THE PROJECT CONSTRUCTION LIMITS TOGETHER WITH THEIR RESPECTIVE OWNERS:

TELEPHONE:
AT&T
5980 WILCOX PLACE (SUITE 1)
DUBLIN, OHIO 43016
(614) 760-8320 (CARL DONAHUE)

CITY OF DAYTON LIGHTING
101 W. THIRD STREET
P.O. BOX 22
DAYTON, OHIO 45401
(937) 333-3850 (MR. DUANE EARLEY)

CITY OF DAYTON SIGNALS
101 W. THIRD STREET
P.O. BOX 22
DAYTON, OHIO 45401
(937) 333-4087 (MR. JOHN ZELINSKI)

CITY OF DAYTON WATER & SEWER
320 WEST MONUMENT AVENUE
DAYTON, OHIO 45402
(937) 333-3737 (SCOTT HOLMES)

DAYTON POWER & LIGHT
REAL ESTATE SERVICES
1900 DRYDEN ROAD
DAYTON, OHIO 45439
(614) 331-4139 (CLAUDIS WALKER)

DPLE
1065 WOODMAN DRIVE
DAYTON, OHIO 45432
(937) 259-7864 (BOB STALLMAN)

GREATER DAYTON REGIONAL TRANSPORTATION
600 LONGWORTH STREET
DAYTON, OHIO 45401
(937) 425-8531 (PETE TRICK)

KMC TELECOM
1755 N. BROWN ROAD
LAWRENCEVILLE, GEORGIA 30043
(678) 985-6472 (ERIC STRACHEM)

MCI
120 RAVINE STREET
AKRON, OHIO 44303
(330) 253-8267 (AL GUEST)

QWEST
130 W. SECOND STREET (SUITE 1538)
DAYTON, OHIO 45402
(937) 228-5476 (DENNIS LUDWIG)

SBC INCORPORATED
3233 WOODMAN DRIVE (RM. 225)
DAYTON, OHIO 45420
(937) 296-3704 (BRENT CUNNINGHAM)

SPRINT
11815 HIGHWAY DRIVE (SUITE 400)
CINCINNATI, OHIO 45241
(513) 459-5761 (DANA COSTA)

TIME WARNER COMMUNICATIONS
NETWORK DESIGN
275 LEO ST.
DAYTON, OHIO 45404
(937) 297-6800 (DENNIS RAPP)

VECTREN ENERGY DELIVERY
4285 JAMES H. McGEE BLVD.
DAYTON, OHIO 45427
(937) 440-1973 (DON SPRECHT)

CENTURY TEL SOLUTIONS
2870 MINA STREET
MORAINE, OHIO 45439
ATTN: SHAWN JOHNSTON

THE LOCATION OF THE UNDERGROUND UTILITIES SHOWN ON THE PLANS ARE AS OBTAINED FROM THE OWNERS AS REQUIRED BY SECTION 153.64 O.R.C.

CONTINGENCY QUANTITIES

THE CONTRACTOR SHALL NOT ORDER MATERIALS OR PERFORM WORK FOR ITEMS DESIGNATED BY PLAN NOTE TO BE USED "AS DIRECTED BY THE ENGINEER" UNLESS AUTHORIZED BY THE ENGINEER. THE ACTUAL WORK LOCATIONS AND QUANTITIES USED FOR SUCH ITEMS SHALL BE INCORPORATED INTO THE FINAL CHANGE ORDER GOVERNING COMPLETION OF THIS PROJECT.

ELEVATION DATUM

ALL ELEVATIONS ARE BASED ON NAVD 88 DATUM.

WORK LIMITS

THE WORK LIMITS SHOWN ON THESE PLANS ARE FOR PHYSICAL CONSTRUCTION ONLY. THE INSTALLATION AND OPERATION OF ALL TEMPORARY TRAFFIC CONTROL AND TEMPORARY TRAFFIC CONTROL DEVICES REQUIRED BY THESE PLANS SHALL BE PROVIDED BY THE CONTRACTOR WHETHER INSIDE OR OUTSIDE THESE WORK LIMITS.

EXISTING PLANS

EXISTING PLANS ENTITLED MOT-04-18.43 GRADE SEPARATION WITH THE B&O RAILROAD KEOWEE STREET GRADE CROSSING ELIMINATION WITH THE B&O RAILROAD DATED 1960 MAY BE INSPECTED IN THE ODOT DISTRICT 7 OFFICE IN 1001 ST. MARY'S AVE., S.R. 29, SIDNEY, OHIO AND IN THE CITY OF DAYTON'S ENGINEER'S OFFICE LOCATED IN THE CITY OF DAYTON MUNICIPAL BUILDING.

CONNECTION BETWEEN EXISTING AND PROPOSED GUARDRAIL

WHEN IT IS NECESSARY TO SPLICE PROPOSED GUARDRAIL TO EXISTING GUARDRAIL, ONLY THE EXISTING GUARDRAIL SHALL BE CUT, DRILLED, OR PUNCHED. THE CONNECTION SHALL BE MADE USING A "W-BEAM RAIL SPLICE" AS SHOWN IN AASHTO M-180. PAYMENT SHALL BE INCLUDED IN THE CONTRACT PRICE FOR THE RESPECTIVE GUARDRAIL ITEMS.

NON-USE OF ASBESTOS-CONTAINING MATERIALS

THE CONTRACTOR SHALL AT NO TIME INCORPORATE ANY MATERIALS WHICH ARE COMPOSED OF OR CONTAIN ANY AMOUNTS OF ASBESTOS. THE SUBSTITUTION OF MATERIALS WHICH CONTAIN ANY AMOUNTS OF ASBESTOS WILL IN NO CIRCUMSTANCES BE ACCEPTABLE.

CONSTRUCTION NOTIFICATION

THE CONTRACTOR WILL ADVISE THE PROJECT ENGINEER A MINIMUM OF FOURTEEN (14) DAYS PRIOR TO THE START OF CONSTRUCTION ACTIVITIES. THE CONTRACTOR MUST ALSO PROVIDE NOTIFICATION FOURTEEN (14) DAYS PRIOR TO ANY DETOURS, RAMP CLOSURES, LANE CLOSURES OR ROAD CLOSURES. THE PROJECT ENGINEER WILL THEN PROVIDE WRITTEN NOTIFICATION TO THE LOCAL EMERGENCY SERVICES, AFFECTED SCHOOLS, AND BUSINESSES OF ANY UPCOMING PROJECT DETOURS AND/OR CLOSURES.

STORM WATER POLLUTION PREVENTION PLAN

THE CONDITIONS OF THE NPDES CONSTRUCTION STORM WATER GENERAL PERMIT (SEE PROPOSAL NOTES) SHALL BE MET DURING ALL STAGES OF CONSTRUCTION. THE LOCATION AND TIMING OF ALL EROSION AND SEDIMENT CONTROL ITEMS SHALL BE FIELD ADJUSTED TO PREVENT SIGNIFICANT IMPACTS ON RECEIVING WATERS. IMPLEMENTATION OF THIS STORM WATER POLLUTION PREVENTION PLAN SHALL CONTINUE THROUGHOUT THE DURATION OF THE PROJECT OR UNTIL SUCH TIME THAT THE UPSLOPE DISTURBED AREAS ARE STABILIZED.

INSTALLATION OF SEDIMENT BASINS/DAMS, PERIMETER FILTER FABRIC FENCE, AND DITCH CHECKS SHALL BE CONCURRENT WITH CLEARING AND GRUBBING AND/OR GRADING OPERATIONS.

ALL REASONABLE ATTEMPTS SHOULD BE MADE TO MINIMIZE THE TOTAL AREA OF DISTURBED LAND.

AREAS TO REMAIN DORMANT FOR MORE THAN 45 DAYS SHOULD BE IMMEDIATELY STABILIZED WITH TEMPORARY SEEDING AND MULCHING, EROSION CONTROL MATTING OR OTHER APPROPRIATE EROSION CONTROL MEASURES.

THE FOLLOWING ESTIMATED QUANTITIES HAVE BEEN INCLUDED IN THE GENERAL SUMMARY FOR THE WORK NOTED ABOVE:

ITEM 832, EROSION CONTROL	20,000 EA.
ITEM 832, STORMWATER POLLUTION PREVENTION PLAN	1 EA.

SEEDING AND MULCHING

THE FOLLOWING QUANTITIES ARE PROVIDED TO PROMOTE GROWTH AND CARE OF PERMANENT SEEDED AREAS:

ITEM 659, SEEDING AND MULCHING	3984 SQ. YD.
ITEM 659, COMMERCIAL FERTILIZER	0.54 TON
ITEM 659, WATER	33 M. GAL.

SEEDING AND MULCHING SHALL BE APPLIED TO ALL AREAS OF EXPOSED SOIL BETWEEN THE RIGHT-OF-WAY LINES, AND WITHIN THE CONSTRUCTION LIMITS FOR AREAS OUTSIDE THE RIGHT-OF-WAY LINES COVERED BY WORK AGREEMENT OR SLOPE EASEMENT. QUANTITY CALCULATIONS FOR SEEDING AND MULCHING ARE BASED ON THE CONSTRUCTION LIMITS SHOWN IN THE PLANS.

EROSION CONTROL

THE CONTRACTOR SHALL FOLLOW BEST MANAGEMENT PRACTICES FOR TEMPORARY SEDIMENT AND EROSION CONTROL DURING CONSTRUCTION IN ACCORDANCE WITH CONSTRUCTION AND MATERIAL SPECIFICATIONS SECTION 107.19, SUPPLEMENTAL SPECIFICATIONS 832 AND 833 AND PROPOSAL NOTE 205. PLAN NOTES AND ESTIMATED QUANTITIES IN ACCORDANCE WITH SUPPLEMENTAL SPECIFICATIONS 832 AND 833 MUST BE INCLUDED IN THE PLANS TO HANDLE EROSION CONTROL. PROPOSAL NOTE 205 MUST BE INCLUDED AS PART OF THE CONTRACT.

ITEM 407 - TACK COAT

THE RATE OF APPLICATION OF THE 407 TACK COAT SHALL BE SUBJECT TO ADJUSTMENT AS DIRECTED BY THE ENGINEER. FOR ESTIMATING PURPOSES ONLY, THE PLAN QUANTITIES INDICATE AN AVERAGE APPLICATION RATE OF:

ITEM 407, TACK COAT 0.075 GAL PER SQ. YARD

ITEM 407, TACK COAT FOR INTERMEDIATE COURSE 0.04 GAL PER SQ. YARD

CALCULATED CAM
CHECKED PAR

GENERAL NOTES

MOT-XWAY

SPECIAL, MAINTAIN EXISTING LIGHTING

EXISTING ROADWAYS WHICH ARE TO REMAIN OPEN TO TRAFFIC DURING CONSTRUCTION OF THIS PROJECT AND WHICH ARE LIGHTED SHALL HAVE THE LIGHTING MAINTAINED AS DESCRIBED HEREIN.

BEFORE ANY WORK IS STARTED IN THE IMMEDIATE VICINITY OF THE EXISTING LIGHTING CIRCUITS, REPRESENTATIVES OF THE CITY OF DAYTON, THE MAINTAINING AGENCY AND THE CONTRACTOR SHALL MAKE A VISUAL INSPECTION OF THE EXISTING ROADWAY LIGHTING CIRCUITS TO BE MAINTAINED. DURING THIS INSPECTION, A WRITTEN RECORD OF THE CONDITION OF EXISTING LIGHTING SHALL BE MADE BY THE CITY OF DAYTON'S REPRESENTATIVE. THIS WRITTEN REPORT SHALL NOTE INDIVIDUAL LUMINAIRES WHICH ARE NOT IN WORKING ORDER, INDIVIDUAL POLES WHICH ARE NOT STANDING, AND INDIVIDUAL CIRCUITS WHICH ARE NOT IN WORKING ORDER. THE COMPLETED REPORT SHALL BE SIGNED BY THE REPRESENTATIVES OF THE CITY OF DAYTON, THE MAINTAINING AGENCY AND THE CONTRACTOR.

IF, AS A RESULT OF THIS INSPECTION, IT IS DETERMINED THAT THE CONDITION OF THE EXISTING SYSTEM IS BELOW THAT REQUIRED FOR THE SAFETY OF THE TRAVELING PUBLIC, THEN THE MAINTAINING AGENCY SHALL MAKE THE REPAIRS NECESSARY TO RETURN THE SYSTEM TO AN ACCEPTABLE CONDITION. FOLLOWING THESE REPAIRS, THE SYSTEM SHALL AGAIN BE INSPECTED AND A REPORT SHALL BE MADE AND SIGNED AS OUTLINED HEREIN.

WHEN THE EXISTING SYSTEM IS IN AN ACCEPTABLE CONDITION, IT SHALL BE TURNED OVER TO THE CONTRACTOR WHO SHALL THEN BE REQUIRED TO MAINTAIN THE EXISTING LIGHTING TO THE CONDITION OUTLINED IN THIS REPORT WITH THE EXCEPTION OF KNOCKDOWNS DUE TO TRAFFIC ACCIDENTS.

REPLACEMENT OF KNOCKED DOWNED UNITS SHALL BE DONE ONLY WHEN THE ENGINEER HAS DETERMINED THAT THE REPLACEMENT OF THE KNOCKED DOWN UNIT IS NECESSARY AND SHALL BE PAID SEPARATELY ON A UNIT BASIS.

BETTERMENTS SHALL BE COVERED IN ITEMS OF WORK PERTAINING TO THE CONSTRUCTION OF PERMANENT IMPROVEMENT.

WHEN THE SEQUENCE OF CONSTRUCTION ACTIVITIES REQUIRES, OR SHOULD THE CONTRACTOR DESIRE, THE REMOVAL OF THE EXISTING LIGHTING BEFORE THE NEW LIGHTING IS OPERATIONAL, THE CONTRACTOR SHALL BE RESPONSIBLE FOR PROVIDING TEMPORARY LIGHTING OF THIS PORTION OF THE ROADWAY.

PRIOR TO INSTALLING SUCH LIGHTING, THE CONTRACTOR SHALL PREPARE AND SUBMIT FOUR SETS OF THE TEMPORARY LIGHTING PLAN TO THE ENGINEER FOR REVIEW AND APPROVAL.

THIS PLAN SHALL SHOW LOCATIONS OF POLES, LENGTHS OF BRACKET ARMS, STYLES OF LUMINAIRES, MOUNTING HEIGHTS, WIRING METHODS AND OTHER PERTINENT INFORMATION. THE TEMPORARY LIGHTING SHALL PROVIDE AN AVERAGE INITIAL INTENSITY OF 1.2 FOOTCANDLES WITH AN AVERAGE TO MINIMUM UNIFORMITY NOT TO EXCEED 3.1. MOUNTING HEIGHT OF TEMPORARY LUMINAIRES SHALL NOT BE LESS THAN 30 FEET, AND THE MINIMUM OVERHEAD CONDUCTOR CLEARANCE SHALL BE 20 FEET. TEMPORARY OVERHEAD CONSTRUCTION SHALL NOT BE LESS THAN GRADE "A" FOR STRENGTH REQUIREMENTS AS DEFINED BY THE NATIONAL ELECTRIC SAFETY CODE. WOOD POLES WITH OVERHEAD WIRING MAY BE USED. HOWEVER, TEMPORARY LIGHTING SHALL MEET FEDERAL AND STATE SAFETY CRITERIA. IF BREAKAWAY POLES ARE USED TO MEET THESE CRITERIA, THEN UNDERGROUND WIRING SHALL BE USED. RECONDITIONED OR USED MATERIALS MAY BE FURNISHED FOR TEMPORARY LIGHTING.

ALL MATERIALS NECESSARY TO COMPLETE THE TEMPORARY LIGHTING SHALL BE FURNISHED AND INSTALLED BY THE CONTRACTOR. WHEN NO LONGER NEEDED, THE TEMPORARY LIGHTING INSTALLATION SHALL BE REMOVED AND PROPERLY DISPOSED OF BY THE CONTRACTOR.

THE MAINTAINING AGENCY WILL PAY FOR ELECTRICAL ENERGY CONSUMED BY EXISTING POWER SERVICES AND BY PROPOSED PERMANENT POWER SERVICES AFTER ACCEPTANCE OF THE LIGHTING WORK. THE CONTRACTOR WILL PAY FOR ELECTRICAL ENERGY, INSTALLATION, REMOVAL AND MAINTENANCE OF ANY TEMPORARY POWER SERVICES.

THE LUMP SUM PRICE BID FOR ITEM SPECIAL "MAINTAIN EXISTING LIGHTING" SHALL INCLUDE PAYMENT FOR ALL LABOR, EQUIPMENT, MATERIALS AND INCIDENTALS NECESSARY TO MAINTAIN THE EXISTING LIGHTING AS SPECIFIED HEREIN.

THE UNIT PRICE BID FOR ITEM SPECIAL "REPLACEMENT OF EXISTING LIGHTING UNIT" SHALL BE FULL PAYMENT FOR THE REPLACEMENT OF AN EXISTING LIGHTING UNIT WHICH HAS BEEN KNOCKED DOWN AFTER THE AFOREMENTIONED INSPECTION AND SHALL INCLUDE ALL LABOR, EQUIPMENT, MATERIALS AND INCIDENTALS NECESSARY TO PROVIDE A REPLACEMENT FOR SUCH UNIT.

ITEM 625, REMOVE AND RE-ERECT EXISTING, LIGHT POLE, AS PER PLAN

THIS ITEM OF WORK SHALL CONSIST OF REMOVAL, PROPER STORAGE AND RE-ERECTION OF AN EXISTING LIGHT POLE, INCLUDING THE BRACKET ARM(S), TRANSFORMER BASE (IF ANY), LUMINAIRE AND POLE WIRING.

PAYMENT SHALL BE MADE AT THE UNIT PRICE BID UNDER CMS ITEM 625, "REMOVE AND RE-ERECT EXISTING LIGHT POLE, AS PER PLAN" FOR EACH POLE RE-ERECTED WHICH SHALL INCLUDE ALL LABOR, MATERIALS AND INCIDENTALS REQUIRED TO COMPLETE THIS ITEM IN A SATISFACTORY AND WORKMANLIKE MANNER.

ITEM 625, LIGHT POLE FOUNDATION, 24" X 10' DEEP, AS PER PLAN

THIS ITEM OF WORK SHALL CONFORM TO ALL ASPECTS OF ITEM 625, LIGHT POLE FOUNDATION, 24" X 10' DEEP, WITH THE EXCEPTION THAT THE CONTRACTOR SHALL FIRST VERIFY THE NECESSARY CONNECTION DETAILS NEEDED TO ATTACH THE EXISTING LIGHT POLES DESIGNATED TO BE REMOVED AND RE-ERECTED TO THE NEW FOUNDATIONS.

PAYMENT SHALL BE MADE AT THE UNIT PRICE BID UNDER CMS ITEM 625, "LIGHT POLE FOUNDATION, 24" X 10' DEEP, AS PER PLAN" FOR EACH LIGHT POLE FOUNDATION AND SHALL INCLUDE ALL LABOR, MATERIALS AND INCIDENTALS REQUIRED TO COMPLETE THIS ITEM IN A SATISFACTORY AND WORKMANLIKE MANNER.

ITEM 625, CONNECTOR KIT, TYPE II, AS PER PLAN

THIS ITEM OF WORK SHALL CONFORM TO ALL ASPECTS OF ITEM 625, CONNECTOR KIT, TYPE II WITH THE ADDITION OF THE REMOVAL OF THE EXISTING CONNECTOR KITS ALREADY IN PLACE ON THE EXISTING LIGHT POLES DESIGNATED TO BE REMOVED AND RE-ERECTED.

PAYMENT SHALL BE MADE AT THE UNIT PRICE BID UNDER CMS ITEM 625, "CONNECTOR KIT, TYPE II, AS PER PLAN" FOR EACH CONNECTOR KIT AND SHALL INCLUDE ALL LABOR, MATERIALS AND INCIDENTALS REQUIRED TO COMPLETE THIS ITEM IN A SATISFACTORY AND WORKMANLIKE MANNER.

ENVIRONMENTAL COMMITTMENTS

THE PROJECT IS LOCATED WITHIN THE BOUNDARIES OF THE REGION'S SOLE SOURCE AQUIFER. BEST CONSTRUCTION PRACTICES ARE TO IMPLEMENTED TO MINIMIZE WATER QUALITY IMPACTS. ON-SITE STORAGE OF PETROLEUM PRODUCTS/CHEMICAL IS TO BE MINIMIZED. A SPILL CONTAINMENT KIT IS TO BE MAINTAINED ON-SITE THROUGHOUT CONSTRUCTION ACTIVITIES. SPILLS OF FUELS, OILS, CHEMICALS, OR OTHER MATERIALS WHICH COULD POSE A TREAT TO GROUNDWATER SHALL BE CLEANED UP IMMEDIATELY. IF THE SPILL IS A REPORTED AMOUNT, THE LOCAL FIRE DEPARTMENT IS TO CONTACTED.

ALL AREAS OUTSIDE OF THE PAVEMENT DISTURBED BY CONSTRUCTION ACTIVITIES WILL BE RESEEDED PRIOR TO COMPLETION OF THE PROJECT.

PRIOR TO THE REMOVAL OF THE EXISTING BRIDGE'S SUPERSTRUCTURE, THE UNDER-SIDE OF THE BRIDGE SHOULD BE CAREFULLY EXAMINED FOR THE PRESENCE OF BATS, ESPECIALLY FROM APRIL 15 TO SEPTEMBER 15. IF ANY BATS ARE FOUND ROOSTING ON THE UNDERSIDE OF THE BRIDGE, CONTACT THE U.S. FISH & WILDLIFE SERVICE AT 614-469-6923. THIS REQUIREMENT IS FOR INFORMATION GATHERING PURPOSES ONLY AND WILL NOT RESULT IN THE DELAY OF THE PROJECT.

ALL LOCAL SCHOOLS AND EMERGENCY SERVICES WHICH ARE LIKELY TO UTILIZE THE ROADWAY DETOURS ARE TO BE NOTIFIED OF ANY SUCH DETOURS NOT LESS TWO (2) WEEKS PRIOR TO THE ROAD CLOSURE.

SEQUENCE OF OPERATIONS

IT IS THE INTENT OF THE FOLLOWING SEQUENCE OF CONSTRUCTION TO PROVIDE A WORK AREA FOR THE CONTRACTOR WHILE ALSO MAINTAINING TRAFFIC IN A MANNER WHICH IS SAFE FOR THE TRAVELING PUBLIC AND CONSTRUCTION PERSONNEL.

ALL TEMPORARY OR PERMANENT PAVEMENT MARKINGS SHALL BE IN PLACE BEFORE ANY PAVEMENT IS OPEN TO TRAFFIC.

PHASE ONE

THE CONTRACTOR SHALL CONSTRUCT THE TEMPORARY CROSSOVER IN THE MEDIAN AND TEMPORARY PAVEMENT IN THE EXISTING SHOULDERS ON THE DAYTON EXPRESSWAY FOR USE DURING PHASE II AS SHOWN IN THE PLANS.

ONE LANE OF DAYTON EXPRESSWAY MAY BE CLOSED IN EACH DIRECTION TO FACILITATE THE CONSTRUCTION OF THE TEMPORARY MEDIAN CROSSOVER AND TEMPORARY PAVEMENT ALONG THE SHOULDER, SUBJECT TO THE FOLLOWING PEAK HOUR RESTRICTIONS:

TWO WEST BOUND LANES SHALL BE MAINTAINED BETWEEN THE HOURS OF 6:00 A.M. - 9:00 A.M.

TWO EAST BOUND LANES SHALL BE MAINTAINED BETWEEN THE HOURS OF 3:00 P.M. TO 6:00 P.M.

NO OTHER LANE OR RAMP CLOSURES WILL BE PERMITTED DURING THIS PHASE.

PHASE TWO

THE CONTRACTOR SHALL CONSTRUCT THE WESTBOUND STRUCTURE AND APPROACHES AS SHOWN IN THE PLANS.

TRAFFIC WILL BE MAINTAINED ACROSS THE EASTBOUND STRUCTURE UTILIZING THE CROSSOVERS. TWO LANES IN EACH DIRECTION WILL BE MAINTAINED ON DAYTON EXPRESSWAY AS SHOWN IN THE PLANS. NO LANE OR RAMP CLOSURES WILL BE PERMITTED DURING THIS PHASE.

PHASE THREE

THE CONTRACTOR SHALL CONSTRUCT THE TEMPORARY CROSSOVER IN THE MEDIAN AND TEMPORARY PAVEMENT IN THE EXISTING SHOULDERS ON THE DAYTON EXPRESSWAY FOR USE DURING PHASE FOUR AS SHOWN IN THE PLANS.

ONE LANE OF DAYTON EXPRESSWAY MAY BE CLOSED IN EACH DIRECTION TO FACILITATE THE CONSTRUCTION OF THE TEMPORARY MEDIAN CROSSOVER AND TEMPORARY PAVEMENT ALONG THE SHOULDER, SUBJECT TO THE FOLLOWING PEAK HOUR RESTRICTIONS:

TWO WEST BOUND LANES SHALL BE MAINTAINED BETWEEN THE HOURS OF 6:00 A.M. - 9:00 A.M.

TWO EAST BOUND LANES SHALL BE MAINTAINED BETWEEN THE HOURS OF 3:00 P.M. TO 6:00 P.M.

NO OTHER LANE OR RAMP CLOSURES WILL BE PERMITTED DURING THIS PHASE.

PHASE FOUR

THE CONTRACTOR SHALL CONSTRUCT THE EASTBOUND STRUCTURE AND APPROACHES AS SHOWN IN THE PLANS.

TRAFFIC WILL BE MAINTAINED ACROSS THE NEWLY CONSTRUCTED WESTBOUND STRUCTURE AND APPROACHES UTILIZING THE CROSSOVERS. TWO LANES IN EACH DIRECTION WILL BE MAINTAINED ON DAYTON EXPRESSWAY AS SHOWN IN THE PLANS. NO LANE CLOSURES WILL BE PERMITTED ON DAYTON EXPRESSWAY. THE EASTBOUND DAYTON EXPRESSWAY RAMP TO TROY/VALLEY STREETS WILL BE CLOSED TO TRAFFIC. RAMP TRAFFIC WILL BE MAINTAINED VIA A DETOUR TO STANLEY AVENUE AS SHOWN IN THE PLANS.

PHASE FIVE

THE CONTRACTOR SHALL REMOVE THE TEMPORARY CROSSOVERS AND TEMPORARY PAVEMENT WIDENING IN THE MEDIAN LOCATIONS OF DAYTON EXPRESSWAY AS SHOWN IN THE PLANS.

THE MEDIAN LANE OF DAYTON EXPRESSWAY MAY BE CLOSED IN BOTH DIRECTIONS TO FACILITATE THE REMOVAL OF THE TEMPORARY CROSSOVER AND TEMPORARY PAVEMENT, SUBJECT TO THE FOLLOWING PEAK HOUR RESTRICTIONS:

TWO WEST BOUND LANES SHALL BE MAINTAINED BETWEEN THE HOURS OF 6:00 A.M. - 9:00 A.M.

TWO EAST BOUND LANES SHALL BE MAINTAINED BETWEEN THE HOURS OF 3:00 P.M. TO 6:00 P.M.

NO OTHER LANE OR RAMP CLOSURES WILL BE PERMITTED DURING THIS PHASE.

KEOWEE STREET

LANE CLOSURES ON KEOWEE STREET SHALL CONFORM TO THE OMUTCD. CLOSURE OF KEOWEE STREET SHALL INCLUDE A DETOUR TO BE ERECTED, MAINTAINED, AND REMOVED BE THE CONTRACTOR. THE DETOUR SHALL BE APPROVED BY THE ENGINEER.

DURING SUBSTRUCTURE CONSTRUCTION, CLOSURE OF THE CURB LANES OF KEOWEE STREET WILL BE PERMITTED.

KEOWEE STREET MAY BE CLOSED ON APPROVED WEEKENDS, BETWEEN THE HOURS OF 7:00 P.M. FRIDAY TO 6:00 A.M. MONDAY FOR THE ERECTION OF THE STRUCTURAL STEEL.

EXCLUDED WEEKENDS INCLUDE THE FOLLOWING:

MAY 26TH - 29TH (MEMORIAL DAY WEEKEND)
JUNE 30TH - JULY 1ST (INDEPENDENCE DAY WEEKEND)

A CLOSURE PLAN MUST BE SUBMITTED BY THE CONTRACTOR FOR APPROVAL BY THE CITY ENGINEER, PRIOR TO ANY LANE CLOSURE ON KEOWEE STREET.

ITEM 614 - MAINTAINING TRAFFIC, AS PER PLAN

EXCEPT AS PROVIDED FOR IN THESE PLANS, A MINIMUM OF 2 LANES OF TRAFFIC IN EACH DIRECTION SHALL BE MAINTAINED AT ALL TIMESBY USE OF THE EXISTING PAVEMENT, THE COMPLETED PAVEMENT AND TEMPORARY PAVEMENT.

ALL WORK AND TRAFFIC CONTROL DEVICES SHALL BE IN ACCORDANCE WITH CMS 614 AND OTHER APPLICABLE PORTIONS OF THE SPECIFICATIONS, AS WELL AS THE OHIO MANUAL OF UNIFORM TRAFFIC CONTROL DEVICES. PAYMENT FOR ALL LABOR, EQUIPMENT AND MATERIALS SHALL BE INCLUDED THE LUMP SUM CONTRACT PRICE FOR ITEM 614, MAINTAINING TRAFFIC, AS PER PLAN, UNLESS SEPARATELY ITEMIZED IN THE PLAN.

CONSTRUCTION INITIATION:

THE CONTRACTOR SHALL ADVISE THE CITY ENGINEER'S OFFICE AT (937) 333-3852, OR BY FAX AT (937) 333-4077, FOURTEEN DAYS PRIOR TO THE START OF CONSTRUCTION ACTIVITIES. THE CONTRACTOR WILL IMMEDIATELY INFORM THE CITY ENGINEER OF ANY AND ALL DELAYS AND/OR CHANGES REGARDING THE CONSTRUCTION PROJECT. THE PROJECT ENGINEER WILL PROVIDE ASSISTANCE/CLARIFICATION FOR ANY QUESTIONS ABOUT THIS NOTIFICATION REQUIREMENT.

THE CONTRACTOR SHALL PROVIDE TO THE CITY OF DAYTON ENGINEER, AN EMERGENCY TELEPHONE NUMBER, AND 24-HOUR AVAILABILITY, TO CORRECT PROBLEMS WITH THE TRAFFIC CONTROL DEVICES WITHIN THE PROJECT LIMITS SHOWN ON THE MAINTENANCE OF TRAFFIC PLANS, AND TO PROVIDE AN IMMEDIATE RESPONSE TO CORRECT HAZARDOUS TRAFFIC CONDITIONS.

LANES OPEN DURING HOLIDAYS OR SPECIAL EVENTS

NO WORK SHALL COMMENCE ON SATURDAYS, SUNDAYS OR HOLIDAYS WITHOUT PRIOR PERMISSION FROM THE ENGINEER.

LANE CLOSURE/REDUCTION REQUIRED

LENGTH AND DURATION OF LANE CLOSURES AND RESTRICTIONS SHALL BE AT THE APPROVAL OF THE ENGINEER. IT IS THE INTENT TO MINIMIZE THE IMPACT TO THE TRAVELING PUBLIC. LANE CLOSURES OR RESTRICTIONS OVER SEGMENTS OF THE PROJECT IN WHICH NO WORK IS ANTICIPATED WITHIN A REASONABLE TIME FRAME, AS DETERMINED BY THE ENGINEER, SHALL NOT BE PERMITTED. THE LEVEL OF UTILIZATION OF MAINTENANCE OF TRAFFIC DEVICES SHALL BE COMMENSURATE WITH THE WORK IN PROGRESS.

ALL WORK AND TRAFFIC CONTROL DEVICES SHALL BE IN ACCORDANCE WITH CMS 614 AND OTHER APPLICABLE PORTIONS OF THE SPECIFICATIONS, AS WELL AS THE OHIO MANUAL OF UNIFORM TRAFFIC CONTROL DEVICES. PAYMENT FOR ALL LABOR, EQUIPMENT AND MATERIALS SHALL BE INCLUDED IN THE LUMP SUM CONTRACT PRICE FOR ITEM 614, MAINTAINING TRAFFIC, AS PER PLAN UNLESS SEPARATELY ITEMIZED IN THE PLAN.

EXISTING PERMANENT TRAFFIC CONTROL ITEMS

ALL OVERHEAD CABLE, DOWN GUYS OR BACK GUYS SHALL NOT BLOCK ANY PORTION OF A TRAFFIC SIGNAL, TRAFFIC CONTROL SIGN, OR OTHER TRAFFIC CONTROL DEVICE SUCH THAT VISIBILITY OR OPERATION OF THE TRAFFIC CONTROL DEVICE IS IMPAIRED.

ALL PERMANENT PAVEMENT MARKINGS AND TRAFFIC CONTROL SIGNS AS SHOWN ON THIS PLAN SHALL BE INSTALLED BY THE CONTRACTOR AT PROJECT EXPENSE.

ANY WORK DONE BY THE CITY OF DAYTON, INCLUDING INSTALLATION, RELOCATION, REMOVAL AND/OR REPLACEMENT OF PERMANENT TRAFFIC CONTROL DEVICES AS A RESULT OF WORK DONE BY THE CONTRACTOR OR AS A RESULT OF NEGLIGENCE OF THE CONTRACTOR, SHALL BE AT THE CONTRACTORS' EXPENSE.

THE CONTRACTOR SHALL BE RESPONSIBLE FOR REINSTALLATION AND/OR REPLACEMENT OF ALL PERMANENT TRAFFIC CONTROL DEVICES DAMAGED OR REMOVED DURING CONSTRUCTION. PERMANENT TRAFFIC CONTROL NO LONGER IN CONFLICT WITH TEMPORARY TRAFFIC CONTROL SHALL BE REPLACED IMMEDIATELY.

PROTECTION VEHICLE

DURING LANE CLOSURES ON DAYTON EXPRESSWAY WHERE WORKERS AND/OR EQUIPMENT OCCUPY THE CLOSED LANES, THE WORK ZONE SHALL UTILIZE A PROTECTION VEHICLE AS SHOWN ON MT-95.30. THE PROTECTION VEHICLE SHALL BE EQUIPPED WITH A TRUCK-MOUNTED ATTENUATOR COMPLIANT WITH NCHRP 350 FOR A SPEED OF 55 MPH. WEIGHT AND SIZE OF THE TRUCK SHALL MEET THE ATTENUATOR MANUFACTURER'S SPECIFICATIONS. PAYMENT SHALL BE INCLUDED IN THE LUMP SUM CONTRACT PRICE FOR ITEM 614 - MAINTAINING TRAFFIC.

RAMP DETOUR

A DETOUR, AS SHOWN ON SHEET 31, SHALL BE PROVIDED BY THE CONTRACTOR. THE CONTRACTOR SHALL BE RESPONSIBLE FOR ALL COSTS IN PROVIDING, MAINTAINING AND REMOVING THE DETOUR, INCLUDING REMOVAL OF ANY CONFLICTING TRAFFIC CONTROL. THE COST OF THIS SHALL BE INCLUDED IN:

ITEM 614 - DETOUR SIGNING

CALCULATED CAM CHECKED PAR

MAINTENANCE OF TRAFFIC GENERAL NOTES

MOT-XWAY

WORK ZONE MARKINGS AND SIGNS

THE FOLLOWING ESTIMATED QUANTITIES HAVE BEEN CARRIED TO THE GENERAL SUMMARY FOR USE AT LOCATIONS IDENTIFIED BY THE ENGINEER FOR WORK ZONE PAVEMENT MARKINGS AND SIGNS PER THE REQUIREMENTS OF CMS 614.04 AND 614.11.

ITEM 622, PORTABLE CONCRETE BARRIER, 50", AS PER PLAN

THIS WORK SHALL CONSIST OF FURNISHING, INSTALLING, MAINTAINING, AND SUBSEQUENTLY REMOVING A 50 INCH PORTABLE CONCRETE BARRIER AT THE LOCATIONS SHOWN ON THE PLANS. FOR DETAILS, SEE SHEETS 34 AND 35.

PORTABLE CONCRETE BARRIER, 32 INCHES HIGH WITH AN 18 INCH MINIMUM HEIGHT GLARE SCREEN MAY BE USED AT THE OPTION OF THE CONTRACTOR. THE GLARE SCREEN SHALL BE CONSTRUCTED USING ONE OF THE FOLLOWING SYSTEMS OR AN APPROVED EQUAL:

CARSONITE MODULAR GLARE SCREEN
CARSONITE INTERNATIONAL
605 BOB GIFFORD BLVD.
EARLY BRANCH, SOUTH CAROLINA 29916
702-883-5104 OR 800-648-7974

TRINITY GLAREFOIL
TRINITY INDUSTRY
1170 N. STATE ST.
GIRARD, OHIO 44420
330-545-4373

PADDLE OR INTERMITTENT TYPE GLARE SCREENS SHALL BE DESIGNED USING A 20 DEGREE CUT-OFF ANGLE BASED ON TANGENT ALIGNMENT. THAT SPACING SHALL BE USED THROUGHOUT THE BARRIER LENGTH WITHOUT REGARD TO BARRIER CURVATURE.

THE GLARE SCREEN SYSTEM SHALL BE SECURELY FASTENED TO THE 32-INCH PORTABLE CONCRETE BARRIER USING THE HARDWARE AND PROCEDURES SPECIFIED BY THE MANUFACTURER.

PAYMENT SHALL INCLUDE ALL LABOR, MATERIAL, AND EQUIPMENT NECESSARY TO PERFORM THE WORK AND SHALL BE PAID FOR AT THE CONTRACT PRICE PER FOOT FOR ITEM 622, PORTABLE CONCRETE BARRIER, 50 INCH, AS PER PLAN.

ITEM 614, REPLACEMENT SIGN

FLAT SHEET SIGNS FURNISHED BY THE CONTRACTOR IN ACCORDANCE WITH THE REQUIREMENTS OF THE PLANS, SPECIFICATIONS, AND PROPOSAL WHICH BECOME DAMAGED BY TRAFFIC FOR REASONS BEYOND THE CONTROL OF THE CONTRACTOR SHALL BE REPLACED IN KIND WHEN ORDERED BY THE ENGINEER. REPLACEMENT SIGNS SHALL BE NEW. USED MATERIALS IN GOOD CONDITION MAY BE USED AS APPROVED BY THE ENGINEER.

PAYMENT FOR THE NEW SIGNS SHALL BE MADE AT THE CONTRACT PRICE PER SQUARE FOOT FOR ITEM 614, REPLACEMENT SIGN, AND SHALL INCLUDE THE COST OF REMOVING AND DISPOSING OF DAMAGED SIGNS, HARDWARE AND SUPPORTS, AND PROVIDING THE NECESSARY REPLACEMENT HARDWARE, SUPPORTS, ETC.

AN ESTIMATED QUANTITY OF 150 SQUARE FEET HAS BEEN PROVIDED IN THE GENERAL SUMMARY.

ITEM 614, REPLACEMENT DRUM

DRUMS FURNISHED BY THE CONTRACTOR IN ACCORDANCE WITH THE REQUIREMENTS OF THE PLANS, SPECIFICATIONS, AND PROPOSAL WHICH BECOME DAMAGED BY TRAFFIC FOR REASONS BEYOND THE CONTROL OF THE CONTRACTOR SHALL BE REPLACED IN KIND WHEN ORDERED BY THE ENGINEER. REPLACEMENT DRUMS SHALL BE NEW.

PAYMENT FOR THE NEW DRUMS SHALL BE MADE AT THE CONTRACT PRICE PER EACH FOR ITEM 614, REPLACEMENT DRUM, AND SHALL INCLUDE THE COST OF REMOVING AND DISPOSING OF THE DAMAGED DRUM, AND PROVIDING AND MAINTAINING THE REPLACEMENT DRUM IN ACCORDANCE WITH THE CONTRACT REQUIREMENTS FOR THE ORIGINAL DRUM.

AN ESTIMATED QUANTITY OF 25 EACH HAS BEEN PROVIDED IN THE GENERAL SUMMARY.

ITEM 614 - BARRIER REFLECTORS AND OBJECT MARKERS

BARRIER REFLECTORS AND/OR OBJECT MARKERS SHALL BE INSTALLED ON ALL PORTABLE CONCRETE BARRIER USED FOR TRAFFIC CONTROL. BARRIER REFLECTORS, OBJECT MARKERS AND THEIR INSTALLATION SHALL CONFORM TO ITEM 626 EXCEPT THAT THE SPACING SHALL BE 25 FEET.

ITEM 614 - TEMPORARY IMPACT ATTENUATOR, (BIDIRECTIONAL)

THIS ITEM SHALL CONSIST OF FURNISHING AND INSTALLING EITHER OF THE FOLLOWING IMPACT ATTENUATORS:

1) THE QUADGUARD CZ, (24" WIDE 6-BAY) TEMPORARY IMPACT ATTENUATOR MANUFACTURED BY ENERGY ABSORPTION SYSTEMS, INC., ONE EAST WACKER DRIVE, CHICAGO, IL 60601 (TELEPHONE: 312-467-6750).

   THE LENGTH OF THE 6-BAY QUADGUARD CZ IS 20'-9". INSTALLATION SHALL BE AT THE LOCATIONS SPECIFIED IN THE PLANS, IN ACCORDANCE WITH THE MANUFACTURER'S SPECIFICATIONS AS DETAILED ON THE FOLLOWING PRE-APPROVED SHOP DRAWINGS:

DWG. NO.	DRAWING NAME	DWG./ REV. DATE	ODOT APPROVAL DATE
QSCZCVR-T4	QUADGUARD CZ SYSTEM FOR CONSTRUCTION ZONES	5/13/99 Rev. J	8/27/99
35-40-10	QUADGUARD SYSTEM CONCRETE PAD, CZ, QG	11/19/97 Rev. D	8/27/99
35-40-16	QUADGUARD SYSTEM BACKUP ASSEMBLY, CZ, QG	7/30/99 Rev. F	8/27/99
354051Z	QUADGUARD CZ SYSTEM NOSE ASSEMBLY, CZ, QG, 24,30,36	5/17/99	8/27/99
35-40-18	TRANSITION ASSEMBLY, 4 OFFSET, QG	6/25/99 Rev. F	8/27/99
35400260	QUADGUARD SYSTEM PCMB ANCHOR ASSEMBLY	11/19/97 Rev. C	8/27/99

2) THE TRACC (TRINITY ATTENUATING CRASH CUSHION) MANUFACTURED BY SYRO INC., 1170 N. STATE STREET, GIRARD, OHIO 44420 (TELEPHONE: 330-545-4373).

   THE TRACC IS 21'-0" LONG AND 2'-7" WIDE. INSTALLATION SHALL BE AT THE LOCATIONS SPECIFIED IN THE PLANS, IN ACCORDANCE WITH THE MANUFACTURER'S SPECIFICATIONS AS DETAILED ON THE FOLLOWING PRE-APPROVED SHOP DRAWINGS:

DWG. NO.	DRAWING NAME	DWG./ REV. DATE	ODOT APPROVAL DATE
SS450	CRASH-CUSHION ATTENUATING TERMINAL PLAN, ELEVATION & SECTIONS	3/12/99 Rev. 1	8/27/99
SS455	TRACC TRANSITION TO W-BEAM MEDIAN BARRIER PLAN, ELEVATION & SECTIONS	2/18/99	8/27/99
SS461	TRACC TRANSITION TO CONCRETE SAFETY SHAPE BARRIER PLAN, ELEVATION & SECTIONS	6/30/99 Rev. 1	8/27/99
SS462	TRACC TRANSITION TO CONCRETE BARRIER SINGLE SLOPE PLAN, ELEVATION & SECTIONS	6/30/99	8/27/99

THE CONTRACTOR SHALL PROVIDE A REPLACEMENT UNIT WHEN AN IMPACT IS SEVERE ENOUGH TO REQUIRE COMPLETE REPLACEMENT OF THE ATTENUATOR. THE CONTRACTOR SHALL HAVE A SPARE PARTS PACKAGE AVAILABLE ON THE PROJECT SITE AT ALL TIMES WHEN AN ATTENUATOR IS IN PLACE. THE CONTRACTOR SHALL PROVIDE A MINIMUM OF ONE COMPLETE SPARE PARTS PACKAGE FOR EVERY 1 TO 6 UNITS INSTALLED ON THE PROJECT SITE. FOR EXAMPLE, 6 INSTALLED UNITS REQUIRE 1 SPARE PARTS PACKAGE AND 7 INSTALLED UNITS REQUIRE 2 SPARE PARTS PACKAGES.

WHEN BI-DIRECTIONAL DESIGNS ARE SPECIFIED, THE CONTRACTOR SHALL SUPPLY APPROPRIATE TRANSITIONS. PAYMENT FOR THE ABOVE WORK SHALL BE MADE AT THE UNIT PRICE BID FOR ITEM 614, TEMPORARY IMPACT ATTENUATOR, (UNIDIRECTIONAL OR BIDIRECTIONAL), EACH, AND SHALL INCLUDE ALL LABOR, TOOLS, EQUIPMENT AND MATERIALS NECESSARY TO CONSTRUCT, MAINTAIN, REPAIR, REPLACE OR RELOCATE A COMPLETE AND FUNCTIONAL IMPACT ATTENUATOR SYSTEM, INCLUDING ALL RELATED BACKUPS, TRANSITIONS, LEVELING PADS, HARDWARE AND GRADING, NOT SEPARATELY SPECIFIED, AS REQUIRED BY THE MANUFACTURER.

ITEM 614, WORK ZONE CROSSOVER LIGHTING SYSTEM

THIS WORK SHALL CONSIST OF FURNISHING, ERECTING, OPERATING, MAINTAINING AND REMOVING A WORK ZONE LIGHTING SYSTEM FOR A SINGLE CROSSOVER, OR OVERLAPPING A PAIR OF CROSSOVERS ON A TWO-LANE, TWO-WAY OPERATION. THE SYSTEM SHALL BE AS SHOWN ON SCD MT-100.00. THE CONTRACTOR SHALL ARRANGE FOR AND PAY FOR POWER. ALL MATERIALS AND CONSTRUCTION SHALL COMPLY WITH APPLICABLE PORTIONS OF 625 AND 725 EXCEPT: THE PERFORMANCE TEST OF 625.19F, AND CERTIFIED DRAWING REQUIREMENT OF 625.04, ARE WAIVED AND USED MATERIALS IN GOOD CONDITION ARE ACCEPTABLE.

POLES MAY BE LESS THAN 30 FT FROM THE EDGE OF PAVEMENT WHEN BEHIND GUARDRAIL. ADDITIONAL POLE LINES, CABLES AND APPURTENANCES NECESSARY TO FURNISH POWER TO THE LIGHTING SYSTEM SHALL BE INCLUDED IN THIS ITEM. SERVICE POLES SHALL BE POSITIONED WITH THE SAME CONSTRAINTS AS THE LIGHTING POLES AS A MINIMUM.

PAYMENT WILL BE MADE AT THE UNIT PRICE PER EACH FOR ITEM 614, WORK ZONE CROSSOVER LIGHTING SYSTEM THROUGHOUT ALL PHASES OF WORK WHEN THE CROSSOVER ROADWAYS ARE USED.

ITEM 614, PORTABLE CHANGEABLE MESSAGE SIGNS, AS PER PLAN

THE CONTRACTOR SHALL FURNISH, INSTALL, MAINTAIN AND REMOVE, WHEN NO LONGER NEEDED, A CHANGEABLE MESSAGE SIGN, ON SITE, FOR THE DURATION OF THE PROJECT. THE SIGN SHALL BE OF A TYPE SHOWN ON A LIST OF APPROVED PCMS UNITS MAINTAINED BY THE DIRECTOR (OFFICE OF MATERIALS MANAGEMENT). THIS LIST IS AVAILABLE ON THE ODOT WEBSITE AT HTTP://WWW.DOT.STATE.OH.US/TESTLAB/APPLISTS/MISC/PCMS.HTM. THE LIST CURRENTLY CONTAINS CLASS I, II, AND III UNITS WITH MINIMUM LEGIBILITY DISTANCES OF 1250 FT., 850 FT. AND 650 FT., RESPECTIVELY.

EACH SIGN SHALL BE TRAILER-MOUNTED AND EQUIPPED WITH A FUNCTIONAL DIMMING MECHANISM, TO DIM THE SIGN DURING DARKNESS, AND A TAMPER AND VANDAL PROOF ENCLOSURE. EACH SIGN SHALL BE PROVIDED WITH APPROPRIATE TRAINING AND OPERATION INSTRUCTIONS TO ENABLE ON-SITE PERSONNEL TO OPERATE AND TROUBLESHOOT THE UNIT. THE SIGN SHALL ALSO BE CAPABLE OF BEING POWERED BY AN ELECTRICAL SERVICE DROP FROM A LOCAL UTILITY COMPANY. PCMS TRAILERS SHOULD BE DELINEATED ON A PERMANENT BASIS BY AFFIXING RETROREFLECTIVE MATERIAL, IN A CONTINUOUS LINE ON THE FACE OF THE TRAILER AS SEEN BY ONCOMING ROAD USERS.

THE PROBABLE PCMS LOCATIONS AND WORK LIMITS FOR THOSE LOCATIONS ARE SHOWN ON SHEET 31 OF THE PLANS. PLACEMENT, OPERATION, MAINTENANCE AND ALL ACTIVATION OF THE SIGNS BY THE CONTRACTOR SHALL BE AS DIRECTED BY THE ENGINEER. THE PCMS SHALL BE LOCATED IN A HIGHLY VISIBLE POSITION YET PROTECTED FROM TRAFFIC. THE CONTRACTOR SHALL, AT THE DIRECTION OF THE ENGINEER, RELOCATE THE PCMS TO IMPROVE VISIBILITY OR ACCOMMODATE CHANGED CONDITIONS. WHEN NOT IN USE, THE PCMS SHALL BE TURNED OFF. ADDITIONALLY, WHEN NOT IN USE FOR EXTENDED PERIODS OF TIME, THE PCMS SHALL BE TURNED, FACING AWAY FROM ALL TRAFFIC, AND SHALL DISPLAY ONE OR MORE HIGH-INTENSITY YELLOW REFLECTIVE SHEETING SURFACES OF 9-INCH BY 15-INCH MINIMUM SIZE FACING TRAFFIC.

THE CONTRACTOR SHALL IMPLEMENT A SYSTEM WHEREBY CHANGEABLE MESSAGES WILL BE IMPLEMENTED WITHIN 24 HOURS FOLLOWING TELEPHONE NOTIFICATION FROM THE PROJECT ENGINEER TO A DESIGNATED PHONE.

ALL MESSAGES TO BE DISPLAYED ON THE SIGN WILL BE PROVIDED BY THE ENGINEER. A LIST OF ALL REQUIRED PRE-PROGRAMMED MESSAGES WILL BE GIVEN TO THE CONTRACTOR AT THE PROJECT PRECONSTRUCTION CONFERENCE. THE SIGN SHALL HAVE THE CAPABILITY TO STORE UP TO 99 MESSAGES. MESSAGE MEMORY OR PRE-PROGRAMMED DISPLAYS SHALL NOT BE LOST AS A RESULT OF POWER FAILURES TO THE ON-BOARD COMPUTER. THE SIGN LEGEND SHALL BE CAPABLE OF BEING CHANGED IN THE FIELD. THREE-LINE PRESENTATION FORMATS WITH UP TO SIX MESSAGE PHASES SHALL BE SUPPORTED. PCMS FORMAT SHALL PERMIT THE COMPLETE MESSAGE FOR EACH PHASE TO BE READ AT LEAST ONCE.

THE PCMS SHALL CONTAIN AN ACCURATE CLOCK AND PROGRAMMING LOGIC WHICH WILL ALLOW THE SIGN TO BE ACTIVATED, DEACTIVATED OR MESSAGES CHANGED AUTOMATICALLY AT DIFFERENT TIMES OF THE DAY FOR DIFFERENT DAYS OF THE WEEK.

THE PCMS SHALL CONTAIN A CELLULAR TELEPHONE DATA LINK WHICH WILL (IN ACTIVE CELLULAR PHONE AREAS) ALLOW REMOTE SIGN ACTIVATION, MESSAGE CHANGES, MESSAGE ADDITIONS AND REVISIONS TO TIME OF DAY PROGRAMS. THE SYSTEM SHALL ALSO PERMIT VERIFICATION OF CURRENT AND PROGRAMMED MESSAGES. ONE REMOTE DATA INPUT DEVICE (LAPTOP COMPUTER PLUS MODEM OR EQUIVALENT) SHALL BE FURNISHED FOR USE BY THE DISTRICT TRAFFIC ENGINEER, OR EQUIVALENT, AND SHALL BE INSURED AGAINST THEFT.

THE PCMS UNIT SHALL BE MAINTAINED IN GOOD WORKING ORDER BY THE CONTRACTOR IN ACCORDANCE WITH THE PROVISIONS OF CMS 614.07. THE CONTRACTOR SHALL, PRIOR TO ACTIVATING THE UNIT, MAKE ARRANGEMENTS, WITH AN AUTHORIZED SERVICE AGENT FOR THE PCMS, TO ASSURE PROMPT SERVICE IN THE EVENT OF FAILURE. ANY FAILURE SHALL NOT RESULT IN THE SIGN BEING OUT OF SERVICE FOR MORE THAN 12 HOURS, INCLUDING WEEKENDS. FAILURE TO COMPLY MAY RESULT IN AN ORDER TO STOP WORK AND OPEN ALL TRAFFIC LANES AND/OR IN THE CITY OF DAYTON TAKING APPROPRIATE ACTION TO SAFELY CONTROL TRAFFIC. THE ENTIRE COST TO CONTROL TRAFFIC, ACCRUED BY THE CITY OF DAYTON DUE TO THE CONTRACTOR'S NONCOMPLIANCE, WILL BE DEDUCTED FROM MONEYS DUE, OR TO BECOME DUE THE CONTRACTOR ON HIS CONTRACT.

THE CONTRACTOR SHALL BE RESPONSIBLE FOR 24-HOUR-PER-DAY OPERATION AND MAINTENANCE OF THESE SIGNS ON THE PROJECT FOR THE DURATION OF THE PHASES WHEN THE PLAN REQUIRES THEIR USE.

PAYMENT FOR THE ABOVE DESCRIBED ITEM SHALL BE AT THE CONTRACT UNIT PRICE. PAYMENT SHALL INCLUDE ALL LABOR, MATERIALS, EQUIPMENT, FUELS, LUBRICATING OILS, SOFTWARE, HARDWARE AND INCIDENTALS TO PERFORM THE ABOVE DESCRIBED WORK.

ITEM 614, PORTABLE CHANGEABLE MESSAGE SIGN, AS PER PLAN 2 EACH

ITEM 614 - WORK ZONE RAISED PAVEMENT MARKER, AS PER PLAN

WORK ZONE RAISED PAVEMENT MARKERS, AS PER PLAN, AND THEIR INSTALLATION SHALL CONFORM TO CMS 614 OR CMS 621 AS SPECIFIED HEREIN.

- RAISED PAVEMENT MARKERS IN USE DURING THE SNOW-PLOWING SEASON SHALL CONFORM TO 621.
- RAISED PAVEMENT MARKERS IN USE DURING THE NON SNOW-PLOWING SEASON SHALL CONFORM TO EITHER 614 OR TO 621.

THE SNOW-PLOWING SEASON SHALL RUN FROM OCTOBER 15 THROUGH APRIL 1.

IF PROJECT DELAYS, NOT THE FAULT OF ODOT OR CITY OF DAYTON, CAUSE THE WORK TO EXTEND INTO THE SNOW-PLOWING SEASON, THE CONTRACTOR SHALL BE RESPONSIBLE FOR REPLACING WORK ZONE RAISED PAVEMENTMARKERS (WZRPMS) CONFORMING TO CMS 614, WITH RAISED PAVEMENT MARKERS CONFORMING TO 621, AS DETERMINED BY THE ENGINEER, AT THE CONTRACTORS EXPENSE.

THIS ITEM SHALL INCLUDE PURCHASE, INSTALLATION AND REMOVAL OF ITEM 614 WORK ZONE RAISED PAVEMENT MARKER. AS PER PLAN, INCLUDING FILLING OF ANY DEPRESSIONS CREATED IN THE PAVEMENT AS PER CM 202.10.

RESURFACING OF THE TRANSITION AREAS SHALL BE PERFORMED AT THE TIME THAT THE SURFACE COURSE IS BEING APPLIED TO THE ENTIRE PROJECT. PRIOR TO APPLICATION OF THE SURFACE COURSE ON THE PROJECT, THE SURFACE COURSE OF THE EXISTING PAVEMENT WITHIN THE TRANSITION AREA SHALL BE REMOVED TO A DEPTH EQUIVALENT TO THE DEPTH OF THE PROPOSED SURFACE COURSE, AS DETERMINED BY THE ENGINEER.

PAYMENT FOR RESURFACING WITHIN THE TRANSITION AREA SHALL BE PAID UNDER THE APPROPRIATE BID ITEMS FOR THE WORK REQUIRED, AS PROVIDED FOR IN THE PLANS.

ITEM 614, WORK ZONE SPEED LIMIT SIGN

THE CONTRACTOR SHALL FURNISH, INSTALL, MAINTAIN, COVER DURING SUSPENSION OF WORK, AND SUBSEQUENTLY REMOVE WORK ZONE SPEED LIMIT (R2-1) SPEED LIMIT SIGNS AND SUPPORTS WITHIN THE WORK LIMITS IN ACCORDANCE WITH THE FOLLOWING REQUIREMENTS:

THE CONTRACTOR SHALL COVER OR REMOVE ANY EXISTING SPEED LIMIT SIGNS WITHIN THE REDUCED SPEED ZONE. THESE SIGNS SHALL BE RESTORED DURING SUSPENSION OR TERMINATION OF THE REDUCED SPEED LIMIT. THE EXPENSE OF COVERING OR REMOVAL AND RESTORATION OF EXISTING SPEED LIMIT OR MINIMUM SPEED LIMIT SIGNS SHALL BE INCLUDED IN THE PAY ITEM FOR THE WORK ZONE SPEED LIMIT SIGNS.

THE WORK ZONE SPEED LIMIT SIGNS MAY BE ERECTED OR UNCOVERED NO MORE THAN FOUR HOURS BEFORE THE ACTUAL START OF WORK. THE SIGNS SHALL BE REMOVED OR COVERED NO LATER THAN FOUR HOURS FOLLOWING RESTORATION OF ALL LANES TO TRAFFIC WITH NO RESTRICTIONS, OR SOONER AS DIRECTED BY THE ENGINEER. TEMPORARY SIGN COVERING AND UNCOVERING DUE TO TEMPORARY LANE RESTORATIONS SHALL BE GUIDED BY THE FOUR-HOUR LIMITATIONS STATED ABOVE. SUCH LANE RESTORATIONS SHOULD BE EXPECTED TO REMAIN IN EFFECT FOR 30 OR MORE DAYS, SUCH AS DURING WINTER SHUT-DOWNS.

CONSTRUCTION AND MATERIALS SPECIFICATIONS, ITEM 614, PARAGRAPH 614.02(B) INDICATES THAT THE TWO DIRECTIONS OF A DIVIDED HIGHWAY ARE CONSIDERED SEPARATE HIGHWAY SECTIONS. THEREFORE, IF THE WORK ON A MULTI-LANE DIVIDED HIGHWAY IS LIMITED TO ONLY ONE DIRECTION, SPEED REDUCTION IN THE DIRECTION OF THE WORK DOES NOT AUTOMATICALLY CONSTITUTE SPEED REDUCTION IN THE OPPOSITE DIRECTION. SPEED LIMIT REDUCTION IN THE OPPOSITE DIRECTION, IN SUCH CASE, IS APPROPRIATE ONLY IF CONDITIONS ARE EXPECTED TO HAVE AN IMPACT ON THE DIRECTIONAL TRAFFIC FLOW, AS DIRECTED BY THE ENGINEER.

THE CONTRACTOR SHALL ERECT A WORK ZONE SPEED LIMIT SIGN IN ADVANCE OF ANY LANE RESTRICTION EXPECTED TO LAST AT LEAST 30 CONSECUTIVE CALENDAR DAYS, OR AS DIRECTED BY THE ENGINEER. THE SIGN SHALL BE MOUNTED ON BOTH SIDES OF A DIRECTIONAL ROADWAY OF DIVIDED HIGHWAYS. THE FIRST WORK ZONE SPEED LIMIT SIGN SHALL BE PLACED 500 FEET IN ADVANCE OF THE LANE REDUCTION OR SHIFT TAPER OR AT A POINT WHEREVER CONSTRUCTION BEGINS, WHICHEVER COMES FIRST. ON UNDIVIDED HIGHWAYS THE SIGN SHALL BE MOUNTED ON THE RIGHT SIDE, 250 FEET IN ADVANCE OF THE TAPER. THE SIGN SHALL BE REPEATED, ON THE SIDE NEAREST TRAFFIC, EVERY 1 MILE FOR 55 MPH ZONES AND EVERY ONE-HALF MILE FOR 50 MPH AND 45 MPH ZONES. THESE SIGNS SHALL ALSO BE ERECTED IMMEDIATELY AFTER EACH OPEN ENTRANCE RAMP WITHIN THE ZONE.

REDUCED SPEED AHEAD SIGNS SHALL BE ERECTED IN ADVANCE OF THE SPEED REDUCTION, APPROXIMATELY 1300 FEET ON MULTI-LANE HIGHWAYS AND 500 FEET ON 2-LANE HIGHWAYS.

A SIGN(S) TO INDICATE THE RESUMPTION OF THE STATUTORY SPEED LIMIT SHALL BE ERECTED AT THE END OF ANY REDUCED SPEED ZONE. R2-1 SPEED LIMIT SIGNS SHALL BE USED ON UNDIVIDED ROADWAYS. R2-1 SPEED LIMIT AND R2-H2a SIGNS SHALL BE USED ON DIVIDED ROADWAYS. WHEN USED THE R2-1 AND R2-H2a SIGNS SHALL BE MOUNTED SIDE-BY-SIDE ON SEPARATE SUPPORTS. THE CONTRACTOR MAY USE SIGNS AND SUPPORTS IN USED, BUT GOOD, CONDITION PROVIDED THE SIGNS MEET CURRENT ODOT SPECIFICATIONS. SIGN FACES SHALL BE REFLECTORIZED WITH TYPE G SHEETING COMPLYING WITH THE REQUIREMENTS OF CMS 730.19.

WORK ZONE SPEED LIMIT SIGNS SHALL BE MOUNTED ON TWO ITEM 630, GROUND MOUNTED SUPPORTS, NO. 3 POSTS.

WORK ZONE SPEED LIMIT SIGNS AND SUPPORTS WILL BE MEASURED AS THE NUMBER OF SIGN INSTALLATIONS, INCLUDING THE SIGNS AND NECESSARY SUPPORTS. IF A SIGN AND SUPPORT COMBINATION IS REMOVED AND REERECTED AT ANOTHER LOCATION WITHIN THE PROJECT DUE TO CHANGES IN THE SPEED ZONE DIRECTED BY THE ENGINEER, IT SHALL BE CONSIDERED ANOTHER UNIT.

PAYMENT FOR ACCEPTED QUANTITIES, COMPLETE IN PLACE, WILL BE MADE AT THE CONTRACT UNIT PRICE. PAYMENT SHALL BE FULL COMPENSATION FOR ALL MATERIALS, LABOR, INCIDENTALS AND EQUIPMENT FOR FURNISHING, ERECTING, MAINTAINING, COVERING DURING SUSPENSION OF WORK, AND REMOVING THE SIGNS AND SUPPORTS. THE FOLLOWING ESTIMATED QUANTITY HAS BEEN CARRIED TO THE GENERAL SUMMARY.

ITEM 614, WORK ZONE SPEED LIMIT SIGN 6 EACH

SHEET NO.	PHASE	614 MAINTAINING TRAFFIC	614 WORK ZONE IMPACT ATTENUATOR (UNI-DIRECTIONAL)	614 DETOUR SIGNING	614 REPLACEMENT SIGN	614 REPLACEMENT DRUM	614 WORK ZONE CROSSOVER LIGHTING SYSTEM	614 WORK ZONE RAISED PAVEMENT MARKER	614 BARRIER REFLECTOR, TYPE B	614 OBJECT MARKER, ONE WAY	614 OBJECT MARKER, TWO WAY	614 PORTABLE CHANGEABLE MESSAGE SIGN, AS PER PLAN	614 WORK ZONE EDGE LINE, CLASS I	614 WORK ZONE CHANNELIZING LINE, CLASS I	614 FLASHING ARROW PANEL	615 PAVEMENT FOR MAINTAINING TRAFFIC, CLASS A, AS PER PLAN	622 PORTABLE CONCRETE BARRIER, 50", AS PER PLAN	622 PORTABLE CONCRETE BARRIER, 50" BRIDGE MOUNTED
		LUMP	EACH	LUMP	SQ FT	EACH	EACH	EACH	EACH	EACH	EACH	EACH	MILE	FT	EACH	SQ YD	FT	FT
13	ONE						2								2	3798		
17	TWO		1					222	158	38	60		1.29	4420	1		1225	700
21	THREE						2								2	4414		
25	FOUR		1					294	155	31	62		1.38	3630			1300	710
28	FIVE														2			
TOTALS CARRIED TO GENERAL SUMMARY		LUMP	2	LUMP			4	516	313	69	122		2.67	8050	7	8212	2525	1410

CALCULATED CAM
CHECKED PAR

MAINTENANCE OF TRAFFIC SUBSUMMARY

MOT - XWAY

CROSSOVER DESIGN CRITERIA	
45 MPH	
DC	5°
TAPER	45:1

CLASS A PAVEMENT AS PER 615

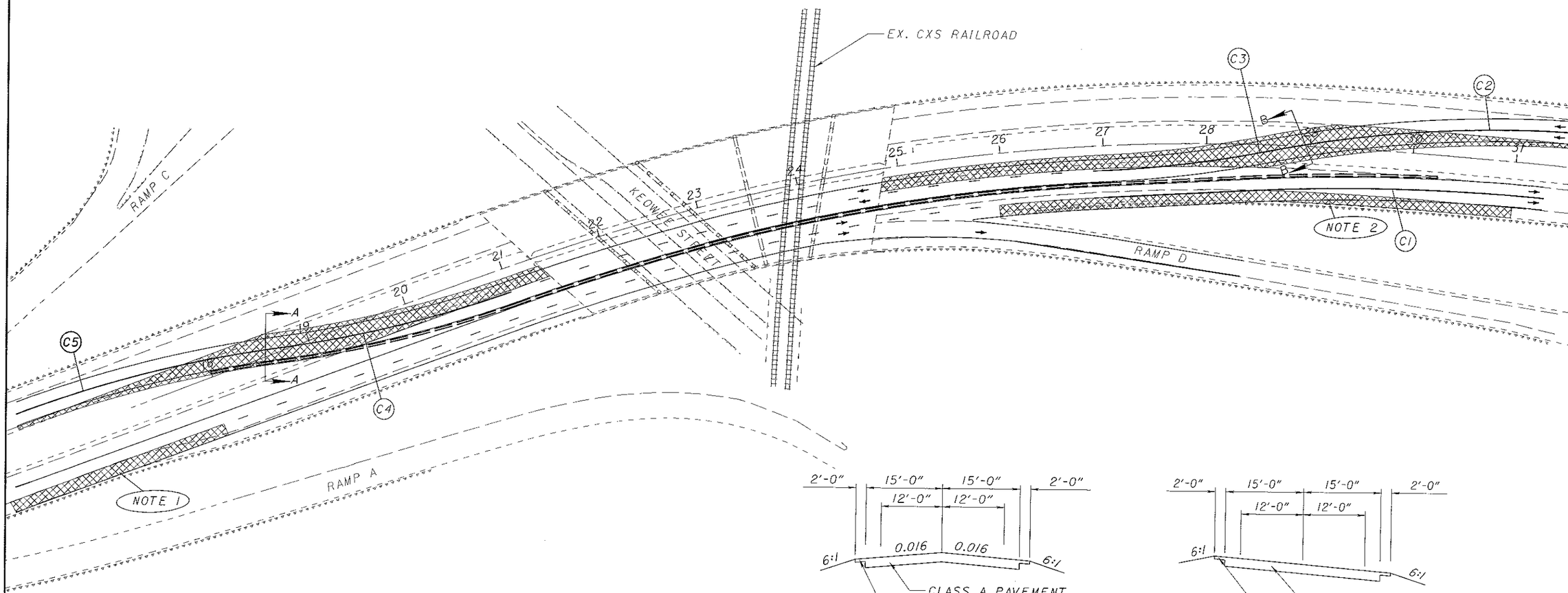

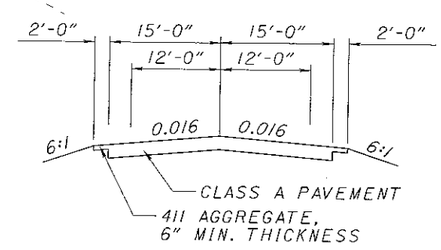

SECTION A-A

NORMAL TYPICAL SECTION

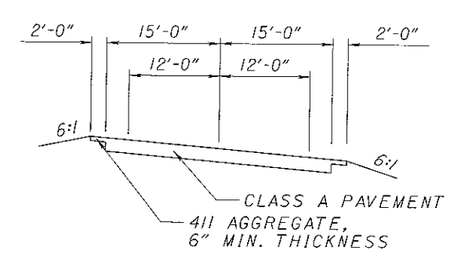

SECTION B-B

SUPERELEVATED TYPICAL SECTION

NOTE:
RECONSTRUCT THE EXISTING SHOULDER WITH FULL DEPTH TEMPORARY PAVEMENT AT THE FOLLOWING LOCATIONS:

1. STA 15+50 TO 18+00 RIGHT
2. STA 26+00 TO 31+00 RIGHT

NOTE: LANES ARE 12' DOWNSTREAM OF TAPER. LANES TRANSITION FROM 11' TO 12' WITHIN TAPER. LANES WITHIN WORK-ZONE ARE 11'.

PHASE ONE CURVE DATA

NUMBER	C1	C2	C3	C4	C5
DELTA ANGLE	08°39'53"	16°39'01"	07°59'07"	11°41'33"	13°08'29"
DEGREE OF CURVE - ARC	3°00'00"	5°00'00"	5°00'00"	5°00'00"	5°00'00"
TANGENT	144.69	167.68	79.98	117.33	131.99
RADIUS	1909.86	1145.92	1145.92	1145.92	1145.92
ARC LENGTH	288.83	333.00	159.71	233.85	262.83
CHORD LENGTH	288.55	331.83	159.58	233.44	262.25

HORIZONTAL SCALE IN FEET 0 50 100

CALCULATED D.M.
CHECKED P.R.

MAINTENANCE OF TRAFFIC
PHASE ONE CROSSOVER DETAIL

MOT- XWAY

SEEDING END WIDTH	SEEDING SQ. YDS.	END AREA CUT	END AREA FILL	VOLUME CUT	VOLUME FILL
25		60			
	123				93
19		40			
	92				65
14		30			
	73				37
12		10			
	42				11
3		1			
73	330	SHEET TOTAL			

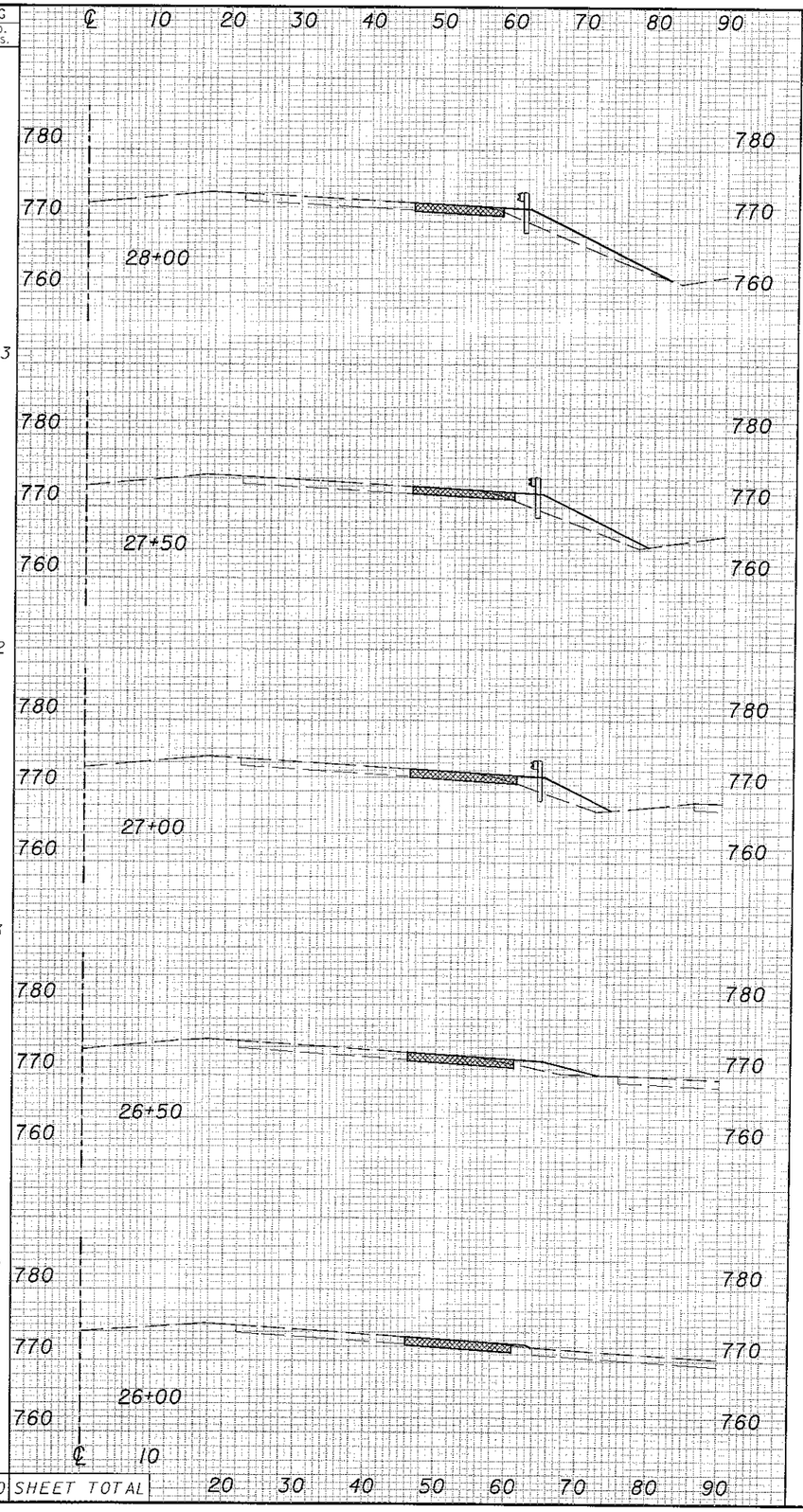

SEEDING END WIDTH	SEEDING SQ. YDS.	END AREA CUT	END AREA FILL	VOLUME CUT	VOLUME FILL
SHEET TOTAL		141		206	

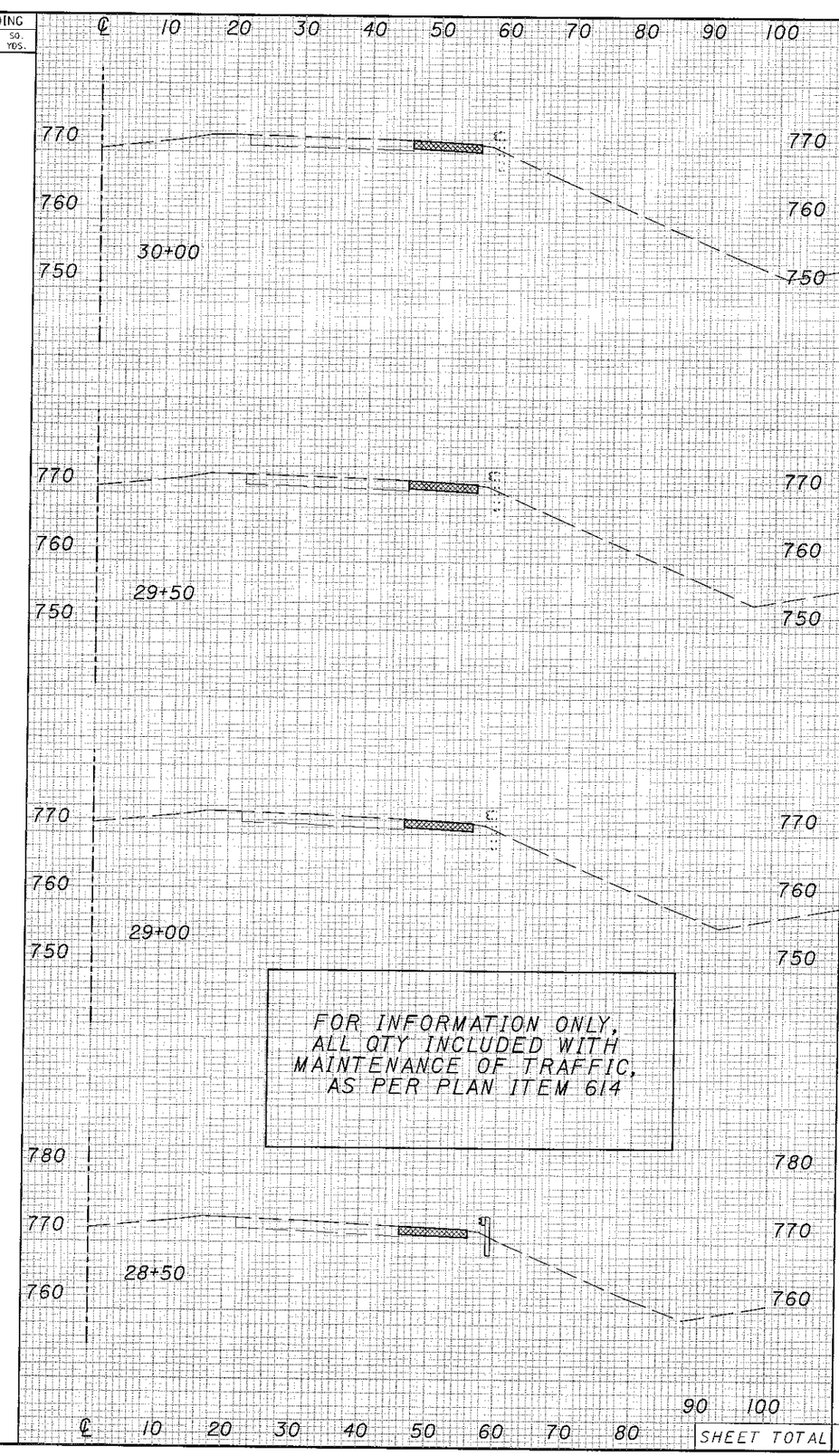

CALCULATED CAM
CHECKED CVR

MAINTENANCE OF TRAFFIC
PHASE ONE TEMPORARY ROAD CROSS SECTIONS

MOT- XWAY

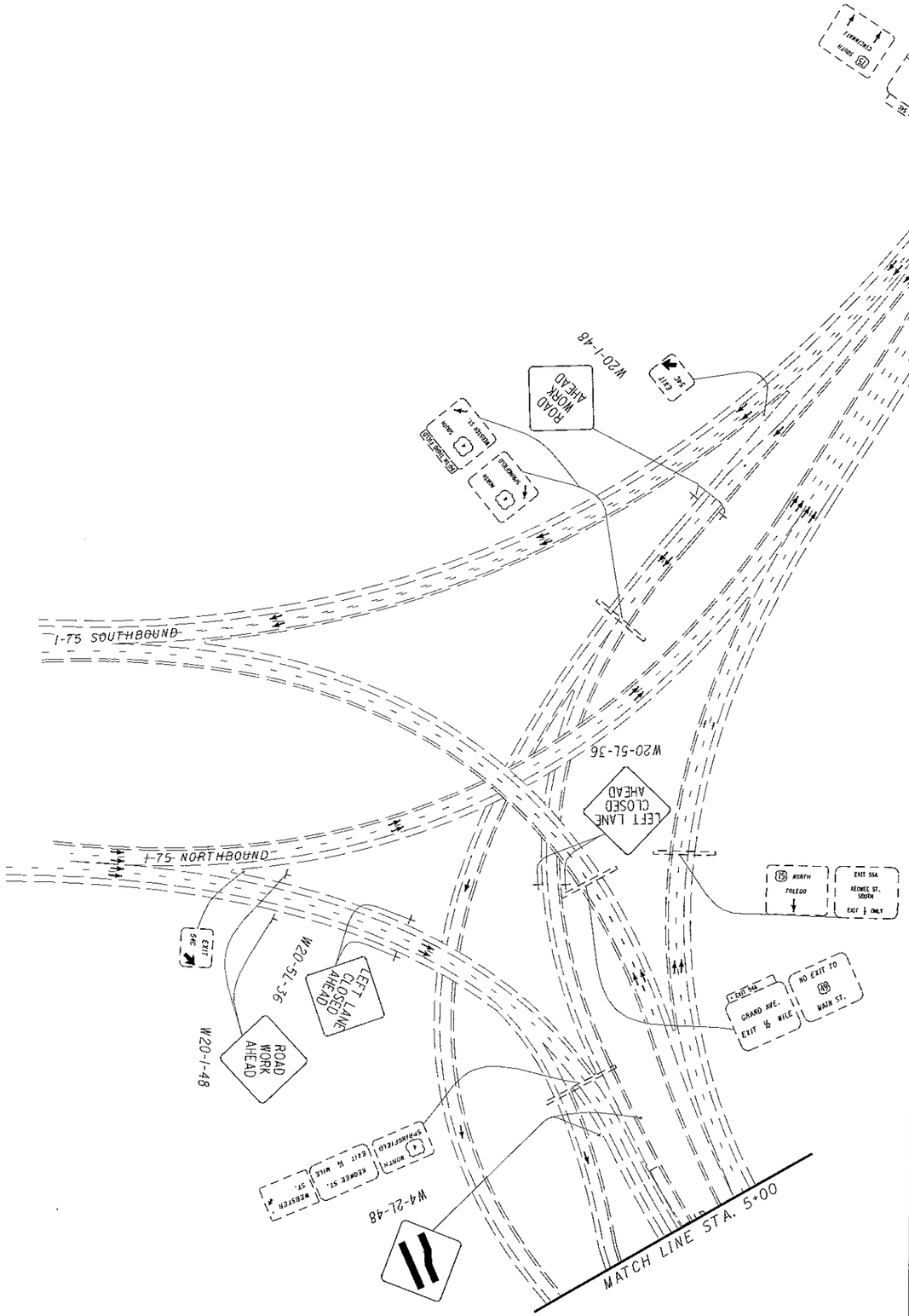

LEGEND

- DRUM
- TEMPORARY EDGE LINE
- TEMPORARY CHANNELIZING LINE
- 50" PORT. CONCRETE BARRIERS
- WORKZONE AREA
- EXISTING SIGNAGE
- PROPOSED SIGNAGE
- TRAFFIC DIRECTION

ESTIMATED QUANTITIES PHASE ONE

REF. NO.	SHEET NO.	STATION FROM	STATION TO	SIDE	614 FLASHING ARROW PANEL (EACH)	614 WORK ZONE CROSS-OVER LIGHTING SYSTEM (EACH)	615 PAVEMENT FOR MAINTINING TRAFFIC, TYPE 'A' AS PER PLAN (SQ. YD.)
FA-1	14	8+00	8+00	RT	1		
FA-2	15	53+20	53+20	RT	1		
TP-1	14	16+00	20+26			1	1515
TP-2	14	24+88	37+30			1	2283
TOTALS TO SHEET 10					2	2	3798

HORIZONTAL SCALE IN FEET 0 100 200

CALCULATED CAM
CHECKED PAR

MAINTENANCE OF TRAFFIC PHASE ONE

MOT- XWAY

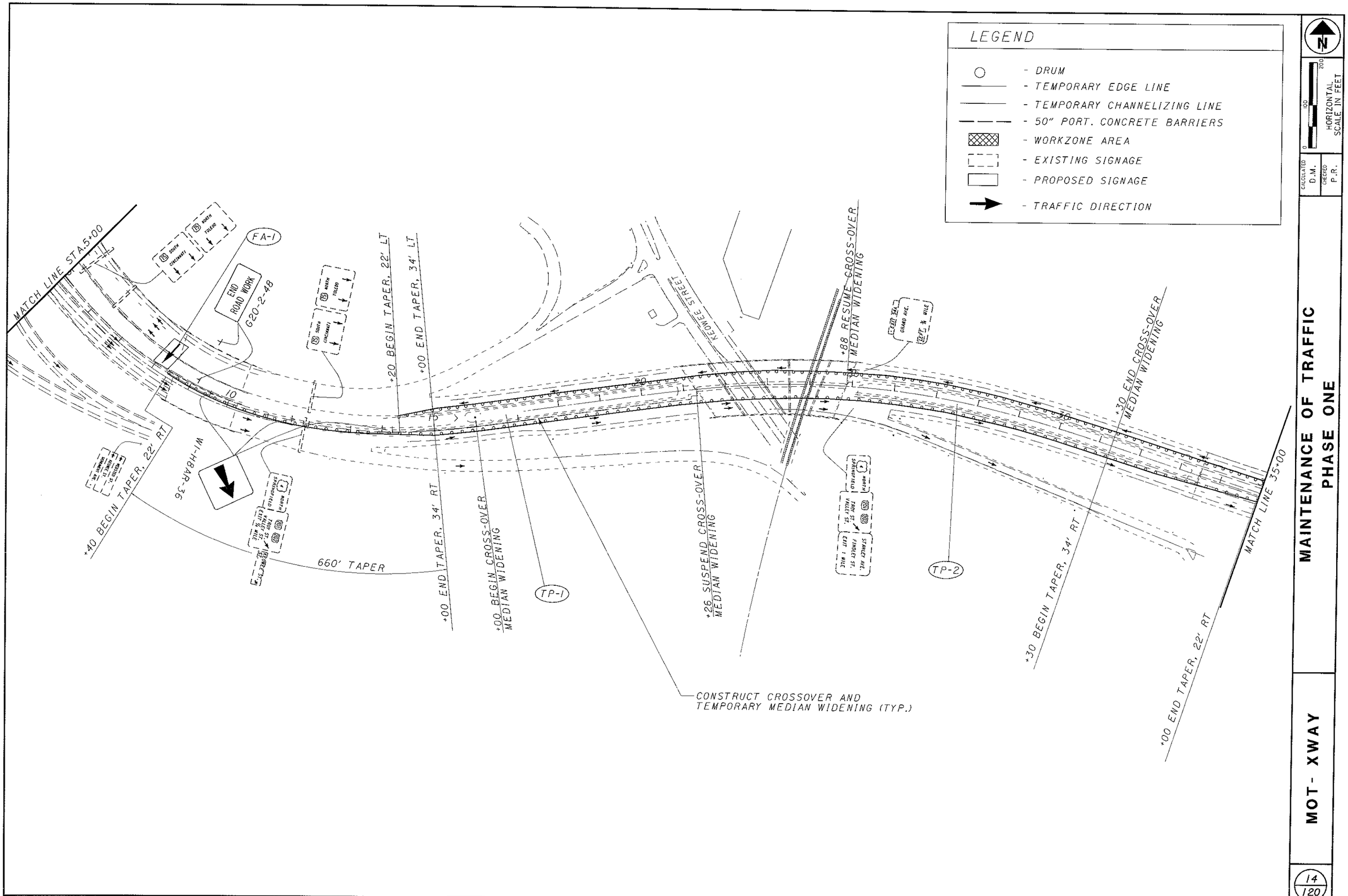

MAINTENANCE OF TRAFFIC PHASE ONE

MOT- XWAY

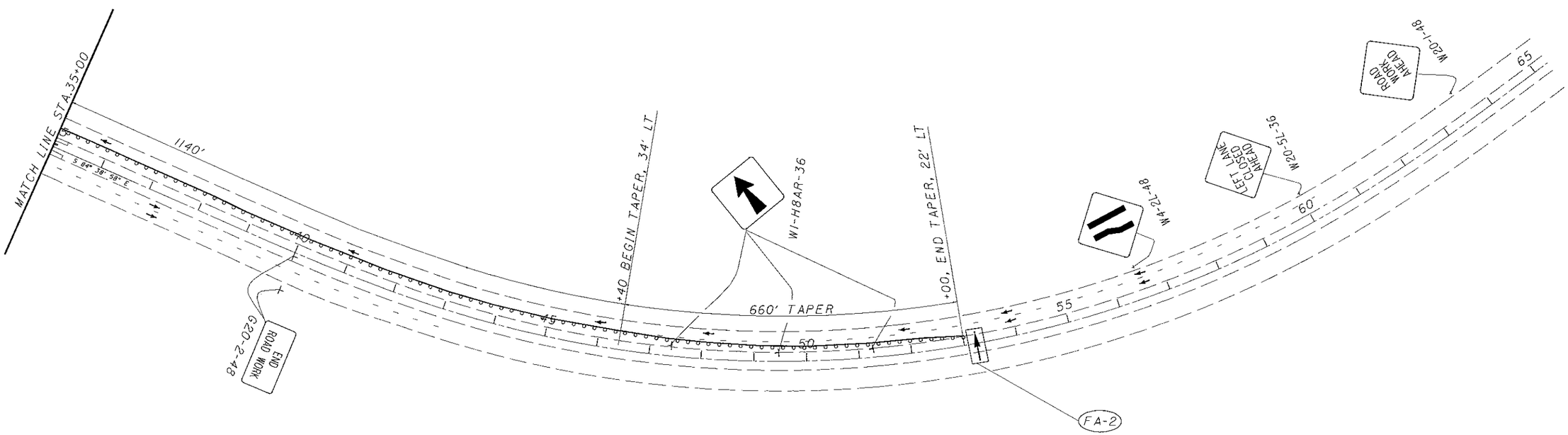

LEGEND

- DRUM
- TEMPORARY EDGE LINE
- TEMPORARY CHANNELIZING LINE
- 50" PORT. CONCRETE BARRIERS
- WORKZONE AREA
- EXISTING SIGNAGE
- PROPOSED SIGNAGE
- TRAFFIC DIRECTION

N

0 100 200
HORIZONTAL SCALE IN FEET

CALCULATED D.M.
CHECKED P.R.

MAINTENANCE OF TRAFFIC PHASE ONE

MOT- XWAY

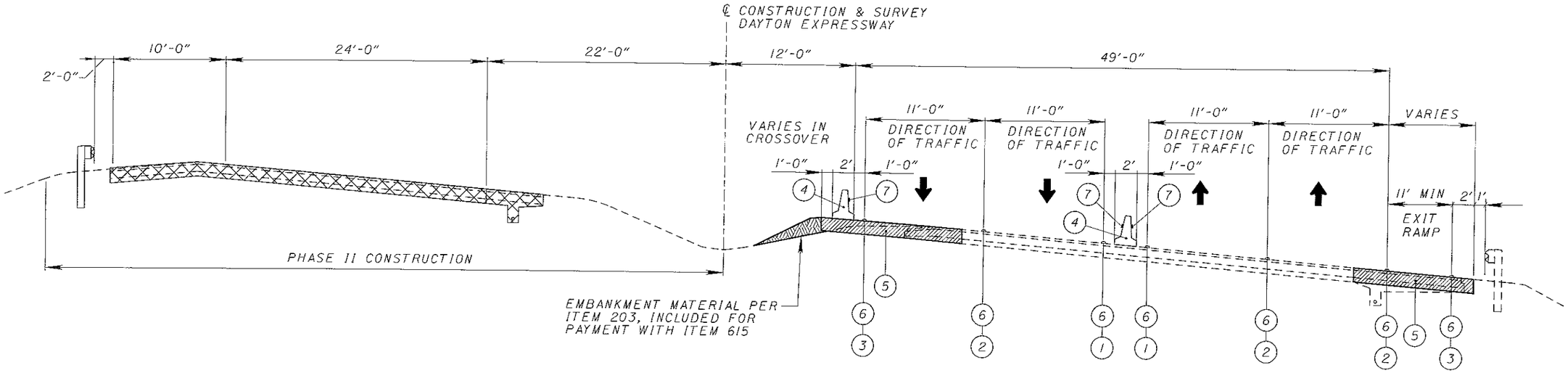

PHASE TWO - CONSTRUCTION

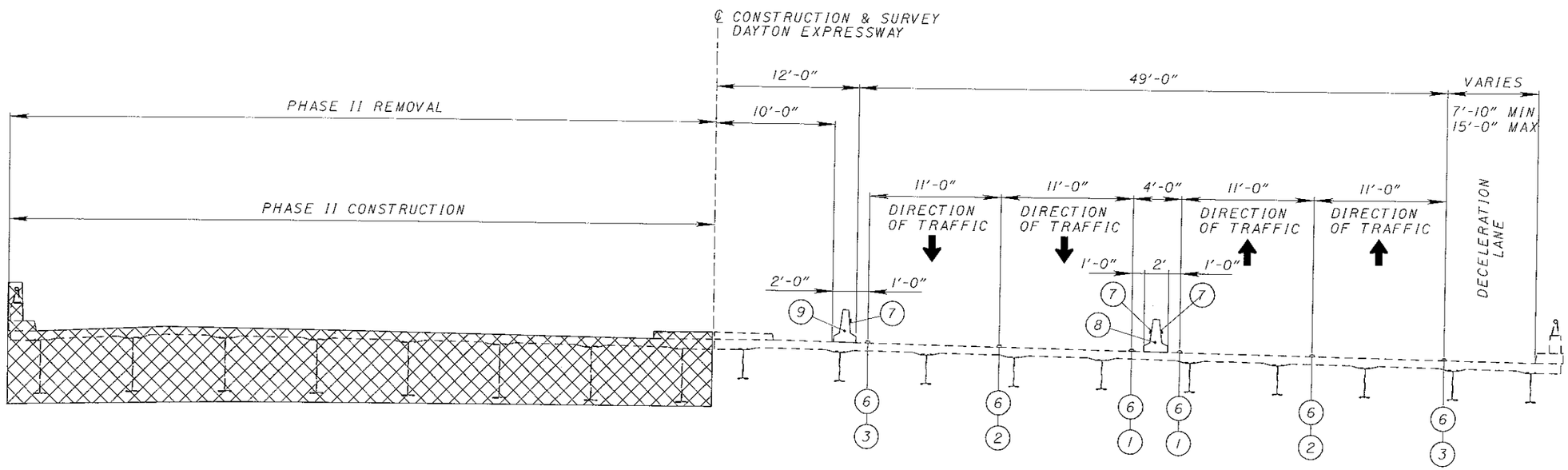

PHASE TWO - BRIDGE CONSTRUCTION

LEGEND

1. ITEM 614 - WORK ZONE EDGE LINE, CLASS I, TYPE I (YELLOW)
2. ITEM 614 - WORK ZONE CHANNELIZING LINE, CLASS I, TYPE I
3. ITEM 614 - WORK ZONE EDGE LINE, CLASS I, TYPE I (WHITE)
4. ITEM 622 - PORTABLE CONCRETE BARRIER 50" (TYP.)
5. ITEM 615 - TEMPORARY PAVEMENT CLASS A, AS PER PLAN
6. ITEM 614 - WORK ZONE RAISED PAVEMENT MARKERS
7. ITEM 614 - BARRIER REFLECTORS
8. ITEM 622 - PORTABLE CONCRETE BARRIER 50" (TYP.), BRIDGE MOUNTED
9. ITEM 622 - PORTABLE CONCRETE BARRIER 50" (TYP.), BRIDGE MOUNTED (THREE ANCHORS PER 10' PCB UNIT)

LEGEND

- TEMPORARY PAVEMENT
- WORKZONE

MAINTENANCE OF TRAFFIC - PHASE TWO DETAILS

MOT- XWAY

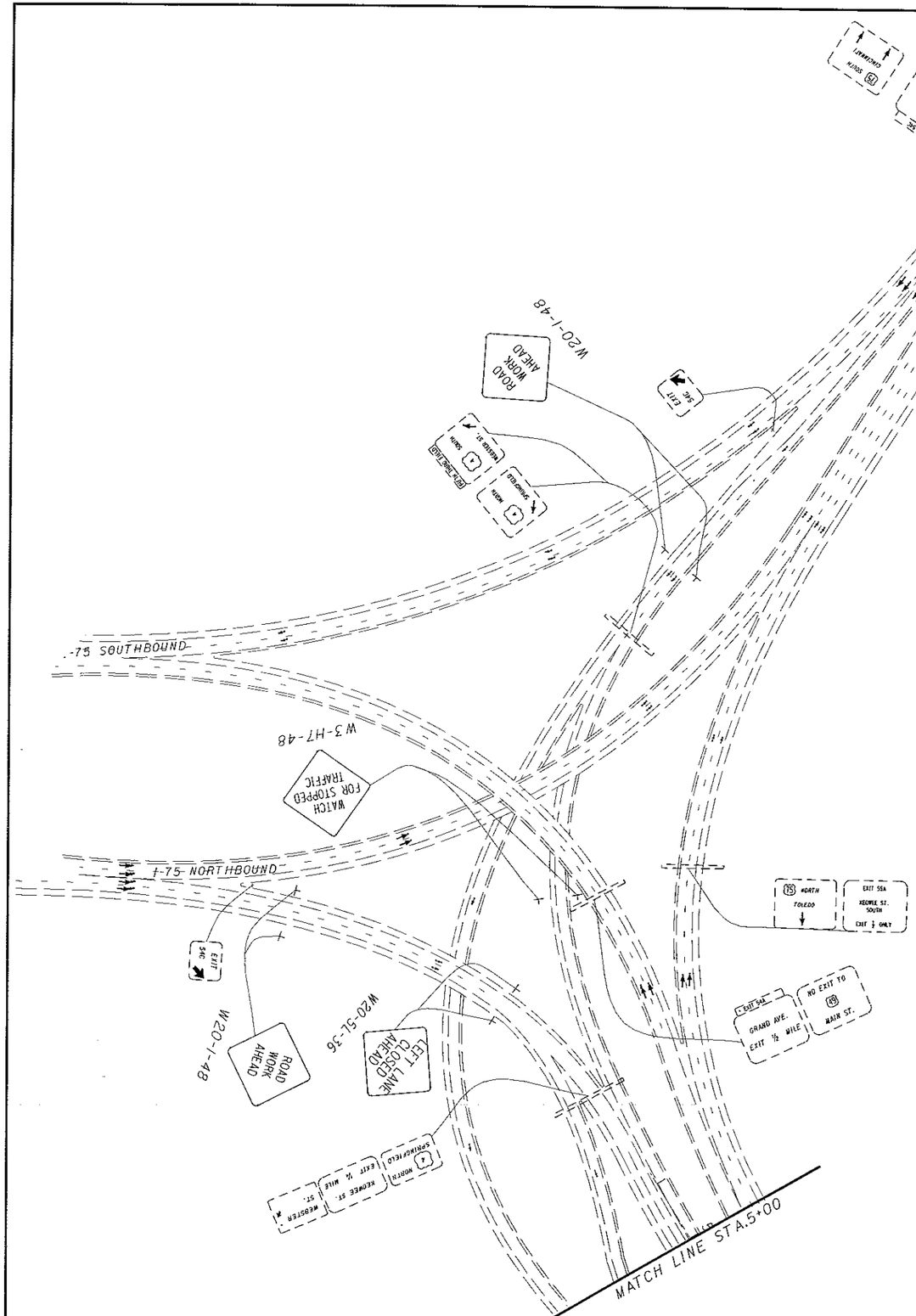

LEGEND

- DRUM
- TEMPORARY EDGE LINE
- TEMPORARY CHANNELIZING LINE
- 50" PORT. CONCRETE BARRIERS
- WORKZONE AREA
- EXISTING SIGNAGE
- PROPOSED SIGNAGE
- TRAFFIC DIRECTION

ESTIMATED QUANTITIES PHASE TWO

REF. NO.	SHEET NO.	STATION FROM	STATION TO	SIDE	614 WORK ZONE IMPACT ATTENUATOR (BI-DIRECTIONAL) EACH	614 WORK ZONE RAISED PAVEMENT MARKER EACH	614 WORK ZONE EDGE LINE, CLASS I MILE	614 WORK ZONE CHANNELIZING LINE, CLASS I FEET	614 FLASHING ARROW PANEL EACH	622 PORTABLE CONCRETE BARRIER, 50", AS PER PLAN FEET	622 PORTABLE CONCRETE BARRIER, 50", BRIDGE MOUNTED FEET	614 BARRIER PROTECTOR, TYPE B EACH	614 OBJECT MARKER, ONE WAY EACH	614 OBJECT MARKER, TWO WAY EACH
FA-1	18	9+40	9+40	RT					1					
EL-1	18	10+20	31+30	RT		23	0.40							
EL-2	18	17+00	31+30	RT		17	0.27							
EL-3	18	16+00	31+30	LT		51	0.29							
EL-4	18	16+00	31+30	LT		51	0.29							
CH-1	18	10+20	31+30	RT		23		2110						
CH-2	18	16+00	31+95	LT		6		1595						
IA-1	18	29+30		RT	1									
PCB-1	18	18+00	30+25	RT						875		120		60
PCB-2	18	20+60	27+60	LT						350		38	38	
TOTALS TO SHEET 10					1	222	1.29	4420	1			158	38	60

HORIZONTAL SCALE IN FEET 0 100 200

CALCULATED CAM
CHECKED PAR

MAINTENANCE OF TRAFFIC PHASE TWO

MOT- XWAY

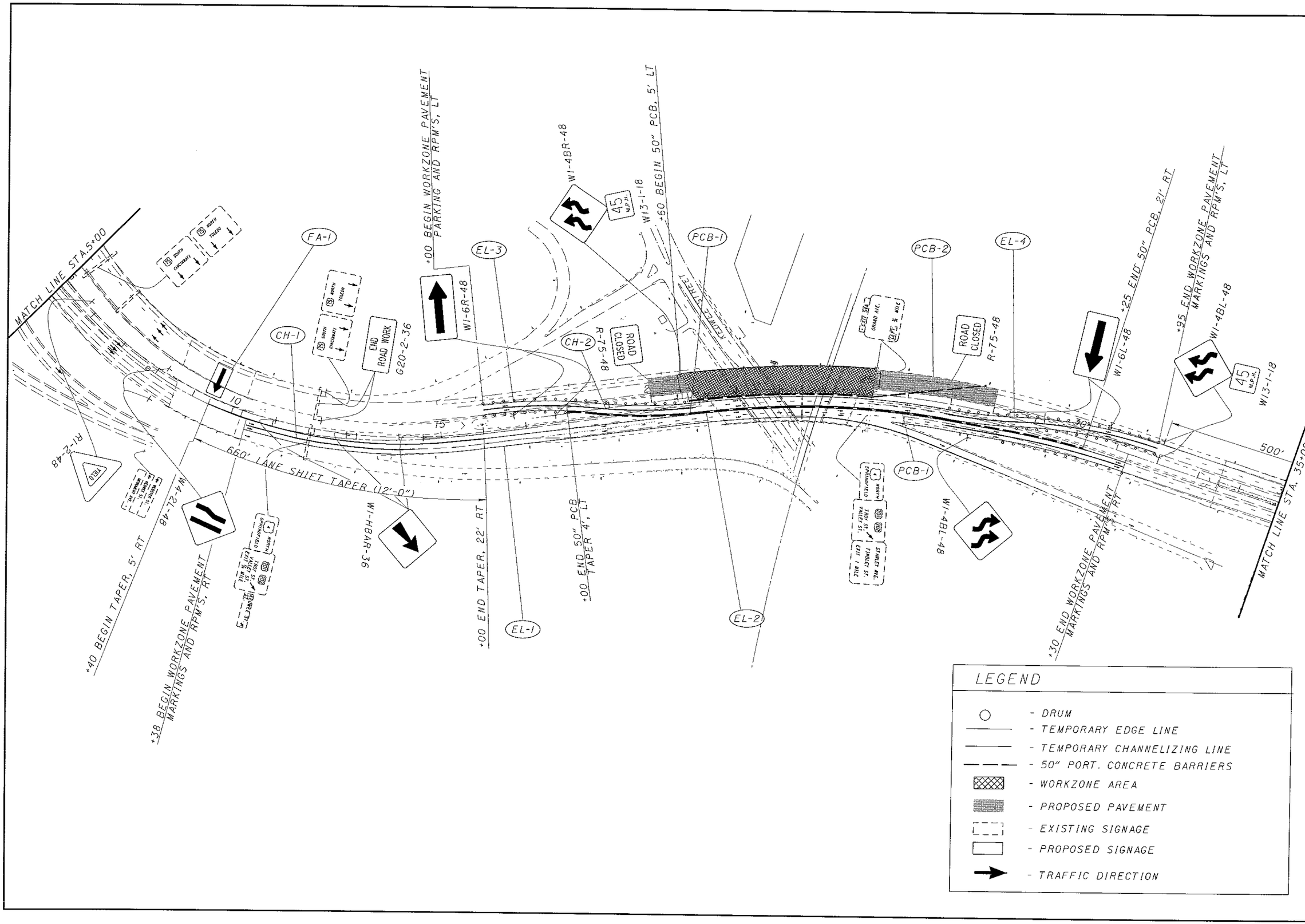
MATCH LINE STA.5+00
FA-1
CH-1
CH-2
EL-1
EL-2
EL-3
EL-4
PCB-1
PCB-2
+00 BEGIN WORKZONE PAVEMENT MARKING AND RPM'S, LT
W1-6R-48
W1-4BR-48
45 M.P.H.
W13-1-18
+60 BEGIN 50" PCB, 5' LT
END ROAD WORK
G20-2-36
ROAD CLOSED
R-75-48
KENNEDY STREET
GRAND AVE.
LEFT ¼ MILE
+25 END 50" PCB, 2' RT
W1-6L-48
+95 END WORKZONE PAVEMENT MARKINGS AND RPM'S, LT
W1-4BL-48
45 M.P.H.
W13-1-18
10
15
30
500'
STA. 35+00
MATCH LINE STA.
660' LANE SHIFT TAPER (12'-0")
R1-2-48
YIELD
W4-2L-48
W1-H8AR-36
+00 END TAPER, 22' RT
+00 END 50" PCB TAPER 4', LT
+40 BEGIN TAPER, 5' RT
+38 BEGIN WORKZONE PAVEMENT MARKINGS AND RPM'S, RT
+30 END WORKZONE PAVEMENT MARKINGS AND RPM'S, RT
W1-4BL-48
SPRINGFIELD
TROY ST.
VALLEY ST.
EXIT 1 MILE
STANLEY AVE.
FINDLEY ST.
EXIT 1 MILE
LEGEND
- DRUM
- TEMPORARY EDGE LINE
- TEMPORARY CHANNELIZING LINE
- 50" PORT. CONCRETE BARRIERS
- WORKZONE AREA
- PROPOSED PAVEMENT
- EXISTING SIGNAGE
- PROPOSED SIGNAGE
- TRAFFIC DIRECTION
HORIZONTAL SCALE IN FEET
0 100 200
CALCULATED D.M.
CHECKED P.R.
MAINTENANCE OF TRAFFIC
PHASE TWO
MOT- XWAY
18
120

LEGEND

- DRUM
- TEMPORARY EDGE LINE
- TEMPORARY CHANNELIZING LINE
- 50" PORT. CONCRETE BARRIERS
- WORKZONE AREA
- EXISTING SIGNAGE
- PROPOSED SIGNAGE
- TRAFFIC DIRECTION

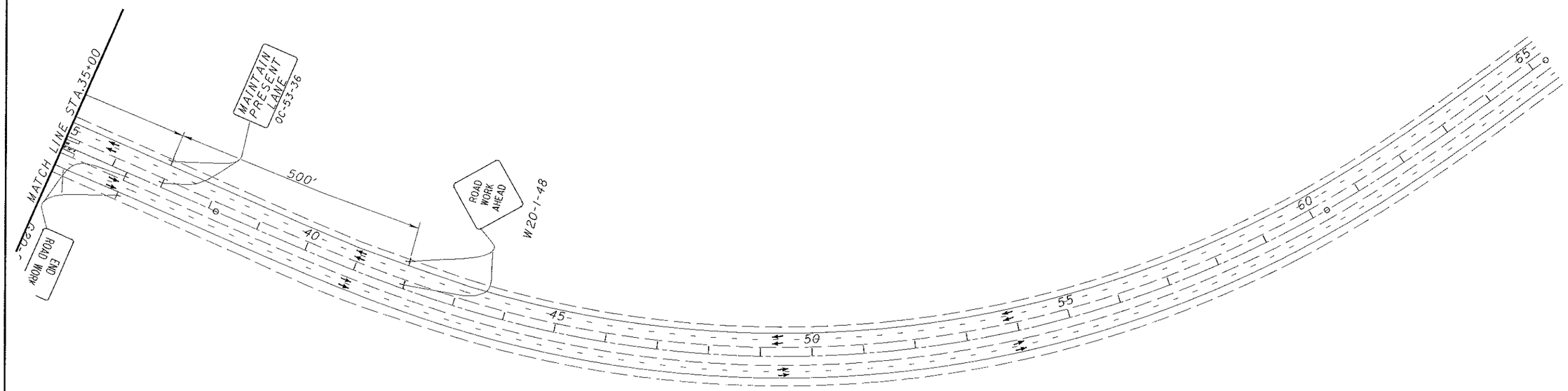

HORIZONTAL SCALE IN FEET
0 100 200

CALCULATED D.M.
CHECKED P.R.

MAINTENANCE OF TRAFFIC PHASE TWO

MOT- XWAY

CROSSOVER DESIGN CRITERIA	
45 MPH	
DC	5°
TAPER	45:1

CLASS A PAVEMENT AS PER 615

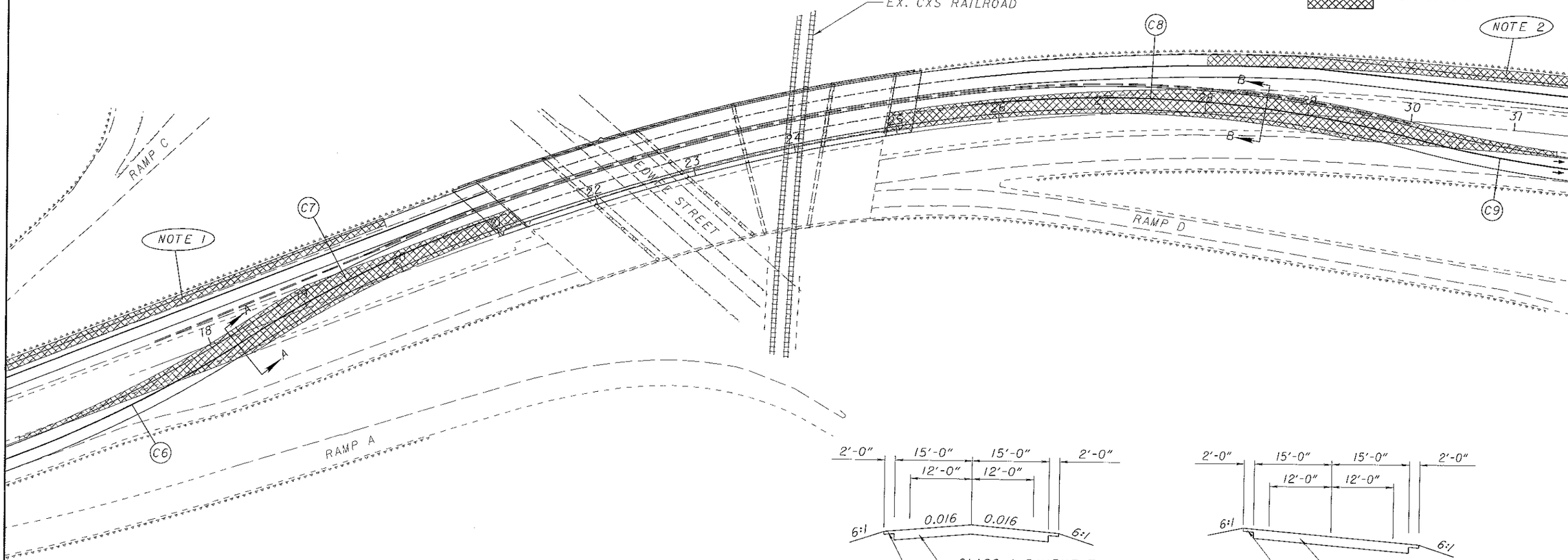

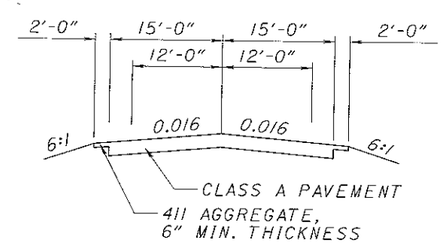

SECTION A-A

NORMAL TYPICAL SECTION

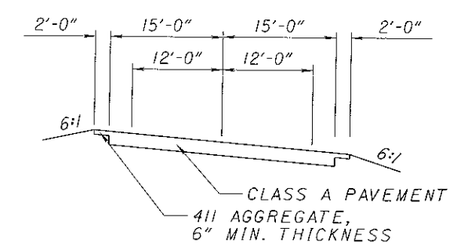

SECTION B-B

SUPERELEVATED TYPICAL SECTION

NOTE:
RECONSTRUCT THE EXISTING SHOULDER WITH FULL DEPTH TEMPORARY PAVEMENT AT THE FOLLOWING LOCATIONS:

1. STA. 15+00 TO STA. 20+00, 46' LT.

2. STA. 28+00 TO STA. 33+00, 46' LT.

NOTE: LANES ARE 12' DOWNSTREAM OF TAPER. LANES TRANSITION FROM 11' TO 12' WITHIN TAPER. LANES WITHIN WORK-ZONE ARE 11'.

PHASE THREE CURVE DATA

NUMBER	C6	C7	C8	C9
DELTA ANGLE	13°44'09"	13°30'39"	21°38'29"	09°14'29"
DEGREE OF CURVE	5°00'00"	5°00'00"	5°00'00"	5°00'00"
TANGENT	138.02	135.74	219.02	92.61
RADIUS	1145.92	1145.92	1145.92	1145.92
ARC LENGTH	274.72	270.22	432.83	184.83
CHORD LENGTH	274.06	269.59	430.26	184.63

N

HORIZONTAL SCALE IN FEET
0 50 100

CALCULATED D.M.
CHECKED P.R.

MAINTENANCE OF TRAFFIC
PHASE THREE CROSSOVER DETAIL

MOT- XWAY

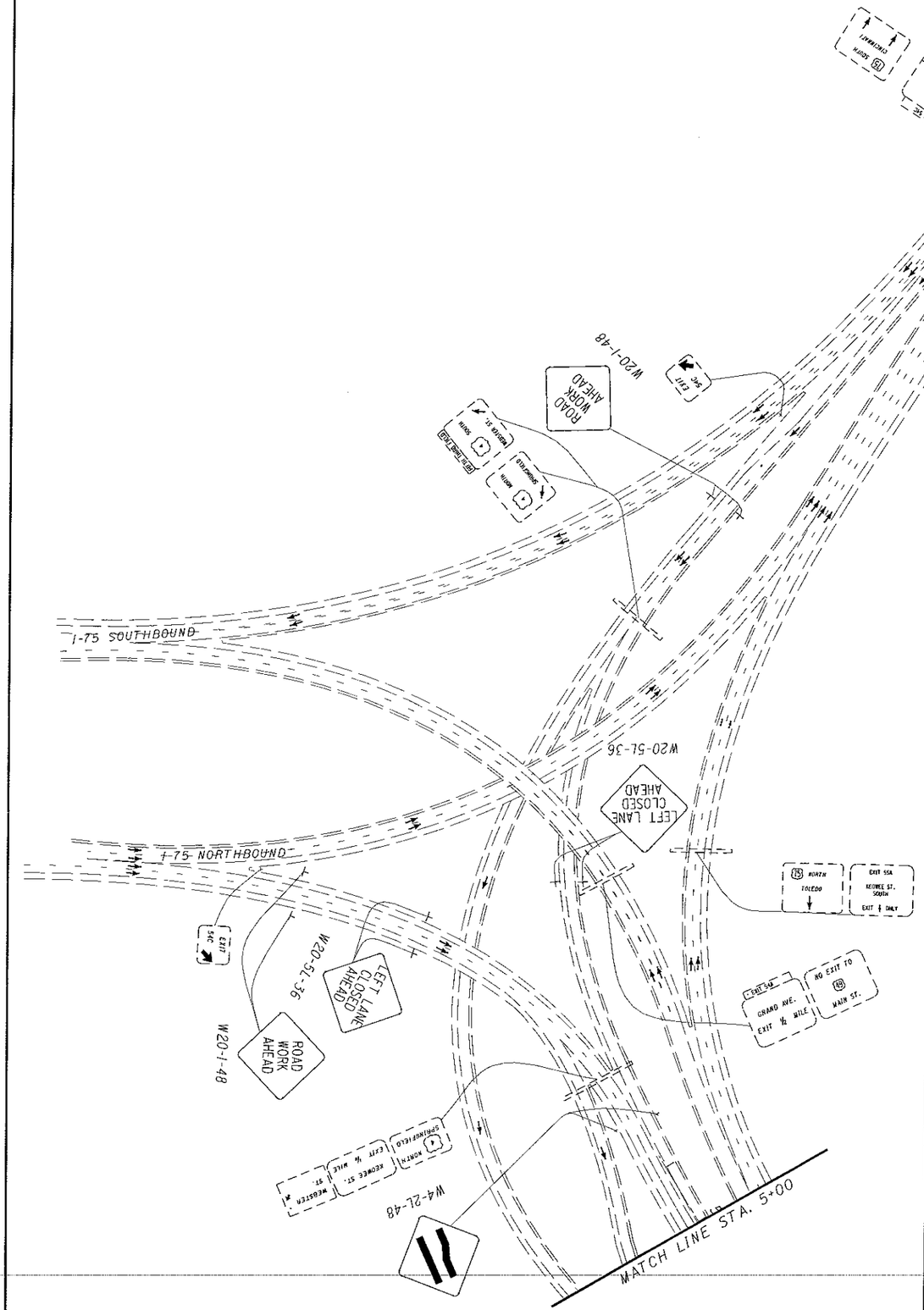

LEGEND

- DRUM
- TEMPORARY EDGE LINE
- TEMPORARY CHANNELIZING LINE
- 50" PORT. CONCRETE BARRIERS
- WORKZONE AREA
- EXISTING SIGNAGE
- PROPOSED SIGNAGE
- TRAFFIC DIRECTION

ESTIMATED PHASE THREE QUANTITIES

REF. NO.	SHEET NO.	STATION FROM	STATION TO	SIDE	614 WORKZONE CROSSOVER LIGHTING		614 FLASHING ARROW PANEL	615 PAVEMENT FOR MAINTAINING TRAFFIC, TYPE A, AS PER PLAN					
					EACH		EACH	SQ. YD.					
FA-1	22	8+40	8+40				1						
FA-2	23	53+20	53+20				1						
TP-1	22	16+00	21+26		1			1988					
TP-2	22	24+88	31+30		1			2426					
TOTALS TO SHEET 10					2		2	4414					

HORIZONTAL SCALE IN FEET 0 100 200

CALCULATED CAM
CHECKED PAR

MAINTENANCE OF TRAFFIC PHASE THREE

MOT- XWAY

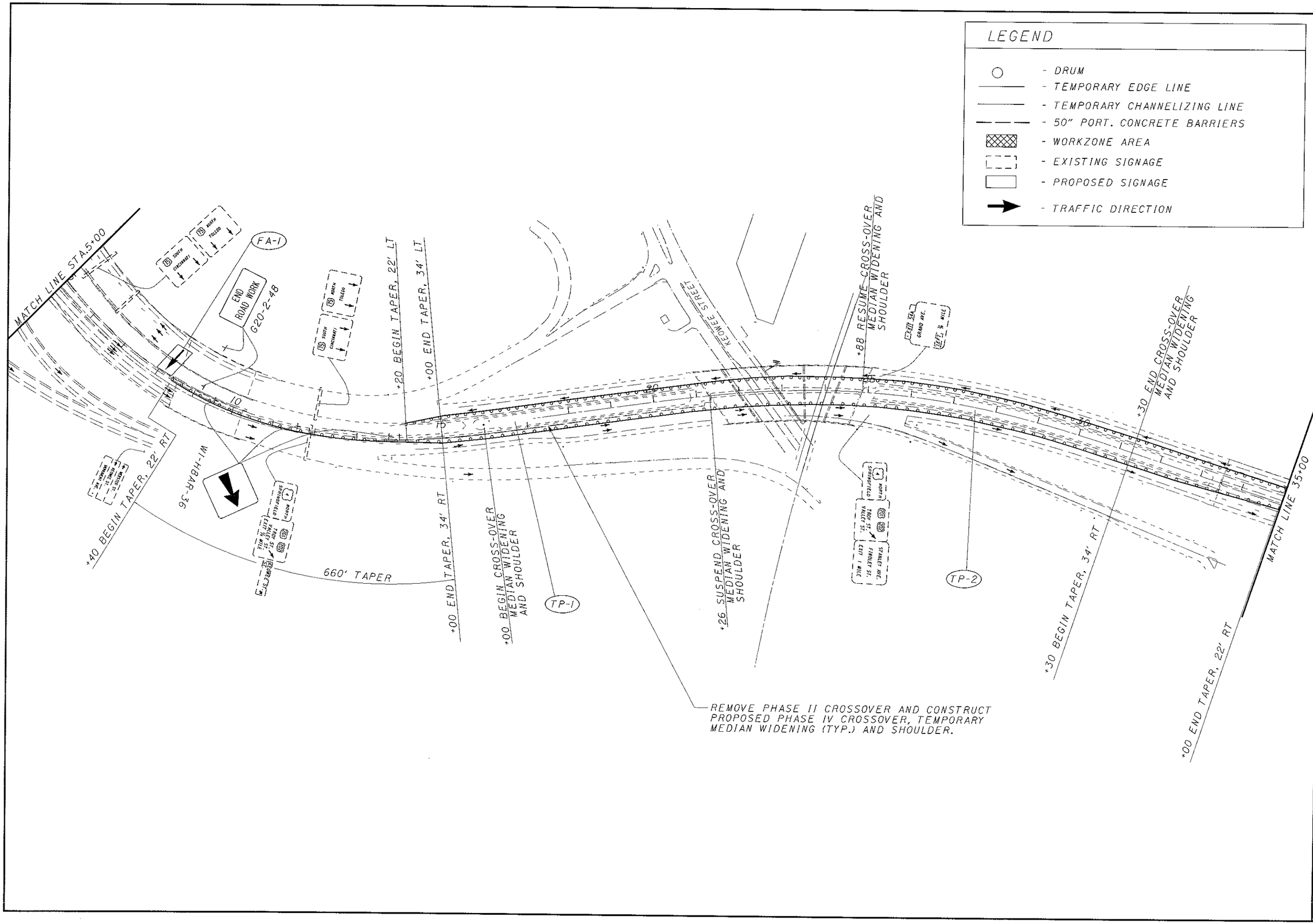

MAINTENANCE OF TRAFFIC PHASE THREE

MOT- XWAY

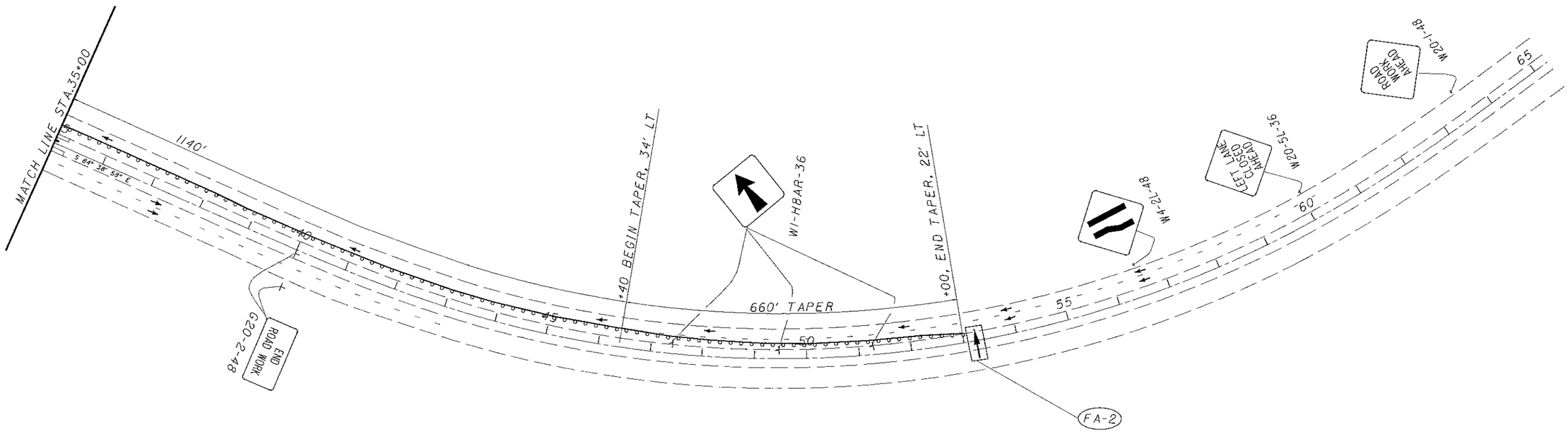

LEGEND

- DRUM
- TEMPORARY EDGE LINE
- TEMPORARY CHANNELIZING LINE
- 50" PORT. CONCRETE BARRIERS
- WORKZONE AREA
- EXISTING SIGNAGE
- PROPOSED SIGNAGE
- TRAFFIC DIRECTION

N

0 100 200
HORIZONTAL SCALE IN FEET

CALCULATED D.M.
CHECKED P.R.

MAINTENANCE OF TRAFFIC
PHASE THREE

MOT- XWAY

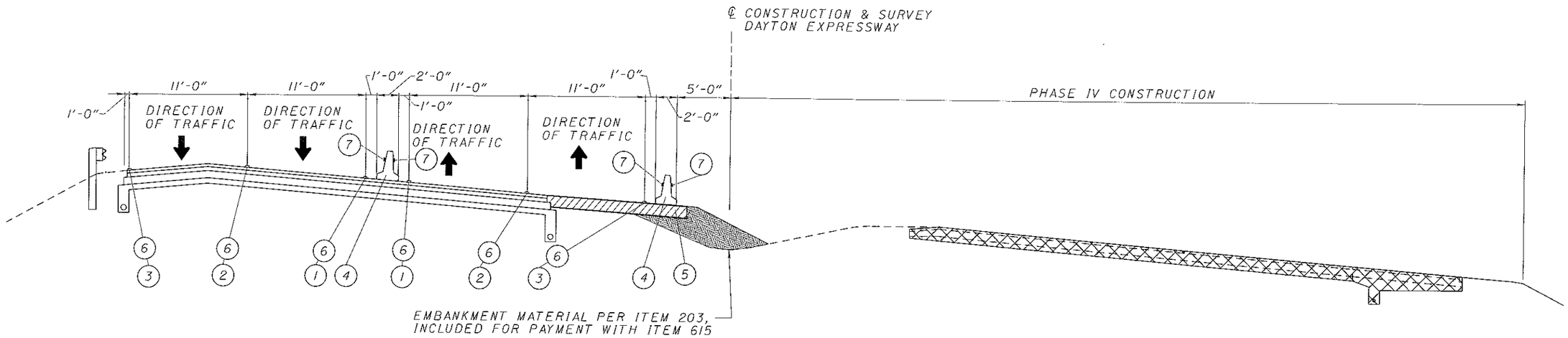

PHASE FOUR - CONSTRUCTION

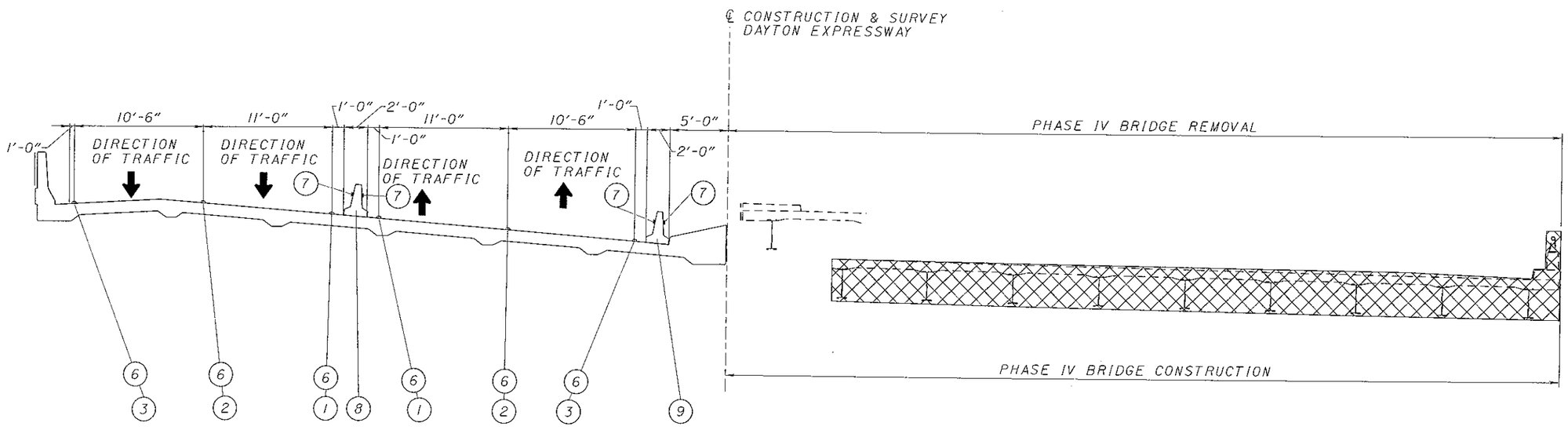

PHASE FOUR - BRIDGE CONSTRUCTION

LEGEND

1. ITEM 614 - WORK ZONE EDGE LINE, CLASS I, TYPE I (YELLOW)
2. ITEM 614 - WORK ZONE CHANNELIZING LINE, CLASS I, TYPE I
3. ITEM 614 - WORK ZONE EDGE LINE, CLASS I, TYPE I (WHITE)
4. ITEM 622 - PORTABLE CONCRETE BARRIER 50" (TYP.)
5. ITEM 615 - TEMPORARY PAVEMENT CLASS A, AS PER PLAN
6. ITEM 614 - WORK ZONE RAISED PAVEMENT MARKERS
7. ITEM 614 - BARRIER REFLECTORS
8. ITEM 622 - PORTABLE CONCRETE BARRIER 50", BRIDGE MOUNTED
9. ITEM 622 - PORTABLE CONCRETE BARRIER 50", BRIDGE MOUNTED (THREE ANCHORS PER 10' PCB UNIT)

- TEMPORARY PAVEMENT
- WORKZONE

MAINTENANCE OF TRAFFIC - PHASE FOUR DETAILS

MOT- XWAY

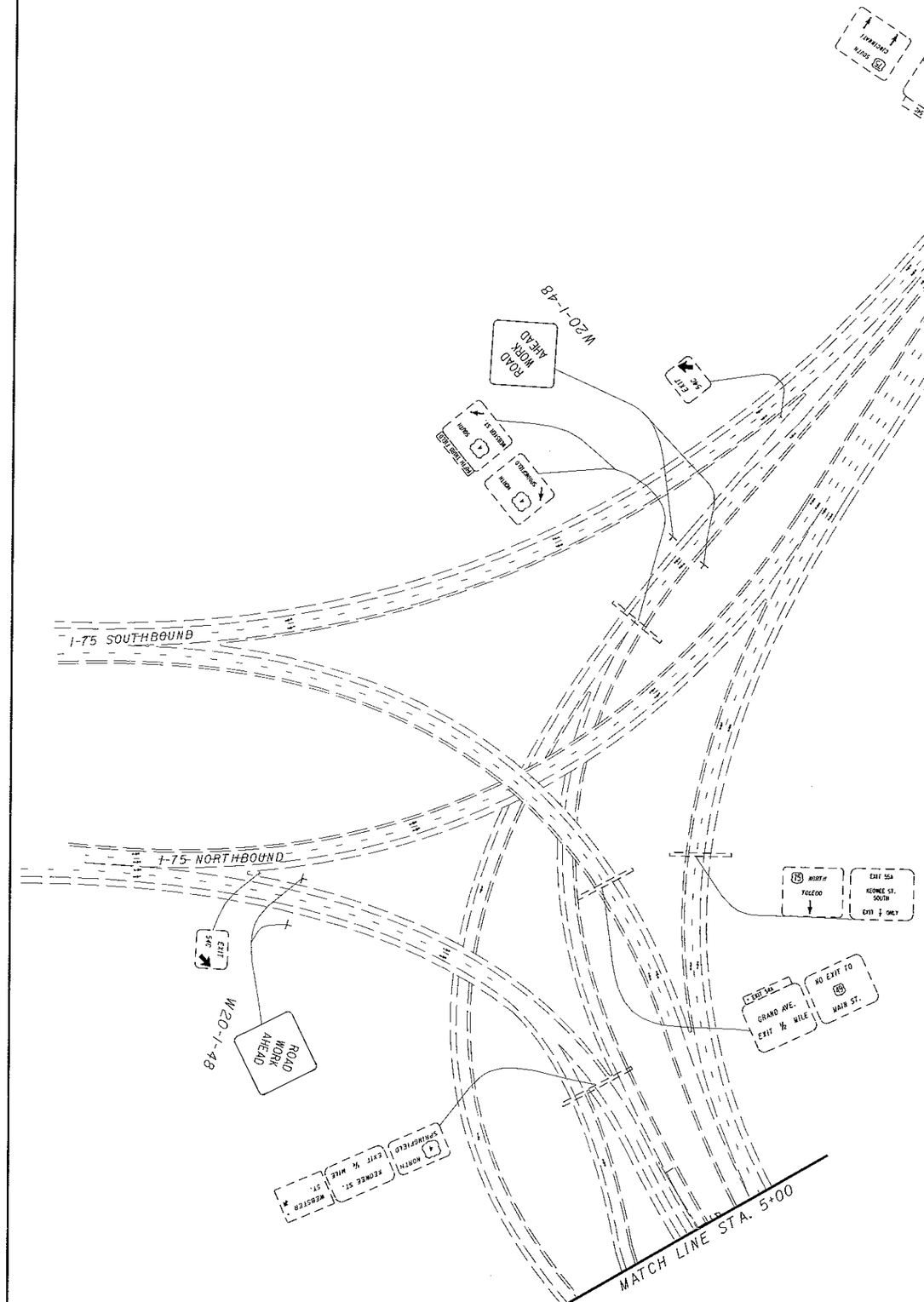

LEGEND

- DRUM
- TEMPORARY EDGE LINE
- TEMPORARY CHANNELIZING LINE
- 50" PORT. CONCRETE BARRIERS
- WORKZONE AREA
- EXISTING SIGNAGE
- PROPOSED SIGNAGE
- TRAFFIC DIRECTION

ESTIMATED QUANTITIES PHASE FOUR

REF. NO.	SHEET NO.	STATION FROM	STATION TO	SIDE		614 WORK ZONE RAISED PAVEMENT MARKER EACH	614 WORK ZONE EDGE LINE, CLASS I MILE	614 WORK ZONE CHANNELIZING LINE, CLASS I FEET	614 BARRIER REFLECTOR TYPE B EACH	614 OBJECT MARKER, ONE WAY EACH	614 OBJECT MARKER, TWO WAY EACH	622 PORTABLE CONCRETE BARRIER, 50", AS PER PLAN FEET	622 PORTABLE CONCRETE BARRIER, 50",BRIDGE MOUNTED FEET
EL 1	26	15+60	31+90	RT		66	0.31						
EL 2	26	15+60	31+90	RT		66	0.31						
EL 3	26	15+00	35+00	LT		32	0.38						
EL 4	26	15+00	35+00	LT		32	0.38						
CH 1	26	15+60	31+90	RT		66		1630					
CH 2	26	15+00	35+00	LT		32		2000					
PCB-1	26	18+00	25+60	RT					31	31		450	310
PCB-2	26	17+50	30+00	LT					124		62	850	400
TOTALS TO SHEET 10						294	1.38	3630	155	31	62	1300	710

HORIZONTAL SCALE IN FEET 0 200 400

CALCULATED CAM
CHECKED PAR

MAINTENANCE OF TRAFFIC PHASE FOUR

MOT- XWAY

LEGEND

- DRUM
- TEMPORARY EDGE LINE
- TEMPORARY CHANNELIZING LINE
- 50" PORT. CONCRETE BARRIERS
- WORKZONE AREA
- PROPOSED PAVEMENT
- EXISTING SIGNAGE
- PROPOSED SIGNAGE
- TRAFFIC DIRECTION

HORIZONTAL SCALE IN FEET 0 100 200

CALCULATED D.M.
CHECKED P.R.

MAINTENANCE OF TRAFFIC PHASE FOUR

MOT- XWAY

LEGEND
- DRUM
- TEMPORARY EDGE LINE
- TEMPORARY CHANNELIZING LINE
- 50" PORT. CONCRETE BARRIERS
- WORKZONE AREA
- EXISTING SIGNAGE
- PROPOSED SIGNAGE
- TRAFFIC DIRECTION
MATCH LINE STA.35+00
350'
350'
MAINTAIN PRESENT LANE OC-53-36
ROAD WORK AHEAD
W20-1-48
END ROAD WORK
G20-2-48
40
45
50
55
60
65
HORIZONTAL SCALE IN FEET
0
100
200
CALCULATED D.M.
CHECKED P.R.
MAINTENANCE OF TRAFFIC
PHASE FOUR
MOT- XWAY
27
120

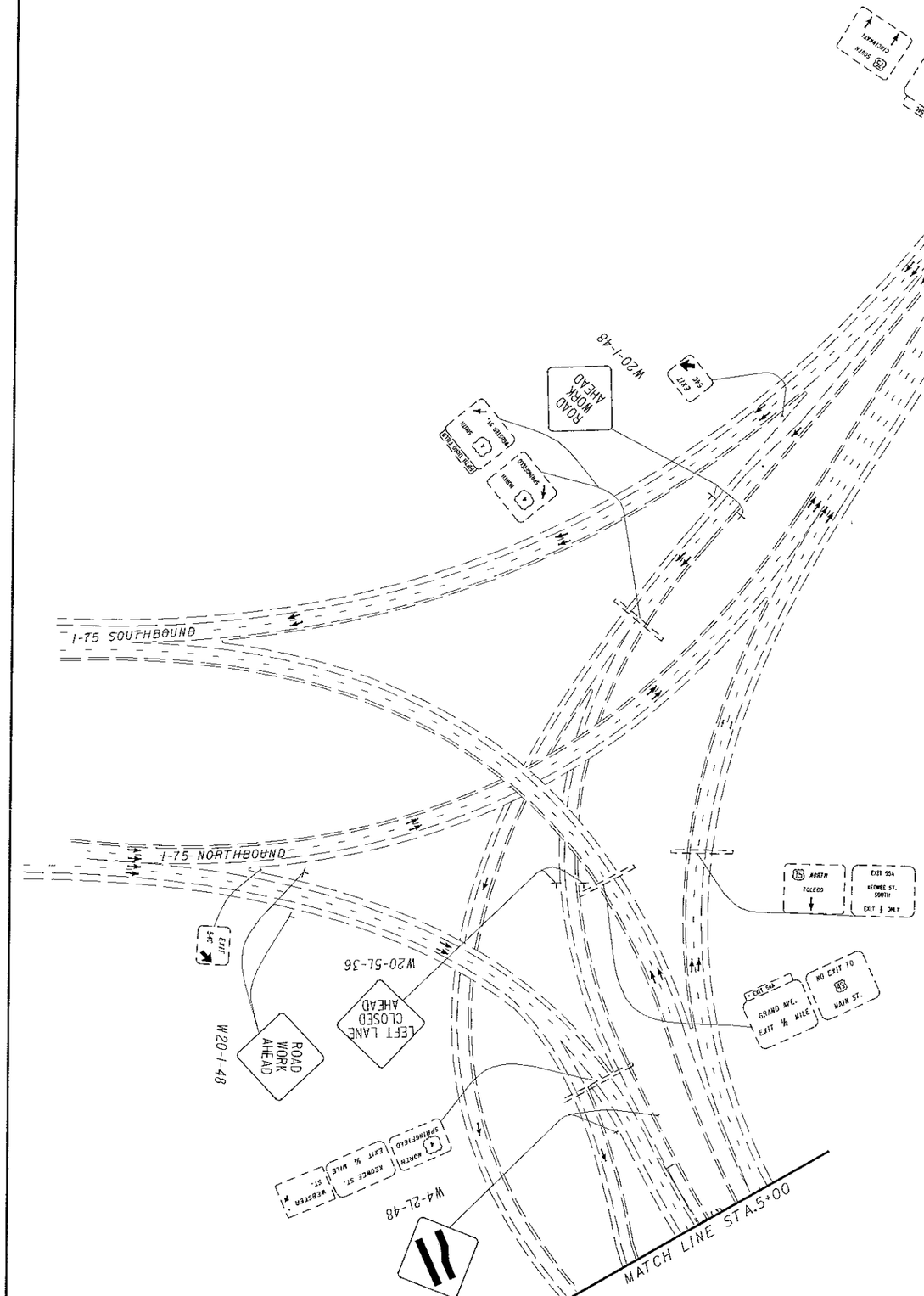

LEGEND

- DRUM
- TEMPORARY EDGE LINE
- TEMPORARY CHANNELIZING LINE
- 50" PORT. CONCRETE BARRIERS
- WORKZONE AREA
- EXISTING SIGNAGE
- PROPOSED SIGNAGE
- TRAFFIC DIRECTION

ESTIMATED QUANTITIES PHASE FIVE

REF. NO.	SHEET NO.	STATION FROM	STATION TO	SIDE	FLASHING ARROW PANEL (EACH)
					614
FA-1	29	8+40	8+40	RT	1
FA-2	30	52+90	52+90	LT	1
TOTALS TO SHEET 10					2

HORIZONTAL SCALE IN FEET 0 100 200

CALCULATED CAM
CHECKED PAR

MAINTENANCE OF TRAFFIC PHASE FIVE

MOT- XWAY

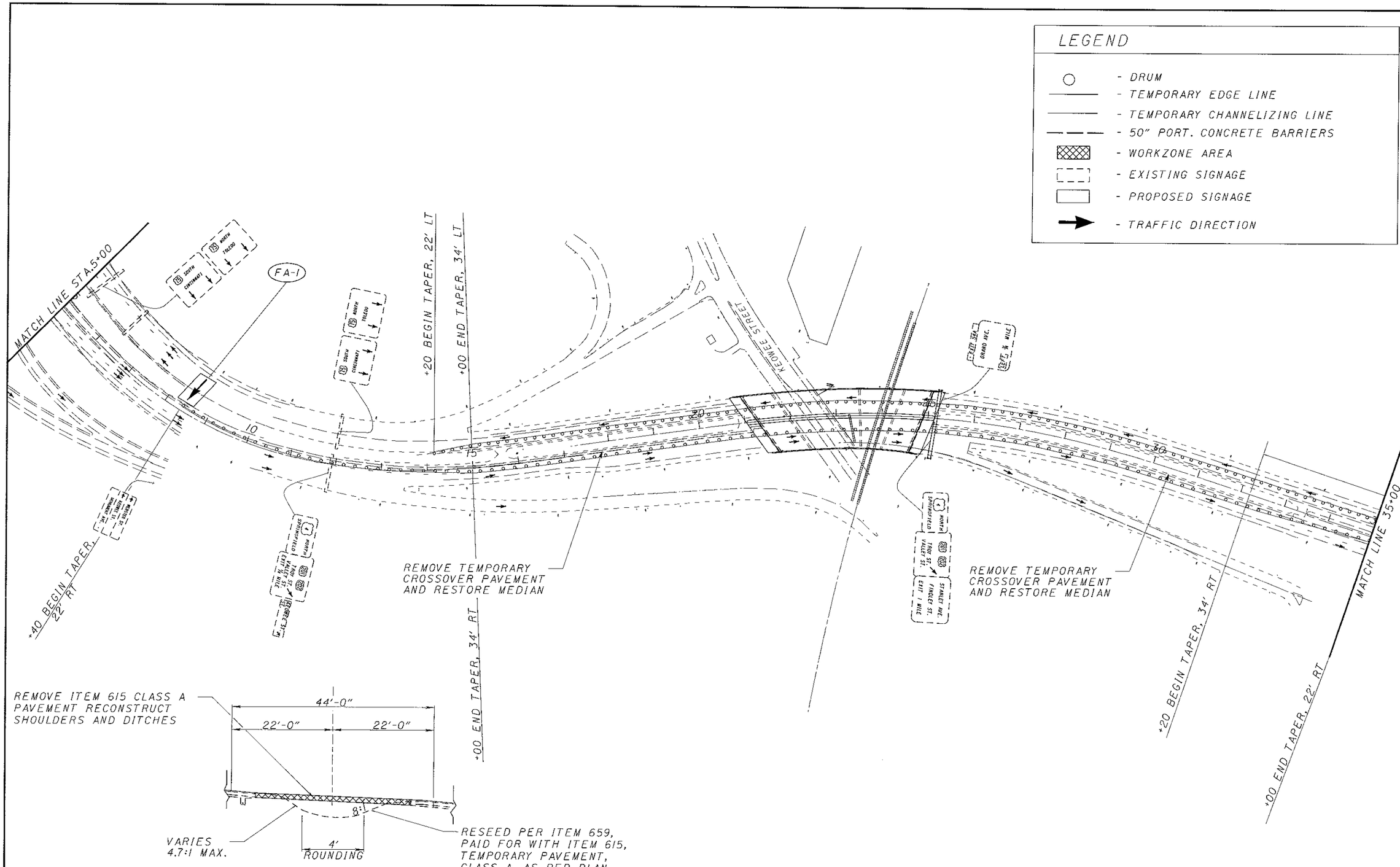
LEGEND
- DRUM
- TEMPORARY EDGE LINE
- TEMPORARY CHANNELIZING LINE
- 50" PORT. CONCRETE BARRIERS
- WORKZONE AREA
- EXISTING SIGNAGE
- PROPOSED SIGNAGE
- TRAFFIC DIRECTION
MATCH LINE STA.5+00
FA-1
+40 BEGIN TAPER, 22' RT
+20 BEGIN TAPER, 22' LT
+00 END TAPER, 34' LT
KEOWEE STREET
REMOVE TEMPORARY CROSSOVER PAVEMENT AND RESTORE MEDIAN
+00 END TAPER, 34' RT
REMOVE TEMPORARY CROSSOVER PAVEMENT AND RESTORE MEDIAN
+20 BEGIN TAPER, 34' RT
+00 END TAPER, 22' RT
MATCH LINE 35+00
REMOVE ITEM 615 CLASS A PAVEMENT RECONSTRUCT SHOULDERS AND DITCHES
44'-0"
22'-0"
22'-0"
8:1
VARIES 4.7:1 MAX.
4' ROUNDING
RESEED PER ITEM 659, PAID FOR WITH ITEM 615, TEMPORARY PAVEMENT, CLASS A, AS PER PLAN
CROSS-OVER RESTORATION
ALL RESTORATION WORK, MATERIALS AND LABOR INCLUDED WITH ITEM 615, TEMPORARY PAVEMENT CLASS A, AS PER PLAN FOR PAYMENT.
HORIZONTAL SCALE IN FEET
0 100 200
CALCULATED D.M.
CHECKED P.R.
MAINTENANCE OF TRAFFIC
PHASE FIVE
MOT- XWAY
29
120

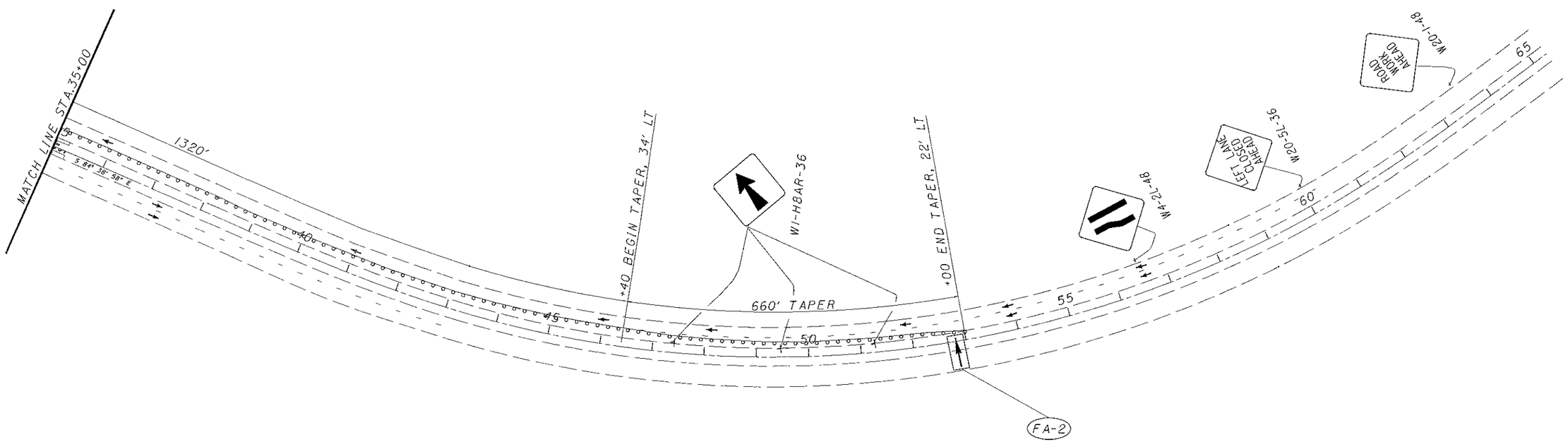

LEGEND

- DRUM
- TEMPORARY EDGE LINE
- TEMPORARY CHANNELIZING LINE
- 50" PORT. CONCRETE BARRIERS
- WORKZONE AREA
- EXISTING SIGNAGE
- PROPOSED SIGNAGE
- TRAFFIC DIRECTION

N

HORIZONTAL SCALE IN FEET
0 100 200

CALCULATED D.M.
CHECKED P.R.

MAINTENANCE OF TRAFFIC
PHASE FIVE

MOT- XWAY

THE FOLLOWING PCMS MESSAGES ARE TO BE POSTED BY THE CONTRACTOR FOURTEEN DAYS (14) DAYS BEFORE WORK IS TO BEGIN.

1	TROY/VALLEY ST. EXIT CLOSED MM/DD	CLOSED FOR 90 DAYS

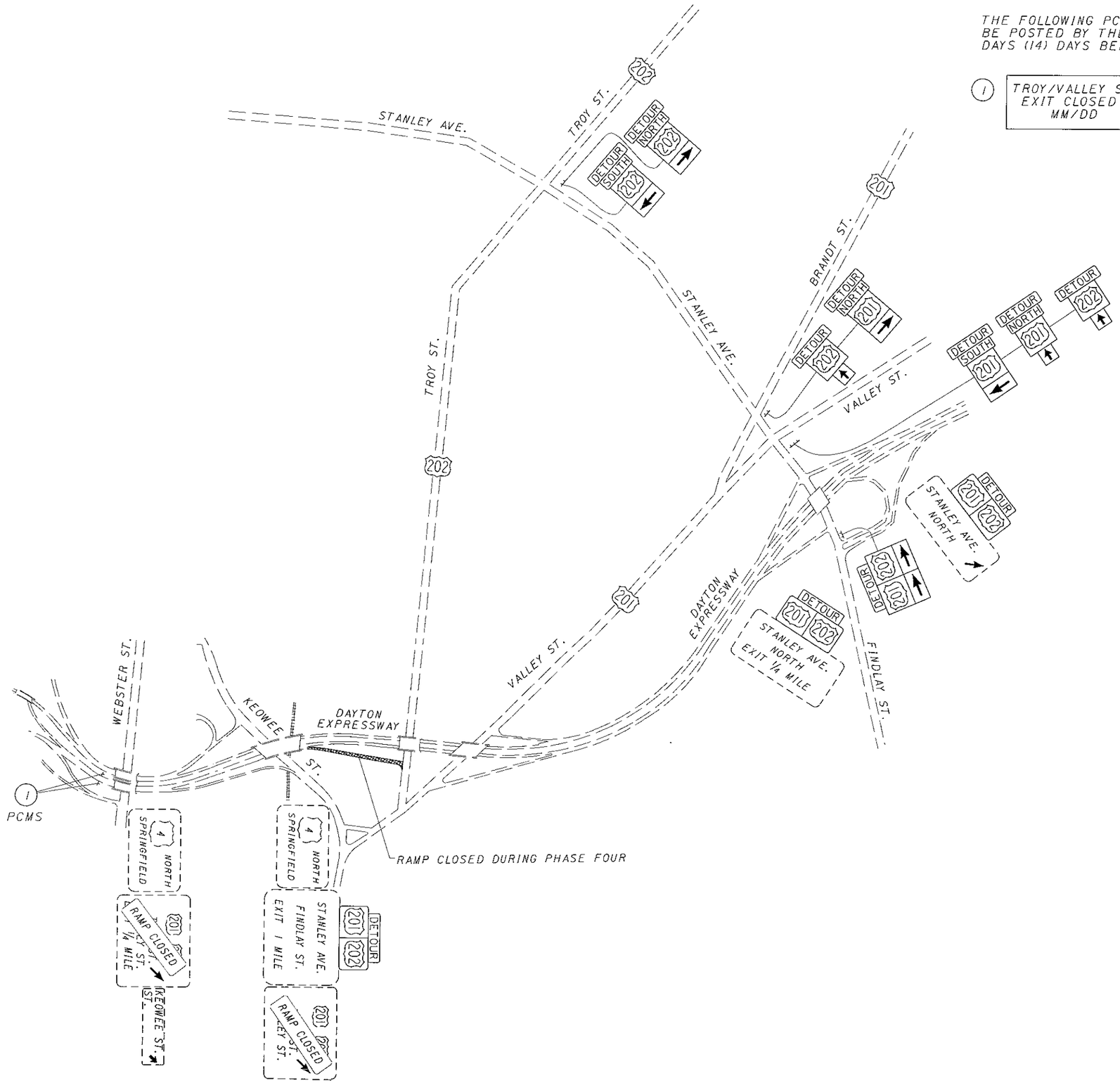

CALCULATED D.M.
CHECKED CAM

MAINTENANCE OF TRAFFIC DETOUR

MOT - XWAY

GENERAL NOTES

1. It is intended that this drawing be used for treatment of drop-offs that develop during construction operations, and that are not otherwise provided for in the construction plans. The suggested treatments are intended for high volume projects that will last at least seven days and have an active work zone 1 mile [1.6 km] or less in length. For guidance on the use of this sheet, see L&D Manual Volume One, Section 500. Where the plans do not provide specific items for labor, equipment, or materials to implement the drop-off treatments specified hereon, they shall be included for payment in the lump sum bid for Item 614 - Maintaining Traffic.
2. While the need for certain advisory signing is noted hereon, it is not intended that this be indicative of all signing that may be required to advise or warn motorists, and all requirements of the Ohio Manual of Uniform Traffic Control Devices (OMUTCD) must be fulfilled.
3. In urban or otherwise heavily developed areas where pedestrians and/or bicyclists may be present in significant numbers, additional signing and protective measures other than those shown hereon may be required.
4. The drop-off treatment selected for use at any given location shall be as appropriate for the prevailing conditions at the site.
5. Where concrete barrier is specified, it shall be in accordance with SCD RM-4.2 and Item 622.
6. When drums are specified for a drop-off condition, a minimum number of four drums shall be used. Spacing shall be as indicated in the plans or as specified in the OMUTCD.
7. When OW-151 (Low Shoulder) signs or OW-155 (Shoulder Drop-Off) signs or OW-171 (Uneven Lanes) signs are required, they shall be placed 750' [230 m] in advance of the condition, on all intersecting entrance ramps within the limits of the condition and immediately beyond all inter secting roadways within the limits of the condition. When the drop-off condition extends more than 0.5 mile [800 m], additional signs should be erected at intervals of 1.0 mile [1600 m] or less.
8. For locations, such as at ramps, lane shifts, lane closures, etc., where traffic is required to negotiate a difference in elevation between pavements, a 3:1 slope treatment similar to the Optional Wedge Treatment shall be provided.
9. Portable concrete barrier shall be placed on the same level as the traffic surface and shall not encroach on lane width(s) designated as the minimum required for traffic use. Where drums are used, and their presence would reduce traveled lane widths to less than 10' [3.0 m], drums may be placed on the opposite level from that of traffic provided the dropoff depth does not exceed 5" [125] and approval is granted by the Project Engineer.
10. Pavement Repairs (or similar work):
    a. Lengths greater than 60' [18 m] - utilize appropriate treatment from Condition I.
    b. Lengths of 60' [18 m] or less - repairs shall be effected in accordance with CMS 255.08. Drums may be used as a separtor adjacent to the traveled lane.

OPTIONAL WEDGE TREATMENT
(MILLING OR RESURFACING)

1. This treatment may be used when permitted for Condition I only.
2. OW-171 sign required.

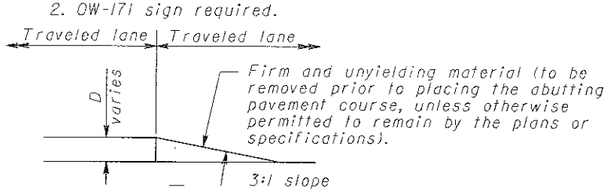

CONDITION I
DROP-OFFS BETWEEN TRAVELED LANES

1. These treatments are to be used for resurfacing, pavement planing, excavation, etc. between or within traveled lanes.

D	Treatment
≤1½" [≤40]	Erect OW-171 sign.
1½"-3" [40-75]	1) Lane closure utilizing drums* as shown below OR 2) Optional Wedge Treatment
>3"-5" [>75-125]	Lane closure utilizing drums as shown below.
>5" [>125]	Lane closure utilizing portable concrete barrier as shown below.

* Cones may be used for daytime only conditions.

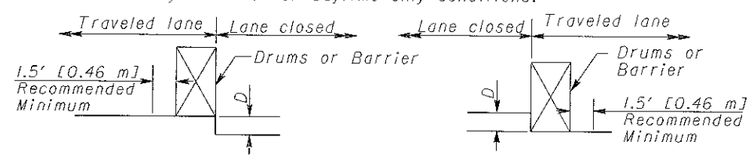

CONDITION II
DROP-OFFS WITHIN GRADED SHOULDER AREA

1. The treatments indicated below are for use in conjunction with resurfacing, planing, or excavations within the graded shoulder area.
2. The graded shoulder area is that flat or gradually sloping area between the edge of a normally traveled lane and the more steeply sloping ditch foreslope or embankment slope. Its surface may be soil or turf, and/or it may be inclusive of a "treated" area (improved with aggregates, asphaltic materials or concrete). For the purpose herein, its maximum width shall be considered to be 12' [3.6 m].

D	Treatment
≤1½" [≤40]	1) Erect OW-155 signs.
>1½"-5" [>40-125]	1) If minimum lane width* requirements can be met, maintain lanes utilizing drums as shown below OR 2) If minimum. lane width* requirements cannot be met, close adjacent lane utilizing drums OR 3) Optional Shoulder Treatment.
>5"-12" [125-305] Daylight only	If minimum lane width* requirements can be met, maintain lanes utilizing drums as shown below.
>5"-24" [>125-610]	1) If minimum lane width* requirements can be met, maintain lanes utilizing portable concrete barrier as shown below. OR 2) If minimum lane width* requirements cannot be met, close adjacent lane utilizing drums.
>24" [>610]	Lane closure utilizing portable concrete barrier as shown below.

* Minimum lane widths shall be 10' [3.0 m] unless otherwise specified in the plans.

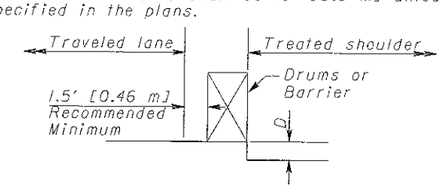

OPTIONAL SHOULDER TREATMENT

1. This treatment may not be used within a bitumunos shoulder where a hot longitudnal joint per CMS 401.15 is required.
2. OW-151 signs required.

CONDITION III
DROP-OFFS BEYOND GRADED SHOULDER OR BACK OF CURB

1. See Note 2 under Condition II.
2. Use Chart A or B below, as applicable.

CHART A

USE FOR: 1. Uncurbed Facilities.
2. Curbed Facilities, where:
   a. Curbs are less than 6" [150] in height.
   b. Curbs are 6" [150] or greater in height and the legal speed is greater than 40 mph [70 km/h].

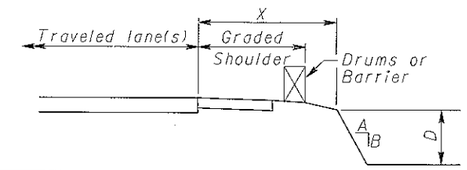

X	D	A/B	Treatment Required	
			Day	Night
0-4' [0-1.2 m]	Any	Any	(a)	(a)
4'-30' [1.2-9.1 m]	Any	3:1 or Flatter	None	None
4'-12' [1.2-3.6 m]	≤3" [≤75]	Steeper than 3:1	None	None
4'-12' [1.2-3.6 m]	>3"-≤12" [>75-≤305]	Steeper than 3:1	Drums	Drums
4'-12' [1.2-3.6 m]	>12" [>305]	Steeper than 3:1	Drums	Barrier
>12'-20' [>3.6-6.1 m]	<12" [<305]	Steeper than 3:1	None	None
>12'-20' [>3.6-6.1 m]	>12"-≤24" [>305-≤610]	Steeper than 3:1	Drums	Drums
>12'-20' [>3.6-6.1 m]	>24" [>610]	Steeper than 3:1	Drums	Barrier
>20'-30' [>6.1-9.1 m]	<24" [<610]	Steeper than 3:1	None	None
>20'-30' [>6.1-9.1 m]	>24" [>610]	Steeper than 3:1	Drums	Barrier
>30' [>9.1 m]	Any	Any	None	None
(a) Use treatment specified under Condition II.				

CHART B

USE FOR: Curbed facilities, where the curb is 6" [150] or greater in height and the legal speed is 40 mph [70 km/h] or less.

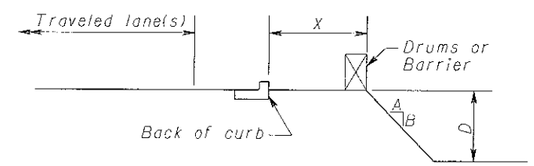

X	D	A/B	Treatment Required	
			Day	Night
0-10' [0-3.0 m]	<12" [<305]	Any	None	Drums
0-10' [0-3.0 m]	>12" [>305]	Any	Drums	Drums
>10' [>3.0 m]	Any	Any	None	None

NOTE: All metric dimensions (in brackets [ ]) are in millimeters unless otherwise noted.

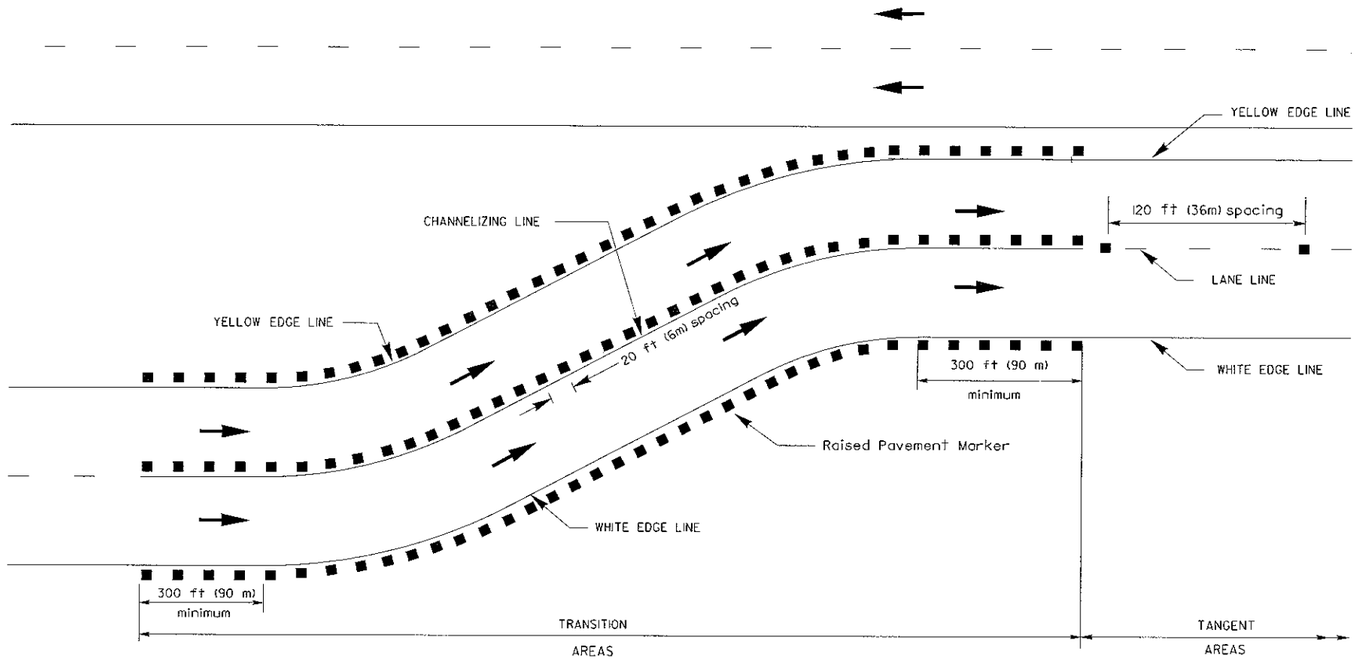

WORK ZONE DELINEATION FOR CROSSOVERS

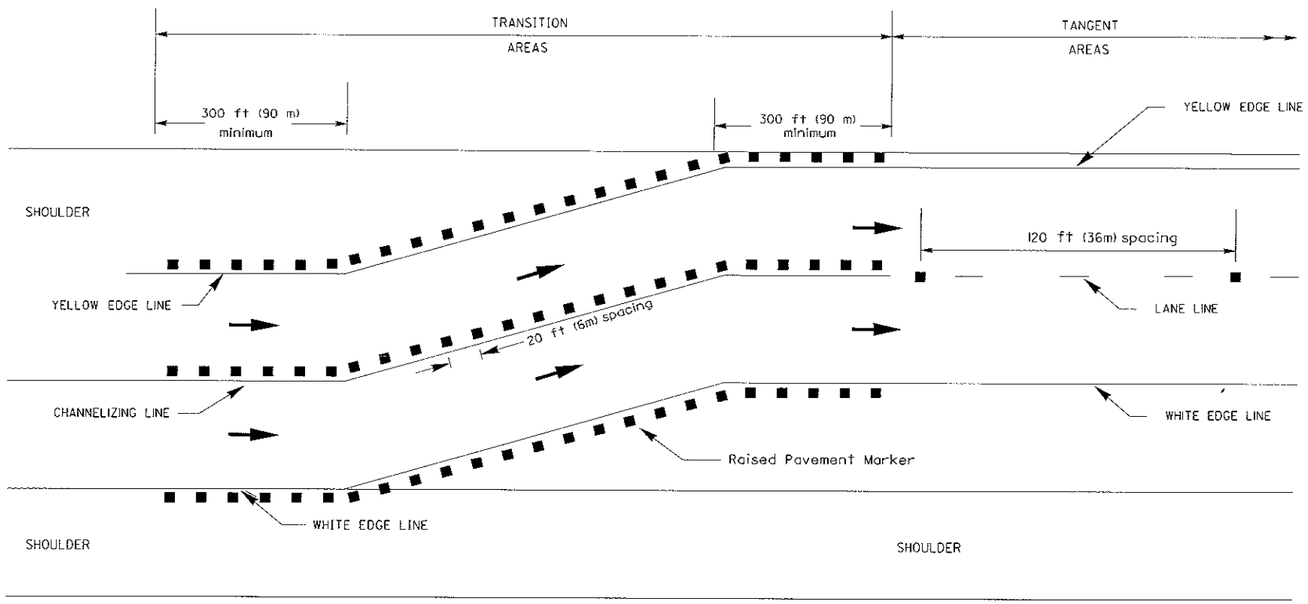

WORK ZONE DELINEATION FOR LANE SHIFTS

LEGEND

- RPM
- DIRECTION OF TRAVEL

NOTES

1. This drawing presents delineation procedures for freeways and expressways on asphalt surfaces. Procedures are provided for transition areas and for tangent areas. The procedures for transition areas apply to crossovers and to lane shifts of 4 feet (1.2 m) or greater. Delineation of transition areas for shifts of less than 4 inches (1.2 m) shall be as per the tangent area delineation.

2. Raised Pavement Markers shall meet the following seasonal specifications:
   a) Raised Pavement Markers in place during the normal construction season may be either 621 Raised Pavement Markers or 614 Work Zone Raised Pavement Markers (WZRPMs). The normal construction season with regard to use of WZRPMs shall be the period from April 1 through October 15.
   b) At locations where it is intended that Raised Pavement Markers will winter over, 621 Raised Pavement Markers shall be provided.
   c) At locations where it is intended that work will continue beyond October 15 but will be completed prior to the beginning of snow-plowing season, 614 WZRPMs may remain in place until such time. Snow-plowing season shall be as specified in the plans. If snow-plowing season is not specified in the plans, it shall be assumed that snow-plowing season runs from October 16 through March 31. If project delays, not the fault of ODOT, cause work to extend into the snow-plowing season, the contractor shall be responsible for replacing WZRPMs with 621 Raised Pavement Markers, as determined by the Engineer, at the contrator's expense.

3. All material furnished shall be listed on the Department's Prequalified Lists.

4. The geometrics of the crossover shall be as shown in the plans. Additional details are provided in Standard Construction Drawing MT-95.70.

5. See Standard Construction Drawings MT-102.10 and MT-102.20 for more details concerning lane shifts.

6. Spacing of raised pavement markers (RPMs) shall be at 20 feet (6 m) center-to-center for all long-line marking within transition areas. Within tangent areas RPMs shall be provided only along the lane lines, spaced at 120 foot (36 m) center-to-center.

7. The RPMs shall be 1-way, facing oncomming traffic, and shall be white or yellow to match the color of the associated line marking.

8. Along the edge lines, the RPMs shall be offset a maximum of 4 inches (100 mm) to the outside of the lines. Along the channelizing lines, the RPMs shall be offset to the left of the lines by no more than 1 inch (25 mm). Along the lane lines the RPMs shall be centered between dashes.

9. The RPMs shall be removed when they are no longer appropriate.

10. Holes resulting from removal of 621 RPMs shall be filled as per 202.10. If removal of the 621 RPMs does not take place immediately after the highlighted alignment becomes invalid, the reflectors within the 621 RPMs shall be removed.

11. Following removal of 621 RPMs resurfacing of the transition shall be performed. The resurfacing shall be performed at the time the surface course is being applied. In preparation for resurfacing, the existing pavement shall be removed to a depth necessary to match the level of the intermediate course of the proposed pavement.

04-21-06

WORK ZONE DELINEATION ON ASPHALT SURFACES

MOT-XWAY

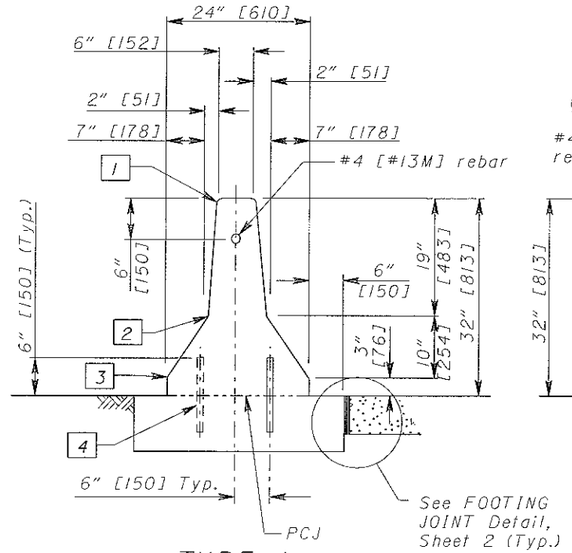

TYPE A

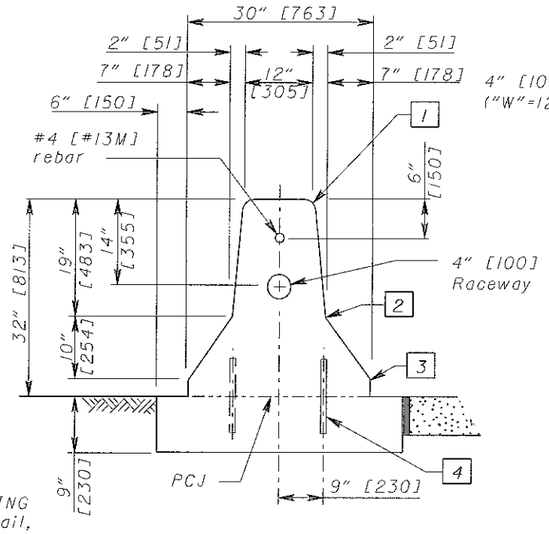

TYPE B

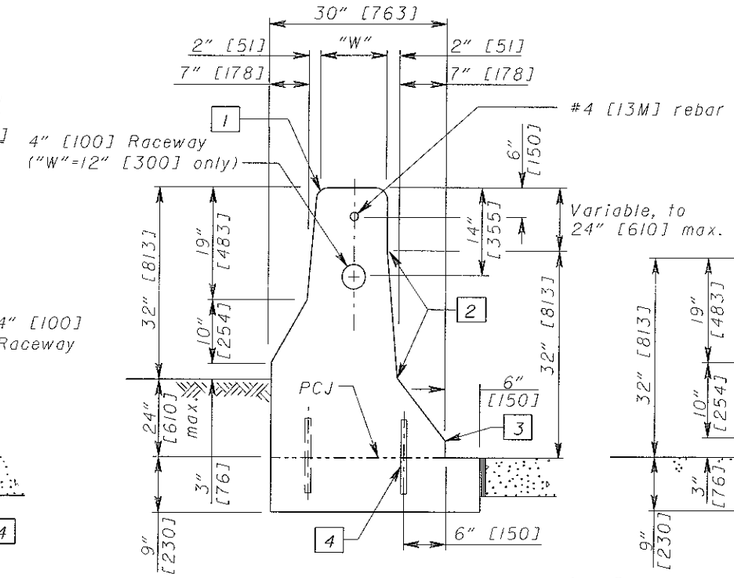

TYPE C

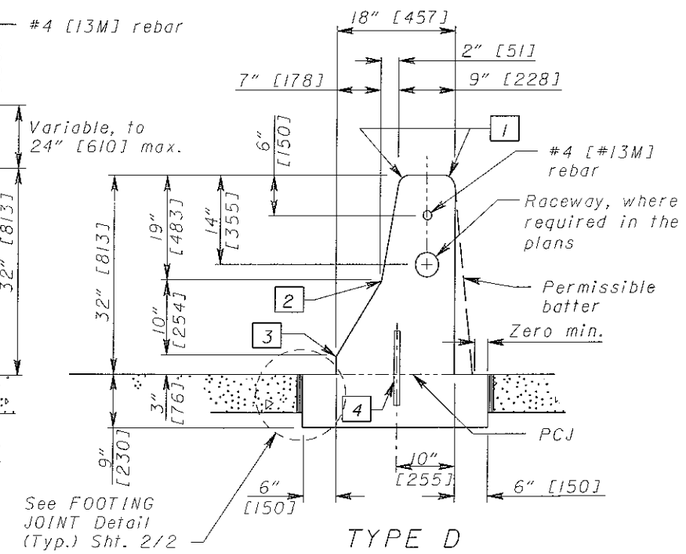

TYPE D

NORMAL SECTIONS

"W" = 6" [152] or 12" [305] barrier width, as specified in the plans.

All metric dimensions (in brackets [ ]) are in millimeters unless otherwise noted.

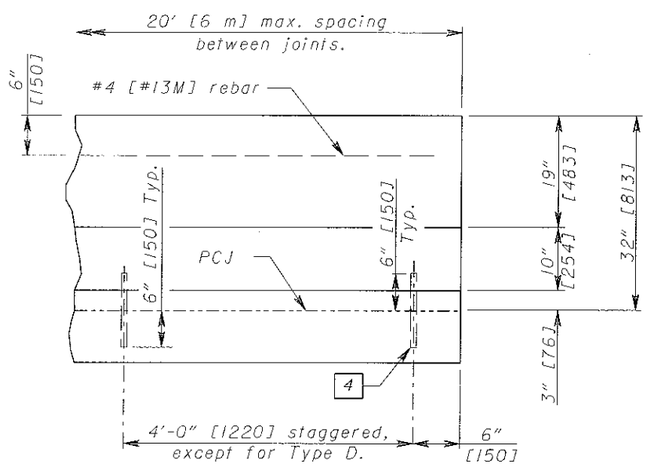

32" [813-mm] BARRIER

BARRIER ELEVATION

NOTES

JOINTS: Unsealed contraction joints spaced at 20' [6 m] maximum shall be constructed throughout the run of Concrete Barrier except that expansion joints shall be used at the center line of and around each bridge pier column and on either side of overhead sign supports, inlets and light pole foundations. If the inlet top is slip formed, the expansion joints adjacent to it may be omitted.

Contraction joints may be constructed with metal inserts inside the forms, preformed full width joint filler, a grooving tool, or by sawing. Inserts, tooled joints, and sawed joints shall have a 3" [75] minimum depth. All joints shall be constructed for the full height of the barrier including the footing. Sawing shall be done as soon as curing will allow, to prevent spalling.

FOOTING JOINTS: The vertical walls between the barrier footing and a concrete pavement or concrete base shall be provided with a sealed joint as shown on Sheet 2. Sealing material shall conform to CMS 705.04.

PCJ = Permissible Construction Joint

MEASUREMENT: Item 622, Concrete Barrier, including transitions and pier sections as detailed on the New Jersey Shape Barrier Transition drawing, is paid for in linear feet [meters] as one of the four types (A, B, C or D) or as Type A1 and B1, (for 50" [1270] high barrier), with appropriate deductions for other items such as:

Item 604 - I-3 Median Inlet	20 Lin Ft. [6 Meters].
Item 625 - Light Pole Foundation or Pullbox	2.5 Lin. Ft. [1 Meter].
Item 630 - Overhead Sign Support Foundation	10 Lin. Ft. [3 Meters].
Item 630 - Barrier Wall Assembly	10 Lin. Ft. [3 Meters].

TRANSITIONS: Linear transitions between the different types of barrier detailed on this Standard Drawing shall occur between contraction joints spaced no closer than 10' [3 m].

RACEWAY: The contractor shall ensure that the electrical raceway is clear of internal obstructions. Cost of the 4" [100] polyvinyl chloride raceway and No. 10 AWG copper-clad or aluminum-clad wire if needed for future installation of circuits shall be included in the unit cost per Linear Foot [Meter] for **Item 622 - Concrete Barrier, Type ____ .**

STATION MARKING: The Station marking shall be impressed in the "green" concrete on both sides at the top of the barrier if specified in the plans. The cost shall be incidental to the unit cost per Linear Foot [Meter] bid for **Item 622 - Concrete Barrier, Type ____ .**

REFLECTORIZATION: Barrier reflectorization shall be installed in accordance with CMS 626.

LEGEND

1. 1" [25] radius or ¾" [19] chamfer.
2. Permissible 10" [250] radius.
3. Permissible 1" [25] radius.
4. #8 [#25M] epoxy coated Deformed Steel Bars, 1'-0" [305] long, spaced 4'-0" [1220] between successive Bars on a staggered pattern except in Type D. Omit Dowels when the top is constructed integrally with the Base.

FORMERLY DRAWING RM-4.3M DATED 10-21-97

4-18-03

NEW JERSEY SHAPE BARRIER (Sheet 1 of 2)

MOT-XWAY

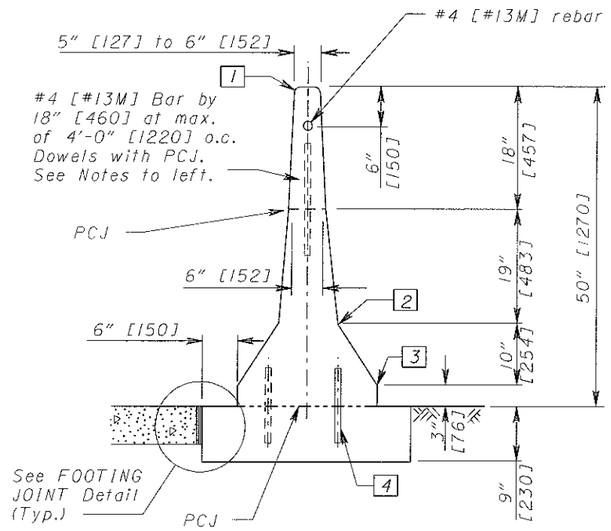

TYPE AI

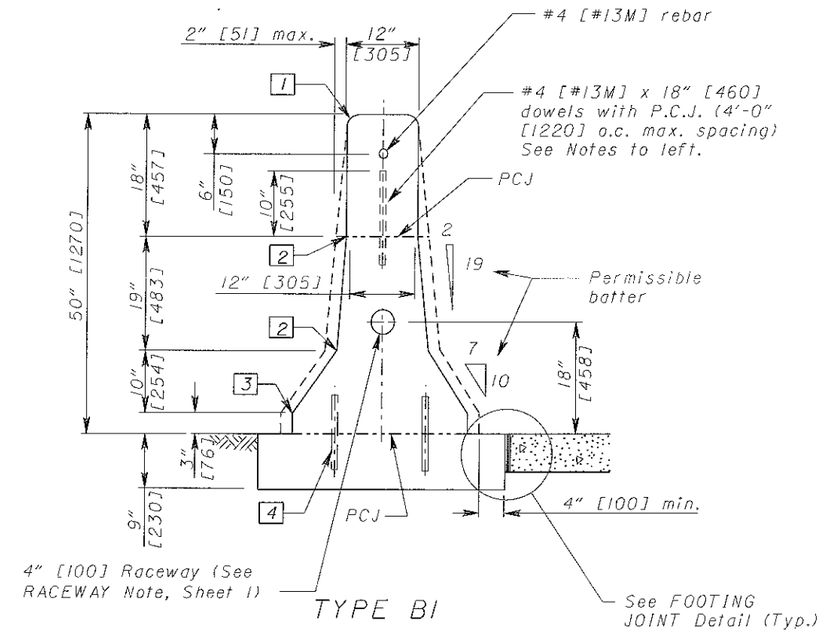

TYPE BI

50" [1270-mm] BARRIERS - TYPICAL SECTIONS

See Type A and Type B Normal Section Details (Sheet 1) for dimensions that are not shown.

All metric dimensions (in brackets [ ]) are in millimeters unless otherwise noted.

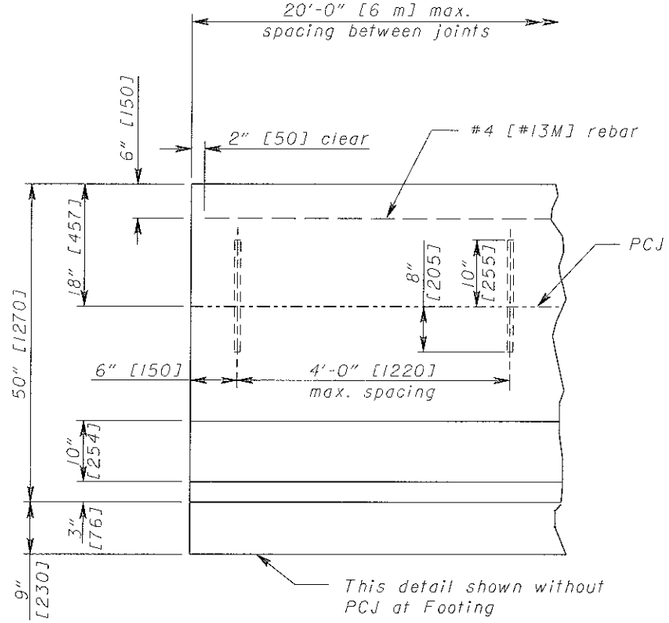

50" [1270-mm] BARRIER

BARRIER ELEVATION

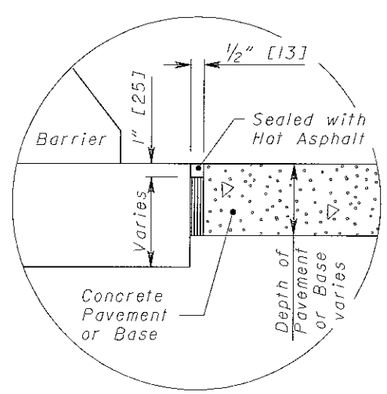

FOOTING JOINT DETAIL

See FOOTING NOTE on Sheet 1.

See FOOTING NOTE on Sheet 1.

NOTES

50" [1270-mm] BARRIER: High barrier shall be built in locations specified in the plans. Construct the lower 32" [813] of the barrier base using the same dimensions as as shown in the corresponding Normal Section on Sheet 1. The upper 18" [457] may be constructed integrally with the bottom, or separately with #4 [#13M] rebar dowels at 4'-0" [1220] maximum spacing.
Start and end dowels 6" [150] from barrier contraction joints.

LEGEND

1. 1" [25] radius or 3/4" [19] chamfer.
2. Permissible 10" [250] radius.
3. Permissible 1" [25] radius.
4. #8 [#25M] epoxy coated deformed Steel Bars, 1'-0" [305] long, spaced 4'-0" [1220] between successive Bars on a staggered pattern except in Type D. Omit Dowels when the top is constructed integrally with the Base.

FORMERLY DRAWING RM-4.3M DATED 10-21-97

4-18-03

NEW JERSEY SHAPE BARRIER (Sheet 2 of 2)

MOT-XWAY

SHEET NUMBER											ITEM	ITEM EXT.	GRAND TOTAL	UNIT	DESCRIPTION	SEE SHEET NO.
4		38	41	42	43	44		48	49							
															ROADWAY	
				250		295					202	22900	545	SQ YD	APPROACH SLAB REMOVED	
				729		2298			350		202	23000	3377	SQ YD	PAVEMENT REMOVED	
				231		581			175		202	38000	987	FT	GUARDRAIL REMOVED	
				2		2					202	47000	4	EACH	BRIDGE TERMINAL ASSEMBLY REMOVED	
				4		1					202	75500	5	EACH	LIGHT POLE FOUNDATION REMOVED	
			699		421			134			203	10000	1254	CU YD	EXCAVATION	
			766		486			65			203	20000	1317	CU YD	EMBANKMENT	
		6472									204	10000	6472	SQ YD	SUBGRADE COMPACTION	
				237.5		563.5			175		606	13000	976	FT	GUARDRAIL, TYPE 5	
						1					606	26100	1	EACH	ANCHOR ASSEMBLY, TYPE E	
				2		2					606	35000	4	EACH	BRIDGE TERMINAL ASSEMBLY, TYPE 1	
				200		20					607	35000	220	FT	FENCE REMOVED AND REBUILT	
															EROSION CONTROL	
			1133		2202			649			659	10000	3984	SQ YD	SEEDING AND MULCHING	
0.54											659	20000	0.54	TON	COMMERCIAL FERTILIZER	
33											659	35000	33	M GAL	WATER	
1											832	10000	1	EACH	STORMWATER POLLUTION PREVENTION PLAN	
20000											832	30000	20000	EACH	EROSION CONTROL	
															DRAINAGE	
				20		10			10		603	00510	40	FT	6" CONDUIT, TYPE F FOR UNDERDRAINS	
				17							603	00900	17	FT	6" CONDUIT, TYPE B	
				2		1			1		604	36600	4	EACH	PRECAST REINFORCED CONCRETE OUTLETS	
				433		1029			175		605	11100	1637	FT	6" SHALLOW PIPE UNDERDRAINS	
															PAVEMENT	
		1010									254	01000	1010	SQ YD	PAVEMENT PLANING, ASPHALT CONCRETE	
		1441									302	46000	1441	CU YD	ASPHALT CONCRETE BASE, PG64-22	
		1441									304	20000	1441	CU YD	AGGREGATE BASE	
		356									407	10000	356	GALLON	TACK COAT	
		261									407	14000	261	GALLON	TACK COAT FOR INTERMEDIATE COURSE	
		2591									408	10000	2591	SQ YD	PRIME COAT	
		319									448	46050	319	CU YD	ASPHALT CONCRETE INTERMEDIATE COURSE, TYPE 1, PG64-22	
		229									448	47020	229	CU YD	ASPHALT CONCRETE SURFACE COURSE, TYPE 1, PG64-22	

CALCULATED CAM
CHECKED PAR

GENERAL SUMMARY

MOT-XWAY

SHEET NUMBER 7	8	9	10			39		42	44		ITEM	ITEM EXT.	GRAND TOTAL	UNIT	DESCRIPTION	SEE SHEET NO.
															LIGHTING/UTILITIES	
								12	6		625	00501	18	EACH	CONNECTOR KIT, TYPE II, AS PER PLAN	5
								24	6		625	01500	30	EACH	CABLE SPLICING KIT	
								4	2		625	14201	6	EACH	LIGHT POLE FOUNDATION, 24" X 10' DEEP, AS PER PLAN	5
								450	315		625	23200	765	FT	No. 4 AWG 5000 VOLT DISTRIBUTION CABLE	
								519	275		625	24320	794	FT	1½" DUCT CABLE WITH THREE No. 4 AWG 5000 VOLT CABLES	
								879	555		625	25400	1434	FT	CONDUIT, 2", 725.04	
								416	260		625	29000	676	FT	TRENCH	
								2	1		625	29920	3	EACH	STRUCTURE JUNCTION BOX	
								8	2		625	30500	10	EACH	PULL BOX, 725.09, 18"	
								5	2		625	31510	7	EACH	PULL BOX REMOVED	
								4	2		625	32000	6	EACH	GROUND ROD	
								1	1		625	33000	2	EACH	STRUCTURE GROUNDING SYSTEM	
								6	3		625	35011	9	EACH	REMOVE AND REERECT EXISTING LIGHT POLE, AS PER PLAN	5
											SPECIAL	62540000	LUMP		MAINTAIN EXISTING LIGHTING	
															TRAFFIC CONTROL	
						85					621	00100	85	EACH	RPM	
						19					626	00100	19	EACH	BARRIER REFLECTOR, TYPE A	
						11					626	00200	11	EACH	BARRIER REFLECTOR, TYPE B	
						1					630	21200	1	EACH	REMOVAL OF OVERHEAD SIGN SUPPORT AND RE-ERECTION, TYPE TC 15.1	5
						2					630	84510	2	EACH	RIGID OVERHEAD SIGN SUPPORT FOUNDATION	
						4					630	87100	4	EACH	REMOVAL OF OVERHEAD MOUNTED SIGN AND REERECTION	
						2.06					646	10000	2.06	MILE	EDGE LINE	
						1.11					646	10100	1.11	MILE	LANE LINE	
						750					646	10300	750	FT	CHANNELIZING LINE	
						373					646	20500	373	FT	DOTTED LINE	
															FOR STRUCTURE QUANTITIES (20' AND OVER) SEE SHEET No.	
															MAINTENANCE OF TRAFFIC	
			2								614	12338	2	EACH	WORK ZONE IMPACT ATTENUATOR (BIDIRECTIONAL)	
			LUMP								614	12420	LUMP		DETOUR SIGNING	
		6									614	12470	6	EACH	WORK ZONE SPEED LIMIT SIGN	
150											614	12500	150	EACH	REPLACEMENT SIGN	
25											614	12600	25	EACH	REPLACEMENT DRUM	
			4								614	12756	4	EACH	WORK ZONE CROSSOVER LIGHTING SYSTEM	
			7								SPECIAL	61412760	7	EACH	FLASHING ARROW PANEL	
			516								614	12801	516	EACH	WORK ZONE RAISED PAVEMENT MARKER, AS PER PLAN	8
			313								614	13300	313	EACH	BARRIER REFLECTOR, TYPE B	7
			69								614	13350	69	EACH	OBJECT MARKER, ONE WAY	7
			122								614	13360	122	EACH	OBJECT MARKER, TWO WAY	7
	2										614	18501	2	EACH	PORTABLE CHANGEABLE MESSAGE SIGN, AS PER PLAN	8
			2.67								614	22000	2.67	MILE	WORK ZONE EDGE LINE, CLASS I	
			8050								614	23000	8050	FT	WORK ZONE CHANNELIZING LINE, CLASS I	
			8212								615	20001	8212	SQ YD	PAVEMENT FOR MAINTAINING TRAFFIC, CLASS A, AS PER PLAN	29
			2525								622	40031	2525	FT	PORTABLE CONCRETE BARRIER, 50", AS PER PLAN	7
			1410								622	40046	1410	FT	PORTABLE CONCRETE BARRIER, 50", BRIDGE MOUNTED	
											614	11000	LUMP		MAINTAINING TRAFFIC	
											619	16020	24	MONTH	FIELD OFFICE, TYPE C	
											623	10000	LUMP		CONSTRUCTION LAYOUT STAKES	
											624	10000	LUMP		MOBILIZATION	
											SPECIAL	100E0300	LUMP		SPECIAL - PREMIUM ON RAILROADS' PROTECTIVE PUBLIC LIABILITY AND PROPERTY DAMAGE LIABILITY INSURANCE	

CALCULATED CAM
CHECKED PAR

GENERAL SUMMARY

MOT-XWAY

STATION TO STATION		SIDE	LENGTH L, (FT.)	AVERAGE WIDTH W, (FT.)	DEPTH D, (FT.)	SURFACE AREA A (SQ.FT.) FROM CADD	VOLUME L x W x D		204 SUBGRADE COMPACTION	254 PAVEMENT PLANING, ASPHALT CONCRETE	302 8" ASPHALT CONCRETE BASE	304 8" AGGREGATE BASE	407 TACK COAT (0.075 GAL./SQ. YD.)	407 TACK COAT INTERMEDIATE COURSE (0.04 GAL./SQ. YD.)	408 PRIME COAT (0.4 GAL./SQ. YD.)	448 1-1/4" ASPHALT CONCRETE SURFACE COURSE, TYPE I PG-64-22	448 1-3/4" ASPHALT CONCRETE INTERMEDIATE COURSE, TYPE I PG-64-22					
FROM	TO		FEET	FEET	FEET	SQ. FT.	CU. FT.		SQ.YD.	SQ.YD.	CU.YD.	CU.YD.	GALLON	GALLON	GALLON	CU.YD.	CU.YD.					
DAYTON XWAY																						
19+50	20+00	L	50	39		1950				217												
19+50	20+00	R	50	51		2550				284												
20+00	21+61	L	150	39		5850			650		145	145	49	26	260	23	32					
20+00	22+09	R	194	51		9894			1100		245	245	83	44	440	39	54					
22+60	23+80	L	93	39		3627			403		90	90	31	17	162	14	20					
23+00	23+60	R	42	51		2142			238		53	53	18	10	96	9	12					
24+62	28+00	L	335	39		13065			1452		323	323	109	58	581	51	71					
24+46	28+00	R	320	39		12480			1387		309	309	104	56	555	49	68					
28+00	28+50	L	50	39		1950				217												
28+00	28+50	R	50	39		1950				217												
RAMP D																						
1+31	2+61	R	130	41.5		5395			600		133	133	45	24	240	21	30					
2+61	4+75	R	214	27		5778			642		143	143	49	26	257	23	32					
4+75	5+00	R	25	27		675				75												
TOTALS CARRIED TO GENERAL SUMMARY									6472	1010	1441	1441	356	261	2591	229	319					

CALCULATED PAR
CHECKED CAM

PAVEMENT CALCULATIONS

MOT-XWAY

SHEET NO.		LOCATION	STATION FROM	STATION TO	SIDE		646 LANE LINE MILE	646 EDGE LINE MILE	646 CHANNELIZING LINE FEET	646 DOTTED LINE FEET	621 RAISED PAVEMENT MARKERS EACH	626 BARRIER REFLECTOR TYPE, A EACH	626 BARRIER REFLECTOR, TYPE B EACH		630 REMOVAL OF OVERHEAD SIGN SUPPORT AND RE-ERECTION, TYPE TC 15.115 EACH	630 RIGID OVERHEAD SIGN SUPPORT FOUNDATION EACH	630 REMOVAL OF OVERHEAD MOUNTED SIGN AND REERECTION EACH
58/59	EL-1	DAYTON EXPRESSWAY	9+40	13+50	RT			0.09									
58/59	EL-2	DAYTON EXPRESSWAY	9+40	36+60	RT			0.52									
58/59	EL-3	DAYTON EXPRESSWAY	13+50	28+50	RT			0.29									
58/59	EL-4	DAYTON EXPRESSWAY	15+00	40+00	LT			0.48									
58/59	EL-5	DAYTON EXPRESSWAY	17+16.21	40+00	LT			0.43									
58/59	LL-1	DAYTON EXPRESSWAY	9+40	11+75	RT		0.05										
58/59	LL-2	DAYTON EXPRESSWAY	9+40	36+60	RT		0.52										
58/59	LL-3	DAYTON EXPRESSWAY	15+00	40+00	LT		0.48										
58/59	CH-1	DAYTON EXPRESSWAY	11+75	13+50	RT				175								
58/59	CH-2	DAYTON EXPRESSWAY	11+75	13+50	RT				175								
58/59	DL-1	DAYTON EXPRESSWAY	17+27	21+00	RT					373							
58/59	RPM-1	DAYTON EXPRESSWAY	9+40	36+60	RT						34						
58/59	RPM-2	DAYTON EXPRESSWAY	11+75	13+50	RT						9						
58/59	RPM-3	DAYTON EXPRESSWAY	15+00	40+00	LT						32						
58/59	EL-6	DAYTON EXPRESSWAY	26+00	36+60	RT			0.20									
58/59	EL-7	DAYTON EXPRESSWAY	26+00	28+50	RT			0.05									
58	S1	DAYTON EXPRESSWAY	24+10		LT/RT										1	2	
58	S2	DAYTON EXPRESSWAY	25+10		RT												1
58	S3	DAYTON EXPRESSWAY	27+10		RT												1
58	S4	DAYTON EXPRESSWAY	25+10		RT												1
58	S5	DAYTON EXPRESSWAY	25+10		LT												1
58/59	LL-4	DAYTON EXPRESSWAY	21+00	24+00	RT		0.06										
58/59	CH-3	DAYTON EXPRESSWAY	24+00	26+00	LT				200								
58/59	CH-4	DAYTON EXPRESSWAY	24+00	26+00	LT				200								
58/59	RPM-4	DAYTON EXPRESSWAY	24+00	26+00	RT						10						
41/43	BR-1	DAYTON EXPRESSWAY	21+52	24+78	RT												
41/43	BR-2	DAYTON EXPRESSWAY	20+78	25+23	LT								5				
													6				
41	GR-1	DAYTON EXPRESSWAY	20+00	21+50.36	RT							3					
41	GR-2	DAYTON EXPRESSWAY	20+00	20+77.23	LT							2					
43	GR-3	DAYTON EXPRESSWAY	24+78.47	26+10	RT							3					
43	GR-4	DAYTON EXPRESSWAY	25+23.02	28+00	LT												
43	GR-5	DAYTON EXPRESSWAY	26+34.15	28+00	RT							4					
												3					
50	GR-6	RAMP D	3+00	4+75	RT												
												4					
TOTALS CARRIED TO GENERAL SUMMARY							1.11	2.06	750	373	85	19	11		1	2	4

CALCULATED CAM
CHECKED PAR

PAVEMENT MARKING AND SIGNAGE SUBSUMMARY

MOT-XWAY

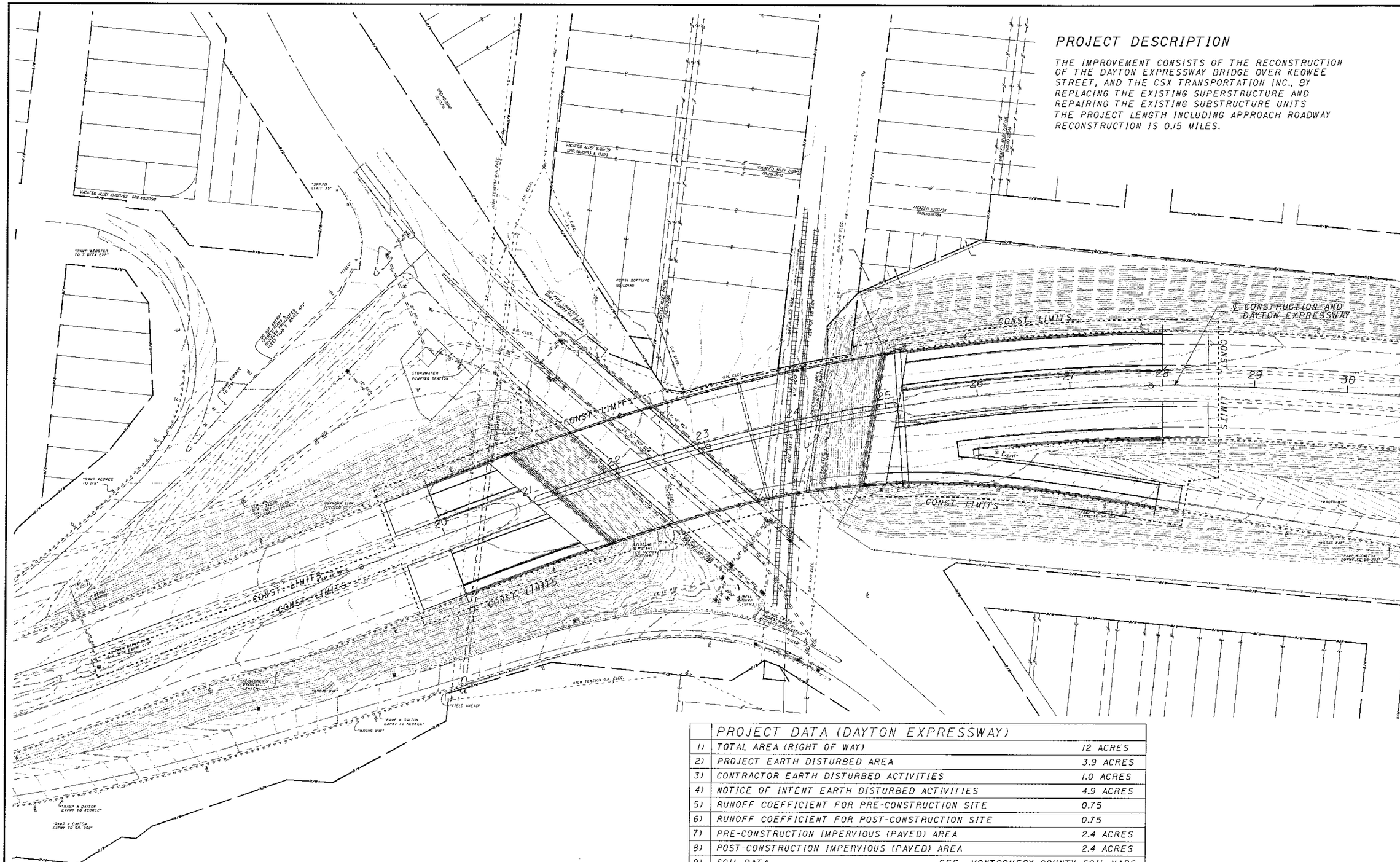

PROJECT DESCRIPTION

THE IMPROVEMENT CONSISTS OF THE RECONSTRUCTION OF THE DAYTON EXPRESSWAY BRIDGE OVER KEOWEE STREET, AND THE CSX TRANSPORTATION INC., BY REPLACING THE EXISTING SUPERSTRUCTURE AND REPAIRING THE EXISTING SUBSTRUCTURE UNITS THE PROJECT LENGTH INCLUDING APPROACH ROADWAY RECONSTRUCTION IS 0.15 MILES.

	PROJECT DATA (DAYTON EXPRESSWAY)	
1)	TOTAL AREA (RIGHT OF WAY)	12 ACRES
2)	PROJECT EARTH DISTURBED AREA	3.9 ACRES
3)	CONTRACTOR EARTH DISTURBED ACTIVITIES	1.0 ACRES
4)	NOTICE OF INTENT EARTH DISTURBED ACTIVITIES	4.9 ACRES
5)	RUNOFF COEFFICIENT FOR PRE-CONSTRUCTION SITE	0.75
6)	RUNOFF COEFFICIENT FOR POST-CONSTRUCTION SITE	0.75
7)	PRE-CONSTRUCTION IMPERVIOUS (PAVED) AREA	2.4 ACRES
8)	POST-CONSTRUCTION IMPERVIOUS (PAVED) AREA	2.4 ACRES
9)	SOIL DATA	SEE MONTGOMERY COUNTY SOIL MAPS
10)	IMMEDIATE RECEIVING WATER(S)	MAD RIVER
11)	SUBSEQUENT RECEIVING WATER(S)	GREAT MIAMI
12)	LONGITUDE: 84°10'44" W, LATITUDE: 39°46'18" N	
13)	USGS QUADRANT:	DAYTON NORTH
14)	TOTAL MAXIMUM DAILY LOAD WATER BODY	NA
15)	CURRENT LAND USE	COMMERICAL/RESIDENTIAL (UBRAN)

HORIZONTAL SCALE IN FEET
0 50 100

CALCULATED CAM
CHECKED PAR

PROJECT SITE PLAN

MOT-XWAY

BEGIN WORK STA. 19+50.00

BEGIN PROJECT STA. 20+00.00

FIRST GUARDRAIL POST STA. 20+70.75

REMOVE EX. PULL BOX

+32, 65' LT REMOVE & REERECT EX. LIGHT POLE

+20, 65' LT PR. PULL BOX CONNECT TO EX. CIRCUIT A

UNKNOWN SIGN (FOLDED UP)

10'-0" SHOULDER

5'-0" SHOULDER

N 68° 48' 29" E

GRASS MEDIAN

BEGIN APPROACH SLAB STA. 21+01.96

END APPROACH SLAB STA. 21+26.96

TS Sta. 19+03.22

CONST. LIMITS

O.H. ELECTRIC

EX. 24" WATER

EX. 10" WATER

EX. 60" CASING PIPE

+85, 65' LT PR. PULL BOX

EX. 30" RCP STM TO REMAIN

EX. 12" RCP

EX. 12" RCP TO REMAIN

℄ SURVEY KEOWEE STREET

SEE L-1

℄ DAYTON - XWAY STA. 22+43.42
℄ KEOWEE STREET STA 22+37.59

22-91.71 64.17' LT

23-94.36 64.17' LT

R/W

O.H. ELEC.

℄ CONSTRUCTION DAYTON XWAY & ℄ SURVEY

TO BE RELOCATED BY OWNER

O.H. ELEC. (UNDER BRIDGE)

EX. 8" C.I.P. FROM DEWATERING PUMP TO REMAIN

CS Sta. 23+03.22

TO REMAIN

MATCHLINE STA. 24+00.00

MILE POST 60

13209

SEE L-2

CS Sta. 0+00 AWS

EX. 12" RCP

EXISTING 8"X12"X6" TEE (APROX. LOCATION)

REMOVE EX. PULL BOX

PR. PULL BOX +90, 78' RT CONNECT TO EX CIRCUIT B

+98, 78' RT REMOVE & REERECT EX. LIGHT POLE

PR. PULL BOX +55, 78' RT

FIRST GUARDRAIL POST STA. 20+92.75

+50 BEGIN PAVEMENT PLANING (LT & RT)

+00 BEGIN FULL DEPTH PAVEMENT BEGIN GUARDRAIL REPLACEMENT END PAVEMENT PLANING (LT & RT)

PAVEMENT PLANNING

DAYTON EXPRESSWAY
HORIZONTAL CURVE
P.I. STA. 25+54.43
Δ = 26°32'33" RT
D = 3°00'
Lc = 484.75'
R = 1,909.86'
Tc = 651.21'
Lc = 400.00'
Oc = 6°00'

EARTHWORK		
EMBANKMENT	766	CU YD
EXCAVATION	699	CU YD
SEEDING	1133	SQ YD

PROFILE GRADE

BRIDGE LIMITS 360.83'

P.V.I. Sta. 24+00.00
ELEV. = 778.40
500' V.C.
K = 160

+2.20%

+26.96 END APPROACH SLAB

P.V.C. Sta. 21+50.00 Elev. 772.90

PROPOSED PROFILE GRADE

BUTT JOINT

50'-0" FEATHER

EXISTING PROFILE ALONG ℄ SURVEY AND CONSTRUCTION

EXISTING KEOWEE STREET

EX. 12" RCP STORM (TO REMAIN)

12'-9" MIN. EXIST. & PROP.

21'-3" MIN. EX.

23'-0" MIN. PR.

SOUTH BOUND LANES

NORTH BOUND LANES

CSX RAILROAD ℄ SB MAIN

EX. 30" RCP STORM

1. SEE SHEET 56 FOR DETAILED BRIDGE INFORMATION

EXISTING GROUND ALONG CENTERLINE

769.60 770.15 770.70 771.25 771.80 772.35 772.90 773.43 773.92 774.37 774.79 775.16 775.50 775.79 776.05 776.27 776.45

765.13 766.38 767.57 768.85 770.92 758.47 730.96 729.39 741.45 742.75 745.26

790 780 770 760 750 740 730 720

19+00 20+00 21+00 22+00 23+00 24+00

HORIZONTAL SCALE IN FEET 0 10 20 40

CALCULATED CVR
CHECKED CAM

PLAN AND PROFILE
STA. 18+50.00 TO STA. 24+00.00

MOT- XWAY

REF NO.	SHEET NO.	STATION TO STATION	SIDE	202 BRIDGE TERMINAL ASSEMBLY REMOVED (EA)	202 GUARDRAIL REMOVED (FT)	202 APPROACH SLAB REMOVED (S.Y.)	202 PAVEMENT REMOVED (S.Y.)	202 LIGHT POLE FOUNDATION REMOVED (EA)	603 6" CONDUIT, TYPE F FOR UNDERDRAINS (FT)	603 6" CONDUIT, TYPE B (FT)	604 PRECAST REINFORCED CONCRETE OUTLET (EA)	605 6" SHALLOW PIPE UNDERDRAINS (FT)	606 GUARDRAIL, TYPE 5 (FT)	606 BRIDGE TERMINAL ASSEMBLY, TYPE 1 (EA)	607 FENCE REMOVED AND REBUILT (FT)	625 CONNECTOR KIT, TYPE 11, AS PER PLAN (EA)	625 CABLE SPLICING KIT (EA)	625 LIGHT POLE FOUNDATION 24"x10' DEEP, A.P.P. (EA)	625 No. 4 AWG 600 VOLT DISTRIBUTION CABLE (FT)	625 1-1/2 DUCT CABLE WITH 3 No. 4 AWG 500 V CABLES (FT)	625 CONDUIT 2", 725.04 (FT)	625 TRENCH (FT)	625 STRUCTURE JUNCTION BOX (EA)	625 PULL BOX, 725.09, 18" (EA)	625 PULL BOX REMOVED (EA)	625 GROUND ROD (EA)	625 STRUCTURE GROUNDING SYSTEM (EA)	625 REMOVE AND REERECT EXISTING LIGHT POLE, AS PER PLAN (EA)
R1	41	20+00 TO 21+52	RT	1	152																							
R2	41	20+00 TO 20+79	LT	1	79																							
R3	41	21+00 TO 21+25	LT/RT			250																						
R4	41	20+00 TO 20+93	LT				235																					
R5	41	20+00 TO 21+32	RT				494																					
F1	41	21+90 TO 23+90	LT												200													
GR1	41	20+00 TO 21+50.36	RT										156.25	1														
GR2	41	20+00 TO 20+77.23	LT										81.25	1														
U1	41	20+00 TO 21+35	RT							12		135																
U2	41	20+00 TO 20+70	LT						10		1	70																
U3	41	20+00 TO 21+43	RT						10		1	143																
U4	41	20+00 TO 20+85	LT							5		85																
L1	41	20+32 TO 22+20	LT					1								4	6	1	145	73	188	53	1	2	1	1		2
L2	41	20+98 TO 27+39	RT					3								8	18	3	305	446	691	363	1	6	4	3	1	4
TOTALS CARRIED TO GENERAL SUMMARY				2	231	250	729	4	20	17	2	433	237.5	2	200	12	24	4	450	519	879	416	2	8	5	4	1	6

CALCULATED CAM
CHECKED PAR

PLAN AND PROFILE SUBSUMMARY
STA. 18+00.00 TO STA.24+00.00

MOT - XWAY

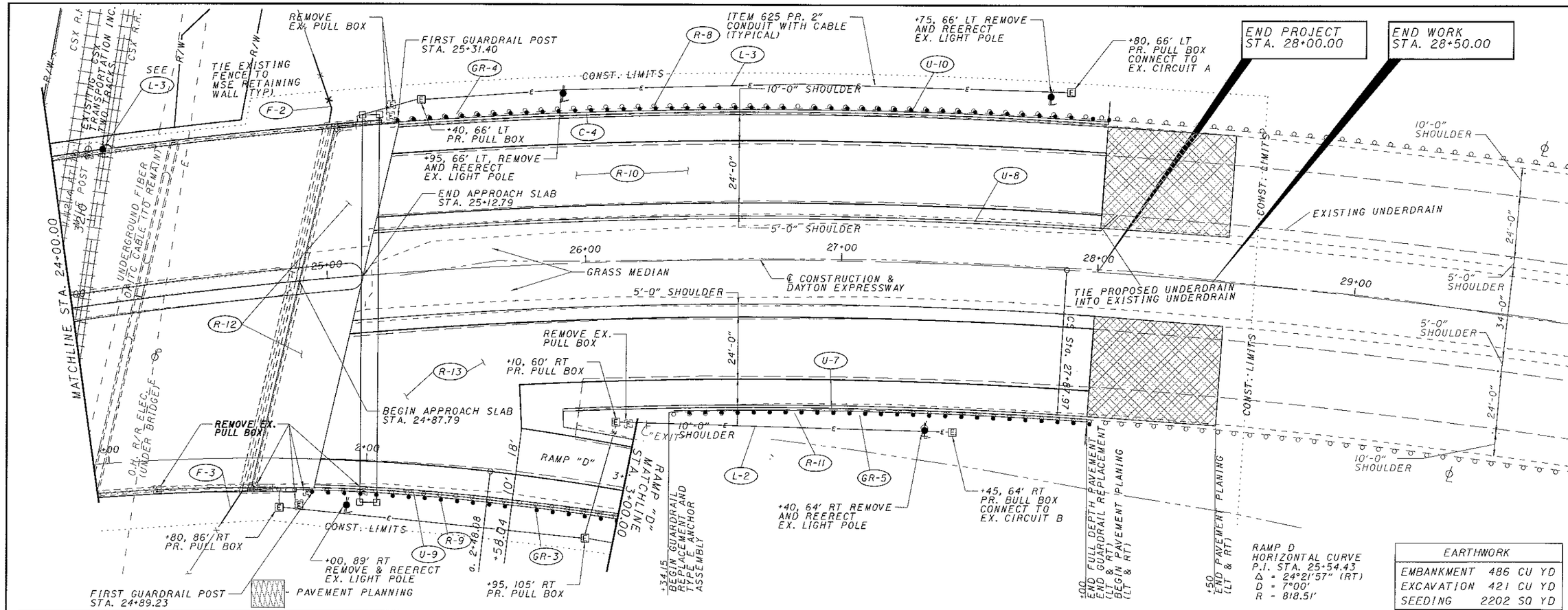

EARTHWORK	
EMBANKMENT	486 CU YD
EXCAVATION	421 CU YD
SEEDING	2202 SQ YD

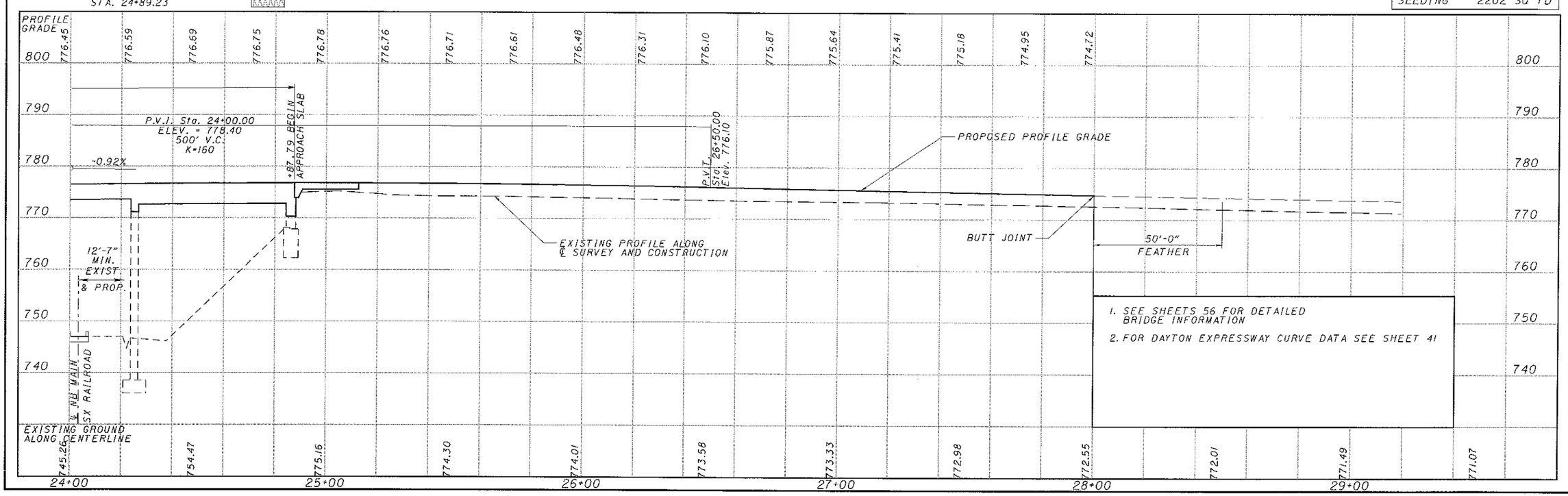

1. SEE SHEETS 56 FOR DETAILED BRIDGE INFORMATION
2. FOR DAYTON EXPRESSWAY CURVE DATA SEE SHEET 41

PLAN AND PROFILE
STA.24+00.00 TO STA.30+00.00

MOT- XWAY

REF NO.	SHEET NO.	STATION TO STATION	SIDE	202 APPROACH SLAB REMOVED (S.Y.)	202 PAVEMENT REMOVED (S.Y.)	202 GUARDRAIL REMOVED (FT)	202 BRIDGE TEMINAL ASSEMBLY REMOVED (EA)	202 LIGHT POLE FOUNDATION REMOVED (EA)	603 6" CONDUIT, TYPE F FOR UNDERDRAINS (FT)	604 PRECAST REINFORCED CONCRETE OUTLET (EA)	605 6" SHALLOW PIPE UNDERDRAINS (FT)	GUARDRAIL, TYPE 5 (FT)	606 BRIDGE TERMINAL ASSEMBLY, TYPE I (EA)	606 GUARDRAIL ANCHOR ASSEMBLY TYPE E (EA)	607 FENCE REMOVED AND REBUILT (FT)	625 CONNECTOR KIT, TYPE II, AS PER PLAN (EA)	625 CABLE SPLICING KIT (EA)	625 LIGHT POLE FOUNDATION 24"x10' DEEP, A.P.P. (EA)	625 No. 4 AWG 600 VOLT DISTRIBUTION CABLE (FT)	625 1-1/2 DUCT CABLE WITH 3 No.4 AWG 500 V CABLES (FT)	625 CONDUIT 2", 725.04 (FT)	625 TRENCH (FT)	625 STRUCTURE JUNCTION BOX (EA)	625 PULL BOX, 725.09, 18" (EA)	625 PULL BOX REMOVED (EA)	625 GROUND ROD (EA)	625 STRUCTURE GROUNDING SYSTEM (EA)	625 REMOVE & REERECT EXIST. LIGHT POLE (EA)
R8	43	25+20 TO 28+00	LT			280	1																					
R9	43	24+75 TO 26+10	RT			135	1																					
R10	43	24+60 TO 28+00	LT		907																							
R11	43	26+34.15 TO 28+00	RT			166																						
R12	43	24+80 TO 25+05	LT/RT	295																								
R13	43	24+45 TO 28+00	RT		1391																							
			LT																									
GR3	43	24+89.23 TO 26+10	RT										1															
GR4	43	25+31.40 TO 28+00	LT										1															
GR5	43	26+34.15 TO 28+00	RT									150		1														
U7	43	26+00 TO 28+00	RT								170																	
U8	43	24+55 TO 28+00	LT								357																	
U9	43	24+38 TO 26+10	RT								172																	
U10	43	24+70 TO 28+00	LT						10	1	330																	
L3	43	22+20 TO 27+75	LT					1								6	6	2	315	275	555	260	1	2	2	2	1	3
F2	43	25+00	LT												10													
F3	43	24+50	RT												10													
TOTALS CARRIED TO GENERAL SUMMARY				295	2298	581	2	1	10	1	1029	563.5	2	1	20	6	6	2	315	275	555	260	1	2	2	2	1	3

CALCULATED CAM
CHECKED PAR

PLAN AND PROFILE SUBSUMMARY
STA. 24+00.00 TO STA. 30+00.00

MOT- XWAY

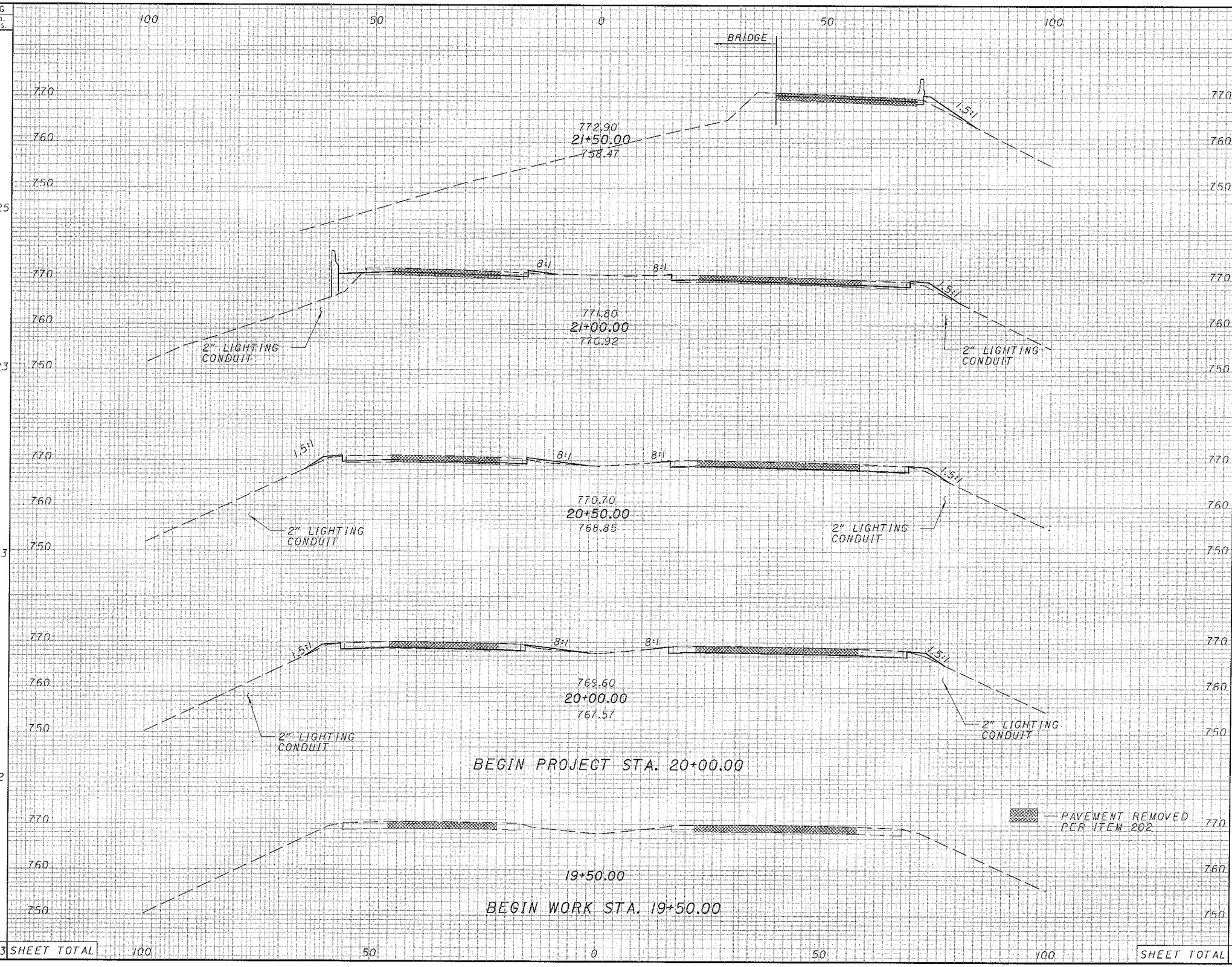

SEEDING END WIDTH	SEEDING SQ. YDS.	END AREA CUT	END AREA FILL	VOLUME CUT	VOLUME FILL
59			820		760
	325			44	
58		47	0		
	323			87	2
58		47	2		
	323			88	3
58		48	1		
	162			45	1
		0	0		
	1133 SHEET TOTAL			264	766

CALCULATED CVR
CHECKED CAM

CROSS SECTIONS

STA. 19+50.00 to STA. 21+50.00

MOT-XWAY

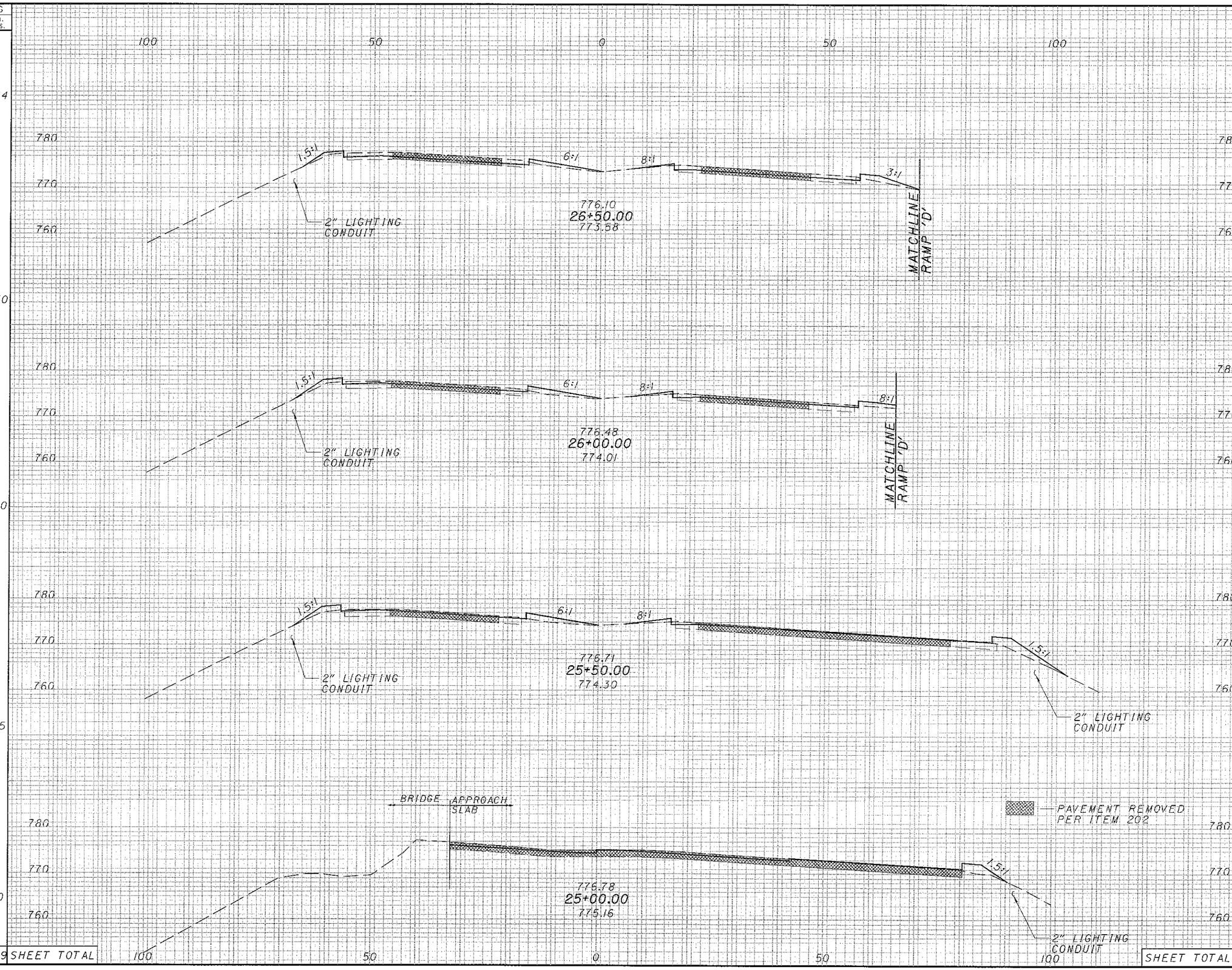

SEEDING END WIDTH	SEEDING SQ. YDS.	END AREA CUT	END AREA FILL	VOLUME CUT	VOLUME FILL
	314			85	58
45		48	11		
	250			68	35
45		25	26		
	250			17	50
45		10	28		
	275			10	83
54		0	61		
	150			0	57
189	1239 SHEET TOTAL	SHEET TOTAL 83	126	180	283

CALCULATED CVR
CHECKED CAM

CROSS SECTIONS

STA. 25+00.00 to STA. 26+00.00

MOT-XWAY

SEEDING END WIDTH	SEEDING SQ. YDS.	END AREA CUT	END AREA FILL	VOLUME CUT	VOLUME FILL
69	192			68	37
69	387	73	40	100	78
70	384	35	44	73	88
68		43	51		
	963 SHEET TOTAL			241	203 SHEET TOTAL

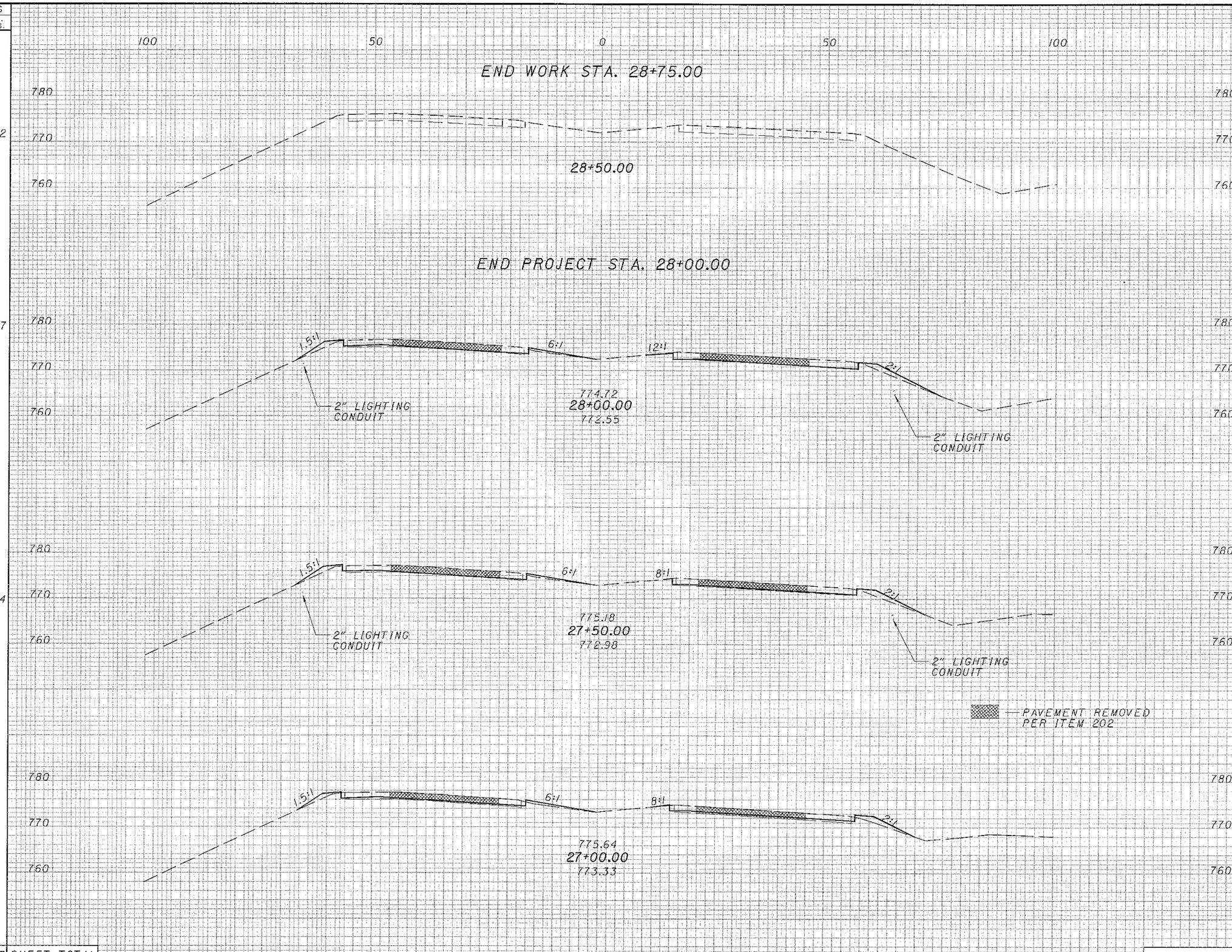

CALCULATED CVR
CHECKED CAM

CROSS SECTIONS
STA. 27+50.00 to STA. 28+75.00

MOT-XWAY

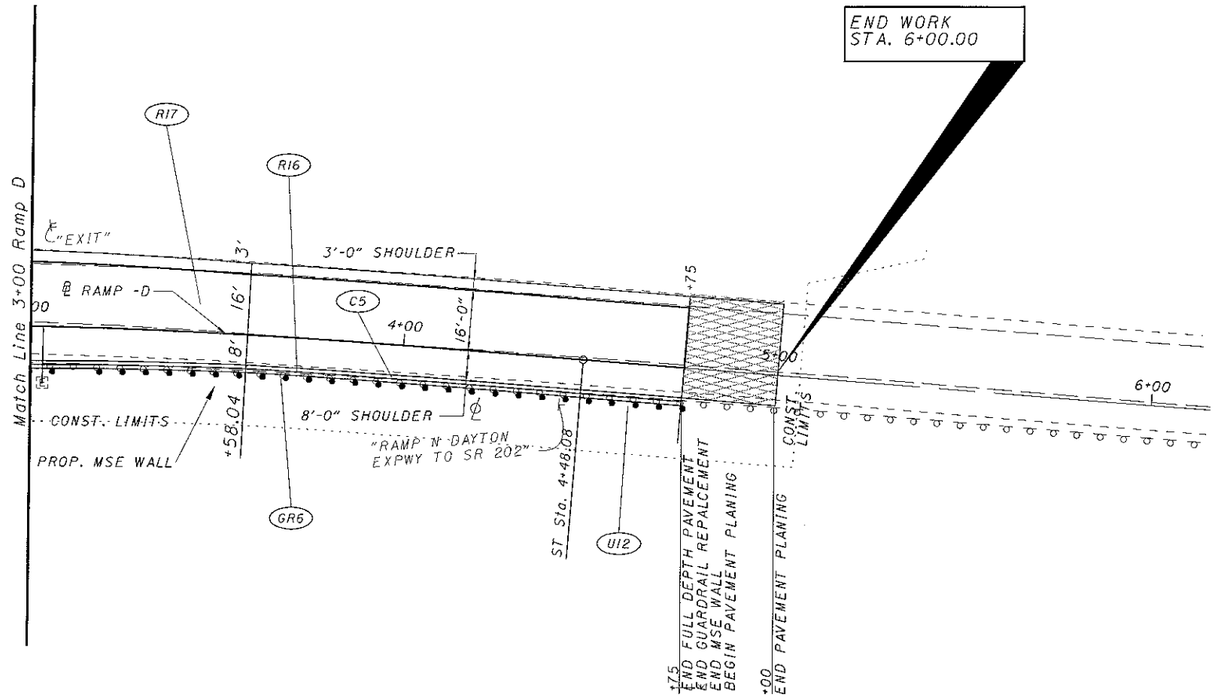

RAMP D
HORIZONTAL CURVE
P.I. STA. 25+54.43
Δ = 24°21'57" (RT)
D = 7°00'
R = 818.51'

PAVEMENT FEATHERING

EARTHWORK	
EMBANKMENT	65 CU YD
EXCAVATION	134 CU YD
SEEDING	649 SQ YD

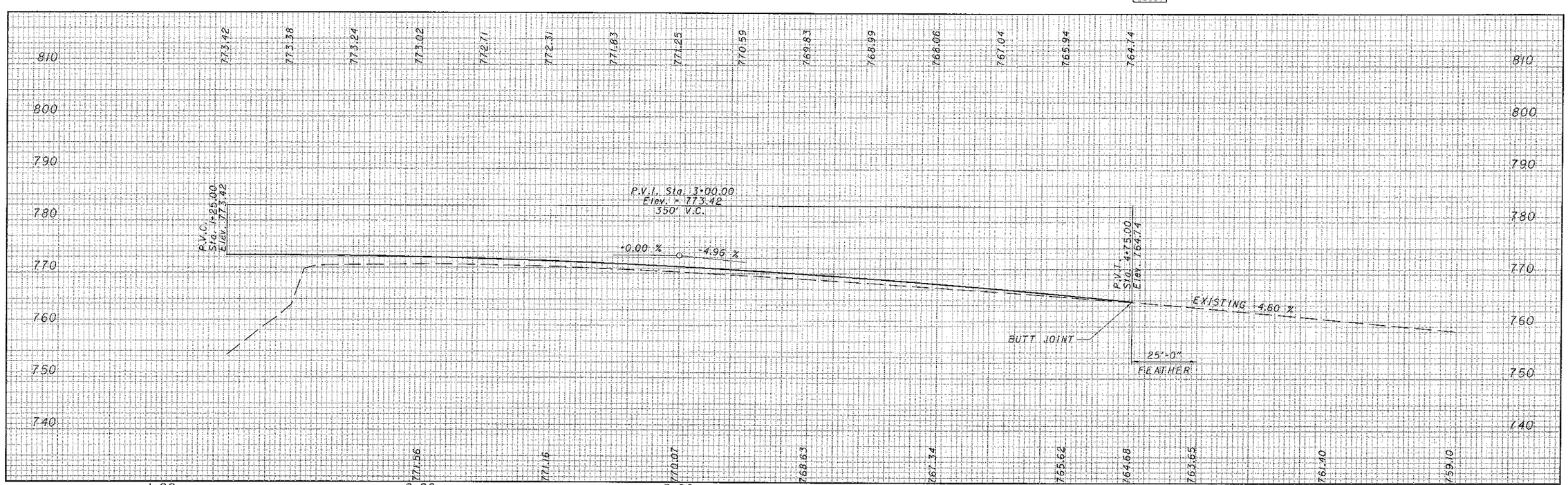

HORIZONTAL SCALE IN FEET
0 10 20 40

CALCULATED CVR
CHECKED CAM

RAMP - D PLAN AND PROFILE
STA. 3+00.00 TO STA. 6+00.00

MOT- XWAY

REF NO.	SHEET NO.	STATION TO STATION	SIDE	202 PAVEMENT REMOVED (SQ YD)	202 GUARDRAIL REMOVED (FEET)		603 6" CONDUIT, TYPE F FOR UNDERDRAINS (FEET)	604 PRECAST REINFORCED CONCRETE OUTLET (EACH)	605 6" SHALLOW PIPE UNDERDRAINS (FEET)	606 GUARDRAIL, TYPE 5 (FEET)
R16	48	3+00 TO 4+75	RT		175					
R17	48	3+00 TO 4+75	LT	350						
C5	48	3+00 TO 4+75	RT							
GR 6	48	3+00 TO 4+75	RT							175
U12	48	3+00 TO 4+75	RT				10	1	175	
TOTALS CARRIED TO GENERAL SUMMARY				350	175		10	1	175	175

CALCULATED CVR
CHECKED CAM

PLAN AND PROFILE SUBSUMMARY
RAMP D STA. 3+00.00 TO STA. 6+00.00

MOT -XWAY

SEEDING END WIDTH	SEEDING SQ. YDS.		END AREA CUT	END AREA FILL	VOLUME CUT	VOLUME FILL
26			21	14		
	131				29	22
21			10	9		
	95				19	9
13			10	0		
0	0					
	226	SHEET TOTAL			48	31

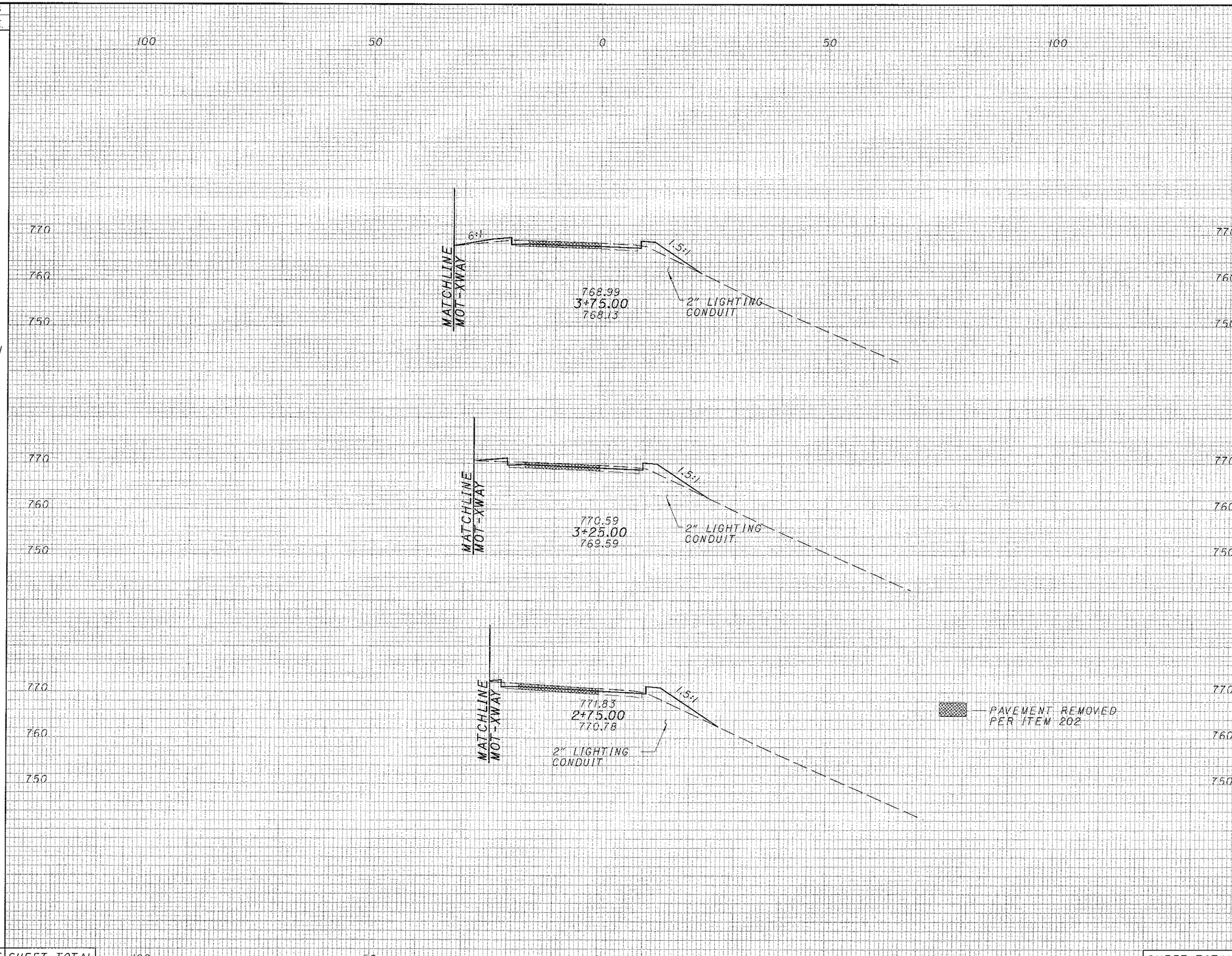

CALCULATED CVR
CHECKED CAM

CROSS SECTIONS RAMP D
STA. 2+75.00 to STA. 3+75.00

MOT-XWAY

SEEDING END WIDTH	SEEDING SQ. YDS.	END AREA CUT	END AREA FILL	VOLUME CUT	VOLUME FILL
0		0	0		
	89			19	10
32		20	10		
	175			33	20
31		15	11		
	159			34	24
	423 SHEET TOTAL			86	54

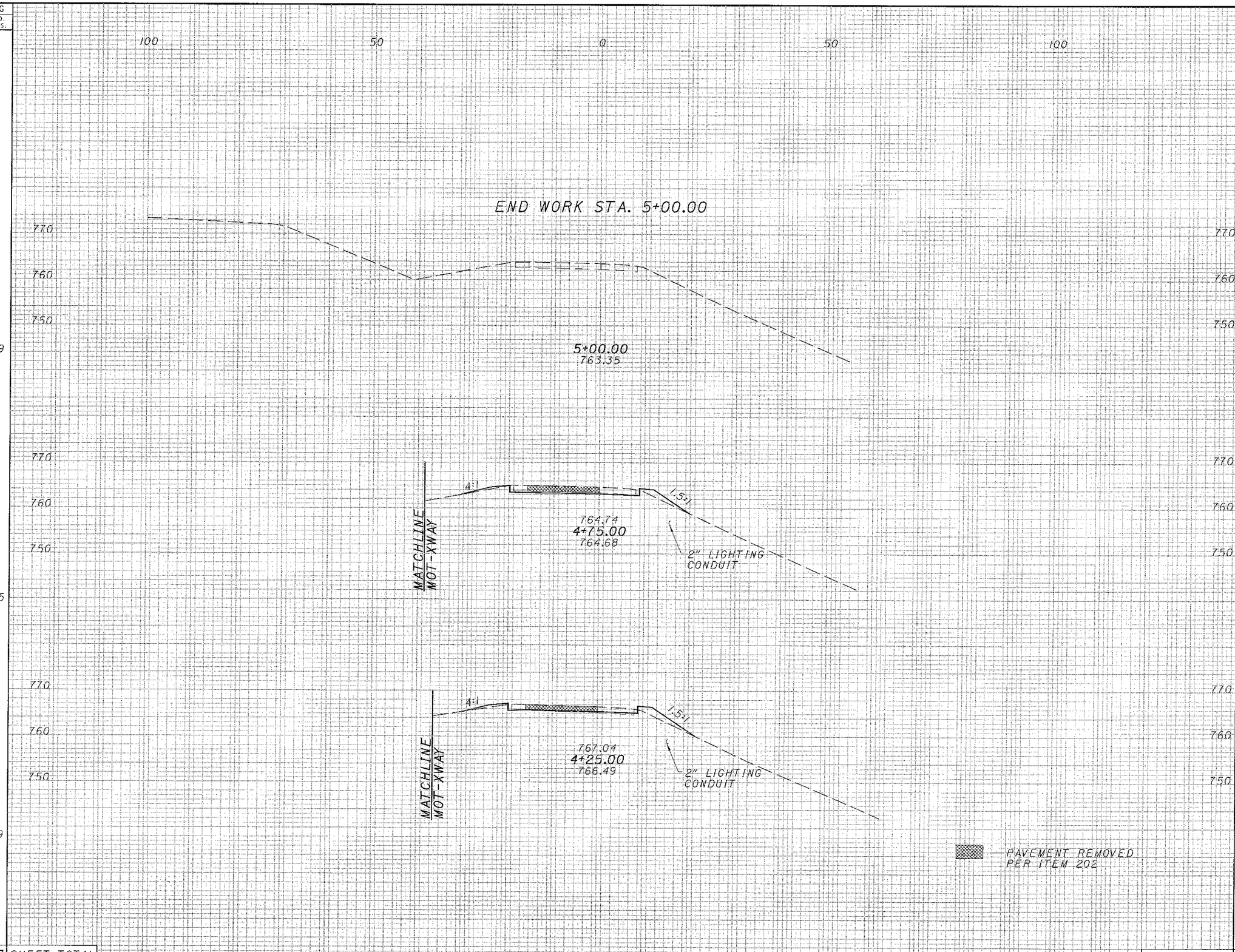

CALCULATED CVR
CHECKED CAM

CROSS SECTIONS RAMP D
STA. 4+25.00 to STA. 5+00.00

MOT-XWAY

SUPERELEVATION TABLE

OUTSIDE EDGE (46' LT)					CENTERLINE OF LANES (34' LT)					INSIDE EDGE (22' LT)		10' LT/RT		INSIDE EDGE (22' RT)		CENTERLINE OF LANES (34' RT)					OUTSIDE EDGE (46' RT)					DECEL LANE/RAMP BL (58.0'-65.7' RT)		
EDGE ELEVATION	ELEVATION CORRECTION	CROSS SLOPE	TRANSISTION RATE	WIDTH	ELEVATION	ELEVATION CORRECTION	CROSS SLOPE	TRANSISTION RATE	WIDTH	ELEVATION CORRECTION	EDGE ELEVATION	STATION	PROFILE GRADE	ELEVATION CORRECTION	EDGE ELEVATION	WIDTH	TRANSISTION RATE	CROSS SLOPE	ELEVATION CORRECTION	ELEVATION	WIDTH	TRANSISTION RATE	CROSS SLOPE	ELEVATION CORRECTION	ELEVATION	WIDTH	ELEVATION CORRECTION	EDGE ELEVATION
764.93*					765.06*						765.19*	18+00			765.42*					765.65*					765.87*			
765.55*					765.65*						765.75*	18+25			765.89*					766.05*					766.21*			766.22*
766.21*					766.27*						766.33*	18+50			766.37*					766.47*					766.57*			766.55*
766.89*					766.92*						766.94*	18+75			766.86*					766.90*					766.94*			766.87*
767.58*					767.56*						767.54*	19+00			767.35*					767.36*					767.37*			767.24*
768.27*					768.20*						768.14*	19+25			767.84*					767.83*					767.82*			767.62*
768.93*					768.81*						768.69*	19+50			768.33*					768.28*					768.23*			767.99*
769.58*					769.40*						769.23*	19+75			768.81*					768.72*					768.62*			768.35*
770.25	0.65	0.0180	305:1	12	770.03	0.43	0.0180	543:1	12	0.22	769.82	20+00	769.60	-0.22	769.38	12	198:1	-0.0180	-0.43	769.17	12	103:1	-0.0180	-0.65	768.95	12	-0.86	768.74
770.92	0.77	0.0215	298:1	12	770.67	0.52	0.0215	595:1	12	0.26	770.41	20+25	770.15	-0.26	769.89	12	595:1	-0.0215	-0.52	769.63	12	298:1	-0.0215	-0.77	769.38	12	-1.03	769.12
771.60	0.90	0.0250	298:1	12	771.30	0.60	0.0250	595:1	12	0.30	771.00	20+50	770.70	-0.30	770.40	12	595:1	-0.0250	-0.60	770.10	12	298:1	-0.0250	-0.90	769.80	12	-1.20	769.50
772.28	1.03	0.0285	298:1	12	771.93	0.68	0.0285	595:1	12	0.34	771.59	20+75	771.25	-0.34	770.91	12	595:1	-0.0285	-0.68	770.57	12	298:1	-0.0285	-1.03	770.22	12	-1.37	769.88
772.95	1.15	0.0320	298:1	12	772.57	0.77	0.0320	595:1	12	0.38	772.18	21+00	771.80	-0.38	771.42	12	595:1	-0.0320	-0.77	771.03	12	298:1	-0.0320	-1.15	770.65	12	-1.54	770.26
773.63	1.28	0.0355	298:1	12	773.20	0.85	0.0355	595:1	12	0.43	772.78	21+25	772.35	-0.43	771.92	12	595:1	-0.0355	-0.85	771.50	12	298:1	-0.0355	-1.28	771.07	12	-1.70	770.65
774.30	1.40	0.0390	298:1	12	773.84	0.94	0.0390	595:1	12	0.47	773.37	21+50	772.90	-0.47	772.43	12	595:1	-0.0390	-0.94	771.96	12	298:1	-0.0390	-1.40	771.50	12	-1.87	771.03
774.96	1.53	0.0425	298:1	12	774.45	1.02	0.0425	595:1	12	0.51	773.94	21+75	773.43	-0.51	772.92	12	595:1	-0.0425	-1.02	772.41	12	298:1	-0.0425	-1.53	771.90	12	-2.04	771.39
775.58	1.66	0.0460	298:1	12	775.03	1.10	0.0460	595:1	12	0.55	774.47	22+00	773.92	-0.55	773.37	12	595:1	-0.0460	-1.10	772.82	12	298:1	-0.0460	-1.66	772.27	12	-2.21	771.71
776.16	1.78	0.0495	298:1	12	775.56	1.19	0.0495	595:1	12	0.59	774.97	22+25	774.37	-0.59	773.78	12	595:1	-0.0495	-1.19	773.19	12	298:1	-0.0495	-1.78	772.59	12	-2.38	772.00
776.70	1.91	0.0530	298:1	12	776.06	1.27	0.0530	595:1	12	0.64	775.42	22+50	774.79	-0.64	774.15	12	595:1	-0.0530	-1.27	773.52	12	298:1	-0.0530	-1.91	772.88	12	-2.54	772.24
777.20	2.03	0.0565	298:1	12	776.52	1.36	0.0565	595:1	12	0.68	775.84	22+75	775.16	-0.68	774.48	12	595:1	-0.0565	-1.36	773.81	12	298:1	-0.0565	-2.03	773.13	12	-2.71	772.45
777.66	2.16	0.0600	298:1	12	776.94	1.44	0.0600	595:1	12	0.72	776.22	23+00	775.50	-0.72	774.78	12	595:1	-0.0600	-1.44	774.06	12	298:1	-0.0600	-2.16	773.34	12	-2.88	772.62
777.95	2.16	0.0600		12	777.23	1.44	0.0600		12	0.72	776.51	23+25	775.79	-0.72	775.07	12		-0.0600	-1.44	774.35	12		-0.0600	-2.16	773.63	12.15	-2.89	772.95
778.21	2.16	0.0600		12	777.49	1.44	0.0600		12	0.72	776.77	23+50	776.05	-0.72	775.33	12		-0.0600	-1.44	774.61	12		-0.0600	-2.16	773.89	12.70	-2.92	773.24
778.43	2.16	0.0600		12	777.71	1.44	0.0600		12	0.72	776.99	23+75	776.27	-0.72	775.55	12		-0.0600	-1.44	774.83	12		-0.0600	-2.16	774.11	13.65	-2.98	773.32
778.61	2.16	0.0600		12	777.89	1.44	0.0600		12	0.72	777.17	24+00	776.45	-0.72	775.73	12		-0.0600	-1.44	775.01	12		-0.0600	-2.16	774.29	15.00	-3.06	773.39
778.75	2.16	0.0600		12	778.03	1.44	0.0600		12	0.72	777.31	24+25	776.59	-0.72	775.87	12		-0.0600	-1.44	775.15	12		-0.0600	-2.16	774.43	16.75	-3.17	773.43
778.85	2.16	0.0600	F	12	778.13	1.44	0.0600	F	12	0.72	777.41	24+50	776.69	-0.72	775.97	12	F	-0.0600	-1.44	775.25	12	F	-0.0600	-2.16	774.53	18.90	-3.29	773.40
778.91	2.16	0.0600	U	12	778.19	1.44	0.0600	U	12	0.72	777.47	24+75	776.75	-0.72	776.03	12	U	-0.0600	-1.44	775.31	12	U	-0.0600	-2.16	774.59			
778.94	2.16	0.0600	L	12	778.22	1.44	0.0600	L	12	0.72	777.50	25+00	776.78	-0.72	776.06	12	L	-0.0600	-1.44	775.34	12	L	-0.0600	-2.16	774.62			
778.92	2.16	0.0600	L	12	778.20	1.44	0.0600	L	12	0.72	777.48	25+25	776.76	-0.72	776.04	12	L	-0.0600	-1.44	775.32	12	L	-0.0600	-2.16	774.60			
778.87	2.16	0.0600		12	778.15	1.44	0.0600		12	0.72	777.43	25+50	776.71	-0.72	775.99	12		-0.0600	-1.44	775.27	12		-0.0600	-2.16	774.55			
778.77	2.16	0.0600	S	12	778.05	1.44	0.0600	S	12	0.72	777.33	25+75	776.61	-0.72	775.89	12	S	-0.0600	-1.44	775.17	12	S	-0.0600	-2.16	774.45		R	
778.64	2.16	0.0600	U	12	777.92	1.44	0.0600	U	12	0.72	777.20	26+00	776.48	-0.72	775.76	12	U	-0.0600	-1.44	775.04	12	U	-0.0600	-2.16	774.32		A	
778.47	2.16	0.0600	P	12	777.75	1.44	0.0600	P	12	0.72	777.03	26+25	776.31	-0.72	775.59	12	P	-0.0600	-1.44	774.87	12	P	-0.0600	-2.16	774.15		M	
778.26	2.16	0.0600	E	12	777.54	1.44	0.0600	E	12	0.72	776.82	26+50	776.10	-0.72	775.38	12	E	-0.0600	-1.44	774.66	12	E	-0.0600	-2.16	773.94		P	
778.03	2.16	0.0600	R	12	777.31	1.44	0.0600	R	12	0.72	776.59	26+75	775.87	-0.72	775.15	12	R	-0.0600	-1.44	774.43	12	R	-0.0600	-2.16	773.71			
777.80	2.16	0.0600		12	777.08	1.44	0.0600		12	0.72	776.36	27+00	775.64	-0.72	774.92	12		-0.0600	-1.44	774.20	12		-0.0600	-2.16	773.48		D	
777.57	2.16	0.0600		12	776.85	1.44	0.0600		12	0.72	776.13	27+25	775.41	-0.72	774.69	12		-0.0600	-1.44	773.97	12		-0.0600	-2.16	773.25			
777.34	2.16	0.0600		12	776.62	1.44	0.0600		12	0.72	775.90	27+50	775.18	-0.72	774.46	12		-0.0600	-1.44	773.74	12		-0.0600	-2.16	773.02			
777.11	2.16	0.0600		12	776.39	1.44	0.0600		12	0.72	775.67	27+75	774.95	-0.72	774.23	12		-0.0600	-1.44	773.51	12		-0.0600	-2.16	772.79			
776.88	2.16	0.0600		12	776.16	1.44	0.0600		12	0.72	775.44	28+00	774.72	-0.72	774.00	12		-0.0600	-1.44	773.28	12		-0.0600	-2.16	772.56			
776.49*					775.82*						775.14*	28+25			773.73*					773.13*					772.54*			
776.12*					775.50*						774.88*	28+50			773.54*					772.99*					772.44*			
775.75*					775.16*						774.58*	28+75			773.36*					772.85*					772.34*			
775.40*					774.84*						774.28*	29+00			773.18*					772.72*					772.25*			
775.07*					774.53*						773.98*	29+25			773.01*					772.59*					772.16*			
774.73*					774.21*						773.68*	29+50			772.84*					772.46*					772.08*			
774.37*					773.87*						773.38*	29+75			772.67*					772.34*					772.00*			
774.00*					773.54*						773.07*	30+00			772.50*					772.20*					771.91*			

* EXISTING ELEVATION

CALCULATED CAM
CHECKED JS

SUPERELEVATION TABLE

MOT-XWAY

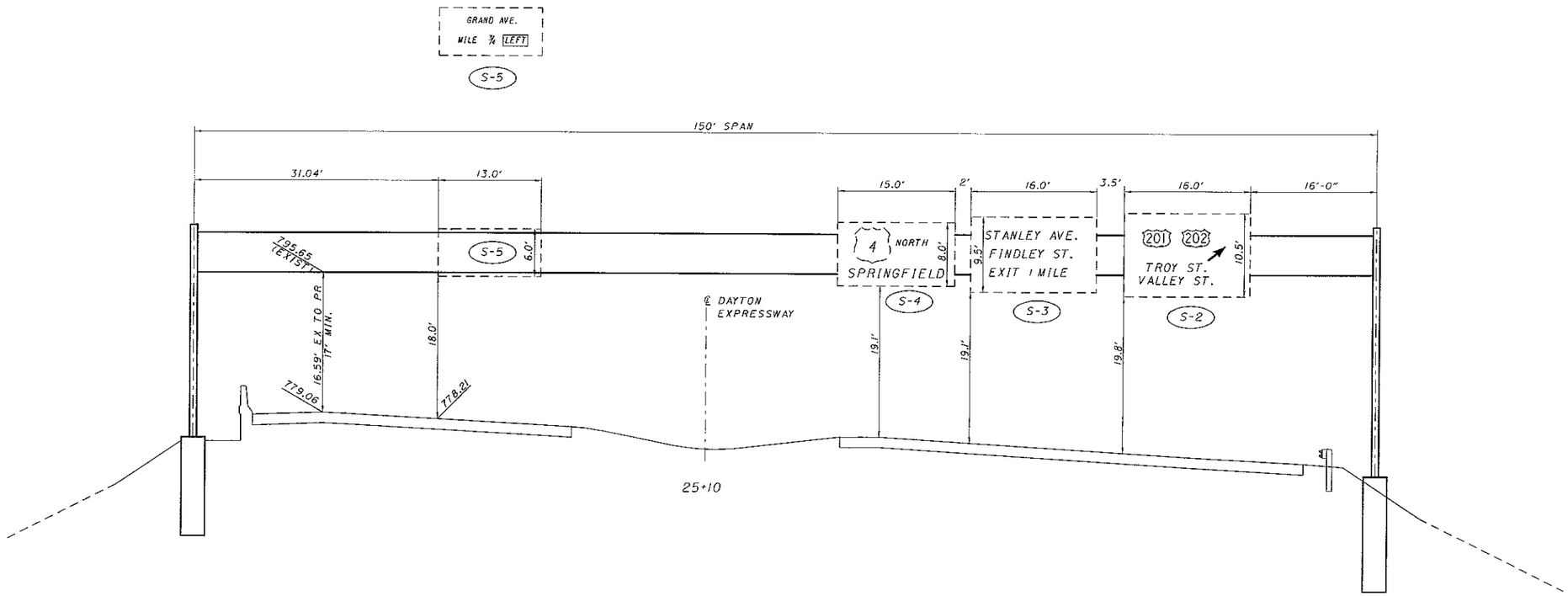

CONTRACTOR SHALL VERIFY EXISTING END FRAME POLE HEIGHTS PRIOR TO REMOVAL OF THE OVERHEAD TRUSS, AND REMOVAL/CONSTRUCTION OF SIGN SUPPORT FOUNDATIONS.

THE OVERHEAD TRUSS SHALL BE RE-ERECTED TO PROVIDED THE MINIMUM 17'-0" CLEARANCE.

REMOVE AND RE-ERECT EXISTING OVERHEAD TRUSS AND SIGNS AT STA. 25+10 DAYTON EXPRESSWAY TO NEW SIGN SUPPORT FOUNDATIONS AT STA. 25+10 DAYTON EXPRESSWAY.

FOR SIGN SUPPORT FOUNDATION DETAILS SEE STANDARD CONSTRUCTION DRAWING TC-21.10.

FOR EXISTING OVERHEAD TRUSS DETAILS SEE STANDARD CONSTRUCTION DRAWING TC-15.115.

TRAFFIC CONTROL - SIGN ELEVATIONS

MOT-XWAY

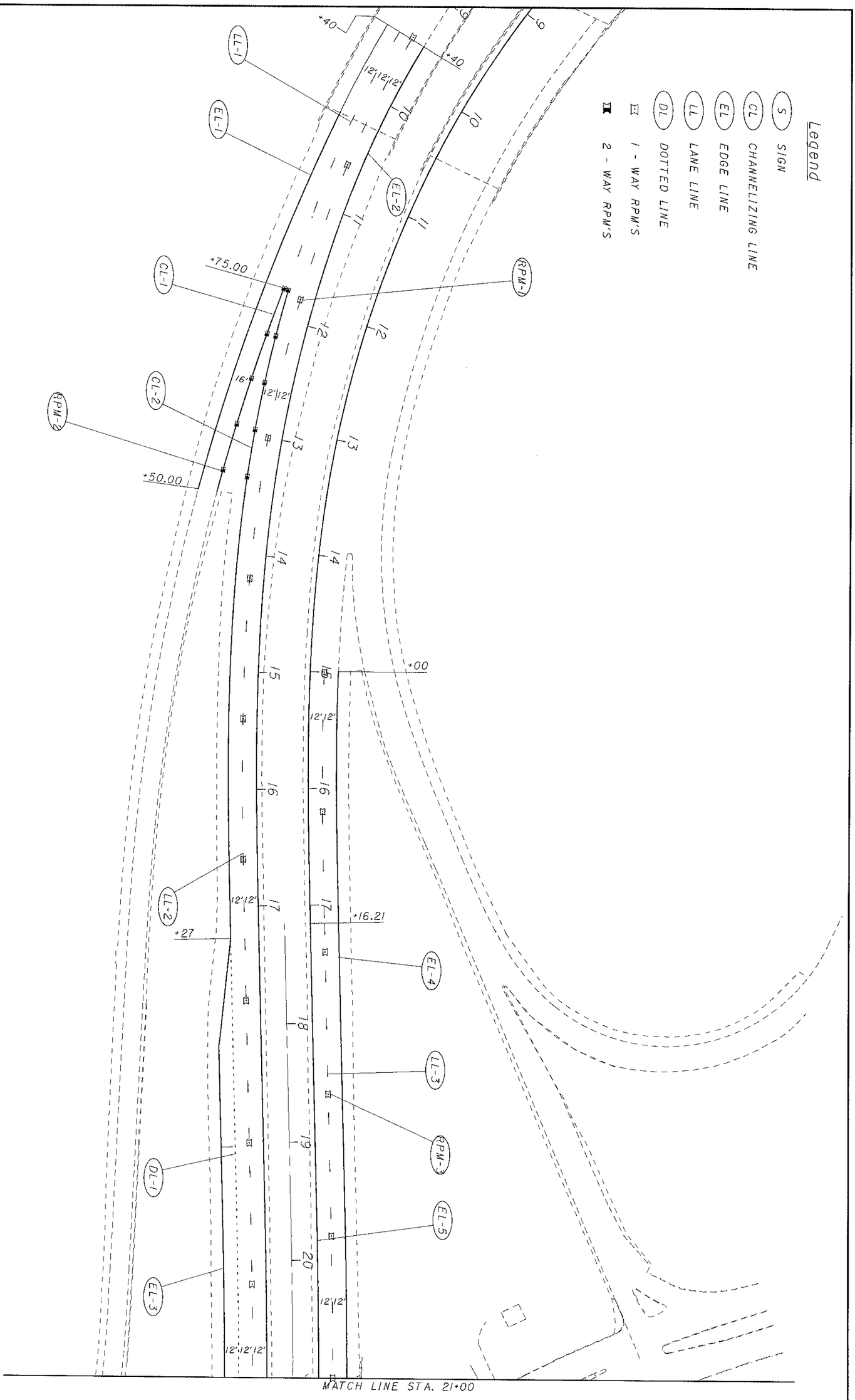

54/120	MOT-XWAY	TRAFFIC CONTROL - SIGNING AND PAVEMENT MARKING DETAILS	CALCULATED CAM / CHECKED PAR	0 20 40 80 HORIZONTAL SCALE IN FEET

Legend

- (S) SIGN
- (CL) CHANNELIZING LINE
- (EL) EDGE LINE
- (LL) LANE LINE
- (DL) DOTTED LINE
- I - WAY RPM'S
- 2 - WAY RPM'S

HORIZONTAL SCALE IN FEET
0 20 40 80

CALCULATED D.M.
CHECKED P.R.

TRAFFIC CONTROL - SIGNING AND PAVEMENT MARKING DETAILS

MOT-XWAY

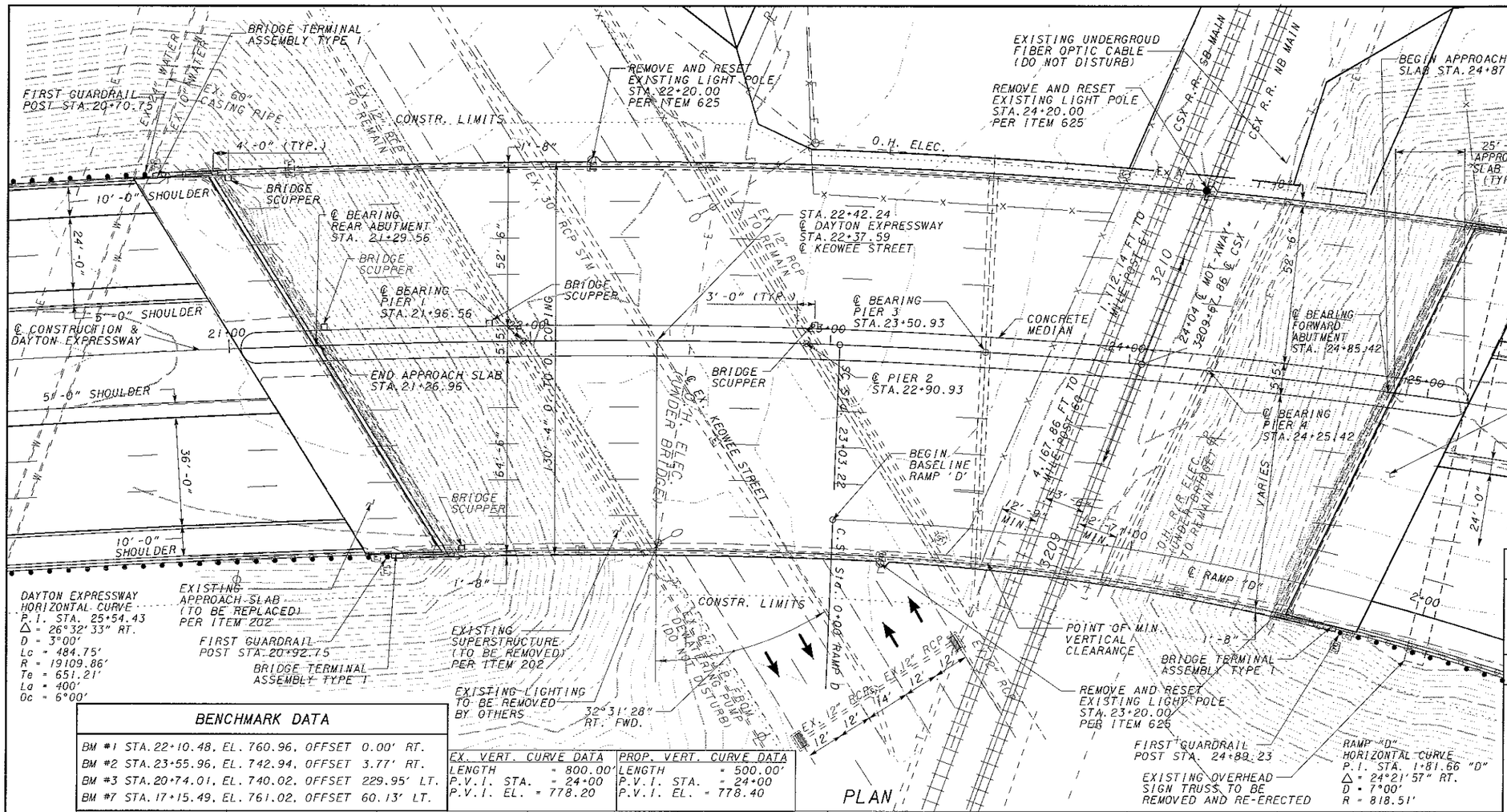

BENCHMARK DATA

BM #1 STA. 22+10.48, EL. 760.96, OFFSET 0.00' RT.	
BM #2 STA. 23+55.96, EL. 742.94, OFFSET 3.77' RT.	
BM #3 STA. 20+74.01, EL. 740.02, OFFSET 229.95' LT.	
BM #7 STA. 17+15.49, EL. 761.02, OFFSET 60.13' LT.	

EX. VERT. CURVE DATA	PROP. VERT. CURVE DATA
LENGTH = 800.00'	LENGTH = 500.00'
P.V.I. STA. = 24+00	P.V.I. STA. = 24+00
P.V.I. EL. = 778.20	P.V.I. EL. = 778.40

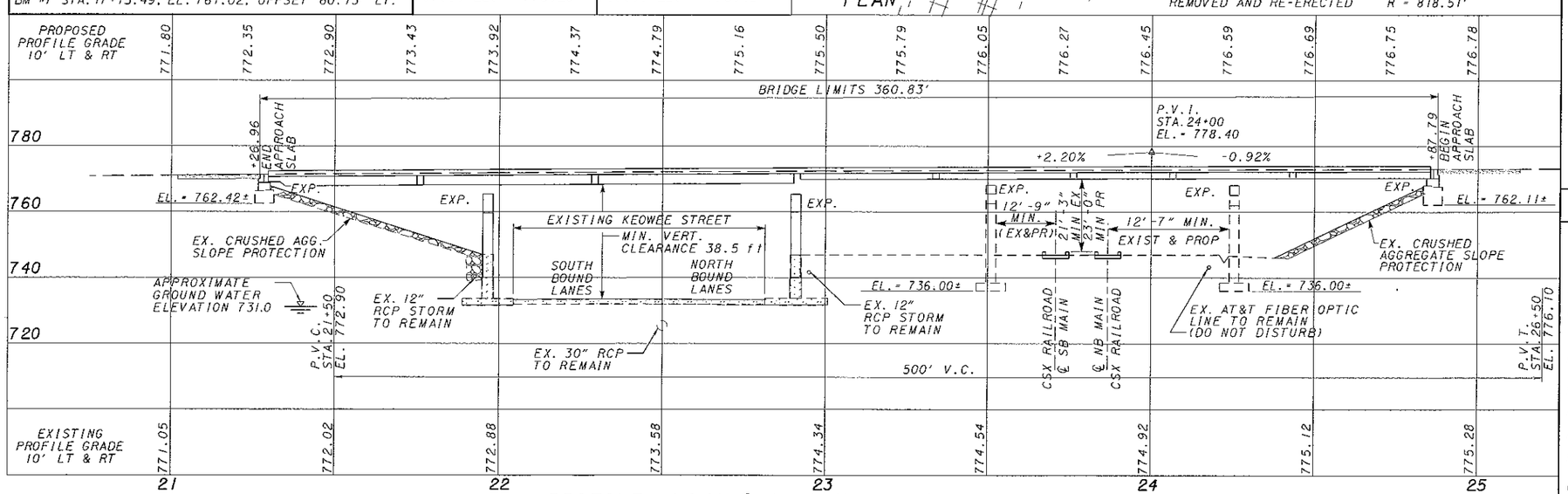

PROFILE ALONG ℄ OF DAYTON EXPRESSWAY

TRAFFIC DATA (DAYTON EXPRESSWAY)

2005 ADT = 38370 2005 AADT = 3070
2025 ADT = 39700 2025 AADT = 3176
DIRECTIONAL DISTRIBUTION = 60%

EXISTING STRUCTURE

TYPE: SIMPLE SPAN COMPOSITE ROLLED STEEL BEAMS & WELDED GIRDERS WITH REINFORCED CONCRETE DECK AND SUBSTRUCTURE UNITS.

SPANS: 67'-0", 94'-4⅜", 60'-0", 74'-5⅞", 60'-0" (C. to C. BEARINGS)

ROADWAY:
E.B.: 63'-10" TO 78'-1 3/4" F CURB/TOE PARAPET
W.B.: 51'-10" TOE PARAPET/F CURB

LOADING: C.F. = 2000(57)

SKEW: 32°31'28" R.F.

APPROACH SLABS: AS-1-54 (25' LONG)

ALIGNMENT: SPIRAL & 3°0'0" CURVE TO RIGHT

SUPERELEVATED: VARIES 0.063 FT/FT (MAX.)

STRUCTURAL FILE NUMBER: 5760895

DATE BUILT: 1960

PROPOSED STRUCTURE

TYPE: CONTINUOUS COMPOSITE STEEL GIRDER BRIDGE WITH REINFORCED CONCRETE DECK AND SUBSTRUCTURE UNITS

SPANS: 67'-0", 94'-4⅜", 60'-0", 74'-5⅞", 60'-0"

ROADWAY:
E.B.: 64'-6" TO 78'-9⅜" F CURB/TOE PARAPET
W.B.: 52'-6" TOE PARAPET/F CURB

LOADING: HS25 CASE II AND ALTERNATE MILITARY

SKEW: 32°31'28" RT. FWD.

APPROACH SLABS: 25'-0" LONG (AS-1-81) MODIFIED

ALIGNMENT: SPIRAL & 3°0'0" CURVE RIGHT

SUPERELEVATED: VARIES 0.06 FT/FT (MAX.)

COORDINATES: LATITUDE 39°46'18" N
LONGITUDE 84°10'44" W

PREPARED BY
R.W. ARMSTRONG & ASSOCIATES
471 EAST BROAD STREET, SUITE 2010
COLUMBUS, OH 43215
OFFICE (614) 225-8868 FAX (614) 225-8869

DATE	REVIEWED	DRAWN	DESIGNED	CHECKED
12/22/06	TDJ	CR	SRS	CAM

STRUCTURE FILE NUMBER 5760569
REVISED

MONTGOMERY COUNTY
STA. 21+26.96
STA. 24+87.79

SITE PLAN

BRIDGE NO. DAY-XWAY-00.79
DAYTON EXPRESSWAY OVER KEOWEE STR. & CSX R.R.

MOT-XWAY
PID No. 77774

STRUCTURE GENERAL NOTES

REFER TO THE FOLLOWING STANDARD BRIDGE DRAWINGS:

A-1-69	REVISED (7-19-02)
AS-1-81	REVISED (7-19-02)
BR-1	REVISED (7-19-02)
EXJ-4-87	REVISED (7-19-02)
GSD-1-96	REVISED (7-19-02)

AND TO THE FOLLOWING SUPPLEMENTAL SPECIFICATIONS:

843	DATE (4-18-03)
885	DATE (11-4-05)

DESIGN SPECIFICATIONS:
THIS STRUCTURE CONFORMS TO "STANDARD SPECIFICATIONS FOR HIGHWAY BRIDGES" ADOPTED BY THE AMERICAN ASSOCIATION OF STATE HIGHWAY AND TRANSPORTATION OFFICIALS (AASHTO), SEVENTEENTH EDITION, 2002 AND THE ODOT BRIDGE DESIGN MANUAL.

DESIGN LOADING:
EXISTING SUBSTRUCTURE: HS20-44, CASE II.

PROPOSED SUPERSTRUCTURE: HS25-44, CASE II AND THE ALTERNATE MILITARY LOADING.

FUTURE WEARING SURFACE (FWS) OF 60 PSF.

EXISTING DESIGN DATA:
EXISTING REINFORCEMENT: ASTM A615, A616 OR A 617
GRADE 40, MINIMUM YIELD STRENGTH, 40,000 PSI.

EXISTING SPIRALS: PLAIN ASTM A306 OR A499

PROPOSED DESIGN DATA:

CONCRETE CLASS HP	COMPRESSIVE STRENGTH 4500 PSI (SUPERSTRUCTURE)
CONCRETE CLASS C	COMPRESSIVE STRENGTH 4000 PSI (SUBSTRUCTURE)
REINFORCING STEEL	ASTM A615 OR A996 GRADE 60 MIN. YIELD STRENGTH 60,000 PSI
STRUCTURAL STEEL	ASTM A709 GRADE 50 - YIELD STRENGTH 50,000 PSI

SPIRAL REINFORCEMENT MAY BE PLAIN BARS, ASTM A82 OR A615.

DECK PROTECTION METHOD:
EPOXY COATED REINFORCING STEEL, 2 1/2" CONCRETE COVER, HIGH PERFORMANCE CONCRETE AND SEALING OF CONCRETE SURFACES.

MONOLITHIC WEARING SURFACE:
IS ASSUMED FOR DESIGN PURPOSES TO BE 1" THICK.

ITEM 202, PORTIONS OF STRUCTURE REMOVED OVER 20 FOOT SPAN, AS PER PLAN:
THIS ITEM SHALL INCLUDE THE ELEMENTS INDICATED IN THE PLANS AND GENERAL NOTES AND THAT ARE NOT SEPARATELY LISTED FOR PAYMENT, EXCEPT FOR WEARING COURSE REMOVAL. ITEMS TO BE REMOVED INCLUDE ALL EXISTING MATERIALS BEING REPLACED BY NEW CONSTRUCTION AND MISCELLANEOUS ITEMS THAT ARE NOT SHOWN TO BE INCORPORATED INTO THE FINAL CONSTRUCTION AND ARE DIRECTED TO BE REMOVED BY THE ENGINEER. THE USE OF EXPLOSIVES, HEADACHE BALLS AND/OR HOE-RAMS WILL NOT BE PERMITTED. THE METHOD OF REMOVAL AND THE WEIGHT OF HAMMER SHALL BE APPROVED BY THE ENGINEER. PERFORM ALL WORK IN A MANNER THAT WILL NOT CUT, ELONGATE OR DAMAGE THE EXISTING REINFORCING STEEL TO BE PRESERVED. CHIPPING HAMMERS SHALL NOT BE HEAVIER THAN THE NOMINAL 90-POUND CLASS. PNEUMATIC HAMMERS SHALL NOT BE PLACED IN DIRECT CONTACT WITH REINFORCING STEEL THAT IS TO BE RETAINED IN THE REBUILT STRUCTURE. SUBMIT CONSTRUCTION PLANS ACCORDING TO CMS 501.05.

MEASUREMENT & PAYMENT: THE CITY OF DAYTON WILL MEASURE THE QUANTITY OF REMOVALS ON A LUMP SUM BASIS. THE CITY OF DAYTON WILL PAY FOR THE ACCEPTED QUANTITIES OF REMOVALS AT THE CONTRACT PRICE FOR ITEM 202, PORTIONS OF STRUCTURE REMOVED OVER 20 FOOT SPAN, AS PER PLAN.

PROTECTION OF TRAFFIC:
PRIOR TO DEMOLITION OF ANY PORTIONS OF THE EXISTING SUPERSTRUCTURE, SUBMIT PLANS FOR THE PROTECTION OF TRAFFIC (VEHICULAR, PEDESTRIAN, BOAT, ETC.) ADJACENT TO AND/OR UNDER THE STRUCTURE TO THE ENGINEER AT LEAST 30 DAYS BEFORE CONSTRUCTION BEGINS. THESE PLANS SHALL INCLUDE PROVISIONS FOR ANY DEVICES AND STRUCTURES THAT MAY BE NECESSARY TO ENSURE SUCH PROTECTION. MAINTAIN TEMPORARY VERTICAL CLEARANCES SPECIFIED ON THE PLANS OR IN THE PROPOSAL AT ALL TIMES EXCEPT AS OTHERWISE APPROVED BY THE ENGINEER. ALL COST ASSOCIATED WITH THIS TRAFFIC PROTECTION WILL BE INCLUDED WITH ITEM 202 FOR PAYMENT.

CUT LINE CONSTRUCTION JOINT PREPARATION:
SAW CUT BOUNDARIES OF PROPOSED CONCRETE REMOVALS 1" DEEP. REMOVE CONCRETE TO A ROUGH SURFACE. LEAVE THE EXISTING REINFORCING STEEL, IF REQUIRED IN THE PLANS, IN PLACE. INSTALL DOWEL BARS IF SPECIFIED. PRIOR TO CONCRETE PLACEMENT ABRASIVELY CLEAN JOINT SURFACES AND EXISTING EXPOSED REINFORCEMENT TO REMOVE LOOSE AND DISINTEGRATED CONCRETE AND LOOSE RUST. THOROUGHLY CLEAN THE JOINT SURFACE AND EXPOSED REINFORCEMENT OF ALL DIRT, DUST, RUST OR OTHER FOREIGN MATERIAL BY THE USE OF WATER, AIR UNDER PRESSURE, OR OTHER METHODS THAT PRODUCE SATISFACTORY RESULTS. EXISTING REINFORCING STEEL DOES NOT HAVE TO HAVE A BRIGHT STEEL FINISH, BUT REMOVE ALL PACK AND LOOSE RUST. THOROUGHLY DRENCH EXISTING CONCRETE SURFACES WITH CLEAN WATER AND ALLOW TO DRY TO A DAMP CONDITION BEFORE PLACING CONCRETE.

SUBSTRUCTURE CONCRETE REMOVAL:
REMOVE CONCRETE BY MEANS OF APPROVED PNEUMATIC HAMMERS EMPLOYING POINTED AND BLUNT CHISEL TOOLS. HYDRAULIC HOE-RAM TYPE HAMMERS WILL NOT BE PERMITTED. THE WEIGHT OF THE HAMMER SHALL NOT BE MORE THAN 35 POUNDS FOR REMOVAL WITHIN 18 INCHES OF PORTIONS TO BE PRESERVED. OUTSIDE THE 18 INCH LIMIT, THE CONTRACTOR MAY USE HAMMERS NOT EXCEEDING 90 POUNDS UPON THE APPROVAL OF THE ENGINEER. DO NOT PLACE PNEUMATIC HAMMERS IN DIRECT CONTACT WITH REINFORCING STEEL THAT IS TO BE RETAINED IN THE REBUILT STRUCTURE.

EXISTING STRUCTURE VERIFICATION:
DETAILS AND DIMENSIONS SHOWN ON THESE PLANS PERTAINING TO THE EXISTING STRUCTURE HAVE BEEN OBTAINED FROM PLANS OF THE EXISTING STRUCTURE AND FROM FIELD OBSERVATIONS AND MEASUREMENTS. CONSEQUENTLY, THEY ARE INDICATIVE OF THE EXISTING STRUCTURE AND THE PROPOSED WORK BUT THEY SHALL BE CONSIDERED TENTATIVE AND APPROXIMATE. THE CONTRACTOR IS REFERRED TO CMS SECTIONS 102.05, 105.02 AND 513.04.

BASE CONTRACT BID PRICES UPON A RECOGNITION OF THE UNCERTAINTIES DESCRIBED ABOVE AND UPON PREBID EXAMINATION OF THE EXISTING STRUCTURE. HOWEVER, THE CITY OF DAYTON WILL PAY FOR ALL PROJECT WORK BASED UPON ACTUAL DETAILS AND DIMENSIONS THAT HAVE BEEN VERIFIED IN THE FIELD.

ITEM 509 REINFORCING STEEL, REPLACEMENT OF EXISTING REINFORCEMENT, AS PER PLAN:
REPLACE ALL EXISTING REINFORCING BARS DEEMED BY THE ENGINEER TO BE UNUSABLE BECAUSE OF CORROSION. THE CITY OF DAYTON WILL MEASURE THE REPLACEMENT REINFORCEMENT STEEL BY THE NUMBER IN POUNDS ACCEPTED IN PLACE. REPLACE ALL EXISTING REINFORCING STEEL BARS WHICH ARE TO BE INCORPORATED INTO THE NEW WORK AND ARE DEEMED BY THE ENGINEER TO BE MADE UNUSABLE BY CONCRETE REMOVAL OPERATIONS WITH NEW EPOXY COATED REINFORCING STEEL OF THE SAME SIZE AT NO COST TO THE CITY OF DAYTON.

ITEM 519, PATCHING CONCRETE STRUCTURES, AS PER PLAN:
PRIOR TO THE SURFACE CLEANING SPECIFIED IN 519.04 AND WITHIN 24 HOURS OF PLACING PATCHING MATERIAL, BLAST CLEAN ALL SURFACES TO BE PATCHED INCLUDING THE EXPOSED REINFORCING STEEL. ACCEPTABLE METHODS INCLUDE HIGH PRESSURE WATER BLASTING WITH OR WITHOUT ABRASIVES IN THE WATER, ABRASIVE BLASTING WITH CONTAINMENT, OR VACUUM ABRASIVE BLASTING.

ITEM 503, UNCLASSIFIED EXCAVATION, AS PER PLAN:
THIS ITEM SHALL BE AS DESCRIBED IN THE CMS, EXCEPT THAT THE AREA TO BE MEASURED FOR PAYMENT SHALL BE AS SHOWN IN THE PLANS ON THE REMOVAL DETAILS.

ITEM 526, REINFORCED CONCRETE APPROACH SLAB (T=15"), AS PER PLAN:
CONCRETE MEDIAN CURB ON THE APPROACH SLABS SHALL BE CLASS HP, AND SHALL BE INCLUDED FOR PAYMENT WITH ITEM 526.

RAILROAD REQUIREMENTS:

THIS STRUCTURE SPANS OVER THE CSX RAILROAD. ALL VERTICAL AND HORIZONTAL CLEARANCES WERE ESTABLISHED FOLLOWING THE CURRENT "MANUAL FOR RAILWAY ENGINEERING" BY THE AMERICAN RAILWAY ENGINEERING AND MAINTENANCE-OF-WAY ASSOCIATION (AREMA).

CONSTRUCTION CLEARANCE:

MAINTAIN A CONSTRUCTION CLEARANCE OF 12 FT. 0 IN. HORIZONTALLY FROM THE CENTER OF THE TRACKS AND 21 FT. 3 IN. VERTICALLY FROM A POINT LEVEL WITH THE TOP OF HIGHER RAIL AT ALL TIMES

RAILROAD GENERAL NOTES:

THE CONTRACTOR SHALL BE REQUIRED TO SUBMIT DETAILED AND COMPREHENSIVE PLANS AND PROCEDURES FOR REVIEW AND APPROVAL BY THE CSXT DIRECTOR OF RIGHT OF WAY CONSTRUCTION OR HIS/HER DESIGNATE IDENTIFIED AT THE PRECONSTRUCTION MEETING FOR THE FOLLOWING CONSTRUCTION TASKS IN OR ADJACENT TO THE RAILROAD SPAN: A) FULL DEPTH CONCRETE DECK AND PARAPET DEMOLITION AND/OR REMOVAL. B) CONCRETE DECK REMOVAL OR STRUCTURE CLEANING BY HYDRODEMOLITION. C) GIRDER DEMOLITION AND/OR REMOVAL. D) COMPOSITE STEEL GIRDER ERECTION. E) PAINT PREPARATION AND PAINTING OF SUPERSTRUCTURE, IF APPLICABLE.

FOR FULL DEPTH CONCRETE DECK AND PARAPET REMOVAL IN THE RAILRAOD SPAN, CONTRACTOR SHALL USE EXTREME CARE AND TAKE ANY MEASURE NECESSARY TO PREVENT DEBRIS FROM FALLING ONTO THE RAILROAD PROPERTY. THIS SHALL BE ACCOMPLISEHD BY THE USE OF BASKETS, NETTING, WRAPPING, SHIEL OR SIMILARLY EFFECTIVE MEANS THAT WILL NOT INFRINGE UPONT THE TEMPORARY VERTICAL CONSTRUCTION CLEARANCES IN THESE PLANS. BE ADVISED THAT CSXT WILL NOT ALLOW TRACKS TO BE OBSTRUCTED WITH AT-GRADE CRANE MAT PROTECTION. COMPLETE AND FULL ENCLOSURE OF STRUCTURE DEMOLITION WITHIN ALOOWABLE CLEARANCES WILL BE REQUIRED.

NO SCAFFOLDING OR TEMPORARY FRAMEWORK FOR PIER 3 AND 4 DEMOLITION WILL BE ALLOWED THAT INFRINGES UPON THE TEMPORARY RAILROAD CONSTRUCTION CLEARANCES WITHOUT THE PRESENCE AND PREMISSION OF A RAILROAD FLAGGER. IT IS ANTICIPATED THAT FULL TIME FLAGGING WILL BE REQUIRED FOR ALL APSECTS OF THE DECK, PIER, PIER CAP AND STEEL BEAM AND GRIDER DEMOLITION AND CONSTRUCTION IN THE RAILROAD AND ADJACENT SPANS.

CSXT RIGHT OF WAY CONSTRUCTION REQUIREMENTS:

A) A DRAWING SHOWING THE LOCATIONS OF CRANE(S) HORIZONTALLY AND VERTICALLY, RELATIVE TO THE TRACK(S) FOR EACH PHASE OF WORK. PICK LOCATIONS, OPERATING RADII, AND DELIVERY / DISPOSAL LOCATIONS SHALL BE INCLUDED. A LOCATION PLAN SHOWING ALL OBSTRUCTIONS SUCH AS WIRES, POLES, ADJACENT STRUCTURES, ETC., MUST BE INCLUDED OR INTEGRATED TO SHOW THAT THE PROPOSED LIFTS ARE CLEAR OF ALL OBSTRUCTIONS.

B) LIFTING EQUIPMENT DATA - INCLUDING CAPACITY CHARTS, COUNTERWEIGHT INFO, BOOM INFORMATION AND OTHER DATA SHEETS FOR HOISTING EQUIPMENT AND MATERIALS ADEQUATE FOR 150% OF THE ACTUAL WEIGHT OF THE PICK FOR ALL LIFTS IN OR ADJACENT TO THE RAILROAD SPAN OR WITH THE POTENTIAL TO FOUL THE RAILROAD SPAN. DATA SHEETS SHALL INCLUDE THE TYPE, SIZE, AND ARRANGEMENTS OF SLINGS, SHACKLES, OR OTHER CONNECTING APPARATUS TO ANY MEMBER OR LOAD. INCLUDE
COPIES OF CATALOG OR INFORMATION SHEETS FOR ANY SPECIALIZED EQUIPMENT OR MODIFICATIONS.

C) PROJECT PLAN DATA, MATERIAL DELIVERY DATA, AND/OR COMPUTATIONS SHOWING WEIGHT AND ORDER OF EACH PICK MUST BE SUBMITTED. WHERE BEAMS OR GIRDERS ARE BEING REMOVED OVER CSXT FACILITIES, THE WEIGHT SHALL INCLUDE THE WEIGHT OF CONCRETE AND ANY OTHER MATERIAL THAT WILL BE INCLUDED IN THE PICK. WEIGHT CALCULATIONS SHALL BE MADE FROM PLANS OF THE EXISTING AND/OR PROPOSED STRUCTURE SHOWING COMPLETE AND SUFFICIENT DETAILS WITH SUPPORTING DATA FOR THE DEMOLITION OR ERECTION FOR ANY PART OF THE STRUCTURE. IF THE SPONSOR CAN PROVE TO CSXT THAT PLANS DO NOT EXIST AND WEIGHTS MUST BE CALCULATED FROM FIELD MEASUREMENTS, THE FIELD MEASUREMENTS ARE TO BE MADE UNDER THE SUPERVISION OF THE LICENSED PROFESSIONAL ENGINEER SUBMITTING THE PROCEDURE AND HE SHALL INCLUDE SKETCHES AND ESTIMATED WEIGHT CALCULATIONS WITH HIS PROCEDURE. IF POSSIBLE, FIELD MEASUREMENTS SHALL BE TAKEN WITH A CSXT REPRESENTATIVE PRESENT.

D) IF THE PROCEDURE INVOLVES EITHER THE CUTTING OF STEEL MEMBERS IN DEMOLITION, THE BOLTING OF JOINTS IN MEMBER ERECTION, OR THE POTENTIAL TO CAUSE A HAZARD TO CSXT OPERATIONS, A DETAILED STAGING PLAN WITH ESTIMATED DURATIONS FOR WORK WILL BE REQUIRED. TEMPORARY SUPPORT AND STABILITY OF ALL COMPONENTS IN INTERMEDIATE REMOVAL STAGES ARE TO BE SHOWN AND DETAILED. INTERMEDIATE STAGES MUST BE DESIGNED TO ALLOW RAILROAD TRAFFIC TO PASS SAFELY THROUGH THE WORK ZONE. A GUARDRAIL (RAILROAD) WILL BE REQUIRED TO BE INSTALLED IN A TRACK WHERE A TEMPORARY BENT IS LOCATED WITHIN TWELVE (12) FEET FROM THE CENTERLINE OF THAT TRACK..

E) A COMPLETE WRITTEN PROCEDURE IS TO BE INCLUDED WITH THE STAGING PLAN DESCRIBED IN (D), INDICATING THE ORDER OF LIFTS AND ANY REPOSITIONING OR RE-HITCHING OF THE CRANE OR CRANES. A TIME SCHEDULE OF THE INTERMEDIATE STAGES MUST BE SHOWN AS WELL AS AN ESTIMATE FOR HOW LONG IT WILL TAKE FOR THE ENTIRE LIFTING PROCEDURE IN RAILROAD SPANS.

F) FOR DECK SLAB AND PARAPET REMOVAL: DEMOLITION SHIELD DESIGN SUBMITTALS MUST INCLUDE A PLAN VIEW OF THE ROADWAY AND PROFILE VIEW RELATIVE TO THE RAILROAD TRACK CENTERLINE. IT MUST INCLUDE EXISTING AND PROPOSED HORIZONTAL AND VERTICAL CLEARANCE TO ANY OBSTRUCTION, MEASURED TO THE TOP OF RAIL AND NOT ENCROACH ON THE PROJECT TEMPORARY CLEARANCES. ALONG WITH THE SHIELD DETAILS AND COMPONENTS, ONE SET OF DESIGN CALCULATIONS VERIFYING THE LOAD CAPACITY OF THE SHIELD IS REQUIRED. THE SHIELD SHOULD BE DESIGNED FOR A MINIMUM LOAD OF FIFTY (50) POUNDS PER SQUARE FEET PLUS THE WEIGHT OF EQUIPMENT, DEBRIS, AND ANY OTHER LOAD INTENDED TO BE SUPPORTED. PROTECTION SHIELDS SHALL BE BRACED FROM WITHIN THE STRUCTURE OR SUSPENDED OVER THE OPERATING TRACK WITHOUT VIOLATING EXISTING OR APPROVED TEMPORARY CLEARANCES AND NO MATERIAL WILL BE ALLOWED TO FALL ONTO THE TRACK. GEOFABRIC MATERIAL WILL BE INSTALLED OVER THE BALLAST SECTION AND DITCHES TO THE SATISFACTION OF THE RR REPRESENTATIVES PRIOR TO SAWCUT TO PROTECT THE TRACK STRUCTURE FROM CONCRETE SLURRY AND OTHER FINES. NO CRANE MATS OR OTHER OBSTRUCTIONS TO TRAIN MOVEMENTS WILL BE PLACED ON TRACKS FOR STRUCTURE DEMOLITION PURPOSES.

H) ALL BRIDGE ERECTION OR DEMOLITION PROCEDURES SUBMITTED SHALL BE PREPARED, SIGNED AND SEALED BY A LICENSED REGISTERED PROFESSIONAL ENGINEER.
I) THREE (3) COPIES OF THE SUBMITTAL PROCEDURE (NO LARGER THAN 11" X 17") ARE TO BE SENT TO CSXT'S RIGHT-OF-WAY CONSTRUCTION ENGINEER OR A DESIGNATE IDENTIFIED AT THE PRECONSTRUCTION MEETING. THE SPONSOR OR CONTRACTOR CAN EXPECT A MINIMUM THIRTY (21) DAY REVIEW PERIOD FROM THE DAY THE SUBMITTAL OR RESUBMITTAL IS RECEIVED BY CSXT ENGINEERING OR HIS DESIGNATE.

J) CSXT'S ENGINEERING AND OPERATIONS REPRESENTATIVES MUST BE PRESENT AT THE SITE DURING THE ENTIRE DEMOLITION AND ERECTION PROCEDURE PERIOD. THE SPONSOR MUST NOTIFY THE RAILROAD REPRESENTATIVE AT LEAST SEVEN (7) DAYS IN ADVANCE OF THE WORK. NO CHANGES WILL BE ACCEPTED AFTER THAT TIME.

K) THE NAME AND EXPERIENCE OF THE EMPLOYEE SUPERVISING THIS OPERATION MUST BE SUPPLIED TO CSXT IN THE SUBMITTAL.

RAILROAD AERIAL LINES MAY NEED TO BE TEMPORARILY RELOCATED BY THE RAILROAD DURING PIER 4 DEMOLITION AND CONSTRUCTION. CONTACT THE RAILROAD PRIOR TO PIER 4 DEMOLITION AND CONSTRUCTION TO DETERMINE NEED FOR TEMPORARY RELOCATION AND CLEARANCE REQUIREMENTS. USE ALL PRECAUTIONS NECESSARY TO SEE THAT THE LINES ARE NOT DISTURBED DURING THE CONSTRUCTION STAGE AND COOPERATE WITH THE RAILROAD IN THE RELOCATION OF THESE LINES. THE COST OF THE RELOCATION WILL BE INCLUDED IN THE RAILROAD FORCE ACCOUNT WORK.

UTILITY LINES:
THE UTILITY(IES) SHALL BORE ALL EXPENSE INVOLVED IN RELOCATING (INSTALLING) THE AFFECTED UTILITY LINES. THE CONTRACTOR AND UTILITY(IES) ARE TO COOPERATE BY ARRANGING THEIR WORK IN SUCH A MANNER THAT INCONVENIENCE TO EITHER WILL BE HELD TO A MINIMUM.

CONCRETE PARAPETS:
AS SOON AS A CONCRETE SAW CAN BE OPERATED WITHOUT DAMAGING THE FRESHLY PLACED CONCRETE, SAWCUT 1 1/4" DEEP CONTROL JOINTS INTO THE PERIMETER OF THE CONCRETE PARAPET STARTING AND ENDING AT THE ELEVATION OF THE CONCRETE DECK. PLACE THE SAWCUTS AT A MINIMUM OF 6 FEET AND A MAXIMUM OF 10 FEET CENTERS. USE AN EDGE GUIDE, FENCE, OR JIG TO ENSURE THAT THE CUT JOINT IS STRAIGHT, TRUE, AND ALIGNED ON ALL FACES OF THE PARAPET. THE JOINT WIDTH SHALL BE THE WIDTH OF THE SAW BLADE, A NOMINAL WIDTH OF 1/4" INCH. SEAL THE PERIMETER OF THE DEFLECTION CONTROL JOINT TO A MINIMUM DEPTH OF 1 INCH WITH A POLYURETHANE OR POLYMERIC MATERIAL CONFORMING TO ASTM C920, TYPE S. LEAVE THE BOTTOM 1/2 INCH OF THE INSIDE AND OUTSIDE FACE UNSEALED TO ALLOW WATER TO ESCAPE.

ITEM 511, CLASS HP CONCRETE, BRIDGE DECK (PARAPET)
THE PAYMENT FOR THIS ITEM INCLUDES THE ROADWAY PARAPET AND THE RAISED MEDIAN.

ITEM 511, CLASS HP CONCRETE FOR BRIDGE DECK
THE PAYMENT FOR THIS ITEM DOES NOT INCLUDE THE ROADWAY PARAPET AND THE RAISED MEDIAN.

ITEM 512, SEALING OF CONCRETE SURFACES (EPOXY-URETHANE), AS PER PLAN: THIS ITEM SHALL CONSIST OF THE APPLICATION OF BOTH AN EPOXY AND URETHANE SEALER TO THE CONCRETE SURFACES DESIGNATED ON THE PLANS. THE COLOR OF URETHANE COATING ON ALL CONCRETE SHALL BE FEDERAL COLOR STANDARD NO. 17778 (LIGHT NEUTRAL)

ITEM 516, 2" PREFORMED EXPANSION JOINT FILLER, AS PER PLAN
THE PAYMENT FOR THIS ITEM INCLUDES THE 4 INCH DEEP HOT APPLIED JOINT SEALER (705.04).

REMOVAL, REINSTALLATION AND MAINTENANCE OF THE EXISTING LIGHT POSTS IS INCLUDED WITH THE ROADWAY QUANTITIES FOR PAYMENT.

PROPOSED WORK
THE IMPROVEMENT CONSISTS OF THE RECONSTRUCTION OF THE DAYTON EXPRESSWAY BRIDGE OVER KEOWEE STREET, AND THE CSX TRANSPORTATION INC., AND INCLUDES SUPERSTRUCTURE REMOVAL AND REPLACEMENT, REHABILITATION OF THE PIERS AND ABUTMENTS AND NEW APPROACH SLABS. REMOVE THE EXISTING SUPERSTRUCTURE, INCLUDING BRIDGE DECK, PARAPET AND RAILING, AND STRUCTURAL STEEL BEAMS AND GIRDERS, INCLUDING BEARING DEVICES. RECONSTRUCT THE SUPERSTRUCTURE WITH NEW STEEL GIRDERS, BEARINGS AND CONCRETE BRIDGE DECK AND PARAPETS.AT THE ABUTMENTS, REMOVE AND REPLACE BACKWALLS AND PORTIONS OF THE WINGWALLS. AT PIERS 1 AND 2, REMOVE AND REPLACE ALL COLUMNS AND PIER CAPS. AT PIERS 3 AND 4, REMOVE AND REPLACE PORTIONS OF THE HAMMERHEAD PIERS.

PREPARED BY:
R.W. ARMSTRONG & ASSOCIATES
471 EAST BROAD STREET, SUITE 2010
COLUMBUS, OH 43215
OFFICE (614) 225-8888 FAX (614) 225-8869

DESIGNED	DRAWN	REVIEWED	DATE
SRS	CLF	PAR	12/22/06
CHECKED	REVISED	STRUCTURE FILE NUMBER	
TDJ		5760569	

GENERAL NOTES
BRIDGE No. DAY-XWAY-00.79
DAYTON EXPRESSWAY OVER KEOWEE STREET AND CSXT RAILROAD

MOT-XWAY
PID NO. 77774

IMAGE FILES : NONE
XREFERENCES : XR-DAY-XWAY-TITBLK;
FILE NAME : P:\Transportation\20053370 Dayton Expressway 3\30 SheetDrawings\20 Singles\General Notes.dwg / Layout1
MRO\INT : 12-FEB-07, 09:51:51 / sschicke

ESTIMATED QUANTITIES

ITEM	ITEM EXT.	TOTAL	UNIT	DESCRIPTION	ABUTMENTS REAR	ABUTMENTS FORWARD	SUPERSTRUCTURE WB	SUPERSTRUCTURE EB	PIERS 1	PIERS 2	PIERS 3	PIERS 4	GEN'L	REFERENCE SHEET NO.
202	11203	LUMP	LUMP SUM	PORTIONS OF STRUCTURE REMOVED, OVER 20 FOOT SPAN, AS PER PLAN										2/65
202	22900	494	SQ. YD.	APPROACH SLAB REMOVED									494	
503	21101	451	CU. YD.	UNCLASSIFIED EXCAVATION, AS PER PLAN	227	220			4	4				2/65
509	10000	648328	POUND	EPOXY COATED REINFORCING STEEL	8794	8818	238169	288404	37817	38852	12088	13872	1514	
509	20001	200	POUND	REINFORCING STEEL, REPLACEMENT OF EXISTING REINFORCING STEEL, AS PER PLAN									200	2/65
510	10000	1628	EACH	DOWEL HOLES WITH NONSHRINK, NONMETALLIC GROUT	606	594			88	88	128	124		
511	40500	455	CU. YD.	CLASS C CONCRETE, PIER ABOVE FOOTINGS					143	154	73	85		
511	44100	197	CU. YD.	CLASS C CONCRETE, ABUTMENT NOT INCLUDING FOOTING	90	107								
511	50000	1583	CU. YD.	CLASS HP CONCRETE, BRIDGE DECK			787	796						
511	50100	200	CU. YD.	CLASS HP CONCRETE, BRIDGE DECK (PARAPET)			128	72						
512	10101	5450	SQ. YD.	SEALING OF CONCRETE SURFACES (EPOXY-URETHANE), AS PER PLAN	145	147	1394	1018	524	536	697	882	107	2/65
512	10600	95	FT.	CONCRETE REPAIR BY EPOXY INJECTION						95				
512	33000	4	SQ. YD.	TYPE 2 WATERPROOFING	2	2								
513	10320	1099245	POUND	STRUCTURAL STEEL MEMBERS, LEVEL 5			580349	518896						
513	20000	13509	EACH	WELDED STUD SHEAR CONNECTORS			6246	7263						
516	10001	360	FT.	PREFORMED ELASTOMERIC COMPRESSION JOINT SEAL, AS PER PLAN									360	40/64
516	11211	300	FT.	STRUCTURAL EXPANSION JOINT INCLUDING ELASTOMERIC STRIP SEAL, AS PER PLAN	153	147								4/65
516	13600	321	SQ. FT.	1" PREFORMED EXPANSION JOINT FILLER									60	
516	13900	72	SQ. FT.	2" PREFORMED EXPANSION JOINT FILLER									72	
516	13901	75	SQ. FT.	2" PREFORMED EXPANSION JOINT FILLER, AS PER PLAN									75	2 & 50-53/65
516	44200	30	EACH	3 3/32" THICK X 12" X 12" ELASTOMERIC BEARING WITH INTERNAL LAMINATES AND LOAD PLATE (NEOPRENE)	15	15								
516	44100	33	EACH	2 1/32" THICK X 18" X 18" ELASTOMERIC BEARING WITH INTERNAL LAMINATES AND LOAD PLATE (NEOPRENE)					15	7	11			
516	44100	16	EACH	2 3/16" THICK X 10" X 16" ELASTOMERIC BEARING WITH INTERNAL LAMINATES AND LOAD PLATE (NEOPRENE)						16				
516	44100	4	EACH	2 3/16" THICK X 10" X 16" ELASTOMERIC BEARING WITH INTERNAL LAMINATES AND LOAD PLATE (NEOPRENE)							4			
516	44200	15	EACH	3 3/32" THICK X 16" X 18" ELASTOMERIC BEARING WITH INTERNAL LAMINATES AND LOAD PLATE (NEOPRENE)								15		
518	12301	3	EACH	SCUPPERS, INCLUDING SUPPORTS, AS PER PLAN (TYPE A)			3							48 & 49/65
518	12301	2	EACH	SCUPPERS, INCLUDING SUPPORTS, AS PER PLAN (TYPE B)				2						48 & 49/65
518	21200	123	CU. YD.	POROUS BACKFILL WITH FILTER FABRIC	62	61								
518	40000	320	FT.	6" PERFORATED CORRUGATED PLASTIC PIPE	160	160								
518	40011	24	FT.	6" NON-PERFORATED CORRUGATED PLASTIC PIPE, INCLUDING SPECIALS, AS PER PLAN	12	12								2/65
518	43301	310	FT.	6" PIPE DOWNSPOUT, INCLUDING SPECIALS, AS PER PLAN					280	30				48 & 49/65
519	11101	420	SQ. FT.	PATCHING CONCRETE STRUCTURE, AS PER PLAN					70	73	156	121		2/65
526	25001	733	SQ. YD.	REINFORCED CONCRETE APPROACH SLAB (T=15"), AS PER PLAN	353	380								2 & 50-53/65
609	24000	80	FT.	CURB, TYPE 4A									80	
843	50000	50	SQ. FT.	PATCHING CONCRETE STRUCTURES WITH TROWELABLE MORTAR									50	
885	00060	78000	SQ. FT.	FIELD PAINTING STRUCTURAL STEEL, INTERMEDIATE COAT, WITH WARRANTY			39000	39000						
885	00066	78000	SQ. FT.	FIELD PAINTING STRUCTURAL STEEL, FINISH COAT,WITH WARRANTY			39000	39000						
885	10000	6	EACH	FINAL INSPECTION REPAIR			3	3						

PREPARED BY:
R.W. ARMSTRONG & ASSOCIATES
471 EAST BROAD STREET, SUITE 2010
COLUMBUS, OH 43215
OFFICE (614) 225-8868 FAX (614) 225-8869

DESIGNED	DRAWN	REVIEWED	DATE
SRS	CLF	PAR	12/22/06
CHECKED	REVISED	STRUCTURE FILE NUMBER	
TDJ		5760569	

ESTIMATED QUANTITIES
BRIDGE No. DAY-XWAY-00.79
DAYTON EXPRESSWAY OVER KEOWEE STREET AND CSXT RAILROAD

MOT-XWAY
PID NO. 77774

IMAGE FILES : NONE
XREFERENCES : XR-DAY-XWAY-TITBLK;
FILE NAME : P:\Transportation\20053370 Dayton Expressway 3\30 Sheet\Drawings\20 Singles\Quantities.dwg / Layout1
WED\WT : 13-FEB-07, 17:03:41 / SJohnson

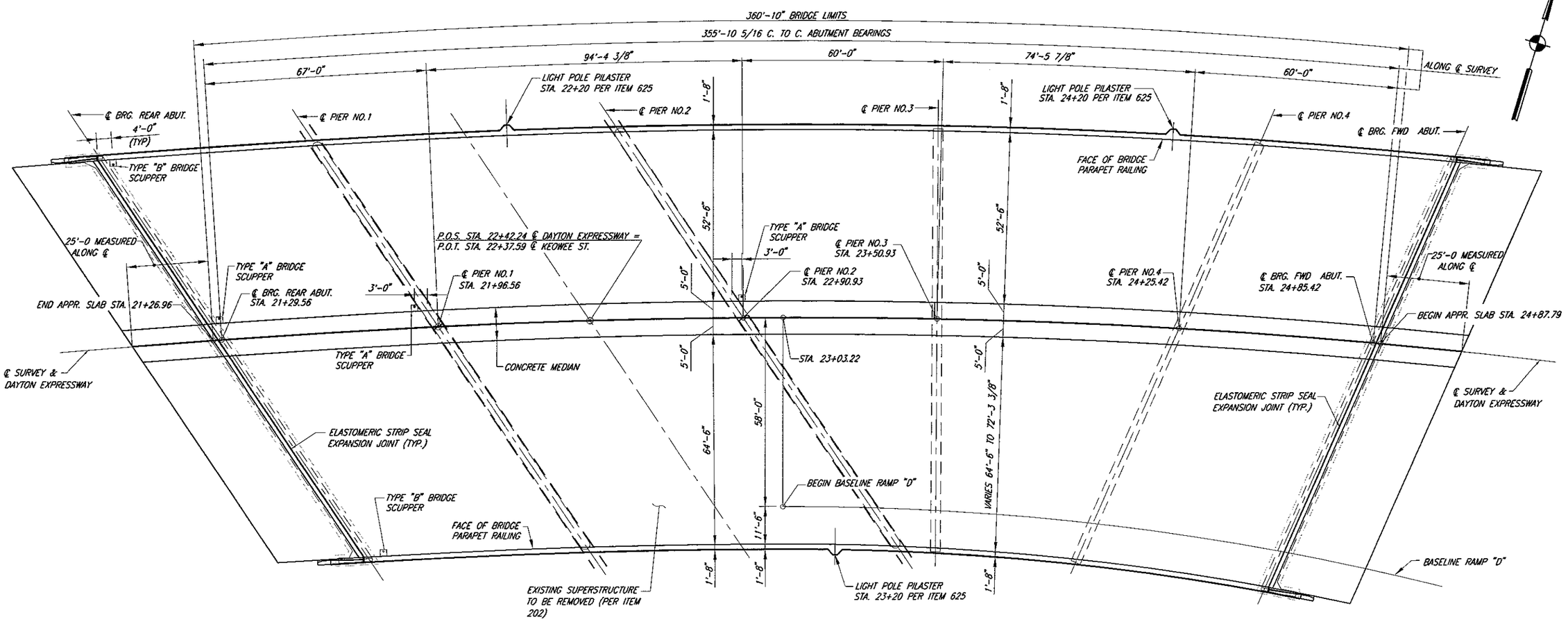

PLAN

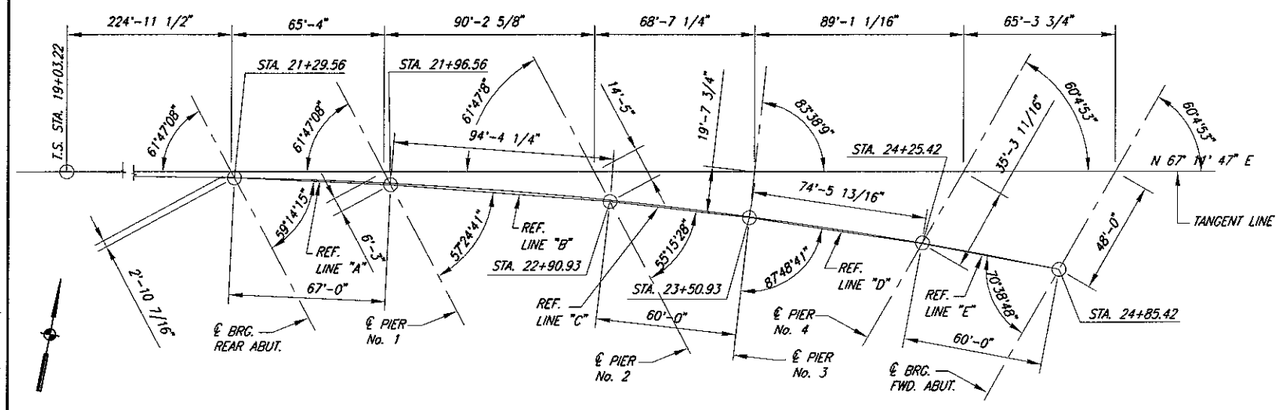

REFERENCE TANGENT / KEY PLAN

CURVE DATA

DAYTON EXPRESSWAY

P.I. STA. 25+54.43
Δ = 26° 32' 33" RT.
Dc = 3° 00' 00"
Rc = 1909.86'
Lc= 484.75'
Ts= 651.21'
Ls= 400'
θs= 6° 00' 00"
Es= 55.99'
S.E.= 0.06375 FT./FT.

BASELINE – RAMP "D"

P.I. STA. 1+81.66 "D"
Δ = 24° 21' 57" RT.
D = 7°00'00"
R = 818.51'
Lc= 248.09'
Ls= 200.00'
Tc= 181.66'
Ts= 272.16'

NOTE:

1. TANGENT LINE IS TANGENT TO ℄ DAYTON EXPRESSWAY AT TS STA. 19+03.22.
2. ℄ BRG. REAR ABUT, PIER No. 1 AND PIER No. 2 ARE PARALLEL. ℄ PIER No. 4 AND ℄ BRG. FWD. ABUT ARE ALSO PARALLEL.
3. REFERENCE LINES "A" THRU "E" ARE CHORDS BETWEEN STATION POINTS.
4. FOR SUPERELEVATION TRANSITION INFORMATION, SEE ROADWAY PLANS.

IMAGE FILES : NONE
XREFERENCES : LAYOUT KEY: XR-DAY-XWAY-TITBLK;
FILE NAME : P:\Transportation\2005337D Dayton Expressway 3\30 SheetDrawings\2D Singles\General-Plan-01.dwg / Layout1
WRD\INT : 12-FEB-07, 16:28:57 / Cfitts

PREPARED BY:
R.W. ARMSTRONG & ASSOCIATES
471 EAST BROAD STREET, SUITE 2010
COLUMBUS, OH 43215
OFFICE (614) 225-8888 FAX (614) 225-8869

DESIGNED	DRAWN	REVIEWED	DATE
SRS	CLF	PAR	12/22/06
CHECKED	REVISED	STRUCTURE FILE NUMBER	
TDJ		5760569	

GENERAL PLAN
BRIDGE No. DAY-XWAY-00.79
DAYTON EXPRESSWAY OVER KEOWEE STREET AND CSXT RAILROAD

MOT-XWAY
PID NO. 77774

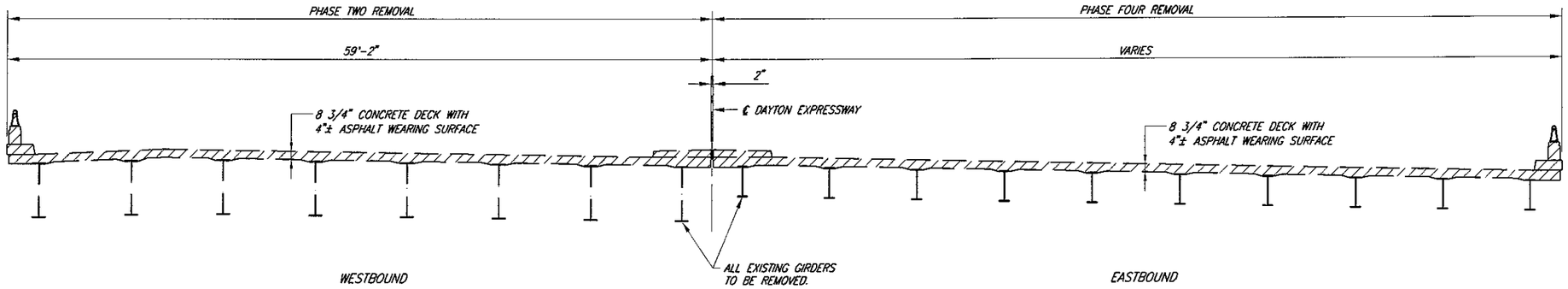

TYPICAL TRANSVERSE SECTION THROUGH SUPERSTRUCTURE

- HATCHING INDICATES EXISTING STRUCTURE TO BE REMOVED

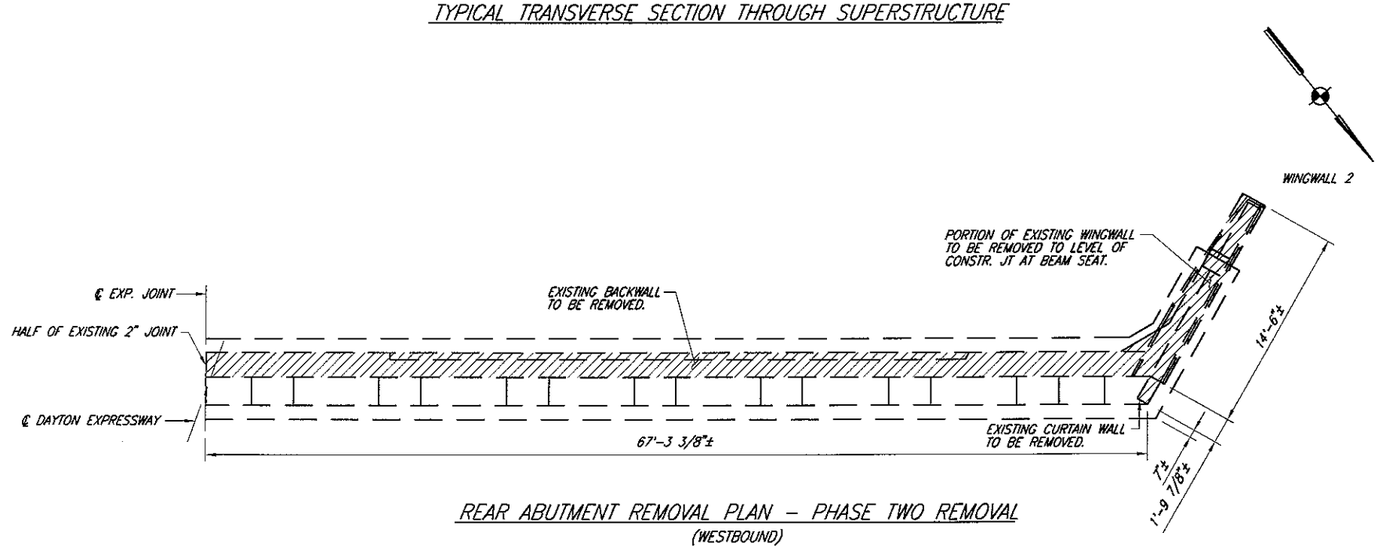

REAR ABUTMENT REMOVAL PLAN – PHASE TWO REMOVAL
(WESTBOUND)

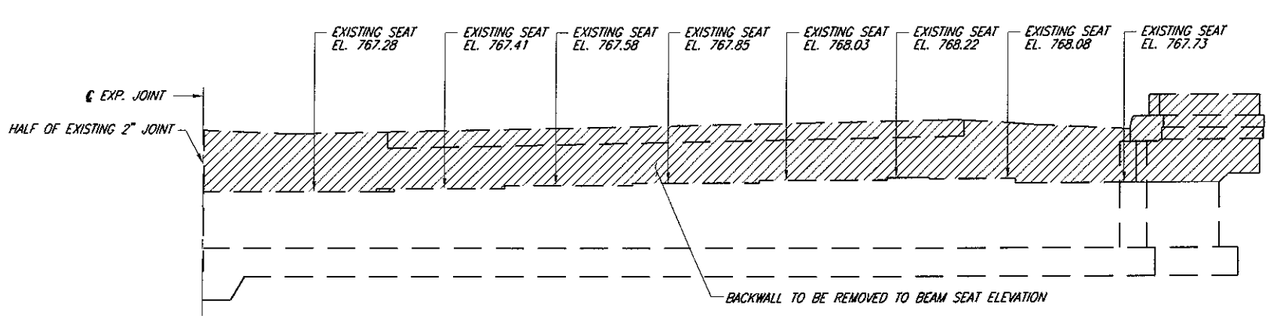

REAR ABUTMENT REMOVAL ELEVATION – PHASE TWO REMOVAL
(WESTBOUND)

NOTE:
1. FOR TYPICAL ABUTMENT SECTION AND WINGWALL ELEVATION, SEE SHEET 6/65.

PREPARED BY:
R.W. ARMSTRONG & ASSOCIATES
471 EAST BROAD STREET, SUITE 2010
COLUMBUS, OH 43215
OFFICE (614) 225-8868 FAX (614) 225-8869

DESIGNED	DRAWN	REVIEWED	DATE
SRS	CLF	PAR	12/22/06
CHECKED	REVISED	STRUCTURE FILE NUMBER	
TDJ		5760569	

REMOVAL DETAILS 1 OF 7
BRIDGE No. DAY-XWAY-00.79
DAYTON EXPRESSWAY OVER KEOWEE STREET AND CSXT RAILROAD

MOT-XWAY
PID NO. 77774

IMAGE FILES : NONE
XREFERENCES : XR-DAY-XWAY-TITBLK;
FILE NAME : P:\Transportation\20053370 Dayton Expressway 3\30 Sheet Drawings\20 Singles\Removal - 1 of 7.dwg / Layout1
MMD\WN1 : 12-FEB-07, 15:37:58 / CFitts

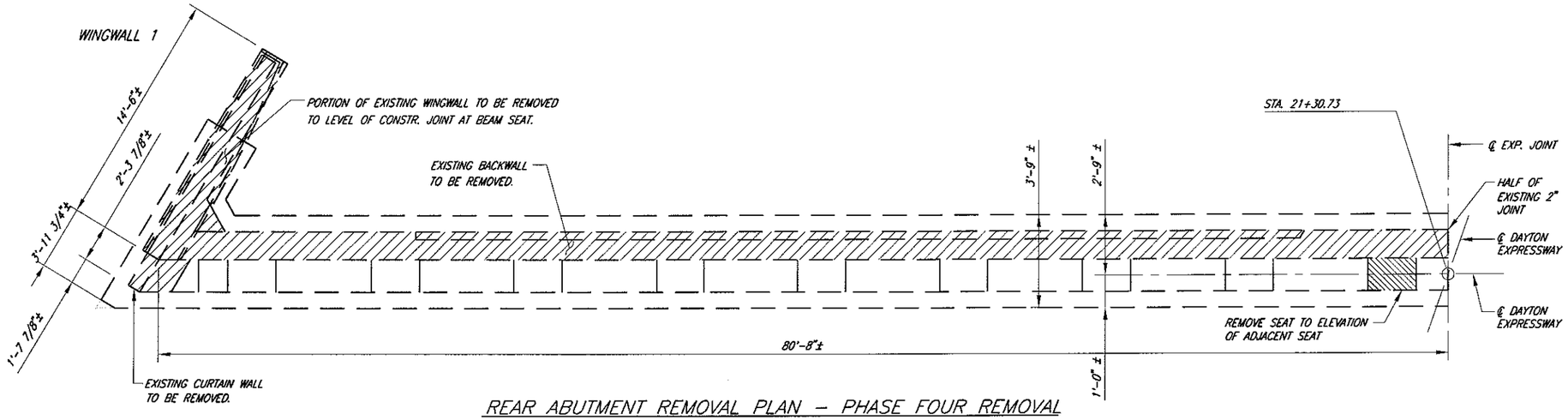

REAR ABUTMENT REMOVAL PLAN – PHASE FOUR REMOVAL
(EASTBOUND)

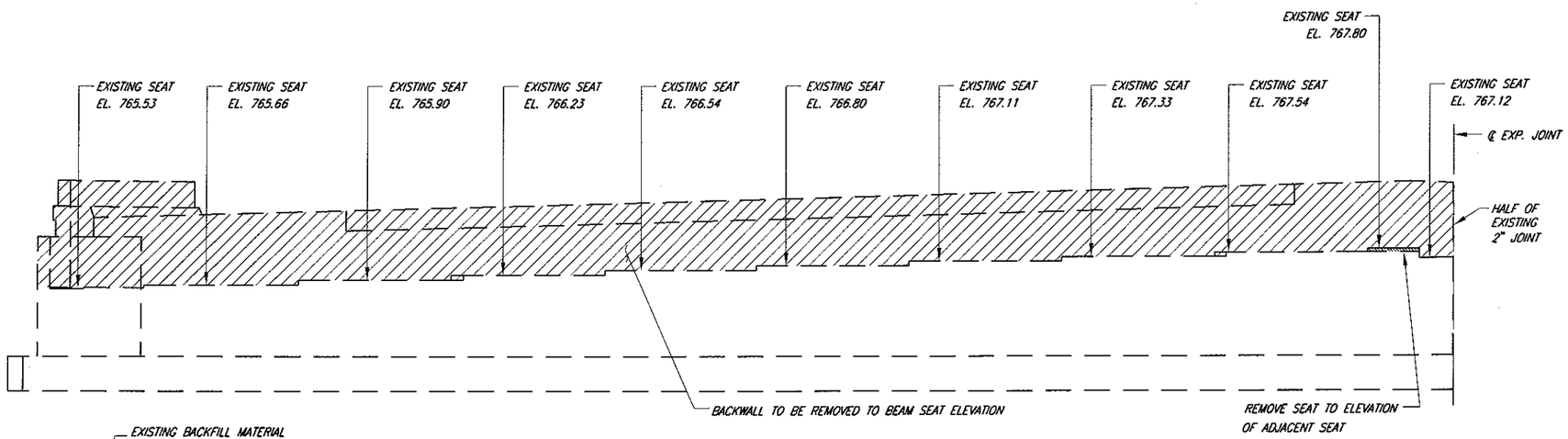

REAR ABUTMENT REMOVAL ELEVATION – PHASE FOUR REMOVAL
(EASTBOUND)

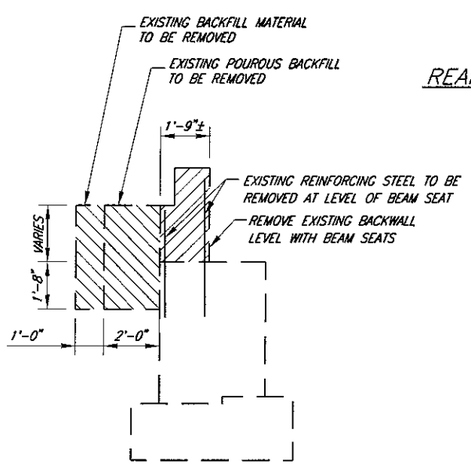

TYPICAL ABUTMENT SECTION

- HATCHING INDICATES EXISTING STRUCTURE TO BE REMOVED

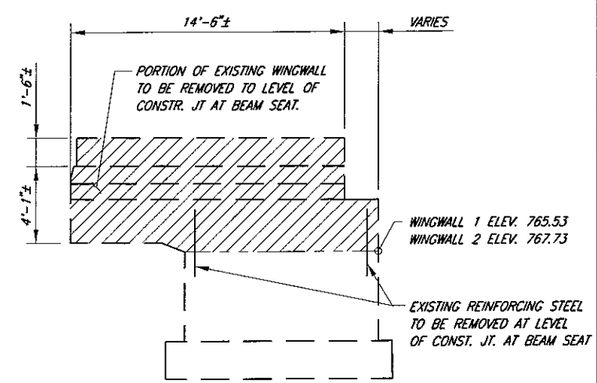

TYPICAL REAR ABUTMENT WINGWALL

PREPARED BY:
R.W. ARMSTRONG & ASSOCIATES
471 EAST BROAD STREET, SUITE 2010
COLUMBUS, OH 43215
OFFICE (614) 225-8868 FAX (614) 225-8869

DESIGNED	DRAWN	REVIEWED	DATE
SRS	CLF	PAR	12/22/06
CHECKED	REVISED	STRUCTURE FILE NUMBER	
TDJ		5760569	

REMOVAL DETAILS 2 OF 7
BRIDGE No. DAY-XWAY-00.79
DAYTON EXPRESSWAY OVER KEOWEE STREET AND CSXT RAILROAD

MOT-XWAY
PID NO. 77774

IMAGE FILES : NONE
XREFERENCES : XR-DAY-XWAY-TITBLK;
FILE NAME : P:\Transportation\20053370 Dayton Expressway 3\30 Sheet\Drawings\20 Singles\Removal - 2 of 7.dwg / Layout1
WED\NT : 12-FEB-07, 16:39:53 / kschickel

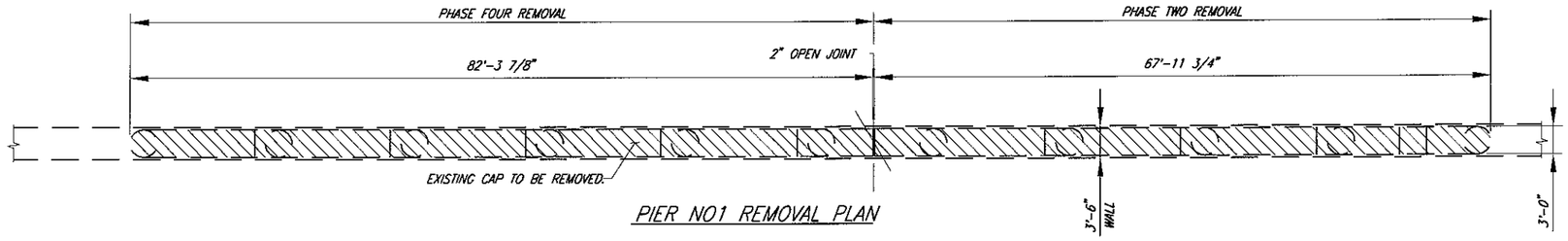

PIER NO1 REMOVAL PLAN

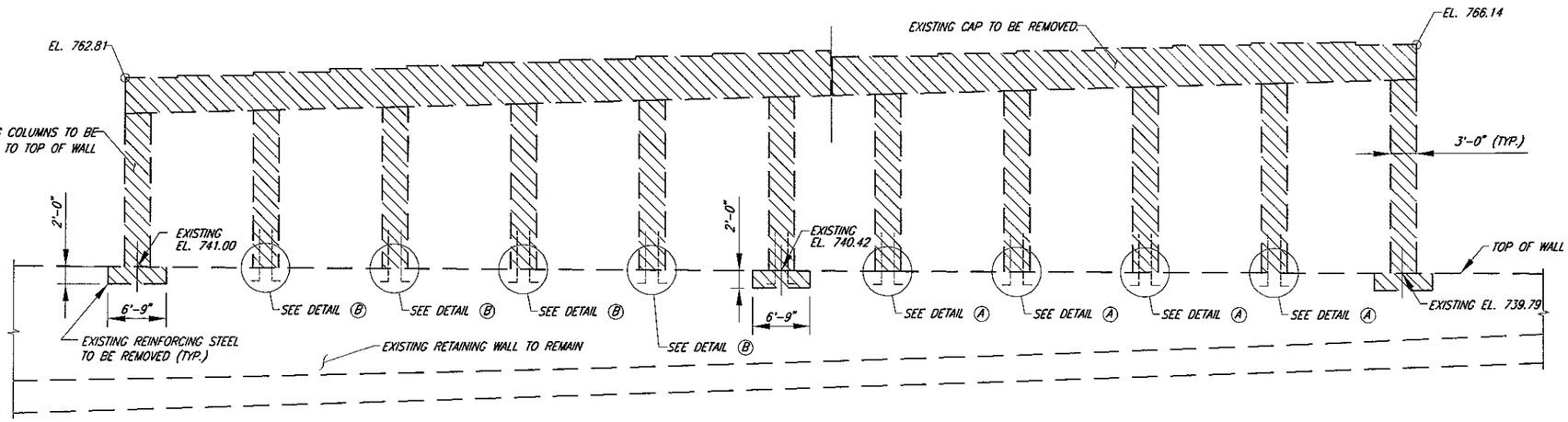

PIER NO.1 LOOKING DOWNSTATION

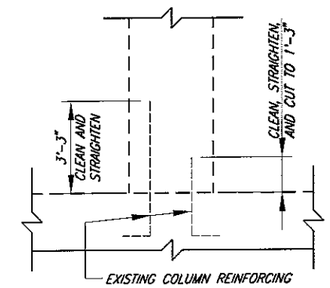

DETAIL (A)

NOTE:
CLEAN AND STRAIGHTEN ALL COLUMN REINFORCING EXTENDING FROM WALL. CUT EVERY OTHER BAR AS SHOWN.

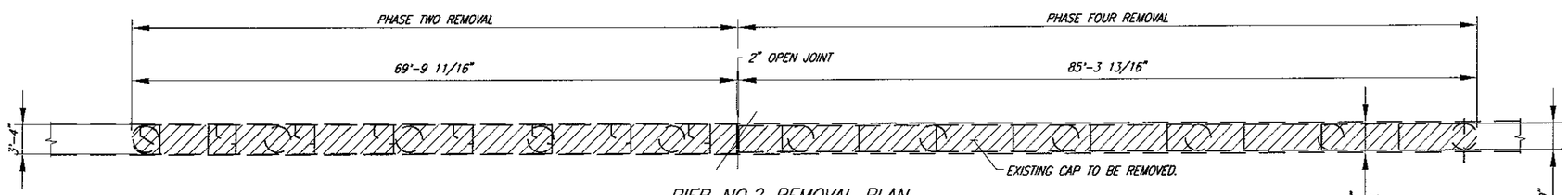

PIER NO.2 REMOVAL PLAN

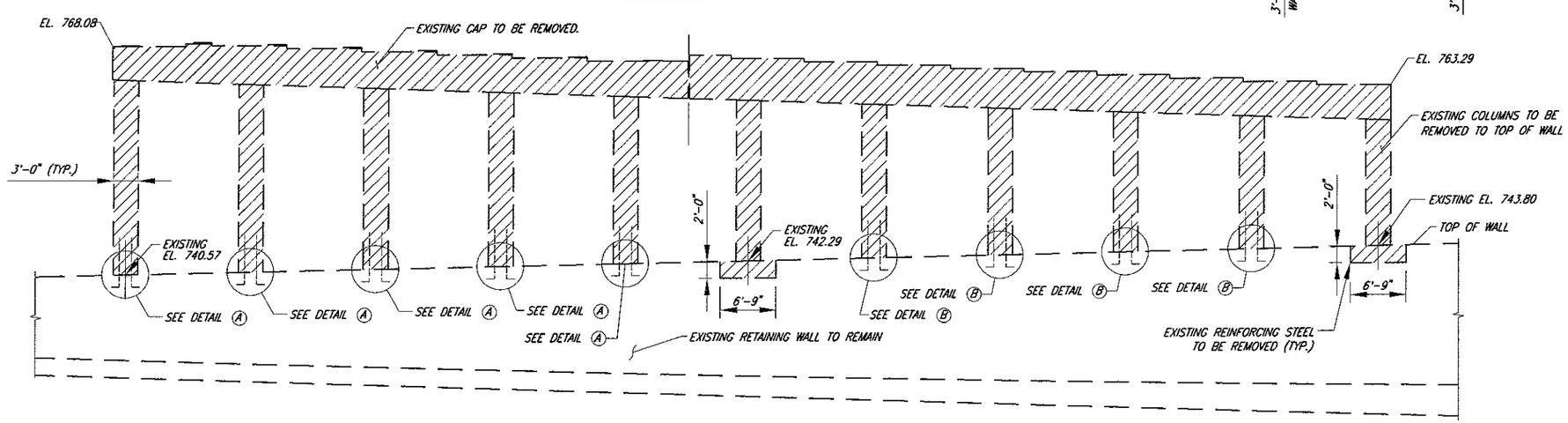

PIER NO.2 LOOKING UPSTATION

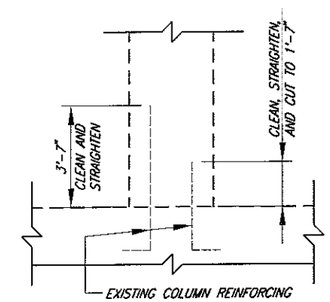

DETAIL (B)

NOTE:
CLEAN AND STRAIGHTEN ALL COLUMN REINFORCING EXTENDING FROM WALL. CUT EVERY OTHER BAR AS SHOWN.

▨ - HATCHING INDICATES EXISTING STRUCTURE TO BE REMOVED

PREPARED BY:
R.W. ARMSTRONG & ASSOCIATES
471 EAST BROAD STREET, SUITE 2010
COLUMBUS, OH 43215
OFFICE (614) 225-8888 FAX (614) 225-8869

DESIGNED	DRAWN	REVIEWED	DATE
SRS	CLF	PAR	12/22/06
CHECKED	REVISED	STRUCTURE FILE NUMBER	
TDJ		5780569	

REMOVAL DETAILS 3 OF 7
BRIDGE No. DAY-XWAY-00.79
DAYTON EXPRESSWAY OVER KEONEE STREET AND CSXT RAILROAD

MOT-XWAY
PID NO. 77774

IMAGE FILES : NONE
XREFERENCES : XR-DAY-XWAY-TITBLK;
FILE NAME : P:\Transportation\30053370 Dayton Expressway 3\30 SheetDrawings\20 Singles\Removal - 3 of 7.dwg / Layout1
NRD\NT : 12-FEB-07, 17:04:39 / sschickel

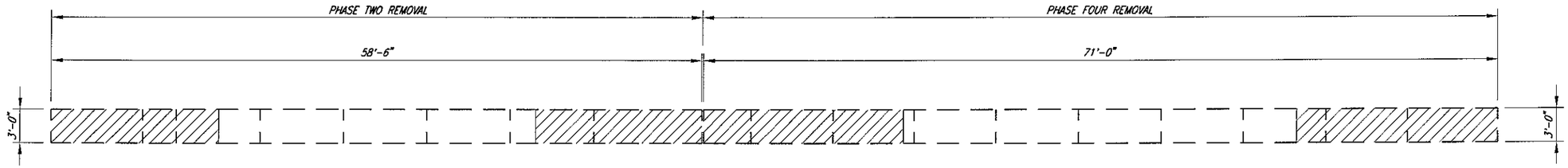

PIER NO.3 REMOVAL PLAN

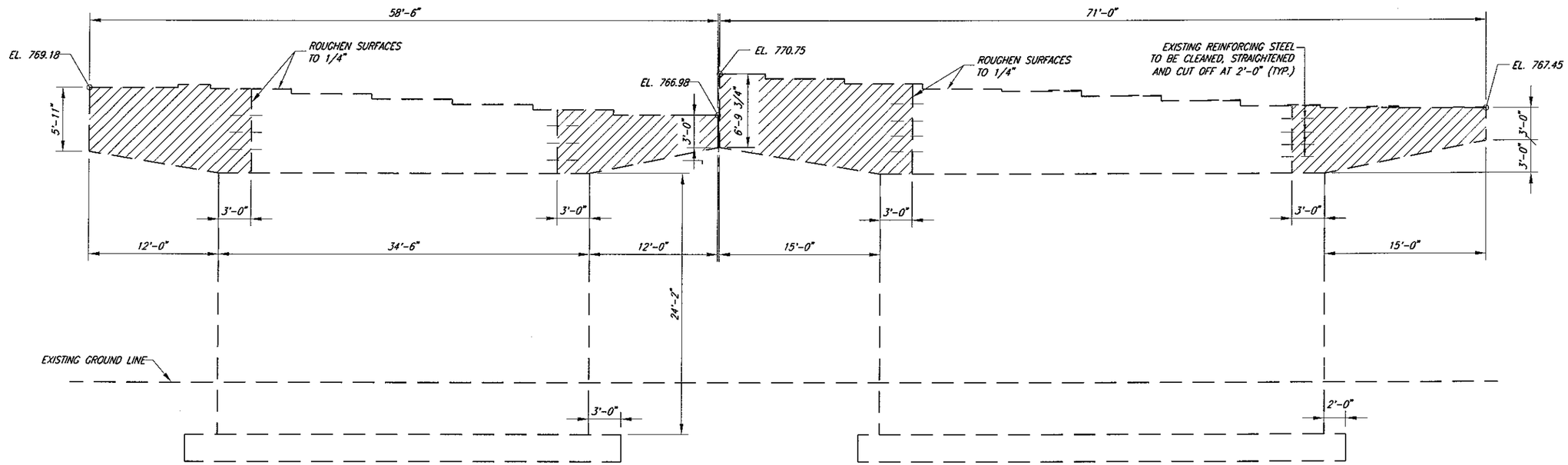

PIER NO.3 REMOVAL ELEVATION

- HATCHING INDICATES EXISTING STRUCTURE TO BE REMOVED

IMAGE FILES : NONE
XREFERENCES : XR-DAY-XWAY-TITBLK;
FILE NAME : P:\Transportation\X0053370 Dayton Expressway 3\30 SheetDrawings\2D Singles\Removal - 4 of 7.dwg / Layout1
MOD\WT : 12-FEB-07, 13:36:34 / CTK1s

PREPARED BY:
R.W. ARMSTRONG & ASSOCIATES
471 EAST BROAD STREET, SUITE 2010
COLUMBUS, OH 43215
OFFICE (614) 225-8868 FAX (614) 225-8869

DESIGNED	DRAWN	REVIEWED	DATE
SRS	CLF	PAR	12/22/06
CHECKED	REVISED	STRUCTURE FILE NUMBER	
TDJ		5760569	

REMOVAL DETAILS 4 OF 7
BRIDGE No. DAY-XWAY-00.79
DAYTON EXPRESSWAY OVER KEONEE STREET AND CSXT RAILROAD

MOT-XWAY
PID NO. 77774

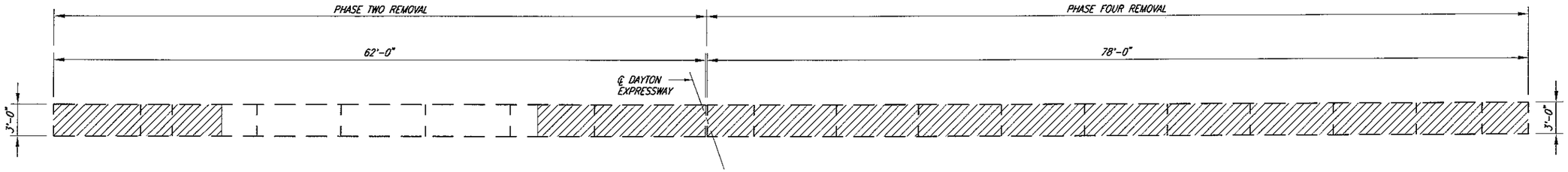

PIER NO.4 REMOVAL PLAN

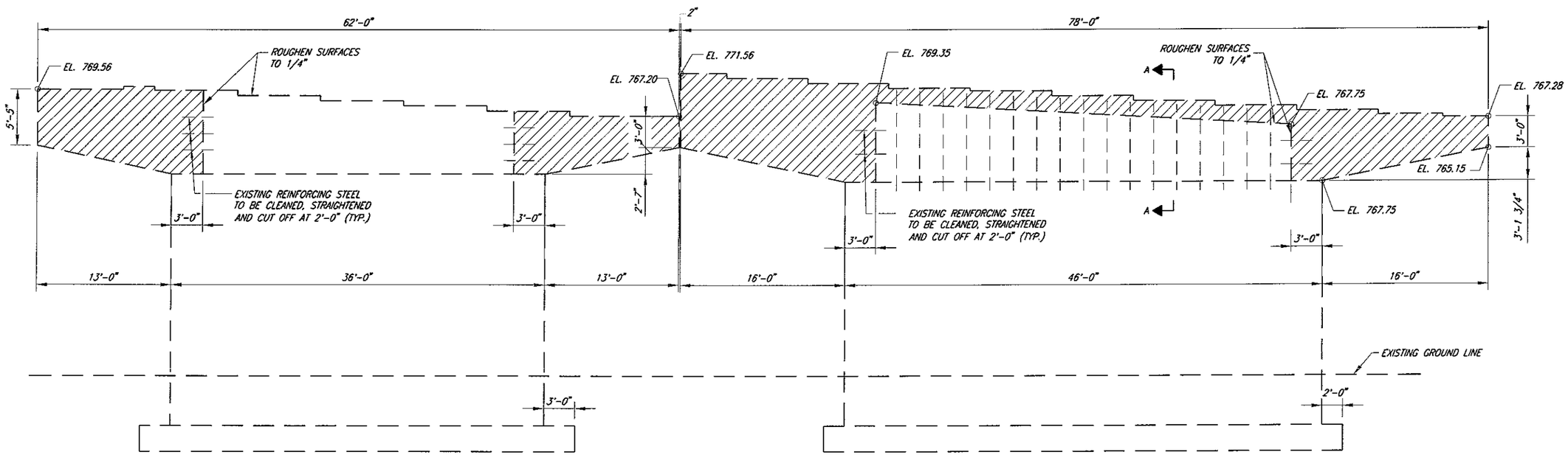

WESTBOUND

EASTBOUND

PIER NO.4 REMOVAL ELEVATION

- HATCHING INDICATES EXISTING STRUCTURE TO BE REMOVED

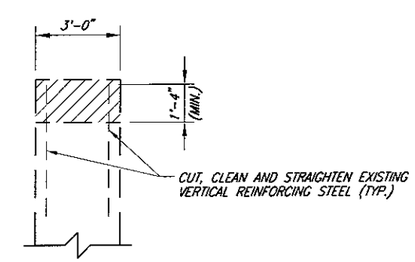

SECTION A-A

IMAGE FILES : NONE
XREFERENCES : XR-DAY-XWAY-TITBLK;
FILE NAME : P:\Transportation\20053370 Dayton Expressway 3\30 SheetDrawings\20 Singles\Removal - 5 of 7.dwg / Layout1
MRD\MT : 12-FEB-07, 15:35:39 / CPKlis

PREPARED BY:
R.W. ARMSTRONG & ASSOCIATES
471 EAST BROAD STREET, SUITE 2010
COLUMBUS, OH 43215
OFFICE (614) 225-8888 FAX (614) 225-8869

DESIGNED	DRAWN	REVIEWED	DATE
SRS	CLF	PAR	12/22/06
CHECKED	REVISED	STRUCTURE FILE NUMBER	
TDJ		5780569	

REMOVAL DETAILS 5 OF 7
BRIDGE No. DAY-XWAY-00.79
DAYTON EXPRESSWAY OVER KEONEE STREET AND CSXT RAILROAD

MOT-XWAY
PID NO. 77774

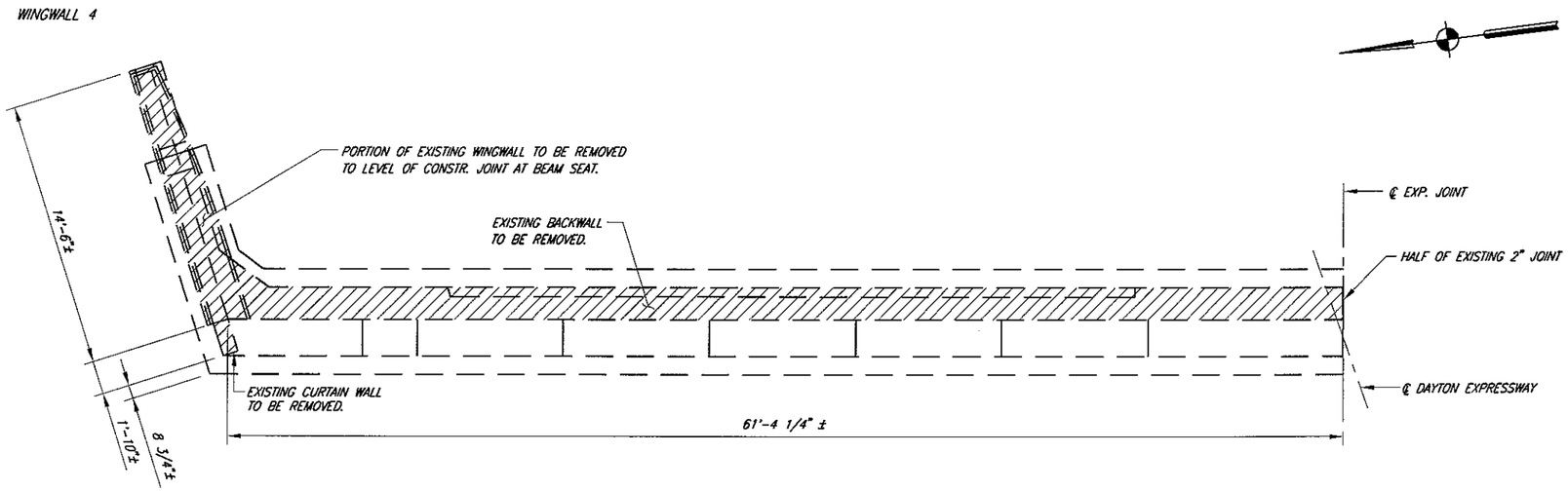

FORWARD ABUTMENT REMOVAL PLAN – PHASE TWO REMOVAL
(WESTBOUND)

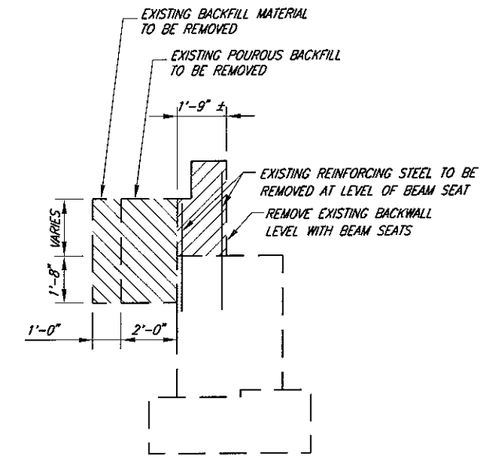

TYPICAL ABUTMENT SECTION

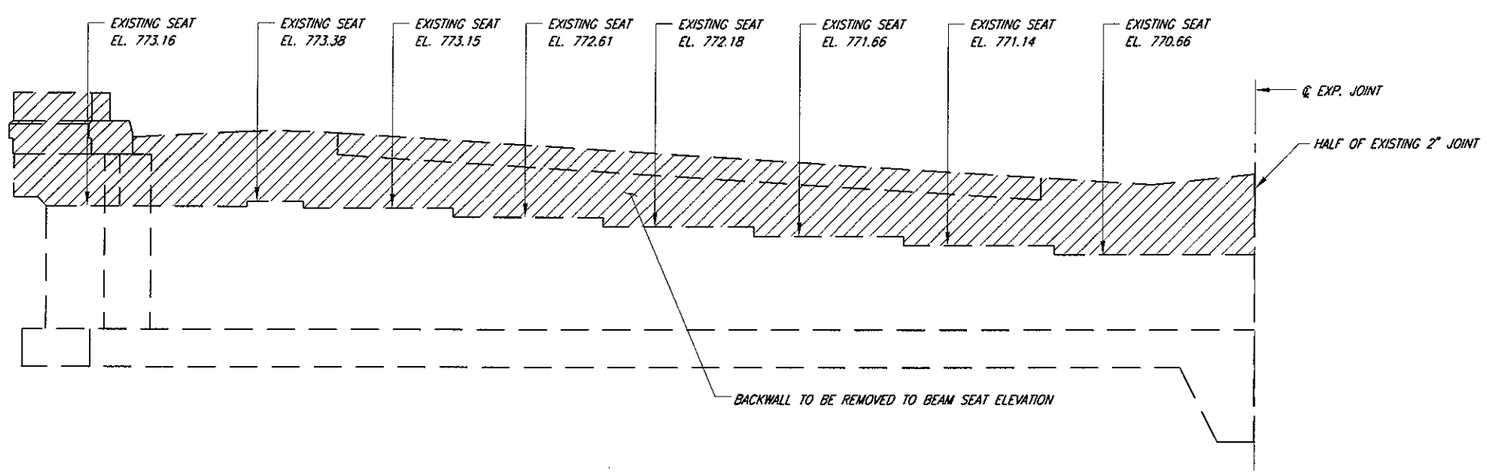

FORWARD ABUTMENT REMOVAL ELEVATION – PHASE TWO REMOVAL
(WESTBOUND)

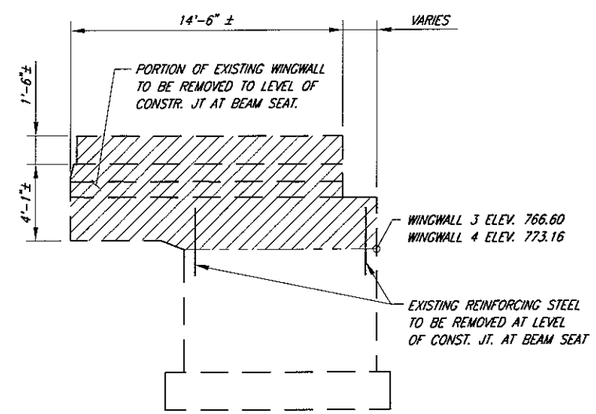

TYPICAL FORWARD ABUTMENT WINGWALL

– HATCHING INDICATES EXISTING STRUCTURE TO BE REMOVED

IMAGE FILES : NONE
XREFERENCES : XR-DAY-XWAY-TITBLK;
FILE NAME : P:\Transportation\20053370 Dayton Expressway 3\30 SheetDrawings\30 Singles\Removal – 6 of 7.dwg / Layout1
MRD\WT : 12-FEB-07; 17:09:42 / aschickel

PREPARED BY:
R.W. ARMSTRONG & ASSOCIATES
471 EAST BROAD STREET, SUITE 2010
COLUMBUS, OH 43215
OFFICE (614) 225-8868 FAX (614) 225-8869

DESIGNED	DRAWN	REVIEWED	DATE
SRS	CLF	PMR	12/22/06
CHECKED	REVISED	STRUCTURE FILE NUMBER	
TDJ		5760569	

REMOVAL DETAILS 6 OF 7
BRIDGE No. DAY-XWAY-00.79
DAYTON EXPRESSWAY OVER KEOWEE STREET AND CSXT RAILROAD

MOT-XWAY
PID NO. 77774

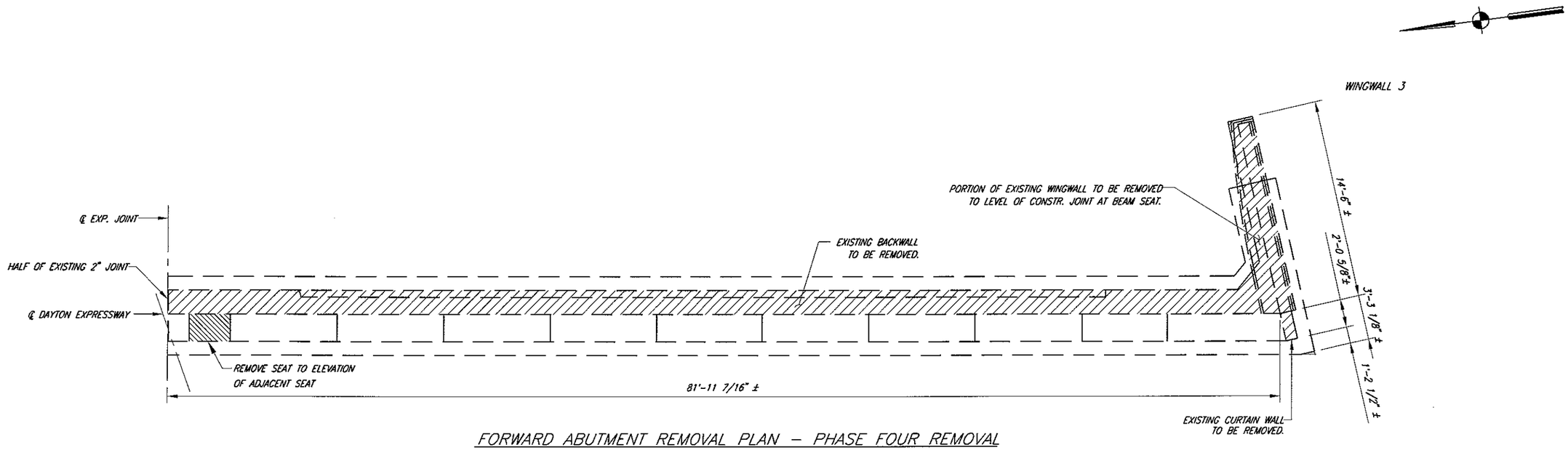

FORWARD ABUTMENT REMOVAL PLAN – PHASE FOUR REMOVAL
(EASTBOUND)

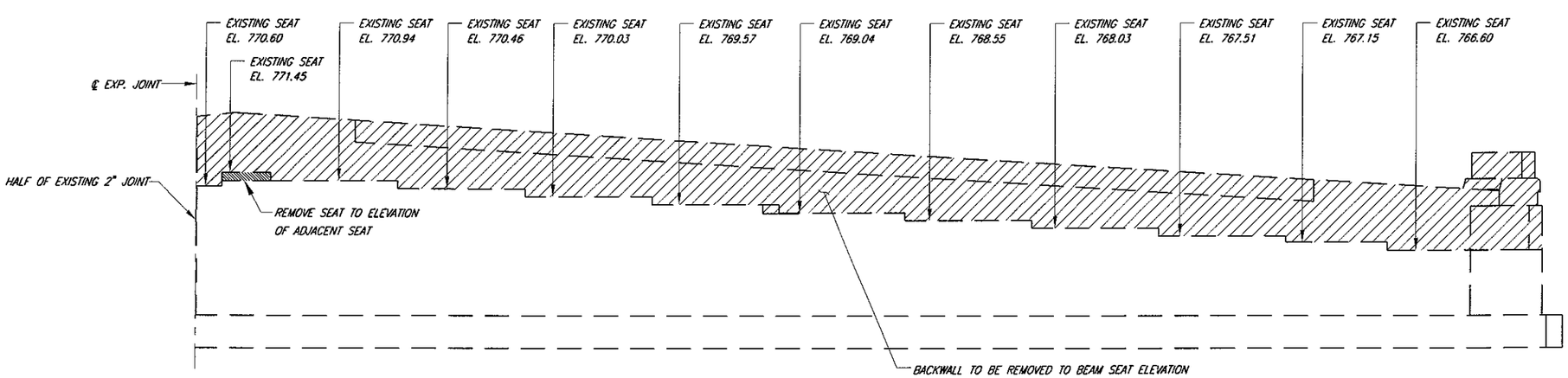

FORWARD ABUTMENT REMOVAL ELEVATION – PHASE FOUR REMOVAL
(EASTBOUND)

– HATCHING INDICATES EXISTING STRUCTURE TO BE REMOVED

NOTE:
1. FOR TYPICAL ABUTMENT SECTION AND WINGWALL ELEVATION, SEE SHEET 10/65.

IMAGE FILES : NONE
XREFERENCES : XR-DAY-XWAY-TITBLK;
FILE NAME : P:\Transportation\20053370 Dayton Expressway 3\30 SheetDrawings\20 Singles\Removal - 7 of 7.dwg / Layout1
WRD\NT : 12-FEB-07, 17:10:35 / sschickel

PREPARED BY:
R.W. ARMSTRONG & ASSOCIATES
471 EAST BROAD STREET, SUITE 2010
COLUMBUS, OH 43215
OFFICE (614) 225-8888 FAX (614) 225-8889

DESIGNED	DRAWN	REVIEWED	DATE
SRS	CLF	PAR	12/22/06
CHECKED	REVISED	STRUCTURE FILE NUMBER	
TDJ		5780569	

REMOVAL DETAILS 7 OF 7
BRIDGE No. DAY-XWAY-00.79
DAYTON EXPRESSWAY OVER KEOWEE STREET AND CSXT RAILROAD

MOT-XWAY
PID NO. 77774

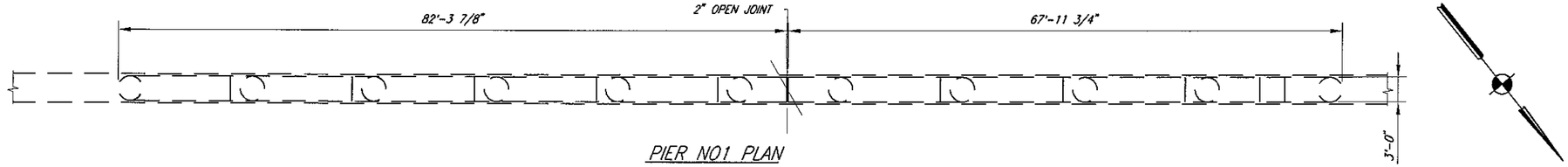

PIER NO1 PLAN

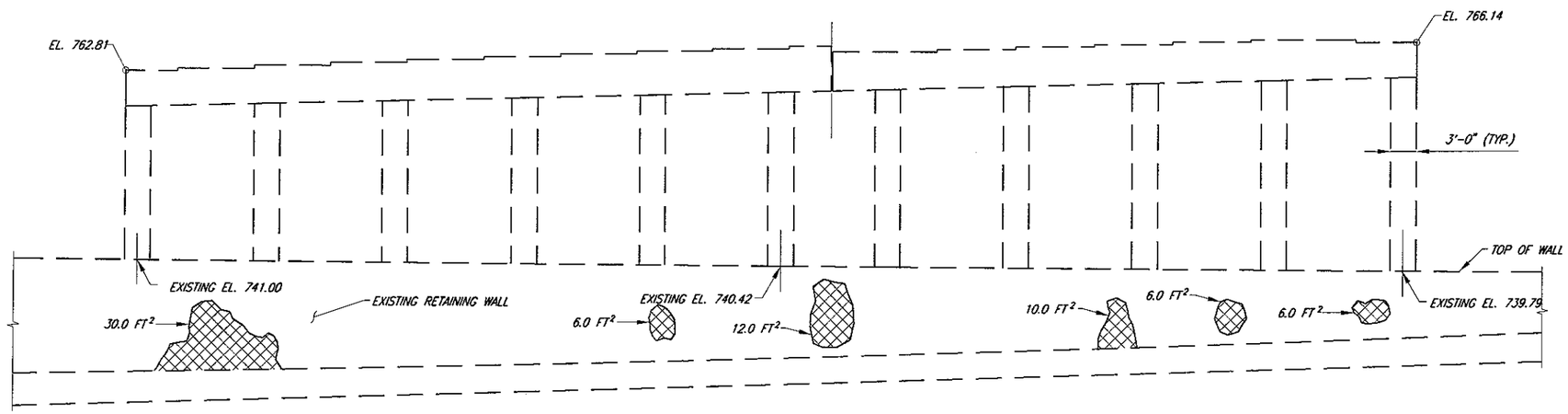

PIER NO.1 LOOKING DOWNSTATION - ELEVATION

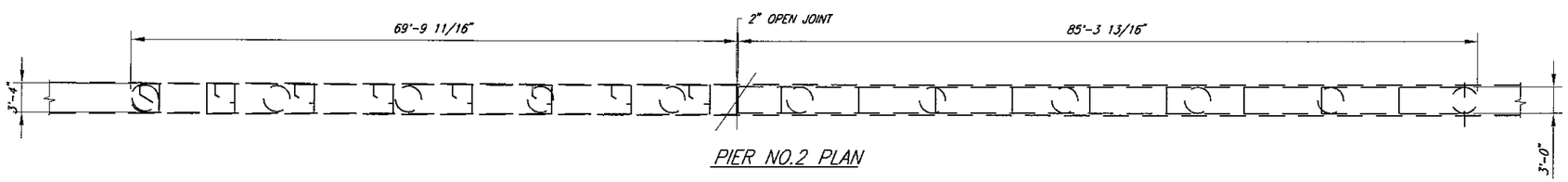

PIER NO.2 PLAN

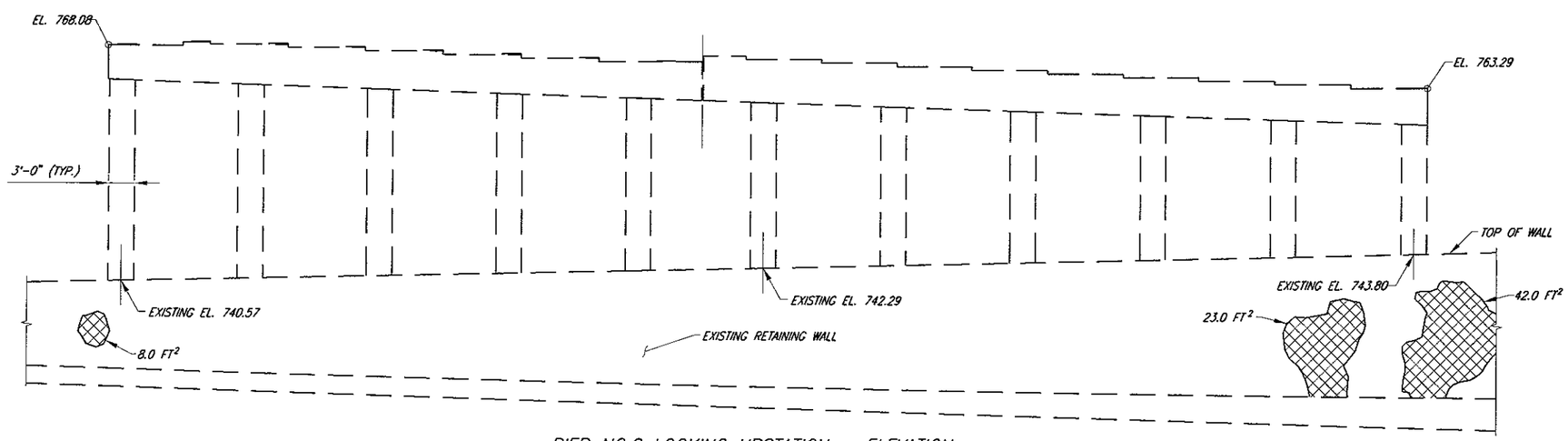

PIER NO.2 LOOKING UPSTATION - ELEVATION

- HATCHING INDICATES AREAS TO BE PATCHED WITH ITEM 519

PREPARED BY:
R.W. ARMSTRONG & ASSOCIATES
471 EAST BROAD STREET, SUITE 2010
COLUMBUS, OH 43215
OFFICE (614) 225-8808 FAX (614) 225-0809

DESIGNED	DRAWN	REVIEWED	DATE
SRS	CLF	PMR	12/22/06
CHECKED	REVISED	STRUCTURE FILE NUMBER	
TDJ		5760569	

SUBSTRUCTURE PATCHING DETAILS 1 OF 1
BRIDGE No. DAY-XWAY-00.79
DAYTON EXPRESSWAY OVER KEONEE STREET AND CSXT RAILROAD

MOT-XWAY
PID NO. 77774

IMAGE FILES : NONE
XREFERENCES : XR-DAY-XWAY-TITBLK,
FILE NAME : T:\Geoparation\20065370 Boyton Expressway 3\30 SheetDrawings\20 Singles\Patching - 1 of 3.dwg / Layout1
LAST WRITE : 19- DEC-06, 17:07:48 / Sullivan

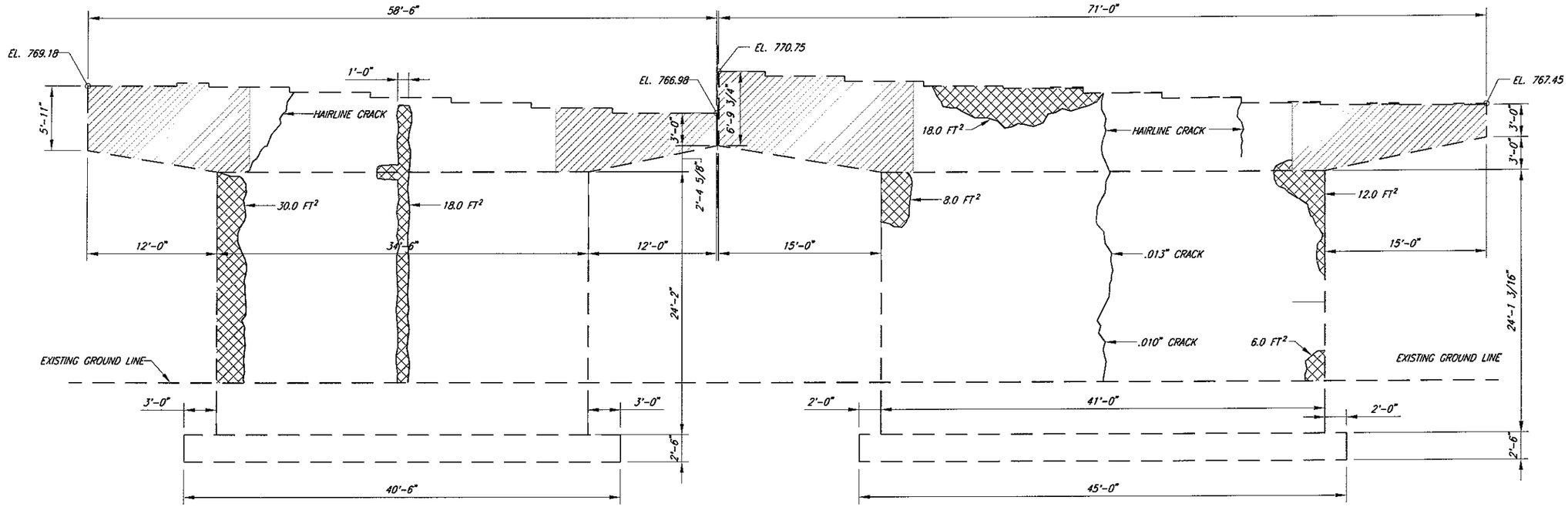

PIER NO.3 LOOKING UPSTATION

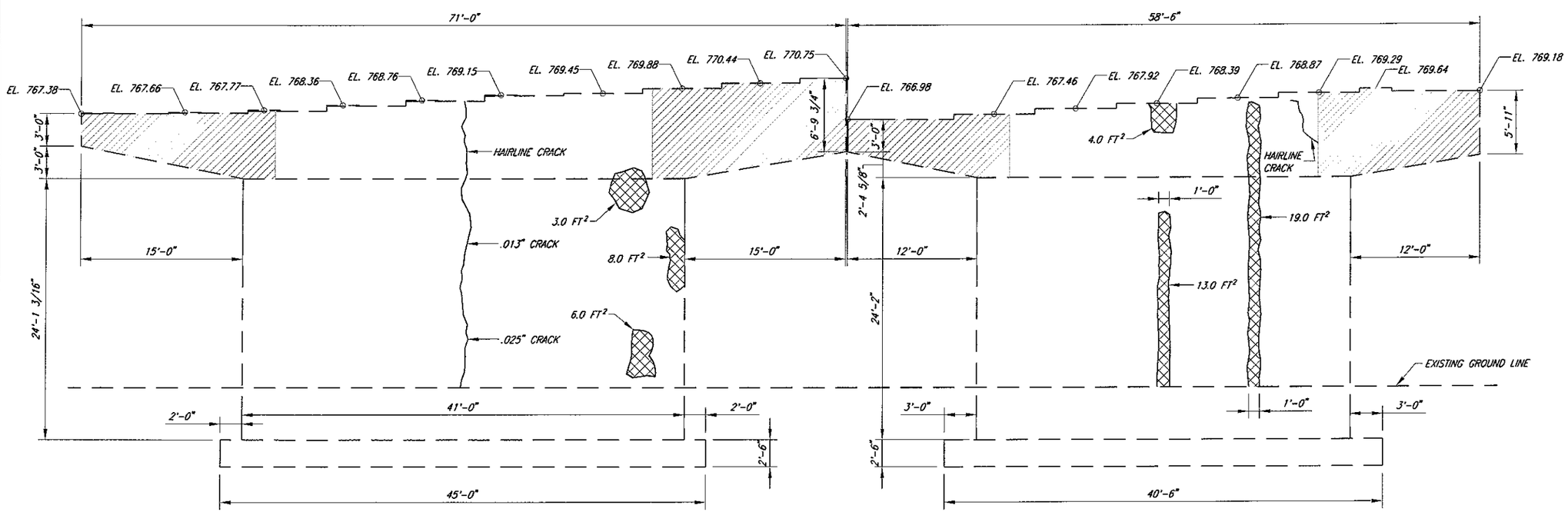

PIER NO.3 LOOKING DOWNSTATION

- HATCHING INDICATES AREAS TO BE PATCHED WITH ITEM 519

NOTE - REPAIR CRACKS IN CONCRETE BY EPOXY INJECTION.

IMAGE FILES : NONE
XREFERENCES : XR-DAY-XWAY-TITBLK;
FILE NAME : P:\Transportation\20053370 Dayton Expressway 3\30 SheetDrawings\20 Singles\Patching - 2 of 3.dwg / Layout1
MPD\XRT : 19-DEC-06, 13:38:58 / Suohnson

PREPARED BY:
R.W. ARMSTRONG & ASSOCIATES
471 EAST BROAD STREET, SUITE 2010
COLUMBUS, OH 43215
OFFICE (614) 225-8888 FAX (614) 225-8869

DESIGNED	DRAWN	REVIEWED	DATE
SKS	CLF	PAR	12/22/06
CHECKED	REVISED	STRUCTURE FILE NUMBER	
TDJ		5780569	

SUBSTRUCTURE PATCHING DETAILS 2 OF 3
BRIDGE No. DAY-XWAY-00.79
DAYTON EXPRESSWAY OVER KEONEE STREET AND CSXT RAILROAD

MOT-XWAY
PID NO. 77774

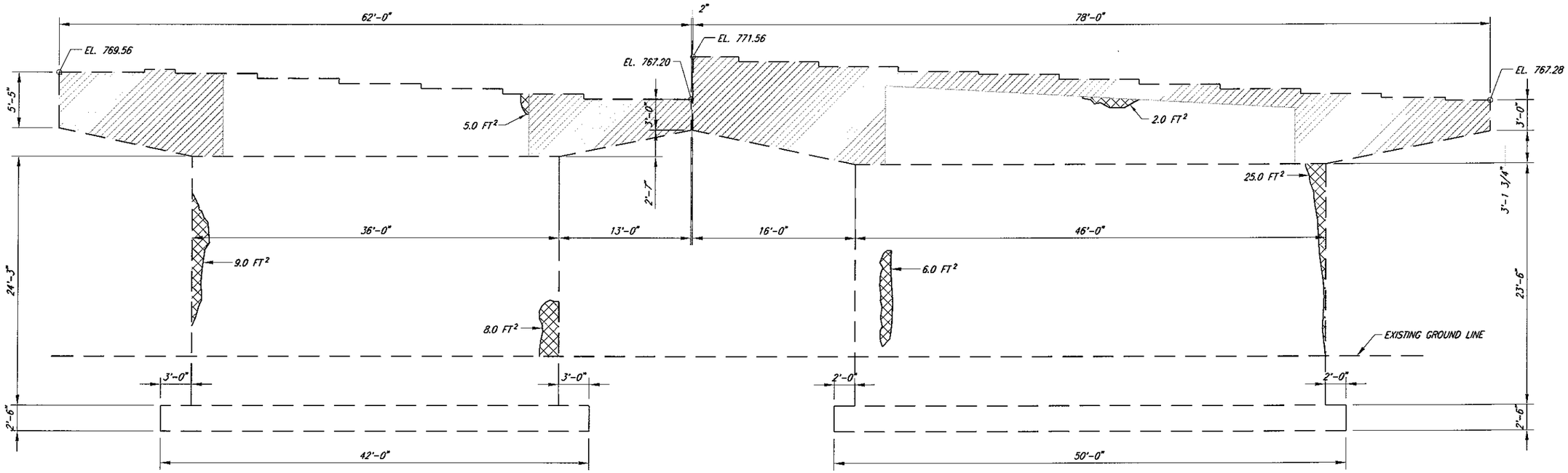

PIER NO.4 LOOKING UPSTATION

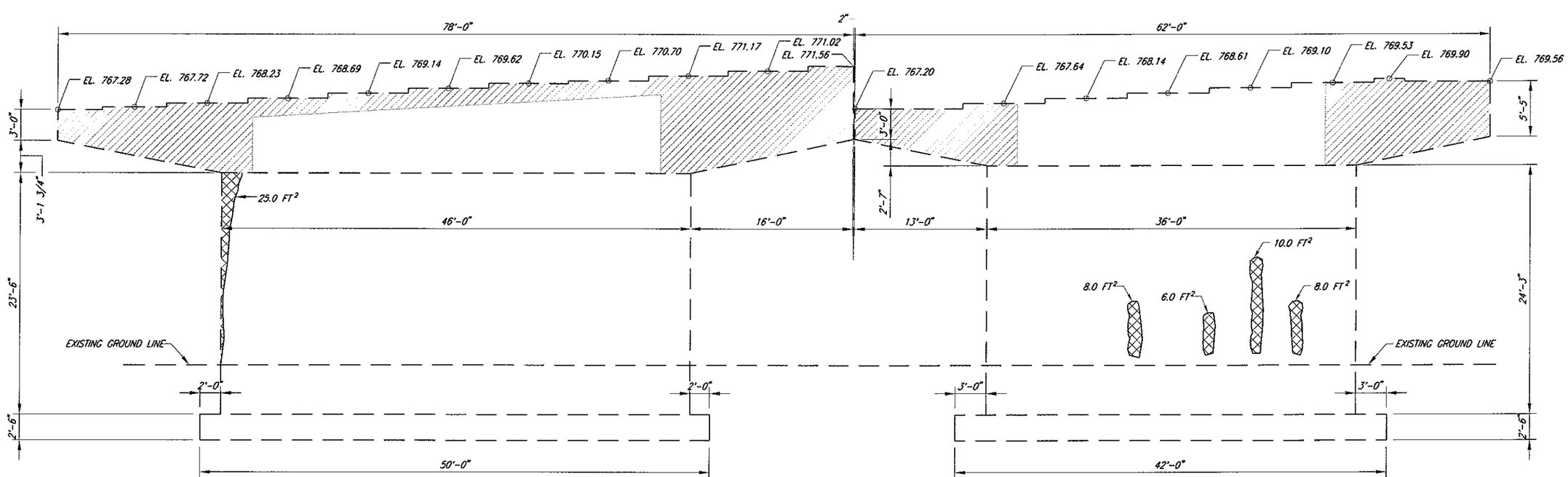

PIER NO.4 LOOKING DOWNSTATION

- HATCHING INDICATES AREAS TO BE PATCHED WITH ITEM 519

IMAGE FILES : NONE
XREFERENCES : XR-DAY-XWAY-TITBLK;
FILE NAME : P:\Transportation\20053370 Dayton Expressway 3\30 SheetDrawings\20 Singles\Patching - 3 of 3.dwg / Layout1
MRD\VNT : 19-DEC-06, 17:03:10 / SJohnson

PREPARED BY:
R.W. ARMSTRONG & ASSOCIATES
471 EAST BROAD STREET, SUITE 2010
COLUMBUS, OH 43215
OFFICE (614) 225-8868 FAX (614) 225-8869

DESIGNED	DRAWN	REVIEWED	DATE
SRS	CLF	PAR	12/22/06
CHECKED	REVISED	STRUCTURE FILE NUMBER	
TDJ		5760569	

SUBSTRUCTURE PATCHING DETAILS 3 OF 3
BRIDGE No. DAY-XWAY-00.79
DAYTON EXPRESSWAY OVER KEOWEE STREET AND CSXT RAILROAD

MOT-XWAY
PID NO. 77774

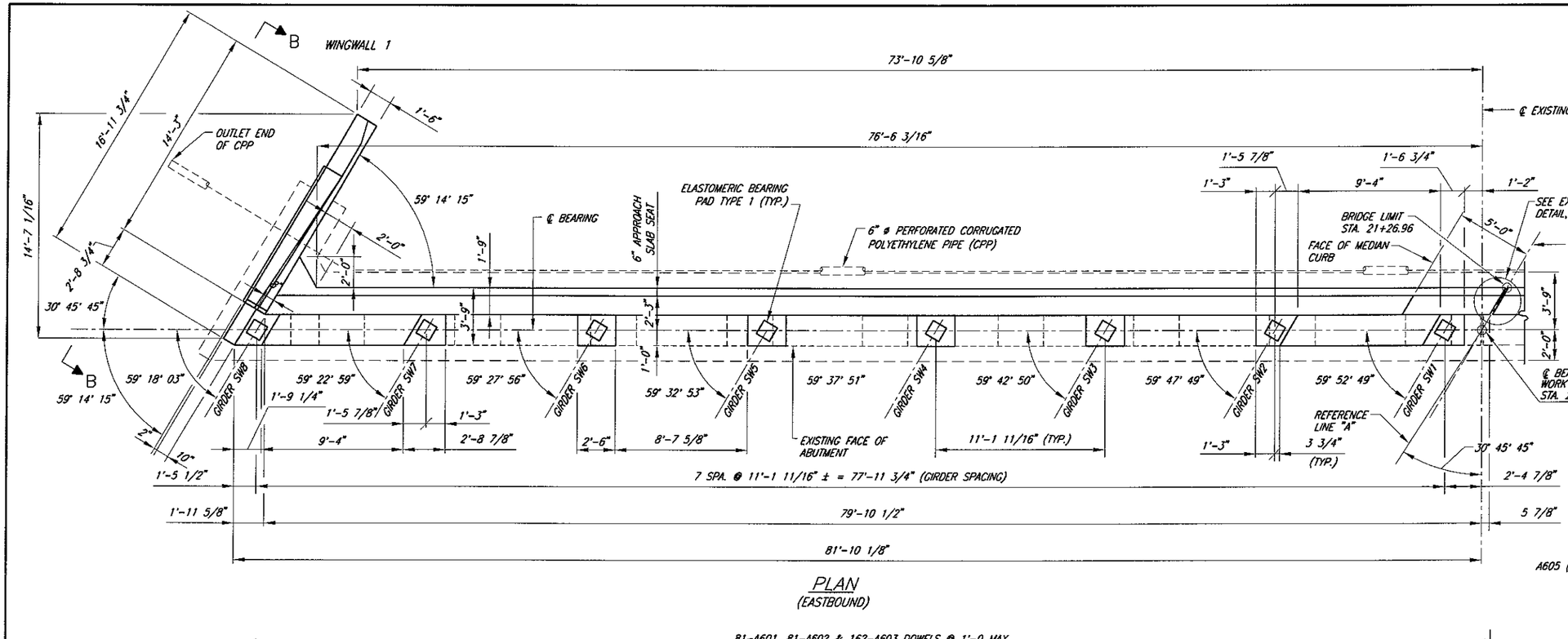

PLAN
(EASTBOUND)

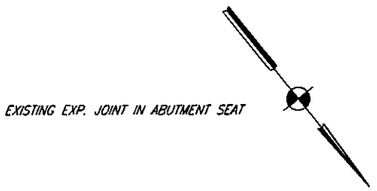

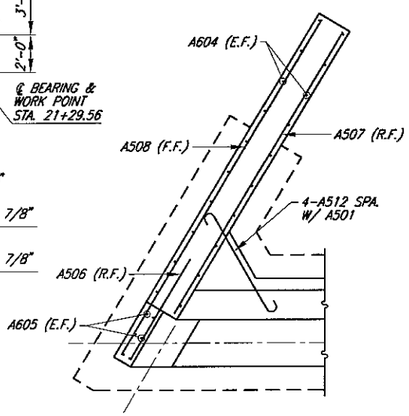

WINGWALL REINFORCING PLAN

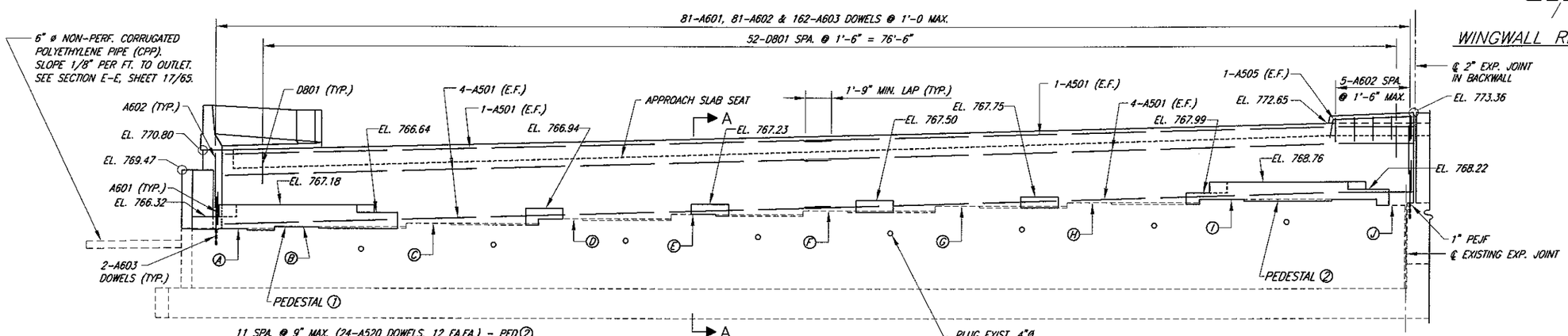

ELEVATION
(EASTBOUND)

EXISTING SEAT ELEVATIONS	
POINT	ELEVATION
A	765.53
B	765.66
C	765.90
D	766.23
E	766.54
F	766.80
G	767.11
H	767.33
I	767.54
J	767.12

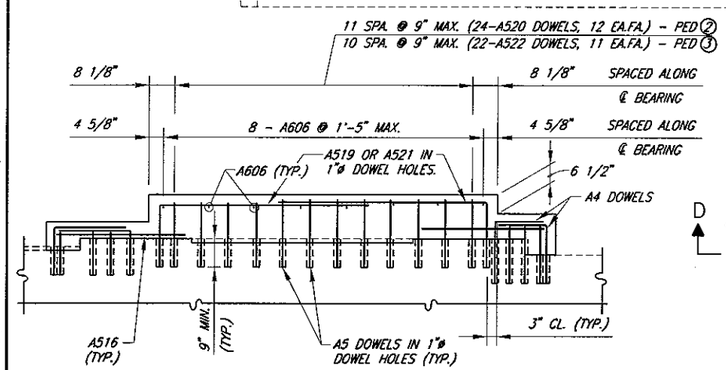

SECTION D-D

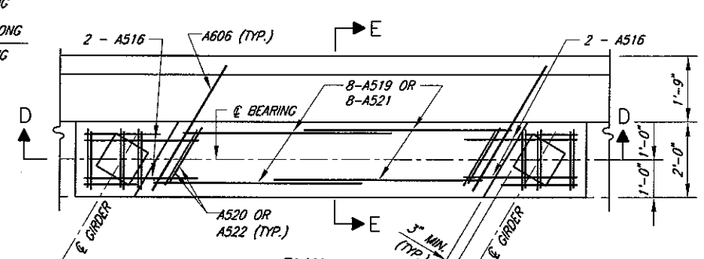

PLAN

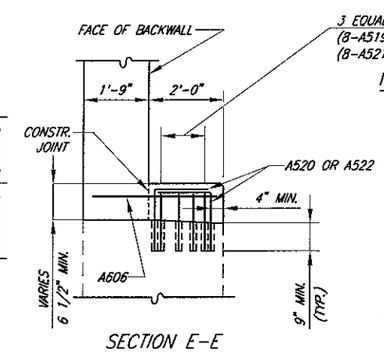

SECTION E-E

3 EQUAL SPACES
(8-A519 DOWELS, 4 EA.FA.) - PED ②
(8-A521 DOWELS, 4 EA.FA.) - PED ③

ABUTMENT SEISMIC PEDESTAL ② DETAILS
(ABUTMENT SEISMIC PEDESTAL ③ SIMILAR)

NOTES:

1. FOR TOP OF WINGWALL DETAILS SEE PARAPET DETAILS, SHEETS 54/65 AND 55/65.
2. FOR SECTION A-A AND VIEW B-B SEE SHEET 17/65.
3. FOR EXPANSION JOINT DETAIL IN BACKWALL, SEE SHEET 17/65.
4. SURFACE SEAL ALL EXPOSED SURFACES OF BACKWALL, CURTAIN WALL AND WINGWALLS WITH EPOXY-URETHANE SEALER (TINTED LIGHT NEUTRAL). SEE SHEET 56/65.
5. IF THE BEAM SEATS ARE SEALED WITH AN EPOXY OR NON-EPOXY SEALER PRIOR TO SETTING THE BEARINGS, DO NOT APPLY SEALER TO THE CONCRETE SURFACES UNDER THE PROPOSED BEARING LOCATIONS. IF THESE LOCATIONS ARE SEALED, REMOVE THE SEALER TO THE SASTIFICATION OF THE ENGINEER PRIOR TO SETTING THE BEARINGS. THE DEPARTMENT WIIL NOT PAY FOR THIS REMOVAL.
6. ALL REINFORCING TO BE EPOXY COATED.
7. FOR ABUTMENT SEISMIC PEDESTAL 1 DETAILS SEE SHEET 16/65.

ABBREVIATIONS

N.F. = NEAR FACE
F.F. = FAR FACE
E.F. = EACH FACE

PREPARED BY:
R.W. ARMSTRONG & ASSOCIATES
471 EAST BROAD STREET, SUITE 2010
COLUMBUS, OH 43215
OFFICE (614) 225-8868 FAX (614) 225-8869

DATE	REVIEWED	DRAWN	DESIGNED
12/22/06	PMR	CLF	SPS
STRUCTURE FILE NUMBER		REVISED	CHECKED
5760569			LAK

REAR ABUTMENT DETAILS 1 OF 3
BRIDGE No. DAY-XWAY-00.79
DAYTON EXPRESSWAY OVER KEONEE STREET AND CSXT RAILROAD

MOT-XWAY
PID NO. 77774

IMAGE FILES : NONE
WORKSPACE : MOT-XWAY-TITBLK
FILE NAME : P:\Transportation\20053370 Dayton Expressway 3\30 SheetDrawings\20 Singles\Abutment-01 - 01.dwg / Layout1
MRO\KNT : 09-FEB-07, 16:13:11 / CFitts

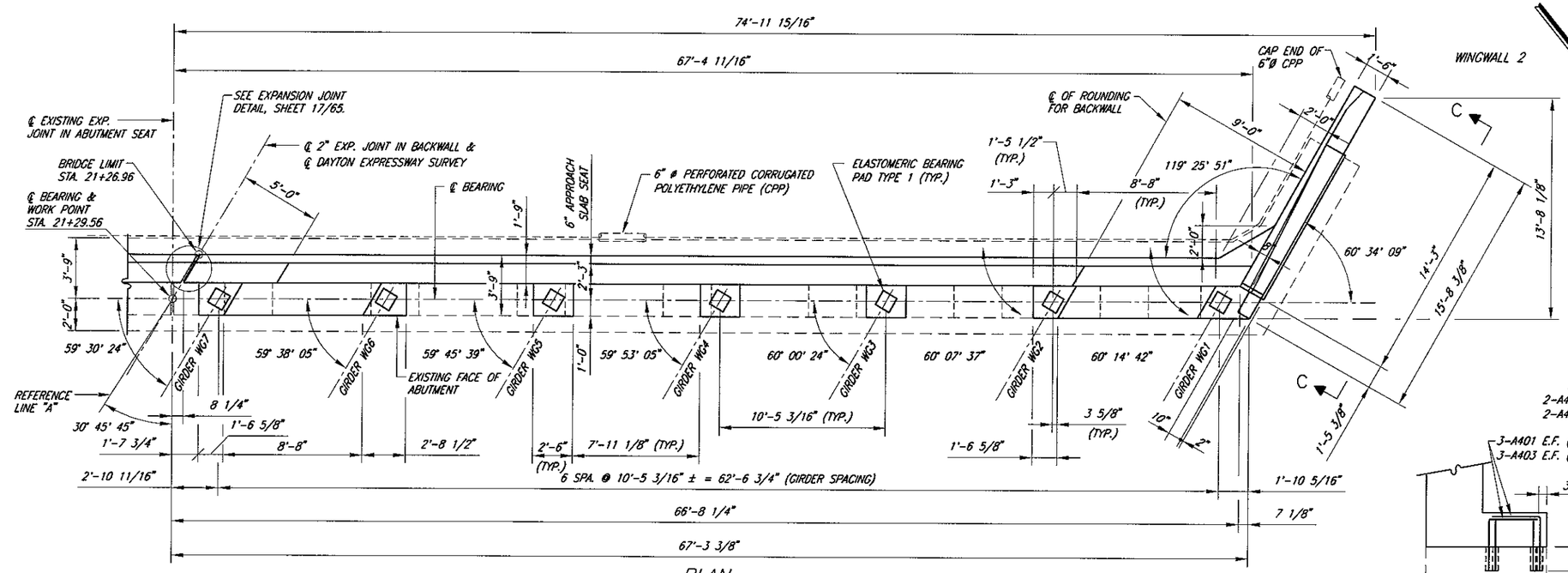

PLAN
(WESTBOUND)

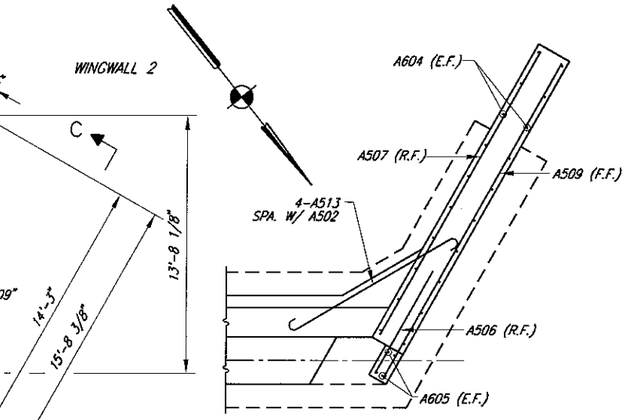

WINGWALL REINFORCING PLAN

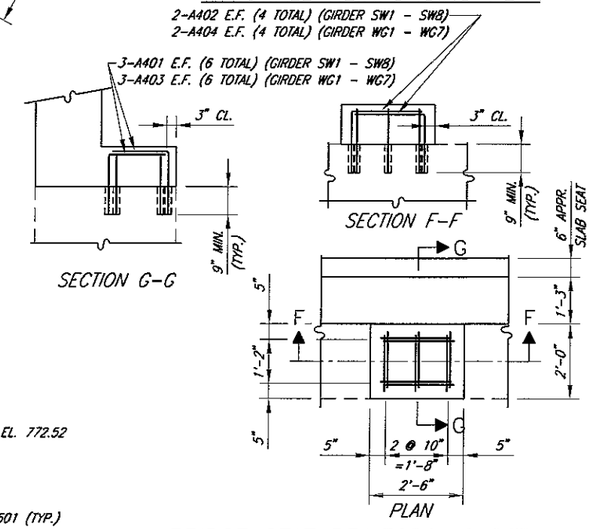

BRIDGE SEAT REINFORCING DETAIL

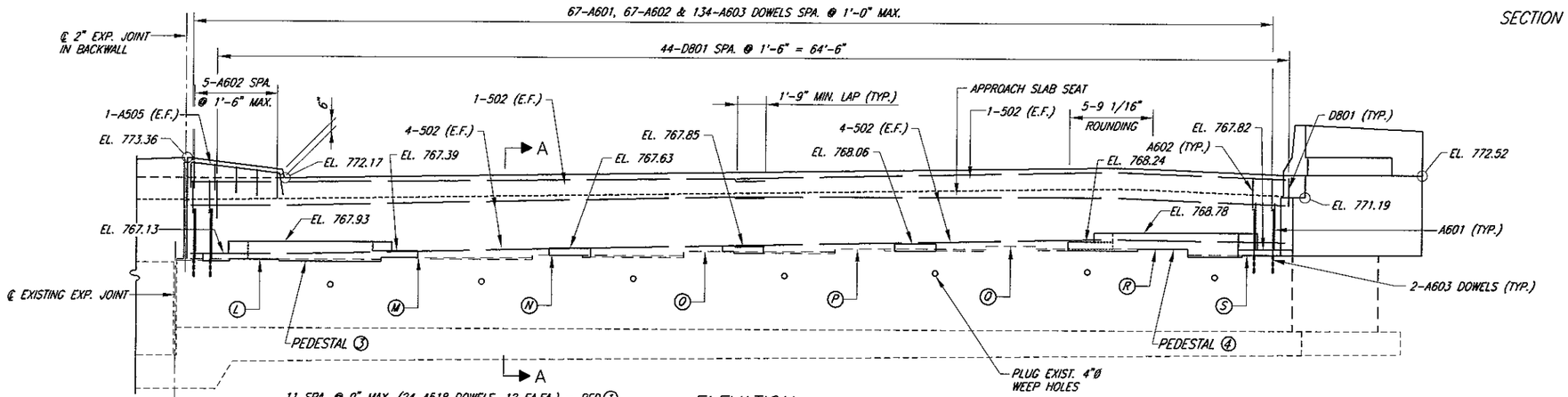

ELEVATION
(WESTBOUND)

EXISTING SEAT ELEVATIONS	
POINT	ELEVATION
L	767.28
M	767.41
N	767.58
O	767.85
P	768.03
Q	768.22
R	768.08
S	767.73

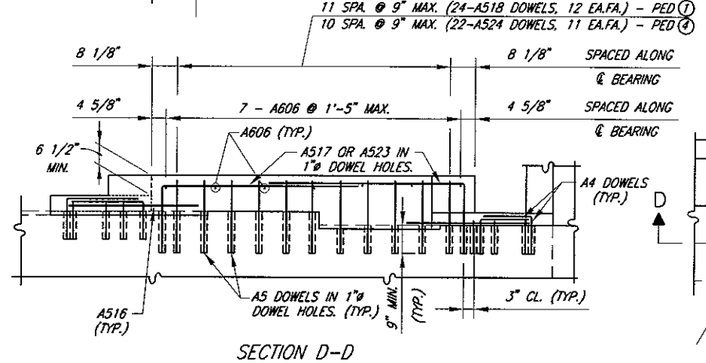

SECTION D-D

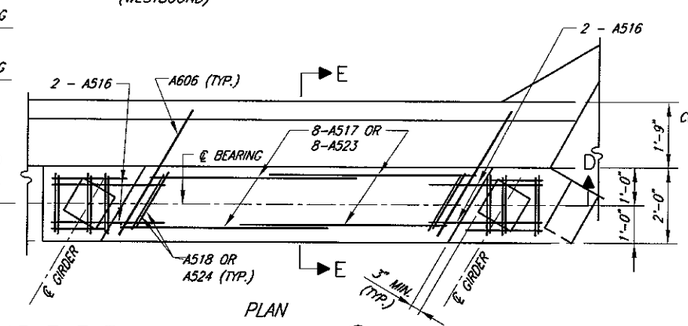

PLAN

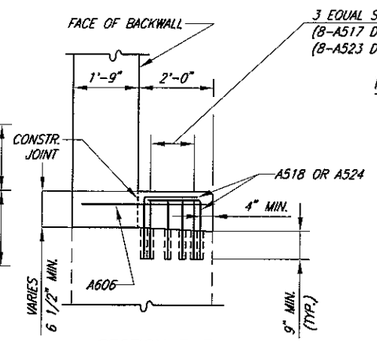

SECTION E-E

ABUTMENT SEISMIC PEDESTAL ④ DETAILS
(ABUTMENT SEISMIC PEDESTAL ① SIMILAR)

NOTES:

1. FOR TOP OF WINGWALL DETAILS SEE PARAPET DETAILS, SHEETS 54/65 AND 55/65.
2. FOR SECTION A-A AND VIEW C-C SEE SHEET 17/65.
3. FOR EXPANSION JOINT DETAIL IN BACKWALL, SEE SHEET 17/65.
4. SURFACE SEAL ALL EXPOSED SURFACES OF BACKWALL, CURTAIN WALL AND WINGWALLS WITH EPOXY-URETHANE SEALER (TINTED LIGHT NEUTRAL). SEE SHEET 56/65.
5. IF THE BEAM SEATS ARE SEALED WITH AN EPOXY OR NON-EPOXY SEALER PRIOR TO SETTING THE BEARINGS, DO NOT APPLY SEALER TO THE CONCRETE SURFACES UNDER THE PROPOSED BEARING LOCATIONS. IF THESE LOCATIONS ARE SEALED, REMOVE THE SEALER TO THE SASTIFICATION OF THE ENGINEER PRIOR TO SETTING THE BEARINGS. THE DEPARTMENT WIIL NOT PAY FOR THIS REMOVAL.
6. ALL REINFORCING TO BE EPOXY COATED.
7. FOR ABUTMENT SEISMIC PEDESTAL ③ DETAILS SEE SHEET 15/65.

ABBREVIATIONS

N.F. = NEAR FACE
F.F. = FAR FACE
E.F. = EACH FACE

PREPARED BY: R.W. ARMSTRONG & ASSOCIATES
471 EAST BROAD STREET, SUITE 2010
COLUMBUS, OH 43215
OFFICE (614) 225-8868 FAX (614) 225-8869

DESIGNED	DRAWN	REVIEWED	DATE
SRS	CLF	PAR	12/22/06
CHECKED	REVISED	STRUCTURE FILE NUMBER	
LAK		5760569	

REAR ABUTMENT DETAILS 2 OF 3
BRIDGE No. DAY-XWAY-00.79
DAYTON EXPRESSWAY OVER KEOWEE STREET AND CSXT RAILROAD

MOT-XWAY
PID NO. 77774

IMAGE FILES : NONE
XREFERENCES : XR-DAY-XWAY-TITBLK
FILE NAME : P:\Transportation\20053370 Dayton Expressway 3\30 SheetDrawings\30 Singles\Abutment-01 - 02.dwg / Layout1
MKD\WKT : 09-FEB-07, 16:13:18 / CFitts

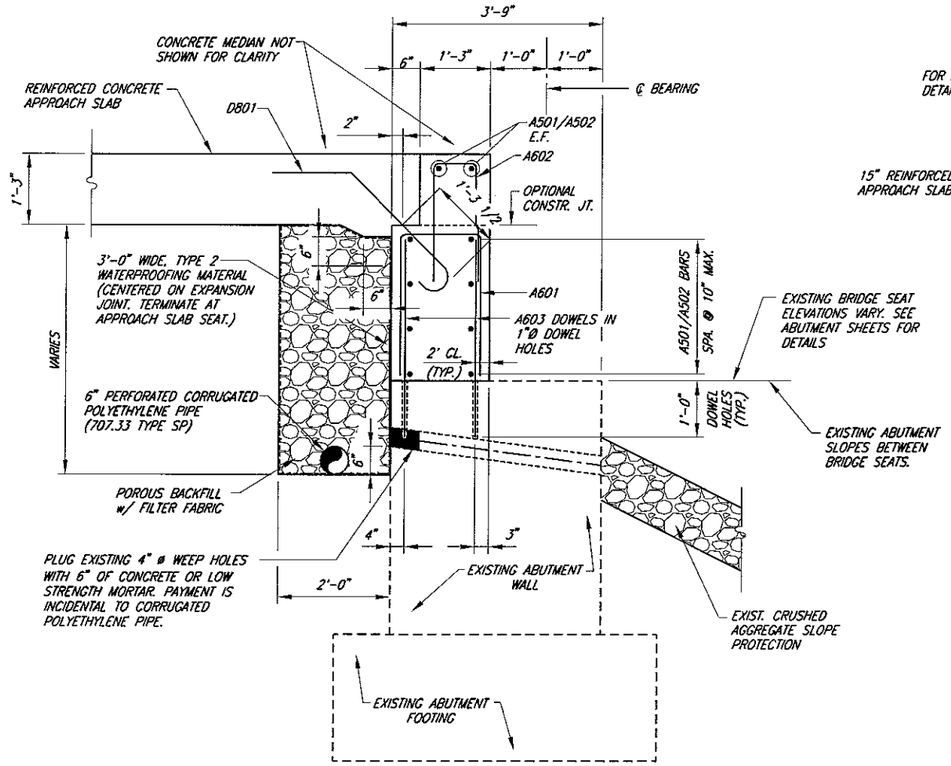

SECTION A–A

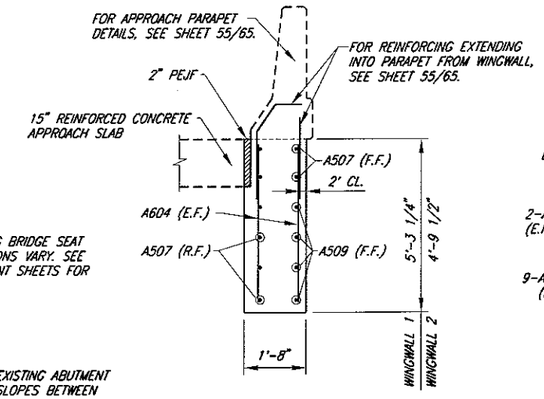

SECTION F–F SHOWN
SECTION D–D SIMILAR

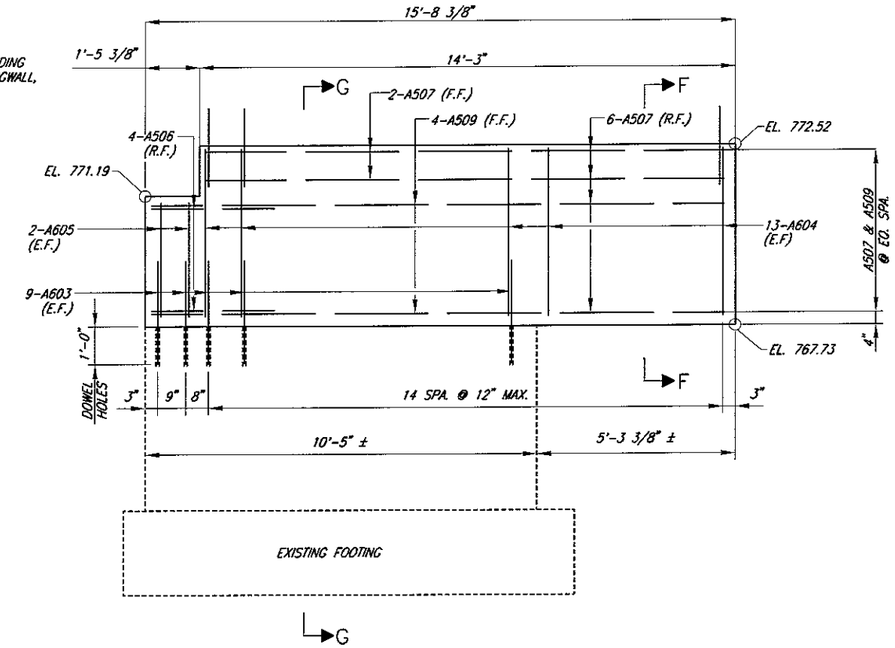

VIEW C–C
(WINGWALL 2)

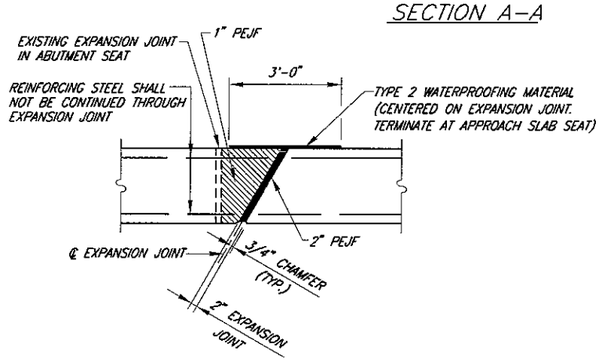

EXPANSION JOINT DETAIL FOR BACKWALL

NOTES:

1. ALL REINFORCING TO BE EPOXY COATED.
2. POROUS BACKFILL WITH FILTER FABRIC, 2 FEET THICK SHALL EXTEND UP TO THE PLANE OF THE SUBGRADE, 1 FOOT BELOW THE EMBANKMENT SURFACE, AND LATERALLY TO THE ENDS OF THE WINGWALLS.
3. DURING INSTALLATION OF THE SUPPORT/ARMOR FOR THE SUPERSTRUCTURE SIDE OF THE EXPANSION JOINT SEAL, OBSERVE THE SEATING OF BEAMS ON BEARINGS TO ASSURE THAT POSITIVE BEARING IS MAINTAINED.
4. IN ADDITION TO 511.10, DO NOT PLACE BACKWALL CONCRETE ABOVE THE OPTIONAL CONSTRUCTION JOINT AT THE APPROACH SLAB SEAT UNTIL AFTER THE DECK CONCRETE IN THE SPAN ADJACENT TO THE ABUTMENT HAS BEEN PLACED.
5. VERTICAL LAPS TO BE 1'-6" MIN.

ABBREVIATIONS

R.F. = REAR FACE
F.F. = FRONT FACE
E.F. = EACH FACE

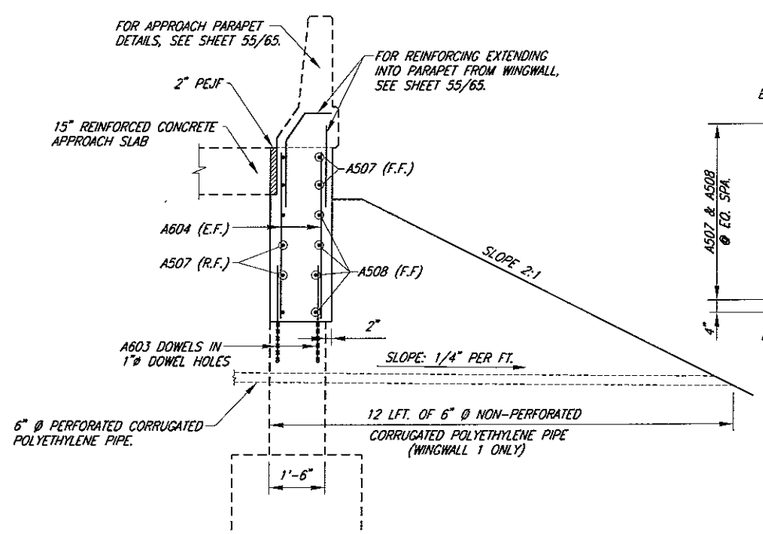

SECTION E–E SHOWN
SECTION G–G SIMILAR

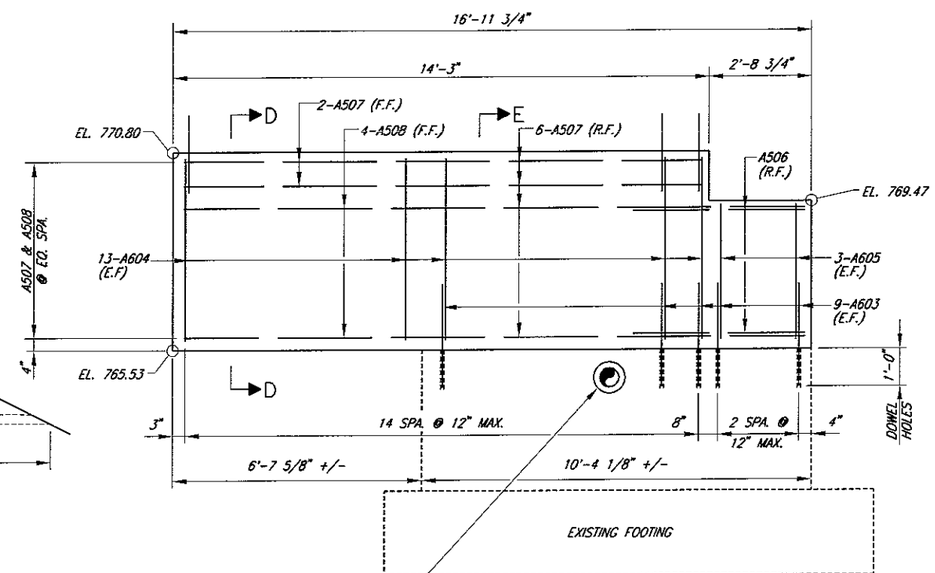

8" ø CORE DRILLED HOLE FOR 6" ø NON-PERFORATED PIPE. PIPE LOCATION AND ELEVATION OF CORE TO BE FIELD DETERMINED. FILL GAPS BETWEEN THE PIPE AND EDGES OF HOLE WITH CEMENT GROUT. (PAYMENT FOR CORE DRILLED HOLE AND GROUT IS INCIDENTAL TO NON-PERFORATED CORRUGATED POLYETHYLENE PIPE)

VIEW B–B
(WINGWALL 1)

IMAGE FILES : NONE
XREFERENCES : XR-DAY-XWAY-TITBLK;
FILE NAME : P:\Transportation\20053370 Dayton Expressway 3\30 SheetDrawings\20 Singles\Abutment-DETAIL- 01.dwg / Layout1
MTO UNIT : 12-FEB-07, 08:48:28 / Sadmson

PREPARED BY:
R.W. ARMSTRONG & ASSOCIATES
471 EAST BROAD STREET, SUITE 2010
COLUMBUS, OHIO 43215
OFFICE (614) 225-8868 FAX (614) 225-8869

DESIGNED	DRAWN	REVIEWED	DATE
SRS	CLF	PAR	12/22/06
CHECKED	REVISED	STRUCTURE FILE NUMBER	
LAK		5760569	

REAR ABUTMENT DETAILS 3 OF 3
BRIDGE No. DAY-XWAY-00.79
DAYTON EXPRESSWAY OVER KEOWEE STREET AND CSXT RAILROAD

MOT-XWAY
PID NO. 77774

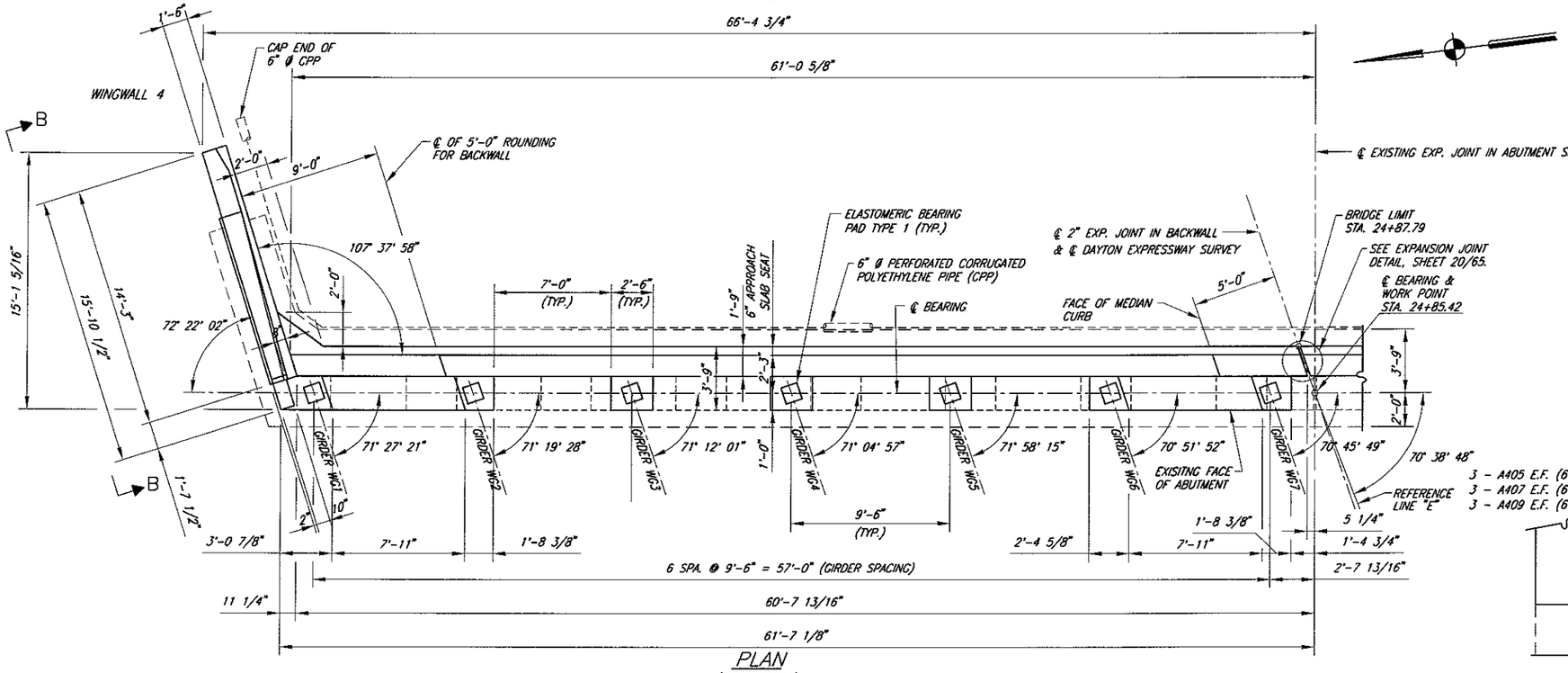

PLAN
(WESTBOUND)

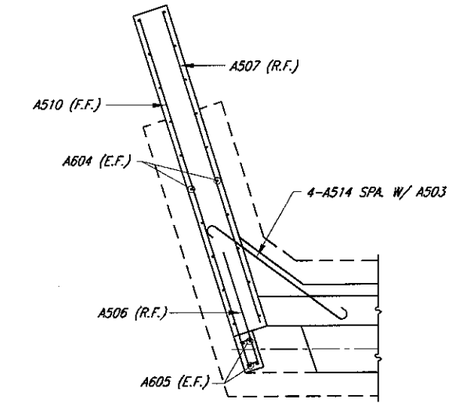

WINGWALL REINFORCING PLAN

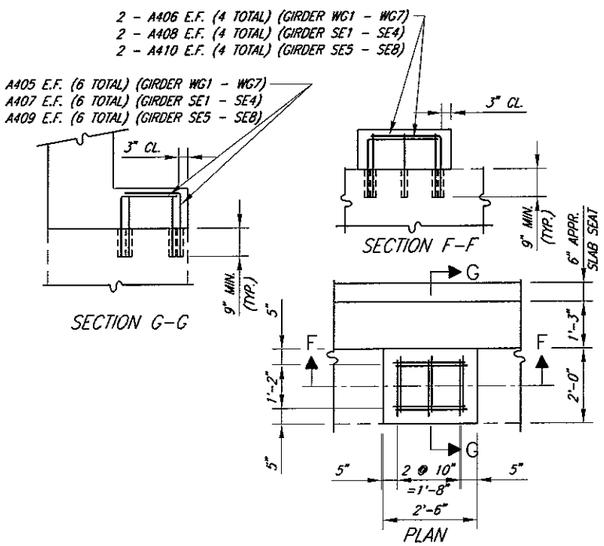

BRIDGE SEAT REINFORCING DETAIL

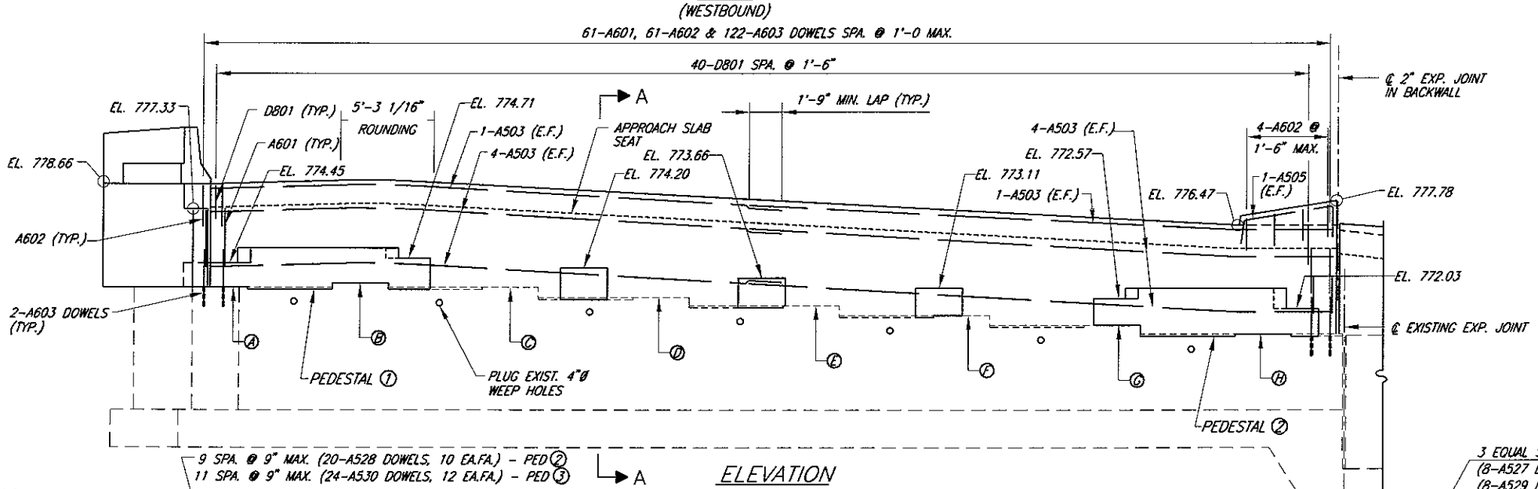

ELEVATION
(WESTBOUND)

EXISTING SEATS ELEVATIONS	
POINT	ELEVATION
A	773.16
B	773.38
C	773.15
D	772.61
E	772.18
F	771.66
G	771.14
H	770.66

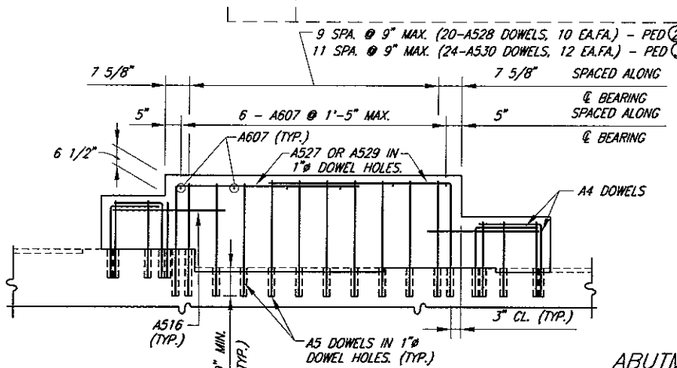

SECTION D-D

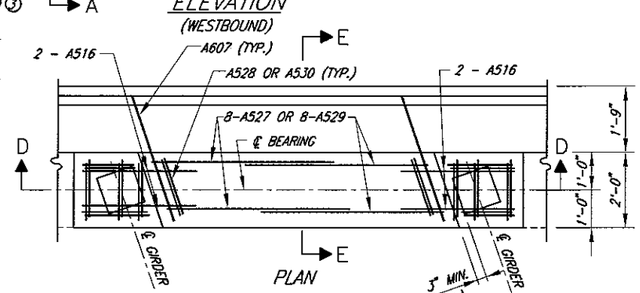

PLAN

ABUTMENT SEISMIC PEDESTAL ② DETAILS
(ABUTMENT SEISMIC PEDESTAL ③ SIMILAR)

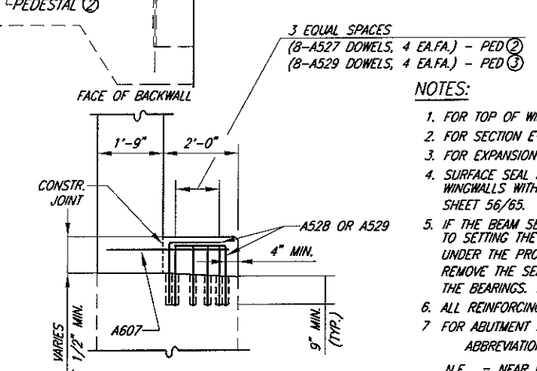

SECTION E-E

NOTES:

1. FOR TOP OF WINGWALL DETAILS SEE PARAPET DETAILS, SHEETS 54/65 AND 55/65.
2. FOR SECTION E-E AND VIEW C-C SEE SHEET 20/65.
3. FOR EXPANSION JOINT DETAIL IN BACKWALL, SEE SHEET 20/65.
4. SURFACE SEAL ALL EXPOSED SURFACES OF BACKWALL, CURTAIN WALL AND WINGWALLS WITH EPOXY-URETHANE SEALER (TINTED LIGHT NEUTRAL). SEE SHEET 56/65.
5. IF THE BEAM SEATS ARE SEALED WITH AN EPOXY OR NON-EPOXY SEALER PRIOR TO SETTING THE BEARINGS, DO NOT APPLY SEALER TO THE CONCRETE SURFACES UNDER THE PROPOSED BEARING LOCATIONS. IF THESE LOCATIONS ARE SEALED, REMOVE THE SEALER TO THE SASTIFICATION OF THE ENGINEER PRIOR TO SETTING THE BEARINGS. THE DEPARTMENT WILL NOT PAY FOR THIS REMOVAL.
6. ALL REINFORCING TO BE EPOXY COATED.
7. FOR ABUTMENT SEISMIC PEDESTAL ① DETAILS SEE SHEET 19/65.

ABBREVIATIONS

N.F. = NEAR FACE
F.F. = FAR FACE
E.F. = EACH FACE

PREPARED BY: R.W. ARMSTRONG & ASSOCIATES
471 EAST BROAD STREET, SUITE 2010
COLUMBUS, OH 43215
OFFICE (614) 225-8868 FAX (614) 225-8869

DESIGNED	DRAWN	REVIEWED	DATE
SRS	CLF	PAR	12/22/06
CHECKED	REVISED	STRUCTURE FILE NUMBER	
LAK		5780569	

FORWARD ABUTMENT DETAILS 1 OF 3
BRIDGE No. DAY-XWAY-00.79
DAYTON EXPRESSWAY OVER KEOWEE STREET AND CSXT RAILROAD

MOT-XWAY
PID NO. 77774

IMAGE FILES : NONE
XREFERENCES : XR-DAY-XWAY-TITBLK;
FILE NAME : P:\Transportation\20063370 Dayton Expressway 3\30 SheetDrawings\20 Singles\Abutment-02 - 01.dwg / Layout1
AND\WT : 12-FEB-07, 08:34:13 / SAdkinson

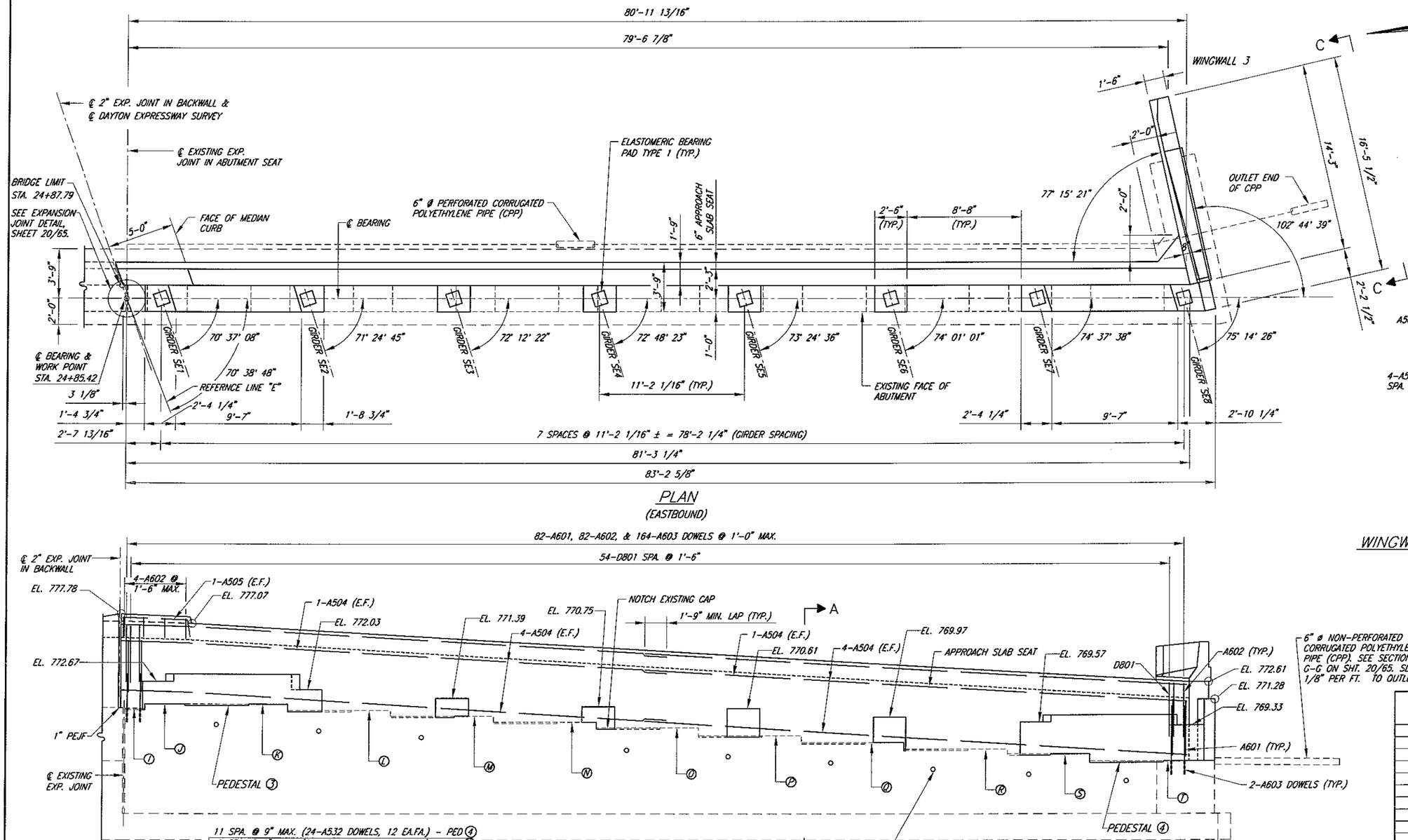

PLAN
(EASTBOUND)

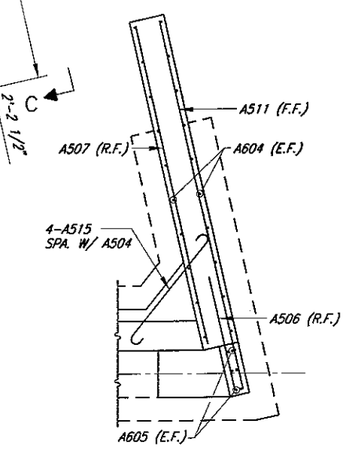

WINGWALL REINFORCING PLAN

ELEVATION
(EASTBOUND)

EXISTING SEAT ELEVATIONS	
POINT	ELEVATION
I	770.60
J	770.94
K	770.94
L	770.46
M	770.03
N	769.57
O	769.04
P	768.55
Q	768.03
R	767.51
S	767.15
T	766.60

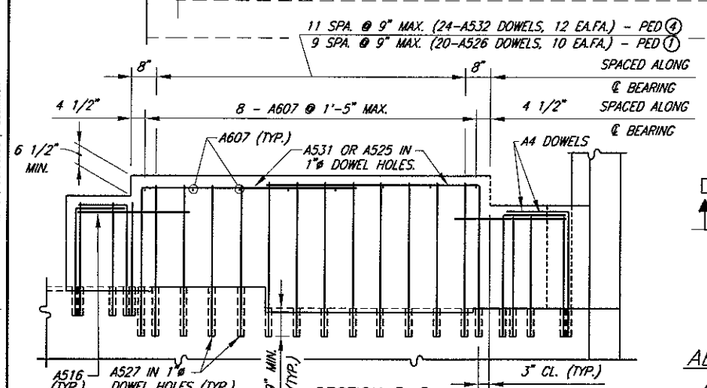

SECTION D-D

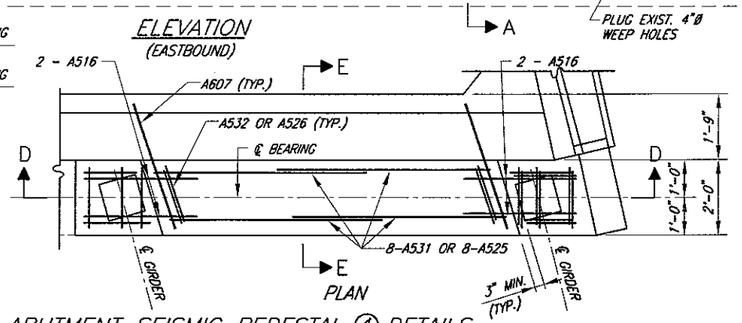

PLAN

ABUTMENT SEISMIC PEDESTAL ④ DETAILS
(ABUTMENT SEISMIC PEDESTAL ① SIMILAR)

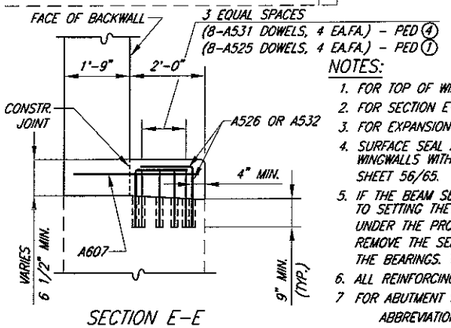

SECTION E-E

NOTES:

1. FOR TOP OF WINGWALL DETAILS SEE PARAPET DETAILS, SHEETS 54/65 AND 55/65.
2. FOR SECTION E-E AND VIEW D-D SEE SHEET 20/65.
3. FOR EXPANSION JOINT DETAIL IN BACKWALL, SEE SHEET 20/65.
4. SURFACE SEAL ALL EXPOSED SURFACES OF BACKWALL, CURTAIN WALL AND WINGWALLS WITH EPOXY-URETHANE SEALER (TINTED LIGHT NEUTRAL). SEE SHEET 56/65.
5. IF THE BEAM SEATS ARE SEALED WITH AN EPOXY OR NON-EPOXY SEALER PRIOR TO SETTING THE BEARINGS, DO NOT APPLY SEALER TO THE CONCRETE SURFACES UNDER THE PROPOSED BEARING LOCATIONS. IF THESE LOCATIONS ARE SEALED, REMOVE THE SEALER TO THE SASTIFICATION OF THE ENGINEER PRIOR TO SETTING THE BEARINGS. THE DEPARTMENT WILL NOT PAY FOR THIS REMOVAL.
6. ALL REINFORCING TO BE EPOXY COATED.
7. FOR ABUTMENT SEISMIC PEDESTAL ③ DETAILS SEE SHEET 18/65.

ABBREVIATIONS

N.F. = NEAR FACE
F.F. = FAR FACE
E.F. = EACH FACE

PREPARED BY:
R.W. ARMSTRONG & ASSOCIATES
471 EAST BROAD STREET, SUITE 2010
COLUMBUS, OH 43215
OFFICE (614) 225-8868 FAX (614) 225-8869

DESIGNED	DRAWN	REVIEWED	DATE
SRS	CLF	PAR	12/22/06
CHECKED	REVISED	STRUCTURE FILE NUMBER	
LAK		5760569	

FORWARD ABUTMENT DETAILS 2 OF 3
BRIDGE No. DAY-XWAY-00.79
DAYTON EXPRESSWAY OVER KEOWEE STREET AND CSXT RAILROAD

MOT-XWAY
PID NO. 77774

IMAGE FILES : NONE
XREFERENCES : XR-DAY-XWAY-TITBLK,
FILE NAME : P:\Transportation\2005\370 Dayton Expressway 3\30 SheetDrawings\20 Singles\Abutment-02 - 02.dwg / Layout1
MPE\VNT : 12-FEB-07, DB:55.30 / SJohnson

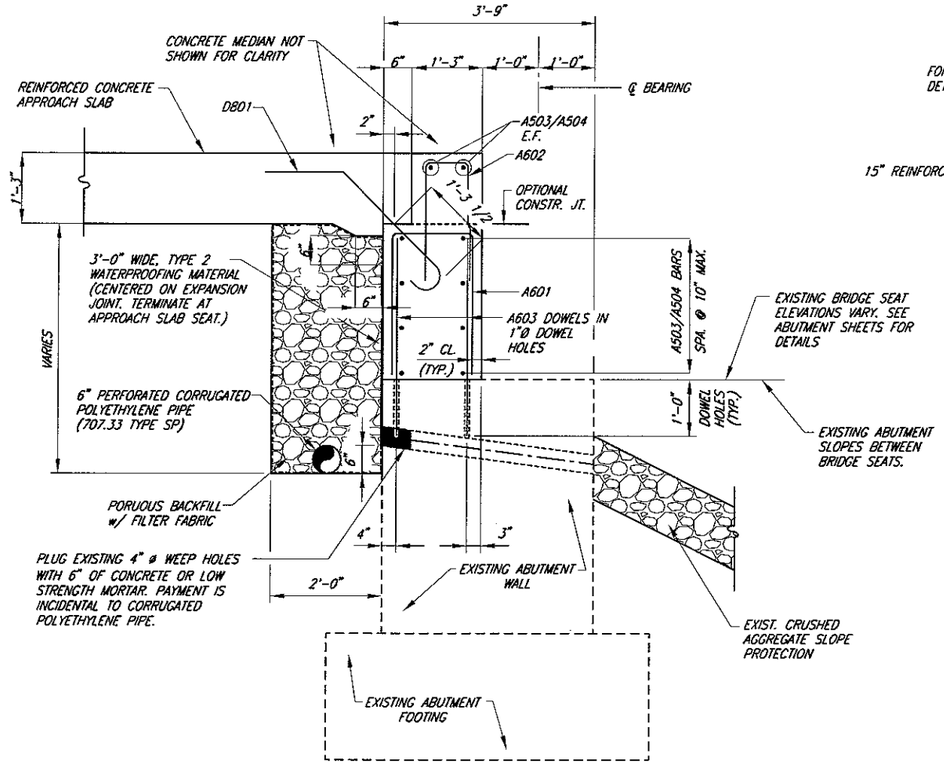

SECTION A-A

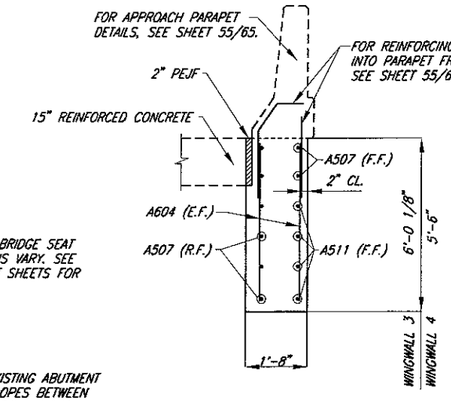

SECTION F-F SHOWN
SECTION D-D SIMILAR

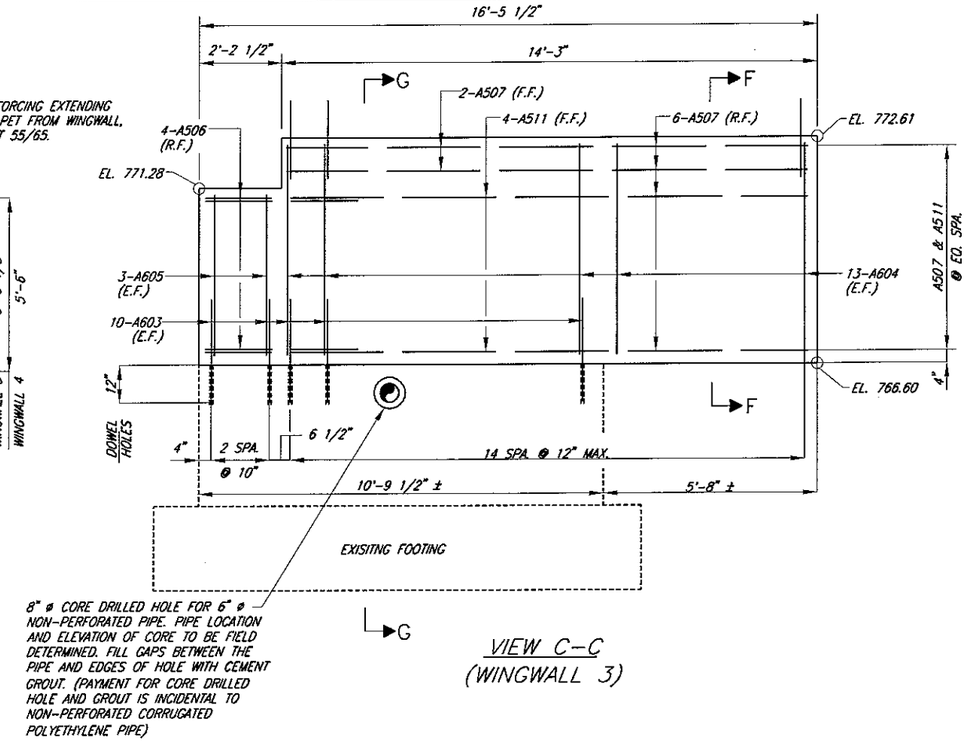

VIEW C-C
(WINGWALL 3)

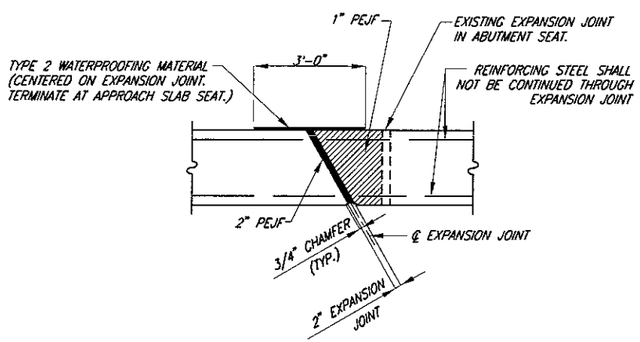

EXPANSION JOINT DETAIL FOR BACKWALL

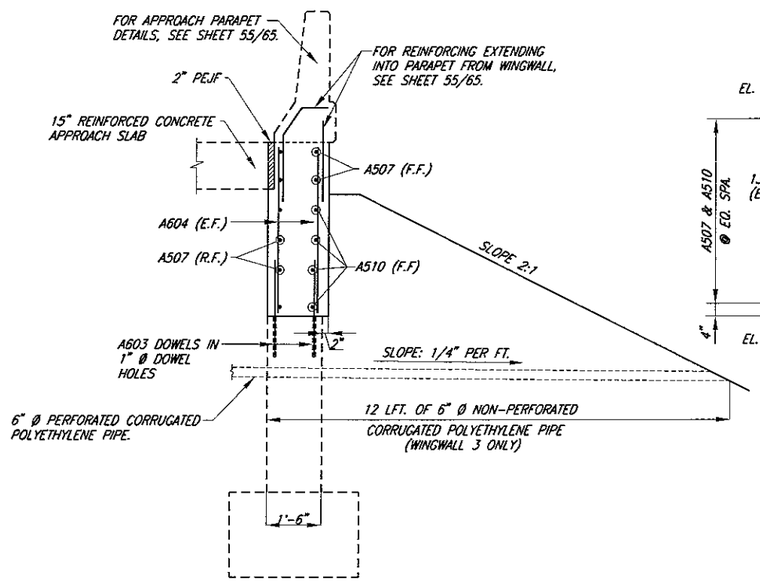

SECTION E-E SHOWN
SECTION G-G SIMILAR

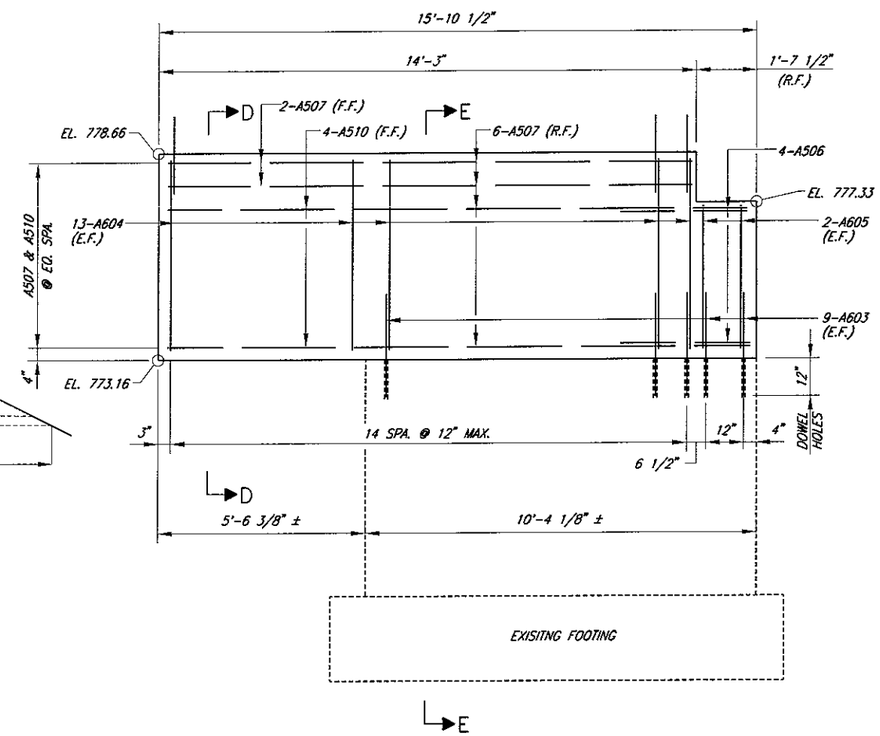

VIEW B-B
(WINGWALL 4)

NOTES:

1. ALL REINFORCING TO BE EPOXY COATED.
2. POROUS BACKFILL WITH FILTER FABRIC, 2 FEET THICK SHALL EXTEND UP TO THE PLANE OF THE SUBGRADE, 1 FOOT BELOW THE EMBANKMENT SURFACE, AND LATERALLY TO THE ENDS OF THE WINGWALLS.
3. DURING INSTALLATION OF THE SUPPORT/ARMOR FOR THE SUPERSTRUCTURE SIDE OF THE EXPANSION JOINT SEAL, OBSERVE THE SEATING OF BEAMS ON BEARINGS TO ASSURE THAT POSITIVE BEARING IS MANTAINED.
4. IN ADDITION TO 511.10, DO NOT PLACE BACKWALL CONCRETE ABOVE THE OPTIONAL CONSTRUCTION JOINT AT THE APPROACH SLAB SEAT UNTIL AFTER THE DECK CONCRETE IN THE SPAN ADJACENT TO THE ABUTMENT HAS BEEN PLACED.
5. VERTICAL LAPS TO BE 1'-6" MIN.

ABBREVIATIONS

R.F. = REAR FACE
F.F. = FRONT FACE
E.F. = EACH FACE

IMAGE FILES : NONE
XREFERENCES : XR-DAY-XWAY-TITBLK;
PDF ATTACHMENTS : P1: Compson Tonsh\2005\3370 Dayton Expressway 3\30 SheetDrawings\20 Singles\Abutment-DETAIL- 02.dwg / Layout1
MRD\WIT : 12-FEB-07, 08:37:38 / Sullivan

PREPARED BY: R.W. ARMSTRONG & ASSOCIATES
471 EAST BROAD STREET, SUITE 2010
COLUMBUS, OH 43215
OFFICE (614) 225-8868 FAX (614) 225-8869

DESIGNED	DRAWN	REVIEWED	DATE
SRS	CLF	PWR	12/22/06
CHECKED	REVISED	STRUCTURE FILE NUMBER	
LAK		5780569	

FORWARD ABUTMENT DETAILS 3 OF 3
BRIDGE No. DAY-XWAY-00.79
DAYTON EXPRESSWAY OVER KEONEE STREET AND CSXT RAILROAD

MOT-XWAY
PID NO. 77774

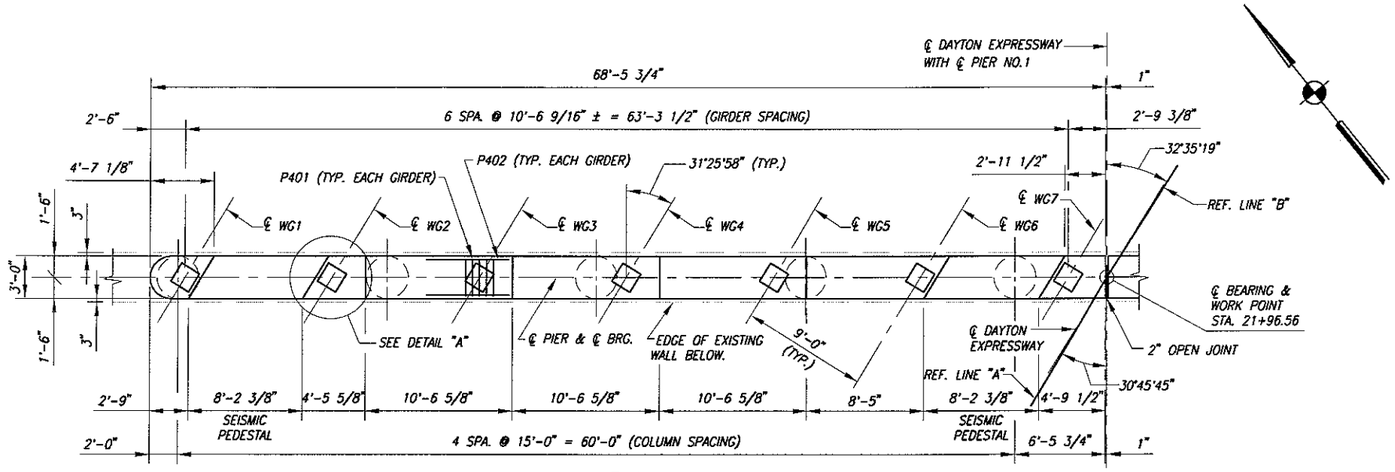

PLAN
(WESTBOUND)

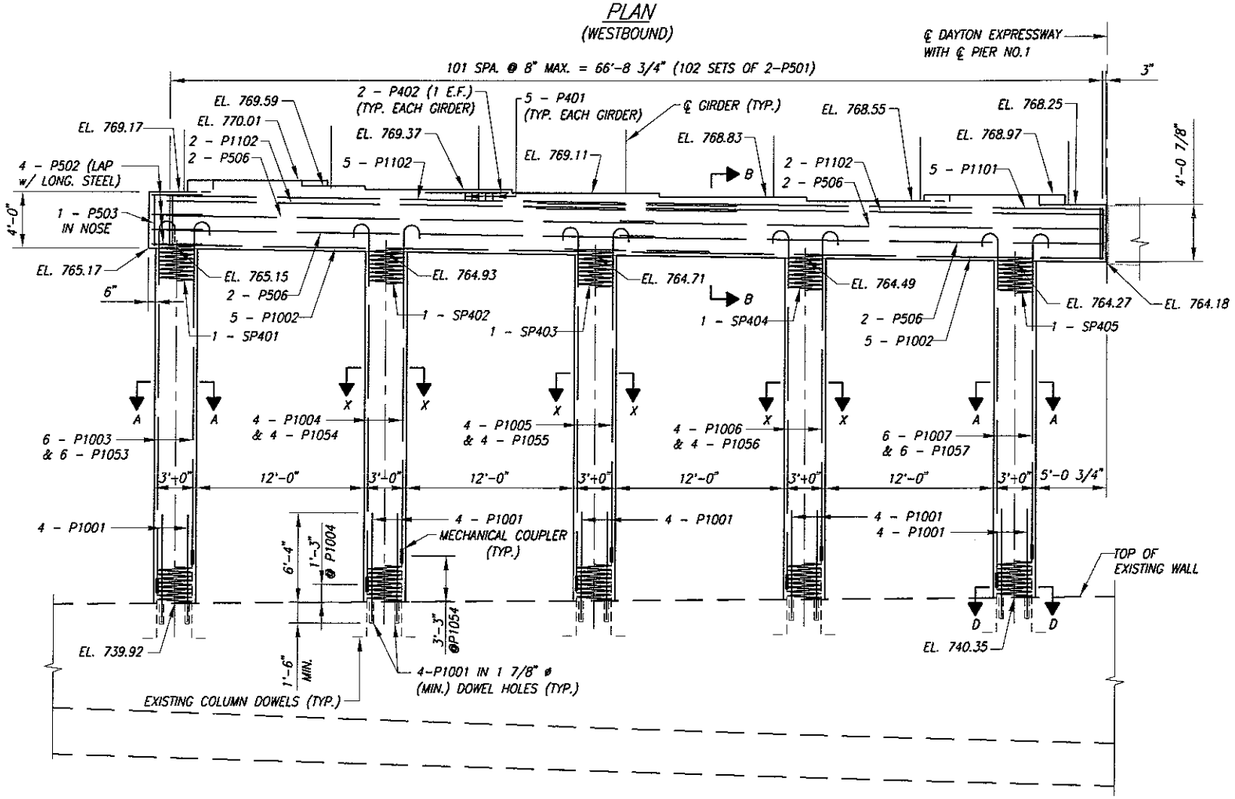

ELEVATION
(WESTBOUND)

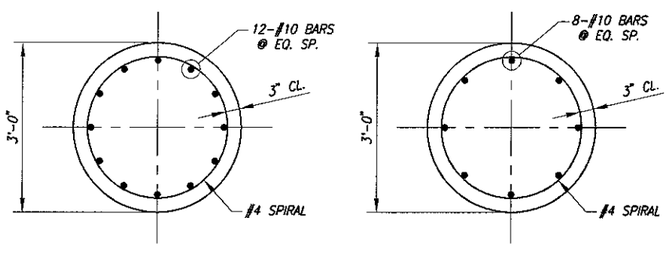

SECTION A-A

SECTION X-X

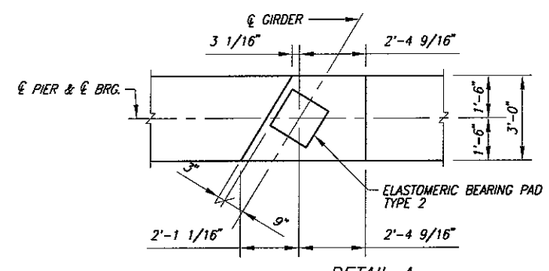

DETAIL A

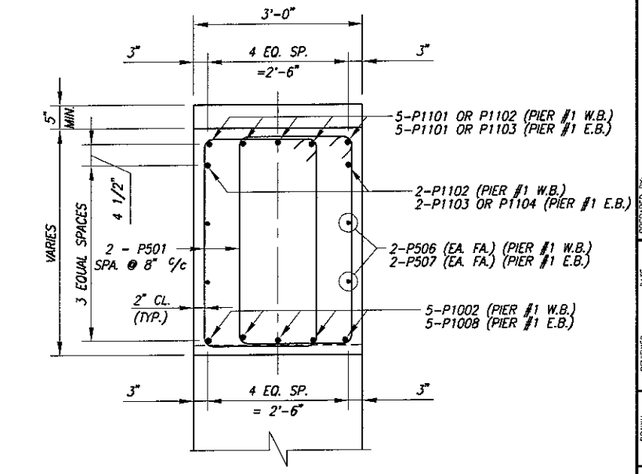

SECTION B-B

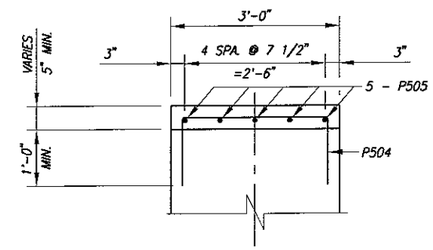

SECTION C-C

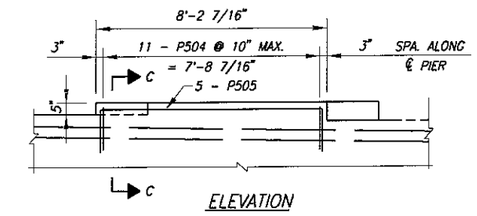

ELEVATION

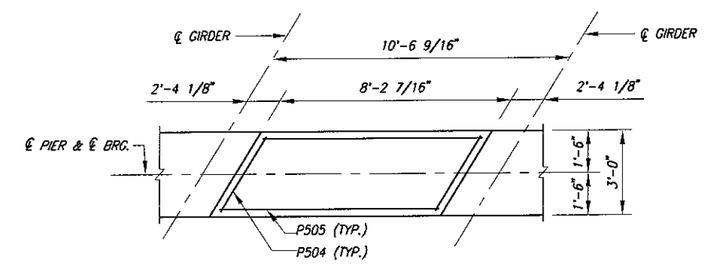

PLAN

SEISMIC PEDESTAL DETAILS

NOTES:

1. SURFACE SEAL ALL EXPOSED FACES OF PIER CAPS AND COLUMNS, DOWN TO THE TOP OF EXISTING WALL WITH EPOXY-URETHANE SEALER (TINTED LIGHT NEUTRAL). SEE SHEET 56/65.
2. MINIMUM CLEARANCE FOR REINFORCING STEEL IS 2", UNLESS NOTED.
3. FOR SECTION D-D, SEE SHEET 23/65.

LAP LENGTHS
#5 BARS - 2'-5"
#10 BARS - 10'-3"
#11 BARS - 14'-3"

PREPARED BY: R.W. ARMSTRONG & ASSOCIATES
471 EAST BROAD STREET, SUITE 2010
COLUMBUS, OH 43215
OFFICE (614) 225-8888 FAX (614) 225-8869

DESIGNED	DRAWN	REVIEWED	DATE
SRS	CLF	PAR	12/22/06
CHECKED	REVISED	STRUCTURE FILE NUMBER	
TDJ		5760569	

PIER NO. 1 DETAILS 1 OF 2
BRIDGE No. DAY-XWAY-00.79
DAYTON EXPRESSWAY OVER KEONEE STREET AND CSXT RAILROAD

MOT-XWAY
PID NO. 77774

IMAGE FILES : NONE
XREFERENCES : XR-DAY-XWAY-TITBLK;
FILE NAME : P:\Transportation\20053370 Dayton Expressway 3\30 SheetDrawings\20 Singles\Pier-1-WB.dwg / Layout1
MRO \WT : 12-FEB-07, 10:43:50 / CFtis

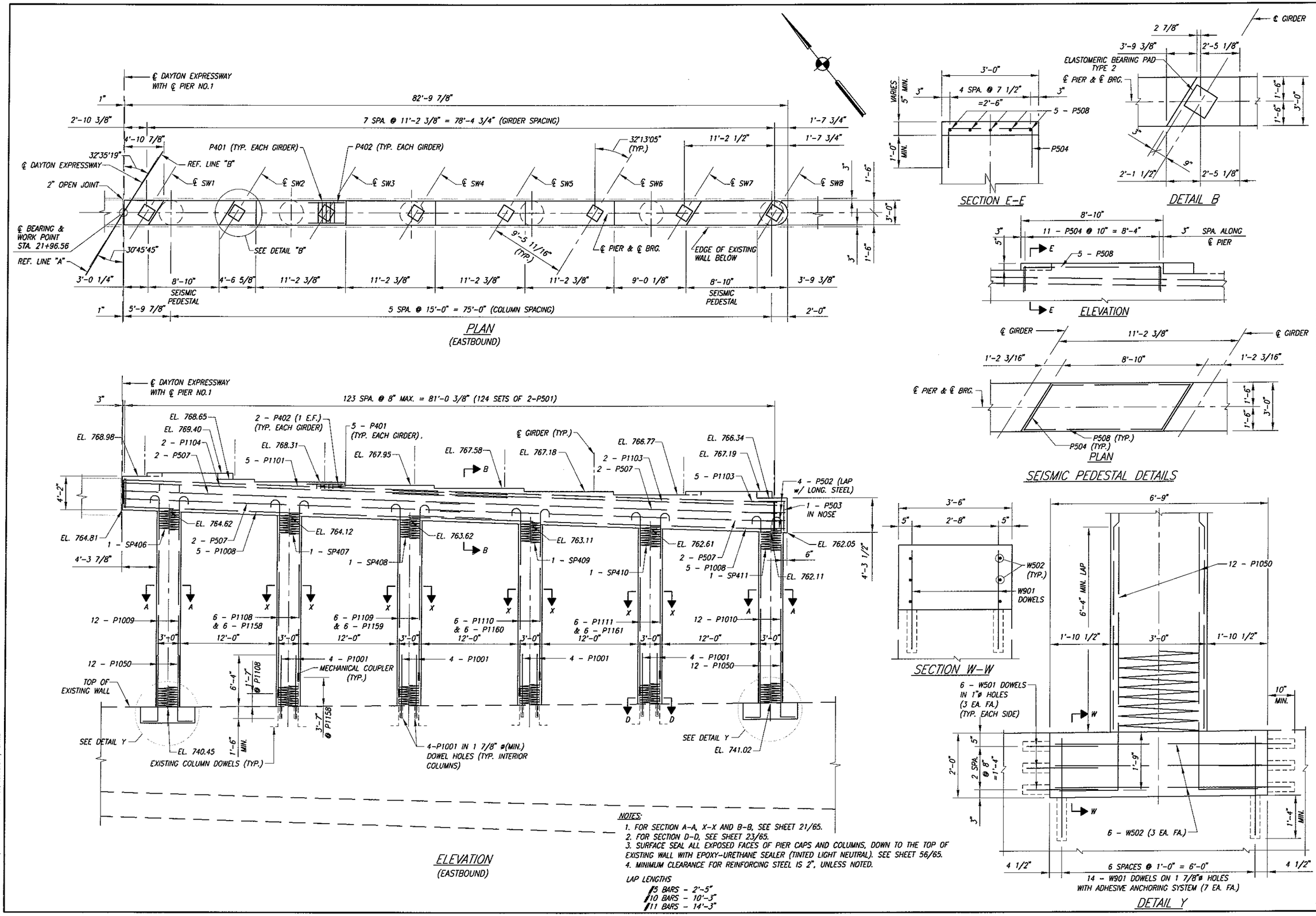

NOTES:

1. FOR SECTION A-A, X-X AND B-B, SEE SHEET 21/65.
2. FOR SECTION D-D, SEE SHEET 23/65.
3. SURFACE SEAL ALL EXPOSED FACES OF PIER CAPS AND COLUMNS, DOWN TO THE TOP OF EXISTING WALL WITH EPOXY-URETHANE SEALER (TINTED LIGHT NEUTRAL). SEE SHEET 56/65.
4. MINIMUM CLEARANCE FOR REINFORCING STEEL IS 2", UNLESS NOTED.

LAP LENGTHS

#5 BARS - 2'-5"
#10 BARS - 10'-3"
#11 BARS - 14'-3"

PREPARED BY: R.W. ARMSTRONG & ASSOCIATES
471 EAST BROAD STREET, SUITE 2010
COLUMBUS, OH 43215
OFFICE (614) 225-8868 FAX (614) 225-8869

DESIGNED	DRAWN	REVIEWED	DATE
SRS	CLF	PAR	12/22/06
CHECKED	REVISED	STRUCTURE FILE NUMBER	
TDJ		5760569	

PIER NO. 1 DETAILS 2 OF 2
BRIDGE No. DAY-XWAY-00.79
DAYTON EXPRESSWAY OVER KEOWEE STREET AND CSXT RAILROAD

MOT-XWAY
PID NO. 77774

IMAGE FILES : NONE
XREF REFERENCES : XR-DAY-XWAY-TTBLK,
FILE NAME : P:\Transportation\20053370 Dayton Expressway 3\30 Sheet\Drawings\20 Singles\Pier-1-EB.dwg / Layout1
MIN\VNT : 12-FEB-07, 10:43:34 / CFitts

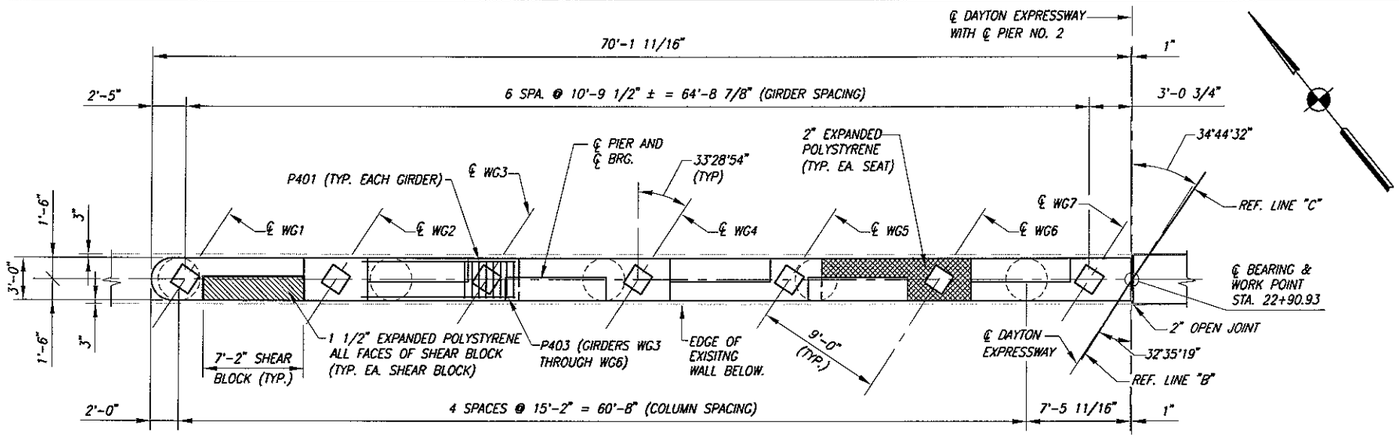

PLAN
(WESTBOUND)

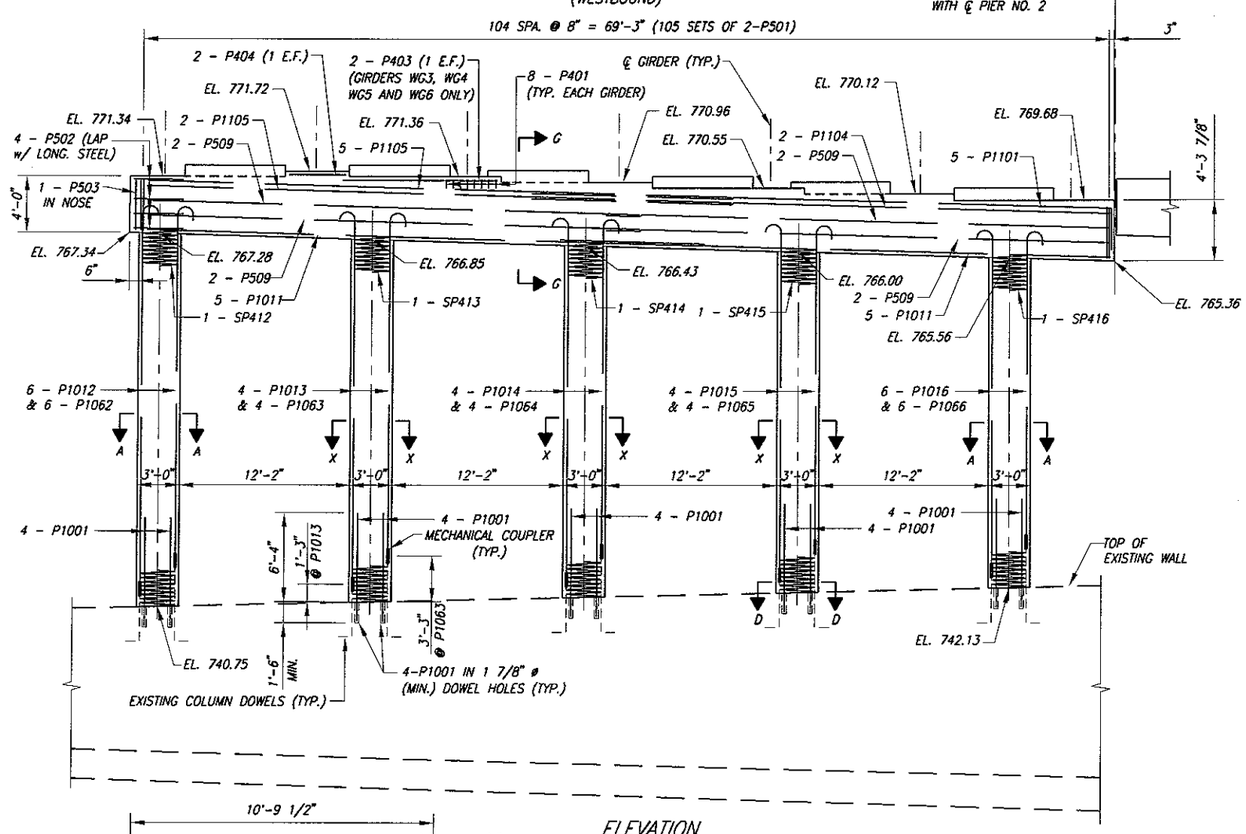

ELEVATION
(WESTBOUND)

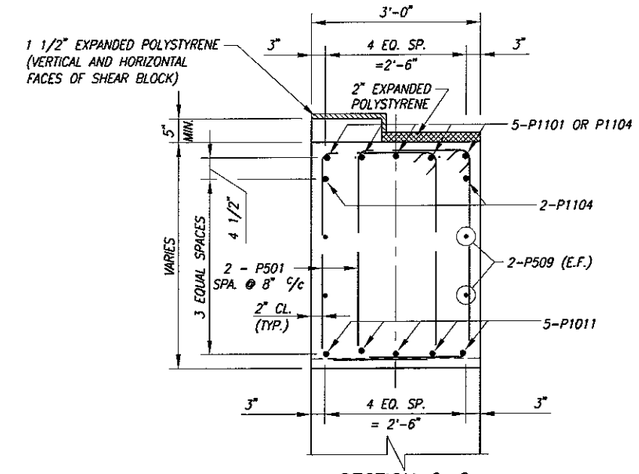

SECTION G-G

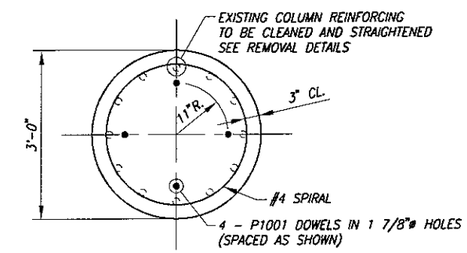

SECTION D-D

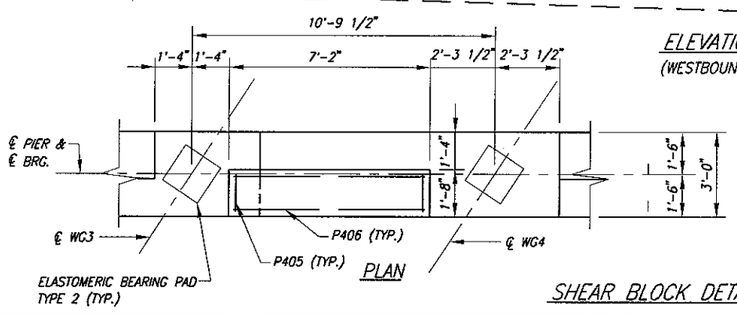

PLAN

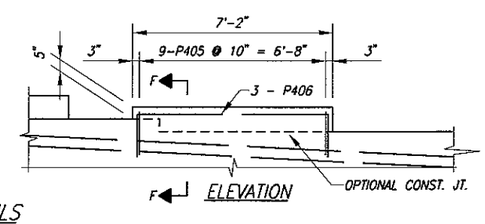

ELEVATION

SHEAR BLOCK DETAILS

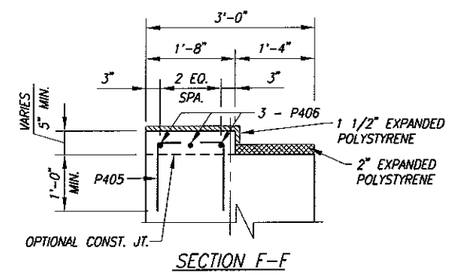

SECTION F-F

NOTES:

1. FOR SECTION A-A AND X-X, SEE SHEET 21/65.
2. SURFACE SEAL ALL EXPOSED FACES OF PIER CAPS AND COLUMNS, DOWN TO THE TOP OF EXISTING WALL WITH EPOXY-URETHANE SEALER (TINTED LIGHT NEUTRAL). SEE SHEET 56/65.
3. MINIMUM CLEARANCE FOR REINFORCING STEEL IS 2", UNLESS NOTED.

LAP LENGTHS
#5 BARS - 2'-5"
#10 BARS - 10'-3"
#11 BARS - 14'-3"

PREPARED BY:
R.W. ARMSTRONG & ASSOCIATES
471 EAST BROAD STREET, SUITE 2010
COLUMBUS, OHIO 43215
OFFICE (614) 225-8868 FAX (614) 225-8869

DESIGNED	DRAWN	REVIEWED	DATE
SRS	CLF	PMR	12/22/06
CHECKED	REVISED	STRUCTURE FILE NUMBER	
TDJ		5780569	

PIER NO. 2 DETAILS 1 OF 2
BRIDGE No. DAY-XWAY-00.79
DAYTON EXPRESSWAY OVER KEOWEE STREET AND CSXT RAILROAD

MOT-XWAY
PID NO. 77774

IMAGE FILES : NONE
XREFERENCES : XR-DAY-XWAY-11TBLK
FILE NAME : 13-FEB-07, 12:43:03 / S.Salmon
WRD\INT : 13-FEB-07, 12:43:03 / S.Salmon

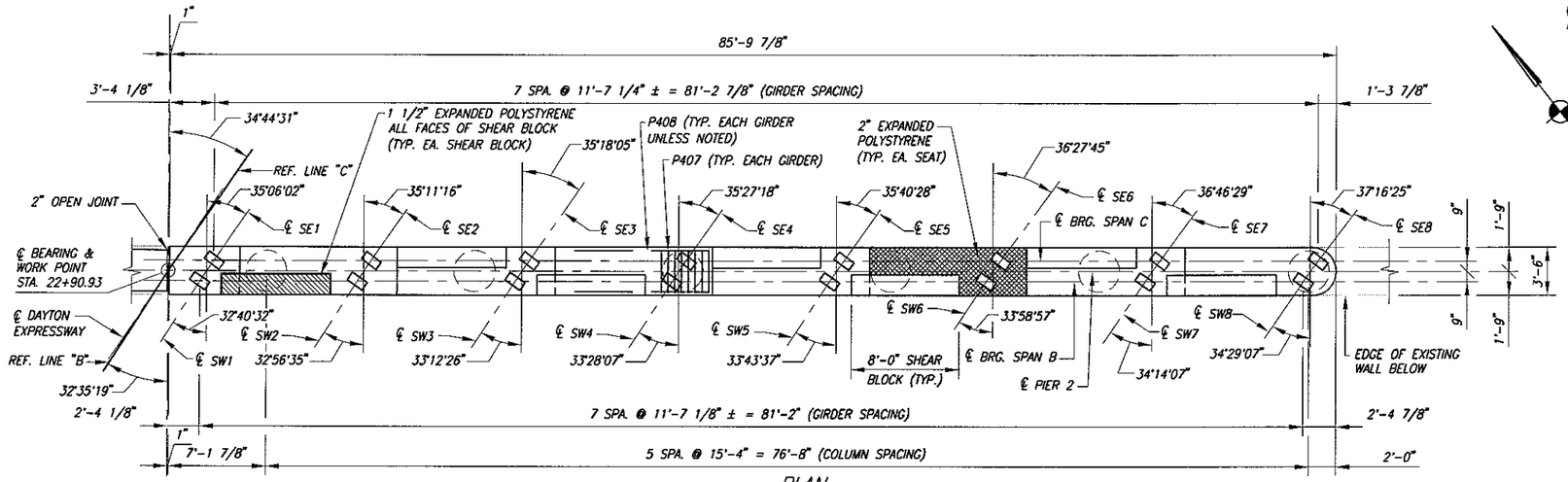

PLAN
(EASTBOUND)

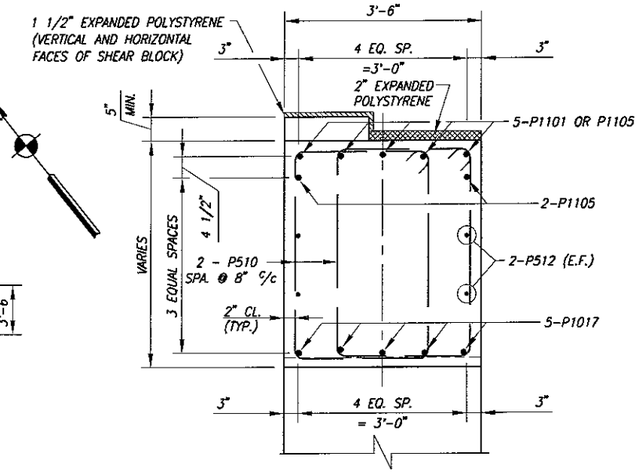

SECTION I-I

NOTES:

1. FOR SECTION A-A AND X-X, SEE SHEET 21/65.
2. FOR SECTION D-D, SEE SHEET 23/65.
3. FOR DETAIL Y, SEE SHEET 22/65.
4. SURFACE SEAL ALL EXPOSED FACES OF PIER CAPS AND COLUMNS, DOWN TO THE TOP OF EXISTING WALL WITH EPOXY-URETHANE SEALER (TINTED LIGHT NEUTRAL). SEE SHEET 56/65.
5. MINIMUM CLEARANCE FOR REINFORCING STEEL IS 2", UNLESS NOTED.

LAP LENGTHS
#5 BARS - 2'-5"
#10 BARS - 10'-3"
#11 BARS - 14'-3"

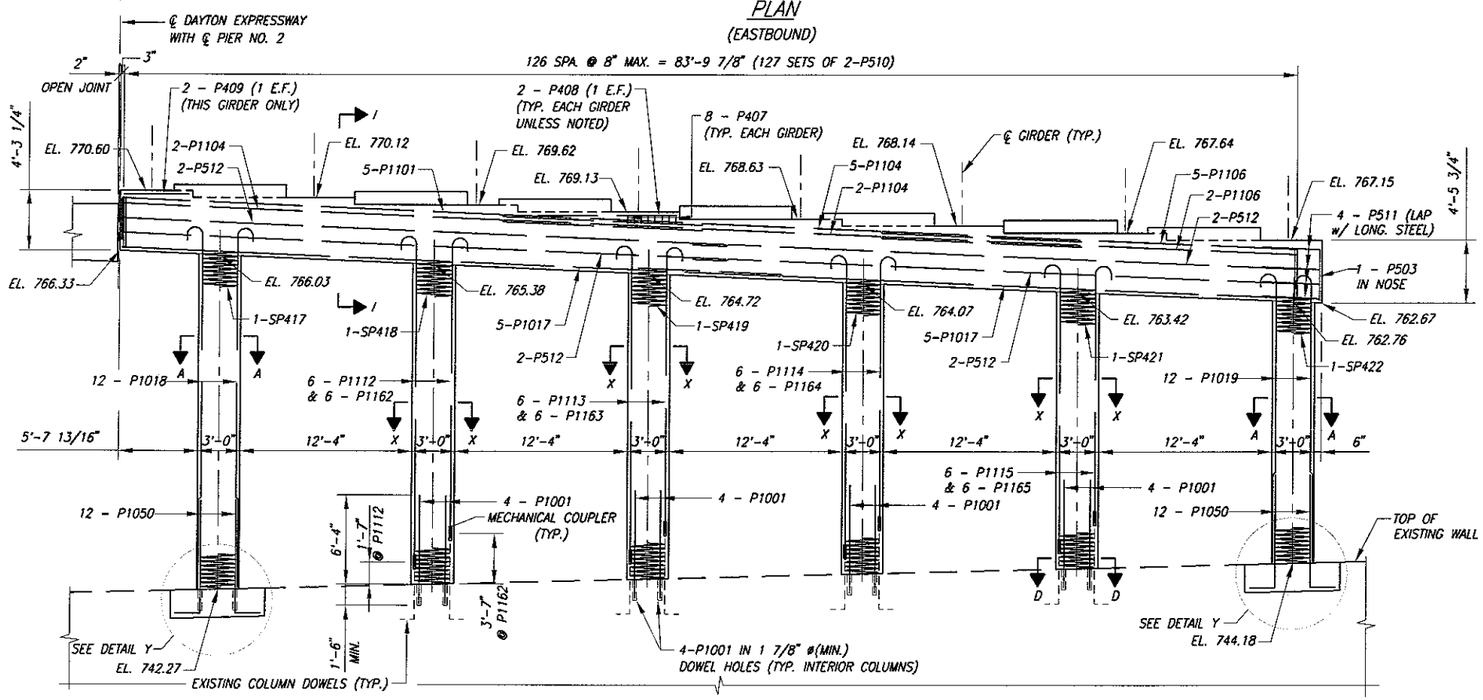

ELEVATION
(EASTBOUND)

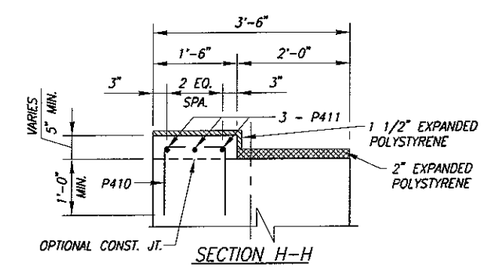

SECTION H-H

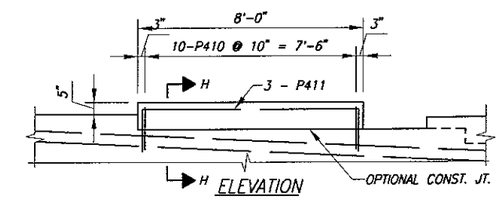

ELEVATION

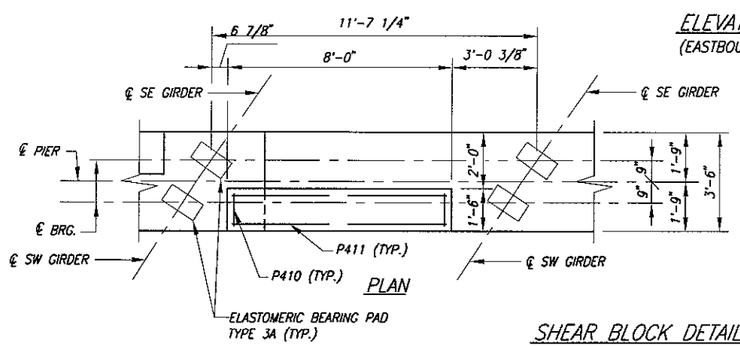

PLAN

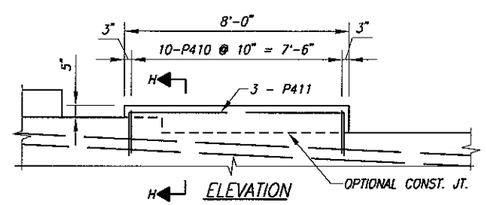

ELEVATION

SHEAR BLOCK DETAILS - SPAN B

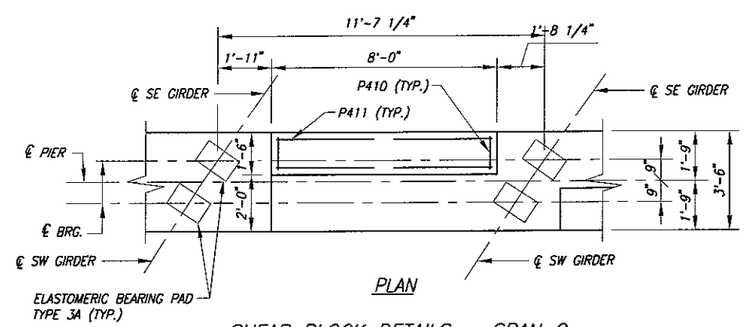

PLAN

SHEAR BLOCK DETAILS - SPAN C

IMAGE FILES : NONE
XREFERENCES : XR-DAY-XWAY-TITBLK;
FILE NAME : P:\Transportation\20053370 Dayton Expressway 3\30 Sheet\Drawings\20 Singles\Pier-2-EB.dwg / Layout1
MOD\WT : 15-FEB-07, 15:55:50 / SJohnson

PREPARED BY:
R.W. ARMSTRONG & ASSOCIATES
471 EAST BROAD STREET, SUITE 2010
COLUMBUS, OH 43215
OFFICE (614) 225-8868 FAX (614) 225-8869

DESIGNED	DRAWN	REVIEWED	DATE
SRS	CLF	PAP	12/22/06
CHECKED	REVISED	STRUCTURE FILE NUMBER	
TDJ		5760569	

PIER NO. 2 DETAILS 2 OF 2
BRIDGE No. DAY-XWAY-00.79
DAYTON EXPRESSWAY OVER KEOWEE STREET AND CSXT RAILROAD

MOT-XWAY
PID NO. 77774

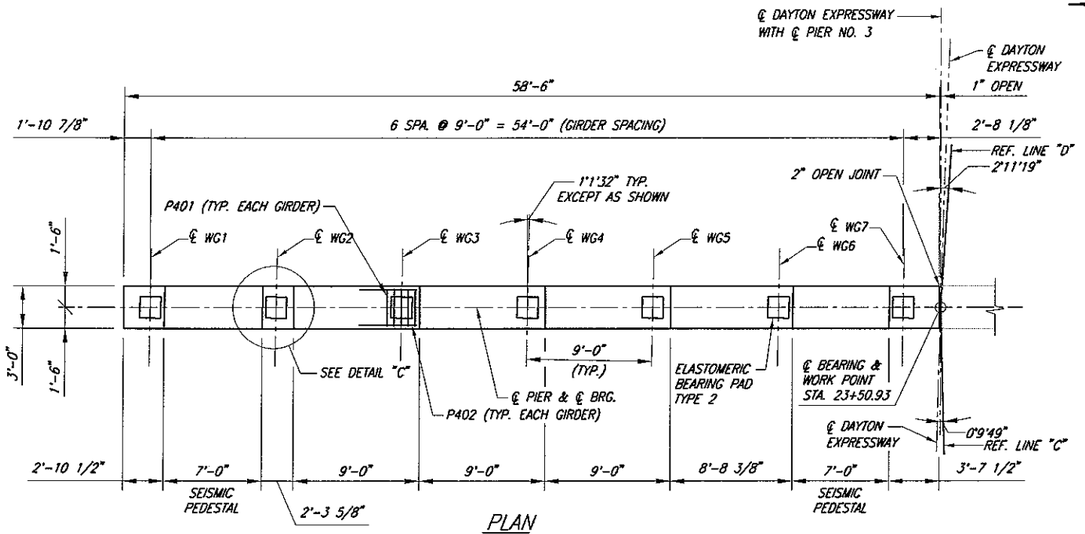

PLAN
(WESTBOUND)

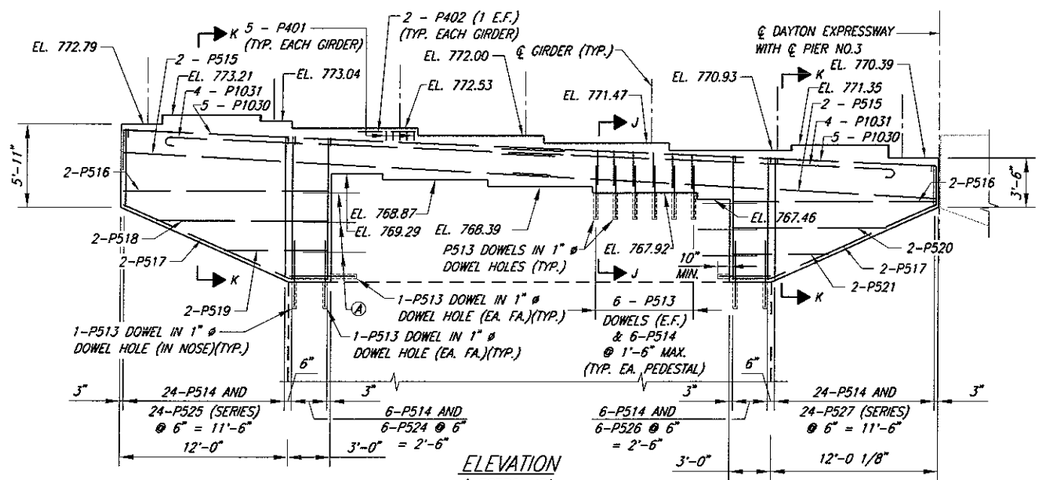

ELEVATION
(WESTBOUND)

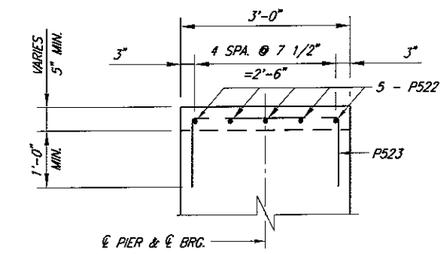

SECTION Z-Z

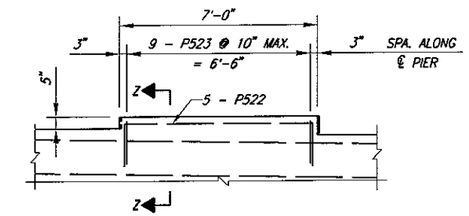

ELEVATION

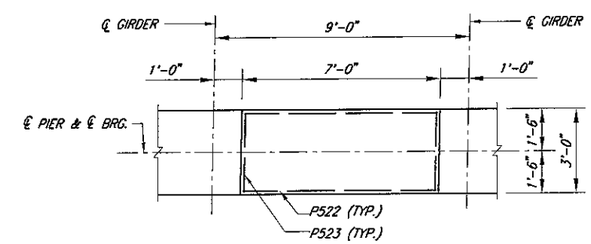

PLAN

SEISMIC PEDESTAL DETAILS

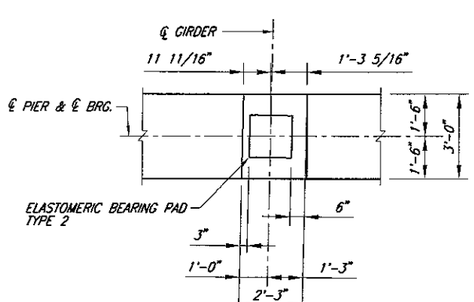

DETAIL C

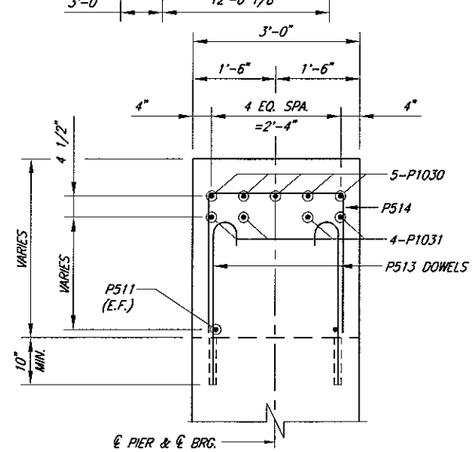

SECTION J-J

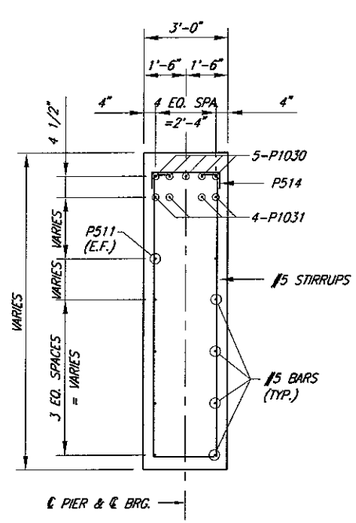

SECTION K-K

NOTES:

1. SURFACE SEAL ALL EXPOSED FACES OF PIERS DOWN TO THE GROUNDLINE WITH EPOXY-URETHANE SEALER (TINTED LIGHT NEUTRAL). SEE SHEET 55/64.
2. MINIMUM CLEARANCE FOR REINFORCING STEEL IS 2", UNLESS NOTED.

LAP LENGTHS
#5 BARS - 2'-5"
#10 BARS - 11'-7"

Ⓐ EXISTING HORIZONTAL REINFORCING STEEL TO BE CLEANED, STRAIGHTENED AND CUT OFF @ 2'-0" (TYP.)

PREPARED BY: R.W. ARMSTRONG & ASSOCIATES
471 EAST BROAD STREET, SUITE 2010
COLUMBUS, OH 43215
OFFICE (614) 225-8868 FAX (614) 225-8869

DESIGNED	DRAWN	REVIEWED	DATE
SRS	CLF	PAR	12/22/06
CHECKED	REVISED	STRUCTURE FILE NUMBER	
TDJ		5760569	

PIER NO. 3 DETAILS 1 OF 2
BRIDGE No. DAY-XWAY-00.79
DAYTON EXPRESSWAY OVER KEOWEE STREET AND CSXT RAILROAD

MOT-XWAY
PID NO. 77774

IMAGE FILES : NONE
XREFERENCES : XR-DAY-XWAY-TITBLK;
FILE NAME : P:\Transportation\60053370 Dayton Expressway 3\30 SheetDrawings\20 Singles\Pier-3-WB.dwg / Layout1
MFD\INT : T1-FEB-07, 10:29:55 / CFrits

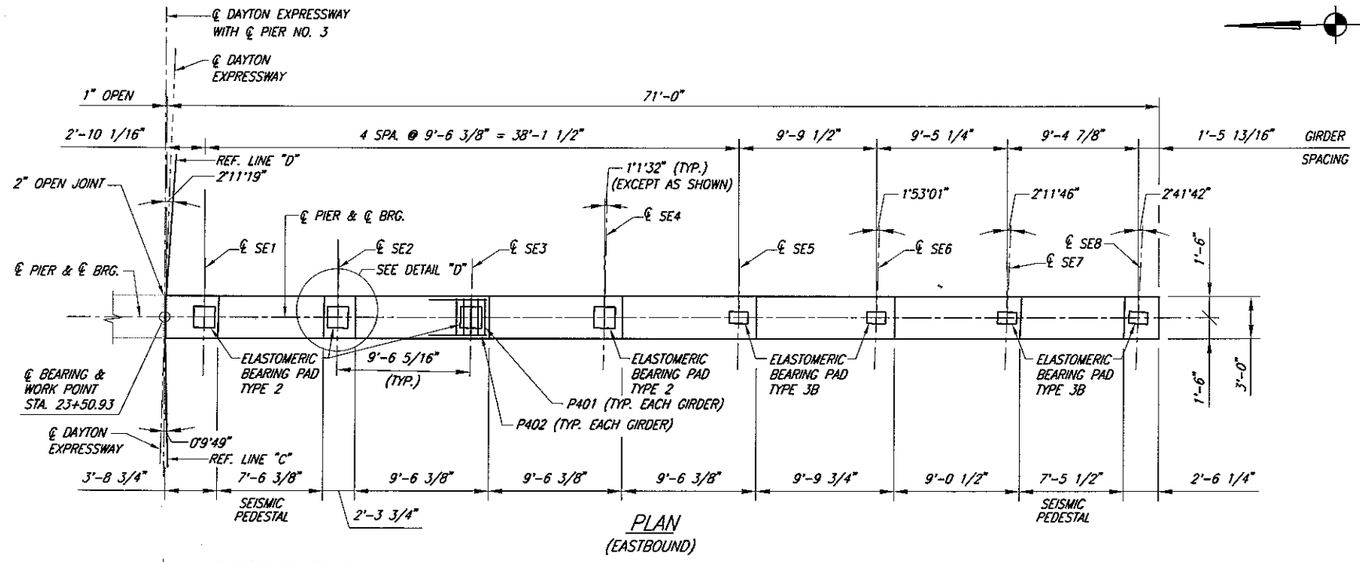

PLAN
(EASTBOUND)

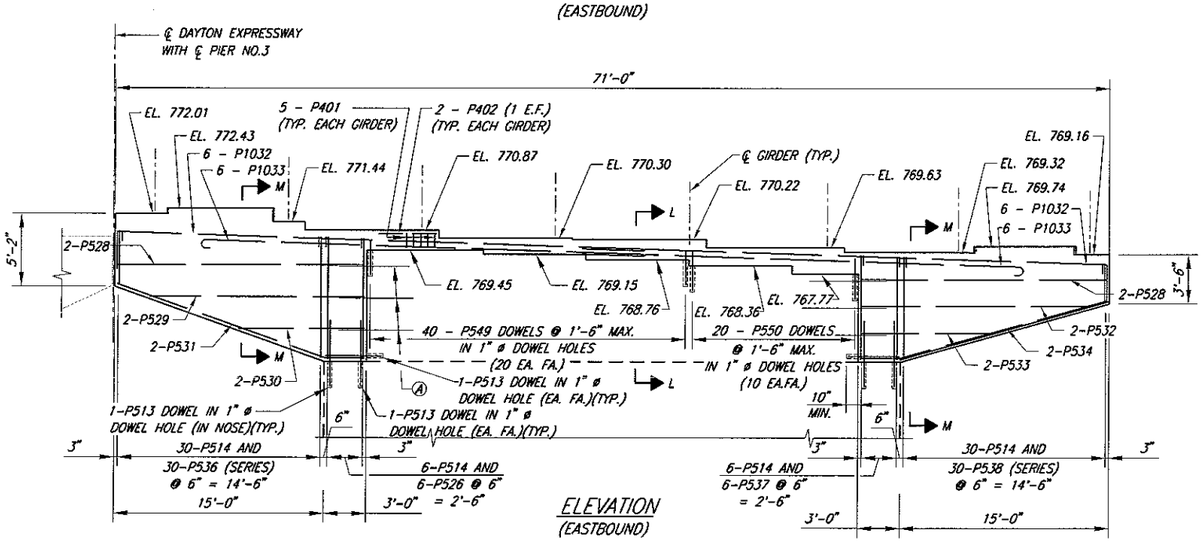

ELEVATION
(EASTBOUND)

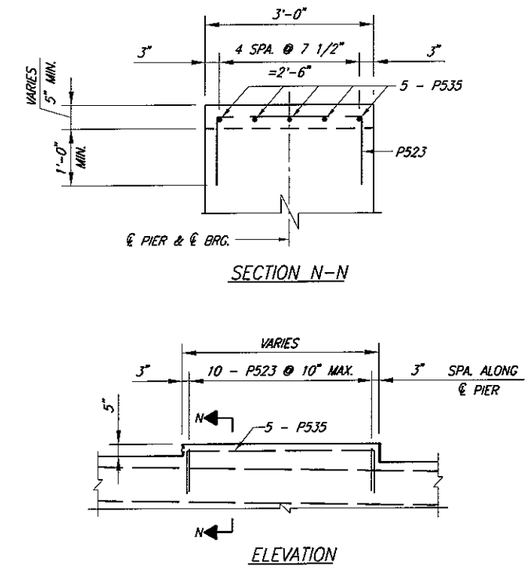

SECTION N-N

ELEVATION

PLAN

SEISMIC PEDESTAL DETAILS

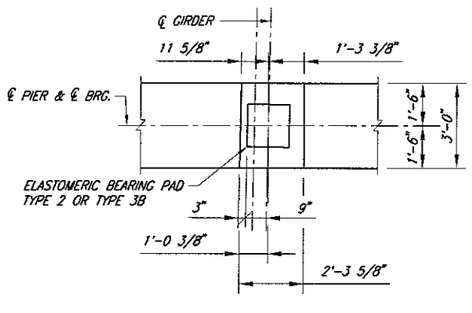

DETAIL D

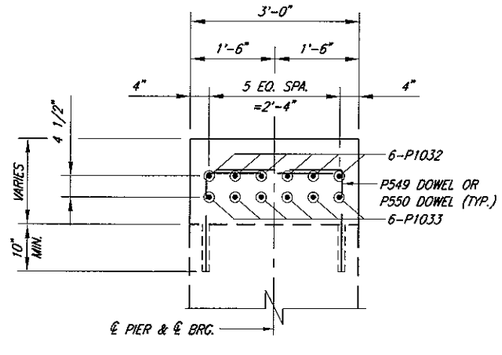

SECTION L-L

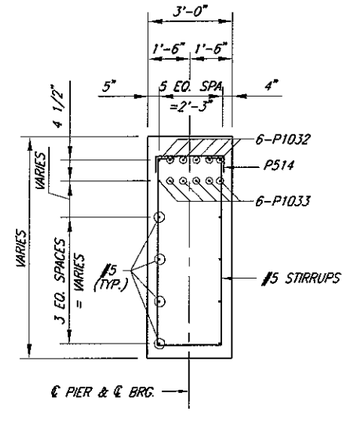

SECTION M-M

NOTES:

1. SURFACE SEAL ALL EXPOSED FACES OF PIERS DOWN TO THE GROUNDLINE WITH EPOXY-URETHANE SEALER (TINTED LIGHT NEUTRAL). SEE SHEET 55/64.
2. MINIMUM CLEARANCE FOR REINFORCING STEEL IS 2", UNLESS NOTED.

LAP LENGTHS
#5 BARS - 2'-5"
#10 BARS - 11'-7"

Ⓐ EXISTING HORIZONTAL REINFORCING STEEL TO BE CLEANED, STRAIGHTENED AND CUT OFF @ 2'-0" (TYP.)

PREPARED BY: R.W. ARMSTRONG & ASSOCIATES
471 EAST BROAD STREET, SUITE 2010
COLUMBUS, OH 43215
OFFICE (614) 225-8868 FAX (614) 225-8869

DESIGNED	DRAWN	REVIEWED	DATE
SRS	CLF	PAR	12/22/06
CHECKED	REVISED	STRUCTURE FILE NUMBER	
TDJ		5760569	

PIER NO. 3 DETAILS 2 OF 2
BRIDGE No. DAY-XWAY-00.79
DAYTON EXPRESSWAY OVER KEOWEE STREET AND CSXT RAILROAD

MOT-XWAY
PID NO. 77774

IMAGE FILES : NONE
XREFERENCES : XR-DAY-XWAY-TITBLK;
FILE NAME : P:\Transportation\20053370 Dayton Expressway 31\30 SheetDrawings\20 Singles\Pier-3-EB.dwg / Layout1
MRD\WAT : 13-FEB-07, 14:17:54 / CPTits

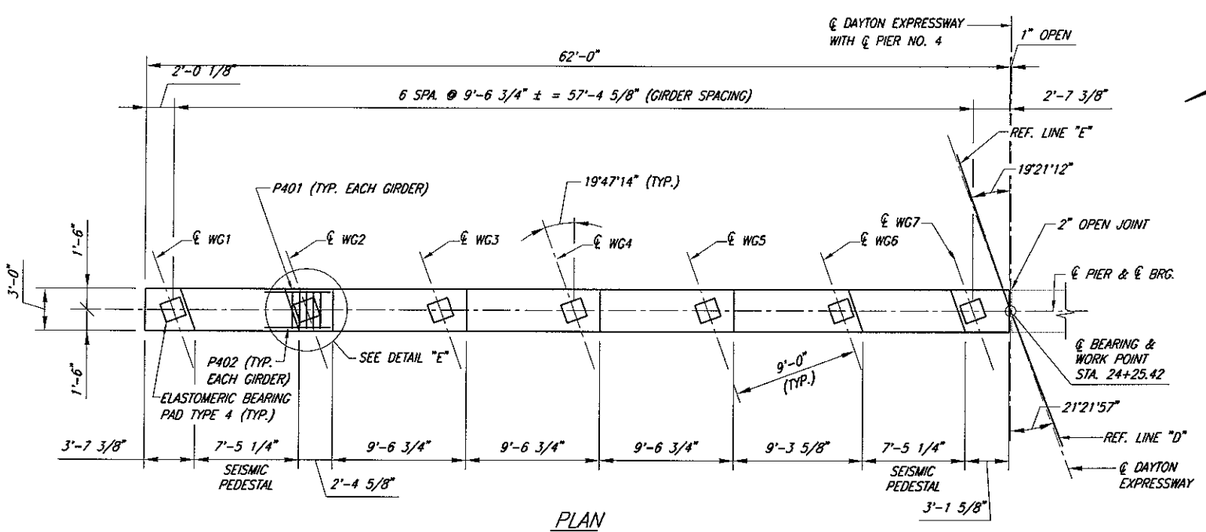

PLAN
(WESTBOUND)

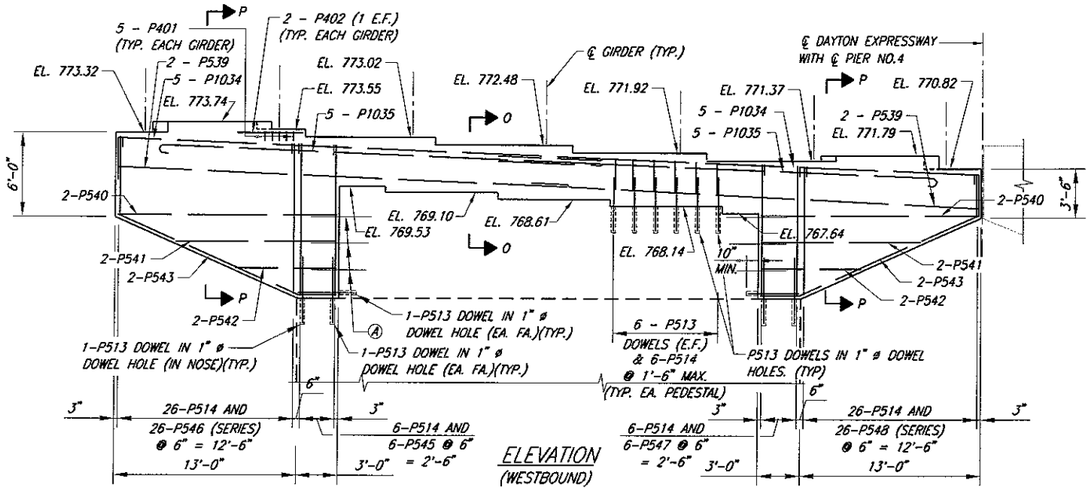

ELEVATION
(WESTBOUND)

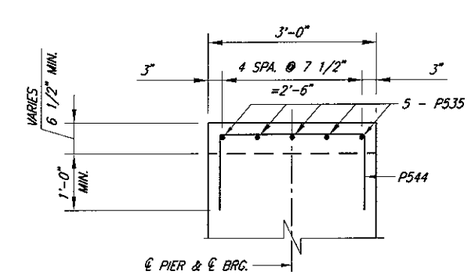

SECTION Q-Q

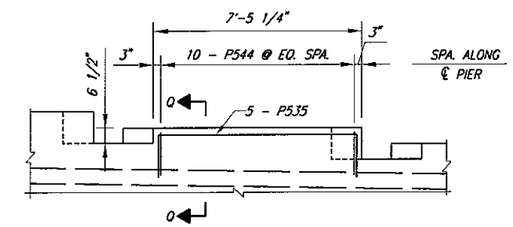

ELEVATION

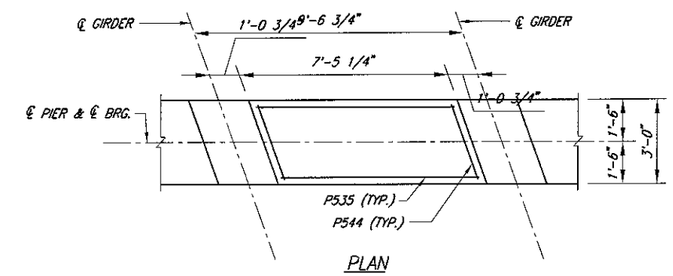

PLAN

SEISMIC BLOCK DETAILS

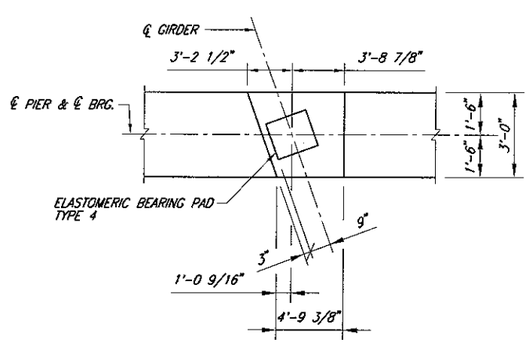

DETAIL E

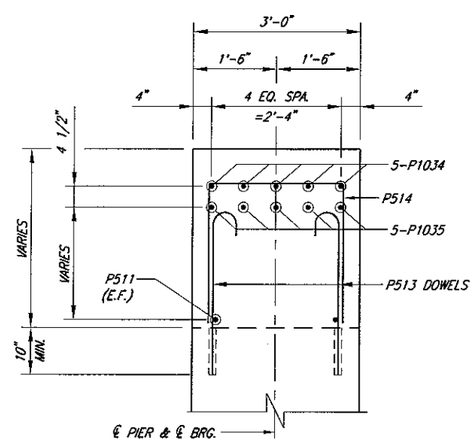

SECTION O-O

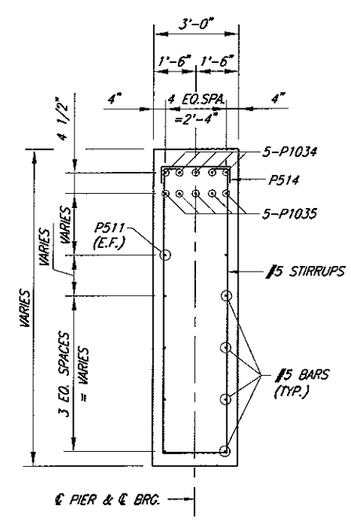

SECTION P-P

NOTES:

1. SURFACE SEAL ALL EXPOSED FACES OF PIERS DOWN TO THE GROUNDLINE WITH EPOXY-URETHANE SEALER (TINTED LIGHT NEUTRAL). SEE SHEET 56/65.
2. MINIMUM CLEARANCE FOR REINFORCING STEEL IS 2", UNLESS NOTED.

LAP LENGTHS
#5 BARS - 2'-5"
#10 BARS - 11'-7"

Ⓐ EXISTING HORIZONTAL REINFORCING STEEL TO BE CLEANED, STRAIGHTENED AND CUT OFF @ 2'-0" (TYP.)

PREPARED BY: R.W. ARMSTRONG & ASSOCIATES
471 EAST BROAD STREET, SUITE 2010
COLUMBUS, OH 43215
OFFICE (614) 225-8868 FAX (614) 225-8869

DESIGNED	DRAWN	REVIEWED	DATE
SRS	CLF	PAR	12/22/06
CHECKED	REVISED	STRUCTURE FILE NUMBER	
LAK		5760569	

PIER NO. 4 DETAILS 1 OF 2
BRIDGE No. DAY-XWAY-00.79
DAYTON EXPRESSWAY OVER KEOWEE STREET AND CSXT RAILROAD

MOT-XWAY
PID NO. 77774

IMAGE FILES : NONE
XREFERENCES : XR-DAY-XWAY-TITBLK;
FILE NAME : P:\Transportation\20053370 Dayton Expressway 3\30 Sheet\Drawings\20 Singles\Pier-4-WB.dwg / Layout1
MRD\MT : 12-FEB-07, 14:43:18 / CFiles

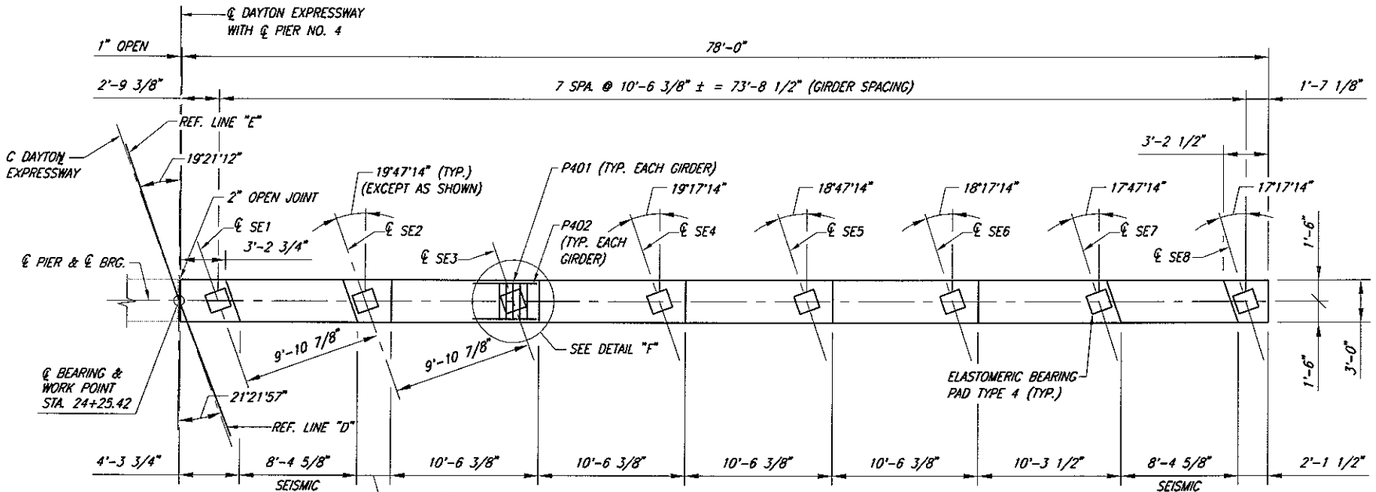

PLAN
(EASTBOUND)

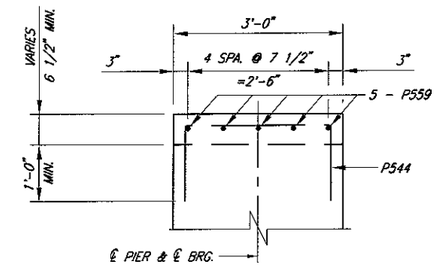

SECTION T-T

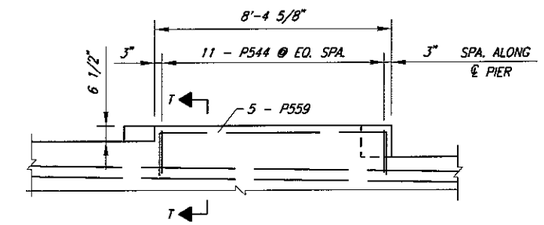

ELEVATION

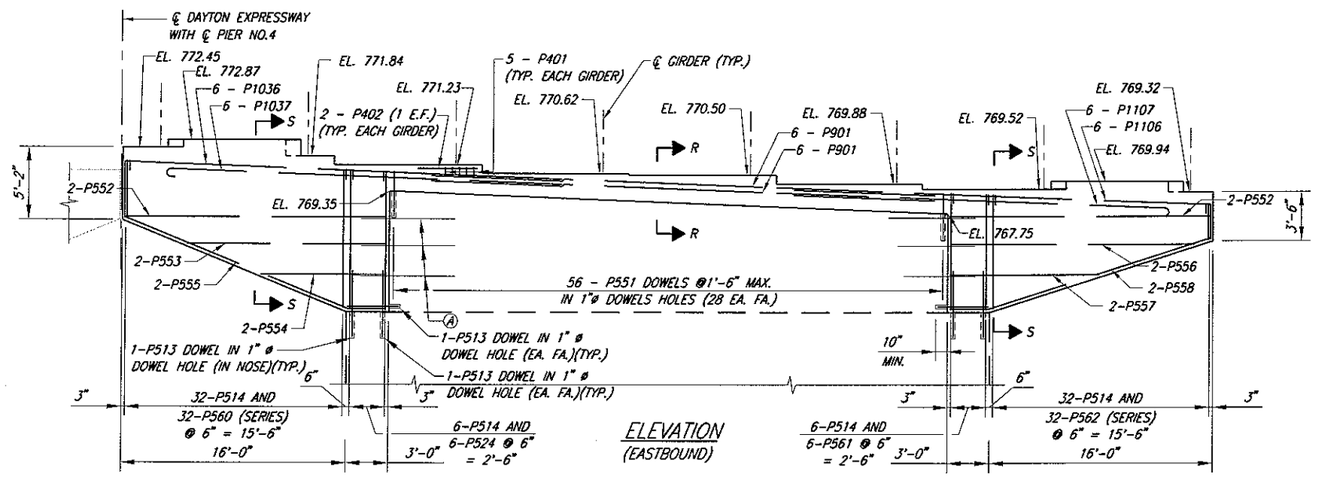

ELEVATION
(EASTBOUND)

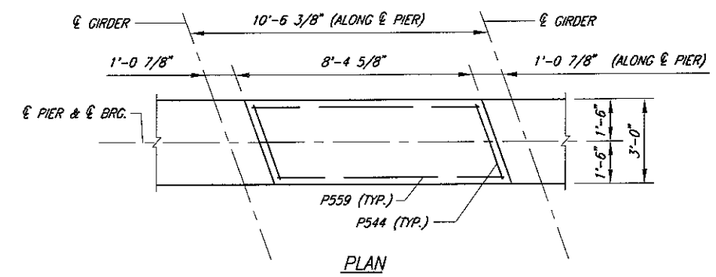

PLAN

SEISMIC PEDESTAL DETAILS

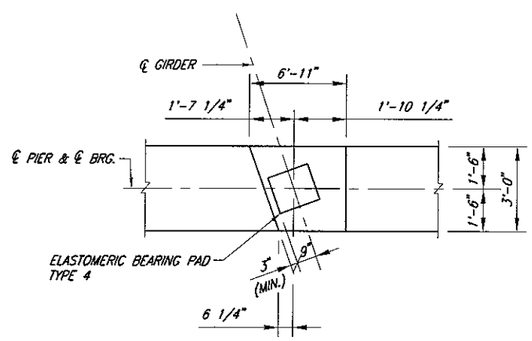

DETAIL F

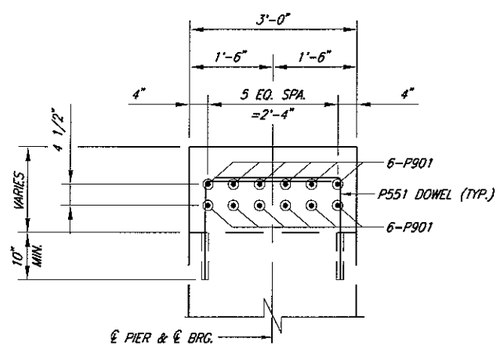

SECTION R-R

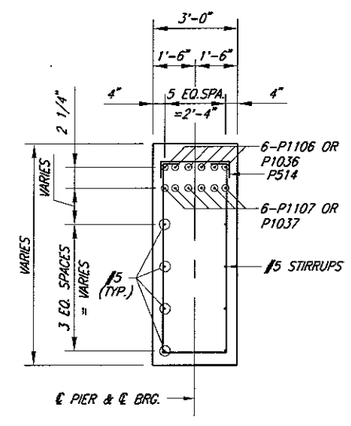

SECTION S-S

NOTES:

1. SURFACE SEAL ALL EXPOSED FACES OF PIERS DOWN TO THE GROUNDLINE WITH EPOXY-URETHANE SEALER (TINTED LIGHT NEUTRAL). SEE SHEET 56/65.
2. MINIMUM CLEARANCE FOR REINFORCING STEEL IS 2", UNLESS NOTED.

LAP LENGTHS
#5 BARS - 2'-5"
#10 BARS - 11'-7"
#11 BARS - 14'-3"

(A) EXISTING HORIZONTAL REINFORCING STEEL TO BE CLEANED, STRAIGHTENED AND CUT OFF @ 2'-0" (TYP.)

PREPARED BY:
R.W. ARMSTRONG & ASSOCIATES
471 EAST BROAD STREET, SUITE 2010
COLUMBUS, OH 43215
OFFICE (614) 225-8868 FAX (614) 225-8869

DESIGNED	DRAWN	REVIEWED	DATE
SRS	CLF	PMR	12/22/06
CHECKED	REVISED	STRUCTURE FILE NUMBER	
TDJ		5760569	

PIER NO. 4 DETAILS 2 OF 2
BRIDGE No. DAY-XWAY-00.79
DAYTON EXPRESSWAY OVER KEOWEE STREET AND CSXT RAILROAD

MOT-XWAY
PID NO. 77774

IMAGE FILES : NONE
XREFERENCES : XR-A1 DAY-XWAY-TITBLK
PLOT NAME : 12-FEB-07, 10:42:47, CFTUS
MRD_NAT : 12-FEB-07, 10:42:47, CFTUS
\\Columbus\Projects\33033370 Dayton Expressway 3\30 SheetDrawings\20 Singles\Pier-4-EB.dwg / Layout1

355'-10 5/16" C. TO C. ABUTMENT BEARINGS (ALONG ℄ SURVEY)

ALONG ℄ SURVEY | 67'-0" SPAN A | 94'-4 3/8" SPAN B | 60'-0" SPAN C | 74'-5 7/8" SPAN D | 60'-0" SPAN E

STA. 21+96.56 ℄ BEARING PIER NO. 1 AND WORK POINT

STA. 22+90.93 ℄ BEARING PIER NO. 2 AND WORK POINT

STA. 23+50.93 ℄ BEARING PIER NO. 3 AND WORK POINT

STA. 24+25.42 ℄ BEARING PIER NO. 4 AND WORK POINT

℄ BRG. REAR ABUT. (EXP.)

℄ BRG. FWD. ABUT. (EXP.)

3'-0" (TYP.)

2 EQUAL SPACES INT. CROSS FRAME

2 EQUAL SPACES INT. CROSS FRAME

2 EQUAL SPACES INT. CROSS FRAME

2 EQUAL SPACES INT. CROSS FRAME

2 EQUAL SPACES INT. CROSS FRAME (1 SPACE-2 INT. BAYS)

3 EQUALS SPACES INT. CROSS FRAME (2 SPACES-2 INTERIOR BAYS)

2 EQUAL SPACES INT. CROSS FRAME

2 EQUAL SPACES INT. CROSS FRAME

2 EQUAL SPACES INT. CROSS FRAME

℄ PIER NO.1 (EXP.)

℄ PIER NO.2 (EXP.)

℄ PIER NO.3 (EXP.)

℄ PIER NO.4 (EXP.)

WG 1, WG 2, WG 3, WG 4, WG 5, WG 6, WG 7

FIELD SPLICE 1, FIELD SPLICE 2, FIELD SPLICE 3, FIELD SPLICE 4, FIELD SPLICE 5, FIELD SPLICE 6, FIELD SPLICE 7, FIELD SPLICE 8

6 SPA. @ 9'-0" = 54'-0" (BETWEEN SPLICES)

2 EQUAL SPACES

END CROSS FRAMES ③

6 SPACES @ 10'-5 3/16" ± = 62'-6 15/16"

6 SPACES @ 9'-6" = 57'-0"

℄ SURVEY AND ℄ DAYTON EXPRESSWAY

SW 1, SW 2, SW 3, SW 4, SW 5, SW 6, SW 7, SW 8

SE 1, SE 2, SE 3, SE 4, SE 5, SE 6, SE 7, SE 8

7 SPA. @ 9'-5 11/16" ± = 66'-3 15/16" ± (BTWN. SPLICES)

7 SPA. @ 11'-1 1/4" ± = 81'-2 7/8" (ALONG ℄ BEARING)

7 SPA. @ 11'-1 1/8" ± = 81'-2" (ALONG ℄ BEARING)

4 SPA. @ 9'-6 3/8" ± = 33'-1 3/8"

7 SPA. @ 10'-6 3/8" ± = 73'-8 1/2" (ALONG ℄ PIER)

STA. 21+29.56 ℄ BEARING REAR ABUTMENT AND WORK POINT

STA. 24+85.42 ℄ BEARING FORWARD ABUTMENT AND WORK POINT

END CROSS FRAMES ③

7 SPACES @ 11'-1 11/16" ± = 77'-11 3/4"

7 SPACES @ 11'-2 1/16" ± = 78'-2 1/4"

2 EQUAL SPACES INT. CROSS FRAME

3 EQUAL SPACES INT. CROSS FRAME

3 EQUAL SPACES INT. CROSS FRAME

3'-0" (TYP.)

SPACING VARIES INT. CROSS FRAME (25'-0" MAX IN SPAN, 10'-0" MAX. EACH SIDE OF PIER 3)

2 EQUAL SPACES INT. CROSS FRAME

2 EQUAL SPACES INT. CROSS FRAME

GIRDERS IN SPANS "A" & "B" DESIGNATED "SW"

GIRDERS IN SPANS "C" - "E"

FRAMING PLAN

NOTES:

① GIRDER SPACING VARIES BETWEEN THE FOLLOWING LOCATIONS:

WB – REAR ABUTMENT AND FIELD SPLICE POINT 1
FIELD SPLICE POINT 2 AND FIELD SPLICE POINT 3
FIELD SPLICE POINT 4 AND FIELD SPLICE POINT 5
FIELD SPLICE POINT 6 AND FIELD SPLICE POINT 7
FIELD SPLICE POINT 8 AND FORWARD ABUTMENT

EB – REAR ABUTMENT AND FIELD SPLICE POINT 1
FIELD SPLICE POINT 2 AND FIELD SPLICE POINT 5 OR 7
FIELD SPLICE POINT 6 AND FIELD SPLICE POINT 7
FIELD SPLICE POINT 8 AND FORWARD ABUTMENT

② SEE ABUTMENT AND PIER DETAILS FOR GIRDER GEOMETRY AND PLACEMENT AT BEARING LOCATIONS.

③ FOR END CROSS FRAME DETAILS, SEE ODOT STANDARD DRAWING GSD-1-96.

④ THESE SIX CROSS FRAMES ARE TO REMAIN IN PLACE DURING PLACEMENT OF DECK CONCRETE IN SPANS B AND C, AND THEN ARE TO BE REMOVED PRIOR TO PLACEMENT OF THE DIAPHRAGM CONCRETE.

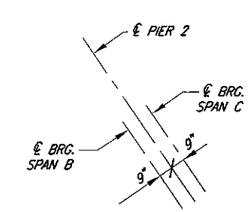

EASTBOUND PIER 2 ONLY

IMAGE FILES : NONE
XREFERENCES : XR-DAY-XWAY-TITBLK;
FILE NAME : P:\Transportation\20053370 Dayton Expressway 3\30 SheetDrawings\20 Singles\Structural Steel Frame.dwg / Layout1
MOD TIME : 15-FEB-07, 15:15:54 / aspinkcdl

PREPARED BY: R.W. ARMSTRONG & ASSOCIATES
471 EAST BROAD STREET, SUITE 2010
COLUMBUS, OHIO 43215
OFFICE (614) 225-8868 FAX (614) 225-8869

DESIGNED	DRAWN	REVIEWED	DATE
SPS	CLF	PAR	12/22/06
CHECKED	REVISED	STRUCTURE FILE NUMBER	
LAK		5760569	

FRAMING PLAN
BRIDGE No. DAY-XWAY-00.79
DAYTON EXPRESSWAY OVER KEONEE STREET AND CSXT RAILROAD

MOT-XWAY
PID NO. 77774

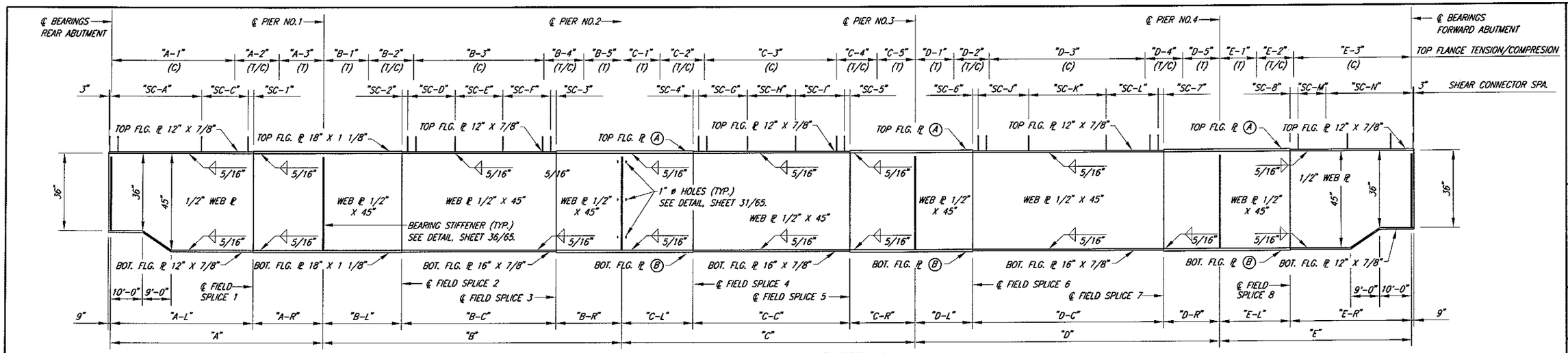

GIRDERS WG1 THRU WG7 DETAILS
NOT TO SCALE

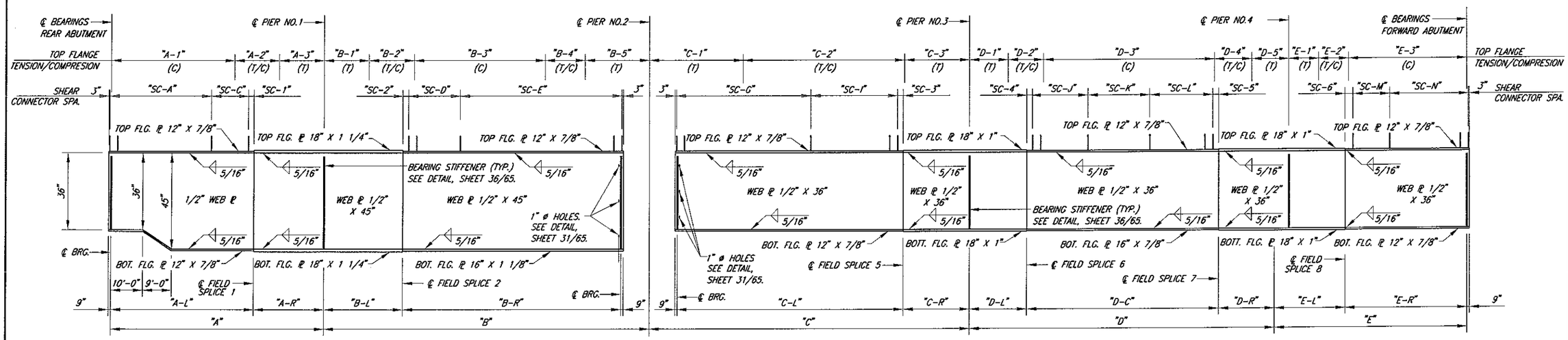

GIRDERS SW1 THRU SW8 DETAILS
NOT TO SCALE

GIRDERS SE1 THRU SE4 DETAILS
NOT TO SCALE

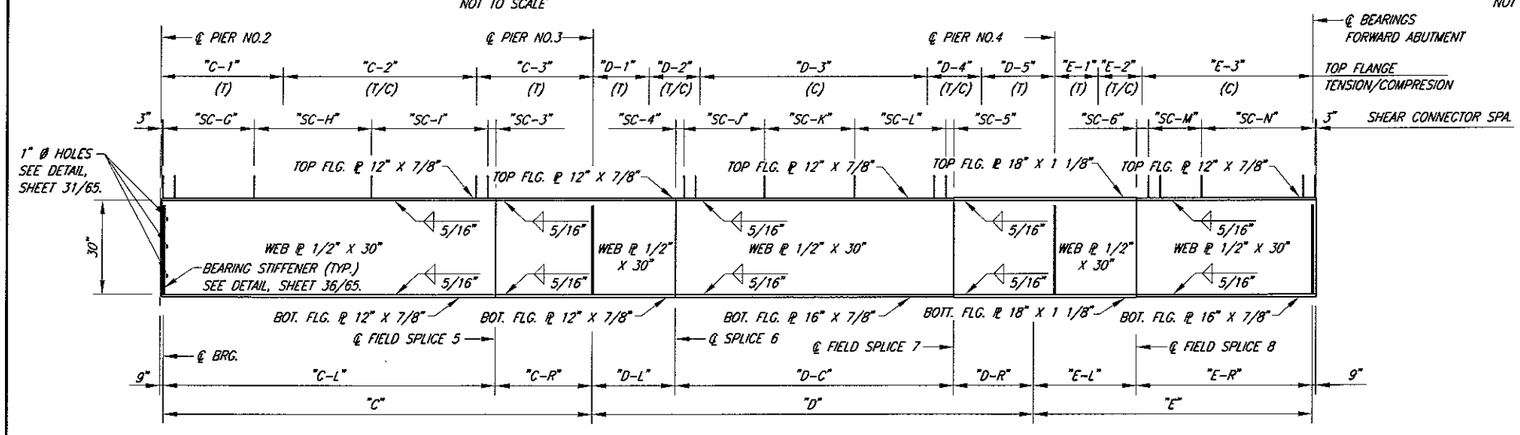

GIRDER SE5 DETAILS
NOT TO SCALE

PLATE LEGEND

TOP FLG. PL (A)	PL 18" X 1 1/8" (WG1, WG2 & WG3) PL 18" X 1" (WG4, WG5, WG6 & WG7)
BOT. FLG. PL (B)	PL 18" X 1 1/8" (WG1, WG2 & WG3) PL 18" X 1" (WG4, WG5, WG6 & WG7)

NOTES:

1. ALL WEB PLATES AND ALL FLANGES SHALL BE CVN MATERIAL. FOR THESE MEMBERS, FURNISH MATERIAL THAT MEETS THE MINIMUM NOTCH TOUGHNESS REQUIREMENTS AS SPECIFIED IN 711.01.
2. NEAR THE BEARING, AT THE INTERSECTION OF THE HORIZONTAL BOTTOM FLANGE WITH THE CURVED PORTION OF THE BOTTOM FLANGE, THE CONTRACTOR'S FABRICATOR SHALL NOT BEND THE FLANGE IN ACCORDANCE WITH AASHTO DIVISION II, SECTION 11.4.3.3.3 OR PROVIDE A FULL PENETRATION WELD, WITH 100% RADIOGRAPHIC INSPECTION.
3. WELD ATTACHMENT OF SUPPORTS FOR CONCRETE DECK FINISHING MACHINE TO AREAS OF THE FASCIA STRINGER FLANGES DESIGATED "COMPRESSION." DO NOT WELD ATTACHMENTS TO AREAS DESIGNATED "TENSION." FILLET WELDS TO COMPRESSION FLANGES SHALL BE AT LEAST 1" FROM EDGE OF FLANGE, BE NO MORE THAN 2" LONG, AND BE AT LEAST 1/4" FOR THICKNESSES UP TO 3/4" OR 5/16" FOR GREATER THAN 3/4" THICK.
4. FOR GIRDER LAYOUT AND LOCATION OF SPLICES, SEE FRAMING PLAN, SHEET 29/65.
5. FOR GIRDER DATA TABLES, SEE SHEETS 35/65 THROUGH 38/65.
6. CROSS-FRAME CONNECTIONS NOT SHOWN.
7. FIELD ADJUST LAST ROW OF WELDED SHEAR STUDS TO AVOID FLANGE SPLICE PLATE BY 3 INCHES.
8. ALL STRUCTURAL STEEL SHALL BE ASTM A709 GR. 50 UNLESS NOTED.

PREPARED BY: R.W. ARMSTRONG & ASSOCIATES
471 EAST BROAD STREET, SUITE 2010
COLUMBUS, OH 43215
OFFICE (614) 225-8868 FAX (614) 225-8869

DESIGNED	DRAWN	REVIEWED	DATE
MHZ	SLO	PAR	12/22/06
CHECKED	REVISED	STRUCTURE FILE NUMBER	
LAK		5760569	

STRUCTURAL STEEL DETAILS 1 OF 9
BRIDGE No. DAY-XWAY-00.79
DAYTON EXPRESSWAY OVER KEOWEE STREET AND CSXT RAILROAD

MOT-XWAY
PID NO. 77774

IMAGE FILES : NONE
XREFERENCES : XR-DAY-XWAY-TITBLK;
FILE NAME : P:\Transportation\20053370 Dayton Expressway 3\30 Sheet\Drawings\20 Singles\Structural Steel-1.dwg / Layout1
MOD DATE : 15-FEB-07, 16:59:28 / Supervisor

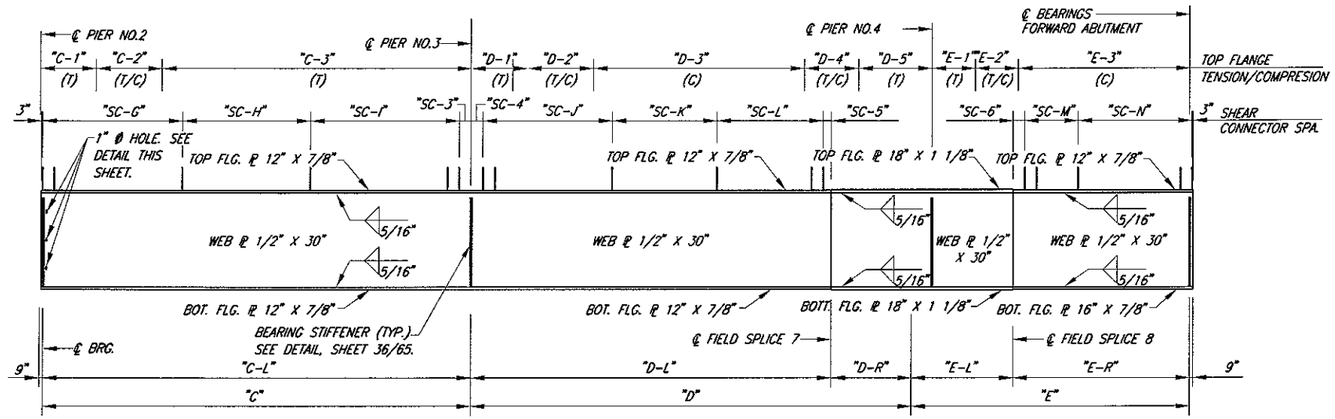

GIRDER SE6 DETAILS

NOT TO SCALE

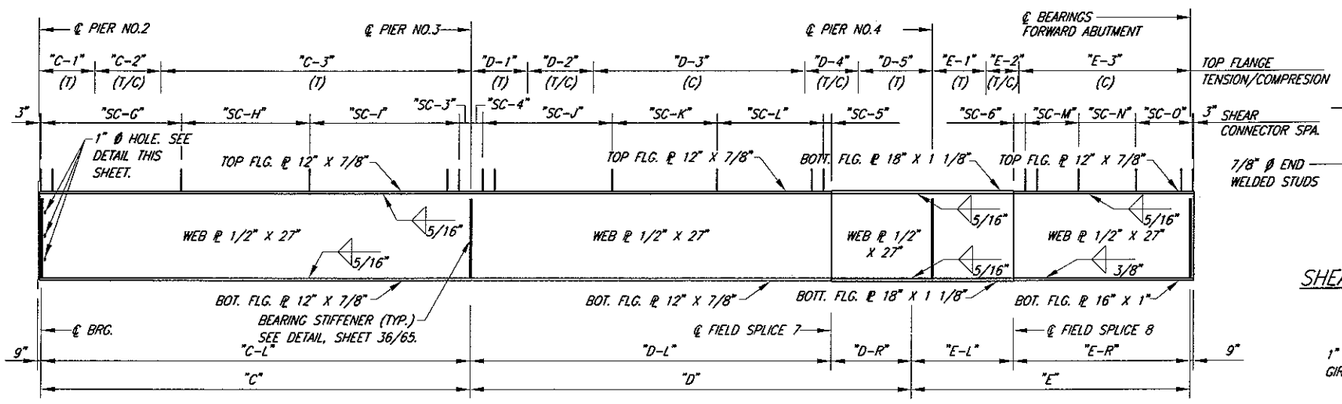

GIRDER SE7 DETAILS

NOT TO SCALE

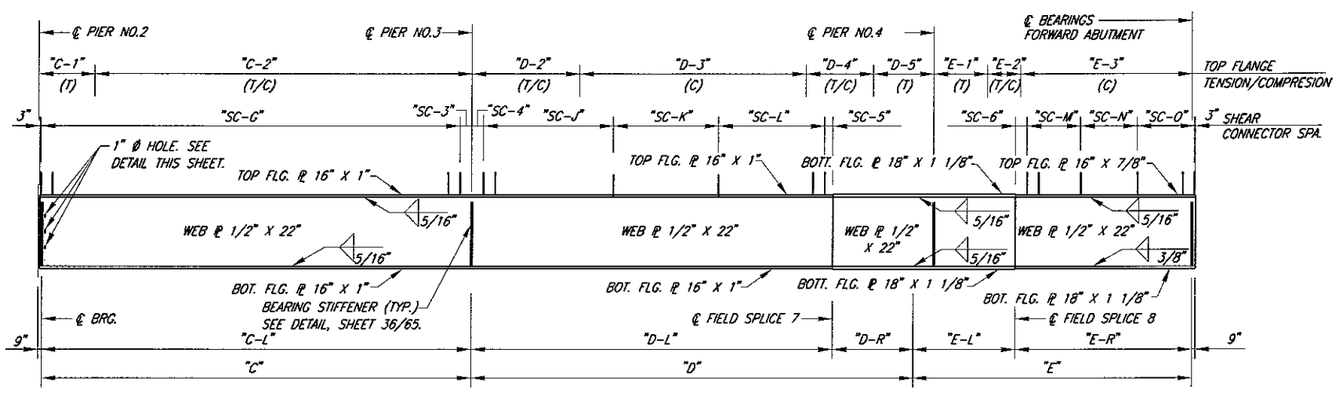

GIRDER SE8 DETAILS

NOT TO SCALE

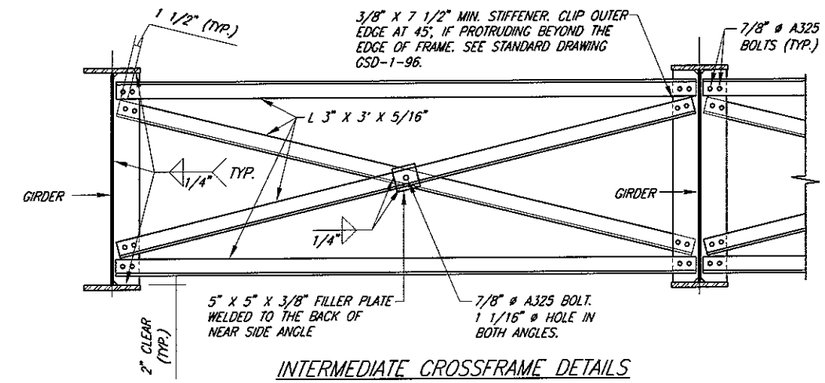

INTERMEDIATE CROSSFRAME DETAILS

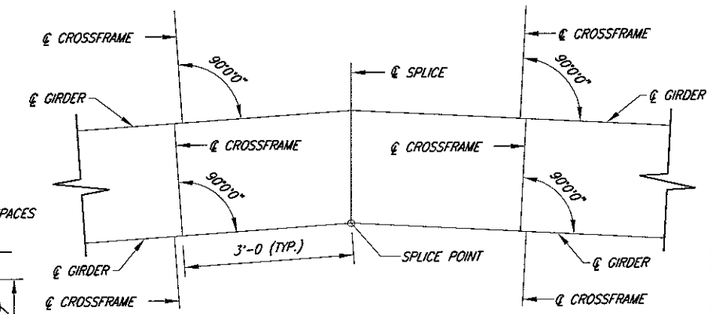

CROSSFRAME AT BEND POINTS

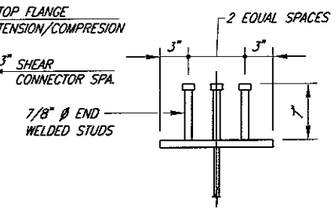

SHEAR CONNECTOR DETAIL

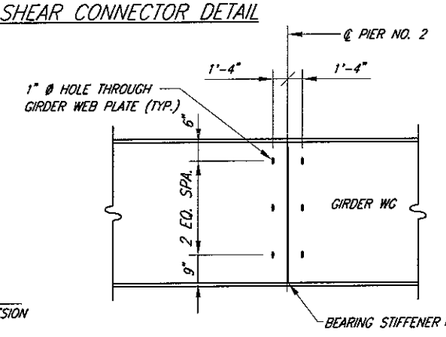

GIRDER HOLE DETAIL

PIER 2 WESTBOUND ONLY

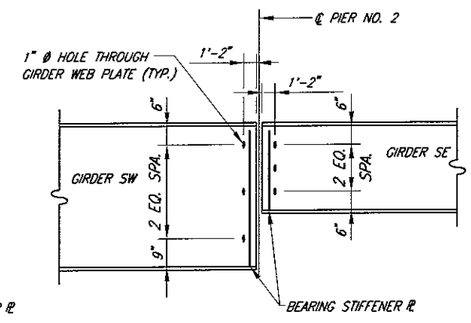

GIRDER HOLE DETAIL

PIER 2 EASTBOUND ONLY

NOTES:

1. ALL WEB PLATES AND ALL FLANGES SHALL BE CVN MATERIAL. FOR THESE MEMBERS, FURNISH MATERIAL THAT MEETS THE MINIMUM NOTCH TOUGHNESS REQUIREMENTS AS SPECIFIED IN 711.01.
2. NEAR THE BEARING, AT THE INTERSECTION OF THE HORIZONTAL BOTTOM FLANGE WITH THE CURVED PORTION OF THE BOTTOM FLANGE, THE CONTRACTOR'S FABRICATOR SHALL NOT BEND THE FLANGE IN ACCORDANCE WITH AASHTO DIVISION II, SECTION 11.4.3.3.3 OR PROVIDE A FULL PENETRATION WELD, WITH 100% RADIOGRAPHIC INSPECTION.
3. WELD ATTACHMENT OF SUPPORTS FOR CONCRETE DECK FINISHING MACHINE TO AREAS OF THE FASCIA STRINGER FLANGES DESIGATED "COMPRESSION." DO NOT WELD ATTACHMENTS TO AREAS DESIGNATED "TENSION." FILLET WELDS TO COMPRESSION FLANGES SHALL BE AT LEAST 1" FROM EDGE OF FLANGE, BE NO MORE THAN 2" LONG, AND BE AT LEAST 1/4" FOR THICKNESSES UP TO 3/4" OR 5/16" FOR GREATER THAN 3/4" THICK.
4. FOR GIRDER LAYOUT AND LOCATION OF SPLICES, SEE FRAMING PLAN, SHEET 29/65.
5. FOR GIRDER DATA TABLES, SEE SHEETS 35/65 THROUGH 38/65.
6. CROSS-FRAME CONNECTIONS NOT SHOWN.
7. FIELD ADJUST LAST ROW OF WELDED SHEAR STUDS TO AVOID FLANGE SPLICE PLATE BY 3 INCHES.
8. ALL STRUCTURAL STEEL SHALL BE ASTM A709 GR. 50, UNLESS NOTED.

PREPARED BY:
R.W. ARMSTRONG & ASSOCIATES
471 EAST BROAD STREET, SUITE 2010
COLUMBUS, OH 43215
OFFICE (614) 225-8868 FAX (614) 225-8869

DESIGNED	DRAWN	REVIEWED	DATE
MHZ	SLO	PAR	12/22/06
CHECKED	REVISED	STRUCTURE FILE NUMBER	
LAK		5760569	

STRUCTURAL STEEL DETAILS 2 OF 9
BRIDGE No. DAY-XWAY-00.79
DAYTON EXPRESSWAY OVER KEONICE STREET AND CSXT RAILROAD

MOT-XWAY
PID NO. 77774

IMAGE FILES : NONE
XREFERENCES : XR-DAY-XWAY-TITBLK;
FILE NAME : P:\Transportation\2005\370 Dayton Expressway 3\30 SheetDrawings\20 Singles\Structural Steel-2.dwg / Layout1
WED\WT : 13-FEB-07, 16:20:37 / Sjamison

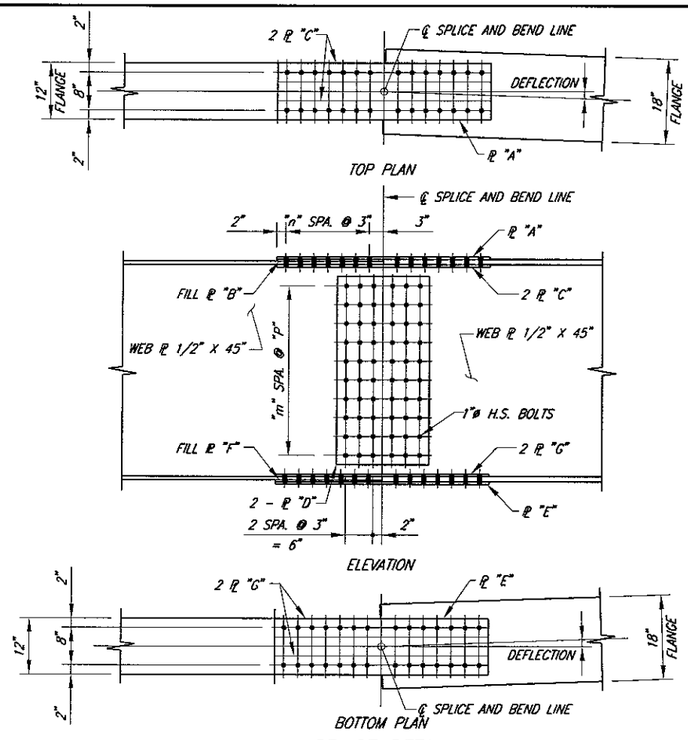

SPLICE DETAIL

GIRDERS SW1 - SW8, SPLICE 1
GIRDERS WG1 - WG7, SPLICE 1

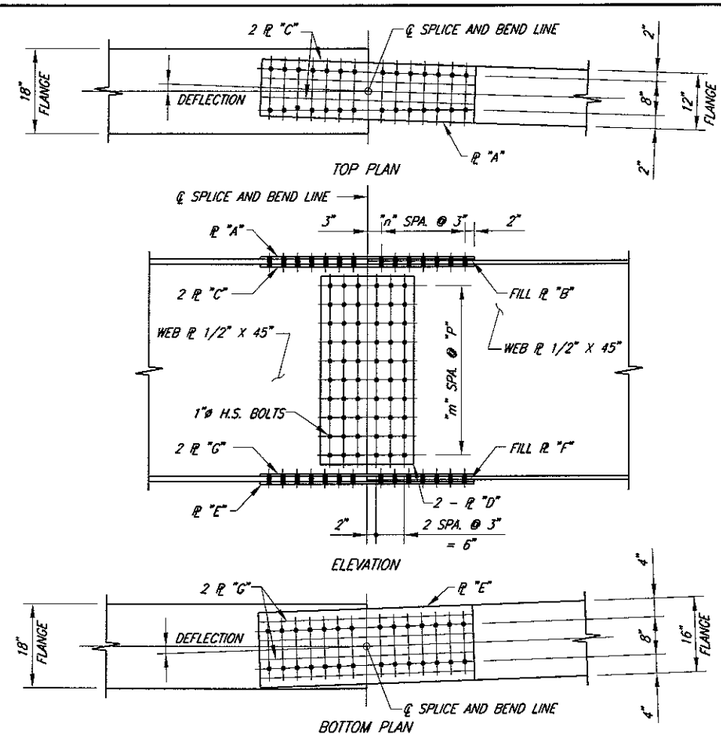

SPLICE DETAIL

GIRDERS SW1 - SW8, SPLICE 2
GIRDERS WG1 - WG7, SPLICES 2, 4 & 6

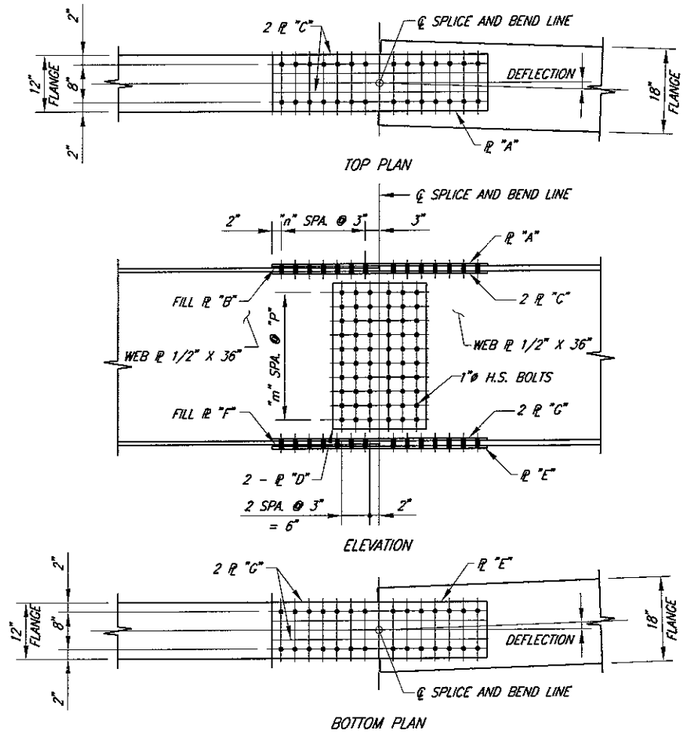

SPLICE DETAIL

GIRDER SE1 - SE4, SPLICE 5

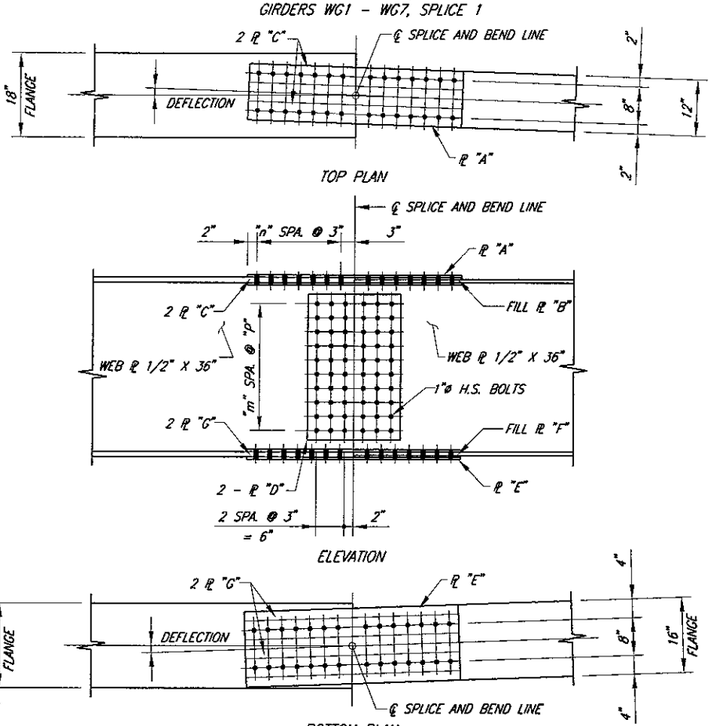

NOTES:

1. HIGH STRENGTH BOLTS SHALL BE 1" DIAMETER A325 UNLESS OTHERWISE NOTED.
2. FOR GIRDER LAYOUT AND LOCATION OF SPLICES, SEE FRAMING PLAN.

SPLICE DETAIL

GIRDER SE1 - SE4, SPLICE 6

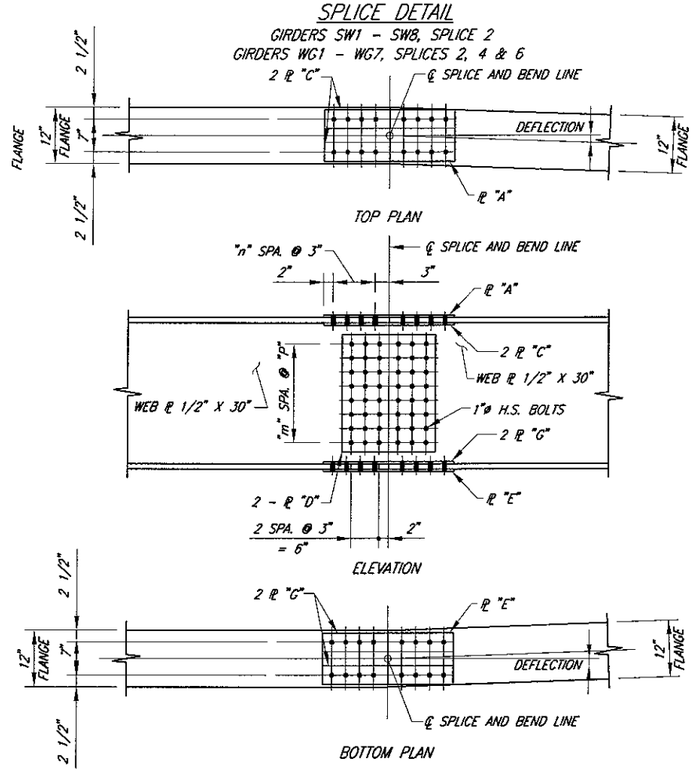

SPLICE DETAIL

GIRDER SE5, SPLICE 5

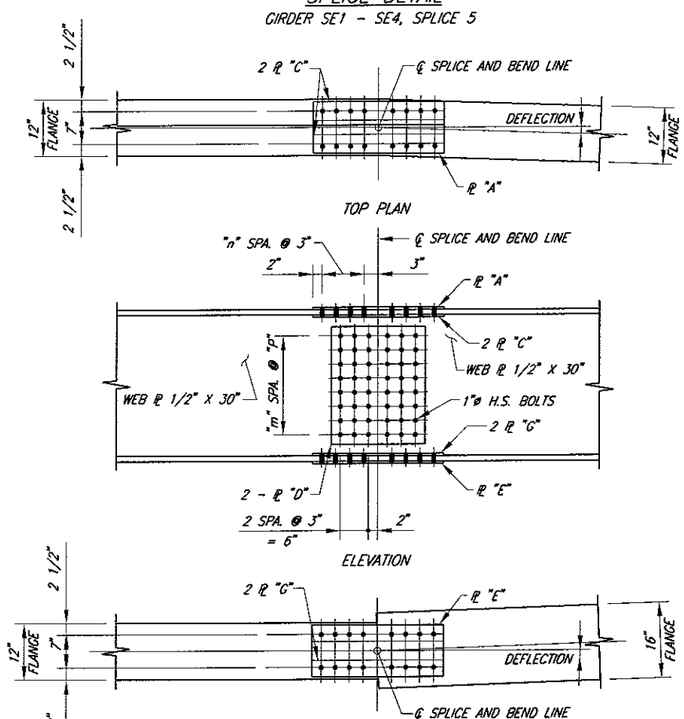

SPLICE DETAIL

GIRDER SE5, SPLICE 6

PREPARED BY:
R.W. ARMSTRONG & ASSOCIATES
471 EAST BROAD STREET, SUITE 2010
COLUMBUS, OH 43215
OFFICE (614) 225-8888 FAX (614) 225-8869

DESIGNED	DRAWN	REVIEWED	DATE
MHZ	SLO	PAR	12/22/06
CHECKED	REVISED	STRUCTURE FILE NUMBER	
LAK		5760569	

STRUCTURAL STEEL DETAILS 3 OF 9
BRIDGE No. DAY-XWAY-00.79
DAYTON EXPRESSWAY OVER KEONEE STREET AND CSXT RAILROAD

MOT-XWAY
PID NO. 77774

IMAGE FILES : NONE
XREFERENCES : XR-DAY-XWAY-TITBLK;
FILE NAME : P:\Transportation\20052370 Dayton Expressway 3\30 SheetDrawings\2D Singles\Structural Steel Splices-A.dwg / Layout1
MND \VAT : 20-DEC-06, 10:51:29 / S.Johnson

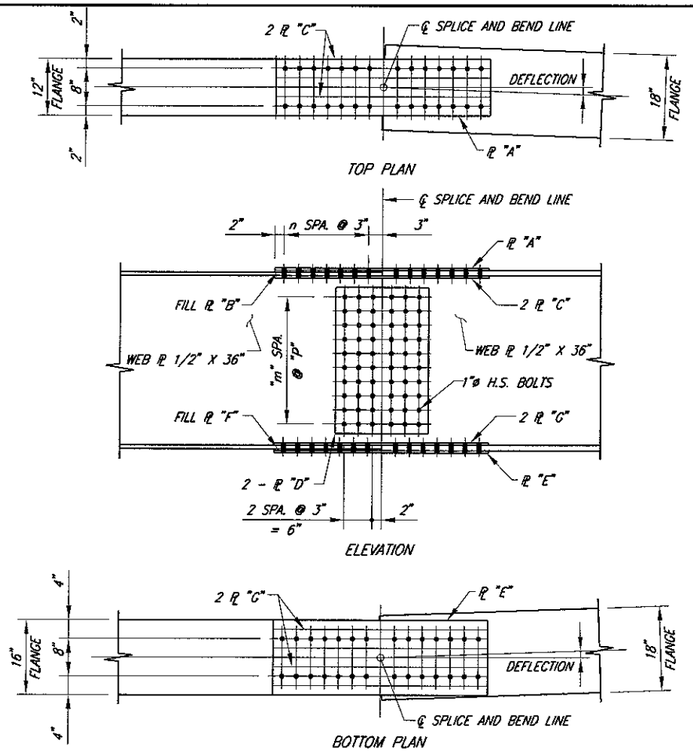

SPLICE DETAIL
GIRDER SE1 - SE4, SPLICE 7

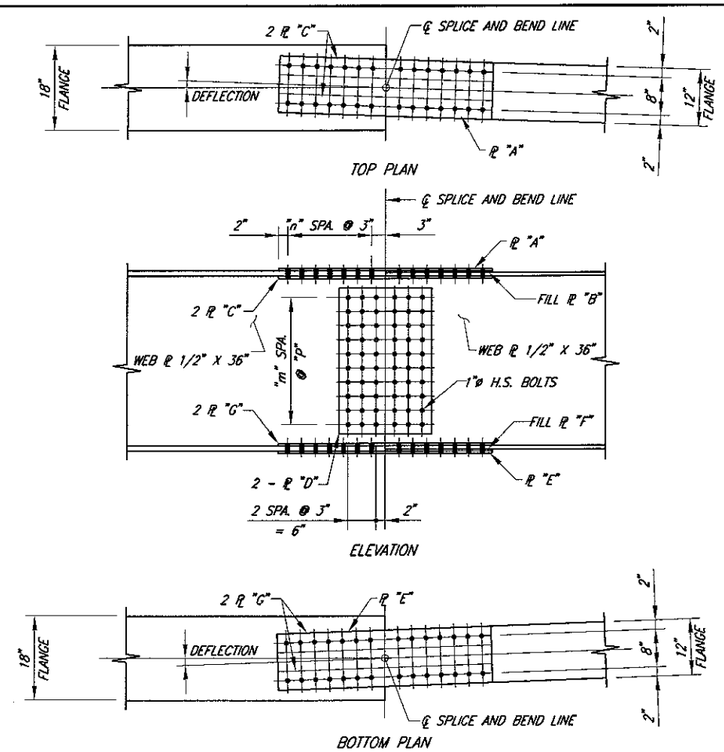

SPLICE DETAIL
GIRDER SE1 - SE4, SPLICE 8

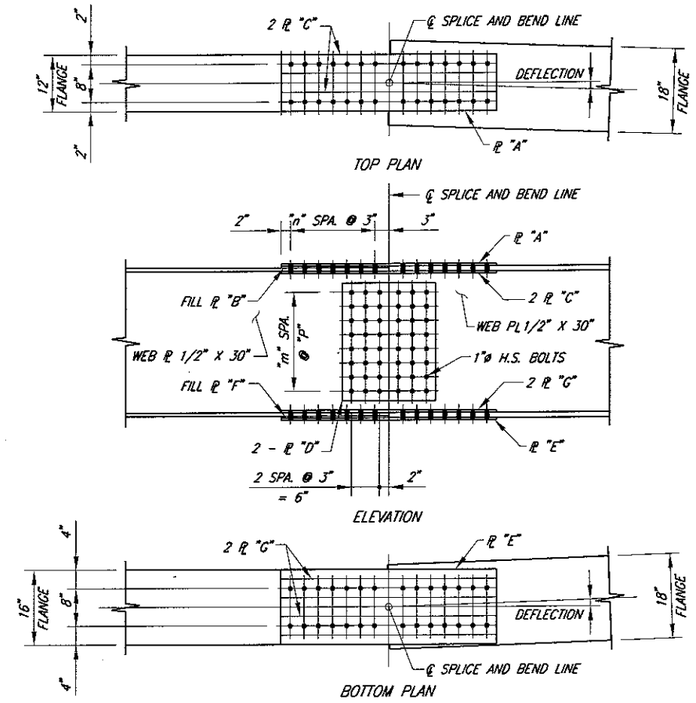

SPLICE DETAIL
GIRDER SE5, SPLICE 7

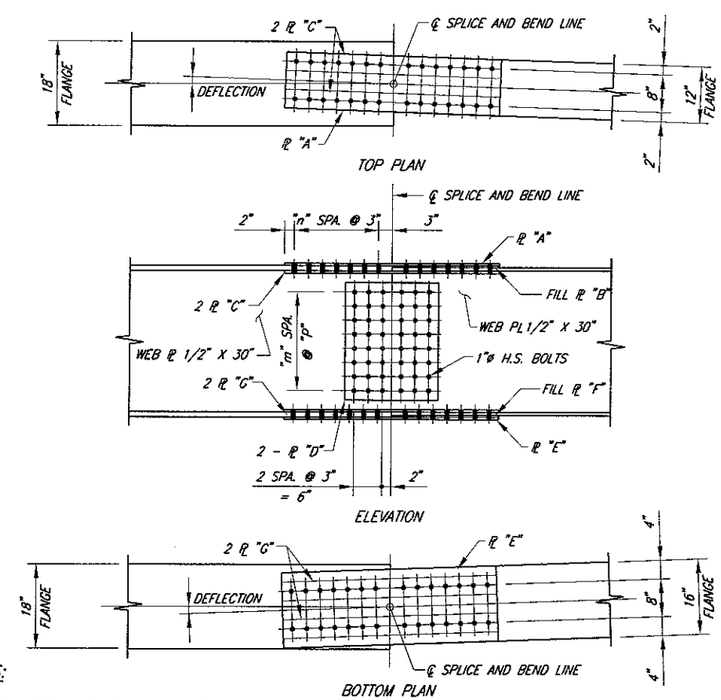

SPLICE DETAIL
GIRDER SE5 & SE6, SPLICE 8

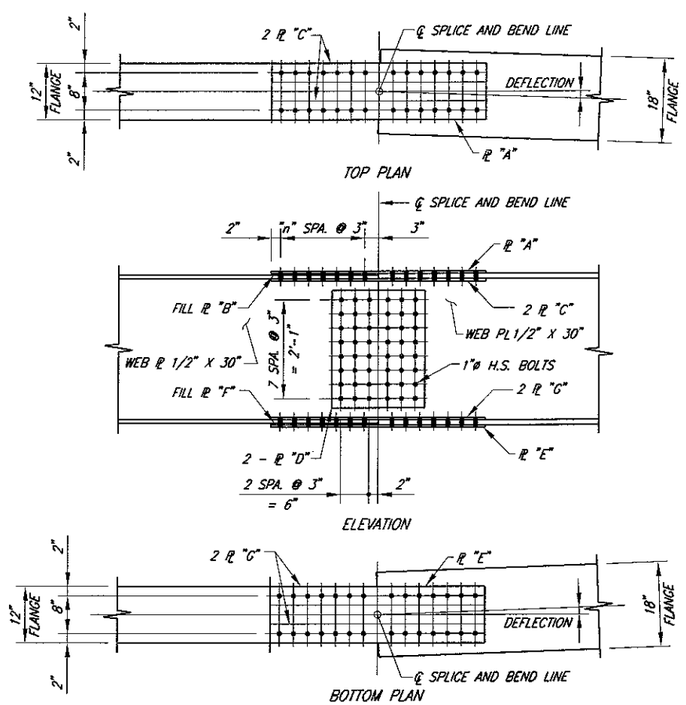

SPLICE DETAIL
GIRDER SE6, SPLICE 7

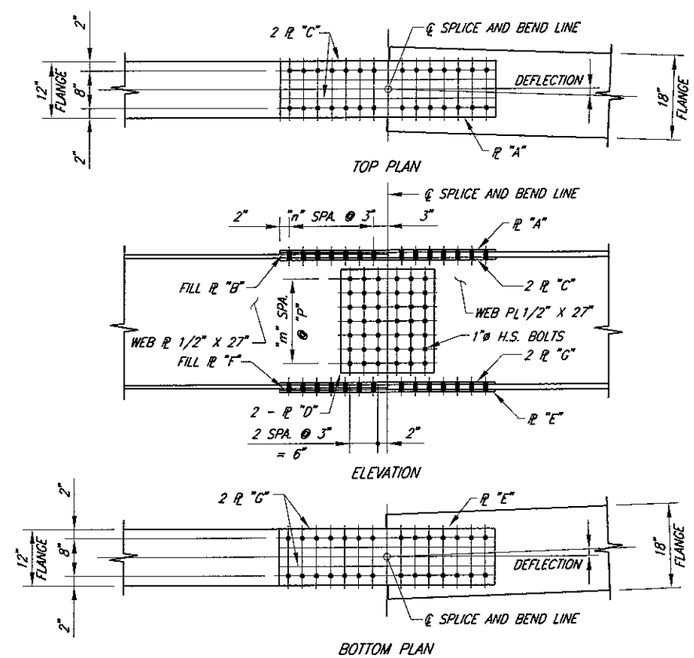

SPLICE DETAIL
GIRDER SE7, SPLICE 7

NOTES:

1. HIGH STRENGTH BOLTS SHALL BE 1" DIAMETER A325 UNLESS OTHERWISE NOTED.
2. FOR GIRDER LAYOUT AND LOCATION OF SPLICES, SEE FRAMING PLAN.

IMAGE FILES : NONE
XREFERENCES : XR-DAY-XWAY-TITBLK;
FILE NAME : P:\Transportation\20053370 Dayton Expressway 3\30 Sheet\Drawings\20 Singles\Structural Steel Splices-B.dwg / Layout1
MRD\MT : 20-DEC-08, 10:32:26 / SJohnson

PREPARED BY: R.W. ARMSTRONG & ASSOCIATES
471 EAST BROAD STREET, SUITE 2010
COLUMBUS, OH 43215
OFFICE (614) 225-8808 FAX (614) 225-8869

DESIGNED	DRAWN	REVIEWED	DATE
MHZ	SLO	PAR	12/22/06
CHECKED	REVISED	STRUCTURE FILE NUMBER	
LAK		5760569	

STRUCTURAL STEEL DETAILS 4 OF 9
BRIDGE No. DAY-XWAY-00.79
DAYTON EXPRESSWAY OVER KEOWEE STREET AND CSXT RAILROAD

MOT-XWAY
PID NO. 77774

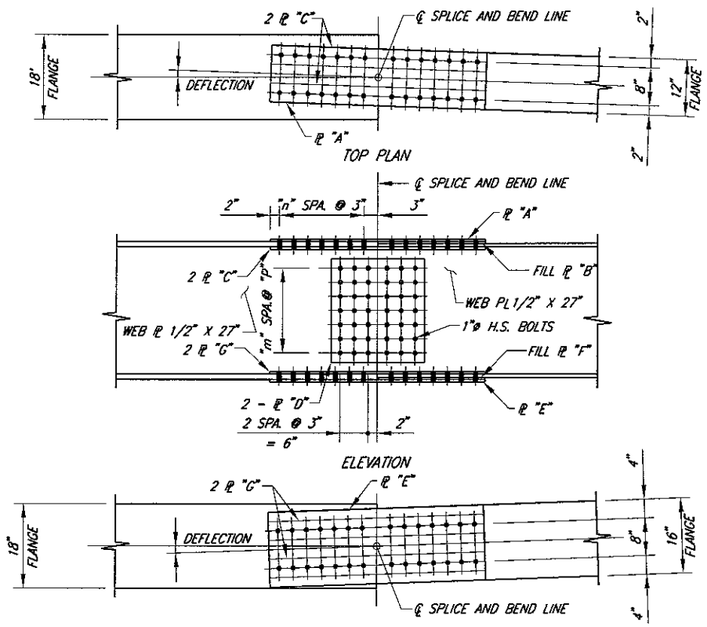

SPLICE DETAIL
GIRDER SE7, SPLICE 8

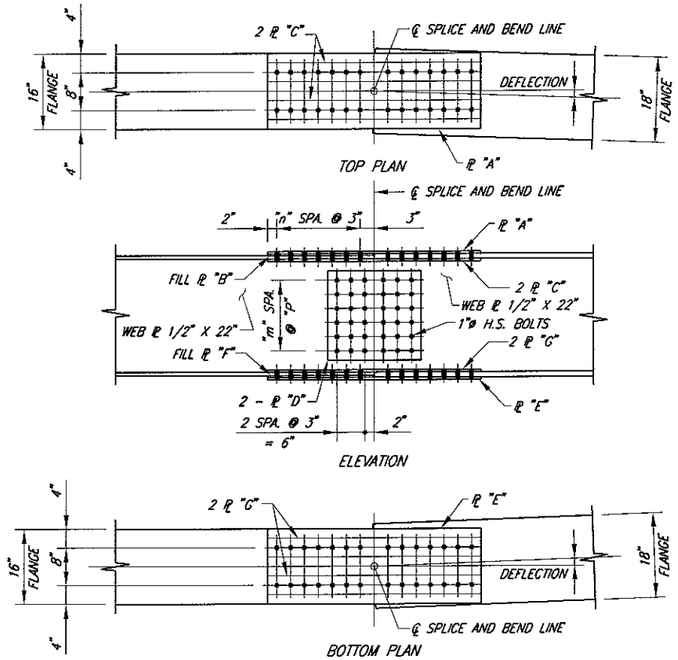

SPLICE DETAIL
GIRDER SE8, SPLICE 7

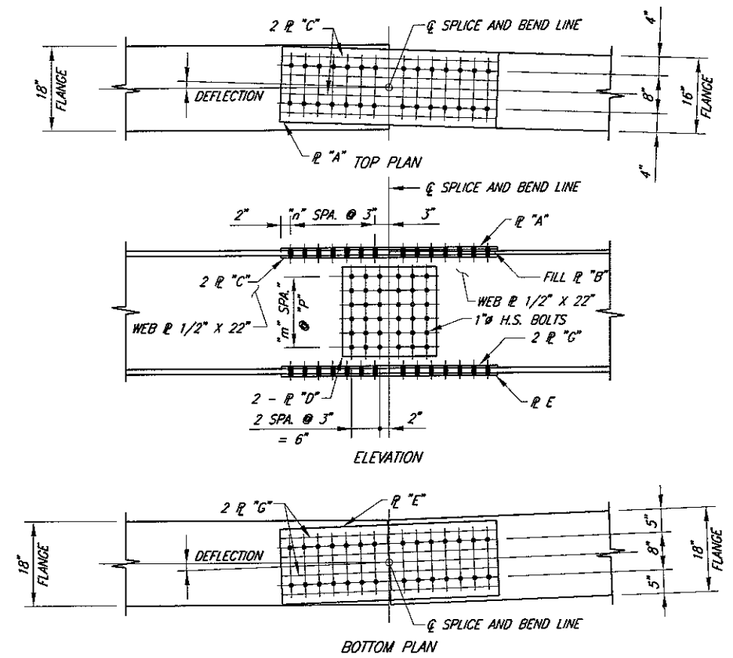

SPLICE DETAIL
GIRDER SE8, SPLICE 8

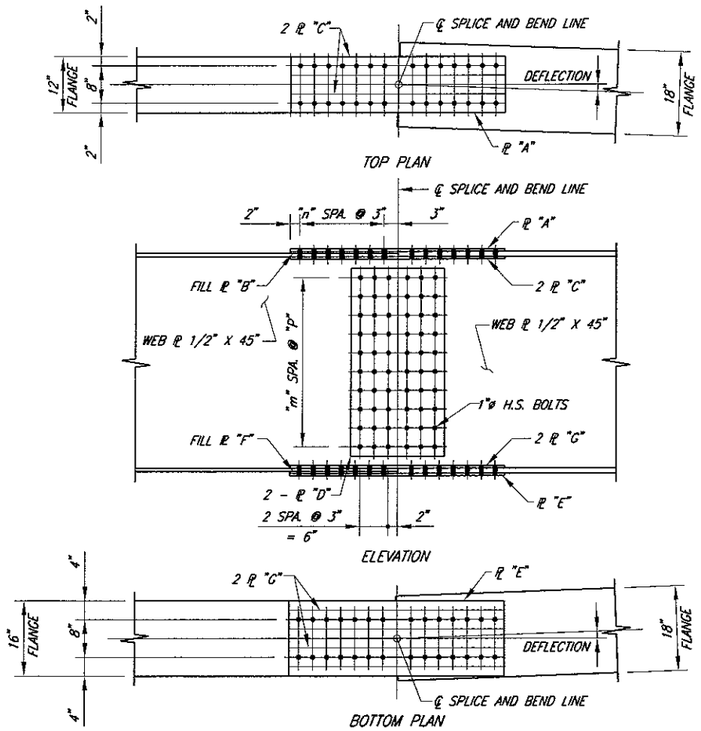

SPLICE DETAIL
GIRDERS WG1 – WG7, SPLICES 3, 5 & 7

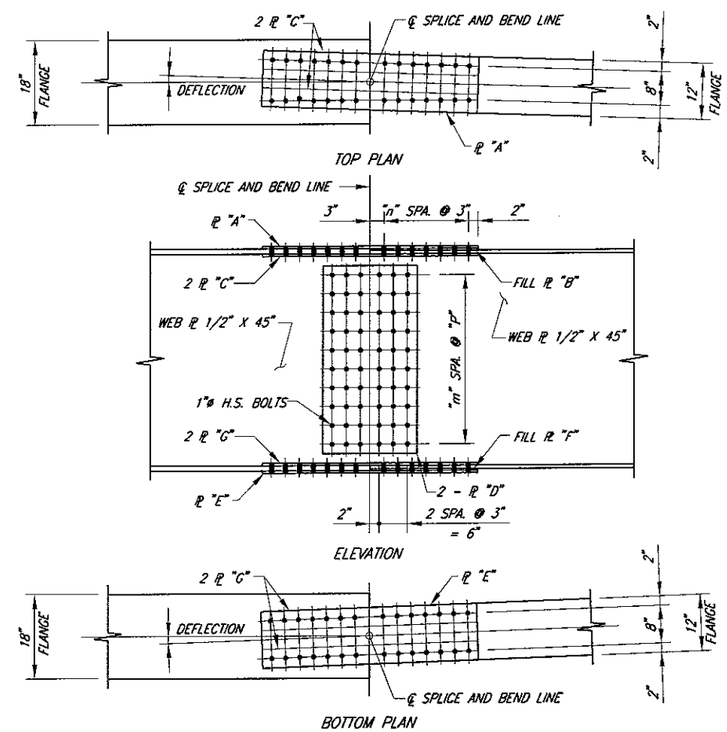

SPLICE DETAIL
GIRDERS WG1 – WG7, SPLICE 8

NOTES:

1. HIGH STRENGTH BOLTS SHALL BE 1" DIAMETER A325 UNLESS OTHERWISE NOTED.
2. FOR GIRDER LAYOUT AND LOCATION OF SPLICES, SEE FRAMING PLAN.

IMAGE FILES : NONE
XREFERENCES : XR-DAY-XWAY-TITBLK;
FILE NAME : P:\Transportation\20053370 Dayton Expressway 31\30 Sheet Drawings\20 Singles\Structural Steel Splices-C.dwg / Layout1
MKD\WT : 20-DEC-06, 10:53:20 / Schmidt

PREPARED BY: R.W. ARMSTRONG & ASSOCIATES
471 EAST BROAD STREET, SUITE 2010
COLUMBUS, OH 43215
OFFICE (614) 225-8868 FAX (614) 225-8869

DESIGNED	DRAWN	REVIEWED	DATE
MHZ	SLO	PAR	12/22/06
CHECKED	REVISED	STRUCTURE FILE NUMBER	
LAK		5780569	

STRUCTURAL STEEL DETAILS 5 OF 9
BRIDGE No. DAY-XWAY-00.79
DAYTON EXPRESSWAY OVER KEOWEE STREET AND CSXT RAILROAD

MOT-XWAY
PID NO. 77774

SPLICE TABLE – GIRDER WG1 THRU WG7

SPLICE	GIRDER	DEFLECTION	TOP "n" SPACES	TOP PLATE "A"	TOP FILLER PLATE "B"	TOP PLATES "C"	"m" SPACES	WEB PLATES "D"	"P"	BOTTOM "n" SPACES	BOTTOM PLATE "E"	BOTTOM FILLER PLATE "F"	BOTTOM PLATES "G"
1	WG 1	1d40'40"	6	PL. 9/16" x 12" x 3'-10"	PL. 1/4" X 12" X 1'-11"	2 PL. 9/16" x 4" x 3'-10"	9	2 PL. 3/8" x 40" x 1'-8"	4"	6	PL. 9/16" x 12" x 3'-10"	PL. 1/4" X 12" X 1'-11"	2 PL. 9/16" x 4" x 3'-10"
	WG 2	1d33'35"	6	PL. 9/16" x 12" x 3'-10"	PL. 1/4" X 12" X 1'-11"	2 PL. 9/16" x 4" x 3'-10"	9	2 PL. 3/8" x 40" x 1'-8"	4"	6	PL. 9/16" x 12" x 3'-10"	PL. 1/4" X 12" X 1'-11"	2 PL. 9/16" x 4" x 3'-10"
	WG 3	1d26'23"	6	PL. 9/16" x 12" x 3'-10"	PL. 1/4" X 12" X 1'-11"	2 PL. 9/16" x 4" x 3'-10"	9	2 PL. 3/8" x 40" x 1'-8"	4"	6	PL. 9/16" x 12" x 3'-10"	PL. 1/4" X 12" X 1'-11"	2 PL. 9/16" x 4" x 3'-10"
	WG 4	1d19'04"	6	PL. 9/16" x 12" x 3'-10"	PL. 1/4" X 12" X 1'-11"	2 PL. 9/16" x 4" x 3'-10"	9	2 PL. 3/8" x 40" x 1'-8"	4"	6	PL. 9/16" x 12" x 3'-10"	PL. 1/4" X 12" X 1'-11"	2 PL. 9/16" x 4" x 3'-10"
	WG 5	1d11'37"	6	PL. 9/16" x 12" x 3'-10"	PL. 1/4" X 12" X 1'-11"	2 PL. 9/16" x 4" x 3'-10"	9	2 PL. 3/8" x 40" x 1'-8"	4"	6	PL. 9/16" x 12" x 3'-10"	PL. 1/4" X 12" X 1'-11"	2 PL. 9/16" x 4" x 3'-10"
	WG 6	1d04'04"	6	PL. 9/16" x 12" x 3'-10"	PL. 1/4" X 12" X 1'-11"	2 PL. 9/16" x 4" x 3'-10"	9	2 PL. 3/8" x 40" x 1'-8"	4"	6	PL. 9/16" x 12" x 3'-10"	PL. 1/4" X 12" X 1'-11"	2 PL. 9/16" x 4" x 3'-10"
	WG 7	0d56'23"	6	PL. 9/16" x 12" x 3'-10"	PL. 1/4" X 12" X 1'-11"	2 PL. 9/16" x 4" x 3'-10"	9	2 PL. 3/8" x 40" x 1'-8"	4"	6	PL. 9/16" x 12" x 3'-10"	PL. 1/4" X 12" X 1'-11"	2 PL. 9/16" x 4" x 3'-10"
2	WG 1	0d30'39"	5	PL. 9/16" x 12" x 3'-4"	PL. 1/4" X 12" X 1'-8"	2 PL. 9/16" x 4" x 3'-4"	9	2 PL. 3/8" x 40" x 1'-8"	4"	6	PL. 5/8" x 16" x 3'-10"	PL. 1/4" x 16" x 1'-11"	2 PL. 9/16" x 4" x 3'-10"
	WG 2	0d12'34"	5	PL. 9/16" x 12" x 3'-4"	PL. 1/4" X 12" X 1'-8"	2 PL. 9/16" x 4" x 3'-4"	9	2 PL. 3/8" x 40" x 1'-8"	4"	6	PL. 5/8" x 16" x 3'-10"	PL. 1/4" x 16" x 1'-11"	2 PL. 9/16" x 4" x 3'-10"
	WG 3	0d04'38"	5	PL. 9/16" x 12" x 3'-4"	PL. 1/4" X 12" X 1'-8"	2 PL. 9/16" x 4" x 3'-4"	9	2 PL. 3/8" x 40" x 1'-8"	4"	6	PL. 5/8" x 16" x 3'-10"	PL. 1/4" x 16" x 1'-11"	2 PL. 9/16" x 4" x 3'-10"
	WG 4	0d20'58"	5	PL. 9/16" x 12" x 3'-4"	PL. 1/4" X 12" X 1'-8"	2 PL. 9/16" x 4" x 3'-4"	9	2 PL. 3/8" x 40" x 1'-8"	4"	6	PL. 5/8" x 16" x 3'-10"	PL. 1/4" x 16" x 1'-11"	2 PL. 9/16" x 4" x 3'-10"
	WG 5	0d36'32"	5	PL. 9/16" x 12" x 3'-4"	PL. 1/4" X 12" X 1'-8"	2 PL. 9/16" x 4" x 3'-4"	9	2 PL. 3/8" x 40" x 1'-8"	4"	6	PL. 5/8" x 16" x 3'-10"	PL. 1/4" x 16" x 1'-11"	2 PL. 9/16" x 4" x 3'-10"
	WG 6	0d51'21"	5	PL. 9/16" x 12" x 3'-4"	PL. 1/4" X 12" X 1'-8"	2 PL. 9/16" x 4" x 3'-4"	9	2 PL. 3/8" x 40" x 1'-8"	4"	6	PL. 5/8" x 16" x 3'-10"	PL. 1/4" x 16" x 1'-11"	2 PL. 9/16" x 4" x 3'-10"
	WG 7	1d05'31"	5	PL. 9/16" x 12" x 3'-4"	PL. 1/4" X 12" X 1'-8"	2 PL. 9/16" x 4" x 3'-4"	9	2 PL. 3/8" x 40" x 1'-8"	4"	6	PL. 5/8" x 16" x 3'-10"	PL. 1/4" x 16" x 1'-11"	2 PL. 9/16" x 4" x 3'-10"
3	WG 1	2d33'35"	5	PL. 9/16" x 12" x 3'-4"	PL. 1/4" X 12" X 1'-8"	2 PL. 9/16" x 4" x 3'-4"	9	2 PL. 3/8" x 40" x 1'-8"	4"	7	PL. 5/8" x 16" x 4'-4"	PL. 1/4" x 16" x 2'-2"	2 PL. 9/16" x 4" x 4'-4"
	WG 2	2d15'29"	5	PL. 9/16" x 12" x 3'-4"	PL. 1/4" X 12" X 1'-8"	2 PL. 9/16" x 4" x 3'-4"	9	2 PL. 3/8" x 40" x 1'-8"	4"	7	PL. 5/8" x 16" x 4'-4"	PL. 1/4" x 16" x 2'-2"	2 PL. 9/16" x 4" x 4'-4"
	WG 3	1d58'18"	5	PL. 9/16" x 12" x 3'-4"	PL. 1/4" X 12" X 1'-8"	2 PL. 9/16" x 4" x 3'-4"	9	2 PL. 3/8" x 40" x 1'-8"	4"	7	PL. 5/8" x 16" x 4'-4"	PL. 1/4" x 16" x 2'-2"	2 PL. 9/16" x 4" x 4'-4"
	WG 4	1d41'58"	5	PL. 9/16" x 12" x 3'-4"	PL. 1/8" X 12" X 1'-8"	2 PL. 9/16" x 4" x 3'-4"	9	2 PL. 3/8" x 40" x 1'-8"	4"	5	PL. 5/8" x 16" x 3'-4"	PL. 1/8" x 16" x 1'-8"	2 PL. 9/16" x 4" x 3'-4"
	WG 5	1d26'24"	5	PL. 9/16" x 12" x 3'-4"	PL. 1/8" X 12" X 1'-8"	2 PL. 9/16" x 4" x 3'-4"	9	2 PL. 3/8" x 40" x 1'-8"	4"	5	PL. 5/8" x 16" x 3'-4"	PL. 1/8" x 16" x 1'-8"	2 PL. 9/16" x 4" x 3'-4"
	WG 6	1d11'34"	5	PL. 9/16" x 12" x 3'-4"	PL. 1/8" X 12" X 1'-8"	2 PL. 9/16" x 4" x 3'-4"	9	2 PL. 3/8" x 40" x 1'-8"	4"	5	PL. 5/8" x 16" x 3'-4"	PL. 1/8" x 16" x 1'-8"	2 PL. 9/16" x 4" x 3'-4"
	WG 7	0d57'25"	5	PL. 9/16" x 12" x 3'-4"	PL. 1/8" X 12" X 1'-8"	2 PL. 9/16" x 4" x 3'-4"	9	2 PL. 3/8" x 40" x 1'-8"	4"	5	PL. 5/8" x 16" x 3'-4"	PL. 1/8" x 16" x 1'-8"	2 PL. 9/16" x 4" x 3'-4"
4	WG 1	0d23'56"	6	PL. 9/16" x 12" x 3'-10"	PL. 1/4" X 12" X 1'-11"	2 PL. 9/16" x 4" x 3'-10"	9	2 PL. 3/8" x 40" x 1'-8"	4"	7	PL. 5/8" x 16" x 4'-4"	PL. 1/4" x 16" x 2'-2"	2 PL. 9/16" x 4" x 4'-4"
	WG 2	0d29'43"	6	PL. 9/16" x 12" x 3'-10"	PL. 1/4" X 12" X 1'-11"	2 PL. 9/16" x 4" x 3'-10"	9	2 PL. 3/8" x 40" x 1'-8"	4"	7	PL. 5/8" x 16" x 4'-4"	PL. 1/4" x 16" x 2'-2"	2 PL. 9/16" x 4" x 4'-4"
	WG 3	0d37'09"	6	PL. 9/16" x 12" x 3'-10"	PL. 1/4" X 12" X 1'-11"	2 PL. 9/16" x 4" x 3'-10"	9	2 PL. 3/8" x 40" x 1'-8"	4"	7	PL. 5/8" x 16" x 4'-4"	PL. 1/4" x 16" x 2'-2"	2 PL. 9/16" x 4" x 4'-4"
	WG 4	0d47'00"	5	PL. 9/16" x 12" x 3'-4"	PL. 1/8" X 12" X 1'-8"	2 PL. 9/16" x 4" x 3'-4"	9	2 PL. 3/8" x 40" x 1'-8"	4"	6	PL. 5/8" x 16" x 3'-10"	PL. 1/8" x 16" x 1'-11"	2 PL. 9/16" x 4" x 3'-10"
	WG 5	1d00'43"	5	PL. 9/16" x 12" x 3'-4"	PL. 1/8" X 12" X 1'-8"	2 PL. 9/16" x 4" x 3'-4"	9	2 PL. 3/8" x 40" x 1'-8"	4"	6	PL. 5/8" x 16" x 3'-10"	PL. 1/8" x 16" x 1'-11"	2 PL. 9/16" x 4" x 3'-10"
	WG 6	1d21'07"	5	PL. 9/16" x 12" x 3'-4"	PL. 1/8" X 12" X 1'-8"	2 PL. 9/16" x 4" x 3'-4"	9	2 PL. 3/8" x 40" x 1'-8"	4"	6	PL. 5/8" x 16" x 3'-10"	PL. 1/8" x 16" x 1'-11"	2 PL. 9/16" x 4" x 3'-10"
	WG 7	1d54'37"	5	PL. 9/16" x 12" x 3'-4"	PL. 1/8" X 12" X 1'-8"	2 PL. 9/16" x 4" x 3'-4"	9	2 PL. 3/8" x 40" x 1'-8"	4"	6	PL. 5/8" x 16" x 3'-10"	PL. 1/8" x 16" x 1'-11"	2 PL. 9/16" x 4" x 3'-10"
5	WG 1	1d43'25"	6	PL. 9/16" x 12" x 3'-10"	PL. 1/4" X 12" X 1'-11"	2 PL. 9/16" x 4" x 3'-10"	9	2 PL. 3/8" x 40" x 1'-8"	4"	7	PL. 5/8" x 16" x 4'-4"	PL. 1/4" x 16" x 2'-2"	2 PL. 9/16" x 4" x 4'-4"
	WG 2	1d37'38"	6	PL. 9/16" x 12" x 3'-10"	PL. 1/4" X 12" X 1'-11"	2 PL. 9/16" x 4" x 3'-10"	9	2 PL. 3/8" x 40" x 1'-8"	4"	7	PL. 5/8" x 16" x 4'-4"	PL. 1/4" x 16" x 2'-2"	2 PL. 9/16" x 4" x 4'-4"
	WG 3	1d30'12"	6	PL. 9/16" x 12" x 3'-10"	PL. 1/4" X 12" X 1'-11"	2 PL. 9/16" x 4" x 3'-10"	9	2 PL. 3/8" x 40" x 1'-8"	4"	7	PL. 5/8" x 16" x 4'-4"	PL. 1/4" x 16" x 2'-2"	2 PL. 9/16" x 4" x 4'-4"
	WG 4	1d20'21"	5	PL. 9/16" x 12" x 3'-4"	PL. 1/8" X 12" X 1'-8"	2 PL. 9/16" x 4" x 3'-4"	9	2 PL. 3/8" x 40" x 1'-8"	4"	6	PL. 5/8" x 16" x 3'-10"	PL. 1/8" x 16" x 1'-11"	2 PL. 9/16" x 4" x 3'-10"
	WG 5	1d06'38"	5	PL. 9/16" x 12" x 3'-4"	PL. 1/8" X 12" X 1'-8"	2 PL. 9/16" x 4" x 3'-4"	9	2 PL. 3/8" x 40" x 1'-8"	4"	6	PL. 5/8" x 16" x 3'-10"	PL. 1/8" x 16" x 1'-11"	2 PL. 9/16" x 4" x 3'-10"
	WG 6	0d46'14"	5	PL. 9/16" x 12" x 3'-4"	PL. 1/8" X 12" X 1'-8"	2 PL. 9/16" x 4" x 3'-4"	9	2 PL. 3/8" x 40" x 1'-8"	4"	6	PL. 5/8" x 16" x 3'-10"	PL. 1/8" x 16" x 1'-11"	2 PL. 9/16" x 4" x 3'-10"
	WG 7	0d12'44"	5	PL. 9/16" x 12" x 3'-4"	PL. 1/8" X 12" X 1'-8"	2 PL. 9/16" x 4" x 3'-4"	9	2 PL. 3/8" x 40" x 1'-8"	4"	6	PL. 5/8" x 16" x 3'-10"	PL. 1/8" x 16" x 1'-11"	2 PL. 9/16" x 4" x 3'-10"
6	WG 1	1d48'35"	6	PL. 9/16" x 12" x 3'-10"	PL. 1/4" X 12" X 1'-11"	2 PL. 9/16" x 4" x 3'-10"	9	2 PL. 3/8" x 40" x 1'-8"	4"	7	PL. 5/8" x 16" x 4'-4"	PL. 1/4" x 16" x 2'-2"	2 PL. 9/16" x 4" x 4'-4"
	WG 2	1d42'14"	6	PL. 9/16" x 12" x 3'-10"	PL. 1/4" X 12" X 1'-11"	2 PL. 9/16" x 4" x 3'-10"	9	2 PL. 3/8" x 40" x 1'-8"	4"	7	PL. 5/8" x 16" x 4'-4"	PL. 1/4" x 16" x 2'-2"	2 PL. 9/16" x 4" x 4'-4"
	WG 3	1d35'27"	6	PL. 9/16" x 12" x 3'-10"	PL. 1/4" X 12" X 1'-11"	2 PL. 9/16" x 4" x 3'-10"	9	2 PL. 3/8" x 40" x 1'-8"	4"	7	PL. 5/8" x 16" x 4'-4"	PL. 1/4" x 16" x 2'-2"	2 PL. 9/16" x 4" x 4'-4"
	WG 4	1d28'14"	5	PL. 9/16" x 12" x 3'-4"	PL. 1/8" X 12" X 1'-8"	2 PL. 9/16" x 4" x 3'-4"	9	2 PL. 3/8" x 40" x 1'-8"	4"	6	PL. 5/8" x 16" x 3'-10"	PL. 1/8" x 16" x 1'-11"	2 PL. 9/16" x 4" x 3'-10"
	WG 5	1d20'30"	5	PL. 9/16" x 12" x 3'-4"	PL. 1/8" X 12" X 1'-8"	2 PL. 9/16" x 4" x 3'-4"	9	2 PL. 3/8" x 40" x 1'-8"	4"	6	PL. 5/8" x 16" x 3'-10"	PL. 1/8" x 16" x 1'-11"	2 PL. 9/16" x 4" x 3'-10"
	WG 6	1d12'14"	5	PL. 9/16" x 12" x 3'-4"	PL. 1/8" X 12" X 1'-8"	2 PL. 9/16" x 4" x 3'-4"	9	2 PL. 3/8" x 40" x 1'-8"	4"	6	PL. 5/8" x 16" x 3'-10"	PL. 1/8" x 16" x 1'-11"	2 PL. 9/16" x 4" x 3'-10"
	WG 7	1d03'20"	5	PL. 9/16" x 12" x 3'-4"	PL. 1/8" X 12" X 1'-8"	2 PL. 9/16" x 4" x 3'-4"	9	2 PL. 3/8" x 40" x 1'-8"	4"	6	PL. 5/8" x 16" x 3'-10"	PL. 1/8" x 16" x 1'-11"	2 PL. 9/16" x 4" x 3'-10"
7	WG 1	0d55'55"	5	PL. 9/16" x 12" x 3'-4"	PL. 1/4" X 12" X 1'-8"	2 PL. 9/16" x 4" x 3'-4"	9	2 PL. 3/8" x 40" x 1'-8"	4"	5	PL. 5/8" x 16" x 3'-4"	PL. 1/4" x 16" x 1'-8"	2 PL. 9/16" x 4" x 3'-4"
	WG 2	1d02'17"	5	PL. 9/16" x 12" x 3'-4"	PL. 1/4" X 12" X 1'-8"	2 PL. 9/16" x 4" x 3'-4"	9	2 PL. 3/8" x 40" x 1'-8"	4"	5	PL. 5/8" x 16" x 3'-4"	PL. 1/4" x 16" x 1'-8"	2 PL. 9/16" x 4" x 3'-4"
	WG 3	1d09'03"	5	PL. 9/16" x 12" x 3'-4"	PL. 1/4" X 12" X 1'-8"	2 PL. 9/16" x 4" x 3'-4"	9	2 PL. 3/8" x 40" x 1'-8"	4"	5	PL. 5/8" x 16" x 3'-4"	PL. 1/4" x 16" x 1'-8"	2 PL. 9/16" x 4" x 3'-4"
	WG 4	1d16'17"	5	PL. 9/16" x 12" x 3'-4"	PL. 1/8" X 12" X 1'-8"	2 PL. 9/16" x 4" x 3'-4"	9	2 PL. 3/8" x 40" x 1'-8"	4"	5	PL. 5/8" x 16" x 3'-4"	PL. 1/8" x 16" x 1'-8"	2 PL. 9/16" x 4" x 3'-4"
	WG 5	1d24'00"	5	PL. 9/16" x 12" x 3'-4"	PL. 1/8" X 12" X 1'-8"	2 PL. 9/16" x 4" x 3'-4"	9	2 PL. 3/8" x 40" x 1'-8"	4"	5	PL. 5/8" x 16" x 3'-4"	PL. 1/8" x 16" x 1'-8"	2 PL. 9/16" x 4" x 3'-4"
	WG 6	1d32'17"	5	PL. 9/16" x 12" x 3'-4"	PL. 1/8" X 12" X 1'-8"	2 PL. 9/16" x 4" x 3'-4"	9	2 PL. 3/8" x 40" x 1'-8"	4"	5	PL. 5/8" x 16" x 3'-4"	PL. 1/8" x 16" x 1'-8"	2 PL. 9/16" x 4" x 3'-4"
	WG 7	1d41'10"	5	PL. 9/16" x 12" x 3'-4"	PL. 1/8" X 12" X 1'-8"	2 PL. 9/16" x 4" x 3'-4"	9	2 PL. 3/8" x 40" x 1'-8"	4"	5	PL. 5/8" x 16" x 3'-4"	PL. 1/8" x 16" x 1'-8"	2 PL. 9/16" x 4" x 3'-4"
8	WG 1	1d14'35"	5	PL. 9/16" x 12" x 3'-4"	PL. 1/4" X 12" X 1'-8"	2 PL. 9/16" x 4" x 3'-4"	9	2 PL. 3/8" x 40" x 1'-8"	4"	5	PL. 9/16" x 12" x 3'-4"	PL. 1/4" x 12" x 1'-8"	2 PL. 9/16" x 4" x 3'-4"
	WG 2	1d06'42"	5	PL. 9/16" x 12" x 3'-4"	PL. 1/4" X 12" X 1'-8"	2 PL. 9/16" x 4" x 3'-4"	9	2 PL. 3/8" x 40" x 1'-8"	4"	5	PL. 9/16" x 12" x 3'-4"	PL. 1/4" x 12" x 1'-8"	2 PL. 9/16" x 4" x 3'-4"
	WG 3	0d59'15"	5	PL. 9/16" x 12" x 3'-4"	PL. 1/4" X 12" X 1'-8"	2 PL. 9/16" x 4" x 3'-4"	9	2 PL. 3/8" x 40" x 1'-8"	4"	5	PL. 9/16" x 12" x 3'-4"	PL. 1/4" x 12" x 1'-8"	2 PL. 9/16" x 4" x 3'-4"
	WG 4	0d52'11"	5	PL. 9/16" x 12" x 3'-4"	PL. 1/8" X 12" X 1'-8"	2 PL. 9/16" x 4" x 3'-4"	9	2 PL. 3/8" x 40" x 1'-8"	4"	5	PL. 9/16" x 12" x 3'-4"	PL. 1/8" x 12" x 1'-8"	2 PL. 9/16" x 4" x 3'-4"
	WG 5	0d45'28"	5	PL. 9/16" x 12" x 3'-4"	PL. 1/8" X 12" X 1'-8"	2 PL. 9/16" x 4" x 3'-4"	9	2 PL. 3/8" x 40" x 1'-8"	4"	5	PL. 9/16" x 12" x 3'-4"	PL. 1/8" x 12" x 1'-8"	2 PL. 9/16" x 4" x 3'-4"
	WG 6	0d39'06"	5	PL. 9/16" x 12" x 3'-4"	PL. 1/8" X 12" X 1'-8"	2 PL. 9/16" x 4" x 3'-4"	9	2 PL. 3/8" x 40" x 1'-8"	4"	5	PL. 9/16" x 12" x 3'-4"	PL. 1/8" x 12" x 1'-8"	2 PL. 9/16" x 4" x 3'-4"
	WG 7	0d33'03"	5	PL. 9/16" x 12" x 3'-4"	PL. 1/8" X 12" X 1'-8"	2 PL. 9/16" x 4" x 3'-4"	9	2 PL. 3/8" x 40" x 1'-8"	4"	5	PL. 9/16" x 12" x 3'-4"	PL. 1/8" x 12" x 1'-8"	2 PL. 9/16" x 4" x 3'-4"

NOTES:

1. WELDED ATTACHMENT OF SUPPORTS FOR CONCRETE DECK FINISHING MACHINE MAY BE MADE TO AREAS OF THE FASCIA STRINGER FLANGES DESIGNATED "COMPRESSION". ATTACHMENTS SHALL NOT BE MADE TO AREAS DESIGNATED "TENSION". FILLET WELDS TO COMPRESSION FLANGES SHALL BE NOT CLOSER THAN 1" FROM EDGE OF FLANGE, BE NOT MORE THAN 2" LONG, AND BE NOT SMALLER THAN 1/4" FOR THICKNESSES UP TO 3/4" AND 5/16" FOR GREATER THAN 3/4" THICK.

PREPARED BY:
R.W. ARMSTRONG & ASSOCIATES
471 EAST BROAD STREET, SUITE 2010
COLUMBUS, OH 43215
OFFICE (614) 225-8868 FAX (614) 225-8869

DESIGNED	DRAWN	REVIEWED	DATE
MHZ	SLO	PMR	12/22/06
CHECKED	REVISED	STRUCTURE FILE NUMBER	
LAK		5760569	

STRUCTURAL STEEL DETAILS 6 OF 9
BRIDGE No. DAY-XWAY-00.79
DAYTON EXPRESSWAY OVER KEOWEE STREET AND CSXT RAILROAD

MOT-XWAY
PID NO. 77774

IMAGE FILES : NONE
XREFERENCES : XR-DAY-XWAY-TITBLK
FILE NAME : P:\Transportation\20053370 Dayton Expressway 3\30 Sheet Drawings\20 Singles\Splice-Tbl-WG.dwg / Layout1
MRD\NT : 20-DEC-06, 10:59:13 / SJohnson

SPLICE TABLE - GIRDERS SW1 THRU SW8 & SE1 THRU SE8

DEFLECTION	TOP "n" SPACES	TOP PLATE "A"	TOP FILLER PLATE "B"	TOP PLATES "C"	"m" SPACES	WEB PLATES "D"	"P"	BOTTOM "n" SPACES	BOTTOM PLATE "E"	BOTTOM FILLER PLATE "F"	BOTTOM PLATES "G"
2d 05'54"	8	PL. 9/16" x 12" x 4'-10"	PL. 3/8" x 12" x 2'-5"	2 PL. 9/16" x 4" x 4'-10"	9	2 PL. 7/16" x 40" x 1'-8"	4"	8	PL. 9/16" x 12" x 4'-10"	PL. 3/8" x 12" x2'-5"	2 PL. 9/16" x 4" x 4'-10"
2d 00'54"	8	PL. 9/16" x 12" x 4'-10"	PL. 3/8" x 12" x 2'-5"	2 PL. 9/16" x 4" x 4'-10"	9	2 PL. 7/16" x 40" x 1'-8"	4"	8	PL. 9/16" x 12" x 4'-10"	PL. 3/8" x 12" x2'-5"	2 PL. 9/16" x 4" x 4'-10"
1d 55'55"	8	PL. 9/16" x 12" x 4'-10"	PL. 3/8" x 12" x 2'-5"	2 PL. 9/16" x 4" x 4'-10"	9	2 PL. 7/16" x 40" x 1'-8"	4"	8	PL. 9/16" x 12" x 4'-10"	PL. 3/8" x 12" x2'-5"	2 PL. 9/16" x 4" x 4'-10"
1d 50'56"	8	PL. 9/16" x 12" x 4'-10"	PL. 3/8" x 12" x 2'-5"	2 PL. 9/16" x 4" x 4'-10"	9	2 PL. 7/16" x 40" x 1'-8"	4"	8	PL. 9/16" x 12" x 4'-10"	PL. 3/8" x 12" x2'-5"	2 PL. 9/16" x 4" x 4'-10"
1d 45'58"	8	PL. 9/16" x 12" x 4'-10"	PL. 3/8" x 12" x 2'-5"	2 PL. 9/16" x 4" x 4'-10"	9	2 PL. 7/16" x 40" x 1'-8"	4"	8	PL. 9/16" x 12" x 4'-10"	PL. 3/8" x 12" x2'-5"	2 PL. 9/16" x 4" x 4'-10"
1d 41'00"	8	PL. 9/16" x 12" x 4'-10"	PL. 3/8" x 12" x 2'-5"	2 PL. 9/16" x 4" x 4'-10"	9	2 PL. 7/16" x 40" x 1'-8"	4"	8	PL. 9/16" x 12" x 4'-10"	PL. 3/8" x 12" x2'-5"	2 PL. 9/16" x 4" x 4'-10"
1d 36'04"	8	PL. 9/16" x 12" x 4'-10"	PL. 3/8" x 12" x 2'-5"	2 PL. 9/16" x 4" x 4'-10"	9	2 PL. 7/16" x 40" x 1'-8"	4"	8	PL. 9/16" x 12" x 4'-10"	PL. 3/8" x 12" x2'-5"	2 PL. 9/16" x 4" x 4'-10"
1d 31'08"	8	PL. 9/16" x 12" x 4'-10"	PL. 3/8" x 12" x 2'-5"	2 PL. 9/16" x 4" x 4'-10"	9	2 PL. 7/16" x 40" x 1'-8"	4"	8	PL. 9/16" x 12" x 4'-10"	PL. 3/8" x 12" x2'-5"	2 PL. 9/16" x 4" x 4'-10"
0d 27'27"	6	PL. 9/16" x 12" x 3'-10"	PL. 3/8" x 12" x 1'-11"	2 PL. 9/16" x 4" x 3'-10"	9	2 PL. 7/16" x 40" x 1'-8"	4"	9	PL. 13/16" x 16" x 5'-4"	PL. 1/8" x 16" x 2'-8"	2 PL. 5/8" x 4" x 5'-4"
0d 43'30"	6	PL. 9/16" x 12" x 3'-10"	PL. 3/8" x 12" x 1'-11"	2 PL. 9/16" x 4" x 3'-10"	9	2 PL. 7/16" x 40" x 1'-8"	4"	9	PL. 13/16" x 16" x 5'-4"	PL. 1/8" x 16" x 2'-8"	2 PL. 5/8" x 4" x 5'-4"
0d 59'21"	6	PL. 9/16" x 12" x 3'-10"	PL. 3/8" x 12" x 1'-11"	2 PL. 9/16" x 4" x 3'-10"	9	2 PL. 7/16" x 40" x 1'-8"	4"	8	PL. 13/16" x 16" x 4'-10"	PL. 1/8" x 16" x 2'-5"	2 PL. 5/8" x 4" x 4'-10"
1d 15'02"	6	PL. 9/16" x 12" x 3'-10"	PL. 3/8" x 12" x 1'-11"	2 PL. 9/16" x 4" x 3'-10"	9	2 PL. 7/16" x 40" x 1'-8"	4"	8	PL. 13/16" x 16" x 4'-10"	PL. 1/8" x 16" x 2'-5"	2 PL. 5/8" x 4" x 4'-10"
1d 30'32"	6	PL. 9/16" x 12" x 3'-10"	PL. 3/8" x 12" x 1'-11"	2 PL. 9/16" x 4" x 3'-10"	9	2 PL. 7/16" x 40" x 1'-8"	4"	8	PL. 13/16" x 16" x 4'-10"	PL. 1/8" x 16" x 2'-5"	2 PL. 5/8" x 4" x 4'-10"
1d 45'52"	6	PL. 9/16" x 12" x 3'-10"	PL. 3/8" x 12" x 1'-11"	2 PL. 9/16" x 4" x 3'-10"	9	2 PL. 7/16" x 40" x 1'-8"	4"	8	PL. 13/16" x 16" x 4'-10"	PL. 1/8" x 16" x 2'-5"	2 PL. 5/8" x 4" x 4'-10"
2d 01'02"	6	PL. 9/16" x 12" x 3'-10"	PL. 3/8" x 12" x 1'-11"	2 PL. 9/16" x 4" x 3'-10"	9	2 PL. 7/16" x 40" x 1'-8"	4"	8	PL. 13/16" x 16" x 4'-10"	PL. 1/8" x 16" x 2'-5"	2 PL. 5/8" x 4" x 4'-10"
2d 16'02"	6	PL. 9/16" x 12" x 3'-10"	PL. 3/8" x 12" x 1'-11"	2 PL. 9/16" x 4" x 3'-10"	9	2 PL. 7/16" x 40" x 1'-8"	4"	8	PL. 13/16" x 16" x 4'-10"	PL. 1/8" x 16" x 2'-5"	2 PL. 5/8" x 4" x 4'-10"
0d 30'13"	5	PL. 9/16" x 12" x 3'-4"	PL. 1/8" x 12" x 1'-8"	2 PL. 9/16" x 4" x 3'-4"	6	2 PL. 7/16" x 31" x 1'-8"	4 1/2"	5	PL. 9/16" x 12" x 3'-4"	PL. 1/8" x 12" x 1'-8"	2 PL. 9/16" x 4" x 3'-4"
0d 24'59"	5	PL. 9/16" x 12" x 3'-4"	PL. 1/8" x 12" x 1'-8"	2 PL. 9/16" x 4" x 3'-4"	6	2 PL. 7/16" x 31" x 1'-8"	4 1/2"	5	PL. 9/16" x 12" x 3'-4"	PL. 1/8" x 12" x 1'-8"	2 PL. 9/16" x 4" x 3'-4"
0d 18'10"	5	PL. 9/16" x 12" x 3'-4"	PL. 1/8" x 12" x 1'-8"	2 PL. 9/16" x 4" x 3'-4"	6	2 PL. 7/16" x 31" x 1'-8"	4 1/2"	5	PL. 9/16" x 12" x 3'-4"	PL. 1/8" x 12" x 1'-8"	2 PL. 9/16" x 4" x 3'-4"
0d 08'57"	5	PL. 9/16" x 12" x 3'-4"	PL. 1/8" x 12" x 1'-8"	2 PL. 9/16" x 4" x 3'-4"	6	2 PL. 7/16" x 31" x 1'-8"	4 1/2"	5	PL. 9/16" x 12" x 3'-4"	PL. 1/8" x 12" x 1'-8"	2 PL. 9/16" x 4" x 3'-4"
0d 04'14"	3	PL. 9/16" x 11" x 2'-4"	NONE	2 PL. 9/16" x 4" x 2'-4"	5	2 PL. 7/16" x 27" x 1'-8"	4 1/2"	3	PL. 9/16" x 11" x 2'-4"	NONE	2 PL. 9/16" x 4" x 2'-4"
0d 34'57"	6	PL. 9/16" x 12" x 3'-10"	PL. 1/8" x 12" x 1'-11"	2 PL. 9/16" x 4" x 3'-10"	6	2 PL. 7/16" x 31" x 1'-8"	4 1/2"	6	PL. 5/8" x 16" x 3'-10"	PL. 1/8" x 16" x 1'-11"	2 PL. 9/16" x 4" x 3'-10"
0d 55'56"	6	PL. 9/16" x 12" x 3'-10"	PL. 1/8" x 12" x 1'-11"	2 PL. 9/16" x 4" x 3'-10"	6	2 PL. 7/16" x 31" x 1'-8"	4 1/2"	6	PL. 5/8" x 16" x 3'-10"	PL. 1/8" x 16" x 1'-11"	2 PL. 9/16" x 4" x 3'-10"
1d 17'29"	6	PL. 9/16" x 12" x 3'-10"	PL. 1/8" x 12" x 1'-11"	2 PL. 9/16" x 4" x 3'-10"	6	2 PL. 7/16" x 31" x 1'-8"	4 1/2"	6	PL. 5/8" x 16" x 3'-10"	PL. 1/8" x 16" x 1'-11"	2 PL. 9/16" x 4" x 3'-10"
1d 24'49"	6	PL. 9/16" x 12" x 3'-10"	PL. 1/8" x 12" x 1'-11"	2 PL. 9/16" x 4" x 3'-10"	6	2 PL. 7/16" x 31" x 1'-8"	4 1/2"	6	PL. 5/8" x 16" x 3'-10"	PL. 1/8" x 16" x 1'-11"	2 PL. 9/16" x 4" x 3'-10"
1d 32'35"	3	PL. 9/16" x 11" x 2'-4"	NONE	2 PL. 9/16" x 4" x 2'-4"	5	2 PL. 7/16" x 27" x 1'-8"	4 1/2"	3	PL. 9/16" x 11" x 2'-4"	NONE	2 PL. 9/16" x 4" x 2'-4"
2d 09'33"	6	PL. 9/16" x 12" x 3'-10"	PL. 1/8" x 12" x 1'-11"	2 PL. 9/16" x 4" x 3'-10"	6	2 PL. 7/16" x 31" x 1'-8"	4 1/2"	6	PL. 5/8" x 16" x 3'-10"	PL. 1/8" x 16" x 1'-11"	2 PL. 9/16" x 4" x 3'-10"
1d 48'34"	6	PL. 9/16" x 12" x 3'-10"	PL. 1/8" x 12" x 1'-11"	2 PL. 9/16" x 4" x 3'-10"	6	2 PL. 7/16" x 31" x 1'-8"	4 1/2"	6	PL. 5/8" x 16" x 3'-10"	PL. 1/8" x 16" x 1'-11"	2 PL. 9/16" x 4" x 3'-10"
1d 27'01"	6	PL. 9/16" x 12" x 3'-10"	PL. 1/8" x 12" x 1'-11"	2 PL. 9/16" x 4" x 3'-10"	6	2 PL. 7/16" x 31" x 1'-8"	4 1/2"	6	PL. 5/8" x 16" x 3'-10"	PL. 1/8" x 16" x 1'-11"	2 PL. 9/16" x 4" x 3'-10"
1d 49'41"	6	PL. 9/16" x 12" x 3'-10"	PL. 1/8" x 12" x 1'-11"	2 PL. 9/16" x 4" x 3'-10"	6	2 PL. 7/16" x 31" x 1'-8"	4 1/2"	6	PL. 5/8" x 16" x 3'-10"	PL. 1/8" x 16" x 1'-11"	2 PL. 9/16" x 4" x 3'-10"
2d 11'55"	7	PL. 9/16" x 12" x 4'-4"	PL. 1/4" x 12" x 2'-2"	2 PL. 9/16" x 4" x 4'-4"	6	2 PL. 1/2" x 27" x 1'-8"	3 3/4"	8	PL. 5/8" x 16" x 4'-10"	PL. 1/8" x 16" x 2'-5"	2 PL. 9/16" x 4" x 4'-10"
3d 23'01"	7	PL. 9/16" x 12" x 4'-4"	PL. 1/4" x 12" x 2'-2"	2 PL. 9/16" x 4" x 4'-4"	5	2 PL. 7/16" x 27" x 1'-8"	4 1/2"	7	PL. 9/16" x 12" x 4'-4"	PL. 1/4" x 12" x 2'-2"	2 PL. 9/16" x 4" x 4'-4"
3d 34'16"	7	PL. 9/16" x 12" x 4'-4"	PL. 1/4" x 12" x 2'-2"	2 PL. 9/16" x 4" x 4'-4"	5	2 PL. 7/16" x 24" x 1'-8"	4	7	PL. 9/16" x 12" x 4'-4"	PL. 1/4" x 12" x 2'-2"	2 PL. 9/16" x 4" x 4'-4"
3d 34'21"	6	PL. 3/4" x 16" x 3'-10"	PL. 1/8" x 16" x 1'-11"	2 PL. 9/16" x 4" x 3'-10"	5	2 PL. 7/16" x 19" x 1'-8"	3	6	PL. 3/4" x 16" x 3'-10"	PL. 1/8" x 16" x 1'-11"	2 PL. 9/16" x 4" x 3'-10"
0d 24'22"	5	PL. 9/16" x 12" x 3'-4"	PL. 1/8" x 12" x 1'-8"	2 PL. 9/16" x 4" x 3'-4"	6	2 PL. 7/16" x 31" x 1'-8"	4 1/2"	5	PL. 9/16" x 12" x 3'-4"	PL. 1/8" x 12" x 1'-8"	2 PL. 9/16" x 4" x 3'-4"
1d 11'59"	5	PL. 9/16" x 12" x 3'-4"	PL. 1/8" x 12" x 1'-8"	2 PL. 9/16" x 4" x 3'-4"	6	2 PL. 7/16" x 31" x 1'-8"	4 1/2"	5	PL. 9/16" x 12" x 3'-4"	PL. 1/8" x 12" x 1'-8"	2 PL. 9/16" x 4" x 3'-4"
1d 59'36"	5	PL. 9/16" x 12" x 3'-4"	PL. 1/8" x 12" x 1'-8"	2 PL. 9/16" x 4" x 3'-4"	6	2 PL. 7/16" x 31" x 1'-8"	4 1/2"	5	PL. 9/16" x 12" x 3'-4"	PL. 1/8" x 12" x 1'-8"	2 PL. 9/16" x 4" x 3'-4"
2d 05'37"	5	PL. 9/16" x 12" x 3'-4"	PL. 1/8" x 12" x 1'-8"	2 PL. 9/16" x 4" x 3'-4"	6	2 PL. 7/16" x 31" x 1'-8"	4 1/2"	5	PL. 9/16" x 12" x 3'-4"	PL. 1/8" x 12" x 1'-8"	2 PL. 9/16" x 4" x 3'-4"
2d 11'50"	7	PL. 9/16" x 12" x 4'-4"	PL. 1/4" x 12" x 2'-2"	2 PL. 9/16" x 4" x 4'-4"	6	2 PL. 1/2" x 27" x 1'-8"	3 3/4"	8	PL. 5/8" x 16" x 4'-10"	PL. 1/4" x 16" x 2'-5"	2 PL. 9/16" x 4" x 4'-10"
2d 18'15"	7	PL. 9/16" x 12" x 4'-4"	PL. 1/4" x 12" x 2'-2"	2 PL. 9/16" x 4" x 4'-4"	5	2 PL. 7/16" x 27" x 1'-8"	4 1/2"	7	PL. 5/8" x 16" x 4'-4"	PL. 1/4" x 16" x 2'-2"	2 PL. 9/16" x 4" x 4'-4"
2d 24'52"	7	PL. 9/16" x 12" x 4'-4"	PL. 1/4" x 12" x 2'-2"	2 PL. 9/16" x 4" x 4'-4"	6	2 PL. 1/2" x 25" x 1'-8"	3 1/2"	9	PL. 13/16" x 16" x 5'-4"	PL. 1/8" x 16" x 2'-8"	2 PL. 9/16" x 4" x 5'-4"
2d 31'39"	10	PL. 5/8" x 16" x 5'-10"	PL. 1/4" x 16" x 2'-11"	2 PL. 9/16" x 4" x 5'-10"	5	2 PL. 5/8" x 20" x 1'-8"	3"	10	PL. 3/4" x 16" x 5'-10"	NONE	2 PL. 9/16" x 4" x 5'-10"

BEARING STIFFENER TABLE

LOCATION	GIRDERS	BEARING STIFFENER	WELD THICK.
REAR ABUTMENT	WG1 THRU WG7	PL. 1" x 8 3/4" x 3'-10 1/2"	5/16"
	SW1 THRU SW8	PL. 1" x 8 3/4" x 3'-10 1/2"	5/16"
PIER NO. 1	WG1 THRU WG7	PL. 1" x 8 3/4" x 3'-7 1/2"	5/16"
	SW1 THRU SW8	PL. 1" x 8 3/4" x 3'-7 1/2"	5/16"
PIER NO. 2	WG1 THRU WG7	PL. 1" x 8 3/4" x 3'-7 1/2"	5/16"
	SE1 THRU SE4	PL. 1" x 8 3/4" x 3'-10 1/2"	5/16"
	SE5 AND SE6	PL. 1" x 8 3/4" x 3'-4 1/2"	5/16"
	SE7	PL. 1" x 8 3/4" x 2'-1 1/2"	5/16"
	SE8	PL. 1" x 7 3/4" x 1'-8 1/2"	5/16"
PIER NO.3	WG1 THRU WG7	PL. 1" x 8 3/4" x 3'-7 1/2"	5/16"
	SE1 THRU SE4	PL. 1" x 8 3/4" x 3'-10 1/2"	5/16"
	SE5 AND SE6	PL. 1" x 8 3/4" x 3'-4 1/2"	5/16"
	SE7	PL. 1" x 8 3/4" x 2'-1 1/2"	5/16"
	SE8	PL. 1" x 7 3/4" x 1'-8 1/2"	5/16"
PIER NO 4.	WG1 THRU WG7	PL. 1" x 8 3/4" x 3'-7 1/2"	5/16"
	SE1 THRU SE4	PL. 1" x 8 3/4" x 3'-10 1/2"	5/16"
	SE5 AND SE6	PL. 1" x 8 3/4" x 3'-4 1/2"	5/16"
	SE7	PL. 1" x 8 3/4" x 2'-1 1/2"	3/8"
	SE8	PL. 1" x 8 3/4" x 1'-8 1/2"	3/8"
FORWARD ABUTMENT	WG1 THRU WG7	PL. 1" x 8 3/4" x 2'-8 1/2"	5/16"
	SE1 THRU SE4	PL. 1" x 8 3/4" x 2'-8 1/2"	5/16"
	SE5 AND SE6	PL. 1" x 7 3/4" x 2'-4 1/2"	5/16"
	SE7	PL. 1" x 7 3/4" x 2'-1 1/2"	5/16"
	SE8	PL. 1" x 8 3/4" x 1'-8 1/2"	5/16"

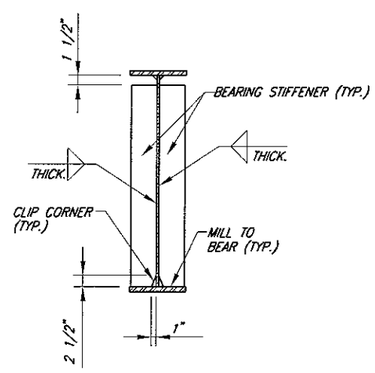

BEARING STIFFENER DETAIL

NOTES:

1. WELDED ATTACHMENT OF SUPPORTS FOR CONCRETE DECK FINISHING MACHINE MAY BE MADE TO AREAS OF THE FASCIA STRINGER FLANGES DESIGNATED "COMPRESSION". ATTACHMENTS SHALL NOT BE MADE TO AREAS DESIGNATED "TENSION". FILLET WELDS TO COMPRESSION FLANGES SHALL BE NOT CLOSER THAN 1" FROM EDGE OF FLANGE, BE NOT MORE THAN 2" LONG, AND BE NOT SMALLER THAN 1/4" FOR THICKNESSES UP TO 3/4" AND 5/16" FOR GREATER THAN 3/4" THICK.

PREPARED BY: R.W. ARMSTRONG & ASSOCIATES
471 EAST BROAD STREET, SUITE 2010
COLUMBUS, OHIO 43215
OFFICE (614) 225-8868 FAX (614) 225-8869

DATE	REVIEWED	DRAWN	DESIGNED
12/22/06	PAR	SLO	MHZ
STRUCTURE FILE NUMBER		REVISED	CHECKED
5760569			LAK

STRUCTURAL STEEL DETAILS 7 OF 9
BRIDGE No. DAY-XWAY-00.79
DAYTON EXPRESSWAY OVER KEONEE STREET AND CSXT RAILROAD

MOT-XWAY
PID NO. 77774

IMAGE FILES : NONE
XREFERENCES : XR-DAY-XWAY-TITBLK;
FILE NAME : P:\Transportation\20053370 Dayton Expressway 3\3D SheetDrawings\20 Singles\Splice-Tbl-SE.dwg / Layout1
MRD\MT : 20-DEC-06, 10:58:45 / SJohnson

GIRDER DIMENSION TABLE – GIRDER WG1 THRU WG7

GIRDER	DIMENSIONS																
	SPAN					SPAN "A"		SPAN "B"			SPAN "C"			SPAN "D"			SPAN "E"	
	A	B	C	D	E	"A-L"	"A-R"	"B-L"	"B-C"	"B-R"	"C-L"	"C-C"	"C-R"	"D-L"	"D-C"	"D-R"	"E-L"	"E-R"
WG 1	66'-9 5/16"	93'-5 3/16"	98'-5 3/4"	98'-6 1/8"	59'-10 11/16"	44'-2 5/16"	22'-6 1/16"	22'-1 3/16"	47'-6 7/8"	23'-9 5/16"	23'-7 3/16"	49'-6 7/16"	25'-4 1/4"	24'-0 1/2"	54'-4 5/8"	20'-1 1/8"	24'-10 9/16"	35'-0 3/16"
WG 2	66'-9 1/16"	93'-6 3/4"	92'-4 5/16"	94'-8 1/8"	59'-10 15/16"	43'-10 3/16"	22'-10 15/16"	22'-0 9/16"	48'-10"	22'-8 5/16"	23'-10 7/8"	44'-1 3/16"	24'-4 5/16"	22'-2 1/4"	52'-8 13/16"	19'-9 1/4"	23'-10 7/8"	36'-0 1/8"
WG 3	66'-9 3/4"	93'-8 1/4"	86'-2 13/16"	90'-10 3/16"	59'-11 3/16"	43'-6"	23'-3 13/16"	22'-0"	50'-1 1/16"	21'-7 5/16"	24'-2 1/2"	38'-7 15/16"	23'-4 7/16"	20'-4"	51'-1"	19'-5 5/16"	22'-11 1/8"	37'-0 1/8"
WG 4	66'-10 1/2"	93'-9 13/16"	80'-1 5/16"	87'-0 1/4"	59'-11 1/2"	43'-1 13/16"	23'-8 11/16"	21'-11 3/8"	51'-4 3/16"	20'-6 5/16"	24'-6 3/16"	33'-2 11/16"	22'-4 9/16"	18'-5 3/4"	49'-5 3/16"	19'-1 7/16"	21'-11 3/8"	38'-0 1/16"
WG 5	66'-11 3/16"	93'-11 3/8"	73'-11 13/16"	83'-2 5/16"	59'-11 3/4"	42'-9 11/16"	24'-1 9/16"	21'-10 13/16"	52'-7 5/16"	19'-5 5/16"	24'-9 13/16"	27'-9 3/8"	21'-4 11/16"	16'-7 1/2"	47'-9 3/8"	18'-9 9/16"	20'-11 11/16"	39'-0 1/16"
WG 6	66'-11 15/16"	94'-0 15/16"	67'-10 5/16"	79'-4 3/8"	60'-0"	42'-5 1/2"	24'-6 7/16"	21'-10 3/16"	53'-10 7/16"	18'-4 5/16"	25'-1 7/16"	22'-4 1/8"	20'-4 13/16"	14'-9 1/4"	46'-1 1/2"	18'-5 11/16"	19'-11 15/16"	40'-0 1/16"
WG 7	67'-0 5/8"	94'-2 1/2"	61'-9 13/16"	75'-6 7/16"	60'-0 1/4"	42'-1 5/16"	24'-11 5/16"	21'-9 5/8"	55'-1 5/8"	17'-3 5/16"	25'-5 1/8"	16'-10 15/16"	19'-4 15/16"	12'-11"	44'-5 11/16"	18'-1 13/16"	19'-0 1/4"	41'-0"

TENSION / COMPRESSION TABLE – GIRDERS WG1 THRU WG7

GIRDER	SPAN "A"			SPAN "B"					SPAN "C"				SPAN "D"						SPAN "E"		
	"A-1"	"A-2"	"A-3"	"B-1"	"B-2"	"B-3"	"B-4"	"B-5"	"C-1"	"C-2"	"C-3"	"C-4"	"C-5"	"D-1"	"D-2"	"D-3"	"D-4"	"D-5"	"E-1"	"E-2"	"E-3"
WG 1	35'-9 7/16"	18'-11 13/16"	11'-11 3/16"	12'-2 1/8"	16'-4"	33'-7 1/2"	11'-9 13/16"	11'-5 15/16"	13'-8 13/16"	16'-0 5/8"	36'-7 3/4"	18'-7 5/8"	16'-7 1/16"	14'-2 1/4"	16'-2 7/16"	43'-9 1/16"	12'-2 5/8"	12'-1 15/16"	12'-7 5/8"	22'-10 7/16"	24'-4 3/4"
WG 2	36'-4 5/8"	23'-9 3/16"	12'-11 5/16"	12'-10 13/16"	12'-3 15/16"	43'-1 1/8"	11'-9 5/16"	13'-5 1/2"	13'-10 1/4"	16'-0 3/4"	23'-3 7/16"	9'-11 3/16"	19'-2 3/4"	13'-8 5/8"	13'-9 3/8"	43'-7"	11'-1 3/4"	12'-5 1/8"	13'-0 3/8"	9'-5"	37'-3 5/8"
WG 3	36'-5 9/16"	17'-2 3/16"	13'-2 1/16"	13'-0 9/16"	12'-2 1/2"	42'-5 9/16"	13'-2 7/16"	12'-9 3/8"	13'-6 3/8"	18'-6 1/2"	22'-10 13/16"	16'-0 1/8"	13'-3 11/16"	12'-6 1/8"	13'-3 7/8"	41'-8 7/16"	11'-4 7/16"	12'-1 7/16"	12'-6 3/4"	18'-3 13/16"	25'-0 5/8"
WG 4	36'-0 13/16"	17'-5"	13'-4 11/16"	13'-2 3/4"	11'-11 13/16"	44'-8 5/16"	12'-0 13/16"	11'-10 11/16"	12'-11 1/16"	20'-6 1/16"	15'-9 3/16"	18'-10 1/4"	12'-6 1/2"	11'-2 1/16"	12'-8 1/8"	40'-5 13/16"	11'-3"	11'-5 3/8"	11'-9 1/4"	16'-10 13/16"	31'-2 7/16"
WG 5	35'-11 1/16"	17'-4 13/16"	13'-7 3/8"	13'-3 9/16"	11'-11 3/4"	45'-10 15/16"	11'-4 1/4"	11'-4 7/8"	12'-10 1/8"	50'-0 1/8"			11'-1 11/16"	9'-10 3/4"	5'-2 5/8"	45'-5"	11'-6 1/16"	11'-2"	11'-5 1/4"	15'-0 7/8"	32'-3 5/8"
WG 6	35'-5 1/8"	17'-5 13/16"	13'-9"	13'-4 9/16"	11'-11 1/8"	47'-1 1/2"	10'-7"	11'-0 13/16"	12'-11"	44'-7 3/8"			10'-4"	8'-8 3/4"	11'-3 9/16"	36'-4"	11'-5 1/4"	10'-10 15/16"	11'-1"	15'-2 1/16"	33'-3 7/8"
WG 7	34'-4 5/16"	19'-5 7/8"	13'-1 7/16"	12'-9 1/4"	13'-1 7/8"	47'-0 1/4"	10'-10 1/2"	10'-4 11/16"	12'-3 7/8"	40'-6 3/16"			8'-10 15/16"	6'-11 1/2"	13'-1 3/4"	31'-11 7/16"	13'-5 1/8"	10'-1 7/16"	10'-1 13/16"	16'-0 5/16"	33'-10 1/16"

SHEAR CONNECTOR TABLE – GIRDERS WG1 THRU WG7

GIRDER	SHEAR CONNECTOR SPACING													
	SPAN "A"				SPAN "B"					SPAN "C"				
	"SC-A"	"SC-B"	"SC-C"	"SC-1"	"SC-2"	"SC-D"	"SC-E"	"SC-F"	"SC-3"	"SC-4"	"SC-G"	"SC-H"	"SC-I"	"SC-5"
WG 1	48 SPA. @ 10"		6 SPA. @ 5"	2'-2 5/16"	1'-8 7/16"	6 SPA. @ 5"	47 SPA. @ 10"	6 SPA. @ 5"	1'-8 7/16"	2'-1 1/4"	6 SPA. @ 5"	44 SPA. @ 11"	6 SPA. @ 5"	2'-1 3/16"
WG 2	47 SPA. @ 10"		6 SPA. @ 5"	2'-8 3/16"	1'-11"	6 SPA. @ 5"	48 SPA. @ 10"	6 SPA. @ 5"	1'-11"	2'-3 5/8"	6 SPA. @ 5"	46 SPA. @ 9"	6 SPA. @ 5"	2'-3 3/16"
WG 3	47 SPA. @ 10"		5 SPA. @ 5"	2'-4"	2'-1 1/2"	6 SPA. @ 5"	49 SPA. @ 10"	6 SPA. @ 5"	2'-1 9/16"	2'-3"	6 SPA. @ 5"	50 SPA. @ 7"	6 SPA. @ 5"	2'-2 15/16"
WG 4	47 SPA. @ 10"		6 SPA. @ 5"	1'-11 13/16"	1'-11 1/8"	6 SPA. @ 5"	51 SPA. @ 10"	6 SPA. @ 5"	1'-11 1/16"	2'-1 3/8"	6 SPA. @ 5"	48 SPA. @ 6"	6 SPA. @ 5"	2'-1 5/16"
WG 5	46 SPA. @ 10"		6 SPA. @ 5"	2'-5 11/16"	2'-1 5/8"	6 SPA. @ 5"	52 SPA. @ 10"	6 SPA. @ 5"	2'-1 11/16"	2'-0 3/16"	57 SPA. @ 5"			2'-0 3/16"
WG 6	46 SPA. @ 10"		6 SPA. @ 5"	2'-1 1/2"	1'-11 1/4"	6 SPA. @ 5"	54 SPA. @ 10"	6 SPA. @ 5"	1'-11 3/16"	2'-1 9/16"		52 SPA. @ 3 1/2"	6 SPA. @ 5"	2'-1 9/16"
WG 7	45 SPA. @ 10"		6 SPA. @ 5"	2'-7 5/16"	2'-1 13/16"	6 SPA. @ 5"	56 SPA. @ 10"	6 SPA. @ 5"	2'-1 13/16"	2'-1"	51 SPA. @ 3"			2'-0 15/16"

GIRDER	SHEAR CONNECTOR SPACING							
	SPAN "D"					SPAN "E"		
	"SC-F"	"SC-J"	"SC-K"	"SC-L"	"SC-5"	"SC-6"	"SC-M"	"SC-N"
WG 1	2'-4 13/16"	6 SPA. @ 5"	54 SPA. @ 10"	6 SPA. @ 5"	2'-1 13/16"	2'-4 3/16"	6 SPA. @ 5"	46 SPA. @ 8"
WG 2	2'-3 15/16"	6 SPA. @ 5"	52 SPA. @ 10"	6 SPA. @ 5"	2'-0 7/8"	2'-5 1/8"	6 SPA. @ 5"	48 SPA. @ 8"
WG 3	2'-4"	6 SPA. @ 5"	55 SPA. @ 10"	6 SPA. @ 5"	2'-1"	2'-4 1/8"	6 SPA. @ 5"	49 SPA. @ 8"
WG 4	2'-4 1/8"	6 SPA. @ 5"	49 SPA. @ 10"	6 SPA. @ 5"	2'-1 1/16"	2'-0 11/16"	6 SPA. @ 5"	51 SPA. @ 8"
WG 5	2'-4 3/16"	6 SPA. @ 5"	48 SPA. @ 10"	6 SPA. @ 5"	2'-1 3/16"	2'-4 1/16"	6 SPA. @ 5"	52 SPA. @ 8"
WG 6	2'-3 3/4"	6 SPA. @ 5"	48 SPA. @ 9"	6 SPA. @ 5"	2'-0 3/4"	2'-0 1/16"	6 SPA. @ 5"	54 SPA. @ 8"
WG 7	2'-2 7/8"	6 SPA. @ 5"	47 SPA. @ 9"	6 SPA. @ 5"	1'-11 13/16"	2'-4"	6 SPA. @ 5"	55 SPA. @ 8"

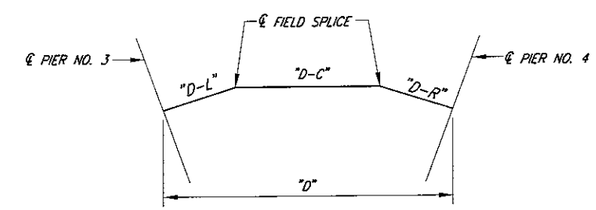

PLAN – GIRDER DIMENSION SCHEMATIC

NOTES:

1. WELDED ATTACHMENT OF SUPPORTS FOR CONCRETE DECK FINISHING MACHINE MAY BE MADE TO AREAS OF THE FASCIA STRINGER FLANGES DESIGNATED "COMPRESSION". ATTACHMENTS SHALL NOT BE MADE TO AREAS DESIGNATED "TENSION". FILLET WELDS TO COMPRESSION FLANGES SHALL BE NOT CLOSER THAN 1" FROM EDGE OF FLANGE, BE NOT MORE THAN 2" LONG, AND BE NOT SMALLER THAN 1/4" FOR THICKNESSES UP TO 3/4" AND 5/16" FOR GREATER THAN 3/4" THICK.
2. FIELD ADJUST LAST ROW OF WELDED SHEAR STUDS TO AVOID FLANGE SPLICE PLATE BY 3 INCHES.

PREPARED BY: R.W. ARMSTRONG & ASSOCIATES
471 EAST BROAD STREET, SUITE 2010
COLUMBUS, OH 43215
OFFICE (614) 225-8868 FAX (614) 225-8869

DESIGNED	DRAWN	REVIEWED	DATE
MHZ	SLO	PMR	12/22/06
CHECKED	REVISED	STRUCTURE FILE NUMBER	
LAK		5760569	

STRUCTURAL STEEL DETAILS 8 OF 9
BRIDGE No. DAY-XWAY-00.79
DAYTON EXPRESSWAY OVER KEONEE STREET AND CSXT RAILROAD

MOT-XWAY
PID NO. 77774

IMAGE FILES : NONE
XREFERENCES : XR-DAY-XWAY-TITBLK;
FILE NAME : P:\Transportation\20053370 Dayton Expressway 3\30 SheetDrawings\20 Singles\Shear-Tbl-WG.dwg / Layout1
WKD\JNT : 20-DEC-06, 11:00:51 / Johnson

GIRDER DIMENSION TABLE – GIRDERS SW1 THRU SW8 & SE1 THRU SE8

GIRDER	DIMENSIONS															
	SPAN					SPAN "A"		SPAN "B"		SPAN "C"		SPAN "D"			SPAN "E"	
	A	B	C	D	E	"A-L"	"A-R"	"B-L"	"B-R"	"C-L"	"C-R"	"D-L"	"D-C"	"D-R"	"E-L"	"E-R"
SW 1	67'-2 13/16"	93'-5 1/4"				35'-10 5/8"	31'-4 5/16"	22'-10 11/16"	70'-6 5/8"							
SW 2	67'-3 3/16"	93'-7 13/16"				35'-11 1/8"	31'-4 3/16"	22'-8 3/8"	70'-11 7/16"							
SW 3	67'-3 9/16"	93'-10 3/8"				35'-11 9/16"	31'-4 1/16"	22'-6 1/8"	71'-4 1/4"							
SW 4	67'-3 15/16"	94'-1"				36'-0 1/16"	31'-3 15/16"	22'-3 7/8"	71'-9 1/8"							
SW 5	67'-4 5/16"	94'-3 9/16"				36'-0 9/16"	31'-3 13/16"	22'-1 5/8"	72'-2"							
SW 6	67'-4 11/16"	94'-6 3/16"				36'-1 1/16"	31'-3 3/4"	21'-11 3/8"	72'-6 15/16"							
SW 7	67'-5 1/16"	94'-8 13/16"				36'-1 1/2"	31'-3 5/8"	21'-9 1/8"	72'-11 13/16"							
SW 8	67'-5 7/16"	94'-11 7/16"				36'-2"	31'-3 1/2"	21'-6 7/8"	73'-4 3/4"							
SE 1			57'-5 13/16"	73'-4 3/8"	60'-0 5/8"					40'-1 5/8"	17'-4 1/8"	17'-10 1/2"	37'-5 1/4"	18'-0 11/16"	16'-11 9/16"	43'-1 1/16"
SE 2			50'-10 13/16"	69'-1 15/16"	59'-10 1/16"					35'-4 3/4"	15'-6 1/8"	15'-8 3/8"	34'-11 3/8"	18'-6 3/8"	16'-7 3/16"	43'-2 15/16"
SE 3			44'-3 13/16"	64'-11 9/16"	59'-7 5/8"					30'-7 3/4"	13'-8 1/8"	13'-6 1/4"	32'-5 3/8"	19'-0"	16'-2 7/8"	43'-4 7/8"
SE 4			37'-8 13/16"	60'-9 3/16"	59'-5 1/4"					25'-10 3/4"	11'-10"	11'-4 1/8"	30'-0 3/8"	19'-4 7/8"	15'-9 7/8"	43'-7 1/2"
SE 5			31'-1 3/4"	56'-6 13/16"	59'-2 15/16"					21'-1 13/16"	9'-11 15/16"	9'-1 15/16"	27'-7 7/16"	19'-9 5/8"	15'-4 15/16"	43'-10 1/8"
SE 6			24'-6 3/4"	52'-4 5/16"	59'-0 3/4"					24'-6 3/4"		32'-2 1/8"		20'-2 7/16"	15'-0 1/16"	44'-0 13/16"
SE 7			17'-11 11/16"	48'-2 1/16"	58'-10 9/16"					17'-11 11/16"		27'-7 1/8"		20'-7 1/4"	14'-7 3/16"	44'-3 1/2"
SE 8			11'-4 5/8"	43'-11 15/16"	58'-8 1/2"					11'-4 5/8"		23'-0 3/16"		21'-0"	14'-2 3/8"	44'-6 1/4"

TENSION / COMPRESSION TABLE – GIRDERS SW1 THRU SW8 & SE1 THRU SE8

GIRDER	DIMENSIONS																	
	SPAN "A"			SPAN "B"					SPAN "C"			SPAN "D"					SPAN "E"		
	"A-1"	"A-2"	"A-3"	"B-1"	"B-2"	"B-3"	"B-4"	"B-5"	"C-1"	"C-2"	"C-3"	"D-1"	"D-2"	"D-3"	"D-4"	"D-5"	"E-1"	"E-2"	"E-3"
SW 1	30'-3 3/4"	21'-11 3/8"	14'-11 3/4"	13'-3 11/16"	13'-0 13/16"	53'-8 9/16"	11'-5 5/8"	1'-10 5/8"											
SW 2	31'-2 1/16"	19'-8 5/16"	16'-6 15/16"	14'-5 5/16"	11'-3 7/8"	57'-6 3/4"	8'-7 5/16"	1'-8 1/2"											
SW 3	31'-2 15/16"	19'-5"	16'-7 11/16"	14'-5 13/16"	11'-3 11/16"	58'-2 3/8"	8'-2 1/16"	1'-8 7/16"											
SW 4	31'-3 15/16"	19'-3 11/16"	16'-8 3/8"	14'-6 1/8"	11'-3 1/2"	58'-6 1/16"	8'-0 11/16"	1'-8 5/8"											
SW 5	30'-9"	20'-0 1/2"	16'-6 7/8"	14'-5 5/16"	11'-2 15/16"	56'-4 1/4"	10'-8 13/16"	1'-6 5/16"											
SW 6	30'-11 1/8"	19'-10 3/16"	16'-7 1/2"	14'-5 11/16"	11'-2 7/8"	59'-2 3/8"	8'-0"	1'-7 7/16"											
SW 7	31'-1 1/16"	19'-9 1/8"	16'-8 15/16"	14'-5 7/8"	11'-3 5/16"	58'-3 13/16"	8'-11"	1'-9"											
SW 8	30'-11 3/4"	21'-1 1/2"	15'-4 1/4"	13'-5 9/16"	12'-11 3/8"	55'-9 1/8"	10'-4 7/8"	2'-4 5/8"											
SE 1									4'-0 1/2"	44'-10 11/16"	8'-6 9/16"	8'-7 3/8"	12'-3 15/16"	28'-2 7/8"	14'-10 1/16"	9'-4 3/16"	8'-10 5/16"	16'-1 11/16"	35'-0 5/8"
SE 2									3'-3 1/4"	39'-4 9/16"	8'-3 1/16"	7'-11 7/16"	10'-1"	27'-11 1/2"	13'-4 3/8"	9'-9 13/16"	9'-4 5/16"	12'-9 7/16"	37'-8 3/8"
SE 3									3'-8 13/16"	33'-4"	7'-3 1/16"	6'-7 13/16"	9'-2 1/8"	25'-8 9/16"	13'-9 3/4"	9'-7 3/8"	9'-1"	12'-0 5/8"	38'-6 1/8"
SE 4									4'-3 1/4"	27'-2 5/16"	6'-3 3/16"	5'-0 1/2"	8'-4 9/16"	23'-10"	14'-1"	9'-5 3/16"	8'-10"	11'-3 3/16"	39'-4 1/4"
SE 5									4'-4 3/16"	22'-0 1/8"	4'-9 1/2"	3'-0 9/16"	6'-10 3/4"	22'-10 5/16"	14'-5 1/16"	9'-4 1/4"	8'-6 13/16"	11'-1 7/16"	39'-6 7/8"
SE 6									5'-5 1/2"	15'-0 1/8"	4'-1 1/8"	1'-10 1/4"	6'-7 1/4"	19'-4 7/16"	15'-2 5/16"	9'-4 5/16"	8'-4 3/16"	10'-4 1/2"	40'-4 3/16"
SE 7									6'-5 1/4"	8'-10 13/16"	2'-7 5/8"	1'-1 3/8"	6'-6 5/8"	16'-6 1/4"	14'-10 3/4"	9'-1 3/8"	7'-11 5/16"	9'-1 11/16"	41'-9 11/16"
SE 8									7'-0"	4'-4 5/8"			10'-9 3/8"	11'-11 3/4"	13'-3 5/16"	7'-11 3/4"	10'-6 7/16"	4'-6 1/8"	43'-6"

SHEAR CONNECTOR TABLE – GIRDERS SW1 THRU SW8

GIRDER	SHEAR CONNECTOR SPACING						
	SPAN "A"				SPAN "B"		
	"SC-A"	"SC-B"	"SC-C"	"SC-1"	"SC-2"	"SC-D"	"SC-E"
SW 1	48 SPA. @ 8"		6 SPA. @ 3"	2'-10 5/8"	2'-6 5/8"	6 SPA. @ 3"	67 SPA. @ 12"
SW 2	48 SPA. @ 8"		6 SPA. @ 3"	2'-11 1/8"	2'-11 7/16"	6 SPA. @ 3"	67 SPA. @ 12"
SW 3	48 SPA. @ 8"		6 SPA. @ 3"	2'-11 9/16"	2'-4 1/4"	6 SPA. @ 3"	68 SPA. @ 12"
SW 4	48 SPA. @ 8"		6 SPA. @ 3"	3'-0 1/16"	2'-9 1/8"	6 SPA. @ 3"	68 SPA. @ 12"
SW 5	48 SPA. @ 8"		6 SPA. @ 3"	3'-0 9/16"	2'-2"	6 SPA. @ 3"	69 SPA. @ 12"
SW 6	48 SPA. @ 8"		6 SPA. @ 3"	3'-1 1/16"	2'-6 15/16"	6 SPA. @ 3"	69 SPA. @ 12"
SW 7	48 SPA. @ 8"		6 SPA. @ 3"	3'-1 1/2"	2'-11 13/16"	6 SPA. @ 3"	69 SPA. @ 12"
SW 8	48 SPA. @ 8"		6 SPA. @ 3"	3'-2"	2'-4 3/4"	6 SPA. @ 3"	70 SPA. @ 12"

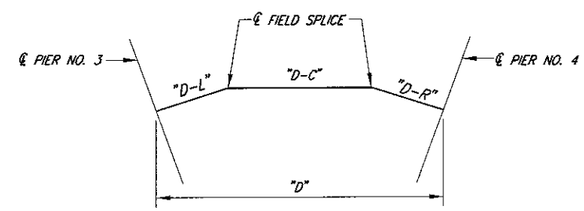

PLAN – GIRDER DIMENSION SCHEMATIC

NOTES:

1. WELDED ATTACHMENT OF SUPPORTS FOR CONCRETE DECK FINISHING MACHINE MAY BE MADE TO AREAS OF THE FASCIA STRINGER FLANGES DESIGNATED "COMPRESSION". ATTACHMENTS SHALL NOT BE MADE TO AREAS DESIGNATED "TENSION". FILLET WELDS TO COMPRESSION FLANGES SHALL BE NOT CLOSER THAN 1" FROM EDGE OF FLANGE, BE NOT MORE THAN 2" LONG, AND BE NOT SMALLER THAN 1/4" FOR THICKNESSES UP TO 3/4" AND 5/16" FOR GREATER THAN 3/4" THICK.
2. FIELD ADJUST LAST ROW OF WELDED SHEAR STUDS TO AVOID FLANGE SPLICE PLATE BY 3 INCHES.

SHEAR CONNECTOR TABLE – GIRDERS SE1 THRU SE8

GIRDER	SHEAR CONNECTOR SPACING											
	SPAN "C"				SPAN "D"					SPAN "E"		
	"SC-G"	"SC-H"	"SC-I"	"SC-3"	"SC-4"	"SC-J"	"SC-K"	"SC-L"	"SC-5"	"SC-6"	"SC-M"	"SC-N"	"SC-O"
SE 1	49 SPA. @ 9"		6 SPA. @ 3"	2'-4 5/8"	2'-4 5/8"	6 SPA. @ 3"	44 SPA. @ 8"	6 SPA. @ 3"	2'-4 5/8"	2'-4 1/16"	6 SPA. @ 3"	53 SPA. @ 9"	
SE 2	48 SPA. @ 8"		6 SPA. @ 3"	2'-4 3/4"	2'-3 3/16"	6 SPA. @ 3"	47 SPA. @ 7"	6 SPA. @ 3"	2'-3 3/16"	2'-5 15/16"	6 SPA. @ 3"	53 SPA. @ 9"	
SE 3	47 SPA. @ 7"		6 SPA. @ 3"	2'-2 3/4"	2'-2 11/16"	6 SPA. @ 3"	50 SPA. @ 6"	6 SPA. @ 3"	2'-2 11/16"	2'-7 7/8"	6 SPA. @ 3"	53 SPA. @ 9"	
SE 4	45 SPA. @ 6"		6 SPA. @ 3"	2'-4 3/4"	2'-0 3/16"	6 SPA. @ 3"	46 SPA. @ 6"	6 SPA. @ 3"	2'-0 3/16"	2'-1 1/2"	6 SPA. @ 3"	54 SPA. @ 9"	
SE 5	43 SPA. @ 5"		6 SPA. @ 3"	2'-2 13/16"	1'-8 7/16"	6 SPA. @ 3"	49 SPA. @ 5"	6 SPA. @ 3"	2'-6"	2'-4 1/8"	6 SPA. @ 3"	54 SPA. @ 9"	
SE 6	46 SPA. @ 5"		6 SPA. @ 3"	4'-4 3/4"	4'-7 1/8"	6 SPA. @ 3"	53 SPA. @ 5"	6 SPA. @ 3"	2'-6"	2'-6 13/16"	6 SPA. @ 3"	54 SPA. @ 9"	
SE 7	42 SPA. @ 4"		6 SPA. @ 3"	2'-11 11/16"	4'-7 1/8"	6 SPA. @ 3"	42 SPA. @ 5"	6 SPA. @ 3"	2'-6"	2'-5 1/2"	6 SPA. @ 3"	50 SPA. @ 9"	5 SPA. @ 8"
SE 8	42 SPA. @ 2 1/2"			3'-1 5/8"	3'-6 3/16"	6 SPA. @ 3"	42 SPA. @ 4"	6 SPA. @ 3"	2'-6"	3'-5 1/4"	6 SPA. @ 3"	41 SPA. @ 9"	16 SPA. @ 7"

PREPARED BY:
R.W. ARMSTRONG & ASSOCIATES
471 EAST BROAD STREET, SUITE 2010
COLUMBUS, OH 43215
OFFICE (614) 225-8868 FAX (614) 225-8869

DATE	REVIEWED	DRAWN	DESIGNED
12/22/06	PAR	SLO	MHZ
STRUCTURE FILE NUMBER		REVISED	CHECKED
5760569			LAK

STRUCTURAL STEEL DETAILS 9 OF 9
BRIDGE No. DAY-XWAY-00.79
DAYTON EXPRESSWAY OVER KEOWEE STREET AND CSXT RAILROAD

MOT-XWAY
PID NO. 77774

IMAGE FILES : NONE
XREFERENCES : XR-DAY-XWAY-TITBLK;
FILE NAME : P:\Transportation\20053370 Dayton Expressway 3\30 SheetDrawings\20 Singles\Shear-Tbl-SW-SE.dwg / Layout1
MRD\NIT : 20-DEC-06, 11:02:30 / SJohnson

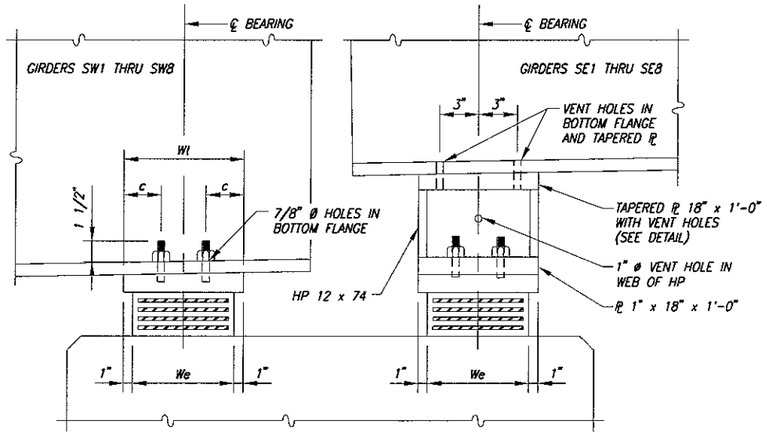

ELEVATION

BEARING ASSEMBLY AT PIER 2 – EASTBOUND

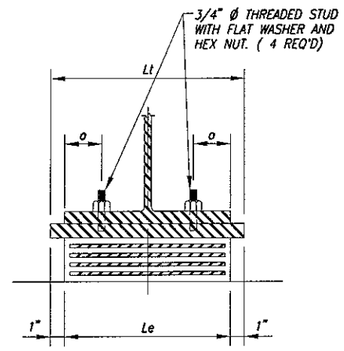

SECTION SW1 THRU SW8

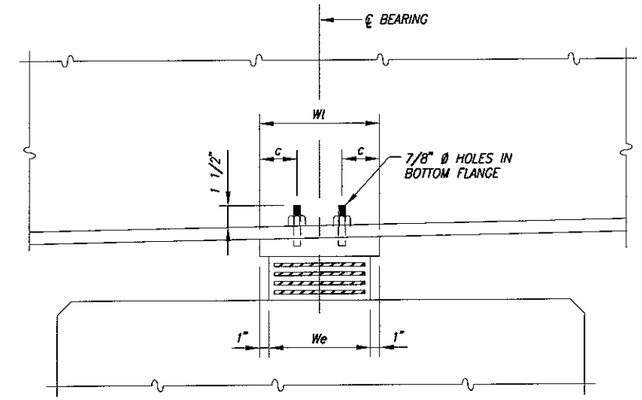

ELEVATION

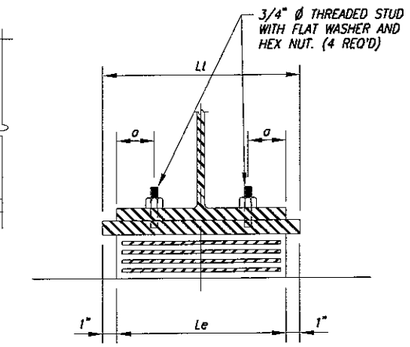

SECTION

BEARING ASSEMBLY AT ALL PIERS EXCEPT PIER 2 – EASTBOUND

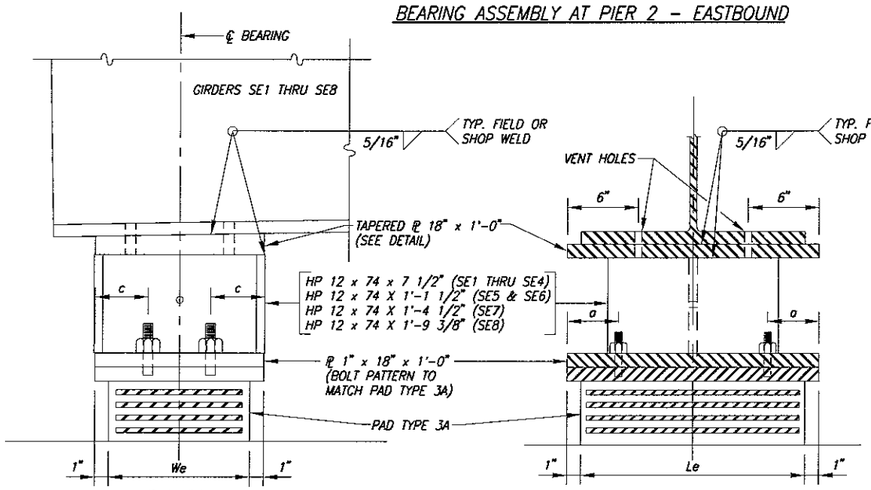

ELEVATION

SECTION – SE1 THRU SE8

BEARING ASSEMBLY WITH BOLSTER AT PIER 2 – EASTBOUND, GIRDERS SE1 THRU SE8

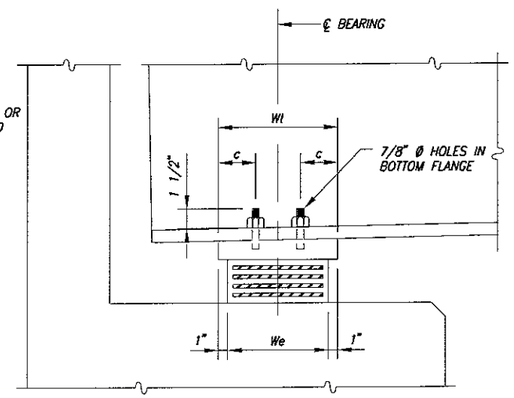

ELEVATION

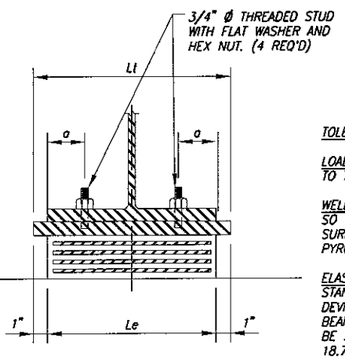

SECTION

BEARING ASSEMBLY AT ABUTMENTS

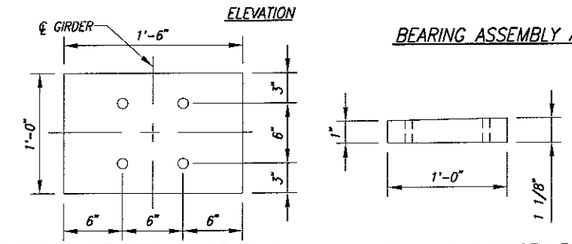

TAPERED PLATE DETAIL – AT PIER 2 – EASTBOUDN GIRDERS SE1 THRU SE8

BEARING NOTES

TOLERANCES: INDIVIDUAL ELASTOMER LAYER THICKNESS: ±20% OF DESIGN VALUE.

LOAD PLATE: THE STEEL LOAD PLATE SHALL BE BONDED BY VULCANIZATION TO THE ELASTOMER DURING THE MOLDING PROCESS.

WELDING: CONTROL WELDING OF THE LOAD PLATE TO THE SUPERSTRUCTURE SO THAT THE PLATE TEMPERATURE AT THE ELASTOMER BONDED SURFACE SHALL NOT EXCEED 300°F AS DETERMINED BY THE USE OF PYROMETRIC STICKS OR OTHER TEMPERATURE MONITORING DEVICES.

ELASTOMERIC BEARINGS SHALL COMPLY WITH ITEM 516 AND AASHTO STANDARD SPECIFICATION FOR HIGHWAY BRIDGES, SECTION 18, BEARING DEVICES, DIVISION II, CONSTRUCTION, ARTICLES 18.4.5.1 AND 18.5.6.2. BEARINGS SHALL BE GRADE 3, 60 DUROMETER ELASTOMER, AND SHALL BE BE SUBJECTED TO THE LOAD TESTING REQUIREMENTS DEFINED IN ARTICLE 18.7.4.5 OF THE AASHTO DOCUMENT LISTED ABOVE. BEARINGS WERE DESIGNED UNDER SECTION 14.6.6 OF SECTION 14, BEARINGS, DIVISION 1, DESIGN. TESTING SHALL BE INCLUDED IN THE UNIT PRICE BID FOR THE BEARINGS, EACH.

BEARING REPOSITIONING: IF THE DECK CONCRETE IS PLACED AT AN AMBIENT TEMPERATURE HIGHER THAN 80°F OR LOWER THAN 40°F, AND THE BEARING SHEAR DEFLECTION EXCEEDS 1/6 OF THE BEARING HEIGHT AT 60°F ± 10°F, RAISE THE GIRDERS TO ALLOW THE BEARINGS TO RETURN TO THEIR UNDEFORMED SHAPE AT 60° ± 10°F.

STEEL DESIGNATION: THE STEEL LOAD PLATE AND THE HP SHAPE SHALL BE ASTM A709 GR.50.

FINISH TOP OF LOAD PLATE PARALLEL TO ROADWAY GRADE.

ALL BEARINGS SHALL BE IDENTIFIED BY THE BEARING MANUFACTURER BY STEEL STAMPING THE APPROPRIATE ABUTMENT OR PIER NUMBERS AND GIRDER LINE ON THE EDGE OF THE BEARINGS LOAD PLATE OR BY SOME OTHER APPROVED TYPE OF DESIGNATION.

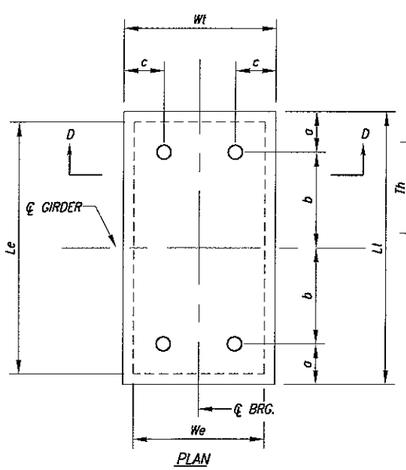

PLAN

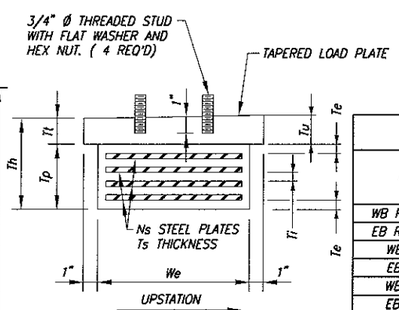

SECTION D–D

NOTE: Tu IS THE UPSTATION TAPERED LOAD PLATE THICKNESS.

ELASTOMERIC BEARING PAD

LAMINATED ELASTOMERIC BEARING DATA

LOCATION	GIRDERS	BEARING TYPE	NO. REQUIRED	Le (IN)	We (IN)	Tp (IN)	Ns (IN)	Th (IN)	Ti (IN)	Ts (IN)	Te (IN)	Lt (IN)	Tt (IN)	Tu (IN)	Wt (IN)	a (IN)	b (IN)	c (IN)	d (IN)	DEAD LOAD (KIPS)	LIVE LOAD (KIPS)	TOTAL LOAD (KIPS)
WB REAR ABUTMENT	WG1 THRU WG 7	1	7	12	12	3 3/32	5	4 19/32	1/2	3/32	5/16	14	1 1/2	1 13/16	14	3	4	2	10	47.3	62.5	109.8
EB REAR ABUTMENT	SW1 THRU SW8	1	8	12	12	3 3/32	5	4 19/32	1/2	3/32	5/16	14	1 1/2	1 13/16	14	3	4	2	10	43.2	66.2	109.4
WB PIER No. 1	WG1 THRU WG7	2	7	18	18	2 1/32	3	3 21/32	9/16	3/32	5/16	20	1 5/8	2	20	3	7	2	16	198.8	89.4	288.2
EB PIER No. 1	SW1 THRU SW8	2	8	18	18	2 1/32	3	3 21/32	9/16	3/32	5/16	20	1 5/8	2	20	3	7	2	16	230.0	95.4	325.2
WB PIER No. 2	WG1 THRU WG7	2	7	18	18	2 1/32	3	3 21/32	9/16	3/32	5/16	20	1 5/8	1 15/16	20	3	7	2	16	198.6	95.5	294.1
EB PIER No. 2	SW1 THRU SW8	3A	8	16	10	2 3/16	4	3 11/16	7/16	3/32	1/4	18	1 1/2	1 11/16	12	5	4	3	6	74.0	63.9	137.9
EB PIER No. 2	SE1 THRU SE8	3A	8	16	10	2 3/16	4	3 11/16	7/16	3/32	1/4	18	1 1/2	1 1/2	12	5	4	3	6	34.3	63.9	98.2
WB PIER No. 3	WG1 THRU WG7	2	7	18	18	2 1/32	3	3 21/32	9/16	3/32	5/16	20	1 5/8	1 13/16	20	3	7	2	16	184.4	99.5	283.9
EB PIER No. 3	SE1 THRU SE4	2	4	18	18	2 1/32	3	3 21/32	9/16	3/32	5/16	20	1 5/8	1 13/16	20	3	7	2	16	138.1	77.4	215.5
EB PIER No. 3	SE5 THRU SE8	3B	4	16	10	2 3/16	4	3 15/16	7/16	3/32	1/4	18	1 3/4	1 15/16	12	5	4	2	8	86.3	73.2	159.5
WB PIER No. 4	WG1 THRU WG7	4	7	18	16	3 3/32	5	4 27/32	1/2	3/32	5/16	20	1 3/4	1 13/16	18	3	7	2	14	188.4	87.8	276.2
EB PIER No. 4	SE1 THRU SE8	4	8	18	16	3 3/32	5	4 27/32	1/2	3/32	5/16	20	1 3/4	1 7/8	18	3	7	2	14	158.5	81.8	240.3
WB FORWARD ABUTMENT	WG1 THRU WG7	1	7	12	12	3 3/32	5	4 19/32	1/2	3/32	5/16	14	1 1/2	1 1/2	14	3	4	2	10	43.1	61.1	104.2
EB FORWARD ABUTMENT	SE1 THRU SE8	1	8	12	12	3 3/32	5	4 19/32	1/2	3/32	5/16	14	1 1/2	1 1/2	14	3	4	2	10	51.4	64.8	116.2

PREPARED BY: R.W. ARMSTRONG & ASSOCIATES
471 EAST BROAD STREET, SUITE 2010
COLUMBUS, OH 43215
OFFICE (614) 225-8868 FAX (614) 225-8869

DESIGNED	DRAWN	REVIEWED	DATE
MHZ	SLO	PAR	12/22/06
CHECKED	REVISED	STRUCTURE FILE NUMBER	
LAK		5760569	

ELASTOMERIC BEARING DETAILS
BRIDGE No. DAY-XWAY-00.79
DAYTON EXPRESSWAY OVER KEONEE STREET AND CSXT RAILROAD

MOT-XWAY
PID NO. 77774

IMAGE FILES : NONE
XREFERENCES : XR-DAY-XWAY-TITBLK;
FILE NAME : P:\Transportation\20053370 Dayton Expressway 3\30 Sheet Drawings\20 Singles\BEARING DTLS.dwg / Layout1
MRD\WT : 13-FEB-07, 13:34:42 / sschickel

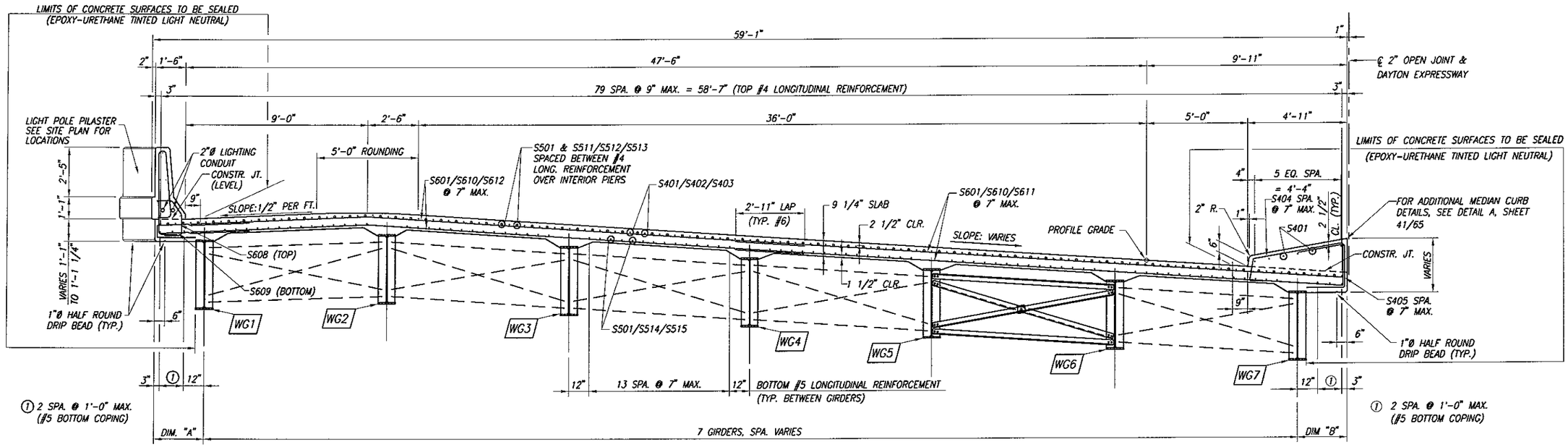

WESTBOUND TRANSVERSE SECTION

(NORMAL TO THE ℄ DAYTON EXPRESSWAY)

SLAB CANTILEVERS

DIMENSIONS	℄ BRG. REAR ABUT.	.25	.50	℄ FIELD SPLICE #1	.75	℄ BRG. PIER #1	.25	℄ FIELD SPLICE #2	.50	.75	℄ FIELD SPLICE #3	℄ BRG. PIER #2	.25	℄ FIELD SPLICE #4	.50	℄ FIELD SPLICE #5	.75
"A"	2'-5 1/2"	2'-5 1/8"	2'-4"	2'-2 5/8"	2'-2"	2'-6 1/2"	2'-9"	2'-7"	2'-2 1/4"	2'-1 7/8"	2'-6 1/4"	2'-7 3/4"	2'-7 7/8"	2'-8 1/4"	2'-5"	2'-5"
"B"	2'-5"	2'-4 1/2"	2'-4 7/8"	2'-5 3/8"	2'-6 3/8"	2'-3 1/2"	2'-6 1/4"	2'-5 3/8"	2'-4 3/4"	2'-5 5/8"	2'-9 1/2"	2'-7 1/2"	2'-9 1/4"	2'-8 1/4"	---	2'-7"

SLAB CANTILEVERS

DIMENSIONS	℄ BRG. PIER #3	℄ FIELD SPLICE #6	.25	.50	.75	℄ FIELD SPLICE #7	℄ BRG. PIER #4	.25	℄ FIELD SPLICE #8	.50	.75	℄ BRG. FWD. ABUT.
"A"	2'-6 7/8"	2'-5 1/8"	2'-5 1/4"	2'-9"	2'-8 7/8"	2'-8 1/2"	2'-9 1/8"	2'-8"	2'-6 5/8"	2'-7"	2'-6 7/8"	2'-5 1/2"
"B"	2'-6 1/8"	2'-6 3/4"	2'-6 1/8"	2'-5 1/2"	2'-7"	2'-7 1/8"	2'-4 1/2"	2'-3 3/4"	2'-3 7/8"	2'-3 1/4"	2'-3 5/8"	2'-5 3/8"

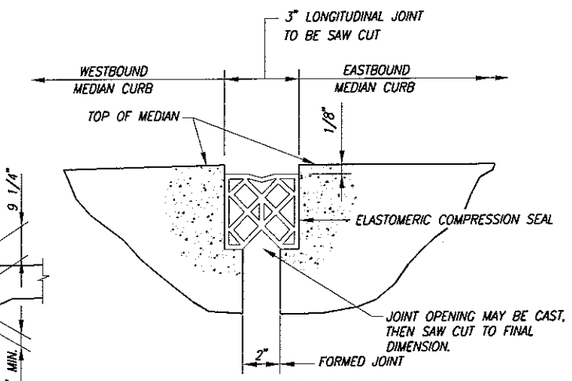

LONGITUDINAL JOINT DETAIL

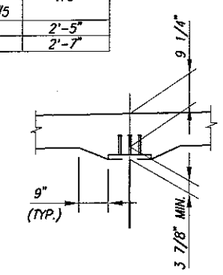

TYPICAL HAUNCH

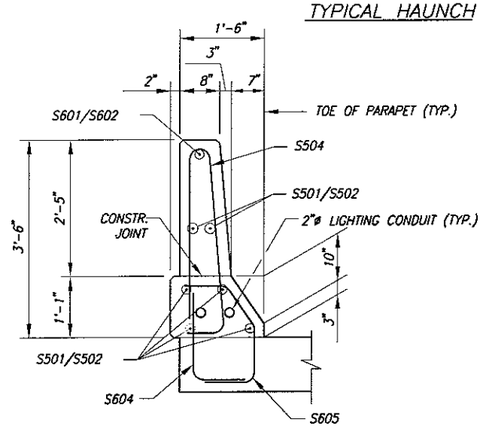

TYPICAL DEFLECTOR PARAPET DETAIL

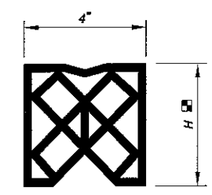

COMPRESSION SEAL DETAIL

■ SEE THE MANUFACTURER'S CATALOGUE FOR THE SEAL ACTUALLY CHOSEN FOR USE.

COMPRESSION SEAL: FURNISH MATERIAL CONFORMING TO 705.11. THE SEAL CONFIGURATION SHOULD BE SIMILAR TO THE DETAILS SHOWN HEREIN.

ACCEPTED MANUFACTURERS ARE: D.S. BROWN (MODEL CV4000), WATSON-BOWMAN-ACME (MODEL WJ400),

INSTALL THE SEAL ACCORDING TO THE MANUFACTURER'S SPECIFICATIONS AND UNDER THE SUPERVISION OF THE MANUFACTURER'S DESIGNATED REPRESENTATIVE.

JOINTS IN COMPRESSION SEALS: FURNISH SEALS IN ONE CONTINUOUS PIECE UNLESS OTHERWISE APPROVED BY THE ENGINEER.

NOTES

1. DECK SLAB CONCRETE QUANTITY:

THE ESTIMATED QUANTITY OF DECK SLAB CONCRETE IS BASED ON THE CONSTANT DECK SLAB THICKNESS, AS SHOWN, PLUS THE QUANTITY OF CONCRETE THAT FORMS EACH BEAM/GIRDER HAUNCH. THE ESTIMATE ASSUMES AN AVERAGE HAUNCH THICKNESS OF 3 7/8 INCHES AND A CONSTANT HAUNCH WIDTH OUTSIDE THE EDGE OF EACH BEAM/GIRDER FLANGE OF 9 INCHES. DEVIATE FROM THIS HAUNCH THICKNESS AS NECESSARY TO PLACE THE DECK SURFACE AT THE FINISHED GRADE. THE ALLOWABLE TOLERANCE FOR THE HAUNCH WIDTH OUTSIDE THE EDGE OF EACH BEAM/GIRDER FLANGE IS +/- 3 INCHES.

THE HAUNCH THICKNESS WAS MEASURED AT THE CENTERLINE OF THE BEAM/GIRDER, FROM THE SURFACE OF THE DECK TO THE BOTTOM OF THE TOP FLANGE MINUS THE DECK SLAB THICKNESS. THE AREA OF ALL EMBEDDED STEEL PLATES HAS BEEN DEDUCTED FROM THE HAUNCH QUANTITY IN ACCORDANCE WITH 511.24.

2. THE SLAB THICKNESS INCLUDES A 1" MONOLITHIC WEARING SURFACE.

3. FOR GENERAL NOTES SEE SHEET 2/65.

4. ALL REINFORCEMENT TO BE EPOXY COATED.

5. FOR LIGHT POLE BASE DETAILS SEE STANDARD DRAWING HL-10.13 POLE BASE DETAILS.

6. FOR EASTBOUND REINFORCEMENT PLAN SEE SHEETS 44/65 AND 45/65.

7. FOR EASTBOUND TRANSVERSE SECTION SEE SHEET 41/65.

8. FOR WESTBOUND REINFORCEMENT PLAN SEE SHEETS 42/65 AND 43/65.

9. FOR SCUPPER DOWN SPOUT DETAILS SEE SHEETS 48/65 AND 49/65.

10. WELDED ATTACHMENT OF SUPPORTS FOR CONCRETE DECK FINISHING MACHINE MAY BE MADE TO AREA OF THE FASCIA STRINGER FLANGES DESIGNATED "COMPRESSION". ATTACHMENTS SHALL NOT BE MADE TO AREAS DESIGNATED "TENSION". FILLET WELDS TO COMPRESSION FLANGES SHALL BE NOT CLOSER THAN 1 INCH FROM EDGE OF FLANGE, BE NOT MORE THAN 2 INCHES LONG, AND BE NOT SMALLER THAN THE MINIMUM SIZE REQUIRED BY AWS D1.5.

11. FOR REINFORCING BAR SCHEDULE SEE SHEET 62/65.

12. FOR TYPICAL PARAPET WALL DETAILS SEE SHEETS 54/65 AND 55/65.

13. STAY-IN-PLACE FORMS ARE NOT PERMITTED.

13. FOR SUPERELEVATION TRANSITION INFORMATION, SEE ROADWAY PLANS.

LAP LENGTHS

#4	2'-0"
#5	2'-5"
#6	2'-11"
#7	3'-8"

PREPARED BY
R.W. ARMSTRONG & ASSOCIATES
471 EAST BROAD STREET, SUITE 2010
COLUMBUS, OH 43215
OFFICE (614) 225-8868 FAX (614) 225-8869

DATE	REVIEWED	DRAWN	DESIGNED
12/22/06	PAR	SLO	LAK
STRUCTURE FILE NUMBER	REVISED		CHECKED
5760569			MHZ

SUPERSTRUCTURE DETAILS 1 OF 6
BRIDGE No. DAY-XWAY-00.79
DAYTON EXPRESSWAY OVER KEDWEE STREET AND CSXT RAILROAD

MOT-XWAY
PID NO. 77774

IMAGE FILES : NONE
XREFERENCES : XR-DAY-XWAY-TITBLK;
FILE NAME : S:\Transportation\2005\3370 Dayton Expressway 3\30 SheetDrawings\20 Singles\Superstr-1.dwg / Layout1
WRD/WAT : 13-Feb-07, 11:59:07 / Schmidt

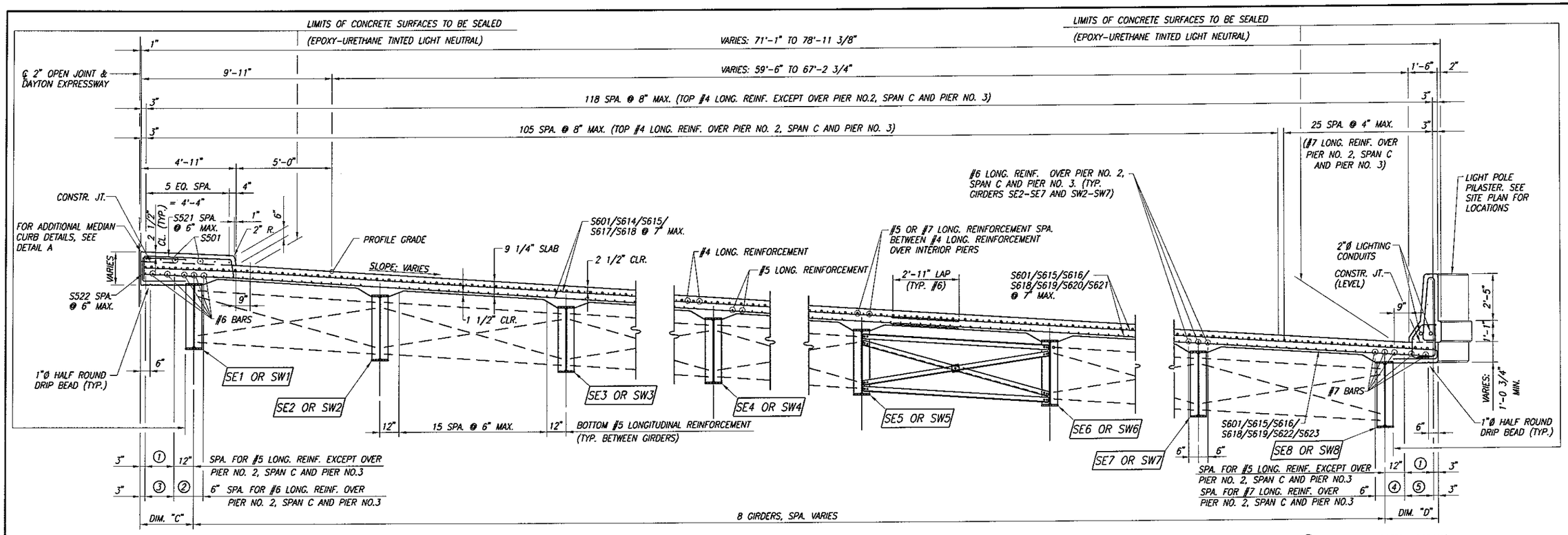

① 2 EQ. SPA. (BOTTOM COPING)
② 2 SPA. @ 6" (BOTTOM COPING)
③ 4 EQ. SPA. (BOTTOM COPING)

① 2 EQ. SPA. (BOTTOM COPING)
④ 2 SPA. @ 6" (BOTTOM COPING)
⑤ 4 EQ. SPA. (BOTTOM COPING)

EASTBOUND TRANSVERSE SECTION
(NORMAL TO THE ℄ DAYTON EXPRESSWAY)

SLAB CANTILEVERS														
DIMENSIONS	℄ BRG. REAR ABUT.	.25	.50	℄ FIELD SPLICE #1	.75	℄ BRG. PIER #1	.25	℄ FIELD SPLICE #2	.50	.75	℄ BRG. PIER #2	.25	.50	℄ FIELD SPLICE #3	.75
"C"	2'-0"	1'-11 1/4"	1'-9 1/2"	1'-9"	2'-0 1/2"	2'-4 1/8"	2'-7"	2'-7 1/8"	2'-9"	2'-7 1/2"	2'-3 1/2"	2'-5 3/8"	2'-7 3/4"	2'-8 1/4"	2'-8 3/8"
DIMENSIONS	℄ BRG. REAR ABUT.	.25	.50	℄ FIELD SPLICE #1	.75	℄ BRG. PIER #1	℄ FIELD SPLICE #2	.25	.50	.75	℄ BRG. PIER #2	.25	.50		.75
"D"	2'-0"	2'-0 5/8"	2'-2 7/8"	2'-3 1/8"	2'-1 7/8"	2'-2 1/8"	2'-4 3/4"	2'-3 5/8"	1'-11 3/8"	1'-10 1/4"	2'-4 3/4"	2'-4 1/2"	2'-4 3/8"		2'-4 1/2"

SLAB CANTILEVERS													
DIMENSIONS	℄ BRG. PIER #3	℄ FIELD SPLICE #4	.25	.50	℄ FIELD SPLICE #5	.75	℄ BRG. PIER #4	.25	℄ FIELD SPLICE #6	.50	.75	℄ BRG. FWD. ABUT.
"C"	2'-9"	2'-7 7/8"	2'-7 7/8"	2'-6 5/8"	2'-3 3/8"	2'-3 3/8"	2'-6 3/8"	2'-7 1/8"	2'-7 1/8"	2'-7 3/4"	2'-6 7/8"	2'-4 7/8"
DIMENSIONS	℄ BRG. PIER #3		.25	.50	℄ FIELD SPLICE #3	.75	℄ BRG. PIER #4	.25	℄ FIELD SPLICE #4	.50	.75	℄ BRG. FWD. ABUT.
"D"	2'-4 5/8"		2'-6 1/8"	2'-9 1/2"	2'-9 7/8"	2'-7 1/4"	2'-5 7/8"	2'-7"	2'-6 7/8"	2'-3 3/8"	2'-3"	2'-5 3/4"

1. DECK SLAB CONCRETE QUANTITY:

THE ESTIMATED QUANTITY OF DECK SLAB CONCRETE IS BASED ON THE CONSTANT DECK SLAB THICKNESS, AS SHOWN, PLUS THE QUANTITY OF CONCRETE THAT FORMS EACH BEAM/GIRDER HAUNCH. THE ESTIMATE ASSUMES AN AVERAGE HAUNCH THICKNESS OF 3 7/8 INCHES AND A CONSTANT HAUNCH WIDTH OUTSIDE THE EDGE OF EACH BEAM/GIRDER FLANGE OF 9 INCHES. DEVIATE FROM THIS HAUNCH THICKNESS AS NECESSARY TO PLACE THE DECK SURFACE AT THE FINISHED GRADE. THE ALLOWABLE TOLERANCE FOR THE HAUNCH WIDTH OUTSIDE THE EDGE OF EACH BEAM/GIRDER FLANGE IS +/- 3 INCHES.

THE HAUNCH THICKNESS WAS MEASURED AT THE CENTERLINE OF THE BEAM/GIRDER, FROM THE SURFACE OF THE DECK TO THE BOTTOM OF THE TOP FLANGE MINUS THE DECK SLAB THICKNESS. THE AREA OF ALL EMBEDDED STEEL PLATES HAS BEEN DEDUCTED FROM THE HAUNCH QUANTITY IN ACCORDANCE WITH 511.24.

2. THE SLAB THICKNESS INCLUDES A 1" MONOLITHIC WEARING SURFACE.

3. FOR GENERAL NOTES SEE SHEET 2/65.

4. ALL REINFORCEMENT TO BE EPOXY COATED.

5. FOR LIGHT POLE BASE DETAILS SEE STANDARD DRAWING HL-10.13 POLE BASE DETAILS.

6. FOR WESTBOUND REINFORCEMENT PLAN SEE SHEET 42/65 AND 43/65.

7. FOR WESTBOUND TRANSVERSE SECTION SEE SHEET 40/65.

8. FOR EASTBOUND REINFORCEMENT PLAN SEE SHEETS 44/65 AND 45/65.

9. FOR SCUPPER DOWN SPOUT DETAILS SEE SHEETS 48/65 AND 49/65.

10. WELDED ATTACHMENT OF SUPPORTS FOR CONCRETE DECK FINISHING MACHINE MAY BE MADE TO AREA OF THE FASCIA STRINGER FLANGES DESIGNATED "COMPRESSION". ATTACHMENTS SHALL NOT BE MADE TO AREAS DESIGNATED "TENSION". FILLET WELDS TO COMPRESSION FLANGES SHALL BE NOT CLOSER THAN 1 INCH FROM EDGE OF FLANGE, BE NOT MORE THAN 2 INCHES LONG, AND BE NOT SMALLER THAN THE MINIMUM SIZE REQUIRED BY AWS D1.5.

11. FOR REINFORCING BAR SCHEDULE SEE SHEET 62/65.

12. FOR TYPICAL PARAPET WALL DETAILS SEE SHEET 54/65 AND 55/65.

13. FOR LONGITUDINAL JOINT DETAILS SEE SHEET 40/65.

14. STAY-IN-PLACE FORMS ARE NOT PERMITTED.

15. FOR SUPERELEVATION TRANSITION INFORMATION, SEE ROADWAY PLANS.

LAP LENGTHS

#4	2'-0"	#6	2'-11"
#5	2'-5"	#7	3'-8"

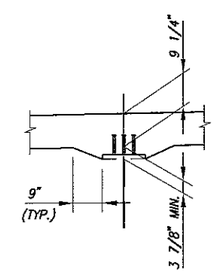

TYPICAL HAUNCH

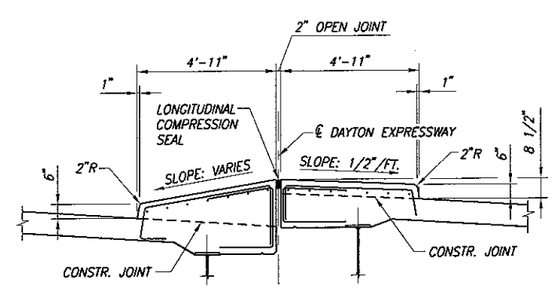

DETAIL "A"

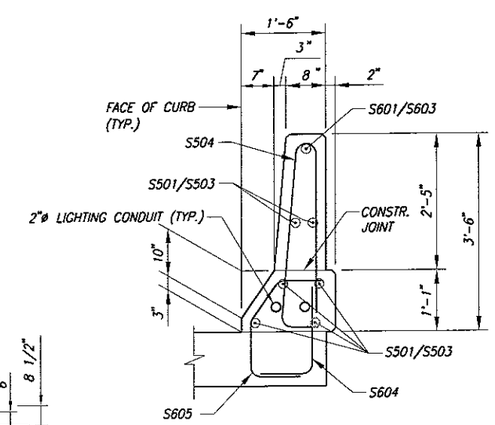

TYPICAL DEFLECTOR PARAPET DETAIL

IMAGE FILES
WORKING DIRECTORY: P:\Transportation\20053370 Dayton Expressway 3\30 SheetDrawings\20 Singles\Superstr-2.dwg / Layout1
FILE NAME: MRD\INT
12-FEB-07, 17:12:57 / sachicket
NONE
MOT-XWAY-XWAY-TITBLK;

PREPARED BY:
R.W. ARMSTRONG & ASSOCIATES
471 EAST BROAD STREET, SUITE 2010
COLUMBUS, OH 43215
OFFICE: (614) 225-8868 FAX: (614) 225-8869

DESIGNED	DRAWN	REVIEWED	DATE
LAK	SLO	PAR	12/22/06
CHECKED	REVISED	STRUCTURE FILE NUMBER	
MHZ		5780569	

SUPERSTRUCTURE DETAILS 2 OF 6
BRIDGE No. DAY-XWAY-00.79
DAYTON EXPRESSWAY OVER KEONEE STREET AND CSXT RAILROAD

MOT-XWAY
PID NO. 77774

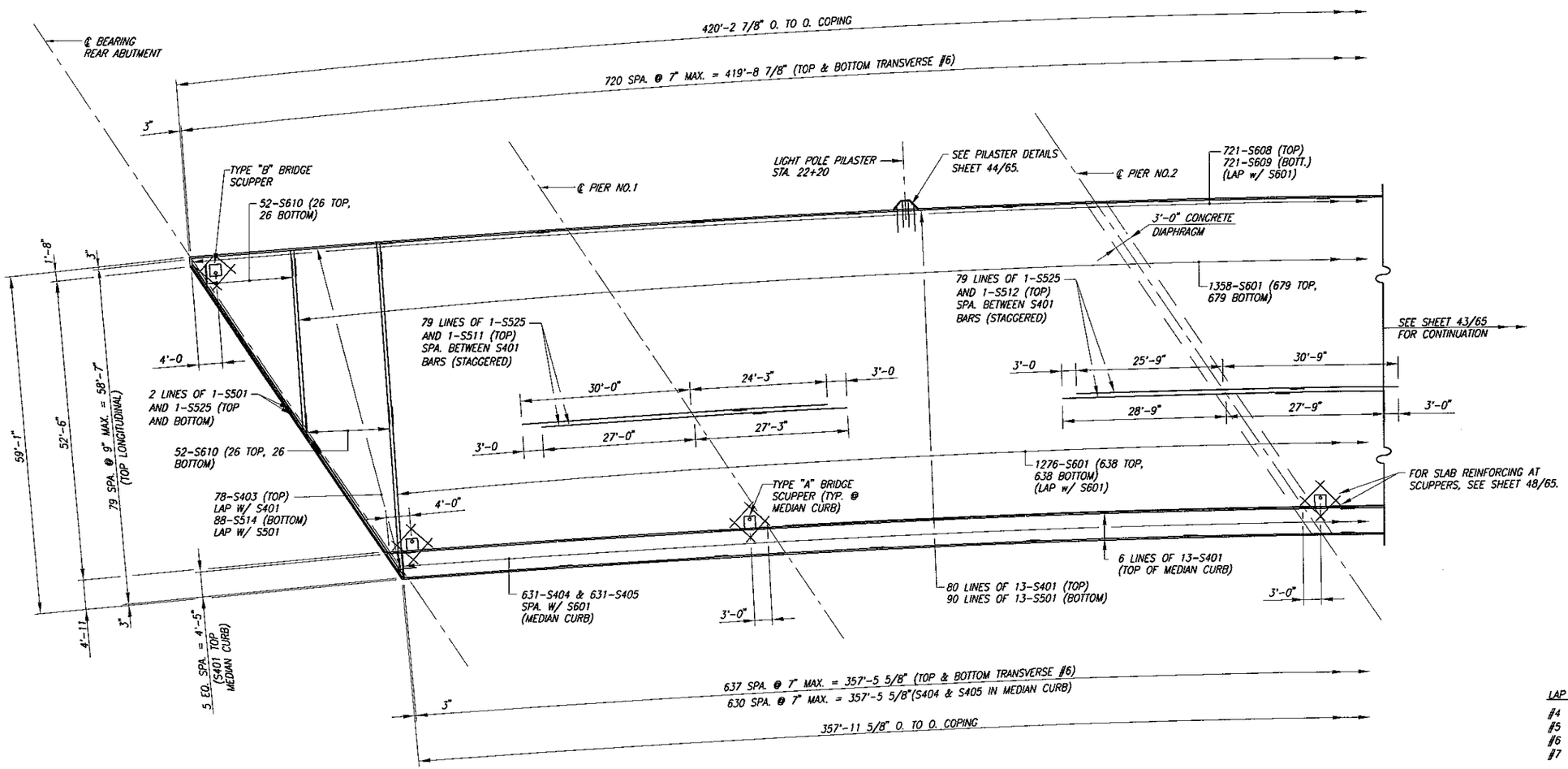

HALF WESTBOUND SLAB REINFORCEMENT PLAN

LAP LENGTHS

#4	2'-0"
#5	2'-5"
#6	2'-11"
#7	3'-8"

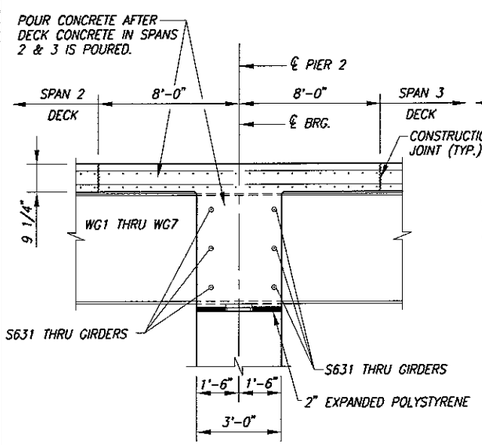

SECTION A-A

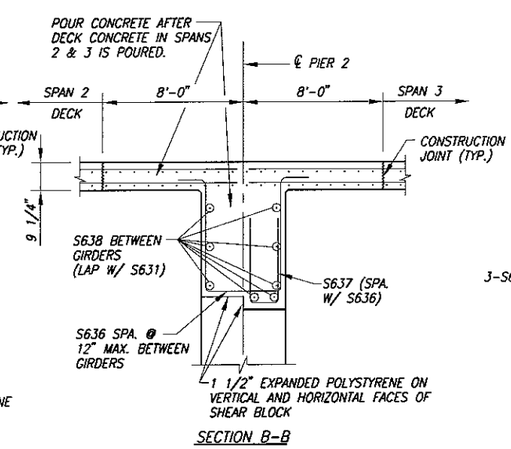

SECTION B-B

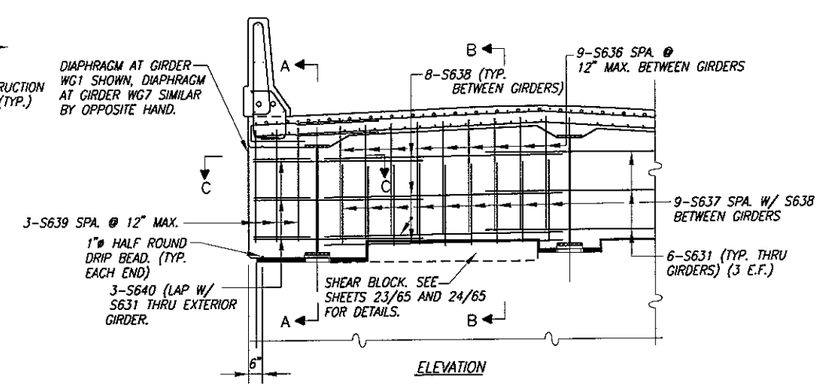

ELEVATION

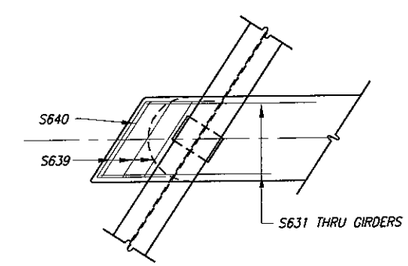

SECTION C-C

PIER No. 2 DIAPHRAGM DETAILS

NOTES:

1. ALL REINFORCEMENT TO BE EPOXY COATED.
2. FOR LIGHT POLE BASE DETAILS SEE STANDARD DRAWING HL-10.13 POLE BASE DETAILS.
3. FOR WESTBOUND LANES TRANSVERSE SECTION SEE SHEET 40/65.
4. FOR TYPE "A" AND "B" BRIDGE SCUPPERS SEE SHEET 48/65.
5. FOR ADDITIONAL SUPERSTRUCTURE PARAPET REINFORCING SEE SHEET 54/65.

PREPARED BY: R.W. ARMSTRONG & ASSOCIATES
471 EAST BROAD STREET, SUITE 2010
COLUMBUS, OH 43215
OFFICE (614) 225-8868 FAX (614) 225-8869

DESIGNED	DRAWN	REVIEWED	DATE
LAK	SLO	PMR	12/22/06
CHECKED	REVISED	STRUCTURE FILE NUMBER	
MHZ		5780569	

SUPERSTRUCTURE DETAILS 3 OF 6
BRIDGE No. DAY-XWAY-00.79
DAYTON EXPRESSWAY OVER KEOWEE STREET AND CSXT RAILROAD

MOT-XWAY
PID NO. 77774

IMAGE FILES NONE
XREFERENCES NONE
FILE NAME : DAY-XWAY-11BLK
MRD\INT : P:\Transportation\20053370 Dayton Expressway 3\30 Sheet\Drawings\20 Singles\Superstr-3.dwg / Layout1
: 13-FEB-07, 14:03:31 / CPitts

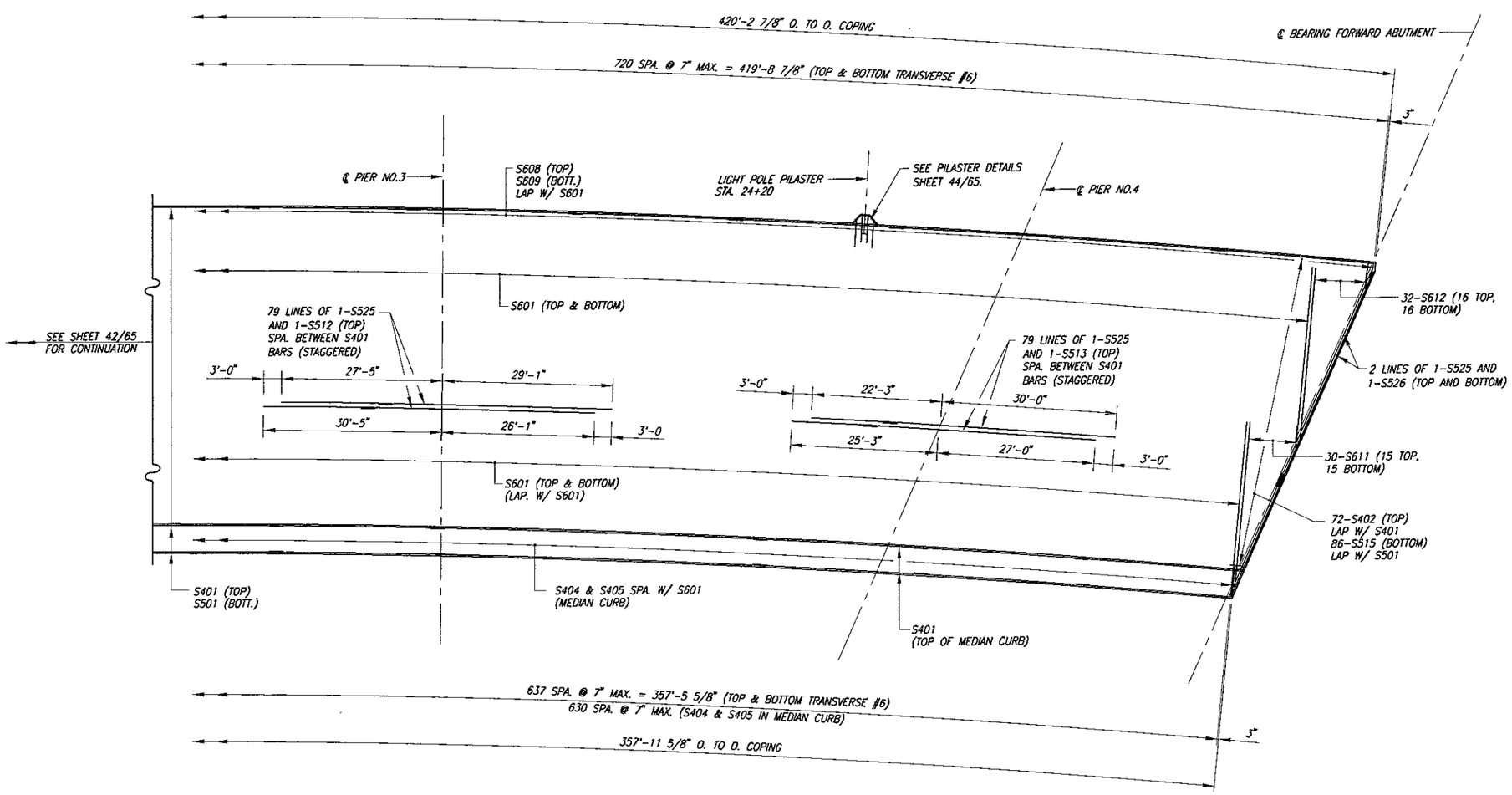

HALF WESTBOUND SLAB REINFORCEMENT PLAN

LAP LENGTHS

#4	2'-0"
#5	2'-5"
#6	2'-11"
#7	3'-8"

NOTES:

1. ALL REINFORCEMENT TO BE EPOXY COATED.
2. FOR LIGHT POLE BASE DETAILS SEE STANDARD DRAWING HL-10.13 POLE BASE DETAILS.
3. FOR WESTBOUND LANES TRANSVERSE SECTION SEE SHEET 40/65.
4. FOR ADDITIONAL SUPERSTRUCTURE PARAPET REINFORCING SEE SHEET 54/65.

PREPARED BY: R.W. ARMSTRONG & ASSOCIATES
471 EAST BROAD STREET, SUITE 2010
COLUMBUS, OH 43215
OFFICE (614) 225-8869 FAX (614) 225-8869

DESIGNED	DRAWN	REVIEWED	DATE
LAK	SLO	PAR	12/22/06
CHECKED	REVISED	STRUCTURE FILE NUMBER	
MHZ		5760569	

SUPERSTRUCTURE DETAILS 4 OF 6
BRIDGE No. DAY-XWAY-00.79
DAYTON EXPRESSWAY OVER KEONEE STREET AND CSXT RAILROAD

MOT-XWAY
PID NO. 77774

IMAGE FILES : NONE
XREF FILES : DAY-XWAY-TITBLK
FILE NAME : P:\Transportation\20053370 Dayton Expressway 3\30 SheetDrawings\20 Singles\Superstr-4.dwg / Layout1
MRD\INT : 11-FEB-07, 13:13:51 / aschicke

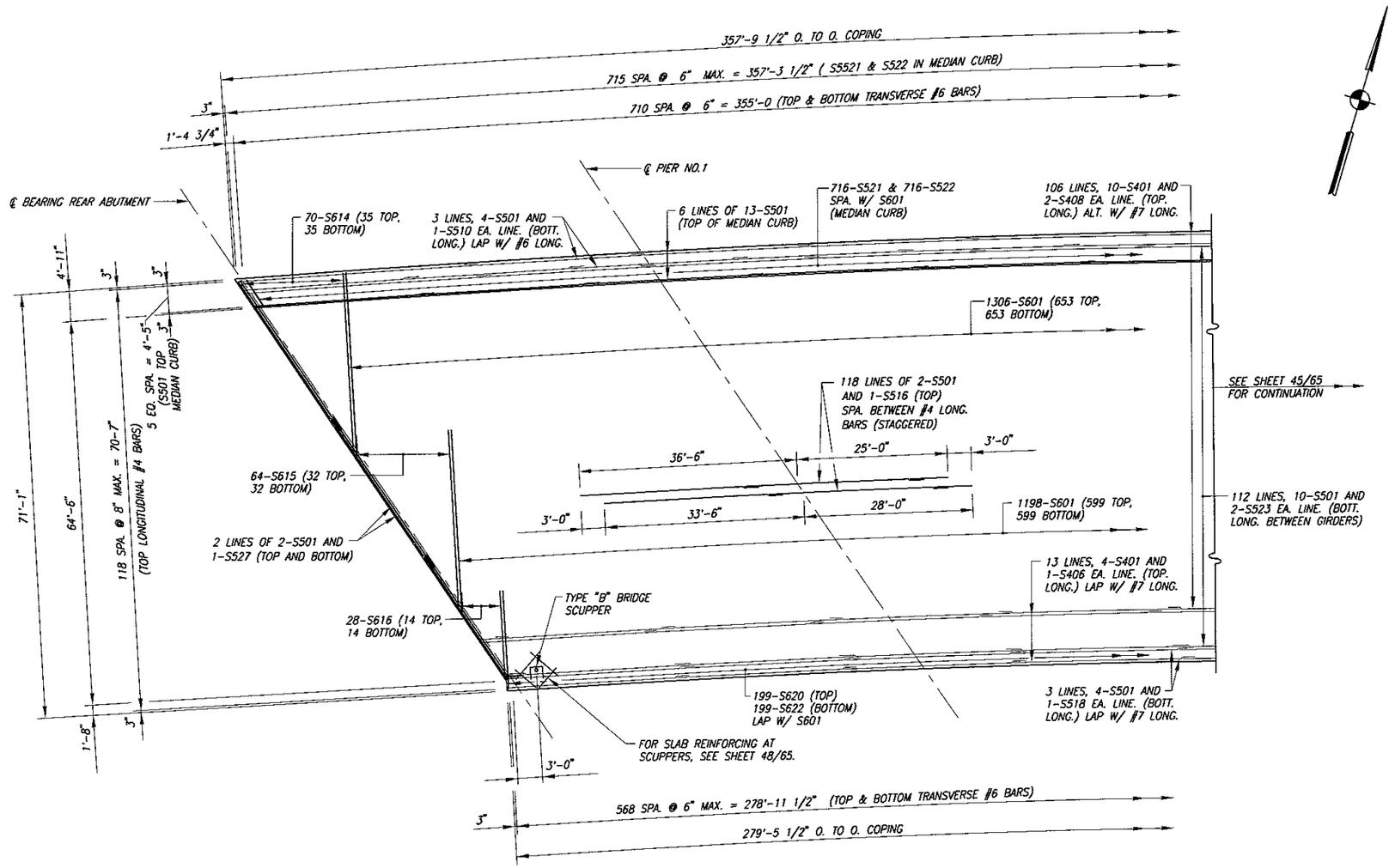

HALF EASTBOUND SLAB REINFORCEMENT PLAN

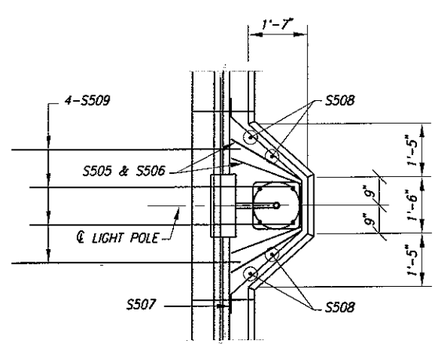

PILASTER PLAN

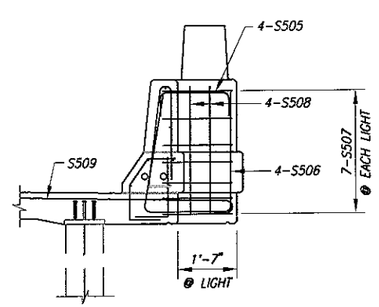

TYPICAL PILASTER SECTION

LAP LENGTHS

#4	2'-0"
#5	2'-5"
#6	2'-11"
#7	3'-8"

NOTES:

1. ALL REINFORCEMENT TO BE EPOXY COATED.
2. FOR LIGHT POLE BASE DETAILS SEE STANDARD DRAWING HL-10.13 POLE BASE DETAILS.
3. FOR EASTBOUND LANES TRANSVERSE SECTION SEE SHEET 41/65.
4. FOR ADDITIONAL SUPERSTRUCTURE PARAPET REINFORCING SEE SHEET 54/65.
5. FOR TYPE "B" SCUPPER DETAILS, SEE SHEET 48/65.

PREPARED BY:
R.W. ARMSTRONG & ASSOCIATES
471 EAST BROAD STREET, SUITE 2010
COLUMBUS, OH 43215
OFFICE (614) 225-8888 FAX (614) 225-8869

DESIGNED	DRAWN	REVIEWED	DATE
LAK	SLO	PAR	12/22/06
CHECKED	REVISED	STRUCTURE FILE NUMBER	
MHZ		5760569	

SUPERSTRUCTURE DETAILS 5 OF 6
BRIDGE No. DAY-XWAY-00.79
DAYTON EXPRESSWAY OVER KEOWEE STREET AND CSXT RAILROAD

MOT-XWAY
PID NO. 77774

IMAGE FILES : NONE
XREFERENCES : XR-DAY-XWAY-TITLE
FILE NAME : P:\Projects\07053370 Dayton Expressway 3\30 Sheet\Drawings\20 Singles\Superstr-5.dwg / Layout1
MRD\WIT : 11-FEB-07, 13:28:40 / sschickel

REINFORCING TABLE

GIRDER	#6 LONG. REINF.
SW2/SE2	3 LINES OF 3-S601 & 1-S624
SW3/SE3	3 LINES OF 3-S601 & 1-S625
SW4/SE4	3 LINES OF 3-S601 & 1-S626
SW5/SE5	3 LINES OF 2-S601 & 1-S627
SW6/SE6	3 LINES OF 2-S601 & 1-S628
SW7/SE7	3 LINES OF 2-S601 & 1-S629

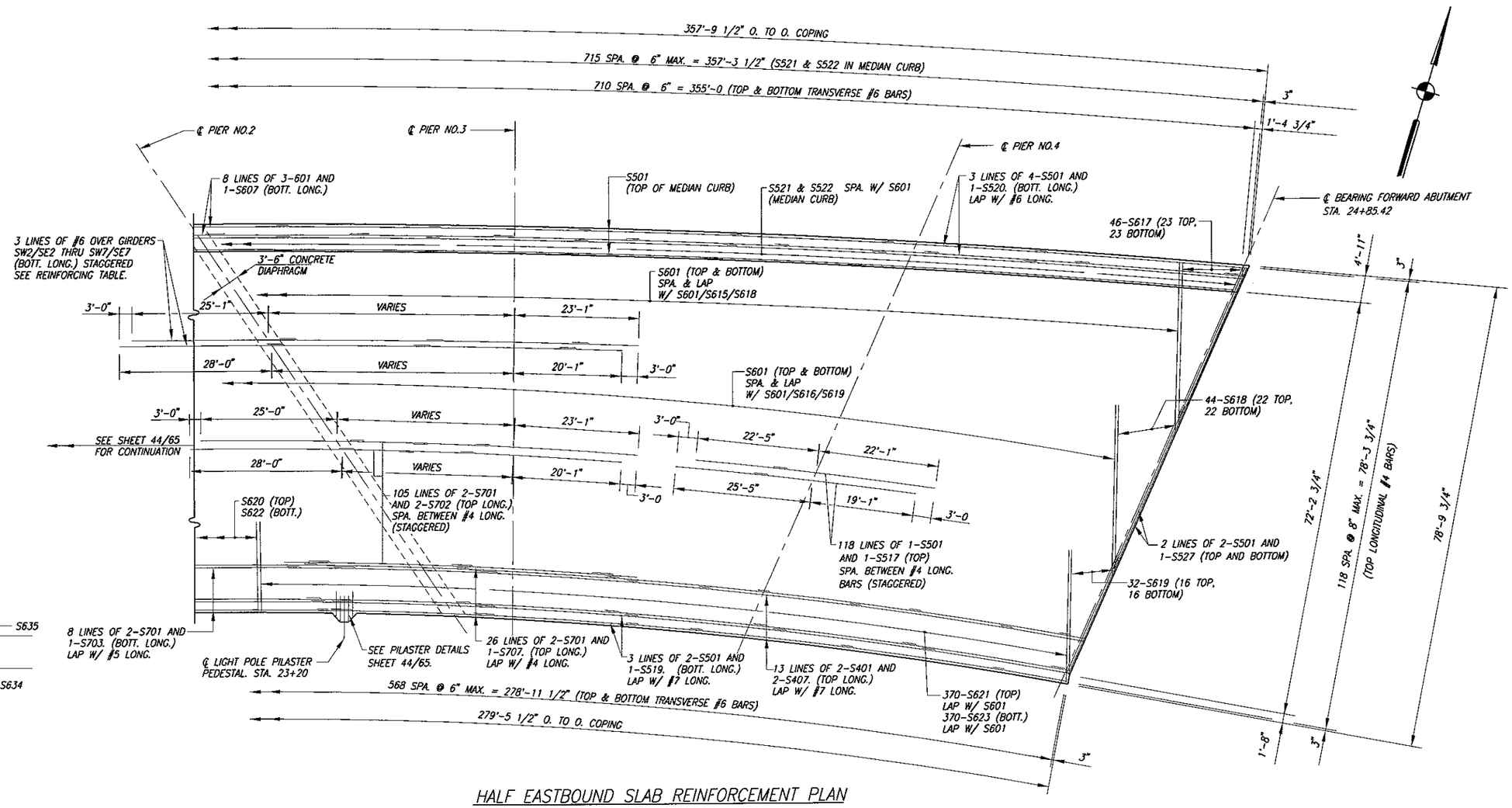

HALF EASTBOUND SLAB REINFORCEMENT PLAN

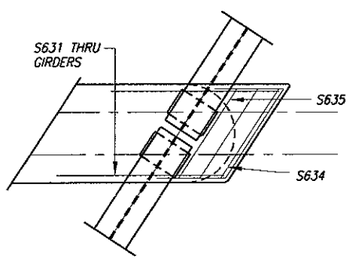

SECTION F-F

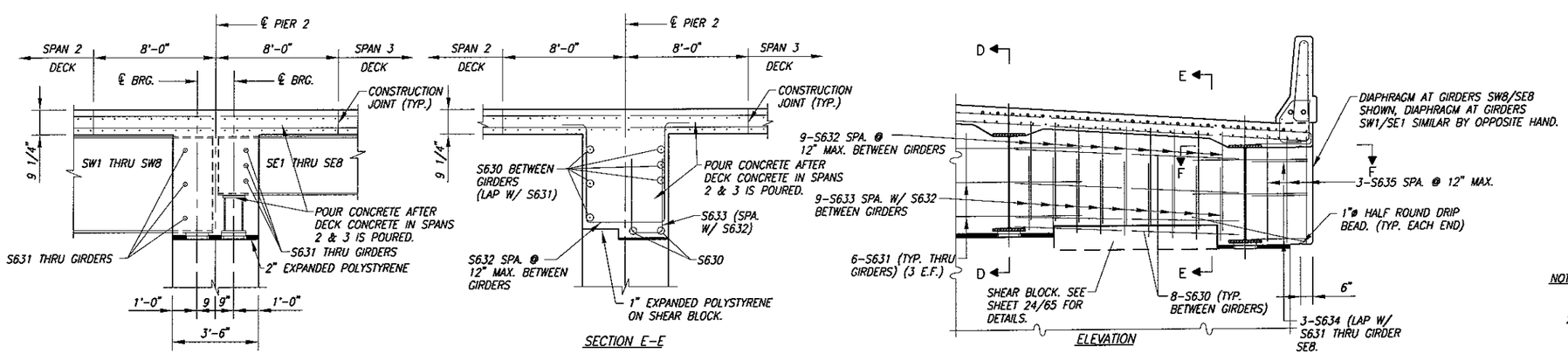

SECTION D-D

SECTION E-E

ELEVATION

PIER No. 2 DIAPHRAGM DETAILS

LAP LENGTHS	
#4	2'-0"
#5	2'-5"
#6	2'-11"
#7	3'-8"

NOTES:

1. ALL REINFORCEMENT TO BE EPOXY COATED.
2. FOR LIGHT POLE BASE DETAILS SEE STANDARD DRAWING HL-10.13 POLE BASE DETAILS.
3. FOR EASTBOUND LANES TRANSVERSE SECTION SEE SHEET 41/65.
4. FOR ADDITIONAL SUPERSTRUCTURE PARAPET REINFORCING SEE SHEET 54/65.

PREPARED BY: R.W. ARMSTRONG & ASSOCIATES
471 EAST BROAD STREET, SUITE 2010
COLUMBUS, OH 43215
OFFICE (614) 225-8868 FAX (614) 225-8869

DESIGNED	DRAWN	REVIEWED	DATE
LAK	SLO	PAR	12/22/06
CHECKED	REVISED	STRUCTURE FILE NUMBER	
MHZ		5760569	

SUPERSTRUCTURE DETAILS 6 OF 6
BRIDGE No. DAY-XWAY-00.79
DAYTON EXPRESSWAY OVER KEOWEE STREET AND CSXT RAILROAD

MOT-XWAY
PID NO. 77774

IMAGE FILES : NONE
XREFERENCES : X0-DAY-XWAY-TITBLK;
FILE NAME : P:\Transportation\20053370 Dayton Expressway 3\30 SheetDrawings\20 Singles\Superstr-6.dwg / Layout1
MRO\VNT : 11-FEB-07, 13:28:15 / sschickel

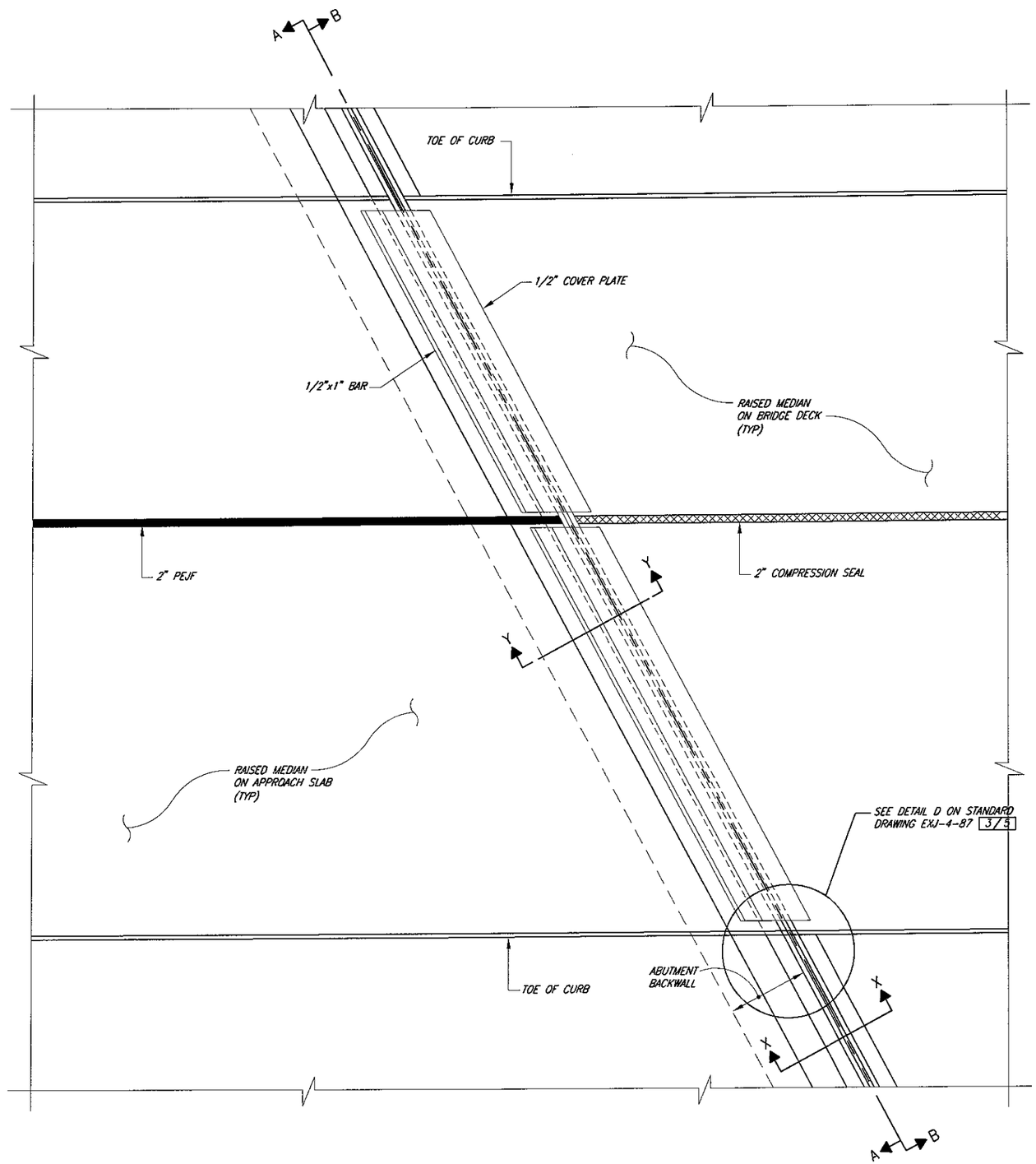

PART MEDIAN PLAN AT ABUTMENT

(FORWARD ABUTMENT SHOWN, REAR ABUTMENT SIMILAR)

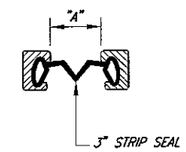

STRIP SEAL DIM. "A" (SEE STD. EXJ-4-87)							
TEMPERATURE	30° F	40° F	50° F	60° F	70° F	80° F	90° F
REAR ABUTMENT	1 15/16"	1 13/16"	1 11/16"	1 5/8"	1 7/16"	1 3/8"	1 1/4"
FORWARD ABUTMENT	1 15/16"	1 13/16"	1 11/16"	1 1/2"	1 3/8"	1 3/16"	1 1/16"

NOTES:

1. FOR SECTION "A-A" AND SECTION "B-B" SEE SHEET 47/65.
2. FOR SECTION "Y-Y" SEE STANDARD EXJ-4-87 SHEET 4/5.
3. FOR SECTION "X-X" SEE STANDARD EXJ-4-87 SHEET 2/5.

PREPARED BY:
R.W. ARMSTRONG & ASSOCIATES
471 EAST BROAD STREET, SUITE 2010
COLUMBUS, OH 43215
OFFICE (614) 225-8869 FAX (614) 225-8869

DESIGNED	DRAWN	REVIEWED	DATE
SRS	CLF	PAR	12/22/06
CHECKED	REVISED	STRUCTURE FILE NUMBER	
TDJ		5760569	

MEDIAN EXPANSION JOINT DETAILS 1 OF 2
BRIDGE No. DAY-XWAY-00.79
DAYTON EXPRESSWAY OVER KEOWEE STREET AND CSXT RAILROAD

MOT-XWAY
PID NO. 77774

IMAGE FILES : NONE
XREFERENCES : XR-DAY-XWAY-TITBLK;
FILE NAME : P:\Transportation\20053370 Dayton Expressway 3\30 Sheets\Drawings\20 Singles\Median-Jt-1.dwg / Layout1
MRD\INT : 12-FEB-07, 16:44:50 / CFatts

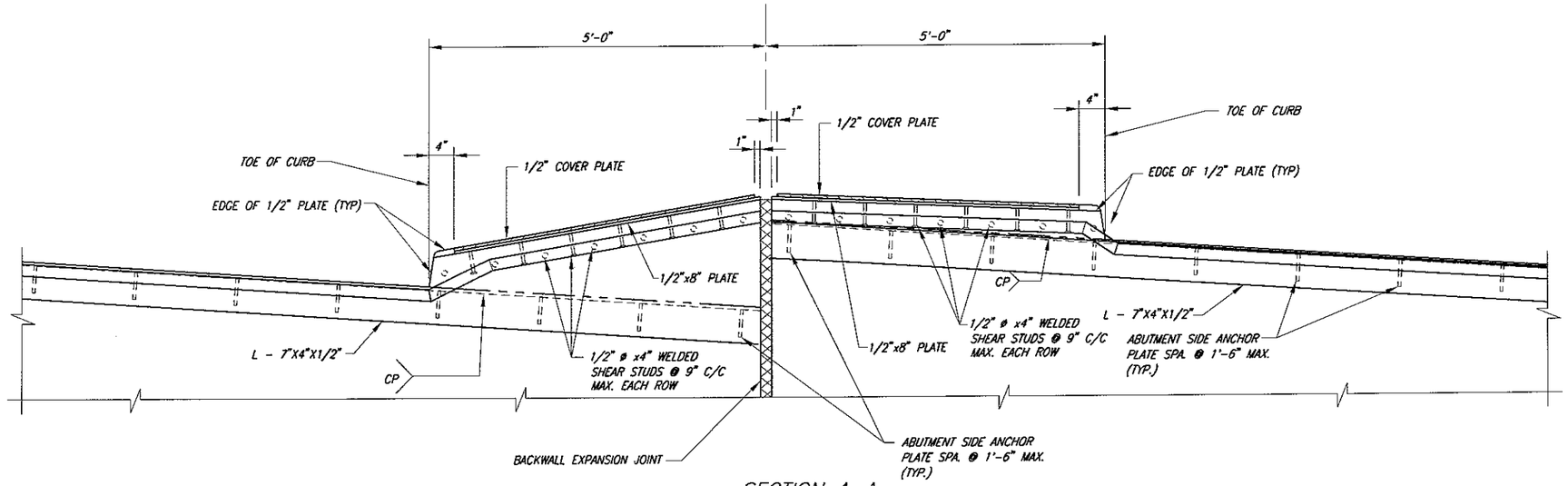

SECTION A-A

THIS DETAIL SIMILAR TO SECTION F-F OF STANDARD DRAWING EXJ-4-87 3/5

(FORWARD ABUTMENT SHOWN, REAR ABUTMENT SIMILAR)

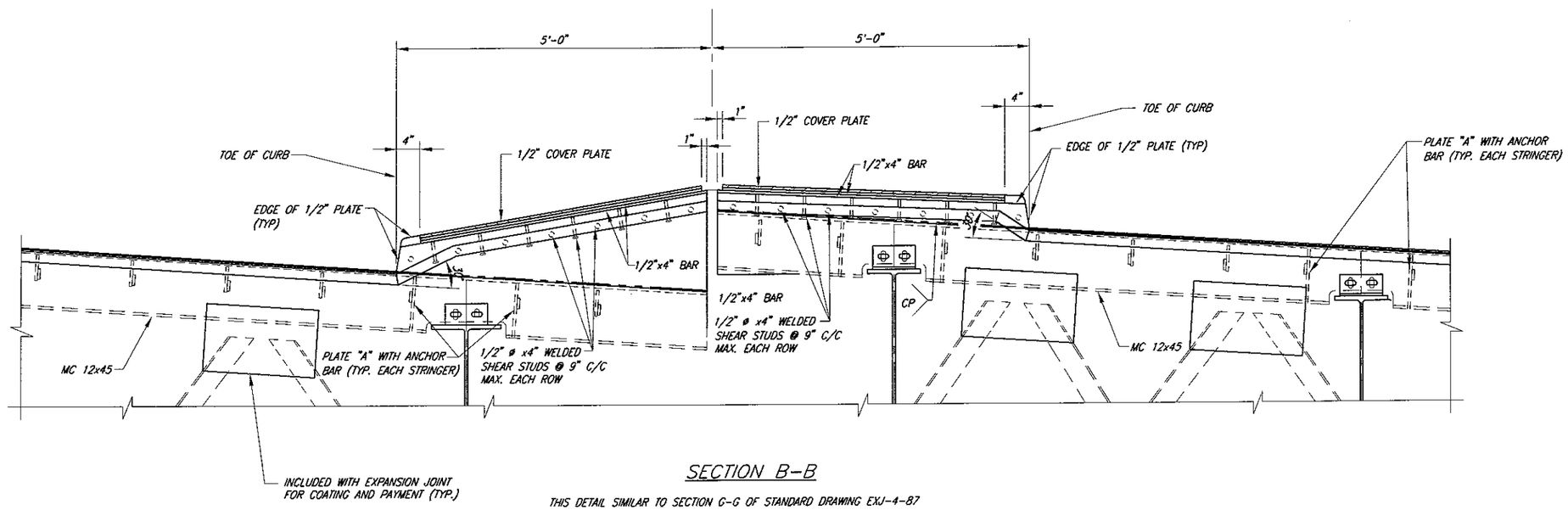

SECTION B-B

THIS DETAIL SIMILAR TO SECTION G-G OF STANDARD DRAWING EXJ-4-87

NOTE:
INSTALLATION OF SEAL: DURING INSTALLATION OF THE SUPPORT/ARMOR FOR THE SUPERSTRUCTURE SIDE OF THE EXPANSION JOINT SEAL, OBSERVE THE SEATING OF BEAMS ON BEARINGS TO ASSURE THAT POSITIVE BEARING IS MAINTAINED.

PREPARED BY:
R.W. ARMSTRONG & ASSOCIATES
471 EAST BROAD STREET, SUITE 2010
COLUMBUS, OH 43215
OFFICE (614) 225-8868 FAX (614) 225-8869

DESIGNED	DRAWN	REVIEWED	DATE
SRS	CLF	PAR	12/22/06
CHECKED	REVISED	STRUCTURE FILE NUMBER	
TDJ		5760569	

MEDIAN EXPANSION JOINT DETAILS 2 OF 2
BRIDGE No. DAY-XWAY-00.79
DAYTON EXPRESSWAY OVER KEOWEE STREET AND CSXT RAILROAD

MOT-XWAY
PID NO. 77774

IMAGE FILES : NONE
XREFERENCES : XR-DAY-XWAY-TITBLK;
FILE NAME : P:\Transportation\20053370 Dayton Expressway 3\30 SheetDrawings\20 Singles\Median-Jt-2.dwg / Layout1
MND\NT : 19-DEC-06, 17:18:36 / SJohnson

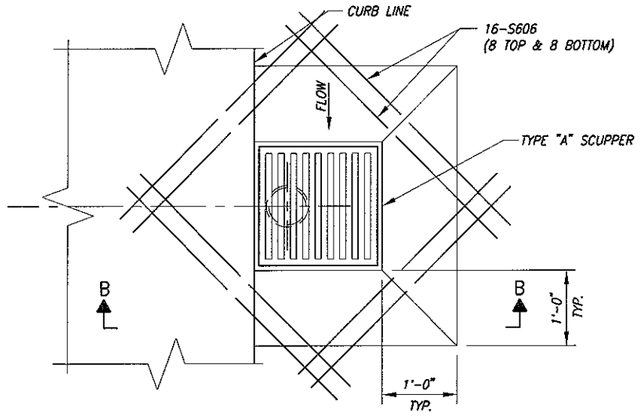

TYPE "A" SCUPPER PLAN

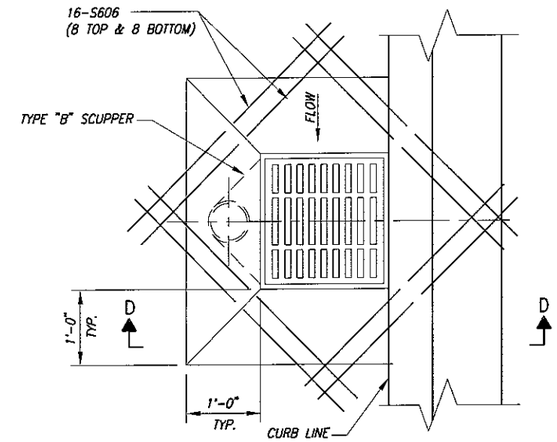

TYPE "B" SCUPPER PLAN

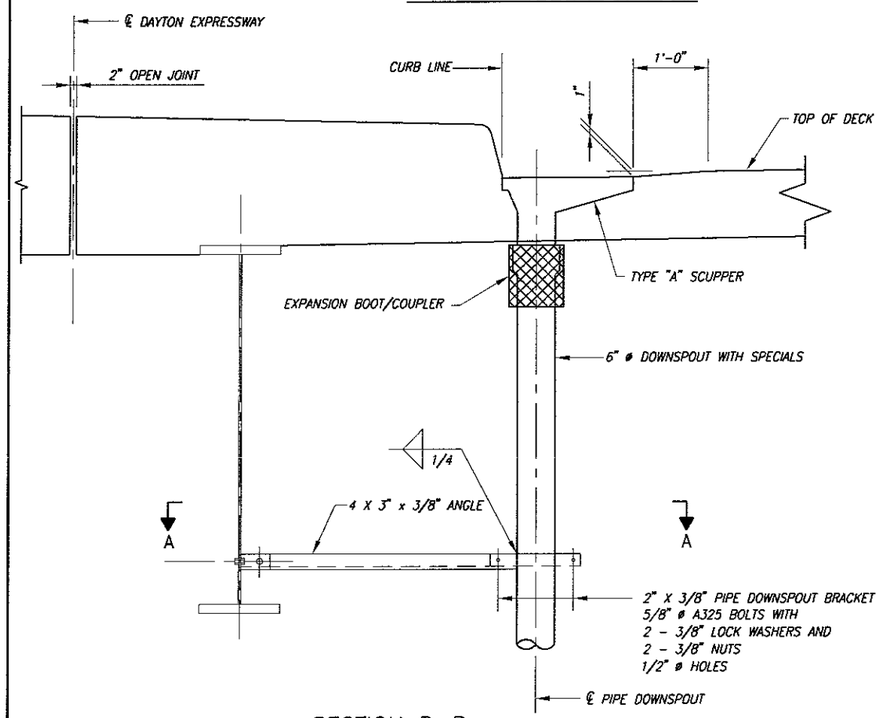

SECTION B-B

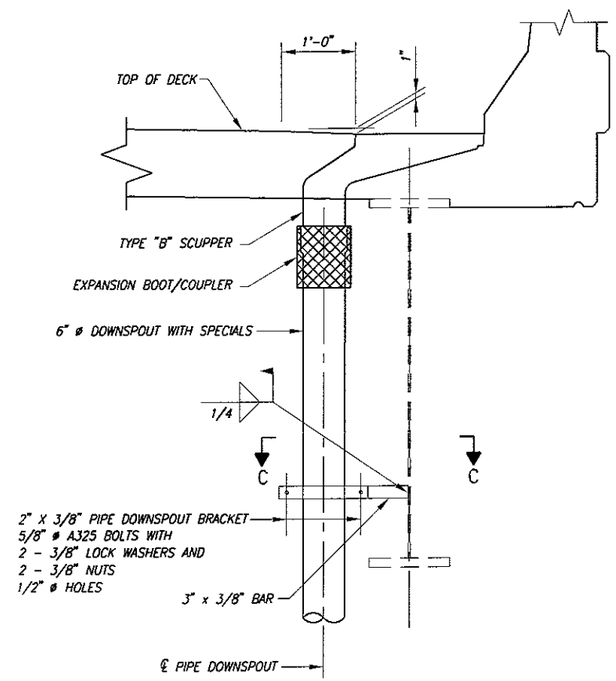

SECTION D-D
@ END BENTS ONLY

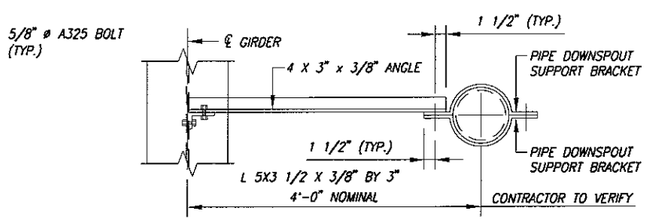

SECTION A-A

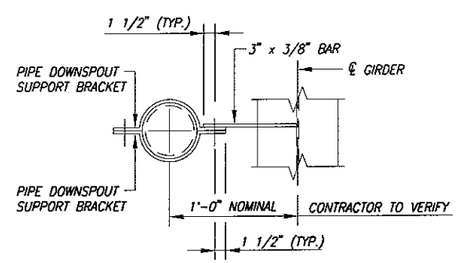

SECTION C-C

NOTE:

1. TYPE "A" BRIDGE SCUPPER TO BE NEENAH R-3952 OR EQUIVALENT.
2. TYPE "B" BRIDGE SCUPPER TO BE NEENAH R-3936-A OR EQUIVALENT.
3. EXPANSION BOOT/COUPLER TO BE FERNCO SERIES 1055 OR EQUIVALENT.
4. FOR DOWN SPOUT DETAILS SEE SHEET 49/65.
5. ALL PIPE DOWNSPOUTS AND SPECIALS SHALL BE GALVANIZED STEEL PIPE. PAYMENT SHALL BE MADE UNDER ITEM 518, 6" PIPE DOWNSPOUT, INCLUDING SPECIALS, AS PER PLAN.

PREPARED BY:
R.W. ARMSTRONG & ASSOCIATES
471 EAST BROAD STREET, SUITE 2010
COLUMBUS, OH 43215
OFFICE (614) 225-8868 FAX (614) 225-8869

DESIGNED	DRAWN	REVIEWED	DATE
DEM	SLO	PAR	12/22/06
CHECKED	REVISED	STRUCTURE FILE NUMBER	
SRS		5760569	

SCUPPER DETAILS 1 OF 2
BRIDGE No. DAY-XWAY-00.79
DAYTON EXPRESSWAY OVER KEOWEE STREET AND CSXT RAILROAD

MOT-XWAY
PID NO. 77774

IMAGE FILES : NONE
XREFERENCES : XR=DAY-XWAY-TITBLK;
FILE NAME : P:\Transportation\2005\3170 Dayton Expressway 3\30 Sheet\Drawings\20 Singles\Stupper-1.dwg / Layout1
AUTO\WAT : 12-FEB-07, 11:49:38 / Schmitch

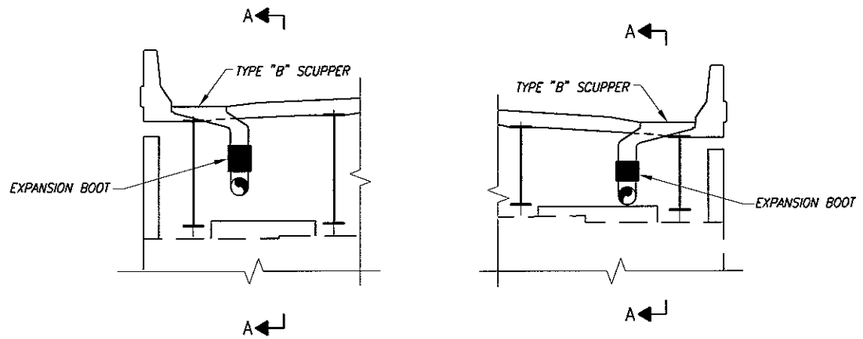

REAR ABUTMENT LOOKING DOWNSTATION

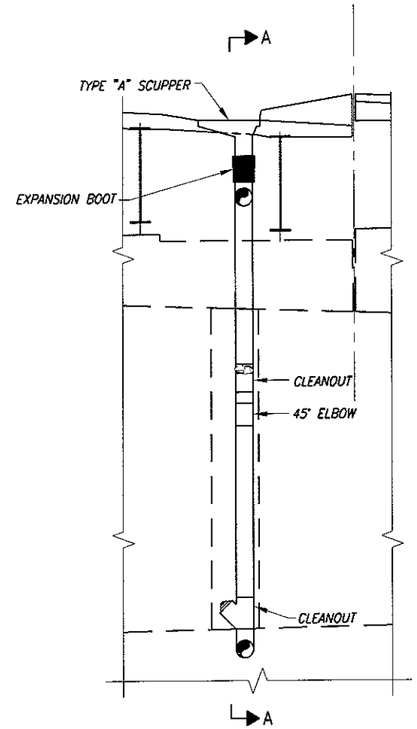

PIER 1 LOOKING UPSTATION

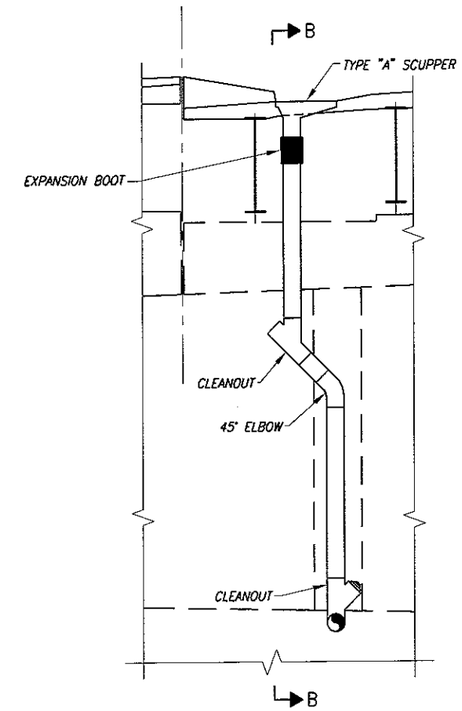

PIER 2 LOOKING DOWNSTATION

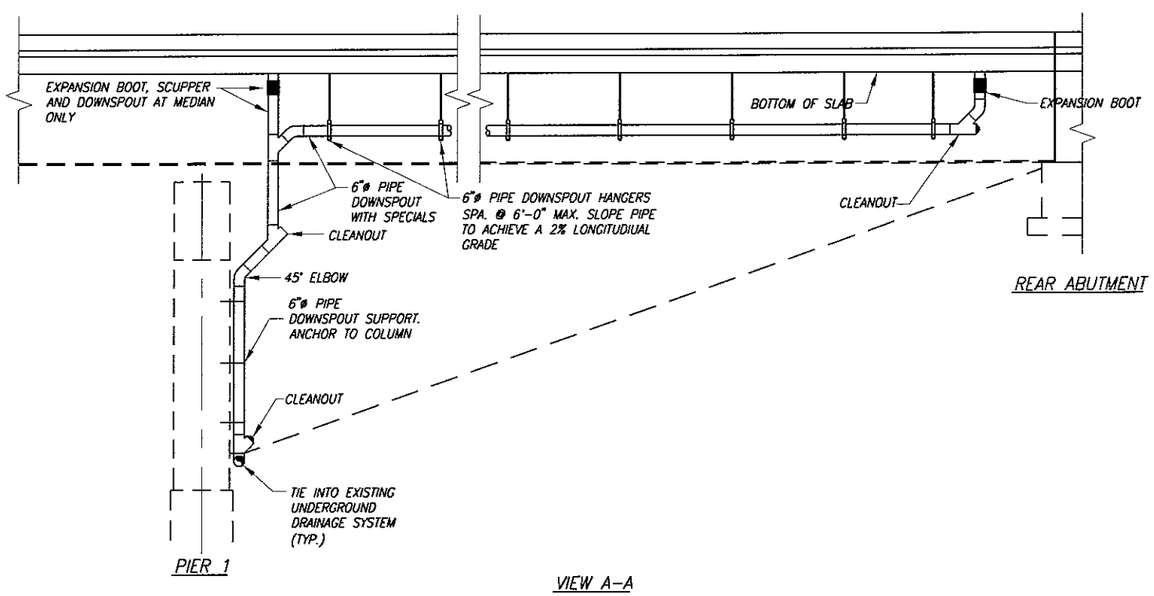

VIEW A–A

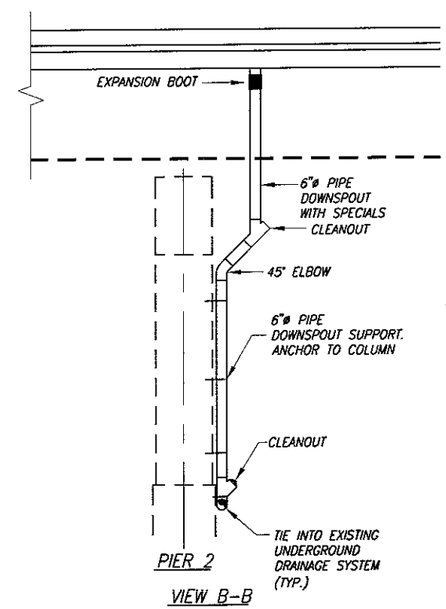

VIEW B–B

NOTE:

1. FOR SCUPPER DETAILS, SEE SHEET 48/65.
2. ALL PIPE DOWNSPOUTS AND SPECIALS SHALL BE GALVANIZED STEEL PIPE. PAYMENT SHALL BE MADE UNDER ITEM 518, 6" PIPE DOWNSPOUT, INCLUDING SPECIALS, AS PER PLAN.

PREPARED BY:
R.W. ARMSTRONG & ASSOCIATES
471 EAST BROAD STREET, SUITE 2010
COLUMBUS, OH 43215
OFFICE (614) 225-8868 FAX (614) 225-8869

DESIGNED	DRAWN	REVIEWED	DATE
DEM	SLO	PAR	12/22/06
CHECKED	REVISED	STRUCTURE FILE NUMBER	
SRS		5760569	

SCUPPER DETAILS 2 OF 2
BRIDGE No. DAY-XWAY-00.79
DAYTON EXPRESSWAY OVER KEOWEE STREET AND CSXT RAILROAD

MOT-XWAY
PID NO. 77774

IMAGE FILES : NONE
XREFERENCES : XR-DAY-XWAY-TITBLK;
FILE NAME : P:\Transportation\20053370 Dayton Expressway 3\30 SheetDrawings\20 Singles\Scupper-2.dwg / Layout1
MRD\INT : 12-FEB-07, 12:01:52 / Subhnson

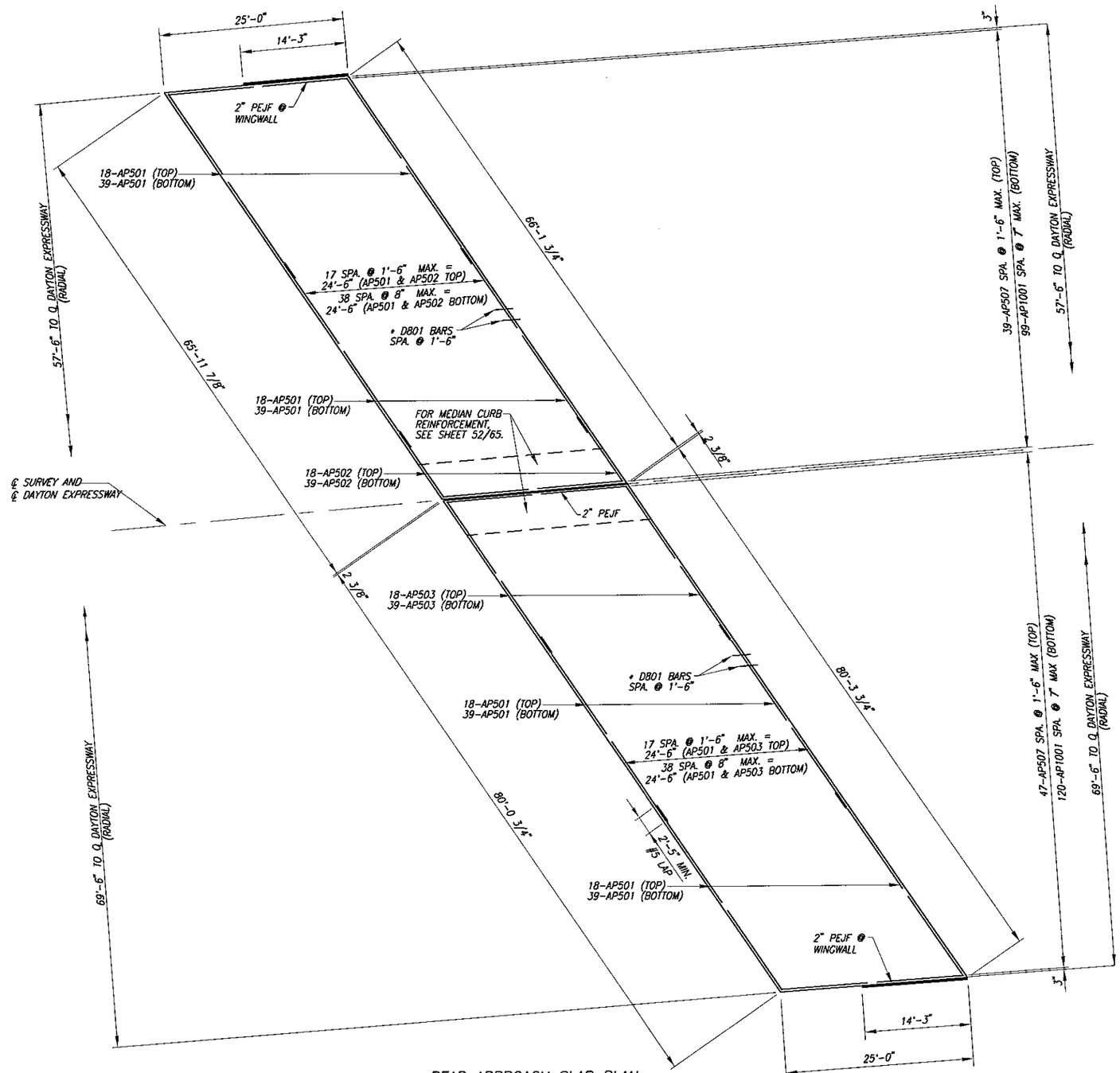

REAR APPROACH SLAB PLAN

(MEDIAN NOT SHOWN FOR CLARITY)

* D801 BARS SPA. @ 1'-6" MAX. MEASURED PERPENDICULAR TO ℄ ROADWAY (TYP)

NOTES:

1. FOR FORWARD APPROACH SLAB PLAN REINFORCEMENT DETAILS SEE APPROACH SLAB DETAILS 2 OF 4 SHEET 51/65.
2. FOR MEDIAN REINFORCEMENT DETAILS SEE APPROACH SLAB DETAILS 3 OF 4 SHEET 52/65.
3. FOR TYPICAL TRANSVERSE AND LONGITUDINAL SECTIONS SEE APPROACH SLAB DETAILS 4 OF 4 SHEET 53/65.
4. ALL REINFORCEMENT SHALL BE EPOXY COATED.
5. FOR ADDITIONAL DETAILS, SEE STANDARD DRAWING AS-1-81, SHEETS 1 - 3.

PREPARED BY:
R.W. ARMSTRONG & ASSOCIATES
471 EAST BROAD STREET, SUITE 2010
COLUMBUS, OH 43215
OFFICE (614) 225-8869 FAX (614) 225-8869

DESIGNED	DRAWN	REVIEWED	DATE
SRS	SLO	PAR	12/22/06
CHECKED	REVISED	STRUCTURE FILE NUMBER	
LAK		5760569	

APPROAD SLAB DETAILS 1 OF 4
BRIDGE No. DAY-XWAY-00.79
DAYTON EXPRESSWAY OVER KEOWEE STREET AND CSXT RAILROAD

MOT-XWAY
PID NO. 77774

IMAGE FILES : NONE
XREFERENCES : XR-DAY-XWAY-118BLK;
FILE NAME : P:\Transportation\2005\5370 Dayton Expressway 3\30 SheetDrawings\20 Singles\Approach-1.dwg / Layout1
MKD\MT : 20-DEC-06, 11:28:06 / SJohnson

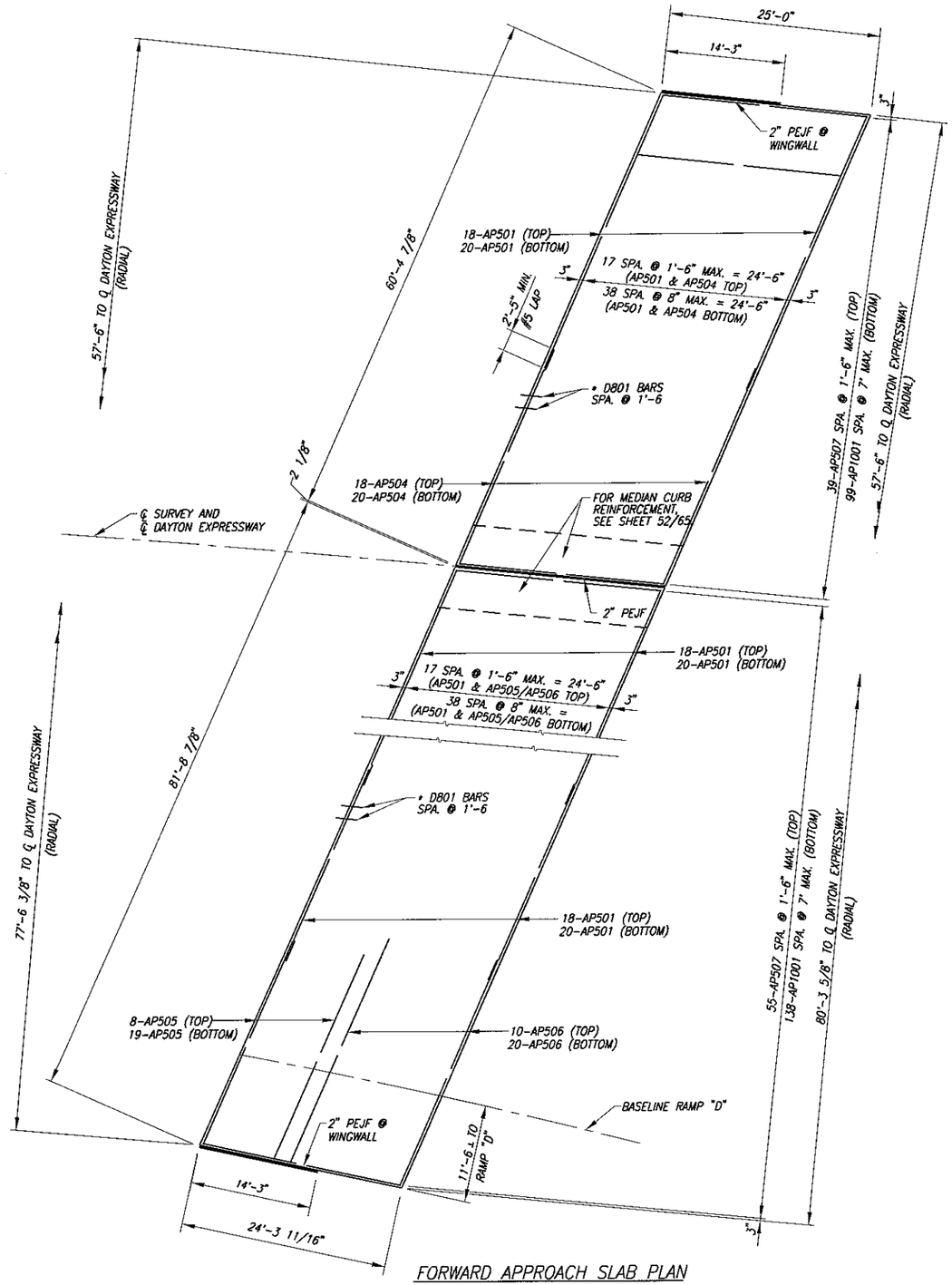

FORWARD APPROACH SLAB PLAN

(MEDIAN NOT SHOWN FOR CLARITY)

* D801 BARS SPA. @ 1'-6" MAX. MEASURED PERPENDICULAR TO ℄ ROADWAY (TYP)

NOTES:

1. FOR REAR APPROACH SLAB PLAN REINFORCEMENT DETAILS SEE APPROACH SLAB DETAILS 1 OF 4 SHEET 50/65.
2. FOR MEDIAN REINFORCEMENT DETAILS SEE APPROACH SLAB DETAILS 3 OF 4 SHEET 52/65.
3. FOR TYPICAL TRANSVERSE AND LONGITUDINAL SECTIONS SEE APPROACH SLAB DETAILS 4 OF 4 SHEET 53/65.
4. ALL REINFORCEMENT SHALL BE EPOXY COATED.
5. FOR ADDITIONAL DETAILS, SEE STANDARD DRAWING AS-1-81, SHEETS 1 - 3.

PREPARED BY:
R.W. ARMSTRONG & ASSOCIATES
471 EAST BROAD STREET, SUITE 2010
COLUMBUS, OH 43215
OFFICE (614) 225-8868 FAX (614) 225-8869

DESIGNED	DRAWN	REVIEWED	DATE
SRS	SLO	PAR	12/22/06
CHECKED	REVISED	STRUCTURE FILE NUMBER	
LAK		5760569	

APPROAH SLAB DETAILS 2 OF 4
BRIDGE No. DAY-XWAY-00.79
DAYTON EXPRESSWAY OVER KEOWEE STREET AND CSXT RAILROAD

MOT-XWAY
PID NO. 77774

IMAGE FILES : NONE
XREFERENCES : XR-DAY-XWAY-TITBLK;
FILE NAME : P:\Transportation\20053370 Dayton Expressway 3\30 SheetDrawings\20 Singles\approach-2.dwg / Layout1
MRD\WT : 20-DEC-06, 11:28:43 / SJohnson

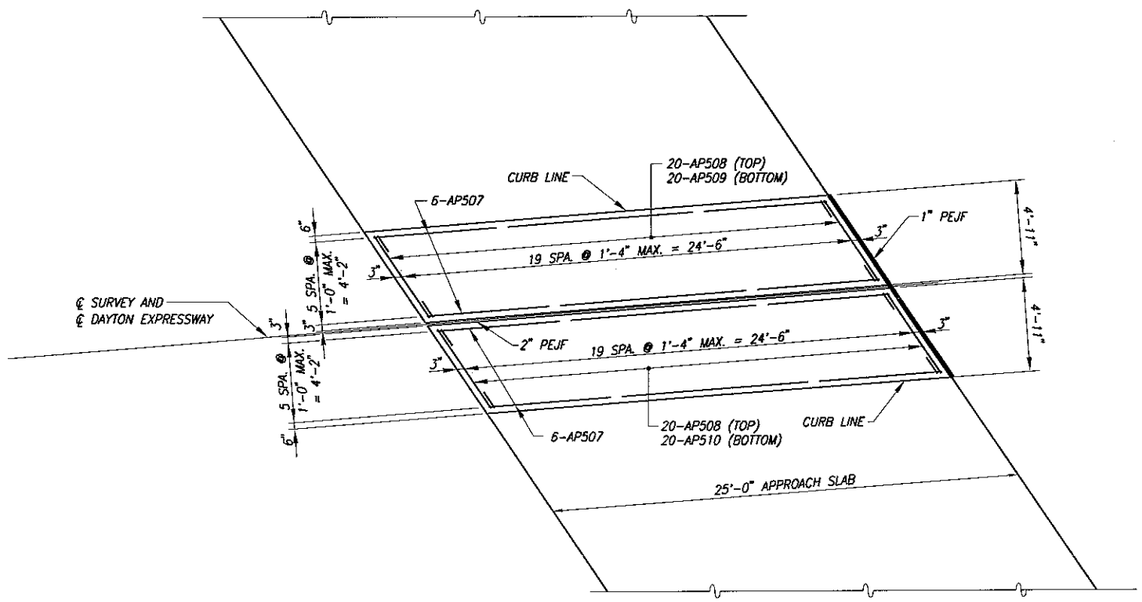

REAR APPROACH MEDIAN PLAN

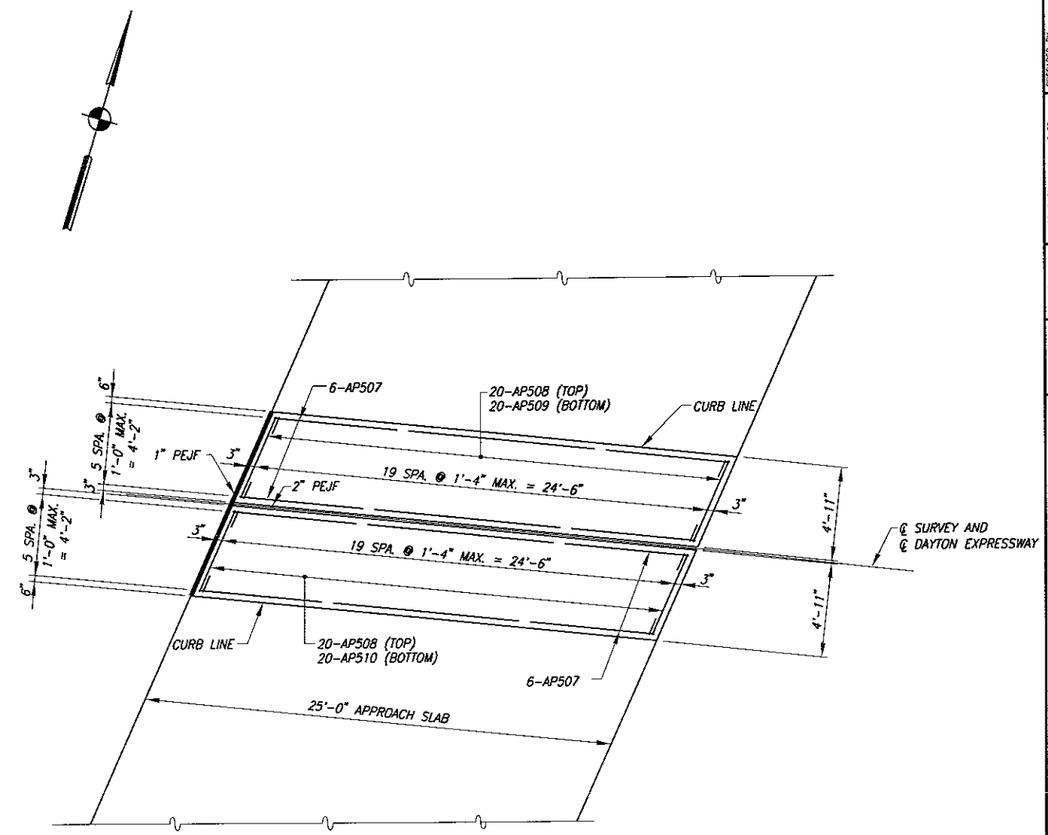

FORWARD APPROACH MEDIAN PLAN

NOTES:

1. FOR REAR APPROACH SLAB PLAN REINFORCEMENT DETAILS SEE APPROACH SLAB DETAILS 1 OF 4 SHEET 50/65.
2. FOR FORWARD APPROACH SLAB PLAN REINFORCEMENT DETAILS SEE SLAB DETAILS 2 OF 4 SHEET 51/65.
3. FOR TYPICAL TRANSVERSE AND LONGITUDINAL SECTIONS SEE APPROACH SLAB DETAILS 4 OF 4 SHEET 53/65.
4. ALL REINFORCEMENT SHALL BE EPOXY COATED.
5. FOR ADDITIONAL DETAILS, SEE STANDARD DRAWING AS-1-81, SHEETS 1 - 3.

PREPARED BY:
R.W. ARMSTRONG & ASSOCIATES
471 EAST BROAD STREET, SUITE 2010
COLUMBUS, OH 43215
OFFICE (614) 225-8868 FAX (614) 225-8869

DESIGNED	DRAWN	REVIEWED	DATE
SRS	SLO	PAR	12/22/06
CHECKED	REVISED	STRUCTURE FILE NUMBER	
LAK		5760569	

APPROACH SLAB DETAILS 3 OF 4
BRIDGE No. DAY-XWAY-00.79
DAYTON EXPRESSWAY OVER KEOWEE STREET AND CSXT RAILROAD

MOT-XWAY
PID NO. 77774

IMAGE FILES : NONE
XREFERENCES : XR-DAY-XWAY-TITBLK,
FILE NAME : P:\Transportation\20053370 Dayton Expressway 3\30 SheetDrawings\20 Singles\approach-3.dwg / Layout1
MRD\MT : 20-DEC-06, 11:29:27 / SJohnson

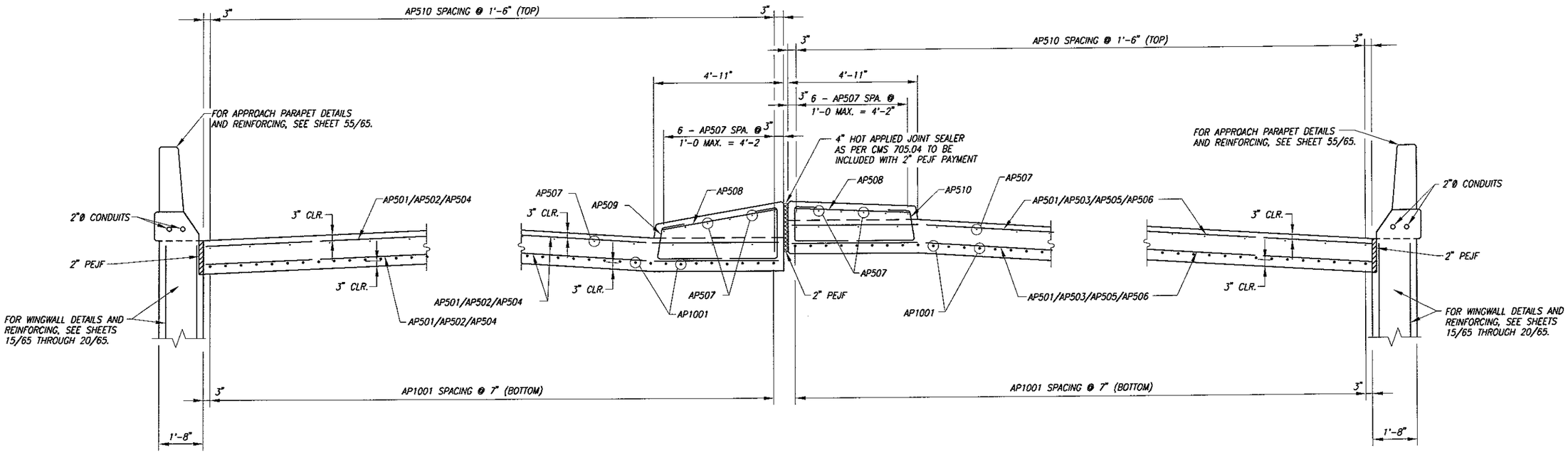

WESTBOUND TRANSVERSE APPROACH SLAB SECTION

EASTBOUND TRANSVERSE APPROACH SLAB SECTION

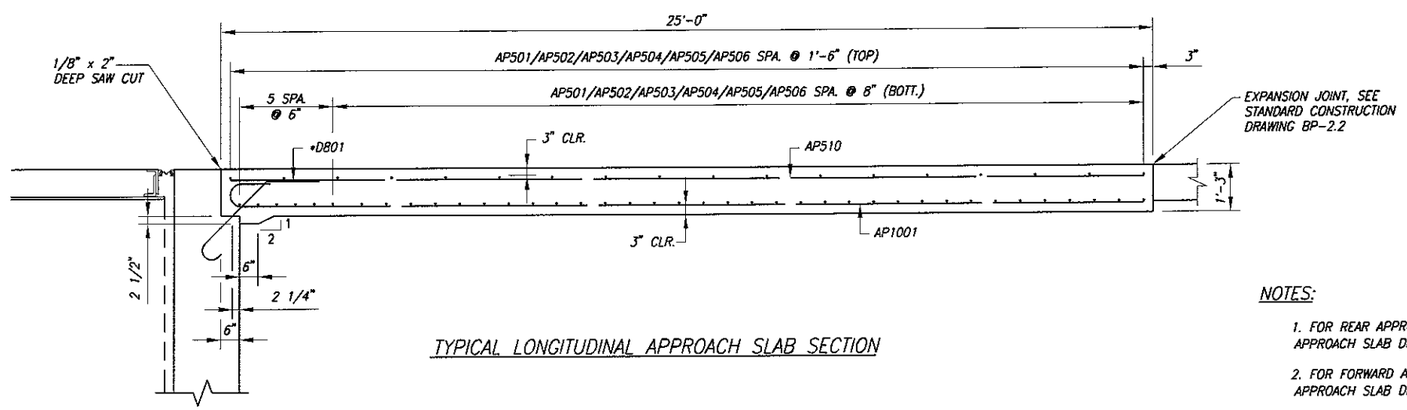

TYPICAL LONGITUDINAL APPROACH SLAB SECTION

* D801 BARS SPA. @ 1'-6" MAX. MEASURED PERPENDICULAR TO ℄ ROADWAY (TYP)

NOTES:

1. FOR REAR APPROACH SLAB PLAN REINFORCEMENT DETAILS SEE APPROACH SLAB DETAILS 1 OF 4 SHEET 50/65.
2. FOR FORWARD APPROACH SLAB PLAN REINFORCEMENT DETAILS SEE APPROACH SLAB DETAILS 2 OF 4 SHEET 51/65
3. FOR MEDIAN REINFORCEMENT DETAILS SEE APPROACH SLAB DETAILS 3 OF 4 SHEET 52/65.
4. FOR WINGWALL/PARAPET REINFORCEMENT DETAILS SEE SHEETS 54/65 & 55/65.
5. ALL REINFORCEMENT SHALL BE EPOXY COATED.
6. MEDIAN CONCRETE CLASS HP TO BE INCIDENTAL TO ITEM 526.
7. FOR ADDITIONAL DETAILS, SEE STANDARD DRAWING AS-1-81, SHEETS 1 - 3.

PREPARED BY:
R.W. ARMSTRONG & ASSOCIATES
471 EAST BROAD STREET, SUITE 2010
COLUMBUS, OH 43215
OFFICE (614) 225-8868 FAX (614) 225-8869

DESIGNED	DRAWN	REVIEWED	DATE
SRS	SLO	PAR	12/22/06
CHECKED	REVISED	STRUCTURE FILE NUMBER	
LAK		5760569	

APPROACH SLAB DETAILS 4 OF 4
BRIDGE No. DAY-XWAY-00.79
DAYTON EXPRESSWAY OVER KEOWEE STREET AND CSXT RAILROAD

MOT-XWAY
PID NO. 77774

IMAGE FILES : NONE
XREFERENCES : XR-DAY-XWAY-11TBLK;
FILE NAME : P:\Transportation\20053370 Dayton Expressway 3\30 SheetDrawings\20 Singles\Approach-4.dwg / Layout1
MRD\MT : 22-DEC-06, 11:23:19 / SJohnson

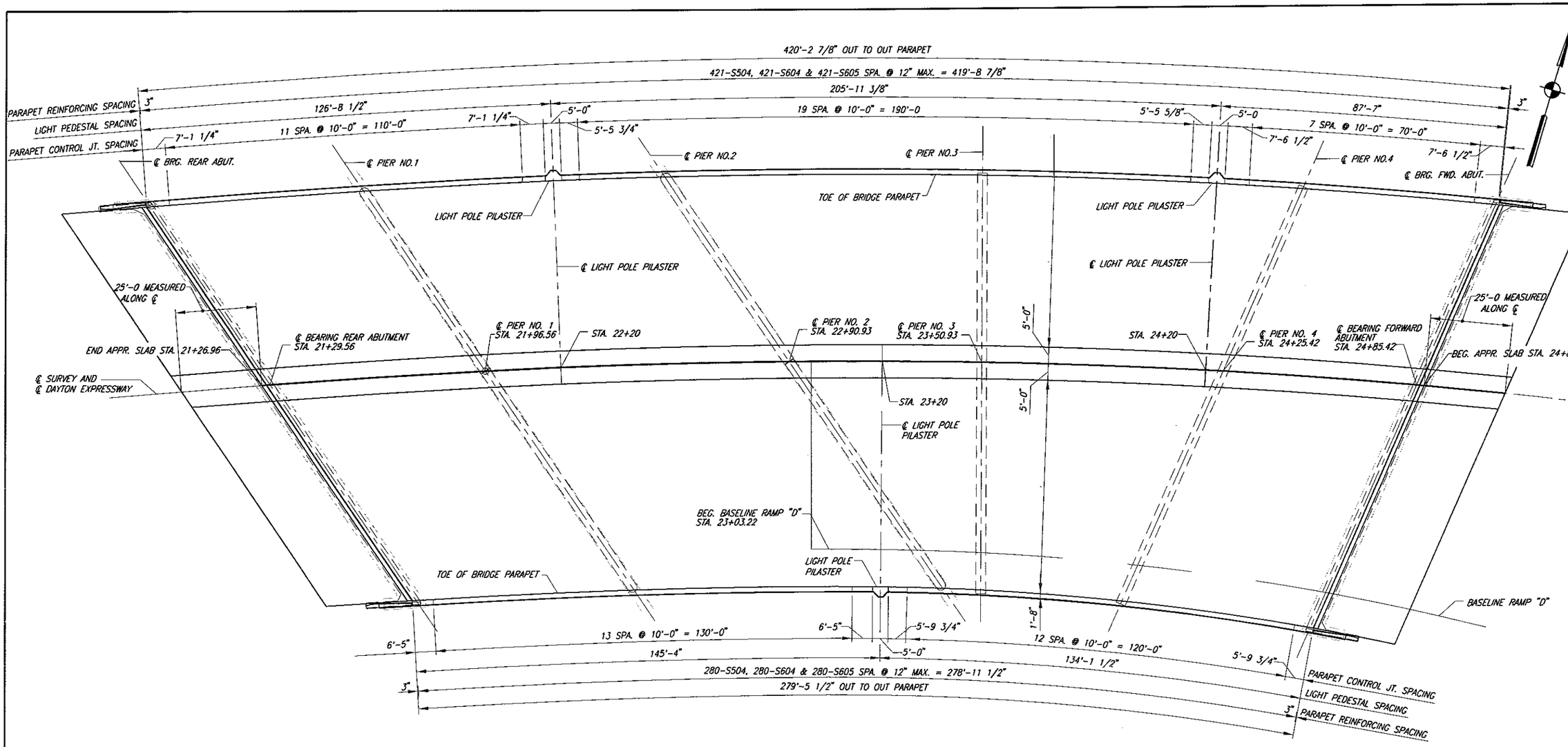

PARAPET CONTROL JOINT PLAN

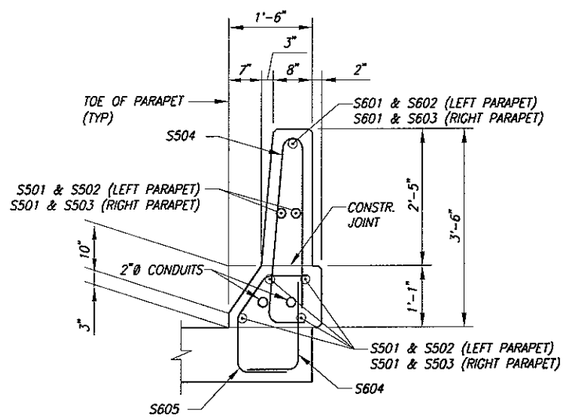

TYPICAL DEFLECTOR PARAPET DETAIL

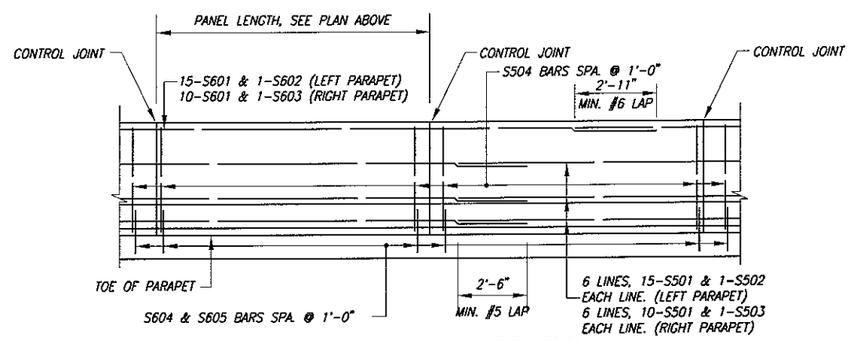

DEFLECTOR PARAPET ELEVATION

NOTES:

1. ALL REINFORCEMENT TO BE EPOXY COATED.
2. FOR LIGHT POLE PILASTER REINFORCEMENT DETAILS, SEE SHEET 45/65.
3. FOR EASTBOUND TRANSVERSE SECTION, SEE SHEET 41/65.
4. FOR EASTBOUND REINFORCEMENT PLAN, SEE SHEETS 44/65 & 45/65.
5. FOR WESTBOUND TRANSVERSE SECTION, SEE SHEET 40/65.
6. FOR WESTBOUND REINFORCEMENT PLAN, SEE SHEETS 42/65 & 43/65.
7. FOR APPROACH PARAPET DETAILS, SEE SHEETS 55/65.
8. REFER TO STANDARD BRIDGE DRAWING BR-1 FOR DETAILS NOT SHOWN.

LAP LENGTHS

#4	2'-0"
#5	2'-5"
#6	2'-11"

PREPARED BY:
R.W. ARMSTRONG & ASSOCIATES
471 EAST BROAD STREET, SUITE 2010
COLUMBUS, OH 43215
OFFICE (614) 225-8888 FAX (614) 225-8869

DESIGNED	DRAWN	REVIEWED	DATE
SRS	SLO	PAR	12/22/06
CHECKED	REVISED	STRUCTURE FILE NUMBER	
LAK		5760569	

PARAPET DETAILS 1 OF 2
BRIDGE No. DAY-XWAY-00.79
DAYTON EXPRESSWAY OVER KEONEE STREET AND CSXT RAILROAD

MOT-XWAY
PID NO. 77774

IMAGE FILES : NONE
REFERENCE FILES : DAY-XWAY-TITBLK
FILE NAME : P:\Transportation\20053370 Dayton Expressway 31\30 Sheet Drawings\20 Singles\Parapet-1.dwg / Layout1
MRD\WT : 09-FEB-07, 11:51:49 / Sjohnson

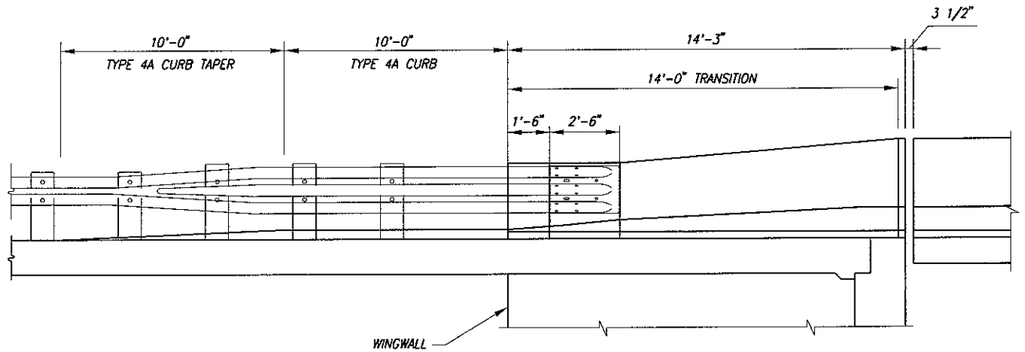

OUTGOING APPROACH

APPROACH PARAPET FRONT FACE ELEVATION

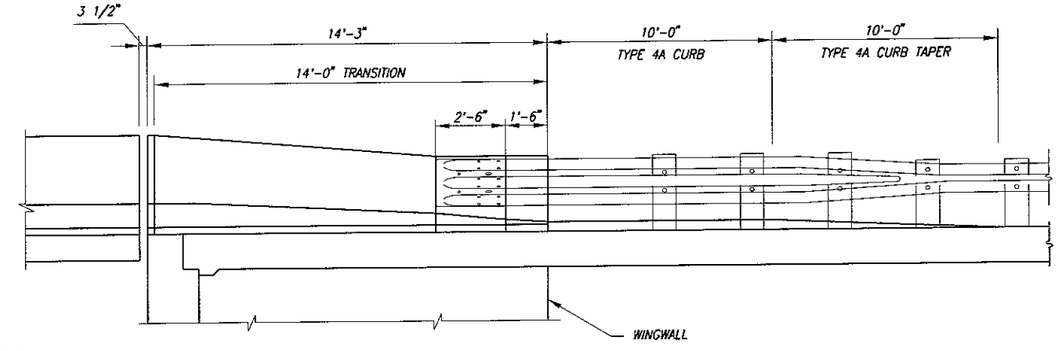

INCOMING APPROACH

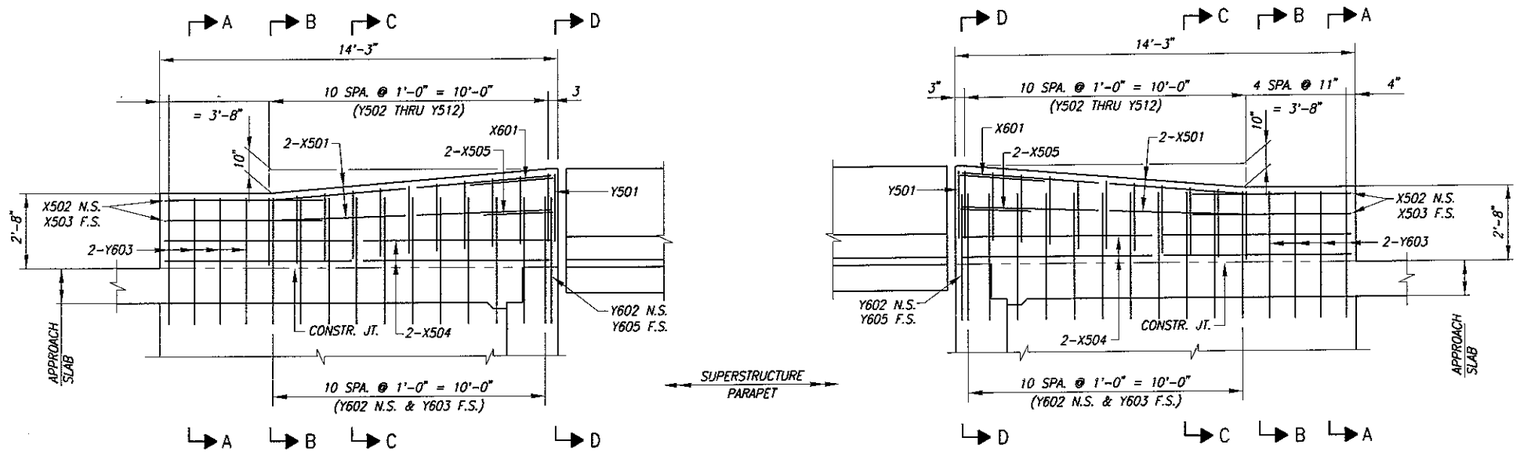

APPROACH PARAPET REINFORCEMENT

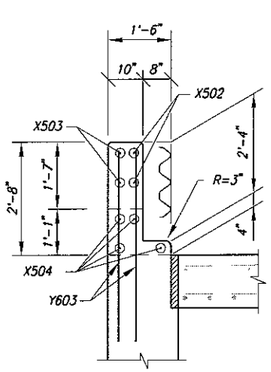

SECTION A-A

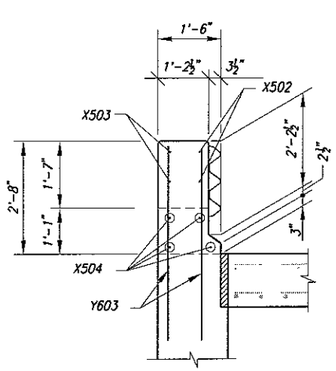

SECTION B-B

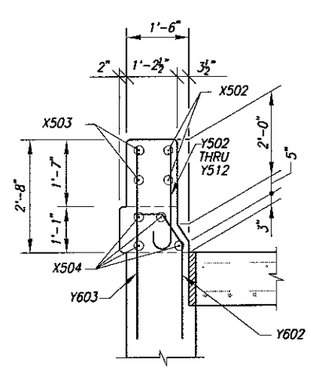

SECTION C-C

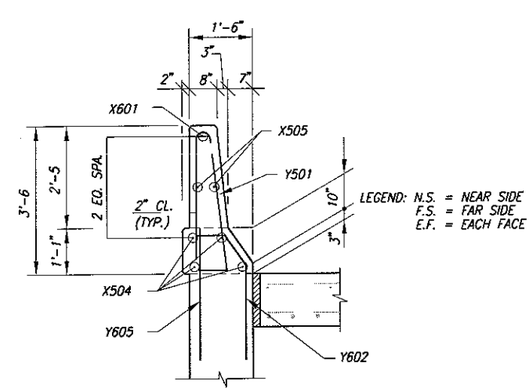

SECTION D-D

NOTES:

1. FOR CONTROL JOINT DETAILS SEE STANDARD DWG. BR-1 SHEET 2/2 DETAIL A.
2. FOR SUPERSTRUCTURE PARAPET REINFORCEMENT SEE SHEET 54/65.
3. ALL REINFORCEMENT TO BE EPOXY COATED.
4. REFER TO STANDARD BRIDGE DRAWING BR-1 FOR DETAILS NOT SHOWN.
5. FOR WINGWALL DETAILS AND REINFORCING, SEE SHEETS 15/65 THROUGH 20/65.
6. REFER TO STANDARD ROADWAY CONSTRUCTION DRAWING GR-3.1 FOR DETAILS NOT SHOWN.

PREPARED BY: R.W. ARMSTRONG & ASSOCIATES
471 EAST BROAD STREET, SUITE 2010
COLUMBUS, OHIO 43215
OFFICE (614) 225-8868 FAX (614) 225-8869

DESIGNED	DRAWN	REVIEWED	DATE
SRS	CLF	PAR	12/22/08
CHECKED	REVISED	STRUCTURE FILE NUMBER	
LAK		5760569	

PARAPET DETAILS 2 OF 2
BRIDGE No. DAY-XWAY-00.79
DAYTON EXPRESSWAY OVER KEOWEE STREET AND CSXT RAILROAD

MOT-XWAY
PID NO. 77774

IMAGE FILES : NONE
WORKREFERENCES : DAY-XWAY-TITBLK
FILE NAME : P:\Transportation\20053370 Dayton Expressway 3\30 SheetDrawings\20 Singles\Parapet-2.dwg / Layout1
MRD\INT : 09-FEB-07, 12:36:35 / Sdohnson

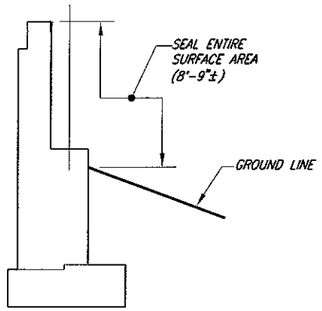

ABUTMENT SEALING LIMITS

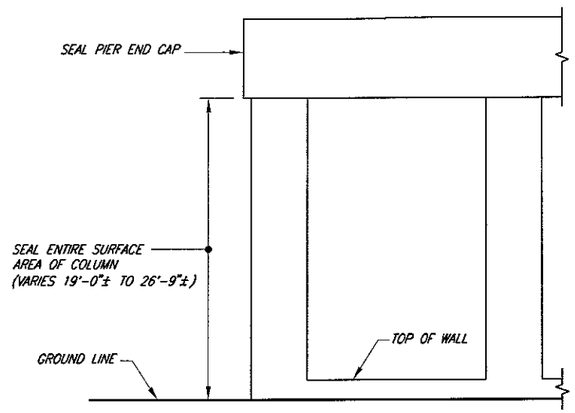

PART PIER COLUMN ELEVATION

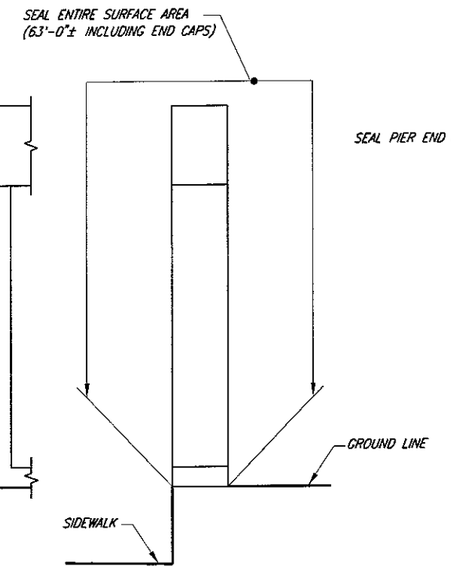

PIER COLUMN END ELEVATION

PIERS 1 & 2

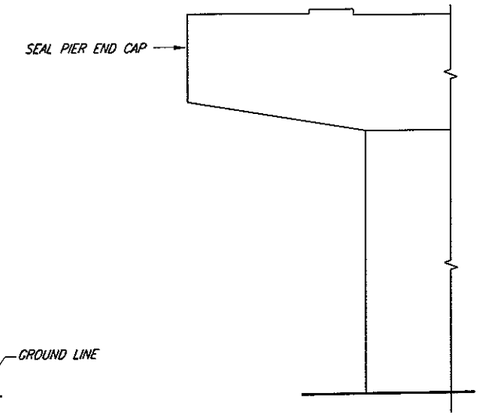

PART PIER ELEVATION

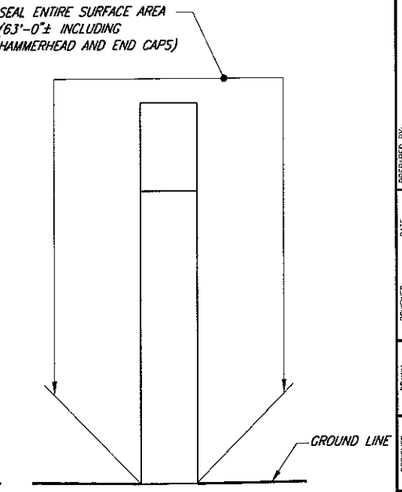

PIER END ELEVATION

PIERS 3 & 4

PIER SURFACE SEALING DETAILS

NOTE: ALL PIERS ARE TO BE SURFACE SEALED AS SHOWN

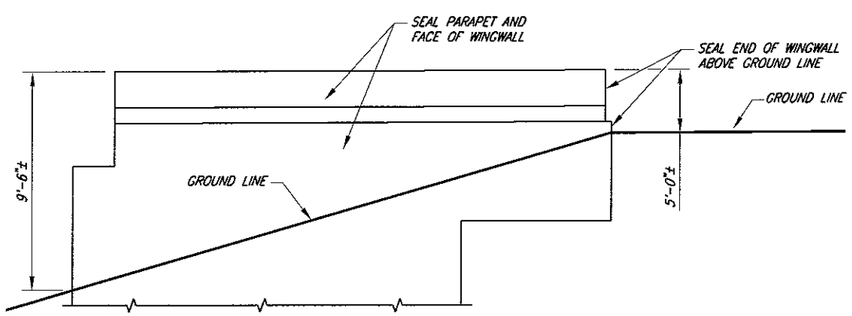

TYPICAL WINGWALL ELEVATION

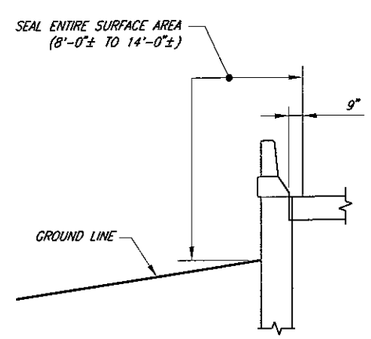

NORTH WINGWALL SECTION

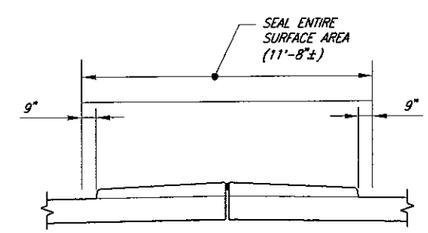

APPROACH SLAB MEDIAN SECTION

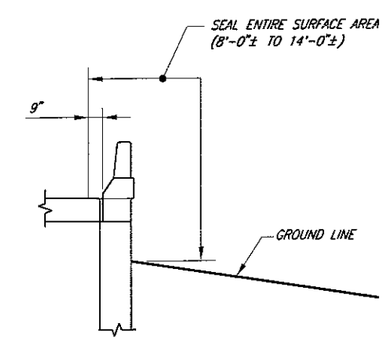

SOUTH WINGWALL SECTION

WINGWALL AND APPROACH SLAB SURFACE SEAL DETAILS

IMAGE FILES : NONE
XREFERENCES : XR-DAY-XWAY-TITBLK
FILE NAME : P:\Transportation\20053370 Dayton Expressway 3\30 Sheet Drawings\20 Singles\Sealing.dwg / Layout1
MRD\VAT : 20-DEC-06, 11:36:24 / Sahnison

PREPARED BY: R.W. ARMSTRONG & ASSOCIATES
471 EAST BROAD STREET, SUITE 2010
COLUMBUS, OHIO 43215
OFFICE (614) 225-8868 FAX (614) 225-8869

DESIGNED	DRAWN	REVIEWED	DATE
SRS	SLO	PAR	12/22/06
CHECKED	REVISED	STRUCTURE FILE NUMBER	
LAK		5760569	

SEALING OF SUBSTRUCTURE CONCRETE SURFACES
BRIDGE No. DAY-XWAY-00.79
DAYTON EXPRESSWAY OVER KEOWEE STREET AND CSXT RAILROAD

MOT-XWAY
PID NO. 77774

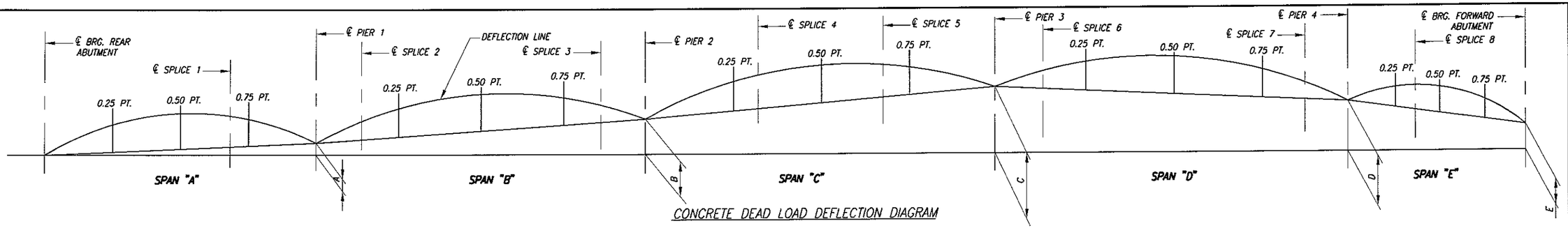

CONCRETE DEAD LOAD DEFLECTION DIAGRAM

WESTBOUND STRUCTURE		A	B	C	D	E	CL BRG REAR ABUT.	0.25 PT.	0.50 PT.	FIELD SPLICE 1	0.75 PT.	CL. PIER 1	FIELD SPLICE 2	0.25 PT.	0.50 PT.	0.75 PT.	FIELD SPLICE 3	CL. PIER 2
WG 1	D. L. STEEL BEAM						0'-0"	0'-0 1/16"	0'-0 1/16"	0'-0 1/16"	0'-0"	0'-0"	0'-0 1/16"	0'-0 1/16"	0'-0 1/16"	0'-0 1/16"	0'-0 1/16"	0'-0"
	REMAIND L. (SEE NOTE 1)						0'-0"	0'-0 5/16"	0'-0 5/16"	0'-0 3/16"	0'-0 1/16"	0'-0"	0'-0 3/16"	0'-0 7/16"	0'-0 3/8"	0'-0 11/16"	0'-0 3/8"	0'-0"
	VERTICAL CURVE CORRECTION						0'-0"	0'-0"	0'-0"	0'-0 9/16"	0'-0 1/16"	0'-0"	0'-0 9/16"	0'-0 9/16"	0'-0 3/8"	0'-0 9/16"	0'-0 9/16"	0'-0"
	TOTAL CAMBER	1'-9 5/8"	3'-11 1/8"	6'-6"	8'-0 3/8"	8'-1 11/16"	0'-0"	0'-0 3/8"	0'-0 7/16"	0'-0 9/16"	0'-0 3/16"	0'-6"	0'-1 1/16"	0'-1 1/16"	0'-1 5/8"	0'-1"	0'-1 1/16"	0'-0"
WG 2	D. L. STEEL BEAM						0'-0"	0'-0 1/16"	0'-0 1/16"	0'-0 1/16"	0'-0"	0'-0"	0'-0 1/16"	0'-0 1/16"	0'-0 1/16"	0'-0 1/16"	0'-0 1/16"	0'-0"
	REMAIND L. (SEE NOTE 1)						0'-0"	0'-0 3/8"	0'-0 3/8"	0'-0 1/8"	0'-0 1/8"	0'-0"	0'-0 1/8"	0'-0 9/16"	0'-0 11/16"	0'-0 9/16"	0'-0 11/16"	0'-0"
	VERTICAL CURVE CORRECTION						0'-0"	0'-0"	0'-0 1/16"	0'-0 1/16"	0'-0 1/16"	0'-0"	0'-0 9/16"	0'-0 9/16"	0'-0 13/16"	0'-0 9/16"	0'-0 9/16"	0'-0"
	TOTAL CAMBER	1'-9 3/8"	3'-10 15/16"	6'-2 13/16"	6'-10 3/16"	6'-11 0/16"	0'-0"	0'-0 1/2"	0'-0 1/2"	0'-0 3/8"	0'-0 5/16"	0'-0"	0'-1 3/16"	0'-1 1/4"	0'-1 1/8"	0'-1 3/16"	0'-1 3/16"	0'-0"
WG 3	D. L. STEEL BEAM						0'-0"	0'-0 1/16"	0'-0 1/16"	0'-0 1/16"	0'-0"	0'-0"	0'-0 1/16"	0'-0 1/16"	0'-0 1/16"	0'-0 1/16"	0'-0 1/16"	0'-0"
	REMAIND L. (SEE NOTE 1)						0'-0"	0'-0 3/8"	0'-0 3/8"	0'-0 1/4"	0'-0 3/16"	0'-0"	0'-0 11/16"	0'-0 3/8"	0'-1 1/16"	0'-0 3/8"	0'-0 11/16"	0'-0"
	VERTICAL CURVE CORRECTION						0'-0"	0'-0 1/16"	0'-0 1/16"	0'-0 1/16"	0'-0 1/16"	0'-0"	0'-0 5/16"	0'-0 5/16"	0'-0 13/16"	0'-0 5/16"	0'-0 5/16"	0'-0"
	TOTAL CAMBER	1'-8 9/16"	3'-8 1/4"	4'-10 5/16"	6'-0 9/16"	6'-2"	0'-0"	0'-0 1/2"	0'-0 1/2"	0'-0 3/8"	0'-0 3/8"	0'-6"	0'-1 1/4"	0'-1 5/16"	0'-2"	0'-1 5/16"	0'-1 1/4"	0'-0"
WG 4	D. L. STEEL BEAM						0'-0"	0'-0 1/16"	0'-0 1/16"	0'-0 1/16"	0'-0"	0'-0"	0'-0 1/16"	0'-0 1/16"	0'-0 3/16"	0'-0 1/16"	0'-0 1/16"	0'-0"
	REMAIND L. (SEE NOTE 1)						0'-0"	0'-0 5/8"	0'-0 5/8"	0'-0 11/16"	0'-0 1/16"	0'-0"	0'-0 5/8"	0'-0 11/16"	0'-1 3/16"	0'-0 5/8"	0'-0 11/16"	0'-0"
	VERTICAL CURVE CORRECTION						0'-0"	0'-0 1/16"	0'-0 1/16"	0'-0 3/16"	0'-0 3/16"	0'-0"	0'-0 5/8"	0'-0 5/8"	0'-0 13/16"	0'-0 5/8"	0'-0 5/8"	0'-0"
	TOTAL CAMBER	1'-7 1/4"	3'-6 9/16"	4'-6 7/8"	5'-0 15/16"	5'-2 9/16"	0'-0"	0'-0 1/2"	0'-0 9/16"	0'-0 3/8"	0'-0 5/16"	0'-6"	0'-1 5/16"	0'-1 3/8"	0'-2 1/8"	0'-1 7/16"	0'-1 5/16"	0'-0"
WG 5	D. L. STEEL BEAM						0'-0"	0'-0 1/16"	0'-0 1/16"	0'-0 1/16"	0'-0"	0'-0"	0'-0 1/16"	0'-0 1/16"	0'-0 3/16"	0'-0 1/16"	0'-0 1/16"	0'-0"
	REMAIND L. (SEE NOTE 1)						0'-0"	0'-0 3/8"	0'-0 3/8"	0'-0 3/16"	0'-0 1/16"	0'-0"	0'-0 11/16"	0'-0 3/8"	0'-1 1/4"	0'-0 11/16"	0'-0 11/16"	0'-0"
	VERTICAL CURVE CORRECTION						0'-0"	0'-0 1/16"	0'-0 1/16"	0'-0 3/16"	0'-0 3/16"	0'-0"	0'-0 5/8"	0'-0 5/8"	0'-0 13/16"	0'-0 5/8"	0'-0 5/8"	0'-0"
	TOTAL CAMBER	1'-6 3/16"	3'-2 13/16"	4'-1 5/8"	4'-3 1/2"	4'-3 10 1/4"	0'-0"	0'-0 1/2"	0'-0 5/8"	0'-0 7/16"	0'-0 5/16"	0'-6"	0'-1 3/8"	0'-1 7/16"	0'-2 1/4"	0'-1 7/16"	0'-1 3/8"	0'-0"
WG 6	D. L. STEEL BEAM						0'-0"	0'-0 1/16"	0'-0 1/16"	0'-0"	0'-0"	0'-0"	0'-0 1/16"	0'-0 1/16"	0'-0 3/16"	0'-0 1/16"	0'-0 1/16"	0'-0"
	REMAIND L. (SEE NOTE 1)						0'-0"	0'-0 3/8"	0'-0 5/16"	0'-0 3/16"	0'-0 1/16"	0'-0"	0'-0 11/16"	0'-0 3/8"	0'-1 5/16"	0'-0 11/16"	0'-0 11/16"	0'-0"
	VERTICAL CURVE CORRECTION						0'-0"	0'-0 1/16"	0'-0 1/16"	0'-0 1/16"	0'-0 1/16"	0'-0"	0'-0 5/8"	0'-0 5/8"	0'-0 13/16"	0'-0 5/8"	0'-0 5/8"	0'-0"
	TOTAL CAMBER	1'-6 1/8"	3'-0 1/16"	3'-9 9/16"	4'-4 1/8"	4'-5 1/16"	0'-0"	0'-0 9/16"	0'-0 5/8"	0'-0 1/2"	0'-0 5/16"	0'-6"	0'-1 3/8"	0'-1 7/16"	0'-2 5/16"	0'-1 9/16"	0'-1 5/16"	0'-0"
WG 7	D. L. STEEL BEAM						0'-0"	0'-0 1/16"	0'-0 1/16"	0'-0"	0'-0"	0'-0"	0'-0 1/16"	0'-0 1/16"	0'-0 3/16"	0'-0 1/16"	0'-0 1/16"	0'-0"
	REMAIND L. (SEE NOTE 1)						0'-0"	0'-0 1/4"	0'-0 1/4"	0'-0 1/16"	0'-0 1/16"	0'-0"	0'-0 11/16"	0'-0 11/16"	0'-1"	0'-0 11/16"	0'-0 11/16"	0'-0"
	VERTICAL CURVE CORRECTION						0'-0"	0'-0 3/16"	0'-0 5/16"	0'-0 5/16"	0'-0 1/4"	0'-0"	0'-0 5/8"	0'-0 5/8"	0'-0 13/16"	0'-0 5/8"	0'-0 5/8"	0'-0"
	TOTAL CAMBER	1'-4"	2'-8 1/4"	3'-5 5/8"	3'-13"	3'-2 1/16"	0'-0"	0'-0 1/2"	0'-0 9/16"	0'-0 1/2"	0'-0 5/16"	0'-6"	0'-1 1/4"	0'-1 7/16"	0'-2 3/16"	0'-1 7/16"	0'-1 3/16"	0'-0"

WESTBOUND STRUCTURE		0.25 PT.	FIELD SPLICE 4	0.50 PT.	0.75 PT.	FIELD SPLICE 5	CL. PIER 3	FIELD SPLICE 6	0.25 PT.	0.50 PT.	0.75 PT.	FIELD SPLICE 7	CL. PIER 4	0.25 PT.	FIELD SPLICE 8	0.50 PT.	0.75 PT.	CL. BRG. REAR ABUT.
WG 1	D. L. STEEL BEAM	0'-0 1/16"	0'-0 1/16"	0'-0 1/16"	0'-0 1/16"	0'-0 1/16"	0'-0"	0'-0 1/16"	0'-0 1/16"	0'-0 3/16"	0'-0 1/16"	0'-0 1/16"	0'-0"	0'-0"	0'-0"	0'-0"	0'-0"	0'-0"
	REMAIN D. L. (SEE NOTE 1)	0'-0 7/16"	0'-0 7/16"	0'-0 3/4"	0'-0 3/8"	0'-0 3/8"	0'-0"	0'-0 1/2"	0'-0 5/16"	0'-1"	0'-0 5/8"	0'-0 1/2"	0'-0"	0'-0"	0'-0 1/16"	0'-0 1/8"	0'-0 1/8"	0'-0"
	VERTICAL CURVE CORRECTION	0'-0 5/8"	0'-0 5/8"	0'-0 7/8"	0'-0 5/8"	0'-0 5/8"	0'-0"	0'-0 5/8"	0'-0 5/8"	0'-0 7/8"	0'-0 5/8"	0'-0 5/8"	0'-0"	0'-0 1/4"	0'-0 5/16"	0'-0 5/16"	0'-0 1/4"	0'-0"
	TOTAL CAMBER	0'-1 1/8"	0'-1 1/8"	0'-1 3/4"	0'-1 1/8"	0'-1 1/8"	0'-0"	0'-1 1/4"	0'-1 1/4"	0'-2"	0'-1 3/8"	0'-1 1/4"	0'-0"	0'-1 1/4"	0'-0 3/8"	0'-0 7/16"	0'-0 7/16"	0'-0"
WG 2	D. L. STEEL BEAM	0'-0 1/16"	0'-0 1/16"	0'-0 1/16"	0'-0 1/16"	0'-0 1/16"	0'-0"	0'-0 1/16"	0'-0 3/16"	0'-0 3/16"	0'-0 1/16"	0'-0 1/16"	0'-0"	0'-0"	0'-0"	0'-0"	0'-0"	0'-0"
	REMAIN D. L. (SEE NOTE 1)	0'-0 5/16"	0'-0 3/8"	0'-0 5/8"	0'-0 5/16"	0'-0 5/16"	0'-0"	0'-0 9/16"	0'-0 5/8"	0'-1 1/8"	0'-0 11/16"	0'-0 9/16"	0'-0"	0'-0"	0'-0 1/8"	0'-0 3/16"	0'-0 3/16"	0'-0"
	VERTICAL CURVE CORRECTION	0'-0 9/16"	0'-0 9/16"	0'-0 3/4"	0'-0 9/16"	0'-0 9/16"	0'-0"	0'-0 5/8"	0'-0 5/8"	0'-0 13/16"	0'-0 5/8"	0'-0 5/8"	0'-0"	0'-0 1/4"	0'-0 5/16"	0'-0 1/4"	0'-0 1/4"	0'-0"
	TOTAL CAMBER	0'-0 15/16"	0'-0 15/16"	0'-1 1/2"	0'-0 15/16"	0'-0 15/16"	0'-0"	0'-1 1/4"	0'-1 5/16"	0'-2 1/16"	0'-1 3/8"	0'-1 1/4"	0'-0"	0'-1 1/4"	0'-0 7/16"	0'-0 1/2"	0'-0 1/2"	0'-0"
WG 3	D. L. STEEL BEAM	0'-0"	0'-0"	0'-0 1/16"	0'-0"	0'-0"	0'-0"	0'-0 1/16"	0'-0 1/16"	0'-0 1/8"	0'-0 1/16"	0'-0 1/16"	0'-0"	0'-0"	0'-0"	0'-0"	0'-0 1/16"	0'-0"
	REMAIN D. L. (SEE NOTE 1)	0'-0 1/8"	0'-0 3/16"	0'-0 3/8"	0'-0 3/16"	0'-0 3/16"	0'-0"	0'-0 1/2"	0'-0 9/16"	0'-0 15/16"	0'-0 9/16"	0'-0 1/2"	0'-0"	0'-0"	0'-0 1/8"	0'-0 3/16"	0'-0 1/4"	0'-0"
	VERTICAL CURVE CORRECTION	0'-0 1/2"	0'-0 1/2"	0'-0 11/16"	0'-0 1/2"	0'-0 1/2"	0'-0"	0'-0 9/16"	0'-0 9/16"	0'-0 3/4"	0'-0 9/16"	0'-0 9/16"	0'-0"	0'-0 1/4"	0'-0 5/16"	0'-0 5/16"	0'-0 1/4"	0'-0"
	TOTAL CAMBER	0'-0 11/16"	0'-0 3/4"	0'-1 11/16"	0'-0 11/16"	0'-0 11/16"	0'-0"	0'-1 1/8"	0'-1 3/16"	0'-1 7/8"	0'-1 1/4"	0'-1 1/8"	0'-0"	0'-0 1/4"	0'-0 7/16"	0'-0 9/16"	0'-0 1/2"	0'-0"
WG 4	D. L. STEEL BEAM	0'-0"	0'-0"	0'-0"	0'-0"	0'-0"	0'-0"	0'-0 1/16"	0'-0 1/16"	0'-0 1/8"	0'-0 1/16"	0'-0 1/16"	0'-0"	0'-0"	0'-0"	0'-0 1/16"	0'-0 1/16"	0'-0"
	REMAIN D. L. (SEE NOTE 1)	0'-0 1/16"	0'-0 1/8"	0'-0 3/16"	0'-0 1/16"	0'-0 1/8"	0'-0"	0'-0 7/16"	0'-0 9/16"	0'-0 7/8"	0'-0 9/16"	0'-0 7/16"	0'-0"	0'-0 1/16"	0'-0 1/4"	0'-0 1/4"	0'-0 1/4"	0'-0"
	VERTICAL CURVE CORRECTION	0'-0 7/16"	0'-0 7/16"	0'-0 9/16"	0'-0 7/16"	0'-0 7/16"	0'-0"	0'-0 1/2"	0'-0 1/2"	0'-0 11/16"	0'-0 1/2"	0'-0 1/2"	0'-0"	0'-0 1/4"	0'-0 5/16"	0'-0 5/16"	0'-0 1/4"	0'-0"
	TOTAL CAMBER	0'-0 7/16"	0'-0 9/16"	0'-0 13/16"	0'-0 9/16"	0'-0 9/16"	0'-0"	0'-1"	0'-1 1/8"	0'-1 11/16"	0'-1 1/8"	0'-1 1/16"	0'-0"	0'-0 5/16"	0'-0 9/16"	0'-0 5/8"	0'-0 9/16"	0'-0"
WG 5	D. L. STEEL BEAM	0'-0"	0'-0"	0'-0"	0'-0"	0'-0"	0'-0"	0'-0 1/16"	0'-0 1/16"	0'-0 1/8"	0'-0 1/16"	0'-0 1/16"	0'-0"	0'-0"	0'-0"	0'-0 1/16"	0'-0 1/16"	0'-0"
	REMAIN D. L. (SEE NOTE 1)	0'-0 11/16"	0'-0"	0'-0 11/16"	0'-0"	0'-0"	0'-0"	0'-0 3/8"	0'-0 1/2"	0'-0 3/4"	0'-0 7/16"	0'-0 3/8"	0'-0"	0'-0 11/16"	0'-0 9/16"	0'-0 1/4"	0'-0 11/16"	0'-0"
	VERTICAL CURVE CORRECTION	0'-0 3/8"	0'-0 3/8"	0'-0 1/2"	0'-0 3/8"	0'-0 3/8"	0'-0"	0'-0 1/2"	0'-0 1/2"	0'-0 5/8"	0'-0 1/2"	0'-0 1/2"	0'-0"	0'-0 1/4"	0'-0 1/4"	0'-0 9/16"	0'-0 1/4"	0'-0"
	TOTAL CAMBER	0'-0 5/16"	0'-0 3/8"	0'-0 9/16"	0'-0 3/8"	0'-0 3/8"	0'-0"	0'-0 7/8"	0'-1"	0'-1 7/16"	0'-0 15/16"	0'-0 7/8"	0'-0"	0'-0 3/8"	0'-0 1/2"	0'-0 5/8"	0'-0 9/16"	0'-0"
WG 6	D. L. STEEL BEAM	0'-0"	0'-0"	0'-0"	0'-0"	0'-0"	0'-0"	0'-0 1/16"	0'-0 1/16"	0'-0 1/16"	0'-0 1/16"	0'-0 1/16"	0'-0"	0'-0"	0'-0"	0'-0 1/16"	0'-0 1/16"	0'-0"
	REMAIN D. L. (SEE NOTE 1)	-0'-0 1/8"	-0'-0 1/16"	-0'-0 1/16"	-0'-0 1/16"	-0'-0 1/16"	0'-0"	0'-0 5/16"	0'-0 7/16"	0'-0 5/8"	0'-0 3/8"	0'-0 5/16"	0'-0"	0'-0 1/8"	0'-0 3/16"	0'-0 5/16"	0'-0 5/16"	0'-0"
	VERTICAL CURVE CORRECTION	0'-0 5/16"	0'-0 3/8"	0'-0 7/16"	0'-0 5/16"	0'-0 5/16"	0'-0"	0'-0 5/16"	0'-0 7/16"	0'-0 9/16"	0'-0 7/16"	0'-0 7/16"	0'-0"	0'-0 1/4"	0'-0 1/4"	0'-0 5/16"	0'-0 1/4"	0'-0"
	TOTAL CAMBER	0'-0 3/16"	0'-0 1/4"	0'-0 3/8"	0'-0 1/4"	0'-0 1/4"	0'-0"	0'-0 11/16"	0'-0 15/16"	0'-1 5/16"	0'-0 13/16"	0'-0 13/16"	0'-0"	0'-0 3/8"	0'-0 1/2"	0'-0 11/16"	0'-0 5/8"	0'-0"
WG 7	D. L. STEEL BEAM	0'-0"	0'-0"	0'-0"	0'-0"	0'-0"	0'-0"	0'-0 1/16"	0'-0 1/16"	0'-0 1/16"	0'-0 1/16"	0'-0 1/16"	0'-0"	0'-0"	0'-0"	0'-0 1/16"	0'-0 1/16"	0'-0"
	REMAIN D. L. (SEE NOTE 1)	-0'-0 1/8"	-0'-0 1/8"	-0'-0 1/8"	-0'-0 1/16"	-0'-0 1/16"	0'-0"	0'-0 3/16"	0'-0 3/16"	0'-0 7/16"	0'-0 1/4"	0'-0 3/16"	0'-0"	0'-0 1/8"	0'-0 1/8"	0'-0 1/4"	0'-0 1/4"	0'-0"
	VERTICAL CURVE CORRECTION	0'-0 1/4"	0'-0 5/16"	0'-0 3/8"	0'-0 1/4"	0'-0 5/16"	0'-0"	0'-0 1/4"	0'-0 3/8"	0'-0 9/16"	0'-0 3/8"	0'-0 5/8"	0'-0"	0'-0 1/4"	0'-0 1/4"	0'-0 5/16"	0'-0 1/4"	0'-0"
	TOTAL CAMBER	0'-0 1/8"	0'-0 3/16"	0'-0 1/4"	0'-0 3/16"	0'-0 3/16"	0'-0"	0'-0 1/2"	0'-0 3/4"	0'-1"	0'-0 11/16"	0'-0 5/8"	0'-0"	0'-0 3/8"	0'-0 7/16"	0'-0 5/8"	0'-0 9/16"	0'-0"

IMAGE FILES NONE
XREFERENCES : XR-DAY-XWAY-TITBLK
FILE NAME : P:\Transportation\20055370 Dayton Expressway 31\30 SheetDrawings\20 Singles\Deflections-1.dwg / Layout1
MRD\W1 : 13-FEB-07, 10:02:48 / Submitted

PREPARED BY:
R.W. ARMSTRONG & ASSOCIATES
471 EAST BROAD STREET, SUITE 2010
COLUMBUS, OH 43215
OFFICE (614) 225-8868 FAX (614) 225-8869

DESIGNED	DRAWN	REVIEWED	DATE
MHZ	SLO	PAR	12/22/06
CHECKED	REVISED	STRUCTURE FILE NUMBER	
LAK		5760569	

CAMBER DETAILS 1 OF 2
BRIDGE No. DAY-XWAY-00.79
DAYTON EXPRESSWAY OVER KEOWEE STREET AND CSXT RAILROAD

MOT-XWAY
PID NO. 77774

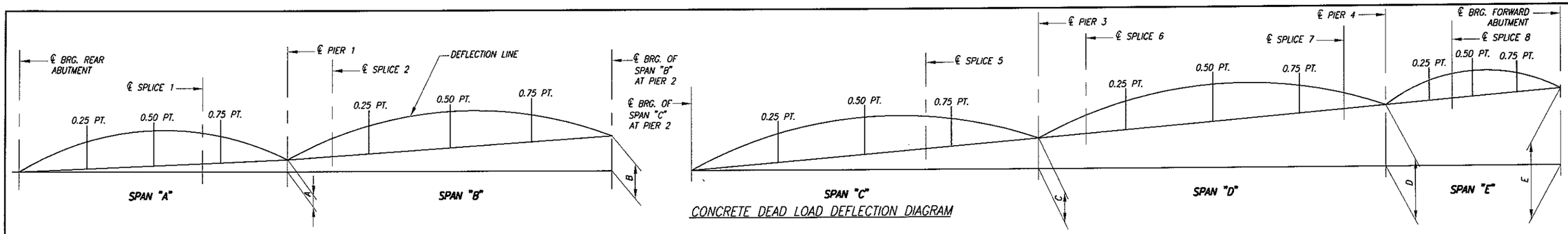

CONCRETE DEAD LOAD DEFLECTION DIAGRAM

	EASTBOUND STRUCTURE	A	B	C	D	E	CL BRG REAR ABUT.	0.25 PT	0.50 PT	FIELD SPLICE 1	0.75 PT	CL PIER 1	FIELD SPLICE 2	0.25 PT	0.50 PT	0.75 PT	FIELD SPLICE 3	CL PIER 2
SW1	D. L. STEEL BEAM						0'-0"	0'-0"	0'-0"	0'-0"	0'-0"	0'-0"	0'-0 3/16"	0'-0 3/16"	0'-0 5/16"	0'-0 1/4"		0'-0"
	REMAIN D. L. (SEE NOTE 1)						0'-0"	0'-0 1/8"	0'-0 1/16"	0'-0 1/16"	-0'-0 1/16"	0'-0"	0'-0 13/16"	0'-0 13/16"	0'-1 1/2"	0'-1 1/4"		0'-0"
	VERTICAL CURVE CORRECTION						0'-0"	0'-0 3/16"	0'-0 3/8"	0'-0 3/8"	0'-0 5/8"	0'-0"	0'-0 5/8"	0'-0 5/8"	0'-0 13/16"	0'-0 5/8"		0'-0"
	TOTAL CAMBER	1'-5 9/16"	3'-0 7/8"	0'-7 1/2"	1'-2 3/8"	1'-4 1/4"	0'-0"	0'-0 3/8"	0'-0 7/16"	0'-0 3/8"	0'-0 3/16"	0'-0"	0'-1 9/16"	0'-1 5/8"	0'-2 3/8"	0'-2 1/8"		0'-0"
SW2	D. L. STEEL BEAM						0'-0"	0'-0"	0'-0"	0'-0"	0'-0"	0'-0"	0'-0 1/8"	0'-0 9/16"	0'-0 9/16"	0'-0 1/4"		0'-0"
	REMAIN D. L. (SEE NOTE 1)						0'-0"	0'-0 3/16"	0'-0 1/16"	0'-0 1/16"	-0'-0 1/8"	0'-0"	0'-1 1/16"	0'-1 1/8"	0'-2 1/8"	0'-1 11/16"		0'-0"
	VERTICAL CURVE CORRECTION						0'-0"	0'-0 3/4"	0'-0 3/8"	0'-0 3/8"	0'-0 5/16"	0'-0"	0'-0 5/8"	0'-0 5/8"	0'-0 13/16"	0'-0 5/8"		0'-0"
	TOTAL CAMBER	1'-4 3/8"	2'-8 13/16"	0'-6 1/2"	1'-1 1/16"	1'-2 3/8"	0'-0"	0'-0 1/2"	0'-0 1/2"	0'-0 7/16"	0'-0 3/16"	0'-0"	0'-1 13/16"	0'-1 15/16"	0'-3 1/4"	0'-2 9/16"		0'-0"
SW3	D. L. STEEL BEAM						0'-0"	0'-0"	0'-0"	0'-0"	0'-0"	0'-0"	0'-0 1/8"	0'-0 9/16"	0'-0 9/16"	0'-0 1/4"		0'-0"
	REMAIN D. L. (SEE NOTE 1)						0'-0"	0'-0 3/16"	0'-0 1/16"	0'-0 1/16"	-0'-0 1/8"	0'-0"	0'-1 1/16"	0'-1 1/8"	0'-2 1/8"	0'-1 3/4"		0'-0"
	VERTICAL CURVE CORRECTION						0'-0"	0'-0 5/16"	0'-0 7/16"	0'-0 3/8"	0'-0 5/16"	0'-0"	0'-0 5/8"	0'-0 5/8"	0'-0 13/16"	0'-0 5/8"		0'-0"
	TOTAL CAMBER	1'-2 1/8"	2'-8 13/16"	0'-5 5/8"	0'-11 13/16"	1'-0 5/8"	0'-0"	0'-0 1/2"	0'-0 1/2"	0'-0 7/16"	0'-0 3/16"	0'-0"	0'-1 7/8"	0'-1 15/16"	0'-3 1/4"	0'-2 5/8"		0'-0"
SW4	D. L. STEEL BEAM						0'-0"	0'-0"	0'-0"	0'-0"	0'-0"	0'-0"	0'-0 1/8"	0'-0 9/16"	0'-0 9/16"	0'-0 1/4"		0'-0"
	REMAIN D. L. (SEE NOTE 1)						0'-0"	0'-0 3/16"	0'-0 1/16"	0'-0 1/16"	0'-0 1/8"	0'-0"	0'-1 1/16"	0'-1 1/8"	0'-2 1/8"	0'-1 3/4"		0'-0"
	VERTICAL CURVE CORRECTION						0'-0"	0'-0 5/16"	0'-0 7/16"	0'-0 7/16"	0'-0 5/16"	0'-0"	0'-0 5/8"	0'-0 5/8"	0'-0 7/16"	0'-0 5/8"		0'-0"
	TOTAL CAMBER	1'-1 7/8"	2'-8 15/16"	0'-4 11/16"	0'-10 5/8"	0'-10 7/8"	0'-0"	0'-0 9/16"	0'-0 1/2"	0'-0 7/16"	0'-0 3/16"	0'-0"	0'-1 13/16"	0'-1 15/16"	0'-3 5/16"	0'-2 5/8"		0'-0"
SW6	D. L. STEEL BEAM						0'-0"	0'-0"	0'-0"	0'-0"	0'-0"	0'-0"	0'-0 1/8"	0'-0 3/16"	0'-0 5/16"	0'-0 1/4"		0'-0"
	REMAIN D. L. (SEE NOTE 1)						0'-0"	0'-0 3/16"	0'-0 1/16"	0'-0"	0'-0 1/8"	0'-0"	0'-1 1/16"	0'-1 1/8"	0'-2 3/16"	0'-1 3/4"		0'-0"
	VERTICAL CURVE CORRECTION						0'-0"	0'-0 5/16"	0'-0 7/16"	0'-0 7/16"	0'-0 5/16"	0'-0"	0'-0 5/8"	0'-0 5/8"	0'-0 7/16"	0'-0 5/8"		0'-0"
	TOTAL CAMBER	1'-0 5/8"	2'-1 1/4"	0'-3 13/16"	0'-0 3/8"	0'-0 1/8"	0'-0"	0'-0 9/16"	0'-0 1/2"	0'-0 7/16"	0'-0 3/16"	0'-0"	0'-1 7/8"	0'-2"	0'-3 3/8"	0'-2 11/16"		0'-0"
SW7	D. L. STEEL BEAM						0'-0"	0'-0"	0'-0"	0'-0"	0'-0"	0'-0"	0'-0 1/8"	0'-0 9/16"	0'-0 5/16"	0'-0 1/4"		0'-0"
	REMAIN D. L. (SEE NOTE 1)						0'-0"	0'-0 3/16"	0'-0 1/16"	0'-0 1/16"	-0'-0 1/8"	0'-0"	0'-1 1/16"	0'-1 9/16"	0'-2 3/16"	0'-1 13/16"		0'-0"
	VERTICAL CURVE CORRECTION						0'-0"	0'-0 5/16"	0'-0 7/16"	0'-0 7/16"	0'-0 5/16"	0'-0"	0'-0 5/8"	0'-0 11/16"	0'-0 7/8"	0'-0 11/16"		0'-0"
	TOTAL CAMBER	0'-10"	1'-5 7/16"	0'-1 7/8"	0'-5 15/16"	0'-5 5/8"	0'-0"	0'-0 1/2"	0'-0 1/2"	0'-0 7/16"	0'-0 3/16"	0'-0"	0'-1 7/8"	0'-2"	0'-3 7/16"	0'-2 11/16"		0'-0"
SW8	D. L. STEEL BEAM						0'-0"	0'-0"	0'-0"	0'-0"	0'-0"	0'-0"	0'-0 1/8"	0'-0 9/16"	0'-0 5/16"	0'-0 1/4"		0'-0"
	REMAIN D. L. (SEE NOTE 1)						0'-0"	0'-0 3/16"	0'-0 1/16"	0'-0 1/16"	-0'-0 1/8"	0'-0"	0'-1 1/16"	0'-1 9/16"	0'-2 3/16"	0'-1 13/16"		0'-0"
	VERTICAL CURVE CORRECTION						0'-0"	0'-0 5/16"	0'-0 7/16"	0'-0 7/16"	0'-0 5/16"	0'-0"	0'-0 5/8"	0'-0 11/16"	0'-0 7/8"	0'-0 11/16"		0'-0"
	TOTAL CAMBER	0'-11 1/4"	1'-10 3/4"	0'-2 11/16"	0'-8 3/16"	0'-7 3/8"	0'-0"	0'-0 1/2"	0'-0 1/2"	0'-0 7/16"	0'-0 3/16"	0'-0"	0'-1 13/16"	0'-2"	0'-3 3/8"	0'-2 11/16"		0'-0"
SW9	D. L. STEEL BEAM						0'-0"	0'-0"	0'-0"	0'-0"	0'-0"	0'-0"	0'-0 1/8"	0'-0 9/16"	0'-0 5/16"	0'-0 1/4"		0'-0"
	REMAIN D. L. (SEE NOTE 1)						0'-0"	0'-0 3/16"	0'-0 1/16"	0'-0 1/16"	-0'-0 1/8"	0'-0"	0'-1 1/16"	0'-1 9/16"	0'-2 3/16"	0'-1 13/16"		0'-0"
	VERTICAL CURVE CORRECTION						0'-0"	0'-0 5/16"	0'-0 7/16"	0'-0 7/16"	0'-0 5/16"	0'-0"	0'-0 5/8"	0'-0 11/16"	0'-0 7/8"	0'-0 11/16"		0'-0"
	TOTAL CAMBER	0'-6 11/16"	1'-6 5/16"	0'-1 1/8"	0'-5 3/4"	0'-3 7/8"	0'-0"	0'-0 1/2"	0'-0 1/2"	0'-0 7/16"	0'-0 1/4"	0'-0"	0'-1 1/2"	0'-1 11/16"	0'-2 13/16"	0'-2 1/4"		0'-0"

	EASTBOUND STRUCTURE	0.25 PT.	FIELD SPLICE 4	0.50 PT.	0.75 PT.	FIELD SPLICE 5	CL. PIER 3	FIELD SPLICE 6	0.25 PT.	0.50 PT.	0.75 PT.	FIELD SPLICE 7	CL. PIER 4	0.25 PT.	FIELD SPLICE 8	0.50 PT.	0.75 PT.	CL. BRG. REAR ABUT.
SE 1	D. L. STEEL BEAM	0'-0 1/16"		0'-0 1/16"	0'-0"	0'-0"	0'-0"	0'-0 1/16"	0'-0 1/16"	0'-0 1/16"	0'-0 1/16"	0'-0 1/16"	0'-0"	0'-0 1/16"	0'-0 1/16"	0'-0 1/16"	0'-0 1/16"	0'-0"
	REMAIN D. L. (SEE NOTE 1)	0'-0 1/4"		0'-0 5/16"	0'-0 1/8"	0'-0 3/16"	0'-0"	0'-0 1/4"	0'-0 1/4"	0'-0 3/8"	0'-0 3/16"	0'-0 3/16"	0'-0"	0'-0 3/16"	0'-0 1/4"	0'-0 7/16"	0'-0 3/8"	0'-0"
	VERTICAL CURVE CORRECTION	0'-0 1/4"		0'-0 5/16"	0'-0 1/4"	0'-0 1/4"	0'-0"	0'-0 3/8"	0'-0 3/8"	0'-0 1/2"	0'-0 3/8"	0'-0 3/8"	0'-0"	0'-0 1/4"	0'-0 1/4"	0'-0 5/16"	0'-0 1/4"	0'-0"
	TOTAL CAMBER	0'-0 9/16"		0'-0 11/16"	0'-0 3/8"	0'-0 7/16"	0'-0"	0'-0 5/8"	0'-0 5/8"	0'-1"	0'-0 5/8"	0'-0 5/8"	0'-0"	0'-0 1/2"	0'-0 9/16"	0'-0 13/16"	0'-0 11/16"	0'-0"
SE 2	D. L. STEEL BEAM	0'-0"		0'-0 1/16"	0'-0"	0'-0"	0'-0"	0'-0"	0'-0"	0'-0 1/16"	0'-0"	0'-0"	0'-0"	0'-0 1/16"	0'-0 1/16"	0'-0 1/16"	0'-0 1/16"	0'-0"
	REMAIN D. L. (SEE NOTE 1)	0'-0 3/16"		0'-0 1/4"	0'-0 1/8"	0'-0 1/8"	0'-0"	0'-0 1/4"	0'-0 1/4"	0'-0 7/16"	0'-0 3/16"	0'-0 1/4"	0'-0"	0'-0 5/16"	0'-0 5/16"	0'-0 5/8"	0'-0 1/2"	0'-0"
	VERTICAL CURVE CORRECTION	0'-0 3/16"		0'-0 1/4"	0'-0 3/16"	0'-0 3/16"	0'-0"	0'-0 5/16"	0'-0 5/16"	0'-0 7/16"	0'-0 5/16"	0'-0 3/8"	0'-0"	0'-0 1/4"	0'-0 1/4"	0'-0 5/16"	0'-0 1/4"	0'-0"
	TOTAL CAMBER	0'-0 7/16"		0'-0 1/2"	0'-0 5/16"	0'-0 3/8"	0'-0"	0'-0 9/16"	0'-0 5/8"	0'-0 15/16"	0'-0 9/16"	0'-0 5/8"	0'-0"	0'-0 9/16"	0'-0 5/8"	0'-1 1/16"	0'-0 7/8"	0'-0"
SE 3	D. L. STEEL BEAM	0'-0"		0'-0"	0'-0"	0'-0"	0'-0"	0'-0"	0'-0"	0'-0 1/16"	0'-0"	0'-0"	0'-0"	0'-0 1/16"	0'-0 1/16"	0'-0 1/16"	0'-0 1/16"	0'-0"
	REMAIN D. L. (SEE NOTE 1)	0'-0 1/8"		0'-0 1/8"	0'-0 1/16"	0'-0 1/16"	0'-0"	0'-0 3/16"	0'-0 3/16"	0'-0 5/16"	0'-0 1/8"	0'-0 3/16"	0'-0"	0'-0 5/16"	0'-0 3/8"	0'-0 5/8"	0'-0 9/16"	0'-0"
	VERTICAL CURVE CORRECTION	0'-0 1/8"		0'-0 3/16"	0'-0 1/8"	0'-0 1/8"	0'-0"	0'-0 5/16"	0'-0 5/16"	0'-0 3/8"	0'-0 5/16"	0'-0 5/16"	0'-0"	0'-0 1/4"	0'-0 1/4"	0'-0 5/16"	0'-0 1/4"	0'-0"
	TOTAL CAMBER	0'-0 1/4"		0'-0 5/16"	0'-0 3/16"	0'-0 1/4"	0'-0"	0'-0 1/2"	0'-0 1/2"	0'-0 3/4"	0'-0 7/16"	0'-0 1/2"	0'-0"	0'-0 5/8"	0'-0 11/16"	0'-1 1/16"	0'-0 7/8"	0'-0"
SE 4	D. L. STEEL BEAM	0'-0"		0'-0"	0'-0"	0'-0"	0'-0"	0'-0"	0'-0"	0'-0"	0'-0"	0'-0"	0'-0"	0'-0 1/16"	0'-0 1/16"	0'-0 1/16"	0'-0 1/16"	0'-0"
	REMAIN D. L. (SEE NOTE 1)	0'-0 1/16"		0'-0 1/16"	0'-0"	0'-0"	0'-0"	0'-0 1/8"	0'-0 3/16"	0'-0 1/4"	0'-0 1/16"	0'-0 1/8"	0'-0"	0'-1"	0'-1 1/16"	0'-1 1/2"	0'-1 1/16"	0'-0"
	VERTICAL CURVE CORRECTION	0'-0 1/8"		0'-0 1/8"	0'-0 1/8"	0'-0 1/8"	0'-0"	0'-0 3/16"	0'-0 1/4"	0'-0 3/8"	0'-0 1/4"	0'-0 5/16"	0'-0"	0'-0 1/4"	0'-0 1/4"	0'-0 5/16"	0'-0 1/4"	0'-0"
	TOTAL CAMBER	0'-0 3/16"		0'-0 3/16"	0'-0 1/8"	0'-0 1/8"	0'-0"	0'-0 5/16"	0'-0 7/16"	0'-0 5/8"	0'-0 3/8"	0'-0 7/16"	0'-0"	0'-1 5/16"	0'-1 3/8"	0'-1 15/16"	0'-1 7/16"	0'-0"
SE 5	D. L. STEEL BEAM	0'-0"		0'-0"	0'-0"	0'-0"	0'-0"	0'-0"	0'-0"	0'-0"	0'-0"	0'-0"	0'-0"	0'-0 1/16"	0'-0 1/16"	0'-0 1/8"	0'-0 1/16"	0'-0"
	REMAIN D. L. (SEE NOTE 1)	0'-0"		0'-0"	0'-0"	0'-0"	0'-0"	0'-0 1/8"	0'-0 3/16"	0'-0 3/16"	0'-0 1/16"	0'-0 1/8"	0'-0"	0'-0 3/16"	0'-0 7/16"	0'-0 13/16"	0'-0 5/8"	0'-0"
	VERTICAL CURVE CORRECTION	0'-0 1/16"		0'-0 1/8"	0'-0 1/16"	0'-0 1/16"	0'-0"	0'-0 1/8"	0'-0 1/4"	0'-0 5/16"	0'-0 1/4"	0'-0 1/4"	0'-0"	0'-0 1/4"	0'-0 1/4"	0'-0 5/16"	0'-0 1/4"	0'-0"
	TOTAL CAMBER	0'-0 1/8"		0'-0 1/8"	0'-0 1/16"	0'-0 1/8"	0'-0"	0'-0 1/4"	0'-0 7/16"	0'-0 9/16"	0'-0 5/16"	0'-0 3/8"	0'-0"	0'-0 11/16"	0'-0 3/4"	0'-1 1/4"	0'-1"	0'-0"
SE 6	D. L. STEEL BEAM	0'-0"		0'-0"	0'-0"		0'-0"		0'-0"	0'-0"	0'-0"	0'-0"	0'-0"	0'-0 1/16"	0'-0 1/16"	0'-0 1/16"	0'-0 1/16"	0'-0"
	REMAIN D. L. (SEE NOTE 1)	0'-0"		0'-0"	0'-0"		0'-0"		0'-0 1/8"	0'-0 1/8"	0'-0"	0'-0 1/16"	0'-0"	0'-0 1/2"	0'-0 1/2"	0'-0 15/16"	0'-0 3/4"	0'-0"
	VERTICAL CURVE CORRECTION	0'-0 1/16"		0'-0 1/16"	0'-0 1/16"		0'-0"		0'-0 3/16"	0'-0 1/4"	0'-0 3/16"	0'-0 1/4"	0'-0"	0'-0 1/4"	0'-0 1/4"	0'-0 3/8"	0'-0 1/4"	0'-0"
	TOTAL CAMBER	0'-0 1/16"		0'-0 1/16"	0'-0 1/16"		0'-0"		0'-0 3/8"	0'-0 7/16"	0'-0 3/16"	0'-0 5/16"	0'-0"	0'-0 13/16"	0'-0 13/16"	0'-1 3/8"	0'-1 1/8"	0'-0"
SE 7	D. L. STEEL BEAM	0'-0"		0'-0"	0'-0"		0'-0"		0'-0"	0'-0"	0'-0"	0'-0"	0'-0"	0'-0 1/16"	0'-0 1/16"	0'-0 1/8"	0'-0 1/8"	0'-0"
	REMAIN D. L. (SEE NOTE 1)	0'-0"		0'-0"	0'-0"		0'-0"		0'-0 1/16"	0'-0 1/16"	0'-0 1/16"	0'-0"	0'-0"	0'-0 9/16"	0'-0 9/16"	0'-1 1/16"	0'-0 7/8"	0'-0"
	VERTICAL CURVE CORRECTION	0'-0"		0'-0 1/16"	0'-0"		0'-0"		0'-0 3/16"	0'-0 1/4"	0'-0 3/16"	0'-0 3/16"	0'-0"	0'-0 1/4"	0'-0 1/4"	0'-0 3/8"	0'-0 1/4"	0'-0"
	TOTAL CAMBER	0'-0"		0'-0"	0'-0"		0'-0"		0'-0 1/4"	0'-0 5/16"	0'-0 1/8"	0'-0 1/4"	0'-0"	0'-0 7/8"	0'-0 7/8"	0'-1 9/16"	0'-1 1/4"	0'-0"
SE 8	D. L. STEEL BEAM	0'-0"		0'-0"	0'-0"		0'-0"		0'-0"	0'-0"	0'-0"	0'-0"	0'-0"	0'-0 1/16"	0'-0 1/16"	0'-0 3/16"	0'-0 1/8"	0'-0"
	REMAIN D. L. (SEE NOTE 1)	0'-0"		0'-0"	0'-0"		0'-0"		0'-0 1/16"	0'-0"	0'-0 1/16"	0'-0"	0'-0"	0'-0 1/2"	0'-0 1/2"	0'-0 7/8"	0'-0 11/16"	0'-0"
	VERTICAL CURVE CORRECTION	0'-0"		0'-0"	0'-0"		0'-0"		0'-0 1/8"	0'-0 3/16"	0'-0 1/8"	0'-0 3/16"	0'-0"	0'-0 1/4"	0'-0 1/4"	0'-0 3/8"	0'-0 1/4"	0'-0"
	TOTAL CAMBER	0'-0"		0'-0"	0'-0"		0'-0"		0'-0 3/16"	0'-0 3/16"	0'-0 1/16"	0'-0 3/16"	0'-0"	0'-0 7/8"	0'-0 13/16"	0'-1 3/8"	0'-1 1/8"	0'-0"

PREPARED BY:
R.W. ARMSTRONG & ASSOCIATES
471 EAST BROAD STREET, SUITE 2010
COLUMBUS, OH 43215
OFFICE (614) 225-8868 FAX (614) 225-8869

DESIGNED	DRAWN	REVIEWED	DATE
MHZ	SLO	PAR	12/22/06
CHECKED	REVISED	STRUCTURE FILE NUMBER	
LAK		5760569	

CAMBER DETAILS 2 OF 2
BRIDGE No. DAY-XWAY-00.79
DAYTON EXPRESSWAY OVER KEOWEE STREET AND CSX1 RAILROAD

MOT-XWAY
PID NO. 77774

IMAGE FILES : NONE
XREFERENCES : XR-DAY-XWAY-TITBLK;
FILE NAME : P:\Transportation\20053370 Dayton Expressway 3\30 SheetDrawings\20 Singles\Deflections-2.dwg / Layout1
MRD\MT : 20-DEC-06, 11:46:12 / Schmesh

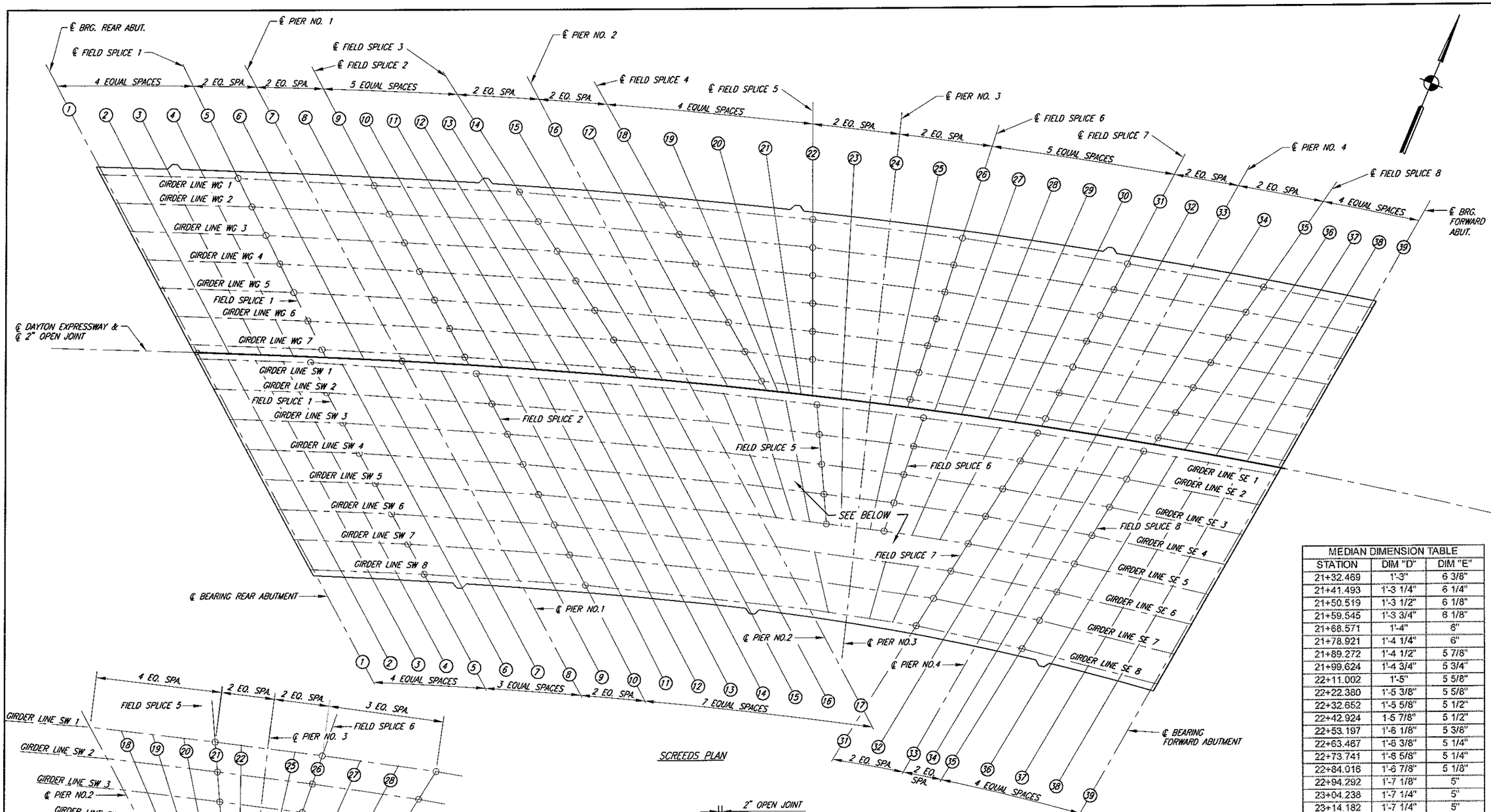

SCREEDS PLAN

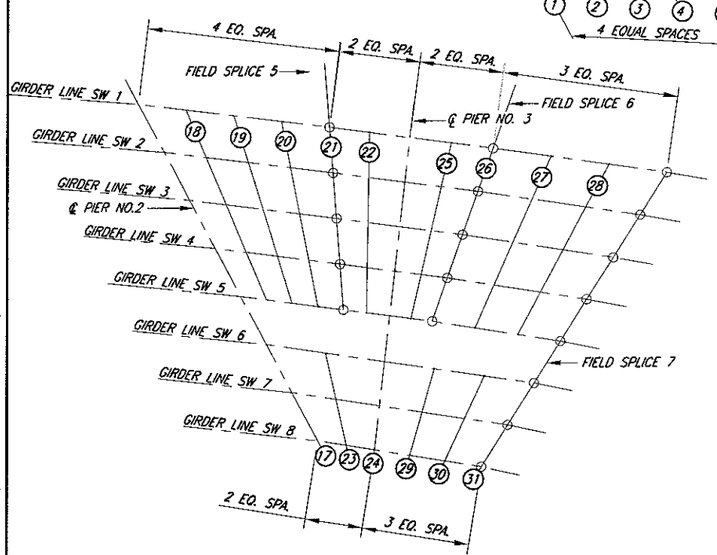

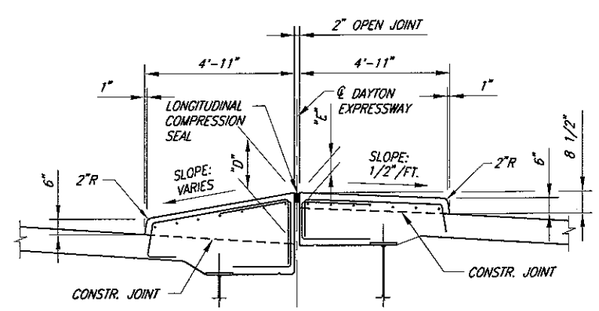

MEDIAN DETAIL

MEDIAN DIMENSION TABLE		
STATION	DIM "D"	DIM "E"
21+32.469	1'-3"	6 3/8"
21+41.493	1'-3 1/4"	6 1/4"
21+50.519	1'-3 1/2"	6 1/8"
21+59.545	1'-3 3/4"	6 1/8"
21+68.571	1'-4"	6"
21+78.921	1'-4 1/4"	6"
21+89.272	1'-4 1/2"	5 7/8"
21+99.624	1'-4 3/4"	5 3/4"
22+11.002	1'-5"	5 5/8"
22+22.380	1'-5 3/8"	5 5/8"
22+32.652	1'-5 5/8"	5 1/2"
22+42.924	1-5 7/8"	5 1/2"
22+53.197	1'-6 1/8"	5 3/8"
22+63.467	1'-6 3/8"	5 1/4"
22+73.741	1'-6 5/8"	5 1/4"
22+84.016	1'-6 7/8"	5 1/8"
22+94.292	1'-7 1/8"	5"
23+04.238	1'-7 1/4"	5"
23+14.182	1'-7 1/4"	5"
23+24.127	1'-7 1/4"	5"
23+34.071	1'-7 1/4"	5"
23+42.547	1'-7 1/4"	5"
23+51.023	1'-7 1/4"	5"
23+59.730	1'-7 1/4"	5"
23+68.437	1'-7 1/4"	5"
23+80.706	1'-7 1/4"	5"
23+92.975	1'-7 1/4"	5"
24+05.244	1'-7 1/4"	5"
24+14.407	1'-7 1/4"	5"
24+23.570	1'-7 1/4"	5"
24+32.044	1'-7 1/4"	5"
24+40.517	1'-7 1/4"	5"
24+51.325	1'-7 1/4"	5"
24+62.132	1'-7 1/4"	5"
24+72.939	1'-7 1/4"	5"
24+83.747	1'-7 1/4"	5"

PREPARED BY:
R.W. ARMSTRONG & ASSOCIATES
471 EAST BROAD STREET, SUITE 2010
COLUMBUS, OH 43215
OFFICE (614) 225-8868 FAX (614) 225-8869

DESIGNED	DRAWN	REVIEWED	DATE
BWB	CLF	PAR	12/22/06
CHECKED	REVISED	STRUCTURE FILE NUMBER	
SRS		5760569	

PLAN OF SCREEDS

BRIDGE No. DAY-XWAY-00.79
DAYTON EXPRESSWAY OVER KEOWEE STREET AND CSXT RAILROAD

MOT-XWAY
PID NO. 77774

IMAGE FILES : NONE
XREFERENCES : XR-DAY-XWAY-TITBLK;
FILE NAME : P:\Transportation\20063370 Dayton Expressway 3\30 Sheet\Drawings\20 Singles\Screed-Plan.dwg / Layout1
WHEN\VAT : 15-FEB-07, 08:35:57 / Samson

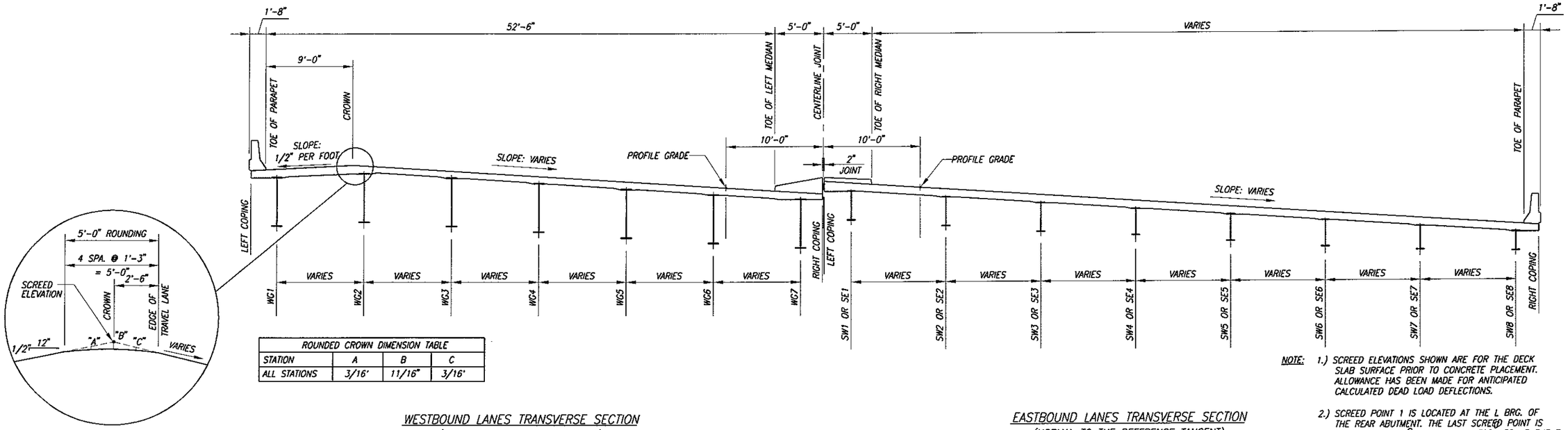

ROUNDED CROWN DIMENSION TABLE			
STATION	A	B	C
ALL STATIONS	3/16'	11/16"	3/16'

WESTBOUND LANES TRANSVERSE SECTION
(NORMAL TO THE REFERENCE TANGENT)

EASTBOUND LANES TRANSVERSE SECTION
(NORMAL TO THE REFERENCE TANGENT)

NOTE:
1.) SCREED ELEVATIONS SHOWN ARE FOR THE DECK SLAB SURFACE PRIOR TO CONCRETE PLACEMENT. ALLOWANCE HAS BEEN MADE FOR ANTICIPATED CALCULATED DEAD LOAD DEFLECTIONS.
2.) SCREED POINT 1 IS LOCATED AT THE L BRG. OF THE REAR ABUTMENT. THE LAST SCREED POINT IS LOCATED AT THE ℄ BRG. OF THE FORWARD ABUTMENT.
3.) SEE SHEET 59/65 FOR MEDIAN DETAIL AND MEDIAN DIMENSION TABLE.

WESTBOUND SCREED ELEVATION TABLE

SCREED POINT	LEFT COPING		TOE OF PARAPET		WG1		CROWN		WG2		WG3		WG4		WG5		WG6		TOE OF LT. MEDIAN		WG7		RIGHT COPING	
	STATION	SCREED ELEV.	STATION	SCREED ELEV.	STATION	SCREED ELEV.	STATION	SCREED ELEV.	STATION	SCREED ELEV.	STATION	SCREED ELEV.	STATION	SCREED ELEV.	STATION	SCREED ELEV.	STATION	SCREED ELEV.	STATION	SCREED ELEV.	STATION	SCREED ELEV.	STATION	SCREED ELEV.
1	20+95.953	772.484	20+96.791	772.569	20+97.192	772.610	21+01.836	773.082	21+02.275	773.069	21+07.401	772.910	21+12.534	772.738	21+17.704	772.554	21+22.891	772.357	21+26.662	772.208	21+28.109	772.149	21+29.511	772.091
2	21+06.881	772.804	21+07.707	772.889	21+08.077	772.929	21+12.685	773.400	21+13.097	773.385	21+18.161	773.210	21+23.248	773.023	21+28.342	772.823	21+33.476	772.612	21+37.204	772.454	21+38.630	772.389	21+40.019	772.329
3	21+17.799	773.112	21+18.615	773.197	21+18.954	773.235	21+23.552	773.710	21+23.936	773.694	21+28.915	773.502	21+33.942	773.300	21+38.978	773.085	21+44.053	772.859	21+47.745	772.687	21+49.150	772.618	21+50.527	772.554
4	21+28.709	773.409	21+29.513	773.493	21+29.821	773.528	21+34.387	774.005	21+34.744	773.988	21+39.663	773.782	21+44.632	773.564	21+49.610	773.334	21+54.629	773.092	21+58.285	772.907	21+59.670	772.834	21+61.035	772.765
5	21+39.609	773.698	21+40.403	773.783	21+40.680	773.812	21+45.215	774.289	21+45.543	774.275	21+50.405	774.053	21+55.317	773.819	21+60.238	773.571	21+65.202	773.311	21+68.824	773.114	21+70.189	773.038	21+71.543	772.962
6	21+50.492	773.983	21+51.325	774.068	21+51.731	774.110	21+56.372	774.580	21+56.822	774.559	21+61.914	774.326	21+67.059	774.080	21+72.217	773.820	21+77.420	773.547	21+81.167	773.344	21+82.649	773.260	21+84.026	773.184
7	21+61.367	774.271	21+62.239	774.357	21+62.775	774.410	21+67.520	774.872	21+68.095	774.846	21+73.443	774.602	21+78.797	774.344	21+84.206	774.071	21+89.636	773.785	21+93.512	773.573	21+95.111	773.483	21+96.509	773.404
8	21+72.133	774.570	21+73.007	774.655	21+73.644	774.715	21+78.307	775.167	21+78.934	775.136	21+84.290	774.876	21+89.653	774.601	21+95.072	774.313	22+00.513	774.009	22+04.411	773.787	22+06.001	773.692	22+07.423	773.609
9	21+82.890	774.862	21+83.806	774.948	21+84.470	775.012	21+89.087	775.464	21+89.767	775.430	21+95.132	775.154	22+00.504	774.863	22+05.935	774.558	22+11.389	774.239	22+15.309	773.994	22+16.891	773.897	22+18.338	773.807
10	21+92.229	775.113	21+93.148	775.198	21+93.790	775.259	21+98.725	775.727	21+99.360	775.691	22+05.002	775.404	22+10.654	775.102	22+16.370	774.786	22+22.111	774.454	22+26.254	774.196	22+27.905	774.090	22+29.439	774.002
11	22+01.562	775.351	22+02.523	775.437	22+03.063	775.491	22+08.357	775.972	22+08.947	775.936	22+14.868	775.639	22+20.801	775.325	22+26.802	774.997	22+32.831	774.652	22+37.199	774.383	22+38.919	774.271	22+40.541	774.182
12	22+10.888	775.573	22+11.892	775.659	22+12.368	775.706	22+17.984	776.197	22+18.528	776.164	22+24.728	775.856	22+30.943	775.531	22+37.231	775.190	22+43.560	774.832	22+48.142	774.552	22+49.932	774.437	22+51.642	774.343
13	22+20.209	775.780	22+21.256	775.867	22+21.666	775.904	22+27.605	776.403	22+28.103	776.375	22+34.582	776.056	22+41.080	775.719	22+47.656	775.365	22+54.277	774.994	22+59.085	774.704	22+60.945	774.589	22+62.743	774.488
14	22+29.523	775.974	22+30.611	776.061	22+30.956	776.088	22+37.221	776.594	22+37.670	776.573	22+44.431	776.243	22+51.212	775.894	22+58.077	775.528	22+64.990	775.143	22+70.027	774.841	22+71.956	774.728	22+73.845	774.616
15	22+41.100	776.211	22+42.114	776.296	22+42.548	776.334	22+48.269	776.808	22+48.777	776.777	22+55.060	776.421	22+61.340	776.047	22+67.710	775.658	22+74.127	775.251	22+78.807	774.947	22+80.591	774.823	22+82.359	774.706
16	22+52.668	776.447	22+53.655	776.530	22+54.179	776.576	22+59.308	777.023	22+59.877	776.985	22+65.664	776.603	22+71.464	776.206	22+77.341	775.793	22+83.262	775.366	22+87.586	775.045	22+89.225	774.922	22+90.874	774.798
17	22+64.106	776.692	22+65.077	776.774	22+65.666	776.825	22+70.943	777.265	22+71.557	777.223	22+77.540	776.821	22+83.568	776.410	22+89.619	775.978	22+95.747	775.529	23+00.325	775.193	23+01.921	775.073	23+03.746	774.941
18	22+75.483	776.940	22+76.489	777.022	22+77.144	777.075	22+82.569	777.514	22+83.274	777.472	22+89.409	777.043	22+95.637	776.618	23+01.893	776.161	23+08.229	775.701	23+13.066	775.349	23+14.616	775.238	23+16.619	775.096
19	22+87.874	777.200	22+88.670	777.278	22+89.182	777.330	22+93.525	777.735	22+94.040	777.685	22+98.891	777.206	23+03.811	776.735	23+08.773	776.247	23+13.782	775.763	23+17.607	775.402	23+18.837	775.284	23+20.417	775.139
20	23+00.254	777.435	23+00.840	777.505	23+01.210	777.552	23+04.408	777.913	23+04.782	777.858	23+08.370	777.331	23+11.992	776.837	23+15.646	776.329	23+19.335	775.827	23+22.147	775.455	23+23.059	775.330	23+24.214	775.183
21	23+12.652	777.578	23+13.030	777.645	23+13.258	777.687	23+15.311	778.036	23+15.542	777.985	23+17.846	777.446	23+20.172	776.934	23+22.519	776.409	23+24.889	775.889	23+26.688	775.506	23+27.280	775.375	23+28.012	775.226
22	23+25.037	777.701	23+25.204	777.766	23+25.288	777.798	23+26.214	778.145	23+26.300	778.100	23+27.321	777.554	23+28.352	777.024	23+29.392	776.486	23+30.442	775.950	23+31.228	775.555	23+31.502	775.419	23+31.810	775.267
23	23+37.450	777.812	23+37.547	777.876	23+37.596	777.911	23+38.131	778.253	23+38.181	778.203	23+38.772	777.663	23+39.368	777.129	23+39.970	776.593	23+40.578	776.055	23+41.033	775.659	23+41.191	775.520	23+41.369	775.368
24	23+49.863	777.923	23+49.890	777.986	23+49.904	778.021	23+50.049	778.363	23+50.063	778.313	23+50.224	777.774	23+50.385	777.236	23+50.549	776.698	23+50.713	776.159	23+50.837	775.760	23+50.880	775.621	23+50.928	775.466
25	23+61.754	778.047	23+61.639	778.109	23+61.582	778.143	23+60.950	778.485	23+60.890	778.434	23+60.192	777.880	23+59.487	777.334	23+58.776	776.790	23+58.058	776.237	23+57.524	775.830	23+57.334	775.687	23+57.126	775.531
26	23+73.644	778.173	23+73.389	778.234	23+73.259	778.264	23+71.851	778.605	23+71.717	778.557	23+70.161	777.993	23+68.590	777.440	23+67.004	776.874	23+65.403	776.311	23+64.210	775.897	23+63.788	775.752	23+63.325	775.594
27	23+84.293	778.276	23+83.993	778.337	23+83.819	778.375	23+82.179	778.706	23+82.003	778.648	23+80.170	778.081	23+78.321	777.527	23+76.454	776.963	23+74.569	776.397	23+73.165	775.981	23+72.667	775.831	23+72.119	775.677
28	23+94.943	778.366	23+94.596	778.427	23+94.379	778.469	23+92.507	778.796	23+92.290	778.732	23+90.181	778.164	23+88.053	777.610	23+85.904	777.041	23+83.736	776.480	23+82.119	776.058	23+81.547	775.905	23+80.914	775.754
29	24+05.592	778.435	24+05.200	778.495	24+04.941	778.541	24+02.835	778.866	24+02.578	778.798	24+00.192	778.229	23+97.785	777.674	23+95.355	777.108	23+92.903	776.544	23+91.073	776.122	23+90.427	775.970	23+89.709	775.818
30	24+16.241	778.482	24+15.803	778.542	24+15.503	778.587	24+13.162	778.914	24+12.866	778.847	24+10.204	778.276	24+07.518	777.722	24+04.806	777.160	24+02.070	776.601	24+00.028	776.177	23+99.307	776.028	23+98.503	775.872
31	24+26.890	778.510	24+26.407	778.570	24+26.065	778.613	24+23.490	778.943	24+23.154	778.880	24+20.215	778.317	24+17.250	777.763	24+14.257	777.198	24+11.236	776.641	24+08.982	776.225	24+08.187	776.081	24+07.298	775.920
32	24+36.692	778.536	24+36.191	778.597	24+35.828	778.641	24+33.166	778.953	24+32.804	778.886	24+29.751	778.338	24+26.670	777.785	24+23.561	777.227	24+20.423	776.678	24+18.121	776.261	24+17.255	776.109	24+16.374	775.956
33	24+46.494	778.553	24+45.975	778.613	24+45.591	778.658	24+42.843	778.977	24+42.454	778.909	24+39.287	778.357	24+36.092	777.804	24+32.866	777.251	24+29.610	776.698	24+27.259	776.301	24+26.324	776.144	24+25.450	775.998
34	24+58.646	778.588	24+58.059	778.648	24+57.676	778.690	24+54.518	779.017	24+54.118	778.952	24+50.526	778.400	24+46.901	777.847	24+43.242	777.293	24+39.549	776.739	24+36.892	776.348	24+35.821	776.188	24+34.844	776.044
35	24+70.798	778.624	24+70.144	778.685	24+69.760	778.721	24+66.194	779.137	24+65.780	779.080	24+61.764	778.527	24+57.710	777.974	24+53.618	777.420	24+49.488	776.865	24+46.524	776.392	24+45.318	776.232	24+44.238	776.089
36	24+79.220	778.644	24+78.612	778.705	24+78.259	778.743	24+74.941	779.082	24+74.562	779.023	24+70.831	778.473	24+67.065	777.923	24+63.264	777.372	24+59.427	776.820	24+56.664	776.432	24+55.553	776.269	24+54.541	776.130
37	24+87.642	778.655	24+87.079	778.717	24+86.758	778.755	24+83.687	779.098	24+83.344	779.039	24+79.898	778.491	24+76.420	777.944	24+72.909	777.396	24+69.366	776.847	24+66.804	776.458	24+65.789	776.297	24+64.843	776.159
38	24+96.063	778.652	24+95.547	778.715	24+95.258	778.752	24+92.434	779.099	24+92.126	779.042	24+88.965	778.497	24+85.775	777.952	24+82.555	777.407	24+79.305	776.861	24+76.944	776.475	24+76.023	776.318	24+75.145	776.177
39	25+04.485	778.651	25+04.015	778.713	25+03.756	778.748	25+01.181	779.088	25+00.907	779.036	24+98.032	778.494	24+95.129	777.951	24+92.200	777.408	24+89.243	776.865	24+87.083	776.471	24+86.258	776.321	24+85.447	776.174

PREPARED BY:
R.W. ARMSTRONG & ASSOCIATES
471 EAST BROAD STREET, SUITE 2010
COLUMBUS, OH 43215
OFFICE (614) 225-8868 FAX (614) 225-8869

DESIGNED	DRAWN	REVIEWED	DATE
BWB	CLF	PAR	12/22/06
CHECKED	REVISED	STRUCTURE FILE NUMBER	
SRS		5760569	

SCREED DETAILS 1 OF 2
BRIDGE No. DAY-XWAY-00.79
DAYTON EXPRESSWAY OVER KEOWEE STREET AND CSXT RAILROAD

MOT-XWAY
PID NO. 77774

IMAGE FILES : NONE
XREFERENCES : XR-DAY-XWAY-TITBLK;
FILE NAME : P:\Transportation\2005\3370 Dayton Expressway 3\30 SheetDrawings\20 Singles\Screed-1.dwg / Layout1
WED\WT : 12-13-07, 16:38:41 / Schenson

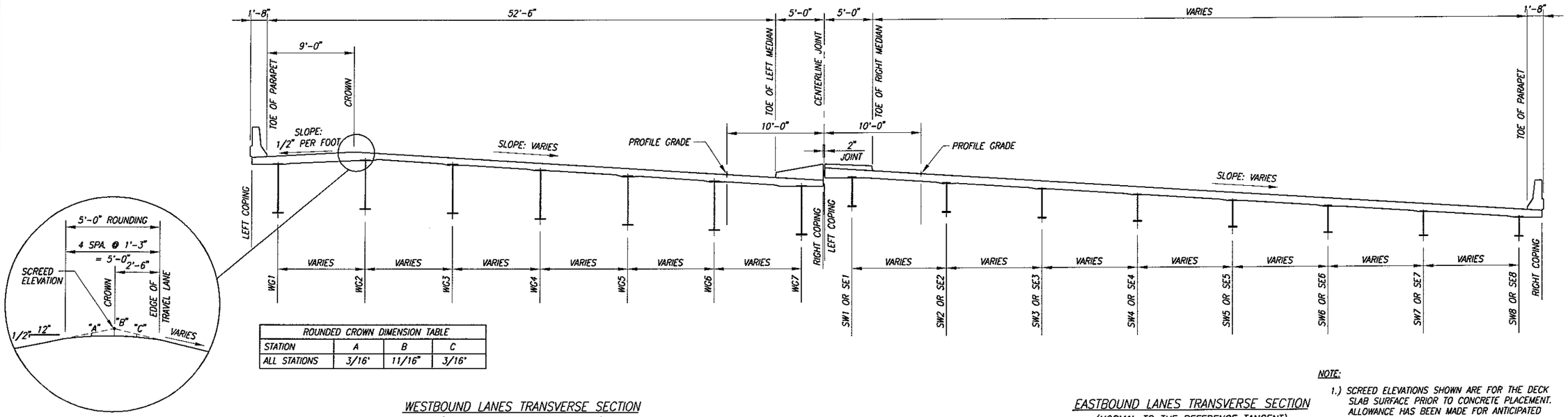

ROUNDED CROWN DIMENSION TABLE			
STATION	A	B	C
ALL STATIONS	3/16"	11/16"	3/16"

WESTBOUND LANES TRANSVERSE SECTION
(NORMAL TO THE REFERENCE TANGENT)

EASTBOUND LANES TRANSVERSE SECTION
(NORMAL TO THE REFERENCE TANGENT)

NOTE:

1.) SCREED ELEVATIONS SHOWN ARE FOR THE DECK SLAB SURFACE PRIOR TO CONCRETE PLACEMENT. ALLOWANCE HAS BEEN MADE FOR ANTICIPATED CALCULATED DEAD LOAD DEFLECTIONS.

2.) SCREED POINT 1 IS LOCATED AT THE ℄ BRG. OF THE REAR ABUTMENT. THE LAST SCREED POINT IS LOCATED AT THE ℄ BRG. OF THE FORWARD ABUTMENT.

3.) SEE SHEET 59/65 FOR MEDIAN DETAIL AND MEDIAN DIMENSION TABLE.

EASTBOUND SCREED ELEVATION TABLE

SCREED POINT	LEFT COPING		SW1 OR SE1		TOE OF RT. MEDIAN		SW2 OR SE2		SW3 OR SE3		SW4 OR SE4		SW5 OR SE5		SW6 OR SE6		SW7 OR SE7		SW8 OR SE8		TOE OF PARAPET		RIGHT COPING	
	STATION	SCREED ELEV.	STATION	SCREED ELEV.	STATION	SCREED ELEV.	STATION	SCREED ELEV.	STATION	SCREED ELEV.	STATION	SCREED ELEV.	STATION	SCREED ELEV.	STATION	SCREED ELEV.	STATION	SCREED ELEV.	STATION	SCREED ELEV.	STATION	SCREED ELEV.	STATION	SCREED ELEV.
1	21+29.608	772.810	21+30.765	772.765	21+32.469	772.697	21+36.360	772.537	21+42.038	772.296	21+47.716	772.040	21+53.426	771.770	21+59.203	771.484	21+64.987	771.180	21+70.855	770.861	21+71.003	770.853	21+71.929	770.801
2	21+38.613	773.028	21+39.744	772.981	21+41.493	772.910	21+45.395	772.743	21+51.089	772.491	21+56.808	772.222	21+62.586	771.938	21+68.379	771.637	21+74.207	771.319	21+80.122	770.984	21+80.334	770.974	21+81.268	770.919
3	21+47.619	773.242	21+48.723	773.193	21+50.519	773.118	21+54.411	772.947	21+60.145	772.681	21+65.904	772.398	21+71.724	772.099	21+77.560	771.783	21+83.432	771.450	21+89.396	771.097	21+89.673	771.084	21+90.616	771.027
4	21+56.624	773.450	21+57.702	773.401	21+59.545	773.319	21+63.428	773.138	21+69.202	772.858	21+75.001	772.560	21+80.865	772.247	21+86.746	771.917	21+92.708	771.570	21+98.677	771.204	21+99.020	771.185	21+99.971	771.126
5	21+65.629	773.649	21+66.681	773.600	21+68.571	773.510	21+72.454	773.321	21+78.260	773.026	21+84.102	772.714	21+90.011	772.387	21+95.936	772.042	22+01.947	771.680	22+07.965	771.301	22+08.374	771.275	22+09.335	771.214
6	21+75.956	773.869	21+77.139	773.809	21+78.921	773.721	21+82.948	773.512	21+88.788	773.200	21+94.667	772.872	22+00.615	772.528	22+06.582	772.167	22+12.637	771.788	22+18.699	771.395	22+19.092	771.371	22+20.063	771.307
7	21+86.283	774.086	21+87.599	774.016	21+89.272	773.930	21+93.432	773.703	21+99.320	773.375	22+05.237	773.031	22+11.227	772.670	22+17.236	772.292	22+23.287	771.897	22+29.445	771.487	22+29.821	771.464	22+30.803	771.397
8	21+96.610	774.309	21+98.060	774.230	21+99.624	774.145	22+03.930	773.903	22+09.656	773.559	22+15.814	773.198	22+21.846	772.821	22+27.899	772.427	22+33.995	772.015	22+40.202	771.587	22+40.561	771.562	22+41.554	771.492
9	22+08.005	774.563	22+09.516	774.474	22+11.002	774.389	22+15.337	774.148	22+21.216	773.785	22+27.126	773.405	22+33.113	773.010	22+39.122	772.597	22+45.175	772.168	22+51.341	771.701	22+51.753	771.672	22+52.742	771.600
10	22+19.400	774.822	22+20.973	774.724	22+22.380	774.637	22+26.747	774.407	22+32.579	774.025	22+38.445	773.627	22+44.353	773.213	22+50.353	772.783	22+56.365	772.335	22+62.490	771.823	22+62.956	771.788	22+63.875	771.711
11	22+29.626	775.056	22+31.232	774.947	22+32.652	774.863	22+37.107	774.599	22+43.043	774.200	22+49.015	773.785	22+55.032	773.353	22+61.146	772.904	22+67.273	772.438	22+73.450	771.920	22+73.893	771.899	22+74.899	771.820
12	22+39.853	775.258	22+41.492	775.139	22+42.924	775.057	22+47.470	774.787	22+53.492	774.371	22+59.592	773.938	22+65.721	773.487	22+71.949	773.020	22+78.194	772.536	22+84.492	771.985	22+84.907	771.978	22+85.935	771.896
13	22+50.079	775.443	22+51.754	775.315	22+53.197	775.233	22+57.835	774.950	22+63.965	774.517	22+70.175	774.056	22+76.417	773.598	22+82.763	773.112	22+89.127	772.609	22+95.549	772.035	22+95.934	772.038	22+96.983	771.953
14	22+60.306	775.597	22+62.016	775.464	22+63.467	775.379	22+68.204	775.090	22+74.442	774.638	22+80.764	774.170	22+87.121	773.683	22+93.534	773.179	23+00.072	772.658	23+06.630	772.112	23+06.981	772.123	23+08.043	772.046
15	22+70.532	775.743	22+72.278	775.606	22+73.741	775.516	22+78.574	775.197	22+84.922	774.728	22+91.359	774.242	22+97.832	773.737	23+04.386	773.240	23+11.007	772.751	23+17.695	772.220	23+18.014	772.229	23+19.096	772.151
16	22+80.759	775.882	22+82.541	775.725	22+84.016	775.627	22+88.945	775.282	22+95.406	774.795	23+01.958	774.297	23+08.547	773.806	23+15.217	773.314	23+21.954	772.822	23+28.762	772.303	23+29.047	772.304	23+30.149	772.225
17	22+90.985	775.964	22+92.802	775.831	22+94.292	775.721	22+99.317	775.345	23+05.897	774.851	23+12.545	774.357	23+19.261	773.862	23+26.046	773.367	23+32.901	772.870	23+39.827	772.373	23+40.079	772.355	23+41.201	772.275
18	23+01.508	776.127	23+03.006	775.979	23+04.238	775.866	23+08.377	775.469	23+13.803	774.962	23+19.284	774.438	23+24.822	773.927										
19	23+12.031	776.267	23+13.209	776.113	23+14.182	775.997	23+17.437	775.581	23+21.709	775.060	23+26.024	774.518	23+30.383	773.993										
20	23+22.554	776.386	23+23.413	776.230	23+24.127	776.109	23+26.498	775.667	23+29.615	775.146	23+32.763	774.594	23+35.943	774.054										
21	23+33.076	776.490	23+33.616	776.335	23+34.071	776.205	23+35.558	775.783	23+37.520	775.228	23+39.501	774.666	23+41.503	774.114										
22	23+42.004	776.572	23+42.299	776.411	23+42.547	776.282	23+43.360	775.848	23+44.431	775.287	23+45.513	774.724	23+46.606	774.162										
23															23+38.973	773.499	23+42.494	772.967	23+46.051	772.436	23+46.184	772.408	23+46.761	772.323
24	23+50.931	776.656	23+50.983	776.491	23+51.023	776.382	23+51.161	775.921	23+51.342	775.351	23+51.525	774.781	23+51.709	774.211	23+51.901	773.625	23+52.087	773.061	23+52.275	772.496	23+52.289	772.456	23+52.319	772.366
25	23+60.177	776.749	23+59.938	776.583	23+59.730	776.450	23+59.065	776.008	23+58.183	775.423	23+57.292	774.839	23+56.391	774.260										
26	23+69.423	776.836	23+68.893	776.673	23+68.437	776.533	23+66.968	776.090	23+65.023	775.496	23+63.058	774.899	23+61.073	774.309										
27	23+82.067	776.951	23+81.387	776.790	23+80.706	776.646	23+78.689	776.193	23+75.965	775.583	23+73.236	774.983	23+70.480	774.385										
28	23+94.710	777.039	23+93.879	776.884	23+92.975	776.733	23+90.409	776.278	23+86.807	775.662	23+83.415	775.057	23+79.889	774.453										
29															23+62.920	773.726	23+61.584	773.143	23+60.235	772.563	23+60.068	772.512	23+59.861	772.421
30															23+73.940	773.820	23+71.082	773.219	23+68.196	772.621	23+67.848	772.560	23+67.404	772.468
31	24+07.354	777.107	24+06.370	776.964	24+05.244	776.800	24+02.129	776.343	23+97.851	775.727	23+93.595	775.121	23+89.298	774.513	23+84.961	773.905	23+80.580	773.297	23+76.159	772.693	23+75.630	772.620	23+74.949	772.527
32	24+16.371	777.148	24+15.414	776.998	24+14.407	776.843	24+11.456	776.381	24+07.460	775.788	24+03.456	775.159	23+99.411	774.549	23+95.326	773.938	23+91.199	773.327	23+87.030	772.718	23+86.602	772.658	23+85.967	772.565
33	24+25.389	777.187	24+24.459	777.032	24+23.570	776.884	24+20.784	776.421	24+17.071	775.810	24+13.320	775.198	24+09.528	774.585	24+05.697	773.971	24+01.824	773.357	23+97.910	772.742	23+97.578	772.690	23+96.989	772.598
34	24+33.928	777.232	24+32.948	777.073	24+32.044	776.929	24+29.136	776.467	24+25.284	775.856	24+21.363	775.240	24+17.402	774.624	24+13.400	774.007	24+09.357	773.389	24+05.271	772.767	24+04.905	772.714	24+04.298	772.623
35	24+42.467	777.275	24+41.437	777.115	24+40.517	776.972	24+37.488	776.518	24+33.498	775.907	24+29.408	775.288	24+25.278	774.668	24+21.106	774.047	24+16.893	773.427	24+12.636	772.793	24+12.232	772.734	24+11.605	772.643
36	24+53.198	777.326	24+52.225	777.165	24+51.325	777.025	24+48.369	776.565	24+44.471	775.947	24+40.490	775.323	24+36.468	774.697	24+32.404	774.072	24+28.298	773.446	24+24.149	772.801	24+23.795	772.761	24+23.193	772.671
37	24+63.929	777.361	24+63.012	777.201	24+62.132	777.061	24+59.251	776.592	24+55.449	775.967	24+51.578	775.337	24+47.656	774.706	24+43.711	774.075	24+39.715	773.444	24+35.675	772.796	24+35.349	772.760	24+34.772	772.670
38	24+74.660	777.371	24+73.799	777.216	24+72.939	777.073	24+70.135	776.592	24+66.430	775.959	24+62.671	775.324	24+58.870	774.688	24+55.027	774.051	24+51.142	773.415	24+47.213	772.769	24+46.907	772.732	24+46.354	772.643
39	24+85.392	777.364	24+84.585	777.218	24+83.747	777.067	24+81.019	776.578	24+77.414	775.938	24+73.766	775.297	24+70.081	774.656	24+66.351	774.014	24+62.579	773.371	24+58.764	772.726	24+58.457	772.677	24+57.930	772.589

PREPARED BY:
R.W. ARMSTRONG & ASSOCIATES
471 EAST BROAD STREET, SUITE 2010
COLUMBUS, OH 43215
OFFICE (614) 225-8888 FAX (614) 225-8889

DESIGNED	DRAWN	REVIEWED	DATE
BWB	CLF	PAR	12/22/06
CHECKED	REVISED	STRUCTURE FILE NUMBER	
SRS		5760569	

SCREED DETAILS 2 OF 2
BRIDGE No. DAY-XWAY-00.79
DAYTON EXPRESSWAY OVER KEOWEE STREET AND CSXT RAILROAD

MOT-XWAY
PID NO. 77774

IMAGE FILES : NONE
XREFERENCES : XR-DAY-XWAY-TITBLK
FILE NAME : P:\Geopotential\20053370 Dayton Expressway 3\30 SheetDrawings\20 Singles\Screed-2.dwg / Layout1
RWA,INC. : 12-Mar-07, 11:11:15 / Autocad2004

REINFORCING SCHEDULE

SUPERSTRUCTURE (EASTBOUND)

MARK	NO. REQ'D	LENGTH	WEIGHT (LBS.)	TYPE	DIMENSIONS A	B	C	D	E	RADIUS	INC.
S401	1138	30'-0"	22,806	STR							
S406	13	30'-6"	265	STR							
	2	13'-11"									
S407	series	TO	255	STR							1 1/2"
	13	15'-5"									
	2	4'-8"									
S408	series	TO	3,145	STR							4"
	of 106	39'-9"									
S501	1670	30-0"	52,254	STR							
S503	6	3'-2"	20	STR							
S504	280	7'-5"	2,166	25	8"	2'-9"	2'-6"				
S505	4	3'-0"	13	2	2'-1"	7"					
S506	4	10'-0"	42	2	2'-1"	4'-1"					
S507	7	7'-6"	55	23	1'-4"	1'-11"	6"	2'-1"			
S508	4	4'-1"	17	STR							
S509	4	5'-2"	22	18	4'-7"						
S510	3	29'-4"	92	STR							
S516	118	6'-4"	779	STR							
S517	118	16'-11"	2,082	STR							
S518	3	31'-7"	99	STR							
S519	3	27'-9"	87	STR							
S520	3	4'-4"	14	STR							
S521	716	6'-2"	4,605	33	1'-3"	4'-4"	2"	2"	9"		
S522	716	5'-6"	4,107	32	2'-3"	1'-3"	0"	2'-3"			
	2	3'-3"									
S523	series	TO	5,150	STR							4"
	of 112	40'-10"									
S527	8	27'-0"	225	STR							
S601	2583	30'-0"	116,390	STR							
S603	1	8'-2"	12	STR							
S604	280	3'-1"	1,297	1	11"	2'-3"					
S605	280	3'-0"	1,262	14	10 1/2"	1'-0"	8 1/2"	6"	9"		
S606	16	4'-0"	96	STR							
S607	8	26'-9"	321	STR							
	1	1'-2"									
S614	series	TO	1,625	STR							5"
	of 70	29'-9"									
	1	3'-6"									
S615	series	TO	1,586	STR							4 15/16"
	of 64	29'-6"									
	1	3'-3"									
S616	series	TO	364	STR							4 13/16"
	of 28	14'-1"									
	1	2'-0"									
S617	series	TO	1,085	STR							7 5/16"
	of 46	29'-5"									
	1	4'-0"									
S618	series	TO	1,115	STR							7 3/16"
	of 44	29'-9"									
	1	4'-0"									
S619	series	TO	637	STR							7 3/16"
	of 32	22'-6"									
S620	199	19'-0"	5,679	32	2'-3"	7"	0"	16'-6"			
	1	19'-0"						16'-6"			
S621	series	TO	12,736	32	2'-3"	7"	0"	TO			1/4"
	of 370	26'-10"						24'-4"			
S622	199	16'-6"	4,932	STR							
	1	16'-6"									
S623	series	TO	11,346	STR							1/4"
	of 370	24'-4"									
S624	3	19'-3"	87	STR							
S625	3	12'-9"	57	STR							
S626	3	6'-3"	28	STR							
S627	3	26'-10"	121	STR							
S628	3	19'-10"	89	STR							
S629	3	13'-4"	60	STR							
S630	56	11'-0"	925	STR							
S631	48	6'-0"	433	STR							
S632	63	12'-11"	1,222	23	3'-7"	0"	1'-0"	4'-0"			
S633	63	7'-2"	678	2	3'-0"	1'-6"					
S634	6	7'-3"	65	32	2'-0"	3'-0"	1'-11 3/8"	2'-0"			
S635	6	13'-7"	122	23	3'-7"	0"	1'-0"	4'-4"			

REINFORCING SCHEDULE

SUPERSTRUCTURE (EASTBOUND CONTINUED)

MARK	NO. REQ'D	LENGTH	WEIGHT (LBS.)	TYPE	DIMENSIONS A	B	C	D	E	RADIUS	INC.
S701	278	30'-0"	17,047	STR							
	2	8'-2"									
S702	series	TO	8,084	STR							2 7/16"
	of 105	29'-6"									
S703	8	7'-4"	120	STR							
	1	6'-1"									
S707	series	TO	483	STR							2 7/8"
	of 26	12'-1"									
		TOTAL	288,404								

REINFORCING SCHEDULE

SUPERSTRUCTURE (WESTBOUND)

MARK	NO. REQ'D	LENGTH	WEIGHT (LBS.)	TYPE	DIMENSIONS A	B	C	D	E	RADIUS	INC.
S401	1,118	30'-0"	22,405	STR							
	1	2'-6'									
S402	series	TO	583	STR							3 1/4"
	of 72	21'-9"									
	1	2'-8"									
S403	series	TO	1,007	STR							5 3/16"
	of 78	36'-0"									
S404	631	7'-5"	3,126	33	2'-2"	4'-4"	2"	9"	1'-0		
S405	631	6'-2"	2,599	32	2''-0"	2'-2"	0"	2'-0"			
S501	1,264	30'-0"	39,551	STR							
S502	6	5'-9"	36	STR							
S504	421	7'-5"	3,257	25	8"	2'-9"	2'-6"				
S505	8	3'-0"	25	2	2'-1"	7"					
S506	8	10'-0"	83	2	2'-1"	4'-1"					
S507	14	7'-6"	110	23	1'-4"	1'-11"	6"	2'-1"			
S508	8	4'-1"	34	STR							
S509	8	5'-2"	43	18	4'-7"						
S511	79	16'-8"	1,373	STR							
S512	158	18'-11"	3,117	STR							
S513	79	14'-8"	1,208	STR							
	1	2'-10"									
S514	series	TO	1,801	STR							4 5/8"
	of 88	36'-5"									
	1	4'-6"									
S515	series	TO	1,439	STR							3 1/4"
	of 86	27'-7"									
S525	324	40'-0"	13,517	STR							
S526	4	22'-9"	95	STR							
S601	2,649	30'-0"	119,364	STR							
S602	1	20'-9"	31	STR							
S604	421	3'-1"	1,950	1	11"	2'-3"					
S605	421	3'-0"	1,897	14	10 1/2"	1'-0"	8 1/2"	6"	9"		
S606	64	4'-0"	385	STR							
S608	721	6'-11"	7,490	32	1'-11"	9"	0"	4'-7"			
S609	721	4'-7"	4,693	STR							
	2	4'-0"									
S610	series	TO	2,577	STR							1'-0"
	of 52	29'-0"									
	1	3'-11"									
S611	series	TO	728	STR							1'-9"
	of 30	28'-5"									
	1	2'-11"									
S612	series	TO	771	STR							1'-9"
	of 32	29'-2"									
S631	42	6'-0"	379	STR							
S636	54	11'-11"	967	23	3'-1"	0"	1'-0"	3'-9"			
S637	54	6'-11"	561	2	1'-3"	3'-0"					
S638	48	11'-0"	793	STR							
S639	6	12'-7"	113	23	3'-1"	0"	1'-0"	4'-1"			
S640	6	6'-9"	61	32	2'-0"	2'-6"	1'-9"	2'-0"			
		TOTAL	238,169								

NOTES:

1. ALL REINFORCING STEEL TO BE EPOXY COATED.
2. THE BAR SIZE NUMBER IS SPECIFIED ON THE PLANS IN THE BAR MARK COLUMN. THE FIRST DIGIT INDICATES THE BAR SIZE NUMBER. FOR EXAMPLE, AN AP501 IS A #5 BAR. BAR DIMENSIONS SHOWN ARE OUT TO OUT UNLESS OTHERWISE INDICATED. ALL RADII ARE INSIDE RADIUS.

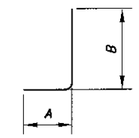

TYPE-1

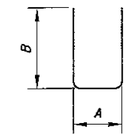

TYPE-2

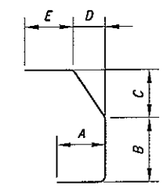

TYPE-14

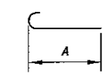

TYPE-18

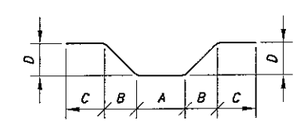

TYPE-23

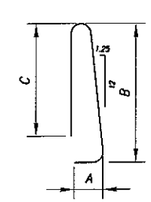

TYPE-25

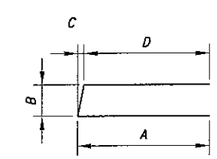

TYPE-32

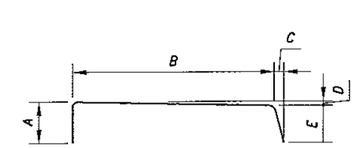

TYPE-33

PREPARED BY:
R.W. ARMSTRONG & ASSOCIATES
471 EAST BROAD STREET, SUITE 2010
COLUMBUS, OH 43215
OFFICE (614) 225-8888 FAX (614) 225-8869

DESIGNED	DRAWN	REVIEWED	DATE
LAK	SLO	PAR	12/22/06
CHECKED	REVISED	STRUCTURE FILE NUMBER	
MHZ		5760569	

REINFORCING SCHEDULE 1 OF 4
BRIDGE No. DAY-XWAY-00.79
DAYTON EXPRESSWAY OVER KEONEE STREET AND CSXT RAILROAD

MOT-XWAY
PID NO. 77774

IMAGE FILES
XREFERENCES
FILENAME
MRD UNIT
XONE
: XR-DAY-XWAY-TITBLK
: D:\Projects\Active\5370 Dayton Expressway 3\30 Sheet\Drawings\20 Singles\Rebar - 1 of 4.dwg / Layout1
: 13-FEB-07, 09:03:11 / Slaminen

REINFORCING SCHEDULE

MARK	NO. REQ'D	LENGTH	WEIGHT (LBS.)	TYPE	DIMENSIONS A	B	C	D	E	RAIDUS	INCRE.
REAR ABUTMENT											
A401	48	2'-7"	83	1	1'-6"	1'-2"					
A402	32	3'-1"	66	1	2'-0"	1'-2"					
A403	42	2'-4"	65	1	1'-6"	11"					
A404	28	2'-10"	53	1	2'-0"	11"					
A501	20	41'-3"	860	STR.							
A502	20	34'-6"	720	STR.							
A505	4	8'-2"	34	33	2'-0"	4'-5"	2"	2"	2'-0"		
A506	8	5'-0"	42	STR							
A507	8	13'-10"	115	STR.							
A508	4	16'-8"	70	STR.							
A509	4	15'-4"	64	STR							
A512	4	5'-7"	23	37	5'-0"						
A513	4	8'-7"	36	37	8'-0"						
A516	16	4'-0"	67	STR.							
A517	8	7'-7"	63	1	5'-8"	2'-0"					
A518	24	3'-5"	86	1	1'-6"	2'-0"					
A519	8	7'-4"	61	1	5'-8"	1'-9"					
A520	24	3'-2"	79	1	1'-6"	1'-9"					
A521	8	6'-9"	56	1	5'-3"	1'-7"					
A522	22	3'-0"	69	1	1'-6"	1'-7"					
A523	8	7'-2"	60	1	5'-3"	2'-0"					
A524	22	3'-5"	78	1	1'-6"	2'-0"					
A601	148	5'-3"	1167	2	1'-5"	2'-1"					
A602	148	6'-1"	1352	2	11"	2'-9"					
A603	314	3'-9"	1415	STR.							
A604	26	4'-6"	156	STR							
A605	5	3'-3"	23	STR.							
A606	30	3'-11"	176	STR.							
D801	94	5'-1"	1276	20	1'-0"	3'-2"					
		TOTAL	8,794								
FORWARD ABUTMENT											
A405	42	3'-5"	96	1	1'-6"	2'-0"					
A406	28	3'-11"	73	1	2'-0"	2'-0"					
A407	24	3'-8"	59	1	1'-6"	2'-3"					
A408	16	4'-2"	45	1	2'-0"	2'-3"					
A409	24	3'-11"	63	1	1'-6"	2'-6"					
A410	16	4'-5"	47	1	2'-0"	2'-6"					
A503	20	31'-6"	657	STR							
A504	20	41'-3"	860	STR							
A505	4	8'-2"	34	33	2'-0	4'-5"	2"	2"	2'-0"		
A506	8	5'-0"	42	STR							
A507	8	13'-10"	115	STR.							
A510	4	15'-6"	65	STR							
A511	4	16'-2"	67	STR							
A514	4	7'-7"	32	37	7'-0"						
A515	4	6'-1"	25	37	5'-6"						
A516	16	4'-0"	67	STR.							
A525	8	7'-6"	63	1	4'-11"	2'-8"					
A526	20	4'-2"	87	1	1'-6"	2'-8"					
A527	8	7'-1"	59	1	4'-11"	2'-3"					
A528	20	3'-8"	76	1	1'-6"	2'-3"					
A529	8	8'-6"	71	1	5'-9"	2'-10"					
A530	24	4'-3"	106	1	1'-6"	2'-10"					
A531	8	9'-9"	81	1	5'-9"	4'-1"					
A532	24	5'-6"	138	1	1'-6"	4'-1"					
A601	143	5'-3"	1128	2	1'-5"	2'-1"					
A602	143	6'-1"	1307	2	11"	2'-9"					
A603	305	3'-9"	1718	STR.							
A604	26	4'-6"	176	STR.							
A605	5	3'-3"	24	STR.							
A607	30	3'-7"	161	STR.							
D801	94	5'-1"	1276	20	1'-0"	3'-2"					
		TOTAL	8,818								

REINFORCING SCHEDULE

MARK	NO. REQ'D	LENGTH	WEIGHT (LBS.)	TYPE	DIMENSIONS A	B	C	D	E	RAIDUS	INCRE.
PIER No. 1											
P401	75	3'-10"	192	2	2'-8"	8"					
P402	30	6'-0"	120	STR							
SP401	1	25'-5"	365	29	4 1/2"	2'-6"					
SP402	1	25'-1"	361	29	4 1/2"	2'-6"					
SP403	1	24'-9"	356	29	4 1/2"	2'-6"					
SP404	1	24'-5"	351	29	4 1/2"	2'-6"					
SP405	1	24'-2"	348	29	4 1/2"	2'-6"					
SP406	1	24'-4"	350	29	4 1/2"	2'-6"					
SP407	1	23'-9"	342	29	4 1/2"	2'-6"					
SP408	1	23'-2"	334	29	4 1/2"	2'-6"					
SP409	1	22'-6"	325	29	4 1/2"	2'-6"					
SP410	1	21'-11"	317	29	4 1/2"	2'-6"					
SP411	1	21'-3"	308	29	4 1/2"	2'-6"					
P501	452	11'-10"	5579	3	2'-1"	3'-8"					
P502	8	9'-0"	75	26	2'-6"	2'-6"				1'-3"	
P503	2	3'-8"	8	STR							
P504	44	6'-4"	291	2	3'-1"	1'-9"					
P505	10	11'-0"	115	2	7'-9"	1'-9"					
P506	8	34'-8"	289	STR							
P507	8	41'-10"	349	STR							
P508	10	11'-8"	122	2	8'-5"	1'-9"					
P1001	36	7'-10"	1213	STR							
P1002	10	38'-6"	1657	STR							
P1003	6	27'-4"	706	18	25'-9"						
P1004	4	27'-0"	465	18	25'-7"						
P1005	4	26'-8"	459	18	25'-3"						
P1006	4	26'-4"	453	18	24'-11"						
P1007	6	26'-1"	673	18	24'-8"						
P1008	10	45'-8"	1965	STR							
P1009	12	27'-6"	1420	18	26'-1"						
P1010	12	24'-5"	1261	18	23'-0"						
P1050	24	9'-9"	1007	1	1'-10"	8'-3"					
P1053	6	25'-4"	654	18	23'-9"						
P1054	4	25'-0"	430	18	23'-7"						
P1055	4	24'-8"	425	18	23'-3"						
P1056	4	24'-4"	419	18	22'-11"						
P1057	6	24'-1"	622	18	22'-8"						
P1101	10	42'-8"	2267	1	3'-0"	40'-0"					
P1102	9	41'-0"	1960	STR							
P1103	7	55'-4"	2058	STR							
P1104	2	40'-0"	425	STR							
P1108	6	25'-2"	802	18	24'-3"						
P1109	6	24'-7"	784	18	23'-8"						
P1110	6	23'-11"	762	18	23'-0"						
P1111	6	23'-4"	744	18	22'-5"						
P1158	6	23'-2"	739	18	22'-3"						
P1159	6	22'-7"	720	18	21'-8"						
P1160	6	21'-11"	699	18	21'-0"						
P1161	6	21'-4"	680	18	20'-5"						
W501	24	3'-0"	75	STR							
W502	12	6'-7"	82	STR							
W901	28	3'-1"	294	STR							
TOTAL			37,817								

NOTES:

1. ALL REINFORCING STEEL TO BE EPOXY COATED.
2. THE BAR SIZE NUMBER IS SPECIFIED ON THE PLANS IN THE BAR MARK COLUMN. THE FIRST DIGIT INDICATES THE BAR SIZE NUMBER. FOR EXAMPLE, AN A501 IS A #5 BAR. BAR DIMENSIONS SHOWN ARE OUT TO OUT UNLESS OTHERWISE INDICATED. ALL RADII ARE INSIDE RADIUS.

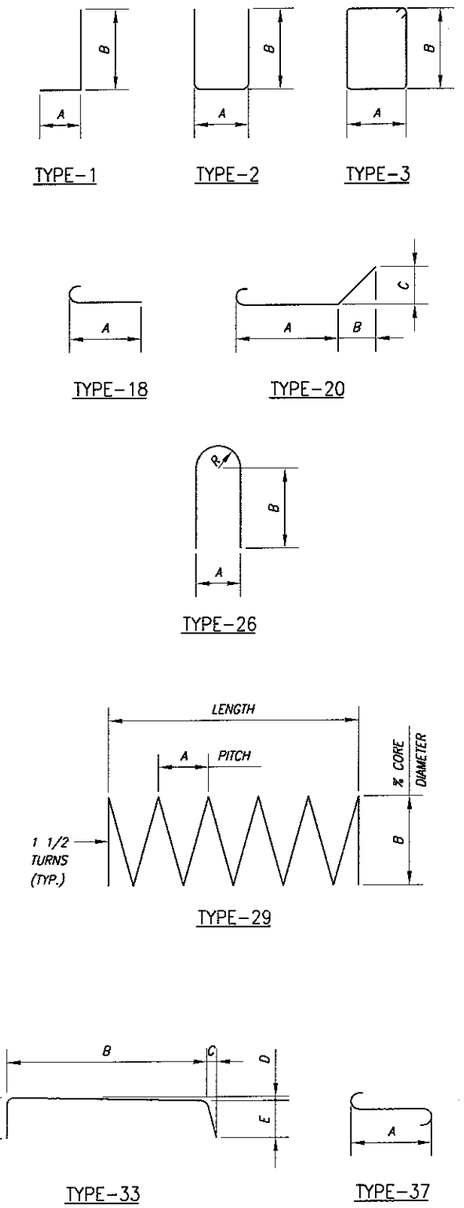

SPIRAL REINFORCING NOTES

CONCRETE SPACERS OR OTHER APPROVED NONCORROSIVE SPACING DEVICES SHALL BE USED AT SUFFICIIENT INTERVAL (NEAR THE BOTTOM AND AT INTERVALS NOT EXCEEDING 10 FT.) TO ENSURE CONCENTRIC SPACING FOR THE ENTIRE CAGE LENGTH. SPACERS SHALL BE CONSTRUCTED OF APPROVED MATERIAL EQUAL IN QUALITY AND DURABILITY TO THE CONCRETE SPECIFIED FOR THE COLUMN. THE SPACERS SHALL HAVE ADEQUATE DIMENSIONS TO ENSURE A MINIMUM 3" CLEAR SPACE BETWEEN THE OUTSIDE OF THE REINFORCING CAGE AND THE DESIGN DIMENSION OF THE COLUMN. CYLINDRICAL CONCRETE FEET (BOTTOM SUPPORT) SHALL BE PROVIDED TO ENSURE THAT THE BOTTOM OF THE CAGE IS MAINTAINED AT THE PROPER DITANCE ABOVE THE BASE.

PREPARED BY: R.W. ARMSTRONG & ASSOCIATES
471 EAST BROAD STREET, SUITE 2010
COLUMBUS, OH 43215
OFFICE (614) 225-8868 FAX (614) 225-8869

DESIGNED	DRAWN	REVIEWED	DATE
SRS	CLF	PAR	12/22/06
CHECKED	REVISED	STRUCTURE FILE NUMBER	
TDJ		5760569	

REINFORCING SCHEDULE 2 OF 4
BRIDGE No. DAY-XWAY-00.79
DAYTON EXPRESSWAY OVER KEOWEE STREET AND CSXT RAILROAD

MOT-XWAY
PID NO. 77774

IMAGE FILES
XREFERENCES
REF NAME
MSD_WT
ZONE
XR-DAY-XWAY-TITBLK
XR-Transportation-Logo
12-FEB-07, 08:55 / Johnson

REINFORCING SCHEDULE

MARK	NO. REQ'D	LENGTH	WEIGHT (LBS.)	TYPE	DIMENSIONS A	B	C	D	E	RADIUS	INCRE.
PIER No. 2											
P401	56	3'-10"	143	2	2'-8"	8"					
P402	14	6'-0"	56	STR							
P403	8	11'-0"	59	STR							
P404	2	4'-1"	5	STR							
P405	54	4'-10"	174	2	1'-4"	1'-10"					
P406	18	10'-3"	123	2	6'-10"	1'-10"					
P407	64	4'-4"	185	2	3'-2"	8"					
P408	14	10'-0"	94	STR							
P409	2	4'-6"	6	STR							
P410	70	4'-8"	218	2	1'-2"	1'-10"					
P411	21	11'-2"	157	2	7'-8"	1'-10"					
SP412	1	26'-9"	383	29	4 1/2"	2'-6"					
SP413	1	25'-11"	372	29	4 1/2"	2'-6"					
SP414	1	25'-2"	362	29	4 1/2"	2'-6"					
SP415	1	24'-5"	351	29	4 1/2"	2'-6"					
SP416	1	23'-8"	341	29	4 1/2"	2'-6"					
SP417	1	23'-11"	344	29	4 1/2"	2'-6"					
SP418	1	22'-11"	331	29	4 1/2"	2'-6"					
SP419	1	21'-10"	316	29	4 1/2"	2'-6"					
SP420	1	20'-10"	302	29	4 1/2"	2'-6"					
SP421	1	19'-10"	288	29	4 1/2"	2'-6"					
SP422	1	18'-9"	273	29	4 1/2"	2'-6"					
P501	210	11'-10"	2592	3	2'-1"	3'-8"					
P502	4	9'-0"	38	26	2'-6"	2'-6"				1'-3"	
P503	2	3'-8"	8	STR							
P509	8	35'-8"	298	STR							
P510	254	12'-8"	3356	3	2'-6"	3'-8"					
P511	4	9'-9"	41	26	3'-0"	2'-6"				1'-6"	
P512	8	43'-3"	361	STR							
P1001	36	7'-10"	1213	STR							
P1011	10	39'-4"	1693	STR							
P1012	6	28'-8"	740	18	27'-3"						
P1013	4	27'-10"	479	18	26'-5"						
P1014	4	27'-1"	466	18	25'-8"						
P1015	4	26'-4"	453	18	24'-11"						
P1016	6	25'-7"	661	18	24'-2"						
P1017	10	47'-3"	2033	STR							
P1018	12	27'-1"	1398	18	25'-8"						
P1019	12	21'-11"	1132	18	20'-6"						
P1050	24	9'-9"	1007	1	1'-10"	8'-3"					
P1062	6	26'-8"	688	18	25'-3"						
P1063	4	25'-10"	445	18	24'-5"						
P1064	4	25'-1"	432	18	23'-8"						
P1065	4	24'-4"	419	18	22'-11"						
P1066	6	23'-7"	609	18	22'-2"						
P1101	10	42'-8"	2267	1	3'-0"	40'-0"					
P1104	11	40'-0"	2338	STR							
P1105	7	42'-8"	1587	STR							
P1106	7	32'-7"	1212	STR							
P1112	6	24'-4"	776	18	23'-5"						
P1113	6	23'-3"	741	18	22'-4"						
P1114	6	22'-3"	709	18	21'-4"						
P1115	6	21'-3"	677	18	20'-4"						
P1162	6	22'-4"	712	18	21'-5"						
P1163	6	21'-3"	677	18	20'-4"						
P1164	6	20'-3"	646	18	19'-4"						
P1165	6	19'-3"	614	18	18'-4"						
W501	24	3'-0"	75	18	STR						
W502	12	6'-7"	82	18	STR						
W901	28	3'-1"	294	18	STR						
TOTAL			38,852								

REINFORCING SCHEDULE

MARK	NO. REQ'D	LENGTH	WEIGHT (LBS.)	TYPE	DIMENSIONS A	B	C	D	E	RADIUS	INCRE.
PIER No. 3											
P401	75	3'-10"	192	2	2'-8"	8"					
P402	30	6'-0"	120	STR							
P513	68	3'-2"	225	18	2'-10"						
P514	156	7'-3"	1180	2	2'-6"	2'-6"					
P515	4	30'-3"	126	STR							
P516	4	14'-8"	61	STR							
P517	4	15'-9"	66	21	12'-10"	2'-6 1/4"	1'-1 3/8"				
P518	2	12'-5"	26	STR							
P519	2	7'-5"	16	STR							
P520	2	11'-1"	23	STR							
P521	2	6'-11"	14	STR							
P522	10	9'-9"	102	2	6'-8"	1'-9"					
P523	38	5'-9"	228	2	2'-6"	1'-9"					
P524	6	23'-8"	148	5	2'-6"	10'-0"	10"				
	1	23'-6"				9'-11"					
P525	series	TO	478	5	2'-6"	TO	10"				2 5/16"
	of 24	14'-8"				5'-6"					
P526	12	21'-0"	263	5	2'-6"	8'-8"	10"				
	1	20'-6"				8'-5"					
P527	series	TO	373	5	2'-6"	TO	10"				3"
	of 24	9'-4"				2'-10"					
P528	4	17'-6"	73	STR							
P529	2	15'-3"	32	STR							
P530	2	9'-0"	19	STR							
P531	2	18'-6"	39	21	15'-9"	2'-7 1/8"	11 1/4"				
P532	2	16'-6"	34	STR							
P533	2	9'-6"	20	STR							
P534	2	18'-2"	38	21	15'-5"	2'-7 7/8"	8 3/4"				
P535	10	10'-4"	108	2	7'-1"	1'-9"					
	1	20'-8"				8'-6"					
P536	series	TO	495	5	2'-6"	TO	10"				2"
	of 30	11'-0"				3'-8"					
P537	6	18'-2"	114	5	2'-6"	7'-3"	10"				
	1	17'-10"				7'-1"					
P538	series	TO	421	5	2'-6"	TO	10"				1 13/16"
	of 30	9'-2"				2'-9"					
P549	40	3'-6"	146	1	2'-3"	1'-4"					
P550	20	3'-11"	82	1	2'-3"	1'-9"					
P1030	10	37'-4	1606	1	2'-10"	34'-10"					
P1031	8	31'-9"	1093	18	30'-10"						
P1032	12	43'-5"	2242	1	2'-8"	41'-1"					
P1033	12	36'-6"	1885	18	35'-7"						
TOTAL			12,088								

NOTES:

1. ALL REINFORCING STEEL TO BE EPOXY COATED.
2. THE BAR SIZE NUMBER IS SPECIFIED ON THE PLANS IN THE BAR MARK COLUMN. THE FIRST DIGIT INDICATES THE BAR SIZE NUMBER. FOR EXAMPLE, AN AP501 IS A #5 BAR. BAR DIMENSIONS SHOWN ARE OUT TO OUT UNLESS OTHERWISE INDICATED. ALL RADII ARE INSIDE RADIUS.

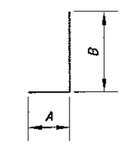

TYPE-1

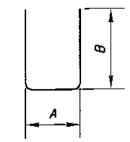

TYPE-2

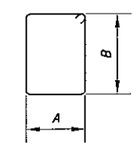

TYPE-3

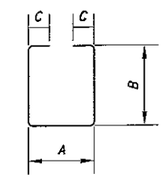

TYPE-5

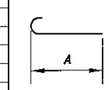

TYPE-18

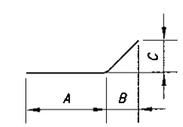

TYPE-21

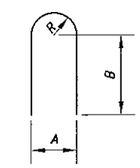

TYPE-26

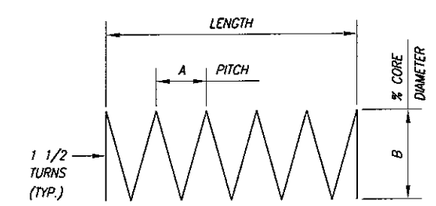

TYPE-29

SPIRAL REINFORCING NOTES

CONCRETE SPACERS OR OTHER APPROVED NONCORROSIVE SPACING DEVICES SHALL BE USED AT SUFFICIENT INTERVAL (NEAR THE BOTTOM AND AT INTERVALS NOT EXCEEDING 10 FT.) TO ENSURE CONCENTRIC SPACING FOR THE ENTIRE CAGE LENGTH. SPACERS SHALL BE CONSTRUCTED OF APPROVED MATERIAL EQUAL IN QUALITY AND DURABILITY TO THE CONCRETE SPECIFIED FOR THE COLUMN. THE SPACERS SHALL HAVE ADEQUATE DIMENSIONS TO ENSURE A MINIMUM 3" CLEAR SPACE BETWEEN THE OUTSIDE OF THE REINFORCING CAGE AND THE DESIGN DIMENSION OF THE COLUMN. CYLINDRICAL CONCRETE FEET (BOTTOM SUPPORT) SHALL BE PROVIDED TO ENSURE THAT THE BOTTOM OF THE CAGE IS MAINTAINED AT THE PROPER DITANCE ABOVE THE BASE.

PREPARED BY: R.W. ARMSTRONG & ASSOCIATES
471 EAST BROAD STREET, SUITE 2010
COLUMBUS, OH 43215
OFFICE (614) 225-8868 FAX (614) 225-8869

DESIGNED	DRAWN	REVIEWED	DATE
SRS	CLF	PAR	12/22/06
CHECKED	REVISED	STRUCTURE FILE NUMBER	
TDJ		5760569	

REINFORCING SCHEDULE 3 OF 4
BRIDGE No. DAY-XWAY-00.79
DAYTON EXPRESSWAY OVER KEONEE STREET AND CSXT RAILROAD

MOT-XWAY
PID NO. 77774

IMAGE FILES :
XREFERENCES :
PLOT NAME :
WRD\VIT :
ONE :
3-DAY-XWAY-TITBLK;
2-Transportation\2005\33170 Dayton Expressway 3\30 Sheet\Drawings\20 Singles\Ybar - 3 of 4.dwg / Layout1
: 12-FEB-07, 12:22:15 / Sunwed

REINFORCING SCHEDULE

MARK	NO. REQ'D	LENGTH	WEIGHT (LBS.)	TYPE	DIMENSIONS A	B	C	D	E	RADIUS	INCRE.
PIER No. 4											
P401	75	3'-10"	192	2	2'-8"	8"					
P402	30	6'-0"	120	STR							
P513	44	3'-2"	145	18	2'-10"						
P514	152	7'-3"	1149	2	2'-6"	2'-6"					
P524	6	23'-8"	148	5	2'-6"	10'-0"	10"				
P535	10	10'-4"	108	2	7'-1"	1'-9"					
P539	4	32'-0"	134	STR							
P540	4	15'-8"	65	STR							
P541	4	11'-6"	48	STR							
P542	4	7'-3"	30	STR							
P543	4	16'-10"	70	21	14'-1"	2'-6 1/8"	1'-1 3/8"				
P544	42	6'-1"	267	2	2'-10"	1'-9"					
P545	6	25'-0"	156	5	2'-6"	10'-8"	10"				
	1	24'-10"				10'-7"					
P546	series	TO	539	5	2'-6"	TO	10"				2 3/8"
	of 26	14'-10"				5'-7"					
P547	6	22'-0"	138	5	2'-6"	9'-2"	10"				
	1	21'-8"				9'-0"					
P548	series	TO	425	5	2'-6"	TO	10"				2 7/8"
	of 26	9'-8"				3'-0"					
P551	56	4'-5"	297	1	2'-3"	2'-3"					
P552	4	18'-8"	78	STR							
P553	2	14'-2"	30	STR							
P554	2	8'-11"	19	STR							
P555	2	19'-10"	41	21	17'-1"	2'-6 1/2"	1'-0 1/2"				
P556	2	17'-6"	37	STR							
P557	2	10'-8"	22	STR							
P558	2	19'-4"	40	21	16'-7"	2'-7 1/2"	10"				
P559	10	11'-3"	117	2	8'-0"	1'-9"					
	1	23'-4"				9'-10"					
P560	series	TO	585	5	2'-6"	TO	10"				2 1/4"
	of 32	11'-10"				4'-1"					
P561	6	20'-4"	127	5	2'-6"	8'-4"	10"				
	1	20'-0"				8'-2"					
P562	series	TO	474	5	2'-6"	TO	10"				2 1/4"
	of 32	8'-6"				2'-5"					
P901	12	39'-4"	1605	STR							
P1034	10	39'-1"	1682	1	2'-8"	36'-7"					
P1035	10	32'-10"	1413	18	32'-1"						
P1036	6	34'-2"	882	1	2'-6"	32'-0"					
P1037	6	26'-9"	691	18	26'-0"						
P1106	6	35'-8"	1137	1	4'-0"	32'-0"					
P1107	6	27'-0"	861	18	26'-2"						
		TOTAL	13,872								

REINFORCING SCHEDULE

MARK	NO. REQ'D	LENGTH	WEIGHT (LBS.)	TYPE	DIMENSIONS A	B	C	D	E	RADIUS
REAR APPROACH SLABS W/ MEDIANS										
AP501	228	30'-0"	7,134	STR.						
AP502	57	10'-7"	629	STR.						
AP503	57	24'-8"	1,466	STR.						
AP507	98	24'-6"	2,504	STR.						
AP508	40	4'-6"	188	STR.						
AP509	20	8'-10"	184	30	4'-6"	1'-11"	1'-2"	2"	10"	
AP510	20	8'-3"	172	30	4'-6"	1'-4"	1'-2"	2"	10"	
AP1001	219	25'-11"	24,423	18	24'-6"					
		TOTAL	36,700							

REINFORCING SCHEDULE

MARK	NO. REQ'D	LENGTH	WEIGHT (LBS.)	TYPE	DIMENSIONS A	B	C	D	E	RADIUS
FORWARD APPROACH SLABS W/ MEDIANS										
AP501	171	30'-0"	5,351	STR.						
AP504	57	32'-7"	1,937	STR.						
AP505	27	26'-3"	739	STR.						
AP506	30	28'-8"	897	STR.						
AP507	106	24'-6"	2,709	STR.						
AP508	40	4'-6"	188	STR.						
AP509	20	8'-10"	184	30	4'-6"	1'-11"	1'-2"	2"	10"	
AP510	20	8'-3"	172	30		1'-4"	1'-2"	2"	10"	
AP1001	237	25'-11"	26,430	18	24'-6"					
		TOTAL	38,607							

REINFORCING SCHEDULE

MARK	NO. REQ'D	LENGTH	WEIGHT (LBS.)	TYPE	DIMENSIONS A	B	C	D	E	RADIUS
REAR APPROACH PARAPETS										
X501	8	10'-0"	83	STR.						
X502	4	5'-8"	24	27	1'-10"	2'-5"	1'-5"	1 1/2"	5"	
X503	4	5'-8"	24	STR.						
X504	8	13'-11"	116	STR.						
X505	4	2'-6"	10	STR.						
X601	2	3'-0"	9	STR						
Y602	24	3'-8"	132	13	2'-3"	8 1/2"	6"	8"		
Y603	38	4'-6"	257	STR.						
Y605	2	2'-10"	9	STR.						
Y501	2	7'-1"	15	25	8"	3'-3"	3'-0"			1 1/2"
Y502	2	3'-10"	8	18	3'-3"					
Y503	2	3'-9"	8	18	3'-2"					
Y504	2	3'-8"	8	18	3'-1"					
Y505	2	3'-7"	7	18	3'-0"					
Y506	2	3'-6"	7	18	2'-11"					
Y507	2	3'-5"	7	18	2'-10"					
Y508	2	3'-4"	7	18	2'-9"					
Y509	2	3'-3"	7	18	2'-8"					
Y510	2	3'-2"	7	18	2'-7"					
Y511	2	3'-1"	6	18	2'-6"					
Y512	2	3'-0"	6	18	2'-5"					
		TOTAL	757							

REINFORCING SCHEDULE

MARK	NO. REQ'D	LENGTH	WEIGHT (LBS.)	TYPE	DIMENSIONS A	B	C	D	E	RADIUS
FORWARD APPROACH PARAPETS										
X501	8	10'-0"	83	STR.						
X502	4	5'-8"	24	27	1'-10"	2'-5"	1'-5"	1 1/2"	5"	
X503	4	5'-8"	24	STR.						
X504	8	13'-11"	116	STR.						
X505	4	2'-6"	10	STR.						
X601	2	3'-0"	9	STR						
Y602	24	3'-8"	132	13	2'-3"	8 1/2"	6"	8"		
Y603	38	4'-6"	257	STR.						
Y605	2	2'-10"	9	STR.						
Y501	2	7'-1"	15	25	8"	3'-3"	3'-0"			1 1/2"
Y502	2	3'-10"	8	18	3'-3"					
Y503	2	3'-9"	8	18	3'-2"					
Y504	2	3'-8"	8	18	3'-1"					
Y505	2	3'-7"	7	18	3'-0"					
Y506	2	3'-6"	7	18	2'-11"					
Y507	2	3'-5"	7	18	2'-10"					
Y508	2	3'-4"	7	18	2'-9"					
Y509	2	3'-3"	7	18	2'-8"					
Y510	2	3'-2"	7	18	2'-7"					
Y511	2	3'-1"	6	18	2'-6"					
Y512	2	3'-0"	6	18	2'-5"					
		TOTAL	757							

NOTES:

1. ALL REINFORCING STEEL TO BE EPOXY COATED.
2. THE BAR SIZE NUMBER IS SPECIFIED ON THE PLANS IN THE BAR MARK COLUMN. THE FIRST DIGIT INDICATES THE BAR SIZE NUMBER. FOR EXAMPLE, AN AP501 IS A #5 BAR. BAR DIMENSIONS SHOWN ARE OUT TO OUT UNLESS OTHERWISE INDICATED. ALL RADII ARE INSIDE RADIUS.
3. REINFORCING STEEL FOR APPROACH SLABS, INCLUDING THE MEDIAN CURB, IS INCLUDED IN ITEM 526 FOR PAYMENT, AND IS NOT INCLUDED IN ITEM 509.

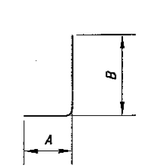

TYPE-1

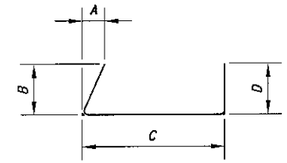

TYPE-9

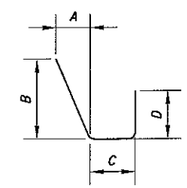

TYPE-10

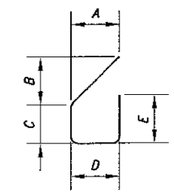

TYPE-12

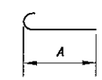

TYPE-18

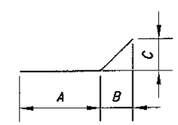

TYPE-21

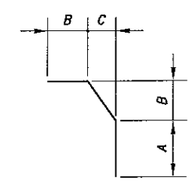

TYPE-13

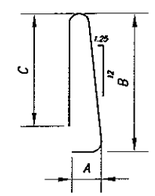

TYPE-25

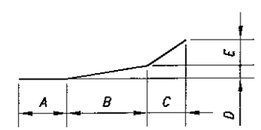

TYPE-27

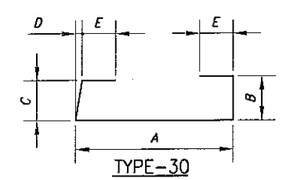

TYPE-30

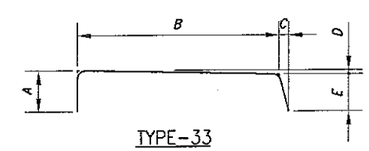

TYPE-33

PREPARED BY: R.W. ARMSTRONG & ASSOCIATES
471 EAST BROAD STREET, SUITE 2010
COLUMBUS, OH 43215
OFFICE (614) 225-8888 FAX (614) 225-8869

DESIGNED	DRAWN	REVIEWED	DATE
SRS	CLF	PAP	12/22/06
CHECKED	REVISED	STRUCTURE FILE NUMBER	
TDJ		5760569	

REINFORCING SCHEDULE 4 OF 4
BRIDGE No. DAY-XWAY-00.79
DAYTON EXPRESSWAY OVER KEONEE STREET AND CSXT RAILROAD

MOT-XWAY
PID NO. 77774

IMAGE FILES
XREFERENCES
FILE NAME
MRD\WT
ZONE
P:\Transportation\60053370 Dayton Expressway 3\30 Sheet\Drawings\20 Singles\Rebar - 4 of 4.dwg / Layout1
D-AY-XWAY-TITBLK;
D-FEB-07, 11:23:15 / SJohnson