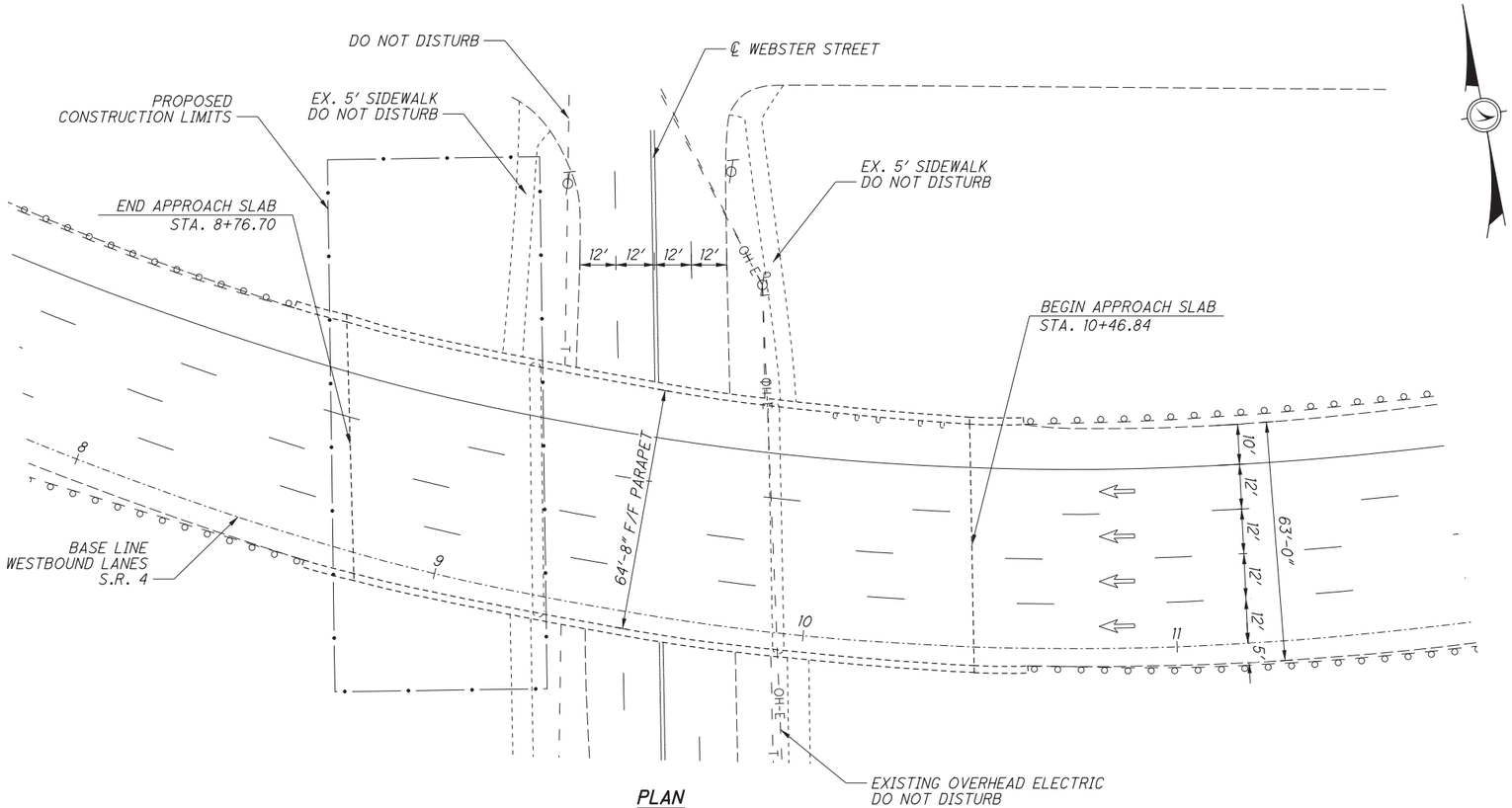

PLAN

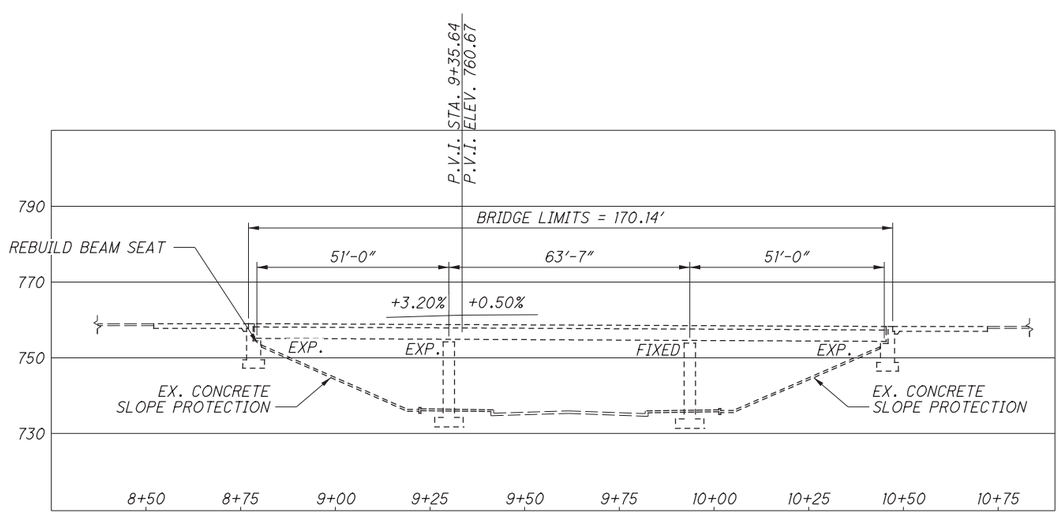

PROFILE ON BASE LINE S.R. 4

NOTES

DIMENSIONS TAKEN FROM EXISTING PLANS ARE CONSIDERED TO BE ± AND ARE FOR REFERENCE ONLY.

EXISTING STRUCTURE

TYPE: CONTINUOUS ROLLED STEEL BEAM WITH REINFORCED CONCRETE DECK AND SUBSTRUCTURE

SPANS: 51'-0", 63'-7", 51'-0"
ROADWAY: 64'-8" F/F PARAPET
LOADING: CF-2000(57) (Orig.)
SKEW: 7°45'39" RT. FWD.
APPROACH SLABS: AS-1-54 (25'-0" LONG)
ALIGNMENT: 7°00' CURVE TO LEFT
WEARING SURFACE (2003): 1½" ASPHALT OVERLAY
STRUCTURAL FILE NUMBER: 5760518
DATE BUILT: 1960
DISPOSITION: TO BE REHABILITATED

PROPOSED WORK

1. REBUILD BEAM SEATS USING ANODES AND QC5
2. REPLACE BEARING AT BEAM 6 AND 7

WORK LISTED IS NOT INCLUSIVE. CONTRACTOR WILL SEQUENCE WORK AS NEEDED

DESIGN AGENCY
ODOT DISTRICT 7
ENGINEERING

REVIEWED	DATE	DRAWN	REVISED	DESIGNED	CHECKED
MRB	1/17/2019	LCG	XXX	LCG	DHG

STRUCTURE FILE NUMBER 5760518

MONTGOMERY COUNTY
STA. 8+76.70
STA. 10+46.84

SITE PLAN
BRIDGE NO.: MOT-4-1779L
SR 4 OVER WEBSTER STREET

D07-BH-FY20(A)
PID No. 101851

i:\ProjectData\D07\10185_BH-FY20 (A)\Design\Structures\MOT004_1779L\Sheets\004_1779L_SP001.dgn Sheet 8/14/2019 8:55:24 AM lgerling

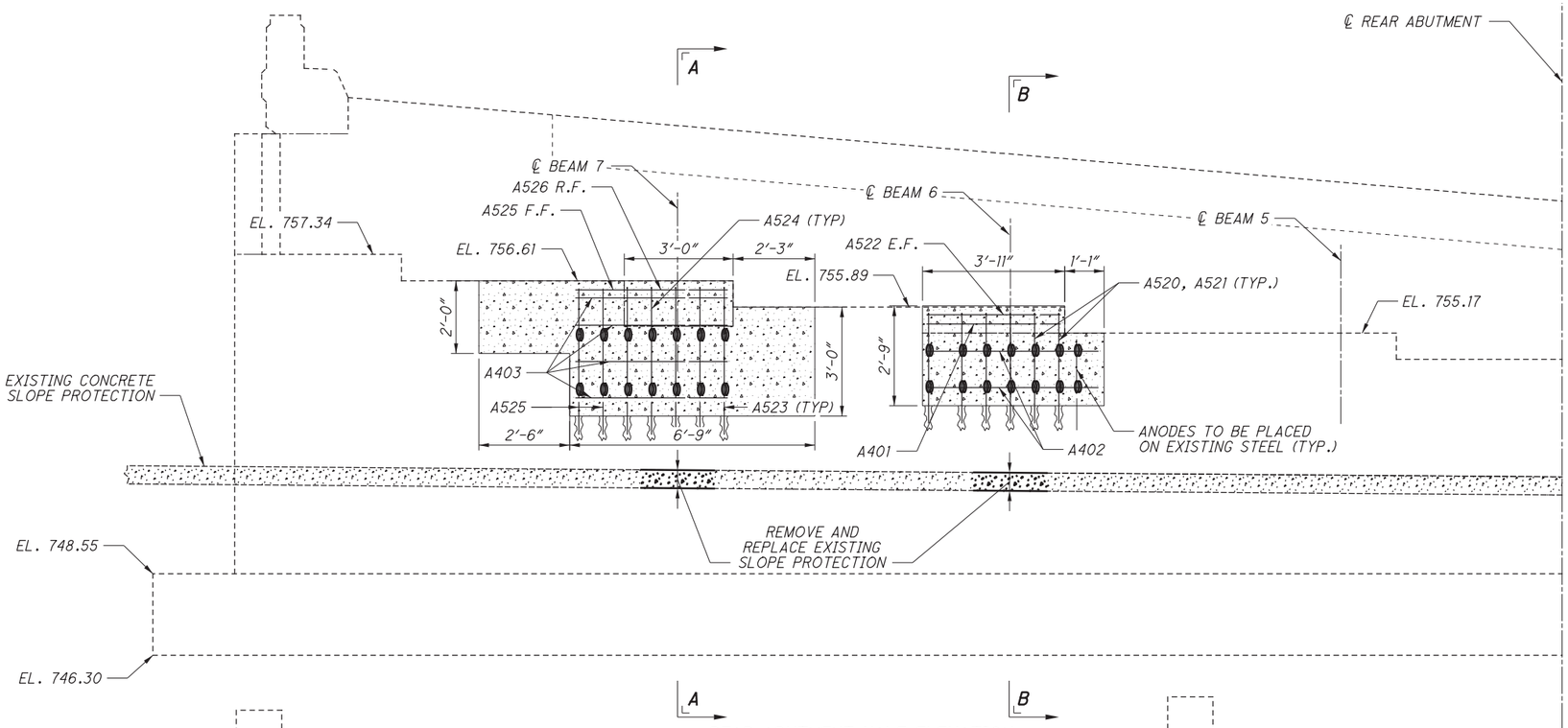

REAR ABUTMENT HALF ELEVATION

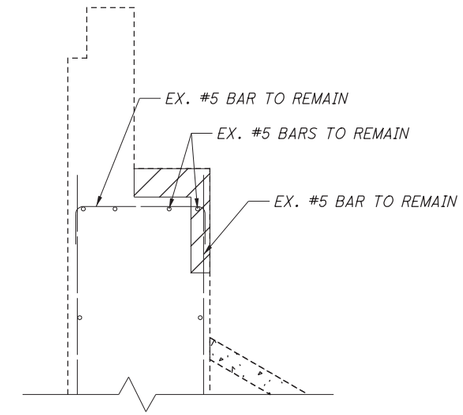

EXISTING SECTION B-B AT BEAM 6

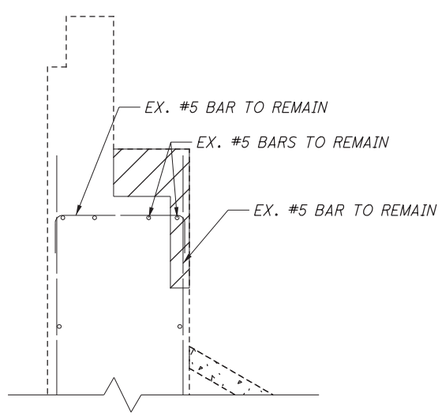

EXISTING SECTION A-A AT BEAM 7

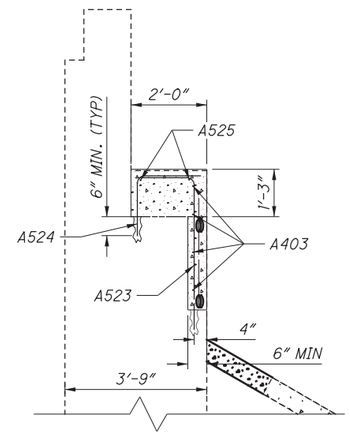

PROPOSED SECTION A-A AT BEAM 7

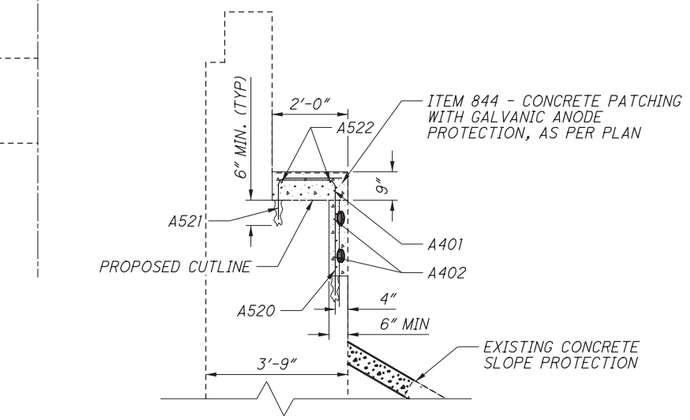

PROPOSED SECTION B-B AT BEAM 6

MARK	NUMBER TOTAL	LENGTH	WEIGHT	TYPE	DIMENSIONS A	DIMENSIONS B	DOWELS
ABUTMENT REINFORCING STEEL (MOT-4-1779L)							
A401	1	3'-7"	2	STR			
A402	2	4'-8"	6	STR			
A403	4	4'-2"	11	STR			
A520	6	4'-5"	28	1	3'-1"	1'-6"	6
A521	6	2'-7"	16	1	1'-1"	1'-8"	6
A522	2	3'-8"	8	STR			
A523	5	5'-5"	28	1	1'-6"	4'-1"	5
A524	5	2'-11"	15	1	1'-6"	1'-7"	5
A525	3	4'-2"	13	STR			2
A526	1	2'-8"	3	STR			
		SUB-TOTAL	130			SUB-TOTAL	24

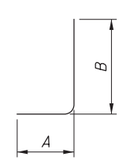

TYPE-1

NOTES AND LEGEND

1. DETAILS WERE TAKEN FROM EXISTING PLANS AND SHOULD BE CONSIDERED EXISTING UNLESS LABELED PROPOSED.
2. LOCATIONS OF ANODES SHOWN ARE REPRESENTATIVE OF DELAMINATED AREAS.
3. CARE SHALL BE TAKEN TO AVOID THE EXISTING REINFORCING STEEL WHEN PLACING THE DOWELS. A PACHOMETER SHALL BE USED TO LOCATE THE EXISTING STEEL, WHEN NOT EXPOSED.
4. PLACE EPOXY-URETHANE SEALER ON ALL NEW CONCRETE SURFACES. MINIMUM OF 6" BEYOND NEW CONCRETE LIMITS.
5. FOR ELASTOMERIC BEARING DETAILS, SEE SHEET 3/3.
6. ALL DOWELS ARE 6" MIN. IN DEPTH
7. TOTAL ESTIMATED ANODES = 28 EA (FOR INFORMATION ONLY)

– APPROXIMATE LIMITS OF UNSOUND CONCRETE TO BE REPAIRED

– ITEM 844 - CONCRETE PATCHING WITH GALVANIC ANODE PROTECTION, AS PER PLAN

DESIGN AGENCY
ODOT DISTRICT 7
ENGINEERING

DESIGNED	DRAWN	REVIEWED	DATE
LCG	LCG	MRB	1/17/2019
CHECKED	REVISED	STRUCTURE FILE NUMBER	
DHG	XXX	5760518	

REAR ABUTMENT DETAIL
BRIDGE NO.: MOT-4-1779L
SR 4 OVER WEBSTER STREET

D07-BH-FY20(A)
PID No. 101851

i:\ProjectData\D07\10185_BH-FY20 (A)\Design\Structures\MOT004_1779L\Sheets\004_1779L_SR001.dgn Sheet 8/14/2019 8:55:26 AM lgerling

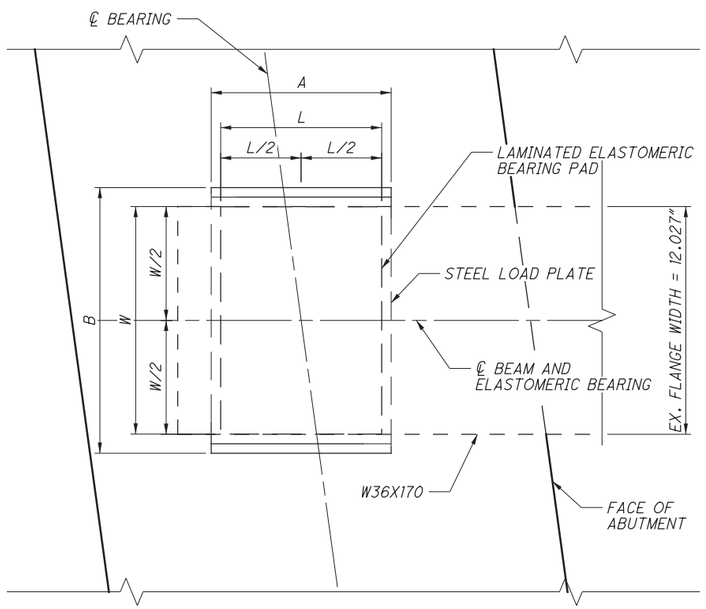

PLAN

ELASTOMERIC BEARINGS													
LOCATION	BEARING DIMENSIONS							STEEL LOAD PLATE			REACTIONS		MAXIMUM TOTAL LOAD
	L	W	ti (in.)	te (in.)	T	N	N-1	A	B	THICKNESS	DL	LL	
REAR ABUT. BEAM 6+7	8.5"	12"	0.23	0.15	1.9"	5	4	9.5"	14"	7/8"	25.90 k	46.55 k	72.45 k

LEGEND

ti = THICKNESS OF INTERNAL LAYERS
te = THICKNESS OF EXTERNAL LAYERS
T = TOTAL THICKNESS OF ELASTOMERIC BEARING
N = NUMBER OF STEEL LAMINATES
INTERNAL STEEL LAMINATE THICKNESS = 0.0747" (14 GAGE)
N-1 = NUMBER OF INTERNAL LAYERS

NOTES

1. ELASTOMERIC BEARINGS: THE ELASTOMER SHALL HAVE A HARDNESS OF 50 DUROMETER. THE BEARINGS WERE DESIGNED UNDER DIVISION 1, SECTION 14.6.6 (METHOD A) OF THE AASHTO STANDARD SPECIFICATIONS FOR HIGHWAY BRIDGES.

2. STEEL PLATE: PLATES SHALL BE BONDED BY VULCANIZATION TO THE ELASTOMER DURING THE MOLDING PROCESS.

3. BASIS OF PAYMENT: PAYMENT FOR ALL MATERIALS, LABOR, TESTING, PAINTING AND INCIDENTALS NECESSARY TO FURNISH AND INSTALL THE ELASTOMERIC BEARINGS FOR THE BEAMS WILL BE INCLUDED IN THE UNIT BID PRICE FOR ITEM 516, ELASTOMERIC BEARINGS WITH INTERNAL LAMINATES AND LOAD PLATE (NEOPRENE), AS PER PLAN, EACH.

4. ALL COST ASSOCIATED WITH THE LOAD PLATES, SIDEBARS AND WELDING TO THE BEAM FLANGES SHALL BE CONSIDERED INCIDENTAL TO ITEM 516.

5. WELDING: CONTROL WELDING SO THAT THE PLATE TEMPERATURE AT THE ELASTOMER BONDED SURFACE DOES NOT EXCEED 185 DEGREES F AS DETERMINED BY USE OF PYROMETRIC STICKS OR OTHER TEMPERATURE MONITORING DEVICES.

✳ - FIELD WELD ONE SIDEBAR TO ENSURE PROPER FIT.

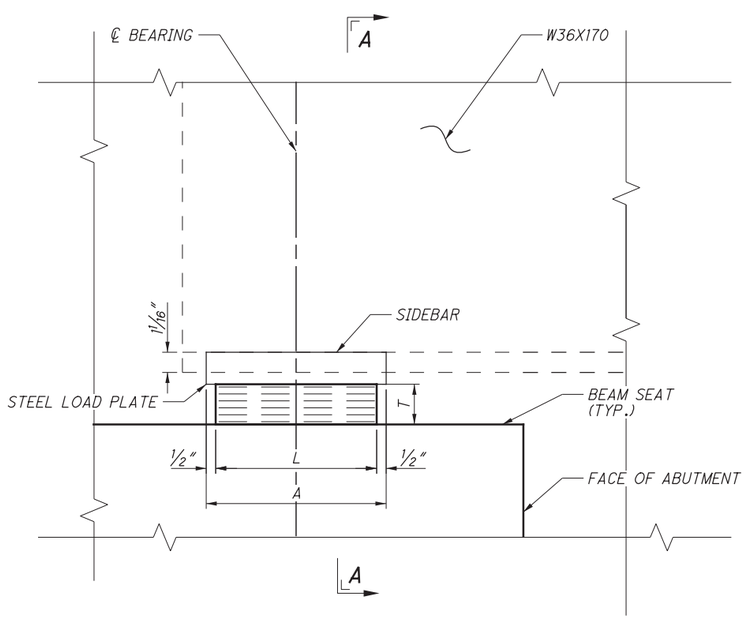

ELEVATION

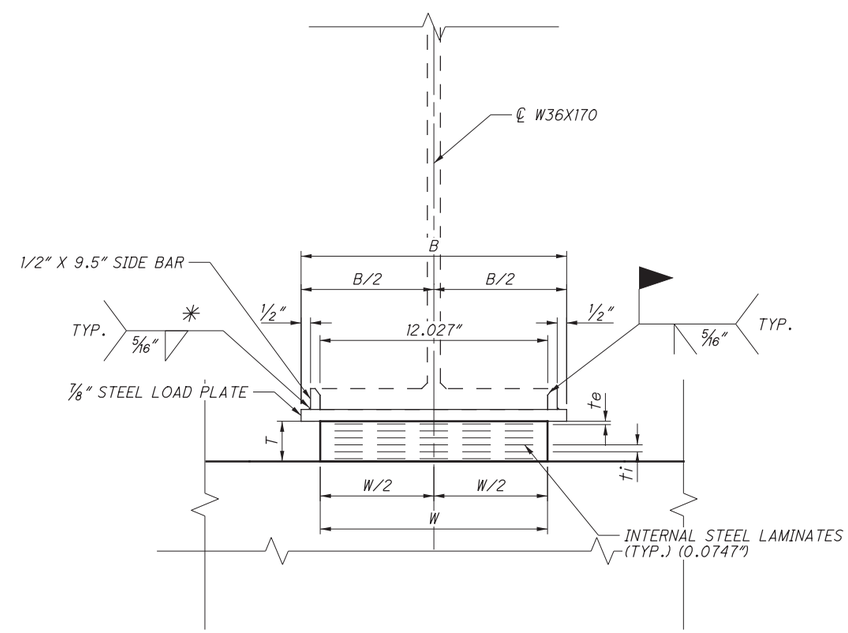

SECTION A-A

DESIGN AGENCY
ODOT DISTRICT 7
ENGINEERING

DESIGNED	DRAWN	REVIEWED	DATE
LCG	LCG	MRB	1/17/2019
CHECKED	REVISED	STRUCTURE FILE NUMBER	
DHG	XXX	5760518	

BEARING DETAIL
BRIDGE NO.: MOT-4-1779L
SR 4 OVER WEBSTER STREET

D07-BH-FY20(A)
PID No. 101851

3 / 3

23 / 54

I:\ProjectData\D07\10185_BH-FY20 (A)\Design\Structures\MOT004_1779L\Sheets\004_1779L_SB001.dgn Sheet 8/14/2019 8:55:27 AM lgerling