FED. RD. DIVISION	STATE	PROJECT	
2	OHIO	I-70-1(15)20	

215

MONTGOMERY COUNTY
MOT-40-2.73

CURVE DATA

For Brookville-Salem Rd.

T.S = 56+89.05
P.I = 59+75.46
S.C. = 58+39.05
C.S. = 61+10.61
S.T = 62+60.61
Δ = 10°23'20"
D = 2°30'
L_s = 150'
θ_s = 1°52'30"
T_s = 286.41'
L_c = 271.56'
X_c = 149.98'
Y_c = 1.64'
Superelevation = 0.041'/'

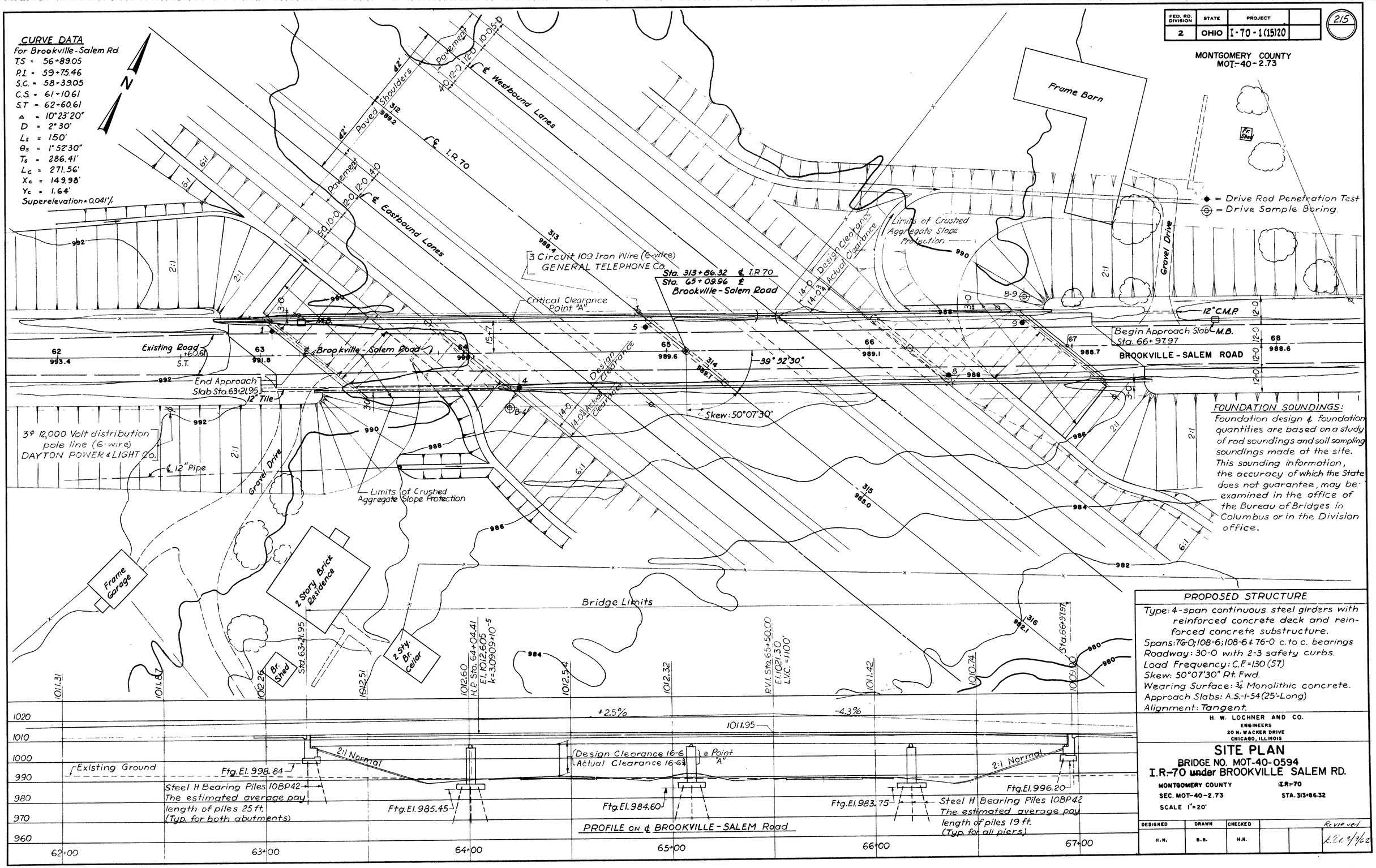

FOUNDATION SOUNDINGS:

Foundation design & foundation quantities are based on a study of rod soundings and soil sampling soundings made at the site. This sounding information, the accuracy of which the State does not guarantee, may be examined in the office of the Bureau of Bridges in Columbus or in the Division office.

PROPOSED STRUCTURE

Type: 4-span continuous steel girders with reinforced concrete deck and reinforced concrete substructure.
Spans: 76-0; 108-6; 108-6 & 76-0 c. to c. bearings
Roadway: 30-0 with 2-3 safety curbs.
Load Frequency: C.F. = 130 (57)
Skew: 50°07'30" Rt. Fwd.
Wearing Surface: 3¾" Monolithic concrete.
Approach Slabs: A.S.-1-54 (25'-Long)
Alignment: Tangent.

H. W. LOCHNER AND CO.
ENGINEERS
20 N. WACKER DRIVE
CHICAGO, ILLINOIS

SITE PLAN

BRIDGE NO. MOT-40-0594
I.R.-70 under BROOKVILLE SALEM RD.

MONTGOMERY COUNTY — I.R.-70
SEC. MOT-40-2.73 — STA. 313+86.32
SCALE 1" = 20'

DESIGNED	DRAWN	CHECKED			Reviewed
H.N.	B.B.	H.N.			R.E.A. 2/9/62

FED. RD. DIVISION	STATE	PROJECT	
2	OHIO		

216

MONTGOMERY COUNTY
MOT-40-2.73

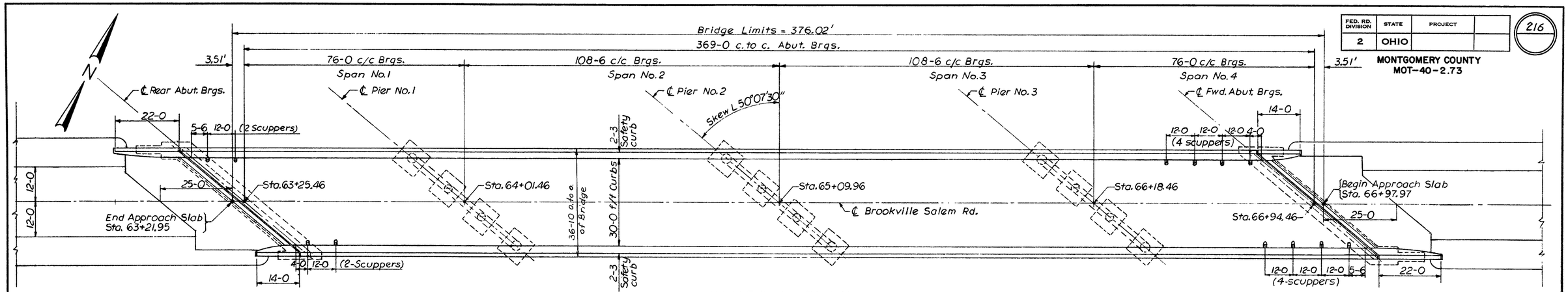

GENERAL PLAN

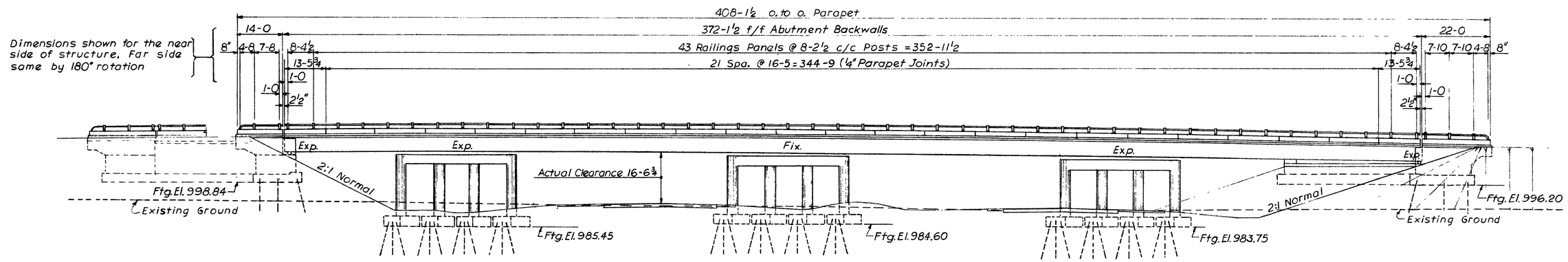

ELEVATION

ESTIMATED QUANTITIES

ITEM	TOTAL	UNIT	DESCRIPTION	Gen.	Super.	Piers	Abut.			
E-2	606	Cu. Yds.	Unclassified Excavation			265	341			
S-1	387	Cu. Yds.	Class "C" concrete, superstructure		387					
S-1	106	Cu. Yds.	Class "C" concrete, piers above footings			106				
S-1	247	Cu. Yds.	Class "E" concrete, abutments				247			
S-1	89	Cu. Yds.	Class "E" concrete, pier footings			89				
S-16	Lump	Sum	First test pile	Lump						
S-18	2800	Lin. ft.	Steel piles, 10BP42			2050	750			
S-4	155,541	Lbs.	Reinforcing steel		103,321	37,448	14,772			
S-7	415,500	Lbs.	Structural steel		415,500					
S-8	415,500	Lbs.	Field painting of structural steel		415,500					
S-14	816.25	Lin. Ft.	Railing Type "A" (aluminum rail & supports, concrete		816.25					
			parapet)							
S-29	52	Cu. Yds.	Porous backfill				52			
S-29	12	Each	Scuppers		12					
I-10	667	Sq. Yds.	Crushed aggregate slope protection	667						
Special	387	Each	Water-reducing, set-retarding admixture *		387					

* See proposal note.

GENERAL NOTES

REFERENCE shall be made to Standard Drawings RB-1-55 revised 2-2-59, AR-1-57 revised 4-2-62 and CSB-2-56 Sheets 2 and 3 revised 2-2-59, and to Supplemental Specification No. S-20710 dated 4-25-61 and No. S-307 dated 8-23-60

DESIGN SPECIFICATIONS: This structure conforms to the requirements of "Design Specifications for Highway Structures" of the State of Ohio, Department of Highways, dated 9-1-57, together with current revisions thereof.

EXCAVATION QUANTITY includes the removal of fill material required for construction of the abutments.

WELDING of structural steel shall be Class "A" except as otherwise shown. Welds shown as field welds may, at the option of the Contractor, be made in the shop.

SHOP PAINTING STEEL. The surface preparation of all steel, requiring shop painting as per the Plans & Specifications, shall be accomplished by blast cleaning or power tool cleaning, except as noted in the Specifications regarding the use of Chromate Primers.

CONCRETE DECK PLACING: In order to facilitate water curing of the concrete of the deck slab, the placing of concrete shall progress upgrade. The slab may be placed in sections, between transverse construction joints which are parallel to transverse reinforcing steel & are located near the center of any span.

SURFACE FINISH OF CONCRETE: The requirements of Sec. S-1.22, Rubbed Finish, shall apply to the following exposed concrete surfaces:

a. The entire superstructure except the top & bottom surfaces of curbs & roadways.
b. The entire surface of piers & abutments except bridge seats, backwalls & the face of spill-through abutments between outside beams

MACHINE FINISH: The concrete bridge deck shall be finished by the use of a finishing machine.

SHEET LEAD shall conform to the requirements of ASTM Designation B29 without restriction to the Common Desilverized type.

UTILITY LINES: All expense involved in relocating (installing) the affected utility lines shall be borne by the owners. The contractor and Owners are requested to cooperate by arranging their work in such manner that inconvenience to either will be held to a minimum.

PIER PILES shall be driven to firm contact with rock. If length of penetration is approximately equal to the depth to rock according to the bridge foundation investigation report, the firm contact shall be considered as attained when the capacity according to the formula in Sec. S-18.05 is not less than the following value for a pile hammer of the indicated energy rating:
50 tons per pile using an 11000 ft. lb. hammer.
43 tons per pile using a 15000 ft. lb. or greater hammer.
If the energy rating of the hammer is between the ratings as shown above, the required formula capacity shall be determined by interpolation.
The design load is 35 tons per pile.

ABUTMENT PILES shall be driven to a minimum bearing capacity of 21 tons per pile.

H. W. LOCHNER AND CO.
ENGINEERS
20 N. WACKER DRIVE
CHICAGO, ILLINOIS

GENERAL PLAN

BRIDGE NO. MOT-40-0594
I.R.-70 UNDER BROOKVILLE-SALEM RD.

MONTGOMERY COUNTY — I.R.-70 STA. 313 + 86.32

DESIGNED	DRAWN	TRACED	CHECKED	REVIEWED	DATE	REVISED
H.N.	B.B.		B.H.	K.A.	6-26-62	

FED. RD. DIVISION	STATE	PROJECT	
2	OHIO		

217

MONTGOMERY COUNTY
MOT-40-2.73

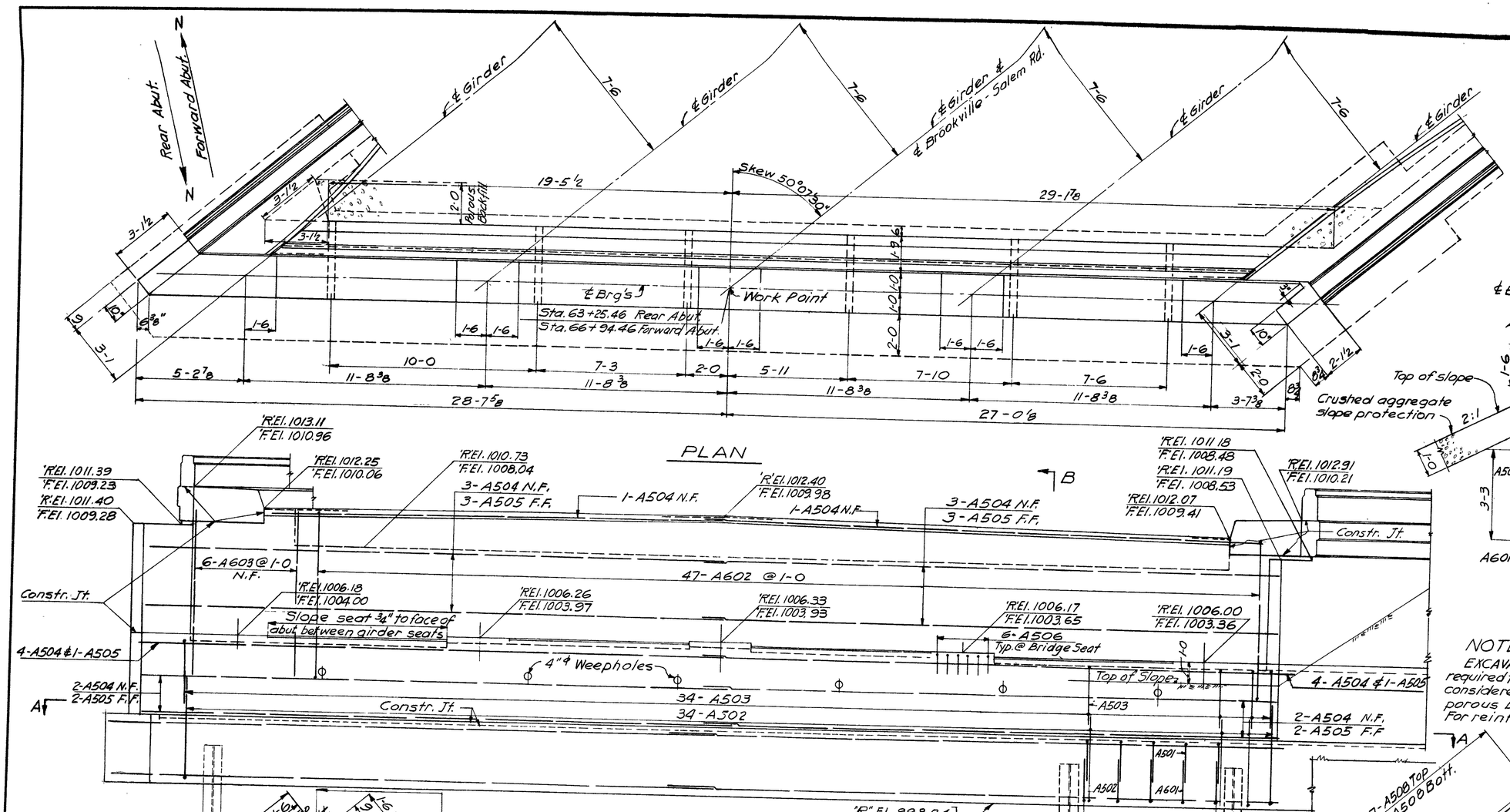

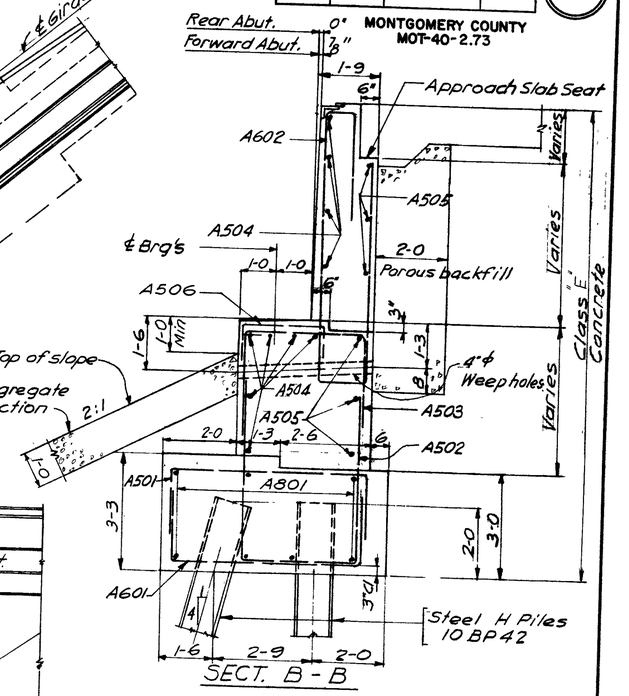

NOTES:

EXCAVATION for porous backfill, in excess of that required for construction of the abutment, shall be considered as paid for in the bid price per Cu. Yd for porous back fill.

For reinforcing steel details see sheet No. 223.

PROCEDURE:

The embankment shall be placed and compacted up to the finished spill-thru slope and to the level of the subgrade for a distance of 200 feet back of the abutments, after which excavation shall be made for the abutment and the piles driven.

NOTES:

N.F. - indicates Near Face reinforcing
F.F. - indicates Far Face reinforcing
'R' El's. refer to Rear Abutment
'F' El's refer to Forward Abutment

H. W. LOCHNER AND CO.
ENGINEERS
20 N. WACKER DRIVE
CHICAGO, ILLINOIS

ABUTMENT DETAILS

BRIDGE NO. MOT-40-0594
I.R.-70 UNDER BROOKVILLE-SALEM RD.

MONTGOMERY COUNTY — I.R.-70 — STA. 313+86.32

DESIGNED	DRAWN	TRACED	CHECKED	REVIEWED	DATE	REVISED

FED. RD. DIVISION	STATE	PROJECT	
2	OHIO		

218

MONTGOMERY COUNTY
MOT-40-2.73

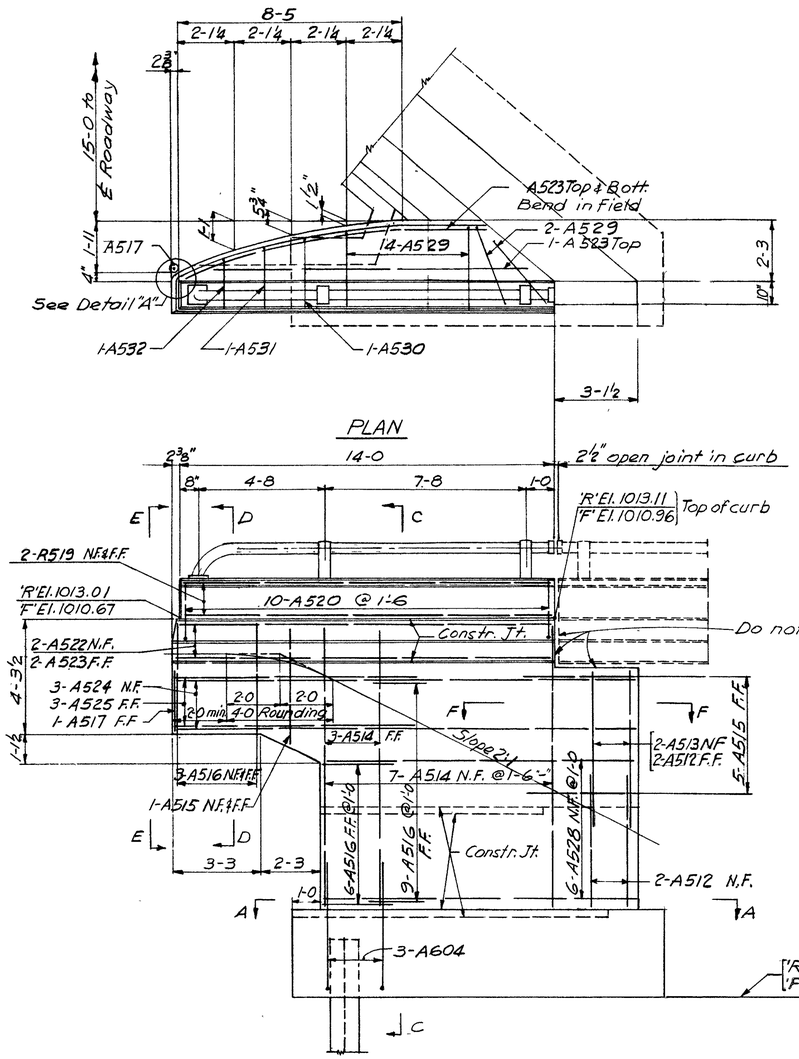

ELEVATION
RIGHT WING WALL - REAR ABUTMENT
LEFT WING WALL - FORWARD ABUT.

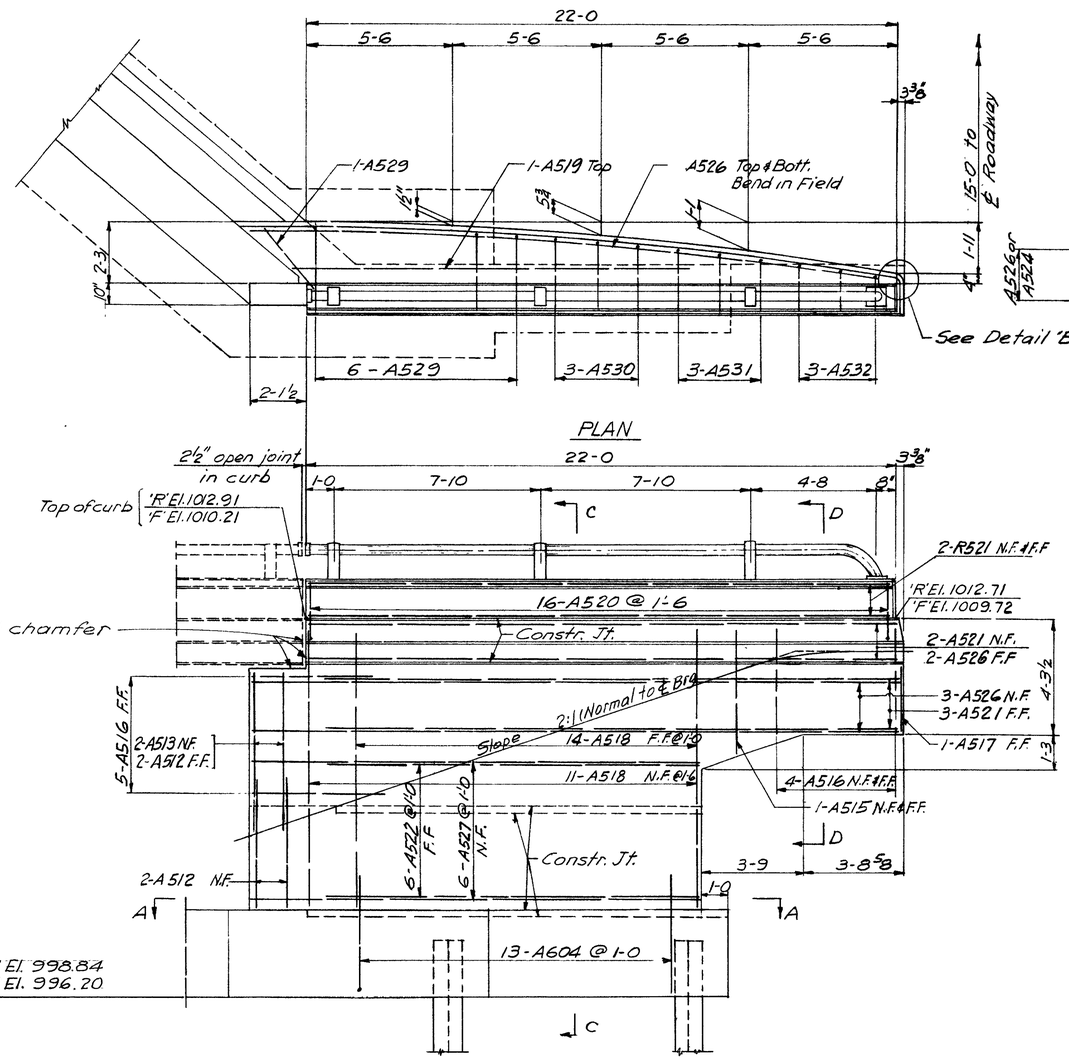

ELEVATION
LEFT WING WALL - REAR ABUTMENT
RIGHT WING WALL - FORWARD ABUT.

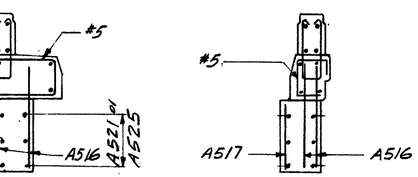

SECT. D-D

VIEW E-E

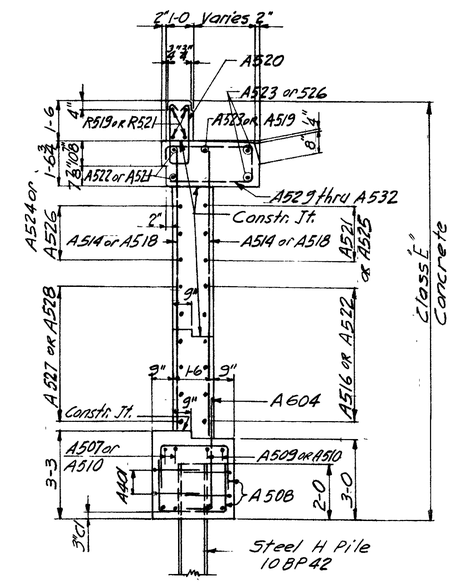

SECT. C-C

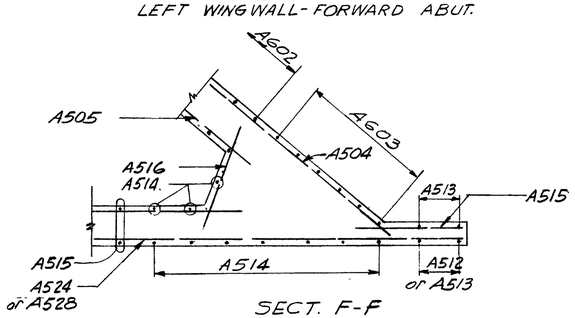

SECT. F-F

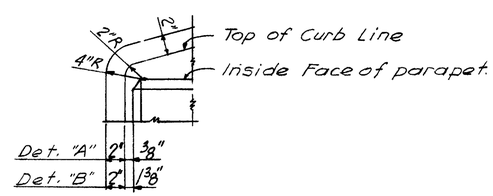

DETAIL "A" As Shown
DETAIL "B" Opp. Hand

For notes see Sh. No. 217.

H. W. LOCHNER AND CO.
ENGINEERS
20 N. WACKER DRIVE
CHICAGO, ILLINOIS

WINGWALLS

BRIDGE NO. MOT-40-0594
I.R.-70 UNDER BROOKVILLE-SALEM RD.

MONTGOMERY COUNTY I.R.-70
STA. 313 + 86.32

DESIGNED	DRAWN	TRACED	CHECKED	REVIEWED	DATE	REVISED
H.N	H.S.		B.H.	KG	6-22-66	

FED. RD. DIVISION	STATE	PROJECT	
2	OHIO		

219

MONTGOMERY COUNTY
MOT-40-2.75

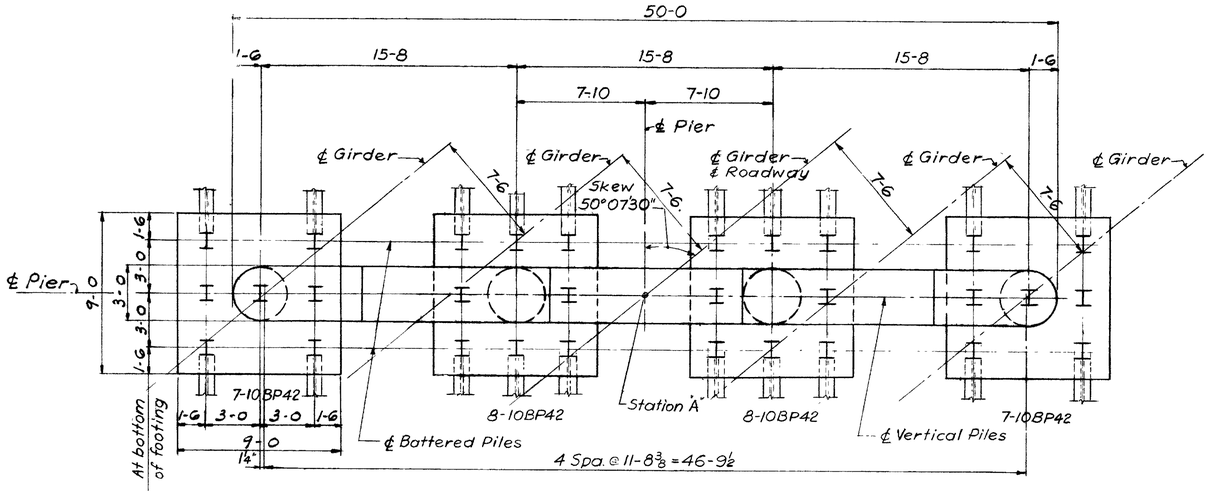

PLAN

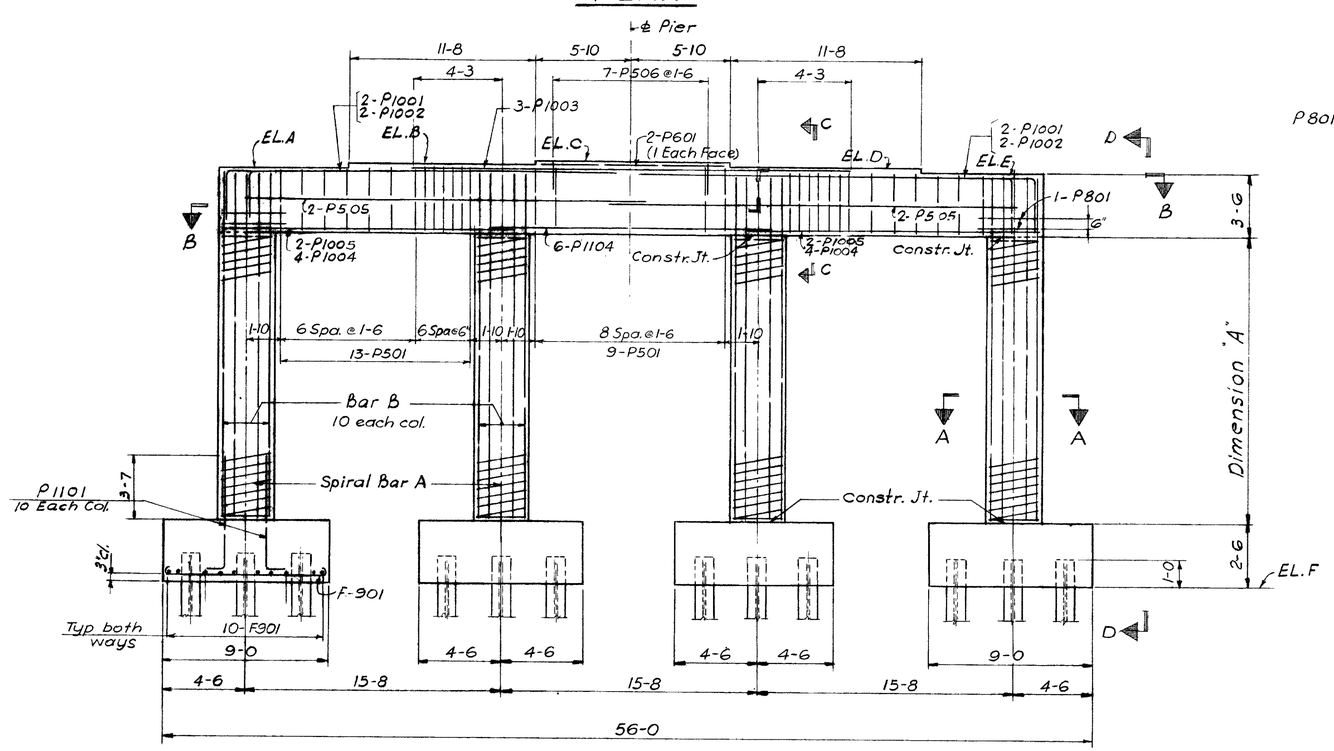

ELEVATION

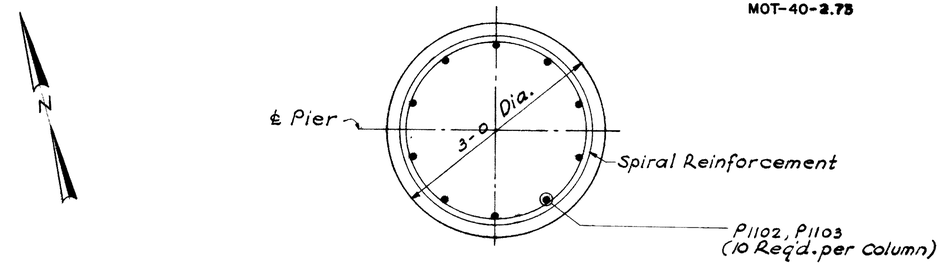

SECTION A-A

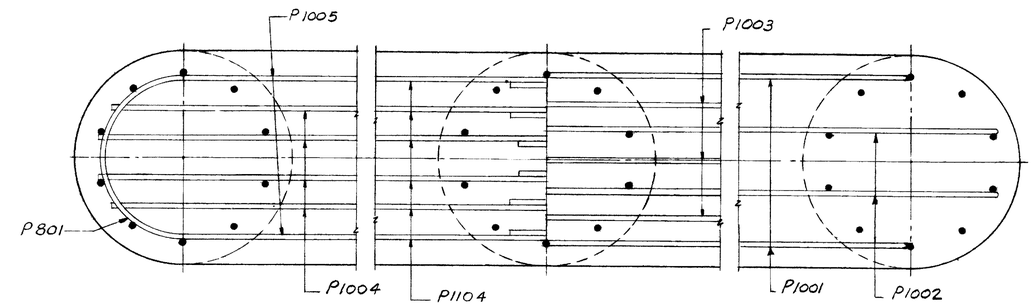

SECTION B-B

NOTES: BRIDGE SEAT REINFORCING
Special care shall be taken in placing reinforcing steel in the vicinity of the bridge seat of Pier No. 2, so as to avoid interference with the drilling of anchor bar holes.

SYMMETRY: All pier details and reinforcement are symmetrical about the center line of the pier, unless otherwise noted.

For view D-D see Sheet No. 220.

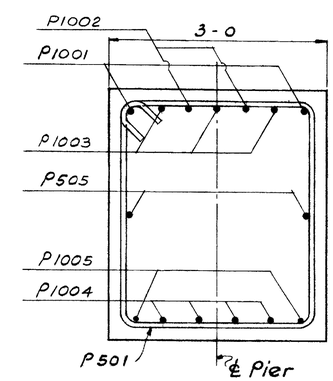

SECTION C-C

PIER	STATION A	ELEVATION A	B	C	D	E	F		BAR A	BAR B	DIMENSION A
PIER No.1	64+01.46	1005.69	1005.82	1005.94	1005.82	1005.70	985.45		SP401	P1102	14-3
PIER No.2	65+09.96	1005.37	1005.44	1005.50	1005.32	1005.14	984.60		SP402	P1103	14-6½

H.W. LOCHNER AND CO.
CONSULTING ENGINEERS
20 N. WACKER DRIVE
CHICAGO, ILLINOIS

PIER NO. 1 & 2 DETAILS

BRIDGE NO. MOT-40-0594
I.R.-70 UNDER BROOKVILLE SALEM RD.

MONTGOMERY COUNTY — I.R.-70 STA. 313 + 88.32

DESIGNED	DRAWN	TRACED	CHECKED	REVIEWED	DATE	REVISED
	B.B.		B.H.	K.A.	6-26-62	

FED. RD. DIVISION	STATE	PROJECT	
2	OHIO		

MONTGOMERY COUNTY
MOT-40-2 73

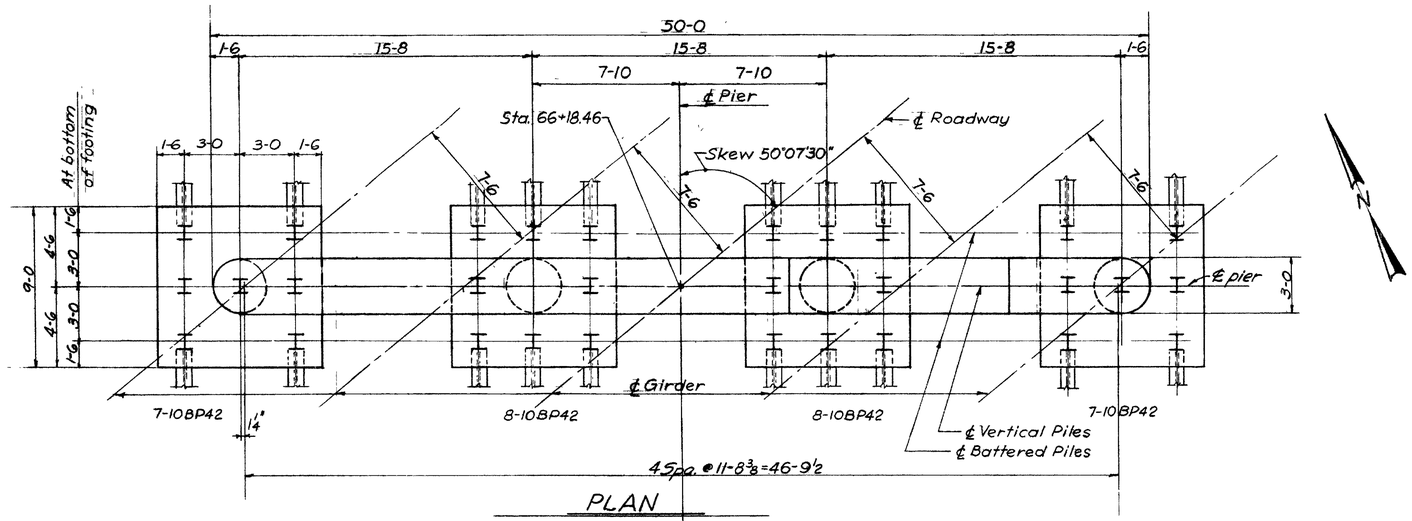

PLAN

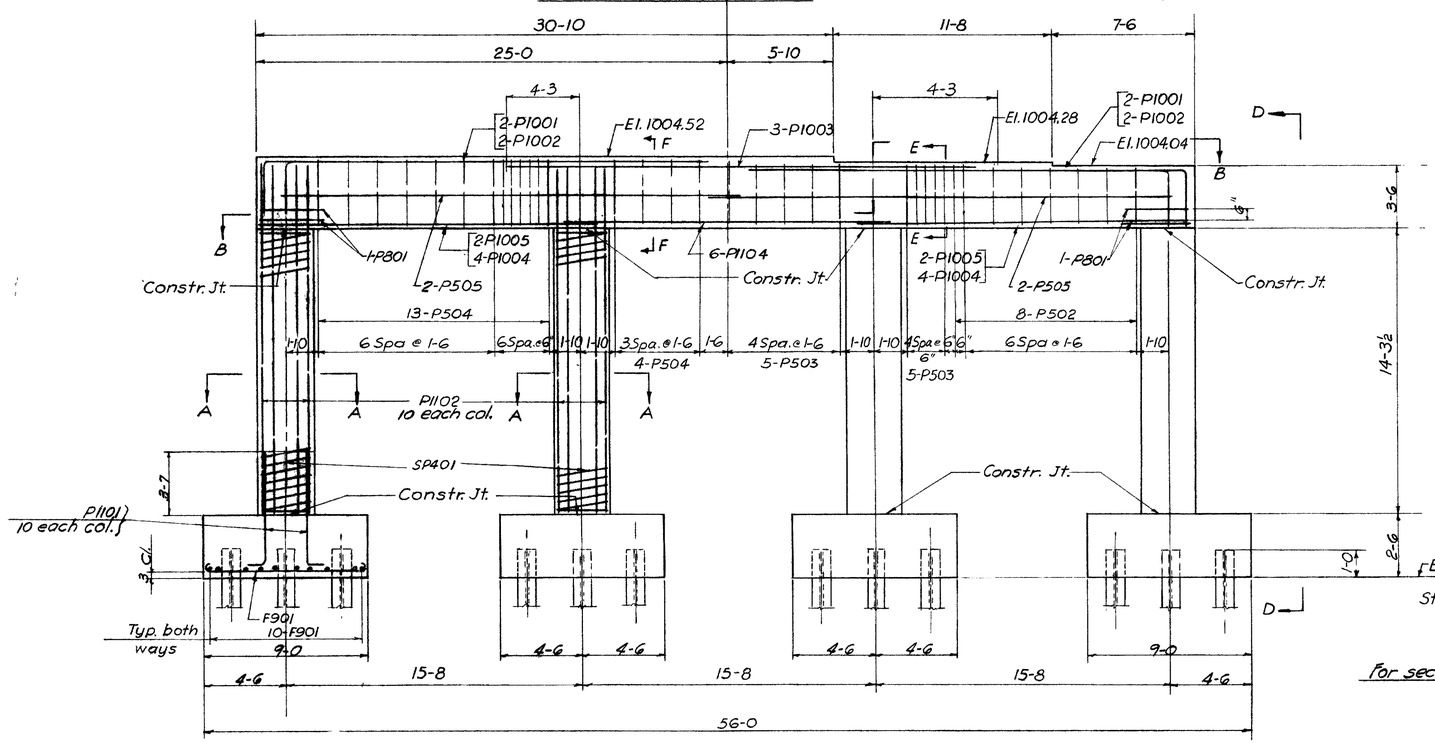

ELEVATION

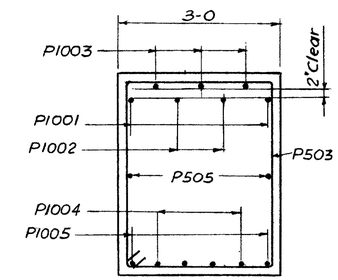

SECTION E-E

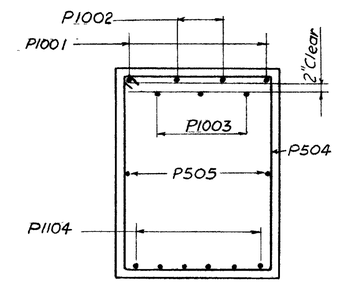

SECTION F-F

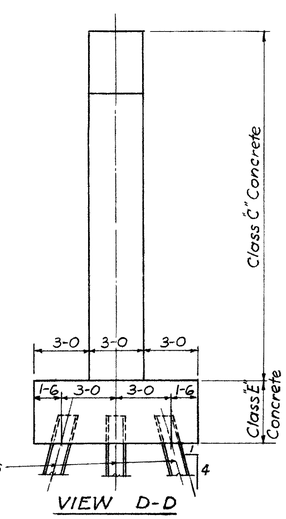

VIEW D-D

For sections "A-A", "B-B" & pier notes see Sheet No 219.

H. W. LOCHNER AND CO.
CONSULTING ENGINEERS
20 N. WACKER DRIVE
CHICAGO, ILLINOIS

PIER NO. 3 DETAILS

BRIDGE NO. MOT-40-0594
I.R.-70 UNDER BROOKVILLE-SALE

MONTGOMERY COUNTY I.R.-70
STA 313 + 8

DESIGNED	DRAWN	TRACED	CHECKED	REVIEWED	DATE
	B.B.		B.H.	K.G.	6-26-6

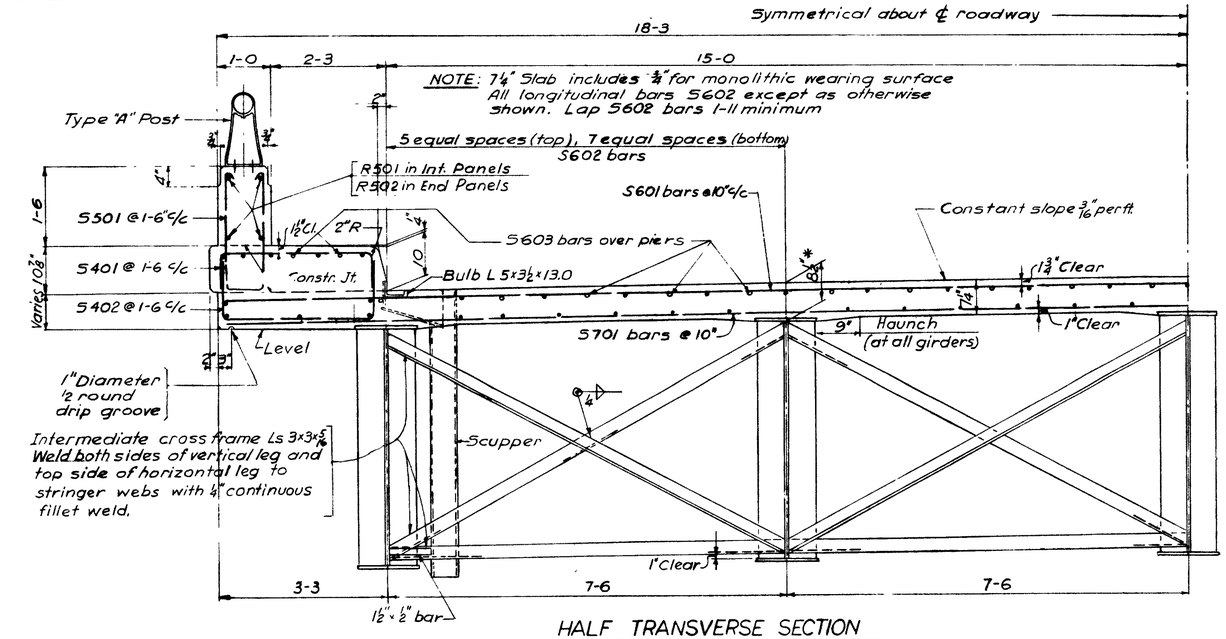

HALF TRANSVERSE SECTION

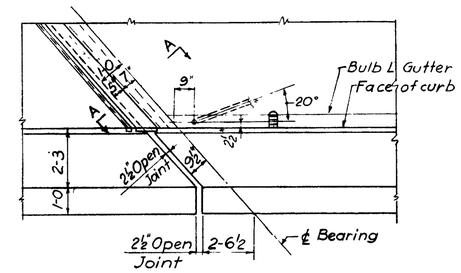

PART PLAN AT ABUTMENT

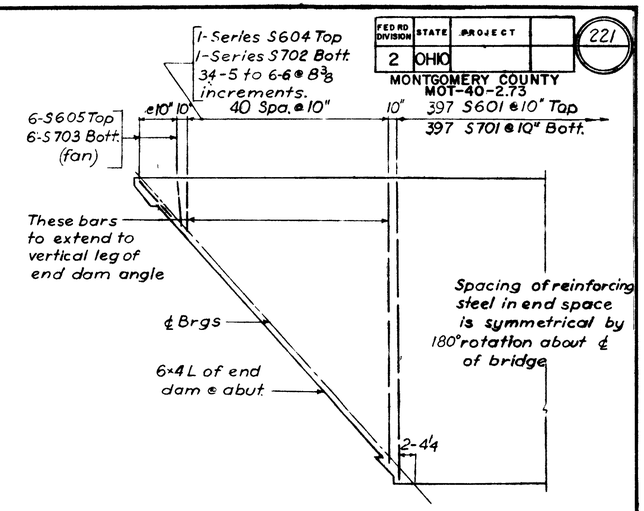

PLAN AT ABUTMENTS

NOTE*
This is the nominal dimension. The quantity of deck concrete to be paid for shall be based on this dimension, even though deviation from it may be necessary because the top flange of girder may not have the exact camber or conformation required to place it parallel to the finished grade.

REFERENCES
For section A-A at abutment; end dam details, bridge roadway crown and diagram showing stagger of S603 bars over piers, see Std. Drwg. CSB-2-56, sh. #2 of 6, revised 2-2-59.
For gutter and scupper details and curb plate details see Std. Drwg. CSB-2-56 sh. #3 of 6, revised 2-2-59.
For details of rockers and bolsters see std. drg. R.B.-1-55, revised 2-2-59.

Deck Slab Haunch:-
The haunch in the deck slab adjacent to the top of steel girders, which is shown as 9" wide, may vary from this dimension between the limits of 6" and 12", except that the maximum slope shall not exceed 3" inches per foot. Payment for deck slab concrete shall be based on the 9" width.

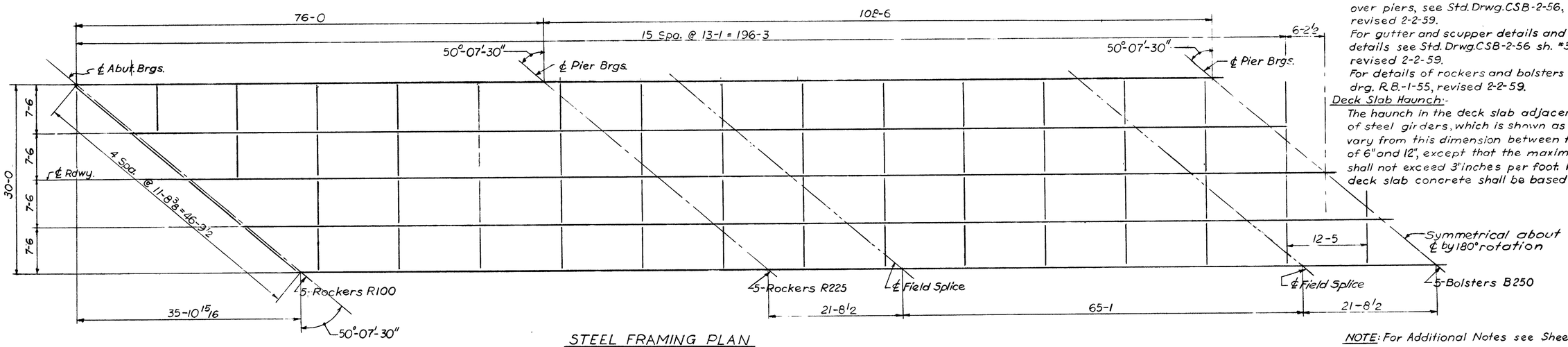

STEEL FRAMING PLAN

NOTE: For Additional Notes see Sheet No. 216.

DEFLECTION AND CAMBER																
Location	Outside Girders								Inside Girders							
	Span No 1 & 4			Span No 2 & 3					Span No 1 & 4			Span No 2 & 3				
	A	B	C	D	E	F	G	H	A	B	C	D	E	F	G	H
Deflection due to Weight of Steel	0	1/8"	0	1/8"	1/8"	1/4"	1/8"	1/8"	0	1/8"	0	1/8"	1/8"	1/4"	1/8"	1/8"
Deflection due to Remaining Dead Load	3/8	3/8	1/8	3/8	1/2	7/8	1/2	3/8	1/4	1/4	1/8	1/4	3/8	5/8	3/8	1/4
Convexity Required for Vertical Curve	3/8	1/2	3/8	3/4	7/8	1 1/8	7/8	3/4	3/8	1/2	3/8	3/4	7/8	1 1/8	7/8	3/4
Sum of Deflections and Convexity	3/4	1	1/2	1 1/4	1 1/2	2 1/4	1 1/2	1 1/4	5/8	7/8	1/2	1 1/8	1 3/8	2	1 3/8	1 1/8
Required Camber		1"				2 1/4"				7/8"				2"		

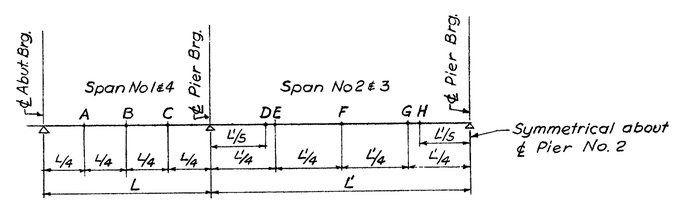

POINT OF DEFLECTION DIAGRAM

H. W. LOCHNER AND CO.
CONSULTING ENGINEERS
20 N. WACKER DRIVE
CHICAGO, ILLINOIS

SUPERSTRUCTURE DETAILS

BRIDGE NO. MOT-40-0594
I.R.-70 UNDER BROOKVILLE-SALEM RD.

MONTGOMERY COUNTY | I.R.-70 | STA. 313+86.32

DESIGNED	DRAWN	TRACED	CHECKED	REVIEWED	DATE	REVISED
H.N.	V.B. & B.B.		B.H.	K.A.	6-26-62	

FED. RD DIVISION	STATE	PROJECT		222
2	OHIO			

MONTGOMERY COUNTY
MOT-40-2.73

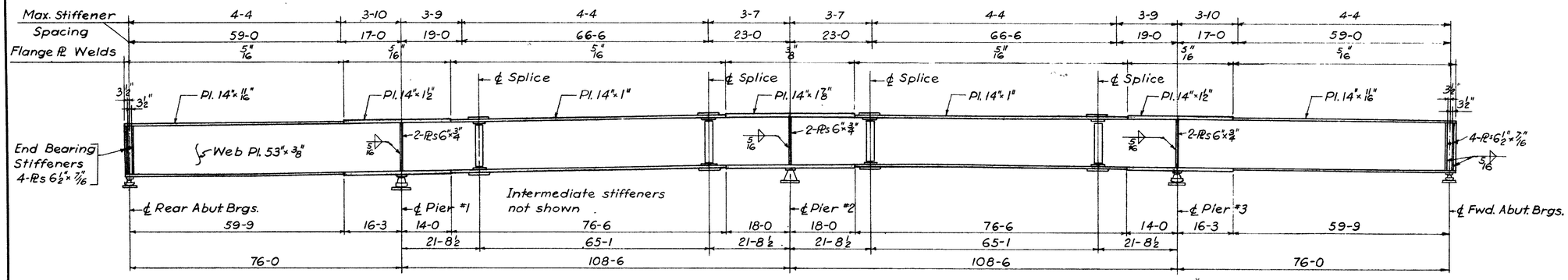

ELEVATION

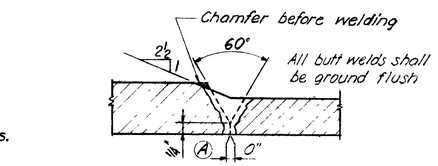

Note Ⓐ: Weld after placing at least one pass on other side.

DETAIL OF FLANGE PLATE SPLICE

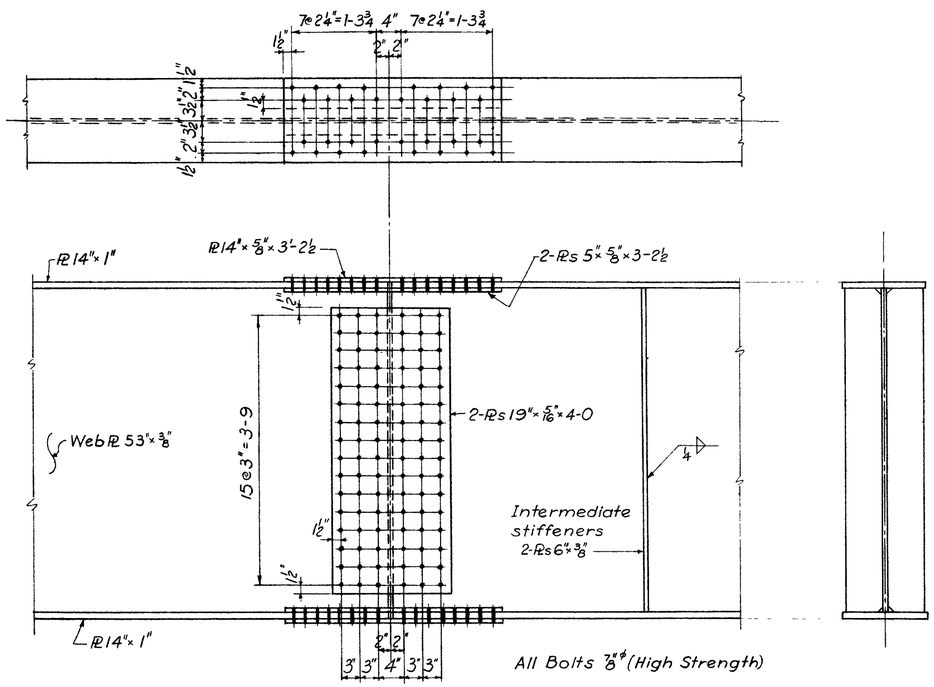

DETAILS OF FIELD SPLICE AND INTERMEDIATE STIFFENERS

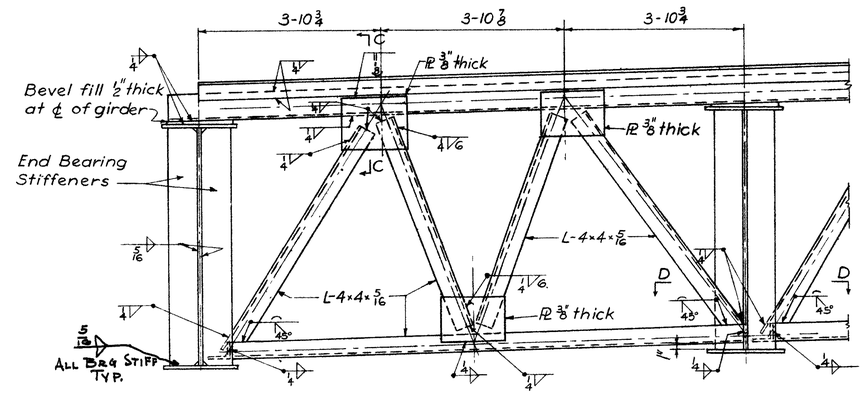

SECTION B-B

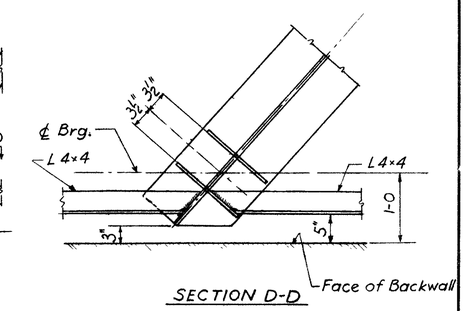

SECTION D-D

NOTES:

HIGH STRENGTH STEEL BOLTS: see Supplemental Specification No. S-207.10, dated 4-25-61

All butt welds shall receive radiographic examination, according to Supplemental Specification No. S-307, dated 8-23-60.

SHOP SPLICES: If additional shop splices are necessary, their location and detail shall be submitted to the Director for approval prior to ordering of material.

ERECTION PROCEDURE: Contractor shall provide to the Director for approval 3 prints showing his proposed erection procedure for the plate girders.

SOLE PLATES of rockers at Pier No. 3 and the forward abutment shall be beveled to follow the roadway gradient. Plates shall be 3 1/2" thick at the ℄ of pier rockers and 2 1/2" thick at the ℄ of abutment rockers.

H. W. LOCHNER AND CO.
ENGINEERS
20 N. WACKER DRIVE
CHICAGO, ILLINOIS

SUPERSTRUCTURE DETAILS

BRIDGE NO. MOT-40-0594
I.R.-70 UNDER BROOKVILLE-SALEM RD.

MONTGOMERY COUNTY — I.R.-70 STA. 313 + 86.32

DESIGNED	DRAWN	TRACED	CHECKED	REVIEWED	DATE	REVISED
H.N. & A.M.	B.B.		B.H.	K.G.	6-26-62	

SH. No. 8

FED. RD DIVISION	STATE	PROJECT	
2	OHIO		

223

MONTGOMERY COUNTY
MOT-40-2.73

REINFORCING STEEL LIST

TWO ABUTMENTS

Mark	No. Req'd	Length	Type	Description	Weight
A801	28	29-10	S	Footing	2230
A601	80	8-11	B	Footing	1072
A602	94	17-1	B	Backwall	2411
A603	12	7-0	S	"	126
A604	32	5-3	B	Footing	252
A501	80	8-10	B	Footing	737
A502	68	16-0	B	"	1135
A503	72	7-0	B	Abutment	526
A504	40	28-3	S	"	1179
A505	24	25-10	S	"	635
A506	60	4-3	B	"	266
A507	8	13-5	S	Footing	112
A508	48	5-7	B	"	279
A509	8	6-6	S	"	54
A510	16	10-0	S	"	167
A511	16	9-6	S	"	159
A512	16	5-7	S	Wingwalls	94
A513	8	5-0	S	"	42
A514	20	10-9	S	"	224
A515	18	4-6	S	"	84
A516	68	4-0	S	"	284
A517	4	2-6	S	"	10
A518	50	10-3	S	"	535
A519	2	13-8	S	"	28
A520	76	5-9	B	"	456
A521	10	21-8	S	"	226
A522	16	13-10	S	"	231
A523	6	11-4	S	"	71
A524	6	17-10	S	"	112
A525	6	9-0	S	"	56
A526	10	24-0	S	"	250
A527	12	16-7	S	"	208
A528	12	11-6	B	Curb	144
A529	26	7-3	B	"	197
A530	8	6-1	B	"	51
A531	8	5-3	B	"	44
A532	8	4-1	B	"	34
A401	16	5-4	B	Footing	57
R519				Parapet	see superstructure bar list
R521				"	

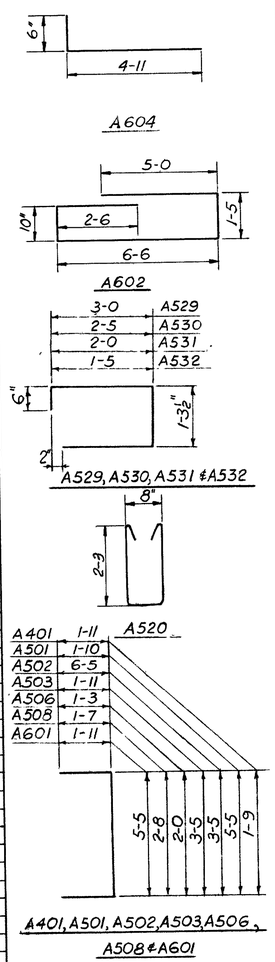

REINFORCING STEEL LIST

SUPERSTRUCTURE

Mark	No. Req'd	Length	Type	Desc.	Weight
S601	397	36-2	S	Slab	21,568
S602	610	38-10	S	"	35,577
S603	78	40-0	S	"	4,686
S604	2 series of 41	6-6 to 34-5	S	"	2,520
S605	12	6-6	S	"	117
S501	496	5-10	B	Curb	3,016
S401	496	4-0	B	Curb	1,325
S402	496	4-9	B	"	1,574
R501	168	17-1	S	Parapet	*
R502	16	12-2	S	"	*
R519	8	13-8	S	"	*
R521	8	21-8	S	"	*
S701	397	36-2	S	Slab	29,350
S702	2 series of 41	6-6 to 34-5	S	"	3,429
S703	12	6-6	S	"	159

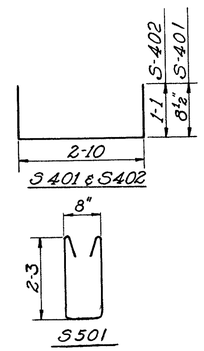

* to be included with railing for payment

REINFORCING STEEL LIST

REPLACEMENT BARS

Mark	No. Req'd	Length	Type	Weight
RE401	1	5-3	S	
* RE402	1	5-3	B	
RE501	1	5-7	S	
RE601	4	5-11	S	
RE701	2	6-2	S	
RE801	1	6-6	S	
RE901	1	6-10	S	
RE1001	1	7-2	S	
RE1101	1	7-6	S	

* Replacement for spiral reinforcing bar shall not have deformations but shall in other respects conform to Item 5-4

REINFORCING STEEL LIST

PIERS

Mark	No. Required Pier No. 1	Pier No. 2	Pier No. 3	Length	Type	Weight
P501	35	35	—	12-2	B	888
P502	—	—	8	12-0	B	100
P503	—	—	10	12-7	B	131
P504	—	—	17	13-1	B	232
P505	4	4	4	24-0	S	300
P506	7	7	—	5-1	B	74
P601	2	2	—	11-4	S	68
P801	4	4	4	9-10	B	315
P1001	4	4	4	24-11	B	1,287
P1002	4	4	4	26-2	B	1,351
P1003	3	3	3	24-2	S	936
P1004	8	8	8	18-4	S	1,893
P1005	4	4	4	16-2	S	835
P1101	40	40	40	6-6	B	4,144
P1102	40	—	40	17-4	S	7,366
P1103	—	40	—	17-8	S	3,755
P1104	6	6	6	16-8	S	1,594
F901	80	80	80	11-0	B	8976

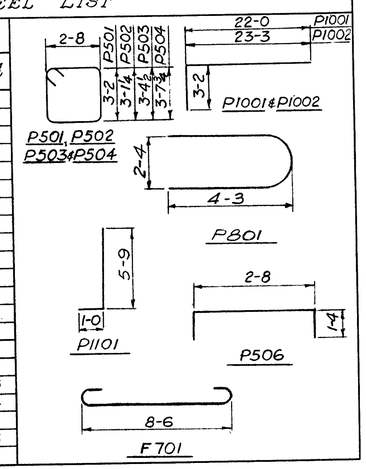

SPIRAL REINFORCING STEEL LIST FOR PIERS

Mark	No. Required Pier No. 1	Pier No. 2	Pier No. 3	Core Dia. % Spiral	Length	Pitch	No. of Turns	Weight
SP401	4		4	32"	14-3	4½"	41	2119
SP402		4		32"	14-6	4½"	42	1084

NOTE:
Bar size is indicated in the bar mark. The first digit where three digits are used and the first two digits where four digits are used, indicate the bar size number. For example, P501 is a No. 5 size bar and P1001 is a No. 10 size bar.

SPIRAL REINFORCING BARS
The "Length" shown in the steel list for the spiral bars is the distance from the top of the footing to the bottom of the pier cap.

The "No. of Turns" shown in the steel list for the spiral bars is the "Length" divided by the pitch, plus 3 turns (total number of closed coils), expressed as the nearest whole number.

Spiral reinforcing bars shall not have deformations but shall in other respects conform to Item S-4.

1½ closed coils shall be provided at the ends of each spiral unit.

Four steel channel, tee or angle spacers, weighing approximately 0.68 lb. per lin. ft. of spacer shall be provided for each spiral unit. They shall be equally spaced along the periphery of the coil. The number of pounds of these spacers, based on 0.68 lb. per lin. ft., will be paid for as reinforcing steel and is included in the tabulated quantity of spiral bars.

H. W. LOCHNER AND CO.
CONSULTING ENGINEERS
20 N. WACKER DRIVE
CHICAGO, ILLINOIS

REINFORCING STEEL DETAILS

BRIDGE NO. MOT-40-Q594
I.R-70 UNDER BROOKVILLE-SALEM RD.
MONTGOMERY COUNTY
I.R-70
STA. 313 + 86.32

DESIGNED	DRAWN	TRACED	CHECKED	REVIEWED	DATE	REVISED
H.N	B.B & H.S.		B.H.	KA.	6-22-22	

Sh. No. 9