gt100.dgn 14-JUL-2004

STATE OF OHIO
DEPARTMENT OF TRANSPORTATION
MOT-70-22.890
BUTLER TOWNSHIP
CITY OF VANDALIA
MONTGOMERY COUNTY

metric units

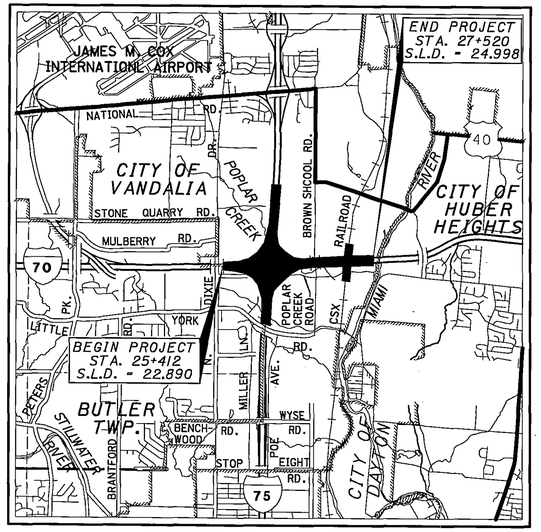

LOCATION MAP

LATITUDE: 39°51'55"N LONGITUDE: 84°11'20"W

SCALE IN KILOMETERS

0 1 2 3 4

N

INTERSTATE & DIVIDED HIGHWAY
UNDIVIDED STATE & FEDERAL ROUTES
OTHER ROADS

EARTH DISTURBED AREAS

PROJECT EARTH DISTURBED AREA	= 25.63 HECTARES
ESTIMATED CONTRACTOR EARTH DISTURBED AREA	= 4.80 HECTARES
NOTICE OF INTENT EARTH DISTURBED AREA	= 30.43 HECTARES

DESIGN DESIGNATION
(SEE SHEET 2)

DESIGN EXCEPTIONS
(SEE SHEET 2)

UNDERGROUND UTILITIES
TWO WORKING DAYS
BEFORE YOU DIG
CALL 1-800-362-2764 (TOLL FREE)
OHIO UTILITIES PROTECTION SERVICE
NON-MEMBERS
MUST BE CALLED DIRECTLY

PLAN PREPARED BY:
CH2MHILL
ONE DAYTON CENTRE, SUITE 1100
ONE SOUTH MAIN STREET
DAYTON, OHIO 45402-1828
TEL: 937.228.4285
FAX: 937.228.7572

ENGINEERS SEAL

SIGNED Samuel Bal
DATE 7/21/04

INDEX OF SHEETS:

TITLE SHEET 1
DESIGN DESIGNATION 2
SCHEMATIC PLAN AND BENCHMARKS 3, 3A, 4-7
INTERCHANGE GEOMETRIC LAYOUT 8-12
REFERENCE POINTS 13-14
TYPICAL SECTIONS 15-27
GENERAL NOTES 28-33
MAINTENANCE OF TRAFFIC 34, 34A, 34B, 35-59, 59A, 60,-94, 94A, 95-110, 110A, 110B, 111-116, 116A, 117-132, 132A, 132B, 133, 134, 134A-134K, 37A, 37B
GENERAL SUMMARY 135-140
SHEET NOT USED 141
ROADWAY SUBSUMMARY 142-145
PAVEMENT SUBSUMMARY 146, 146A
DRAINAGE SUBSUMMARY 147-150
QUANTITY CALCULATIONS 151-153
PAVEMENT CALCULATIONS 154-159, 159A
PROJECT SITE PLAN 160-164
PLAN AND PROFILE (I-70) 165-176
PLAN AND PROFILE (I-75) 177-187
PLAN AND PROFILE (RAMP A) 188-194
PLAN AND PROFILE (RAMP D) 195-198
PLAN AND PROFILE (RAMP E) 199-202
PLAN AND PROFILE (RAMP G) 203-208
CROSS SECTION LAYOUT 209-212
CROSS SECTIONS (I-70) 213-293
CROSS SECTIONS (I-75) 294-341
CROSS SECTIONS (RAMP A) 342-362
CROSS SECTIONS (RAMP D) 363-371
CROSS SECTIONS (RAMP E) 372-382
CROSS SECTIONS (RAMP G) 383-418
EXISTING RAMP REMOVAL PLAN 419-421
INTERCHANGE GRADING PLAN 422-429
BARRIER DETAILS 430-437, 437A
PAVEMENT JOINT DETAILS 438
PAVEMENT TRANSITION DETAILS 439-440
SUPERELEVATION TABLES 441-445
RAMP PAVEMENT DETAILS 446-453
UNDERDRAIN DETAILS/SUBSUMMARY 454-504
STORM DRAINAGE LAYOUT 505, 505A
DRAINAGE PROFILES 506-529, 506A
SHEET NOT USED 527
CULVERT DETAILS 530-545
MISCELLANEOUS DETAILS 546-551
WETLAND MITIGATION PLAN 552-563
RETAINING WALLS 564-718
SHEETS NOT USED 658-662
NOISE BARRIERS: ELEVATION AND DETAILS 719-745
PLAN AND CROSS SECTIONS 746-766, 762A-762D
SANITARY SEWER PLAN 767-772
TRAFFIC CONTROL 773-794, 794A, 795-798
LIGHTING 799-804, 804A, 805-819
LANDSCAPING 820-856
CSXT RAILROAD TRACK WORK 857-903
STRUCTURES OVER 6.1m
TEMPORARY CSXT OVER I-70 . . . . . 904-910, 910A, 911-920
PERMANENT CSXT OVER I-70
STRUCTURE NO. MOT-70-27425 921-957
I-70 OVER RAMPS A & G
STRUCTURE NO. MOT-70-25856 L & R 958-1000
SHEETS NOT USED 1001-1002
I-70 OVER I-75
STRUCTURE NO. MOT-75-26078 L & R 1003, 1006A, 1007-1048
I-75 OVER RAMP G
STRUCTURE NO. MOT-75-32689 L & R 1049-1082
SHEETS NOT USED 1083-1087
RAMP A OVER RAMP G
STRUCTURE NO. NO. MOT-70-25976 1088-1115
RAMP A OVER I-75
STRUCTURE NO. MOT-70-26106 1116-1144
RAMP E OVER RAMPS A & G
STRUCTURE NO. MOT-70-25858 1145-1173
RAMP E OVER I-75
STRUCTURE NO. MOT-70-26074 1174-1199
RAMP C BRIDGE
STRUCTURE NO. MOT-75-32721 1200-1203
FENCE PLAN/SUBSUMMARY 1204-1211
RIGHT-OF-WAY 1212-1245
SOIL PROFILE/FOUNDATION INVESTIGATION

STANDARD CONSTRUCTION DRAWINGS
(SEE SHEET 2)

PROJECT DESCRIPTION

THE FINAL PHASE OF A 3-PHASE RECONSTRUCTION OF I-70/I-75 SYSTEM INTERCHANGE. THIS IMPROVEMENT INCLUDES CONSTRUCTION OF FOUR NEW RAMPS (ONE-EXTERIOR; THREE INTERIOR); CONSTRUCTION OF SEVEN HIGHWAY BRIDGES; RECONSTRUCTION OF CSXT RAILROAD BRIDGE (STRUCTURE NO. MOT-70-27425) OVER I-70; TEMPORARY RAILROAD RUNAROUND WITH STRUCTURE OVER I-70; RECONSTRUCTION OF APPROXIMATELY 2.1 km OF I-70 MAINLINE AND 2.2 km OF I-75 MAINLINE UPGRADE.

LIMITED ACCESS

THIS IMPROVEMENT IS ESPECIALLY DESIGNED FOR THROUGH TRAFFIC AND HAS BEEN DECLARED A LIMITED ACCESS HIGHWAY OR FREEWAY BY ACTION OF THE DIRECTOR IN ACCORDANCE WITH THE PROVISIONS OF SECTION 5511.02 OF THE REVISED CODE OF OHIO.

2002 SPECIFICATIONS

THE STANDARD SPECIFICATIONS OF THE STATE OF OHIO, DEPARTMENT OF TRANSPORTATION, INCLUDING CHANGES AND SUPPLEMENTAL SPECIFICATIONS LISTED IN THE PROPOSAL SHALL GOVERN THIS IMPROVEMENT.

I HEREBY APPROVE THESE PLANS AND DECLARE THAT THE MAKING OF THIS IMPROVEMENT WILL NOT REQUIRE THE CLOSING TO TRAFFIC OF THE HIGHWAY EXCEPT AS SHOWN ON SHEETS NO. 62 - 64, AND THAT THE PROVISIONS FOR MAINTENANCE AND SAFETY OF TRAFFIC WILL BE AS SET FORTH ON THE PLANS AND ESTIMATES.

UNDER AUTHORITY OF SECTION 4511.21, DIVISION (H) OF THE REVISED CODE OF OHIO, THE REVISED PRIMA FACIE SPEED LIMITS AS INDICATED HEREIN ARE DETERMINED TO BE REASONABLE AND SAFE, AND ARE HEREBY ESTABLISHED FOR THE DURATION OF THIS PROJECT. THE PRIMA FACIE SPEED LIMIT OR LIMITS HEREBY ESTABLISHED SHALL BECOME EFFECTIVE WHEN APPROPRIATE SIGNS GIVING NOTICE THEREOF ARE ERECTED.

APPROVED William T. Davis /REC
DATE 7/26/04 DISTRICT DEPUTY DIRECTOR

APPROVED Gordon Proctor
DATE 9-3-04 DIRECTOR, DEPARTMENT OF TRANSPORTATION

FEDERAL PROJECT NO. G020(677)

PID NO. 19069

CONSTRUCTION PROJECT NO.

RAILROAD INVOLVEMENT
CSXT RAILROAD

MOT-70-22.890

MOT - IR - 70-22.890
040555 PID - 19069
DIST 7 12/1/2004

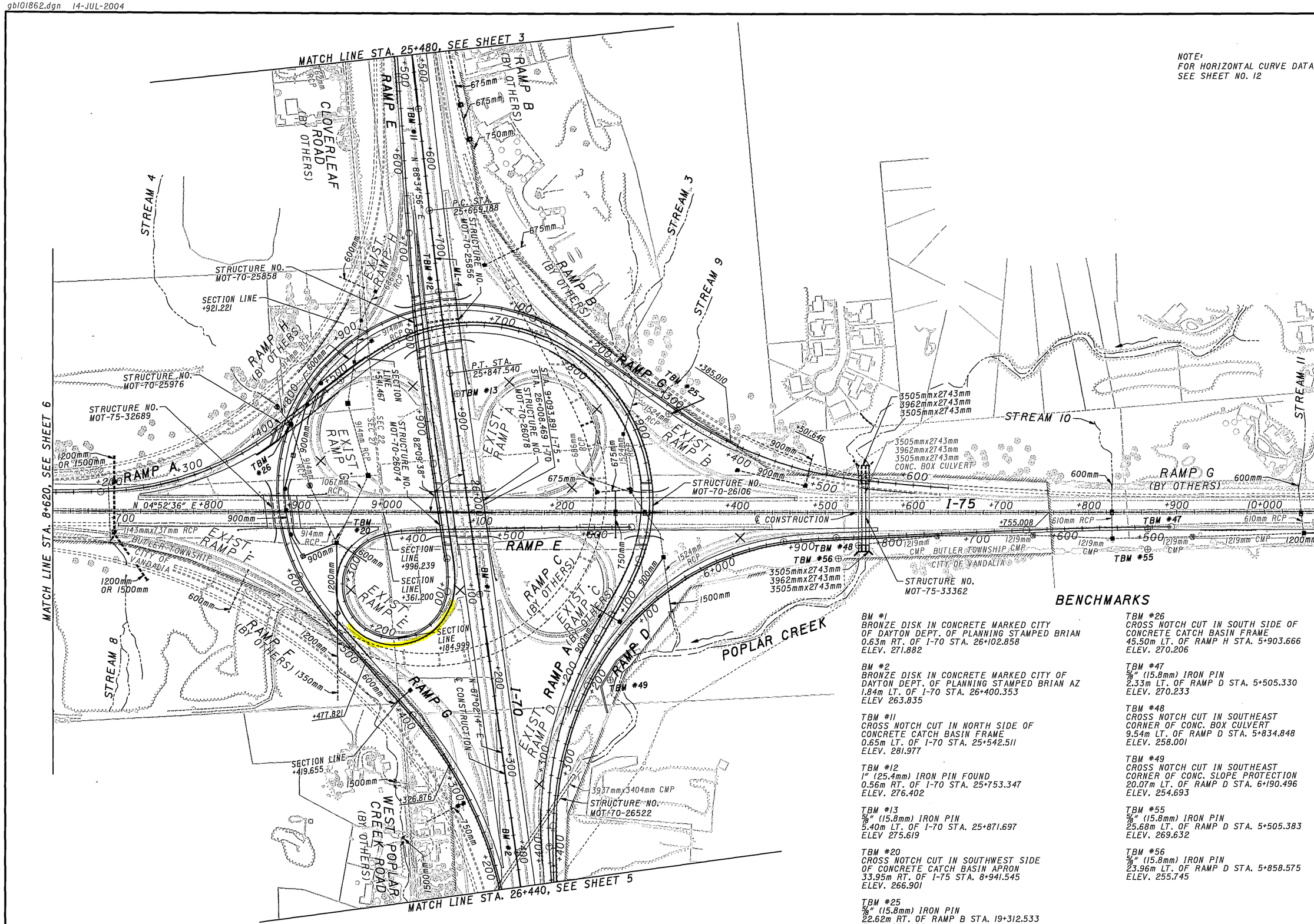

BENCHMARKS

BM #1
BRONZE DISK IN CONCRETE MARKED CITY OF DAYTON DEPT. OF PLANNING STAMPED BRIAN
0.63m RT. OF I-70 STA. 26+102.858
ELEV. 271.882

BM #2
BRONZE DISK IN CONCRETE MARKED CITY OF DAYTON DEPT. OF PLANNING STAMPED BRIAN AZ
1.84m LT. OF I-70 STA. 26+400.353
ELEV 263.835

TBM #11
CROSS NOTCH CUT IN NORTH SIDE OF CONCRETE CATCH BASIN FRAME
0.65m LT. OF I-70 STA. 25+542.511
ELEV. 281.977

TBM #12
1" (25.4mm) IRON PIN FOUND
0.56m RT. OF I-70 STA. 25+753.347
ELEV. 276.402

TBM #13
5/8" (15.8mm) IRON PIN
5.40m LT. OF I-70 STA. 25+871.697
ELEV 275.619

TBM #20
CROSS NOTCH CUT IN SOUTHWEST SIDE OF CONCRETE CATCH BASIN APRON
33.95m RT. OF I-75 STA. 8+941.545
ELEV. 266.901

TBM #25
5/8" (15.8mm) IRON PIN
22.62m RT. OF RAMP B STA. 19+312.533
ELEV. 268.566

TBM #26
CROSS NOTCH CUT IN SOUTH SIDE OF CONCRETE CATCH BASIN FRAME
45.50m LT. OF RAMP H STA. 5+903.666
ELEV. 270.206

TBM #47
5/8" (15.8mm) IRON PIN
2.33m LT. OF RAMP D STA. 5+505.330
ELEV. 270.233

TBM #48
CROSS NOTCH CUT IN SOUTHEAST CORNER OF CONC. BOX CULVERT
9.54m LT. OF RAMP D STA. 5+834.848
ELEV. 258.001

TBM #49
CROSS NOTCH CUT IN SOUTHEAST CORNER OF CONC. SLOPE PROTECTION
20.07m LT. OF RAMP D STA. 6+190.496
ELEV. 254.693

TBM #55
5/8" (15.8mm) IRON PIN
25.68m LT. OF RAMP D STA. 5+505.383
ELEV. 269.632

TBM #56
5/8" (15.8mm) IRON PIN
23.96m LT. OF RAMP D STA. 5+858.575
ELEV. 255.745

SCHEMATIC PLAN I-75 STA. 8+620 TO STA. 10+060
I-70 STA. 25+480 TO STA. 26+440

MOT-70-22.890

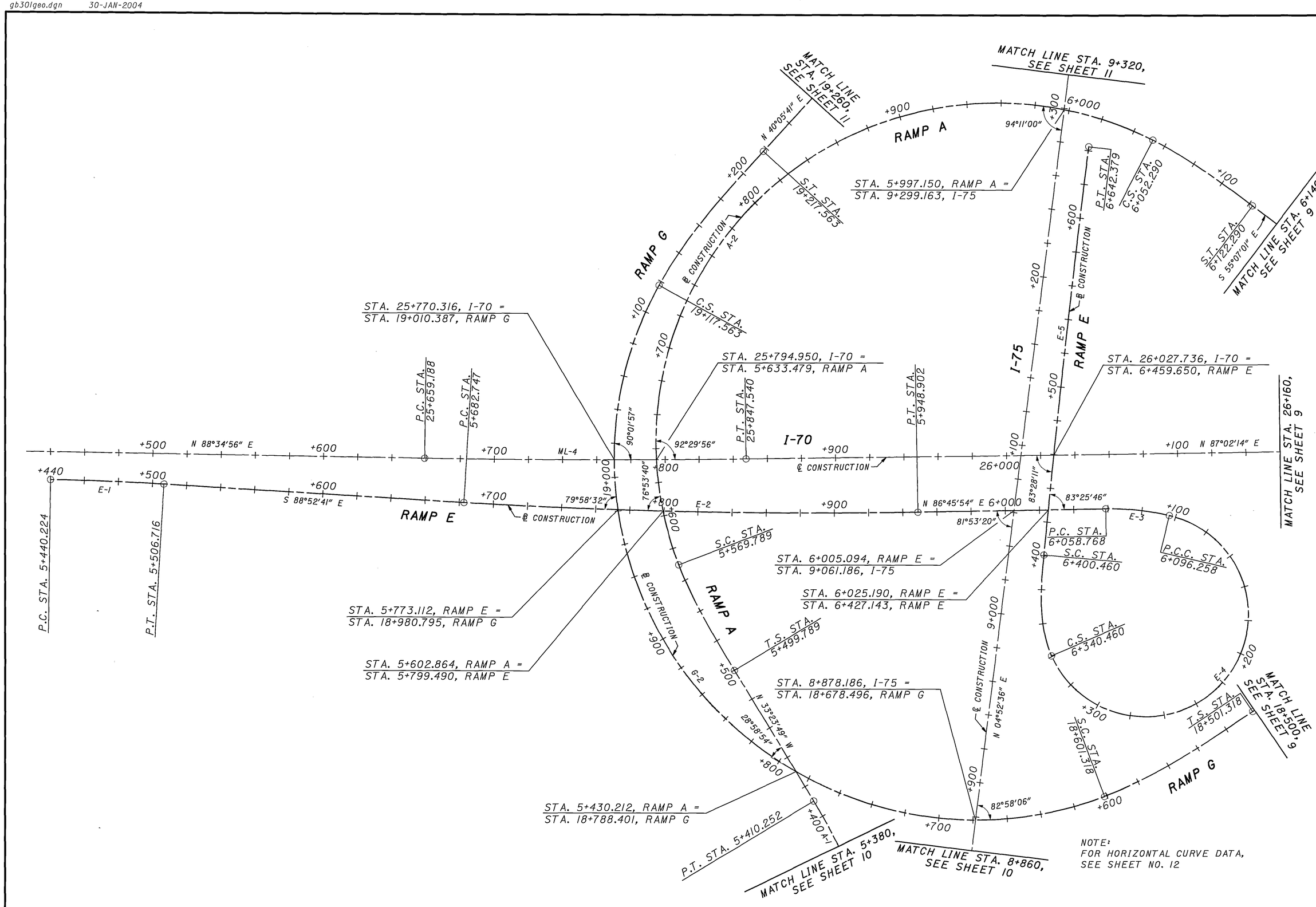

NOTE:
FOR HORIZONTAL CURVE DATA, SEE SHEET NO. 12

INTERCHANGE GEOMETRIC LAYOUT

MOT-70-22.890

HORIZONTAL CURVE DATA

CURVE NO.	P.I. STATION	P.I. COORDINATES NORTH	P.I. COORDINATES EAST	P.I. C_1 STATION	P.I. C_1 COORDINATES NORTH	P.I. C_1 COORDINATES EAST	P.I. C_2 STATION	P.I. C_2 COORDINATES NORTH	P.I. C_2 COORDINATES EAST	Δ	Δc	Δc_1	Δc_2	R OR R_1	R_2	Ls OR Ls_1	Ls_2	θs OR θs_1	θs_2	LT OR LT_1	LT_2	ST OR ST_1	ST_2
I-75																							
ML-1	7+668.422	207034.741	455426.416							04°48'08"				5217.397m									
ML-2	10+852.617	210207.666	455697.123							04°57'53"				10478.273m									
I-70																							
ML-3	24+028.090	208399.431	453568.078							01°44'00"				6985.515m									
ML-4	25+753.370	208442.120	455292.846							01°32'42"				6985.515m									
RAMP A																							
A-1	5+304.547	208152.860	455496.828							36°57'50"				340.000m									
A-2				6+093.900	208864.111	455142.081					138°13'35"			200.000m		70.000m		10°01'36"		46.742m		23.402m	
A-3	6+281.398	208516.240	455807.738							33°46'38"				420.000m									
A-4	6+659.414	208508.800	456193.111							04°04'07"				1500.000m									
RAMP D																							
D-1	5+561.159	209168.573	455625.532							02°21'56"				4000.000m									
D-2	6+192.972	208537.343	455597.850	6+077.501	208652.789	455620.949				89°13'57"		56°11'14"		295.000m		60.000m		05°49'36"		40.022m		20.020m	
D-3	6+192.972	208537.343	455597.850				6+293.021	208530.394	455828.757	89°13'57"			23°38'15"	400.000m			50.000m		03°34'52"		33.340m		16.673m
RAMP E																							
E-1	5+473.476	208418.739	455013.446							02°32'23"				1500.000m									
E-2	5+815.889	208412.034	455355.803							04°21'25"				3500.000m									
E-3				6+077.611	208426.811	455617.237					14°19'14"			150.000m									
E-4	6+361.109	208356.873	455561.176							28°51'46"		233°11'45"		60.000m		60.000m							
E-5							6+521.440	208517.999	455570.026				01°43'58"		8000.000m								
RAMP G																							
G-1	18+273.657	208449.188	455877.546							32°17'50"				450.000m									
G-2				19+176.301	208032.893	455074.693					139°31'19"			212.000m		100.000m		13°30'47"		66.862m		33.511m	
G-3				19+431.736	208792.060	455527.983						29°26'34"		450.000m									

HORIZONTAL CURVE DATA

CURVE NO.	L OR Lc OR Lc_1	Lc_2	Tc OR Tc_1	Tc_2	T, T_1, OR T_s	T_2	E	e_{max}	P.C./T.S. STATION	P.C./T.S. COORDINATES NORTH	P.C./T.S. COORDINATES EAST	S.C. STATION	S.C. COORDINATES NORTH	S.C. COORDINATES EAST	C.S. STATION	C.S. COORDINATES NORTH	C.S. COORDINATES EAST	P.C.C. STATION	P.C.C. COORDINATES NORTH	P.C.C. COORDINATES EAST	P.T./S.T. STATION	P.T./S.T. COORDINATES NORTH	P.T./S.T. COORDINATES EAST
I-75																							
ML-1	437.282m				218.769m		4.585m	NC	7+449.653	206815.973	455426.132										7+886.935	207252.718	455445.014
ML-2	907.950m				454.259m		9.842m	NC	10+398.358	209755.051	455658.507										11+306.308	210661.924	455696.424
I-70																							
ML-3	211.322m				105.669m		0.799m	NC	23+922.421	208400.012	453462.411										24+133.743	208402.045	453673.715
ML-4	188.352m				94.181m		0.635m	NC	25+659.188	208439.789	455198.693										25+847.540	208446.988	455386.902
RAMP A																							
A-1	219.348m				113.643m		18.490m	0.050	5+190.904	208039.437	455489.758										5+410.252	208247.739	455434.275
A-2	482.501m		524.111m		1082.785m		360.975m	0.060	5+499.789	208322.491	455384.991	5+569.789	208382.996	455349.980	6+052.290	208643.803	455617.641				6+122.290	208607.234	455677.218
A-3	247.599m				127.514m		18.930m	0.045	6+153.884	208589.166	455703.135										6+401.483	208513.778	455935.228
A-4	106.518m				53.280m		0.946m	0.026	6+606.134	208509.828	456139.841										6+712.652	208511.554	456246.322
RAMP D																							
D-1	165.148m				82.586m		0.852m	NC	5+478.573	209250.860	455632.552										5+643.721	209086.067	455621.913
D-2	289.292m		157.473m		332.944m	364.444m	39.399m	0.059	5+860.028	208869.967	455612.437	5+920.028	208809.998	455611.841				6+209.320	208572.872	455756.636			
D-3		165.020m		83.701m	332.944m	364.444m	8.663m	0.059							6+374.340	208520.397	455911.859	6+209.320	208572.872	455756.636	6+424.340	208516.499	455961.698
RAMP E																							
E-1	66.492m				33.250m		0.369m	0.026	5+440.224	208417.917	454980.204										5+506.716	208418.088	455046.690
E-2	266.155m				133.142m		2.531m	NC	5+682.747	208414.641	455222.687										5+948.902	208419.548	455488.733
E-3	37.490m		18.844m				1.179m	0.043	6+058.768	208425.748	455598.423							6+096.258	208423.188	455635.729			
E-4	244.202		INFINITY		20.649m(ST)	40.400m(LT)	INFINITY	0.060							6+340.460	208338.270	455570.137	6+096.258	208423.188	455635.729			
E-5		241.919		120.980			0.915m	NC				6+400.460	208397.213	455563.392							6+642.379	208638.529	455580.309
RAMP G																							
G-1	253.662m				130.299m		18.485m	0.050	18+143.357	208458.632	456007.503										18+397.019	208371.768	455772.741
G-2	516.245m		574.991m		1864.212m		400.828m	0.060	18+501.318	208309.797	455688.849	18+601.318	208257.008	455604.209	19+117.563	208547.105	455331.986				19+217.563	208628.222	455390.044
G-3	231.243m		118.235m				15.274m	0.050	19+313.501	208701.613	455451.834							19+544.744	208908.257	455549.839	19+927.799	209287.640	455601.567

NOTE: ALL COORDINATES GIVEN ARE GROUND COORDINATES. TO CONVERT TO STATE PLANE COORDINATES MULTIPLY BY 0.99992520.

HORIZONTAL CURVE DATA

MOT-70-22.890

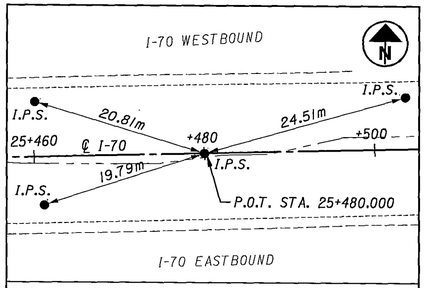

P.O.T. STA. 25+480.000
I-70

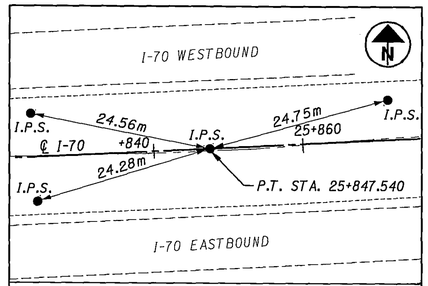

P.T. STA. 25+847.540
I-70

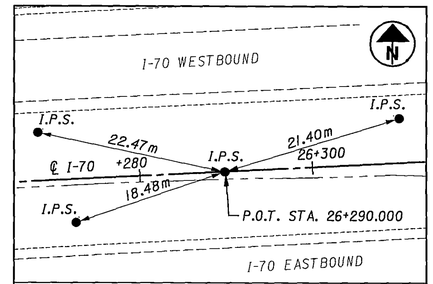

P.O.T. STA. 26+290.000
I-70

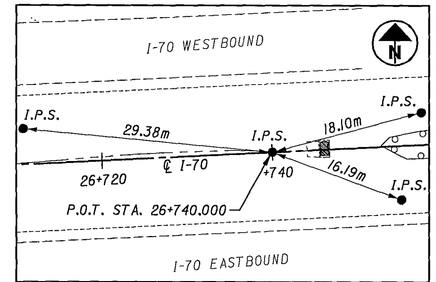

P.O.T. 26+740.000
I-70

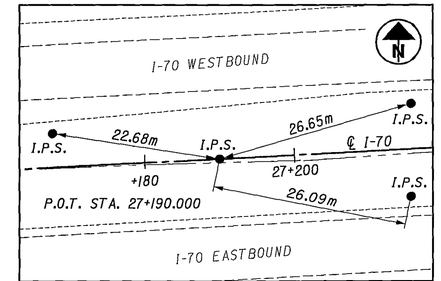

P.O.T. 27+190.000
I-70

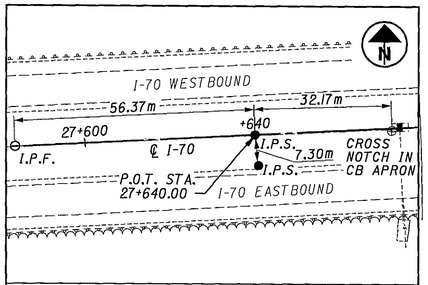

P.O.T. STA. 27+640.000
I-70

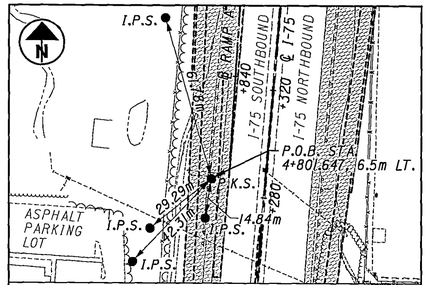

P.O.B. STA. 4+801.647
RAMP A

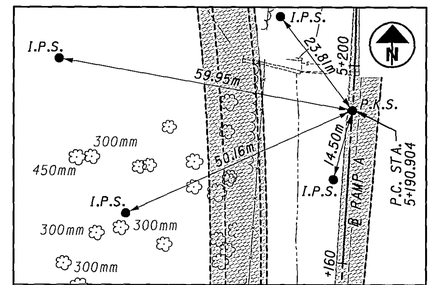

P.C. STA. 5+190.904
RAMP A

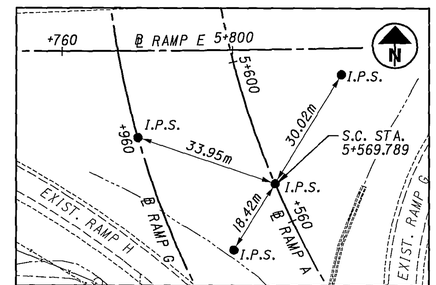

S.C. STA. 5+569.789
RAMP A

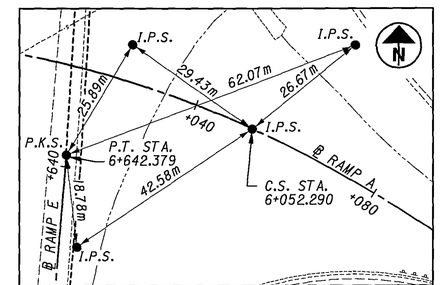

RAMP A C.S. STA. 6+052.290
RAMP E P.T. STA. 6+642.379
RAMPS A & E

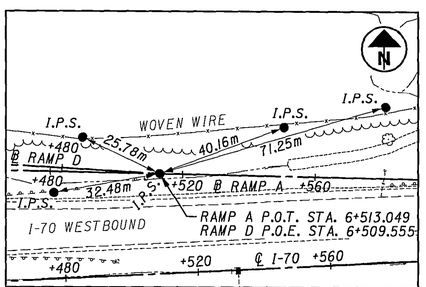

RAMP A P.O.T. STA. 6+513.049
RAMP D P.O.E. STA. 6+509.555
RAMPS A & D

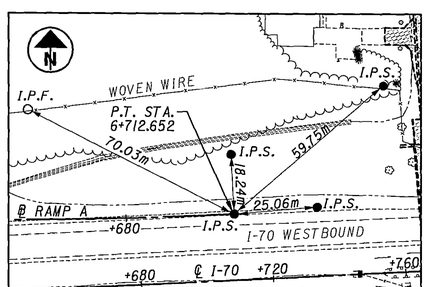

P.T. STA. 6+712.652
RAMP A

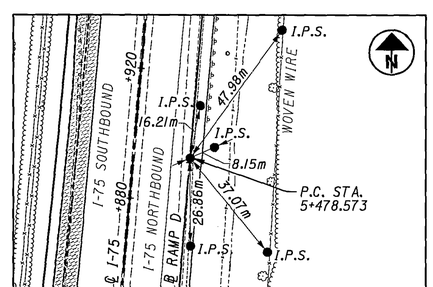

P.C. STA. 5+478.573
RAMP D

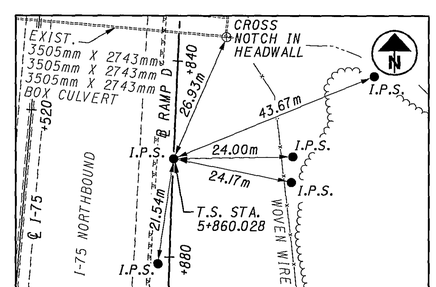

T.S. STA. 5+860.028
RAMP D

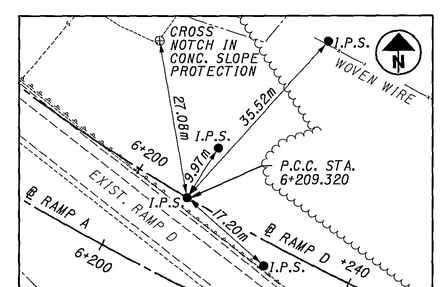

P.C.C. STA. 6+209.320
RAMP D

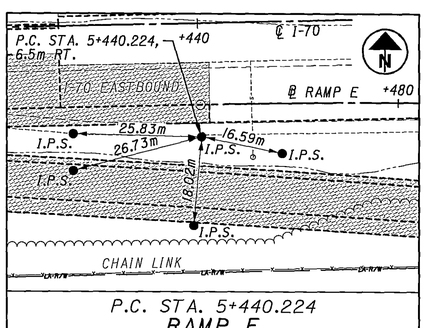

P.C. STA. 5+440.224
RAMP E

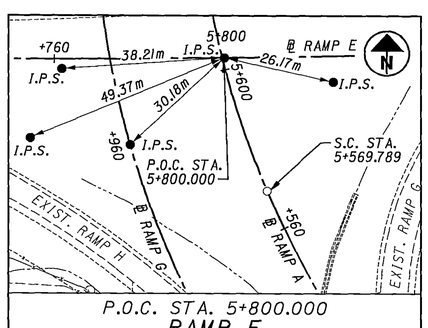

P.O.C. STA. 5+800.000
RAMP E

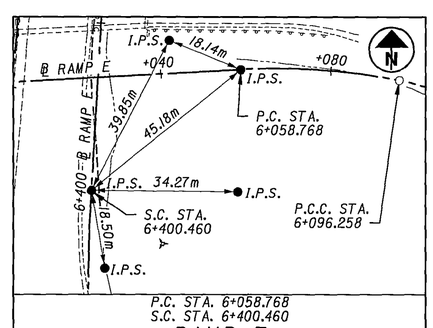

P.C. STA. 6+058.768
S.C. STA. 6+400.460
RAMP E

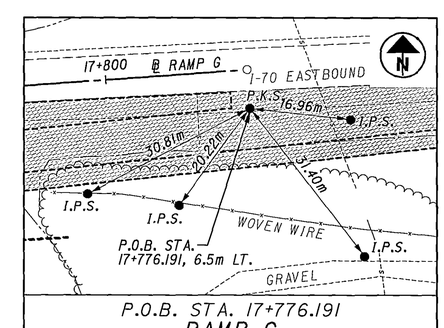

P.O.B. STA. 17+776.191
RAMP G

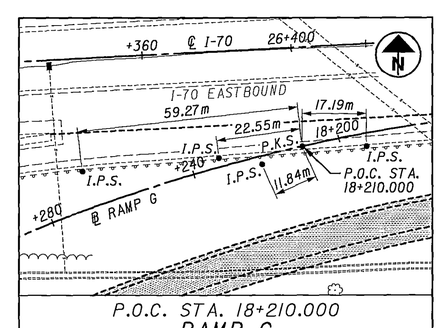

P.O.C. STA. 18+210.000
RAMP G

DENOTES PROPOSED WORK PERFORMED BY OTHERS (PROJECT MOT-75-31.842)

CALCULATED CWB
CHECKED JAE

REFERENCE POINTS

MOT-70-22.890

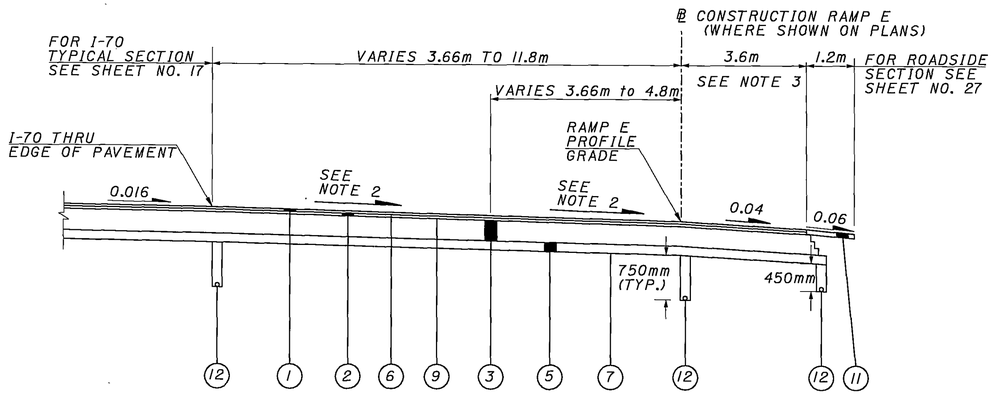

DECELERATION LANE (EASTBOUND)

I-70: STA. 25+412.000 TO STA. 25+657.096 = 245.096m

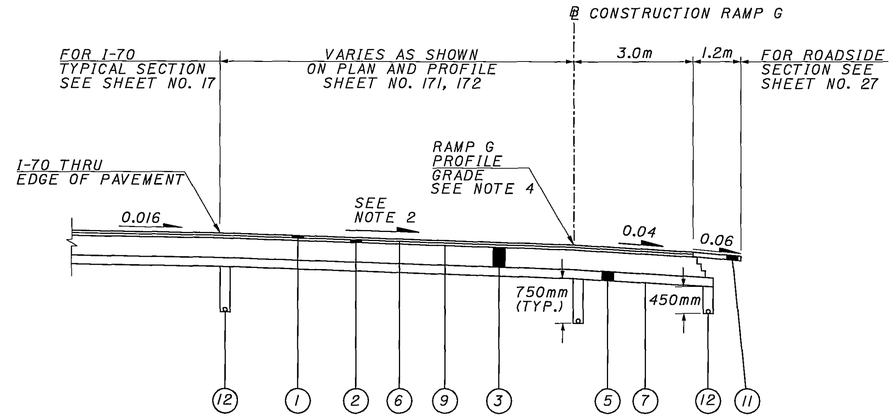

ACCELERATION LANE (EASTBOUND)

I-70: STA. 26+475.000 TO STA. 26+695.586 = 220.586m

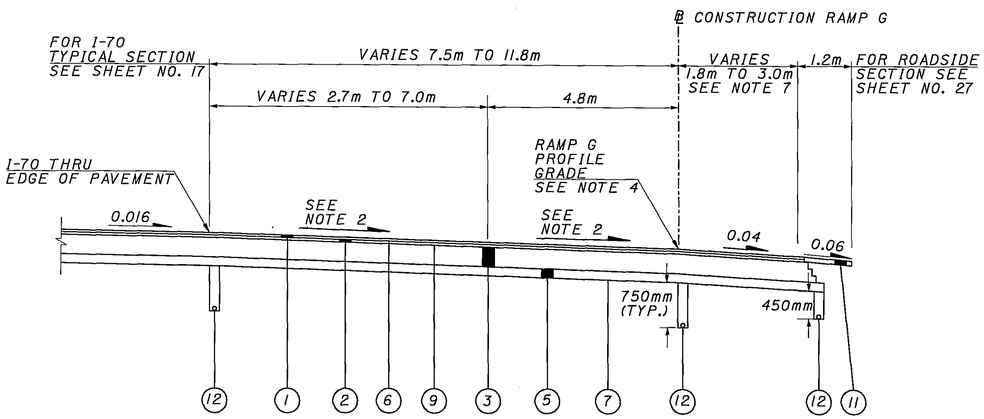

ACCELERATION LANE - TRANSITION SECTION (EASTBOUND)

I-70: STA. 26+415.259 TO STA. 26+475.00 = 59.741m

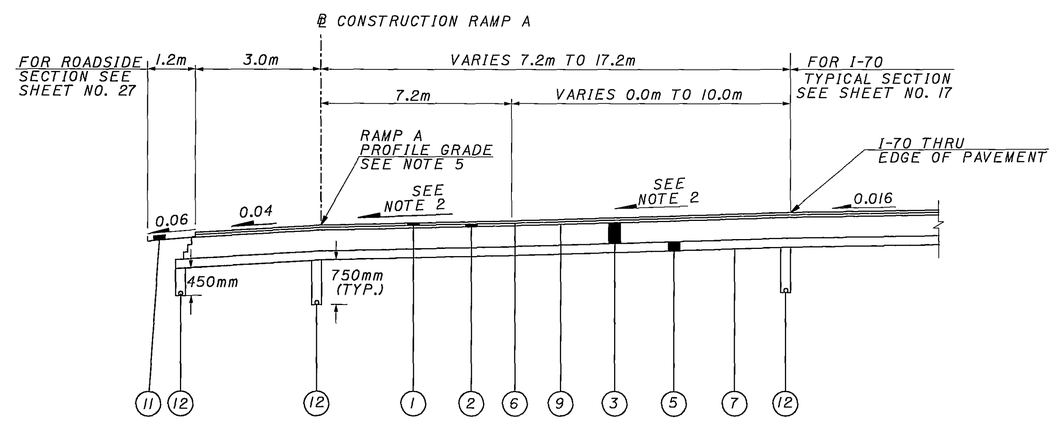

DECELERATION LANE (WESTBOUND)

I-70: STA. 26+515.871 TO STA. 26+709.149 = 193.278m

NOTES:

1. FOR LEGEND SEE SHEET NO. 15
2. SLOPE VARIES SEE PAVEMENT DETAILS, SHEET NO. 447, 448, 451, 453
3. 3.6m OR AS SHOWN ON PLAN AND PROFILE SHEET NO. 167
4. WHERE NO RAMP G PROFILE IS SHOWN, SEE PAVEMENT DETAILS SHEET NO. 453
5. WHERE NO RAMP A PROFILE IS SHOWN, SEE PAVEMENT DETAILS SHEET NO. 448
6. FOR BASE STEP DETAIL SEE SHEET NO. 17
7. 1.8m (RAMP G STA. 18+195.385 TO STA. 18+716.293) AND VARIES AS SHOWN ON PLAN AND PROFILE SHEET NO. 171

CALCULATED

CHECKED

SPEED CHANGE LANE RAMPS A, E AND G TYPICAL SECTIONS

MOT-70-22.890

gy104.dgn 30-JAN-2004

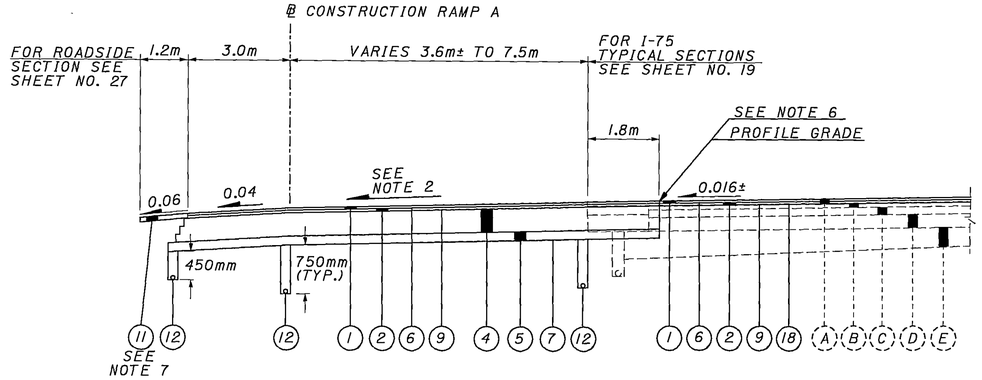

ACCELERATION LANE (SOUTHBOUND)

I-75: STA. 8+441.848 TO STA. 8+613.606= 171.758m

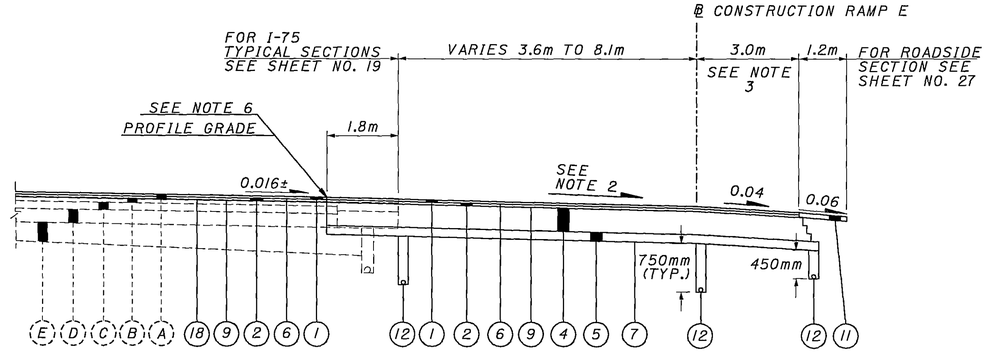

ACCELERATION LANE (NORTHBOUND)

I-75: STA. 9+019.057 TO STA. 9+279.231 = 260.174m

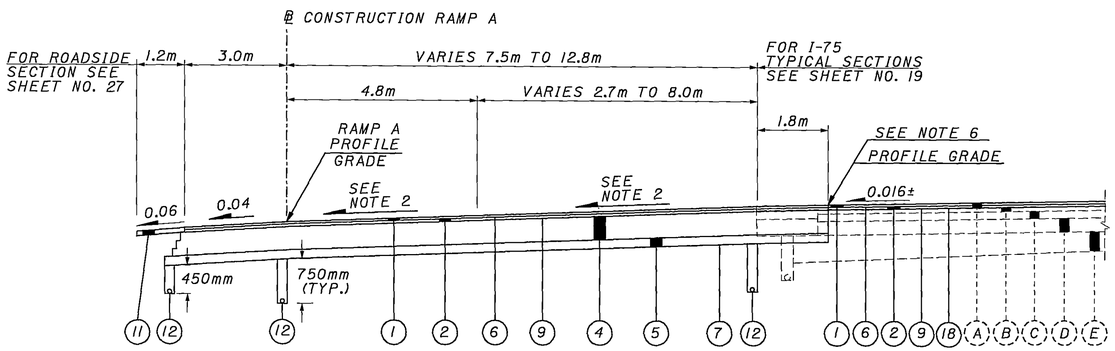

ACCELERATION LANE - TRANSITION SECTION (SOUTHBOUND)

I-75: STA. 8+613.606 TO STA. 8+719.162 = 105.556m

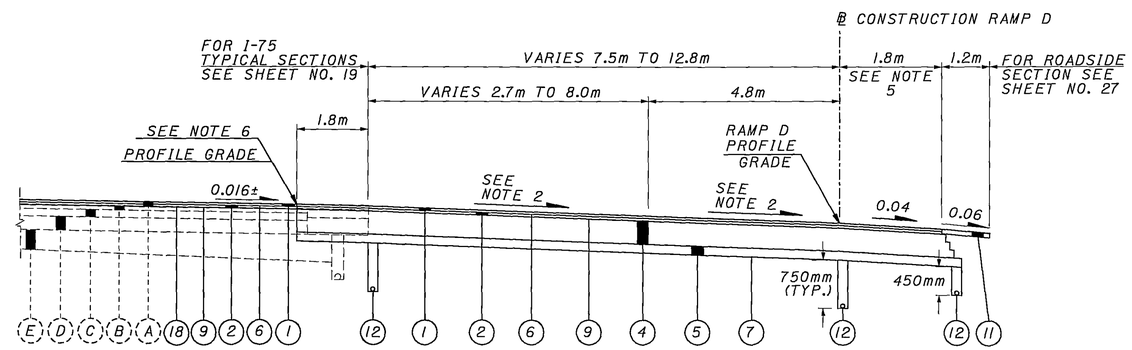

ACCELERATION LANE - TRANSITION SECTION (NORTHBOUND)

I-75: STA. 9+559.707 TO STA. 9+716.695 = 156.988m

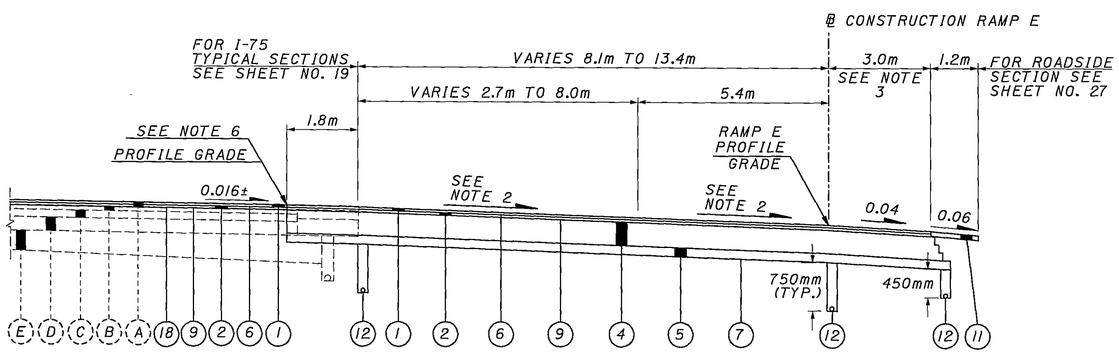

ACCELERATION LANE - TRANSITION SECTION (NORTHBOUND)

I-75: STA. 8+990.514 TO STA. 9+019.057 = 28.543m

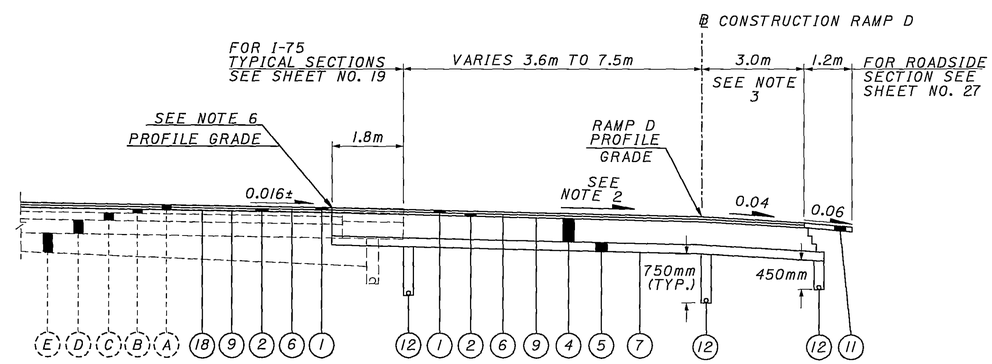

ACCELERATION LANE (NORTHBOUND)

I-75: STA. 9+716.695 TO STA. 9+893.786 = 177.091m

NOTES:

1. FOR LEGEND SEE SHEET NO. 15
2. SLOPE VARIES SEE PAVEMENT DETAILS, SHEET NO. 449, 450, 452
3. 3.0m OR AS SHOWN ON THE PLAN AND PROFILE SHEET NO. 180, 184, 201
4. FOR BASE STEP DETAIL SEE SHEET NO. 17
5. 1.8m OR AS SHOWN ON THE PLAN AND PROFILE SHEET NO. 183
6. TRIM AND CUT EXISTING PAVEMENT EDGE PER 203.04(e)
7. BEGIN ITEM 617 FROM STA. 8+419.000

CALCULATED | CHECKED

SPEED CHANGE LANE RAMPS A, D, AND E TYPICAL SECTIONS

MOT-70-22.890

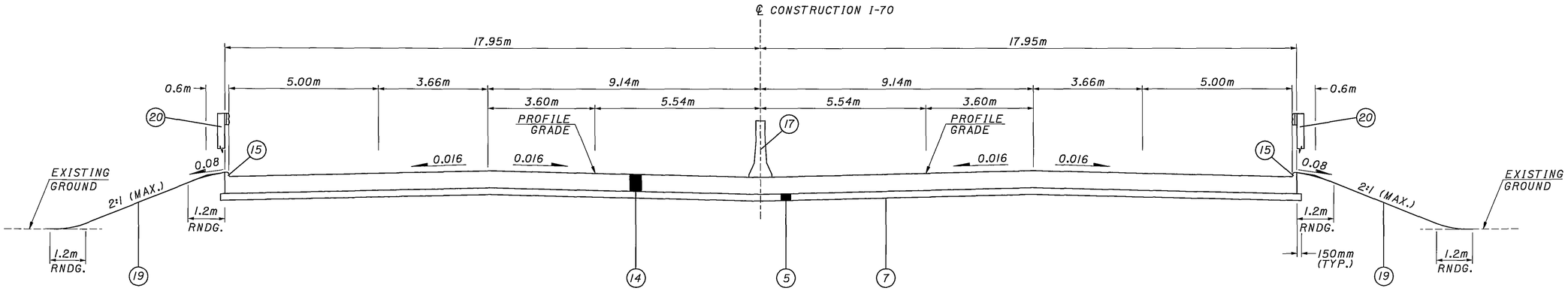

APPROACH SLAB SECTION - I-70 OVER RAMPS A AND G

STA. 25+754.324 TO STA. 25+761.924 = 7.600m
STA. 25+813.068 TO STA. 25+820.668 = 7.600m
MOT-70-25856 BRIDGE LIMITS
STA. 25+761.924 TO STA. 25+813.068 = 51.144m

APPROACH SLAB SECTION - I-70 OVER I-75

STA. 25+975.431 TO STA. 25+983.031 = 7.600m
STA. 26+037.816 TO STA. 26+045.416 = 7.600m
MOT-70-26078 BRIDGE LIMITS
STA. 25+983.031 TO STA. 26+037.816 = 54.785m

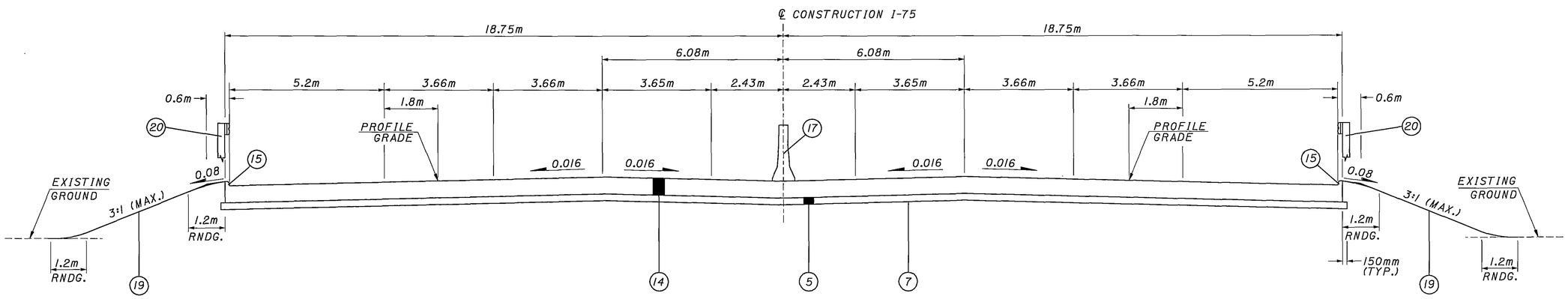

APPROACH SLAB SECTION - I-75 OVER RAMP G

STA. 8+862.309 TO STA. 8+869.909 = 7.600m
STA. 8+892.452 TO STA. 8+900.052 = 7.600m
MOT-75-32689 BRIDGE LIMITS
STA. 8+869.909 TO STA. 8+892.452 = 22.543m

NOTES:

1. FOR LEGEND SEE SHEET NO. 15

CALCULATED
CHECKED

I-70 AND I-75 APPROACH SLAB-TYPICAL SECTIONS

MOT-70-22.890

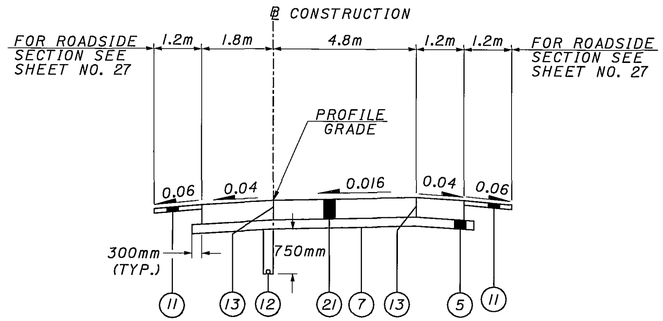

I-LANE NORMAL SECTION - RAMP

RAMP D: STA. 5+812.595 TO STA. 5+860.028 = 47.433m
RAMP G: STA. 18+450.352 TO STA. 18+501.318 = 50.966m (0.016 OPPOSITE HAND)
RAMP G: STA. 19+217.563 TO STA. 19+260.168 = 42.605m (0.016 OPPOSITE HAND)

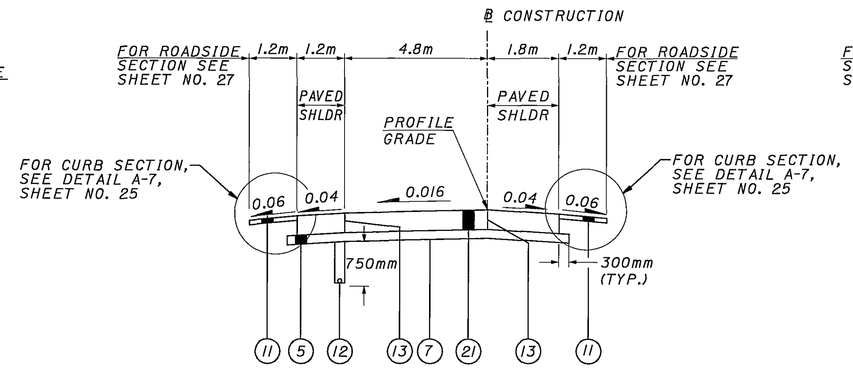

I-LANE NORMAL SECTION - RAMP

RAMP E: STA. 5+689.414 TO STA. 5+757.180 = 67.766m
RAMP E: STA. 5+825.768 TO STA. 5+972.039 = 146.271m

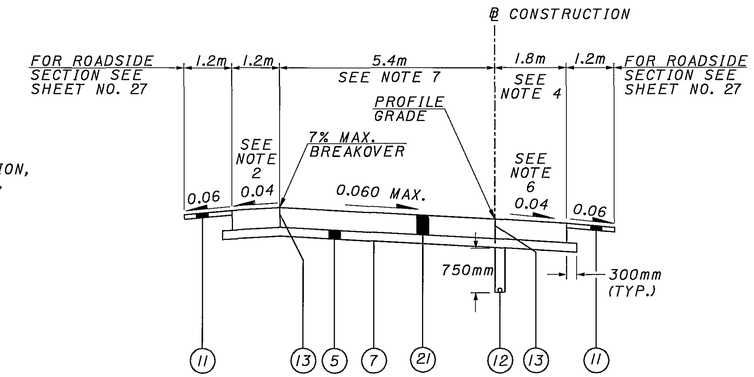

I-LANE SUPERELEVATED SECTION - RAMP

RAMP E: STA. 5+657.050 TO STA. 5+689.414 = 32.364m (emax = 0.016)
RAMP E: STA. 6+110.479 TO STA. 6+175.331 = 64.852m (emax = 0.060)
RAMP E: STA. 6+278.396 TO STA. 6+355.158 = 76.762m (emax = 0.060)

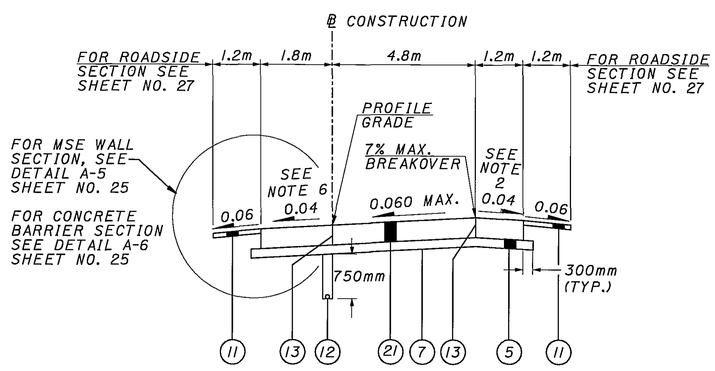

I-LANE SUPERELEVATED SECTION - RAMP

RAMP D: STA. 5+860.028 TO STA. 6+245.239 = 385.211m (emax = 0.059)
RAMP G: STA. 18+195.385 TO STA. 18+450.352 = 254.967m (emax = 0.050)
RAMP G: STA. 18+501.318 TO STA. 19+217.563 = 716.245m (emax = 0.060, OPPOSITE HAND)
RAMP G: STA. 19+260.168 TO STA. 19+280.168 = 20.0m (emax = 0.016, OPPOSITE HAND)
RAMP G: STA. 19+280.168 TO STA. 19+393.748 = 113.489m (emax = 0.050)

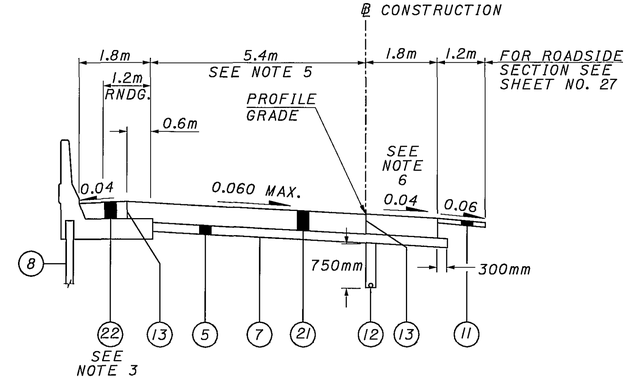

I-LANE SUPERELEVATED SECTION - RAMP

RAMP E: STA. 6+042.060 TO STA. 6+110.479 = 68.419m
RAMP E: STA. 6+175.331 TO STA. 6+278.396 = 103.065m

NOTES:

1. FOR LEGEND SEE SHEET NO. 15
2. 0.04 OR AS SHOWN ON SUPERELEVATION TABLES, SHEET NO. 443-445
3. FOR VARIABLE CONCRETE PAVEMENT DETAIL, SEE SHEET NO. 604
4. 1.8m OR AS SHOWN ON THE PLAN AND PROFILE SHEET NO. 199
5. VARIES FROM 4.8m AT STA. 6+058.768 TO 5.4m AT STA 6+096.258
6. 0.04 OR RATE OF SUPERELEVATION, WHICHEVER IS GREATER. SEE SUPERELEVATION TABLES, SHEET NO. 443-445
7. 4.8m FROM STA. 5+657.050 TO STA. 5+689.414

CALCULATED
CHECKED

RAMP TYPICAL SECTIONS

MOT-70-22.890

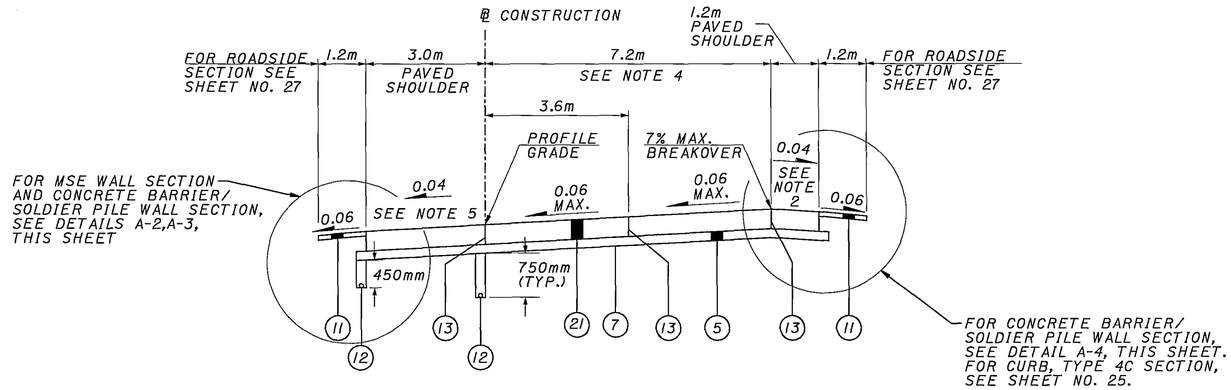

2-LANE SUPERELEVATED SECTION - RAMP

RAMP A: STA. 5+234.746 TO STA. 5+405.773 = 171.027m (emax = 0.050)
RAMP A: STA. 5+473.002 TO STA. 5+499.789 = 26.787m (emax = 0.050)
RAMP A: STA. 5+499.789 TO STA. 5+963.931 = 464.142m (emax = 0.060, OPPOSITE HAND)
RAMP A: STA. 6+034.294 TO STA. 6+122.290 = 87.996m (emax = 0.060, OPPOSITE HAND)
RAMP A: STA. 6+122.290 TO STA. 6+245.779 = 123.489m (emax = 0.045)

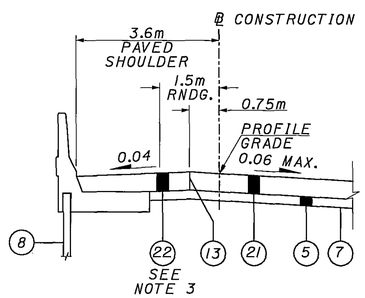

DETAIL A-2

SHOULDER WIDTH AT MSE WALL SECTION

RAMP A: STA. 5+749.563 LT. TO STA. 5+845.675 LT.

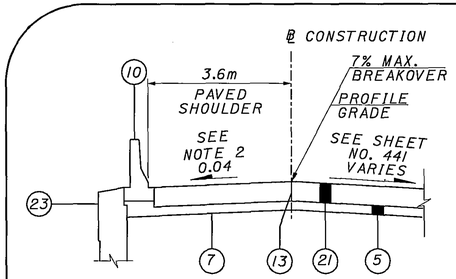

DETAIL A-3

SHOULDER WIDTH AT CONCRETE BARRIER/SOLDIER PILE (LEFT)

RAMP A: STA. 5+478.545 LT. TO STA. 5+538.665 LT.

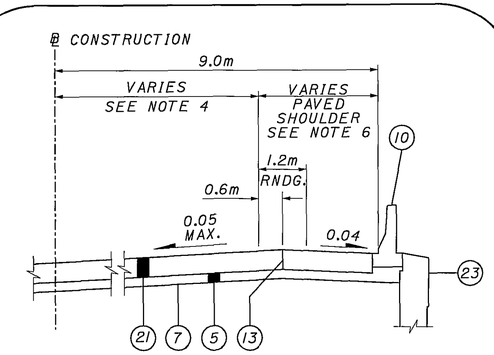

DETAIL A-4

SHOULDER WIDTH AT CONCRETE BARRIER/SOLDIER PILE (RIGHT)

RAMP A: STA. 5+372.713 RT. TO STA. 5+393.009 RT.

NOTES:

1. FOR LEGEND SEE SHEET NO. 15
2. 0.04 OR AS SHOWN ON SUPERELEVATION TABLES, SHEET NO. 441-442
3. FOR VARIABLE CONCRETE PAVEMENT DETAIL, SEE SHEET NO. 604
4. VARIES FROM 4.8m AT STA. 5+234.746 TO 7.2m AT STA 5+405.000
5. 0.04 OR RATE OF SUPERELEVATION, WHICHEVER IS GREATER. SEE SUPERELEVATION TABLES, SHEET NO. 441, 442
6. VARIES SEE SHEET NO. 190 AND 449

CALCULATED
CHECKED

RAMP TYPICAL SECTIONS

MOT-70-22.890

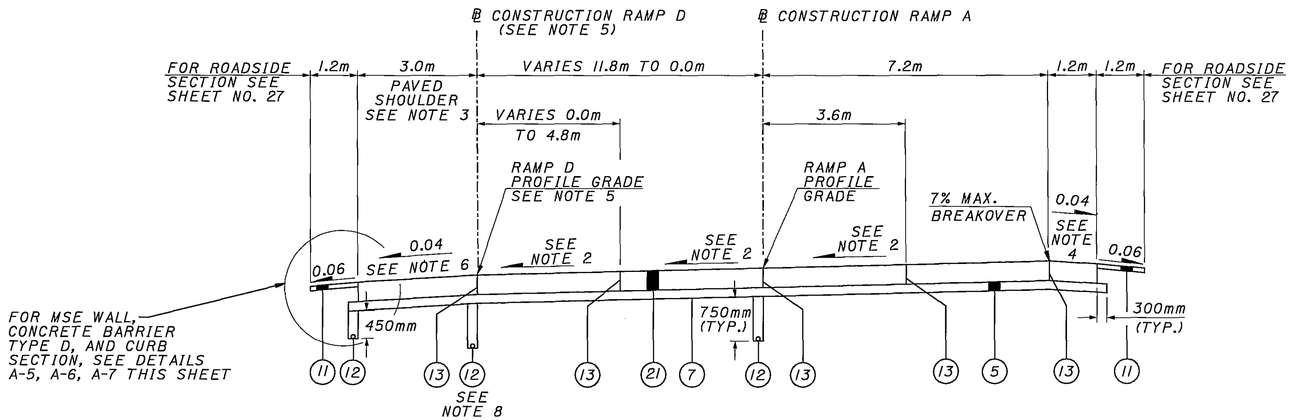

RAMP A DIVERGING LANE

RAMP A: STA. 6+245.779 (RAMP D: STA. 6+245.239) TO STA. 6+519.576 - 273.797m

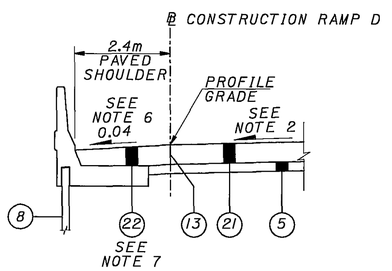

DETAIL A-5

SHOULDER WIDTH AT MSE WALL SECTION

RAMP D: STA. 6+263.194 LT. TO STA. 6+342.737 LT.
(RAMP A: STA. 6+264.593 LT. TO STA. 6+345.735 LT.)
RAMP D: STA. 6+137.159 LT. TO STA. 6+223.926 LT.

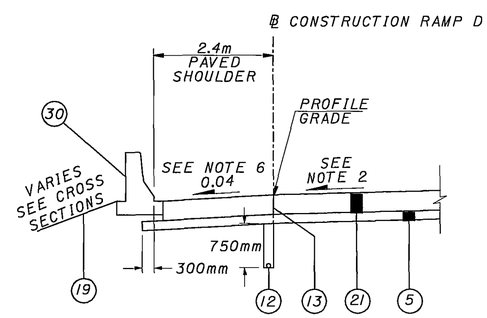

DETAIL A-6

SHOULDER WIDTH AT CONCRETE BARRIER, TYPE D, AS PER PLAN A SECTION

RAMP D: STA. 6+223.926 LT. TO STA. 6+263.194 LT.
(RAMP A: STA. 6+224.244 LT. TO STA. 6+264.593 LT.)

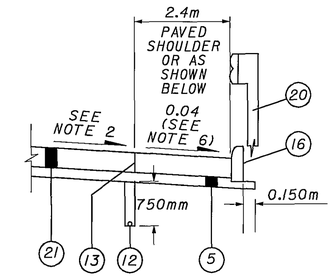

DETAIL A-7

SHOULDER WIDTH AT CURB, TYPE 4C SECTION

RAMP A: 1.8m AT STA. 5+459.143 RT. TO STA. 5+462.743 RT.
RAMP A: 1.8m AT STA. 6+033.260 RT. TO STA. 6+046.228 RT.
RAMP E: 1.8m AT STA. 5+824.220 LT. TO STA. 5+830.300 LT. (OPPOSITE HAND)
RAMP E: 2.4m AT STA. 5+826.329 RT. TO STA. 5+834.900 RT.
RAMP E: 2.4m AT STA. 5+968.697 RT. TO STA. 5+971.697 RT.
RAMP E: 1.8m AT STA. 5+972.980 LT. TO STA. 5+969.980 LT. (OPPOSITE HAND)
RAMP E: 2.4m AT STA. 6+041.718 RT. TO STA. 6+044.718 RT.
RAMP D: 2.4m AT STA. 6+342.737 LT. TO STA. 6+347.677 LT.
(RAMP A: STA. 6+345.735 LT. TO STA. 6+350.757 LT. (OPPOSITE HAND))

NOTES:

1. FOR LEGEND SEE SHEET NO. 15
2. SLOPE VARIES SEE PAVEMENT DETAILS, SHEET NO. 446-448
3. 3.0m OR AS SHOWN ON PLAN AND PROFILE SHEET NO. 198
4. VARIES FROM 0.025 TO 0.040 TO MEET 7% MAX. BREAKOVER
5. WHERE NO RAMP D BASELINE OF CONSTRUCTION AND/OR PROFILE ARE SHOWN, SEE PAVEMENT DETAILS SHEET NO. 446-448
6. 0.04 OR RATE OF SUPERELEVATION, WHICHEVER IS GREATER.
7. FOR VARIABLE CONCRETE PAVEMENT DETAIL, SEE SHEET NO. 604
8. FOR UNDERDRAIN LIMITS, SEE SHEET NO. 488-489

CALCULATED
CHECKED

SPEED CHANGE LANE
RAMPS A AND D TYPICAL SECTIONS

MOT-70-22.890

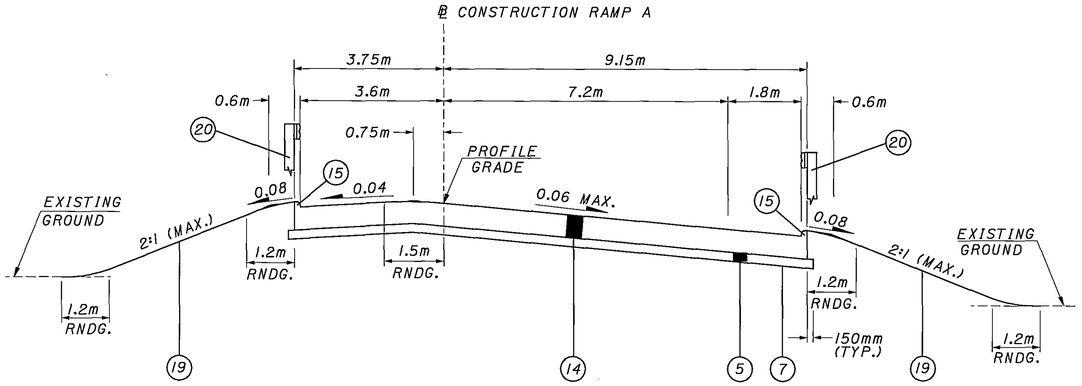

APPROACH SLAB SECTION - RAMP A OVER I-75

STA. 5+963.931 TO STA. 5+971.531 = 7.600m
STA. 6+026.694 TO STA. 6+034.294 = 7.600m
MOT-70-26106 BRIDGE LIMITS
STA. 5+971.531 TO STA. 6+026.694 = 55.163m

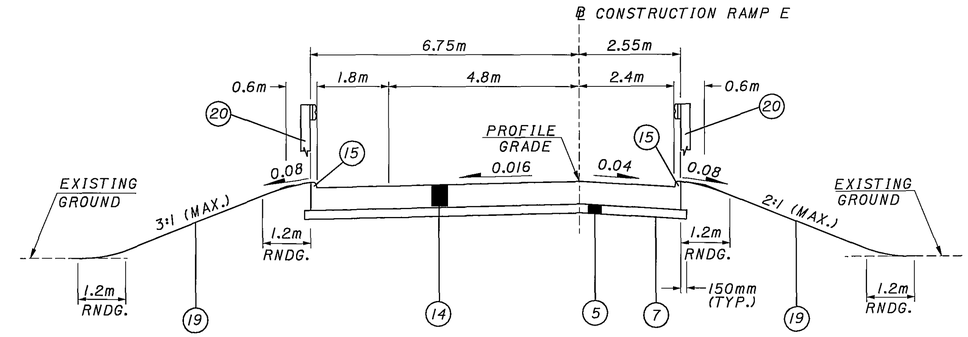

APPROACH SLAB SECTION - RAMP E OVER RAMPS A AND G

STA. 5+757.180 TO STA. 5+764.780 = 7.600m
STA. 5+818.168 TO STA. 5+825.768 = 7.600m
MOT-70-25858 BRIDGE LIMITS
STA. 5+764.780 TO STA. 5+818.168 = 53.388m

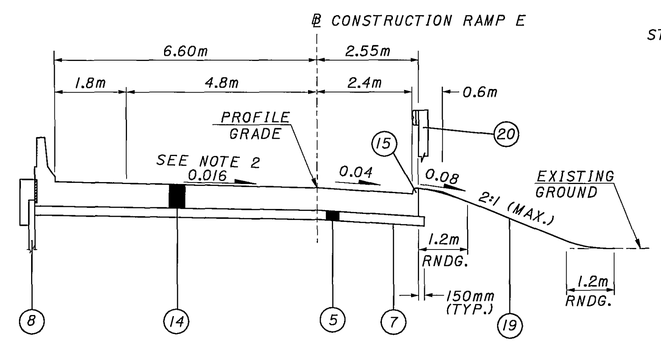

APPROACH SLAB SECTION - RAMP E OVER I-75

STA. 6+034.460 TO STA. 6+042.060 = 7.600m
MOT-70-26074 BRIDGE LIMITS
STA. 5+979.639 TO STA. 6+034.460 = 54.821m

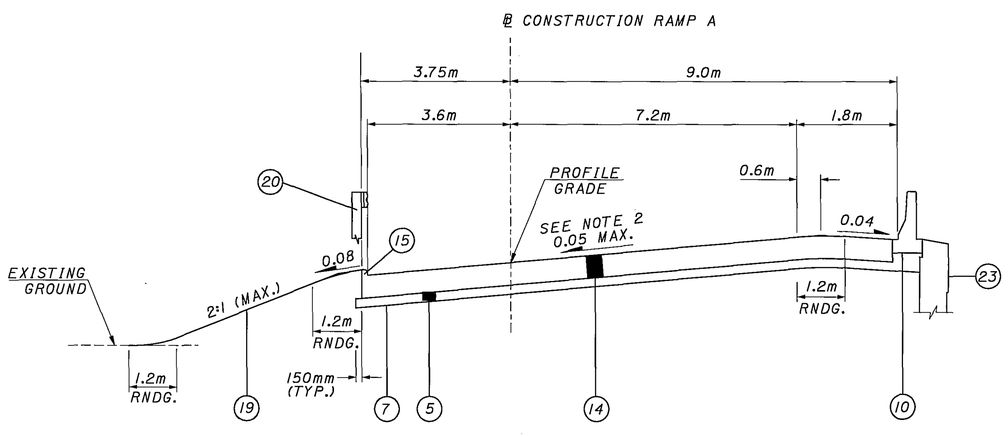

APPROACH SLAB SECTION - RAMP A OVER RAMP G

STA. 5+405.773 TO STA. 5+413.373 = 7.600m
STA. 5+465.402 TO STA. 5+473.002 = 7.600m
MOT-70-25976 BRIDGE LIMITS
STA. 5+413.373 TO STA. 5+465.402 = 52.029m

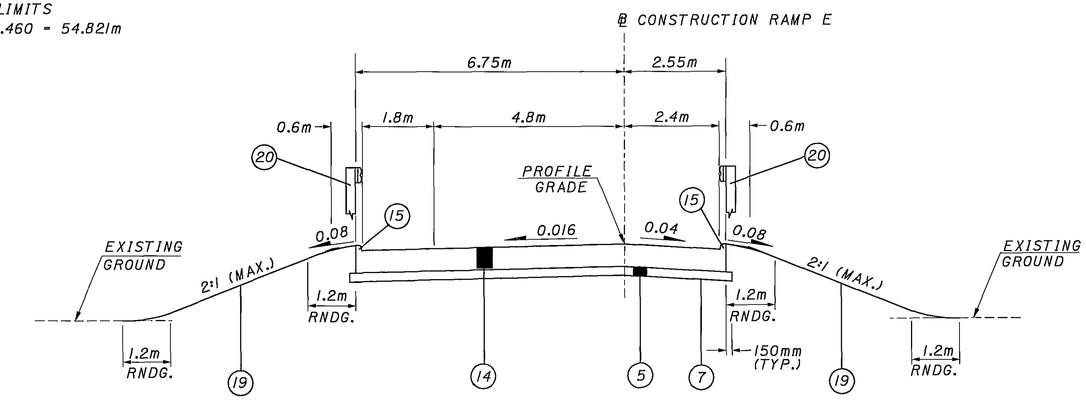

APPROACH SLAB SECTION - RAMP E OVER I-75

STA. 5+972.039 TO STA. 5+979.639 = 7.600m

NOTES:

1. FOR LEGEND SEE SHEET NO. 15
2. FOR SUPERELEVATION TABLES, SHEET NO. 441-445

CALCULATED
CHECKED

RAMP APPROACH SLAB - TYPICAL SECTIONS

MOT-70-22.890

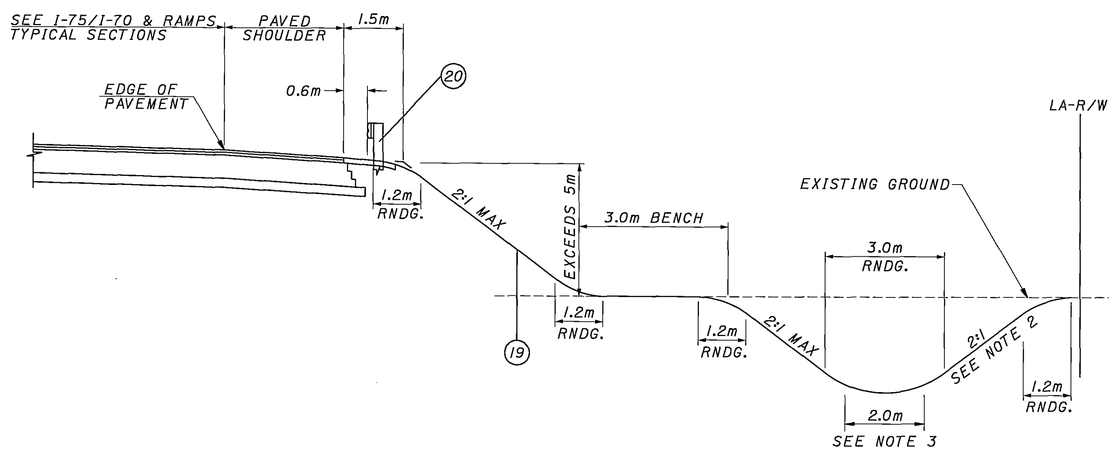

I-75/I-70 & RAMP TYPICAL PLACEMENT OF GUARDRAIL AND BARRIER GRADING

OPPOSITE HAND ALSO, SEE CROSS SECTIONS

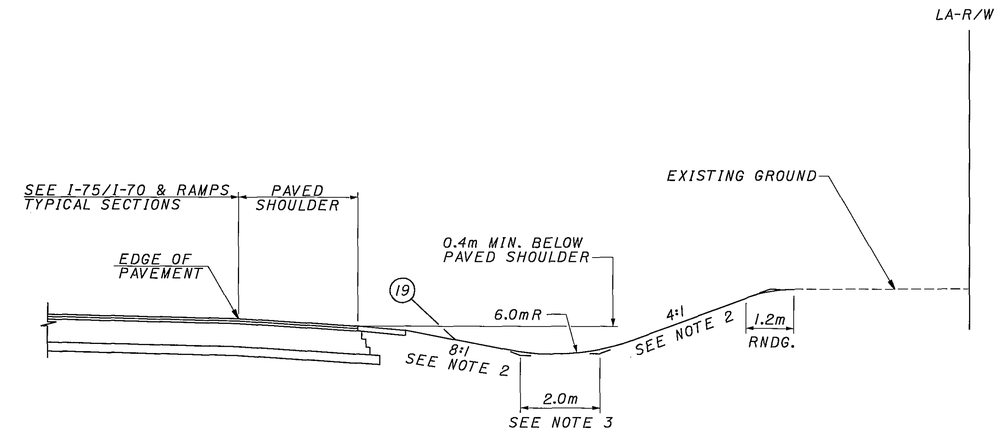

CUT SECTION

OPPOSITE HAND ALSO, SEE CROSS SECTIONS

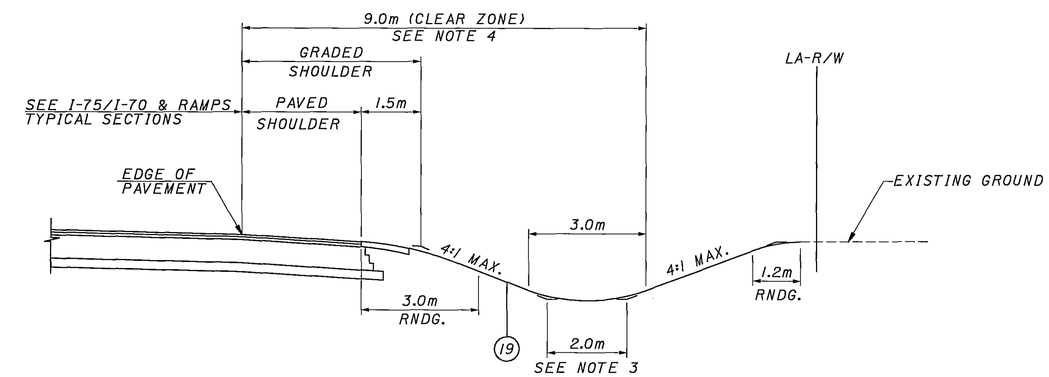

CLEAR ZONE GRADING SECTION

OPPOSITE HAND ALSO, SEE CROSS SECTIONS

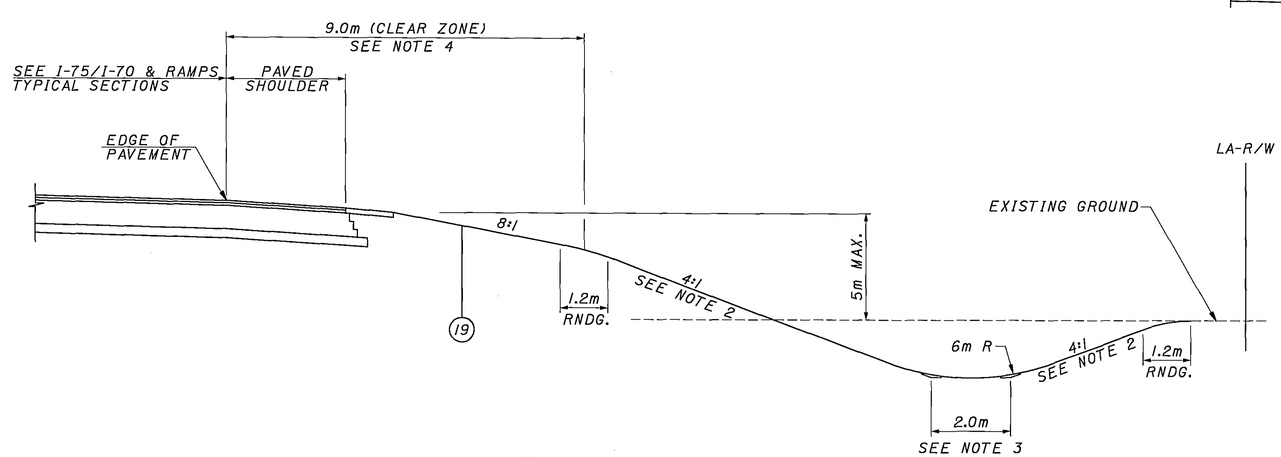

SAFETY GRADING MEDIUM FILL SECTION

OPPOSITE HAND ALSO, SEE CROSS SECTION

NOTES:

1. NO ROUNDING IS REQUIRED WHEN FORESLOPE IS 6:1 OR FLATTER.
2. SLOPE AS NOTED OR AS SHOWN ON CROSS SECTIONS.
3. 2.0m OR AS SHOWN ON CROSS SECTIONS.
4. CLEAR ZONE = 6.3m FOR RAMPS A, D, E, AND G.

CALCULATED | CHECKED

ROADSIDE TYPICAL SECTIONS

MOT-70-22.890

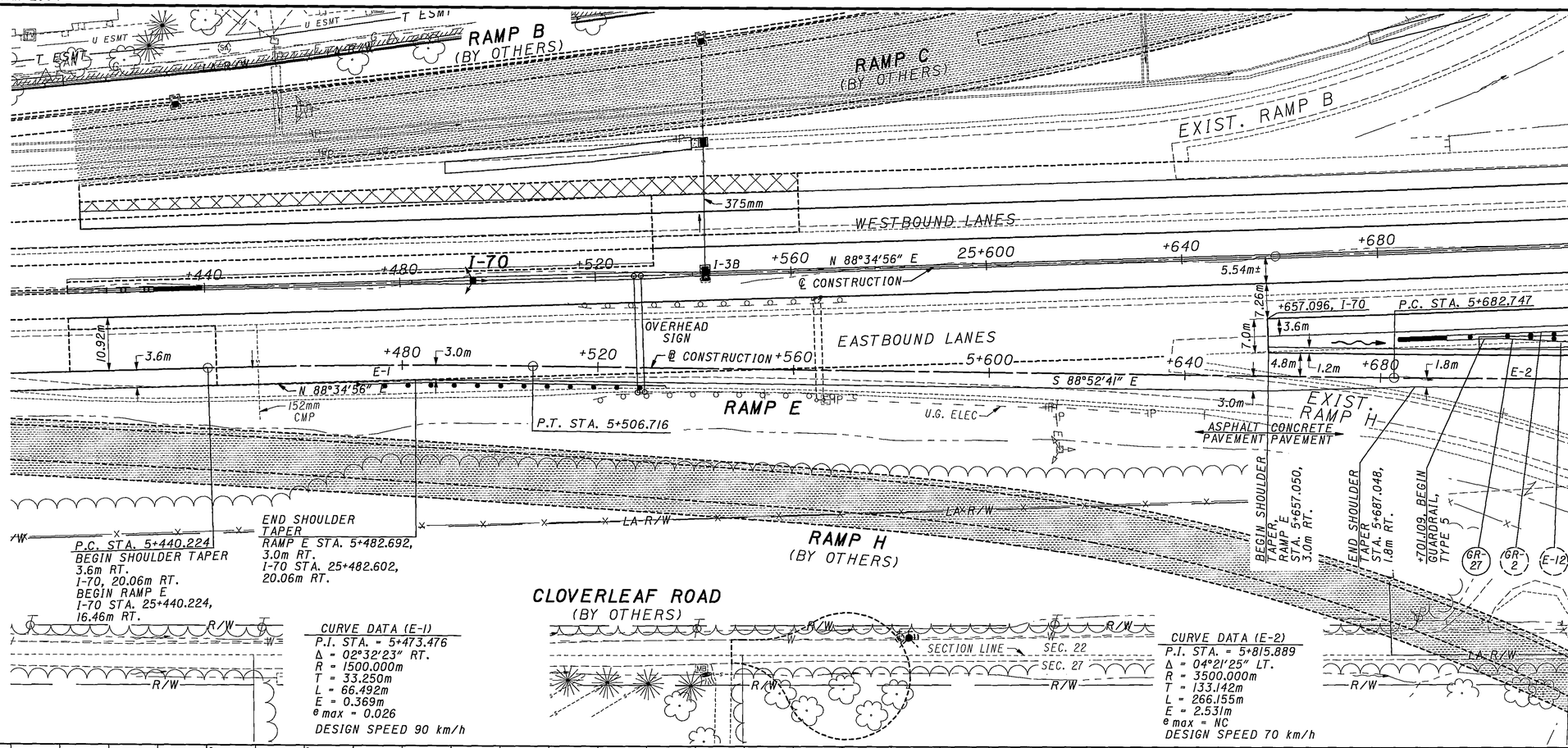

SHEET TOTALS: (CARRIED TO SHEET 144)		
203	EXCAVATION	125 CU. M
203	EMBANKMENT	135 CU. M
	INFIELD SEEDING AND MULCHING SEE LANDSCAPING PLANS	

CROSS REFERENCES	
SHEET NO.	DESCRIPTION
167, 168	CONSTRUCTION OF I-70
454-504	UNDERDRAIN DETAILS/SUBSUMMARY
144	ROADWAY SUBSUMMARY

N

0 10 20
HORIZONTAL SCALE IN METERS

CALCULATED RN
CHECKED DYB

RAMP E PLAN AND PROFILE
STA. 5+440.224 TO STA. 5+720

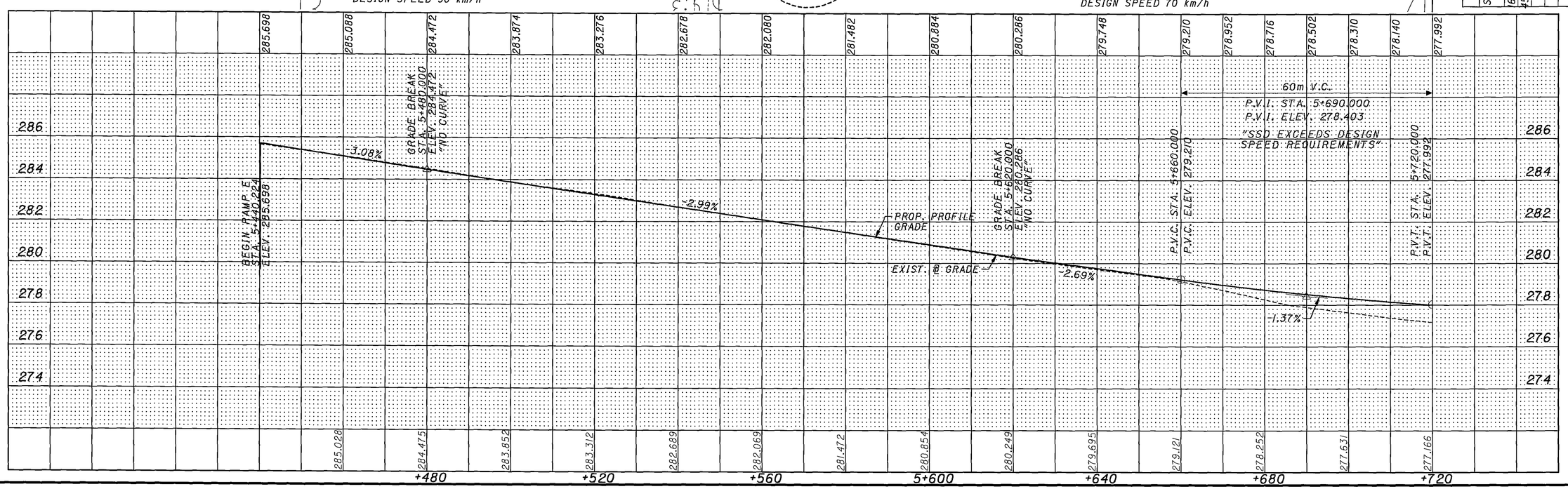

MOT-70-22.890

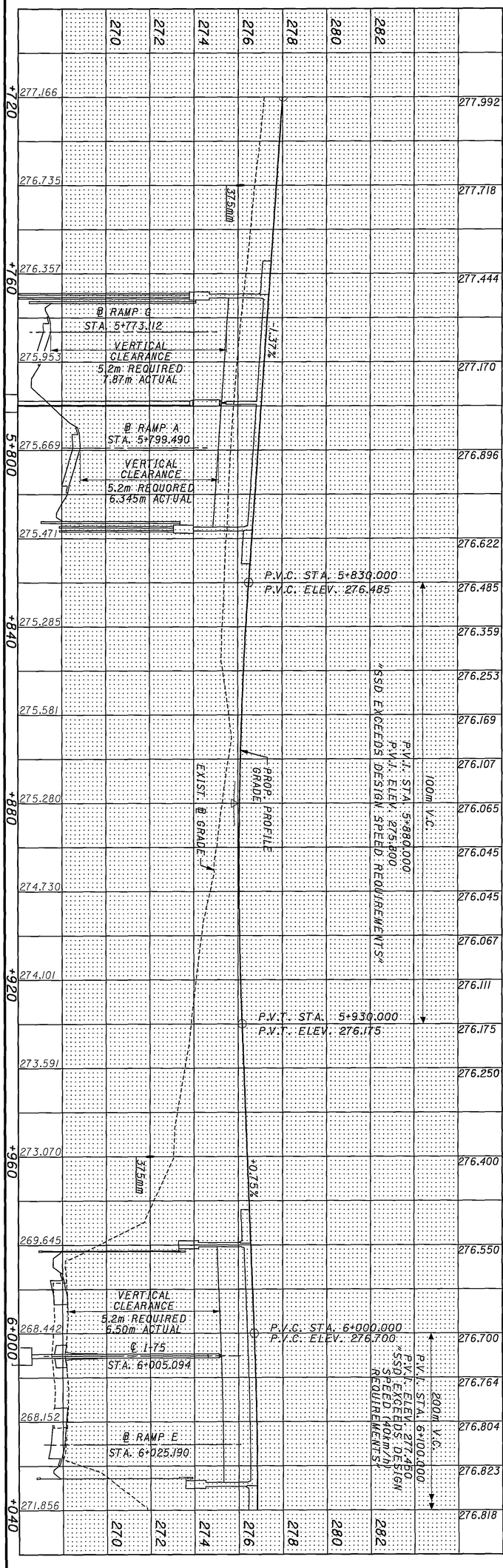

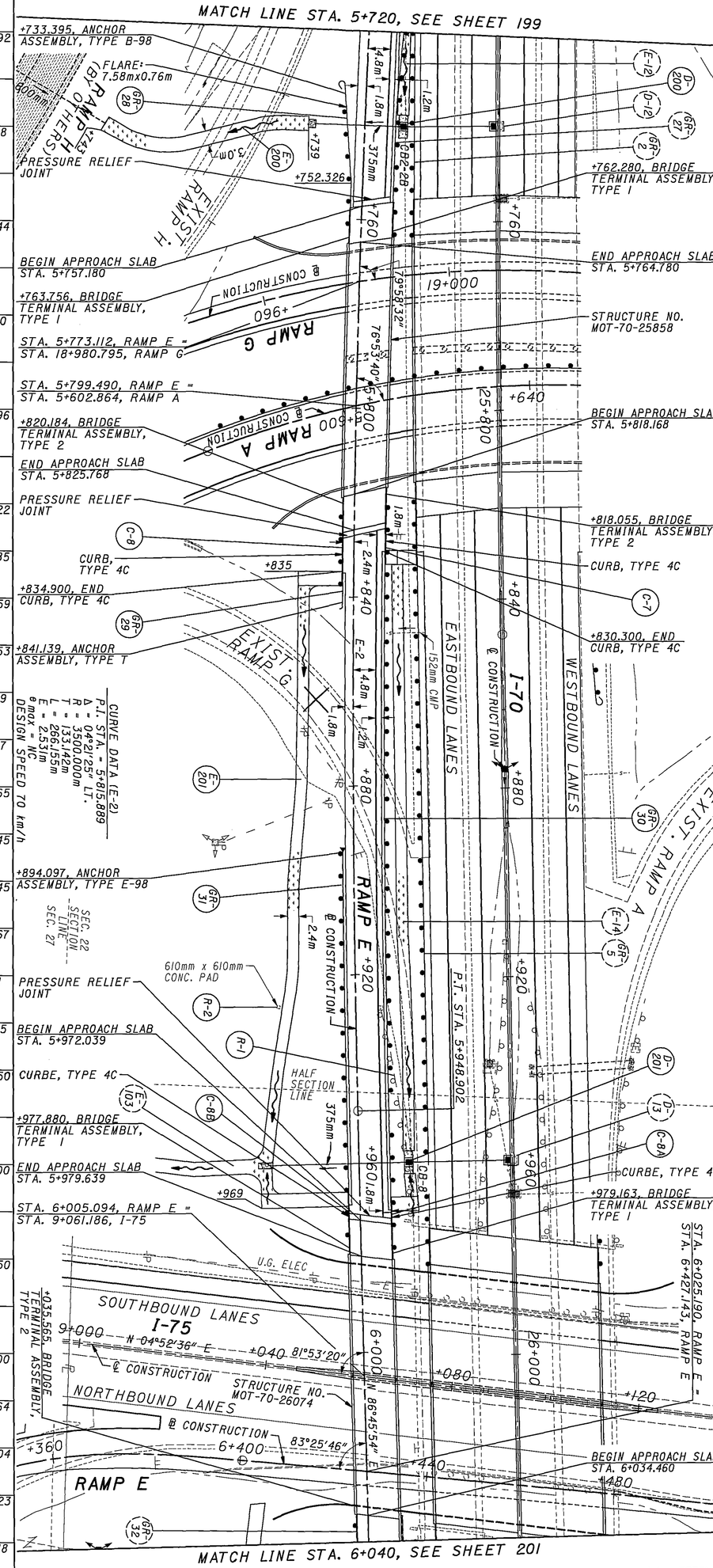

SHEET TOTALS* (CARRIED TO SHEET 144)		
203	EXCAVATION	2216 CU. M
203	EMBANKMENT	1775 CU. M
203	EMBANKMENT, AS PER PLAN A	2761 CU. M
	INFIELD SEEDING AND MULCHING SEE LANDSCAPING PLANS	

CROSS REFERENCES	
SHEET NO.	DESCRIPTION
168, 169	CONSTRUCTION OF I-70
180	CONSTRUCTION OF I-75
190, 191	CONSTRUCTION OF RAMP A
207	CONSTRUCTION OF RAMP G
373, 376	DRAINAGE PROFILES

CROSS REFERENCES	
SHEET NO.	DESCRIPTION
149	DRAINAGE SUBSUMMARY
454-504	UNDERDRAIN DETAILS/SUBSUMMARY
419-421	EXISTING RAMP REMOVAL
144	ROADWAY SUBSUMMARY
153	EROSION CONTROL SUBSUMMARY

BY OTHERS

BY OTHERS

200/1245

MOT-70-22.890

RAMP E PLAN AND PROFILE STA. 5+720 TO STA. 6+040

CALCULATED RN
CHECKED DYB

0 10 20
HORIZONTAL SCALE IN METERS

gp402604.dgn 14-JUL-2004

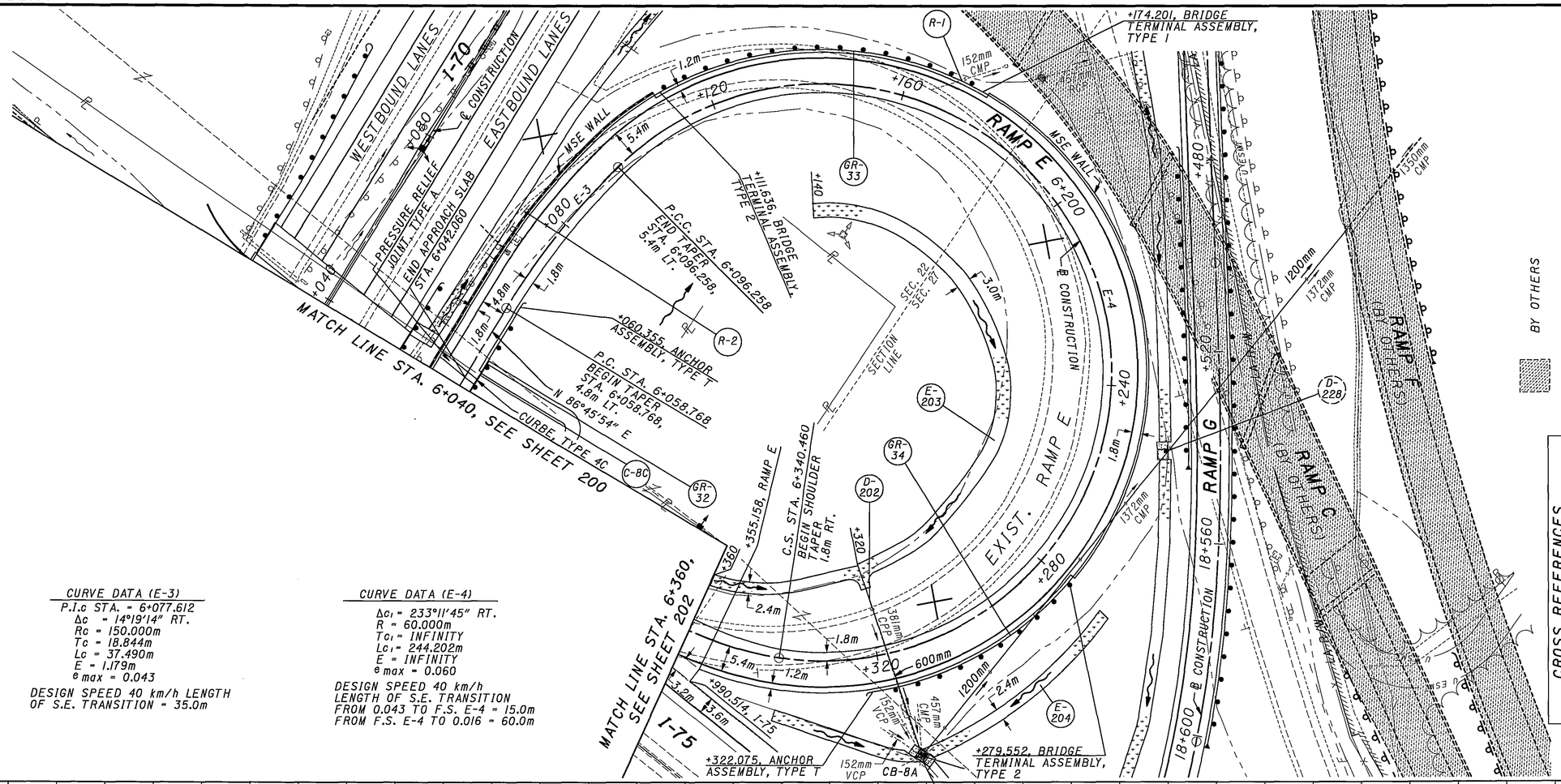

CURVE DATA (E-3)

P.I.c STA. = 6+077.612
Δc = 14°19'14" RT.
Rc = 150.000m
Tc = 18.844m
Lc = 37.490m
E = 1.179m
e max = 0.043

DESIGN SPEED 40 km/h LENGTH OF S.E. TRANSITION = 35.0m

CURVE DATA (E-4)

Δc1 = 233°11'45" RT.
R = 60.000m
Tc1 = INFINITY
Lc1 = 244.202m
E = INFINITY
e max = 0.060

DESIGN SPEED 40 km/h
LENGTH OF S.E. TRANSITION
FROM 0.043 TO F.S. E-4 = 15.0m
FROM F.S. E-4 TO 0.016 = 60.0m

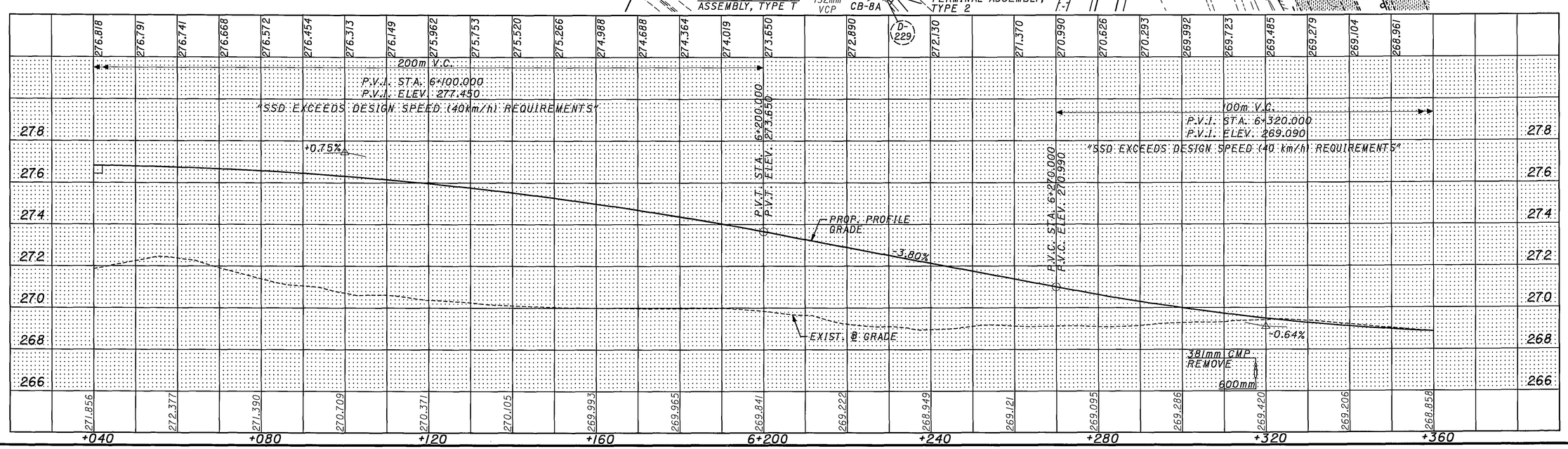

SHEET TOTALS: (CARRIED TO SHEET 144)	
203 EXCAVATION	1173 CU. M
203 EMBANKMENT	18464 CU. M
203 EMBANKMENT, AS PER PLAN A	2952 CU. M
INFIELD SEEDING AND MULCHING SEE LANDSCAPING PLANS	

BY OTHERS

BY OTHERS

CROSS REFERENCES

SHEET NO.	DESCRIPTION
169	CONSTRUCTION OF I-70
180	CONSTRUCTION OF I-75
205, 206	CONSTRUCTION OF RAMP G
518, 381	DRAINAGE PROFILES
149	DRAINAGE SUBSUMMARY
454-504	UNDERDRAIN DETAILS/SUBSUMMARY
419-421	EXISTING RAMP REMOVAL
144	ROADWAY SUBSUMMARY
153	EROSION CONTROL SUBSUMMARY

CALCULATED RN
CHECKED DYB

0 10 20
HORIZONTAL SCALE IN METERS

RAMP E PLAN AND PROFILE STA. 6+040 TO STA. 6+360

MOT-70-22.890

gp403636.dgn 30-JAN-2004

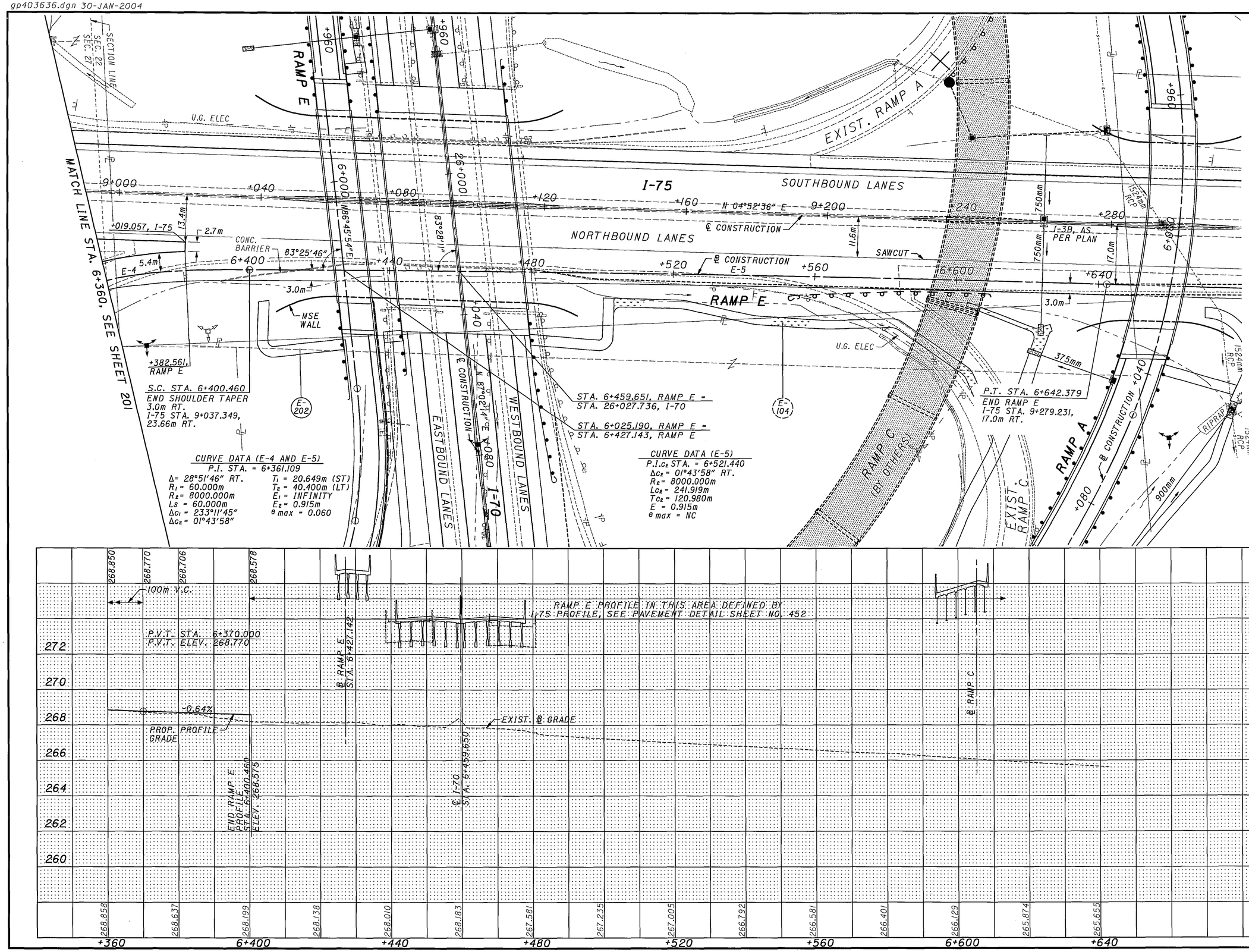

CROSS REFERENCES	
SHEET NO.	DESCRIPTION
169	CONSTRUCTION OF I-70
180, 181	CONSTRUCTION OF I-75
192	CONSTRUCTION OF RAMP A
144	ROADWAY SUBSUMMARY
153	EROSION CONTROL SUBSUMMARY

RAMP E PLAN AND PROFILE
STA. 6+360 TO STA. 6+642.379

MOT-70-22.890

gx400566.dgn 30-JAN-2004

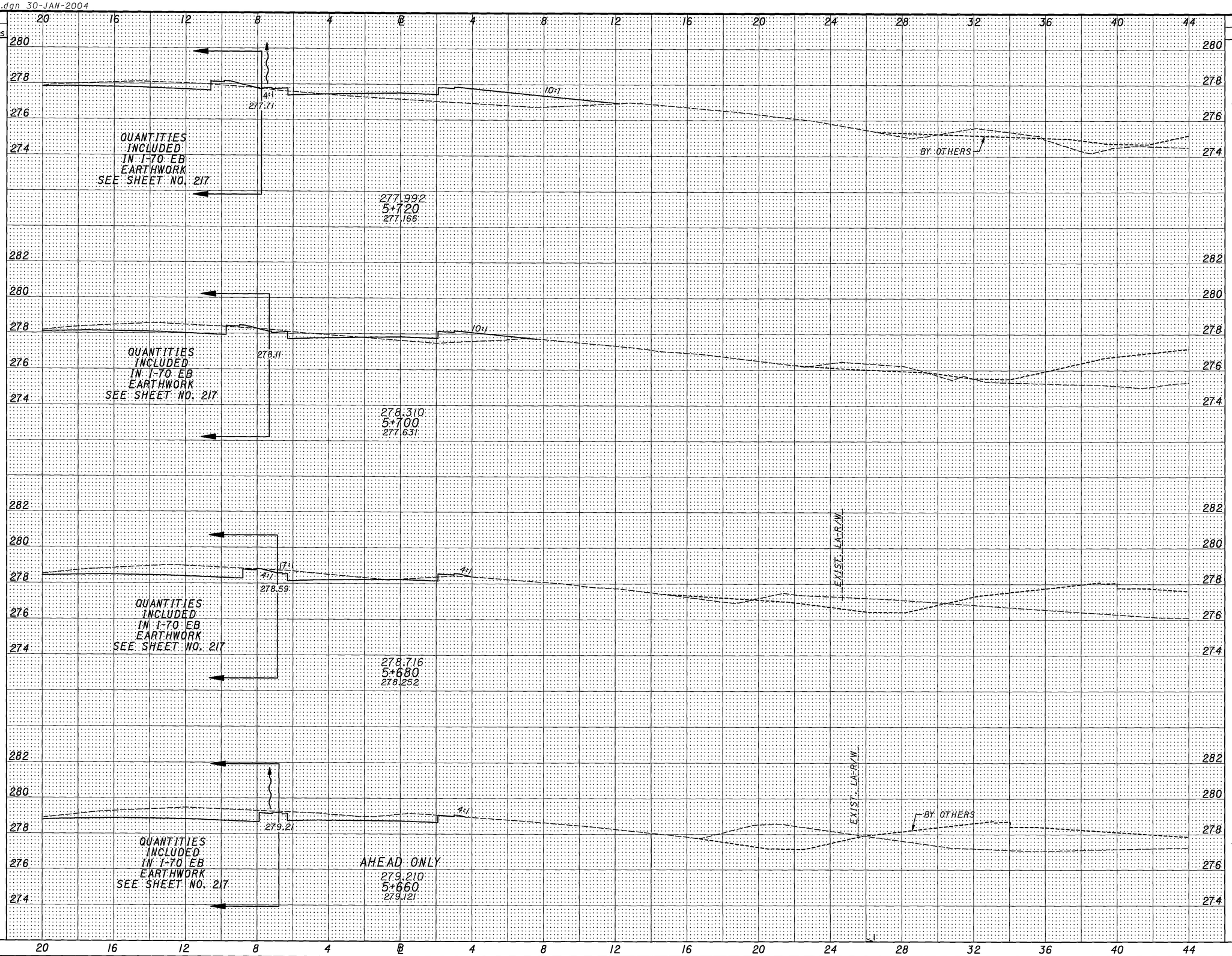

END AREA CUT	END AREA FILL	VOLUME CUT	VOLUME FILL
0.3	7.5		
		13	102
1.0	2.7		
		29	29
1.9	0.2		
		51	3
3.2	0.1		
		32	1

CALCULATED PCG
CHECKED DYB

RAMP E CROSS SECTIONS
STA. 5+660 TO STA. 5+720

MOT-70-22.890

372
1245

gx401574.dgn 30-JAN-2004

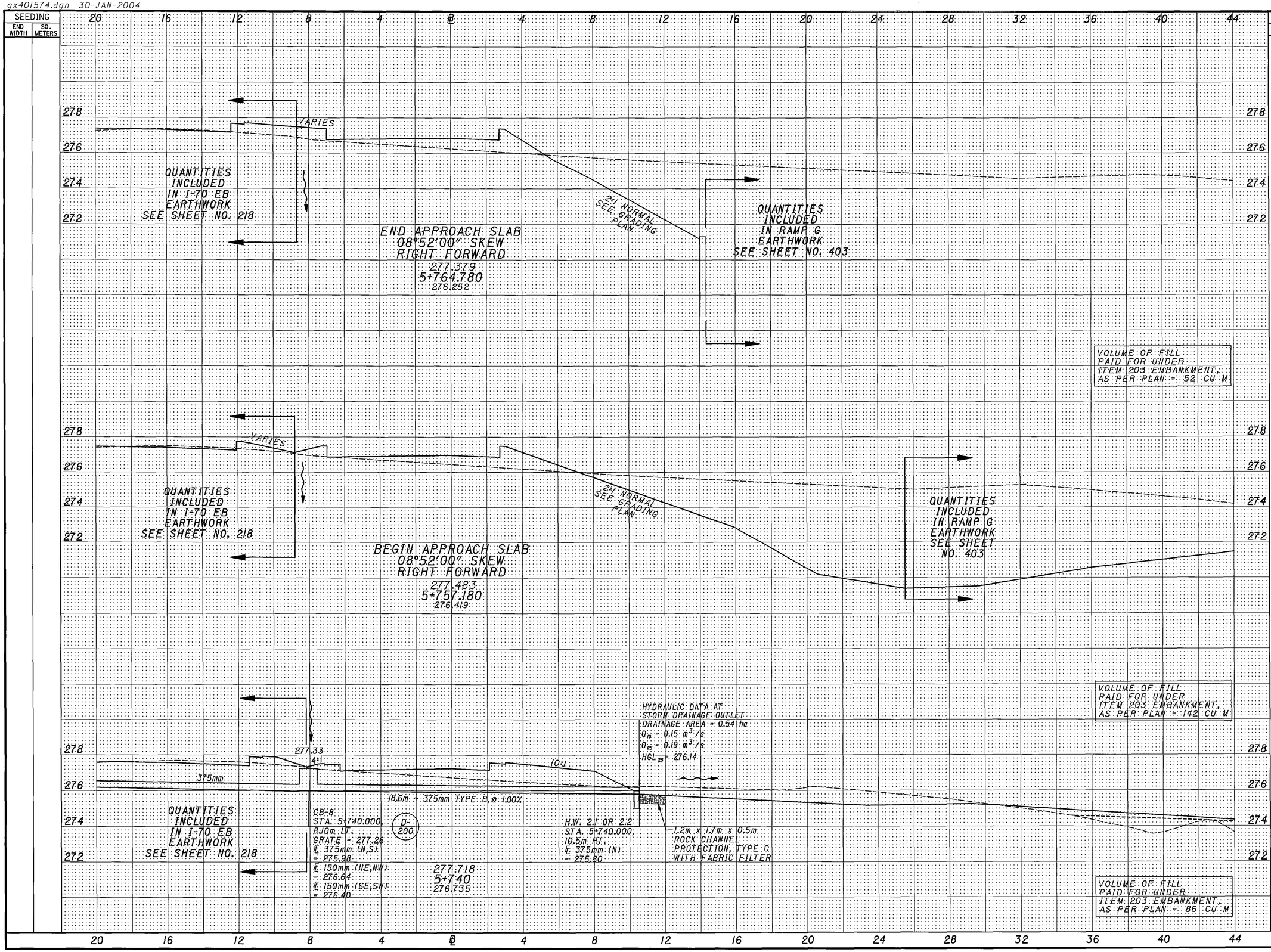

END AREA CUT	END AREA FILL	VOLUME CUT	VOLUME FILL
19.2	6.7		
		285	52 -52
55.9	6.9		
		655	142 -142
20.3	9.6		
		206	171 -86

CALCULATED PCG
CHECKED DYB

RAMP E CROSS SECTIONS
STA. 5+740 TO STA. 5+764.780

MOT-70-22.890

373
1245

gx402581.dgn 30-JAN-2004

SEEDING END WIDTH	SEEDING SQ. METERS	END AREA CUT	END AREA FILL	VOLUME CUT	VOLUME FILL
		4.8	2.0		
				67	89 / -45
		1.9	6.9		
				240	107 / -107
		31.8	8.1		
				161	55 / -55
		10.5	6.3		

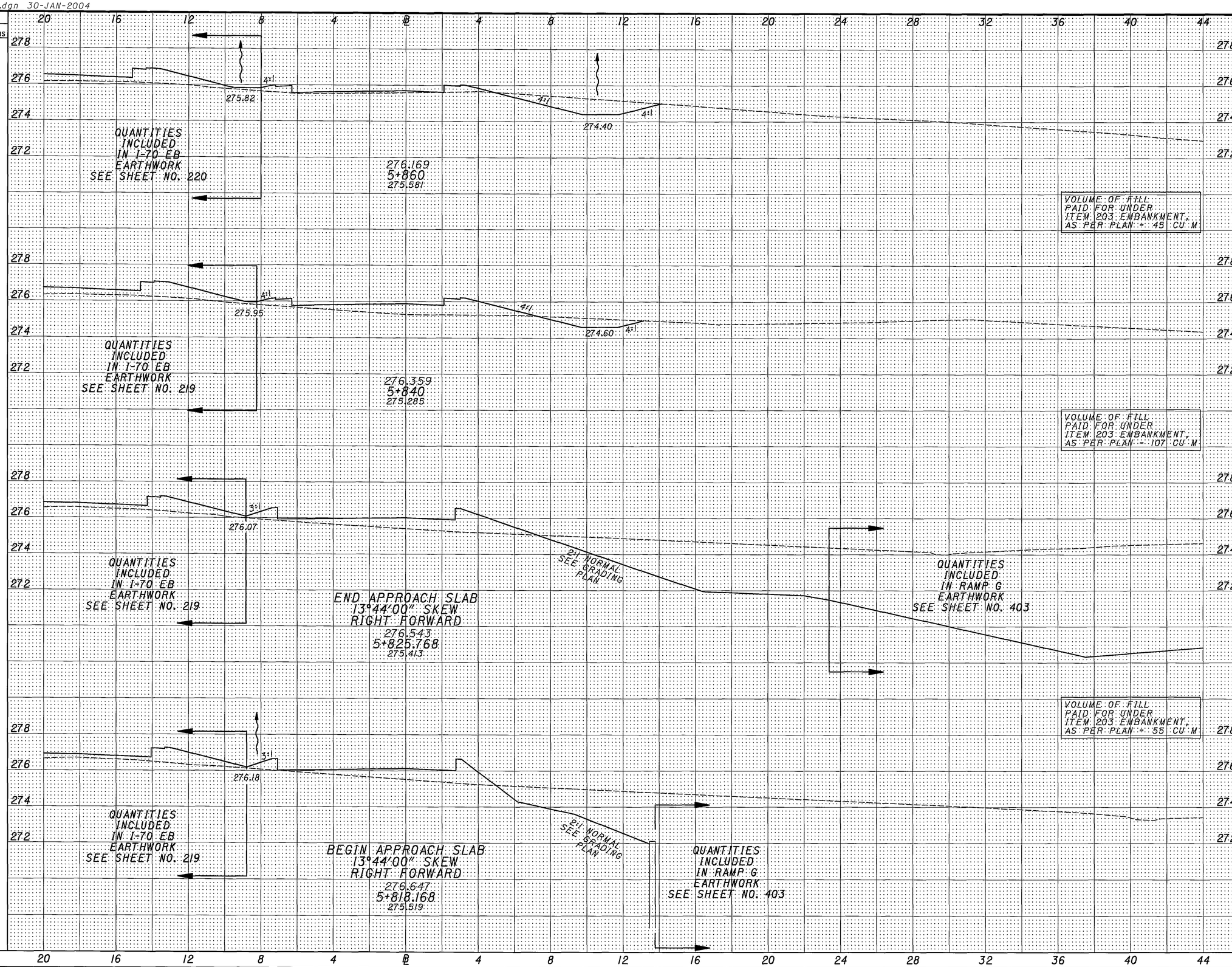

CALCULATED PCG
CHECKED DYB

RAMP E CROSS SECTIONS
STA. 5+818.168 TO STA. 5+860

MOT-70-22.890

374
1245

gx403588.dgn 30-JAN-2004

SEEDING END WIDTH	SEEDING SQ. METERS	END AREA CUT	END AREA FILL	VOLUME CUT	VOLUME FILL
		3.5	38.3		
				72	600
		3.7	21.7		
				70	326
		3.3	10.9		
				52	155
		1.9	4.6		
				67	66

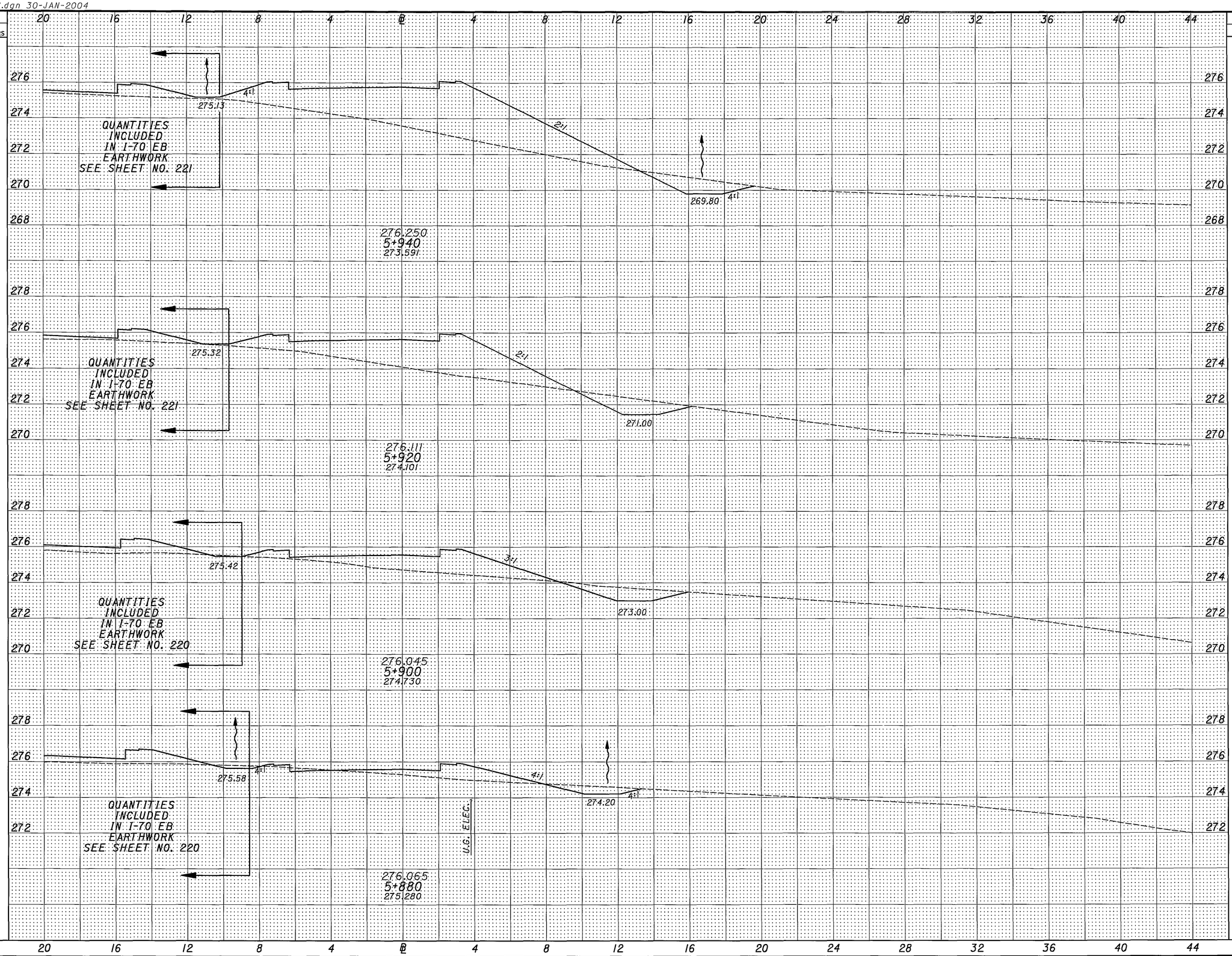

CALCULATED PCG
CHECKED DYB

RAMP E CROSS SECTIONS
STA. 5+880 TO STA. 5+940

MOT-70-22.890

375
1245

gx404596.dgn 30-JAN-2004

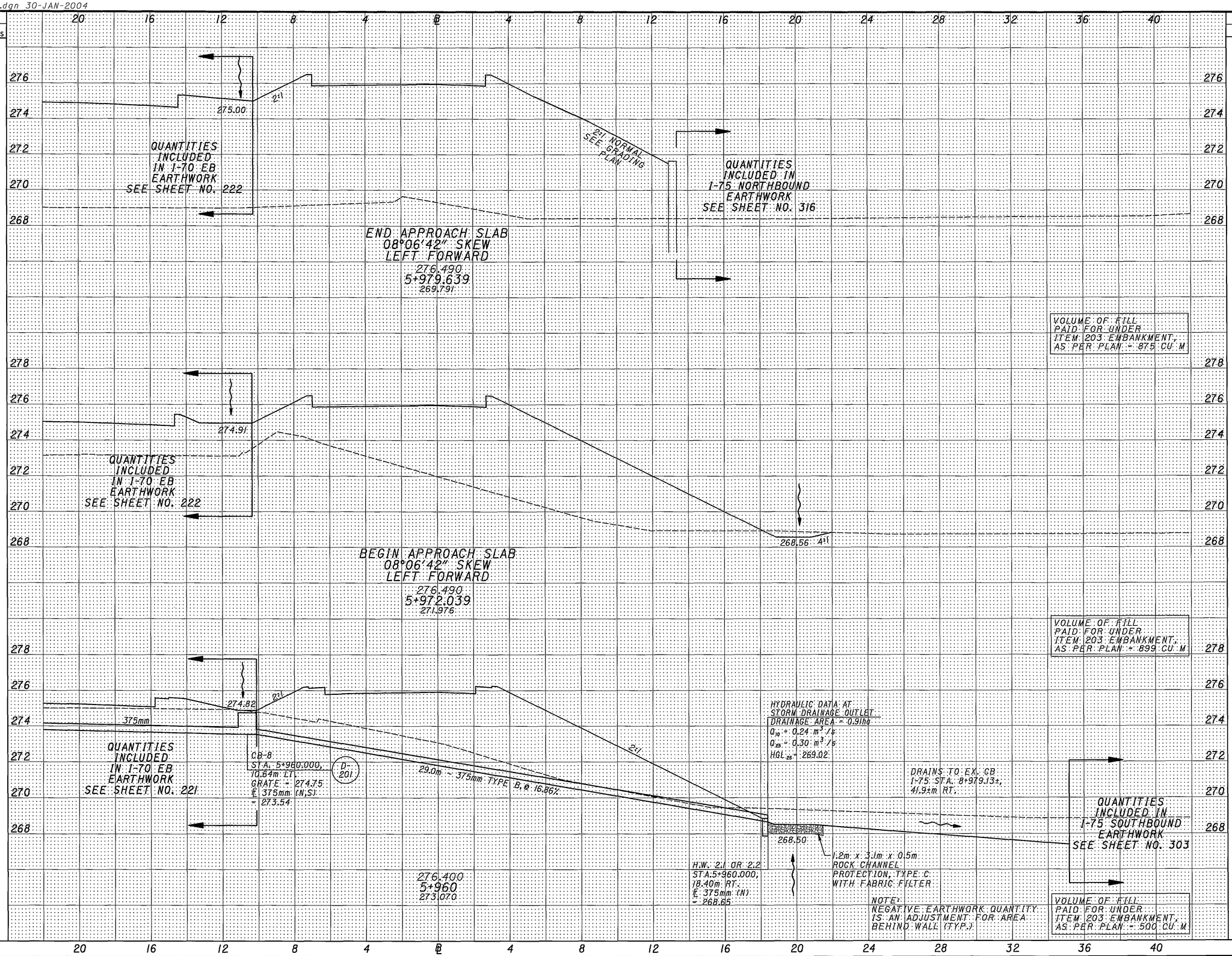

END AREA CUT	END AREA FILL	VOLUME CUT	VOLUME FILL
0.0	142.5 -142.5		
		4	875 -875
1.0	87.8 -87.8		
		117	899 -899
18.5	61.6		
		220	999 -500

CALCULATED PCG
CHECKED DYB

RAMP E CROSS SECTIONS
STA. 5+960 TO STA. 5+979.639

MOT-70-22.890

376
1245

gx405603.dgn 30-JAN-2004

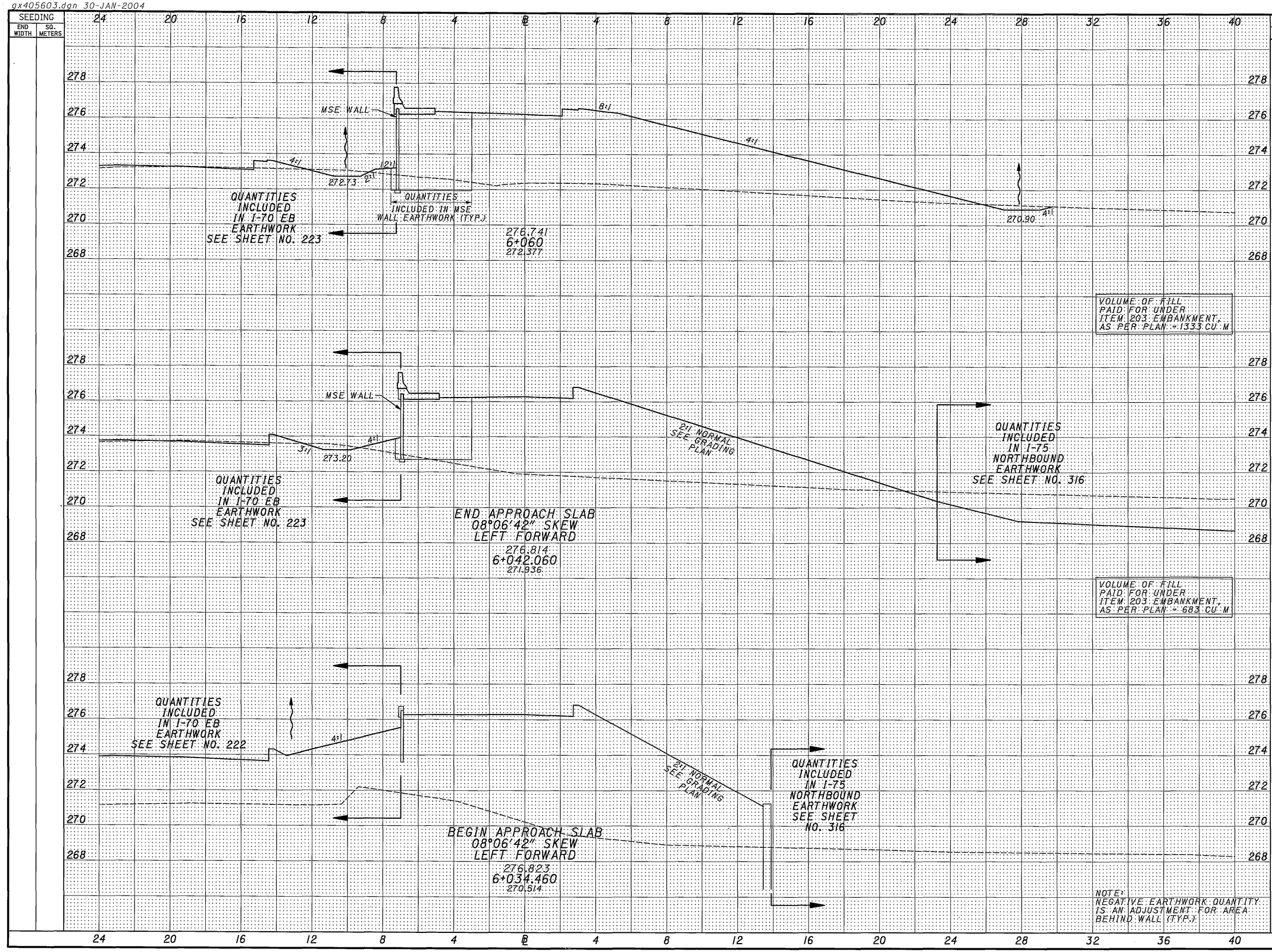

gx406608.dgn 30-JAN-2004

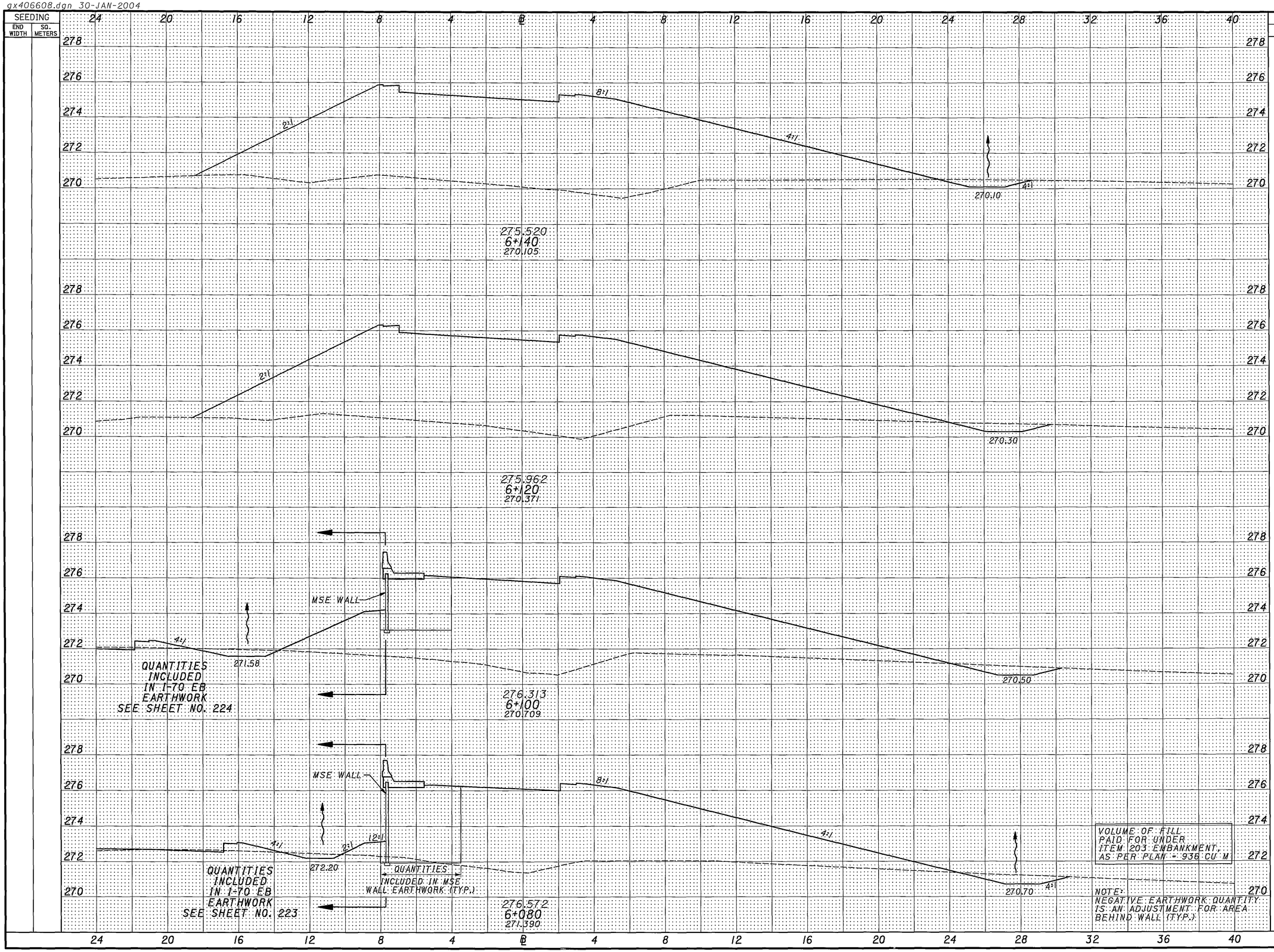

END AREA CUT	END AREA FILL	VOLUME CUT	VOLUME FILL
1.5	139.6		
		33	2764
1.8	136.8		
		39	2264
2.1	101.7 -12.1		
		42	1664
2.1	95.3 -18.5		
		29	1519 -936

CALCULATED PCG
CHECKED DYB

RAMP E CROSS SECTIONS
STA.6+080 TO STA. 6+140

MOT-70-22.890

378
1245

gx407616.dgn 30-JAN-2004

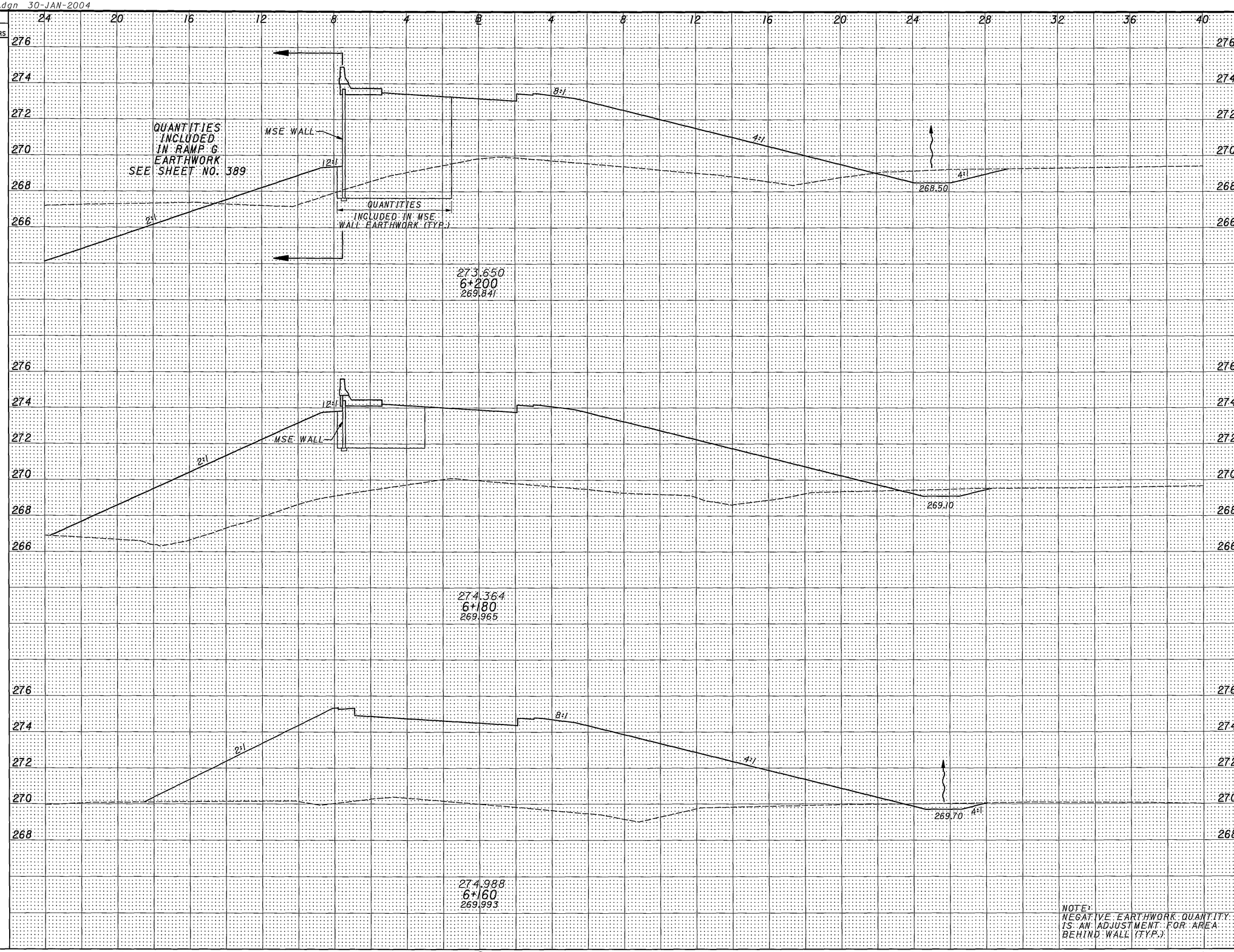

SEEDING END WIDTH	SEEDING SQ. METERS	END AREA CUT	END AREA FILL	VOLUME CUT	VOLUME FILL
		3.4	87.0 -28.2		
				48	1993
		1.4	152.6 -12.1		
				25	2772
		1.1	136.7		
				26	2763

CALCULATED PCG
CHECKED DYB

RAMP E CROSS SECTIONS
STA. 6+160 TO STA. 6+200

MOT-70-22.890

gx408622.dgn 14-JUL-2004

SEEDING END WIDTH	SEEDING SQ. METERS	END AREA CUT	END AREA FILL	VOLUME CUT	VOLUME FILL
		2.9	36.1 -17.5	45	426
		1.6	53.8 -29.8	72	607
		5.6	71.4 -34.7	90	955

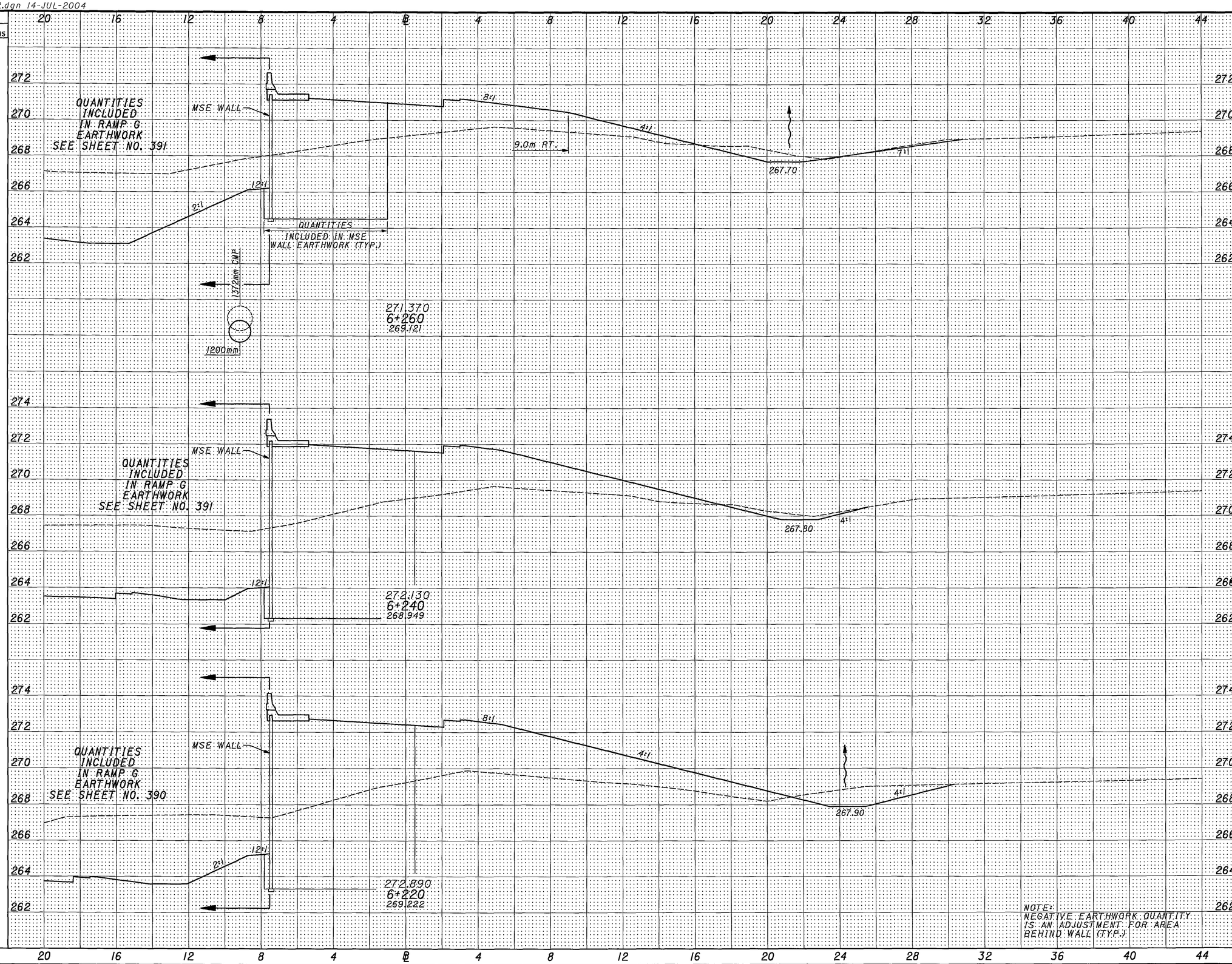

CALCULATED PCG
CHECKED DYB

RAMP E CROSS SECTIONS
STA. 6+220 TO STA. 6+260

MOT-70-22.890

380
1245

gx409628.dgn 14-JUL-2004

SEEDING END WIDTH	SEEDING SQ. METERS	END AREA CUT	END AREA FILL	VOLUME CUT	VOLUME FILL
		13.8	11.3		
				170	355
		3.2	24.2		
				51	619
		1.9	37.7		
				48	563

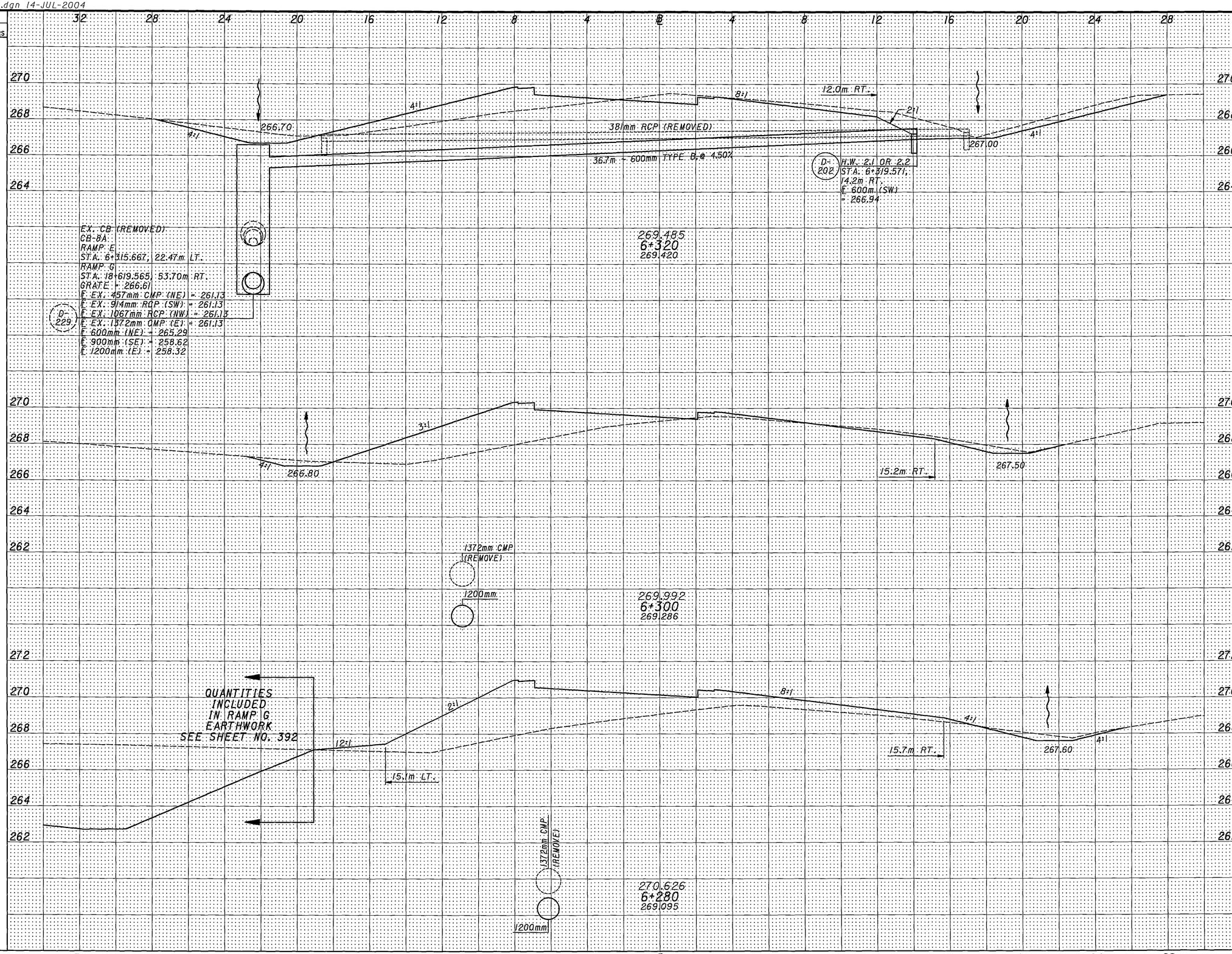

CALCULATED PCG
CHECKED DYB

RAMP E CROSS SECTIONS
STA. 6+280 TO STA. 6+320

MOT-70-22.890

381
1245

gx410634.dgn 30-JAN-2004

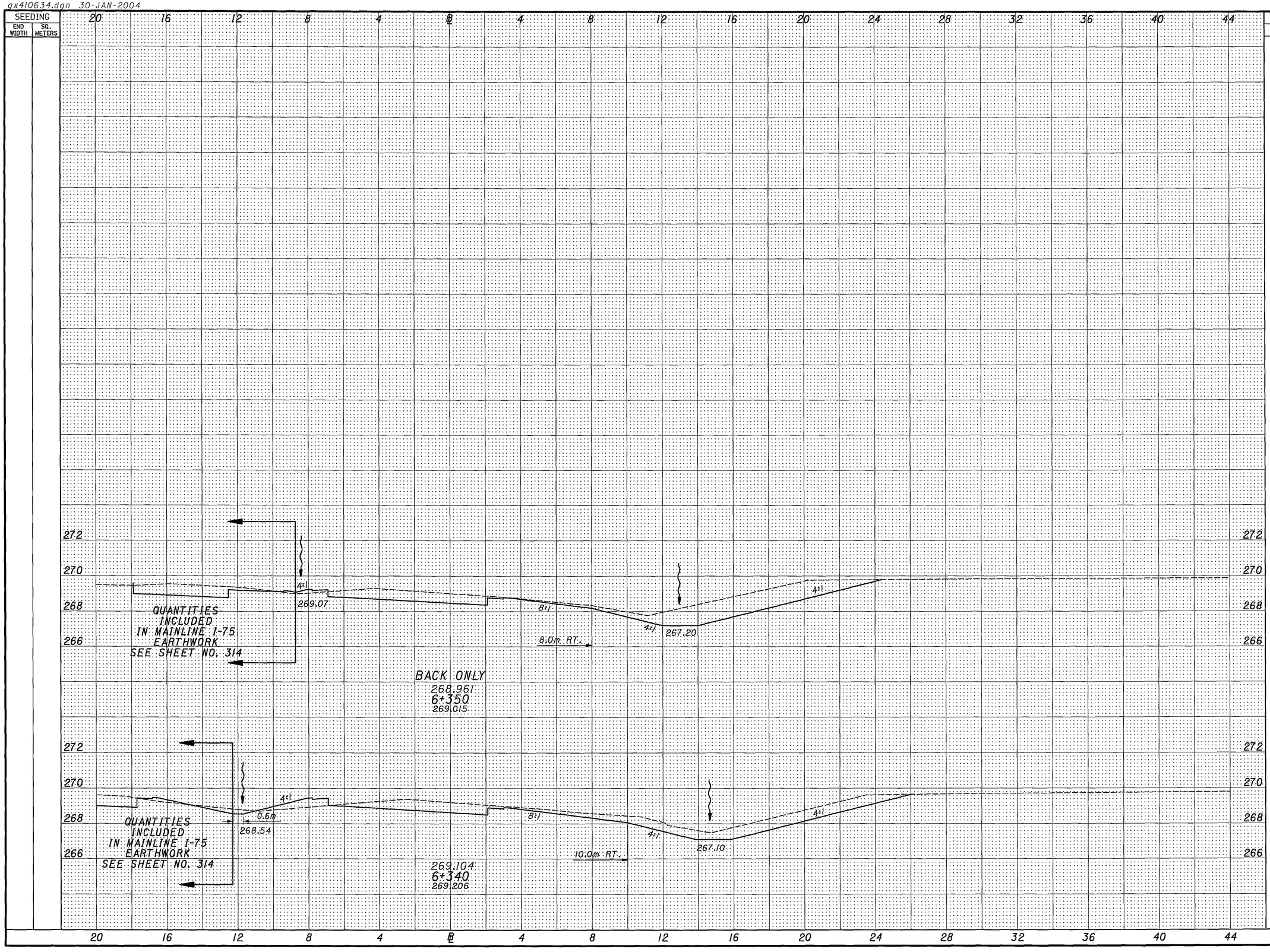

END AREA CUT	END AREA FILL	VOLUME CUT	VOLUME FILL
17.5	0.3		
		159	9
14.3	1.4		
		281	127

CALCULATED PCG
CHECKED DYB

RAMP E CROSS SECTIONS
STA. 6+340 TO STA. 6+350

MOT-70-22.890

382
1245

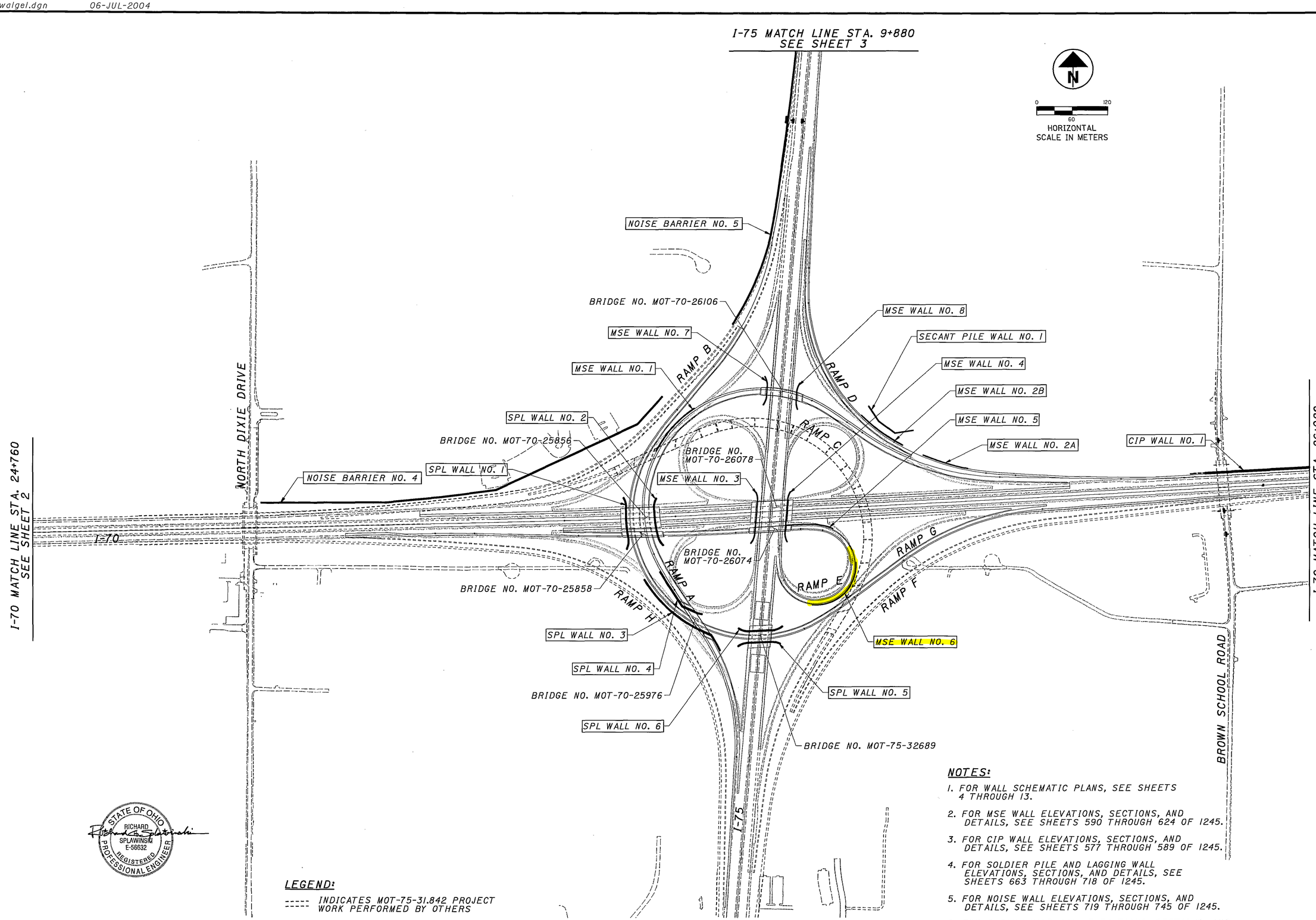

STATE OF OHIO
RICHARD SPLAWINSKI
E-56632
REGISTERED PROFESSIONAL ENGINEER

LEGEND:

----- INDICATES MOT-75-31.842 PROJECT WORK PERFORMED BY OTHERS

—— INDICATES MOT-70-22.890 PROPOSED PROJECT WORK

NOTES:

1. FOR WALL SCHEMATIC PLANS, SEE SHEETS 4 THROUGH 13.
2. FOR MSE WALL ELEVATIONS, SECTIONS, AND DETAILS, SEE SHEETS 590 THROUGH 624 OF 1245.
3. FOR CIP WALL ELEVATIONS, SECTIONS, AND DETAILS, SEE SHEETS 577 THROUGH 589 OF 1245.
4. FOR SOLDIER PILE AND LAGGING WALL ELEVATIONS, SECTIONS, AND DETAILS, SEE SHEETS 663 THROUGH 718 OF 1245.
5. FOR NOISE WALL ELEVATIONS, SECTIONS, AND DETAILS, SEE SHEETS 719 THROUGH 745 OF 1245.
6. FOR SECANT PILE WALL ELEVATIONS, SECTIONS, AND DETAILS, SEE SHEETS 644 THROUGH 657 OF 1245.

DESIGN AGENCY
CH2MHILL
ONE DAYTON CENTRE, SUITE 1100
ONE SOUTH MAIN STREET
DAYTON, OH 45402-1828

DESIGNED	DRAWN	REVIEWED	DATE
SKT	DGS	JES	01/02
CHECKED	REVISED	STRUCTURE FILE NUMBER	
JTC			

NOISE WALL AND RETAINING WALL KEY PLAN

MOT-70-22.890

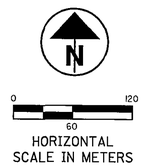

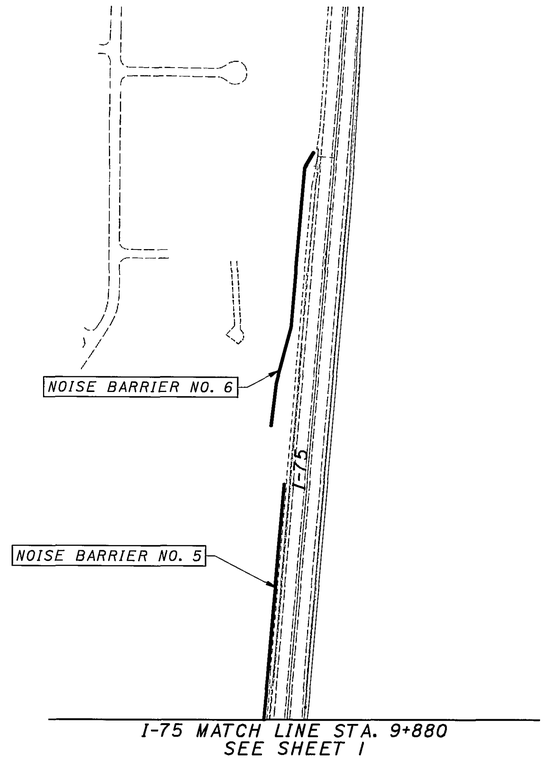

LEGEND:

----- INDICATES MOT-75-31.842 PROJECT WORK PERFORMED BY OTHERS

═══ INDICATES MOT-70-22.890 PROPOSED PROJECT WORK

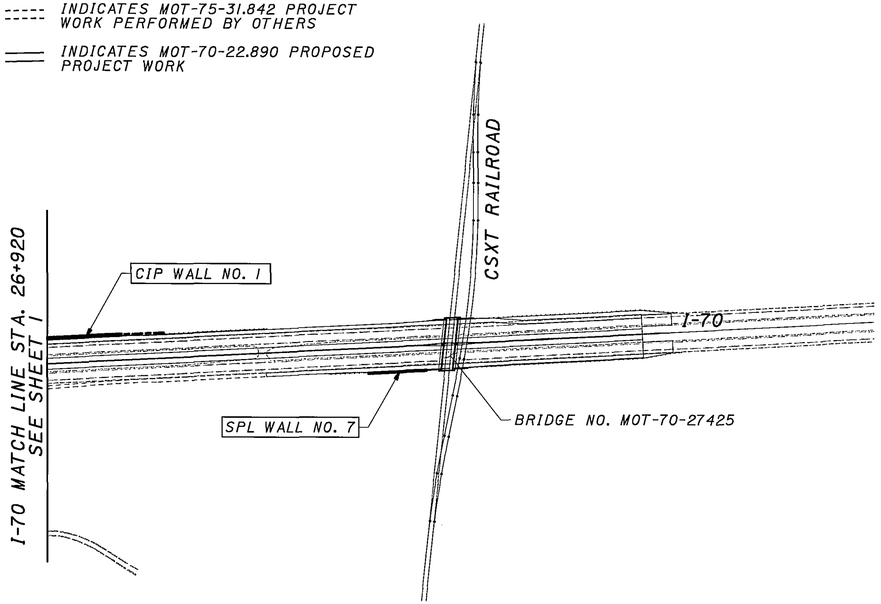

CURVED RETAINING WALL ALIGNMENT COORDINATES

SPL WALLS

CURVE NO.	WALL ALIGNMENT LOCATION		COORDINATES NORTH	COORDINATES EAST
SPL1-1	P.C. STA.	28+946.361	208382.389	455297.618
	P.I. STA.	28+963.578	208393.747	455310.556
	P.C.C. STA.	28+977.622	208410.649	455307.276
SPL1-2	P.C.C. STA.	28+977.622	208410.649	455307.276
	P.I. STA.	29+003.519	208436.072	455302.342
	P.C.C. STA.	29+029.175	208461.943	455303.493
SPL1-3	P.C.C. STA.	29+029.175	208461.943	455303.493
	P.I. STA.	29+043.082	208475.836	455304.111
	P.T. STA.	29+055.219	208485.286	455293.909
SPL2-1	P.C. STA.	25+593.380	208482.867	455356.716
	P.I. STA.	25+604.072	208474.648	455349.878
	P.C.C. STA.	25+613.922	208463.956	455349.779
SPL2-2	P.C.C. STA.	25+613.922	208463.956	455349.779
	P.I. STA.	25+669.571	208408.310	455349.287
	P.C.C. STA.	25+667.330	208411.230	455357.018
SPL2-3	P.C.C. STA.	25+667.330	208411.230	455357.018
	P.I. STA.	25+640.816	208437.064	455349.541
	P.T. STA.	25+687.915	208394.860	455368.825
SPL3-1	P.C. STA.	28+694.800	208189.292	455476.172
	P.I. STA.	28+727.354	208219.568	455464.210
	P.C.C. STA.	28+759.720	208247.121	455446.874
SPL3-2	P.C.C. STA.	28+759.720	208247.121	455446.874
	P.I. STA.	28+858.245	208280.836	455354.298
	P.T. STA.	28+944.820	208372.564	455318.338
SPL4-1	P.O.B. STA.	28+706.358	208381.006	455345.548
	P.I.c STA.	28+166.491	208358.957	455355.130
	T.S. STA.	28+777.561	208319.464	455381.168
SPL4-2	P.C. STA.	28+835.563	208282.858	455423.048
	P.I. STA.	28+859.102	208273.433	455444.617
	P.T. STA.	28+875.481	208292.141	455458.903
SPL5-1	P.C. STA.	28+616.918	208210.762	455579.202
	P.I. STA.	28+642.706	208236.061	455574.205
	P.T. STA.	28+659.521	208234.918	455548.442
SPL5-2	P.C. STA.	28+698.967	208233.170	455509.034
	P.I. STA.	28+724.808	208232.025	455483.219
	P.T. STA.	28+741.630	208206.324	455480.527
SPL6-1	P.C. STA.	28+614.208	208276.337	455479.794
	P.I. STA.	28+640.324	208250.655	455484.535
	P.T. STA.	28+657.186	208251.812	455510.625
SPL6-2	P.C. STA.	28+696.632	208253.561	455550.032
	P.I. STA.	28+722.854	208254.723	455576.229
	P.T. STA.	28+739.730	208280.840	455578.582

MSE WALLS

CURVE NO.	WALL ALIGNMENT LOCATION		COORDINATES NORTH	COORDINATES EAST
W1-1	P.C. STA.	25+880.000	208647.897	455449.000
	P.I. STA.	25+978.509	208607.044	455359.361
	P.T. STA.	26+063.537	208511.433	455335.642
W2-1	P.C. STA.	25+867.613	208523.108	455912.185
	P.I. STA.	26+008.806	208539.972	455772.002
	P.C.C. STA.	26+031.507	208575.224	455758.022
W2-2	P.C.C. STA.	26+031.507	208575.224	455758.022
	P.I. STA.	25+950.742	208533.037	455829.650
	P.T. STA.	26+120.000	208630.907	455689.678
W3-1	P.C. STA.	29+030.822	208397.568	455510.333
	P.I. STA.	29+043.292	208405.581	455519.888
	P.T. STA.	29+054.458	208418.005	455520.948
W3-2	P.C. STA.	29+109.603	208472.951	455525.636
	P.I. STA.	29+121.370	208484.675	455526.636
	P.T. STA.	29+132.031	208493.953	455519.399
W4-1	P.C. STA.	29+055.824	208495.543	455586.765
	P.I. STA.	29+067.857	208487.584	455577.741
	P.T. STA.	29+078.711	208475.595	455576.718
W4-2	P.C. STA.	29+133.611	208420.893	455572.051
	P.I. STA.	29+149.239	208405.323	455570.716
	P.T. STA.	29+162.426	208395.304	455582.710
W5-1	P.C. STA.	26+160.000	208385.326	455688.705
	P.I. STA.	26+199.803	208423.171	455676.375
	P.C.C. STA.	26+231.994	208430.874	455637.324
W5-2	P.C.C. STA.	26+231.994	208430.874	455637.324
	P.I. STA.	26+249.440	208434.241	455620.206
	P.T. STA.	26+266.702	208433.256	455602.788
W6-1	P.C. STA.	26+023.685	208303.429	455594.967
	P.I. STA.	26+151.068	208248.300	455709.802
	P.T. STA.	26+170.000	208374.285	455690.981
W7-1	P.C. STA.	29+266.706	208632.321	455530.930
	P.I. STA.	29+278.704	208640.275	455539.912
	P.T. STA.	29+289.532	208652.229	455540.932
W7-2	P.C. STA.	29+304.063	208666.707	455542.167
	P.I. STA.	29+318.718	208681.309	455543.413
	P.T. STA.	29+331.327	208691.268	455532.661
W8-1	P.C. STA.	29+270.853	208676.156	455599.887
	P.I. STA.	29+281.136	208668.601	455592.911
	P.T. STA.	29+290.666	208658.355	455592.037
W8-2	P.C. STA.	29+305.516	208643.559	455590.775
	P.I. STA.	29+315.518	208633.593	455589.924
	P.T. STA.	29+324.824	208625.111	455595.224

TANGENT RETAINING WALL ALIGNMENT COORDINATES

SPL WALL

SPL WALL	WALL ALIGNMENT LOCATION	COORDINATES NORTH	COORDINATES EAST
NO. 7	BEGIN WALL STA. 25+298.881	208497.364	456839.819
	END WALL STA. 25+357.400	208494.340	456781.379

CIP WALL

CIP WALL	WALL ALIGNMENT LOCATION	COORDINATES NORTH	COORDINATES EAST
NO. 1	BEGIN WALL STA. 26+745.000	208517.601	456281.909
	END WALL STA. 26+996.200	208530.585	456532.773

SECANT PILE WALL

SECANT PILE WALL	WALL ALIGNMENT LOCATION	COORDINATES NORTH	COORDINATES EAST
NO. 1	BEGIN WALL STA. 25+019.400	208592.901	455788.842
	ANGLE POINT NO. 1 STA. 25+050.000	208588.216	455758.603
	ANGLE POINT NO. 2 STA. 25+084.740	208608.729	455730.566
	END WALL STA. 25+115.340	208634.155	455713.540

NOTES:

1. FOR WALL SCHEMATIC PLANS, SEE SHEETS 4 THROUGH 13.
2. FOR CIP WALL ELEVATIONS, SECTIONS, AND DETAILS, SEE SHEETS 577 THROUGH 589 OF 1245.
3. FOR SOLDIER PILE AND LAGGING WALL ELEVATIONS, SECTIONS, AND DETAILS, SEE SHEETS 663 THROUGH 718 OF 1245.
4. FOR NOISE WALL ELEVATIONS, SECTIONS, AND DETAILS, SEE SHEETS 719 THROUGH 745 OF 1245.

DESIGN AGENCY
CH2MHILL
ONE DAYTON CENTRE, SUITE 1100
ONE SOUTH MAIN STREET
DAYTON, OH 45402-1828

DATE 01/02 | REVIEWED JES | STRUCTURE FILE NUMBER
DRAWN DGS | REVISED
DESIGNED SKT | CHECKED JTC

NOISE WALL AND RETAINING WALL KEY PLAN

MOT-70-22.890

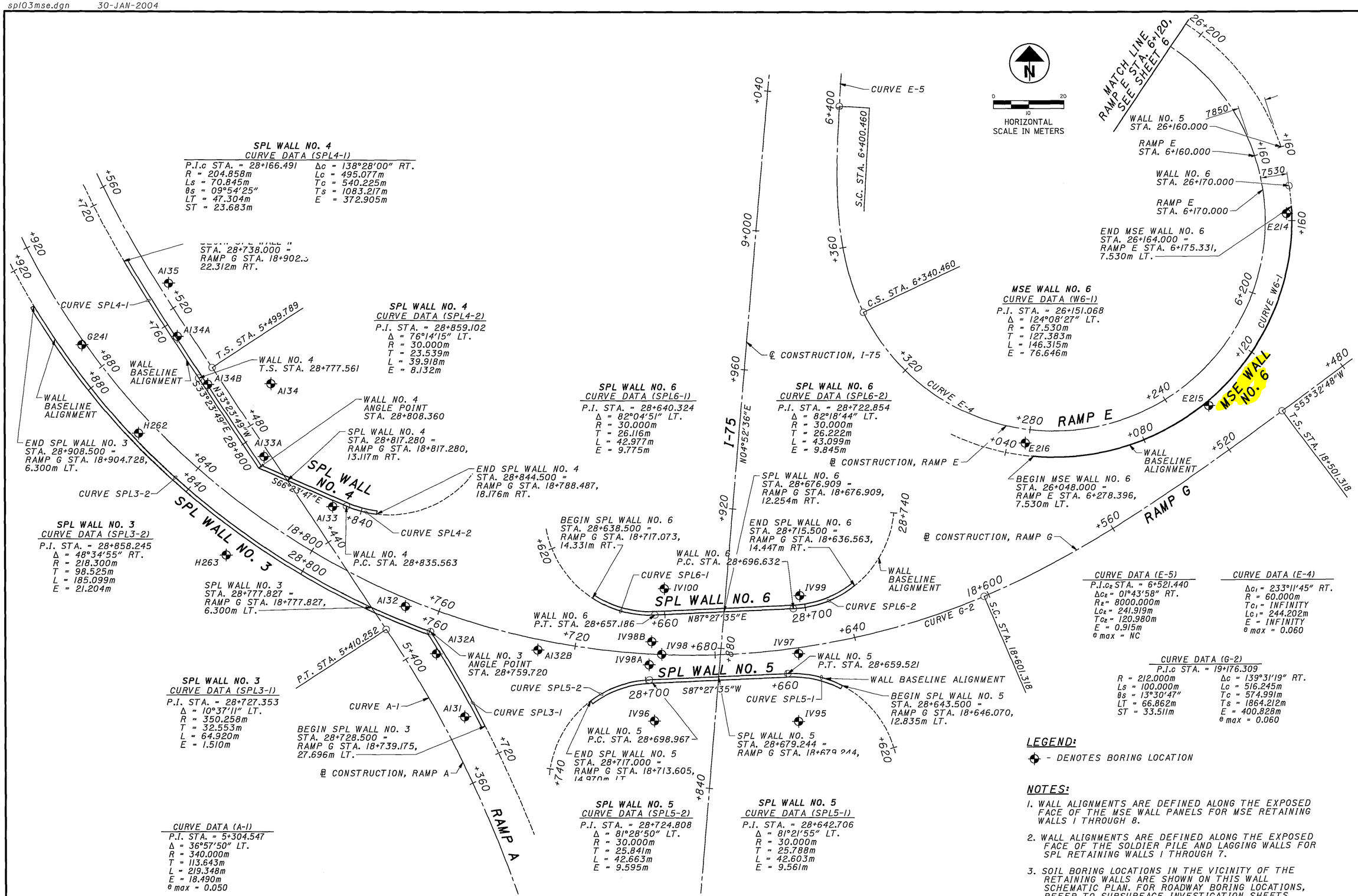

DESIGN AGENCY
CH2MHILL
ONE DAYTON CENTRE, SUITE 1100
ONE SOUTH MAIN STREET
DAYTON, OH 45402-1928

DESIGNED	DRAWN	REVIEWED	DATE
SKT	DGS	JES	01/02
CHECKED	REVISED	STRUCTURE FILE NUMBER	
JTC			

WALL SCHEMATIC PLAN
I-75 M.L. STA. 8+810.000
TO STA. 9+045.000

MOT-70-22.890

GENERAL NOTES

REFER TO THE FOLLOWING SPECIAL PROVISIONS:

REINFORCED EARTH WALL
RETAINED EARTH WALL
MSE PLUS RETAINING WALL

REFER TO THE FOLLOWING STANDARD BRIDGE DRAWINGS:

BR-1 REVISED 07-19-02

AND TO THE FOLLOWING SUPPLEMENTAL SPECIFICATION(S):

864 DATED 07-11-00 898 DATED 07-18-03

DESIGN SPECIFICATIONS: THIS STRUCTURE CONFORMS TO "STANDARD SPECIFICATIONS FOR HIGHWAY BRIDGES" ADOPTED BY THE AMERICAN ASSOCIATION OF STATE HIGHWAY AND TRANSPORTATION OFFICIALS (AASHTO), 2002, AND THE ODOT BRIDGE DESIGN MANUAL.

DESIGN DATA:
CONCRETE CLASS C - COMPRESSIVE STRENGTH 27.5 MPa (COPING AND SLEEPER SLABS)
QC/QA CONCRETE, CLASS QSC2, FOR SUPERSTRUCTURE - COMPRESSIVE STRENGTH 31.0 MPa (PARAPETS)
REINFORCING STEEL - ASTM A615M OR A996M, GRADE 420, MINIMUM YIELD STRENGTH 420 MPa

CONVERSION OF STANDARD BRIDGE DRAWINGS: THE STANDARD BRIDGE DRAWINGS REFERENCED IN THIS PLAN ARE IN ENGLISH UNITS. ANY CONVERSION OF DIMENSIONS REQUIRED TO CONSTRUCT THE ITEMS SHOWN ON THE STANDARDS IS THE RESPONSIBILITY OF THE CONTRACTOR. REFER TO 109.02 OF THE 2002 CONSTRUCTION AND MATERIAL SPECIFICATIONS FOR A LISTING OF CONVERSION FACTORS. CONVERSIONS SHALL BE APPROPRIATELY PRECISE AND SHALL REFLECT STANDARD METRIC VALUES WHERE SUITABLE.

UTILITY LINES: THE UTILITIES SHALL BEAR ALL EXPENSE INVOLVED IN RELOCATING AFFECTED UTILITY LINES. THE CONTRACTOR AND UTILITIES ARE TO COOPERATE BY ARRANGING THEIR WORK IN SUCH A MANNER THAT INCONVENIENCE TO EITHER WILL BE HELD TO A MINIMUM.

WALL DESIGN CRITERIA:

ALLOWABLE BEARING CAPACITIES:

WALL NO. 1	150 kPa
WALL NO. 2A	420 kPa
WALL NO. 2B	240 kPa
WALL NO. 3	360 kPa
WALL NO. 4	370 kPa
WALL NO. 5	220 kPa
WALL NO. 6	330 kPa
WALL NO. 7	500 kPa
WALL NO. 8	260 kPa

MAXIMUM EXPECTED DIFFERENTIAL SETTLEMENTS:

WALL NO. 1	19 mm
WALL NO. 2A	39 mm
WALL NO. 2B	50 mm
WALL NO. 3	27 mm
WALL NO. 4	21 mm
WALL NO. 5	27 mm
WALL NO. 6	60 mm
WALL NO. 7	32 mm
WALL NO. 8	32 mm

BRIDGE SUPERSTRUCTURE LOADINGS: SEE TABLE THIS SHEET.

ITEM SPECIAL, REINFORCED EARTH WALL, RETAINED EARTH WALL, OR MSE PLUS RETAINING WALL: THIS WORK SHALL CONSIST OF THE DESIGN, FABRICATION AND CONSTRUCTION OF MECHANICALLY STABILIZED EMBANKMENT (MSE) RETAINING WALLS. THE WORK SHALL INCLUDE ALL WALL COMPONENTS; WALL EXCAVATION AND BACKFILL; SUBGRADE PREPARATION; EXCAVATION FOR AND CONSTRUCTION OF AGGREGATE BEARING PADS; WALL LEVELING PADS; BACKFILL DRAINAGE COMPONENTS; SELECT GRANULAR EMBANKMENT; ALL OTHER EMBANKMENT WITHIN THE WALL PAYMENT LIMITS; REINFORCED CONCRETE SLEEPER SLABS AND COPING; AND SEALING OF THE MSE WALL SURFACES.

ALL MATERIALS AND CONSTRUCTION SHALL MEET THE REQUIREMENTS SHOWN ON THE CONTRACT PLANS AND INCLUDED IN THE APPROPRIATE RETAINING WALL SPECIAL PROVISIONS. LUMP SUM PAYMENT FOR THE RETAINING WALLS SHALL BE IN ACCORDANCE WITH THE SPECIAL PROVISIONS.

THE PERMANENT REINFORCED CONCRETE FACING SHALL BE RECTANGULAR PANELS, WITH NOMINAL DIMENSIONS OF 1.5 M BY 3.0 M AND A SMOOTH SURFACE FINISH. FOR ADDITIONAL REINFORCED CONCRETE FACING PANEL REQUIREMENTS, SEE SPECIAL PROVISIONS.

STAGED CONSTRUCTION OF MSE WALLS:

MSE WALL NO. 3 AND NO. 4 WILL BE CONSTRUCTED IN STAGES. FOR TEMPORARY MSE WALL REQUIREMENTS, SEE SHEET 625 OF 1245. FOR DETAILS OF TEMPORARY SHORING AT THE STAGE CONSTRUCTION JOINTS, SEE SHEETS 626 - 631 OF 1245. FOR DETAILS OF TEMPORARY MSE WALLS, SEE SHEETS 642 & 643 OF 1245.

FOR DESCRIPTIONS OF THE PROPOSED WORK NECESSARY TO CONSTRUCT THE I-70 MAINLINE BRIDGE IN STAGES, SEE SHEET 1010 OF 1245.

MSE WALL NO. 3 AND NO. 4 SEQUENCE OF CONSTRUCTION:

IN GENERAL, THE PROPOSED WORK SHALL CONSIST OF THE REMOVAL OF THE EXISTING I-70 TWIN BRIDGES OVER I-75 AND THE CONSTRUCTION OF THE REPLACEMENT BRIDGE IN STAGES. REMOVAL AND CONSTRUCTION OPERATIONS ARE TO BE PERFORMED WHILE MAINTAINING TWO-WAY, FOUR LANE TRAFFIC ON I-70. MAJOR RETAINING WALL ITEMS OF WORK REQUIRING STAGED CONSTRUCTION ARE DESCRIBED BELOW. FOR DETAILS OF BRIDGE ITEMS OF WORK REQUIRING STAGED CONSTRUCTION, SEE I-70 MAINLINE OVER I-75 BRIDGE PLANS.

A. STAGE 1 CONSTRUCTION:

1. INSTALL PORTABLE CONCRETE BARRIER ON BRIDGE APPROACHES ACCORDING TO MAINTENANCE OF TRAFFIC PLANS.
2. REMOVE EXISTING ABUTMENT WINGWALLS ON MEDIAN SIDE.
3. DRIVE SOLDIER PILES FOR TEMPORARY SHORING ALONG I-70 MEDIAN SHOULDERS AT REAR AND FORWARD ABUTMENTS AS SHOWN ON TEMPORARY SHORING PLANS.
4. CONSTRUCT LAGGING AND ANCHORS FOR TEMPORARY SHORING AS EXCAVATION PROCEEDS DOWN TO THE PROPOSED BOTTOM OF MSE WALLS.
5. PREPARE SUBGRADE FOR STAGE 1 MSE ABUTMENT WALLS.
6. CONSTRUCT MSE ABUTMENT WALLS IN I-70 MEDIAN USING PERMANENT FACING PANELS FOR BREASTWALLS AND TEMPORARY MSE WALLS FOR SIDES OF MSE AND ROADWAY EMBANKMENT ADJACENT TO SHORING.
7. CONSTRUCT CENTRAL SEMI-INTEGRAL ABUTMENT SECTIONS AND REMAINING BRIDGE AND APPROACH ROADWAY COMPONENTS AS SHOWN ON BRIDGE, ROADWAY, AND M.O.T. PLANS.

B. STAGE 2 CONSTRUCTION:

1. INSTALL ANCHORED PORTABLE CONCRETE BARRIERS ON STAGE 1 CONSTRUCTION AS SHOWN ON BRIDGE AND MAINTENANCE OF TRAFFIC PLANS. ROUTE TRAFFIC ONTO COMPLETED STAGE 1 PORTION OF THE BRIDGE.
2. REMOVE EXISTING RIGHT STRUCTURE AND I-70 MEDIAN TEMPORARY SHORING ACCORDING TO THE PLANS AND SPECIFICATIONS AS EXCAVATION PROCEEDS DOWN TO THE PROPOSED BOTTOM OF MSE WALLS.
3. PREPARE SUBGRADE FOR AND CONSTRUCT RIGHT MSE ABUTMENT BREASTWALLS AND WINGWALLS ADJACENT TO TEMPORARY MSE WALLS THAT REMAIN IN PLACE.
4. CONSTRUCT RIGHT SEMI-INTEGRAL ABUTMENT SECTIONS AND REMAINING BRIDGE AND APPROACH ROADWAY COMPONENTS AS SHOWN ON BRIDGE, ROADWAY, AND M.O.T. PLANS.

C. STAGE 3 CONSTRUCTION:

1. INSTALL PORTABLE CONCRETE BARRIER AND ROUTE TRAFFIC ONTO COMPLETED STAGE 1 AND 2 PORTIONS OF THE BRIDGE.
2. REMOVE EXISTING LEFT STRUCTURE AND I-70 MEDIAN TEMPORARY SHORING ACCORDING TO THE PLANS AND SPECIFICATIONS AS EXCAVATION PROCEEDS DOWN TO THE PROPOSED BOTTOM OF MSE WALLS.
3. PREPARE SUBGRADE FOR AND CONSTRUCT LEFT MSE ABUTMENT BREASTWALLS AND WINGWALLS ADJACENT TO TEMPORARY MSE WALLS THAT REMAIN IN PLACE.
4. CONSTRUCT LEFT SEMI-INTEGRAL ABUTMENT SECTIONS AND REMAINING BRIDGE AND APPROACH ROADWAY COMPONENTS AS SHOWN ON BRIDGE, ROADWAY, AND M.O.T. PLANS.

ITEM 864, SEALING OF CONCRETE SURFACES (EPOXY-URETHANE): THE FINISH COAT COLOR FOR THE MSE WALL PANELS SHALL BE LIGHT GRAY, MEETING NO. FS-595B-16515. THE FINISH COAT COLOR FOR ALL CAST-IN-PLACE COPING AND PARAPETS SHALL BE WHITE, MEETING NO. FS-595B-17875. FOR COLOR BOUNDARIES, SEE MSE WALL/PARAPET PAYMENT LIMIT DETAIL THIS SHEET.

BRIDGE SUPERSTRUCTURE LOADINGS

BRIDGE	MSE WALL	LOCATION	UNITS	VERTICAL DEAD LOAD	VERTICAL LIVE LOAD	LONGITUDINAL WIND ON SUPERSTR.
I-70 OVER I-75	NO. 3	REAR ABUTMENT	kN/m	132.5	66.0	1.8
I-70 OVER I-75	NO. 4	FORWARD ABUTMENT	kN/m	160.5	67.0	2.0
RAMP E OVER I-75	NO. 3	REAR ABUTMENT	kN/m	143.2	74.4	3.1
RAMP E OVER I-75	NO. 4	FORWARD ABUTMENT	kN/m	169.6	75.7	3.6
RAMP A OVER I-75	NO. 7	REAR ABUTMENT	kN/m	96.9	67.7	2.3
RAMP A OVER I-75	NO. 8	FORWARD ABUTMENT	kN/m	115.6	64.9	2.9
BRIDGE	**MSE WALL**	**LOCATION**	**UNITS**	**LONGITUDINAL WIND ON LIVE LOAD**	**LONGITUDINAL FORCE DUE TO LIVE LOAD**	**LONGITUDINAL FORCE DUE TO TEMPERATURE**
I-70 OVER I-75	NO. 3	REAR ABUTMENT	kN/m	0.4	1.3	19.0
I-70 OVER I-75	NO. 4	FORWARD ABUTMENT	kN/m	0.4	1.6	20.1
RAMP E OVER I-75	NO. 3	REAR ABUTMENT	kN/m	0.7	1.8	18.5
RAMP E OVER I-75	NO. 4	FORWARD ABUTMENT	kN/m	0.9	1.9	19.6
RAMP A OVER I-75	NO. 7	REAR ABUTMENT	kN/m	0.6	1.8	9.6
RAMP A OVER I-75	NO. 8	FORWARD ABUTMENT	kN/m	0.7	1.9	11.2

MSE WALL/PARAPET PAYMENT LIMITS:

PAYMENT LIMITS FOR ITEM 509, EPOXY COATED REINFORING STEEL, ITEM 898, QC/QA CONCRETE, CLASS QSC2, SUPERSTRUCTURE (PARAPET), AND ITEM SPECIAL, REINFORCED EARTH WALL, RETAINED EARTH WALL, OR MSE PLUS RETAINING WALL ARE SHOWN BELOW. ALL REINFORCING STEEL EMBEDDED IN THE SLEEPER SLAB SHALL BE CONSIDERED PART OF THE MSE WALL FOR PAYMENT.

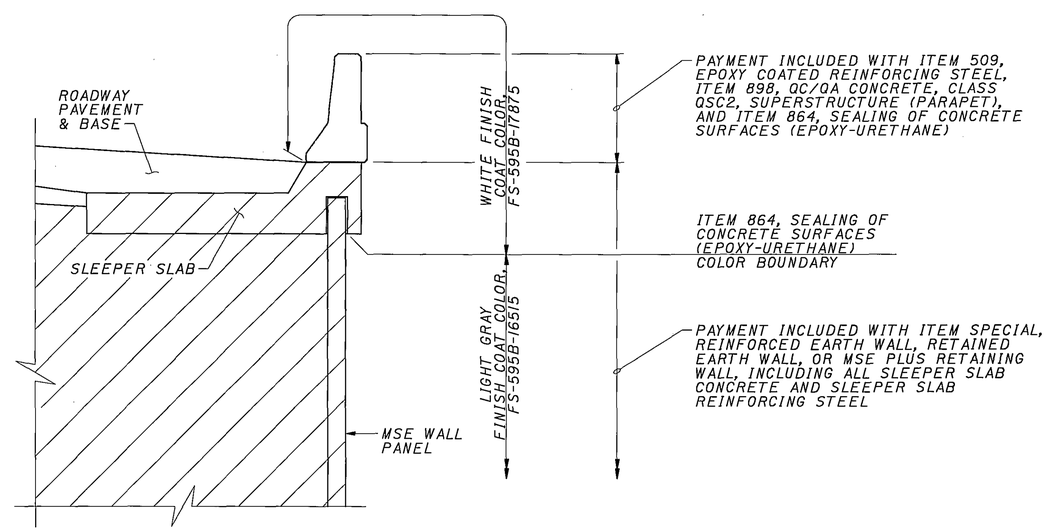

DESIGN AGENCY
CH2MHILL
ONE DAYTON CENTRE, SUITE 1100
ONE SOUTH MAIN STREET
DAYTON, OH 45402-1828

DESIGNED	DRAWN	REVIEWED	DATE
SKT	SKT	RV	06/03
CHECKED	REVISED	STRUCTURE FILE NUMBER	
RGS			

MSE WALL GENERAL NOTES

MOT-70-22.890

MSE WALL ESTIMATED QUANTITIES

CALCULATED BY: SKT DATED: 06/03
CHECKED BY: DGS DATED: 06/03

ITEM	ITEM EXT.	TOTAL	UNIT	DESCRIPTION	MSE WALLS 1	2A	2B	3	4	5	6	7	8
				DESIGN OPTION "A" (REINFORCED EARTH CO.)									
509	10000	9270	KILOGRAM	EPOXY COATED REINFORCING STEEL	2017	1639	1784	-	-	1440	2390	-	
518	40010	416	METER	150 mm NON-PERFORATED CORRUGATED PLASTIC PIPE, INCLUDING SPECIALS	118	4	5	154	70	40	18	5	2
SPECIAL	61013600	LUMP		REINFORCED EARTH WALL (SEE SPECIAL PROVISIONS)	LUMP	LUMP	LUMP	LUMP	LUMP	LUMP	LUMP	LUMP	LUMP
SPECIAL	61060000	LUMP		RETAINING WALL, MISC.: TEMPORARY MSE WALLS	-	-	-	LUMP	LUMP	-	-	-	-
864	10100	991	SQ METER	SEALING OF CONCRETE SURFACES (EPOXY-URETHANE)	217	175	190	-	-	153	256	-	-
898	11000	131.2	CU METER	QC/QA CONCRETE, CLASS QSC2, SUPERSTRUCTURE (PARAPET)	28.7	23.1	25.1	-	-	20.3	34.0	-	-
				DESIGN OPTION "B" (FOSTER GEOTECHNICAL)									
509	10000	9270	KILOGRAM	EPOXY COATED REINFORCING STEEL	2017	1639	1784	-	-	1440	2390	-	
518	40010	416	METER	150 mm NON-PERFORATED CORRUGATED PLASTIC PIPE, INCLUDING SPECIALS	118	4	5	154	70	40	18	5	2
SPECIAL	61013800	LUMP		RETAINED EARTH WALL (SEE SPECIAL PROVISIONS)	LUMP	LUMP	LUMP	LUMP	LUMP	LUMP	LUMP	LUMP	LUMP
SPECIAL	61060000	LUMP		RETAINING WALL, MISC.: TEMPORARY MSE WALLS	-	-	-	LUMP	LUMP	-	-	-	-
864	10100	991	SQ METER	SEALING OF CONCRETE SURFACES (EPOXY-URETHANE)	217	175	190	-	-	153	256	-	-
898	11000	131.2	CU METER	QC/QA CONCRETE, CLASS QSC2, SUPERSTRUCTURE (PARAPET)	28.7	23.1	25.1	-	-	20.3	34.0	-	-
				DESIGN OPTION "C" (SSL, LLC)									
509	10000	9270	KILOGRAM	EPOXY COATED REINFORCING STEEL	2017	1639	1784	-	-	1440	2390	-	
518	40010	416	METER	150 mm NON-PERFORATED CORRUGATED PLASTIC PIPE, INCLUDING SPECIALS	118	4	5	154	70	40	18	5	2
SPECIAL	61014200	LUMP		MSE PLUS RETAINING WALL (SEE SPECIAL PROVISIONS)	LUMP	LUMP	LUMP	LUMP	LUMP	LUMP	LUMP	LUMP	LUMP
SPECIAL	61060000	LUMP		RETAINING WALL, MISC.: TEMPORARY MSE WALLS	-	-	-	LUMP	LUMP	-	-	-	-
864	10100	991	SQ METER	SEALING OF CONCRETE SURFACES (EPOXY-URETHANE)	217	175	190	-	-	153	256	-	-
898	11000	131.2	CU METER	QC/QA CONCRETE, CLASS QSC2, SUPERSTRUCTURE (PARAPET)	28.7	23.1	25.1	-	-	20.3	34.0	-	-

DRAINAGE QUANTITIES

LOCATION	MSE WALL PLAN SHEET NO.	604 PRECAST REINFORCED CONCRETE OUTLET (EACH)
WALL 2A	30	1
WALL 2B	30	1
WALL 3	31	1
WALL 4	31	1
WALL 5	32	1
WALL 7	33	1
WALL 8	33	1
TOTALS CARRIED TO SHEET NO. 150		7

LIST OF ABBREVIATIONS

THE FOLLOWING ABBREVIATIONS HAVE BEEN USED THROUGHOUT THESE PLANS:

@ = AT
ASTM = AMERICAN SOCIETY OF TESTING AND MATERIALS

℄ = BASELINE

℄ = CENTERLINE
CB = CATCH BASIN
CIP = CAST-IN-PLACE
CJ = CONSTRUCTION JOINT
CMP = CORRUGATED METAL PIPE
CMS = CONSTRUCTION AND MATERIAL SPECIFICATIONS
CPP = CORRUGATED PLASTIC PIPE
C.S. = CURVE TO SPIRAL
CU M = CUBIC METER

DIA. = DIAMETER
DWG. = DRAWING

E = EAST
EF = EACH FACE
EL./ELEV. = ELEVATION
EX. = EXISTING
EXT. = EXTENSION

℄ = FLOW LINE
FF = FAR FACE

INC. = INCREMENT
INV. = INVERT

KG = KILOGRAM

LT. = LEFT

M/m = METER
MAX. = MAXIMUM
MIN. = MINIMUM
M.L. = MAINLINE
mm = MILLIMETER
MPa = MEGAPASCAL
MSE = MECHANICALLY STABILIZED EARTH

N = NORTH
NF = NEAR FACE
NO. = NUMBER
NOS. = NUMBERS
NPCPP = NON-PERFORATED CORRUGATED PLASTIC PIPE

PAVT. = PAVEMENT
P.C. = POINT OF CURVATURE
P.C.C. = POINT OF COMPOUND CURVE
PEJF = PREFORMED ELASTOMERIC JOINT FILLER
PERF. = PERFORATED
P.I. = POINT OF INTERSECTION
P.T. = POINT OF TANGENCY

R = RADIUS
RCP = REINFORCED CONCRETE PIPE
RECON. = RECONSTRUCT
RT. = RIGHT

S = SOUTH
S.C. = SPIRAL TO CURVE
SQ M = SQUARE METER
SPL = SOLDIER PILE AND LAGGING
S.T. = SPIRAL TO TANGENT
STA. = STATION
STD. = STANDARD
STR = STRAIGHT
SUPERSTR. = SUPERSTRUCTURE

T.S. = TANGENT TO SPIRAL
TYP. = TYPICAL

W = WEST

DESIGN AGENCY
CH2MHILL
ONE DAYTON CENTRE, SUITE 1100
ONE SOUTH MAIN STREET
DAYTON, OH 45402-1828

REVIEWED RV DATE 06/03
STRUCTURE FILE NUMBER
DRAWN SKT REVISED
DESIGNED SKT CHECKED DGS

MSE WALL ESTIMATED QUANTITIES

MOT-70-22.890

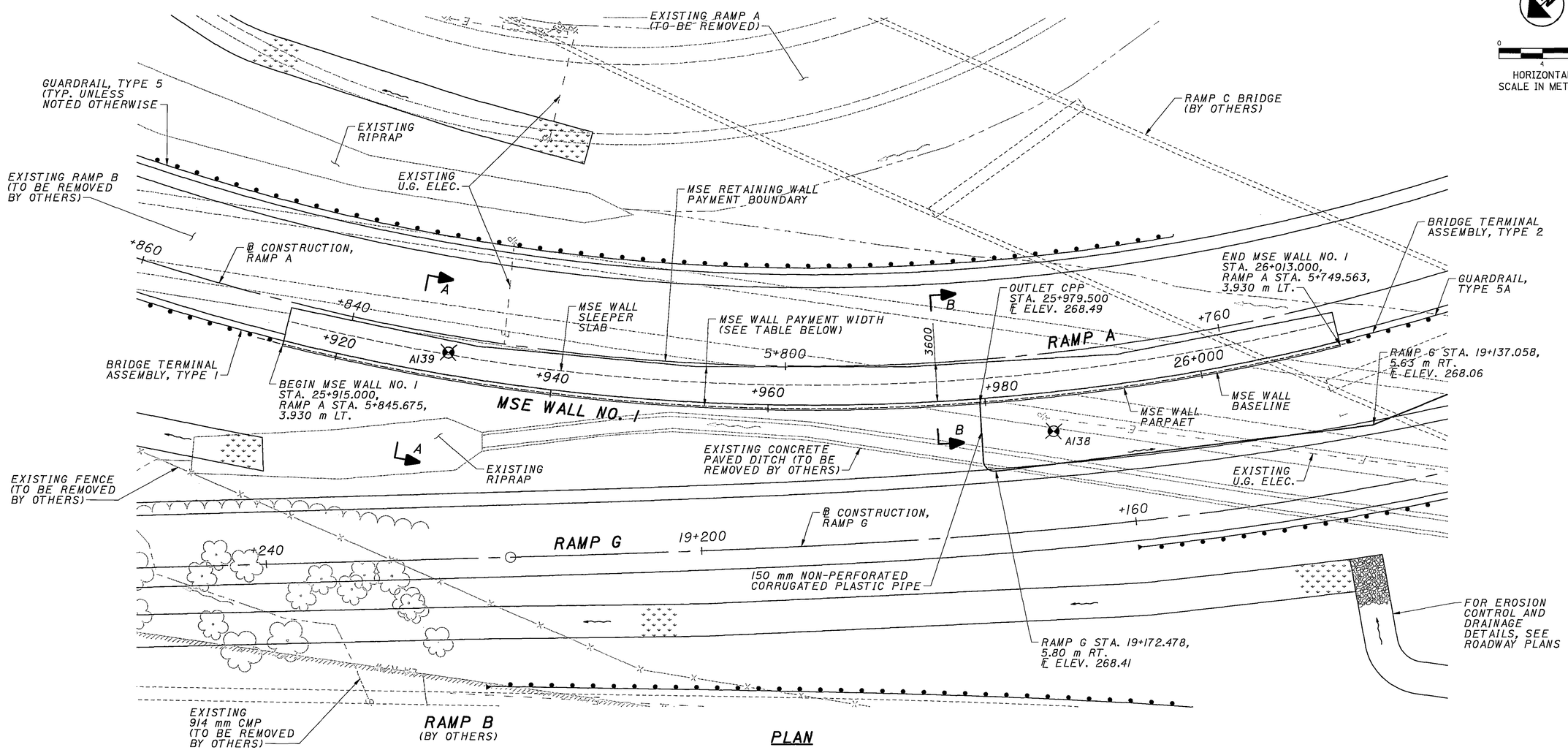

PLAN

HORIZONTAL SCALE IN METERS

MSE WALL NO. 1 PAYMENT BOUNDARY			
MSE WALL STATION	MSE WALL PAYMENT WIDTH	RAMP G STATION	RAMP G OFFSET
25+915.000	3.432	19+236.917	23.500 RT.
25+932.683	3.367	19+220.000	19.500 RT.
25+953.067	3.608	19+200.000	17.000 RT.
25+973.029	3.682	19+180.000	16.000 RT.
25+992.648	3.050	19+160.000	15.500 RT.
26+011.950	3.138	19+140.000	16.500 RT.
26+013.000	3.074	19+138.897	16.500 RT.

LEGEND:

DENOTES BORING LOCATION

DENOTES PLAN BOUNDARY OF ITEMS INCLUDED FOR PAYMENT WITH THE MSE RETAINING WALL.

NOTES:

1. FOR MSE WALL NO. 1 SCHEMATIC PLAN, SEE SHEET 567 OF 1245.
2. THE MSE WALL ALIGNMENT IS DEFINED ALONG THE EXPOSED FACE OF THE MSE WALL PANELS.
3. FOR WALL ELEVATION VIEW, SEE SHEET 4.
4. FOR SECTIONS A-A AND B-B, SEE SHEET 21.
5. FOR WALL DRAINAGE PLAN, SEE SHEET 29.
6. FOR DEFINITION OF WALL COMPONENTS INCLUDED FOR PAYMENT WITH THE MSE RETAINING WALL, SEE MSE WALL SPECIAL PROVISIONS.

DESIGN AGENCY
CH2MHILL
ONE DAYTON CENTRE, SUITE 1100
ONE SOUTH MAIN STREET
DAYTON, OH 45402-1828

DESIGNED	DRAWN	REVIEWED	DATE
JTC	JTC	RGS	01/04
CHECKED	REVISED	STRUCTURE FILE NUMBER	
SKT			

MSE WALL PLAN - WALL NO. 1
STA. 25+915.000 TO STA. 26+013.000

MOT-70-22.890

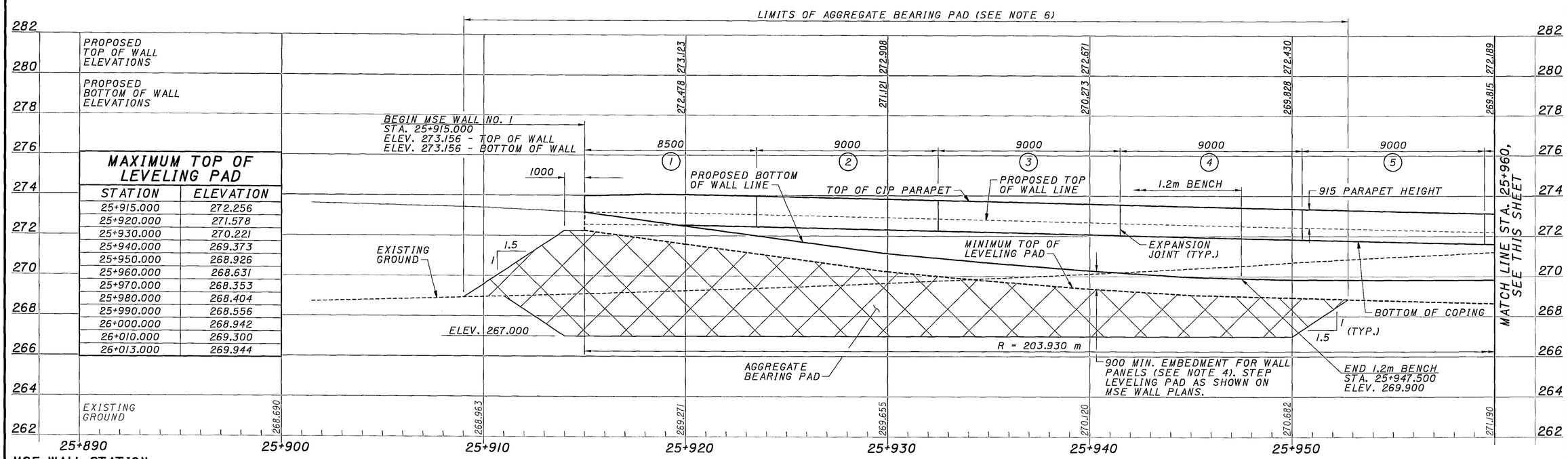

MAXIMUM TOP OF LEVELING PAD

STATION	ELEVATION
25+915.000	272.256
25+920.000	271.578
25+930.000	270.221
25+940.000	269.373
25+950.000	268.926
25+960.000	268.631
25+970.000	268.353
25+980.000	268.404
25+990.000	268.556
26+000.000	268.942
26+010.000	269.300
26+013.000	269.944

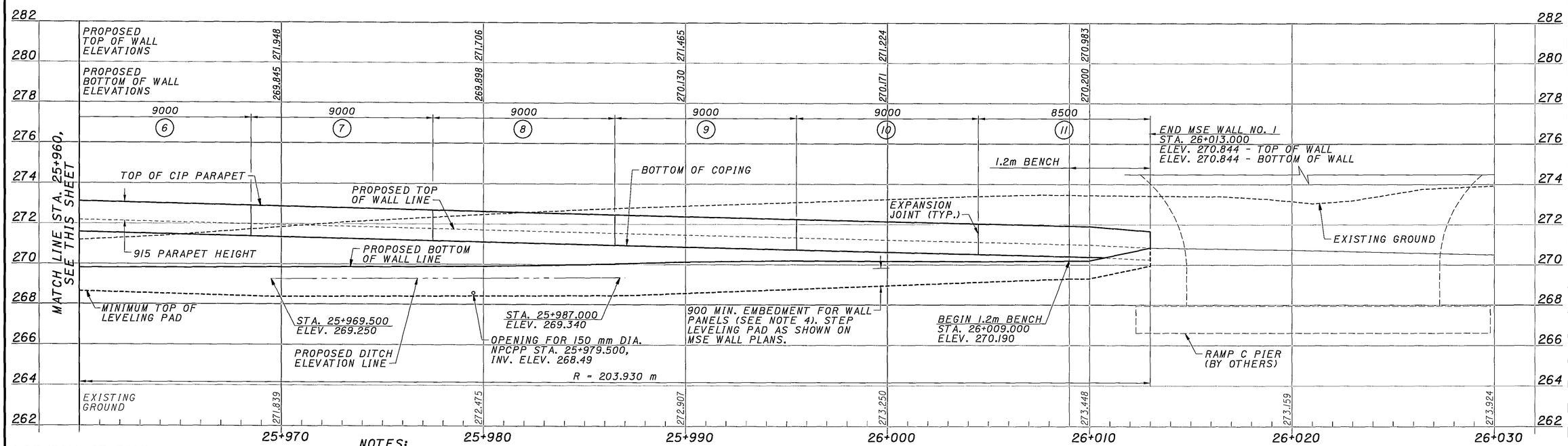

NOTES:

1. MSE WALL ELEVATIONS ARE SHOWN VIEWED FROM THE EXPOSED FACE OF THE WALL.
2. FOR DEFINITION OF MSE WALL TOP AND BOTTOM ELEVATIONS, SEE MSE WALL SECTION ON SHEET 21.
3. FOR PARAPET, COPING, AND SLEEPER SLAB SECTION AND REINFORCING DETAILS, SEE SHEETS 25 AND 26.
4. MINIMUM EMBEDMENT TO THE TOP OF LEVELING PAD SHALL BE 900 mm, MEASURED FROM THE PROPOSED DITCH ELEVATION WHERE NO BENCH IS PROVIDED, OR FROM THE BOTTOM OF WALL ELEVATION WHERE A 1.2m BENCH IN FRONT OF THE WALL IS PROVIDED. FOR AREAS BETWEEN DITCHES AND BENCHES, THE 900 mm EMBEDMENT SHALL BE MEASURED FROM A LINE INTERPOLATED BETWEEN DITCH AND BENCH ELEVATIONS SHOWN.
5. JOINT LAYOUT INFORMATION ON PARAPET, COPING, AND SLEEPER SLAB IS SHOWN IN GENERAL TERMS. CONTRACTOR SHALL COORDINATE FINAL JOINT LAYOUT AND REINFORCING DIMENSIONS WITH THE PROPRIETARY WALL SYSTEM ACTUALLY CONSTRUCTED.
6. AGGREGATE BEARING PAD EXCAVATION, SUBGRADE COMPACTION, AND BACKFILL ARE INCLUDED FOR PAYMENT WITH THE MSE WALL - SEE SPECIAL PROVISIONS.

DESIGN AGENCY
CH2MHILL
ONE DAYTON CENTRE, SUITE 1100
ONE SOUTH MAIN STREET
DAYTON, OH 45402-1828

DATE 06/03 | REVIEWED RV | STRUCTURE FILE NUMBER
DRAWN CAC | REVISED
DESIGNED JTC | CHECKED SKT

MSE WALL ELEVATIONS - WALL NO. 1
STA. 25+915.000 TO STA. 26+013.000

MOT-70-22.890

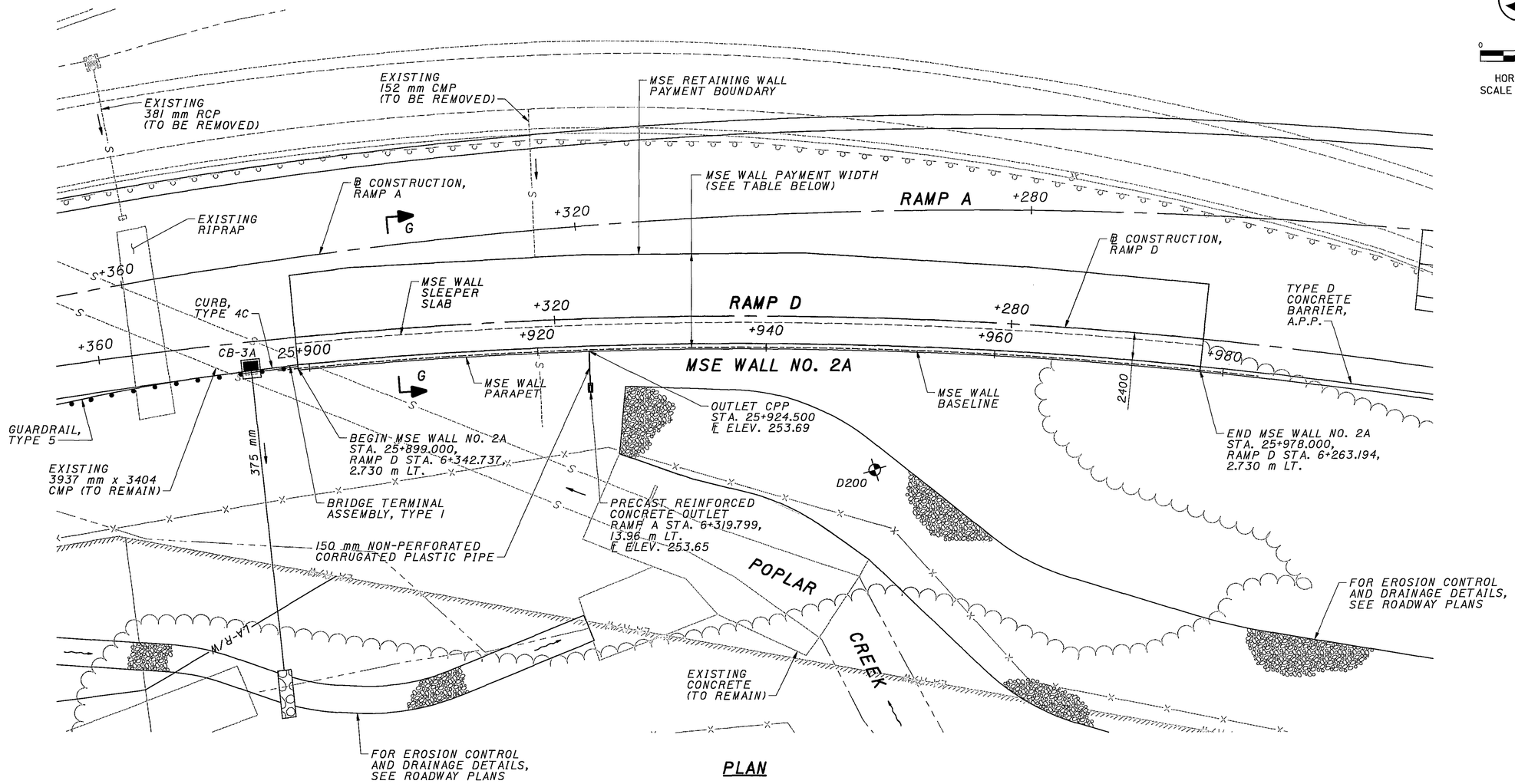

PLAN

0 4 8
HORIZONTAL SCALE IN METERS

MSE WALL NO. 2A PAYMENT BOUNDARY			
MSE WALL STATION	MSE WALL PAYMENT WIDTH	RAMP A STATION	RAMP A OFFSET
25+899.000	8.160	6+345.369	1.500 LT.
25+904.235	8.406	6+340.000	1.500 LT.
25+923.753	8.342	6+320.000	2.500 LT.
25+943.227	8.305	6+300.000	3.500 LT.
25+962.681	7.793	6+280.000	5.000 LT.
25+978.000	7.588	6+264.208	6.000 LT.

LEGEND:

DENOTES BORING LOCATION

DENOTES PLAN BOUNDARY OF ITEMS INCLUDED FOR PAYMENT WITH THE MSE RETAINING WALL.

NOTES:

1. FOR MSE WALL NO. 2A SCHEMATIC PLAN, SEE SHEET 568 OF 1245.
2. THE MSE WALL ALIGNMENT IS DEFINED ALONG THE EXPOSED FACE OF THE MSE WALL PANELS.
3. FOR WALL ELEVATION VIEW, SEE SHEET 6.
4. FOR SECTION G-G, SEE SHEET 22.
5. FOR WALL DRAINAGE PLAN, SEE SHEET 30.
6. FOR DEFINITION OF WALL COMPONENTS INCLUDED FOR PAYMENT WITH THE MSE RETAINING WALL, SEE MSE WALL SPECIAL PROVISIONS.

DESIGN AGENCY
CH2MHILL
ONE DAYTON CENTRE, SUITE 1100
ONE SOUTH MAIN STREET
DAYTON, OH 45402-1828

DESIGNED	DRAWN	REVIEWED	DATE
JTC	JTC	RGS	01/04
CHECKED	REVISED	STRUCTURE FILE NUMBER	
SKT			

MSE WALL PLAN - WALL NO. 2A
STA. 25+899.000 TO STA. 25+978.000

MOT-70-22.890

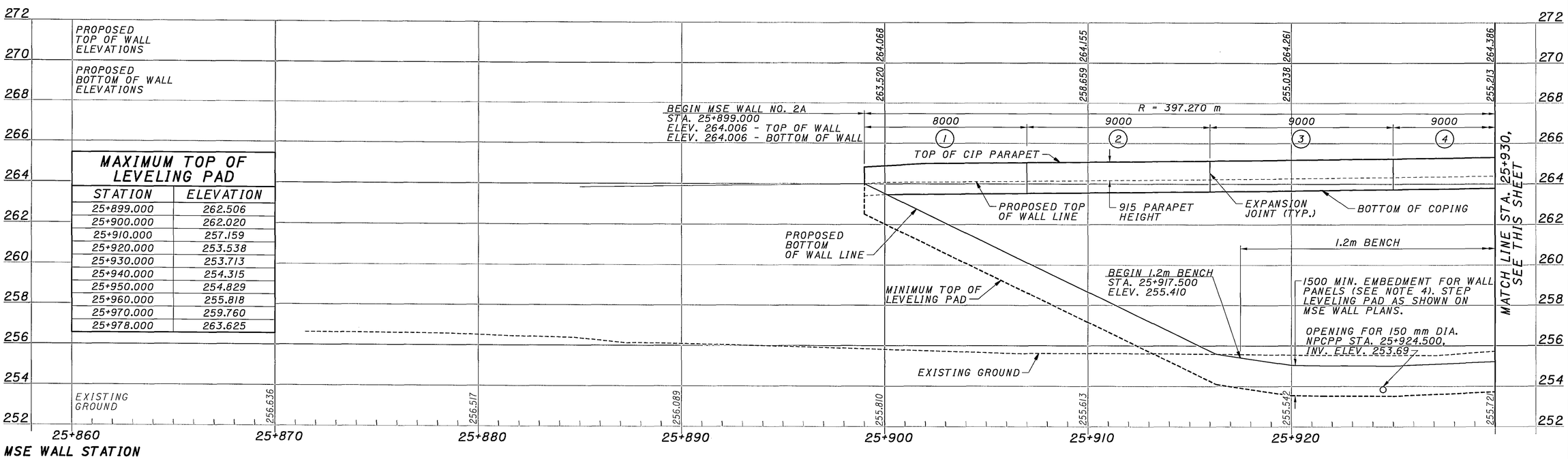

MAXIMUM TOP OF LEVELING PAD

STATION	ELEVATION
25+899.000	262.506
25+900.000	262.020
25+910.000	257.159
25+920.000	253.538
25+930.000	253.713
25+940.000	254.315
25+950.000	254.829
25+960.000	255.818
25+970.000	259.760
25+978.000	263.625

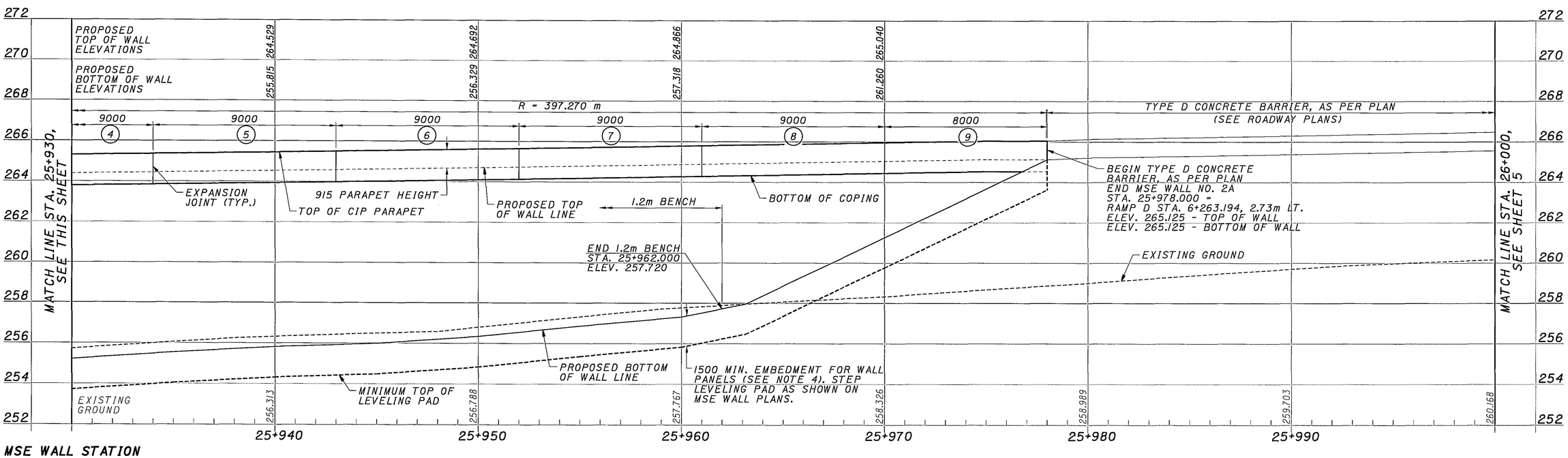

NOTES:

1. MSE WALL ELEVATIONS ARE SHOWN VIEWED FROM THE EXPOSED FACE OF THE WALL.
2. FOR DEFINITION OF MSE WALL TOP AND BOTTOM ELEVATIONS, SEE MSE WALL SECTION ON SHEET 22.
3. FOR PARAPET, COPING, AND SLEEPER SLAB SECTION AND REINFORCING DETAILS, SEE SHEETS 25 AND 26.
4. MINIMUM EMBEDMENT TO THE TOP OF LEVELING PAD SHALL BE 1500 mm, MEASURED FROM THE BOTTOM OF WALL ELEVATIONS SHOWN.
5. JOINT LAYOUT INFORMATION ON PARAPET, COPING, AND SLEEPER SLAB IS SHOWN IN GENERAL TERMS. CONTRACTOR SHALL COORDINATE FINAL JOINT LAYOUT AND REINFORCING DIMENSIONS WITH THE PROPRIETARY WALL SYSTEM ACTUALLY CONSTRUCTED.

DESIGN AGENCY
CH2MHILL
ONE DAYTON CENTRE, SUITE 1100
ONE SOUTH MAIN STREET
DAYTON, OH 45402-1828

DESIGNED	DRAWN	REVIEWED	DATE
JTC	CAC	RV	06/03
CHECKED	REVISED	STRUCTURE FILE NUMBER	
SKT			

MSE WALL ELEVATIONS - WALL NO. 2A
STA. 25+899.000 TO STA. 25+978.000

MOT-70-22.890

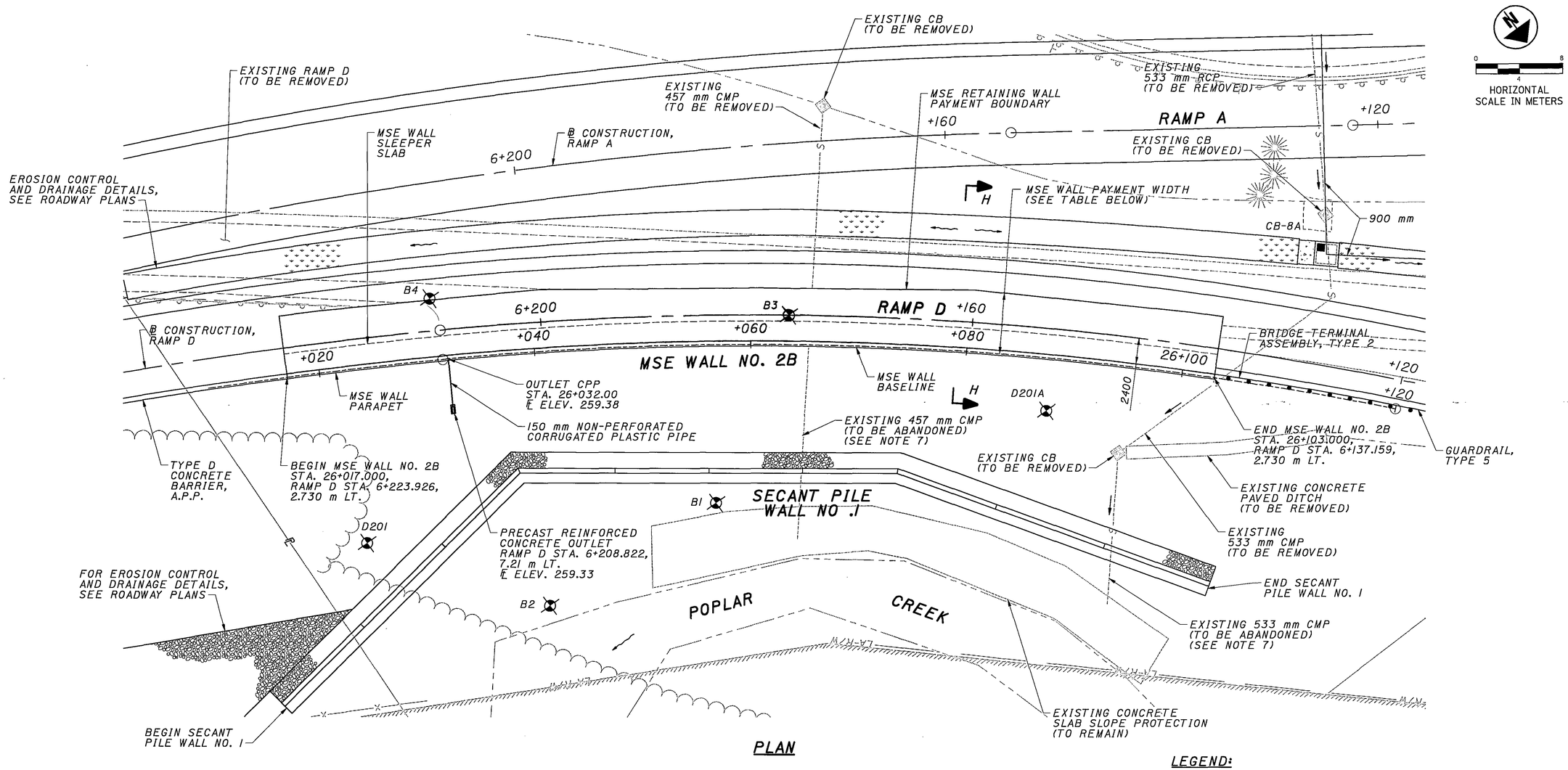

PLAN

MSE WALL NO. 2B PAYMENT BOUNDARY			
MSE WALL STATION	MSE WALL PAYMENT WIDTH	RAMP D STATION	RAMP D OFFSET
26+017.000	5.730	6+223.926	3.000 RT.
26+020.900	5.730	6+220.000	3.000 RT.
26+040.740	5.730	6+200.000	3.000 RT.
26+060.555	5.230	6+180.000	2.500 RT.
26+080.370	5.730	6+160.000	3.000 RT.
26+100.185	5.730	6+140.000	3.000 RT.
26+103.000	5.730	6+137.159	3.000 RT.

LEGEND:

DENOTES BORING LOCATION

DENOTES PLAN BOUNDARY OF ITEMS INCLUDED FOR PAYMENT WITH THE MSE RETAINING WALL.

NOTES:

1. FOR MSE WALL NO. 2B SCHEMATIC PLAN, SEE SHEET 568 OF 1245.
2. THE MSE WALL ALIGNMENT IS DEFINED ALONG THE EXPOSED FACE OF THE MSE WALL PANELS.
3. FOR WALL ELEVATION VIEW, SEE SHEET 8.
4. FOR SECTION H-H, SEE SHEET 22.
5. FOR WALL DRAINAGE PLAN, SEE SHEET 30.
6. FOR DEFINITION OF WALL COMPONENTS INCLUDED FOR PAYMENT WITH THE MSE RETAINING WALL, SEE MSE WALL SPECIAL PROVISIONS.
7. REMOVE ONLY THE PORTION OF THE EXISTING CMP WITHIN THE LIMITS OF THE DRILLED SHAFTS. REMAINING PORTIONS OF THE EXISTING CMP TO BE PLUGGED ON EACH SIDE OF THE SECANT PILE WALL.

DESIGN AGENCY
CH2MHILL
ONE DAYTON CENTRE, SUITE 1100
ONE SOUTH MAIN STREET
DAYTON, OH 45402-1826

DESIGNED	DRAWN	REVIEWED	DATE
JTC	JTC	RGS	01/04
CHECKED	REVISED	STRUCTURE FILE NUMBER	
SKT			

MSE WALL PLAN - WALL NO. 2B
STA. 26+017.000 TO STA. 26+103.000

MOT-70-22.890

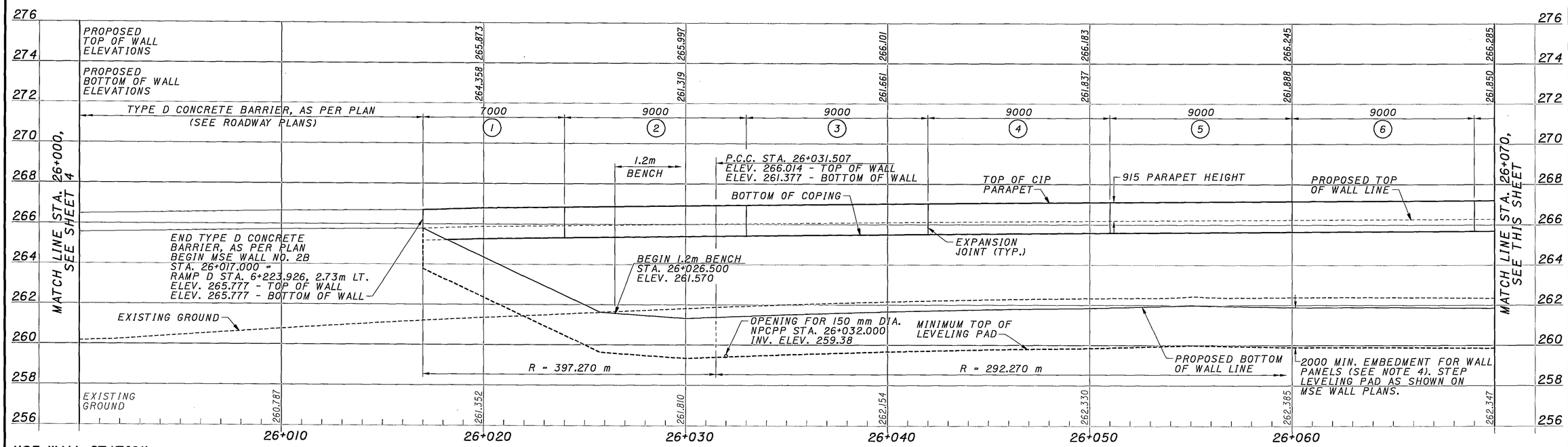

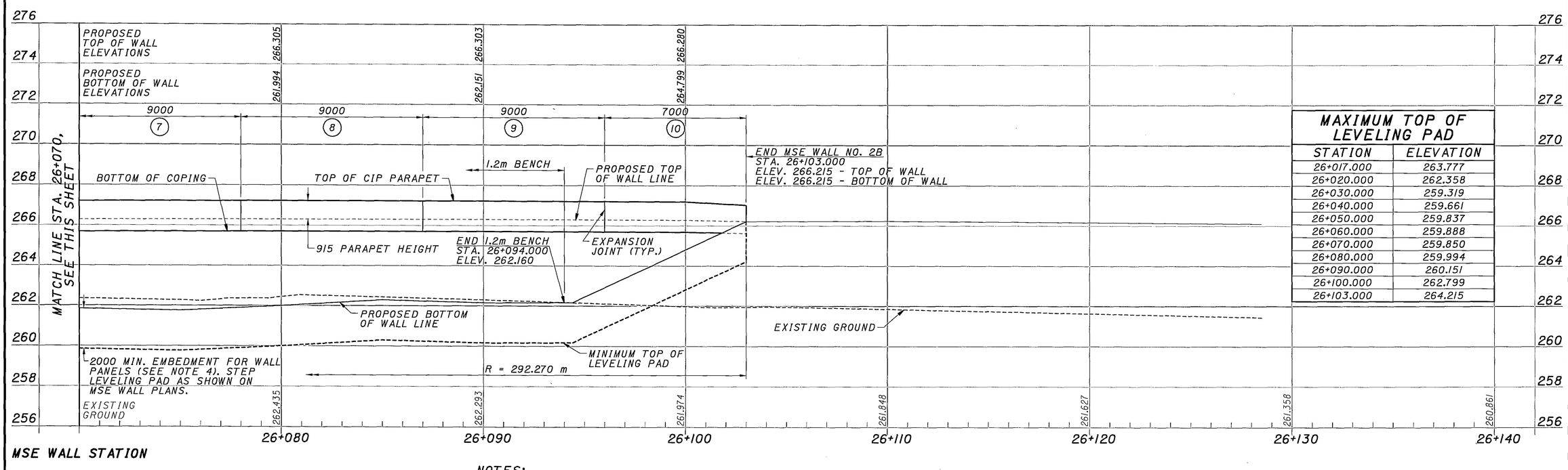

MAXIMUM TOP OF LEVELING PAD

STATION	ELEVATION
26+017.000	263.777
26+020.000	262.358
26+030.000	259.319
26+040.000	259.661
26+050.000	259.837
26+060.000	259.888
26+070.000	259.850
26+080.000	259.994
26+090.000	260.151
26+100.000	262.799
26+103.000	264.215

NOTES:

1. MSE WALL ELEVATIONS ARE SHOWN VIEWED FROM THE EXPOSED FACE OF THE WALL.
2. FOR DEFINITION OF MSE WALL TOP AND BOTTOM ELEVATIONS, SEE MSE WALL SECTION ON SHEET 22.
3. FOR PARAPET, COPING, AND SLEEPER SLAB SECTION AND REINFORCING DETAILS, SEE SHEETS 25 AND 26.
4. MINIMUM EMBEDMENT TO THE TOP OF LEVELING PAD SHALL BE 2000 mm, MEASURED FROM THE BOTTOM OF WALL ELEVATIONS SHOWN.
5. JOINT LAYOUT INFORMATION ON PARAPET, COPING, AND SLEEPER SLAB IS SHOWN IN GENERAL TERMS. CONTRACTOR SHALL COORDINATE FINAL JOINT LAYOUT AND REINFORCING DIMENSIONS WITH THE PROPRIETARY WALL SYSTEM ACTUALLY CONSTRUCTED.

DESIGN AGENCY
CH2MHILL
ONE DAYTON CENTRE, SUITE 1100
ONE SOUTH MAIN STREET
DAYTON, OH 45402-1828

DESIGNED	DRAWN	REVIEWED	DATE
JTC	CAC	RV	06/03
CHECKED	REVISED	STRUCTURE FILE NUMBER	
SKT			

MSE WALL ELEVATIONS - WALL NO. 2B
STA. 26+017.000 TO STA. 26+103.000

MOT-70-22.890

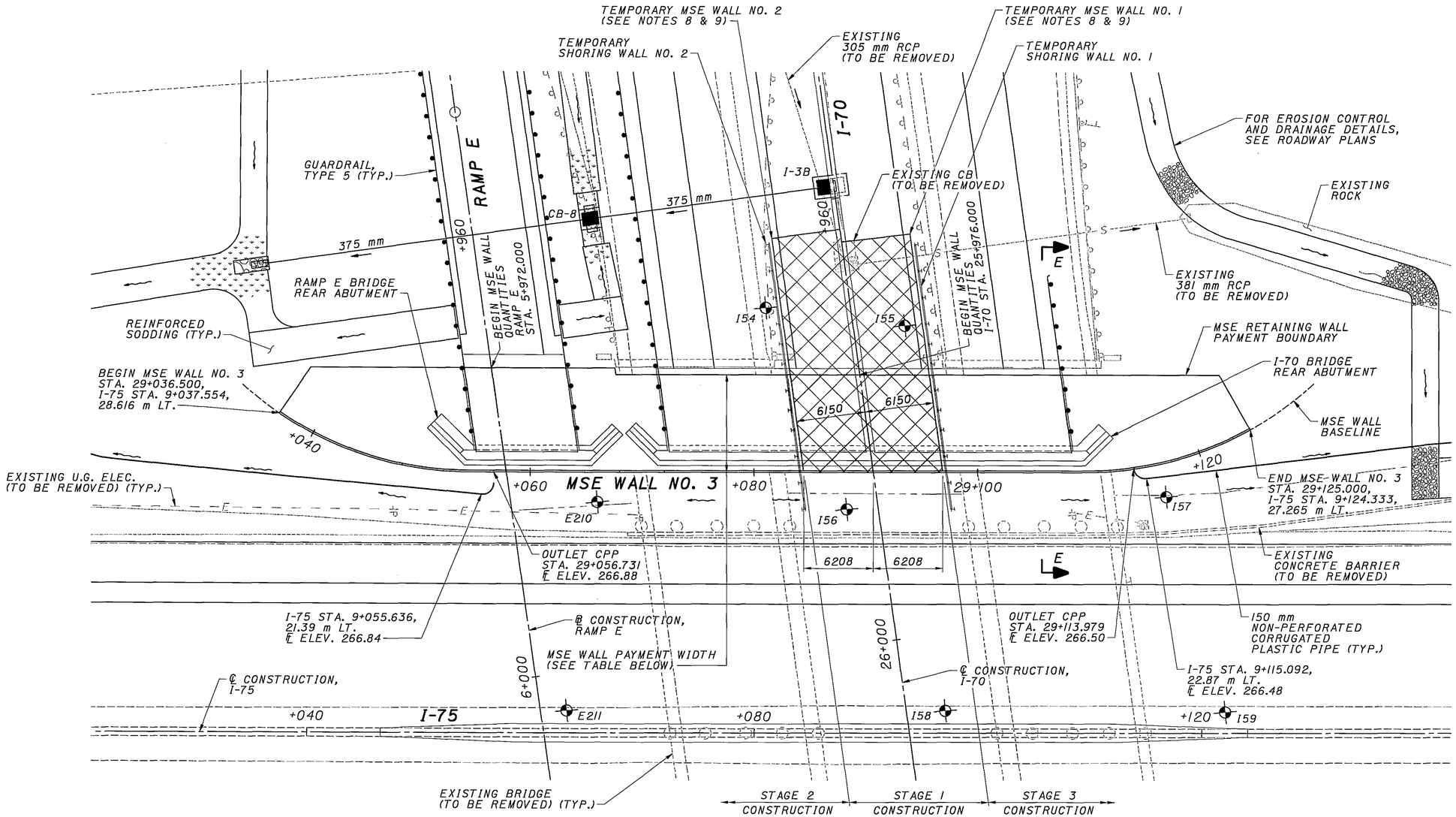

PLAN

LEGEND:

- DENOTES BORING LOCATION
- DENOTES PLAN BOUNDARY OF ITEMS INCLUDED FOR PAYMENT WITH THE PERMANENT MSE RETAINING WALL.
- DENOTES PLAN BOUNDARY OF ITEMS INCLUDED FOR PAYMENT WITH THE TEMPORARY MSE RETAINING WALL.

MSE WALL NO. 3 PAYMENT BOUNDARY

MSE WALL STATION	MSE WALL PAYMENT WIDTH	I-75 STATION	I-75 OFFSET
29+036.500	5.019	9+040.382	32.763 LT.
29+060.000	9.363	9+060.000	32.763 LT.
29+080.000	8.766	9+080.000	32.165 LT.
29+100.000	8.766	9+100.000	32.165 LT.
29+123.262	6.357	9+120.000	32.165 LT.
29+125.000	5.625	9+121.572	32.165 LT.

NOTES:

1. FOR MSE WALL NO. 3 SCHEMATIC PLAN, SEE SHEET 569 OF 1245.
2. THE MSE WALL ALIGNMENT IS DEFINED ALONG THE EXPOSED FACE OF THE MSE WALL PANELS.
3. FOR WALL ELEVATION VIEW, SEE SHEET 10.
4. FOR SECTION E-E, SEE SHEET 22.
5. FOR WALL DRAINAGE PLAN, SEE SHEET 31.
6. FOR DEFINITION OF WALL COMPONENTS INCLUDED FOR PAYMENT WITH THE MSE RETAINING WALL, SEE MSE WALL SPECIAL PROVISIONS.
7. FOR TEMPORARY SHORING DETAILS, SEE SHEETS 626 - 631 OF 1245.
8. FOR TEMPORARY MSE WALL DETAILS, SEE SHEETS 642 & 643 OF 1245.
9. FOR METHOD OF MEASUREMENT AND BASIS OF PAYMENT FOR TEMPORARY MSE WALLS, SEE MSE WALL SPECIAL PROVISIONS.

DESIGN AGENCY
CH2MHILL
ONE DAYTON CENTRE, SUITE 1100
ONE SOUTH MAIN STREET
DAYTON, OH 45402-1828

DESIGNED	DRAWN	REVIEWED	DATE
JTC	JTC	RGS	01/04
CHECKED	REVISED	STRUCTURE FILE NUMBER	
SKT			

MSE WALL PLAN - WALL NO. 3
STA. 29+036.500 TO STA. 29+125.000

MOT-70-22.890

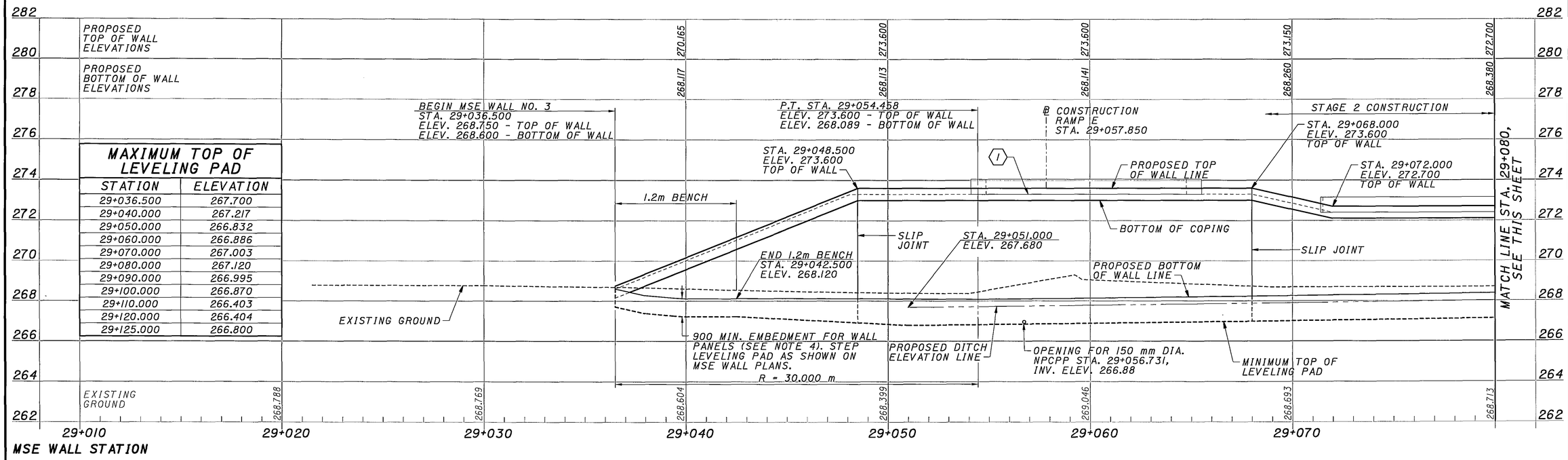

MAXIMUM TOP OF LEVELING PAD

STATION	ELEVATION
29+036.500	267.700
29+040.000	267.217
29+050.000	266.832
29+060.000	266.886
29+070.000	267.003
29+080.000	267.120
29+090.000	266.995
29+100.000	266.870
29+110.000	266.403
29+120.000	266.404
29+125.000	266.800

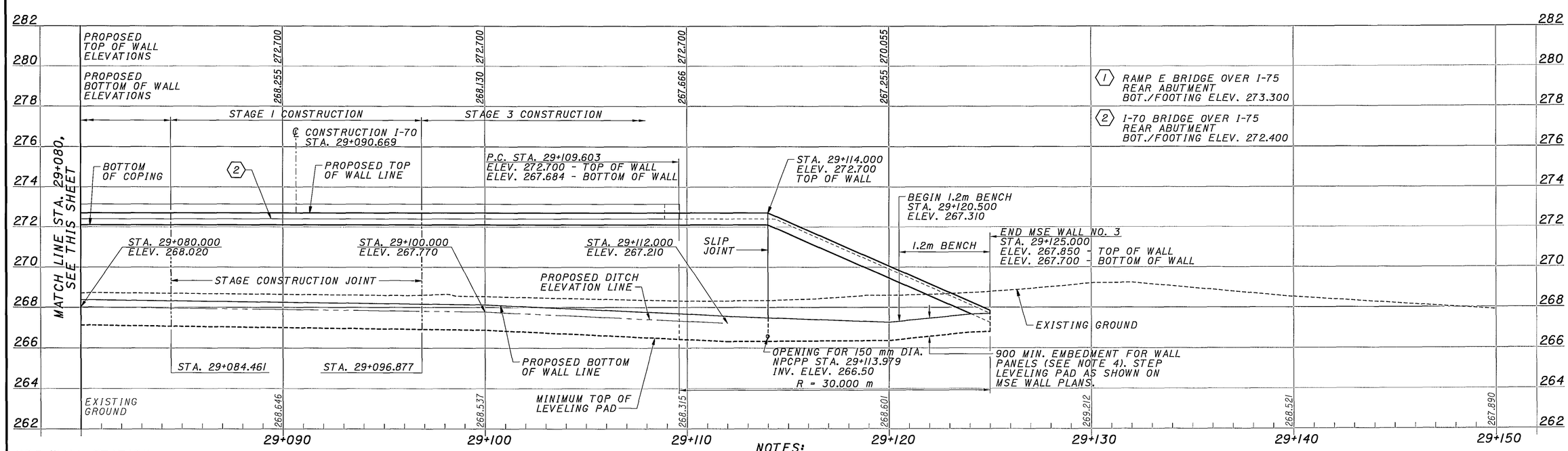

NOTES:

1. MSE WALL ELEVATIONS ARE SHOWN VIEWED FROM THE EXPOSED FACE OF THE WALL.
2. FOR DEFINITION OF MSE WALL TOP AND BOTTOM ELEVATIONS, SEE MSE WALL SECTION ON SHEET 22.
3. FOR WALL COPING DETAIL, SEE SHEET 24.
4. MINIMUM EMBEDMENT TO THE TOP OF LEVELING PAD SHALL BE 900 mm, MEASURED FROM THE PROPOSED DITCH ELEVATION WHERE NO BENCH IS PROVIDED, OR FROM THE BOTTOM OF WALL ELEVATION WHERE A 1.2m BENCH IN FRONT OF THE WALL IS PROVIDED. FOR AREAS BETWEEN DITCHES AND BENCHES, THE 900 mm EMBEDMENT SHALL BE MEASURED FROM A LINE INTERPOLATED BETWEEN DITCH AND BENCH ELEVATIONS SHOWN.
5. FOR SEQUENCE OF CONSTRUCTION, SEE SHEET 1.

DESIGN AGENCY
CH2MHILL
ONE DAYTON CENTRE, SUITE 1100
ONE SOUTH MAIN STREET
DAYTON, OH 45402-1829

DESIGNED	DRAWN	REVIEWED	DATE
JTC	JTC	RV	06/03
CHECKED	REVISED	STRUCTURE FILE NUMBER	
SKT			

MSE WALL ELEVATIONS - WALL NO. 3
STA. 29+036.500 TO STA. 29+125.000

MOT-70-22.890

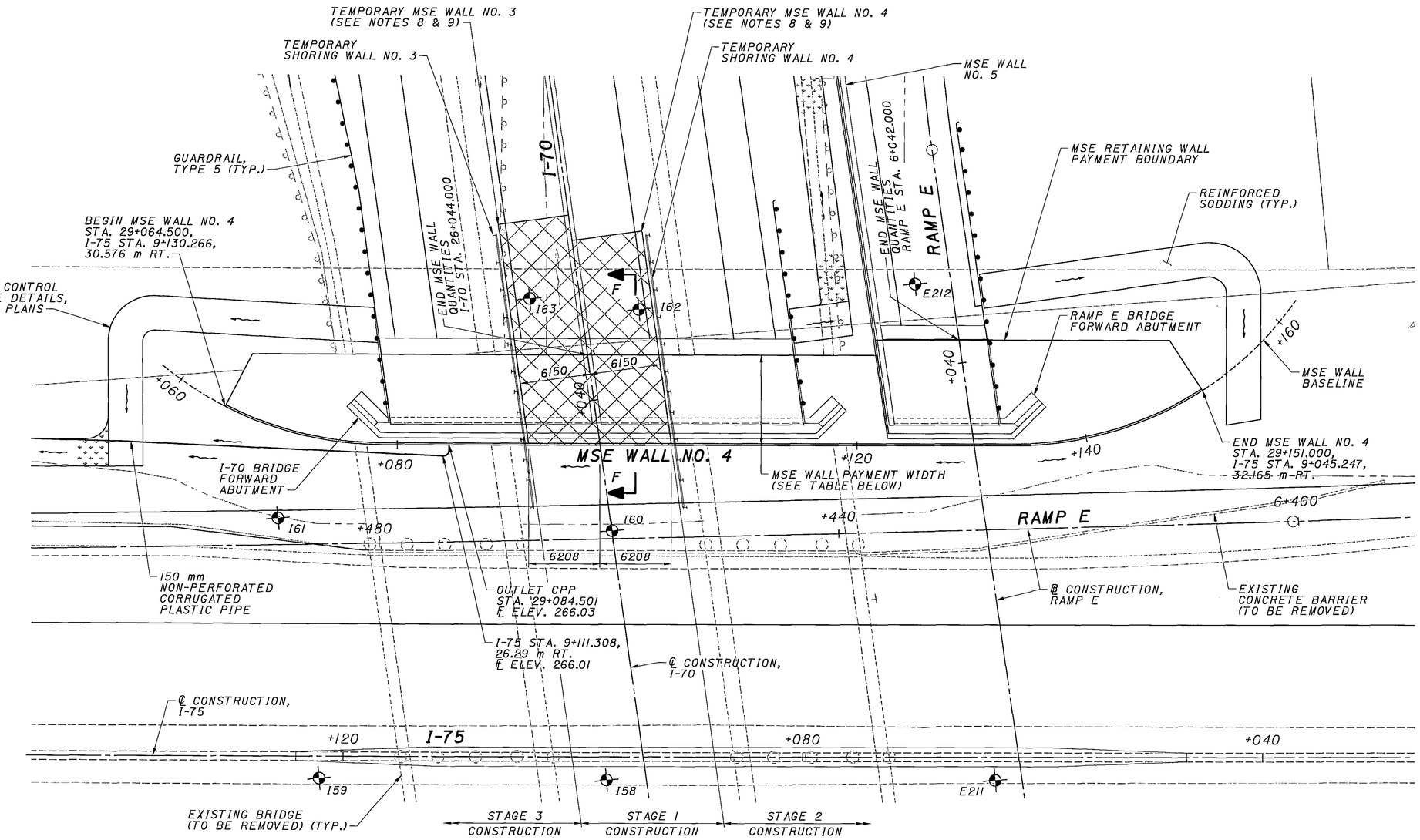

PLAN

LEGEND:

- DENOTES BORING LOCATION
- DENOTES PLAN BOUNDARY OF ITEMS INCLUDED FOR PAYMENT WITH THE PERMANENT MSE RETAINING WALL.
- DENOTES PLAN BOUNDARY OF ITEMS INCLUDED FOR PAYMENT WITH THE TEMPORARY MSE RETAINING WALL.

MSE WALL NO. 4 PAYMENT BOUNDARY

MSE WALL STATION	MSE WALL PAYMENT WIDTH	I-75 STATION	I-75 OFFSET
29+064.500	5.195	9+127.896	35.199 RT.
29+074.100	7.663	9+120.000	35.199 RT.
29+095.291	7.926	9+100.000	35.199 RT.
29+115.291	7.926	9+080.000	35.199 RT.
29+136.031	9.197	9+060.000	36.537 RT.
29+151.000	5.223	9+048.106	36.537 RT.

NOTES:

1. FOR MSE WALL NO. 4 SCHEMATIC PLAN, SEE SHEET 569 OF 1245.
2. THE MSE WALL ALIGNMENT IS DEFINED ALONG THE EXPOSED FACE OF THE MSE WALL PANELS.
3. FOR WALL ELEVATION VIEW, SEE SHEET 12.
4. FOR SECTION F-F, SEE SHEET 22.
5. FOR WALL DRAINAGE PLAN, SEE SHEET 31.
6. FOR DEFINITION OF WALL COMPONENTS INCLUDED FOR PAYMENT WITH THE MSE RETAINING WALL, SEE MSE WALL SPECIAL PROVISIONS.
7. FOR TEMPORARY SHORING DETAILS, SEE SHEETS 626 - 631 OF 1245.
8. FOR TEMPORARY MSE WALL DETAILS, SEE SHEETS 642 & 643 OF 1245.
9. FOR METHOD OF MEASUREMENT AND BASIS OF PAYMENT FOR TEMPORARY MSE WALLS, SEE MSE WALL SPECIAL PROVISIONS.

HORIZONTAL SCALE IN METERS

DESIGN AGENCY
CH2MHILL
ONE DAYTON CENTRE, SUITE 1100
ONE SOUTH MAIN STREET
DAYTON, OH 45402-1828

DESIGNED	DRAWN	REVIEWED	DATE
JTC	JTC	RGS	01/04
CHECKED	REVISED	STRUCTURE FILE NUMBER	
SKT			

MSE WALL PLAN - WALL NO. 4
STA. 29+064.500 TO STA. 29+151.000

MOT-70-22.890

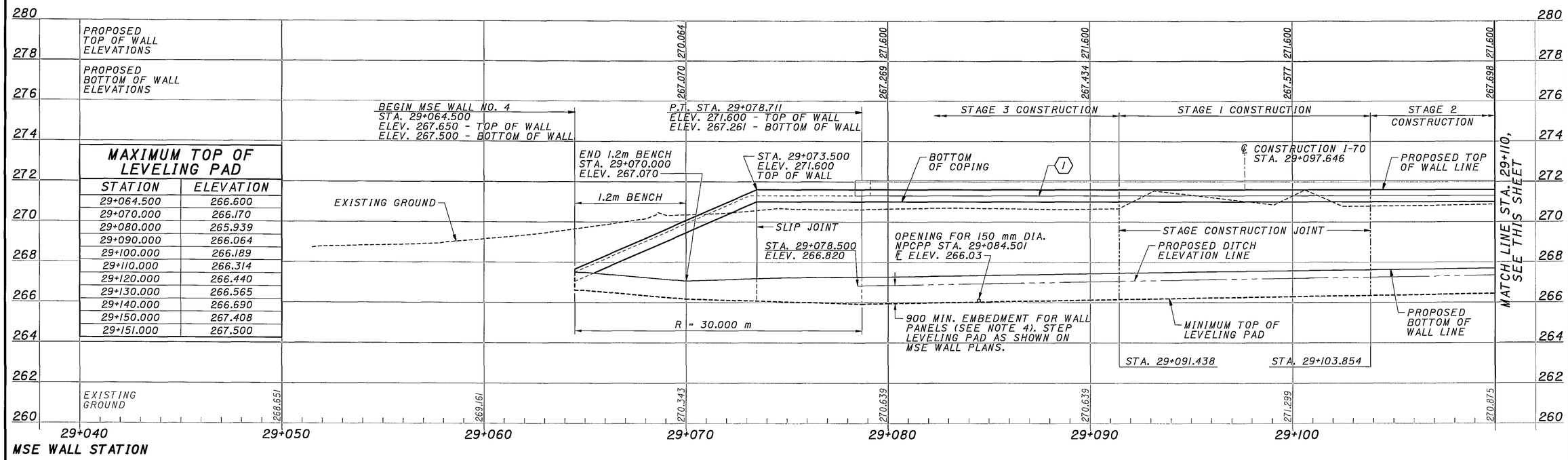

MAXIMUM TOP OF LEVELING PAD	
STATION	ELEVATION
29+064.500	266.600
29+070.000	266.170
29+080.000	265.939
29+090.000	266.064
29+100.000	266.189
29+110.000	266.314
29+120.000	266.440
29+130.000	266.565
29+140.000	266.690
29+150.000	267.408
29+151.000	267.500

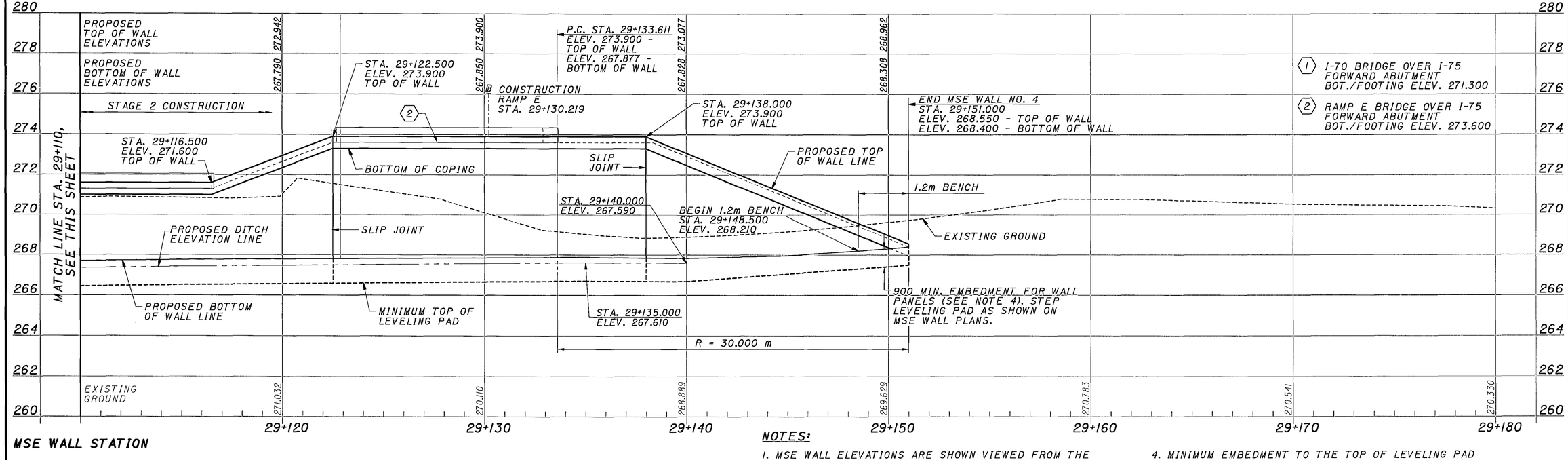

NOTES:

1. MSE WALL ELEVATIONS ARE SHOWN VIEWED FROM THE EXPOSED FACE OF THE WALL.
2. FOR DEFINITION OF MSE WALL TOP AND BOTTOM ELEVATIONS, SEE MSE WALL SECTION ON SHEET 22.
3. FOR WALL COPING DETAIL, SEE SHEET 24.
4. MINIMUM EMBEDMENT TO THE TOP OF LEVELING PAD SHALL BE 900 mm, MEASURED FROM THE PROPOSED DITCH ELEVATION WHERE NO BENCH IS PROVIDED, OR FROM THE BOTTOM OF WALL ELEVATION WHERE A 1.2m BENCH IN FRONT OF THE WALL IS PROVIDED. FOR AREAS BETWEEN DITCHES AND BENCHES, THE 900 mm EMBEDMENT SHALL BE MEASURED FROM A LINE INTERPOLATED BETWEEN DITCH AND BENCH ELEVATIONS SHOWN.
5. FOR SEQUENCE OF CONSTRUCTION, SEE SHEET 1.

DESIGN AGENCY
CH2MHILL
ONE DAYTON CENTRE, SUITE 1100
ONE SOUTH MAIN STREET
DAYTON, OH 45402-1828

DESIGNED JTC | CHECKED SKT | DRAWN JTC | REVISED | REVIEWED RV | DATE 06/03 | STRUCTURE FILE NUMBER

MSE WALL ELEVATIONS - WALL NO. 4
STA. 29+064.500 TO STA. 29+151.000

MOT-70-22.890

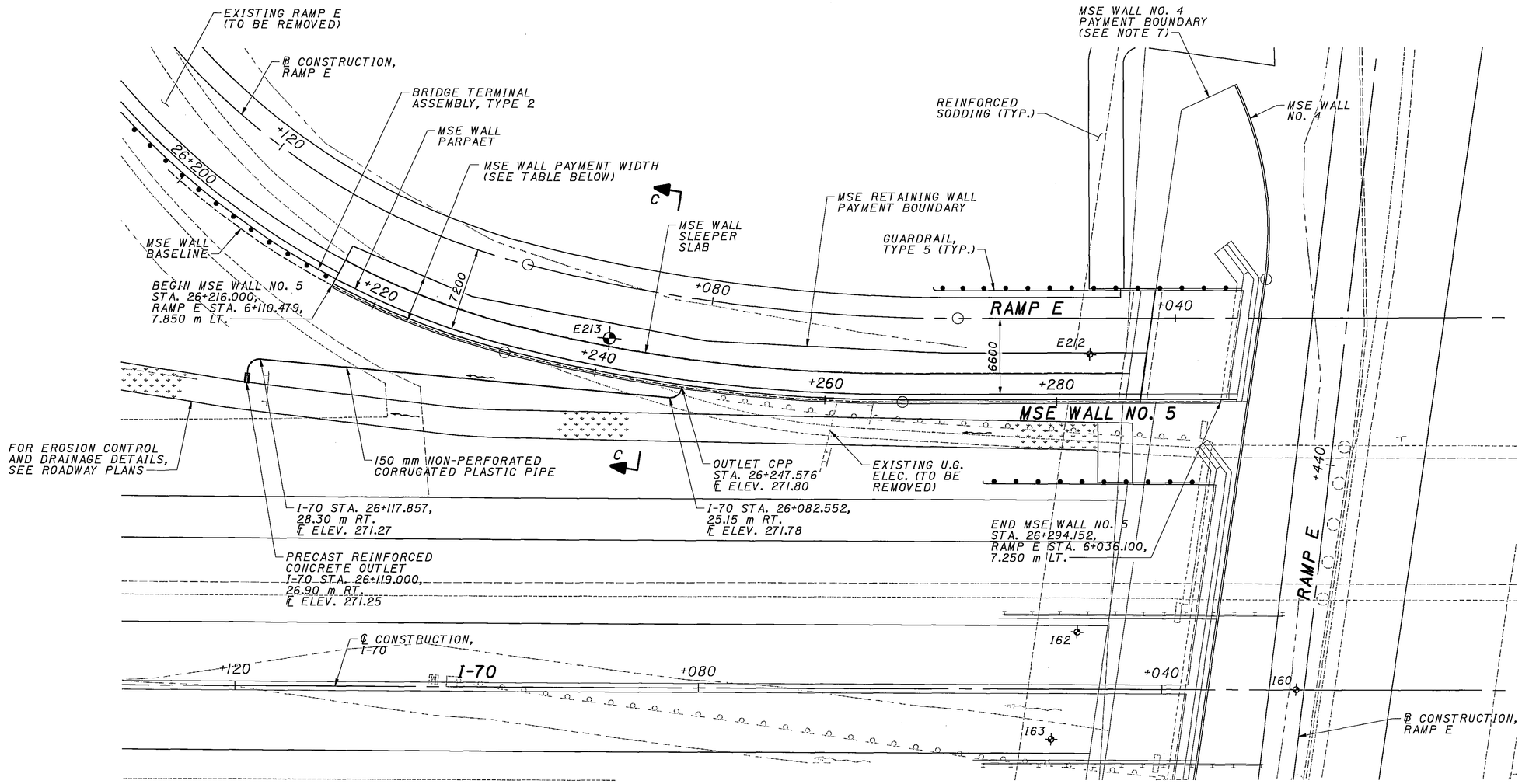

PLAN

MSE WALL NO. 5 PAYMENT BOUNDARY			
MSE WALL STATION	MSE WALL PAYMENT WIDTH	RAMP E STATION	RAMP E OFFSET
26+216.000	3.850	6+110.479	4.000 LT.
26+227.850	3.850	6+100.000	4.000 LT.
26+249.252	4.221	6+080.000	3.500 LT.
26+270.227	4.256	6+060.000	3.000 LT.
26+287.824	4.250	6+042.428	3.000 LT.

LEGEND:

⊕ DENOTES BORING LOCATION

▭ DENOTES PLAN BOUNDARY OF ITEMS INCLUDED FOR PAYMENT WITH THE MSE RETAINING WALL.

NOTES:

1. FOR MSE WALL NO. 5 SCHEMATIC PLAN, SEE SHEET 569 OF 1245.
2. THE MSE WALL ALIGNMENT IS DEFINED ALONG THE EXPOSED FACE OF THE MSE WALL PANELS.
3. FOR WALL ELEVATION VIEW, SEE SHEET 14.
4. FOR SECTION C-C, SEE SHEET 21.
5. FOR WALL DRAINAGE PLAN, SEE SHEET 32.
6. FOR DEFINITION OF WALL COMPONENTS INCLUDED FOR PAYMENT WITH THE MSE RETAINING WALL, SEE MSE WALL SPECIAL PROVISIONS.
7. FOR MSE WALL NO. 4 PAYMENT BOUNDARY, SEE SHEET 11.

DESIGN AGENCY
CH2MHILL
ONE DAYTON CENTRE, SUITE 1100
ONE SOUTH MAIN STREET
DAYTON, OH 45402-1828

DESIGNED	DRAWN	REVIEWED	DATE
JTC	JTC	RGS	01/04
CHECKED	REVISED	STRUCTURE FILE NUMBER	
SKT			

MSE WALL PLAN - WALL NO. 5
STA. 26+216.000 TO STA. 26+294.152

MOT-70-22.890

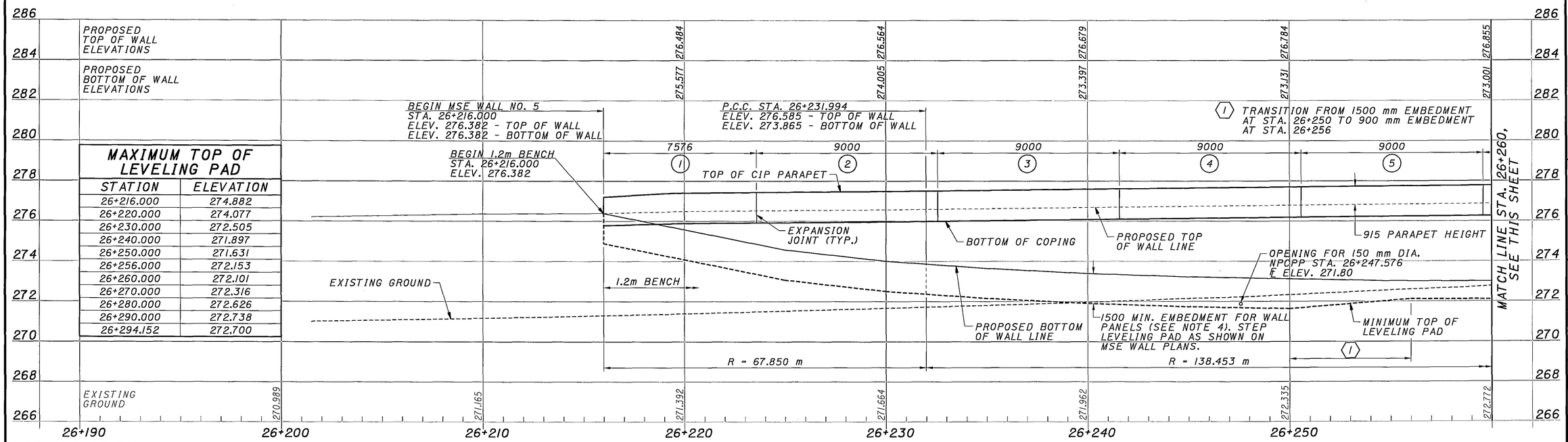

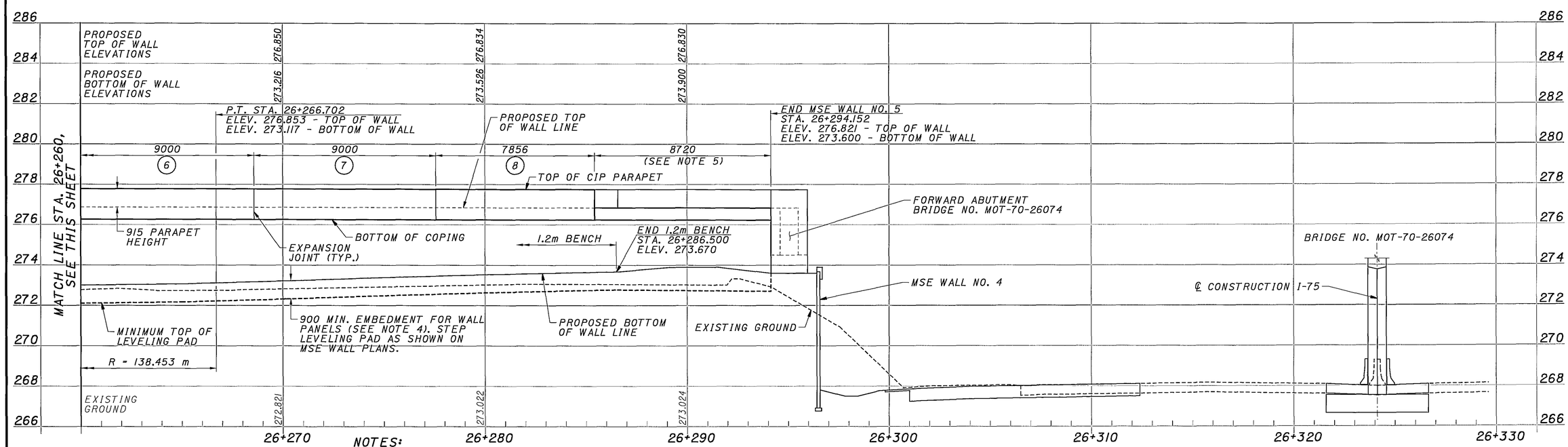

NOTES:

1. MSE WALL ELEVATIONS ARE SHOWN VIEWED FROM THE EXPOSED FACE OF THE WALL.
2. FOR DEFINITION OF MSE WALL TOP AND BOTTOM ELEVATIONS, SEE MSE WALL SECTION ON SHEET 21.
3. FOR PARAPET, COPING, AND SLEEPER SLAB SECTION AND REINFORCING DETAILS, SEE SHEETS 25 AND 27.
4. MINIMUM EMBEDMENT TO THE TOP OF LEVELING PAD SHALL BE 900 mm OR 1500 mm AS SHOWN ON THE WALL ELEVATION, MEASURED FROM THE BOTTOM OF WALL ELEVATIONS SHOWN.
5. PARAPET MOUNTED ON BRIDGE APPROACH SLAB AND PRESSURE RELIEF JOINT SLEEPER SLAB. SEE BRIDGE PLAN SHEET 1177 OF 1245 AND ROADWAY PLAN SHEETS 549-551 OF 1245 FOR DETAILS.
6. JOINT LAYOUT INFORMATION ON PARAPET, COPING, AND SLEEPER SLAB IS SHOWN IN GENERAL TERMS. CONTRACTOR SHALL COORDINATE FINAL JOINT LAYOUT AND REINFORCING DIMENSIONS WITH THE PROPRIETARY WALL SYSTEM ACTUALLY CONSTRUCTED.

DESIGN AGENCY
CH2MHILL
ONE DAYTON CENTRE, SUITE 1100
ONE SOUTH MAIN STREET
DAYTON, OH 45402-1928

DESIGNED	DRAWN	REVIEWED	DATE
JTC	CAC	RV	06/03
CHECKED	REVISED	STRUCTURE FILE NUMBER	
SKT			

MSE WALL ELEVATIONS - WALL NO. 5
STA. 26+216.000 TO STA. 26+294.152

MOT-70-22.890

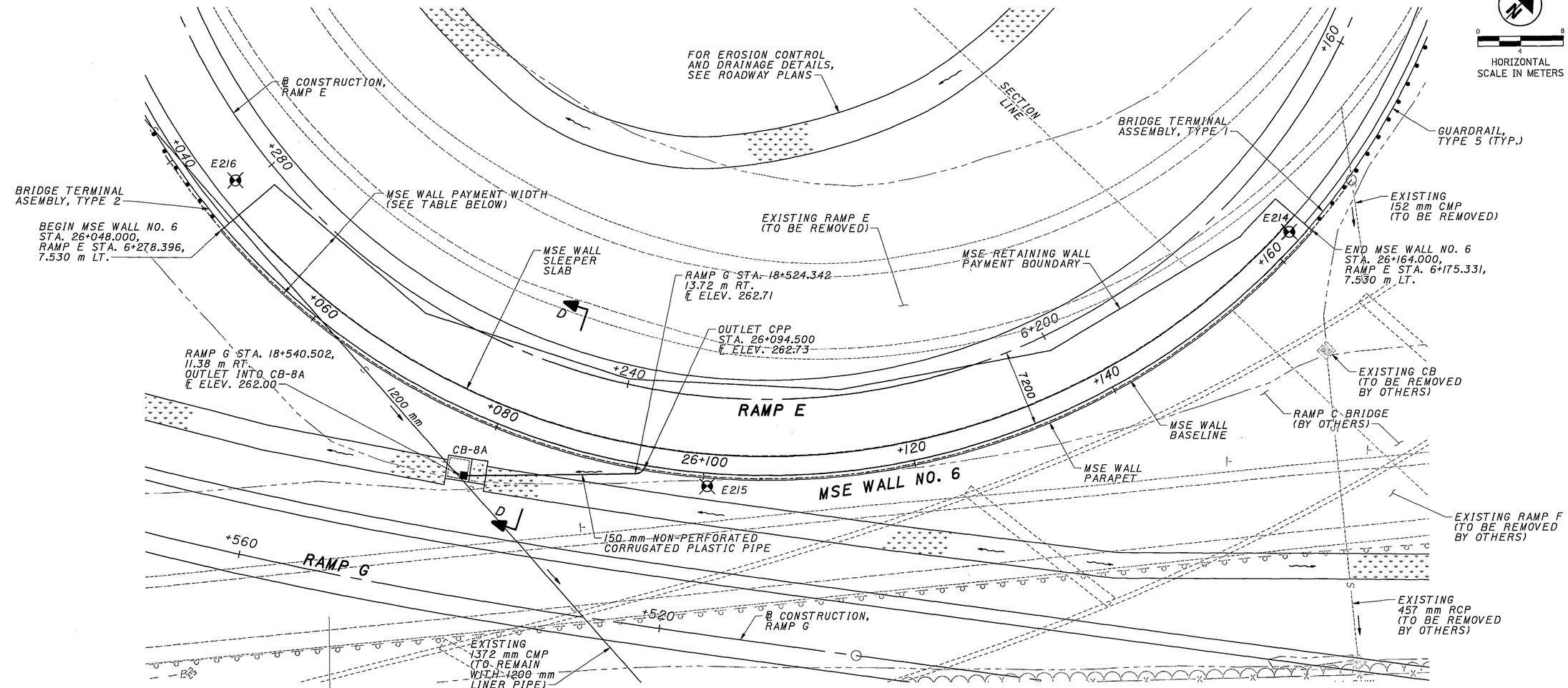

PLAN

MSE WALL NO. 6 PAYMENT BOUNDARY			
MSE WALL STATION	MSE WALL PAYMENT WIDTH	RAMP E STATION	RAMP E OFFSET
26+048.000	6.530	6+278.396	1.000 LT.
26+068.705	6.530	6+260.000	1.000 LT.
26+091.215	8.030	6+240.000	0.500 RT.
26+113.725	8.030	6+220.000	0.500 RT.
26+136.235	6.030	6+200.000	1.500 LT.
26+158.745	4.530	6+180.000	3.000 LT.
26+164.000	4.530	6+175.331	3.000 LT.

LEGEND:

- DENOTES BORING LOCATION
- DENOTES PLAN BOUNDARY OF ITEMS INCLUDED FOR PAYMENT WITH THE MSE RETAINING WALL.

NOTES:

1. FOR MSE WALL NO. 6 SCHEMATIC PLAN, SEE SHEET 570 OF 1245.
2. THE MSE WALL ALIGNMENT IS DEFINED ALONG THE EXPOSED FACE OF THE MSE WALL PANELS.
3. FOR WALL ELEVATION VIEW, SEE SHEET 16.
4. FOR SECTION D-D, SEE SHEET 21.
5. FOR WALL DRAINAGE PLAN, SEE SHEET 32.
6. FOR DEFINITION OF WALL COMPONENTS INCLUDED FOR PAYMENT WITH THE MSE RETAINING WALL, SEE MSE WALL SPECIAL PROVISIONS.

DESIGN AGENCY
CH2MHILL
DAYTON CENTRE SUITE 1100
ONE DAYTON CENTRE, SUITE 1100
DAYTON, OH 45402-1828

DESIGNED	DRAWN	REVIEWED	DATE
JTC	JTC	RGS	01/04
CHECKED	REVISED	STRUCTURE FILE NUMBER	
SKT			

MSE WALL PLAN - WALL NO. 6
STA. 26+048.000 TO STA. 26+164.000

MOT-70-22.890

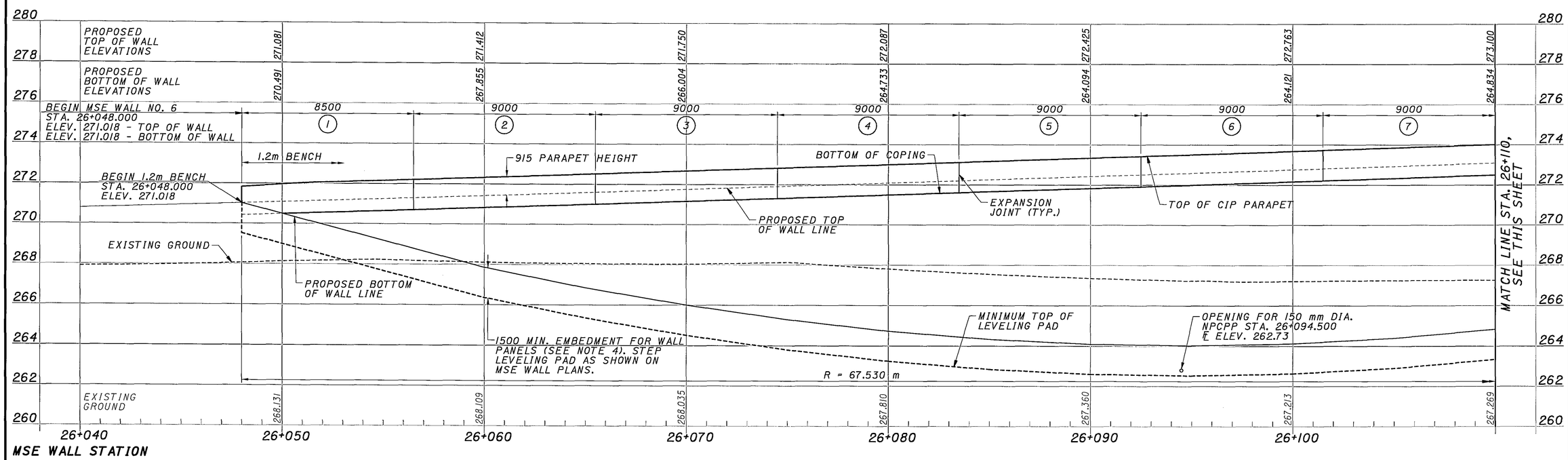

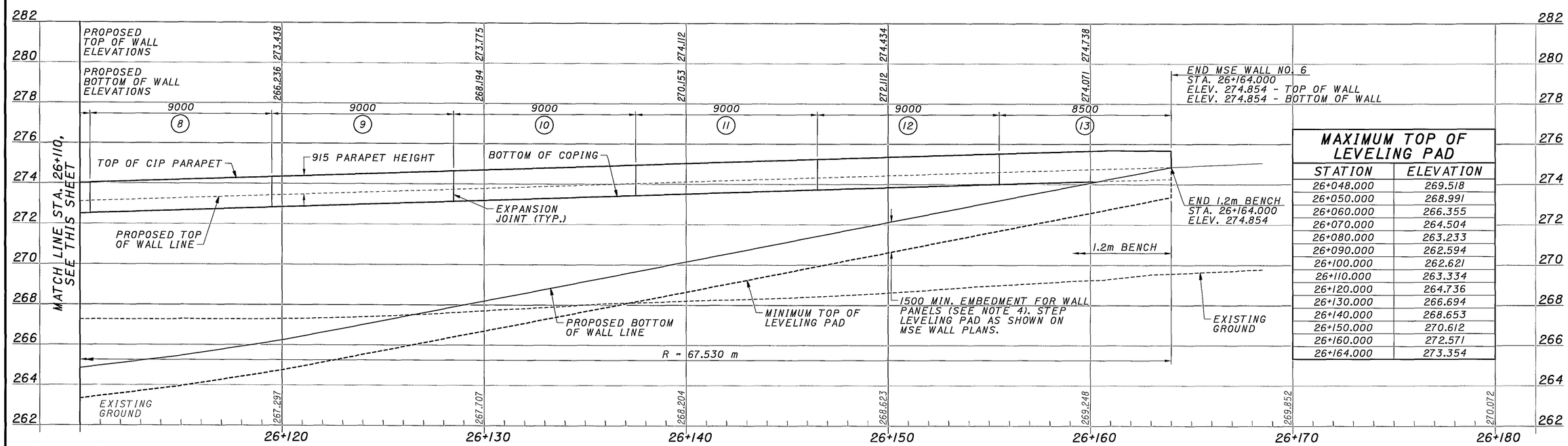

MAXIMUM TOP OF LEVELING PAD

STATION	ELEVATION
26+048.000	269.518
26+050.000	268.991
26+060.000	266.355
26+070.000	264.504
26+080.000	263.233
26+090.000	262.594
26+100.000	262.621
26+110.000	263.334
26+120.000	264.736
26+130.000	266.694
26+140.000	268.653
26+150.000	270.612
26+160.000	272.571
26+164.000	273.354

NOTES:

1. MSE WALL ELEVATIONS ARE SHOWN VIEWED FROM THE EXPOSED FACE OF THE WALL.
2. FOR DEFINITION OF MSE WALL TOP AND BOTTOM ELEVATIONS, SEE MSE WALL SECTION ON SHEET 21.
3. FOR PARAPET, COPING, AND SLEEPER SLAB SECTION AND REINFORCING DETAILS, SEE SHEETS 25 AND 26.
4. MINIMUM EMBEDMENT TO THE TOP OF LEVELING PAD SHALL BE 1500 mm, MEASURED FROM THE BOTTOM OF WALL ELEVATIONS SHOWN.
5. JOINT LAYOUT INFORMATION ON PARAPET, COPING, AND SLEEPER SLAB IS SHOWN IN GENERAL TERMS. CONTRACTOR SHALL COORDINATE FINAL JOINT LAYOUT AND REINFORCING DIMENSIONS WITH THE PROPRIETARY WALL SYSTEM ACTUALLY CONSTRUCTED.

DESIGN AGENCY
CH2MHILL
ONE DAYTON CENTRE, SUITE 1100
ONE SOUTH MAIN STREET
DAYTON, OH 45402-1828

DESIGNED	DRAWN	REVIEWED	DATE
JTC	CAC	RV	06/03
CHECKED	REVISED	STRUCTURE FILE NUMBER	
SKT			

MSE WALL ELEVATIONS - WALL NO. 6
STA. 26+048.000 TO STA. 26+164.000

MOT-70-22.890

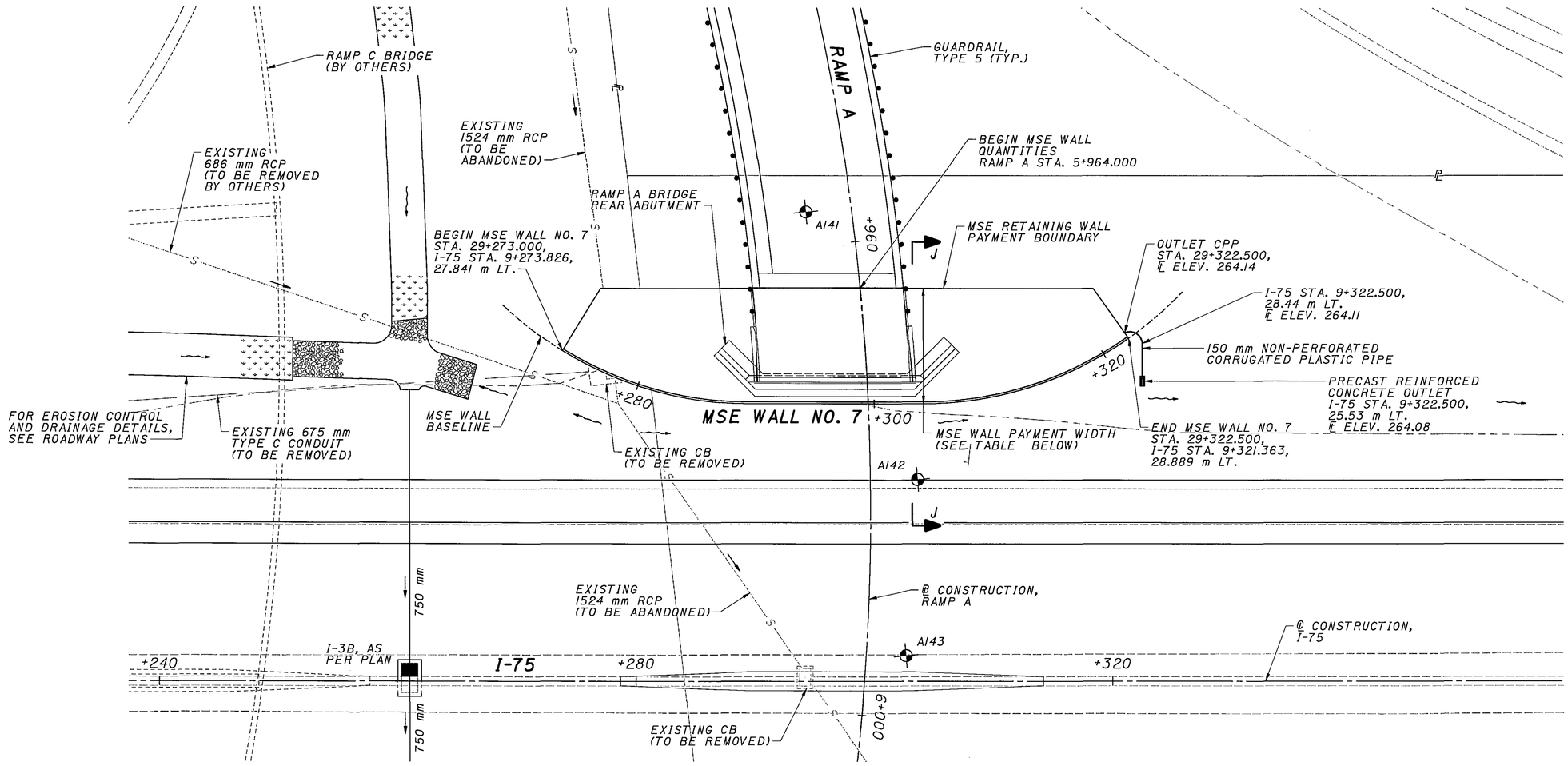

PLAN

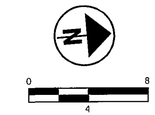

MSE WALL NO. 7 PAYMENT BOUNDARY			
MSE WALL STATION	MSE WALL PAYMENT WIDTH	I-75 STATION	I-75 OFFSET
29+273.000	6.185	9+277.064	33.110 LT.
29+276.354	7.582	9+280.000	33.110 LT.
29+300.000	9.710	9+300.000	33.110 LT.
29+322.500	5.166	9+318.384	33.110 LT.

LEGEND:

DENOTES BORING LOCATION

DENOTES PLAN BOUNDARY OF ITEMS INCLUDED FOR PAYMENT WITH THE MSE RETAINING WALL.

NOTES:

1. FOR MSE WALL NO. 7 SCHEMATIC PLAN, SEE SHEET 567 OF 1245.
2. THE MSE WALL ALIGNMENT IS DEFINED ALONG THE EXPOSED FACE OF THE MSE WALL PANELS.
3. FOR WALL ELEVATION VIEW, SEE SHEET 18.
4. FOR SECTION J-J, SEE SHEET 23.
5. FOR WALL DRAINAGE PLAN, SEE SHEET 33.
6. FOR DEFINITION OF WALL COMPONENTS INCLUDED FOR PAYMENT WITH THE MSE RETAINING WALL, SEE MSE WALL SPECIAL PROVISIONS.

DESIGN AGENCY
CH2MHILL
ONE DAYTON CENTRE, SUITE 1100
ONE SOUTH MAIN STREET
DAYTON, OH 45402-1928

DESIGNED	DRAWN	REVIEWED	DATE
JTC	JTC	RGS	01/04
CHECKED	REVISED	STRUCTURE FILE NUMBER	
SKT			

MSE WALL PLAN - WALL NO. 7
STA. 29+273.000 TO STA. 29+322.500

MOT-70-22.890

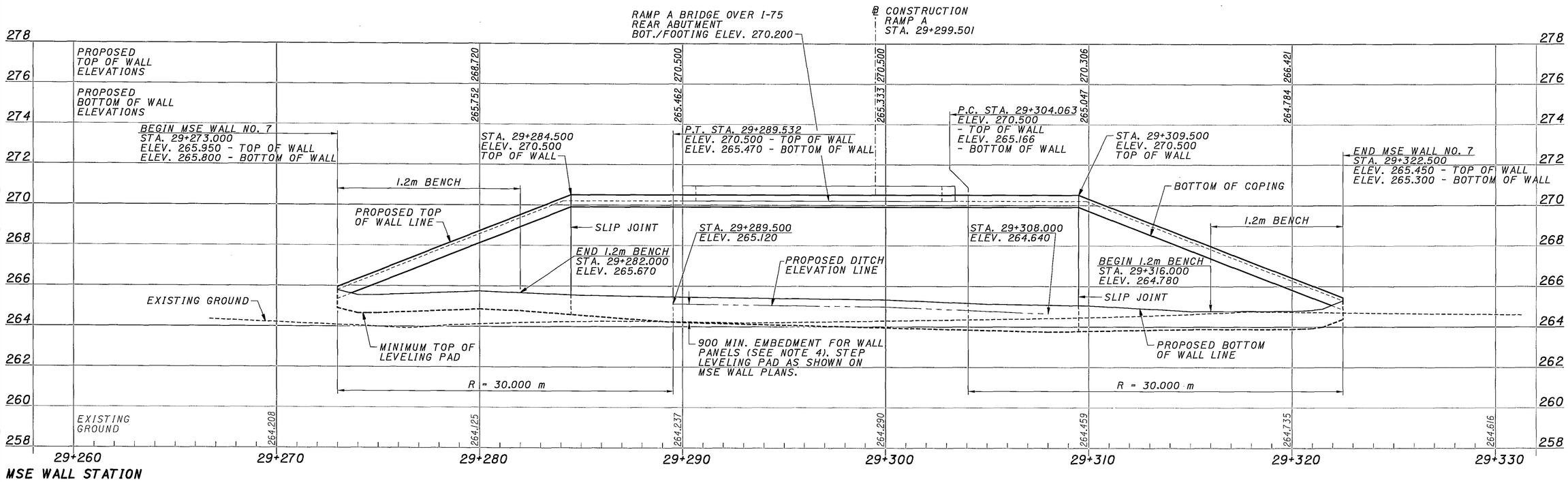

MAXIMUM TOP OF LEVELING PAD	
STATION	ELEVATION
29+273.000	264.900
29+280.000	264.852
29+290.000	264.207
29+300.000	263.948
29+310.000	263.775
29+320.000	263.884
29+322.500	264.400

NOTES:

1. MSE WALL ELEVATIONS ARE SHOWN VIEWED FROM THE EXPOSED FACE OF THE WALL.
2. FOR DEFINITION OF MSE WALL TOP AND BOTTOM ELEVATIONS, SEE MSE WALL SECTION ON SHEET 23.
3. FOR WALL COPING DETAIL, SEE SHEET 24.
4. MINIMUM EMBEDMENT TO THE TOP OF LEVELING PAD SHALL BE 900 mm, MEASURED FROM THE PROPOSED DITCH ELEVATION WHERE NO BENCH IS PROVIDED, OR FROM THE BOTTOM OF WALL ELEVATION WHERE A 1.2m BENCH IN FRONT OF THE WALL IS PROVIDED. FOR AREAS BETWEEN DITCHES AND BENCHES, THE 900 mm EMBEDMENT SHALL BE MEASURED FROM A LINE INTERPOLATED BETWEEN DITCH AND BENCH ELEVATIONS SHOWN.

DESIGN AGENCY
CH2MHILL
ONE DAYTON CENTRE, SUITE 1100
ONE SOUTH MAIN STREET
DAYTON, OH 45402-1828

DATE	REVIEWED	DRAWN	DESIGNED
06/03	RV	JTC	JTC
STRUCTURE FILE NUMBER		REVISED	CHECKED
			SKT

MSE WALL ELEVATIONS - WALL NO. 7
STA. 29+273.000 TO STA. 29+322.500

MOT-70-22.890

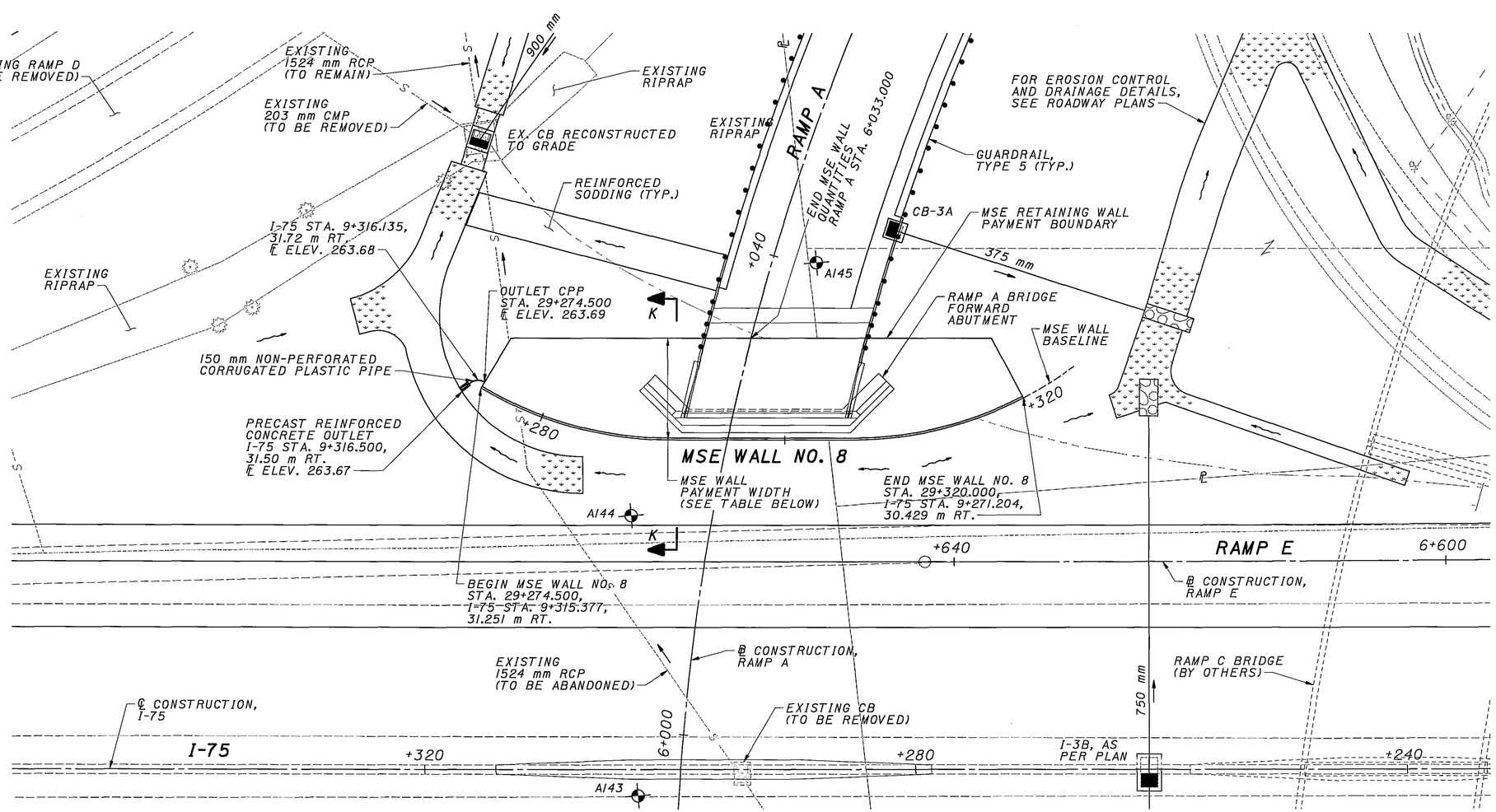

HORIZONTAL SCALE IN METERS

PLAN

MSE WALL NO. 8 PAYMENT BOUNDARY			
MSE WALL STATION	MSE WALL PAYMENT WIDTH	I-75 STATION	I-75 OFFSET
29+274.500	4.752	9+312.938	35.330 RT.
29+290.641	8.330	9+300.000	35.330 RT.
29+312.492	7.731	9+280.000	35.330 RT.
29+320.000	5.534	9+273.773	35.330 RT.

LEGEND:

DENOTES BORING LOCATION

DENOTES PLAN BOUNDARY OF ITEMS INCLUDED FOR PAYMENT WITH THE MSE RETAINING WALL.

NOTES:

1. FOR MSE WALL NO. 8 SCHEMATIC PLAN, SEE SHEET 567 OF 1245.
2. THE MSE WALL ALIGNMENT IS DEFINED ALONG THE EXPOSED FACE OF THE MSE WALL PANELS.
3. FOR WALL ELEVATION VIEW, SEE SHEET 20.
4. FOR SECTION K-K, SEE SHEET 23.
5. FOR WALL DRAINAGE PLAN, SEE SHEET 33.
6. FOR DEFINITION OF WALL COMPONENTS INCLUDED FOR PAYMENT WITH THE MSE RETAINING WALL, SEE MSE WALL SPECIAL PROVISIONS.

DESIGN AGENCY
CH2MHILL
ONE DAYTON CENTRE, SUITE 1100
ONE SOUTH MAIN STREET
DAYTON, OH 45402-1928

DESIGNED	DRAWN	REVIEWED	DATE
JTC	JTC	RGS	01/04
CHECKED	REVISED	STRUCTURE FILE NUMBER	
SKT			

MSE WALL PLAN - WALL NO. 8
STA. 29+274.500 TO STA. 29+320.000

MOT-70-22.890

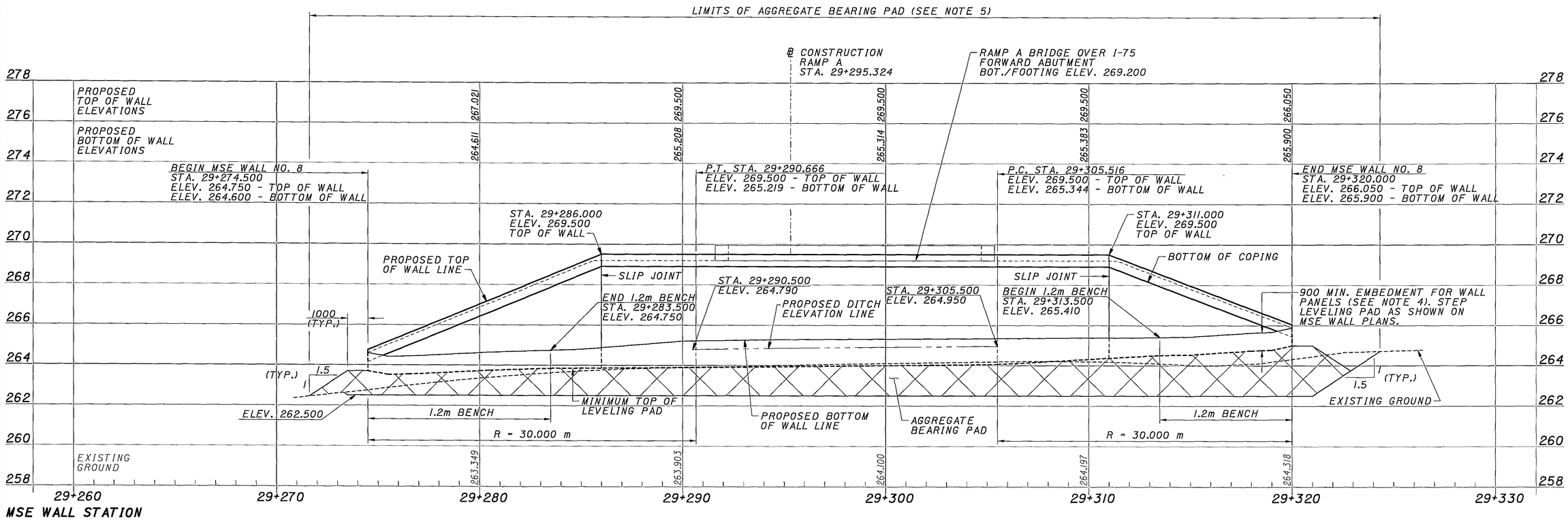

MAXIMUM TOP OF LEVELING PAD	
STATION	ELEVATION
29+274.500	263.700
29+280.000	263.711
29+290.000	263.887
29+300.000	263.991
29+310.000	264.309
29+320.000	265.000

NOTES:

1. MSE WALL ELEVATIONS ARE SHOWN VIEWED FROM THE EXPOSED FACE OF THE WALL.
2. FOR DEFINITION OF MSE WALL TOP AND BOTTOM ELEVATIONS, SEE MSE WALL SECTION ON SHEET 23.
3. FOR WALL COPING DETAIL, SEE SHEET 24.
4. MINIMUM EMBEDMENT TO THE TOP OF LEVELING PAD SHALL BE 900 mm, MEASURED FROM THE PROPOSED DITCH ELEVATION WHERE NO BENCH IS PROVIDED, OR FROM THE BOTTOM OF WALL ELEVATION WHERE A 1.2m BENCH IN FRONT OF THE WALL IS PROVIDED. FOR AREAS BETWEEN DITCHES AND BENCHES, THE 900 mm EMBEDMENT SHALL BE MEASURED FROM A LINE INTERPOLATED BETWEEN DITCH AND BENCH ELEVATIONS SHOWN.
5. AGGREGATE BEARING PAD EXCAVATION, SUBGRADE COMPACTION, AND BACKFILL ARE INCLUDED FOR PAYMENT WITH THE MSE WALL - SEE SPECIAL PROVISIONS.

DESIGN AGENCY
CH2MHILL
ONE DAYTON CENTRE, SUITE 1100
ONE SOUTH MAIN STREET
DAYTON, OH 45402-1920

REVIEWED RV DATE 06/03 STRUCTURE FILE NUMBER
DRAWN JTC REVISED
DESIGNED JTC CHECKED SKT

MSE WALL ELEVATIONS - WALL NO. 8
STA. 29+274.500 TO STA. 29+320.000

MOT-70-22.890

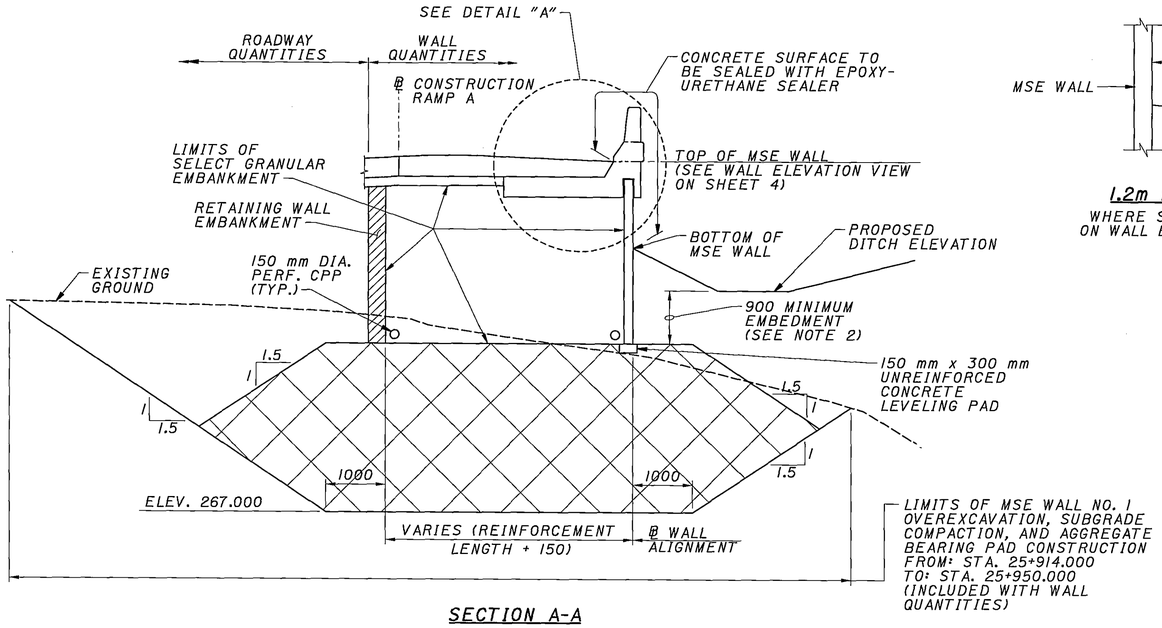

SECTION A-A

WALL NO. 1 - RAMP A
(SEE NOTE 3)

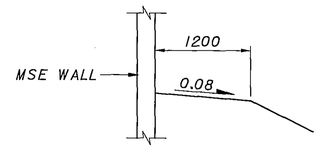

1.2m BENCH

WHERE SPECIFIED ON WALL ELEVATIONS

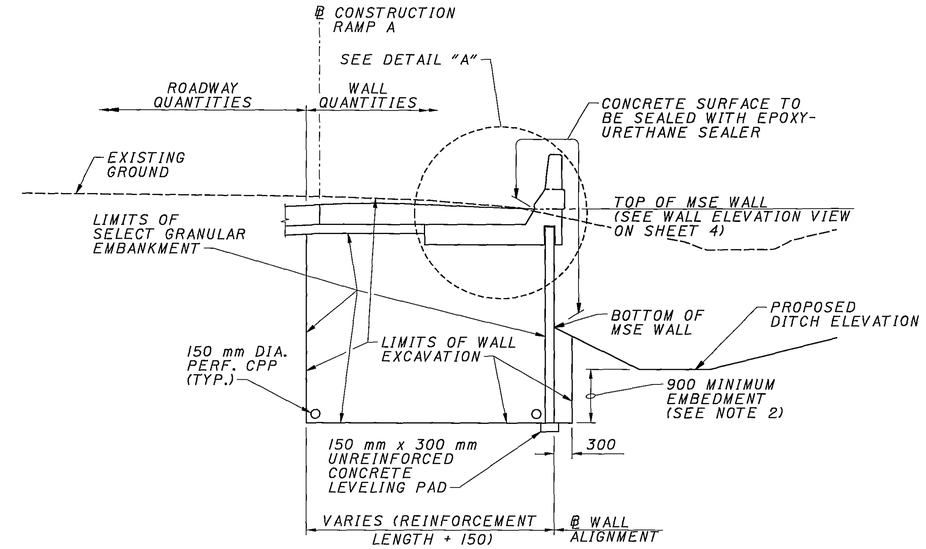

SECTION B-B

WALL NO. 1 - RAMP A
(SEE NOTE 4)

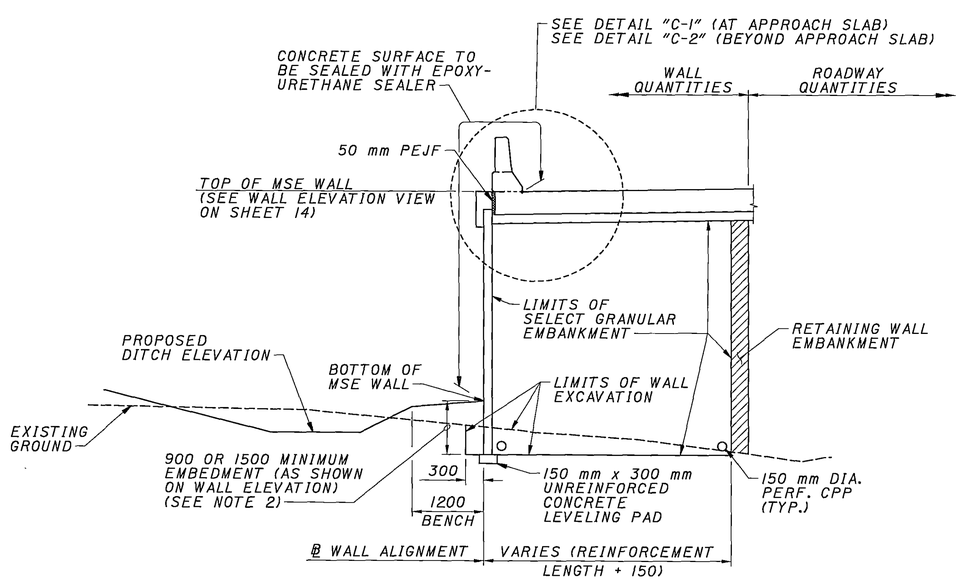

SECTION C-C

WALL NO. 5 - RAMP E

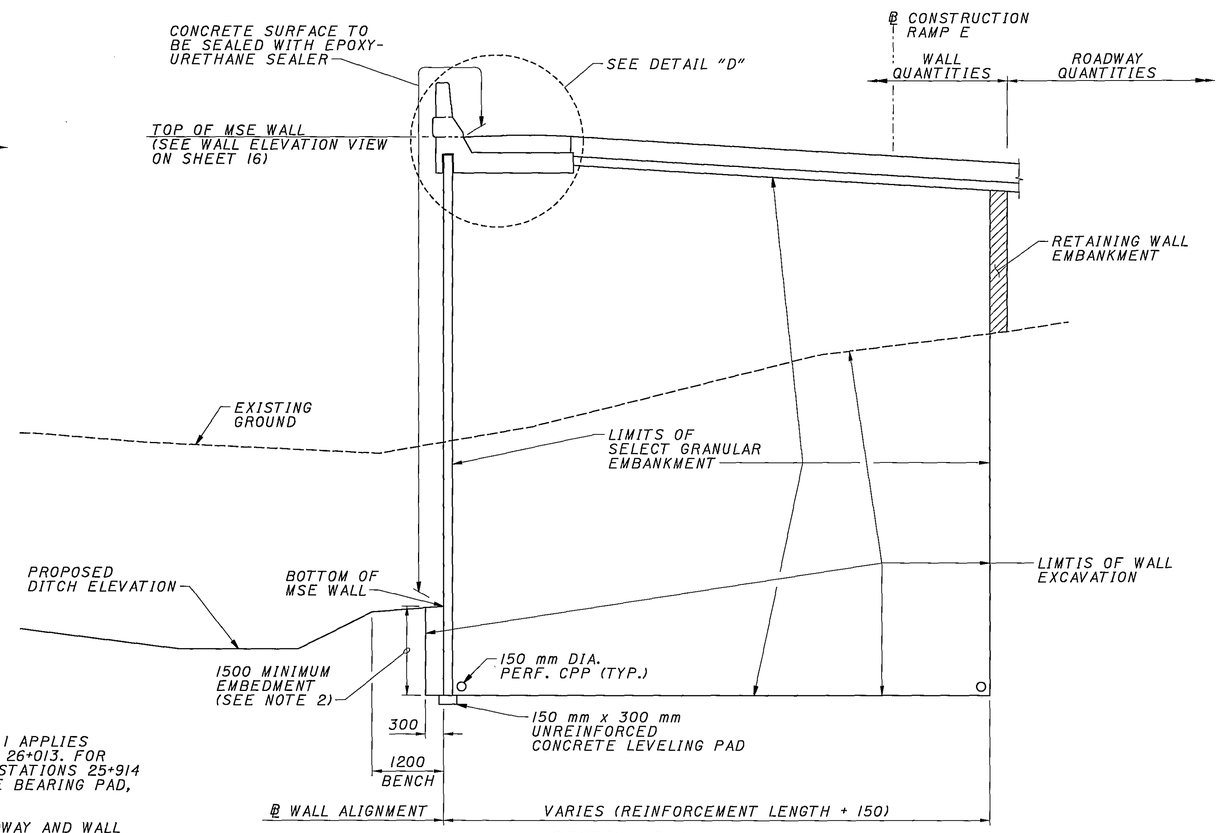

SECTION D-D

WALL NO. 6 - RAMP E

NOTES:

1. FOR DETAILS "A", "B", "C-1", "C-2", AND "D", SEE SHEET 24.
2. MINIMUM EMBEDMENT IS MEASURED FROM PROPOSED DITCH ELEVATION WHERE NO BENCH IS PROVIDED, OR FROM PROPOSED BOTTOM OF WALL ELEVATION WHERE 1.2m BENCH IS PROVIDED.
3. SECTION A-A FOR MSE WALL NO. 1 APPLIES BETWEEN WALL STATIONS 25+914 AND 25+950, SHOWING OVEREXCAVATION AND AGGREGATE BEARING PAD. FOR MSE WALL NO. 1 BEYOND AGGREGATE BEARING PAD, SEE SECTION B-B.
4. SECTION B-B FOR MSE WALL NO. 1 APPLIES BETWEEN STATIONS 25+950 AND 26+013. FOR MSE WALL NO. 1 BETWEEN WALL STATIONS 25+914 AND 25+950 SHOWING AGGREGATE BEARING PAD, SEE SECTION A-A.
5. FOR BOUNDARIES BETWEEN ROADWAY AND WALL QUANTITIES, SEE MSE WALL PLANS ON SHEETS 3, 13, & 15.

DESIGN AGENCY
CH2MHILL
ONE DAYTON CENTRE, SUITE 1100
ONE SOUTH MAIN STREET
DAYTON, OH 45402-1920

DESIGNED	DRAWN	REVIEWED	DATE
SKT	SKT	RV	06/03
CHECKED	REVISED	STRUCTURE FILE NUMBER	
JTC			

MSE WALL SECTIONS
WALL NOS. 1, 5, AND 6

MOT-70-22.890

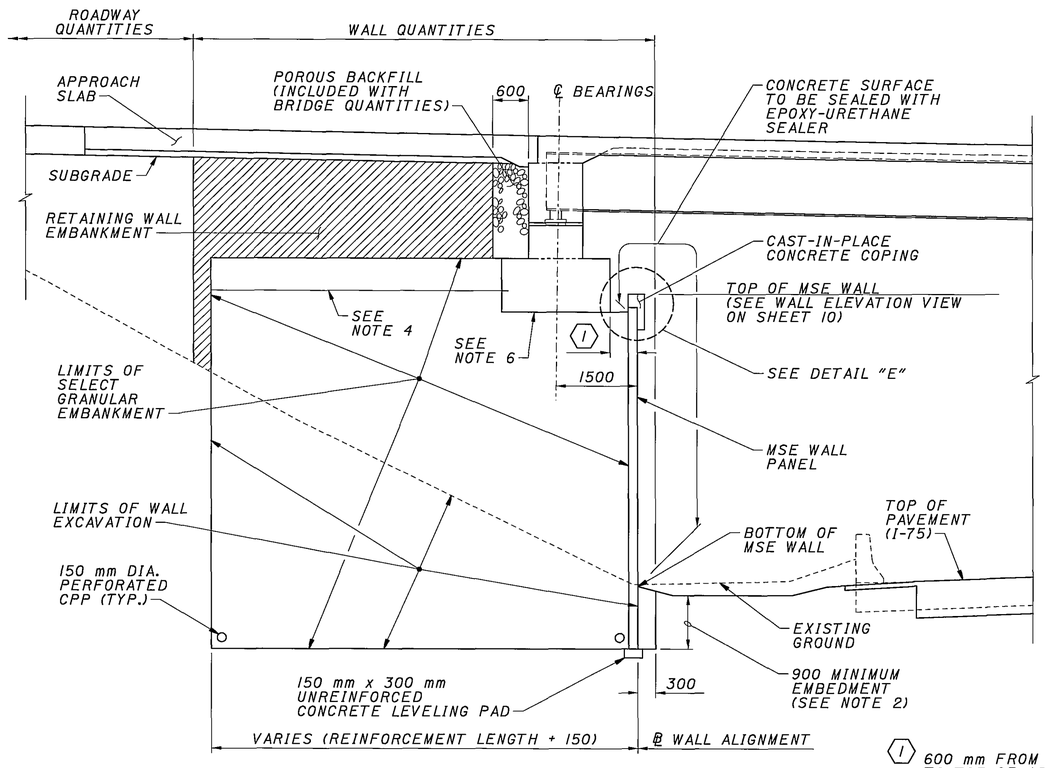

SECTION E-E

WALL NO. 3 @ REAR ABUTMENT
I-70 OVER I-75 STRUCTURE,
RAMP E OVER I-75 STRUCTURE

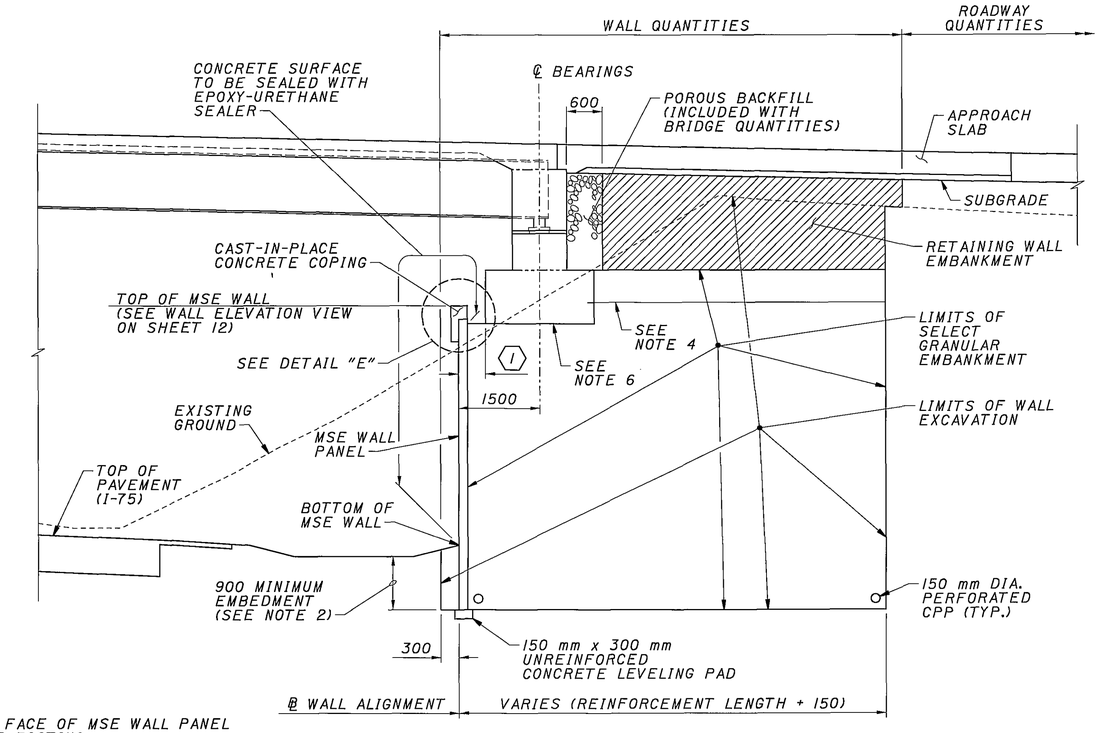

SECTION F-F

WALL NO. 4 @ FORWARD ABUTMENT
I-70 OVER I-75 STRUCTURE,
RAMP E OVER I-75 STRUCTURE

(1) 600 mm FROM FRONT FACE OF MSE WALL PANEL TO TOE OF ABUTMENT FOOTING.
460 mm FROM BACK FACE OF MSE WALL PANEL TO TOE OF FOOTING FOR 140 mm THICK PANEL.

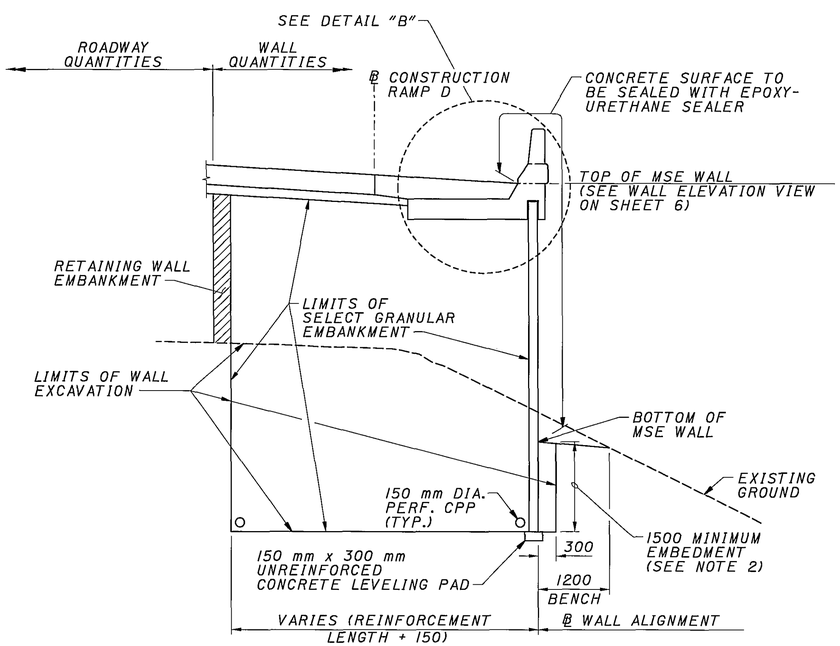

SECTION G-G

WALL NO. 2A - RAMP D

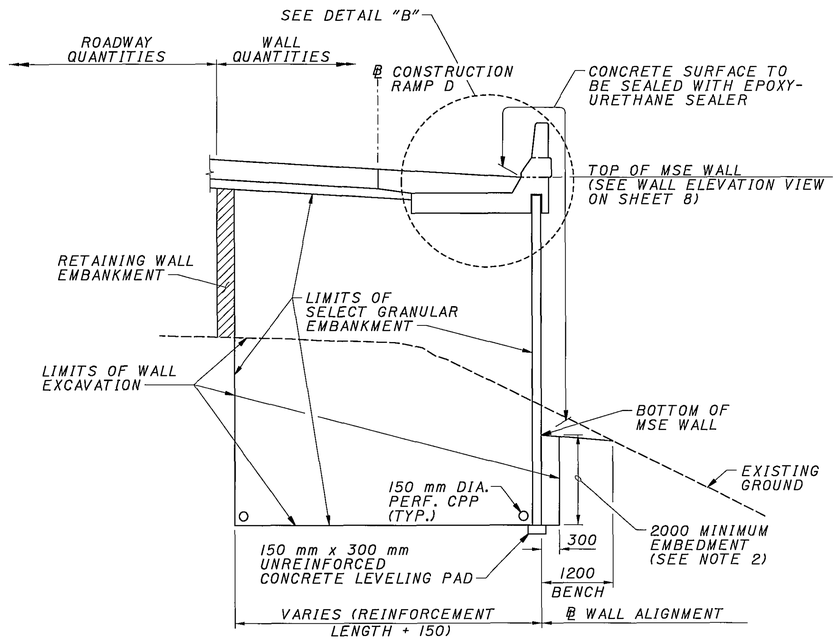

SECTION H-H

WALL NO. 2B - RAMP D

NOTES:

1. FOR DETAILS "A" AND "E", SEE SHEET 24.
2. MINIMUM EMBEDMENT IS MEASURED FROM PROPOSED DITCH ELEVATION WHERE NO BENCH IS PROVIDED, OR FROM PROPOSED BOTTOM OF WALL ELEVATION WHERE 1.2m BENCH IS PROVIDED.
3. FOR 1.2m BENCH DETAIL, SEE SHEET 21.
4. FOR SOIL REINFORCING ATTACHMENT DETAIL AT ABUTMENT FOOTINGS, SEE PROPRIETARY MSE WALL PLANS.
5. FOR BOUNDARIES BETWEEN ROADWAY AND WALL QUANTITIES, SEE MSE WALL PLANS ON SHEETS 5, 7, 9, & 11.
6. PROVIDE 300 mm MINIMUM CLEARANCE BETWEEN BOTTOM OF FOOTING AND UPPERMOST WALL REINFORCEMENT.

DESIGN AGENCY
CH2MHILL
ONE DAYTON CENTRE, SUITE 1100
ONE SOUTH MAIN STREET
DAYTON, OH 45402-1928

DESIGNED	DRAWN	REVIEWED	DATE
SKT	JTC	RV	06/03
CHECKED	REVISED	STRUCTURE FILE NUMBER	
JTC			

MSE WALL SECTIONS
WALL NOS. 2A, 2B, 3, AND 4

MOT-70-22.890

(1) 600 mm FROM FRONT FACE OF MSE WALL PANEL TO TOE OF ABUTMENT FOOTING.
460 mm FROM BACK FACE OF MSE WALL PANEL TO TOE OF FOOTING FOR 140 mm THICK PANEL.

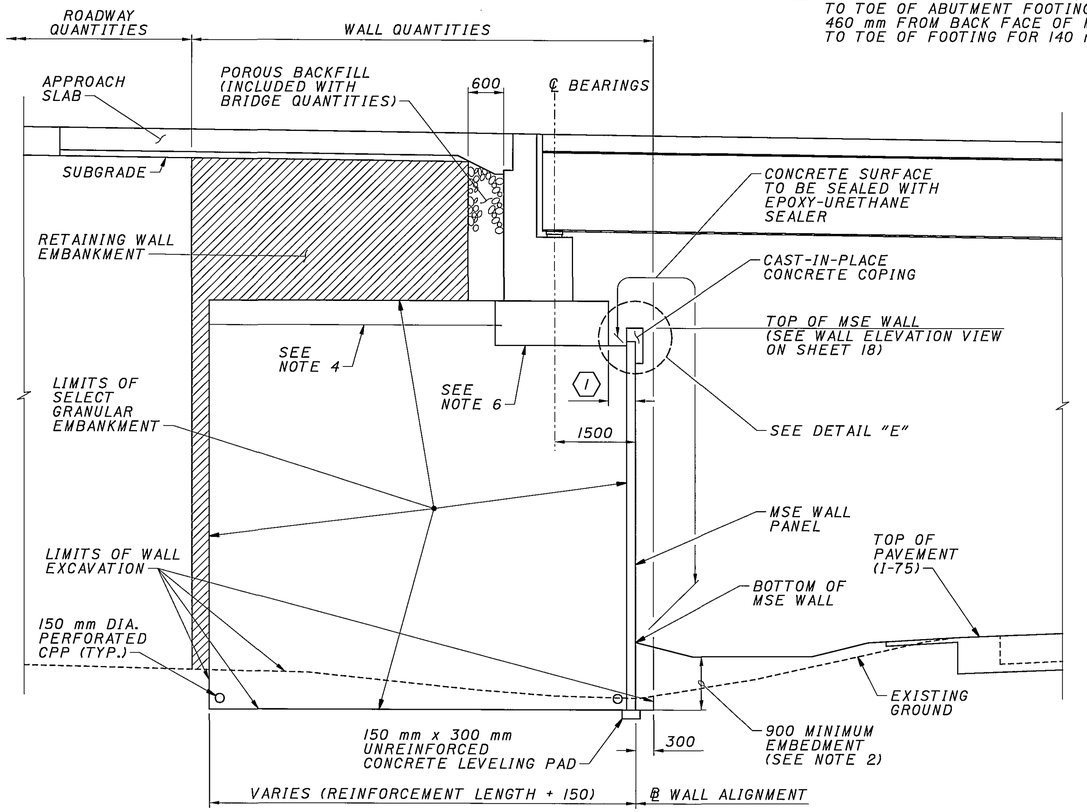

SECTION J-J

WALL NO. 7 @ REAR ABUTMENT
RAMP A OVER I-75 STRUCTURE

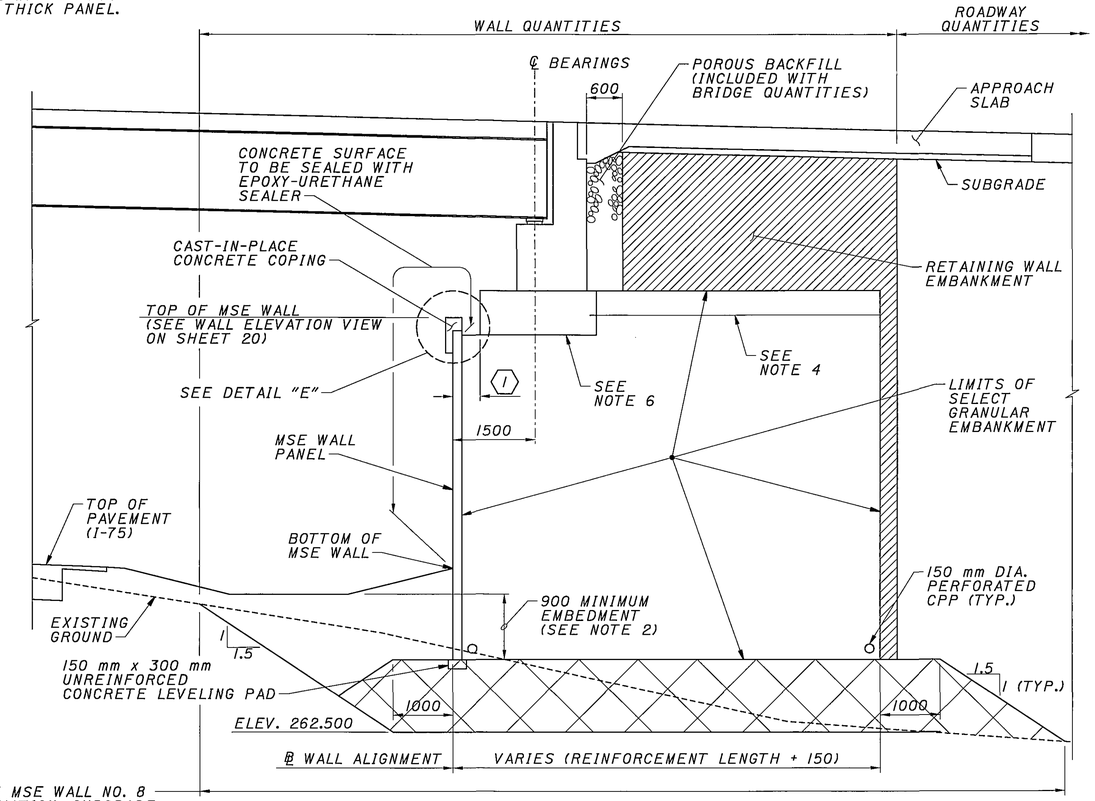

LIMITS OF MSE WALL NO. 8 OVEREXCAVATION, SUBGRADE COMPACTION, AND AGGREGATE BEARING PAD CONSTRUCTION
FROM: STA. 29+273.500
TO: STA. 29+321.000
(INCLUDED WITH WALL QUANTITIES)

SECTION K-K

WALL NO. 8 @ FORWARD ABUTMENT
RAMP A OVER I-75 STRUCTURE

NOTES:

1. FOR DETAIL "E", SEE SHEET 24.
2. MINIMUM EMBEDMENT IS MEASURED FROM PROPOSED DITCH ELEVATION WHERE NO BENCH IS PROVIDED, OR FROM PROPOSED BOTTOM OF WALL ELEVATION WHERE 1.2m BENCH IS PROVIDED.
3. FOR 1.2m BENCH DETAIL, SEE SHEET 21.
4. FOR SOIL REINFORCING ATTACHMENT DETAIL AT ABUTMENT FOOTINGS, SEE PROPRIETARY MSE WALL PLANS.
5. FOR BOUNDARIES BETWEEN ROADWAY AND WALL QUANTITIES, SEE MSE WALL PLANS ON SHEETS 17 & 19.
6. PROVIDE 300 mm MINIMUM CLEARANCE BETWEEN BOTTOM OF FOOTING AND UPPERMOST WALL REINFORCEMENT.

DESIGN AGENCY
CH2MHILL
ONE DAYTON CENTRE, SUITE 1100
ONE SOUTH MAIN STREET
DAYTON, OH 45402-1828

DESIGNED	DRAWN	REVIEWED	DATE
SKT	JTC	RV	06/03
CHECKED	REVISED	STRUCTURE FILE NUMBER	
JTC			

MSE WALL SECTIONS
WALL NOS. 7 AND 8

MOT-70-22.890

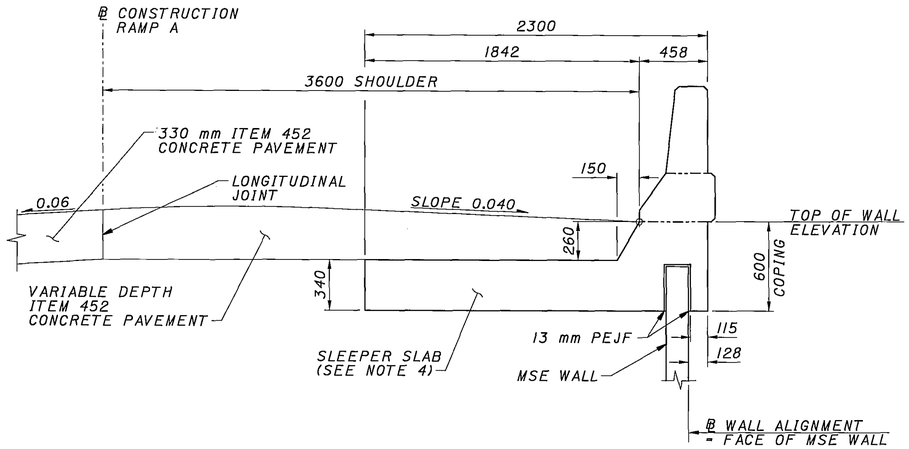

DETAIL "A"
(WALL NO. 1)

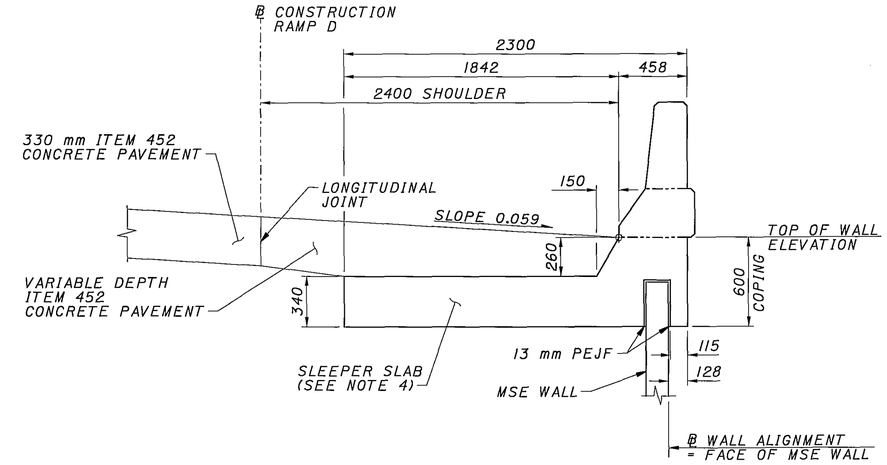

DETAIL "B"
(WALL NOS. 2A AND 2B)

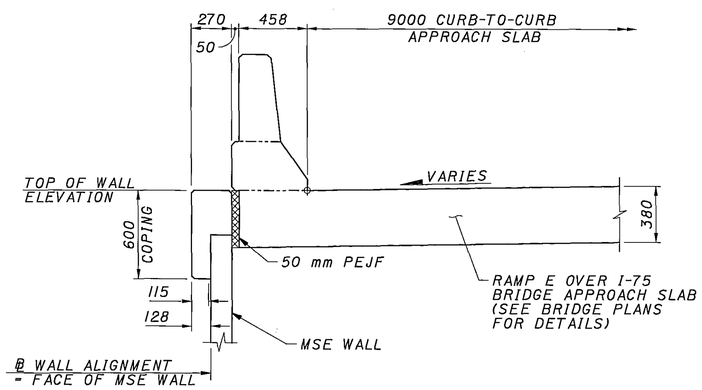

DETAIL "C-1"
(WALL NO. 5)

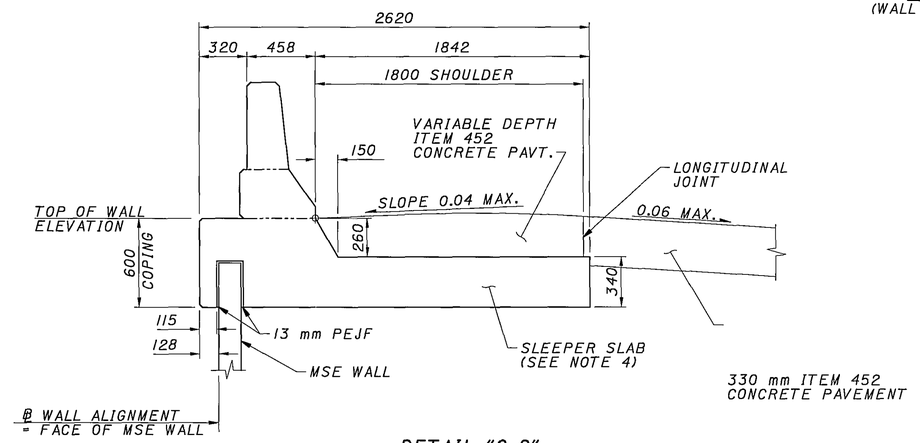

DETAIL "C-2"
(WALL NO. 5)

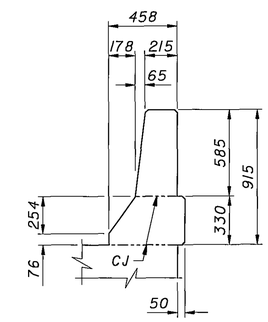

TYPICAL MSE WALL DEFLECTOR PARAPET

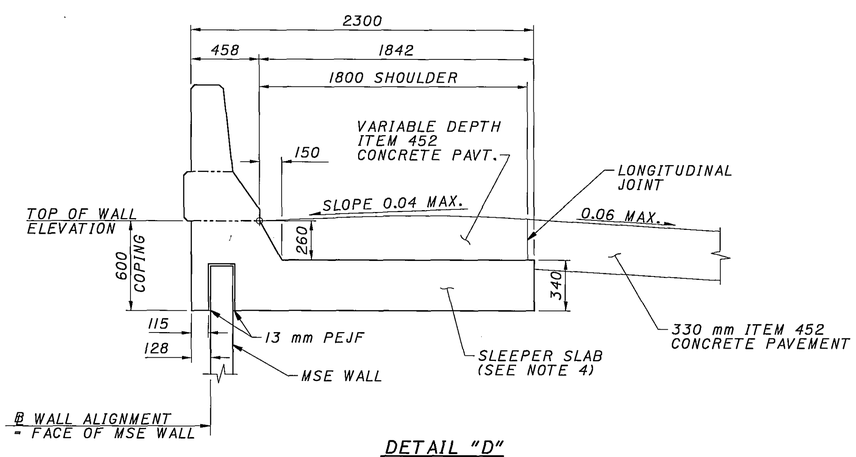

DETAIL "D"
(WALL NO. 6)

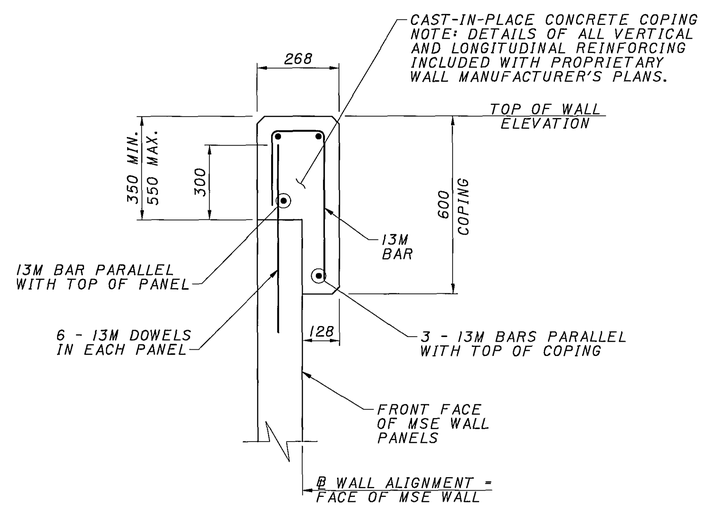

DETAIL "E"
(WALL NOS. 3, 4, 7, AND 8)

NOTES:

1. FOR LOCATIONS OF DETAILS "A" THROUGH "E", SEE SHEETS 21 - 23.
2. ALL CONSTRUCTION JOINTS ARE LEVEL UNLESS OTHERWISE NOTED.
3. SEE SHEETS 441 TO 445 OF 1245 (SUPERELEVATION TABLES) FOR VARIABLE PAVEMENT SLOPE INFORMATION.
4. PROVIDE 300 mm MINIMUM CLEARANCE BETWEEN BOTTOM OF SLEEPER SLAB AND UPPERMOST WALL REINFORCEMENT.

DESIGN AGENCY
CH2MHILL
ONE DAYTON CENTRE, SUITE 1100
ONE SOUTH MAIN STREET
DAYTON, OH 45402-1928

DESIGNED	DRAWN	REVIEWED	DATE
SKT	DGS	RV	06/03
CHECKED	REVISED	STRUCTURE FILE NUMBER	
JTC			

MSE WALL PARAPET, SLEEPER SLAB, AND COPING DETAILS

MOT-70-22.890

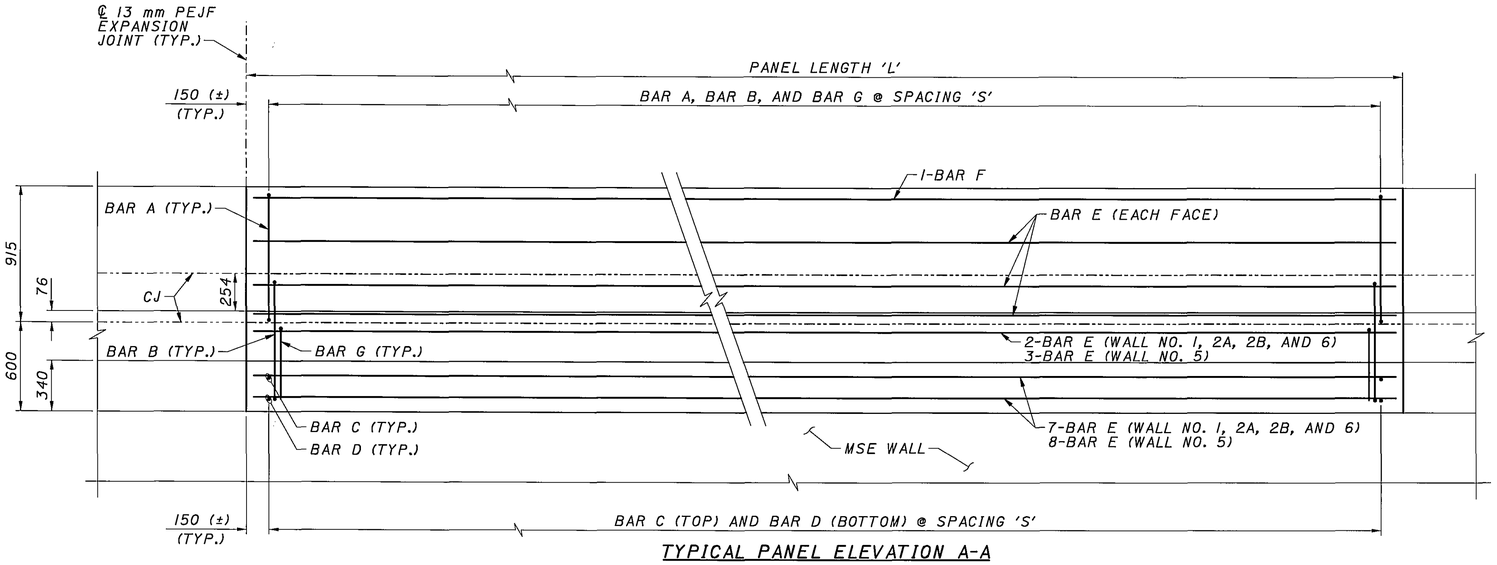

TYPICAL PANEL ELEVATION A-A

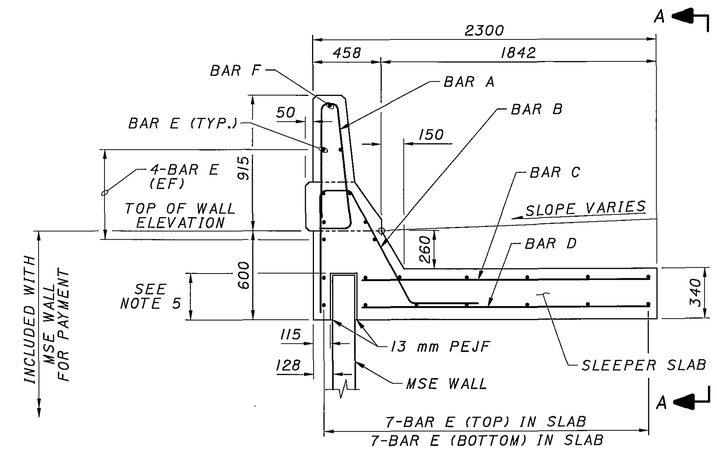

TYPICAL SECTION
(WALL NO. 1, 2A, 2B, AND 6)

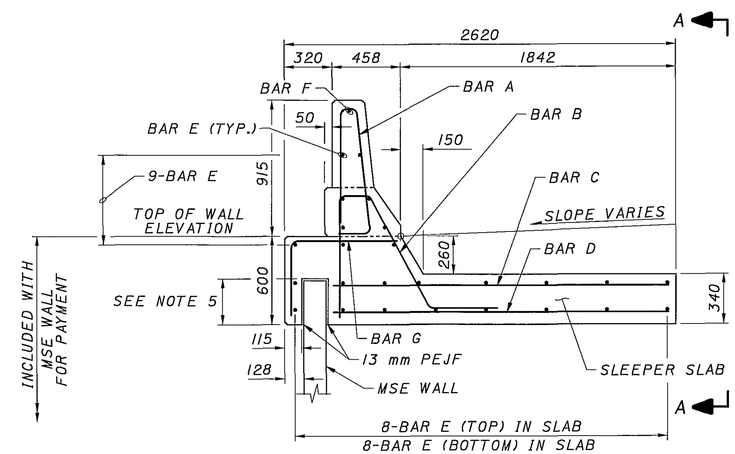

TYPICAL SECTION
(WALL NO. 5)

MSE WALL NO. 1

PANEL NO.	PANEL LENGTH 'L' (mm)	BAR A NO.	BAR A MARK	BAR A SPACING 'S'	BAR B NO.	BAR B MARK	BAR B SPACING 'S'	BAR C NO.	BAR C MARK	BAR C SPACING 'S'	BAR D NO.	BAR D MARK	BAR D SPACING 'S'	BAR E NO.	BAR E MARK	BAR F NO.	BAR F MARK
2-10	9000	30	MS16M01	300	30	MS19M01	300	30	MS16M02	300	21	MS16M02	435	22	MS16M03	1	MS19M02

MSE WALL NO. 2A

PANEL NO.	PANEL LENGTH 'L' (mm)	BAR A NO.	BAR A MARK	BAR A SPACING 'S'	BAR B NO.	BAR B MARK	BAR B SPACING 'S'	BAR C NO.	BAR C MARK	BAR C SPACING 'S'	BAR D NO.	BAR D MARK	BAR D SPACING 'S'	BAR E NO.	BAR E MARK	BAR F NO.	BAR F MARK
2-8	9000	30	MS16M01	300	30	MS19M01	300	30	MS16M02	300	21	MS16M02	435	22	MS16M03	1	MS19M02
9	8000	27	MS16M01	295	27	MS19M01	295	27	MS16M02	295	19	MS16M02	430	22	MS16M04	1	MS19M03

MSE WALL NO. 2B

PANEL NO.	PANEL LENGTH 'L' (mm)	BAR A NO.	BAR A MARK	BAR A SPACING 'S'	BAR B NO.	BAR B MARK	BAR B SPACING 'S'	BAR C NO.	BAR C MARK	BAR C SPACING 'S'	BAR D NO.	BAR D MARK	BAR D SPACING 'S'	BAR E NO.	BAR E MARK	BAR F NO.	BAR F MARK
1	7000	24	MS16M01	290	24	MS19M01	290	24	MS16M02	290	16	MS16M02	445	22	MS16M05	1	MS19M04
2-9	9000	30	MS16M01	300	30	MS19M01	300	30	MS16M02	300	21	MS16M02	435	22	MS16M03	1	MS19M02

MSE WALL NO. 6

PANEL NO.	PANEL LENGTH 'L' (mm)	BAR A NO.	BAR A MARK	BAR A SPACING 'S'	BAR B NO.	BAR B MARK	BAR B SPACING 'S'	BAR C NO.	BAR C MARK	BAR C SPACING 'S'	BAR D NO.	BAR D MARK	BAR D SPACING 'S'	BAR E NO.	BAR E MARK	BAR F NO.	BAR F MARK
2-12	9000	30	MS16M01	300	30	MS19M01	300	30	MS16M02	300	21	MS16M02	435	22	MS16M03	1	MS19M02

MSE WALL NO. 5

PANEL NO.	PANEL LENGTH 'L' (mm)	BAR A NO.	BAR A MARK	BAR A SPACING 'S'	BAR B NO.	BAR B MARK	BAR B SPACING 'S'	BAR C NO.	BAR C MARK	BAR C SPACING 'S'	BAR D NO.	BAR D MARK	BAR D SPACING 'S'	BAR E NO.	BAR E MARK	BAR F NO.	BAR F MARK	BAR G NO.	BAR G MARK	BAR G SPACING 'S'
2-7	9000	30	MS16M01	300	30	MS19M01	300	30	MS16M17	300	21	MS16M17	435	25	MS16M03	1	MS19M02	21	MS16M15	435
8	7856	27	MS16M01	290	27	MS19M01	290	27	MS16M17	290	18	MS16M17	445	25	MS16M16	1	MS19M05	18	MS16M15	445

NOTES:

1. FOR REINFORCING STEEL LIST, SEE SHEET 34.
2. 13 mm PEJF INCLUDED WITH MSE WALL FOR PAYMENT.
3. FOR PAVEMENT CONSTRUCTION ABOVE SLEEPER SLAB, SEE ROADWAY PLANS.
4. FOR SLEEPER SLAB AND PARAPET REINFORCEMENT DETAILS AT END PANELS, SEE SHEETS 26 AND 27.
5. DIMENSION VARIES, 50 mm MINIMUM TO 380 mm MAXIMUM.
6. BARS EMBEDDED IN SLEEPER SLAB ARE INCLUDED WITH MSE WALL FOR PAYMENT.

DESIGN AGENCY
CH2MHILL
ONE DAYTON CENTRE, SUITE 1100
ONE SOUTH MAIN STREET
DAYTON, OH 45402-1928

DATE 06/03 | REVIEWED RV | STRUCTURE FILE NUMBER
DRAWN DGS | REVISED
DESIGNED DGS | CHECKED SKT

PARAPET AND SLEEPER SLAB DETAILS - 1

MOT-70-22.890

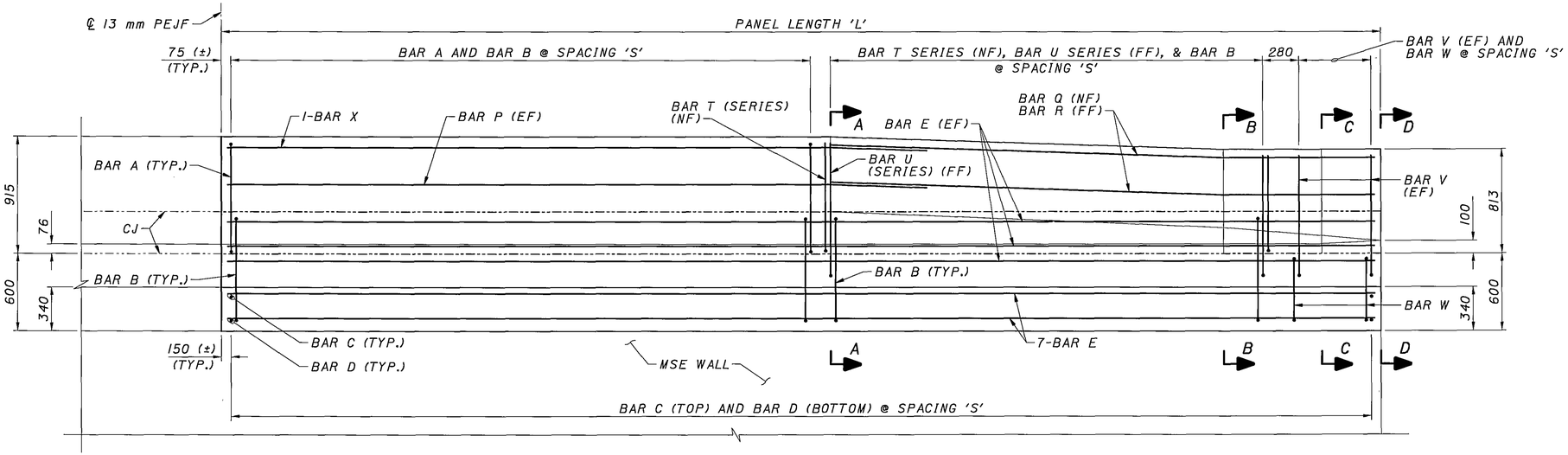

TYPICAL PARAPET TRANSITION PANEL ELEVATION

(WALL NO. 1, 2A, 2B, AND 6)

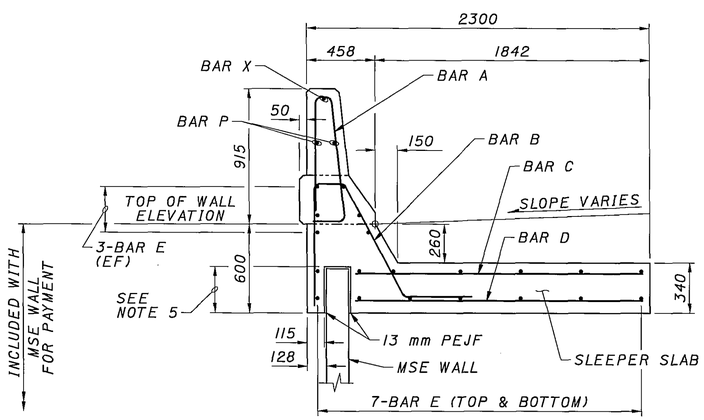

SECTION A-A

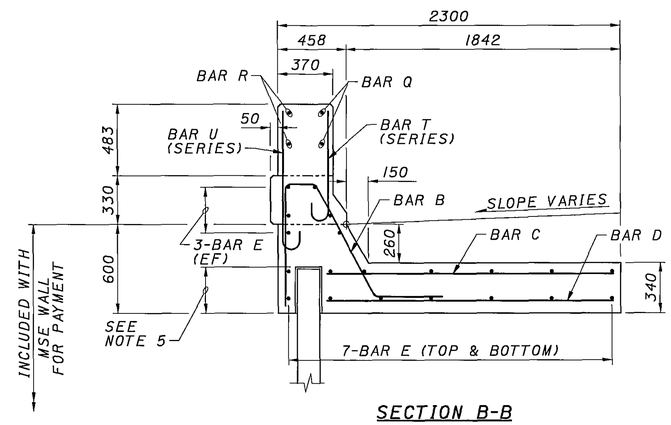

SECTION B-B

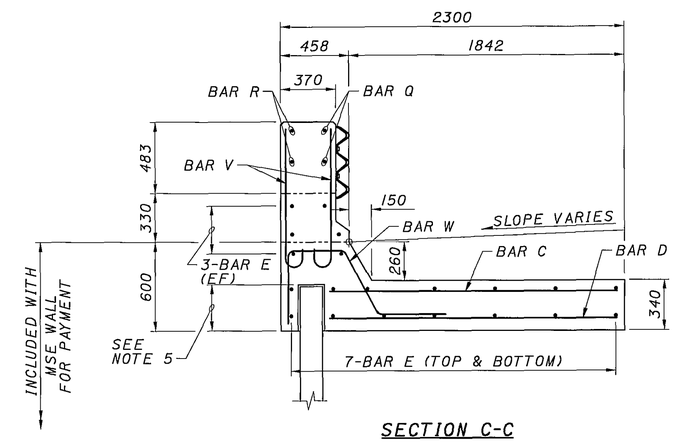

SECTION C-C

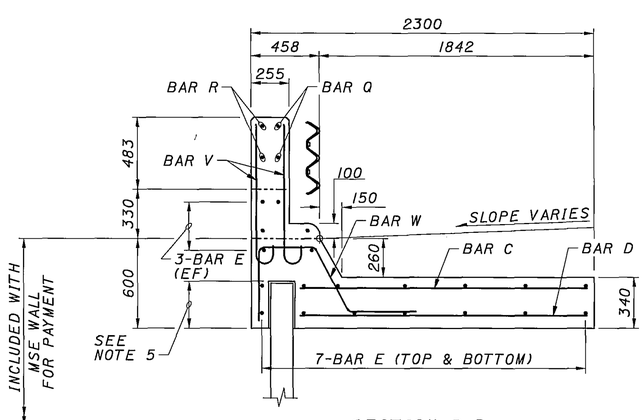

SECTION D-D

NOTES:

1. FOR REINFORCING STEEL SCHEDULES, SEE SHEET 28.
2. 13 mm PEJF INCLUDED WITH MSE WALL FOR PAYMENT.
3. FOR PAVEMENT CONSTRUCTION ABOVE SLEEPER SLAB, SEE ROADWAY PLANS.
4. FOR PARAPET TRANSITION DETAILS AND DIMENSIONS NOT SHOWN, SEE STD. DWG. BR-1.
5. DIMENSION VARIES, 50 mm MINIMUM TO 380 MAXIMUM.
6. REINFORCING STEEL LAP LENGTHS: UNLESS OTHERWISE NOTED, MINIMUM LAPS SHALL BE AS FOLLOWS:
   NO. 16M BARS = 750 mm
   NO. 19M BARS = 900 mm
7. FOR REINFORCING STEEL LIST, SEE SHEET 34.
8. BARS EMBEDDED IN SLEEPER SLAB ARE INCLUDED WITH MSE WALL FOR PAYMENT.

DESIGN AGENCY
CH2MHILL
ONE DAYTON CENTRE, SUITE 1100
ONE SOUTH MAIN STREET
DAYTON, OH 45402-1828

DESIGNED	DRAWN	REVIEWED	DATE
DGS	DGS	RV	06/03
CHECKED	REVISED	STRUCTURE FILE NUMBER	
SKT			

PARAPET AND SLEEPER SLAB DETAILS - II

MOT-70-22.890

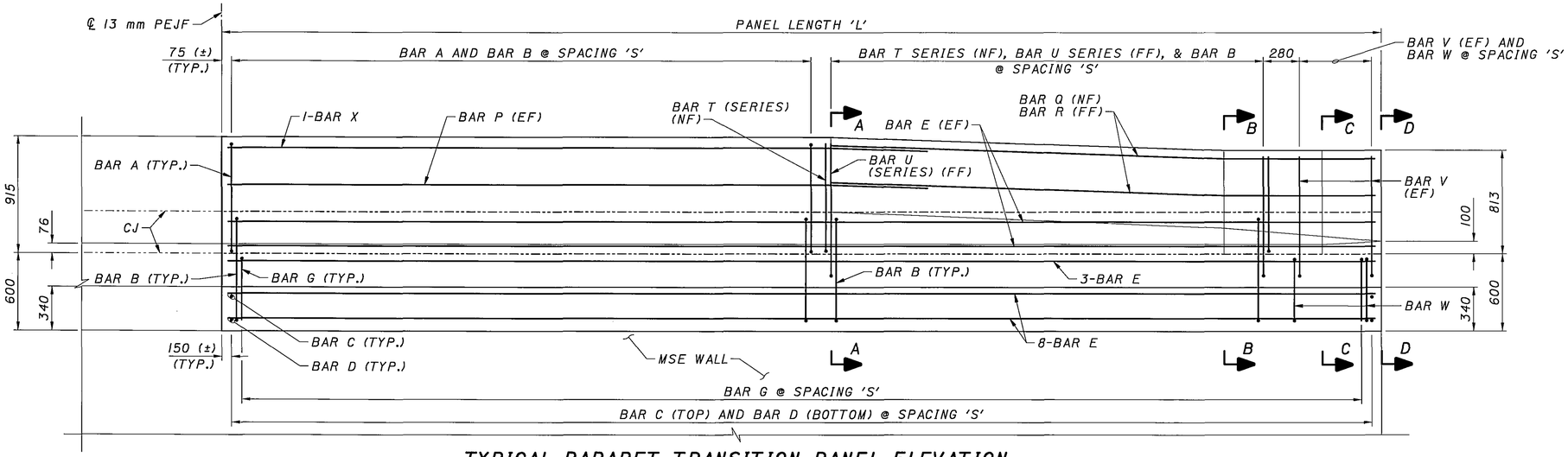

TYPICAL PARAPET TRANSITION PANEL ELEVATION

(WALL NO. 5)

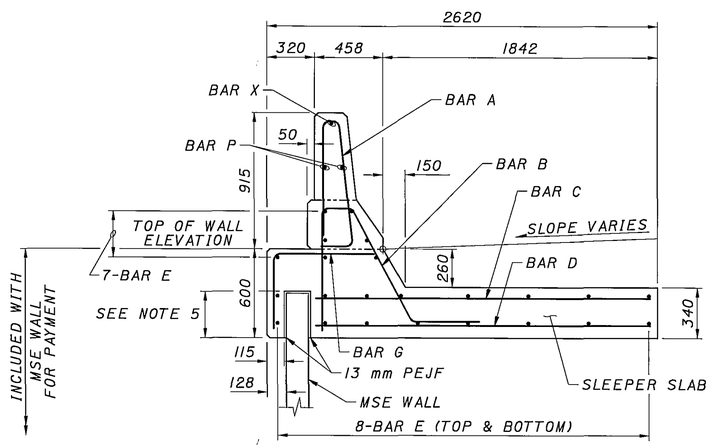

SECTION A-A

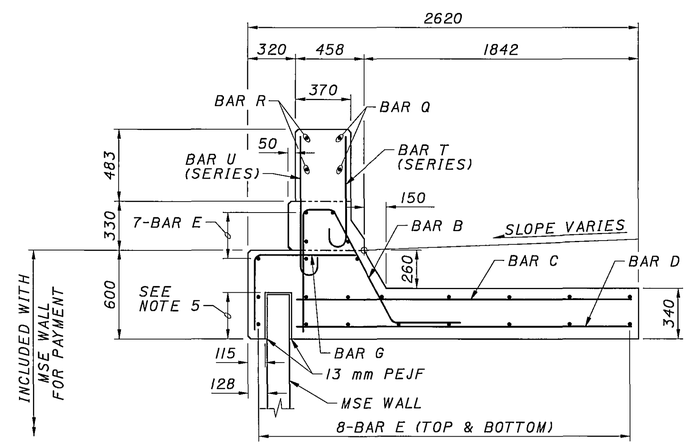

SECTION B-B

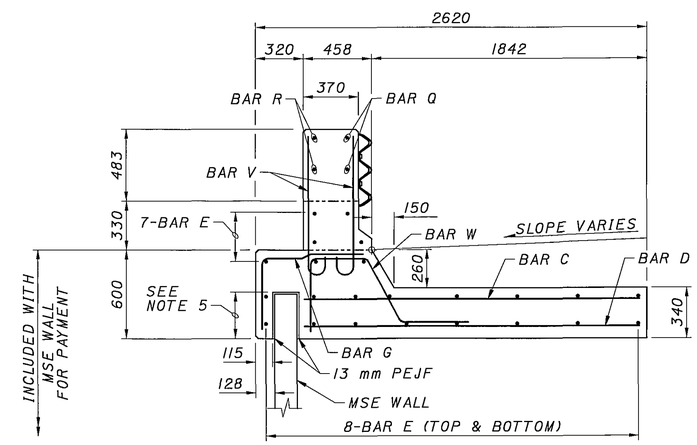

SECTION C-C

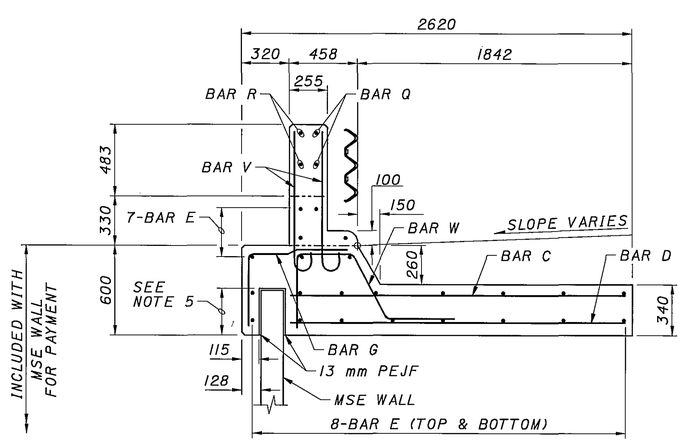

SECTION D-D

NOTES:

1. FOR REINFORCING STEEL SCHEDULES, SEE SHEET 28.
2. 13 mm PEJF INCLUDED WITH MSE WALL FOR PAYMENT.
3. FOR PAVEMENT CONSTRUCTION ABOVE SLEEPER SLAB, SEE ROADWAY PLANS.
4. FOR PARAPET TRANSITION DETAILS AND DIMENSIONS NOT SHOWN, SEE STD. DWG. BR-1.
5. DIMENSION VARIES, 50 mm MINIMUM TO 380 MAXIMUM.
6. REINFORCING STEEL LAP LENGTHS: UNLESS OTHERWISE NOTED, MINIMUM LAPS SHALL BE AS FOLLOWS:
   NO. 16M BARS = 750 mm
   NO. 19M BARS = 900 mm
7. FOR REINFORCING STEEL LIST, SEE SHEET 34.
8. BARS EMBEDDED IN SLEEPER SLAB ARE INCLUDED WITH MSE WALL FOR PAYMENT.

DESIGN AGENCY
CH2MHILL
ONE DAYTON CENTRE, SUITE 1100
ONE SOUTH MAIN STREET
DAYTON, OH 45402-1828

DESIGNED	DRAWN	REVIEWED	DATE
DGS	DGS	RV	06/03
CHECKED	REVISED	STRUCTURE FILE NUMBER	
SKT			

PARAPET AND SLEEPER SLAB DETAILS - III

MOT-70-22.890

MSE WALL NO. 1

PANEL NO.	PANEL LENGTH 'L' (mm)	BAR A NO.	BAR A MARK	BAR A SPACING 'S'	BAR B NO.	BAR B MARK	BAR B SPACING 'S'	BAR C NO.	BAR C MARK	BAR C SPACING 'S'	BAR D NO.	BAR D MARK	BAR D SPACING 'S'	BAR E NO.	BAR E MARK	BAR X NO.	BAR X MARK	BAR P NO.	BAR P MARK
1	8500	14	MS16M01	300	14	MS19M01	300	29	MS16M02	290	20	MS16M02	430	20	MS16M07	1	MS19M06	2	MS16M08
11	8500	14	MS16M01	300	14	MS19M01	300	29	MS16M02	290	20	MS16M02	430	20	MS16M07	1	MS19M06	2	MS16M08

MSE WALL NO. 1

PANEL NO.	PANEL LENGTH 'L' (mm)	BAR Q NO.	BAR Q MARK	BAR R NO.	BAR R MARK	BAR T NO.	BAR T MARK	BAR T SPACING 'S'	BAR U NO.	BAR U MARK	BAR U SPACING 'S'	BAR V NO.	BAR V MARK	BAR V SPACING 'S'	BAR W NO.	BAR W MARK	BAR W SPACING 'S'
1	8500	2	MS16M12	2	MS16M13	12	MS16M14	305	12	MS19M10	305	6	MS19M11	280	3	MS19M12	280
11	8500	2	MS16M12	2	MS16M13	12	MS16M14	305	12	MS19M10	305	6	MS19M11	280	3	MS19M12	280

MSE WALL NO. 2A

PANEL NO.	PANEL LENGTH 'L' (mm)	BAR A NO.	BAR A MARK	BAR A SPACING 'S'	BAR B NO.	BAR B MARK	BAR B SPACING 'S'	BAR C NO.	BAR C MARK	BAR C SPACING 'S'	BAR D NO.	BAR D MARK	BAR D SPACING 'S'	BAR E NO.	BAR E MARK	BAR X NO.	BAR X MARK	BAR P NO.	BAR P MARK
1	8000	13	MS16M01	280	13	MS19M01	280	27	MS16M02	295	19	MS16M02	425	20	MS16M04	1	MS19M07	2	MS16M09

MSE WALL NO. 2A

PANEL NO.	PANEL LENGTH 'L' (mm)	BAR Q NO.	BAR Q MARK	BAR R NO.	BAR R MARK	BAR T NO.	BAR T MARK	BAR T SPACING 'S'	BAR U NO.	BAR U MARK	BAR U SPACING 'S'	BAR V NO.	BAR V MARK	BAR V SPACING 'S'	BAR W NO.	BAR W MARK	BAR W SPACING 'S'
1	8000	2	MS16M12	2	MS16M13	12	MS16M14	305	12	MS19M10	305	6	MS19M11	280	3	MS19M12	280

MSE WALL NO. 2B

PANEL NO.	PANEL LENGTH 'L' (mm)	BAR A NO.	BAR A MARK	BAR A SPACING 'S'	BAR B NO.	BAR B MARK	BAR B SPACING 'S'	BAR C NO.	BAR C MARK	BAR C SPACING 'S'	BAR D NO.	BAR D MARK	BAR D SPACING 'S'	BAR E NO.	BAR E MARK	BAR X NO.	BAR X MARK	BAR P NO.	BAR P MARK
10	7000	9	MS16M01	295	9	MS19M01	295	24	MS16M02	290	16	MS16M02	445	20	MS16M05	1	MS19M08	2	MS16M10

MSE WALL NO. 2B

PANEL NO.	PANEL LENGTH 'L' (mm)	BAR Q NO.	BAR Q MARK	BAR R NO.	BAR R MARK	BAR T NO.	BAR T MARK	BAR T SPACING 'S'	BAR U NO.	BAR U MARK	BAR U SPACING 'S'	BAR V NO.	BAR V MARK	BAR V SPACING 'S'	BAR W NO.	BAR W MARK	BAR W SPACING 'S'
10	7000	2	MS16M12	2	MS16M13	12	MS16M14	305	12	MS19M10	305	6	MS19M11	280	3	MS19M12	280

MSE WALL NO. 5

PANEL NO.	PANEL LENGTH 'L' (mm)	BAR A NO.	BAR A MARK	BAR A SPACING 'S'	BAR B NO.	BAR B MARK	BAR B SPACING 'S'	BAR C NO.	BAR C MARK	BAR C SPACING 'S'	BAR D NO.	BAR D MARK	BAR D SPACING 'S'	BAR E NO.	BAR E MARK	BAR G NO.	BAR G MARK	BAR G SPACING 'S'	BAR X NO.	BAR X MARK
1	7576	11	MS16M01	295	11	MS19M01	295	26	MS16M17	290	18	MS16M17	425	23	MS16M06	18	MS16M15	430	1	MS19M09

MSE WALL NO. 5

PANEL NO.	PANEL LENGTH 'L' (mm)	BAR P NO.	BAR P MARK	BAR Q NO.	BAR Q MARK	BAR R NO.	BAR R MARK	BAR T NO.	BAR T MARK	BAR T SPACING 'S'	BAR U NO.	BAR U MARK	BAR U SPACING 'S'	BAR V NO.	BAR V MARK	BAR V SPACING 'S'	BAR W NO.	BAR W MARK	BAR W SPACING 'S'
1	7576	2	MS16M11	2	MS16M12	2	MS16M13	12	MS16M14	305	12	MS19M10	305	6	MS19M11	280	3	MS19M12	280

MSE WALL NO. 6

PANEL NO.	PANEL LENGTH 'L' (mm)	BAR A NO.	BAR A MARK	BAR A SPACING 'S'	BAR B NO.	BAR B MARK	BAR B SPACING 'S'	BAR C NO.	BAR C MARK	BAR C SPACING 'S'	BAR D NO.	BAR D MARK	BAR D SPACING 'S'	BAR E NO.	BAR E MARK	BAR X NO.	BAR X MARK	BAR P NO.	BAR P MARK
1	8500	14	MS16M01	300	14	MS19M01	300	29	MS16M02	290	20	MS16M02	430	20	MS16M07	1	MS19M06	2	MS16M08
13	8500	14	MS16M01	300	14	MS19M01	300	29	MS16M02	290	20	MS16M02	430	20	MS16M07	1	MS19M06	2	MS16M08

MSE WALL NO. 6

PANEL NO.	PANEL LENGTH 'L' (mm)	BAR Q NO.	BAR Q MARK	BAR R NO.	BAR R MARK	BAR T NO.	BAR T MARK	BAR T SPACING 'S'	BAR U NO.	BAR U MARK	BAR U SPACING 'S'	BAR V NO.	BAR V MARK	BAR V SPACING 'S'	BAR W NO.	BAR W MARK	BAR W SPACING 'S'
1	8500	2	MS16M12	2	MS16M13	12	MS16M14	305	12	MS19M10	305	6	MS19M11	280	3	MS19M12	280
13	8500	2	MS16M12	2	MS16M13	12	MS16M14	305	12	MS19M10	305	6	MS19M11	280	3	MS19M12	280

NOTES:

1. FOR PARAPET TRANSITION DETAILS AND NOTES, SEE SHEETS 26 AND 27.

DESIGN AGENCY
CH2MHILL
ONE DAYTON CENTRE, SUITE 1100
ONE SOUTH MAIN STREET
DAYTON, OH 45402-1928

DATE 06/03 | REVIEWED RV | STRUCTURE FILE NUMBER
DRAWN DGS | REVISED
DESIGNED DGS | CHECKED SKT

PARAPET AND SLEEPER SLAB DETAILS - IV

MOT-70-22.890

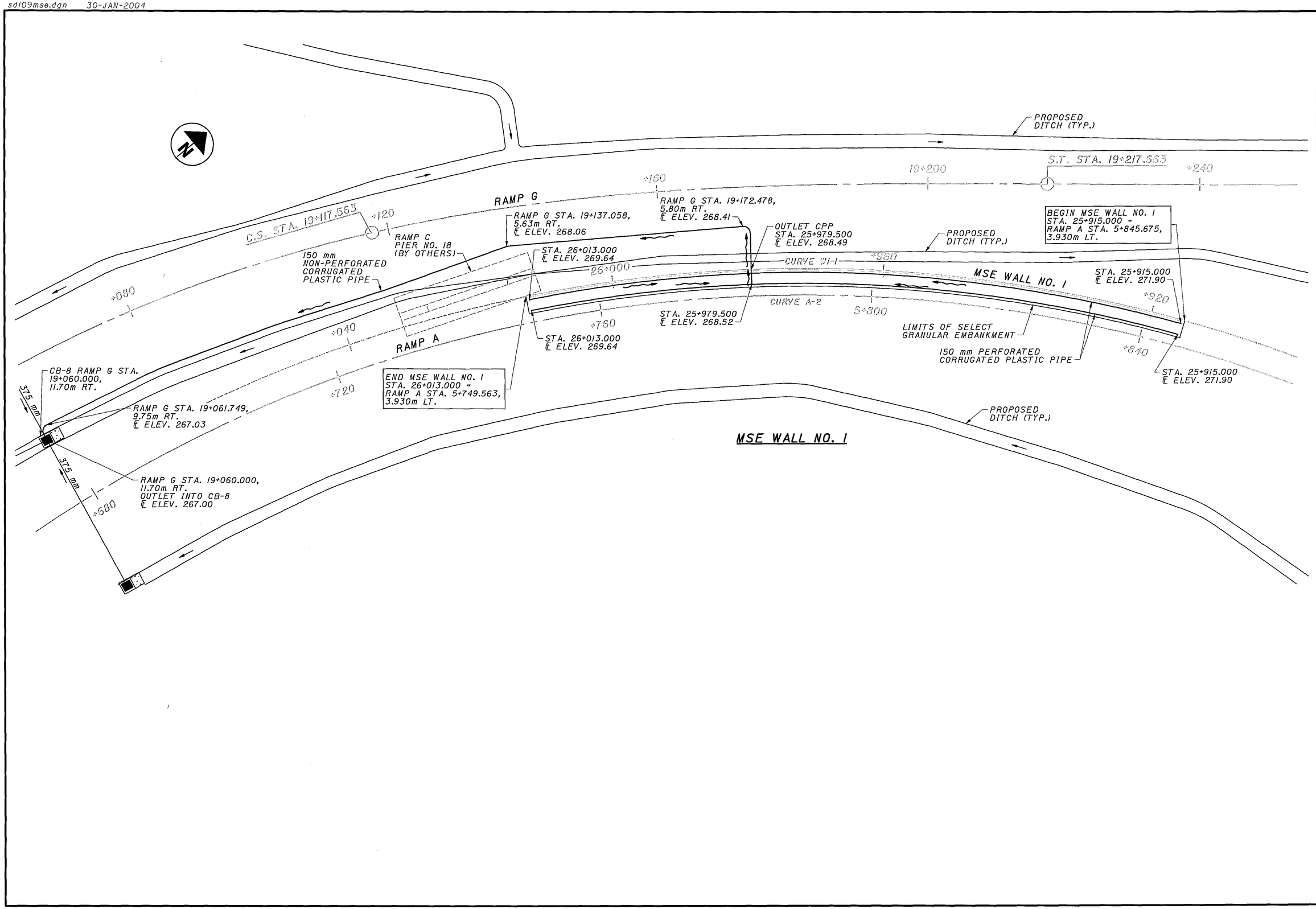

DESIGN AGENCY
CH2MHILL
ONE DAYTON CENTRE, SUITE 1100
ONE SOUTH MAIN STREET
DAYTON, OH 45402-1928

DATE	REVISED	DRAWN	REVISED	DESIGNED	CHECKED
06/03	RV	DGS		DGS	SKT

STRUCTURE FILE NUMBER

MSE WALL DRAINAGE PLAN - 1
MSE WALL NO. 1

MOT-70-22.890

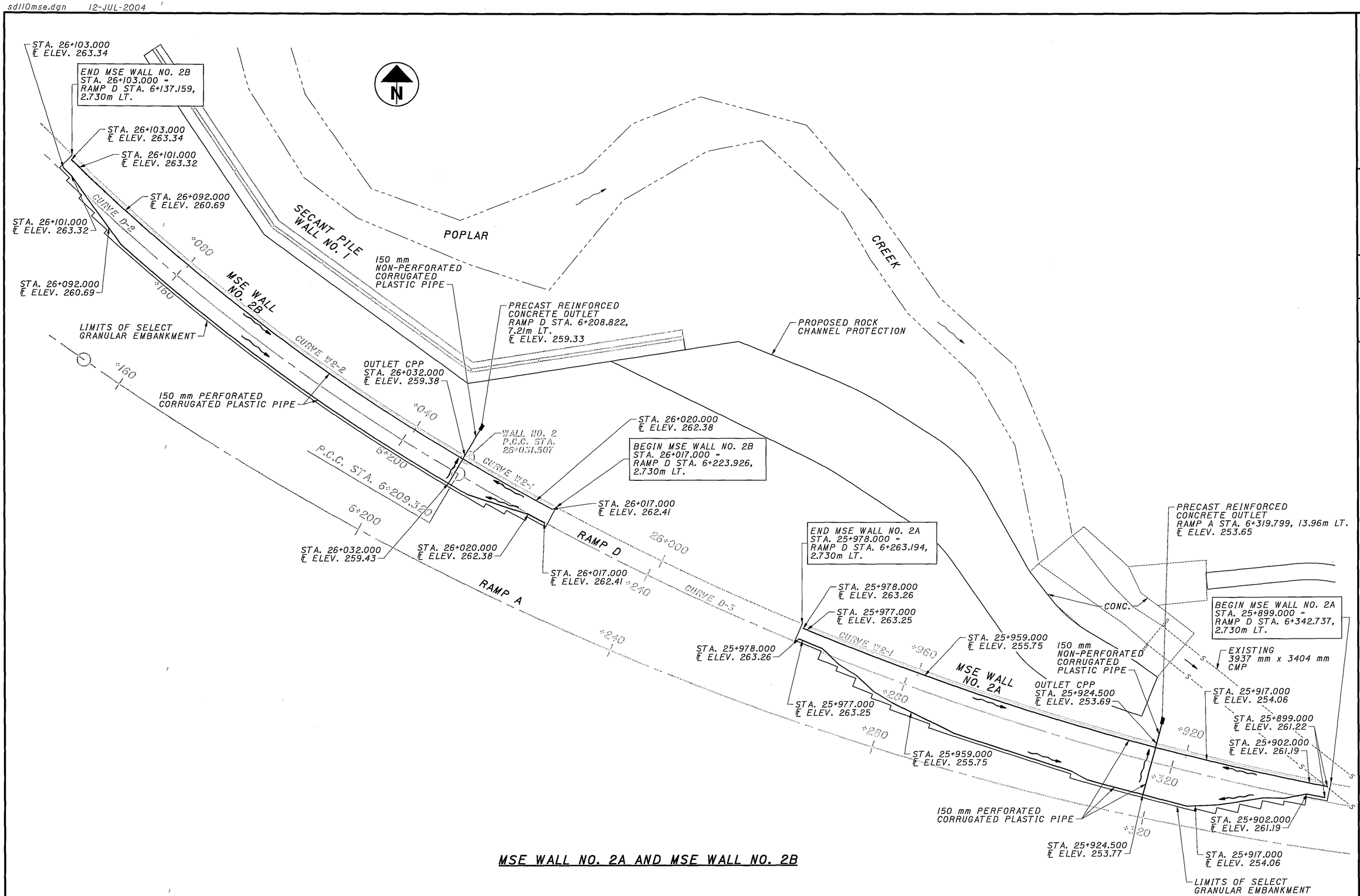

MSE WALL NO. 2A AND MSE WALL NO. 2B

DESIGN AGENCY
CH2MHILL
ONE DAYTON CENTRE, SUITE 1100
ONE SOUTH MAIN STREET
DAYTON, OH 45402-1828

DESIGNED	DRAWN	REVIEWED	DATE
DGS	DGS	RV	06/03
CHECKED	REVISED	STRUCTURE FILE NUMBER	
SKT			

MSE WALL DRAINAGE PLAN - II
MSE WALL NO. 2A AND MSE WALL NO. 2B

MOT-70-22.890

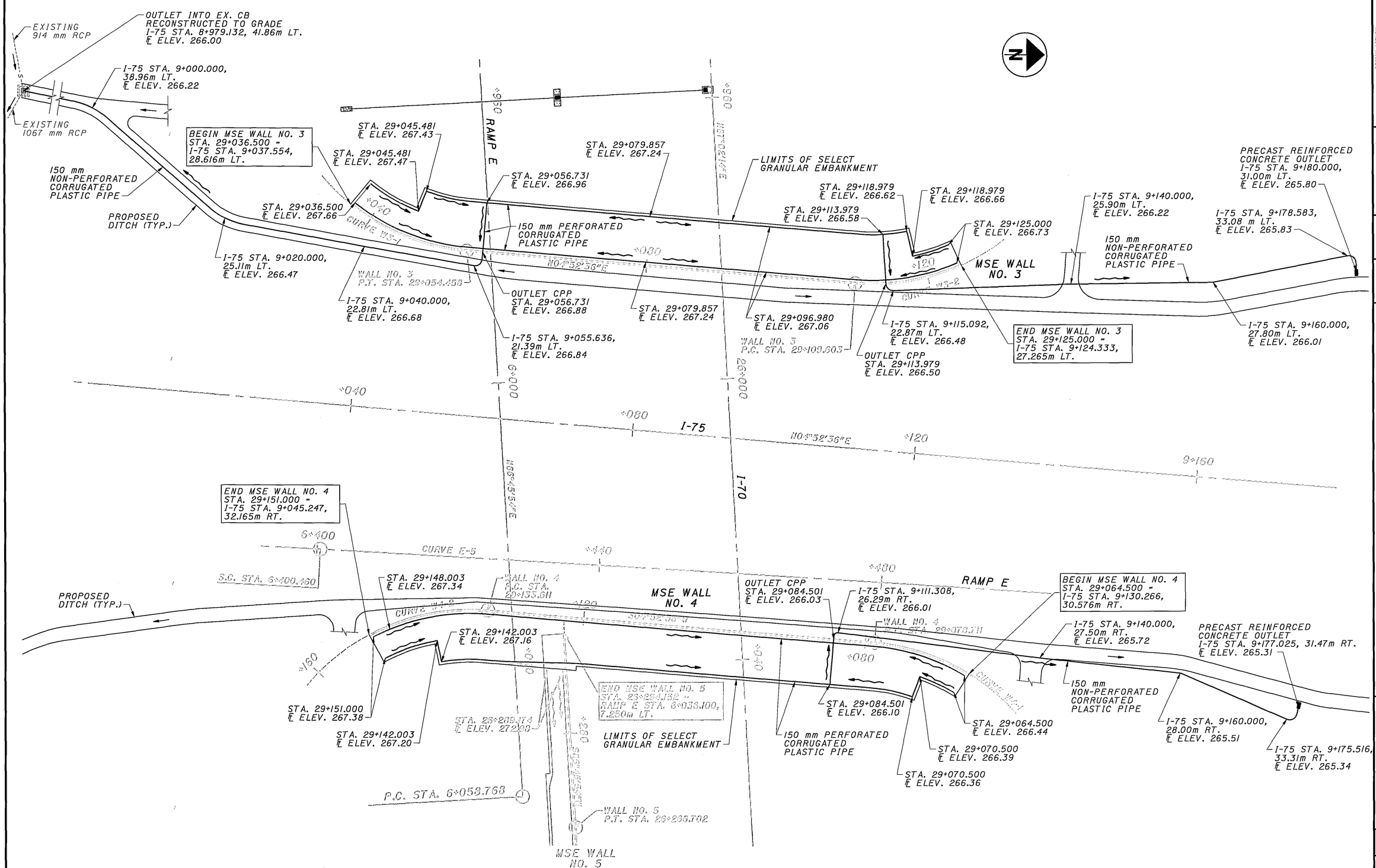

MSE WALL NO. 3 AND MSE WALL NO. 4

DESIGN AGENCY
CH2MHILL
ONE DAYTON CENTRE, SUITE 1100
ONE SOUTH MAIN STREET
DAYTON, OH 45402-1928

DESIGNED	DRAWN	REVIEWED	DATE
DGS	DGS	RV	06/03
CHECKED	REVISED	STRUCTURE FILE NUMBER	
SKT			

MSE WALL DRAINAGE PLAN - III
MSE WALL NO. 3 AND MSE WALL NO. 4

MOT-70-22.890

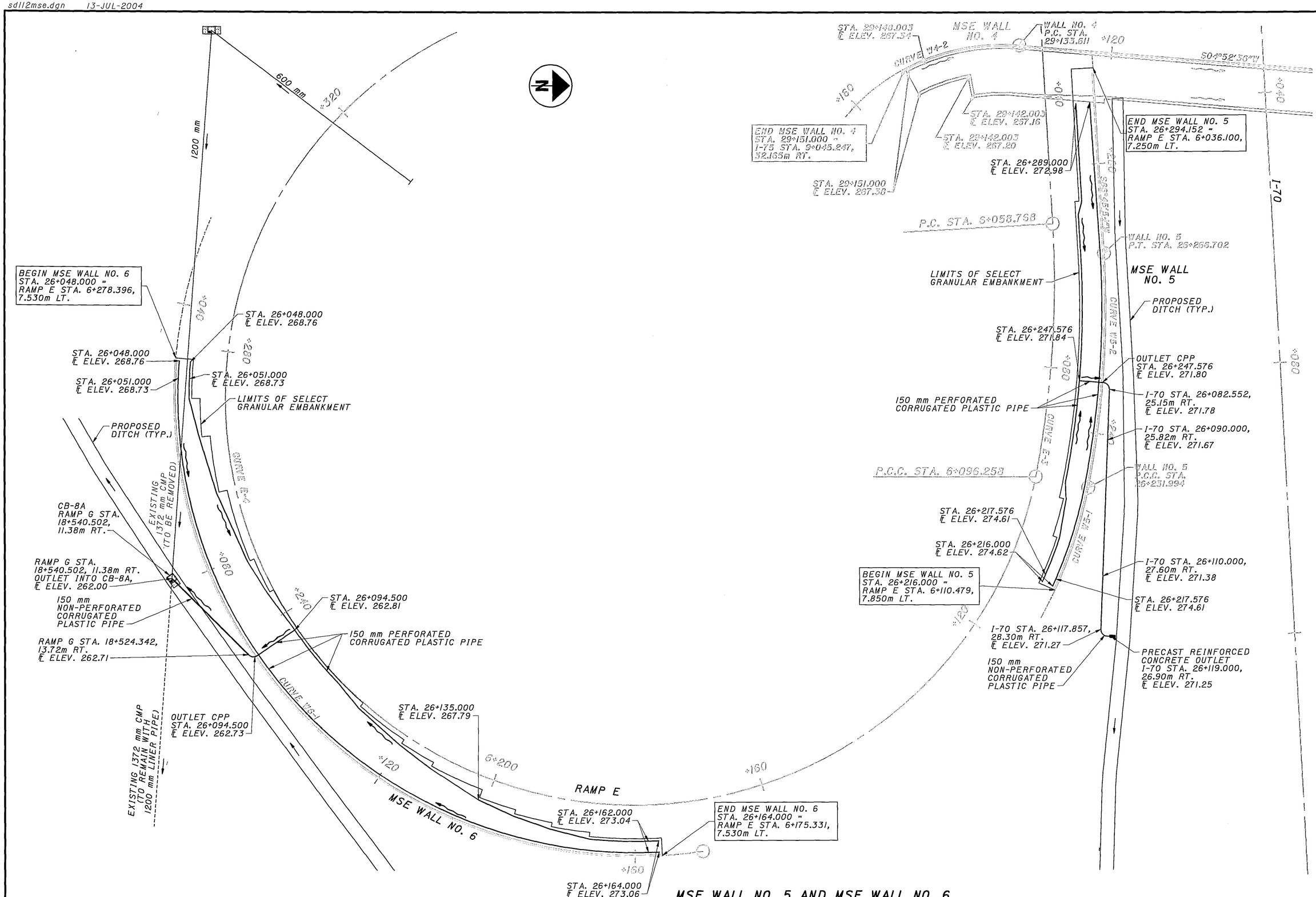

MSE WALL NO. 5 AND MSE WALL NO. 6

DESIGN AGENCY
CH2MHILL
ONE DAYTON CENTRE, SUITE 1100
ONE SOUTH MAIN STREET
DAYTON, OH 45402-1828

DESIGNED	DRAWN	REVIEWED	DATE
DGS	DGS	RV	06/03
CHECKED	REVISED	STRUCTURE FILE NUMBER	
SKT			

MSE WALL DRAINAGE PLAN - IV
MSE WALL NO. 5 AND MSE WALL NO. 6

MOT-70-22.890

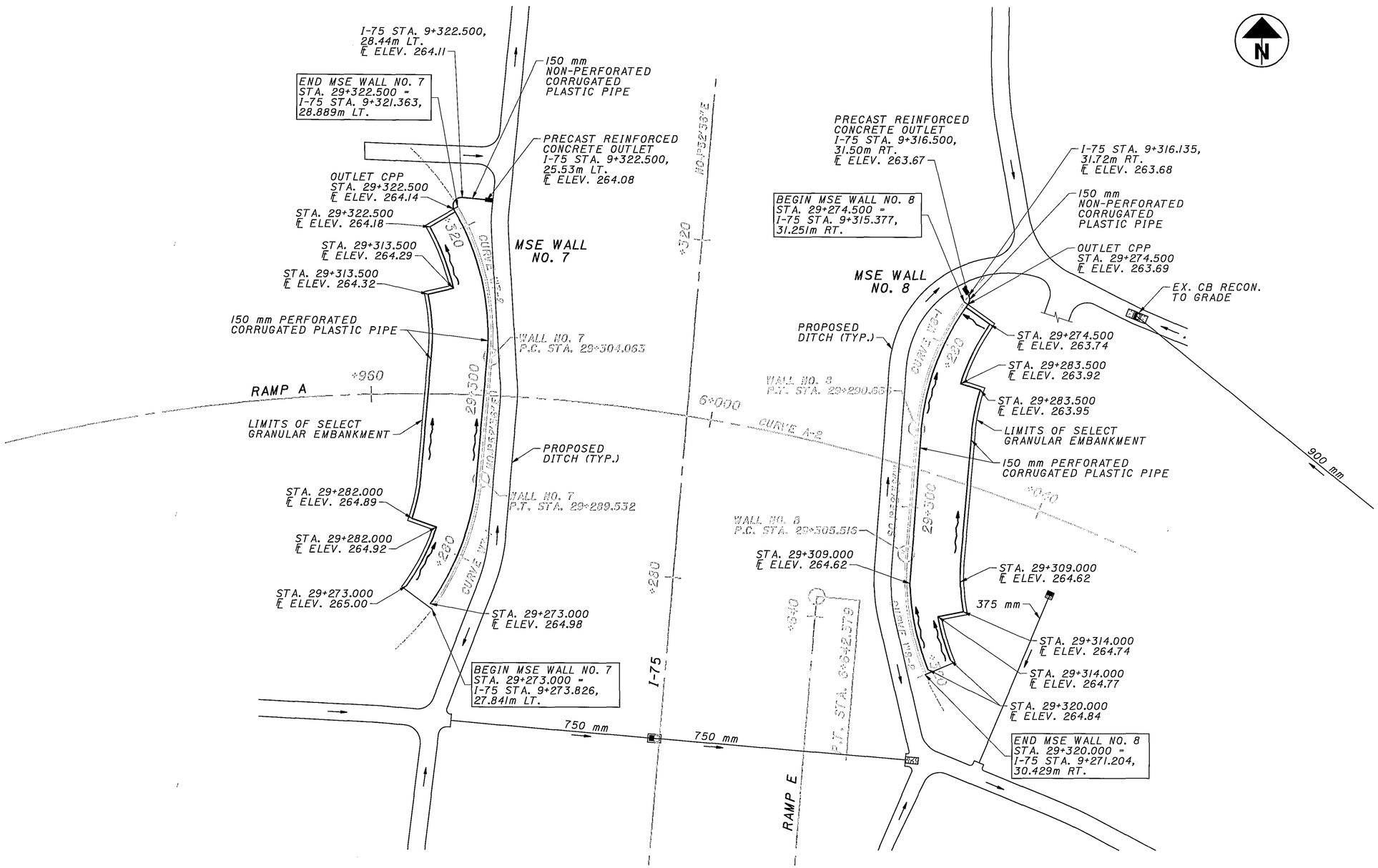

MSE WALL NO. 7 AND MSE WALL NO. 8

DESIGN AGENCY
CH2MHILL
ONE DAYTON CENTRE, SUITE 1100
ONE SOUTH MAIN STREET
DAYTON, OH 45402-1828

DESIGNED	DRAWN	REVIEWED	DATE
DGS	DGS	RV	06/03
CHECKED	REVISED	STRUCTURE FILE NUMBER	
SKT			

MSE WALL DRAINAGE PLAN - V
MSE WALL NO. 7 AND MSE WALL NO. 8

MOT-70-22.890

MSE WALL PARAPET / SLEEPER SLAB

MARK	PARAPET	SLEEPER SLAB	TOTAL	LENGTH (mm)	WEIGHT IN PARAPET (kg)	WEIGHT IN SLEEPER SLAB (kg)	TYPE	DIMENSIONS (mm)						
								A	B	C	D	E	R	INC.
MS16M01	1397		1397	1825	3957	0	42	205	840	765			38	
MS16M02		2153	2153	1920	0	6416	STR							
MS16M03	246	674	920	8900	3398	9310	STR							
MS16M04	10	32	42	7900	123	393	STR							
MS16M05	10	32	42	6900	108	343	STR							
MS16M06	4	19	23	7475	47	221	STR							
MS16M07	16	64	80	8400	209	835	STR							
MS16M08	8		8	4930	62	0	STR							
MS16M09	2		2	4430	14	0	STR							
MS16M10	2		2	3430	11	0	STR							
MS16M11	2		2	4005	13	0	STR							
MS16M12	14		14	4220	92	0	25	3050	737	413	38	127		
MS16M13	14		14	4220	92	0	STR							
MS16M14	7 SERIES OF 12		7 SERIES OF 12	920 TO 1020	127	0	30	12	740	840				9
MS16M15		162	162	1135	0	286	1	678	500					
MS16M16	6	19	25	7755	73	229	STR							
MS16M17		395	395	2240	0	1374	STR							
MS19M01		1397	1397	2375	0	7416	49	830	230	830	425	450		
MS19M02	41		41	8900	816	0	STR							
MS19M03	1		1	7900	18	0	STR							
MS19M04	1		1	6900	16	0	STR							
MS19M05	1		1	7755	18	0	STR							
MS19M06	4		4	5080	46	0	STR							
MS19M07	1		1	4580	11	0	STR							
MS19M08	1		1	3580	9	0	STR							
MS19M09	1		1	4155	10	0	STR							
MS19M10		7 SERIES OF 12	7 SERIES OF 12	1140 TO 1240	0	224	30	12	933	1035				9
MS19M11		42	42	1140	0	108	16	933						
MS19M12		21	21	1805	0	85	49	500	375	500	225	450		
				TOTAL WEIGHT	9270	27240								

NOTES:

1. FOR REINFORCING BAR BENDS AND NOTES, SEE SHEET 35.
2. PAYMENT FOR PARAPET REINFORCING STEEL IS INCLUDED WITH ITEM 509, EPOXY COATED REINFORCING STEEL.
3. PAYMENT FOR SLEEPER SLAB REINFORCING STEEL IS INCLUDED WITH THE MSE RETAINING WALL.

DESIGN AGENCY
CH2MHILL
ONE DAYTON CENTRE, SUITE 1100
ONE SOUTH MAIN STREET
DAYTON, OH 45402-1828

DESIGNED DGS | DRAWN SKT | REVIEWED RV | DATE 06/03
CHECKED SKT | REVISED | STRUCTURE FILE NUMBER

REINFORCING STEEL LIST

MOT-70-22.890

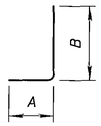

TYPE-1

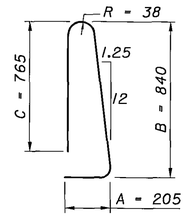

TYPE-42

(FOR 915 mm PARAPET ONLY)

TYPE-16

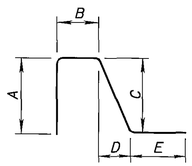

TYPE-49

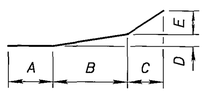

TYPE-25

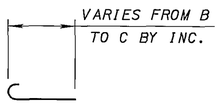

A = NO. OF BARS IN SERIES

TYPE-30

NOTES:

1. ALL DIMENSIONS ARE MEASURED OUT-TO-OUT OF BAR UNLESS NOTED OTHERWISE.
2. RADIUS DIMENSION 'R' IS TO OUTSIDE OF BAR. RADIUS DIMENSION 'I.R.' IS TO INSIDE OF BAR.
3. THE LENGTH OF BENT BARS IS MEASURED ALONG THE CENTERLINE.
4. FOR STANDARD HOOK DIMENSIONS, SEE SECTION 509.05 OF THE SPECIFICATIONS.
5. ALL REINFORCING STEEL SHALL BE EPOXY COATED, GRADE 420.
6. PAYMENT FOR PARAPET REINFORCING STEEL IS INCLUDED WITH ITEM 509, EPOXY COATED REINFORCING STEEL.
7. REINFORCING SAMPLES: REFER TO CMS SECTIONS 106.03, 700, 709.01 THROUGH 709.05, AND 709.08. SUFFICIENT ADDITIONAL REINFORCING STEEL SHALL BE PROVIDED FOR SAMPLING. RANDOM SAMPLES SHALL BE REPLACED IN THE STRUCTURE BY THE ADDITIONAL STEEL, SPLICED IN ACCORDANCE WITH 509.08.
8. FOR ABUTMENT COPING REINFORCING DETAILS, SEE MSE WALL COMPANY PLANS.

DESIGN AGENCY
CH2MHILL
ONE DAYTON CENTRE, SUITE 1100
ONE SOUTH MAIN STREET
DAYTON, OH 45402-1828

DESIGNED	DRAWN	REVIEWED	DATE
DGS	DGS	RV	06/03
CHECKED	REVISED	STRUCTURE FILE NUMBER	
SKT			

REINFORCING BAR BENDS

MOT-70-22.890