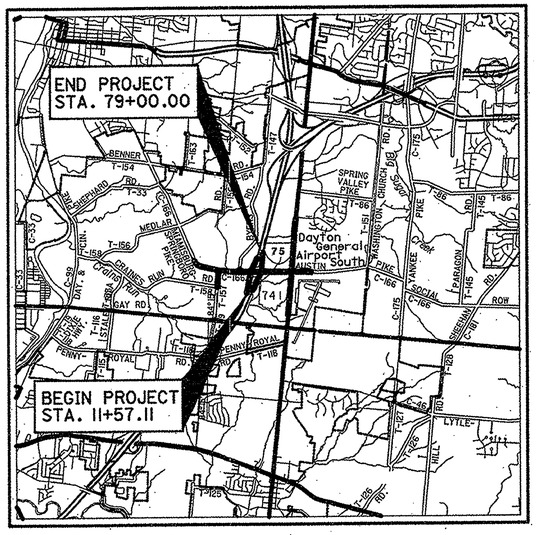

LOCATION MAP

LATITUDE: 39°35'48" LONGITUDE: 84°14'17"

SCALE IN MILES

0 1 2 3 4

N

PORTION TO BE IMPROVED

INTERSTATE & DIVIDED HIGHWAY

UNDIVIDED STATE & FEDERAL ROUTES

OTHER ROADS

DESIGN DESIGNATION

SEE SCHEMATIC PLAN

DESIGN EXCEPTIONS

NONE

STATE OF OHIO

DEPARTMENT OF TRANSPORTATION

MOT-75-0.75 (WAR)

CITY OF MIAMISBURG
CITY OF SPRINGBORO
MIAMI TOWNSHIP
MONTGOMERY COUNTY

INDEX OF SHEETS:

TITLE SHEET	1
SCHEMATIC PLAN	2-3
PROJECT CONTROL AND BENCHMARKS	4-5
TYPICAL SECTIONS	6-22
GENERAL NOTES	23-29
MAINTENANCE OF TRAFFIC	30-57
GENERAL SUMMARY	58-63
SUBSUMMARIES	64-84
PROJECT SITE PLAN	85
RAMP P PLAN	86-90
RAMP P PROFILE	91-93
RAMP P CROSS SECTIONS	94-110
I-75 AND RAMP H PLAN	111-114
RAMP H PROFILE	115-117
I-75 AND RAMP H CROSS SECTIONS	118-137
RAMP M AND I-75 PLAN	138-142
RAMP M PROFILE	143-145
RAMP M AND I-75 CROSS SECTIONS	146-160
RAMP J AND I-75 PLAN	161-167
RAMP J PROFILE	168-170
RAMP J AND I-75 CROSS SECTIONS	171-194
MIAMISBURG-SPRINGBORO PIKE AND AUSTIN PIKE PLAN	195-212
MIAMISBURG-SPRINGBORO PIKE AND AUSTIN PIKE PROFILE	213-221
MIAMISBURG-SPRINGBORO PIKE AND AUSTIN PIKE CROSS SECTIONS	222-282
WOOD ROAD PLAN	283-284
WOOD ROAD PROFILE	285-286
WOOD ROAD CROSS SECTIONS	287-293
BYERS ROAD PLAN	294
BYERS ROAD PROFILE	295
BYERS ROAD CROSS SECTIONS	296
SR 741 PLAN	297-299
SR 741 PROFILE	300-301
SR 741 CROSS SECTIONS	302-308
SUPERELEVATION AND PAVEMENT ELEVATION TABLES	309-317
INTERCHANGE DETAILS	318-321
INTERSECTION DETAILS	322-337
DRIVE DETAILS	338-339
STORM SEWER PROFILES	340-361
CULVERT DETAILS	362-392
RETAINING WALLS	393-399
SANITARY SEWER	400-401
WATER WORK	402-403
MISCELLANEOUS DETAILS	404-441
TRAFFIC CONTROL	442-638,604A, 609A, 615A, 623A, 629A, 634A-F
LIGHTING	639-653, 648A-B
STRUCTURES OVER 20'	654-688
RIGHT OF WAY	689-773, 720A, 772A
SOIL PROFILE	
SHEETS NOT USED:	28, 455, 456, 457, 458, 459, 523, 599

PROJECT DESCRIPTION

THE PROJECT IS TO CONTRUCT A NEW DIAMOND INTERCHANGE AT AUSTIN BOULEVARD TO INTERSTATE 75. THE PROJECT LENGTH IS 1.3 MILES ALONG INTERSTATE 75, 2.8 MILES OF SIDEROAD IMPROVEMENTS TO AUSTIN BOULEVARD, WOOD ROAD, BYERS ROAD AND STATE ROUTE 741.

PROJECT EDA = 87.40 AC
CONTRACTOR EDA = 15.00 AC
TOTAL EDA = 102.40 AC

LIMITED ACCESS

THIS IMPROVEMENT IS ESPECIALLY DESIGNED FOR THROUGH TRAFFIC AND HAS BEEN DECLARED A LIMITED ACCESS HIGHWAY OR FREEWAY BY ACTION OF THE DIRECTOR IN ACCORDANCE WITH THE PROVISIONS OF SECTION 5511.02 OF THE OHIO REVISED CODE.

2008 SPECIFICATIONS

THE STANDARD SPECIFICATIONS OF THE STATE OF OHIO, DEPARTMENT OF TRANSPORTATION, INCLUDING CHANGES AND SUPPLEMENTAL SPECIFICATIONS LISTED IN THE PROPOSAL SHALL GOVERN THIS IMPROVEMENT.

I HEREBY APPROVE THESE PLANS AND DECLARE THAT THE MAKING OF THIS IMPROVEMENT WILL NOT REQUIRE THE CLOSING TO TRAFFIC OF THE HIGHWAY AND THAT PROVISIONS FOR THE MAINTENANCE AND SAFETY OF TRAFFIC WILL BE AS SET FORTH ON THE PLANS AND ESTIMATES.

UNDER AUTHORITY OF SECTION 4511.21, DIVISION (I) OF THE OHIO REVISED CODE, THE REVISED PRIMA FACIE SPEED LIMITS AS INDICATED HEREIN ARE DETERMINED TO BE REASONABLE AND SAFE, AND ARE HEREBY ESTABLISHED FOR THE DURATION OF THIS PROJECT. THE PRIMA FACIE SPEED LIMIT OR LIMITS HEREBY ESTABLISHED SHALL BECOME EFFECTIVE WHEN APPROPRIATE SIGNS GIVING NOTICE THEREOF ARE ERECTED.

PLAN PREPARED BY:

LJB Inc. • 3100 Research Blvd. • P.O. Box 20246
Dayton, OH 45420-0246
(937) 259-5000 tel • (937) 259-5100 fax • ljbinc.com

ENGINEERS SEAL:

STATE OF OHIO MICHAEL G. BRUCE E-69928 REGISTERED PROFESSIONAL ENGINEER

SIGNED: [signature]
DATE: 6-06-08

I HEREBY AFFIX MY SEAL AND SIGNATURE ACKNOWLEDGING DESIGN RESPONSIBILITY WITHIN PROJECT LIMITS FOR CONTINUOUS FLOW INTERSECTION GEOMETRY, TRAFFIC SIGNALS, AND PAVEMENT GRADES AT STATE ROUTE 741 AND MIAMISBURG-SPRINGBORO PIKE. ACKNOWLEDGEMENT INCLUDES THE ENTIRE PROJECT LENGTH ON STATE ROUTE 741 BUT IS LIMITED TO STATIONS 169+50.00 TO 187+75.00 ON MIAMISBURG-SPRINGBORO PIKE.

ENGINEERS SEAL:

STATE OF OHIO ANDREW J. SHAHAN E-66260 REGISTERED PROFESSIONAL ENGINEER

SIGNED: [signature]
DATE: 10-5-08

ENGINEERS SEAL:

STATE OF OHIO DIRK W. WILLMS E-61863 REGISTERED PROFESSIONAL ENGINEER

SIGNED: [signature]
DATE: 6-5-08

STANDARD CONSTRUCTION DRAWINGS

BP-1.1	7-28-00	DM-1.4	4-21-06	HW-1.1	1-21-05	HL-30.21	1-19-07	MT-105.11	10-18-02	TC-16.20	1-19-07	TC-52.20	1-19-07	800-2008	10-17-08
BP-2.1	7-16-04	DM-2.1	7-20-01	HW-2.2	4-21-06	HL-30.22	1-21-05	MT-35.10	4-20-01	TC-21.10	1-19-07	TC-61.10	1-19-01	802	4-15-05
BP-2.2	7-16-04	DM-4.1	7-19-02	MH-1.2	1-20-06	HL-30.31	1-21-05	MT-95.30	9-05-06	TC-21.20	1-19-07	TC-65.10	1-21-05	804	1-19-07
BP-3.1	10-19-07	DM-4.2	1-21-05	RM-1.1	4-21-06	HL-30.32	4-19-02	MT-95.31	9-05-06	TC-22.10	1-19-01	TC-65.11	1-21-05	815	1-19-07
BP-4.1	7-16-04	DM-4.3	7-19-02	RM-7.1	7-15-05	HL-30.33	1-21-05	MT-95.32	9-05-06	TC-22.20	1-19-01	TC-71.10	1-19-07	816	1-19-07
BP-5.1	7-28-00	F-1.1	7-16-04	AS-1-81	7-19-02	HL-40.10	1-19-07	MT-95.60	4-19-02	TC-32.11	1-19-07	TC-72.20	1-21-05		
BP-7.1	1-19-07	F-2.1	7-28-00	BR-2-98	7-19-02	HL-40.20	1-19-07	MT-97.10	9-05-06	TC-41.10	10-19-07	TC-73.10	1-19-01	832	4-25-06
BP-8.1	7-28-00	F-3.1	7-28-00	PSID-1-99	4-20-07	HL-50.11	1-19-07	MT-97.12	9-05-06	TC-41.20	1-19-01	TC-81.10	5-01-00	836	4-15-05
		F-3.3	7-28-00	SICD-1-96	7-19-02	HL-50.21	1-19-07	MT-99.20M	1-30-95	TC-41.40	7-16-04	TC-81.20	1-16-04	838	4-15-05
CB-1.1	7-15-05	F-3.4	7-28-00	VPF-1-90	7-19-02	HL-60.11	1-19-07	MT-101.20	10-18-02	TC-41.41	1-19-01			840	4-18-08
CB-2.1	7-15-05	GR-1.1	7-16-04			HL-60.12	10-19-07	MT-101.60	9-20-06	TC-41.50	1-19-07	TC-82.10	4-19-02		
CB-2.2	7-15-05	GR-2.1	1-16-04	HL-10.11	1-16-04	HL-60.31	1-19-07	MT-101.70	10-18-02	TC-42.10	1-19-07	TC-83.10	1-19-07	898	4-18-08
CB-3.2	7-15-05	GR-3.1	1-19-07	HL-10.12	1-19-07					TC-42.20	7-16-04	TC-83.20	1-19-07		
		GR-3.2	1-19-07	HL-10.13	1-17-03	MT-102.10	10-20-06	TC-7.65	1-19-07	TC-51.11	4-20-01	TC-84.20	1-19-07		
DM-1.1	4-21-06	GR-4.2	1-19-07	HL-20.14	1-21-05	MT-102.30	9-05-06	TC-12.30	1-19-07	TC-51.12	4-20-01	TC-85.10	4-19-02		
DM-1.2	10-21-05	GR-5.1	4-18-03	HL-30.11	1-21-05	MT-105.10	10-18-02	TC-15.115	1-19-07	TC-52.10	1-19-07	TC-85.20	5-01-00		

SUPPLEMENTAL SPECIFICATIONS

904	1-19-07		
906	1-19-07		
907	1-19-07		

SPECIAL PROVISIONS

404/401 PERMIT APPLICATION 01/02/07

401 WATER QUALITY CERTIFICATION - PERMIT 03/26/07

404 PERMIT 06/22/07

SP832 5/20/08

OEPA Notification of Demolition and Renovation

UNDERGROUND UTILITIES
TWO WORKING DAYS
BEFORE YOU DIG
CALL 1-800-362-2764 (TOLL FREE)
OHIO UTILITIES PROTECTION SERVICE
NON-MEMBERS
MUST BE CALLED DIRECTLY
OIL & GAS PRODUCERS PROTECTIVE SERVICE CALL: 1-800-925-0988

APPROVED Rex Dickey, P.E., P.S./PRN
DATE 7-29-08 DISTRICT DEPUTY DIRECTOR

APPROVED James J. Barley II
DATE 10-15-08 DIRECTOR, DEPARTMENT OF TRANSPORTATION

FEDERAL PROJECT NO. E060(355) E060(356) E080(770) E080(771)

PID NO. 77246

CONSTRUCTION PROJECT NO.

RAILROAD INVOLVEMENT NONE

MOT-75-0.75

1 / 773

MOT-75-0.75
090103
DIST 07

PID - 77246
02/11/2009

CURVE DATA RAMP M

M-1
CURVE RAMP M-1
PI STA. = 442+73.39
Δ = 20° 48' 00" (RT)
Dc = 8° 00' 00"
R = 716.20'
T = 131.45'
L = 260.00'
E = 11.96'
e max = 0.048

M-2
CURVE RAMP M-2
PI STA. = 448+87.01
Δ = 15° 48' 00" (LT)
Dc = 5° 30' 00"
R = 1,041.74'
T = 144.55'
L = 287.27'
E = 9.98'
e max = 0.058

M-3
CURVE RAMP M-3
PI STA. = 455+30.04
Δ = 5° 00' 00" (LT)
Dc = 0° 30' 00"
R = 11,459.16'
T = 500.32'
L = 1,000.00'
E = 10.92'
e max = 0.020

CURVE DATA MIAMISBURG-SPRINGBORO PIKE

MS-1
M-S PIKE CURVE NO. 1
PI STA. = 110+71.15
Δ = 59° 37' 49" (LT)
Dc = 9° 30' 00"
R = 603.11'
T = 345.62'
L = 627.69'
E = 92.01'
e max = Match Ex. = 0.060

MS-2
M-S PIKE CURVE NO. 2
PI STA. = 128+46.64
Δ = 12° 35' 17" (LT)
Dc = 1° 00' 00"
R = 5,729.58'
T = 631.95'
L = 1,258.81'
E = 34.75'
e max = NC

CURVE DATA RAMP J

J-1
CURVE RAMP J-1
PI STA. = 144+29.64
Δ = 21° 07' 30" (LT)
Dc = 6° 30' 00"
R = 881.47'
T = 164.37'
L = 325.00'
E = 15.19'
e max = 0.060

J-2
CURVE RAMP J-2
PI STA. = 150+89.01
Δ = 19° 27' 24" (RT)
Dc = 4° 00' 00"
R = 1,432.39'
T = 245.57'
L = 486.42'
E = 20.90'
e max = 0.060

J-3
CURVE RAMP J-3
PI STA. = 153+79.86
Δ = 0° 52' 30" (RT)
Dc = 0° 52' 30"
R = 6,548.09'
T = 50.00'
L = 100.00'
E = 0.19'
e max = 0.024

CURVE DATA AUSTIN PIKE

A-1
AUSTIN PIKE CURVE NO. 1
PI STA. = 190+84.36
Δ = 11° 01' 38" (LT)
Dc = 3° 00' 00"
R = 1,909.86'
T = 184.36'
L = 367.58'
E = 8.88'
e max = NC

A-2
AUSTIN PIKE CURVE NO. 2
PI STA. = 194+14.75
Δ = 8° 48' 47" (RT)
Dc = 3° 00' 00"
R = 1,909.86'
T = 147.17'
L = 293.77'
E = 5.66'
e max = NC

CURVE DATA SR 741

S-1
SR 741 CURVE NO. 1
P.I. STA. = 48+78.77
Δ = 3° 28' 24" (LT)
Dc = 0° 28' 11"
R = 12,200.00'
T = 369.90'
L = 739.57'
E = 5.61'
e max= NC

S-2
SR 741 CURVE NO. 2
P.I. STA. = 56+21.73
Δ = 3° 30' 18" (RT)
Dc = 0° 28' 11"
R = 12,200.00'
T = 373.29'
L = 746.35'
E = 5.71'
e max= NC

CURVE DATA RAMP P

P-1
CURVE RAMP P-1
PI STA. = 314+57.08
Δ = 2° 49' 49" (LT)
Dc = 0° 28' 19"
R = 12,142.76'
T = 299.97'
L = 599.82'
E = 3.70'
e max = 0.020

P-2
CURVE RAMP P-2
PI STA. = 320+81.28
Δ = 3° 03' 45" (LT)
Dc = 0° 28' 20"
R = 12,133.52'
T = 324.35'
L = 648.54'
E = 4.33'
e max = 0.020

P-3
CURVE RAMP P-3
PI STA. = 324+55.48
Δ = 1° 15' 00" (LT)
Dc = 1° 15' 00"
R = 4,583.67'
T = 50.00'
L = 100.00'
E = 0.27'
e max = 0.024

P-4
CURVE RAMP P-4
PI STA. = 328+43.25
Δ = 23° 19' 01" (LT)
Dc = 3° 30' 00"
R = 1,637.02'
T = 337.77'
L = 666.20'
E = 34.48'
e max = 0.048

P-5
CURVE RAMP P-5
PI STA. = 334+77.96
Δ = 18° 24' 00" (RT)
Dc = 8° 00' 00"
R = 716.20'
T = 116.00'
L = 230.00'
E = 9.33'
e max = 0.048

CURVE DATA RAMP H

H-1
CURVE RAMP H-1
PI STA. = 224+80.19
Δ = 1° 56' 44" (LT)
Dc = 0° 27' 41"
R = 12,416.19'
T = 210.81'
L = 421.58'
E = 1.79'
e max = -0.020

H-2
CURVE RAMP H-2
PI STA. = 229+75.68
Δ = 19° 43' 58" (RT)
Dc = 3° 30' 00"
R = 1,637.02'
T = 284.71'
L = 563.79'
E = 24.571
e max = 0.060

H-3
CURVE RAMP H-3
PI STA. = 236+46.48
Δ = 25° 26' 59" (LT)
Dc = 8° 00' 00"
R = 716.20'
T = 161.73'
L = 318.12'
E = 18.03'
e max= 0.048

CURVE DATA I-75

I-1
CURVE I-75-1
P.I. STA. = 198+03.96
Δ = 9° 36' 55" (LT)
Dc = 0° 28' 00"
R = 12,277.69'
T = 1,032.64'
L = 2,060.44'
E = 43.35'
e max= NC

I-2
CURVE I-75-2
P.I. STA. = 19+72.39
Δ = 18° 15' 11" (LT)
Dc = 0° 28' 00"
R = 12,277.69'
T = 1,972.39'
L = 3,911.36'
E = 157.42'
e max= NC

THERE ARE NO EXISTING LANDSCAPED AREAS WITHIN THE PROJECT LIMITS

HORIZONTAL SCALE IN FEET
0 200 400 800

CALCULATED DJB CHECKED AJS

SCHEMATIC PLAN

MOT-75-0.75

2
773

I-75

DESIGN DESIGNATION

CURRENT ADT (2015)	107640
DESIGN YEAR ADT (2035)	141050
DESIGN HOURLY VOLUME (2035)	14150
DIRECTIONAL DISTRIBUTION	0.57
TRUCKS (24 HOUR B&C)	T_{24} 0.26
	T_D 0.13
DESIGN SPEED	70 MPH
LEGAL SPEED	65 MPH

DESIGN FUNCTIONAL CLASSIFICATION -
URBAN INTERSTATE

MIAMISBURG - SPRINGBORO PIKE

DESIGN DESIGNATION

CURRENT ADT (2015)	19800
DESIGN YEAR ADT (2035)	29650
DESIGN HOURLY VOLUME (2035)	2410
DIRECTIONAL DISTRIBUTION	.054
TRUCKS (24 HOUR B&C)	T_{24} 0.04
DESIGN SPEED	45 MPH
LEGAL SPEED	45 MPH

DESIGN FUNCTIONAL CLASSIFICATION -
URBAN COLLECTOR

AUSTIN PIKE

DESIGN DESIGNATION

CURRENT ADT (2015)	7470
DESIGN YEAR ADT (2035)	11140
DESIGN HOURLY VOLUME (2035)	1058
DIRECTIONAL DISTRIBUTION	0.57
TRUCKS (24 HOUR B&C)	T_{24} 0.04
DESIGN SPEED	45 MPH
LEGAL SPEED	45 MPH

DESIGN FUNCTIONAL CLASSIFICATION -
URBAN COLLECTOR

SR-741

DESIGN DESIGNATION

CURRENT ADT (2015)	29470
DESIGN YEAR ADT (2035)	41160
DESIGN HOURLY VOLUME (2035)	3910
DIRECTIONAL DISTRIBUTION	0.61
TRUCKS (24 HOUR B&C)	T_{24} 0.03
DESIGN SPEED	60 MPH
LEGAL SPEED	55 MPH

DESIGN FUNCTIONAL CLASSIFICATION -
URBAN PRINCIPAL ARTERIAL

BYERS ROAD

DESIGN DESIGNATION

CURRENT ADT (2015)	6230
DESIGN YEAR ADT (2035)	9830
DESIGN HOURLY VOLUME (2035)	934
DIRECTIONAL DISTRIBUTION	0.67
TRUCKS (24 HOUR B&C)	T_{24} 0.04
DESIGN SPEED	45 MPH
LEGAL SPEED	45 MPH

DESIGN FUNCTIONAL CLASSIFICATION -
URBAN COLLECTOR

WOOD ROAD

DESIGN DESIGNATION

CURRENT ADT (2015)	8480
DESIGN YEAR ADT (2035)	11690
DESIGN HOURLY VOLUME (2035)	1111
DIRECTIONAL DISTRIBUTION	0.68
TRUCKS (24 HOUR B&C)	T_{24} 0.04
DESIGN SPEED	45 MPH
LEGAL SPEED	45 MPH

DESIGN FUNCTIONAL CLASSIFICATION -
URBAN COLLECTOR

SCHEMATIC PLAN
DESIGN DESIGNATIONS

MOT-75-0.75

THE CONTROL SURVEY FOR THIS PROJECT WAS CONDUCTED BY WOOLPERT LLP FOR THE OHIO DEPARTMENT OF TRANSPORTATION IN MAY, 2004.

SURVEY CONTROL IS ESTABLISHED FROM NATIONAL GEODETIC SURVEY (NGS) MONUMENTS BY STATIC GLOBAL POSITIONING SYSTEM (GPS) METHODS.

SURVEY CONTROL IS FOR PROJECT USE ONLY

THIS SURVEY ACHIEVES SECOND-ORDER GPS ACCURACY FOR HORIZONTAL MEASUREMENTS AND IS CONSISTENT WITH THIRD-ORDER GPS VERTICAL ACCURACY AS ESTABLISHED BY THE FEDERAL GEODETIC CONTROL COMMITTEE.

THE NGS CONTROL MONUMENT STATIONS USED ARE SOUTHPORT AZ MK, SEIMERING RESET AND MOT 1083 (3-D), MOT 1011 AZ MK AND MOT 1079 (2-D) AND F346ECC AND N345 (1-D).

ALL CONTROL STATIONS CONSIST OF A 5/8" REBAR WITH AN ALUMINUM LOGO CAP, WITH THE EXCEPTIONS P02 IS A PK NAIL AND P10 AND P30 HAVE PLASTIC CAPS.

THE FOLLOWING PAIRS OF POINTS ARE ESTABLISHED TO BE INTER-VISIBLE FOR USE OF CONVENTIONAL (NON-GPS) SURVEYING INSTRUMENTS DURING CONSTRUCTION:

P18	P19	TBM1	TBM2	TBM3	TBM4	TBM6
P17	P20	P1	TBM8	P33	TBM5	TBM7

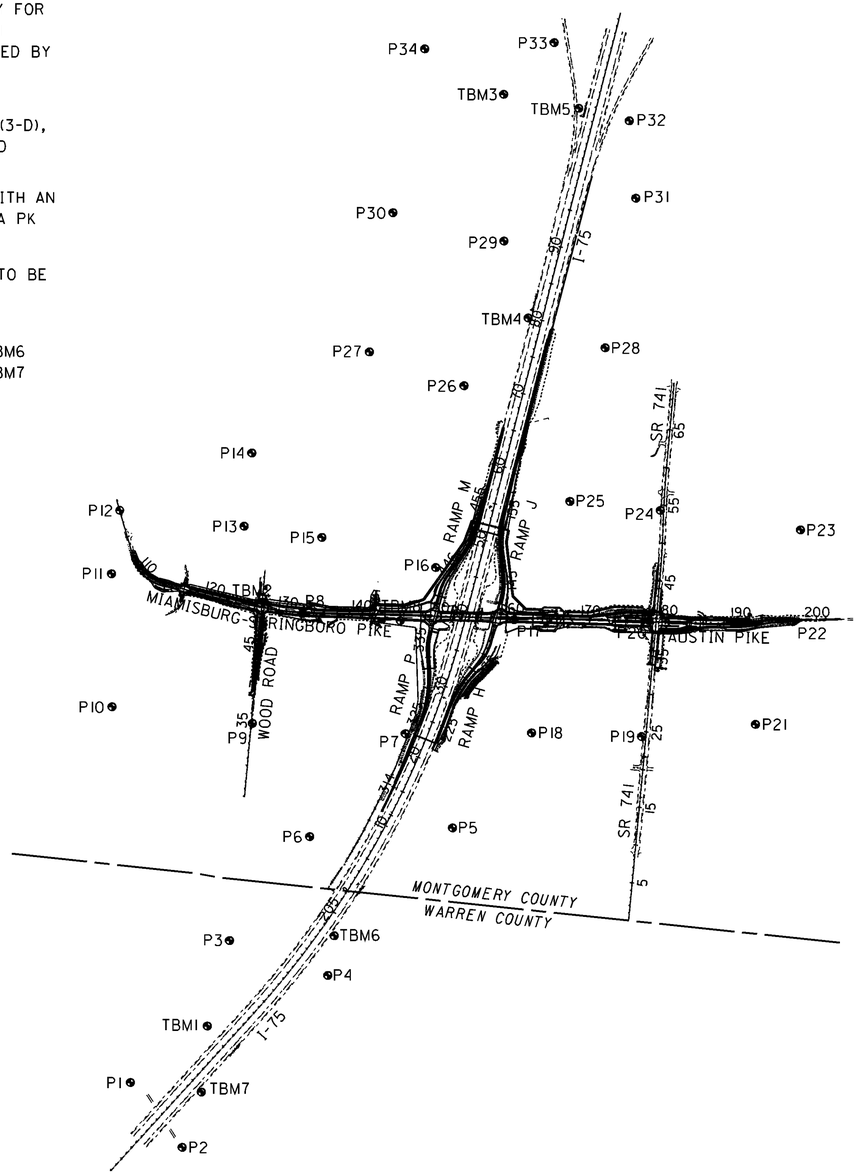

MOT I-75/ AUSTIN ROAD GROUND CONTROL
MONTGOMERY COUNTY, OHIO
HORIZONTAL DATUM: NAD 83 (1995)
VERTICAL DATUM: NADV 88
UNITS: US SURVEY FOOT
STATE PLANE ZONE: OHIO SOUTH
GEOID MODEL: GEOID 03
COORDINATE SYSTEM: GROUND
COMBINED SCALE FACTOR BASED ON AVERAGE PROJECT SITE ELEVATION: 0.99990331320
DATE: JUNE 2004

NOTE: ALL STATION ELEVATIONS EQUAL TARGET ELEVATIONS.

PHOTO CONTROL STATIONS

STATION NUMBER	NORTHING	EASTING	ELEVATION
P1	580190.87	1474508.80	958.79
P2	579335.12	1475192.42	961.28
P3	582064.79	1475817.84	948.32
P4	581604.76	1477113.80	927.27
P5	583551.70	1478761.09	901.61
P6	583436.76	1476875.75	917.31
P7	584796.03	1478138.52	903.37
P8	586379.31	1476778.26	909.05
P9	584932.55	1476119.09	908.08
P10	585150.79	1474266.67	891.04
P11	586905.89	1474260.32	878.48
P12	587743.56	1474369.50	887.28
P13	587533.81	1476010.44	912.88
P14	588499.77	1476112.87	913.14
P15	587385.53	1477036.70	909.97
P16	586988.53	1478538.91	929.03
P17	586300.47	1479573.17	924.98
P18	584805.85	1479804.08	916.65
P19	584757.88	1481256.28	943.30
P20	586287.61	1481355.20	945.37
P21	584918.12	1482760.44	955.88
P22	586273.32	1483248.24	968.92
P23	587485.30	1483354.03	973.16
P24	587742.45	1481503.91	959.28
P25	587860.91	1480311.14	936.93
P26	589388.60	1478912.79	961.41
P27	589834.74	1477664.50	946.25
P28	589888.99	1480776.11	996.53
P29	591298.42	1479439.34	941.15
P30	591672.16	1477974.54	939.68
P31	591863.53	1481181.12	943.90
P32	592885.12	1481094.97	942.55
P33	593917.36	1480103.28	968.75
P34	593834.34	1478393.82	979.81

INTERMEDIATE CONTROL STATIONS

STATION NUMBER	NORTHING	EASTING	ELEVATION
TBM1	580935.75	1475525.10	962.17
TBM2	586513.73	1476236.85	931.46
TBM3	593234.81	1479436.68	1002.66
TBM4	590283.43	1479759.64	987.27
TBM5	593050.01	1480426.96	950.06
TBM6	582128.43	1477198.81	935.88
TBM7	580065.29	1475445.65	954.37
TBM8	586287.98	1478071.83	910.33

HORIZONTAL SCALE IN FEET
0 500 1000 2000
CALCULATED HGH CHECKED AJS

PROJECT CONTROL AND BENCHMARKS

MOT-75-0.75

BYERS ROAD			
POINT	STATION	NORTHING	EASTING
P.O.T. Station	70+00.00	N 586,365.86	E 1,477,727.04
P.O.T. Station	73+00.00	N 586,664.40	E 1,477,756.64

CRAINS CREEK ROAD			
POINT	STATION	NORTHING	EASTING
P.O.T. Station	15+48.54	N 586,357.90	E 1,474,971.63
P.I. Station	17+41.12	N 586,430.31	E 1,475,150.09
P.C. Station	16+26.48	N 586,387.21	E 1,475,043.85
P.T. Station	18+36.77	N 586,541.59	E 1,475,177.66
P.I. Station	21+90.21	N 586,884.66	E 1,475,262.65
P.C. Station	21+48.23	N 586,843.92	E 1,475,252.56
P.T. Station	22+29.88	N 586,925.86	E 1,475,254.64
P.O.T. Station	23+30.58	N 587,024.71	E 1,475,235.43

MIAMISBURG-SPRINGBORO ROAD/AUSTIN PIKE			
POINT	STATION	NORTHING	EASTING
P.O.T. Station	100+00.00	N 587,875.81	E 1,474,328.09
P.I. Station	110+71.15	N 586,847.65	E 1,474,628.49
P.C. Station	107+25.53	N 587,179.40	E 1,474,531.57
P.T. Station	113+53.22	N 586,763.55	E 1,474,963.72
P.I. Station	128+46.64	N 586,400.17	E 1,476,412.26
P.C. Station	122+14.69	N 586,553.93	E 1,475,799.30
P.T. Station	134+73.50	N 586,383.68	E 1,477,043.99
P.I. Station	190+84.36	N 586,237.33	E 1,482,652.94
P.C. Station	189+00.00	N 586,242.14	E 1,482,468.65
P.T. Station	192+67.58	N 586,267.86	E 1,482,834.75
P.I. Station	194+14.75	N 586,292.23	E 1,482,979.90
P.C. Station	192+67.58	N 586,267.86	E 1,482,834.75
P.T. Station	195+61.34	N 586,294.08	E 1,483,127.06
P.O.T. Station	199+26.24	N 586,298.66	E 1,483,491.92
P.O.T. Station	203+72.33	N 586,304.82	E 1,483,937.97

EXISTING I-75			
POINT	STATION	NORTHING	EASTING
P.O.T. Station	34+62.31	N 569,751.94	E 1,465,829.46
P.I. Station	198+03.96	N 581,849.56	E 1,476,815.68
P.C. Station	187+71.32	N 581,085.10	E 1,476,121.45
P.T. Station	208+31.76	N 582,719.24	E 1,477,372.47
Station Equation: Sta 208+31.76 (BK) = Sta 0+00.00 (AH)			
P.I. Station	19+72.39	N 584,380.36	E 1,478,435.95
P.C. Station	0+00.00	N 582,719.24	E 1,477,372.47
P.T. Station	39+11.36	N 586,290.99	E 1,478,925.64
P.I. Station	147+71.76	N 596,811.37	E 1,481,621.96
P.C. Station	124+38.00	N 594,550.67	E 1,481,042.55
P.T. Station	170+50.50	N 599,126.98	E 1,481,331.49
P.O.T. Station	200+50.50	N 602,103.66	E 1,480,958.10

RAMP H			
POINT	STATION	NORTHING	EASTING
P.I. Station	224+80.19	N 584,875.82	E 1,478,620.48
P.C. Station	222+69.38	N 584,680.41	E 1,478,541.37
P.T. Station	226+90.96	N 585,073.80	E 1,478,692.90
P.I. Station	229+75.68	N 585,341.19	E 1,478,790.71
P.C. Station	226+90.96	N 585,073.80	E 1,478,692.90
P.T. Station	232+54.75	N 585,559.85	E 1,478,973.05
P.I. Station	236+46.48	N 585,860.70	E 1,479,223.93
P.C. Station	234+84.75	N 585,736.49	E 1,479,120.35
P.T. Station	238+02.87	N 586,017.37	E 1,479,264.08
P.O.T. Station	241+19.11	N 586,323.70	E 1,479,342.60

RAMP J			
POINT	STATION	NORTHING	EASTING
P.O.T. Station	140+10.27	N 586,323.71	E 1,479,342.60
P.I. Station	144+29.64	N 586,729.94	E 1,479,446.71
P.C. Station	142+65.27	N 586,570.72	E 1,479,405.91
P.T. Station	145+90.27	N 586,893.17	E 1,479,427.39
P.I. Station	150+89.01	N 587,388.46	E 1,479,368.77
P.C. Station	148+43.44	N 587,144.58	E 1,479,397.64
P.T. Station	153+29.86	N 587,628.01	E 1,479,422.79
P.I. Station	153+79.86	N 587,676.79	E 1,479,433.79
P.C. Station	153+29.86	N 587,628.01	E 1,479,422.79
P.T. Station	154+29.86	N 587,725.39	E 1,479,445.53
P.O.T. Station	160+79.76	N 588,357.12	E 1,479,598.15

RAMP M			
POINT	STATION	NORTHING	EASTING
P.O.T. Station	438+26.94	N 586,345.04	E 1,478,524.87
P.I. Station	442+73.39	N 586,777.51	E 1,478,635.71
P.C. Station	441+41.94	N 586,650.18	E 1,478,603.08
P.T. Station	444+01.94	N 586,884.95	E 1,478,711.44
P.I. Station	448+87.01	N 587,281.45	E 1,478,990.88
P.C. Station	447+42.45	N 587,163.29	E 1,478,907.60
P.T. Station	450+29.73	N 587,417.81	E 1,479,038.83
P.I. Station	455+30.04	N 587,889.80	E 1,479,204.81
P.C. Station	450+29.73	N 587,417.81	E 1,479,038.83
P.T. Station	460+29.73	N 588,374.45	E 1,479,329.03

INTERSECTION DATA			
POINT LOCATION	POINT LOCATION	NORTHING	EASTING
Sta. 116+14.25 M-S Pike	Sta. 20+00.00 Crains Creek Road	N 586,700.04	E 1,475,216.91
Sta. 126+68.49 M-S Pike	Sta. 50+00.00 Wood Road	N 586,461.05	E 1,476,243.37
Sta. 141+56.78 M-S Pike	Sta. 70+00.00 Byers Road	N 586,365.86	E 1,477,727.04
Sta. 149+54.88 M-S Pike	Sta. 338+51.96 Ramp P	N 586,345.04	E 1,478,524.87
Sta. 149+54.88 M-S Pike	Sta. 438+26.94 Ramp M	N 586,345.04	E 1,478,524.87
Sta. 153+66.88 M-S Pike	Sta. 39+56.06 I-75	N 586,334.29	E 1,478,936.73
Sta. 157+72.88 M-S Pike	Sta. 241+19.11 Ramp H	N 586,323.70	E 1,479,342.60
Sta. 157+72.88 M-S Pike	Sta. 140+10.27 Ramp J	N 586,323.70	E 1,479,342.60
Sta. 178+80.09 M-S Pike	Sta. 39+56.49 SR-741	N 586,268.74	E 1,481,449.08

RAMP P			
POINT	STATION	NORTHING	EASTING
P.I. Station	314+57.08	N 584,048.98	E 1,477,968.96
P.C. Station	311+57.11	N 583,779.55	E 1,477,837.07
P.T. Station	317+56.93	N 584,324.58	E 1,478,087.38
P.I. Station	320+81.28	N 584,621.79	E 1,478,217.26
P.C. Station	317+56.93	N 584,324.58	E 1,478,087.38
P.T. Station	324+05.47	N 584,925.52	E 1,478,331.07
P.I. Station	324+55.48	N 584,972.34	E 1,478,348.62
P.C. Station	324+05.47	N 584,925.52	E 1,478,331.07
P.T. Station	325+05.47	N 585,019.53	E 1,478,365.14
P.I. Station	328+43.25	N 585,338.34	E 1,478,476.73
P.C. Station	325+05.47	N 585,019.53	E 1,478,365.14
P.T. Station	331+71.67	N 585,675.28	E 1,478,453.02
P.I. Station	334+77.96	N 585,980.82	E 1,478,431.52
P.C. Station	333+61.96	N 585,865.10	E 1,478,439.67
P.T. Station	335+91.96	N 586,093.18	E 1,478,460.32
P.O.T. Station	338+51.96	N 586,345.04	E 1,478,524.87

SR-741			
POINT	STATION	NORTHING	EASTING
P.O.T. Station	0+00.00	N 582,328.92	E 1,481,086.33
P.O.T. Station	16+34.25	N 583,955.91	E 1,481,240.23
P.O.T. Station	21+71.10	N 584,490.45	E 1,481,289.96
P.O.T. Station	40+17.64	N 586,329.64	E 1,481,454.53
P.I. Station	48+78.77	N 587,187.35	E 1,481,531.31
P.C. Station	45+08.87	N 586,818.92	E 1,481,498.33
P.T. Station	52+48.44	N 587,557.09	E 1,481,541.92
P.I. Station	56+21.73	N 587,930.23	E 1,481,552.61
P.C. Station	52+48.44	N 587,557.09	E 1,481,541.92
P.T. Station	59+94.79	N 588,302.02	E 1,481,586.10
P.O.T. Station	71+24.83	N 589,427.50	E 1,481,687.49

WOOD ROAD			
POINT	STATION	NORTHING	EASTING
P.O.T. Station	25+00.00	N 583,971.28	E 1,476,017.49
P.O.T. Station	50+00.00	N 586,461.05	E 1,476,243.37
P.O.T. Station	55+00.00	N 586,959.01	E 1,476,288.55

CALCULATED HGH CHECKED AJS

PROJECT CONTROL AND BENCHMARKS

MOT-75-0.75

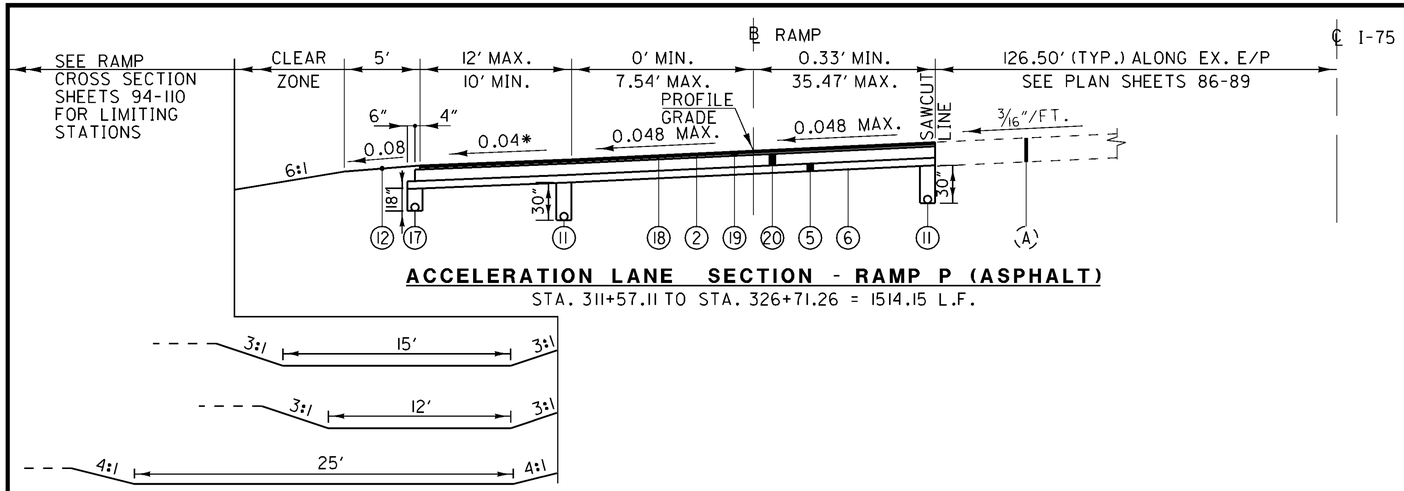

ACCELERATION LANE SECTION - RAMP P (ASPHALT)

STA. 311+57.11 TO STA. 326+71.26 = 1514.15 L.F.

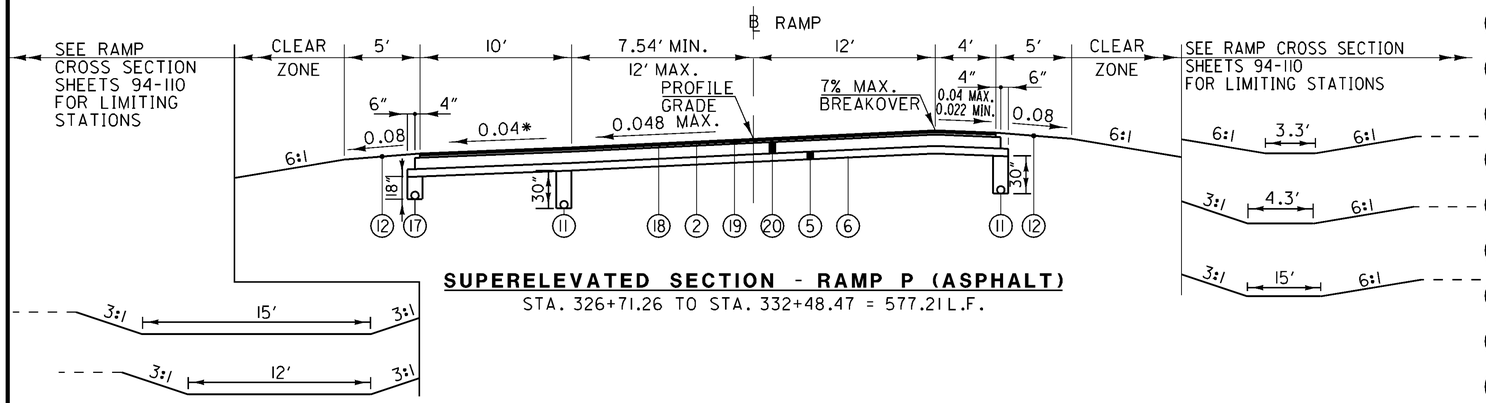

SUPERELEVATED SECTION - RAMP P (ASPHALT)

STA. 326+71.26 TO STA. 332+48.47 = 577.21 L.F.

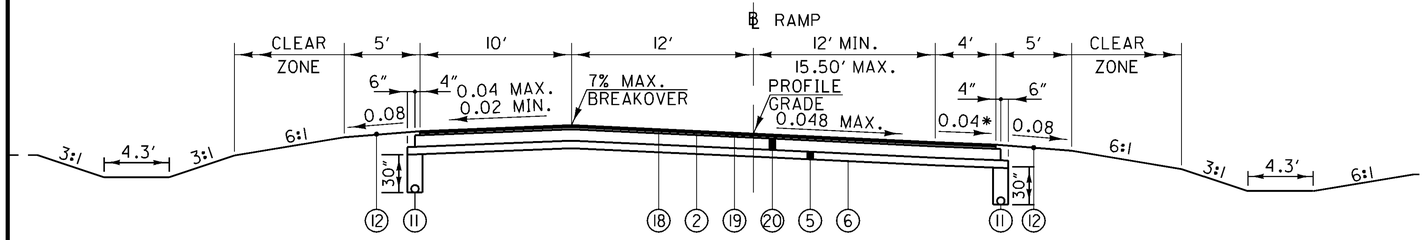

SUPERELEVATED SECTION - RAMP P (ASPHALT)

STA. 332+48.47 TO STA. 334+50.00 = 201.53 L.F.

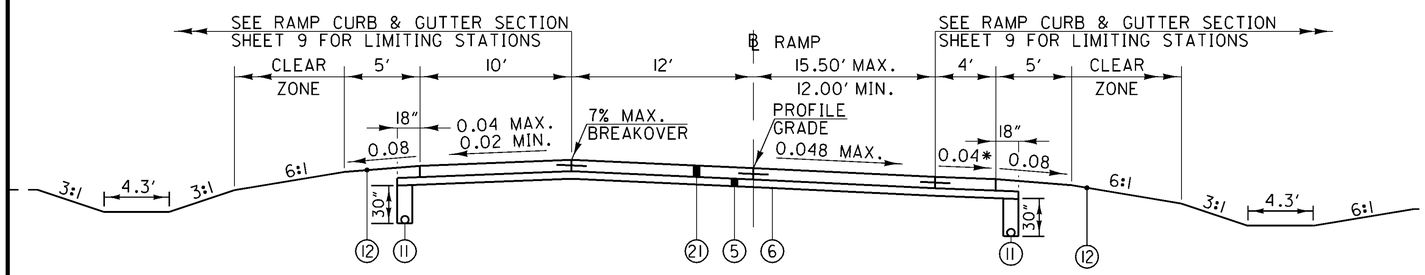

SUPERELEVATED SECTION - RAMP P (CONCRETE)

STA. 334+50.00 TO STA. 338+06.81 = 356.81 L.F.

LEGEND

1	ITEM 446 - 1½″ ASPHALT CONCRETE SURFACE COURSE, TYPE 1H, PG 76-22M
2	ITEM 407 - TACK COAT FOR INTERMEDIATE COURSE @ 0.04 GAL./S.Y.
3	ITEM 446 - 2″ ASPHALT CONCRETE INTERMEDIATE COURSE, TYPE 2, PG64-28
4	ITEM 301 - 8″ ASPHALT CONCRETE BASE, PG64-22 (2 - 4″ LIFTS)
5	ITEM 304 - 6″ AGGREGATE BASE
6	ITEM 204 - SUBGRADE COMPACTION
7	ITEM 411 - 8″ STABILIZED CRUSHED AGGREGATE
8	ITEM 448 - VARIABLE THICKNESS ASPHALT CONCRETE INTERMEDIATE COURSE, TYPE 2, PG64-28
9	ITEM 407 - TACK COAT @ 0.075 GAL./S.Y
10	ITEM 254 - PAVEMENT PLANING ASPHALT CONCRETE (SEE PLAN SHEETS FOR LOCATIONS)
11	ITEM 605 - 6″ SHALLOW PIPE UNDERDRAINS WITH FABRIC WRAP
12	ITEM 659 - SEEDING AND MULCHING
13	ITEM 609 - COMBINATION CURB AND GUTTER, TYPE 2
14	ITEM 608 - 4″ CONCRETE WALK
15	ITEM 610 - SPECIAL - RETAINING WALL, MISC: MODULAR BLOCK WALL
16	ITEM 609 - CONCRETE MEDIAN, AS PER PLAN
17	ITEM 605 - 6″ BASE PIPE UNDERDRAINS WITH FABRIC WRAP
18	ITEM 442 - 1½″ ASPHALT CONCRETE SURFACE COURSE, 12.5MM, TYPE A (446), AS PER PLAN
19	ITEM 442 - 1¾″ ASPHALT CONCRETE INTERMEDIATE COURSE, 19MM, TYPE A (446), AS PER PLAN
20	ITEM 302 - 9″ ASPHALT CONCRETE BASE, PG64-22
21	ITEM 452 - 9″ NON-REINFORCED CONCRETE PAVEMENT
22	ITEM 889 - QC/QA CONCRETE, CLASS QSC2, SUPERSTRUCTURE (APPROACH SLAB), 17″, AS PER PLAN
23	ITEM 442 - 1¼″ ASPHALT CONCRETE SURFACE COURSE, 9.5 MM, TYPE A (446)
24	ITEM 442 - 1¾″ ASPHALT CONCRETE INTERMEDIATE COURSE, 19MM, TYPE A (446)
25	ITEM 302 - 5½″ ASPHALT CONCRETE BASE, PG64-22
26	ITEM 609 - CURB, TYPE 6
27	ITEM 448 - 1¼″ ASPHALT CONCRETE SURFACE COURSE, TYPE 1, PG 64-22
28	ITEM 606 - GUARDRAIL TYPE 5
29	ITEM 451 - REINFORCED CONCRETE PAVEMENT, MISC: 4″ ENHANCED CONCRETE PAVEMENT
30	ITEM 304 - 5¼″ AGGREGATE BASE
A	EXISTING PAVEMENT (SEE PLAN SHEETS FOR TYPICAL ADJOINING SECTION)

* OR PAVEMENT SLOPE IF GREATER

TYPICAL SECTIONS RAMP P

MOT-75-0.75

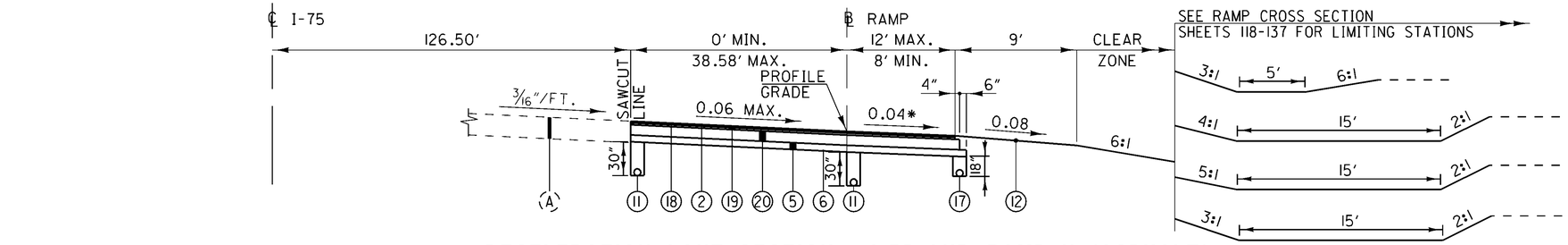

DECELERATION LANE SECTION - I-75 AND RAMP H (ASPHALT)

STA. 21+69.38 TO STA. 22+69.38 (I-75) = STA. 222+69.38 (RAMP H) TO STA. 229+69.38 = 800.00 L.F.

NOTE: ℄ CONSTRUCTION I-75 STA. 22+69.38; 138.50' RT.=
℄ CONSTRUCTION RAMP H P.C. STA. 222+69.38

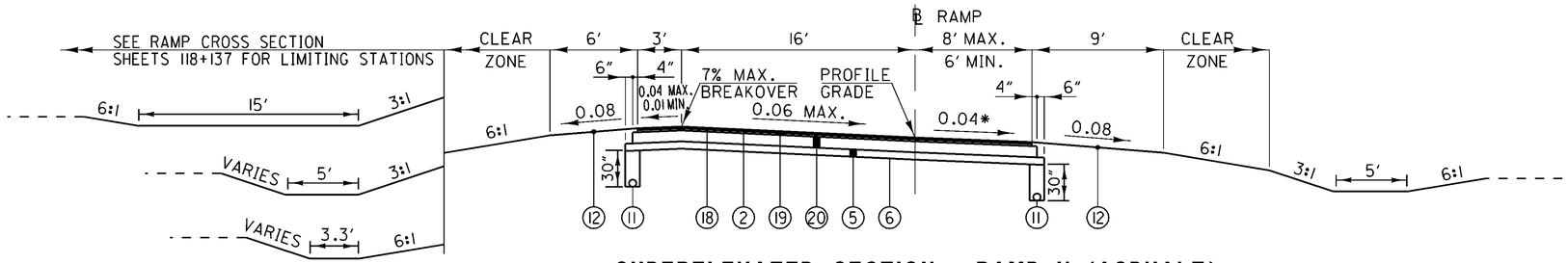

SUPERELEVATED SECTION - RAMP H (ASPHALT)

STA. 229+69.38 TO STA. 233+69.95 = 400.57 L.F.

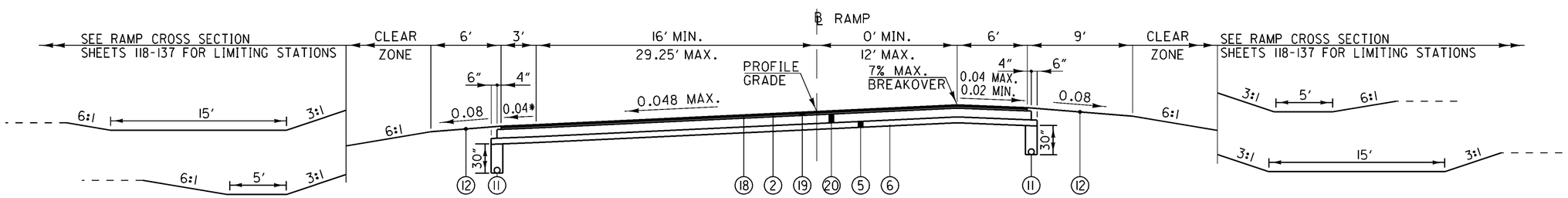

SUPERELEVATED SECTION - RAMP H (ASPHALT)

STA. 233+69.95 TO STA. 237+25.00 = 355.05 L.F.

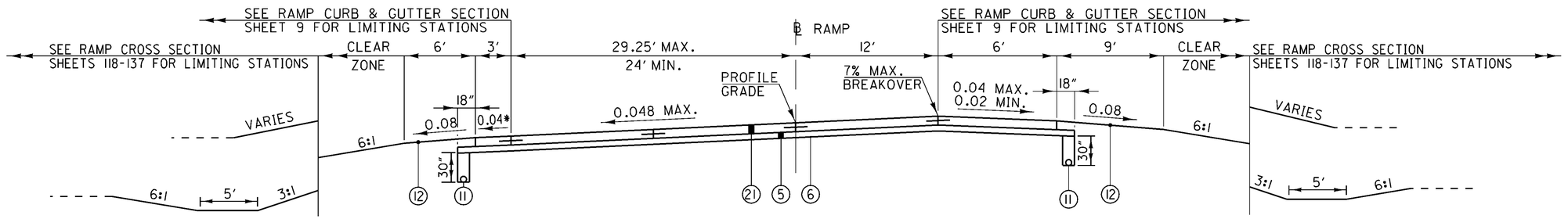

SUPERELEVATED SECTION - RAMP H (CONCRETE)

STA. 237+25.00 TO STA. 240+76.03 = 351.03 L.F.

* OR PAVEMENT SLOPE IF GREATER

TYPICAL SECTIONS I-75 AND RAMP H

MOT-75-0.75

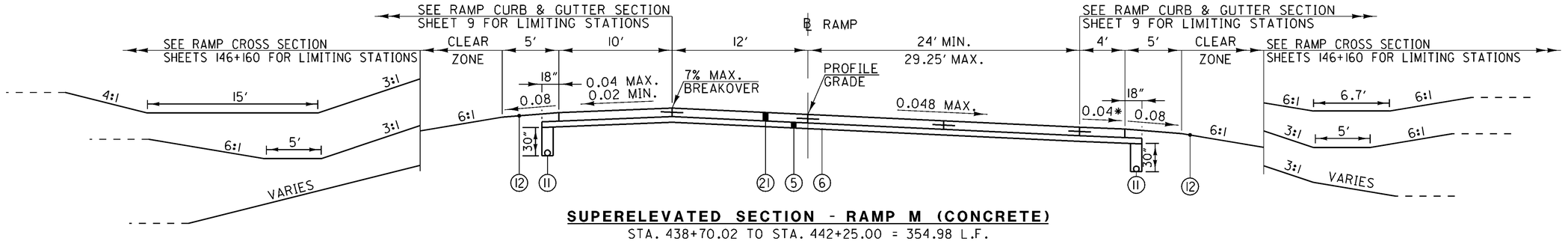

SUPERELEVATED SECTION - RAMP M (CONCRETE)

STA. 438+70.02 TO STA. 442+25.00 = 354.98 L.F.

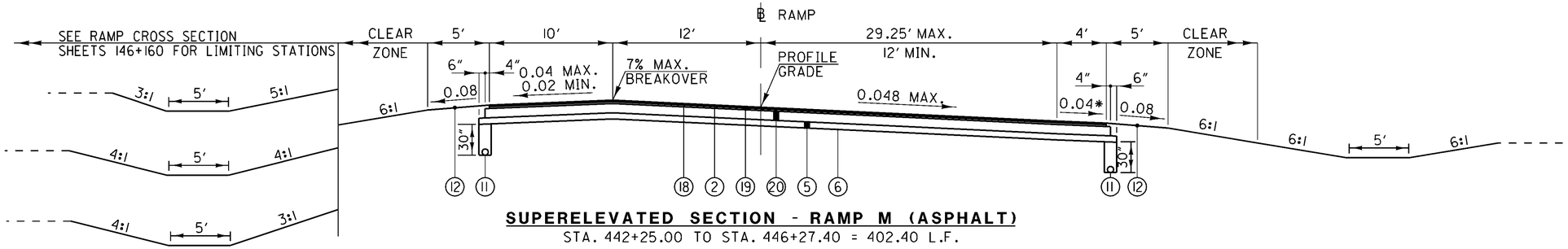

SUPERELEVATED SECTION - RAMP M (ASPHALT)

STA. 442+25.00 TO STA. 446+27.40 = 402.40 L.F.

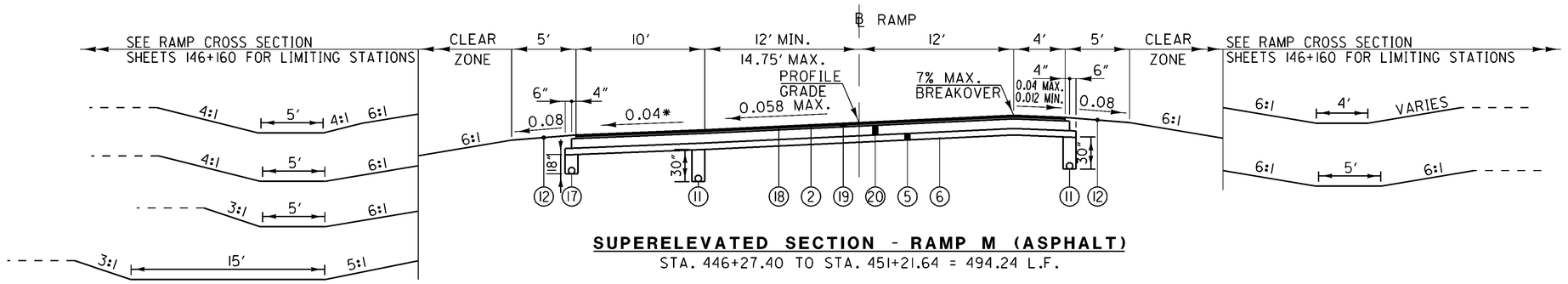

SUPERELEVATED SECTION - RAMP M (ASPHALT)

STA. 446+27.40 TO STA. 451+21.64 = 494.24 L.F.

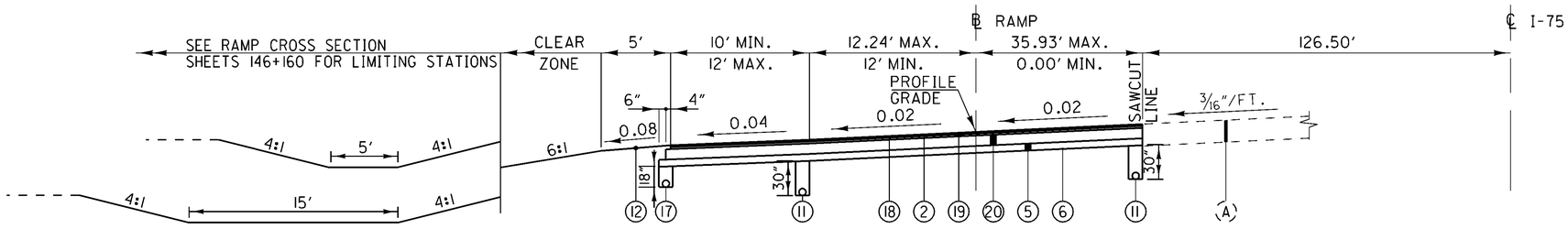

DECELERATION LANE SECTION - RAMP M (ASPHALT) AND I-75

STA. 451+21.64 TO STA. 460+29.73 (RAMP M) = STA. 60+29.73 (I-75) TO STA. 65+00.00 = 1378.36 L.F.

NOTE: ℄ CONSTRUCTION RAMP M P.T. STA. 460+29.73=
℄ CONSTRUCTION I-75 STA. 60+29.73; 126.50′ LT.

* OR PAVEMENT SLOPE IF GREATER

DECEL 51+21.64;126.50′ LT. (I-75) 451+21.64 (RAMP M) TO 60+29.73;126.50′ LT. (I-75) 460+29.73 (RAMP M END STA.)

TYPICAL SECTIONS RAMP M AND I-75

MOT-75-0.75

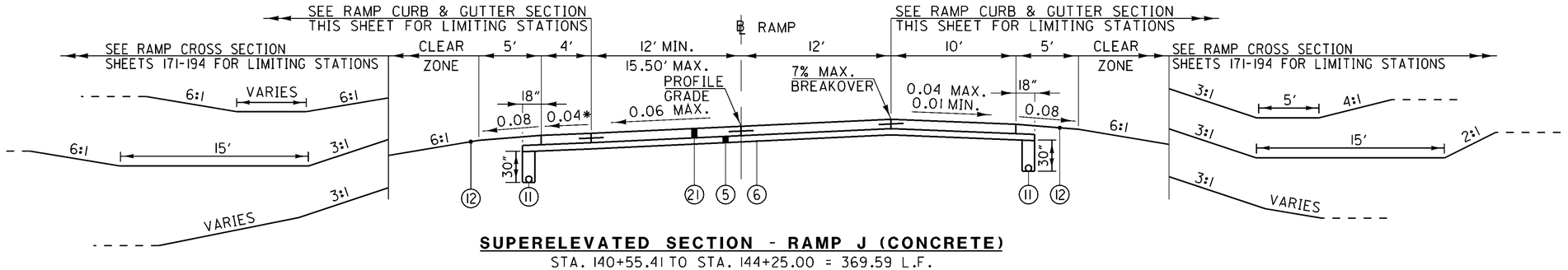

SUPERELEVATED SECTION - RAMP J (CONCRETE)

STA. 140+55.41 TO STA. 144+25.00 = 369.59 L.F.

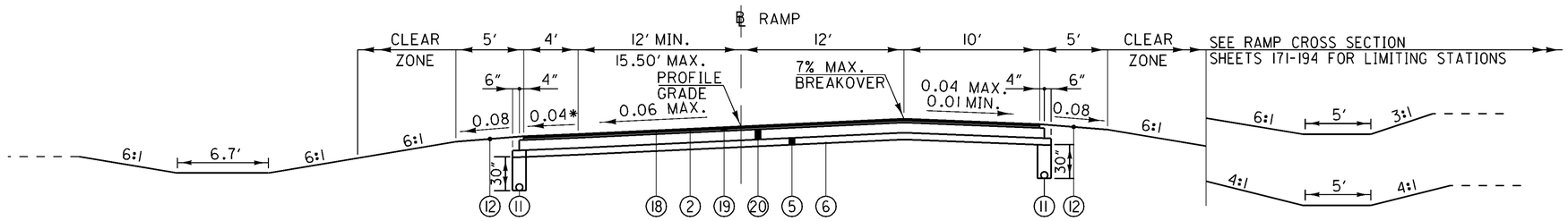

SUPERELEVATED SECTION - RAMP J (ASPHALT)

STA. 144+25.00 TO STA. 147+14.27 = 289.27 L.F.

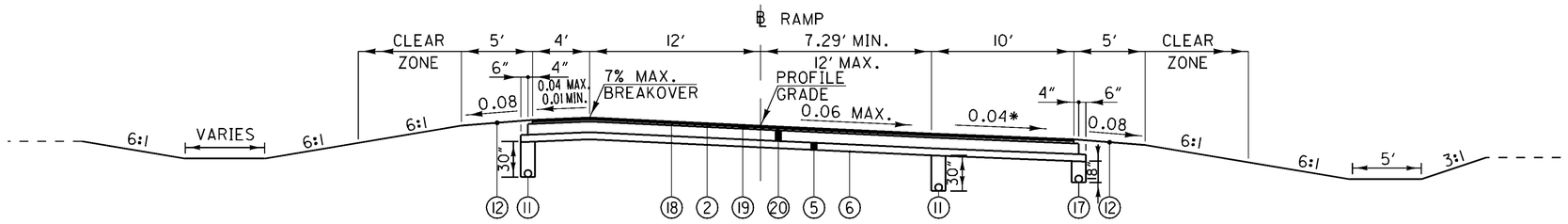

SUPERELEVATED SECTION - RAMP J (ASPHALT)

STA. 147+14.27 TO STA. 151+83.54 = 469.27 L.F.

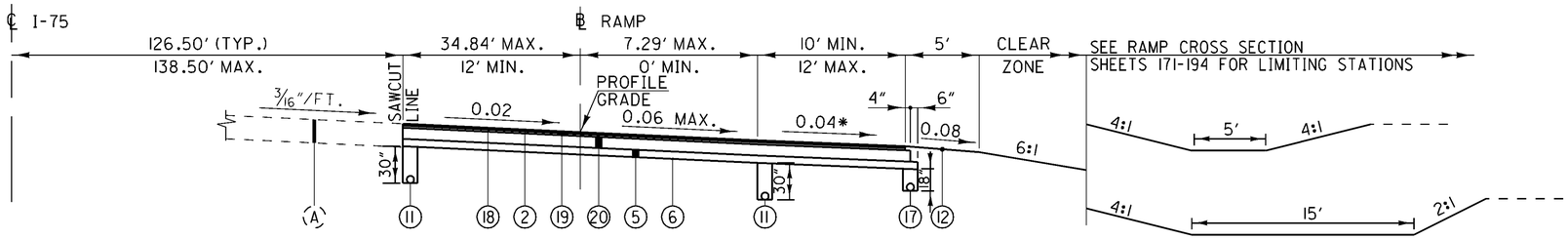

ACCELERATION LANE SECTION - RAMP J (ASPHALT) AND I-75

STA. 151+83.54 TO STA. 160+79.76 (RAMP J) = STA. 60+79.76 (I-75) TO STA. 79+00.00 = 2716.46 L.F.

NOTE: ℄ CONSTRUCTION RAMP J STA. 160+79.76=
℄ CONSTRUCTION I-75 STA. 60+79.76; 138.50′ RT.

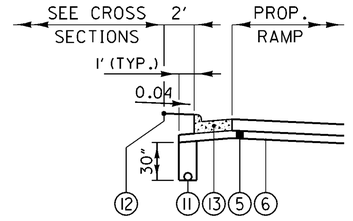

RAMP CURB AND GUTTER SECTION

RAMP P
STA. 336+53.92 TO STA. 338+06.81

RAMP H
STA. 239+66.93 TO STA. 240+76.03

RAMP M
STA. 438+70.02 TO STA. 439+79.79

RAMP J
STA. 140+55.41 TO STA. 142+09.49

* OR PAVEMENT SLOPE IF GREATER

TYPICAL SECTIONS
RAMP J AND I-75

MOT-75-0.75

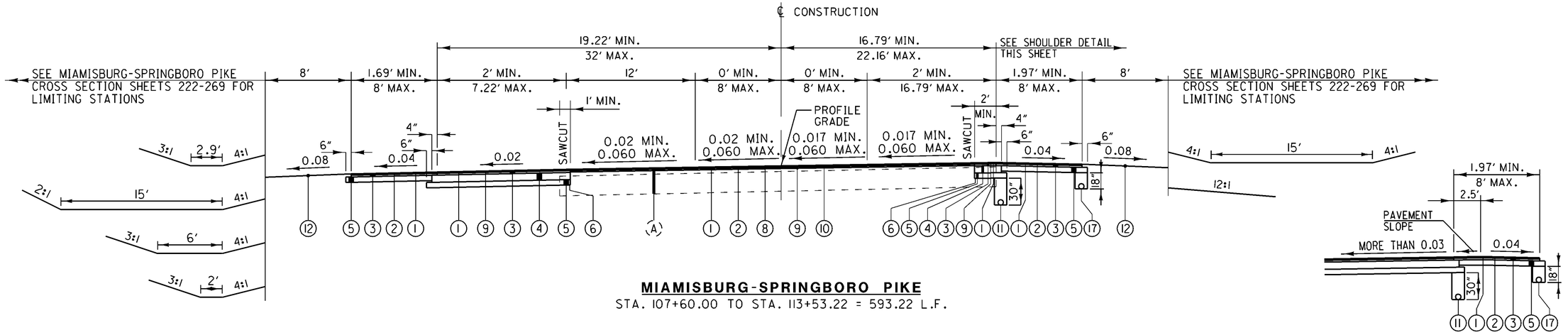

MIAMISBURG-SPRINGBORO PIKE
STA. 107+60.00 TO STA. 113+53.22 = 593.22 L.F.

SHOULDER DETAIL

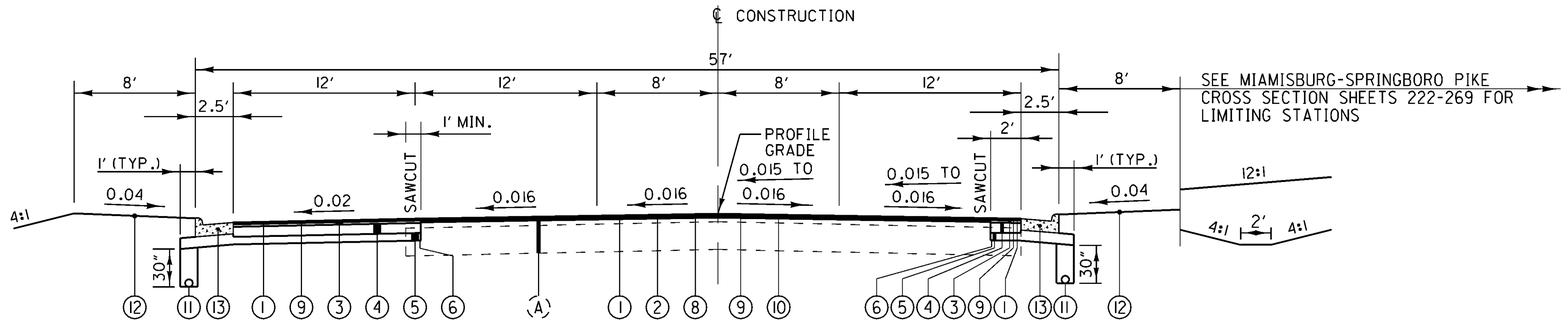

MIAMISBURG-SPRINGBORO PIKE
STA. 113+53.22 TO STA. 116+14.26 = 261.04 L.F.

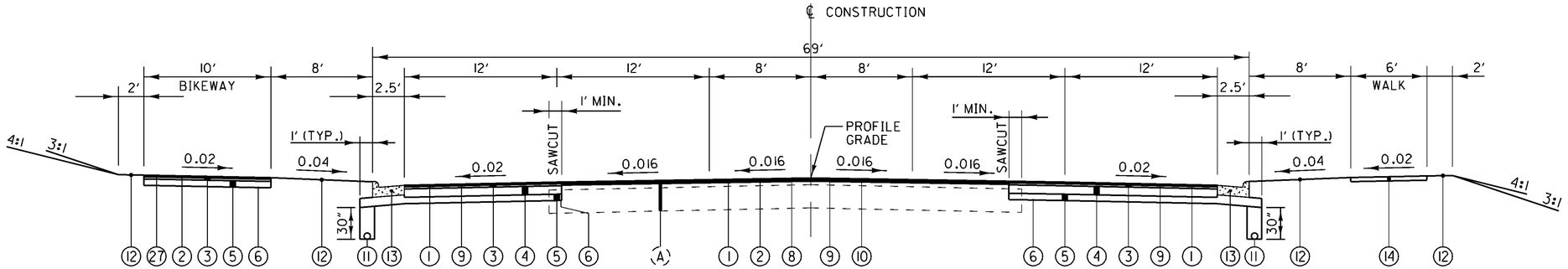

MIAMISBURG-SPRINGBORO PIKE
STA. 116+14.26 TO STA. 121+10.00 = 495.74 L.F.

MODULAR BLOCK WALL
STA. 118+99.25 TO STA. 123+50.87

SEE TYPICAL SECTION
STA. 121+10.00 TO STA. 122+14.69

NOTE:
FOR PAVEMENT PLANING AREAS SEE PLAN SHEETS

FOR SAWCUT LOCATIONS SEE PLAN SHEETS

TYPICAL SECTIONS
MIAMISBURG-SPRINGBORO PIKE

MOT-75-0.75

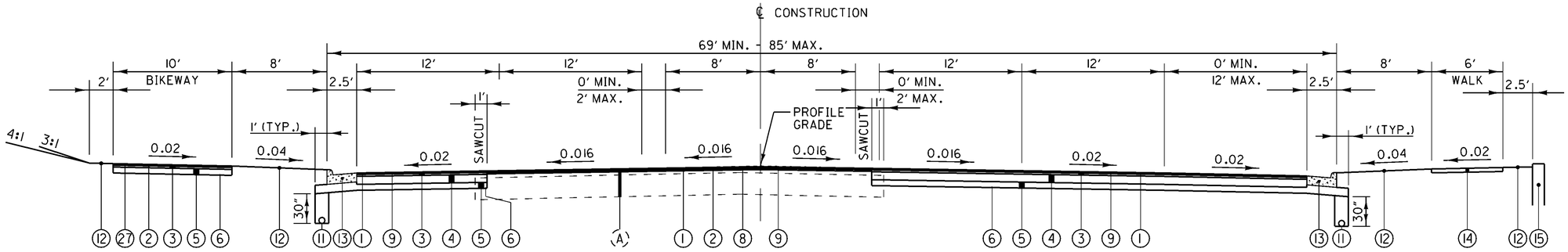

MODULAR BLOCK WALL
STA. 118+99.25 TO STA. 123+50.87

MIAMISBURG-SPRINGBORO PIKE
STA. 121+10.00 TO STA. 122+14.69 = 104.69 L.F.

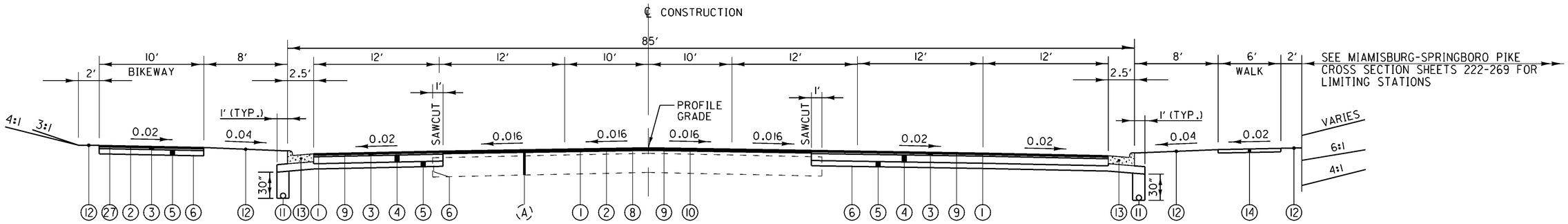

MIAMISBURG-SPRINGBORO PIKE
STA. 122+14.69 TO STA. 127+00.00 = 485.31 L.F.

MODULAR BLOCK WALL
STA. 118+99.25 TO STA. 123+50.87

SEE TYPICAL SECTION
STA. 121+10.00 TO STA. 122+14.69

NOTE:
FOR PAVEMENT PLANING AREAS SEE PLAN SHEETS

FOR SAWCUT LOCATIONS SEE PLAN SHEETS

TYPICAL SECTIONS
MIAMISBURG-SPRINGBORO PIKE

MOT-75-0.75

II
773

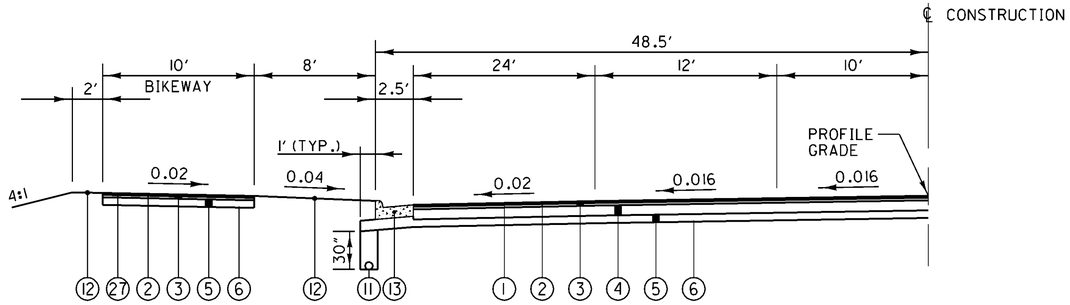

MIAMISBURG-SPRINGBORO PIKE

STA. 127+00.00, LT. TO STA. 131+40.24, LT. = 440.24 L.F.

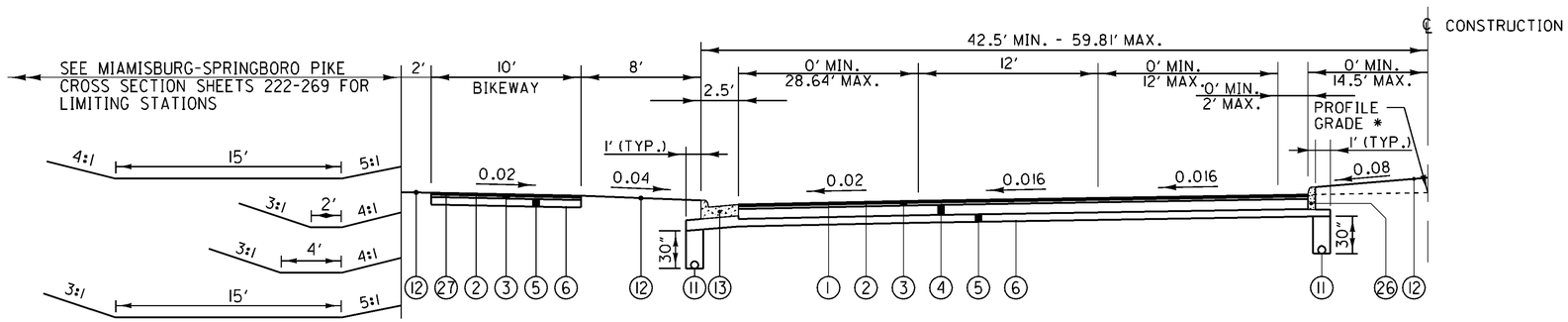

MIAMISBURG-SPRINGBORO PIKE

STA. 131+40.24, LT. TO STA. 133+50.00, LT. = 209.76 L.F.
STA. 157+88.18, LT. TO STA. 172+34.97, LT. = 1446.79 L.F.
TOTAL = 1656.55 L.F.

(SEE MEDIAN DETAIL SHEET 17)

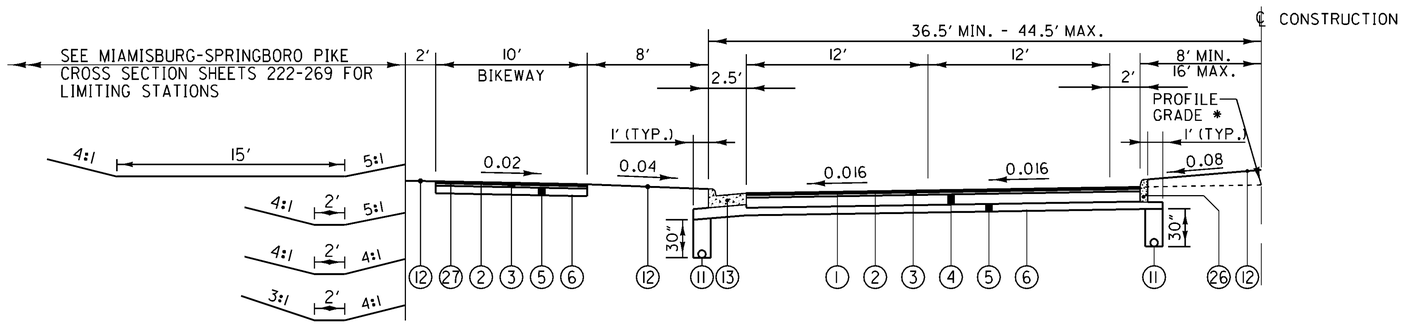

MIAMISBURG-SPRINGBORO PIKE

STA. 133+50.00, LT. TO STA. 149+23.17, LT. = 1573.17 L.F.
(SEE MEDIAN DETAIL SHEET 17)

* = SEE PROFILE GRADE DETAIL SHEET 17

NOTE:
FOR MEDIAN DIMENSIONS, LIMITING STATIONS, OFFSETS, AND ELEVATIONS SEE MEDIAN DETAIL SHEETS.

TYPICAL SECTIONS
MIAMISBURG-SPRINGBORO PIKE

MOT-75-0.75

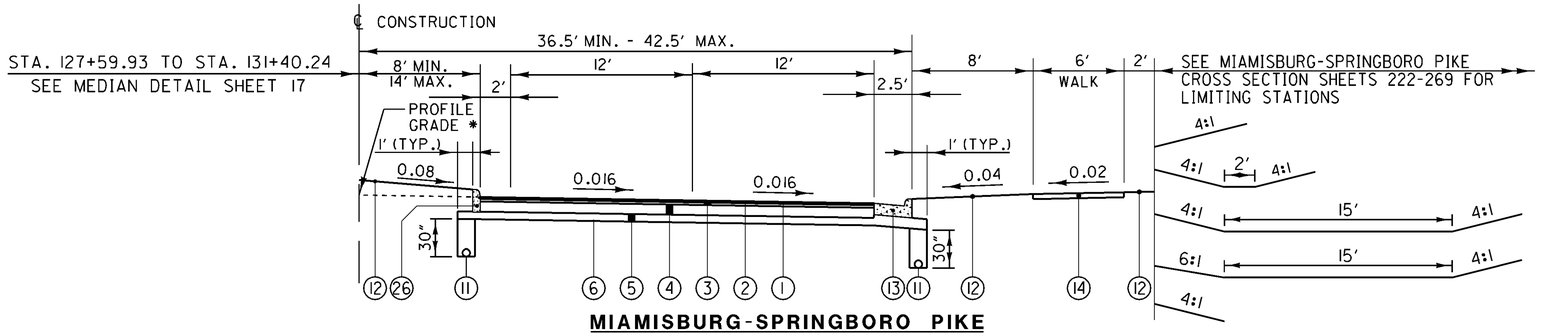

MIAMISBURG-SPRINGBORO PIKE

STA. 127+00.00, RT. TO STA. 141+56.00, RT. = 1456.00 L.F.
(SEE MEDIAN DETAIL SHEET 17)

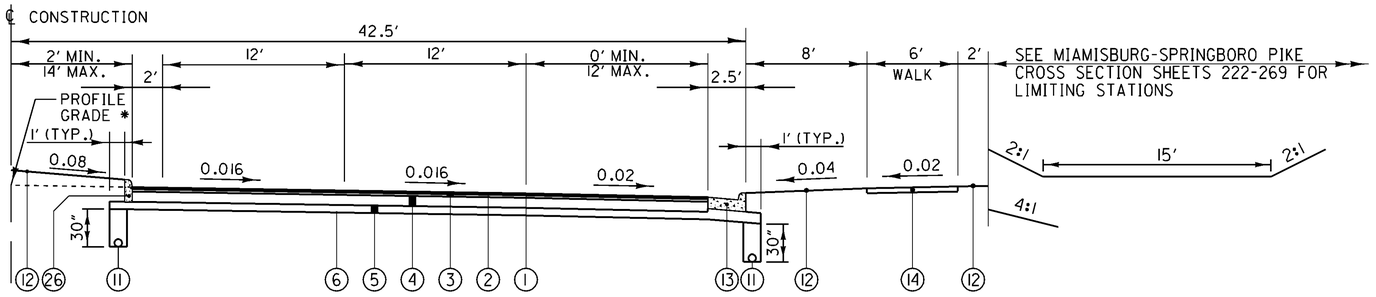

MIAMISBURG-SPRINGBORO PIKE

STA. 141+56.00, RT. TO STA. 144+30.00, RT. = 274.00 L.F.
(SEE MEDIAN DETAIL SHEET 17)

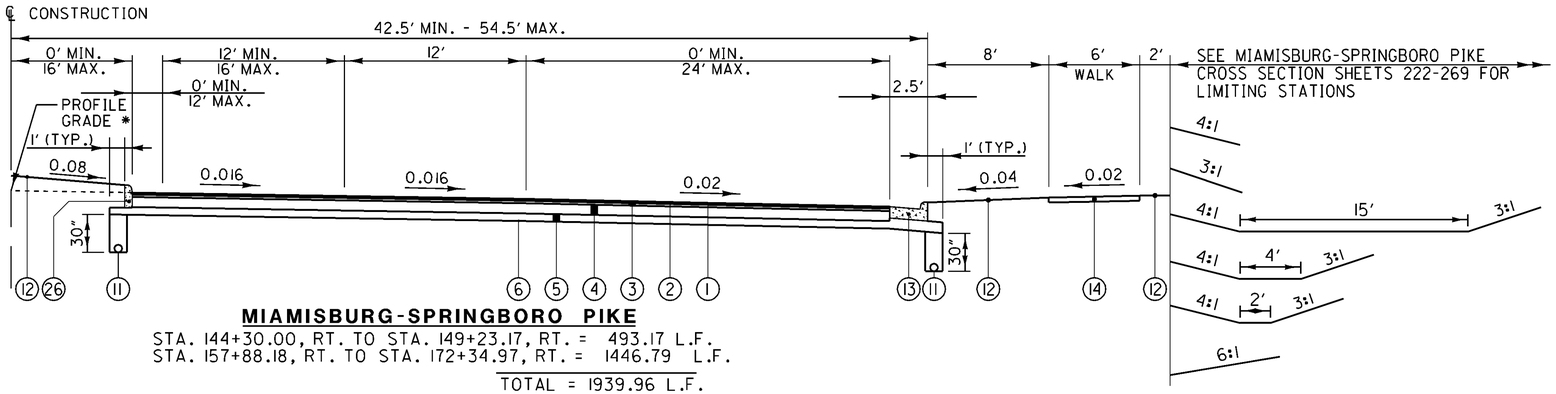

MIAMISBURG-SPRINGBORO PIKE

STA. 144+30.00, RT. TO STA. 149+23.17, RT. = 493.17 L.F.
STA. 157+88.18, RT. TO STA. 172+34.97, RT. = 1446.79 L.F.
TOTAL = 1939.96 L.F.

(SEE MEDIAN DETAIL SHEET 17)

* = SEE PROFILE GRADE DETAIL SHEET 17

NOTE:
FOR MEDIAN DIMENSIONS, LIMITING STATIONS,
OFFSETS, AND ELEVATIONS SEE MEDIAN DETAIL SHEETS.

TYPICAL SECTIONS
MIAMISBURG-SPRINGBORO PIKE

MOT-75-0.75

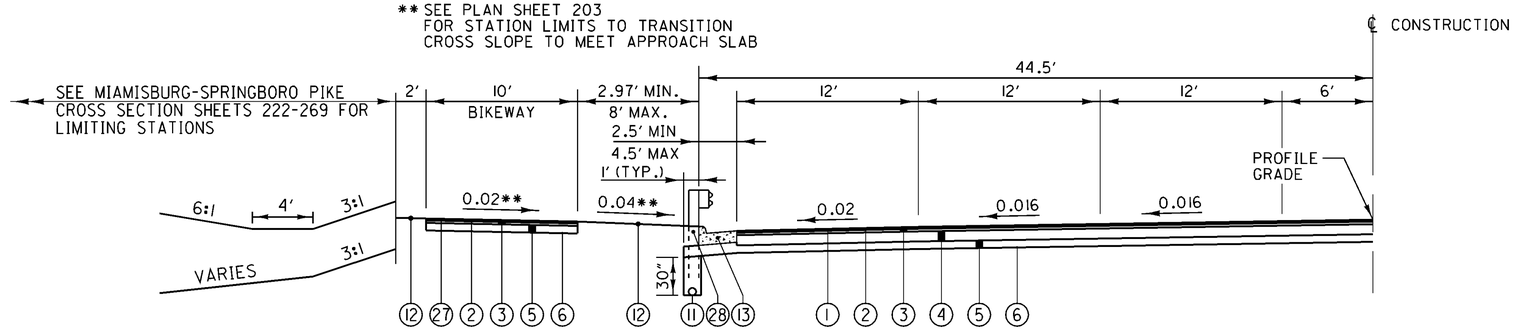

MIAMISBURG-SPRINGBORO PIKE

STA. 149+23.17, LT. TO STA. 151+69.26, LT. (APP. SLAB) = 246.09 L.F.
STA. 155+64.51, LT. (APP. SLAB) TO STA. 157+88.18, LT. = 223.67 L.F.
TOTAL = 469.76 L.F.

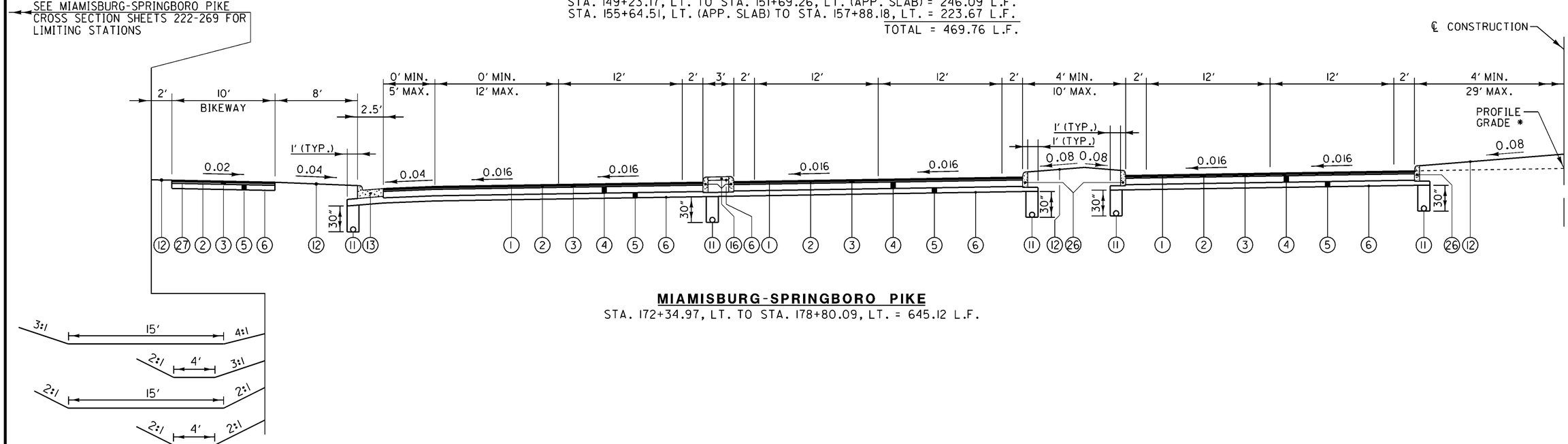

MIAMISBURG-SPRINGBORO PIKE

STA. 172+34.97, LT. TO STA. 178+80.09, LT. = 645.12 L.F.

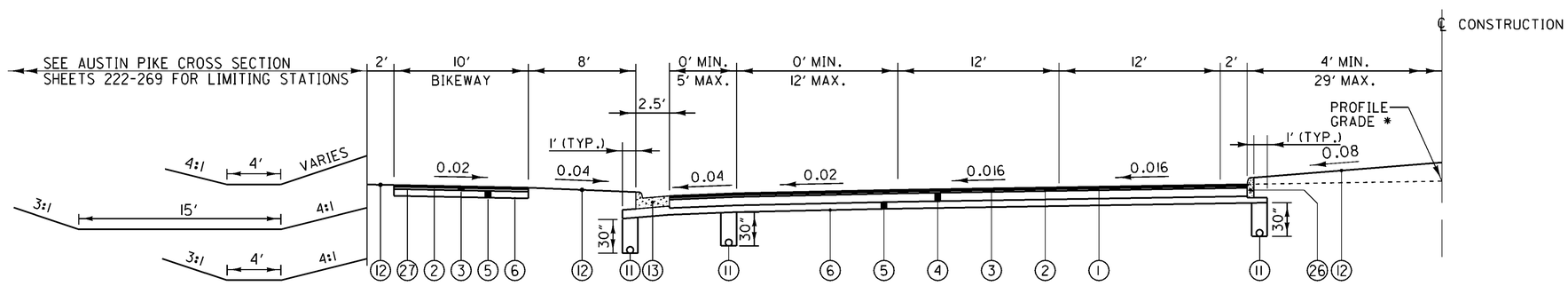

AUSTIN PIKE

STA. 178+80.09, LT. TO STA. 187+69.30, LT. = 889.21 L.F.

* = SEE PROFILE GRADE DETAIL SHEET 17

NOTE:
FOR MEDIAN DIMENSIONS, LIMITING STATIONS, OFFSETS, AND ELEVATIONS SEE MEDIAN DETAIL SHEETS.

FOR GUARDRAIL LOCATIONS SEE PLAN SHEETS

TYPICAL SECTIONS
MIAMISBURG-SPRINGBORO PIKE & AUSTIN PIKE

MOT-75-0.75

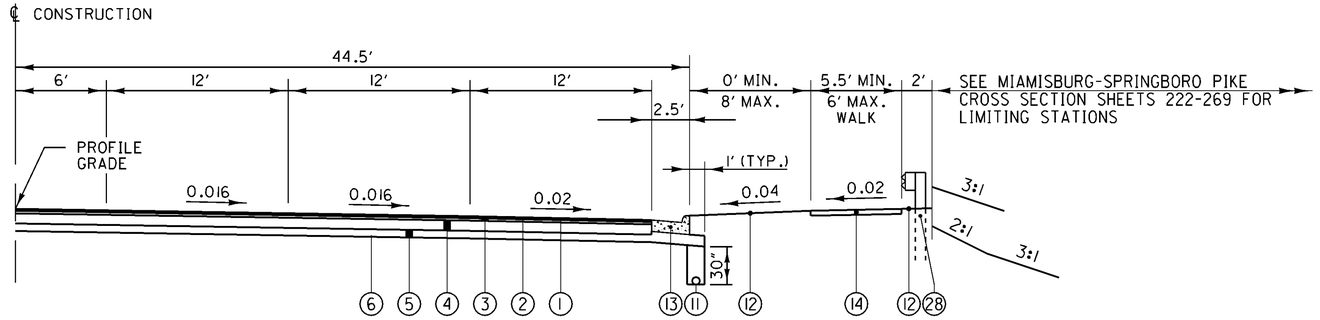

MIAMISBURG-SPRINGBORO PIKE

STA. 149+23.17, RT. TO STA. 151+69.26, RT. (APP. SLAB) = 246.09 L.F.
STA. 155+64.51, RT. (APP. SLAB) TO STA. 157+88.18, RT. = 223.67 L.F.
TOTAL = 469.76 L.F.

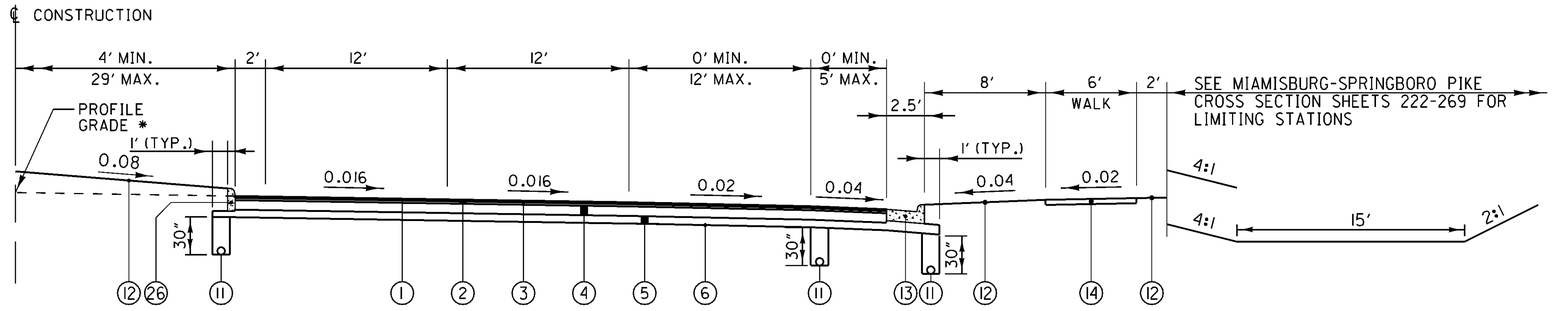

MIAMISBURG-SPRINGBORO PIKE

STA. 172+34.97, RT. TO STA. 178+80.09, RT. = 645.12 L.F.

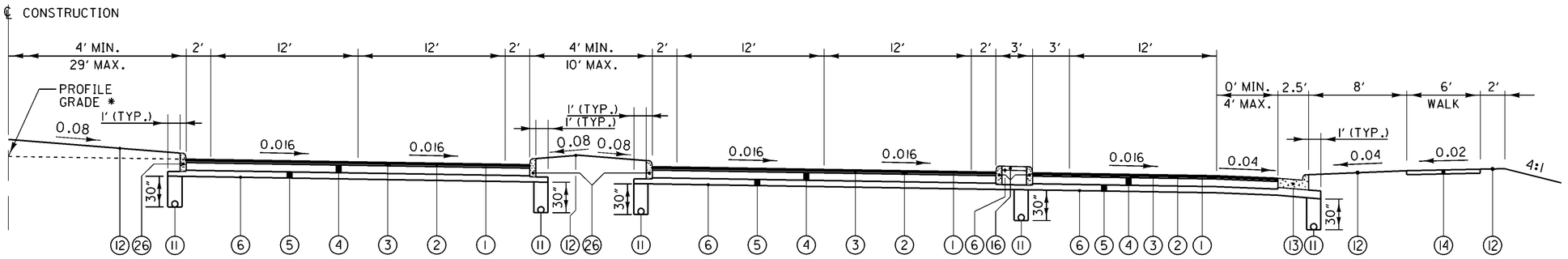

AUSTIN PIKE

STA. 178+80.09, RT. TO STA. 187+69.30, RT. = 889.21 L.F.

* = SEE PROFILE GRADE DETAIL SHEET 17

NOTE:
FOR MEDIAN DIMENSIONS, LIMITING STATIONS,
OFFSETS, AND ELEVATIONS SEE MEDIAN DETAIL SHEETS.

FOR GUARDRAIL LOCATIONS SEE PLAN SHEETS

TYPICAL SECTIONS
MIAMISBURG-SPRINGBORO PIKE & AUSTIN PIKE

MOT-75-0.75

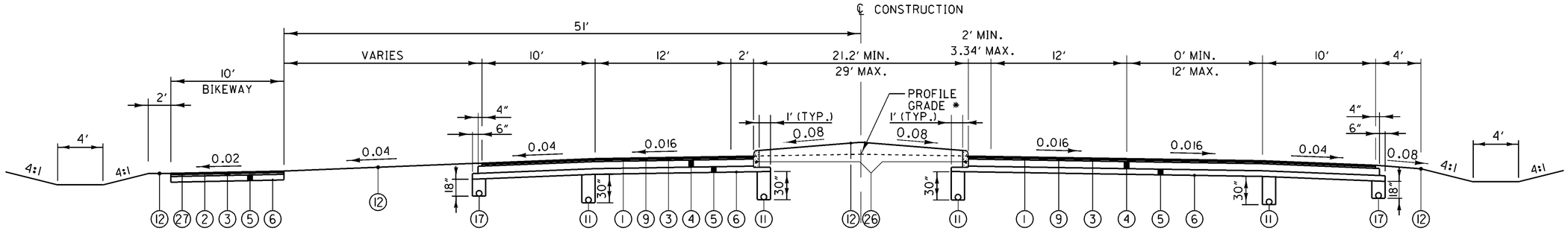

AUSTIN PIKE

STA. 187+69.30 TO STA. 191+18.00 = 348.70 L.F.

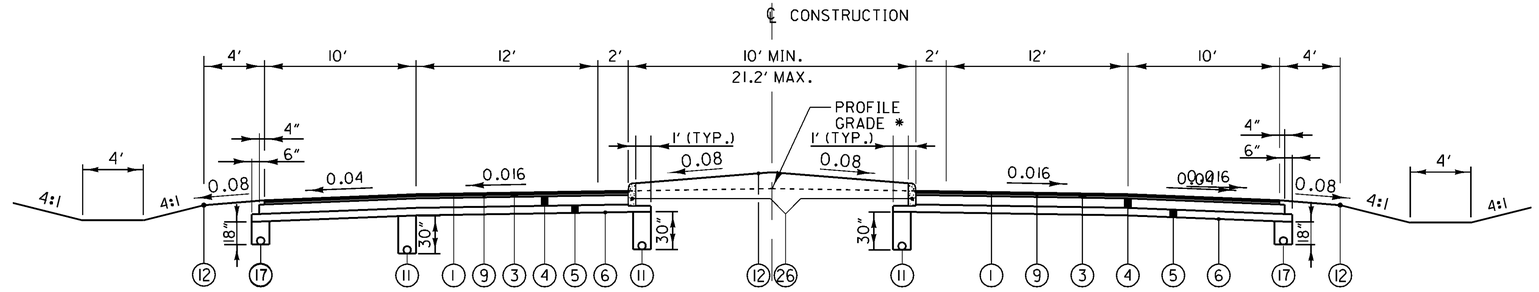

AUSTIN PIKE

STA. 191+18.00 TO STA. 192+88.08 = 170.08 L.F.

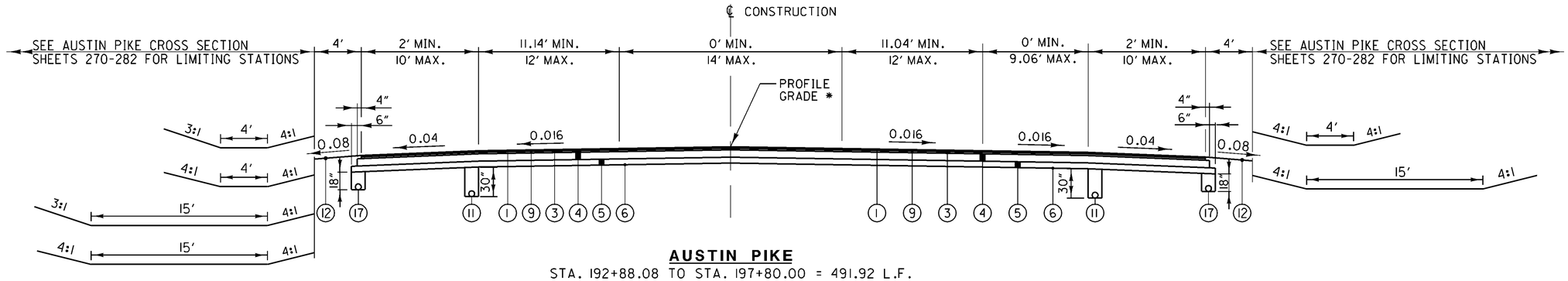

AUSTIN PIKE

STA. 192+88.08 TO STA. 197+80.00 = 491.92 L.F.

* = SEE PROFILE GRADE DETAIL SHEET 17

NOTE:
FOR MEDIAN DIMENSIONS, LIMITING STATIONS, OFFSETS, AND ELEVATIONS SEE MEDIAN DETAIL SHEETS.

TYPICAL SECTIONS
AUSTIN PIKE

MOT-75-0.75

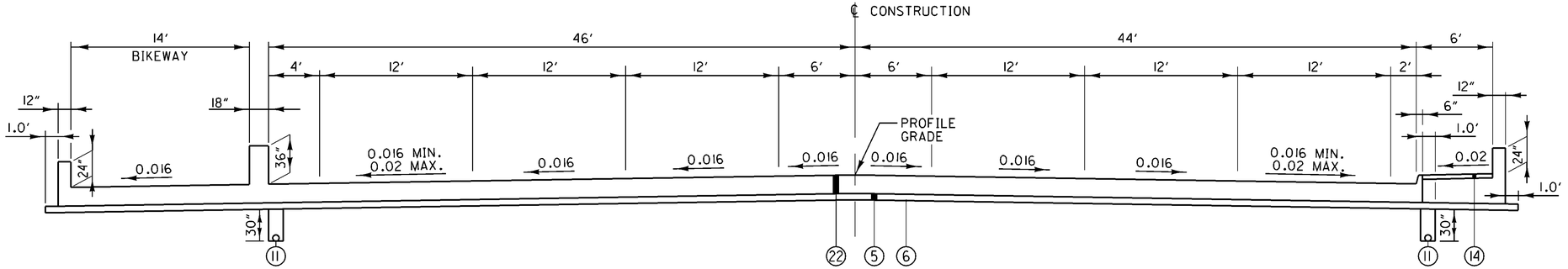

APPROACH SLAB

STA. 151+69.26 TO STA. 151+99.26 = 30 L.F.
STA. 155+34.51 TO STA. 155+64.51 = 30 L.F.

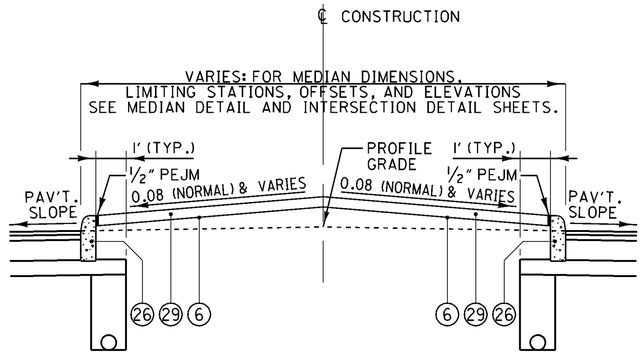

CONCRETE MEDIAN DETAIL

ITEM 451 - REINFORCED CONCRETE PAVEMENT,
MISC: 4" ENHANCED CONCRETE PAVEMENT

NOT TO SCALE

(SEE GENERAL NOTES SHEET 25)

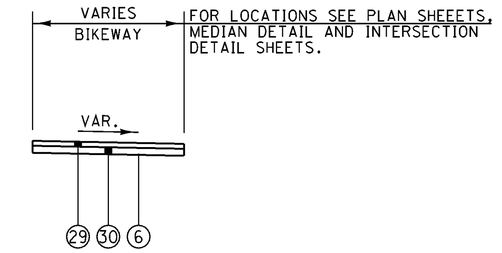

BIKEWAY DETAIL

ITEM 451 - REINFORCED CONCRETE PAVEMENT,
MISC: 4" ENHANCED CONCRETE PAVEMENT

NOT TO SCALE

(SEE GENERAL NOTES SHEET 25)

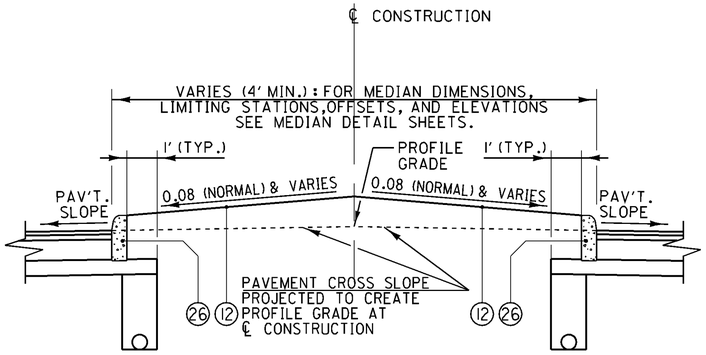

MEDIAN DETAIL AND
MIAMISBURG-SPRINGBORO PIKE PROFILE GRADE DETAIL

NOT TO SCALE

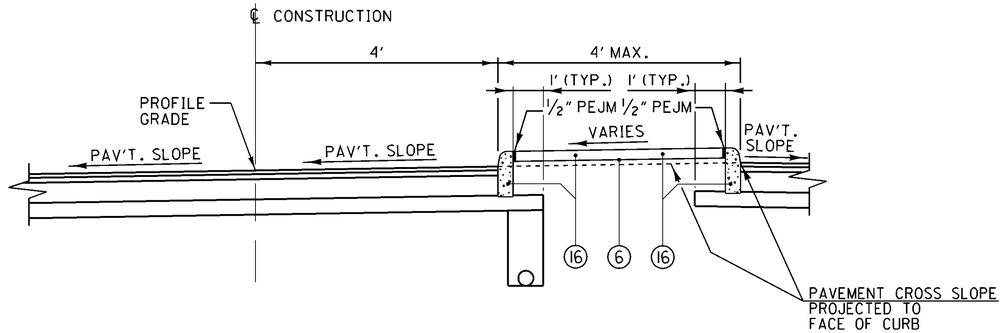

MIAMISBURG-SPRINGBORO PIKE
CONCRETE MEDIAN DETAIL

NOT TO SCALE

STA. 127+59.93 TO STA. 131+40.24 = 380.31 L.F.

TYPICAL SECTIONS
APPROACH SLAB AND MISCELLANEOUS DETAILS

MOT-75-0.75

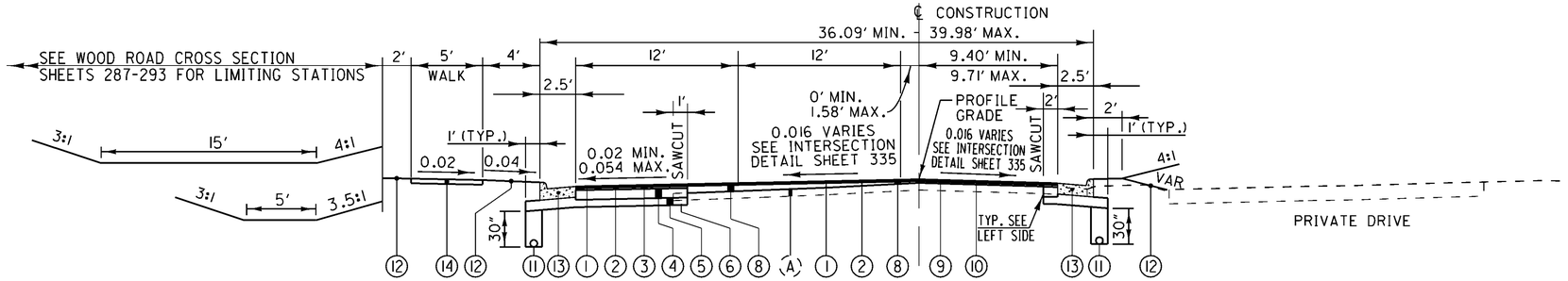

WOOD ROAD

STA. 38+36.75 TO STA. 40+00.00 = 163.25 L.F.

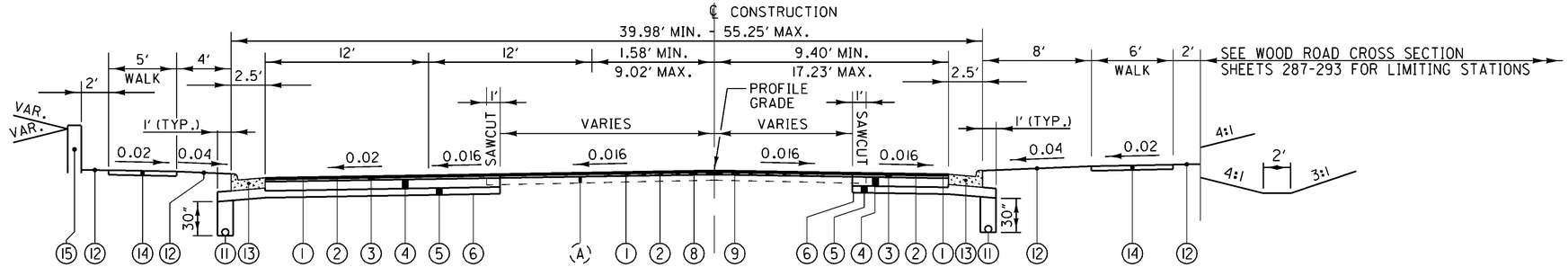

MODULAR BLOCK WALL
STA. 40+49.11 TO STA. 46+99.96

WOOD ROAD

STA. 40+00.00 TO STA. 43+40.00 = 340.00 L.F.

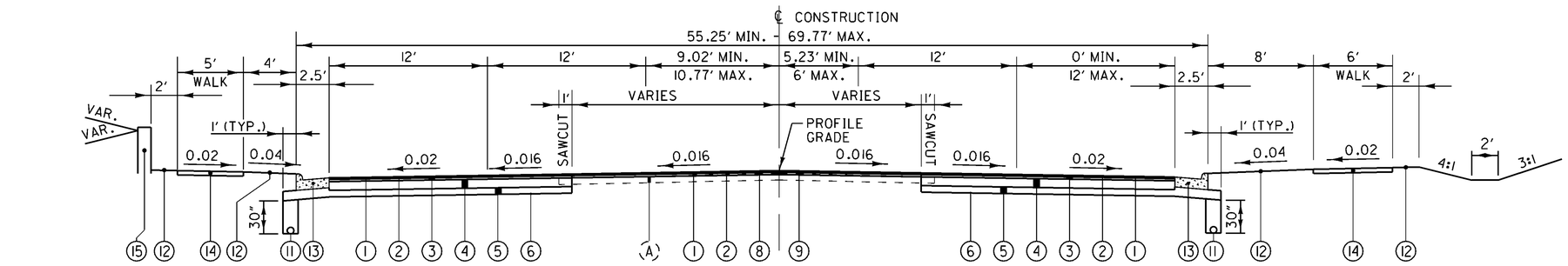

MODULAR BLOCK WALL
STA. 40+49.11 TO STA. 46+99.96

WOOD ROAD

STA. 43+40.00 TO STA. 44+20.00 = 80.00 L.F.

NOTE:
FOR PAVEMENT PLANING AREAS SEE PLAN SHEETS

FOR SAWCUT LOCATIONS SEE PLAN SHEETS

TYPICAL SECTIONS
WOOD ROAD

MOT-75-0.75

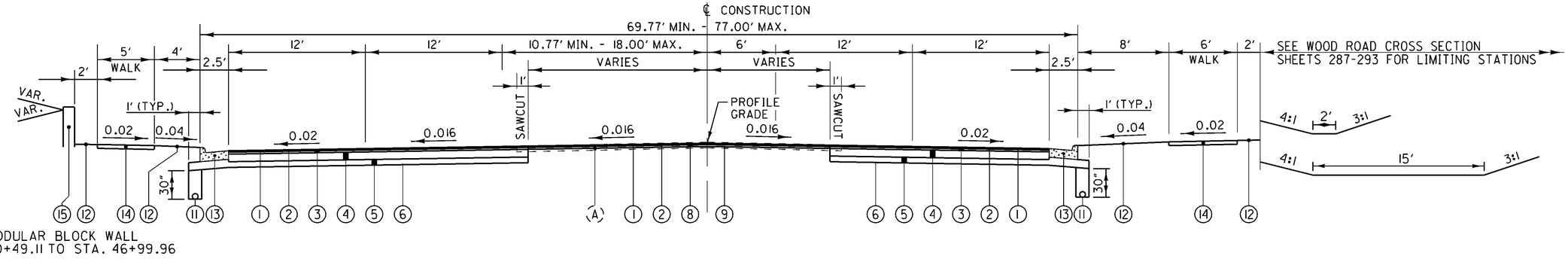

MODULAR BLOCK WALL
STA. 40+49.11 TO STA. 46+99.96

WOOD ROAD

STA. 44+20.00 TO STA. 47+50.00 = 330.00 L.F.

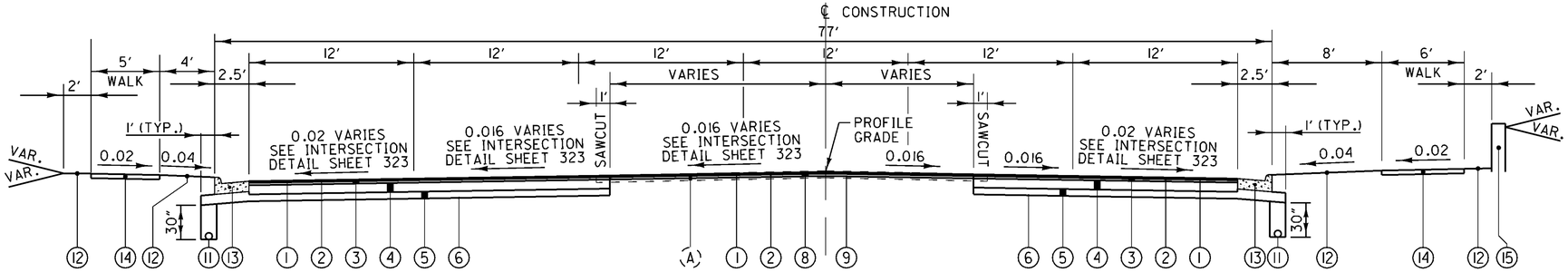

SOLDIER PILE WALL
STA. 47+20 TO STA. 49+07.20

WOOD ROAD

STA. 47+50.00 TO STA. 49+65.90 = 215.90 L.F.

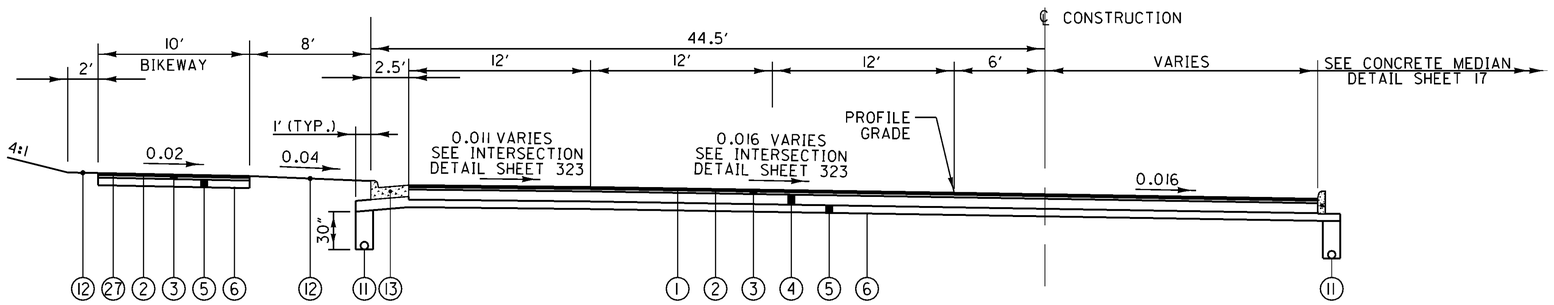

WOOD ROAD

STA. 50+34.10 TO STA. 51+12.92 = 78.82 L.F.

NOTE:
FOR PAVEMENT PLANING AREAS SEE PLAN SHEETS

FOR SAWCUT LOCATIONS SEE PLAN SHEETS

TYPICAL SECTIONS
WOOD ROAD

MOT-75-0.75

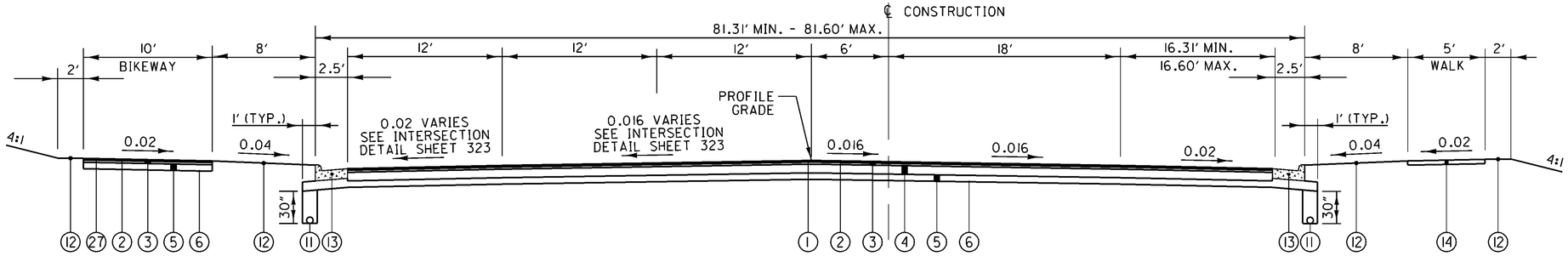

WOOD ROAD

STA. 51+12.92 TO STA. 51+65.53 = 52.61 L.F.

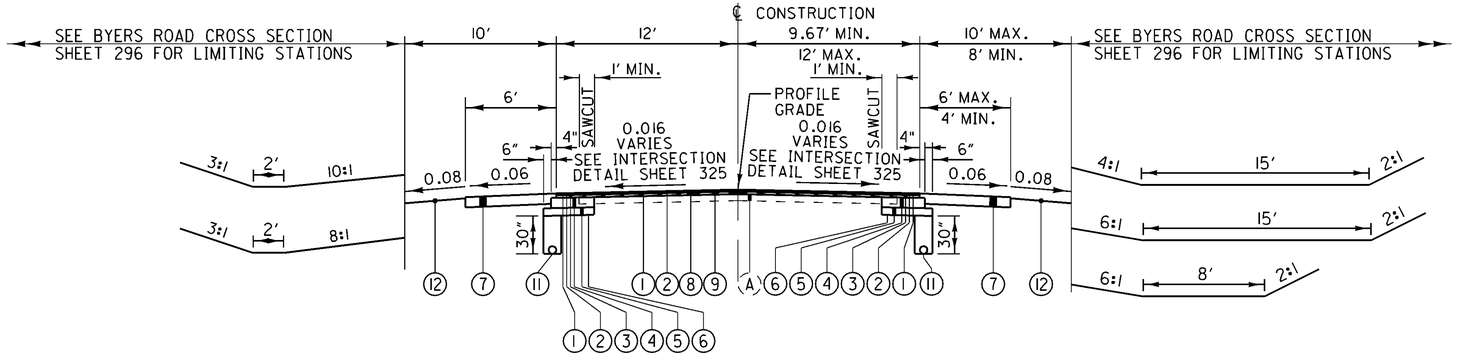

BYERS ROAD

STA. 70+95.02 TO STA. 72+00.00 = 104.98 L.F.

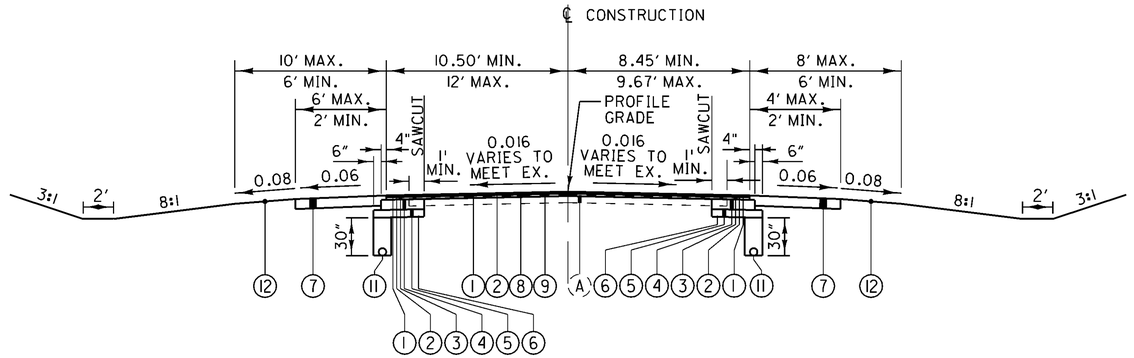

BYERS ROAD

STA. 72+00.00 TO STA. 72+50.00 = 50.00 L.F.

NOTE:
FOR SAWCUT LOCATIONS SEE PLAN SHEETS

TYPICAL SECTIONS
WOOD ROAD AND BYERS ROAD

MOT-75-0.75

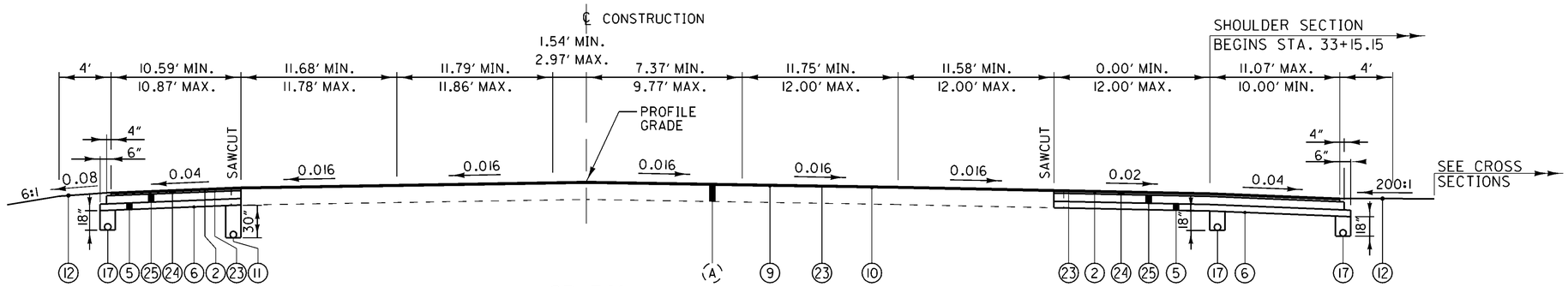

SR 741

STA. 33+90.44 TO STA. 34+90.44 = 100.00 L.F.

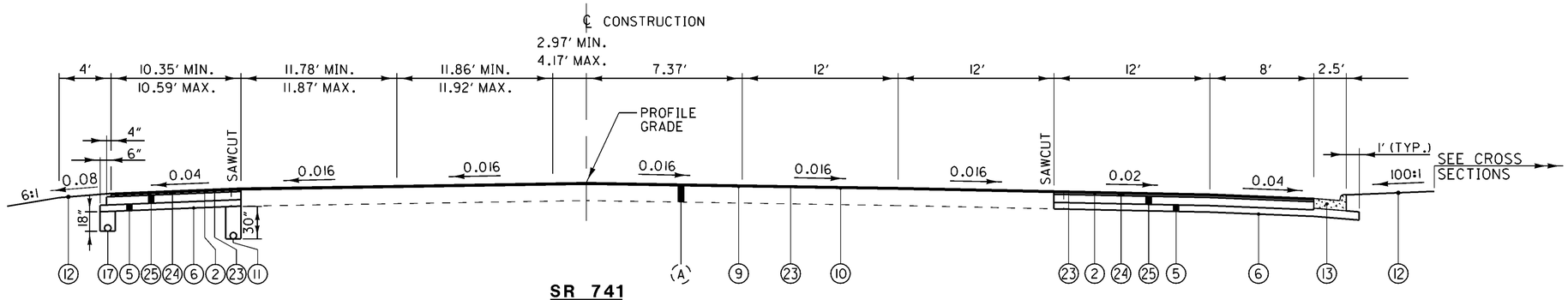

SR 741

STA. 34+90.44 TO STA. 35+75.00 = 84.56 L.F.

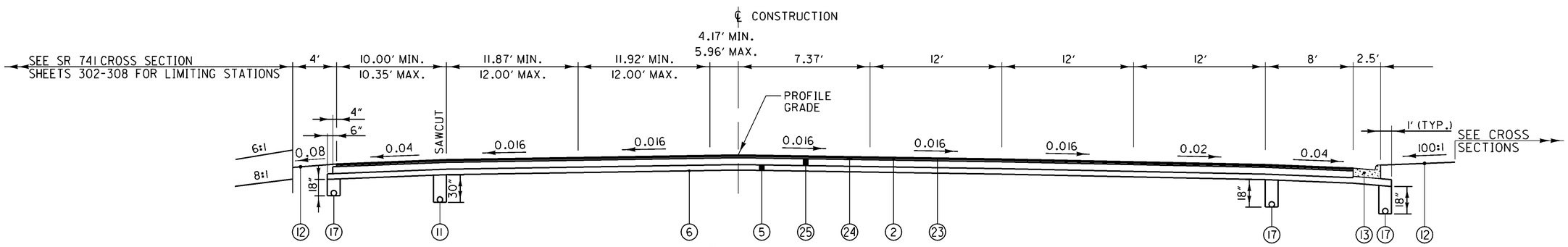

SR 741

STA. 35+75.00 TO STA. 37+89.45 = 214.45 L.F.

NOTE:
FOR PAVEMENT PLANING AREAS SEE PLAN SHEETS

FOR SAWCUT LOCATIONS SEE PLAN SHEETS

TYPICAL SECTIONS
SR 741

MOT-75-0.75

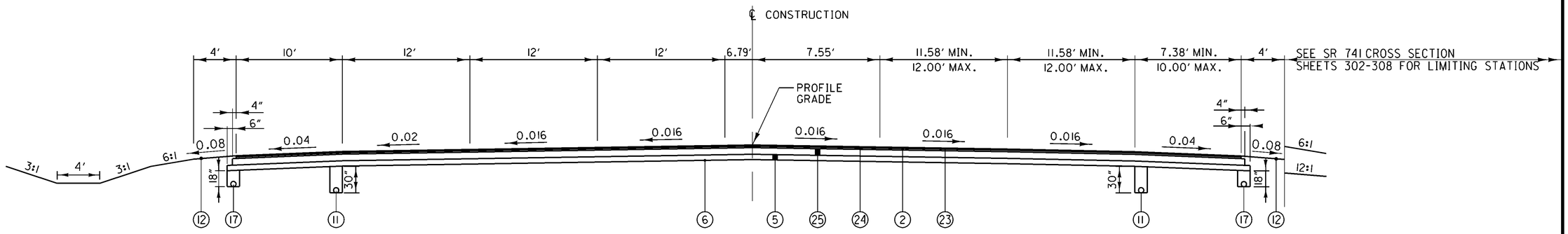

SR 741

STA. 41+30.59 TO STA. 44+00.00 = 269.41 L.F.

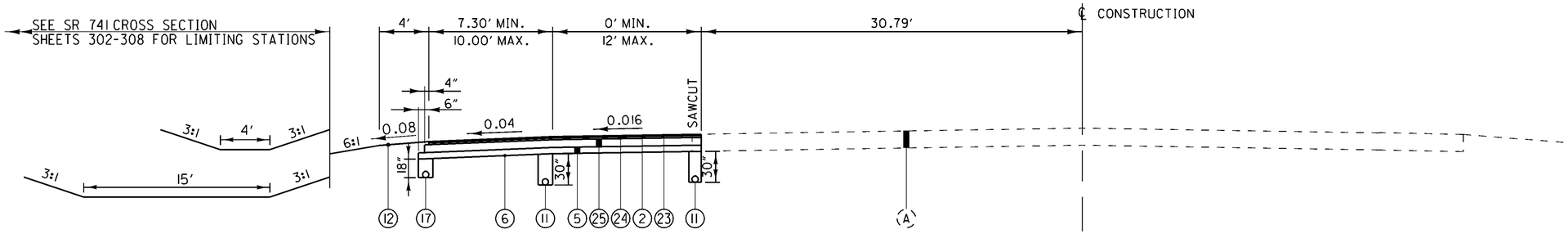

SR 741

STA. 44+00.00 TO STA. 47+26.88 = 326.88 L.F.

NOTE:
FOR SAWCUT LOCATIONS SEE PLAN SHEETS

TYPICAL SECTIONS
SR 741

MOT-75-0.75

ELEVATION DATUM
ALL ELEVATIONS ARE BASED ON U.S.G.S. DATUM.

WORK LIMITS
THE WORK LIMITS SHOWN ON THESE PLANS ARE FOR PHYSICAL CONSTRUCTION ONLY.PROVIDE THE INSTALLATION AND OPERATION OF ALL WORK ZONE TRAFFIC CONTROL AND WORK ZONE TRAFFIC CONTROL DEVICES REQUIRED BY THESE PLANS WHETHER INSIDE OR OUTSIDE THESE WORK LIMITS.

UTILITIES
LISTED BELOW ARE ALL UTILITIES LOCATED WITHIN THE PROJECT CONSTRUCTION LIMITS TOGETHER WITH THEIR RESPECTIVE OWNERS:

THE LOCATION OF THE UNDERGROUND UTILITIES SHOWN ON THE PLANS ARE AS OBTAINED FROM THE OWNERS AS REQUIRED BY SECTION 153.64 O.R.C.

ELECTRIC

DAYTON POWER AND LIGHT
1900 DRYDEN ROAD
DAYTON, OH 45439

JOHN KENTON
(937) 331-4132

GAS & ELECTRIC

DUKE ENERGY
139 EAST FOURTH STREET
ROOM 460A
CINCINNATI, OH 45202

JOE LOVELL
(513) 287-2926

GAS

VECTREN ENERGY DELIVERY OF OHIO
6500 CLYO ROAD
CENTERVILLE, OHIO 45459

GREGORY FISHMAN
(937) 312-2521

GAS

BP PIPELINE (NORTH AMERICA) INC.
12011 HAMILTON AVE.
CINCINNATI, OH 45231

KIMBLE MILLER
(513) 646-6187

JEFF BOMER
(513) 825-5250 x12

TELEPHONE

MCI (VERIZON BUISNESS)
120 RAVINE STREET
AKRON, OH 44303

AL GUEST
(330) 253-8267

TELEPHONE

CINCINNATI BELL TELEPHONE
221 E. FOURTH STREET
BUILDING 343
CINCINNATI, OH 45201

KEITH GALEY
(513) 565-7043

TELEPHONE

AT&T OHIO
3233 WOODMAN DRIVE
ROOM 225
KETTERING, OH 45420

GARY LEIS
(937) 296-3604

CABLE

TIME WARNER CABLE
3691 TURNER ROAD
DAYTON, OH 45415

REUBEN LEMASTER
(937) 425-8871

SANITARY & WATER

MONTGOMERY COUNTY SANITARY ENGINEERING DEPT.
1850 SPAULDING ROAD
DAYTON, OH 45420

ED SCHLAACK
(937) 781-2632

WATER

CITY OF MIAMISBURG
20 E. CENTRAL AVE.
MIAMISBURG, OH 45342-2877

BOB STANLEY
(937) 847-6534

ODOT TRAFFIC SIGNAL

ODOT DISTRICT 7
1001 ST. MARY'S AVE.
SIDNEY, OH 45365

CRAIG ELEY
(937) 497-6832

VECTREN GAS LINES
ALL EXISTING GAS LINES HAVE BEEN COORDINATED WITH VECTREN FOR RELOCATION PRIOR TO PROJECT SALE. IT IS ANTICIPATED THAT EXISTING GAS LINES WILL BE ABANDONED IN PLACE BY VECTREN. THE CONTRACTOR WILL NEED TO COORDINATE ALL EXCAVATION ACTIVITIES WITH VECTREN.

ROUNDING
THE ROUNDING AT SLOPE BREAKPOINTS SHOWN ON THE TYPICAL SECTIONS APPLY TO ALL CROSS-SECTIONS EVEN THOUGH OTHERWISE SHOWN.

CLEARING AND GRUBBING
ALTHOUGH THERE ARE NO TREES OR STUMPS SPECIFICALLY MARKED FOR REMOVAL WITHIN THE LIMITS OF THE PROJECT, A LUMP SUM QUANTITY IS INCLUDED IN THE GENERAL SUMMARY FOR ITEM 201, CLEARING AND GRUBBING. ALL PROVISIONS AS SET FORTH IN THE SPECIFICATIONS UNDER THIS ITEM ARE INCLUDED IN THE LUMP SUM PRICE BID FOR ITEM 201, CLEARING AND GRUBBING.

BENCHING OF FOUNDATION SLOPES
ALTHOUGH CROSS-SECTIONS INDICATE SPECIFIC DIMENSIONS FOR PROPOSED BENCHING OF THE EMBANKMENT FOUNDATIONS IN CERTAIN AREAS, NO WAIVER OF THE SPECIFICATIONS IS INTENDED. BENCH ALL OTHER SLOPED EMBANKMENT AREAS AS SET FORTH IN 203.05. NO ADDITIONAL PAYMENT WILL BE MADE FOR BENCHING REQUIRED UNDER THE PROVISIONS OF 203.05.

MONUMENT ASSEMBLIES
CONSTRUCT MONUMENT ASSEMBLIES IN ACCORDANCE WITH THE DETAILS SHOWN ON THE STANDARD CONSTRUCTION DRAWINGS AND AT THE LOCATIONS SHOWN ON SHEET NO. 710-712.

ITEM 604 - MONUMENT ASSEMBLY 20 EACH

PAVEMENT RESTORATION FOR MONUMENT ASSEMBLY INSTALLATIONS
THE FOLLOWING QUANTITY HAS BEEN PROVIDED FOR PAVEMENT RESTORATION FOLLOWING INSTALLATION OF ITEM 604 MONUMENT ASSEMBLIES.

ITEM 302 - ASPHALT CONCRETE BASE, PG 64-22 21 CU. YDS.

THE ABOVE QUANTITY IS BASED ON A 301 THICKNESS OF 11 INCHES AND A WIDTH OF TWO FEET AROUND THE PERIMETER OF THE MONUMENT ASSEMBLIES.

PROVIDE ANY MATERIALS USED OUTSIDE THE LIMITS STATED ABOVE AT NO ADDITIONAL COST.

PROOF ROLLING
THE FOLLOWING QUANTITY IS PROVIDED IN THE GENERAL SUMMARY TO ADDRESS LOCATIONS REQUIRING PROOF ROLLING.

ITEM 204 - PROOF ROLLING 49 HOUR.

PART WIDTH CONSTRUCTION
BECAUSE OF THE NECESSITY TO BUILD THIS PROJECT UNDER TRAFFIC AND TO CONSTRUCT THE FULL PAVEMENT WIDTH IN STAGES, EXERCISE CARE TO PREVENT THE CONSTRUCTION OF A BUTT JOINT IN THE BASE COURSES. LAP LONGITUDINAL JOINTS AS SHOWN ON STANDARD CONSTRUCTION DRAWING BP-3.1.

PAVEMENT RESTORATION FOR PIPE INSTALLATIONS
THE FOLLOWING QUANTITY HAS BEEN PROVIDED FOR PAVEMENT RESTORATION FOLLOWING INSTALLATION OF PIPES UNDER ITEM 603.

ITEM 301 - ASPHALT CONCRETE BASE, PG64-22 10 CU. YD.

THE ABOVE QUANTITY IS BASED ON A 301 THICKNESS OF 11 INCHES AND A PAVEMENT RESTORATION WIDTH THAT INCLUDES THE TRENCH WIDTH PLUS TWO FEET ON EACH SIDE OF THE TRENCH. SEE STANDARD CONSTRUCTION DRAWING DM-1.4 FOR TRENCH WIDTH FORMULA AND CALCULATION.

PROVIDE ANY MATERIALS USED OUTSIDE THE LIMITS STATED ABOVE AT NO ADDITIONAL COST.

CROSSINGS AND CONNECTIONS TO EXISTING PIPES AND UTILITIES
WHERE PLANS PROVIDE FOR A PROPOSED CONDUIT TO BE CONNECTED TO, OR CROSS OVER OR UNDER AN EXISTING SEWER OR UNDERGROUND UTILITY, THE CONTRACTOR SHALL LOCATE THE EXISTING PIPES OR UTILITIES BOTH AS TO LINE AND GRADE BEFORE STARTING TO LAY THE PROPOSED CONDUIT. IF IT IS DETERMINED THAT THE ELEVATION OF THE EXISTING CONDUIT, OR EXISTING APPURTENANCE TO BE CONNECTED, DIFFERS FROM THE PLAN ELEVATION OR RESULTS IN A CHANGE IN THE PLAN CONDUIT SLOPE, THE ENGINEER SHALL BE NOTIFIED BEFORE STARTING CONSTRUCTION OF ANY PORTION OF THE PROPOSED CONDUIT WHICH WILL BE AFFECTED BY THE VARIANCE IN THE EXISTING ELEVATIONS. IF IT IS DETERMINED THAT THE PROPOSED CONDUIT WILL INTERSECT AN EXISTING SEWER OR UNDERGROUND UTILITY IF CONSTRUCTED AS SHOWN ON THE PLAN, THE ENGINEER SHALL BE NOTIFIED BEFORE STARTING CONSTRUCTION OF ANY PORTION OF THE PROPOSED CONDUIT WHICH WOULD BE AFFECTED BY THE INTERFERENCE WITH AN EXISTING FACILITY.

PAYMENT FOR ALL THE OPERATIONS DESCRIBED ABOVE SHALL BE INCLUDED IN THE CONTRACT PRICE FOR THE PERTINENT 603 CONDUIT ITEM.

FARM DRAINS
ALL FARM DRAINS, WHICH ARE ENCOUNTERED DURING CONSTRUCTION, SHALL BE PROVIDED WITH UNOBSTRUCTED OUTLETS. EXISTING COLLECTORS WHICH ARE LOCATED BELOW THE ROADWAY DITCH ELEVATIONS, AND WHICH CROSS THE ROADWAY, SHALL BE REPLACED WITHIN THE CONSTRUCTION LIMITS BY ITEM 603 CONDUIT, TYPE B, ONE COMMERCIAL SIZE LARGER THAN THE EXISTING CONDUIT. EXISTING COLLECTORS AND ISOLATED FARM DRAINS, WHICH ARE ENCOUNTERED ABOVE THE ELEVATION OF ROADWAY DITCHES, SHALL BE OUTLETTED INTO THE ROADWAY DITCH BY 603 TYPE F CONDUIT. THE OPTIMUM OUTLET ELEVATION SHALL BE ONE FOOT ABOVE THE FLOWLINE ELEVATION OF THE DITCH. LATERAL FIELD TILES WHICH CROSS THE ROADWAY SHALL BE INTERCEPTED BY 603, TYPE E CONDUIT, AND CARRIED IN A LONGITUDINAL DIRECTION TO AN ADEQUATE OUTLET OR ROADWAY CROSSING. THE LOCATION, TYPE, SIZE AND GRADE OF REPLACEMENTS SHALL BE DETERMINED BY THE ENGINEER AND PAYMENT SHALL BE MADE ON FINAL MEASUREMENTS. EROSION CONTROL PADS AND ANIMAL GUARDS SHALL BE PROVIDED AT THE OUTLET END OF ALL FARM DRAINS AS PER STANDARD CONSTRUCTION DRAWING DM-1.1, EXCEPT WHEN THEY OUTLET INTO A DRAINAGE STRUCTURE. PAYMENT FOR THE EROSION CONTROL PADS AND ANIMAL GUARDS AND ANY NECESSARY BENDS OR BRANCHES SHALL BE INCLUDED FOR PAYMENT IN THE PERTINENT CONDUIT ITEMS.

THE FOLLOWING ESTIMATED QUANTITIES HAVE BEEN INCLUDED IN THE GENERAL SUMMARY FOR THE WORK NOTED ABOVE:
603 6" CONDUIT, TYPE B 100 FT.
603 6" CONDUIT, TYPE E 50 FT.
603 6" CONDUIT, TYPE F 50 FT.
601 ROCK CHANNEL PROTECTION, TYPE C, WITH FABRIC FILTER 5 CU. YD.

REVIEW OF DRAINAGE FACILITIES
BEFORE ANY WORK IS STARTED ON THE PROJECT AND AGAIN BEFORE FINAL ACCEPTANCE BY THE STATE, REPRESENTATIVES OF THE STATE AND THE CONTRACTOR, ALONG WITH LOCAL REPRESENTATIVES, SHALL MAKE AN INSPECTION OF ALL EXISTING SEWERS WHICH ARE TO REMAIN IN SERVICE AND WHICH MAY BE AFFECTED BY THE WORK. THE CONDITION OF THE EXISTING CONDUITS AND THEIR APPURTENANCE SHALL BE DETERMINED FROM FIELD OBSERVATIONS. RECORDS OF THE INSPECTION SHALL BE KEPT IN WRITING BY THE STATE.

ALL NEW CONDUITS, INLETS, CATCH BASINS, AND MANHOLES CONSTRUCTED AS A PART OF THE PROJECT SHALL BE FREE OF ALL FOREIGN MATTER AND IN A CLEAN CONDITION BEFORE THE PROJECT WILL BE ACCEPTED BY THE STATE.

ALL EXISTING SEWERS INSPECTED INITIALLY BY THE ABOVE MENTIONED PARTIES SHALL BE MAINTAINED AND LEFT IN A CONDITION REASONABLY COMPARABLE TO THAT DETERMINED BY THE ORIGINAL INSPECTION. ANY CHANGE IN THE CONDITION RESULTING FROM THE CONTRACTOR'S OPERATIONS SHALL BE CORRECTED BY THE CONTRACTOR TO THE SATISFACTION OF THE ENGINEER.

PAYMENT FOR ALL OPERATIONS DESCRIBED ABOVE SHALL BE INCLUDED IN THE CONTRACT PRICE FOR THE PERTINENT 603 CONDUIT ITEMS.

CALCULATED GKB
CHECKED AJS

GENERAL NOTES

MOT-75-0.75

EASTERN MASSASAUGA RATTLESNAKE PROTECTION
THE CONTRACTOR SHALL IMMEDIATELY STOP WORK IF AN EASTERN MASSASAUGA RATTLESNAKE IS ENCOUNTERED DURING CONSTRUCTION AND TO CONTACT THE ODNR DIVISION OF WILDLIFE AT 1-800-945-3543.

INDIANA BAT HABITAT
ANY UNAVOIDABLE CUTTING OF TREES WITH SUITABLE ROOSTING AND BROAD-REARING HABITAT FOR THE INDIANA BAT (LIVING OR STANDING DEAD TREES OR SNAGS WITH EXFOLIATING, PEELING OR LOOSE BARK, SPLIT TRUNKS AND/OR BRANCHES, OR CAVITIES) WILL BE PERFORMED ONLY BEFORE APRIL 15 OR AFTER SEPTEMBER 15 WHEN THE SPECIES WOULD NOT BE USING SUCH HABITATS.

PRIOR TO THE REMOVAL OF EXISTING BRIDGES, THE UNDERSIDE OF THE BRIDGES SHOULD BE CAREFULLY EXAMINED FOR THE PRESENCE OF BATS, ESPECIALLY FROM APRIL 15 TO SEPTEMBER 15. IF ANY BATS ARE FOUND ROOSTING ON THE UNDERSIDE OF HE BRIDGE, CONTACT THE US FISH & WILDLIFE SERVICE AT 614-469-6923. THIS REQUIREMENT IS FOR INFORMATION GATHERING PURPOSES ONLY AND WILL NOT RESULT IN THE DELAY OF THE PROJECT.

ABANDONMENT OF WATER WELLS
ABANDONMENT OF WATER WELLS WILL BE PERMANENTLY ABANDONED IN ACCORDANCE WITH ODNR GUIDELINES. THE CONTRACTOR SHALL FURNISH ALL THE LABOR, EQUIPMENT AND MATERIALS NECESSARY TO PERFORM THE AFOREMENTIONED WORK. THE FOLLOWING ESTIMATED QUANTITIES HAVE BEEN INCLUDED IN THE GENERAL SUMMARY FOR THE WORK NOTED ABOVE:

ITEM SPECIAL - DRILLED WATER WELL ABANDONED

ASBESTOS INSPECTIONS
THE CONTRACTOR SHALL NOT BE PERMITTED TO DEMOLISH ANY STRUCTURES AS PART OF THIS PROJECT, UNTIL ASBESTOS INSPECTIONS ARE COMPLETED ON THE STRUCTURES PROPOSED FOR DEMOLITION.

BRIDGE NOTIFICATION OF DEMOLITION AND RENOVATION
THE CONTRACTOR WILL SUBMIT THE OEPA NOTIFICATION OF DEMOLITION AND RENOVATION FORM IN APPENDIX B TO THE REGIONAL AIR POLLUTION CONTROL AGENCY NO SOONER THAN 10 DAYS PRIOR TO THE START OF THE BRIDGE DEMOLITION. THIS NOTIFICATION REQUIREMENT WILL BE SHOWN AS A PLAN NOTE ON THE FINAL PLANS.

ROAD CLOSURES
THE CONTRACTOR SHALL CONTACT THE MONTGOMERY COUNTY ENGINEER'S OFFICE 21 DAYS PRIOR TO SCHEDULED ROAD CLOSINGS TO ALLOW THE COUNTY COMMISSIONERS TO PASS A ROAD CLOSURE RESOLUTION.

DETOUR COORDINATION
THE CONTRACTOR SHALL COORDINATE THE DETOUR WITH SPRINGBORO AND THE MONTGOMERY COUNTY TRANSPORTATION IMPROVEMENT DISTRICT AND REQUEST THAT SPRINGBORO MAKE THE APPROPRIATE TIMING CHANGES AT THE S.R. 741/ PENNYROYAL ROAD SIGNALIZED INTERSECTION TO MAXIMIZE TRAFFIC MOVEMENT WHILE THE DETOUR IS IN EFFECT.

WATERWAY PERMITS
WATERWAY PERMITS REQUIRED TO COMPLY WITH SECTIONS 401 AND 404 OF THE CLEAN WATER ACT WILL BE OBTAINED BY ODOT PRIOR TO CONSTRUCTION OF THE PROJECT. ODOT WILL LIST THESE REQUIRED WATERWAY PERMITS AND THEIR CONDITIONS IN THE SPECIAL PROVISIONS BOX IN THE FINAL PLANS AND THEY SHALL BE ADHERED TO BY THE CONTRACTOR THROUGHOUT THE PROJECT. ODOT WILL INCLUDE ANY REQUIRED WETLAND OR STREAM MITIGATION AS PART OF THE PROJECT.

POST CONSTRUCTION STORM WATER TREATMENT
THIS PLAN UTILIZES STRUCTURAL BEST MANAGEMENT PRACTICES (BMP'S) FOR POST CONSTRUCTION STORM WATER TREATMENT.

CONTRACTION AND/OR EXPANSION JOINTS
ALTHOUGH SPECIFIC LOCATIONS OF CERTAIN CONTRACTION AND EXPANSION JOINTS HAVE BEEN DETAILED ON THIS PLAN, NO WAIVER OF THE SPECIFICATIONS IS INTENDED. IN ALL CASES, THE PROVISION OF EXPANSION JOINTS AT ALL MAJOR STRUCTURES INCLUDING THE MAXIMUM SPACING BETWEEN CONTRACTION JOINTS IS IN ACCORDANCE WITH STANDARD CONSTRUCTION DRAWING BP-2.2 AND THE SPECIFICATIONS.

CONTRACTION JOINTS IN CONCRETE PAVEMENT OR BASE WIDENING
WHERE NEW CONCRETE IS PLACED ADJACENT TO EXISTING CONCRETE, PROVIDE CONTRACTION JOINTS IN THE NEW CONCRETE TO FORM CONTINUOUS JOINTS WITH THOSE IN THE EXISTING CONCRETE.

THE MAXIMUM DISTANCE BETWEEN THE JOINTS IN THE NEW CONCRETE ARE IN ACCORDANCE WITH STANDARD CONSTRUCTION DRAWING BP-2.2, IF NECESSARY, ADDITIONAL JOINTS MAY BE PROVIDED IN THE NEW CONCRETE AT APPROXIMATELY EQUALINTERVALS BETWEEN EXISTING JOINTS THAT EXCEED THE MAXIMUM SPACING.

MAINTENANCE OF TRAFFIC COORDINATION
ALL LOCAL SCHOOLS AND EMERGENCY SERVICES WHICH ARE LIKELY TO UTILIZE THE CLOSED AND DETOURED SEGMENTS OF MIAMISBURG-SPRINGBORO PIKE OR BYERS ROAD ARE TO BE NOTIFIED OF THE DETOUR NOT LESS THAN TWO WEEKS PRIOR TO THE ROAD CLOSURE. THE CONTRACTOR SHALL REQUEST NOTIFICATION BY ODOT DISTRICT 7 HIGHWAY MAINTENANCE ADMINISTRATION AND THE DISTRICT PUBLIC INFORMATION OFFICER NO LESS THAN THREE WEEKS IN ADVANCE OF CONSTRUCTION AND/OR ROAD CLOSURES.

ACCESS FOR FARMING OPERATIONS
ACCESS FOR FARMING OPERATIONS DURING CONSTRUCTION WILL BE MAINTAINED. THE CONTRACTOR SHALL COORDINATE AND SCHEDULE WORK WITH THE FARMER(S) ADJACENT TO THE PROJECT AREA PRIOR TO COMMENCING OPERATIONS THAT COULD INTERFERE WITH ACCESS TO THEIR FIELDS. THE PROJECT ENGINEER'S APPROVAL OF THESE OPERATIONS WILL BE REQUIRED TO ENSURE THAT CONSTRUCTION OF THE ROADWAY DOES NOT PRECLUDE ACCESS FOR FARMING OPERATIONS.

ITEM 442 - ASPHALT CONCRETE SURFACE COURSE, 12.5mm, TYPE A (446), AS PER PLAN AND ITEM 442 - ASPHALT CONCRETE INTERMEDIATE COURSE, 19mm, TYPE A (446), AS PER PLAN
THESE ITEMS SHALL FOLLOW SPECIFICATION 442. THE 442.04 BINDER SHALL BE PG76-22M FOR THE SURFACE COURSE AND PG70-22M FOR THE INTERMEDIATE COURSE.

SEEDING AND MULCHING
THE FOLLOWING QUANTITIES ARE PROVIDED TO PROMOTE GROWTH AND CARE OF PERMANENT SEEDED AREAS:

659, SOIL ANALYSIS TEST	3 EACH
659, TOPSOIL	25,959 CU. YD.
659, SEEDING AND MULCHING	233,856 SQ. YD.
659, REPAIR SEEDING AND MULCHING	11,693 SQ. YD.
659, INTER-SEEDING	11,693 SQ. YD.
659, COMMERCIAL FERTILIZER	32.62 TON
659, LIME	48.32 ACRES
659, WATER	1547 M. GAL.
659, MOWING	527 M. SQ. FT.

SEEDING AND MULCHING SHALL BE APPLIED TO ALL AREAS OF EXPOSED SOIL BETWEEN THE RIGHT-OF-WAY LINES, AND WITHIN THE CONSTRUCTION LIMITS FOR AREAS OUTSIDE THE RIGHT-OF-WAY LINES COVERED BY WORK AGREEMENT OR SLOPE EASEMENT. QUANTITY CALCULATIONS FOR SEEDING AND MULCHING ARE BASED ON THESE LIMITS.

ITEM 660, SODDING REINFORCED
THE FOLLOWING QUANTITIES ARE PROVIDED TO PROMOTE GROWTH AND CARE OF PERMANENT SODDED AREAS.

659, TOPSOIL	57 CU. YD.
659, COMMERCIAL FERTILIZER	0.07 TON
659, LIME	0.11 ACRE
659, WATER	11 M. GAL.
660, SODDING REINFORCED	505 SQ. YD.

ITEM 670, DITCH EROSION PROTECTION
THE FOLLOWING QUANTITIES ARE PROVIDED TO PROMOTE GROWTH AND CARE OF ITEM 670, DITCH EROSION PROTECTION.

659, TOPSOIL	1246 CU. YD.
659, COMMERCIAL FERTILIZER	1.52 TON
659, LIME	2.32 ACRE
659, WATER	243 M. GAL.
670, DITCH EROSION PROTECTION	11,219 SQ. YD.

ITEM 836, SEEDING AND EROSION CONTROL WITH TURF REINFORCING MAT, TYPE 1
THE FOLLOWING QUANTITIES ARE PROVIDED TO PROMOTE GROWTH AND CARE OF ITEM 836, SEEDING AND EROSION CONTROL WITH TURF REINFORCING MAT, TYPE 1 AREAS.

659, TOPSOIL	1073 CU. YD.
659, COMMERCIAL FERTILIZER	1.31 TON
659, LIME	2.00 ACRE
659, WATER	209 M. GAL.
836, SEEDING AND EROSION CONTROL WITH TURF REINFORCING MAT, TYPE 1	9666 SQ. YD.

RIGHT OF WAY MONUMENTS
ANY RIGHT OF WAY MONUMENTS DISTURBED DURING CONSTRUCTION SHALL BE RESET BY THE CONTRACTOR. IN ADDITION TO THE REQUIREMENTS OF CMS SECTION 107.10, THE FOLLOWING SHALL APPLY:

DURING CONSTRUCTION, THE CONTRACTOR WILL INSTALL ITEM 604 MONUMENT ASSEMBLIES, ITEM 604 REFERENCE MONUMENTS AND CENTERLINE MONUMENTS AS SPECIFIED IN THE PLANS.

ALL MONUMENTS SET AND/OR RESET BY THE CONTRACTOR'S SURVEYOR WILL INCLUDE A CAP AS PER STANDARD CONSTRUCTION DRAWING RW-1.1 AND BEAR THE SURVEYOR'S OHIO REGISTRATION NUMBER AND/OR NAME OR COMPANY NAME.

THE CONTRACTOR'S SURVEYOR IS REQUIRED TO SUBMIT TO ODOT A SIGNED AND SEALED REPORT AND/OR DRAWING IDENTIFYING ANY MONUMENTS SET OR RESET. THE REPORT WILL IDENTIFY THE STATION AND OFFSET RELATIVE TO THE PLANS AS WELL AS LISTING THE NORTHING AND EASTING COORDINATES RELATIVE TO THE PROJECT CONTROL COORDINATE DATUM WHEN DEFINED IN THE PLANS.

WHEN THE LOCATION AND/OR TYPE OF MONUMENT SET HAS CHANGED FROM THOSE MONUMENTS IDENTIFIED IN THE CENTERLINE PLAT SHEET A REVISED AND/OR NEW CENTERLINE PLAT SHALL BE RECORDED WITH THE APPROPRIATE COUNTY OFFICE(S).

AN ESTIMATED 67 RIGHT OF WAY MONUMENTS WILL BE DISTURBED BY CONSTRUCTION ACTIVITIES. THE WORK DESCRIBED ABOVE IS CONSIDERED INCIDENTAL TO ITEM 604.

PAVEMENT PLANING
THE INTENT OF THE PAVEMENT PLANNING IS TO PROVIDE A UNIFORM THICKNESS OF THE SURFACE COURSE. PER THE TYPICAL SECTIONS, THE SURFACE COURSE IS 1-1/2 INCHES ON MIAMISBURG-SPRINGBORO PIKE AND WOOD ROAD AND 1-1/4 INCHES ON STATE ROUTE 741. THE INTENT OF THE VARIABLE DEPTH INTERMEDIATE COURSE IS TO BUILD FROM EXISTING PAVEMENT TO THE PROPER INTERMEDIATE ELEVATION ONLY WHEN REQUIRED.

CALCULATED GKB
CHECKED AJS

GENERAL NOTES

MOT-75-0.75

ITEM 407 - TACK COAT
THE RATE OF APPLICATION OF THE 407 TACK COAT SHALL BE SUBJECT TO ADJUSTMENT AS DIRECTED BY THE ENGINEER. FOR ESTIMATING PURPOSES ONLY, THE PLAN QUANTITIES INDICATE AN AVERAGE APPLICATION RATE OF:

407, TACK COAT	0.075 GAL/S.Y.
407, TACK COAT FOR INTERMEDIATE COURSE	0.040 GAL/S.Y.

AIRWAY/HIGHWAY CLEARANCE FOR AIRPORTS AND HELIPORTS
THIS PROJECT HAS BEEN IDENTIFIED AS BEING WITHIN THE INFLUENCE AREA OF A PUBLIC USE AIRPORT OR HELIPORT. NO TEMPORARY STRUCTURES OR CONSTRUCTION EQUIPMENT AT MAXIMUM OPERATING HEIGHT SHALL EXCEED A HEIGHT OF 100 FT. IF ANY TEMPORARY STRUCTURES OR CONSTRUCTION EQUIPMENT WILL EXCEED THIS HEIGHT, FURTHER COORDINATION WITH THE FEDERAL AVIATION ADMINISTRATION (FAA), AND ODOT OFFICE OF AVIATION, WILL BE NECESSARY PRIOR TO ERECTING SUCH TEMPORARY STRUCTURES OR OPERATING SUCH EQUIPMENT ON THE PROJECT. THE CONTRACTOR WILL BE REQUIRED TO FILE A NEW FAA FORM 7460-1, ADVISING THE FAA THAT AERONAUTICAL STUDY NO. 2008-AGL-4745-OE IS BEING RESUBMITTED AND THAT AN ALTERATION TO THE ORIGINAL SUBMISSION IS REQUESTED.

COPIES OF THE ALTERATION AND FORM 7460-1 SHALL BE FORWARDED TO THE ODOT OFFICE OF AVIATION. NO TEMPORARY STRUCTURES OR CONSTRUCTION EQUIPMENT SHALL EXCEED THE PERMISSIBLE HEIGHT, UNTIL A COPY OF THE FAA APPROVAL AND ODOT OFFICE OF AVIATION PERMIT HAS BEEN FURNISHED TO THE PROJECT ENGINEER.

FAA APPROVAL MAY TAKE UP TO 45 DAYS. ALL SUBMISSIONS SHALL BE DIRECTED TO THESE OFFICES:

EXPRESS PROCESSING CENTER
THE FEDERAL AVIATION ADMINISTRATION
SOUTHWEST REGIONAL OFFICE
AIR TRAFFIC AIRSPACE BRANCH ASW-520
2601 MEACHAN BLVD.
FORT WORTH, TX 76137-4298

OHIO DEPARTMENT OF TRANSPORTATION
OFFICE OF AVIATION
2829 WEST DUBLIN-GRANVILLE ROAD
COLUMBUS, OHIO 43235
614-387-2346

ITEM 451 - REINFORCED CONCRETE PAVEMENT, MISC.: 4" ENHANCED CONCRETE PAVEMENT
IN ADDITION TO THE REQUIREMENTS OF THE DEPARTMENT'S CONSTRUCTION AND MATERIAL SPECIFICATIONS, CONCRETE MEDIANS SHALL BE AS FOLLOWS:

CONCRETE MEDIAN FINISH: BONMITE CORPORATION - MEDIUM ASHLAR SLATE PATTERN WITH SIZES TO RANGE FROM 8" X 9" TO 18" X 20" AND 8" X 9" AND 21" X 32", INCRETE SYSTEMS - RANDOM SIDEWALK SLATE PATTERN, LM. SCOFIELD COMPANY- FRACTURED RANDOM INTERLOCKING PATTERNS 700A 700B 700C, OR EQUAL AS APPROVED BY THE ENGINEER. COLOR MUST MATCH FEDERAL STANDARD 595B: #10115

BOMANITE CORPORATION
232 S. SCHNOOR AVENUE
MADERA, CA 93637
PHONE: (559)-673-2411

INCRETE SYSTEMS
1611 GUNN HWY
ODESSA, FL 33556
580 S. LAKE
AURORA, IL 60506
PHONE: 1-866-342-8760

L M. SCOFIELD COMPANY
1652 E. MAIN ST., SUITE 200
ST. CHARLES, IL 60174
PHONE: (630)-377-5959
FAX: (630)-377-5952

TRUNCATED DOMES
IN ADDITION TO THE REQUIREMENTS OF THE DEPARTMENT'S CONSTRUCTION AND MATERIAL SPECIFICATIONS, AND STANDARD CONSTRUCTION DRAWING BP-7.1, TRUNCATED DOMES SHALL BE SELECTED FROM THE FOLLOWING LIST:

BELDEN BRICK COMPANY
PO BOX 20910
CANTON, OHIO 44701
PH: 330-456-0031
ADA PAVER, COLOR WHEATFIELD

HANOVER ARCHITECTURAL PRODUCTS
240 BENDER ROAD
HANOVER, PA 17331
PH: 800-426-4242
DETECTABLE WARNING PAVER, COLOR CREAM

WHITACRE GREER
1400 S. MAHONING AVENUE
ALLIANCE, OH 44601
PH: 330-823-1610
ADA PAVER, COLOR IVORY #50

ODOT APPROVED LIST LOCATED AT:
HTTP://WWW.DOT.STATE.OH.US/ROADWAYENGINEERING/STANDARDS/TD.HTM
ONLY HANOVER ARCHITECTURAL PRODUCTS IS APPROVED BY ODOT.
WAUSAU TILE WARNING PAVERS IS NOT APPROVED BY ODOT.
NITTERHOUSE MASONRY PRODUCTS, LLC IS NOT APPROVED BY ODOT.

PAYMENT FOR ALL OPERATIONS DESCRIBED ABOVE SHALL BE INCLUDED IN THE PERTINENT ITEM 608 CURB RAMP ITEM.

ITEM 204 - SUBGRADE COMPACTION AND PROOF ROLLING
CONSTRUCT THE SUBGRADE AS FOLLOWS AND IN THE FOLLOWING SEQUENCE:

1. SHAPE THE SUBGRADE TO WITHIN 0.2 OF A FOOT OF THE PLAN SUBGRADE ELEVATION.

IF THERE IS UNSUITABLE MATERIAL IN A SHALLOW FILL LOCATION, THEN REMOVE AND REPLACE THE UNSUITABLE MATERIAL ACCORDING TO STEP 2 PRIOR TO CONSTRUCTING THE SHALLOW FILL AND SHAPING THE SUBGRADE.

2. REMOVE AND REPLACE THE UNSUITABLE MATERIALS (E.G., A-4B, A-2-5, A-5, A-7-5, COAL, SHALE, ROCK). THESE MATERIALS ARE TO BE REMOVED PRIOR TO PROOF ROLLING. THE LIMITS ARE SHOWN ON THE CROSS SECTIONS AS UNSUITABLE SOILS. THE QUANTITIES FOR THE UNSUITABLE SOILS ARE PAID UNDER ITEM 204 EXCAVATION OF SUBGRADE.

3. CONSTRUCT AND COMPACT THE SUBGRADE ACCORDING TO 204.03.

4. PROOF ROLL THE COMPACTED SUBGRADE ACCORDING TO 204.06 TO DETERMINE THE ACTUAL LIMITS OF THE SOFT SOILS AND TO VERIFY THE UNIFORMITY OF THE SUBGRADE COMPACTION. THE APPROXIMATE LIMITS OF THE SOFT SOILS ARE SHOWN ON THE CROSS SECTIONS AS SOFT SOILS.

5. THE ENGINEER WILL IDENTIFY THE ACTUAL LOCATIONS OF THESE SOFT SOILS BASED ON THE PROOF ROLLING RESULTS. AFTER THE SOFT SOIL AREAS HAVE BEEN DETERMINED, THE ENGINEER WILL ADJUST THE PLAN WIDTH AND DEPTH BY UTILIZING TEST PITS ACCORDING TO THE CONSTRUCTION INSPECTION MANUAL. THE QUANTITIES FOR THE SOFT SOILS ARE PAID UNDER ITEM 204 EXCAVATION OF SUBGRADE.

6. UNDERCUT THE AREAS DETERMINED BY THE ENGINEER AND REPLACE WITH THE SPECIFIED MATERIALS ACCORDING TO 204.07. THE UNDERCUTS WILL EXTEND TO 18 INCHES BEYOND THE EDGE OF THE SURFACE OF THE PAVEMENT, PAVED SHOULDERS, OR PAVED MEDIANS.

7. PROOF ROLL THE UNDERCUT AREAS ACCORDING TO 204.06 TO VERIFY THE UNDERCUT STABILITY.

8. FINE GRADE THE SUBGRADE TO THE SPECIFIED GRADE.

FENCE LENGTHS
THE LENGTHS OF FENCE SHOWN IN THE PLANS ARE HORIZONTAL DIMENSIONS. MEASUREMENTS OF THE FINAL QUANTITIES SHALL BE MADE IN ACCORDANCE WITH ITEM 607.

UNRECORDED UNTREATED NON-STORMWATER DRAINAGE
FURNISH NO CONTINUANCE FOR ANY UNRECORDED UNTREATED NON-STORMWATER DRAINAGE SUCH AS UNTREATED SEPTIC, UNTREATED WASTEWATER, UNTREATED CURTAIN/GRADIENT DRAINS, AND UNTREATED FOUNDATION FLOOR DRAINS DISTURBED BY THE WORK. PLUG ANY UNRECORDED UNTREATED NON-STORMWATER DRAINAGE WITH CLASS C CONCRETE AT THE RIGHT OF WAY LINE. PAYMENT FOR PLUGGING SHALL BE INCLUDED IN THE CONTRACT PRICE FOR THE PERTINENT 202 OR 203 ITEM.

UNRECORDED STORM WATER DRAINAGE
FURNISH A CONTINUANCE FOR ALL UNRECORDED STORM WATER DRAINAGE, SUCH AS ROOF DRAINS, FOOTER DRAINS, OR YARD DRAINS, DISTURBED BY THE WORK. FURNISH EITHER AN OPEN CONTINUANCE OR AN UNOBSTRUCTED CONTINUANCE BY CONNECTING A CONDUIT THROUGH THE CURB OR INTO A DRAINAGE STRUCTURE. THE LOCATION, TYPE, SIZE AND GRADE OF THE NEEDED CONDUIT TO REPLACE OR EXTEND AN EXISTING DRAIN WILL BE DETERMINED BY THE ENGINEER. ALL SUCH CONTINUANCE REQUIRES A RIGHT OF WAY USE PERMIT.

THE FOLLOWING CONDUIT TYPES MAY BE USED: 707.33, 707.41 NON-PERFORATED, 707.42, 707.43, 707.45, 707.46, 707.47, 707.51, 707.52 SDR35.

THE FOLLOWING ESTIMATED QUANTITIES HAVE BEEN INCLUDED IN THE GENERAL SUMMARY FOR USE AS DIRECTED BY THE ENGINEER FOR THE WORK NOTED ABOVE:

603, 6" CONDUIT, TYPE B, FOR DRAINAGE CONNECTION	50 FT.
603, 6" CONDUIT, TYPE C, FOR DRAINAGE CONNECTION	50 FT.
603, 6" CONDUIT, TYPE E, FOR DRAINAGE CONNECTION	50 FT.

UNRECORDED ACTIVE SANITARY SEWER CONNECTIONS
FURNISH A CONTINUANCE FOR ALL UNRECORDED ACTIVE SANITARY SEWER CONNECTIONS SUCH AS SANITARY, WASTEWATER, CURTAIN/GRADIENT DRAINS, AND FOUNDATION FLOOR DRAINS DISTURBED BY THE WORK. FURNISH AN UNOBSTRUCTED CONTINUANCE OF THE UNRECORDED ACTIVE SANITARY SEWER CONNECTIONS TO THE SATISFACTION OF THE ENGINEER. ALL SUCH CONTINUANCE REQUIRES A RIGHT OF WAY USE PERMIT. ALL SANITARY AND SANITARY WASTEWATER CONTINUANCE MAY ALSO REQUIRE A NPDES PERMIT FROM THE OHIO ENVIRONMENTAL PROTECTION AGENCY. REPORT ALL CONTINUANCE TO THE LOCAL HEALTH DEPARTMENT.

THE FOLLOWING CONDUIT TYPES MAY BE USED: 707.42, 707.43, 707.44, 707.45, 707.46, 707.47, 707.51, 707.52 SDR35, 706.01, 706.02, OR 706.08 WITH JOINTS AS PER 706.11 OR 706.12.

THE FOLLOWING ESTIMATED QUANTITIES HAVE BEEN INCLUDED IN THE GENERAL SUMMARY FOR USE AS DIRECTED BY THE ENGINEER FOR THE WORK NOTED ABOVE:

603, 6" CONDUIT, TYPE B, FOR SANITARY	150 FT.
603, 6" CONDUIT, TYPE C, FOR SANITARY	150 FT.

CONTINGENCY QUANTITIES
THE CONTRACTOR SHALL NOT ORDER MATERIALS OR PERFORM WORK FOR ITEMS DESIGNATED BY PLAN NOTE TO BE USED "AS DIRECTED BY THE ENGINEER" UNLESS AUTHORIZED BY THE ENGINEER. THE ACTUAL WORK LOCATIONS AND QUANTITIES USED FOR SUCH ITEMS SHALL BE INCORPORATED INTO THE FINAL CHANGE ORDER GOVERNING COMPLETION OF THIS PROJECT.

CALCULATED GKB
CHECKED AJS

GENERAL NOTES

MOT-75-0.75

ITEM 606 - ANCHOR ASSEMBLY, TYPE E-98

THIS ITEM SHALL CONSIST OF FURNISHING AND INSTALLING EITHER OF THE FOLLOWING GUARDRAIL END TERMINALS, OR AN APPROVED EQUAL AS LISTED ON ROADWAY ENGINEERING'S WEB PAGE AT WWW.DOT.STATE.OH.US/DRRC/ UNDER ROADSIDE SAFETY DEVICES FOR APPROVED GUARDRAIL END TREATMENTS:

1) THE ET-2000 (1997) MANUFACTURED BY TRINITY INDUSTRY, 1170 N. STATE STREET, GIRARD, OHIO 44420 (TELEPHONE: 330-545-4373).

THE LENGTH OF THE ET-2000 (1997) SYSTEM IS CONSIDERED TO BE 50'-0" [15.24 m], INCLUSIVE OF TWO 25'-0" [7.62 m] LONG RAIL ELEMENTS. INSTALLATION SHALL BE AT THE LOCATIONS SPECIFIED IN THE PLANS, IN ACCORDANCE WITH THE MANUFACTURER'S SPECIFICATIONS AS DETAILED ON THE FOLLOWING PRE-APPROVED SHOP DRAWINGS:

DWG. #	DRAWING NAME	DWG./REV. DATE	ODOT APPROVAL DATE
SS265M	ET-2000 (1997) PLAN, ELEVATION & SECTIONS	6/20/97	3/6/98
SS142	ET2000 PLUS 50'-0" PLAN, ELEVATION & SECTION 25'-0" RAIL, SLEEVE W/PL POSTS 1-4	4/12/00	7/31/00
SS141	ET2000 PLUS PLAN, ELEVATION & SECTION 25'-0" RAIL, HBA POSTS 1-4	2/29/00	7/31/00
SS158	ET2000 PLUS 50'-0" WITH 12'-6" PANELS & HBA POST 1-4 PLAN, ELEVATION & SECTION	2/29/00	7/31/00

2) THE SKT-350 MANUFACTURED BY ROAD SYSTEMS, INC., 2516 MALLORY LANE, STOW, OHIO, 44224, (TELEPHONE: 330-346-0721).

THE LENGTH OF THE SKT-350 SYSTEM IS CONSIDERED TO BE 50'-0" [15.24 m], INCLUSIVE OF FOUR 12'-6" [3.81 m] LONG RAIL ELEMENTS. INSTALLATION SHALL BE AT THE LOCATIONS SPECIFIED IN THE PLANS, IN ACCORDANCE WITH THE MANUFACTURER'S SPECIFICATIONS AS DETAILED ON THE FOLLOWING PRE-APPROVED SHOP DRAWINGS:

DWG. #	DRAWING NAME	DWG./REV. DATE	ODOT APPROVAL DATE
SKT-4M	SEQUENTIAL KINKING TERMINAL (SKT-350) ASSEMBLY WITH 4 FOUNDATION TUBES	12/11/97	3/6/98

THE FACE OF THE TYPE E-98 IMPACT HEAD SHALL BE COVERED WITH A SHEET OF TYPE G REFLECTIVE SHEETING, PER CMS 730.19, APPROXIMATELY 18" X 18" [450 mm X 450 mm.], OR 12" [30 mm] X 18" [450 mm] IF APPLIED TO A RECTANGULAR ET-2000 "PLUS" EXTRUDER HEAD.

REFER TO THE MANUFACTURER'S INSTRUCTION REGARDING THE INSTALLATION OF, AND THE GRADING AROUND, THE FOUNDATION TUBES AND GROUND STRUT. THE TOP OF ANY FOUNDATION TUBE SHOULD BE LESS THAN 4-INCHES [100 mm] ABOVE THE GROUND. THE PLACEMENT OF THE FOUNDATION TUBES SHOULD BE AN APPROPRIATE DEPTH BELOW THE LEVEL LINE IN ORDER TO MAINTAIN THE FINISHED GUARDRAIL HEIGHT OF 27-3/4-INCHES [706 mm] FROM THE EDGE OF THE SHOULDER.

ON-SITE GRADING IS REQUIRED IF THE TOP OF THE FOUNDATION TUBES OR TOP OF THE GROUND STRUT DOES PROJECT MORE THAN 4-INCHES [100 mm] ABOVE THE GROUND LINE.

PAYMENT FOR THE ABOVE WORK SHALL BE MADE AT THE UNIT PRICE BID FOR ITEM 606, ANCHOR ASSEMBLY, TYPE E-98, EACH, AND SHALL INCLUDE ALL LABOR, TOOLS, EQUIPMENT AND MATERIALS NECESSARY TO CONSTRUCT A COMPLETE AND FUNCTIONAL ANCHOR ASSEMBLY SYSTEM, INCLUDING ALL RELATED TRANSITIONS, REFLECTIVE SHEETING, HARDWARE, GRADING, EMBANKMENT AND EXCAVATION NOT SEPARATELY SPECIFIED, AS REQUIRED BY THE MANUFACTURER.

ITEM 202, GUARDRAIL REMOVED FOR STORAGE, AS PER PLAN

THIS ITEM OF WORK SHALL CONSIST OF THE REMOVAL OF THE EXISTING GUARDRAIL AND ALL EXISTING GUARDRAIL CONCRETE FOUNDATIONS USED FOR GUARDRAIL POSTS BY THE CONTRACTOR. CARE SHALL BE TAKEN IN THE REMOVAL OF THE EXISTING GUARDRAIL. THE CONTRACTOR SHALL CONTACT THE MONTGOMERY COUNTY MANAGER, JOHN GLOVER, AT 937-832-1824 REGARDING THE DELIVERY AND STORAGE LOCATION OF THE GUARDRAIL.

PAYMENT FOR THE ABOVE WORK SHALL BE INCLUDED IN THE UNIT PRICE BID FOR ITEM 202, GUARDRAIL REMOVED FOR STORAGE, AS PER PLAN AND SHALL INCLUDE ALL LABOR, MATERIAL, AND EQUIPMENT NECESSARY TO COMPLETE THIS ITEM OF WORK.

ITEM 202, ANCHOR ASSEMBLY REMOVED FOR STORAGE, AS PER PLAN

THIS ITEM OF WORK SHALL CONSIST OF THE REMOVAL OF THE EXISTING ANCHOR ASSEMBLIES AND ALL EXISTING CONCRETE FOUNDATIONS USED FOR ANCHOR ASSEMBLIES AND GUARDRAIL POSTS BY THE CONTRACTOR. CARE SHALL BE TAKEN IN THE REMOVAL OF THE EXISTING GUARDRAIL. THE CONTRACTOR SHALL CONTACT THE MONTGOMERY COUNTY MANAGER, JOHN GLOVER, AT 937-832-1824 REGARDING THE DELIVERY AND STORAGE LOCATION OF THE GUARDRAIL.

PAYMENT FOR THE ABOVE WORK SHALL BE INCLUDED IN THE UNIT PRICE BID FOR ITEM 202, ANCHOR ASSEMBLY REMOVED FOR STORAGE, AS PER PLAN AND SHALL INCLUDE ALL LABOR, MATERIAL, AND EQUIPMENT NECESSARY TO COMPLETE THIS ITEM OF WORK.

CALCULATED GKB
CHECKED AJS

GENERAL NOTES

MOT-75-0.75

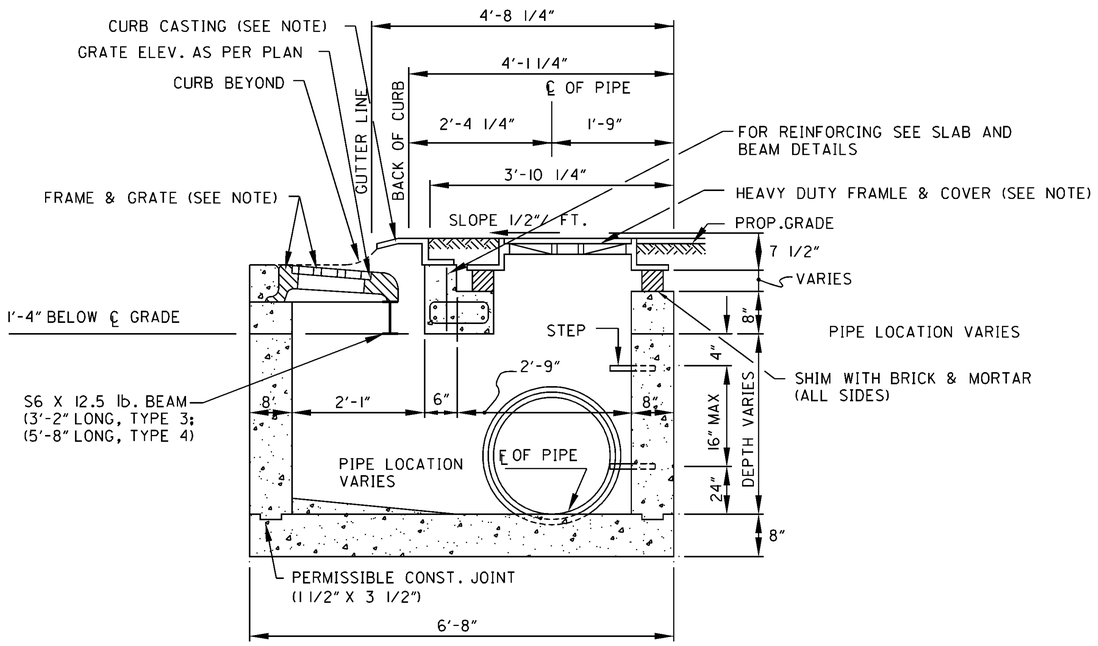

SECTION A-A

CB-3, COMBO & CB-3A, COMBO

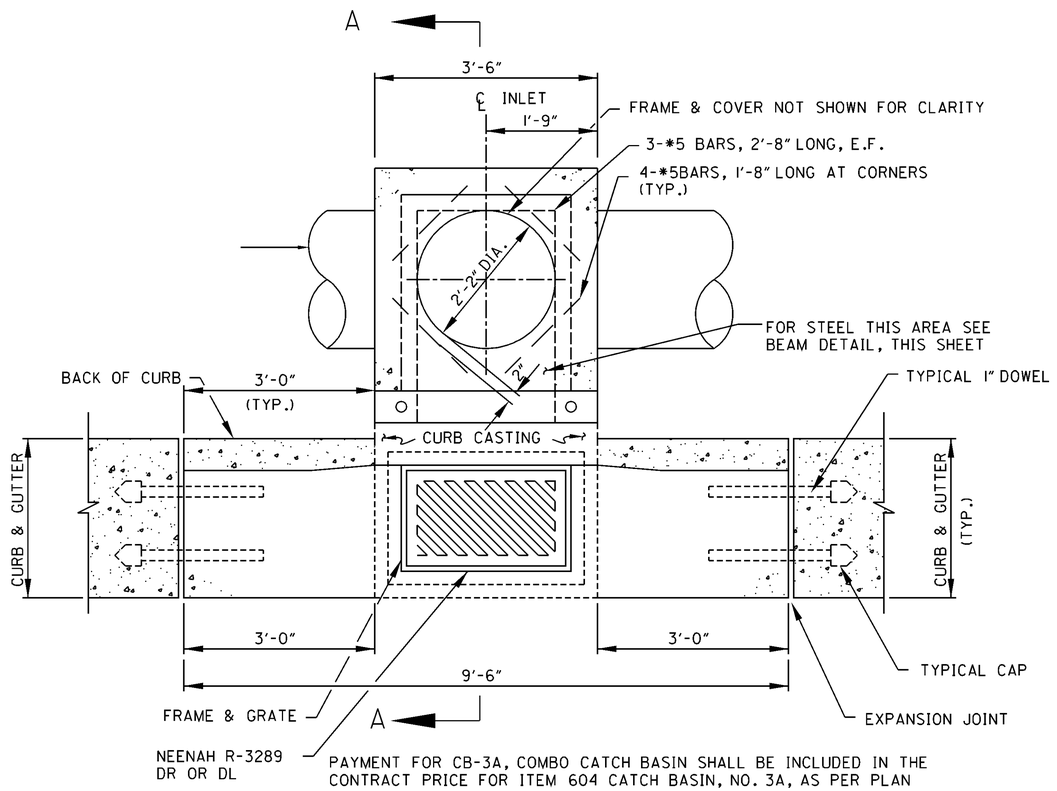

PAYMENT FOR CB-3A, COMBO CATCH BASIN SHALL BE INCLUDED IN THE CONTRACT PRICE FOR ITEM 604 CATCH BASIN, NO. 3A, AS PER PLAN

CB-3A, COMBO CATCH BASIN - PLAN VIEW

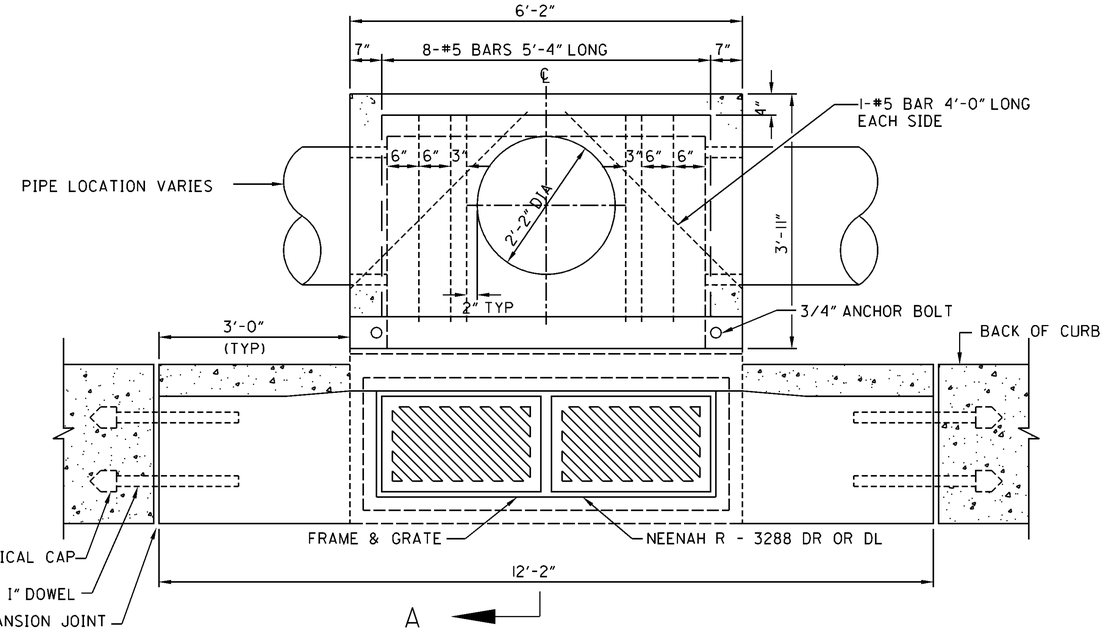

PAYMENT FOR CB-3, COMBO CATCH BASIN SHALL BE INCLUDED IN THE CONTRACT PRICE FOR ITEM 604 CATCH BASIN, NO. 3, AS PER PLAN

CB-3, COMBO CATCH BASIN - PLAN VIEW

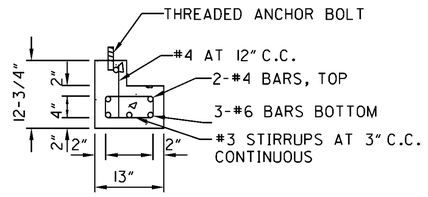

BEAM DETAIL

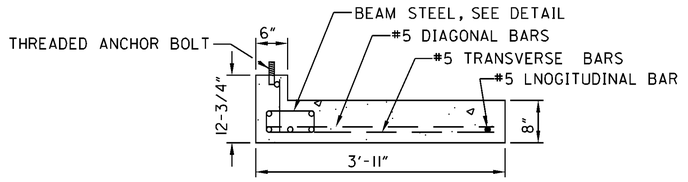

SLAB DETAIL

CALCULATED GKB
CHECKED AJS

GENERAL NOTES

MOT-75-0.75

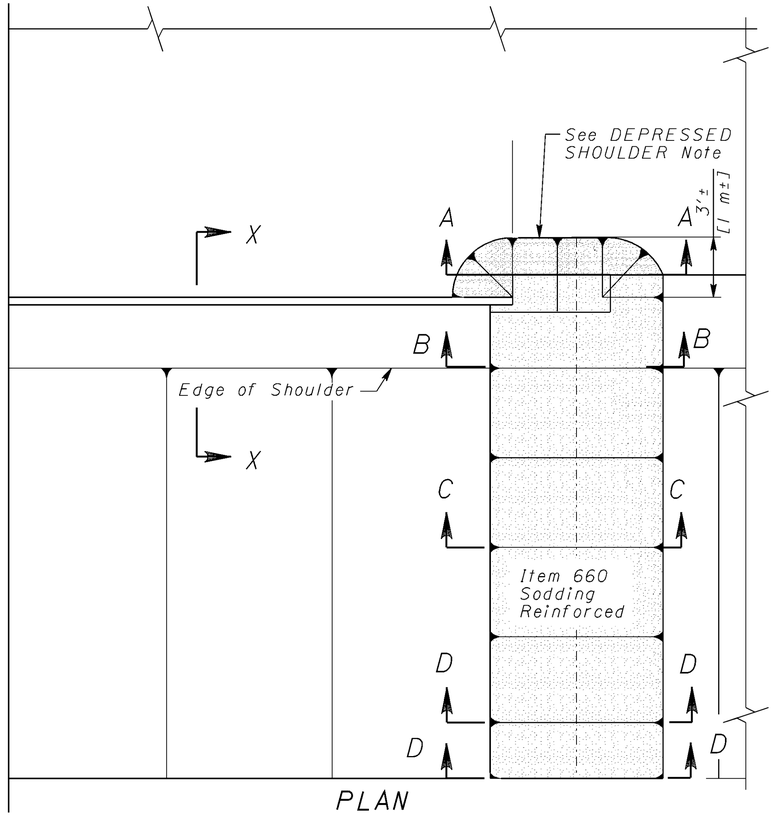

PLAN

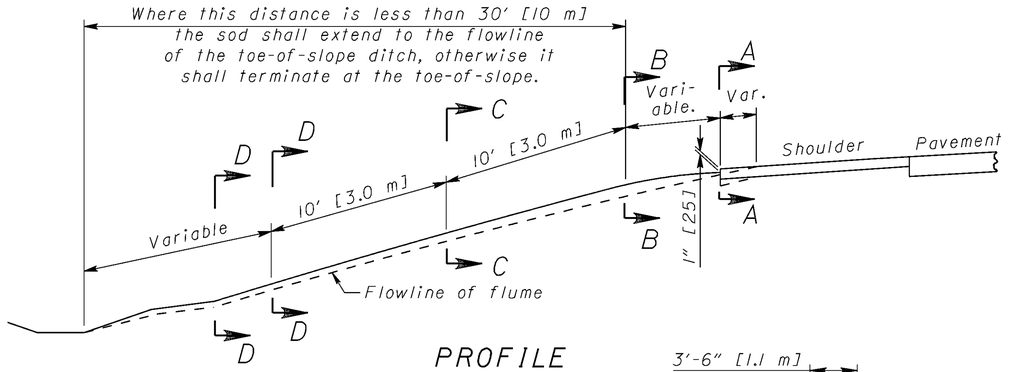

PROFILE

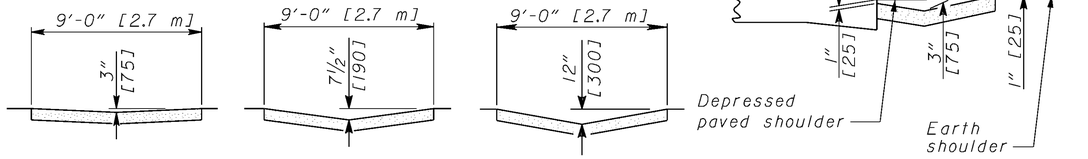

CROSS SECTIONS

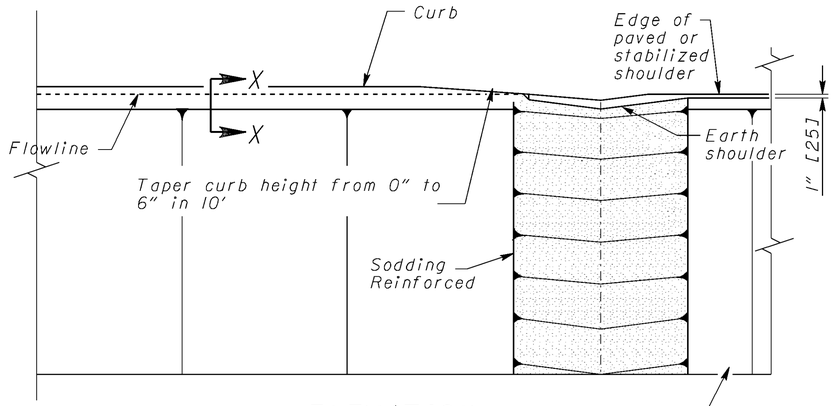

ELEVATION

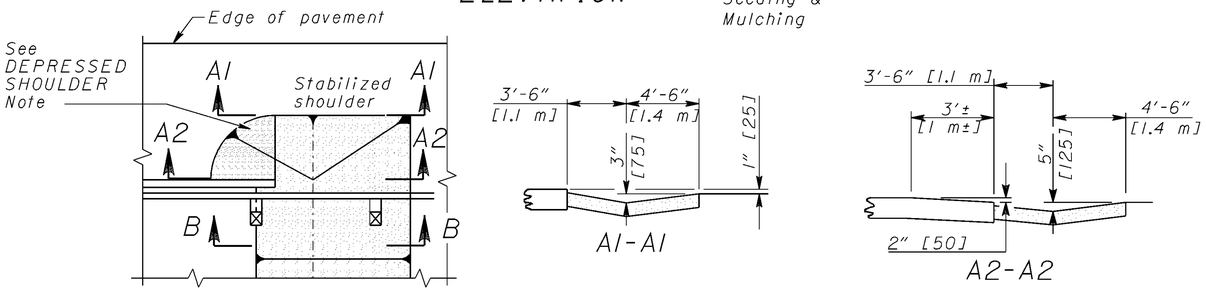

STABILIZED SHOULDER DETAIL

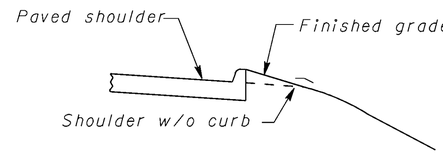

SECTION X-X

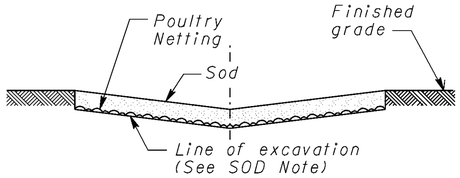

SOD INSTALLALLATION DETAIL

NOTES

DEPRESSED SHOULDER: This portion of the shoulder shall be depressed to ensure positive drainage into the sodded flume. It is especially important in the shoulder area to excavate and shape the subgrade according to the cross-sections.

PLACING REINFORCED SODDING: Prior to placing the sod, galvanized poultry netting shall be placed on the finished subgrade. The netting shall be 4' [1.2 m] wide, poultry netting or equivalent, with 2" [50] mesh and No. 20 gage minimum wire. Each strand shall be staked securely to the subgrade by using T-shaped pins or 1"x1"x8" [25x25x200] wood stakes. The stakes or pins shall be placed at 4' [1.2 m] intervals on the top and bottom and in rows 4' [1.2 m] apart. Fasten the poultry netting to the wood stakes with staples. Where the sodding is from 8' to 9' [2.5 to 3.0 m] wide, two strands of netting for a total width of 8' [2.5 m] is permitted.

SOD: Sod shall be laid in accordance with CMS 660. Special care shall be taken to excavate the sod bed to a proper depth so that the sod is flush with the surrounding grade.

PAYMENT: Payment for all the above shall be included in the unit price bid for **Item 660, Sodding Reinforced, Square Yard.**

CALCULATED GKB
CHECKED AJS

GENERAL NOTES

MOT-75-0.75

ITEM 614 - MAINTAINING TRAFFIC, AS PER PLAN

THE CONTRACTOR SHALL BE RESPONSIBLE FOR PROVIDING, MAINTAINING, AND SUBSEQUENT REMOVAL OF ALL TEMPORARY ROADS AND PAVEMENT, SIGNS, BARRICADES, BARRIERS, LIGHTS, AND OTHER INCIDENTALS NECESSARY FOR THE PURPOSES OF MAINTAINING TRAFFIC.

ALL WORK AND TRAFFIC CONTROL DEVICES SHALL BE IN ACCORDANCE WITH THE CMS 614 AND OTHER APPLICABLE PORTIONS OF THE SPECIFICATIONS, AS WELL AS THE STANDARD CONSTRUCTION DRAWINGS AND THE OHIO MANUAL OF UNIFORM TRAFFIC CONTROL DEVICES (CURRENT EDITION, MOST RECENT REVISION) WITH CERTAIN RESTRICTIONS, EXCEPTIONS, AND CLARIFICATIONS AS NOTED IN THE PLAN.

PAYMENT FOR ALL LABOR, EQUIPMENT, AND MATERIALS FOR MAINTAINING TRAFFIC SHALL BE INCLUDED IN THE LUMP SUM CONTRACT PRICE FOR ITEM 614 MAINTAINING TRAFFIC, AS PER PLAN, UNLESS SEPARATELY ITEMIZED IN THE PLANS.

GENERAL REQUIREMENTS

CONSTRUCTION OF THE PROJECT HAS BEEN DIVIDED INTO TWO MAJOR STAGES, AS OUTLINED IN THE SEQUENCE OF CONSTRUCTION SCHEMATICS (SHEETS 39 AND 40).

LENGTH AND DURATION OF LANE CLOSURES AND RESTRICTIONS SHALL BE AT THE APPROVAL OF THE ENGINEER. IT IS THE INTENT TO MINIMIZE THE IMPACT TO THE TRAVELING PUBLIC. LANE CLOSURES OR RESTRICTIONS OVER SEGMENTS OF THE PROJECT IN WHICH NO WORK IS ANTICIPATED WITHIN A REASONABLE TIME FRAME, AS DETERMINED BY THE ENGINEER, SHALL NOT BE PERMITTED. THE LEVEL OF UTILIZATION FOR MAINTENANCE OF TRAFFIC DEVICES SHALL BE COMMENSURATE WITH THE WORK IN PROGRESS. THE CONTRACTOR SHALL PROVIDE A 72 HOUR NOTIFICATION TO THE DEPARTMENT FOR ANTICIPATED LANE CLOSURES AND RESTRICTIONS. THE LANE CLOSURES WILL BE AT THE ENGINEER'S DISCRETION.

TRAFFIC PATTERN CHANGES, TEMPORARY LANE CLOSURES (FOR CONSTRUCTION OPERATIONS NOT SPECIFICALLY COVERED IN THE PLAN), AND CONSTRUCTION OPERATIONS WHICH REQUIRE ONE-LANE, TWO-WAY OPERATIONS WILL NOT BE PERMITTED DURING RESTRICTED HOURS (SEE "LANE CLOSURE POLICY" NOTE, THIS SHEET).

THE CONTRACTOR SHALL BE RESPONSIBLE TO MAINTAIN ADEQUATE DRAINAGE AT ALL TIMES DURING PHASED CONSTRUCTION WORK, TO THE SATISFACTION OF THE ENGINEER, IN ACCORDANCE WITH 614.02.

IF THE CONTRACTOR SO ELECTS, HE MAY SUBMIT ALTERNATE METHODS FOR THE MAINTENANCE OF TRAFFIC, PROVIDED THE INTENT AND PROVISIONS HEREIN ARE FOLLOWED, AND NO ADDITIONAL INCONVENIENCE TO THE TRAVELING PUBLIC RESULTS THEREFROM. NO ALTERNATE PLAN SHALL BE PLACED INTO EFFECT UNTIL APPROVAL HAS BEEN GRANTED IN WRITING BY THE ENGINEER.

WORK ZONE DROP-OFF

THE CONTRACTOR IS FORBIDDEN TO PERFORM CONSTRUCTION OPERATIONS WHICH VIOLATE THE STATE'S WORK ZONE DROP-OFF CRITERIA. IF THE CONTRACTOR SO ELECTS, HE/SHE MAY ERECT PORTABLE CONCRETE BARRIER IN ORDER TO PROTECT DROP-OFF FOR CONSTRUCTION OPERATIONS WHICH COULD OTHERWISE BE CONSTRUCTED DURING NON-RESTRICTED HOURS USING TEMPORARY LANE CLOSURES (FOR EXAMPLE, PAVEMENT DEMOLITION, INSTALLATION OF DRAINAGE FEATURES, AND SHOULDER WIDENING). HOWEVER, ALL LABOR AND MATERIALS USED TO PROTECT THESE AREAS SHALL BE AT THE CONTRACTOR'S OWN EXPENSE, UNLESS SPECIFICALLY ITEMIZED IN THE PLAN. SEE PLAN INSERT SHEET 55, FOR SPECIFIC WORKZONE DROP-OFF CRITERIA.

LANE CLOSURE POLICY

THE CONTRACTOR IS REQUIRED TO FOLLOW THE STATE'S LANE CLOSURE POLICY FOR ALL CONSTRUCTION WORK. THE CONTRACTOR IS ADVISED THAT IT MAY BE NECESSARY TO SCHEDULE WEEKEND AND NIGHT TIME WORK FOR CONSTRUCTION ACTIVITIES SUCH AS PAVING, PAVEMENT DEMOLITION, RE-GRADING FOR DRAINAGE DITCHES, INSTALLATION OF DRAINAGE FEATURES (FOR EXAMPLE, PIPES AND CULVERTS), BRIDGE PAINTING AND ERECTION OF MEDIAN MOUNTED TRUSS FOUNDATIONS. IN ORDER TO CONFORM WITH THIS REQUIREMENT, THE CONTRACTOR SHALL BE RESPONSIBLE FOR ALL INCREMENTAL COSTS ASSOCIATED WITH NIGHT TIME AND WEEKEND CONSTRUCTION ACTIVITIES WHICH ARE REQUIRED TO CONFORM WITH THIS POLICY.

LANE CLOSURES SHALL ONLY BE IMPLEMENTED AT THE TIMES LISTED ON THE OHIO DEPARTMENT OF TRANSPORTATION'S PERMITTED LANE CLOSURE WEBSITE, WHICH IS LOCATED AT:

* http://plcm.dot.state.oh.us. THE PERMITTED CLOSURE TIMES LISTED ON THE WEBSITE 14 DAYS PRIOR TO THE BID LETTING DATE SHALL BE IN EFFECT FOR THE PROJECT.

* LANE CLOSURES ON MIAMISBURG-SPRINGBORO PIKE, CRAINS CREEK RD., CRAINS RUN RD., AND AUSTIN ROAD SHALL NOT OCCUR DURING RESTRICTED HOURS, DEFINED AS 6:00 AM TO 8:00 AM AND 3:00 TO 6:00 PM ON WEEKDAYS, OR HOLIDAYS.

NO WORK WITHIN ACTIVE TRAVEL LANES OR WHICH WILL SLOW TRAFFIC IS PERMITTED AT ANY OTHER TIMES.

NO WORK SHALL BE PERFORMED AND ALL EXISTING LANES SHALL BE OPEN TO TRAFFIC DURING THE FOLLOWING DESIGNATED HOLIDAYS:

CHRISTMAS, MEMORIAL DAY, LABOR DAY, NEW YEARS DAY, FOURTH OF JULY, EASTER, AND THANKSGIVING.

THE PERIOD OF TIME THAT THE LANES ARE TO BE OPENED DEPENDS ON THE DAY OF THE WEEK ON WHICH THE HOLIDAY FALLS. THE FOLLOWING SCHEDULE SHALL BE USED TO DETERMINE THIS PERIOD:

DAY OF WEEK	TIME ALL LANES MUST BE OPENED
SUNDAY	12:00 N FRIDAY THROUGH 6:00 AM MONDAY
MONDAY	12:00 N FRIDAY THROUGH 6:00 AM TUESDAY
TUESDAY	12:00 N MONDAY THROUGH 6:00 AM WEDNESDAY
WEDNESDAY	12:00 N TUESDAY THROUGH 6:00 AM THURSDAY
THURSDAY	12:00 N WEDNESDAY THROUGH 6:00 AM MONDAY
FRIDAY	12:00 N THURSDAY THROUGH 6:00 AM MONDAY
SATURDAY	12:00 N FRIDAY THROUGH 6:00 AM MONDAY

NO EXTENSIONS OF TIME SHALL BE GRANTED IN MATERIAL DELIVERIES, UNLESS SUCH DELAYS ARE INDUSTRY-WIDE, OR FOR LABOR STRIKES, UNLESS SUCH STRIKES ARE AREA-WIDE.

SHOULD THE CONTRACTOR FAIL TO MEET ANY OF THESE REQUIREMENTS, THE CONTRACTOR SHALL BE ASSESSED LIQUIDATED DAMAGES IN ACCORDANCE WITH CMS 108.07.

USE OF STANDARD CONSTRUCTION DRAWINGS

THE CONTRACTOR SHALL REFER TO STANDARD CONSTRUCTION DRAWINGS AND THE OHIO MANUAL OF TRAFFIC CONTROL DEVICES (OMUTCD), AS NOTED IN THE PLAN, FOR DETAILS ON PLACEMENT OF SIGNS, DRUMS, AND OTHER INCIDENTAL ITEMS NOT SPECIFICALLY ITEMIZED IN THE SUBSUMMARY. MODIFICATIONS TO THE PLACEMENT OF THESE CONTROL DEVICES MAY BE REQUIRED, DUE TO PHYSICAL CONSTRAINTS WITHIN THE VICINITY OF THE WORK ZONE. THE ENGINEER MAY DIRECT THE CONTRACTOR TO MODIFY THE PLACEMENT OF SIGNS, DRUMS, BARRICADES, AND OTHER INCIDENTAL TRAFFIC CONTROL ITEMS NOT SPECIFICALLY ITEMIZED IN THE PLAN. PAYMENT FOR THIS WORK SHALL BE CONSIDERED INCIDENTAL TO AND INCLUDED WITH ITEM 614, MAINTAINING TRAFFIC, AS PER PLAN.

FLOODLIGHTING

FLOODLIGHTING OF THE WORK SITE FOR OPERATIONS CONDUCTED DURING NIGHTTIME PERIODS SHALL BE ACCOMPLISHED SO THAT THE LIGHTS DO NOT CAUSE GLARE TO THE DRIVERS ON THE ROADWAY. TO ENSURE THE ADEQUACY OF THE FLOODLIGHT PLACEMENT, THE CONTRACTOR AND THE ENGINEER SHALL DRIVE THROUGH THE WORK SITE EACH NIGHT WHEN THE LIGHTING IS IN PLACE AND OPERATIVE PRIOR TO COMMENCING ANY WORK. IF GLARE IS DETECTED, THE LIGHT PLACEMENT AND SHIELDING SHALL BE ADJUSTED TO THE SATISFACTION OF THE ENGINEER BEFORE WORK PROCEEDS.

PAYMENT FOR ALL LABOR, EQUIPMENT AND MATERIALS SHALL BE INCLUDED IN THE LUMP SUM CONTRACT PRICE FOR ITEM 614, MAINTAINING TRAFFIC, AS PER PLAN.

MAINTENANCE OF HIGHWAY SIGNS

THE CONTRACTOR SHALL BE RESPONSIBLE FOR MAINTAINING HIGHWAY SIGNS IN CONFORMANCE WITH 614.07. INCLUDING APPLICABLE REGULATORY/WARNING SIGNS, STREET NAME SIGNS, TRAILBLAZER ASSEMBLIES, GUIDE SIGNS, AND EXIT GORE SIGNS. WHEN CONSTRUCTION OPERATIONS RESULT IN REMOVAL OF EXISTING OVERHEAD OR GROUND MOUNTED GUIDE SIGNS, THE CONTRACTOR SHALL INSTALL TEMPORARY GROUND MOUNTED GUIDE SIGNS OR PERMANENT (PROPOSED) OVERHEAD GUIDE SIGN STRUCTURES WITH PROPOSED SIGNS AND TEMPORARY OVERLAYS, AS SHOWN IN THE PLAN, OR AS DIRECTED BY THE ENGINEER. STREET NAME SIGNS AND TRAILBLAZER SIGNS SHALL BE CLEARLY VISIBLE TO MOTORISTS AT ALL TIMES, AND SHALL BE UPDATED TO REFLECT THE CURRENT TRAVEL PATTERNS.

FOLLOWING CONSTRUCTION, THE CONTRACTOR SHALL RESTORE ALL EXISTING HIGHWAY SIGNS AND STRUCTURES, WHICH ARE DESIGNATED TO REMAIN.

PAYMENT FOR ALL WORK ASSOCIATED WITH MAINTAINING HIGHWAY SIGNING SHALL BE CONSIDERED INCIDENTAL TO AND INCLUDED WITH ITEM 614, MAINTAINING TRAFFIC, AS PER PLAN.

WORK ZONE PAVEMENT WEDGING

WORK ZONE PAVEMENT WEDGES SHALL BE PROVIDED AT ALL TIMES WHERE TRAFFIC IS REQUIRED TO TRAVEL FROM OR ONTO A PAVEMENT SURFACE OF A DIFFERENT ELEVATION. THE MINIMUM SLOPE OF THE TEMPORARY PAVEMENT WEDGE SHALL BE 3:1 ALONG LONGITUDINAL JOINTS AND 120:1 AT TRANSVERSE JOINTS. THE WEDGES SHALL BE REMOVED PRIOR TO PLACING THE SPECIFIED PAVEMENT COURSE. PAYMENT FOR ALL WORK, MATERIALS, ETC. ASSOCIATED WITH THIS ITEM SHALL BE PAID FOR UNDER ITEM 614 MAINTAINING TRAFFIC, AS PER PLAN.

TRAFFIC SIGNAL CONTROL

TRAFFIC SIGNAL ADJUSTMENTS WILL BE REQUIRED AT THE INTERSECTION OF SR 741 AT AUSTIN ROAD TO ACCOMMODATE THE MAINTENANCE OF VEHICULAR TRAFFIC. THE CONTRACTOR SHALL BE RESPONSIBLE FOR PROVIDING ALL MATERIAL, LABOR, AND EQUIPMENT NECESSARY TO PROVIDE SATISFACTORY TRAFFIC SIGNAL OPERATIONS DURING CONSTRUCTION. THIS WORK MAY INCLUDE INSTALLATION OF TEMPORARY LOOP DETECTORS, REPLACEMENT OF SIGNAL HEADS (TO FACILITATE PHASING OR SEQUENCE CHANGES), RELOCATION OF SIGNAL HEADS, ADJUSTMENTS OF CONTROLLER SETTINGS, AND ANY OTHER SIGNAL WORK NECESSARY TO OPERATE THE SIGNAL IN CONFORMANCE WITH THE OMUTCD, OR AS DEEMED NECESSARY BY THE ENGINEER. WEATHER TYPE WIRE SPLICES, AS APPROVED BY THE ENGINEER, WILL BE PERMITTED. THE CONTRACTOR SHALL CONTACT THE ENGINEER AT 937-497-6832 5 WORKING DAYS PRIOR TO MAKING CHANGES FOR APPROVAL. PAYMENT FOR THIS WORK SHALL BE CONSIDERED INCIDENTAL TO AND INCLUDED WITH ITEM 614 MAINTAINING TRAFFIC, AS PER PLAN.

CALCULATED MJH | CHECKED CMK

MAINTENANCE OF TRAFFIC GENERAL NOTES

MOT-75-0.75

ITEM 614 - WORK ZONE IMPACT ATTENUATOR FOR 24" WIDE HAZARDS (UNIDIRECTIONAL OR BIDIRECTIONAL)

THIS ITEM SHALL CONSIST OF FURNISHING AND INSTALLING EITHER OF THE FOLLOWING IMPACT ATTENUATORS:

1. THE QUADGUARD CZ, (24 INCHES WIDE SIX-BAY) WORK ZONE IMPACT ATTENUATOR MANUFACTURED BY ENERGY ABSORPTION SYSTEMS, INC., 35 EAST WACKER DRIVE, CHICAGO, IL 60601 (TELEPHONE: 312-467-6750).

THE LENGTH OF THE SIX-BAY QUADGUARD CZ IS 20'-9". INSTALLATION SHALL BE AT THE LOCATIONS SPECIFIED IN THE PLANS, IN ACCORDANCE WITH THE MANUFACTURER'S SPECIFICATIONS AS DETAILED ON THE FOLLOWING PRE-APPROVED SHOP DRAWINGS:

DWG. NO.	DRAWING NAME	DWG./ REV. DATE	ODOT APPROVAL DATE
0SCZCVR-T4	QUADGUARD CZ SYSTEM FOR CONSTRUCTION ZONES	5/13/99 Rev. J	8/27/99
35-40-10	QUADGUARD SYSTEM CONCRETE PAD, CZ, QG	11/19/97 Rev. D	8/27/99
35-40-16	QUADGUARD SYSTEM BACKUP ASSEMBLY, CZ, QG	7/30/99 Rev. F	8/27/99
354051Z	QUADGUARD CZ SYSTEM NOSE ASSEMBLY, CZ, QG, 24,30,36	5/17/99	8/27/99
35-40-18	TRANSITION ASSEMBLY, 4 OFFSET, QG	6/25/99 Rev. F	8/27/99
35400260	QUADGUARD SYSTEM PCMB ANCHOR ASSEMBLY	11/19/97 Rev. C	8/27/99

2. THE TRACC (TRINITY ATTENUATING CRASH CUSHION) MANUFACTURED BY TRINITY INDUSTRY, 1170 N. STATE STREET, GIRARD, OHIO 44420 (TELEPHONE: 330-545-4373).

THE TRACC IS 21'-0" LONG AND 2'-7" WIDE. INSTALLATION SHALL BE AT THE LOCATIONS SPECIFIED IN THE PLANS, IN ACCORDANCE WITH THE MANUFACTURER'S SPECIFICATIONS AS DETAILED ON THE FOLLOWING PRE-APPROVED SHOP DRAWINGS:

DWG. NO.	DRAWING NAME	DWG./ REV. DATE	ODOT APPROVAL DATE
SS450M	CRASH-CUSHION ATTENUATING TERMINAL PLAN, ELEVATION & SECTIONS	3/12/99 Rev. 1	8/27/99
SS455	TRACC TRANSITION TO W-BEAM MEDIAN BARRIER PLAN, ELEVATION & SECTIONS	2/18/99	8/27/99
SS461	TRACC TRANSITION TO CONCRETE SAFETY SHAPE BARRIER PLAN, ELEVATION & SECTIONS	6/30/99 Rev. 1	8/27/99
SS462	TRACC TRANSITION TO CONCRETE BARRIER SINGLE SLOPE PLAN, ELEVATION & SECTIONS	6/30/99	8/27/99

ITEM 614 - WORK ZONE IMPACT ATTENUATOR FOR 24" WIDE HAZARDS (UNIDIRECTIONAL OR BIDIRECTIONAL): (CONT.)

3. THE BARRIER SYSTEMS, INC. TAU-II ATTENUATOR, DISTRIBUTED BY ROAD SYSTEMS, INC., SALES SUPPORT, 2183 ELM TRACE, AUSTINTOWN, OH, 44515 (TELEPHONE: 330-799-9291).

THE TAU-II FOR THIS NOTE IS A PARALLEL 8-BAY UNIT, 24' LONG AND 35" WIDE. INSTALLATION SHALL BE AT THE LOCATIONS SPECIFIED IN THE PLANS, IN ACCORDANCE WITH THE MANUFACTURER'S SPECIFICATIONS AS DETAILED ON THE FOLLOWING PRE-APPROVED SHOP DRAWINGS:

DWG. NO.	DRAWING NAME	DWG./ REV. DATE	ODOT APPROVAL DATE
A040416	UNIVERSAL TAU-II PARTS LIST	4/22/04	10/16/04
A040420	UNIVERSAL TAU-II FOUNDATION, FLUSH MOUNT BACKSTOP	4/28/04	10/16/04
A040105	UNIVERSAL TAU-II FOUNDATION, PCB BACKSTOP (REFERENCED ON A04020)	1/07/04	10/16/04
B040239	APPLICATION, FLUSH MOUNT BACKSTOP (TYPICAL FOR PARALLEL 60 MPH UNIT)	4/21/04	10/16/04

THE CONTRACTOR SHALL PROVIDE A REPLACEMENT UNIT WHEN AN IMPACT IS SEVERE ENOUGH TO REQUIRE COMPLETE REPLACEMENT OF THE ATTENUATOR. THE CONTRACTOR SHALL HAVE A SPARE PARTS PACKAGE AVAILABLE ON THE PROJECT SITE AT ALL TIMES WHEN AN ATTENUATOR IS IN PLACE. THE CONTRACTOR SHALL PROVIDE A MINIMUM OF ONE COMPLETE SPARE PARTS PACKAGE FOR EVERY 1 TO 6 UNITS INSTALLED ON THE PROJECT SITE. FOR EXAMPLE, 5 INSTALLED UNITS REQUIRE 1 SPARE PARTS PACKAGE AND 7 INSTALLED UNITS REQUIRE 2 SPARE PARTS PACKAGES.

WHEN BI-DIRECTIONAL DESIGNS ARE SPECIFIED, THE CONTRACTOR SHALL SUPPLY APPROPRIATE TRANSITIONS. PAYMENT FOR THE ABOVE WORK SHALL BE MADE AT THE UNIT PRICE BID AND SHALL INCLUDE ALL LABOR, TOOLS, EQUIPMENT AND MATERIALS NECESSARY TO CONSTRUCT, MAINTAIN, AND REPAIR A COMPLETE AND FUNCTIONAL IMPACT ATTENUATOR SYSTEM, INCLUDING ALL RELATED BACKUPS, TRANSITIONS, LEVELING PADS, HARDWARE AND GRADING, NOT SEPARATELY SPECIFIED, AS REQUIRED BY THE MANUFACTURER.

IF IN THE EVENT THAT AN IMPACT ATTENUATOR SHOULD NEED TO BE REPAIRED OR COMPLETELY REPLACED, THE CONTRACTOR WILL BE COMPENSATED ACCORDING TO SUPPLEMENTAL SPECIFICATION 800, ITEM 614.16, OR BY WAY OF A NEGOTIATED AGREED UNIT PRICE.

ITEM 614 - WORK ZONE RAISED PAVEMENT MARKER, AS PER PLAN

WORK ZONE RAISED PAVEMENT MARKERS, AS PER PLAN, AND THEIR INSTALLATION SHALL CONFORM TO CMS 614 OR CMS 621 AS SPECIFIED HEREIN.

* RAISED PAVEMENT MARKERS IN USE DURING THE SNOW-PLOWING SEASON SHALL CONFORM TO 621.
* RAISED PAVEMENT MARKERS IN USE DURING THE NON-SNOW-PLOWING SEASON SHALL CONFORM TO EITHER 614 OR TO 621.

THE SNOW PLOWING SEASON SHALL RUN FROM OCTOBER 15 THROUGH APRIL 1.

IF PROJECT DELAYS, NOT THE FAULT OF ODOT, CAUSE THE WORK TO EXTEND INTO THE SNOW PLOWING SEASON, THE CONTRACTOR SHALL BE RESPONSIBLE FOR REPLACING WORK ZONE RAISED PAVEMENT MARKERS (WZRPMS) CONFORMING TO CMS 614, WITH RAISED PAVEMENT MARKERS CONFORMING TO 621, AS DETERMINED BY THE ENGINEER, AT THE CONTRACTOR'S EXPENSE.

THIS ITEM SHALL INCLUDE PURCHASE, INSTALLATION AND REMOVAL OF ITEM 614 WORK ZONE RAISED PAVEMENT MARKER, AS PER PLAN, INCLUDING FILLING OF ANY DEPRESSIONS CREATED IN THE PAVEMENT AS PER CMS 202.10. MAINTENANCE OF THE WORKZONE RPM'S IS ALSO CONSIDERED INCIDENTAL TO THE COST OF THIS ITEM.

RESURFACING OF THE TRANSITION AREAS SHALL BE PERFORMED AT THE TIME THAT THE SURFACE COURSE IS BEING APPLIED TO THE ENTIRE PROJECT. PRIOR TO APPLICATION OF THE SURFACE COURSE ON THE PROJECT, THE SURFACE COURSE OF THE EXISTING PAVEMENT WITHIN THE TRANSITION AREA SHALL BE REMOVED TO A DEPTH EQUIVALENT TO THE DEPTH OF THE PROPOSED SURFACE COURSE, AS DETERMINED BY THE ENGINEER.

THE FOLLOWING BID ITEMS SHOULD BE INCLUDED IN THE PLANS:

ITEM 202 PAVEMENT PLANING ASPHALT CONCRETE
8430 SQUARE YARDS
ITEM 614 WORK ZONE RAISED PAVEMENT MARKER, AS PER PLAN
1570 EACH

PAYMENT FOR RESURFACING WITHIN THE TRANSITION AREA SHALL BE PAID FOR UNDER THE APPROPRIATE BID ITEMS FOR THE WORK REQUIRED, AS PROVIDED FOR IN THE PLANS.

CALCULATED MJH
CHECKED CMK

MAINTENANCE OF TRAFFIC
GENERAL NOTES

MOT-75-0.75

ITEM 614 - PORTABLE CHANGEABLE MESSAGE SIGN, AS PER PLAN

THE CONTRACTOR SHALL FURNISH, INSTALL, MAINTAIN AND REMOVE, WHEN NO LONGER NEEDED, A CHANGEABLE MESSAGE SIGN, ON SITE, FOR THE DURATION OF THE PROJECT. THE SIGN SHALL BE OF A TYPE SHOWN ON A LIST OF APPROVED PCMS UNITS MAINTAINED BY THE DIRECTOR (OFFICE OF MATERIALS MANAGEMENT). THIS LIST IS AVAILABLE ON THE ODOT WEBSITE AT HTTP://WWW.DOT.STATE.OH.US/TESTLAB/APPLISTS/MISC/PCMS.HTM. THE LIST CURRENTLY CONTAINS CLASS I, II, AND III UNITS WITH MINIMUM LEGIBILITY DISTANCES OF 1250 FT., 850 FT. AND 650 FT., RESPECTIVELY.

EACH SIGN SHALL BE TRAILER-MOUNTED AND EQUIPPED WITH A FUNCTIONAL DIMMING MECHANISM, TO DIM THE SIGN DURING DARKNESS, AND A TAMPER AND VANDAL PROOF ENCLOSURE. EACH SIGN SHALL BE PROVIDED WITH APPROPRIATE TRAINING AND OPERATION INSTRUCTIONS TO ENABLE ON-SITE PERSONNEL TO OPERATE AND TROUBLESHOOT THE UNIT. THE SIGN SHALL ALSO BE CAPABLE OF BEING POWERED BY AN ELECTRICAL SERVICE DROP FROM A LOCAL UTILITY COMPANY. PCMS TRAILERS SHOULD BE DELINEATED ON A PERMANENT BASIS BY AFFIXING RETROREFLECTIVE MATERIAL, IN A CONTINUOUS LINE ON THE FACE OF THE TRAILER AS SEEN BY ONCOMING ROAD USERS.

THE PROBABLE PCMS LOCATIONS AND WORK LIMITS FOR THOSE LOCATIONS ARE SHOWN ON SHEET 45 OF THE PLAN. PLACEMENT, OPERATION, MAINTENANCE AND ALL ACTIVATION OF THE SIGNS BY THE CONTRACTOR SHALL BE AS DIRECTED BY THE ENGINEER. THE PCMS SHALL BE LOCATED IN A HIGHLY VISIBLE POSITION YET PROTECTED FROM TRAFFIC. THE CONTRACTOR SHALL, AT THE DIRECTION OF THE ENGINEER, RELOCATE THE PCMS TO IMPROVE VISIBILITY OR ACCOMMODATE CHANGED CONDITIONS. WHEN NOT IN USE, THE PCMS SHALL BE TURNED OFF. ADDITIONALLY, WHEN NOT IN USE FOR EXTENDED PERIODS OF TIME, THE PCMS SHALL BE TURNED, FACING AWAY FROM ALL TRAFFIC, AND SHALL DISPLAY ONE OR MORE HIGH-INTENSITY YELLOW REFLECTIVE SHEETING SURFACES OF 9-INCH BY 15-INCH MINIMUM SIZE FACING TRAFFIC.

THE ENGINEER SHALL BE PROVIDED ACCESS TO EACH SIGN UNIT AND SHALL BE PROVIDED WITH APPROPRIATE TRAINING AND OPERATION INSTRUCTIONS TO ENABLE ODOT PERSONNEL TO OPERATE AND TROUBLESHOOT THE UNIT, AND TO REVISE SIGN MESSAGES, IF NECESSARY.

(THE CONTRACTOR SHALL IMPLEMENT A SYSTEM WHEREBY CHANGEABLE MESSAGES WILL BE IMPLEMENTED WITHIN 8 HOURS FOLLOWING TELEPHONE NOTIFICATION FROM THE PROJECT ENGINEER TO A DESIGNATED PHONE.)

ALL MESSAGES TO BE DISPLAYED ON THE SIGN WILL BE PROVIDED BY THE ENGINEER. A LIST OF ALL REQUIRED PRE-PROGRAMMED MESSAGES WILL BE GIVEN TO THE CONTRACTOR AT THE PROJECT PRECONSTRUCTION CONFERENCE. THE SIGN SHALL HAVE THE CAPABILITY TO STORE UP TO 99 MESSAGES. MESSAGE MEMORY OR PRE-PROGRAMMED DISPLAYS SHALL NOT BE LOST AS A RESULT OF POWER FAILURES TO THE ON-BOARD COMPUTER. THE SIGN LEGEND SHALL BE CAPABLE OF BEING CHANGED IN THE FIELD. THREE-LINE PRESENTATION FORMATS WITH UP TO SIX MESSAGE PHASES SHALL BE SUPPORTED. PCMS FORMAT SHALL PERMIT THE COMPLETE MESSAGE FOR EACH PHASE TO BE READ AT LEAST TWICE.

THE PCMS SHALL CONTAIN AN ACCURATE CLOCK AND PROGRAMMING LOGIC WHICH WILL ALLOW THE SIGN TO BE ACTIVATED, DEACTIVATED OR MESSAGES CHANGED AUTOMATICALLY AT DIFFERENT TIMES OF THE DAY FOR DIFFERENT DAYS OF THE WEEK.

(THE PCMS SHALL CONTAIN A CELLULAR TELEPHONE DATA LINK WHICH WILL (IN ACTIVE CELLULAR PHONE AREAS) ALLOW REMOTE SIGN ACTIVATION, MESSAGE CHANGES, MESSAGE ADDITIONS AND REVISIONS TO TIME OF DAY PROGRAMS. THE SYSTEM SHALL ALSO PERMIT VERIFICATION OF CURRENT AND PROGRAMMED MESSAGES. ONE REMOTE DATA INPUT DEVICE (LAPTOP COMPUTER PLUS MODEM OR EQUIVALENT) SHALL BE FURNISHED FOR USE BY THE DISTRICT TRAFFIC ENGINEER, OR EQUIVALENT, AND SHALL BE INSURED AGAINST THEFT.)

ITEM 614 - PORTABLE CHANGEABLE MESSAGE SIGN, AS PER PLAN (CONT'D)

THE PCMS UNIT SHALL BE MAINTAINED IN GOOD WORKING ORDER BY THE CONTRACTOR IN ACCORDANCE WITH THE PROVISIONS OF CMS 614.07. THE CONTRACTOR SHALL, PRIOR TO ACTIVATING THE UNIT, MAKE ARRANGEMENTS, WITH AN AUTHORIZED SERVICE AGENT FOR THE PCMS, TO ASSURE PROMPT SERVICE IN THE EVENT OF FAILURE. ANY FAILURE SHALL NOT RESULT IN THE SIGN BEING OUT OF SERVICE FOR MORE THAN 12 HOURS, INCLUDING WEEKENDS. FAILURE TO COMPLY MAY RESULT IN AN ORDER TO STOP WORK AND OPEN ALL TRAFFIC LANES AND/OR IN THE DEPARTMENT TAKING APPROPRIATE ACTION TO SAFELY CONTROL TRAFFIC. THE ENTIRE COST TO CONTROL TRAFFIC, ACCRUED BY THE DEPARTMENT DUE TO THE CONTRACTOR'S NONCOMPLIANCE, WILL BE DEDUCTED FROM MONEYS DUE, OR TO BECOME DUE THE CONTRACTOR ON HIS CONTRACT.

THE CONTRACTOR SHALL BE RESPONSIBLE FOR 24-HOUR-PER-DAY OPERATION AND MAINTENANCE OF THESE SIGNS ON THE PROJECT FOR THE DURATION OF THE PHASES WHEN THE PLAN REQUIRES THEIR USE.

PAYMENT FOR THE ABOVE DESCRIBED ITEM SHALL BE AT THE CONTRACT UNIT PRICE. THE CONTRACTOR IS RESPONSIBLE TO HAVE 4 SIGNS PER MONTH TO BE KEPT ON SITE AND WITHIN THE PROJECT LIMITS. WHEN PCMS'S ARE USED THEY WILL BE PAID ACCORDING TO THE FOLLOWING:

1-7 DAYS - 0.25 SIGN MONTHS
7-14 DAYS - 0.50 SIGN MONTHS
14-21 DAYS = 0.75 SIGN MONTHS
21-31 DAYS = 1.0 SIGN MONTHS

THIS WILL BE APPLIED FOR EACH SIGN. FOR EXAMPLE, 2 SIGNS USED FOR 15 DAYS = 0.75 SIGN MONTHS (EACH) TIMES 2 SIGNS = 1.50 SIGN MONTHS FOR THE 2 SIGNS. PAYMENT SHALL INCLUDE ALL LABOR, EQUIPMENT, FUELS, LUBRICATING OILS, MATERIALS, EQUIPMENT, FUELS, LUBRICATING OILS, SOFTWARE,HARDWARE AND INCIDENTALS TO PERFORM THE ABOVE DESCRIBED WORK.

THE FOLLOWING QUANTITIY HAS BEEN CARRIED TO THE GENERAL SUMMARY:

ITEM 614, PORTABLE CHANGEABLE MESSAGE SIGN, AS PER PLAN
26 SIGN-MONTHS

ITEM 615 - PAVEMENT FOR MAINTAINING TRAFFIC, CLASS A, AS PER PLAN

PAVEMENT FOR MAINTAINING TRAFFIC, CLASS A, WILL BE REQUIRED AT VARIOUS LOCATIONS AS SHOWN IN THE PLANS, AND SHALL BE CONSTRUCTED ACCORDING TO CMS 615 AND BP-3.1. THIS ITEM SHALL BE USED TO PROVIDE TEMPORARY WIDENING OF PAVEMENT, FOR PURPOSES OF MAINTAINING TRAFFIC, OR FOR PROVIDING PAVEMENT FOR CONSTRUCTION OF ITEM 615, ROADS FOR MAINTAINING TRAFFIC.

THE CONTRACTOR SHALL BE RESPONSIBLE FOR ALL GRADING, EMBANKMENT, EXCAVATION, MATERIALS, AND OTHER INCIDENTALS WHICH ARE REQUIRED TO PROVIDE AND MAINTAIN A SAFE DRIVING SURFACE, AS APPROVED BY THE ENGINEER. THE CONTRACTOR SHALL ALSO BE RESPONSIBLE FOR PROVIDING TEMPORARY GRADING, DRAINAGE FACILITIES, AND PAVEMENT RESURFACING (OVERLAYS) NECESSARY TO MAINTAIN ADEQUATE AND POSITIVE DRAINAGE THROUGH THE WORK ZONE, AS SPECIFIED IN THE PLAN OR AS DIRECTED BY THE ENGINEER.

THE CONTRACTOR SHALL MAINTAIN, TEMPORARILY RELOCATE, OR ADJUST TO TEMPORARY GRADE ALL TOPOGRAPHIC ELEMENTS WITHIN THE WORK LIMITS INCLUDING BUT NOT LIMITED TO; WATER METER PITS, MANHOLES, CATCH BASINS, INLETS, SIGNS, LANDSCAPED AREAS, LIGHTING FEATURES, AND OTHER UTILITY APPURTENANCES AS DIRECTED BY THE ENGINEER.

TEMPORARY DRAINAGE FACILITIES AS SHOWN IN THE PLANS, ARE APPROXIMATE ONLY. THE CONTRACTOR IS RESPONSIBLE FOR DETERMINING ACTUAL DRAINAGE SYSTEM CHARACTERISTICS, INCLUDING SIZE, TYPE, AND LOCATION OF TEMPORARY DRAINAGE ITEMS. TEMPORARY SHEETING AND SHORING, WHERE NEEDED TO KEEP SIDE SLOPES FROM INTERFERING WITH OTHER CONSTRUCTION ACTIVITIES AND/OR THE TRAVELING PUBLIC, SHALL ALSO BE INCLUDED WITH THIS ITEM.

PAYMENT FOR ALL LABOR, EQUIPMENT, MATERIALS AND OTHER INCIDENTALS REQUIRED TO CONSTRUCT TEMPORARY ROADWAY WIDENING SHALL BE INCLUDED IN THE CONTRACT BID PRICE FOR ITEM 615, PAVEMENT FOR MAINTAINING TRAFFIC, AS PER PLAN, UNLESS SEPARATELY ITEMIZED IN THE PLANS.

ITEM 614 - BARRIER REFLECTORS AND/OR OBJECT MARKERS

BARRIER REFLECTORS AND/OR OBJECT MARKERS SHALL BE INSTALLED ON ALL PORTABLE CONCRETE BARRIER USED FOR TRAFFIC CONTROL. BARRIER REFLECTORS, OBJECT MARKERS AND THEIR INSTALLATION SHALL CONFORM TO CMS 626, EXCEPT THAT THE SPACING SHALL BE 50 FEET. BARRIER REFLECTORS AND OBJECT MARKERS ON EXISTING BARRIER WHICH IS MOVED SHALL NOT BE PAID FOR SEPARATELY. THE COST OF MAINTAINING EXISTING BARRIER REFLECTOR AND OBJECT MARKERS ON BARRIER WHICH IS MOVED SHALL BE CONSIDERED INCIDENTAL TO THE COST OF THIS ITEM.

AN ESTIMATED QUANTITY OF 310 EACH OF ITEM 614 BARRIER REFLECTOR, TYPE B AND 240 EACH 1-WAY AND 65 EACH 2-WAY OF ITEM 614 OBJECT MARKER, HAVE BEEN PROVIDED AND CARRIED TO THE GENERAL SUMMARY.

WORKSITE TRAFFIC SUPERVISOR

SUBJECT TO APPROVAL OF THE ENGINEER, THE CONTRACTOR SHALL EMPLOY AND IDENTIFY (SOMEONE OTHER THAN THE SUPERINTENDENT) A CERTIFIED WORKSITE TRAFFIC SUPERVISOR (WTS) BEFORE STARTING WORK IN THE FIELD. THE WTS MAY BE CERTIFIED FROM ONE OF THE FOLLOWING ORGANIZATIONS:

1. AMERICAN TRAFFIC SAFETY SERVICE ASSOCIATION (ATSSA), PHONE NUMBER 1-800-272-8772, CERTIFIED TRAFFIC CONTROL SUPERVISOR (TCS).
2. NATIONAL HIGHWAY INSTITUTE, DESIGN AND OPERATION OF WORK ZONE TRAFFIC CONTROL, PHONE NUMBER 1-703-235-0528.
3. THE OHIO CONTRACTORS ASSOCIATION, TRAFFIC CONTROL SUPERVISOR (OCA/TCS) WORK ZONE CLASS, ONLY IF TAKEN AFTER MAY 5, 2004, PHONE NUMBER 1-614-599-7915.
4. OHIO LABORERS TRAINING, TRAFFIC CONTROL SUPERVISORS CLASS, PHONE NUMBER 1-740-599-7915.

A COPY OF EACH WTSS CERTIFICATION AND 24-HOUR CONTACT INFORMATION SHALL BE PROVIDED TO THE ENGINEER AT THE PRECONSTRUCTION CONFERENCE. IF THE DESIGNATED WTS WILL NOT BE AVAILABLE FULL TIME (24/7) THE CONTRACTOR MAY DESIGNATE AN ALTERNATE WTS TO BE AVAILABLE WHEN THE PRIMARY IS OFF DUTY. EACH WTS SHALL HAVE A CURRENT WTS CERTIFICATION (WITH AN EXPIRATION DATE NO MORE THAN 5 YEARS FROM THE DATE OF ISSUE) FROM ANY OF THE APPROVED ORGANIZATIONS.

THE WTS POSITION HAS THE RESPONSIBILITY OF MONITORING AND CORRECTING TRAFFIC CONTROL DEFICIENCIES FOR THE ENTIRE WORK ZONE. THE DUTIES OF THE WTS ARE AS FOLLOWS:

1. BE AVAILABLE ON A 24-HOUR PER DAY BASIS, AND BE ABLE TO BE ON SITE FOR ALL EMERGENCY TRAFFIC CONTROL NEEDS WITHIN ONE HOUR OF NOTIFICATION BY POLICE OR PROJECT STAFF AND BE PREPARED TO EFFECT CORRECTIVE MEASURES IMMEDIATELY ON EXISTING WORK ZONE TRAFFIC CONTROL DEVICES.
2. ATTEND PRECONSTRUCTION MEETING AND ALL PROJECT MEETINGS WHERE TRAFFIC CONTROL MANAGEMENT IS DISCUSSED.
3. BE AVAILABLE FOR MEETINGS OR DISCUSSIONS WITH THE ENGINEER UPON REQUEST OR WITHIN 36 HOURS.
4. BE AWARE OF, AND COORDINATE IF NECESSARY, ALL TRAFFIC CONTROL OPERATIONS, INCLUDING THOSE OF SUBCONTRACTORS AND SUPPLIERS.
5. COORDINATE PROJECT ACTIVITIES WITH ALL LAW ENFORCEMENT OFFICERS (LEOS). A WTS SHALL ALSO BE THE MAIN CONTACT PERSON WITH THE LEOS WHILE THEY ARE ON THE PROJECT.
6. COORDINATE MEETINGS WITH ODOT PERSONNEL, LEOS AND OTHER APPLICABLE ENTITIES BEFORE EACH PLAN PHASE SWITCH TO DISCUSS WORK ZONE TRAFFIC CONTROL.

CALCULATED MJH
CHECKED CMK

MAINTENANCE OF TRAFFIC
GENERAL NOTES

MOT-75-0.75

WORKSITE TRAFFIC SUPERVISOR (CONT.)

7. ENSURE COMPLIANCE WITH THE CONTRACT DOCUMENTS FOR SIGNS, BARRICADES, TEMPORARY CONCRETE BARRIER, PAVEMENT MARKINGS, PORTABLE MESSAGE SIGNS, AND OTHER TRAFFIC CONTROL DEVICES ON A DAILY BASIS; AND FACILITATE ANY CORRECTIVE ACTION NECESSARY.

8. NOTIFY THE CONTRACTOR OF THE NEED FOR CLEANING AND MAINTENANCE OF ALL TRAFFIC CONTROL DEVICES, INCLUDING THE COVERING AND REMOVAL OF INAPPLICABLE SIGNS.

9. INSPECT, EVALUATE, PROPOSE NECESSARY MODIFICATIONS TO, AND DOCUMENT THE EFFECTIVENESS OF, THE TRAFFIC CONTROL DEVICES AND/OR TRAFFIC OPERATIONS ON A DAILY BASIS (7 DAYS A WEEK). IN ADDITION, A WEEKLY NIGHT INSPECTION OF THE WORK ZONE SETUP FOR DAYTIME WORK OPERATIONS; AND ONE DAYTIME INSPECTION PER WEEK FOR NIGHTTIME PROJECTS. THIS SHALL INCLUDE (BUT NOT BE LIMITED TO) DOCUMENTATION ON THE FOLLOWING PROJECT EVENTS:

   A. INITIAL TRAFFIC CONTROL SETUP (DAY AND NIGHT REVIEW).

   B. DAILY TRAFFIC CONTROL SETUP AND REMOVAL.

   C. WHEN CONSTRUCTION STAGING CAUSES A CHANGE IN THE TRAFFIC CONTROL SETUP.

   D. CRASH OCCURRENCES WITHIN THE CONSTRUCTION AREA.

   E. REMOVAL OF TRAFFIC CONTROL DEVICES AT THE END OF A PHASE OR PROJECT.

   F. ALL OTHER EMERGENCY TRAFFIC CONTROL NEEDS.

10. COMPLETE THE DEPARTMENT APPROVED LONG TERM INSPECTION FORM (CA-D-8) AFTER EACH INSPECTION AS REQUIRED IN # 9 AND SUBMIT IT TO THE ENGINEER THE FOLLOWING WORK DAY. THESE REPORTS SHALL INCLUDE A CHECKLIST OF ALL TRAFFIC CONTROL MAINTENANCE ITEMS TO BE REVIEWED. A COPY OF THE FORM WILL BE PROVIDED AT THE PRE-CONSTRUCTION MEETING. ANY DEFICIENCIES OBSERVED SHALL BE NOTED, ALONG WITH RECOMMENDED CORRECTIVE ACTIONS AND THE DATES BY WHICH SUCH CORRECTIONS WERE, OR WILL BE, COMPLETED. A COPY OF THIS DOCUMENT CAN BE FOUND IN THE DEPARTMENT OF TRANSPORTATION CONSTRUCTION INSPECTION FORMS MANUAL DATED 10/15/06 OR CURRENT REVISION.

11. VERIFY THAT ALL FLAGGING OPERATIONS ARE BEING CONDUCTED PER THE OHIO MANUAL OF UNIFORM TRAFFIC CONTROL DEVICES.

12. HAVE COPIES OF THE ODOT TEMPORARY TRAFFIC CONTROL MANUAL AND APPLICABLE STANDARDS AND SPECIFICATIONS INCLUDED IN THE CONTRACT DOCUMENTS AVAILABLE AT ALL TIMES ON THE PROJECT.

THE DEPARTMENT WILL NOT PAY THE UNIT PRICE BID FOR THE WTS FOR ANY DAY ON WHICH THE CONTRACTOR FAILS TO PERFORM THE DUTIES SET FORTH ABOVE. SHOULD THE CONTRACTOR'S FAILURE TO PERFORM ANY OF THE DUTIES DESCRIBED ABOVE RESULT IN A MAINTENANCE OF TRAFFIC SAFETY ISSUE, THE DEPARTMENT WILL DEDUCT THE PRORATED DAILY AMOUNT FOR ITEM 614 MAINTENANCE OF TRAFFIC FROM THE CONTRACTOR 5/32 S NEXT SCHEDULED ESTIMATE.

IF THREE OR MORE FAILURES TO PERFORM THE DUTIES SET FORTH ABOVE OCCUR, THE WTS SHALL BE IMMEDIATELY REMOVED FROM THE WORK IN ACCORDANCE WITH C&MS 108.05.

THE FOLLOWING ESTIMATED QUANTITY HAS BEEN INCLUDED FOR THE WORKSITE TRAFFIC SUPERVISOR:

ITEM 614 WORKSITE TRAFFIC SUPERVISOR 36 MONTHS

WORK ZONE INCREASED PENALTIES SIGN

R11-H5A-48 SIGNS SHALL BE FURNISHED, ERECTED, AND MAINTAINED IN GOOD CONDITION AND/OR REPLACED AS NECESSARY AND SUBSEQUENTLY REMOVED BY THE CONTRACTOR. SIGNS SHALL BE MOUNTED AT THE APPROPRIATE OFFSETS AND ELEVATIONS AS PRESCRIBED BY THE OHIO MANUAL OF UNIFORM TRAFFIC CONTROL DEVICES. THEY SHALL BE MAINTAINED ON SUPPORTS MEETING CURRENT SAFETY CRITERIA.

THE SIGNS MAY BE ERECTED OR UNCOVERED NO MORE THAN FOUR HOURS BEFORE THE ACTUAL START OF WORK. THE SIGNS SHALL BE REMOVED OR COVERED NO LATER THAN FOUR HOURS FOLLOWING RESTORATION OF ALL LANES TO TRAFFIC WITH NO RESTRICTIONS, OR SOONER AS DIRECTED BY THE ENGINEER. TEMPORARY SIGN COVERING AND UNCOVERING DUE TO TEMPORARY LANE RESTORATIONS SHALL BE GUIDED BY THE FOUR-HOUR LIMITATIONS STATED ABOVE. SUCH LANE RESTORATIONS SHOULD BE EXPECTED TO REMAIN IN EFFECT FOR 30 OR MORE CONSECUTIVE CALENDAR DAYS, SUCH AS DURING WINTER SHUTDOWNS.

(THE SIGNS ON THE MAINLINE SHALL BE DUAL MOUNTED UNLESS NOT PHYSICALLY POSSIBLE. THE FIRST SIGN SHALL BE PLACED BETWEEN THE ROAD WORK AHEAD (W20-1)SIGN AND THE NEXT SIGN IN THE SEQUENCE. SIGNS SHALL BE ERECTED ON EACH ENTRANCE RAMP AND EVERY 2 MILES THROUGH THE CONSTRUCTION WORK LIMITS. SIGNS ON THE MAINLINE SHALL BE R11-H5A-48. SIGNS USED ON THE RAMPS SHALL BE R11-H5A-24. R11-H5A-24 SIGNS MAY BE USED IN THE MEDIAN IN LIEU OF R11-H5A-48 SIGNS IF IT IS NOT PHYSICALLY POSSIBLE TO PROVIDE R11-H5A-48 SIGNS IN THE MEDIAN.)

THE CONTRACTOR MAY USE SIGNS AND SUPPORTS IN USED, BUT GOOD, CONDITION PROVIDED THE SIGNS MEET CURRENT ODOT SPECIFICATIONS. SIGN FACES SHALL BE REFLECTORIZED WITH TYPE G SHEETING COMPLYING WITH THE REQUIREMENTS OF CMS 730.19.

WORK ZONE INCREASED PENALITIES SIGNS AND SUPPORTS WILL BE MEASURED AS THE NUMBER OF SIGN INSTALLATIONS, INCLUDING THE SIGN AND NECESSARY SUPPORTS. IF A SIGN AND SUPPORT COMBINATION IS REMOVED AND REERECTED AT ANOTHER LOCATION AS DIRECTED BY THE ENGINEER, IT SHALL BE CONSIDERED ANOTHER UNIT.

PAYMENT FOR ACCEPTED QUANTITIES, COMPLETE, IN PLACE WILL BE MADE AT THE CONTRACT UNIT PRICE. PAYMENT SHALL BE FULL COMPENSATION FOR ALL MATERIALS, LABOR, INCIDENTALS AND EQUIPMENT FOR FURNISHING, ERECTING, MAINTAINING, COVERING DURING SUSPENSION OF WORK AND REMOVAL OF THE SIGN AND SUPPORT.

ITEM 614, WORK ZONE INCREASED PENALITIES SIGN 6 EACH

WORK ZONE INCREASED PENALTIES SIGNS WILL BE PLACED ON BOTH SIDES OF THE FREEWAY AT THE FOLLOWING LOCATIONS:

NORTHBOUND	ENTRANCE RAMP	SOUTHBOUND
STA. 0+00	STA. 33+00	STA. 107+00

ITEM 614 - WORK ZONE SPEED LIMIT SIGN

THE CONTRACTOR SHALL FURNISH, INSTALL, MAINTAIN, COVER DURING SUSPENSION OF WORK, AND SUBSEQUENTLY REMOVE WORK ZONE SPEED LIMIT (R2-1) (55 MPH SPEED LIMIT) SIGNS AND SUPPORTS WITHIN THE WORK LIMITS IN ACCORDANCE WITH THE FOLLOWING REQUIREMENTS:

THE CONTRACTOR SHALL COVER OR REMOVE ANY EXISTING SPEED LIMIT SIGNS WITHIN THE REDUCED SPEED ZONE. THESE SIGNS SHALL BE RESTORED DURING SUSPENSION OR TERMINATION OF THE REDUCED SPEED LIMIT. THE EXPENSE OF COVERING OR REMOVAL AND RESTORATION OF EXISTING SPEED LIMIT OR MINIMUM SPEED LIMIT SIGNS SHALL BE INCLUDED IN THE PAY ITEM FOR THE WORK ZONE SPEED LIMIT SIGNS.

THE WORK ZONE SPEED LIMIT SIGNS MAY BE ERECTED OR UNCOVERED NO MORE THAN FOUR HOURS BEFORE THE ACTUAL START OF WORK. THE SIGNS SHALL BE REMOVED OR COVERED NO LATER THAN FOUR HOURS FOLLOWING RESTORATION OF ALL LANES TO TRAFFIC WITH NO RESTRICTIONS, OR SOONER AS DIRECTED BY THE ENGINEER. TEMPORARY SIGN COVERING AND UNCOVERING DUE TO TEMPORARY LANE RESTORATIONS SHALL BE GUIDED BY THE FOUR-HOUR LIMITATIONS STATED ABOVE. SUCH

ITEM 614 - WORK ZONE SPEED LIMIT SIGN (CONT'D)

LANE RESTORATIONS SHOULD BE EXPECTED TO REMAIN IN EFFECT FOR 30 OR MORE DAYS, SUCH AS DURING WINTER SHUTDOWNS. CLEANUP WORK AND OTHER WORK BEYOND THE SHOULDER SUCH AS SEEDING, TO BE PERFORMED AFTER RESTORATION OF ALL FULL-WIDTH LANES AND SHOULDERS TO TRAFFIC, DOES NOT CONSTITUTE A CONDITION WARRANTING A SPEED REDUCTION. THEREFORE, WHEN ACTIVITY IS LIMITED TO SUCH WORK, THE SPEED LIMIT IN EFFECT SHALL BE THE NORMAL SPEED LIMIT FOR THE SITE.

CONSTRUCTION AND MATERIALS SPECIFICATIONS, ITEM 614, PARAGRAPH 614.02(B) INDICATES THAT THE TWO DIRECTIONS OF A DIVIDED HIGHWAY ARE CONSIDERED SEPARATE HIGHWAY SECTIONS. THEREFORE, IF THE WORK ON A MULTI-LANE DIVIDED HIGHWAY IS LIMITED TO ONLY ONE DIRECTION, SPEED REDUCTION IN THE DIRECTION OF THE WORK DOES NOT AUTOMATICALLY CONSTITUTE SPEED REDUCTION IN THE OPPOSITE DIRECTION. SPEED LIMIT REDUCTION IN THE OPPOSITE DIRECTION, IN SUCH CASE, IS APPROPRIATE ONLY IF CONDITIONS ARE EXPECTED TO HAVE AN IMPACT ON THE DIRECTIONAL TRAFFIC FLOW, AS DIRECTED BY THE ENGINEER.

ON PROJECTS FOR WHICH THE ACTIVITY OR ROADWAY RESTRICTION IS LIMITED TO ONE SECTION OF THE PROJECT FOR AT LEAST THIRTY DAYS AND THEN IS MOVED TO ANOTHER SECTION OF THE PROJECT UPON COMPLETION OF WORK IN THE FIRST SECTION, THE SPEED LIMIT REDUCTION SHALL BE LIMITED TO ONLY THE ACTIVE PORTION OF THE PROJECT AT THE GIVEN TIME. SIGNING FOR A SPEED LIMIT REDUCTION, AS WELL AS ALL OTHER ADVANCE CONSTRUCTION SIGNING, SHALL BE RELOCATED WHEN THE CONCENTRATION OF ACTIVITY IS RELOCATED.

ON PROJECTS FOR WHICH SPEED REDUCTION IS CALLED FOR ON MORE THAN ONE ROADWAY, THE DISPLAY OF REDUCED SPEED LIMIT SIGNING ON A GIVEN ROADWAY SHALL BE DEPENDANT ON THE SCHEDULING OF WORK ACTIVITY ON THE GIVEN ROADWAY.

REDUCED SPEED AHEAD SIGNS SHALL BE ERECTED IN ADVANCE OF THE SPEED REDUCTION, APPROXIMATELY 1250 FEET ON MULTI-LANE HIGHWAYS AND 500 FEET ON 2-LANE HIGHWAYS.

A SIGN(S) TO INDICATE THE RESUMPTION OF THE STATUTORY SPEED LIMIT SHALL BE ERECTED AT THE END OF ANY REDUCED SPEED ZONE, TYPICALLY AT THE POINT WHERE ROADWAY AND SHOULDER WIDTHS RETURN TO NORMAL. ON UNDIVIDED ROADWAYS, THE R2-1 (SPEED LIMIT) SIGN SHALL BE USED. ON DIVIDED HIGHWAYS WHERE THE SPEED LIMIT VARIES BY VEHICLE TYPE, THE R2-1 (SPEED LIMIT) SIGN AND THE R2-H2A (TRUCK SPEED LIMIT) SIGNS SHALL BE MOUNTED SIDE-BY-SIDE ON SEPARATE SUPPORTS. THE CONTRACTOR MAY USE SIGNS AND SUPPORTS IN USED, BUT GOOD CONDITION, PROVIDED THE SIGNS

MEET CURRENT ODOT SPECIFICATIONS. SIGN FACES SHALL BE REFLECTORIZED WITH TYPE G SHEETING COMPLYING WITH THE REQUIREMENTS OF CMS 730.19.

CALCULATED MJH
CHECKED CMK

MAINTENANCE OF TRAFFIC
GENERAL NOTES

MOT-75-0.75

ITEM 614 - WORK ZONE SPEED LIMIT SIGN (CONT'D)

WORK ZONE SPEED LIMIT SIGNS SHALL BE MOUNTED ON TWO ITEM 630, GROUND MOUNTED SUPPORTS, NO. 3 POSTS.

WORK ZONE SPEED LIMIT SIGNS AND SUPPORTS WILL BE MEASURED AS THE NUMBER OF SIGN INSTALLATIONS, INCLUDING THE SIGNS AND NECESSARY SUPPORTS. IF A SIGN AND SUPPORT COMBINATION IS REMOVED AND REERECTED AT ANOTHER LOCATION WITHIN THE PROJECT DUE TO CHANGES IN THE SPEED ZONE DIRECTED BY THE ENGINEER, IT SHALL BE CONSIDERED ANOTHER UNIT.

PAYMENT FOR ACCEPTED QUANTITIES, COMPLETE IN PLACE, WILL BE MADE AT THE CONTRACT UNIT PRICE. PAYMENT SHALL BE FULL COMPENSATION FOR ALL MATERIALS, LABOR, INCIDENTALS AND EQUIPMENT FOR FURNISHING, ERECTING, MAINTAINING, COVERING DURING SUSPENSION OF WORK, AND REMOVING THE SIGNS AND SUPPORTS. THE FOLLOWING ESTIMATED QUANTITY HAS BEEN CARRIED TO THE GENERAL SUMMARY.

ITEM 614, WORK ZONE SPEED LIMIT SIGN 16 EACH

THE SIGNS WILL BE PLACED AT THE FOLLOWING LOCATIONS:

NORTHBOUND I-75:
R2-1 AT STA. 10+50 AND 63+00
R2-1/R2-H2A AT STA. 83+00
R2-5A PLACED 200 FEET IN ADVANCE OF STA. 0+00

SOUTHBOUND I-75:
R2-1 AT STA. 34+00 AND 72+00
R2-1/R2-H2A AT STA. 7+00
R2-5A AT STA. 84+50

TRENCH FOR WIDENING

TRENCH EXCAVATION FOR BASE WIDENING SHALL BE ONLY ON ONE SIDE OF THE PAVEMENT AT A TIME. THE OPEN TRENCH SHALL BE ADEQUATELY MAINTAINED AND PROTECTED WITH DRUMS OR BARRICADES AT ALL TIMES. PLACEMENT OF PROPOSED SUBBASE AND BASE MATERIAL SHALL FOLLOW AS CLOSELY AS POSSIBLE BEHIND EXCAVATION OPERATIONS. THE LENGTH OF WIDENING TRENCH WHICH IS OPEN AT ANY ONE TIME SHALL BE HELD TO A MINIMUM AND SHALL BE SUBJECT TO THE APPROVAL OF THE ENGINEER.

OVERNIGHT TRENCH CLOSING

THE BASE WIDENING SHALL BE COMPLETED TO A DEPTH OF NO MORE THAN 5" BELOW THE EXISTING PAVEMENT, BY THE END OF EACH WORK DAY. NO TRENCH SHALL BE LEFT OPEN OVERNIGHT EXCEPT FOR A SHORT LENGTH (25' OR LESS) OF A WORK SECTION AT THE END OF THE TRENCH. IN CASE WORK MUST BE SUSPENDED BECAUSE OF INCLEMENT WEATHER OR OTHER REASONS, THE TRENCH FOR THE UNCOMPLETED BASE WIDENING SHALL BE BACKFILLED AT THE DIRECTION OF THE ENGINEER.

ITEM 614 - LAW ENFORCEMENT OFFICER (WITH PATROL CAR) FOR ASSISTANCE DURING CONSTRUCTION OPERATIONS

USE OF LAW ENFORCEMENT OFFICERS (LEOS) BY CONTRACTORS OTHER THAN THE USES SPECIFIED IN THIS NOTE WILL NOT GENERALLY BE PERMITTED AT PROJECT COST UNLESS PRIOR APPROVAL HAS BEEN OBTAINED FROM THE ENGINEER. LEOS SHOULD NOT BE USED WHERE THE OHIO MANUAL OF UNIFORM TRAFFIC CONTROL DEVICES (OMUTCD) INTENDS THAT FLAGGERS BE USED.

IN ADDITION TO THE REQUIREMENTS OF CMS 614 AND THE OMUTCD, A UNIFORMED LEO WITH AN OFFICIAL PATROL CAR (CAR WITH TOP-MOUNTED EMERGENCY FLASHING LIGHTS AND COMPLETE MARKINGS OF THE APPROPRIATE LAW ENFORCEMENT AGENCY) SHOULD BE PROVIDED FOR CONTROLLING TRAFFIC FOR THE FOLLOWING TASKS:

FOR LANE CLOSURES: DURING INITIAL SET-UP PERIODS, TEAR DOWN PERIODS, SUBSTANTIAL SHIFTS OF A CLOSURE POINT OR WHEN NEW LANE CLOSURE ARRANGEMENTS ARE INITIATED. IN GENERAL, LEOS SHOULD BE POSITIONED AT THE POINT OF LANE RESTRICTION OR ROAD CLOSURE AND TO MANUALLY CONTROL TRAFFIC MOVEMENTS THROUGH INTERSECTIONS IN WORK ZONES.

DURING THE ENTIRE ADVANCE PREPARATION AND CLOSURE SEQUENCE WHERE COMPLETE BLOCKAGE OF TRAFFIC IS REQUIRED.

DURING A TRAFFIC SIGNAL INSTALLATION OR WHEN TRAFFIC NEEDS TO BE DIRECTED THROUGH AN ENERGIZED TRAFFIC SIGNAL CONTRARY TO THE SIGNAL DISPLAY (E.G., DIRECTING MOTORISTS THROUGH A RED LIGHT).

ROUTINE PATROLLING THROUGH THE WORK ZONE (WITH FLASHING LIGHTS OFF) AS SPECIFIED IN THE PLANS.

LEOS SHOULD NOT FORGO THEIR TRAFFIC CONTROL RESPONSIBILITIES TO APPREHEND MOTORISTS FOR ROUTINE TRAFFIC VIOLATIONS. HOWEVER, IF A MOTORIST'S ACTIONS ARE CONSIDERED TO BE RECKLESS, THEN PURSUIT OF THE MOTORIST IS APPROPRIATE.

THE LEOS WORK AT THE DIRECTION OF THE CONTRACTOR. THE CONTRACTOR IS RESPONSIBLE FOR SECURING THE SERVICES OF THE LEOS AND COMMUNICATING THE INTENTIONS OF THE PLANS WITH RESPECT TO DUTIES OF THE LEOS. THE ENGINEER SHALL HAVE FINAL CONTROL OVER THE LEOS' DUTIES AND PLACEMENT, AND WILL RESOLVE ANY ISSUES THAT MAY ARISE BETWEEN THE TWO PARTIES. THE CONTRACTOR SHALL PROVIDE THE ENGINEER WITH A LIST OF THE APPROPRIATE LAW ENFORCEMENT AGENCY(S), INCLUDING ADDRESS AND TELEPHONE NUMBER.

THE LEO SHOULD REPORT IN TO THE CONTRACTOR PRIOR TO THE START OF THE SHIFT TO RECEIVE INSTRUCTIONS REGARDING SPECIFIC WORK ASSIGNMENTS DURING THE SHIFT. THE LEO IS EXPECTED TO STAY AT THE PROJECT SITE FOR THE ENTIRE DURATION OF THE SHIFT. SHOULD IT BE NECESSARY TO LEAVE THE PROJECT SITE, THE LEO SHOULD NOTIFY THE ENGINEER. THE CONTRACTOR SHALL PROVIDE THE LEO WITH A TWO-WAY COMMUNICATION DEVICE WHICH SHALL BE RETURNED TO THE CONTRACTOR AT THE END OF THE SHIFT.

LAW ENFORCEMENT OFFICERS (WITH PATROL CAR) REQUIRED BY THE TRAFFIC MAINTENANCE TASKS ABOVE SHALL BE PAID FOR ON A UNIT PRICE (HOURLY) BASIS UNDER ITEM 614, LAW ENFORCEMENT OFFICER (WITH PATROL CAR). THE FOLLOWING ESTIMATED QUANTITY HAS BEEN CARRIED TO THE GENERAL SUMMARY.

ITEM 614, LAW ENFORCEMENT OFFICER WITH PATROL CAR 300 HOURS

THE HOURS PAID SHALL INCLUDE MINIMUM SHOW-UP TIME REQUIRED BY THE LAW ENFORCEMENT AGENCY INVOLVED.

ANY ADDITIONAL COSTS (ADMINISTRATIVE OR OTHERWISE) INCURRED BY THE CONTRACTOR TO OBTAIN THE SERVICES OF AN LEO ARE INCLUDED WITH THE BID UNIT PRICE FOR ITEM 614, LAW ENFORCEMENT OFFICER WITH PATROL CAR.

NOTICE OF CLOSURE SIGNS

NOTICE OF CLOSURE SIGNS, AS DETAILED IN THESE PLANS, SHALL BE ERECTED BY THE CONTRACTOR AT LEAST ONE WEEK IN ADVANCE OF THE SCHEDULED ROAD CLOSURE. THE SIGNS SHALL BE ERECTED ON THE RIGHT HAND SIDE OF THE ROAD FACING TRAFFIC. THEY SHALL BE PLACED SO AS NOT TO INTERFERE WITH THE VISIBILITY OF ANY OTHER TRAFFIC CONTROL SIGNS, AS APPROVED BY THE ENGINEER. PAYMENT FOR ALL WORK IN CONNECTION WITH SUPPLYING, ERECTING, MAINTAINING, AND SUBSEQUENTLY REMOVING NOTICE OF CLOSURE SIGNS WILL BE CONSIDERED INCIDENTAL TO AND INCLUDED WITH ITEM 614 MAINTAINING TRAFFIC, AS PER PLAN.

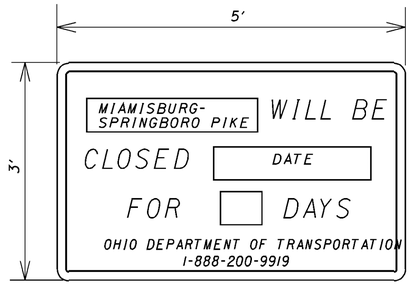

W20-H13-60

CALCULATED MJH
CHECKED CMK

MAINTENANCE OF TRAFFIC
GENERAL NOTES

MOT-75-0.75

CONTINGENCY QUANTITIES

THE FOLLOWING ITEMS AND ESTIMATED QUANTITIES HAVE BEEN CARRIED TO THE GENERAL SUMMARY FOR USE AS DIRECTED BY THE ENGINEER FOR THE MAINTENANCE OF TRAFFIC, AND OTHER INCIDENTAL CONSTRUCTION ITEMS NOT SPECIFICALLY COVERED IN THE PLAN (FOR EXAMPLE, JACKING AND DRILLING, PAVEMENT DEMOLITION, ETC.):

ITEM 614 - WORK ZONE IMPACT ATTENUATOR FOR 24" WIDE HAZARDS (BIDIRECTIONAL) 2 EACH

IMPACT ATTENUATORS HIT ONCE, WHICH CAN BE REPAIRED, WILL BE CONSIDERED INCIDENTAL TO THIS ITEM. IMPACT ATTENUATORS HIT MORE THAN ONCE FOR EACH INSTALLATION WHICH CAN BE REPAIRED WILL BE DONE SO AT AN AGREED UNIT PRICE, OR ACCORDING TO 109.05. IMPACT ATTENUATORS DESTROYED BEYOND USE WILL BE PAID AT THE UNIT BID PRICE FOR IMPACT ATTENUATORS THROUGH THESE CONTINGENCY QUANTITIES.

THE FOLLOWING ESTIMATED QUANTITY IS TO BE USED FOR REPAIRS TO EXISTING ROADS USED FOR DETOURED TRAFFIC, AND FOR MAINTENANCE OF SIDE ROADS AND DRIVEWAYS:

410 TRAFFIC COMPACTED SURFACE, TYPE A OR B 50 CU. YD.

614 ASPHALT CONCRETE FOR MAINTAINING TRAFFIC 50 CU. YD.

PAYMENT FOR ITEM 614 ASPHALT CONCRETE FOR MAINTAINING TRAFFIC WILL INCLUDE SUBSEQUENT REMOVAL, WHEN DIRECTED BY THE ENGINEER.

THE FOLLOWING QUANTITY HAS BEEN INCLUDED IN THE GENERAL SUMMARY TO BE USED AS DIRECTED BY THE ENGINEER TO PROVIDE RAISED PAVEMENT MARKERS ON TEMPORARY PAVEMENT MARKINGS WHICH MAY REQUIRE ADDITIONAL DELIEATION:

ITEM 614 WORK ZONE RAISED PAVEMENT MARKER, AS PER PLAN 315 EACH

THIS QUANTITY IS TO BE USED ONLY FOR PROVIDING WZRPM, APP IN LOCATIONS NOT SPECIFICALLY DESIGNATED IN THE PLAN, AS DIRECTED BY THE ENGINEER.

DUST CONTROL

THE CONTRACTOR SHALL FURNISH AND APPLY WATER FOR DUST CONTROL AS DIRECTED BY THE ENGINEER. THE FOLLOWING ESTIMATED QUANTITIES HAVE BEEN INCLUDED FOR DUST CONTROL PURPOSES:

ITEM 616, WATER 2280 M. GAL

ITEM 614 - REPLACEMENT DRUM

DRUMS FURNISHED BY THE CONTRACTOR IN ACCORDANCE WITH THE REQUIREMENTS OF THE PLANS, SPECIFICATIONS AND PROPOSAL WHICH BECOME DAMAGED BY TRAFFIC FOR REASONS BEYOND THE CONTROL OF THE CONTRACTOR SHALL BE REPLACED IN KIND WHEN ORDERED BY THE ENGINEER. REPLACEMENT DRUMS SHALL BE NEW.

PAYMENT FOR THE NEW DRUMS SHALL BE MADE AT THE CONTRACT PRICE PER EACH FOR ITEM 614, REPLACEMENT DRUM, AND SHALL INCLUDE THE COST OF REMOVING AND DISPOSING OF THE DAMAGED DRUM, AND PROVIDING AND MAINTAINING THE REPLACEMENT DRUM IN ACCORDANCE WITH THE CONTRACT REQUIREMENTS FOR THE ORIGINAL DRUM.

AN ESTIMATED QUANTITY OF 150 EACH HAS BEEN PROVIDED IN THE GENERAL SUMMARY.

ITEM 614 REPLACEMENT SIGN

FLATSHEET SIGNS FURNISHED BY THE CONTRACTOR IN ACCORDANCE WITH THE REQUIREMENTS OF THE PLANS, SPECIFICATIONS AND PROPOSAL WHICH BECOME DAMAGED BY TRAFFIC FOR REASONS BEYOND THE CONTROL OF THE CONTRACTOR SHALL BE REPLACED IN KIND WHEN ORDERED BY THE ENGINEER. REPLACEMENT SIGNS SHALL BE NEW. OTHER MATERIALS MAY BE IN USED, BUT GOOD, CONDITION SUBJECT TO APPROVAL BY THE ENGINEER.

PAYMENT FOR THE NEW SIGNS SHALL BE MADE AT THE CONTRACT PRICE PER EACH FOR ITEM 614, REPLACEMENT SIGN, AND SHALL INCLUDE THE COST OF REMOVING AND DISPOSING OF DAMAGED FLAT SHEET SIGNS, HARDWARE AND SUPPORTS, AND PROVIDING THE NECESSARY REPLACEMENT HARDWARE, SUPPORTS, ETC. REPLACEMENT OF REDUCED SPEED LIMIT SIGNS AND FINES DOUBLED SIGNS ARE NOT INCLUDED WITH THIS ITEM, BUT ARE PAID FOR UNDER OTHER PAY ITEMS.

AN ESTIMATED QUANTITY OF 12 EACH HAS BEEN PROVIDED IN THE GENERAL SUMMARY.

ITEM SPECIAL - LINEAR DELINEATION

3MTM SCOTCHLITETM LINEAR DELINEATION SYSTEM (LDS) SHALL BE INSTALLED ON ALL CONCRETE BARRIER, PERMANENT OR TEMPORARY, LOCATED WITHIN 5 FEET OF THE EDGE OF THE TRAVEL LANE UNDER EITHER OF THE FOLLOWING CONDITIONS:

* ALONG TAPERS AND TRANSITION AREAS
* ALONG CURVES (OUTSIDE ONLY) WITH DEGREE OF CURVATURE GREATER THAN OR EQUAL TO 3 DEGREES

THE LDS SHALL CONSIST OF PANELS OF DELINEATION, APPROXIMATELY 34 INCHES LONG AND 6 INCHES WIDE. PANELS SHALL BE PROVIDED AT THE RATE OF ONE PER SECTION OF PORTABLE CONCRETE BARRIER OR ONE PANEL EVERY 10 FEET, SPACED EVENLY ALONG THE LENGTH OF THE RUN. THE PANELS SHALL BE MOUNTED SUCH THAT THE TOPS OF THE PANELS ARE 26-INCHES FROM THE BASE OF THE CONCRETE BARRIER.

PAYMENT SHALL BE FULL COMPENSATION FOR ALL MATERIAL, LABOR, INCIDENTALS AND EQUIPMENT NECESSARY FOR FURNISHING, INSTALLING, MAINTAINING AND REMOVING 3MTM SCOTCHLITETM LINEAR DELINEATION SYSTEM (LDS).

AN ESTIMATED QUANTITY OF 11,125 FEET OF ITEM SPECIAL DELINEATION, HAS BEEN PROVIDED AND CARRIED TO THE GENERAL SUMMARY. ALONG RUNS OF CONCRETE BARRIER WHERE THIS ITEM IS PROVIDED, THE QUANTITY SHALL BE MEASURED AS THE ENTIRE LENGTH OF THE RUN BEING DELINEATED, INCLUDING THESPACES BETWEEN THE INDIVIDUAL PANELS.

MAINTENANCE OF TRAFFIC SIGNAL/FLASHER INSTALLATIONS

THE CONTRACTOR SHALL BE RESPONSIBLE FOR MAINTAINING TRAFFIC SIGNAL/FLASHER INSTALLATIONS WITHIN THE PROJECT UNDER THE FOLLOWING CONDITIONS:

1. EXISTING SIGNAL /FLASHER INSTALLATIONS THAT THE PLANS REQUIRE THE CONTRACTOR TO ADJUST, MODIFY, ADD ONTO OR REMOVE, OR WHICH THE CONTRACTOR ACTUALLY ADJUSTS, MODIFIES OR OTHERWISE DISTURBS. THE CONTRACTOR SHALL BE RESPONSIBLE FOR THE ENTIRE INSTALLATION (AT AN INTERSECTION) FROM THE FIRST DAY OF WORK UNTIL THE INSTALLATION HAS BEEN SUBSEQUENTLY REMOVED OR MODIFIED AND THE WORK IS ACCEPTED.

2. NEW OR REUSED SIGNAL/FLASHER INSTALLATIONS OR DEVICES INSTALLED BY THE CONTRACTOR. THE CONTRACTOR SHALL BE RESPONSIBLE FOR MAINTENANCE OF THESE FROM THE TIME OF INSTALLATION UNTIL WORK IS ACCEPTED.

THE CONTRACTOR SHALL CORRECT AS QUICKLY AS POSSIBLE ALL OUTAGES OR MALFUNCTIONS. HE SHALL PROVIDE THE MAINTAINING AGENCY AND THE ENGINEER SUCH ADDRESSES AND PHONE NUMBERS WHERE HIS MAINTENANCE FORCES CAN BE CONTACTED. THE CONTRACTOR SHALL PROVIDE ONE OR MORE PERSONS TO RECEIVE ALL CALLS AND DISPATCH THE NECESSARY MAINTENANCE FORCES TO CORRECT OUTAGES. SUCH A PERSON OR PERSONS MAY BE USED TO PERFORM OTHER DUTIES AS LONG AS PROMPT ATTENTION IS GIVEN TO THESE CALLS AND A PERSON IS READILY AVAILABLE CONTINUOUSLY 24 HOURS A DAY, 7 DAYS A WEEK. ALL LAMP OUTAGES, CABLE OUTAGES, ELECTRICAL FAILURE, EQUIPMENT MALFUNCTIONS AND MISALIGNED SIGNAL HEADS SHALL BE CORRECTED TO THE SATISFACTION OF THE ENGINEER WITH THE SIGNAL BACK IN SERVICE WITHIN FOUR HOURS AFTER THE CONTRACTOR HAS BEEN NOTIFIED OF THE OUTAGE.

IN THE EVENT NEW SIGNALS ARE DAMAGED PRIOR TO ACCEPTANCE ALL DAMAGED EQUIPMENT EXCEPT POLES AND CONTROL EQUIPMENT SHALL BE REPLACED BY THE CONTRACTOR TO THE SATISFACTION OF THE ENGINEER WITH THE SIGNAL BACK IN SERVICE WITHIN 8 HOURS AFTER THE CONTRACTOR'S NOTIFICATION OF THE OUTAGE. THE CONTRACTOR SHALL ARRANGE FOR FULL TRAFFIC CONTROL UNTIL THE SIGNAL IS BACK IN OPERATION.

IF THE POLES AND/OR CONTROL EQUIPMENT ARE DAMAGED AND MUST BE REPLACED, THE CONTRACTOR SHALL MAKE TEMPORARY REPAIRS AS NECESSARY TO BRING THE SIGNAL BACK INTO FULL OPERATION WITHIN THE ALLOWED 8-HOUR PERIOD, AND SHALL MAKE PERMANENT REPAIRS OR REPLACEMENTS AS SOON THEREAFTER AS POSSIBLE.

NONE OF THE ABOVE SHALL BE CONSTRUED AS COLLECTIVE OR CONSECUTIVE OUTAGE TIME PERIODS AT ANY ONE LOCATION. THAT IS WHERE MORE THAN ONE OUTAGE OCCURS AT ANY ONE LOCATION, THEN THE ALLOTTED TIME LIMIT SHALL BE FOR THE WORST SINGLE OUTAGE.

WHERE OUTAGES ARE THE DIRECT RESULT OF A VEHICLE ACCIDENT THE RESPONSE OF THE CONTRACTOR SHALL BE AS OUTLINED ABOVE. THE CONTRACTOR SHALL BE RESPONSIBLE FOR COLLECTION OF ANY COMPENSATION FOR THIS WORK FROM THOSE PARTIES RESPONSIBLE FOR THE DAMAGE.

WHERE THE CONTRACTOR HAS FAILED TO, OR CANNOT RESPOND TO, AN OUTAGE OR SIGNAL EQUIPMENT MALFUNCTION, AT THESE LOCATIONS WITHIN HIS RESPONSIBILITY, WITHIN PERIODS AS SPECIFIED ABOVE, THE ENGINEER MAY INVOKE THE PROVISIONS OF SECTION 105.15 AND ANY SUBSEQUENT BILLINGS TO THE STATE OR MIAMI TOWNSHIP POLICE FOR POLICE SERVICES AND MAINTENANCE SERVICES BY CITY FORCES SHALL BE DEDUCTED FROM MONIES DUE OR TO BECOME DUE THE CONTRACTOR IN ACCORDANCE WITH PROVISIONS OF SECTION 105.15.

WHEN THE CONTRACTOR DUE TO CONSTRUCTION PROCEDURES MUST TAKE A TRAFFIC SIGNAL OUT OF SERVICE, THIS OUTAGE SHALL NOT EXCEED 4 HOURS AND SHALL NOT INCLUDE THE HOURS OF 6 AM TO 10 AM AND 2 PM TO 6 PM. THE CONTRACTOR AS DESCRIBED ABOVE SHALL PROTECT ANY SIGNALIZED INTERSECTION, WHERE THE SIGNAL IS OUT OF SERVICE DUE TO CONSTRUCTION PROCEDURES, OR DUE TO AN OUTAGE OR MALFUNCTION OF EQUIPMENT, BY PROVISION OF A LAW ENFORCEMENT OFFICER. ANY OTHER WORK THAT DOES NOT REQUIRE THE INTERSECTION TO BE TAKEN OUT OF SERVICE, OR LANE CLOSURES, MAY BE PERFORMED DURING NORMAL WORK HOURS.

THE CONTRACTOR SHALL PROVIDE THE MAINTENANCE SERVICE ENTIRELY WITH HIS FORCES OR HE MAY CHOOSE TO ENTER INTO A COOPERATIVE UNDERSTANDING WITH THE LOCAL MAINTAINING AGENCY TO PROVIDE THE MAINTENANCE. THE CONTRACTOR SHALL INFORM THE ENGINEER, IN WRITING, OF THE MAINTENANCE METHOD SELECTED.

CALCULATED MJH
CHECKED CMK

MAINTENANCE OF TRAFFIC
GENERAL NOTES

MOT-75-0.75

MAINTENANCE OF TRAFFIC SIGNAL/FLASHER INSTALLATIONS (CON'D)

THE CONTRACTOR SHALL BE RESPONSIBLE FOR ANY DAMAGE TO ANY TRAFFIC SIGNAL COMPONENTS REQUIRED TO BE HANDLED DURING THE RELOCATION OF POLES AND REVISIONS TO THE SIGNAL SYSTEM.

WHEN A TRAFFIC SIGNAL MUST BE TAKEN OUT OF SERVICE BY THE CONTRACTOR, DUE TO CONSTRUCTION PROCEDURES, THIS OUTAGE SHALL NOT EXCEED 4 HOURS AND SHALL NOT INCLUDE THE HOURS OF 6 AM TO 10 AM. AND 2 PM TO 6 PM. ANY SIGNALIZED INTERSECTION, WHERE THE SIGNAL IS OUT OF SERVICE DUE TO CONSTRUCTION PROCEDURES, OR DUE TO AN OUTAGE OR MALFUNCTION OF EQUIPMENT AS DESCRIBED ABOVE, SHALL BE PROTECTED BY AN OFF-DUTY LAW ENFORCEMENT OFFICER (LEO), HIRED BY THE CONTRACTOR.

ANY VEHICULAR TRAFFIC SIGNAL HEAD, EITHER NEW OR EXISTING WHICH WILL BE OUT OF OPERATION SHALL BE COVERED IN THE MANNER DESCRIBED IN 632.25.

THE CONTRACTOR SHALL MAINTAIN COMPLETE RECORDS OF MALFUNCTIONS INCLUDING:

1. TIME OF NOTIFICATION OF MALFUNCTION;
2. TIME OF WORK CREWS ARRIVAL TO CORRECT THE MALFUNCTION;
3. ACTIONS TAKEN TO CORRECT THE MALFUNCTION, INCLUDING A LIST OF PARTS REPAIRED OR REPLACED;
4. A DIAGNOSIS OF REASON FOR THE MALFUNCTION AND PROBABILITY OF REOCCURRENCE;
5. TIME OF COMPLETION OF THE REPAIR AND SYSTEM RESTORED TO FULL SERVICE.

A COPY OF THESE RECORDS SHALL BE PROVIDED TO THE ENGINEER WITHIN THREE (3) WORKING DAYS FOLLOWING COMPLETION OF EACH REPAIR.

ALL COSTS RESULTING FROM THE ABOVE REQUIREMENTS SHALL BE CONSIDERED TO BE INCLUDED IN THE LUMP SUM PRICE BID FOR ITEM 614, MAINTAINING TRAFFIC, AS PER PLAN.

ITEM 614 - DETOUR SIGNING

THE CONTRACTOR SHALL ERECT, MAINTAIN, AND SUBSEQUENTLY REMOVE ALL DETOUR SIGNING AND SUPPORTS SPECIFIED IN THE DETOUR-SIGNING PLANS, AND IN ACCORDANCE WITH CMS 614.06.

AN INTERIM COMPLETION TIME PERIOD HAS BEEN ESTABLISHED FOR EACH DETOUR OPERATION (SEE SHEET 54). SHOULD THE CONTRACTOR FAIL TO REMOVE THE DETOUR SIGNING AND SUPPORTS BY THE REQUIRED TIME LIMIT, LIQUIDATED DAMAGES, AS SPECIFIED IN THE PLAN NOTES AND THE DETOUR-SIGNING PLANS, SHALL BE ASSESSED IN ACCORDANCE WITH CMS 108.07.

PAYMENT SHALL BE MADE AT THE LUMP SUM CONTRACT PRICE FOR ITEM 614, DETOUR SIGNING. PAYMENT SHALL INCLUDE ALL LABOR, EQUIPMENT, MATERIALS AND OTHER INCIDENTALS NECESSARY TO INSTALL, ERECT, MAINTAIN, AND REMOVE THE DESIGNATED DETOUR ROUTE.

SEQUENCE OF CONSTRUCTION

CONSTRUCTION OF THIS PROJECT HAS BEEN DIVIDED INTO TWO MAJOR STAGES, AND IS ILLUSTRATED IN THE PLAN SCHEMATIC ON SHEETS 39 AND 40:

STAGE 1 - CONSTRUCT RIGHT CURB LINE OF MIAMISBURG-SPRINGBORO PIKE AND RIGHT SIDE OF AUSTIN ROAD;
STAGE 2 - SHIFT TRAFFIC AND COMPLETE CONSTRUCTION.

NOTE: CONSTRUCTION ON I-75 ASSUMED TO BE COMPLETED IN STAGE 1.

INTERIM COMPLETION DATES AND LIQUIDATED DAMAGES

INTERIM COMPLETION DATES WITH LIQUIDATED DAMAGES HAVE BEEN ESTABLISHED FOR SEVERAL CONSTRUCTION ELEMENTS, PARTS, AND/OR STAGES, AS SUMMARIZED BELOW. THE INTERIM DATES WILL BE SUBJECT TO LIQUIDATED DAMAGES AS DESCRIBED BY SECTION 108.07 OF THE CONSTRUCTION AND MATERIALS SPECIFICATIONS BOOK. REQUESTS FOR EXTENSIONS OF THE INTERIM COMPLETION DATES WILL BE PROCESSED AS PER CMS SPECIFICATION 108.06. A GRANTED TIME EXTENSION TO THE INTERIM COMPLETION DATE WILL NOT INCLUDE A CORRESPONDING EXTENSION TO THE FINAL COMPLETION DATE.

SHEET	DESCRIPTION/ STAGE	MAXIMUM DURATION OF ROADWAY OR RAMP CLOSURE	LIQUIDATED DAMAGE
54	DETOUR MIAMISBURG - SPRINGBORO PIKE	260 CONSECUTIVE CALENDAR DAYS	$10,000/DAY
46	STAGE 1 - CLOSE RIGHT LANE ON SR 741: STA 21+50 TO 41+00 NB STA 32+50 TO 56+00 SB	7 CONSECUTIVE CALENDAR DAYS	$5,000/DAY
52	STAGE 1 - CLOSE RIGHT LANE ON NORTHBOUND SR 741 STA 39+00 TO 44+00	7 CONSECUTIVE CALENDAR DAYS	$5,000/DAY

PLAN LEGEND

- PORTABLE CONCRETE BARRIER (USE TAPERED END SECTION AT TERMINALS, UNLESS OTHERWISE NOTED)
- DRUM (SPACE 40' ON ON-CENTER FOR TANGENTS AND 10' ON-CENTER FOR RADIUS RETURNS, UNLESS OTHERWISE SPECIFIED)
- PAVEMENT FOR MAINTAINING TRAFFIC
- LANE MAINTAINED/ DIRECTION OF TRAVEL
- CONSTRUCT THIS STAGE/PHASE/STEP
- WORK ZONE IMPACT ATTENUATOR
- TYPE A WARNING LIGHT (BATTERY OPERATED)
- FLASHING ARROW PANEL
- YE-X — WORK ZONE YELLOW EDGE LINE
- WE-X — WORK ZONE WHITE EDGE LINE
- LL-X — WORK ZONE LANE LINE
- CH-X — WORK ZONE CHANNELIZING LINE
- DW-X — WORK ZONE WHITE DOTTED LINE
- DY-X — WORK ZONE DOUBLE YELLOW LINE
- PCB-X — PORTABLE CONCRETE BARRIER
- TP-X — PAVEMENT FOR MAINTAINING TRAFFIC (TEMPORARY)
- AW-X — ASPHALT WEDGE
- SL-X — WORK ZONE STOP LINE

SIGNING LEGEND

- PROPOSED MOT SIGN
- EXISTING MOT SIGN TO REMAIN
- EXISTING MOT SIGN TO BE REMOVED (THIS TRAFFIC PHASE)

CALCULATED MJH
CHECKED CMK

MAINTENANCE OF TRAFFIC GENERAL NOTES

MOT-75-0.75

ms01.dgn 16-JULY-2008

SHEET	REF NO.	STATION FROM	STATION TO	ITEM 614 WORK ZONE IMPACT ATTENUATOR FOR 24" WIDE HAZARDS (UNIDIRECTIONAL) EACH	ITEM 614 WORK ZONE IMPACT ATTENUATOR FOR 24" WIDE HAZARDS (BIDIRECTIONAL) EACH	ITEM 614 WORK ZONE LANE LINE, CLASS I MILE	ITEM 614 WORK ZONE CENTER LINE, CLASS I MILE	ITEM 614 WORK ZONE EDGE LINE, CLASS I WHITE MILE	ITEM 614 WORK ZONE EDGE LINE, CLASS I YELLOW MILE		ITEM 614 WORK ZONE CHANNELIZING LINE, CLASS I FT	ITEM 614 WORK ZONE DOTTED LINE, CLASS I FT		ITEM 614 WORK ZONE STOP LINE, CLASS I FT	ITEM 614 WORK ZONE ARROW, CLASS I EACH	ITEM 614 WORK ZONE WORD ON PAVEMENT, 72", CLASS I, 642 PAINT EACH	ITEM 615	ITEM 615 PAVEMENT FOR MAINTAINING TRAFFIC, CLASS A, AS PER PLAN SQ YD	ITEM 622	ITEM 622 PORTABLE CONCRETE BARRIER, 32" FT		IR	EARMARK
41-42	STAGE I (MS PIKE)																							
	WE-1	105+60	126+48					0.40																X
	WE-2	18+40	19+66					0.02																X
	WE-3	17+40	19+66					0.04																X
	WE-4	38+97	49+68					0.20																X
	WE-5	38+50	38+97					0.03																X
	WE-6	125+96	48+05					0.03																
	DY-1	105+60	48+05 (WOOD)				0.40																	X
	DY-2	116+52	118+02				0.03																	X
	DY-3	18+40	19+66				0.02																	X
	DY-4	49+05	49+93				0.02																	X
	DY-5	25' LT	155' LT				0.02																	X
	CH-1	114+45	115+82								137													X
	SL-1	119+86												20										X
	PCB-1	108+00	114+75		1																	675		X
	PCB-2	118+75	41+50 (WOOD)		2																	1590		X
43-45	STAGE I (I-75)																							
	WE-1	8+40	99+10					1.72															X	
	WE-2	15+50	82+10					1.26															X	
	WE-3	1+00	21+20					0.36															X	
	LL-1	8+40	74+35			2.50																	X	
	LL-2	15+50	82+10			2.52																	X	
	LL-3	89+90	93+40			0.07																	X	
	DW-1	79+10	82+10																				X	
	PCB-1	11+40	70+20	1																		5880	X	
	PCB-2	18+65	79+10	1																		6045	X	
46-49	STAGE I (AUSTIN RD)																							
	WE-1	32+50	56+00					0.45																X
	WE-2	21+50	39+90					0.35																X
	WE-3	191+59	201+19					0.18																X
	WE-4	193+68	201+19					0.14																X
	DY-1	37+75	39+90				0.04																	X
	DY-2	193+21	201+19				0.15																	X
	DW-1	20+81	28+26									748												X
	DW-2	48+50	56+50									800												X
	TP-1	193+68	201+19																1521					X
	TP-2	197+80	199+00																14					X
	PCB-1	191+80	201+19		2																	939		X
SUB-TOTALS (EARMARK)					5		0.69	2.04			137	1548		20				1535		3204				
TOTALS CARRIED TO GENERAL SUMMARY				2	5	5.09	0.69	5.18			137	1548		20				1535		15129				

CALCULATED CAK CHECKED MJH

MAINTENANCE OF TRAFFIC SUBSUMMARY

MOT-75-0.75

ms02.dgn 16-JULY-2008

SHEET	REF NO.	STATION FROM	STATION TO	ITEM 614 WORK ZONE IMPACT ATTENUATOR FOR 24" WIDE HAZARDS (UNIDIRECTIONAL) EACH	ITEM 614 WORK ZONE IMPACT ATTENUATOR FOR 24" WIDE HAZARDS (BIDIRECTIONAL) EACH	ITEM 614 WORK ZONE LANE LINE, CLASS I MILE	ITEM 614 WORK ZONE CENTER LINE, CLASS I MILE	ITEM 614 WORK ZONE EDGE LINE, CLASS I WHITE MILE	ITEM 614 WORK ZONE EDGE LINE, CLASS I YELLOW MILE	ITEM 614 WORK ZONE CHANNELIZING LINE, CLASS I FT	ITEM 614 WORK ZONE DOTTED LINE, CLASS I FT	ITEM 614 WORK ZONE STOP LINE, CLASS I FT	ITEM 614 WORK ZONE ARROW, CLASS I EACH	ITEM 614 WORK ZONE WORD ON PAVEMENT, 72", CLASS I, 642 PAINT EACH	ITEM 615 PAVEMENT FOR MAINTAINING TRAFFIC, CLASS A, AS PER PLAN SQ YD	ITEM 622 PORTABLE CONCRETE BARRIER, 32" FT	IR	EARMARK
50-51	STAGE 2 (MS PIKE)																	
	WE-1	107+60	126+45					0.36										X
	WE-2	107+60	126+45					0.36										X
	WE-3	20+26	21+45					0.02										X
	WE-4	20+26	21+45					0.02										X
	WE-5	38+45	49+80					0.22										X
	WE-6	38+05	49+80					0.22										X
	DY-1	105+60	126+45				0.35											X
	DY-2	105+60	126+45				0.36											X
	DY-3	20+26	21+45				0.02											X
	DY-4	41+72	49+80				0.15											X
	DY-5	39+00	49+80				0.20											X
	CH-1	114+45	115+82							96			2					X
	CH-2	116+76	118+01							125			2					X
	SL-1	20+26										25						
	PCB-1	107+60	113+77		2												617	X
	PCB-2	116+76	126+45		1												969	X
	PCB-3	41+40	49+80		1												840	X
52-53	STAGE 2 (AUSTIN RD)																	
	WE-1	36+00	41+17					0.10										X
	WE-2	39+55	44+00					0.08										X
	WE-3	179+13	199+00					0.38										X
	WE-4	179+00	199+00					0.38										X
	DY-1	39+74	41+17				0.03											X
	DY-2	179+25	199+00				0.37											X
	DY-3	179+25	182+80				0.07											X
	LL-1	39+74	41+17			0.03												X
	CH-1	36+00	38+51							251			3	1				X
	CH-2	39+74	41+17							143			1					X
	CH-3	179+25	18+25							200			4					X
	SL-1	38+51										36						X
	SL-1	39+74										36						X
	SL-1	179+25										26						X
	PCB-1	193+10	198+30		2												520	X
TOTALS CARRIED TO GENERAL SUMMARY					6	0.03	1.56	2.14		815		123	12	1			2946	

CALCULATED CAK CHECKED MJH

MAINTENANCE OF TRAFFIC SUBSUMMARY

MOT-75-0.75

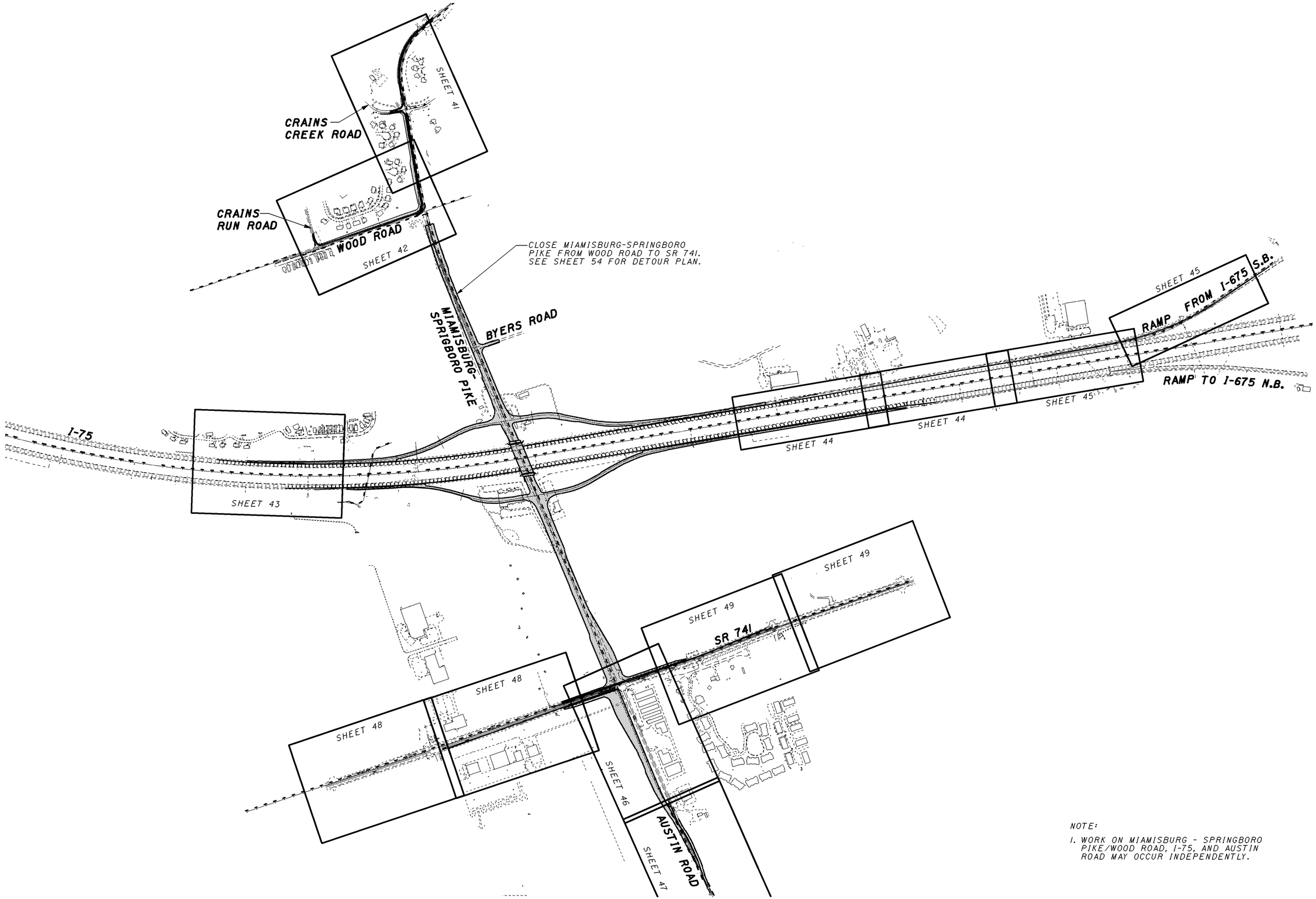

NOTE:

1. WORK ON MIAMISBURG - SPRINGBORO PIKE/WOOD ROAD, I-75, AND AUSTIN ROAD MAY OCCUR INDEPENDENTLY.

CALCULATED BJP
CHECKED MJH

MAINTENANCE OF TRAFFIC - STAGE 1 SCHEMATIC PLAN

MOT-75-0.75

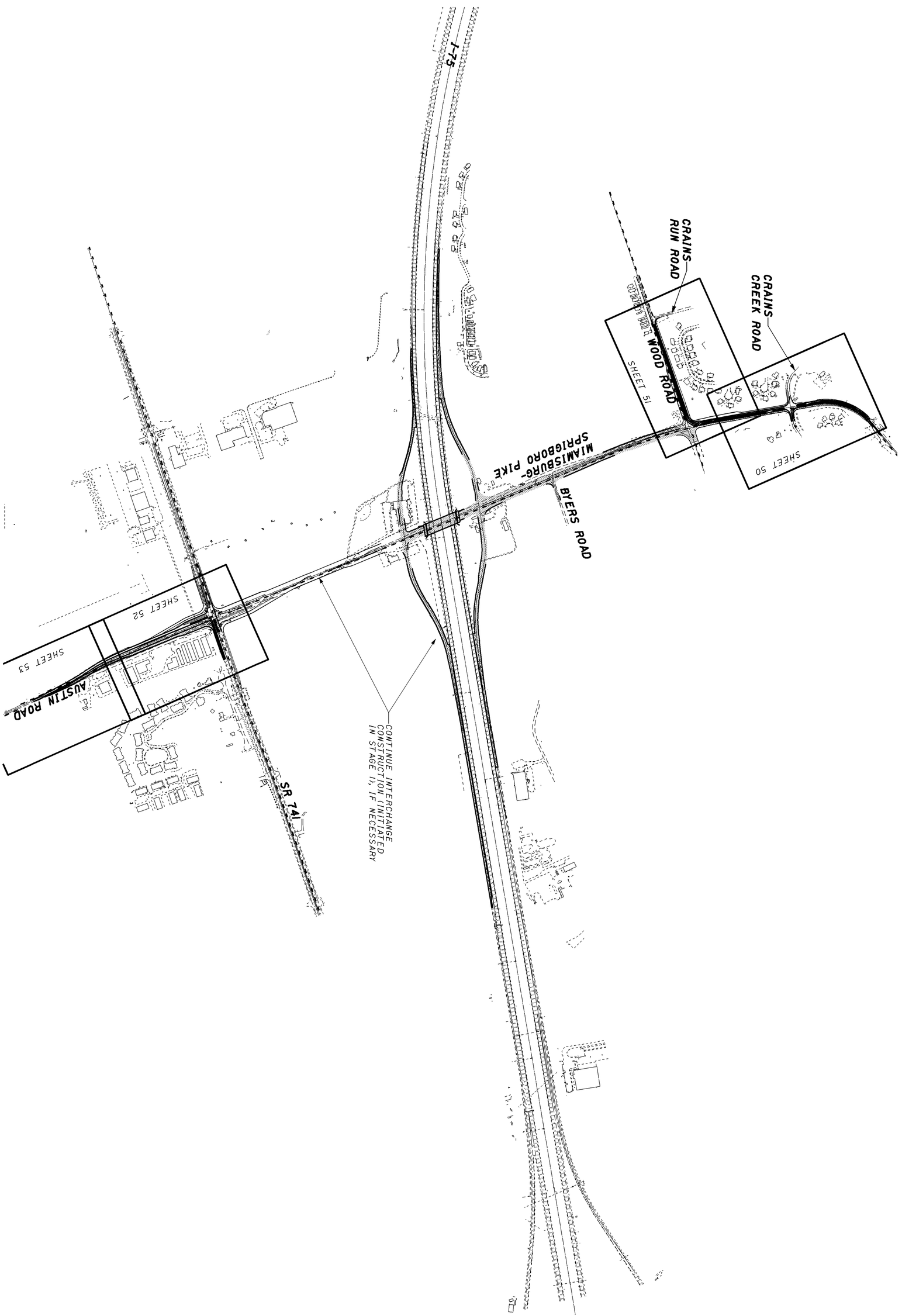

schem-p2.dgn

21-MAR-2008

40 / 773	MOT-75-0.75	**MAINTENANCE OF TRAFFIC - STAGE 2 SCHEMATIC PLAN**	CALCULATED BJP / CHECKED MJH

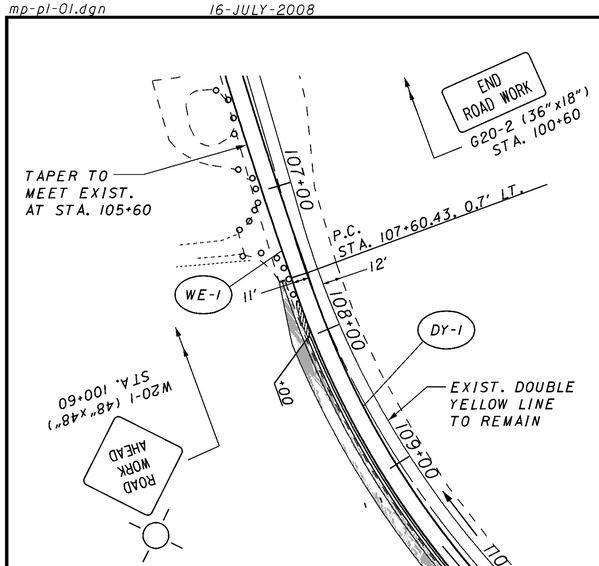

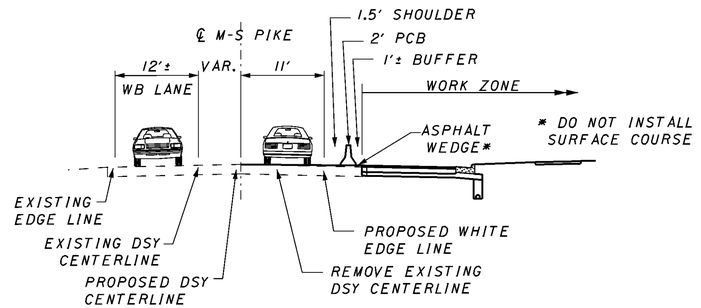

SECTION A-A

NOTES:
1. SEE SHEET 36 FOR PLAN LEGEND.

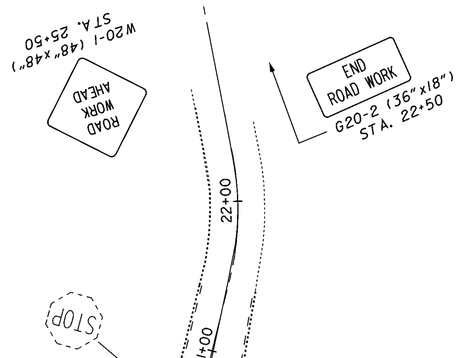

HORIZONTAL SCALE IN FEET
0 50 100

CALCULATED BJP
CHECKED MJH

MAINTENANCE OF TRAFFIC - STAGE 1
MIAMISBURG-SPRINGBORO PIKE

MOT-75-0.75

NOTES:
1. SEE SHEET 36 FOR PLAN LEGEND.

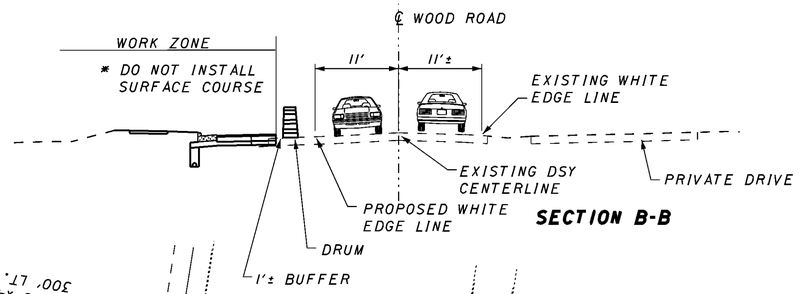

SECTION B-B

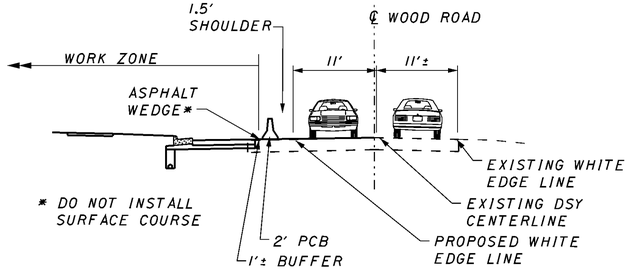

SECTION C-C

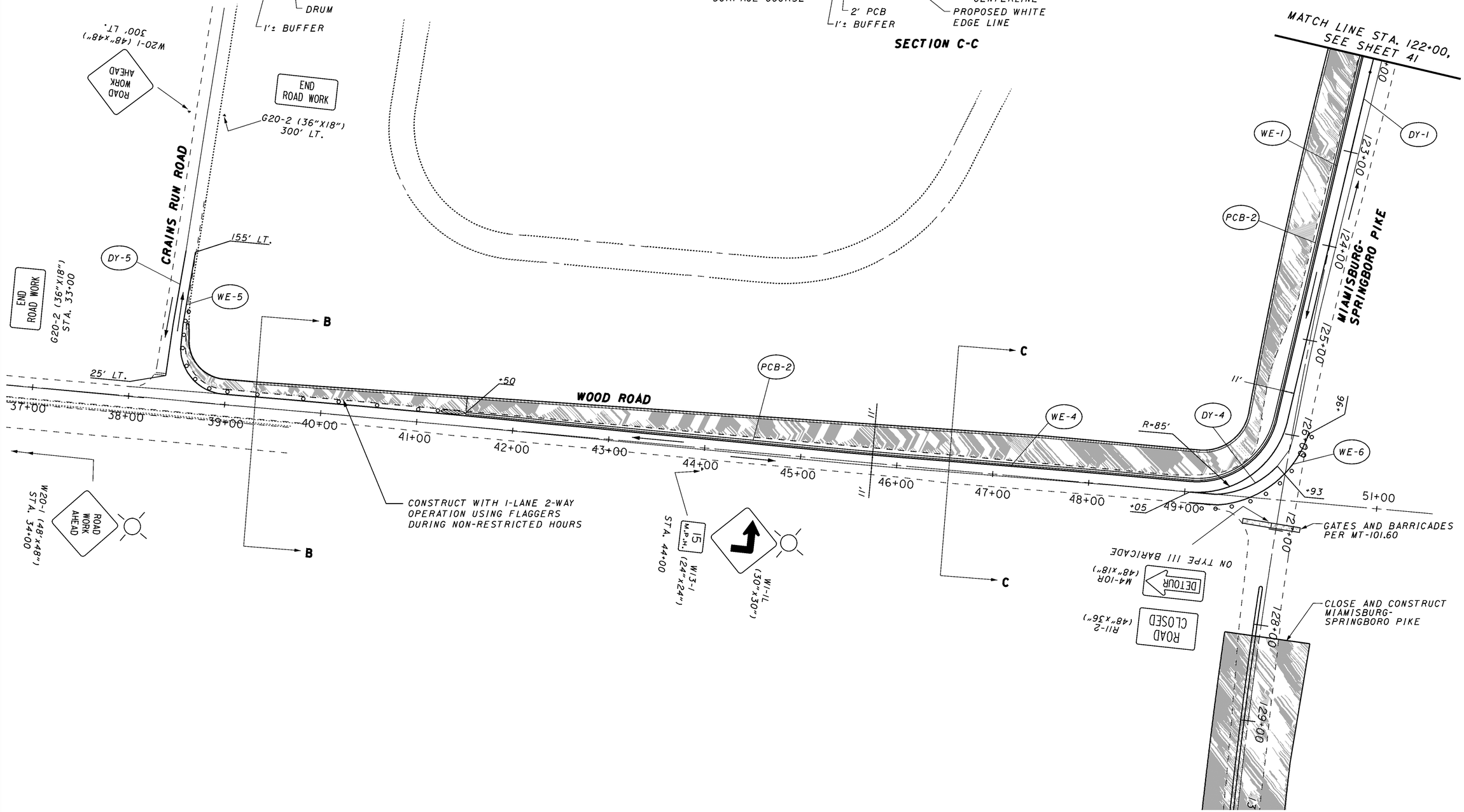

HORIZONTAL SCALE IN FEET
0 50 100

CALCULATED BJP
CHECKED MJH

MAINTENANCE OF TRAFFIC - STAGE 1
WOOD ROAD

MOT-75-0.75

NOTES:
1. SEE SHEET 36 FOR PLAN LEGEND.

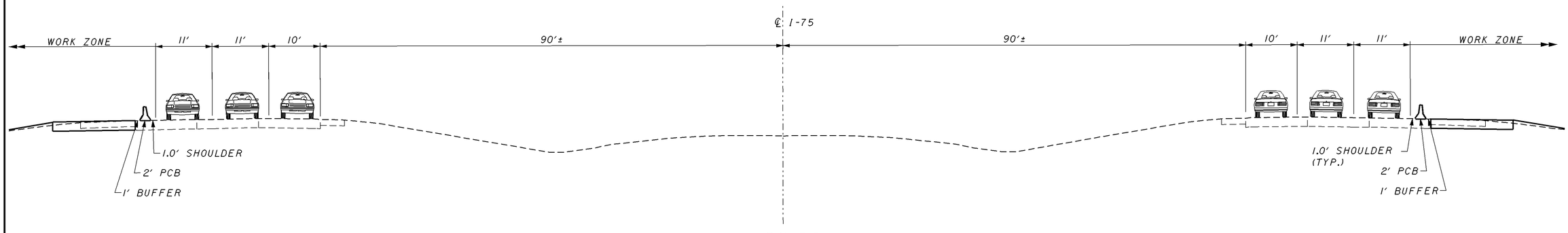

SECTION D-D

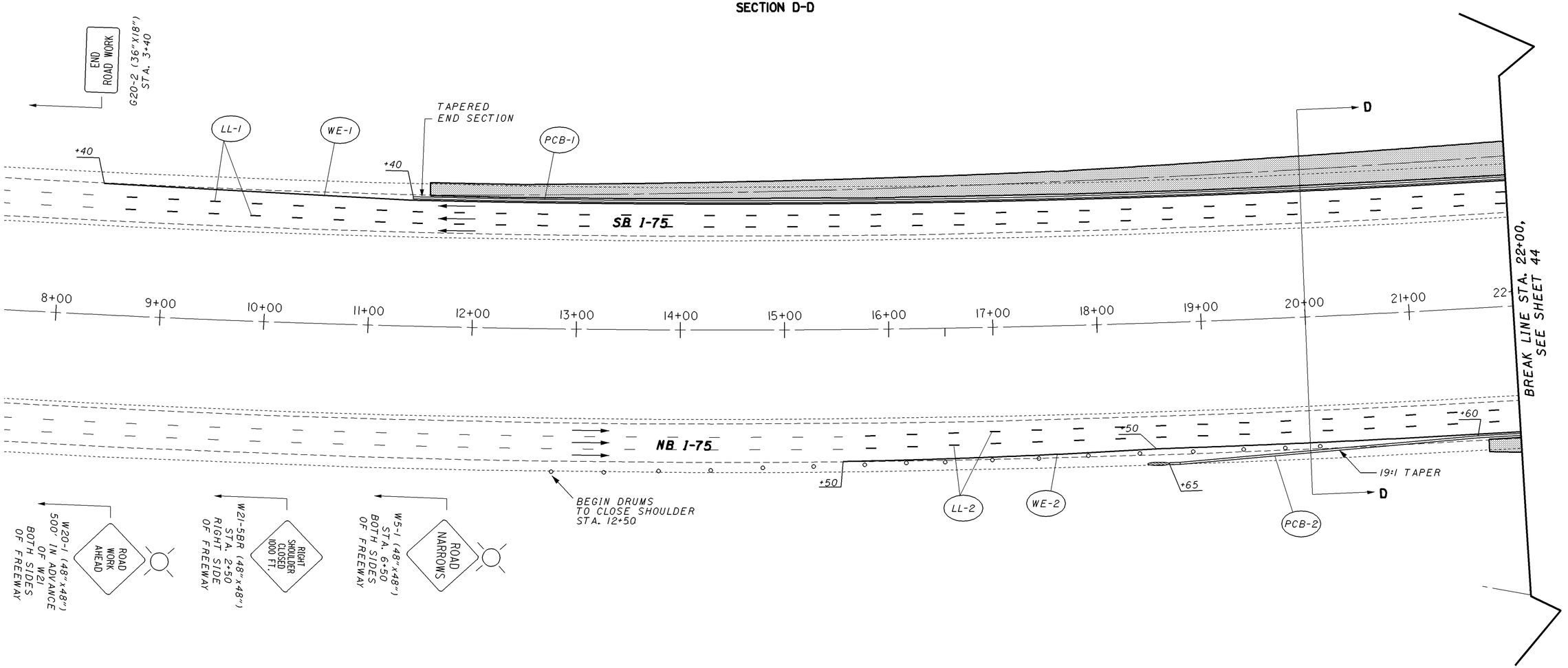

HORIZONTAL SCALE IN FEET
0 50 100

CALCULATED BJP
CHECKED MJH

MAINTENANCE OF TRAFFIC - STAGE 1
I-75 - BEGIN PROJECT TO STA. 22+00

MOT-75-0.75

NOTES:
1. SEE SHEET 36 FOR PLAN LEGEND.

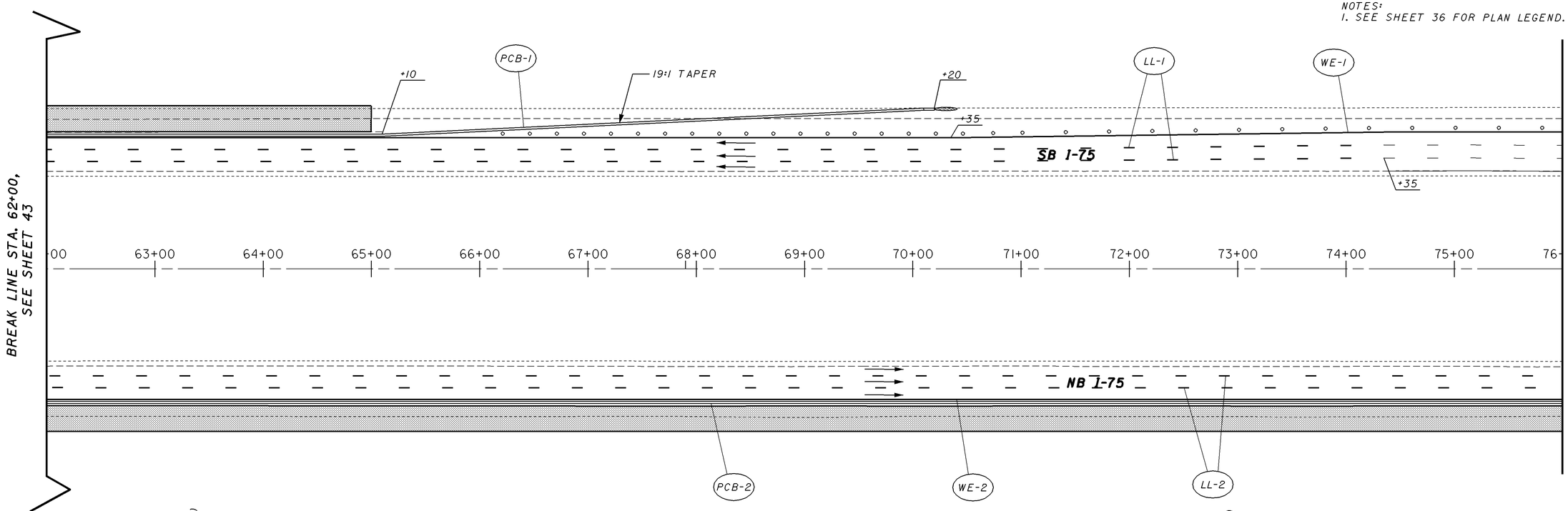

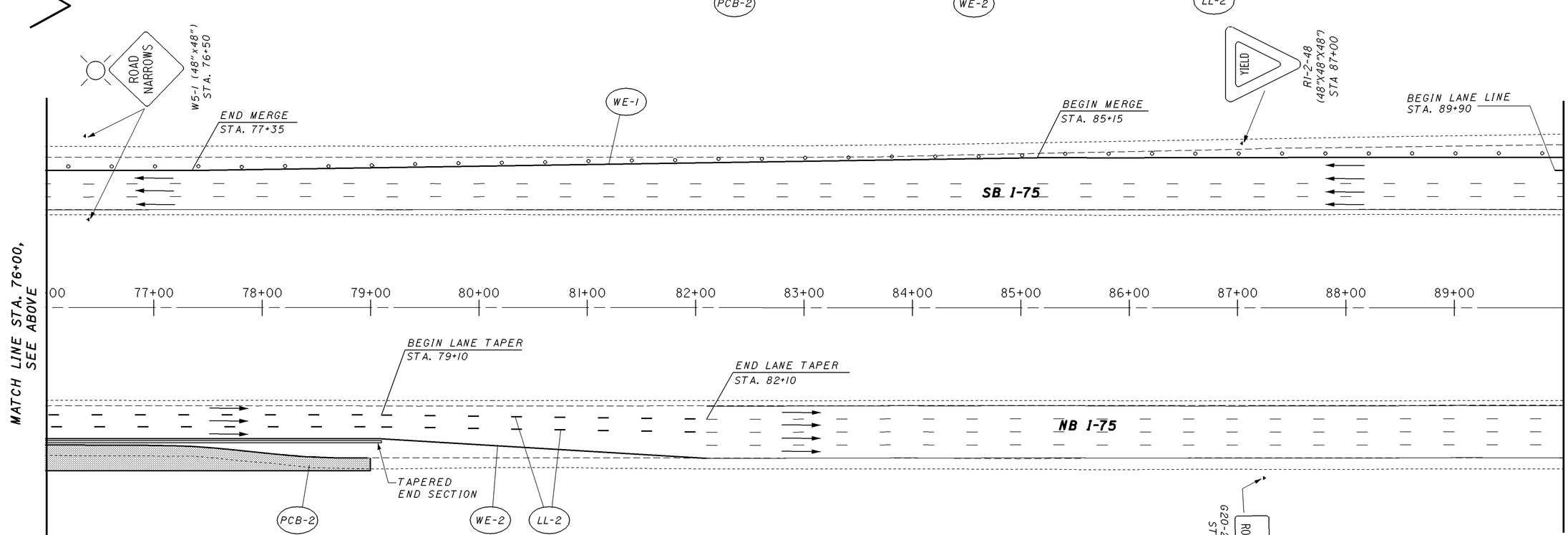

HORIZONTAL SCALE IN FEET
0 50 100

CALCULATED BJP
CHECKED MJH

MAINTENANCE OF TRAFFIC - STAGE 1
I-75 - STA. 62+00 TO STA. 90+00

MOT-75-0.75

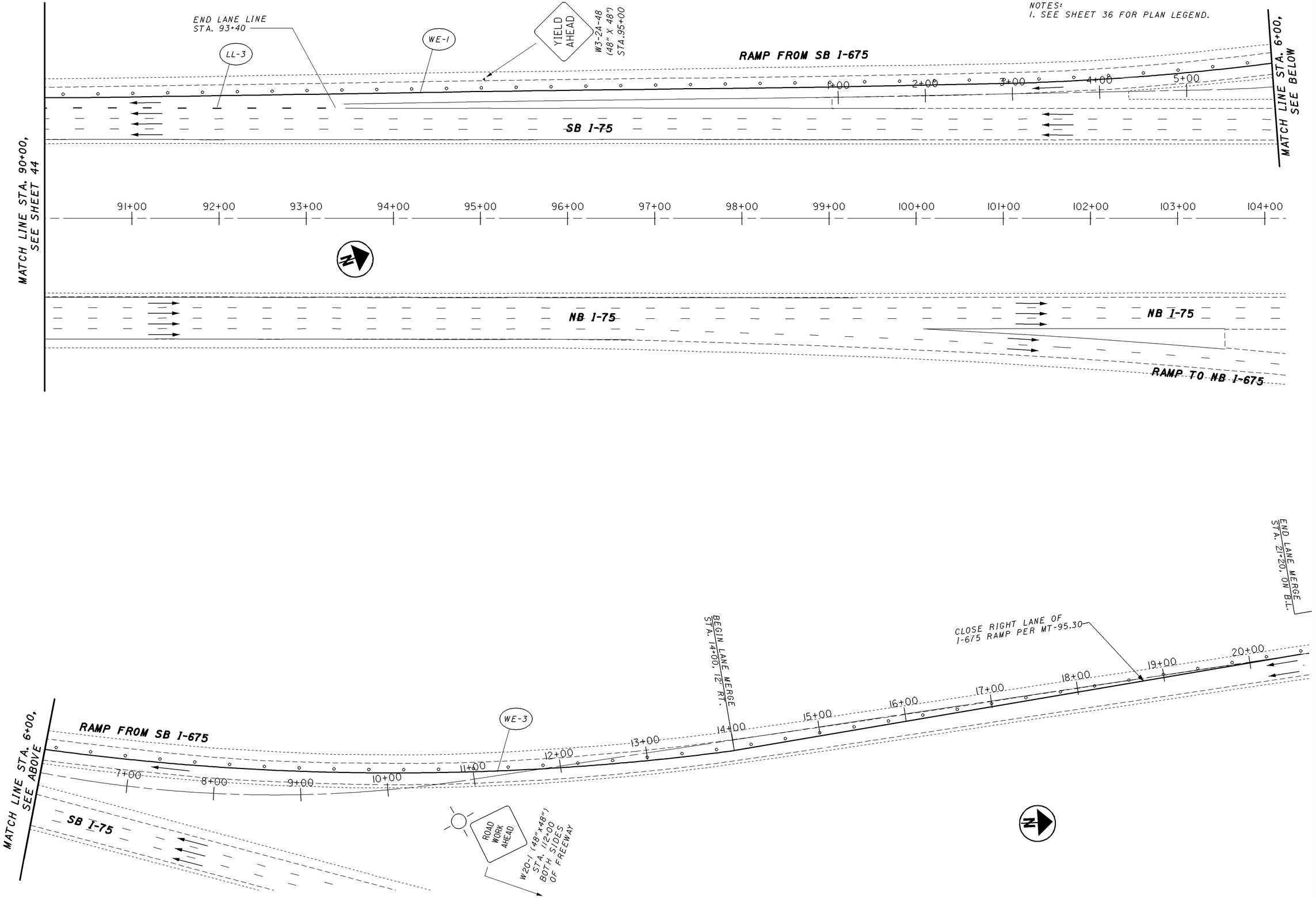
NOTES:
1. SEE SHEET 36 FOR PLAN LEGEND.
END LANE LINE
STA. 93+40
LL-3
WE-1
YIELD AHEAD
W3-2A-48 (48" X 48")
STA.95+00
RAMP FROM SB I-675
MATCH LINE STA. 6+00, SEE BELOW
MATCH LINE STA. 90+00, SEE SHEET 44
SB I-75
NB I-75
RAMP TO NB I-675
BEGIN LANE MERGE
STA. 14+00, 12' RT.
CLOSE RIGHT LANE OF
I-675 RAMP PER MT-95.30
END LANE MERGE
STA. 21+20, ON B.L.
WE-3
ROAD WORK AHEAD
W20-1 (48"x48")
STA. 112+00
BOTH SIDES OF FREEWAY
HORIZONTAL SCALE IN FEET
CALCULATED BJP
CHECKED MJH
MAINTENANCE OF TRAFFIC - STAGE 1
I-75 - STA. 90+00 TO END PROJECT
MOT-75-0.75
45
773

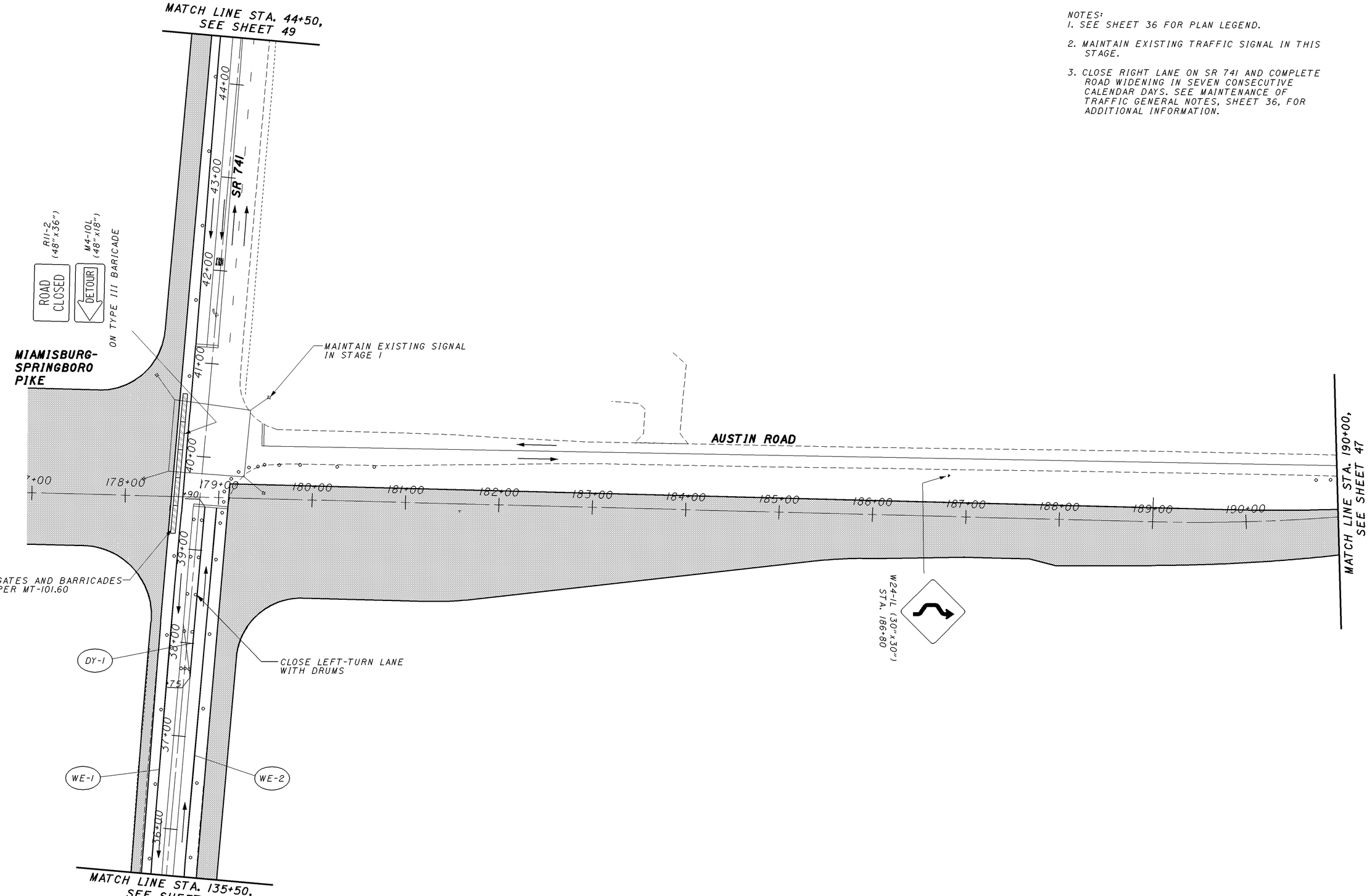

NOTES:
1. SEE SHEET 36 FOR PLAN LEGEND.

2. MAINTAIN EXISTING TRAFFIC SIGNAL IN THIS STAGE.

3. CLOSE RIGHT LANE ON SR 741 AND COMPLETE ROAD WIDENING IN SEVEN CONSECUTIVE CALENDAR DAYS. SEE MAINTENANCE OF TRAFFIC GENERAL NOTES, SHEET 36, FOR ADDITIONAL INFORMATION.

N

0 50 100
HORIZONTAL SCALE IN FEET

CALCULATED BJP
CHECKED MJH

MAINTENANCE OF TRAFFIC - STAGE 1
AUSTIN ROAD / SR 741

MOT-75-0.75

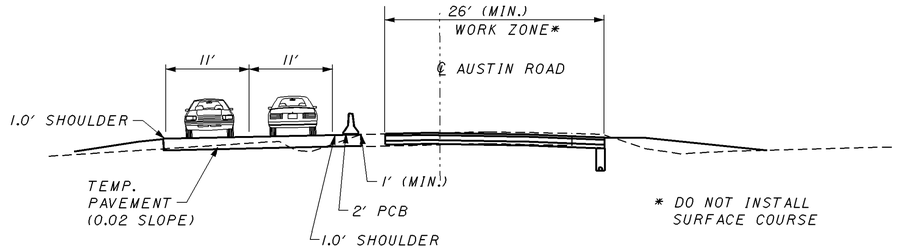

SECTION E-E

NOTES:
1. SEE SHEET 36 FOR PLAN LEGEND.

2. CONSTRUCT TEMPORARY PAVEMENT PRIOR TO STAGE 1 USING ONE-LANE, TWO-WAY OPERATIONS, PER MT-97.10. SEE GENERAL NOTES FOR RESTRICTED HOURS.

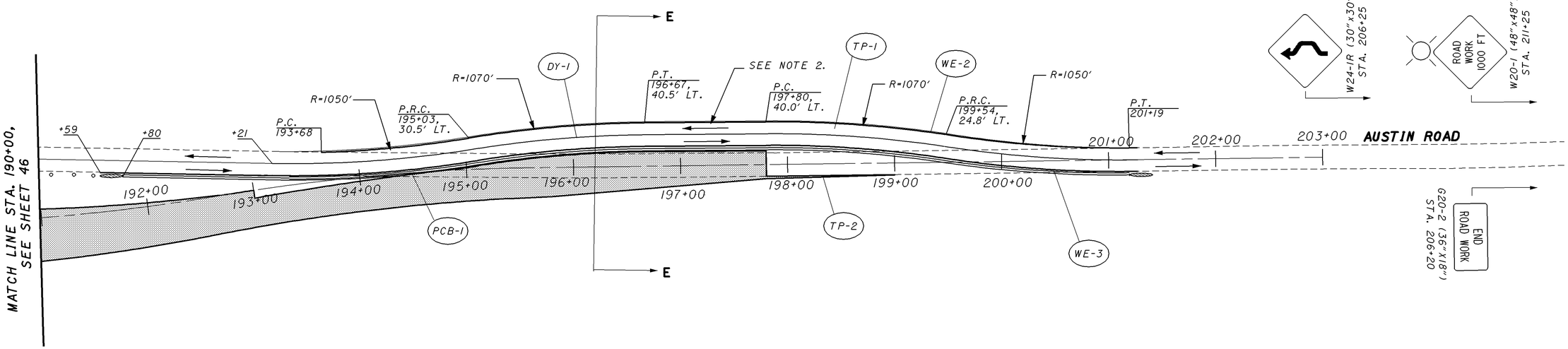

HORIZONTAL SCALE IN FEET
0 50 100

CALCULATED BJP
CHECKED MJH

MAINTENANCE OF TRAFFIC - STAGE 1
AUSTIN ROAD

MOT-75-0.75

NOTES:
1. SEE SHEET 36 FOR PLAN LEGEND.

HORIZONTAL SCALE IN FEET
0 50 100

CALCULATED BJP
CHECKED MJH

MAINTENANCE OF TRAFFIC - STAGE 1 SR 741

MOT-75-0.75

NOTES:
1. SEE SHEET 36 FOR PLAN LEGEND.

2. CLOSE RIGHT LANE ON SR 741 AND COMPLETE ROAD WIDENING IN SEVEN CONSECUTIVE CALENDAR DAYS.

HORIZONTAL SCALE IN FEET
0 50 100

CALCULATED BJP
CHECKED MJH

OFFICE OF TRAFFIC - STAGE 1
SR 741

MAINTENANCE

MOT-75-0.75

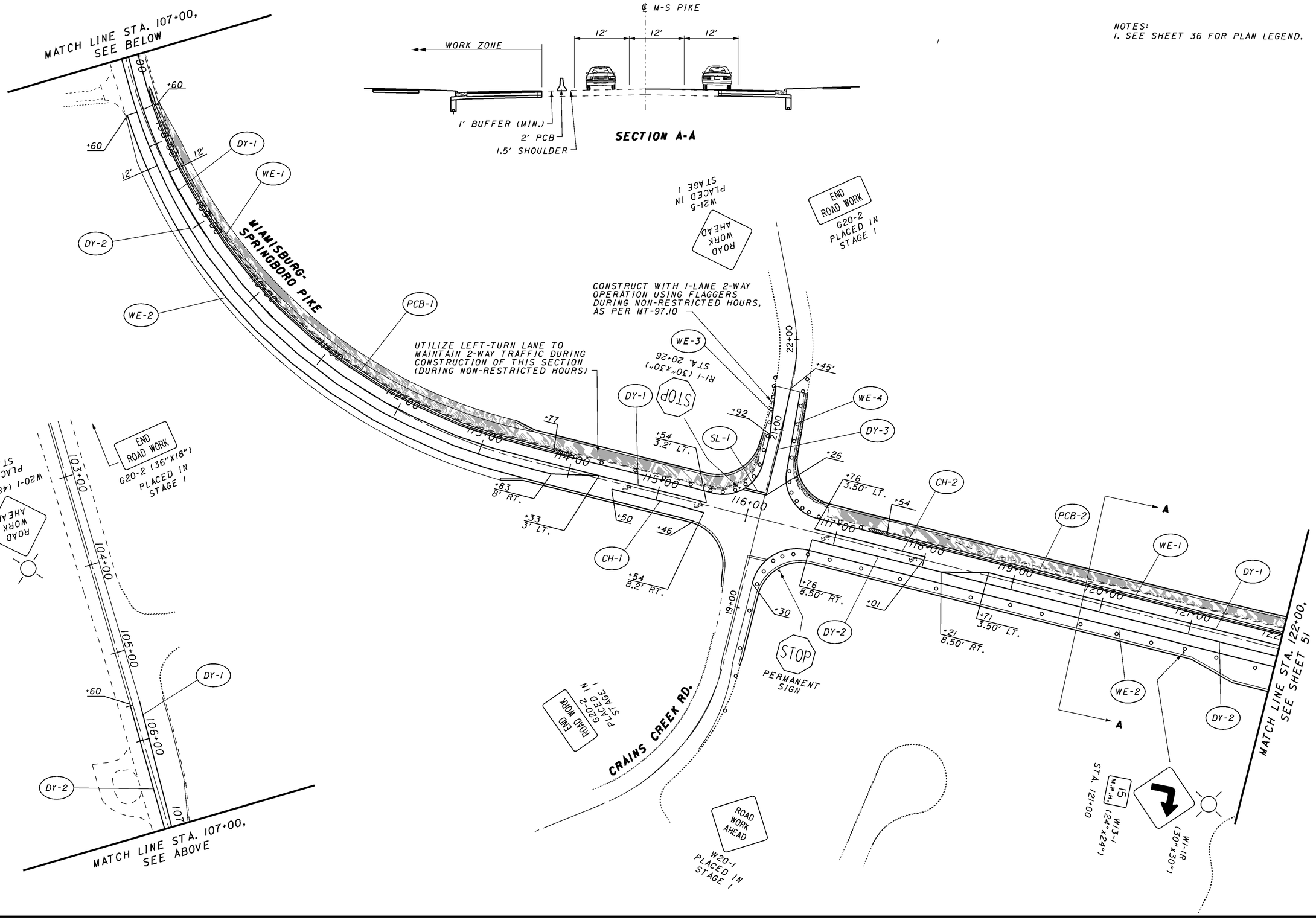

MAINTENANCE OF TRAFFIC - STAGE 2
MIAMISBURG-SPRINGBORO PIKE

MOT-75-0.75

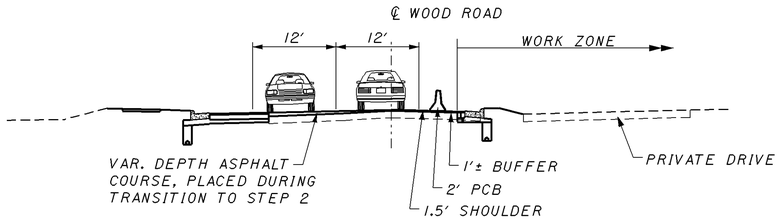

SECTION B-B

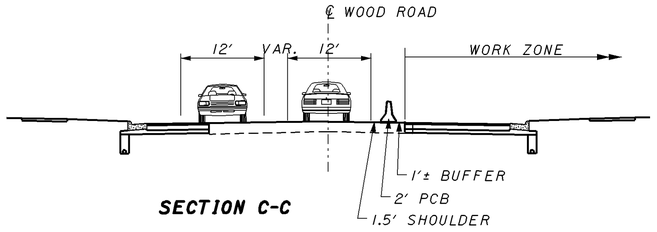

SECTION C-C

NOTES:
1. SEE SHEET 36 FOR PLAN LEGEND.

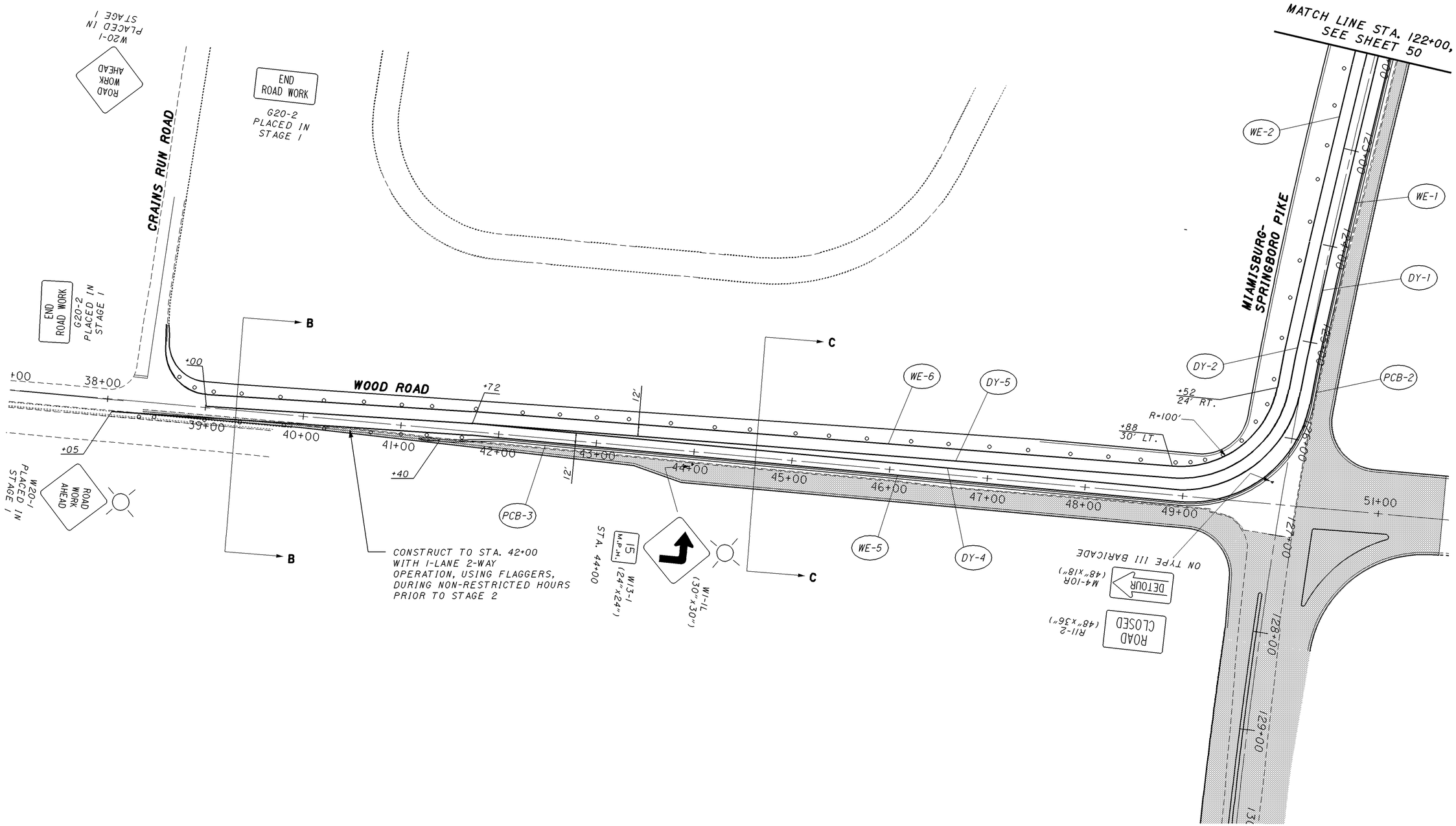

HORIZONTAL SCALE IN FEET
0 50 100

CALCULATED BJP
CHECKED MJH

MAINTENANCE OF TRAFFIC - STAGE 2
WOOD ROAD

MOT-75-0.75

51
773

mp-p2-03.dgn 24-MAR-2008

NOTES:
1. SEE SHEET 36 FOR PLAN LEGEND.

2. SEE SHEET 57 FOR TEMPORARY TRAFFIC SIGNAL PLAN.

END ROAD WORK
G20-2
PLACED IN STAGE 1

W20-1 (48"X48")
STA. 52+00

ROAD WORK AHEAD

CLOSE RIGHT LANE AND CONSTRUCT PAVEMENT IN 7 CONSECUTIVE CALENDAR DAYS.

REMOVE EXISTING SIGANAL. SEE NOTE 2.

MIAMISBURG-SPRINGBORO PIKE

SR 741

WE-2 DY-1 LL-1 CH-2 SL-2 SL-3 CH-3 DY-3 WE-3 DY-2 WE-4 SL-1 CH-1 WE-1

R-50' (TYP.)

R-325'

R-310'

AUSTIN ROAD

MATCH LINE STA. 190+00, SEE SHEET 53

R11-2 (48"x36")
M4-10L (48"x18")
ROAD CLOSED
DETOUR
ON TYPE III BARICADE

CLOSE LEFT-TURN LANE WITH DRUMS

R4-8 (24"x30") STA. 179+30

R4-8 (24"x30") STA. 181+67

W1-4R (30"x30") STA. 184+50

RIGHT LANE MUST TURN RIGHT
R3-7 (24"x24")
STA. 31+00

ROAD WORK AHEAD
W20-1 (48"X48")
STA. 26+00

END ROAD WORK
G20-2
PLACED IN STAGE 1

HORIZONTAL SCALE IN FEET
0 50 100

CALCULATED BJP
CHECKED MJH

MAINTENANCE OF TRAFFIC - STAGE 2
AUSTIN ROAD / SR 741

MOT-75-0.75

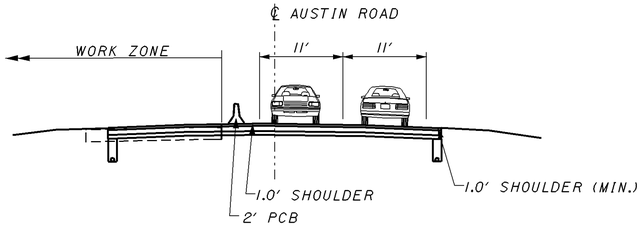

SECTION E-E

NOTES:
1. SEE SHEET 36 FOR PLAN LEGEND.

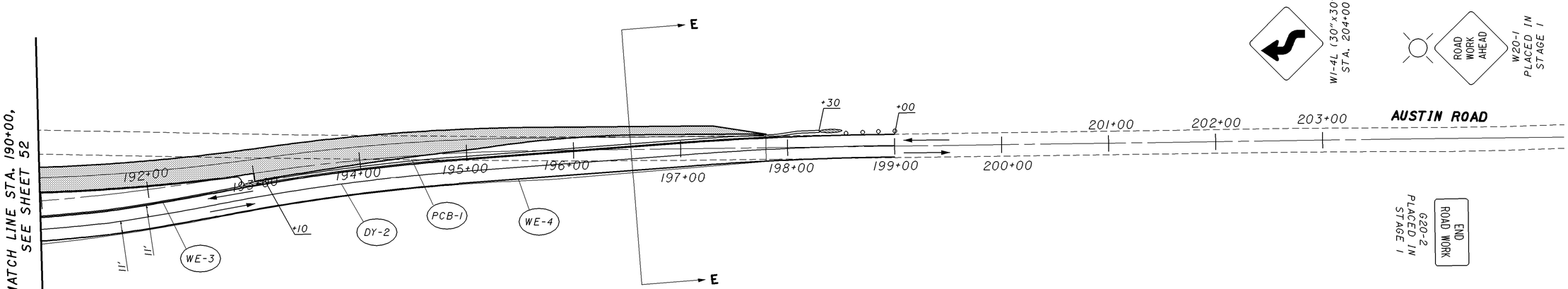

HORIZONTAL SCALE IN FEET
0 50 100

CALCULATED BJP
CHECKED MJH

MAINTENANCE OF TRAFFIC - STAGE 2
AUSTIN ROAD

MOT-75-0.75

NOTES:

1. MIAMISBURG-SPRINGBORO PIKE AND BYERS ROAD SHALL BE CLOSED WITH TYPE III BARRICADES, AS SHOWN IN THE OMUTCD, FIGURE 6H-8 (TA-8).

2. THE CONTRACTOR SHALL CONTACT THE MONTGOMERY COUNTY ENGINEER'S OFFICE 21 DAYS PRIOR TO THE SCHEDULED ROAD CLOSING TO ALLOW FOR THE MONTGOMERY COUNTY COMMISSIONERS TO PASS A ROAD CLOSURE RESOLUTION.

3. THE CONTRACTOR IS TO MODIFY THE TRAFFIC SIGNAL TIMINGS AS NECESSARY FOR THE EASTBOUND PHASE AT PENNYROYAL ROAD, AS DIRECTED BY THE ENGINEER. THE SIGNAL PHASING AT SR 741 & AUSTIN PIKE SHALL BE MODIFIED TO OMIT THE EXISTING NB LEFT TURN PHASE, WHEN THE DETOUR IS IN EFFECT.

4. THE CONTRACTOR IS RESPONSIBLE FOR POT HOLE REPAIR ALONG ALL SIGNED DETOUR ROUTES, AS DIRECTED BY THE ENGINEER.

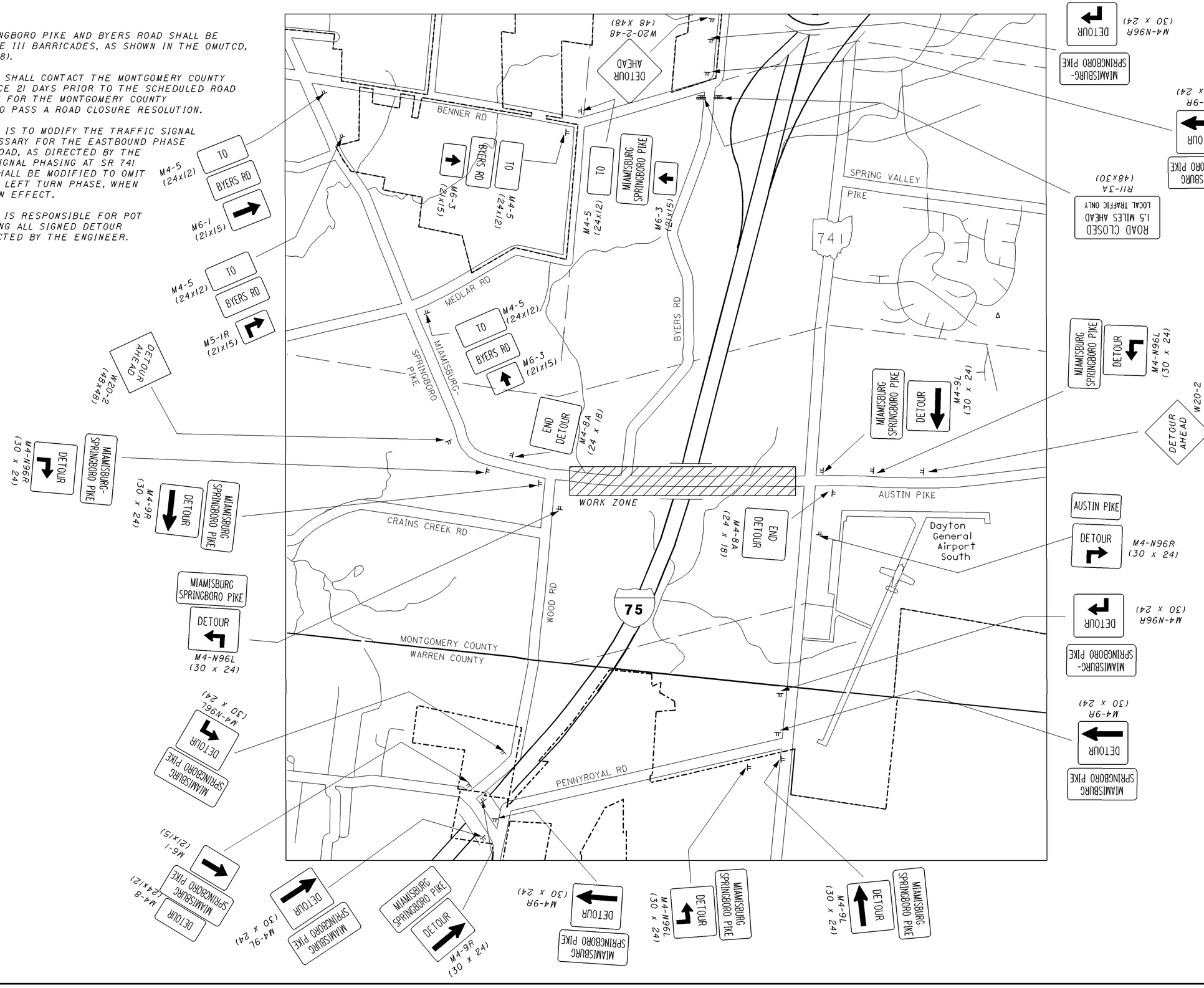

CALCULATED BJP
REVIEWED MJH

MIAMISBURG-SPRINGBORO PIKE
DETOUR PLAN

MOT-75-0.75

GENERAL NOTES

1. It is intended that this drawing be used for treatment of drop-offs that develop during construction operations, and that are not otherwise provided for in the construction plans. The suggested treatments are intended for high volume projects that will last at least seven days and have an active work zone 1 mile [1.6 km] or less in length. For guidance on the use of this sheet, see L&D Manual Volume One, Section 500. Where the plans do not provide specific items for labor, equipment, or materials to implement the drop-off treatments specified hereon, they shall be included for payment in the lump sum bid for Item 614 - Maintaining Traffic.

2. While the need for certain advisory signing is noted hereon, it is not intended that this be indicative of all signing that may be required to advise or warn motorists, and all requirements of the Ohio Manual of Uniform Traffic Control Devices (OMUTCD) must be fulfilled.

3. In urban or otherwise heavily developed areas where pedestrians and/or bicyclists may be present in significant numbers, additional signing and protective measures other than those shown hereon may be required.

4. The drop-off treatment selected for use at any given location shall be as appropriate for the prevailing conditions at the site.

5. Where concrete barrier is specified, it shall be in accordance with Standard Construction Drawing RM-4.2 and Item 622.

6. When drums are specified for a drop-off condition, a minimum number of four drums shall be used. Spacing shall be as indicated in the plans or as specified in the OMUTCD.

7. When W8-9 (Low Shoulder) signs or W8-9a (Shoulder Drop-Off) signs or W8-11 (Uneven Lanes) signs are required, they shall be placed 750 feet [230 m] in advance of the condition, on all intersecting entrance ramps within the limits of the condition and immediately beyond all inter secting roadways within the limits of the condition. When the drop-off condition extends more than 0.5 mile [800 m], additional signs should be erected at intervals of 1.0 mile [1600 m] or less.

8. For locations, such as at ramps, lane shifts, lane closures, etc., where traffic is required to negotiate a difference in elevation between pavements, a 3:1 slope treatment similar to the Optional Wedge Treatment shall be provided.

9. Portable concrete barrier shall be placed on the same level as the traffic surface and shall not encroach on lane width(s) designated as the minimum required for traffic use. Where drums are used, and their presence would reduce traveled lane widths to less than 10 feet [3.0 m], drums may be placed on the opposite level from that of traffic provided the dropoff depth does not exceed 5 inches [125] and approval is granted by the Project Engineer.

10. Pavement Repairs (or similar work):

    a. Lengths greater than 60 feet [18 m] - utilize appropriate treatment from Condition I.

    b. Lengths of 60 feet [18 m] or less - repairs shall be effected in accordance with CMS 255.08. Drums may be used as a separtor adjacent to the traveled lane.

OPTIONAL WEDGE TREATMENT

(MILLING OR RESURFACING)

1. This treatment may be used when permitted for Condition I only.

2. W8-11 sign required.

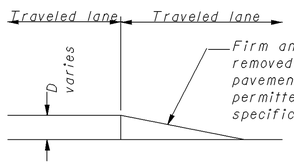

CONDITION I

DROP-OFFS BETWEEN TRAVELED LANES

1. These treatments are to be used for resurfacing, pavement planing, excavation, etc. between or within traveled lanes.

D - inches (mm)	Treatment
<1-1/2 [<40]	Erect W8-11 sign.
1-1/2 - 3 [40-75]	1) Lane closure utilizing drums* as shown below OR 2) Optional Wedge Treatment
> 3 - 5 [>75-125]	Lane closure utilizing drums as shown below.
> 5 [>125]	Lane closure utilizing portable concrete barrier as shown below.

* Cones may be used for daytime only conditions.

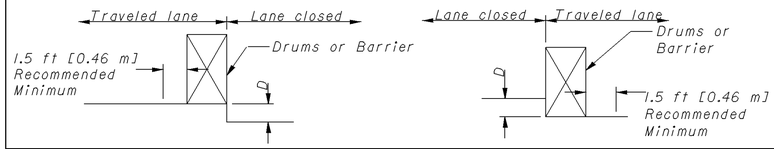

CONDITION II

DROP-OFFS WITHIN GRADED SHOULDER AREA

1. The treatments indicated below are for use in conjunction with resurfacing, planing, or excavations within the graded shoulder area.
2. The graded shoulder area is that flat or gradually sloping area between the edge of a normally traveled lane and the more steeply sloping ditch foreslope or embankment slope. Its surface may be soil or turf, and/or it may be inclusive of a "treated" area (improved with aggregates, asphaltic materials or concrete). For the purpose herein, its maximum width shall be considered to be 12 feet [3.6 m].

D - inches (mm)	Treatment
< 1-1/2 [<40]	1) Erect W8-9a signs.
> 1-1/2 - 5 [>40-125]	1) If minimum lane width* requirements can be met, maintain lanes utilizing drums as shown below OR 2) If minimum. lane width* requirements cannot be met, close adjacent lane utilizing drums OR 3) Optional Shoulder Treatment.
> 5 -12 [125-305] Daylight only	If minimum lane width* requirements can be met, maintain lanes utilizing drums as shown below.
> 5 - 24 [>125-610]	1) If minimum lane width* requirements can be met, maintain lanes utilizing portable concrete barrier as shown below. OR 2) If minimum lane width* requirements cannot be met, close adjacent lane utilizing drums.
> 24 [> 610]	Lane closure utilizing portable concrete barrier as shown below.

* Minimum lane widths shall be 10 ft [3.0 m] unless otherwise specified in the plans.

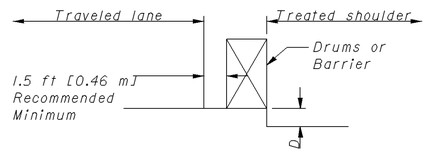

OPTIONAL SHOULDER TREATMENT

1. This treatment may not be used within a bitumunos shoulder where a hot longitudnal joint per CMS 401.15 is required.

2. W8-9 signs required.

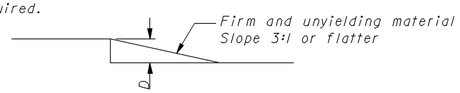

CONDITION III

DROP-OFFS BEYOND GRADED SHOULDER OR BACK OF CURB

1. See Note 2 under Condition II.
2. Use Chart A or B below, as applicable.

CHART A

USE FOR:
1. Uncurbed Facilities
2. Curbed Facilities, where:
a. Curbs are less than 6 inch [150] in height
b. Curbs are 6 inch [150] or greater in height and the legal speed is greater than 40 mph [70 km/hr].

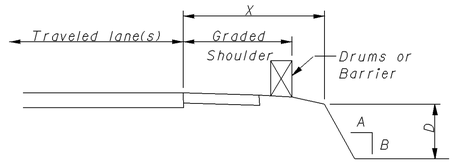

X feet (m)	D inch (mm)	A/B	Treatment Required	
			Day	Night
0 - 4 [0 - 1.2]	Any	Any	(a)	(a)
4 - 30 [1.2 - 9.1]	Any	3:1 or Flatter	None	None
4 - 12 [1.2 - 3.6]	< 3 [< 75]	Steeper than 3:1	None	None
4 - 12 [1.2 - 3.6]	> 3 - < 12 [> 75 - < 305]	Steeper than 3:1	Drums	Drums
4 - 12 [1.2 - 3.6]	> 12 [> 305]	Steeper than 3:1	Drums	Barrier
> 12 - 20 [> 3.6 - 6.1]	< 12 [< 305]	Steeper than 3:1	None	None
> 12 - 20 [> 3.6 - 6.1]	> 12 - 24 [> 305 - < 610]	Steeper than 3:1	Drums	Drums
> 12 - 20 [> 3.6 - 6.1]	> 24 [> 610]	Steeper than 3:1	Drums	Barrier
> 20 - 30 [> 6.1 - 9.1]	< 24 [< 610]	Steeper than 3:1	None	None
> 20 - 30 [> 6.1 - 9.1]	> 24 [> 610]	Steeper than 3:1	Drums	Barrier
> 30 [> 9.1 m]	Any	Any	None	None
(a) Use treatment specified under Condition II.				

CHART B

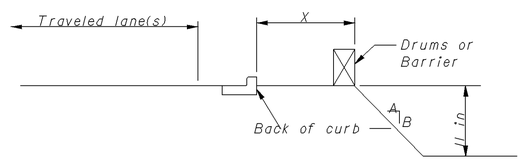

X feet (m)	D inch (mm)	A/B	Treatment Required	
			Day	Night
0 - 10 [0-3.0 m]	< 12 [< 305]	Any	None	Drums
0 - 10 [0-3.0 m]	> 12 [> 305]	Any	Drums	Drums
> 10 [> 3.0 m]	Any	Any	None	None

CALCULATED BJP
REVIEWED MJH

MIAMISBURG-SPRINGBORO PIKE
WORKZONE DROPOFF CRITERIA

MOT-75-0.75

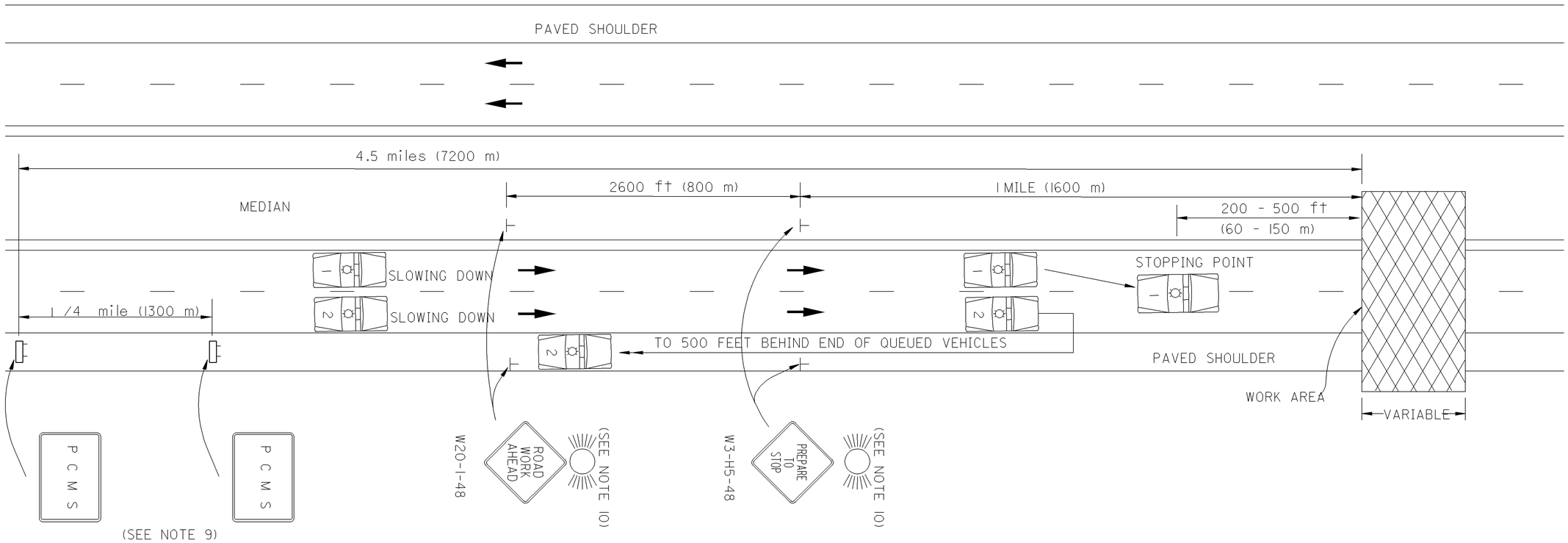

1. This type of highway closure shall be used for all construction, maintenance and utility operations when the duration of closure will not exceed 15 minutes.

2. A minimum of two Law Enforement Officers (LEO) with patrol cars per direction shall be provided to block traffic and pace motorists to a stop. The number of patrol cars shall equal the number of lanes closed on the highway.

3. Patrol cars, with lights flashing, should enter the stream of traffic at approximately three (3) miles before the point of closure. At approximately two (2) miles before the point of closure, they should begin the gradual slow down. Traffic shall be brought to a complete stop a safe distance, between 200 feet and 500 feet (60 and 150 m), from the work area. This slowing operation shall take no more than ten (10) minutes. After traffic has been stopped, one patrol car shall travel along the roadway shoulder 500 feet (150 m) behind the end of the queued vehicles.

4. The contractor shall not begin work until traffic has been brought to a complete stop.

5. All entrance ramps located between the stopped traffic and the work area shall be closed.

6. After the highway has been closed and reopened via this procedure, both of the following requirements shall have been met before implementation of another short duration closure, except with the approval of the engineer:
   A. A minimum period of 15 minutes shall have elapsed
   B. The queued traffic shall have dissipated

7. The time frame for stopping traffic shall be specified in the plans or by the District District Deputy Director.

8. The public shall be given advance notice of the upcomming closure by providing Portable Changeable Message signs at the site at least one week in advance of the scheduled closing. Closure information should also be provided through the news media.

9. Two ODOT approved Portable Changeable Message Signs, Class 1, shall be provided. The first message sign shall be placed at approximately 4.5 miles in advance of the closure or as directed by the engineer. The second message sign shall be placed at approximately one quarter mile beyond the first message sign. The first message sign shall read ROAD CLOSED AHEAD (0.8 sec.), PREPARE TO STOP (0.8 sec.), (Black screen for 0.3 sec.) The second message sign shall read ROAD CLOSED AHEAD (0.8 sec.), "EXPECT 30 MIN. DELAY" (0.8 sec.), (Black screen for 0.3 sec.)

10. The contractor shall erect and maintian 48 inch "ROAD WORK AHEAD" and "PREPARE TO STOP" signs on each side of the highway. During night operations, each sign shall be illuminated with one (1) Type A flashing warning light or two (2) flares. The flares shall be replaced if if they burn out.

CALCULATED BJP
REVIEWED MJH

MIAMISBURG-SPRINGBORO PIKE
SHORT TERM FREEWAY CLOSURE

MOT-75-0.75

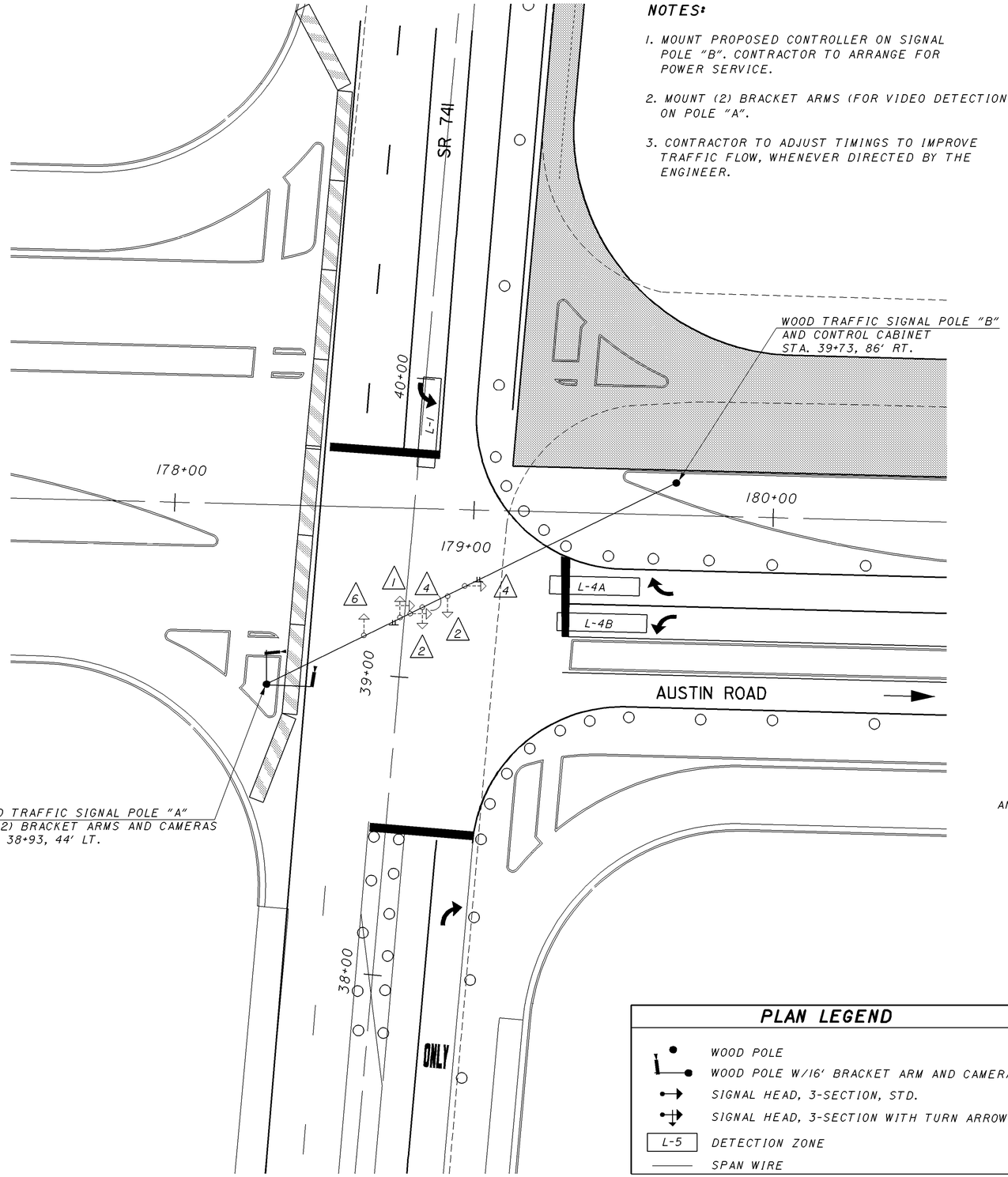

NOTES:

1. MOUNT PROPOSED CONTROLLER ON SIGNAL POLE "B". CONTRACTOR TO ARRANGE FOR POWER SERVICE.
2. MOUNT (2) BRACKET ARMS (FOR VIDEO DETECTION) ON POLE "A".
3. CONTRACTOR TO ADJUST TIMINGS TO IMPROVE TRAFFIC FLOW, WHENEVER DIRECTED BY THE ENGINEER.

VEHICLE DETECTION ZONE SUMMARY

LOOP	LOCATION	DETECTION ZONE DIMENSIONS	CONNECT TO PHASE	PRESENCE/ PULSE	LOCK/ NON-LOCK	CAMERA
L1	STA. 39+71	6' X 35'	ϕ1	PRESENCE	NON-LOCK	1
L4A	48' RT.	6' X 35'	ϕ4	PRESENCE	NON-LOCK	2
L4B	50' RT.	6' X 35'	ϕ4	PRESENCE	NON-LOCK	2

SIGNAL TIMING IN SECONDS

TIMING INTERVAL	ϕ1	ϕ2 +ϕ6	ϕ4
MINIMUM GREEN	7.0	15.0	7.0
MINIMUM EXTENSION	3.0	-	3.0
MAX GREEN 1	15.0	40.0	15.0
MAX GREEN 2	15.0	40.0	15.0
VEHICLE CLEAR	4.0	4.5	4.5
ALL RED	2.0	1.5	2.0
RECALL	-	MIN	-
MEMORY	NON LOCK	NON LOCK	NON LOCK

WIRING DIAGRAM

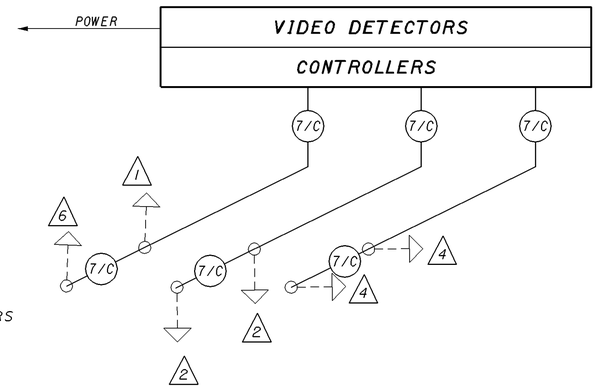

SIGNAL INDICATIONS

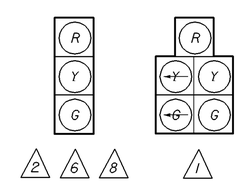

ALL LENSES SHALL BE 12" AND EQUIPPED WITH TUNNEL VISORS

PHASE DIAGRAM

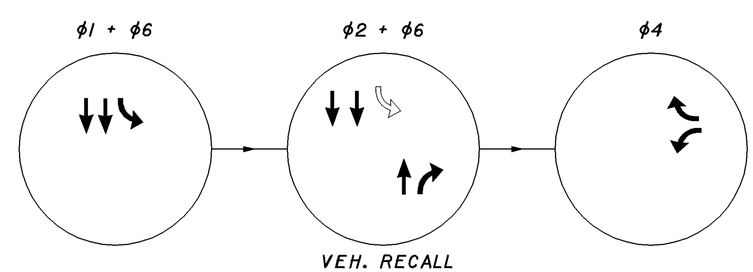

PLAN LEGEND

- WOOD POLE
- WOOD POLE W/16' BRACKET ARM AND CAMERA
- SIGNAL HEAD, 3-SECTION, STD.
- SIGNAL HEAD, 3-SECTION WITH TURN ARROW
- L-5 DETECTION ZONE
- SPAN WIRE

N

HORIZONTAL SCALE IN FEET 0 20 40

CALCULATED MJH CHECKED CS

MAINTENANCE OF TRAFFIC - STAGE 2
AUSTIN ROAD - TEMPORARY SIGNAL

MOT-75-0.75

SHEET NUMBER																									PARTICIPATION				ITEM	ITEM EXT.	GRAND TOTAL	UNIT	DESCRIPTION	SEE SHEET NO.
23	64	65	66	67	68	69	70	110	118	137	156	160	181	194	282	293	296	308	318	319	320	321	428	OFFICE CALCS	IR	ENHANCE-MENTS MPO/LOCAL	CFI/MPO/LOCAL	EARMARK/LOCAL						
																																	ROADWAY	
																									LUMP				201	11000	LUMP		CLEARING AND GRUBBING	
		9	1																						4			6	202	20010	10	EACH	HEADWALL REMOVED	
	22,117	30,160																							24,644			27,633	202	23010	52,277	SQ YD	PAVEMENT REMOVED, ASPHALT	
	3,962	180																							4,142			0	202	30000	4,142	SQ FT	WALK REMOVED	
	9																								9			0	202	30200	9	FT	STEPS REMOVED	
	2,754		1,742																						2,754			1,742	202	32500	4,496	FT	CURB AND GUTTER REMOVED	
			17																						0			17	202	32700	17	SQ YD	GUTTER REMOVED	
	25																								25			0	202	32800	25	SQ YD	CONCRETE SLOPE PROTECTION REMOVED	
	1,055		1,513	8,643																					1,636			9,575	202	35100	11,211	FT	PIPE REMOVED, 24" AND UNDER	
				922																					310			612	202	35200	922	FT	PIPE REMOVED, OVER 24"	
	153			2,758			178.5																		2,482.5			607.0	202	38101	3,089.5	FT	GUARDRAIL REMOVED FOR STORAGE, AS PER PLAN	26
				20			2																		15			7	202	42509	22	EACH	ANCHOR ASSEMBLY REMOVED FOR STORAGE, AS PER PLAN	26
	11																								11			0	SPECIAL	20252990	11	EACH	PARKING BLOCK REMOVED	
					3																				3			0	202	53100	3	EACH	MAILBOX REMOVED	
	2			12	1																				4			11	202	58000	15	EACH	MANHOLE REMOVED	
			7																						0			7	202	58100	7	EACH	CATCH BASIN REMOVED	
					3																				0			3	202	60010	3	EACH	MONUMENT ASSEMBLY REMOVED	
	2																								2			0	202	62700	2	EACH	SEPTIC TANK REMOVED	
	3				2																				4			1	SPECIAL	20266000	5	EACH	DRILLED WATER WELL ABANDONED	24
	15																								15			0	SPECIAL	20270000	15	FT	FILL AND PLUG EXISTING CONDUIT	403
	8,935				669																				9,345			259	202	75000	9,604	FT	FENCE REMOVED	
					2,112																				0			2,112	202	75200	2,112	FT	FENCE REMOVED FOR REUSE	
					1																				0			1	202	75250	1	EACH	GATE REMOVED	
					1																				0			1	202	75254	1	EACH	GATE REMOVED FOR REUSE	
	9			18																					9			18	202	75610	27	EACH	VALVE BOX REMOVED	
				LUMP																					LUMP				202	98000	LUMP		REMOVAL MISC: BILLBOARD SIGN APPURTENACES	
				LUMP																					LUMP				202	98000	LUMP		REMOVAL MISC: COMMERCIAL SIGN WITH STONE FOUNDATION	
				LUMP																					LUMP				202	98000	LUMP		REMOVAL MISC: COMMERCIAL BRICK SIGN AND LANDSCAPING	
				1																					0			1	202	98100	1	EACH	REMOVAL MISC: COMMERCIAL SIGN	
				83																					0			83	202	98200	83	FT	REMOVAL MISC: DECORATIVE LANDSCAPING WALL	
								3,681	101	4,326	9,503	818	22,063	26,474	30,953	9,634	792	4,589	1,639	1,973	2,492	2,324	44		74,748	8,428	0	38,230	203	10000	121,406	CU YD	EXCAVATION	
								61,865	45	54,398	13,675	81	9,404	441	178,373	771	84	1,101					224		184,726			135,736	203	20000	320,462	CU YD	EMBANKMENT	
																								149,561	62,954	11,064	37,613	37,930	204	10000	149,561	SQ YD	SUBGRADE COMPACTION	
								713			70	462	1,114	2,009	7,760	4,346									6,308			10,166	204	13000	16,474	CU YD	EXCAVATION OF SUBGRADE	
								1,008			71	464	1,237	2,039	3,311	4,346									5,647			6,829	204	30010	12,476	CU YD	GRANULAR MATERIAL, TYPE B	
49																									22			27	204	45000	49	HOUR	PROOF ROLLING	
								2,577			133	1,271	2,867	2,828	20,336	4,856									14,760			20,108	204	50000	34,868	SQ YD	GEOTEXTILE FABRIC	
20																									0			20	604	38500	20	EACH	MONUMENT ASSEMBLY	
						100	1,038																		1,138			0	606	13000	1,138	FT	GUARDRAIL, TYPE 5	
						2	7																		9			0	606	22010	9	EACH	ANCHOR ASSEMBLY, TYPE E-98	
						1	7																		8			0	606	26500	8	EACH	ANCHOR ASSEMBLY, TYPE T	
						2																			2			0	606	35000	2	EACH	BRIDGE TERMINAL ASSEMBLY, TYPE 1	
						1																			1			0	606	35100	1	EACH	BRIDGE TERMINAL ASSEMBLY, TYPE 2	
	5,822					2,260																			8,082			0	607	15000	8,082	FT	FENCE, TYPE 47	
																								52,271	11,546	0	8,584	32,141	608	10000	52,271	SQ FT	4" CONCRETE WALK	
																								10	4	0	0	6	608	52110	10	EACH	CURB RAMP, TYPE A1	
																								15	9	0	4	2	608	52120	15	EACH	CURB RAMP, TYPE A2	
																								3	0	0	0	3	608	52130	3	EACH	CURB RAMP, TYPE B1	
																			1,639	1,973	2,492	2,324			0	8,428	0	0	653	10000	8,428	CU YD	TOPSOIL FURNISHED AND PLACED	

CALCULATED MAG CHECKED AJS

GENERAL SUMMARY

MOT-75-0.75

SHEET NUMBER																								PARTICIPATION		ITEM	ITEM	GRAND	UNIT	DESCRIPTION	SEE SHEET NO.
23	24	25	71	72	73	74	75	76	77	78	79	80	81	364	366	367	368	369	371	381	382	383	385	392	IR	EARMARK /LOCAL		EXT.	TOTAL			
																															EROSION CONTROL	
								2						36						4	4				44	2	601	11000	46	SQ YD	RIPRAP USING 6" REINFORCED CONCRETE SLAB	
																			230				80		0	310	601	32104	310	CU YD	ROCK CHANNEL PROTECTION, TYPE B WITH FABRIC FILTER	
5				1,111	58	21	14	5						62	7	4	3	4	152	7	5	11		23	1,285	207	601	32204	1,492	CU YD	ROCK CHANNEL PROTECTION, TYPE C WITH FABRIC FILTER	
	3																								2	1	659	00100	3	EACH	SOIL ANALYSIS TEST	
	28,335																								14,876	13,459	659	00300	28,335	CU YD	TOPSOIL	
	233,856																								122,774	111,082	659	10000	233,856	SQ YD	SEEDING AND MULCHING	
	11,693																								6,139	5,554	659	14000	11,693	SQ YD	REPAIR SEEDING AND MULCHING	
	11,693																								6,139	5,554	659	15000	11,693	SQ YD	INTER-SEEDING	
	36																								19	17	659	20000	36	TON	COMMERCIAL FERTILIZER	
	53																								28	25	659	31000	53	ACRES	LIME	
	2,010																								1,055	955	659	35000	2,010	M GAL	WATER	
	527																								277	250	659	40000	527	M SQ FT	MOWING	
			202	250	53																				452	53	660	20000	505	SQ YD	SODDING REINFORCED	
			7,178	2,996	1,045																				8,009	3,210	670	00700	11,219	SQ YD	DITCH EROSION PROTECTION	
																									LUMP		832	15000	LUMP		STORM WATER POLLUTION PREVENTION PLAN	
																									447,000		832	30000	447,000	EACH	EROSION CONTROL	
			5,798	3,868																					7,138	2,528	836	10000	9,666	SQ YD	SEEDING AND EROSION CONTROL WITH TURF REINFORCED MAT, TYPE I	
				56																					0	56	838	20701	56	CU YD	GABIONS, AS PER PLAN	403
																															DRAINAGE	
														LUMP											LUMP	0	503	11100	LUMP		COFFERDAMS, CRIBS, AND SETTINGS	
														LUMP											LUMP	0	503	21300	LUMP		UNCLASSIFIED EXCAVATION	
														18											18	0	511	46600	18	CU YD	CLASS C CONCRETE, HEADWALL	
														59											59	0	512	10100	59	SQ YD	SEALING OF CONCRETE SURFACES (EPOXY-URETHANE)	
														LUMP											LUMP	0	518	21230	LUMP		POROUS BACKFILL WITH FILTER FABRIC	
						3	4	2							1	1	1	1		2	2	2		1	10	10	602	20000	20	CU YD	CONCRETE MASONRY	
									470	570	363	342	326												833	1,238	603	00510	2,071	FT	6" CONDUIT, TYPE F FOR UNDERDRAIN OUTLET	
100		50							473	12		56	242												548	385	603	00900	933	FT	6" CONDUIT, TYPE B	
		50																							25	25	603	01100	50	FT	6" CONDUIT, TYPE C	
50		50																							50	50	603	01400	100	FT	6" CONDUIT, TYPE E	
50																									25	25	603	01500	50	FT	6" CONDUIT, TYPE F	
									72																72	0	603	02600	72	FT	8" CONDUIT, TYPE F	
									9																9	0	603	03700	9	FT	10" CONDUIT, TYPE F	
						3,007	3,771	236																	1,812	5,202	603	04400	7,014	FT	12" CONDUIT, TYPE B	
						513	149	243																	334	571	603	04600	905	FT	12" CONDUIT, TYPE C	
							40																		0	40	603	04900	40	FT	12" CONDUIT, TYPE D	
						1,115	582	74																	296	1,475	603	05900	1,771	FT	15" CONDUIT, TYPE B	
						600	139	309																	9	1,039	603	06100	1,048	FT	15" CONDUIT, TYPE C	
						226	438	42																	199	507	603	07400	706	FT	18" CONDUIT, TYPE B	
						70	98																		36	132	603	07600	168	FT	18" CONDUIT, TYPE C	
						72	109																		53	128	603	08900	181	FT	21" CONDUIT, TYPE B	
						91	98	34																	56	167	603	09100	223	FT	21" CONDUIT, TYPE C	
																		113							113	0	603	10201	113	FT	24" CONDUIT, TYPE A, 706.02, AS PER PLAN	369
						30	262																		30	262	603	10400	292	FT	24" CONDUIT, TYPE B	
						6																			6	0	603	10600	6	FT	24" CONDUIT, TYPE C	
							112																		0	112	603	10900	112	FT	24" CONDUIT, TYPE D	
															122		128								250	0	603	13201	250	FT	30" CONDUIT, TYPE A, 706.02, AS PER PLAN A	366, 368
																98									98	0	603	13201	98	FT	30" CONDUIT, TYPE A, 706.02, AS PER PLAN B	367
						265																			265	0	603	13600	265	FT	30" CONDUIT, TYPE C	
								48																	0	48	603	15400	48	FT	33" CONDUIT, TYPE D	

CALCULATED MAG CHECKED AJS

GENERAL SUMMARY

MOT-75-0.75

23	74	75	76	77	78	79	80	81	364	371	381	382	383	385	392	OFFICE CALCS	PARTICIPATION IR	PARTICIPATION ENHANCE-MENTS MPO/LOCAL	PARTICIPATION CFI/MPO/ LOCAL	PARTICIPATION EARMARK/ LOCAL	ITEM	ITEM EXT.	GRAND TOTAL	UNIT	DESCRIPTION	SEE SHEET NO.
																									DRAINAGE (CONTINUED)	
															233		0			233	603	16200	233	FT	36" CONDUIT, TYPE A, 706.02	
												294	310				604			0	603	19201	604	FT	42" CONDUIT, TYPE A, 706.02, AS PER PLAN	382, 383
									50								50			0	603	23600	50	FT	60" CONDUIT, TYPE A, 706.02	
									25								25			0	603	28000	25	FT	84" CONDUIT, TYPE A, 706.02	
											197						97			100	603	53000	197	FT	38" X 60" CONDUIT, TYPE A, 706.04	
														221			0			221	603	96441	221	FT	16' X 6' CONDUIT, TYPE A, 706.05, AS PER PLAN	386
	5	7															3			9	604	00400	12	EACH	CATCH BASIN, NO. 3	
		5															1			4	604	00401	5	EACH	CATCH BASIN, NO. 3, AS PER PLAN	27
	32	29	6														19			48	604	00800	67	EACH	CATCH BASIN, NO. 3A	
	6	11	3														0			20	604	00801	20	EACH	CATCH BASIN, NO. 3A, AS PER PLAN	27
			1														0			1	604	01200	1	EACH	CATCH BASIN, NO. 4	
	1		1														1			1	604	01600	2	EACH	CATCH BASIN, NO. 5	
		2	1														0			3	604	04500	3	EACH	CATCH BASIN, NO. 2-2B	
	16	11															10			17	604	31500	27	EACH	MANHOLE, NO. 3	
				26	1			4									26			5	604	36600	31	EACH	PRECAST REINFORCED CONCRETE OUTLET	
				19,097	7,281	5,901	5,388	8,227									24,998			20,896	605	11110	45,894	FT	6" SHALLOW PIPE UNDERDRAINS WITH FABRIC WRAP	
				882	103			200									882			303	605	13410	1,185	FT	6" UNCLASSIFIED PIPE UNDERDRAINS WITH FABRIC WRAP	
				7,460	511	191	1,388	3,319									7,460			5,409	605	14020	12,869	FT	6" BASE PIPE UNDERDRAINS WITH FABRIC WRAP	
									40								40			0	613	41200	40	CU YD	LOW STRENGTH MORTAR BACKFILL	
																									PAVEMENT	
																	14,475	6,514	0	978	6,983	252	01500	14,475	FT	FULL DEPTH PAVEMENT SAWING	
																	2,845	0	0	1,196	1,649	254	01000	2,845	SQ YD	PAVEMENT PLANING, ASPHALT CONCRETE	
10																	15,613	3,529	0	5,849	6,245	301	46000	15,623	CU YD	ASPHALT CONCRETE BASE, PG64-22	
																	107	0	0	82	25	301	48000	107	CU YD	ASPHALT CONCRETE BASE, PG64-22 (DRIVEWAYS)	
21																	9,439	8,280	21	1,159	0	302	46000	9,460	CU YD	ASPHALT CONCRETE BASE, PG64-22	
																	23,611	10,274	1,498	5,997	5,842	304	20000	23,611	CU YD	AGGREGATE BASE	
																	1,863	0	0	516	1,347	407	10000	1,863	GALLON	TACK COAT	
																	4,737	1,941	282	1,078	1,436	407	14000	4,737	GALLON	TACK COAT FOR INTERMEDIATE COURSE	
																	34	0	0	0	34	411	10000	34	CU YD	STABILIZED CRUSHED AGGREGATE	
																	263	0	0	263	0	442	00200	263	CU YD	ASPHALT CONCRETE SURFACE COURSE, 9.5 MM, TYPE A(446)	
																	1,360	1,360	0	0	0	442	10001	1,360	CU YD	ASPHALT CONCRETE SURFACE COURSE, 12.5 MM, TYPE A(446), AS PER PLAN	24
																	310	0	0	310	0	442	10100	310	CU YD	ASPHALT CONCRETE INTERMEDIATE COURSE, 19 MM, TYPE A(446)	
																	1,587	1,587	0	0	0	442	10101	1,587	CU YD	ASPHALT CONCRETE INTERMEDIATE COURSE, 19 MM, TYPE A(446), AS PER PLAN	24
																	4,341	882	392	1,458	1,609	446	46040	4,341	CU YD	ASPHALT CONCRETE INTERMEDIATE COURSE, TYPE 2, PG64-28	
																	3,481	662	0	1,093	1,726	446	50014	3,481	CU YD	ASPHALT CONCRETE SURFACE COURSE, TYPE IH, PG76-22M	
																	848	0	0	0	848	448	46040	848	CU YD	ASPHALT CONCRETE INTERMEDIATE COURSE, TYPE 2, PG64-28	
																	245	0	245	0	0	448	47020	245	CU YD	ASPHALT CONCRETE SURFACE COURSE, TYPE 1, PG64-22	
																	28	0	0	22	6	448	48020	28	CU YD	ASPHALT CONCRETE SURFACE COURSE, TYPE 1, PG64-22 (DRIVEWAYS)	
																	4,425	0	4,425	0	0	451	20000	4,425	SQ YD	REINFORCED CONCRETE PAVMENT, MISC.: 4" ENHANCED CONCRETE PAVEMENT	
																	71	0	0	0	71	452	12000	71	SQ YD	8" NON-REINFORCED CONCRETE PAVEMENT	
																	8,449	8,449	0	0	0	452	13000	8,449	SQ YD	9" NON-REINFORCED CONCRETE PAVEMENT	
																	17,416	4,225	0	3,425	9,766	609	12000	17,416	FT	COMBINATION CURB AND GUTTER, TYPE 2	
																	40	40	0	0	0	609	24510	40	FT	CURB, TYPE 4-C	
																	14,465	3,714	0	6,895	3,856	609	26000	14,465	FT	CURB, TYPE 6	
																	515	0	0	515	0	609	72001	515	SQ YD	CONCRETE MEDIAN, AS PER PLAN	17

CALCULATED MAG CHECKED AJS

GENERAL SUMMARY

MOT-75-0.75

SHEET NUMBER												PARTICIPATION		ITEM	ITEM EXT.	GRAND TOTAL	UNIT	DESCRIPTION	SEE SHEET NO.
		25				82	83	84				IR	EARMARK/ LOCAL						
																		WATER WORK	
						11	2					0	13	638	07800	13	EACH	6" GATE VALVE AND VALVE BOX	
						2						2	0	638	07900	2	EACH	8" GATE VALVE AND VALVE BOX	
						3	3					0	6	638	08100	6	EACH	12" GATE VALVE AND VALVE BOX	
							1					0	1	638	08102	1	EACH	16" GATE VALVE AND VALVE BOX	
						4	2					0	6	638	09800	6	EACH	12" X 12" TAPPING SLEEVE, VALVE AND VALVE BOX	
						11	3					2	12	638	10200	14	EACH	6" FIRE HYDRANT	
						12	2					2	12	638	10480	14	EACH	FIRE HYDRANT REMOVED	
						1	1					0	2	638	10600	2	EACH	FIRE HYDRANT AND GATE VALVE REMOVED AND RESET	
						4	7					0	11	638	10800	11	EACH	VALVE BOX ADJUSTED TO GRADE	
						1						1	0	638	98000	1	EACH	WATER WORK, MISC.: CUT AND PLUG 8" WATER LINE	
						47	10					10	47	SPECIAL	69098100	57	FT	MISC.: 6" WATER MAIN DUCTILE IRON PIPE, MCSED	402
						736						736	0	SPECIAL	69098100	736	FT	MISC.: 8" WATER MAIN DUCTILE IRON PIPE, MCSED	402
						937	1,347					0	2,284	SPECIAL	69098100	2,284	FT	MISC.: 12" WATER MAIN DUCTILE IRON PIPE, MCSED	402
							121					0	121	SPECIAL	69098100	121	FT	MISC.: 16" WATER MAIN DUCTILE IRON PIPE, MCSED	402
						72						0	72	SPECIAL	69098100	72	FT	MISC.: 6" WATER MAIN CAST IRON PIPE, CITY OF MIAMISBURG	402
						3,932						0	3,932	SPECIAL	69098100	3,932	FT	MISC.: 12" WATER MAIN CAST IRON PIPE, CITY OF MIAMISBURG	402
																		SANITARY SEWER	
		150										50	100	603	00900	150	FT	6" CONDUIT, TYPE B	
		150										50	100	603	01100	150	FT	6" CONDUIT, TYPE C	
								151				0	151	603	01800	151	FT	8" CONDUIT, TYPE B	
								95				0	95	603	02000	95	FT	8" CONDUIT, TYPE C	
								991				0	991	603	03300	991	FT	10" CONDUIT, TYPE C	
								446				0	446	603	04400	446	FT	12" CONDUIT, TYPE B	
								188				0	188	603	04600	188	FT	12" CONDUIT, TYPE C	
								666				666	0	603	06100	666	FT	15" CONDUIT, TYPE C	
								15				4	11	604	31500	15	EACH	MANHOLE, NO. 3	
								5				0	5	604	35500	5	EACH	MANHOLE RECONSTRUCTED TO GRADE	
								400				0	400	SPECIAL	63822906	400	FT	30" STEEL CASING PIPE	402
								689				0	689	SPECIAL	69098100	689	FT	MISC.: 16" SANITARY FORCE MAIN	402
																		LIGHTING GENERAL SUMMARY	642
																		TRAFFIC CONTROL GENERAL SUMMARY	443, 529
																		TRAFFIC SIGNALS GENERAL SUMMARY	610-612

CALCULATED MAG
CHECKED AJS

GENERAL SUMMARY

MOT-75-0.75

SHEET NUMBER												PARTICIPATION		ITEM	ITEM EXT.	GRAND TOTAL	UNIT	DESCRIPTION	SEE SHEET NO.
70					393	394	397				428	IR	EARMARK/ LOCAL						
																		RETAINING WALLS	
						452	649					0	1,101	517	76300	1,101	FT	RAILING MISC.: RAILING (PEDESTRIAN, ALUMINUM), AS PER PLAN	396
						2,445	3,983					0	6,428	SPECIAL	61050010	6,428	SQ FT	RETAINING WALL, MISC.: MODULAR BLOCK WALL	396
					1,544							0	1,544	SPECIAL	61050010	1,544	SQ FT	RETAINING WALL, MISC.: SOLDIER PILE WALL	393
																		MSE RETAINING WALLS	684
																		BUILDING DEMOLITION	
1												0	1	202	56100	1	EACH	BUILDING DEMOLISHED, PARCEL 118, 2.5-STORY FRAME, BARN FRAME, CONCRETE SLAB, FOUNDATION	
1												0	1	202	56100	1	EACH	BUILDING DEMOLISHED, PARCEL 120, 2-STORY BRICK OFFICE BUILDING, 5 MONITORING WELLS	
1												0	1	202	56100	1	EACH	BUILDING DEMOLISHED, PARCEL 119,160,161, 1-STORY FRAME, 1-STORY BRICK , 1-STORY FRAME, PUMP HOUSE, BLOCK SHED, FRAME SHED WITH NO FOUNDATION, 1-STORY FRAME GARAGE, 3 CISTERNS	
1												0	1	202	56100	1	EACH	BUILDING DEMOLISHED, PARCEL 122, 1-STORY BRICK & FRAME SHED WITH NO FOUNDATION	
1												0	1	202	56100	1	EACH	BUILDING DEMOLISHED, PARCEL 112, 1-STORY CONCRETE BLOCK	
																		NOISE BARRIERS	
											1,473	1,473	0	SPECIAL	60610300	1,473	SQ FT	NOISE BARRIER (ABSORPTIVE), 10' HEIGHT AND UNDER	419
											3,191	3,191	0	SPECIAL	60610310	3,191	SQ FT	NOISE BARRIER (ABSORPTIVE), OVER 10' TO 14' HEIGHT	419
											44,564	44,564	0	SPECIAL	60610320	44,564	SQ FT	NOISE BARRIER (ABSORPTIVE), OVER 14' TO 20' HEIGHT	419
																		STRUCTURES (20' AND UNDER)	
																		MOT-MIAMISBURG-SPRINGBORO PIKE CULVERT @ STA. 164+92.99	385
																		STRUCTURES (OVER 20') GENERAL SUMMARY	
																		BR MOT-75-0075	657
																		MOT-MIAMISBURG-SPRINGBORO PIKE CULVERT @ STA. 133+63.89	371

CALCULATED MAG
CHECKED AJS

GENERAL SUMMARY

MOT-75-0.75

SHEET NUMBER												PARTICIPATION		ITEM	ITEM EXT.	GRAND TOTAL	UNIT	DESCRIPTION	SEE SHEET NO.
		31	32	33	34	35	37	38				IR	EARMARK/ LOCAL						
																		MAINTENANCE OF TRAFFIC	
		8,430										8,430	0	254	01000	8,430	SQ. YD.	PAVEMENT PLANING, ASPHALT CONCRETE	
						50						0	50	410	12000	50	CU. YD.	TRAFFIC COMPACTED SURFACE, TYPE A OR B	
					300							200	100	614	11100	300	HOUR	LAW ENFORCEMENT OFFICER WITH PATROL CAR	
				36								24	12	614	11500	36	MONTH	WORKSITE TRAFFIC SUPERVISOR	
							2					2	0	614	12346	2	EACH	WORK ZONE IMPACT ATTENUATOR FOR 24" WIDE HAZARDS (UNIDIRECTIONAL)	
						2	5	6				0	13	614	12348	13	EACH	WORK ZONE IMPACT ATTENUATOR FOR 24" WIDE HAZARDS (BIDIRECTIONAL)	
													LUMP	614	12420	LUMP		DETOUR SIGNING	
					16							16	0	614	12470	16	EACH	WORK ZONE SPEED LIMIT SIGN	
				6								6	0	614	12484	6	EACH	WORK ZONE INCREASED PENALTIES SIGN	
						12						10	2	614	12500	12	EACH	REPLACEMENT SIGN	
						150						75	75	614	12600	150	EACH	REPLACEMENT DRUM	
		1,570				315						1,885	0	614	12801	1,885	EACH	WORK ZONE RAISED PAVEMENT MARKER, AS PER PLAN	31
						50						0	50	614	13000	50	CU. YD.	ASPHALT CONCRETE FOR MAINTAINING TRAFFIC	
						11,125						11,125	0	SPECIAL	61413170	11,125	FT	LINEAR DELINEATION	
			310									205	105	614	13300	310	EACH	BARRIER REFLECTOR, TYPE B	
			240									160	80	614	13350	240	EACH	OBJECT MARKER, ONE-WAY	
			65									43	22	614	13360	65	EACH	OBJECT MARKER, TWO-WAY	
			26									13	13	614	18601	26	SIGN MONTHS	PORTABLE CHANGEABLE MESSAGE SIGN, AS PER PLAN	32
							5.09	0.03				5.09	0.03	614	20000	5.12	MILE	WORK ZONE LANE LINE, CLASS I	
							0.69	1.56				0	2.25	614	21000	2.25	MILE	WORK ZONE CENTER LINE, CLASS I	
							5.18	2.14				3.14	4.18	614	22000	7.32	MILE	WORK ZONE EDGE LINE, CLASS I	
							137	815				0	952	614	23000	952	FT	WORK ZONE CHANNELIZING LINE, CLASS I	
							1,548					0	1,548	614	24000	1,548	FT	WORK ZONE DOTTED LINE, CLASS I	
							20	123				0	143	614	26000	143	FT	WORK ZONE STOP LINE, CLASS I	
								12				0	12	614	30000	12	EACH	WORK ZONE ARROW, CLASS I	
								1				0	1	614	31000	1	EACH	WORK ZONE WORD ON PAVEMENT, 72", CLASS I	
							1,535					0	1,535	615	20001	1,535	SQ. YD.	PAVEMENT FOR MAINTAINING TRAFFIC, CLASS A, AS PER PLAN	32
						2,280						1,140	1,140	616	10000	2,280	M. GAL.	WATER	
							15,129	2,946				11,925	6,150	622	40020	18,075	FT	PORTABLE CONCRETE BARRIER, 32"	
														SPECIAL	10810000	LUMP		CPM PROGRESS SCHEDULE	
														614	11001	LUMP		MAINTAINING TRAFFIC, AS PER PLAN	30
														619	16020	24	MONTH	FIELD OFFICE, TYPE C	
														623	10000	LUMP		CONSTRUCTION LAYOUT STAKES	
														624	10000	LUMP		MOBILIZATION	

CALCULATED MAG
CHECKED AJS

GENERAL SUMMARY

MOT-75-0.75

REF. NO.	SHEET NO.	STATION FROM	STATION TO	SIDE	202 PAVEMENT REMOVED, ASPHALT	202 WALK REMOVED	202 STEPS REMOVED	202 CURB AND GUTTER REMOVED	202 CONCRETE SLOPE PROTECTION REMOVED	202 PIPE REMOVED, 24" AND UNDER	202 GUARDRAIL REMOVED FOR STORAGE, AS PER PLAN	SPECIAL - PARKING BLOCK REMOVED	202 MANHOLE REMOVED	202 SEPTIC TANK REMOVED	202 SPECIAL - DRILLED WATER WELL ABANDONED	202 SPECIAL - FILL AND PLUG EXISTING CONDUIT	202 FENCE REMOVED		202 VALVE BOX REMOVED		607 FENCE, TYPE 47	IR	EARMARK/LOCAL
					SY	SF	FT	FT	SQ YD	FT	FT	EACH	EACH	EACH	EACH	FT	FT		EACH		FT		
		RAMP P																					
R-1	86-90,203,429-434	207+76 (I-75)	338+52.00	LT/RT													4026					X	
R-2	86-89	311+57.00	326+69.00	RT	1753																	X	
R-3		NOT USED																					
R-4	88-90,202	322+88.00	336+47.00	LT																	1365	X	
R-5	90, 202	336+66.00	337+21.00	LT													56					X	
		RAMP H																					
R-6	111-112	21+64.10 (I-75)	224+67.95	RT																	399	X	
R-7	111-113	21+69.00 (I-75)	29+63.00 (I-75)	RT	887																	X	
R-8	111-112	21+64.10 (I-75)	224+67.95	RT													384					X	
R-9	113,114,203	228+98.00	240+46.00	LT/RT													1124					X	
R-10	113,114	228+98.00	239+51.00	RT																	1096	X	
R-11	114,203,204	235+43.00	240+70.00	LT	2893																	X	
R-12		NOT USED																					
R-13	114,203,204	234+72.00	240+32.00	LT				1039														X	
R-14	114	235+76.00	238+73.00	LT		1306																X	
R-15	114	239+09.00	239+51.00	LT		321																X	
R-16	114,204,205	235+43.00	240+70.00	RT	5641																	X	
R-17	114	237+44.00	238+12.00	RT		1075																X	
R-18	112	223+48.00	223+60.00	RT					25													X	
R-19	114,204,205	237+41.00	240+70.00	RT				1715														X	
R-20	114	236+10.00	236+55.00	RT								11										X	
R-21	114	237+64.00	239+30.00	RT						579			1			15						X	
R-22	114	237+49.00	239+20.00	RT						476									6			X	
R-23	114	237+38.00		RT															3			X	
R-24	114	237+32.00	238+49.00	LT/RT			9															X	
		RAMP M																					
R-25	138-140,203	438+67.00	456+62.00	LT/RT													1759					X	
R-26	138-140	439+99.00	456+62.00	LT																	1692	X	
R-27	138	439+71.00	440+08.00	LT/RT										2								X	
R-28	138,202,203	438+48.00	440+19.00	LT/RT	1121																	X	
R-29	138,202	438+70.00	440+94.00	LT/RT											3							X	
R-30		NOT USED																					
R-31	138,203	440+13.00	440+80.00	RT		229																X	
R-32	138	443+83.00	443+91.00	LT/RT	101																	X	
R-33	140-142	451+24.00	65+00.00 (I-75)	LT/RT	3067																	X	
R-34		NOT USED																					
R-35		NOT USED																					
		RAMP J																					
R-36	161-163,203,204	40+05 (I-75)	155+86.00	LT/RT													1586					X	
R-37	161,162,163	143+24.00	155+86.00	RT																	1269	X	
R-38		NOT USED																					
R-39		NOT USED																					
R-40	161,204	141+26.00	141+75.00	LT/RT	3629																	X	
R-41		NOT USED																					
R-42	161,204	141+56.00	141+68.00	RT		1031																X	
R-43	161	141+61.00		RT									1									X	
R-44		NOT USED																					
R-45	162-167	151+86.00	79+00 (I-75)	LT/RT	3025																	X	
R-47	164	61+64.00 (I-75)	63+17 (I-75)	RT							153											X	
TOTALS CARRIED TO GENERAL SUMMARY					22117	3962	9	2754	25	1055	153	11	2	2	3	15	8935		9		5822		

CALCULATED MAG CHECKED AJS

ROADWAY SUBSUMMARY

MOT-75-0.75

REF. NO.	SHEET NO.	STATION FROM	STATION TO	SIDE				202 HEADWALL REMOVED EACH		202 PAVEMENT REMOVED, ASPHALT SQ YD						202 WALK REMOVED EACH					IR	EARMARK/LOCAL
		MIAMISBURG-SPRINGBORO PIKE																				
R-50		NOT USED																				
R-51		NOT USED																				
R-52		NOT USED																				
R-53		NOT USED																				
R-54	201	142+03.00		RT				1													X	
R-55	201	143+03.00	143+55.00	RT				2													X	
R-56	203	155+70.00		LT				1													X	
R-57	207	177+28.00	177+59.00	LT				2														X
R-58	208	178+15.00		LT				1														X
R-59	208	179+54.00		LT				1														X
R-60	208	179+46.00		RT				1														X
R-61		NOT USED																				
R-62		NOT USED																				
R-63		NOT USED																				
R-64		NOT USED																				
R-65	195,196	107+60.00	115+98.00	RT						349												X
R-66	195,196	107+60.00	115+97.00	LT						489												X
R-67	196-201,283,284,294	116+30.00	141+81.00	LT/RT						5759												X
R-68	196,198,283,284	116+31.00	38+60 (WOOD RD)	RT						264												X
R-69	201-203	141+81.00	151+63.00	RT						2795											X	
R-70	203-205	155+60.00	164+81.00	LT/RT						2527											X	
R-71	205-211,297,298	164+81.00	197+80.00	LT/RT						15290												X
R-72	207	177+20.00	177+70.00	LT						97												X
R-73	207,208,297	174+62.00	33+90 (SR 741)	RT						1129												X
R-74	208	33+13 (SR 741)	181+97.00	RT						591												X
R-75	208,298	179+23.00	44+00 (SR 741)	LT						273												X
R-76	208,298,299	178+30.00	47+26.88 (SR 741)	LT						597												X
R-77		NOT USED																				
R-78		NOT USED																				
R-79		NOT USED																				
R-80		NOT USED																			X	
R-81		NOT USED																				
R-82		NOT USED																				
R-83		NOT USED																				
R-84		NOT USED																				
R-85		NOT USED																				
R-86		NOT USED																				
R-87		NOT USED																				
R-88		NOT USED																				
R-89		NOT USED																				
R-90	201	143+27.00		RT												54					X	
R-91	202	148+59.00	149+06.00	LT												126					X	
R-92		NOT USED																				
R-93		NOT USED																				
R-94		NOT USED																				
SUBTOTALS (IR)								4		2527						180						
SUBTOTALS (EARMARK/LOCAL)								5		27633						0						
TOTALS CARRIED TO GENERAL SUMMARY								9		30160						180						

CALCULATED MAG CHECKED AJS

ROADWAY SUBSUMMARY

MOT-75-0.75

REF. NO.	SHEET NO.	STATION FROM	STATION TO	SIDE				202 HEADWALL REMOVED EACH				202 CURB AND GUTTER REMOVED FT	202 GUTTER REMOVED SQ YD		202 PIPE REMOVED, 24" AND UNDER FT		202 CATCH BASIN REMOVED EACH				IR	EARMARK/LOCAL
		MIAMISBURG-SPRINGBORO PIKE																				
R-95		NOT USED																				
R-96	196	115+47.00	119+18 (CRAINS CREEK)	RT								79										X
R-97	196	118+40 (CRAINS CREEK)	116+77.00	RT								170										X
R-98	196	115+48.00	120+92 (CRAINS CREEK)	LT								101										X
R-99	196	121+45 (CRAINS CREEK)	116+80.00	LT								136										X
R-100	198,283,284	125+89.00	138+54 (WOOD RD)	RT								1198										X
R-101		NOT USED																				
R-102	204	160+38.00	160+81.00	LT								58										X
R-103	208	179+55.00	179+83.00	LT									17									X
R-104	199	132+38.00	132+69.00	RT											50							X
R-105	199,200	133+37.00	134+23.00	LT											86							X
R-106	200	137+23.00	137+99.00	RT											53							X
R-107		NOT USED																				
R-108	201	141+78.00		RT/LT				1							52							X
R-109	201	143+03.00	143+55.00	RT											104						X	
R-110	203	40+99(I-75)	41+00(I-75)	RT											42						X	
R-111		NOT USED																				
R-112	204	160+47.00	160+78.00	LT											31						X	
R-113	205	163+23.00	164+23.00	RT											100						X	
R-114		NOT USED																				
R-115	205	166+22.00	166+47.00	RT											25							X
R-116	206	169+53.00	169+78.00	LT											25							X
R-117	207	173+76.00	173+80.00	LT											39							X
R-118	207	174+83.00	175+26.00	LT											43							X
R-119	207	176+47.00	176+54.00	RT/LT											21		1					X
R-120		NOT USED																				
R-121	208	178+01.00	179+46.00	RT											163		1					X
R-122	208	180+39.00	180+70.00	LT											31							X
R-123	208	179+59.00	179+61.00	LT											7							X
R-124	208	182+02.00	182+40.00	LT											40							X
R-125	208,209	183+38.00	184+00.00	LT											65							X
R-126		NOT USED																				
R-127	210	193+85.00	194+02.00	LT											17							X
		WOOD ROAD																				
R-128	283	38+53.00		RT											7		1					X
R-129	283	39+03.00	39+05.00	LT											14		1					X
R-130	283	38+89.00	38+91.00	LT											12							X
R-131	283,284	41+43.00	45+25.00	LT											486		3					X
R-132		NOT USED																				
SUBTOTALS (IR)								0				0	0		277		0					
SUBTOTALS (EARMARK/LOCAL)								1				1742	17		1236		7					
TOTALS CARRIED TO GENERAL SUMMARY								1				1742	17		1513		7					

CALCULATED MAG
CHECKED AJS

ROADWAY SUBSUMMARY

MOT-75-0.75

REF. NO.	SHEET NO.	STATION FROM	STATION TO	SIDE						202 PIPE REMOVED, 24" AND UNDER	202 PIPE REMOVED, OVER 24"	202 GUARDRAIL REMOVED FOR STORAGE, AS PER PLAN	202 ANCHOR ASSEMBLY REMOVED FOR STORAGE, AS PER PLAN	202 MANHOLE REMOVED	202 VALVE BOX REMOVED	202 REMOVAL MISC: BILLBOARD SIGN APPURTENACES	202 REMOVAL MISC: COMMERCIAL SIGN WITH STONE FOUNDATION	202 REMOVAL MISC: COMMERCIAL BRICK SIGN AND LANDSCAPING	202 REMOVAL MISC: COMMERCIAL SIGN	202 REMOVAL MISC: DECORATIVE LANDSCAPING WALL	IR	EARMARK/LOCAL
										FT	FT	FT	EACH	EACH	EACH	LUMP	LUMP	LUMP	EACH	FT		
		SR 741																				
R-133	297	36+99.00		RT						12												X
R-134	298	43+08.00		RT						10												X
		MIAMISBURG-SPRINGBORO PIKE																				
R-135	201	141+52.00	142+04.00	RT							52										X	X
R-136		NOT USED																				
R-137	203	151+72.00	152+15.00	RT/LT							154										X	
R-138		NOT USED																				
R-139	203	155+34.00	155+71.00	RT/LT							134										X	
R-140	207,208	173+91.00	178+13.00	RT							412			2								X
R-141	207	177+27.00	177+60.00	LT							30											X
R-142	208	178+14.00	179+55.00	LT							140											X
R-143		NOT USED																				
R-144		NOT USED																				
R-145		NOT USED																				
R-146		NOT USED																				
R-147		NOT USED																				
R-148		NOT USED																				
R-149		NOT USED																				
R-150	195-202,294	108+75.00	146+90.00	LT						4021					9							X
R-151	196	112+75.00	114+00.00	RT						135												X
R-152	197,198,283,284	118+50.00	38+99 (WOOD)	RT						2048					9							X
R-153	199	132+84.00	132+98.80	RT/LT						82				2								X
R-154	201	141+15.00	142+06.00	RT/LT						313				3							X	X
R-155	205-207	163+54.00	176+80.00	RT/LT						1502				5							X	X
R-156	207,208,297	177+88.00	179+70.94	RT/LT						520												X
R-157	198	125+88.50	49+06 (WOOD)	RT/LT																83		X
R-158	201	143+21.43		LT												1					X	
R-159	204	159+97.00		LT													1				X	
R-160	203	152+22.00	153+28.00	RT/LT								275	2								X	
R-161	203	153+99.00	155+11.00	RT/LT								313	2								X	
R-162	205	162+65.00		RT														1			X	
R-163	208	183+41.49		LT															1			X
R-164		NOT USED																				
R-165	202,203	145+89.00	151+47.00	RT								562	2								X	
R-166	202,203	147+08.00	151+57.00	RT								451	2								X	
R-167	203,204	155+77.00	159+95.00	RT								422	2								X	
R-168	205	163+91.00	164+61.00	LT								75	2								X	
R-169	205	164+82.00	166+56.00	LT								178	2									X
R-170	205	164+71.00	165+96.00	RT								125	1									X
R-171	205	164+20.00	164+71.00	RT								53	1								X	
R-172		NOT USED																				
R-173	199,200	132+65.00	134+22.00	RT								158	2									X
R-174	199,200	132+72.00	134+19.00	LT								146	2									X
SUBTOTALS (IR)										304	310	2151	13	1	0	1	1	1	0	0		
SUBTOTALS (EARMARK/LOCAL)										8339	612	607	7	11	18	0	0	0	1	83		
TOTALS CARRIED TO GENERAL SUMMARY										8643	922	2758	20	12	18	1	1	1	1	83		

CALCULATED MAG CHECKED AJS

ROADWAY SUBSUMMARY

MOT-75-0.75

REF. NO.	SHEET NO.	STATION FROM	STATION TO	SIDE	202 MAILBOX REMOVED EACH		202 MANHOLE REMOVED EACH		202 MONUMENT ASSEMBLY REMOVED EACH		202 SPECIAL - DRILLED WATER WELL ABANDONED EACH	202 FENCE REMOVED FT		202 FENCE REMOVED FOR REUSE FT		202 GATE REMOVED EACH	202 GATE REMOVED FOR REUSE EACH				IR	EARMARK/LOCAL
		MIAMISBURG-SPRINGBORO PIKE																				
R-175		NOT USED																				
R-176	202	146+02.00		RT	1																X	
R-177	204	160+23.00	160+61.00	RT	2																X	
R-178		NOT USED																				
R-179	204	160+10.00		LT			1														X	
R-180		NOT USED																				
R-181		NOT USED																				
R-182	198	128+48.00		CL					1													X
R-183	208	178+84.00		LT					1													X
		SR 741																				
R-184	298	45+02.00		LT					1													X
R-185-190		NOT USED																				
		MIAMISBURG-SPRINGBORO PIKE																				
R-191	200	137+50.00		LT							1											X
R-192	204	159+98.00		LT							1										X	
R-193		NOT USED																				
		MIAMISBURG-SPRINGBORO PIKE																				
R-194	203,204	155+81.00	159+90.00	LT								410									X	
R-195	206	169+52.00	169+77.00	LT								22										X
R-196	209	183+94.00	185+19.00	LT										161								X
R-197	208-211	180+61.00	197+48.00	RT/LT										1808		1						X
		WOOD ROAD																				
R-198	283	40+75.00	41+70.00	LT								101										X
R-199	283,284	42+61.00	43+46.00	LT								136										X
R-200	284,198	48+09.00	48+70.00	RT										143			1					X
R-201		NOT USED																				
R-202		NOT USED																				
R-203		NOT USED																				
R-204		NOT USED																				
R-205		NOT USED																				
R-206		NOT USED																				
R-207		NOT USED																				
R-208		NOT USED																				
R-209		NOT USED																				
SUBTOTALS (IR)					3		1		0		1	410		0		0	0					
SUBTOTALS (EARMARK/LOCAL)					0		0		3		1	259		2112		1	1					
TOTALS CARRIED TO GENERAL SUMMARY					3		1		3		2	669		2112		1	1					

CALCULATED MAG
CHECKED AJS

ROADWAY SUBSUMMARY

MOT-75-0.75

REF. NO.	SHEET NO.	STATION FROM	STATION TO	SIDE		606 GUARDRAIL, TYPE 5 FT	606 ANCHOR ASSEMBLY, TYPE E-98 EACH	606 ANCHOR ASSEMBLY, TYPE T EACH	606 BRIDGE TERMINAL ASSEMBLY, TYPE I EACH	606 BRIDGE TERMINAL ASSEMBLY, TYPE 2 EACH						607 FENCE, TYPE 47 FT					IR	EARMARK/LOCAL
		MIAMISBURG-SPRINGBORO PIKE																				
R-210		NOT USED																				
R-211		NOT USED																				
R-212		NOT USED																				
R-213		NOT USED																				
R-214		NOT USED																				
R-215		NOT USED																				
R-216		NOT USED																				
R-217		NOT USED																				
R-218		NOT USED																				
R-219		NOT USED																				
R-220		NOT USED																				
R-221		NOT USED																				
		BYERS ROAD																				
R-222		NOT USED																				
		MIAMISBURG-SPRINGBORO PIKE																				
R-223		NOT USED																				
		SR 741																				
R-224		NOT USED																				
R-225		NOT USED																				
R-226		NOT USED																				
R-227		NOT USED																				
R-228		NOT USED																				
		MIAMISBURG-SPRINGBORO PIKE																				
R-229	203	151+33.75	151+83.55	LT												50					X	
R-230	203,204	155+78.57	156+28.25	LT												50					X	
R-231	202,203	150+04.36	151+59.93	RT		75	1		1												X	
R-232	203,204	155+50.91	156+13.16	RT		25		1		1											X	
R-233	203,204	155+72.92	156+54.11	LT			1		1												X	
R-234		NOT USED																				
R-235		NOT USED																				
R-236		NOT USED																				
R-237	201,202	142+14.94	147+07.95	RT												496					X	
R-238	201,202	142+46.79	148+13.62	LT												583					X	
R-239	204,205	159+72.24	164+80.84	LT												577					X	
R-240	204,205	158+84.58	163+74.45	RT												504					X	
SUBTOTALS (IR)						100	2	1	2	1						2260						
SUBTOTALS (EARMARK/LOCAL)						0	0	0	0	0						0						
TOTALS CARRIED TO GENERAL SUMMARY						100	2	1	2	1						2260						

CALCULATED MAG
CHECKED AJS

ROADWAY SUBSUMMARY

MOT-75-0.75

REF. NO.	SHEET NO.	STATION FROM	STATION TO	SIDE					202 GUARDRAIL REMOVED FOR STORAGE, AS PER PLAN FT	202 ANCHOR ASSEMBLY REMOVED FOR STORAGE, AS PER PLAN EACH		202 BUILDING DEMOLISHED EACH			606 GUARDRAIL, TYPE 5 FT		606 ANCHOR ASSEMBLY, TYPE E-98 EACH	606 ANCHOR ASSEMBLY, TYPE T EACH		IR	EARMARK/LOCAL
R-241		NOT USED																			
R-242		NOT USED																			
R-243		NOT USED																			
R-244		NOT USED																			
R-245		NOT USED																			
R-246		NOT USED																			
R-247		NOT USED																			
R-248		NOT USED																			
		RAMP H																			
R-249	112	226+11.90	228+12.58	RT											137.5		1	1		X	
		RAMP M																			
R-250		NOT USED																			
R-251	140-141	454+37.47	457+00.52	LT											200		1	1		X	
		I-75																			
R-252	538	182+62.50 (WAR)	183+62.50 (WAR)	RT											137.5		1	1		X	
R-253		NOT USED																			
R-254	538	0+14.03 (MOT)	1+62.36 (MOT)	RT					62.5	1					87.5		1	1		X	
R-255	162	48+53.19 (MOT)	49+03.00 (MOT)	RT					116	1										X	
R-256	164	60+37.00 (MOT)	62+62.00 (MOT)	RT											162.5		1	1		X	
R-257	539	80+87.50 (MOT)	83+25.00 (MOT)	LT											175		1	1		X	
R-258		NOT USED																			
R-259	539	107+37.50 (MOT)	109+37.50 (MOT)	LT											137.5		1	1		X	
R-260		NOT USED																			
		M-S PIKE																			
R-261		NOT USED																			
R-262		NOT USED																			
		AUSTIN PIKE																			
R-263		NOT USED																			
		BUILDING DEMOLISHED																			
		RAMP P																			
BD-1	90	335+59.00	337+12.00	LT								1								X	
		RAMP H																			
BD-2	114, 204	237+31.00	239+78.00	LT/RT								1								X	
		RAMP M																			
BD-3	138,202,203	438+77.00	444+17.00	LT/RT								1								X	
		RAMP J																			
BD-4	161, 204	140+91.00	142+14.00	LT/RT								1								X	
		M-S PIKE																			
BD-5	201	144+33.00		LT/RT								1								X	
SUBTOTALS (IR)									178.5	2		5			1037.5		7	7			
SUBTOTALS (EARMARK/LOCAL)									0	0		0			0.0		0	0			
TOTALS CARRIED TO GENERAL SUMMARY									178.5	2		5			1037.5		7	7			

CALCULATED MAG CHECKED AJS

BUILDING DEMOLITION SUBSUMMARY / ROADWAY

MOT-75-0.75

REF. NO.	SHEET NO.	STATION FROM	STATION TO	SIDE							660 SODDING REINFORCED		670 DITCH EROSION PROTECTION		836 SEEDING AND EROSION CONTROL WITH TURF REINFORCED MAT, TYPE I							
											SQ YD		SQ YD		SQ YD							
		IR																				
		I-75 RAMP P																				
E-1		NOT USED																				
E-2		NOT USED																				
E-3		NOT USED																				
E-4		NOT USED																				
E-5	90	331+50.00	332+63.00	LT											232							
E-6	90	331+50.00	332+60.00	RT									244									
E-7	90	332+63.00	336+43.00	LT											421							
E-8	90	332+60.00	336+88.00	RT									448									
E-9	90	336+45.00	336+54.00	RT							80											
		I-75 RAMP H																				
E-10		NOT USED																				
E-11	112	223+56.00	224+70.00	RT									380									
E-12	112, 113	224+70.00	233+48.00	RT									2292									
E-13		NOT USED																				
E-14		NOT USED																				
E-15	113,114	233+48.00	234+70.00	RT											367							
E-16	114	234+80.00	238+50.00	RT											734							
E-17	114,204	238+50.00	239+83.00	RT									302									
		I-75 RAMP M																				
E-18	138	439+80.00	439+89.00	LT							86											
E-19	138	440+00.00	441+20.00	LT									248									
E-20	138	441+20.00	442+41.00	LT									376									
E-21		NOT USED																				
E-22		NOT USED																				
E-23	138,139	442+41.00	446+19.00	LT									566									
E-24	139	446+19.00	447+50.00	LT											364							
E-25	139,140	447+50.00	454+69.00	LT											1173							
E-26		NOT USED																				
E-27		NOT USED																				
		I-75 RAMP J																				
E-28		NOT USED																				
E-29	161	142+09.00	142+18.00	LT							36											
E-30	161	142+02.00	143+21.00	RT											419							
E-31	161,162	143+30.00	151+90.00	RT											1545							
E-32	162,163	151+90.00	153+10.00	RT									607									
E-33	163	153+10.00	156+97.00	RT									559									
E-34	163,164	157+10.00	161+90.00	RT											543							
E-35	164	161+90.00	163+10.00	RT									400									
E-36	164,165	63+10.00	66+50.00	RT									756									
E-37		NOT USED																				
TOTALS CARRIED TO GENERAL SUMMARY											202		7178		5798							

CALCULATED MAG
CHECKED AJS

EROSION CONTROL SUBSUMMARY

MOT-75-0.75

REF. NO.	SHEET NO.	STATION FROM	STATION TO	SIDE					601 ROCK CHANNEL PROTECTION, TYPE C WITH FABRIC FILTER		660 SODDING REINFORCED		670 DITCH EROSION PROTECTION		836 SEEDING AND EROSION CONTROL WITH TURF REINFORCED MAT, TYPE I		838 GABIONS, AS PER PLAN				IR	EARMARK/LOCAL
		FROM	TO						CU YD		SQ YD		SQ YD		SQ YD		CU YD					
		RAMP H																				
E-38		NOT USED																				
E-39		NOT USED																				
E-40	113,114	229+79.00	236+13.00	RT					IIII												X	
		MIAMISBURG-SPRINGBORO PIKE																				
E-41 - E-47		NOT USED																				
E-48	203	151+74.00	152+03.00	LT							75										X	
E-49	203	155+75.00	155+88.00	LT							60										X	
E-50		NOT USED																				
E-51	196	112+38.00	113+74.00	RT											253							X
E-52	196	113+74.00	114+51.00	RT											35							X
E-53	199	128+99.00	131+87.00	RT											195							X
E-54	199,200	131+87.00	134+38.00	RT											419							X
																						X
E-55	199,200	132+90.00	134+30.00	LT											316							X
E-56	200	134+30.00	138+00.00	LT											289							X
E-57	200	135+46.00	136+70.00	RT									249									X
E-58	201	141+20.00	141+21.00	RT													56					X
E-60	201	141+87.00	143+02.00	RT									213								X	X
E-61	201,202	142+41.00	146+00.00	LT											399						X	
E-62	202	146+00.00	147+70.00	LT									138								X	
E-63	202,138	147+70.00	440+00.00	LT											272						X	
E-64	90,203,202	150+00.00	151+25.00	RT									249								X	
E-65		NOT USED																				
E-66	204	157+50.00	158+70.00	RT							115										X	
E-67	204,205	159+74.00	164+50.00	LT											587						X	
E-68	205	162+50.00	164+03.00	RT									274								X	
E-69	205	164+04.00	165+50.00	RT									280									X
E-70	205	164+50.00	165+74.00	LT											273						X	X
E-72	207	173+40.00	174+71.00	LT											284							X
E-73	207	173+43.00	174+74.00	RT									255									X
E-74	207	174+71.00	177+15.00	LT											217							X
E-75	208	180+15.00	181+36.00	LT											244							X
E-76	208,209	181+36.00	184+52.00	LT									317									X
E-77	209	185+26.00	186+22.00	LT											85							X
E-78	209,210	186+22.00	191+07.00	LT									372									X
E-79	209,210	188+07.00	192+00.00	RT									349									X
E-80	210	193+10.00	196+39.00	LT									300									X
E-81		NOT USED																				
E-82		NOT USED																				
SUBTOTALS (IR)									IIII		250		831		1340		0					
SUBTOTALS (EARMARK/LOCAL)									0		0		2165		2528		56					
TOTALS CARRIED TO GENERAL SUMMARY									IIII		250		2996		3868		56					

CALCULATED MAG
CHECKED AJS

EROSION CONTROL SUBSUMMARY

MOT-75-0.75

REF. NO.	SHEET NO.	STATION FROM	STATION TO	SIDE					601 ROCK CHANNEL PROTECTION, TYPE C WITH FABRIC FILTER		660 SODDING REINFORCED		670 DITCH EROSION PROTECTION									IR	EARMARK/LOCAL
									CU YD		SQ YD		SQ YD										
		WOOD ROAD																					
E-101	283	38+90.00	39+74.00	LT									261										X
E-102	283,284	40+17.00	45+17.00	RT									520										X
E-103	284	45+17.00	46+40.00	RT									264										X
		S.R. 741																					
E-120		NOT USED																					X
E-121		NOT USED																					X
E-122	297	34+81.44	34+90.44	RT							53												X
		NOISE BARRIER ON I-75 RAMP P																					
		BARRIER STATIONS																					
E-150	429	3+66.00	3+70.00	LT					3													X	
E-151	430	7+00.00	7+04.00	LT					2													X	
E-152	431	10+40.00	10+45.00	LT					3													X	
E-153	431	14+98.00	15+02.00	LT					3													X	
E-154	432	17+15.00	17+19.00	LT					3													X	
E-155	432	19+48.00	19+52.00	LT					2													X	
E-156	433	21+12.00	21+16.00	LT					3													X	
E-157		NOT USED																				X	
E-158	433	22+37.00	22+41.00	LT					3													X	
E-159	433	23+72.00	24+00.00	LT					14													X	
E-160	434	27+14.00	27+57.00	LT					21													X	
SUBTOTALS (IR)									58		0		0										
SUBTOTALS (EARMARK/LOCAL)									0		53		1045										
TOTALS CARRIED TO GENERAL SUMMARY									58		53		1045										

CALCULATED MAG CHECKED AJS

EROSION CONTROL SUBSUMMARY

MOT-75-0.75

REF. NO.	SHEET NO.	STATION FROM	STATION TO	SIDE	601 ROCK CHANNEL PROTECTION, TYPE C WITH FABRIC FILTER CU YD	602 CONCRETE MASONRY CU YD	603 12" CONDUIT, TYPE B FT	603 12" CONDUIT, TYPE C FT	603 15" CONDUIT, TYPE B FT	603 15" CONDUIT, TYPE C FT	603 18" CONDUIT, TYPE B FT	603 18" CONDUIT, TYPE C FT	603 21" CONDUIT, TYPE B FT	603 21" CONDUIT, TYPE C FT	603 24" CONDUIT, TYPE B FT	603 24" CONDUIT, TYPE C FT	603 30" CONDUIT, TYPE C FT	604 CATCH BASIN, NO. 3 EACH	604 CATCH BASIN, NO. 3A EACH	604 CATCH BASIN, NO. 3A, AS PER PLAN EACH	604 CATCH BASIN, NO. 5 EACH	604 MANHOLE, NO. 3 EACH	IR	EARMARK/LOCAL
		I-75 RAMP P																						
D-1	89	328+80.54	328+97.19	LT & RT	2.2	0.3					74												X	
D-2	90	336+90.00		LT & RT	1	0.2	128												1				X	
		I-75 RAMP J																						
D-3	163	156+98.56	156+99.17	RT	2	0.4									30								X	
		MIAMISBURG-SPRINGBORO PIKE																						
D-4	195	107+07.26	108+50.00	LT		0.2		135																X
D-5	196-198	113+59.50	125+00.00	RT			217	187	150	591										5		2		X
D-6	196	113+59.50		LT & RT	2	0.3	59					34							1					X
D-7	196	116+90.00		LT & RT			71												1					X
D-8	197	118+95.00		LT & RT			72												1					X
D-9	197	121+00.00		LT & RT			72												1					X
D-10	198	123+15.00		LT & RT			87												1					X
D-11	198,199	125+94.66	132+85.00	LT & RT			419		300										3	1		3		X
D-12	198	50+65 (WOOD)	51+62 (WOOD)	LT & RT			177												2					X
D-13	199	128+65.00	129+00.00	LT & RT			101												2					X
D-14	199	131+50.00	132+00.00	LT & RT	2	0.4	69						36	51					2					X
D-15	200,201	134+25.00	141+94.33	LT & RT			320		333		152							1	1			5	X	X
D-16	200	134+75.00	134+90.00	LT			39												1					X
D-17	200	135+75.00	137+30.00	LT			155												2					X
D-18	200	135+75.00	137+20.00	RT			145												2					X
D-19	200	136+68.25		LT & RT	2	0.4			36				36	40				2						X
D-20	200	138+20.00	138+40.00	LT & RT			79											1	1					X
D-21	201	139+75.00	140+25.00	LT & RT			105											1	1					X
D-22	201	142+02.00	143+00.00	RT			98												2				X	
D-23	201	143+00.00		LT & RT	2	0.3	39		46			36							1				X	
D-24	201,202	143+00.00	148+00.00				250		250													3	X	
D-25	202	145+50.00		LT & RT			97												2				X	
D-26	202	148+00.00	148+50.00	LT & RT			112												2				X	
D-27	202,203	150+30.00	151+55.00	LT & RT	1	0.2	96	191											2			1	X	
D-28	203	38+47.52 (I-75)	41+08.50 (I-75)	RT	8	0.6				9							265				1	2	X	
D-29	203	41+00.00 (I-75)		RT												6							X	
SUBTOTALS (IR)					16	2.0	828	191	296	9	74	36	0	0	30	6	265	0	11	0	1	6		
SUBTOTALS (EARMARK/LOCAL)					5	1.3	2179	322	819	591	152	34	72	91	0	0	0	5	21	6	0	10		
TOTALS CARRIED TO GENERAL SUMMARY					21	3.3	3007	513	1115	600	226	70	72	91	30	6	265	5	32	6	1	16		

CALCULATED MAG CHECKED AJS

DRAINAGE SUBSUMMARY

MOT-75-0.75

REF. NO.	SHEET NO.	STATION FROM	STATION TO	SIDE	601 ROCK CHANNEL PROTECTION, TYPE C WITH FABRIC FILTER	602 CONCRETE MASONRY	603 12" CONDUIT, TYPE B	603 12" CONDUIT, TYPE C	603 12" CONDUIT, TYPE D	603 15" CONDUIT, TYPE B	603 15" CONDUIT, TYPE C	603 18" CONDUIT, TYPE B	603 18" CONDUIT, TYPE C	603 21" CONDUIT, TYPE B	603 21" CONDUIT, TYPE C	603 24" CONDUIT, TYPE B	603 24" CONDUIT, TYPE D	604 CATCH BASIN, NO. 3	604 CATCH BASIN, NO. 3, AS PER PLAN	604 CATCH BASIN, NO. 3A	604 CATCH BASIN, NO. 3A, AS PER PLAN	603 CATCH BASIN, NO. 2-2B	604 MANHOLE, NO. 3	IR	EARMARK/LOCAL
					CU YD	CU YD	FT	FT	FT	FT	FT	FT	FT	FT	FT	FT	FT	EACH	EACH	EACH	EACH	EACH	EACH		
		MIAMISBURG-SPRINGBORO PIKE																							
D-30	204,114	156+38.41	157+40.00	LT & RT	2	0.2	110	143												2			1	X	
D-31	204,205	141+25 (RAMP J)	165+00.00	LT & RT			629					125							1	3			3	X	X
D-32	204	160+05.00		RT			39													1				X	
D-33	205	162+55.00		LT & RT	2	0.4	43							53	56			1		1				X	
D-34	205	163+80.00		LT & RT			96													2				X	
D-35	205	164+39.09		LT & RT			87											2						X	
D-36	205	165+00.00	165+70.00	RT			70												1						X
D-37	205,206	165+70.00	172+40.00	LT & RT			238			257		175									2		2		X
D-38	205	165+70.00		LT & RT	2	0.4	31							56	42					1	1				X
D-39	206	167+48.00	168+75.00	LT & RT			237													3					X
D-40	206	170+02.00	170+40.00	LT & RT			107													2					X
D-41	206,207	172+25.00	172+75.00	LT & RT			130													3					X
D-42	206,207	172+40.00	173+25.00	LT			85													1					X
D-43	207	173+95.00	174+45.00	LT			53													1					X
D-44	207	174+45.00	174+80.00	LT & RT	2	0.3	76					103	53						2	1	1				X
D-45	207	174+80.00	177+75.00	LT			295											1			2				X
D-46	207	175+85.00	176+25.00	LT			84											1		1					X
D-47	207	176+75.00	177+50.00	LT & RT			160											1		1					X
D-48	208	179+49.00	181+85.00	RT			251													3					X
D-49	208	179+49.00	180+65.00	RT	2	0.3	143					35	45					1			3				X
D-50	207,208	177+00.00	180+05.00	LT	2	0.4					48					262						1	1		X
D-51	208	179+59.33		LT				6																	X
D-52	208,209	179+59.33	188+05.00	LT &RT			536			325	91								1		2	1	4		X
D-53	208	180+10.00	181+75.00	LT			165													1					X
D-54	208	182+90.00		LT & RT			51													1					X
D-55	209	185+41.00		LT & RT			55													1					X
D-56		NOT USED																							X
D-57		NOT USED																							X
D-58		NOT USED																							X
D-59		NOT USED																							X
D-60	209	184+52.24	185+26.05	LT	2	0.9											66								X
D-61	201	141+41.70	141+87.31	RT		0.9											46								X
D-62	210	192+65.40	193+10.35	LT	1				40																X
D-63		NOT USED																							X
D-64		NOT USED																							X
D-65		NOT USED																							X
SUBTOTALS (IR)					4	0.6	984	143	0	0	0	125	0	53	56	0	0	3	1	8	0	0	4		
SUBTOTALS (EARMARK/LOCAL)					10	3.1	2787	6	40	582	139	313	98	56	42	262	112	4	4	21	11	2	7		
TOTALS CARRIED TO GENERAL SUMMARY					14	3.7	3771	149	40	582	139	438	98	109	98	262	112	7	5	29	11	2	11		

CALCULATED MAG CHECKED AJS

DRAINAGE SUBSUMMARY

MOT-75-0.75

REF. NO.	SHEET NO.	STATION FROM	STATION TO	SIDE	601 RIPRAP USING 6" REINFORCED CONCRETE SLAB (SQ YD)	601 ROCK CHANNEL PROTECTION, TYPE C WITH FABRIC FILTER (CU YD)	602 CONCRETE MASONRY (CU YD)	603 12" CONDUIT, TYPE B (FT)	603 12" CONDUIT, TYPE C (FT)	603 15" CONDUIT, TYPE B (FT)	603 15" CONDUIT, TYPE C (FT)	603 18" CONDUIT, TYPE B (FT)		603 21" CONDUIT, TYPE C (FT)		603 33" CONDUIT, TYPE D (FT)	604 CATCH BASIN, NO. 3A (EACH)	604 CATCH BASIN, NO. 3A, AS PER PLAN (EACH)	604 CATCH BASIN, NO. 4 (EACH)	604 CATCH BASIN, NO. 5 (EACH)	603 CATCH BASIN, NO. 2-2B (EACH)	
		EARMARK/LOCAL WOOD ROAD																				
D-66	283	38+53.36		RT				6									1					
D-67	283	38+90.23		LT					12											1		
D-68	283	39+03.96		LT					6								1					
D-69	283,284	40+15.00	44+80.00	LT & RT				81	225		240						1	2				
D-70	283	40+15.00		LT & RT		2	0.4				28	42		34			1	1			1	
D-71	284	45+20.00	45+25.43	LT & RT				149											1			
D-72	284	46+40.00		LT & RT	2		0.3			74	41						2					
		SR 741																				
D-73	297	33+22.91	33+68.00	RT		3	1.2									48						
TOTALS CARRIED TO GENERAL SUMMARY					2	5	1.9	236	243	74	309	42		34		48	6	3	1	1	1	

CALCULATED MAG CHECKED AJS

DRAINAGE SUBSUMMARY

MOT-75-0.75

REF. NO.	SHEET NO.	STATION FROM	STATION TO	SIDE	603 6" CONDUIT, TYPE F FOR UNDERDRAIN OUTLET FT	603 6" CONDUIT, TYPE B FT	603 8" CONDUIT, TYPE F FT	603 10" CONDUIT, TYPE F FT	604 PRECAST REINFORCED CONCRETE OUTLET EACH	605 6" SHALLOW PIPE UNDERDRAINS WITH FABRIC WRAP FT	605 6" UNCLASSIFIED PIPE UNDERDRAINS WITH FABRIC WRAP FT	605 6" BASE PIPE UNDERDRAINS WITH FABRIC WRAP FT
		IR										
		I-75 RAMP P										
UD-1	86-88	311+57.11	322+44.00	LT	23	25			1	1632		1086
UD-2	87	318+33.95		LT			19		1			
UD-3	88-90	318+33.95	332+95.00	LT/RT	39	43			2	1463		991
UD-4	89-90	326+71.26	332+95.00	RT		26				628		
UD-5	89	326+83.21		LT			25		1			
UD-6	90	333+00.00	336+86.81	LT	21				1	361		34
UD-7	90	333+00.00	336+54.00	RT	21				1	348		
		I-75 RAMP H										
UD-8	111-113	222+69.38	229+68.80	RT	49	28			2	1396		699
UD-9	112	226+92.58		RT			8		1			
UD-10	113	229+68.80	231+93.04	LT		20				227		
UD-11	113	229+68.80	231+93.04	RT						225		
UD-12	113-114	232+00.00	235+95.02	LT	22				1	392		
UD-13	113-114	232+00.00	235+95.44	RT	21				1	400		
UD-14	114,204	236+00.00	240+59.28	LT	20				1	472		
UD-15	114,204	236+00.00	240+32.00	RT	20				1	440		
		I-75 RAMP M										
UD-16	138-140	439+79.79	450+93.30	LT	19				1	655		460
UD-17	138-140	438+86.32	451+21.95	RT	22	29			1	1310	288	
UD-18		NOT USED										
UD-19		NOT USED										
UD-20	140-141	451+00.00	456+45.75	LT	24	58			1	1067		545
UD-21	141	456+50.00	459+96.85	LT	24	28			1	695		345
UD-22	141-142	460+00.00	465+00.00	LT	24	22			1	999		500
UD-23	141	457+02.28		LT				9	1			
		I-75 RAMP J										
UD-24	161-162	142+08.67	151+83.15	LT		42				678	294	
UD-25		NOT USED										
UD-26	161-162	142+09.51	151+90.19	RT	30	29			1	987		471
UD-27	162-164	152+00.00	159+46.26	RT	23	50			1	1494		744
UD-28	163	157+05.11		RT			20		1			
UD-29	164	159+50.00	160+79.76	RT	24	25			1	856		394
UD-30		NOT USED										
UD-31	165	63+50.00	69+08.15	RT	23	24			1	883	100	391
UD-32	165-167	68+00.00	75+99.73	RT	21	24			1	1489	200	800
TOTALS CARRIED TO GENERAL SUMMARY					470	473	72	9	26	19097	882	7460

CALCULATED MAG
CHECKED AJS

UNDERDRAIN SUBSUMMARY

MOT-75-0.75

REF. NO.	SHEET NO.	STATION FROM	STATION TO	SIDE	603 6" CONDUIT, TYPE F FOR UNDERDRAIN OUTLET FT	603 6" CONDUIT, TYPE B FT		604 PRECAST REINFORCED CONCRETE OUTLET EACH		605 6" SHALLOW PIPE UNDERDRAINS WITH FABRIC WRAP FT	605 6" UNCLASSIFIED PIPE UNDERDRAINS WITH FABRIC WRAP FT	605 6" BASE PIPE UNDERDRAINS WITH FABRIC WRAP FT										
		EARMARK/LOCAL																				
		MIAMISBURG-SPRINGBORO PIKE																				
UD-33	195-196	108+00.00	113+29.29	RT		12		1		445	103											
UD-34	196	113+59.50	115+90.41	LT	10					239												
UD-35	196	113+59.50	115+34.04	RT	10					173												
UD-36	196	115+40.00	115+88.41	RT	10					65												
UD-37	196-197	116+90.00	118+90.16	RT	10					190												
UD-38	196-197	116+90.00	118+88.62	LT	10					190												
UD-39	197	118+95.00	120+95.14	LT	10					190												
UD-40	197	118+95.00	120+93.10	RT	10					189												
UD-41	197-198	121+00.00	123+11.35	LT	10					201												
UD-42	197	121+00.00	122+73.56	RT	10					165												
UD-43	198	123+15.00	125+94.66	LT	20					259												
UD-44	198	123+15.00	125+00.00	RT	20					167												
UD-45	198	125+00.00	48+50 (WOOD)		10					201												
UD-46	198	125+94.10	51+62 (WOOD)	LT	20					101												
UD-47	198	51+62 (WOOD)	128+99.96		20					224												
UD-48	198	127+61.93	129+00.00	RT	10					120												
UD-49	198-199	48+50 (WOOD)	128+65.00	RT	10					230												
UD-50	199	129+03.54	131+49.99	LT	10					234												
UD-51	199	129+04.96	132+00.00	RT	13					288												
UD-52	199	128+71.02	132+00.00	RT	10					321												
UD-53	199	131+54.78	132+85.00	LT	10					119												
UD-54	199-200	132+03.96	134+70.00	RT	14							266										
UD-55	199-200	132+37.24	134+90.00	LT	13							245										
UD-56	199-200	133+55.83	134+75.00	LT	10					109												
UD-57	200	134+30.78	135+75.00	RT	10					134												
UD-58	200	134+79.33	135+75.00	LT	10					86												
UD-59	200	135+75.00	136+68.25	LT	10					79												
UD-60	200	134+87.25	136+68.25	LT & RT	23					341												
UD-61	200	135+84.11	136+68.25	RT	10					74												
UD-62	200	136+68.25	137+25.17	LT	10					47												
UD-63	200	136+68.25	138+20.50	LT & RT	23					282												
UD-64	200	136+68.25	137+16.60	RT	10					38												
UD-65	200	137+30.00	138+32.11	LT	10					92												
UD-66	200	137+20.00	138+15.26	RT	10					85												
UD-67	200-201	138+39.98	140+18.26	LT	10					168												
UD-68	200-201	138+20.00	139+81.52	LT & RT	24					300												
UD-69	200-201	138+19.98	139+70.91	RT	10					141												
UD-70	201,294	140+24.98	72+50 (BYERS)	LT	10					298												
UD-71	201	139+75.00	141+44.29	LT & RT	48					296												
UD-72	201	139+75.00	141+53.33	RT	10					168												
UD-73	201,294	72+50 (BYERS)	141+89.99	LT	10					183												
UD-400	201	141+40.00	141+86.13	LT&RT	42					49												
TOTALS CARRIED TO GENERAL SUMMARY					570	12		1		7281	103	511										

CALCULATED MAG CHECKED AJS

UNDERDRAIN SUBSUMMARY

MOT-75-0.75

REF. NO.	SHEET NO.	STATION FROM	STATION TO	SIDE	603 6" CONDUIT, TYPE F FOR UNDERDRAIN OUTLET FT					605 6" SHALLOW PIPE UNDERDRAINS WITH FABRIC WRAP FT		605 6" BASE PIPE UNDERDRAINS WITH FABRIC WRAP FT										
		IR																				
		MIAMISBURG-SPRINGBORO PIKE																				
UD-74	201	141+86.13	142+96.15	LT & RT						219												
UD-75	201	142+02.00	142+93.57	RT	10					82												
UD-76	201-202	143+00.00	145+45.04	LT	10					235												
UD-77	201-202	143+00.00	145+43.35	LT & RT	21					449												
UD-78	201-202	143+00.00	145+42.87	RT	10					234												
UD-79	202	145+50.00	147+95.48	LT	10					236												
UD-80	202	145+50.00	147+98.87	LT & RT	21					477												
UD-81	90,202	145+50.00	336+90 (RAMP P)	RT	20					364												
UD-82	138,202	147+99.93	439+79.79 (RAMP M)	LT	10					195												
UD-83	202	148+00.00	149+13.17	LT & RT	35					192												
UD-84	202	150+23.24	439+80 (RAMP M)							111												
UD-85	90,202	336+54 (RAMP P)	150+21.52	RT						195												
UD-86	202,203	150+30.00	152+09.66	LT	10					171												
UD-87	202,203	150+30.00	151+89.08	RT	10					150												
UD-88	203,204	155+44.91	157+39.89	LT	10					187												
UD-89	203,204	155+24.33	156+95.00	RT	10					161												
UD-90	204,161	157+46.12	142+09 (RAMP J)	LT						155												
UD-91	204,161	142+09 (RAMP J)	160+05.00	LT	10					239												
UD-92	204	158+04.18	160+05.00	LT & RT	36					383												
UD-93	204	157+93.34	160+05.00	RT	10					214												
UD-94	204-205	160+15.09	162+55.00	LT	10					229												
UD-95	204-205	160+15.00	162+55.00	LT & RT	20					464												
UD-96	204-205	160+15.00	162+55.00	RT	10					230												
UD-97	205	162+62.80	163+80.07	LT	10					107												
UD-98	205	162+55.00	163+80.00		10					115												
UD-99	205	162+63.42	163+80.00	RT	10					107												
UD-100	205	163+87.82	164+39.09	LT	10							42										
UD-101	205	163+84.42	164+39.09		10							45										
UD-102	205	163+89.06	164+39.09	RT	10							40										
UD-401		NOT USED																				
UD-402	205	164+39.09	164+81.84	LT	10							32										
UD-403	205	164+39.09	164+80.41	LT	10							32										
TOTALS CARRIED TO GENERAL SUMMARY					363					5901		191										

CALCULATED MAG CHECKED AJS

UNDERDRAIN SUBSUMMARY

MOT-75-0.75

REF. NO.	SHEET NO.	STATION FROM	STATION TO	SIDE			603 6" CONDUIT, TYPE F FOR UNDERDRAIN OUTLET	603 6" CONDUIT, TYPE B		605 6" SHALLOW PIPE UNDERDRAINS WITH FABRIC WRAP		605 6" BASE PIPE UNDERDRAINS WITH FABRIC WRAP										
							FT	FT		FT		FT										
		EARMARK/LOCAL																				
		MIAMISBURG-SPRINGBORO PIKE																				
UD-103	205	164+81.84	164+95.98	LT								14										
UD-104	205	164+80.41	165+65.05	LT								85										
UD-105	205	164+39.09	164+93.53	RT			10					44										
UD-106	205	165+00.00	165+61.33	RT			10					51										
UD-107	205-206	165+70.00	167+35.71	RT			10			156												
UD-108	205-206	165+70.00	167+44.01	LT			10			174												
UD-109	205-206	165+70.00	167+94.57	RT			10			215												
UD-110	206	167+48.00	168+68.08	LT			10			110												
UD-111	206	167+45.00	169+94.41	LT & RT			10			239												
UD-112	206	168+02.00	169+94.00	RT			10			190												
UD-113	206	168+74.99	170+33.91	LT			10			149												
UD-114	206	170+02.00	172+33.66	LT			10			222												
UD-115	206	170+39.86	172+14.84	LT			10			167												
UD-116	206-207	170+02.00	172+67.70	RT			10			256												
UD-117	206-207	172+24.86	174+44.86	LT			10			212												
UD-118	206-207	172+40.00	174+39.60	LT			12			263												
UD-119	207	173+25.00	173+89.18	LT			10			56												
UD-120	207-208	173+25.00	178+12.83	RT				56		488												
UD-121	207	173+25.00	177+39.33	LT						418												
UD-122	207	172+75.00	174+73.35	RT			10			190												
UD-123	207	174+44.86	176+18.04	LT			10			163												
UD-124	207	174+44.26	176+13.49	LT			10			160												
UD-125	207	174+79.99	177+42.36	LT			10			253												
UD-126	207	174+79.99	175+83.25	LT			10			93												
UD-127	207	174+80.01	177+03.25	RT			10			213												
UD-128	207-208	177+49.81	175+13.18	LT & RT			10			56												
UD-129	207-208,298	176+25.00	178+37.40	LT						240												
UD-130	207-208	176+25.00	178+17.66	LT			10			183												
UD-131	207-208	177+75.00	178+25.23	LT			10			40												
UD-132	207-208	175+85.00	176+69.00	LT			10			74												
UD-133	207-208	176+75.00	178+24.66	LT			10			140												
UD-134	207-208	177+05.00	178+04.98	RT			10			94												
UD-135	208	178+04.98	178+30.43	RT						60												
UD-136	208	179+30.75	179+58.12	LT						66												
UD-137	208	179+58.12	180+05.06	LT			10			48												
UD-138	208	179+23.81	179+45.90	RT			10					33										
UD-139	208,209	179+45.90	187+69.30	RT			20					812										
UD-140	208	179+62.00	180+57.07	RT			10					85										
UD-141	208	179+68.62	181+25.93	RT			10					155										
UD-142	208	179+49.00	180+67.76	RT			10					109										
TOTALS CARRIED TO GENERAL SUMMARY							342	56		5388		1388										

CALCULATED MAG CHECKED AJS

UNDERDRAIN SUBSUMMARY

MOT-75-0.75

REF. NO.	SHEET NO.	STATION FROM	STATION TO	SIDE	603 6" CONDUIT, TYPE F FOR UNDERDRAIN OUTLET	603 6" CONDUIT, TYPE B		604 PRECAST REINFORCED CONCRETE OUTLET		605 6" SHALLOW PIPE UNDERDRAINS WITH FABRIC WRAP	605 6" UNCLASSIFIED PIPE UNDERDRAINS WITH FABRIC WRAP	605 6" BASE PIPE UNDERDRAINS WITH FABRIC WRAP										
		FROM	TO		FT	FT		EACH		FT	FT	FT										
		EARMARK/LOCAL																				
		MIAMISBURG-SPRINGBORO PIKE																				
UD-143	208	180+10.00	181+66.92	LT	10					147												
UD-144	208	180+15.00	183+47.30	LT	10					324												
UD-145	208	180+15.00	182+76.06	RT	14					262												
UD-146	208	180+65.00	181+85.22	RT	10					110												
UD-147	208	180+75.00	181+70.12	RT	10					85												
UD-148	208,209	181+75.00	185+29.63	LT	10					346												
UD-149	208	181+75.15	182+84.44	RT	10					105												
UD-150	208-209	181+90.33	184+16.13	RT	10					220												
UD-151	208-209	182+90.00	184+15.99	RT	10					116												
UD-152	209	184+19.50	185+34.08	RT	10					105												
UD-153	209	185+41.00	188+49.89	LT	10					300												
UD-154	209-210	185+41.00	192+83.16	RT		25				735												
UD-155	209-210	186+95.00	192+83.16	LT	30					580												
UD-156		NOT USED																				
UD-157	209-211	188+49.89	196+00.00	LT	20							748										
UD-158	209-211	188+49.89	197+00.00	LT	10	26				738	100											
UD-159	209-211	188+05.00	195+80.32	RT	10	20				778		779										
UD-160	211	195+80.32	197+00.00	RT		17		1		20	100											
		WOOD ROAD																				
UD-201	283	39+03.94	40+07.82	LT	10					94												
UD-202	283	40+15.00	42+46.39	LT	10					221												
UD-203	283-284	40+15.00	44+38.44	RT	10					414												
UD-204	283-284	4+24.98	44+73.37	LT	10					208												
UD-205	284	44+79.98	46+34.89	LT	10					145												
UD-206	284	44+45.00	46+38.25	RT	10					183												
UD-207	284	46+40.00	48+50.00	LT	10					200												
UD-208	284	46+40.00	48+50.00	RT	10					200												
		S.R. 741																				
UD-301	297,208	33+94.00	38+17.46	LT	11	40		1		427		427										
UD-302	297	33+22.00	37+89.45	RT	20	93		1		464		464										
UD-303	298	41+30.59	46+26.88	LT	21	21		1		496		497										
UD-304	298	40+95.63	44+00.01	RT								304										
UD-305	298	40+95.63	43+00.00	RT	10					204												
UD-306	298-299	46+28.04	47+26.94	LT								100										
TOTALS CARRIED TO GENERAL SUMMARY					326	242		4		8227	200	3319										

CALCULATED MAG CHECKED AJS

UNDERDRAIN SUBSUMMARY

MOT-75-0.75

REF. NO.	SHEET NO.	STATION FROM	STATION TO	SIDE	638 6" GATE VALVE AND VALVE BOX EACH	638 8" GATE VALVE AND VALVE BOX EACH	638 12" GATE VALVE AND VALVE BOX EACH	638 12" X 12" TAPPING SLEEVE, VALVE AND VALVE BOX EACH	638 6" FIRE HYDRANT EACH	638 FIRE HYDRANT REMOVED EACH	638 FIRE HYDRANT AND GATE VALVE REMOVED AND RESET EACH	638 VALVE BOX ADJUSTED TO GRADE EACH	638 WATER WORK, MISC.: CUT AND PLUG 8" WATER LINE EACH	690 SPECIAL - MISC.: 6" WATER MAIN DUCTILE IRON PIPE, MCSED FT	690 SPECIAL - MISC.: 8" WATER MAIN DUCTILE IRON PIPE, MCSED FT	690 SPECIAL - MISC.: 12" WATER MAIN DUCTILE IRON PIPE, MCSED FT	690 SPECIAL - MISC.: 6" WATER MAIN CAST IRON PIPE, CITY OF MIAMISBURG FT	690 SPECIAL - MISC.: 12" WATER MAIN CAST IRON PIPE, CITY OF MIAMISBURG FT	FOR INFORMATION ONLY 90 DEGREE BEND	45 DEGREE BEND	22 1/2 DEGREE BEND	11 1/4 DEGREE BEND
		I-75 RAMP H																				
W-1	113,114	229+42.00	236+50.50	RT		2 (IR)			2 (IR)					10 (IR)	736 (IR)				2	1	1	
W-2	114	235+46.50		LT	2					1 (IR)												
W-9	114	239+20.00		RT						1 (IR)												
W-10	114	236+57.00		RT									1 (IR)									
		MIAMISBURG-SPRINGBORO PIKE																				
W-3	195	108+06.00		RT								1										
W-4	195-202	108+75.00	146+82.00	LT	1			1	1									3932	2	5	3	9
W-5	195	109+75.00		LT	1				1	1							16					
W-6	196	112+75.00	114+00.00	RT				2								146			2			1
W-7	196	114+95.00		LT	1				1	1							5					
W-8	196	115+81.00		RT							1	3		13								
W-11	197	118+50.00		LT	1				1	1							5					
W-12		NOT USED																				
W-13		NOT USED																				
W-14	197,198	118+50.00	125+90.00	RT				1								791			1	3	1	1
W-15	197,198	121+50.00		RT	1				1	1				24								
W-16	197	122+85.00		LT	1				1	1							5					
W-17	197	125+77.00	125+85.00	RT	1				1	1							31					
W-18	198	127+66.00		LT						1												
W-19	198	128+50.00		LT	1				1								5					
W-20	199	142+00.00		LT			3															
W-21	201	141+92.00		LT						1												
W-22	201	71+21.00	(BYERS ROAD)	RT	1				1								5					
W-23	201	146+76.00		LT						1												
W-24	202	150+50.00		LT						1												
W-25		NOT USED																				
W-26		NOT USED																				
SUBTOTALS (IR)					0	2	0	0	2	2	0	0	1	10	736	0	0	0				
SUBTOTALS (EARMARK/LOCAL)					11	0	3	4	9	10	1	4	0	37	0	937	72	3932				
TOTALS CARRIED TO GENERAL SUMMARY					11	2	3	4	11	12	1	4	1	47	736	937	72	3932	7	9	5	11

CALCULATED MAG
CHECKED AJS

WATER WORK SUBSUMMARY

MOT-75-0.75

REF. NO.	SHEET NO.	STATION FROM	STATION TO	SIDE	638 6" GATE VALVE AND VALVE BOX EACH	638 12" GATE VALVE AND VALVE BOX EACH	638 16" GATE VALVE AND VALVE BOX EACH	638 12" X 12" TAPPING SLEEVE, VALVE AND VALVE BOX EACH		638 6" FIRE HYDRANT EACH	638 FIRE HYDRANT REMOVED EACH	638 FIRE HYDRANT AND GATE VALVE REMOVED AND RESET EACH	638 VALVE BOX ADJUSTED TO GRADE EACH		690 SPECIAL - MISC.: 6" WATER MAIN DUCTILE IRON PIPE, MCSED FT	690 SPECIAL - MISC.: 12" WATER MAIN DUCTILE IRON PIPE, MCSED FT	690 SPECIAL - MISC.: 16" WATER MAIN DUCTILE IRON PIPE, MCSED FT		FOR INFORMATION ONLY 90 DEGREE BEND	45 DEGREE BEND	22 1/2 DEGREE BEND	11 1/4 DEGREE BEND
		EARMARK/LOCAL																				
		MIAMISBURG-SPRINGBORO PIKE																				
W-27		NOT USED																				
W-28		NOT USED																				
W-29		NOT USED																				
W-30		NOT USED																				
		WOOD ROAD																				
W-31		NOT USED																				
W-32	283,284	38+99.00	48+33.60	LT & RT		2		2		1						1057			2		3	
W-33	283	39+91.00		LT							1											
W-34	283	40+30.00		RT	1					1					5							
W-35	284	45+30.00		RT	1					1					5							
W-36	284	45+43.00		LT							1											
W-37	198,284	47+25.00	49+21.00	LT & RT		1										290			1			
		BYERS ROAD																				
W-38	201,294	71+30.00	72+51.00	RT			1										121					
		S.R. 741																				
W-39		NOT USED																				
W-40		NOT USED																				
W-41	297	34+30.00	34+44.00	LT										3								
W-42	298	41+92.00	42+36.00	LT										3								
W-43	298	44+95.00		LT									1									
W-44	298	44+95.00		LT										1								
TOTALS CARRIED TO GENERAL SUMMARY					2	3	1	2		3	2	1	7		10	1347	121		3	0	3	0

CALCULATED MAG
CHECKED AJS

WATER WORK SUBSUMMARY

MOT-75-0.75

REF. NO.	SHEET NO.	STATION FROM	STATION TO	SIDE		603 8" CONDUIT, TYPE B FT	603 8" CONDUIT, TYPE C FT	603 10" CONDUIT, TYPE C FT	603 12" CONDUIT, TYPE B FT	603 12" CONDUIT, TYPE C FT	603 15" CONDUIT, TYPE C FT				604 MANHOLE, No. 3 EACH	604 MANHOLE RECONSTRUCTED TO GRADE EACH			638 SPECIAL - 30"STEEL CASING PIPE FT	690 SPECIAL - MISC.: 16" SANITARY FORCE MAIN FT	IR	EARMARK/LOCAL
		I-75 RAMP H																				
S-1	113,114	229+81.00	236+32.50	RT							666 (IR)				4 (IR)							X	
		MIAMISBURG-SPRINGBORO PIKE																				
S-2	195	108+57.54		LT												1						X
S-3	195	109+28.77		LT												1						X
S-4	195	110+77.00		LT												1						X
S-5		NOT USED																				
S-6	199	132+20.00	133+98.00	LT & RT					147						2							X
S-7	199	133+75.00		RT												1						X
S-8	201	141+15.00	141+33.00	LT & RT		151	95								3							X
S-9		NOT USED																				
S-10	205-207	163+54.30	176+80.00	LT & RT				991	299	188					6							X
S-11	208,209,297	176+78.00	179+71.00	LT & RT															400	689		X
S-12		NOT USED																				
S-13	210	193+78.00		LT												1						X
SUBTOTALS (IR)						0	0	0	0	0	666				4	0			0	0		
SUBTOTALS (EARMARK/LOCAL)						151	95	991	446	188	0				11	5			400	689		
TOTALS CARRIED TO GENERAL SUMMARY						151	95	991	446	188	666				15	5			400	689		

CALCULATED MAG CHECKED AJS

SANITARY SUBSUMMARY

MOT-75-0.75

PROJECT DESCRIPTION

THE PROJECT IS TO CONTRUCT A NEW DIAMOND INTERCHANGE AT AUSTIN BOULEVARD TO INTERSTATE 75. THE PROJECT LENGTH IS 1.3 MILES ALONG INTERSTATE 75, 2.8 MILES OF SIDEROAD IMPROVEMENTS TO AUSTIN BOULEVARD, WOOD ROAD, BYERS ROAD AND STATE ROUTE 741.

U.S.G.S. QUADRANT NO. 39084-E2-TF-024
SPRINGBORO OHIO
LATITUDE: 39°35'48" LONGITUDE: 84°14'17"

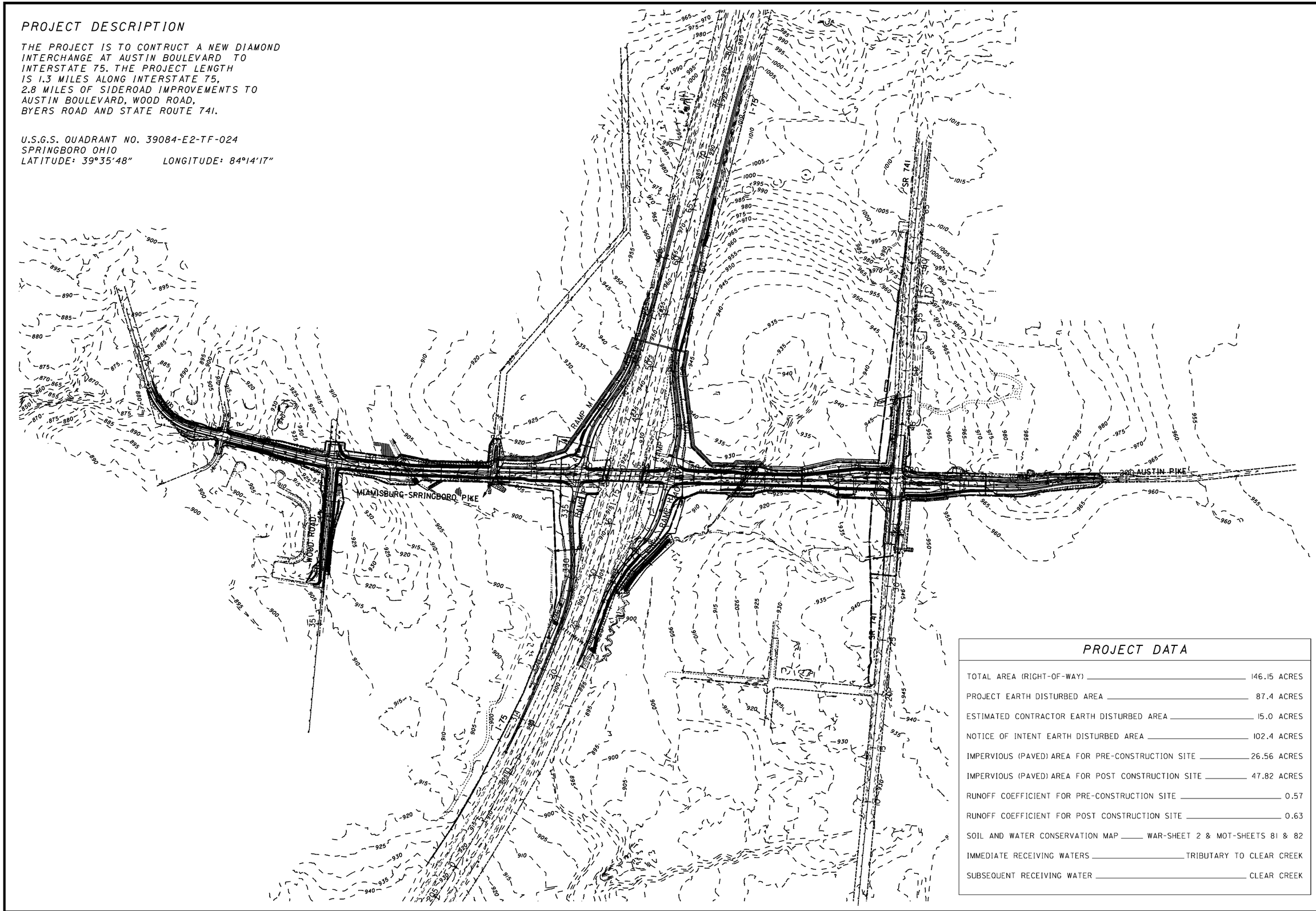

PROJECT DATA

TOTAL AREA (RIGHT-OF-WAY)	146.15 ACRES
PROJECT EARTH DISTURBED AREA	87.4 ACRES
ESTIMATED CONTRACTOR EARTH DISTURBED AREA	15.0 ACRES
NOTICE OF INTENT EARTH DISTURBED AREA	102.4 ACRES
IMPERVIOUS (PAVED) AREA FOR PRE-CONSTRUCTION SITE	26.56 ACRES
IMPERVIOUS (PAVED) AREA FOR POST CONSTRUCTION SITE	47.82 ACRES
RUNOFF COEFFICIENT FOR PRE-CONSTRUCTION SITE	0.57
RUNOFF COEFFICIENT FOR POST CONSTRUCTION SITE	0.63
SOIL AND WATER CONSERVATION MAP	WAR-SHEET 2 & MOT-SHEETS 81 & 82
IMMEDIATE RECEIVING WATERS	TRIBUTARY TO CLEAR CREEK
SUBSEQUENT RECEIVING WATER	CLEAR CREEK

HORIZONTAL SCALE IN FEET
0 200 400 800

CALCULATED TAM
CHECKED AJS

PROJECT SITE PLAN

MOT-75-0.75

BEGIN WORK
STA. 181+55.00

BEGIN PROJECT
STA. 11+57.11
S.L.M.=0.22

S.T.P.

U ESMT
LA-R/W

NOISE BARRIER (SEE SHEETS 419-441)

CONSTRUCTION LIMITS

R-1

Dense Vegetation

P.C. STA. 311+57.11
℄ CONSTRUCTION RAMP P=
STA. 11+57.11;126.50' LT.
℄ CONSTRUCTION I-75
BEGIN SHLD. TAPER
STA. 11+57.11;126.17' LT.
℄ CONSTRUCTION I-75
BEGIN RAMP TAPER

STA. 312+57.11
END SHLD. TAPER

UD-1

8"
12'
0.33'
10'

312+00
313+00
314+00

CONSTRUCTION LIMITS

CURVE RAMP P-1

SAWCUT LINE ALONG EX. E/P

R-2

B CONSTRUCTION
RAMP P

I-75 Southbound

P.I. STA. 314+57.08

MATCH LINE STA. 315+00 SEE SHEET 87

CURVE RAMP P-1
P.I. STA. = 314+57.08
Δ = 2° 49' 49" (LT)
Dc = 0° 28' 19"
R = 12,142.76'
T = 299.97'
L = 599.82'
E = 3.70'
e max = 0.020

+90
+03

10+00
11+00
12+00
13+00
14+00
15+00

℄ CONSTRUCTION I-75
CURVE I-75-2

CURVE I-75-2
P.I. STA. = 19+72.39
Δ = 18° 15' 11" (LT)
Dc = 0° 28' 00"
R = 12,277.69'
T = 1,972.39'
L = 3,911.36'
E = 157.42'
e max = NC

℄ RAMP P
12'
3.51%
1.47%
19" Asphalt

TYPICAL ADJOINING SECTION
STA. 11+57.11

F.I.O. - ANTICIPATED LOCATIONS OF RELOCATED UTILITIES
FOR SUBSUMMARIES SEE SHEETS 64-84
FOR PAVEMENT LEGEND SEE SHEET 195
FOR PROFILE SEE SHEETS 91-93
FOR CROSS SECTIONS SEE SHEETS 94-110
FOR INTERSECTION DETAILS SEE SHEETS 322-337
FOR STORM SEWER PROFILES SEE SHEETS 340-361
FOR MEDIAN DETAILS SEE SHEETS 404-414

HORIZONTAL SCALE IN FEET
0 10 20 40

CALCULATED MAG
CHECKED AJS

RAMP P PLAN
STA. 311+57.11 TO STA. 315+00

MOT-75-0.75

86
773

CURVE RAMP P-1
P.I. STA. = 314+57.08
Δ = 2° 49′ 49″ (LT)
Dc = 0° 28′ 19″
R = 12,142.76′
T = 299.97′
L = 599.82′
E = 3.70′
e max = 0.020

CURVE RAMP P-2
P.I. STA. = 320+81.28
Δ = 3° 03′ 45″ (LT)
Dc = 0° 28′ 20″
R = 12,133.52′
T = 324.35′
L = 648.54′
E = 4.33′
e max = 0.020

MATCH LINE STA. 315+00 SEE SHEET 86

MATCH LINE STA. 320+50 SEE SHEET 88

U ESMT

LA-R/W

NOISE BARRIER (SEE SHEETS 419-441)

CONSTRUCTION LIMITS

San. MH

SAN

10″ SAN

12″ SAN

8″ W

PRECAST REINFORCED CONCRETE OUTLET
318+38.23; 42.89′ LT

R-1

P.C.C. STA. 317+66.93

UD-1

UD-2

8″-F

MASONRY COLLAR

PRECAST REINFORCED CONCRETE OUTLET
318+50.14
34.75′ LT
INV. 6″=898.93

℄ CONSTRUCTION RAMP P

316+00

317+00

318+00

319+00

320+00

CURVE RAMP P-1

CURVE RAMP P-2

12′

10′

+00

R-2

SAWCUT LINE ALONG EX. E/P

126.50′ LT. (TYP.)

I-75 Southbound

16″ Casing

CURVE I-75-2
P.I. STA. = 19+72.39
Δ = 18° 15′ 11″ (LT)
Dc = 0° 28′ 00″
R = 12,277.69′
T = 1,972.39′
L = 3,911.36′
E = 157.42′
e max = NC

16+00

17+00

18+00

19+00

20+00

℄ CONSTRUCTION I-75
CURVE I-75-2

42″

36″

F.I.O. - ANTICIPATED LOCATIONS OF RELOCATED UTILITIES
FOR SUBSUMMARIES SEE SHEETS 64-84
FOR PAVEMENT LEGEND SEE SHEET 195
FOR PROFILE SEE SHEETS 91-93
FOR CROSS SECTIONS SEE SHEETS 94-110
FOR INTERSECTION DETAILS SEE SHEETS 322-337
FOR STORM SEWER PROFILES SEE SHEETS 340-361
FOR MEDIAN DETAILS SEE SHEETS 404-414

HORIZONTAL SCALE IN FEET
0 10 20 40

CALCULATED MAG
CHECKED AJS

RAMP P PLAN
STA. 315+00 TO STA. 320+50

MOT-75-0.75

87
773

CURVE RAMP P-2
P.I. STA. = 320+81.28
Δ = 3° 03′ 45″ (LT)
Dc = 0° 28′ 20″
R = 12,133.52′
T = 324.35′
L = 648.54′
E = 4.33′
e max = 0.020

CURVE RAMP P-3
P.I. STA. = 324+55.48
Δ = 1° 15′ 00″ (LT)
Dc = 1° 15′ 00″
R = 4,583.67′
T = 50.00′
L = 100.00′
E = 0.27′
e max = 0.024

322+97.97 I.A.P.A.
96.09′ LT

325+49.00 I.A.P.A.
102.50′ LT

325+16.77 I.A.P.A.
92.26′ LT

324+87.49
93.15′ LT

CH ESMT
U ESMT
Dense Vegetation
CONSTRUCTION LIMITS
NOISE BARRIER (SEE SHEETS 419-441)
Conc. Enegsement
SEE CULVERT DETAIL
I-75 STA. 23+98.15
SHEET 362
60" Ch. Link
PRECAST REINFORCED
CONCRETE OUTLET
322+50.00
37.69′ LT
INV. 6"=900.33
P.C.C. STA. 324+05.41
END RAMP TAPER
BEGIN PAVT. TAPER
P.C.C. STA. 325+05.47
MASONRY
COLLAR (TYP.)
60"-A
84"-A
60"-A
MATCH LINE STA. 320+50 SEE SHEET 87
MATCH LINE STA. 326+00 SEE SHEET 89
CURVE RAMP P-2
CURVE RAMP P-3
℄ CONSTRUCTION
RAMP P
P.I. STA. 320+81.28
126.50′ LT.
(TYP.)
SAWCUT LINE ALONG EX. E/P
CONSTRUCTION LIMITS
P.I. STA. 324+55.48
I-75 Southbound
R-1
R-2
R-4
UD-1
UD-3
321+00
322+00
323+00
324+00
325+00
10'
21'
16'
10'
12'
10'
5.33'

CURVE I-75-2
P.I. STA. = 19+72.39
Δ = 18° 15′ 11″ (LT)
Dc = 0° 28′ 00″
R = 12,277.69′
T = 1,972.39′
L = 3,911.36′
E = 157.42′
e max = NC

21+00
22+00
23+00
24+00
25+00
26+00
℄ CONSTRUCTION I-75
CURVE I-75-2
60"
84"
60"

F.I.O. - ANTICIPATED LOCATIONS OF
RELOCATED UTILITIES
FOR SUBSUMMARIES SEE SHEETS 64-84
FOR PAVEMENT LEGEND SEE SHEET 195
FOR PROFILE SEE SHEETS 91-93
FOR CROSS SECTIONS SEE SHEETS 94-110
FOR INTERSECTION DETAILS SEE SHEETS 322-337
FOR STORM SEWER PROFILES SEE SHEETS 340-361
FOR MEDIAN DETAILS SEE SHEETS 404-414

HORIZONTAL SCALE IN FEET
0 10 20 40
CALCULATED MAG
CHECKED AJS

RAMP P PLAN
STA. 320+50 TO STA. 326+00

MOT-75-0.75

88
773

CURVE RAMP P-4
P.I. STA. = 328+43.25
Δ = 23° 19' 01" (LT)
Dc = 3° 30' 00"
R = 1,637.02'
T = 337.77'
L = 666.20'
E = 34.48'
e max = 0.048

CURVE I-75-2
P.I. STA. = 19+72.39
Δ = 18° 15' 11" (LT)
Dc = 0° 28' 00"
R = 12,277.69'
T = 1,972.39'
L = 3,911.36'
E = 157.42'
e max = NC

327+08.50 I.A.P.A.
115.93' LT

PRECAST REINFORCED
CONCRETE OUTLET
327+64.19
35.89' LT
INV. 6"=901.16

26+89.95
125.87' LT.

STA. 326+71.26

STA. 330+05.40
END PAV'T. TAPER

P.I. STA. 328+43.25

MATCH LINE STA. 326+00 SEE SHEET 88

MATCH LINE STA. 331+50 SEE SHEET 90

SEE CULVERT DETAIL
RAMP P STA. 331+50
SHEET 366

CONSTRUCTION LIMITS

NOISE BARRIER (SEE SHEETS 419-441)

CURVE RAMP P-4

℄ CONSTRUCTION I-75
CURVE I-75-2

℄ CONSTRUCTION
RAMP P

MASONRY COLLAR

SAWCUT LINE ALONG EX. E/P

Concrete Lined Ditch

54" Casing

I-75 Southbound

F.I.O. - ANTICIPATED LOCATIONS OF RELOCATED UTILITIES
FOR SUBSUMMARIES SEE SHEETS 64-84
FOR PAVEMENT LEGEND SEE SHEET 195
FOR PROFILE SEE SHEETS 91-93
FOR CROSS SECTIONS SEE SHEETS 94-110
FOR INTERSECTION DETAILS SEE SHEETS 322-337
FOR STORM SEWER PROFILES SEE SHEETS 340-361
FOR MEDIAN DETAILS SEE SHEETS 404-414

HORIZONTAL SCALE IN FEET
0 10 20 40

CALCULATED MAG
CHECKED AJS

RAMP P PLAN
STA. 326+00 TO STA. 331+50

MOT-75-0.75

89
773

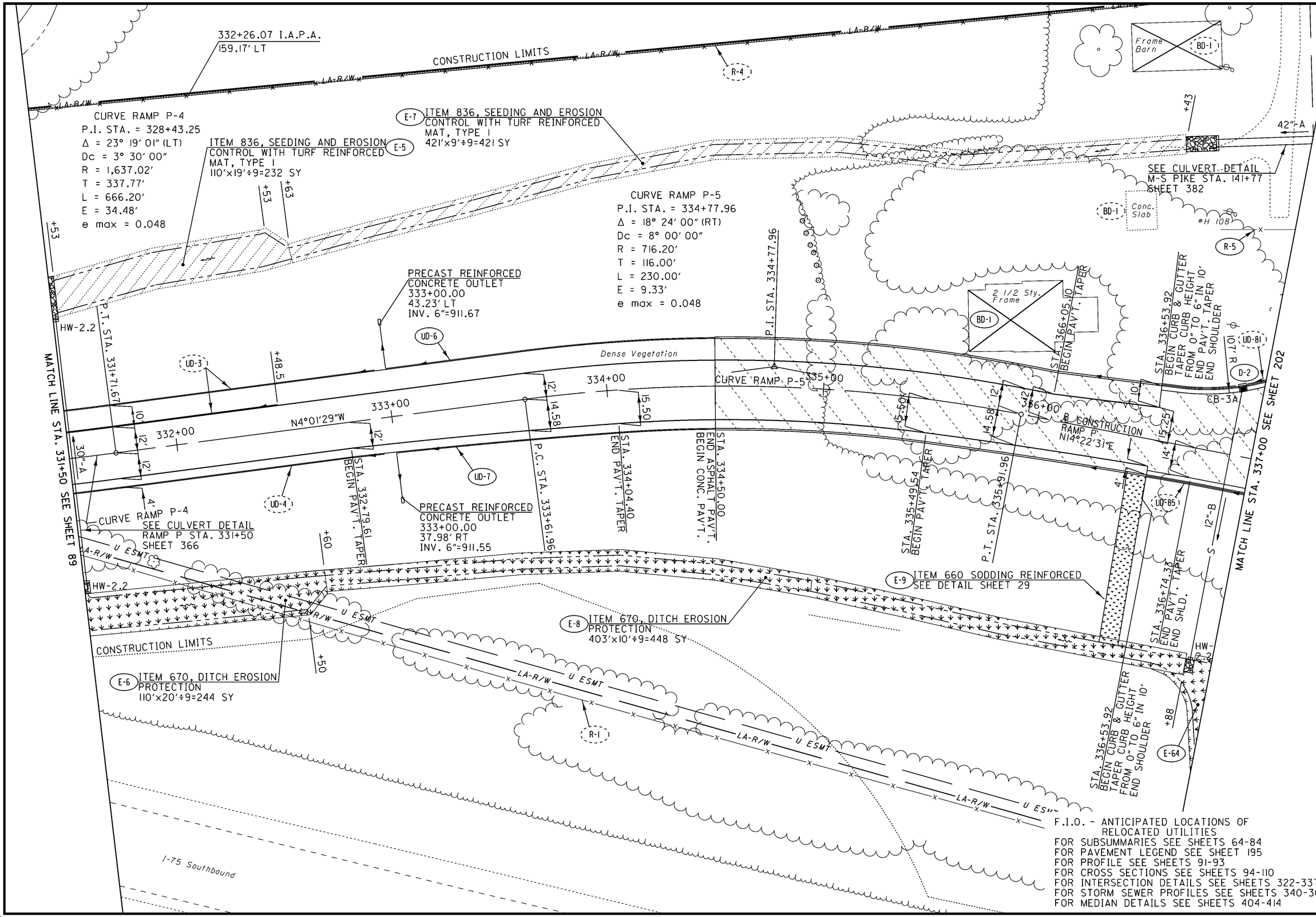

F.I.O. - ANTICIPATED LOCATIONS OF RELOCATED UTILITIES
FOR SUBSUMMARIES SEE SHEETS 64-84
FOR PAVEMENT LEGEND SEE SHEET 195
FOR PROFILE SEE SHEETS 91-93
FOR CROSS SECTIONS SEE SHEETS 94-110
FOR INTERSECTION DETAILS SEE SHEETS 322-337
FOR STORM SEWER PROFILES SEE SHEETS 340-361
FOR MEDIAN DETAILS SEE SHEETS 404-414

HORIZONTAL SCALE IN FEET 0 10 20 40

CALCULATED MAG
CHECKED AJS

RAMP P PLAN
STA. 331+50 TO STA. 337+00

MOT-75-0.75

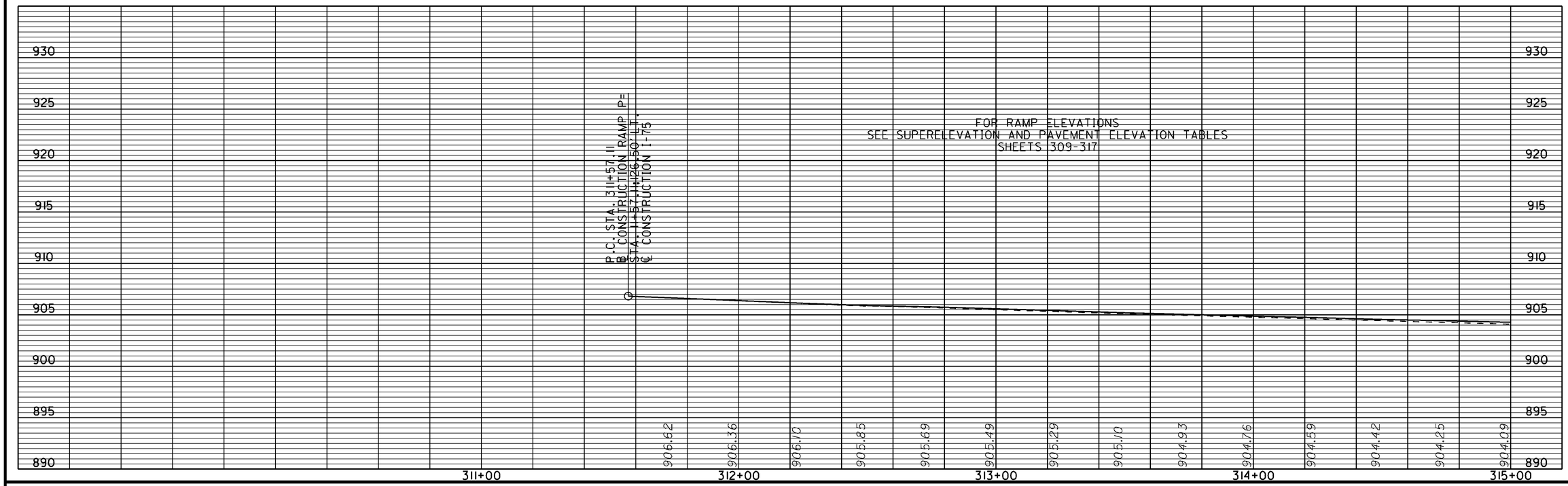

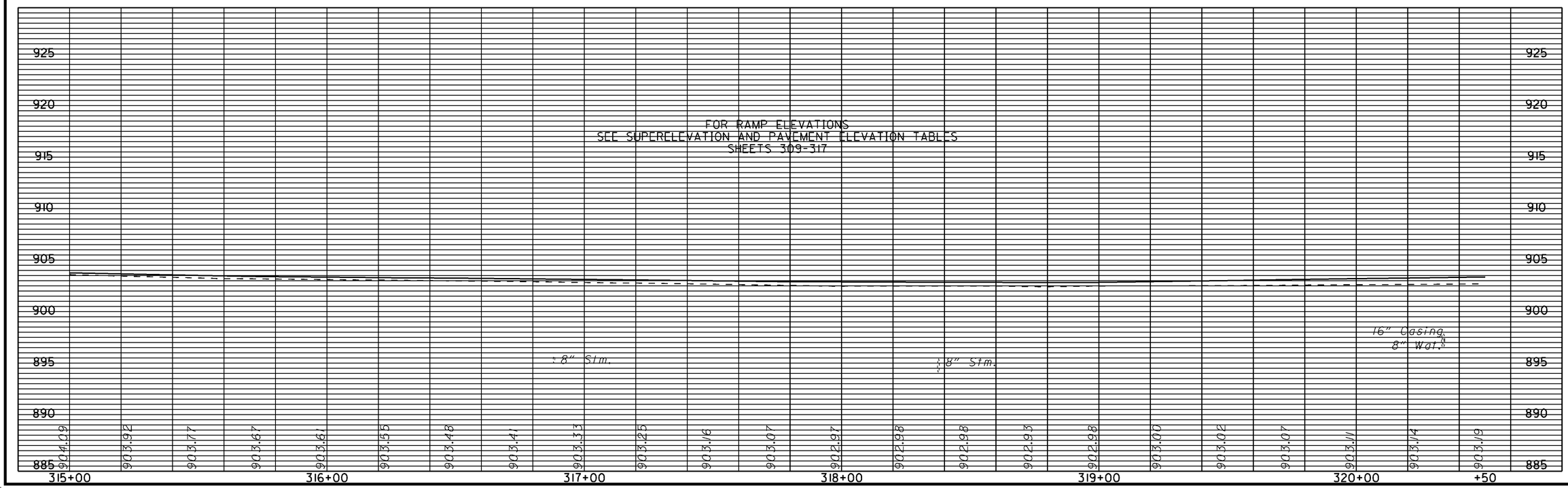

CALCULATED MAG
CHECKED AJS

RAMP P PROFILE

STA. 311+57.11 TO STA. 320+50

MOT-75-0.75

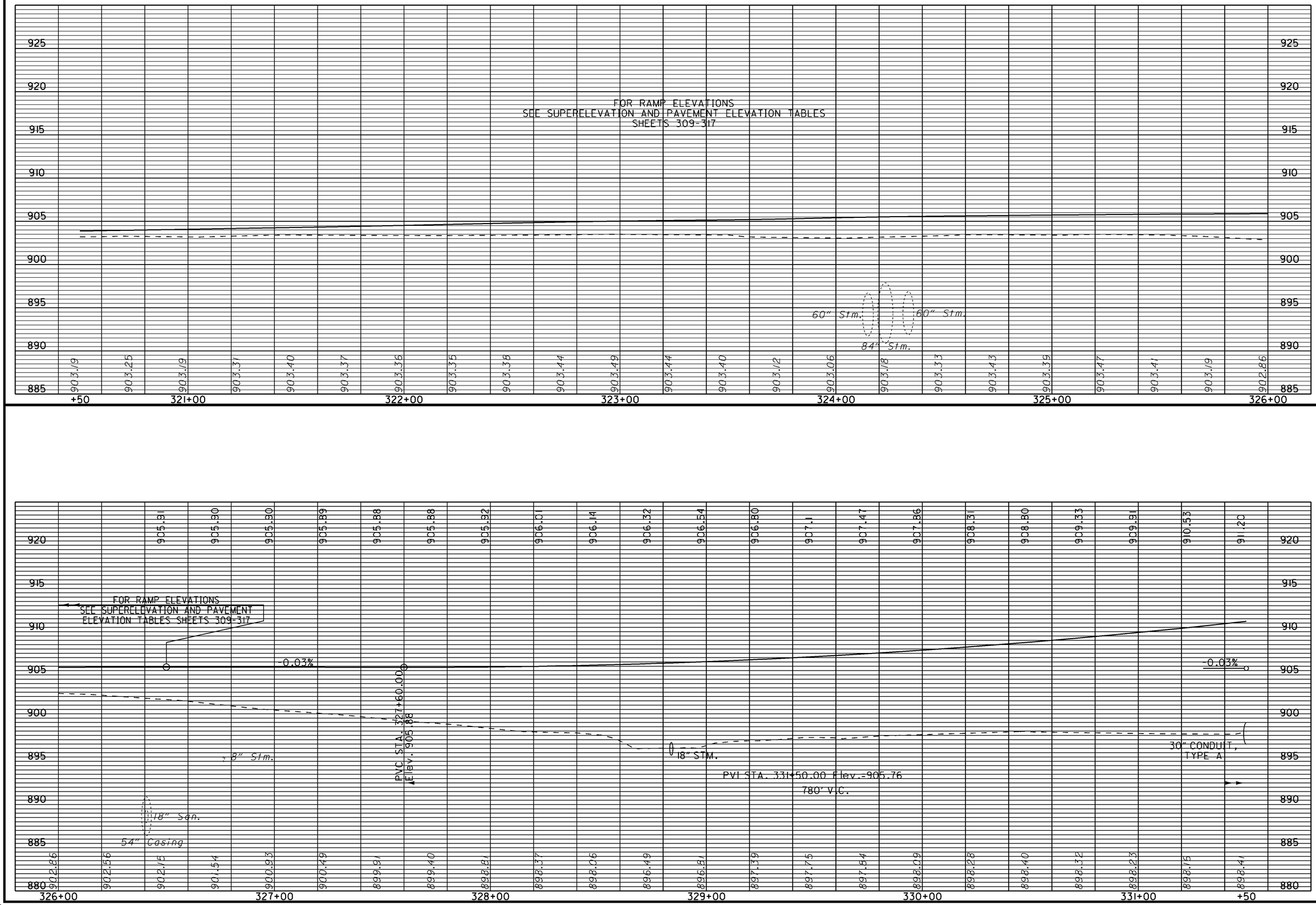

CALCULATED MAG
CHECKED AJS

RAMP P PROFILE
STA. 320+50 TO STA. 331+50

MOT-75-0.75

CALCULATED MAG
CHECKED AJS

RAMP P PROFILE

STA. 331+50 TO STA. 338+51.97

MOT-75-0.75

SEEDING		END AREA		VOLUME	
END WIDTH	SQ. YDS.	CUT	FILL	CUT	FILL
		53	10		
				66	15
		18	6		
				35	10
		20	5		
				31	8
		20	6		
SHEET TOTAL					

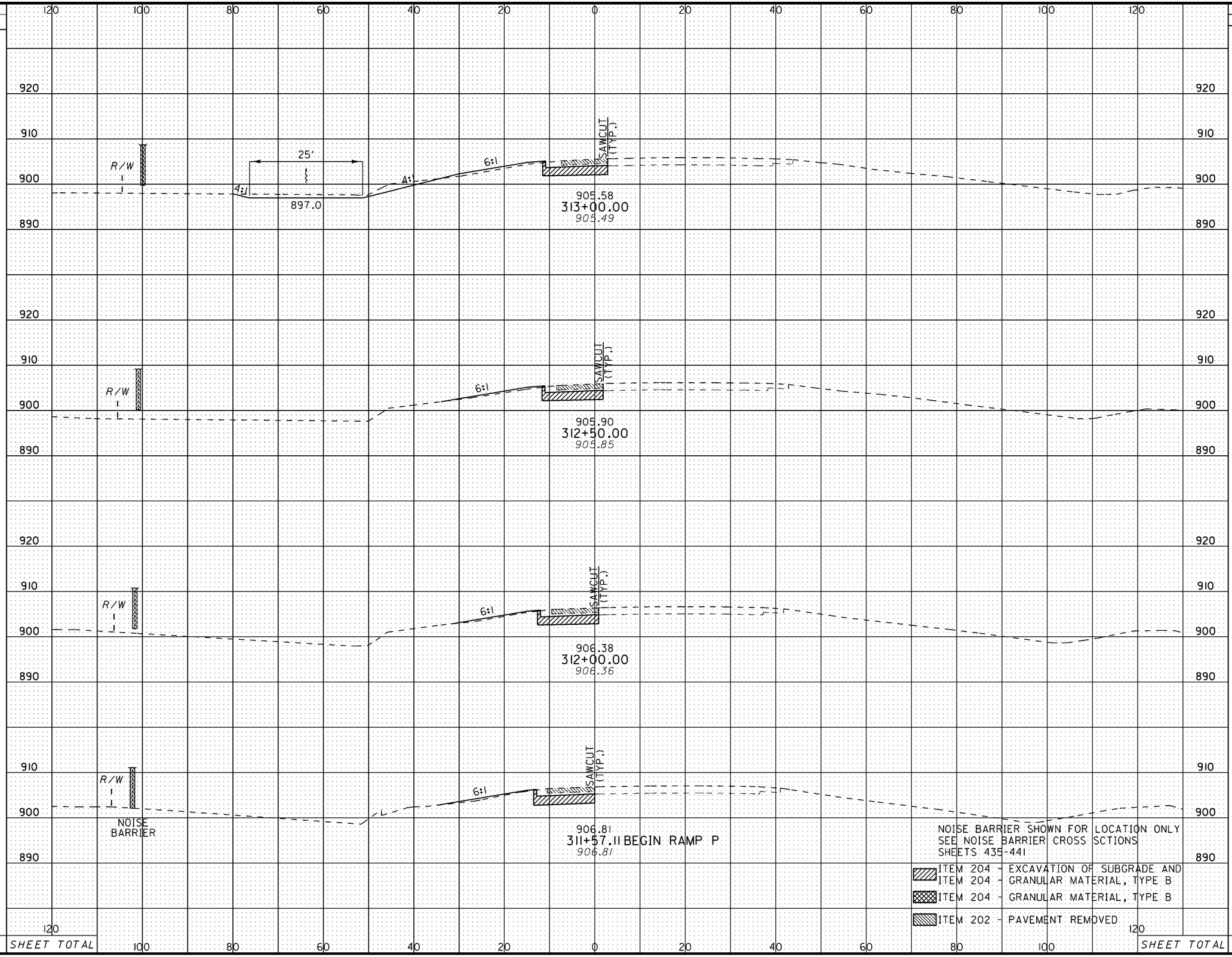

CALCULATED JMD
CHECKED AJS

RAMP P CROSS SECTIONS
STA. 311+57.11 TO STA. 313+00

MOT-75-0.75

SEEDING		END AREA		VOLUME	
END WIDTH	SQ. YDS.	CUT	FILL	CUT	FILL
		23	18	42	33
		23	17	65	29
		48	14	97	24
		57	11	102	20

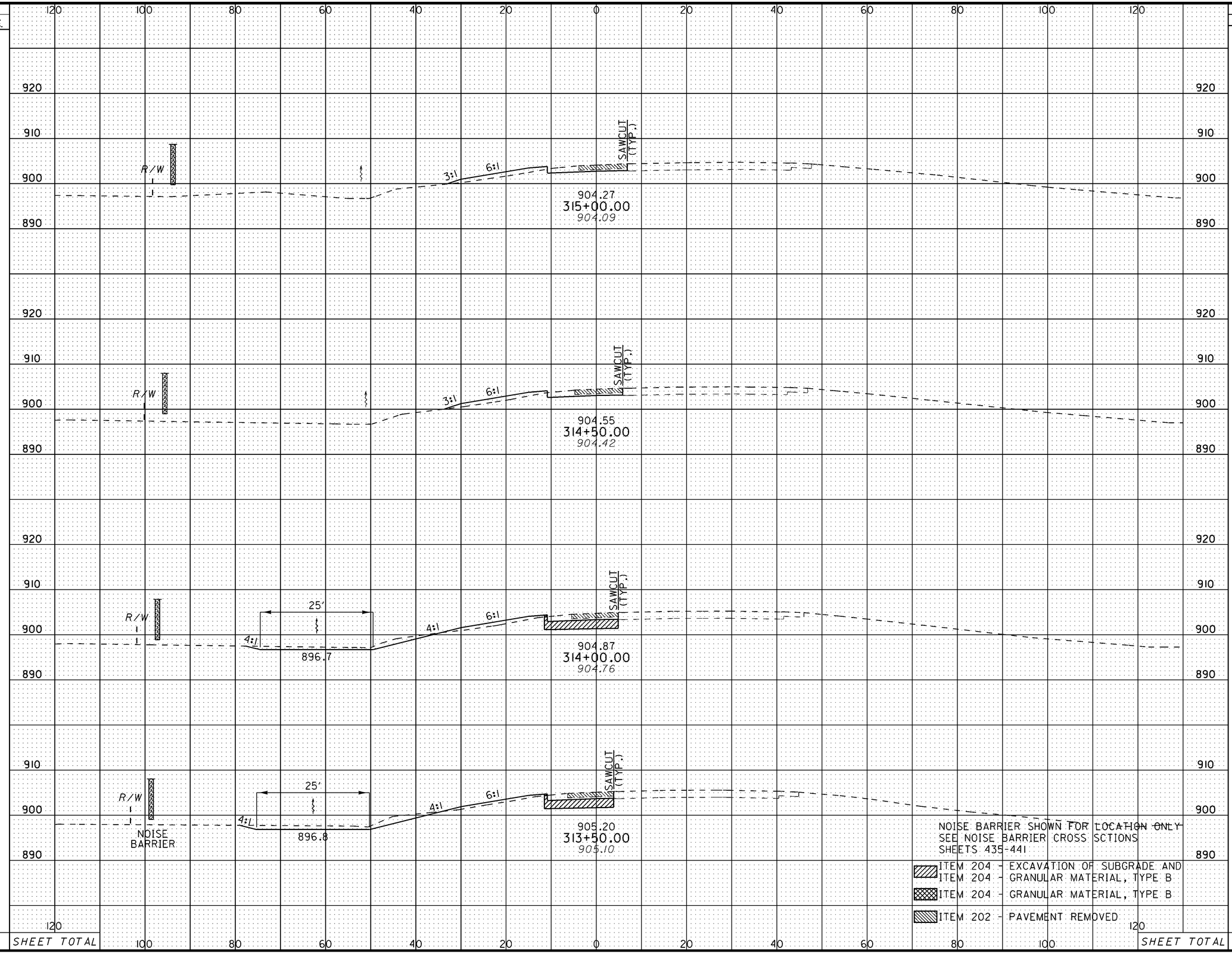

CALCULATED JMD
CHECKED AJS

RAMP P CROSS SECTIONS
STA. 313+50 TO STA. 315+00

MOT-75-0.75

SEEDING		END AREA		VOLUME	
END WIDTH	SQ. YDS.	CUT	FILL	CUT	FILL
		24	39		
				46	59
		25	25		
				46	36
		25	15		
				45	30
		23	18		
				43	33

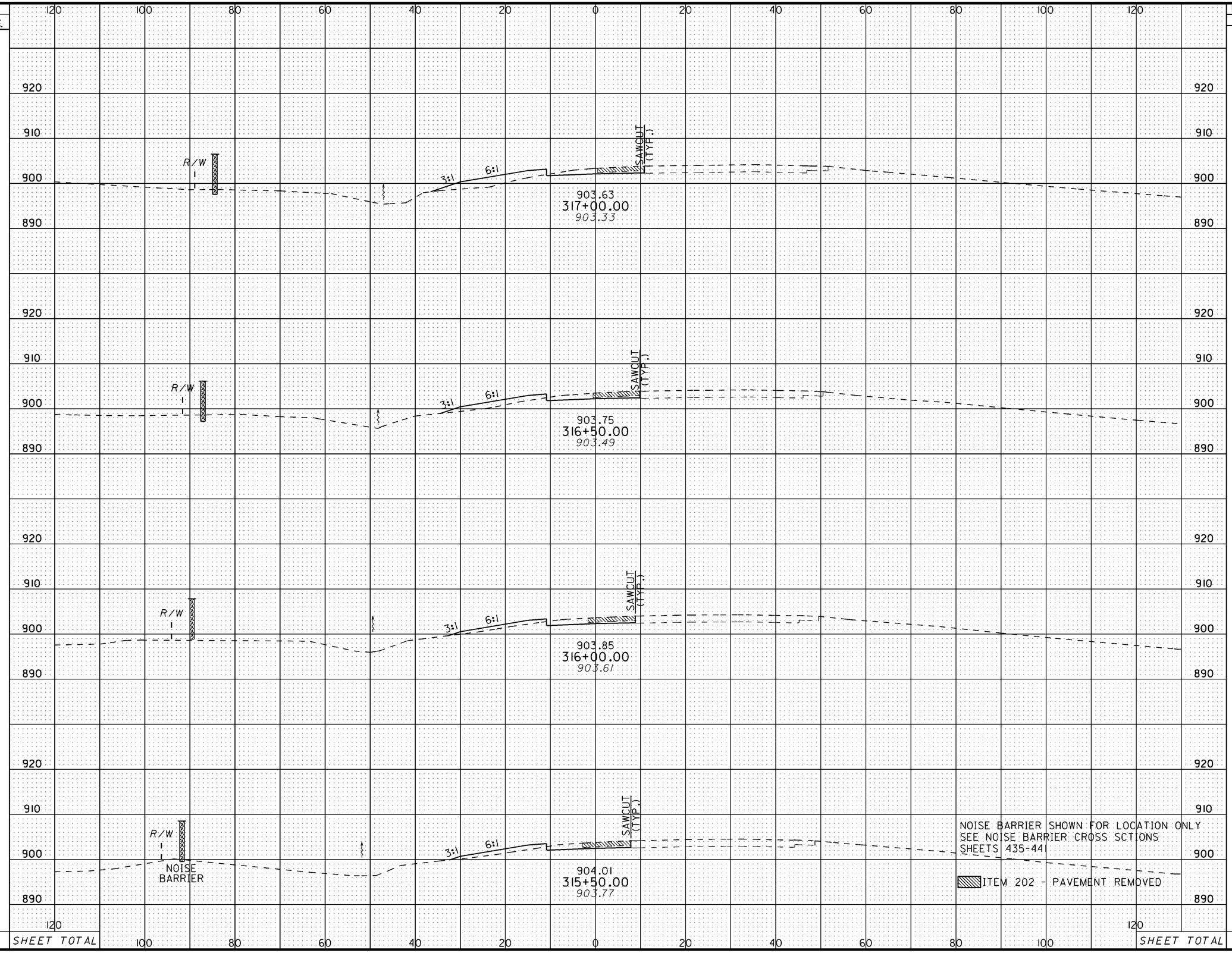

CALCULATED JMD

CHECKED AJS

RAMP P CROSS SECTIONS
STA. 315+50 TO STA. 317+00

MOT-75-0.75

SEEDING	
END WIDTH	SQ. YDS.

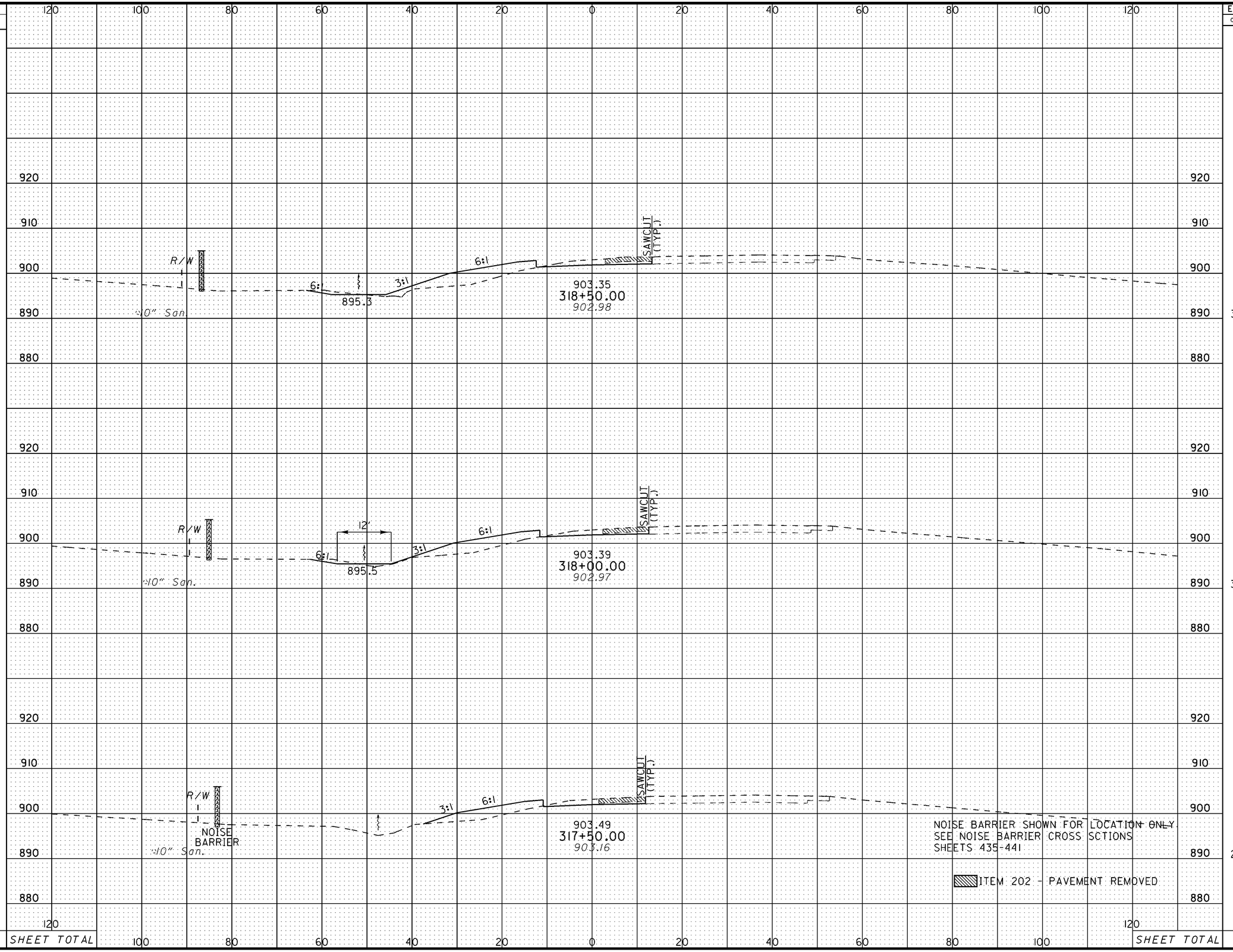

END AREA		VOLUME	
CUT	FILL	CUT	FILL
33	73		
		59	123
30	60		
		52	98
26	46		
		46	79

CALCULATED JMD
CHECKED AJS

RAMP P CROSS SECTIONS
STA. 317+50 TO STA. 318+50

MOT-75-0.75

97
773

SEEDING		END AREA		VOLUME	
END WIDTH	SQ. YDS.	CUT	FILL	CUT	FILL
		54	126	79	208
		31	98	58	163
		32	78	61	140

CALCULATED JMD
CHECKED AJS

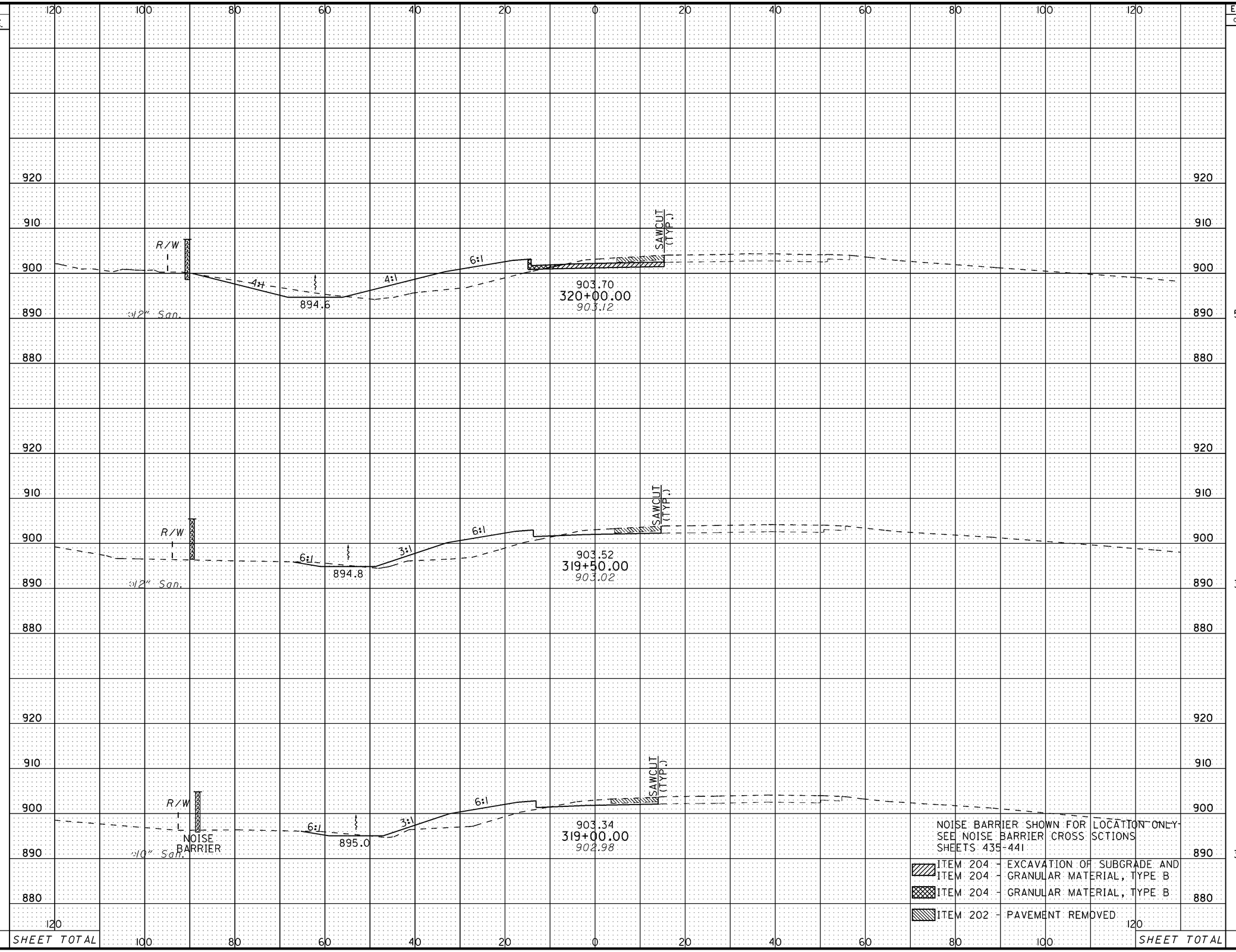

RAMP P CROSS SECTIONS
STA. 319+00 TO STA. 320+00

MOT-75-0.75

SEEDING	
END WIDTH	SQ. YDS.

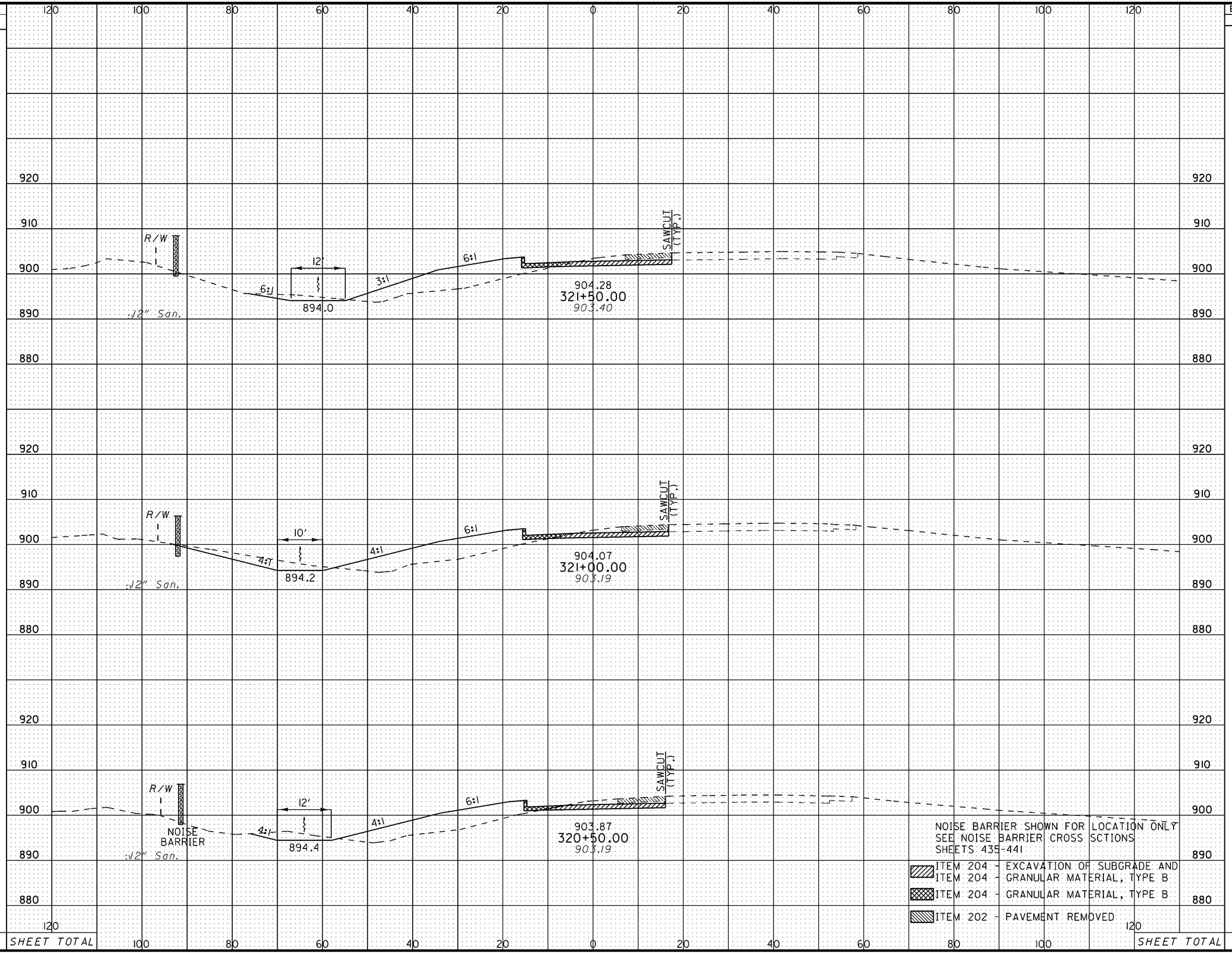

END AREA		VOLUME	
CUT	FILL	CUT	FILL
39	145		
		98	272
66	149		
		103	262
45	134		
		92	241

CALCULATED JMD
CHECKED AJS

RAMP P CROSS SECTIONS
STA. 320+50 TO STA. 321+50

MOT-75-0.75

SEEDING		END AREA		VOLUME	
END WIDTH	SQ. YDS.	CUT	FILL	CUT	FILL
		50	177	88	318
		45	166	93	296
		55	154	88	277

CALCULATED JMD

CHECKED AJS

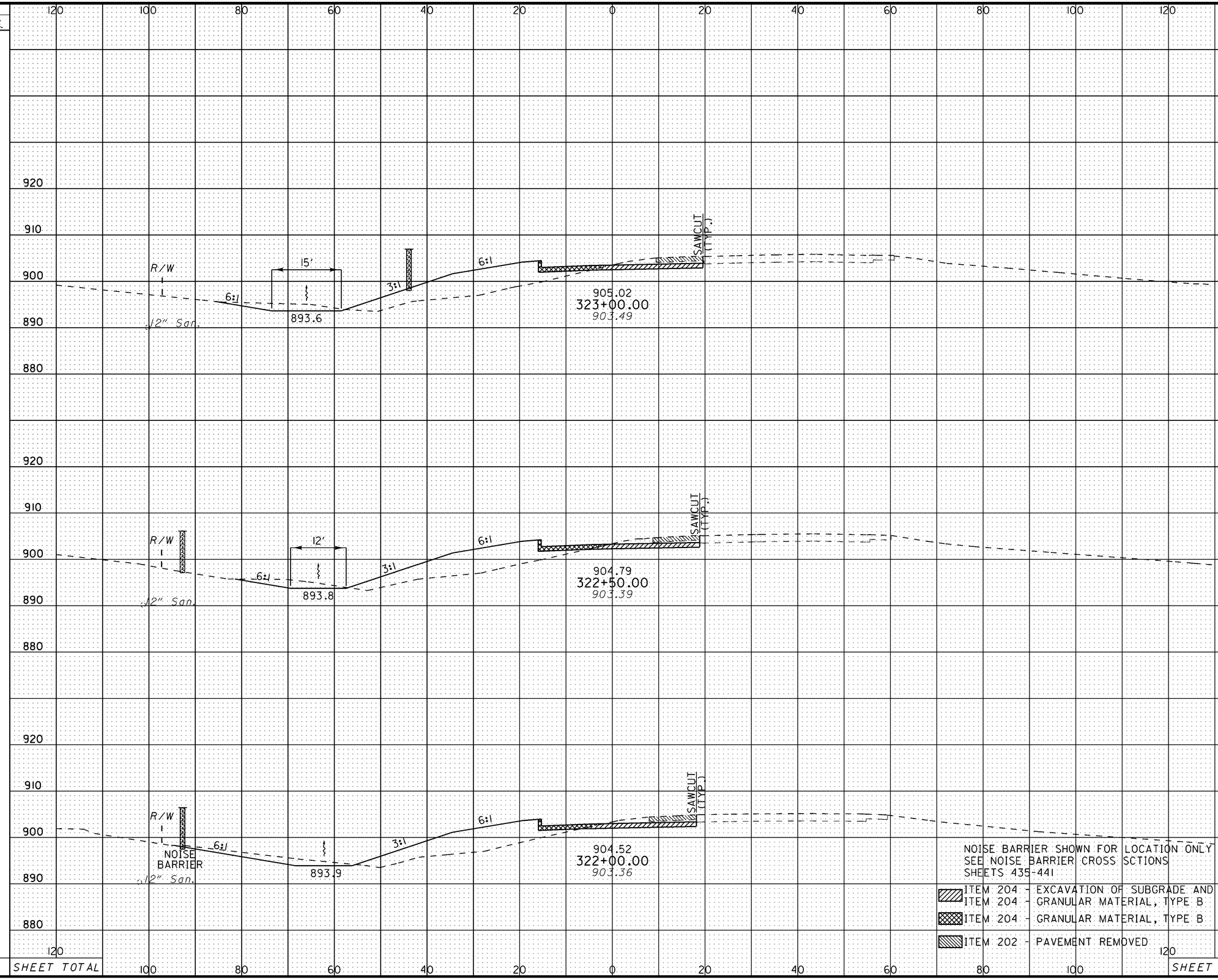

RAMP P CROSS SECTIONS STA. 322+00 TO STA. 323+00

MOT-75-0.75

SEEDING	
END WIDTH	SQ. YDS.

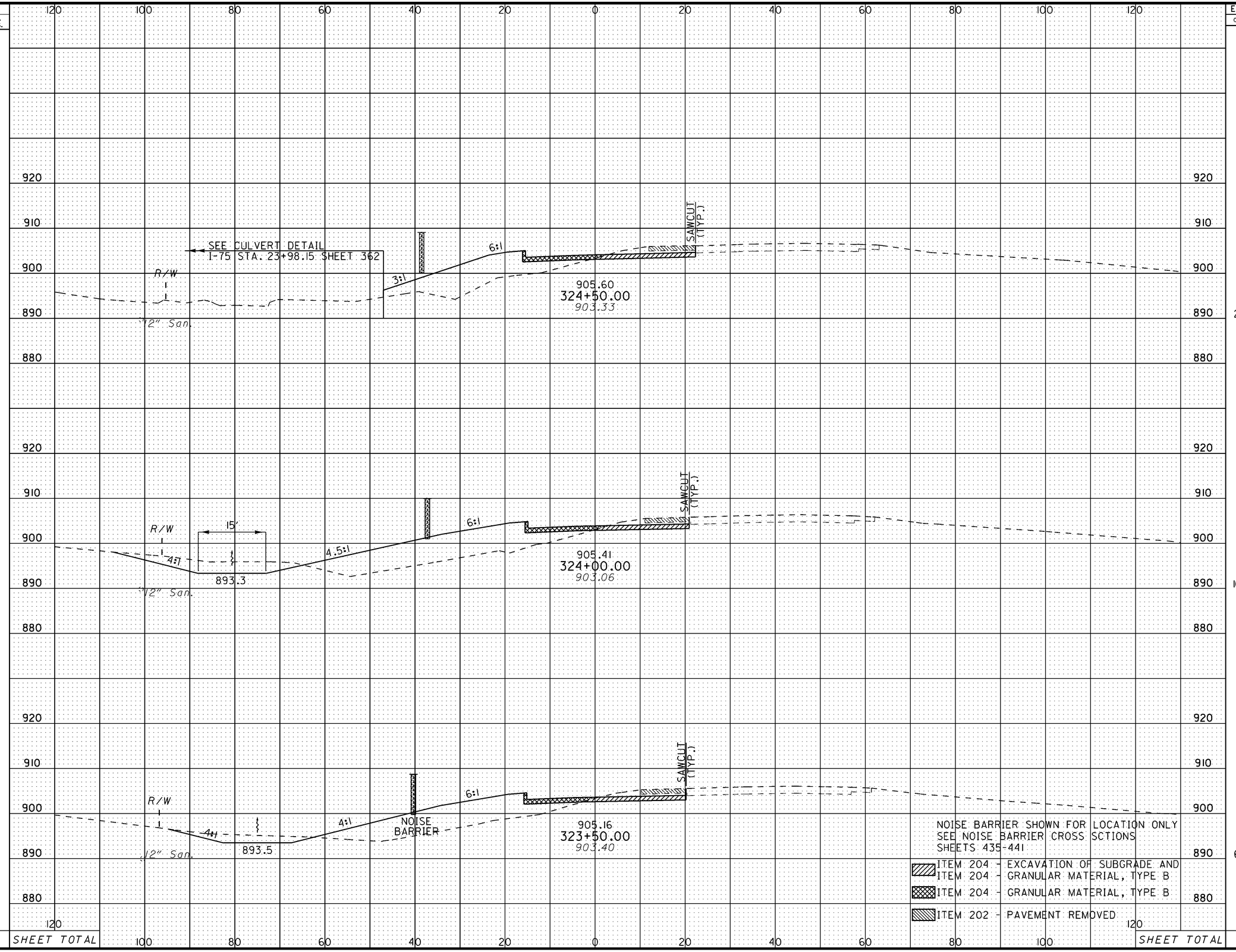

END AREA		VOLUME	
CUT	FILL	CUT	FILL
24	175		
		116	415
101	273		
		150	461
61	225		
		103	372

CALCULATED JMD
CHECKED AJS

RAMP P CROSS SECTIONS
STA. 323+50 TO STA. 324+50

MOT-75-0.75

SEEDING	
END WIDTH	SQ. YDS.

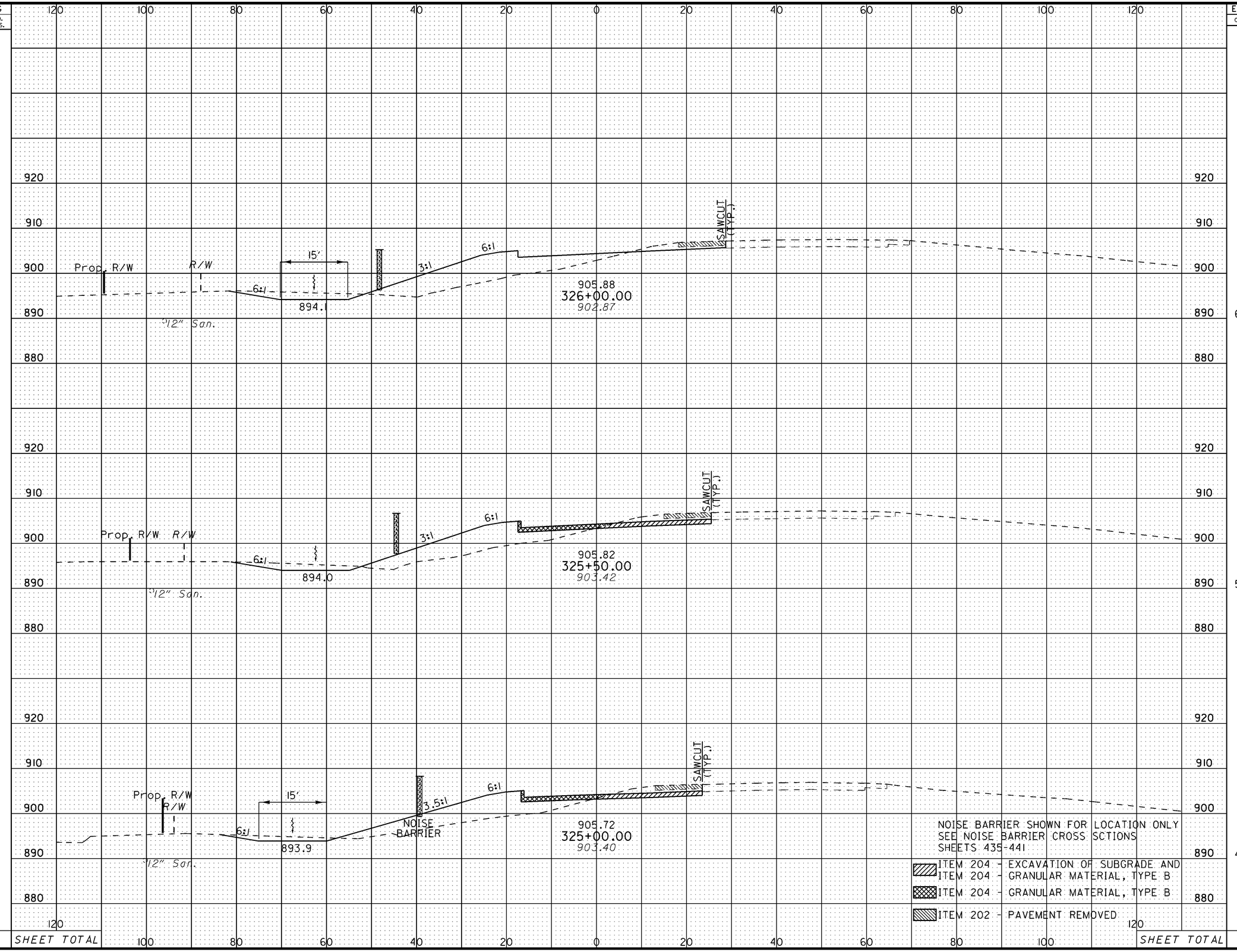

END AREA		VOLUME	
CUT	FILL	CUT	FILL
62	205	108	338
55	160	93	307
45	171	64	321

CALCULATED JMD
CHECKED AJS

RAMP P CROSS SECTIONS
STA. 325+00 TO STA. 326+00

MOT-75-0.75

SEEDING		END AREA		VOLUME	
END WIDTH	SQ. YDS.	CUT	FILL	CUT	FILL
		63	317	95	559
		40	287	97	489
		65	241	117	412

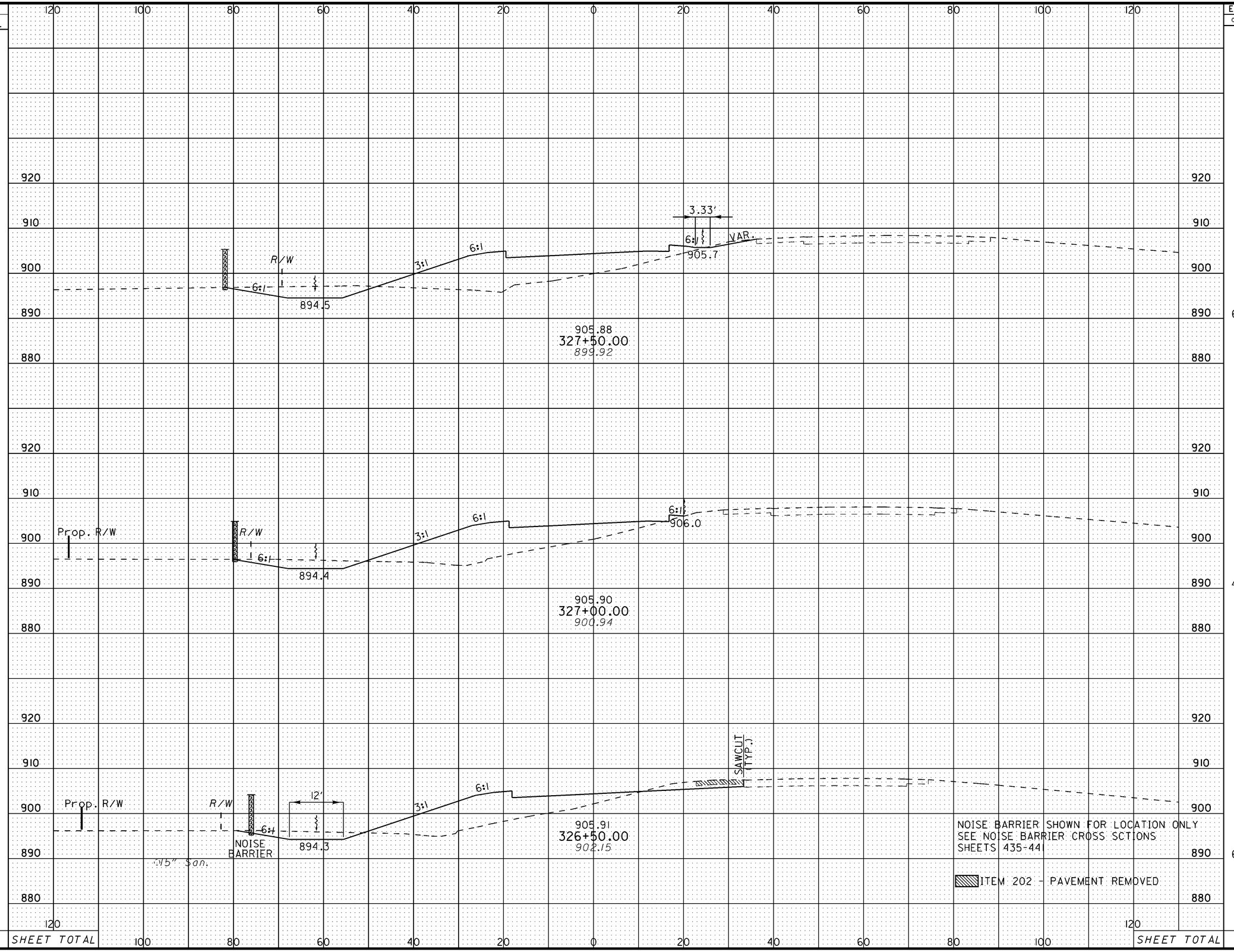

CALCULATED JMD

CHECKED AJS

RAMP P CROSS SECTIONS STA. 326+50 TO STA. 327+50

MOT-75-0.75

SEEDING		END AREA		VOLUME	
END WIDTH	SQ. YDS.	CUT	FILL	CUT	FILL
		63	532	120	887
		67	426	129	721
		73	353	125	621

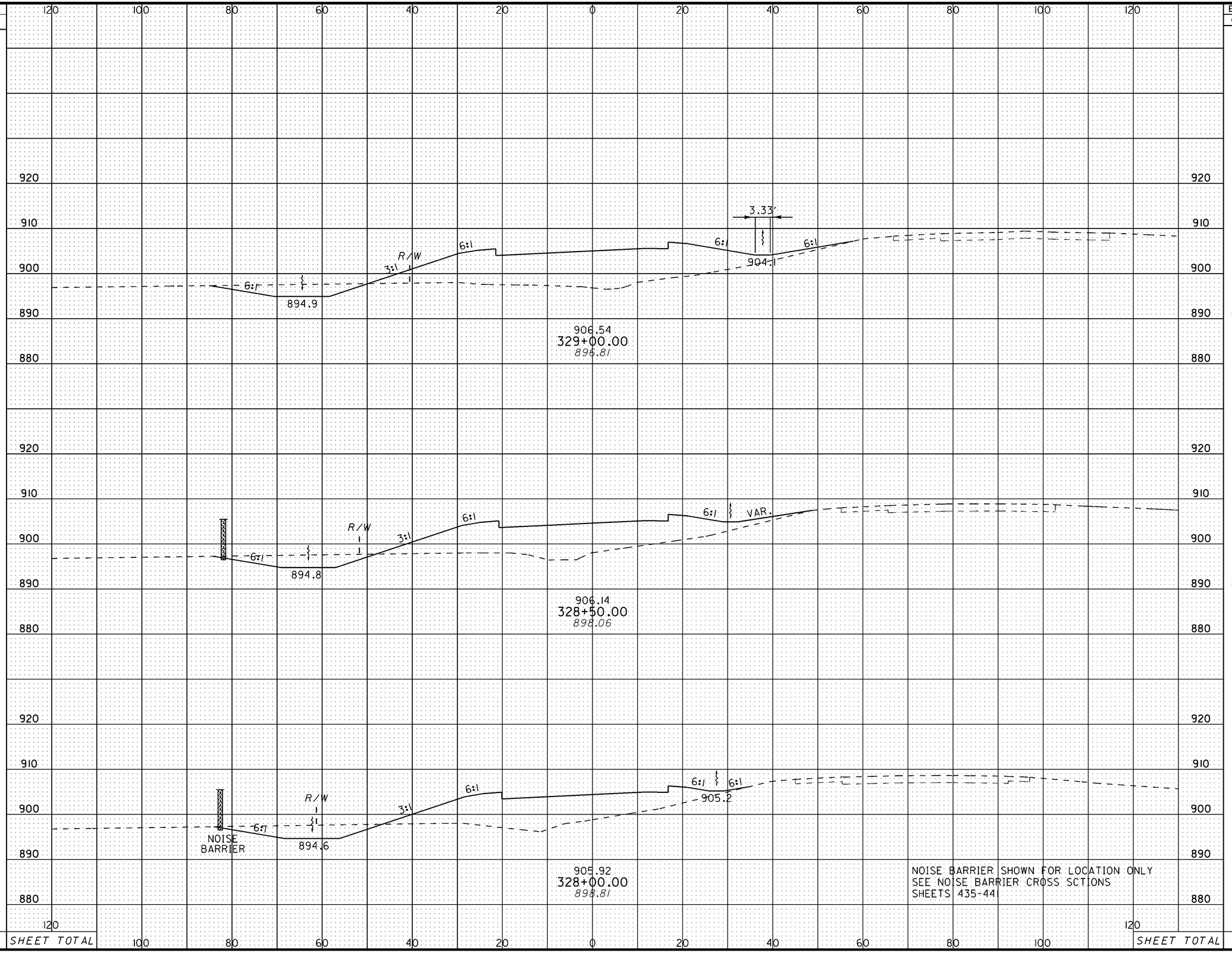

NOISE BARRIER SHOWN FOR LOCATION ONLY
SEE NOISE BARRIER CROSS SCTIONS
SHEETS 435-441

CALCULATED JMD
CHECKED AJS

RAMP P CROSS SECTIONS
STA. 328+00 TO STA. 329+00

MOT-75-0.75

104
773

SEEDING	
END WIDTH	SQ. YDS.

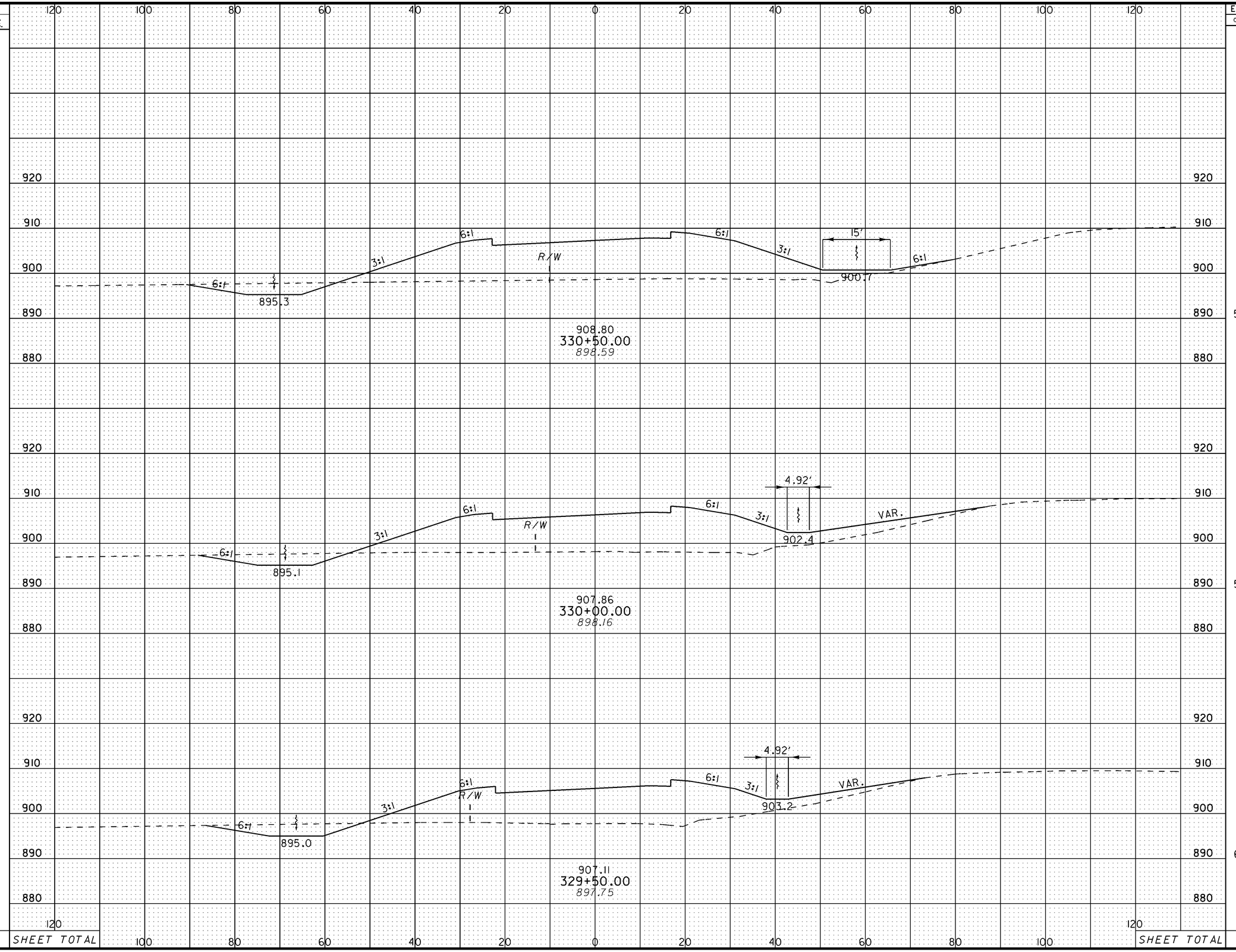

END AREA		VOLUME	
CUT	FILL	CUT	FILL
56	791		
		104	1436
57	760		
		109	1291
61	635		
		115	1080

CALCULATED JMD

CHECKED AJS

RAMP P CROSS SECTIONS
STA. 329+50 TO STA. 330+50

MOT-75-0.75

105
773

SEEDING	
END WIDTH	SQ. YDS.

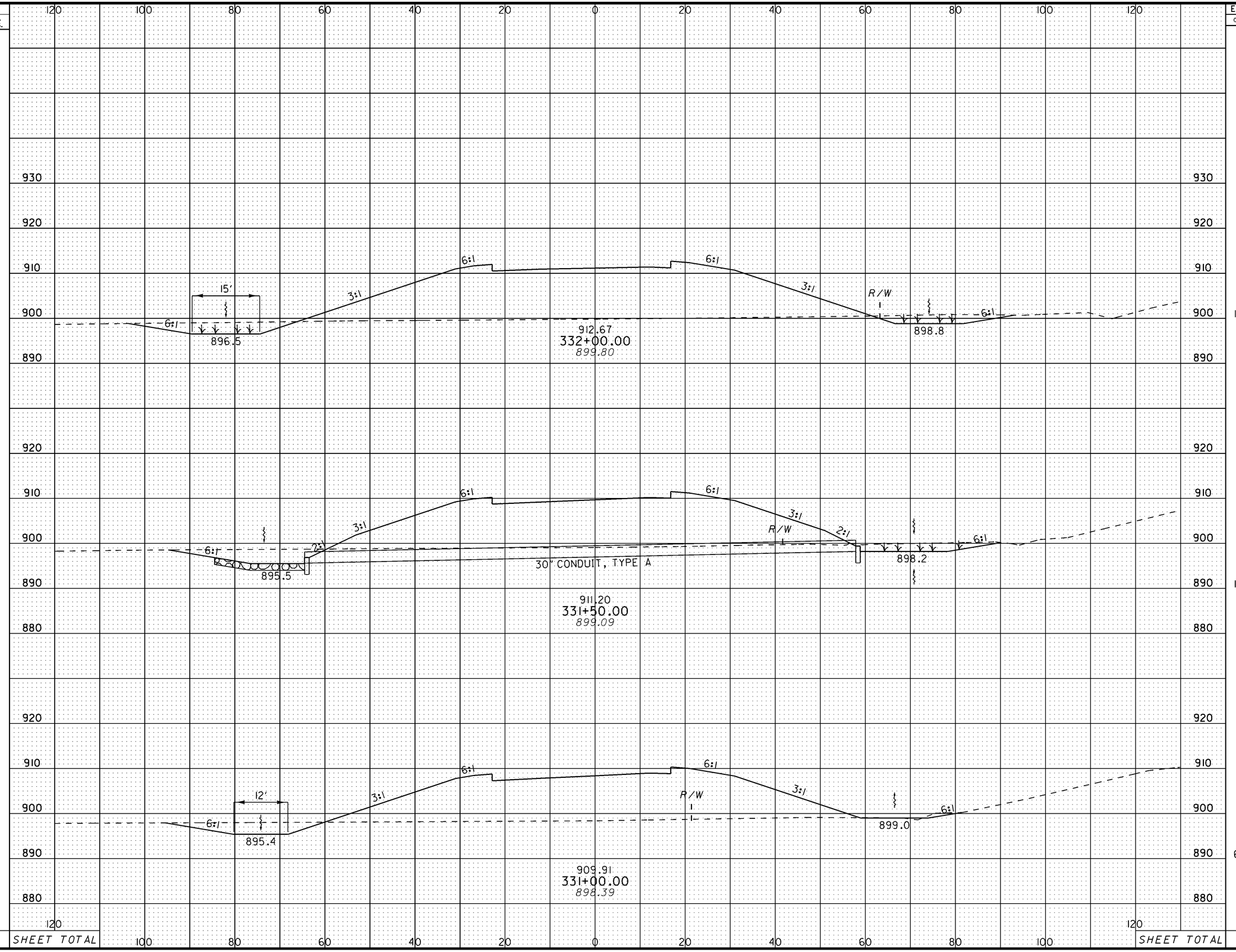

END AREA		VOLUME	
CUT	FILL	CUT	FILL
113	1071		
		215	1880
119	959		
		172	1715
66	893		
		113	1559

CALCULATED JMD

CHECKED AJS

RAMP P CROSS SECTIONS STA. 331+00 TO STA. 332+00

MOT-75-0.75

SEEDING		END AREA		VOLUME	
END WIDTH	SQ. YDS.	CUT	FILL	CUT	FILL
		16	1680	38	2888
		25	1438	97	2450
		79	1208	178	2110

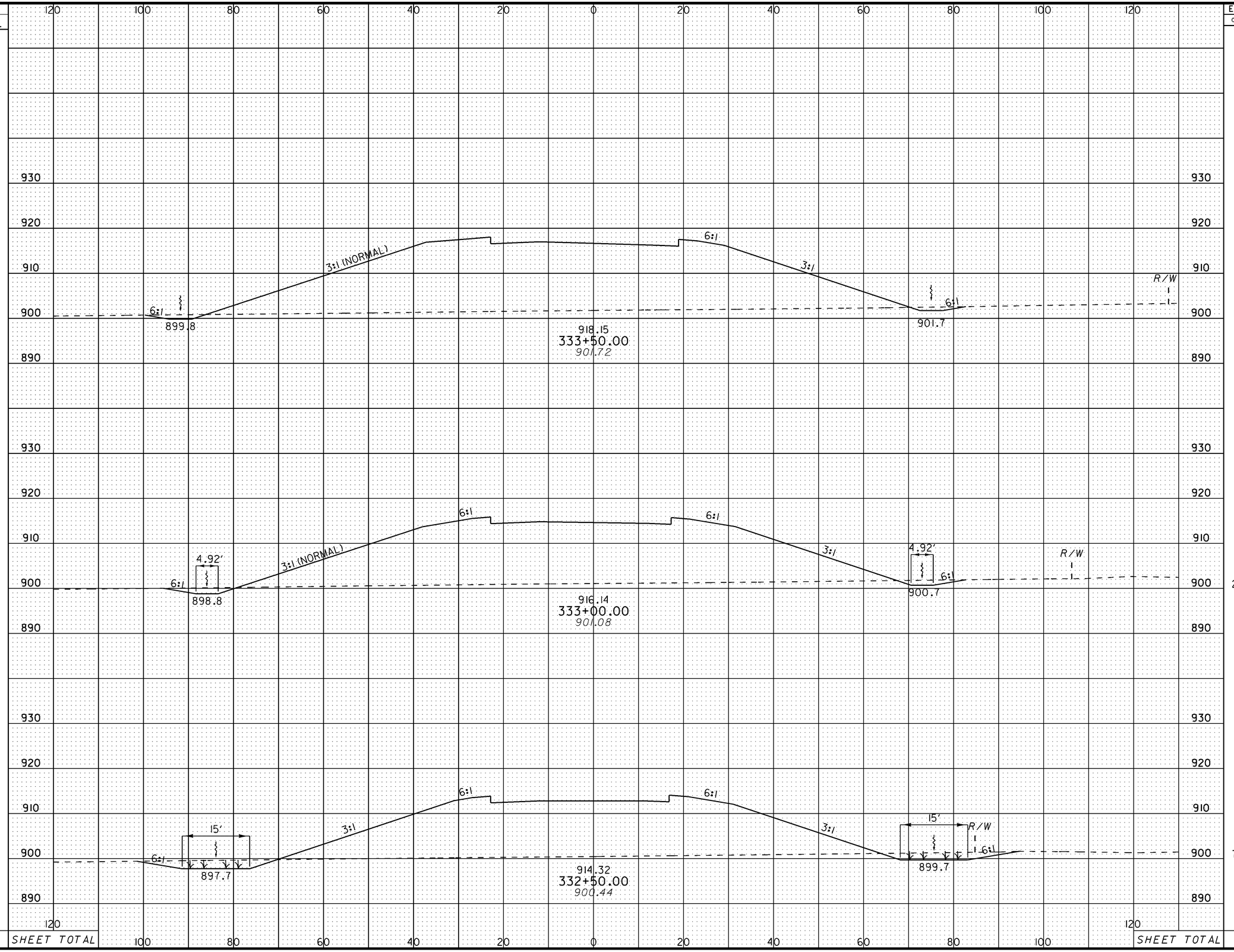

CALCULATED JMD

CHECKED AJS

RAMP P CROSS SECTIONS
STA. 332+50 TO STA. 333+50

MOT-75-0.75

107
773

SEEDING		END AREA		VOLUME	
END WIDTH	SQ. YDS.	CUT	FILL	CUT	FILL
		32	2427	45	4379
		16	2302	24	3972
		10	1988	24	3396

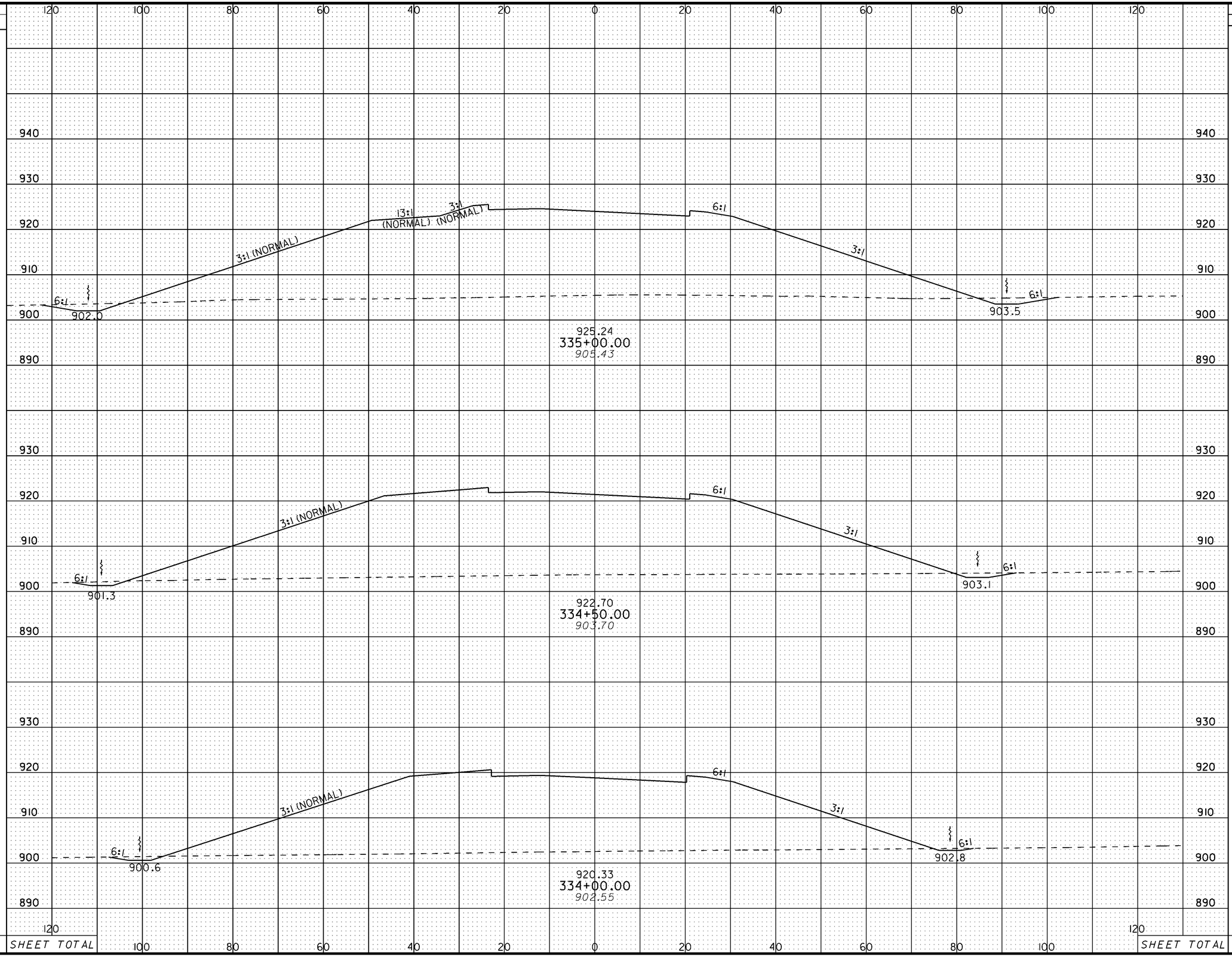

CALCULATED JMD

CHECKED AJS

RAMP P CROSS SECTIONS
STA. 334+00 TO STA. 335+00

MOT-75-0.75

108
773

SEEDING	
END WIDTH	SQ. YDS.

SEEDING	
END WIDTH	SQ. YDS.

END AREA		VOLUME	
CUT	FILL	CUT	FILL

CALCULATED JMD

CHECKED AJS

TOTALS CARRIED TO GENERAL SUMMARY	
ITEM 203 - EXCAVATION	3681 CU YD
ITEM 203 - EMBANKMENT	61865 CU YD
ITEM 204 - EXCAVATION OF SUBGRADE	713 CU YD
ITEM 204 - GRANULAR MATERIAL, TYPE B	1008 CU YD
ITEM 204 - GEOTEXTILE FABRIC	2577 SY YD

ADJUST FOR ITEM 202 - PAVEMENT REMOVED -586

950 940 930 920 910 900

SEE M-S PIKE CROSS SECTIONS STA. 148+50 SHEET 245

AHEAD-SEE INTERSECTION DETAIL SHEET 326

VARIES

3:1 (NORMAL)

SEE M-S PIKE CROSS SECTIONS STA. 150+00 SHEET 247

R/W

935.23
337+50.00 BACK ONLY
915.13

SEE M-S PIKE CROSS SECTIONS STA. 148+50 SHEET 245

VARIES

6:1

VARIES

SEE M-S PIKE CROSS SECTIONS STA. 150+50 SHEET 247

909.0

933.73
337+00.00
911.30

0	2682		
38	2873		
		35	5143
		39	5291

SHEET TOTAL

RAMP P CROSS SECTIONS STA. 337+00 TO STA. 337+50

MOT-75-0.75

F.I.O. - ANTICIPATED LOCATIONS OF RELOCATED UTILITIES
FOR SUBSUMMARIES SEE SHEETS 64-84
FOR PAVEMENT LEGEND SEE SHEET 195
FOR PROFILE SEE SHEETS 115-117
FOR CROSS SECTIONS SEE SHEETS 118-137
FOR INTERSECTION DETAILS SEE SHEETS 322-337
FOR STORM SEWER PROFILES SEE SHEETS 340-361
FOR MEDIAN DETAILS SEE SHEETS 404-414

HORIZONTAL SCALE IN FEET
0 10 20 40

CALCULATED MAG
CHECKED AJS

18+00 19+00 ℄ CONSTRUCTION I-75 20+00 21+00 22+00
CURVE I-75-2

CURVE I-75-2
P.I. STA. = 19+72.39
Δ = 18° 15' 11" (LT)
Dc = 0° 28' 00"
R = 12,277.69'
T = 1,972.39'
L = 3,911.36'
E = 157.42'
e max = NC

CURVE RAMP H-1
P.I. STA. = 224+80.19
Δ = 1° 56' 44" (LT)
Dc = 0° 27' 41"
R = 12,416.19'
T = 210.81'
L = 421.58'
E = 1.79'
e max = -0.020

36"
16" CMP
8"
I-75 Northbound
Concrete Paved Ditch
P.I. STA. 19+72.39
℄ I-75
126.50'
12'
2.24%
3.38%
19" Asphalt
TYPICAL ADJOINING SECTION
STA. 21+69.38
Dense Vegetation

21+69.38
126.50' RT
SAWCUT LINE
R-7
℄ CONSTRUCTION
RAMP H
CURVE RAMP H-1
CONSTRUCTION LIMITS
12'
8'
PRECAST REINFORCED
CONCRETE OUTLET
222+69.38
32.92' RT
INV. 6"=900.58
UD-8
21+65.42 C.P.A.
166.42' RT
R-6
21+64.10 C.P.A.
221.24' RT
54" Woven Wire
1 Str. Barb Wire
R-8
22+00
CONSTRUCTION LIMITS
STA. 223+00 SEE SHEET 112
MATCH LINE STA. 223+00

STA. 21+69.38:126.50' RT.
BEGIN RAMP TAPER
BEGIN SHLD. TAPER

P.C. STA. 222+69.38
BEGIN CONSTRUCTION RAMP H=
STA. 22+69.38:138.50' RT.
END CONSTRUCTION I-75
END SHLD. TAPER
STA. 22+69.38:126.50' RT.
℄ CONSTRUCTION I-75
END RAMP TAPER

CH ESMT
SAN
S ESMT
8" W
LA R/W

RAMP H PLAN
STA. 21+69.38 TO STA. 223+00

MOT-75-0.75

III
773

CURVE I-75-2
P.I. STA. = 19+72.39
Δ = 18° 15' 11" (LT)
Dc = 0° 28' 00"
R = 12,277.69'
T = 1,972.39'
L = 3,911.36'
E = 157.42'
e max = NC

F.I.O. - ANTICIPATED LOCATIONS OF RELOCATED UTILITIES
FOR SUBSUMMARIES SEE SHEETS 64-84
FOR PAVEMENT LEGEND SEE SHEET 195
FOR PROFILE SEE SHEETS 115-117
FOR CROSS SECTIONS SEE SHEETS 118-137
FOR INTERSECTION DETAILS SEE SHEETS 322-337
FOR STORM SEWER PROFILES SEE SHEETS 340-361
FOR MEDIAN DETAILS SEE SHEETS 404-414

CURVE RAMP H-1
P.I. STA. = 224+80.19
Δ = 1° 56' 44" (LT)
Dc = 0° 27' 41"
R = 12,416.19'
T = 210.81'
L = 421.58'
E = 1.79'
e max = -0.020

HORIZONTAL SCALE IN FEET
0 10 20 40
CALCULATED MAG
CHECKED AJS

RAMP H PLAN
STA. 223+00 TO STA. 228+50

MOT-75-0.75

112
773

F.I.O. - ANTICIPATED LOCATIONS OF RELOCATED UTILITIES
FOR SUBSUMMARIES SEE SHEETS 64-84
FOR PAVEMENT LEGEND SEE SHEET 195
FOR PROFILE SEE SHEETS 115-117
FOR CROSS SECTIONS SEE SHEETS 118-137
FOR INTERSECTION DETAILS SEE SHEETS 322-337
FOR STORM SEWER PROFILES SEE SHEETS 340-361
FOR MEDIAN DETAILS SEE SHEETS 404-414

HORIZONTAL SCALE IN FEET
0 10 20 40

CALCULATED MAG
CHECKED AJS

CURVE I-75-2
P.I. STA. = 19+72.39
Δ = 18° 15' 11" (LT)
Dc = 0° 28' 00"
R = 12,277.69'
T = 1,972.39'
L = 3,911.36'
E = 157.42'
e max = NC

CURVE RAMP H-2
P.I. STA. = 229+75.68
Δ = 19° 43' 58" (RT)
Dc = 3° 30' 00"
R = 1,637.02'
T = 284.71'
L = 563.79'
E = 24.57'
e max = 0.060

℄ CONSTRUCTION I-75
CURVE I-75-2

29+00
30+00
I-75 Northbound
CONSTRUCTION LIMITS
P.I. STA. 229+75.68
29+62.70
126.50' RT.
MATCH LINE STA. 228+50 SEE SHEET 112
SAWCUT LINE CONSTRUCTION LIMITS
℄ CONSTRUCTION RAMP H
CURVE RAMP H-2
229+00
230+00
231+00
232+00
233+00
N39°49'30"E
30°-A
BEGIN SHLD. TAPER STA. 229+69.38
END SHLD. TAPER STA. 230+19.38
STA 229+55, 78.0' RT
22 1/2° BEND, 8"x6" TEE, 90°BEND, 6" VALVE & HYDRANT
228+98.31 I.A.P.A.
55.84' RT
PRECAST REINFORCED CONCRETE OUTLET
232+00.00
41.29' LT
INV. 6"=906.56
PRECAST REINFORCED CONCRETE OUTLET
232+00.00
27.61' RT
INV. 6"=905.44
SEE CULVERT DETAIL RAMP H STA. 233+50 SEE SHEET 367
STA. 233+78.78 BEGIN PAVT. TAPER
MATCH LINE STA. 234+00 SEE SHEET 114
232+54.75
232+17.40 I.A.P.A.
78.53' RT
8" WATER MAIN
15" SAN
MH-3 (5B0298)
MH-3 (5B0299)
STA 232+00.0, 85.0' RT
DEFLECT JOINTS
Dense Vegetation
CONSTRUCTION LIMITS
STA 229+42.0, 82.0' RT
8" VALVE, 13'-8" WATER MAIN
RAMP H, STA. 229+79 TO STA. 236+12.50
ROCK CHANNEL PROTECTION, TYPE C, WITH FABRIC FILTER (E-40)
635'x31.5'x18" THK.÷27= 1111.25 CU YD
(E-15) ITEM 836, SEEDING AND EROSION CONTROL WITH TURF REINFORCED MAT, TYPE I
127'x26'÷9=367 SY

R-7 R-9 R-10 UD-8 UD-10 UD-11 UD-12 UD-13 HW-2.2 E-12 W-1 S-1

RAMP H PLAN
STA. 228+50 TO STA. 234+00

MOT-75-0.75

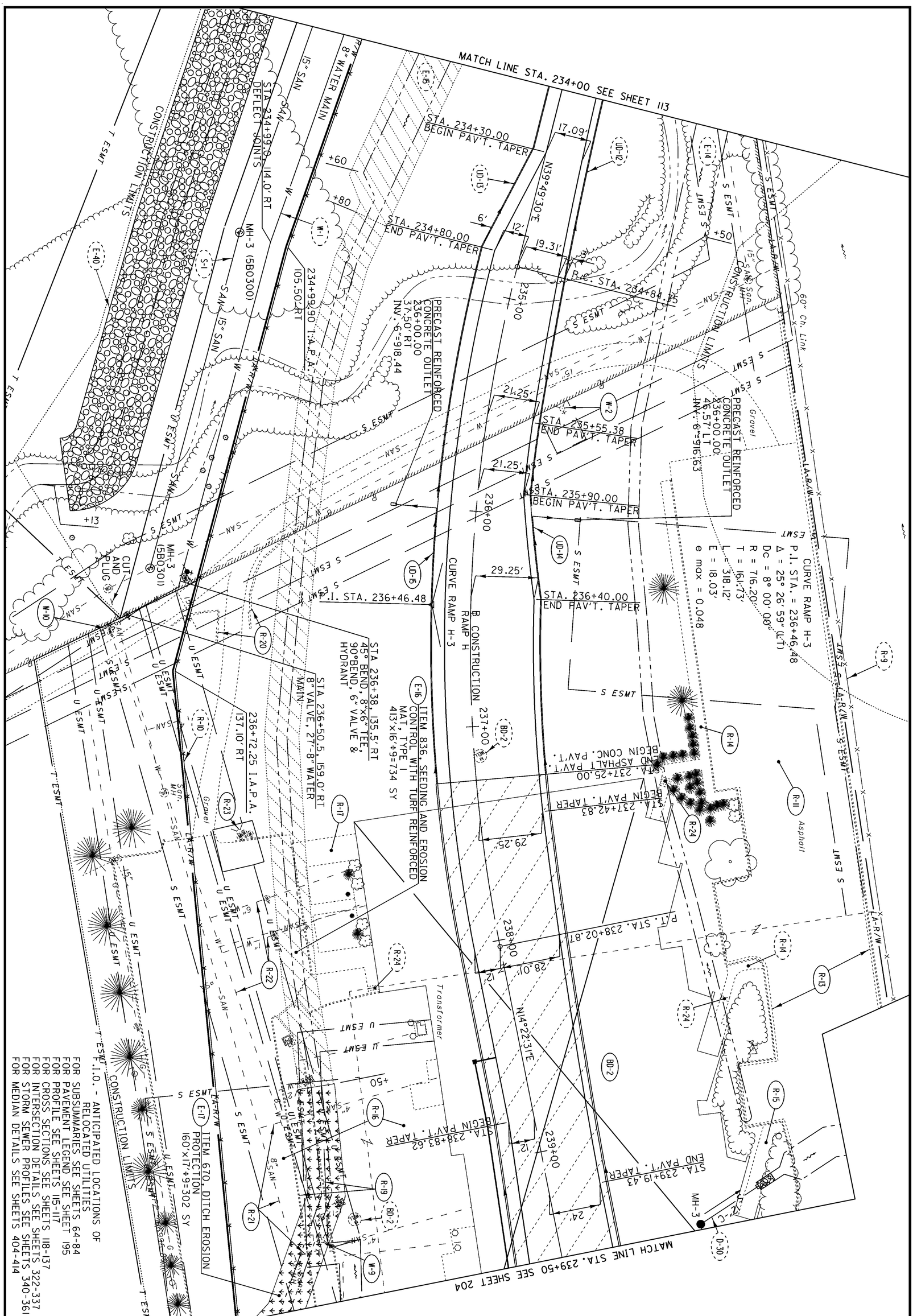
MATCH LINE STA. 234+00 SEE SHEET 113
STA. 234+30.00 BEGIN PAV'T. TAPER
STA. 234+80.00 END PAV'T. TAPER
STA 234+99.90 114.0' RT DEFLECT JOINTS
234+99.90 114.0' RT
105.50' RT
PRECAST REINFORCED CONCRETE OUTLET 236+00.00 37.50' RT INV. 6"=918.44
PRECAST REINFORCED CONCRETE OUTLET 236+00.00 46.57' LT INV. 6"=916.63
STA. 235+55.38 END PAV'T. TAPER
STA. 235+90.00 BEGIN PAV'T. TAPER
STA. 236+40.00 END PAV'T. TAPER
P.I. STA. 236+46.48
CURVE RAMP H-3
P.I. STA. = 236+46.48
Δ = 25° 26' 59" (LT)
Dc = 8° 00' 00"
R = 716.20'
T = 161.73'
L = 318.12'
E = 18.03'
e max = 0.048
CURVE RAMP H-3
RAMP H CONSTRUCTION
STA 236+38, 135.5' RT 45° BEND, 8"x6" TEE, 90° BEND, 6" VALVE & HYDRANT
STA 236+50.5, 159.0' RT 8" VALVE, 27'-8" WATER MAIN
236+72.25 1.A.P.A. 137.10' RT
ITEM 836, SEEDING AND EROSION CONTROL WITH TURF REINFORCED MAT, TYPE I 413×16+9=734 SY
ITEM 670, DITCH EROSION PROTECTION 160×17+9=302 SY
STA. 237+25.00 END ASPHALT PAV'T. BEGIN CONC. PAV'T.
STA. 237+42.83 BEGIN PAV'T. TAPER
P.T. STA. 238+02.81
STA. 238+83.62 BEGIN PAV'T. TAPER
STA. 239+19.43 END PAV'T. TAPER
MATCH LINE STA. 239+50 SEE SHEET 204
CUT AND PLUG
MH-3 (5B0300)
MH-3 (5B0301)
8" WATER MAIN
15" SAN. SEWER
CONSTRUCTION LIMITS
S ESMT
U ESMT
T ESMT
LA-R/W
Gravel
Asphalt
Transformer
N39°49'30"E
N14°22'31"E
29.25'
21.25'
17.09'
19.31'
28.01'
+60
+80
+50
+13
W-1
W-2
W-9
W-10
R-9
R-10
R-11
R-13
R-14
R-15
R-16
R-17
R-19
R-20
R-21
R-22
R-23
R-24
BD-2
UD-12
UD-13
UD-14
UD-15
E-14
E-15
E-16
E-17
E-40
S-1
O-30
P.I.O. - ANTICIPATED LOCATIONS OF RELOCATED UTILITIES
FOR SUBSUMMARIES SEE SHEETS 64-84
FOR PAVEMENT LEGEND SEE SHEET 195
FOR PROFILE SEE SHEETS 115-117
FOR CROSS SECTIONS SEE SHEETS 118-137
FOR INTERSECTION DETAILS SEE SHEETS 322-337
FOR STORM SEWER PROFILES SEE SHEETS 340-361
FOR MEDIAN DETAILS SEE SHEETS 404-414

CALCULATED MAG
CHECKED AJS

RAMP H · PROFILE
STA. 222+69.38 TO STA. 228+50

MOT-75-0.75

CALCULATED MAG
CHECKED AJS

RAMP H PROFILE
STA. 228+50 TO STA. 239+50

MOT-75-0.75

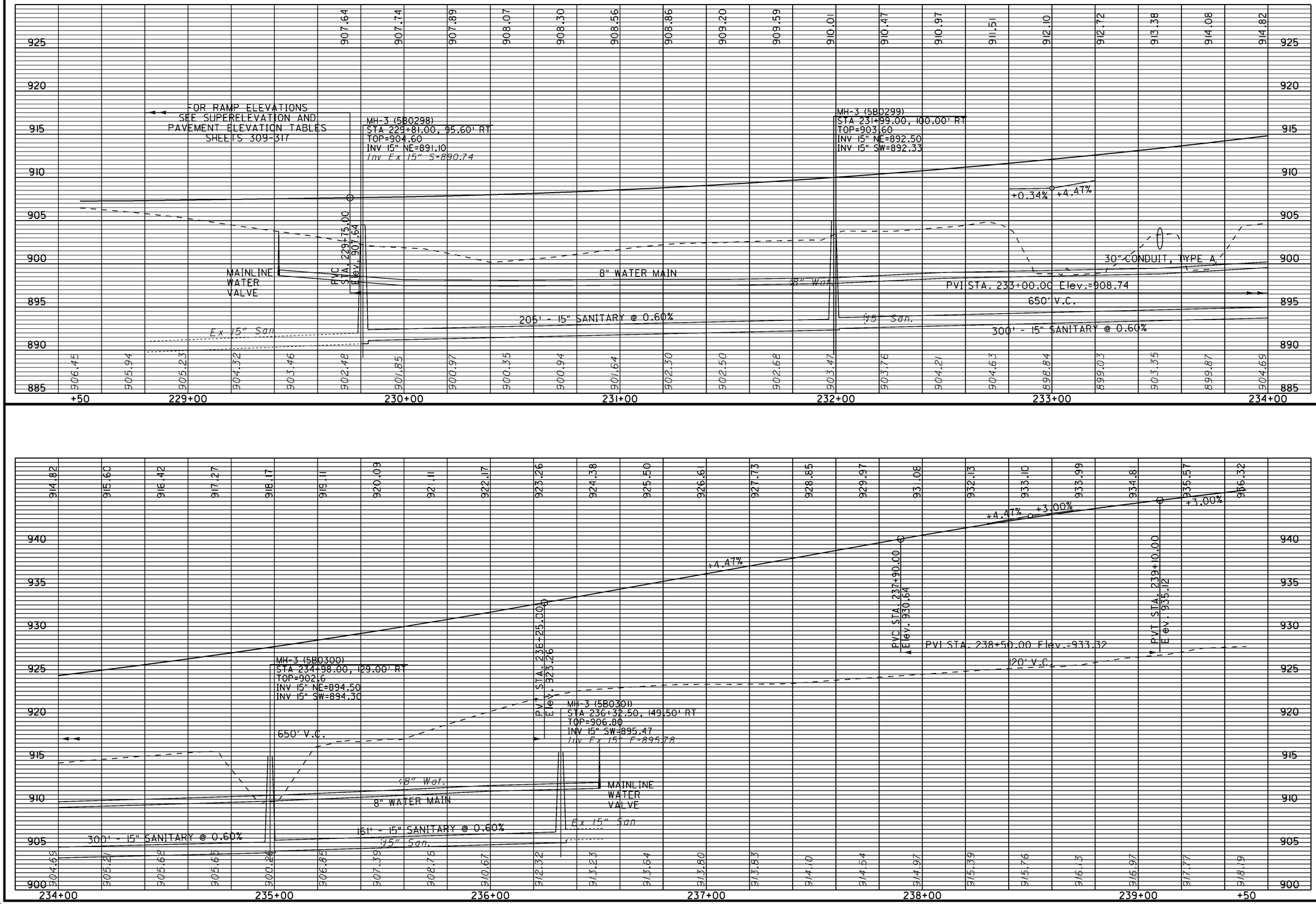

CALCULATED MAG
CHECKED AJS

RAMP H PROFILE
STA. 239+50 TO STA. 241+19.11

MOT-75-0.75

SEEDING END WIDTH	SEEDING SQ. YDS.	END AREA CUT	END AREA FILL	VOLUME CUT	VOLUME FILL
				-33	
		88	67		
				150	81
		94	32		
				134	45
		36	12		

TOTALS CARRIED TO GENERAL SUMMARY

ITEM 203 - EXCAVATION	101 CU YD
ITEM 203 - EMBANKMENT	45 CU YD

ADJUST FOR ITEM 202 - PAVEMENT REMOVED

RAMP H STA. 222+69.38

AHEAD-SEE RAMP H CROSS SECTION STA. 222+69.38
SHEET 119

904.98
904.59
SAWCUT (TYP.)
6:1
3:1
15'
6:1
R/W
896.5

22+25.00
897.77

904.79
904.31
SAWCUT (TYP.)
6:1
5'
6:1
R/W
898.0

21+69.38 MEET EXISTING
897.58

ITEM 202 - PAVEMENT REMOVED

SHEET TOTAL

SHEET TOTAL

CALCULATED JMD
CHECKED AJS

I-75 AT RAMP H CROSS SECTIONS
STA. 21+69.38 TO STA. 22+25

MOT-75-0.75

118
773

SEEDING	
END WIDTH	SQ. YDS.

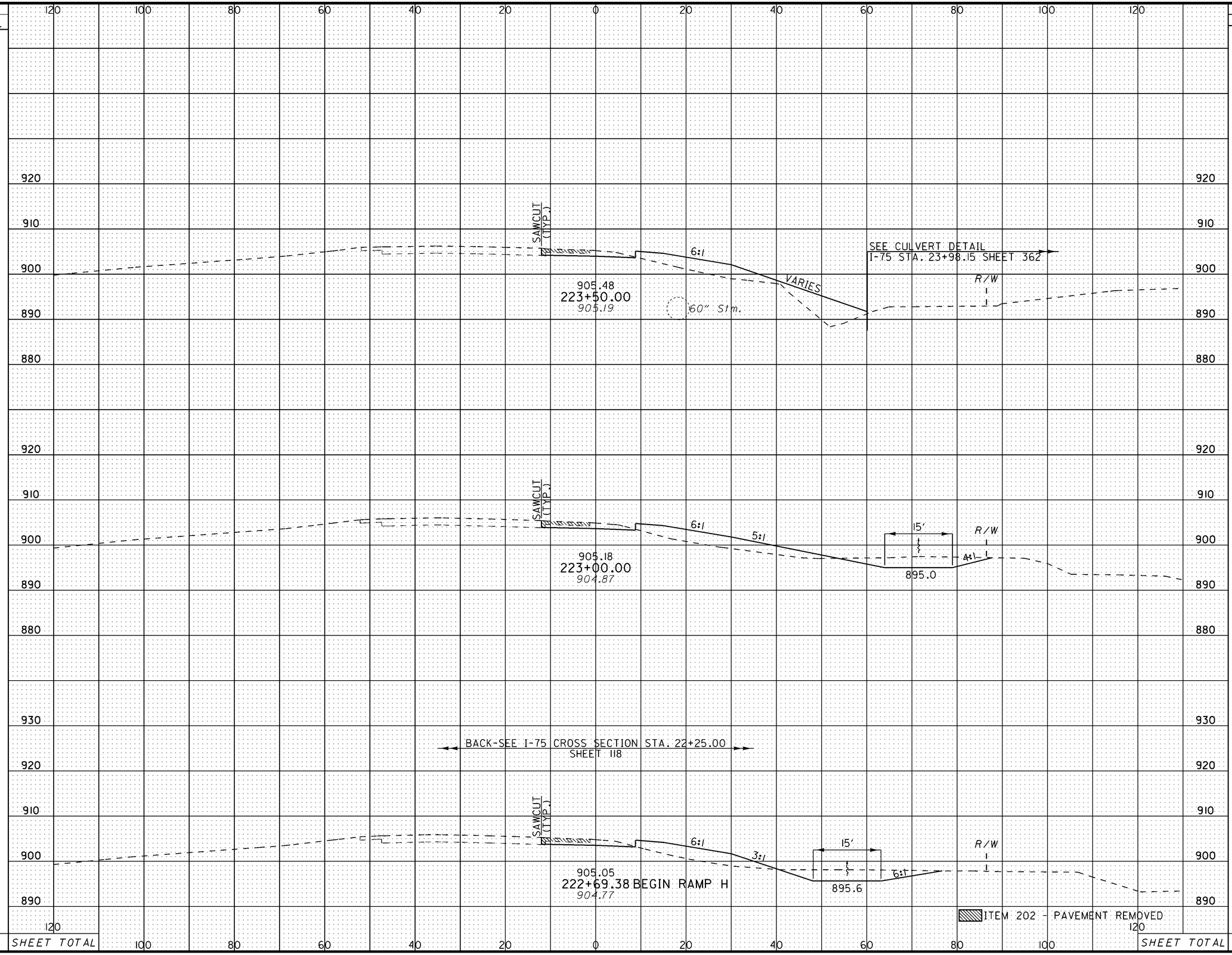

END AREA		VOLUME	
CUT	FILL	CUT	FILL
24	141		
		97	214
81	90		
		96	89
88	67		

SHEET TOTAL

SHEET TOTAL

CALCULATED JMD

CHECKED AJS

RAMP H CROSS SECTIONS
STA. 222+69.38 TO STA. 223+50

MOT-75-0.75

SEEDING		END AREA		VOLUME	
END WIDTH	SQ. YDS.	CUT	FILL	CUT	FILL
		55	101		
				92	194
		45	109		
				99	202
		63	110		
				80	232

CALCULATED JMD

CHECKED AJS

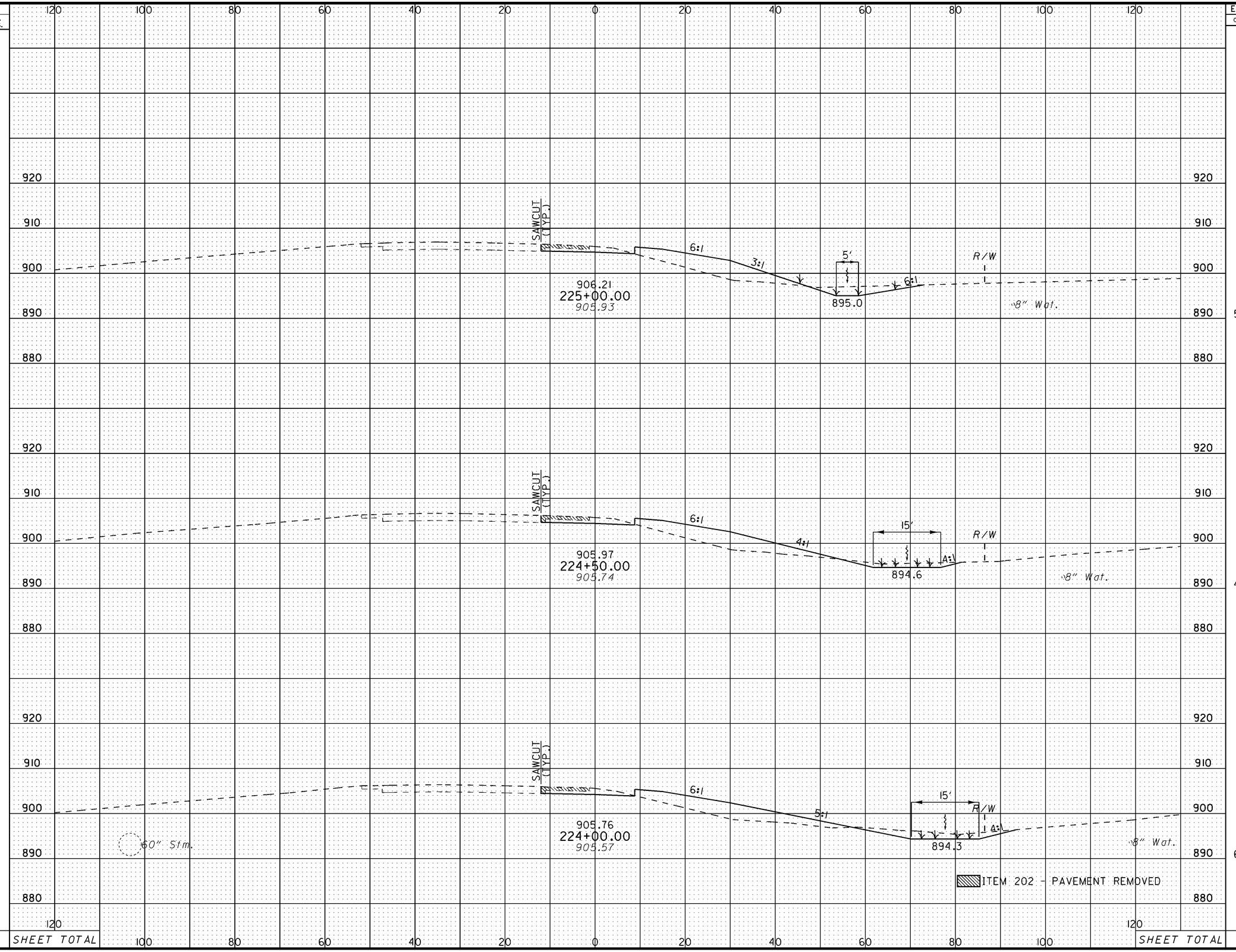

RAMP H CROSS SECTIONS
STA. 224+00 TO STA. 225+00

MOT-75-0.75

SEEDING		END AREA		VOLUME	
END WIDTH	SQ. YDS.	CUT	FILL	CUT	FILL
		44	78	93	158
		56	93	103	177
		55	98	102	184
SHEET TOTAL					SHEET TOTAL

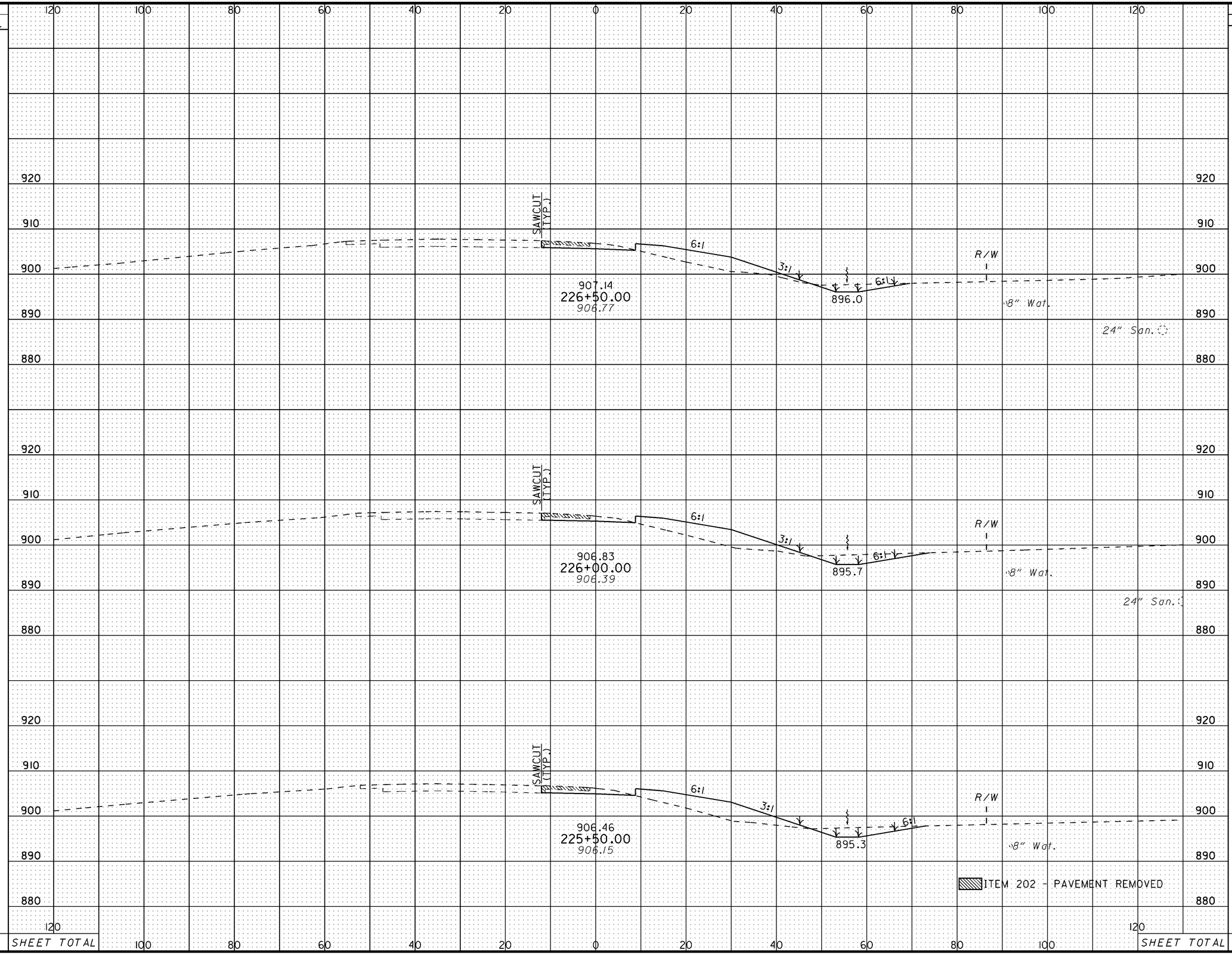

CALCULATED JMD
CHECKED AJS

RAMP H CROSS SECTIONS STA. 225+50 TO STA. 226+50

MOT-75-0.75

121
773

SEEDING		END AREA		VOLUME	
END WIDTH	SQ. YDS.	CUT	FILL	CUT	FILL
		30	79	59	142
		34	74	67	132
		39	69	77	136
SHEET TOTAL					

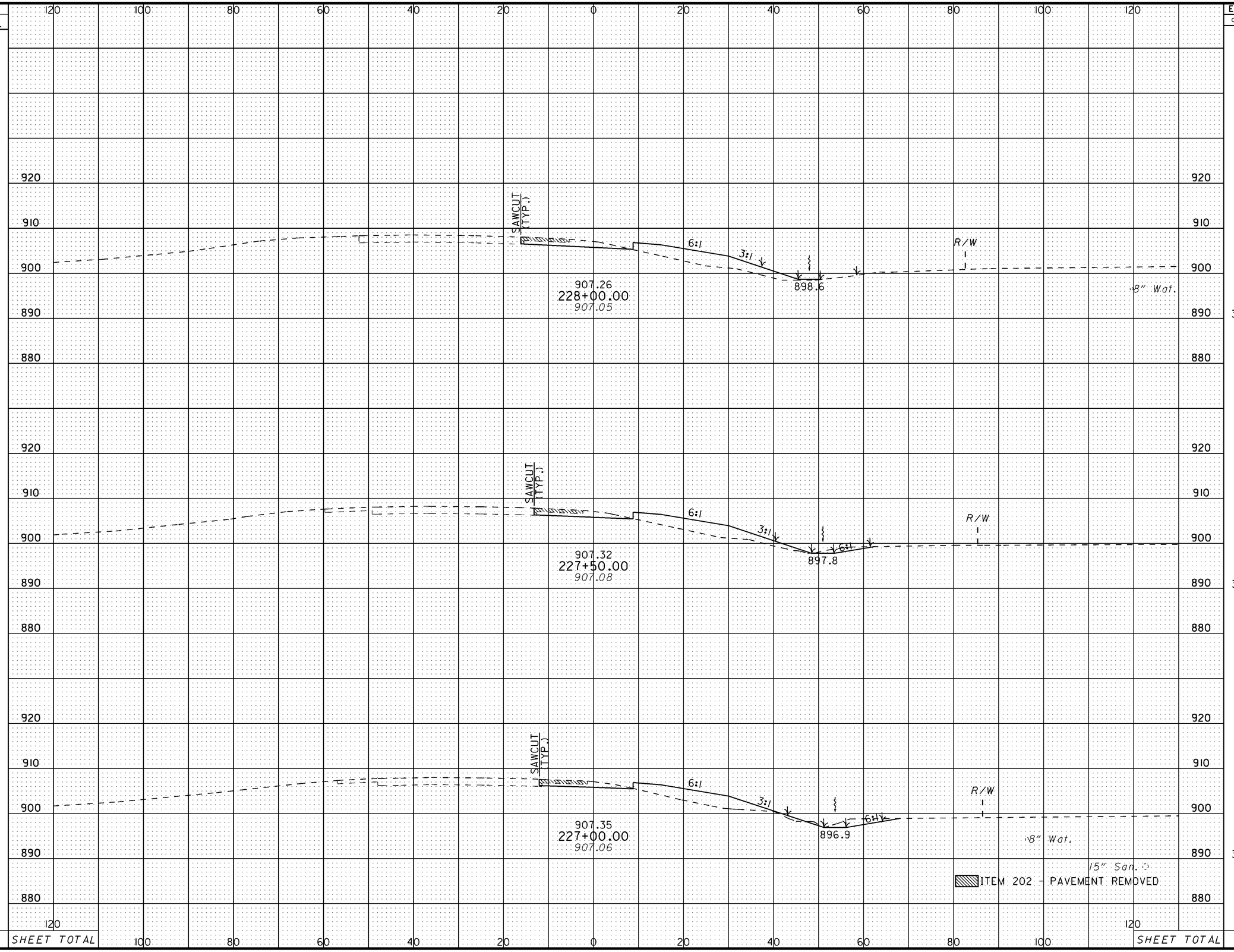

CALCULATED JMD
CHECKED AJS

RAMP H CROSS SECTIONS
STA. 227+00 TO STA. 228+00

MOT-75-0.75

SEEDING		END AREA		VOLUME	
END WIDTH	SQ. YDS.	CUT	FILL	CUT	FILL
		33	194	62	310
		33	141	62	223
		33	100	59	166
SHEET TOTAL					

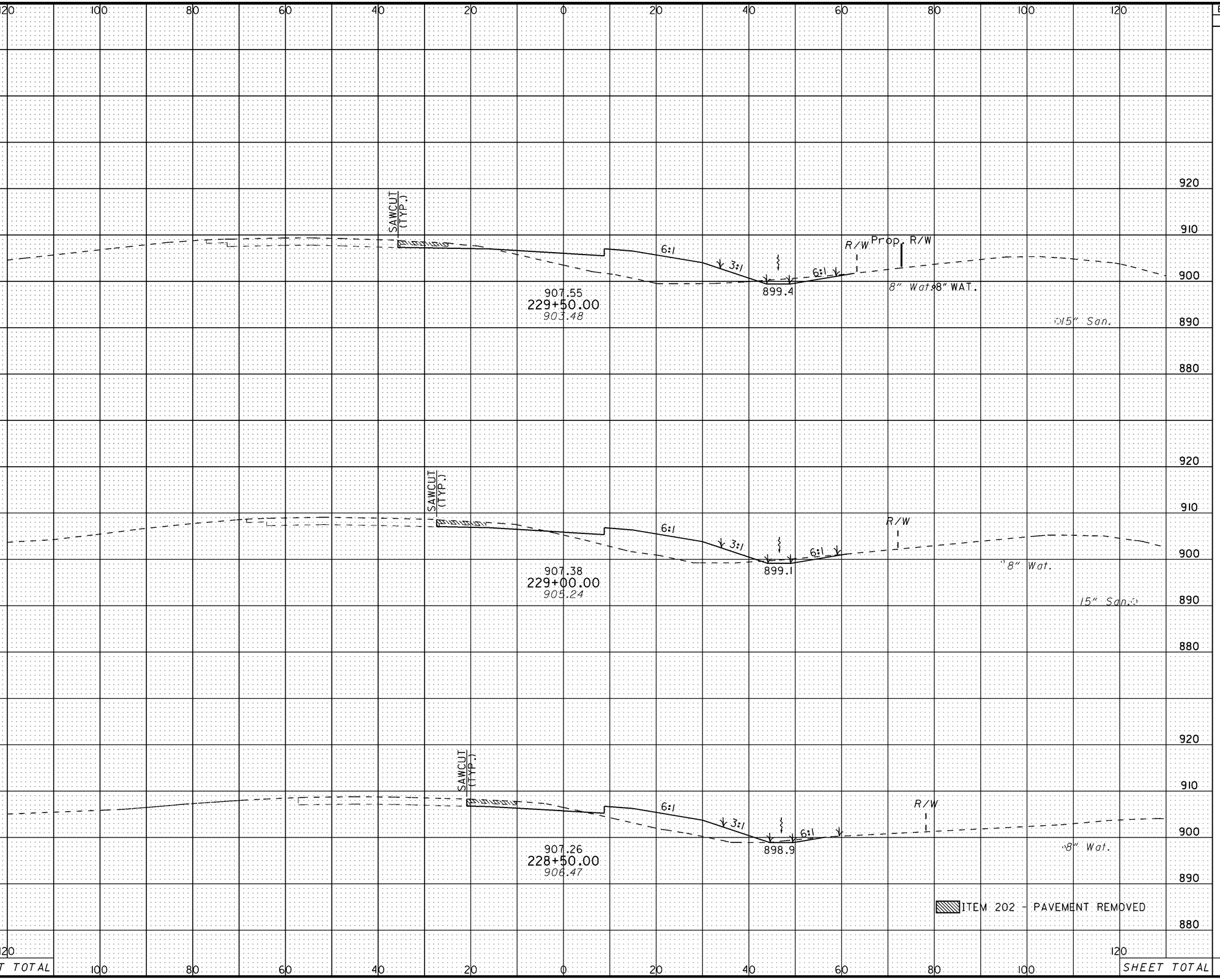

CALCULATED JMD
CHECKED AJS

RAMP H CROSS SECTIONS
STA. 228+50 TO STA. 229+50

MOT-75-0.75

123
773

SEEDING	
END WIDTH	SQ. YDS.

END AREA	
CUT	FILL
84	683
121	417
79	317

VOLUME	
CUT	FILL
191	1018
185	680
104	473

CALCULATED JMD

CHECKED AJS

RAMP H CROSS SECTIONS STA. 230+00 TO STA. 231+00

MOT-75-0.75

SEEDING	
END WIDTH	SQ. YDS.

END AREA	
CUT	FILL
67	753
118	637

VOLUME	
CUT	FILL
172	1288
188	1222

CALCULATED JMD

CHECKED AJS

RAMP H CROSS SECTIONS
STA. 231+50 TO STA. 232+00

MOT-75-0.75

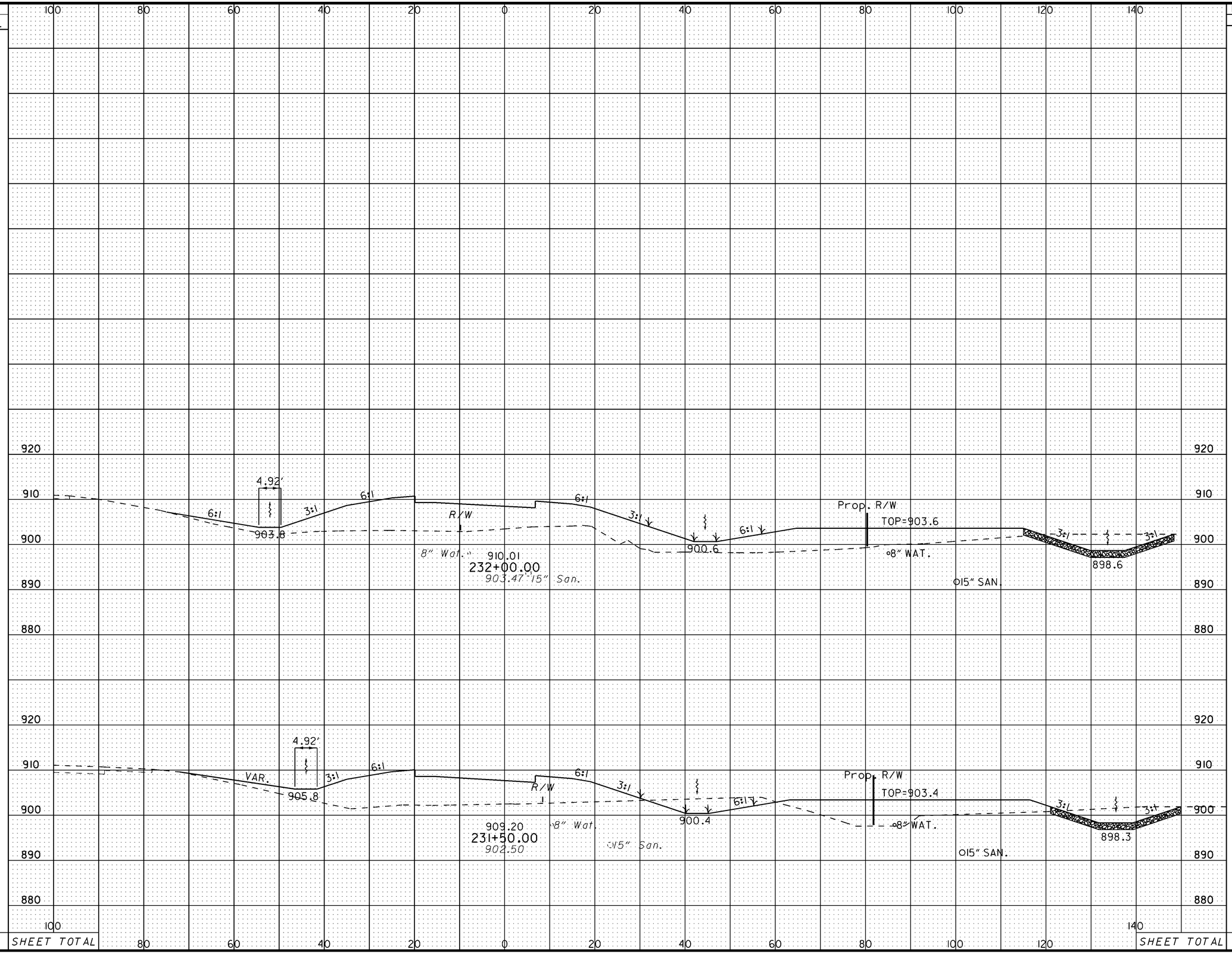

SEEDING	
END WIDTH	SQ. YDS.

END AREA		VOLUME	
CUT	FILL	CUT	FILL

CALCULATED JMD

CHECKED AJS

240 220 200 180 160 140 120 100 80 60 40 20 0

930 920 910 900 890

100:1 6:1 15' R/W 3:1 6:1 30" CONDUIT, TYPE A

8" Wat. 15" San.

902.0

913.38
233+50.00
903.56

930 920 910 900 890

15' R/W 100:1 6:1 3:1 6:1

8" Wat. 15" San.

902.8

912.10
233+00.00
898.84

930 920 910 900 890

6:1 15' 3:1 R/W 6:1

8" Wat. 15" San.

903.5

910.97
232+50.00
904.21

240 220 200 180 160 140 120 100 80 60 40 20 0

SHEET TOTAL SHEET TOTAL

RAMP H CROSS SECTIONS - LEFT
STA. 232+50 TO STA. 233+50

MOT-75-0.75

SEEDING		END AREA		VOLUME	
END WIDTH	SQ. YDS.	CUT	FILL	CUT	FILL
		157	716	233	1451
		94	852	149	1338
		67	594	125	1247

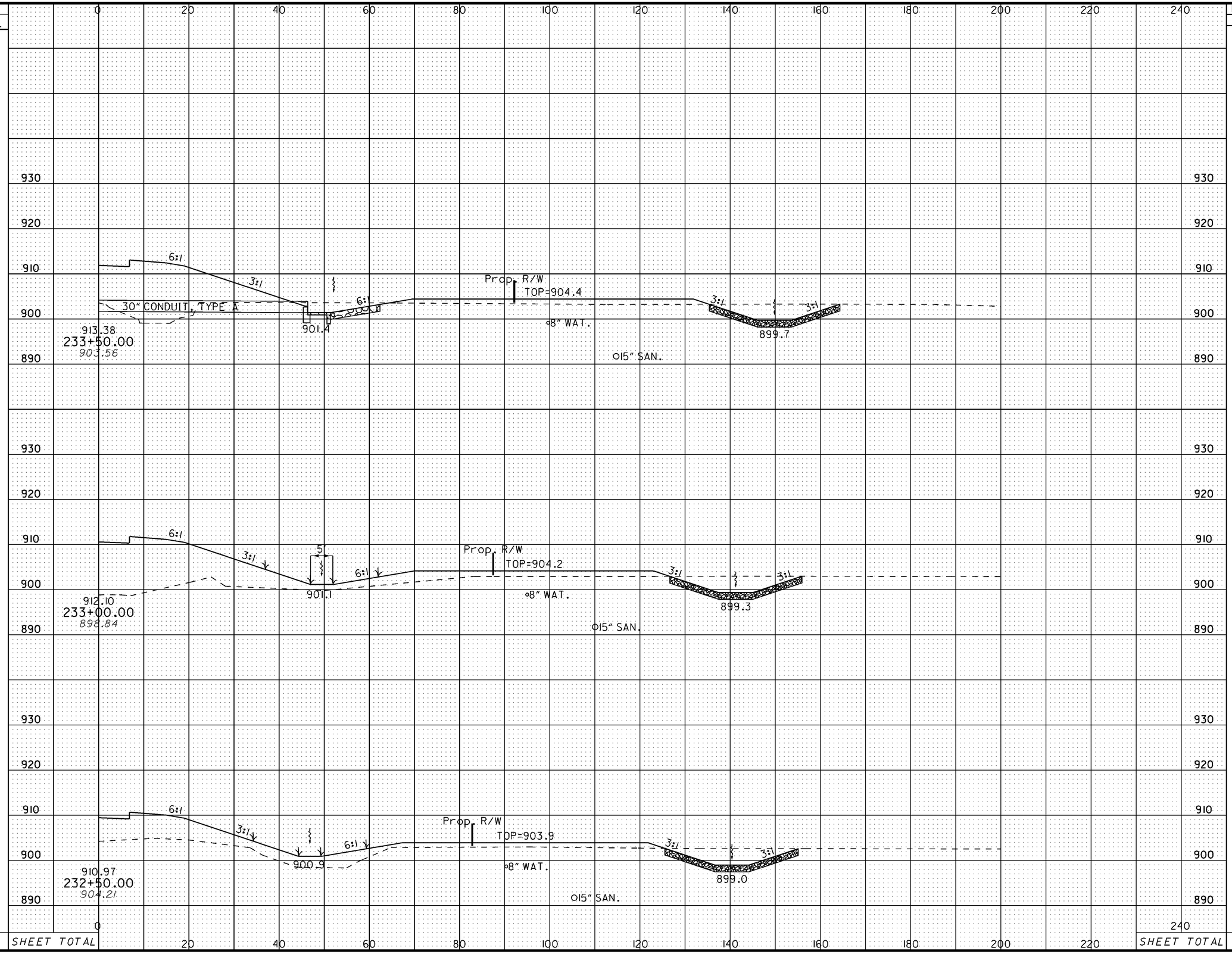

CALCULATED JMD

CHECKED AJS

RAMP H CROSS SECTIONS - RIGHT
STA. 232+50 TO STA. 233+50

MOT-75-0.75

127
773

SEEDING	
END WIDTH	SQ. YDS.

END AREA		VOLUME	
CUT	FILL	CUT	FILL

CALCULATED JMD

CHECKED AJS

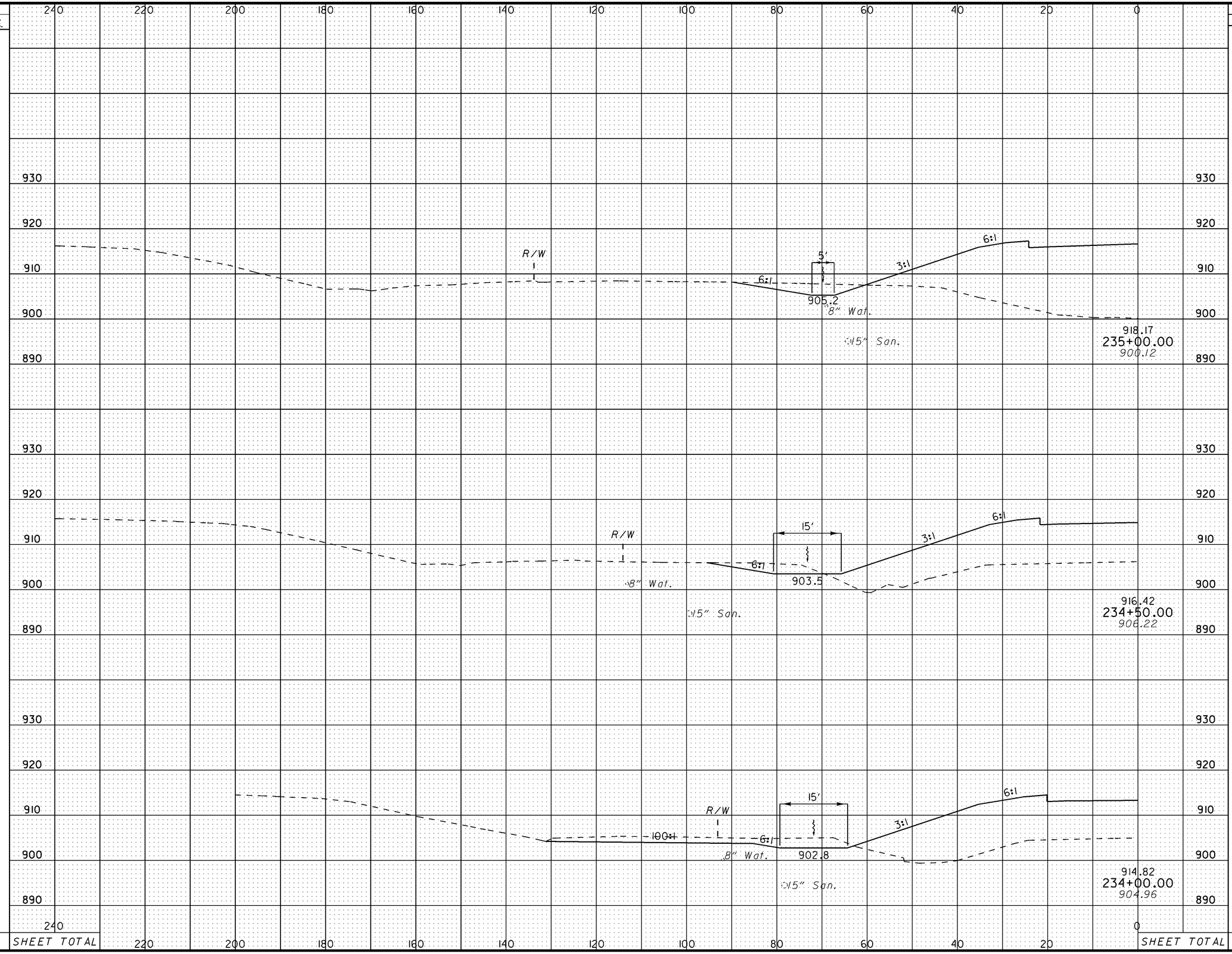

RAMP H CROSS SECTIONS - LEFT
STA. 234+00 TO STA. 235+00

MOT-75-0.75

SEEDING		END AREA		VOLUME	
END WIDTH	SQ. YDS.	CUT	FILL	CUT	FILL
		152	1520	313	2220
		186	877	411	1561
		258	809	384	1412

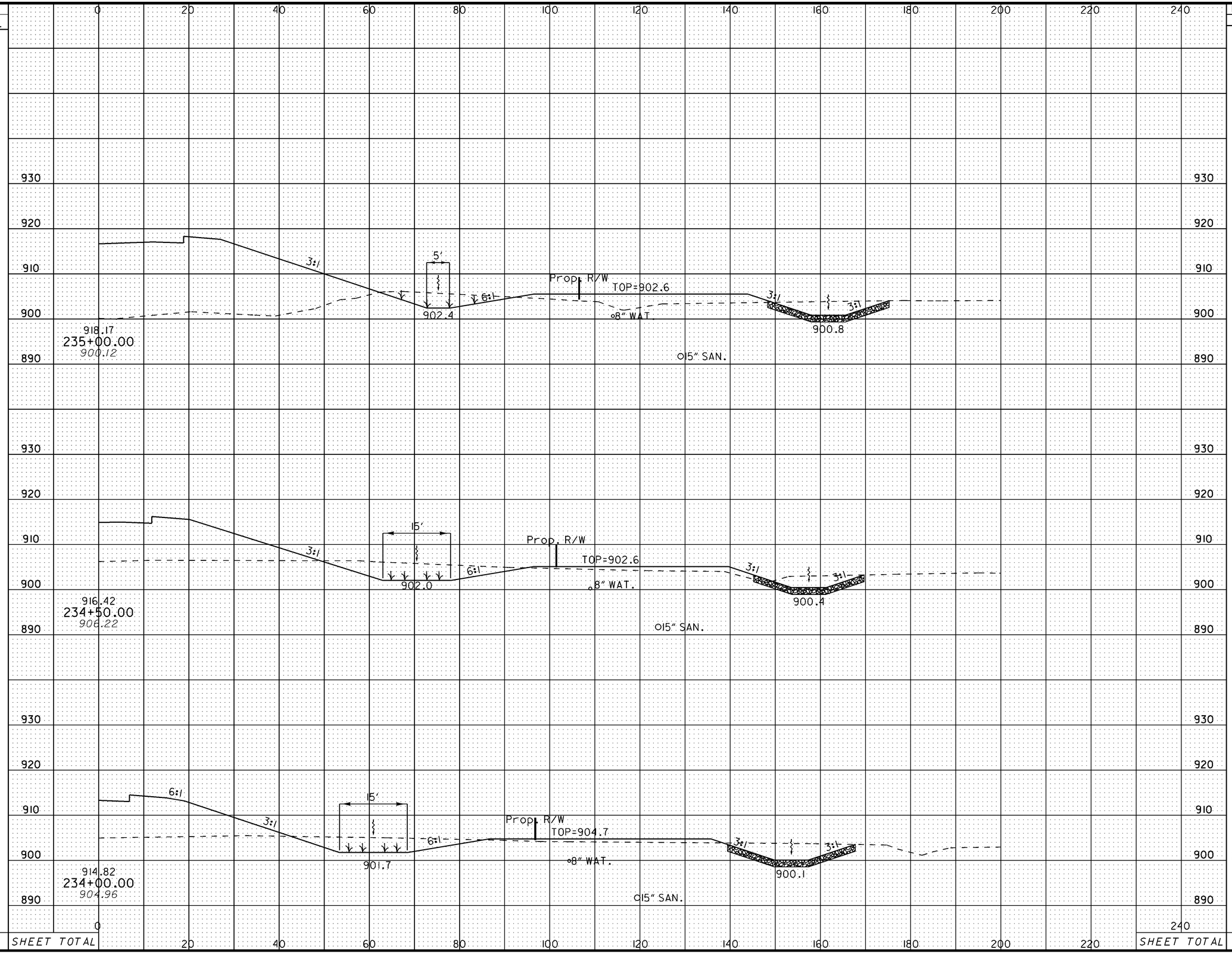

CALCULATED JMD

CHECKED AJS

RAMP H CROSS SECTIONS - RIGHT
STA. 234+00 TO STA. 235+00

MOT-75-0.75

SEEDING	
END WIDTH	SQ. YDS.

END AREA		VOLUME	
CUT	FILL	CUT	FILL

CALCULATED JMD

CHECKED AJS

240 220 200 180 160 140 120 100 80 60 40 20 0

940 930 920 910 900 890

R/W

6:1 3:1 6:1

910.3

924.38
236+50.00
913.23

R/W

6:1 3:1 6:1

908.8

922.17
236+00.00
910.67

R/W

6:1 3:1 6:1

907.3

8" Wat.
15" San.

920.09
235+50.00
907.39

240 220 200 180 160 140 120 100 80 60 40 20 0

SHEET TOTAL SHEET TOTAL

RAMP H CROSS SECTIONS - LEFT
STA. 235+50 TO STA. 236+50

MOT-75-0.75

130
773

SEEDING		END AREA		VOLUME	
END WIDTH	SQ. YDS.	CUT	FILL	CUT	FILL
		50	1022	90	2138
		47	1288	157	2479
		122	1389	254	2694

CALCULATED JMD

CHECKED AJS

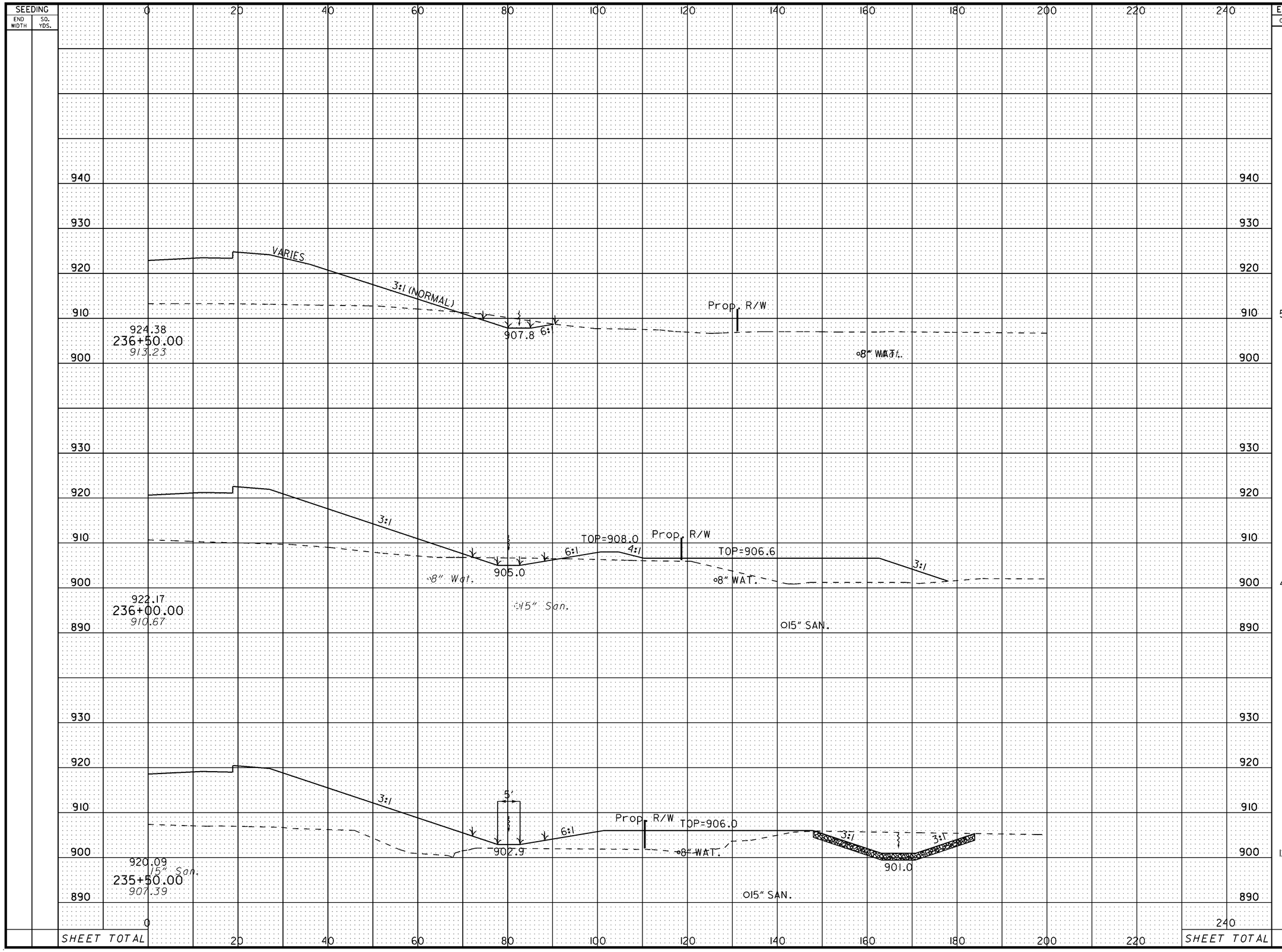

RAMP H CROSS SECTIONS - RIGHT
STA. 235+50 TO STA. 236+50

MOT-75-0.75

SEEDING	
END WIDTH	SQ. YDS.

END AREA		VOLUME	
CUT	FILL	CUT	FILL

CALCULATED JMD

CHECKED AJS

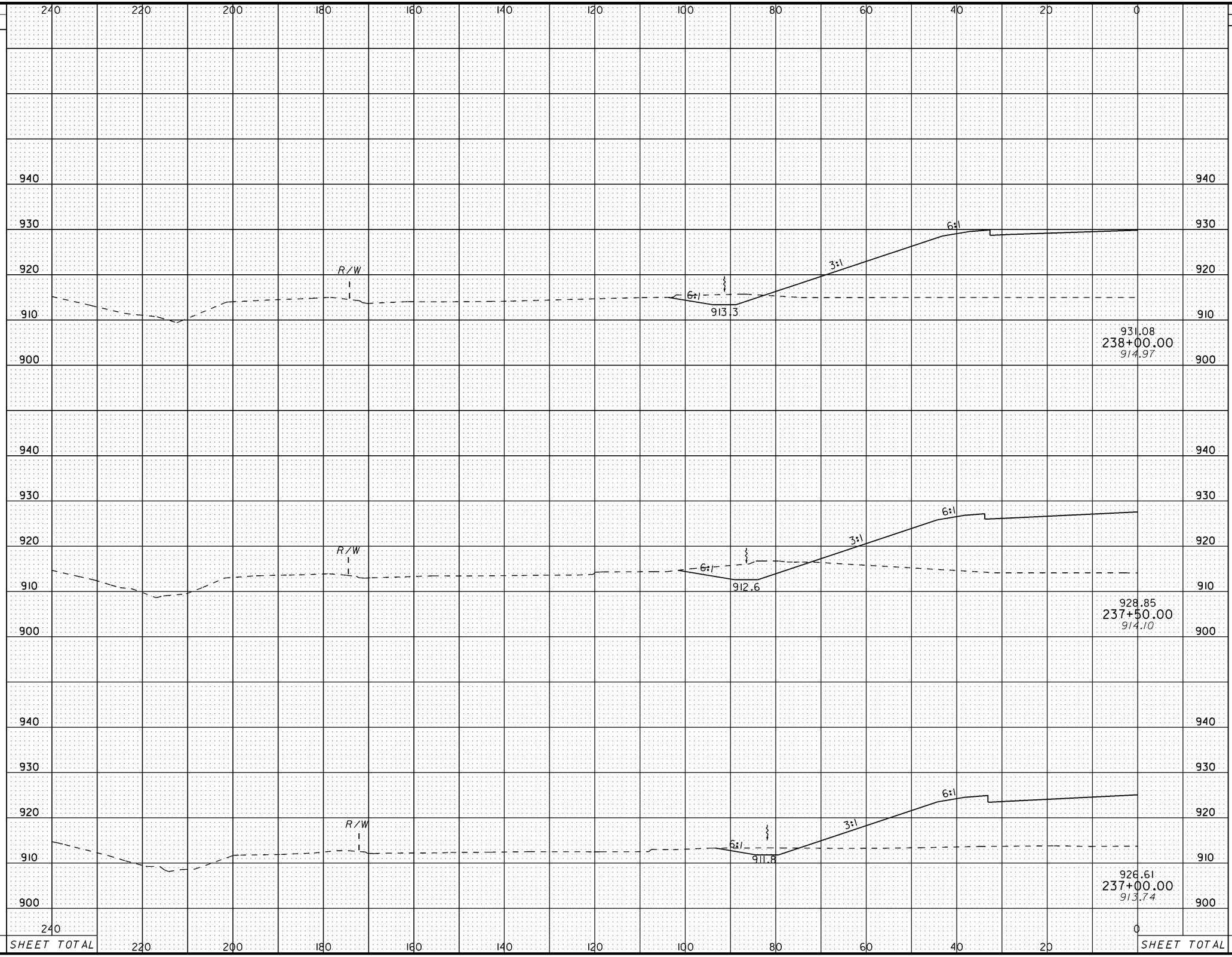

RAMP H CROSS SECTIONS - LEFT
STA. 237+00 TO STA. 238+00

MOT-75-0.75

SEEDING		END AREA		VOLUME	
END WIDTH	SQ. YDS.	CUT	FILL	CUT	FILL
		54	1781	130	3045
		87	1507	111	2613
		33	1314	76	2163

CALCULATED JMD

CHECKED AJS

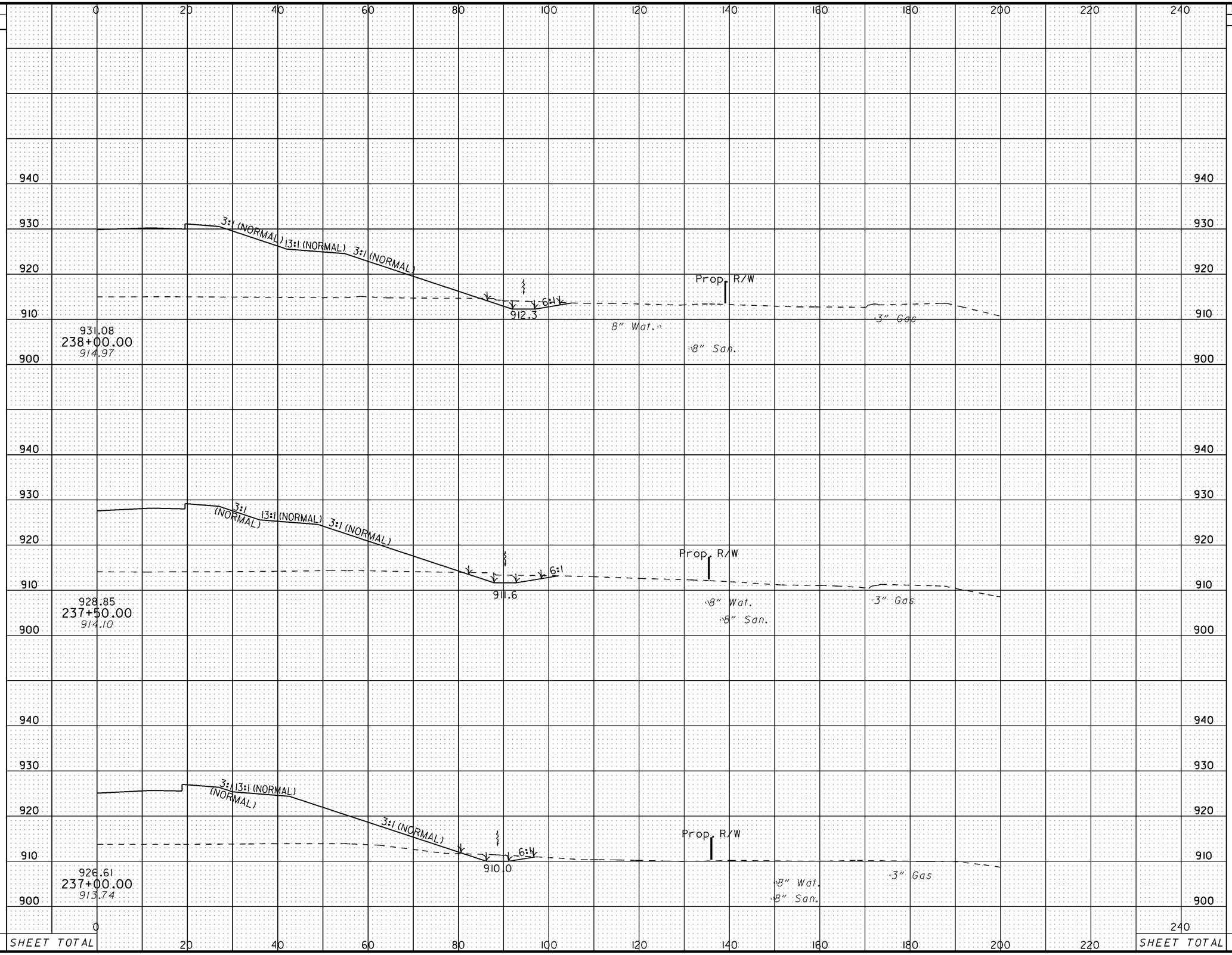

RAMP H CROSS SECTIONS - RIGHT
STA. 237+00 TO STA. 238+00

MOT-75-0.75

133
773

SEEDING	
END WIDTH	SQ. YDS.

END AREA		VOLUME	
CUT	FILL	CUT	FILL

CALCULATED JMD

CHECKED AJS

240 220 200 180 160 140 120 100 80 60 40 20 0

950 940 930 920 910 900

SEE M-S PIKE CROSS SECTIONS
STA. 156+50 SHEET 250

M.

R/W

6:1

3:1

Ø12" SLM.

936.32
239+50.00
918.19

R/W

6:1

3:1

6:1

914.9

934.81
239+00.00
916.97

R/W

6:1

3:1

6:1

914.1

933.10
238+50.00
915.76

240 220 200 180 160 140 120 100 80 60 40 20 0

SHEET TOTAL SHEET TOTAL

RAMP H CROSS SECTIONS - LEFT
STA. 238+50 TO STA. 239+50

MOT-75-0.75

SEEDING END WIDTH	SEEDING SQ. YDS.	END AREA CUT	END AREA FILL	VOLUME CUT	VOLUME FILL
		38	2142	81	3875
		49	2043	104	3703
		63	1956	108	3460

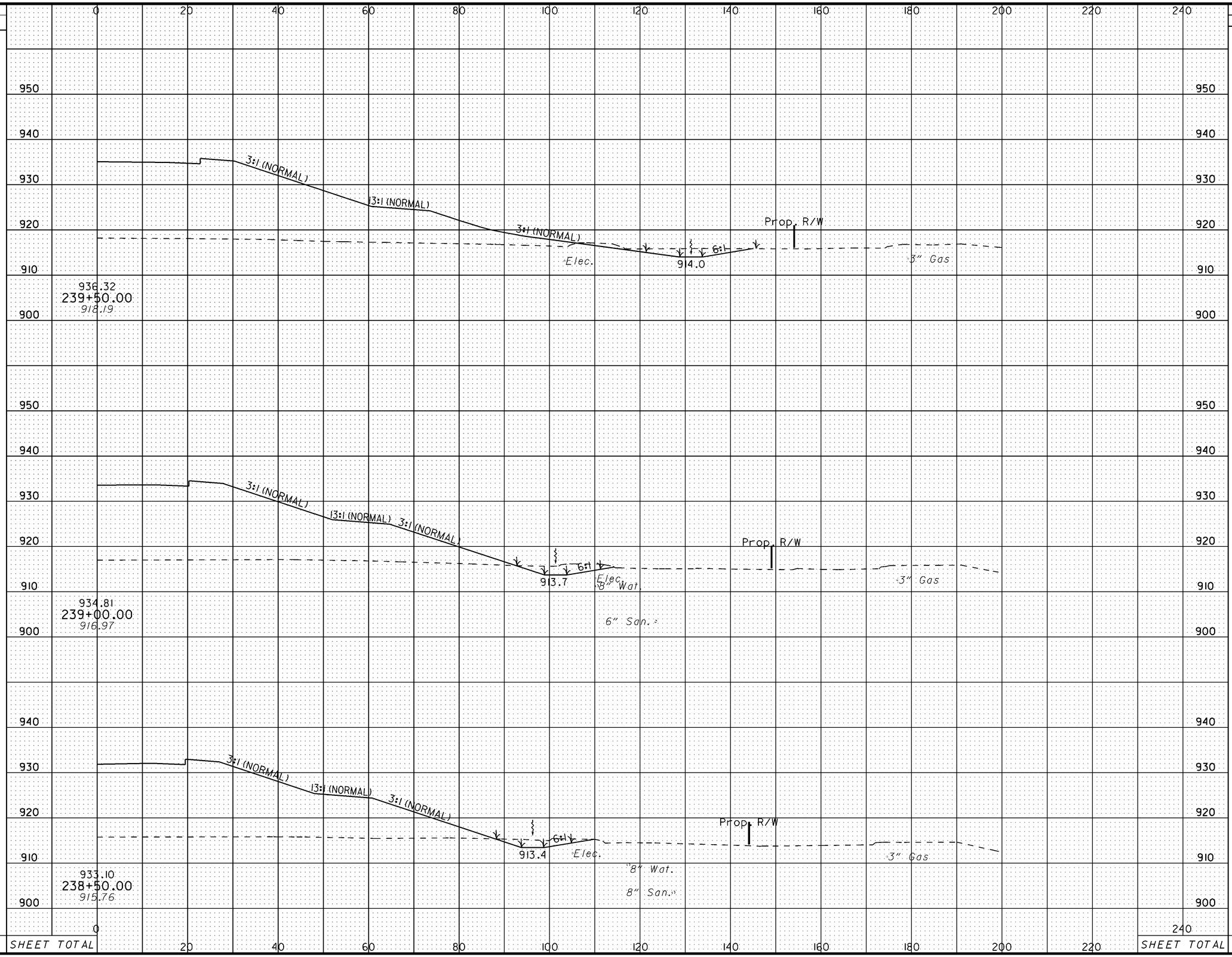

SHEET TOTAL

SHEET TOTAL

CALCULATED JMD

CHECKED AJS

RAMP H CROSS SECTIONS - RIGHT
STA. 238+50 TO STA. 239+50

MOT-75-0.75

135
773

SEEDING	
END WIDTH	SQ. YDS.

END AREA		VOLUME	
CUT	FILL	CUT	FILL

CALCULATED JMD

CHECKED AJS

240 220 200 180 160 140 120 100 80 60 40 20 0

950 940 930 920 910 900

R/W

SEE INTERSECTION DETAIL SHEET 328

AHEAD-SEE INTERSECTION DETAIL SHEET 328

M.

Tele.

12" STM.

36" Stm.

939.32
BACK ONLY 240+50.00
919.95

SEE M-S PIKE CROSS SECTIONS STA. 156+50 SHEET 252

VARIES

3:1 (NORMAL)

VARIES

R/W

R/W

M.

36" Stm.

Tele.

Tele.

12" STM.

937.82
240+00.00
917.22

240 SHEET TOTAL 220 200 180 160 140 120 100 80 60 40 20 0 SHEET TOTAL

RAMP H CROSS SECTIONS - LEFT STA. 240+00 TO STA. 240+50

MOT-75-0.75

SEEDING END WIDTH	SEEDING SQ. YDS.

END AREA CUT	END AREA FILL	VOLUME CUT	VOLUME FILL

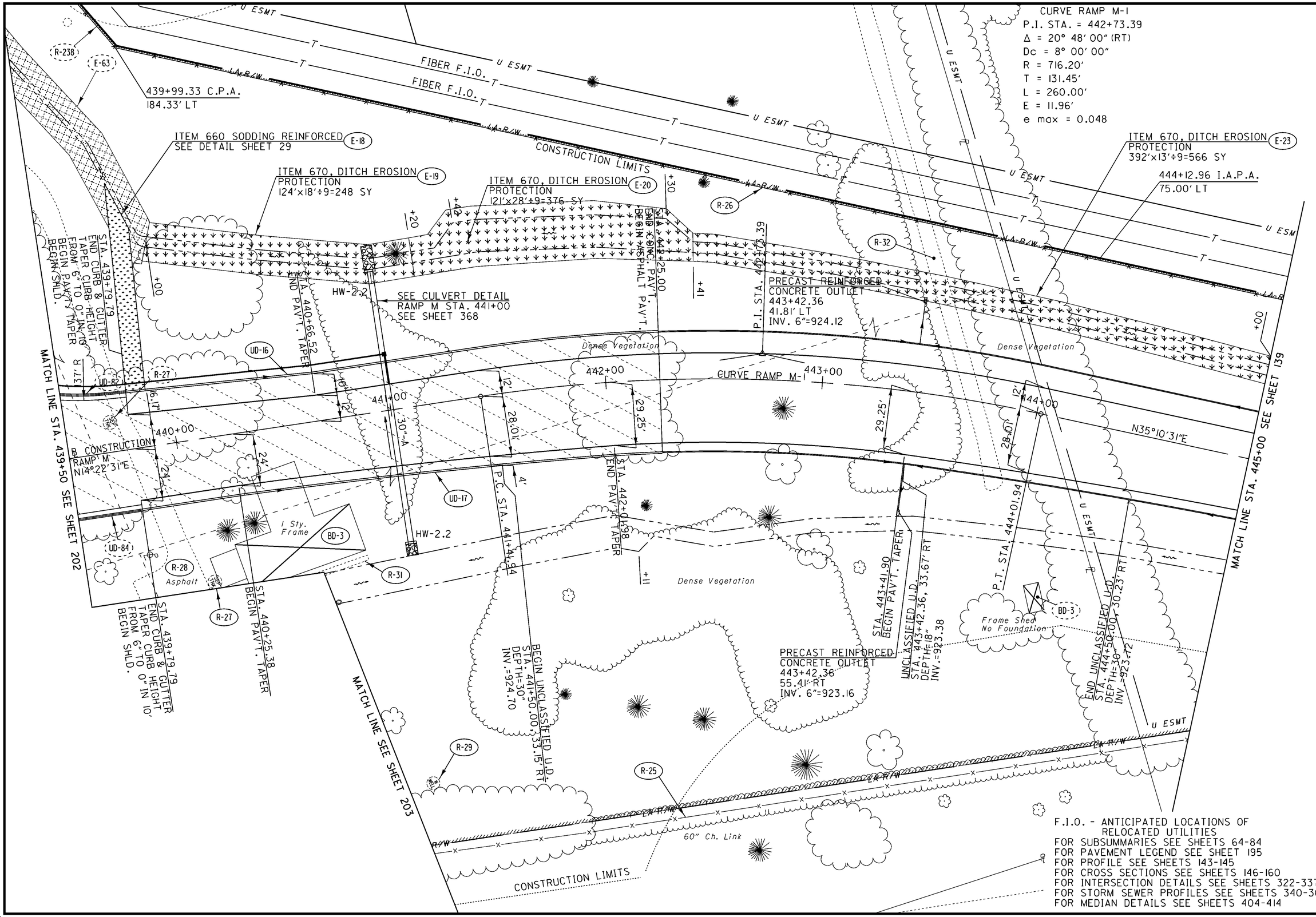

F.I.O. - ANTICIPATED LOCATIONS OF RELOCATED UTILITIES
FOR SUBSUMMARIES SEE SHEETS 64-84
FOR PAVEMENT LEGEND SEE SHEET 195
FOR PROFILE SEE SHEETS 143-145
FOR CROSS SECTIONS SEE SHEETS 146-160
FOR INTERSECTION DETAILS SEE SHEETS 322-337
FOR STORM SEWER PROFILES SEE SHEETS 340-361
FOR MEDIAN DETAILS SEE SHEETS 404-414

CALCULATED MAG
CHECKED AJS

RAMP M PLAN
STA. 439+50 TO STA. 445+00

MOT-75-0.75

F.I.O. - ANTICIPATED LOCATIONS OF RELOCATED UTILITIES
FOR SUBSUMMARIES SEE SHEETS 64-84
FOR PAVEMENT LEGEND SEE SHEET 195
FOR PROFILE SEE SHEETS 143-145
FOR CROSS SECTIONS SEE SHEETS 146-160
FOR INTERSECTION DETAILS SEE SHEETS 322-337
FOR STORM SEWER PROFILES SEE SHEETS 340-361
FOR MEDIAN DETAILS SEE SHEETS 404-414

CURVE RAMP M-2
P.I. STA. = 448+87.01
Δ = 15° 48' 00" (LT)
Dc = 5° 30' 00"
R = 1,041.74'
T = 144.55'
L = 287.27'
E = 9.98'
e max = 0.058

CURVE RAMP M-3
P.I. STA. = 455+30.04
Δ = 5° 00' 00" (LT)
Dc = 0° 30' 00"
R = 11,459.16'
T = 500.32'
L = 1,000.00'
E = 10.92'
e max = 0.020

E-24 ITEM 836, SEEDING AND EROSION CONTROL WITH TURF REINFORCED MAT, TYPE I
131'x25'÷9=364 SY

E-25 ITEM 836, SEEDING AND EROSION CONTROL WITH TURF REINFORCED MAT, TYPE I
704'x15'÷9=1173 SY

MATCH LINE STA. 445+00 SEE SHEET 138

MATCH LINE STA. 450+50 SEE SHEET --

U ESMT
FIBER F.I.O.
CONSTRUCTION LIMITS
L.A.R/W
E-23
+19
+39
+50
STA. 446+27.40 BEGIN PAVT. TAPER
STA. 447+42.45 P.C.
STA. 447+98.50 END PAVT. TAPER
R-26
UD-16
448+86.59 I.A.P.A.
65.67' LT
STA. 449+73.68 BEGIN PAVT. TAPER
STA. 450+12.73 P.C.C.
℄ CONSTRUCTION RAMP M
N35°10'31"E
446+00
447+00
448+00
449+00
450+00
CURVE RAMP M-2
CURVE RAMP M-3
12'
24'
10'
14.20'
14.75'
14.17'
4'
STA. 445+18.60 END PAVT. TAPER
STA. 445+40.00 BEGIN PAVT. TAPER
STA. 445+90.00 END PAVT. TAPER
UD-17
P.I. STA. 448+87.01
Dense Vegetation
CONSTRUCTION LIMITS
R-25
8"
I-75 Southbound
℄ CONSTRUCTION I-75
N14°22'31"E
49+00
50+00

RAMP M PLAN
STA. 445+00 TO STA. 450+50

MOT-75-0.75

CALCULATED MAG
CHECKED AJS

HORIZONTAL SCALE IN FEET
0 10 20 40

CURVE RAMP M-3
P.I. STA. = 455+30.04
Δ = 5° 00′ 00″ (LT)
Dc = 0° 30′ 00″
R = 11,459.16′
T = 500.32′
L = 1,000.00′
E = 10.92′
e max = 0.020

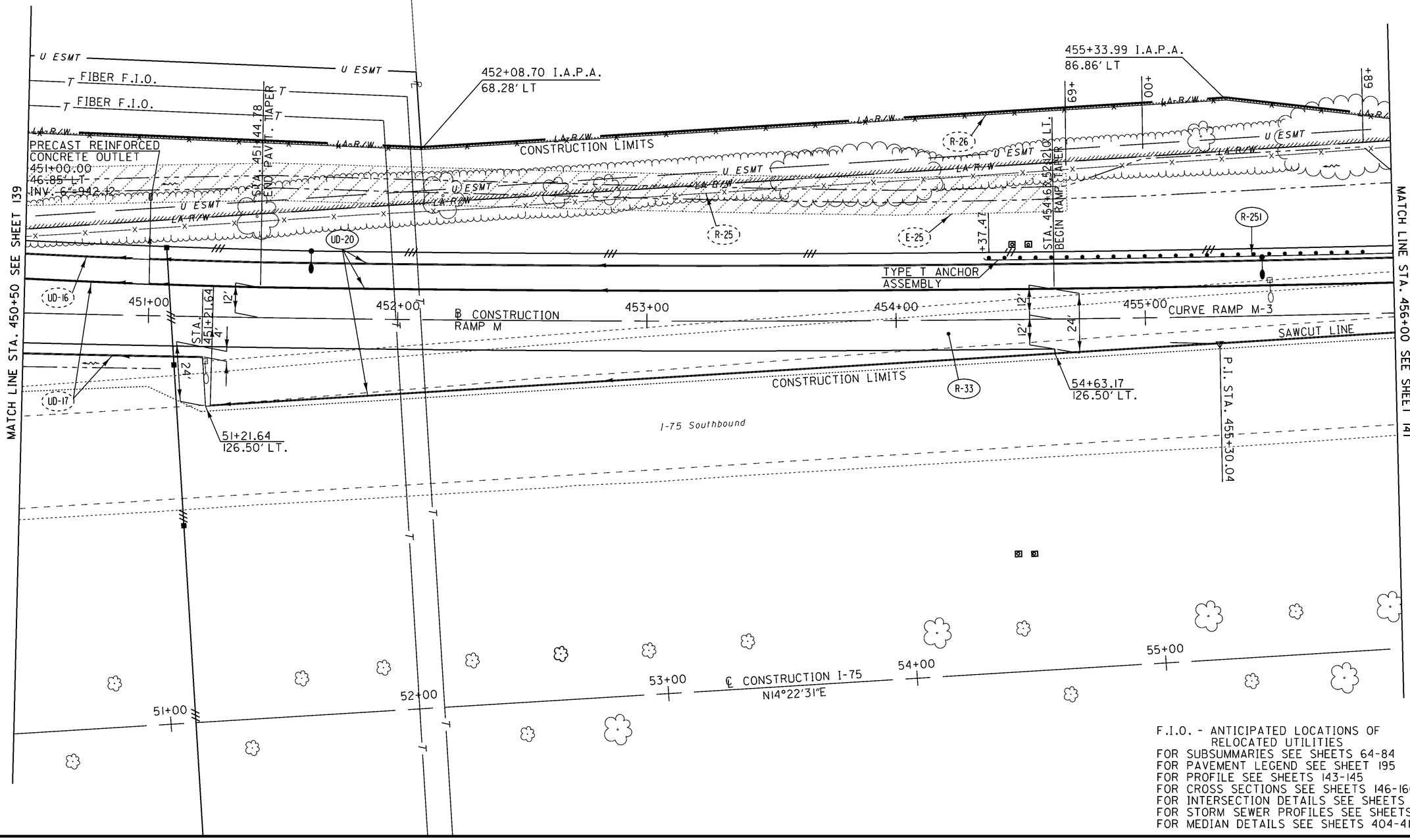

F.I.O. - ANTICIPATED LOCATIONS OF RELOCATED UTILITIES
FOR SUBSUMMARIES SEE SHEETS 64-84
FOR PAVEMENT LEGEND SEE SHEET 195
FOR PROFILE SEE SHEETS 143-145
FOR CROSS SECTIONS SEE SHEETS 146-160
FOR INTERSECTION DETAILS SEE SHEETS 322-337
FOR STORM SEWER PROFILES SEE SHEETS 340-361
FOR MEDIAN DETAILS SEE SHEETS 404-414

HORIZONTAL SCALE IN FEET
0 10 20 40

CALCULATED MAG
CHECKED AJS

RAMP M PLAN
STA. 450+50 TO STA. 456+00

MOT-75-0.75

140
773

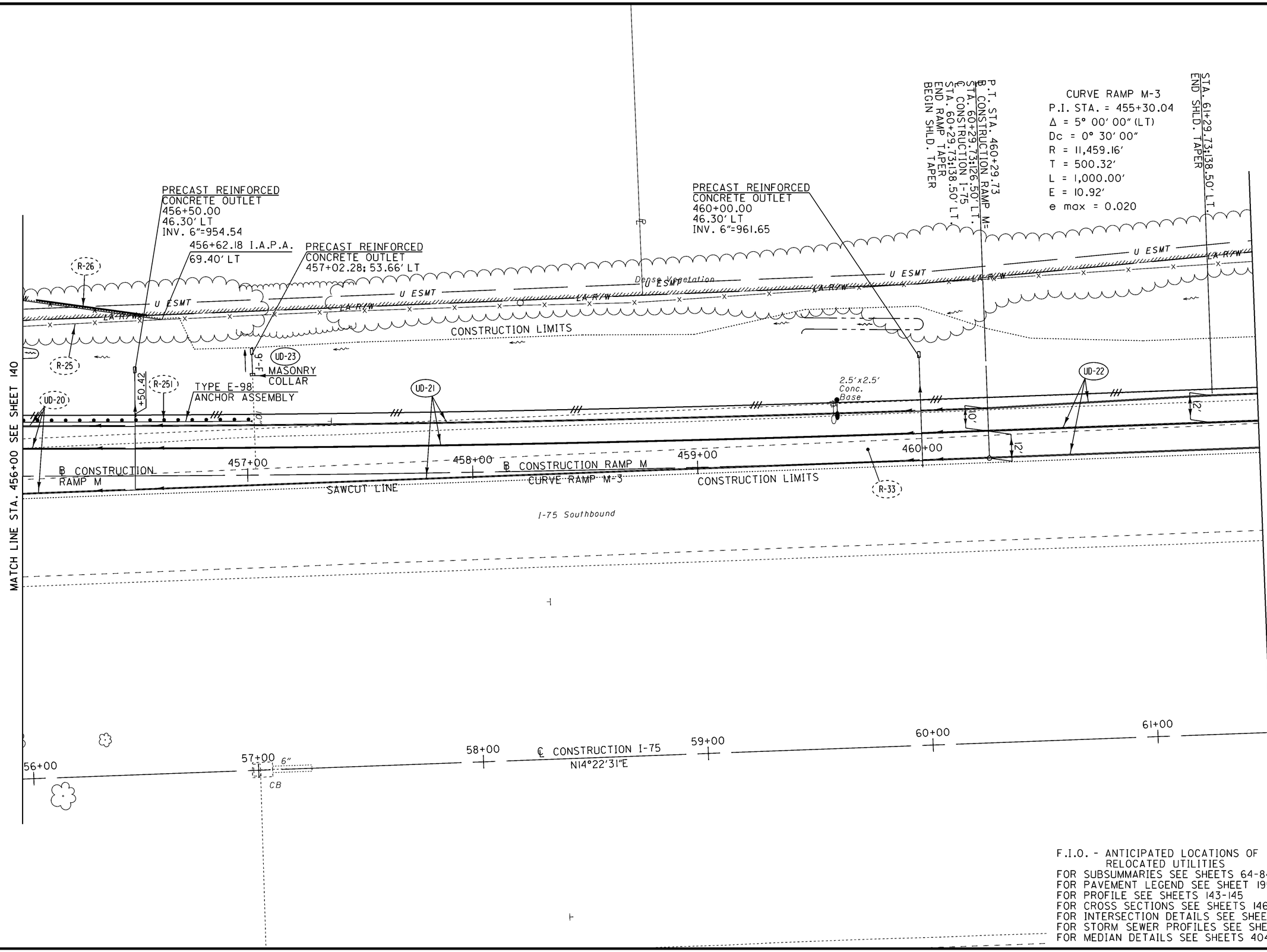

F.I.O. - ANTICIPATED LOCATIONS OF RELOCATED UTILITIES
FOR SUBSUMMARIES SEE SHEETS 64-84
FOR PAVEMENT LEGEND SEE SHEET 195
FOR PROFILE SEE SHEETS 143-145
FOR CROSS SECTIONS SEE SHEETS 146-160
FOR INTERSECTION DETAILS SEE SHEETS 322-337
FOR STORM SEWER PROFILES SEE SHEETS 340-361
FOR MEDIAN DETAILS SEE SHEETS 404-414

HORIZONTAL SCALE IN FEET
0 10 20 40

CALCULATED MAG
CHECKED AJS

RAMP M AND I-75 PLAN
STA. 456+00 RAMP M TO STA. 61+50 I-75

MOT-75-0.75

141
773

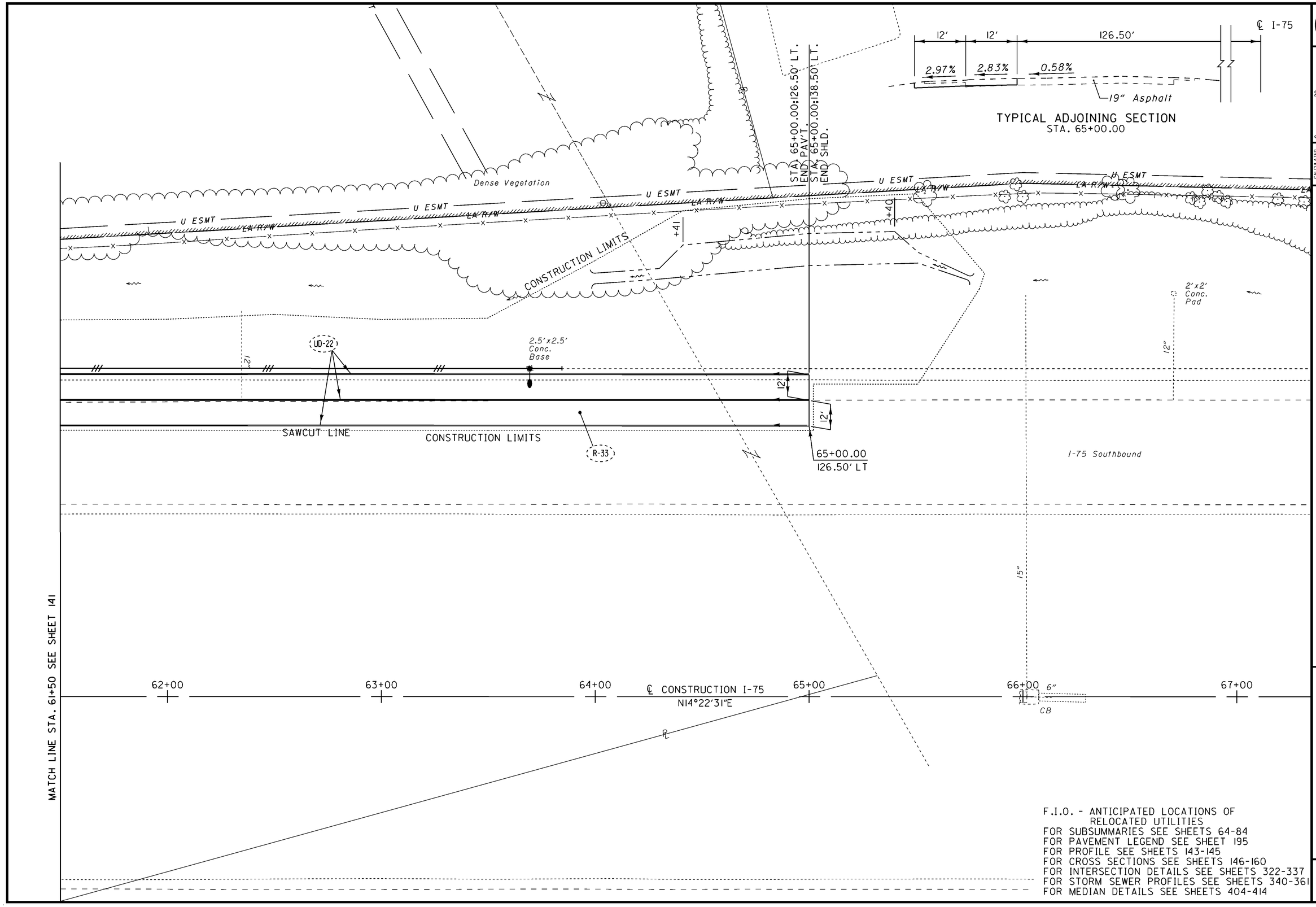

F.I.O. - ANTICIPATED LOCATIONS OF RELOCATED UTILITIES
FOR SUBSUMMARIES SEE SHEETS 64-84
FOR PAVEMENT LEGEND SEE SHEET 195
FOR PROFILE SEE SHEETS 143-145
FOR CROSS SECTIONS SEE SHEETS 146-160
FOR INTERSECTION DETAILS SEE SHEETS 322-337
FOR STORM SEWER PROFILES SEE SHEETS 340-361
FOR MEDIAN DETAILS SEE SHEETS 404-414

HORIZONTAL SCALE IN FEET
0 10 20 40

CALCULATED MAG
CHECKED AJS

RAMP M AND I-75 PLAN
STA. 61+50 TO STA. 65+00

MOT-75-0.75

142
773

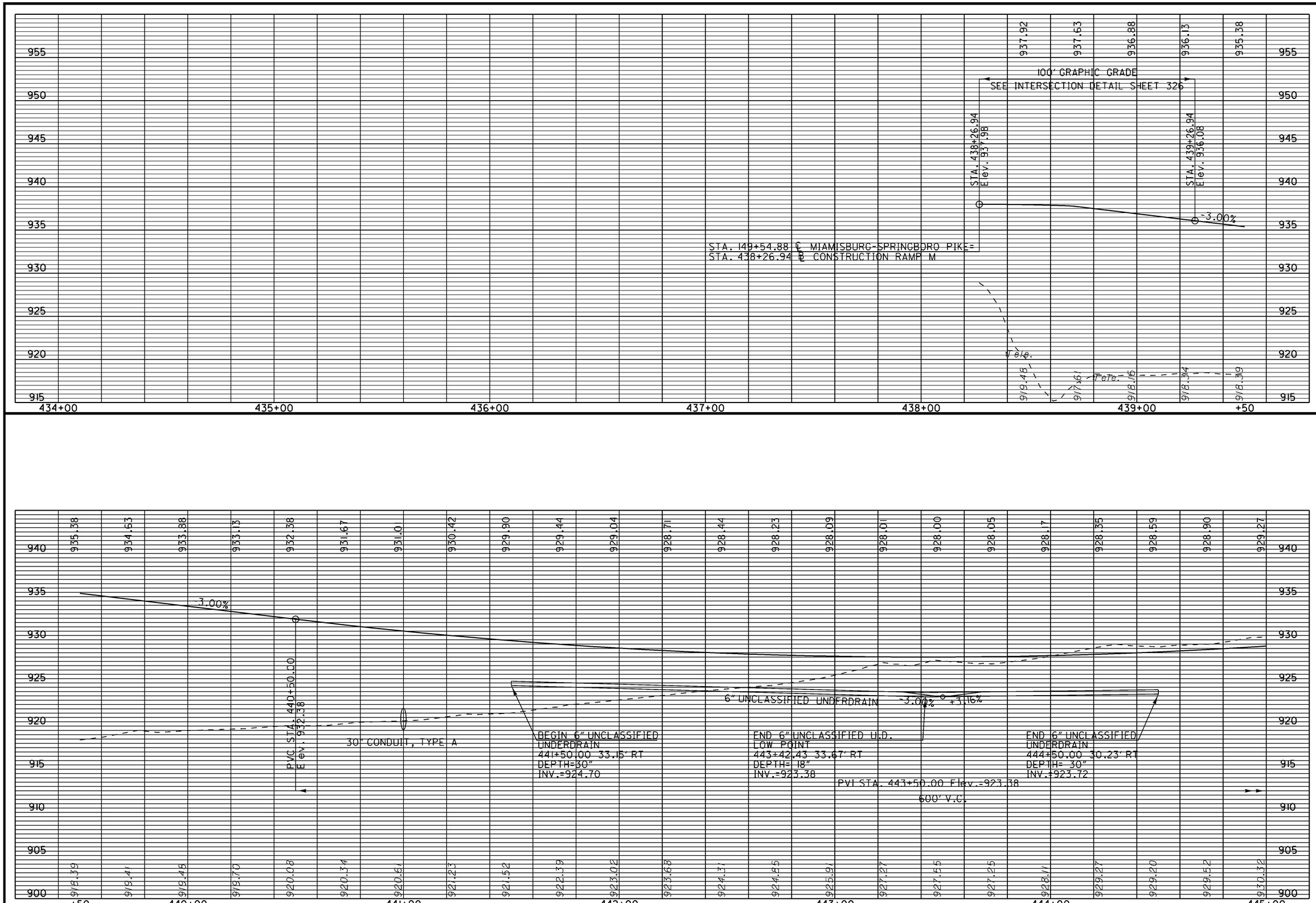

CALCULATED MAG
CHECKED AJS

RAMP M PROFILE
STA. 438+26.94 TO STA. 445+00

MOT-75-0.75

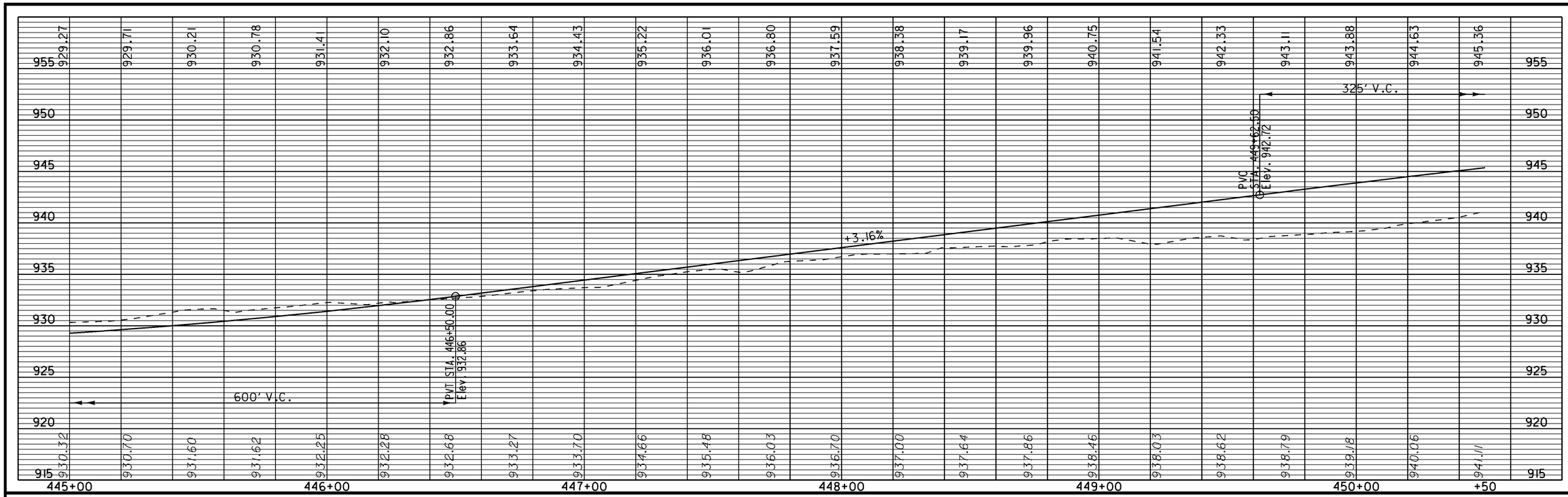

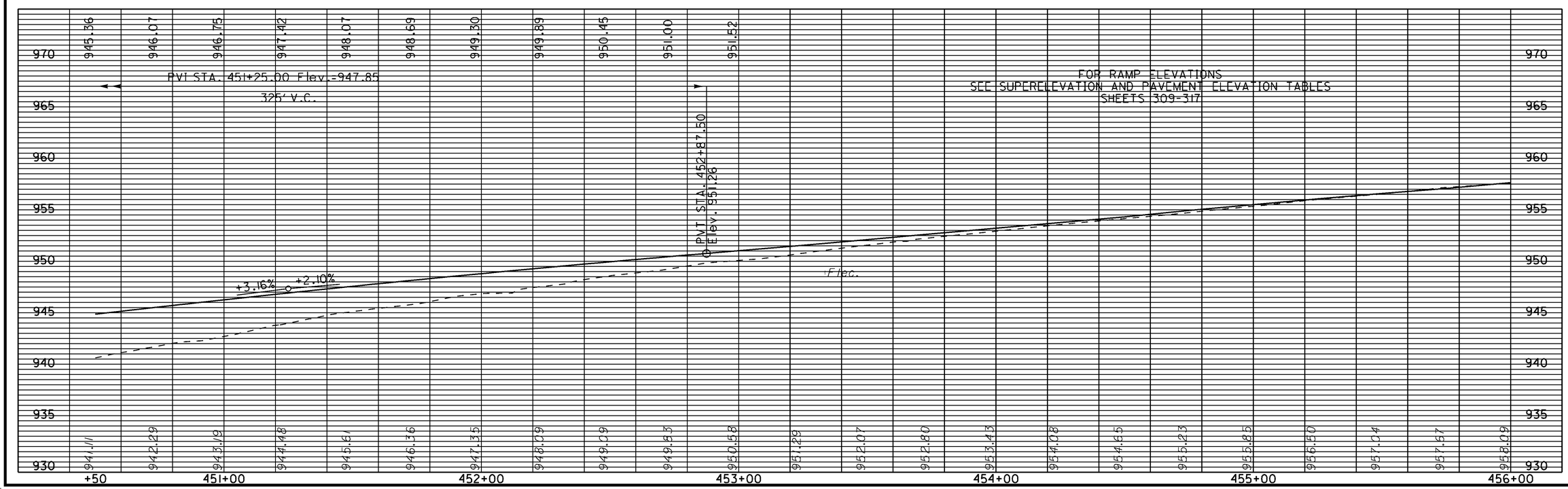

CALCULATED MAG
CHECKED AJS

RAMP M PROFILE
STA. 445+00 TO STA. 456+00

MOT-75-0.75

CALCULATED MAG
CHECKED AJS

RAMP M PROFILE
STA. 456+00 TO STA. 460+29.73

MOT-75-0.75

SEEDING	
END WIDTH	SQ. YDS.

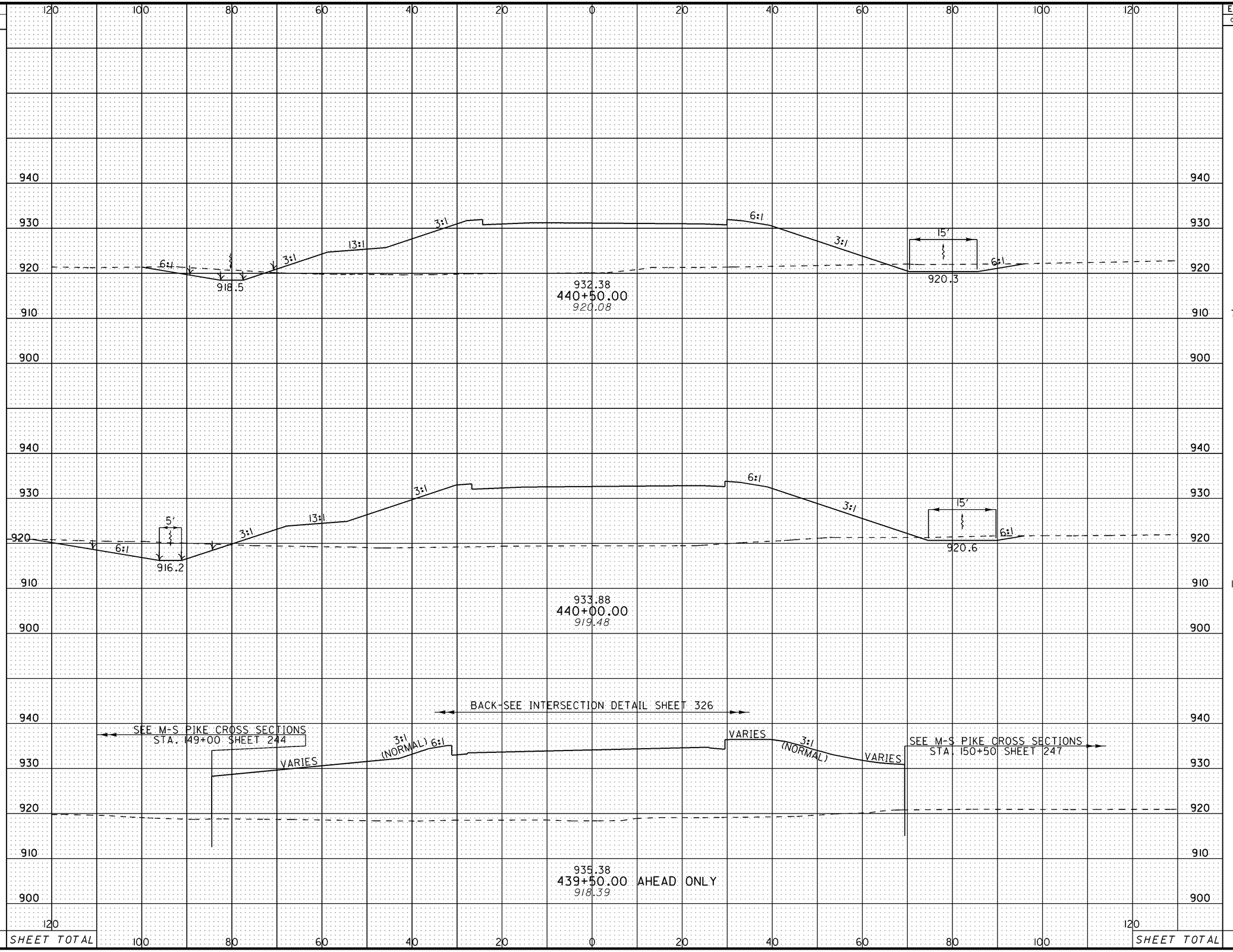

END AREA		VOLUME	
CUT	FILL	CUT	FILL
78	1092		
		178	2346
114	1442		
		106	3345
0	2171		

CALCULATED JMD
CHECKED AJS

RAMP M CROSS SECTIONS
STA. 439+50 TO STA. 440+50

MOT-75-0.75

146
773

SEEDING	
END WIDTH	SQ. YDS.

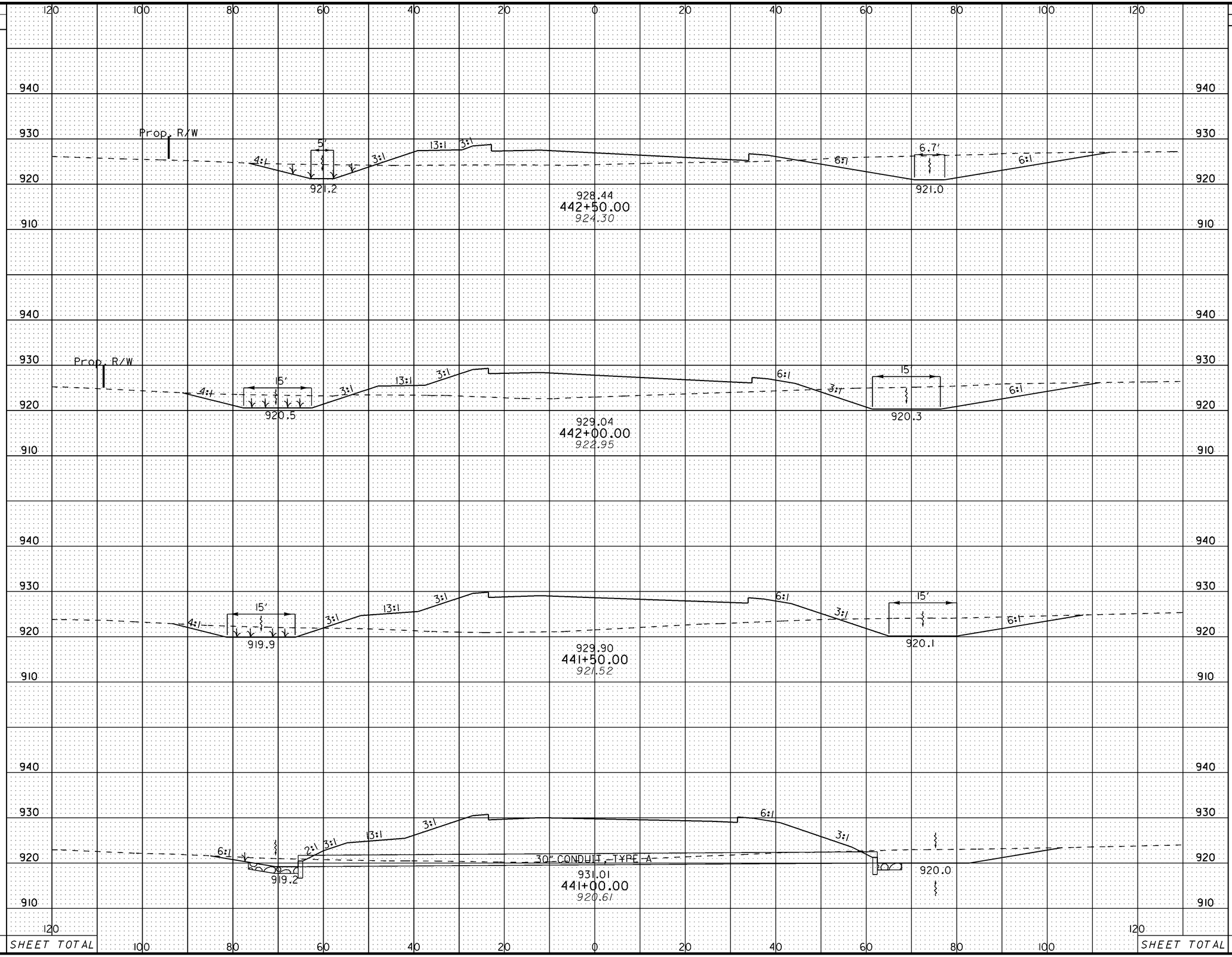

END AREA		VOLUME	
CUT	FILL	CUT	FILL
258	203		
		487	524
268	363		
		426	895
192	604		
		286	1337
117	840		
		180	1789

CALCULATED JMD

CHECKED AJS

RAMP M CROSS SECTIONS
STA. 441+00 TO STA. 442+50

MOT-75-0.75

147
773

SEEDING		END AREA		VOLUME	
END WIDTH	SQ. YDS.	CUT	FILL	CUT	FILL
		441	0	753	0
		372	0	666	6
		347	7	590	44
		290	41	507	226
SHEET TOTAL					

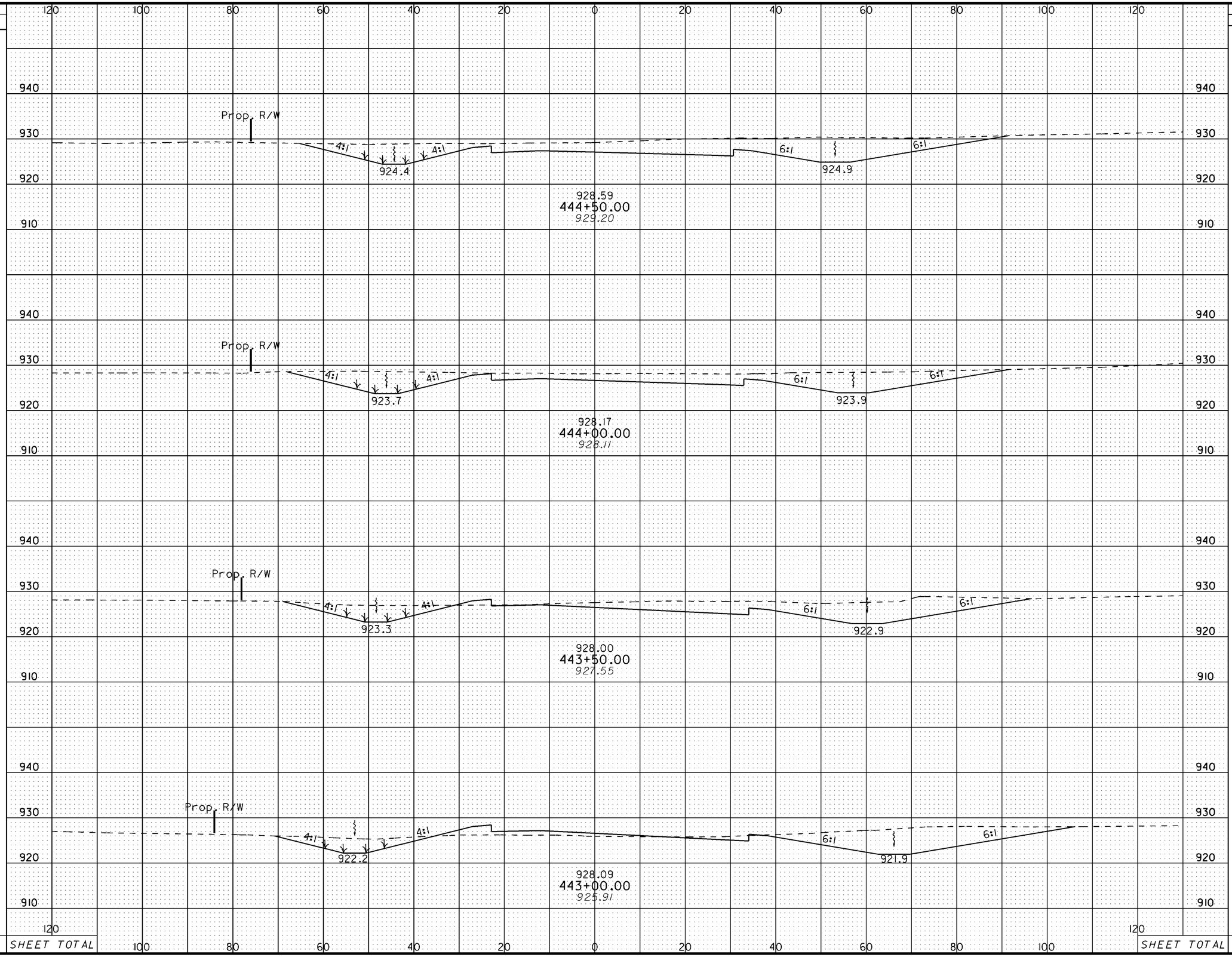

CALCULATED JMD

CHECKED AJS

RAMP M CROSS SECTIONS STA. 443+00 TO STA. 444+50

MOT-75-0.75

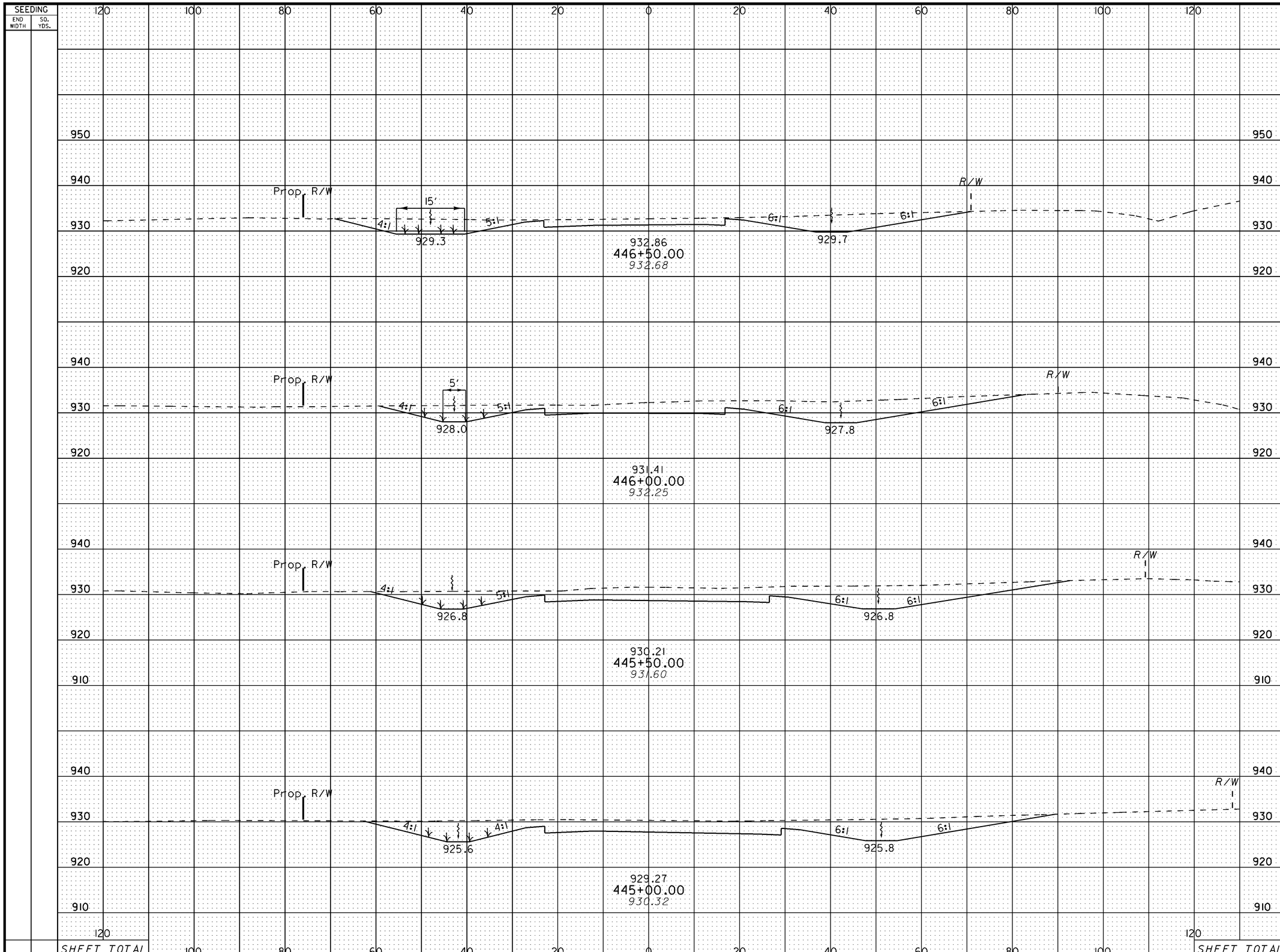

END AREA CUT	END AREA FILL	VOLUME CUT	VOLUME FILL
267	0		
		575	0
355	0		
		727	0
430	0		
		789	0
423	0		
		800	0

CALCULATED JMD
CHECKED AJS

RAMP M CROSS SECTIONS
STA. 445+00 TO STA. 446+50

MOT-75-0.75

SEEDING		END AREA		VOLUME	
END WIDTH	SQ. YDS.	CUT	FILL	CUT	FILL
		77	48	162	60
		98	16	200	20
		118	6	284	8
		188	3	421	2
SHEET TOTAL					

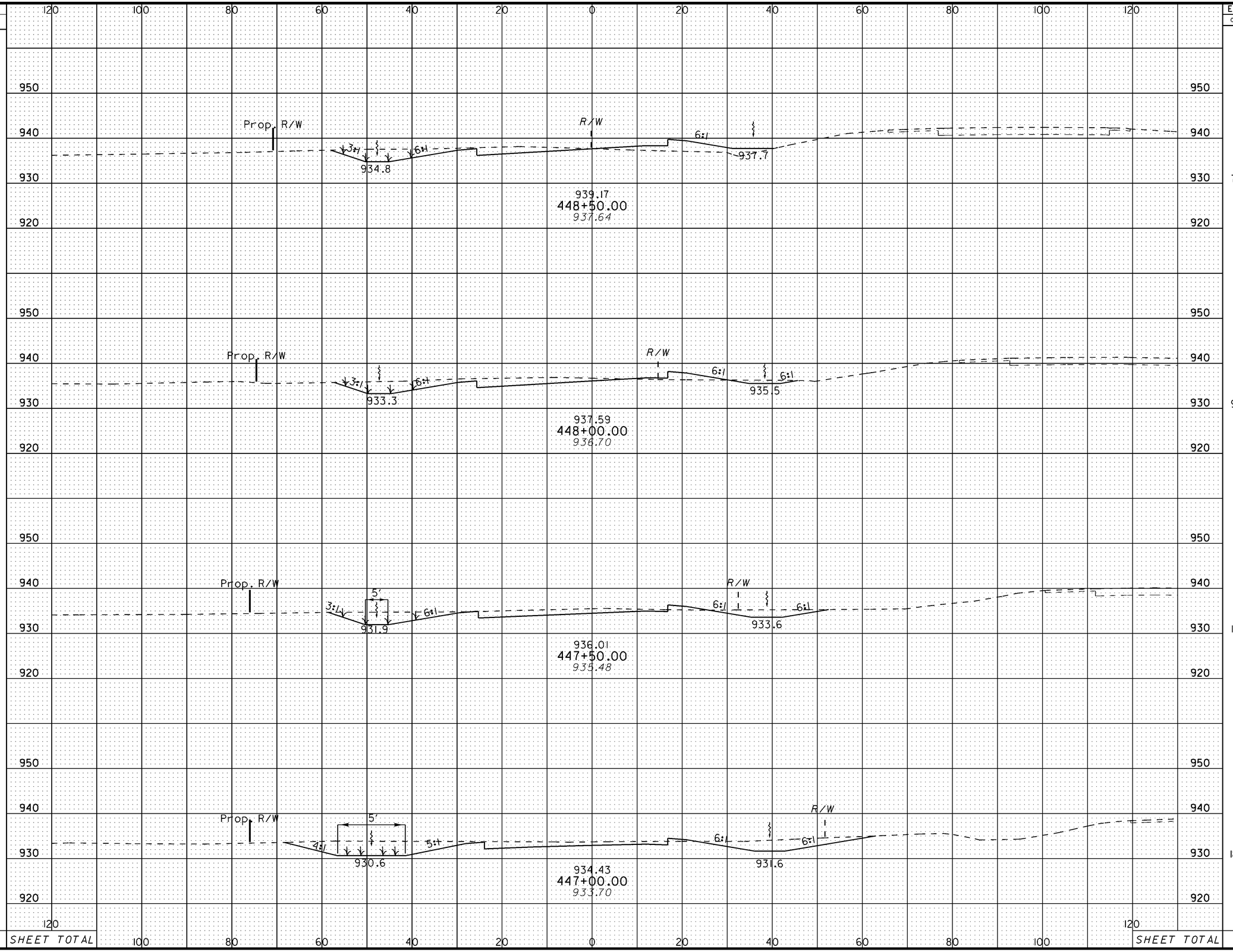

CALCULATED JMD

CHECKED AJS

RAMP M CROSS SECTIONS
STA. 447+00 TO STA. 448+50

MOT-75-0.75

150
773

SEEDING		END AREA		VOLUME	
END WIDTH	SQ. YDS.	CUT	FILL	CUT	FILL
		15	148	35	240
		23	111	65	174
		47	76	96	125
		57	58	124	99
SHEET TOTAL					

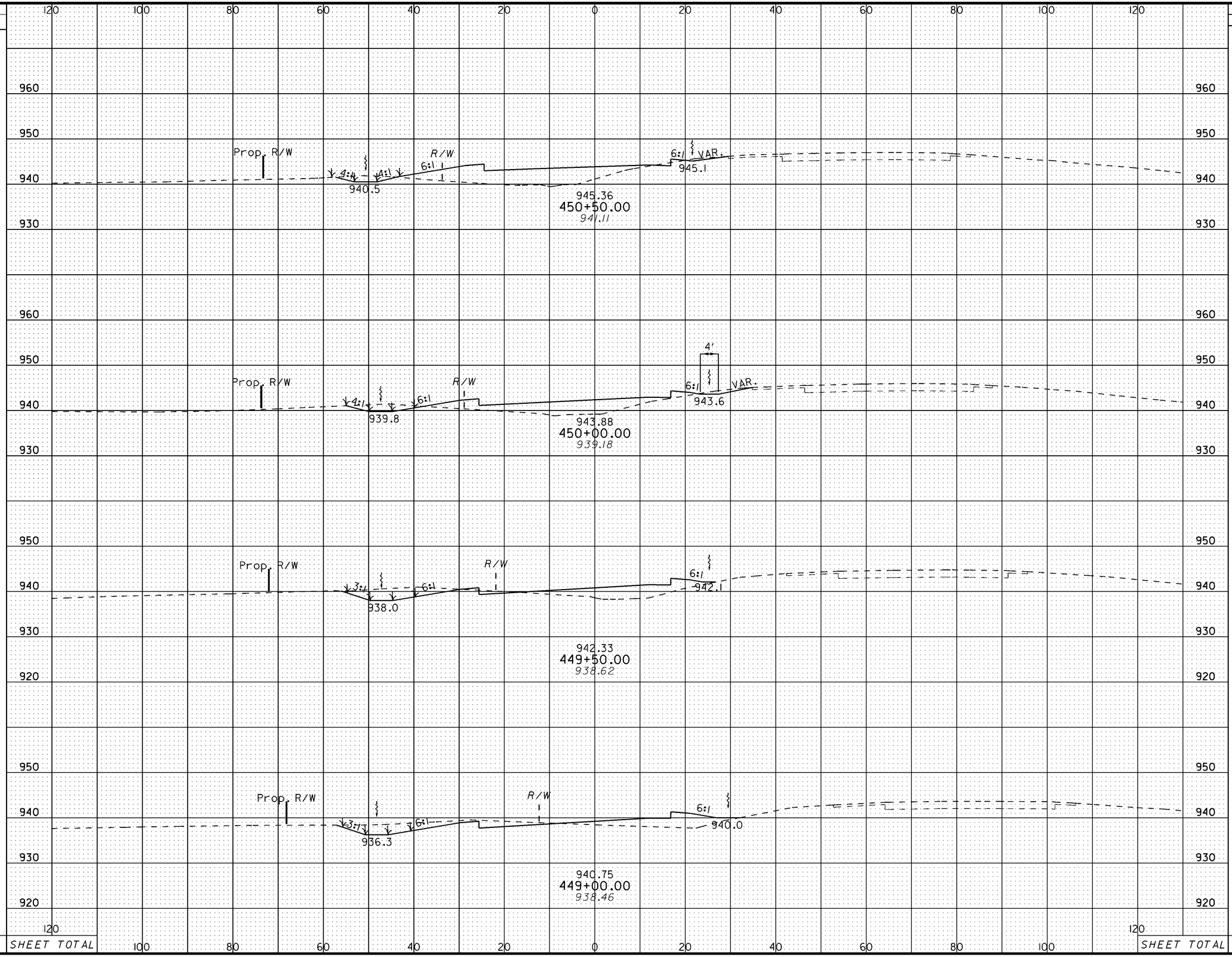

CALCULATED JMD

CHECKED AJS

RAMP M CROSS SECTIONS STA. 449+00 TO STA. 450+50

MOT-75-0.75

151
773

SEEDING		END AREA		VOLUME	
END WIDTH	SQ. YDS.	CUT	FILL	CUT	FILL
		39	126	63	268
		28	164	75	276
		53	134	68	268
		20	156	33	281

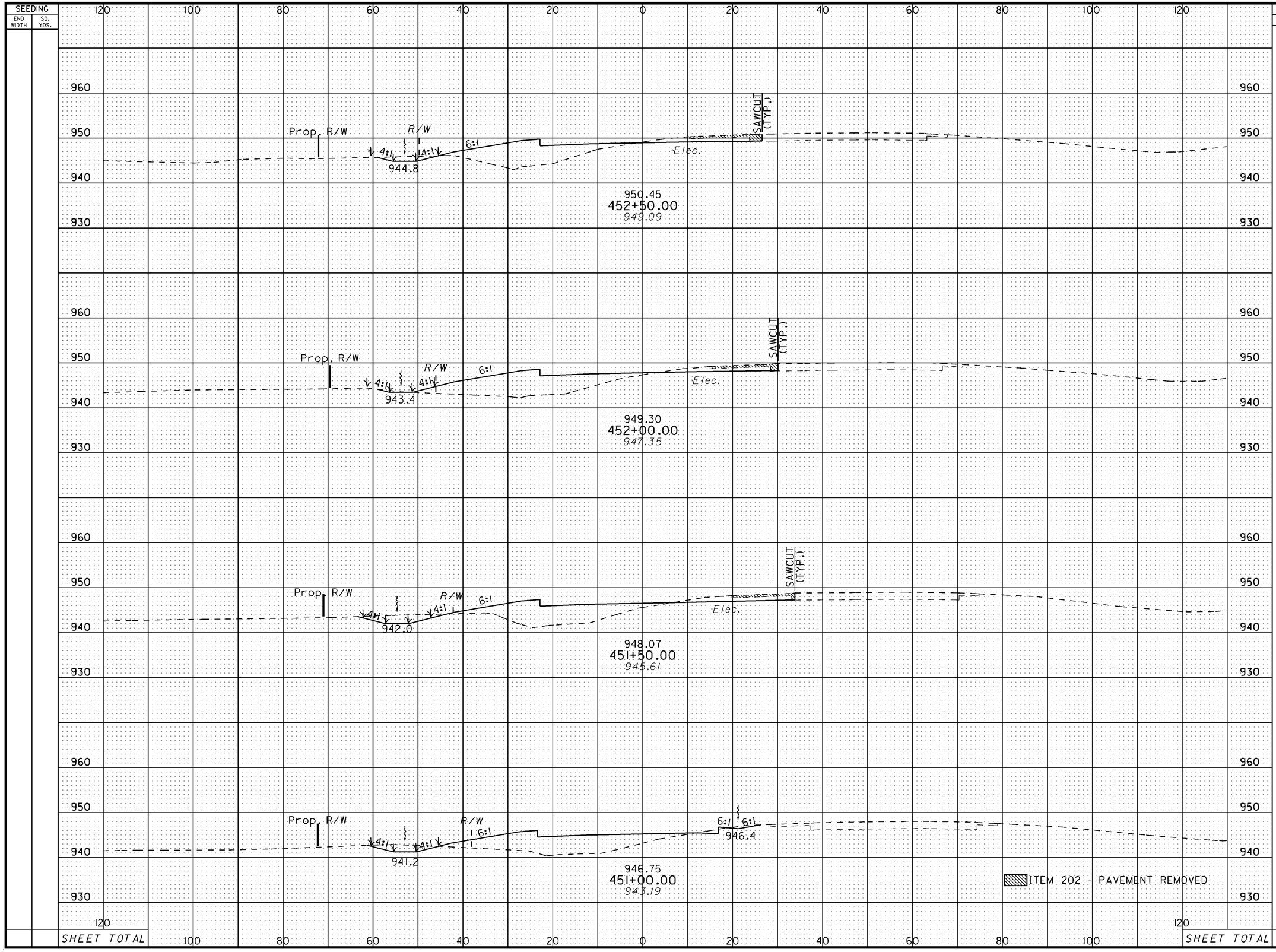

CALCULATED JMD

CHECKED AJS

RAMP M CROSS SECTIONS
STA. 451+00 TO STA. 452+50

MOT-75-0.75

SEEDING	
END WIDTH	SQ. YDS.

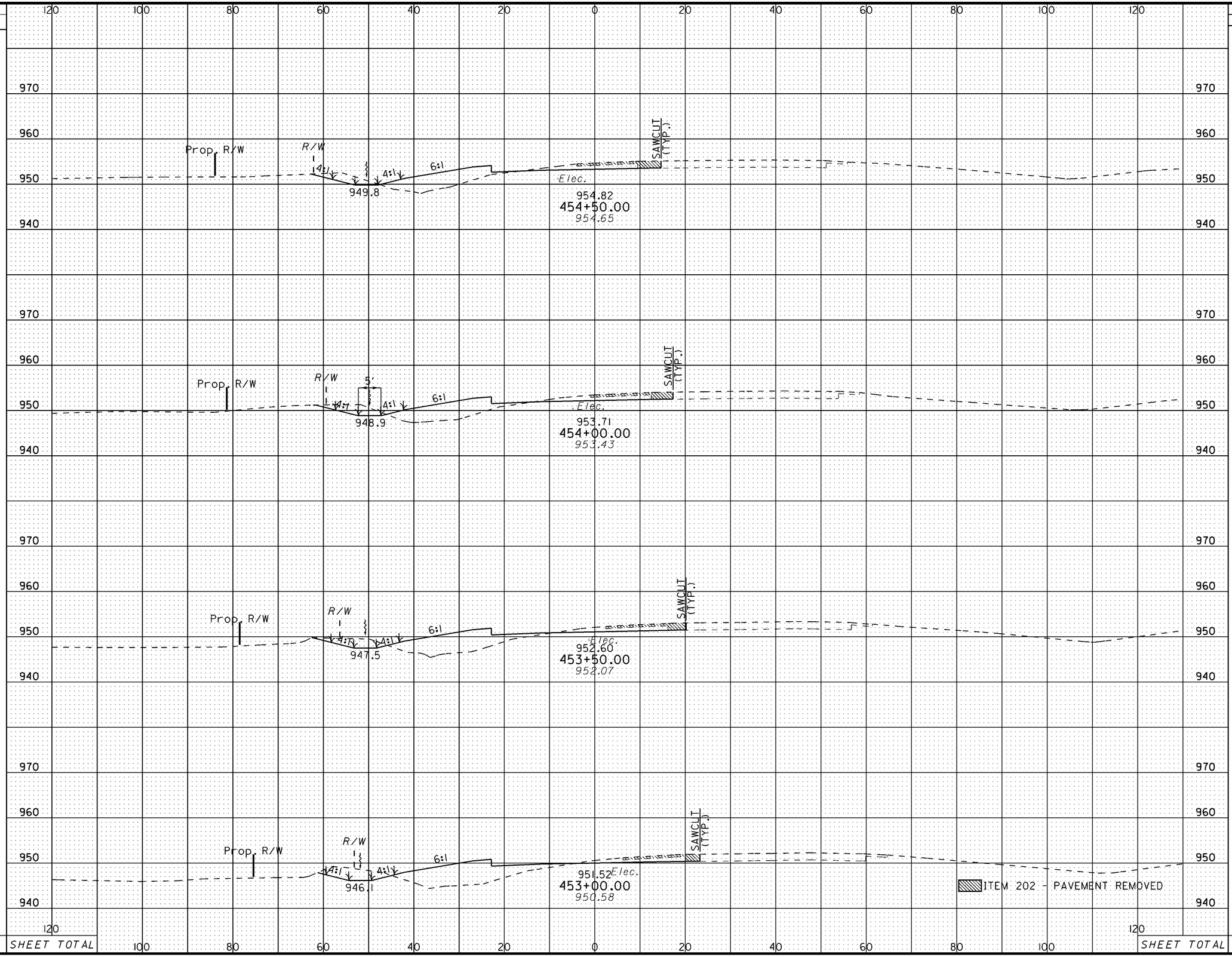

END AREA		VOLUME	
CUT	FILL	CUT	FILL
52	71		
		99	138
55	78		
		100	161
54	96		
		105	193
60	113		
		92	221

ITEM 202 - PAVEMENT REMOVED

CALCULATED JMD

CHECKED AJS

RAMP M CROSS SECTIONS
STA. 453+00 TO STA. 454+50

MOT-75-0.75

153
773

SEEDING		END AREA		VOLUME	
END WIDTH	SQ. YDS.	CUT	FILL	CUT	FILL
		38	34		
				92	69
		61	41		
				138	84
		89	50		
				161	105
		85	64		
				127	125

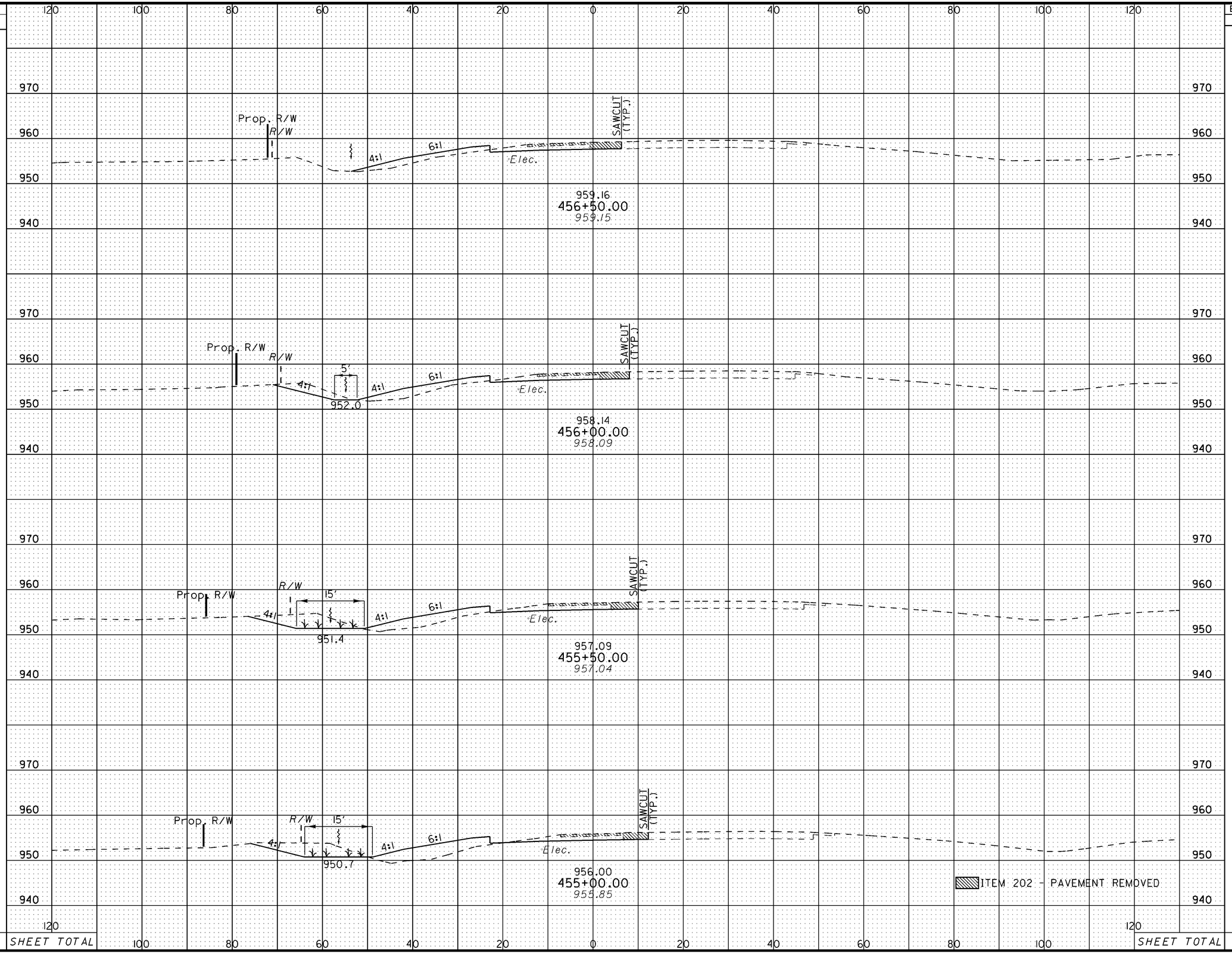

CALCULATED JMD
CHECKED AJS

RAMP M CROSS SECTIONS
STA. 455+00 TO STA. 456+50

MOT-75-0.75

154
773

SEEDING		END AREA		VOLUME	
END WIDTH	SQ. YDS.	CUT	FILL	CUT	FILL
		35	11	65	32
		35	24	68	47
		39	27	71	55
		38	32	71	61
SHEET TOTAL					

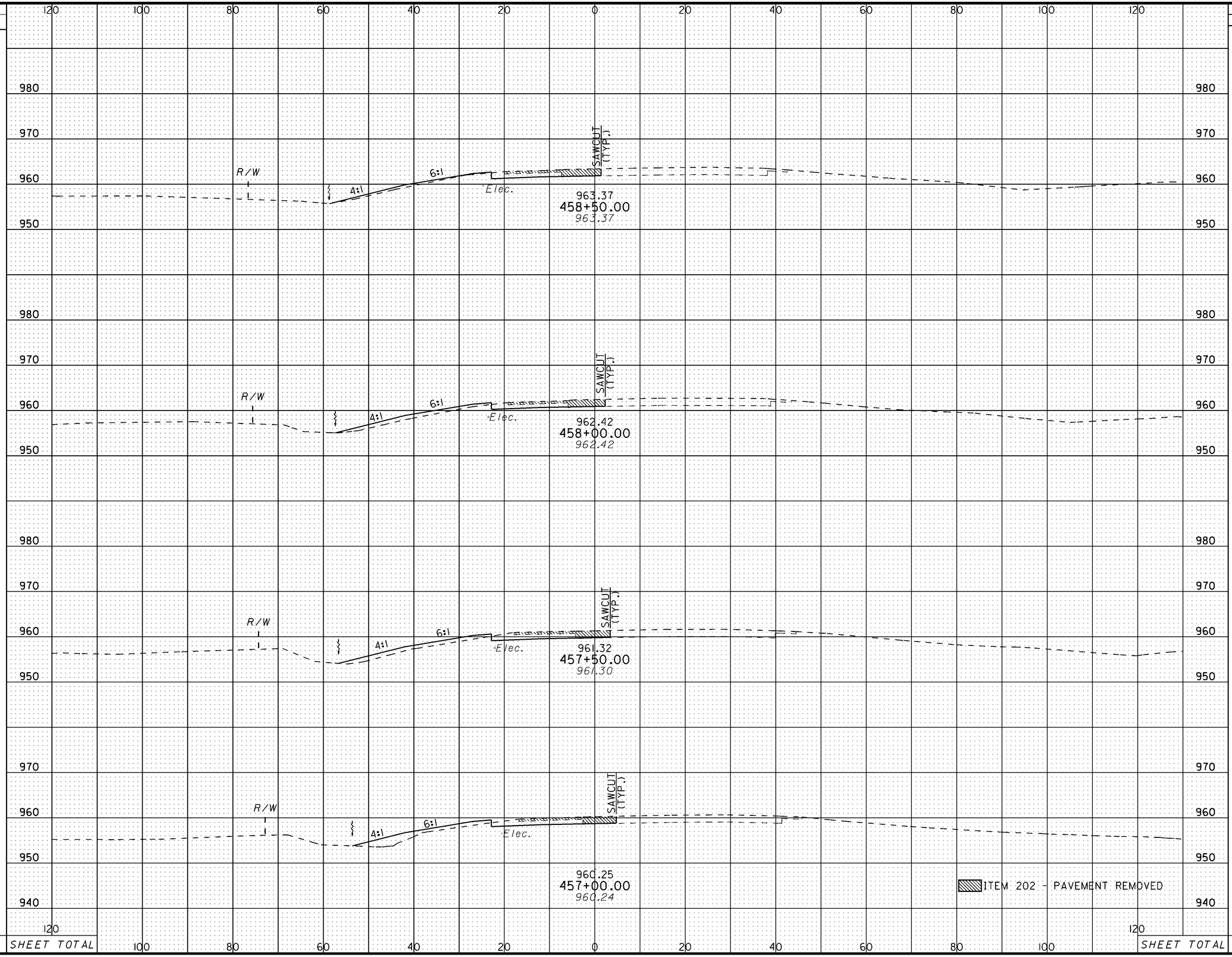

CALCULATED JMD

CHECKED AJS

RAMP M CROSS SECTIONS
STA. 457+00 TO STA. 458+50

MOT-75-0.75

SEEDING	
END WIDTH	SQ. YDS.

AHEAD-SEE I-75 AT RAMP M CROSS SECTION STA. 60+50
SHEET 157

TOTALS CARRIED TO GENERAL SUMMARY

ITEM 203 - EXCAVATION	9503 CU YD
ITEM 203 - EMBANKMENT	13675 CU YD
ITEM 204 - EXCAVATION OF SUBGRADE	70 CU YD
ITEM 204 - GRANULAR MATERIAL, TYPE B	71 CU YD
ITEM 204 - GEOTEXTILE FABRIC	133 SY YD

ADJUST FOR ITEM 202 - PAVEMENT REMOVED
I-75 AT RAMP M STA. 60+50

966.89
460+29.72 END RAMP M
966.89

966.37
460+00.00
966.37

965.38
459+50.00
965.33

964.39
459+00.00
964.37

ITEM 204 - EXCAVATION OF SUBGRADE AND ITEM 204 - GRANULAR MATERIAL, TYPE B
ITEM 204 - GRANULAR MATERIAL, TYPE B
ITEM 202 - PAVEMENT REMOVED

END AREA		VOLUME	
CUT	FILL	CUT	FILL
45	0	-672	
		32	1
41	1		
		49	1
48	1		
		78	8
36	8		
		65	19
34	12		
		64	22

CALCULATED JMD
CHECKED AJS

RAMP M CROSS SECTIONS
STA. 459+00 TO STA. 460+29.72

MOT-75-0.75

156
773

SEEDING	
END WIDTH	SQ. YDS.

240 220 200 180 160 140 120 100 80 60 40 20 0

990 980 970 960 950

968.64 969.12 SAWCUT 6:1

61+50.00
967.80

967.56 968.02 SAWCUT 6:1

61+00.00
966.59

BACK-SEE RAMP M CROSS SECTION STA. 460+29.72
SHEET 156

966.62 E/S (TYP.) 967.04 E/P (TYP.) SAWCUT (TYP.) 6:1 Elec.

60+50.00
965.66

ITEM 204 - EXCAVATION OF SUBGRADE AND
ITEM 204 - GRANULAR MATERIAL, TYPE B
ITEM 204 - GRANULAR MATERIAL, TYPE B
ITEM 202 - PAVEMENT REMOVED

240 220 200 180 160 140 120 100 80 60 40 20 0

SHEET TOTAL SHEET TOTAL

END AREA		VOLUME	
CUT	FILL	CUT	FILL
41	0		
		77	1
42	0		
		81	0
45	0		

CALCULATED JMD
CHECKED AJS

I-75 AT RAMP M CROSS SECTIONS STA. 60+50 TO STA. 61+50

MOT-75-0.75

157
773

SEEDING	
END WIDTH	SQ. YDS.

240 220 200 180 160 140 120 100 80 60 40 20 0

990 980 970 960 950

971.78 972.26 SAWCUT 6:1

63+00.00
970.75

970.76 971.24 SAWCUT 6:1

62+50.00
969.59

969.67 E/S (TYP.) 970.15 E/P (TYP.) SAWCUT (TYP.) 6:1

62+00.00
968.71

ITEM 204 - EXCAVATION OF SUBGRADE AND
ITEM 204 - GRANULAR MATERIAL, TYPE B
ITEM 204 - GRANULAR MATERIAL, TYPE B
ITEM 202 - PAVEMENT REMOVED

240 220 200 180 160 140 120 100 80 60 40 20 0

SHEET TOTAL SHEET TOTAL

END AREA		VOLUME	
CUT	FILL	CUT	FILL
40	0		
		75	0
41	0		
		75	0
41	0		
		76	1

CALCULATED JMD
CHECKED AJS

I-75 AT RAMP M CROSS SECTIONS STA. 62+00 TO STA. 63+00

MOT-75-0.75

SEEDING	
END WIDTH	SQ. YDS.

240 220 200 180 160 140 120 100 80 60 40 20 0

990 980 970 960 950

15'
3:1
967.2
6:1
974.92
975.40
SAWCUT

64+50.00
973.58

5'
966.8
6:1
973.91
974.39
SAWCUT

64+00.00
972.65

6:1
972.83
E/S (TYP.)
973.31
E/P (TYP.)
SAWCUT (TYP.)

63+50.00
971.77

ITEM 204 - EXCAVATION OF SUBGRADE AND
ITEM 204 - GRANULAR MATERIAL, TYPE B
ITEM 204 - GRANULAR MATERIAL, TYPE B
ITEM 202 - PAVEMENT REMOVED

END AREA		VOLUME	
CUT	FILL	CUT	FILL
114	11		
		149	22
47	13		
		82	12
41	0		
		76	0

SHEET TOTAL

SHEET TOTAL

CALCULATED JMD
CHECKED AJS

I-75 AT RAMP M CROSS SECTIONS
STA. 63+50 TO STA. 64+50

MOT-75-0.75

SEEDING		240	220	200	180	160	140	120	100	80	60	40	20	0	END AREA		VOLUME	
END WIDTH	SQ. YDS.														CUT	FILL	CUT	FILL

TOTALS CARRIED TO GENERAL SUMMARY

ITEM 203 - EXCAVATION	818 CU YD
ITEM 203 - EMBANKMENT	81 CU YD
ITEM 204 - EXCAVATION OF SUBGRADE	462 CU YD
ITEM 204 - GRANULAR MATERIAL, TYPE B	464 CU YD
ITEM 204 - GEOTEXTILE FABRIC	1271 SY YD

ADJUST FOR ITEM 202 - PAVEMENT REMOVED -386

990 990

980 980

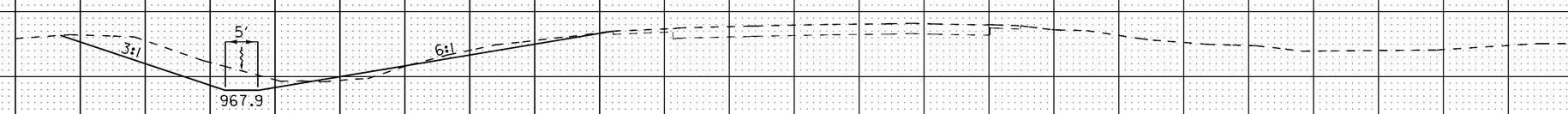

960 960 108 8

MEET EXISTING 65+50.00
975.09

950 950 254 21

990 990

980 980

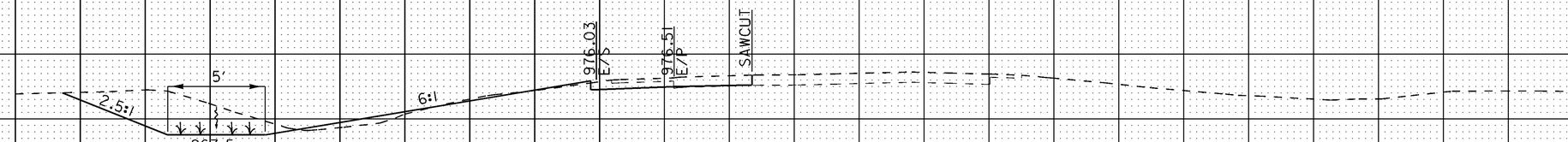

970 970

960 960 166 15

ITEM 204 - EXCAVATION OF SUBGRADE AND
ITEM 204 - GRANULAR MATERIAL, TYPE B
ITEM 204 - GRANULAR MATERIAL, TYPE B
ITEM 202 - PAVEMENT REMOVED

65+00.00
974.23

950 950 259 24

240 0

SHEET TOTAL SHEET TOTAL

CALCULATED JMD
CHECKED AJS

I-75 AT RAMP M CROSS SECTIONS STA. 65+00 TO STA. 65+50

MOT-75-0.75

160
773

F.I.O. - ANTICIPATED LOCATIONS OF RELOCATED UTILITIES
FOR SUBSUMMARIES SEE SHEETS 64-84
FOR PAVEMENT LEGEND SEE SHEET 195
FOR PROFILE SEE SHEETS 168-170
FOR CROSS SECTIONS SEE SHEETS 171-194
FOR INTERSECTION DETAILS SEE SHEETS 322-337
FOR STORM SEWER PROFILES SEE SHEETS 340-361
FOR MEDIAN DETAILS SEE SHEETS 404-414

HORIZONTAL SCALE IN FEET
0 10 20 40

CALCULATED MAG
CHECKED AJS

RAMP J PLAN
STA. 141+50 TO STA. 147+00

MOT-75-0.75

161
773

CONSTRUCTION LIMITS
I-75 Northbound
8"
LA-R/W
R-36
CURVE RAMP J-I
P.I. STA. = 144+29.64
Δ = 21° 07' 30" (LT)
Dc = 6° 30' 00"
R = 881.47'
T = 164.37'
L = 325.00'
E = 15.19'
e max = 0.060
MATCH LINE STA. 141+50 SEE SHEET 204
MATCH LINE STA. 147+00 SEE SHEET 162
R-40
HW-2.2
Asphalt
UD90
UD-24
UD-91
UD-26
UD-27
UD-28
UD-29
UD-30
UD-31
UD-32
UD-33
UD-34
UD-35
UD-36
UD-37
UD-38
UD-39
UD-40
UD-41
UD-42
UD-43
UD-44
UD-45
UD-46
UD-47
UD-48
UD-49
UD-50
UD-51
UD-52
UD-53
UD-54
UD-55
UD-56
UD-57
UD-58
UD-59
UD-60
UD-61
UD-62
UD-63
UD-64
UD-65

CURVE RAMP J-2
P.I. STA. = 150+89.01
Δ = 19° 27′ 24″ (RT)
Dc = 4° 00′ 00″
R = 1,432.39′
T = 245.57′
L = 486.42′
E = 20.90′
e max = 0.060

℄ CONSTRUCTION I-75
N14°22′31″E

51+00
52+00
148+00
149+00
150+00
151+00
152+00

I-75 Northbound

CONSTRUCTION LIMITS

LA-R/W

R-255
R-45
R-36
R-37
E-31
UD-24
UD-26
UD-27

P.I. STA. 150+89.01

51+82.07
126.50′ RT.

SAWCUT LINE

4′
23′
12′

12′ CONSTRUCTION RAMP J
N6°44′59″W

STA. 148+29.86
BEGIN PAVT. TAPER

P.C. STA. 148+43.44

12′
11.75′
10′

Dense Vegetation

150+25.26 T.A.P.A.
74.07′ RT

STA. 151+83.54

+90
+00

MATCH LINE STA. 147+00 SEE SHEET 161

STA. 147+14.27
END PAVT. TAPER

MATCH LINE STA. 152+50 SEE SHEET 163

FIBER F.I.O.
U ESMT
T

PRECAST REINFORCED
CONCRETE OUTLET
152+00.00
40.58′ RT
INV. 6″=943.58

E-32 ITEM 670, DITCH EROSION PROTECTION
120′×26′÷9=307 SY

F.I.O. - ANTICIPATED LOCATIONS OF RELOCATED UTILITIES
FOR SUBSUMMARIES SEE SHEETS 64-84
FOR PAVEMENT LEGEND SEE SHEET 195
FOR PROFILE SEE SHEETS 168-170
FOR CROSS SECTIONS SEE SHEETS 171-194
FOR INTERSECTION DETAILS SEE SHEETS 322-337
FOR STORM SEWER PROFILES SEE SHEETS 340-361
FOR MEDIAN DETAILS SEE SHEETS 404-414

N

HORIZONTAL SCALE IN FEET
0 10 20 40

CALCULATED MAG
CHECKED AJS

RAMP J PLAN
STA. 147+00 TO STA. 152+50

MOT-75-0.75

162
773

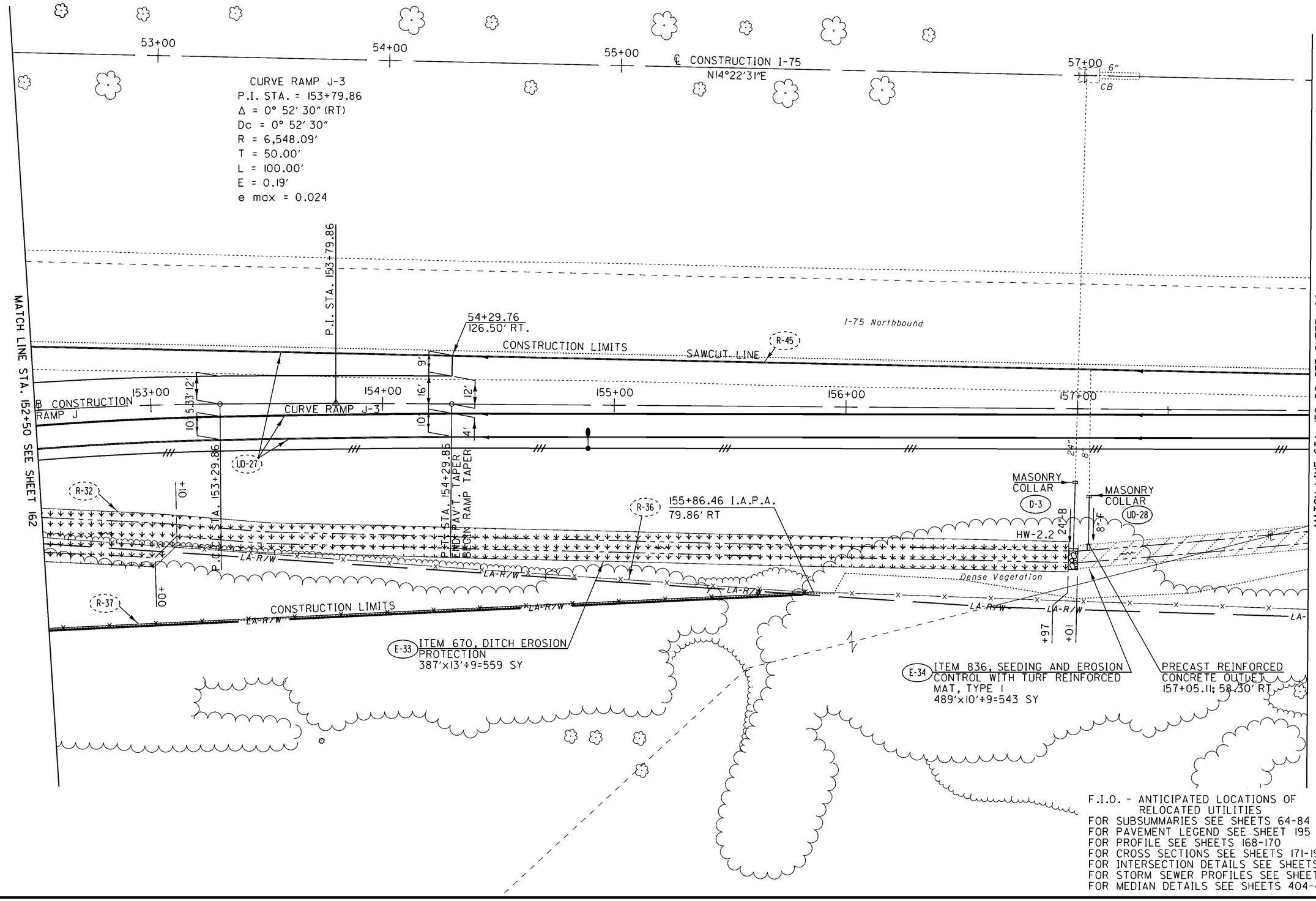

F.I.O. - ANTICIPATED LOCATIONS OF RELOCATED UTILITIES
FOR SUBSUMMARIES SEE SHEETS 64-84
FOR PAVEMENT LEGEND SEE SHEET 195
FOR PROFILE SEE SHEETS 168-170
FOR CROSS SECTIONS SEE SHEETS 171-194
FOR INTERSECTION DETAILS SEE SHEETS 322-337
FOR STORM SEWER PROFILES SEE SHEETS 340-361
FOR MEDIAN DETAILS SEE SHEETS 404-414

HORIZONTAL SCALE IN FEET
0 10 20 40

CALCULATED MAG
CHECKED AJS

RAMP J PLAN
STA. 152+50 TO STA. 158+00

MOT-75-0.75

163
773

F.I.O. - ANTICIPATED LOCATIONS OF RELOCATED UTILITIES

FOR SUBSUMMARIES SEE SHEETS 64-84
FOR PAVEMENT LEGEND SEE SHEET 195
FOR PROFILE SEE SHEETS 168-170
FOR CROSS SECTIONS SEE SHEETS 171-194
FOR INTERSECTION DETAILS SEE SHEETS 322-337
FOR STORM SEWER PROFILES SEE SHEETS 340-361
FOR MEDIAN DETAILS SEE SHEETS 404-414

HORIZONTAL SCALE IN FEET
0 10 20 40

CALCULATED MAG
CHECKED AJS

RAMP J AND I-75 PLAN
STA. 158+00 RAMP J TO STA. 63+50 I-75

MOT-75-0.75

MATCH LINE STA. 63+50 SEE SHEET 164

MATCH LINE STA. 69+00 SEE SHEET 166

64+00 65+00 66+00 67+00 68+00

℄ CONSTRUCTION I-75
N14°22'31"E

℄

BEGIN UNCLASSIFIED U.D.
63+50.00, 138.92' RT
DEPTH=18"
INV.=970.34

END UNCLASSIFIED U.D.
64+00.00, 138.92' RT
DEPTH=30"
INV.=970.38

138.50' RT.
(TYP.)

I-75 Northbound

SAWCUT LINE ALONG EX. E/P

CONSTRUCTION LIMITS

R-45

BEGIN UNCLASSIFIED U.D.
68+00.00, 138.92' RT
DEPTH=15"
INV.=979.42

END UNCLASSIFIED U.D.
69+00.00, 138.92' RT
DEPTH=30"
INV.=979.67

UD-31

12'

UD-32

PRECAST
REINFORCED
CONCRETE
OUTLET
63+50.00
173.76' RT
INV. 6"=969.99

BEGIN UNCLASSIFIED U.D.
63+50.00, 150.92' RT
DEPTH=13"
INV.=970.28

END UNCLASSIFIED U.D.
64+00.00, 150.92' RT
DEPTH=18"
INV.=970.92

CONSTRUCTION LIMITS

E-36

+50

LA-R/W

BEGIN UNCLASSIFIED U.D.
68+00.00, 150.92' RT
DEPTH=10"
INV.=979.31

PRECAST REINFORCED
CONCRETE OUTLET
68+00.00
171.58' RT
INV. 6"=979.10

END UNCLASSIFIED U.D.
69+00.00, 150.92' RT
DEPTH=18"
INV.=980.21

F.I.O. - ANTICIPATED LOCATIONS OF
RELOCATED UTILITIES
FOR SUBSUMMARIES SEE SHEETS 64-84
FOR PAVEMENT LEGEND SEE SHEET 195
FOR PROFILE SEE SHEETS 168-170
FOR CROSS SECTIONS SEE SHEETS 171-194
FOR INTERSECTION DETAILS SEE SHEETS 322-337
FOR STORM SEWER PROFILES SEE SHEETS 340-361
FOR MEDIAN DETAILS SEE SHEETS 404-414

HORIZONTAL SCALE IN FEET
0 10 20 40

CALCULATED MAG
CHECKED AJS

RAMP J AND I-75 PLAN
STA. 63+50 TO STA. 69+00

MOT-75-0.75

MATCH LINE STA. 69+00 SEE SHEET 165

MATCH LINE STA. 74+50 SEE SHEET 167

70+00 | 71+00 | ℄ CONSTRUCTION I-75 N14°22'31"E | 72+00 | 73+00 | 74+00

℄

CONSTRUCTION LIMITS

38.50' RT. (TYP.)

SAWCUT LINE ALONG EX. E/P

I-75 Northbound

R-45

12'

UD-32

Dense Vegetation

CONSTRUCTION LIMITS

LA-R/W — LA-R/W — LA-R/W — LA-R/W — LA-R/W — LA-R/W

F.I.O. - ANTICIPATED LOCATIONS OF RELOCATED UTILITIES

FOR SUBSUMMARIES SEE SHEETS 64-84
FOR PAVEMENT LEGEND SEE SHEET 195
FOR PROFILE SEE SHEETS 168-170
FOR CROSS SECTIONS SEE SHEETS 171-194
FOR INTERSECTION DETAILS SEE SHEETS 322-337
FOR STORM SEWER PROFILES SEE SHEETS 340-361
FOR MEDIAN DETAILS SEE SHEETS 404-414

HORIZONTAL SCALE IN FEET
0 10 20 40

CALCULATED MAG
CHECKED AJS

RAMP J AND I-75 PLAN
STA. 69+00 TO STA. 74+50

MOT-75-0.75

MATCH LINE STA. 74+50 SEE SHEET 166

75+00 76+00 77+00 ℄ CONSTRUCTION I-75 N14°22'31"E 78+00 79+00

END WORK
STA. 109+45.00

CONSTRUCTION LIMITS

SAWCUT LINE ALONG EX. E/P

138.50' RT. (TYP.)

R-45

I-75 Northbound

12'

12'

EP

UD-32

Dense Vegetation

+80

+87

STA. 79+00.00
138.50' RT.
END PAVT.
END SPLD.

CONSTRUCTION LIMITS

LA-R/W LA-R/W LA-R/W LA-R/W LA-R/W LA-R/W

℄ I-75

138.50' 12'

1.23% 5.32%

EP

19" Asphalt

TYPICAL ADJOINING SECTION
STA. 79+00.00

END PROJECT
STA. 79+00.00
S.L.M.=1.50

S.T.P.

F.I.O. - ANTICIPATED LOCATIONS OF RELOCATED UTILITIES
FOR SUBSUMMARIES SEE SHEETS 64-84
FOR PAVEMENT LEGEND SEE SHEET 195
FOR PROFILE SEE SHEETS 168-170
FOR CROSS SECTIONS SEE SHEETS 171-194
FOR INTERSECTION DETAILS SEE SHEETS 322-337
FOR STORM SEWER PROFILES SEE SHEETS 340-361
FOR MEDIAN DETAILS SEE SHEETS 404-414

N

HORIZONTAL SCALE IN FEET
0 10 20 40

CALCULATED MAG
CHECKED AJS

RAMP J AND I-75 PLAN
STA. 74+50 TO STA. 79+00

MOT-75-0.75

167
773

CALCULATED MAG
CHECKED AJS

RAMP J PROFILE

STA. 140+10.27 TO STA. 147+00

MOT-75-0.75

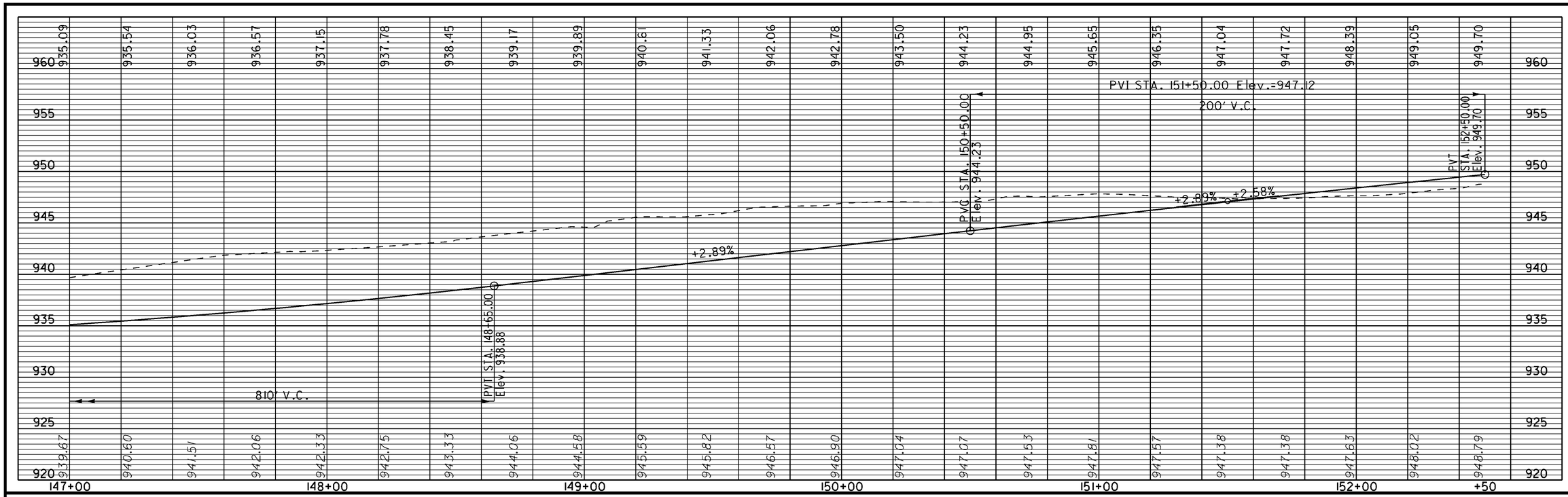

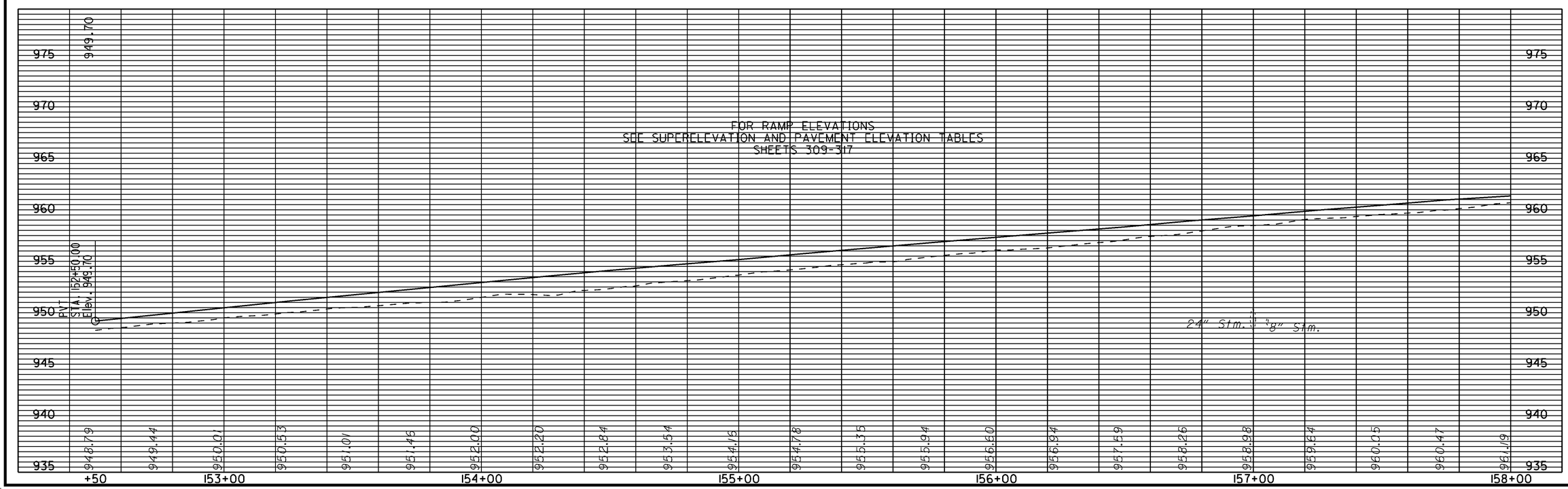

CALCULATED MAG
CHECKED AJS

RAMP J PROFILE
STA. 147+00 TO STA. 158+00

MOT-75-0.75

CALCULATED MAG
CHECKED AJS

RAMP J PROFILE

STA. 158+00 TO STA. 160+79.76

MOT-75-0.75

SEEDING		END AREA		VOLUME	
END WIDTH	SQ. YDS.	CUT	FILL	CUT	FILL
		204	670	189	2034
		0	1526	0	2758
		0	1452		

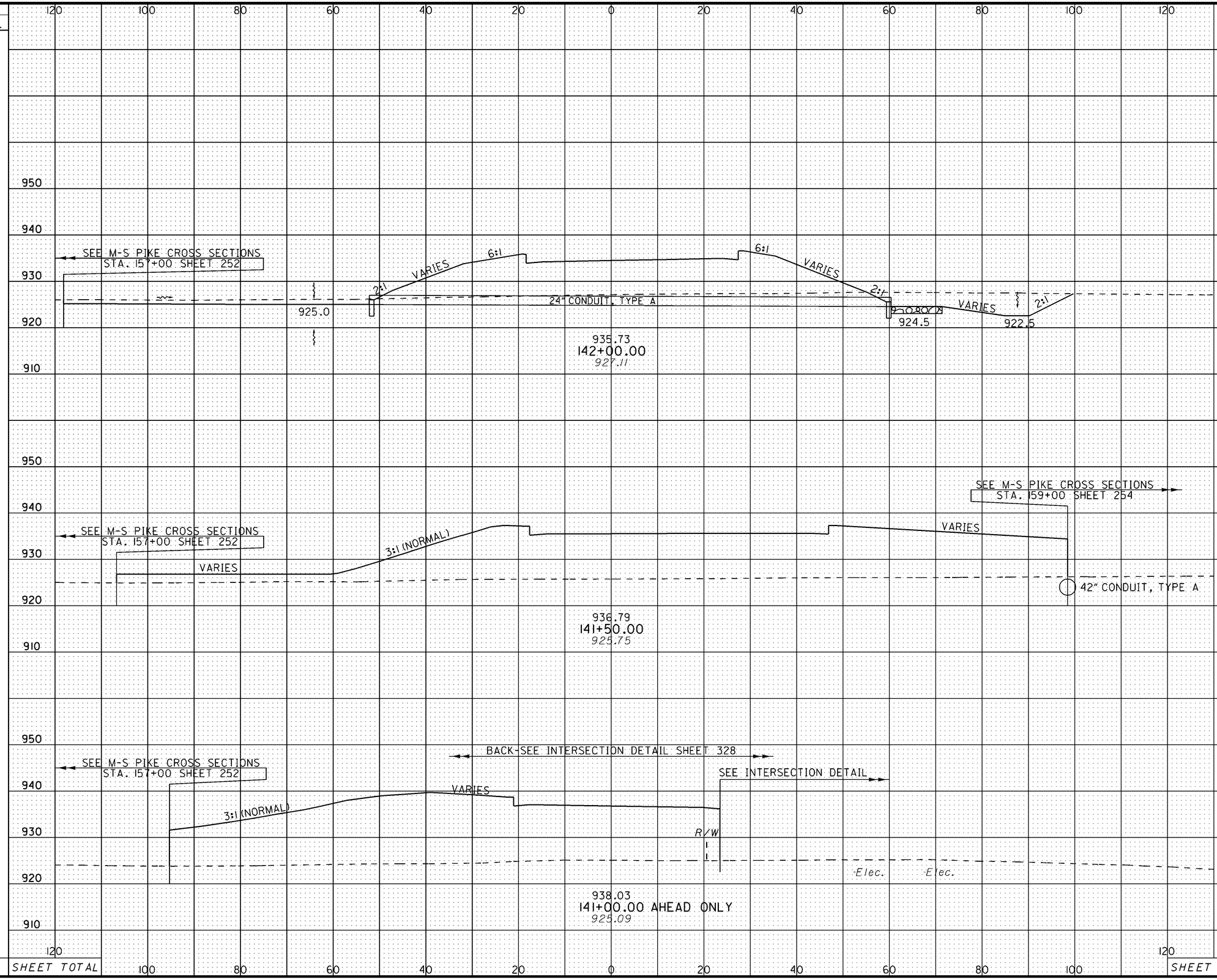

CALCULATED JMD
CHECKED AJS

RAMP J CROSS SECTIONS
STA. 141+00 TO STA. 142+00

MOT-75-0.75

171
773

SEEDING		END AREA		VOLUME	
END WIDTH	SQ. YDS.	CUT	FILL	CUT	FILL
		209	120	405	377
		228	287	357	695
		158	463	335	1050

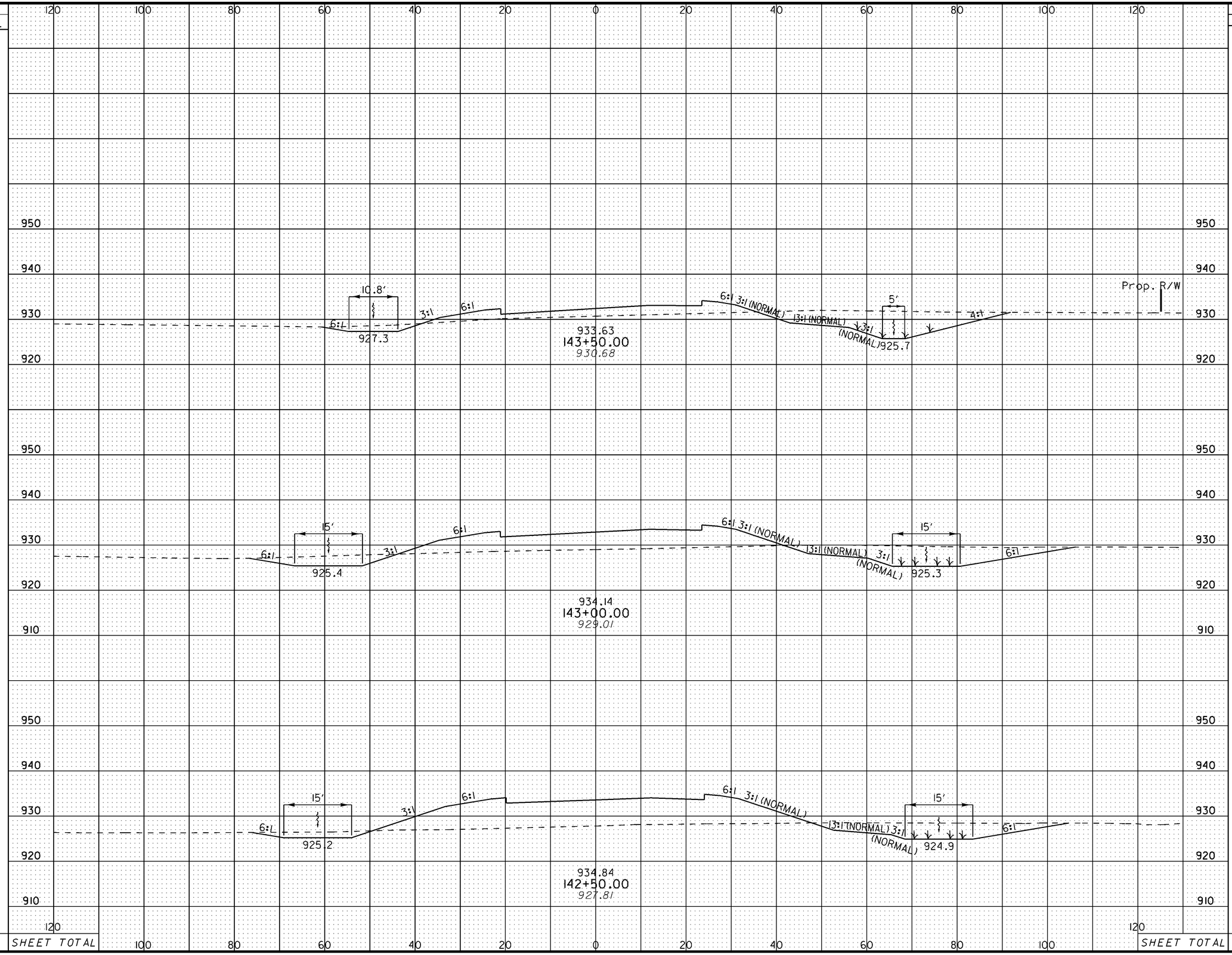

SHEET TOTAL

SHEET TOTAL

CALCULATED JMD

CHECKED AJS

RAMP J CROSS SECTIONS STA. 142+50 TO STA. 143+50

MOT-75-0.75

172
773

SEEDING		END AREA		VOLUME	
END WIDTH	SQ. YDS.	CUT	FILL	CUT	FILL
		425	0	724	0
		357	0	672	0
		369	0	600	11
		279	12	452	122

CALCULATED JMD

CHECKED AJS

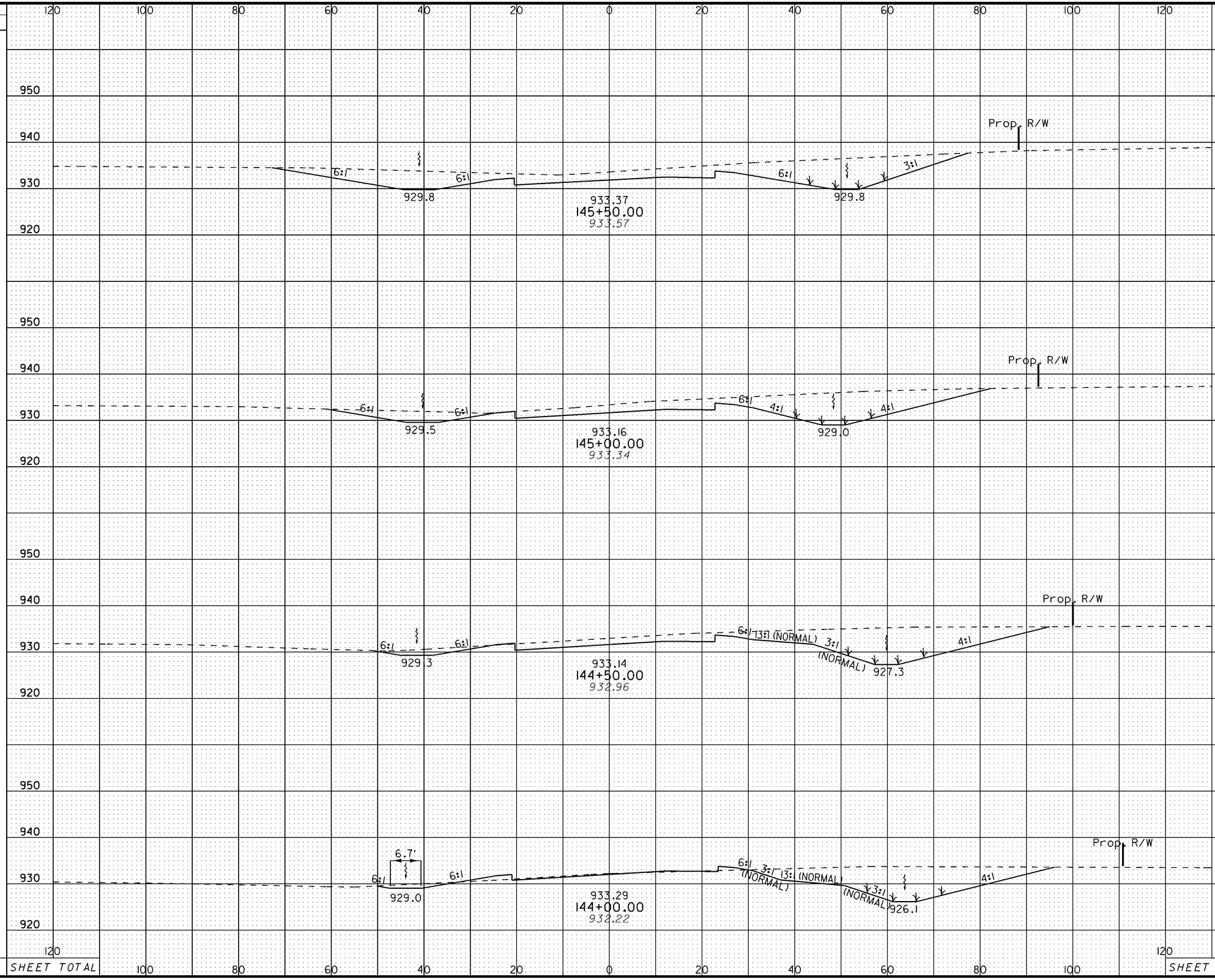

RAMP J CROSS SECTIONS
STA. 144+00 TO STA. 145+50

MOT-75-0.75

SEEDING	
END WIDTH	SQ. YDS.

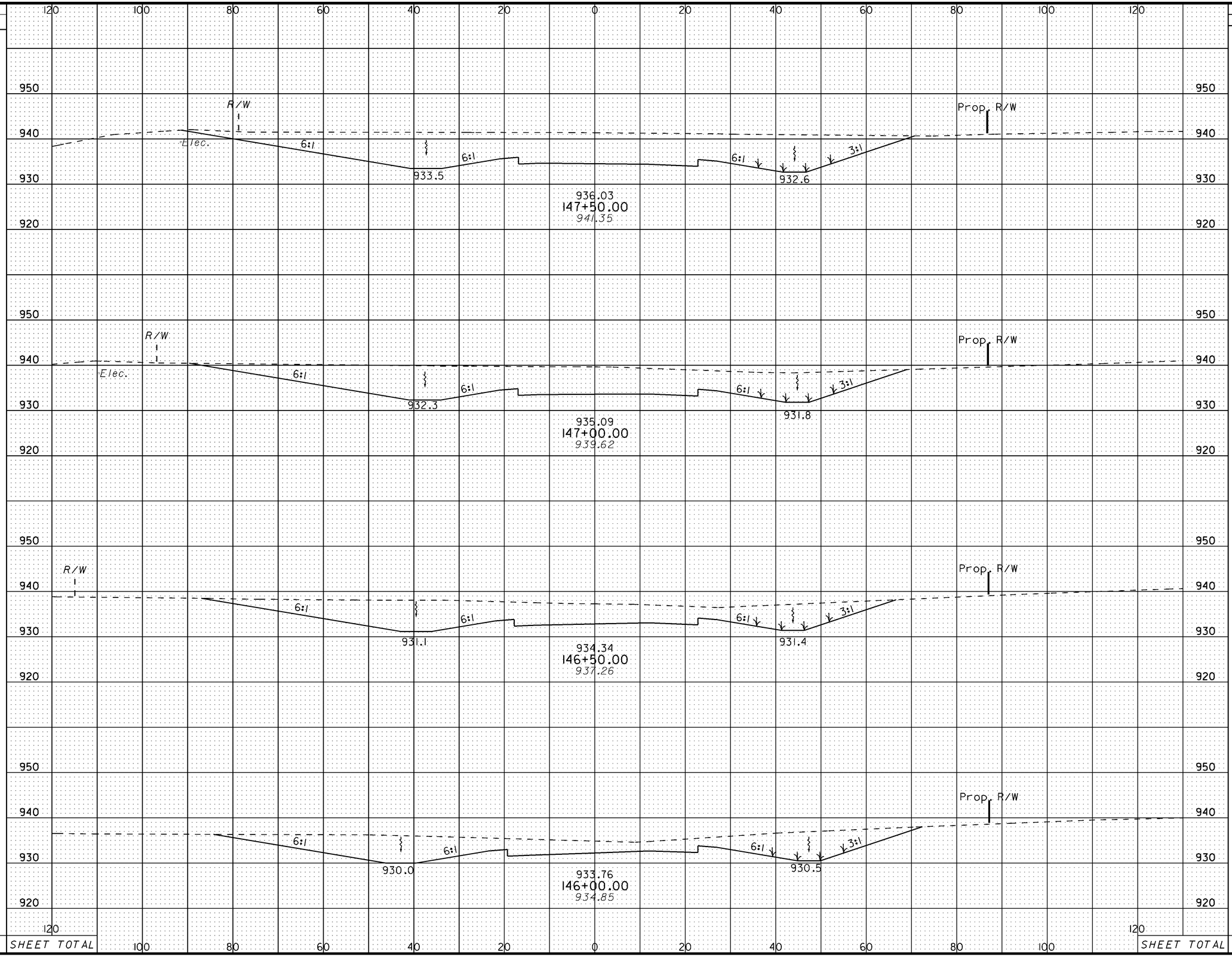

END AREA		VOLUME	
CUT	FILL	CUT	FILL
907	0		
		1564	0
783	0		
		1309	0
631	0		
		1094	0
550	0		
		903	0

CALCULATED JMD

CHECKED AJS

RAMP J CROSS SECTIONS
STA. 146+00 TO STA. 147+50

MOT-75-0.75

174
773

SEEDING	
END WIDTH	SQ. YDS.

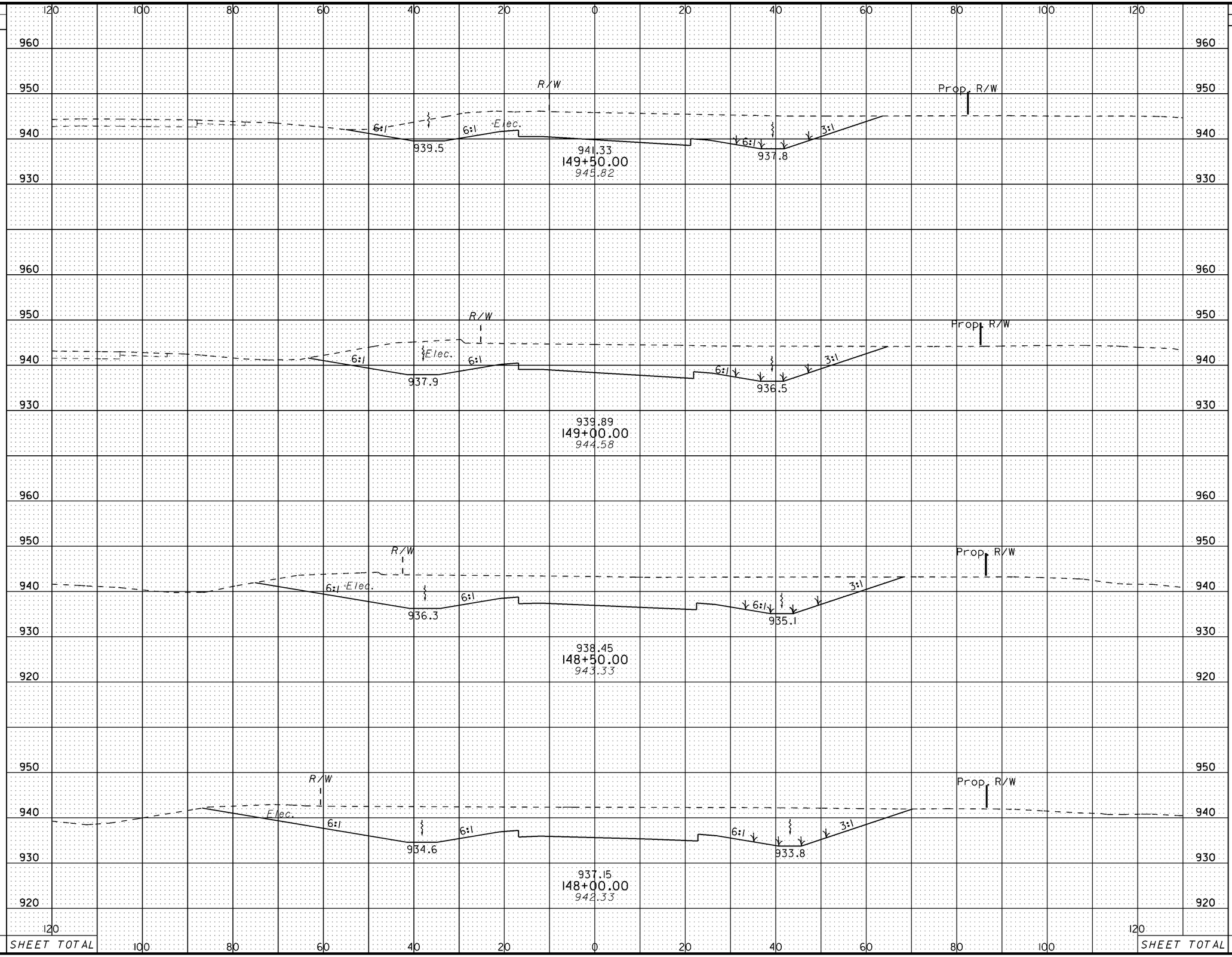

END AREA		VOLUME	
CUT	FILL	CUT	FILL
584	0		
		1195	0
706	0		
		1403	0
809	0		
		1583	0
901	0		
		1673	0

CALCULATED JMD

CHECKED AJS

RAMP J CROSS SECTIONS
STA. 148+00 TO STA. 149+50

MOT-75-0.75

SEEDING	
END WIDTH	SQ. YDS.

SEEDING	
END WIDTH	SQ. YDS.

END AREA	
CUT	FILL
260	4
343	0
358	0
371	0

VOLUME	
CUT	FILL
559	4
649	0
675	0
587	1

CALCULATED JMD

CHECKED AJS

952.23
153+50.00
951.01

943.7

949.70
152+50.00
948.79

943.4

950.99
153+00.00
950.01

943.5

948.39
152+00.00
947.63

943.2

ITEM 204 - EXCAVATION OF SUBGRADE AND
ITEM 204 - GRANULAR MATERIAL, TYPE B

ITEM 204 - GRANULAR MATERIAL, TYPE B

ITEM 202 - PAVEMENT REMOVED

RAMP J CROSS SECTIONS
STA. 152+00 TO STA. 153+50

MOT-75-0.75

SEEDING		END AREA		VOLUME	
END WIDTH	SQ. YDS.	CUT	FILL	CUT	FILL
		104	98	236	152
		151	66	293	101
		165	43	348	58
		210	19	436	22

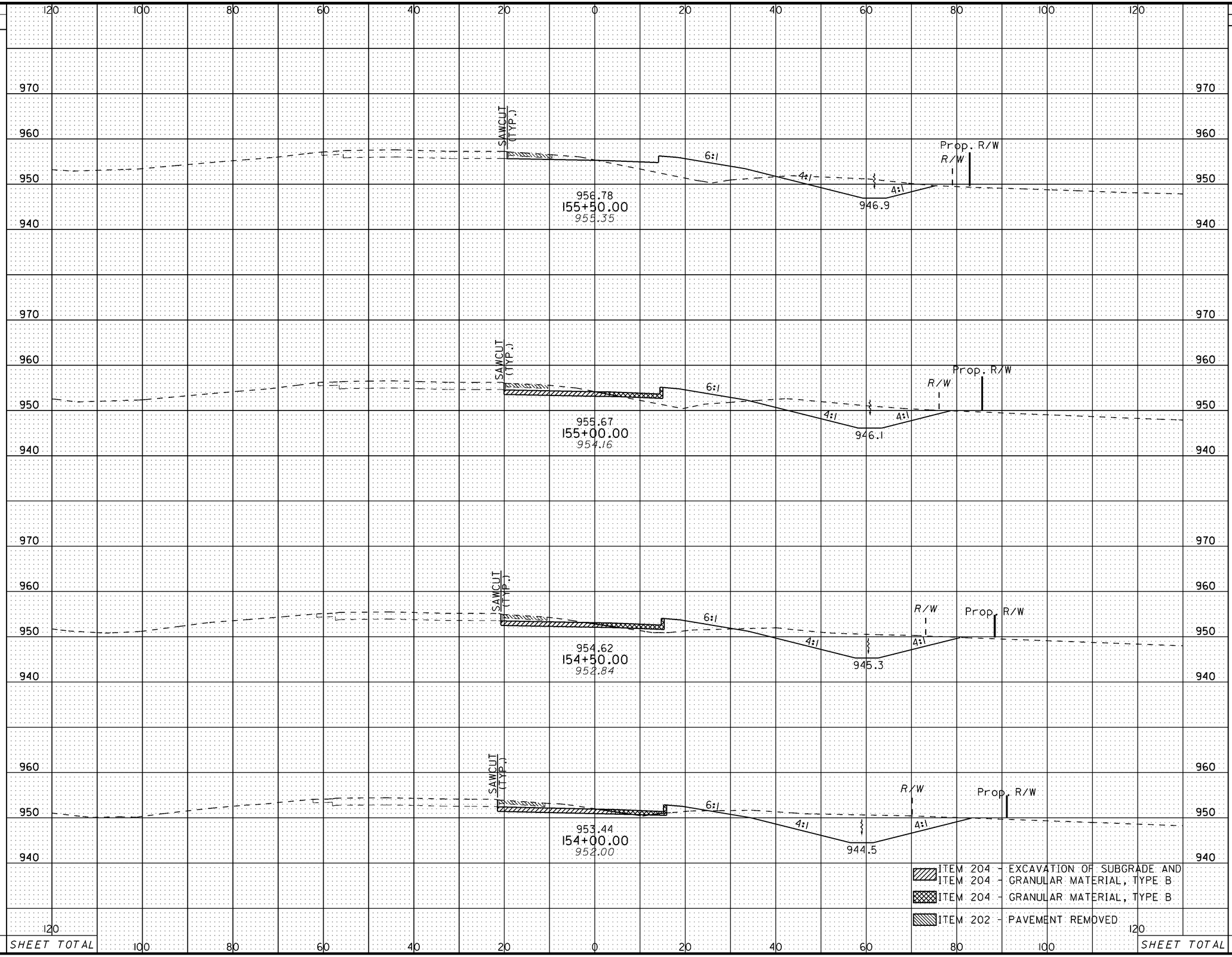

CALCULATED JMD
CHECKED AJS

RAMP J CROSS SECTIONS
STA. 154+00 TO STA. 155+50

MOT-75-0.75

178
773

SEEDING	
END WIDTH	SQ. YDS.

120 100 80 60 40 20 0 20 40 60 80 100 120

980 970 960 950 940

SAWCUT (TYP.)

24" Stm.

959.92
157+00.00
958.98

6:1 4:1 4:1 R/W

948.3

970 960 950 940

SAWCUT (TYP.)

958.84
156+50.00
957.59

6:1 4:1 4:1 R/W

948.1

970 960 950 940

SAWCUT (TYP.)

957.83
156+00.00
956.60

6:1 4:1 4:1 R/W

947.7

ITEM 202 - PAVEMENT REMOVED

120 100 80 60 40 20 0 20 40 60 80 100 120

SHEET TOTAL SHEET TOTAL

END AREA		VOLUME	
CUT	FILL	CUT	FILL
51	168		
		77	280
32	135		
		60	243
33	128		
		126	209

CALCULATED JMD

CHECKED AJS

RAMP J CROSS SECTIONS
STA. 156+00 TO STA. 157+00

MOT-75-0.75

SEEDING		END AREA		VOLUME	
END WIDTH	SQ. YDS.	CUT	FILL	CUT	FILL
		52	91		
				81	191
		36	116		
				78	244
		48	147		
				102	275
		62	150		
				105	295

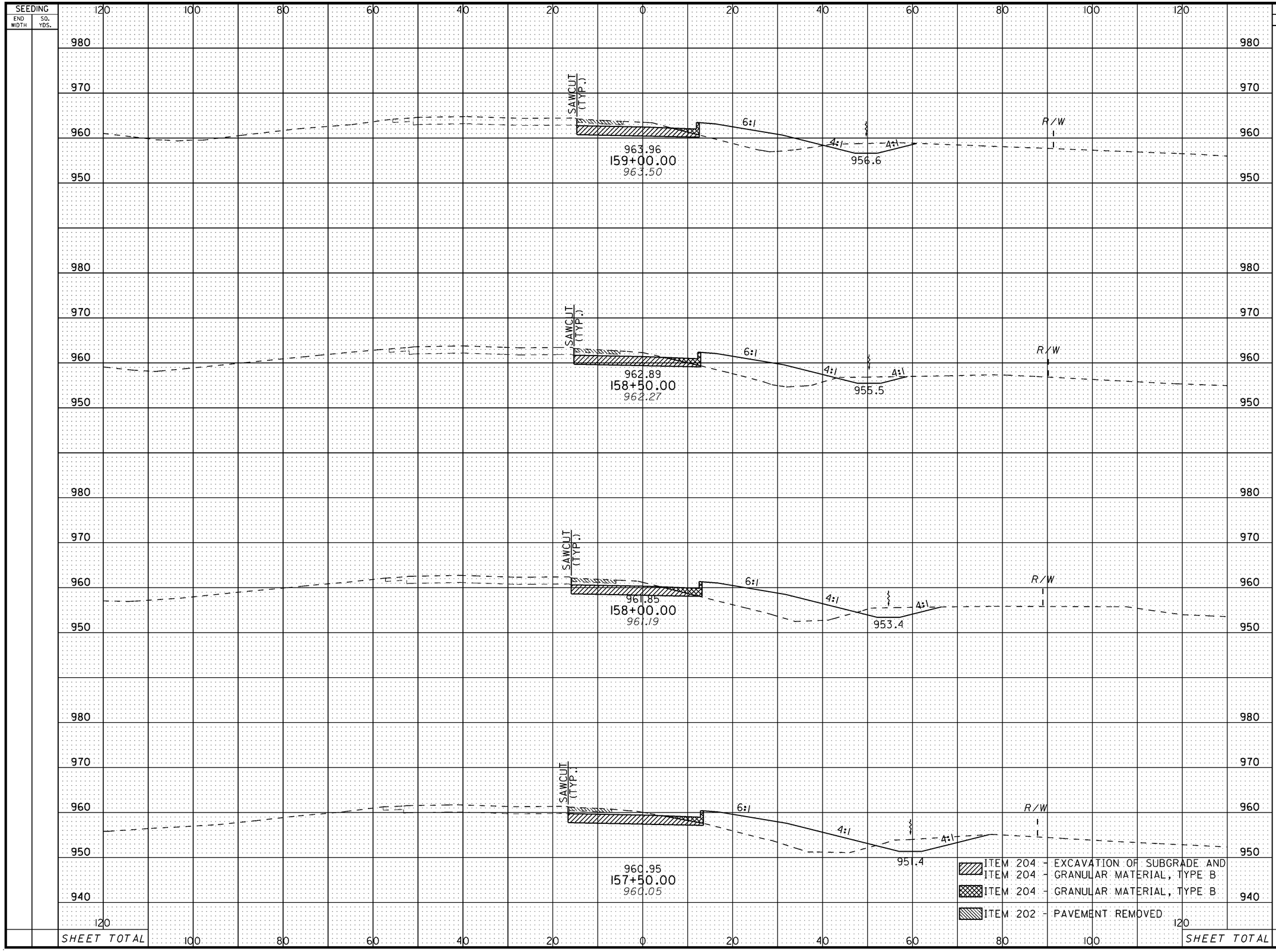

CALCULATED JMD

CHECKED AJS

RAMP J CROSS SECTIONS STA. 157+50 TO STA. 159+00

MOT-75-0.75

180
773

SEEDING	
END WIDTH	SQ. YDS.

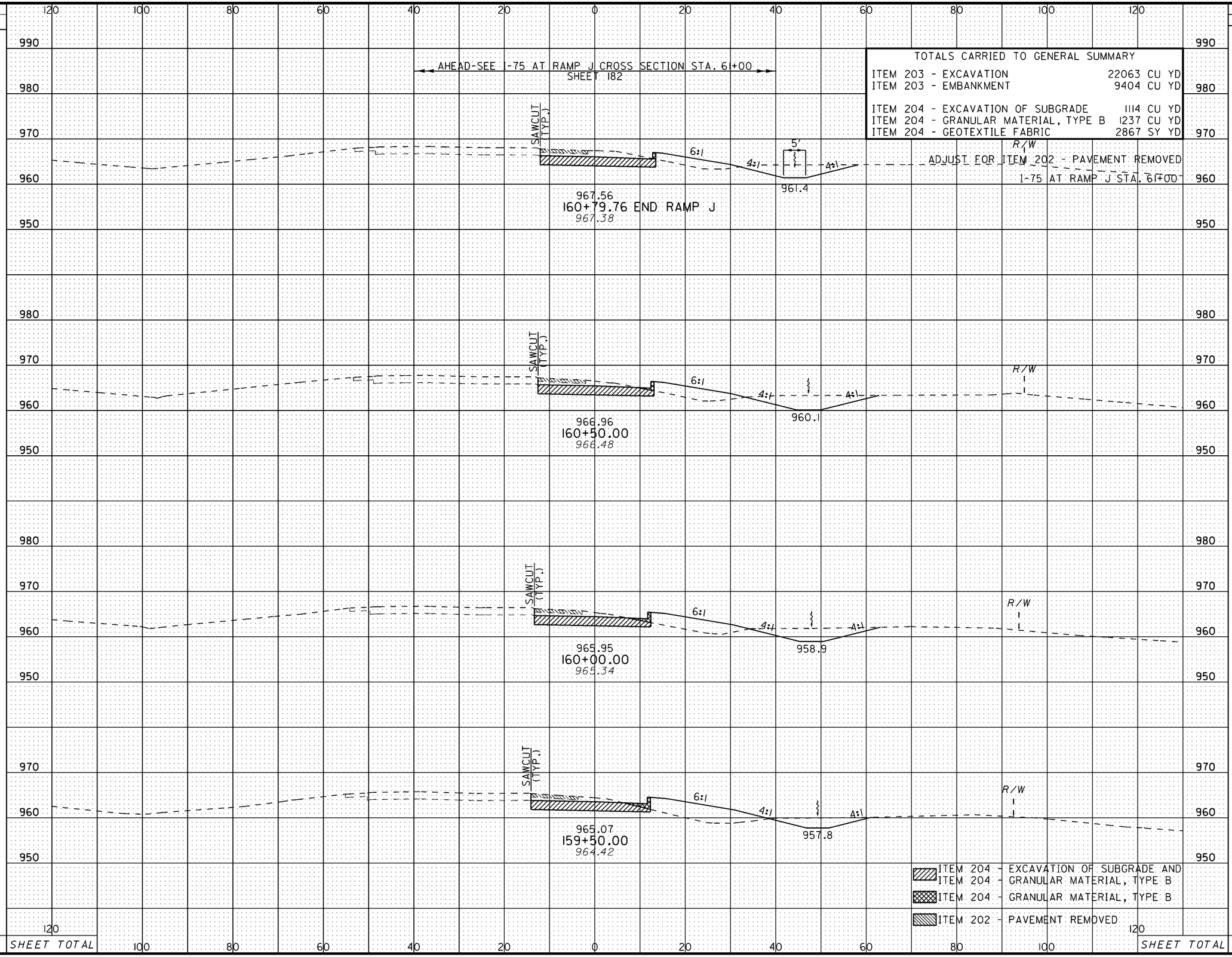

TOTALS CARRIED TO GENERAL SUMMARY

ITEM 203 - EXCAVATION	22063 CU YD
ITEM 203 - EMBANKMENT	9404 CU YD
ITEM 204 - EXCAVATION OF SUBGRADE	1114 CU YD
ITEM 204 - GRANULAR MATERIAL, TYPE B	1237 CU YD
ITEM 204 - GEOTEXTILE FABRIC	2867 SY YD

END AREA		VOLUME	
CUT	FILL	CUT	FILL
		-257	
71	22		
		55	19
75	29		
		85	40
79	43		
		140	89
72	53		
		114	122
51	79		
		95	157

CALCULATED JMD

CHECKED AJS

RAMP J CROSS SECTIONS
STA. 159+50 TO STA. 160+79.76

MOT-75-0.75

181
773

SEEDING	
END WIDTH	SQ. YDS.

END AREA	
CUT	FILL
47	18
52	22
71	22

VOLUME	
CUT	FILL
92	37
115	41

CALCULATED JMD

CHECKED AJS

I-75 AT RAMP J CROSS SECTIONS STA. 61+00 TO STA. 62+00

MOT-75-0.75

SEEDING	
END WIDTH	SQ. YDS.

END AREA	
CUT	FILL
75	14
77	19
58	19

VOLUME	
CUT	FILL
141	31
124	35
97	34

CALCULATED JMD

CHECKED AJS

63+50.00
971.77

63+00.00
970.75

62+50.00
969.59

SAWCUT
973.38
972.90
8:1
4.5'
3:1
969.9
R/W
Elec.

SAWCUT
972.35
971.87
8:1
15'
2:1
969.0
R/W

SAWCUT (TYP.)
971.30
E/P (TYP.)
970.82
E/S (TYP.)
8:1
2:1
968.1
R/W

ITEM 204 - EXCAVATION OR SUBGRADE AND
ITEM 204 - GRANULAR MATERIAL, TYPE B

ITEM 204 - GRANULAR MATERIAL, TYPE B

ITEM 202 - PAVEMENT REMOVED

I-75 AT RAMP J CROSS SECTIONS
STA. 62+50 TO STA. 63+50

MOT-75-0.75

183
773

SEEDING		END AREA		VOLUME	
END WIDTH	SQ. YDS.	CUT	FILL	CUT	FILL
		37	10	73	18
		42	9	91	19
		56	11	122	24
SHEET TOTAL				SHEET TOTAL	

CALCULATED JMD

CHECKED AJS

I-75 AT RAMP J CROSS SECTIONS
STA. 64+00 TO STA. 65+00

MOT-75-0.75

184
773

65+00.00
974.23

64+50.00
973.58

64+00.00
972.65

SAWCUT
976.43
975.95
8:1
3:1
973.8
R/W
Elec.

SAWCUT
975.38
974.90
8:1
3:1
972.5
R/W
Elec.

SAWCUT (TYP.)
974.42
E/P (TYP.)
973.94
E/S (TYP.)
8:1
3:1
971.2
R/W
Elec.

ITEM 204 - EXCAVATION OR SUBGRADE AND
ITEM 204 - GRANULAR MATERIAL, TYPE B

ITEM 204 - GRANULAR MATERIAL, TYPE B

ITEM 202 - PAVEMENT REMOVED

SEEDING		END AREA		VOLUME	
END WIDTH	SQ. YDS.	CUT	FILL	CUT	FILL
		63	3	90	10
		34	8	62	14
		32	8	64	17
SHEET TOTAL					

CALCULATED JMD
CHECKED AJS

I-75 AT RAMP J CROSS SECTIONS STA. 65+50 TO STA. 66+50

MOT-75-0.75

SEEDING		END AREA		VOLUME	
END WIDTH	SQ. YDS.	CUT	FILL	CUT	FILL
		209	6	330	10
		147	5	216	10
		86	6	138	8

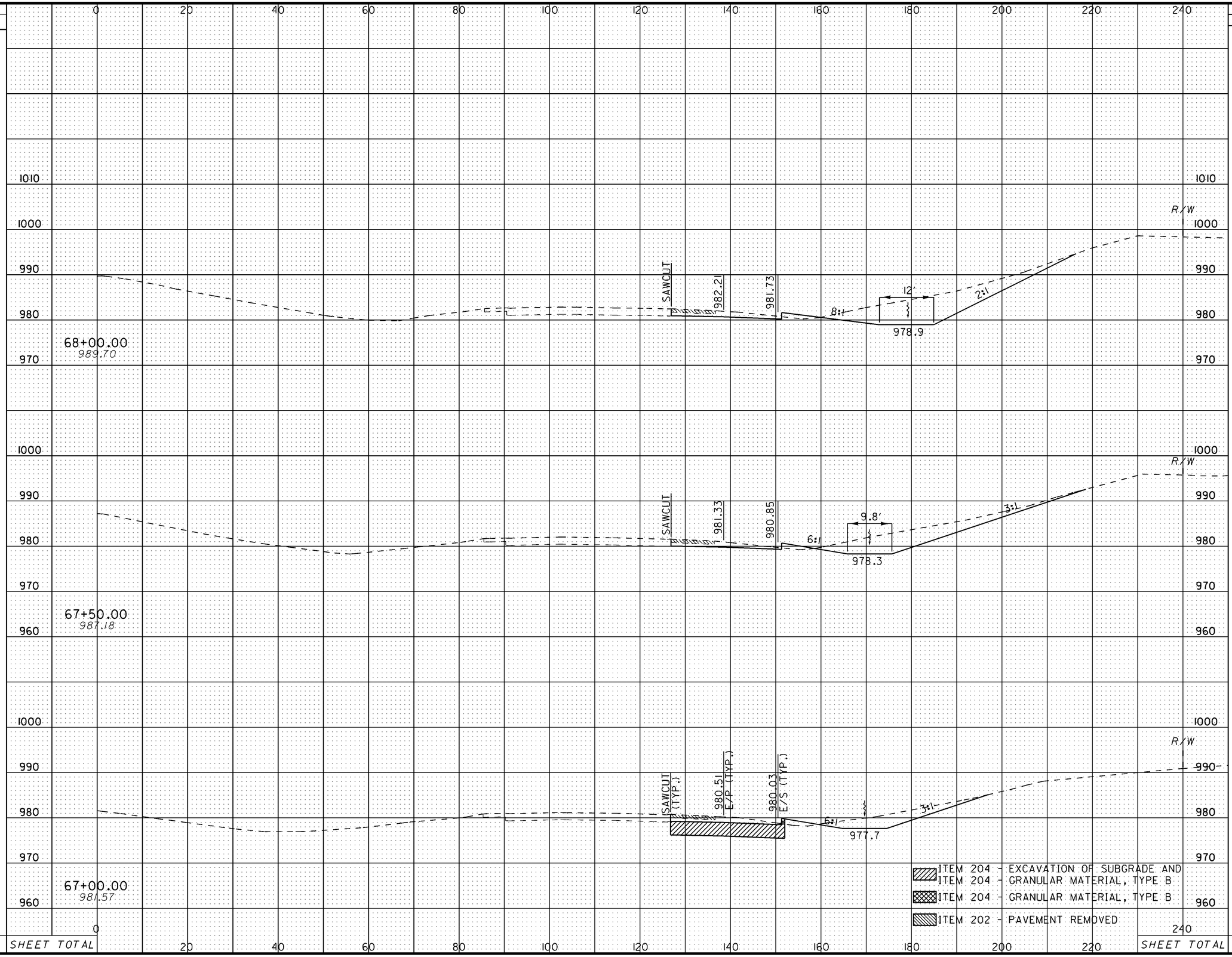

CALCULATED JMD

CHECKED AJS

I-75 AT RAMP J CROSS SECTIONS STA. 67+00 TO STA. 68+00

MOT-75-0.75

SEEDING		END AREA		VOLUME	
END WIDTH	SQ. YDS.	CUT	FILL	CUT	FILL
		826	5	1221	8
		492	4	693	7
		257	4	431	9

CALCULATED JMD
CHECKED AJS

69+50.00
992.85

69+00.00
991.85

68+50.00
990.73

SAWCUT
984.34
983.86
981.5
SAWCUT
983.71
983.23
980.6
SAWCUT (TYP.)
982.97 E/P (TYP.)
982.49 E/S (TYP.)
979.8
8:1
2:1
R/W

ITEM 202 - PAVEMENT REMOVED

SHEET TOTAL

I-75 AT RAMP J CROSS SECTIONS STA. 68+50 TO STA. 69+50

MOT-75-0.75

187
773

SEEDING	
END WIDTH	SQ. YDS.

END AREA	
CUT	FILL
770	3
819	4
867	4

VOLUME	
CUT	FILL
1471	6
1561	7
1568	8

CALCULATED JMD

CHECKED AJS

71+00.00
994.65

70+50.00
993.96

70+00.00
993.61

SAWCUT
986.21
985.73
8:1
2:1
984.0
R/W

SAWCUT
985.55
985.07
8:1
2:1
983.2
R/W

SAWCUT (TYP.)
984.95
E/P (TYP.)
984.47
E/S (TYP.)
8:1
2:1
982.3
R/W

ITEM 202 - PAVEMENT REMOVED

SHEET TOTAL

SHEET TOTAL

I-75 AT RAMP J CROSS SECTIONS STA. 70+00 TO STA. 71+00

MOT-75-0.75

SEEDING	
END WIDTH	SQ. YDS.

END AREA		VOLUME	
CUT	FILL	CUT	FILL
837	1		
		1597	2
887	2		
		1620	4
862	3		
		1511	5

CALCULATED JMD

CHECKED AJS

I-75 AT RAMP J CROSS SECTIONS
STA. 71+50 TO STA. 72+50

MOT-75-0.75

189
773

SEEDING		END AREA		VOLUME	
END WIDTH	SQ. YDS.	CUT	FILL	CUT	FILL
		781	3	1482	3
		819	0	1548	1
		852	1	1564	1

74+00.00
995.77

73+50.00
995.83

73+00.00
995.49

SAWCUT
1988.12
987.64
8:1
985.5
2:1
R/W

SAWCUT
987.88
987.40
8:1
985.3
2:1
R/W

SAWCUT (TYP.)
987.68
E/P (TYP.)
987.20
E/S (TYP.)
8:1
985.1
2:1
R/W

ITEM 202 - PAVEMENT REMOVED

SHEET TOTAL

SHEET TOTAL

CALCULATED JMD

CHECKED AJS

I-75 AT RAMP J CROSS SECTIONS STA. 73+00 TO STA. 74+00

MOT-75-0.75

190
773

SEEDING	
END WIDTH	SQ. YDS.

END AREA	
CUT	FILL
623	5
637	3
726	3

VOLUME	
CUT	FILL
1167	7
1262	5
1395	6

CALCULATED JMD

CHECKED AJS

I-75 AT RAMP J CROSS SECTIONS STA. 74+50 TO STA. 75+50

MOT-75-0.75

SEEDING		END AREA		VOLUME	
END WIDTH	SQ. YDS.	CUT	FILL	CUT	FILL
		472	3	949	6
		553	4	973	8
		498	4	1038	8

CALCULATED JMD

CHECKED AJS

RAMP J CROSS SECTIONS
I-75 AT RAMP J STA. 76+00 TO STA. 77+00
MOT-75-0.75

SEEDING	
END WIDTH	SQ. YDS.

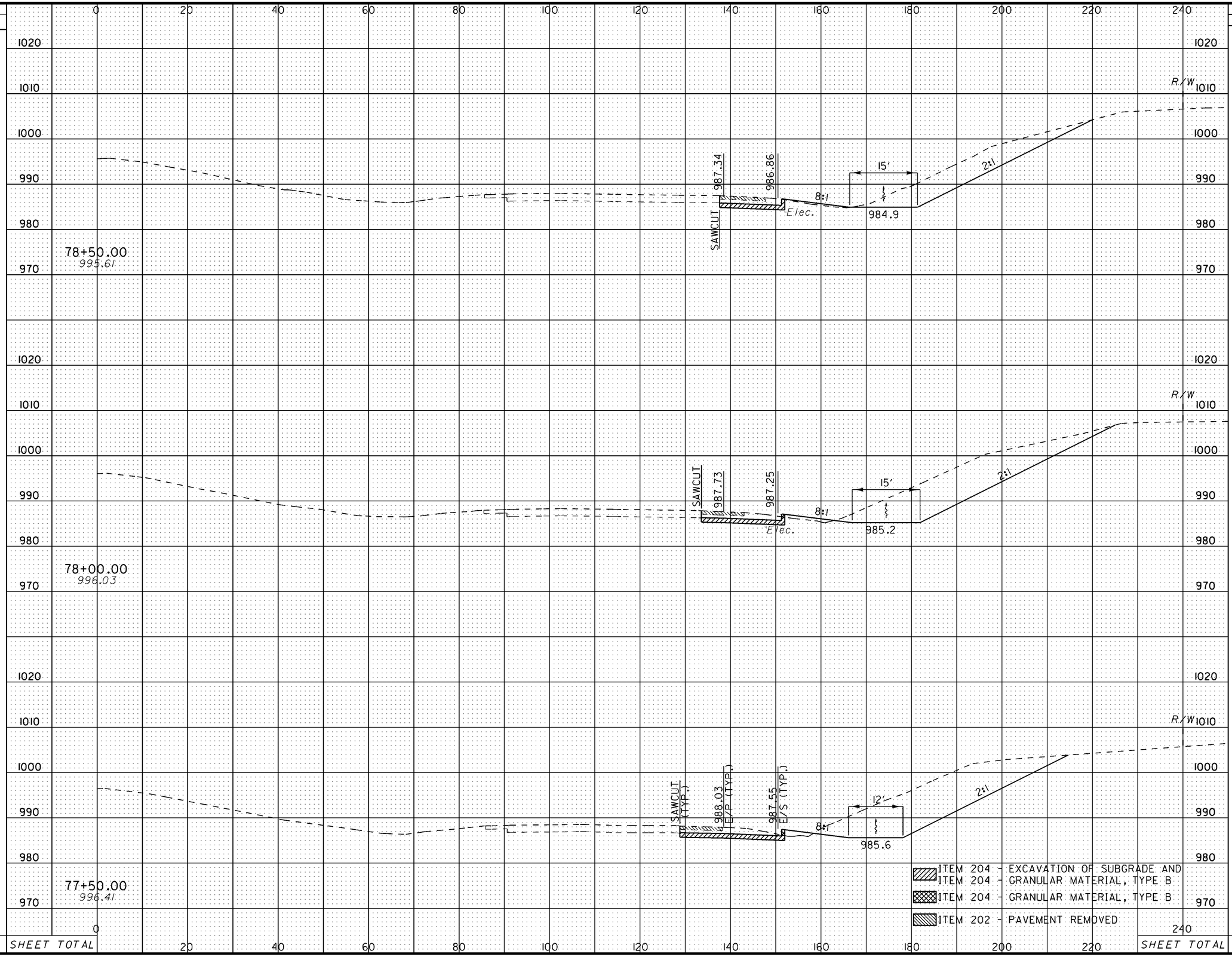

END AREA		VOLUME	
CUT	FILL	CUT	FILL
201	3	496	9
335	7	651	12
369	6	778	8

CALCULATED JMD
CHECKED AJS

I-75 AT RAMP J CROSS SECTIONS STA. 77+50 TO STA. 78+50

MOT-75-0.75

193
773

SEEDING	
END WIDTH	SQ. YDS.

TOTALS CARRIED TO GENERAL SUMMARY	
ITEM 203 - EXCAVATION	26474 CU YD
ITEM 203 - EMBANKMENT	441 CU YD
ITEM 204 - EXCAVATION OF SUBGRADE	2009 CU YD
ITEM 204 - GRANULAR MATERIAL, TYPE B	2039 CU YD
ITEM 204 - GEOTEXTILE FABRIC	2828 SY YD

ADJUST FOR ITEM 202 - PAVEMENT REMOVED -506

END AREA		VOLUME	
CUT	FILL	CUT	FILL
67	0		
		249	3

CALCULATED JMD
CHECKED AJS

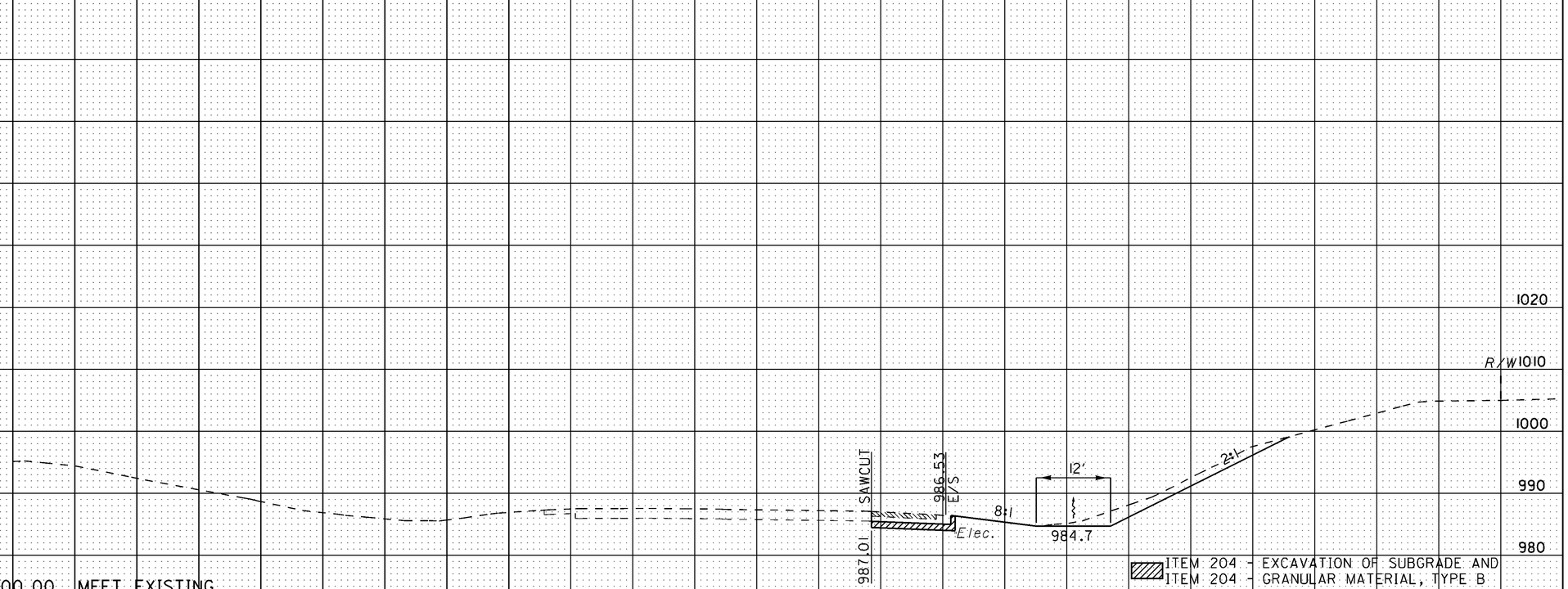

I-75 AT RAMP J CROSS SECTIONS STA. 79+00

MOT-75-0.75

PAVEMENT LEGEND

- 1 1/2 " 446 ASPHALT CONCRETE SURFACE COURSE, TYPE 1H, PG 76-22M
  407 TACK COAT FOR INTERMEDIATE COURSE @ 0.04 GAL/S.Y.
  2" 446 ASPHALT CONCRETE INTERMEDIATE COURSE, TYPE 2, PG 64-28
  8" 301 ASPHALT CONCRETE BASE, PG 64-22 (2 - 4" LIFTS)
  6" 304 AGGREGATE BASE
- 1 1/2 " 446 ASPHALT CONCRETE SURFACE COURSE, TYPE 1H, PG 76-22M
  407 TACK COAT FOR INTERMEDIATE COURSE @ 0.04 GAL/S.Y.
  VARIABLE THICKNESS 448 ASPHALT CONCRETE INTERMEDIATE COURSE, TYPE 2, PG 64-28
  407 TACK COAT @ 0.075 GAL/S.Y.
- 254 PAVEMENT PLANING ASPHALT CONCRETE
- ITEM 451 - REINFORCED CONCRETE PAVEMENT, MISC: 4" ENHANCED CONCRETE PAVEMENT (SEE GENERAL NOTES SHEET 25)
- 8" 411 STABILIZED CRUSHED AGGREGATE

ASPHALT PAVEMENT FOR RAMPS
1 1/2" 442 ASPHALT CONCRETE SURFACE COURSE, 12.5MM, TYPE A (446), AS PER PLAN
407 TACK COAT FOR INTERMEDIATE COURSE @ 0.04 GAL/S.Y.
1 3/4" 442 ASPHALT CONCRETE INTERMEDIATE COURSE, 19MM, TYPE A (446), AS PER PLAN
9" 302 ASPHALT CONCRETE BASE, PG 64-22
6" 304 AGGREGATE BASE

CONCRETE PAVEMENT FOR RAMPS
9" 452 NON-REINFORCED CONCRETE PAVEMENT
6" 304 AGGREGATE BASE

ASPHALT PAVEMENT FOR S.R. 741
1 1/4 " 442 ASPHALT CONCRETE SURFACE COURSE, 9.5 MM, TYPE A (446)
407 TACK COAT FOR INTERMEDIATE COURSE @ 0.04 GAL./S.Y.
1 3/4 " 442 ASPHALT CONCRETE INTERMEDIATE COURSE, 19MM, TYPE A (446)
5 1/2 " 302 ASPHALT CONCRETE BASE, PG64-22
6" 304 AGGREGATE BASE

DRIVES
1 1/4" 448 ASPHALT CONCRETE SURFACE COURSE, TYPE 1, PG 64-22 (DRIVEWAYS)
4 3/4" 301 ASPHALT CONCRETE BASE, PG 64-22 (DRIVEWAYS)

- 10" 304 AGGREGATE BASE
- 8" 452 NON-REINFORCED CONCRETE PAVEMENT

℄ MIAMISBURG-SPRINGBORO PIKE

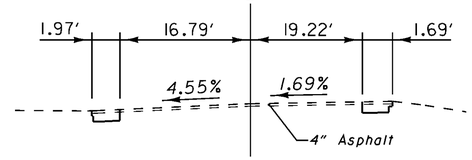

TYPICAL ADJOINING SECTION
STA. 107+60.00

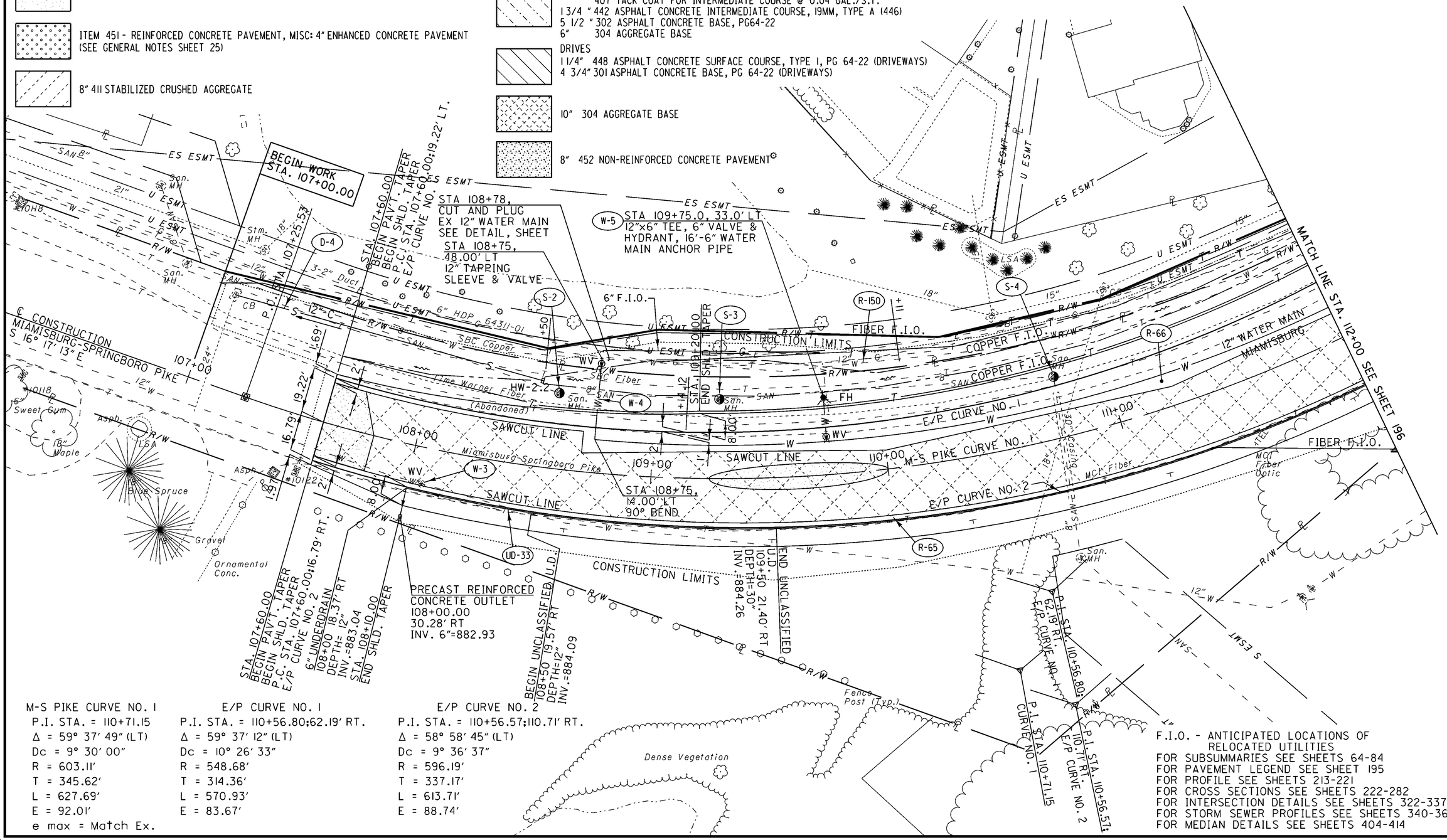

M-S PIKE CURVE NO. 1	E/P CURVE NO. 1	E/P CURVE NO. 2
P.I. STA. = 110+71.15	P.I. STA. = 110+56.80; 62.19' RT.	P.I. STA. = 110+56.57; 110.71' RT.
Δ = 59° 37' 49" (LT)	Δ = 59° 37' 12" (LT)	Δ = 58° 58' 45" (LT)
Dc = 9° 30' 00"	Dc = 10° 26' 33"	Dc = 9° 36' 37"
R = 603.11'	R = 548.68'	R = 596.19'
T = 345.62'	T = 314.36'	T = 337.17'
L = 627.69'	L = 570.93'	L = 613.71'
E = 92.01'	E = 83.67'	E = 88.74'
e max = Match Ex.		

F.I.O. - ANTICIPATED LOCATIONS OF RELOCATED UTILITIES
FOR SUBSUMMARIES SEE SHEETS 64-84
FOR PAVEMENT LEGEND SEE SHEET 195
FOR PROFILE SEE SHEETS 213-221
FOR CROSS SECTIONS SEE SHEETS 222-282
FOR INTERSECTION DETAILS SEE SHEETS 322-337
FOR STORM SEWER PROFILES SEE SHEETS 340-361
FOR MEDIAN DETAILS SEE SHEETS 404-414

HORIZONTAL SCALE IN FEET
0 10 20 40

CALCULATED MAG
CHECKED AJS

MIAMISBURG-SPRINGBORO PIKE PLAN
STA. 107+60 TO STA. 112+00

MOT-75-0.75

MIAMISBURG-SPRINGBORO PIKE PLAN
STA. 112+00 TO STA. 117+50

MOT-75-0.75

196
773

HORIZONTAL SCALE IN FEET
0 10 20 40

CALCULATED MAG
CHECKED AJS

MATCH LINE STA. 112+00 SEE SHEET 195

MATCH LINE STA. 117+50 SEE SHEET 197

END WORK STA. 21+50.00

STA. 21+45.00
END CURB & GUTTER
END CURB HEIGHT & WIDTH TAPER TO MEET EX.
BEGIN CURB HEIGHT & WIDTH TAPER

STA. 20+92.08
END CURB & GUTTER
END CURB HEIGHT & WIDTH TAPER TO MEET EX.
BEGIN CURB HEIGHT & WIDTH TAPER

STA. 20+78.08
BEGIN PAV'T. TAPER

STA 114+90.0
40.0' LT
12"x6" TEE, 90° ANCHOR BEND, 6" VALVE, ANCHOR COUPLING & HYDRANT

STA 113+54.8
40.0' LT
45° BEND

P.T. STA. 113+53.22
P.T. STA. 113+53.22
E/P CURVE NO. 1
END PAV'T. TAPER
END SHLD.
STA. 113+28.20
BEGIN CURB & GUTTER
TAPER CURB HEIGHT FROM 0" TO 6" IN 10'

STA 113+27.6
14.0' LT
45° BEND

STA 113+50.40, 77.40' RT
11 1/4° VERTICAL BEND

STA. 116+14.26 ℄ MIAMISBURG-SPRINGBORO PIKE

STA. 20+00.00 ℄ CRAINS CREEK ROAD

STA. 19+36.53
END PAV'T. TAPER
END CURB HEIGHT & WIDTH TAPER

STA. 19+47.87
BEGIN PAV'T. TAPER
BEGIN CURB & GUTTER
BEGIN TAPER CURB HEIGHT & WIDTH

19+06.18
40.16' LT

STA. 115+59.85
72.31' LT

STA. 21+72.02
67.25' RT

CURB RAMP TYPE A2

CURB RAMP TYPE B1

CURB RAMP TYPE B1

CONSTRUCTION LIMITS

CONSTR LIMITS

℄ CONSTRUCTION
MIAMISBURG-SPRINGBORO PIKE
S 75° 55' 02" E

℄ CONSTRUCTION
CRAINS CREEK ROAD
N 13° 54' 55" E

89°49'57"

116+00

115+00

114+00

117+00

22+00

21+00

20+00

19+00

E-51 ITEM 836, SEEDING AND EROSION CONTROL WITH TURF REINFORCED MAT, TYPE I
134'x17'÷9=253 SY

STA 112+75.00, 72.90' RT
12"x12" TAPPING SLEEVE AND VALVE, 6' - 12" WATER MAIN 90° BEND, ROTATE TO GRADE, CUT AND PLUG EXISTING 12" WATER TO THE EAST

E-52 ITEM 836, SEEDING AND EROSION CONTROL WITH TURF REINFORCED MAT, TYPE I
79'x4'÷9=35 SY

STA 114+00.00, 70.68' RT
12"x12" TAPPING SLEEVE AND VALVE, 6' - 12" WATER MAIN 90° BEND, ROTATE TO GRADE, CUT AND PLUG EXISTING 12" WATER TO THE WEST

W-8 STA 19+20, 28.2' LT
RELOCATE EXISTING FIRE HYDRANT PLUG EXISTING PIPE AND ADJUST VALVE TO GRADE. CONNECT TO EXISTING WATER MAIN. PROVIDE REDUCER, IF REQUIRED.
13' - 6" WATER MAIN

M-S PIKE CURVE NO. 1
P.I. STA. = 110+71.15
Δ = 59° 37' 49" (LT)
Dc = 9° 30' 00"
R = 603.11'
T = 345.62'
L = 627.69'
E = 92.01'
e max = Match Ex.

℄ E/P CURVE NO. 1
P.I. STA. = 110+56.80;62.19' RT.
Δ = 59° 37' 12" (LT)
Dc = 10° 26' 33"
R = 548.68'
T = 314.36'
L = 570.93'
E = 83.67'

E/P CURVE NO. 2
P.I. STA. = 110+56.57;110.71' RT.
Δ = 58° 58' 45" (LT)
Dc = 9° 36' 37"
R = 596.19'
T = 337.17'
L = 613.71'
E = 88.74'

F.I.O. - ANTICIPATED LOCATIONS OF RELOCATED UTILITIES
FOR SUBSUMMARIES SEE SHEETS 64-84
FOR PAVEMENT LEGEND SEE SHEET 195
FOR PROFILE SEE SHEETS 213-221
FOR CROSS SECTIONS SEE SHEETS 222-282
FOR INTERSECTION DETAILS SEE SHEETS 322-337
FOR STORM SEWER PROFILES SEE SHEETS 340-361
FOR MEDIAN DETAILS SEE SHEETS 404-414

BEGIN WORK STA. 18+35.00

END CURB HEIGHT & WIDTH TAPER
STA. 18+40.00
BEGIN CURB & GUTTER
BEGIN TAPER CURB HEIGHT & WIDTH

Dense Vegetation

Emergency Water Tie-in

Time Warner Fiber

Ameritech (Abandoned)

MCI Fiber

SBC Fiber

SBC Copper

FIBER F.I.O.

COPPER F.I.O.

6" F.I.O.

12" WATER MAIN

MIAMISBURG SAWCUT LINE

Steel Fence

Asph.

Concr.

LSA

CB-3A (Abandoned)

CB-3A COMBO

MH-3

HW-2.2

W-4

W-6

W-7

R-150

R-151

R-65

R-66

R-67

R-68

R-96

R-97

R-98

R-99

D-5

D-6

D-7

UD-33

UD-34

UD-35

UD-36

UD-37

UD-38

M-S PIKE CURVE NO. 2
P.I. STA. = 128+46.64
Δ = 12° 35' 17" (LT)
Dc = 1° 00' 00"
R = 5,729.58'
T = 631.95'
L = 1,258.81'
E = 34.75'
e max = NC

MATCH LINE STA. 117+50 SEE SHEET 196

MATCH LINE STA. 123+00 SEE SHEET 198

W-11 STA 118+50.0
40.0' LT
12"x6" TEE, 90° ANCHOR BEND, 6" VALVE, ANCHOR COUPLING & HYDRANT

STA 121+10.0, 40.0' LT
DEFLECT JOINTS

STA. 121+10.00
BEGIN PAV'T. TAPER

STA 122+14.7, 42.0' LT
DEFLECT JOINTS

P.C. STA. 122+14.69
END PAV'T. TAPER

W-16 STA 122+85.0
42.0' LT
12"x6" TEE, 90° ANCHOR BEND, 6" VALVE, ANCHOR COUPLING & HYDRANT

U ESMT
FIBER F.I.O.
CONSTRUCTION LIMITS
12 Trimtyton 05115 12" Dia. 6" HDP 63824-99
3-2" Duct
6" F.I.O.
3-2" DUCT F.I.O.
SBC Copper
SBC Fiber
COPPER F.I.O.
12" WATER MAIN MIAMISBURG
CB-3A
D-8 (Abandoned)
D-9
R-67
SAWCUT LINE
118+00 ℄ CONSTRUCTION MIAMISBURG-SPRINGBORO PIKE S 75° 55' 02" E
119+00
120+00
121+00
122+00
M-S PIKE CURVE NO. 2
MCI Fiber Optic
#TEL #3640
FIBER F.I.O. 15"-C
MH 3
R-68
12" WATER MAIN
CB-3A COMBO
W-14
W-15
UD-37
UD-38
UD-39
UD-40
UD-41
UD-42
R-150
R-152
W-4
D-5
48" Wood
DO NOT DISTURB FENCE
CONSTRUCTION LIMITS
MODULAR BLOCK WALL
(SEE DETAIL SHEETS 394-399)

STA 118+50.0
25.0' RT
90° BEND

STA 118+50.0, 25.0' RT
12"x12" TAPPING SLEEVE AND VALVE, CUT AND PLUG EXISTING 12" WATER TO THE EAST

STA. 120+80.00
BEGIN PAV'T. TAPER
P.I. 250' R

STA 121+50.0, 25.0' RT
12"x6" TEE, 6" VALVE, 22' - 6" ANCHOR PIPE & HYDRANT

STA. 121+60.00
END PAV'T. TAPER
P.I. 100' R

F.I.O. - ANTICIPATED LOCATIONS OF RELOCATED UTILITIES
FOR SUBSUMMARIES SEE SHEETS 64-84
FOR PAVEMENT LEGEND SEE SHEET 195
FOR PROFILE SEE SHEETS 213-221
FOR CROSS SECTIONS SEE SHEETS 222-282
FOR INTERSECTION DETAILS SEE SHEETS 322-337
FOR STORM SEWER PROFILES SEE SHEETS 340-361
FOR MEDIAN DETAILS SEE SHEETS 404-414

N

HORIZONTAL SCALE IN FEET
0 10 20 40

CALCULATED MAG
CHECKED AJS

MIAMISBURG-SPRINGBORO PIKE PLAN
STA. 117+50 TO STA. 123+00

MOT-75-0.75

197
773

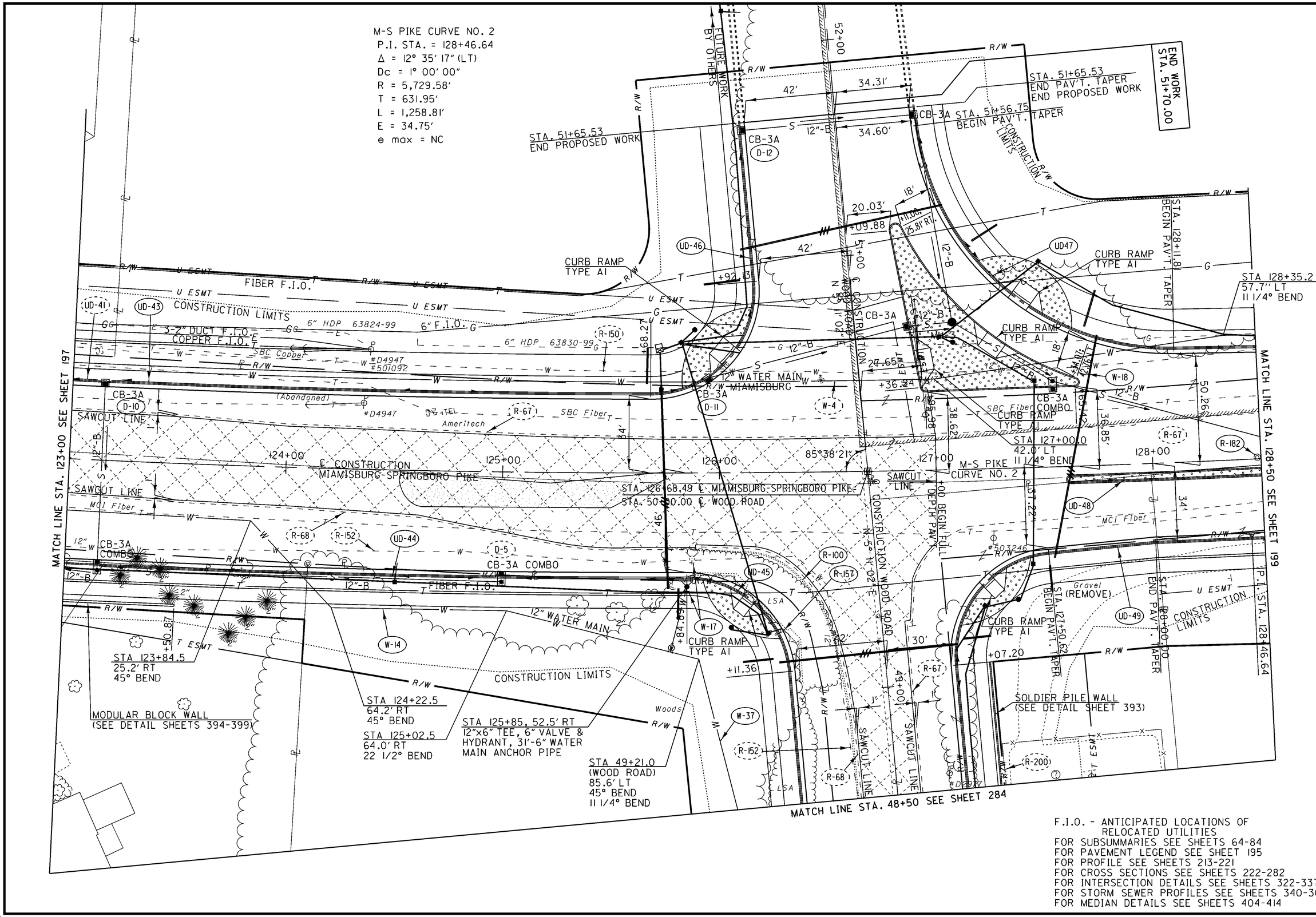

F.I.O. - ANTICIPATED LOCATIONS OF RELOCATED UTILITIES
FOR SUBSUMMARIES SEE SHEETS 64-84
FOR PAVEMENT LEGEND SEE SHEET 195
FOR PROFILE SEE SHEETS 213-221
FOR CROSS SECTIONS SEE SHEETS 222-282
FOR INTERSECTION DETAILS SEE SHEETS 322-337
FOR STORM SEWER PROFILES SEE SHEETS 340-361
FOR MEDIAN DETAILS SEE SHEETS 404-414

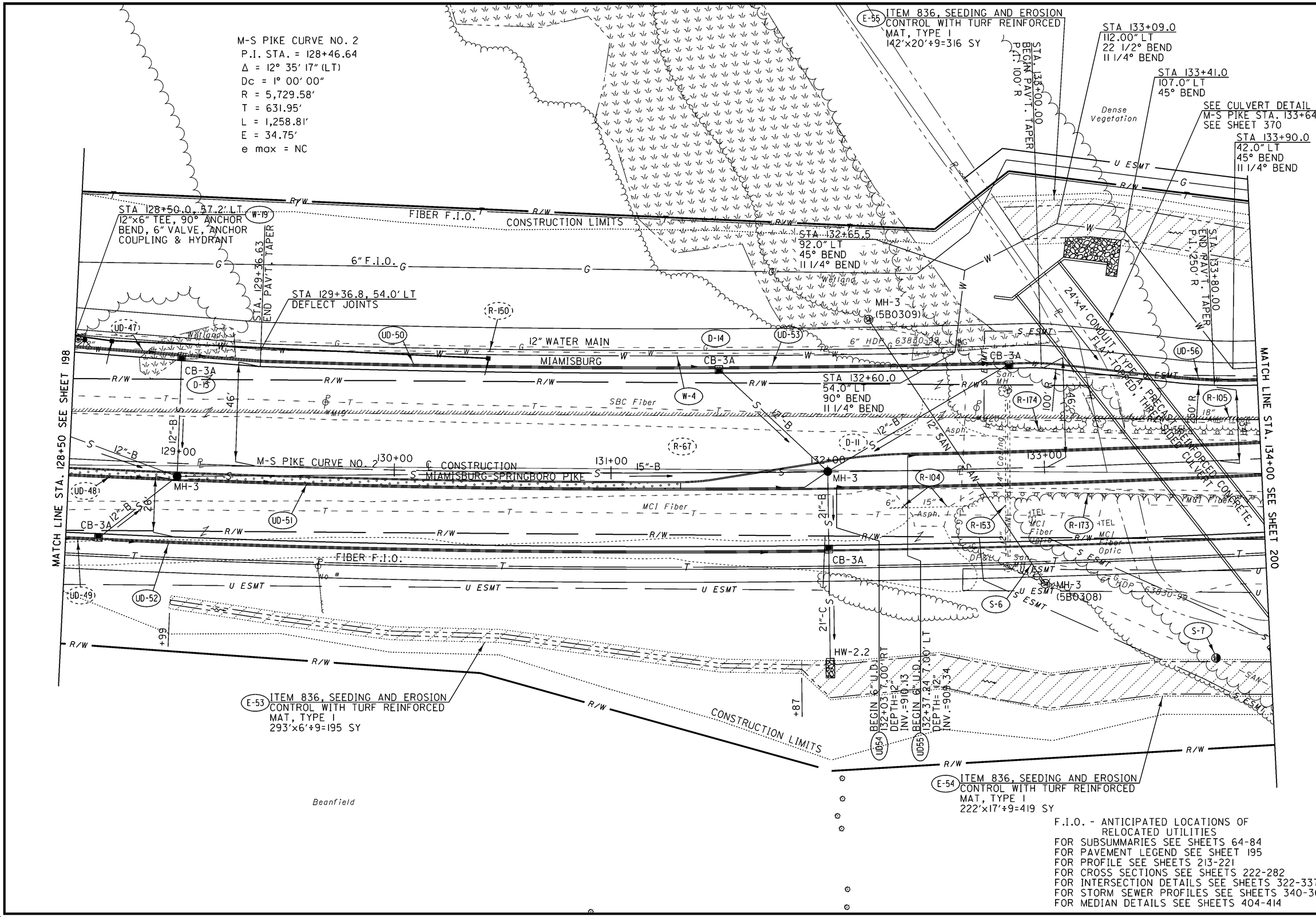

F.I.O. - ANTICIPATED LOCATIONS OF RELOCATED UTILITIES
FOR SUBSUMMARIES SEE SHEETS 64-84
FOR PAVEMENT LEGEND SEE SHEET 195
FOR PROFILE SEE SHEETS 213-221
FOR CROSS SECTIONS SEE SHEETS 222-282
FOR INTERSECTION DETAILS SEE SHEETS 322-337
FOR STORM SEWER PROFILES SEE SHEETS 340-361
FOR MEDIAN DETAILS SEE SHEETS 404-414

MIAMISBURG-SPRINGBORO PIKE PLAN
STA. 128+50 TO STA. 134+00

MOT-75-0.75

M-S PIKE CURVE NO. 2
P.I. STA. = 128+46.64
Δ = 12° 35' 17" (LT)
Dc = 1° 00' 00"
R = 5,729.58'
T = 631.95'
L = 1,258.81'
E = 34.75'
e max = NC

Dense Vegetation

U ESMT
G
R/W
6" F.I.O. G
FIBER F.I.O.

ITEM 836, SEEDING AND EROSION CONTROL WITH TURF REINFORCED MAT, TYPE I
371'x7'÷9=289 SY
E-56

STA. 137+75.00
BEGIN PAV'T. TAPER

Dense Vegetation

CONSTRUCTION LIMITS

STA 137+75.0, 42.0' LT
DEFLECT JOINTS

E-55

+30

P.T. STA. 134+73.50

END 6" HDPE
134+90.00 ℄
DEPTH=12'
INV.= 905.35

Beanfield

STA 134+73.5, 42.0' LT
DEFLECT JOINTS

+00

12" WATER MAIN
MIAMISBURG

UD-56 UD-58 UD-59 UD-62 R-191 UD-65 UD-67

W
CB-3A D-16
CB-3A D-17
CB-3 D-19
CB-3A
CB-3 W
D-20

12"-B
S 12"-B

R-174 UD-55 R-105 R-150 W-4

MATCH LINE STA. 134+00 SEE SHEET 199

M-S PIKE CURVE NO. 2

135+00 136+00 137+00 138+00 139+00

S88°30'19"E

MH-3

CONSTRUCTION
MIAMISBURG-SPRINGBORO PIKE

#D 4500

UD-54 R-173 UD60 R-67 R-106 UD-68

MCI Fiber
Fiber

D-15 CB-3 CB-3A D-18 CB-3 CB-3A

15"-B
21"-B
12"-B
18"-B

24" RCP CONDUIT, TYPE A

UD-57 UD-61 UD-64 UD-66 UD-69

ESMT
G
U ESMT
R/W
T

6" HDP 63830-99

SEE CULVERT DETAIL
M-S PIKE STA. 133+64
SEE SHEET 370

Wetland

HW-2.2

21"-C

CH ESMT

E-54

ITEM 670, DITCH EROSION PROTECTION
132'x17'÷9=249 SY
E-57

CONSTRUCTION LIMITS

Dense Vegetation

Beanfield

STA. 137+75.00
BEGIN PAV'T. TAPER

Dense Vegetation

12" SAN
S ESMT
CH ESMT
SAN

Wetland

F.I.O. - ANTICIPATED LOCATIONS OF RELOCATED UTILITIES
FOR SUBSUMMARIES SEE SHEETS 64-84
FOR PAVEMENT LEGEND SEE SHEET 195
FOR PROFILE SEE SHEETS 213-221
FOR CROSS SECTIONS SEE SHEETS 222-282
FOR INTERSECTION DETAILS SEE SHEETS 322-337
FOR STORM SEWER PROFILES SEE SHEETS 340-361
FOR MEDIAN DETAILS SEE SHEETS 404-414

HORIZONTAL SCALE IN FEET
0 10 20 40

CALCULATED MAG
CHECKED AJS

MIAMISBURG-SPRINGBORO PIKE PLAN
STA. 134+00 TO STA. 139+50

MOT-75-0.75

MATCH LINE STA. 139+50 SEE SHEET 201

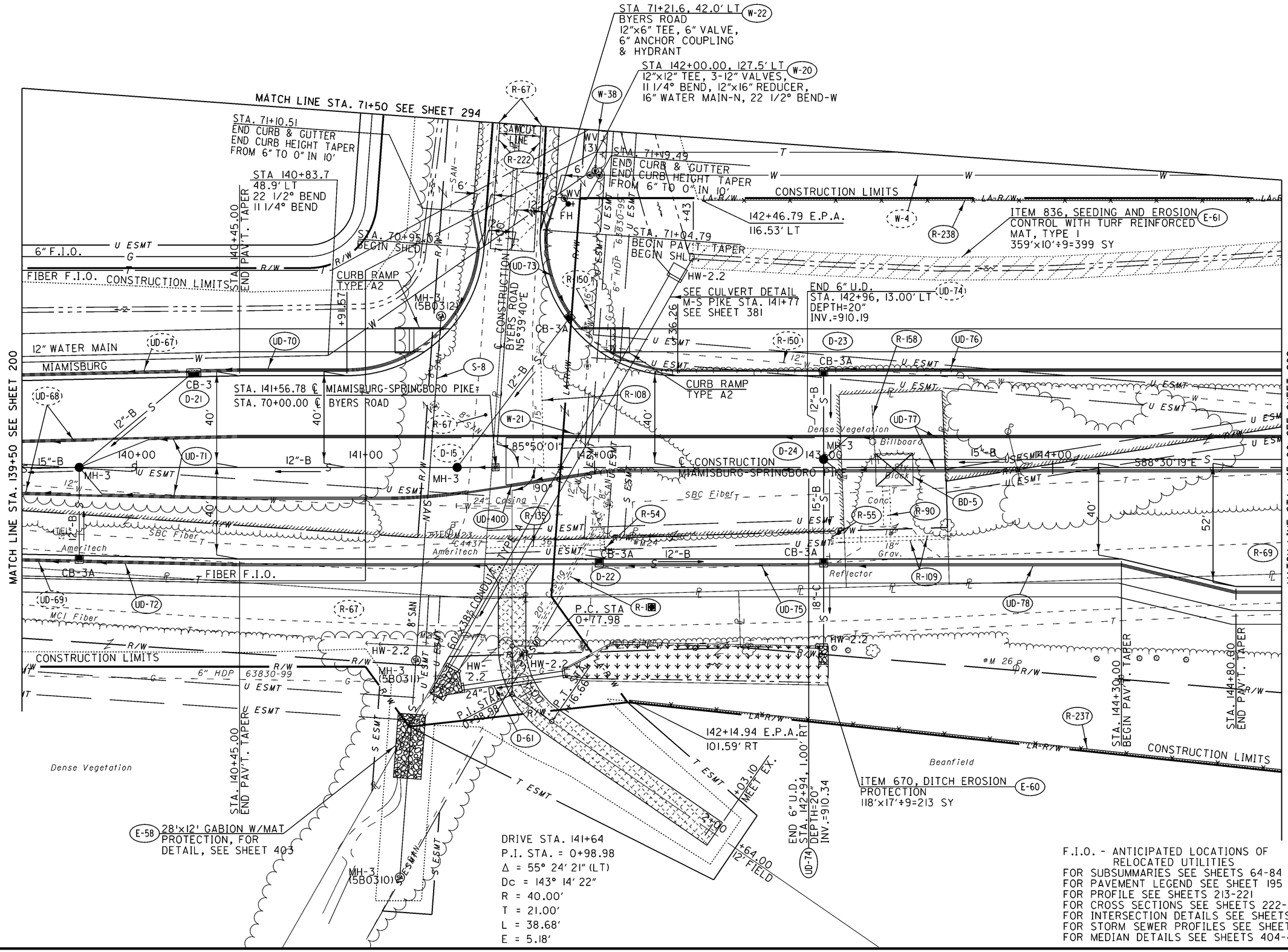

HORIZONTAL SCALE IN FEET
0 10 20 40

CALCULATED MAG
CHECKED AJS

MIAMISBURG-SPRINGBORO PIKE PLAN
STA. 139+50 TO STA. 145+00

MOT-75-0.75

F.I.O. - ANTICIPATED LOCATIONS OF RELOCATED UTILITIES
FOR SUBSUMMARIES SEE SHEETS 64-84
FOR PAVEMENT LEGEND SEE SHEET 195
FOR PROFILE SEE SHEETS 213-221
FOR CROSS SECTIONS SEE SHEETS 222-282
FOR INTERSECTION DETAILS SEE SHEETS 322-337
FOR STORM SEWER PROFILES SEE SHEETS 340-361
FOR MEDIAN DETAILS SEE SHEETS 404-414

HORIZONTAL SCALE IN FEET
0 10 20 40

CALCULATED MAG
CHECKED AJS

STA 146+81.6
174.4' LT
12x6 REDUCER
6" VALVE &
HYDRANT

STA 145+50.0
127.5' LT
11 1/4° BEND

ITEM 836, SEEDING AND EROSION CONTROL WITH TURF REINFORCED MAT, TYPE 2
136'x18'÷9=272 SY (E-63)

E-62 ITEM 670, DITCH EROSION PROTECTION
178'x7'÷9=138 SY

U ESMT
FIBER F.I.O.
12" WATER MAIN
MIAMISBURG
CONSTRUCTION LIMITS
+00
+70
HW-2.2

SEE CULVERT DETAIL
M-S PIKE STA. 147+75
SEE SHEET 382

STA. 147+85.00 BEGIN PAV'T. TAPER
STA. 147+60.40 END PAV'T. TAPER
STA. 148+41.14 END PAV'T. TAPER
BEGIN PAV'T. TAPER

145+50.17 I.A.P.A.
116.50' LT

MATCH LINE STA. 439+50 SEE SHEET 138

CURB RAMP TYPE A2
CURB RAMP TYPE A2
CURB RAMP TYPE A1
CURB RAMP TYPE A1
CURB RAMP TYPE A2

148+41.14
42.00' LT

STA. 149+54.88 ℄ MIAMISBURG-SPRINGBORO PIKE=
STA. 338+51.96 B CONSTRUCTION RAMP P
STA. 438+26.94 B CONSTRUCTION RAMP M

B CONSTRUCTION RAMP M
N 14° 22' 31" E

B CONSTRUCTION RAMP P
N14°22'31"E

S88°30'19"E
77°07'10"
77°07'10"
150+00
149+00
146+00
147+00
148+00

MIAMISBURG-SPRINGBORO PIKE

MATCH LINE STA. 145+00 SEE SHEET 201

MATCH LINE STA. 150+50 SEE SHEET 203

MATCH LINE STA. 337+00 SEE SHEET 90

STA. 149+81.27
44.01' RT

TYPE E ANCHOR ASSEMBLY
STA. 149+81.27
BEGIN PAV'T. TAPER
CURB RAMP
TYPE A2

STA. 337+80.65
END PAV'T. TAPER

STA. 337+29.51
BEGIN PAV'T. TAPER

STA. 147+15.00
BEGIN PAV'T. TAPER

STA. 147+43.69
END PAV'T. TAPER
BEGIN PAV'T. TAPER

STA. 147+93.06
END PAV'T. TAPER

147+07.95 C.P.A.
154.10' RT

CONSTRUCTION LIMITS

Asphalt
Dense Vegetation
Gravel
5' Wood
Cistern
1 Sty. Brick & Fr.
1 Sty. Fr. Bldg.
Foundation REMOVE

MIAMISBURG-SPRINGBORO PIKE
STA. 145+00 TO STA. 150+50

MOT-75-0.75

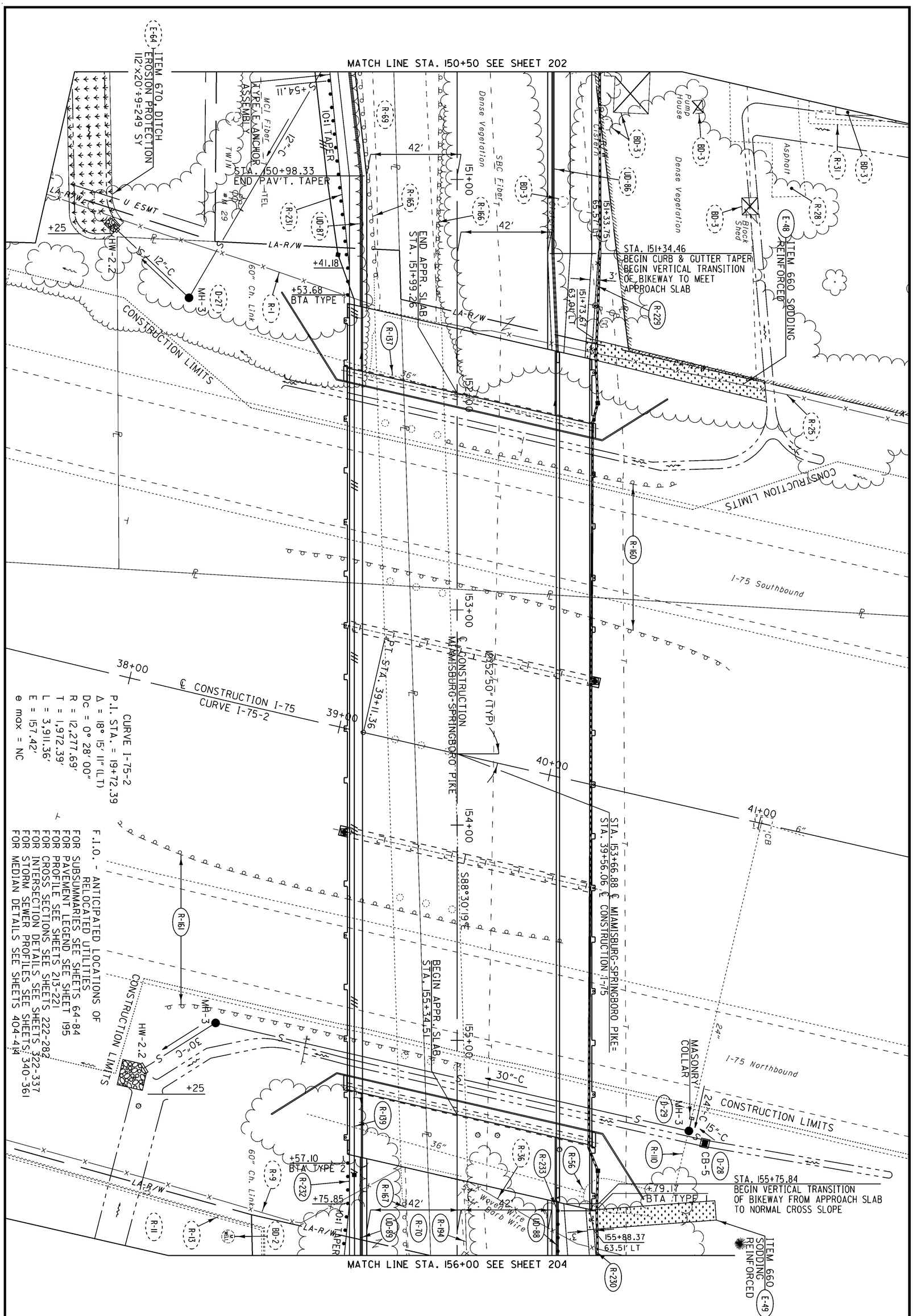

203 / 773	MOT-75-0.75	MIAMISBURG-SPRINGBORO PIKE PLAN STA. 150+50 TO STA. 156+00	CALCULATED MAG CHECKED AJS	0 20 10 40 HORIZONTAL SCALE IN FEET

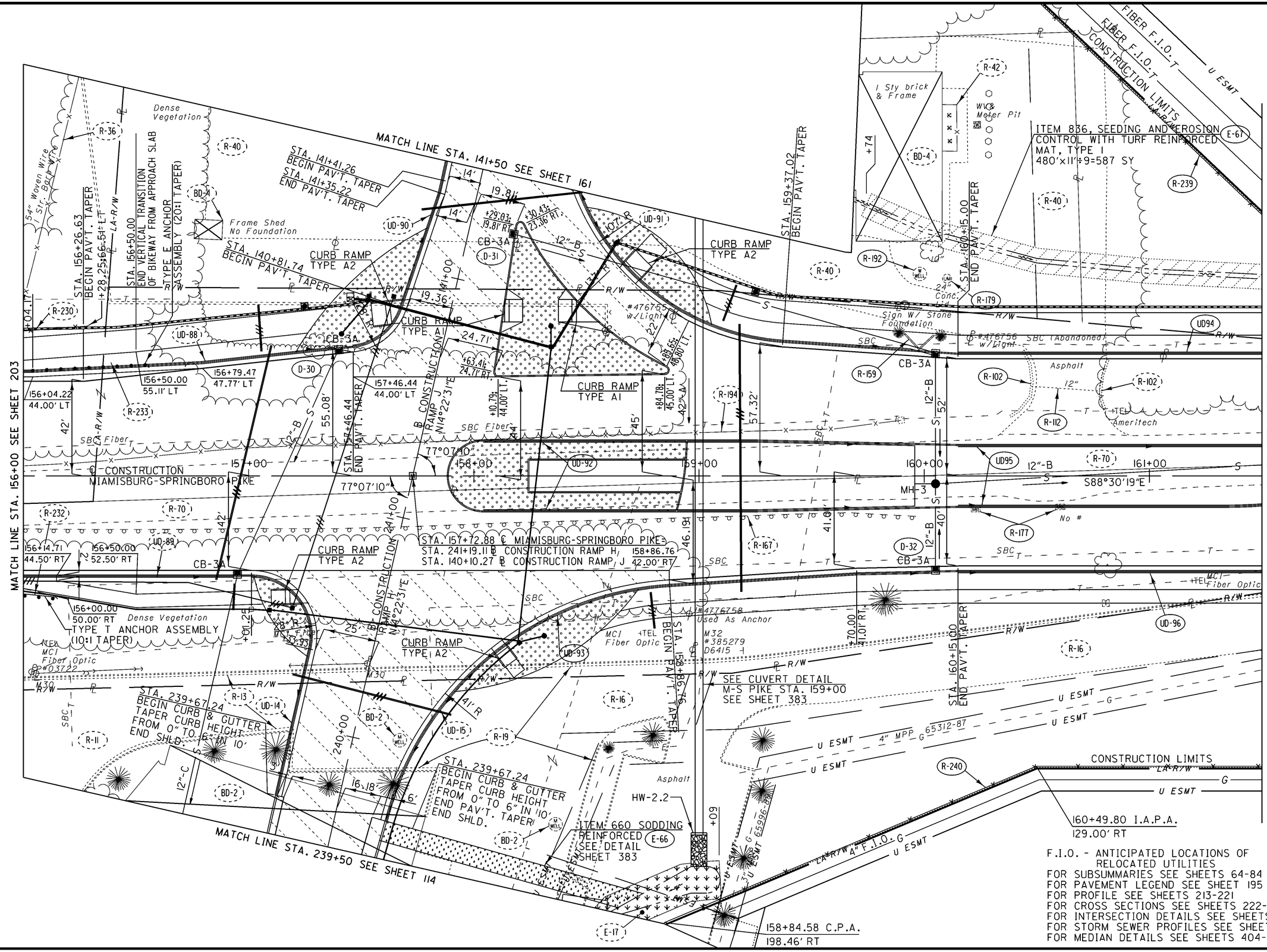

F.I.O. - ANTICIPATED LOCATIONS OF RELOCATED UTILITIES
FOR SUBSUMMARIES SEE SHEETS 64-84
FOR PAVEMENT LEGEND SEE SHEET 195
FOR PROFILE SEE SHEETS 213-221
FOR CROSS SECTIONS SEE SHEETS 222-282
FOR INTERSECTION DETAILS SEE SHEETS 322-337
FOR STORM SEWER PROFILES SEE SHEETS 340-361
FOR MEDIAN DETAILS SEE SHEETS 404-414

HORIZONTAL SCALE IN FEET
0 10 20 40

CALCULATED MAG
CHECKED AJS

MIAMISBURG-SPRINGBORO PIKE PLAN
STA. 156+00 TO STA. 161+50

MOT-75-0.75

ITEM 836, SEEDING AND EROSION CONTROL WITH TURF REINFORCED MAT, TYPE I
123'x20'÷9=273 SY (E-70)

Dense Vegetation

164+80.84 E.P.A.
114.00' LT

U ESMT
T
CH ESMT
FIBER F.I.O.
CONSTRUCTION LIMITS
L.A.-R/W
R/W
S ESMT
G
S
SAN
12"-B
18"-B
21"-B
21"-C
MH-3
CB-3
CB-3A
CB-3 COMBO
D-31
D-33
D-34
D-35
D-36
D-37
D-38
UD-94
UD-95
UD-96
UD-97
UD-98
UD-99
UD-100
UD-101
UD-102
UD-103
UD-104
UD-105
UD-106
UD-107
UD-108
UD-109
UD-402
UD-403
R-16
R-19
R-70
R-71
R-113
R-115
R-155
R-162
R-168
R-169
R-170
R-171
R-239
R-240
E-67
E-68
161+52.11 C.P.A.
114.00' LT
STA. 163+80.00 BEGIN PAV'T. TAPER P.I. 100' R
6" UNDERDRAIN 163+84 13.00' LT DEPTH=18" INV.=918.77
6" UNDERDRAIN 163+87 53.98' LT DEPTH=12" INV.=917.58
6" UNDERDRAIN 164+39.09 13.00' LT DEPTH=18" INV.=917.82
6" UNDERDRAIN 164+39.09 45.16' LT DEPTH=12" INV.=917.58
STA. 164+60.00 END PAV'T. TAPER P.I. 250' R
6" UNDERDRAIN 164+96 43.00' LT DEPTH=12" INV.=917.83
6" UNDERDRAIN 164+96 45.00' RT DEPTH=12" INV.=917.78
6" UNDERDRAIN 165+00.00 42.00' RT DEPTH=18" INV.=917.3
6" UNDERDRAIN 165+63 43.00' RT DEPTH=18" INV.=918.0
6" UNDERDRAIN 165+65 13.00' LT DEPTH=18" INV.=918.77
MH-3 (5B0304)
MH-3 (5B0302)
MH-3 (5B0303)
SBC (Abandoned)
SBC (Live)
San. MH
Gravel
Asphalt
Brick Sign
Dense Vegetation
MCI Fiber
CONDUIT & WIRE
#476759 w/ Light
#476760
#476405
#476406
DROPPED CURB
HW-2.2
4" MPP 65-12-87
190' R
250' R
52'
40'
706.05
S88°30'19"E
MIAMISBURG-SPRINGBORO PIKE
162+00
163+00
164+00
165+00
166+00
SEE CUVERT DETAIL M-S PIKE STA. 164+87 SEE SHEET 384
ITEM 670, DITCH EROSION PROTECTION
145'x17'÷9=274 SY (E-68)
ITEM 670, DITCH EROSION PROTECTION
148'x17'÷9=280 SY (E-67)
163+74.45 E.P.A.
129.00' RT
S-10
12" SAN
MATCH LINE STA. 161+50 SEE SHEET 204
MATCH LINE STA. 167+00 SEE SHEET 206

F.I.O. - ANTICIPATED LOCATIONS OF RELOCATED UTILITIES
FOR SUBSUMMARIES SEE SHEETS 64-84
FOR PAVEMENT LEGEND SEE SHEET 195
FOR PROFILE SEE SHEETS 213-221
FOR CROSS SECTIONS SEE SHEETS 222-282
FOR INTERSECTION DETAILS SEE SHEETS 322-337
FOR STORM SEWER PROFILES SEE SHEETS 340-361
FOR MEDIAN DETAILS SEE SHEETS 404-414

N

HORIZONTAL SCALE IN FEET
0 10 20 40

CALCULATED MAG
CHECKED AJS

MIAMISBURG-SPRINGBORO PIKE PLAN
STA. 161+50 TO STA. 167+00

MOT-75-0.75

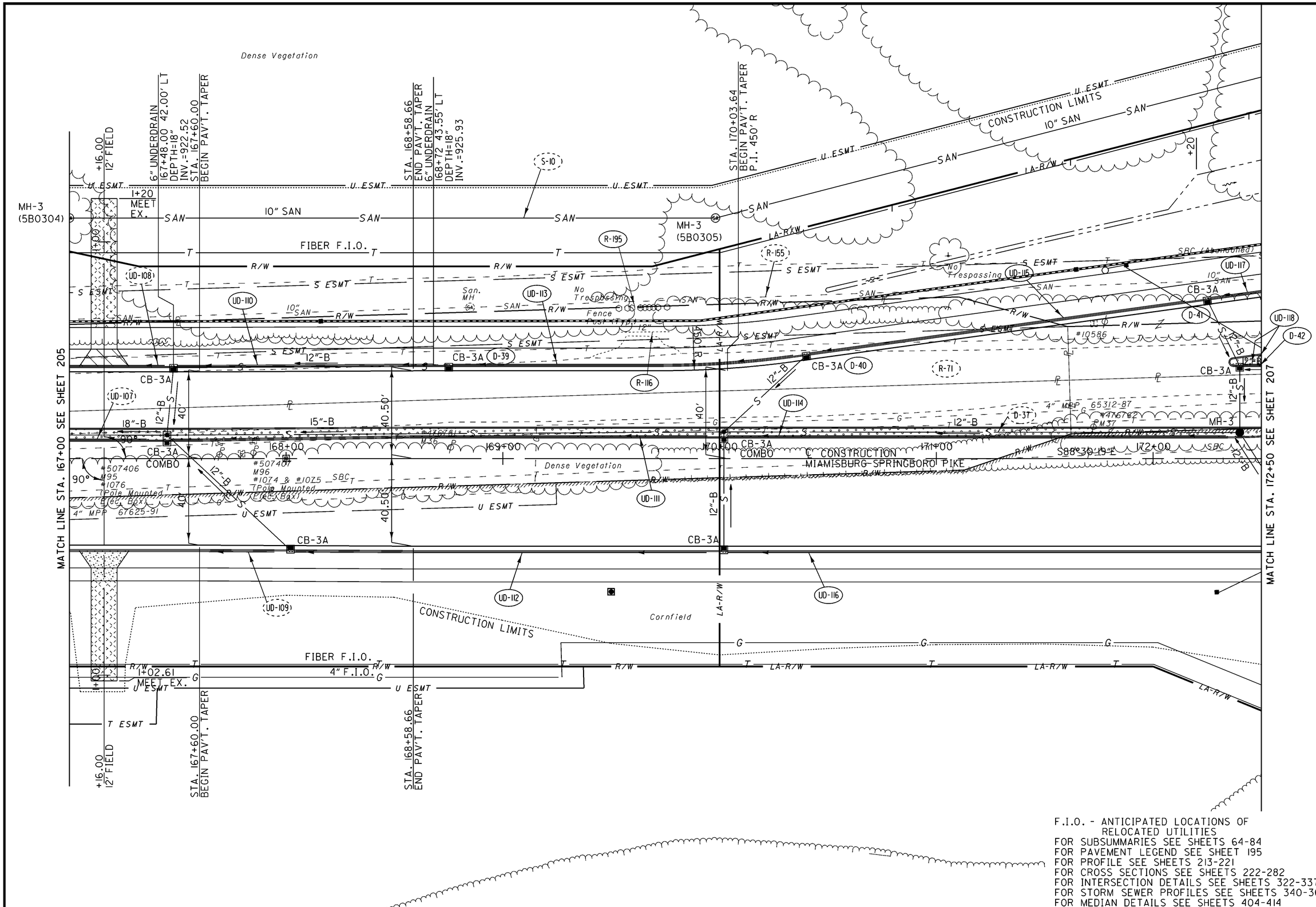

F.I.O. - ANTICIPATED LOCATIONS OF RELOCATED UTILITIES
FOR SUBSUMMARIES SEE SHEETS 64-84
FOR PAVEMENT LEGEND SEE SHEET 195
FOR PROFILE SEE SHEETS 213-221
FOR CROSS SECTIONS SEE SHEETS 222-282
FOR INTERSECTION DETAILS SEE SHEETS 322-337
FOR STORM SEWER PROFILES SEE SHEETS 340-361
FOR MEDIAN DETAILS SEE SHEETS 404-414

HORIZONTAL SCALE IN FEET 0 10 20 40

CALCULATED MAG
CHECKED AJS

MIAMISBURG-SPRINGBORO PIKE PLAN
STA. 167+00 TO STA. 172+50

MOT-75-0.75

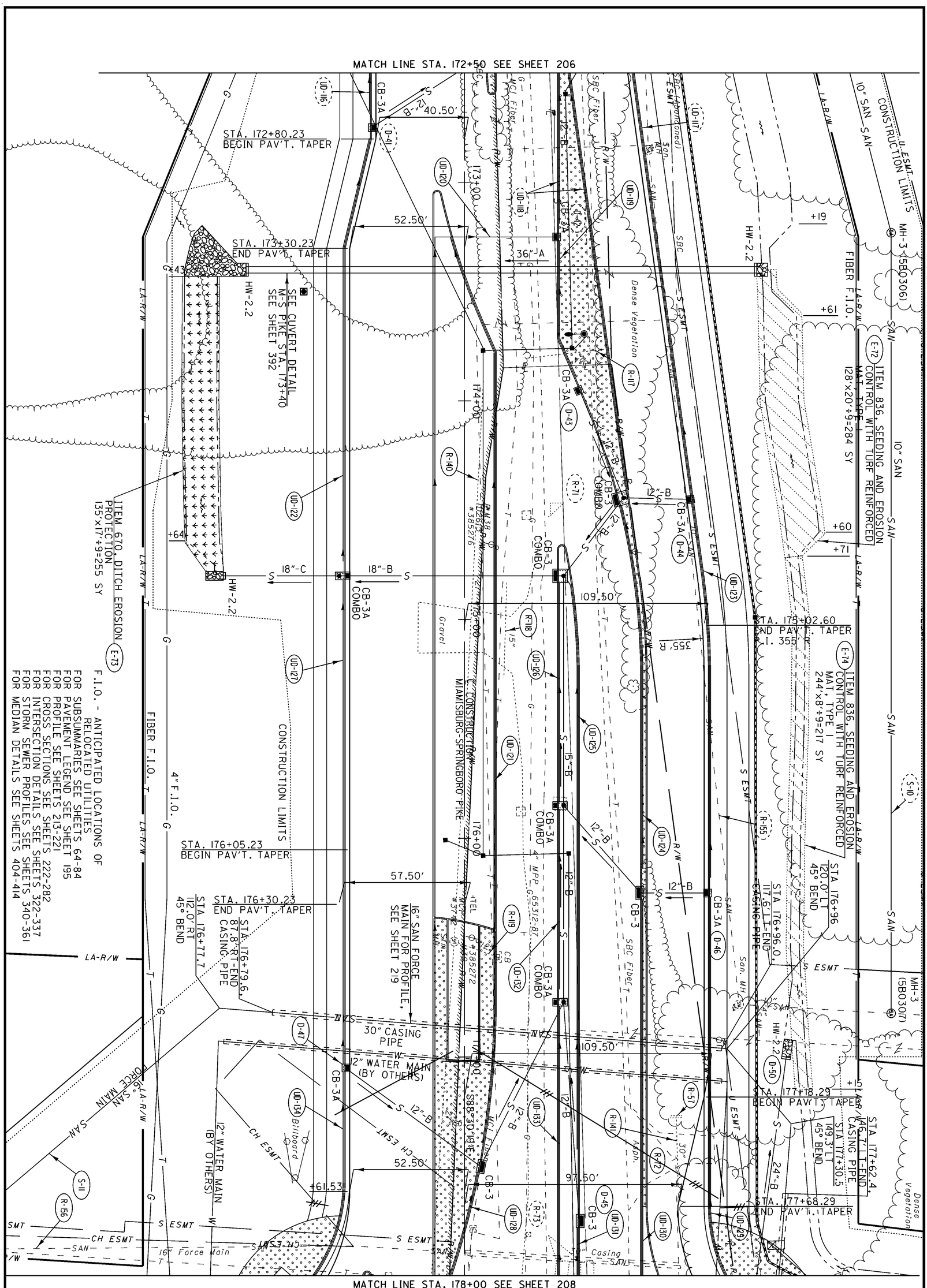

207 / 773	MOT-75-0.75	MIAMISBURG-SPRINGBORO PIKE PLAN STA. 172+50 TO STA. 178+00	CALCULATED MAG CHECKED AJS	0 10 20 40 HORIZONTAL SCALE IN FEET

STA 179+71.0, 130.0' LT
CONNECT TO EXISTING
SANITARY FORCE MAIN

STA 179+55.4,
131.3' LT-END
CASING PIPE

STA. 40+93.63
END CURB & GUTTER
END TAPER CURB HEIGHT
FROM 6" TO 0" IN 10'
BEGIN SHLD.

E-75 ITEM 836, SEEDING AND EROSION CONTROL WITH TURF REINFORCED MAT, TYPE I
129'x17'÷9=244 SY

6" UNDERDRAIN
180+10.00 55.50' LT
DEPTH=18"
INV.= 947.16

6" UNDERDRAIN
180+70 55.50' LT
DEPTH=18"
INV.=950.23

STA. 182+23.74
BEGIN PAV'T. TAPER

STA. 182+73.74
END PAV'T. TAPER

CURB RAMP
TYPE A2

MATCH LINE STA. 41+00 SEE SHEET 298

16" SAN FORCE MAIN

30" CASING PIPE
124"-B
31.59'

12" WATER MAIN
(BY OTHERS)

3'x3' Conc. Hd.

30" Casing

32"x48"

MASONRY COLLAR

MH-3

15"-C

6" Iron

16" Force Main

6" Propane

4" MPP 65986-89

CONSTRUCTION LIMITS

Boat & RV Storage

Exit Swing Gate

Gr. Oil Pipeline

CB-3A

CB-3A COMBO

CB-3 COMBO

CURB RAMP
TYPE A2

P.I. STA. 40+17.64
Δ=0°00'08" RT

12"-B

8" G Dayton-Bromley

12" WATER MAIN
(BY OTHERS)

STA. 178+80.09 ℄ MIAMISBURG-SPRINGBORO PIKE (BACK)
STA. 178+80.09 ℄ AUSTIN PIKE (AHEAD)
STA. 39+56.49 ℄ SR 741

86°22'53"
179+00

℄ CONSTRUCTION
MIAMISBURG-SPRINGBORO PIKE

Mont. Co. San. Eng. MTCH 98

MCI Fiber

Gravel & Dirt

15"-B

18"-C

MH-3
180+00

℄ CONSTRUCTION
AUSTIN PIKE

181+00

182+00

MH-3
183+00

S88°30'19"E

6' Ch. Link w/3 Str. Barb Wire
No Trespassing

Gate (2)

Fiber Optic

AEP Communications Fiber optic

2.5'x4.0' FLUME

Cornfield

6' Ch. Link w/3 Str. Barb Wire

CB-3

CB-3A

12"-B

D-54

MATCH LINE STA. 183+50 SEE SHEET 209

MATCH LINE STA. 178+00 SEE SHEET 207

℄ CONSTRUCTION SR 741
N5°06'48"E

CURB RAMP
TYPE A2

CURB RAMP
TYPE A2

12" WATER MAIN
(BY OTHERS)

30.01'
801 R

+16.77

+29.96'

Propane

Bromley Pipeline

Fiber Optic

CB-3A COMBO

+92.67'

CONSTRUCTION LIMITS

LA-R/W

Gravel & Dirt

HW-2.2

12" WATER MAIN (BY OTHERS)

FIBER F.I.O.

6" F.I.O.

4" F.I.O.

MATCH LINE STA. 38+00 SEE SHEET 297

STA. 38+19.46
END SHLD. & TAPER
BEGIN CURB & GUTTER
BEGIN TAPER CURBHEIGHT
FROM 0" TO 6" IN 10'

6" UNDERDRAIN
179+49.00
81.50' RT
DEPTH=18"
INV.=946.14

6" UNDERDRAIN
179+62.00
43.50' RT
DEPTH=18"
INV.= 946.80

6" UNDERDRAIN
179+68.50
51.50' RT
DEPTH= 18"
INV.=946.90

6" UNDERDRAIN
180+58 43.50' RT
DEPTH=18"
INV.=948.62

6" UNDERDRAIN
180+70 81.50' RT
DEPTH=18"
INV.=948.00

6" UNDERDRAIN
180+75.00 80.50' RT
DEPTH=18"
INV.= 948.16

6" UNDERDRAIN
181+25 51.50' RT
DEPTH=18"
INV.=949.59

STA. 181+49.60
BEGIN PAVT. TAPER
P.I. 348' R

6" UNDERDRAIN
181+70 78.52' RT
DEPTH=18"
INV.=950.10

F.I.O. - ANTICIPATED LOCATIONS OF RELOCATED UTILITIES
FOR SUBSUMMARIES SEE SHEETS 64-84
FOR PAVEMENT LEGEND SEE SHEET 195
FOR PROFILE SEE SHEETS 213-221
FOR CROSS SECTIONS SEE SHEETS 222-282
FOR INTERSECTION DETAILS SEE SHEETS 322-337
FOR STORM SEWER PROFILES SEE SHEETS 340-361
FOR MEDIAN DETAILS SEE SHEETS 404-414

HORIZONTAL SCALE IN FEET
0 10 20 40

CALCULATED MAG
CHECKED AJS

MIAMISBURG-SPRINGBORO PIKE PLAN STA. 178+00 TO STA. 178+80.09
AUSTIN PIKE PLAN STA. 178+80.09 TO STA. 183+50

MOT-75-0.75

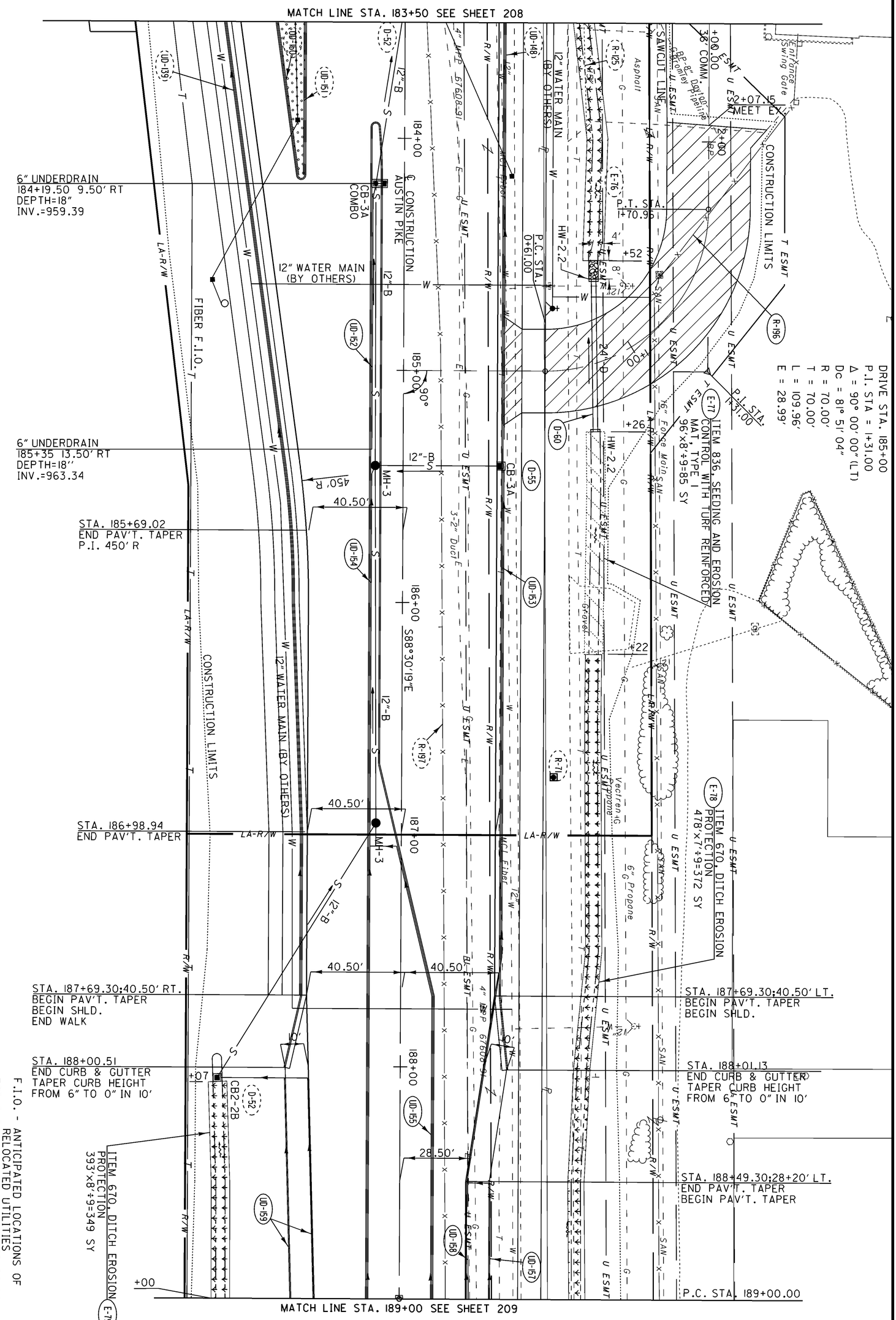

F.I.O. - ANTICIPATED LOCATIONS OF RELOCATED UTILITIES

FOR SUBSUMMARIES SEE SHEETS 64-84
FOR PAVEMENT LEGEND SEE SHEET 195
FOR PROFILE SEE SHEETS 213-221
FOR CROSS SECTIONS SEE SHEETS 222-282
FOR INTERSECTION DETAILS SEE SHEETS 322-337
FOR STORM SEWER PROFILES SEE SHEETS 340-361
FOR MEDIAN DETAILS SEE SHEETS 404-414

209
773

MOT-75-0.75

AUSTIN PIKE PLAN
STA. 183+50 TO STA. 189+00

CALCULATED MAG
CHECKED AJS

0 20
10 40
HORIZONTAL SCALE IN FEET

N

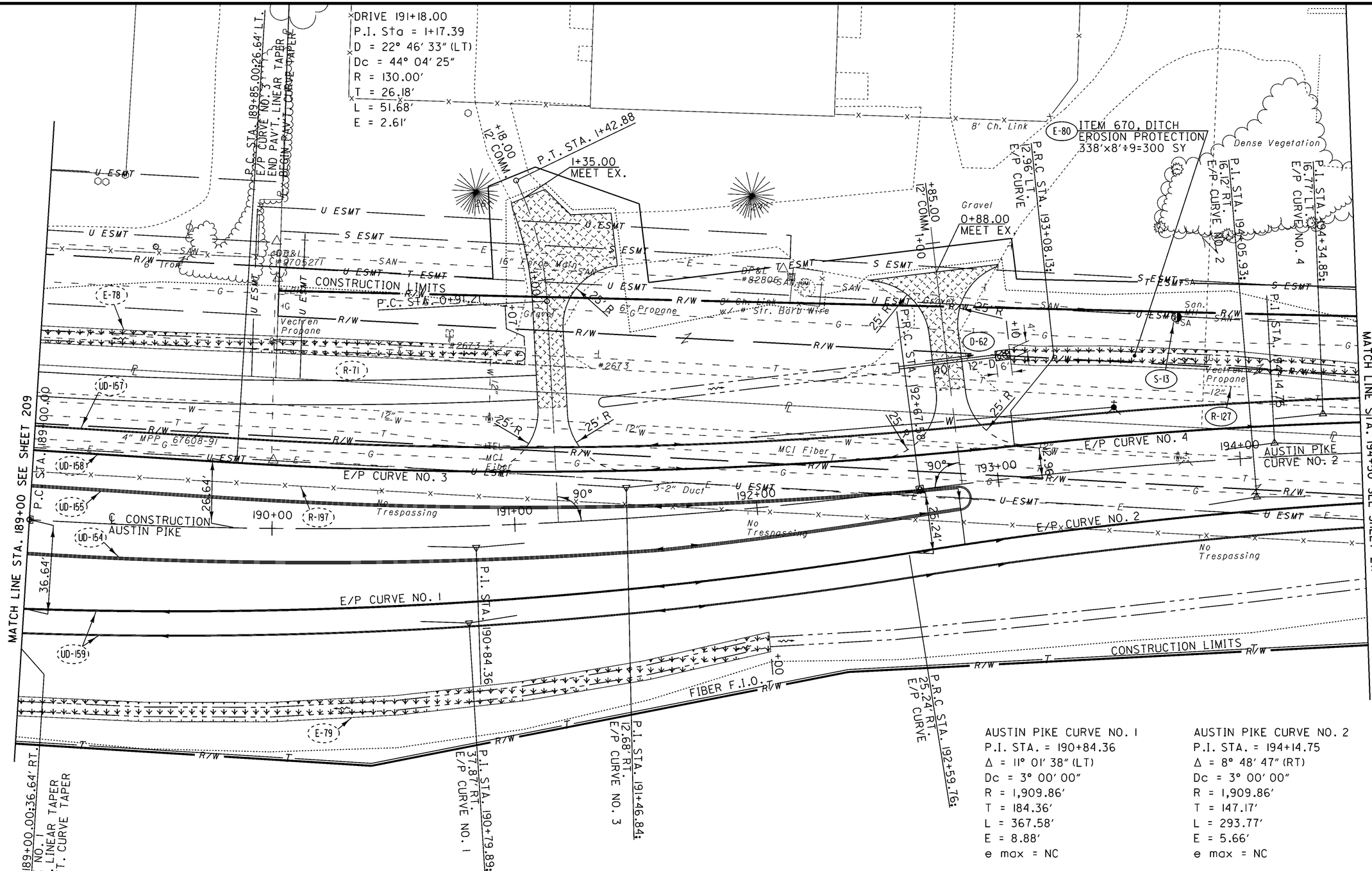

AUSTIN PIKE CURVE NO. 1
P.I. STA. = 190+84.36
Δ = 11° 01′ 38″ (LT)
Dc = 3° 00′ 00″
R = 1,909.86′
T = 184.36′
L = 367.58′
E = 8.88′
e max = NC

AUSTIN PIKE CURVE NO. 2
P.I. STA. = 194+14.75
Δ = 8° 48′ 47″ (RT)
Dc = 3° 00′ 00″
R = 1,909.86′
T = 147.17′
L = 293.77′
E = 5.66′
e max = NC

E/P CURVE NO. 1
P.I. STA. = 190+79.89; 39.87′ RT.
Δ = 10° 58′ 24″ (LT)
Dc = 3° 00′ 00″
R = 1909.86′
T = 183.45′
L = 365.78′
E = 8.79′

E/P CURVE NO. 2
P.I. STA. = 194+05.92; 16.12′ RT.
Δ = 8° 41′ 09″ (RT)
Dc = 3° 00′ 00″
R = 1909.86′
T = 145.04′
L = 289.53′
E = 5.50′

E/P CURVE NO. 3
P.I. STA. = 191+46.84; 12.68′ LT.
Δ = 9° 37′ 16″ (LT)
Dc = 3° 00′ 00″
R = 1909.86′
T = 160.73′
L = 320.70′
E = 6.75′

E/P CURVE NO. 4
P.I. STA. = 194+34.85; 16.77′ LT.
Δ = 7° 39′ 11″ (RT)
Dc = 3° 00′ 00″
R = 1909.86′
T = 127.74′
L = 255.10′
E = 4.27′

F.I.O. - ANTICIPATED LOCATIONS OF RELOCATED UTILITIES
FOR SUBSUMMARIES SEE SHEETS 64-84
FOR PAVEMENT LEGEND SEE SHEET 195
FOR PROFILE SEE SHEETS 213-221
FOR CROSS SECTIONS SEE SHEETS 222-282
FOR INTERSECTION DETAILS SEE SHEETS 322-337
FOR STORM SEWER PROFILES SEE SHEETS 340-361
FOR MEDIAN DETAILS SEE SHEETS 404-414

HORIZONTAL SCALE IN FEET
0 10 20 40
CALCULATED MAG
CHECKED AJS

AUSTIN PIKE PLAN
STA. 189+00 TO STA. 194+50

MOT-75-0.75

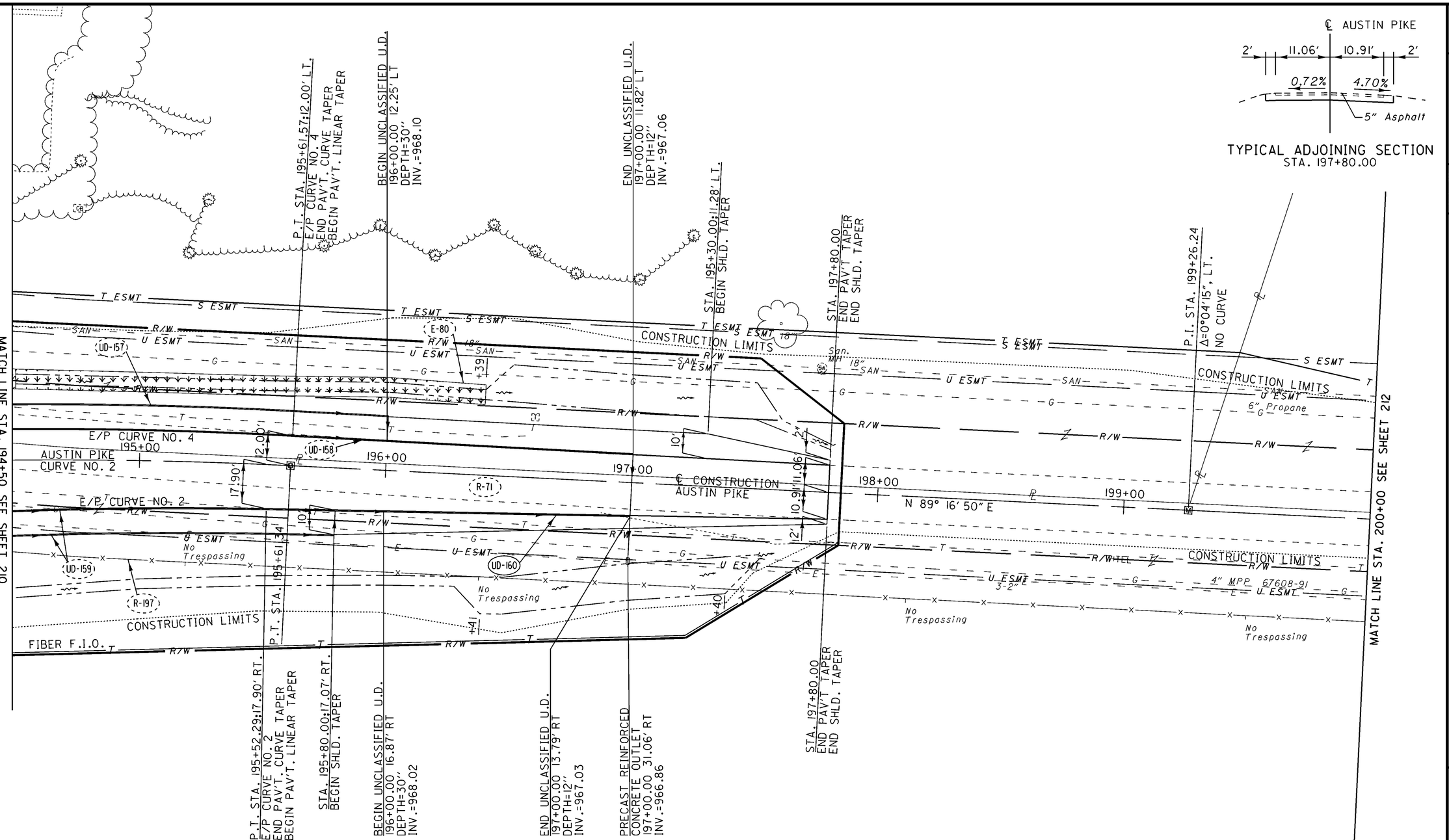

E/P CURVE NO. 2
P.I. STA. = 194+05.92; 16.12' RT.
Δ = 8° 41' 09" (RT)
Dc = 3° 00' 00"
R = 1909.86'
T = 145.04'
L = 289.53'
E = 5.50'

E/P CURVE NO. 4
P.I. STA. = 194+34.85; 16.77' LT.
Δ = 7° 39' 11" (RT)
Dc = 3° 00' 00"
R = 1909.86'
T = 127.74'
L = 255.10'
E = 4.27'

AUSTIN PIKE CURVE NO. 2
P.I. STA. = 194+14.75
Δ = 8° 48' 47" (RT)
Dc = 3° 00' 00"
R = 1,909.86'
T = 147.17'
L = 293.77'
E = 5.66'
e max = NC

F.I.O. - ANTICIPATED LOCATIONS OF RELOCATED UTILITIES
FOR SUBSUMMARIES SEE SHEETS 64-84
FOR PAVEMENT LEGEND SEE SHEET 195
FOR PROFILE SEE SHEETS 213-221
FOR CROSS SECTIONS SEE SHEETS 222-282
FOR INTERSECTION DETAILS SEE SHEETS 322-337
FOR STORM SEWER PROFILES SEE SHEETS 340-361
FOR MEDIAN DETAILS SEE SHEETS 404-414

AUSTIN PIKE PLAN
STA. 194+50 TO STA. 200+00

MOT-75-0.75

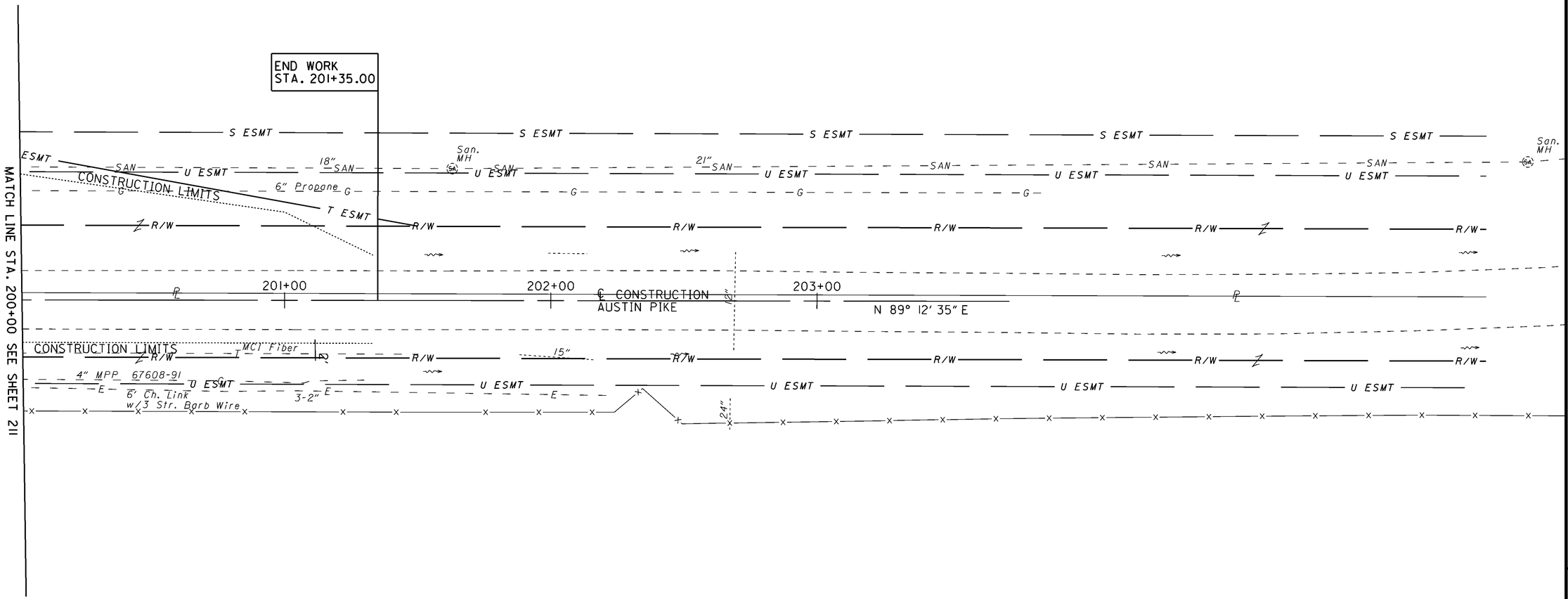

F.I.O. - ANTICIPATED LOCATIONS OF
RELOCATED UTILITIES
FOR SUBSUMMARIES SEE SHEETS 64-84
FOR PAVEMENT LEGEND SEE SHEET 195
FOR PROFILE SEE SHEETS 213-221
FOR CROSS SECTIONS SEE SHEETS 222-282
FOR INTERSECTION DETAILS SEE SHEETS 322-337
FOR STORM SEWER PROFILES SEE SHEETS 340-361
FOR MEDIAN DETAILS SEE SHEETS 404-414

N

HORIZONTAL SCALE IN FEET
0 10 20 40

CALCULATED MAG
CHECKED AJS

AUSTIN PIKE PLAN
STA. 200+00 TO STA. 201+35

MOT-75-0.75

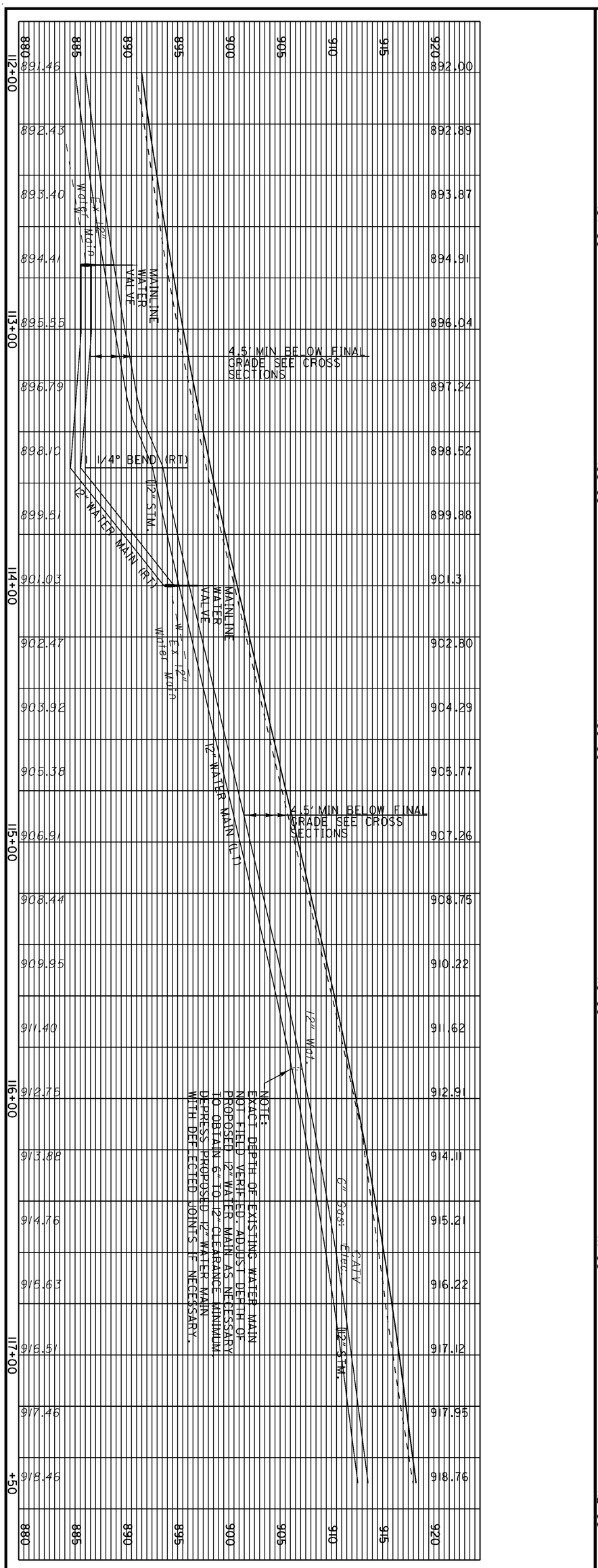

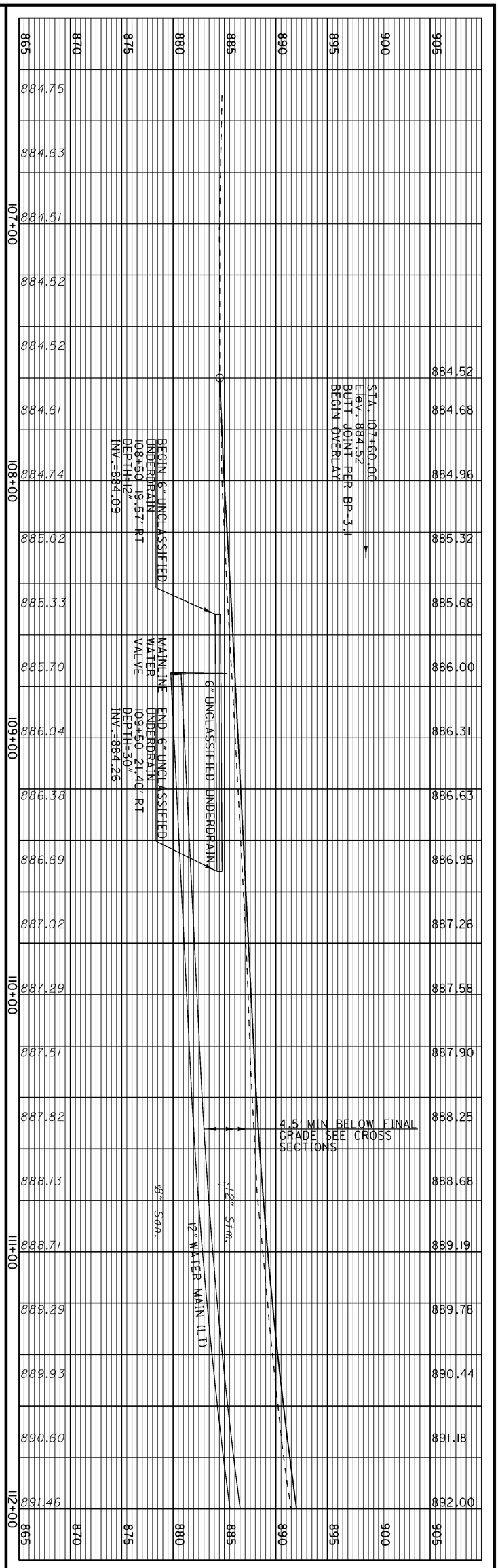

213 / 773	MOT-75-0.75	MIAMISBURG-SPRINGBORO PIKE PROFILE STA. 107+60 TO STA. 117+50	CALCULATED HGH CHECKED AJS

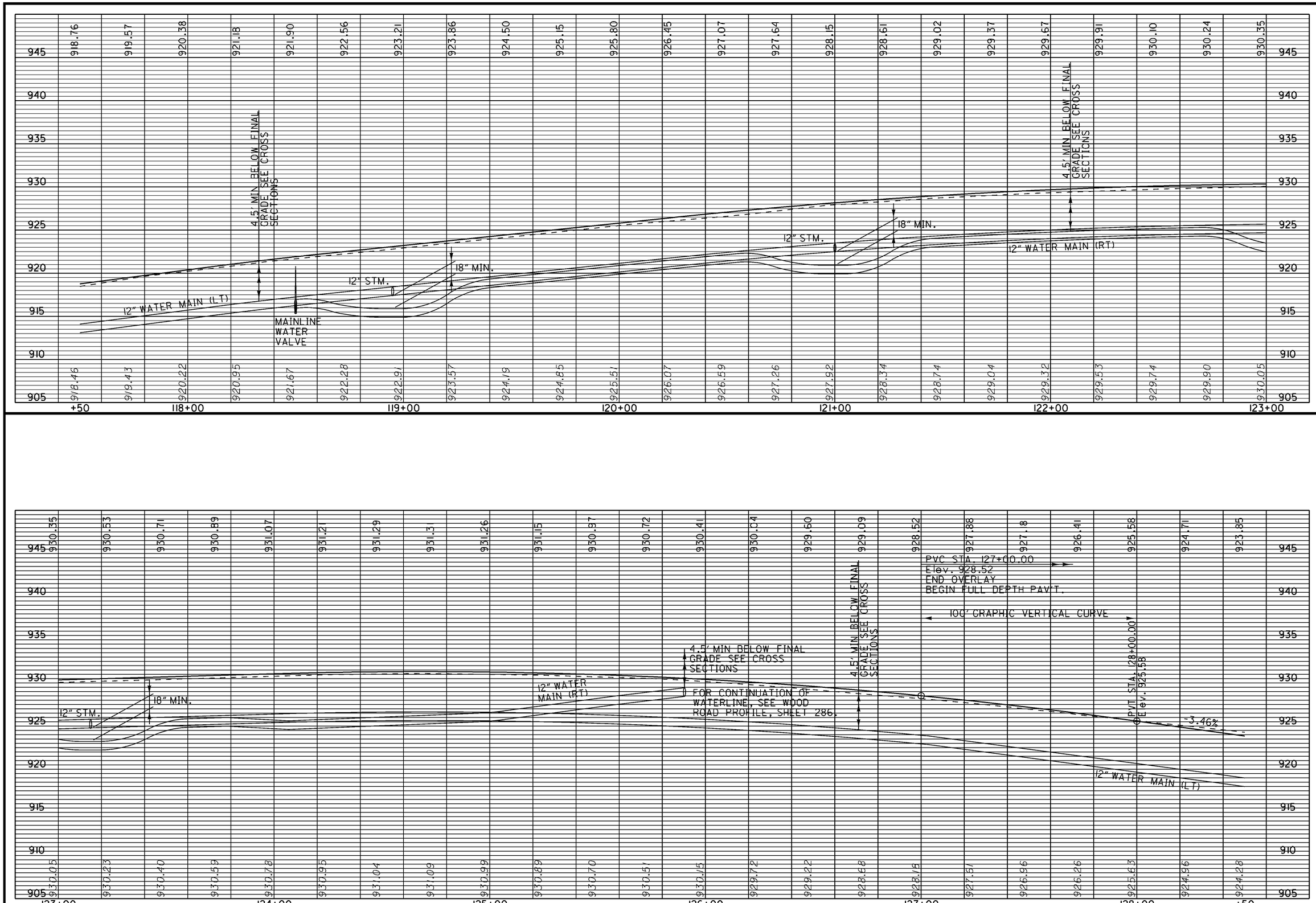

CALCULATED HGH
CHECKED AJS

MIAMISBURG-SPRINGBORO PIKE PROFILE
STA. 117+50 TO STA. 128+50

MOT-75-0.75

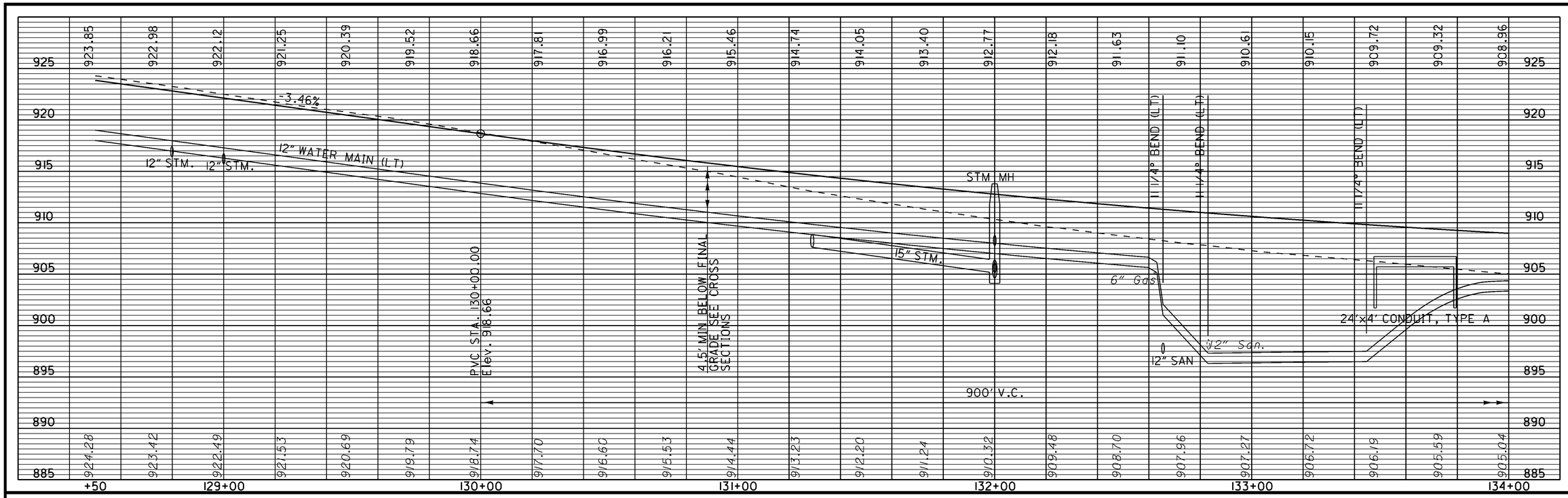

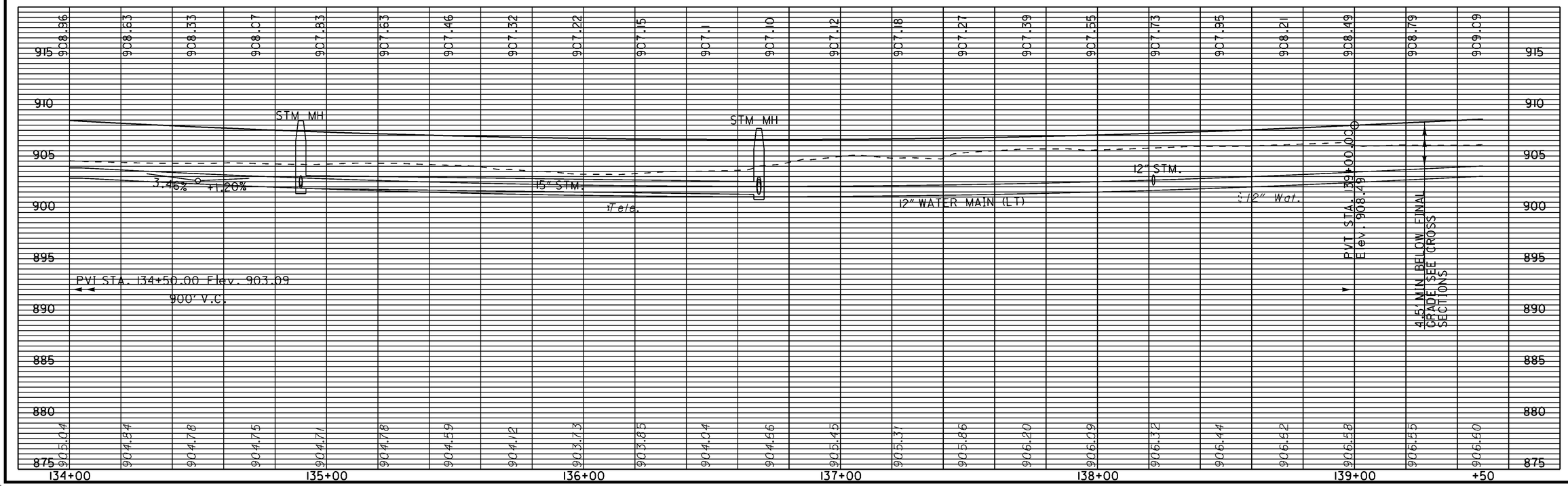

CALCULATED HGH
CHECKED AJS

MIAMISBURG-SPRINGBORO PIKE PROFILE
STA. 128+50 TO STA. 139+50

MOT-75-0.75

MIAMISBURG-SPRINGBORO PIKE PROFILE
STA. 139+50 TO STA. 150+50

CALCULATED HGH
CHECKED AJS

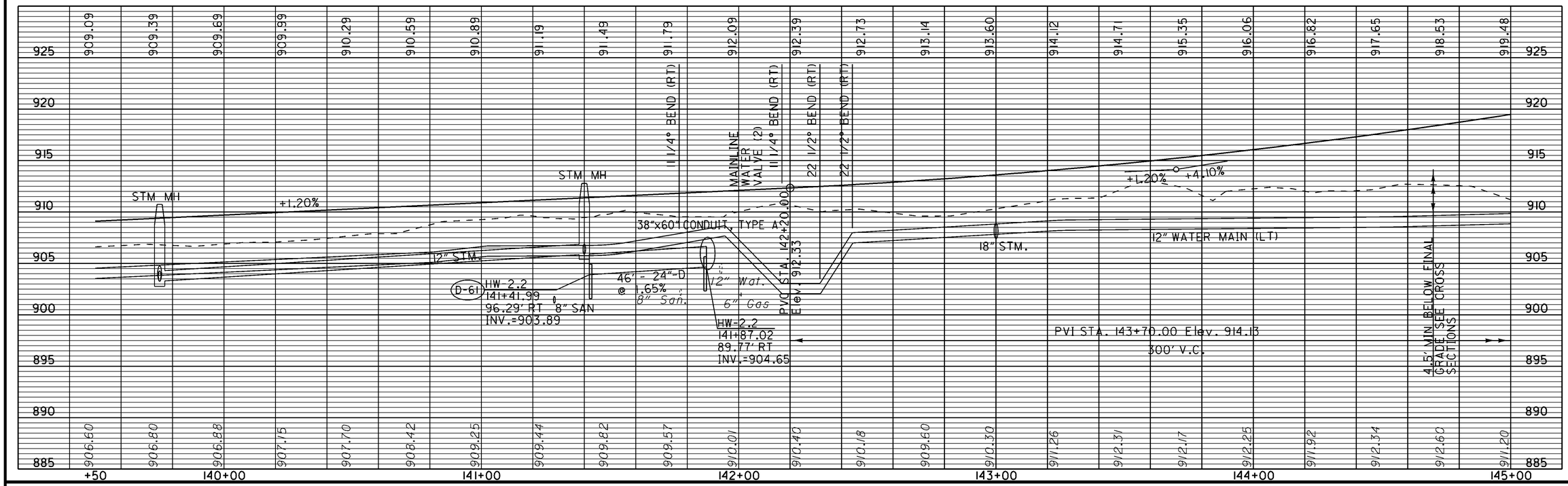

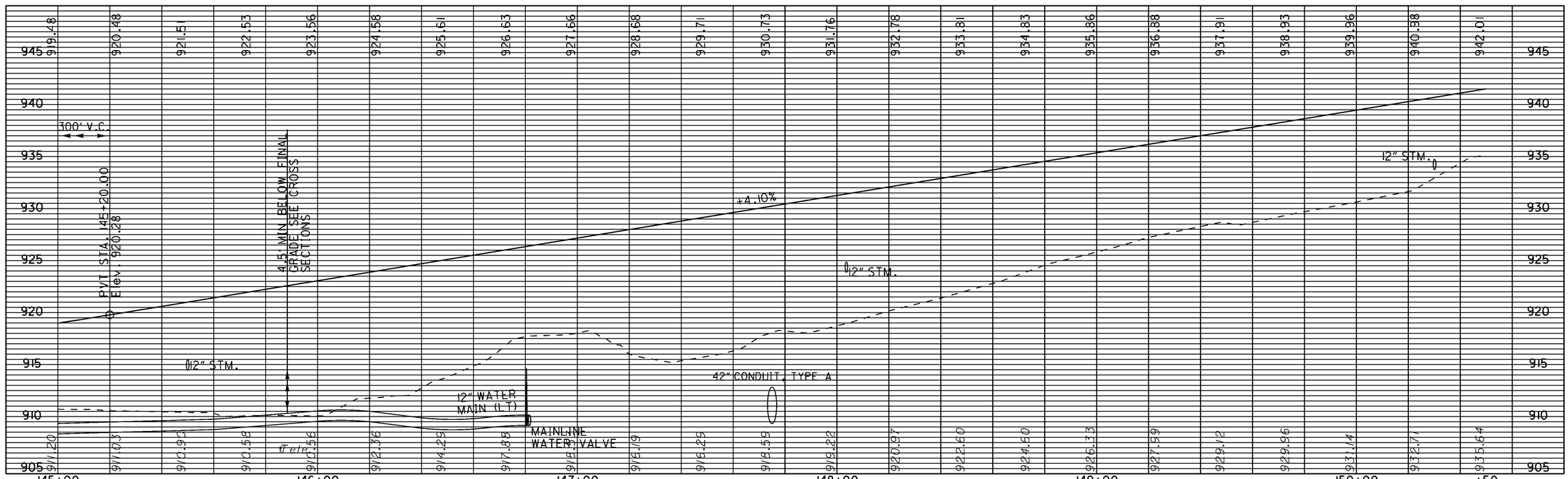

MOT-75-0.75

MIAMISBURG-SPRINGBORO PIKE PROFILE
STA. 150+50 TO STA. 161+50

CALCULATED HGH
CHECKED AJS

MOT-75-0.75

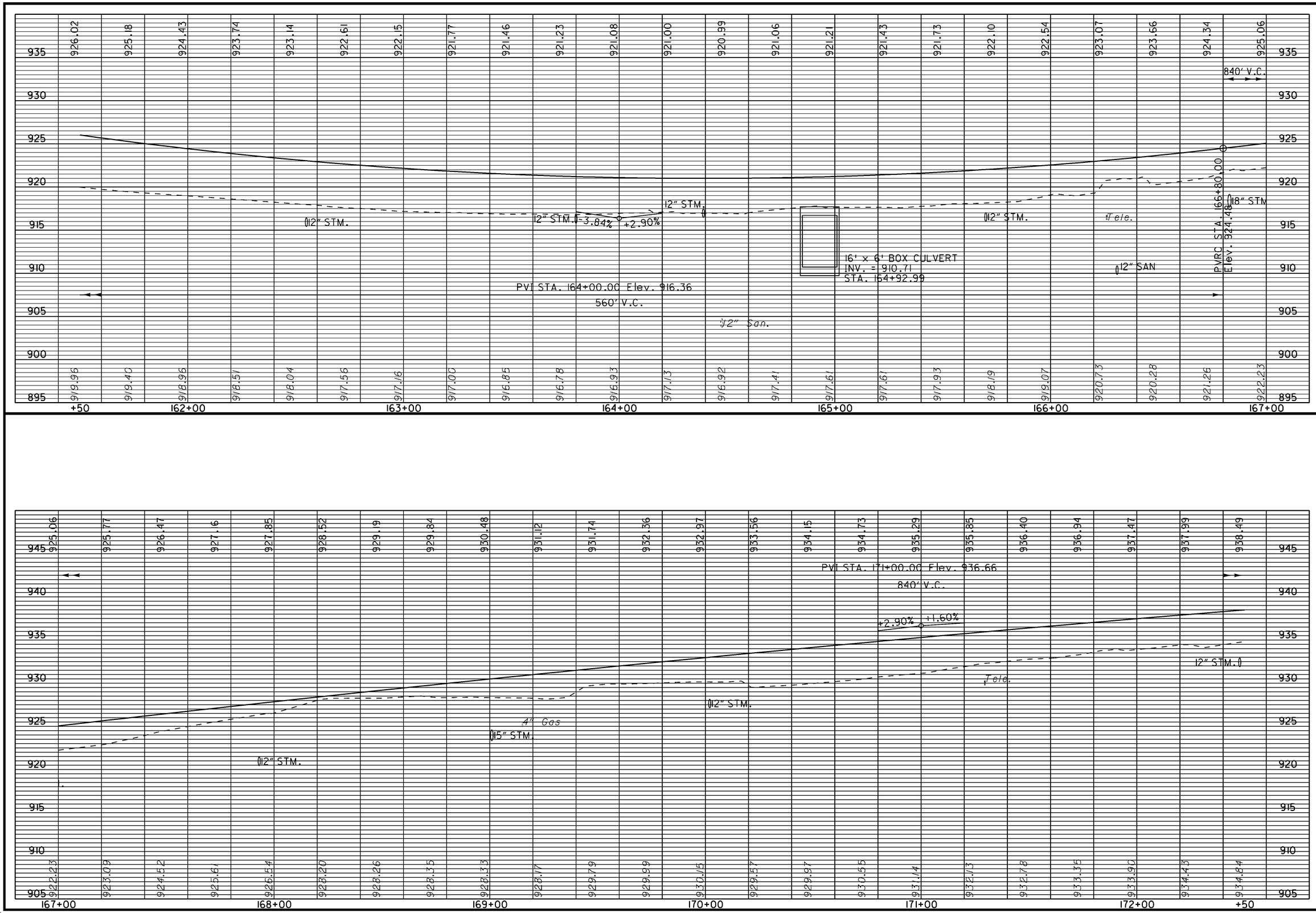

CALCULATED HGH
CHECKED AJS

MIAMISBURG-SPRINGBORO PIKE PROFILE
STA. 161+50 TO STA. 172+50

MOT-75-0.75

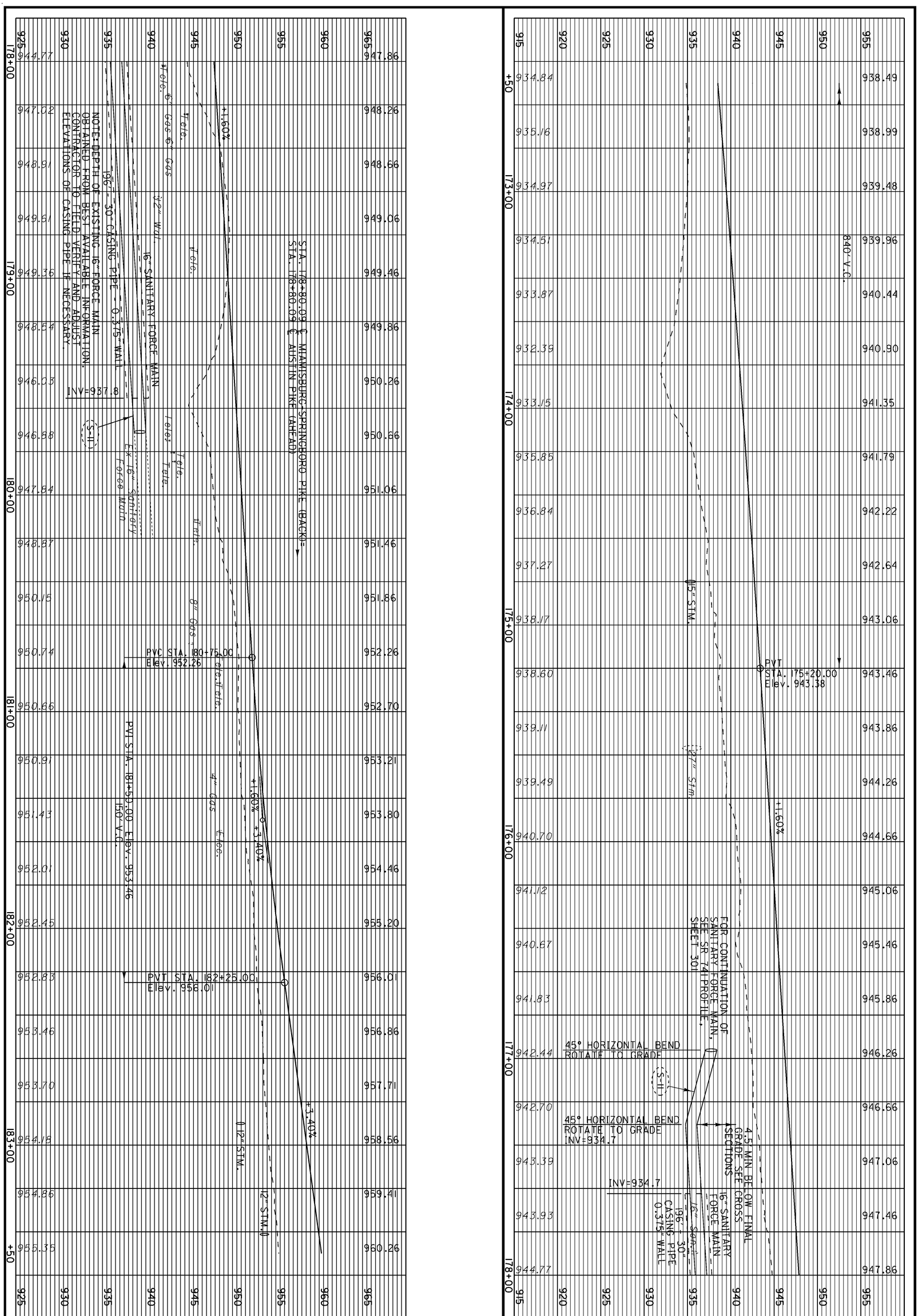

219 / 773	MOT-75-0.75	MIAMISBURG-SPRINGBORO PIKE PROFILE STA. 172+50 TO STA. 178+80.09 AUSTIN PIKE PROFILE STA. 178+80.09 TO STA. 183+50	CALCULATED HGH CHECKED AJS

CALCULATED HGH
CHECKED AJS

AUSTIN PIKE PROFILE
STA. 183+50 TO STA. 194+50

MOT-75-0.75

220
773

CALCULATED HGH
CHECKED AJS

AUSTIN PIKE PROFILE
STA. 194+50 TO STA. 197+80

MOT-75-0.75

221
773

SEEDING		END AREA		VOLUME	
END WIDTH	SQ. YDS.	CUT	FILL	CUT	FILL
		56	1		
				81	1
		31	1		
				48	1
		20	0		
				29	0
		19	0		

CALCULATED JMD
CHECKED AJS

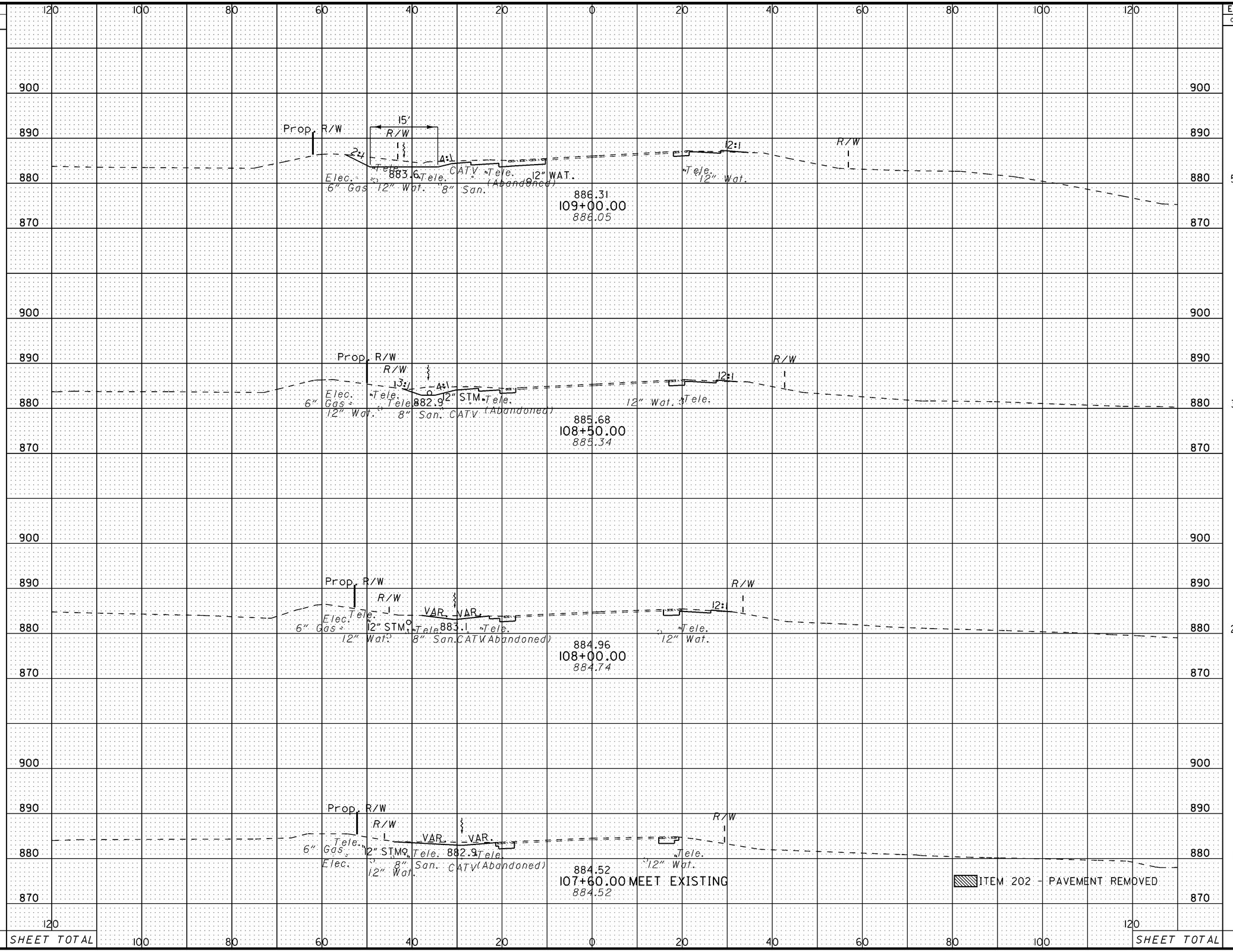

MIAMISBURG-SPRINGBORO PIKE CROSS SECTIONS STA. 107+60 TO STA. 109+00

MOT-75-0.75

SEEDING		END AREA		VOLUME	
END WIDTH	SQ. YDS.	CUT	FILL	CUT	FILL
		49	0		
				91	1
		49	1		
				86	2
		44	1		
				93	1
		56	0		
				105	1

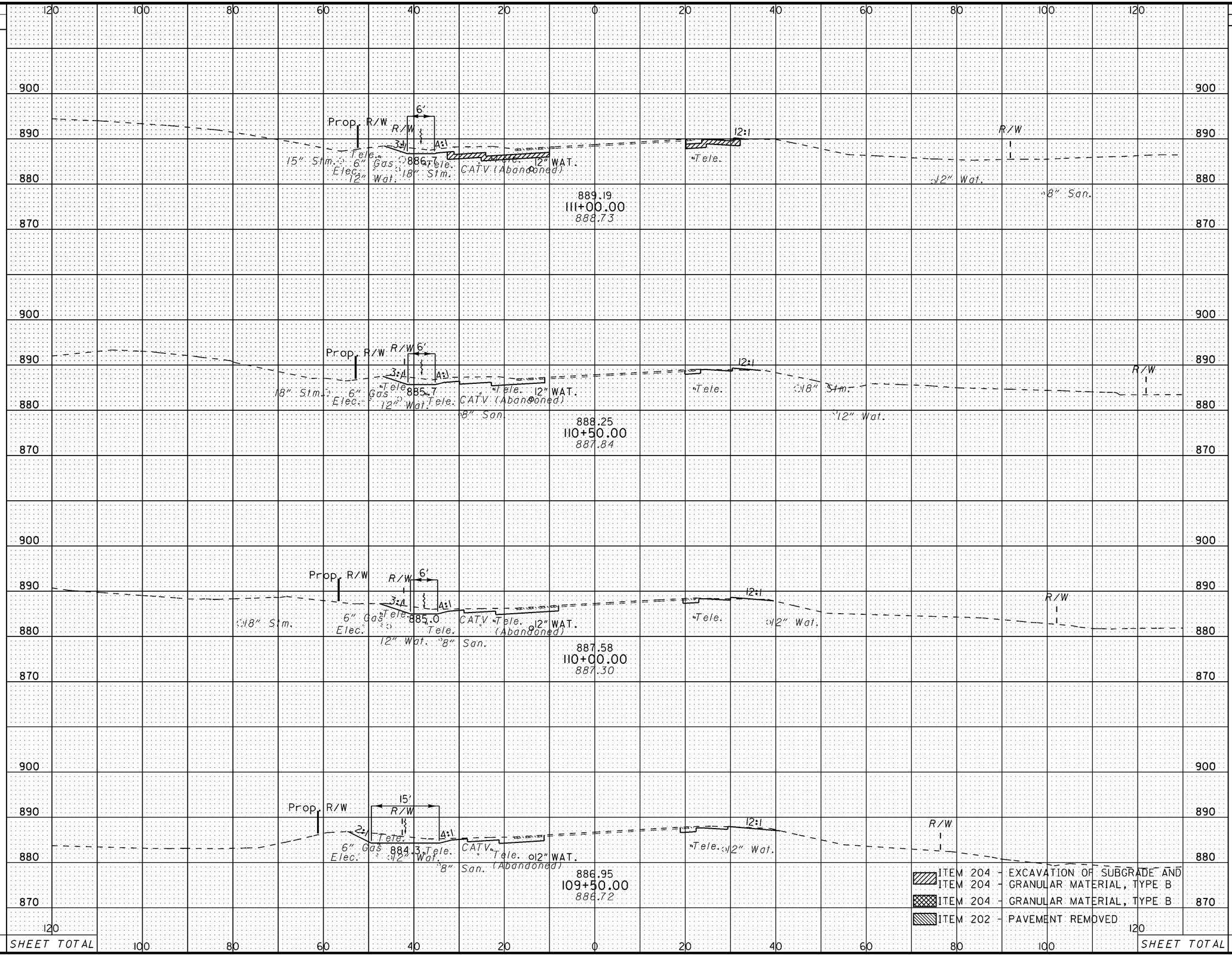

ITEM 204 - EXCAVATION OF SUBGRADE AND
ITEM 204 - GRANULAR MATERIAL, TYPE B
ITEM 204 - GRANULAR MATERIAL, TYPE B
ITEM 202 - PAVEMENT REMOVED

CALCULATED JMD
CHECKED AJS

MIAMISBURG-SPRINGBORO PIKE CROSS SECTIONS STA. 109+50 TO STA. 111+00

MOT-75-0.75

SEEDING	
END WIDTH	SQ. YDS.

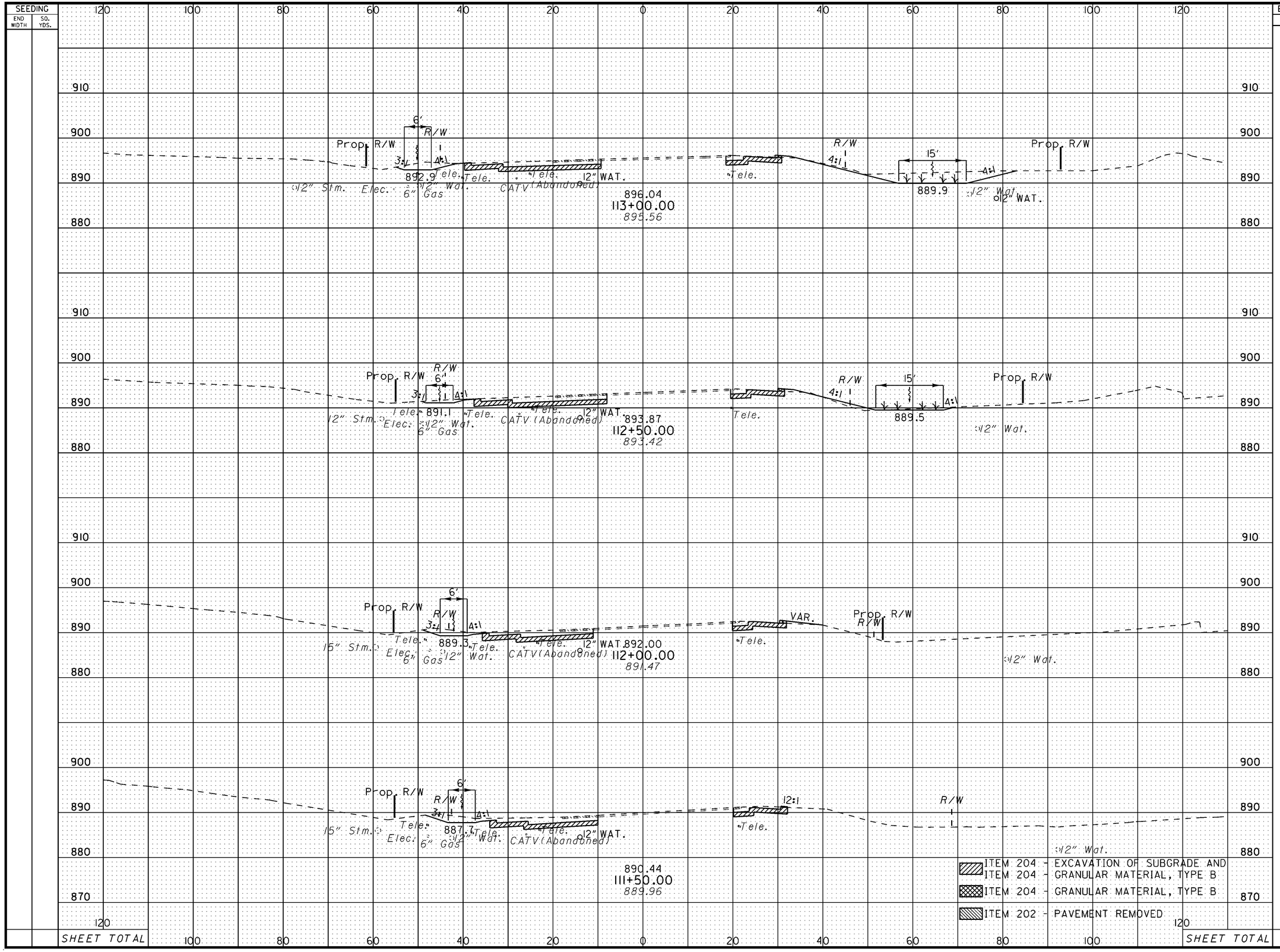

END AREA		VOLUME	
CUT	FILL	CUT	FILL
108	1	140	7
43	7	79	8
42	2	84	2
48	0	90	0

CALCULATED JMD
CHECKED AJS

MIAMISBURG-SPRINGBORO PIKE CROSS SECTIONS
STA. 111+50 TO STA. 113+00

MOT-75-0.75

SEEDING	
END WIDTH	SQ. YDS.

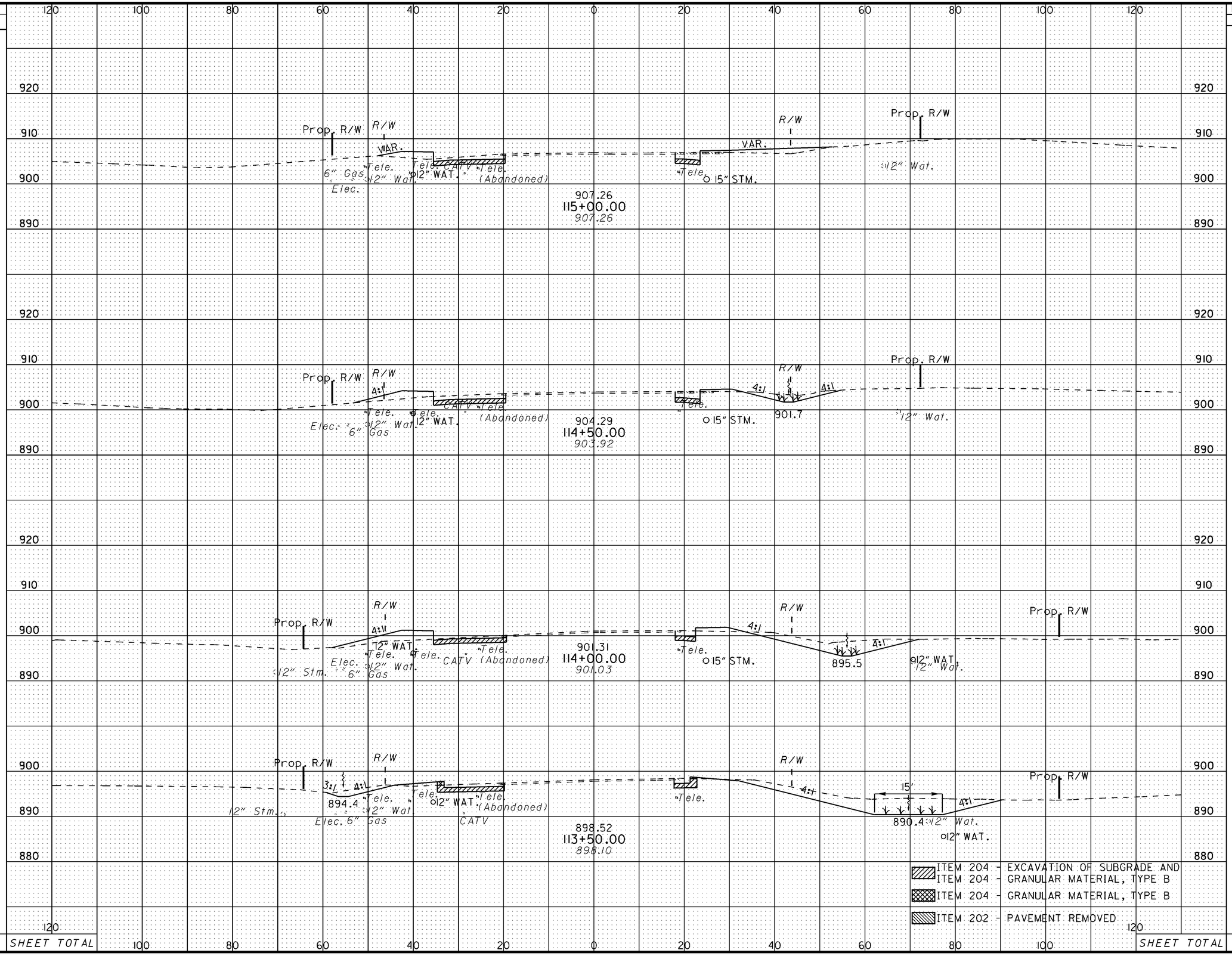

END AREA	
CUT	FILL
21	34
43	24
77	40
156	5
SHEET TOTAL	

VOLUME	
CUT	FILL
59	53
111	59
216	42
245	6

CALCULATED JMD

CHECKED AJS

MIAMISBURG-SPRINGBORO PIKE CROSS SECTIONS STA. 113+50 TO STA. 115+00

MOT-75-0.75

SEEDING	
END WIDTH	SQ. YDS.

END AREA	
CUT	FILL
56	20
41	86
418	0
33	7

VOLUME	
CUT	FILL
90	99
426	80
418	7
50	38

CALCULATED JMD

CHECKED AJS

MIAMISBURG-SPRINGBORO PIKE CROSS SECTIONS STA. 115+50 TO STA. 117+00

MOT-75-0.75

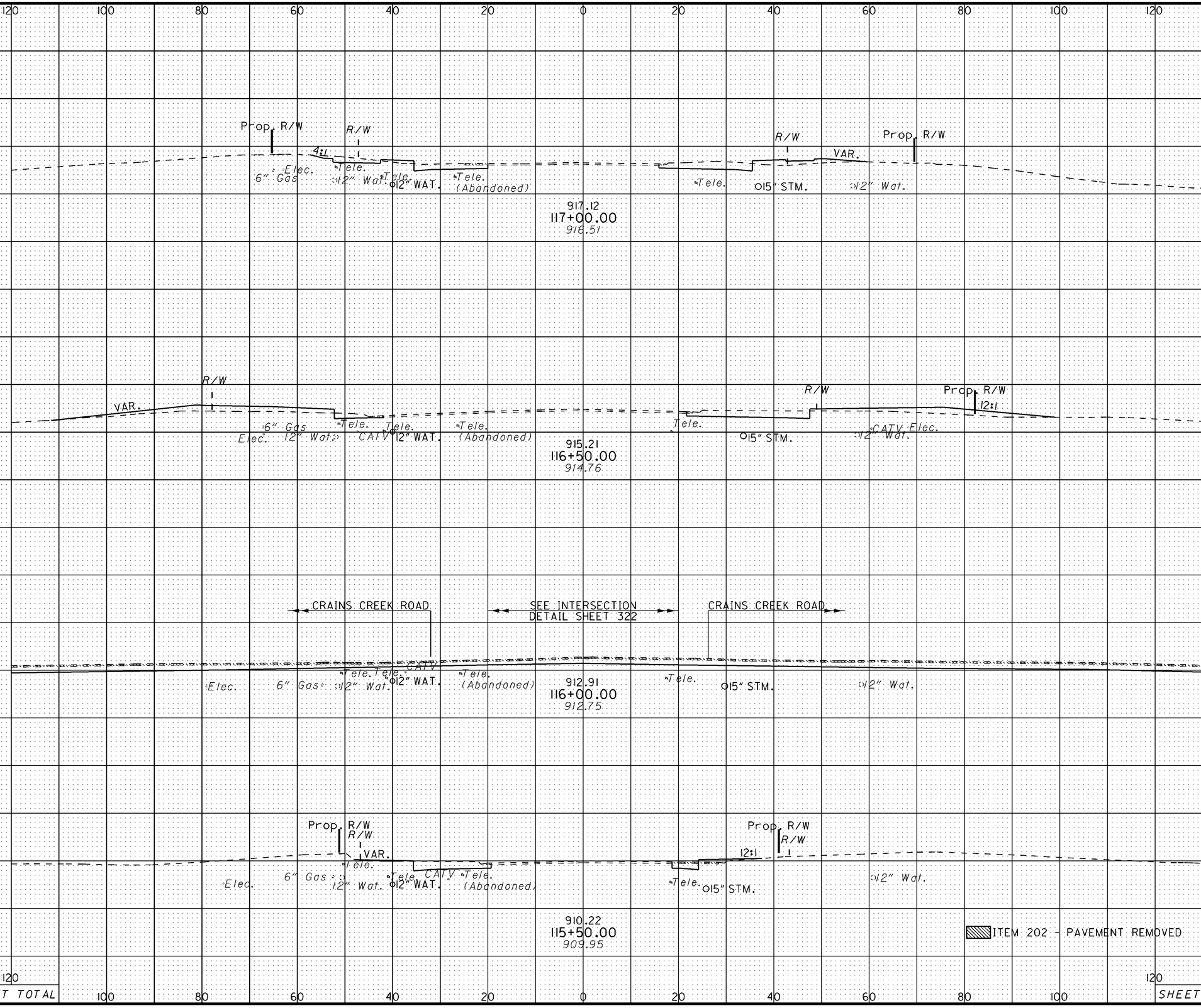

SEEDING	
END WIDTH	SQ. YDS.

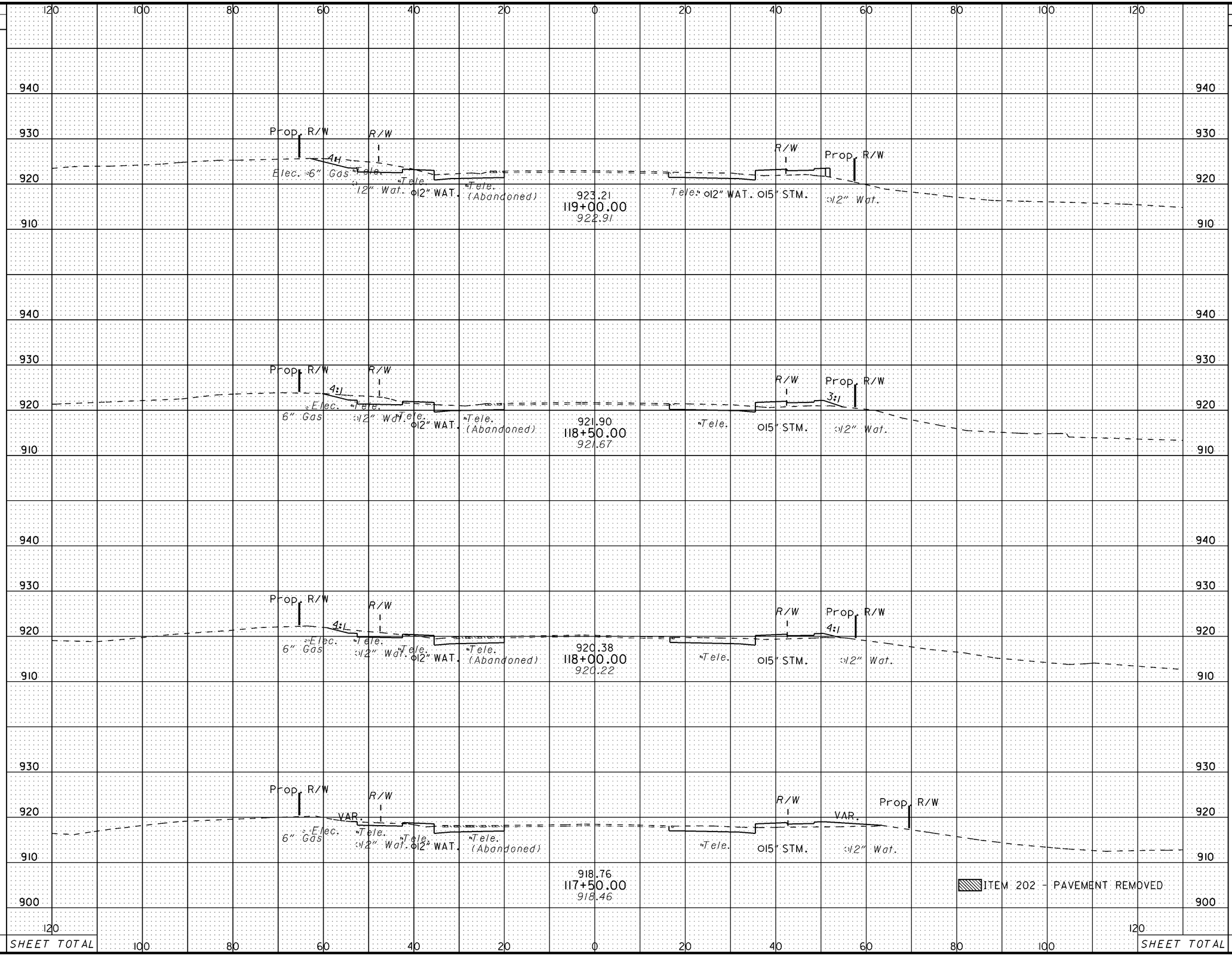

END AREA	
CUT	FILL
71	21
63	21
58	17
50	25

VOLUME	
CUT	FILL
124	39
112	35
100	38
98	42

CALCULATED JMD

CHECKED AJS

MIAMISBURG-SPRINGBORO PIKE CROSS SECTIONS STA. 117+50 TO STA. 119+00

MOT-75-0.75

SEEDING	
END WIDTH	SQ. YDS.

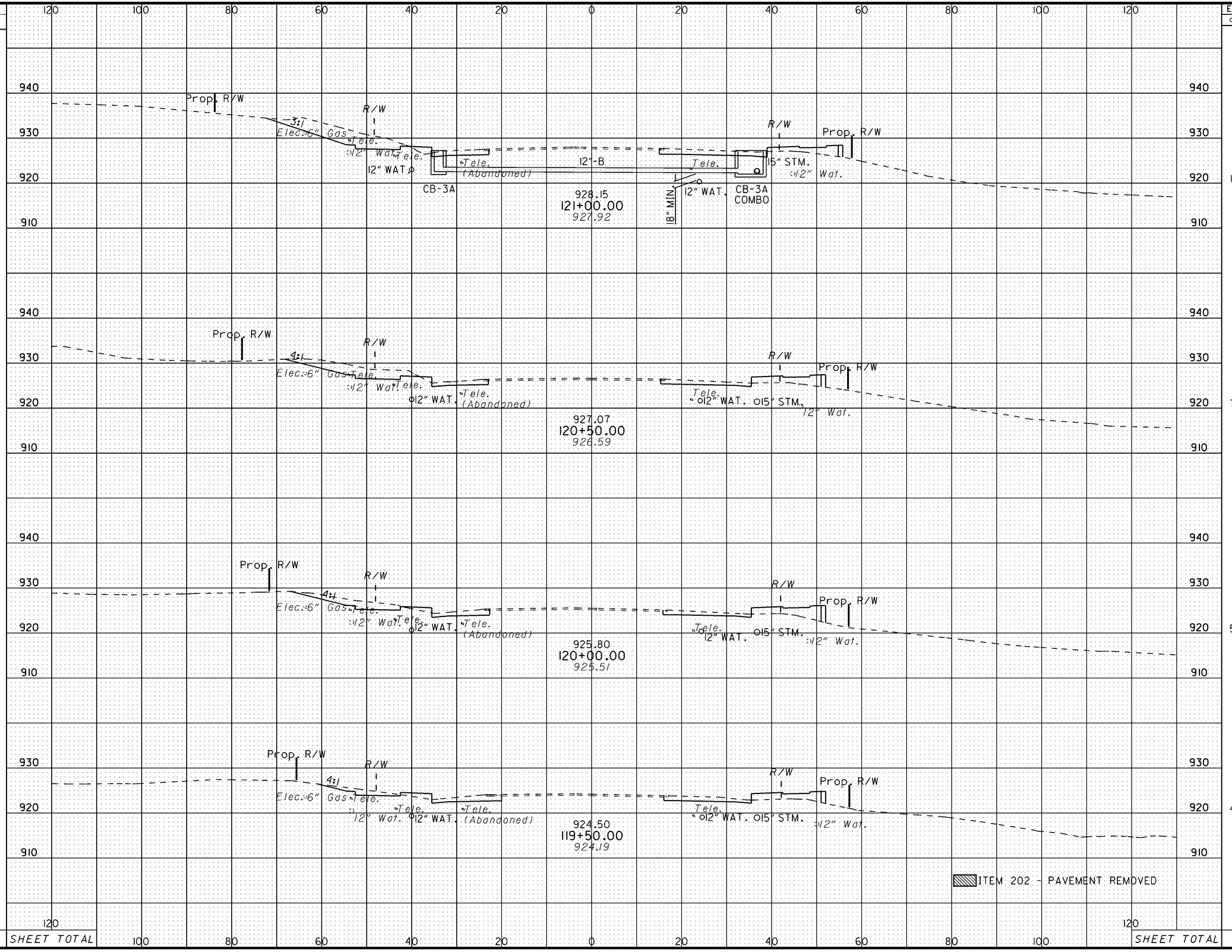

END AREA		VOLUME	
CUT	FILL	CUT	FILL
113	26		
		177	48
79	27		
		125	55
56	33		
		96	58
47	29		
		110	47

CALCULATED JMD

CHECKED AJS

MIAMISBURG-SPRINGBORO PIKE CROSS SECTIONS
STA. 119+50 TO STA. 121+00

MOT-75-0.75

SEEDING		END AREA		VOLUME	
END WIDTH	SQ. YDS.	CUT	FILL	CUT	FILL
		138	67	272	131
		156	74	274	110
		140	45	234	65
SHEET TOTAL					

CALCULATED JMD
CHECKED AJS

MIAMISBURG-SPRINGBORO PIKE CROSS SECTIONS
STA. 121+50 TO STA. 122+50

MOT-75-0.75

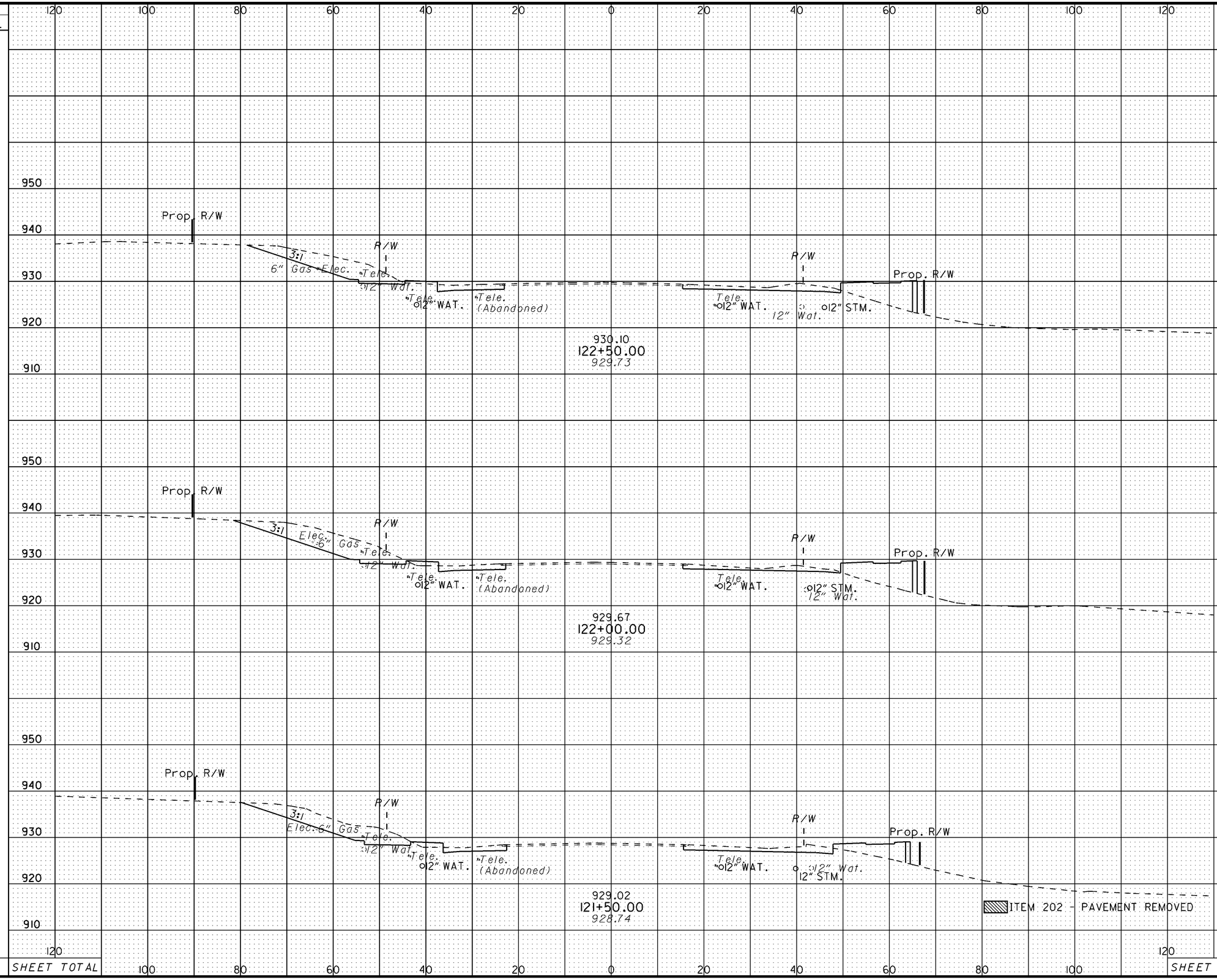

SEEDING	
END WIDTH	SQ. YDS.

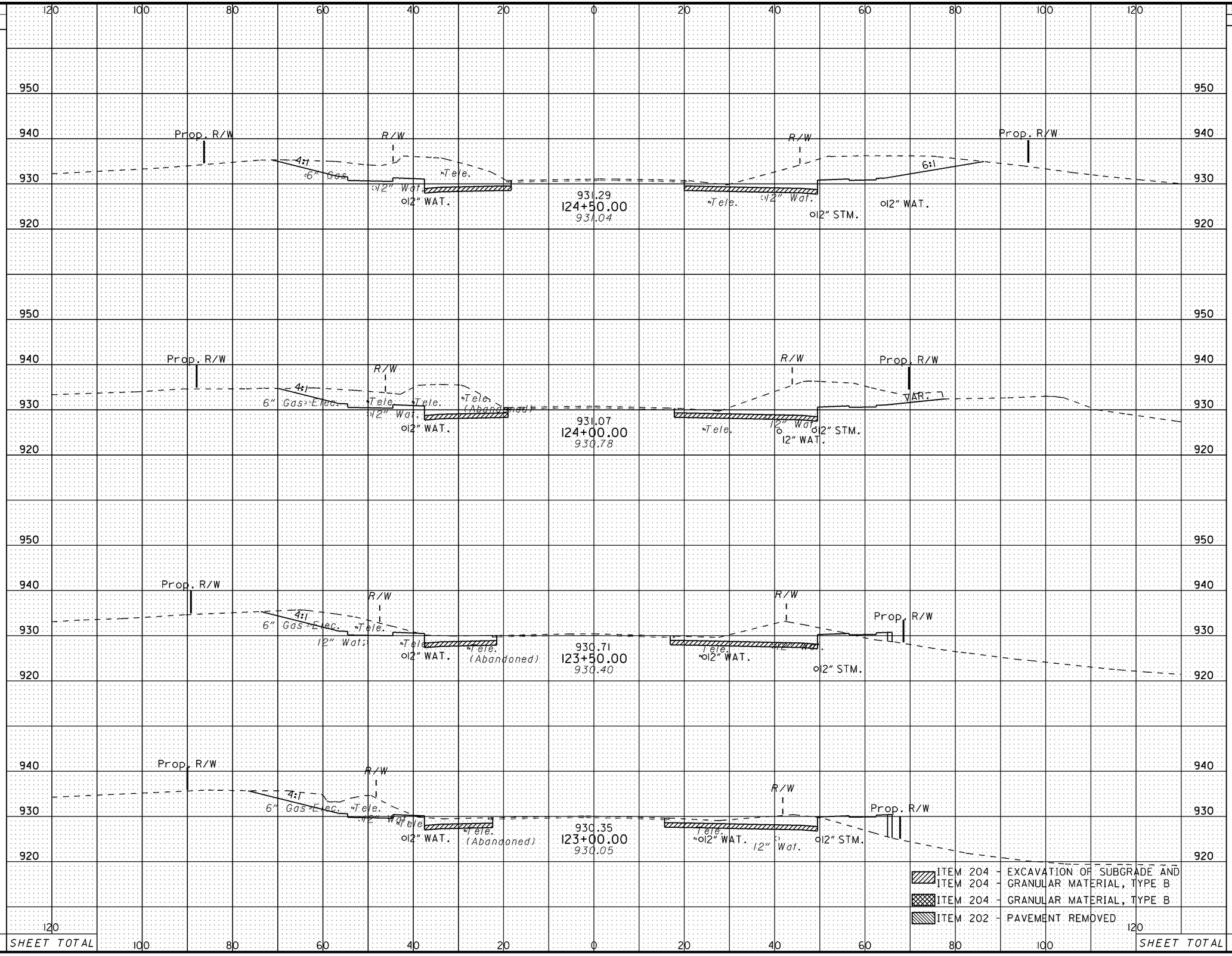

END AREA		VOLUME	
CUT	FILL	CUT	FILL
401	0		
		729	0
386	0		
		532	8
188	8		
		319	41
156	36		
		272	96

ITEM 204 - EXCAVATION OF SUBGRADE AND
ITEM 204 - GRANULAR MATERIAL, TYPE B

ITEM 204 - GRANULAR MATERIAL, TYPE B

ITEM 202 - PAVEMENT REMOVED

CALCULATED JMD

CHECKED AJS

MIAMISBURG-SPRINGBORO PIKE CROSS SECTIONS STA. 123+00 TO STA. 124+50

MOT-75-0.75

SEEDING		END AREA		VOLUME	
END WIDTH	SQ. YDS.	CUT	FILL	CUT	FILL
		1174	0		
				1703	0
		665	0		
				864	0
		269	0		
				491	0
		261	0		
				613	0

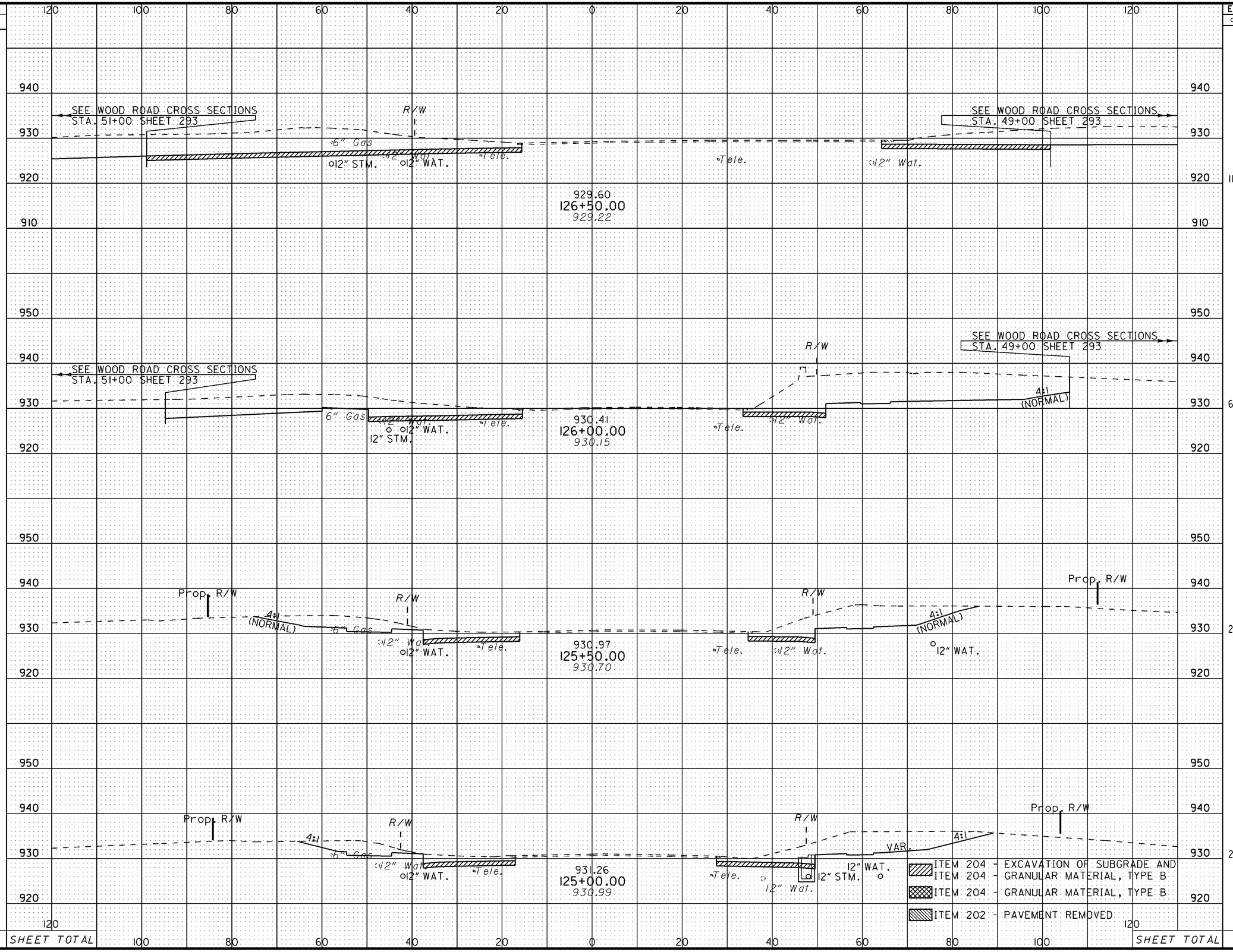

SHEET TOTAL

SHEET TOTAL

CALCULATED JMD

CHECKED AJS

MIAMISBURG-SPRINGBORO PIKE CROSS SECTIONS STA. 125+00 TO STA. 126+50

MOT-75-0.75

SEEDING		END AREA		VOLUME	
END WIDTH	SQ. YDS.	CUT	FILL	CUT	FILL
		115	374	269	589
		175	263	430	306
		290	68	652	161
		414	106	1471	98

CALCULATED JMD
CHECKED AJS

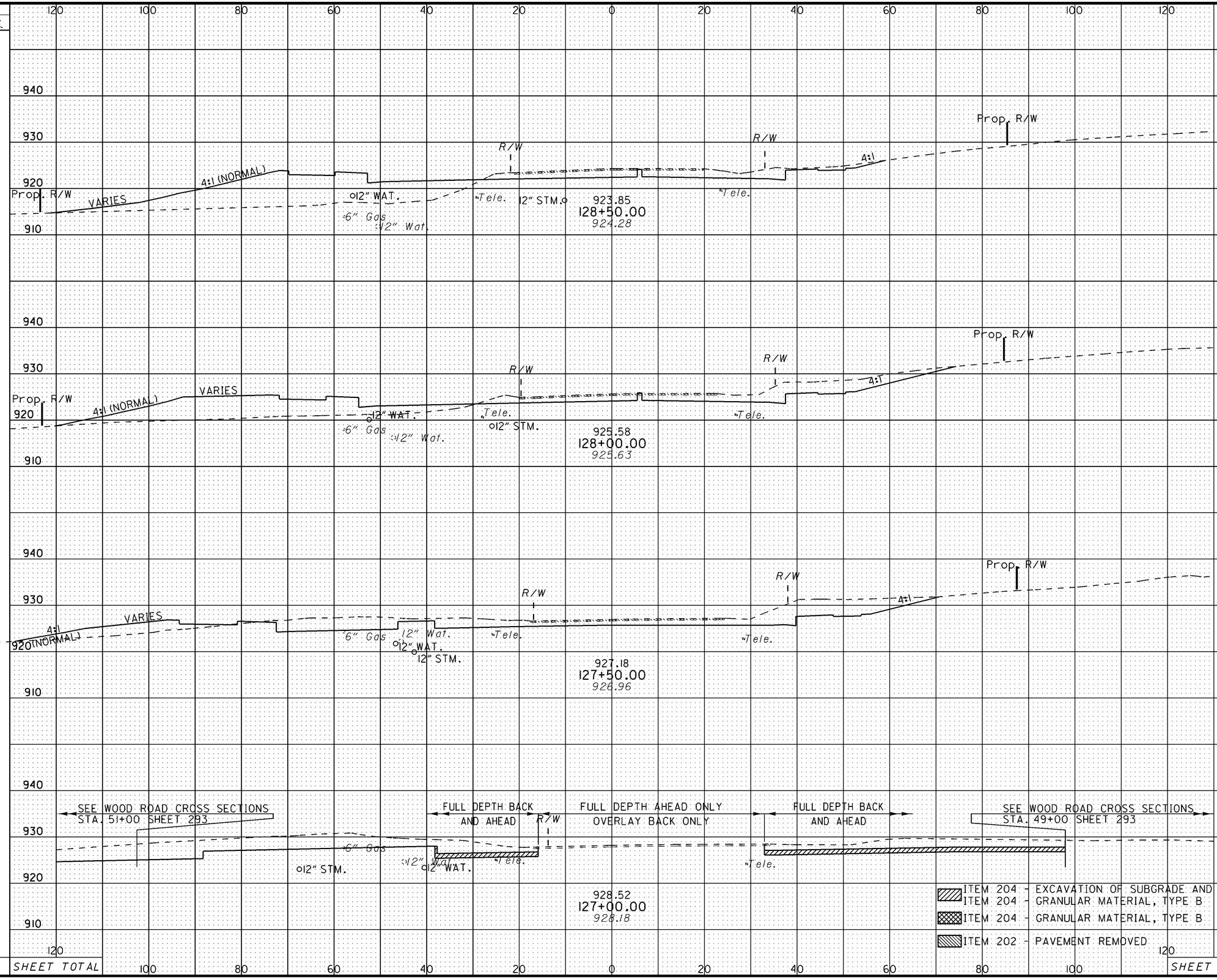

MIAMISBURG-SPRINGBORO PIKE CROSS SECTIONS
STA. 127+00 TO STA. 128+50

MOT-75-0.75

SEEDING		END AREA		VOLUME	
END WIDTH	SQ. YDS.	CUT	FILL	CUT	FILL
		48	462		
				111	848
		72	454		
				139	920
		78	539		
				166	961
		102	499		
				201	808

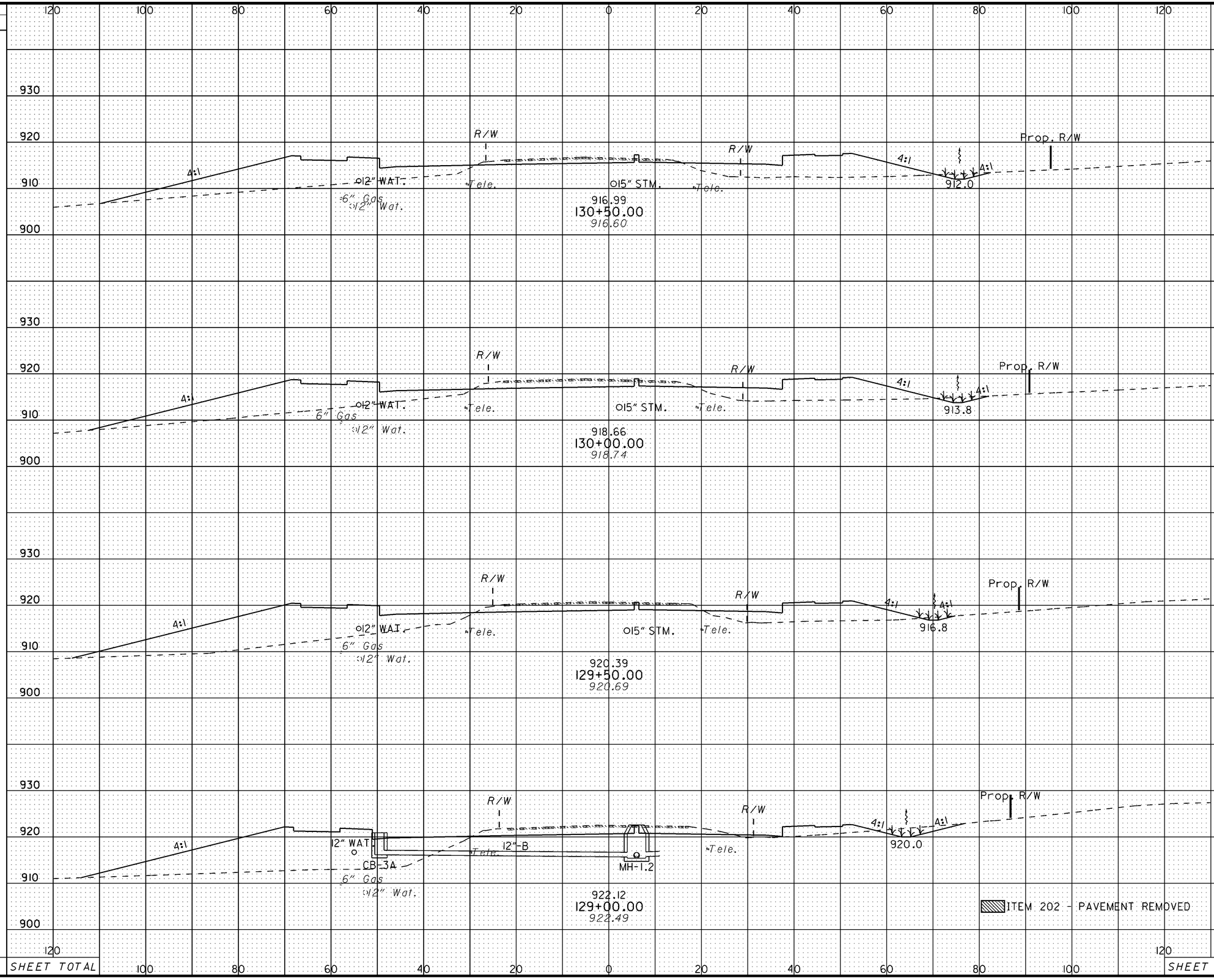

CALCULATED JMD
CHECKED AJS

MIAMISBURG-SPRINGBORO PIKE CROSS SECTIONS
STA. 129+00 TO STA. 130+50

MOT-75-0.75

233
773

SEEDING	
END WIDTH	SQ. YDS.

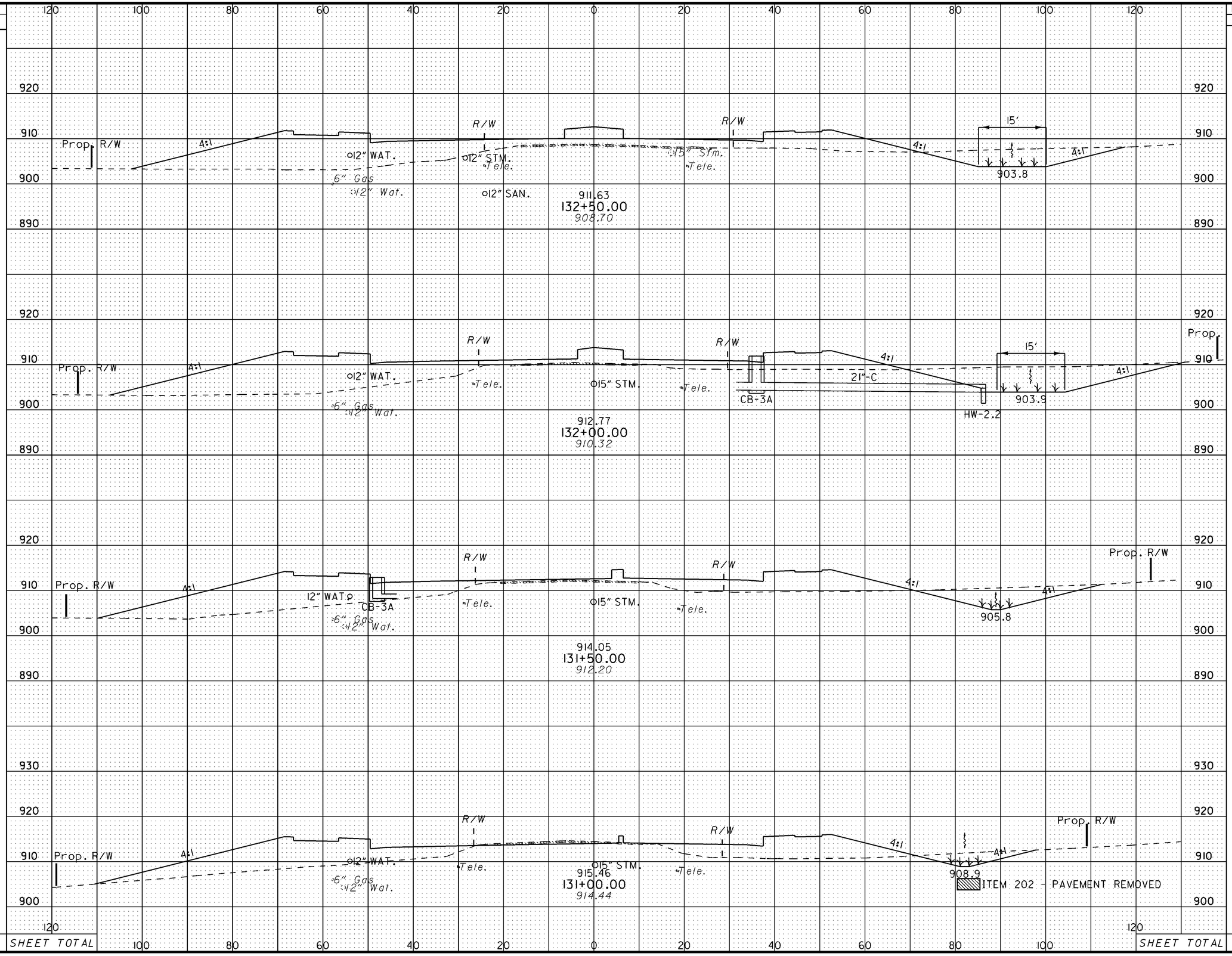

END AREA		VOLUME	
CUT	FILL	CUT	FILL
116	638	306	1177
214	633	295	1136
104	594	149	1009
57	496	98	887

CALCULATED JMD

CHECKED AJS

MIAMISBURG-SPRINGBORO PIKE CROSS SECTIONS STA. 131+00 TO STA. 132+50

MOT-75-0.75

SEEDING	
END WIDTH	SQ. YDS.

END AREA	
CUT	FILL
9	536
22	678
64	747
78	715

VOLUME	
CUT	FILL
28	1123
80	1319
131	1353
180	1252

CALCULATED JMD
CHECKED AJS

MIAMISBURG-SPRINGBORO PIKE CROSS SECTIONS STA. 133+00 TO STA. 134+50

MOT-75-0.75

235
773

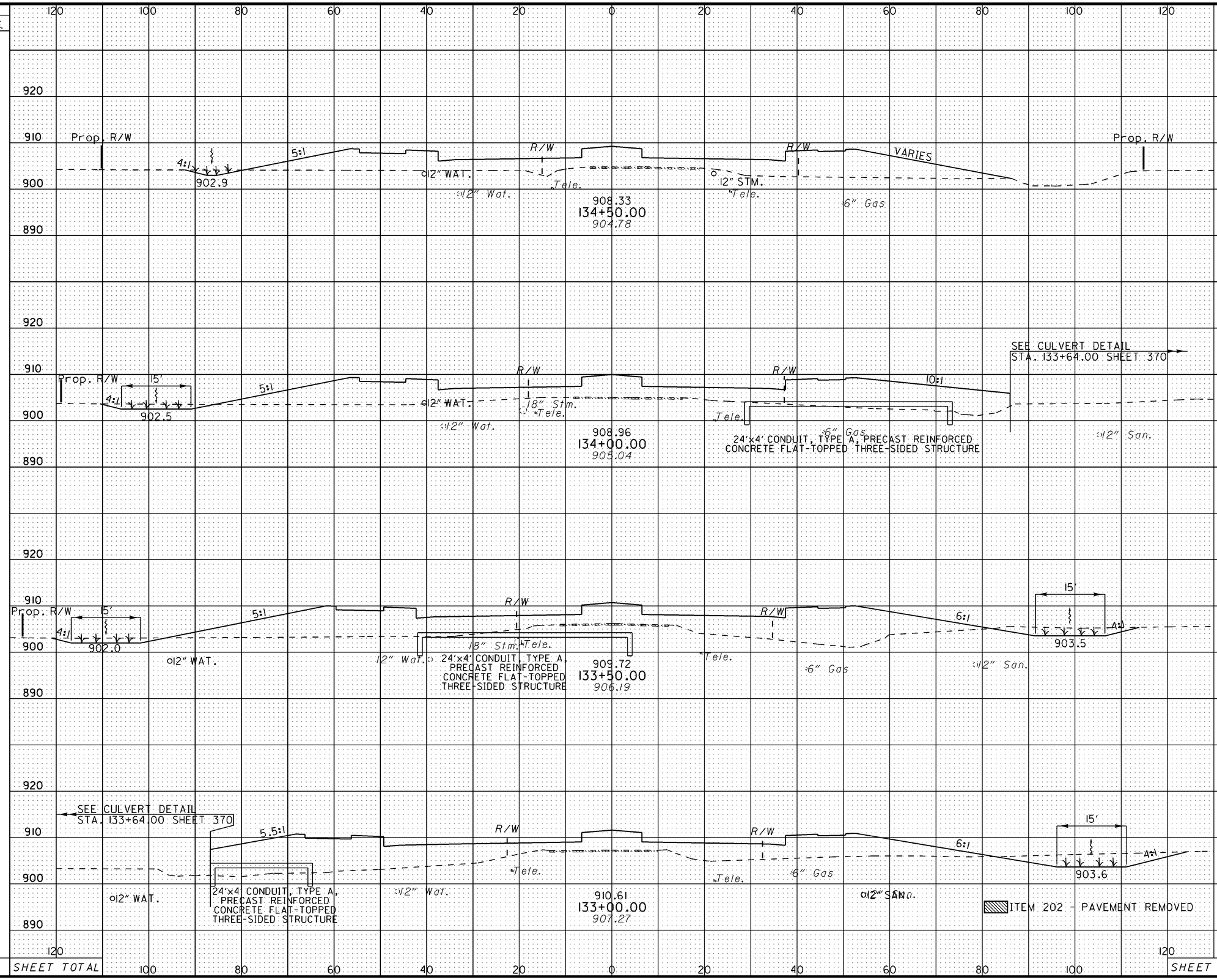

SEEDING	
END WIDTH	SQ. YDS.

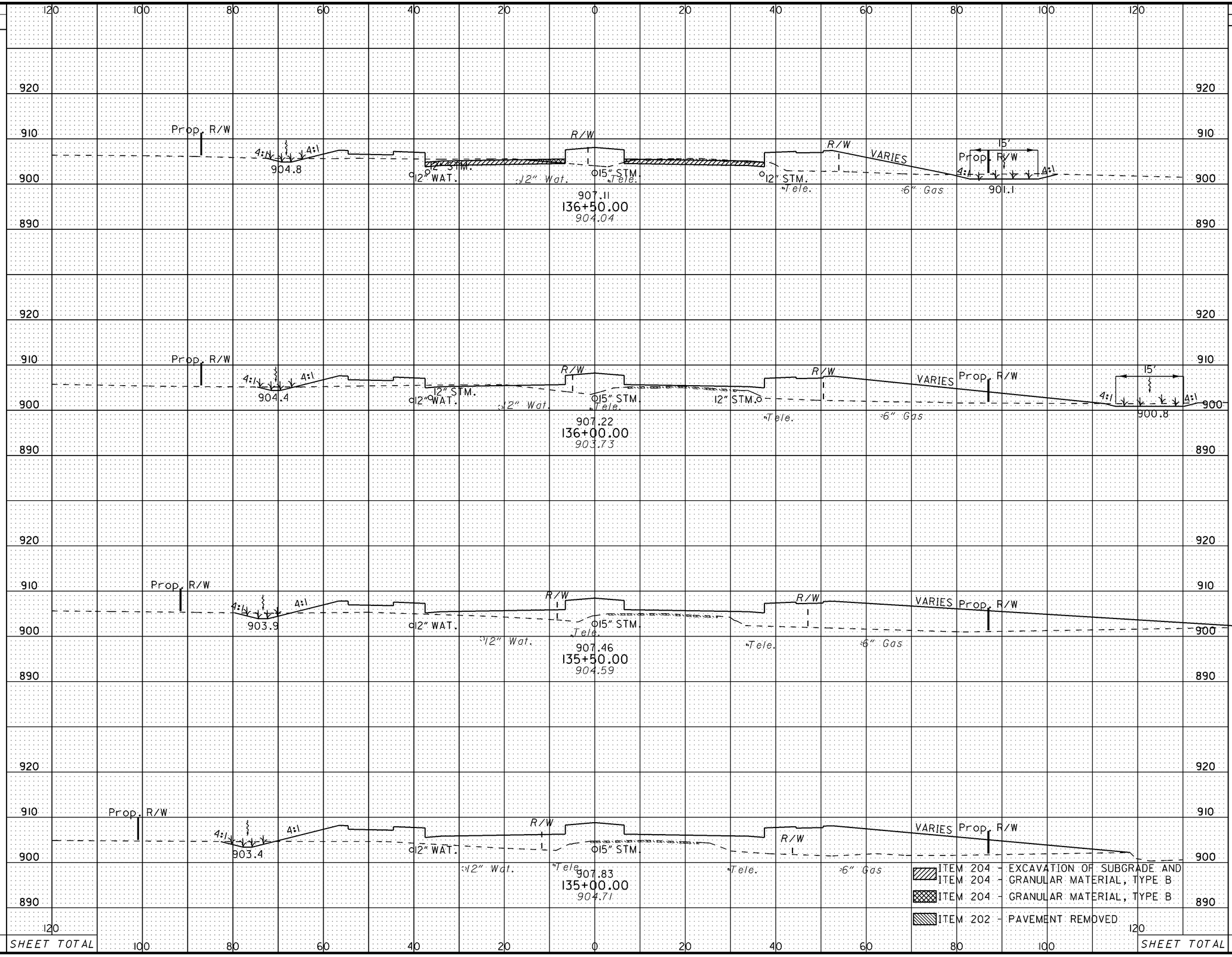

END AREA		VOLUME	
CUT	FILL	CUT	FILL
38	197		
		54	514
21	358		
		30	876
12	587		
		19	1094
8	594		
		16	1046

CALCULATED JMD

CHECKED AJS

MIAMISBURG-SPRINGBORO PIKE CROSS SECTIONS
STA. 135+00 TO STA. 136+50

MOT-75-0.75

SEEDING	
END WIDTH	SQ. YDS.

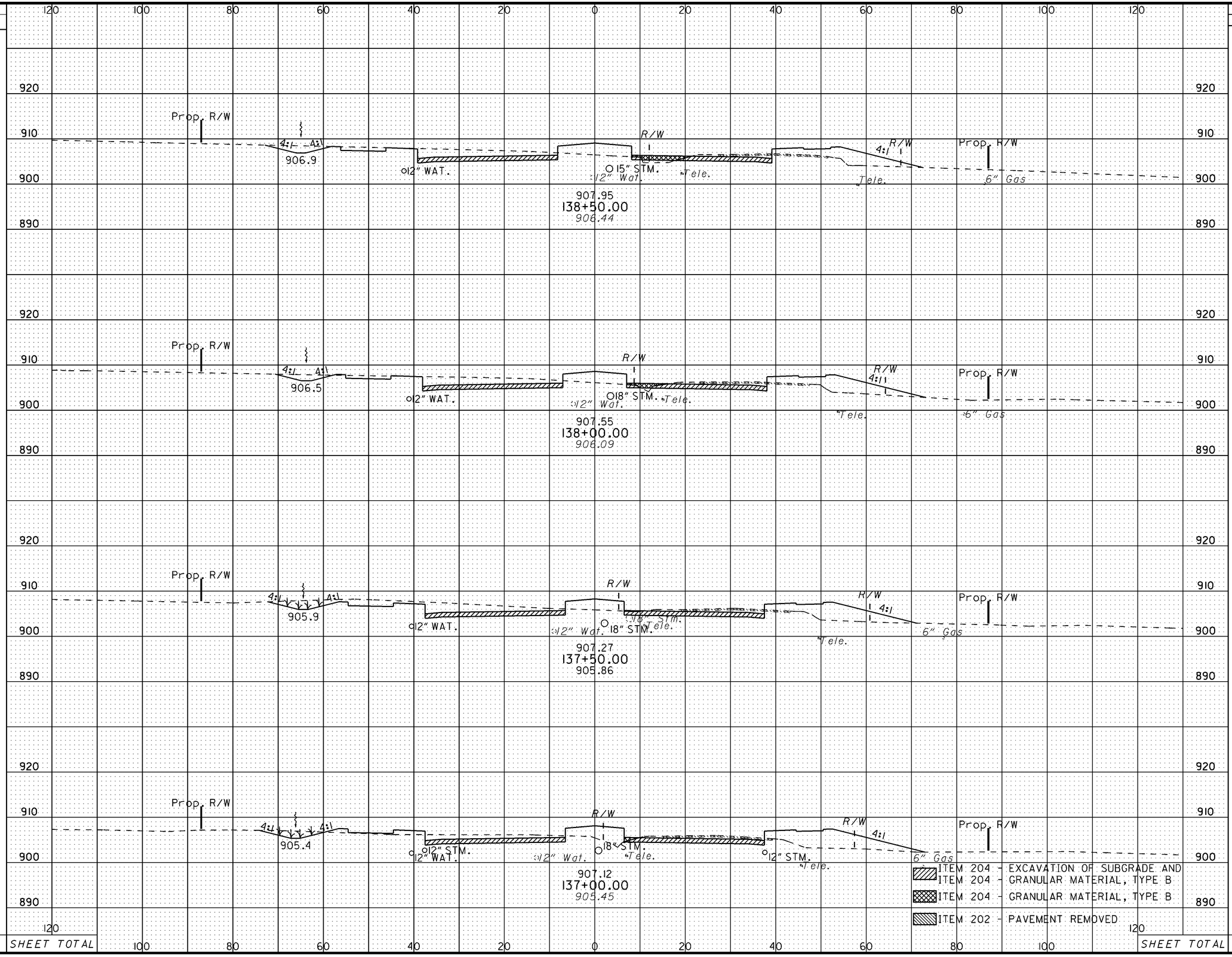

END AREA		VOLUME	
CUT	FILL	CUT	FILL
72	99		
		134	184
73	99		
		157	183
96	99		
		138	217
53	135		
		84	307

ITEM 204 - EXCAVATION OR SUBGRADE AND
ITEM 204 - GRANULAR MATERIAL, TYPE B

ITEM 204 - GRANULAR MATERIAL, TYPE B

ITEM 202 - PAVEMENT REMOVED

CALCULATED JMD

CHECKED AJS

MIAMISBURG-SPRINGBORO PIKE CROSS SECTIONS STA. 137+00 TO STA. 138+50

MOT-75-0.75

237
773

SEEDING	
END WIDTH	SQ. YDS.

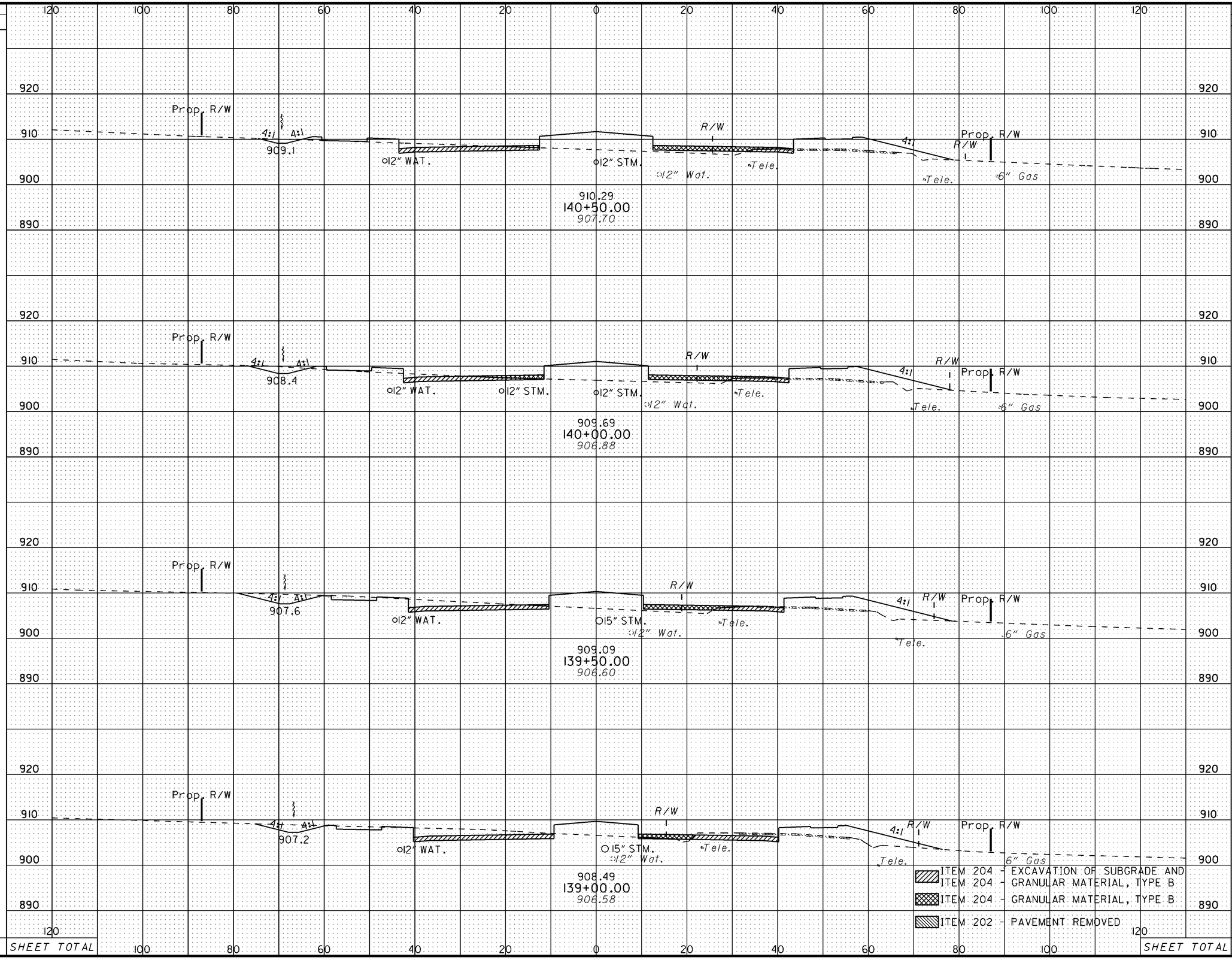

END AREA		VOLUME	
CUT	FILL	CUT	FILL
17	171	32	320
18	175	67	303
54	153	113	249
68	116	129	199

CALCULATED JMD

CHECKED AJS

MIAMISBURG-SPRINGBORO PIKE CROSS SECTIONS
STA. 139+00 TO STA. 140+50

MOT-75-0.75

SEEDING	
END WIDTH	SQ. YDS.

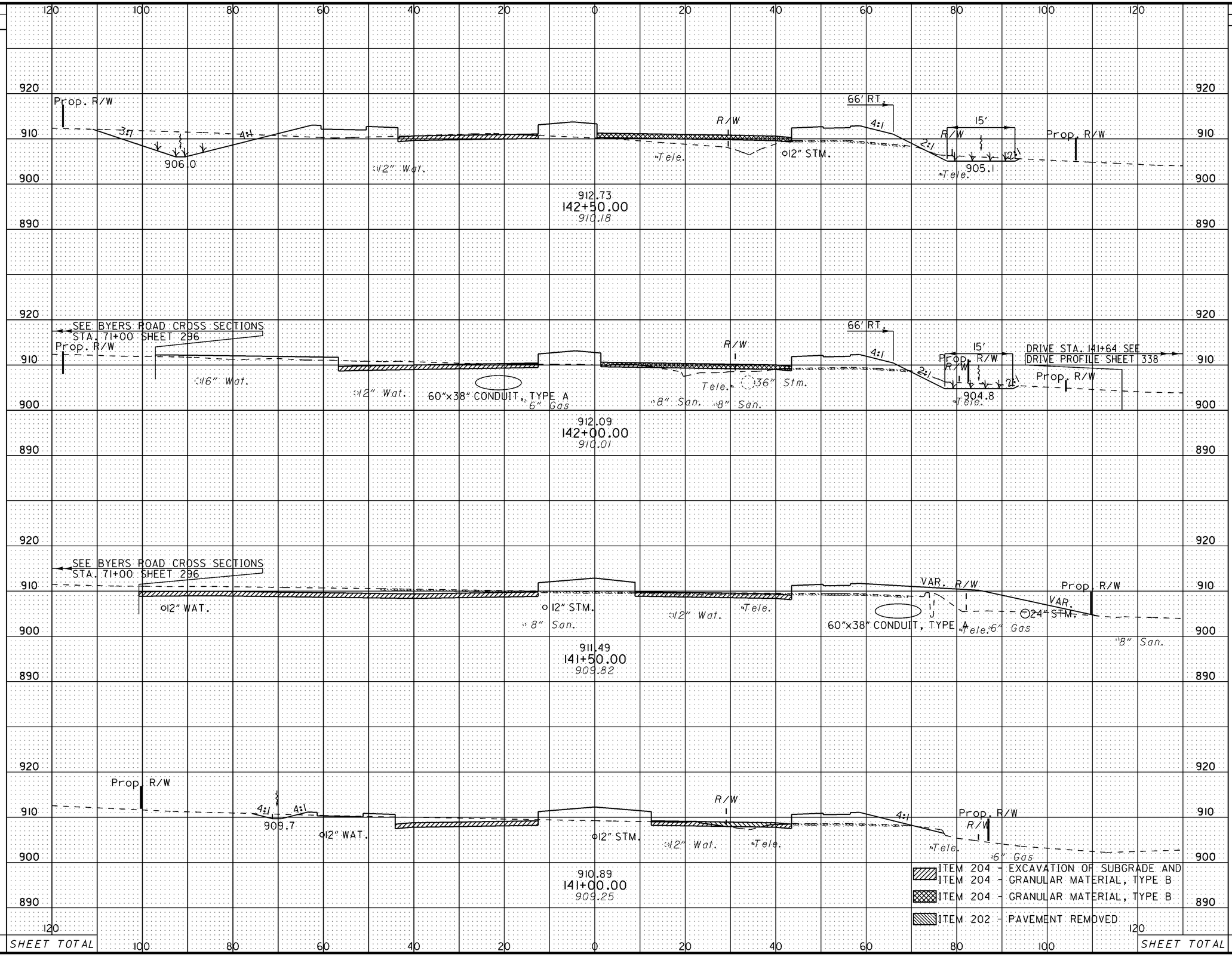

END AREA		VOLUME	
CUT	FILL	CUT	FILL
134	210		
		167	322
47	137		
		47	325
3	213		
		31	308
30	119		
		44	269

CALCULATED JMD
CHECKED AJS

MIAMISBURG-SPRINGBORO PIKE CROSS SECTIONS
STA. 141+00 TO STA. 142+50

MOT-75-0.75

239
773

SEEDING	
END WIDTH	SQ. YDS.

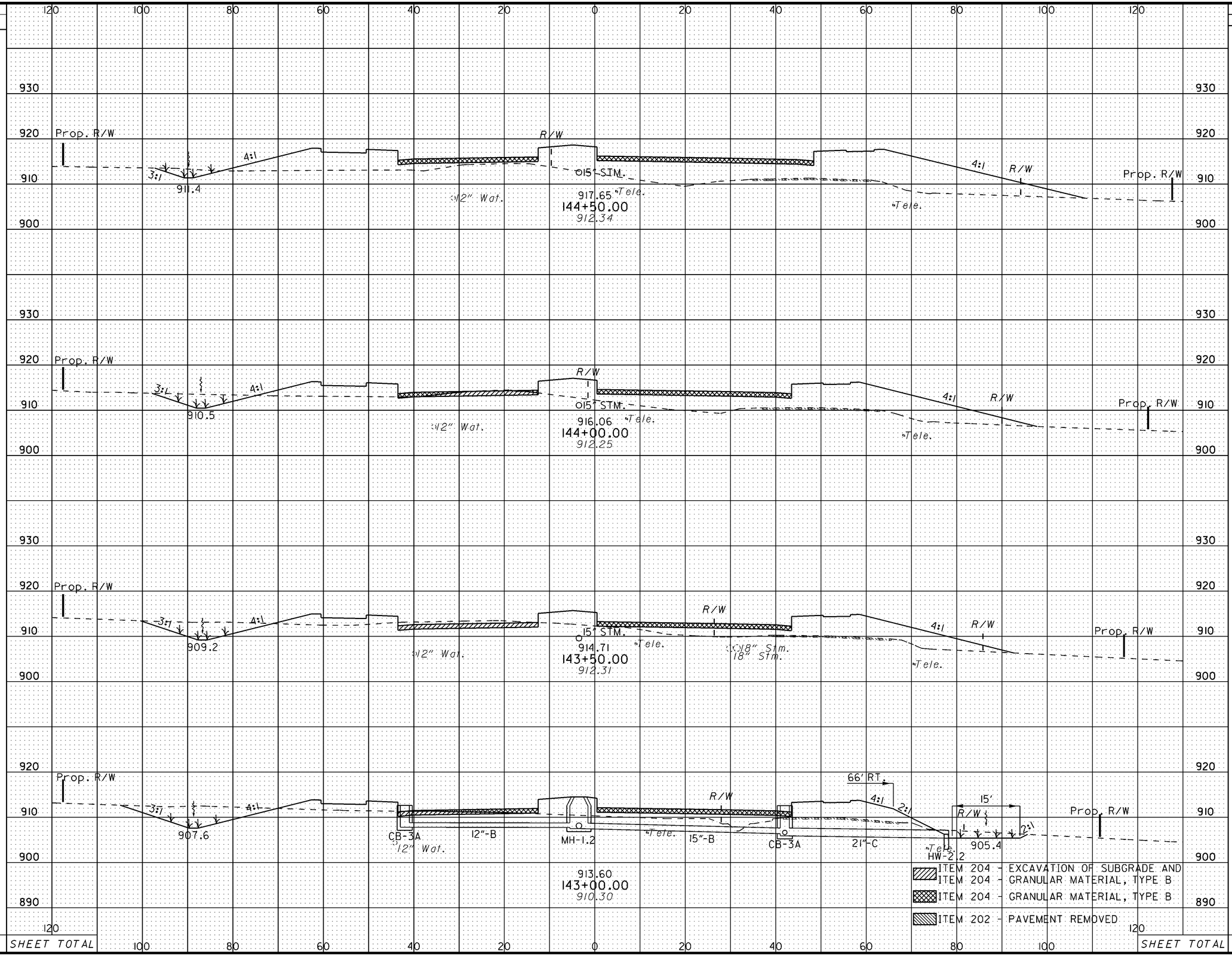

END AREA		VOLUME	
CUT	FILL	CUT	FILL
16	710	51	1082
39	458	108	698
77	296	175	496
112	240	227	417

ITEM 204 - EXCAVATION OR SUBGRADE AND
ITEM 204 - GRANULAR MATERIAL, TYPE B
ITEM 204 - GRANULAR MATERIAL, TYPE B
ITEM 202 - PAVEMENT REMOVED

CALCULATED JMD
CHECKED AJS

MIAMISBURG-SPRINGBORO PIKE CROSS SECTIONS STA. 143+00 TO STA. 144+50

MOT-75-0.75

SEEDING	
END WIDTH	SQ. YDS.

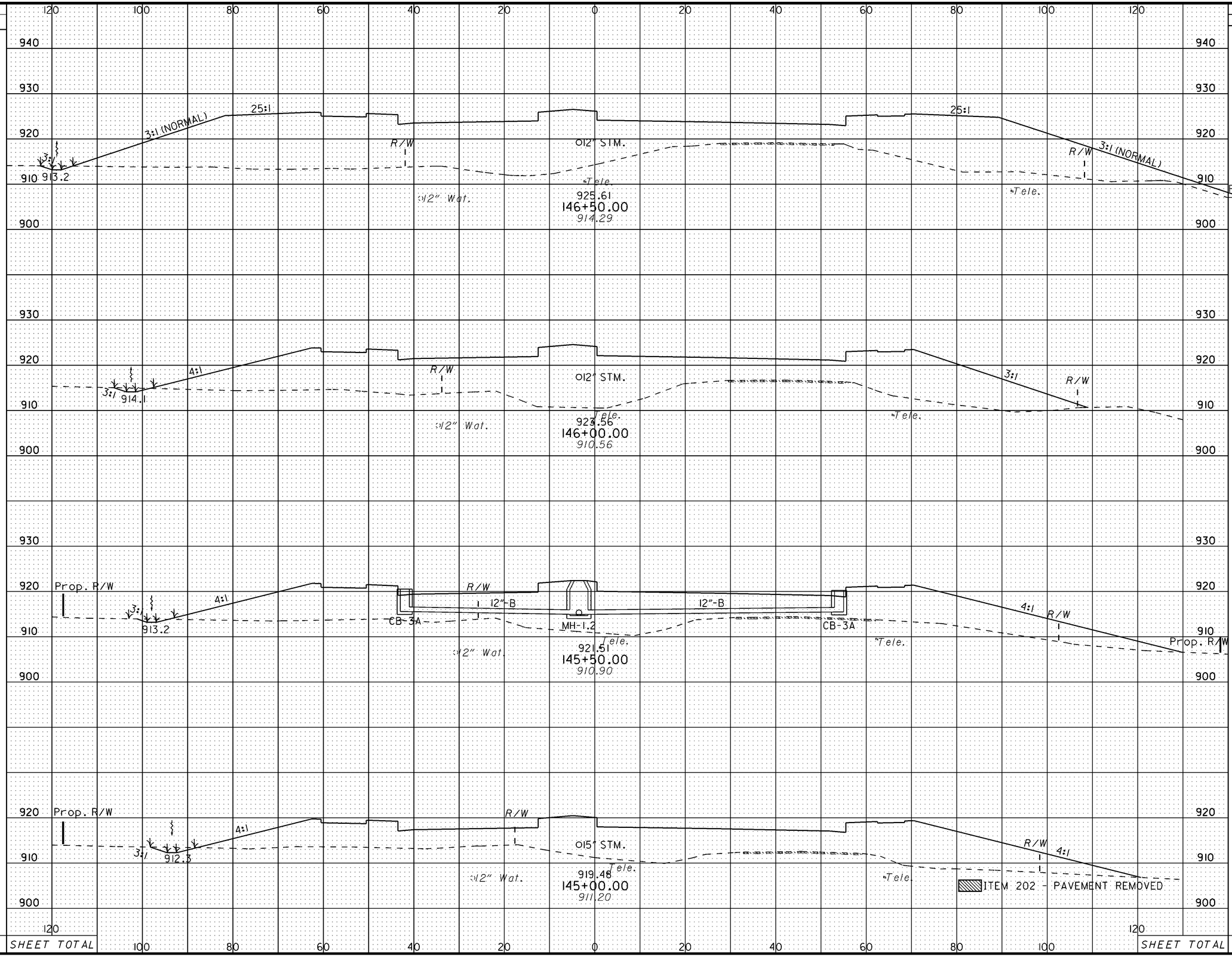

END AREA		VOLUME	
CUT	FILL	CUT	FILL
4	2088		
		8	3327
4	1505		
		7	2632
3	1337		
		10	2272
7	1116		
		22	1691

SHEET TOTAL

CALCULATED JMD

CHECKED AJS

MIAMISBURG-SPRINGBORO PIKE CROSS SECTIONS STA. 145+00 TtO STA. 146+50

MOT-75-0.75

SEEDING	
END WIDTH	SQ. YDS.

END AREA		VOLUME	
CUT	FILL	CUT	FILL

CALCULATED JMD

CHECKED AJS

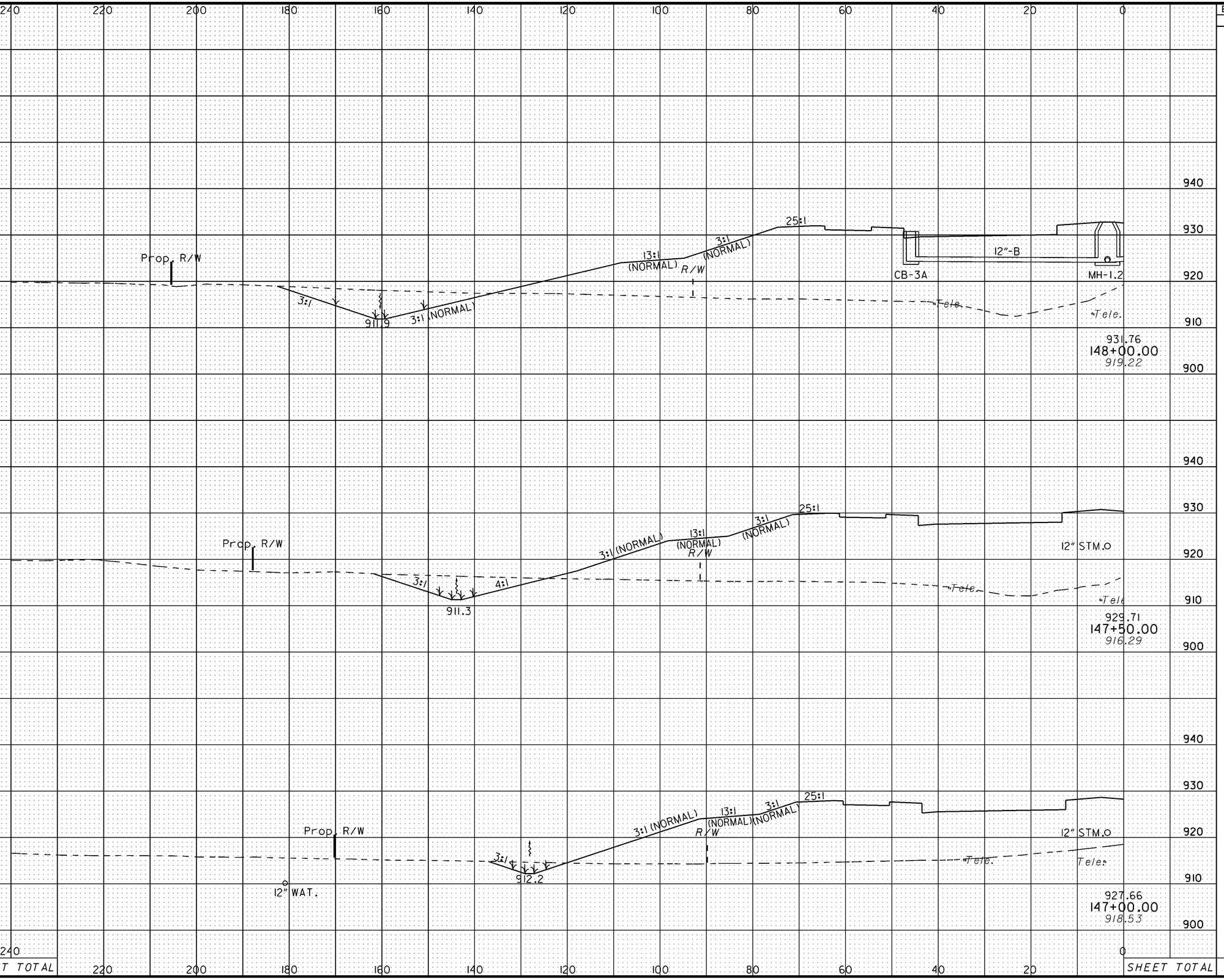

MIAMISBURG-SPRINGBORO PIKE CROSS SECTIONS - LEFT
STA. 147+00 TO STA. 148+00

MOT-75-0.75

SEEDING		END AREA		VOLUME	
END WIDTH	SQ. YDS.	CUT	FILL	CUT	FILL
		149	3161	230	5320
		100	2585	114	4418
		23	2187	25	3958

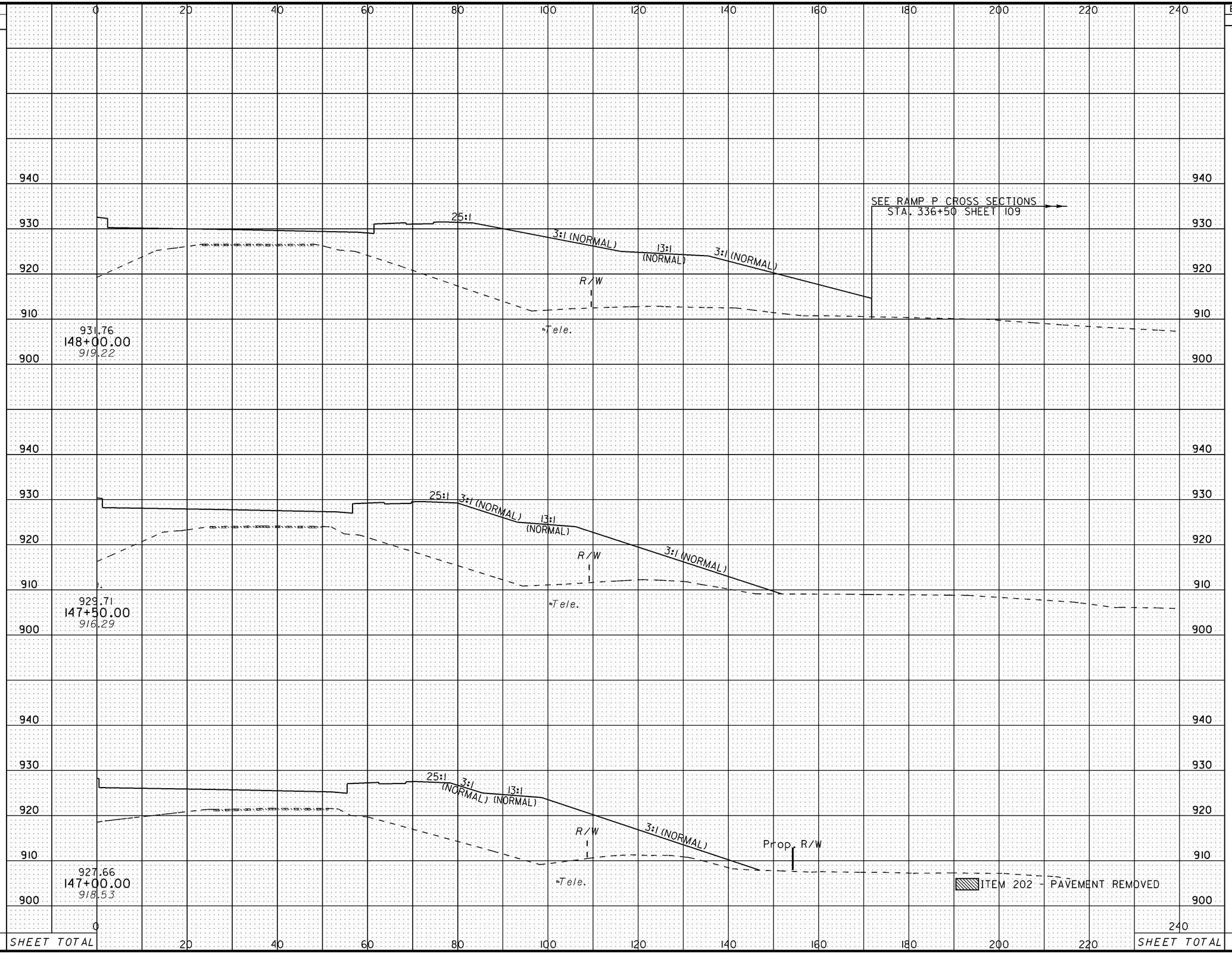

CALCULATED JMD
CHECKED AJS

MIAMISBURG-SPRINGBORO PIKE CROSS SECTIONS - RIGHT
STA. 147+00 TO STA. 148+00

MOT-75-0.75

SEEDING	
END WIDTH	SQ. YDS.

END AREA		VOLUME	
CUT	FILL	CUT	FILL

CALCULATED JMD

CHECKED AJS

240 220 200 180 160 140 120 100 80 60 40 20 0

950 940 930 920 910 900

SEE RAMP M CROSS SECTIONS
STA. 439+50 SHEET 146

R/W

Tele.

Tele.

937.91
149+50.00
929.12

950 940 930 920 910 900

SEE RAMP M CROSS SECTIONS
STA. 440+00 SHEET 146

3:1 (NORMAL)

13:1 (NORMAL)

3:1 (NORMAL)

25:1

916.2

R/W

Tele.

Tele.

935.86
149+00.00
926.33

950 940 930 920 910 900

3:1

914.0

3:1 (NORMAL)

13:1 (NORMAL)

3:1 (NORMAL)

25:1

R/W

Tele.

Tele.

933.81
148+50.00
922.60

240 220 200 180 160 140 120 100 80 60 40 20 0

SHEET TOTAL SHEET TOTAL

MIAMISBURG-SPRINGBORO PIKE CROSS SECTIONS - LEFT
STA. 148+50 TO STA. 149+50

MOT-75-0.75

SEEDING		END AREA		VOLUME	
END WIDTH	SQ. YDS.	CUT	FILL	CUT	FILL
		0	2867		
				36	4976
		39	2506		
				166	5478
		140	3410		
				268	6084

CALCULATED JMD

CHECKED AJS

MIAMISBURG-SPRINGBORO PIKE CROSS SECTIONS - RIGHT
STA. 148+50 TO STA. 149+50

MOT-75-0.75

245
773

0 20 40 60 80 100 120 140 160 180 200 220 240

950 940 930 920 910 900

SEE RAMP P CROSS SECTIONS
STA. 337+50 SHEET 110

Tele.

937.91
149+50.00
929.12

SEE INTERSECTION DETAIL
SHEET 326

R/W

Tele.

935.86
149+00.00
926.33

VARIES

3:1
(NORMAL)

SEE RAMP P CROSS SECTIONS
STA. 337+00 SHEET 110

CB-3A

R/W

Tele.

933.81
148+50.00
922.60

ITEM 202 - PAVEMENT REMOVED

SHEET TOTAL 0 20 40 60 80 100 120 140 160 180 200 220 240 SHEET TOTAL

SEEDING	
END WIDTH	SQ. YDS.

END AREA		VOLUME	
CUT	FILL	CUT	FILL

CALCULATED JMD

CHECKED AJS

240 220 200 180 160 140 120 100 80 60 40 20 0

950 940 930 920 910 900

4'

6:1

3:1

920.8

R/W

Tele.

Tele.

944.06
151+00.00
937.54

SEE RAMP M CROSS SECTIONS
STA. 439+50 SHEET 146

3:1 (NORMAL)

R/W

Tele.

Tele.

942.01
150+50.00
935.64

SEE RAMP M CROSS SECTIONS
STA. 439+50 SHEET 146

R/W

Tele.

Tele.

939.96
150+00.00
931.14

240 SHEET TOTAL 220 200 180 160 140 120 100 80 60 40 20 0 SHEET TOTAL

MIAMISBURG-SPRINGBORO PIKE CROSS SECTIONS - LEFT
STA. 150+00 TO STA. 151+00

MOT-75-0.75

SEEDING	
END WIDTH	SQ. YDS.

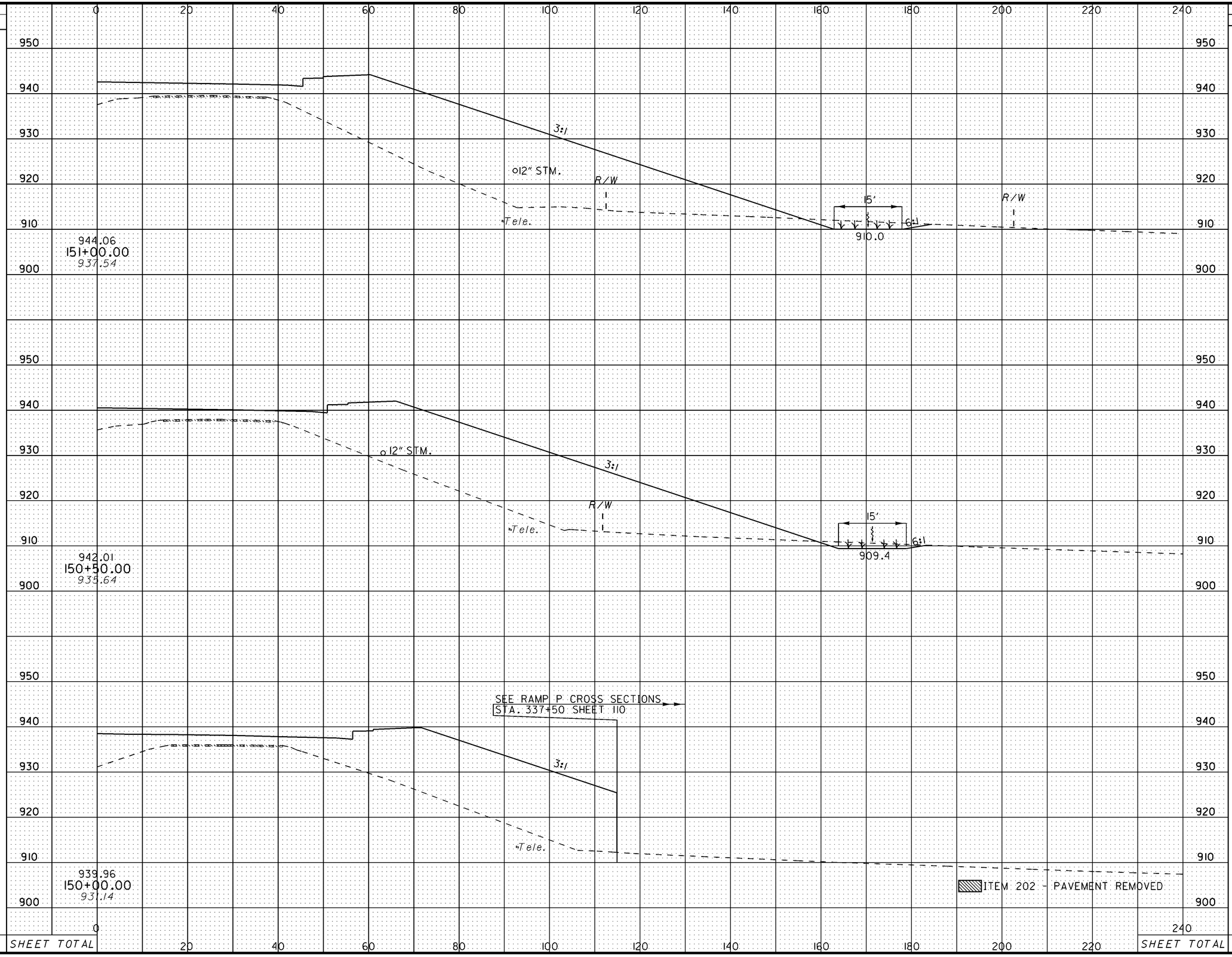

END AREA		VOLUME	
CUT	FILL	CUT	FILL
43	3435	61	6118
24	3173	22	5698
0	2981	0	5415

CALCULATED JMD

CHECKED AJS

MIAMISBURG-SPRINGBORO PIKE CROSS SECTIONS - RIGHT STA. 150+00 TO STA. 151+00

MOT-75-0.75

SEEDING	
END WIDTH	SQ. YDS.

END AREA		VOLUME	
CUT	FILL	CUT	FILL

CALCULATED JMD

CHECKED AJS

240 220 200 180 160 140 120 100 80 60 40 20 0

960 950 940 930 920 910

APPROACH SLAB (BACK ONLY)

VAR. VAR.

Tele. Tele 36" Stm 947.75

END APPROACH SLAB (SKEWED 12°52'50" L.F.) 151+99.26

921.61

FULL DEPTH PAVEMENT (BACK ONLY)

APPROACH SLAB (AHEAD ONLY)

2:1 (NORMAL)

3:1 (NORMAL)

VAR. VAR.

921.4

Tele. Tele. Tele.

946.78

BEGIN APPROACH SLAB (SKEWED 12°52'50" L.F.) 151+69.26

937.16

3:1

6:1

921.1

R/W

Tele. Tele.

946.08

151+50.00

938.72

240 SHEET TOTAL 220 200 180 160 140 120 100 80 60 40 20 0 SHEET TOTAL

MIAMISBURG-SPRINGBORO PIKE CROSS SECTIONS - LEFT STA. 151+50 TO STA. 151+99.26

MOT-75-0.75

SEEDING END WIDTH	SEEDING SQ. YDS.	END AREA CUT	END AREA FILL	VOLUME CUT	VOLUME FILL
		3	3787		
				12	3039
		24	2777		
				18	2769
		16	3238		
				54	6179

CALCULATED JMD
CHECKED AJS

MIAMISBURG-SPRINGBORO PIKE CROSS SECTIONS - RIGHT
STA. 151+50 TO STA. 151+99.26

MOT-75-0.75

0 20 40 60 80 100 120 140 160 180 200 220 240

960 950 940 930 920 910

APPROACH SLAB (BACK ONLY)

VAR. VAR.

BACK ONLY

947.75
151+99.26 END APPROACH SLAB (SKEWED 12°52'50" L.F.)
921.61

FULL DEPTH PAVEMENT (BACK ONLY)

2:1 (NORMAL)

APPROACH SLAB (AHEAD ONLY)

3:1 (NORMAL)

SEE CROSS SECTION STA. 151+50

946.78
151+69.26 BEGIN APPROACH SLAB (SKEWED 12°52'50" L.F.)
937.16

R/W

82.11' RT.

2:1

3:1

946.08
151+50.00
938.72

12" STM. 12" STM.

ITEM 202 - PAVEMENT REMOVED

SHEET TOTAL SHEET TOTAL

SEEDING	
END WIDTH	SQ. YDS.

END AREA		VOLUME	
CUT	FILL	CUT	FILL

CALCULATED JMD

CHECKED AJS

240 220 200 180 160 140 120 100 80 60 40 20 0

960 950 940 930 920 910

VAR.

VAR.

3:1

Tele.

Tele.

947.02
156+00.00
941.67

FULL DEPTH PAVEMENT (AHEAD ONLY)

SEE CROSS SECTION
STA. 156+00

VAR.

VAR.

3:1 (NORMAL)

2:1 (NORMAL)

APPROACH SLAB (BACK ONLY)

Tele.

Tele.

948.11
END APPROACH SLAB (SKEWED 12°52'50" L.F.) 155+64.51
940.22

APPROACH SLAB (AHEAD ONLY)

VAR.

VAR.

VAR.

Tele.

24" Sim.

Tele.

948.88
BEGIN APPROACH SLAB (SKEWED 12°52'50" L.F.) 155+34.51
925.45

ITEM 202 - PAVEMENT REMOVED

240 220 200 180 160 140 120 100 80 60 40 20 0

SHEET TOTAL SHEET TOTAL

MIAMISBURG-SPRINGBORO PIKE CROSS SECTIONS - LEFT
STA. 155+34.51 TO STA. 156+00

MOT-75-0.75

250
773

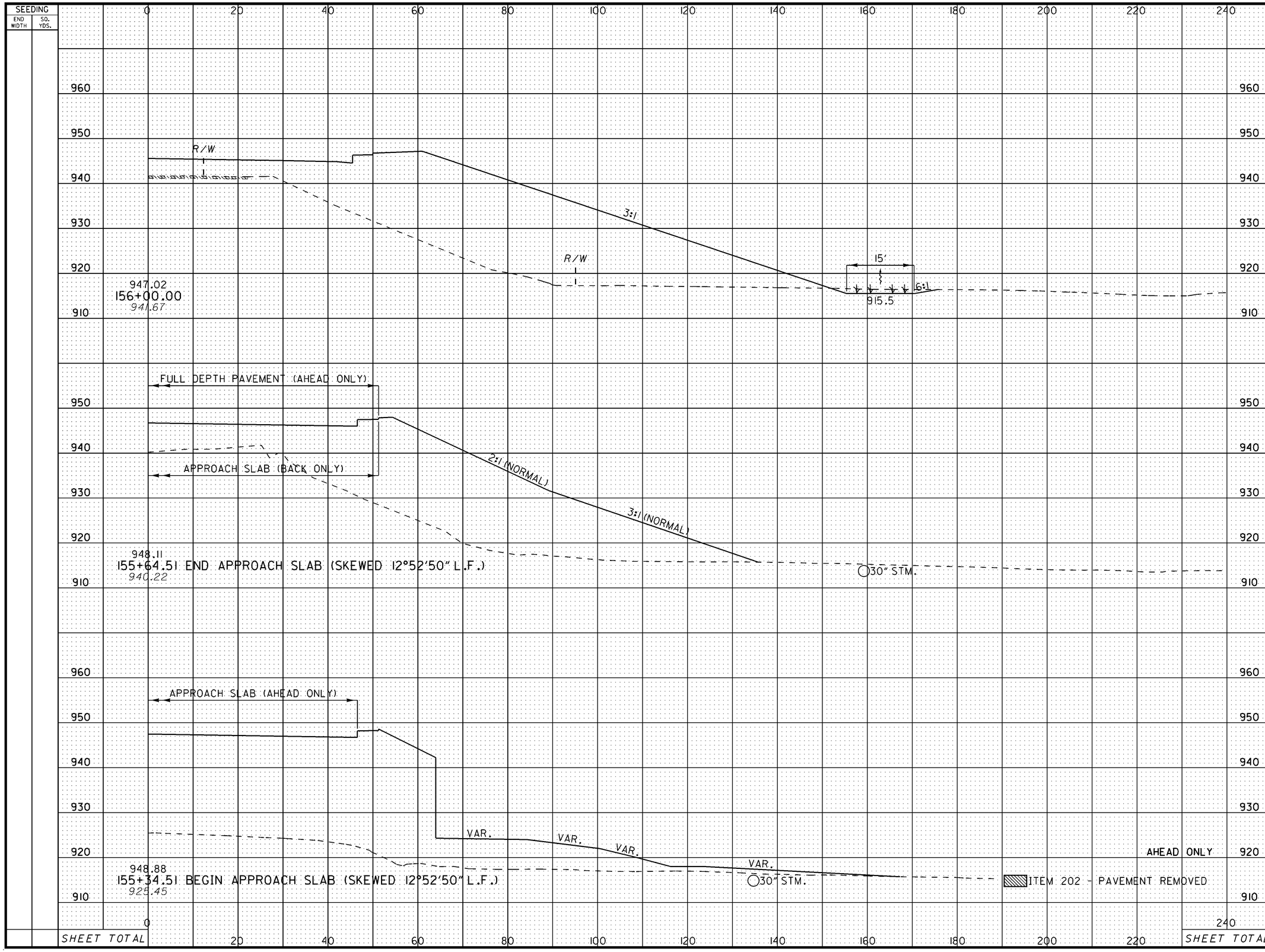

END AREA CUT	END AREA FILL	VOLUME CUT	VOLUME FILL
18	4460		
		14	6406
0	3959		
		0	3821
0	4295		

CALCULATED JMD
CHECKED AJS

MIAMISBURG-SPRINGBORO PIKE CROSS SECTIONS - RIGHT
STA. 155+34.51 TO STA. 156+00

MOT-75-0.75

SEEDING	
END WIDTH	SQ. YDS.

END AREA		VOLUME	
CUT	FILL	CUT	FILL

CALCULATED JMD

CHECKED AJS

240 220 200 180 160 140 120 100 80 60 40 20 0

950 940 930 920 910

SEE RAMP J CROSS SECTIONS
STA. 141+50 SHEET 171

VARIES

VARIES

R/W

Elec.

Tele.

941.33
157+50.00
937.45

950 940 930 920 910

4:1 4:1

925.2

VARIES

3:1

R/W

Elec.

Tele.

943.25
157+00.00
939.06

950 940 930 920 910

4:1 4:1

925.4

VARIES

3:1

R/W

Elec.

Tele.

ITEM 202 - PAVEMENT REMOVED

945.17
156+50.00
940.62

950 940 930 920 910

240 220 200 180 160 140 120 100 80 60 40 20 0

SHEET TOTAL SHEET TOTAL

MIAMISBURG-SPRINGBORO PIKE CROSS SECTIONS - LEFT
STA. 156+50 TO STA. 157+50

MOT-75-0.75

252
773

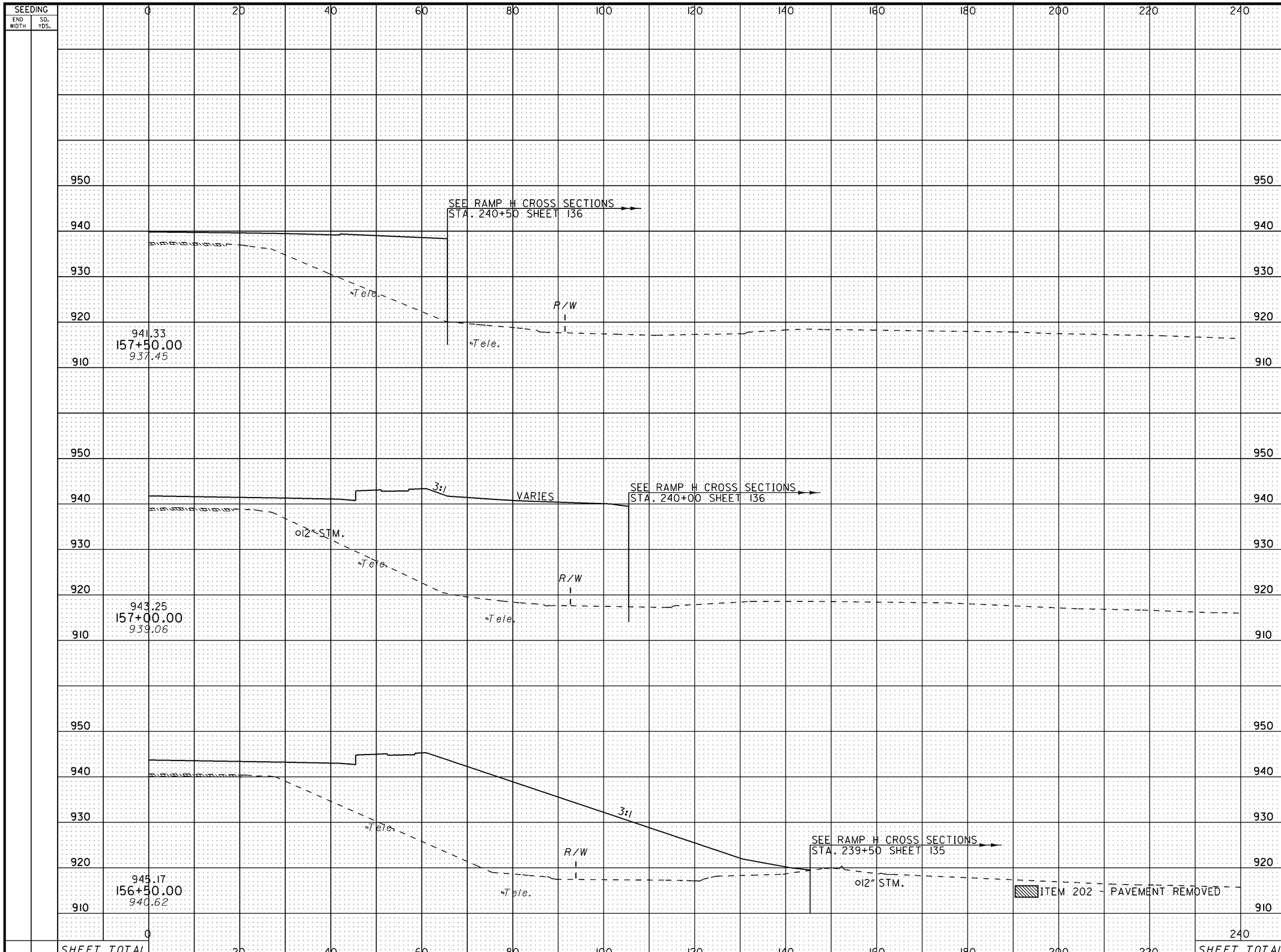

END AREA CUT	END AREA FILL	VOLUME CUT	VOLUME FILL
0	2143		
		12	4788
13	3028		
		40	5789
30	3224		
		45	7115

CALCULATED JMD
CHECKED AJS

MIAMISBURG-SPRINGBORO PIKE CROSS SECTIONS - RIGHT
STA. 156+50 TO STA. 157+50

MOT-75-0.75

SEEDING	
END WIDTH	SQ. YDS.

END AREA		VOLUME	
CUT	FILL	CUT	FILL

CALCULATED JMD

CHECKED AJS

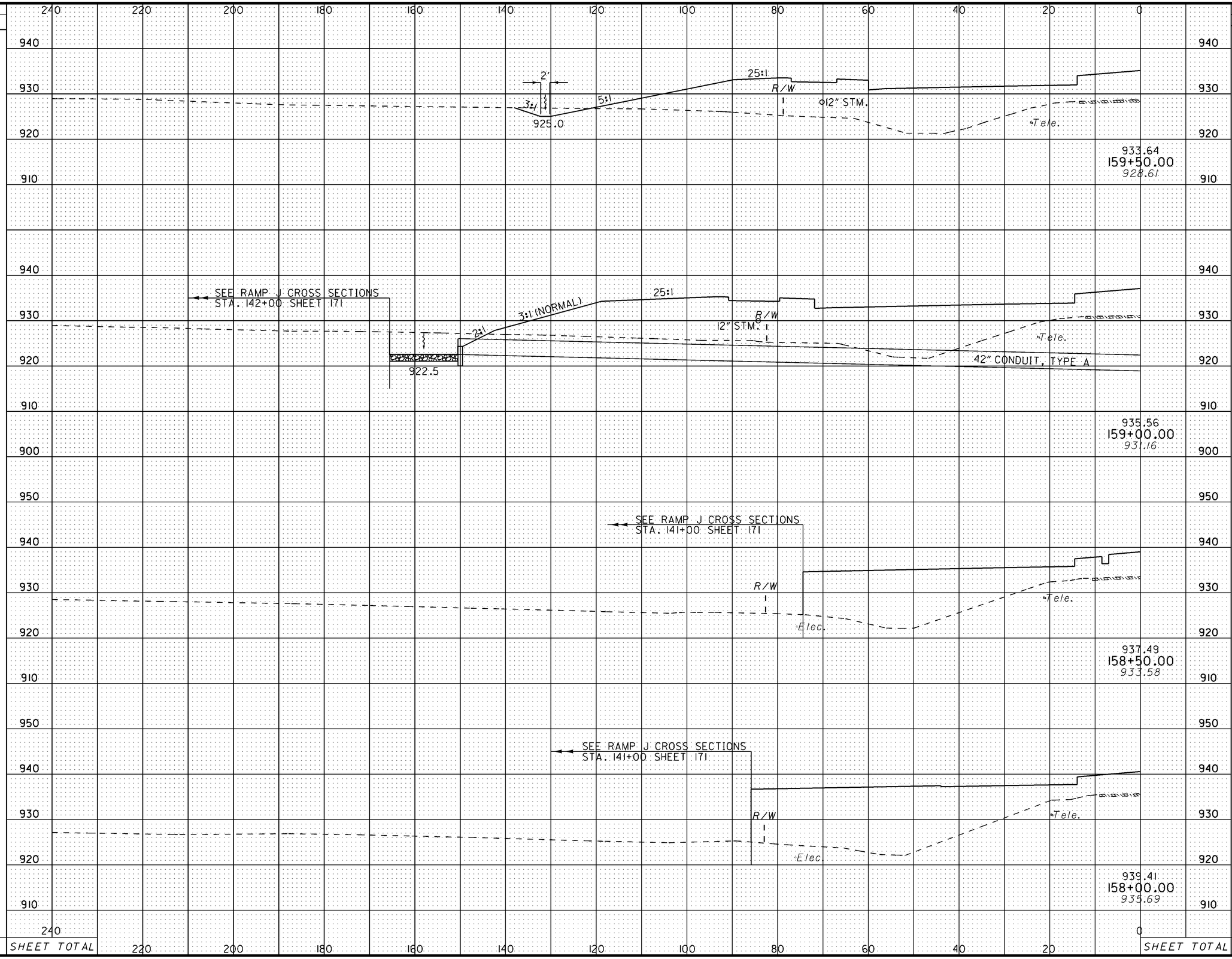

MIAMISBURG-SPRINGBORO PIKE CROSS SECTIONS - LEFT
STA. 158+00 TO STA. 159+50

MOT-75-0.75

SEEDING	
END WIDTH	SQ. YDS.

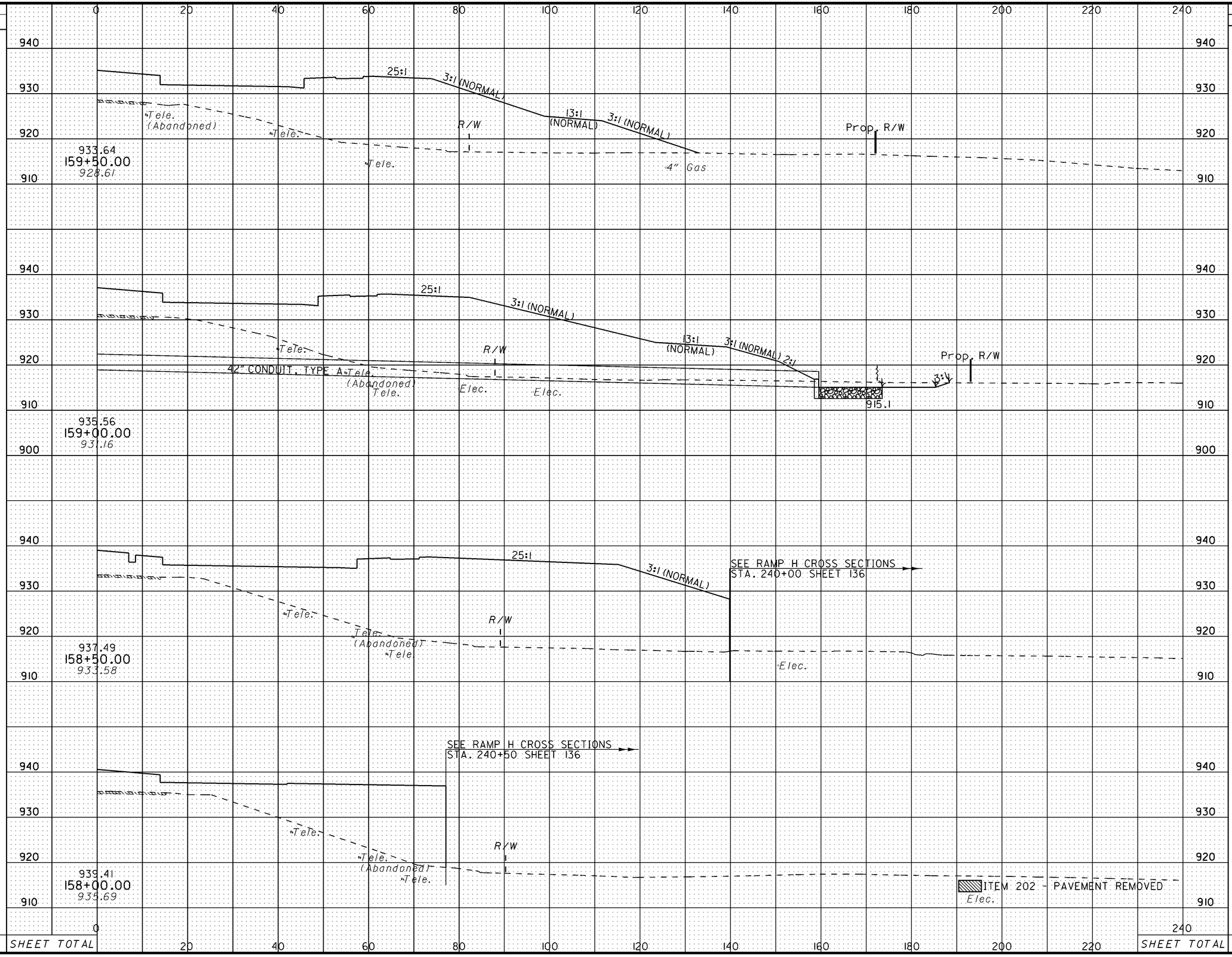

END AREA		VOLUME	
CUT	FILL	CUT	FILL
17	1955	121	4245
114	2630	106	4663
0	2406	0	3609
0	1493	0	3367

CALCULATED JMD

CHECKED AJS

MIAMISBURG-SPRINGBORO PIKE CROSS SECTIONS - RIGHT
STA. 158+00 TO STA. 159+50

MOT-75-0.75

SEEDING	
END WIDTH	SQ. YDS.

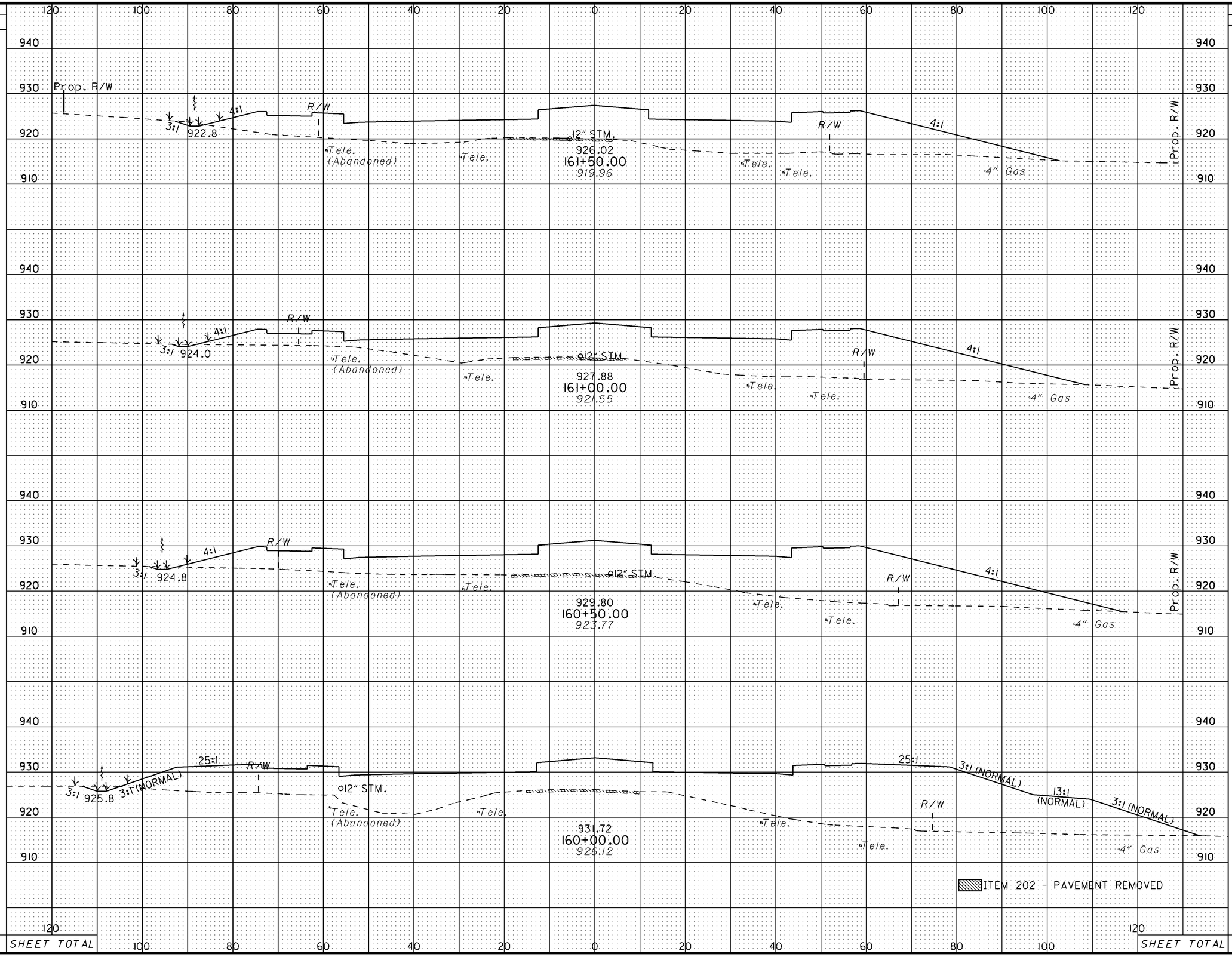

END AREA		VOLUME	
CUT	FILL	CUT	FILL
3	1035		
		4	1970
2	1093		
		4	2165
2	1246		
		8	2821
6	1800		
		21	3477

CALCULATED JMD

CHECKED AJS

MIAMISBURG-SPRINGBORO PIKE CROSS SECTIONS
STA. 160+00 TO STA. 161+50

MOT-75-0.75

256
773

SEEDING	
END WIDTH	SQ. YDS.

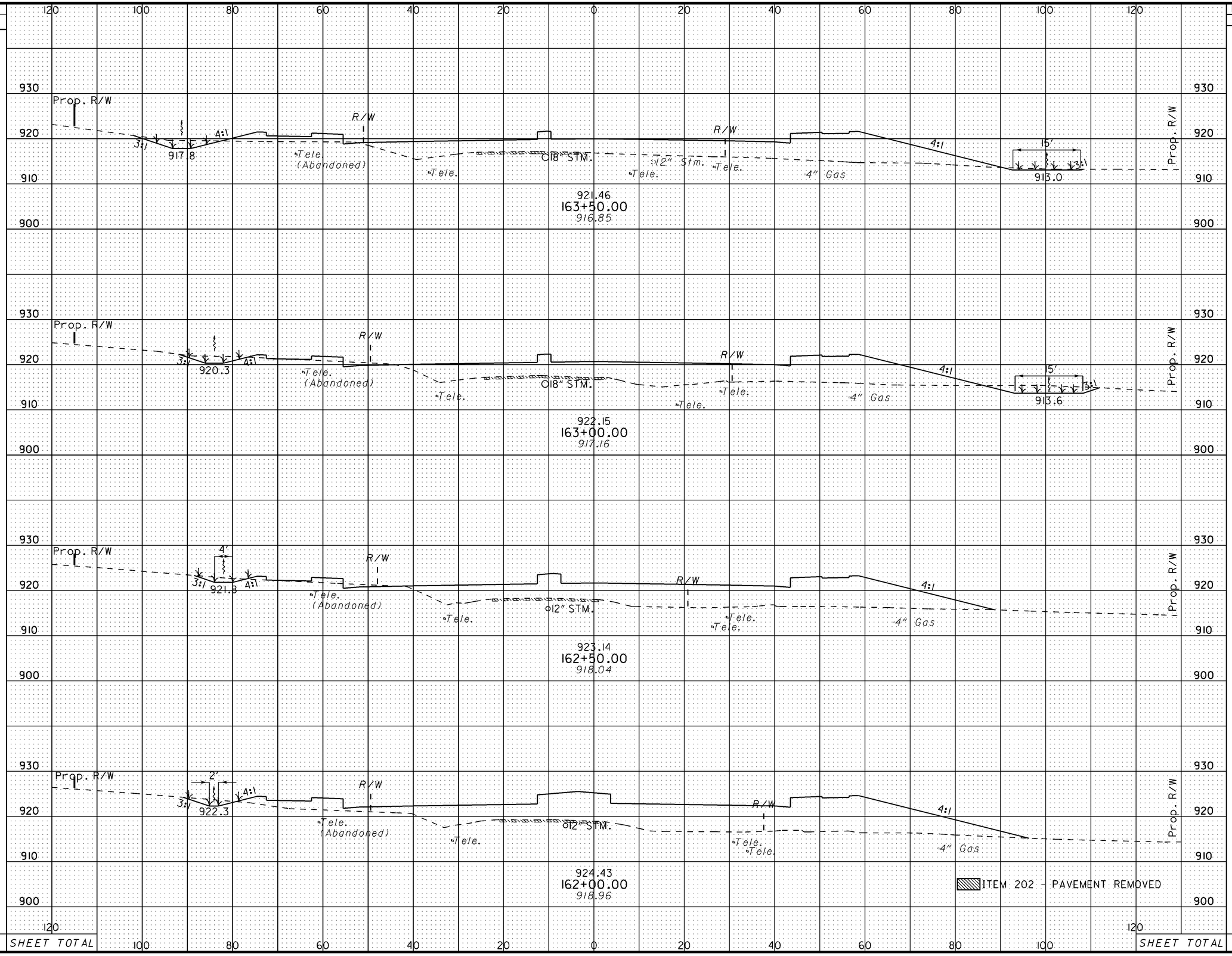

END AREA		VOLUME	
CUT	FILL	CUT	FILL
24	533	72	968
54	513	62	996
13	563	21	1215
9	749	12	1652

CALCULATED JMD

CHECKED AJS

MIAMISBURG-SPRINGBORO PIKE CROSS SECTIONS STA. 162+00 TO STA. 163+50

MOT-75-0.75

257
773

SEEDING	
END WIDTH	SQ. YDS.

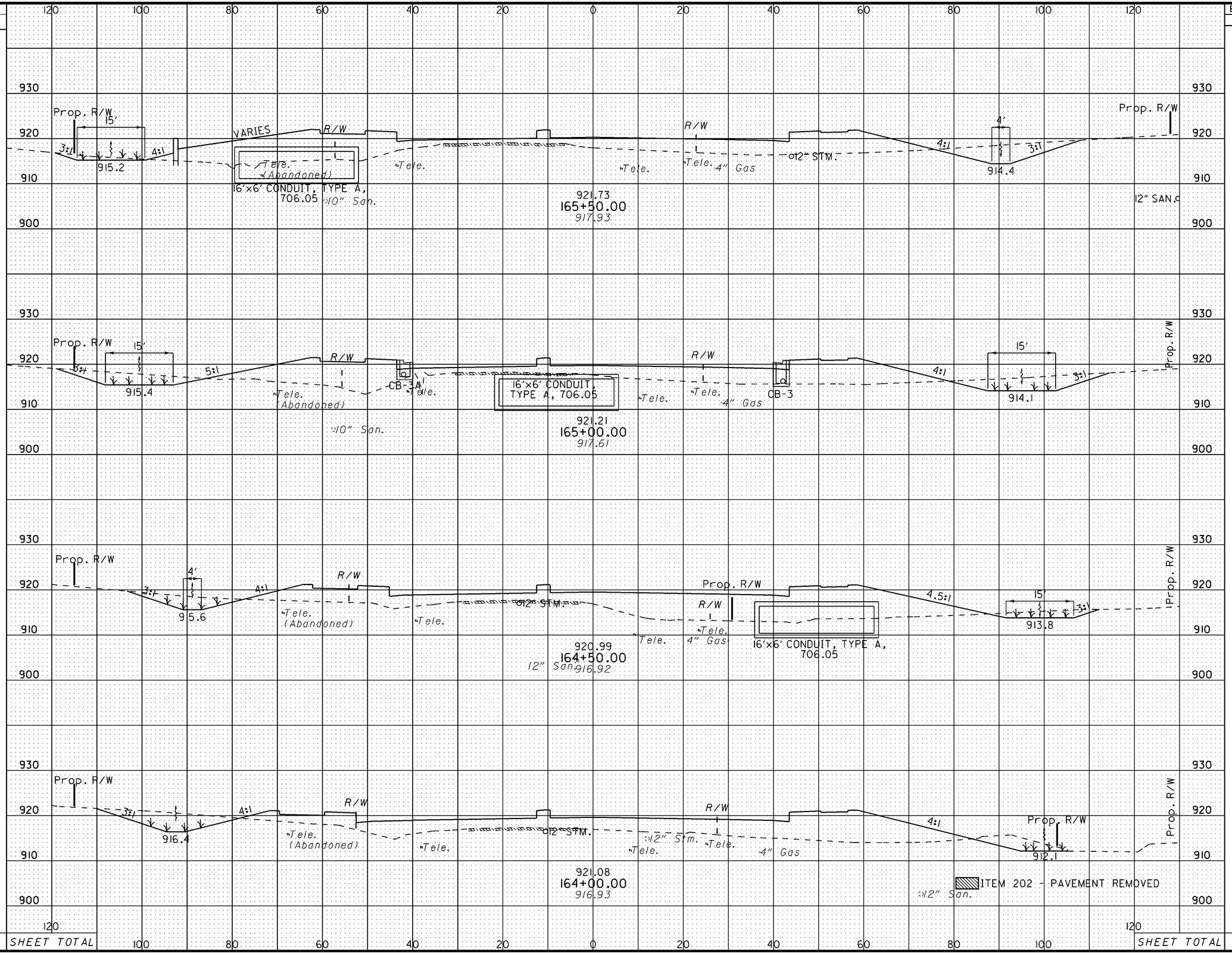

END AREA		VOLUME	
CUT	FILL	CUT	FILL
88	580	206	1031
134	534	191	1089
72	642	172	1079
114	524	128	978

CALCULATED JMD

CHECKED AJS

MIAMISBURG-SPRINGBORO PIKE CROSS SECTIONS STA. 164+00 TO STA. 165+50

MOT-75-0.75

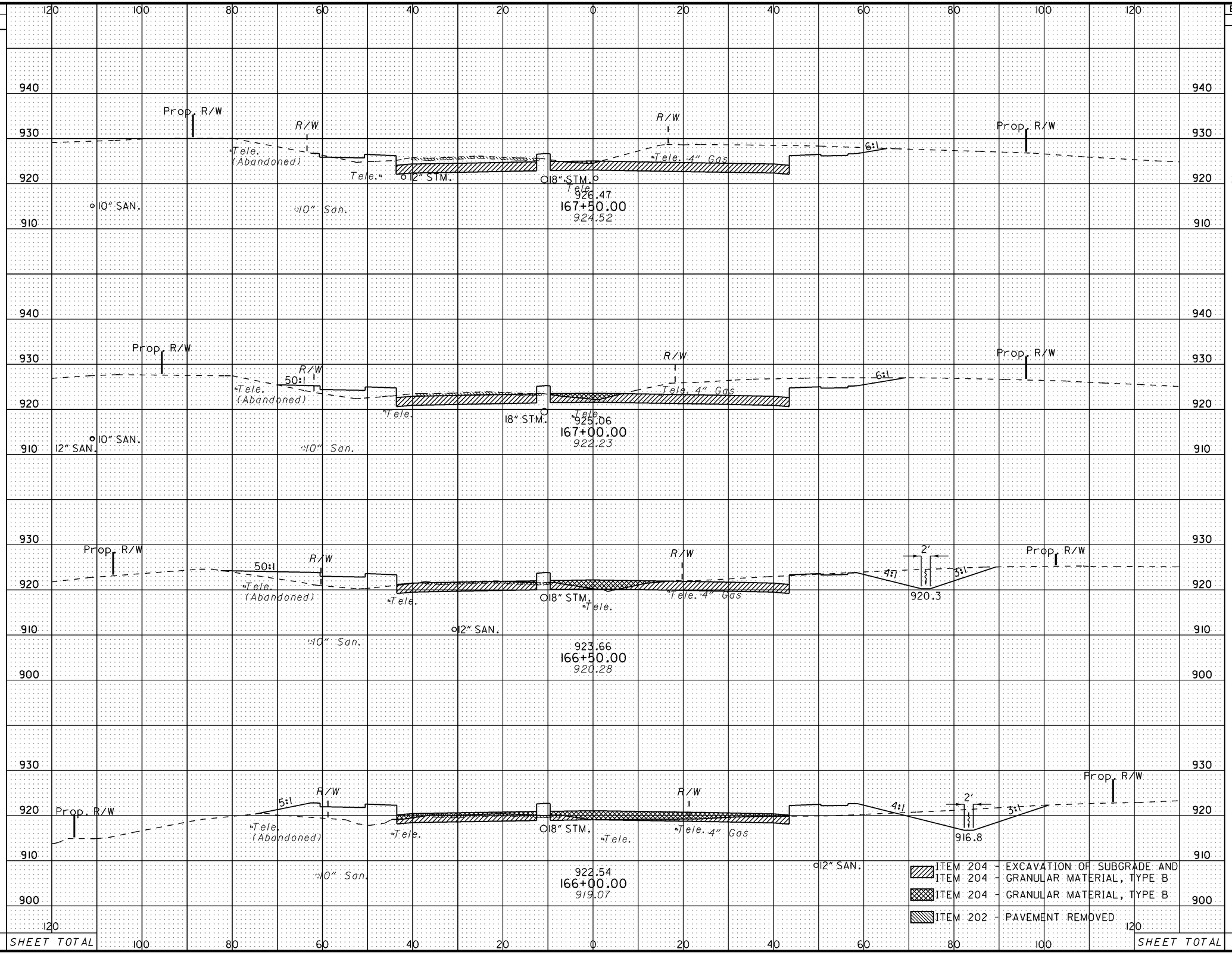

SEEDING	
END WIDTH	SQ. YDS.

END AREA	
CUT	FILL
215	17
156	43
97	82
83	138

VOLUME	
CUT	FILL
344	55
234	116
166	204
158	664

ITEM 204 - EXCAVATION OF SUBGRADE AND
ITEM 204 - GRANULAR MATERIAL, TYPE B
ITEM 204 - GRANULAR MATERIAL, TYPE B
ITEM 202 - PAVEMENT REMOVED

CALCULATED JMD
CHECKED AJS

MIAMISBURG-SPRINGBORO PIKE CROSS SECTIONS STA. 166+00 TO STA. 167+50

MOT-75-0.75

SEEDING	
END WIDTH	SQ. YDS.

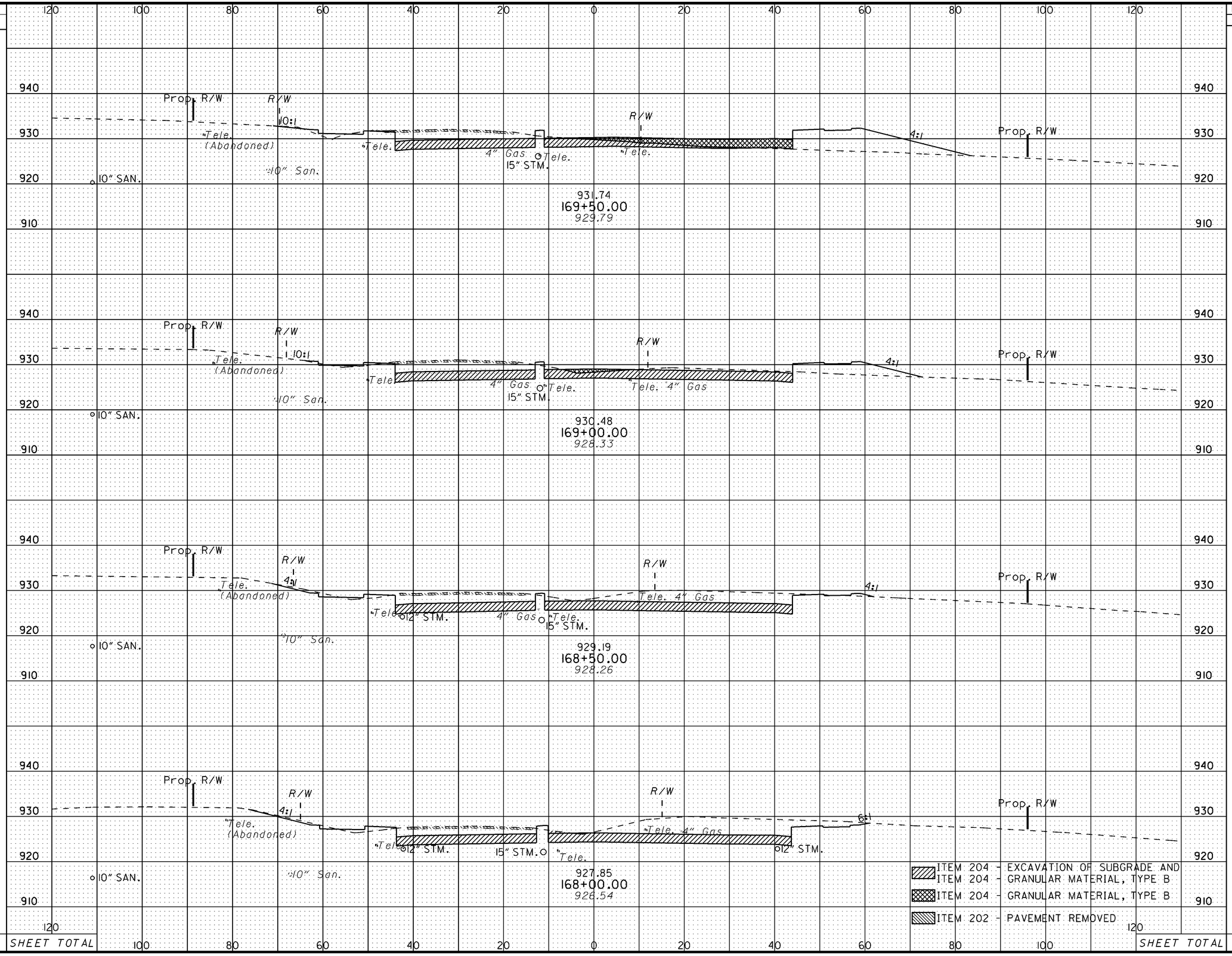

END AREA		VOLUME	
CUT	FILL	CUT	FILL
63	140		
		136	185
83	59		
		239	63
175	9		
		362	18
216	10		
		400	25

CALCULATED JMD
CHECKED AJS

MIAMISBURG-SPRINGBORO PIKE CROSS SECTIONS
STA. 168+00 TO STA. 169+50

MOT-75-0.75

260
773

SEEDING	
END WIDTH	SQ. YDS.

END AREA	
CUT	FILL
38	233
76	410
43	209
99	324

VOLUME	
CUT	FILL

CALCULATED JMD

CHECKED AJS

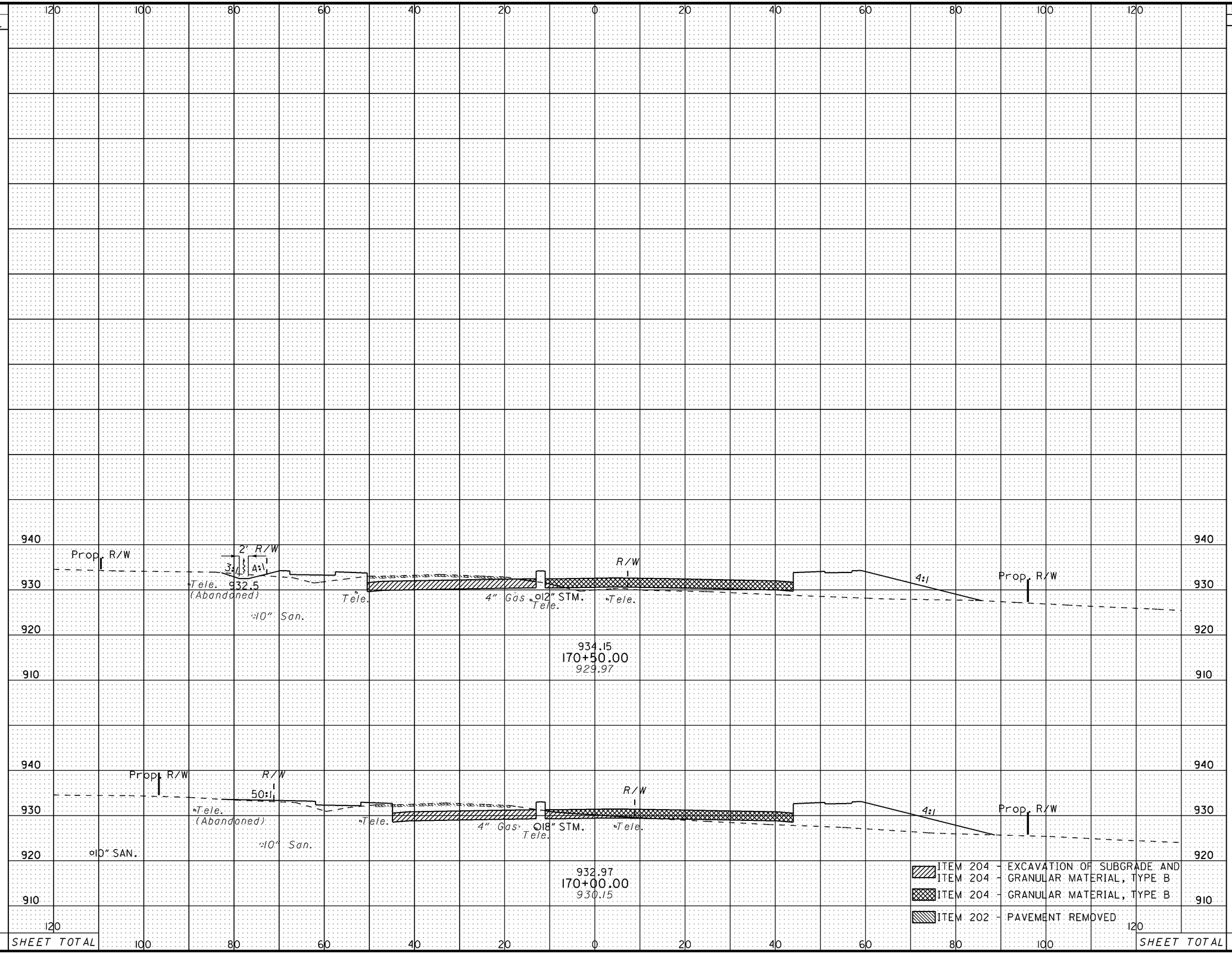

MIAMISBURG-SPRINGBORO PIKE CROSS SECTIONS STA. 170+00 TO STA. 170+50

MOT-75-0.75

SEEDING	
END WIDTH	SQ. YDS.

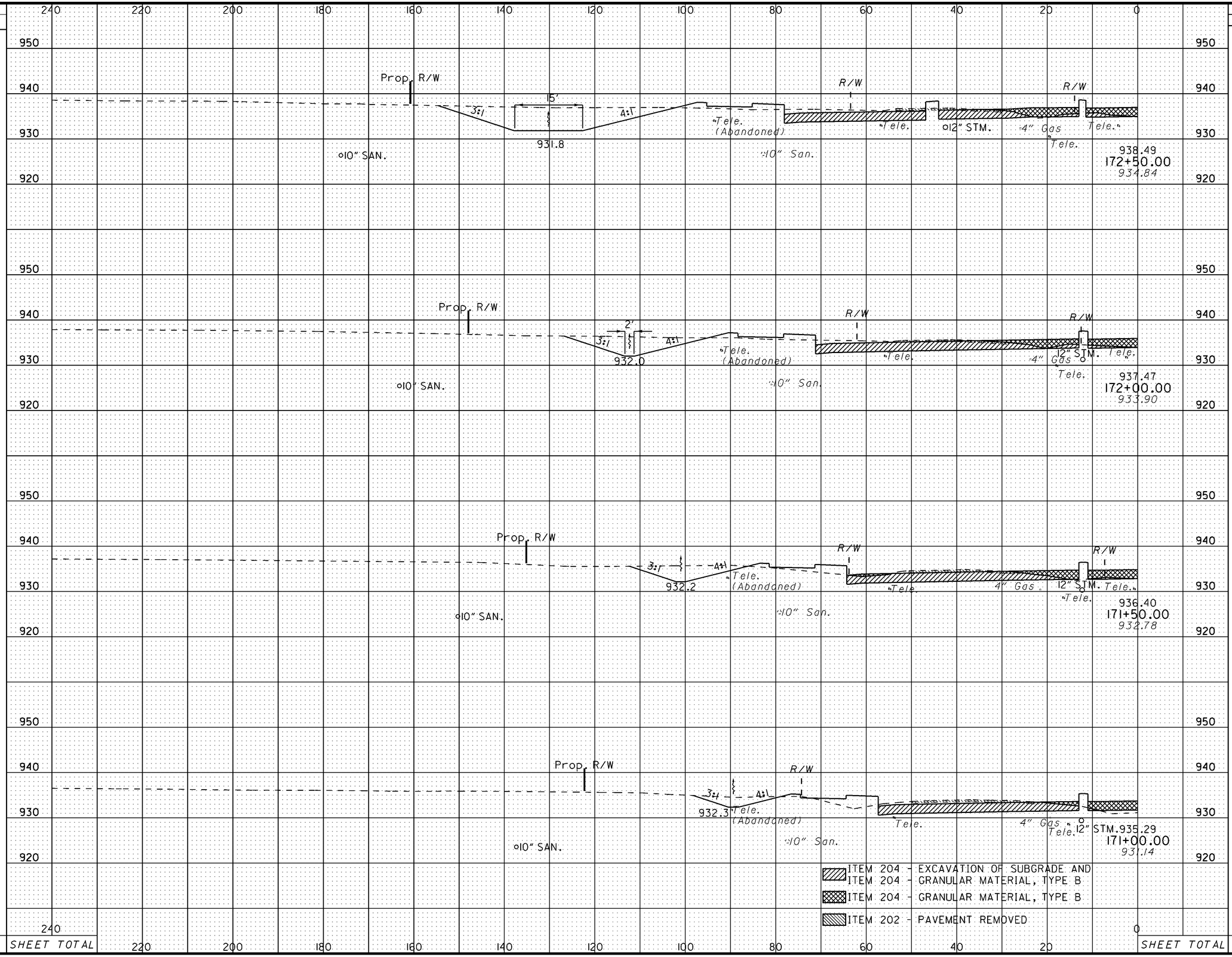

END AREA		VOLUME	
CUT	FILL	CUT	FILL
195	283		
		261	433
86	184		
		136	343
61	186		
		97	355
44	197		
		76	399

CALCULATED JMD
CHECKED AJS

MIAMISBURG-SPRINGBORO PIKE CROSS SECTIONS - LEFT
STA. 171+00 TO STA. 172+50

MOT-75-0.75

262
773

SEEDING	
END WIDTH	SQ. YDS.

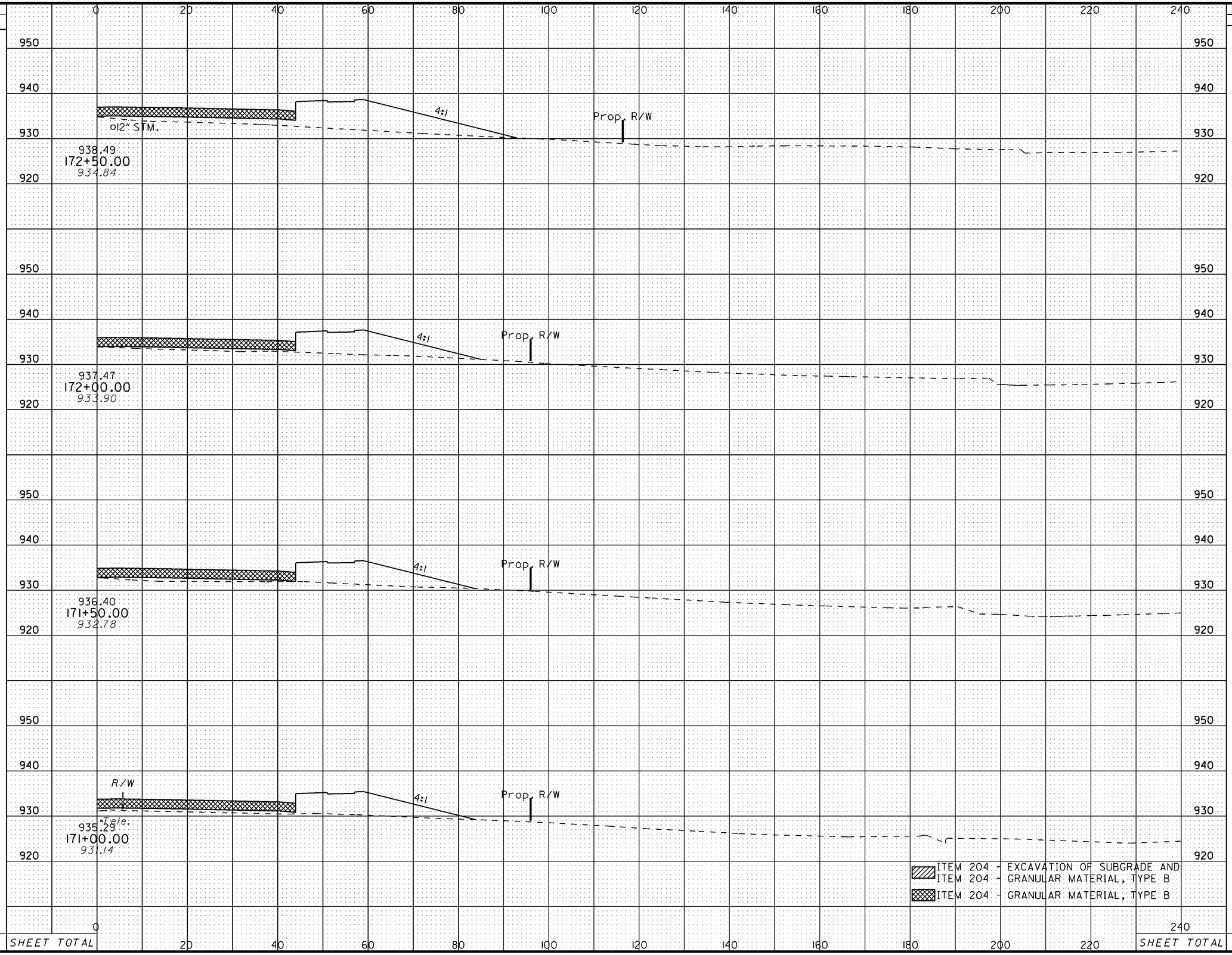

END AREA		VOLUME	
CUT	FILL	CUT	FILL
195	283		
		261	433
86	184		
		136	343
61	186		
		97	355
44	197		
		76	399

SHEET TOTAL

SHEET TOTAL

CALCULATED JMD

CHECKED AJS

MIAMISBURG-SPRINGBORO PIKE CROSS SECTIONS - RIGHT

STA. 171+00 TO STA. 172+50

MOT-75-0.75

263
773

SEEDING	
END WIDTH	SQ. YDS.

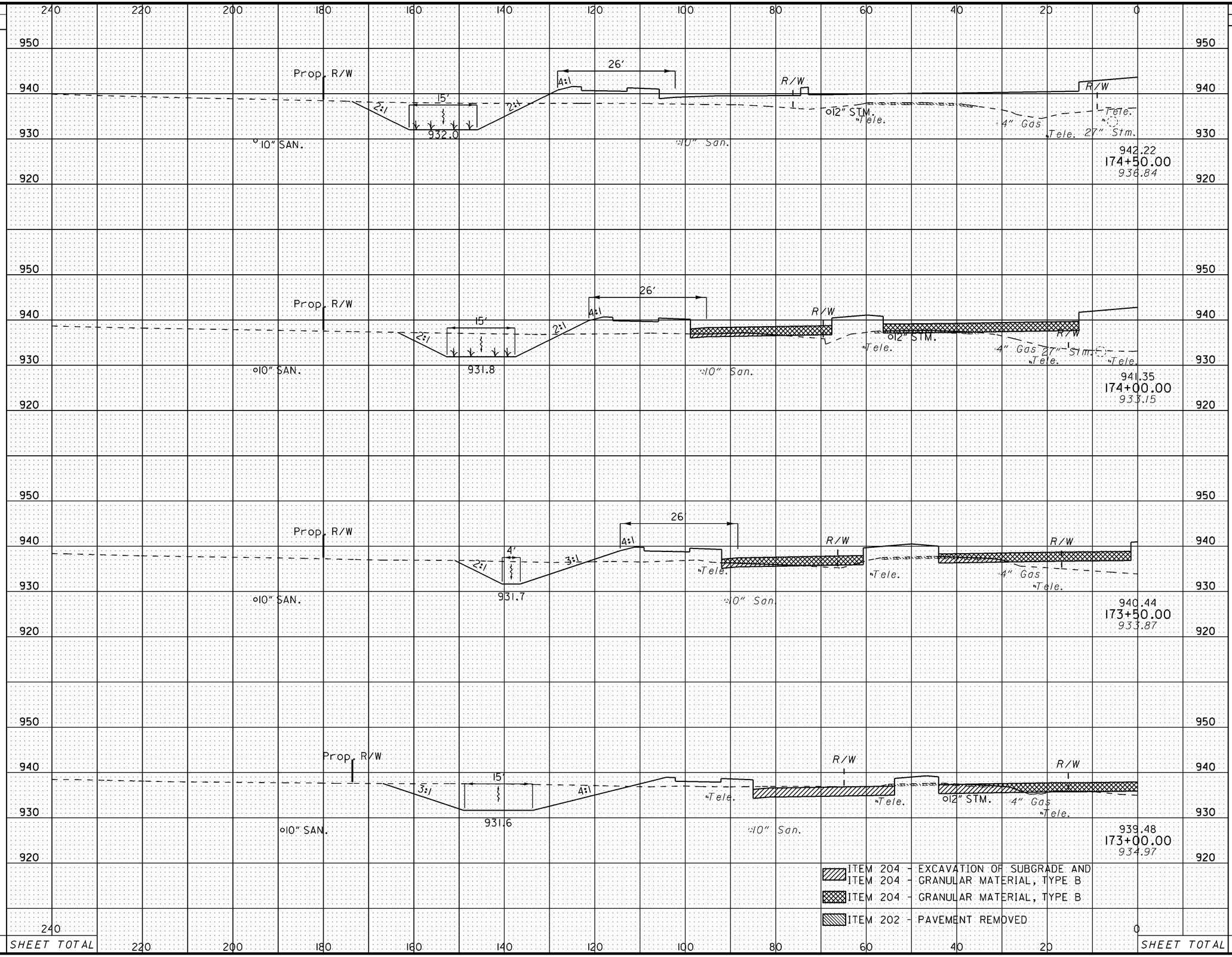

END AREA		VOLUME	
CUT	FILL	CUT	FILL
384	704		
		517	1346
175	749		
		239	1438
83	804		
		272	1181
211	471		
		376	699

CALCULATED JMD

CHECKED AJS

MIAMISBURG-SPRINGBORO PIKE CROSS SECTIONS - LEFT STA. 173+00 TO STA. 174+50

MOT-75-0.75

SEEDING END WIDTH	SEEDING SQ. YDS.	END AREA CUT	END AREA FILL	VOLUME CUT	VOLUME FILL
		384	704		
				517	1346
		175	749		
				239	1438
		83	804		
				272	1181
		211	471		
				376	699

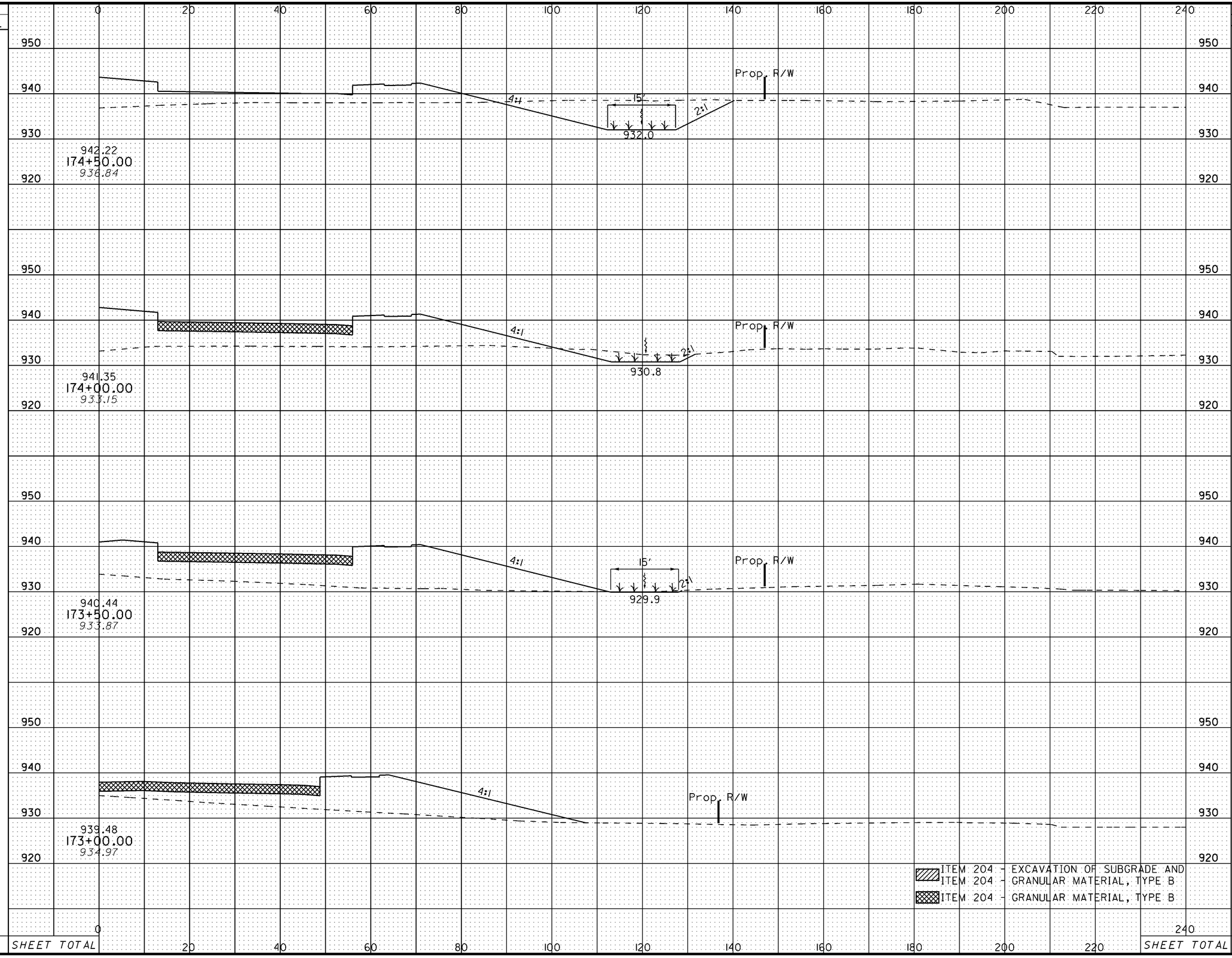

CALCULATED JMD

CHECKED AJS

MIAMISBURG-SPRINGBORO PIKE CROSS SECTIONS - RIGHT
STA. 173+00 TO STA. 174+50

MOT-75-0.75

SEEDING	
END WIDTH	SQ. YDS.

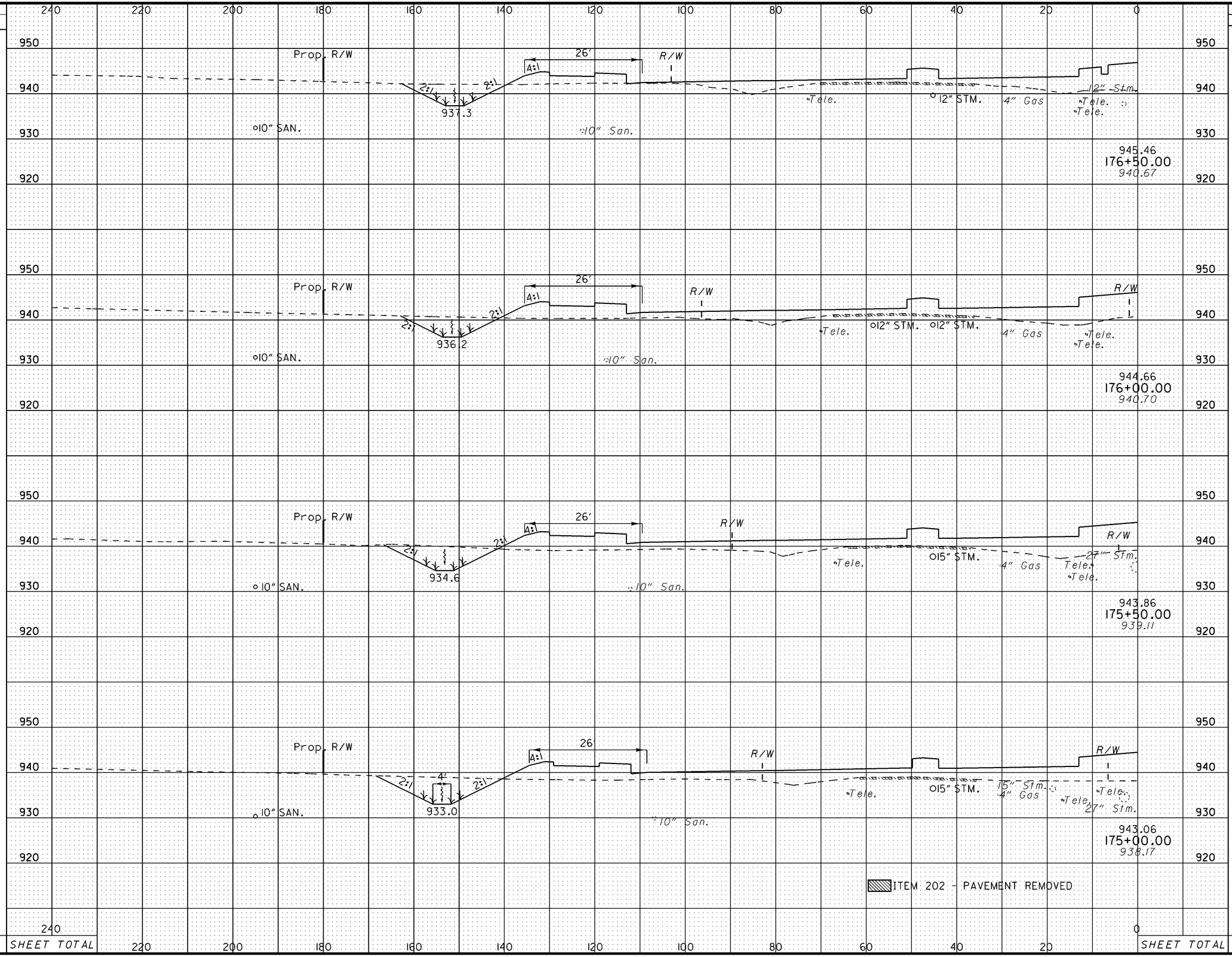

END AREA		VOLUME	
CUT	FILL	CUT	FILL
67	401		
		117	820
59	484		
		129	973
81	567		
		162	1095
95	616		
		443	1222

CALCULATED JMD
CHECKED AJS

MIAMISBURG-SPRINGBORO PIKE CROSS SECTIONS - LEFT
STA. 175+00 TO STA. 176+50

MOT-75-0.75

SEEDING		END AREA		VOLUME	
END WIDTH	SQ. YDS.	CUT	FILL	CUT	FILL
		67	401		
				117	820
		59	484		
				129	973
		81	567		
				162	1095
		95	616		
				443	1222

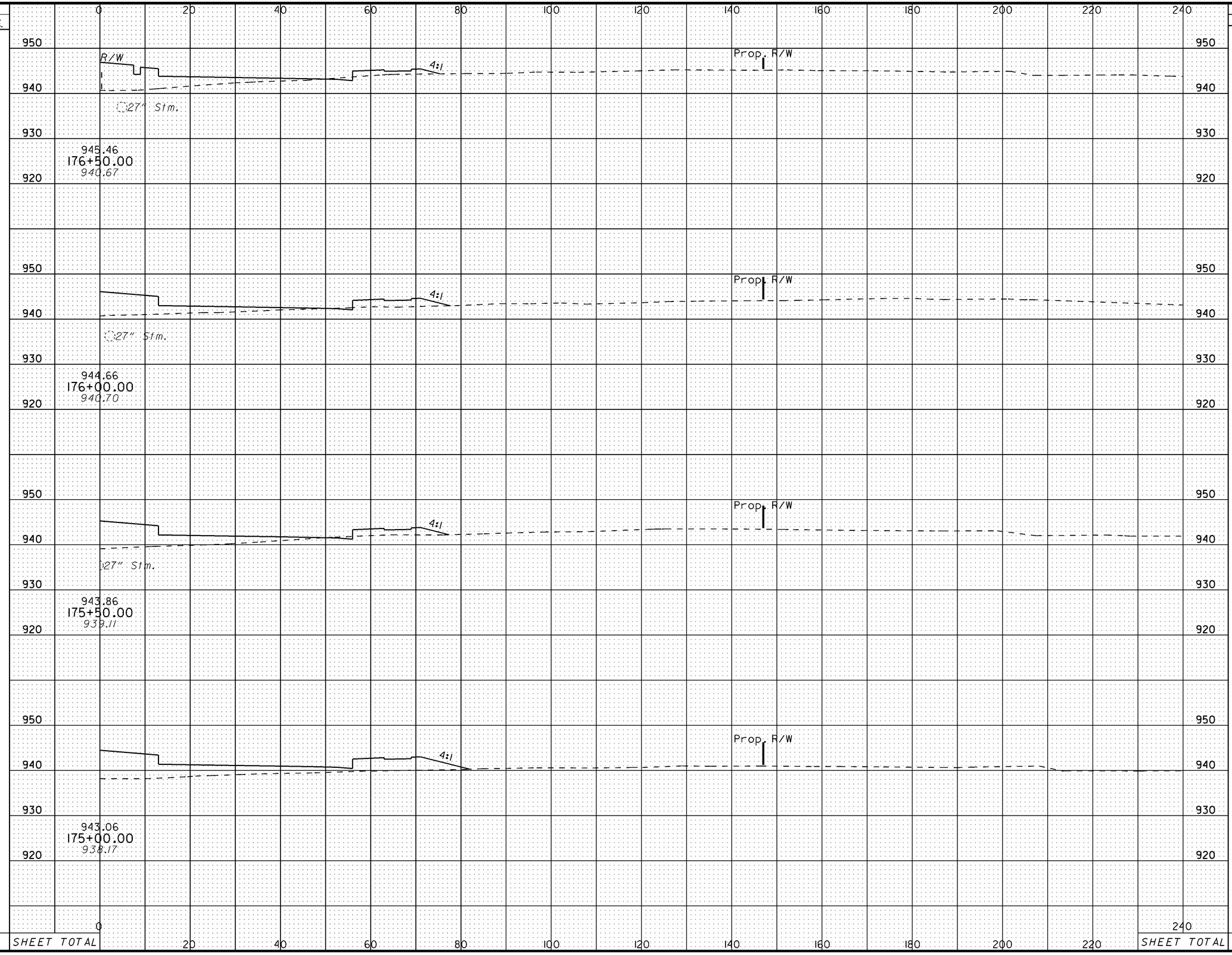

CALCULATED JMD

CHECKED AJS

MIAMISBURG-SPRINGBORO PIKE CROSS SECTIONS - RIGHT

STA. 175+00 TO STA. 176+50

MOT-75-0.75

SEEDING	
END WIDTH	SQ. YDS.

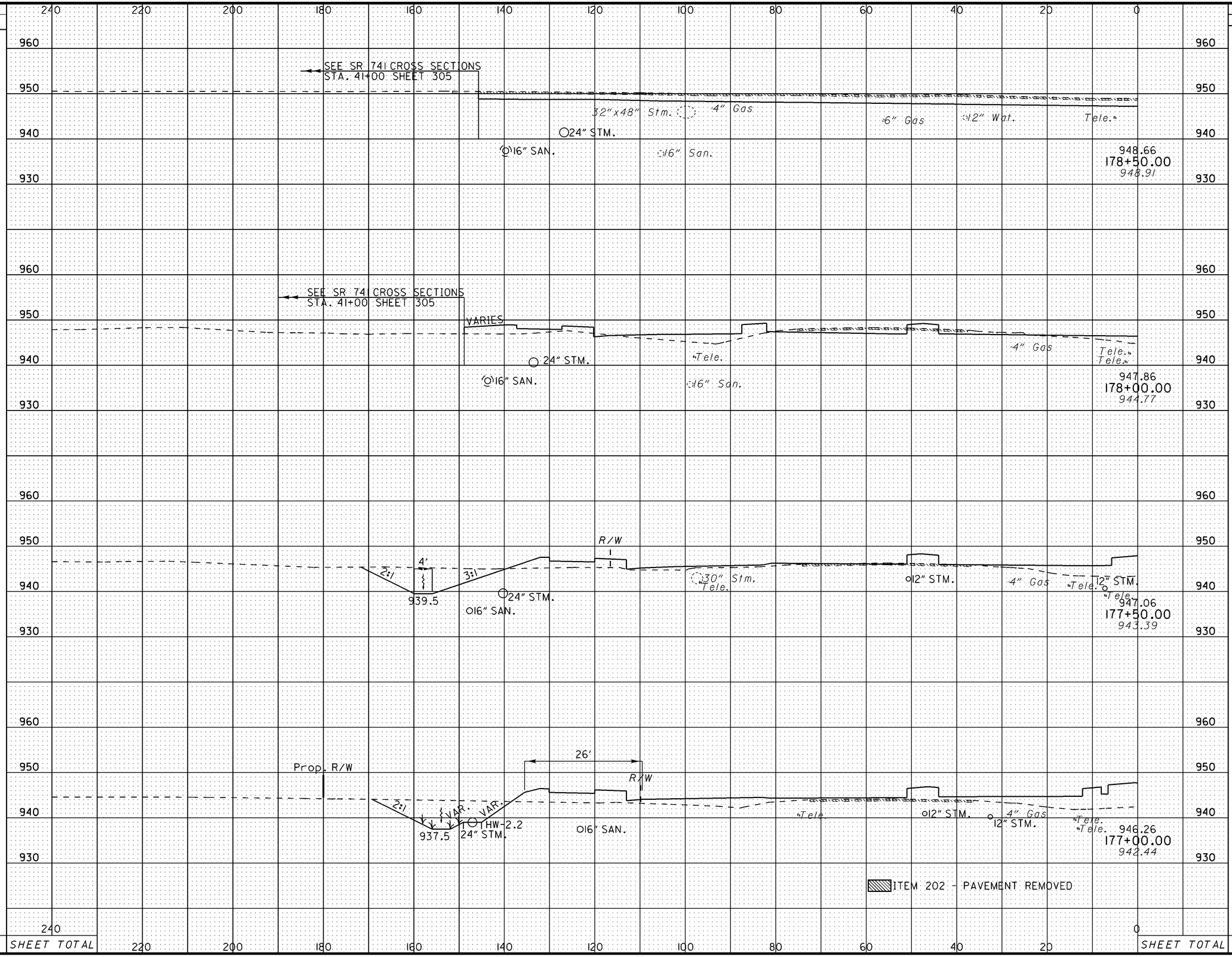

END AREA		VOLUME	
CUT	FILL	CUT	FILL
615	0		
		610	464
44	501		
		146	680
114	234		
		220	536
124	345		
		177	690

CALCULATED JMD

CHECKED AJS

MIAMISBURG-SPRINGBORO PIKE CROSS SECTIONS - LEFT
STA. 177+00 TO STA. 178+50

MOT-75-0.75

SEEDING		END AREA		VOLUME	
END WIDTH	SQ. YDS.	CUT	FILL	CUT	FILL
		615	0	610	464
		44	501	146	680
		114	234	220	536
		124	345	177	690
SHEET TOTAL					

0 20 40 60 80 100 120 140 160 180 200 220 240

960 950 940 930

SEE SR 741 CROSS SECTIONS
STA. 38+00 SHEET 304

Tele.

948.66
178+50.00
948.91

21" Stm.

12" Wat.

4:1

27" Stm.

Tele.

947.86
178+00.00
944.77

947.06
177+50.00
943.39

016" SAN.

R/W

946.26
177+00.00
942.44

ITEM 202 - PAVEMENT REMOVED

CALCULATED JMD
CHECKED AJS

MIAMISBURG-SPRINGBORO PIKE CROSS SECTIONS - RIGHT
STA. 177+00 TO STA. 178+50

MOT-75-0.75

269
773

SEEDING	
END WIDTH	SQ. YDS.

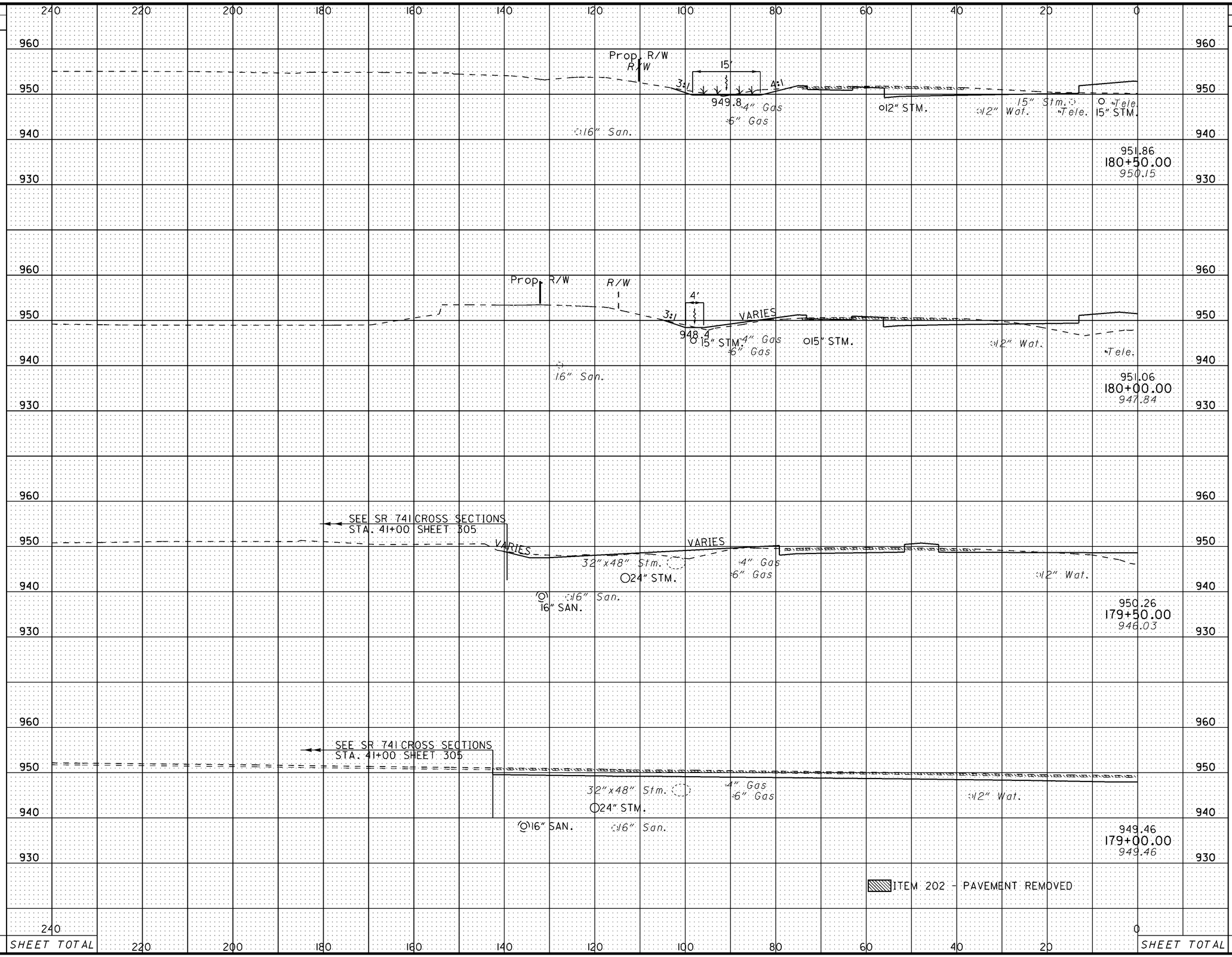

END AREA		VOLUME	
CUT	FILL	CUT	FILL
75	189	110	440
44	287	89	648
52	413	436	383
419	0	957	0

CALCULATED JMD
CHECKED AJS

AUSTIN PIKE CROSS SECTIONS - LEFT
STA. 179+00 TO STA. 180+50

MOT-75-0.75

270
773

SEEDING		END AREA		VOLUME	
END WIDTH	SQ. YDS.	CUT	FILL	CUT	FILL
		75	189	110	440
		44	287	89	648
		52	413	436	383
		419	0	957	0

CALCULATED JMD
CHECKED AJS

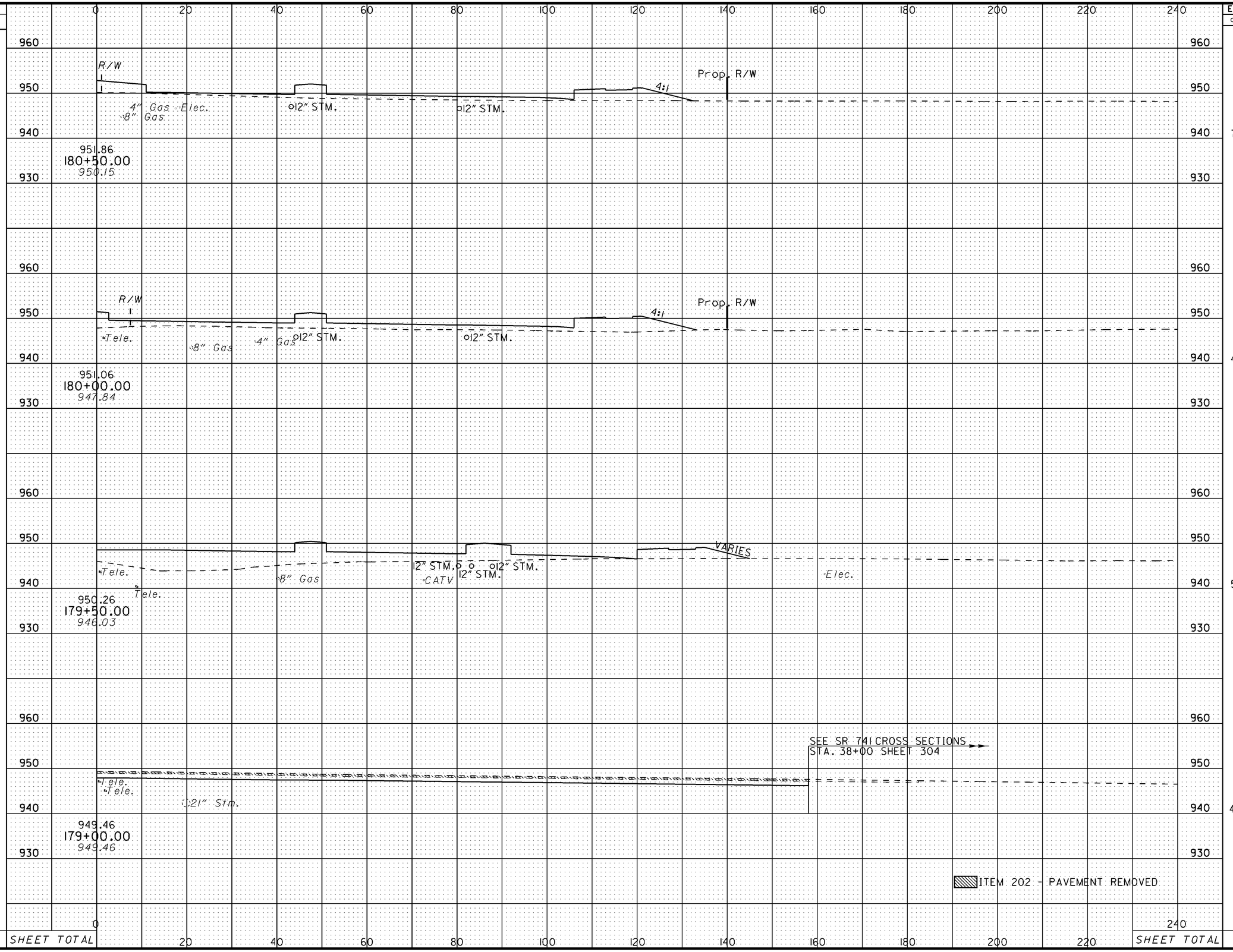

AUSTIN PIKE CROSS SECTIONS - RIGHT
STA. 179+00 TO STA. 180+50

MOT-75-0.75

271
773

SEEDING	
END WIDTH	SQ. YDS.

240 220 200 180 160 140 120 100 80 60 40 20 0

970 960 950 940 930

Prop. R/W
R/W
4'
3:1
4:1
952.0
4" Gas
6" Gas
16" San.
12" STM.
12" Wat.
8" Gas
Tele.
4" Gas
15" STM.
R/W
953.80
181+50.00
951.43

Prop. R/W
R/W
15'
3:1
4:1
951.4
4" Gas
6" Gas
16" San.
12" STM.
12" Wat.
Tele.
8" Gas
15" STM.
Tele.
R/W
952.70
181+00.00
950.66

ITEM 202 - PAVEMENT REMOVED

SHEET TOTAL

END AREA		VOLUME	
CUT	FILL	CUT	FILL
68	285		
		131	494
74	249		
		138	405

SHEET TOTAL

CALCULATED JMD
CHECKED AJS

AUSTIN PIKE CROSS SECTIONS - LEFT
STA. 181+00 TO STA. 181+50

MOT-75-0.75

272
773

SEEDING		END AREA		VOLUME	
END WIDTH	SQ. YDS.	CUT	FILL	CUT	FILL
		68	285		
				131	494
		74	249		
				138	405

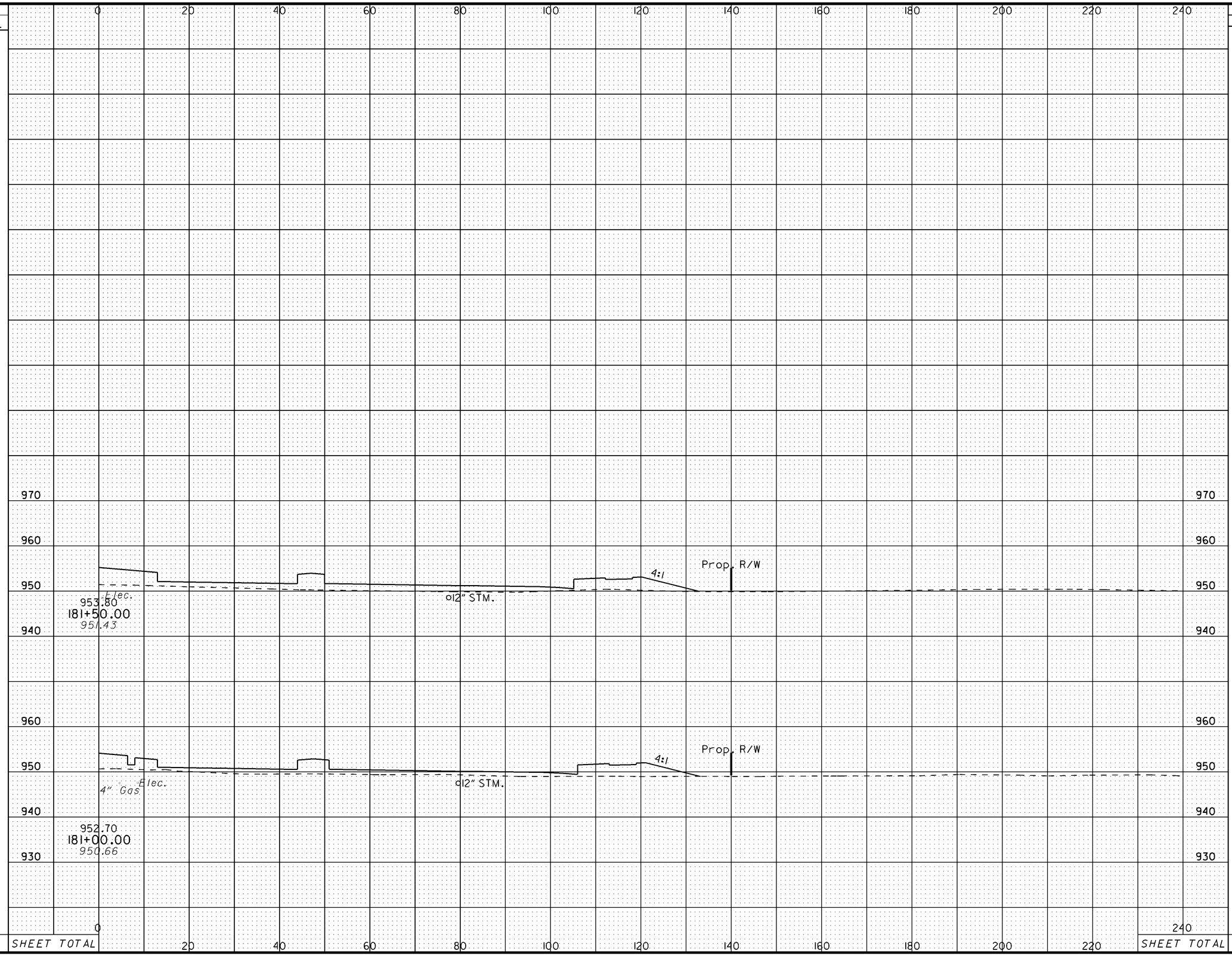

CALCULATED JMD

CHECKED AJS

AUSTIN PIKE CROSS SECTIONS - RIGHT
STA. 181+00 TO STA. 181+50

MOT-75-0.75

273
773

SEEDING	
END WIDTH	SQ. YDS.

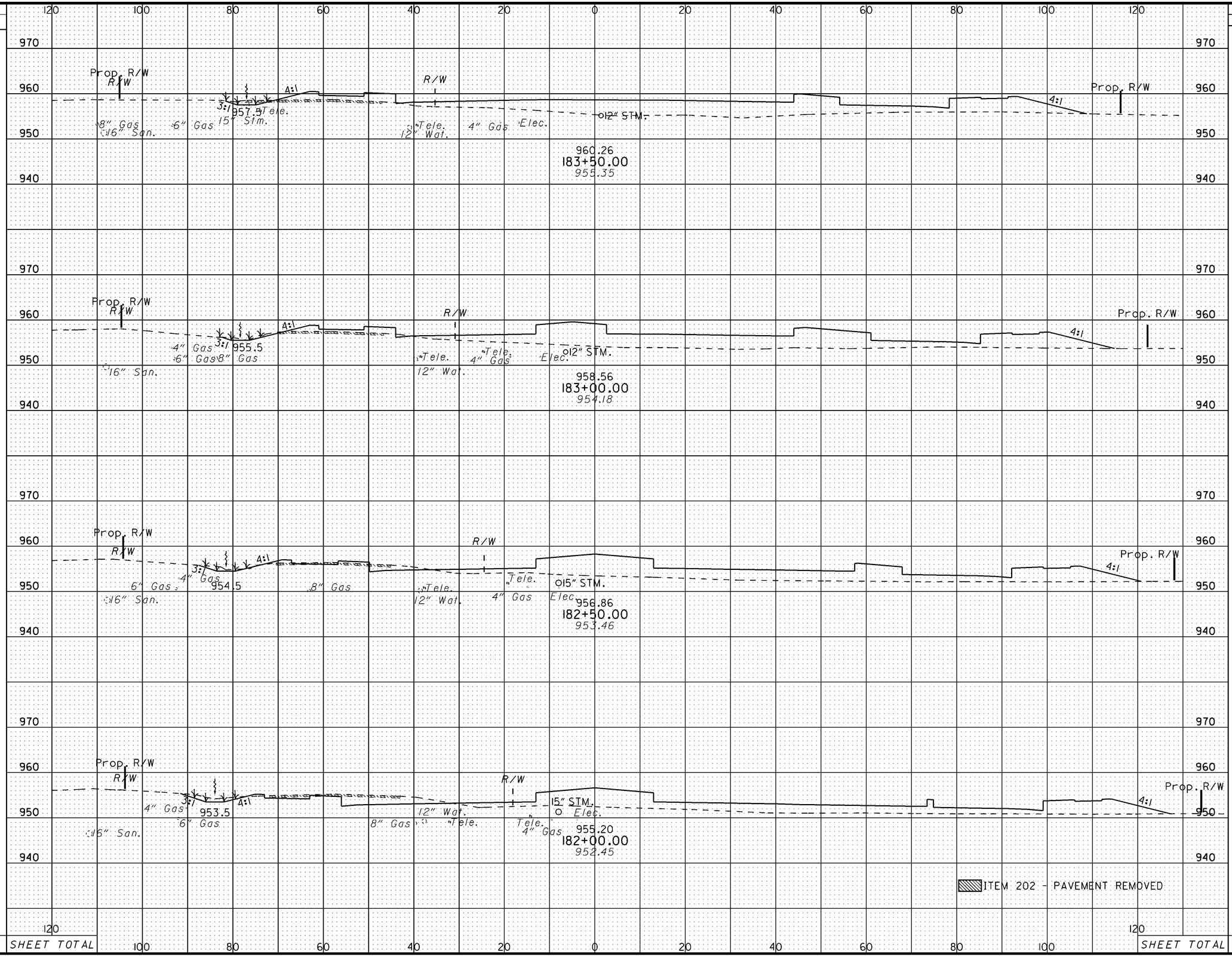

END AREA		VOLUME	
CUT	FILL	CUT	FILL
7	411		
		11	776
5	428		
		23	746
20	377		
		70	643
56	317		
		115	558

CALCULATED JMD

CHECKED AJS

AUSTIN PIKE CROSS SECTIONS
STA. 182+00 TO STA. 183+50

MOT-75-0.75

274
773

SEEDING	
END WIDTH	SQ. YDS.

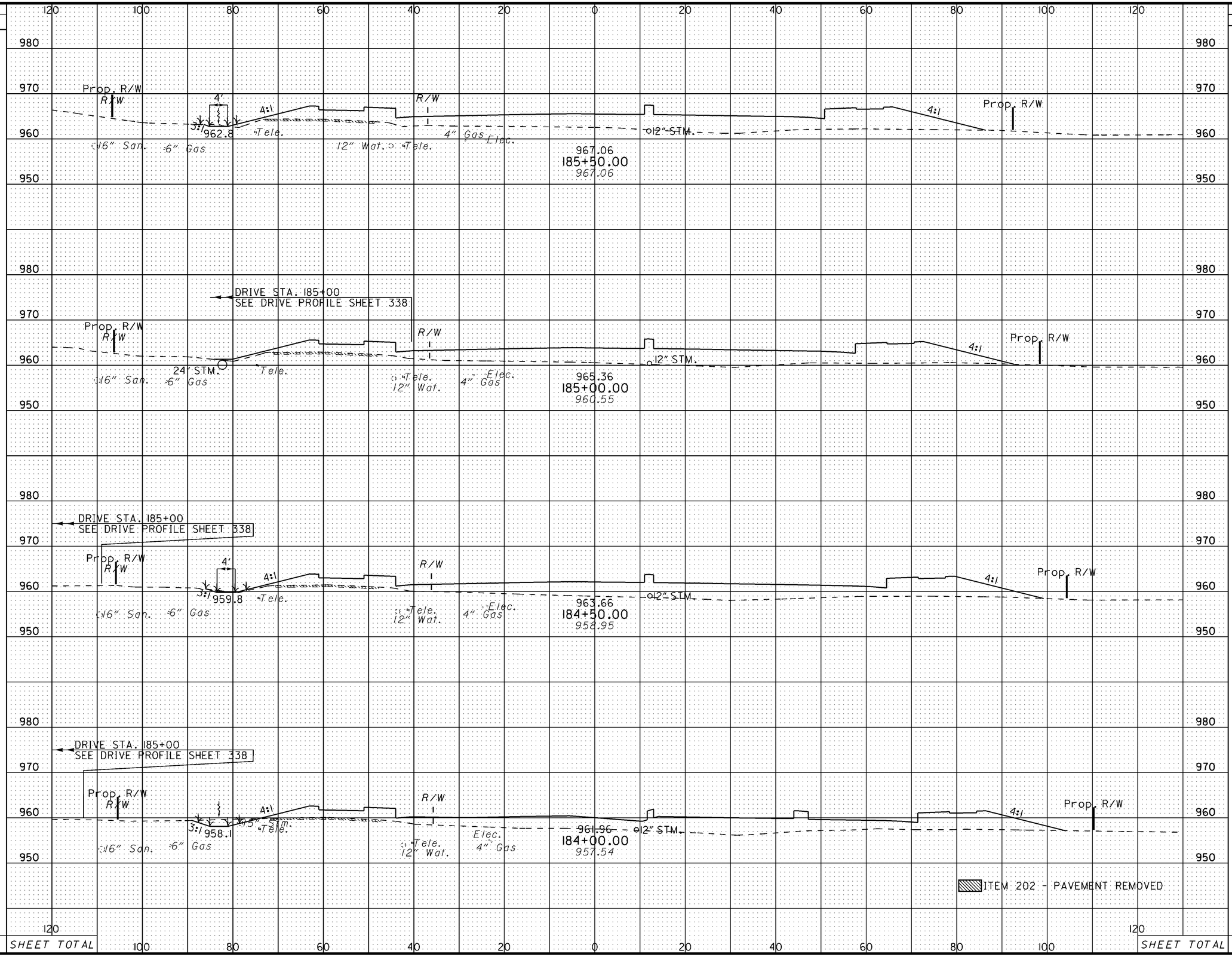

END AREA		VOLUME	
CUT	FILL	CUT	FILL
1	473		
		1	885
0	482		
		1	872
1	459		
		15	840
14	448		
		20	795

CALCULATED JMD

CHECKED AJS

AUSTIN PIKE CROSS SECTIONS
STA. 184+00 TO STA. 185+50

MOT-75-0.75

SEEDING	
END WIDTH	SQ. YDS.

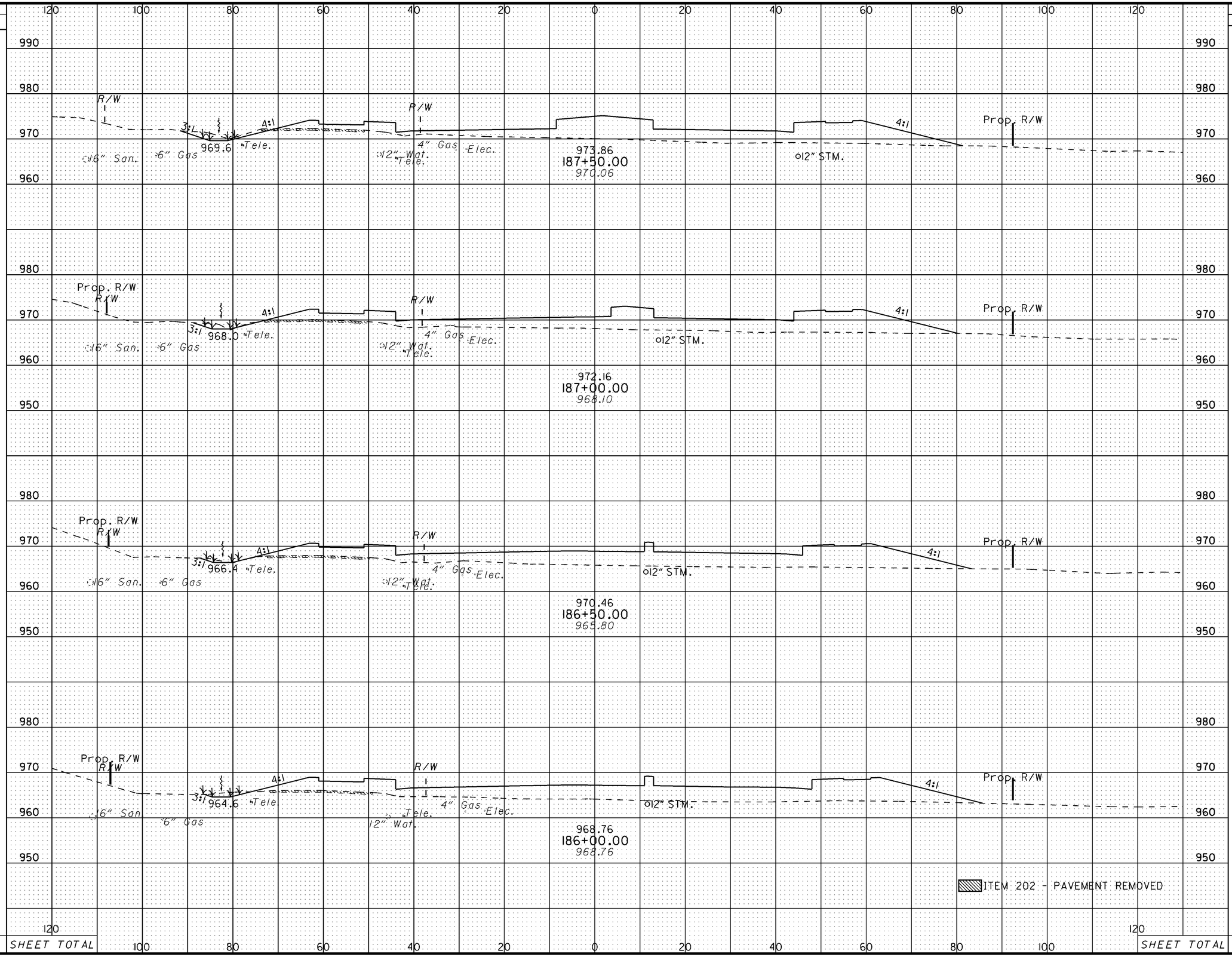

END AREA		VOLUME	
CUT	FILL	CUT	FILL
15	395		
		19	740
6	404		
		8	786
3	444		
		8	847
6	471		
		7	874

CALCULATED JMD

CHECKED AJS

AUSTIN PIKE CROSS SECTIONS STA. 186+00 TO STA. 187+50

MOT-75-0.75

276
773

SEEDING		END AREA		VOLUME	
END WIDTH	SQ. YDS.	CUT	FILL	CUT	FILL
		196	130		
				328	254
		158	144		
				254	301
		117	180		
				163	396
		59	247		
				68	594

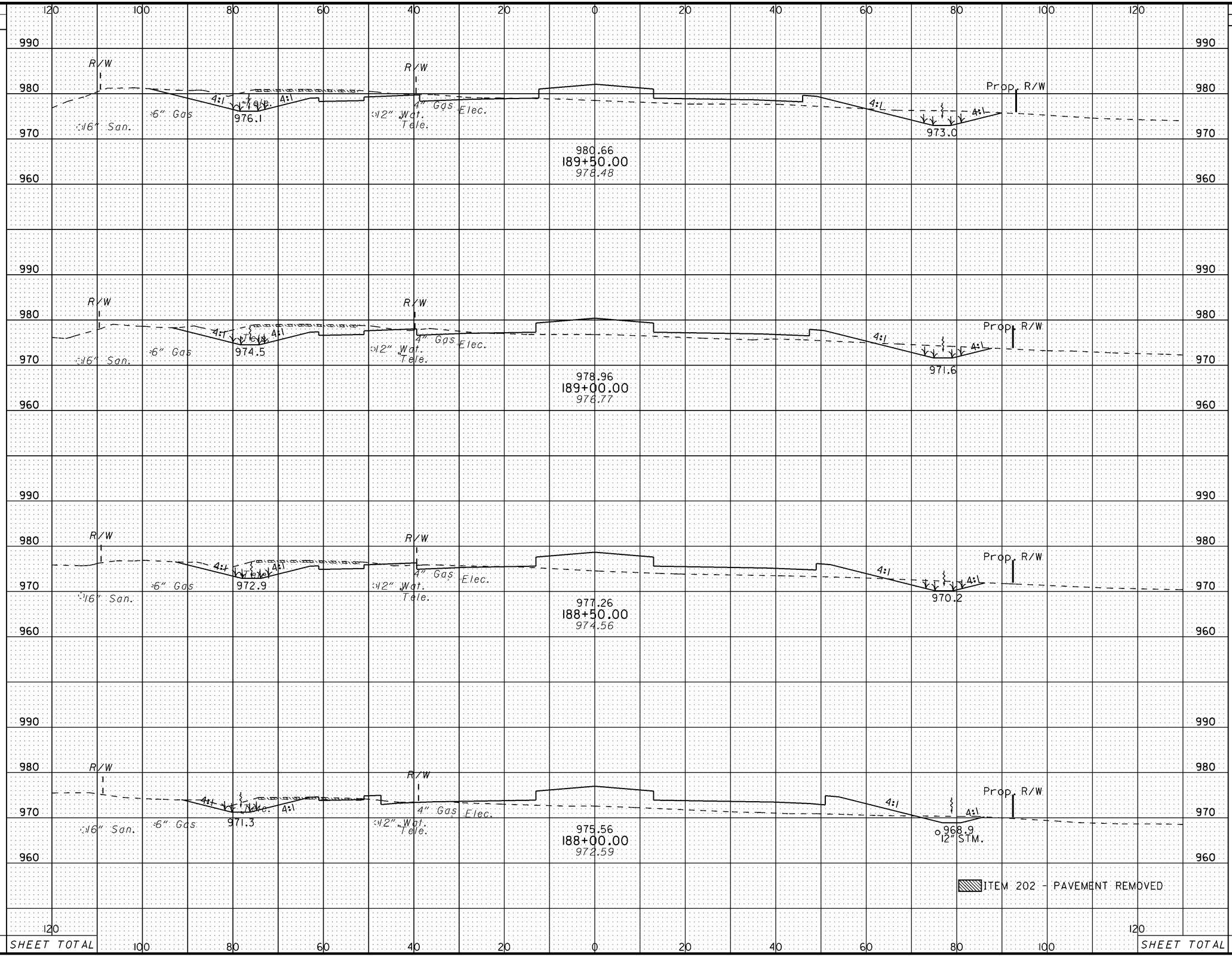

CALCULATED JMD
CHECKED AJS

AUSTIN PIKE CROSS SECTIONS
STA. 188+00 TO STA. 189+50

MOT-75-0.75

277
773

SEEDING		END AREA		VOLUME	
END WIDTH	SQ. YDS.	CUT	FILL	CUT	FILL
		191	76	375	145
		214	80	424	154
		245	87	446	178
		237	106	401	218
SHEET TOTAL					

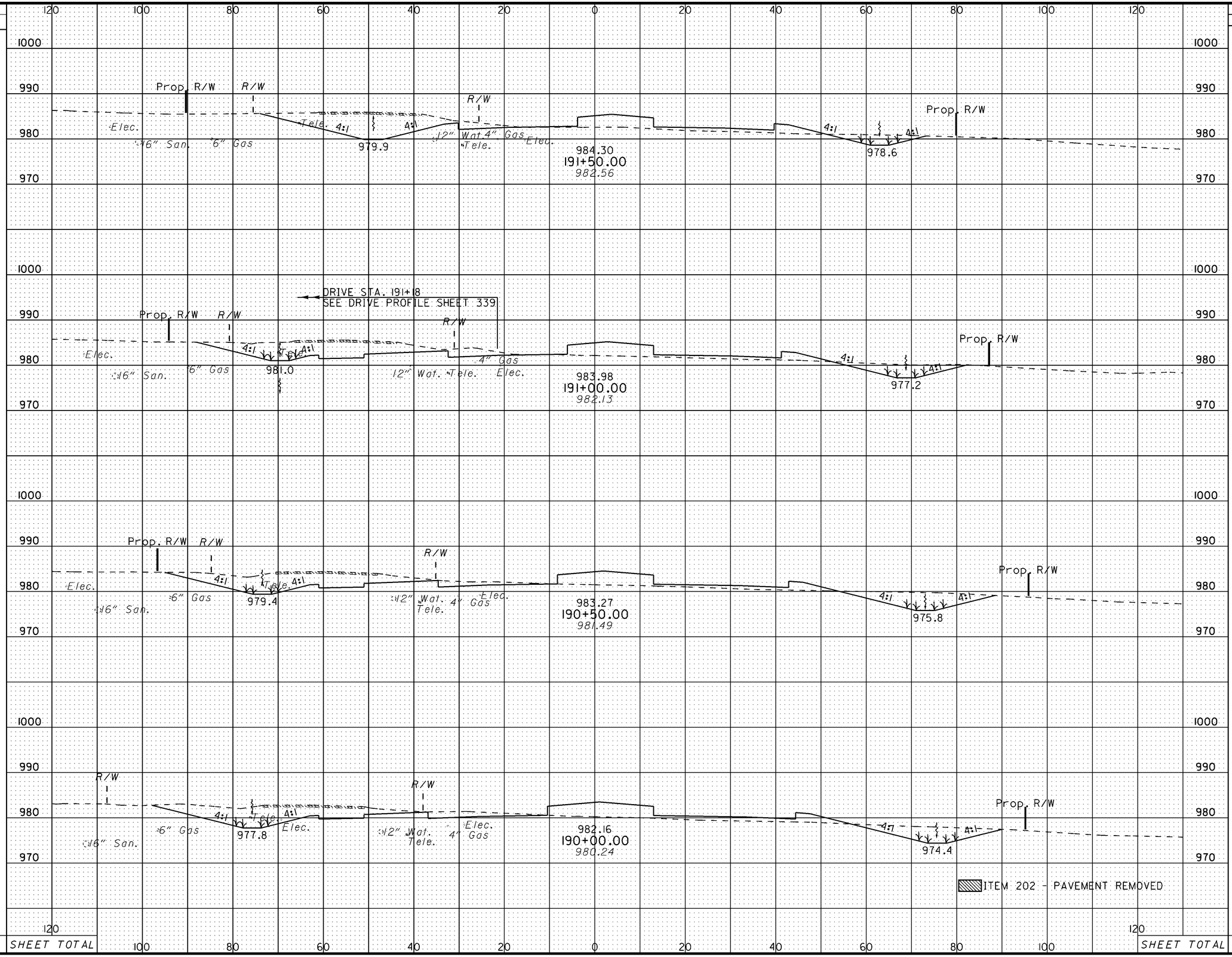

CALCULATED JMD

CHECKED AJS

AUSTIN PIKE CROSS SECTIONS
STA. 190+00 TO STA. 191+50

MOT-75-0.75

278
773

SEEDING	
END WIDTH	SQ. YDS.

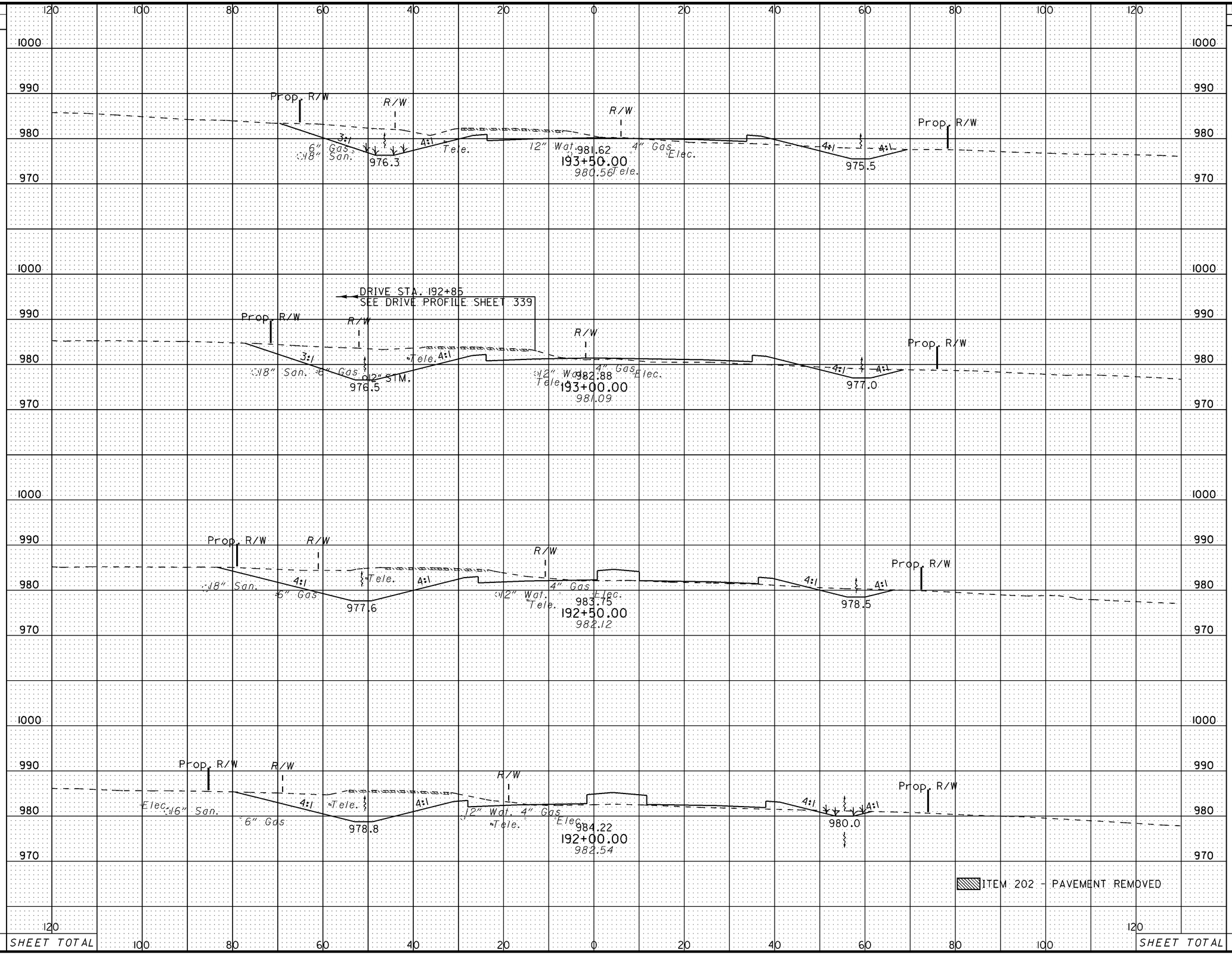

END AREA		VOLUME	
CUT	FILL	CUT	FILL
228	24	465	53
274	33	511	64
278	37	460	85
219	55	380	121

CALCULATED JMD

CHECKED AJS

AUSTIN PIKE CROSS SECTIONS
STA. 192+00 TO STA. 193+50

MOT-75-0.75

SEEDING	
END WIDTH	SQ. YDS.

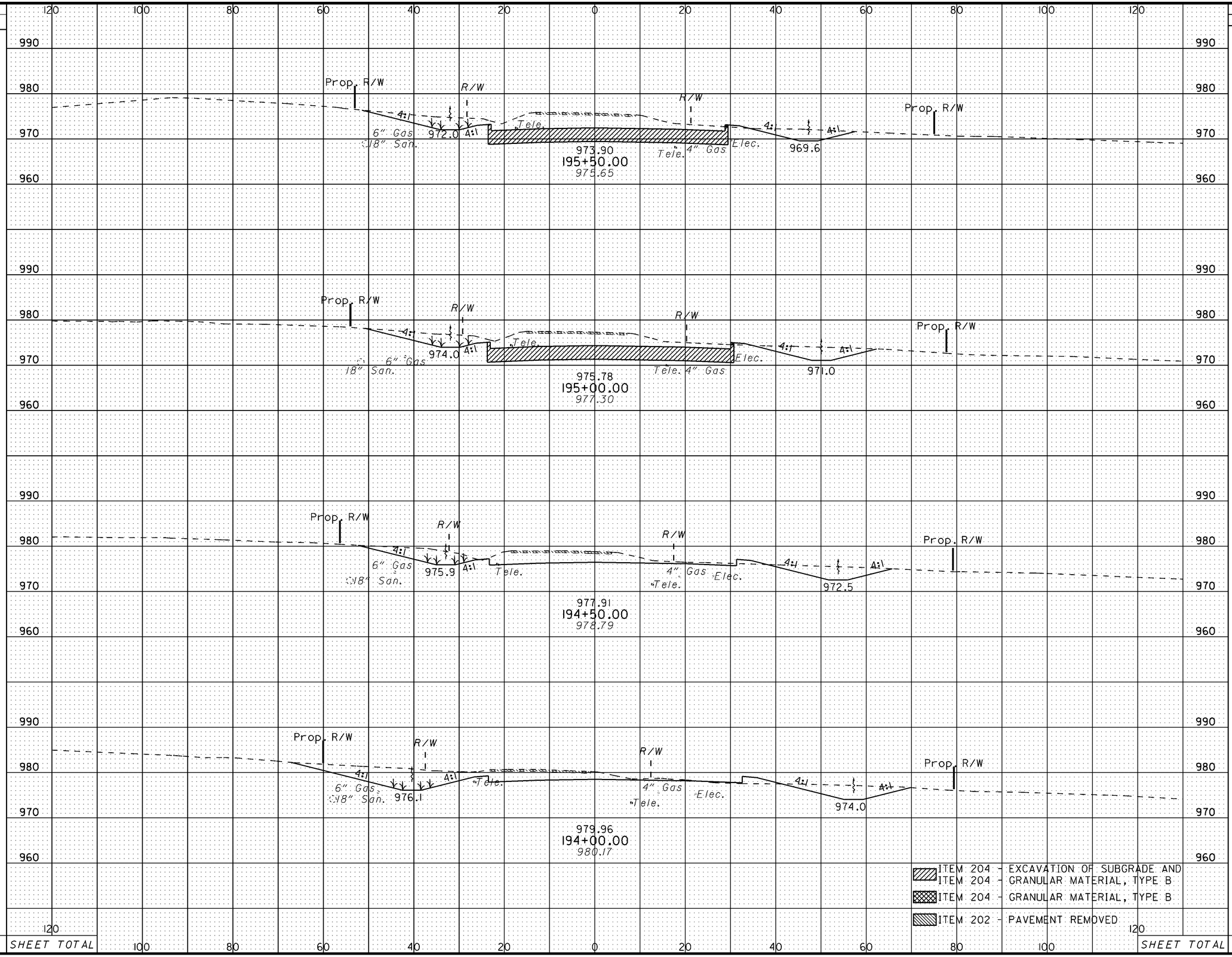

END AREA		VOLUME	
CUT	FILL	CUT	FILL
209	2		
		392	3
214	1		
		372	5
188	4		
		388	12
231	9		
		425	31
SHEET TOTAL			

CALCULATED JMD
CHECKED AJS

AUSTIN PIKE CROSS SECTIONS STA. 194+00 TO STA. 195+50

MOT-75-0.75

SEEDING		END AREA		VOLUME	
END WIDTH	SQ. YDS.	CUT	FILL	CUT	FILL
		100	4	219	7
		137	4	323	8
		212	4	396	6
		216	2	394	3

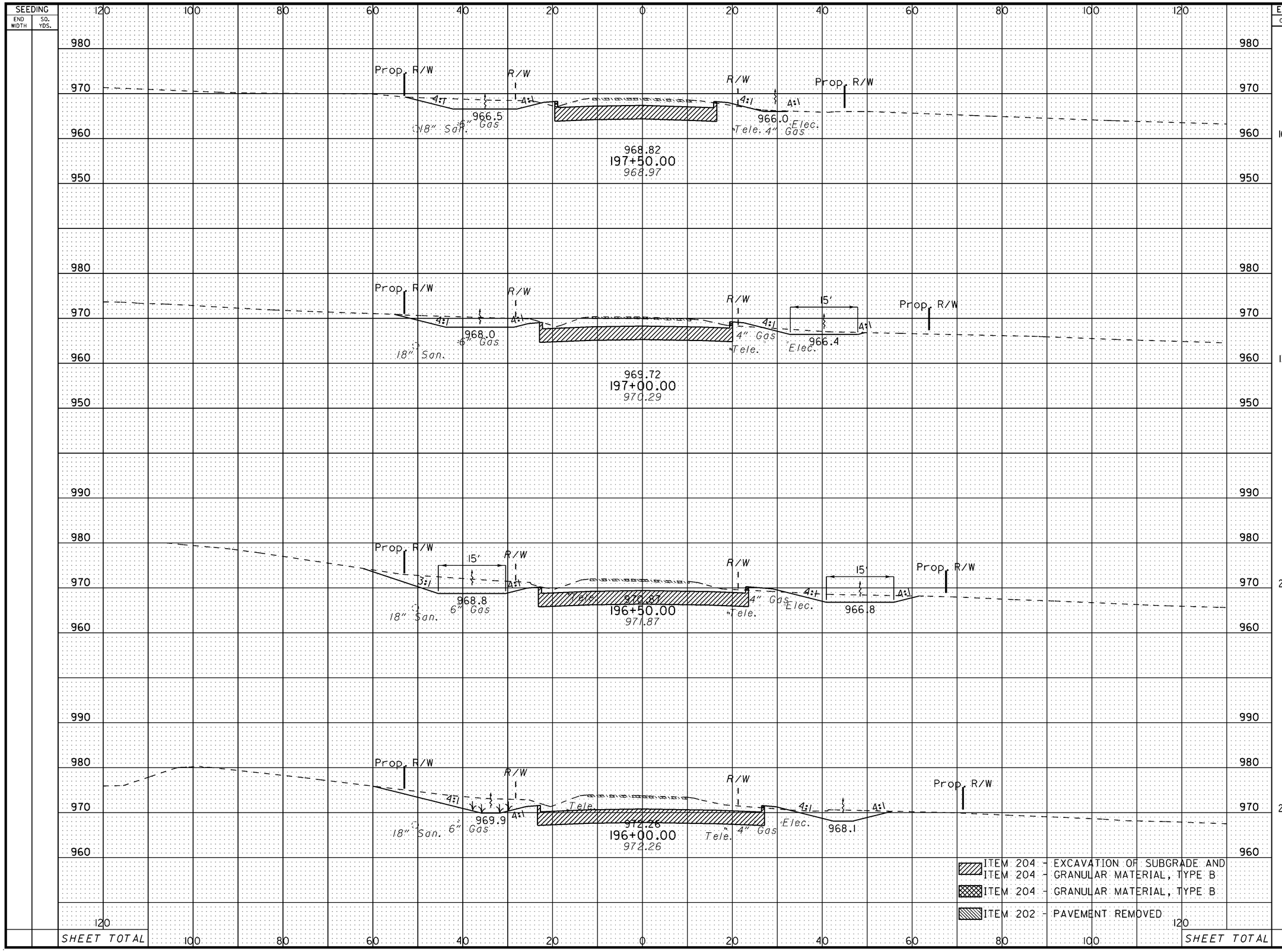

CALCULATED JMD
CHECKED AJS

AUSTIN PIKE CROSS SECTIONS
STA. 196+00 TO STA. 197+50

MOT-75-0.75

281
773

SEEDING	
END WIDTH	SQ. YDS.

120 100 80 60 40 20 0 20 40 60 80 100 120

END AREA		VOLUME	
CUT	FILL	CUT	FILL

CALCULATED JMD

CHECKED AJS

TOTALS CARRIED TO GENERAL SUMMARY

ITEM 203 - EXCAVATION	30953 CU YD
ITEM 203 - EMBANKMENT	178373 CU YD
ITEM 204 - EXCAVATION OF SUBGRADE	7760 CU YD
ITEM 204 - GRANULAR MATERIAL, TYPE B	3311 CU YD
ITEM 204 - GEOTEXTILE FABRIC	20336 SY YD

ADJUST FOR: ITEM 203 - EMBANKMENT, AS PER PLAN (BRIDGE) & ITEM 840 - SELECT GRANULAR BACKFILL (BRIDGE) -7932

ADJUST FOR ITEM 202 - PAVEMENT REMOVED -3267

980 970 960 950

Prop. R/W
R/W
L
VAR.
VAR.
Prop. R/W
R/W
1
6" Gas
18" San.
4" Gas
Elec.
Tele.

968.35
197+80.00 MEET EXISTING
968.35

ITEM 204 - EXCAVATION OF SUBGRADE AND ITEM 204 - GRANULAR MATERIAL, TYPE B

ITEM 204 - GRANULAR MATERIAL, TYPE B

ITEM 202 - PAVEMENT REMOVED

40	0	78	2

120 100 80 60 40 20 0 20 40 60 80 100 120

SHEET TOTAL SHEET TOTAL

AUSTIN PIKE CROSS SECTIONS STA. 197+80

MOT-75-0.75

*NOTE: THE EXISTING WATER MAIN IS NOT RESTRAINED WHEN VALVED OFF AT THE NEAREST VALVE. CONTRACTOR SHALL EITHER TEMPORARILY RESTRAIN THE WATER MAIN AT THE POINT OF CONNECTION OR ARRANGE FOR THE MAINS TO BE TAKEN OUT OF SERVICE IN ORDER TO ENSURE THE EXISTING TEE AND VALVES ARE NOT DISTURBED.

BEGIN WORK STA. 38+30.00

STA 38+99.0,130.0' LT
CONNECT TO EXISTING WITH TEE, PLUG AND 22 1/2° BEND- ROTATE TO GRADE. INSTALL THRUST BLOCK PER DETAIL, SHEET 403. CUT, PLUG AND ABANDON EXISTING 12" WATER TO THE EAST - SEE NOTE.

ITEM 670, DITCH EROSION PROTECTION
138'x17'÷9=261 SY (E-101)

STA 40+30.0
73.0' LT
90° BEND
22 1/2° BEND

STA 40+30.0, 18.0' RT (W-34)
12"x12"x12" TEE,
12"x6" REDUCER,
6" VALVE & HYDRANT-S

ITEM 670, DITCH EROSION PROTECTION (E-102)
(283'x8'+217'x11')÷9=520 SY

12" WATER MAIN (BY OTHERS)

MODULAR BLOCK WALL
(SEE DETAIL SHEETS 394-399)

STA. 38+36.75
BEGIN PAVT. TAPER & GUTTER
BEGIN CURB & WIDTH TAPER
BEGIN CURB HEIGHT & WIDTH TAPER

STA. 39+28.00
BEGIN PAVT. TAPER

STA. 40+00.00
END PAVT. TAPER
BEGIN PAVT. TAPER

10' END CURB HEIGHT & WIDTH TAPER

10' CURB HEIGHT & WIDTH TAPER TO MEET EX.

CONSTRUCTION LIMITS

MASONRY COLLAR

SAWCUT LINE

Crains Run Rd.

Dense Vegetation

Beanfield

MATCH LINE STA. 43+00 SEE SHEET 284

38+00 39+00 40+00 41+00 42+00

℄ WOOD ROAD
9.71'
5.38%
6" Asphalt

TYPICAL ADJOINING SECTION
STA. 38+37.26

F.I.O. - ANTICIPATED LOCATIONS OF RELOCATED UTILITIES
FOR SUBSUMMARIES SEE SHEETS 64-84
FOR PAVEMENT LEGEND SEE SHEET 195
FOR PROFILE SEE SHEETS 285-286
FOR CROSS SECTIONS SEE SHEETS 287-288
FOR INTERSECTION DETAILS SEE SHEETS 322-337
FOR STORM SEWER PROFILES SEE SHEETS 340-361
FOR MEDIAN DETAILS SEE SHEETS 404-414

HORIZONTAL SCALE IN FEET
0 10 20 40

CALCULATED MAG
CHECKED AJS

WOOD ROAD PLAN
STA. 38+37.26 TO STA. 43+00

MOT-75-0.75

283
773

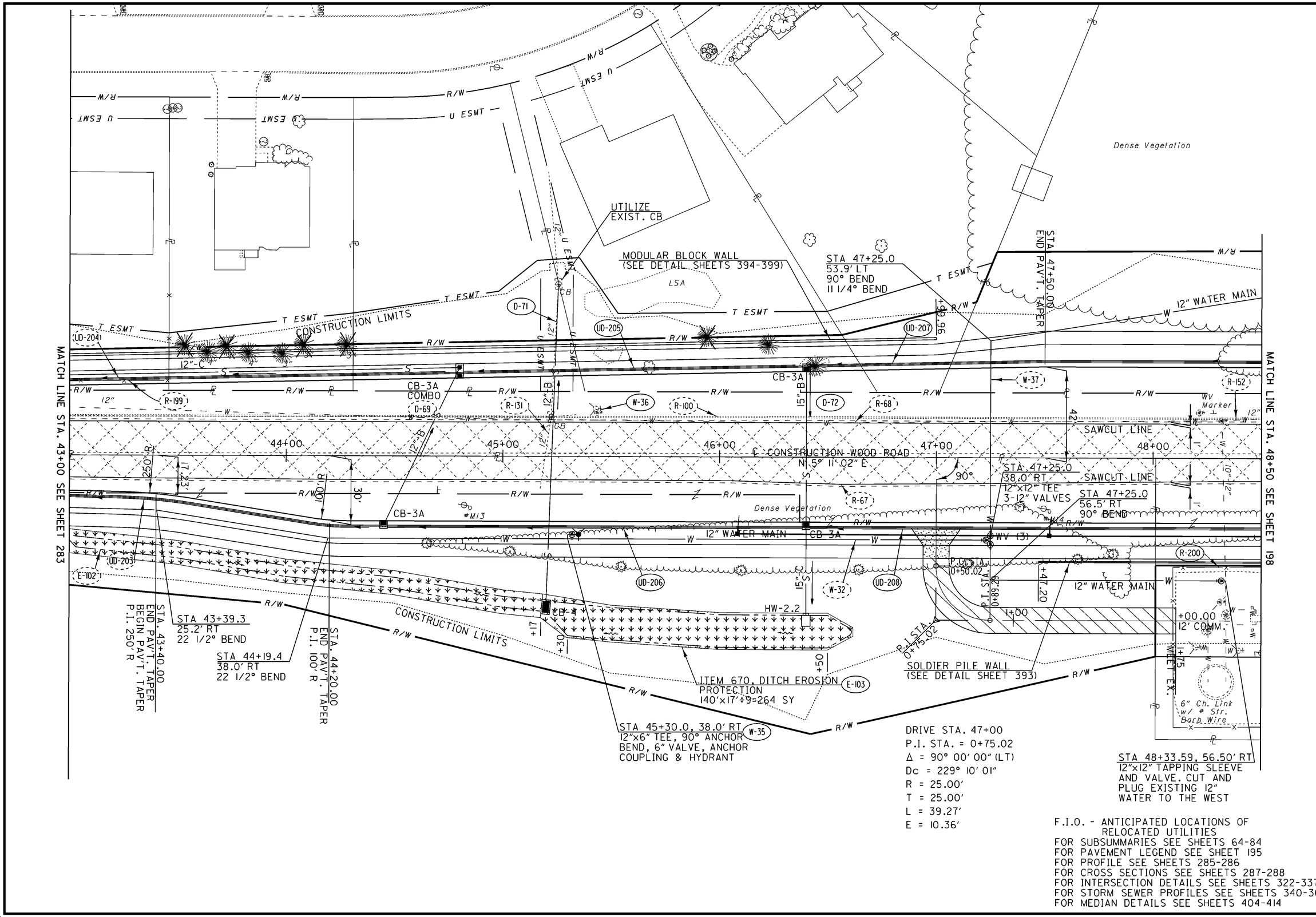

DRIVE STA. 47+00
P.I. STA. = 0+75.02
Δ = 90° 00' 00" (LT)
Dc = 229° 10' 01"
R = 25.00'
T = 25.00'
L = 39.27'
E = 10.36'

F.I.O. - ANTICIPATED LOCATIONS OF RELOCATED UTILITIES
FOR SUBSUMMARIES SEE SHEETS 64-84
FOR PAVEMENT LEGEND SEE SHEET 195
FOR PROFILE SEE SHEETS 285-286
FOR CROSS SECTIONS SEE SHEETS 287-288
FOR INTERSECTION DETAILS SEE SHEETS 322-337
FOR STORM SEWER PROFILES SEE SHEETS 340-361
FOR MEDIAN DETAILS SEE SHEETS 404-414

HORIZONTAL SCALE IN FEET 0 10 20 40

CALCULATED MAG
CHECKED AJS

WOOD ROAD PLAN
STA. 43+00 TO STA. 48+50

MOT-75-0.75

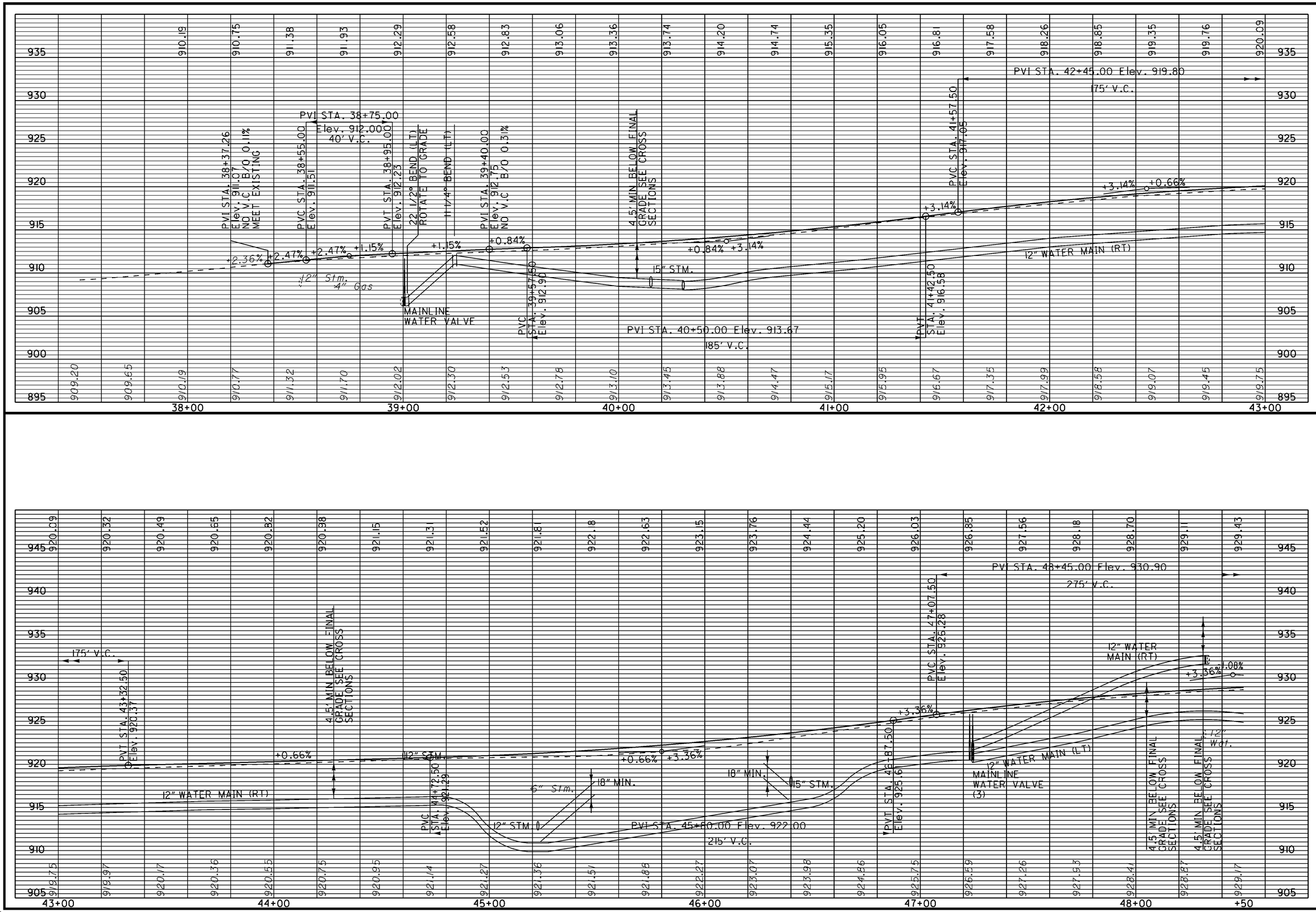

CALCULATED HGH
CHECKED AJS

WOOD ROAD PROFILE
STA. 38+37.26 TO STA. 48+50

MOT-75-0.75

CALCULATED HGH
CHECKED AJS

WOOD ROAD PROFILE
STA. 48+50 TO STA. 51+65.53

MOT-75-0.75

286
773

SEEDING	
END WIDTH	SQ. YDS.

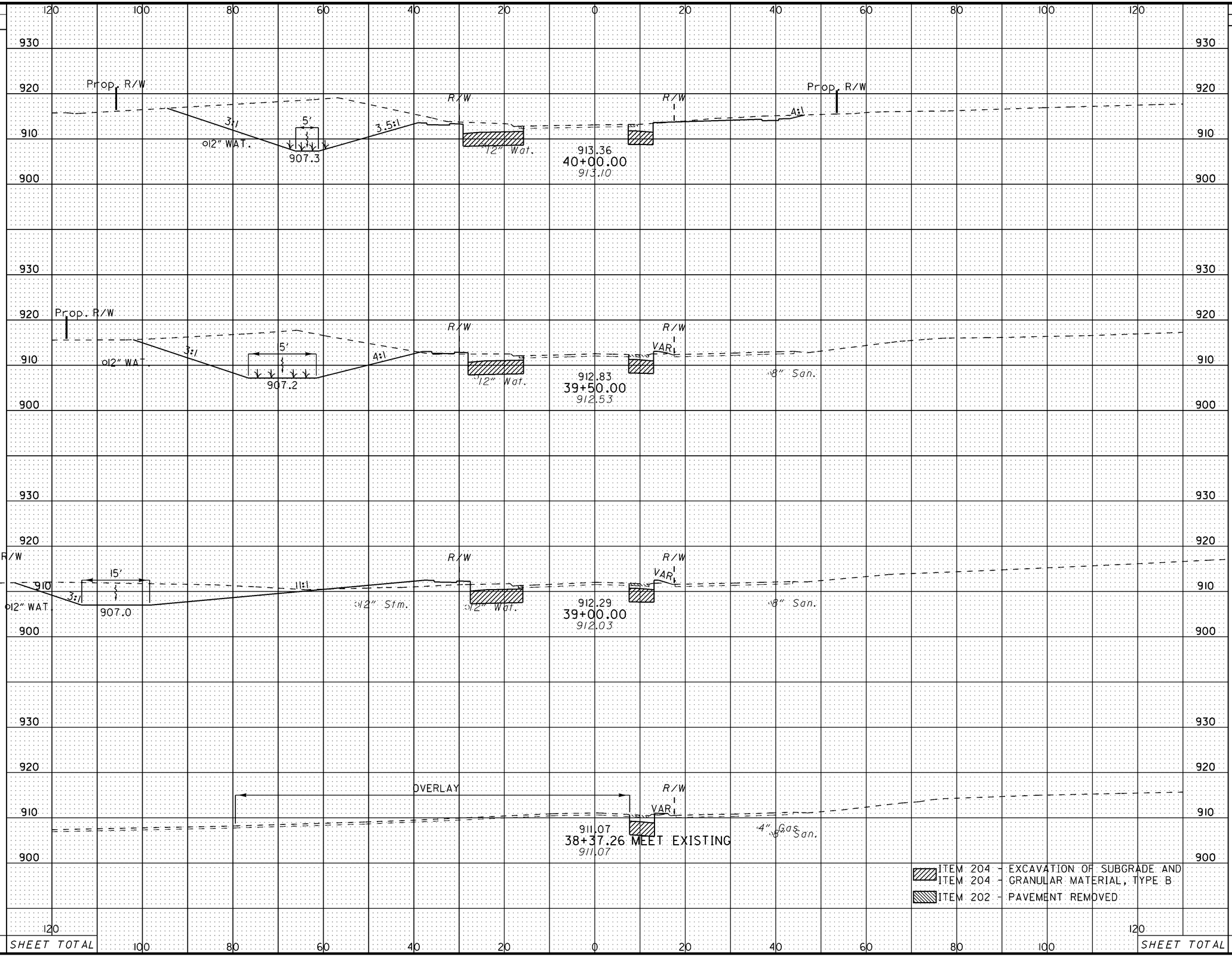

END AREA		VOLUME	
CUT	FILL	CUT	FILL
432	0	781	4
411	4	588	27
224	25	270	30
8	1		

CALCULATED JMD
CHECKED AJS

WOOD ROAD CROSS SECTIONS
STA. 38+37.26 TO STA. 40+00

MOT-75-0.75

SHEET TOTAL SHEET TOTAL

SEEDING	
END WIDTH	SQ. YDS.

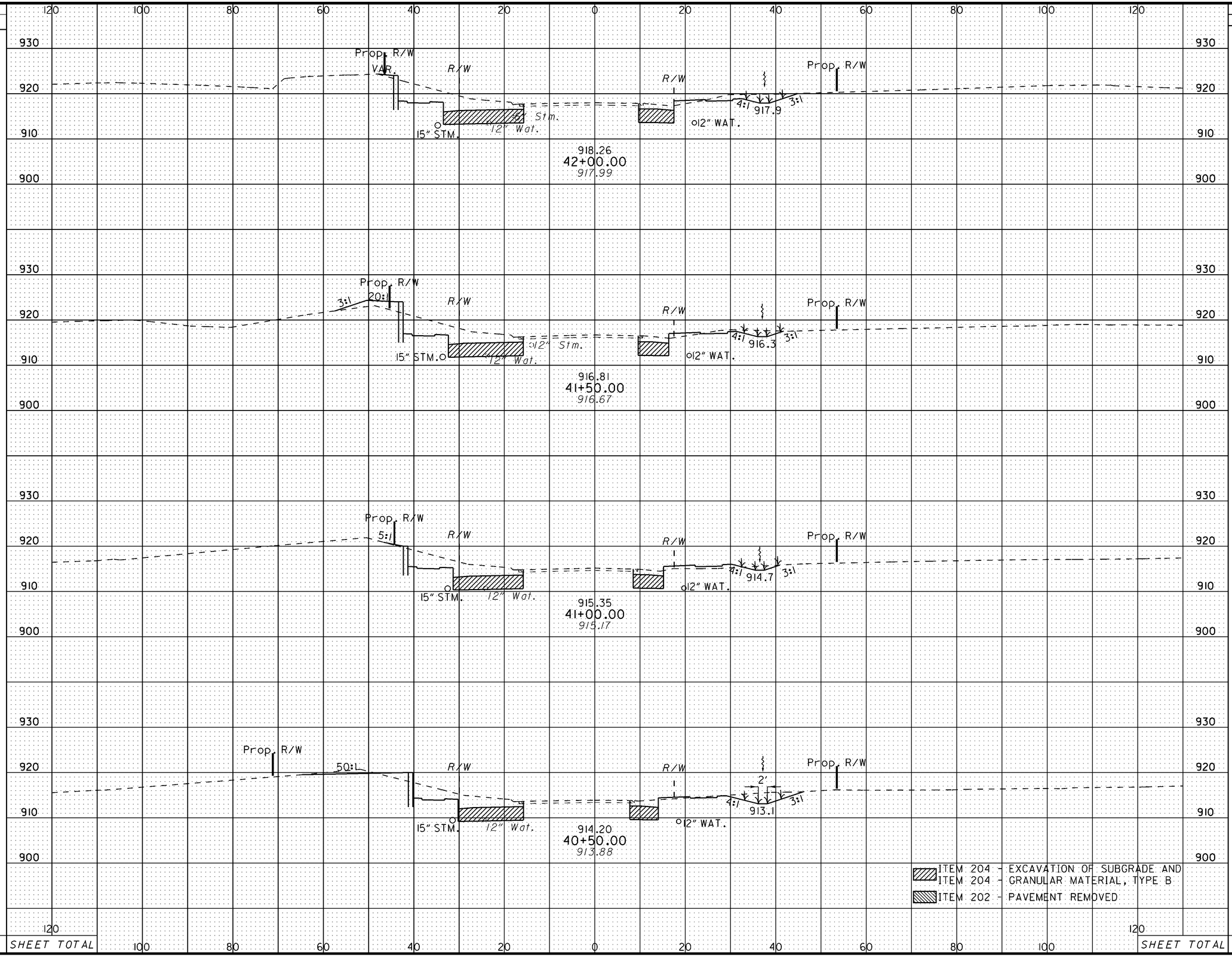

END AREA		VOLUME	
CUT	FILL	CUT	FILL
110	6		
		189	27
94	23		
		156	32
75	11		
		157	21
94	12		
		487	11

CALCULATED JMD

CHECKED AJS

WOOD ROAD CROSS SECTIONS
STA. 40+50 TO STA. 42+00

MOT-75-0.75

SEEDING		END AREA		VOLUME	
END WIDTH	SQ. YDS.	CUT	FILL	CUT	FILL
		176	0		
		156	14	307	13
				276	37
		142	26		
				233	29

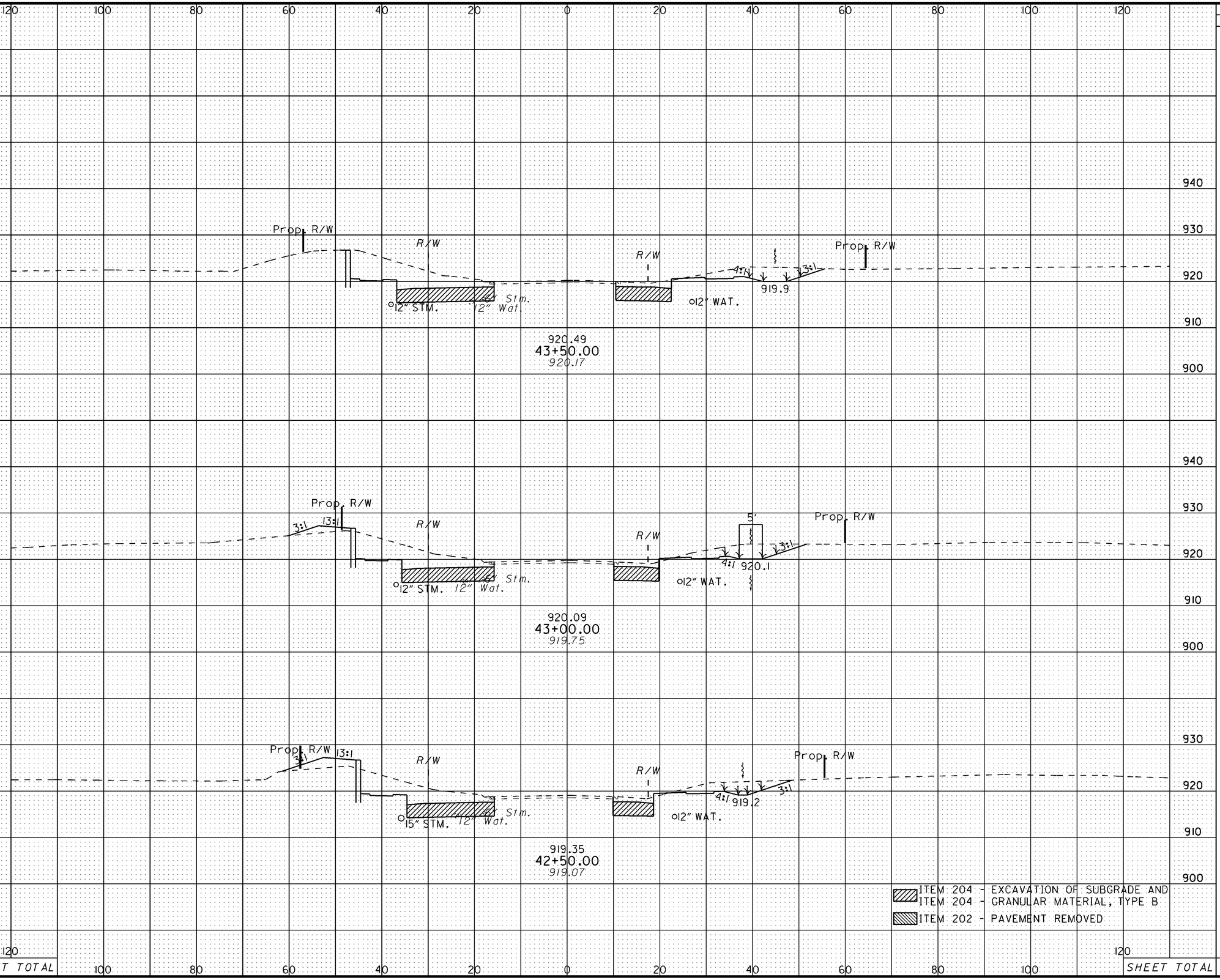

CALCULATED JMD
CHECKED AJS

WOOD ROAD CROSS SECTIONS
STA. 42+50 TO STA. 43+50

MOT-75-0.75

289
773

SEEDING	
END WIDTH	SQ. YDS.

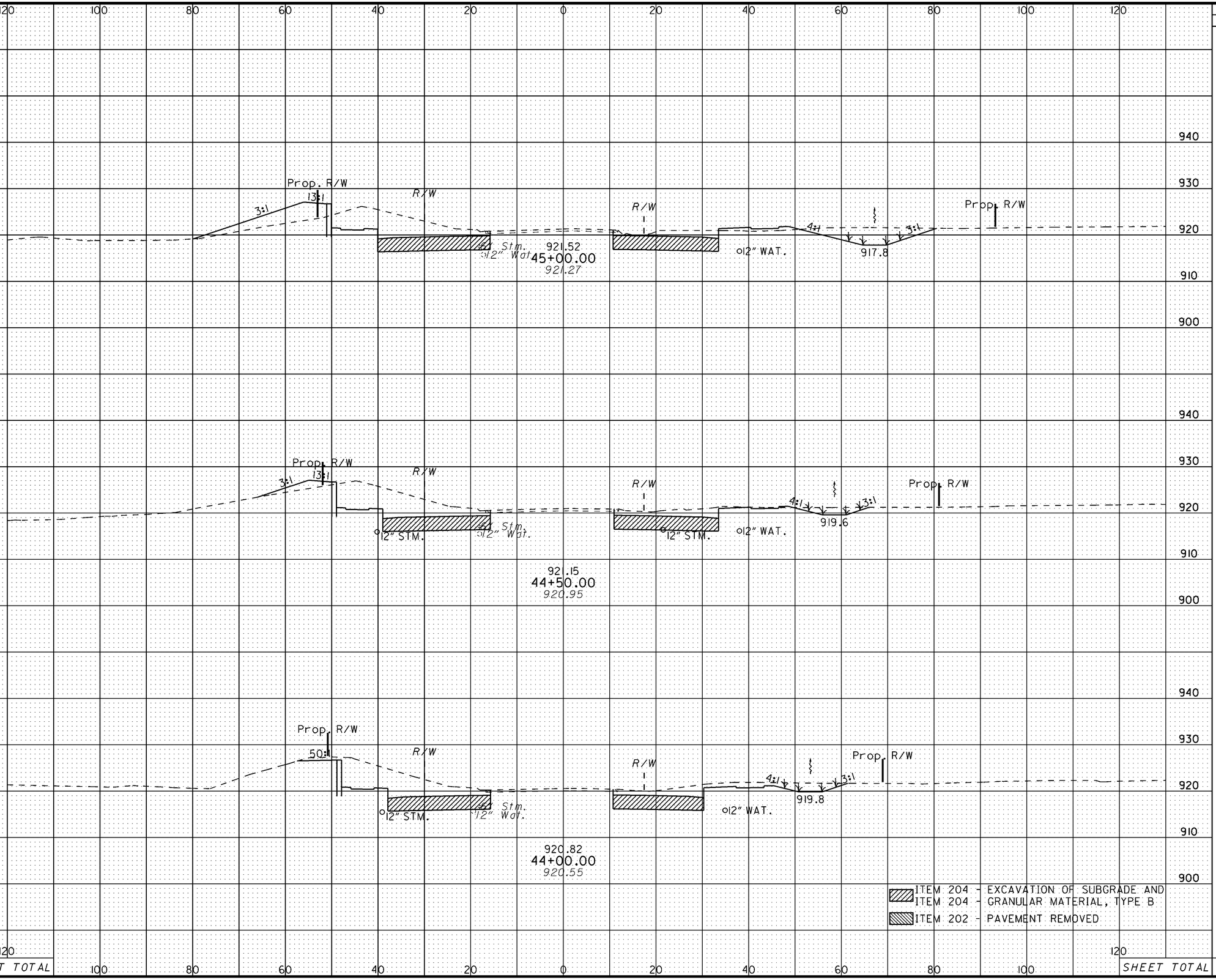

END AREA		VOLUME	
CUT	FILL	CUT	FILL
195	78		
		344	88
177	18		
		339	16
189	0		
		338	0

CALCULATED JMD
CHECKED AJS

WOOD ROAD CROSS SECTIONS
STA. 44+00 TO STA. 45+00

MOT-75-0.75

290
773

SEEDING	
END WIDTH	SQ. YDS.

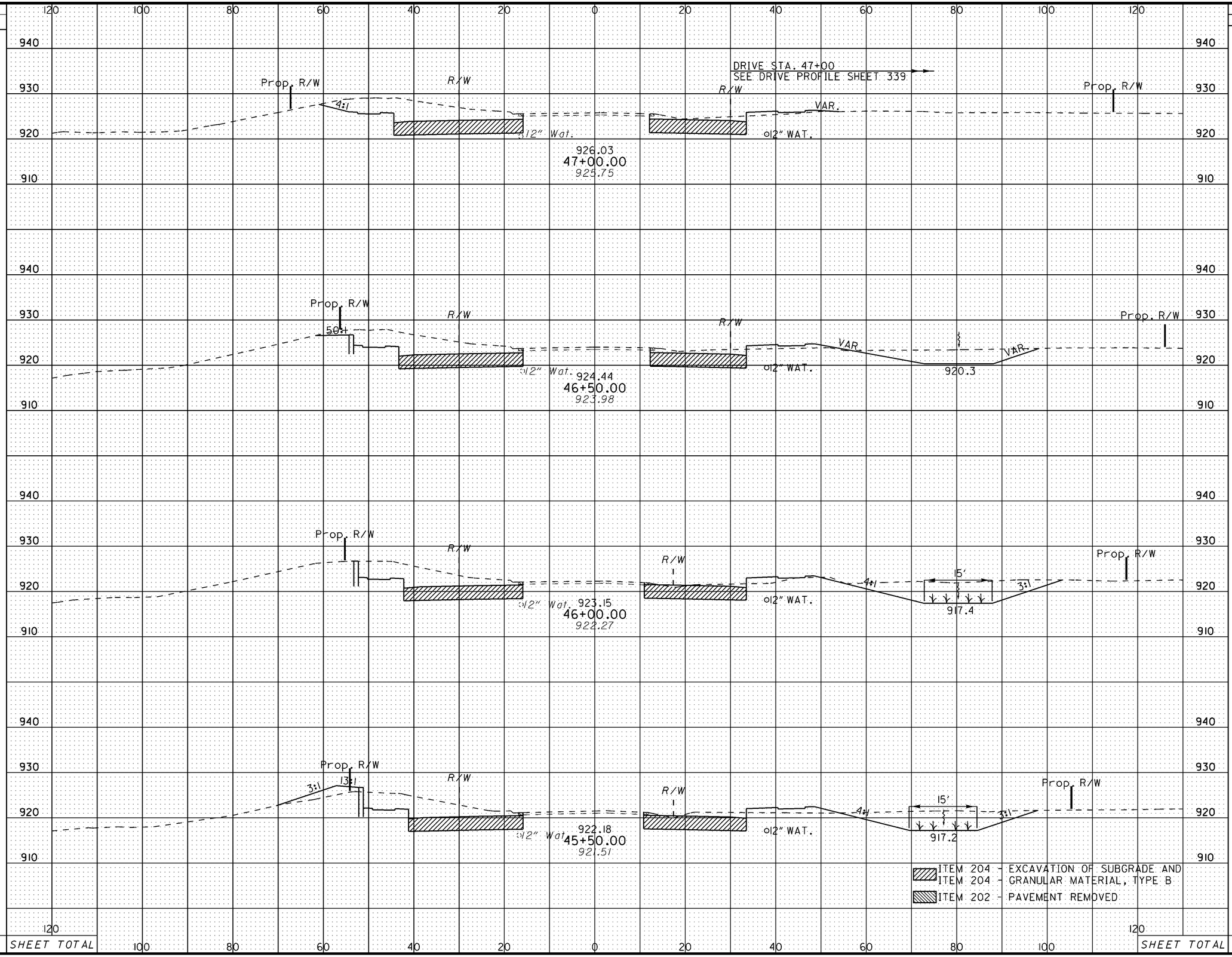

END AREA		VOLUME	
CUT	FILL	CUT	FILL
144	8		
		342	21
225	14		
		452	24
263	12		
		463	49
237	41		
		400	110
SHEET TOTAL			

CALCULATED JMD

CHECKED AJS

WOOD ROAD CROSS SECTIONS STA. 45+50 TO STA. 47+00

MOT-75-0.75

SEEDING	
END WIDTH	SQ. YDS.

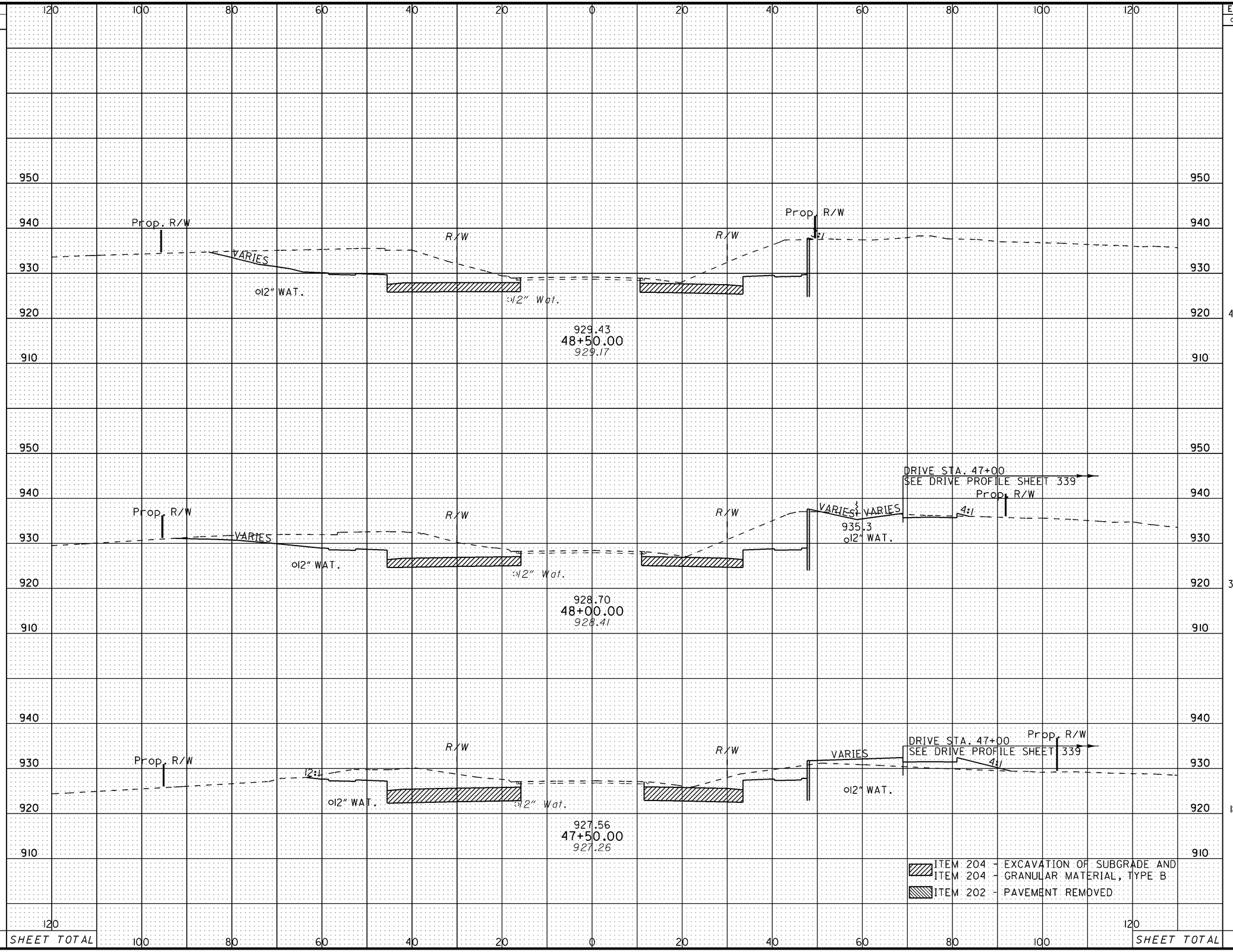

END AREA		VOLUME	
CUT	FILL	CUT	FILL
441	0		
		749	2
368	2		
		515	55
189	57		
		308	61

CALCULATED JMD
CHECKED AJS

WOOD ROAD CROSS SECTIONS
STA. 47+50 TO STA. 48+50

MOT-75-0.75

SEEDING	
END WIDTH	SQ. YDS.

TOTALS CARRIED TO GENERAL SUMMARY	
ITEM 203 - EXCAVATION	9634 CU YD
ITEM 203 - EMBANKMENT	771 CU YD
ITEM 204 - EXCAVATION OF SUBGRADE	4346 CU YD
ITEM 204 - GRANULAR MATERIAL, TYPE B	4346 CU YD
ITEM 204 - GEOTEXTILE FABRIC	4856 SY YD

ADJUST FOR ITEM 202 - PAVEMENT REMOVED

Prop. R/W

4:1

AHEAD - FUTURE WORK BY OTHERS

925.57
51+65.52 BACK ONLY
927.51

Prop. R/W

Prop. R/W

4:1 (NORMAL)

BACK - SEE INTERSECTION DETAIL SHEET 323

SEE MS PIKE CROSS SECTIONS STA. 127+50 SHEET --

VARIES

o12" STM.

927.45
51+00.00 AHEAD ONLY
930.57

R/W

AHEAD - SEE INTERSECTION DETAIL SHEET 323

R/W

Prop. R/W

3:1

4:1 (NORMAL)

o12" WAT.

o12" Wat.

929.76
49+00.00 BACK ONLY
929.50

ITEM 204 - EXCAVATION OF SUBGRADE AND ITEM 204 - GRANULAR MATERIAL, TYPE B

ITEM 202 - PAVEMENT REMOVED

END AREA		VOLUME	
CUT	FILL	CUT	FILL
408	47		
		-50	
		1114	112
511	45		
		36	2
466	0		
		840	1

CALCULATED JMD

CHECKED AJS

WOOD ROAD CROSS SECTIONS
STA. 49+00 TO STA. 51+65.52

MOT-75-0.75

293
773

SHEET TOTAL

SHEET TOTAL

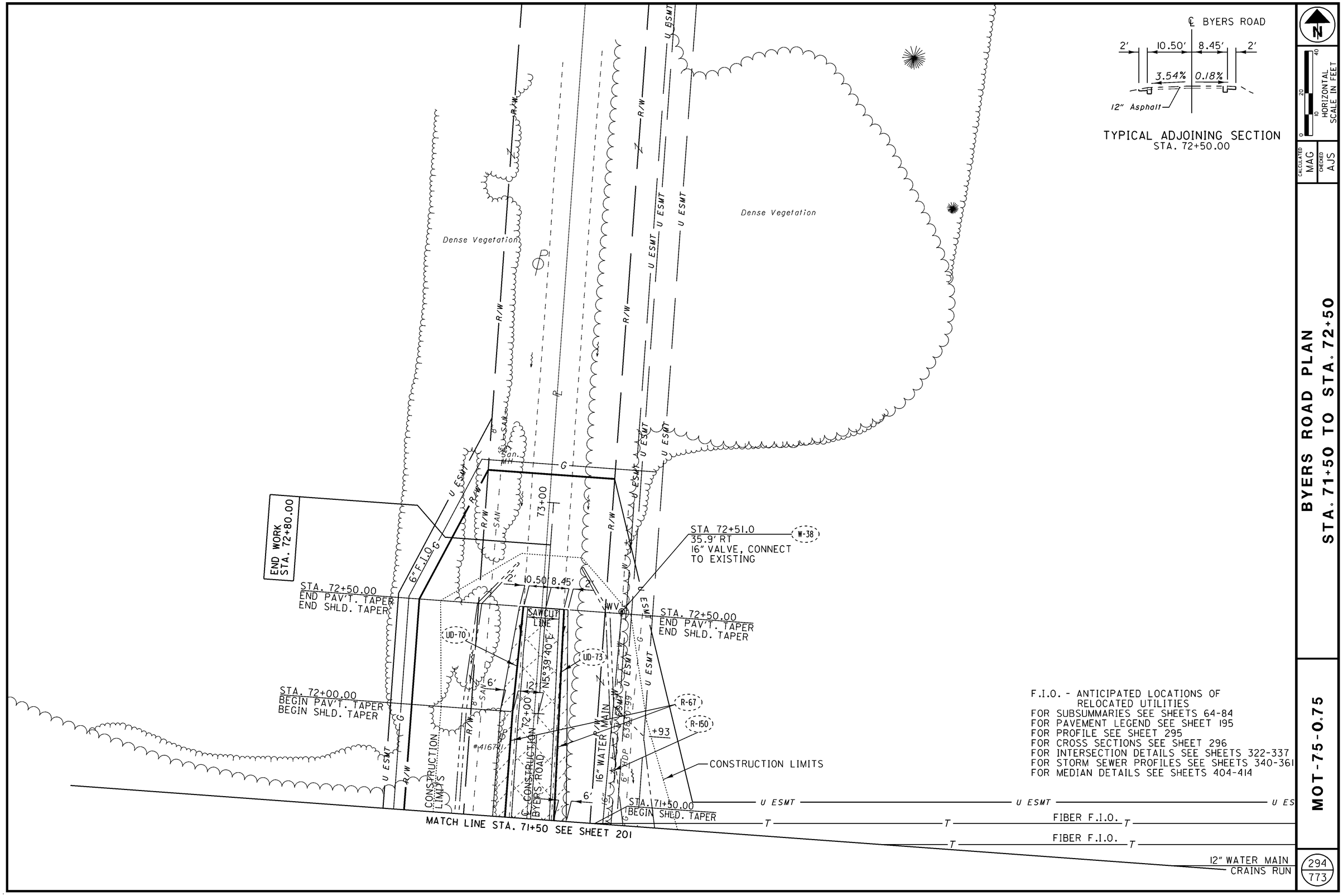

F.I.O. - ANTICIPATED LOCATIONS OF RELOCATED UTILITIES
FOR SUBSUMMARIES SEE SHEETS 64-84
FOR PAVEMENT LEGEND SEE SHEET 195
FOR PROFILE SEE SHEET 295
FOR CROSS SECTIONS SEE SHEET 296
FOR INTERSECTION DETAILS SEE SHEETS 322-337
FOR STORM SEWER PROFILES SEE SHEETS 340-361
FOR MEDIAN DETAILS SEE SHEETS 404-414

HORIZONTAL SCALE IN FEET
0 10 20 40

CALCULATED MAG
CHECKED AJS

BYERS ROAD PLAN
STA. 71+50 TO STA. 72+50

MOT-75-0.75

CALCULATED HGH
CHECKED AJS

BYERS ROAD PROFILE
STA. 70+00 TO STA. 72+50

MOT-75-0.75

295
773

SEEDING	
END WIDTH	SQ. YDS.

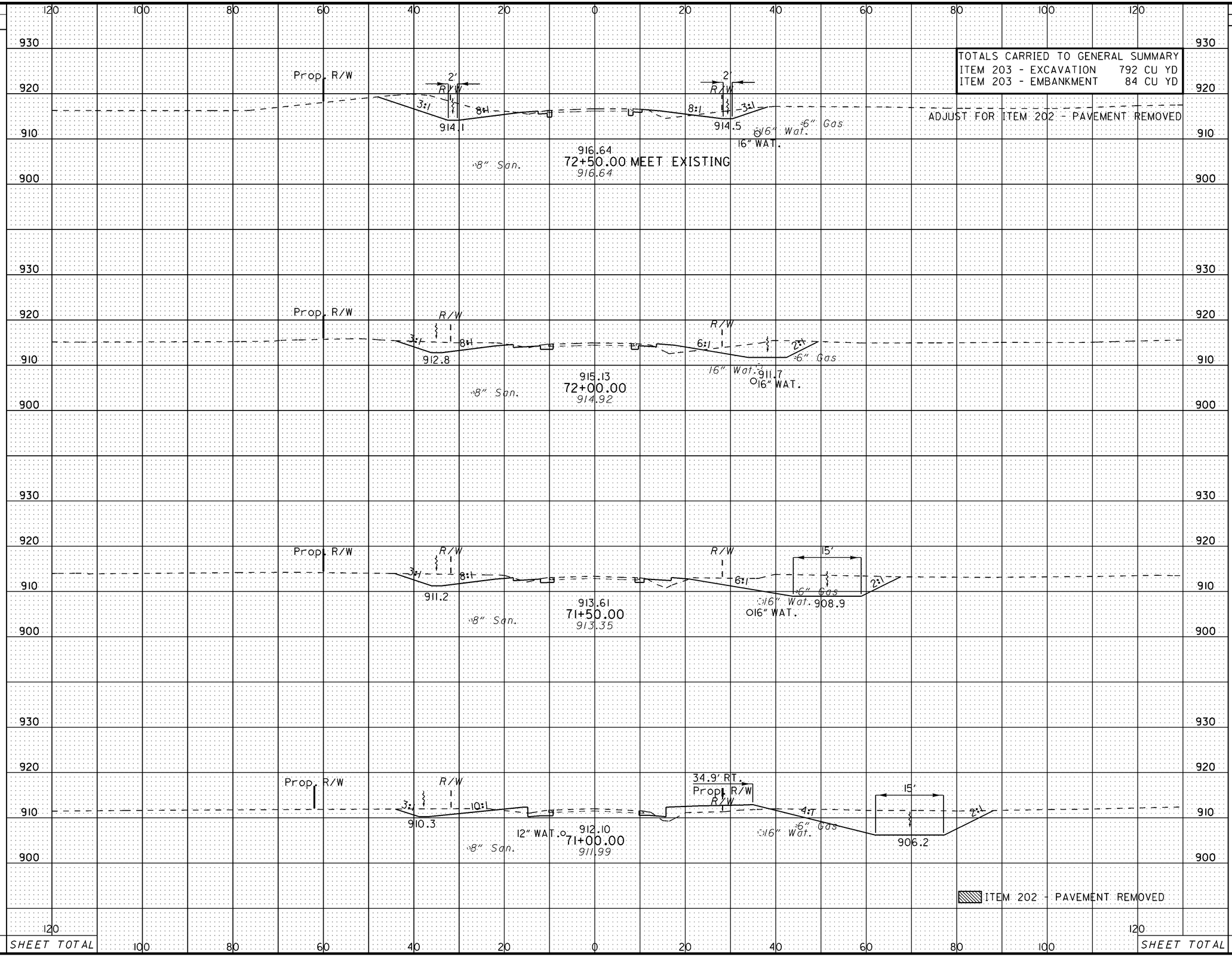

END AREA		VOLUME	
CUT	FILL	CUT	FILL
95	9	-13	
		177	20
97	12	263	20
187	10	365	44
207	38		

CALCULATED JMD

CHECKED AJS

BYERS ROAD CROSS SECTIONS STA. 71+00 TO STA. 72+50

MOT-75-0.75

℄ SR 741

10.88′ | 25.01′ | 33.10′ | 10.45′

2.29% | 1.05% | 0.74% | 3.58%

9″ Asphalt

TYPICAL ADJOINING SECTION
STA. 33+90.44

STA 37+10.0, 76.7′ LT
45° BEND, CONNECT TO EXISTING SANITARY FORCE MAIN

BEGIN WORK
STA. 33+10.00

STA. 33+90.44
BEGIN PAV'T. TAPER
BEGIN SHLD. TAPER

STA. 37+00.00
END PAV'T TAPER
END SHLD. TAPER

PRECAST REINFORCED
CONCRETE OUTLET
33+94.00
65.11′ LT
INV. 6″=940.11

MATCH LINE STA. 178+00
SEE SHEET 207

MATCH LINE STA. 38+00 SEE SHEET 208

CONSTRUCTION LIMITS

SAWCUT LINE

℄ CONSTRUCTION SR 741
N5°06′48″E

33+00 | 34+00 | 35+00 | 36+00 | 37+00

90°

HW-2.2
48′
33′ TYPE D

PRECAST REINFORCED
CONCRETE OUTLET
33+22.00
64.51′ RT
INV. 6″=940.04

1+89.32
MEET EX.

2+00

ITEM 660 SODDING
REINFORCED
SEE DETAIL SHEET 29

CONSTRUCTION LIMITS

F.I.O. - ANTICIPATED LOCATIONS OF RELOCATED UTILITIES
FOR SUBSUMMARIES SEE SHEETS 64-84
FOR PAVEMENT LEGEND SEE SHEET 195
FOR PROFILE SEE SHEETS 300-301
FOR CROSS SECTIONS SEE SHEETS 302-308
FOR INTERSECTION DETAILS SEE SHEETS 322-337
FOR STORM SEWER PROFILES SEE SHEETS 340-361
FOR MEDIAN DETAILS SEE SHEETS 404-414

N

HORIZONTAL SCALE IN FEET
0 10 20 40

CALCULATED MAG
CHECKED AJS

SR 741 PLAN
STA. 33+90.44 TO STA. 38+00

MOT-75-0.75

297
773

SR 741 CURVE NO. 1
P.I. STA. = 48+78.77
Δ = 3° 28′ 24″ (LT)
Dc = 0° 28′ 11″
R = 12,200.00′
T = 369.90′
L = 739.57′
E = 5.61′
e max = NC

MATCH LINE STA. 178+00
SEE SHEET 207

STA. 41+30.59
END CURB & GUTTER
END TAPER CURB HEIGHT
FROM 6″ TO 0″ IN 10′
BEGIN SHLD.

PRECAST REINFORCED
CONCRETE OUTLET
46+26.88
74.31′ LT
INV. 6"=946.54

STA. 46+26.88
BEGIN PAV'T TAPER
BEGIN SHLD. TAPER

P.C. STA. 45+08.87

MATCH LINE STA. 41+00 SEE SHEET 208

MATCH LINE STA. 46+50 SEE SHEET 299

CONSTRUCTION LIMITS

SAWCUT LINE

℄ CONSTRUCTION SR 741
N5°06′56″E

SR 741 CURVE NO. 1

42+00 43+00 44+00 45+00 46+00

STA. 43+00.00
BEGIN PAV'T TAPER
BEGIN SHLD. TAPER

STA. 44+00.00
END PAV'T TAPER
END SHLD. TAPER

6" F.I.O.

6" MPP G 65312-87

#248518

#248517

Asphalt

F.I.O. - ANTICIPATED LOCATIONS OF RELOCATED UTILITIES
FOR SUBSUMMARIES SEE SHEETS 64-84
FOR PAVEMENT LEGEND SEE SHEET 195
FOR PROFILE SEE SHEETS 300-301
FOR CROSS SECTIONS SEE SHEETS 302-308
FOR INTERSECTION DETAILS SEE SHEETS 322-337
FOR STORM SEWER PROFILES SEE SHEETS 340-361
FOR MEDIAN DETAILS SEE SHEETS 404-414

HORIZONTAL SCALE IN FEET
0 10 20 40

CALCULATED MAG
CHECKED AJS

SR 741 PLAN
STA. 41+00 TO STA. 46+50

MOT-75-0.75

298
773

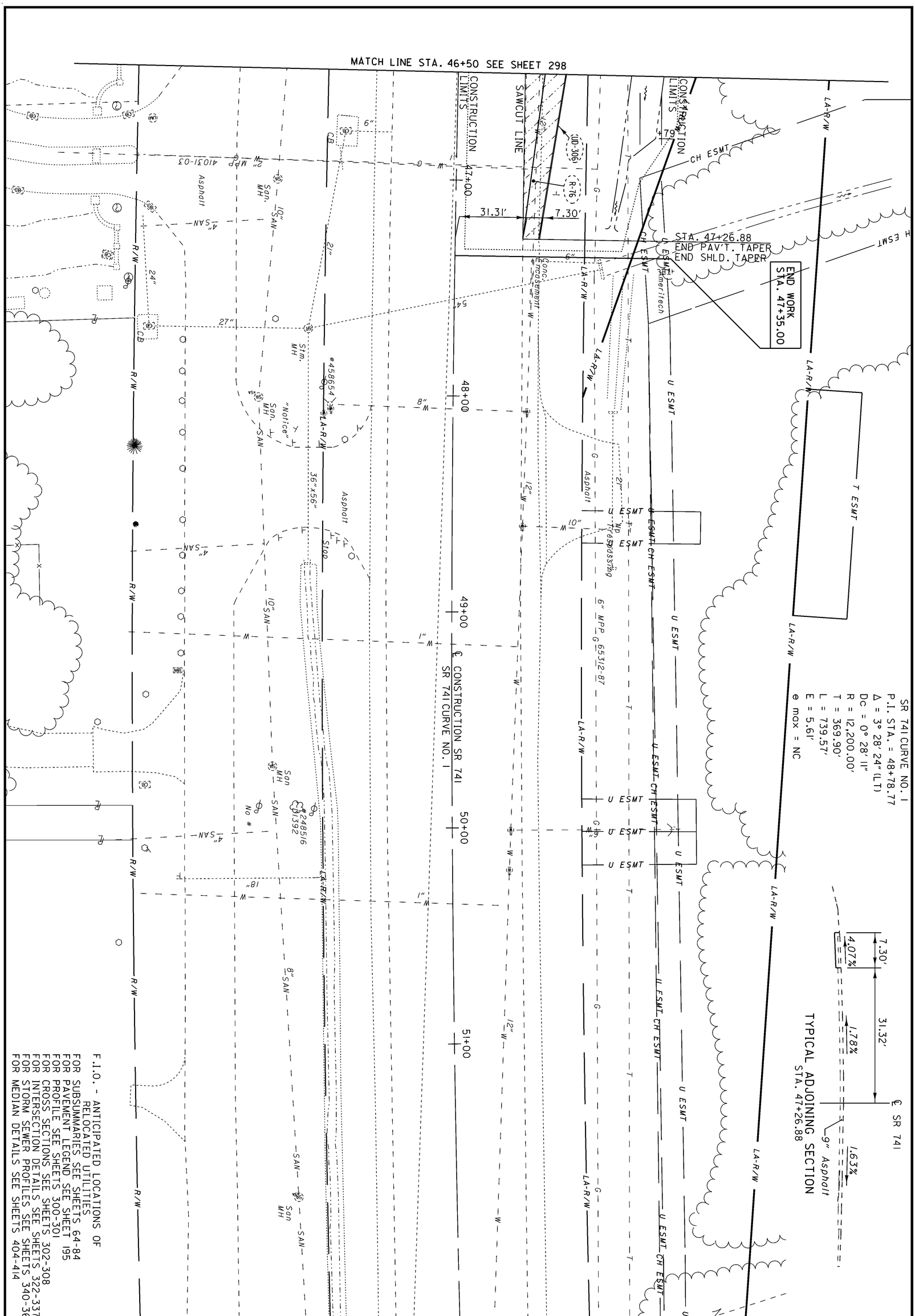

F.I.O. - ANTICIPATED LOCATIONS OF RELOCATED UTILITIES

FOR SUBSUMMARIES SEE SHEETS 64-84
FOR PAVEMENT LEGEND SEE SHEET 195
FOR PROFILE SEE SHEETS 300-301
FOR CROSS SECTIONS SEE SHEETS 302-308
FOR INTERSECTION DETAILS SEE SHEETS 322-337
FOR STORM SEWER PROFILES SEE SHEETS 340-361
FOR MEDIAN DETAILS SEE SHEETS 404-414

299
773

MOT-75-0.75

SR 741 PLAN
STA. 46+50 TO STA. 47+26.88

CALCULATED MAG
CHECKED AJS

0 20 40
HORIZONTAL SCALE IN FEET

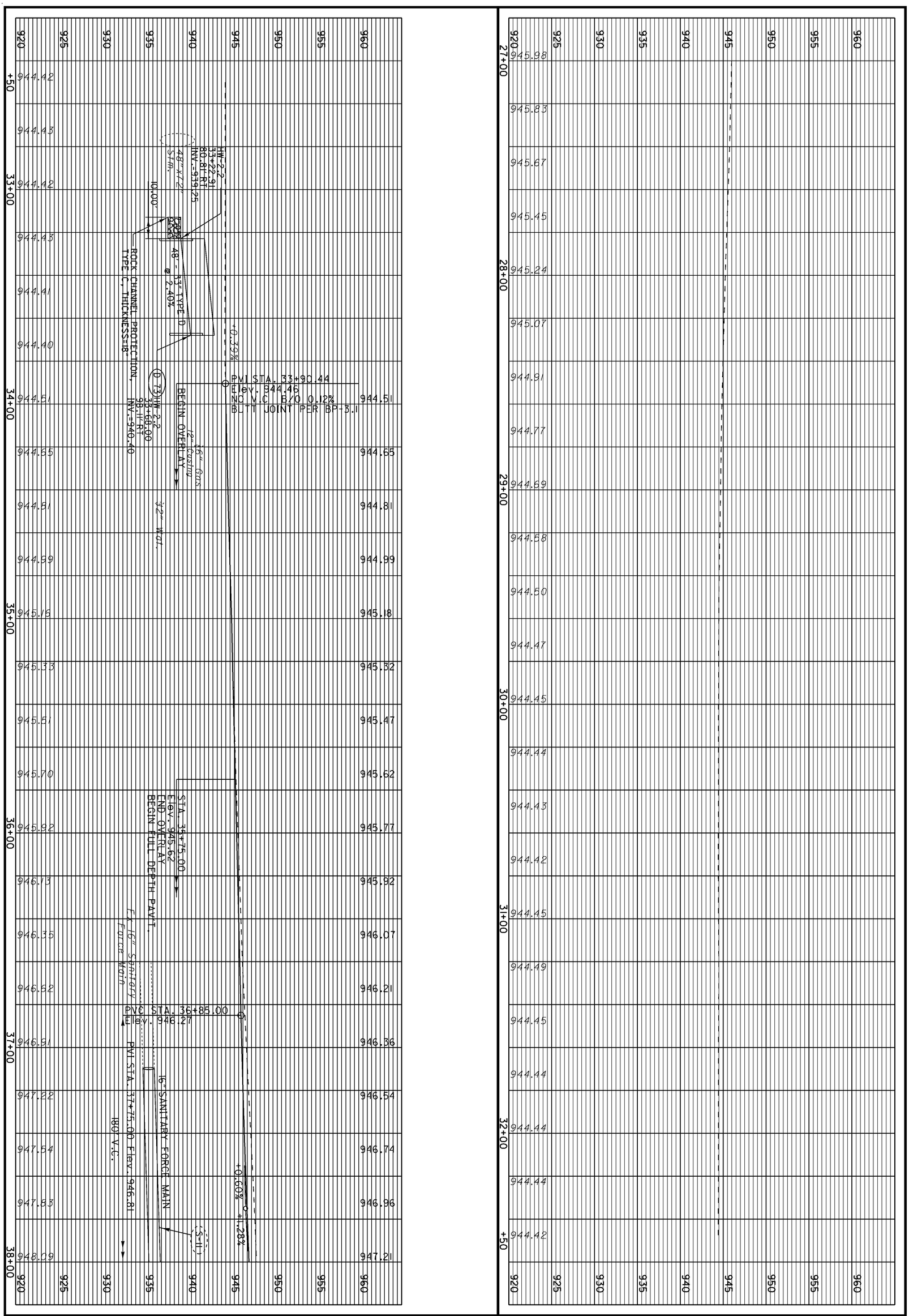

300 / 773	MOT-75-0.75	SR 741 PROFILE STA. 33+90.44 TO STA. 38+00	CALCULATED MAG CHECKED AJS

CALCULATED MAG
CHECKED AJS

SR 741 PROFILE

STA. 38+00 TO STA. 44+00

MOT-75-0.75

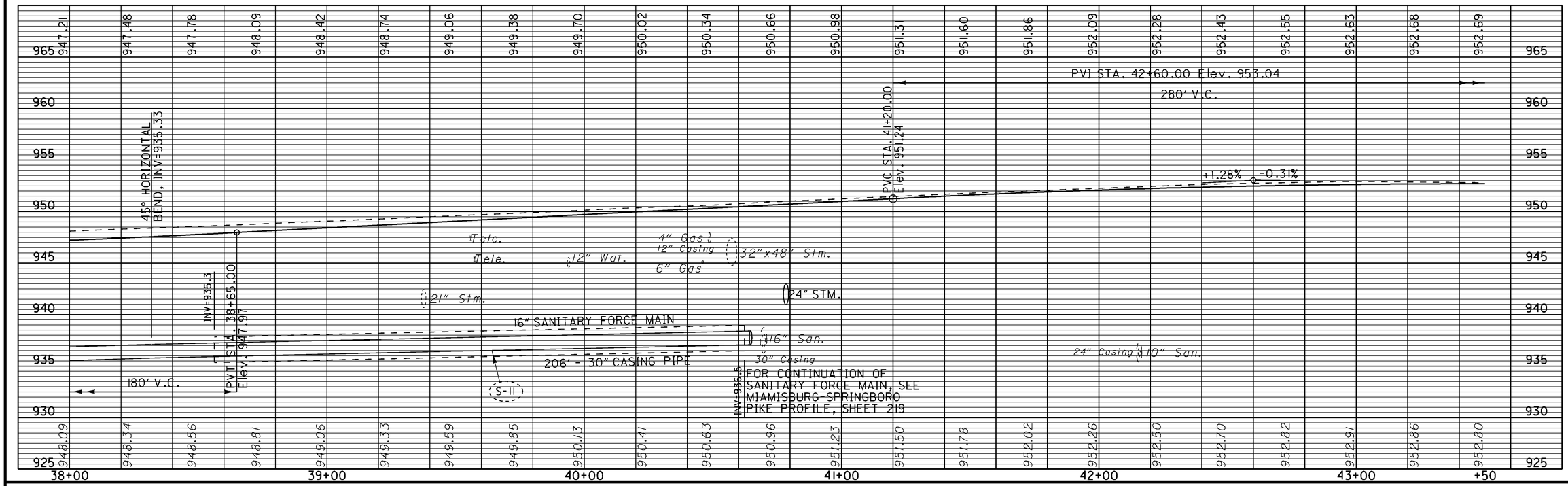

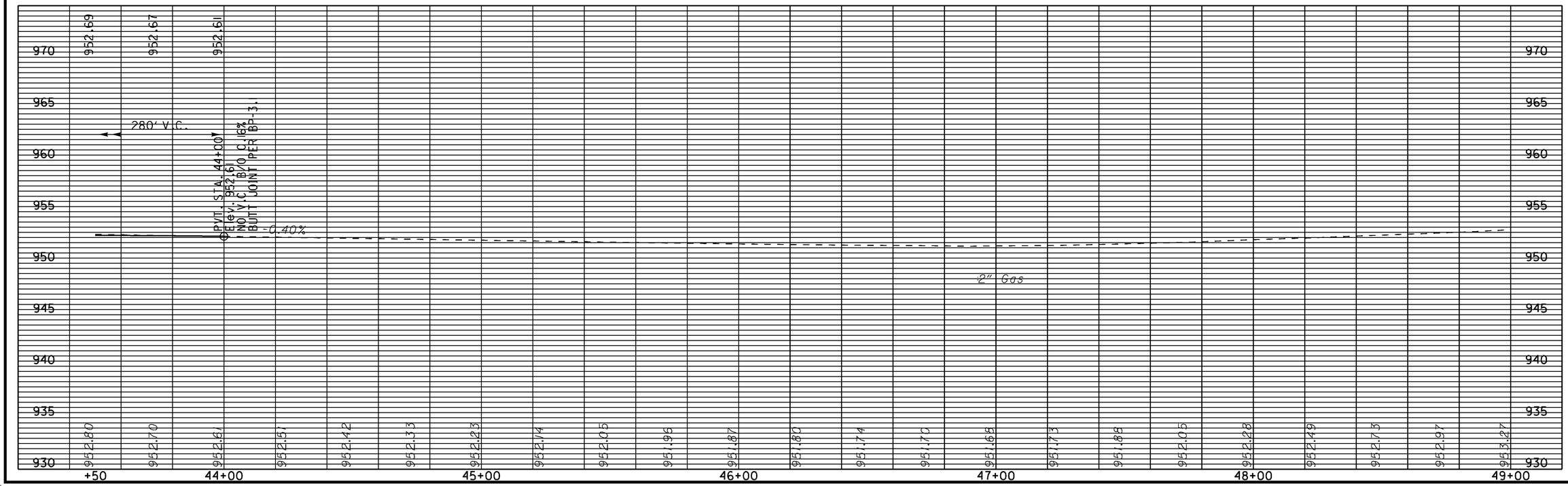

SEEDING	
END WIDTH	SQ. YDS.

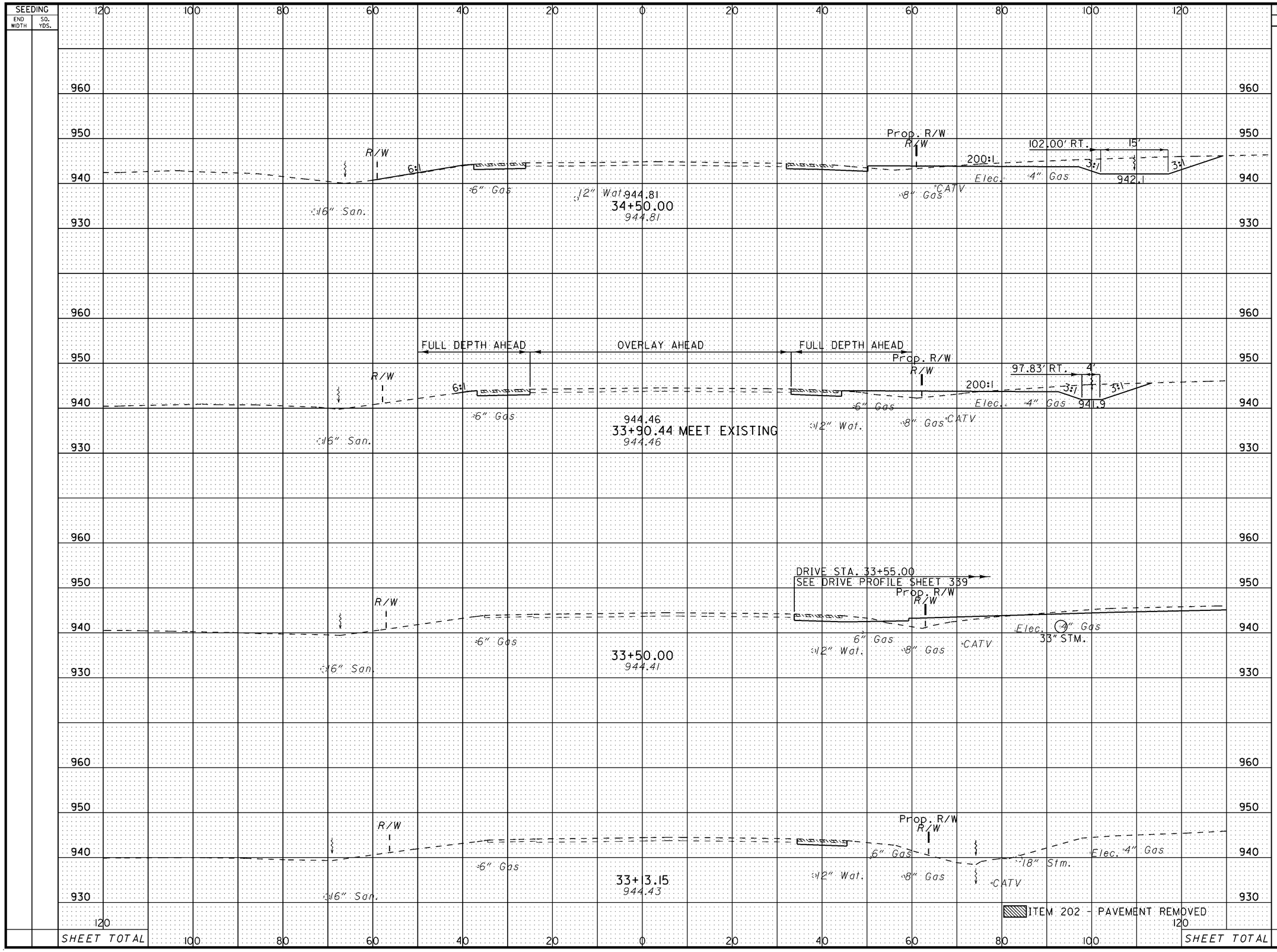

END AREA		VOLUME	
CUT	FILL	CUT	FILL
149	12		
		255	41
83	25		
		140	40
104	28		
		80	19
13	0		

SHEET TOTAL — SHEET TOTAL

CALCULATED JMD
CHECKED AJS

SR 741 CROSS SECTIONS
STA. 33+13.15 TO STA. 34+50

MOT-75-0.75

302
773

SEEDING		END AREA		VOLUME	
END WIDTH	SQ. YDS.	CUT	FILL	CUT	FILL
		167	22		
				155	14
		166	9		
				119	8
		91	7		
				210	24
		136	18		
				263	28
		SHEET TOTAL			

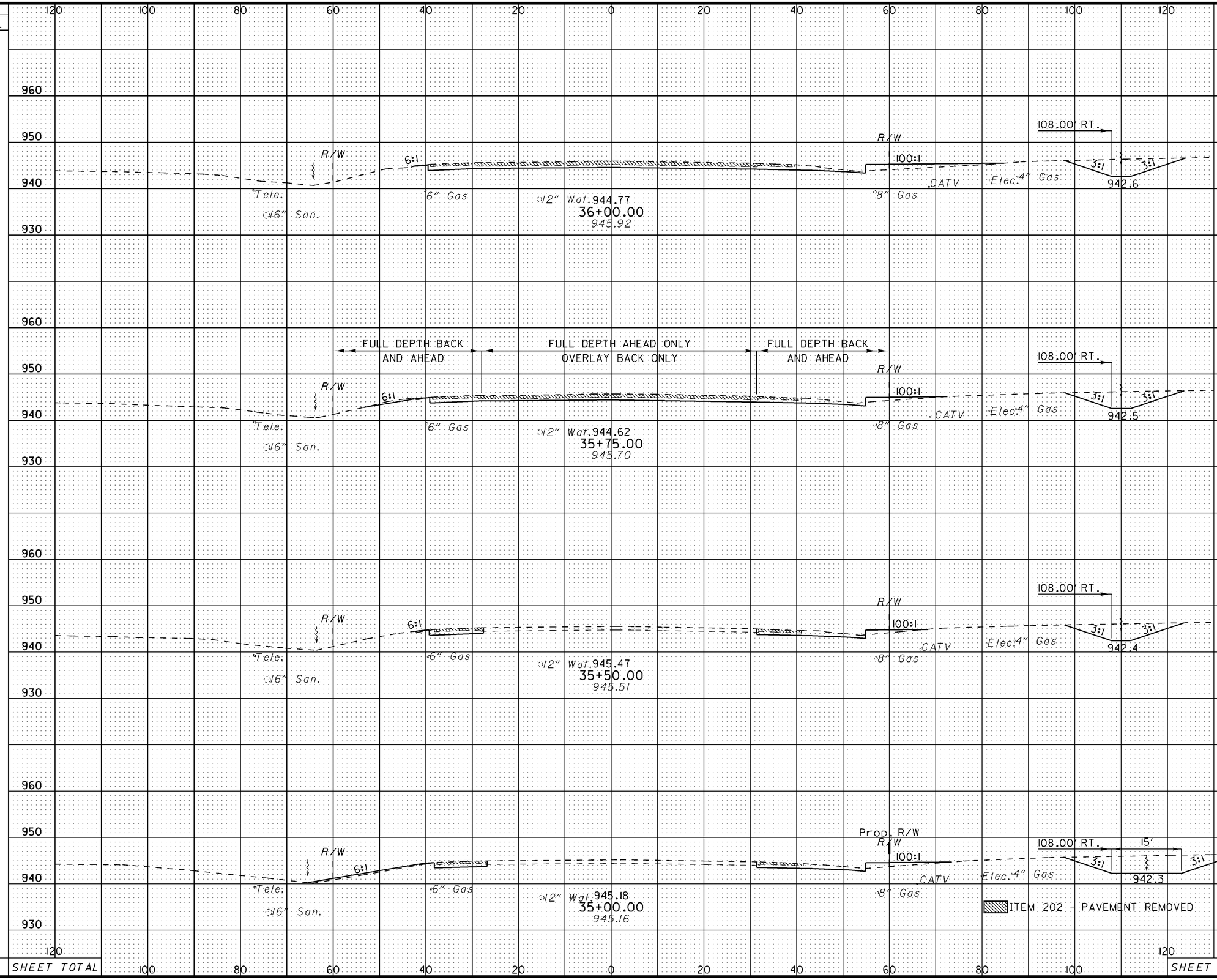

CALCULATED JMD

CHECKED AJS

SR 741 CROSS SECTIONS
STA. 35+00 TO STA. 36+00

MOT-75-0.75

303
773

SEEDING	
END WIDTH	SQ. YDS.

END AREA	
CUT	FILL
238	34
230	38
214	19
200	8

VOLUME	
CUT	FILL
433	66
411	53
384	25
341	27

CALCULATED JMD

CHECKED AJS

AHEAD - SEE INTERSECTION DETAIL SHEET 332

Prop. R/W

106.00' RT.

R/W

8:1

100:1

3:1

3:1

943.3

Tele.

6" Gas

12" Wat.

8" Gas

CATV

Elec.

4" Gas

16" San.

947.21

38+00.00 BACK ONLY

948.09

108.00' RT.

943.1

16" SAN.

946.74

37+50.00

947.54

6:1

943.0

946.37

37+00.00

946.91

942.8

946.07

36+50.00

946.35

ITEM 202 - PAVEMENT REMOVED

SHEET TOTAL

SHEET TOTAL

SR 741 CROSS SECTIONS
STA. 36+50 TO STA. 38+00

MOT-75-0.75

SEEDING	
END WIDTH	SQ. YDS.

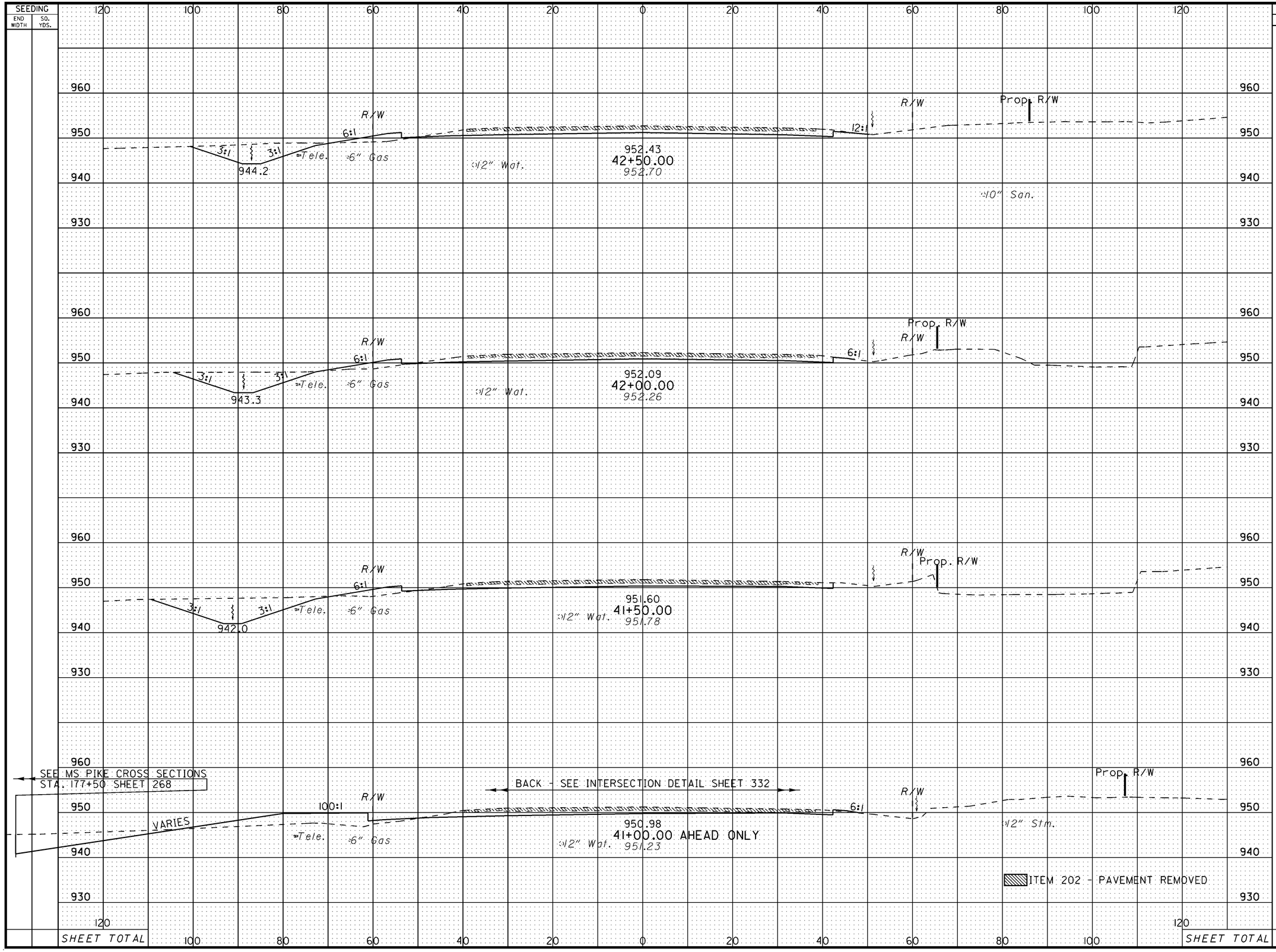

END AREA		VOLUME	
CUT	FILL	CUT	FILL
205	17	378	31
203	17	404	31
233	17	394	93
192	83		

CALCULATED JMD

CHECKED AJS

SR 741 CROSS SECTIONS
STA. 41+00 TO STA. 42+50

MOT-75-0.75

SEEDING	
END WIDTH	SQ. YDS.

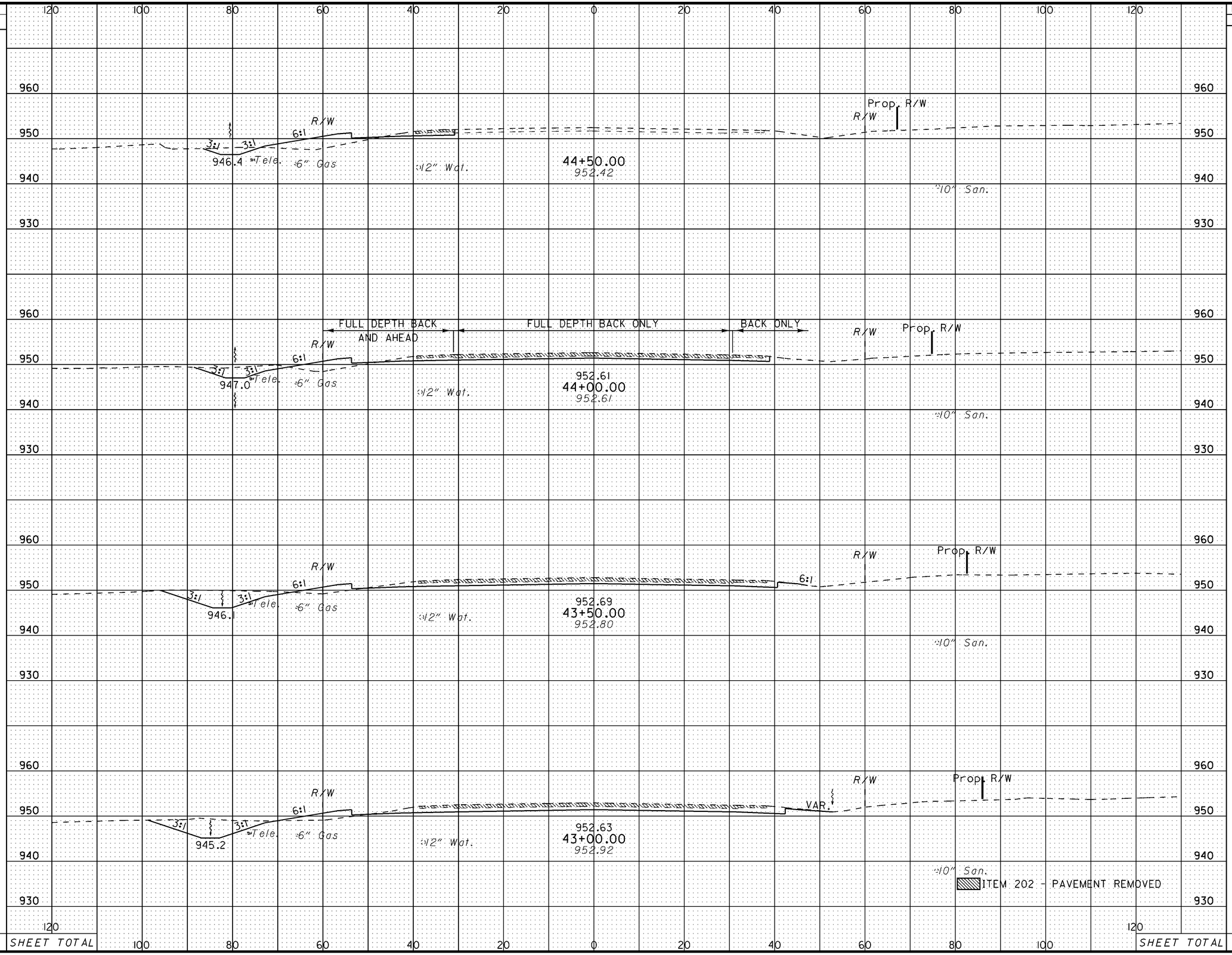

END AREA		VOLUME	
CUT	FILL	CUT	FILL
27	41		
		143	62
128	25		
		279	38
173	15		
		340	32
195	19		
		370	33

CALCULATED JMD

CHECKED AJS

SR 741 CROSS SECTIONS
STA. 43+00 TO STA. 44+50

MOT-75-0.75

306
773

SEEDING	
END WIDTH	SQ. YDS.

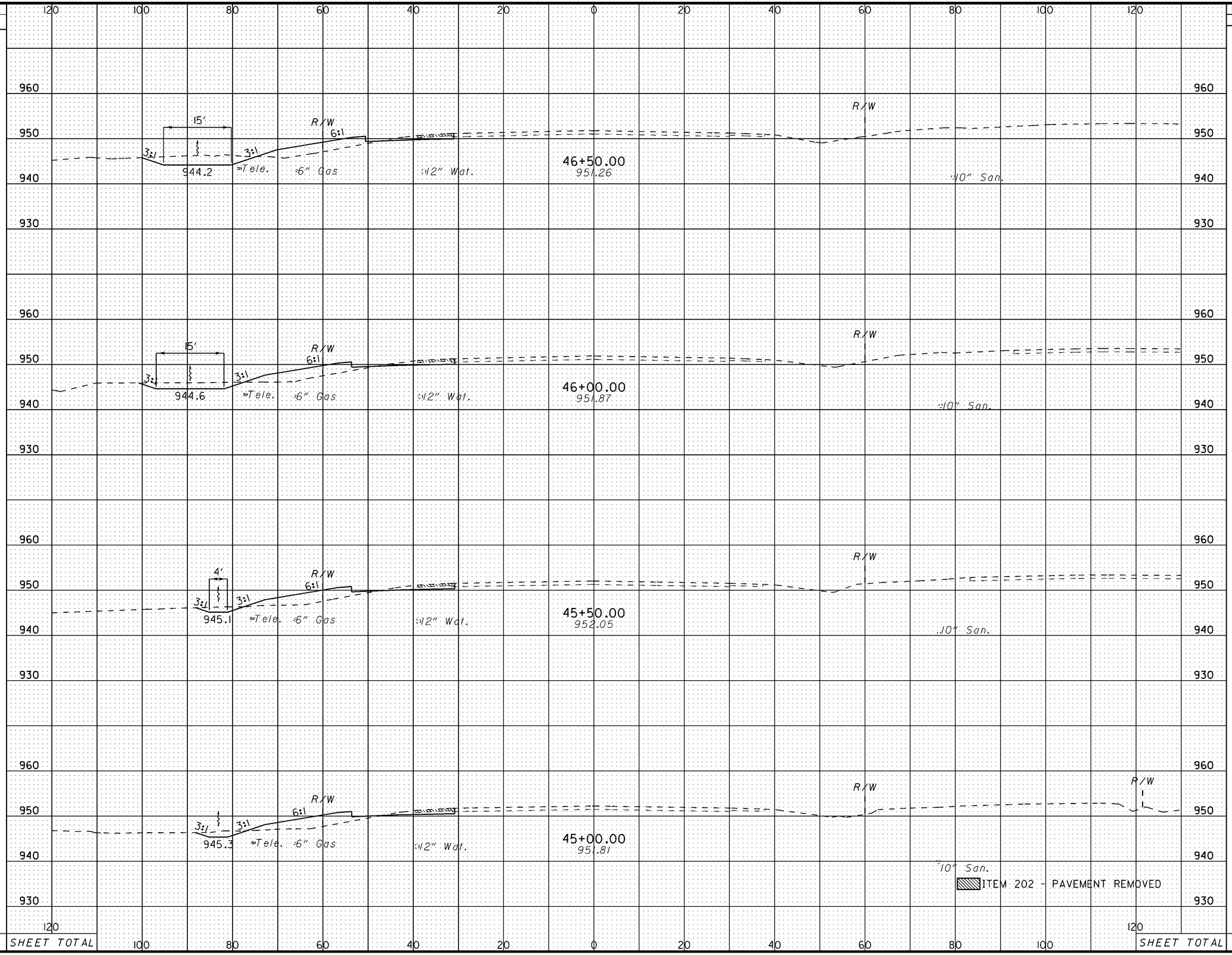

END AREA		VOLUME	
CUT	FILL	CUT	FILL
54	45		
		86	85
40	48		
		57	88
22	48		
		41	87
22	46		
		45	81

CALCULATED JMD

CHECKED AJS

SR 741 CROSS SECTIONS STA. 45+00 TO STA. 46+50

MOT-75-0.75

SEEDING	
END WIDTH	SQ. YDS.

END AREA		VOLUME	
CUT	FILL	CUT	FILL
10	0		
		13	19
16	38		
		64	76

CALCULATED JMD

CHECKED AJS

TOTALS CARRIED TO GENERAL SUMMARY

ITEM 203 - EXCAVATION	4589 CU YD
ITEM 203 - EMBANKMENT	1101 CU YD

ADJUST FOR ITEM 202 - PAVEMENT REMOVED -816

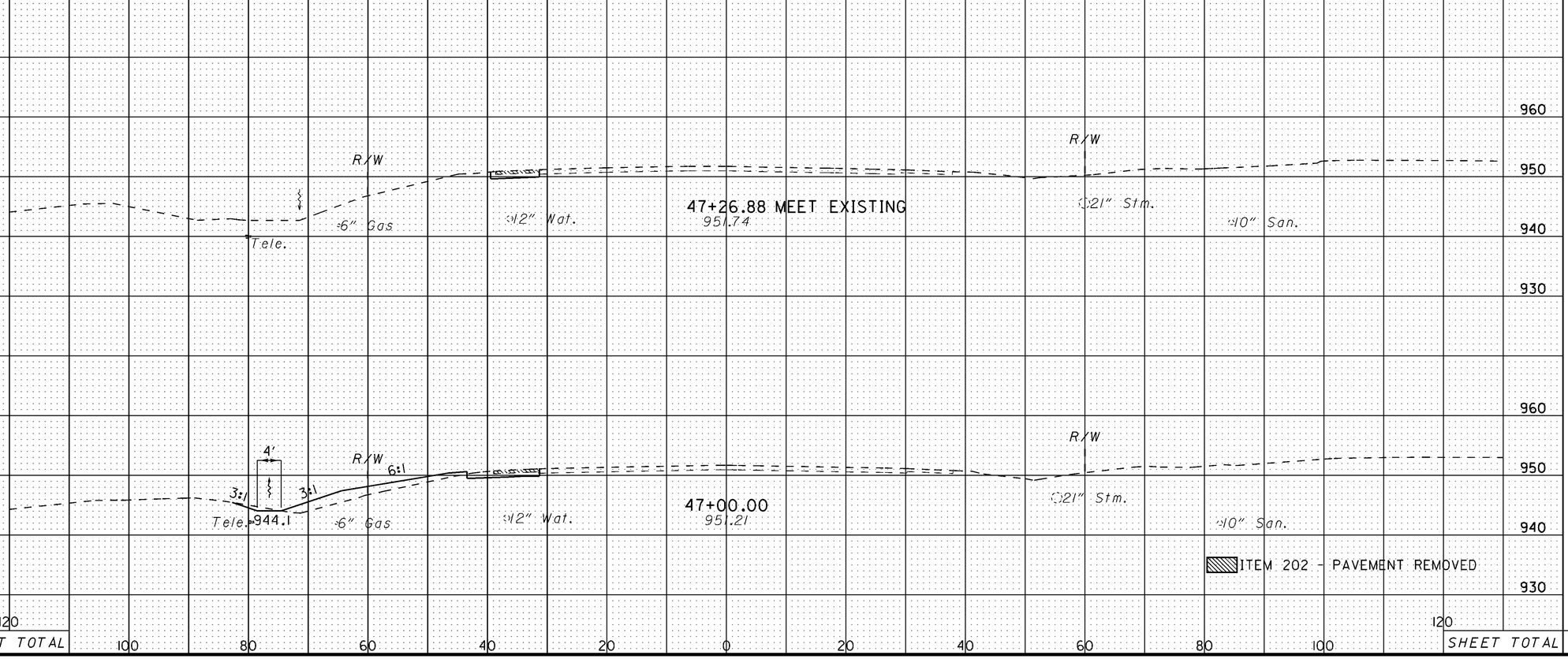

SR 741 CROSS SECTIONS
STA. 47+00 TO STA. 47+26.88

MOT-75-0.75

MOT-75-0.75
RAMP P
SUPERELEVATION AND PAVEMENT ELEVATION TABLE

CALCULATED: RMH
CHECKED: MAG

LEFT SIDE RAMP P								BASELINE CONTROL		RIGHT SIDE RAMP P								
EDGE OF SHOULDER ELEVATION	*ELEVATION CORRECTION	SHOULDER SLOPE	SHOULDER WIDTH (FEET)	EDGE ELEVATION	TRANSITION RATE	*ELEVATION CORRECTION	PAVEMENT SLOPE	BASELINE OFFSET (FEET)	STATION	PROFILE GRADE	BASELINE OFFSET (FEET)	PAVEMENT SLOPE	*ELEVATION CORRECTION	TRANSITION RATE	EDGE ELEVATION	SHOULDER WIDTH (FEET)	SHOULDER SLOPE	*ELEVATION CORRECTION	EDGE OF SHOULDER ELEVATION	REMARKS
906.33	-0.48	-0.040	12.00	906.81					311+57.11	906.81	0.00	0.020	0.00		906.81					P.C. CURVE 1
906.16	-0.47	-0.040	11.64	906.63					311+75.00	906.63	0.36	0.020	0.01		906.64					
905.93	-0.45	-0.040	11.14	906.38					312+00.00	906.38	0.86	0.020	0.02		906.40					
905.69	-0.43	-0.040	10.64	906.12					312+25.00	906.12	1.36	0.020	0.03		906.15					
905.49	-0.41	-0.040	10.14	905.90					312+50.00	905.90	1.86	0.020	0.04		905.94					
905.37	-0.40	-0.040	10.00	905.77					312+75.00	905.77	2.36	0.020	0.05		905.82					
905.18	-0.40	-0.040	10.00	905.58					313+00.00	905.58	2.86	0.020	0.06		905.64					
904.99	-0.40	-0.040	10.00	905.39					313+25.00	905.39	3.36	0.020	0.07		905.46					
904.80	-0.40	-0.040	10.00	905.20					313+50.00	905.20	3.86	0.020	0.08		905.28					
904.63	-0.40	-0.040	10.00	905.03					313+75.00	905.03	4.36	0.020	0.09		905.12					
904.47	-0.40	-0.040	10.00	904.87					314+00.00	904.87	4.86	0.020	0.10		904.97					
904.31	-0.40	-0.040	10.00	904.71					314+25.00	904.71	5.36	0.020	0.11		904.82					
904.15	-0.40	-0.040	10.00	904.55					314+50.00	904.55	5.86	0.020	0.12		904.67					
904.01	-0.40	-0.040	10.00	904.41					314+75.00	904.41	6.36	0.020	0.13		904.54					
903.87	-0.40	-0.040	10.00	904.27					315+00.00	904.27	6.86	0.020	0.14		904.41					
903.74	-0.40	-0.040	10.00	904.14					315+25.00	904.14	7.36	0.020	0.15		904.29					
903.61	-0.40	-0.040	10.00	904.01					315+50.00	904.01	7.86	0.020	0.16		904.17					
903.50	-0.40	-0.040	10.00	903.90					315+75.00	903.90	8.36	0.020	0.17		904.07					
903.45	-0.40	-0.040	10.00	903.85					316+00.00	903.85	8.86	0.020	0.18		904.03					
903.39	-0.40	-0.040	10.00	903.79					316+25.00	903.79	9.36	0.020	0.19		903.98					
903.35	-0.40	-0.040	10.00	903.75					316+50.00	903.75	9.86	0.020	0.20		903.95					
903.29	-0.40	-0.040	10.00	903.69					316+75.00	903.69	10.36	0.020	0.21		903.90					
903.23	-0.40	-0.040	10.00	903.63					317+00.00	903.63	10.86	0.020	0.22		903.85					
903.16	-0.40	-0.040	10.00	903.56					317+25.00	903.56	11.36	0.020	0.23		903.79					
903.09	-0.40	-0.040	10.00	903.49					317+50.00	903.49	11.86	0.020	0.24		903.73					
903.07	-0.40	-0.040	10.00	903.47		0.00	-0.020	0.00	317+56.93	903.47	12.00	0.020	0.24		903.71					
903.01	-0.40	-0.040	10.00	903.41		-0.01	-0.020	0.33	317+75.00	903.42	12.00	0.020	0.24		903.66					P.C. CURVE 2
902.97	-0.40	-0.040	10.00	903.37		-0.02	-0.020	0.76	318+00.00	903.39	12.00	0.020	0.24		903.63					
902.95	-0.40	-0.040	10.00	903.35		-0.02	-0.020	1.17	318+25.00	903.37	12.00	0.020	0.24		903.61					
902.92	-0.40	-0.040	10.00	903.32		-0.03	-0.020	1.56	318+50.00	903.35	12.00	0.020	0.24		903.59					
902.89	-0.40	-0.040	10.00	903.29		-0.04	-0.020	1.92	318+75.00	903.33	12.00	0.020	0.24		903.57					
902.89	-0.40	-0.040	10.00	903.29		-0.05	-0.020	2.26	319+00.00	903.34	12.00	0.020	0.24		903.58					
902.98	-0.40	-0.040	10.00	903.38		-0.05	-0.020	2.57	319+25.00	903.43	12.00	0.020	0.24		903.67					
903.06	-0.40	-0.040	10.00	903.46		-0.06	-0.020	2.86	319+50.00	903.52	12.00	0.020	0.24		903.76					
903.15	-0.40	-0.040	10.00	903.55		-0.06	-0.020	3.13	319+75.00	903.61	12.00	0.020	0.24		903.85					
903.23	-0.40	-0.040	10.00	903.63		-0.07	-0.020	3.37	320+00.00	903.70	12.00	0.020	0.24		903.94					
903.31	-0.40	-0.040	10.00	903.71		-0.07	-0.020	3.59	320+25.00	903.78	12.00	0.020	0.24		904.02					
903.39	-0.40	-0.040	10.00	903.79		-0.08	-0.020	3.79	320+50.00	903.87	12.00	0.020	0.24		904.11					
903.49	-0.40	-0.040	10.00	903.89		-0.08	-0.020	3.96	320+75.00	903.97	12.00	0.020	0.24		904.21					
903.94	-0.05	-0.040	10.00	903.99		-0.08	-0.020	4.11	321+00.00	904.07	12.00	0.020	0.24		904.31					
904.04	-0.05	-0.040	10.00	904.10		-0.08	-0.020	4.23	321+25.00	904.18	12.00	0.020	0.24		904.42					
904.14	-0.05	-0.040	10.00	904.19		-0.09	-0.020	4.33	321+50.00	904.28	12.00	0.020	0.24		904.52					
904.25	-0.05	-0.040	10.00	904.30		-0.09	-0.020	4.41	321+75.00	904.39	12.00	0.020	0.24		904.63					
904.38	-0.05	-0.040	10.00	904.43		-0.09	-0.020	4.46	322+00.00	904.52	12.00	0.020	0.24		904.76					
904.17	-0.40	-0.040	10.00	904.57		-0.09	-0.020	4.49	322+25.00	904.66	12.00	0.020	0.24		904.90					
904.30	-0.40	-0.040	10.00	904.70		-0.09	-0.020	4.50	322+50.00	904.79	12.00	0.020	0.24		905.03					
904.43	-0.40	-0.040	10.00	904.83		-0.09	-0.020	4.48	322+75.00	904.92	12.00	0.020	0.24		905.16					
904.53	-0.40	-0.040	10.00	904.93		-0.09	-0.020	4.44	323+00.00	905.02	12.00	0.020	0.24		905.26					
904.60	-0.40	-0.040	10.00	905.00		-0.09	-0.020	4.37	323+25.00	905.09	12.00	0.020	0.24		905.33					
904.67	-0.40	-0.040	10.00	905.07		-0.09	-0.020	4.28	323+50.00	905.16	12.00	0.020	0.24		905.40					
904.78	-0.40	-0.040	10.00	905.18		-0.08	-0.020	4.17	323+75.00	905.26	12.00	0.020	0.24		905.50					
904.93	-0.40	-0.040	10.00	905.33		-0.08	-0.020	4.03	324+00.00	905.41	12.00	0.020	0.24		905.65					
904.95	-0.40	-0.040	10.00	905.35		-0.08	-0.020	4.00	324+05.46	905.43	12.00	0.020	0.24		905.67					
904.95	-0.40	-0.040	10.00	905.35	600:1	-0.08	-0.020	4.00	324+05.47	905.43	12.00	0.020	0.24		905.67					P.C. CURVE 3
904.98	-0.40	-0.040	10.00	905.38		-0.10	-0.024	4.13	324+15.07	905.48	12.00	0.024	0.29		905.77					BEGIN FULL SUPERELEVATION
905.02	-0.40	-0.040	10.00	905.42		-0.10	-0.024	4.26	324+25.00	905.52	12.00	0.024	0.29		905.81					
905.09	-0.40	-0.040	10.00	905.49		-0.11	-0.024	4.59	324+50.00	905.60	12.00	0.024	0.29		905.89					
905.14	-0.40	-0.040	10.00	905.54		-0.12	-0.024	4.93	324+75.00	905.66	12.00	0.024	0.29		905.95					
905.17	-0.40	-0.040	10.00	905.57		-0.12	-0.024	5.08	324+86.27	905.69	12.00	0.024	0.36	200:1	906.05					
905.48	-0.40	-0.040	10.00	905.88	450:1	0.16	0.030	5.27	325+00.00	905.72	12.00	0.030	0.36		906.08					

* NEGATIVE CORRECTIONS MEANING BELOW PROFILE GRADE
POSITIVE CORRECTIONS MEANING ABOVE PROFILE GRADE.

SUPERELEVATION AND PAVEMENT ELEVATION TABLE - RAMP P

MOT-75-0.75

I:\HIGHWAYS\Data\ODOT_D7\21665\ENG\Roadway\Superelvation_calcs\SUPERTABLE1665.xls

MOT-75-0.75
RAMP P
SUPERELEVATION AND PAVEMENT ELEVATION TABLE

CALCULATED: RMH
CHECKED: MAG

LEFT SIDE RAMP P								BASELINE CONTROL		RIGHT SIDE RAMP P									
EDGE OF SHOULDER ELEVATION	*ELEVATION CORRECTION	SHOULDER SLOPE	SHOULDER WIDTH (FEET)	EDGE ELEVATION	TRANSITION RATE	*ELEVATION CORRECTION	PAVEMENT SLOPE	BASELINE OFFSET (FEET)	STATION	PROFILE GRADE	BASELINE OFFSET (FEET)	PAVEMENT SLOPE	*ELEVATION CORRECTION	TRANSITION RATE	EDGE ELEVATION	SHOULDER WIDTH (FEET)	SHOULDER SLOPE	*ELEVATION CORRECTION	EDGE OF SHOULDER ELEVATION	REMARKS
905.16	-0.40	-0.040	10.00	905.56	450:1	-0.17	-0.032	5.33	325+05.47	905.73	12.00	0.032	0.38		906.11					P.C. CURVE 4
905.15	-0.40	-0.040	10.00	905.55		-0.22	-0.040	5.59	325+25.00	905.77	12.00	0.040	0.48	200:1	906.25					
905.05	-0.48	-0.048	10.00	905.53	411:1	-0.28	-0.048	5.84	325+43.87	905.81	12.00	0.048	0.58		906.39					BEGIN FULL SUPERELEVATION
905.06	-0.48	-0.048	10.00	905.54		-0.28	-0.048	5.93	325+50.00	905.82	12.00	0.048	0.58		906.40					
905.07	-0.48	-0.048	10.00	905.55		-0.30	-0.048	6.26	325+75.00	905.85	12.00	0.048	0.58		906.43					
905.08	-0.48	-0.048	10.00	905.56		-0.32	-0.048	6.59	326+00.00	905.88	12.00	0.048	0.58		906.46					
905.09	-0.48	-0.048	10.00	905.57		-0.33	-0.048	6.92	326+25.00	905.90	12.00	0.048	0.58		906.48					
905.07	-0.48	-0.048	10.00	905.55		-0.36	-0.048	7.26	326+50.00	905.91	12.00	0.048	0.58		906.49					
905.04	-0.48	-0.048	10.00	905.52		-0.38	-0.048	7.55	326+71.96	905.90	12.00	0.048	0.58		906.48	4.00	0.022	0.09	906.56	BEGIN SHOULDER RT SIDE
905.02	-0.48	-0.048	10.00	905.50		-0.40	-0.048	7.60	326+75.00	905.90	12.00	0.048	0.58		906.48	4.00	0.022	0.09	906.56	
905.01	-0.48	-0.048	10.00	905.49		-0.41	-0.048	7.92	327+00.00	905.90	12.00	0.048	0.58		906.48	4.00	0.022	0.09	906.56	
904.98	-0.48	-0.048	10.00	905.46		-0.43	-0.048	8.26	327+25.00	905.89	12.00	0.048	0.58		906.47	4.00	0.022	0.09	906.55	
904.96	-0.48	-0.048	10.00	905.44		-0.44	-0.048	8.60	327+50.00	905.88	12.00	0.048	0.58		906.46	4.00	0.022	0.09	906.54	
904.94	-0.48	-0.048	10.00	905.42		-0.46	-0.048	8.93	327+75.00	905.88	12.00	0.048	0.58		906.46	4.00	0.022	0.09	906.54	
904.95	-0.48	-0.048	10.00	905.43		-0.49	-0.048	9.26	328+00.00	905.92	12.00	0.048	0.58		906.50	4.00	0.022	0.09	906.58	
905.02	-0.48	-0.048	10.00	905.50		-0.51	-0.048	9.60	328+25.00	906.01	12.00	0.048	0.58		906.59	4.00	0.022	0.09	906.67	
905.14	-0.48	-0.048	10.00	905.62		-0.52	-0.048	9.93	328+50.00	906.14	12.00	0.048	0.58		906.72	4.00	0.022	0.09	906.80	
905.30	-0.48	-0.048	10.00	905.78		-0.54	-0.048	10.27	328+75.00	906.32	12.00	0.048	0.58		906.90	4.00	0.022	0.09	906.98	
905.50	-0.48	-0.048	10.00	905.98		-0.56	-0.048	10.60	329+00.00	906.54	12.00	0.048	0.58		907.12	4.00	0.022	0.09	907.20	
906.32	-0.48	-0.048	10.00	906.22		-0.58	-0.048	10.93	329+25.00	906.80	12.00	0.048	0.58		907.38	4.00	0.022	0.09	907.46	
906.63	-0.48	-0.048	10.00	906.53		-0.58	-0.048	11.27	329+50.00	907.11	12.00	0.048	0.58		907.69	4.00	0.022	0.09	907.77	
906.99	-0.48	-0.048	10.00	906.89		-0.58	-0.048	11.60	329+75.00	907.47	12.00	0.048	0.58		908.05	4.00	0.022	0.09	908.13	
907.38	-0.48	-0.048	10.00	907.28		-0.58	-0.048	12.00	330+00.00	907.86	12.00	0.048	0.58		908.44	4.00	0.022	0.09	908.52	
907.83	-0.48	-0.048	10.00	907.73		-0.58	-0.048	12.00	330+25.00	908.31	12.00	0.048	0.58		908.89	4.00	0.022	0.09	908.97	
908.32	-0.48	-0.048	10.00	908.22		-0.58	-0.048	12.00	330+50.00	908.80	12.00	0.048	0.58		909.38	4.00	0.022	0.09	909.46	
908.85	-0.48	-0.048	10.00	908.75		-0.58	-0.048	12.00	330+75.00	909.33	12.00	0.048	0.58		909.91	4.00	0.022	0.09	909.99	
909.43	-0.48	-0.048	10.00	909.33		-0.58	-0.048	12.00	331+00.00	909.91	12.00	0.048	0.58		910.49	4.00	0.022	0.09	910.57	
910.05	-0.48	-0.048	10.00	909.95		-0.58	-0.048	12.00	331+25.00	910.53	12.00	0.048	0.58		911.11	4.00	0.022	0.09	911.19	
910.27	-0.48	-0.048	10.00	910.17		-0.58	-0.048	12.00	331+33.27	910.75	12.00	0.048	0.58		911.33	4.00	0.022	0.09	911.41	BEGIN SUPERELEVATION RUNOFF
910.79	-0.41	-0.041	10.00	910.70		-0.50	-0.042	12.00	331+50.00	911.20	12.00	0.042	0.50		911.70	4.00	0.028	0.11	911.81	
910.87	-0.40	-0.040	10.00	910.79		-0.48	-0.040	12.00	331+52.47	911.27	12.00	0.040	0.48		911.75	4.00	0.030	0.12	911.87	
911.41	-0.40	-0.040	10.00	911.43		-0.38	-0.032	12.00	331+71.67	911.81	12.00	0.032	0.38		912.19	4.00	0.038	0.05	912.25	P.T. CURVE 4
911.51	-0.40	-0.040	10.00	911.54	200:1	-0.37	-0.031	12.00	331+75.00	911.91	12.00	0.031	0.37		912.28	4.00	0.039	0.05	912.33	
911.56	-0.40	-0.040	10.00	911.60		-0.36	-0.030	12.00	331+76.47	911.96	12.00	0.030	0.36	200:1	912.32	4.00	0.040	0.05	912.37	
912.27	-0.40	-0.040	10.00	912.43		-0.24	-0.020	12.00	332+00.00	912.67	12.00	0.020	0.24		912.91	4.00	0.040	0.03	912.94	
913.07	-0.40	-0.040	10.00	913.35		-0.12	-0.010	12.00	332+25.00	913.47	12.00	0.010	0.12		913.59	4.00	0.040	0.01	913.60	
913.86	-0.40	-0.040	10.00	914.26		0.00	0.000	12.00	332+48.47	914.26	12.00	0.000	0.00		914.26	4.00	0.040	0.16	914.42	
913.92	-0.40	-0.040	10.00	914.32		0.00	0.000	12.00	332+50.00	914.32	12.00	0.000	0.00		914.32	4.00	-0.040	-0.16	914.16	
914.81	-0.40	-0.040	10.00	915.30		0.09	0.008	12.00	332+75.00	915.21	12.00	-0.008	-0.09		915.12	4.00	-0.040	-0.16	914.96	
915.74	-0.40	-0.040	10.00	916.32		0.18	0.015	12.00	333+00.00	916.14	12.43	-0.015	-0.19		915.95	4.00	-0.040	-0.16	915.79	
916.72	-0.40	-0.040	10.00	917.38	287:1	0.26	0.022	12.00	333+25.00	917.12	13.15	-0.022	-0.29		916.83	4.00	-0.040	-0.16	916.67	
917.75	-0.40	-0.040	10.00	918.50		0.35	0.030	12.00	333+50.00	918.15	14.07	-0.030	-0.41	229:1	917.74	4.00	-0.040	-0.16	917.58	
917.82	-0.40	-0.040	10.00	918.57		0.35	0.030	12.00	333+51.64	918.22	14.13	-0.030	-0.42		917.80	4.00	-0.040	-0.16	917.64	
918.29	-0.37	-0.037	10.00	919.06		0.40	0.033	12.00	333+61.96	918.66	14.58	-0.033	-0.48		918.18	4.00	-0.040	-0.16	918.02	P.C. CURVE 5
918.90	-0.32	-0.032	10.00	919.68	306:1	0.46	0.038	12.00	333+75.00	919.22	15.07	-0.038	-0.58	161:1	918.64	4.00	-0.040	-0.16	918.48	
919.11	-0.30	-0.030	10.00	919.89		0.48	0.040	12.00	333+79.43	919.41	15.36	-0.040	-0.61		918.80	4.00	-0.040	-0.16	918.64	
920.09	-0.22	-0.022	10.00	920.89		0.58	0.048	12.00	333+99.39	920.31	15.49	-0.048	-0.74		919.57	4.00	-0.048	-0.19	919.37	BEGIN FULL SUPERELEVATION
920.11	-0.22	-0.022	10.00	920.91		0.58	0.048	12.00	334+00.00	920.33	15.49	-0.048	-0.74		919.59	4.00	-0.048	-0.19	919.39	
921.27	-0.22	-0.022	10.00	922.07		0.58	0.048	12.00	334+25.00	921.49	15.50	-0.048	-0.74		920.75	4.00	-0.048	-0.19	920.55	
922.48	-0.22	-0.022	10.00	923.28		0.58	0.048	12.00	334+50.00	922.70	15.50	-0.048	-0.74		921.96	4.00	-0.048	-0.19	921.76	
923.73	-0.22	-0.022	10.00	924.53		0.58	0.048	12.00	334+75.00	923.95	15.50	-0.048	-0.74		923.21	4.00	-0.048	-0.19	923.01	
925.02	-0.22	-0.022	10.00	925.82		0.58	0.048	12.00	335+00.00	925.24	15.50	-0.048	-0.74		924.50	4.00	-0.048	-0.19	924.30	
926.36	-0.22	-0.022	10.00	927.16		0.58	0.048	12.00	335+25.00	926.58	15.50	-0.048	-0.74		925.84	4.00	-0.048	-0.19	925.64	
927.75	-0.20	-0.020	10.00	928.53		0.58	0.048	12.00	335+50.00	927.95	15.50	-0.048	-0.74		927.21	4.00	-0.048	-0.19	927.01	
927.99	-0.20	-0.020	10.00	928.77		0.58	0.048	12.00	335+54.53	928.19	15.50	-0.048	-0.74		927.45	4.00	-0.048	-0.19	927.25	BEGIN SUPERELEVATION RUNOFF
928.89	-0.30	-0.030	10.00	929.67		0.48	0.040	12.00	335+74.49	929.19	15.18	-0.040	-0.61		928.58	4.00	-0.040	-0.16	928.42	
918.91	-0.30	-0.030	10.00	919.69		0.48	0.040	12.00	335+75.00	919.21	15.19	-0.040	-0.60	161:1	918.61	4.00	-0.040	-0.16	918.45	
929.63	-0.37	-0.037	10.00	930.40		0.40	0.033	12.00	335+91.96	930.00	14.58	-0.033	-0.48		929.52	4.00	-0.040	-0.16	929.36	P.T. CURVE 5
929.95	-0.40	-0.040	10.00	930.71	208:1	0.36	0.030	12.00	336+00.00	930.35	14.23	-0.030	-0.42		929.93	4.00	-0.040	-0.16	929.77	
930.16	-0.40	-0.040	10.00	930.92		0.36	0.030	12.00	336+05.10	930.56	14.02	-0.030	-0.42	166:1	930.14	4.00	-0.040	-0.16	929.98	
930.95	-0.40	-0.040	10.00	931.61		0.26	0.020	13.32	336+25.00	931.35	13.28	-0.020	-0.26		931.09	4.00	-0.040	-0.16	930.93	
931.82	-0.40	-0.040	10.00	932.37		0.15	0.010	14.99	336+50.00	932.22	12.53	-0.010	-0.12		932.10	4.00	-0.040	-0.16	931.94	
					SEE INTERSECTION GRADING DETAIL									SEE INTERSECTION GRADING DETAIL						

* NEGATIVE CORRECTIONS MEANING BELOW PROFILE GRADE
POSITIVE CORRECTIONS MEANING ABOVE PROFILE GRADE.

SUPERELEVATION AND PAVEMENT ELEVATION TABLE - RAMP P

MOT-75-0.75

I:\HIGHWAYS\Data\ODOT_D7\21665\ENG\Roadway\Superelvation_calcs\SUPERTABLE1665.xls

MOT-75-0.75
RAMP H
SUPERELEVATION AND PAVEMENT ELEVATION TABLE

CALCULATED: RMH
CHECKED: MAG

LEFT SIDE RAMP H								BASELINE CONTROL		RIGHT SIDE RAMP H								REMARKS
EDGE OF SHOULDER ELEVATION	*ELEVATION CORRECTION	SHOULDER SLOPE	SHOULDER WIDTH (FEET)	EDGE ELEVATION	TRANSITION RATE	*ELEVATION CORRECTION	PAVEMENT SLOPE	BASELINE OFFSET (FEET)	STATION	PROFILE GRADE	BASELINE OFFSET (FEET)	PAVEMENT SLOPE	*ELEVATION CORRECTION	TRANSITION RATE	EDGE ELEVATION	SHOULDER WIDTH (FEET)	SHOULDER SLOPE	*ELEVATION CORRECTION	EDGE OF SHOULDER ELEVATION	
				905.29		0.24	0.020	12.00	222+69.38	905.05					905.05	8.000	-0.040	-0.32	904.73	
				905.31		0.24	0.020	12.00	222+75.00	905.07					905.07	8.000	-0.040	-0.32	904.75	
				905.42		0.24	0.020	12.00	223+00.00	905.18					905.18	8.000	-0.040	-0.32	904.86	
				905.57		0.24	0.020	12.00	223+25.00	905.33					905.33	8.000	-0.040	-0.32	905.01	
				905.72		0.24	0.020	12.00	223+50.00	905.48					905.48	8.000	-0.040	-0.32	905.16	
				905.88		0.24	0.020	12.00	223+75.00	905.64					905.64	8.000	-0.040	-0.32	905.32	
				906.00		0.24	0.020	12.00	224+00.00	905.76					905.76	8.000	-0.040	-0.32	905.44	
				906.10		0.24	0.020	12.00	224+25.00	905.86					905.86	8.000	-0.040	-0.32	905.54	
				906.21		0.24	0.020	12.00	224+50.00	905.97					905.97	8.000	-0.040	-0.32	905.65	
				906.33		0.24	0.020	12.00	224+75.00	906.09					906.09	8.000	-0.040	-0.32	905.77	
				906.45		0.24	0.020	12.00	225+00.00	906.21					906.21	8.000	-0.040	-0.32	905.89	
				906.58		0.24	0.020	12.00	225+25.00	906.34					906.34	8.000	-0.040	-0.32	906.02	
				906.70		0.24	0.020	12.00	225+50.00	906.46					906.46	8.000	-0.040	-0.32	906.14	
				906.88		0.24	0.020	12.00	225+75.00	906.64					906.64	8.000	-0.040	-0.32	906.32	
				907.07		0.24	0.020	12.00	226+00.00	906.83					906.83	8.000	-0.040	-0.32	906.51	
				907.25		0.24	0.020	12.00	226+25.00	907.01					907.01	8.000	-0.040	-0.32	906.69	
				907.28		0.24	0.020	12.00	226+31.51	907.04					907.04	8.000	-0.040	-0.32	906.72	
				907.42		0.28	0.023	12.00	226+50.00	907.14					907.14	8.000	-0.040	-0.32	906.82	
				907.52		0.32	0.027	12.00	226+75.00	907.20					907.20	8.000	-0.040	-0.32	906.88	
				907.59		0.36	0.030	12.00	226+90.96	907.23					907.23	8.000	-0.040	-0.32	906.91	P.C. CURVE 2
				907.63		0.38	0.032	12.03	227+00.00	907.25					907.25	8.000	-0.040	-0.32	906.93	
				907.75		0.45	0.036	12.40	227+25.00	907.30					907.30	8.000	-0.040	-0.32	906.98	
				907.85		0.53	0.040	13.22	227+50.00	907.32					907.32	8.000	-0.040	-0.32	907.00	
				907.85	495:1	0.53	0.040	13.23	227+50.40	907.32					907.32	8.000	-0.040	-0.32	907.00	
				907.94		0.64	0.044	14.47	227+75.00	907.30					907.30	8.000	-0.044	-0.35	906.95	
				907.99		0.69	0.048	16.00	227+97.96	907.30					907.30	8.000	-0.044	-0.35	906.95	BEGIN GORE
				908.03		0.77	0.048	16.00	228+00.00	907.26					907.26	8.000	-0.048	-0.38	906.88	
				908.08		0.85	0.053	16.00	228+25.00	907.23					907.23	8.000	-0.053	-0.42	906.81	
				908.17		0.91	0.057	16.00	228+50.00	907.26					907.26	8.000	-0.057	-0.46	906.80	
				908.25		0.96	0.060	16.00	228+69.30	907.29					907.29	8.000	-0.060	-0.48	906.81	BEGIN FULL SUPERELEVATION
				908.26		0.96	0.060	16.00	228+75.00	907.30					907.30	8.000	-0.060	-0.48	906.82	
				908.34		0.96	0.060	16.00	229+00.00	907.38					907.38	8.000	-0.060	-0.48	906.90	
				908.43		0.96	0.060	16.00	229+25.00	907.47					907.47	8.000	-0.060	-0.48	906.99	
				908.51		0.96	0.060	16.00	229+50.00	907.55					907.55	8.000	-0.060	-0.48	907.07	
908.55	-0.03	-0.010	3.00	908.58		0.96	0.060	16.00	229+69.38	907.62					907.62	8.000	-0.060	-0.48	907.14	
908.57	-0.03	-0.010	3.00	908.60		0.96	0.060	16.00	229+75.00	907.64					907.64	7.774	-0.060	-0.47	907.17	
908.67	-0.03	-0.010	3.00	908.70		0.96	0.060	16.00	230+00.00	907.74					907.74	6.771	-0.060	-0.41	907.33	
908.78	-0.03	-0.010	3.00	908.81		0.96	0.060	16.00	230+19.38	907.85					907.85	6.000	-0.060	-0.36	907.49	
908.82	-0.03	-0.010	3.00	908.85		0.96	0.060	16.00	230+25.00	907.89					907.89	6.000	-0.060	-0.36	907.53	
909.00	-0.03	-0.010	3.00	909.03		0.96	0.060	16.00	230+50.00	908.07					908.07	6.000	-0.060	-0.36	907.71	
909.23	-0.03	-0.010	3.00	909.26		0.96	0.060	16.00	230+75.00	908.30					908.30	6.000	-0.060	-0.36	907.94	
909.49	-0.03	-0.010	3.00	909.52		0.96	0.060	16.00	231+00.00	908.56					908.56	6.000	-0.060	-0.36	908.20	
909.79	-0.03	-0.010	3.00	909.82		0.96	0.060	16.00	231+25.00	908.86					908.86	6.000	-0.060	-0.36	908.50	
910.13	-0.03	-0.010	3.00	910.16		0.96	0.060	16.00	231+50.00	909.20					909.20	6.000	-0.060	-0.36	908.84	
910.52	-0.03	-0.010	3.00	910.55		0.96	0.060	16.00	231+75.00	909.59					909.59	6.000	-0.060	-0.36	909.23	
910.55	-0.03	-0.010	3.00	910.58		0.96	0.060	16.00	231+77.00	909.62					909.62	6.000	-0.060	-0.36	909.26	BEGIN SUPERELELVATION RUNOFF
910.56	-0.03	-0.010	3.00	910.59		0.96	0.060	16.00	231+77.95	909.63					909.63	6.000	-0.060	-0.36	909.27	
910.81	-0.05	-0.017	3.00	910.86		0.85	0.053	16.00	232+00.00	910.01					910.01	6.000	-0.053	-0.32	909.69	
911.12	-0.08	-0.025	3.00	911.19		0.72	0.045	16.00	232+25.00	910.47					910.47	6.000	-0.045	-0.27	910.20	
911.36	-0.09	-0.030	3.00	911.45		0.64	0.040	16.00	232+41.95	910.81					910.81	6.000	-0.040	-0.24	910.57	
911.46	-0.10	-0.033	3.00	911.56		0.59	0.037	16.00	232+50.00	910.97					910.97	6.000	-0.040	-0.24	910.73	
911.54	-0.10	-0.034	3.00	911.65		0.58	0.036	16.00	232+54.75	911.07					911.07	6.000	-0.040	-0.24	910.83	P.T. CURVE 2
911.85	-0.12	-0.040	3.00	911.97	200:1	0.48	0.030	16.00	232+73.95	911.49					911.49	6.000	-0.040	-0.24	911.25	
911.87	-0.12	-0.040	3.00	911.99		0.48	0.030	16.00	232+75.00	911.51					911.51	6.000	-0.040	-0.24	911.27	
912.33	-0.12	-0.040	3.00	912.45		0.35	0.022	16.00	233+00.00	912.10					912.10	6.000	-0.040	-0.24	911.86	
912.82	-0.12	-0.040	3.00	912.94		0.22	0.014	16.00	233+25.00	912.72					912.72	6.000	-0.040	-0.24	912.48	
913.36	-0.12	-0.040	3.00	913.48		0.10	0.006	16.00	233+50.00	913.38					913.38	6.000	-0.040	-0.24	913.14	
913.81	-0.12	-0.040	3.00	913.93		0.00	0.000	16.00	233+69.95	913.93					913.93	6.000	-0.040	-0.24	913.69	
913.94	-0.12	-0.040	3.00	914.06		-0.02	-0.001	16.00	233+75.00	914.08					914.08	6.000	-0.040	-0.24	913.84	
914.57	-0.12	-0.040	3.00	914.69		-0.13	-0.008	16.31	234+00.00	914.82					914.82	6.000	-0.040	-0.24	914.58	
915.24	-0.12	-0.040	3.00	915.36		-0.24	-0.014	16.93	234+25.00	915.60					915.60	6.000	-0.040	-0.24	915.36	
915.37	-0.12	-0.040	3.00	915.49		-0.27	-0.016	17.09	234+30.00	915.76					915.76	6.000	-0.040	-0.24	915.52	
915.93	-0.12	-0.040	3.00	916.05	195:1	-0.37	-0.021	17.84	234+50.00	916.42	4.79	0.021	0.10		916.52	6.000	-0.040	-0.24	916.18	
916.64	-0.12	-0.040	3.00	916.76		-0.51	-0.027	19.03	234+75.00	917.27	10.79	0.027	0.29		917.56	6.000	-0.040	-0.24	917.03	
916.77	-0.12	-0.040	3.00	916.89		-0.56	-0.029	19.33	234+80.00	917.45	12.00	0.029	0.35		917.80	6.000	-0.040	-0.24	917.21	
916.91	-0.12	-0.040	3.00	917.03		-0.59	-0.030	19.58	234+84.75	917.62	12.00	0.030	0.36		917.98	6.000	-0.040	-0.24	917.38	P.C. CURVE 3
917.36	-0.12	-0.040	3.00	917.48		-0.69	-0.034	20.33	235+00.00	918.17	12.00	0.034	0.41		918.58	6.000	-0.036	-0.22	917.95	
917.96	-0.12	-0.040	3.00	918.08		-0.84	-0.040	20.99	235+20.07	918.92	12.00	0.040	0.48		919.40	6.000	-0.030	-0.18	918.74	
918.12	-0.12	-0.041	3.00	918.24	166:1	-0.87	-0.041	21.10	235+25.00	919.11	12.00	0.041	0.49	294:1	919.60	6.000	-0.029	-0.17	918.94	
918.26	-0.13	-0.043	3.00	918.39		-0.91	-0.043	21.18	235+30.00	919.30	12.00	0.043	0.52		919.82	6.000	-0.027	-0.16	919.14	
918.85	-0.14	-0.048	3.00	919.00		-1.02	-0.048	21.29	235+48.32	920.02	12.00	0.048	0.58		920.60	6.000	-0.022	-0.13	919.89	BEGIN FULL SUPERELEVATION
918.92	-0.14	-0.048	3.00	919.07		-1.02	-0.048	21.29	235+50.00	920.09	12.00	0.048	0.58		920.67	6.000	-0.022	-0.13	919.96	

* NEGATIVE CORRECTIONS MEANING BELOW PROFILE GRADE
POSITIVE CORRECTIONS MEANING ABOVE PROFILE GRADE.

SUPERELEVATION AND PAVEMENT ELEVATION TABLE - RAMP H

MOT-75-0.75

I:\HIGHWAYS\Data\ODOT_D7\21665\ENG\Roadway\Superelvation_calcs\SUPERTABLE1665.xls

MOT-75-0.75
RAMP H
SUPERELEVATION AND PAVEMENT ELEVATION TABLE

LEFT SIDE RAMP H									BASELINE CONTROL		RIGHT SIDE RAMP H									REMARKS
EDGE OF SHOULDER ELEVATION	*ELEVATION CORRECTION	SHOULDER SLOPE	SHOULDER WIDTH (FEET)	EDGE ELEVATION (SAME AS PROFILE GRADE)	TRANSITION RATE	*ELEVATION CORRECTION	PAVEMENT SLOPE	BASELINE OFFSET (FEET)	STATION	PROFILE GRADE	BASELINE OFFSET (FEET)	PAVEMENT SLOPE	*ELEVATION CORRECTION	TRANSITION RATE	EDGE ELEVATION	SHOULDER WIDTH (FEET)	SHOULDER SLOPE	*ELEVATION CORRECTION	EDGE OF SHOULDER ELEVATION	
919.95	-0.14	-0.048	3.00	920.09		-1.02	-0.048	21.25	235+75.00	921.11	12.00	0.048	0.58		921.69	6.000	-0.022	-0.13	920.98	
920.93	-0.14	-0.048	3.00	921.07		-1.10	-0.048	22.85	236+00.00	922.17	12.00	0.048	0.58		922.75	6.000	-0.022	-0.13	922.04	
921.83	-0.14	-0.048	3.00	921.97		-1.29	-0.048	26.85	236+25.00	923.26	12.00	0.048	0.58		923.84	6.000	-0.022	-0.13	923.13	
922.59	-0.14	-0.048	3.00	922.74		-1.40	-0.048	29.25	236+44.71	924.14	12.00	0.048	0.58		924.72	6.000	-0.022	-0.13	924.01	
922.83	-0.14	-0.048	3.00	922.98		-1.40	-0.048	29.25	236+50.00	924.38	12.00	0.048	0.58		924.96	6.000	-0.022	-0.13	924.25	
923.95	-0.14	-0.048	3.00	924.10		-1.40	-0.048	29.25	236+75.00	925.50	12.00	0.048	0.58		926.08	6.000	-0.022	-0.13	925.37	
924.19	-0.14	-0.048	3.00	924.34		-1.40	-0.048	29.25	236+80.54	925.74	12.00	0.048	0.58		926.32	6.000	-0.022	-0.13	925.61	
925.06	-0.14	-0.048	3.00	925.21		-1.40	-0.048	29.25	237+00.00	926.61	12.00	0.048	0.58		927.19	6.000	-0.022	-0.13	926.48	
926.18	-0.14	-0.048	3.00	926.33		-1.40	-0.048	29.25	237+25.00	927.73	12.00	0.048	0.58		928.31	6.000	-0.022	-0.13	927.60	
927.29	-0.14	-0.048	3.00	927.43		-1.41	-0.048	29.30	237+49.90	928.84	12.00	0.048	0.58		929.42	6.000	-0.022	-0.13	928.71	BEGIN SUPERELEVATION RUNOFF
927.30	-0.14	-0.048	3.00	927.44		-1.41	-0.048	29.30	237+50.00	928.85	12.00	0.048	0.58		929.43	6.000	-0.022	-0.13	928.72	
928.66	-0.12	-0.041	3.00	928.78	161:1	-1.19	-0.041	29.05	237+75.00	929.97	12.00	0.041	0.49		930.46	6.000	-0.029	-0.17	929.80	
928.83	-0.12	-0.040	3.00	928.95		-1.16	-0.040	28.97	237+78.15	930.11	12.00	0.040	0.48	294:1	930.59	6.000	-0.030	-0.18	929.93	
930.00	-0.12	-0.040	3.00	930.12		-0.96	-0.034	28.16	238+00.00	931.08	12.00	0.034	0.41		931.49	6.000	-0.036	-0.22	930.86	
930.16	-0.12	-0.040	3.00	930.28		-0.92	-0.033	28.01	238+02.87	931.20	12.00	0.033	0.40		931.60	6.000	-0.037	-0.22	930.98	P.T. CURVE 3
930.71	-0.12	-0.040	3.00	930.83		-0.82	-0.030	27.46	238+13.47	931.65	12.00	0.030	0.36		932.01	6.000	-0.040	-0.24	931.41	
931.28	-0.12	-0.040	3.00	931.40		-0.73	-0.027	26.90	238+25.00	932.13	12.00	0.027	0.32		932.45	6.000	-0.040	-0.24	931.89	
932.46	-0.12	-0.040	3.00	932.58	174:1	-0.52	-0.020	25.85	238+50.00	933.10	12.00	0.020	0.24	294:1	933.34	6.000	-0.040	-0.24	932.86	
933.55	-0.12	-0.040	3.00	933.67		-0.32	-0.013	25.00	238+75.00	933.99	12.00	0.013	0.16		934.15	6.000	-0.040	-0.24	933.75	
933.91	-0.12	-0.040	3.00	934.03		-0.25	-0.010	24.75	238+83.62	934.28	12.00	0.010	0.12		934.40	6.000	-0.040	-0.24	934.04	
934.54	-0.12	-0.040	3.00	934.66		-0.15	-0.006	24.36	239+00.00	934.81	12.82	0.006	0.07		934.88	6.000	-0.040	-0.24	934.57	
935.28	-0.12	-0.040	3.00	935.40		0.00	0.000	24.00	239+19.43	935.40	13.79	0.000	0.00		935.40	6.000	-0.040	-0.24	935.16	
935.50	-0.12	-0.040	3.00	935.62		0.05	0.002	24.00	239+25.00	935.57	14.07	-0.002	-0.02		935.55	6.000	-0.040	-0.24	935.33	
936.45	-0.12	-0.040	3.00	936.57		0.25	0.011	24.00	239+50.00	936.32	15.32	-0.011	-0.13		936.19	6.000	-0.040	-0.24	936.08	
					1611		SEE INTERSECTION GRADING DETAIL		239+75.00	907.07		SEE INTERSECTION GRADING DETAIL		241:1						
									240+00.00	937.82										
									240+06.37	938.01										
									240+25.00	938.57										
									240+29.55	938.70										

* NEGATIVE CORRECTIONS MEANING BELOW PROFILE GRADE
POSITIVE CORRECTIONS MEANING ABOVE PROFILE GRADE.

CALCULATED: RMH
CHECKED: MAG

SUPERELEVATION AND PAVEMENT ELEVATION TABLE - RAMP H

MOT-75-0.75

I:\HIGHWAYS\Data\ODOT_D7\21665\ENG\Roadway\Superelvation_calcs\SUPERTABLE1665.xls

MOT-75-0.75
RAMP M
SUPERELEVATION AND PAVEMENT ELEVATION TABLE

CALCULATED: RMH
CHECKED: MAG

LEFT SIDE RAMP M									BASELINE CONTROL		RIGHT SIDE RAMP M									REMARKS
EDGE OF SHOULDER ELEVATION	*ELEVATION CORRECTION	SHOULDER SLOPE	SHOULDER WIDTH (FEET)	EDGE ELEVATION	TRANSITION RATE	*ELEVATION CORRECTION	PAVEMENT SLOPE	BASELINE OFFSET (FEET)	STATION	PROFILE GRADE	BASELINE OFFSET (FEET)	PAVEMENT SLOPE	*ELEVATION CORRECTION	TRANSITION RATE	EDGE ELEVATION	SHOULDER WIDTH (FEET)	SHOULDER SLOPE	*ELEVATION CORRECTION	EDGE OF SHOULDER ELEVATION	
					SEE INTERSECTION DETAIL				439+06.56	936.69				SEE INTERSECTION DETAIL						
									439+09.38	936.60										
									439+25.00	936.13										
									439+38.44	935.73										
									439+50.00	935.38										
									439+75.00	934.63										
									440+00.00	933.88										
932.73	-0.40	-0.040	10.00	933.13		0.00	0.000	13.99	440+25.00	933.13	24.00	0.000	0.00		933.13	4.00	-0.040	-0.16	932.97	
932.72	-0.40	-0.040	10.00	933.12		0.00	0.000	13.98	440+25.38	933.12	24.00	0.000	0.00		933.12	4.00	-0.040	-0.16	932.96	
932.06	-0.40	-0.040	10.00	932.46		0.08	0.007	12.79	440+50.00	932.38	24.47	-0.007	-0.17		932.21	4.00	-0.040	-0.16	932.22	
931.64	-0.40	-0.040	10.00	932.04		0.14	0.012	12.00	440+66.52	931.90	24.90	-0.012	-0.29		931.61	4.00	-0.040	-0.16	931.74	
931.44	-0.40	-0.040	10.00	931.84		0.17	0.014	12.00	440+75.00	931.67	25.16	-0.014	-0.35		931.32	4.00	-0.040	-0.16	931.51	
930.86	-0.40	-0.040	10.00	931.26		0.25	0.021	12.00	441+00.00	931.01	26.05	-0.021	-0.55		930.46	4.00	-0.040	-0.16	930.85	
930.36	-0.40	-0.040	10.00	930.76		0.34	0.028	12.00	441+25.00	930.42	27.15	-0.028	-0.76		929.66	4.00	-0.040	-0.16	930.26	
930.24	-0.40	-0.040	10.00	930.64	376:1	0.36	0.030	12.00	441+31.78	930.28	27.48	-0.030	-0.82	161:1	929.46	4.00	-0.040	-0.16	930.12	
930.09	-0.37	-0.037	10.00	930.46		0.40	0.033	12.00	441+41.94	930.06	28.01	-0.033	-0.92		929.14	4.00	-0.040	-0.16	929.90	P.C. CURVE 1
929.97	-0.35	-0.035	10.00	930.32		0.42	0.035	12.00	441+50.00	929.90	28.40	-0.035	-0.99		928.91	4.00	-0.040	-0.16	929.74	
929.76	-0.30	-0.030	10.00	930.06		0.48	0.040	12.00	441+66.66	929.58	28.97	-0.040	-1.16		928.42	4.00	-0.040	-0.16	929.42	
929.67	-0.28	-0.028	10.00	929.95		0.51	0.042	12.00	441+75.00	929.44	29.16	-0.042	-1.24		928.20	4.00	-0.042	-0.17	929.27	
929.47	-0.22	-0.022	10.00	929.69		0.58	0.048	12.00	441+94.91	929.11	29.30	-0.048	-1.41		927.70	4.00	-0.048	-0.19	928.92	BEGIN FULL SUPERELEVATION
929.40	-0.22	-0.022	10.00	929.62		0.58	0.048	12.00	442+00.00	929.04	29.25	-0.048	-1.40		927.64	4.00	-0.048	-0.19	928.85	
929.07	-0.22	-0.022	10.00	929.29		0.58	0.048	12.00	442+25.00	928.71	29.25	-0.048	-1.40		927.31	4.00	-0.048	-0.19	928.52	
928.80	-0.22	-0.022	10.00	929.02		0.58	0.048	12.00	442+50.00	928.44	29.25	-0.048	-1.40		927.04	4.00	-0.048	-0.19	928.25	
928.59	-0.22	-0.022	10.00	928.81		0.58	0.048	12.00	442+75.00	928.23	29.25	-0.048	-1.40		926.83	4.00	-0.048	-0.19	928.04	
928.45	-0.22	-0.022	10.00	928.67		0.58	0.048	12.00	443+00.00	928.09	29.25	-0.048	-1.40		926.69	4.00	-0.048	-0.19	927.90	
928.37	-0.22	-0.022	10.00	928.59		0.58	0.048	12.00	443+25.00	928.01	29.25	-0.048	-1.40		926.61	4.00	-0.048	-0.19	927.82	
928.36	-0.22	-0.022	10.00	928.58		0.58	0.048	12.00	443+48.97	928.00	29.30	-0.048	-1.41		926.59	4.00	-0.048	-0.19	927.81	BEGIN FULL SUPERELEVATION RUNOFF
928.35	-0.22	-0.022	10.00	928.57		0.57	0.048	12.00	443+50.00	928.00	29.30	-0.048	-1.40		926.60	4.00	-0.048	-0.19	927.81	
928.25	-0.29	-0.029	10.00	928.54	294:1	0.49	0.041	12.00	443+75.00	928.05	29.03	-0.041	-1.19	161:1	926.86	4.00	-0.041	-0.16	927.89	
928.24	-0.30	-0.030	10.00	928.54		0.48	0.040	12.00	443+77.22	928.06	28.97	-0.040	-1.12		926.94	4.00	-0.040	-0.16	927.90	
928.22	-0.36	-0.036	10.00	928.58		0.41	0.034	12.00	444+00.00	928.17	28.11	-0.034	-0.91		927.26	4.00	-0.040	-0.16	928.01	
928.21	-0.37	-0.037	10.00	928.58		0.40	0.033	12.00	444+01.94	928.18	28.01	-0.033	-0.85		927.33	4.00	-0.040	-0.16	928.02	P.T. CURVE 1
928.31	-0.40	-0.040	10.00	928.71		0.36	0.030	12.00	444+25.00	928.35	26.86	-0.030	-0.75		927.60	4.00	-0.040	-0.16	928.19	
928.50	-0.40	-0.040	10.00	928.90		0.31	0.026	12.00	444+50.00	928.59	25.81	-0.026	-0.63		927.96	4.00	-0.040	-0.16	928.43	
928.76	-0.40	-0.040	10.00	929.16		0.26	0.022	12.00	444+75.00	928.90	24.97	-0.022	-0.53		928.37	4.00	-0.040	-0.16	928.74	
929.10	-0.40	-0.040	10.00	929.50		0.23	0.019	12.00	445+00.00	929.27	24.34	-0.019	-0.46		928.81	4.00	-0.040	-0.16	929.11	
929.49	-0.40	-0.040	10.00	929.89		0.18	0.015	12.00	445+25.00	929.71	24.00	-0.015	-0.18		929.53	4.00	-0.040	-0.16	929.55	
929.76	-0.40	-0.040	10.00	930.16	569:1	0.16	0.013	12.00	445+40.00	930.00	24.00	-0.013	-0.16	380:1	929.84	4.00	-0.040	-0.16	929.84	
929.94	-0.40	-0.040	10.00	930.34		0.13	0.011	12.00	445+50.00	930.21	21.60	-0.011	-0.13		930.08	4.00	-0.040	-0.16	930.05	
930.48	-0.40	-0.040	10.00	930.88		0.10	0.008	12.00	445+75.00	930.78	15.60	-0.008	-0.12		930.66	4.00	-0.040	-0.16	930.62	
930.82	-0.40	-0.040	10.00	931.22		0.07	0.005	12.00	445+90.00	931.15	12.00	-0.005	-0.06		931.09	4.00	-0.040	-0.16	930.99	
931.06	-0.40	-0.040	10.00	931.46		0.05	0.004	12.00	446+00.00	931.41	12.00	-0.004	-0.05		931.36	4.00	-0.040	-0.16	931.25	
931.70	-0.40	-0.040	10.00	932.10		0.00	0.000	12.00	446+25.00	932.10	12.00	0.000	0.00		932.10	4.00	-0.040	-0.16	931.94	
931.77	-0.40	-0.040	10.00	932.17		0.00	0.000	12.00	446+27.40	932.17	12.00	0.000	0.00		932.17	4.00	-0.040	-0.16	932.01	BEGIN SUPERELEVATION RUNOFF
932.37	-0.40	-0.040	10.00	932.77		-0.09	-0.008	12.22	446+50.00	932.86	12.00	0.008	0.09		932.95	4.00	-0.040	-0.16	932.70	
933.04	-0.40	-0.040	10.00	933.44		-0.20	-0.016	12.58	446+75.00	933.64	12.00	0.016	0.19		933.83	4.00	-0.040	-0.16	933.48	
933.70	-0.40	-0.040	10.00	934.10		-0.33	-0.025	13.07	447+00.00	934.43	12.00	0.025	0.30		934.73	4.00	-0.040	-0.16	934.27	
934.14	-0.40	-0.040	10.00	934.54		-0.40	-0.030	13.45	447+15.90	934.94	12.00	0.030	0.36		935.30	4.00	-0.040	-0.16	934.78	
934.34	-0.40	-0.040	10.00	934.74	200:1	-0.48	-0.033	13.69	447+25.00	935.22	12.00	0.033	0.40		935.62	4.00	-0.037	-0.15	935.07	
934.82	-0.40	-0.040	10.00	935.22		-0.55	-0.039	14.20	447+42.45	935.77	12.00	0.039	0.47	246:1	936.24	4.00	-0.031	-0.12	935.65	P.C. CURVE 2
934.90	-0.40	-0.040	10.00	935.30		-0.57	-0.040	14.29	447+45.40	935.87	12.00	0.040	0.48		936.35	4.00	-0.030	-0.12	935.75	
935.00	-0.42	-0.042	10.00	935.41		-0.60	-0.042	14.41	447+50.00	936.01	12.00	0.042	0.50		936.51	4.00	-0.028	-0.11	935.90	
935.56	-0.50	-0.050	10.00	936.06		-0.74	-0.050	14.81	447+75.00	936.80	12.00	0.050	0.60		937.40	4.00	-0.020	-0.08	936.72	
936.10	-0.58	-0.058	10.00	936.68		-0.86	-0.058	14.75	447+98.50	937.54	12.00	0.058	0.70		938.24	4.00	-0.012	-0.05	937.49	
936.15	-0.58	-0.058	10.00	936.73		-0.86	-0.058	14.75	448+00.00	937.59	12.00	0.058	0.70		938.29	4.00	-0.012	-0.05	937.54	BEGIN FULL SUPERELEVATION
936.94	-0.58	-0.058	10.00	937.52		-0.86	-0.058	14.75	448+25.00	938.38	12.00	0.058	0.70		939.08	4.00	-0.012	-0.05	938.33	
937.73	-0.58	-0.058	10.00	938.31		-0.86	-0.058	14.75	448+50.00	939.17	12.00	0.058	0.70		939.87	4.00	-0.012	-0.05	939.12	
938.52	-0.58	-0.058	10.00	939.10		-0.86	-0.058	14.75	448+75.00	939.96	12.00	0.058	0.70		940.66	4.00	-0.012	-0.05	939.91	
939.31	-0.58	-0.058	10.00	939.89		-0.86	-0.058	14.75	449+00.00	940.75	12.00	0.058	0.70		941.45	4.00	-0.012	-0.05	940.70	
940.10	-0.58	-0.058	10.00	940.68		-0.86	-0.058	14.75	449+25.00	941.54	12.00	0.058	0.70		942.24	4.00	-0.012	-0.05	941.49	
940.89	-0.58	-0.058	10.00	941.47		-0.86	-0.058	14.75	449+50.00	942.33	12.00	0.058	0.70		943.03	4.00	-0.012	-0.05	942.28	
941.63	-0.58	-0.058	10.00	942.21	200:1	-0.86	-0.058	14.75	449+73.68	943.07	12.00	0.058	0.70	246:1	943.77	4.00	-0.012	-0.05	943.02	BEGIN SUPERELEVATION RUNOFF

* NEGATIVE CORRECTIONS MEANING BELOW PROFILE GRADE
POSITIVE CORRECTIONS MEANING ABOVE PROFILE GRADE.

SUPERELEVATION AND PAVEMENT ELEVATION TABLE - RAMP M

MOT-75-0.75

I:\HIGHWAYS\Data\ODOT_D7\21665\ENG\Roadway\Superelvation_calcs\SUPERTABLE1665.xls

MOT-75-0.75
RAMP M
SUPERELEVATION AND PAVEMENT ELEVATION TABLE

CALCULATED: RMH
CHECKED: MAG

LEFT SIDE RAMP M								BASELINE CONTROL		RIGHT SIDE RAMP M									
EDGE OF SHOULDER ELEVATION	*ELEVATION CORRECTION	SHOULDER SLOPE	SHOULDER WIDTH (FEET)	EDGE ELEVATION	TRANSITION RATE	*ELEVATION CORRECTION	PAVEMENT SLOPE	BASELINE OFFSET (FEET)	STATION	PROFILE GRADE	BASELINE OFFSET (FEET)	PAVEMENT SLOPE	*ELEVATION CORRECTION	TRANSITION RATE	EDGE ELEVATION	SHOULDER WIDTH (FEET)	SHOULDER SLOPE	*ELEVATION CORRECTION	EDGE OF SHOULDER ELEVATION	REMARKS
941.67	-0.58	-0.058	10.00	942.25		-0.86	-0.058	14.76	449+75.00	943.11	12.00	0.058	0.70		943.81	4.00	0.012	0.05	943.16	
942.67	-0.49	-0.049	10.00	943.16		-0.72	-0.049	14.74	450+00.00	943.88	12.00	0.049	0.59		944.47	4.00	0.021	0.08	943.96	
943.63	-0.41	-0.041	10.00	944.04		-0.59	-0.041	14.30	450+25.00	944.63	12.00	0.041	0.49		945.12	4.00	0.029	0.12	944.75	
943.71	-0.40	-0.040	10.00	944.11		-0.57	-0.040	14.25	450+26.78	944.68	12.00	0.040	0.48		945.16	4.00	0.030	0.12	944.80	
943.82	-0.40	-0.040	10.00	944.22	200:1	-0.55	-0.039	14.17	450+29.73	944.77	12.00	0.039	0.47	246:1	945.24	4.00	0.031	0.12	944.89	P.C.C.
944.52	-0.40	-0.040	10.00	944.92		-0.44	-0.032	13.61	450+50.00	945.36	12.00	0.032	0.38		945.74	4.00	0.038	0.15	945.51	
944.74	-0.40	-0.040	10.00	945.14		-0.40	-0.030	13.44	450+56.28	945.54	12.00	0.030	0.36		945.90	4.00	0.040	0.16	945.70	
945.36	-0.40	-0.040	10.00	945.76		-0.31	-0.024	13.02	450+75.00	946.07	12.00	0.024	0.28		946.35	4.00	0.040	0.16	946.51	
945.70	-0.40	-0.040	10.00	946.10		-0.26	-0.020	12.80	450+85.78	946.36	12.00	0.020	0.24		946.60	4.00	0.040	0.16	946.76	
946.10	-0.40	-0.040	10.00	946.50		-0.25	-0.020	12.55	451+00.00	946.75	12.00	0.020	0.24		946.99	4.00	0.040	0.16	947.15	
946.69	-0.40	-0.040	10.00	947.09		-0.24	-0.020	12.24	451+21.64	947.33	12.00	0.020	0.24		947.57					SHOULDER ENDS RT SIDE
946.78	-0.40	-0.040	10.00	947.18		-0.24	-0.020	12.20	451+25.00	947.42	12.00	0.020	0.24		947.66					END SUPERELEVATION RUNOFF
947.43	-0.40	-0.040	10.00	947.83		-0.24	-0.020	12.00	451+50.00	948.07	12.00	0.020	0.24		948.31					
948.05	-0.40	-0.040	10.00	948.45		-0.24	-0.020	12.00	451+75.00	948.69	12.00	0.020	0.24		948.93					
948.66	-0.40	-0.040	10.00	949.06		-0.24	-0.020	12.00	452+00.00	949.30	12.00	0.020	0.24		949.54					
949.25	-0.40	-0.040	10.00	949.65		-0.24	-0.020	12.00	452+25.00	949.89	12.00	0.020	0.24		950.13					
949.81	-0.40	-0.040	10.00	950.21		-0.24	-0.020	12.00	452+50.00	950.45	12.00	0.020	0.24		950.69					
950.36	-0.40	-0.040	10.00	950.76		-0.24	-0.020	12.00	452+75.00	951.00	12.00	0.020	0.24		951.24					
950.89	-0.40	-0.040	10.00	951.29		-0.24	-0.020	12.00	453+00.00	951.53	12.00	0.020	0.24		951.77					
951.41	-0.40	-0.040	10.00	951.81		-0.24	-0.020	12.00	453+25.00	952.05	12.00	0.020	0.24		952.29					
951.96	-0.40	-0.040	10.00	952.36		-0.24	-0.020	12.00	453+50.00	952.60	12.00	0.020	0.24		952.84					
952.52	-0.40	-0.040	10.00	952.92		-0.24	-0.020	12.00	453+75.00	953.16	12.00	0.020	0.24		953.40					
953.07	-0.40	-0.040	10.00	953.47		-0.24	-0.020	12.00	454+00.00	953.71	12.00	0.020	0.24		953.95					
953.63	-0.40	-0.040	10.00	954.03		-0.24	-0.020	12.00	454+25.00	954.27	12.00	0.020	0.24		954.51					
954.18	-0.40	-0.040	10.00	954.58		-0.24	-0.020	12.00	454+50.00	954.82	12.00	0.020	0.24		955.06					
954.22	-0.40	-0.040	10.00	954.62		-0.24	-0.020	12.00	454+51.52	954.86	12.00	0.020	0.24		955.10	250:1				
954.52	-0.40	-0.040	10.00	954.92		-0.24	-0.020	12.00	454+63.52	955.16	12.00	0.016	0.19		955.35					END GORE
954.80	-0.40	-0.040	10.00	955.20		-0.24	-0.020	12.00	454+75.00	955.44										
955.36	-0.40	-0.040	10.00	955.76		-0.24	-0.020	12.00	455+00.00	956.00										
955.93	-0.40	-0.040	10.00	956.33		-0.24	-0.020	12.00	455+25.00	956.57										
956.45	-0.40	-0.040	10.00	956.85		-0.24	-0.020	12.00	455+50.00	957.09										
956.94	-0.40	-0.040	10.00	957.34		-0.24	-0.020	12.00	455+75.00	957.58										
957.50	-0.40	-0.040	10.00	957.90		-0.24	-0.020	12.00	456+00.00	958.14										
958.04	-0.40	-0.040	10.00	958.44		-0.24	-0.020	12.00	456+25.00	958.68										
958.52	-0.40	-0.040	10.00	958.92		-0.24	-0.020	12.00	456+50.00	959.16										
959.08	-0.40	-0.040	10.00	959.48		-0.24	-0.020	12.00	456+75.00	959.72										
959.61	-0.40	-0.040	10.00	960.01		-0.24	-0.020	12.00	457+00.00	960.25										
960.13	-0.40	-0.040	10.00	960.53		-0.24	-0.020	12.00	457+25.00	960.77										
960.68	-0.40	-0.040	10.00	961.08		-0.24	-0.020	12.00	457+50.00	961.32										
961.49	-0.40	-0.040	10.00	961.89		0.00	-0.020	0.00	457+75.00	961.89										
962.02	-0.40	-0.040	10.00	962.42		0.00	-0.020	0.00	458+00.00	962.42										
962.47	-0.40	-0.040	10.00	962.87		0.00	-0.020	0.00	458+25.00	962.87										
962.97	-0.40	-0.040	10.00	963.37		0.00	-0.020	0.00	458+50.00	963.37										
963.50	-0.40	-0.040	10.00	963.90		0.00	-0.020	0.00	458+75.00	963.90										
963.97	-0.40	-0.040	10.00	964.37		0.00	-0.020	0.00	459+00.00	964.37										
964.46	-0.40	-0.040	10.00	964.86		0.00	-0.020	0.00	459+25.00	964.86										
964.93	-0.40	-0.040	10.00	965.33		0.00	-0.020	0.00	459+50.00	965.33										
965.47	-0.40	-0.040	10.00	965.87		0.00	-0.020	0.00	459+75.00	965.87										
965.97	-0.40	-0.040	10.00	966.37		0.00	-0.020	0.00	460+00.00	966.37										
966.40	-0.40	-0.040	10.00	966.80		0.00	-0.020	0.00	460+25.00	966.80										
966.49	-0.40	-0.040	10.00	966.89		0.00	-0.020	0.00	460+29.73	966.89										

* NEGATIVE CORRECTIONS MEANING BELOW PROFILE GRADE
POSITIVE CORRECTIONS MEANING ABOVE PROFILE GRADE.

SUPERELEVATION AND PAVEMENT ELEVATION TABLE - RAMP M

MOT-75-0.75

I:\HIGHWAYS\Data\ODOT_D7\21665\ENG\Roadway\Superelvation_calcs\SUPERTABLE1665.xls

MOT-75-0.75
RAMP J
SUPERELEVATION AND PAVEMENT ELEVATION TABLE

CALCULATED: RMH
CHECKED: MAG

LEFT SIDE RAMP J									BASELINE CONTROL		RIGHT SIDE RAMP J									REMARKS
EDGE OF SHOULDER ELEVATION	*ELEVATION CORRECTION	SHOULDER SLOPE	SHOULDER WIDTH (FEET)	EDGE ELEVATION	TRANSITION RATE	*ELEVATION CORRECTION	PAVEMENT SLOPE	BASELINE OFFSET (FEET)	STATION	PROFILE GRADE	BASELINE OFFSET (FEET)	PAVEMENT SLOPE	*ELEVATION CORRECTION	TRANSITION RATE	EDGE ELEVATION	SHOULDER WIDTH (FEET)	SHOULDER SLOPE	*ELEVATION CORRECTION	EDGE OF SHOULDER ELEVATION	
							SEE INTERSECTION GRADING DETAIL		140+67.85	938.93		SEE INTERSECTION GRADING DETAIL								
									140+75.00	938.73										
									140+83.31	938.49										
									141+00.00	938.03										
									141+25.00	937.39										
									141+41.27	936.99										
									141+50.00	936.79										
									141+75.00	936.23										
									142+00.00	935.73										
									142+08.76	935.56										
934.74	-0.16	-0.040	4.00	934.90	209:1	-0.36	-0.027	13.48	142+25.00	935.26	14.18	0.027	0.38		935.64	10.00	-0.040	-0.40	934.86	
934.53	-0.16	-0.040	4.00	934.69		-0.41	-0.030	13.75	142+34.27	935.10	13.57	0.030	0.41	258:1	935.51	10.00	-0.040	-0.40	934.70	
934.18	-0.16	-0.040	4.00	934.34		-0.50	-0.035	14.26	142+50.00	934.84	12.51	0.035	0.44		935.28	10.00	-0.035	-0.35	934.49	
934.01	-0.16	-0.040	4.00	934.17		-0.55	-0.038	14.55	142+58.05	934.72	12.00	0.038	0.47		935.19	10.00	-0.032	-0.32	934.40	
933.86	-0.16	-0.040	4.00	934.02		-0.59	-0.040	14.82	142+65.27	934.61	12.00	0.040	0.48		935.09	10.00	-0.030	-0.30	934.31	P.C. CURVE 1
933.64	-0.17	-0.043	4.00	933.82		-0.65	-0.043	15.15	142+75.00	934.47	12.00	0.043	0.52		934.99	10.00	-0.027	-0.27	934.20	
933.14	-0.20	-0.051	4.00	933.34	200:1	-0.80	-0.051	15.61	143+00.00	934.14	12.00	0.051	0.61		934.75	10.00	-0.019	-0.19	933.95	
932.70	-0.24	-0.059	4.00	932.94		-0.92	-0.059	15.53	143+25.00	933.86	12.00	0.059	0.71		934.57	10.00	-0.011	-0.11	933.75	
932.67	-0.24	-0.060	4.00	932.91		-0.93	-0.060	15.50	143+27.27	933.84	12.00	0.060	0.72		934.56	10.00	-0.010	-0.10	933.74	BEGIN FULL SUPERELEVATION
932.46	-0.24	-0.060	4.00	932.70		-0.93	-0.060	15.50	143+50.00	933.63	12.00	0.060	0.72		934.35	10.00	-0.010	-0.10	933.53	
932.27	-0.24	-0.060	4.00	932.51		-0.93	-0.060	15.50	143+75.00	933.44	12.00	0.060	0.72		934.16	10.00	-0.010	-0.10	933.34	
932.12	-0.24	-0.060	4.00	932.36		-0.93	-0.060	15.50	144+00.00	933.29	12.00	0.060	0.72		934.01	10.00	-0.010	-0.10	933.19	
932.02	-0.24	-0.060	4.00	932.26		-0.93	-0.060	15.50	144+25.00	933.19	12.00	0.060	0.72		933.91	10.00	-0.010	-0.10	933.09	
931.97	-0.24	-0.060	4.00	932.21		-0.93	-0.060	15.50	144+50.00	933.14	12.00	0.060	0.72		933.86	10.00	-0.010	-0.10	933.04	
931.96	-0.24	-0.060	4.00	932.20		-0.93	-0.060	15.50	144+75.00	933.13	12.00	0.060	0.72		933.85	10.00	-0.010	-0.10	933.03	
931.99	-0.24	-0.060	4.00	932.23		-0.93	-0.060	15.50	145+00.00	933.16	12.00	0.060	0.72		933.88	10.00	-0.010	-0.10	933.06	
932.08	-0.24	-0.060	4.00	932.32		-0.93	-0.060	15.50	145+25.00	933.25	12.00	0.060	0.72		933.97	10.00	-0.010	-0.10	933.15	
932.09	-0.24	-0.060	4.00	932.33		-0.93	-0.060	15.50	145+28.27	933.26	12.00	0.060	0.72		933.98	10.00	-0.010	-0.10	933.16	BEGIN SUPERELEVATION RUNOFF
932.33	-0.21	-0.053	4.00	932.54	200:1	-0.83	-0.053	15.64	145+50.00	933.37	12.00	0.053	0.64		934.01	10.00	-0.017	-0.17	933.20	
932.68	-0.18	-0.045	4.00	932.86		-0.69	-0.045	15.29	145+75.00	933.55	12.00	0.045	0.54		934.09	10.00	-0.025	-0.25	933.30	
932.92	-0.16	-0.040	4.00	933.08		-0.59	-0.040	14.82	145+90.27	933.67	12.00	0.040	0.48		934.15	10.00	-0.030	-0.30	933.37	P.T. CURVE 1
933.07	-0.16	-0.040	4.00	933.23		-0.53	-0.037	14.46	146+00.00	933.76	12.00	0.037	0.44		934.20	10.00	-0.033	-0.33	933.43	
933.42	-0.16	-0.040	4.00	933.58		-0.41	-0.030	13.75	146+21.27	933.99	12.00	0.030	0.36		934.35	10.00	-0.040	-0.40	933.59	
933.48	-0.16	-0.040	4.00	933.64	209:1	-0.39	-0.029	13.64	146+25.00	934.03	12.00	0.029	0.35	258:1	934.38	10.00	-0.040	-0.40	933.63	
933.91	-0.16	-0.040	4.00	934.07		-0.27	-0.021	12.97	146+50.00	934.34	12.00	0.021	0.25		934.59	10.00	-0.040	-0.40	933.94	
934.37	-0.16	-0.040	4.00	934.53		-0.16	-0.013	12.47	146+75.00	934.69	12.00	0.013	0.15		934.84	10.00	-0.040	-0.40	934.29	
934.87	-0.16	-0.040	4.00	935.03		-0.06	-0.005	12.13	147+00.00	935.09	12.00	0.005	0.06		935.15	10.00	-0.040	-0.40	934.69	
935.18	-0.16	-0.040	4.00	935.34		0.00	0.000	12.00	147+14.27	935.34	12.00	0.000	0.00		935.34	10.00	-0.040	-0.40	934.94	
935.42	-0.16	-0.040	4.00	935.58		0.04	0.003	12.00	147+25.00	935.54	12.00	-0.003	-0.04		935.50	10.00	-0.040	-0.40	935.14	
936.00	-0.16	-0.040	4.00	936.16		0.13	0.011	12.00	147+50.00	936.03	12.00	-0.011	-0.13		935.90	10.00	-0.040	-0.40	935.63	
936.64	-0.16	-0.040	4.00	936.80		0.23	0.019	12.00	147+75.00	936.57	12.00	-0.019	-0.23		936.34	10.00	-0.040	-0.40	936.17	
937.31	-0.16	-0.040	4.00	937.47	269:1	0.32	0.027	12.00	148+00.00	937.15	12.00	-0.027	-0.32	269:1	936.83	10.00	-0.040	-0.40	936.75	
937.62	-0.16	-0.040	4.00	937.78		0.36	0.030	12.00	148+11.02	937.42	12.00	-0.030	-0.36		937.06	10.00	-0.040	-0.40	937.02	
938.05	-0.14	-0.036	4.00	938.19		0.41	0.034	12.00	148+25.00	937.78	12.00	-0.034	-0.41		937.37	10.00	-0.040	-0.40	937.38	
938.19	-0.14	-0.034	4.00	938.33		0.43	0.036	12.00	148+29.86	937.90	12.00	-0.036	-0.43		937.47	10.00	-0.040	-0.40	937.50	END 12' LANE WIDTH
938.62	-0.12	-0.030	4.00	938.74		0.48	0.040	12.00	148+43.27	938.26	11.76	-0.040	-0.47		937.79	10.00	-0.040	-0.40	937.86	P.C. CURVE 2
938.85	-0.11	-0.027	4.00	938.96	222:1	0.51	0.043	12.00	148+50.00	938.45	11.68	-0.043	-0.50	227:1	937.95	10.00	-0.043	-0.43	938.02	
939.72	-0.07	-0.018	4.00	939.79		0.62	0.052	12.00	148+75.00	939.17	11.35	-0.052	-0.59		938.58	10.00	-0.052	-0.52	938.65	
940.47	-0.04	-0.010	4.00	940.51		0.72	0.060	12.00	148+96.72	939.79	11.07	-0.060	-0.66		939.13	10.00	-0.060	-0.60	939.19	BEGIN SUPERELEVATION
940.57	-0.04	-0.010	4.00	940.61		0.72	0.060	12.00	149+00.00	939.89	11.03	-0.060	-0.66		939.23	10.00	-0.060	-0.60	939.29	
941.29	-0.04	-0.010	4.00	941.33		0.72	0.060	12.00	149+25.00	940.61	10.70	-0.060	-0.64		939.97	10.00	-0.060	-0.60	940.01	
942.01	-0.04	-0.010	4.00	942.05		0.72	0.060	12.00	149+50.00	941.33	10.38	-0.060	-0.62		940.71	10.00	-0.060	-0.60	940.73	
942.74	-0.04	-0.010	4.00	942.78		0.72	0.060	12.00	149+75.00	942.06	10.05	-0.060	-0.60		941.46	10.00	-0.060	-0.60	941.46	
943.46	-0.04	-0.010	4.00	943.50		0.72	0.060	12.00	150+00.00	942.78	9.72	-0.060	-0.58		942.20	10.00	-0.060	-0.60	942.18	
944.18	-0.04	-0.010	4.00	944.22		0.72	0.060	12.00	150+25.00	943.50	9.39	-0.060	-0.56		942.94	10.00	-0.060	-0.60	942.90	
944.91	-0.04	-0.010	4.00	944.95		0.72	0.060	12.00	150+50.00	944.23	9.06	-0.060	-0.54		943.69	10.00	-0.060	-0.60	943.63	
945.63	-0.04	-0.010	4.00	945.67		0.72	0.060	12.00	150+75.00	944.95	8.73	-0.060	-0.52		944.43	10.00	-0.060	-0.60	944.35	
946.33	-0.04	-0.010	4.00	946.37		0.72	0.060	12.00	151+00.00	945.65	8.40	-0.060	-0.50		945.15	10.00	-0.060	-0.60	945.05	
947.03	-0.04	-0.010	4.00	947.07		0.72	0.060	12.00	151+25.00	946.35	8.07	-0.060	-0.48		945.87	10.00	-0.060	-0.60	945.75	
947.72	-0.04	-0.010	4.00	947.76		0.72	0.060	12.00	151+50.00	947.04	7.73	-0.060	-0.46		946.58	10.00	-0.060	-0.60	946.44	
948.40	-0.04	-0.010	4.00	948.44		0.72	0.060	12.00	151+75.00	947.72	7.40	-0.060	-0.44		947.28	10.00	-0.060	-0.60	947.12	
				948.68		0.72	0.060	12.00	151+83.75	947.96	7.29	-0.060	-0.44		947.52	10.00	-0.060	-0.60	947.36	BEGINNING OF GORE
				949.11		0.72	0.060	12.00	152+00.00	948.39	7.07	-0.060	-0.42		947.97	10.00	-0.060	-0.60	947.79	
				949.77		0.72	0.060	12.00	152+25.00	949.05	6.73	-0.060	-0.40		948.65	10.00	-0.060	-0.60	948.45	
				950.42		0.72	0.060	12.00	152+50.00	949.70	6.40	-0.060	-0.38		949.32	10.00	-0.060	-0.60	949.10	
				951.06		0.72	0.060	12.00	152+75.00	950.34	6.07	-0.060	-0.36		949.98	10.00	-0.060	-0.60	949.74	
				951.10		0.72	0.060	12.00	152+76.58	950.38	6.03	-0.060	-0.36		950.02	10.00	-0.060	-0.60	949.78	BEGIN SUPEREVELVATION RUNOFF
				951.60		0.61	0.051	12.00	153+00.00	950.99	5.73	-0.051	-0.29		950.70	10.00	-0.051	-0.51	950.48	
				952.13		0.50	0.042	12.00	153+25.00	951.63	5.40	-0.042	-0.23		951.40	10.00	-0.042	-0.42	951.21	
				952.23	222:1	0.48	0.040	12.00	153+29.86	951.75	5.33	-0.040	-0.21	442:1	951.54	10.00	-0.040	-0.40	951.35	P.C.C.
				952.62		0.39	0.032	12.00	153+50.00	952.23	5.07	-0.032	-0.16		952.07	10.00	-0.040	-0.40	951.83	

* NEGATIVE CORRECTIONS MEANING BELOW PROFILE GRADE
POSITIVE CORRECTIONS MEANING ABOVE PROFILE GRADE.

SUPERELEVATION AND PAVEMENT ELEVATION TABLE - RAMP J

MOT-75-0.75

I:\HIGHWAYS\Data\ODOT_D7\21665\ENG\Roadway\Superelvation_calcs\SUPERTABLE1665.xls

MOT-75-0.75
RAMP J
SUPERELEVATION AND PAVEMENT ELEVATION TABLE

LEFT SIDE RAMP J									BASELINE CONTROL		RIGHT SIDE RAMP J									REMARKS
EDGE OF SHOULDER ELEVATION	*ELEVATION CORRECTION	SHOULDER SLOPE	SHOULDER WIDTH (FEET)	EDGE ELEVATION	TRANSITION RATE	*ELEVATION CORRECTION	PAVEMENT SLOPE	BASELINE OFFSET (FEET)	STATION	PROFILE GRADE	BASELINE OFFSET (FEET)	PAVEMENT SLOPE	*ELEVATION CORRECTION	TRANSITION RATE	EDGE ELEVATION	SHOULDER WIDTH (FEET)	SHOULDER SLOPE	*ELEVATION CORRECTION	EDGE OF SHOULDER ELEVATION	
				953.06	222:1	0.29	0.024	12.00	153+72.49	952.77	4.77	-0.024	-0.11	442:1	952.66	10.00	-0.040	-0.40	952.26	
				953.13		0.29	0.024	12.00	153+75.00	952.84	4.73	-0.024	-0.11		952.73	10.00	-0.040	-0.40	952.33	
				953.73		0.29	0.024	12.00	154+00.00	953.44	4.40	-0.024	-0.11		953.33	10.00	-0.040	-0.40	952.93	
				953.93	222:1	0.29	0.024	12.00	154+08.55	953.64	4.28	-0.024	-0.10	222:1	953.54	10.00	-0.040	-0.40	953.24	BEGIN SUPERELEVATION RUNOFF
				954.30		0.26	0.022	12.00	154+25.00	954.04	4.07	-0.022	-0.09		953.95	10.00	-0.040	-0.40	953.64	
				954.39		0.24	0.020	21.00	154+29.86	954.15	4.00	-0.020	-0.08		954.07	10.00	-0.040	-0.40	953.75	P.T. CURVE 3
				954.86		0.24	0.020	20.72	154+50.00	954.62	3.88	-0.020	-0.08		954.54	10.00	-0.040	-0.40	954.22	
				955.39		0.24	0.020	20.38	154+75.00	955.15	3.72	-0.020	-0.07		955.08	10.00	-0.040	-0.40	954.75	
				955.91		0.24	0.020	20.03	155+00.00	955.67	3.57	-0.020	-0.07		955.60	10.00	-0.040	-0.40	955.27	
				956.48		0.24	0.020	19.68	155+25.00	956.24	3.41	-0.020	-0.07		956.17	10.00	-0.040	-0.40	955.77	
				957.02		0.24	0.020	19.34	155+50.00	956.78	3.26	-0.020	-0.07		956.71	10.00	-0.040	-0.40	956.31	
				957.55		0.24	0.020	18.99	155+75.00	957.31	3.11	-0.020	-0.06		957.25	10.00	-0.040	-0.40	956.85	
				958.07		0.24	0.020	18.65	156+00.00	957.83	2.95	-0.020	-0.06		957.77	10.00	-0.040	-0.40	957.37	
				958.58		0.24	0.020	18.30	156+25.00	958.34	2.80	-0.020	-0.06		958.28	10.00	-0.040	-0.40	957.88	
				959.08		0.24	0.020	17.95	156+50.00	958.84	2.65	-0.020	-0.05		958.79	10.00	-0.040	-0.40	958.39	
				959.65		0.24	0.020	17.61	156+75.00	959.41	2.49	-0.020	-0.05		959.36	10.00	-0.040	-0.40	958.96	
				960.16		0.24	0.020	17.26	157+00.00	959.92	2.34	-0.020	-0.05		959.87	10.00	-0.040	-0.40	959.47	
				960.71		0.24	0.020	16.91	157+25.00	960.47	2.18	-0.020	-0.04		960.43	10.00	-0.040	-0.40	960.03	
				961.19		0.24	0.020	16.57	157+50.00	960.95	2.03	-0.020	-0.04		960.91	10.00	-0.040	-0.40	960.51	
				961.71		0.24	0.020	16.22	157+75.00	961.47	1.88	-0.020	-0.04		961.43	10.00	-0.040	-0.40	961.03	
				962.09		0.24	0.020	15.88	158+00.00	961.85	1.72	-0.020	-0.03		961.82	10.00	-0.040	-0.40	961.42	
				962.62		0.24	0.020	15.53	158+25.00	962.38	1.57	-0.020	-0.03		962.35	10.00	-0.040	-0.40	961.95	
				963.13		0.24	0.020	15.18	158+50.00	962.89	1.41	-0.020	-0.03		962.86	10.00	-0.040	-0.40	962.46	
				963.62		0.24	0.020	14.84	158+75.00	963.38	1.26	-0.020	-0.03		963.35	10.00	-0.040	-0.40	962.95	
				964.20		0.24	0.020	14.49	159+00.00	963.96	1.11	-0.020	-0.02		963.94	10.00	-0.040	-0.40	963.54	
				964.76		0.24	0.020	14.14	159+25.00	964.52	0.95	-0.020	-0.02		964.50	10.00	-0.040	-0.40	964.10	
				965.31		0.24	0.020	13.77	159+50.00	965.07	0.80	-0.020	-0.02		965.05	10.00	-0.040	-0.40	964.65	
				965.89		0.24	0.020	13.45	159+75.00	965.65	0.64	-0.020	-0.01		965.64	10.00	-0.040	-0.40	965.24	
				965.95		0.24	0.020	13.39	159+79.76	965.71	0.62	-0.020	-0.01		965.70	10.00	-0.040	-0.40	965.30	
				966.19		0.24	0.020	13.11	160+00.00	965.95	0.49	-0.020	-0.01		965.94	10.90	-0.040	-0.44	965.50	
				966.72		0.24	0.020	12.76	160+25.00	966.48	0.34	-0.020	-0.01		966.47	11.24	-0.040	-0.45	966.02	
				967.20		0.24	0.020	12.60	160+50.00	966.96	0.18	-0.020	0.00		966.96	11.41	-0.040	-0.46	966.50	
				968.20		0.24	0.020	12.07	160+75.00	967.96	0.03	-0.020	0.00		967.96	11.93	-0.040	-0.48	967.48	
				967.80		0.24	0.020	12.00	160+79.76	967.56	0.00	-0.020	0.00		967.56	12.00	-0.040	-0.48	967.08	

* NEGATIVE CORRECTIONS MEANING BELOW PROFILE GRADE
POSITIVE CORRECTIONS MEANING ABOVE PROFILE GRADE.

CALCULATED: RMH
CHECKED: MAG

SUPERELEVATION AND PAVEMENT ELEVATION TABLE - RAMP J

MOT-75-0.75

I:\HIGHWAYS\Data\ODOT_D7\21665\ENG\Roadway\Superelvation_calcs\SUPERTABLE1665.xls

MOT-75-0.75
MIAMISBURG-SPRINGBORO PIKE
SUPERELEVATION AND PAVEMENT ELEVATION TABLE

LEFT SIDE

EDGE OF SHOULDER ELEVATION	*ELEVATION CORRECTION	SHOULDER SLOPE	SHOULDER WIDTH (FEET)	EDGE OF PAVEMENT ELEVATION	TRANSITION RATE	*ELEVATION CORRECTION	PAVEMENT SLOPE	PAVEMENT WIDTH (FEET)
883.55	-0.12	-0.060	2.00	883.67		-0.85	-0.044	19.22
883.71	-0.13	-0.060	2.24	883.84		-0.85	-0.044	19.12
883.92	-0.20	-0.060	3.27	884.12		-0.84	-0.044	19.00
884.04	-0.22	-0.060	3.72	884.27		-0.84	-0.044	18.97
884.22	-0.27	-0.060	4.43	884.48	550:1	-0.84	-0.044	18.95
884.49	-0.34	-0.060	5.74	884.83		-0.85	-0.045	18.96
884.62	-0.38	-0.060	6.39	885.00		-1.00	-0.052	19.03
884.73	-0.43	-0.060	7.21	885.16		-1.15	-0.060	19.17
884.99	-0.48	-0.060	8.00	885.47		-1.16	-0.060	19.38
885.29	-0.48	-0.060	8.00	885.77		-1.18	-0.060	19.65
885.58	-0.48	-0.060	8.00	886.06		-1.20	-0.060	19.98
885.88	-0.48	-0.060	8.00	886.36		-1.22	-0.060	20.38
886.17	-0.48	-0.060	8.00	886.65		-1.25	-0.060	20.83
886.46	-0.48	-0.060	8.00	886.94		-1.28	-0.060	21.35
886.82	-0.48	-0.060	8.00	887.30		-1.32	-0.060	21.93
887.25	-0.48	-0.060	8.00	887.73		-1.35	-0.060	22.57
887.77	-0.48	-0.060	8.00	888.25		-1.40	-0.060	23.26
888.37	-0.48	-0.060	8.00	888.85		-1.44	-0.060	24.02
889.05	-0.48	-0.060	8.00	889.53		-1.49	-0.060	24.82
889.97	-0.48	-0.060	8.00	890.45		-1.38	-0.054	25.68
890.98	-0.48	-0.060	8.00	891.46		-1.26	-0.047	26.59
892.09	-0.48	-0.060	8.00	892.57	185 : 1	-1.13	-0.041	27.55
893.29	-0.48	-0.060	8.00	893.77		-0.99	-0.035	28.56
894.58	-0.48	-0.060	8.00	895.06		-0.84	-0.028	29.61
895.97	-0.48	-0.060	8.00	896.45		-0.68	-0.022	30.71
							-0.021	

CENTERLINE CONTROL

STATION	PROFILE GRADE
107+60.00	884.52
107+75.00	884.69
108+00.00	884.96
108+10.00	885.10
108+25.00	885.32
108+50.00	885.68
108+75.00	886.00
109+00.00	886.31
109+25.00	886.63
109+50.00	886.95
109+75.00	887.26
110+00.00	887.58
110+25.00	887.90
110+50.00	888.22
110+75.00	888.61
111+00.00	889.09
111+25.00	889.65
111+50.00	890.29
111+75.00	891.02
112+00.00	891.83
112+25.00	892.72
112+50.00	893.70
112+75.00	894.76
113+00.00	895.90
113+25.00	897.13
113+30.00	

RIGHT SIDE

PAVEMENT WIDTH (FEET)	PAVEMENT SLOPE	*ELEVATION CORRECTION	TRANSITION RATE	EDGE OF PAVEMENT ELEVATION	SHOULDER WIDTH (FEET)	SHOULDER SLOPE TO BREAK (2.5')	SHOULDER SLOPE BEYOND BREAK	*ELEVATION CORRECTION	EDGE OF SHOULDER ELEVATION	REMARKS
16.79	0.017	0.29		884.81	2.00	0.017	-	0.03	884.85	MEET EXISTING
17.21	0.022	0.38		885.06	3.29	0.022	-0.060	0.01	885.07	
17.87	0.030	0.53		885.49	6.42	0.030	-0.060	-0.16	885.33	
18.13	0.033	0.59	195:1	885.69	8.00	0.033	-0.060	-0.25	885.45	
18.49	0.037	0.69		886.01	8.00	0.037	-0.060	-0.24	885.77	
19.07	0.045	0.85		886.53	8.00	0.045	-0.060	-0.22	886.32	
19.60	0.052	1.03		887.02	8.00	0.052	-0.060	-0.20	886.82	
20.08	0.060	1.20		887.52	8.00	0.060	-0.060	-0.18	887.34	BEGIN FULL SUPERELEVATION
20.51	0.060	1.23		887.86	8.00	0.060	-0.060	-0.18	887.68	
20.90	0.060	1.25		888.20	8.00	0.060	-0.060	-0.18	888.02	
21.23	0.060	1.27		888.54	8.00	0.060	-0.060	-0.18	888.36	
21.52	0.060	1.29		888.87	8.00	0.060	-0.060	-0.18	888.69	
21.75	0.060	1.31		889.20	8.00	0.060	-0.060	-0.18	889.02	
21.93	0.060	1.32		889.54	8.00	0.060	-0.060	-0.18	889.36	
22.06	0.060	1.32		889.93	8.00	0.060	-0.060	-0.18	889.75	
22.14	0.060	1.33		890.42	8.00	0.060	-0.060	-0.18	890.24	
22.17	0.060	1.33		890.98	8.00	0.060	-0.060	-0.18	890.80	
22.14	0.060	1.33		891.62	8.00	0.060	-0.060	-0.18	891.44	
22.06	0.060	1.32		892.34	8.00	0.060	-0.060	-0.18	892.16	END FULL SUPERELEVATION
21.93	0.054	1.18		893.00	8.00	0.054	-0.060	-0.20	892.81	
21.74	0.047	1.03		893.75	8.00	0.047	-0.060	-0.21	893.54	
21.51	0.041	0.88		894.58	8.00	0.041	-0.060	-0.23	894.35	
21.22	0.035	0.74		895.49	8.00	0.035	-0.060	-0.24	895.25	
20.88	0.028	0.59		896.49	8.00	0.028	-0.060	-0.26	896.23	
20.50	0.022	0.45		897.58	8.00	0.022	-0.060	-0.28	897.31	
	0.021									

LEFT SIDE PAVEMENT BREAK

EDGE OF PAVEMENT ELEVATION 32' LEFT	*ELEVATION CORRECTION	PAVEMENT SLOPE	LANE WIDTH (FEET)	LANE BREAK ELEVATION 20' LEFT	TRANSITION RATE	*ELEVATION CORRECTION	PAVEMENT SLOPE	OFFSET (FEET)
		-0.021				-0.42	-0.021	20.00
897.88	-0.25	-0.021	11.85	898.13	185 : 1	-0.31	-0.016	20.00
898.05	-0.25	-0.021	12.00	898.30		-0.32	-0.016	20.00
899.27	-0.25	-0.021	12.00	899.52		-0.32	-0.016	20.00
900.74	-0.25	-0.021	12.00	900.99		-0.32	-0.016	20.00
902.23	-0.25	-0.021	12.00	902.48		-0.32	-0.016	20.00
903.71	-0.25	-0.021	12.00	903.97		-0.32	-0.016	20.00
905.20	-0.25	-0.021	12.00	905.45		-0.32	-0.016	20.00

CENTERLINE CONTROL

STATION	PROFILE GRADE
113+30.00	
113+50.00	898.44
113+53.22	898.62
113+75.00	899.84
114+00.00	901.31
114+25.00	902.80
114+50.00	904.29
114+75.00	905.77

185 : 1

REMARKS

BEGIN PAVEMENT BREAK - 20' LEFT

REVERSE CROWN

LEFT SIDE CURBS

TOP of CURB ELEVATION	*ELEVATION CORRECTION	CURB HEIGHT	CURB / GUTTER WIDTH (FEET)	EDGE OF PAVEMENT ELEVATION 32' LEFT	TRANSITION RATE	*ELEVATION CORRECTION	PAVEMENT SLOPE	OFFSET (FEET)
896.52	-0.21	0"	2.50	896.73		-0.57	broken	36.86
897.56	0.29	6"	2.50	897.27		-0.57	broken	34.95
898.16	0.29	6"	2.50	897.87		-0.57	broken	32.70
898.34	0.29	6"	2.50	898.05		-0.57	broken	32.00
899.56	0.29	6"	2.50	899.27		-0.57	broken	32.00
901.03	0.29	6"	2.50	900.74		-0.57	broken	32.00
902.52	0.29	6"	2.50	902.23		-0.57	broken	32.00
904.01	0.29	6"	2.50	903.71		-0.57	broken	32.00
905.49	0.29	6"	2.50	905.20		-0.57	broken	32.00

CENTERLINE CONTROL

STATION	PROFILE GRADE
113+28.30	897.30
113+31.15	897.45
113+38.79	897.84
113+40.34	897.93
113+50.00	898.44
113+53.22	898.62
113+75.00	899.84
114+00.00	901.31
114+25.00	902.80
114+50.00	904.29
114+75.00	905.77
115+00.00	

RIGHT SIDE CURBS

OFFSET (FEET)	PAVEMENT SLOPE	*ELEVATION CORRECTION	TRANSITION RATE	EDGE ELEVATION	CURB / GUTTER WIDTH (FEET)	CURB HEIGHT	*ELEVATION CORRECTION	TOP of CURB ELEVATION
26.38	0.020	0.54		897.98	2.50	0"	-0.21	897.78
23.61	0.018	0.43		898.35	2.50	6"	0.29	898.64
20.88	0.016	0.33		898.77	2.50	6"	0.29	899.06
20.00	0.015	0.30		898.91	2.50	6"	0.29	899.21
20.00	0.009	0.19		900.02	2.50	6"	0.29	900.32
20.00	0.003	0.06		901.37	2.50	6"	0.29	901.66
20.00	-0.003	-0.07		902.73	2.50	6"	0.29	903.02
20.00	-0.010	-0.19		904.09	2.50	6"	0.29	904.38
20.00	-0.016	-0.32		905.45	2.50	6"	0.29	905.75

REMARKS

NORMAL CROWN

• SEE CRAIN'S CREEK INTERSECTION DETAIL

* NEGATIVE CORRECTIONS MEANING BELOW PROFILE GRADE
POSITIVE CORRECTIONS MEANING ABOVE PROFILE GRADE.

SUPERELEVATION AND PAVEMENT ELEVATION TABLE - MIAMISBURG-SPRINGBORO PIKE
STATION 107+60.00 TO STATION 114+75.00

MOT-75-0.75

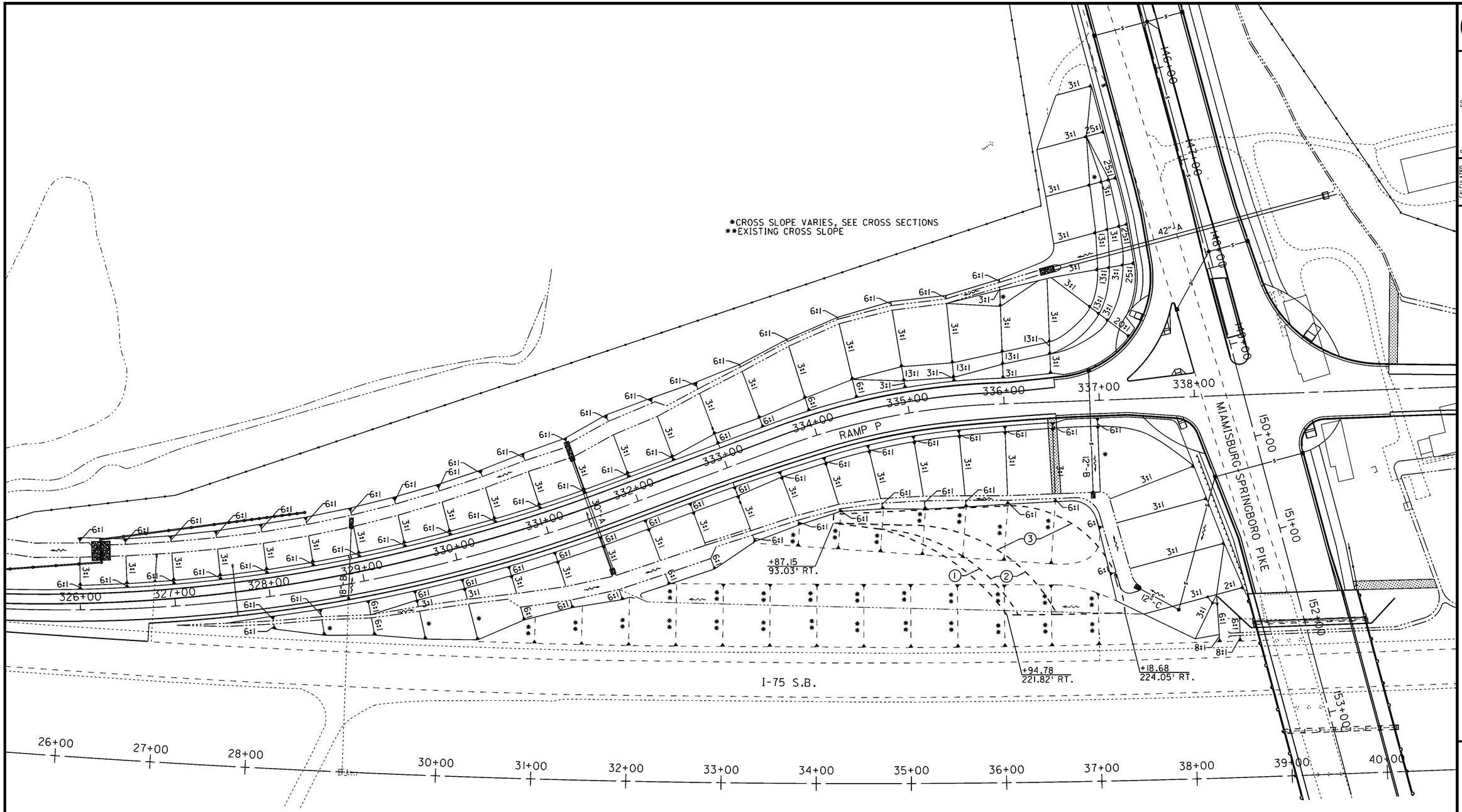
*CROSS SLOPE VARIES, SEE CROSS SECTIONS
**EXISTING CROSS SLOPE
RAMP P
I-75 S.B.
MIAMISBURG-SPRINGBORO PIKE
42"-A
12"-B
12"-C
18"-A
+87.15
93.03' RT.
+94.78
221.82' RT.
+18.68
224.05' RT.
LEGEND
1 ITEM 653 - TOPSOIL FURNISHED AND PLACED
1476.90 SF (measured)x6" thick=27 CY
2 ITEM 653 - TOPSOIL FURNISHED AND PLACED
4446.93 SF (measured)x12" thick=165 CY
3 ITEM 653 - TOPSOIL FURNISHED AND PLACED
13018.24 SF (measured)x36" thick=1447 CY
ITEM 203 - EXCAVATION (27+165+1447)=1639 CY
QUANTITIES CARRIED TO GENERAL SUMMARY
HORIZONTAL SCALE IN FEET
0 25 50 100
CALCULATED MNM
CHECKED AJS
GRADING PLAN
RAMP P
MOT-75-0.75
318
773

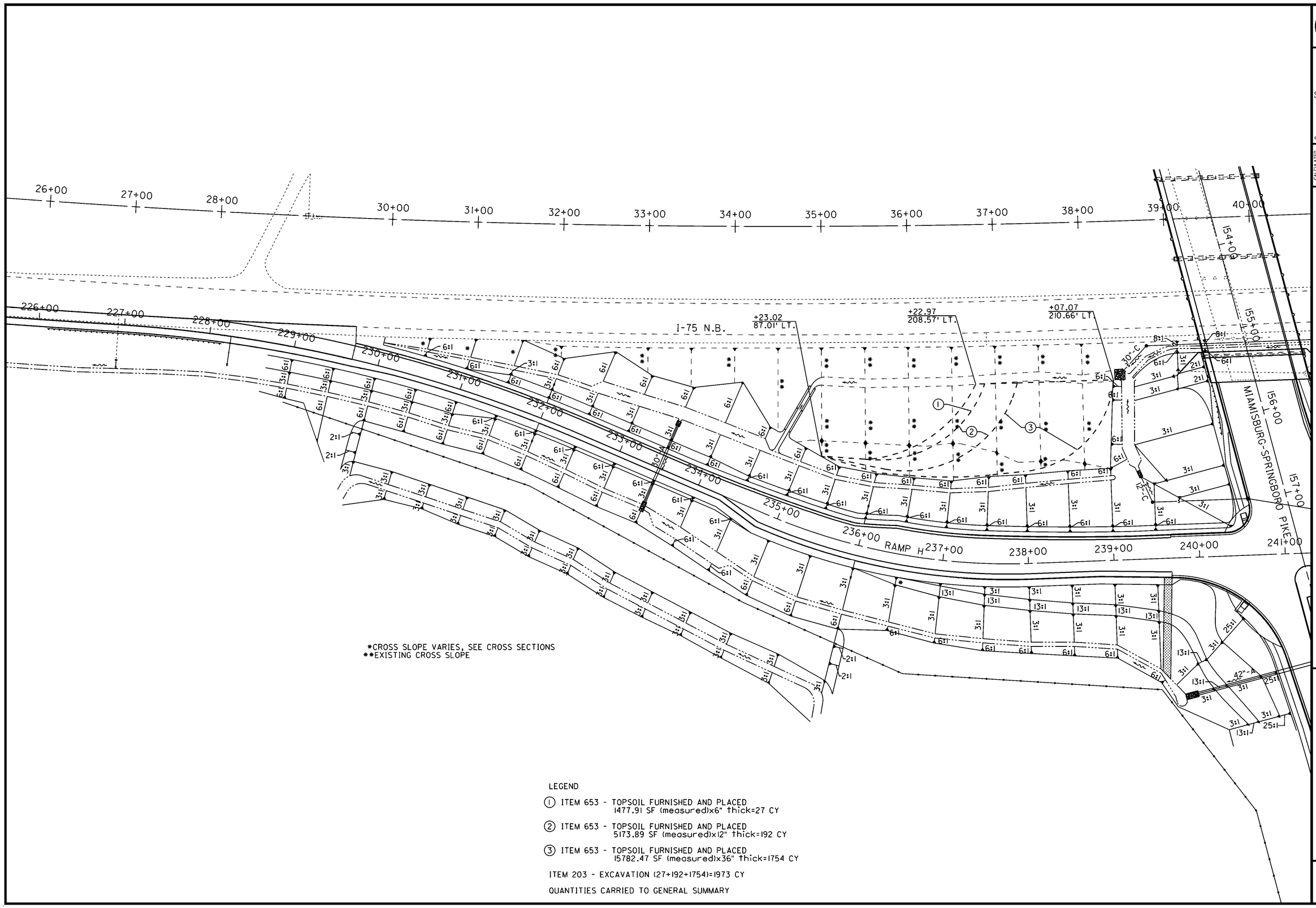

*CROSS SLOPE VARIES, SEE CROSS SECTIONS
**EXISTING CROSS SLOPE

LEGEND

(1) ITEM 653 - TOPSOIL FURNISHED AND PLACED
1477.91 SF (measured)x6" thick=27 CY

(2) ITEM 653 - TOPSOIL FURNISHED AND PLACED
5173.89 SF (measured)x12" thick=192 CY

(3) ITEM 653 - TOPSOIL FURNISHED AND PLACED
15782.47 SF (measured)x36" thick=1754 CY

ITEM 203 - EXCAVATION (27+192+1754)=1973 CY

QUANTITIES CARRIED TO GENERAL SUMMARY

HORIZONTAL SCALE IN FEET
0 25 50 100

CALCULATED MNM
CHECKED AJS

GRADING PLAN
RAMP H

MOT-75-0.75

319
773

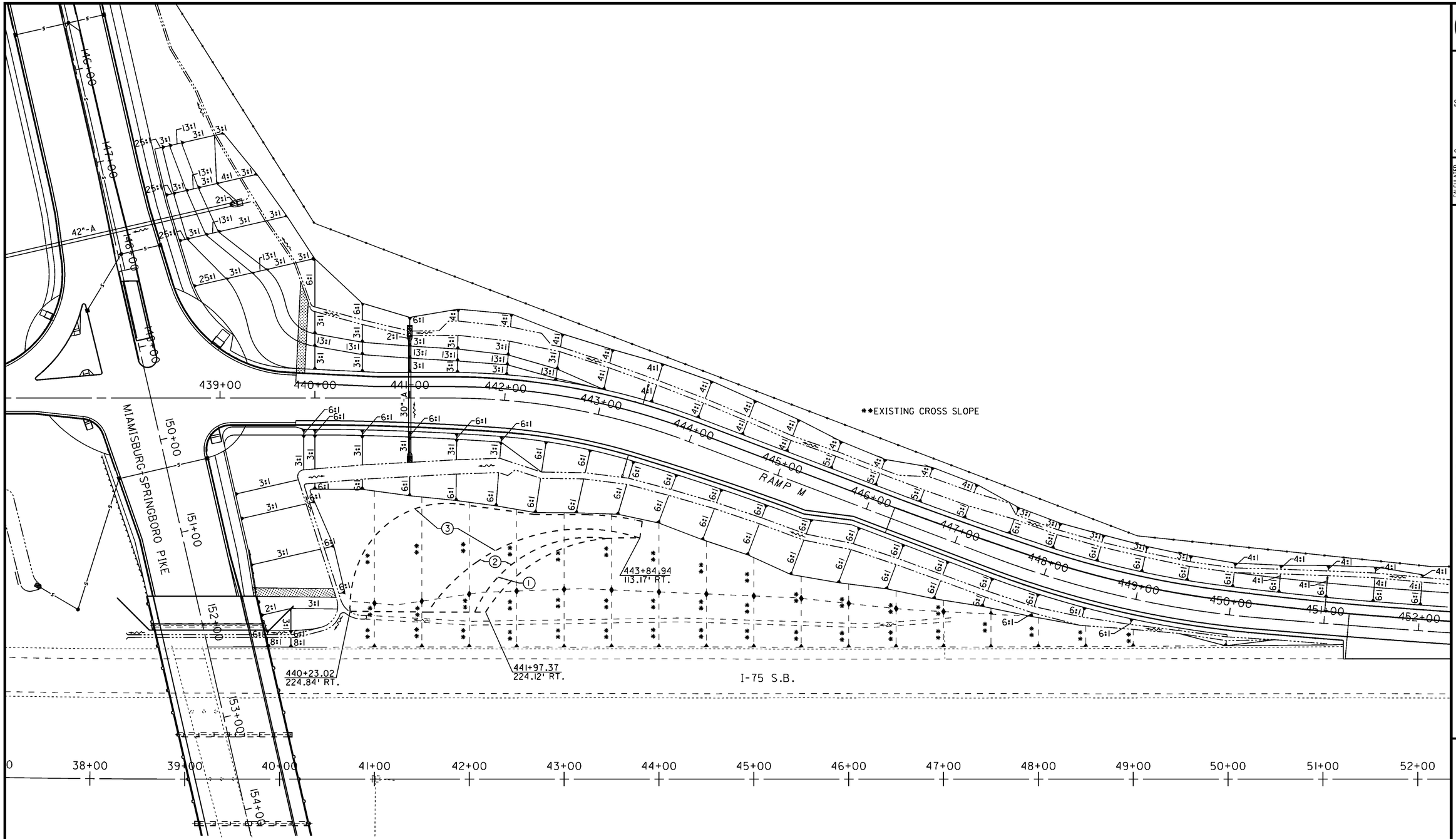

LEGEND

(1) ITEM 653 - TOPSOIL FURNISHED AND PLACED
1449.37 SF (measured)x6" thick=27 CY

(2) ITEM 653 - TOPSOIL FURNISHED AND PLACED
4151.39 SF (measured)x12" thick=154 CY

(3) ITEM 653 - TOPSOIL FURNISHED AND PLACED
19199.32 SF (measured)x36" thick=2311 CY

ITEM 203 - EXCAVATION (27+154+2311)=2492 CY

QUANTITIES CARRIED TO GENERAL SUMMARY

HORIZONTAL SCALE IN FEET
0 25 50 100

CALCULATED MNM
CHECKED AJS

GRADING PLAN RAMP M

MOT-75-0.75

320
773

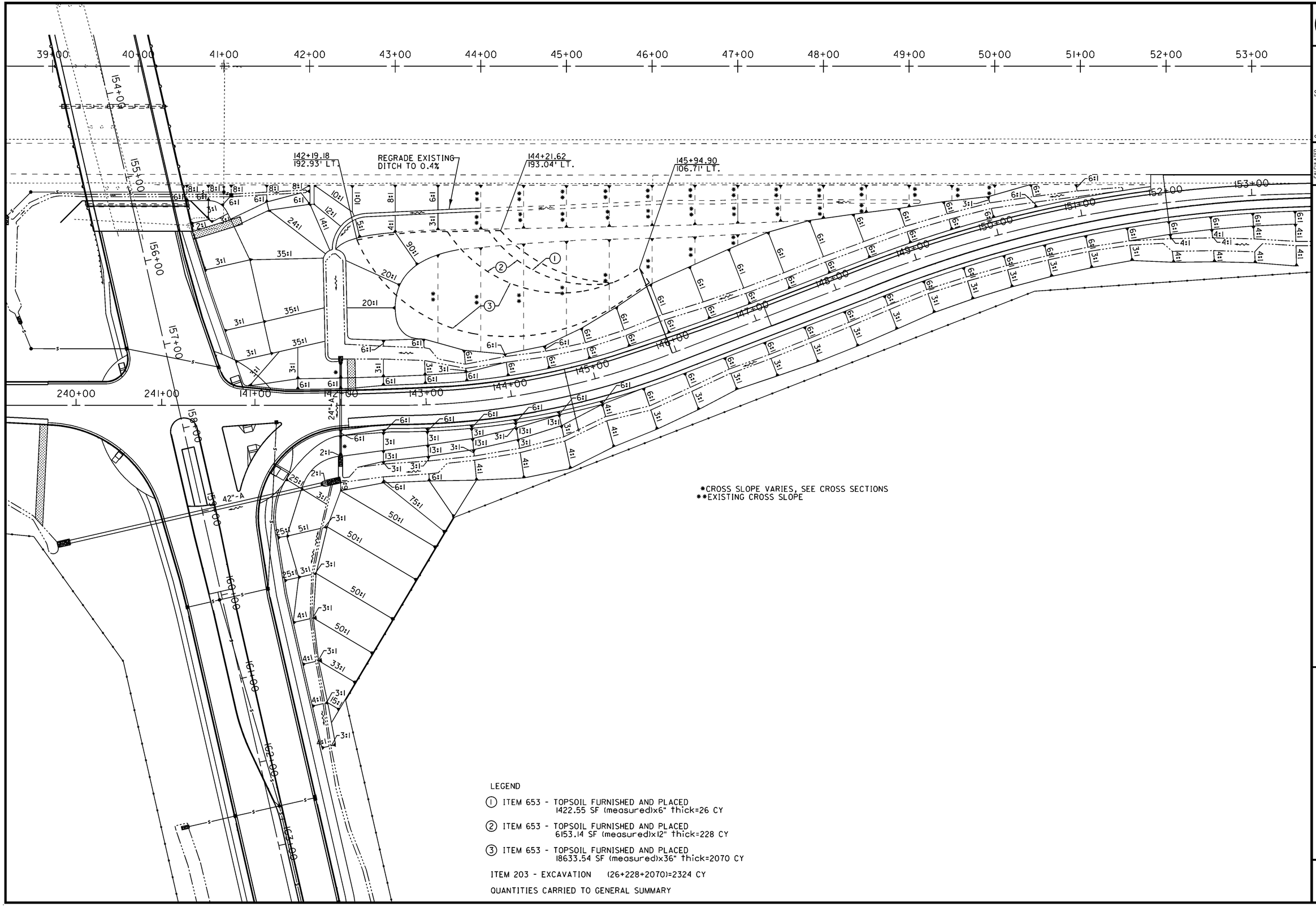

*CROSS SLOPE VARIES, SEE CROSS SECTIONS
**EXISTING CROSS SLOPE

LEGEND

(1) ITEM 653 - TOPSOIL FURNISHED AND PLACED
1422.55 SF (measured)x6" thick=26 CY

(2) ITEM 653 - TOPSOIL FURNISHED AND PLACED
6153.14 SF (measured)x12" thick=228 CY

(3) ITEM 653 - TOPSOIL FURNISHED AND PLACED
18633.54 SF (measured)x36" thick=2070 CY

ITEM 203 - EXCAVATION (26+228+2070)=2324 CY

QUANTITIES CARRIED TO GENERAL SUMMARY

GRADING PLAN
RAMP J

MOT-75-0.75

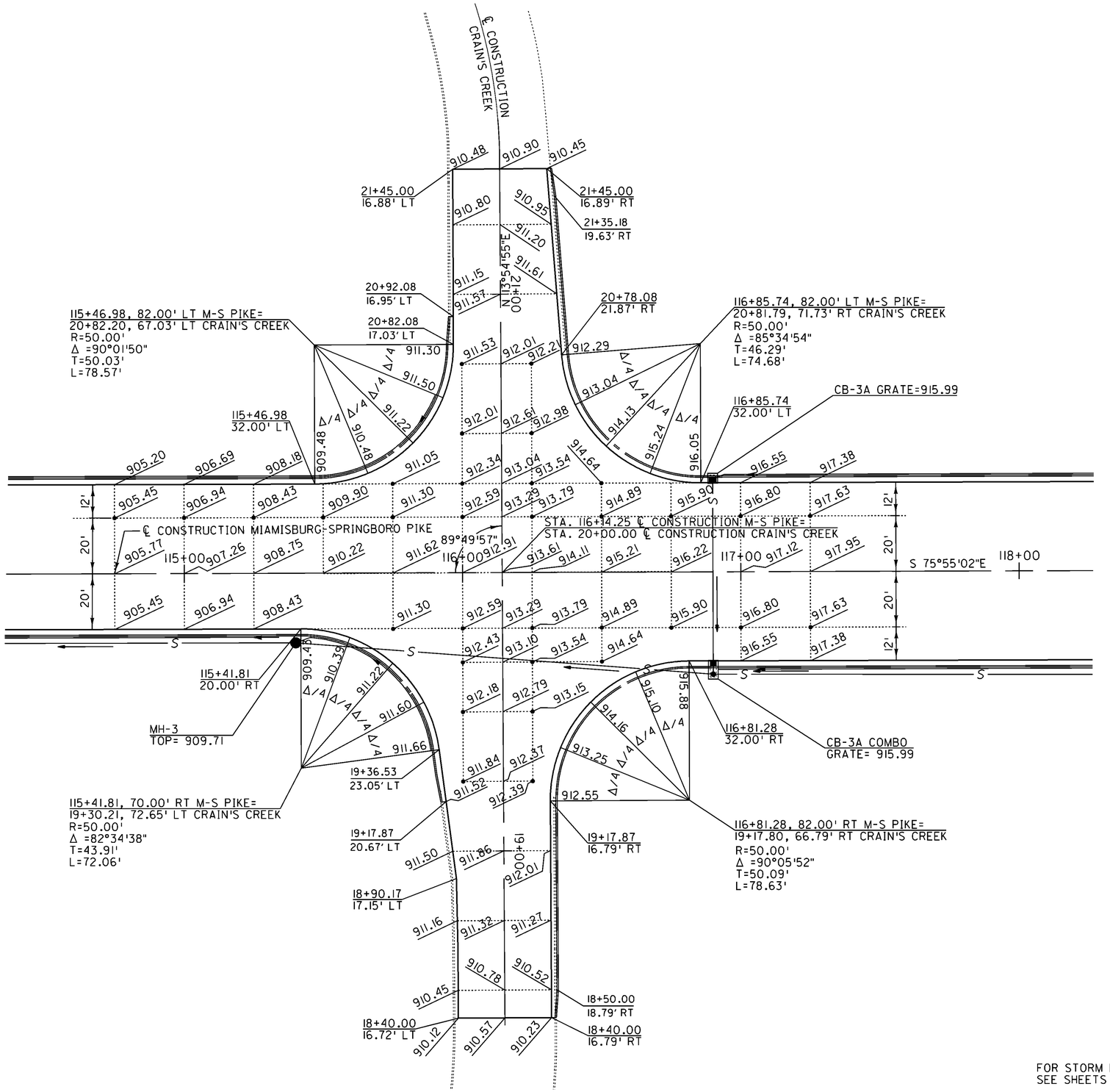

FOR STORM DATA IN MEDIANS AND ISLANDS SEE SHEETS 404-414.

ALL ELEVATIONS SHOWN AROUND RADII ARE EDGE OF PAVEMENT UNLESS OTHERWISE NOTED.

FOR MEDIAN AND TRAFFIC ISLAND ELEVATIONS SEE SHEETS 404-414.

HORIZONTAL SCALE IN FEET
0 10 20 40

CALCULATED HGH
CHECKED AJS

INTERSECTION DETAILS
MIAMISBURG-SPRINGBORO PK. & CRAIN'S CREEK

MOT-75-0.75

322
773

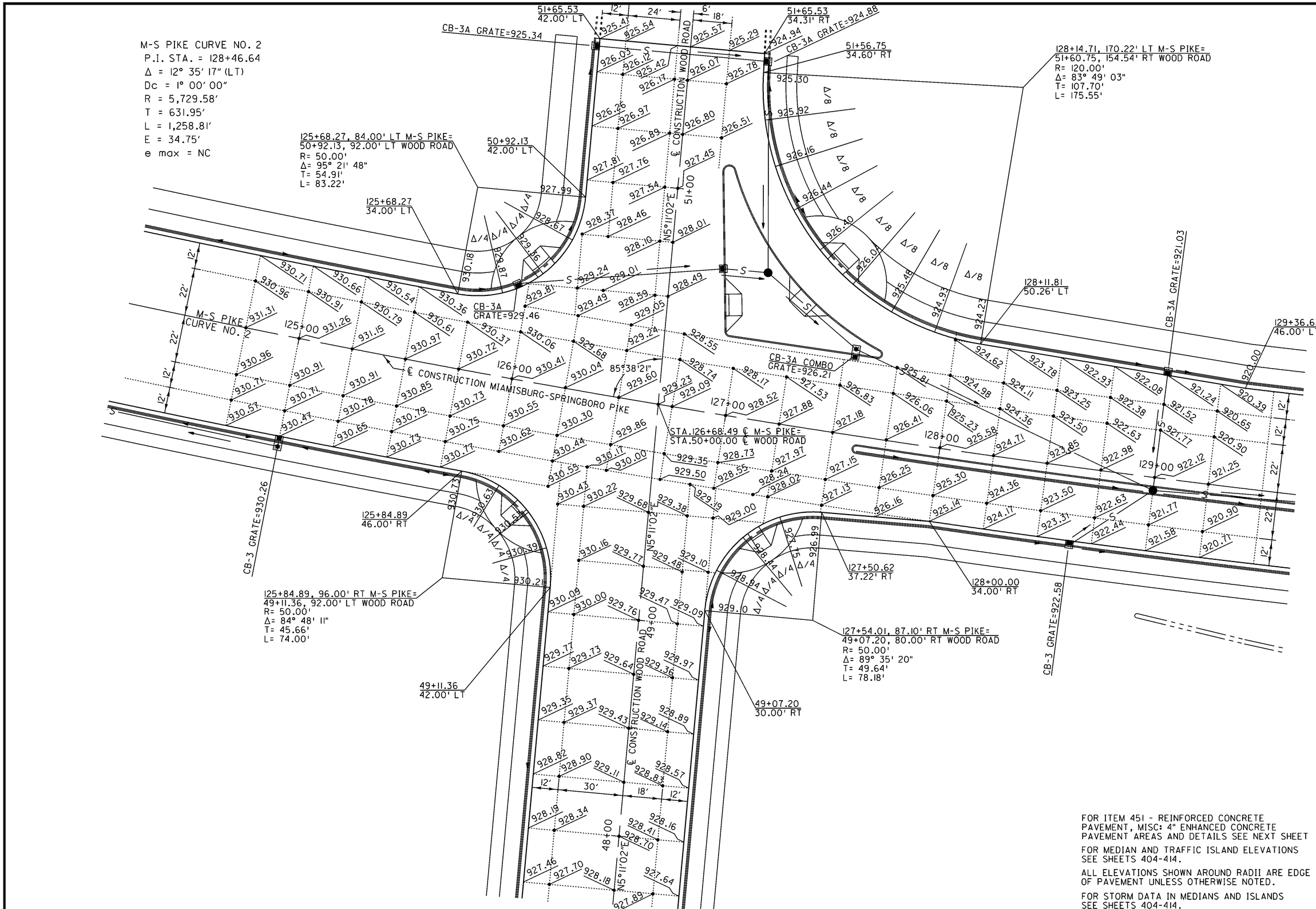

FOR ITEM 451 - REINFORCED CONCRETE PAVEMENT, MISC: 4" ENHANCED CONCRETE PAVEMENT AREAS AND DETAILS SEE NEXT SHEET

FOR MEDIAN AND TRAFFIC ISLAND ELEVATIONS SEE SHEETS 404-414.

ALL ELEVATIONS SHOWN AROUND RADII ARE EDGE OF PAVEMENT UNLESS OTHERWISE NOTED.

FOR STORM DATA IN MEDIANS AND ISLANDS SEE SHEETS 404-414.

HORIZONTAL SCALE IN FEET
0 10 20 40

CALCULATED HGH
CHECKED AJS

INTERSECTION DETAILS
MIAMISBURG-SPRINGBORO PIKE AND WOOD RD.

MOT-75-0.75

ITEM 451 - REINFORCED CONCRETE PAVEMENT, MISC: 4" ENHANCED CONCRETE PAVEMENT (SEE GENERAL NOTES SHEET 25)

ALL STATIONS AND OFFSETS SHOWN AROUND RADII ARE BACK OF CURB UNLESS OTHERWISE NOTED.

HORIZONTAL SCALE IN FEET
0 10 20 40

CALCULATED HGH
CHECKED AJS

INTERSECTION DETAILS
MIAMISBURG-SPRINGBORO PIKE AND WOOD RD.

MOT-75-0.75

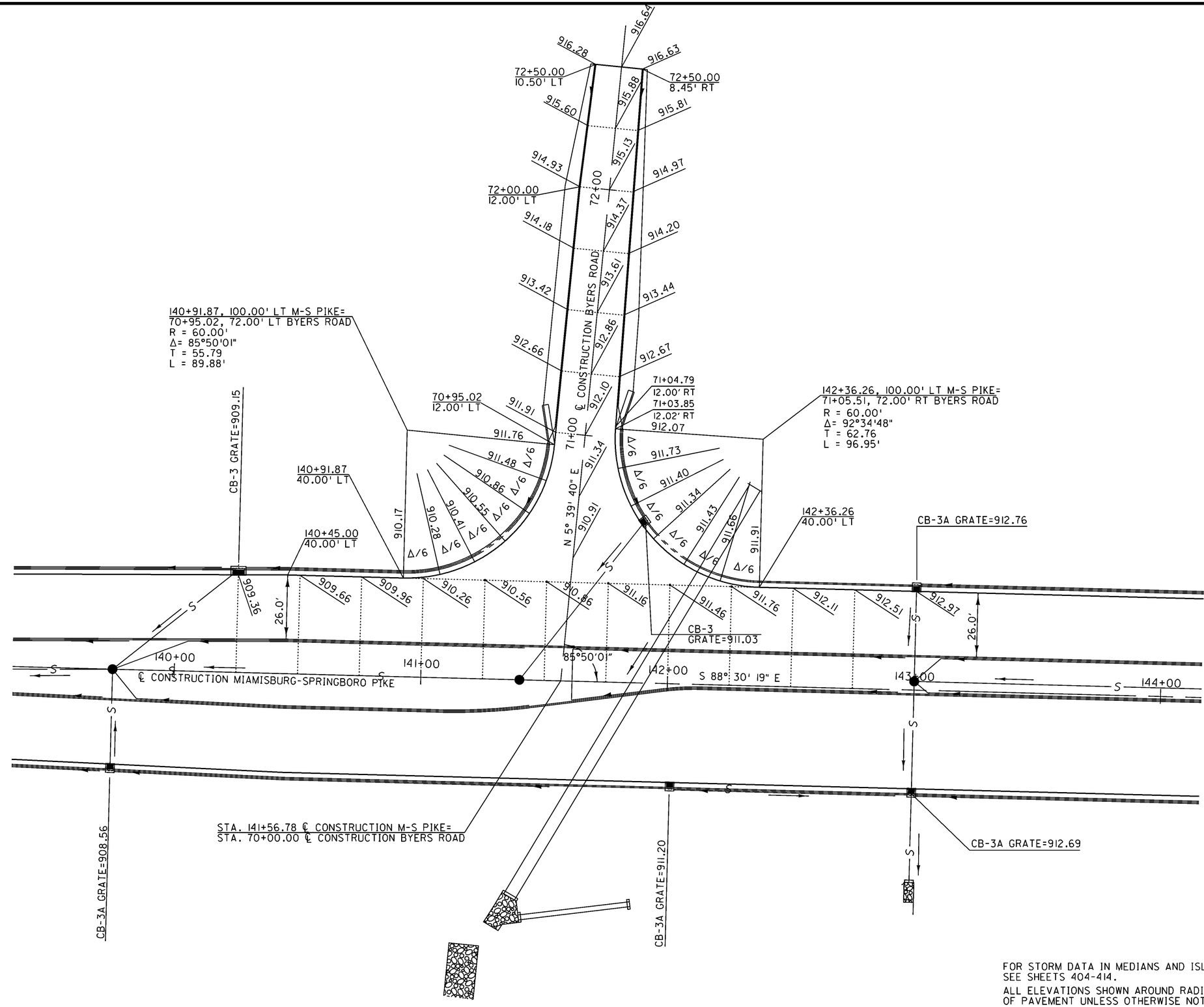

FOR STORM DATA IN MEDIANS AND ISLANDS SEE SHEETS 404-414.

ALL ELEVATIONS SHOWN AROUND RADII ARE EDGE OF PAVEMENT UNLESS OTHERWISE NOTED.

FOR MEDIAN AND TRAFFIC ISLAND ELEVATIONS SEE SHEETS 404-414.

HORIZONTAL SCALE IN FEET
0 10 20 40

CALCULATED HGH
CHECKED AJS

INTERSECTION DETAILS
MIAMISBURG-SPRINGBORO PK. & BYERS RD.

MOT-75-0.75

325
773

148+31.27, 183.49' LT M-S PIKE=
439+78.26, 161.41' LT RAMP M
R= 137.00'
Δ = 70° 14' 14"
T= 96.35'
L= 167.94'

439+79.79
16.17' LT
934.25
439+80.17
24.16' LT
934.13
439+71.68
24.57' LT

440+25.00
13.99' LT

440+25.00
24.00' RT

439+79.79
24.00' RT
934.85
439+79.79
26.00' RT
934.87

℄ CONSTRUCTION RAMP M
N 14° 22' 31" E

439+11.10
26.00' RT

150+26.29, 70.00' LT M-S PIKE=
439+11.10, 54.00' RT RAMP M
R= 28.00'
Δ = 102° 52' 50"
T= 35.13'
L= 50.28'

150+26.29
42.00' LT

151+34.51
42.00' LT
944.75

151+79.32
43.98' LT
946.36

CB-3A GRATE=930.86
CB-3A GRATE=940.26

147+15.00
40.00' LT

147+60.40
41.01' LT

148+41.14
46.85' LT

439+00
440+00

STA. 149+54.88 ℄ CONSTRUCTION M-S PIKE=
STA. 338+51.96 ℄ CONSTRUCTION RAMP P=
STA. 438+26.94 ℄ CONSTRUCTION RAMP M

℄ CONSTRUCTION MIAMISBURG-SPRINGBORO PIKE
S 88°30'19"E

147+00
148+00
149+00
150+00
151+00
152+00

147+15.00
52.00' RT

147+43.69
52.64' RT

147+93.06
57.04' RT

147+83.57, 163.62' RT M-S PIKE=
336+54.281, 130.53' LT RAMP P
R= 107.00'
Δ = 93° 58' 44"
T= 114.70'
L= 175.51'

CB-3A
GRATE=933.09

336+74.33
14.00' RT

336+53.92
12.43' RT
932.24

336+53.97
14.43' RT
932.23

336+50.00
12.53' RT
932.10

336+53.39
23.24' LT
932.53

336+61.39
23.77' LT

336+53.92
15.25' LT
932.46

336+50.00
14.99' LT

℄ CONSTRUCTION RAMP P

337+00
338+00

337+29.51
14.00' RT

337+80.65
19.39' RT

149+81.27
55.08' RT

149+84.38, 82.91' RT M-S PIKE=
337+77.72, 47.23' RT RAMP P
R= 28.00'
Δ = 64° 43' 54"
T= 17.75'
L= 31.63'

150+98.33
42.00' RT

151+59.66
42.00' RT

CB-3A GRATE=940.10

FOR ITEM 451 - REINFORCED CONCRETE PAVEMENT, MISC: 4" ENHANCED CONCRETE PAVEMENT AREAS AND DETAILS SEE NEXT SHEET

FOR STORM DATA IN MEDIANS AND ISLANDS SEE SHEETS 404-414.

ALL ELEVATIONS SHOWN AROUND RADII ARE EDGE OF PAVEMENT UNLESS OTHERWISE NOTED.

FOR MEDIAN AND TRAFFIC ISLAND ELEVATIONS SEE SHEETS 404-414.

HORIZONTAL SCALE IN FEET
0 10 20 40

CALCULATED HGH
CHECKED AJS

INTERSECTION DETAILS
MIAMISBURG-SPRINGBORO PIKE, RAMP M & P

MOT-75-0.75

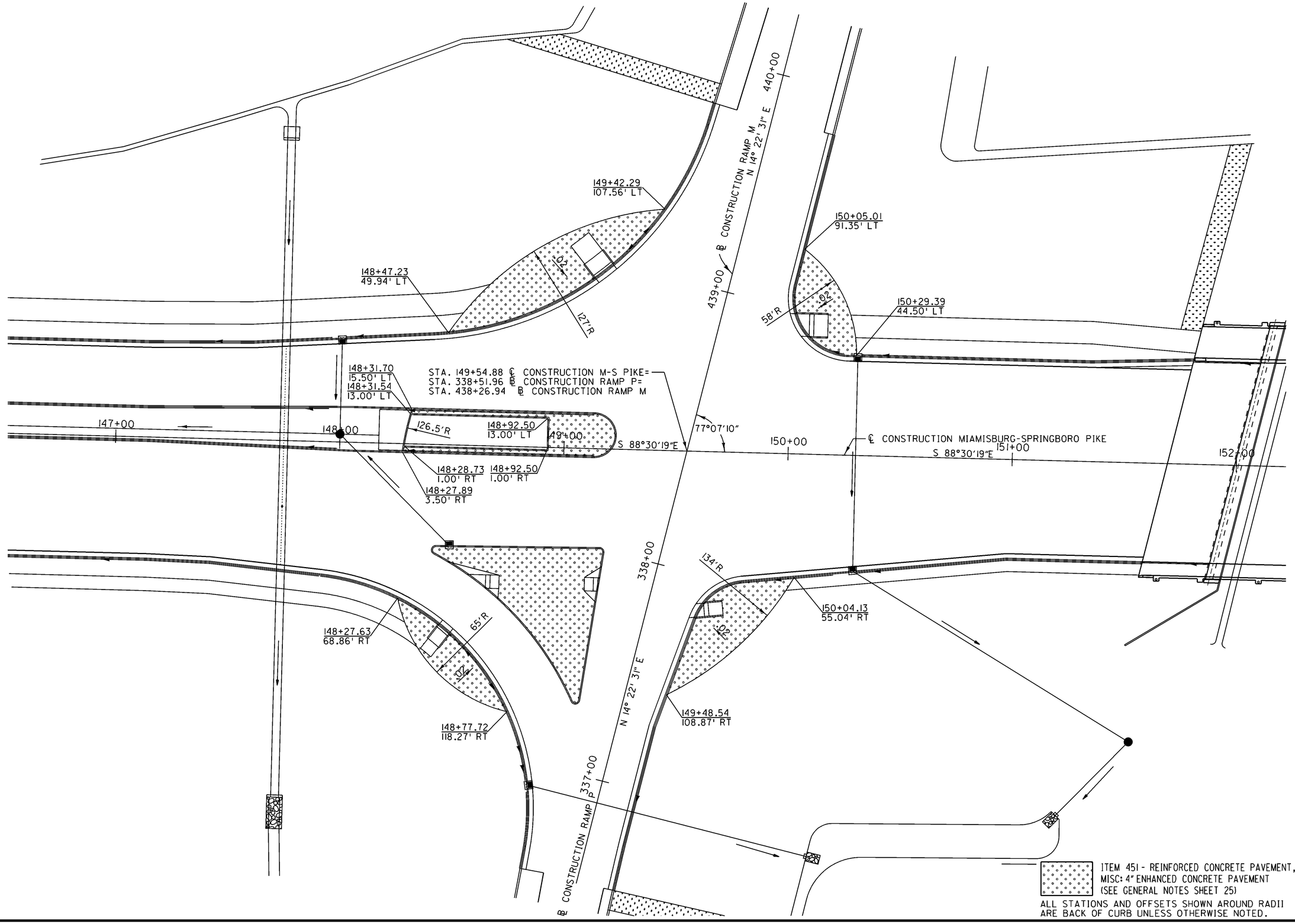

N

HORIZONTAL SCALE IN FEET
0 10 20 40

CALCULATED HGH
CHECKED AJS

INTERSECTION DETAILS
MIAMISBURG-SPRINGBORO PIKE, RAMP M & P

MOT-75-0.75

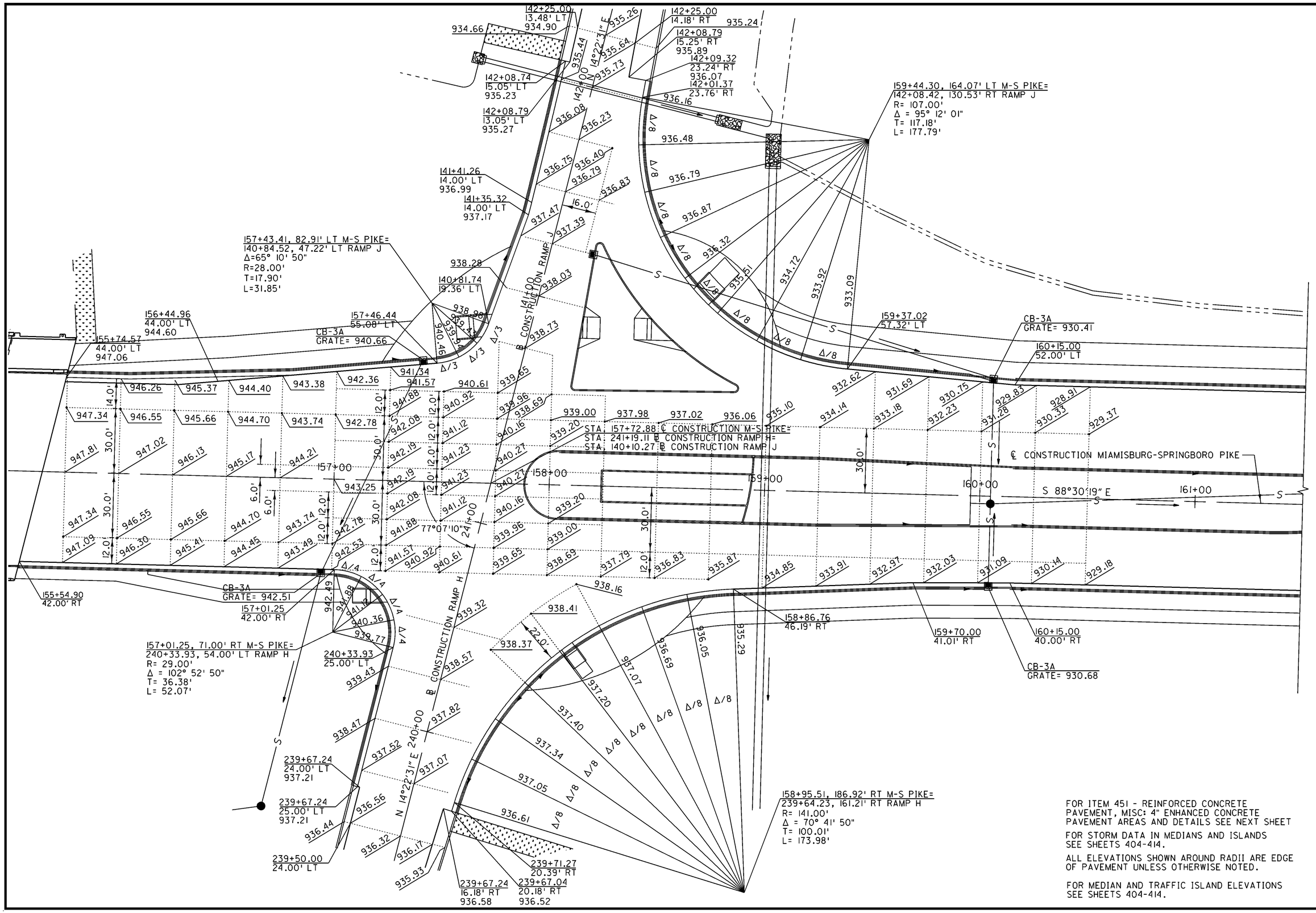

FOR ITEM 451 - REINFORCED CONCRETE PAVEMENT, MISC: 4" ENHANCED CONCRETE PAVEMENT AREAS AND DETAILS SEE NEXT SHEET

FOR STORM DATA IN MEDIANS AND ISLANDS SEE SHEETS 404-414.

ALL ELEVATIONS SHOWN AROUND RADII ARE EDGE OF PAVEMENT UNLESS OTHERWISE NOTED.

FOR MEDIAN AND TRAFFIC ISLAND ELEVATIONS SEE SHEETS 404-414.

HORIZONTAL SCALE IN FEET
0 10 20 40

CALCULATED SES
CHECKED AJS

INTERSECTION DETAILS
MIAMISBURG-SPRINGBORO PK. AND RAMPS H & J

MOT-75-0.75

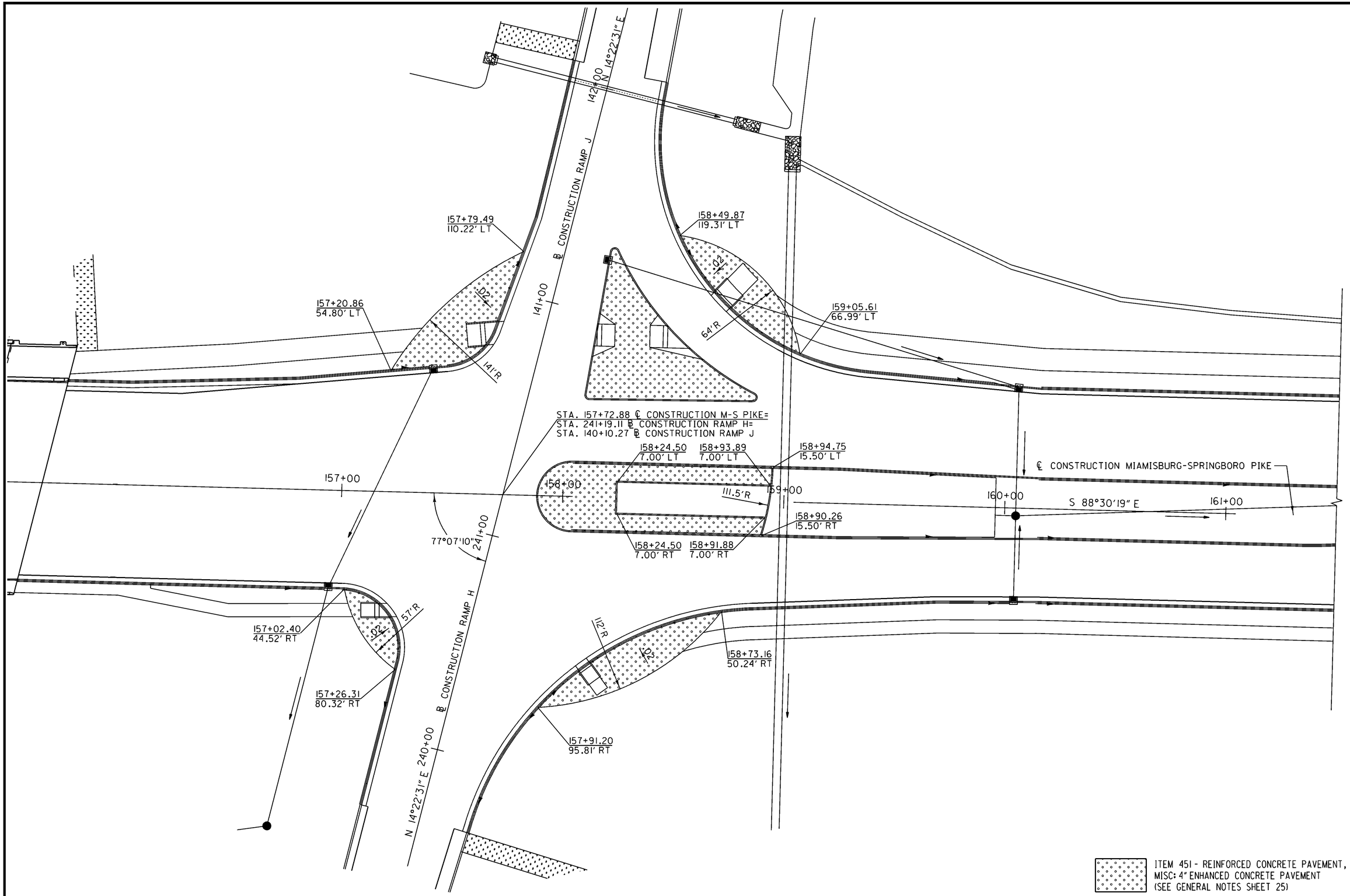

ITEM 451 - REINFORCED CONCRETE PAVEMENT,
MISC: 4" ENHANCED CONCRETE PAVEMENT
(SEE GENERAL NOTES SHEET 25)

ALL STATIONS AND OFFSETS SHOWN AROUND RADII ARE BACK OF CURB UNLESS OTHERWISE NOTED.

HORIZONTAL SCALE IN FEET
0 10 20 40

CALCULATED SES
CHECKED AJS

INTERSECTION DETAILS
MIAMISBURG-SPRINGBORO PK. AND RAMPS H & J

MOT-75-0.75

329
773

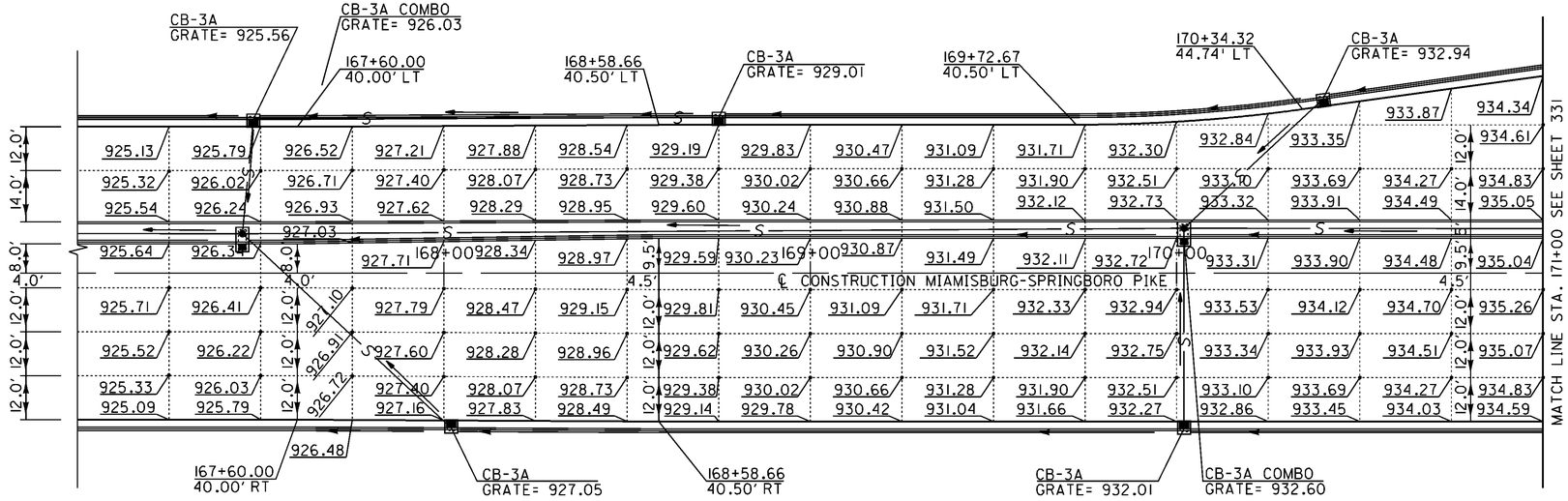

ALL ELEVATIONS SHOWN ARE EDGE OF PAVEMENT UNLESS OTHERWISE NOTED.

FOR MEDIAN AND TRAFFIC ISLAND ELEVATIONS SEE SHEETS 404.

FOR STORM DATA IN MEDIANS AND ISLANDS SEE SHEETS 404.

HORIZONTAL SCALE IN FEET
0 10 20 40

CALCULATED DJB CHECKED AJS

INTERSECTION DETAILS
MIAMISBURG-SPRINGBORO PK. STA. 167+25 - STA. 171+00

MOT-75-0.75

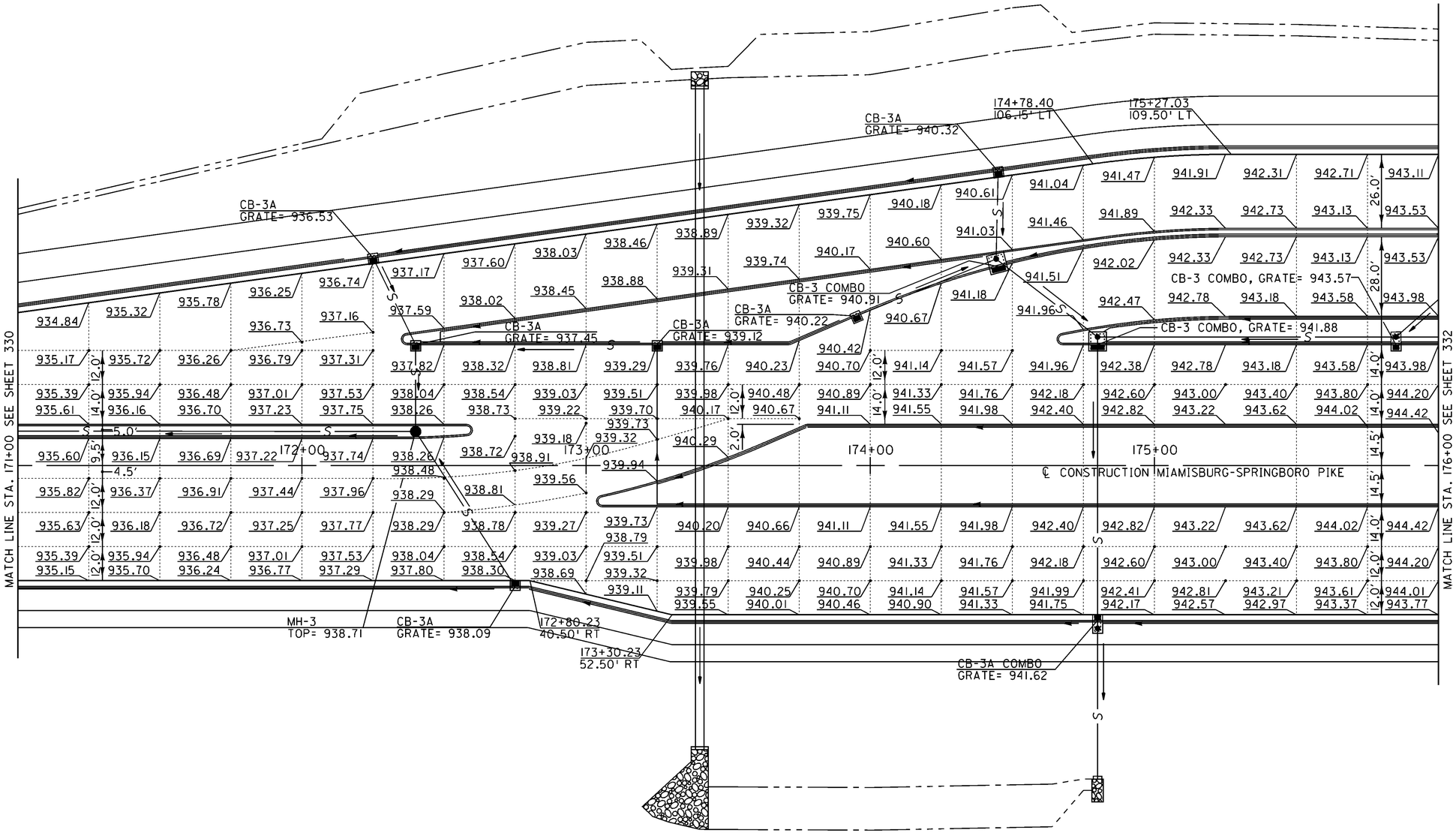

ALL ELEVATIONS SHOWN ARE EDGE OF PAVEMENT UNLESS OTHERWISE NOTED.

FOR MEDIAN AND TRAFFIC ISLAND ELEVATIONS SEE SHEETS 404-414.

FOR STORM DATA IN MEDIANS AND ISLANDS SEE SHEETS 404-414.

HORIZONTAL SCALE IN FEET
0 10 20 40

CALCULATED DJB
CHECKED AJS

INTERSECTION DETAILS
MIAMISBURG-SPRINGBORO PK. STA. 171+00 - STA. 176+00

MOT-75-0.75

MATCH LINE STA. 41+50 SEE SHEET 337

177+68.54, 181.50' LT M-S PIKE=
41+30.59, 122.79' LT SR 741
R = 72.00'
Δ = 86°22'45"
T = 67.59'
L = 108.55'

41+30.59
50.79' LT
41+26.58
42.79' LT
41+30.59
42.79' LT
R=80'
30.79'
31.55'
40+96.32
31.55' RT
40+93.63
31.59' RT
40+93.63
39.55' RT

CB-3
GRADE= 943.76
CB-3A
GRADE= 943.31
177+68.54
109.50' LT
177+68.29
97.50' LT
947.53
177+18.29
109.50' LT

180+05.06, 129.50' LT M-S PIKE=
40+93.63, 116.55' RT SR 741
R = 77.00'
Δ= 93°37'15"
T = 82.03'
L = 125.82'

180+05.06
52.50' LT
CB-3 COMBO
GRADE= 950.16
CB-3A
GRADE= 953.36

PI STA. 40+17.64
Δ =0°00'08", RT.

CB-3 COMBO
GRADE= 945.08
CB-3
GRADE= 947.73
CB-3A COMBO
GRADE= 949.56

MATCH LINE STA. 176+00 SEE SHEET 331

177+00
178+00
179+00
180+00
181+00
S88°30'19"E
℄ CONSTRUCTION
MIAMISBURG-SPRINGBORO PIKE
℄ CONSTRUCTION AUSTIN PIKE S88°30'19"E
SR 741
86°22'53"
℄ CONSTRUCTION
N05°06'48"E
N05°06'56"E
MH-3
TOP= 952.04
CB-3
GRADE= 946.95
CB-3
GRADE= 951.25

MATCH LINE STA. 182+00 SEE SHEET

176+05.23
52.50' RT
CB-3A
GRADE= 945.24
177+56.71
52.50' RT

CB-3 COMBO
GRADE= 948.95
CB-3 COMBO
GRADE= 949.61
CB-3A
GRADE= 950.96
CB-3 COMBO
GRADE= 948.14

179+92.42
98.50' RT
179+92.67
102.50' RT
181+25.93
102.50' RT
181+73.60
99.22' RT
CB-3A
GRADE= 953.11

177+56.71, 129.50' RT M-S PIKE=
38+19.46, 114.96' LT SR 741
R = 77.00'
Δ= 93°37'05"
T = 82.02'
L = 125.81'

38+19.46
37.96' LT
38+19.46
30.01' LT
38+16.77
29.96' LT

179+92.67, 174.50' RT M-S PIKE=
37+89.45, 123.37' RT SR 741
R = 72.00'
Δ = 86°22'52"
T = 67.59'
L = 108.55'

37+89.45
51.37' RT
37+89.45
43.47' RT
37+85.44
43.37' RT

STA. 178+80.09 ℄ MIAMISBURG-SPRINGBORO PIKE (BACK)=
STA. 178+80.09 ℄ AUSTIN PIKE (AHEAD)
STA. 39+56.49 ℄ SR 741

MATCH LINE STA. 37+50 SEE SHEET 336

FOR ITEM 451 - REINFORCED CONCRETE PAVEMENT, MISC: 4" ENHANCED CONCRETE PAVEMENT AREAS AND DETAILS SEE NEXT SHEET

ALL ELEVATIONS SHOWN ARE EDGE OF PAVEMENT UNLESS OTHERWISE NOTED.

FOR MEDIAN AND TRAFFIC ISLAND ELEVATIONS SEE SHEETS 404-414.

FOR STORM DATA IN MEDIANS AND ISLANDS SEE SHEETS 404-414.

HORIZONTAL SCALE IN FEET
0 10 20 40

CALCULATED DJB
CHECKED AJS

INTERSECTION DETAILS
M-S PIKE, AUSTIN PIKE & SR 741

MOT-75-0.75

332
773

MATCH LINE STA. 41+50 SEE SHEET 337

MATCH LINE STA. 176+00 SEE SHEET 332

MATCH LINE STA. 182+00 SEE SHEET 334

MATCH LINE STA. 37+50 SEE SHEET 336

178+36.45
166.71' LT

177+75.48
112.35' LT

102°

59' R

179+32.47
112.75' LT

179+92.71
56.03' LT

PI STA. 40+17.64
Δ =0°00'08", RT.

N05°06'56"E

40+00

SR 741

86°22'53"

179+00

178+00

177+00

S88°30'19"E

℄ CONSTRUCTION
MIAMISBURG-SPRINGBORO PIKE

180+00

181+00

126.5' R

176+41.68
14.00' LT

176+40.01
6.50' LT

177+01.50
6.50' LT

180+63.50
7.50' LT

181+27.36
7.50' LT

181+28.61
14.00' LT

176+35.95
14.00' RT

176+37.20
7.50' RT

177+01.50
7.50' RT

180+63.50
6.50' RT

181+24.57
6.50' RT

181+22.90
14.00' RT

STA. 178+80.09 ℄ MIAMISBURG-SPRINGBORO PIKE (BACK)=
STA. 178+80.09 ℄ AUSTIN PIKE (AHEAD)
STA. 39+56.49 ℄ SR 741

℄ CONSTRUCTION
N05°06'48"E

39+00

38+00

54' R

177+72.63
56.72' RT

102°

178+28.64
110.11' RT

48' R

179+79.28
106.30' RT

179+25.11
158.18' RT

S

ITEM 451 - REINFORCED CONCRETE PAVEMENT,
MISC: 4" ENHANCED CONCRETE PAVEMENT
(SEE GENERAL NOTES SHEET 25)

ALL STATIONS AND OFFSETS SHOWN AROUND RADII
ARE BACK OF CURB UNLESS OTHERWISE NOTED.

HORIZONTAL
SCALE IN FEET
0 10 20 40

CALCULATED DJB
CHECKED AJS

INTERSECTION DETAILS
M-S PIKE, AUSTIN PIKE & SR 741

MOT-75-0.75

333
773

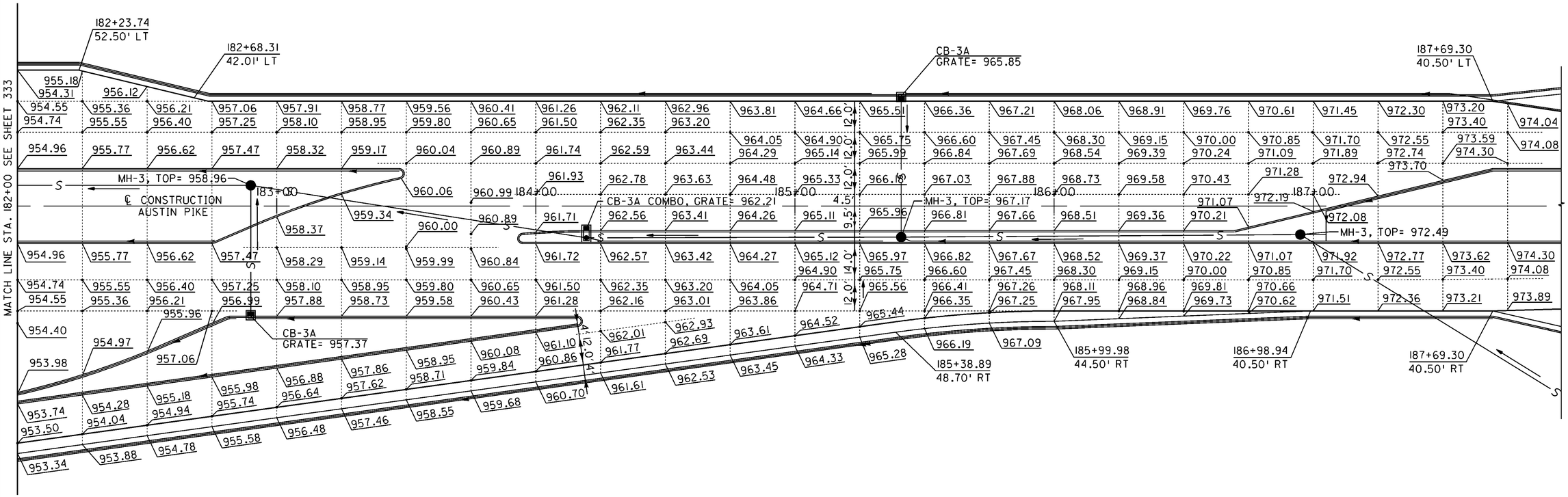

ALL ELEVATIONS SHOWN ARE EDGE OF PAVEMENT UNLESS OTHERWISE NOTED.

FOR MEDIAN AND TRAFFIC ISLAND ELEVATIONS SEE SHEETS 404-414

FOR STORM DATA IN MEDIANS AND ISLANDS SEE SHEETS 404-414

HORIZONTAL SCALE IN FEET
0 10 20 40

CALCULATED DJB
CHECKED AJS

INTERSECTION DETAILS
AUSTIN PIKE STA. 182+00 TO STA. 187+75

MOT-75-0.75

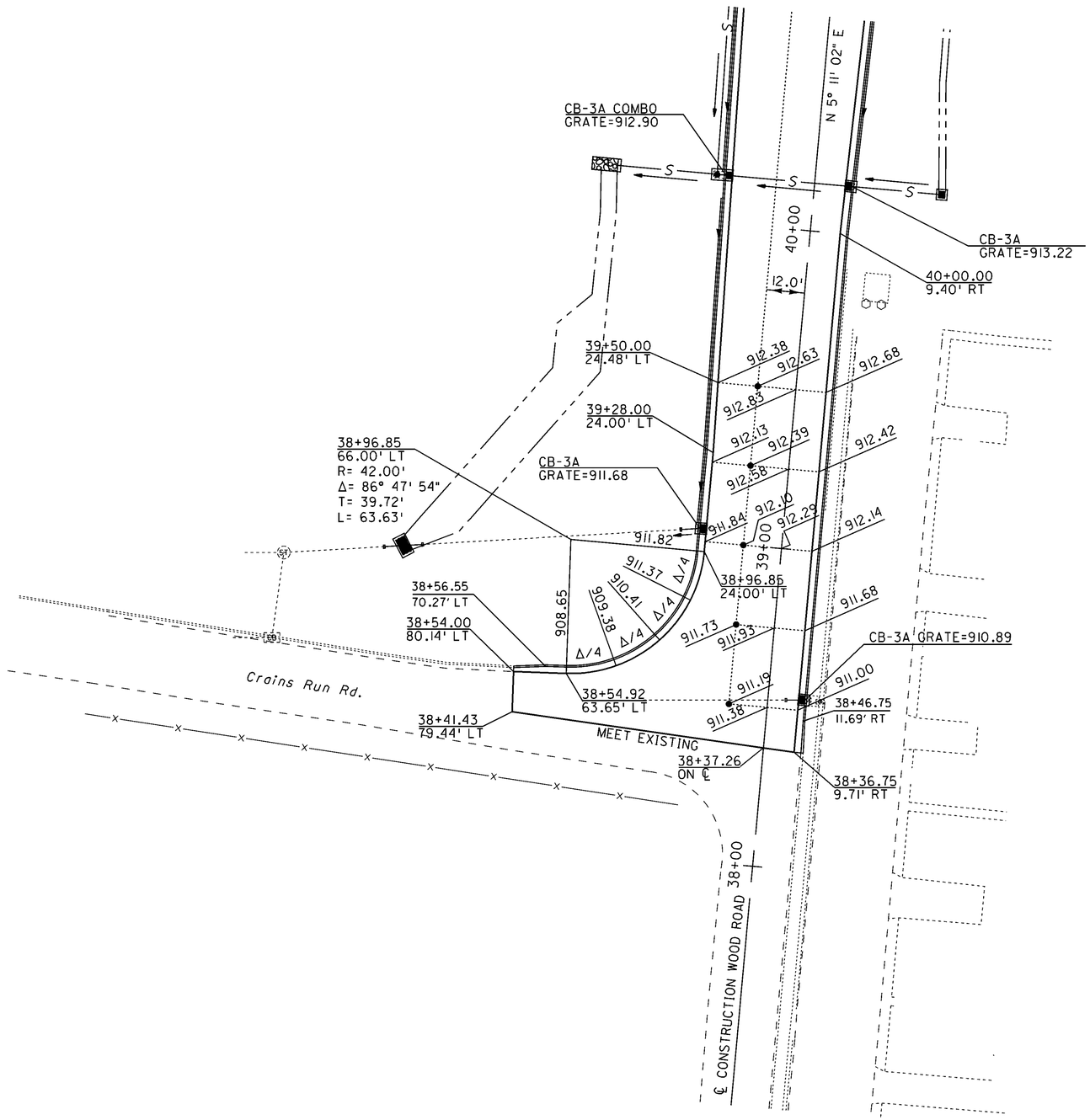

FOR MEDIAN AND TRAFFIC ISLAND ELEVATIONS SEE SHEETS 404-414.

ALL ELEVATIONS SHOWN AROUND RADII ARE EDGE OF PAVEMENT UNLESS OTHERWISE NOTED.

FOR STORM DATA IN MEDIANS AND ISLANDS SEE SHEETS 404-414.

HORIZONTAL SCALE IN FEET
0 10 20 40

CALCULATED HGH
CHECKED AJS

INTERSECTION DETAILS
CRAINS RUN ROAD AND WOOD ROAD

MOT-75-0.75

335
773

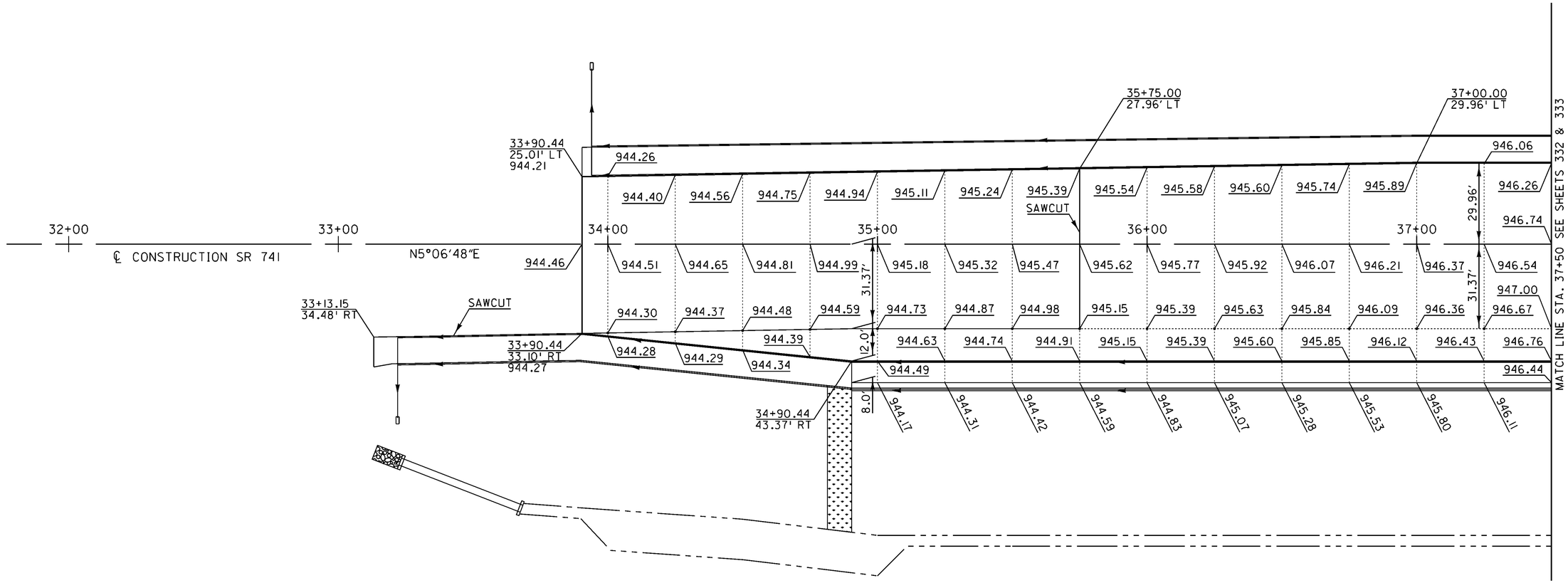

ALL ELEVATIONS SHOWN ARE EDGE OF PAVEMENT UNLESS OTHERWISE NOTED.

FOR MEDIAN AND TRAFFIC ISLAND ELEVATIONS SEE SHEETS 404-414.

FOR STORM DATA IN MEDIANS AND ISLANDS SEE SHEETS 404-414.

HORIZONTAL SCALE IN FEET
0 10 20 40

CALCULATED DJB
CHECKED AJS

INTERSECTION DETAILS
SR 741 STA. 33+90.44 TO STA. 37+50

MOT-75-0.75

336
773

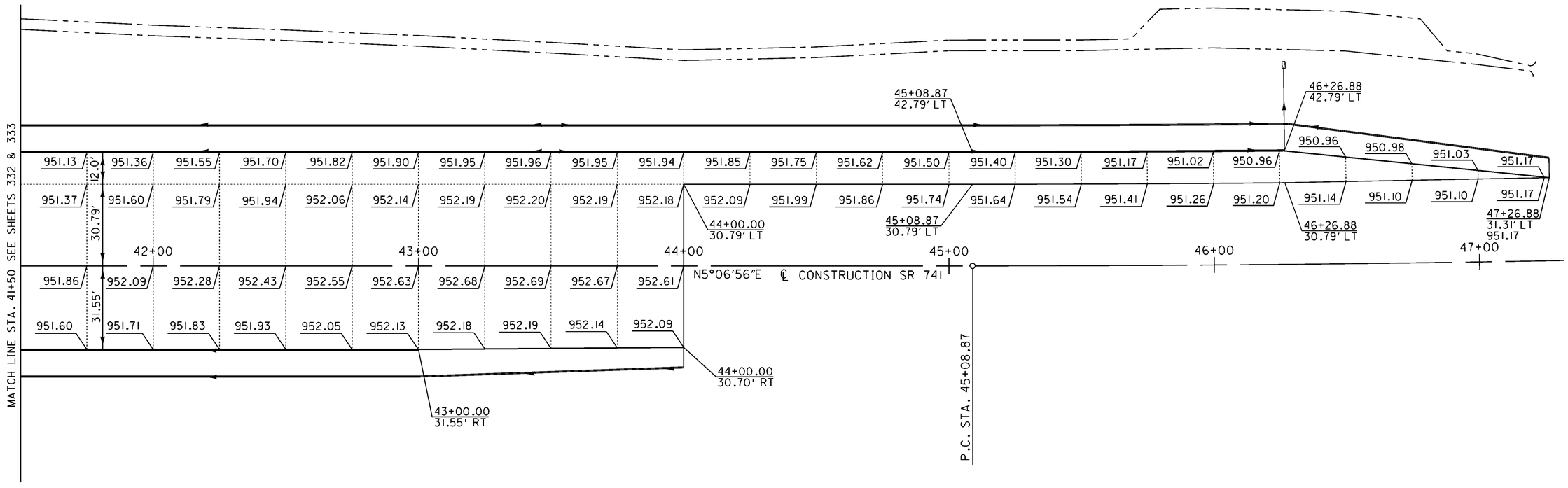

ALL ELEVATIONS SHOWN ARE EDGE OF PAVEMENT UNLESS OTHERWISE NOTED.

FOR MEDIAN AND TRAFFIC ISLAND ELEVATIONS SEE SHEETS 404-414.

FOR STORM DATA IN MEDIANS AND ISLANDS SEE SHEETS 404-414.

HORIZONTAL SCALE IN FEET
0 10 20 40

CALCULATED DJB
CHECKED AJS

INTERSECTION DETAILS
SR 741 STA. 41+50 TO STA. 47+26.88

MOT-75-0.75

337
773

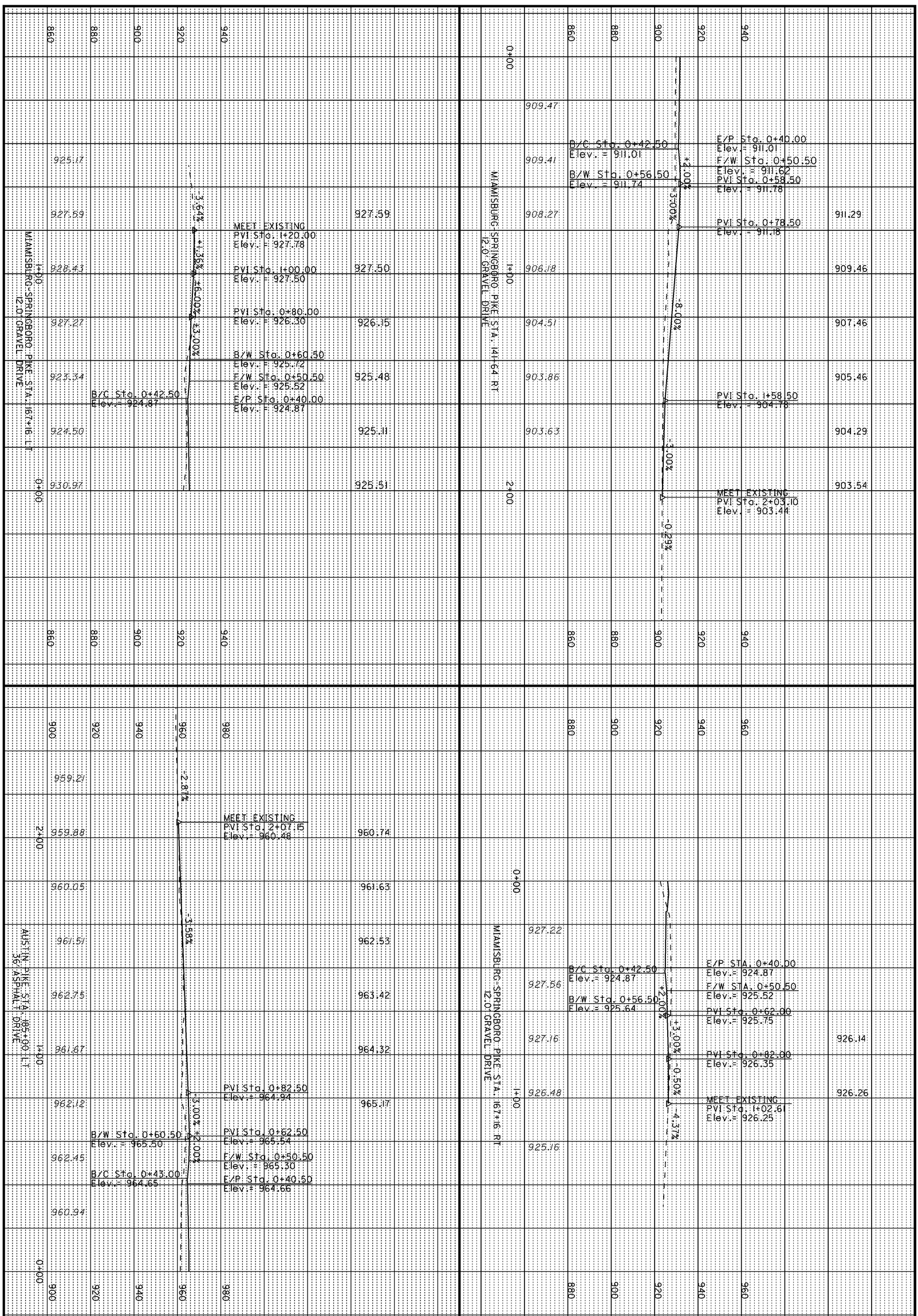

338 / 773	**MOT-75-0.75**	**DRIVEWAY PROFILES** **MIAMISBURG-SPRINGBORO PIKE & AUSTIN PIKE**

CALCULATED DJB
CHECKED AJS

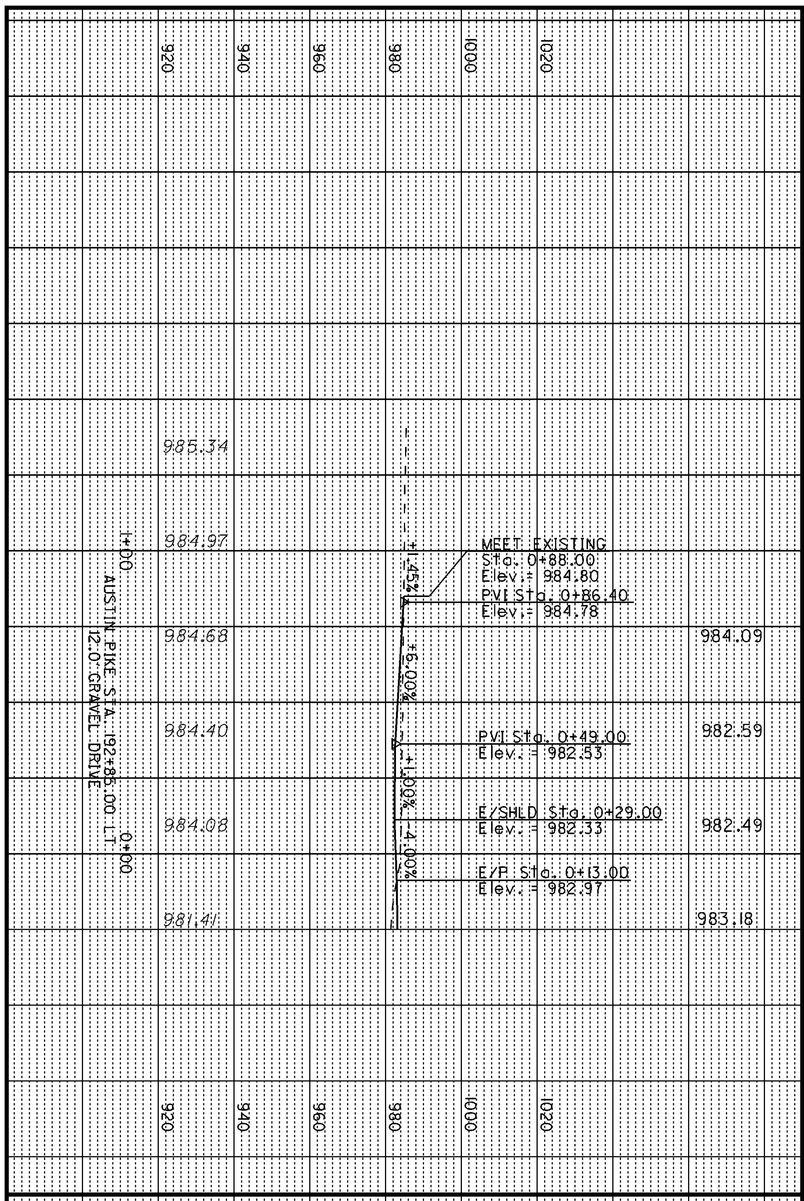

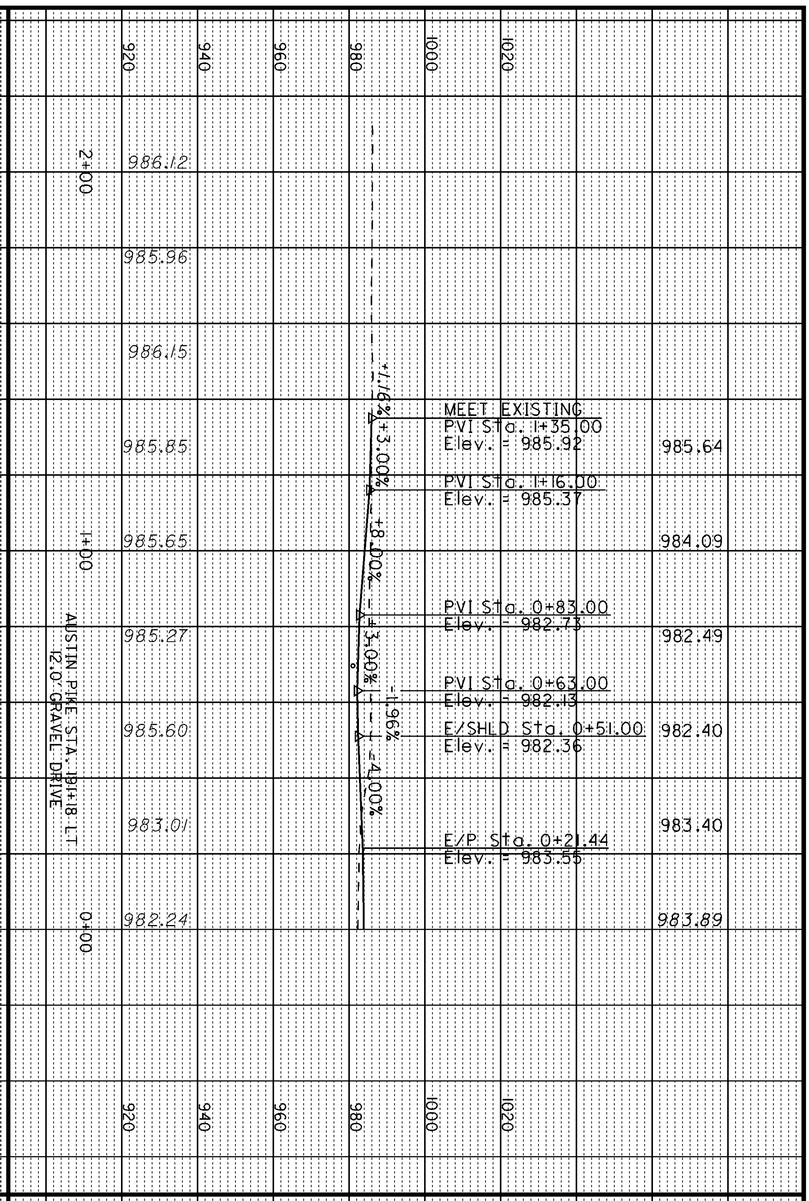

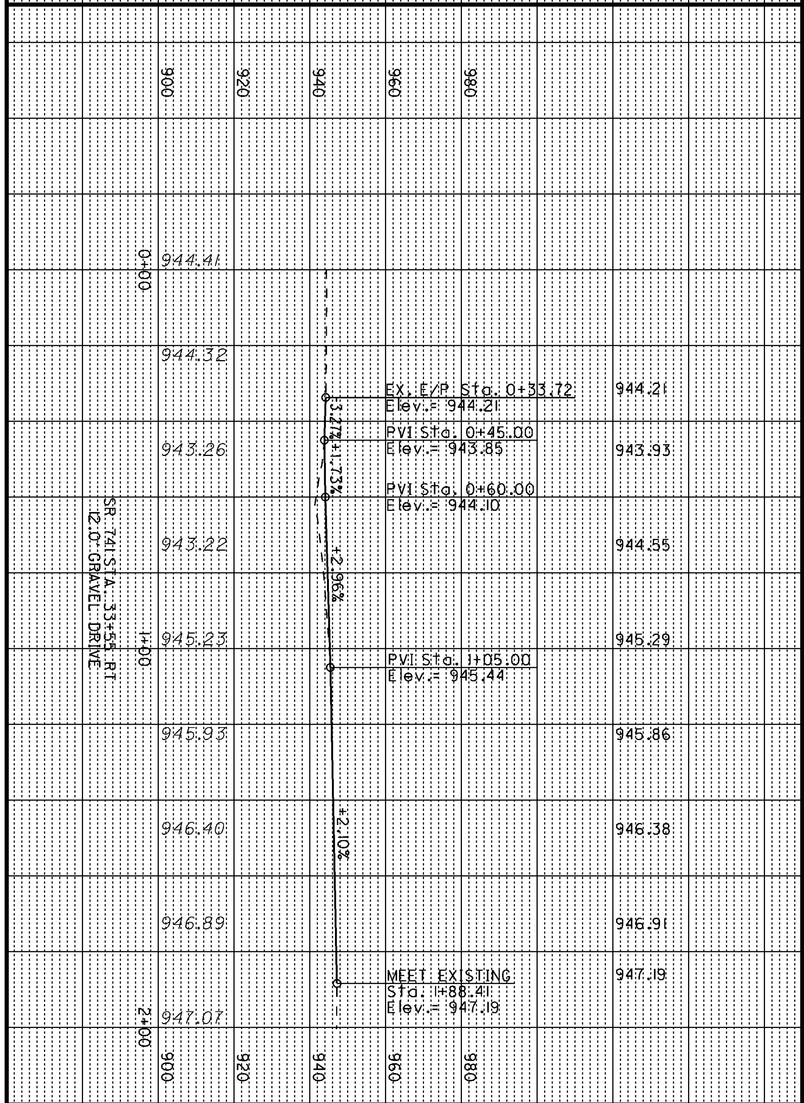

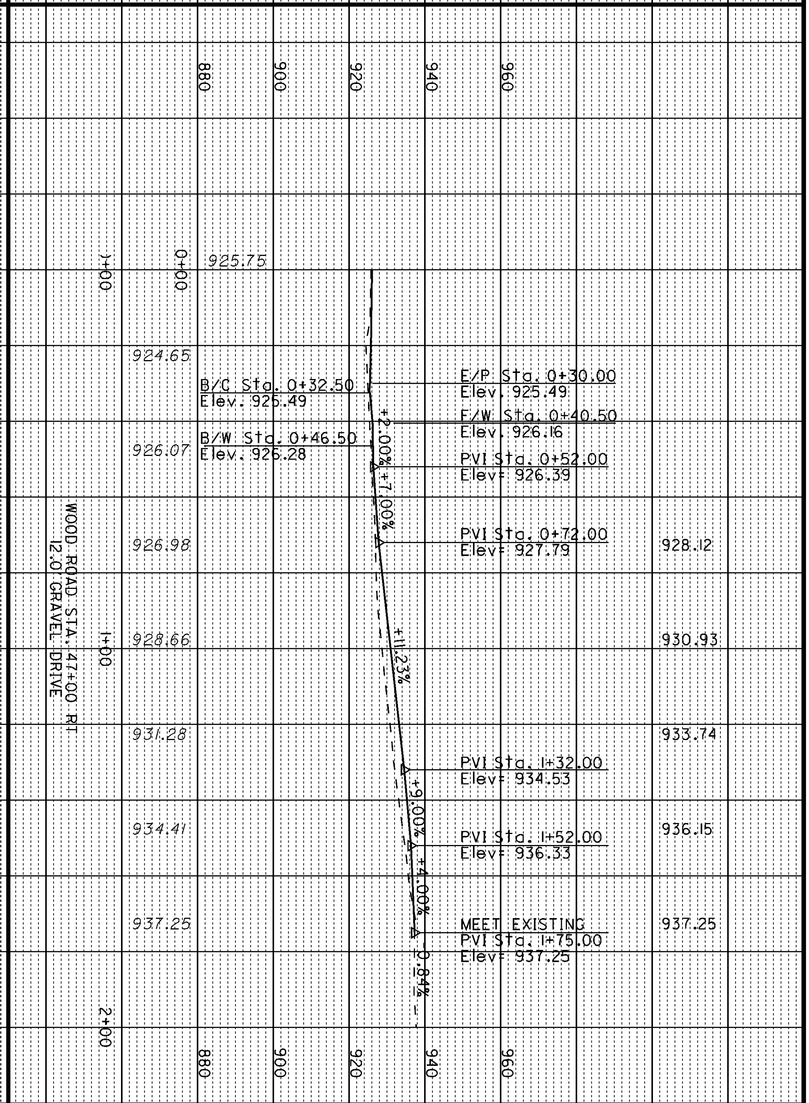

339
773

MOT-75-0.75

DRIVEWAY PROFILES
AUSTIN PIKE, WOOD ROAD & SR 741

CALCULATED DJB
CHECKED AJS

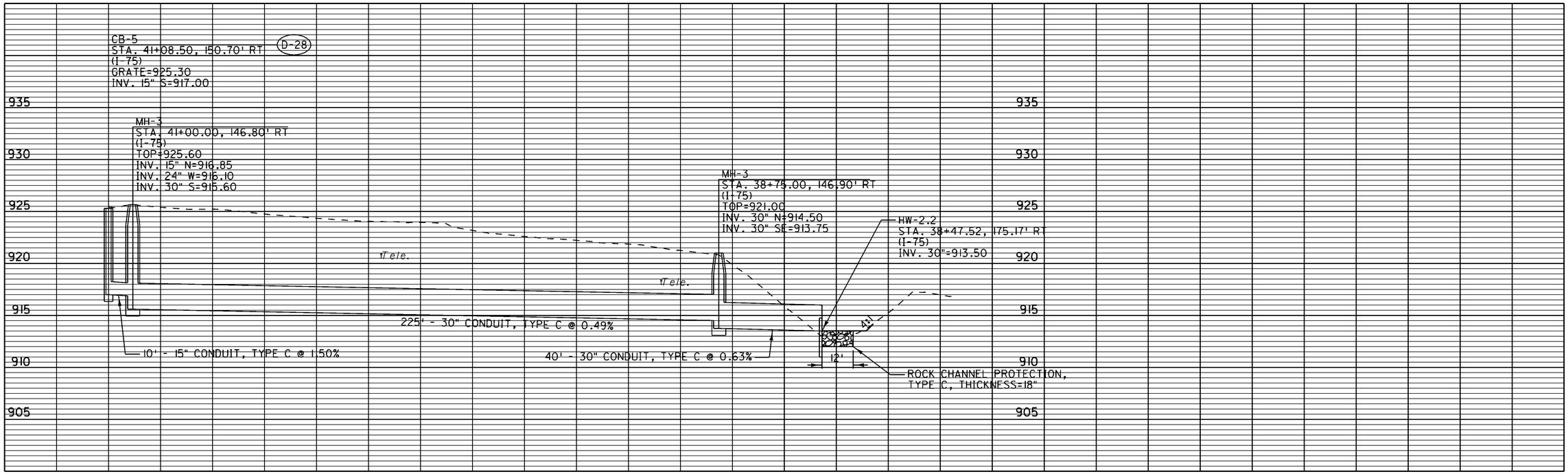

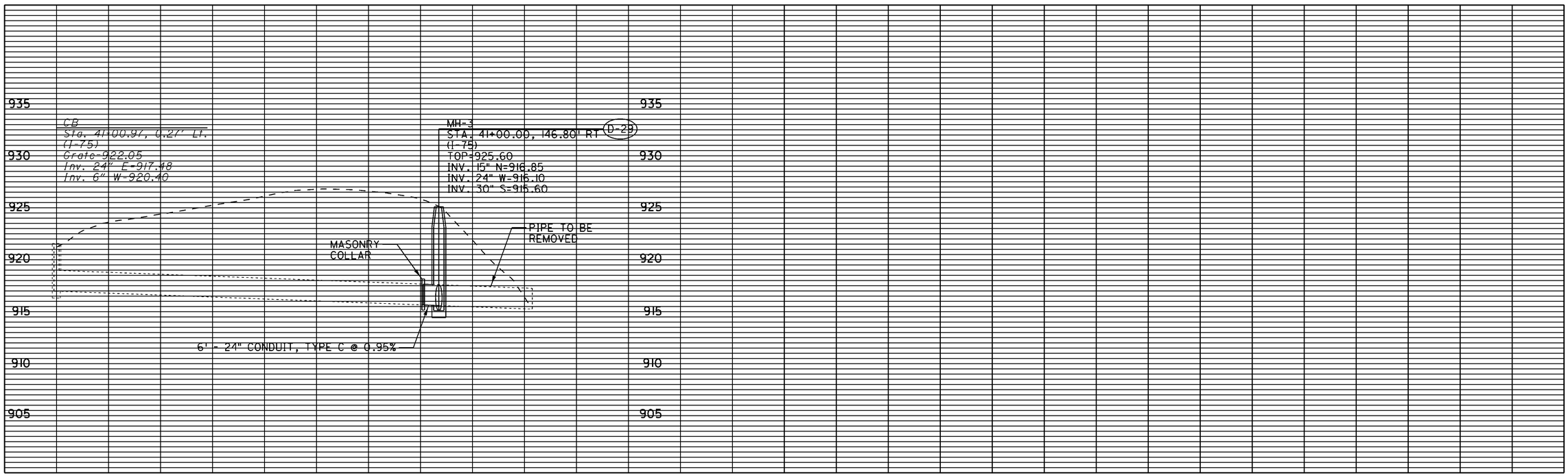

CALCULATED SES
CHECKED MAG

STORM SEWER PROFILES
I-75

MOT-75-0.75

340
773

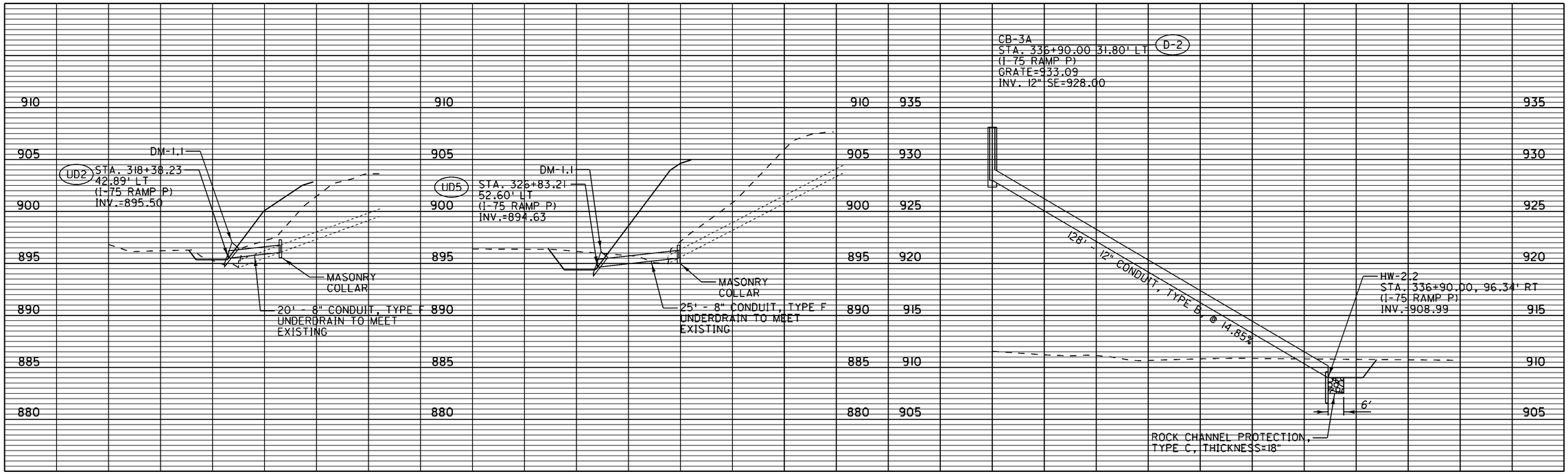

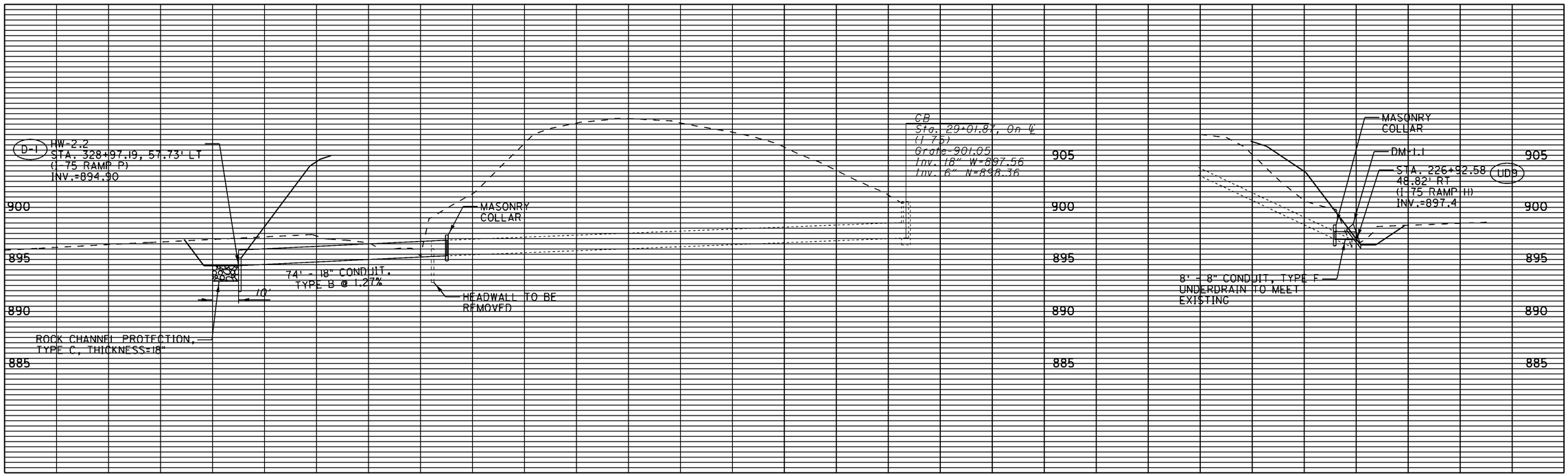

CALCULATED SES
CHECKED MAG

STORM SEWER PROFILES
RAMP P AND RAMP H

MOT-75-0.75

970
965
960
955
950
945
940

DM-1.1
STA. 457+02.28
53.66' LT
(I-75 RAMP M)
INV. =953.78

Eloc.

MASONRY
COLLAR

9' - 10' CONDUIT, TYPE F (UD23)
UNDERDRAIN TO MEET
EXISTING

970
965
960
955
950
945
940

CB
Sta. 57+00.83, 0.18' LT
(I-75)
Grate=954.55
Inv. 24" E=949.92
Inv. 6" N=951.45

D-3
HW-2.2
STA. 156+98.56, 61.39' RT
(I-75 RAMP J)
INV. 948.40

MASONRY
COLLAR

HEADWALL TO BE
REMOVED

8'

ROCK CHANNEL PROTECTION,
TYPE C, THICKNESS=18"

30' - 24" CONDUIT, TYPE B @ 0.77%

970
965
960
955
950
945
940

DM-1.1
STA. 157+05.11, 58.30' RT (UD28)
(I-75 RAMP J)
INV. 8"=948.80

MASONRY
COLLAR

20' - 8" CONDUIT, TYPE F @ 2.60%

CALCULATED SES
CHECKED MAG

STORM SEWER PROFILES
RAMP M AND RAMP J

MOT-75-0.75

342
773

CALCULATED SES
CHECKED MAG

MATCH LINE THIS SHEET

925
920
915
910
905
900
895
890
885

CB-3A COMBO
STA. 113+59.50 22.00' RT.
GRATE = 899.16
INV. 6" U.D. E=895.16
INV. 12" N=891.79
INV. 15" E=891.44
INV. 18" S=891.19

D-5

181' - 15" CONDUIT, TYPE C @ 6.39%

MH-3
STA. 115+40.00 25.00' RT.
TOP = 909.71
INV. 6" U.D. E=905.11
INV. 15" E,W=903.00

12" Water

150' - 15" CONDUIT, TYPE B @ 5.07%

CB-3A COMBO
STA. 116+90.000 34.00' RT.
GRATE = 915.98
INV. 6" U.D. E=911.81
INV. 12" N=910.85
INV. 15" E,W=910.60

205' - 15" CONDUIT, TYPE C @ 3.12%

MH-3
STA. 118+95.00 37.50' RT.
TOP = 922.90
INV. 6" U.D. E=918.30
INV. 12" N=917.25
INV. 15" E,W=917.00

CATV

205' - 15" CONDUIT, TYPE C @ 2.44%

935
930
925
920
915
910
905

CB-3A COMBO
STA. 121+00.00 37.53' RT.
GRATE = 927.30
INV. 6" U.D. E=923.30
INV. 12" N,E=922.26
INV. 15" W=922.01

12" Water

217' - 12" CONDUIT, TYPE B @ 1.06%

CB-3A COMBO
STA. 123+15.00 48.00' RT.
GRATE = 929.40
INV. 6" U.D. E=925.40
INV. 12" N,W=924.55

187' - 12" CONDUIT, TYPE C @ 0.51%

CB-3A COMBO
STA. 125+00.00 48.00' RT.
GRATE = 930.26
INV. 6" U.D. E,W=926.26
INV. 12" W=925.50

MATCH LINE THIS SHEET

STORM SEWER PROFILES
MIAMISBURG-SPRINGBORO PIKE

MOT-75-0.75

343
773

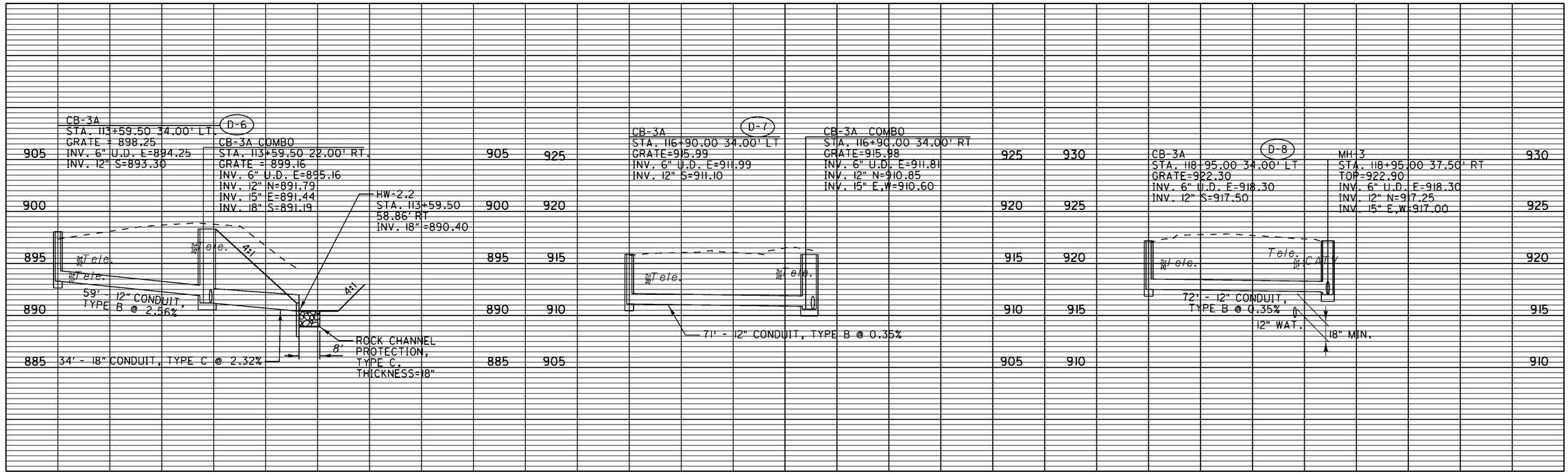

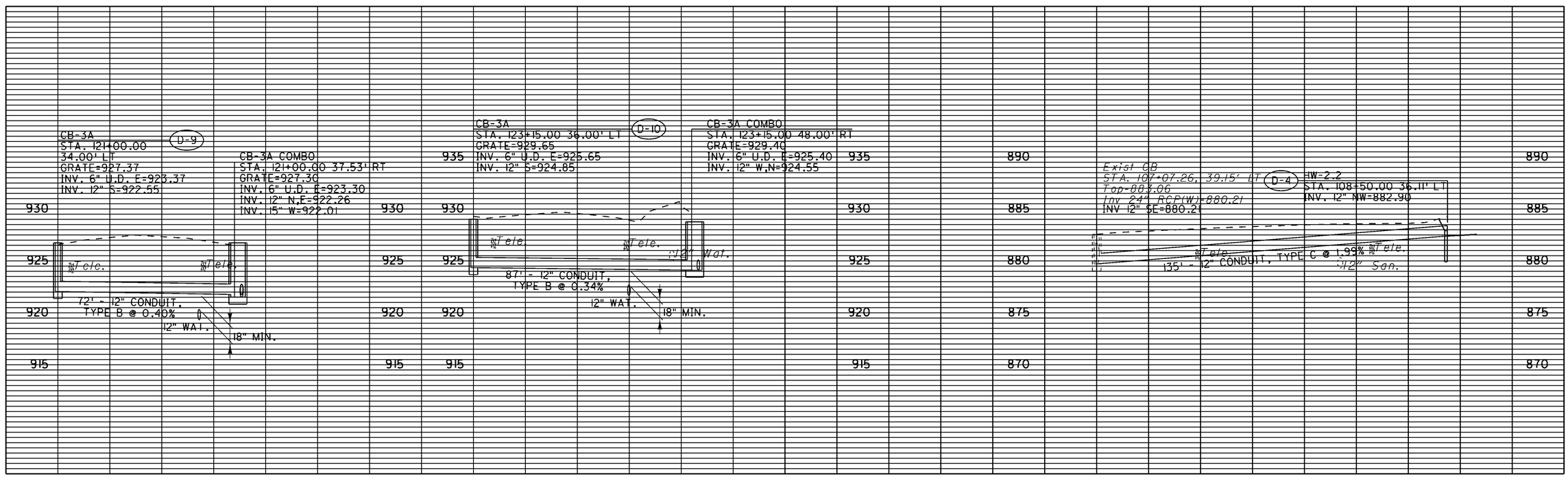

CALCULATED SES
CHECKED MAG

STORM SEWER PROFILES
MIAMISBURG-SPRINGBORO PIKE

MOT-75-0.75

CALCULATED SES
CHECKED MAG

STORM SEWER PROFILES
MIAMISBURG-SPRINGBORO PIKE AND WOOD ROAD

MOT-75-0.75

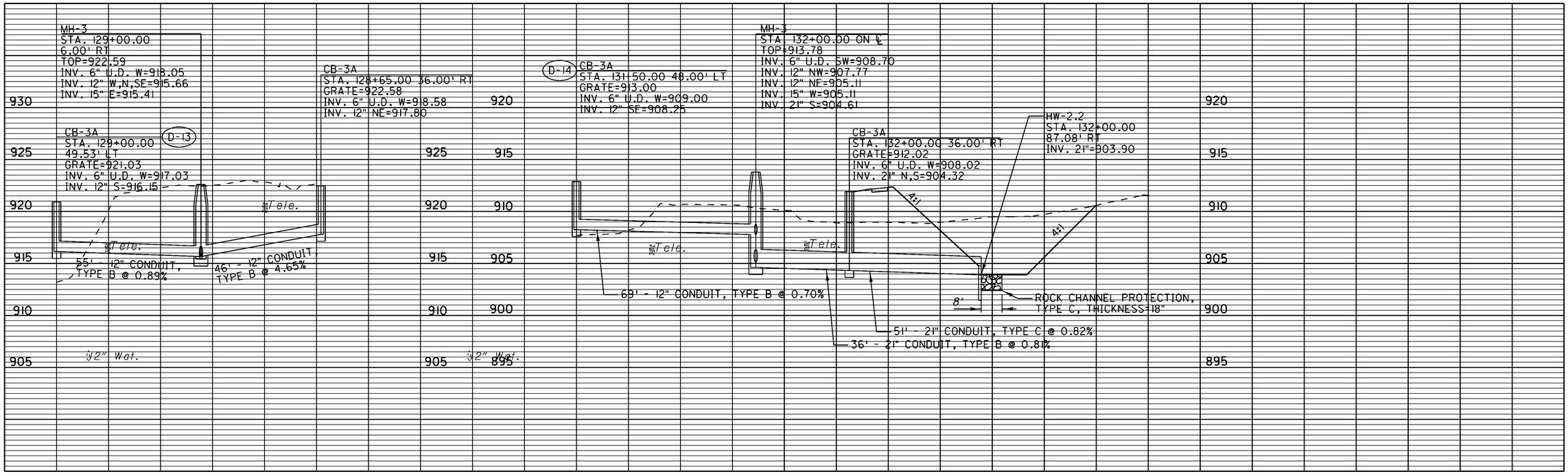

CALCULATED SES
CHECKED MAG

STORM SEWER PROFILES
MIAMISBURG-SPRINGBORO PIKE

MOT-75-0.75

346
773

CALCULATED SES
CHECKED MAG

STORM SEWER PROFILES
MIAMISBURG-SPRINGBORO PIKE

MOT-75-0.75

CALCULATED SES
CHECKED MAG

STORM SEWER PROFILES
MIAMISBURG-SPRINGBORO PIKE

MOT-75-0.75

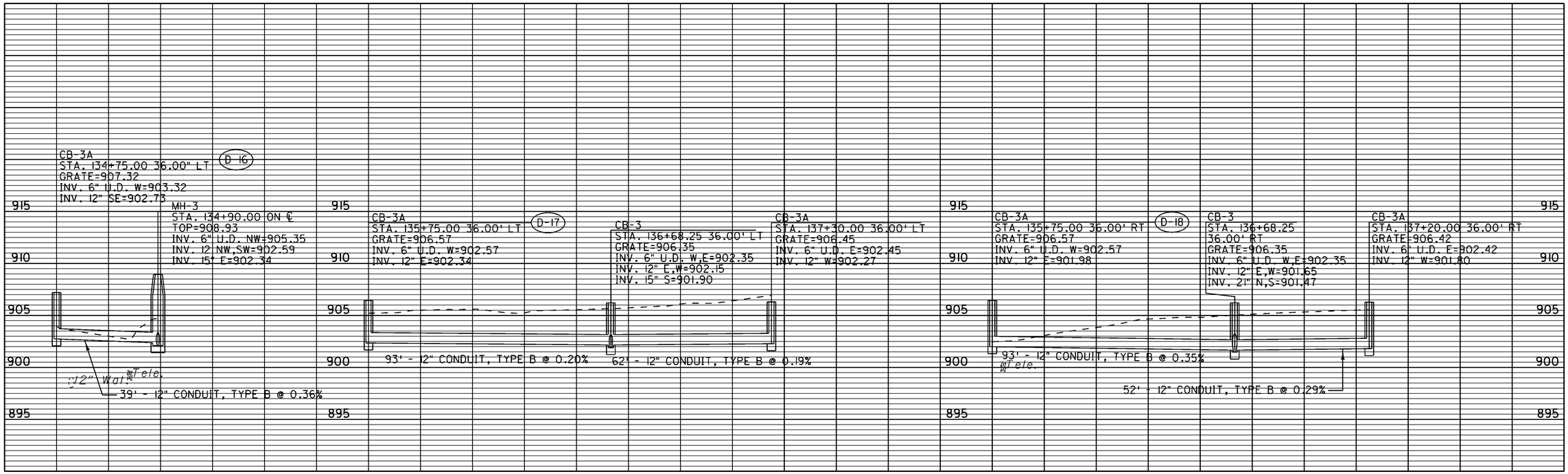

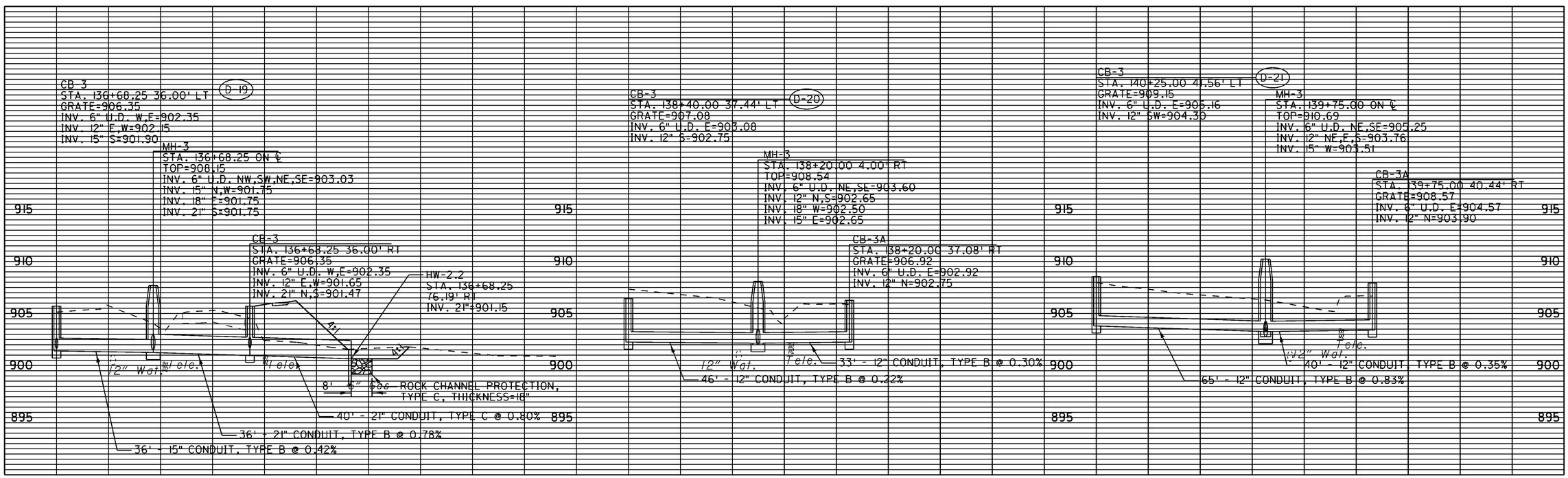

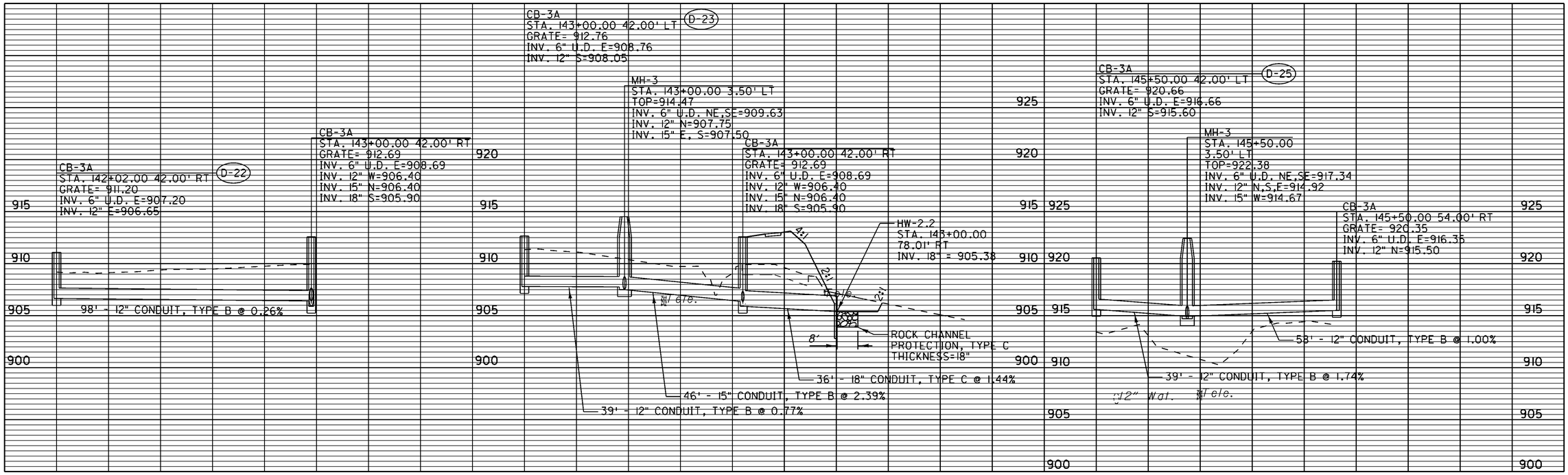

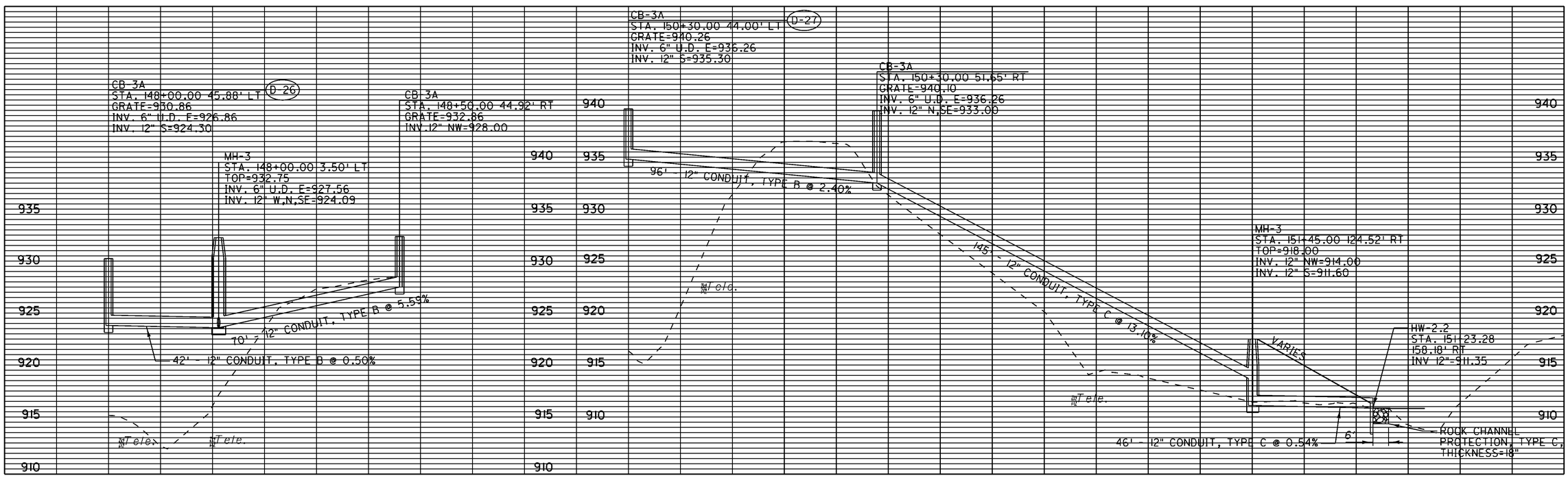

CALCULATED SES
CHECKED MAG

STORM SEWER PROFILES
MIAMISBURG-SPRINGBORO PIKE

MOT-75-0.75

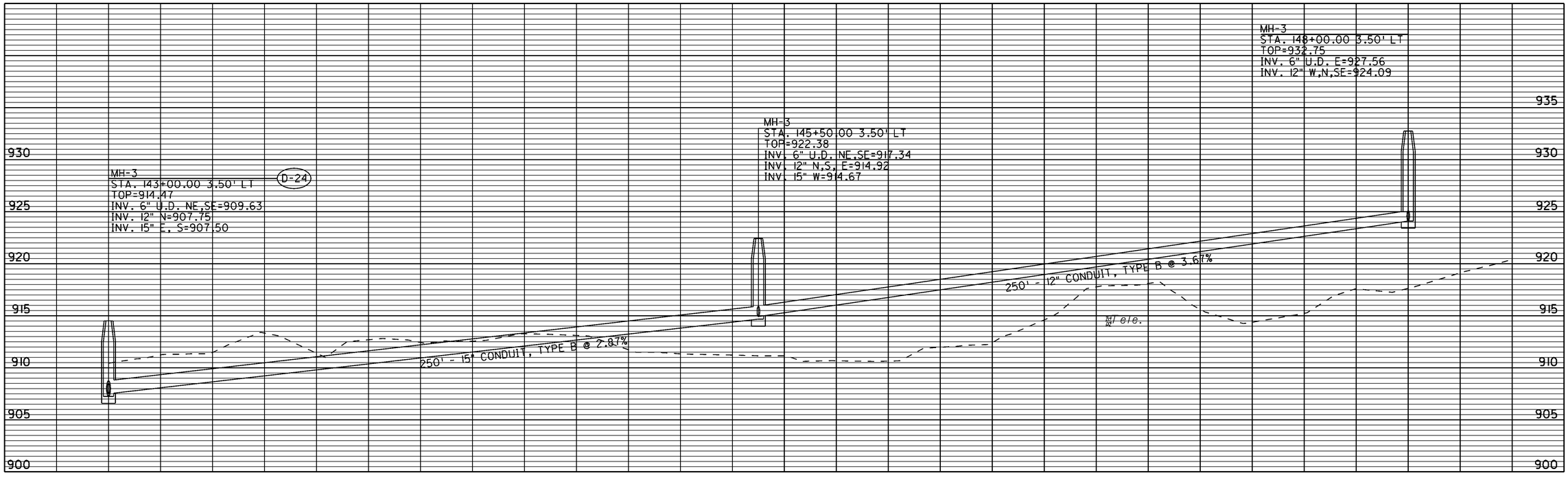

CALCULATED SES
CHECKED MAG

STORM SEWER PROFILES
MIAMISBURG-SPRINGBORO PIKE

MOT-75-0.75

350
773

CALCULATED SES
CHECKED MAG

STORM SEWER PROFILES
MIAMISBURG-SPRINGBORO PIKE

CB-3A
STA. 157+40.00, 56.39' LT (D-30)
GRATE=940.66
INV. 6" U.D. W=936.66
INV. 12" S=934.00

CB-3A
STA. 156+95.00, 44.00' RT
GRATE=942.51
INV. 6" U.D. W=938.51
INV. 12" N,S=933.00

MH-3
STA. 156+70.12, 152.60' RT
TOP=926.00
INV. 12" N=920.00
INV. 12" W=916.30

HW=2.2
STA. 156+38.41, 157.76' RT
INV. 916.15

CB-3A
STA. 141+25.00, 20.11' RT (D-31)
(RAMP J)
GRATE=937.09
INV. 12" SE=932.40

CB-3A
STA. 160+08.00, 54.59' LT
GRATE=930.41
INV. 6" U.D. W=926.36
INV. 12" NW,S=925.70

110' - 12" CONDUIT, TYPE B @ 0.91%

111' - 12" CONDUIT, TYPE C @ 11.71%

32' - 12" CONDUIT, TYPE C @ 0.47%

ROCK CHANNEL PROTECTION, TYPE C, THICKNESS=18"

8'

194' - 12" CONDUIT, TYPE B @ 3.45%

58' - 12" CONDUIT, TYPE B @ 0.86%

*Tele.

*Tele. (Abandoned)

MATCH LINE SEE THIS SHEET

MH-3
STA. 160+05.00, 3.50' RT
TOP=932.62
INV. 6" U.D. W=927.36
INV. 12" N,S,E=925.20

MH-3
STA. 162+55.00, 11.00' LT
TOP=923.72
INV. 6" U.D. NW,SW=918.86
INV. 12" N,W=915.30
INV. 18" E=914.80
INV. 21" S=914.55

MH-3
STA. 163+80.00, 11.00' LT
TOP=921.77
INV. 6" U.D. NW=917.03
INV. 12" N,S,E=915.75
INV. 18" W=915.25

CB-3A
STA. 165+00.00, 42.00' LT
GRATE=920.36
INV. 12" SW=916.92

CB-3 COMBO
STA. 164+39.09, 8.00' LT
GRATE=920.70
INV. 6" U.D. W,E=917.82
INV. 12" W,N,S,NE=916.45

250' - 12" CONDUIT, TYPE B @ 3.96%

125' - 18" CONDUIT, TYPE B @ 0.36%

59' - 12" CONDUIT TYPE B @ 1.19%

68' - 12" CONDUIT, TYPE B @ 0.69%

*Tele.

12" San.

MATCH LINE SEE THIS SHEET

MOT-75-0.75

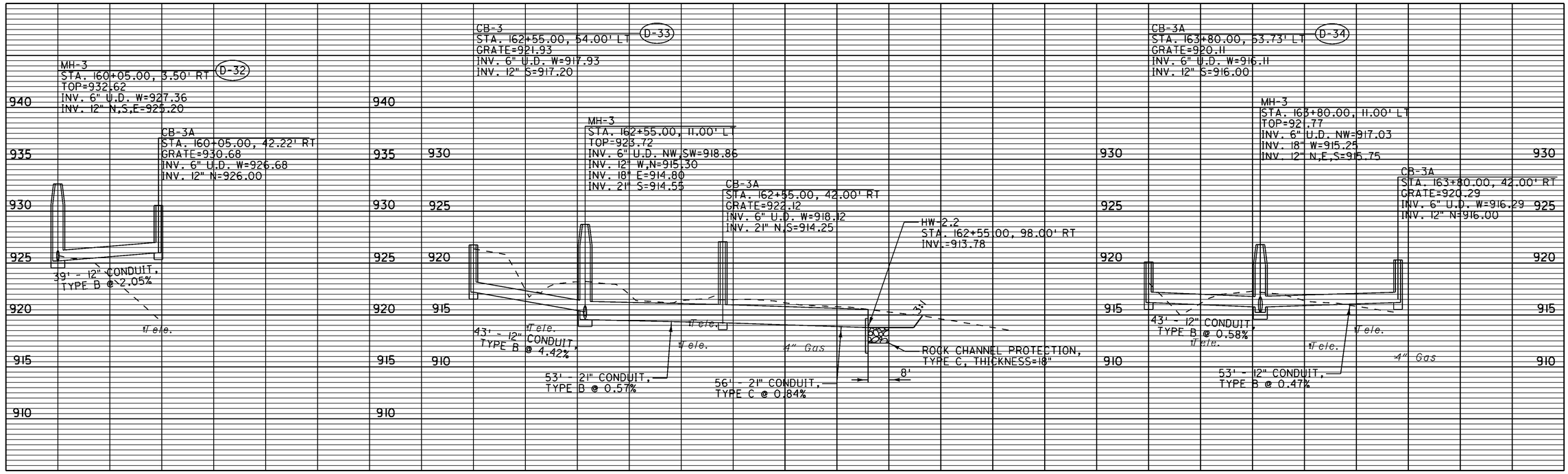

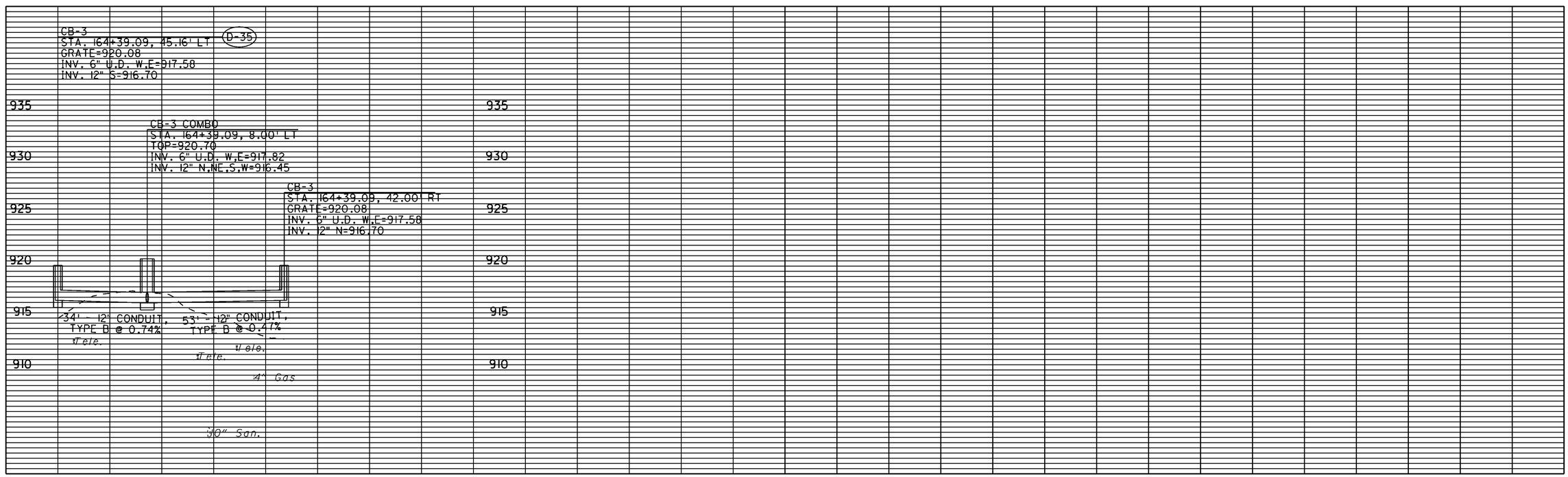

CALCULATED SES
CHECKED MAG

STORM SEWER PROFILES
MIAMISBURG-SPRINGBORO PIKE

MOT-75-0.75

352
773

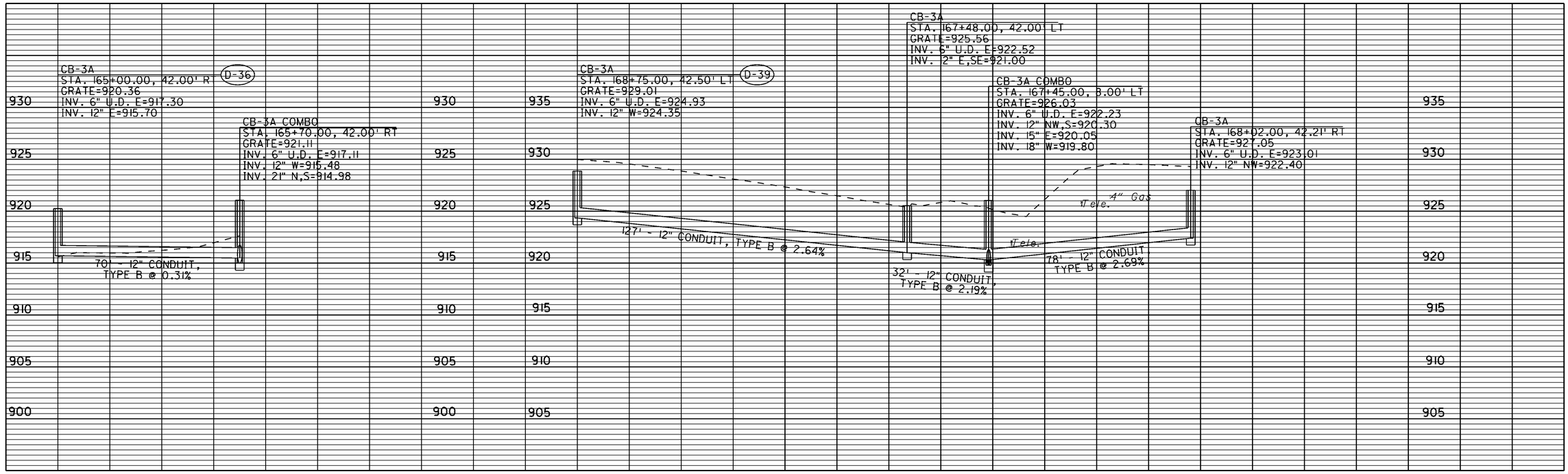

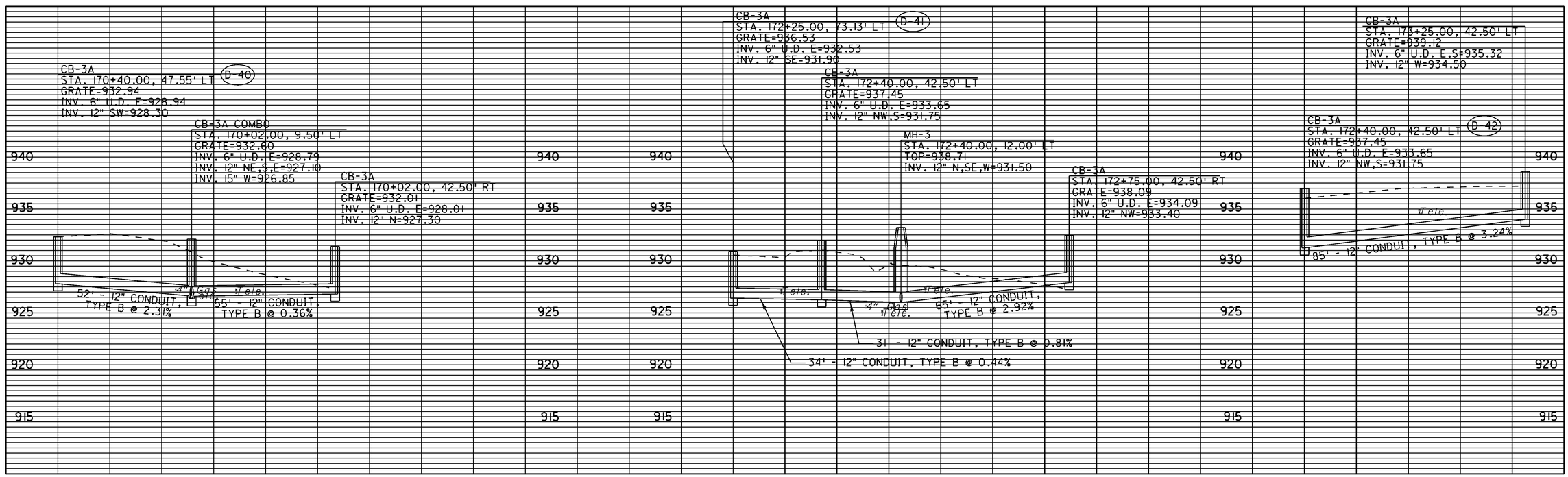

CALCULATED SES
CHECKED MAG

STORM SEWER PROFILES
MIAMISBURG-SPRINGBORO PIKE

MOT-75-0.75

CALCULATED SES
CHECKED MAG

STORM SEWER PROFILES
MIAMISBURG-SPRINGBORO PIKE

MOT-75-0.75

354
773

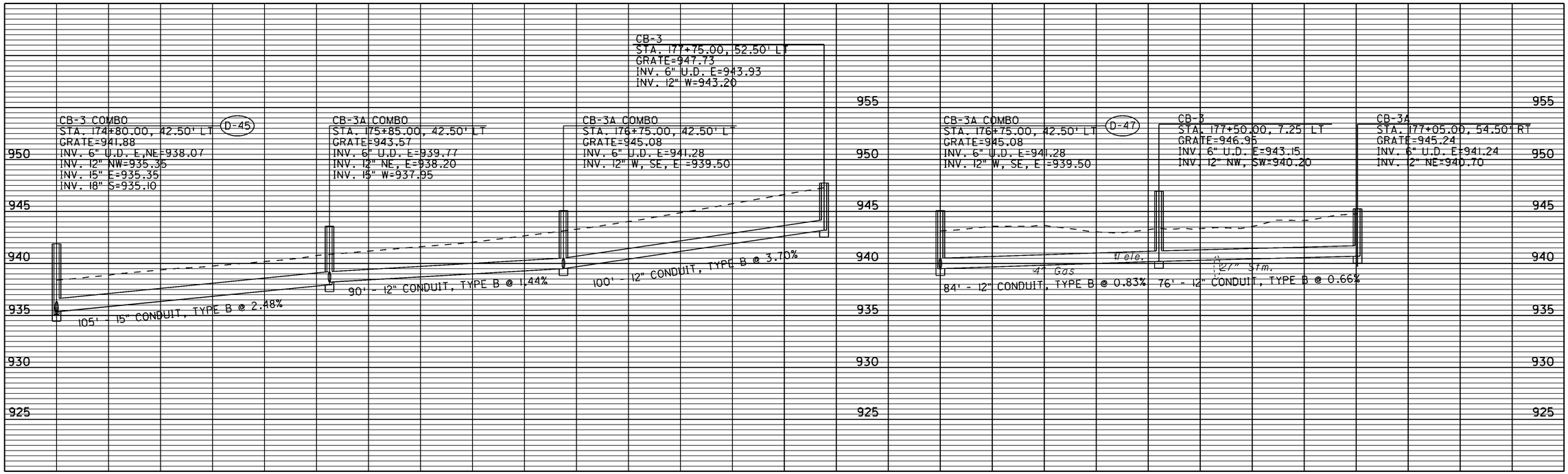

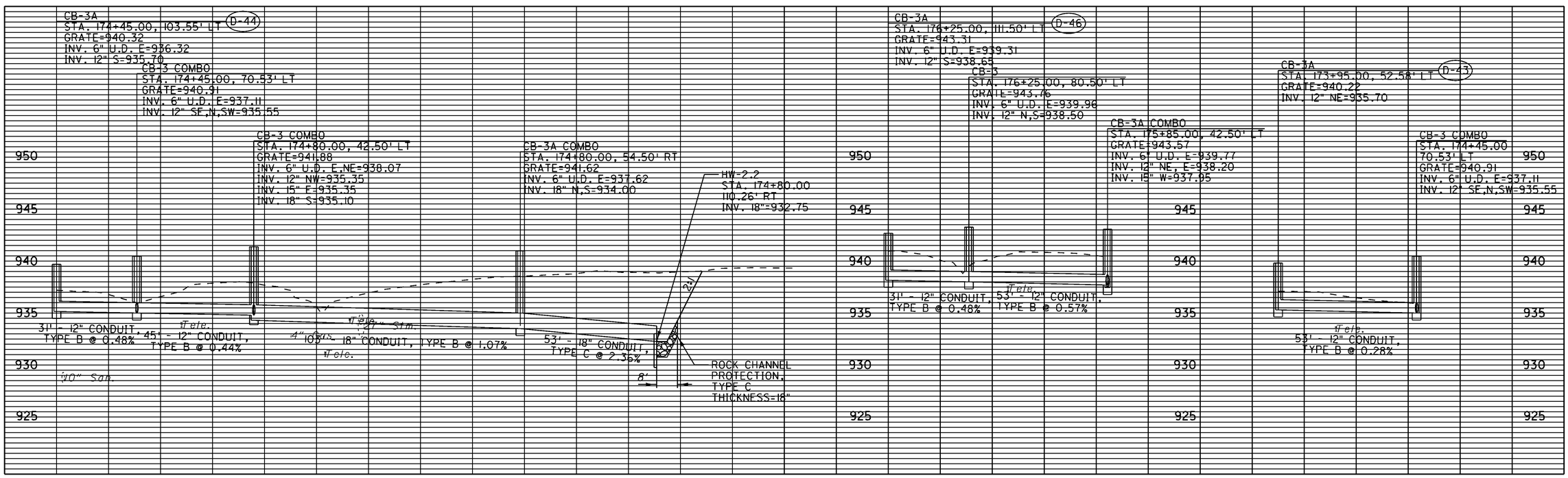

CALCULATED SES
CHECKED MAG

STORM SEWER PROFILES
MIAMISBURG-SPRINGBORO PIKE AND SR 741
MOT-75-0.75

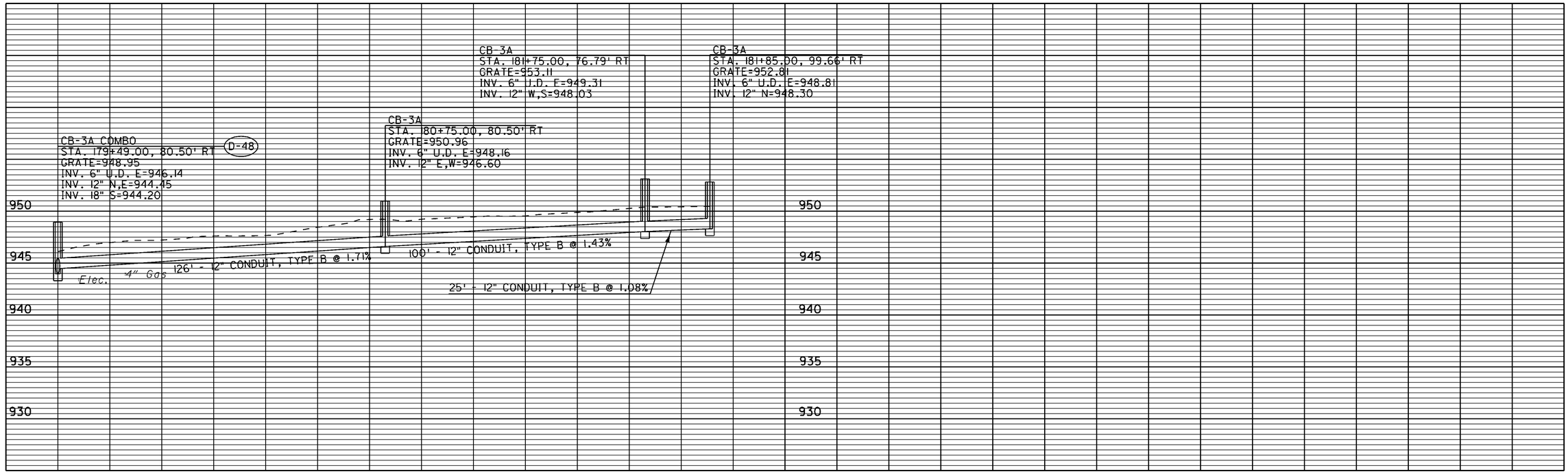

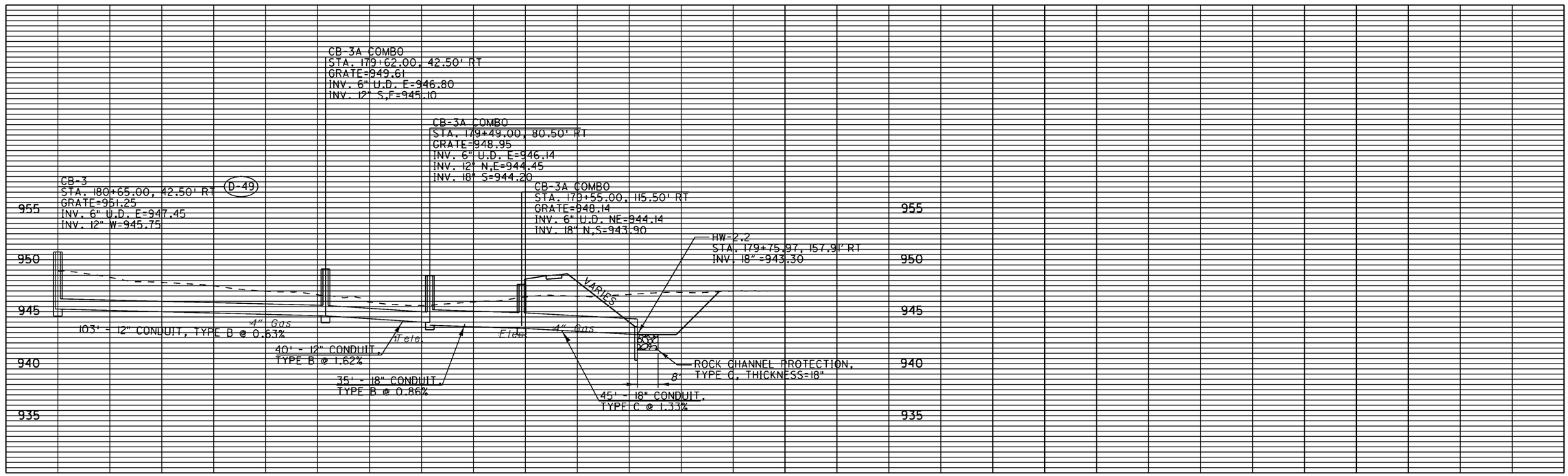

CALCULATED SES
CHECKED MAG

STORM SEWER PROFILES
MIAMISBURG-SPRINGBORO PIKE AND AUSTIN PIKE

MOT-75-0.75

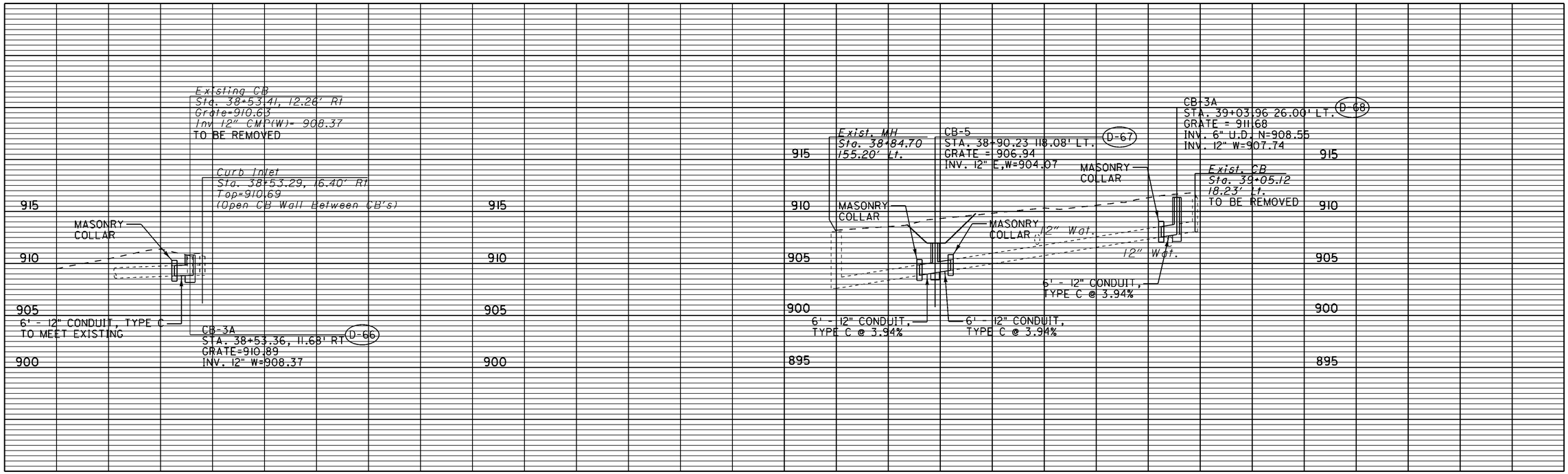

CALCULATED SES
CHECKED MAG

STORM SEWER PROFILES
WOOD ROAD

MOT-75-0.75

357
773

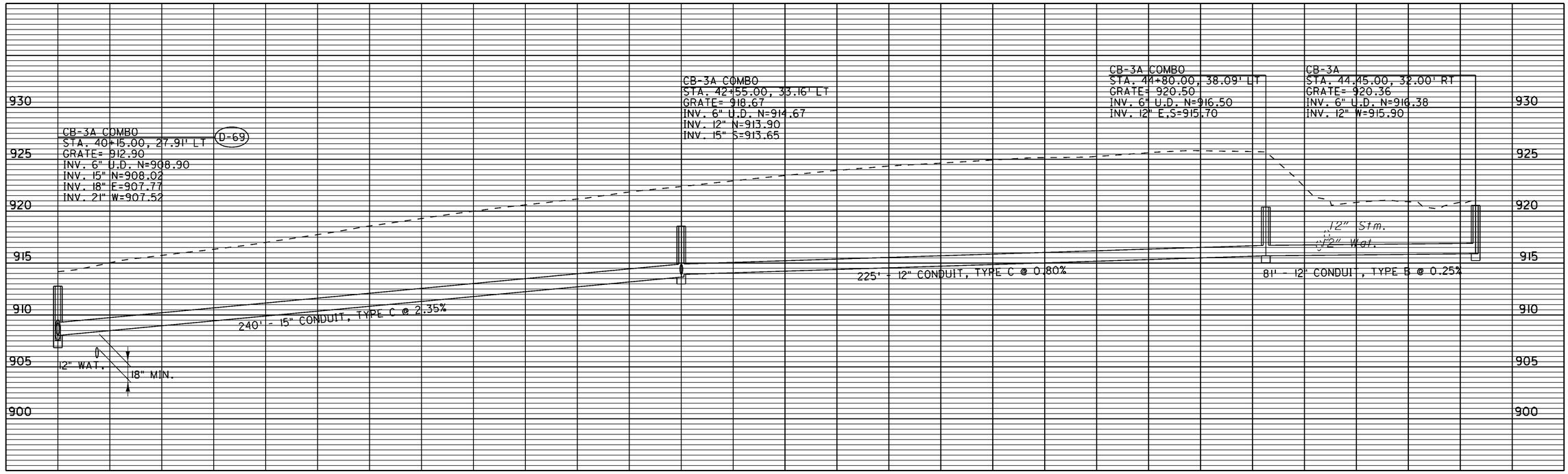

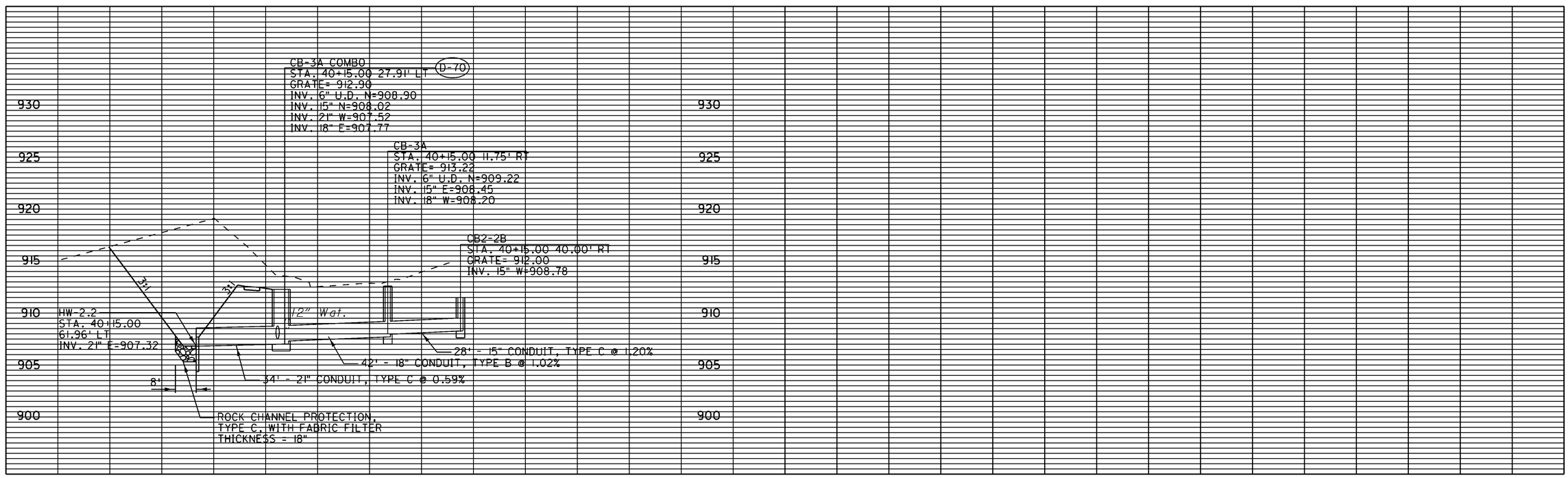

CALCULATED SES
CHECKED MAG

STORM SEWER PROFILES
WOOD ROAD

MOT-75-0.75

358
773

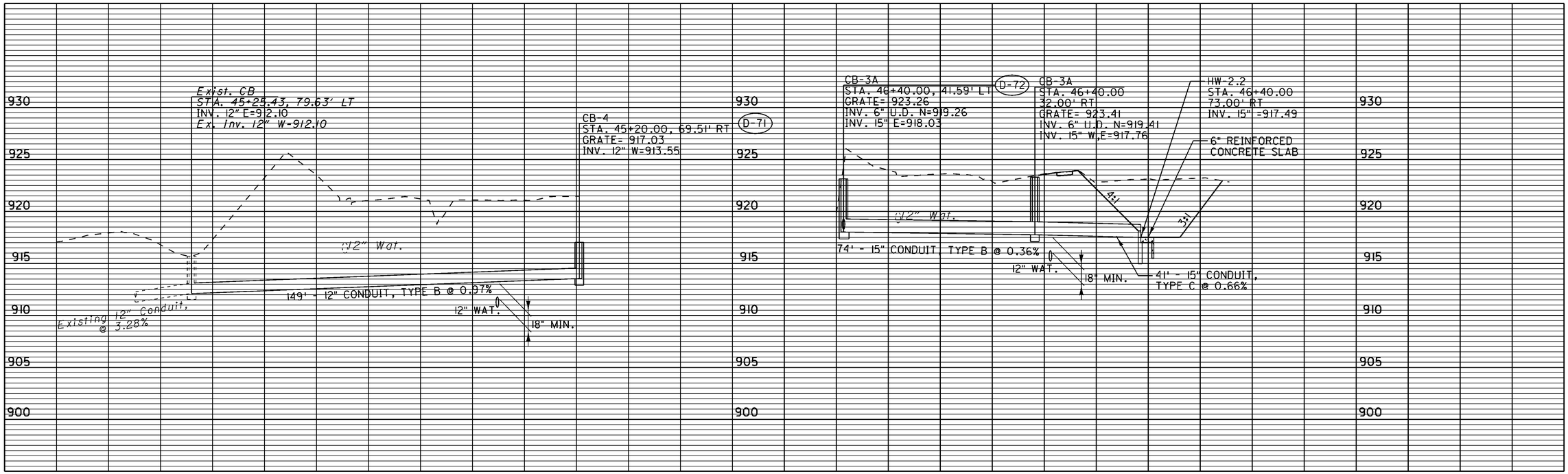

CALCULATED SES
CHECKED MAG

STORM SEWER PROFILES
WOOD ROAD

MOT-75-0.75

359
773

CALCULATED SES
CHECKED MAG

STORM SEWER PROFILES
SR 741 AND AUSTIN PIKE

MOT-75-0.75

360
773

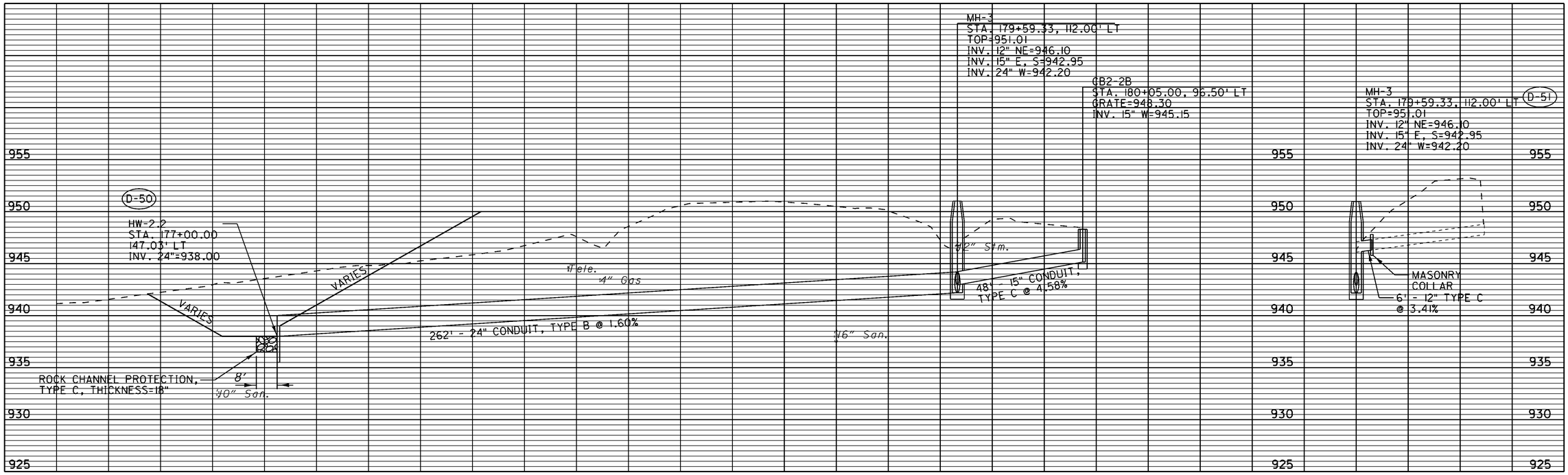

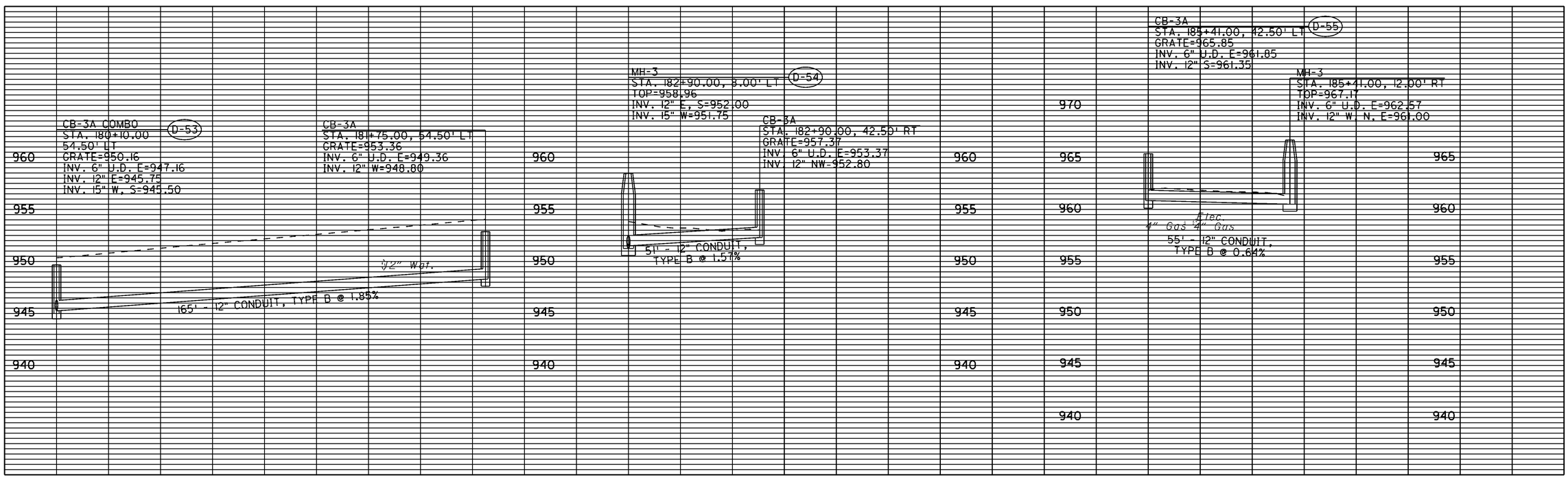

CALCULATED SES
CHECKED MAG

STORM SEWER PROFILES
SR 741 AND AUSTIN PIKE

MOT-75-0.75

PC Sta. 16+38.53

CURVE DATA, CURVE
P.I. Sta = 17+13.53
Δ = 90° 00' 00" (LT)
Dc = 76° 23' 40"
R = 75.00'
T = 75.00'
L = 117.81'
E = 31.07'

PT Sta. 17+56.34

CURVE 1

Exist. Concrete Slope Protection To Remain

CUT OFF EXISTING CONCRETE SLOPE PROTECTION
STA. 223+55.13
99.06' RT

I-75 STA. 23+47.20
199.16' RT

CUT-OFF WALL

HW-2.2, APP

MASONRY COLLAR (TYP.)

CONSTRUCTION LIMITS

64' ESMT SAW

STA. 20+00.00 ℄ CONSTRUCTION CULVERT=
STA. 23+98.15 ℄ CONSTRUCTION I-75

℄ CONSTRUCTION I-75

POT Sta. 20+00.00

℄ CONSTRUCTION CULVERT

NOISEWALL GRADING DETAIL
N.T.S.

SEE SHEET 440 FOR DETAILS.

NOTE: FOR SECTION A-A AND SECTION B-B SEE SHEET 365.

CURVE DATA, CURVE 2
P.I. Sta = 22+62.86
Δ = 56° 08' 31" (RT)
Dc = 76° 23' 40"
R = 75.00'
T = 40.00'
L = 73.49'
E = 10.00'

CONSTRUCTION LIMITS

NOISEWALL

I-75 STA. 24+51.60
201.99' LT

CUT-OFF WALL

HW-2.2, APP

MASONRY COLLAR (TYP.)

PC Sta. 22+22.86

PT Sta. 22+96.35

CURVE

EXISTING STRUCTURES

Type - Multiple Pipe Culvert
Size - 1 - 84"x388' 2 - 60"x388'
Skew - 15°
Date Built - Approx. 1960
Condition -

EXISTING HYDRAULIC DATA

Area = 789 Acres
Q_{25} = 619 c.f.s.

INV. SEE SECTION B-B

2- 9' - 60" CONDUIT, TYPE A, 706.02
1- 9' - 84" CONDUIT, TYPE A, 706.02

HW-2.2, APP

CUT OFF WALL

STA. 17+56.34

STA. 17+94.32

℄ CONSTRUCTION I-75

2, 16' - 60" CONDUIT, TYPE A, 706.02
1, 16' - 84" CONDUIT, TYPE A, 706.02

HW-2.2, APP

NOISEWALL

INV. SEE SECTION A-A

Existing 12" San.

CUT OFF WALL

STA. 22+08.83

17	18	19	20	21	22
893.84	893.01	894.48	894.49	899.23	899.87	904.31	905.96	906.20	904.64	902.95	900.64	899.25	900.81	902.68	904.35	906.31	906.04	903.90	899.82	892.43	892.65	893.75	897.62

HORIZONTAL SCALE IN FEET
0 10 20 40

CALCULATED SES
CHECKED AJS

CULVERT DETAIL I-75 STA. 23+98.15

MOT-75-0.75

1 / 4

362
773

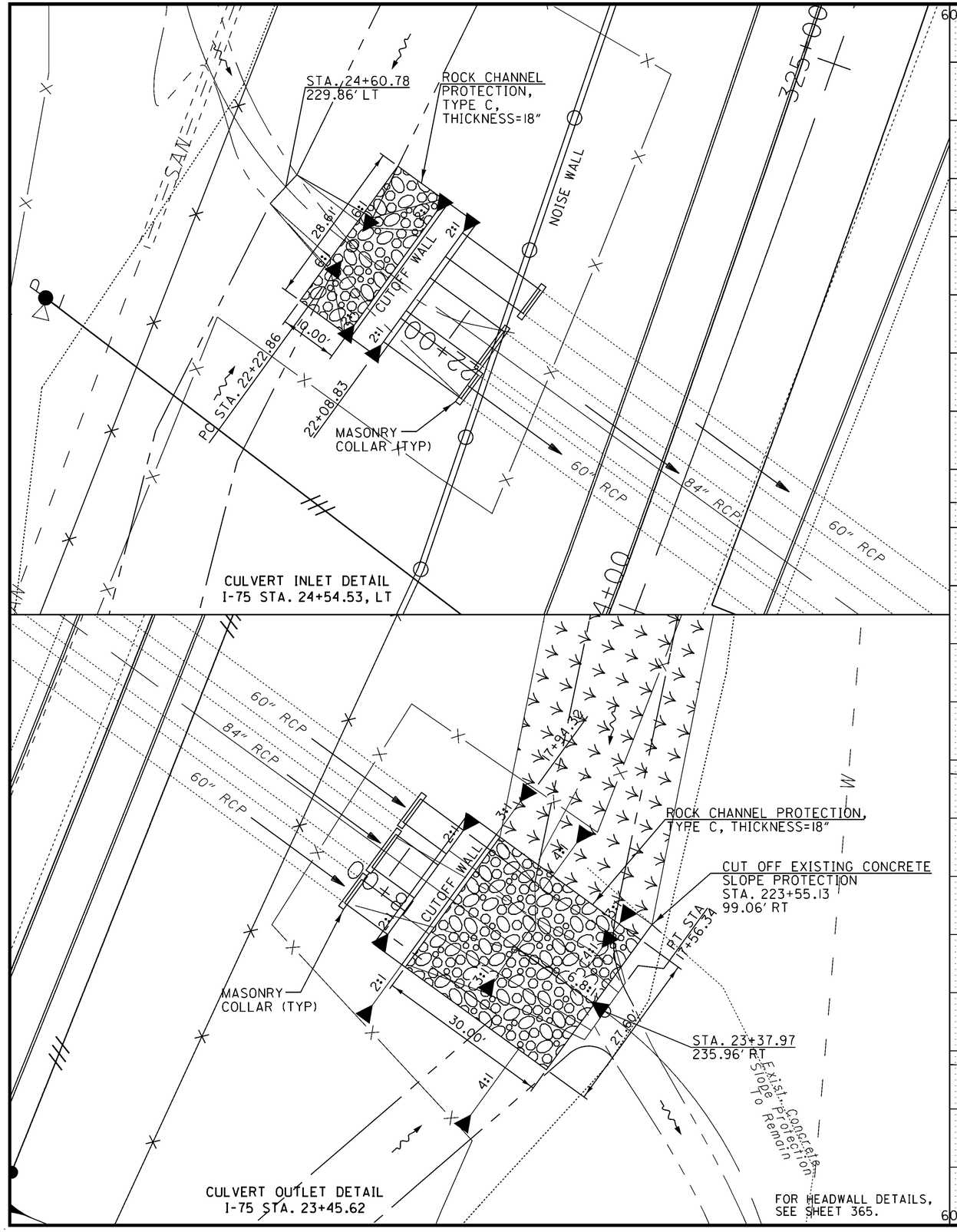

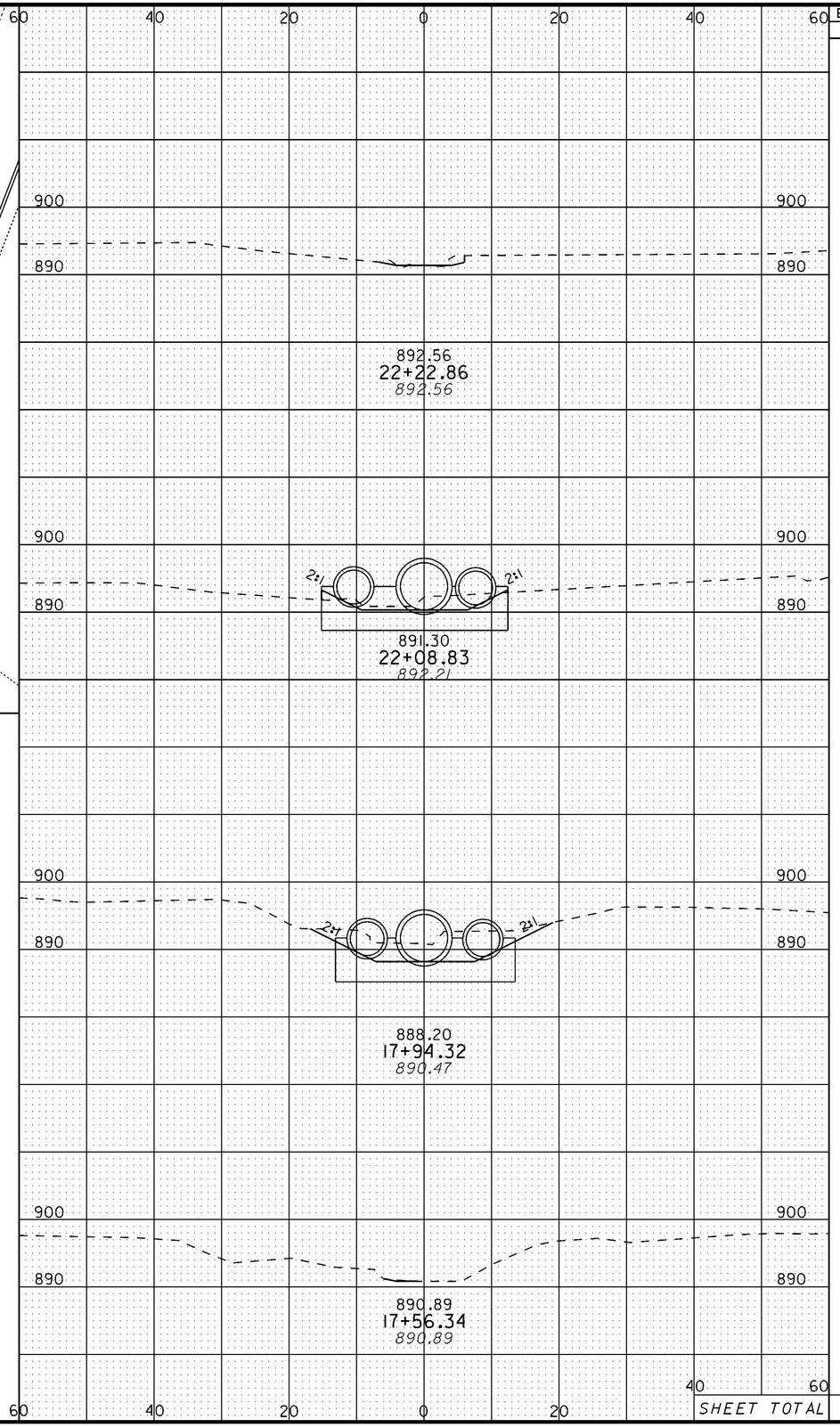

END AREA		VOLUME	
CUT	FILL	CUT	FILL
4	0		
		8	0
28	3		
92	0		
		73	0
11	0		
		81	0

SHEET TOTAL

CALCULATED CDR
CHECKED AJS

CULVERT DETAIL HEADWALL, AS PER PLAN

MOT-75-0.75

2 / 4

363
773

GENERAL NOTES

HALF-HEIGHT HEADWALLS: SHALL BE IN ACCORDANCE WITH THE OHIO DEPARTMENT OF TRANSPORTATION STANDARD CONSTRUCTION DRAWING HW-2.2, REVISED 4-21-06

RIPRAP CUTOFF WALL: SHALL BE IN ACCORDANCE WITH THE OHIO DEPARTMENT OF TRANSPORTATION STANDARD CONSTRUCTION DRAWING DM-1.1.

DESIGN DATA:
CLASS C CONCRETE, HEADWALLS - COMPRESSIVE STRENGTH 4000 P.S.I.

UTILITY LINES: THE UTILITIES SHALL BEAR ALL EXPENSE INVOLVED IN RELOCATING (INSTALLING) THE AFFECTED UTILITY LINES. THE CONTRACTOR AND UTILITIES ARE TO COOPERATE BY ARRANGING THEIR WORK IN SUCH A MANNER THAT INCONVENIENCE TO EITHER WILL BE HELD TO A MINIMUM.

ITEM 503, UNCLASSIFIED EXCAVATION: UNCLASSIFIED EXCAVATION SHALL BE IN ACCORDANCE WITH 503 EXCEPT THAT THE SOFT BOTTOM OF THE EXCAVATION AT THE INLET CAN BE STABILIZED WITH NO. 2 STONE PER THE RECOMMENDATIONS IN THE SOIL REPORTS BY BOWSER MORNER (ORIGINAL DATED: JULY 19, 2005 AND ADDENDUM DATED: OCTOBER 17, 2005).

ITEM 512, SEALING OF CONCRETE SURFACES (EPOXY-URETHANE): ALL EXPOSED HEADWALLS AND ENDS OF PIPES SHALL BE SEALED WITH EPOXY-URETHANE SEALER, INCLUDING ENDS AND 2'-0" INSIDE PIPES. PAYMENT FOR THE EPOXY-URETHANE SEALER SHALL BE PER ITEM 512 - SEALING OF CONCRETE SURFACES.

ITEM 613, LOW STRENGTH MORTAR BACKFILL: IN THE AREA BETWEEN PIPES, WHERE COMPACTION IS NOT POSSIBLE, LOW STRENGTH MORTAR SHALL BE USED. PLACE LOW STRENGTH MORTAR BETWEEN THE PIPE EXTENSIONS TO ELEV. 892.5 (INLET) AND ELEV. 890.0 (OUTLET).

ESTIMATED QUANTITIES

ITEM	ITEM EXTENSION	TOTAL	UNIT	DESCRIPTION
503	11100	LUMP		COFFERDAMS, CRIBS AND SHEETING
503	21300	LUMP		UNCLASSIFIED EXCAVATION
511	46600	18	CU.YD.	CLASS C CONCRETE, HEADWALLS
512	10100	59	SQ.YD.	SEALING OF CONCRETE SURFACES (EPOXY-URETHANE)
518	21230	LUMP		POROUS BACKFILL WITH FILTER FABRIC
601	11000	36	SQ.YD.	RIPRAP USING 6" REINFORCED CONCRETE SLAB
601	32204	62	CU.YD.	ROCK CHANNEL PROTECTION, TYPE C WITH FABRIC FILTER
603	28000	25	FT.	84" CONDUIT, TYPE A, 706.02
603	23600	50	FT.	60" CONDUIT, TYPE A, 706.02
613	41200	40	CU.YD.	LOW STRENGTH MORTAR BACKFILL

TOTAL CARRIED TO GENERAL SUMMARY SHEET (58/773).

QUANTITIES COMPUTED BY: AMT
QUANTITIES CHECKED BY: DWS

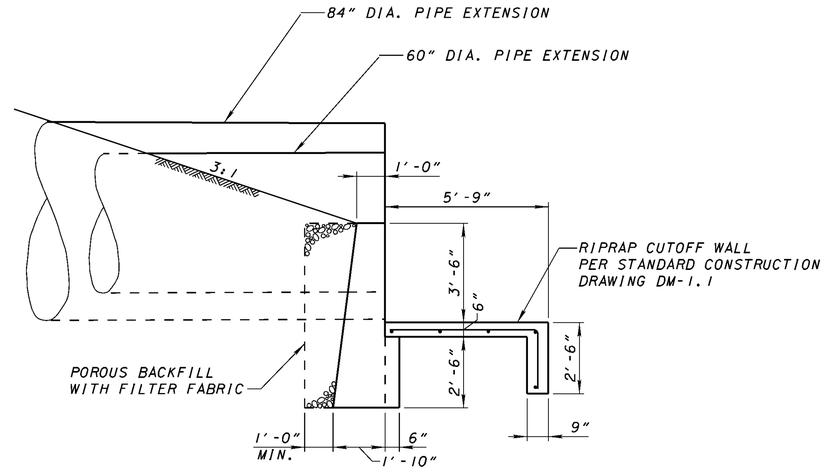

SECTION C-C

LJB Inc. • 3100 Research Blvd. • P.O. Box 20246
Dayton, OH 45420-0246
(937) 259-5000 tel • (937) 259-5100 fax • ljbinc.com

DESIGNED AMT | DRAWN MHD | REVIEWED MPH | DATE 3-08
CHECKED DWS | REVISED | STRUCTURE FILE NUMBER 5706394

GENERAL NOTES AND ESTIMATED QUANTITIES
I-75 CULVERT AT STA. 23+98.15

MOT-75-0.75
PID 77246

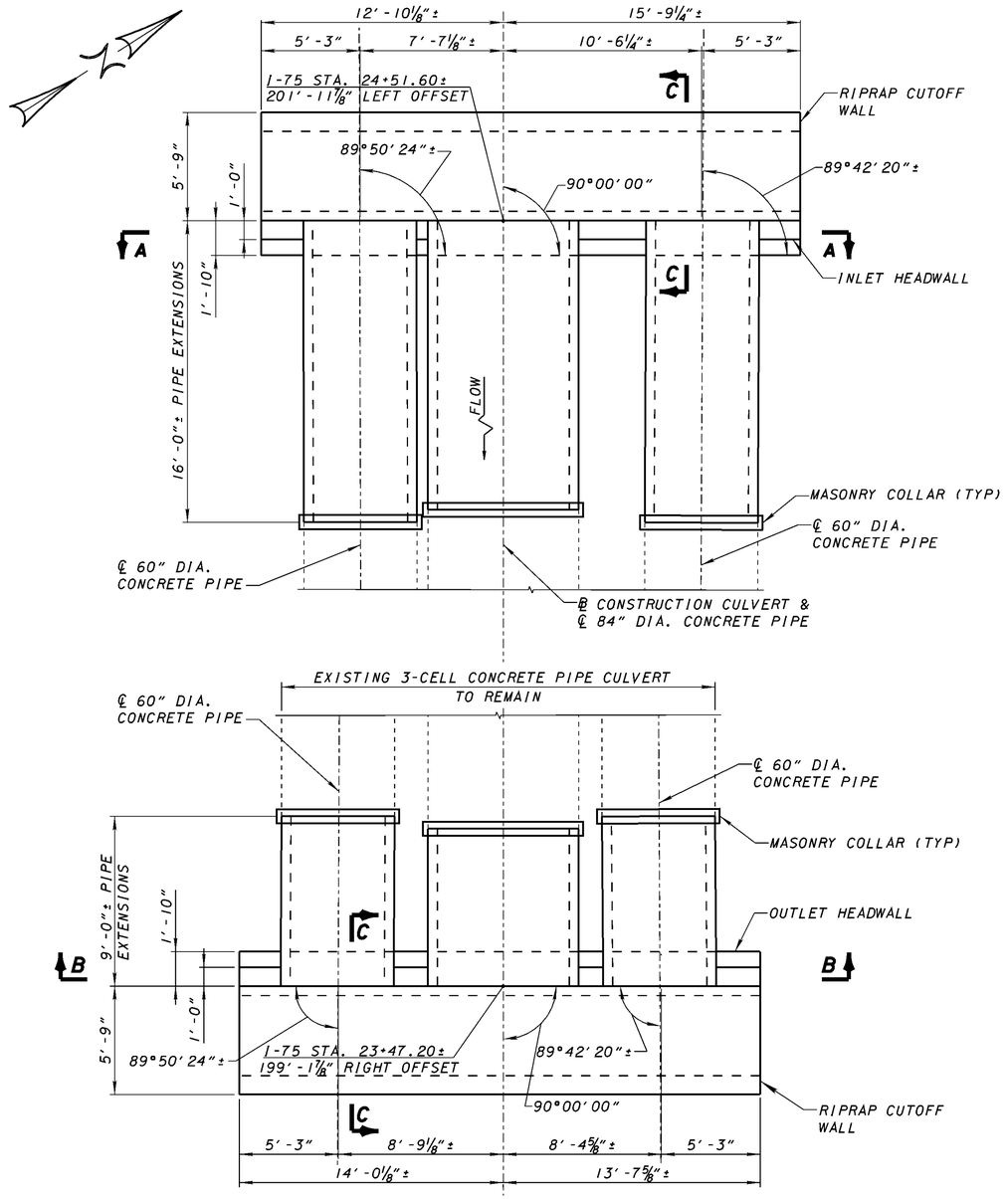

CULVERT & WINGWALL LAYOUT

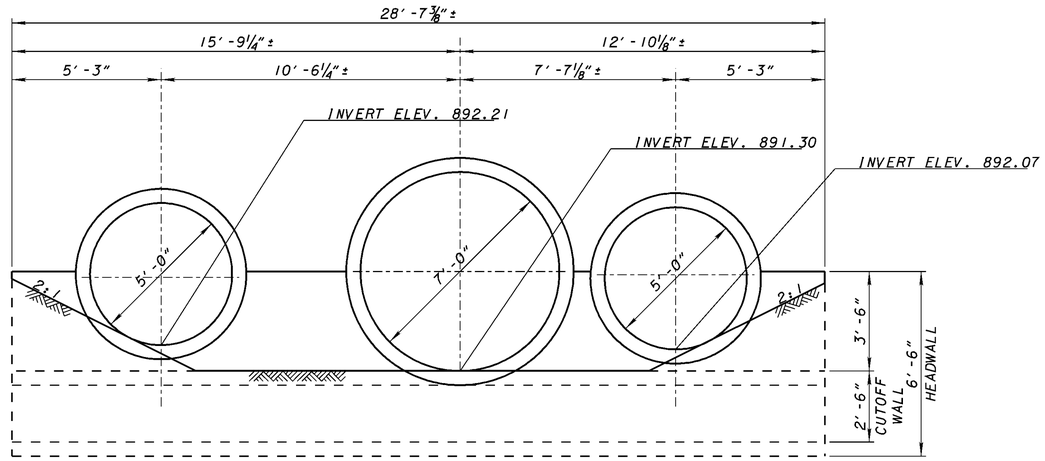

INLET ELEVATION
(SECTION A-A)

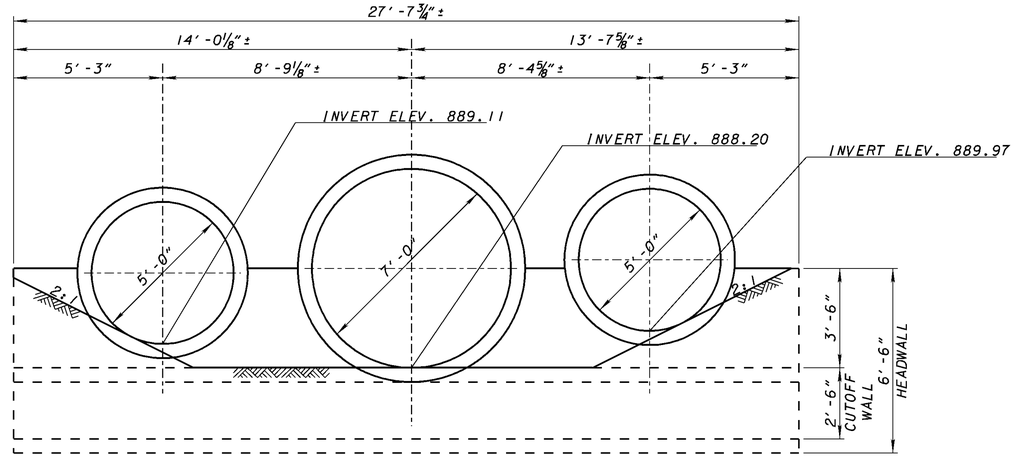

OUTLET ELEVATION
(SECTION B-B)

NOTES:

1. FOR CULVERT LOCATION PLAN, SEE SHEET (362/773).
2. FOR GENERAL NOTES AND ESTIMATED QUANTITIES, SEE SHEET 3 / 4.
3. FOR SECTION A-A, SEE SHEET 3 / 4.
4. FOR ADDITIONAL RIPRAP CUTOFF WALL DETAILS, SEE STANDARD CONSTRUCTION DRAWING DM-1.1.

LJB Inc. • 3100 Research Blvd. • P.O. Box 20246
Dayton, OH 45420-0246
(937) 259-5000 tel • (937) 259-5100 fax ljbinc.com

DESIGNED AMT | DRAWN MHD | REVIEWED MPH | DATE 3-08
CHECKED DWS | REVISED | STRUCTURE FILE NUMBER 5706394

CULVERT EXTENSION DETAILS

I-75 CULVERT AT STA. 23+98.15

MOT-75-0.75
PID 77246

4 / 4

365/773

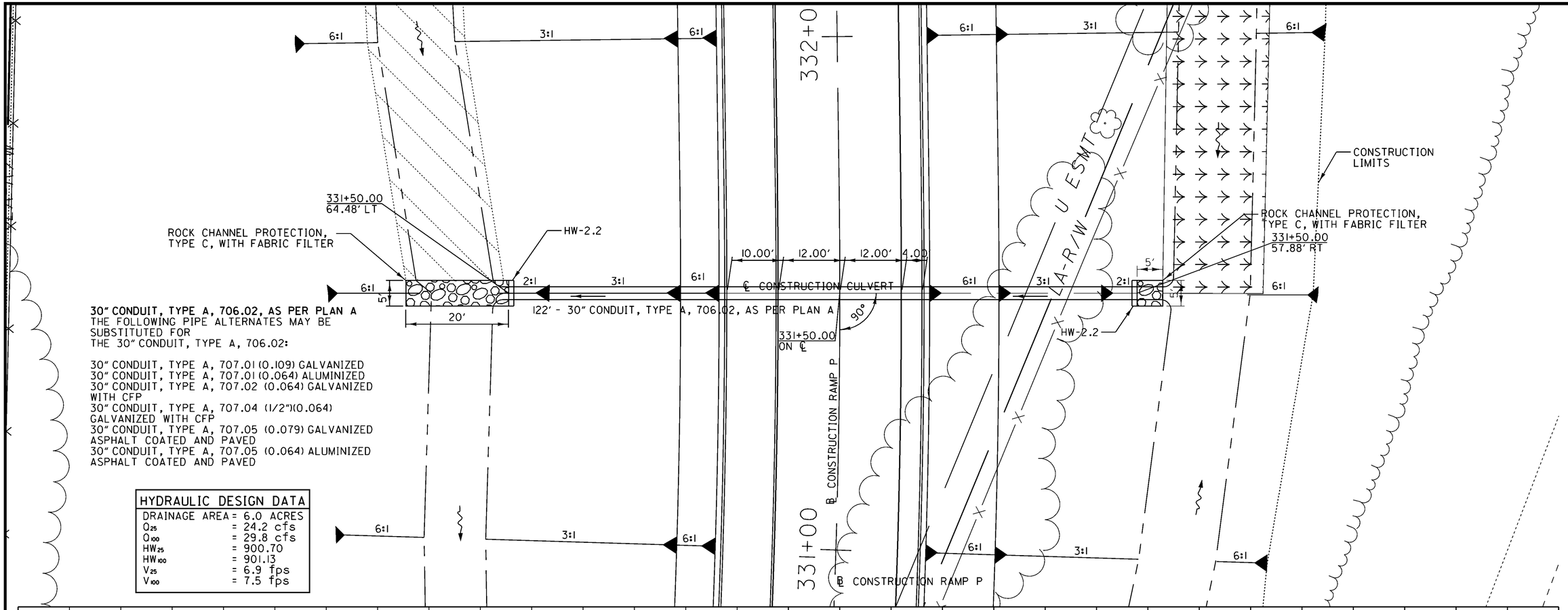

30" CONDUIT, TYPE A, 706.02, AS PER PLAN A
THE FOLLOWING PIPE ALTERNATES MAY BE SUBSTITUTED FOR THE 30" CONDUIT, TYPE A, 706.02:

30" CONDUIT, TYPE A, 707.01 (0.109) GALVANIZED
30" CONDUIT, TYPE A, 707.01 (0.064) ALUMINIZED
30" CONDUIT, TYPE A, 707.02 (0.064) GALVANIZED WITH CFP
30" CONDUIT, TYPE A, 707.04 (1/2")(0.064) GALVANIZED WITH CFP
30" CONDUIT, TYPE A, 707.05 (0.079) GALVANIZED ASPHALT COATED AND PAVED
30" CONDUIT, TYPE A, 707.05 (0.064) ALUMINIZED ASPHALT COATED AND PAVED

HYDRAULIC DESIGN DATA	
DRAINAGE AREA	= 6.0 ACRES
Q_{25}	= 24.2 cfs
Q_{100}	= 29.8 cfs
HW_{25}	= 900.70
HW_{100}	= 901.13
V_{25}	= 6.9 fps
V_{100}	= 7.5 fps

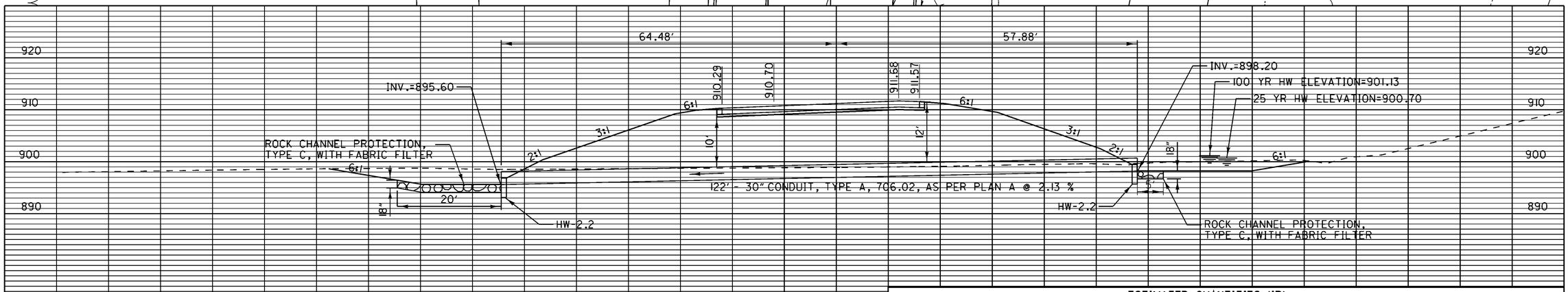

ESTIMATED QUANTITIES (IR)

ITEM	QUANTITY	UNIT	DESCRIPTION
601	7	CU. YD.	ROCK CHANNEL PROTECTION, TYPE C WITH FABRIC FILTER
602	1.1	CU. YD.	CONCRETE MASONRY
603	122	FEET	30" CONDUIT, TYPE A, 706.02, AS PER PLAN A

TOTALS CARRIED TO GENERAL SUMMARY

HORIZONTAL SCALE IN FEET
0 5 10 20
CALCULATED MAG
CHECKED AJS

CULVERT DETAIL
RAMP P STA. 331+50.00

MOT-75-0.75

366
773

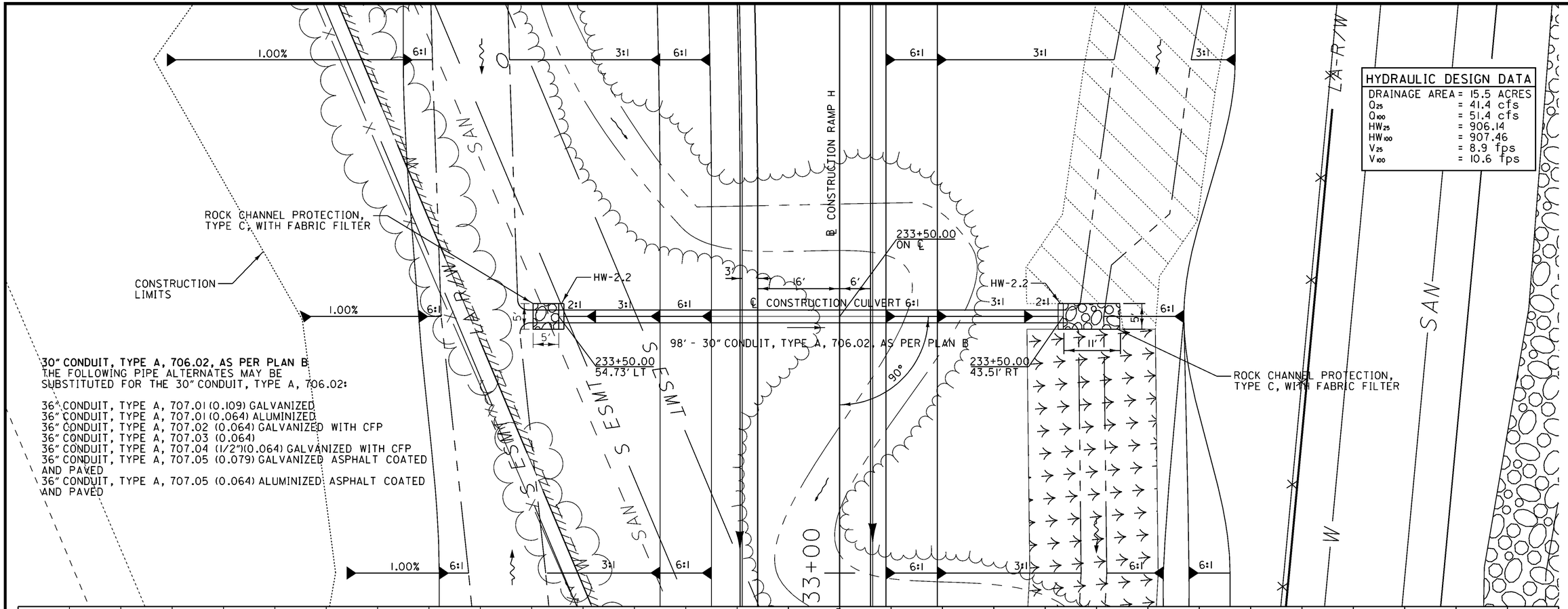

ESTIMATED QUANTITIES (IR)			
ITEM	QUANTITY	UNIT	DESCRIPTION
601	4	CU. YD.	ROCK CHANNEL PROTECTION, TYPE C, WITH FABRIC FILTER
602	1.1	CU. YD.	CONCRETE MASONRY
603	98	FEET	30" CONDUIT, TYPE A, 706.02, AS PER PLAN B

TOTALS CARRIED TO GENERAL SUMMARY

CULVERT DETAIL RAMP H STA. 233+50.00

MOT-75-0.75

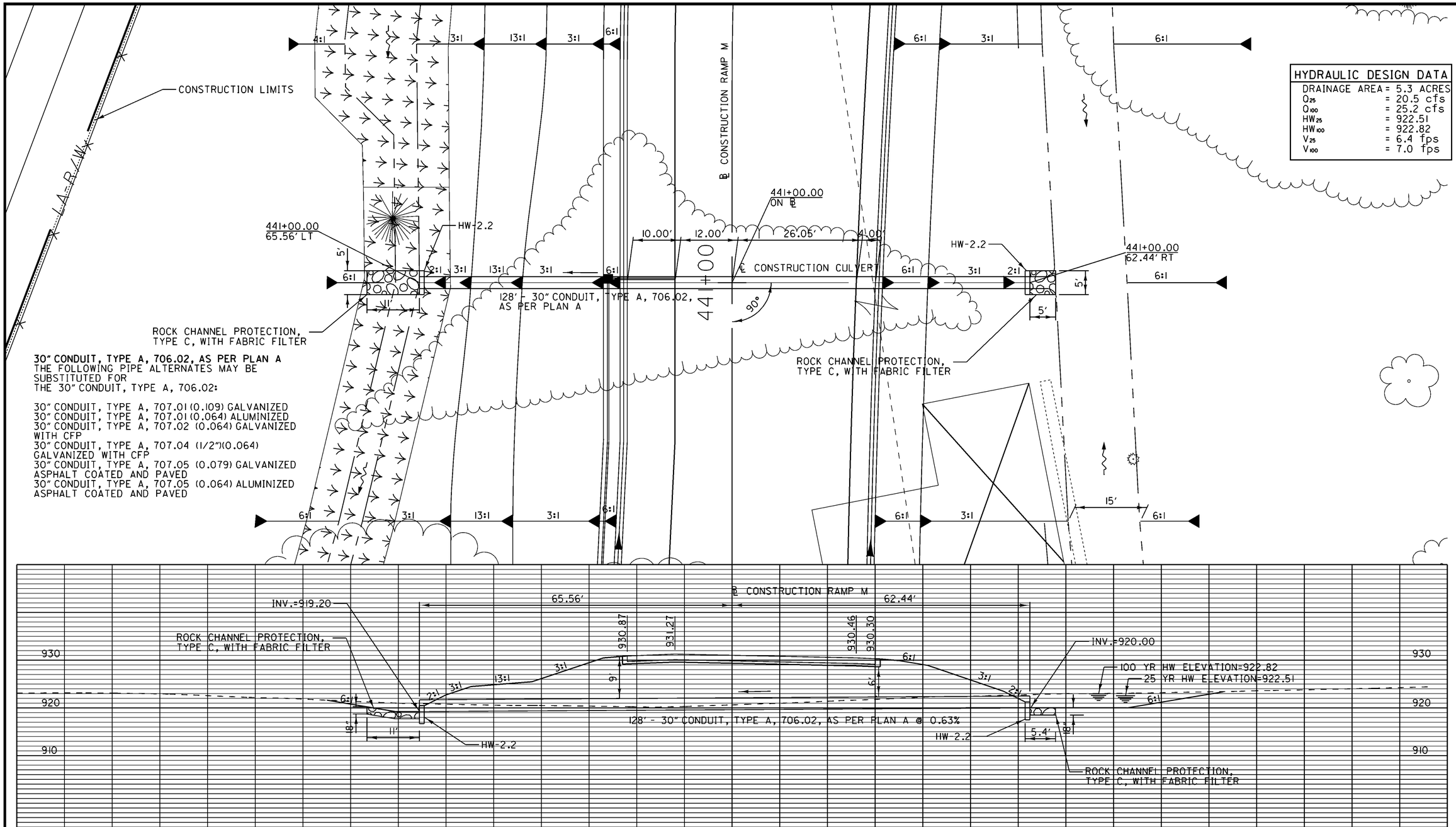

30" CONDUIT, TYPE A, 706.02, AS PER PLAN A
THE FOLLOWING PIPE ALTERNATES MAY BE SUBSTITUTED FOR THE 30" CONDUIT, TYPE A, 706.02:

30" CONDUIT, TYPE A, 707.01 (0.109) GALVANIZED
30" CONDUIT, TYPE A, 707.01 (0.064) ALUMINIZED
30" CONDUIT, TYPE A, 707.02 (0.064) GALVANIZED WITH CFP
30" CONDUIT, TYPE A, 707.04 (1/2")(0.064) GALVANIZED WITH CFP
30" CONDUIT, TYPE A, 707.05 (0.079) GALVANIZED ASPHALT COATED AND PAVED
30" CONDUIT, TYPE A, 707.05 (0.064) ALUMINIZED ASPHALT COATED AND PAVED

HYDRAULIC DESIGN DATA	
DRAINAGE AREA	= 5.3 ACRES
Q_{25}	= 20.5 cfs
Q_{100}	= 25.2 cfs
HW_{25}	= 922.51
HW_{100}	= 922.82
V_{25}	= 6.4 fps
V_{100}	= 7.0 fps

HORIZONTAL SCALE IN FEET
0 5 10 20

CALCULATED MAG
CHECKED AJS

ESTIMATED QUANTITIES (IR)

ITEM	QUANTITY	UNIT	DESCRIPTION
601	3	CU. YD.	ROCK CHANNEL PROTECTION, TYPE C, WITH FABRIC FILTER
602	1.1	CU. YD.	CONCRETE MASONRY
603	128	FEET	30" CONDUIT, TYPE A 706.02, AS PER PLAN A

TOTALS CARRIED TO GENERAL SUMMARY

CULVERT DETAIL RAMP M STA. 441+00.00

MOT-75-0.75

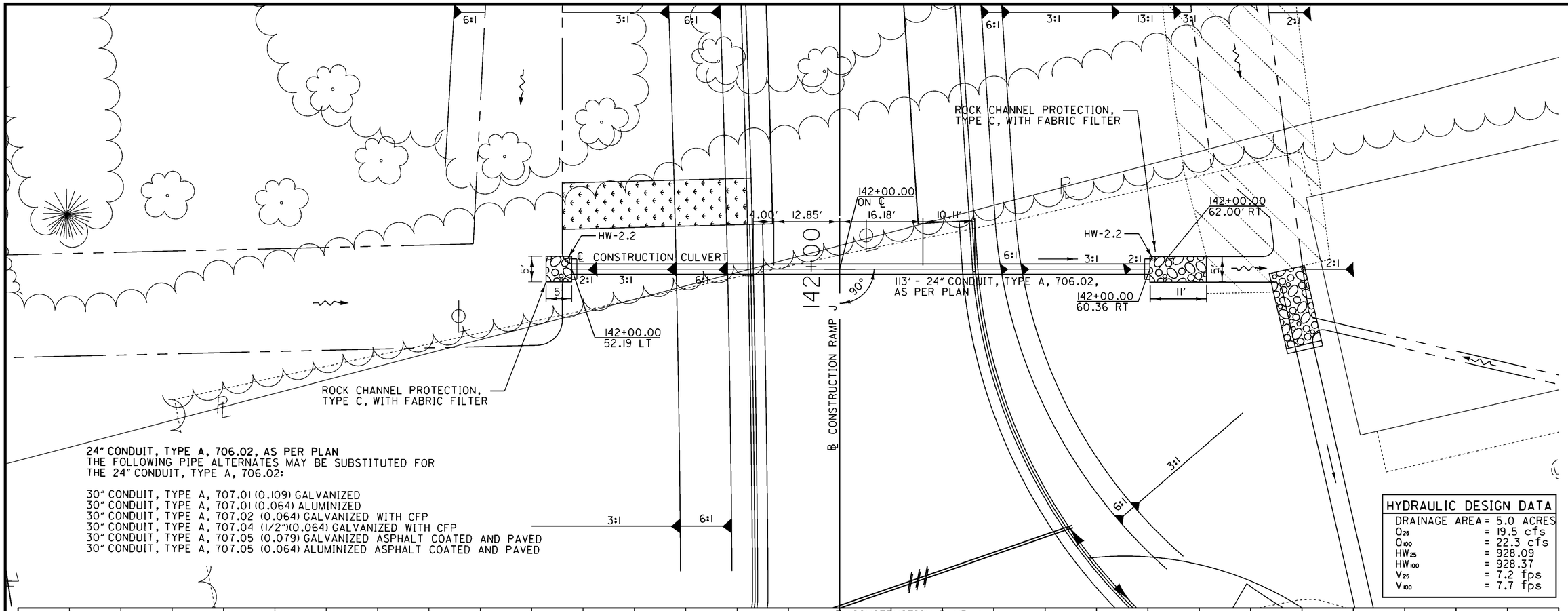

24" CONDUIT, TYPE A, 706.02, AS PER PLAN
THE FOLLOWING PIPE ALTERNATES MAY BE SUBSTITUTED FOR THE 24" CONDUIT, TYPE A, 706.02:

30" CONDUIT, TYPE A, 707.01 (0.109) GALVANIZED
30" CONDUIT, TYPE A, 707.01 (0.064) ALUMINIZED
30" CONDUIT, TYPE A, 707.02 (0.064) GALVANIZED WITH CFP
30" CONDUIT, TYPE A, 707.04 (1/2")(0.064) GALVANIZED WITH CFP
30" CONDUIT, TYPE A, 707.05 (0.079) GALVANIZED ASPHALT COATED AND PAVED
30" CONDUIT, TYPE A, 707.05 (0.064) ALUMINIZED ASPHALT COATED AND PAVED

HYDRAULIC DESIGN DATA	
DRAINAGE AREA	= 5.0 ACRES
Q_{25}	= 19.5 cfs
Q_{100}	= 22.3 cfs
HW_{25}	= 928.09
HW_{100}	= 928.37
V_{25}	= 7.2 fps
V_{100}	= 7.7 fps

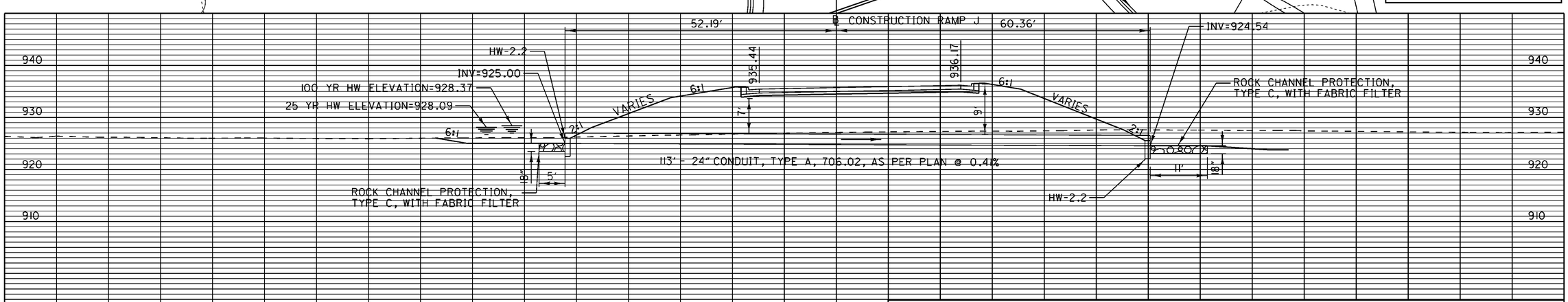

ESTIMATED QUANTITIES (IR)			
ITEM	QUANTITY	UNIT	DESCRIPTION
601	4	CU. YD.	ROCK CHANNEL PROTECTION, TYPE C, WITH FABRIC FILTER
602	0.8	CU. YD.	CONCRETE MASONRY
603	113	FEET	24" CONDUIT, TYPE A, 706.02, AS PER PLAN

TOTALS CARRIED TO GENERAL SUMMARY

HORIZONTAL SCALE IN FEET
0 5 10 20

CALCULATED MAG
CHECKED AJS

CULVERT DETAIL
RAMP J STA. 142+00.00

MOT-75-0.75

369
773

EXISTING STRUCTURE DATA

Type - Single Span
Size - 30'
Skew - 0°
Date Built - Unknown
Condition - Fair
HW_{25} = 905.5
HW_{100} = 905.7

HYDRAULIC DESIGN DATA

DRAINAGE AREA	= 431 ACRES
Q_{25}	= 409 cfs
Q_{100}	= 551 cfs
HW_{25}	= 905.0
HW_{100}	= 905.8
V_{25}	= 6.5 fps
V_{100}	= 8.0 fps

FOR HEADWALL AND WINGWALL STRUCTURAL DETAILS, SEE SHEETS 371-380

ROCK CHANNEL PROTECTION, TYPE B WITH FABRIC FILTER

132+99.32
87.43' LT

℄ CONSTRUCTION MIAMISBURG-SPRINGBORO PIKE

133+67.58
℄ CULVERT

40.88
℄ CONSTRUCTION CULVERT

9.76'
9.96'
31.99'

35°47'10"

200' - 24'x4' CONDUIT, TYPE A, PRECAST REINFORCED CONCRETE FLAT-TOPPED THREE-SIDED CULVERT, 706.051

134+16.67
74.86' RT

134+60.92
94.21' RT

134+49.46
116.32' RT

134+16.61
112.07' RT

134+30.21
122.99' RT

CONSTRUCTION LIMITS

CURVE I
CHANNEL CURVE DATA
R= 36.40'
Δ= 31° 33' 57"
T= 10.29'
L= 20.05'

PROPOSED STRUCTURE DATA

TYPE - PRECAST REINFORCED CONCRETE FLAT-TOPPED THREE-SIDED CULVERT
SPAN - 24'-0"
LOADING - HS25, ALTERNATE MILITARY LOADING AND 60 PSF FUTURE WEARING SURFACE
ALIGNMENT - TANGENT
SKEW - 35°47'10" RIGHT FORWARD

℄ CONSTRUCTION
MIAMISBURG-SPRINGBORO PIKE

108.44'
91.78'

INV.=901.46
100 YR. HW
ELEV.= 905.8
25 YR. HW
ELEV.= 905.0

909.33
909.46
909.28
909.39

VARIES

2.00%

0.60%

INV.=901.00

50'

18" Stm
Tel
12" Water
6" Gas

200' - 24'x4' CONDUIT, TYPE A, PRECAST REINFORCED CONCRETE FLAT-TOPPED THREE-SIDED CULVERT, 706.051 @ 0.23%

ROCK CHANNEL PROTECTION, TYPE B WITH FABRIC FILTER

HORIZONTAL SCALE IN FEET
0 5 10 20

CALCULATED MAG
CHECKED AJS

CULVERT DETAIL
MIAMISBURG-SPRINGBORO PIKE STA. 133+64.00
MOT-75-0.75

I / II

370
773

GENERAL NOTES

DESIGN SPECIFICATIONS: THIS STRUCTURE CONFORMS TO "STANDARD SPECIFICATIONS FOR HIGHWAY BRIDGES" ADOPTED BY THE AMERICAN ASSOCIATION OF STATE HIGHWAY AND TRANSPORTATION OFFICIALS 2002, AND THE ODOT BRIDGE DESIGN MANUAL.

DESIGN LOADING: HS-25, ALTERNATE MILITARY LOADING AND 60 PSF FUTURE WEARING SURFACE.

DESIGN DATA:
CLASS C CONCRETE, SUBSTRUCTURE - COMPRESSIVE STRENGTH 4000 P.S.I.
REINFORCING STEEL - ASTM A615 OR A996.
GRADE 60, MINIMUM YIELD STRENGTH 60,000 P.S.I. (ALL REINFORCING SHALL BE EPOXY COATED).
PRECAST STRUCTURES: FOR BOX AND PIPE CULVERTS, SEE CMS SECTION 603.

PILE DESIGN LOADS (ULTIMATE BEARING VALUE): THE ULTIMATE BEARING VALUE IS 50 TONS PER PILE FOR THE 12"ø CAST-IN-PLACE REINFORCED CONCRETE CULVERT FOOTING & WINGWALL PILES. A MINIMUM PILE TIP ELEVATION OF 826.00 IS REQUIRED. THIS INCLUDES 15'-0" OF ADDITIONAL PILE LENGTH FOR POTENTIAL SCOUR.

132 PILES 80 FEET LONG, ORDER LENGTH
1 DYNAMIC LOAD TESTING ITEM

BATTERED PILES: THE BLOW COUNT FOR BATTERED PILES SHALL BE THE BLOW COUNT DETERMINED FOR VERTICAL PILES OF THE SAME ULTIMATE BEARING VALUE DIVIDED BY AN EFFICIENCY FACTOR (D). COMPUTE THE EFFICIENCY FACTOR (D) AS FOLLOWS:

$$D = \frac{1 - UG}{\sqrt{(1 + G^2)}}$$

U = COEFFICIENT OF FRICTION, WHICH IS ESTIMATED AT 0.05 FOR DOUBLE-ACTING AIR OPERATED OR DIESEL HAMMERS; 0.1 FOR SINGLE-ACTING AIR OPERATED OR DIESEL HAMMERS; AND 0.2 FOR DROP HAMMERS.

G = RATE OF BATTER (1/3, 1/4, ETC.)

REINFORCING STEEL COVER: THE MINIMUM CONCRETE COVER OVER REINFORCING STEEL IS 2" UNLESS OTHERWISE NOTED.

FORESLOPE WALL ANCHOR DOWELS: ANCHOR PER CMS 510 WITH NONSHRINK, NONMETALLIC GROUT CONFORMING TO CMS 705.20 AND TO A DEPTH AS SHOWN ON SECTION F-F (SHEET 10/11). PAYMENT FOR DOWEL HOLES, GROUT AND INSTALLATION SHALL BE INCLUDED WITH ITEM 511.

AS AN ALTERNATIVE TO RESIN BONDING, THREADED INSERTS OR NONPROTRUDING MECHANICAL CONNECTORS CAST INTO THE CULVERT BY THE MANUFACTURER MAY BE USED PROVIDED THEY CAN RESIST AN ULTIMATE PULL-OUT STRENGTH OF 12 KIPS AND MAINTAIN A MINIMUM COVER OF 3 INCHES AT THE BOTTOM OF THE CULVERT SLAB. MECHANICAL CONNECTORS MUST PROVIDE AN "L-SHAPED" BAR INSIDE THE CULVERT WITH A MINIMUM HORIZONTAL LENGTH OF 12 INCHES. PAYMENT FOR INSERTS OR MECHANICAL CONNECTORS SHALL BE INCLUDED WITH ITEM 603.

PREFORMED EXPANSION JOINT FILLER: PREFORMED EXPANSION JOINT FILLER (PEJF) CONFORMING TO CMS 705.03, 1 INCH THICK, SHALL BE PLACED ABOVE THE FOOTING BETWEEN THE SIDES OF THE BOX CULVERT AND THE ENDS OF THE WINGWALLS. PAYMENT FOR MATERIALS AND INSTALLATION SHALL BE INCLUDED WITH ITEM 516 - 1" PREFORMED EXPANSION JOINT FILLER.

BASIS OF PAYMENT: ALL LABOR, EQUIPMENT AND INCIDENTALS REQUIRED TO CONSTRUCT THE FOOTING, WINGWALLS AND FORESLOPE WALL SHALL BE INCLUDED WITH ITEM 511 - CLASS C CONCRETE. PAYMENT FOR REINFORCING STEEL SHALL BE INCLUDED WITH ITEM 509 - EPOXY COATED REINFORCING STEEL.

POROUS BACKFILL WITH FILTER FABRIC: POROUS BACKFILL WITH FILTER FABRIC 1'-6" THICK SHALL EXTEND UP TO THE PLANE OF THE SUBGRADE, TO 1'-0" BELOW THE EMBANKMENT SURFACE, AND LATERALLY TO THE ENDS OF THE WINGWALLS. BEHIND THE WINGWALLS, IT SHALL EXTEND AT LEAST 6" BELOW THE BOTTOM OF THE WEEPHOLES. FILTER FABRIC SHALL BE PLACED BETWEEN THE POROUS BACKFILL AND REPLACED EXCAVATION ADJACENT TO THE STRUCTURE. IT SHALL TURN UNDER THE BOTTOM OF THE POROUS BACKFILL AND RETURN 6" ABOVE THE TOP ELEVATION OF THE WEEPHOLE. TWO CUBIC FEET OF BAGGED NO.3 AGGREGATE SHALL BE PLACED AT EACH WEEPHOLE. THE BAGGED AGGREGATE SHALL BE INCLUDED FOR PAYMENT WITH THE APPROPRIATE POROUS BACKFILL ITEM 518 FOR PAYMENT.

WEEPHOLES SHALL BE PLACED 6" TO 12" ABOVE THE NORMAL WATER ELEVATION OR GROUND LINE AND SHALL HAVE A MAXIMUM SPACING OF 10'-0". A MINIMUM OF ONE WEEPHOLE SHALL BE PROVIDED PER WINGWALL.

UTILITY LINES: THE UTILITIES SHALL BEAR ALL EXPENSE INVOLVED IN RELOCATING (INSTALLING) THE AFFECTED UTILITY LINES. THE CONTRACTOR AND UTILITIES ARE TO COOPERATE BY ARRANGING THEIR WORK IN SUCH A MANNER THAT INCONVENIENCE TO EITHER WILL BE HELD TO A MINIMUM.

WATERPROOFING: TYPE 2 WATERPROOFING, PER CMS 512.08 AND 711.25, SHALL EXTEND VERTICALLY DOWN THE ENTIRE SIDES OF THE PRECAST CULVERT SECTIONS FOR ALL PORTIONS OF THE CULVERT WHICH SHALL BE IN CONTACT WITH THE BACKFILL. PAYMENT FOR THE MEMBRANE WATERPROOFING SHALL BE AT THE CONTRACT PRICE BID PER SQUARE YARD FOR ITEM 512 - TYPE 2 WATERPROOFING.

TYPE 2 WATERPROOFING, PER CMS 512.08 AND 711.25 SHALL BE APPLIED TO THE TOP SURFACE OF THE PRECAST CULVERT SECTIONS AND SHALL EXTEND ONE FOOT VERTICALLY DOWN THE SIDES FOR ALL PORTIONS OF THE CULVERT WHICH SHALL BE IN CONTACT WITH THE BACKFILL. PAYMENT FOR THE MEMBRANE WATERPROOFING SHALL BE AT THE CONTRACT PRICE BID PER SQUARE YARD FOR ITEM 512 - TYPE 2 WATERPROOFING.

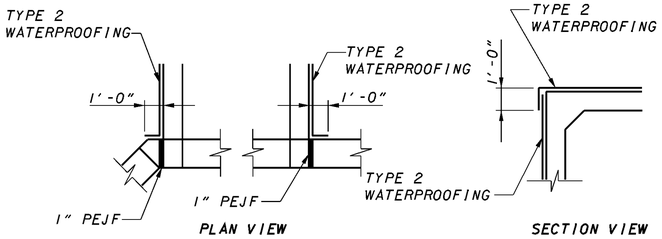

WATERPROOFING DETAILS

SEALING OF FORESLOPE WALL AND WINGWALLS: ALL EXPOSED FORESLOPE WALL AND WINGWALL CONCRETE SHALL BE SEALED WITH EPOXY-URETHANE SEALER. THE LIMITS SHALL BE AS SHOWN IN THE DIAGRAMS BELOW. PAYMENT FOR THE EPOXY-URETHANE SEALER SHALL BE PER ITEM 512 - SEALING OF CONCRETE SURFACES.

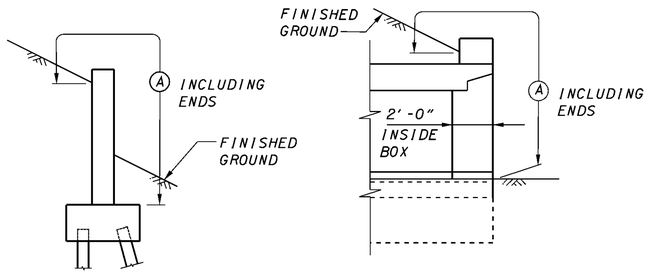

LIMITS OF ITEM 512-SEALING CONCRETE SURFACES

(A) - SEAL ENTIRE CONCRETE SURFACE AREA

ITEM 503, UNCLASSIFIED EXCAVATION: UNCLASSIFIED EXCAVATION SHALL BE IN ACCORDANCE WITH 503 EXCEPT THAT THE BACKFILL MATERIAL SHALL BE 203 MATERIAL PLACED IN 6 INCH LIFTS.

ESTIMATED QUANTITIES

ITEM	ITEM EXTENSION	TOTAL	UNIT	DESCRIPTION
202	11000	LUMP		STRUCTURE REMOVED
503	11100	LUMP		COFFERDAMS, CRIBS AND SHEETING
503	21300	LUMP		UNCLASSIFIED EXCAVATION
505	11100	LUMP		PILE DRIVING EQUIPMENT MOBILIZATION
507	00500	9900	FT.	12" CAST-IN-PLACE REINFORCED CONCRETE
				PILES, DRIVEN
507	00550	10560	FT.	12" CAST-IN-PLACE REINFORCED CONCRETE
				PILES, FURNISHED
507	93301	132	EACH	STEEL POINTS OR SHOES, AS PER PLAN, SEE SHEET 3/11.
509	10000	18439	POUND	EPOXY COATED REINFORCING STEEL
511	46000	15	CU.YD.	CLASS C CONCRETE, WINGWALL
511	46500	356	CU.YD.	CLASS C CONCRETE, FOOTING
511	46600	4	CU.YD.	CLASS C CONCRETE, HEADWALLS
512	10100	100	SQ.YD.	SEALING OF CONCRETE SURFACES (EPOXY-URETHANE)
512	33000	848	SQ.YD.	TYPE 2 WATERPROOFING
516	13600	32	SQ.FT.	1" PREFORMED EXPANSION JOINT FILLER
517	76300	110	FT.	RAILING, MISC: RAILING (PEDESTRIAN, TUBULAR STEEL), AS PER PLAN, SEE SHEET 3/11.
518	21230	LUMP		POROUS BACKFILL WITH FILTER FABRIC
523	20000	1	EACH	DYNAMIC LOAD TESTING
601	32104	230	CU.YD.	ROCK CHANNEL PROTECTION, TYPE B WITH FABRIC FILTER
601	32204	152	CU.YD.	ROCK CHANNEL PROTECTION, TYPE C WITH FABRIC FILTER
603	70000	200	FT.	24'x4' CONDUIT, TYPE A PRECAST REINFORCED CONCRETE FLAT-TOPPED THREE-SIDED CULVERT, 706.051

NOTE: TOTAL CARRIED TO GENERAL SUMMARY SHEETS.

QUANTITIES COMPUTED BY: AMT
QUANTITIES CHECKED BY: DWS

LJB Inc. - 3100 Research Blvd. - P.O. Box 20246
Dayton, OH 45420-0246
(937) 259-5000 tel - (937) 259-5100 fax ljbinc.com

DESIGNED AMT | DRAWN MHD | REVIEWED MPH | DATE 3-08
CHECKED DWS | REVISED | STRUCTURE FILE NUMBER 5746159

GENERAL NOTES AND ESTIMATED QUANTITIES

MIAMISBURG-SPRINGBORO PIKE CULVERT AT STA. 133+63.58

MOT-75-0.75
PID 77246

GENERAL NOTES (CONTINUED)

ITEM 507, STEEL POINTS, AS PER PLAN: USE STEEL PILE POINTS TO PROTECT THE TIPS OF THE PROPOSED STEEL PILING. FURNISH STEEL POINTS FROM THE FOLLOWING MANUFACTURERS/ SUPPLIERS: ASSOCIATED PILE AND FITTING CORPORATION, 262 RUTHERFORD BLVD., CLIFTON, NEW JERSEY 07014, PHONE: (973) 773-8400, (800) 526-9047, FAX: (973) 773-8442; INTERNATIONAL CONSTRUCTION EQUIPMENT, INC., 301 WAREHOUSE DRIVE, MATTEWS, NORTH CAROLINA 28015, PHONE: (704) 821-8200, (888) 423-8721, FAX: (704) 821-8201; DOUGHERTY FOUNDATION PRODUCTS, INC., P.O. BOX 688, FRANKLIN LAKES, NEW JERSEY 07417, PHONE (201) 337-5748, FAX: (201) 337-9022; VERSA STEEL INC., 1618 N.E. FIRST AVE., PORTLAND, OREGON 97232, PHONE: (503) 287-9822, (800) 678-0814, FAX : (503) 287-7483; VERSABITE PILING ACCESSORIES, 1704 TOWER INDUSTRIAL DR., MONROE, NORTH CAROLINA 28110, PHONE: (800) 280-9950, (704) 225-1566, FAX: (704) 225-1567; OR BY A MANUFACTURER THAT CAN FURNISH A STEEL POINT THAT IS ACCEPTABLE TO DIRECTOR.THE MATERIAL USED FOR THE MANUFACTURING OF PILE POINTS SHALL CONFORM TO ASTM A27/A27M 65/35 [450/240] - CLASS 2 - HEAT TREATED OR AASHTO M103/M103M 65/35 [450/240] - HEAT TREATED. WELD THE PILE POINTS TO THE PILE IN ACCORDANCE WITH AWS D1.5 OR THE MANUFACTURER'S WRITTEN WELDING PROCEDURE SUPPLIED TO THE ENGINEER BEFORE THE WELDING IS PERFORMED. SUBMIT A NOTARIZED COPY OF THE MILL TEST REPORT TO THE ENGINEER.

ITEM 517,RAILING (PEDESTRIAN, TUBULAR STEEL), AS PER PLAN: RAILING AND POST SHALL BE FABRICATED FROM NOMINAL SIZE 1½IN., 0.145 IN. WALL THICKNESS GALVANIZED PER ASTM A123 STEEL PIPE MEETING THE REQUIREMENTS ESTABLISHED IN STANDARD DRAWING RM-2.1 AND ODOT CONSTRUCTION AND MATERIALS SPECIFICATION (CMS) 710. THE HANDRAIL POSTS SHALL BE SET IN HOLES THAT CONSIST OF A 3 IN. DIAMETER BY 13 IN. DEEP BLOCK OUT OR BY CORE AFTER CONCRETE PLACEMENT. ALL HANDRAIL POSTS SHALL BE GROUTED INTO THE PROVIDED HOLES. NON-SHRINKING EPOXY GROUT SHALL BE IN ACCORDANCE WITH ODOT CMS 705.20. HANDRAIL ANCHORING SHALL CONFORM TO ODOT CMS 705.20. THE HANDRAIL POSTS SHALL BE SET IN A TRUE VERTICAL ALIGNMENT ALONG ENTIRE LENGTH OF WALL. PAYMENT SHALL INCLUDE DRILLING OR CASTING OF HOLES INTO THE CONCRETE, THE FURNISHING AND PLACING OF THE RAILING AND POSTS AND THE FURNISHING AND PLACING OF THE NON-SHRINKING EPOXY GROUT INTO THE HOLES TO PLACE THE HANDRAIL.

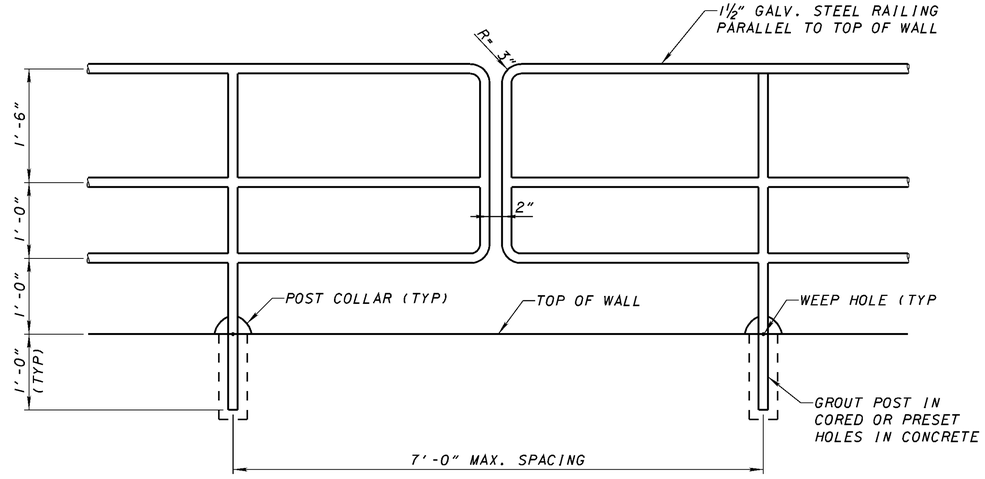

LJB Inc. - 3100 Research Blvd. - P.O. Box 20246
Dayton, OH 45420-0246
(937) 259-5000 tel - (937) 259-5100 fax ljbinc.com

DESIGNED	DRAWN	REVIEWED	DATE
AMT	MHD	MPH	3-08
CHECKED	REVISED	STRUCTURE FILE NUMBER	
DWS		5746159	

GENERAL NOTES (CONTINUED)

MIAMISBURG-SPRINGBORO PIKE CULVERT AT STA. 133+63.58

MOT-75-0.75
PID 77246

372/773

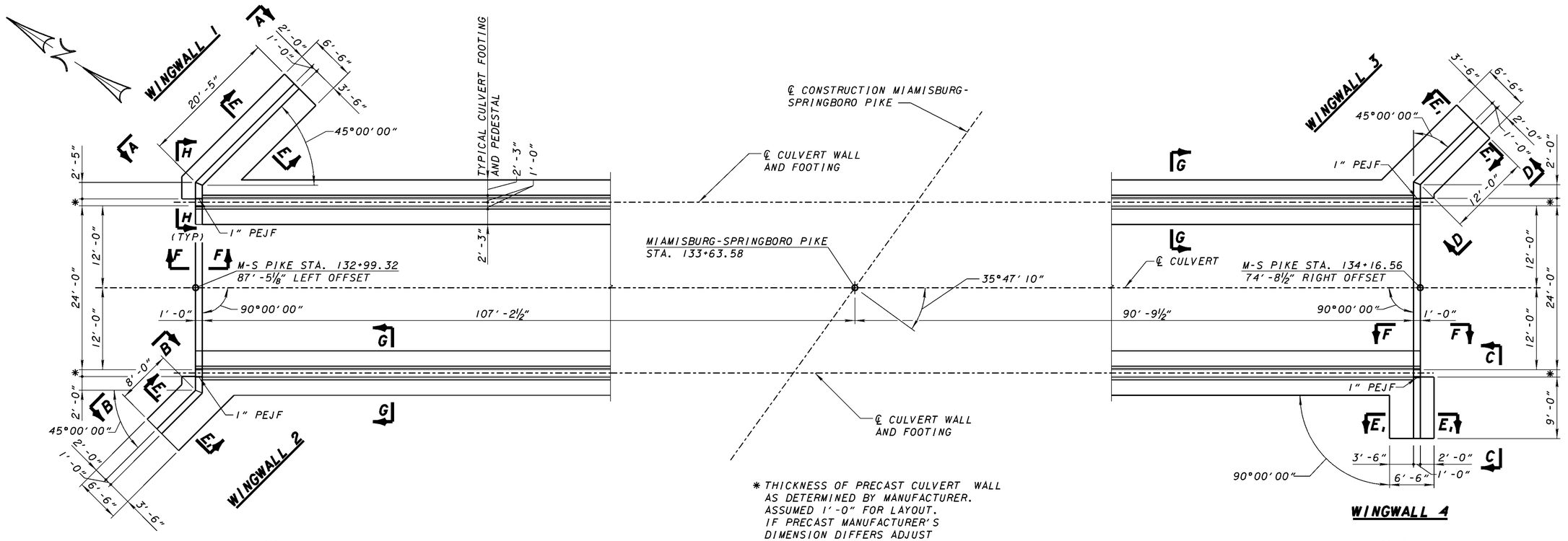

* THICKNESS OF PRECAST CULVERT WALL AS DETERMINED BY MANUFACTURER. ASSUMED 1'-0" FOR LAYOUT. IF PRECAST MANUFACTURER'S DIMENSION DIFFERS ADJUST DIMENSIONS ACCORDINGLY.

PLAN VIEW

(PILES NOT SHOWN FOR CLARITY)

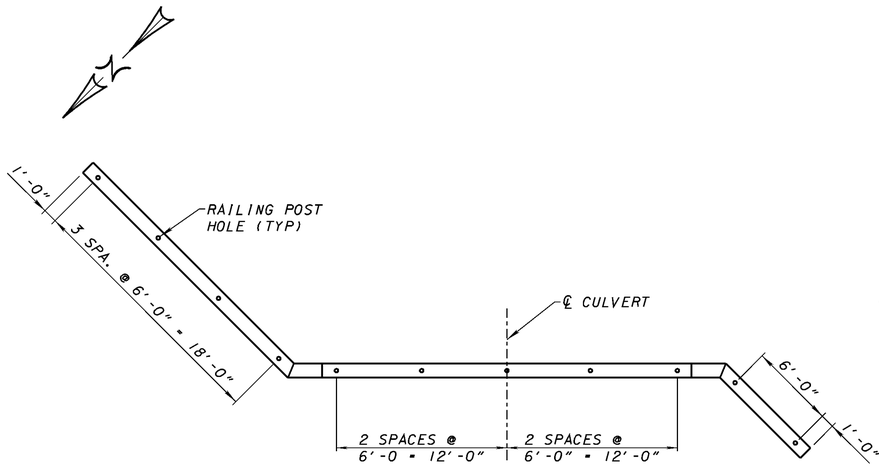

INLET RAILING POST PLAN

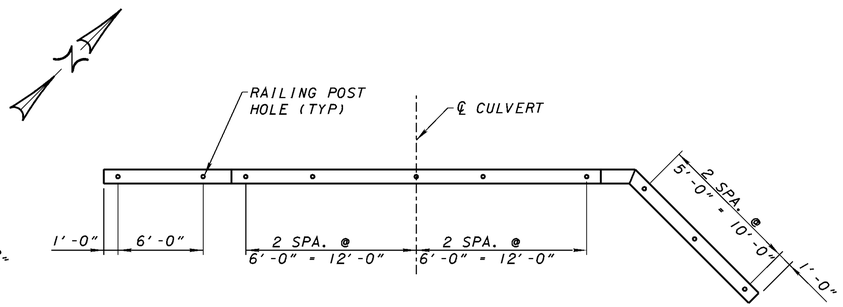

OUTLET RAILING POST PLAN

LEGEND

PEJF - PREFORMED EXPANSION JOINT FILLER

NOTES:

1. FOR CULVERT LOCATION PLAN, SEE SHEET 370/773.
2. FOR GENERAL NOTES, SEE SHEET 2/11.
3. FOR REINFORCING STEEL LIST, SEE SHEET 11/11.
4. FOR VIEWS A-A, B-B, C-C AND D-D, SEE SHEET 9/11.
5. FOR SECTIONS E-E, E_1-E_1, & F-F, SEE SHEET 10/11.
6. FOR SECTIONS G-G & H-H, SEE SHEET 11/11.
7. FOR TYPICAL RAILING DETAILS, SEE SHEET 3/11.

LJB Inc. - 3100 Research Blvd. - P.O. Box 20246
Dayton, OH 45420-0246
(937) 259-5000 tel - (937) 259-5100 fax ljbinc.com

DESIGNED AMT | DRAWN MHD | REVIEWED MPH | DATE 3-08
CHECKED DWS | REVISED | STRUCTURE FILE NUMBER 5746159

INLET AND OUTLET PLAN

MIAMISBURG-SPRINGBORO PIKE CULVERT AT STA. 133+63.58

MOT-75-0.75
PID 77246

4/11

373/773

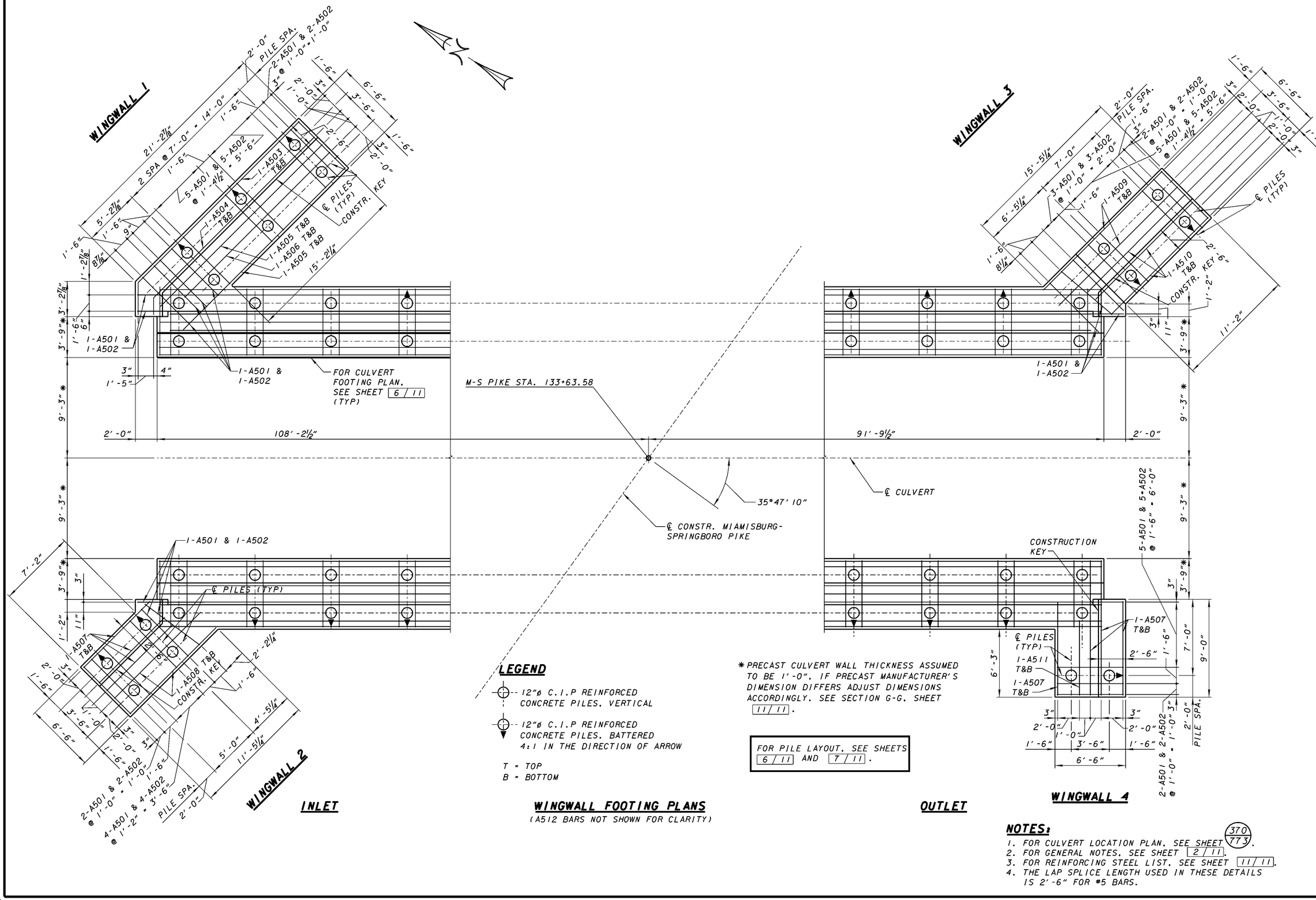

NOTES:

1. FOR CULVERT LOCATION PLAN, SEE SHEET 370/773.
2. FOR GENERAL NOTES, SEE SHEET 2/11.
3. FOR REINFORCING STEEL LIST, SEE SHEET 11/11.
4. THE LAP SPLICE LENGTH USED IN THESE DETAILS IS 2'-6" FOR #5 BARS.

LJB Inc. • 3100 Research Blvd. • P.O. Box 20246
Dayton, OH 45420-0246
(937) 259-5000 tel • (937) 259-5100 fax ljbinc.com

DESIGNED	DRAWN	REVIEWED	DATE
AMT	MHD	MPH	3-08
CHECKED	REVISED	STRUCTURE FILE NUMBER	
DWS		5746159	

WINGWALL FOOTING PLANS

MIAMISBURG-SPRINGBORO PIKE CULVERT AT STA. 133+63.58

MOT-75-0.75
PID 77246

5/11

374/773

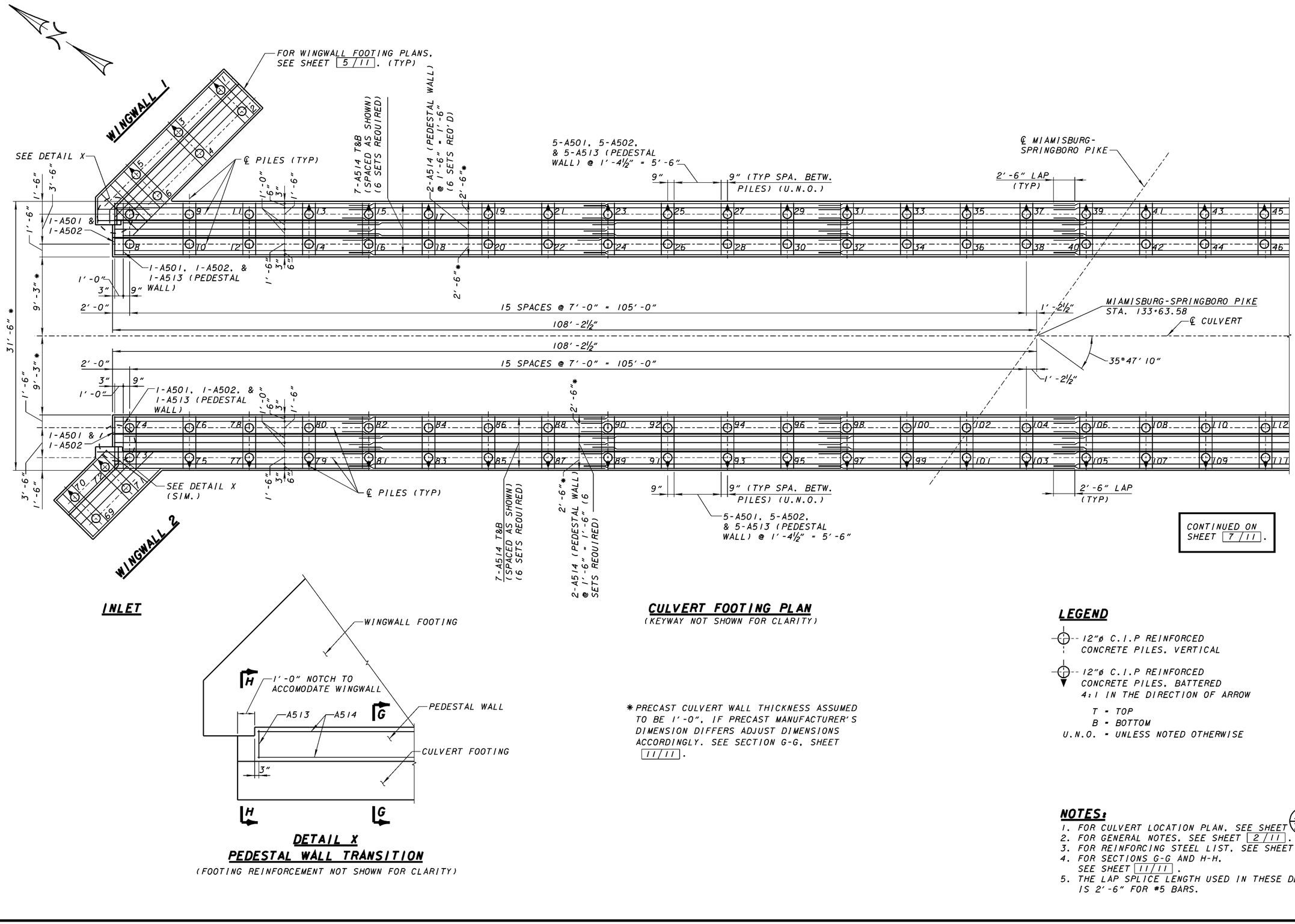

INLET

DETAIL X
PEDESTAL WALL TRANSITION

(FOOTING REINFORCEMENT NOT SHOWN FOR CLARITY)

CULVERT FOOTING PLAN

(KEYWAY NOT SHOWN FOR CLARITY)

*PRECAST CULVERT WALL THICKNESS ASSUMED TO BE 1'-0". IF PRECAST MANUFACTURER'S DIMENSION DIFFERS ADJUST DIMENSIONS ACCORDINGLY. SEE SECTION G-G, SHEET 11/11.

LEGEND

- 12"ø C.I.P REINFORCED CONCRETE PILES. VERTICAL
- 12"ø C.I.P REINFORCED CONCRETE PILES. BATTERED 4:1 IN THE DIRECTION OF ARROW

T = TOP
B = BOTTOM
U.N.O. = UNLESS NOTED OTHERWISE

NOTES:

1. FOR CULVERT LOCATION PLAN. SEE SHEET 370/773.
2. FOR GENERAL NOTES. SEE SHEET 2/11.
3. FOR REINFORCING STEEL LIST. SEE SHEET 11/11.
4. FOR SECTIONS G-G AND H-H. SEE SHEET 11/11.
5. THE LAP SPLICE LENGTH USED IN THESE DETAILS IS 2'-6" FOR #5 BARS.

LJB Inc. - 3100 Research Blvd. - P.O. Box 20246
Dayton, OH 45420-0246
(937) 259-5000 tel - (937) 259-5100 fax ljbinc.com

DESIGNED AMT | DRAWN MHD | CHECKED DWS | REVISED | REVIEWED MPH | DATE 3-08

STRUCTURE FILE NUMBER 5746159

PARTIAL FOOTING PLAN (INLET)

MIAMISBURG-SPRINGBORO PIKE CULVERT AT STA. 133+63.58

MOT-75-0.75
PID 77246

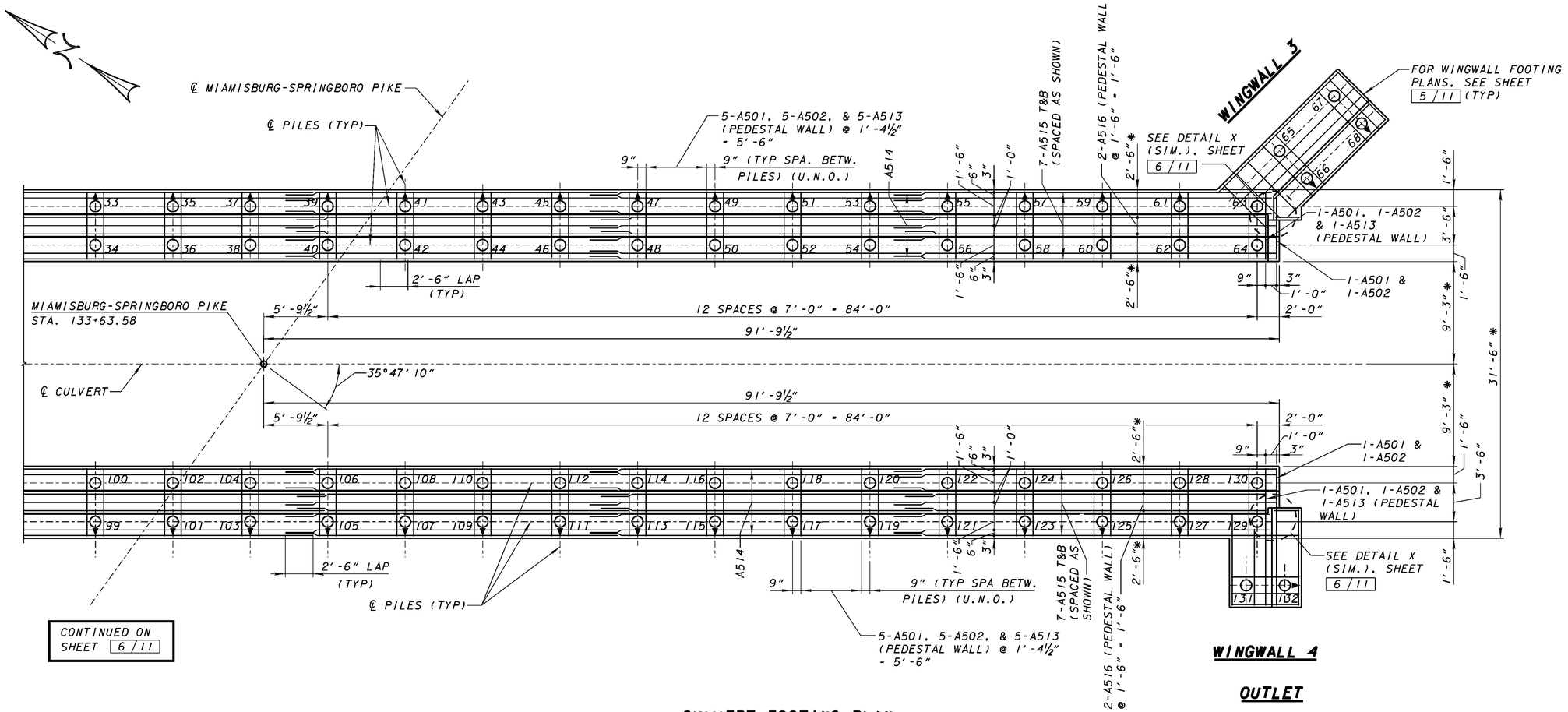

CONTINUED ON SHEET 6/11

CULVERT FOOTING PLAN
(KEYWAY NOT SHOWN FOR CLARITY)

*PRECAST CULVERT WALL THICKNESS ASSUMED TO BE 1'-0". IF PRECAST MANUFACTURER'S DIMENSION DIFFERS ADJUST DIMENSION ACCORDINGLY. SEE SECTION G-G, SHEET 11/11.

LEGEND
- 12"ø C.I.P REINFORCED CONCRETE PILES, VERTICAL
- 12"ø C.I.P REINFORCED CONCRETE PILES, BATTERED 4:1 IN THE DIRECTION OF ARROW
- T = TOP
- B = BOTTOM
- U.N.O. = UNLESS NOTED OTHERWISE

NOTES:
1. FOR CULVERT LOCATION PLAN, SEE SHEET 2/11. (370/773)
2. FOR GENERAL NOTES, SEE SHEET 2/11.
3. FOR REINFORCING STEEL LIST, SEE SHEET 11/11.
4. THE LAP SPLICE LENGTH USED IN THESE DETAILS IS 2'-6" FOR #5 BARS.

LJB Inc. • 3100 Research Blvd. • P.O. Box 20246
Dayton, OH 45420-0246
(937) 259-5000 tel • (937) 259-5100 fax • ljbinc.com

DESIGNED	DRAWN	REVIEWED	DATE
AMT	MHD	MPH	3-08
CHECKED	REVISED	STRUCTURE FILE NUMBER	
DWS		5746159	

PARTIAL FOOTING PLAN (OUTLET)
MIAMISBURG-SPRINGBORO PIKE CULVERT AT STA. 133+63.58

MOT-75-0.75
PID 77246

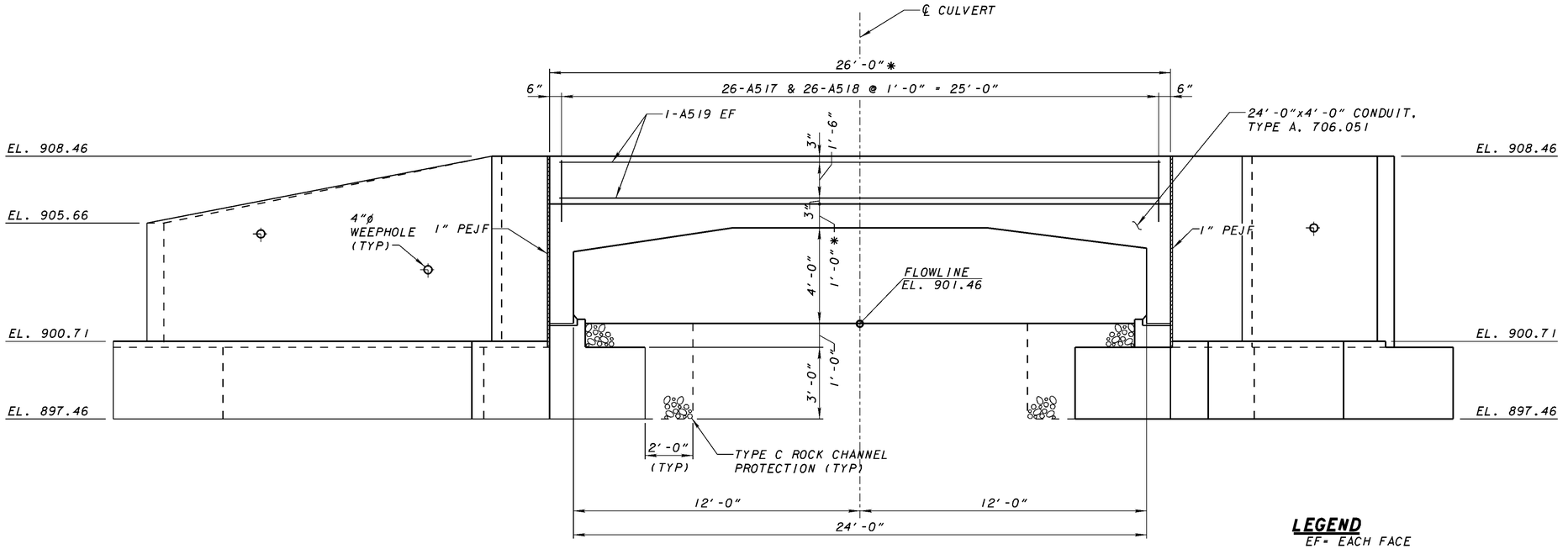

INLET ELEVATION

(PILES & RAILING NOT SHOWN FOR CLARITY)

LEGEND

EF= EACH FACE
PEJF= PREFORMED EXPANSION JOINT FILLER

* PRECAST CULVERT SLAB & WALL THICKNESS ASSUMED TO BE 1′-0″. IF PRECAST MANUFACTURER'S DIMENSION DIFFERS ADJUST DIMENSIONS AND B/FTG ELEVATION ACCORDINGLY.

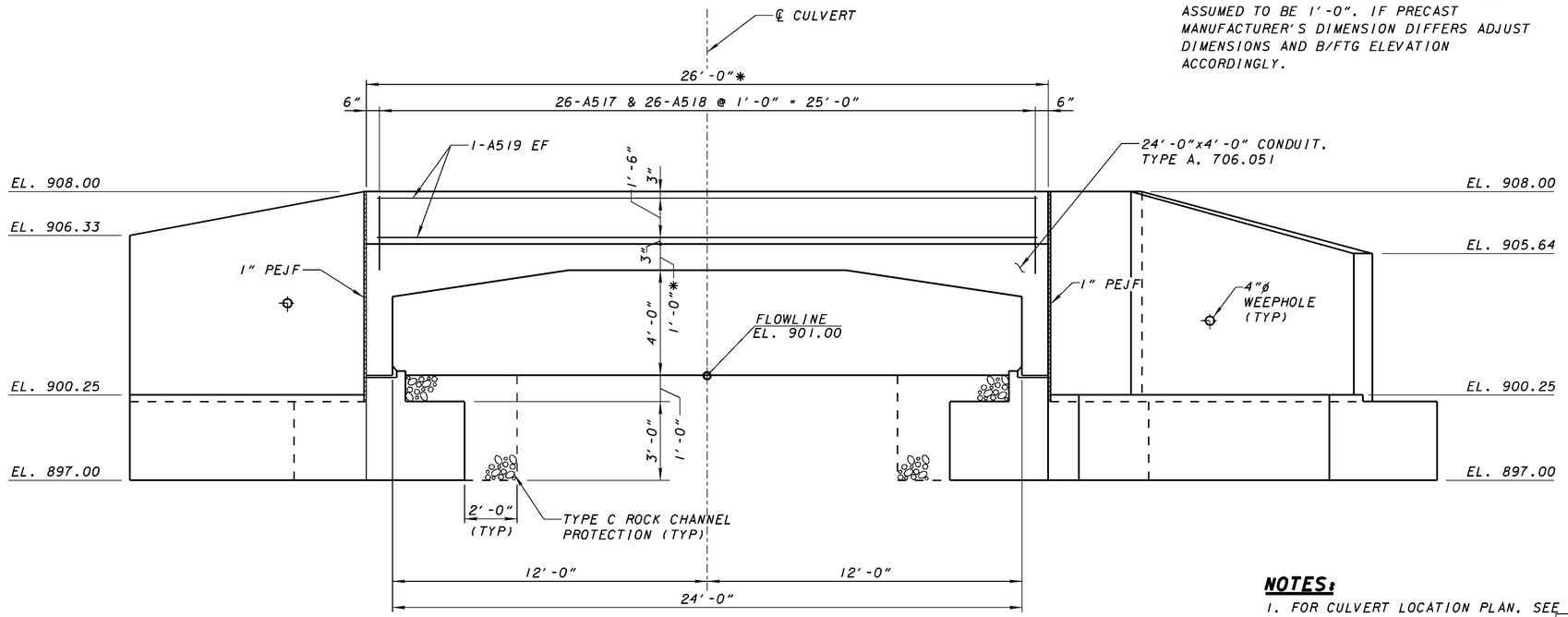

OUTLET ELEVATION

(PILES & RAILING NOT SHOWN FOR CLARITY)

NOTES:

1. FOR CULVERT LOCATION PLAN, SEE SHEET 370/773.
2. FOR GENERAL NOTES, SEE SHEET 2/11.
3. FOR REINFORCING STEEL LIST, SEE SHEET 11/11.

LJB Inc. • 3100 Research Blvd. • P.O. Box 20246
Dayton, OH 45420-0246
(937) 259-5000 tel • (937) 259-5100 fax • ljbinc.com

DESIGNED	DRAWN	REVIEWED	DATE
AMT	MHD	MPH	3-08
CHECKED	REVISED	STRUCTURE FILE NUMBER	
DWS		5746159	

INLET AND OUTLET ELEVATIONS

MIAMISBURG-SPRINGBORO PIKE CULVERT AT STA. 133+63.58

MOT-75-0.75
PID 77246

8/11

377/773

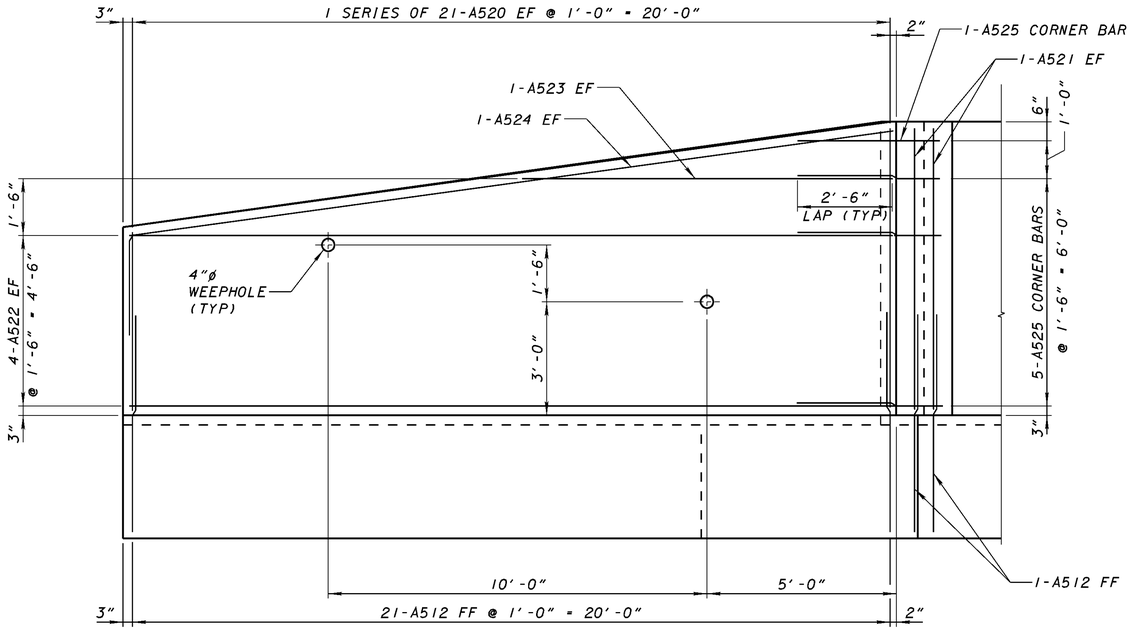

WINGWALL VIEW A-A

(PILES & RAILING NOT SHOWN FOR CLARITY)

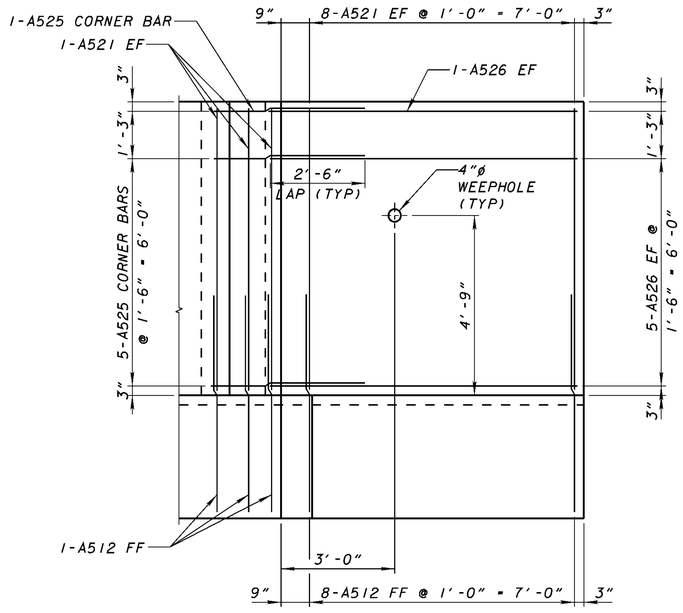

WINGWALL VIEW B-B

(PILES & RAILING NOT SHOWN FOR CLARITY)

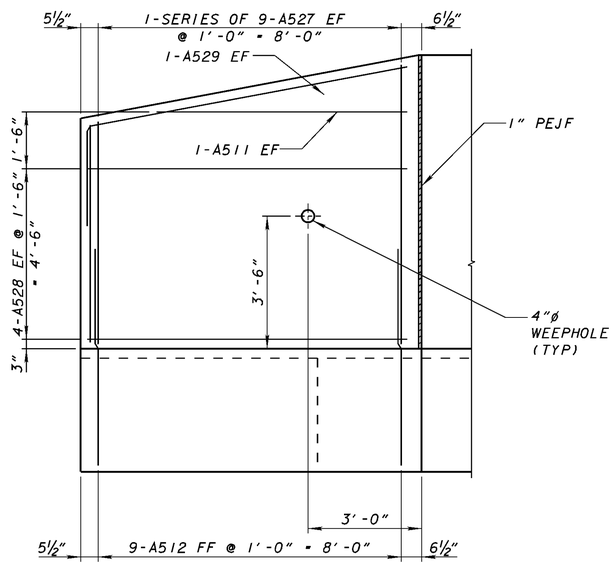

WINGWALL VIEW C-C

(PILES & RAILING NOT SHOWN FOR CLARITY)

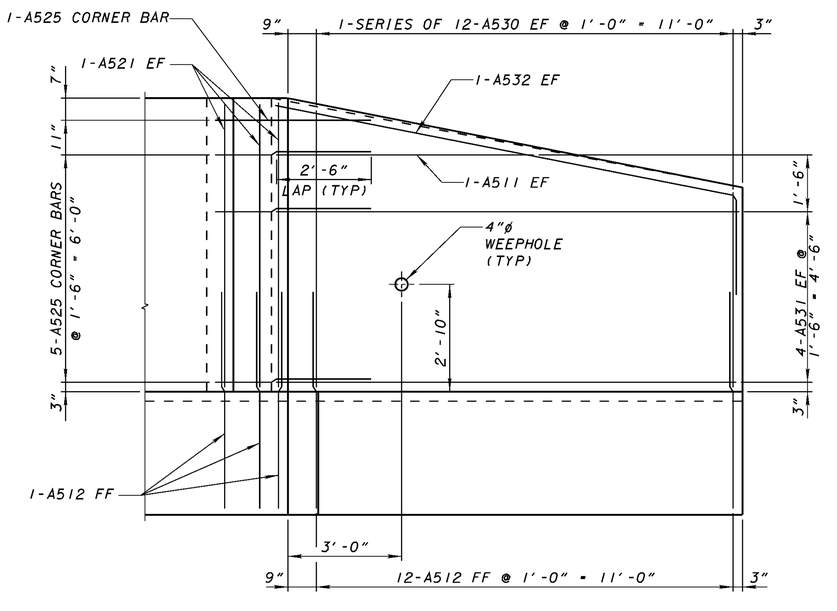

WINGWALL VIEW D-D

(PILES & RAILING NOT SHOWN FOR CLARITY)

LEGEND

EF= EACH FACE
NF= NEAR FACE
FF= FAR FACE
PEJF= PREFORMED EXPANSION JOINT FILLER

NOTES:

1. FOR CULVERT LOCATION PLAN, SEE SHEET 370/773.
2. FOR GENERAL NOTES, SEE SHEET 2/11.
3. FOR REINFORCING STEEL LIST, SEE SHEET 11/11.

LJB Inc. • 3100 Research Blvd. • P.O. Box 20246
Dayton, OH 45420-0246
(937) 259-5000 tel • (937) 259-5100 fax • ljbinc.com

DESIGNED	DRAWN	REVIEWED	DATE
AWT	MHD	MPH	3-08
CHECKED	REVISED	STRUCTURE FILE NUMBER	
DWS		5746159	

WINGWALL ELEVATIONS

MIAMISBURG-SPRINGBORO PIKE CULVERT AT STA. 133+63.58

MOT-75-0.75
PID 77246

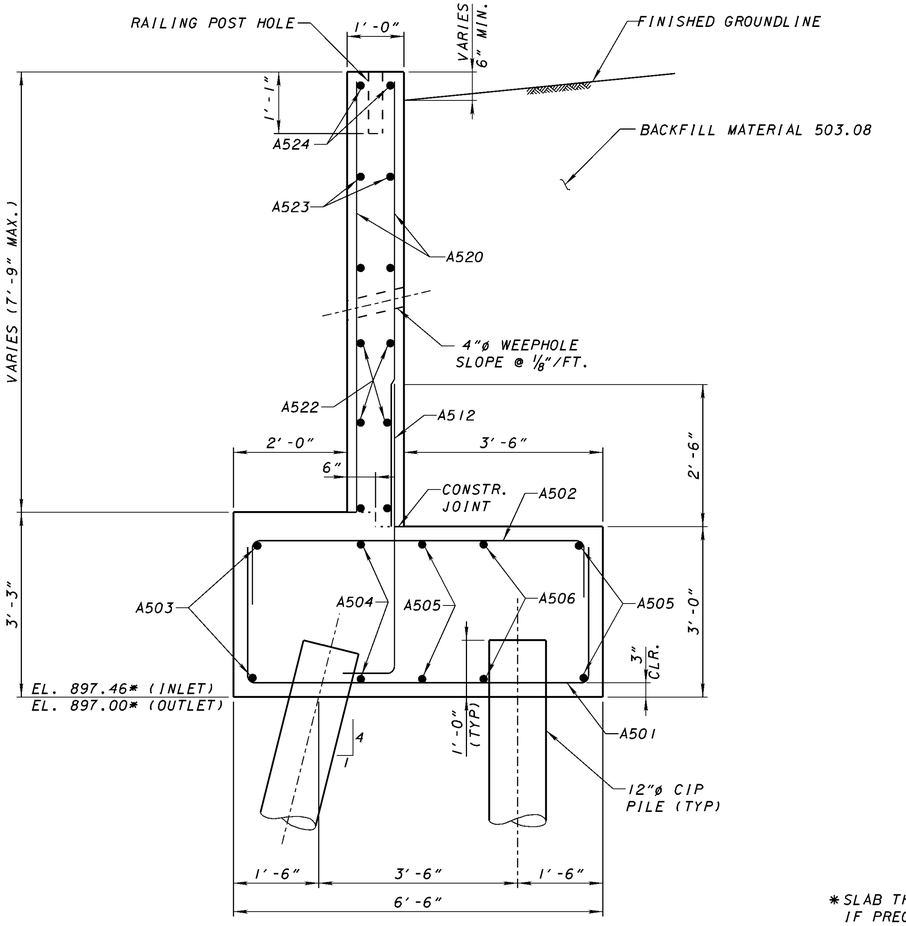

SECTION E-E

(SECTION E-E, SIMILAR)
(POROUS BACKFILL NOT SHOWN FOR CLARITY)

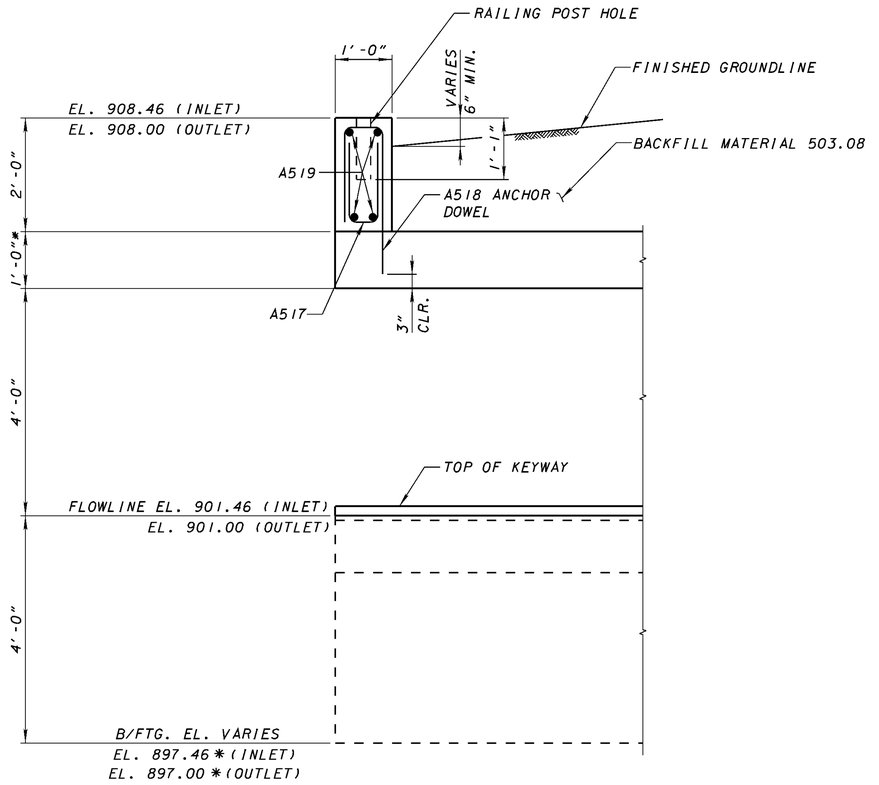

SECTION F-F

*SLAB THICKNESS ASSUMED TO BE 1'-0". IF PRECAST MANUFACTURER'S DIMENSIONS DIFFERS, ADJUST B/FTG. ELEVATION ACCORDINGLY.

NOTES:

1. FOR GENERAL NOTES, SEE SHEET 2/11.
2. FOR REINFORCING STEEL LIST, SEE SHEET 11/11.

LJB Inc. • 3100 Research Blvd. • P.O. Box 20246
Dayton, OH 45420-0246
(937) 259-5000 tel • (937) 259-5100 fax • ljbinc.com

DESIGNED	DRAWN	REVIEWED	DATE
AMT	MHD	MPH	3-08
CHECKED	REVISED	STRUCTURE FILE NUMBER	
DWS		5746159	

TYPICAL CULVERT SECTIONS
MIAMISBURG-SPRINGBORO PIKE CULVERT AT STA. 133+63.58

MOT-75-0.75
PID 77246

REINFORCING STEEL

MARK	NO.	LENGTH	WEIGHT	TYPE	A	B	C	D	E	F	G	H	K	O	R
A501	335	10'-9"	3756	8			2'-6"	6'-0"	2'-6"						
A502	335	7'-9"	2708	8			1'-0"	6'-0"	1'-0"						
A503	2	23'-11"	50	9		2'-11"	21'-0"		2'-1 1/8"	2'-1 1/8"				23'-1 1/8"	
A504	2	22'-6"	47	9		1'-6"	21'-0"		1'-1 1/8"	1'-1 1/8"				22'-1 1/8"	
A505	4	21'-0"	88	STR.											
A506	2	18'-11"	39	STR.											
A507	14	8'-8"	127	STR.											
A508	4	11'-3"	47	STR.											
A509	4	15'-10"	66	STR.											
A510	6	12'-8"	79	STR.											
A511	6	7'-0"	44	STR.											
A512	58	6'-2"	373	10		1'-0"	5'-3"								
A513	284	5'-9"	1703	8			2'-3"	1'-6"	2'-3"						
A514	192	30'-0"	6008	STR.											
A515	28	34'-8"	1012	STR.											
A516	4	32'-8"	136	STR.											
A517	52	3'-9"	203	8			1'-8"	8"	1'-8"						
A518	52	4'-8"	253	8			1'-8"	8"	2'-7"						
A519	8	25'-8"	214	STR.											
A520	2 SER	VAR. 4'-8"	263	STR.											
	OF 21	TO 7'-4"													
	• 42	INCR. 1 5/8"													
A521	32	7'-5"	248	STR.											
A522	8	20'-1"	168	STR.											
A523	2	9'-6"	20	STR.											
A524	2	22'-8"	47	9		2'-6"	20'-3"		4 1/8"	2'-5 3/4"				20'-7 1/8"	
A525	18	7'-1"	133	21		2'-6"	2'-0"	8"	2'-2"	2'-0"		1'-9 1/4"	1'-9 1/4"	0"	
A526	12	8'-1"	101	STR.											
A527	2 SER	VAR 5'-10"	124	STR.											
	OF 9	TO 7'-4"													
	• 18	INCR. 2 1/4"													
A528	8	8'-7"	72	STR.											
A529	2	11'-1"	23	9		2'-6"	8'-8"		5 1/2"	2'-5 1/2"				9'-1 1/2"	
A530	2 SER	VAR. 5'-1"	154	STR.											
	OF 12	TO 7'-3"													
	• 24	INCR. 2 3/8"													
A531	8	12'-2"	102	STR.											
A532	2	14'-8"	31	9		2'-6"	12'-3"		5 3/4"	2'-5 1/2"				12'-8 3/4"	
		TOTAL •	18439												

BENDING DIAGRAMS

TYPE 8

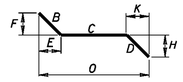

TYPE 9

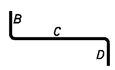

TYPE 10

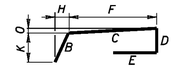

TYPE 21

NOTES

1. ALL REINFORCING STEEL BARS SHALL BE EPOXY COATED.
2. ALL DIMENSIONS ARE OUT TO OUT OF BAR.
3. RADIUS DIMENSION "R" IS TO THE OUTSIDE OF THE BAR.
4. THE BAR SIZE NUMBER IS SPECIFIED ON THE PLANS IN THE BAR MARK COLUMN. THE FIRST DIGIT WHERE THREE DIGITS ARE USED, AND THE FIRST TWO DIGITS WHERE FOUR ARE USED, INDICATES THE BAR SIZE NUMBER.

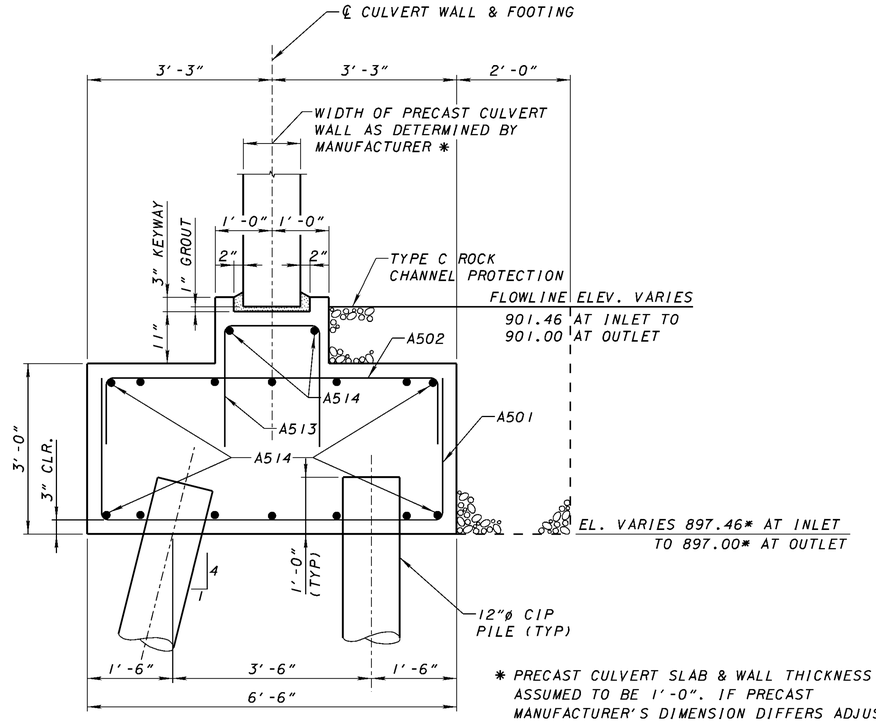

SECTION G-G

* PRECAST CULVERT SLAB & WALL THICKNESS ASSUMED TO BE 1'-0". IF PRECAST MANUFACTURER'S DIMENSION DIFFERS ADJUST DIMENSIONS AND B/FTG ELEVATION ACCORDINGLY.

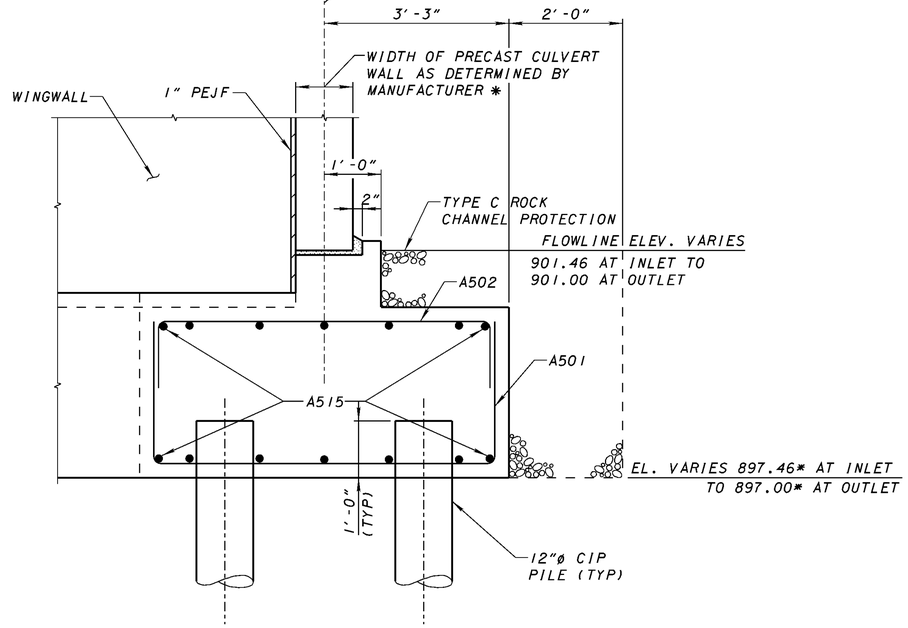

SECTION H-H
(WINGWALL REINFORCEMENT NOT SHOWN FOR CLARITY)

LJB Inc. - 3100 Research Blvd. - P.O. Box 20246
Dayton, OH 45420-0246
(937) 259-5000 tel - (937) 259-5100 fax ljbinc.com

DESIGNED AMT | DRAWN MHD | REVIEWED MPH | DATE 3-08
CHECKED DWS | REVISED | STRUCTURE FILE NUMBER 5746159

CULVERT FOOTING SECTIONS AND STEEL LIST

MIAMISBURG-SPRINGBORO PIKE CULVERT AT STA. 133+63.58

MOT-75-0.75
PID 77246

11/11

380/773

EXISTING STRUCTURE DATA

Type - Single Span
Size - 5'
Skew - 0°
Date Built - Unknown
Condition - Fair

HYDRAULIC DESIGN DATA

DRAINAGE AREA	= 38 ACRES
Q_{25}	= 79 cfs
Q_{100}	= 109 cfs
HW_{25}	= 908.19
HW_{100}	= 909.23
V_{25}	= 9.5 fps
V_{100}	= 10.3 fps

HORIZONTAL SCALE IN FEET (0, 5, 10, 20)

CALCULATED MAG CHECKED AJS

HW-2.2
142+35.11
83.33' LT

6" REINFORCED CONCRETE SLAB

10.04'

197' - 60"x38" CONDUIT, TYPE A, 706.04

141+87.95
0.00' RT

40.05'

℄ CONSTRUCTION CULVERT

6.89'

141+38.10
88.05' RT

INV. 24" = 903.89

24" CONDUIT, TYPE D @ 1.65%

ROCK CHANNEL PROTECTION, TYPE C, WITH FABRIC FILTER

CONSTRUCTION LIMITS

℄ CONSTRUCTION BYERS ROAD

CONSTRUCTION MIAMISBURG-SPRINGBORO PIKE

26.00'

35.17'

20.79'

30°

12" Water

16" Water

8" San

24" Casing

12" Water

8" San

San MH

8" San

12" Water

ESTIMATED QUANTITIES

ITEM	QUANTITY	UNIT	DESCRIPTION
601	4	SQ. YD.	RIPRAP USING 6" REINFORCED CONCRETE SLAB
601	7	CU. YD.	ROCK CHANNEL PROTECTION, TYPE C, WITH FABRIC FILTER
602	1.6	CU. YD.	CONCRETE MASONRY
603	197	FEET	38"x60" CONDUIT, TYPE A, 706.04

TOTALS CARRIED TO GENERAL SUMMARY

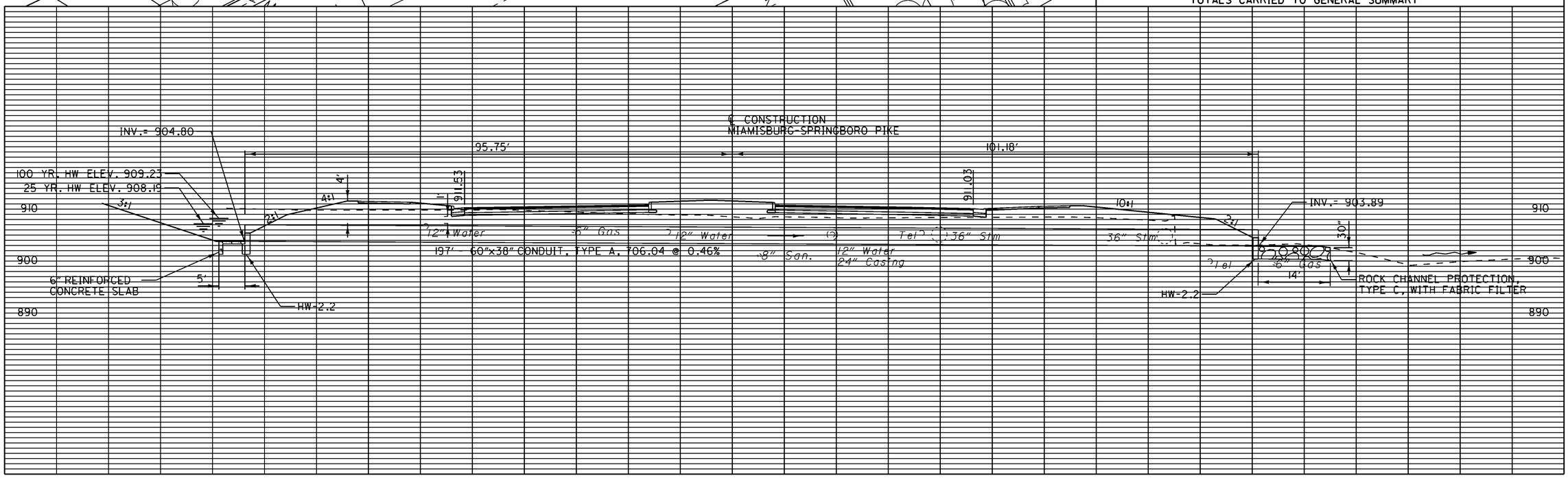

CULVERT DETAIL
MIAMISBURG-SPRINGBORO PIKE STA. 141+77.00

MOT-75-0.75

381
773

42" CONDUIT, TYPE A, 706.02, AS PER PLAN
THE FOLLOWING PIPE ALTERNATES MAY BE SUBSTITUTED FOR THE 42" CONDUIT, TYPE A, 706.02:

42" CONDUIT, TYPE A, 707.01 (0.109) GALVANIZED
42" CONDUIT, TYPE A, 707.01 (0.064) ALUMINIZED
42" CONDUIT, TYPE A, 707.02 (0.064) GALVANIZED WITH CFP
42" CONDUIT, TYPE A, 707.03 (0.064)
42" CONDUIT, TYPE A, 707.04 (1/2")(0.064) GALVANIZED WITH CFP
42" CONDUIT, TYPE A, 707.05 (0.079) GALVANIZED ASPHALT COATED AND PAVED
42" CONDUIT, TYPE A, 707.05 (0.064) ALUMINIZED ASPHALT COATED AND PAVED

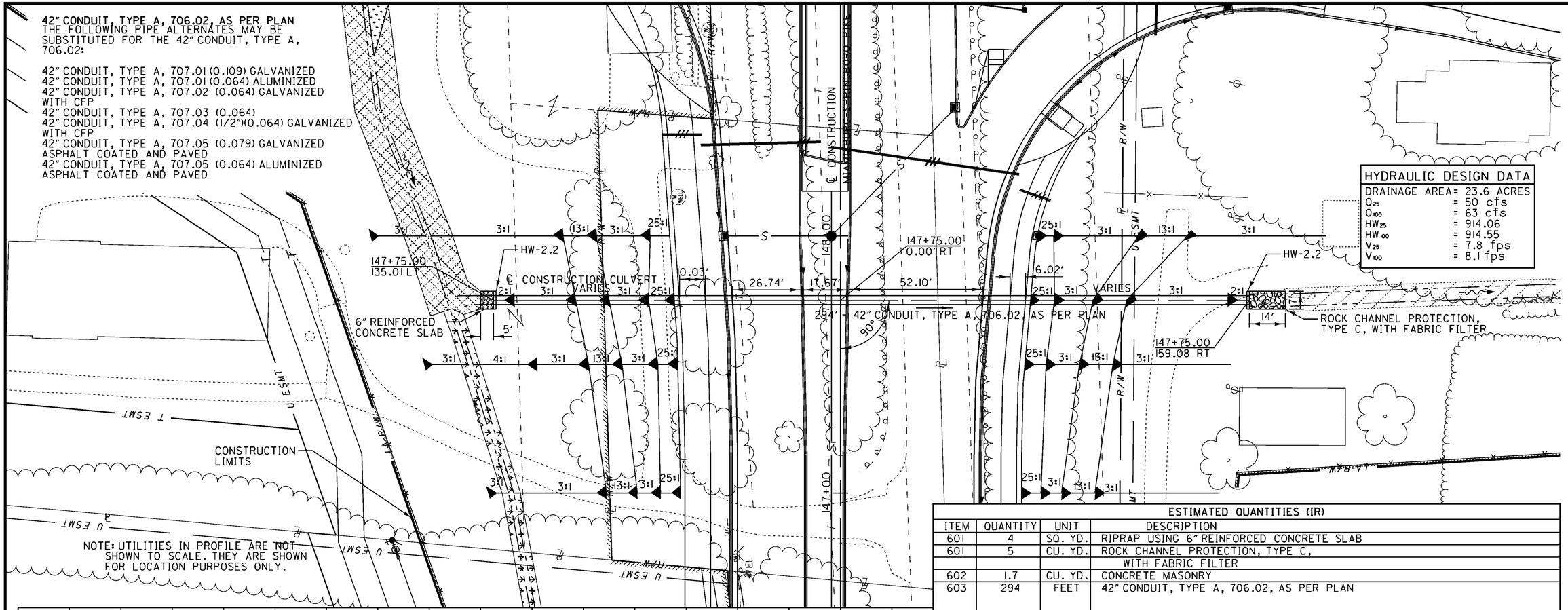

HYDRAULIC DESIGN DATA	
DRAINAGE AREA	= 23.6 ACRES
Q_{25}	= 50 cfs
Q_{100}	= 63 cfs
HW_{25}	= 914.06
HW_{100}	= 914.55
V_{25}	= 7.8 fps
V_{100}	= 8.1 fps

ESTIMATED QUANTITIES (IR)

ITEM	QUANTITY	UNIT	DESCRIPTION
601	4	SQ. YD.	RIPRAP USING 6" REINFORCED CONCRETE SLAB
601	5	CU. YD.	ROCK CHANNEL PROTECTION, TYPE C, WITH FABRIC FILTER
602	1.7	CU. YD.	CONCRETE MASONRY
603	294	FEET	42" CONDUIT, TYPE A, 706.02, AS PER PLAN

TOTALS CARRIED TO GENERAL SUMMARY

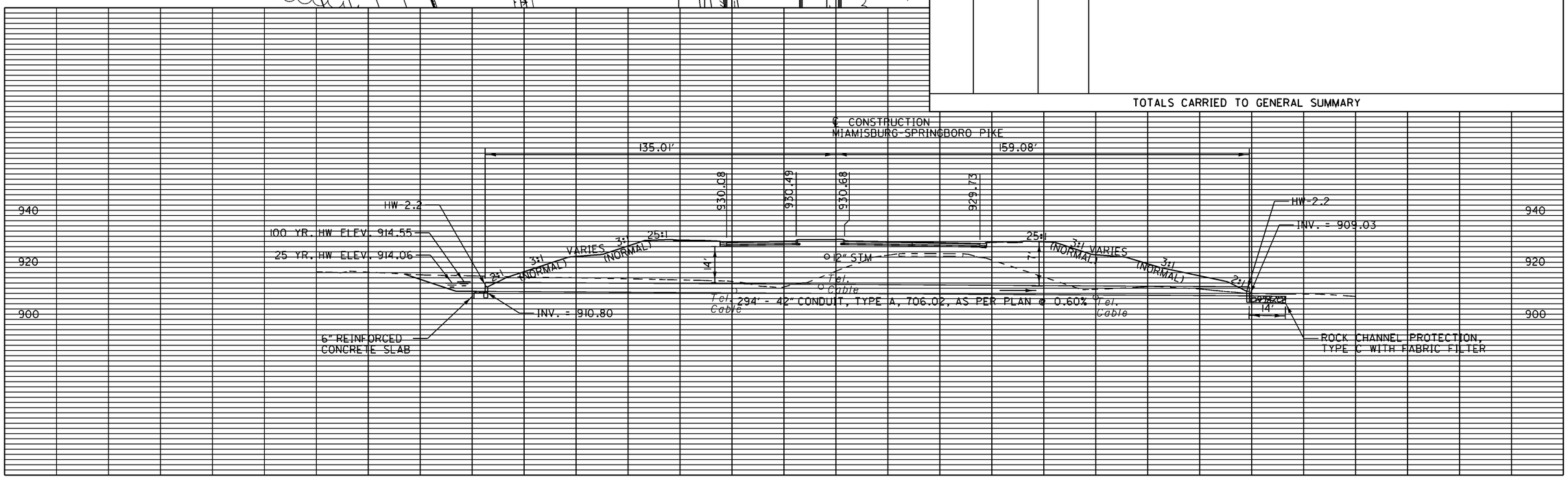

HORIZONTAL SCALE IN FEET
0 10 20 40

CALCULATED MAG
CHECKED AJS

CULVERT DETAIL
MIAMISBURG-SPRINGBORO PIKE STA. 147+75.00

MOT-75-0.75

382
773

42" CONDUIT, TYPE A, 706.02, AS PER PLAN
THE FOLLOWING PIPE ALTERNATES MAY BE SUBSTITUTED FOR THE 42" CONDUIT, TYPE A, 706.02:

42" CONDUIT, TYPE A, 707.01 (0.109) GALVANIZED
42" CONDUIT, TYPE A, 707.01 (0.064) ALUMINIZED
42" CONDUIT, TYPE A, 707.02 (0.064) GALVANIZED WITH CFP
42" CONDUIT, TYPE A, 707.03 (0.064)
42" CONDUIT, TYPE A, 707.04 (1/2")(0.064) GALVANIZED WITH CFP
42" CONDUIT, TYPE A, 707.05 (0.079) GALVANIZED ASPHALT COATED AND PAVED
42" CONDUIT, TYPE A, 707.05 (0.064) ALUMINIZED ASPHALT COATED AND PAVED

HORIZONTAL SCALE IN FEET
0 10 20 40

CALCULATED MAG
CHECKED AJS

CULVERT DETAIL
MIAMISBURG-SPRINGBORO PIKE STA. 159+00.00

MOT-75-0.75

383
773

HW-2.2
159+00.00 ON ℄
℄ CONSTRUCTION MIAMISBURG-SPRINGBORO PIKE
160+00
158+00
62'
15'
29'
310' - 42" CONDUIT, TYPE A, 706.02, AS PER PLAN
159+00.00 150.47 LT
159+00.00 159.53 RT
℄ CONSTRUCTION CULVERT
14'
ROCK CHANNEL PROTECTION, TYPE C, WITH FABRIC FILTER
ROCK CHANNEL PROTECTION, TYPE C, WITH FABRIC FILTER
143+00
142+00
141+00
R/W
℄ R/W
U ESMT
T ESMT
S ESMT
G ESMT
SAN
T TEL
W
S
G
U
T
SAN

NOTE: UTILITIES IN PROFILE ARE NOT SHOWN TO SCALE. THEY ARE SHOWN FOR LOCATION PURPOSES ONLY.

HYDRAULIC DESIGN DATA

DRAINAGE AREA	= 20.3 ACRES
Q_{25}	= 46 cfs
Q_{100}	= 57 cfs
HW_{25}	= 925.61
HW_{100}	= 926.10
V_{25}	= 13.9 fps
V_{100}	= 14.0 fps

ESTIMATED QUANTITIES (IR)

ITEM	QUANTITY	UNIT	DESCRIPTION
601	11	CU. YD.	ROCK CHANNEL PROTECTION, TYPE C, WITH FABRIC FILTER
602	1.7	CU. YD.	CONCRETE MASONRY
603	310	FEET	42" CONDUIT, TYPE A, 706.02, AS PER PLAN

TOTALS CARRIED TO GENERAL SUMMARY

940
920
900
880

INV=922.53
100 YR HW ELEV.=926.10
25 YR HW ELEV.=925.61
922.5
HW-2.2
ROCK CHANNEL PROTECTION, TYPE C, WITH FABRIC FILTER
12" STM.
334.51
334.71
℄ CONSTRUCTION MIAMISBURG-SPRINGBORO PIKE
310' - 42" CONDUIT, TYPE A, 706.02, AS PER PLAN @ 2.41%
Exist. Ele.
Ele. (Abandoned) Exist.
150.47'
159.53'
VARIES
INV=915.06
ROCK CHANNEL PROTECTION, TYPE C, WITH FABRIC FILTER
14'
30"
2:1
3:1 (NORMAL)
25:1
6"

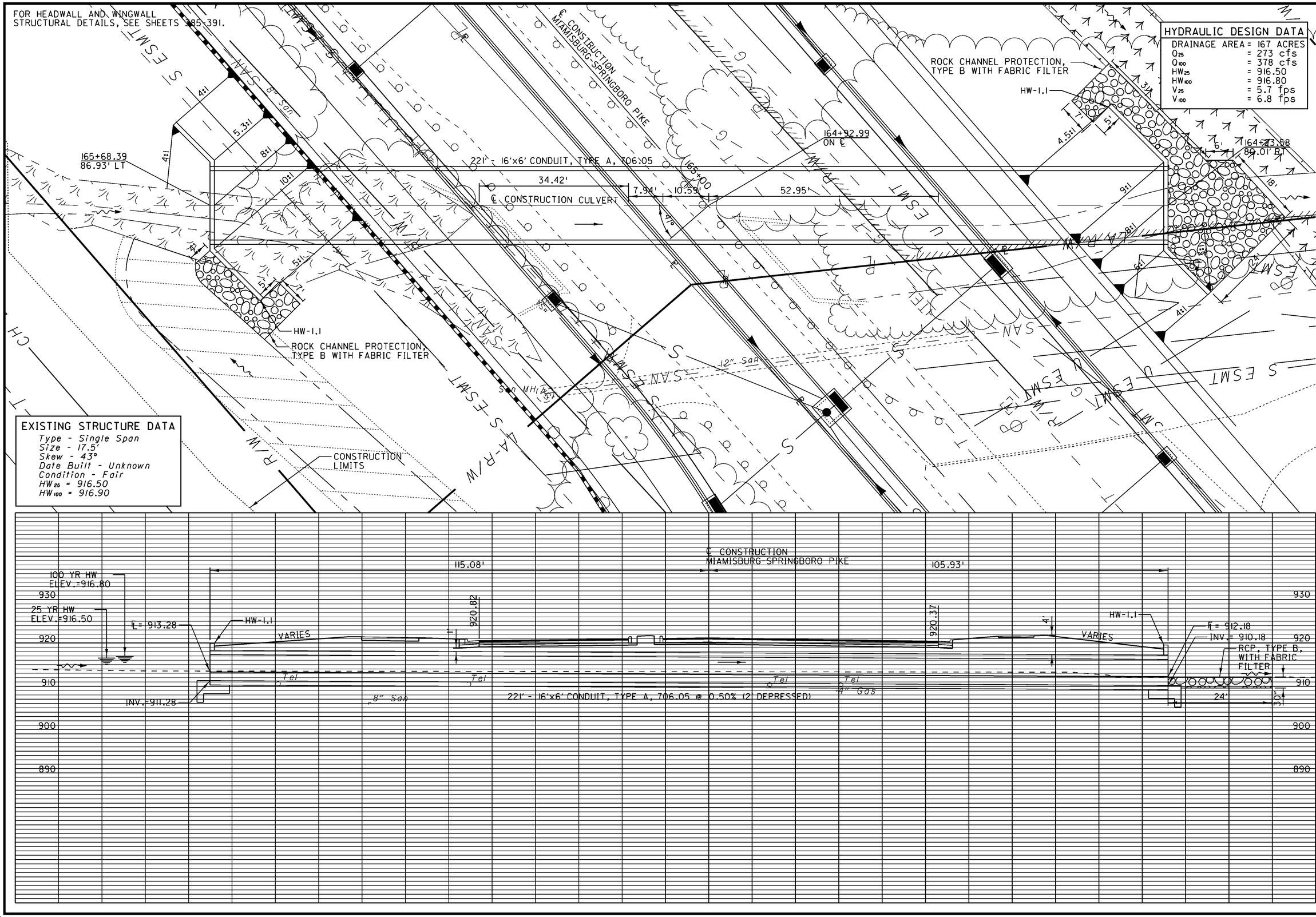

HORIZONTAL SCALE IN FEET

CALCULATED MAG
CHECKED AJS

CULVERT DETAIL
MIAMISBURG-SPRINGBORO PIKE STA. 164+92.99

MOT-75-0.75

GENERAL NOTES

DESIGN SPECIFICATIONS: THIS STRUCTURE CONFORMS TO "STANDARD SPECIFICATIONS FOR HIGHWAY BRIDGES" ADOPTED BY THE AMERICAN ASSOCIATION OF STATE HIGHWAY AND TRANSPORTATION OFFICIALS 2002, AND THE ODOT BRIDGE DESIGN MANUAL.

DESIGN LOADING: HS-25, ALTERNATE MILITARY LOADING AND 60 PSF FUTURE WEARING SURFACE.

DESIGN DATA:
CLASS C CONCRETE, SUBSTRUCTURE - COMPRESSIVE STRENGTH 4000 P.S.I.
REINFORCING STEEL - ASTM A615 OR A996.
GRADE 60, MINIMUM YIELD STRENGTH 60,000 P.S.I. (ALL REINFORCING SHALL BE EPOXY COATED).
PRECAST STRUCTURES: FOR BOX AND PIPE CULVERTS, SEE CMS SECTION 603.

FOUNDATION BEARING PRESSURE: THE HEADWALL AND WINGWALL FOOTINGS, AS DESIGNED, PRODUCE A MAXIMUM BEARING PRESSURE OF 1.0 TON PER SQUARE FOOT. THE ALLOWABLE BEARING PRESSURE IS 2.0 TONS PER SQUARE FOOT.

REINFORCING STEEL COVER: THE MINIMUM CONCRETE COVER OVER REINFORCING STEEL IS 2" UNLESS OTHERWISE NOTED.

FORESLOPE WALL ANCHOR DOWELS: ANCHOR PER CMS 510 WITH NONSHRINK, NONMETALLIC GROUT CONFORMING TO CMS 705.20 AND TO A DEPTH OF 9 INCHES. PAYMENT FOR DOWEL HOLES, GROUT AND INSTALLATION SHALL BE INCLUDED WITH ITEM 511.

AS AN ALTERNATIVE TO RESIN BONDING, THREADED INSERTS OR NONPROTRUDING MECHANICAL CONNECTORS CAST INTO THE CULVERT BY THE MANUFACTURER MAY BE USED PROVIDED THEY CAN RESIST AN ULTIMATE PULL-OUT STRENGTH OF 12 KIPS AND MAINTAIN A MINIMUM COVER OF 3 INCHES AT THE BOTTOM OF THE CULVERT SLAB. MECHANICAL CONNECTORS MUST PROVIDE AN "L-SHAPED" BAR INSIDE THE CULVERT WITH A MINIMUM HORIZONTAL LENGTH OF 12 INCHES. PAYMENT FOR INSERTS OR MECHANICAL CONNECTORS SHALL BE INCLUDED WITH ITEM 603.

PREFORMED EXPANSION JOINT FILLER: PREFORMED EXPANSION JOINT FILLER (PEJF) CONFORMING TO CMS 705.03, 1 INCH THICK, SHALL BE PLACED ABOVE THE FOOTING BETWEEN THE SIDES OF THE BOX CULVERT AND THE ENDS OF THE WINGWALLS. PAYMENT FOR MATERIALS AND INSTALLATION SHALL BE INCLUDED WITH ITEM 516 - 1" PREFORMED EXPANSION JOINT FILLER.

BASIS OF PAYMENT: ALL LABOR, EQUIPMENT AND INCIDENTALS REQUIRED TO CONSTRUCT THE FOOTING, CUTOFF WALL, WINGWALLS AND FORESLOPE WALL SHALL BE INCLUDED WITH ITEM 511 - CLASS C CONCRETE. PAYMENT FOR REINFORCING STEEL SHALL BE INCLUDED WITH ITEM 509 - EPOXY COATED REINFORCING STEEL.

POROUS BACKFILL WITH FILTER FABRIC: POROUS BACKFILL WITH FILTER FABRIC 1'-6" THICK SHALL EXTEND UP TO THE PLANE OF THE SUBGRADE, TO 1'-0" BELOW THE EMBANKMENT SURFACE, AND LATERALLY TO THE ENDS OF THE WINGWALLS. BEHIND THE WINGWALLS, IT SHALL EXTEND AT LEAST 6" BELOW THE BOTTOM OF THE WEEPHOLES. FILTER FABRIC SHALL BE PLACED BETWEEN THE POROUS BACKFILL AND REPLACED EXCAVATION ADJACENT TO THE STRUCTURE. IT SHALL TURN UNDER THE BOTTOM OF THE POROUS BACKFILL AND RETURN 6" ABOVE THE TOP ELEVATION OF THE WEEPHOLE. TWO CUBIC FEET OF BAGGED NO.3 AGGREGATE SHALL BE PLACED AT EACH WEEPHOLE. THE BAGGED AGGREGATE SHALL BE INCLUDED FOR PAYMENT WITH THE APPROPRIATE POROUS BACKFILL ITEM 518 FOR PAYMENT.

WEEPHOLES SHALL BE PLACED 6" TO 12" ABOVE THE NORMAL WATER ELEVATION OR GROUND LINE AND SHALL HAVE A MAXIMUM SPACING OF 10'-0". A MINIMUM OF ONE WEEPHOLE SHALL BE PROVIDED PER WINGWALL.

UTILITY LINES: THE UTILITIES SHALL BEAR ALL EXPENSE INVOLVED IN RELOCATING (INSTALLING) THE AFFECTED UTILITY LINES. THE CONTRACTOR AND UTILITIES ARE TO COOPERATE BY ARRANGING THEIR WORK IN SUCH A MANNER THAT INCONVENIENCE TO EITHER WILL BE HELD TO A MINIMUM.

WATERPROOFING: TYPE 2 WATERPROOFING, PER CMS 512.08 AND 711.25, SHALL EXTEND VERTICALLY DOWN THE ENTIRE SIDES OF THE PRECAST CULVERT SECTIONS FOR ALL PORTIONS OF THE CULVERT WHICH SHALL BE IN CONTACT WITH THE BACKFILL. PAYMENT FOR THE MEMBRANE WATERPROOFING SHALL BE AT THE CONTRACT PRICE BID PER SQUARE YARD FOR ITEM 512 - TYPE 2 WATERPROOFING.

TYPE 2 WATERPROOFING, PER CMS 512.08 AND 711.25 SHALL BE APPLIED TO THE TOP SURFACE OF THE PRECAST CULVERT SECTIONS AND SHALL EXTEND ONE FOOT VERTICALLY DOWN THE SIDES FOR ALL PORTIONS OF THE CULVERT WHICH SHALL BE IN CONTACT WITH THE BACKFILL. PAYMENT FOR THE MEMBRANE WATERPROOFING SHALL BE AT THE CONTRACT PRICE BID PER SQUARE YARD FOR ITEM 512 - TYPE 2 WATERPROOFING.

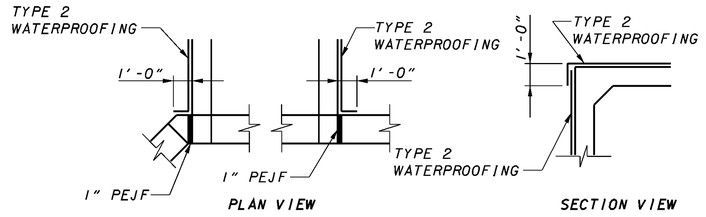

WATERPROOFING DETAILS

SEALING OF FORESLOPE WALL AND WINGWALLS: ALL EXPOSED FORESLOPE WALL AND WINGWALL CONCRETE SHALL BE SEALED WITH EPOXY-URETHANE SEALER. THE LIMITS SHALL BE AS SHOWN IN THE DIAGRAMS ON SHEET 8/8. PAYMENT FOR THE EPOXY-URETHANE SEALER SHALL BE PER ITEM 512 - SEALING OF CONCRETE SURFACES.

ESTIMATED QUANTITIES

ITEM	ITEM EXTENSION	TOTAL	UNIT	DESCRIPTION
202	11001	LUMP		STRUCTURE REMOVED, AS PER PLAN
503	11100	LUMP		COFFERDAMS, CRIBS AND SHEETING
503	21300	LUMP		UNCLASSIFIED EXCAVATION
509	10000	6773	POUND	EPOXY COATED REINFORCING STEEL*
511	46000	22	CU.YD.	CLASS C CONCRETE, WINGWALL
511	46500	73	CU.YD.	CLASS C CONCRETE, FOOTING
511	46600	3	CU.YD.	CLASS C CONCRETE, HEADWALLS
512	10100	105	SQ.YD.	SEALING OF CONCRETE SURFACES (EPOXY-URETHANE)
512	33000	895	SQ.YD.	TYPE 2 WATERPROOFING
516	13600	40	SQ.FT.	1" PREFORMED EXPANSION JOINT FILLER
517	76300	102	FT.	RAILING, MISC: RAILING (PEDESTRIAN, TUBULAR STEEL), AS PER PLAN*
518	21230	LUMP	FT.	POROUS BACKFILL WITH FILTER FABRIC
601	32104	80	CU.YD.	ROCK CHANNEL PROTECTION, TYPE B WITH FABRIC FILTER
603	96441	221	FT.	16'x6' CONDUIT TYPE A, 706.05, AS PER PLAN

NOTE: TOTAL CARRIED TO GENERAL SUMMARY SHEETS.

QUANTITIES COMPUTED BY: AMT
QUANTITIES CHECKED BY: DWS

ITEM 202, STRUCTURE REMOVED, AS PER PLAN: CAREFULLY EXCAVATE, MATCH-MARK, AND DISMANTLE THE EXISTING 3-SIDED CULVERT AT STA. 164+75 ON MIAMISBURG-SPRINGBORO PIKE AND STORE THE PRECAST CULVERT SECTIONS ON FLAT TERRAIN WITH ACCESSIBILITY ALONG THE RIGHT-OF-WAY FOR RETRIEVAL BY MONTGOMERY COUNTY FORCES.

ALL ITEM 603 PROVISIONS INCLUDING CONSTRUCTION LOADING, BACKFILL PLACEMENT, AND ERECTION OF THE CULVERT SHALL BE FOLLOWED WHEN EXCAVATING, DISMANTLING, LIFTING, TRANSPORTING, AND STORING THE PRECAST UNITS DURING THE SALVAGE OPERATION. SEPARATE THE PRECAST UNITS FROM THE WINGWALLS AND FOOTINGS BY MEANS OF APPROVED PNEUMATIC HAMMERS EMPLOYING POINTED AND BLUNT CHISEL TOOLS. HYDRAULIC HOE-RAM TYPE HAMMERS WILL NOT BE PERMITTED. THE WEIGHT OF THE HAMMER SHALL NOT BE MORE THAN 35 POUNDS FOR SEPARATING PRECAST SECTIONS FROM CAST-IN-PLACE COMPONENTS. THE CAST-IN-PLACE CONCRETE HEADWALLS ARE NOT REQUIRED TO BE REMOVED, AND MAY REMAIN ATTACHED TO THE END SECTIONS. EXISTING GROUTED OR PLUGGED LIFT HOLES MAY BE USED TO LIFT THE PRECAST CULVERT SECTIONS, BUT NO NEW HOLES MAY BE DRILLED. AFTER SALVAGING THE PRECAST SECTIONS, REMOVAL OF THE REMAINING FOUNDATIONS AND WINGWALLS SHALL BE IN ACCORDANCE WITH ITEM 202 REQUIREMENTS. CLEANING THE CULVERT SECTIONS OF OLD GROUT AND WATERPROOFING WILL BE DONE BY OTHERS. STRUCTURE-MOUNTED GUARD RAIL POSTS SHALL BE REMOVED PRIOR TO LIFTING THE CULVERT FASCIA SECTIONS IN SUCH A WAY AS TO PRESERVE THE ANCHOR BOLTS, NUTS AND WASHERS FOR REUSE BY OTHERS. THE CONTRACTOR SHALL NOTIFY THE ENGINEER IN WRITING OF PRE-EXISTING DAMAGE TO ANY ITEM IDENTIFIED FOR SALVAGE BY THIS NOTE IN ADVANCE OF THE REMOVAL WORK.

CONTACT MARK HARTUNG IN THE MONTGOMERY COUNTY OPERATIONS DIVISION AT (937)837-2528 TO COORDINATE RETRIEVAL OF THE PRECAST UNITS BY COUNTY FORCES. PLANS OF THE EXISTING STRUCTURE ARE AVAILABLE FOR REVIEW AT THE MONTGOMERY COUNTY ENGINEER'S OFFICE, 451 WEST THIRD STREET, DAYTON, OH 45422-1260, (937)225-4904 DURING NORMAL BUSINESS HOURS.

ITEM 503, UNCLASSIFIED EXCAVATION: UNCLASSIFIED EXCAVATION SHALL BE IN ACCORDANCE WITH 503 EXCEPT THAT THE BACKFILL MATERIAL SHALL BE 203 MATERIAL PLACED IN 6 INCH LIFTS.

EXCAVATION FOR THE CULVERT AND WINGWALL FOUNDATIONS SHALL EXTEND TO A DEPTH OF 905.3.

ANY OVEREXCAVATION MAY BE REPLACED WITH COMPACTED SOIL FILL PER THE RECOMMENDATIONS IN THE SOIL REPORTS BY BOWSER MORNER (ORIGINAL DATED: JULY 19, 2005 AND ADDENDUM DATED: OCTOBER 17, 2005).

ALL MATERIAL AND LABOR REQUIRED TO PERFORM THE ADDITIONAL WORK, AS DESCRIBED ABOVE, SHALL BE INCLUDED IN ITEM 503 - UNCLASSIFIED EXCAVATION FOR PAYMENT.

ITEM 517 RAILING, MISC.: RAILING (PEDESTRIAN, TUBULAR STEEL), AS PER PLAN
RAILING AND POST SHALL BE FABRICATED FROM NOMINAL SIZE 1½ IN., 0.145 IN. WALL THICKNESS GALVANIZED PER ASTM A123 STEEL PIPE MEETING THE REQUIREMENTS ESTABLISHED IN STANDARD DRAWING RM-2.1 AND ODOT CONSTRUCTION AND MATERIALS SPECIFICATION (CMS) 710. THE HANDRAIL POSTS SHALL BE SET IN HOLES THAT CONSIST OF A 3 IN. DIAMETER BY 13 IN. DEEP BLOCK OUT OR BY CORE AFTER CONCRETE PLACEMENT. ALL HANDRAIL POSTS SHALL BE GROUTED INTO THE PROVIDED HOLES. NON-SHRINKING EPOXY GROUT SHALL BE IN ACCORDANCE WITH ODOT CMS 705.20. HANDRAIL ANCHORING SHALL CONFORM TO ODOT CMS 705.20. THE HANDRAIL POSTS SHALL BE SET IN A TRUE VERTICAL ALIGNMENT ALONG ENTIRE LENGTH OF WALL. PAYMENT SHALL INCLUDE DRILLING OR CASTING OF HOLES INTO THE CONCRETE, THE FURNISHING AND PLACING OF THE RAILING AND POSTS AND THE FURNISHING AND PLACING OF THE NON-SHRINKING EPOXY GROUT INTO THE HOLES TO PLACE THE HANDRAILS.

LJB Inc. - 3100 Research Blvd. - P.O. Box 20246
Dayton, OH 45420-0246
(937) 259-5000 tel - (937) 259-5100 fax ljbinc.com

DESIGNED AMT | DRAWN MHD | CHECKED DWS | REVIEWED MPH | DATE 3-08 | REVISED | STRUCTURE FILE NUMBER 5746434

GENERAL NOTES AND ESTIMATED QUANTITIES
MIAMISBURG-SPRINGBORO PIKE CULVERT AT STA. 164+92.99

MOT-75-0.75
PID 77246

MIAMISBURG-SPRINGBORO PIKE
STA. 164+92.99 MIA-CR 166-0565
SFN 5746434

Ohio Department of Transportation

Item 603 - 16' X 6' Conduit Type A, 706.05, As Per Plan
All Requirements of 706.05 Shall Be Met
Except As Detailed Herein:

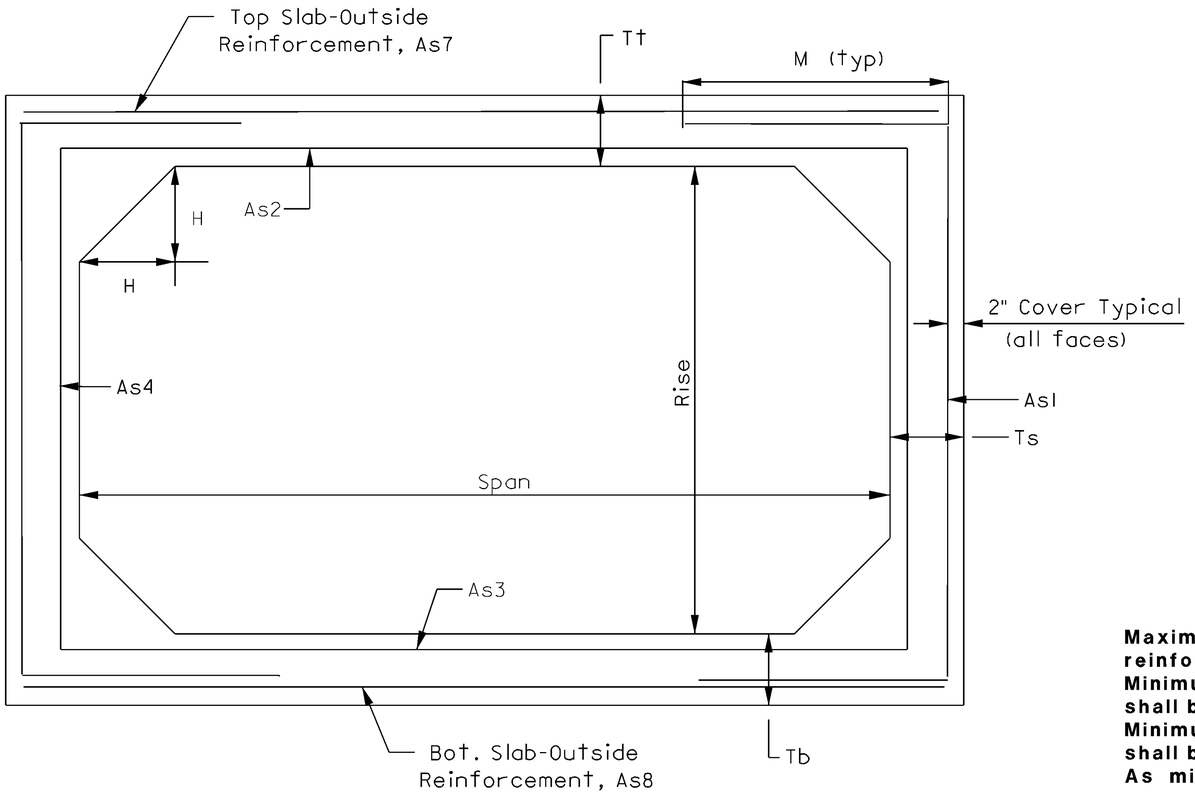

Loading: HS-25
Depth of Cover = 2.5' - 3.5'
FWS = 60 psf

Span	16'
Rise	6'
Tt	12"
Tb	12"
Ts	12"
H	12"
As1	1.1
As2	1.1
As3	0.9
As4	0.29
As7	0.29
As8	0.29
M min	53"

Maximum spacing of the circumferential reinforcing shall be 4".
Minimum yield strength for reinforcing shall be 60 ksi.
Minimum concrete compressive strength shall be 5000 psi.
As min = 0.002 X Gross Section Area

NOTES:

1. OUTLET SECTION SHALL BE FABRICATED WITHOUT A PROTRUDING TONGUE JOINT.
2. A CORROSION INHIBITOR SHALL BE USED UNLESS EPOXY COATED REINFORCING STEEL IS USED. SEE CMS 706.051-6.4 FOR ADDITIONAL REQUIREMENTS.

BOX CULVERT DESIGN
MIAMISBURG-SPRINGBORO PIKE CULVERT AT STA. 164+92.99
MIAMISBURG-SPRINGBORO PIKE
MOT-75-0.75
PID 77246

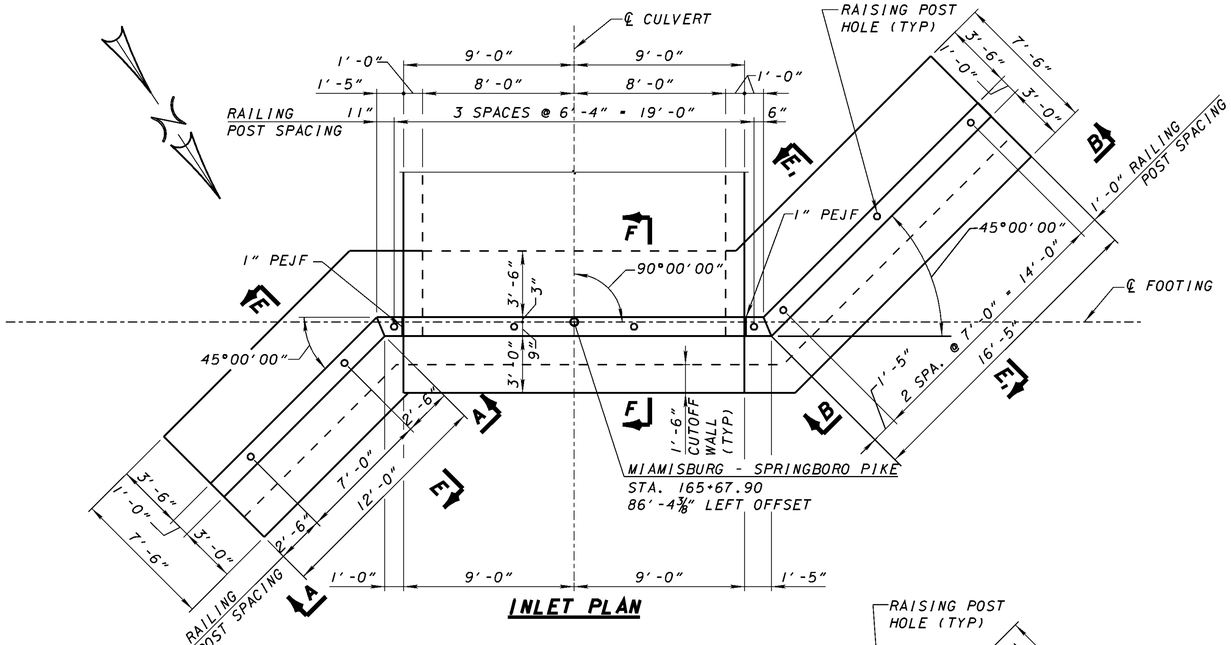

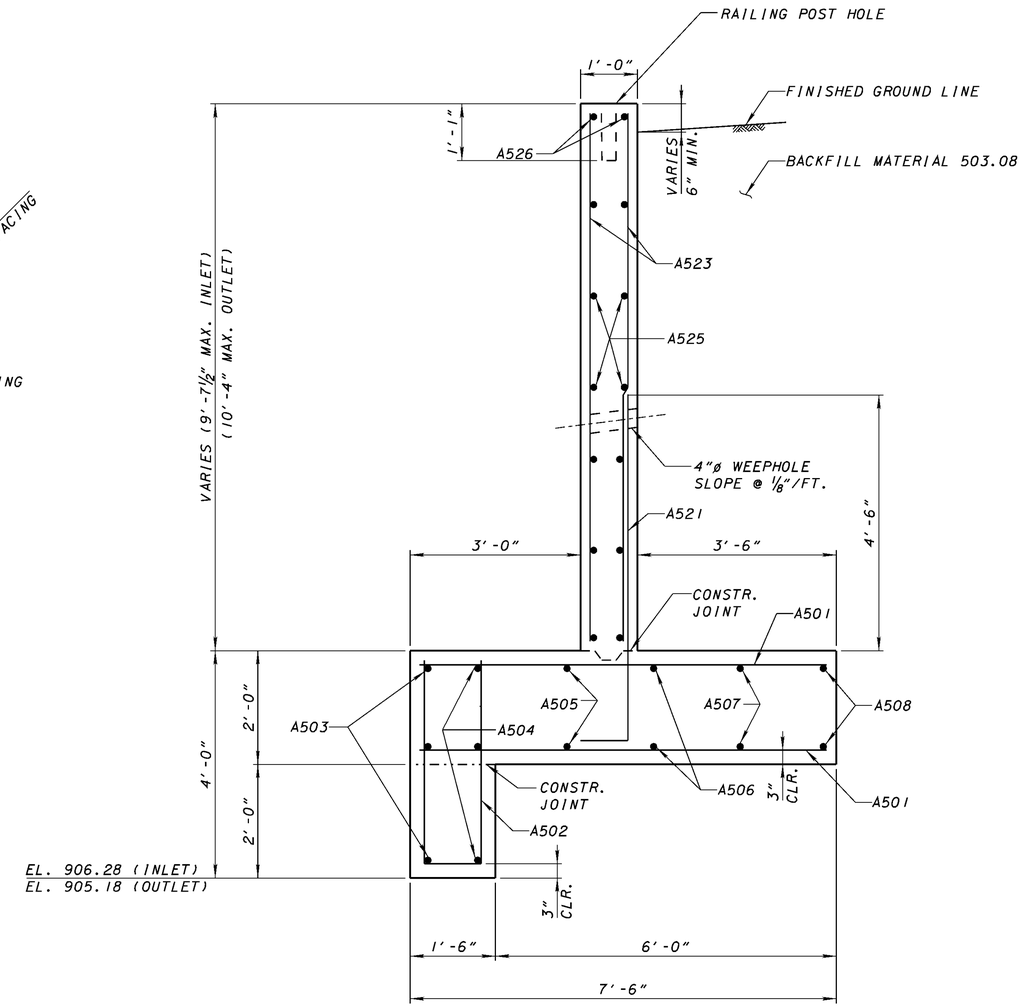

SECTION E-E

(SECTION E_1-E_1, SIMILAR)
(POROUS BACKFILL NOT SHOWN FOR CLARITY)

LEGEND

PEJF - PREFORMED EXPANSION JOINT FILLER

NOTES:

1. FOR CULVERT LOCATION PLAN, SEE SHEET (384/773).
2. FOR GENERAL NOTES, SEE SHEET 2 / 8 .
3. FOR REINFORCING STEEL LIST, SEE SHEET 8 / 8 .
4. FOR VIEWS A-A, B-B, C-C, AND D-D, SEE SHEET 7 / 8 .
5. FOR SECTIONS F-F AND F_1-F_1, SEE SHEET 5 / 8 .
6. FOR TYPICAL RAILING DETAILS, SEE SHEET 8 / 8 .

LJB Inc. - 3100 Research Blvd. - P.O. Box 20246
Dayton, OH 45420-0246
(937) 259-5000 tel - (937) 259-5100 fax ljbinc.com

DESIGNED	DRAWN	REVIEWED	DATE
AMT	MHD	MPH	3-08
CHECKED	REVISED	STRUCTURE FILE NUMBER	
DWS		5746434	

INLET AND OUTLET PLANS AND SECTION

MIAMISBURG-SPRINGBORO PIKE CULVERT AT STA. 164+92.99

MOT-75-0.75
PID 77246

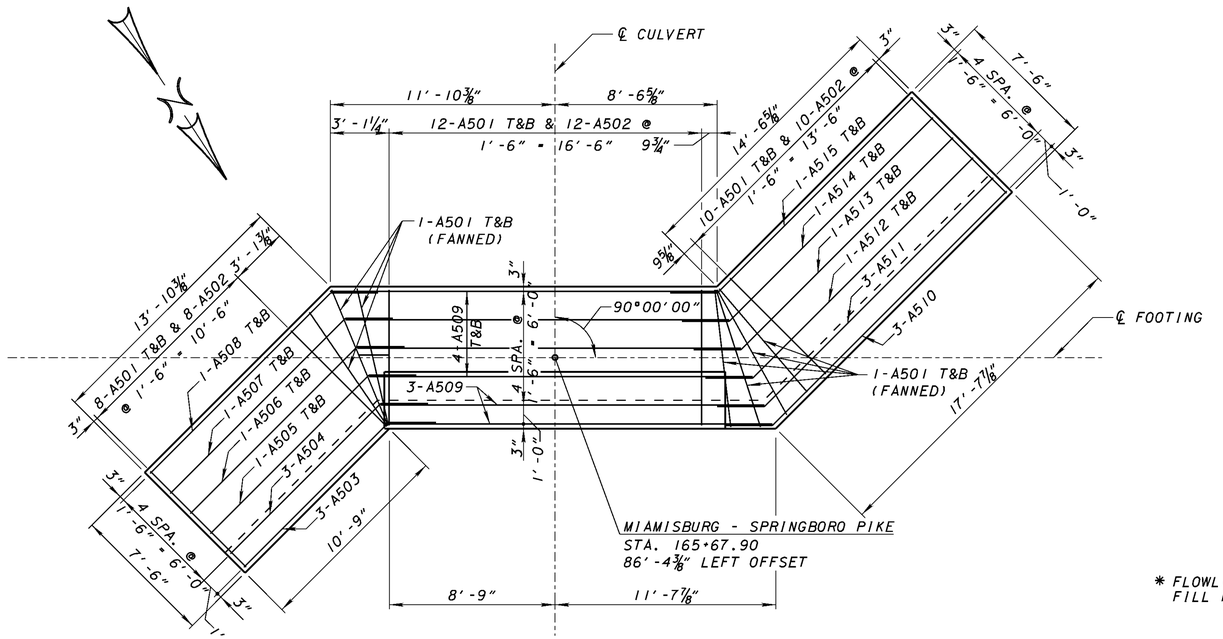

INLET FOOTING PLAN

(A516 & A521 BARS NOT SHOWN FOR CLARITY)

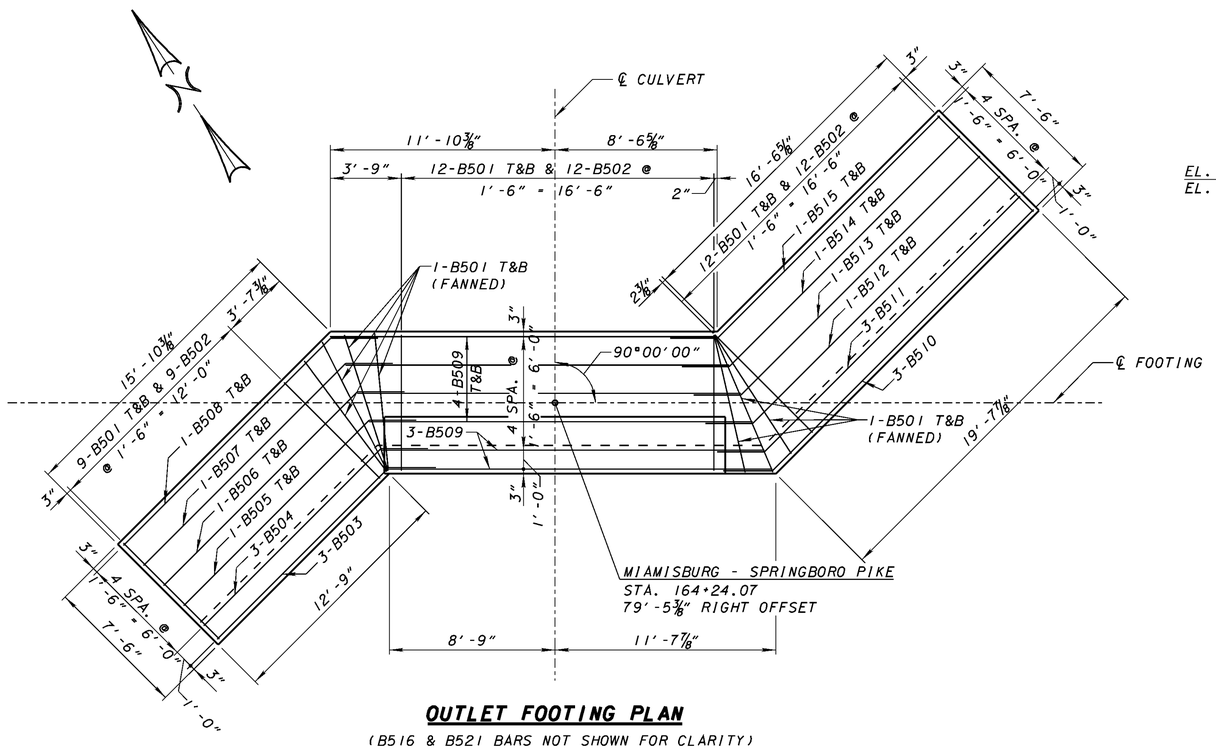

OUTLET FOOTING PLAN

(B516 & B521 BARS NOT SHOWN FOR CLARITY)

* FLOWLINE TO FILL NATURALLY

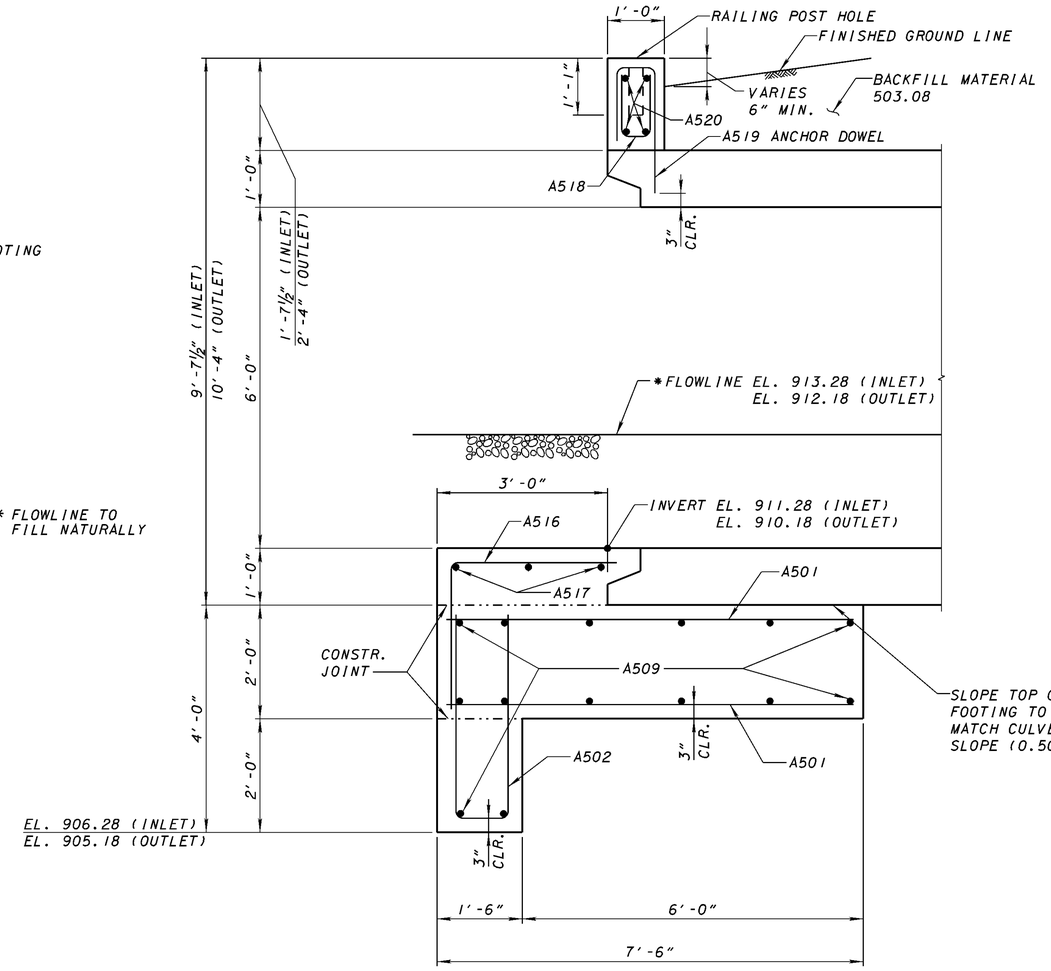

SECTION F-F

(SECTION F$_2$-F$_2$ SIMILAR)
(CULVERT INLET BEVEL SHOWN, OUTLET SECTION TO BE WITHOUT A PROTRUDING TONGUE JOINT)

LEGEND

T- TOP
B- BOTTOM

NOTES:

1. FOR CULVERT LOCATION PLAN, SEE SHEET 384/773.
2. FOR GENERAL NOTES, SEE SHEET 2 / 8.
3. FOR REINFORCING STEEL LIST, SEE SHEET 8 / 8.
4. THE LAP SPLICE LENGTH USED IN THESE DETAILS IS 2'-6" FOR #5 BARS.

LJB Inc. • 3100 Research Blvd. • P.O. Box 20246
Dayton, OH 45420-0246
(937) 259-5000 tel • (937) 259-5100 fax ljbinc.com

DESIGNED	DRAWN	REVIEWED	DATE
AMT	MHD	MPH	3-08
CHECKED	REVISED	STRUCTURE FILE NUMBER	
DWS		5746434	

INLET AND OUTLET FOOTING PLANS AND SECTION

MIAMISBURG-SPRINGBORO PIKE CULVERT AT STA. 164+92.99

MOT-75-0.75
PID 77246

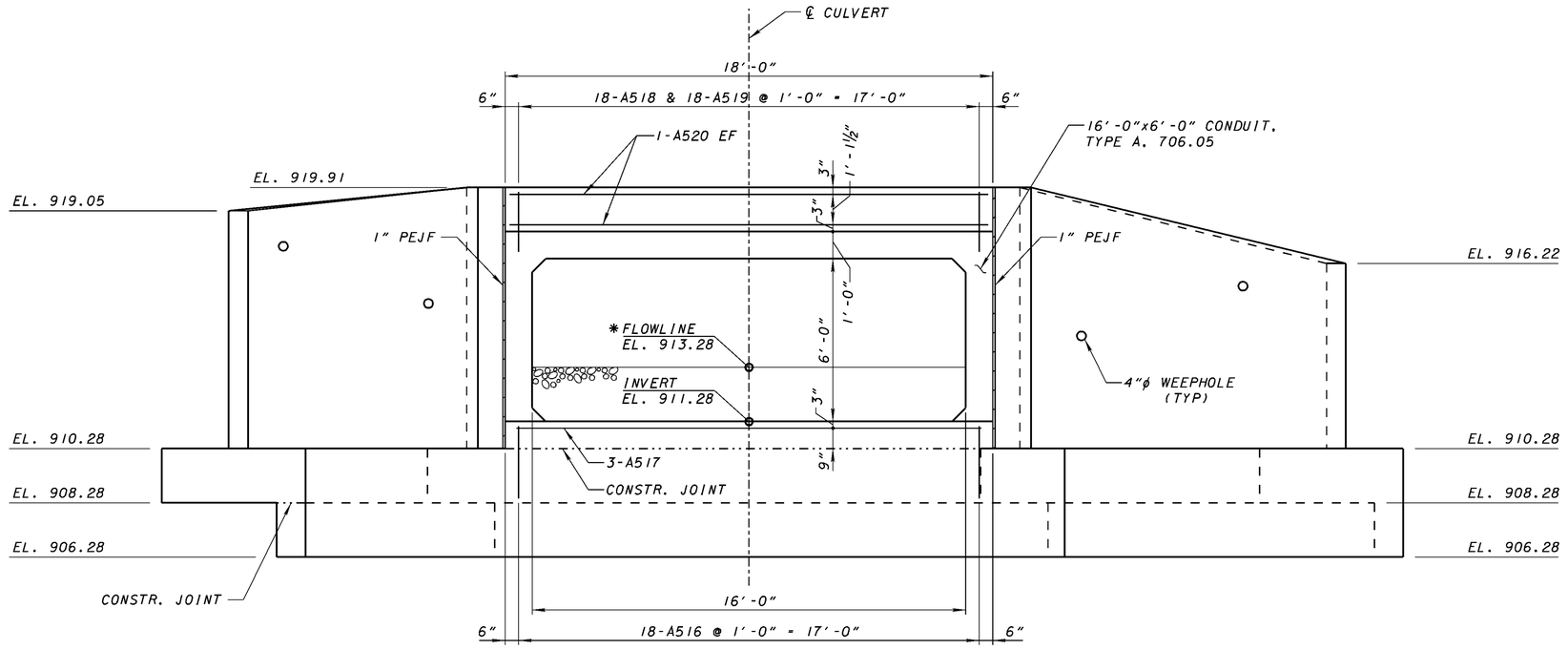

INLET ELEVATION

(RAILING NOT SHOWN FOR CLARITY)

* FLOWLINE TO FILL NATURALLY

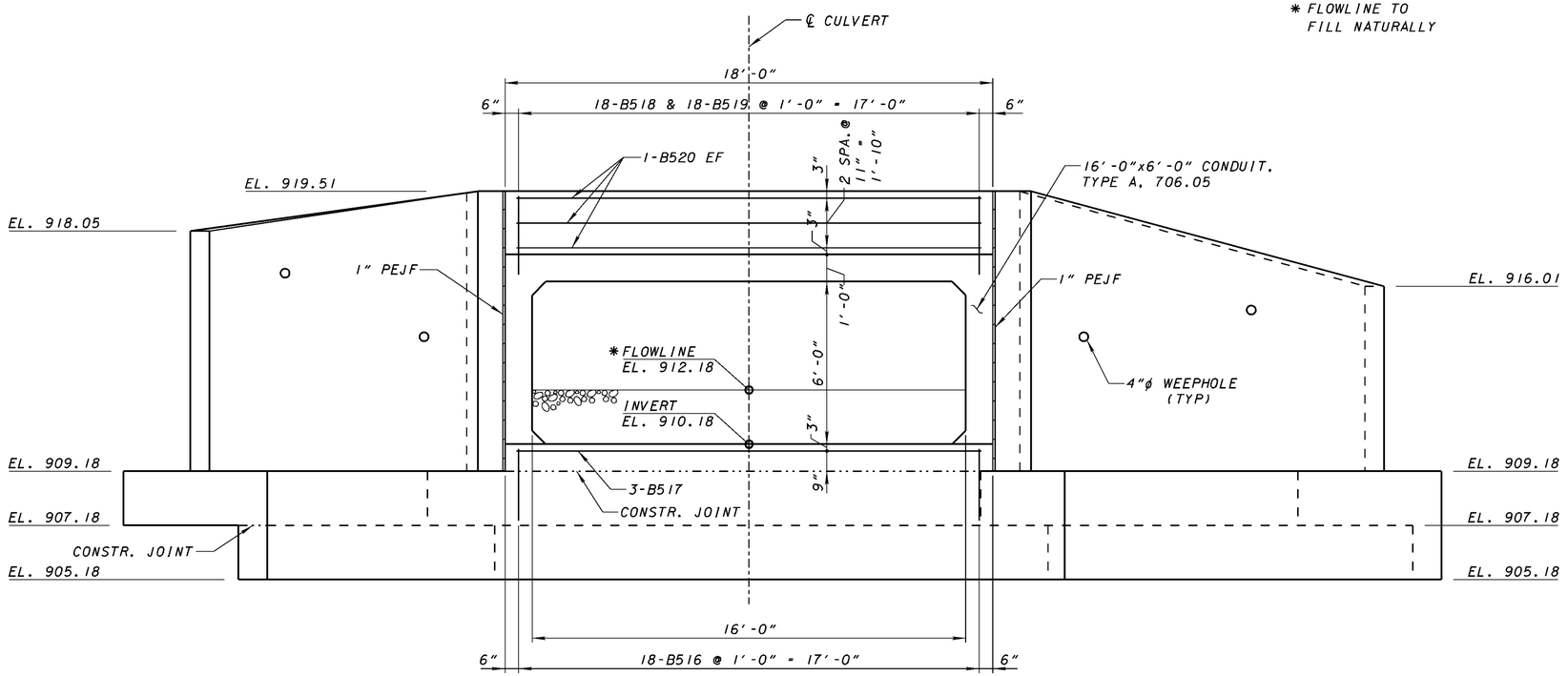

OUTLET ELEVATION

(RAILING NOT SHOWN FOR CLARITY)

LEGEND

EF = EACH FACE
PEJF = PREFORMED EXPANSION JOINT FILLER

NOTES:

1. FOR CULVERT LOCATION PLAN, SEE SHEET (384/773).
2. FOR GENERAL NOTES, SEE SHEET 2 / 8.
3. FOR REINFORCING STEEL LIST, SEE SHEET 8 / 8.

LJB Inc. • 3100 Research Blvd. • P.O. Box 20246
Dayton, OH 45420-0246
(937) 259-5000 tel • (937) 259-5100 fax • ljbinc.com

DESIGNED AMT | DRAWN MHD | REVIEWED MPH | DATE 3-08
CHECKED DWS | REVISED | STRUCTURE FILE NUMBER 5746434

INLET AND OUTLET ELEVATIONS

MIAMISBURG-SPRINGBORO PIKE CULVERT AT STA. 164+92.99

MOT-75-0.75
PID 77246

6 / 8

(389/773)

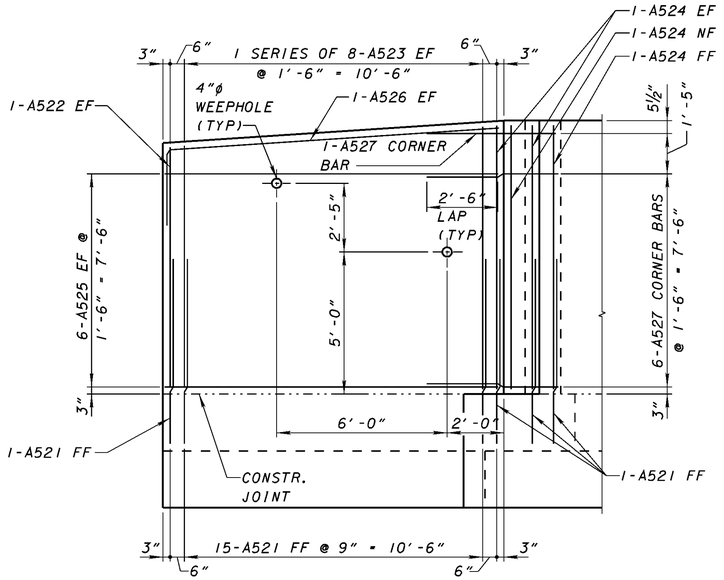

WINGWALL VIEW A-A

(RAILING NOT SHOWN FOR CLARITY)

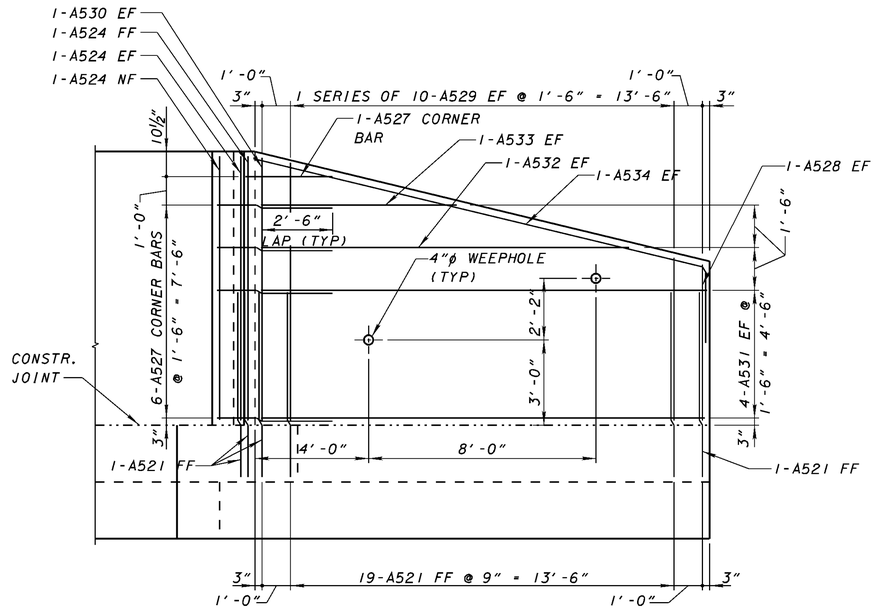

WINGWALL VIEW B-B

(RAILING NOT SHOWN FOR CLARITY)

LEGEND

EF- EACH FACE
FF- FAR FACE
NF- NEAR FACE

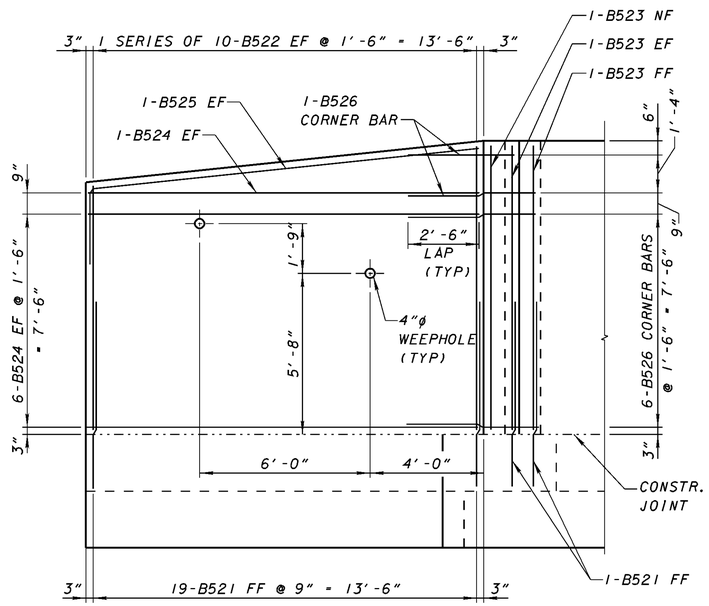

WINGWALL VIEW C-C

(RAILING NOT SHOWN FOR CLARITY)

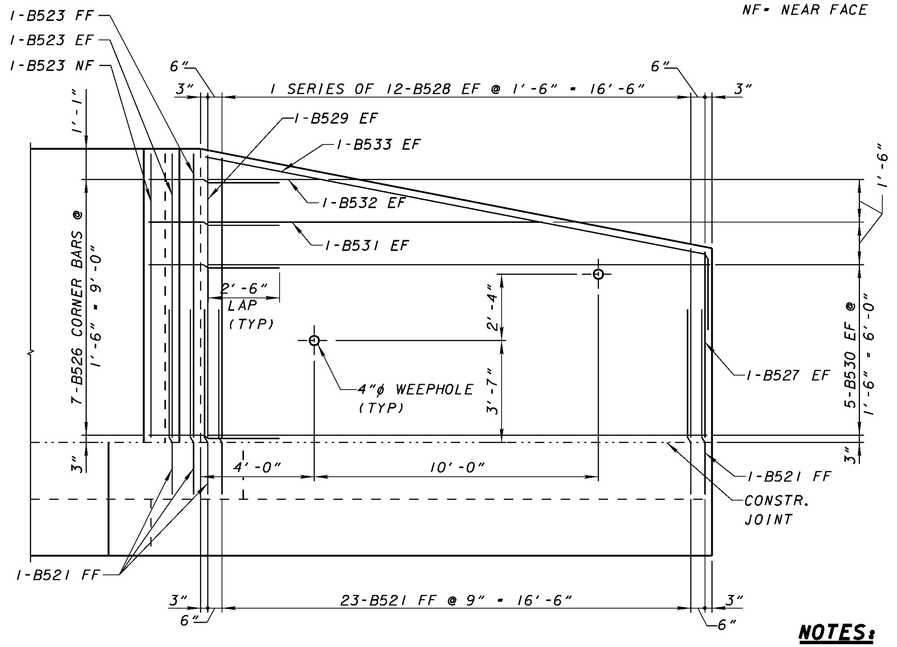

WINGWALL VIEW D-D

(RAILING NOT SHOWN FOR CLARITY)

NOTES:

1. FOR CULVERT LOCATION PLAN, SEE SHEET 384/773.
2. FOR GENERAL NOTES, SEE SHEET 2 / 8 .
3. FOR REINFORCING STEEL LIST, SEE SHEET 8 / 8 .

LJB Inc. • 3100 Research Blvd. • P.O. Box 20246
Dayton, OH 45420-0246
(937) 259-5000 tel • (937) 259-5100 fax • ljbinc.com

DESIGNED	DRAWN	REVIEWED	DATE
AWT	MHD	MPH	3-08
CHECKED	REVISED	STRUCTURE FILE NUMBER	
DWS		5746434	

WINGWALL VIEWS

MIAMISBURG-SPRINGBORO PIKE CULVERT AT STA. 164+92.99

MOT-75-0.75
PID 77246

INLET REINFORCING STEEL

MARK	NO.	LENGTH	WEIGHT	TYPE	A	B	C	D	E	F	G	H	K	O	R
A501	74	7'-2"	553	STR.											
A502	30	7'-11"	248	8			3'-7"	1'-0"	3'-7"						
A503	3	13'-4"	42	9			10'-10"	2'-6"				1'-9¼"	1'-9¼"	12'-7¼"	
A504	3	13'-6"	42	9			11'-0"	2'-6"				1'-9¼"	1'-9¼"	12'-9¼"	
A505	2	14'-4"	30	9			11'-10"	2'-6"				1'-9¼"	1'-9¼"	13'-7¼"	
A506	2	15'-0"	31	9			12'-6"	2'-6"				1'-9¼"	1'-9¼"	14'-3¼"	
A507	2	15'-7"	33	9			13'-1"	2'-6"				1'-9¼"	1'-9¼"	14'-10¼"	
A508	2	16'-0"	33	9			13'-6"	2'-6"				1'-9¼"	1'-9¼"	15'-3¼"	
A509	14	20'-4"	297	STR.											
A510	3	20'-0"	63	9			17'-6"	2'-6"				1'-9¼"	1'-9¼"	19'-3¼"	
A511	3	19'-7"	61	9			17'-1"	2'-6"				1'-9¼"	1'-9¼"	18'-10¼"	
A512	2	19'-0"	40	9			16'-6"	2'-6"				1'-9¼"	1'-9¼"	18'-3¼"	
A513	2	18'-4"	38	9			15'-10"	2'-6"				1'-9¼"	1'-9¼"	17'-7¼"	
A514	2	17'-9"	37	9			15'-3"	2'-6"				1'-9¼"	1'-9¼"	17'-0¼"	
A515	2	17'-3"	36	9			14'-9"	2'-6"				1'-9¼"	1'-9¼"	16'-6¼"	
A516	18	5'-5"	102	10			3'-0"	2'-7"							
A517	3	17'-8"	55	STR.											
A518	18	2'-11"	55	8			1'-3"	8"	1'-3"						
A519	18	3'-10"	72	8			1'-3"	8"	2'-2"						
A520	4	17'-8"	74	STR.											
A521	42	7'-1"	310	10		1'-0"	6'-3"								
A522	2	8'-5"	18	STR.											
A523	2 SER	VAR 8'-6"	148	STR.											
	OF 8	TO 9'-3"													
	+ 16	INCR. 1¼"													
A524	10	9'-3"	96	STR.											
A525	12	11'-9"	147	STR.											
A526	2	14'-0"	29	9			11'-7"	2'-6"				2'-6"	2¼"	11'-9¼"	
A527	14	5'-3"	77	21		2'-6"	1'-1"	8"	1'-3"	1'-1"		1'-9¼"	1'-9¼"	0"	
A528	2	5'-8"	12	STR.											
A529	2 SER	VAR 5'-11"	155	STR.											
	OF 10	TO 8'-11"													
	+ 20	INCR. 4"													
A530	2	9'-3"	19	STR.											
A531	8	15'-8"	131	STR.											
A532	2	13'-9"	29	STR.											
A533	2	7'-0"	15	STR.											
A534	2	18'-6"	39	9			16'-1"	2'-6"				2'-5¼"	6½"	16'-7½"	
		TOTAL +	3167												

BENDING DIAGRAMS

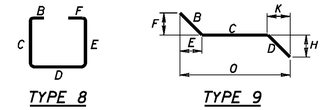

TYPE 8

TYPE 9

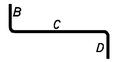

TYPE 10

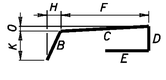

TYPE 21

NOTES

1. ALL REINFORCING STEEL BARS SHALL BE EPOXY COATED.
2. ALL DIMENSIONS ARE OUT TO OUT OF BAR.
3. RADIUS DIMENSION "R" IS TO THE OUTSIDE OF THE BAR.
4. THE BAR SIZE NUMBER IS SPECIFIED ON THE PLANS IN THE BAR MARK COLUMN. THE FIRST DIGIT WHERE THREE DIGITS ARE USED, AND THE FIRST TWO DIGITS WHERE FOUR ARE USED, INDICATES THE BAR SIZE NUMBER.

OUTLET REINFORCING STEEL

MARK	NO.	LENGTH	WEIGHT	TYPE	A	B	C	D	E	F	G	H	K	O	R
B501	80	7'-2"	598	STR.											
B502	33	7'-11"	272	8			3'-7"	1'-0"	3'-7"						
B503	3	15'-4"	48	9			12'-10"	2'-6"				1'-9¼"	1'-9¼"	14'-7¼"	
B504	3	15'-6"	48	9			13'-0"	2'-6"				1'-9¼"	1'-9¼"	14'-9¼"	
B505	2	16'-4"	34	9			13'-10"	2'-6"				1'-9¼"	1'-9¼"	15'-7¼"	
B506	2	17'-2"	36	9			14'-8"	2'-6"				1'-9¼"	1'-9¼"	16'-5¼"	
B507	2	17'-7"	37	9			15'-1"	2'-6"				1'-9¼"	1'-9¼"	16'-10¼"	
B508	2	18'-0"	38	9			15'-6"	2'-6"				1'-9¼"	1'-9¼"	17'-3¼"	
B509	14	20'-4"	297	STR.											
B510	3	22'-0"	69	9			19'-6"	2'-6"				1'-9¼"	1'-9¼"	21'-3¼"	
B511	3	21'-7"	68	9			19'-1"	2'-6"				1'-9¼"	1'-9¼"	20'-10¼"	
B512	2	21'-0"	44	9			18'-6"	2'-6"				1'-9¼"	1'-9¼"	20'-3¼"	
B513	2	20'-4"	42	9			17'-10"	2'-6"				1'-9¼"	1'-9¼"	19'-7¼"	
B514	2	19'-9"	41	9			17'-3"	2'-6"				1'-9¼"	1'-9¼"	19'-0¼"	
B515	2	19'-1"	40	9			16'-7"	2'-6"				1'-9¼"	1'-9¼"	18'-4¼"	
B516	18	5'-5"	102	10			3'-0"	2'-7"							
B517	3	17'-8"	55	STR.											
B518	18	4'-5"	83	8			2'-0"	8"	2'-0"						
B519	18	5'-4"	100	8			2'-0"	8"	2'-11"						
B520	6	17'-8"	111	STR.											
B521	47	7'-1"	347	10		1'-0"	6'-3"								
B522	2 SER	VAR 8'-7"	194	STR.											
	OF 10	TO 10'-0"													
	+ 20	INCR. 1⅞"													
B523	8	10'-0"	83	STR.											
B524	14	13'-9"	201	STR.											
B525	2	16'-1"	34	9			13'-8"	2'-6"				2'-6"	3⅛"	13'-11⅛"	
B526	15	5'-3"	82	21		2'-6"	1'-1"	8"	1'-3"	1'-1"		1'-9¼"	1'-9¼"	0"	
B527	2	6'-6"	14	STR.											
B528	2 SER	VAR 6'-8"	207	STR.											
	OF 12	TO 9'-10"													
	+ 24	INCR. 3⅜"													
B529	2	9'-11"	21	STR.											
B530	10	17'-8"	184	STR.											
B531	2	12'-2"	25	STR.											
B532	2	4'-4"	9	STR.											
B533	2	20'-4"	42	9			17'-11"	2'-6"				2'-5½"	5⅝"	18'-4⅝"	
		TOTAL +	3606												

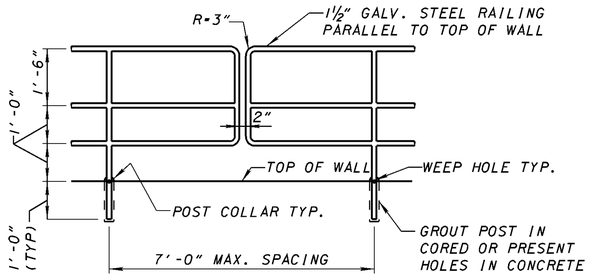

RAILING DETAIL

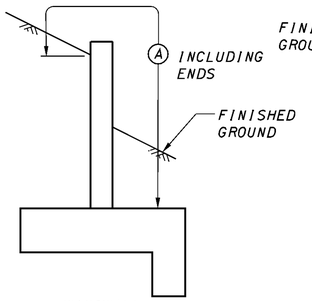

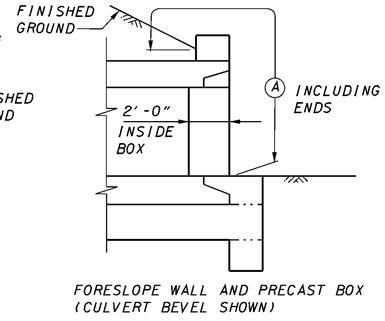

LIMITS OF ITEM 512-SEALING CONCRETE SURFACES

(A) - SEAL ENTIRE CONCRETE SURFACE AREA

LJB Inc. - 3100 Research Blvd. - P.O. Box 20246
Dayton, OH 45420-0246
(937) 259-5000 tel - (937) 259-5100 fax ljbinc.com

DESIGNED AMT | DRAWN MHD | REVIEWED MPH | DATE 3-08

CHECKED DWS | REVISED

STRUCTURE FILE NUMBER 5746434

REINFORCING STEEL LIST

MIAMISBURG-SPRINGBORO PIKE CULVERT AT STA. 164+92.99

MOT-75-0.75
PID 77246

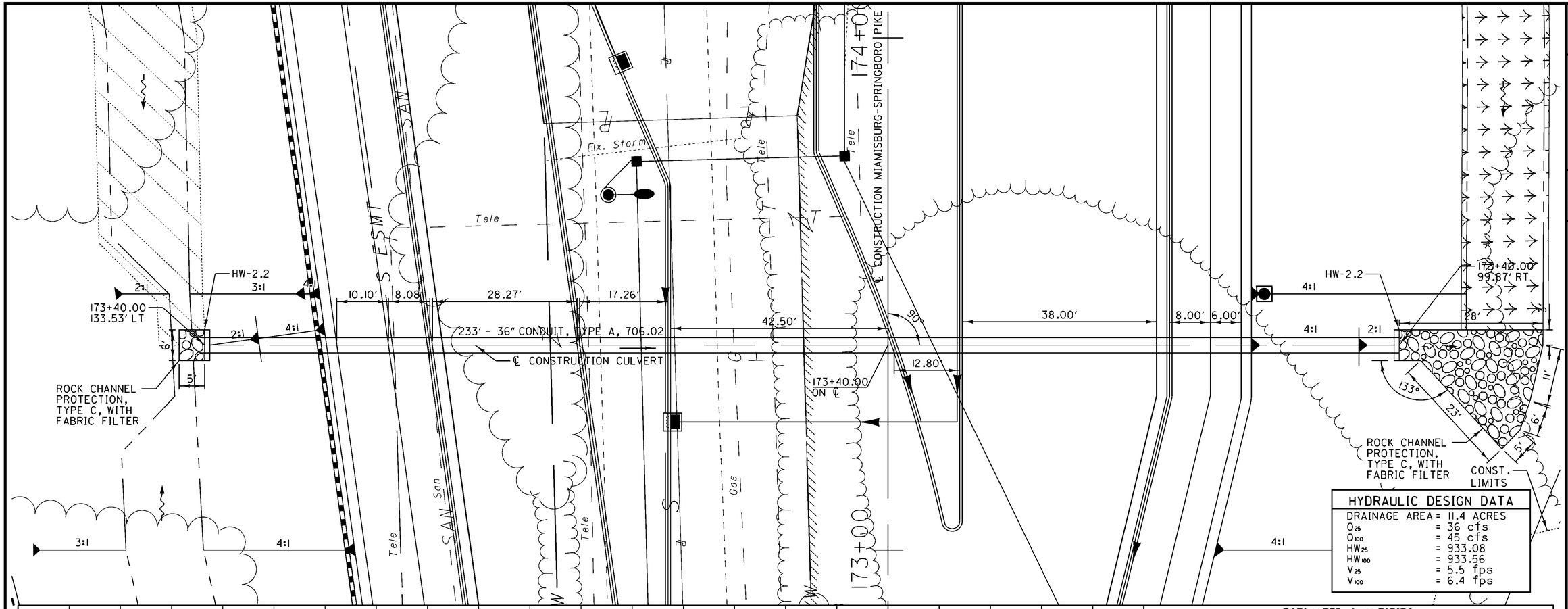

HYDRAULIC DESIGN DATA	
DRAINAGE AREA	= 11.4 ACRES
Q_{25}	= 36 cfs
Q_{100}	= 45 cfs
HW_{25}	= 933.08
HW_{100}	= 933.56
V_{25}	= 5.5 fps
V_{100}	= 6.4 fps

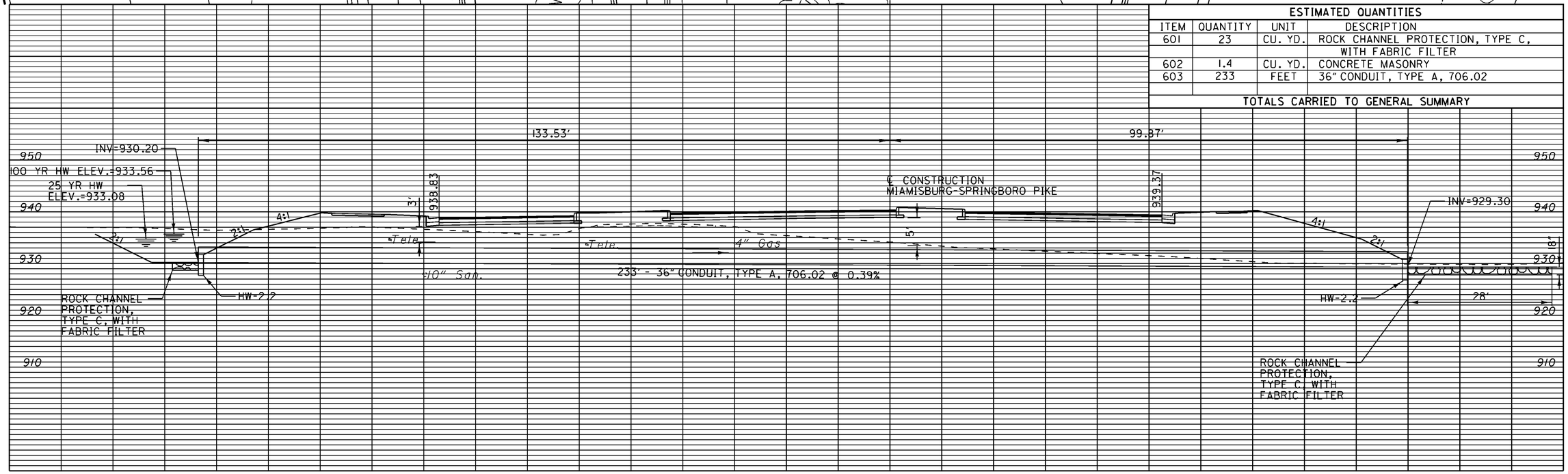

ESTIMATED QUANTITIES			
ITEM	QUANTITY	UNIT	DESCRIPTION
601	23	CU. YD.	ROCK CHANNEL PROTECTION, TYPE C, WITH FABRIC FILTER
602	1.4	CU. YD.	CONCRETE MASONRY
603	233	FEET	36" CONDUIT, TYPE A, 706.02
TOTALS CARRIED TO GENERAL SUMMARY			

HORIZONTAL SCALE IN FEET

CALCULATED MAG
CHECKED AJS

CULVERT DETAIL
MIAMISBURG-SPRINGBORO PIKE STA. 173+40.00

MOT-75-0.75

392
773

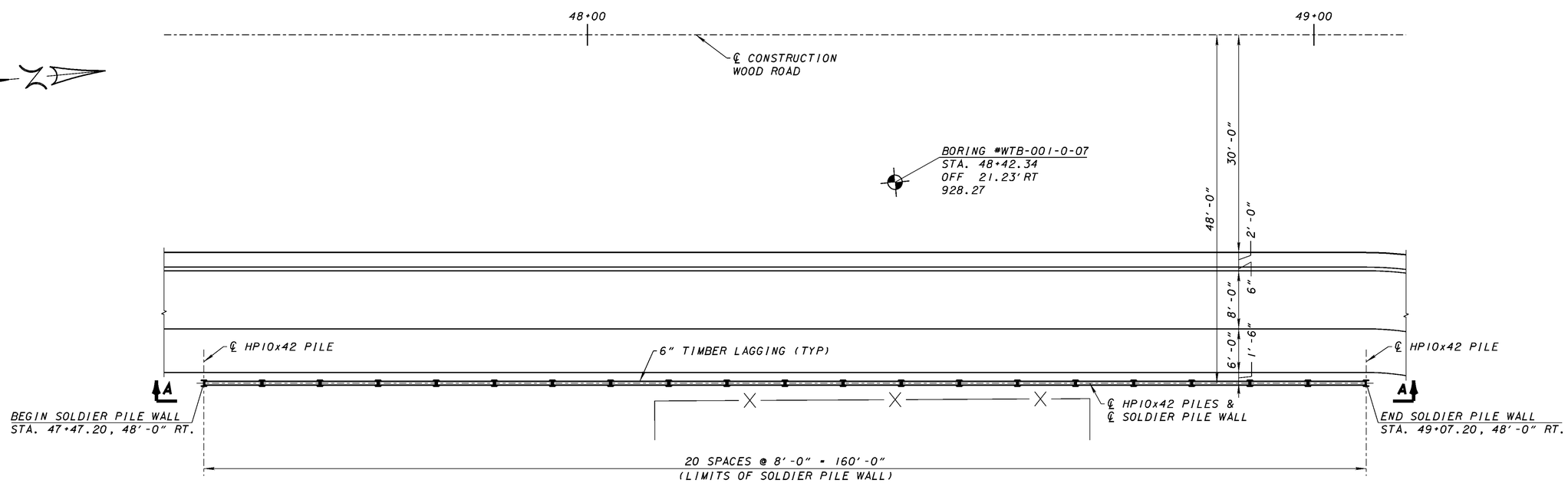

PLAN

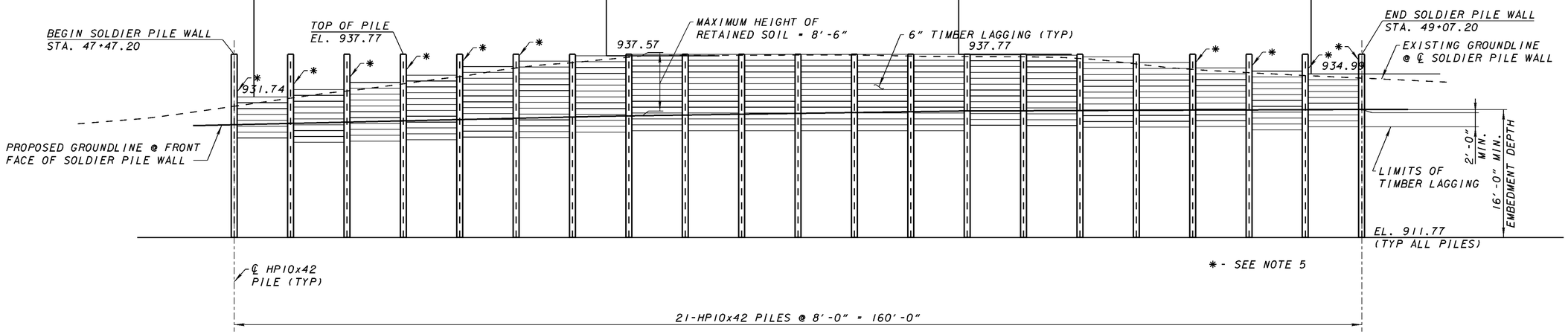

ELEVATION A-A

NOTES:

1. THE FOLLOWING QUANTITY IS INCLUDED IN THE GENERAL SUMMARY FOR ALL MATERIAL AND LABOR REQUIRED FOR CONSTRUCTION OF THE SOLDIER PILE WALL:

   ITEM 610 SPECIAL-RETAINING WALL, MISC.:SOLDIER PILE WALL 1544 SQ. FT.

2. PROVIDE 6" THICK BY 10" TO 12" WIDE TIMBER LAGGING FIELD CUT TO FIT BETWEEN H-PILES SHOWN. TIMBER SHALL BE STRUCTURALLY SOUND AND FREE OF EXTENSIVE LOOSE KNOTS MEETING CMS 711.26 AND ENGINEERS APPROVAL.

3. ALL H-PILING SHALL CONFORM TO ASTM A572, GRADE 50 STEEL.

4. THE DESIGN LOADING FOR THE SOLDIER PILE WALL INCLUDES A 2' LIVE LOAD SURCHARGE, APPLIED UNIFORMLY, AND AN EQUIALENT DEPTH OF SOIL APPLIED ALONG TOP OF WALL.

5. ALL HP10x42 PILES ARE SHOWN AT THE FURNISHED LENGTH OF 26'-0". AFTER DRIVING THE PILES TO THE SPECIFIC ELEVATION, THE CONTRACTOR SHALL CUT OFF THE EXPOSED PILE LENGTH ABOVE THE TIMBER LAGGING REQUIRED TO RETAIN THE EXISTING EMBANKMENT. THE PORTION OF THE PILES THAT ARE CUT OFF SHALL BECOME THE PROPERTY OF THE DEPARTMENT.

6. REFER TO CMS 507.04 FOR DRIVING OF PILES

CALCULATED JAL
CHECKED MPH

SOLDIER PILE WALL ALONG WOOD ROAD

MOT-75-0.75

393
773

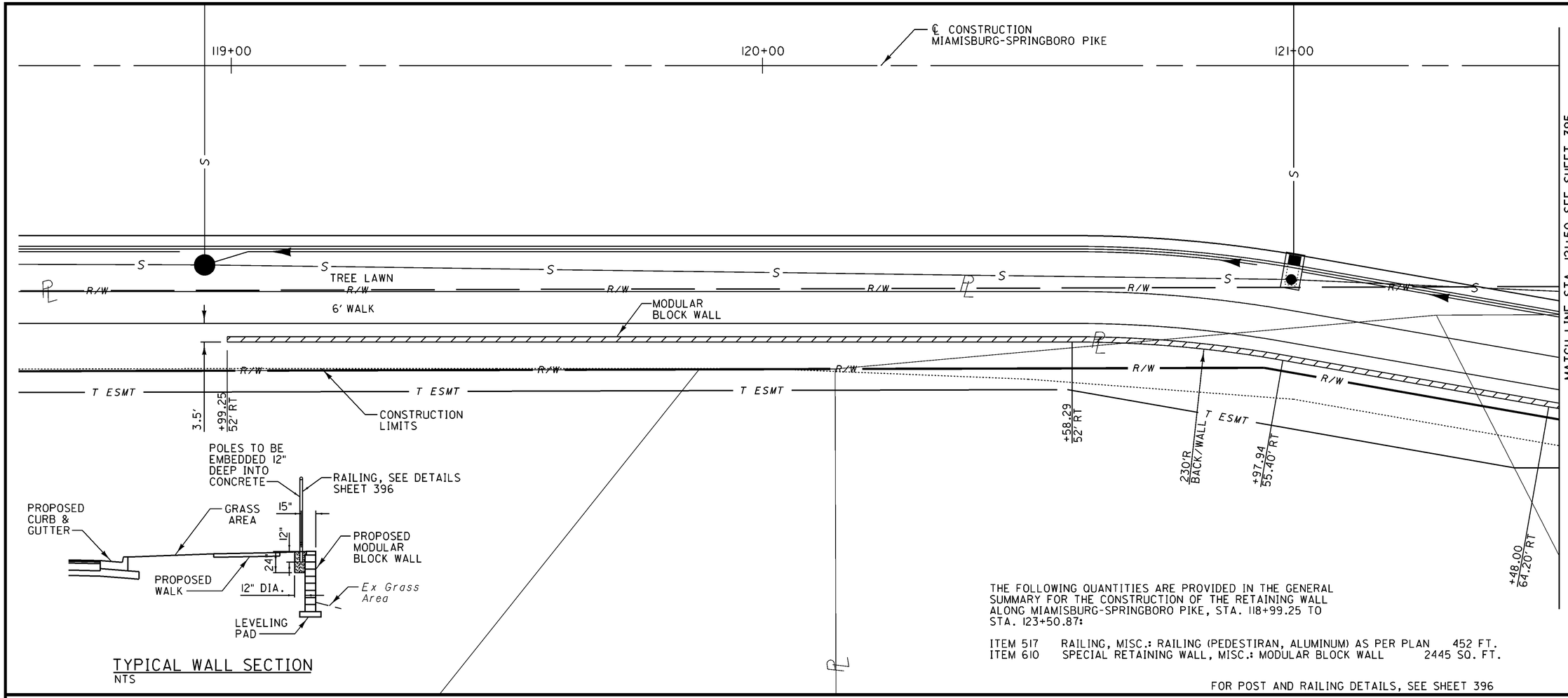

TYPICAL WALL SECTION
NTS

THE FOLLOWING QUANTITIES ARE PROVIDED IN THE GENERAL SUMMARY FOR THE CONSTRUCTION OF THE RETAINING WALL ALONG MIAMISBURG-SPRINGBORO PIKE, STA. 118+99.25 TO STA. 123+50.87:

ITEM 517	RAILING, MISC.: RAILING (PEDESTIRAN, ALUMINUM) AS PER PLAN	452 FT.
ITEM 610	SPECIAL RETAINING WALL, MISC.: MODULAR BLOCK WALL	2445 SQ. FT.

FOR POST AND RAILING DETAILS, SEE SHEET 396

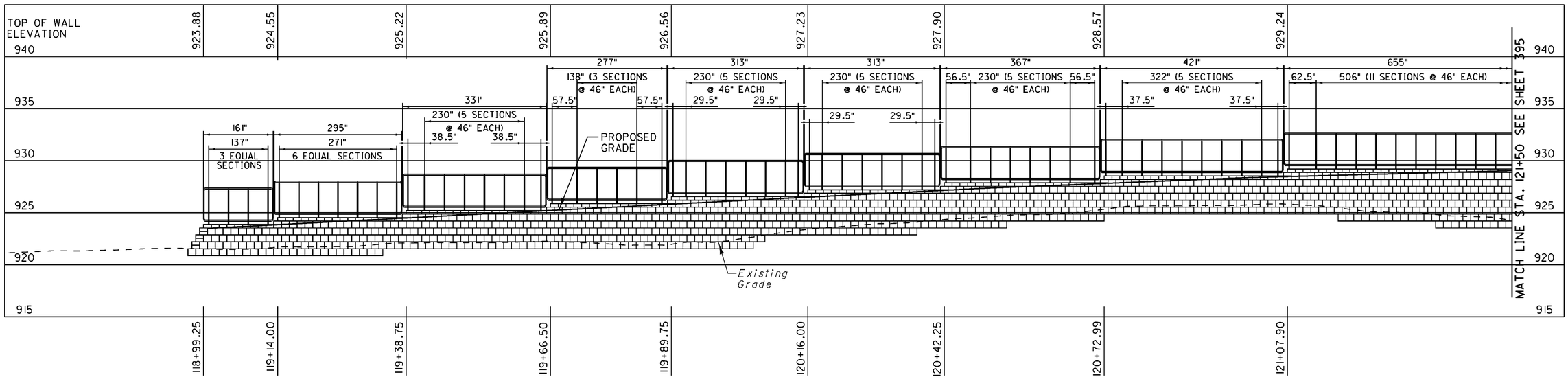

HORIZONTAL SCALE IN FEET
0 5 10 20

CALCULATED MNM
CHECKED AJS

MODULAR BLOCK WALL
MS PIKE - STA. 118+99.25 TO STA. 121+50
PLAN AND PROFILE

MOT-75-0.75

394
773

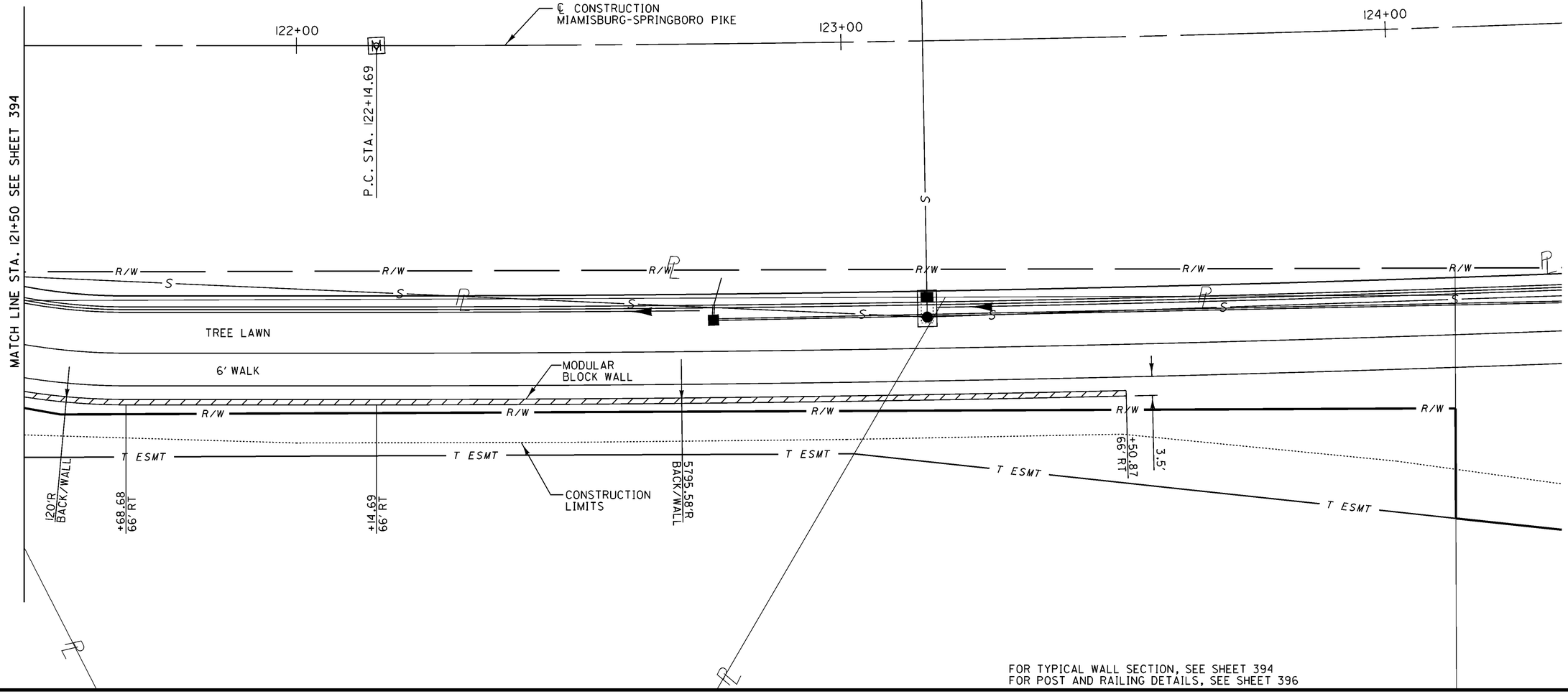

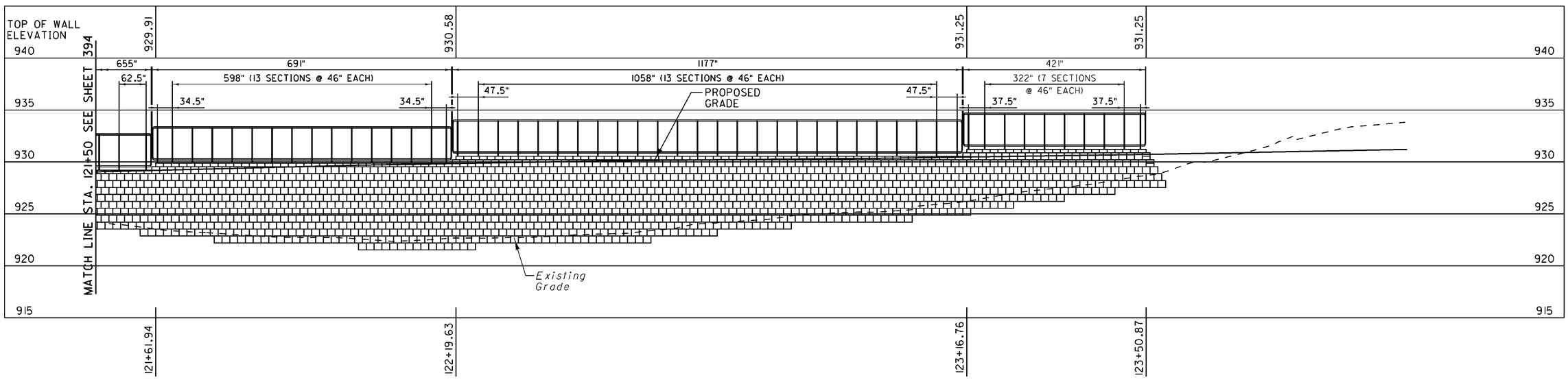

HORIZONTAL SCALE IN FEET
0 5 10 20

CALCULATED MNM
CHECKED AJS

MODULAR BLOCK WALL PLAN AND PROFILE
MS PIKE - STA. 121+50.87 TO STA. 123+50.87

MOT-75-0.75

395
773

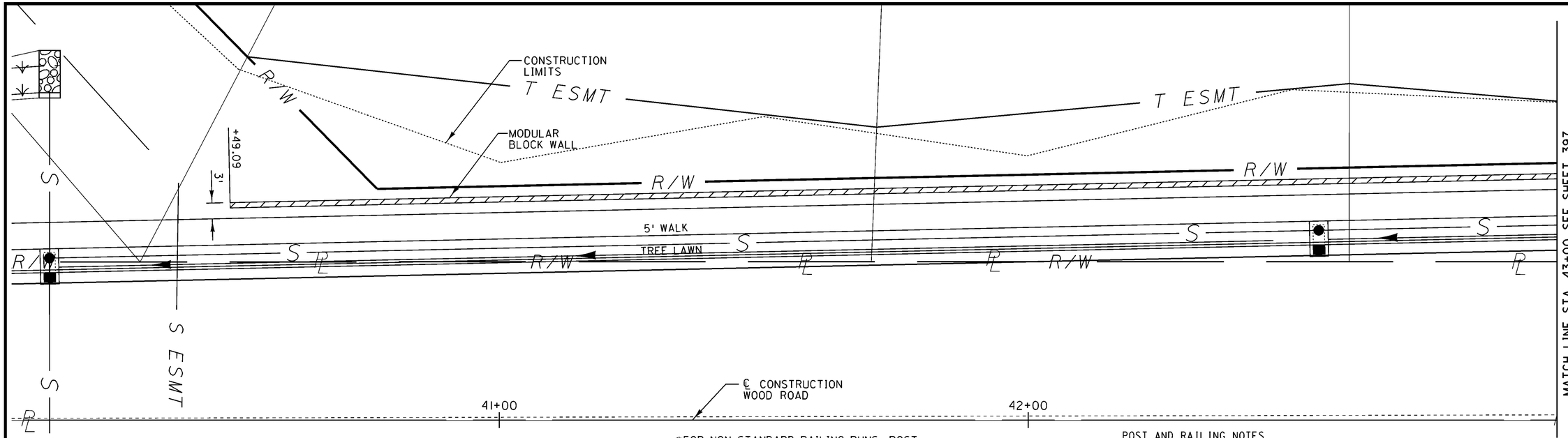

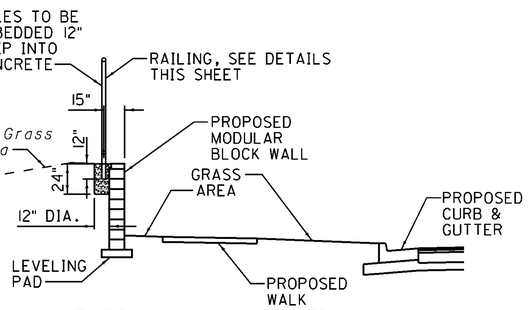

TYPICAL WALL SECTION
NTS

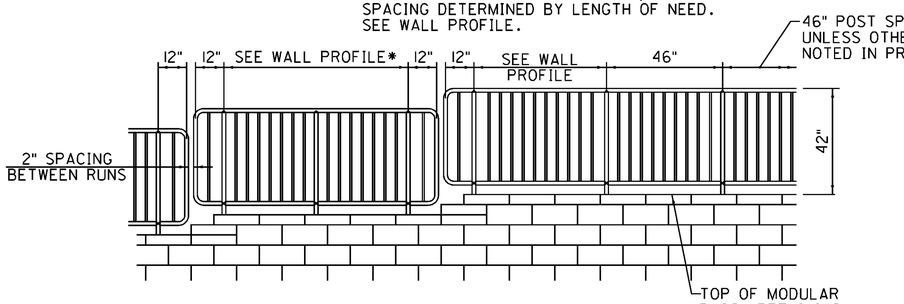

POST AND RAILING DETAIL
NTS

POST AND RAILING NOTES

1. ALL POSTS AND RAILS SHALL BE FORMED FROM EXTRUDED 6063-T6 ALUMINUM OF 1-1/2 SCHEDULE 40 PIPE SIZE (1.9 IN. OUTSIDE DIAMETER) EXCEPT WHERE THERE ARE FORMED BENDS WHEREBY, 6063-T4 IS USED.
2. ALL FASTENERS USED IN THE SYSTEM SHALL BE ALUMINUM OR STAINLESS STEEL.
3. RAILING TO BE 42" HIGH - 550 RAIL.
4. PICKETS ARE ¾" ROUND AND LOCATED ON 4-1/2" CENTERS.
5. SATIN ANODIZED FINISH.
6. 12" EMBEDDED INTO CONCRETE WITH #509 COVER FLANGE AND SOLID REINFORCEMENT ROD.
7. FIELD VERIFY ALL DIMENSIONS.
8. SOME FIELD TRIMMING MAY BE REQUIRED DURING INSTALLATION.

PAYMENT: PAYMENT FOR THE ABOVE SHALL BE INCLUDED IN THE UNIT BID PRICE FOR ITEM 517, RAILING, MISC.: RAILING (PEDESTRIAN, ALUMINUM) AS PER PLAN, FEET.

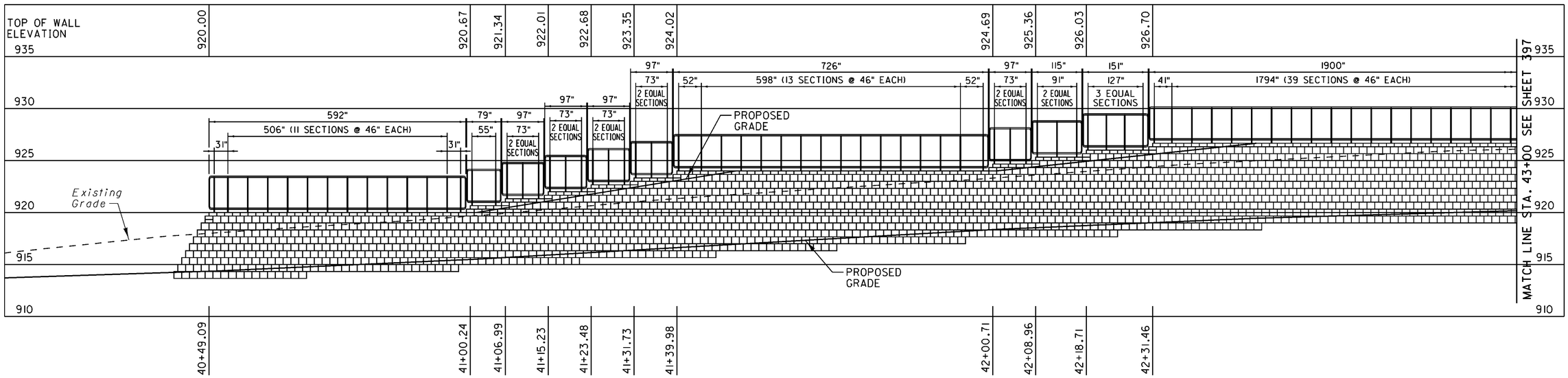

MODULAR BLOCK WALL PLAN AND PROFILE
WOOD ROAD - STA. 40+49.09 TO STA. 43+00

MOT-75-0.75

HORIZONTAL SCALE IN FEET
0 5 10 20

CALCULATED MNM
CHECKED AJS

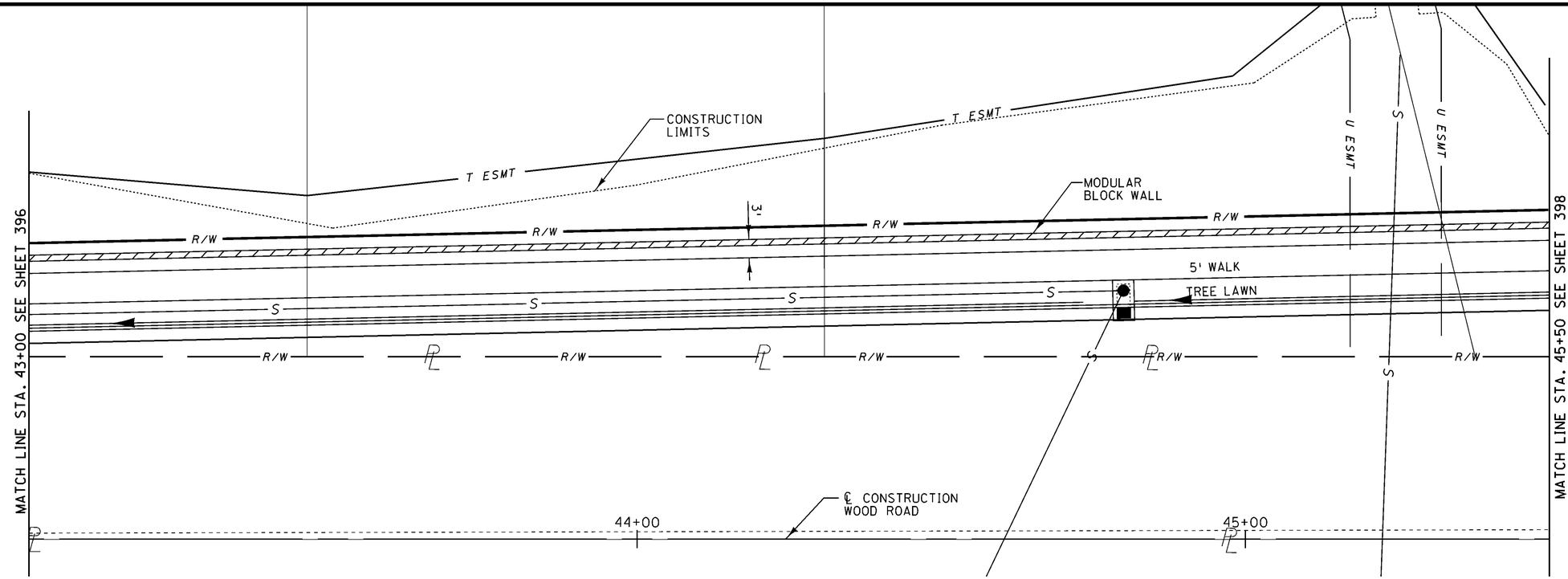

THE FOLLOWING QUANTITIES ARE PROVIDED IN THE GENERAL SUMMARY FOR THE CONSTRUCTION OF THE RETAINING WALL ALONG WOOD ROAD, STA. 40+49.09 TO STA. 46+99.93:

ITEM 517	RAILING, MISC.: RAILING (PEDESTIRAN, ALUMINUM) AS PER PLAN	649 FT.
ITEM 610	SPECIAL RETAINING WALL, MISC.: MODULAR BLOCK WALL	3983 SQ. FT.

FOR TYPICAL WALL SECTION, SEE SHEET 396
FOR POST AND RAILING DETAILS, SEE SHEET 396

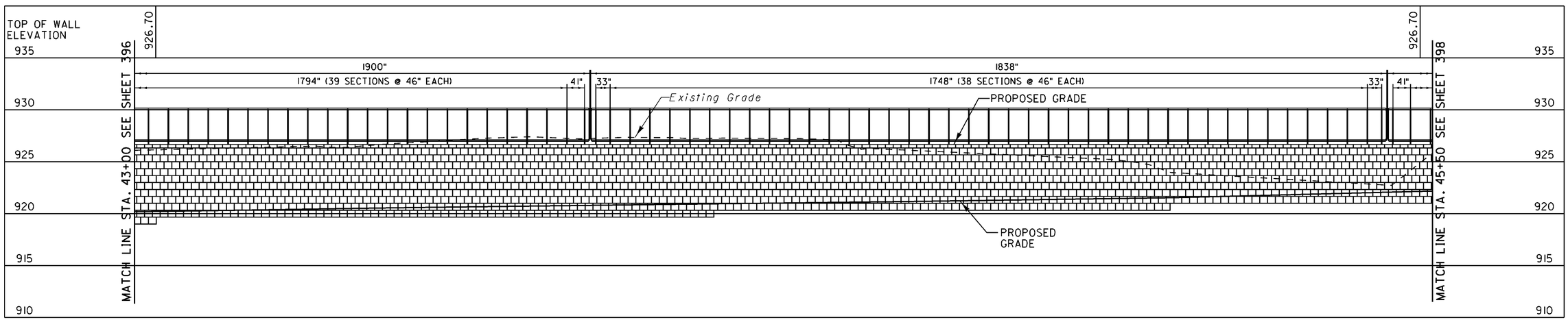

HORIZONTAL SCALE IN FEET
0 5 10 20

CALCULATED MNM
CHECKED AJS

MODULAR BLOCK WALL PLAN AND PROFILE
WOOD ROAD - STA. 43+00 TO STA. 45+50

MOT-75-0.75

397
773

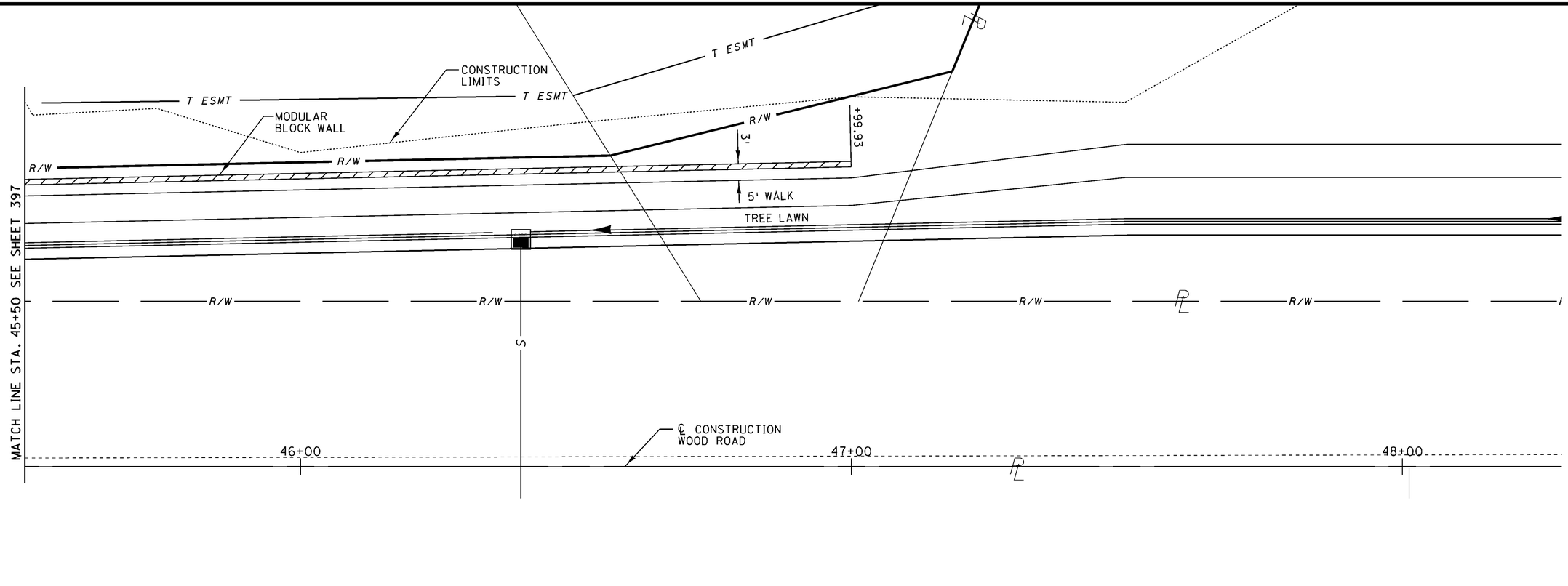

FOR TYPICAL WALL SECTION, SEE SHEET 396
FOR POST AND RAILING DETAILS, SEE SHEET 396

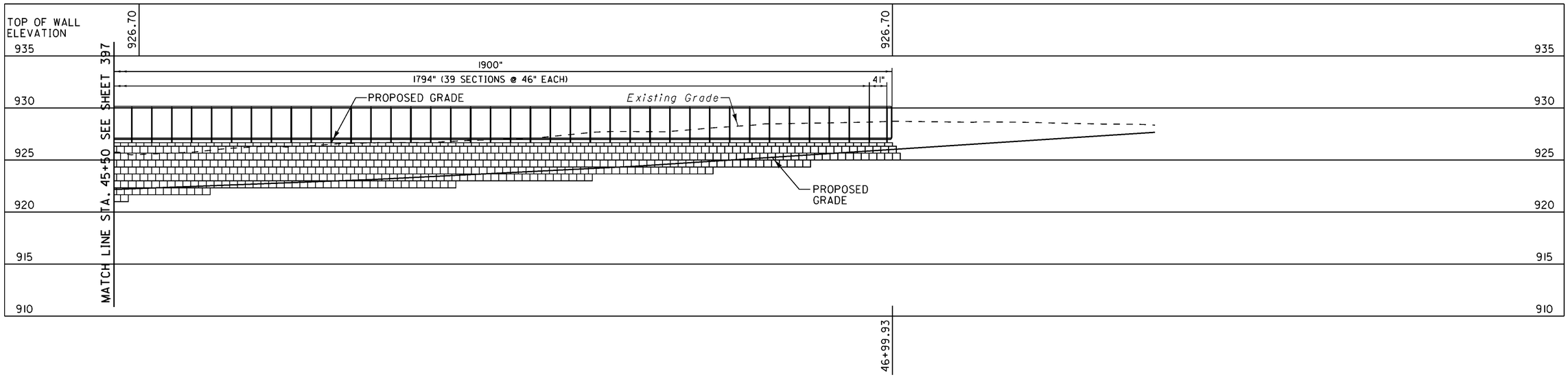

HORIZONTAL SCALE IN FEET
0 5 10 20

CALCULATED MNM
CHECKED AJS

MODULAR BLOCK WALL PLAN AND PROFILE
WOOD ROAD - STA. 45+50 TO STA. 46+99.93

MOT-75-0.75

398
773

BASE LEVELING PAD NOTES:

1. THE LEVELING PAD IS TO BE CONSTRUCTED OF CRUSHED STONE OR 2,000 PSI* UNREINFORCED CONCRETE.
2. THE BASE FOUNDATION IS TO BE APPROVED BY THE ENGINEER PRIOR TO PLACEMENT OF THE LEVELING PAD.

UNIT	
*WIDTH:	18"
*DEPTH:	12"
*HEIGHT:	8"
*WEIGHT:	85 LBS

CAP UNIT	
*WIDTH:	18"
*DEPTH:	10½""
*HEIGHT:	4"
*WEIGHT:	45 LBS

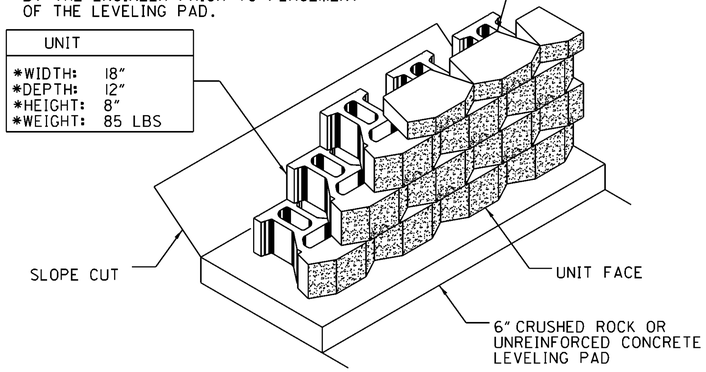

BLOCK UNIT/BASE PAD ISOMETRIC VIEW

*DIMENSIONS & WEIGHT MAY VARY

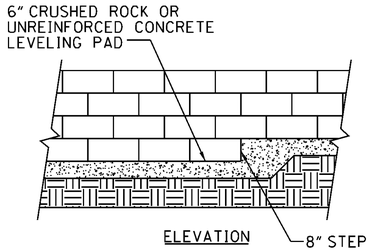

ELEVATION

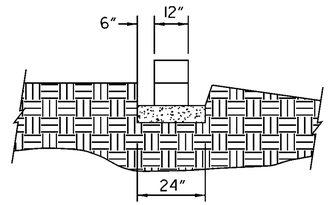

SECTION

LEVELING PAD DETAIL

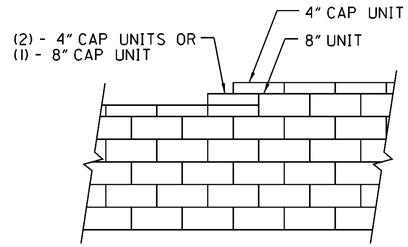

TOP OF WALL STEPS

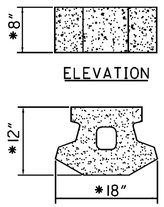

ELEVATION

PLAN

BLOCK UNIT

*DIMENSIONS & WEIGHT MAY VARY

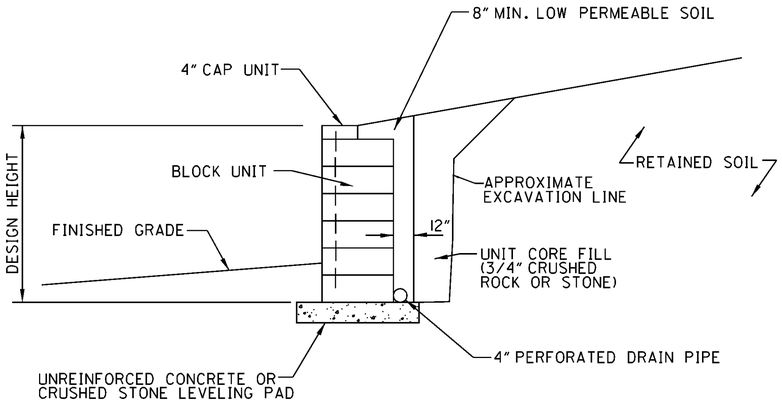

TYPICAL RETAINING GRAVITY WALL SECTION
BLOCK UNIT - NEAR VERTICAL SETBACK

CALCULATED MNM
CHECKED AJS

MODULAR BLOCK WALL DETAILS

MOT-75-0.75

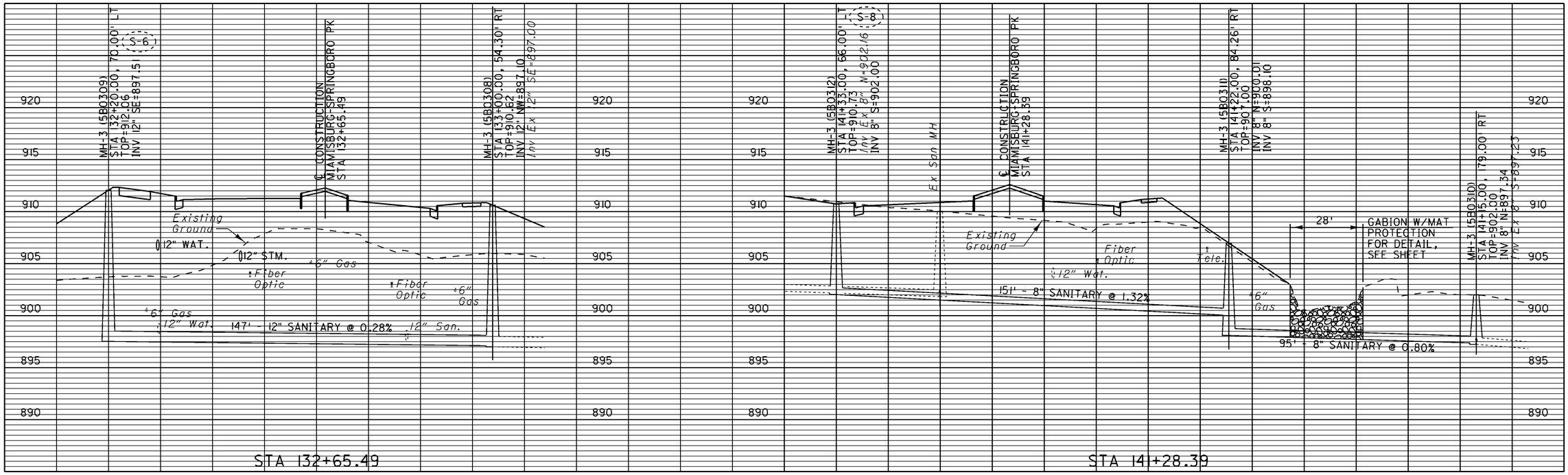

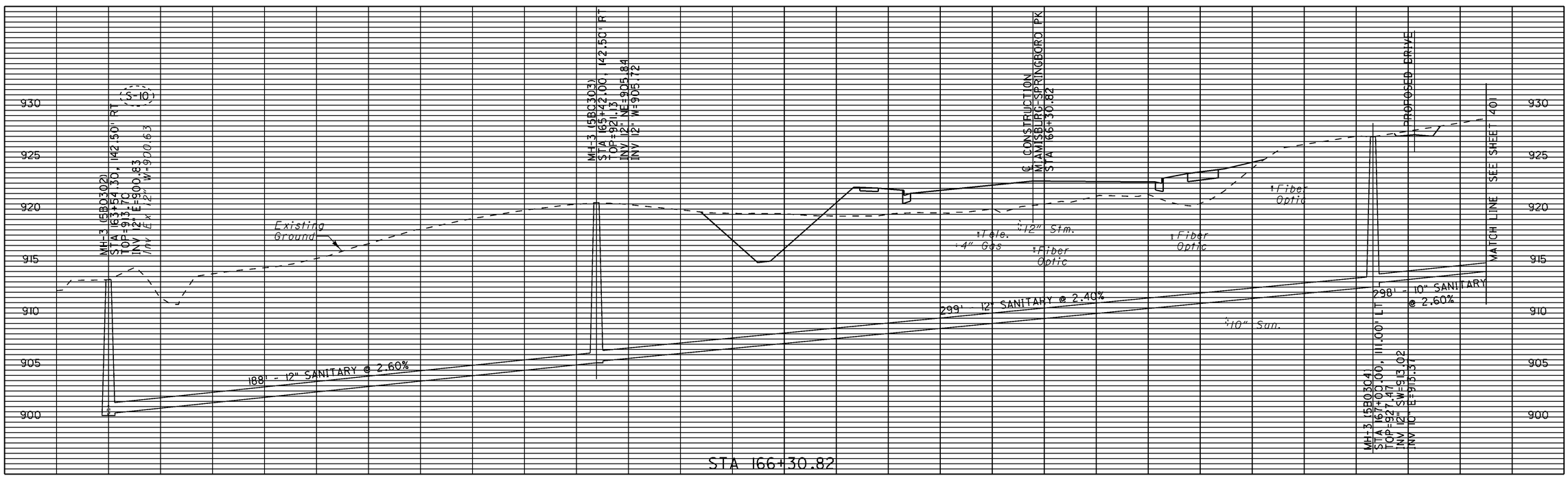

SANITARY PROFILES
MIAMISBURG-SPRINGBORO PIKE

CALCULATED MNM
CHECKED HGH

MOT-75-0.75

400
773

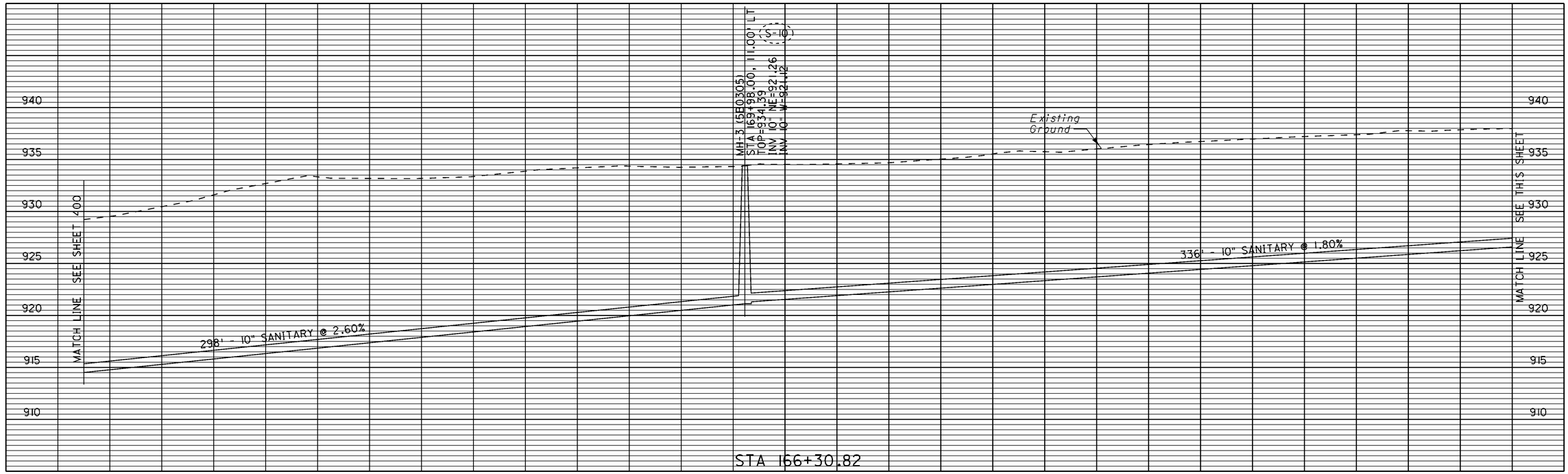

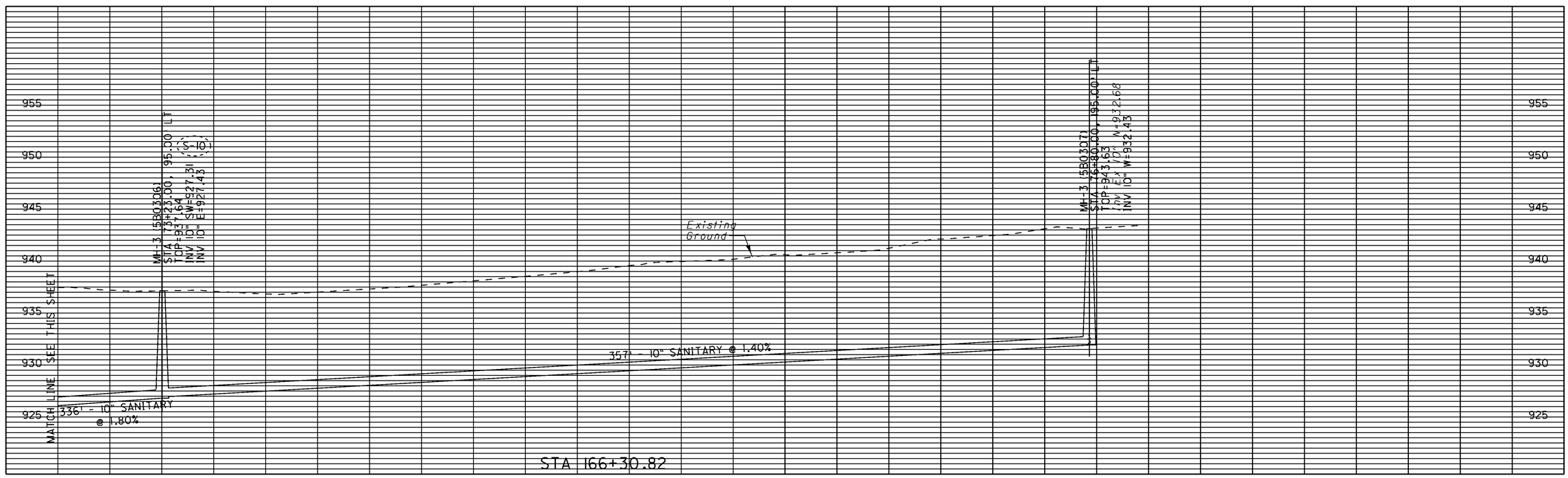

CALCULATED MNM
CHECKED HGH

SANITARY PROFILES
MIAMISBURG-SPRINGBORO PIKE

MOT-75-0.75

401
773

GENERAL

WATER MAINS WITHIN THE PROJECT LIMITS ARE OWNED BY TWO SEPERATE ENTITIES. WATER MAINS IDENTIFIED AS MONTGOMERY COUNTY MAINS AND CRAINS RUN MAINS SHALL BE INSTALLED PER MONTGOMERY COUNTY SANITARY ENGINEERING DEPARTMENT (MCSED) SPECIFICATIONS. WATER MAINS IDENTIFIED AS CITY OF MIAMISBURG MAINS SHALL BE INSTALLED PER MCSED SPECIFICATIONS WITH THE MINOR MODIFICATIONS ADOPTED BY THE CITY OF MIAMISBURG.

ALL SANITARY SEWERS SHALL CONFORM TO MCSED SPECIFICATIONS.

THE INTENT OF THESE PLANS, THE ODOT CONSTRUCTION AND MATERIAL SPECIFICATIONS AND MONTGOMERY COUNTY SPECIFICATIONS IS TO PRESCRIBE A COMPLETE IMPROVEMENT WHICH THE CONTRACTOR UNDERTAKES TO DO IN FULL COMPLIANCE WITH ALL THE ABOVE MENTIONED, AND WHAT IS CALLED FOR BY ANY IS AS BINDING AS IF CALLED FOR BY ALL. SHOULD A MISUNDERSTANDING ARISE AS TO THE INTENT OR MEANING OF THE WORK DESCRIBED. THESE PLANS, THEN ODOT C&MS AND THEN THE MONTGOMERY COUNTY SPECIFICATIONS, SHALL CONTROL.

ALL WATER AND SANITARY LINE AND APPURTENANCES SHALL CONFORM TO THE LATEST EDITION OF THE ODOT CONSTRUCTION AND MATERIAL SPECIFICATION ITEM 638, ITEM 748, ITEM 603 AND ITEM 604.

WATER MAINS, BENDS AND FITTINGS SHALL BE:

ITEM SPECIAL - MISC.: 6" WATER MAIN DUCTILE IRON PIPE, MCSED
ITEM SPECIAL - MISC.: 8" WATER MAIN DUCTILE IRON PIPE, MCSED
ITEM SPECIAL - MISC.: 12" WATER MAIN DUCTILE IRON PIPE, MCSED
ITEM SPECIAL - MISC.: 16" WATER MAIN DUCTILE IRON PIPE, MCSED
MCSED: DUCTILE IRON, ANSI A 21.51 (AWWA C-151), CLASS 51, POLYWRAPPED

ITEM SPECIAL - MISC.: 6" WATER MAIN CAST IRON PIPE, CITY OF MIAMISBURG
ITEM SPECIAL - MISC.: 12" WATER MAIN CAST IRON PIPE, CITY OF MIAMISBURG
CITY OF MIAMISBURG: DUCTILE CAST IRON, ANSI A 21.51 (AWWA C-151), CLASS 53 FOR 6" AND 8", CLASS 52 FOR 10", CLASS 51 FOR 12" AND LARGER

ITEM SPECIAL - MISC.: 16" SANITARY FORCE MAIN
FORCE MAIN, BENDS AND FITTINGS SHALL BE DUCTILE IRON, ANSI A 21.51 (AWWA C-151), CLASS 51, WITH POLYURETHANE OR CERAMIC EPOXY LINING, POLYWRAPPED.

WATER MAINS AND SANITARY FORCE MAINS SHALL HAVE 4.5 FEET MINIMUM COVER, UNLESS OTHERWISE NOTED IN THE PLANS.

NO SERVICE CONNECTIONS SHALL BE MADE TO THE WATER MAIN UNTIL THE MAIN LINE HAS BEEN INSPECTED, TESTED, DISINFECTED, AND RELEASED FOR TAPS.

NO CONSTRUCTION SHALL COMMENCE UNTIL MONTGOMERY COUNTY SANITARY ENGINEERING DEPARTMENT PERMITS HAVE BEEN ISSUED.

NO ADDITIONS, DELETIONS, OR REVISIONS TO THE SANITARY SEWER AND/OR WATER FACILITIES ARE TO BE MADE WITHOUT PRIOR WRITTEN APPROVAL BY THE MONTGOMERY COUNTY SANITARY ENGINEERING DEPARTMENT OR FACILITY OWNER.

ONLY MONTGOMERY COUNTY SANITARY ENGINEERING DEPARTMENT OR FACILITY OWNER PERSONNEL SHALL OPERATE MAIN LINE WATER VALVES.

WATER LINES CROSSING ANY AND ALL SEWER LINES SHALL HAVE A MINIMUM VERTICAL SEPARATION OF 1.5' BETWEEN THE OUTSIDES OF THE WATER MAIN PIPE AND THE SEWER LINE. ONE FULL LENGTH OF WATER MAIN PIPE SHALL BE CENTERED AT THE POINT OF CROSSING SUCH THAT BOTH JOINTS WILL BE EQUIDISTANT AND AS FAR FROM THE SEWER LINE AS POSSIBLE.

THE WATER MAIN INSTALLATION WILL BE INSPECTED BY THE MONTGOMERY COUNTY SANITARY ENGINEERING DEPARTMENT OR FACILITY OWNER.

ALL GATE VALVES ARE TO BE LOCATED AT THE TEES OR CROSSES WITH A 4' MAXIMUM PIPE NIPPLE BETWEEN TEE OR CROSS AND VALVE UNLESS OTHERWISE NOTED IN THE PLANS. CITY OF MIAMISBURG SHALL HAVE A 12" MAXIMUM PIPE NIPPLE.

DURING THE CONSTRUCTION OF PROPOSED WATER MAIN,THE CONTRACTOR IS TO COORDINATE CLOSELY THE SEQUENCE OF CONSTRUCTION WITH THE MONTGOMERY COUNTY SANITARY ENGINEERING DEPARTMENT OR FACILITY OWNER AND MINIMIZE DISRUPTION TIME OF WATER SUPPLY.

ITEM SPECIAL - 30" STEEL CASING PIPE
CASING PIPE SHALL BE STEEL CASING PIPE OF THE SIZE AND WALL THICKNESS SPECIFIED MEETING ASTM A139 GRADE B.

UNDERGROUND UTILITY PROTECTION

EXISTING UNDERGROUND UTILITIES AND SERVICES ARE SHOWN IN THEIR APPROXIMATE LOCATIONS ACCORDING TO THE BEST INFORMATION AVAILABLE. THE LOCATIONS SHOWN ARE INTENDED ONLY AS A GUIDE AND CANNOT BE GUARANTEED ACCURATE. THE CONTRACTOR SHALL BE RESPONSIBLE FOR EACH OF THE FOLLOWING:

A. CONTACTING THE INDIVIDUAL UTILITY OWNERS TEN (10) DAYS PRIOR TO CONSTRUCTION AND ADVISING THEM OF THE WORK TO TAKE PLACE.

B. SOLICITING THEIR AID IN LOCATING AND PROTECTING ANY UTILITY WHICH MAY INTERFERE WITH CONSTRUCTION.

C. EXCAVATING AND VERIFYING THE HORIZONTAL AND VERTICAL LOCATION OF EACH UTILITY PRIOR TO THE ANY CONSTRUCTION.

D. ALL DAMAGE TO ANY EXISTING UTILITY.

E. NOTIFYING 48 HOURS PRIOR TO CONSTRUCTION THE OWNERS OF UNDERGROUND UTILITIES IN ORDER TO FIELD LOCATE SAID UTILITIES. SEE SHEET 23 FOR A LIST OF NAMES AND ADDRESSES OF UTILITY COMPANIES.

SCOPE OF WORK

THE WORK CONTEMPLATED UNDER THIS CONTRACT COMPRISES THE FURNISHING AND INSTALLATION OF DUCTILE IRON PIPE, WITH ALL APPURTENANCES, COMPLETE IN ALL DETAILS, TESTED AND READY FOR OPERATION. THE CONTRACTOR SHALL DO ALL THE WORK AND FURNISH ALL THE LABOR AND MATERIALS NECESSARY FOR THE PROPER AND FINAL COMPLETION OF THIS CONTRACT IN THE MANNER AND UNDER THE CONDITIONS HEREIN SPECIFIED AND PROVIDED, AND IN ACCORDANCE WITH THE CONTRACT DRAWINGS, AND THE STATE OF OHIO DEPARTMENT OF TRANSPORTATION "CONSTRUCTION AND MATERIAL SPECIFICATIONS", SHALL GOVERN.

USE OF FIRE HYDRANTS

THE CONTRACTOR SHALL MAKE THE PROPER ARRANGEMENTS WITH THE FIRE CHIEF OF THE GOVERNING FIRE DEPARTMENT AND FACILITY OWNER FOR THE USE OF FIRE HYDRANTS WHEN USED FOR WORK PERFORMED UNDER THIS CONTRACT. BEFORE THE FINAL ESTIMATE IS PAID. THE CONTRACTOR SHALL SUBMIT EVIDENCE TO THE ENGINEER STATING THAT HE AND HIS SUBCON-TRACTOR HAVE PAID ALL COSTS ARISING FROM THE USE OF THE FIRE HYDRANTS.

MINOR WATER MAIN DEFLECTIONS

A.) AS MANY PIPE JOINTS AS NECESSARY ARE TO BE DEFLECTED TO INSURE THE REQUIRED AMOUNT OF DEFLECTION IS ACHIEVED.

B.) PIPE JOINTS ARE TO BE DEFLECTED A MAXIMUM AMOUNT EQUAL TO APPROXIMATELY ½ THE MAXIMUM ALLOWED DEFLECTION AS STATED BY THE MANUFACTURER FOR THE PARTICULAR STYLE OF PIPE BEING USED.

C.) THIS WORK SHALL MEET THE APPROVAL OF THE MONTGOIMERY COUNTY SANITARY ENGINEERING DEPARTMENT.

INSPECTION AND REPORTS

NOT WITHSTANDING THE REQUIREMENTS OF ANY OTHER PROVISIONS OF THESE SPECIFICATIONS, THE CONTRACTOR SHALL ARRANGE FOR THE INSPECTION OF ALL MATERIALS FURNISHED, MANUFACTURERS OF ALL PIPE, VALVES, FITTINGS, ETC. , FIELD AND SHOP WELDS AND WELDING, FURNISH TO THE STATE AND THE FACILITY OWNER COPIES OF ALL SHOP, FABRICATION, MANUFACTURERS AND OTHER RELATED INSPECTION REPORTS OF ALL MATERIALS FURNISHED. THIS INSPECTION SHALL BE DONE BY A RECOGNIZED INSPECTION LABORATORY APPROVED BY THE MONTGOMERY COUNTY SANITARY ENGINEERING DEPARTMENT.

FIRE HYDRANTS ADJUSTED TO FINAL GRADE

ALL FIRE HYDRANTS DESIGNATED ON THE PLANS SHALL BE ADJUSTED TO FINAL GRADE. THE CENTER OF THE HYDRANT STEAMER SHALL BE LOCATED 2 FEET ABOVE THE PROPOSED GRADE.

TESTING AND FLUSHING

THE PROPOSED WATER MAIN SHALL BE TAPPED FOR TESTING AND FLUSHING IN ACCORDANCE WITH THE REQUIREMENTS OF THE STATE OF OHIO, DEPARTMENT OF TRANSPORTATION "CONSTRUCTION AND MATERIAL SPECIFICATIONS", AND THE REQUIREMENTS OF THE MONTGOMERY COUNTY SANITARY ENGINEERING DEPARTMENT OR FACILITY OWNER. TAPPING, TESTING AND FLUSHING SHALL BE PAID FOR UNDER THE APPROPRIATE 638 ITEM.

HYDRANT LOCATION

ALL HYDRANTS SHALL BE PLACED AS SHOWN ON THE PLANS AND THERE SHALL BE A MINIMUM OF TWO (2) FEET OF CLEARANCE BETWEEN SIDEWALKS OR BIKEWAYS AND HYDRANTS.

JOINT RESTRAINT

"E" \ "D"	4"	6"	8"	10"	12"	16"	20"	24"	48"
11 1/4°	3'	5'	6'	8'	9'	12'	15'	18'	36'
22 1/2°	7'	10'	13'	16'	19'	25'	31'	37'	72'
45°	14'	20'	27'	33'	39'	51'	64'	76'	150'
90°	34'	49'	64'	79	94'	124'	154'	184'	362'

"L" (vertical)

"L" (horizontal)

JOINT RESTRAINT FOR BENDS WITH POLYWRAP ENCASEMENT * , **

TABLE FOR "L" (IN FEET)
REQUIRED LENGTH OF RESTRAINED JOINTS

"D" - DIAMETER OF PIPE
"E" - DEGREE OF DEFLECTION
PRESSURE = 150 PSI
SAFTEY FACTOR = 1.33
SOIL DESIGNATION = CLAY 1
DEPTH OF COVER = 4.5 FEET
LAYING CONDITIONS = TYPE 4 BEDDING

* THE LENGTHS WERE TAKEN FROM DIPRA CALCULATIONS FOR PIPE WITH POLYWRAP

** FOR MOST CRITICAL REQ.- VERTICAL BEND DOWN

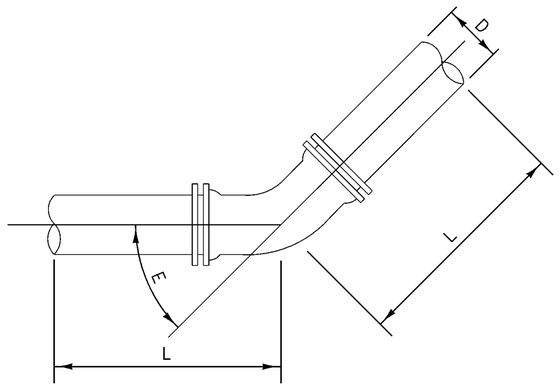

JOINT RESTRAINT FOR BENDS WITH POLYWRAP ENCASEMENT

CALCULATED HGH CHECKED AJS

SANITARY AND WATER WORKS GENERAL NOTES

MOT-75-0.75

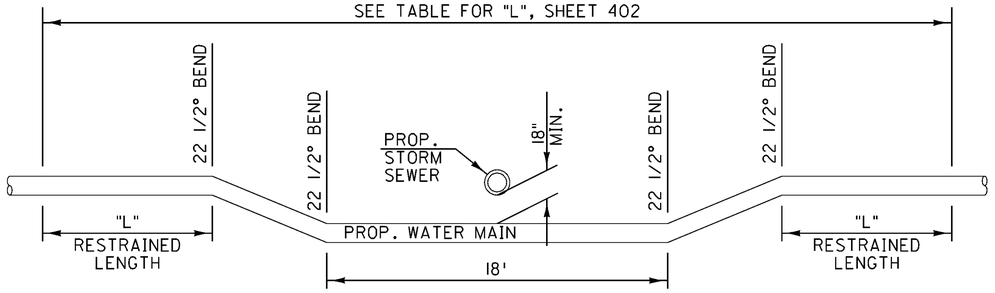

WATER MAIN LOWERING DETAILS

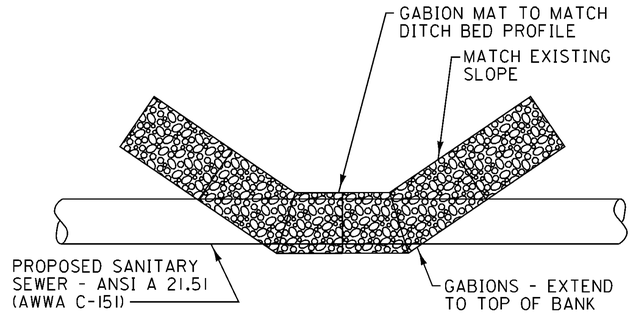

TYPICAL SECTION

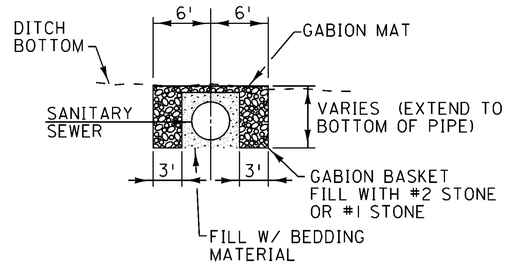

END SECTION

GABION PROTECTION @ DITCH CROSSING

SIDE VIEW

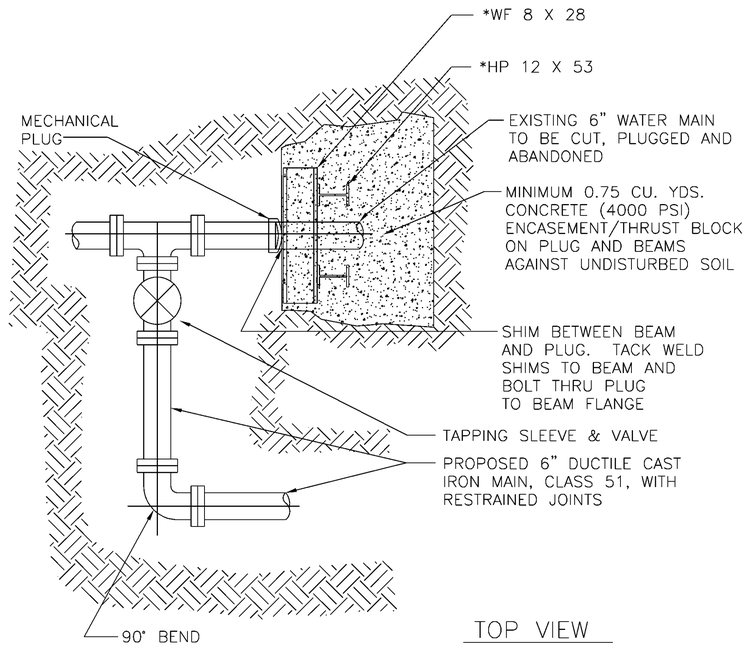

TOP VIEW

NOTE:
THE MINIMUM OF 5' BETWEEN THE CUT & PLUG AND THE PROPOSED EXCAVATION FOR THE SEWER SHALL BE MAINTAINED UNLESS IT IS DETERMINED IN THE FIELD THAT LESS THAN 5' SEPERATION CAN BE CONSTRUCTED.

NOTE:
TYPICAL FOR 6" PIPE: LARGER DIAMETERS WILL REQUIRE BEAMS TO BE SIZED ACCORDINGLY

WATER MAIN CUT AND PLUG DETAILS (FOR PIPE DIAMETER 12" OR SMALLER)

CALCULATED HGH
CHECKED AJS

WATER WORKS DETAILS

MOT-75-0.75

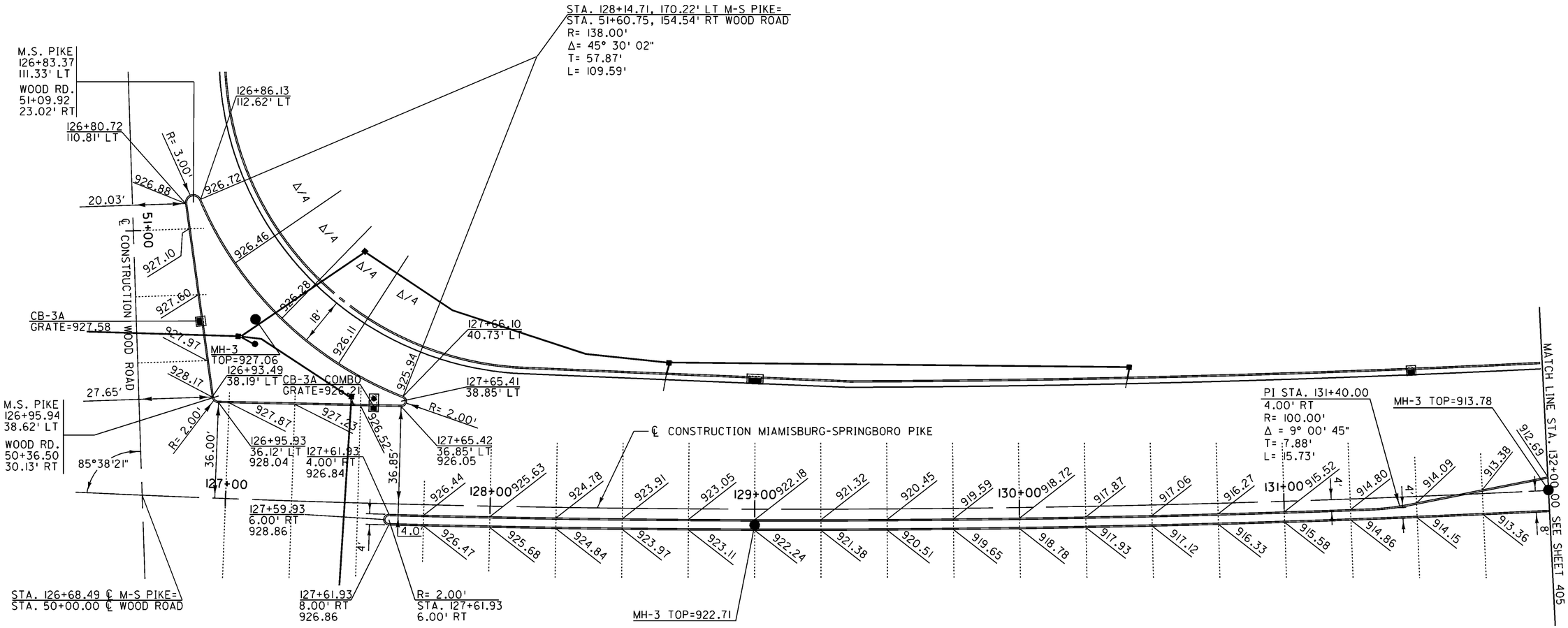

NOTE: ELEVATIONS AND DIMENSIONS SHOWN ARE PAVEMENT UNLESS OTHERWISE NOTED.

FOR ROADWAY AND CATCH BASIN ELEVATIONS SEE SHEETS 322-337.

FOR CENTERLINE ELEVATIONS SEE PROFILE SHEETS 213-221.

HORIZONTAL SCALE IN FEET
0 10 20 40

CALCULATED SES CHECKED AJS

MEDIAN DETAILS
MIAMISBURG-SPRINGBORO PK. STA. 126+80.72 TO STA. 132+00

MOT-75-0.75

NOTE: ELEVATIONS AND DIMENSIONS SHOWN ARE PAVEMENT UNLESS OTHERWISE NOTED.

FOR ROADWAY AND CATCH BASIN ELEVATIONS SEE SHEETS 322-337.

FOR CENTERLINE ELEVATIONS SEE PROFILE SHEETS 213-221.

HORIZONTAL SCALE IN FEET
0 10 20 40

CALCULATED SES
CHECKED AJS

MEDIAN DETAILS
MIAMISBURG-SPRINGBORO PK. STA. 132+00.00 TO STA. 142+00.00

MOT-75-0.75

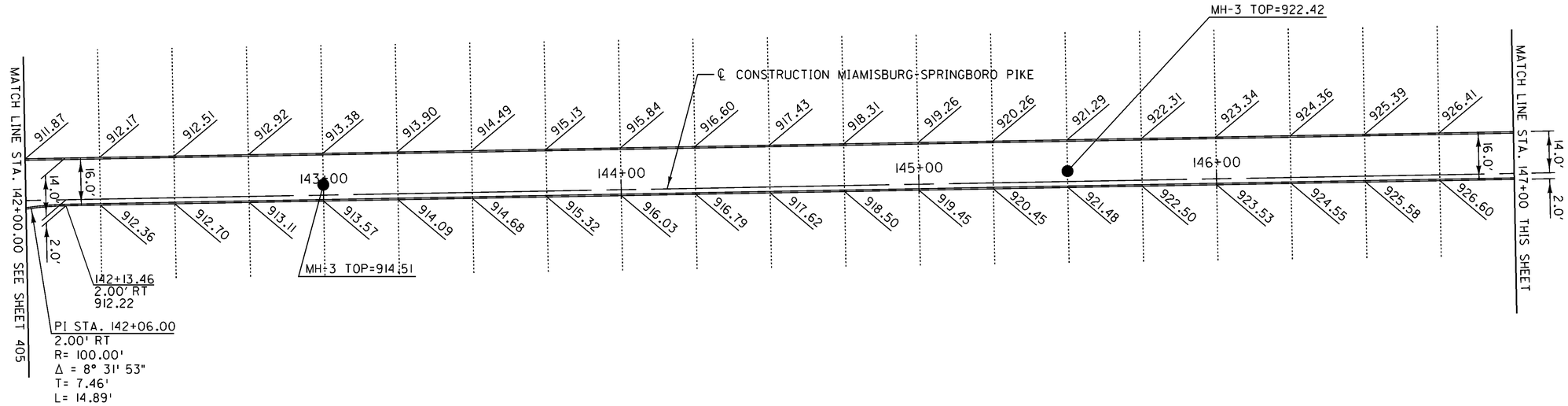

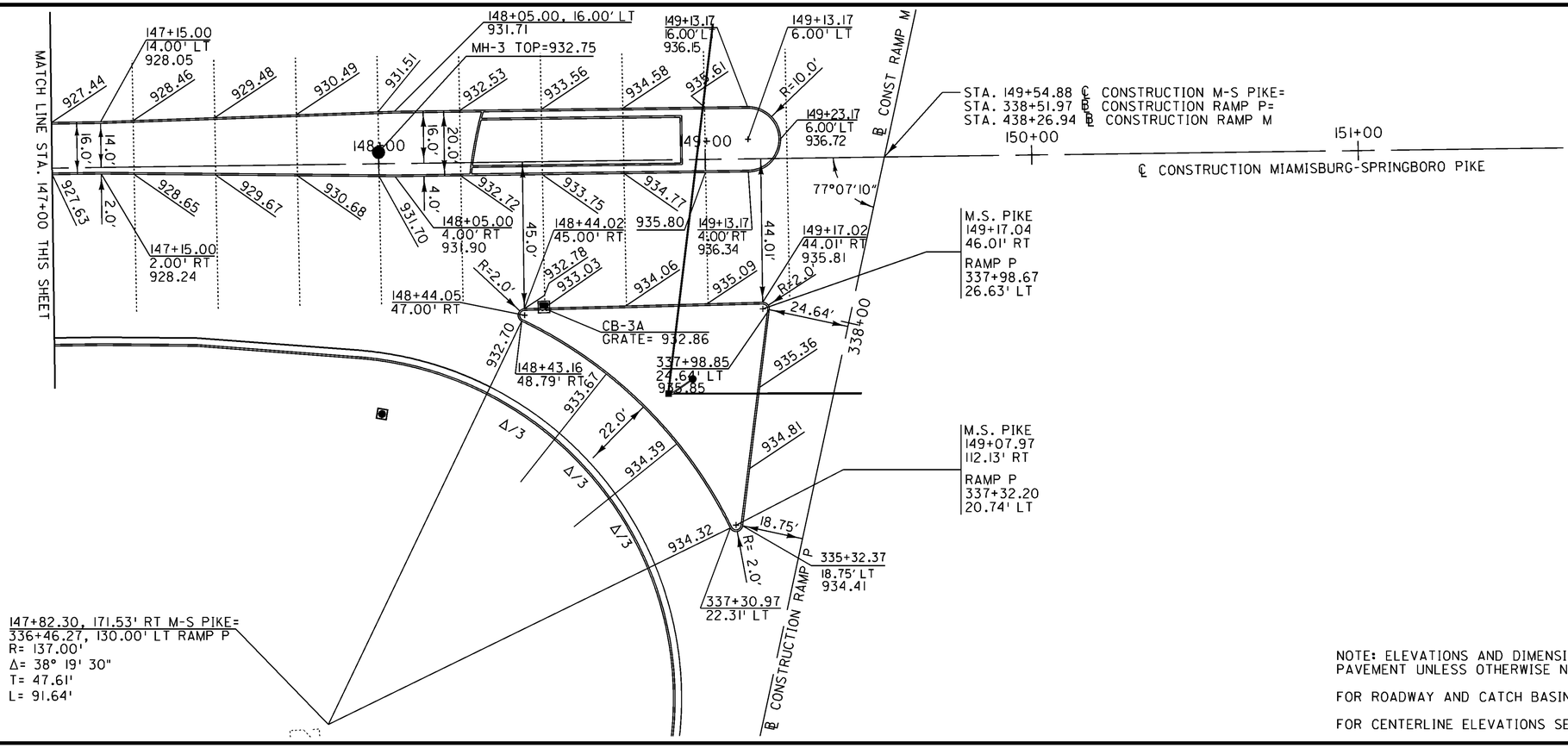

NOTE: ELEVATIONS AND DIMENSIONS SHOWN ARE PAVEMENT UNLESS OTHERWISE NOTED.

FOR ROADWAY AND CATCH BASIN ELEVATIONS SEE SHEETS 322-337.

FOR CENTERLINE ELEVATIONS SEE PROFILE SHEETS 213-221.

HORIZONTAL SCALE IN FEET
0 10 20 40

CALCULATED SES
CHECKED AJS

MEDIAN DETAILS
MIAMISBURG-SPRINGBORO PK. STA. 142+00.00 TO STA. 149+23.17

MOT-75-0.75

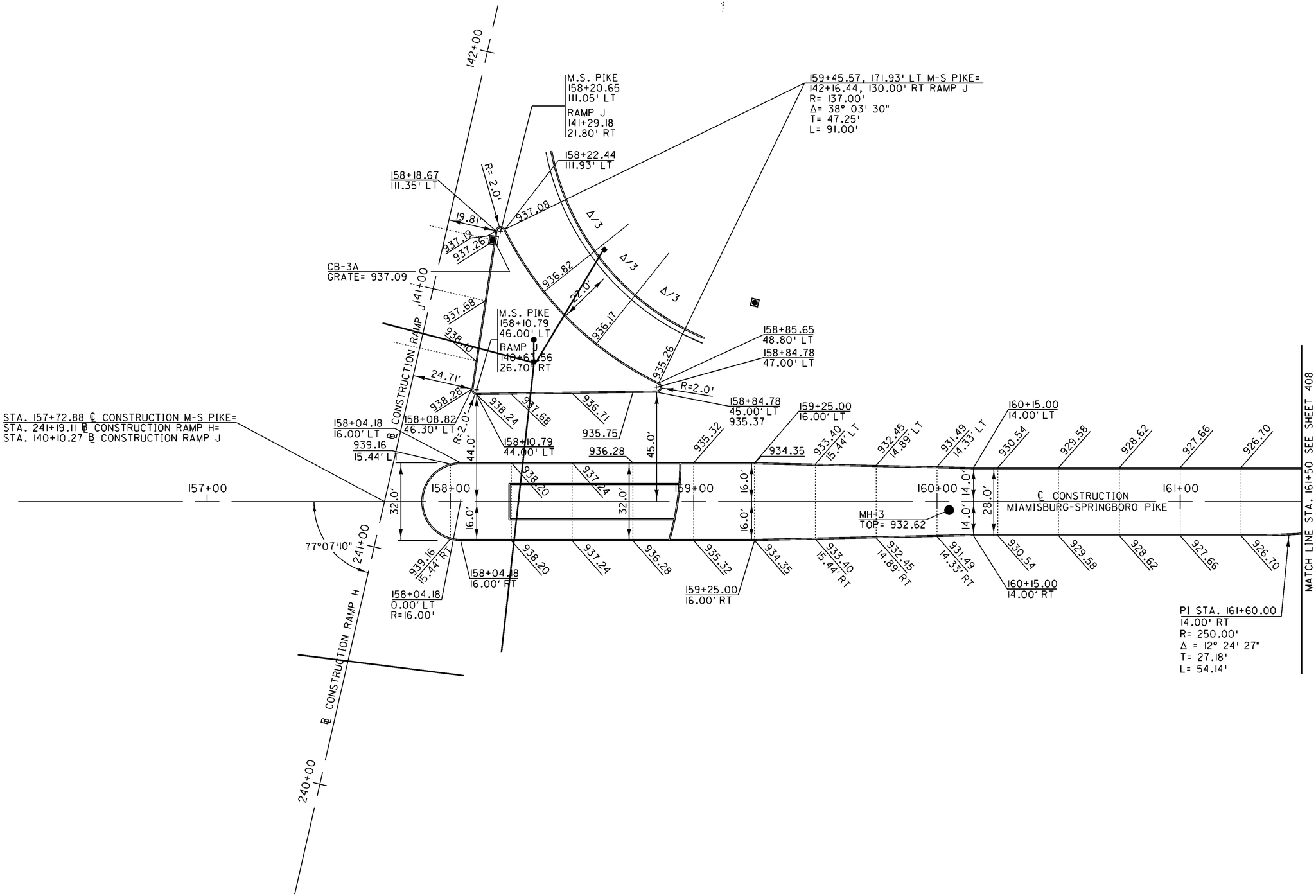

NOTE: ELEVATIONS AND DIMENSIONS SHOWN ARE PAVEMENT UNLESS OTHERWISE NOTED.

FOR ROADWAY AND CATCH BASIN ELEVATIONS SEE SHEETS 322-337.

FOR CENTERLINE ELEVATIONS SEE PROFILE SHEETS 213-221.

HORIZONTAL SCALE IN FEET
0 10 20 40

CALCULATED SES
CHECKED AJS

MEDIAN DETAILS
MIAMISBURG-SPRINGBORO PK. STA. 157+88.18 TO STA. 161+50

MOT-75-0.75

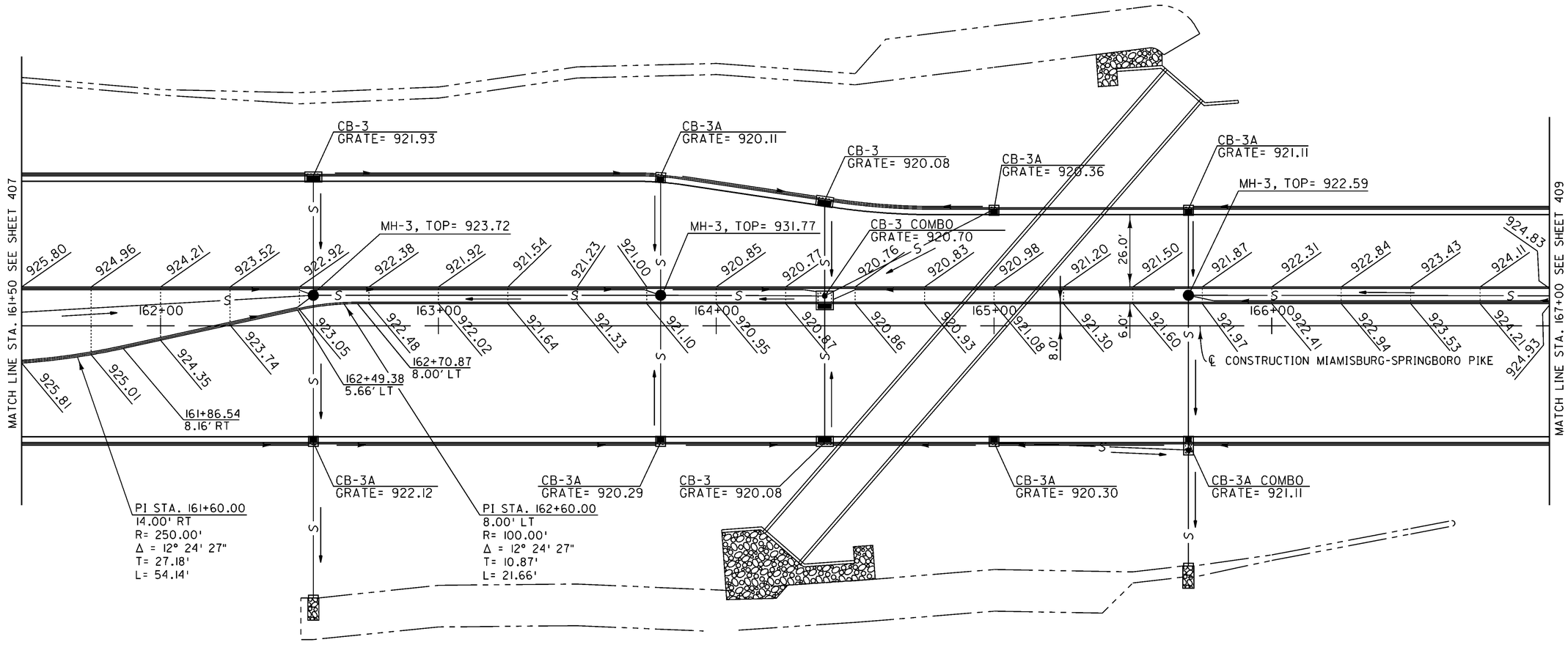

NOTE: ELEVATIONS AND DIMENSIONS SHOWN ARE PAVEMENT UNLESS OTHERWISE NOTED.

FOR ROADWAY AND CATCH BASIN ELEVATIONS SEE SHEETS 322-337.

FOR CENTERLINE ELEVATIONS SEE PROFILE SHEETS 213-221.

HORIZONTAL SCALE IN FEET
0 10 20 40

CALCULATED DJB
CHECKED AJS

MEDIAN DETAILS
MIAMISBURG-SPRINGBORO PK. STA. 161+50 - STA. 167+00

MOT-75-0.75

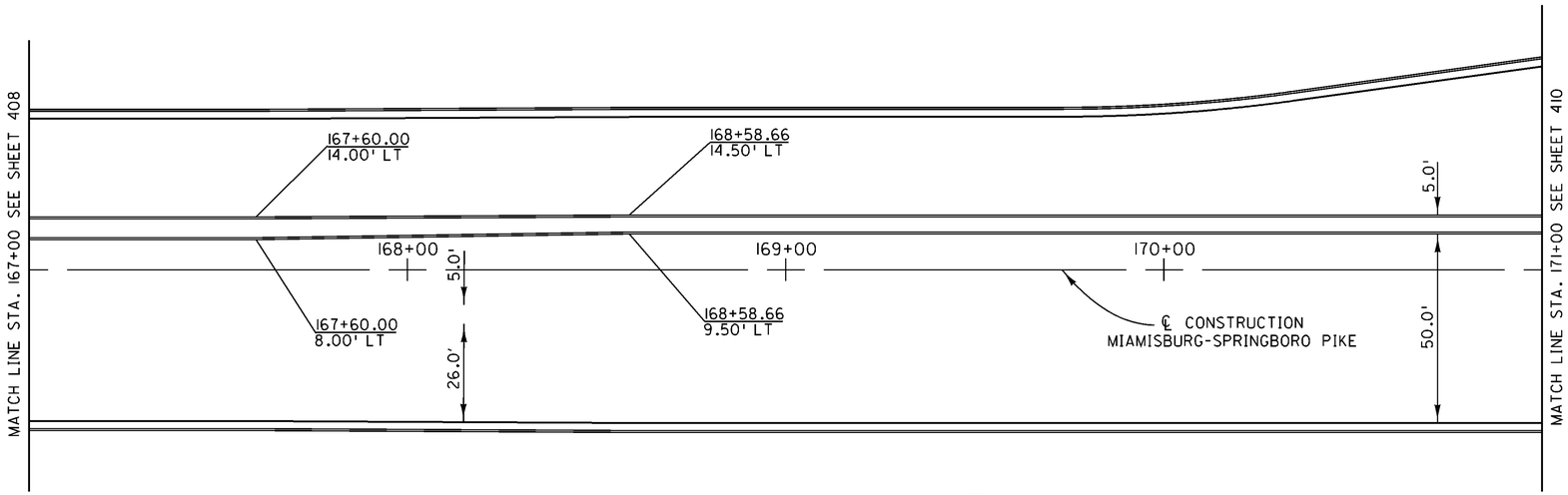

NOTE: ELEVATIONS AND DIMENSIONS SHOWN ARE PAVEMENT UNLESS OTHERWISE NOTED.

FOR ROADWAY AND CATCH BASIN ELEVATIONS SEE SHEETS 322-337.

FOR CENTERLINE ELEVATIONS SEE PROFILE SHEETS 213-221.

HORIZONTAL SCALE IN FEET
0 10 20 40

CALCULATED DJB
CHECKED AJS

MEDIAN DETAILS
MIAMISBURG-SPRINGBORO PK. STA. 167+00 - STA. 171+00

MOT-75-0.75

409
773

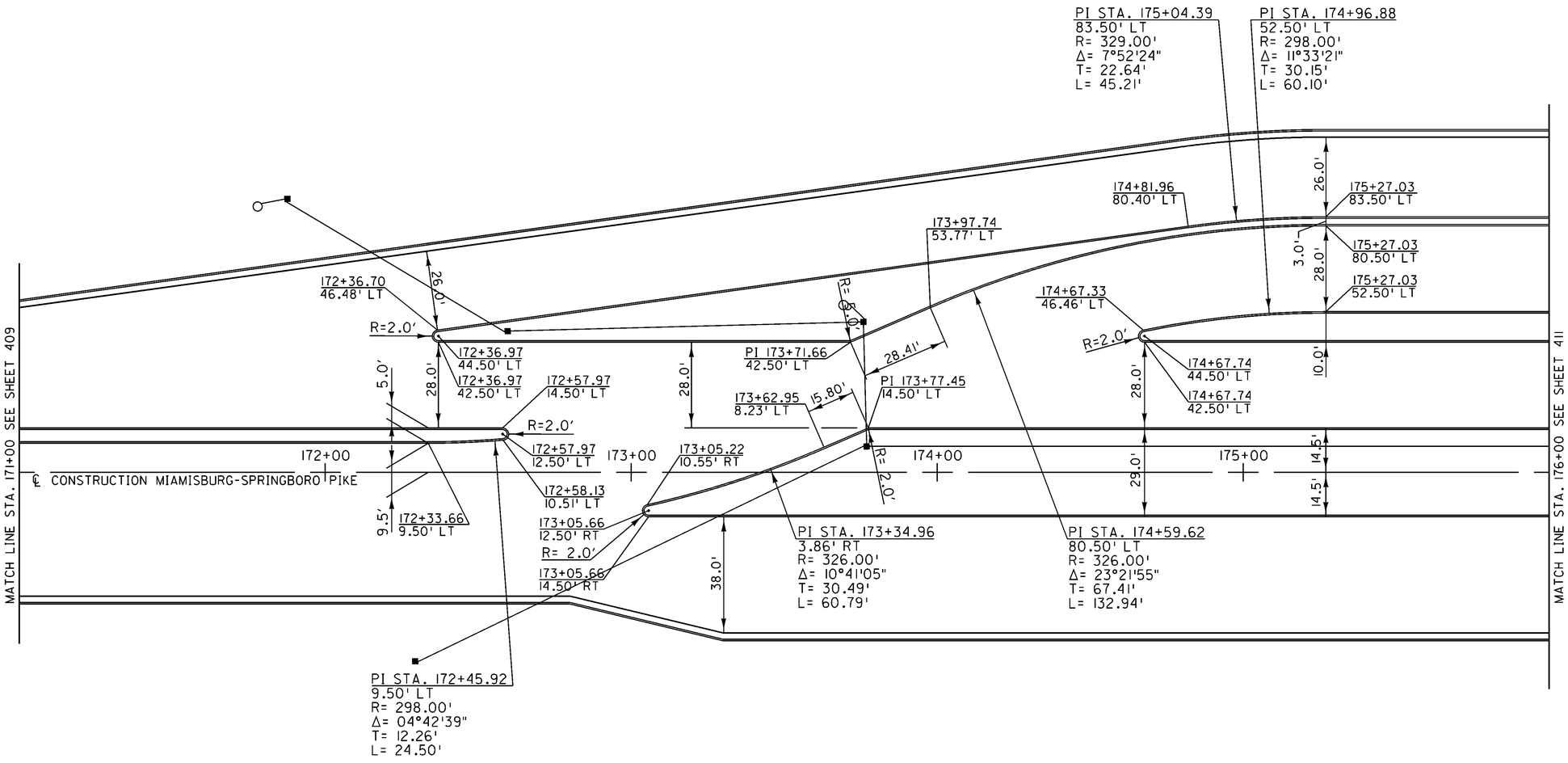

NOTE: ELEVATIONS AND DIMENSIONS SHOWN ARE PAVEMENT UNLESS OTHERWISE NOTED.

FOR ROADWAY AND CATCH BASIN ELEVATIONS SEE SHEETS 322-337.

FOR CENTERLINE ELEVATIONS SEE PROFILE SHEETS 213-221.

HORIZONTAL SCALE IN FEET
0 10 20 40

CALCULATED DJB CHECKED AJS

MEDIAN DETAILS
MIAMISBURG-SPRINGBORO PK. STA. 171+00 - STA. 176+00

MOT-75-0.75

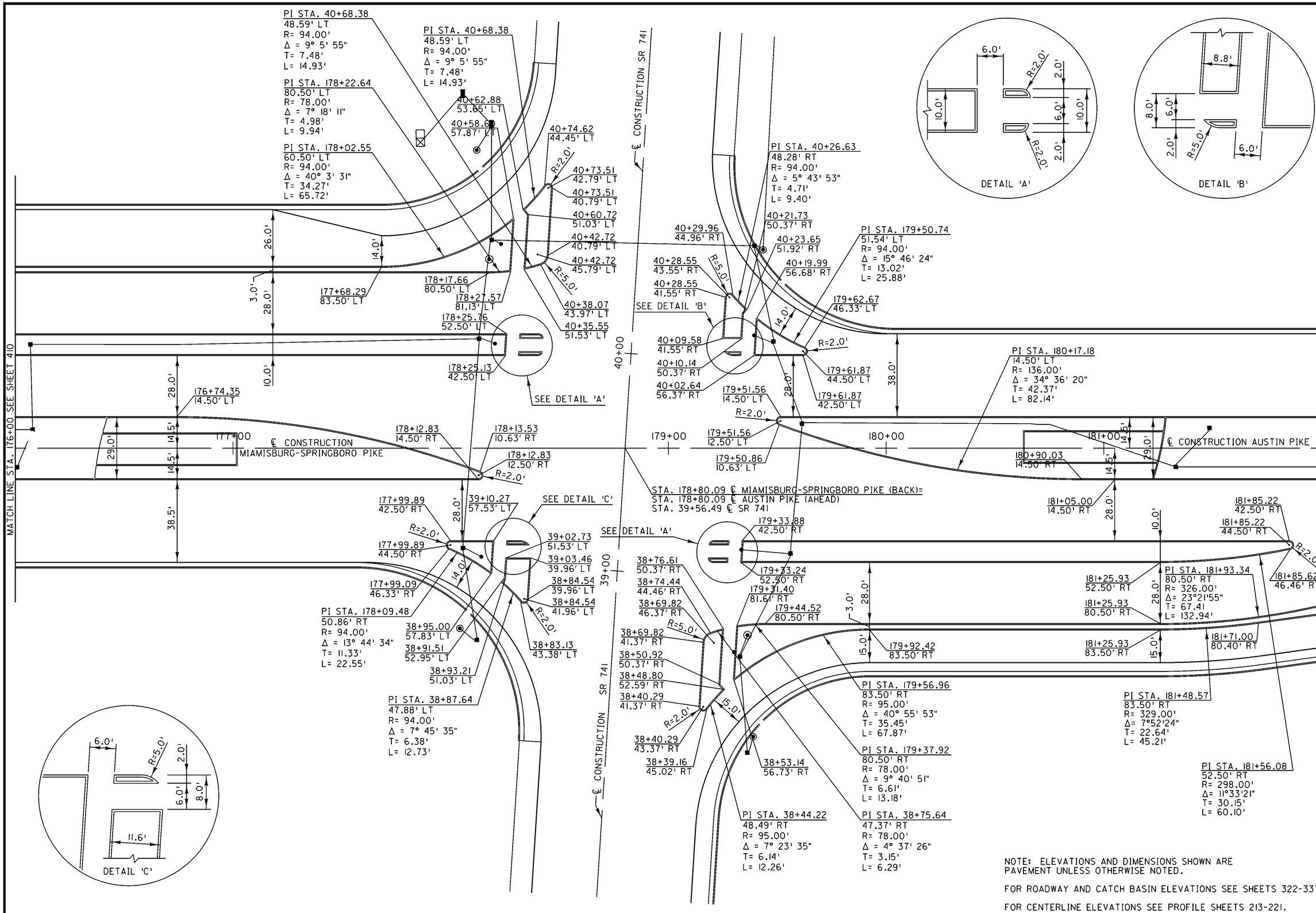

NOTE: ELEVATIONS AND DIMENSIONS SHOWN ARE PAVEMENT UNLESS OTHERWISE NOTED.

FOR ROADWAY AND CATCH BASIN ELEVATIONS SEE SHEETS 322-337.

FOR CENTERLINE ELEVATIONS SEE PROFILE SHEETS 213-221.

HORIZONTAL SCALE IN FEET 0 10 20 40

CALCULATED DJB
CHECKED AJS

MEDIAN DETAILS
M.S. PK. STA. 176+00 - AUSTIN ROAD STA. 182+00

MOT-75-0.75

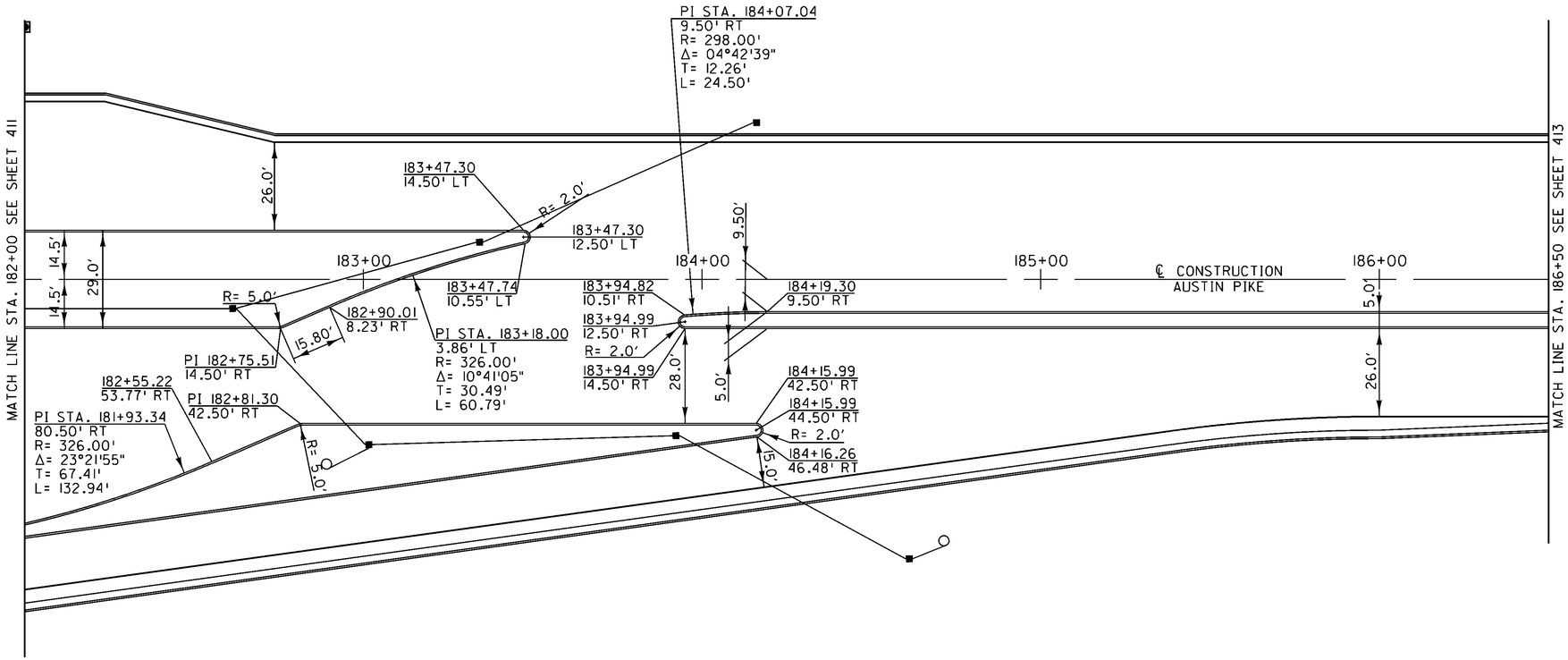

NOTE: ELEVATIONS AND DIMENSIONS SHOWN ARE PAVEMENT UNLESS OTHERWISE NOTED.

FOR ROADWAY AND CATCH BASIN ELEVATIONS SEE SHEETS 322-337.

FOR CENTERLINE ELEVATIONS SEE PROFILE SHEETS 213-221.

HORIZONTAL SCALE IN FEET
0 10 20 40

CALCULATED DJB
CHECKED AJS

MEDIAN DETAILS
AUSTIN PIKE STA. 182+00 TO STA. 186+50

MOT-75-0.75

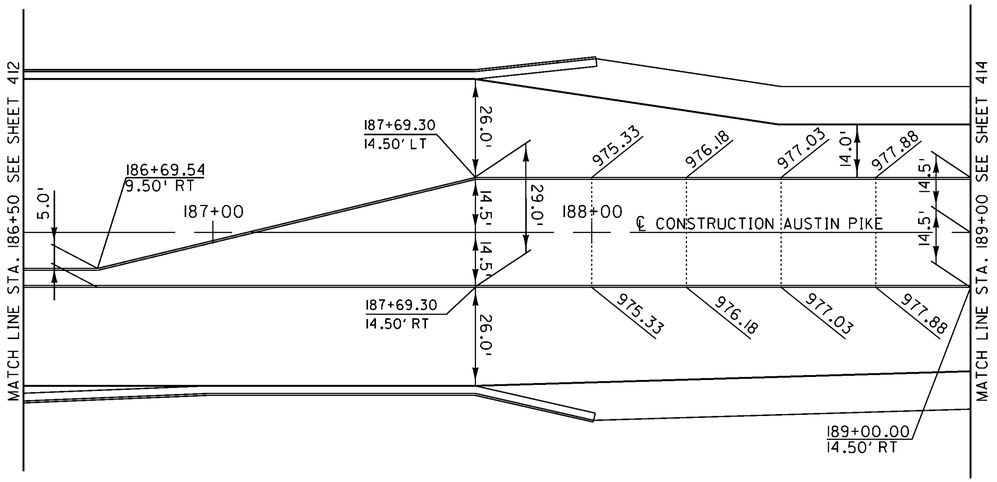

NOTE: ELEVATIONS AND DIMENSIONS SHOWN ARE PAVEMENT UNLESS OTHERWISE NOTED.

FOR MEDIAN ELEVATIONS WEST OF STATION 188+00, SEE INTERSECTION DETAIL, SHEET 334.

FOR ROADWAY AND CATCH BASIN ELEVATIONS SEE SHEETS 322-337.

FOR CENTERLINE ELEVATIONS SEE PROFILE SHEETS 213-221.

HORIZONTAL SCALE IN FEET
0 10 20 40

CALCULATED DJB
CHECKED AJS

MEDIAN DETAILS
AUSTIN PIKE STA. 186+50 TO STA. 189+00

MOT-75-0.75

413
773

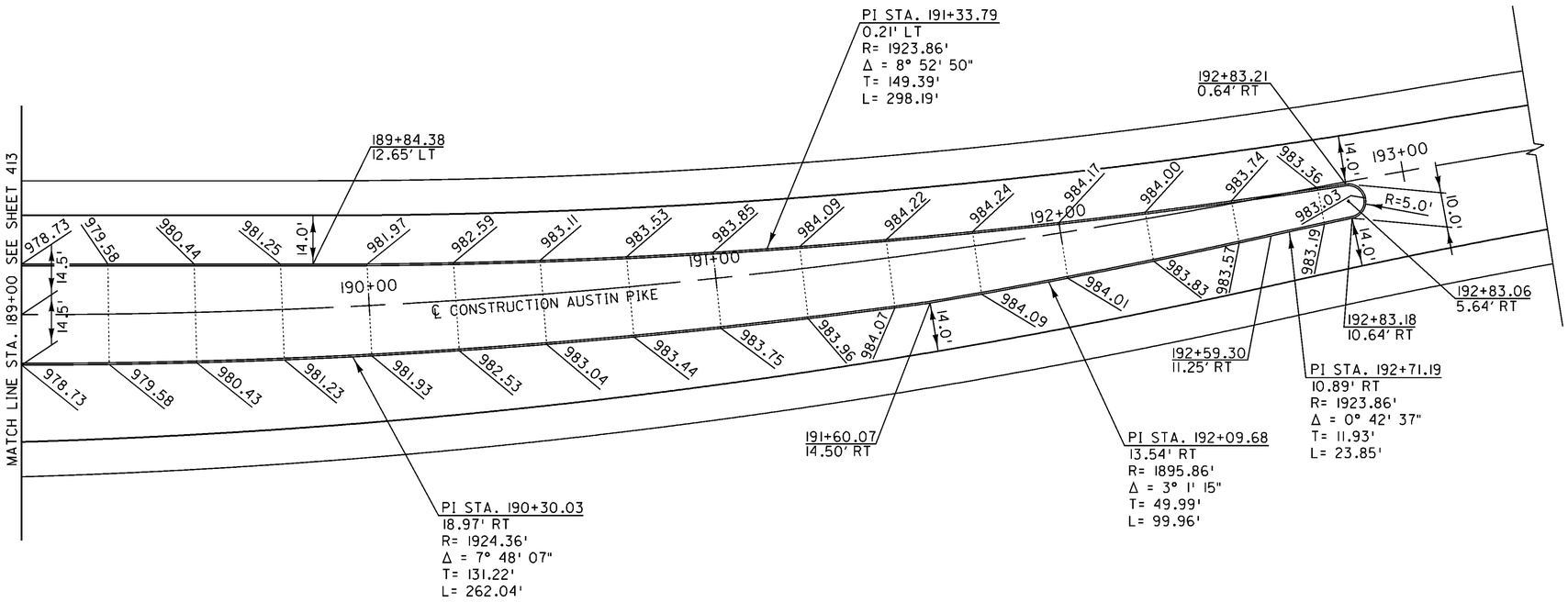

NOTE: ELEVATIONS AND DIMENSIONS SHOWN ARE PAVEMENT UNLESS OTHERWISE NOTED.

FOR ROADWAY AND CATCH BASIN ELEVATIONS SEE SHEETS 322-337.

FOR CENTERLINE ELEVATIONS SEE PROFILE SHEETS 213-221.

HORIZONTAL SCALE IN FEET
0 10 20 40

CALCULATED DJB
CHECKED AJS

MEDIAN DETAILS
AUSTIN PIKE STA. 189+00 TO STA. 192+88.08

MOT-75-0.75

TYPICAL SECTION OF ADJOINING PAVEMENT
STA. 334+50

LEGEND

- (L) STANDARD LONGITUDINAL JOINT AS PER BP-2.1
- (S) STANDARD TRANSVERSE JOINT AS PER BP-2.2 WITHOUT TIE BARS
- (A) 1½" ASPHALT CONCRETE, SURFACE COURSE
- (B) 1¾" ASPHALT CONCRETE, INTERMEDIATE COURSE
- (C) 9" ASPHALT CONCRETE
- (D) 6" AGGREGATE BASE

N

0 10 20 40
HORIZONTAL SCALE IN FEET

CALCULATED GKB
CHECKED AJS

PAVEMENT JOINT DETAILS RAMP P

MOT-75-0.75

TYPICAL SECTION OF ADJOINING PAVEMENT
STA. 442+25

LEGEND

- (L) STANDARD LONGITUDINAL JOINT AS PER BP-2.1
- (S) STANDARD TRANSVERSE JOINT AS PER BP-2.2 WITHOUT TIE BARS
- (A) 1½" ASPHALT CONCRETE, SURFACE COURSE
- (B) 1¾" ASPHALT CONCRETE, INTERMEDIATE COURSE
- (C) 9" ASPHALT CONCRETE
- (D) 6" AGGREGATE BASE

N

0 10 20 40 HORIZONTAL SCALE IN FEET

CALCULATED GKB
CHECKED AJS

PAVEMENT JOINT DETAILS RAMP H

MOT-75-0.75

416
773

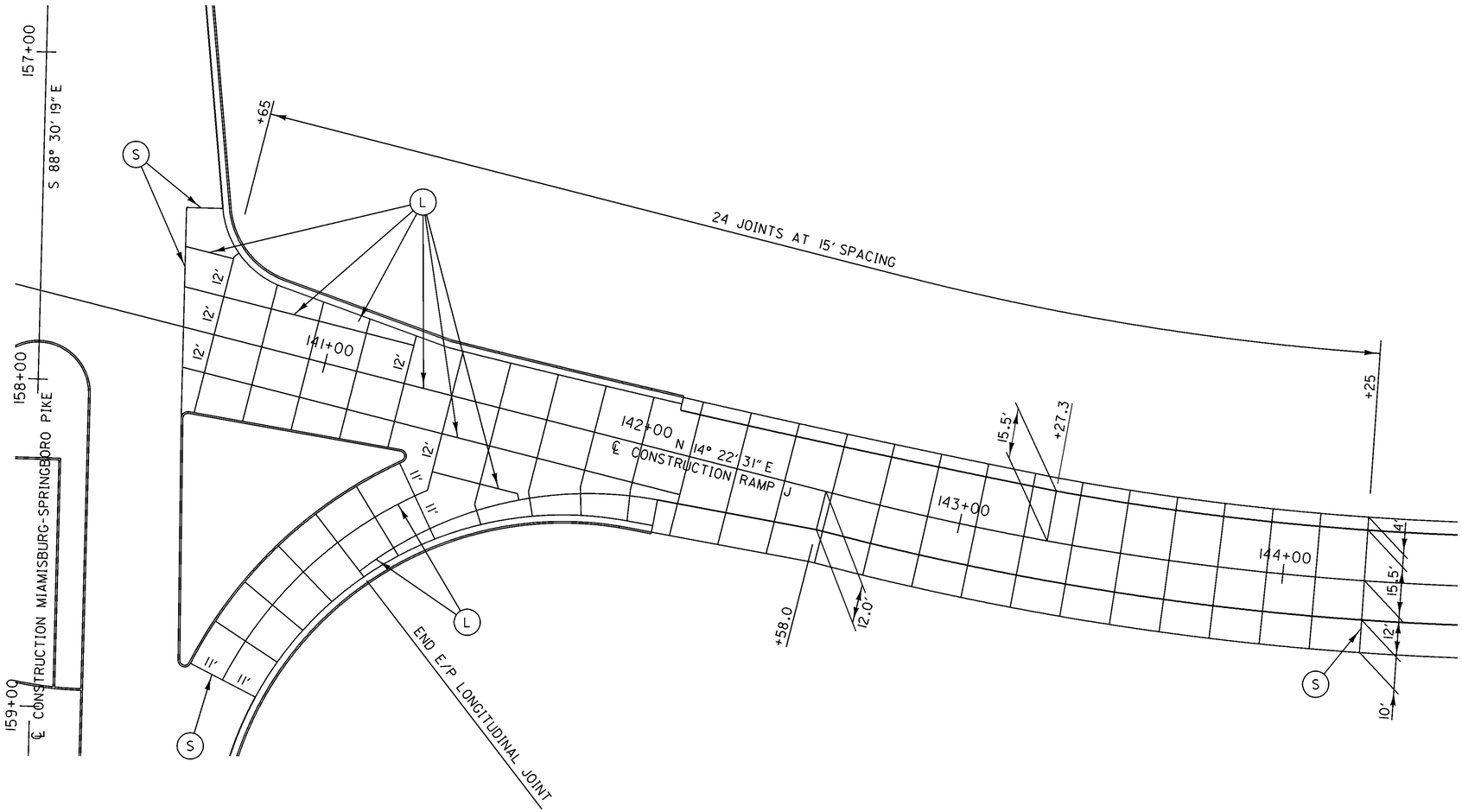

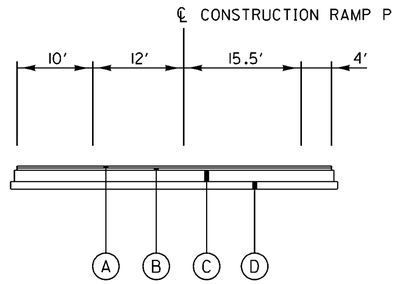

TYPICAL SECTION OF ADJOINING PAVEMENT
STA. 144+25

LEGEND

- (L) STANDARD LONGITUDINAL JOINT AS PER BP-2.1
- (S) STANDARD TRANSVERSE JOINT AS PER BP-2.2 WITHOUT TIE BARS
- (A) 1½" ASPHALT CONCRETE, SURFACE COURSE
- (B) 1¾" ASPHALT CONCRETE, INTERMEDIATE COURSE
- (C) 9" ASPHALT CONCRETE
- (D) 6" AGGREGATE BASE

N

0 10 20 40
HORIZONTAL SCALE IN FEET

CALCULATED GKB
CHECKED AJS

PAVEMENT JOINT DETAILS RAMP J

MOT-75-0.75

417
773

TYPICAL SECTION OF ADJOINING PAVEMENT
STA. 442+25

LEGEND

- (L) STANDARD LONGITUDINAL JOINT AS PER BP-2.1
- (S) STANDARD TRANSVERSE JOINT AS PER BP-2.2 WITHOUT TIE BARS
- (A) 1½" ASPHALT CONCRETE, SURFACE COURSE
- (B) 1¾" ASPHALT CONCRETE, INTERMEDIATE COURSE
- (C) 9" ASPHALT CONCRETE
- (D) 6" AGGREGATE BASE

N

HORIZONTAL SCALE IN FEET
0 10 20 40

CALCULATED GKB
CHECKED AJS

PAVEMENT JOINT DETAILS RAMP M

MOT-75-0.75

418
773

GENERAL NOTES

Noise Barrier

I. Description
II. Posts
III. Barrier Materials
IV. Construction Methods
V. Acceptance Criteria
VI. Method of measurement
VII. Basis of Payment

Item Special-Noise Barrier

I. Description

This work shall consist of furnishing and installing noise barriers including all material, labor and equipment required in accordance with these provisions and applicable standards and in conformity with the dimensions, lines and grades shown on the plans.

No mixing of barrier material types or colors at any one noise barrier unless otherwise specified in the plans will be allowed, except where a run of noise barrier includes placement on a bridge.

~~Noise barriers placed on bridges shall not weigh more than 225 lbs./linear foot.~~

~~Barrier material type supplied for reflective noise barrier projects shall be any listed on sheets 3A, 3B of 7 unless otherwise specified.~~ Barrier material type supplied for absorptive noise barrier projects shall be any listed on sheet 3C of 7 unless otherwise specified .

Individual barrier fabrication and erection details, except for posts and foundations, shall be as per approved Manufacturer's drawings listed on sheets 3A, 3B, 3C of 7. Posts and foundations shall be as detailed in these plans. Posts and foundations shall be as detailed in these plans unless alternative Manufacturer's details are submitted and approved by the Engineer.

Post spacing shown in the noise barrier material Manufacturer's approved drawings may be used in lieu of the post spacing shown in the plans. Any interference with utilities or other post spacing adjustments required to meet design plan alignment, connections to structures, or other conditions created due to changing of post spacings shall be at the Contractor's expense.

Copies of the ODOT approved, Manufacturer's drawings listed on sheets 3A, 3B, 3C of 7, shall be furnished the Engineer before any work is initiated. All project specific details not covered by the plans or the Manufacturer's drawings shall be approved by the Engineer before work is initiated.

The barrier and the associated work shall conform to sections 499 and 501 of the CMS as appropriate.

II. Posts

A. ~~SAWN TIMBER POSTS (to be used with wooden noise barriers only)~~

~~Sawn timber posts shall be select structure grade southern pine, surfaced four sides, with an allowable stress of 1,500 PSI. The material shall be dried to 19% maximum moisture content prior to preservative treatment. Color shall be similar to the barrier material furnished.~~

B. ~~GLULAM POSTS (to be used with wooden noise barriers only)~~

~~Glulam posts (stress symbol 20F, wet use condition) shall be southern pine with an allowable stress of 2,000 PSI for the finished laminated post. AITC Standard 117, latest version, and ANSI/AITC A190.1-92, shall govern the material requirements and laminating procedures. The adhesive used in glulam production shall comply with "wet condition" use as set forth in ANSI/AITC A190 1-92. The appearance grade of the posts shall be Industrial - Section 2 of AITC Standard 110.~~

Color shall be similar to the barrier material furnished, unless otherwise specified in the plans.

C. STEEL POSTS

Steel posts shall be ASTM A-588 and manufactured in accordance with item 863 of the CMS unless otherwise specified. Exposed portions of the posts shall be painted to match the noise panel's color or receive a flashing matching the noise panel's color unless otherwise specified.

The portion of any posts in contact with soil and an additional 6 inches above and below the soil contact line on the post shall be coated with coal tar epoxy paint. The paint shall conform to Structural Steel Painting Council (SSPC) Paint Specification 16; be black in color; be applied as per the paint manufacturer's recommendations; and have a minimum dry film thickness of 16 mils. All surfaces that receive paint on the steel posts, whether coal tar epoxy or paint to match the noise panel color, shall be blast cleaned to conform to SSPC - SP10, near white metal.

The Contractor, in lieu of applying coal tar epoxy paint to post surfaces in contact with soil, may choose to supply galvanized posts. The post shall be ASTM A572, grade 50, steel, galvanized in accordance with ASTM A123.

Steel posts not mounted on drilled shafts shall be ASTM A572, grade 50, steel galvanized in accordance with ASTM A123.

The use of galvanized posts does not eliminate the Contractor from the requirement to paint or flash any exposed portion of the posts to match the noise panel's color.

D. CONCRETE NOISE BARRIER PANELS AND POSTS

Every producer of precast concrete noise barrier components supplied to the project shall be certified in accordance with Supplement 1073. The Department will not accept precast components from non-certified plants.

The concrete supplied for concrete posts and panels shall be as specified by the supplier on their ODOT approved plan sheets. The concrete panels and posts shall not exhibit any efflorescence for a period of 3 years after the completion of the project. The contractor will be held responsible for the repair of efflorescence on the sound wall for this period of time at no expense to ODOT.

Concrete noise barrier panels and posts require a reinforced integral or non-integral cap on the top of the posts and the top of the top noise barrier panels as per BDM Section 802.2. When called out on the plans, the concrete noise barrier panels and posts should be coated with an ODOT approved coating from a supplier on the Noise Barrier Concrete Panel Sealer/Coating Specification available from the ODOT Office of Materials Management. All concrete noise barrier panel edges shall be sealed/coated at the manufacturing plant. The sealer/coating shall be identical to the sealer/coating which is applied to the front and back surfaces of the panels. Horizontal joint lines between panels shall match for a minimum distance of 500 feet for aesthetic purposes.

E. CONCRETE POSTS AND PANELS (with and without integral cap), PEDESTALS, SPREAD FOOTINGS, and DRILLED SHAFTS

Reinforcing steel shall be CMS 709.00, Grade 60, welded wire fabric shall be 709.14.
Prestressed concrete shall have an ODOT approved corrosion inhibitor added to the concrete mix.

Concrete shall meet CMS 499, except for drill shaft concrete which shall conform to section H. Concrete for Drilled Shafts.

The concrete mix design for panels shall contain a water repellant admixture and 15% by weight fly ash or 15-30% ground granulated blast furnace slag (GGBF)".

Post concrete shall be colored to match the noise panel material unless otherwise specified in the plans.

The non-integral cap shall be attached to the top of the post and panel by means of a structural designed mechanical attachment which has been approved by the ODOT Office of Structural Engineering.

F. PRESTRESSED CONCRETE POSTS (with and without integral cap)

Item 515 of the CMS shall apply except as modified below.
Prestressed Concrete;
compressive strength - 5,000 PSI,
compressive strength at transfer of prestress - 4,000 PSI
Initial stress = 0.70 F's.

Prestressing strand shall be ½" diameter with an area of 0.153 sq. in. An initial tensile force of 28900 lbs. shall be applied to each strand. Exposed strand ends shall be painted with approved epoxy. See section C. above for specifications and application rates.

Post concrete shall be colored to match the noise panel material unless otherwise specified in the plans.

G. REINFORCED MASONRY POSTS

Reinforcing steel shall be as per section II.E. above. Concrete pea gravel for posts shall conform to ASTM C 476. Portland Cement, Type I, II or III, shall be used in the grout mix.

Posts shall be faced either with brick or concrete block. Color and texture shall be similar to barrier material furnished unless otherwise specified in the plans.

For additional masonry notes, see masonry wall plans.

H. DRILLED SHAFTS
Drilled shafts shall be constructed as per CMS Item 524. The Designer is responsible to determine the "N" value and soil type based on the noise wall borings and the design data sheet. The Designer can then determine the drilled shaft length from the Noise Barrier Table (Post and Panel Construction) on sheet 7 of 7. Only the station locations, the top elevation of the drilled shaft and the actual drilled shaft lengths should be shown on the project plans.

The design data sheet and the Noise Barrier Table (Post and Panel Construction) sheet should not be included in the plans. The Contractor at no time should be required to determine the drilled shaft length.

ODOT requires for all noise walls that soil borings shall be supplied by the consultant or in the case of an in-house project, by the ODOT Office of Geotechnical Engineering. Soil Borings shall be located directly along the alignment of the noise barrier wall. Soil borings shall be obtained acccording to the ODOT manual: "Specifications for Subsuface Investigation".

I. BEARING PADS
All bottom noise wall panels require a neoprene preformed bearing pad between the bottom of the noise panel and the bearing surface. The bearing pads shall be a minimum ¼" thick and cover a minimum of 25 square inches. The bearing pads shall conform to ODOT CMS Section 711.21 Preformed Bearing Pads.

DESIGN AGENCY
OFFICE OF STRUCTURAL ENGINEERING

REVISED	DATE
	11-21-97

STRUCTURE FILE NUMBER

DRAWN	REVISED
	10/19/03

DESIGNED	CHECKED
CDR	GKB

REVISED 05/17/05

NOISE BARRIER DETAILS

MOT-75 -0.75

III. Barrier Materials

Acceptable Noise panel designs are listed on sheets 3A, 3B, 3C of 7. For ~~reflective barrier see sheet 3A and 3B of 7 and for~~ absortive barrier see sheet 3C of 7. Materials shall either meet the manufacturer's requirements listed on their approved drawings or CMS requirements if not listed on manufacturer's approved drawings.

IV. Construction Methods

A. Noise barriers shall be installed in accordance with the plans. Joints and connections shall be secured in such a manner as to be structurally sound with no visible openings for sound transmission. Noise panel attachments to posts and installation methods shall be structurally sound, give adequate support to the noise panels, and be secured to the post or adequately blocked between the post's flanges to eliminate movement at the support and eliminate any possible vibration.

Exclusive of the Contractor's choice of noise barrier panel, the top of installed noise barriers shall match the top of wall design elevations, with no variation between posts, unless the design plans require an elevation change.

B. Marred, chipped, scratched, spalled, or any other damage deemed detrimental to the noise barriers by the Engineer shall be replaced, as approved by the Engineer, at the Contractor's expense.

C. Preservative treatment of all wood materials used in the noise barrier shall be in accordance with section 712.06 of the CMS and the requirements of one of the following optional materials:

TYPE	RETENTION RATE (pcf)	
	Above Ground	In Ground Contact
CCA-Type C	0.4	0.6
Penta/LPG	0.4	0.6

Penta/LPG shall be penta-chlorophenol in AWPA P9 Section 2 solvent.

Laminated components shall be in conformance with AWPA Standard C28 for Glulam. Sawn lumber shall be in conformance with AWPA Standard C2.

Additional requirements for CCA-Type C are:

1. All lumber materials shall be dried to 19 percent moisture content or less prior to treatment. The treatment shall be in accordance with the AWPA Standards.

2. The same preservative shall be used to treat bolt holes, saw cuts, etc. (if any), and for additional dressing deemed necessary by the Engineer.

3. All wood members, except posts, shall be kiln-dried to a moisture content of 15 percent or less after preservative treatment.

4. After completion of the preservative treatment, all lumber materials shall be protected from increases in moisture content until they are incorporated into the wall.

5. CCA-Type C shall meet AWPA P-5.

Payment for all the above shall be included in the unit price bid for Item Special, Noise Barrier.

D. Trench backfill shall be with Class S concrete modified as per II.H. above. The method of placement shall not allow voids or excessive segregation and shall be performed to the satisfaction of the Engineer.

E. All excess excavation shall be disposed of in a manner satisfactory to the Engineer.

F. After erection of the noise barrier, the disturbed area shall be left in a finished condition at the direction of the Engineer and a growth of grass established, at the Contractor's expense, in accordance with CMS Item 659.

G. Tolerances

1. Posts (measured at top)
   a. Vertical alignment shall be within 0.05 inch/ft. of height.
   b. Posts shall be set within +/- ½ inch of their specified location.

2. Noise barriers
   a. Vertical alignment shall be within 0.05 inch/ft. of height.

H. For noise barriers that are built on top of earth berms, the berms shall be constructed of earthwork fill material in accordance with Item 203 of the CMS.

I. ~~Inlet No. 3E shall be constructed as per the details and notes on Standard Construction Drawings I-2.3, "CONCRETE BARRIER (TYPE D) INLET"~~

J. Concrete Epoxy Sealer where Noise Barriers are constructed adjacent to bridge parapet or type D concrete barriers and the Noise Barrier is not constructed to the ground line, the exposed concrete surface shall be coated with a concrete epoxy sealer of a color matching that of the noise barrier. The sealer shall be applied in accordance with the manufacturer's recommendation. A urethane top coat sealer shall also be applied over the concrete areas coated with epoxy sealer. The urethane coating shall be applied in accordance with the manufacturer's recommendation.

K. Stainless Steel unless otherwise specified, shall be ASTM F593 Austentitic Alloy Groups 1,2, or 3, except the free-machining grades 303 or 303Se used to make fasteners. All stainless steel used in ODOT noise walls shall be capable of passing the test for susceptibility to intergranular corrosion as specified in Practice E of ASTM Practices A 262.

V. Acceptance Requirements

In addition to conforming with the structural requirements as shown in the plans, it is also necessary to comply with the following aesthetic requirements.

The Contractor shall deliver to the job site one full size noise panel, and one full size post representative of the product the contractor is going to supply. The Engineer will evaluate whether both the noise panel and post meet all plan specified federal color standard, texture, trim, and/or coating requirements. To facilitate this comparison, the contractor shall supply the Engineer with a copy of "Federal Standard 595B Color Used in Government Procurement". If either the noise panel or post do not meet the plan requirements the Contractor shall have another noise panel or post manufactured and delivered to the job site for approval by the Engineer. If the plans do not specify a color, texture, trim, or coating requirement, it will still be necessary to deliver the sample post and panel to the job site for approval, prior to the production of any additional noise barriers or posts.

The sample post and panel will become the control post and panel with which all subsequent posts and panels will be compared. This control post and panel shall be delivered to, and if necessary, moved to different locations to facilitate comparisons with the remaining posts and panels.

Any delivered and/or erected posts and panels which do not match the control post and panel or do not conform with the structural requirements as shown in the plans shall be removed and replaced at no additional costs.

All noise barrier panels shall be manufactured using the same method of construction so as to produce a uniform panel finish.

VI. Method of Measurement

Noise barrier plan quantities are measured in square feet of acceptable barrier using a height from bottom of wall to top of wall including the cap and a length from post to post as detailed in the plans. Where a noise barrier is constructed behind a concrete parapet the bottom of the wall shall be defined as the top of the parapet for measurement purposes.

Final plan quantities of noise barrier in square feet shall not include any addition for noise barrier heights greater than plan requirements. The additional heights of noise barrier required to accommodate the contractor"s selected manufactured barrier materials or post spacing either greater or less than plan post spacing shall not be included for payment. Square feet of noise barrier constructed below the ground line shall also not be included for payment.

The completed and accepted inlets, whether new, reconstructed, or adjusted to grade will be measured by the unit for each type of structure and class of work itemized.

VII. Basis of Payment

Noise barriers, completed and in place, as described in method of measurement, will be paid for at the contract unit price per square foot. This payment shall be full compensation for all materials, including panels, panels with an integral cap, posts, foundations, protective coatings, labor and equipment necessary to construct the noise barrier. All excavation, backfill with suitable material and any adjustment in earthwork quantities required due to the contractor's selected noise panel, sealing concrete with epoxy and urethane, aggregate drains, compaction, disposal of surplus or unsuitable materials, seeding, fertilizing and mulching of disturbed areas shall also be included for payment.

ITEM	DESCRIPTION	UNIT
	REFLECTIVE TYPE	
Special	Noise Barrier (Reflective) 10 ft. ht. and under	Sq.ft.
Special	Noise Barrier (Reflective), over 10 to 14 ft. ht.	Sq.ft.
Special	Noise Barrier (Reflective), over 14 to 20 ft. ht.	Sq.ft.
	ABSORPTIVE TYPE	
Special	Noise Barrier (Absorptive), 10 ft. ht. and under	Sq.ft.
Special	Noise Barrier (Absorptive), over 10 to 14 ft. ht.	Sq.ft.
Special	Noise Barrier (Absorptive), over 14 to 20 ft. ht.	Sq.ft.
Item 604	Inlet, No.3E	Each

ABBREVIATIONS

AITC	American Institute of Timber Construction
ASTM	American Society for Testing and Materials
AWPA	American Wood Preservers' Association
BIA	Brick Institute of America
CCA	Cromated Copper Arsenate
CMS	Construction and Materials Specifications of ODOT
ILI	Indiana Limestone Institute
LPG	Volatile Petroleum Solvent (liquid propane gas)
SSPC	Structural Steel Painting Council
VPS	Voluntary Product Standard

DESIGN AGENCY
OFFICE OF STRUCTURAL ENGINEERING

REVIEWED	DATE	STRUCTURE FILE NUMBER
	11-21-97	
DRAWN		REVISED 10/19/03
DESIGNED CDR	CHECKED GKB	
REVISED 05/17/05		

NOISE BARRIER DETAILS

MOT-75 -0.75

APPROVED REFLECTIVE BARRIER SUPPLIERS

	SUPPLIERS	DRAWINGS & NOTES	VARIABLES COLOR TEXTURE PATTERN BRICK STYLE
METAL	Empire International 36744 Constitution Drive Trinidad, Colorado 81082 Telephone: (719) 846-2300 Fax: (719) 846-7466	SB1 (3/11/92) Reflective Horizontal/Continuous Wall SB1 (3/11/92) Reflective Horizontal/One Span Shadowbox SB1 (3/11/92) Reflective Horizontal/Two Span Shadowbox SB2 (3/11/92) Reflective Vertical/Continuous Wall SB2 (3/11/92) Reflective Vertical/One Span Shadowbox SB2 (3/11/92) Reflective Vertical/Two Span Shadowbox	
FIBERGLASS WOOD PANEL	CorTec Company 3401 S. Delaware Milwaukee, Wisconsin 53207 Telephone:(414) 486-1876 or 1-800-879-4377 Fax: (740) 636-3250	Crane CorTec Sound Barrier System Manual (4/1/90)	
FIBERGLASS	Carsonite International 10 Bob Gifford P.O. Box 98 Early Branch, South Carolina 29916 Telephone:(803) 943-1172	#9106121-02-2 (3/5/92) Product Binder #30-02180-92 #SBSA1001, SHEETS 1 THRU 8, (10/22/97) #SBSA1002, SHEET 1, (10/22/97)	
	M. H. Corbin, Inc. 9021G Heritage Drive Plain City, Ohio 43064 Telephone: (614) 873-5216 or (800) 380-1718 Fax: (614) 873-8095	FiberCor Composite Reflective Noise Barrier System sheets 1,2&3 dated 3/8/04	

METAL
FIBERGLASS WOOD PANEL
FIBERGLASS RECYCLED RUBBER

NOTE: ADDITIONAL REFLECTIVE SUPPLIERS-SEE SHEET 3B

NOTE: ADDITIONAL REFLECTIVE SUPPLIERS-SEE ATTACHED SHEET 3B

DESIGN AGENCY
OFFICE OF STRUCTURAL ENGINEERING

REVISED	DATE	STRUCTURE FILE NUMBER
	11-21-97	

DRAWN	REVISED
	10/19/03

DESIGNED	CHECKED
CDR	GKB

REVISED 05/17/05

NOISE BARRIER DETAILS

MOT-75 -0.75

3A / 7

421 / 773

APPROVED REFLECTIVE BARRIER SUPPLIERS

SUPPLIERS	DRAWINGS & NOTES	VARIABLES COLOR TEXTURE PATTERN BRICK STYLE
CONCRETE		
Faddis Concrete Products 3515 Kings Hwy. Downingtown, PA 19335 Telephone: (800) 777-1373 or (610) 269-4685 Fax: 1-(215)-873-8431 OR 1-(610) 873-8431	USDOT-1 Sheets 1-6 Nov. 1993 Noteup to 3283 N per meter on structures Note:Panels per Evercrete Limited D -7700297 - Sheets 1 & 2 Feb. 18,1997	
The Reinforced Earth Company Midwest Region 3884 Penbrook Lane Layfeyette, Ind. 47905 Telephone:(765) 449-1200 Fax: (765) 449-7970	FW-1 & FW-2 of 3 (5/17/83) Fanwall/Durisol Technical Handbook (10/1/89) with ODOT posts	
Reading Rock AB Fence System - Sheets 1 thru 9 dated 3-30-07 4600 Devitt Rd. Allan Block Project #1034.04 Cincinnati, Ohio 45246 513 874-2345 fax 513 874-2520	SHEETS 1 THRU 9 DATED 3-30-07 ALLAN BLOCK PROJECT •1034.04	
Prestress Engineering Corp. P.O. Box 609 Algonquin, Illinois 60102-0609 Telephone: (815) 459-4545 Fax:(815) 459-6855	Precast Noise Abatement Wall January, 1994	
Sidley Precast Div. P.O. Box 70 Thompson, Ohio 44086 Telephone: (440) 951-1919 Fax:(440) 951-1921	Noise Barrier March 04, 1994	
Hanson Pipe and Products, Inc. Building 1A Kiem Street Pottstown Industrial Complex P.O. Box 955 Pottstown, PA 19464 Telephone: (800) 970-2216 Fax: 1-610-970-9412	Hanson Pipe and Products, Inc. Precast Concrete Post and Panel Noise Barrier System Job Number 602-132-00-01 (Sheets No. 1 thru 5 of 5) Dated February 2, 2002	
Durisol Inc. 67 Frid Street Hamilton, Ontario Canada, L8P 4M3 Telephone: (905) 521-0999 Fax: 1-905-521-8658 E-mail: edwards@durisol.com	Durisol Noise Barrier Wall System - Reflective OHIO REFLECTIVE -1,2 & 3 Drawings:OHIO-R1, OHIO-R2 & OHIO-R3 (R1-DATED 5-1-02, R2 & R3 DATED 5-2-02) Sound Barriers for Ohio D.O.T.	
Mack Industries, Inc. 201 Columbia Rd. P.O. Box 335 Valley City, OH 44280 Telephone: (330)483-3111	Mack Industries Reflective Sound Wall Panel Standard 24' -0" Post Spacing	
BRICK OR BLOCK MASONRY		
Masonry Institute of Dayton 2077 Embury Park Road P.O. Box 14026 Dayton,Ohio 45414 Telephone: (937) 278-7821 Fax:(937) 599-3683	Block Masonry Drawing Rev.(4/83) Notes Rev.(3/83) Brick Masonry Drawings Rev.(3/83)(2/85) Notes Rev.(12/91)	
Advanced Masonry Technology, Inc 2786 Center Road P.O. Box 878 Brunswick,Ohio 44212 Telephone: (330) 225-9496 Fax: (330) 273-0046	Advanced Masonry Technology Brick Masonry Sound Barrier Panel Drawings: SBC1, SB1, SB2, & SB3, Dated 8/6/02	

NOTE: ADDITIONAL REFLECTIVE SUPPLIERS-SEE SHEET 3A

CONCRETE

BRICK OR BLOCK MASONRY

DESIGN AGENCY
OFFICE OF STRUCTURAL ENGINEERING

REVISED	DATE	STRUCTURE FILE NUMBER
	11-21-97	

DRAWN	REVISED
	10/19/03

DESIGNED	CHECKED
CDR	GKB

REVISED 05/17/05

NOISE BARRIER DETAILS

MOT-75 -0.75

APPROVED ABSORPTIVE BARRIER SUPPLIERS

	SUPPLIERS	DRAWINGS & NOTES	VARIABLES COLOR TEXTURE PATTERN BRICK STYLE
METAL	Empire International 36744 Constitution Drive Trinidad, Colorado 81082 Telephone: (719) 846-2300 Fax: (719) 846-7466	88SSA-101 Empire Silent Screen (1of2)(6/6/88) 88SSA-102 Empire Silent Screen (2of2)(6/6/88) 88SSA-301 Empire Sight and Sound Wall (1of2)(6/6/88) 88SSA-302 Empire Sight and Sound Wall (2of2)(6/6/88)	
	Industrial Acoustics Company, Inc. 1160 Commerce Ave. Bronx, New York 10462 Telephone (718) 931-8000 or (718) 863-1138	Industrial Acoustics Metal Sound Absorptive Dwg. C-9413-444-1 issue B dated 9/2/94	
	Faddis Concrete Products 3515 Kings Hwy. Downingtown, PA 19335 Telephone: (800) 777-7973 or (610) 269-4685 Fax: 1-(215)-873-8431 OR 1-(610) 873-8431	Faddis - Metal Noise Barrier "ACOUSTAX " (AIR FORCE I) Sound Absorptive Noise Barrier Panels Drawings 1 thru 8 June 7, 2001	
CONCRETE	The Prestressed Group 14300 Henn Rd. Dearborn, MI. 48126 c/o F+L Construction Svs. LLC P.O. Box 335 Monroe Falls, Ohio 44262 Telephone: (330) 688-8671	Standard Noise Barrier Wall Sheets P-1 Through P-8 (3-10-06) Sheets C-1 Through C-14 (8-29-06)	
	Faddis Concrete Products 3515 Kings Hwy. Downingtown, PA 19335 Telephone: (800) 777-7973 or (610) 269-4685 Fax: 1-215-873-8431	"Faddis Concrete Standard and Sound Absorptive Ground Mounted Sound Barriers for Ohio D.O.T." 2003.203.009 (A thru C) - Sheets 1 thru 3, Approved August 10, 2004	
	Durisol Inc. 67 Frid Street Hamilton, Ontario Canada, L8P 4M3 Telephone: (905) 521-0999 Fax: 1-905-521-8658 E-mail: edwards@durisol.com	Durisol Noise Barrier Wall System (Sound Absorptive) Noise Barrier Panel Details - OHDNBP (7-24)A Drawings: OH10-A1, OH10A2, & OH10-A3 (DATED 05-02-02) Sound Barriers for Ohio D.O.T.	
	Mack Industries, Inc. 201 Columbia Rd. P.O. Box 335 Valley City, OH 44280 Telephone: (330)483-3111	Mack Industries Absorbtive Sound Wall Panel Standard 24' -0" Post Spacing	

METAL

CONCRETE

DESIGN AGENCY
OFFICE OF
STRUCTURAL ENGINEERING

REVISED	DATE	STRUCTURE FILE NUMBER
	11-21-97	

DRAWN	REVISED
	10/19/03

DESIGNED	CHECKED
CDR	GKB

REVISED
05/17/05 9/11/06

NOISE BARRIER DETAILS

MOT-75 -0.75

30 / 7

423
773

TABLE - DETAILS FOR SPREAD FOOTINGS*

PANEL GROUP	LENGTH L	WIDTH W	A BARS	B BARS
I	7'-6"	3'-6"	4-#5x7'-2" Top 4-#6x7'-2" Bot.	6-#5x3'-2" Top & Bottom
II	9'-0"	5'-6"	6-#5x8'-8" Top 6-#6x8'-8" Bot.	7-#5x5'-2" Top & Bottom
III	10'-6"	7'-6"	7-#5x10'-2" Top 7-#6x10'-2" Bot.	7-#5x7'-2" Top & Bottom
IV	12'-0"	9'-6"	9-#5x11'-8" Top 9-#6x11'-8" Bot.	9-#5x9'-2" Top & Bottom

Note: Soil should be able to handle a minimum allowable bearing pressure = 1.25 tons per sq. ft.

* All post and panel noise barriers shall utilize drilled shaft foundations unless otherwise indicated on the plans or directed by the Engineer.

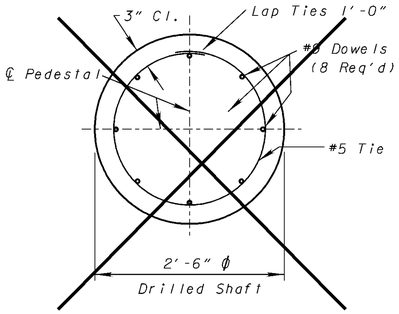

SECTION C-C

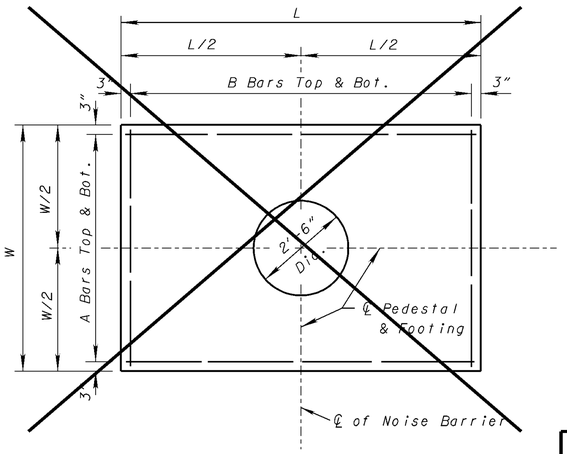

PLAN

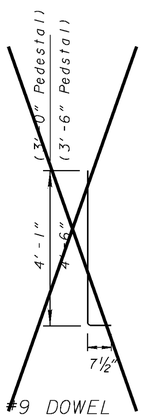

#9 DOWEL

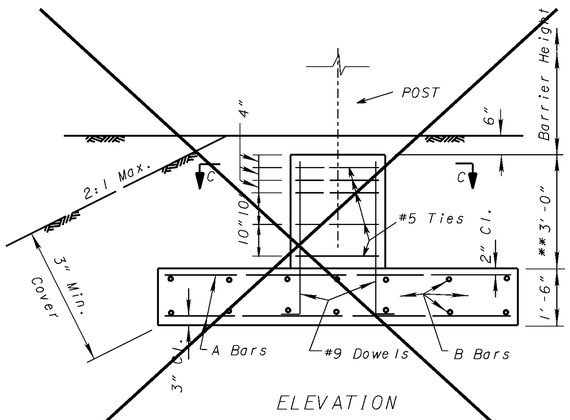

ELEVATION

SPREAD FOOTING FOUNDATION

** 3'-6" Pedestal for all embedded posts except concrete.

TABLE - OPTIONAL POST MOUNTING DETAILS
BOLTED CONNECTION

Steel Post	Base Plate	Dim. A	Dim. B	Min. Weld Size	Anchor Bolts	Proj.	Threaded Length	Base ℄ Hole Dim. H
W 8x13	12"x14"x5/8"	4"	5"	1/4"	4 - 5/8" ϕ x 12"	2"	4"	7/8"
W 8x18	12"x14"x1"	4"	5"	1/4"	4 - 7/8" ϕ x 14"	2½"	4½"	1¼"
W 8x28	14"x14"x1⅜"	5"	5"	5/16"	4- 1¼" ϕ x 17"	3¼"	5¼"	1¾"
W 14x38	14"x20"x1½"	5"	8"	5/16"	4- 1⅜" ϕ x 18"	3½"	5½"	1⅞"

Note: All anchor bolts, nuts, plain washers and lock washers shall be galvanized and conform to the physical properties of ASTM A325 except that the minimum elongation shall be 10%. The chemical properties are waived.

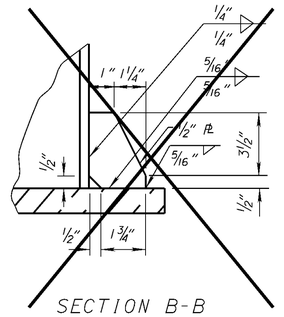

SECTION B-B

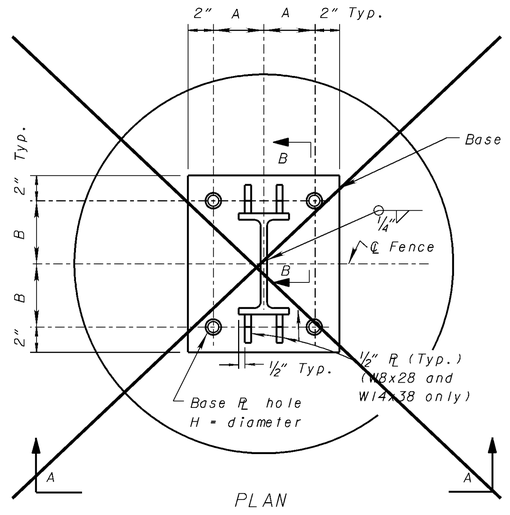

PLAN

OPTIONAL POST ATTACHMENT

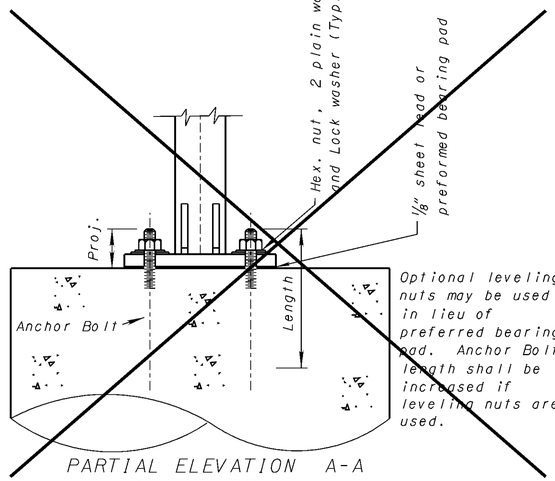

PARTIAL ELEVATION A-A
STEEL POST

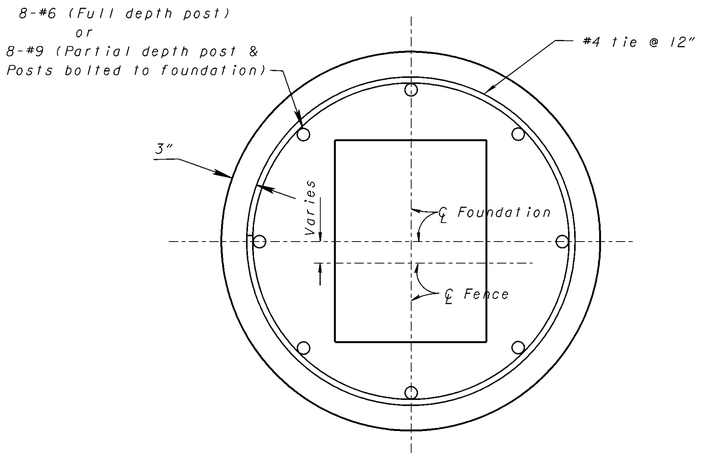

TYPICAL DRILLED SHAFT CROSS-SECTION

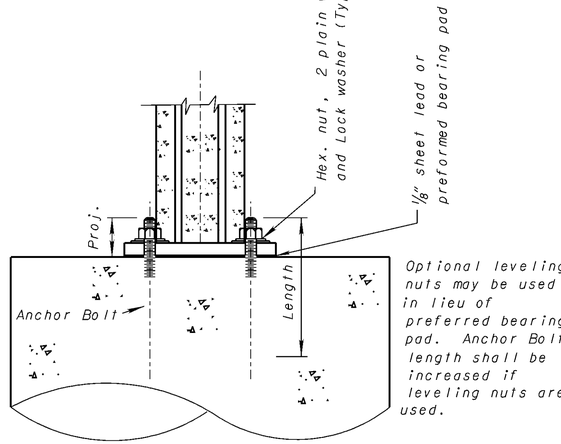

PARTIAL ELEVATION A-A
CONCRETE POST

DESIGN AGENCY
BUREAU OF BRIDGES AND STRUCTURAL DESIGN

REVISED	DATE	STRUCTURE FILE NUMBER
	11-21-97	
DRAWN	REVISED	10/19/03
DESIGNED CDR	CHECKED GKB	
REVISED 05/17/05		

NOISE BARRIER DETAILS

MOT-75 -0.75

4 / 7

424
773

POST CONNECTION TO BIKEWAY STRUCTURE DETAIL

POST SPACING ON BIKEWAY BRIDGES: For all bridge mounted posts, including the first post off the bridge, the maximum post spacing shall be 12 feet.

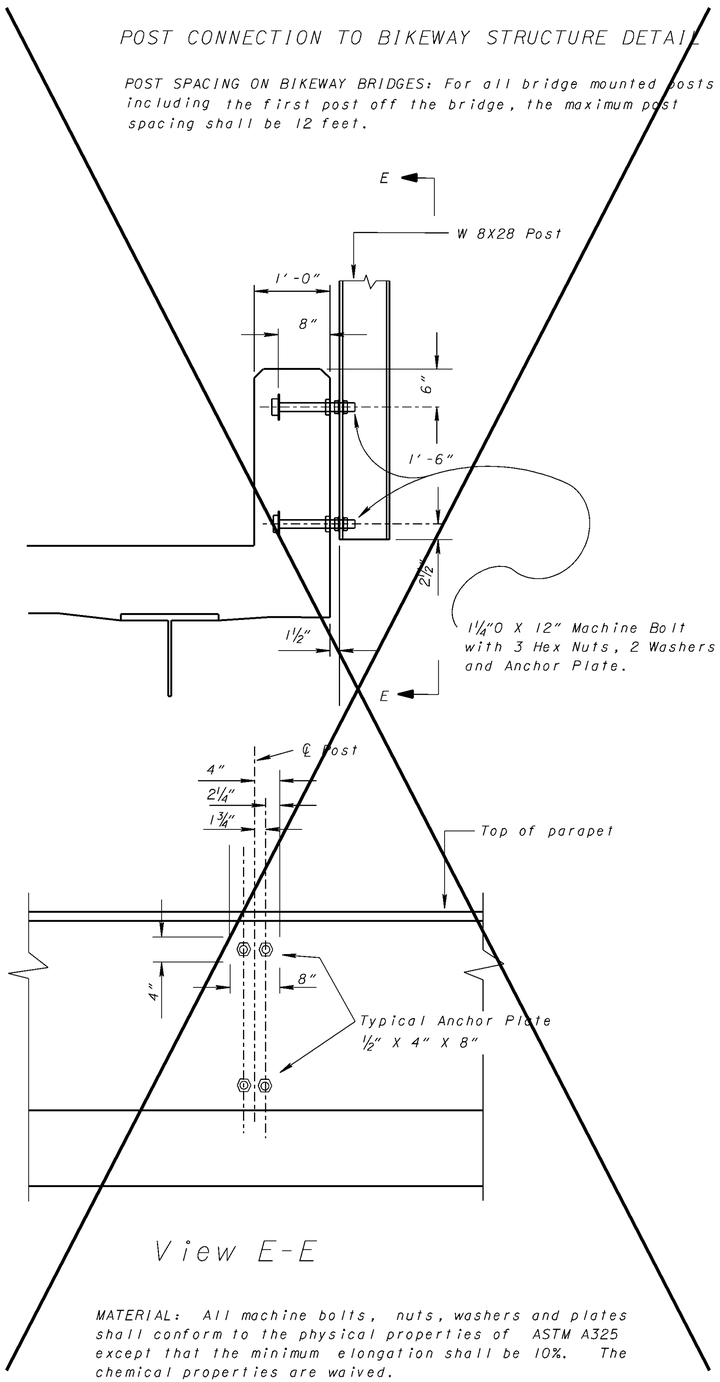

View E-E

MATERIAL: All machine bolts, nuts, washers and plates shall conform to the physical properties of ASTM A325 except that the minimum elongation shall be 10%. The chemical properties are waived.

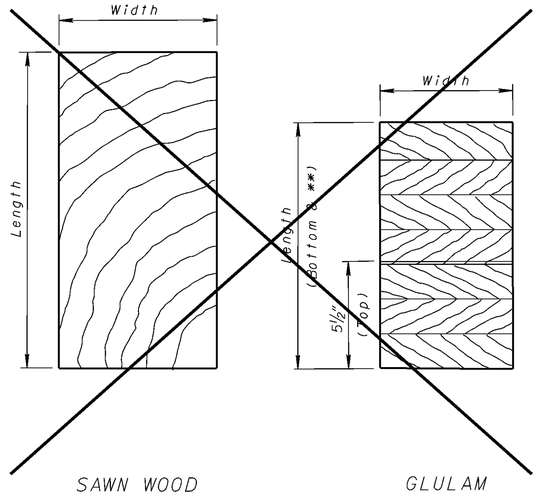

SAWN WOOD

GLULAM

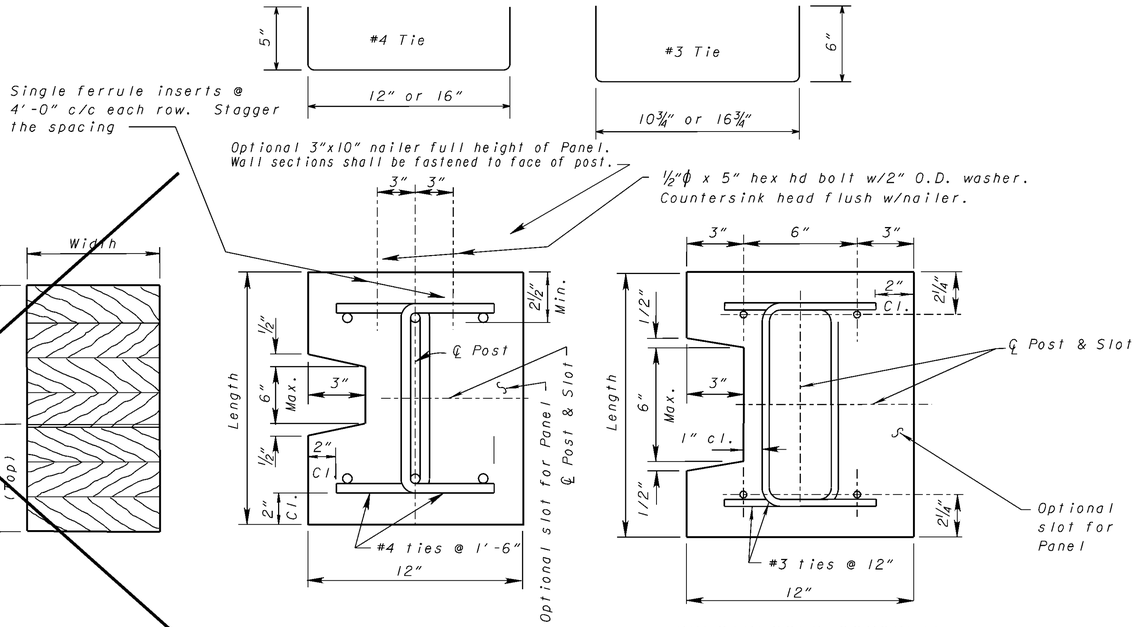

REINFORCED CONCRETE
(Precast)

PRESTRESSED CONCRETE
(4-½"Ø strands)

LINE POST DETAILS

NOTE: For post sizes and concrete post reinforcement, see Noise Barrier Table on Sheet 7 and 7.

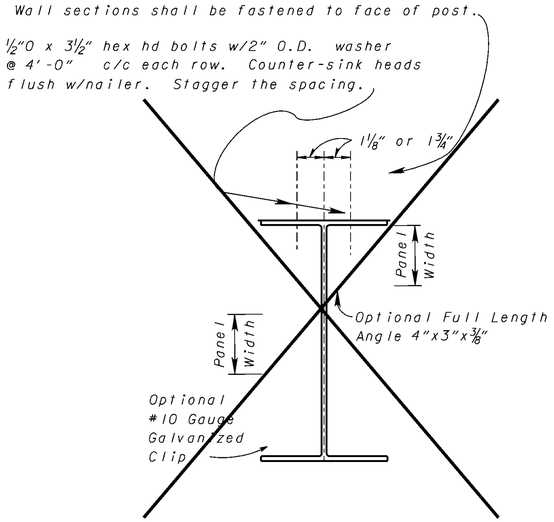

STEEL

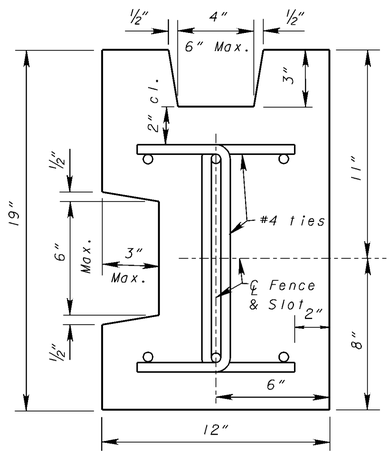

REINFORCED CONCRETE
CORNER POST

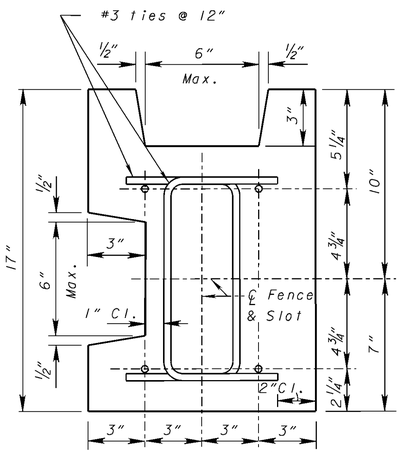

PRESTRESSED CONCRETE
CORNER POST

DESIGN AGENCY
BUREAU OF BRIDGES AND STRUCTURAL DESIGN

REVISED	DATE	STRUCTURE FILE NUMBER
	11-21-97	
DRAWN	REVISED	
	10/19/03	
DESIGNED	CHECKED	
CDR	GKB	
REVISED		
05/17/05		

NOISE BARRIER DETAILS

MOT-75 -0.75

5 / 7

425
773

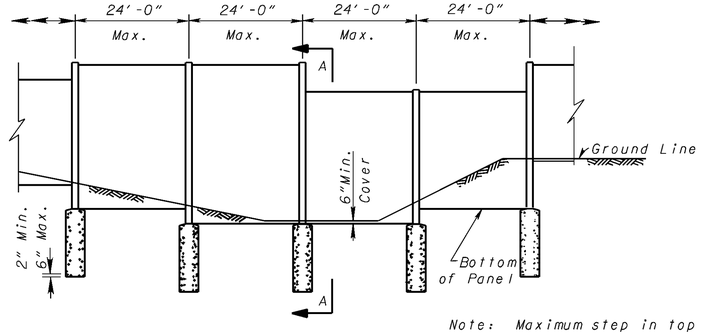

FRONT ELEVATION
(Post and Panel Noise Barrier)

Note: Maximum step in top elevation will be 12 inches for aesthetic purposes.

Note: All noise wall designs will be required to have a cap on top of the wall for aesthetic purposes.

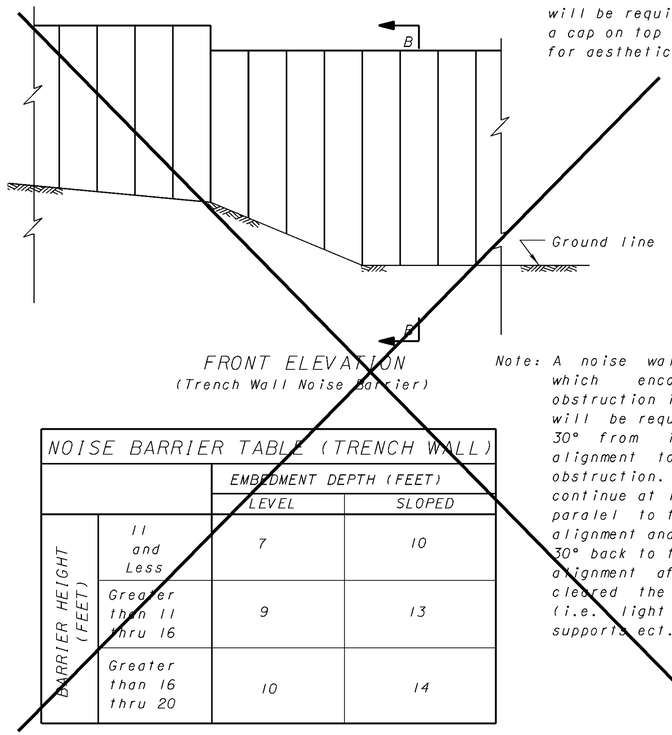

FRONT ELEVATION
(Trench Wall Noise Barrier)

Note: A noise wall alignment which encounters an obstruction in its path will be required to veer 30° from its original alignment to avoid the obstruction. It should continue at least 10 feet paralel to the original alignment and then return 30° back to the original alignment after having cleared the obstruction. (i.e. light posts, sign supports ect.)

NOISE BARRIER TABLE (TRENCH WALL)

BARRIER HEIGHT (FEET)	EMBEDMENT DEPTH (FEET)	
	LEVEL	SLOPED
11 and Less	7	10
Greater than 11 thru 16	9	13
Greater than 16 thru 20	10	14

~~For drainage inlets below Type D concrete barrier consult the STANDARD CONSTRUCTION DRAWING - I-2.3~~
~~CONCRETE BARRIER (TYPE D) INLET~~

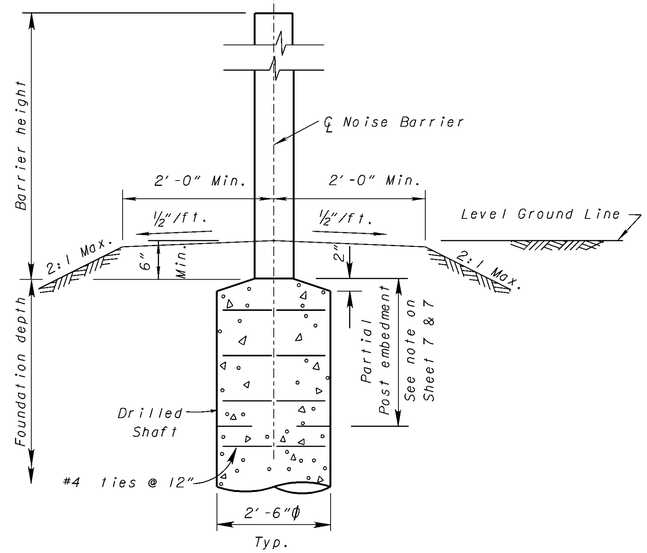

IF A FRONT MOUNTED NOISE WALL PANEL IS REQUIRED TO BE CUT OR PHYSICALLY ALTERED IN SOME OTHER MANNER THAT WILL STRUCTURALLY DAMAGE THE MANUFACTURER'S STANDARD PANEL SECTION, THE DETAILS SHALL BE SUBMITTED TO THE ENGINEER FOR APPROVAL.

THE NOISE WALL PANELS SHALL EXTEND DOWN TO THE TOP OF THE POST FOOTING OR BE EMBEDDED A MINIMUM 6 INCHES BELOW THE FINISHED GRADELINE. NO ADDITIONAL PAYMENT SHALL BE MADE TO THE CONTRACTOR FOR ANY ADDITIONAL MATERIALS OR LABOR REQUIRED TO CONSTRUCT THE OPTION.

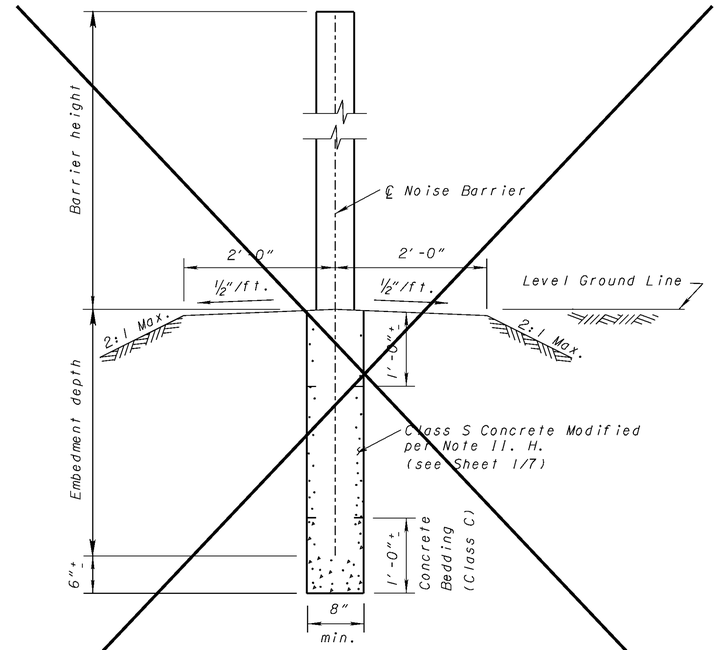

SECTION B-B

HALF HEIGHT HEADWALL PLASTIC CONDUIT

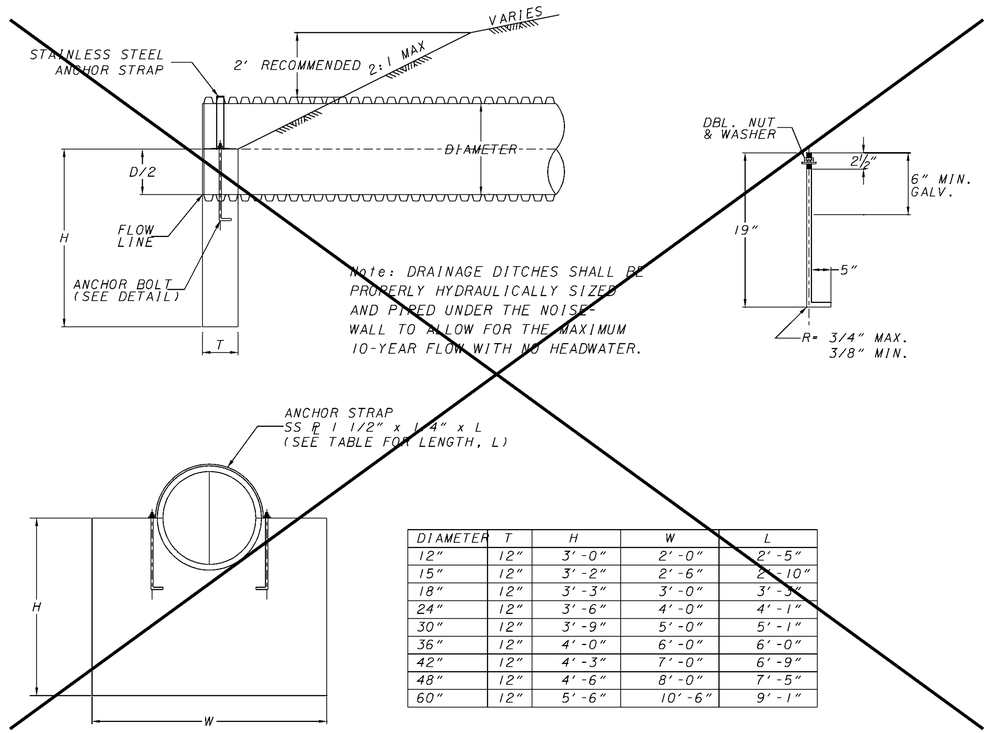

DIAMETER	T	H	W	L
12"	12"	3'-0"	2'-0"	2'-5"
15"	12"	3'-2"	2'-6"	2'-10"
18"	12"	3'-3"	3'-0"	3'-3"
24"	12"	3'-6"	4'-0"	4'-1"
30"	12"	3'-9"	5'-0"	5'-1"
36"	12"	4'-0"	6'-0"	6'-0"
42"	12"	4'-3"	7'-0"	6'-9"
48"	12"	4'-6"	8'-0"	7'-5"
60"	12"	5'-6"	10'-6"	9'-1"

DETAIL A

DESIGN AGENCY
OFFICE OF STRUCTURAL ENGINEERING

REVISED	DATE	STRUCTURE FILE NUMBER
	11-21-97	

DRAWN	REVISED
	10/19/03

DESIGNED	CHECKED
CDR	GKB

REVISED
05/17/05

NOISE BARRIER DETAILS

MOT-75 -0.75

6 / 7

426
773

NOISE BARRIER TABLE (POST AND PANEL CONSTRUCTION)

BARRIER HEIGHT (FEET)	POST SPACING (FEET)				PANEL GROUP	POST SIZE	SOIL TYPE	FOUNDATION DEPTH (FEET) GRANULAR SOIL (1)						
	8 & Under	Over 8 Thru 12	Over 12 Thru 16	Over 16 Thru 24					A		B			
								N (2)	2-3	4-9	10-19	20-29	30-49	50-60
								ϕ (3)	25-32	27-35	30-38	32-40	34-43	36-44
	12 and Less	10 and Less	8 and Less	6 and Less	I	Steel W8x13	TRANSVERSE GROUND SLOPE (1)	LEVEL	8.0	8.0	6.5	6.0	5.5	5.0
						Sawn Timber 8"x10" (Nom.)		5:1	8.0	8.0	7.0	6.5	6.0	5.5
						Glulam $5\frac{1}{8}$" x $12\frac{3}{8}$" (**) to $5\frac{1}{8}$"x $5\frac{1}{2}$" (top)		4:1	8.5	8.5	7.0	7.0	6.0	6.0
						Reinforced Concrete 12"x16" W/6 #4		3:1	9.0	8.5	7.5	7.0	6.5	6.5
						Prestressed Concrete 12"x14" W/4 strands		2:1	10.0	9.5	8.0	7.5	7.0	6.5
						Masonry △ $8\frac{3}{4}$"x$12\frac{3}{4}$" W/4-#6		LEVEL	9.5	9.5	8.0	7.5	7.5	6.5
	Greater Than 12 Thru 16	Greater Than 10 Thru 14	Greater Than 8 Thru 12	Greater Than 6 Thru 10	II	Steel W8x18		5:1	10.5	10.0	8.5	8.0	8.0	7.0
						Sawn Timber 8"x14"(Nom.)		4:1	11.0	10.5	9.0	8.5	8.0	7.5
						Glulam $5\frac{1}{8}$"x $16\frac{1}{2}$"(**) to $5\frac{1}{8}$"x $5\frac{1}{2}$"(top)		3:1	11.5	11.0	9.5	9.0	8.5	7.5
						Reinforced Concrete 12"x16" W/6 #6		2:1	12.5	12.0	10.0	9.5	9.0	8.0
						Prestressed Concrete 12"x14" W/4 strands		LEVEL	11.5	11.0	9.5	9.0	8.5	8.0
						Masonry △ $8\frac{3}{4}$"x$12\frac{3}{4}$" W/4-#7		5:1	12.5	11.5	10.0	10.0	8.5	8.5
	Greater Than 16 Thru 20	Greater Than 14 Thru 20	Greater Than 12 Thru 16	Greater Than 10 Thru 14	III	Steel W8x28		4:1	13.0	12.0	10.5	10.5	9.0	8.5
						Sawn Timber 10"x16"(Nom.)		3:1	13.5	13.0	11.0	10.5	9.5	9.0
						Glulam $6\frac{3}{4}$" x$19\frac{1}{4}$"(**) to $6\frac{3}{4}$" x $5\frac{1}{2}$" (top)		2:1	14.5	14.5	12.0	11.5	10.0	9.5
						Reinforced Concrete 12"x16" W/6 #9		LEVEL	15.5	14.0	12.0	11.0	10.5	10.5
						Prestressed Concrete 12"x14" W/4 strands		5:1	19.0	16.0	13.5	12.5	11.0	11.0
						Masonry △ $8\frac{3}{4}$"x$16\frac{3}{4}$" W/4-#9		4:1	20.5	17.5	14.0	13.0	12.0	11.5
			Greater Than 16 Thru 20	Greater Than 14 Thru 20	IV	Steel W14x38		3:1	24.0	19.5	15.0	14.0	12.5	12.0
						Sawn Timber 12"x20"(Nom.)		2:1	*	30.0	19.0	16.0	14.0	13.0
						Glulam $10\frac{3}{4}$"x $20\frac{5}{8}$"(**) to $10\frac{3}{4}$"x $5\frac{1}{2}$"(top)								
						Reinforced Concrete 12"x20" W/6 #9								
						Prestressed Concrete 12"x20" w/4 strands								
						Masonry △ $8\frac{3}{4}$"x$16\frac{3}{4}$" W/4 #11								

(1) Transverse grade slope will be as designated in the plans.

(2) N = summation SP Test Values at 12 inches and 18 inches.

(3) Estimated Friction Angle based on N value

(4) This column applies to the listed stations

COLUMN	STATION
B	0+00 to 13+65
D	13+65 to 19+69
C	19+69 to 21+51
D	21+51 to 26+70
C	26+70 to 28+49
A	28+49 to 29+71

NOISE BARRIER TABLE (POST AND PANEL CONSTRUCTION)

BARRIER HEIGHT (FEET)	POST SPACING (FEET)				PANEL GROUP	POST SIZE	SOIL TYPE	FOUNDATION DEPTH (FEET) COHESIVE SOIL (1)					
	8 & Under	Over 8 Thru 12	Over 12 Thru 16	Over 16 Thru 24					C		D		
								N (2)	0-1	2-3	4-8	9-15	16-32
	12 and Less	10 and Less	8 and Less	6 and Less	I	Steel W8x13	TRANSVERSE GROUND SLOPE (1)	LEVEL	12.5	12.5	7.0	5.0	4.0
						Sawn Timber 8"x10" (Nom.)		5:1	13.5	13.5	7.5	5.0	4.0
						Glulam $5\frac{1}{8}$" x $12\frac{3}{8}$" (**) to $5\frac{1}{8}$"x $5\frac{1}{2}$" (top)		4:1	13.5	13.5	7.5	5.0	4.0
						Reinforced Concrete 12"x16" W/6 #4		3:1	14.0	14.0	8.0	5.0	4.0
						Prestressed Concrete 12"x14" W/4 strands		2:1	14.5	15.0	8.0	5.5	4.0
						Masonry △ $8\frac{3}{4}$"x$12\frac{3}{4}$" W/4-#6		LEVEL	17.0	17.0	9.5	7.5	5.0
	Greater Than 12 Thru 16	Greater Than 10 Thru 14	Greater Than 8 Thru 12	Greater Than 6 Thru 10	II	Steel W8x18		5:1	18.5	18.5	10.0	8.0	5.0
						Sawn Timber 8"x14"(Nom.)		4:1	19.0	18.5	10.5	8.0	5.0
						Glulam $5\frac{1}{8}$"x $16\frac{1}{2}$"(**) to $5\frac{1}{8}$"x $5\frac{1}{2}$"(top)		3:1	19.5	19.0	10.5	8.0	5.0
						Reinforced Concrete 12"x16" W/6 #6		2:1	20.0	20.0	11.0	8.5	5.5
						Prestressed Concrete 12"x14" W/4 strands		LEVEL	21.5	21.0	13.5	9.5	6.5
						Masonry △ $8\frac{3}{4}$"x$12\frac{3}{4}$" W/4-#7		5:1	23.0	23.0	14.5	10.0	7.0
	Greater Than 16 Thru 20	Greater Than 14 Thru 20	Greater Than 12 Thru 16	Greater Than 10 Thru 14	III	Steel W8x28		4:1	23.5	23.0	14.5	10.0	7.0
						Sawn Timber 10"x16"(Nom.)		3:1	25.0	24.0	15.0	10.5	7.0
						Glulam $6\frac{3}{4}$" x$19\frac{1}{4}$"(**) to $6\frac{3}{4}$" x $5\frac{1}{2}$" (top)		2:1	25.5	24.5	16.0	11.0	7.0
						Reinforced Concrete 12"x16" W/6 #9		LEVEL	*	*	19.0	13.0	9.0
						Prestressed Concrete 12"x14" W/4 strands		5:1	*	*	20.5	14.0	9.0
						Masonry △ $8\frac{3}{4}$"x$16\frac{3}{4}$" W/4-#9		4:1	*	*	21.0	14.5	9.0
			Greater Than 16 Thru 20	Greater Than 14 Thru 20	IV	Steel W14x38		3:1	*	*	22.0	15.0	9.5
						Sawn Timber 12"x20"(Nom.)		2:1	*	*	24.0	15.0	10.0
						Glulam $10\frac{3}{4}$"x $20\frac{5}{8}$"(**) to $10\frac{3}{4}$"x $5\frac{1}{2}$"(top)								
						Reinforced Concrete 12"x20" W/6 #9								
						Prestressed Concrete 12"x20" w/4 strands								
						Masonry △ $8\frac{3}{4}$"x$16\frac{3}{4}$" W/4 #11								

LEGEND: △ Core dimensions only

(**)= Top of foundation.

NOTES:

Noise barrier height is the distance from the top of drilled shaft to the top of the higher barrier wall at that post, rounded to the nearest foot.

All posts and panel noise barriers shall utilize drilled shaft foundations unless otherwise indicated on the plans or directed by the Engineer.

If within the required length of the foundation, bedrock is encountered, the drilled shaft foundation may be terminated after 3 feet of penetration into hard bedrock or 6 feet of penetration into soft bedrock.

Embedment of posts into the drilled shafts shall not be less than 3'-6", except for concrete posts which shall be embedded not less than 3'-0".

POST SPACING ON PEDESTRIAN BRIDGES: For all pedestrian bridge mounted posts, including the first post off the bridge, the maximum post spacing shall be 12 feet.

* - not an acceptable design - select or install at a lower spacing to meet the height requirements of the wall.

DESIGN AGENCY: OFFICE OF STRUCTURAL ENGINEERING

REVISED | DATE: 11-21-97 | STRUCTURE FILE NUMBER

DRAWN | REVISED: 10/19/03

DESIGNED: CDR | CHECKED: GKB

REVISED: 05/17/05

NOISE BARRIER DETAILS

MDT-75 -0.75

7 / 7

427 / 773

NOISE BARRIER, GENERAL

NOISE BARRIER PANELS, POSTS, CAPS AND CLADDING SHALL BE CONCRETE.
NOISE BARRIER PANELS SHALL HAVE AN ASHLAR BLOCK FINISH.
NOISE BARRIER POSTS, CAPS AND CLADDING SHALL HAVE A SMOOTH FINISH.
NOISE BARRIER COLOR SHALL BE FEDERAL COLOR NUMBER 17778 (BEIGE).
THE BACK OF NOISE BARRIER PANELS SHALL BE COATED WITH AN APPROVED GRAFFITI GUARD SYSTEM.

REINFORCED CONCRETE CAP FOR POSTS AND PANELS: THE CONTRACTOR SHALL SUBMIT THE DESIGN OF THE REINFORCED CONCRETE CAP TO THE OFFICE OF STRUCTURAL ENGINEERING FOR REVIEW AND SUBSEQUENT APPROVAL BEFORE FABRICATION CAN BEGIN. THE CAP SHALL HAVE A VISUAL DEPTH OF 4 TO 6 INCHES AND EXTEND A MINIMUM OF 2 INCHES BEYOND THE FACE OF THE PANEL ON BOTH SIDES. THE COLOR SHALL CLOSELY MATCH FEDERAL COLOR NUMBER 17778 (BEIGE).

APPROVED CAP DESIGN PLANS SHALL BE INCLUDED IN CONSTRUCTION PLANS WITH THE MANUFACTURER'S DRAWINGS. NOISE BARRIERS SHALL BE SOUND ABSORBTIVE. ALL NOISE BARREIR PANELS, POSTS, CLADDING AND CAPS SHALL BE PAINTED TO MATCH FEDERAL COLOR NUMBER 17778 (BEIGE).

SAMPLE BARRIER PANELS
ONE SAMPLE OF A CONCRETE BARRIER PANEL, WITH CAPS, SHALL BE DELIVERED TO A LOCATION DESIGNATED BY THE ENGINEER FOR EVALUATION BY THE ENGINEER IN ACCORDANCE WITH NOTE "V. ACCEPTANCE REQUIREMENTS" OF THE NOISE BARRIER DETAILS ON SHEET 420. THE BACKSIDE OF THE CONCRETE PANEL SHALL BE COATED WITH THE APPROVED GRAFFITI GUARD SYSTEM.

SPECIAL - NOISE BARRIER (ABSORPTIVE), OVER 14' TO 20' HEIGHT

1) POST FOR DRILLED SHAFTS NUMBERED 108 AND 109 MUST BE BUILT PER THE NOISE BARRIER DETAILS AS REINFORCED CONCRETE POSTS.

2) THE PANEL SUPPORTED BY DRILLED SHAFTS NUMBERED 108 AND 109 IS GREATER THAN 24 FEET LONG. SPECIAL DESIGN IS REQUIRED BY THE CONTRACTOR. SHOP DRAWINGS, DETAILS, AND CALCULATIONS FOR THIS PANEL NEEDS TO BE SIGNED, SEALED, AND DATED BY A REGISTERED PROFESSIONAL ENGINEER AND SUBMITTED FOR APPROVAL.

3) POST FOR DRILLED SHAFTS NUMBERED 24, 27, 28, 30, 31, 33, 35, 36, 38, 39, 41, 44, 48, 49, 53, AND 54 ARE GREATER THAN 20 FEET HIGH. SPECIAL DESIGN IS REQUIRED BY THE CONTRACTOR. SHOP DRAWINGS, DETAILS, AND CALCULATIONS FOR THESE SPECIAL POSTS NEED TO BE SIGNED, SEALED, AND DATED BY A REGISTERED PROFESSIONAL ENGINEER AND SUBMITTED FOR APPROVAL.

PAYMENT

THE FOLLOWING ESTIMATED QUANTITIES HAVE BEEN INCLUDED IN THE GENERAL SUMMARY:

ITEM 203 - EXCAVATION	44 CU YD
ITEM 203 - EMBANKMENT	224 CU YD
ITEM 606 - SPECIAL - NOISE BARRIER (ABSORPTIVE), 10' HEIGHT AND UNDER	1473 SQ FT
ITEM 606 - SPECIAL - NOISE BARRIER (ABSORPTIVE), OVER 10' TO 14' HEIGHT	3191 SQ FT
ITEM 606 - SPECIAL - NOISE BARRIER (ABSORPTIVE), OVER 14' TO 20' HEIGHT	44564 SQ FT

NOISE BARRIER DRILLED SHAFT DETAIL

DRILLED SHAFT NUMBER	NOISE BARRIER STATION		I-75 STATION @ BREAK POINTS ALONG NOISE BARRIER ALIGNMENT		TOP OF DRILLED SHAFT ELEVATION	SHAFT LENGTH (FEET)
	STATION	OFFSET	STATION	OFFSET		
1	0+48.00	0.00	207+84.30	231.35' LT	932.77	8
2	0+72.00	0.00	208+08.76	231.48' LT	932.77	8
3	0+96.00	0.00			931.77	8
4	1+20.00	0.00			931.77	8
5	1+44.00	0.00			930.77	8
6	1+68.00	0.00			929.77	8
7	1+92.00	0.00			928.77	9.5
8	2+16.00	0.00			926.77	9.5
9	2+40.00	0.00			924.77	9.5
10	2+64.00	0.00			923.77	9.5
11	2+88.00	0.00			922.77	9.5
12	3+12.00	0.00			922.77	9.5
13	3+36.00	0.00			922.77	9.5
14	3+60.00	0.00			922.77	9.5
15	3+84.00	0.00			921.77	12
16	4+08.00	0.00	3+19.16	221.23' LT	920.77	12
17	4+24.00	0.00	3+35.45	220.81' LT	920.77	12
18	4+40.00	0.00	3+51.74	220.60' LT	919.77	12
19	4+56.00	0.00	3+68.03	220.60' LT	917.77	12
20	4+80.00	0.00	3+92.47	220.60' LT	916.77	12
21	5+04.00	0.00	4+16.91	220.60' LT	914.77	12
22	5+28.00	0.00	4+41.35	220.60' LT	912.77	12
23	5+52.00	0.00	4+65.79	220.60' LT	911.77	14
24	5+76.00	0.00	4+90.23	220.60' LT	910.77	14
25	6+00.00	0.00	5+14.67	220.60' LT	910.77	14
26	6+24.00	0.00	5+39.11	220.60' LT	910.77	14
27	6+48.00	0.00	5+63.55	220.60' LT	909.77	14
28	6+72.00	0.00	5+87.99	220.60' LT	908.77	14
29	6+96.00	0.00	6+12.43	220.60' LT	908.77	14
30	7+20.00	0.00	6+36.86	220.60' LT	907.77	14
31	7+44.00	0.00	6+61.30	220.60' LT	907.77	14
32	7+68.00	0.00	6+85.74	220.60' LT	907.77	12
33	7+92.00	0.00	7+10.18	220.60' LT	906.77	12
34	8+16.00	0.00	7+34.62	220.60' LT	906.77	12
35	8+40.00	0.00	7+59.06	220.60' LT	905.77	12
36	8+64.00	0.00	7+83.50	220.60' LT	905.77	12
37	8+88.00	0.00	8+07.94	220.60' LT	905.77	12
38	9+12.00	0.00			904.77	12
39	9+36.00	0.00			904.77	12
40	9+60.00	0.00			904.77	12
41	9+84.00	0.00			903.77	12
42	10+08.00	0.00			903.77	12
43	10+32.00	0.00			903.77	12
44	10+56.00	0.00			902.77	12
45	10+80.00	0.00			902.77	12
46	11+04.00	0.00			902.77	12
47	11+28.00	0.00			902.77	12
48	11+52.00	0.00			901.77	12
49	11+76.00	0.00			901.77	12
50	12+00.00	0.00			901.77	12
51	12+24.00	0.00			901.77	12
52	12+48.00	0.00			901.77	12
53	12+72.00	0.00			900.77	12
54	12+96.00	0.00			899.77	12
55	13+20.00	0.00			899.77	12
56	13+44.00	0.00			899.77	12
57	13+68.00	0.00			898.77	13
58	13+92.00	0.00			898.77	13
59	14+16.00	0.00			898.77	13
60	14+40.00	0.00			898.77	13
61	14+64.00	0.00			898.77	13
62	14+88.00	0.00			898.77	13
63	15+12.00	0.00			898.77	13
64	15+36.00	0.00			898.77	13
65	15+60.00	0.00			898.77	13
66	15+84.00	0.00			898.77	13
67	16+08.00	0.00			898.77	13
68	16+32.00	0.00			898.77	13

NOISE BARRIER DRILLED SHAFT DETAIL (CONTINUED)

DRILLED SHAFT NUMBER	NOISE BARRIER STATION		I-75 STATION @ BREAK POINTS ALONG NOISE BARRIER ALIGNMENT		TOP OF DRILLED SHAFT ELEVATION	SHAFT LENGTH (FEET)
	STATION	OFFSET	STATION	OFFSET		
69	16+56.00	0.00			898.77	13
70	16+80.00	0.00			898.17	13
71	17+04.00	0.00			898.17	13
72	17+28.00	0.00			896.77	13
73	17+52.00	0.00			896.77	13
74	17+76.00	0.00			896.77	13
75	18+00.00	0.00	17+36.85	220.60' LT	896.77	13
76	18+24.00	0.00			896.77	13
77	18+48.00	0.00			896.77	13
78	18+72.00	0.00			896.77	13
79	18+96.00	0.00			896.77	13
80	19+20.00	0.00			896.77	13
81	19+44.00	0.00			896.77	13
82	19+68.00	0.00			896.77	22
83	19+92.00	0.00			896.77	22
84	20+16.00	0.00			896.77	22
85	20+40.00	0.00			896.77	22
86	20+64.00	0.00			896.77	22
87	20+88.00	0.00			898.77	22
88	21+04.00	0.00			898.77	22
89	21+20.00	0.00			898.77	22
90	21+36.00	0.00			898.77	22
91	21+60.00	0.00			898.77	15
92	21+84.00	0.00			898.77	15
93	22+08.00	0.00			897.77	15
94	22+32.00	0.00			897.77	15
95	22+56.00	0.00			896.77	15
96	22+80.00	0.00			896.77	15
97	23+04.00	0.00			896.77	15
98	23+28.00	0.00			896.77	15
99	23+52.00	0.00	22+99.12	238.51' LT	895.77	15
100	23+68.00	0.00			895.77	15
101	23+92.00	0.00			895.77	15
102	24+00.00	0.00	23+00.54	190.53' LT	895.77	15
103	24+09.00	0.00			895.77	15
104	24+33.00	0.00			895.77	15
105	24+57.00	0.00			897.77	15
106	24+81.00	0.00			898.77	15
107	25+05.00	0.00	24+06.98	184.38' LT	899.77	15
108	25+29.00	0.00			899.77	20
109	25+63.00	0.00			899.77	20
110	25+87.00	0.00			898.77	15
111	26+11.00	0.00	25+14.53	188.67' LT	897.77	15
112	26+35.00	0.00			896.77	15
113	26+59.00	0.00			895.77	15
114	26+83.00	0.00			895.77	22
115	27+07.00	0.00			895.77	22
116	27+31.00	0.00	26+35.25	205.73' LT	895.77	22
117	27+55.00	0.00	26+32.87	229.62' LT	894.77	22
118	27+79.00	0.00			894.77	22
119	28+03.00	0.00			894.77	22
120	28+27.00	0.00			894.77	22
121	28+51.00	0.00			895.77	22
122	28+75.00	0.00			895.77	19.5
123	28+91.00	0.00			895.77	19.5
124	28+99.00	0.00			895.77	19.5
125	29+07.00	0.00			895.77	19.5
126	29+15.00	0.00			895.77	19.5
127	29+23.00	0.00			895.77	19.5
128	29+31.00	0.00			895.77	19.5
129	29+39.00	0.00			895.77	19.5
130	29+47.00	0.00			895.77	19.5
131	29+55.00	0.00			895.77	19.5
132	29+63.00	0.00			895.77	19.5
133	29+71.00	0.00	28+49.42	270.30' LT	895.77	19.5

CALCULATED DJB CHECKED CDR

NOISE BARRIER GENERAL NOTES

MOT-75-0.75

FOR DRILLED SHAFT DETAILS SEE SHEET 428

BEGIN NOISE BARRIER

PI Sta. 0+00.00

PI Sta. 0+72.00

STA. 202+08.76, 231.48' LT, I-75=
STA. 0+72.00, NOISE BARRIER

R-1

CONSTRUCTION LIMITS

10

E-150 ITEM 601-ROCK CHANNEL PROTECTION, TYPE C
13.5'x4'x1.5' = 3 C.Y.

PI Sta. 4+08.00

PI Sta. 4+24.00

PI Sta. 4+40.00

N30° 58' 04"E

N31° 46' 28"E

N32° 34' 51"E

0+00 L.A.-R/W. 1+00 L.A.-R/W. 2+00 L.A.-R/W. 3+00 L.A.-R/W. 4+00 L.A.-R/W.

N32° 29' 27"E

N33° 41' 07"E

1 BORING #NWB-001-0-07
STA 1+03.31
OFF 4.03' RT
933.10

BORING #NWB-002-0-07
STA 2+68.88
OFF 6.57' RT
925.20

STA. 207+84.30, 231.35' LT, I-75=
STA. 0+48.00 ℄ NOISE BARRIER

℄ NOISE BARRIER

STA. 3+19.16, 221.23' LT, I-75=
STA. 4+08.00, ℄ NOISE BARRIER

CONSTRUCTION LIMITS

Exist. San

Exist. Edge/Shoulder

Exist. Edge/Pavement

MATCH LINE STA. 4+50 SEE SHEET 430

LEGEND

SOIL BORING

(1) DRILLED SHAFT NUMBER

I-75 SOUTHBOUND

NOTE: ALL OFFSETS ARE TO NOISE BARRIER CENTERLINE

PROP. GROUND ELEV.	934.52	933.94	933.25	932.79	932.28	931.50	930.42	928.74	926.93	925.35	924.13	923.57	923.36	923.07	922.79	922.00	921.06
Exist. Ground Elev.	934.99	934.04	934.50	933.90	933.14	932.72	932.28	931.45	930.47	928.24	926.65	924.84	923.77	922.95	922.79	923.35	922.57	922.03	921.35

945 940 935 930 925 920 915 910

THEORETICAL TOP OF NOISE BARRIER

939.77 938.77 937.77 936.77 935.77 934.77 933.77

BREAK POINT

932.77 931.77 930.77 929.77 928.77 926.77 924.77 923.77 922.77 921.77 920.77 919.77

Exist. Ground

TOP OF WALL

PROP. GROUND

℄=922.00

15 PANELS @ 24.0'

3 PANELS @ 16.0'

MATCH LINE STA. 4+50 SEE SHEET 430

0 1+00 2+00 3+00 4+00

HORIZONTAL SCALE IN FEET
0 10 20 40

CALCULATED DJB
CHECKED CDR

NOISE BARRIER
STA. 0+00 TO STA. 4+50

MOT-75-0.75

429
773

FOR DRILLED SHAFT DETAILS SEE SHEET 428

MATCH LINE STA. 4+50 SEE SHEET 429

MATCH LINE STA. 10+00 SEE SHEET 431

PI STA. 4+56.50 | N30° 51' 13"E | PI STA. 4+80.00 | N30° 44' 23"E | PI STA. 5+04.00 | N30° 37' 32"E | PI STA. 5+28.00 | N30° 30' 42"E | PI STA. 5+52.00 | N30° 23' 51"E | PI STA. 5+76.00 | N30° 17' 00"E | PI STA. 6+00.00 | N30° 10' 10"E | PI STA. 6+24.00 | N30° 03' 19"E | PI STA. 6+48.00 | N29° 56' 29"E | PI STA. 6+72.00 | N29° 49' 38"E | PI STA. 6+96.00 | N29° 42' 47"E | PI STA. 7+20.00 | N29° 35' 57"E | PI STA. 7+44.00 | N29° 29' 06"E | PI STA. 7+68.00 | N29° 22' 16"E | PI STA. 7+92.00 | N29° 15' 25"E | PI STA. 8+16.00 | N29° 08' 35"E | PI STA. 8+40.00 | N29° 01' 44"E | PI STA. 8+64.00 | N28° 54' 53"E

U ESMT
A-R/W
LA-R/W
M/R/W

5+00 | 6+00 | 7+00 | 8+00 | 9+00

STA. 8+07.94, 220.60' LT, I-75-
PI STA. 8+88.00, ℄ NOISE BARRIER

R-1

N26° 41' 25"E

(20) (30) (40)

BORING #NWB 003-0-07
STA 4+67.15
OFF 6.34' RT
920.10

CONSTRUCTION LIMITS

BORING #NWB 004-0-07
STA 6+36.55
OFF 15.61' RT
912.44

ITEM 601-ROCK CHANNEL PROTECTION, TYPE C
8'x4'x1.5' = 2 C.Y.
E-151

℄ NOISE BARRIER

BORING #NWB 005-0-07
STA 8+58.03
OFF 16.67' RT
910.51

Exist.Edge/Shoulder

Exist.Edge/Pavement

LEGEND

SOIL BORING

(1) DRILLED SHAFT NUMBER

I-75 SOUTHBOUND

NOTE: ALL OFFSETS ARE TO NOISE BARRIER CENTERLINE

PROP. GROUND ELEV.

919.44 | 917.68 | 916.82 | 914.00 | 912.87 | 911.80 | 911.44 | 911.03 | 910.01 | 908.14 | 909.14 | 908.84 | 908.54 | 908.15 | 907.59 | 907.11 | 906.76 | 906.46 | 906.16 | 905.80 | 905.34 | 904.83

935 | 930 | 925 | 920 | 915 | 910 | 905 | 900

937.77 | 932.77 | 931.77 | 930.77 | 929.77 | 928.77 | 927.77 | 926.77 | 925.77 | 924.77 | 923.77

THEORETICAL TOP OF NOISE BARRIER

TOP OF WALL

BREAK POINT

917.77 | 916.77 | 914.77 | 912.77 | 911.77 | 910.77 | 909.77 | 908.77 | 907.77 | 906.77 | 905.77 | 904.77 | 903.77

Exist. Ground

T=908.06

PROP. GROUND

68 PANELS @ 24'0"

Exist. Ground Elev.

919.44 | 917.67 | 915.72 | 913.94 | 912.79 | 911.77 | 911.59 | 910.69 | 909.63 | 909.83 | 909.25 | 909.35 | 909.66 | 907.77 | 907.68 | 906.74 | 905.78 | 905.60 | 905.76 | 906.41 | 904.89 | 904.39

5+00 | 6+00 | 7+00 | 8+00 | 9+00 | 10+00

HORIZONTAL SCALE IN FEET
0 10 20 40

CALCULATED DJB
CHECKED CDR

NOISE BARRIER
STA. 4+50 TO STA. 10+00

MOT-75-0.75

430
773

FOR DRILLED SHAFT DETAILS SEE SHEET 428

MATCH LINE STA. 10+00 SEE SHEET 430

MATCH LINE STA. 15+50 SEE SHEET 432

ITEM 601-ROCK CHANNEL PROTECTION, TYPE C
14'x4'x1.5' = 3 C.Y.
E-152

ITEM 601-ROCK CHANNEL PROTECTION, TYPE C
9'x4'x2' = 3 C.Y.
E-153

CONSTRUCTION LIMITS

R-1

U ESMT — LA-R/W

10+00 11+00 12+00 13+00 14+00 15+00

N26° 41' 25"E

50 60

℄ NOISE BARRIER

BORING #NWB 006-0-07
STA 10+55.72
OFF 20.95' RT
907.62

BORING #NWB 007-0-07
STA 12+62.83
OFF 24.68' RT
904.28

BORING #NWB 008-0-07
STA 14+68.02
OFF 6.17' RT
899.71

℄ RAMP P

PROP. EDGE/SHOULDER

PROP. EDGE/PAVEMENT

312+00 313+00 314+00

I-75 SOUTHBOUND

LEGEND

Exist. Edge/Shoulder

Exist. Edge/Pavement

SOIL BORING

(I) DRILLED SHAFT NUMBER

NOTE: ALL OFFSETS ARE TO NOISE BARRIER CENTERLINE

PROP. GROUND ELEV.	904.39	904.15	903.81	903.57	903.38	903.28	903.16	903.04	902.92	902.76	902.14	901.13	900.64	900.41	900.11	899.68	899.58	899.49	899.35	897.49	899.66	900.13
Exist. Ground Elev.	903.84	903.73	904.16	903.44	903.97	902.82	902.36	902.14	902.79	902.65	902.37	900.97	899.96	899.86	899.69	899.43	899.39	899.33	899.27	897.49	896.79	899.93

925 920 915 910 905 900 895 890

923.77 922.77 921.77 920.77 919.77 918.77

THEORETICAL TOP OF NOISE BARRIER

TOP OF WALL

903.77 902.77 901.77 900.77 899.77 898.77

E=903.60

E=897.49

Exist. Ground

PROP. GROUND

68 PANELS @ 24.0' (CON'T.)

10+00 11+00 12+00 13+00 14+00 15+00

HORIZONTAL SCALE IN FEET
0 10 20 40

CALCULATED DJB CHECKED CDR

NOISE BARRIER
STA. 10+00 TO STA. 15+50

MOT-75-0.75

431
773

FOR DRILLED SHAFT DETAILS SEE SHEET 428

MATCH LINE STA. 15+50 SEE SHEET 431

MATCH LINE STA. 21+00 SEE SHEET 433

CONSTRUCTION LIMITS

U ESMT

LA-R/W

SAN

R-1

16+00

17+00

18+00

19+00

20+00

21+00

N26° 41' 25"E

N21° 21' 07"E

70

80

BORING #NWB 009-0-07
STA 16+63.53
OFF 4.15' RT
898.83

℄ NOISE BARRIER

STA. 17+36.85, 220.60' LT, I-75=
STA. 18+00.00, NOISE BARRIER

E-154 ITEM 601-ROCK CHANNEL PROTECTION, TYPE C
14'x4'x1.5' = 3 C.Y.

BORING #NWB 010-0-07
STA 18+64.48
OFF 9.98' RT
896.76

BORING #NWB 011-0-07
STA 20+73.66
OFF 12.46' RT
895.93

ITEM 601-ROCK CHANNEL PROTECTION, TYPE C E-155
7'x4'x1.5' = 2 C.Y.

℄ RAMP P

PROP. EDGE/SHOULDER

PROP. EDGE/PAVEMENT

316+00

317+00

318+00

319+00

320+00

Exist. Edge/Shoulder

Exist. Edge/Pavement

LEGEND

SOIL BORING

(I) DRILLED SHAFT NUMBER

I-75 SOUTHBOUND

NOTE: ALL OFFSETS ARE TO NOISE BARRIER CENTERLINE

PROP. GROUND ELEV. ⇨

900.23 900.19 899.97 899.66 899.24 898.82 898.49 898.19 897.97 897.84 897.74 897.65 897.55 897.46 897.36 897.28 897.50 897.77 897.86 898.71 899.84 899.50

920 915 910 905 900 895 890 885

MATCH LINE STA. 15+50 SEE SHEET 431

MATCH LINE STA. 21+00 SEE SHEET 433

70

TOP OF WALL

THEORETICAL TOP OF NOISE BARRIER

80

918.77

917.77

916.77

915.77

916.77

898.77

898.17

896.77

898.77

BREAK POINT

℄=897.66

Exist. Ground

PROP. GROUND

℄=896.30

8" Water
16" Casing

68 PANELS @ 24.0' (CON'T.)

Exist. Ground Elev. ⇨

899.97 900.18 900.09 899.49 898.87 898.74 898.11 897.98 898.16 897.68 897.33 896.71 896.54 896.43 896.38 896.06 896.21 896.35 896.86 896.62 899.64 899.80

16+00 17+00 18+00 19+00 20+00 21+00

HORIZONTAL SCALE IN FEET
0 10 20 40

CALCULATED DJB CHECKED CDR

NOISE BARRIER
STA. 15+50 TO STA. 21+00

MOT-75-0.75

FOR DRILLED SHAFT DETAILS SEE SHEET 428

BORING #NWB 012-0-07
STA. 22+28.46
OFF 14.15' R
895.63

ITEM 601-ROCK CHANNEL PROTECTION, TYPE C
14'x4'x1.5' = 3 C.Y.
E-158

STA. 22+99.12, 238.51' LT, I-75=
STA. 23+52.00, ℄ NOISE BARRIER

CONSTRUCTION LIMITS

MATCH LINE STA. 21+00 SEE SHEET 432

MATCH LINE STA. 26+50 SEE SHEET 434

U ESMT
SAN
LA-R/W
CH ESMT

22+00
23+00
24+00
25+00
26+00

N21° 21' 07"E
S69° 46' 24"E
N 25° 00' 11"E
N12° 26' 25"E
N18° 49' 21"E

90
100
110
R-1

℄ NOISE BARRIER

STA. 25+14.53, 188.67' LT, I-75=
STA. 26+11.00, ℄ NOISE BARRIER

BORING #NWB 013-0-07
STA 25+15.00
OFF 3.02' LT
895.46

ITEM 601-ROCK CHANNEL PROTECTION, TYPE C
17'x15'x1.5' = 14 C.Y.
E-159

ITEM 601-ROCK CHANNEL PROTECTION, TYPE C
13.5'x4'x1.5' = 3 C.Y.
E-156

STA. 24+06.98, 184.38' LT, I-75=
STA. 25+05.00, ℄ NOISE BARRIER

STA. 23+00.54, 190.53'LT, I-75=
STA. 24+00.00, ℄ NOISE BARRIER

℄ RAMP P

PROP. EDGE/SHOULDER
PROP. EDGE/PAVEMENT
Exist. Edge/Shoulder
Exist. Edge/Pavement

321+00
322+00
323+00
324+00
325+00

BORING #NWB-014-0-07
STA 26+09.30
OFF 8.40' LT
896.87

I-75 SOUTHBOUND

LEGEND
SOIL BORING
(1) DRILLED SHAFT NUMBER

NOTE: ALL OFFSETS ARE TO NOISE BARRIER CENTERLINE

| | | |

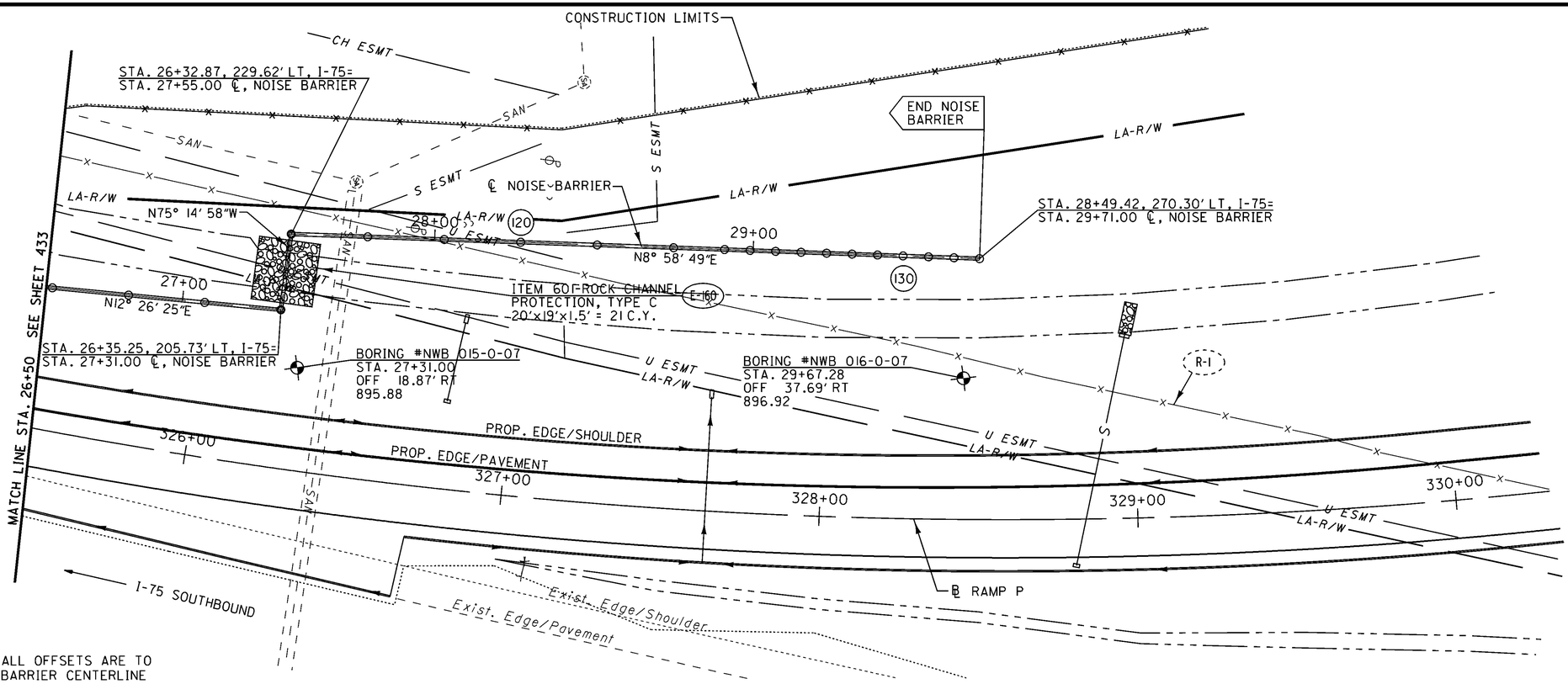

FOR DRILLED SHAFT DETAILS SEE SHEET 428

LEGEND

SOIL BORING

(I) DRILLED SHAFT NUMBER

NOTE: ALL OFFSETS ARE TO NOISE BARRIER CENTERLINE

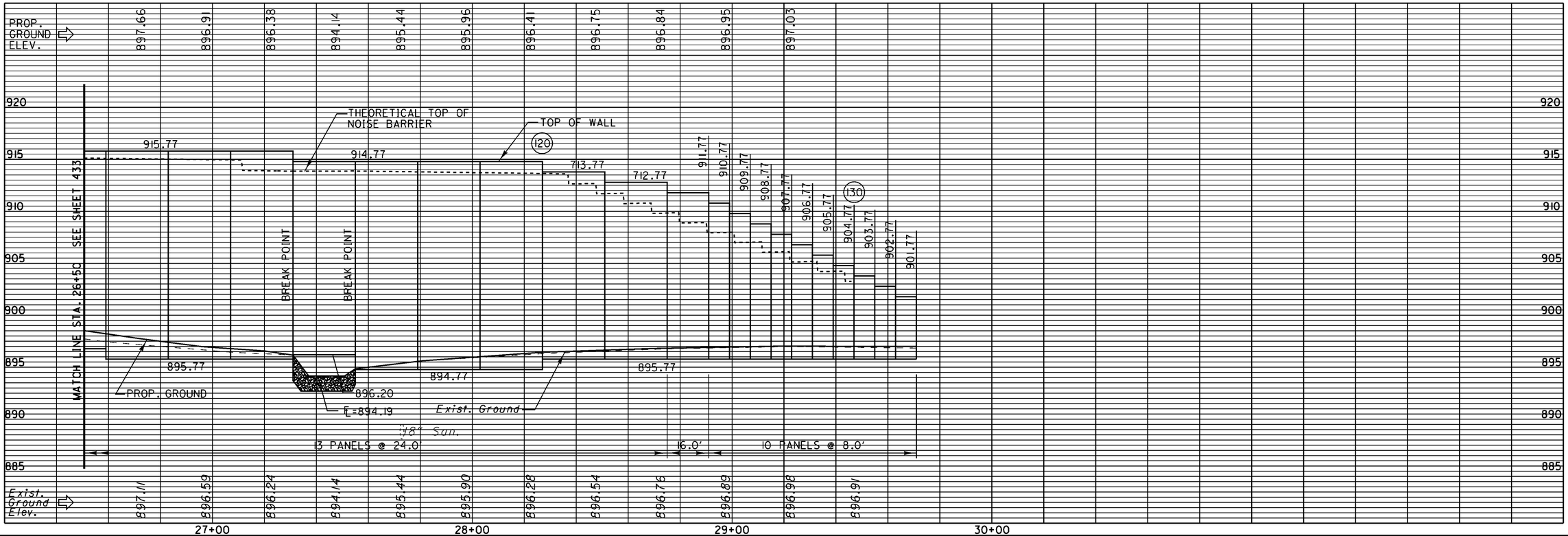

NOISE BARRIER
STA. 26+50 TO STA. 29+71.00

HORIZONTAL SCALE IN FEET
0 10 20 40

CALCULATED DJB
CHECKED CDR

MOT-75-0.75

434
773

SEEDING	
END WIDTH	SQ. YDS.

END AREA		VOLUME	
CUT	FILL	CUT	FILL

CALCULATED DJB

CHECKED CDR

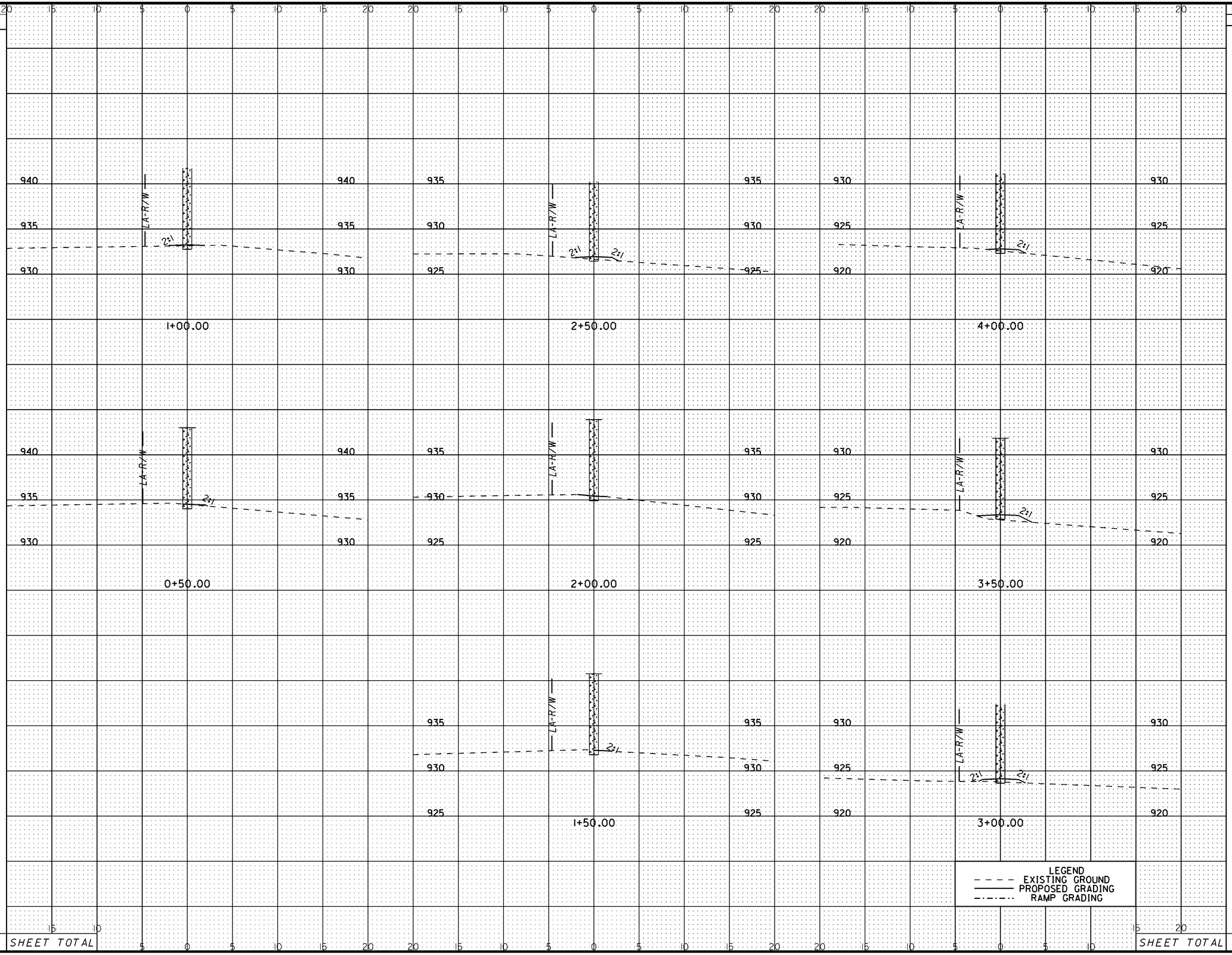

NOISE BARRIER CROSS SECTIONS
STA. 0+00.00 TO STA. 4+00.00

MOT-75-0.75

SEEDING	
END WIDTH	SQ. YDS.

END AREA		VOLUME	
CUT	FILL	CUT	FILL

CALCULATED DJB

CHECKED CDR

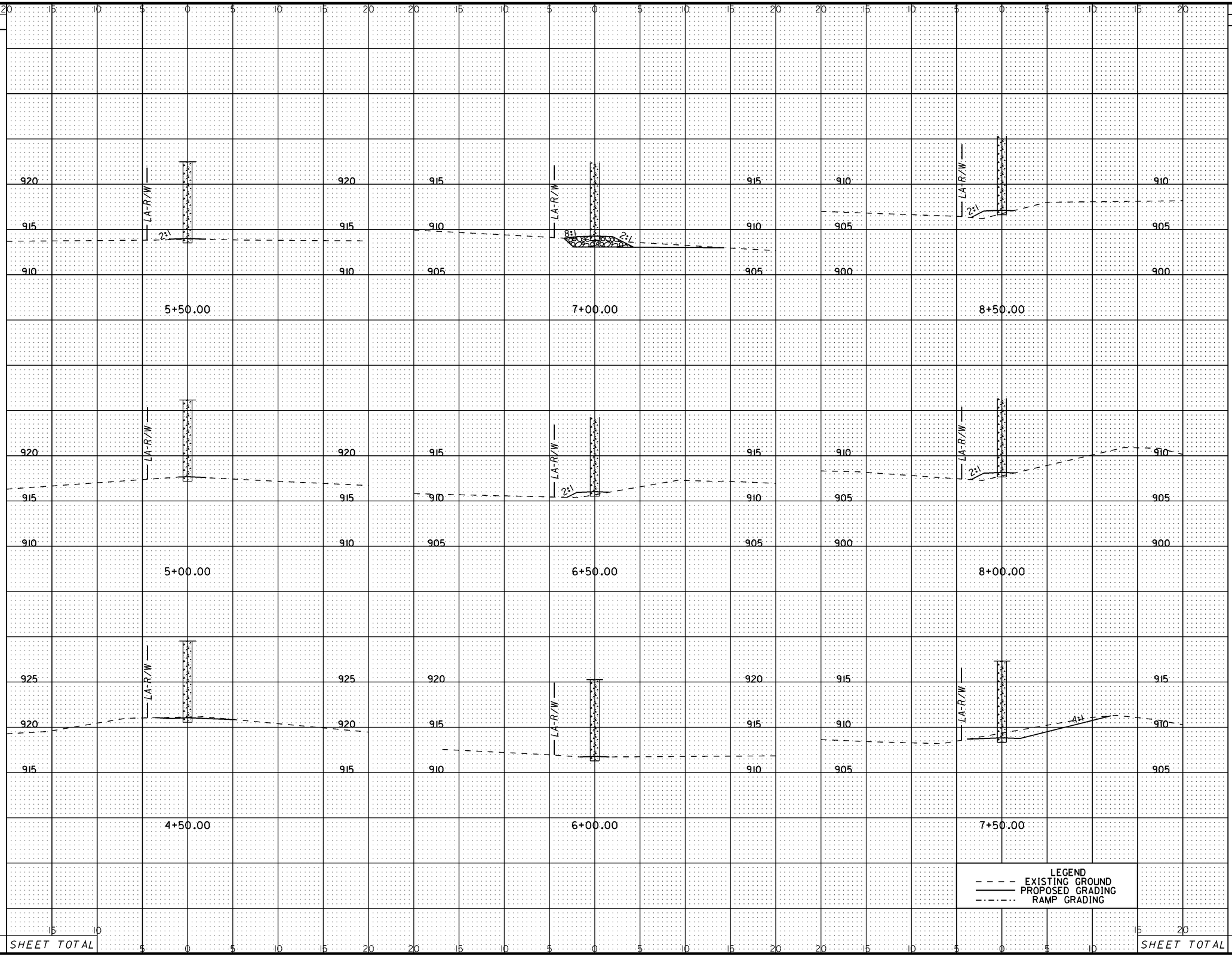

NOISE BARRIER CROSS SECTIONS STA. 4+50.00 TO STA. 8+50.00

MOT-75-0.75

SEEDING	
END WIDTH	SQ. YDS.

END AREA		VOLUME	
CUT	FILL	CUT	FILL

CALCULATED DJB

CHECKED CDR

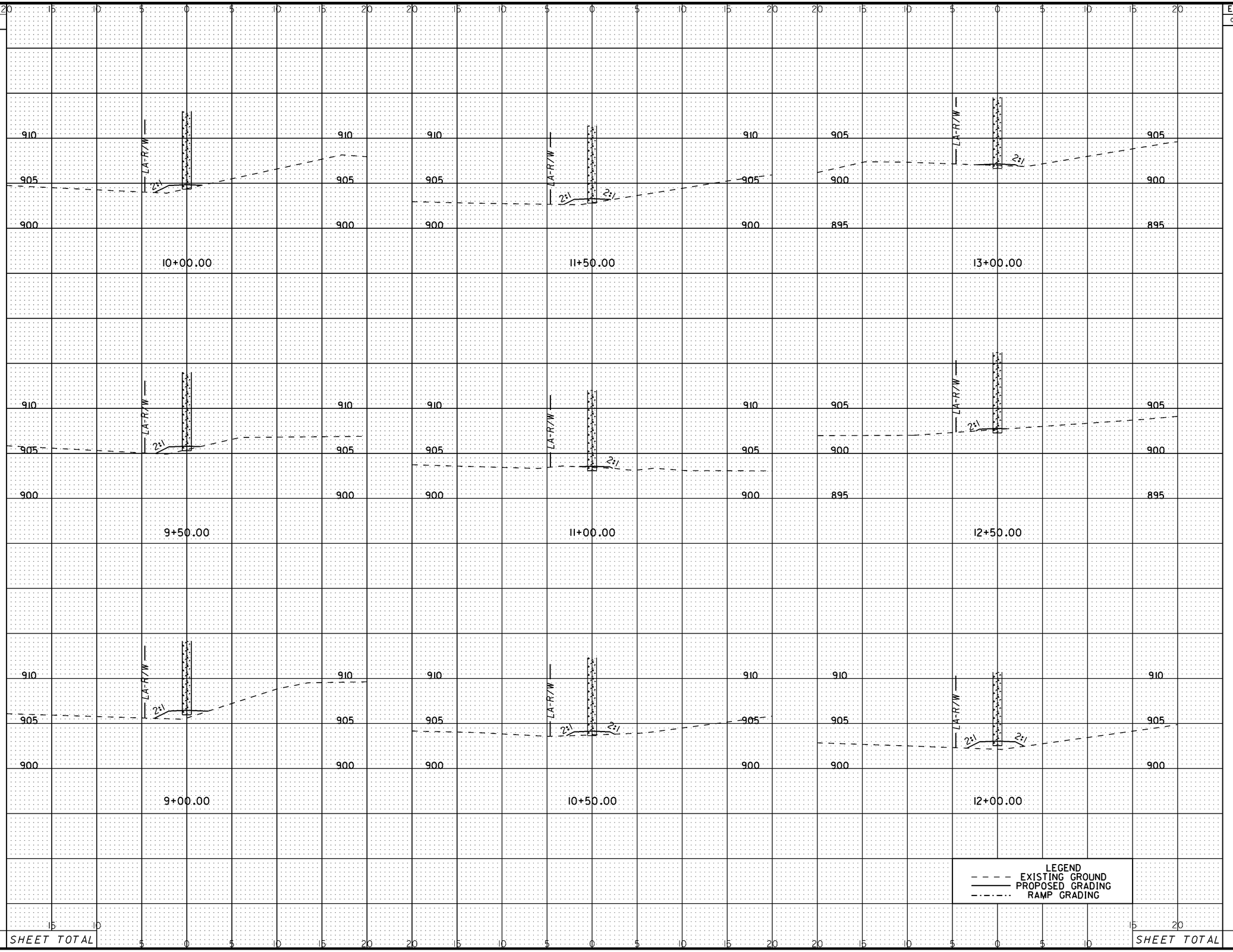

SHEET TOTAL

SHEET TOTAL

NOISE BARRIER CROSS SECTIONS STA. 9+00.00 TO STA. 13+00.00

MOT-75-0.75

SEEDING	
END WIDTH	SQ. YDS.

END AREA		VOLUME	
CUT	FILL	CUT	FILL

CALCULATED DJB

CHECKED CDR

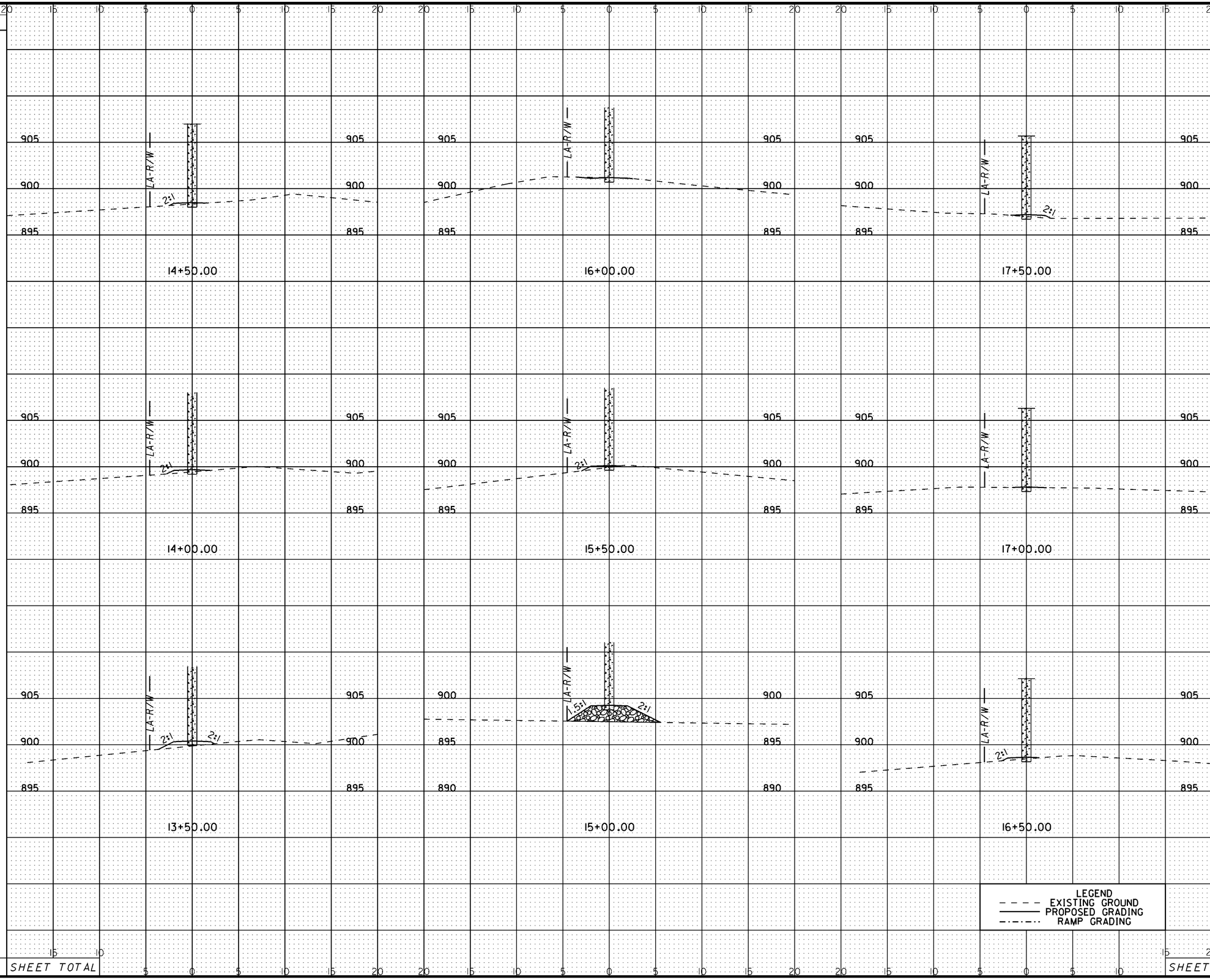

NOISE BARRIER CROSS SECTIONS STA. 13+50.00 TO STA. 17+50.00

MOT-75-0.75

SEEDING	
END WIDTH	SQ. YDS.

END AREA		VOLUME	
CUT	FILL	CUT	FILL

CALCULATED DJB

CHECKED CDR

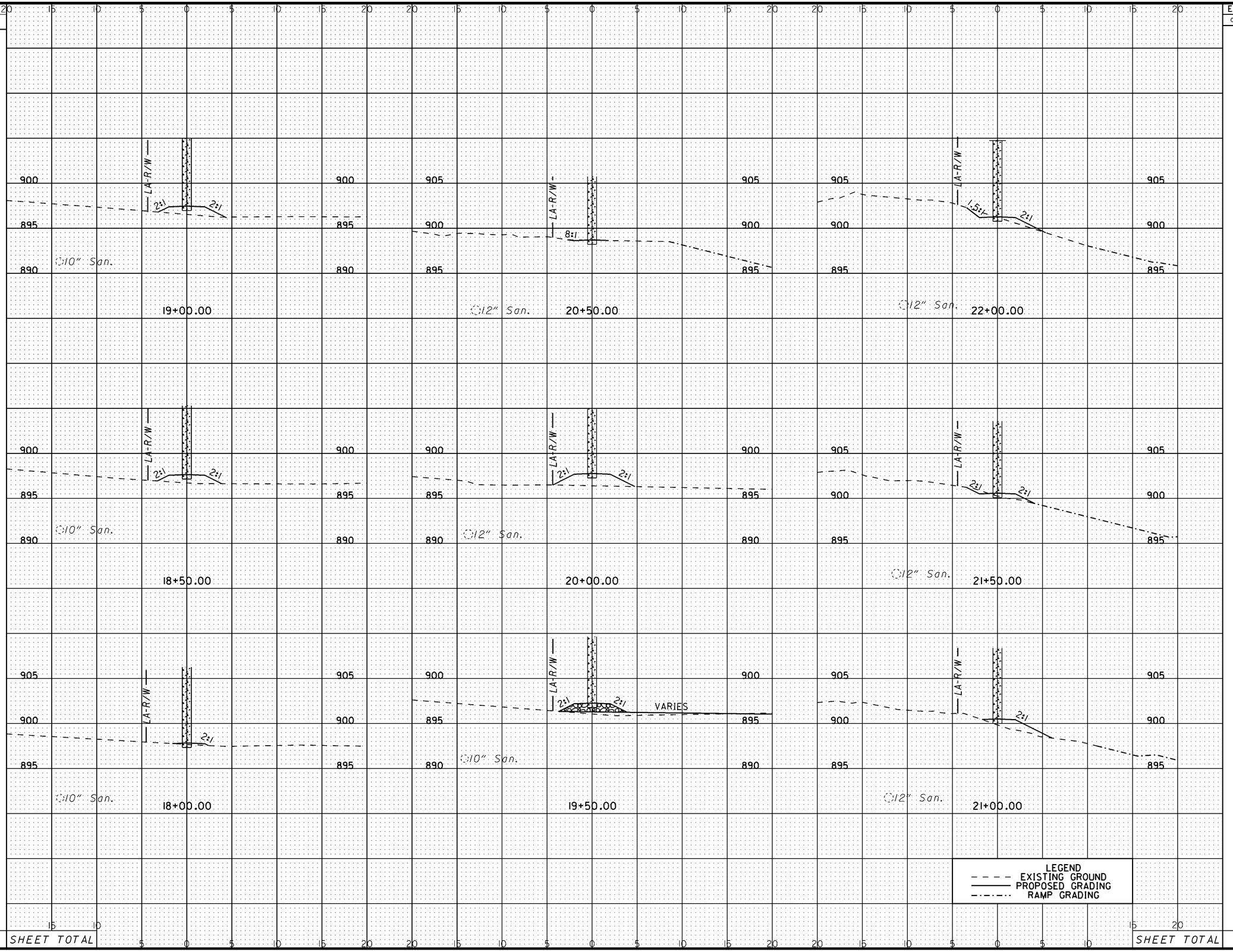

NOISE BARRIER CROSS SECTIONS STA. 18+00.00 TO STA. 22+00.00

MOT-75-0.75

SEEDING	
END WIDTH	SQ. YDS.

END AREA		VOLUME	
CUT	FILL	CUT	FILL

CALCULATED DJB

CHECKED CDR

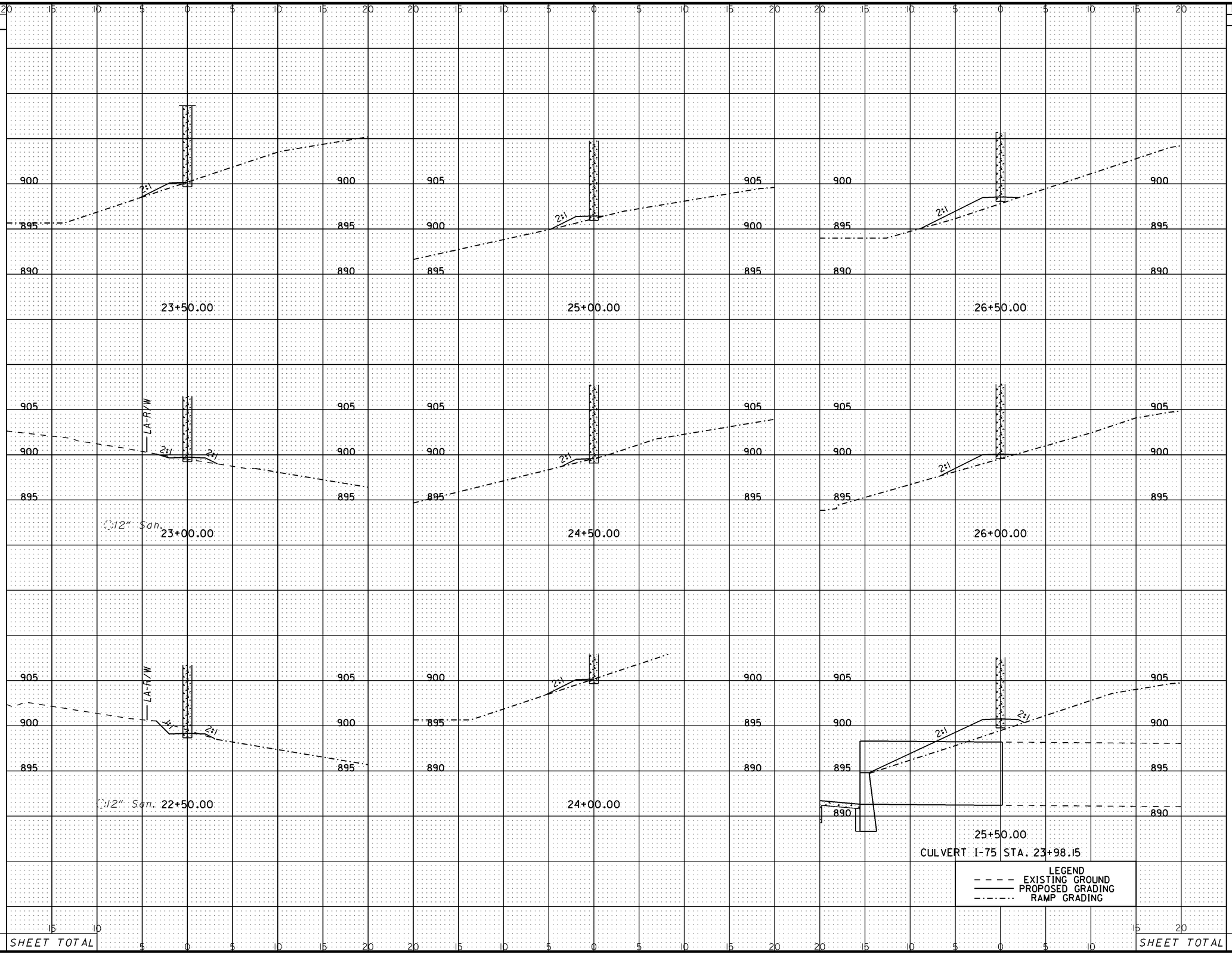

NOISE BARRIER CROSS SECTIONS STA. 22+50.00 TO STA. 26+50.00

MOT-75-0.75

SEEDING	
END WIDTH	SQ. YDS.

END AREA		VOLUME	
CUT	FILL	CUT	FILL

CALCULATED DJB

CHECKED CDR

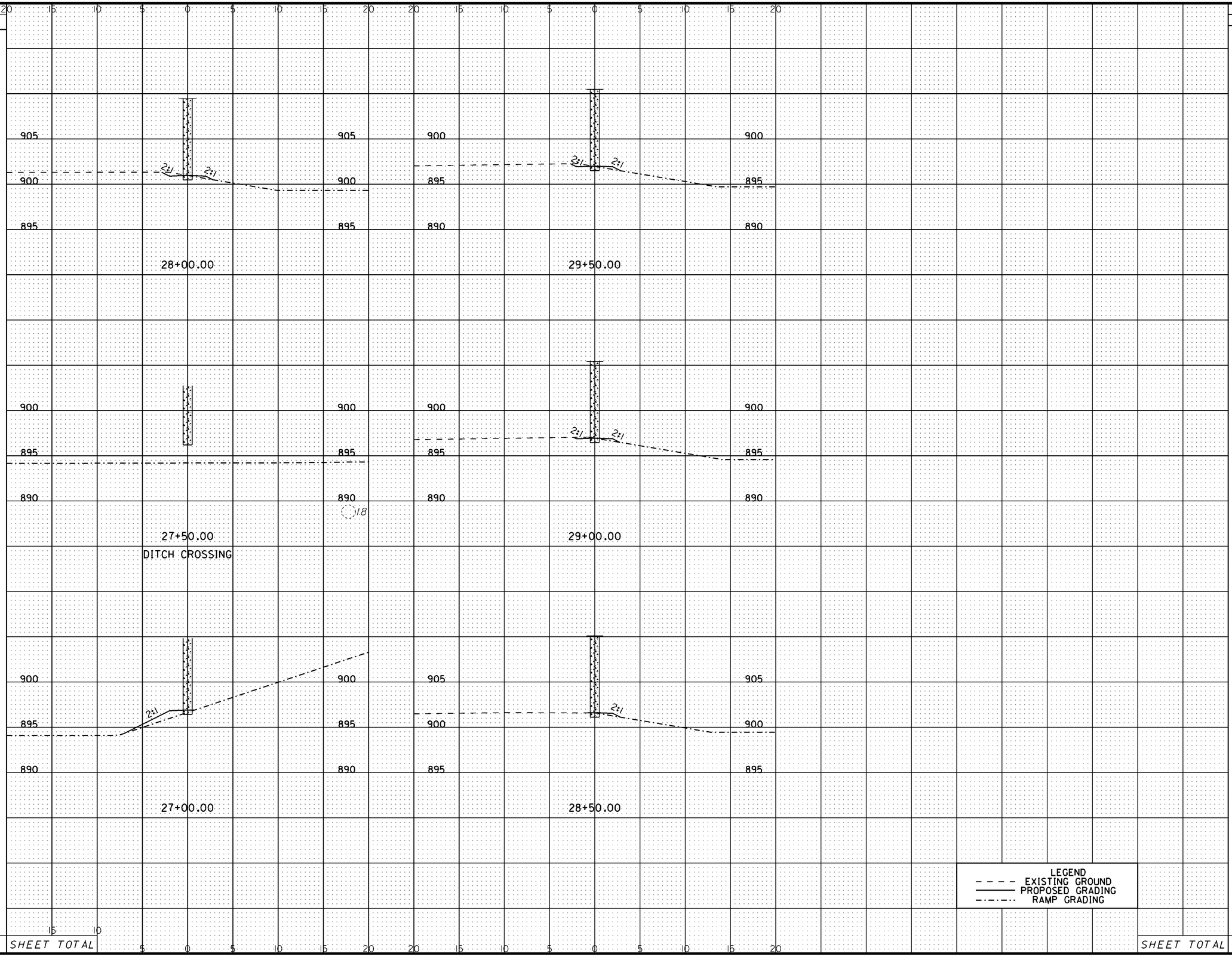

NOISE BARRIER CROSS SECTIONS STA. 27+00.00 TO STA. 29+00.00

MOT-75-0.75

ITEM 644 - EDGE LINE, AS PER PLAN

THIS ITEM SHALL BE THE SAME AS ITEM 644 WITH THE WIDTH MODIFIED TO 6".

PAYMENT WILL BE MADE AT THE CONTRACT UNIT PRICE BID PER FOOT OR PER MILE OF ITEM 644 - EDGE LINE, AS PER PLAN INSTALLED.

ITEM 644 - LANE LINE, AS PER PLAN

THIS ITEM SHALL BE THE SAME AS ITEM 644 WITH THE WIDTH MODIFIED TO 6".

PAYMENT WILL BE MADE AT THE CONTRACT UNIT PRICE BID PER FOOT OR PER MILE OF ITEM 644 - LANE LINE, AS PER PLAN INSTALLED.

CALCULATED AEC
CHECKED LAS

TRAFFIC CONTROL GENERAL NOTES (PAVEMENT MARKING)

MOT-75-0.75

SHEET NUMBER												PARTICIPATION		ITEM	ITEM EXT.	GRAND TOTAL	UNIT	DESCRIPTION	SEE SHEET NO.
444	445	446	447	448	449	450	451	452	453	454		I.R.	EAR MARK /LOCAL						
																		PAVEMENT MARKING	
										8		8	0	620	00500	8	EACH	DELINEATOR, POST MOUNTED	
220	106	108	36	92	110	207	196	35	467			863	765	621	00100	1628	EACH	RPM	
				25				197	331			331	222	621	54000	553	EACH	RAISED PAVEMENT MARKER REMOVED	
										37		37	0	626	00100	37	EACH	BARRIER REFLECTOR	
					4416			11425	65028			65028	15841	642	30000	80869	FT	REMOVAL OF PAVEMENT MARKING	
								10				0	10	642	30020	10	EACH	REMOVAL OF PAVEMENT MARKING	
								57				0	57	643	00900	57	SQ FT	ISLAND MARKING	
1.15	0.56	0.94	0.34	1.30	0.22	0.06	0.67	0.55				0.84	4.95	644	00100	5.79	MILE	EDGE LINE	
						2.46			5.62			8.08	0.00	644	00101	8.08	MILE	EDGE LINE, AS PER PLAN	450, 453
1.23	0.25	0.88	0.20	0.19	0.17		1.33					0.76	3.49	644	00200	4.25	MILE	LANE LINE	
						0.77			6.59			7.36	0.00	644	00201	7.36	MILE	LANE LINE, AS PER PLAN	450, 453
0.67	0.12	0.05		0.32	0.50	0.04	0.84	0.23				0.12	2.65	644	00300	2.77	MILE	CENTER LINE	
2782	2351	1181	455	382	2085	3616	1698	100	1241			7550	8341	644	00400	15891	FT	CHANNELIZING LINE	
98	144	96	120	36	113	124	101					291	600	644	00500	891	FT	STOP LINE	
484	609	474	474	100			381					0	2522	644	00600	2522	FT	CROSSWALK LINE	
656		711		303	231		54	452				607	1800	644	00700	2407	FT	TRANSVERSE/DIAGONAL LINE	
25	16	12	27	8	20	24	16	15				42	119	644	01300	161	EACH	LANE ARROW	
118	489	181		115		786	550					1331	908	644	01510	2239	FT	DOTTED LINE, 6"	
16	43											43	16	644	50300	59	FT	PAVEMENT MARKING, MISC.: YIELD LINE	

SEE SHEET 529 FOR SIGNING GENERAL SUMMARY

CALCULATED GWA
CHECKED LAS

TRAFFIC CONTROL GENERAL SUMMARY (PAVEMENT MARKING)

MOT-75-0.75

PAVEMENT MARKING ESTIMATED QUANTITIES

MOT-75-0.75

CALCULATED GWA
CHECKED LAS

REFERENCE NO.	SHEET NO.	LOCATION	STATION FROM	STATION TO	SIDE	644 EDGE LINE (WHITE)	644 EDGE LINE (YELLOW)	644 LANE LINE	644 CHANNELIZING LINE	644 CENTER LINE	644 CROSSWALK LINE	644 STOP LINE	644 LANE ARROW	644 TRANSVERSE/ DIAGONAL LINE (WHITE)	644 TRANSVERSE/ DIAGONAL LINE (YELLOW)	644 DOTTED LINE, 6" (WHITE)	621 RPM, LOW PROFILE, WHITE, 1-WAY	621 RPM, WHITE/RED, 2-WAY	621 RPM, YELLOW/YELLOW, 2-WAY	644 PAVEMENT MARKING, MISC.: YIELD LINE	621 RAISED PAVEMENT MARKER REMOVED		
						MILE	MILE	MILE	FEET	MILE	FEET	FEET	EACH	FEET	FEET	FEET	EACH	EACH	EACH	FEET	EACH		
		M-S PIKE																					
	494-496	#	105+58	113+55	RT & LT	0.30											16						
	494-496	#	105+58	115+75	RT & LT					0.37									26				
	496	#	114+33		RT								1										
	496	#	115+43		RT								1										
	496	#	114+20	115+75	RT				280									7					
	496	#	113+53.22	115+75	LT			0.04										3					
	496-498	#	116+53	126+02	RT & LT					0.28									20				
	496-497	#	116+53	119+30	LT				474									12					
	496	#	116+83		RT & LT								1										
	497	#	117+62		RT & LT								1										
	497	#	119+17		LT								1										
	497	#	118+39		LT								1										
	497	#	121+96		RT								1										
	496-498	#	116+53	126+08	RT & LT			0.36										24					
	497-498	#	121+83	126+08	RT				425									10					
	497-498	#	118+00	124+91	RT & LT										245								
	498	#	124+11	126+05	RT				328									8					
	498	#	124+41	126+05	RT									48									
	498	#	126+08		RT & LT							62											
	498	#	123+23		RT								1										
	498	#	124+24		RT								1										
	498	#	124+50		RT								1										
	498	#	124+98		LT								1										
	498	#	125+72		LT								1										
	498	#	125+77		RT								1										
	498-501	#	127+27	141+83	RT			0.28										18					
	498-501	#	127+12	141+86	LT			0.28										18					
	498	#	126+03	127+27	RT & LT						484												
	498	#	127+12		LT							24											
	498	#	127+27		RT & LT							12											
	498	#	127+27	127+62	RT										13								
	498	#	127+27	127+62	RT					0.01									5				
	498	#	126+84	128+11	LT	0.02												3					
	498	#	127+51		LT															16			
	498	#	127+57		LT								1										
	498	#	127+81		LT								1										
	498-499	#	127+12	131+32	LT				420									11					
	498-499	#	127+67	132+80	LT				513									13					
	498	#	127+58	127+27	RT & LT											118							
	498-501	#	127+62	141+86	RT & LT		0.54																
	499	#	142+78	132+67	LT								6										
	501	#	141+26	141+83	RT										18								
	501-502	*	141+86	149+25	RT & LT		0.28																
	501-502	*	141+86	149+00	RT & LT			0.27										18					
	501-502	*	141+83	419+15	RT										332								
	502	*	145+00	148+42	RT				342									8					
	502	*	144+13	148+13	RT								4										
		I.R. *				0.00	0.28	0.27	342	0.00	0	0	4	0	332	0	0	26	0	0			
		Earmark/Local #				0.33	0.54	0.96	2440	0.67	484	98	21	48	276	118	16	127	51	16			
						0.33	0.82																
TOTALS CARRIED TO GENERAL SUMMARY						1.15		1.23	2782	0.67	484	98	25	656		118	220			16			

REFERENCE NO.	SHEET NO.	LOCATION	STATION FROM	STATION TO	SIDE	644 EDGE LINE (WHITE)	644 EDGE LINE (YELLOW)	644 LANE LINE	644 CHANNELIZING LINE	644 CENTER LINE	644 CROSSWALK LINE	644 STOP LINE	644 LANE ARROW	644 DOTTED LINE, 6" (WHITE)	621 RPM, LOW PROFILE, WHITE, 1-WAY	621 RPM, WHITE/RED, 2-WAY	621 RPM, YELLOW/YELLOW, 2-WAY	644 PAVEMENT MARKING, MISC.: YIELD LINE
						MILE	MILE	MILE	FEET	MILE	FEET	FEET	EACH	FEET	EACH	EACH	EACH	FEET
		M-S PIKE																
	502	*	148+20	149+23	RT	0.02										3		
	502	*	148+142	149+10	RT		0.02											
	502	*	149+10	149+23	RT	0.02												
	502	#	148+56		RT						88							
	502	#	148+55		RT						46							
	502	*	148+50		RT													23
	502	*	150+14		RT							24						
	502	*	150+01	150+25	LT	0.00												
	502	#	150+04		LT						168							
	502-503	*	149+47	150+49	RT & LT									114				
	502-503	*	149+67	150+62	RT & LT									140				
	502	*	149+00		RT							24						
	502-504	*	150+14	156+77	LT			0.13								8		
	502-504	*	150+14	156+77	LT				663							17		
	503	*	150+49		RT & LT							24						
	503	*	150+49	153+22	LT				273							7		
	503	*	150+79		RT & LT								2					
	503	*	151+67		RT & LT								2					
	503	*	152+55		RT & LT								2					
	503	*	151+60	155+55	RT	0.07										10		
	503-504	*	150+49	156+77	RT & LT					0.12							10	
	503-505	*	150+49	157+12	RT				663							17		
	503-504	*	154+12	156+77	RT				265							7		
	503-504	*	151+36	156+77	LT	0.10									7			
	503-504	*	150+62	157+12	RT			0.12								8		
	503	*	151+20		RT								1					
	503	*	154+72		RT & LT								2					
	503	*	155+60		RT & LT								2					
	503	*	156+07		LT								1					
	504	*	156+47		RT & LT								2					
	504	*	156+77		RT & LT							24						
	504	*	157+12		RT							24						
	504	*	158+06	159+09	LT	0.02												
	504	*	158+25		LT							24						
	504	*	157+03	157+27	RT	0.00												
	504	*	156+77	157+84	RT & LT									125				
	504-505	*	158+87	163+72	LT				487									
	504	*	159+09		LT								1			12		
	504	*	160+57		LT								1					
	504	*	158+79		LT													20
	504	*	156+77	157+49	RT & LT									110				
	504	#	157+58		RT						172							
	504	#	157+68		LT						87							
	504	#	158+42		LT						48							
	504	*	158+06	141+43	LT	0.02												
	504	*	141+43	158+87	LT		0.02											
	504-505	*	157+86	164+82	RT & LT		0.26											
		I.R. *				0.26	0.30	0.25	2351	0.12	0	144	16	489	7	89	10	43
		Earmark/Local #				0.00	0.00	0.00	0	0.00	609	0	0	0	0	0	0	0
						0.26	0.30											
TOTALS CARRIED TO GENERAL SUMMARY						0.56		0.25	2351	0.12	609	144	16	489	106			43

CALCULATED GWA
CHECKED LAS

PAVEMENT MARKING ESTIMATED QUANTITIES

MOT-75-0.75

REFERENCE NO.	SHEET NO.	LOCATION	STATION FROM	STATION TO	SIDE	644 EDGE LINE (WHITE)	644 EDGE LINE (YELLOW)	644 LANE LINE	644 CHANNELIZING LINE	644 CENTER LINE	644 CROSSWALK LINE	644 STOP LINE	644 LANE ARROW	644 TRANSVERSE/ DIAGONAL LINE (WHITE)	644 TRANSVERSE/ DIAGONAL LINE (YELLOW)	644 DOTTED LINE, 6" (WHITE)	621 RPM, LOW PROFILE, WHITE, 1-WAY	621 RPM, WHITE/RED, 2-WAY	621 RPM, YELLOW/YELLOW, 2-WAY				
						MILE	MILE	MILE	FEET	MILE	FEET	FEET	EACH	FEET	FEET	FEET	EACH	EACH	EACH				
		M-S PIKE																					
	504	*	157+68	158+16	RT											56							
	504-505	*	158+25	164+83	LT			0.12										8					
	504-505	*	158+16	164+50	RT			0.12										8					
	505	*	162+14	164+57	RT & LT									275									
	505-507	#	164+83	173+47	LT			0.16										11					
	505-508	#	164+50	178+13	RT			0.26										17					
	505-507	#	164+82	172+58	RT & LT		0.29																
	505-506	#	164+82	168+77	RT & LT									410									
	506-507	#	169+59	173+04	RT & LT				345									9					
	506	#	169+87	171+96	RT			0.04										3					
	506	#	170+21		RT & LT								2										
	506	#	170+87		RT & LT								2										
	506	#	171+53		RT & LT								2										
	506	#	172+19		RT & LT								2										
	506	#	169+73	172+50	LT																		
	506	#	171+79	172+37	LT					0.02													
	506-507	#	171+96	172+97	RT & LT				101									3					
	506-507	#	172+37	173+72	LT	0.04											6						
	506-508	#	172+37	40+75	LT		0.12																
	506	#	171+79	172+37	LT									14									
	507	#	172+58	173+07	LT					0.02									5				
	507	#	172+56		LT							24											
	507	#	172+56	173+51	LT				100									3					
	507	#	173+51	177+18	LT			0.05										3					
	507	#	172+58	173+07	LT										12								
	507	#	172+50	173+77	RT&LT	0.02												3					
	507	#	172+97	174+02	LT											125							
	507-508	#	173+50	178+47	RT				497									12					
	507	#	174+52		LT							24											
	507	#	174+36	174+68	LT					0.01													
	507	#	174+02	177+23	LT			0.06										4					
	507-508	#	174+68	178+52	LT		0.15																
	507	#	174+52	178+00	LT			0.07										4					
	508	#	178+13		RT							24											
	507-508	#	177+62	177+98	RT				36									1					
	507-508	#	177+62	38+72	RT				102									3					
	507	#	177+47		LT								2										
	508	#	178+12		LT								2										
	507-508	#	173+72	178+55	LT		0.09																
	507-508	#	173+77	178+17	RT & LT		0.08				166												
	507-508	#	173+04	178+17	RT		0.10				308												
	507-508	#	177+18	41+48	LT	0.04												5					
	507-508	#	177+98	38+72	RT		0.01																
	507	#	172+97		RT & LT							24											
		I.R. *				0.00	0.00	0.24	0	0.00	0	0	0	275	0	56	0	16	0				
		Earmark/Local #				0.10	0.84	0.64	1181	0.05	474	96	12	424	12	125	6	81	5				
						0.10	0.84																
TOTALS CARRIED TO GENERAL SUMMARY						0.94		0.88	1181	0.05	474	96	12	711		181	108						

CALCULATED GWA
CHECKED LAS

PAVEMENT MARKING ESTIMATED QUANTITIES

MOT-75-0.75

REFERENCE NO.	SHEET NO.	LOCATION	STATION FROM	STATION TO	SIDE	644 EDGE LINE (WHITE)	644 EDGE LINE (YELLOW)	644 LANE LINE	644 CHANNELIZING LINE	644 CROSSWALK LINE	644 STOP LINE	644 LANE ARROW	621 RPM, LOW PROFILE, WHITE, 1-WAY	621 RPM, WHITE/RED, 2-WAY	621 RPM, YELLOW/YELLOW, 2-WAY
						MILE	MILE	MILE	FEET	FEET	FEET	EACH	EACH	EACH	EACH
		M-S PIKE													
	508		178+15		RT						12				
	507		172+86		RT							1			
	507		172+84		LT							1			
	508		178+22		LT						24				
	508		178+23		RT & LT					170					
	508		178+25		LT					59					
	508		178+17		RT					36					
	507-508		177+23	178+22	LT				99					3	
	507-508		177+98	37+75	RT	0.03							4		
	507		174+87		RT							1			
	507		175+53		RT							1			
	507		176+19		RT							1			
	507		176+85		RT							1			
	507		177+51		RT							1			
	507		175+49		LT							2			
	507		176+15		LT							2			
	507		176+82		LT							2			
	507		173+56		RT							1			
	507		174+21		RT							1			
		AUSTIN ROAD													
	508		180+10		LT							1			
	508		180+76		LT							1			
	508		181+42		LT							1			
	508		182+08		LT							1			
	508		179+55		LT						24				
	508		179+36		RT						24				
	508-509		179+53	187+69	LT			0.15						10	
	508-509		179+47	184+19	LT		0.09								
	508		179+47	182+76	RT		0.06								
	508		179+65	182+24	LT				259					6	
	508		179+14	180+00	LT	0.02							3		
	508		40+51	179+65	LT		0.01								
	508		179+53		LT						12				
	508		41+48	180+00	LT	0.03							4		
	508		179+40		LT					37					
	508		179+34		RT & LT					172					
	508		179+53	182+02	RT			0.05						3	
	508		182+02		RT						24				
	508		179+09	179+28	RT		0.01								
	508		179+34	181+85	RT	0.10									
	508		179+36	180+33	RT				97					3	
	508		179+46		RT							2			
	508		180+12		RT							2			
	508		180+78		RT							2			
	508		181+44		RT							2			
		ALL ITEMS EARMARK/LOCAL				0.17	0.17	0.20	455	474	120	27	11	25	0
		TOTALS CARRIED TO GENERAL SUMMARY				0.34		0.20	455	474	120	27	36		

CALCULATED GWA
CHECKED LAS

PAVEMENT MARKING ESTIMATED QUANTITIES

MOT-75-0.75

REFERENCE NO.	SHEET NO.	LOCATION	STATION FROM	STATION TO	SIDE	644 EDGE LINE (WHITE)	644 EDGE LINE (YELLOW)	644 LANE LINE	644 CHANNELIZING LINE	644 CENTER LINE	644 CROSSWALK LINE	644 STOP LINE	644 LANE ARROW	644 TRANSVERSE/ DIAGONAL LINE (YELLOW)	644 DOTTED LINE, 6" (WHITE)	621 RPM, LOW PROFILE, WHITE, 1-WAY	621 RPM, WHITE/RED, 2-WAY	621 RPM, YELLOW/YELLOW, 2-WAY	RAISED PAVEMENT MARKER REMOVED				
			FROM	TO		MILE	MILE	MILE	FEET	MILE	FEET	FEET	EACH	FEET	FEET	EACH	EACH	EACH	EACH				
		AUSTIN ROAD																					
	508		38+70	182+81	RT		0.07																
	508		180+33	182+50	RT			0.04									3						
	508		179+33		RT						60												
	508-512		37+75	202+69	RT	0.45										5	25						
	508-509		38+37	184+18	RT		0.10																
	508		38+48		RT						40												
	508		181+85	182+17	RT					0.01							5						
	508-509		182+76	184+19	RT & LT	0.03											4						
	508-509		182+50	183+61	RT										115								
	508-509		182+81	184+18	RT	0.03											4						
	508-509		183+40	187+70	RT			0.08									5						
	508-509		183+45	183+95	RT					0.02							5						
	509		183+63		RT & LT							24											
	509		183+63	184+54	LT				91								2						
	509		184+18	184+81	RT					0.02							5						
	509		184+18		RT							12											
	509		184+18	184+81	RT									16									
	509		183+50	183+95	RT									13									
	509-510		183+95	192+85	RT & LT		0.34																
	509		183+58	186+69	LT			0.06									4						
	509		184+19	187+10	LT				291								7						
	509		183+68		RT & LT								2										
	509		184+34		RT & LT								2										
	509		185+00		RT & LT								2										
	509		186+32		RT & LT								2										
	509-512		187+69	202+69	LT	0.28																	
	510-511		192+85	197+00	RT & LT					0.16								11					
	510-511		192+85	197+00	RT & LT									137									
	511-512		197+00	202+69	CL					0.11				137				7					
	508-511		179-50	197-80	RT & LT														25				
		ALL ITEMS EARMARK/LOCAL				0.79	0.50	0.19	382	0.32	100	36	8	303	115	5	69	18	25				
TOTALS CARRIED TO GENERAL SUMMARY						1.30		0.19	382	0.32	100	36	8	303	115	92			25				

CALCULATED GWA
CHECKED LAS

PAVEMENT MARKING ESTIMATED QUANTITIES

MOT-75-0.75

REFERENCE NO.	SHEET NO.	LOCATION	STATION FROM	STATION TO	SIDE	644 REMOVAL OF PAVEMENT MARKING	644 EDGE LINE (WHITE)	644 EDGE LINE (YELLOW)	644 LANE LINE	644 CHANNELIZING LINE	644 CENTER LINE	644 STOP LINE	644 LANE ARROW	644 TRANSVERSE/ DIAGONAL LINE (WHITE)	644 TRANSVERSE/ DIAGONAL LINE (YELLOW)	621 RPM, LOW PROFILE, WHITE, 1-WAY	621 RPM, WHITE/RED, 2-WAY	621 RPM, YELLOW/YELLOW, 2-WAY
						FEET	MILE	MILE	MILE	FEET	MILE	FEET	EACH	FEET	FEET	EACH	EACH	EACH
		CRAINS CREEK RD																
	496		20+54	21+02	LT					48							1	
	496		18+60	19+50	RT					90							2	
	496		18+40	19+50	LT						0.02							5
	496		18+73		RT & LT								1					
	496		19+20		RT & LT								1					
	496		20+74		RT & LT								1					
		FUTURE BYERS RD																
	498		50+65	51+65	LT				0.02								1	
	498		50+63	51+65	LT					102							3	
	498		50+61	51+65	LT					104							3	
	498		50+60	51+65	RT						0.02							5
	498		50+30	51+65	RT					135							4	
	498		51+65	127+67	RT			0.03										
	498		50+65		RT & LT							56						
	498		50+95		RT & LT								2					
		WOOD RD																
	498		49+37		RT & LT							57						
	498		49+07		RT & LT								2					
	513-514		34+58	38+41	LT		0.10											
	513-514		34+58	38+36	RT		0.07											
	513-514		34+58	38+18	CL						0.07							5
	514-498		38+67	39+37	RT & LT						0.37							24
	514		38+52	41+18	LT					266							7	
	514		38+82		LT								1					
	514		39+70		LT								1					
	514		40+59		LT								1					
	514-498		41+18	49+37	LT				0.16								11	
	514-516		39+28	47+50	RT & LT										127			
	515-516		44+40	49+37	RT					497							13	
	515-516		44+61	49+37	RT & LT					476							12	
	515		44+67		RT & LT								2					
	515		45+55		RT & LT								2					
	515		46+43		RT & LT								2					
	515-498		45+70	49+37	RT & LT					367							9	
	515-498		45+70	49+37	RT & LT									104				
	516		47+32		RT & LT								2					
	516		48+20		RT & LT								2					
	513-498	CENTER	34+58	49+30	RT & LT	1472												
	513-498	EDGE	34+58	49+30	RT & LT	2944												
		CRAINS RUN RD																
	514				LT						0.02						5	
	514				LT		0.01											
	514				RT		0.01											
		ALL ITEMS EARMARK/LOCAL				4416	0.19	0.03	0.17	2085	0.50	113	20	104	127	0	71	39
		TOTALS CARRIED TO GENERAL SUMMARY				4416	0.22		0.17	2085	0.50	113	20	231		110		

CALCULATED GWA
CHECKED LAS

PAVEMENT MARKING ESTIMATED QUANTITIES

MOT-75-0.75

REFERENCE NO.	SHEET NO.	LOCATION	STATION FROM	STATION TO	SIDE	644 EDGE LINE (WHITE) MILE	644 EDGE LINE, AS PER PLAN (WHITE) MILE	644 EDGE LINE, AS PER PLAN (YELLOW) MILE	644 LANE LINE, AS PER PLAN MILE	644 CHANNELIZING LINE FEET	644 CENTER LINE MILE	644 STOP LINE FEET	644 LANE ARROW EACH	644 DOTTED LINE, 6" (WHITE) FEET	621 RPM, LOW PROFILE, WHITE, 1-WAY EACH	621 RPM, WHITE/RED, 2-WAY EACH	621 RPM, YELLOW/YELLOW, 2-WAY EACH	621 RPM, YELLOW/RED, 2-WAY EACH					
		OLD BYERS RD																						
	501	#	70+65		LT							20												
	501	#	70+65	72+50	CL						0.04						3							
	501	#	70+95	72+50	LT	0.03										4								
	501	#	71+04	72+50	RT	0.03																		
		RAMP P																						
	502-464	*	330+05	338+15	RT & LT				0.15							10								
	502-461	*	148+33	311+57	LT		0.50																	
	502-464	*	149+80	326+71	RT			0.22										15						
	463-464	*	321+91	326+71	RT					480						12								
	461-462	*	312+00	316+71	RT									471										
	462-463	*	316+71	321+91	RT				0.10							7								
		RAMP H																						
	567-568	*	21+69	224+84	LT									315										
	568	*	224+84	227+98	LT				0.06							4								
	568-569	*	227+98	229+69	LT					342						8								
	468-504	*	223+00	160+15	RT		0.38																	
	469-504	*	229+69	240+68	LT			0.21										14						
	470	*	235+05	236+90	LT				0.04							3								
	470-504	*	236+90	240+44	RT & LT					708						18								
	470	*	237+41		RT & LT								3											
	470	*	238+38		RT & LT								3											
	470	*	239+28		RT & LT								3											
	470	*	240+14		RT & LT								3											
	470	*	240+44		RT & LT							52												
		RAMP M																						
	502	*	439+03		RT & LT							52												
	502	*	439+32		LT								3											
	502-474	*	147+60	460+00	LT		0.44																	
	502-473	*	438+78	451+22	RT			0.24										16						
	502-471	*	439+03	444+90	RT					587						15								
	502-472	*	439+03	446+27	CL					724						18								
	471	*	440+20		RT & LT								3											
	471	*	441+08		RT & LT								3											
	471	*	444+44		RT & LT								3											
	472-474	*	446+27	460+00	CL				0.26							17								
	473	*	451+22	454+64	RT					342						9								
		RAMP J																						
	504-487	*	140+87	149+34	CL				0.16							11								
	486-488	*	142+09	158+00	RT		0.30																	
	486-487	*	142+09	151+82	LT			0.18										12						
	487-488	*	151+82	156+15	LT					433						11								
		I.R. *				0.00	1.61	0.84	0.77	3616	0.00	104	24	786	0	143	0	57						
		Earmark/Local #				0.06	0.00	0.00	0.00	0	0.04	20	0	0	0	4	3	0						
							1.61	0.84																
TOTALS CARRIED TO GENERAL SUMMARY						0.06	2.46		0.77	3616	0.04	124	24	786	207									

CALCULATED GWA
CHECKED LAS

PAVEMENT MARKING ESTIMATED QUANTITIES

MOT-75-0.75

REFERENCE NO.	SHEET NO.	LOCATION	STATION FROM	STATION TO	SIDE	644 EDGE LINE (WHITE)	644 LANE LINE	644 CHANNELIZING LINE	644 CENTER LINE	644 CROSSWALK LINE	644 STOP LINE	644 LANE ARROW	644 TRANSVERSE/ DIAGONAL LINE (WHITE)	644 DOTTED LINE, 6" (WHITE)	621 RPM, LOW PROFILE, WHITE, 1-WAY	621 RPM, WHITE/RED, 2-WAY	621 RPM, YELLOW/YELLOW, 2-WAY		621 RAISED PAVEMENT MARKER REMOVED				
						MILE	MILE	FEET	MILE	FEET	FEET	EACH	FEET	FEET	EACH	EACH	EACH		EACH				
		SR 741																					
	517-518		21+50	27+98	LT		0.12									8							
	517-519		21+50	33+90	RT & LT				0.47								31						
	517-519		21+50	37+75	RT & LT	0.62																	
	519-508		21+50	38+37	RT & LT		0.64									42							
	519		33+90	36+42	LT				0.05								3						
	519-508		36+42	38+00	LT				0.06								4						
	517		23+54		RT & LT							2											
	518		28+57		RT & LT							2											
	519		32+69		RT & LT							2											
	519-508		34+00	38+37	RT			437								11							
	519-508		35+01	38+37	RT			336								8							
	519		34+60		RT							1											
	519		35+11		RT							1											
	519		35+26		RT							1											
	519		35+77		RT							1											
	519		35+92		RT							1											
	519		36+43		RT							1											
	519		35+58		RT							1											
	519		37+09		RT							1											
	519		37+24		RT							1											
	519		37+75		RT							1											
	508		38+00		RT & LT						14												
	508		38+37		RT						24												
	508		37+85	38+70	RT	0.02										3							
	508		37+98		RT						12												
	508		38+00	38+46	RT								28										
	508		38+00	39+38	LT									160									
	508		38+37	38+94	RT & LT									110									
	508		38+63	39+13	LT	0.01										2							
	508		39+04	39+18	RT	0.003																	
	508		39+06		RT & LT					164													
	508		39+99	40+51	RT	0.01										2							
	508		39+95	40+09	LT	0.003																	
	508		40+01		RT & LT					167													
	508		39+78	41+11	RT									150									
	508		40+20	41+11	RT & LT									130									
	508		40+42	41+27	LT	0.02										3							
	508		40+70	41+09	LT								26										
	508		40+65		LT					50													
	508		40+75		LT						24												
	508		41+11		RT & LT						15												
	508		41+09		LT						12												
	508-520		40+78	46+17	LT			539								14							
	508-520		40+75	44+61	LT			386								10							
	508-522		40+75	56+00	LT		0.29									19							
	508-522		41+11	56+00	RT		0.28									18							
	508-521		41+11	48+12	RT & LT				0.27							18							
		ALL ITEMS EARMARK/LOCAL				0.67	1.33	1698	0.84	381	101	16	54	550	0	158	38						
		TOTALS CARRIED TO GENERAL SUMMARY				0.67	1.33	1698	0.84	381	101	16	54	550	196								

CALCULATED GWA
CHECKED LAS

PAVEMENT MARKING ESTIMATED QUANTITIES

MOT-75-0.75

REFERENCE NO.	SHEET NO.	LOCATION	STATION FROM	STATION TO	SIDE	644 REMOVAL OF PAVEMENT MARKING FEET	644 REMOVAL OF PAVEMENT MARKING EACH	644 ISLAND (YELLOW) SQ FT		644 EDGE LINE (WHITE) MILE	644 CHANNELIZING LINE FEET	644 CENTER LINE MILE	644 LANE ARROW EACH	644 TRANSVERSE/ DIAGONAL LINE (YELLOW) FEET	621 RPM, LOW PROFILE, WHITE, 1-WAY EACH	621 RPM, WHITE/RED, 2-WAY EACH	621 RPM, YELLOW/YELLOW, 2-WAY EACH	621 RAISED PAVEMENT MARKER REMOVED EACH					
		SR 741																					
	508		41+37		LT								1										
	508		41+21		RT								1										
	520-522		41+48	56+00	RT & LT					0.55					16								
	520		41+87		RT & LT								1										
	520		42+03		LT								1										
	520		42+53		RT & LT								1										
	520		42+69		LT								1										
	520		43+19		RT & LT								1										
	520		43+35		LT								1										
	520		43+85		RT & LT								1										
	520		44+01		LT								1										
	520		44+51		RT & LT								1										
	520		44+67		LT								1										
	520		45+33		LT								1										
	520		45+99		LT								1										
	520-521		44+61	48+05	RT & LT									195									
	521		48+12		RT & LT			57															
	521-522		49+08	56+00	RT							0.13					9						
	521-522		50+58	56+00	RT & LT							0.10					7						
	521		49+08	50+08	LT						100					3							
	521		49+38		RT & LT								1										
	517-522	EDGE	21+50	56+00	RT & LT	3450																	
	517-522	LANE	21+50	56+00	RT & LT	3450																	
	517-522	CENTER	21+50	56+00	RT & LT	3450																	
	517-522	ARROWS/ONLY	21+50	56+00	RT & LT		10																
	517-522	TRANSVERSE	21+50	56+00	RT & LT	1075								257									
	517-523		21+50	56+00	RT & LT													197					
		ALL ITEMS EARMARK/LOCAL				11425	10	57		0.55	100	0.23	15	452	16	3	16	197					
TOTALS CARRIED TO GENERAL SUMMARY						11425	10	57		0.55	100	0.23	15	452	35			197					

CALCULATED GWA
CHECKED LAS

PAVEMENT MARKING ESTIMATED QUANTITIES

MOT-75-0.75

REFERENCE NO.	SHEET NO.	LOCATION	STATION FROM	STATION TO	SIDE	644 REMOVAL OF PAVEMENT MARKING	644 EDGE LINE, AS PER PLAN (WHITE)	644 EDGE LINE, AS PER PLAN (YELLOW)	644 LANE LINE, AS PER PLAN	644 CHANNELIZING LINE	621 RPM, LOW PROFILE, WHITE, 1-WAY	621 RPM, WHITE/RED, 2-WAY	621 RPM, YELLOW/YELLOW, 2-WAY	621 RAISED PAVEMENT MARKER REMOVED
						FEET	MILE	MILE	MILE	FEET	EACH	EACH	EACH	EACH
		I-75 SOUTHBOUND												
	460-477		7+77	74+35	LT			1.26						
	460-477		7+77	74+35	LT				2.52			166		
	460-461		7+77	11+57	LT		0.07							
	463-473		22+05	51+22	LT			0.55						
	473		51+22	54+63	LT					341		9		
	474-481		60+00	98+00	LT		0.72							
	474-481		60+00	98+00	LT				0.72			48		
	481-482		93+44	102+44	LT					900		23		
	460-482	EDGE	7+77	98+10	LT	9033								
	460-477	LANE	7+77	74+35	LT	13316								
	460-477	EDGE	7+77	74+35	LT	6658								
	482-485	EDGE	0+00	20+40	LT	2040								
	476-482	LANE	68+56	98+10	LT	2954								
	482-485	LANE	0+00	20+40	LT	2040								
	481-485	CH & EDGE	93+44	20+40	LT	2506								
			7+77	74+35	LT									166
		I-675 SB RAMP												
	482-485		0+14	20+40	CL		0.38							
	482-485		0+14	20+40	RT				0.38			25		
	482-485		4+57	20+40	RT			0.30						
		I-75 NORTHBOUND												
	466-493		15+21	81+10	RT			1.25						
	466-493		15+21	81+10	RT				2.50			165		
	466-467		15+21	23+00	RT		0.15							
	468-488		29+69	56+15	RT			0.50						
	488-493		56+15	81+10	RT				0.47			31		
	489-493		58+00	81+10	RT		0.44							
	466-493	EDGE	15+21	81+10	RT	6589								
	466-493	LANE	15+21	81+10	RT	13178								
	466-493	EDGE	15+21	81+10	RT	6589								
	493	LANE	79+85	81+10	RT	125								
			15+21	81+10	RT									165
		ALL ITEMS IR				65028	1.76	3.86	6.59	1241	0	467	0	331
		TOTALS CARRIED TO GENERAL SUMMARY				65028	5.62		6.59	1241		467		331

CALCULATED GWA
CHECKED LAS

PAVEMENT MARKING ESTIMATED QUANTITIES

MOT-75-0.75

REFERENCE NO.	SHEET NO.	LOCATION	STATION FROM	STATION TO	SIDE	620 DELINEATOR, POST MOUNTED, TYPE D EACH	626 BARRIER REFLECTOR, TYPE A EACH	626 BARRIER REFLECTOR, TYPE B EACH
		RAMP H						
R-249	112		226+11.90	228+12.58	RT	1	3	
		RAMP M						
R-251	140-142		454+37.47	457+00.52	LT	1	3	
		IR-75						
R-252	538		182+62.50 (WAR)	183+62.50 (WAR)	RT	1	3	
R-254	538		0+14.03 (MOT)	1+62.36 (MOT)	RT	1	3	
R-256	164,539		60+37.00 (MOT)	62+62.00 (MOT)	RT	1	3	
R-257	539		80+87.50 (MOT)	82+75.00 (MOT)	LT	1	3	
R-259	539		107+37.50 (MOT)	109+37.50 (MOT)	LT	1	3	
		M-S PIKE						
R-231	202,203		150+04.36	151+59.93	RT	1	3	
R-232	203,204		155+50.91	156+13.16	RT		3	
	203		151+57.83	155+52.85	RT			5
	203		151+83.55	155+78.57	LT			5
		ALL ITEMS I.R.				8	27	10
		TOTALS CARRIED TO GENERAL SUMMARY				8	37	

CALCULATED GWA
CHECKED LAS

PAVEMENT MARKING ESTIMATED QUANTITIES

MOT-75-0.75

FOR PAVEMENT MARKING LEGEND, SEE SHEET 494.

N

0 10 20 40
HORIZONTAL SCALE IN FEET

CALCULATED GWA
CHECKED LAS

PAVEMENT MARKING PLAN RAMP P
LIMIT OF WORK TO STA. 10+00

MOT-75-0.75

460
773

FOR PAVEMENT MARKING LEGEND, SEE SHEET 494.

N

0 10 20 40
HORIZONTAL SCALE IN FEET

CALCULATED GWA
CHECKED LAS

PAVEMENT MARKING PLAN RAMP P
STA. 10+00 I-75 TO STA. 315+00 RAMP P

MOT-75-0.75

461
773

FOR PAVEMENT MARKING LEGEND, SEE SHEET 494.

HORIZONTAL SCALE IN FEET
0 10 20 40

CALCULATED GWA
CHECKED LAS

PAVEMENT MARKING PLAN RAMP P
STA. 315+00 TO STA. 320+50

MOT-75-0.75

462
773

FOR PAVEMENT MARKING LEGEND, SEE SHEET 494.

HORIZONTAL SCALE IN FEET
0 10 20 40

CALCULATED GWA
CHECKED LAS

PAVEMENT MARKING PLAN RAMP P
STA. 320+50 TO STA. 326+00

MOT-75-0.75

MATCH LINE STA. 326+00 SEE SHEET 463

C

STA. 326+71
START CHANNELIZING LINE
END YELLOW EDGE LINE

Y

19.5'

327+00

328+00

E

329+00

℄ CONSTRUCTION RAMP P

STA. 330+05.43
END TAPER

330+00

13'

L

331+00

MATCH LINE STA. 331+50 SEE SHEET 465

12'
12'
12'

I-75 Southbound

L
E
L
Y

27+00

℄ CONSTRUCTION I-75

28+00

29+00

30+00

31+00

MATCH LINE STA. 31+50 SEE SHEET 524

FOR PAVEMENT MARKING LEGEND, SEE SHEET 494.

N

0 10 20 40
HORIZONTAL SCALE IN FEET

CALCULATED MAG
CHECKED AJS

PAVEMENT MARKING PLAN RAMP P
STA. 326+00 TO STA. 331+50

MOT-75-0.75

464
773

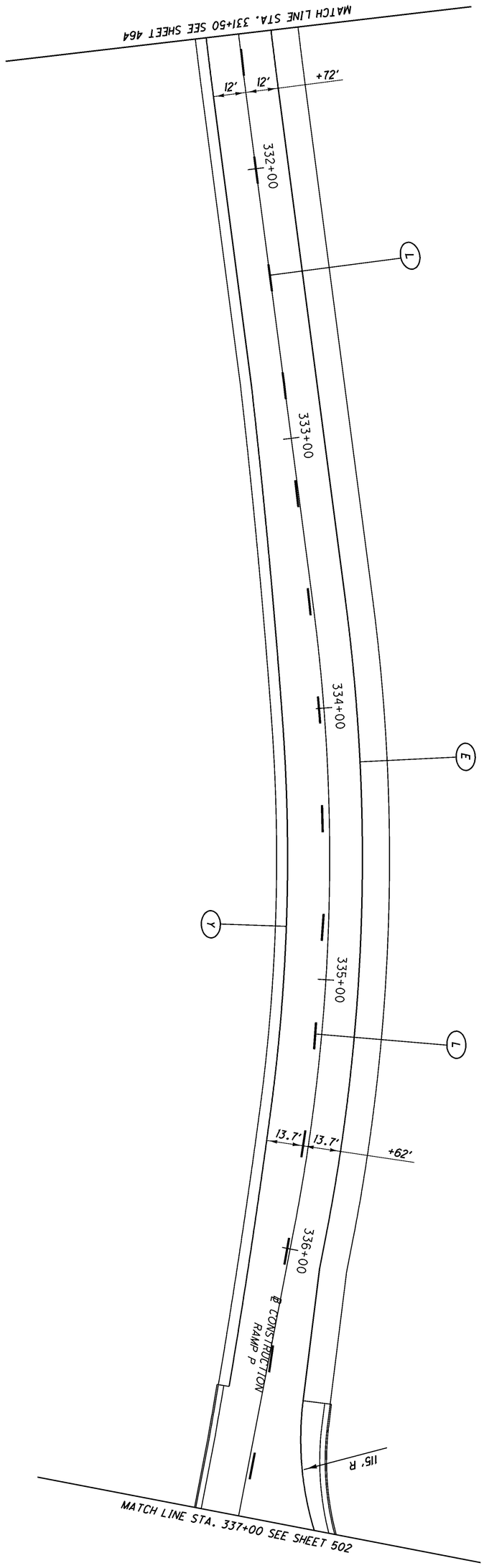

FOR PAVEMENT MARKING LEGEND, SEE SHEET 494.

465 / 773	MOT-75-0.75	PAVEMENT MARKING PLAN RAMP P STA. 331+50 TO STA. 337+00	CALCULATED GWA CHECKED LAS	0 10 20 40 HORIZONTAL SCALE IN FEET	N

FOR PAVEMENT MARKING LEGEND, SEE SHEET 494.

HORIZONTAL SCALE IN FEET
0 10 20 40

CALCULATED GWA
CHECKED LAS

PAVEMENT MARKING PLAN RAMP H
LIMIT OF WORK TO STA. 18+00

MOT-75-0.75

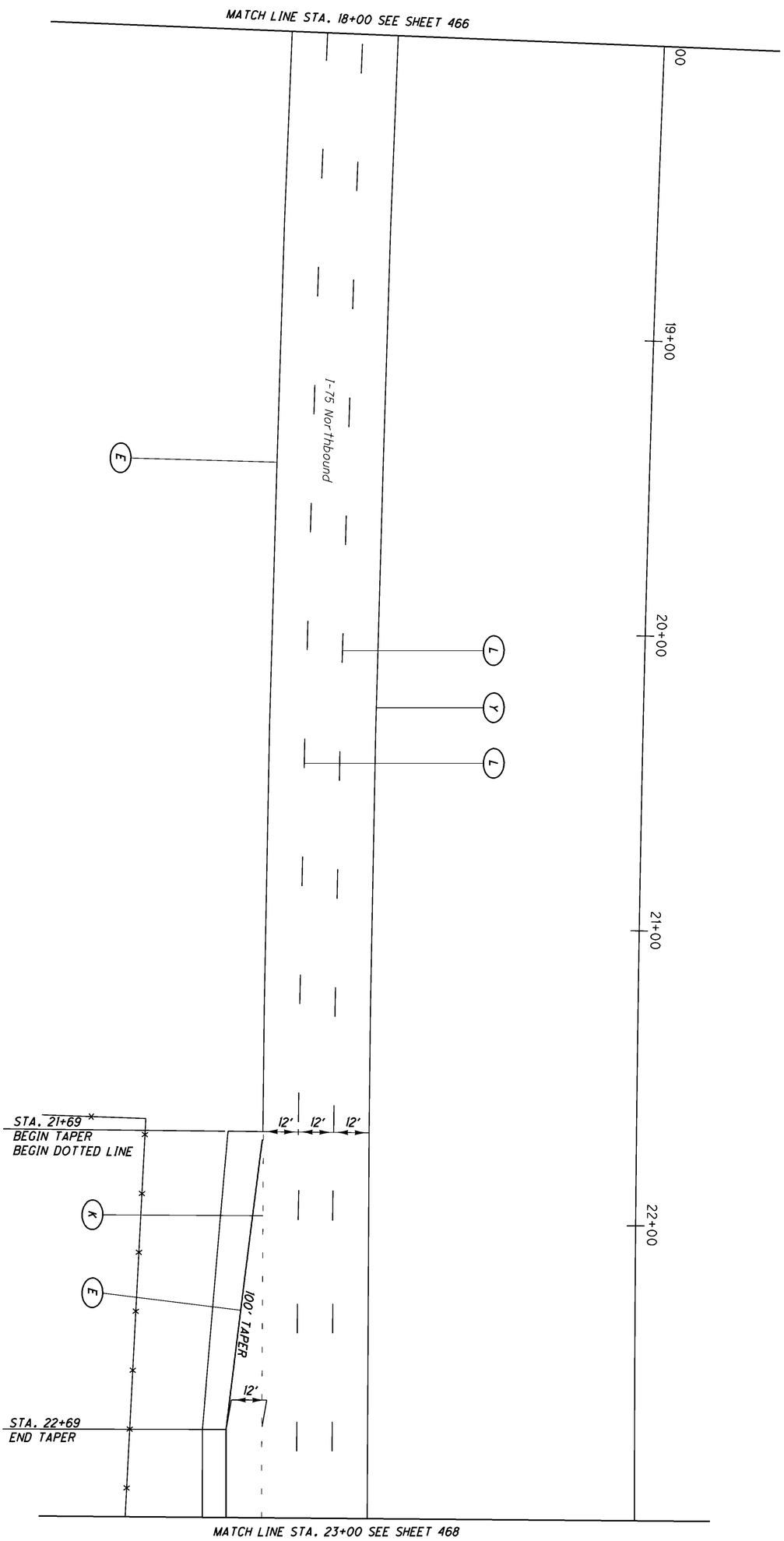

FOR PAVEMENT MARKING LEGEND, SEE SHEET 494.

467 / 773	MOT-75-0.75	PAVEMENT MARKING PLAN RAMP H STA. 18+00 TO STA. 23+00	CALCULATED GWA CHECKED LAS	0 20 10 40 HORIZONTAL SCALE IN FEET

FOR PAVEMENT MARKING LEGEND, SEE SHEET 494.

HORIZONTAL SCALE IN FEET
0 10 20 40

CALCULATED GWA
CHECKED LAS

PAVEMENT MARKING PLAN RAMP H
STA. 223+00 TO STA. 228+50

MOT-75-0.75

468
773

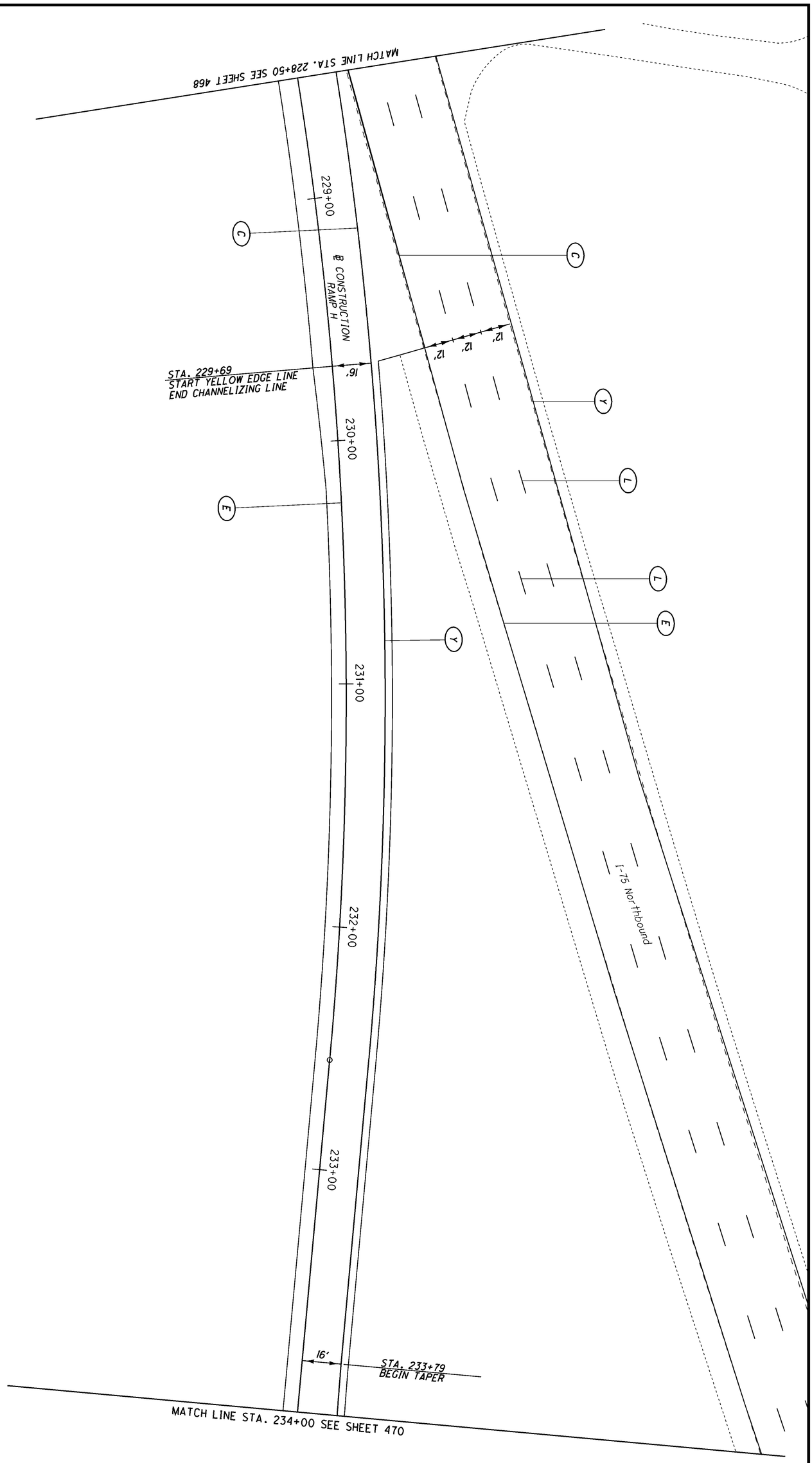

FOR PAVEMENT MARKING LEGEND, SEE SHEET 494.

469 / 773	MOT-75-0.75	PAVEMENT MARKING PLAN H STA. 228+50 TO STA. 234+00	CALCULATED GWA CHECKED LAS	0 10 20 40 HORIZONTAL SCALE IN FEET	N

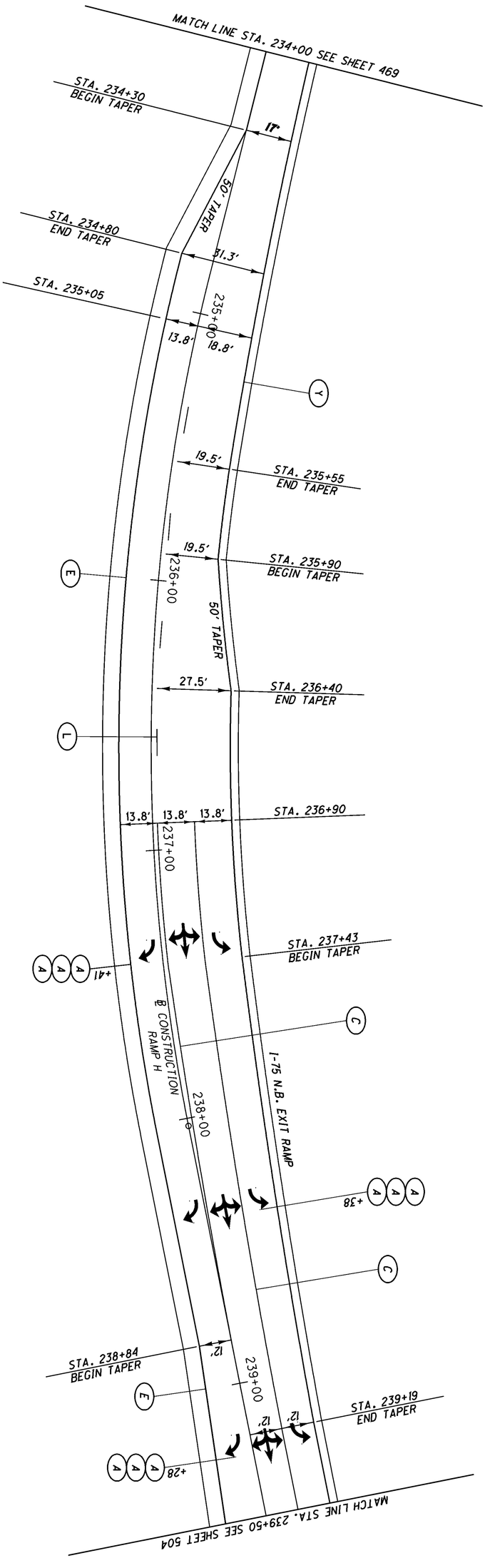

FOR PAVEMENT MARKING LEGEND, SEE SHEET 494.

470 773	MOT-75-0.75	PAVEMENT MARKING PLAN RAMP H STA. 234+00 TO STA. 239+50	CALCULATED GWA CHECKED LAS	0 10 20 40 HORIZONTAL SCALE IN FEET

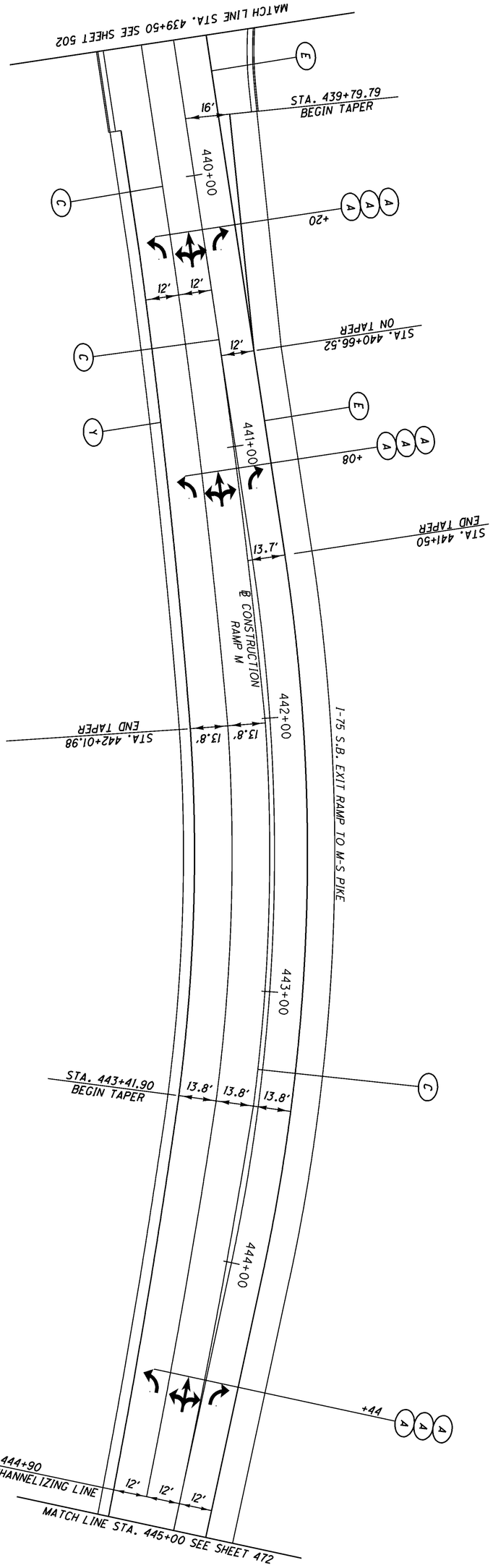

FOR PAVEMENT MARKING LEGEND, SEE SHEET 494.

471 / 773	MOT-75-0.75	PAVEMENT MARKING PLAN RAMP M STA. 439+50 TO STA. 445+00	CALCULATED GWA CHECKED LAS	0 10 20 40 HORIZONTAL SCALE IN FEET	N

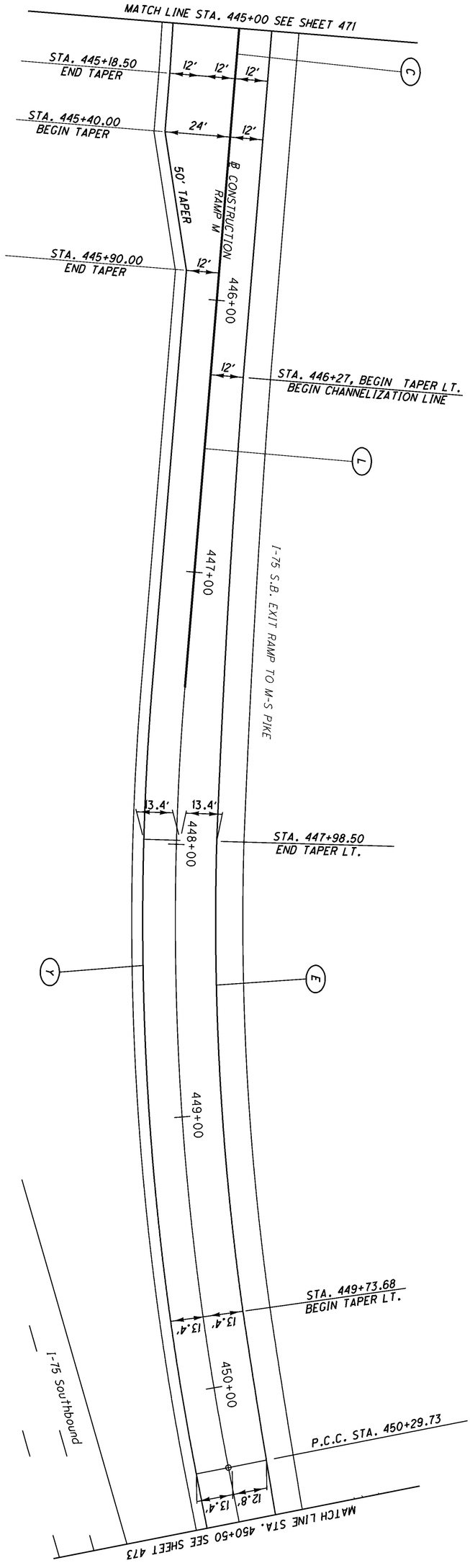

FOR PAVEMENT MARKING LEGEND, SEE SHEET 494.

472
773

MOT-75-0.75

PAVEMENT MARKING PLAN RAMP M
STA. 445+00 TO STA. 450+50

CALCULATED GWA
CHECKED LAS

0 10 20 40
HORIZONTAL SCALE IN FEET

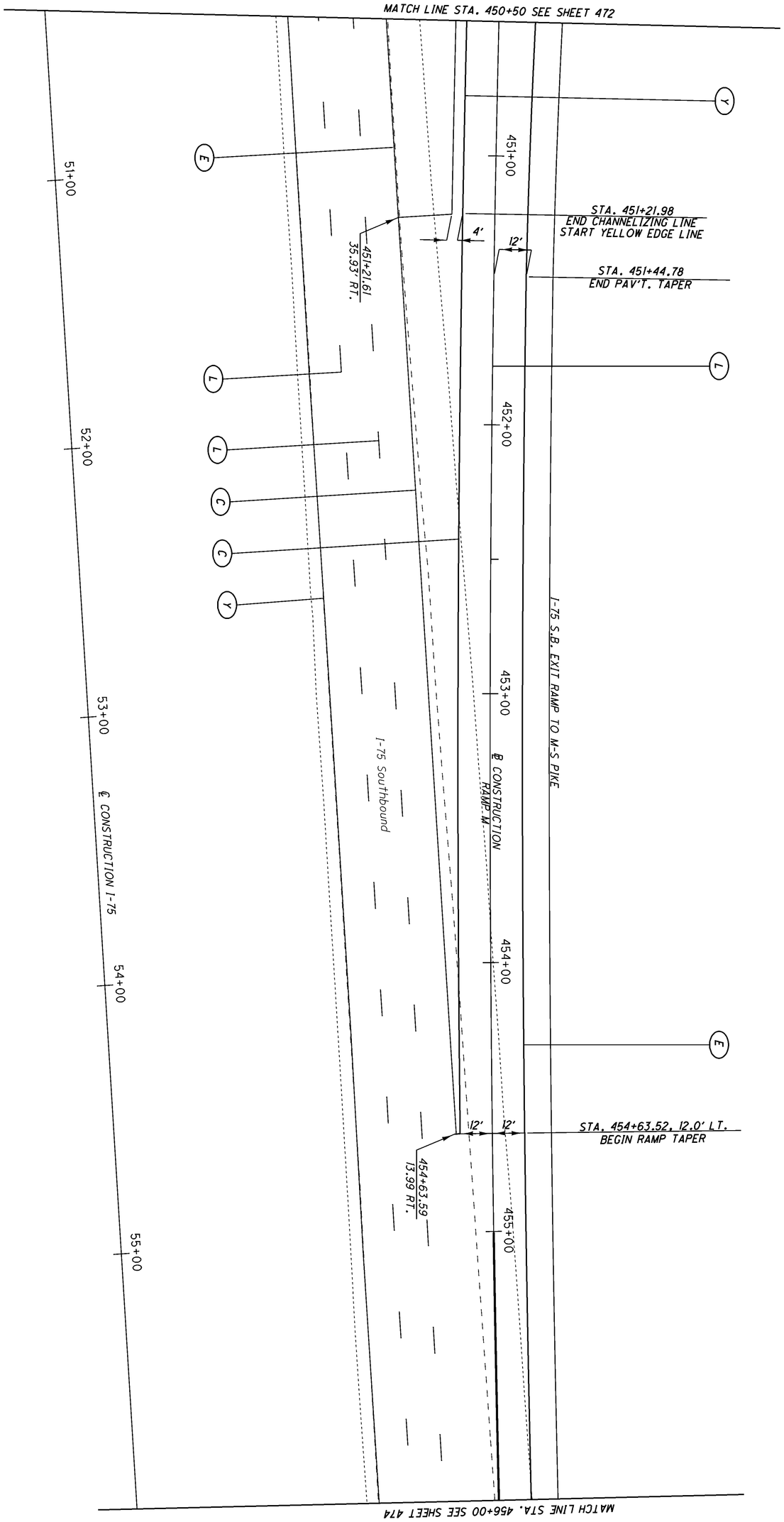

FOR PAVEMENT MARKING LEGEND, SEE SHEET 494.

473
773

MOT-75-0.75

PAVEMENT MARKING PLAN RAMP M
STA. 450+50 TO STA. 456+00

CALCULATED GWA
CHECKED LAS

0 10 20 40
HORIZONTAL SCALE IN FEET

FOR PAVEMENT MARKING LEGEND, SEE SHEET 494.

PAVEMENT MARKING PLAN RAMP M AND I-75 STA. 456+00 RAMP M TO STA. 61+50 I-75

CALCULATED GWA
CHECKED LAS

0 10 20 40 HORIZONTAL SCALE IN FEET

MOT-75-0.75

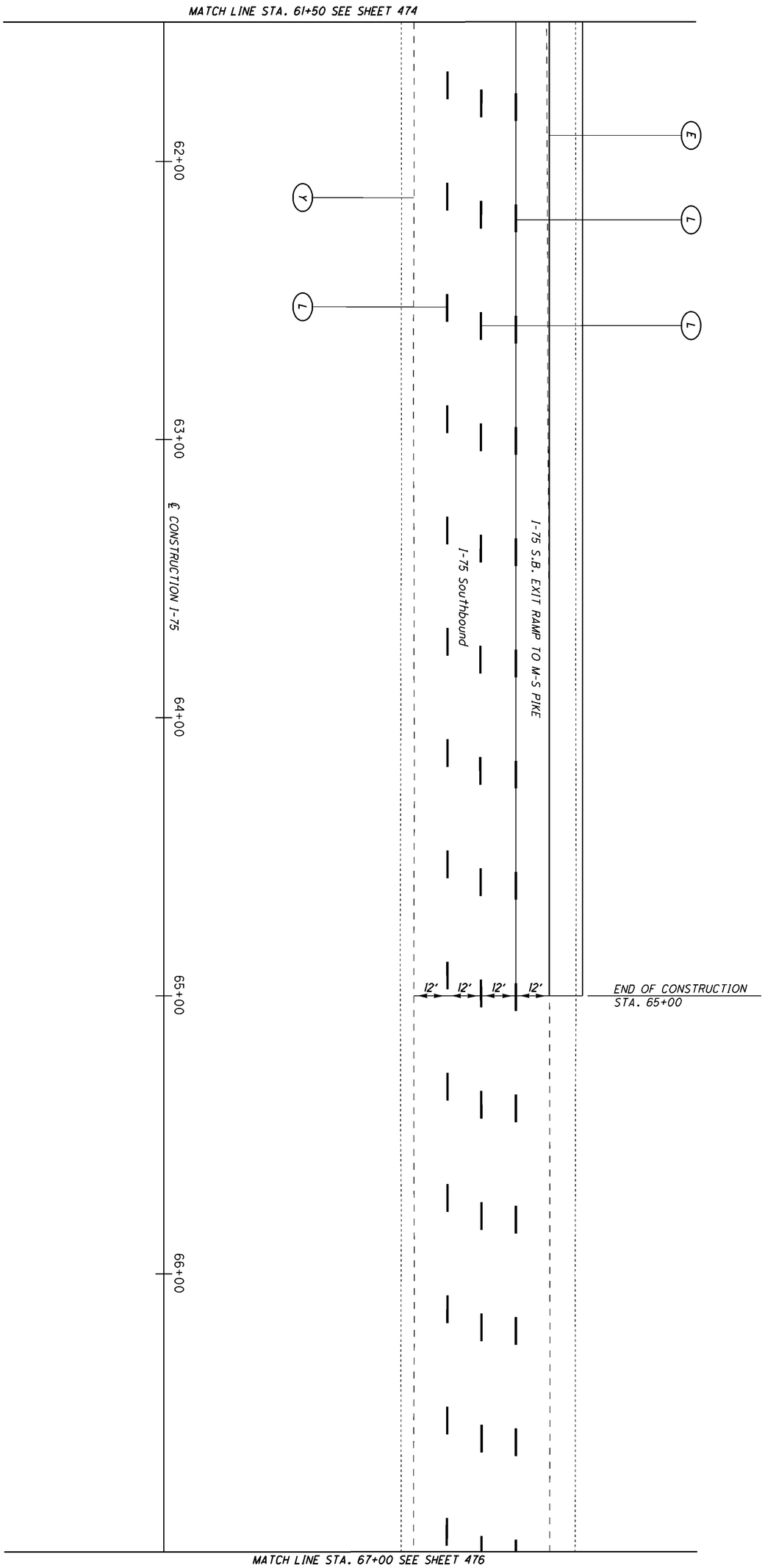

FOR PAVEMENT MARKING LEGEND, SEE SHEET 494.

475 / 773	MOT-75-0.75	PAVEMENT MARKING PLAN RAMP M AND I-75 STA. 61+50 TO STA. 67+00	CALCULATED GWA CHECKED LAS	0 20 10 40 HORIZONTAL SCALE IN FEET

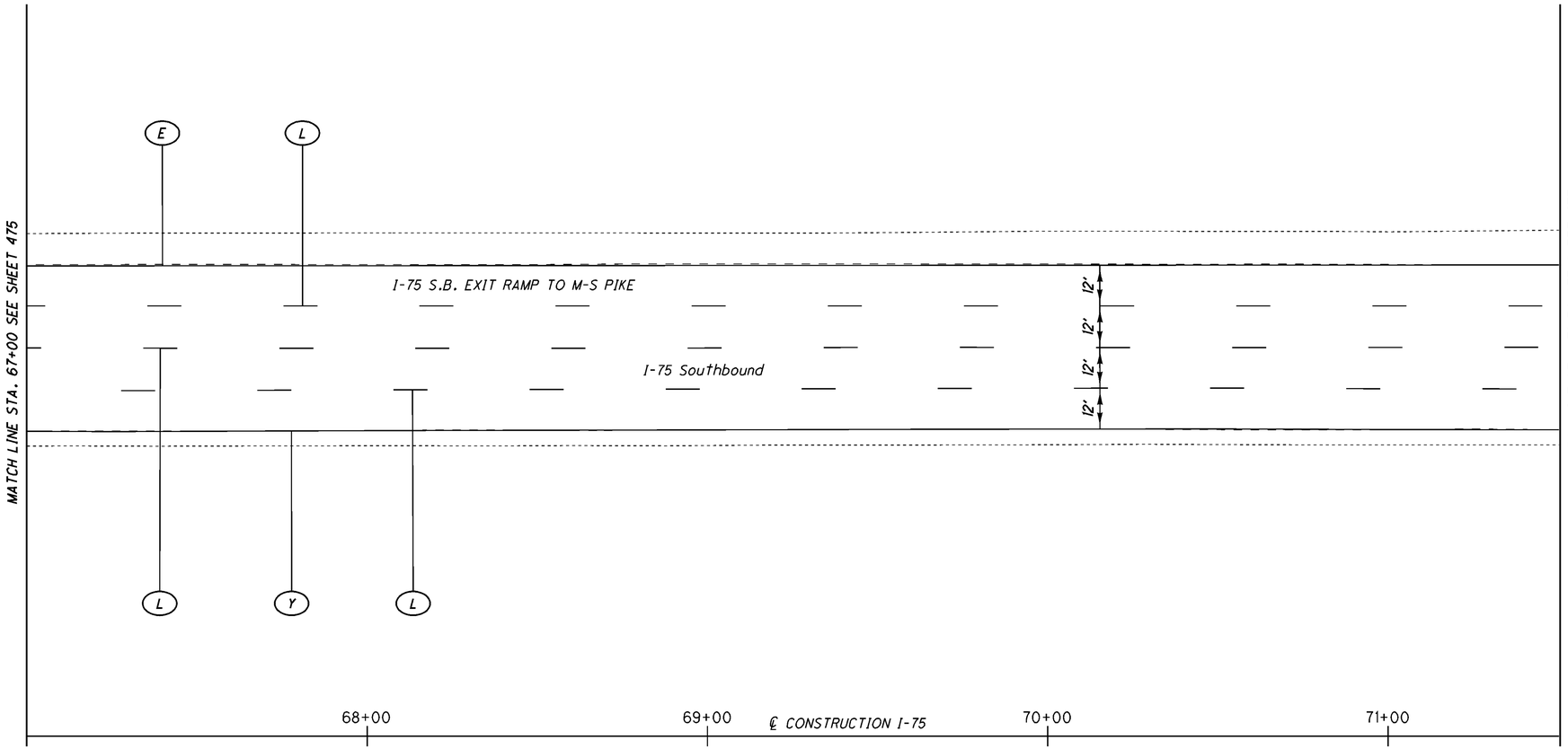

FOR PAVEMENT MARKING LEGEND, SEE SHEET 494.

PAVEMENT MARKING PLAN RAMP M AND I-75
STA. 67+00 TO STA. 71+50

CALCULATED GWA
CHECKED LAS

0 10 20 40
HORIZONTAL SCALE IN FEET

MOT-75-0.75

476
773

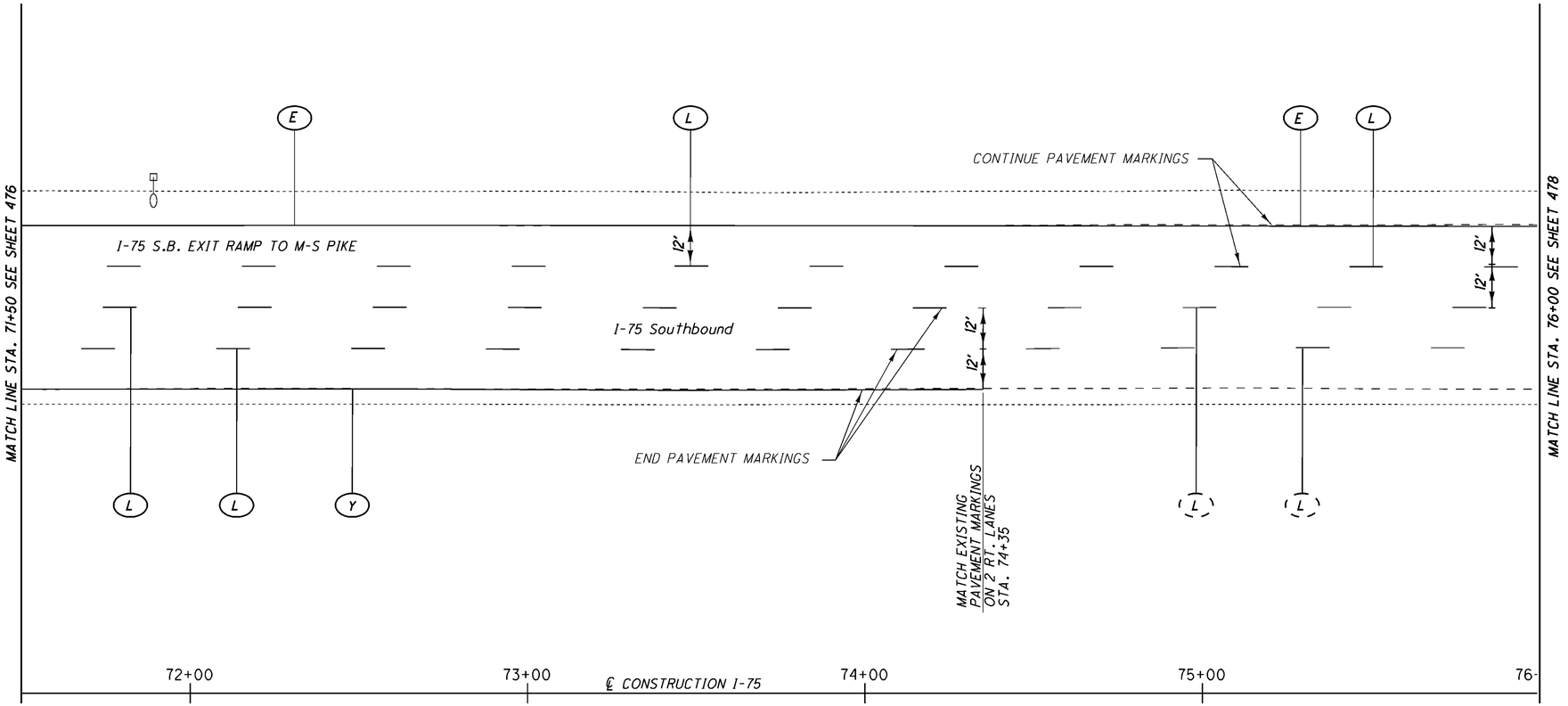

FOR PAVEMENT MARKING LEGEND, SEE SHEET 494.

HORIZONTAL SCALE IN FEET
0 10 20 40

CALCULATED GWA
CHECKED LAS

PAVEMENT MARKING PLAN RAMP M AND I-75 STA. 71+50 TO STA. 76+00

MOT-75-0.75

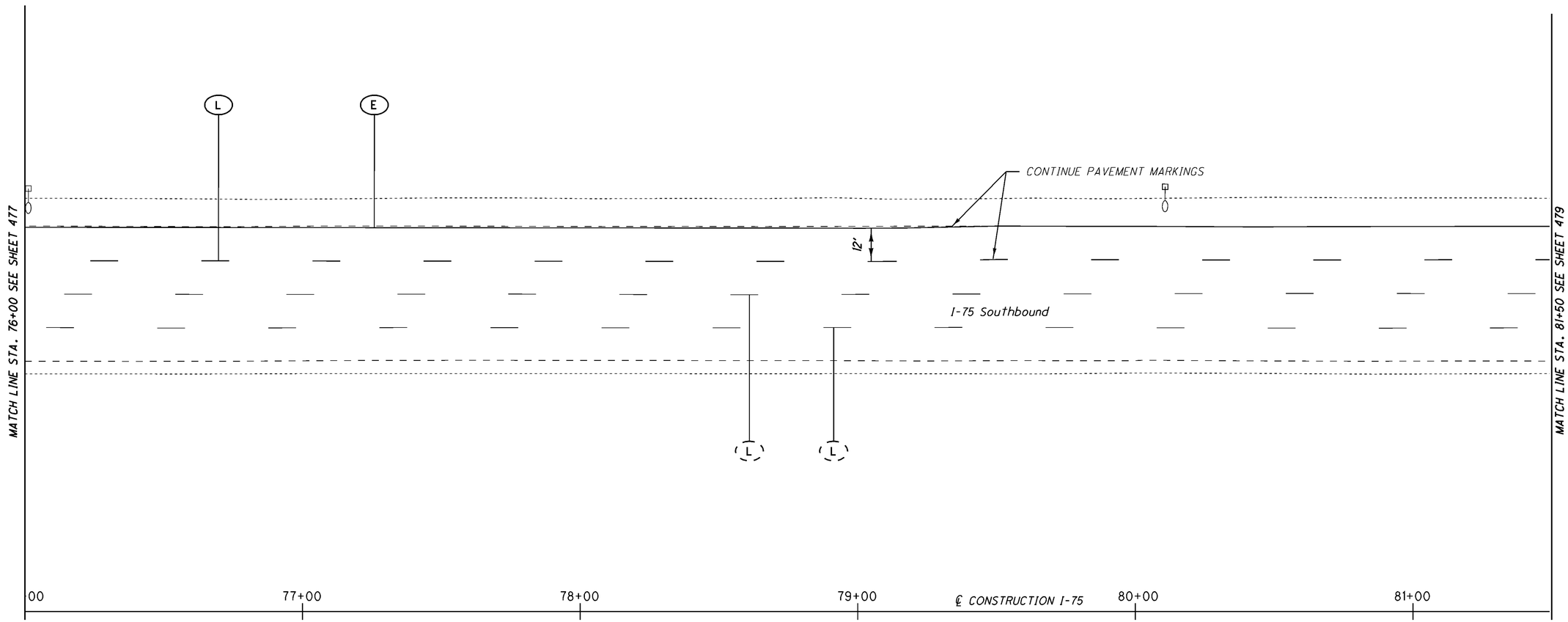

FOR PAVEMENT MARKING LEGEND, SEE SHEET 494.

HORIZONTAL SCALE IN FEET
0 10 20 40

CALCULATED GWA
CHECKED LAS

PAVEMENT MARKING PLAN RAMP M AND I-75
STA. 76+00 TO STA. 81+50

MOT-75-0.75

478
773

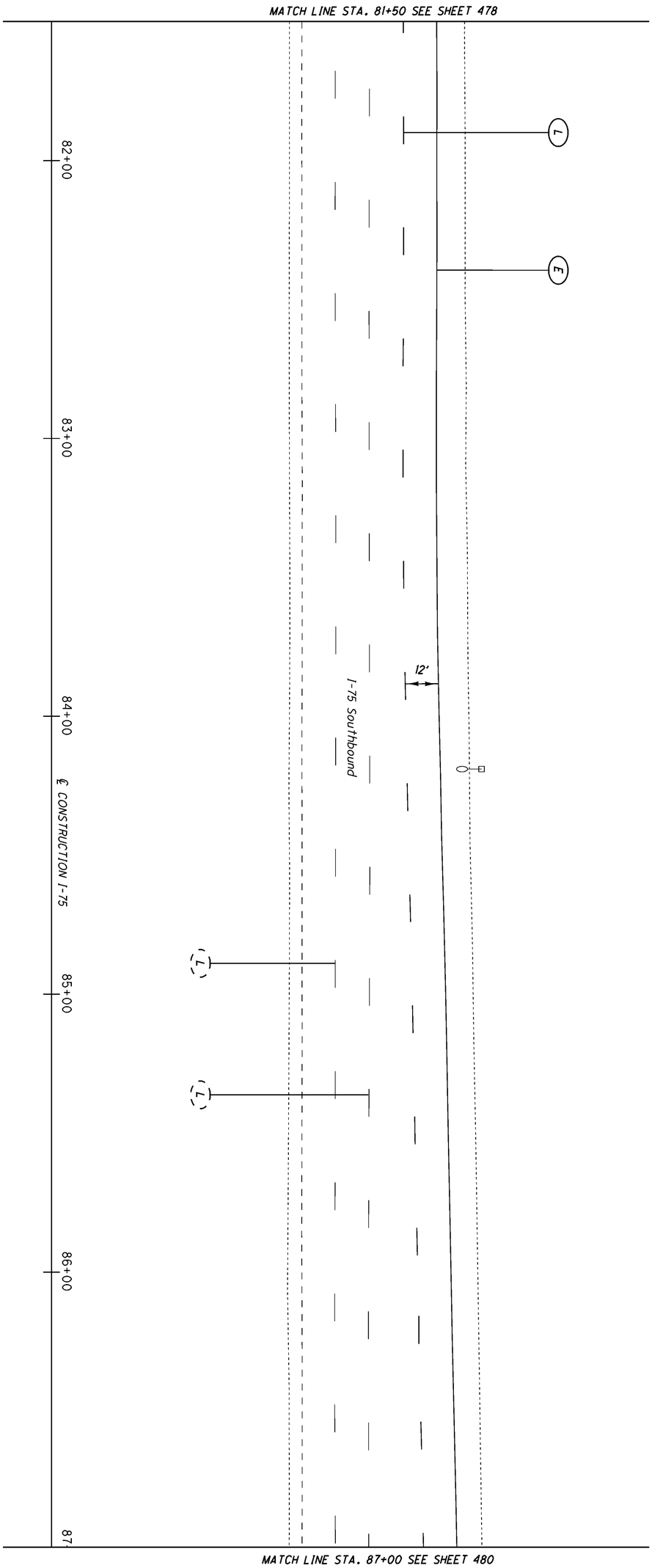

FOR PAVEMENT MARKING LEGEND, SEE SHEET 494.

479 / 773	MOT-75-0.75	PAVEMENT MARKING PLAN RAMP M AND I-75 STA. 81+50 TO STA. 87+00	CALCULATED GWA CHECKED LAS	0 10 20 40 HORIZONTAL SCALE IN FEET

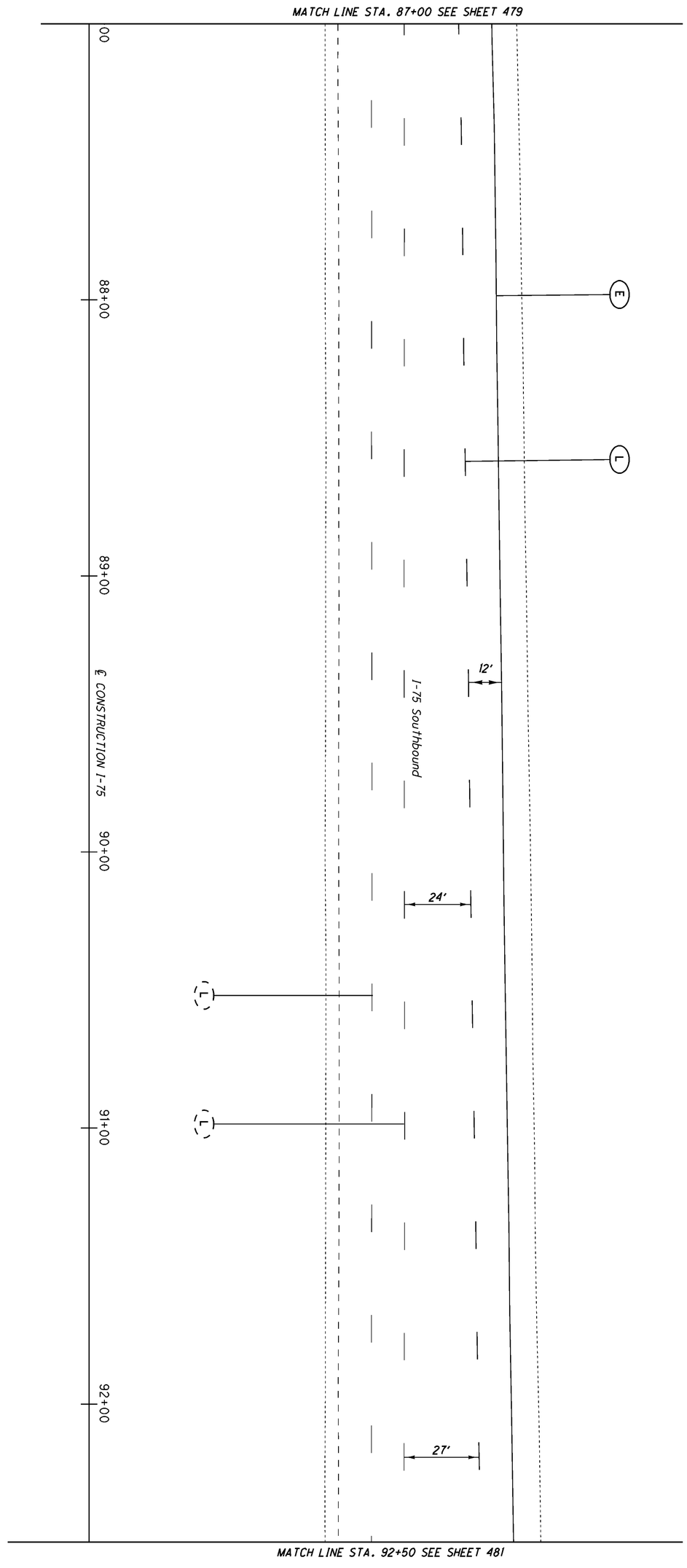

FOR PAVEMENT MARKING LEGEND, SEE SHEET 494.

480
773

MOT-75-0.75

PAVEMENT MARKING PLAN RAMP M AND I-75
STA. 87+00 TO STA. 92+50

CALCULATED GWA
CHECKED LAS

0 10 20 40
HORIZONTAL SCALE IN FEET

N

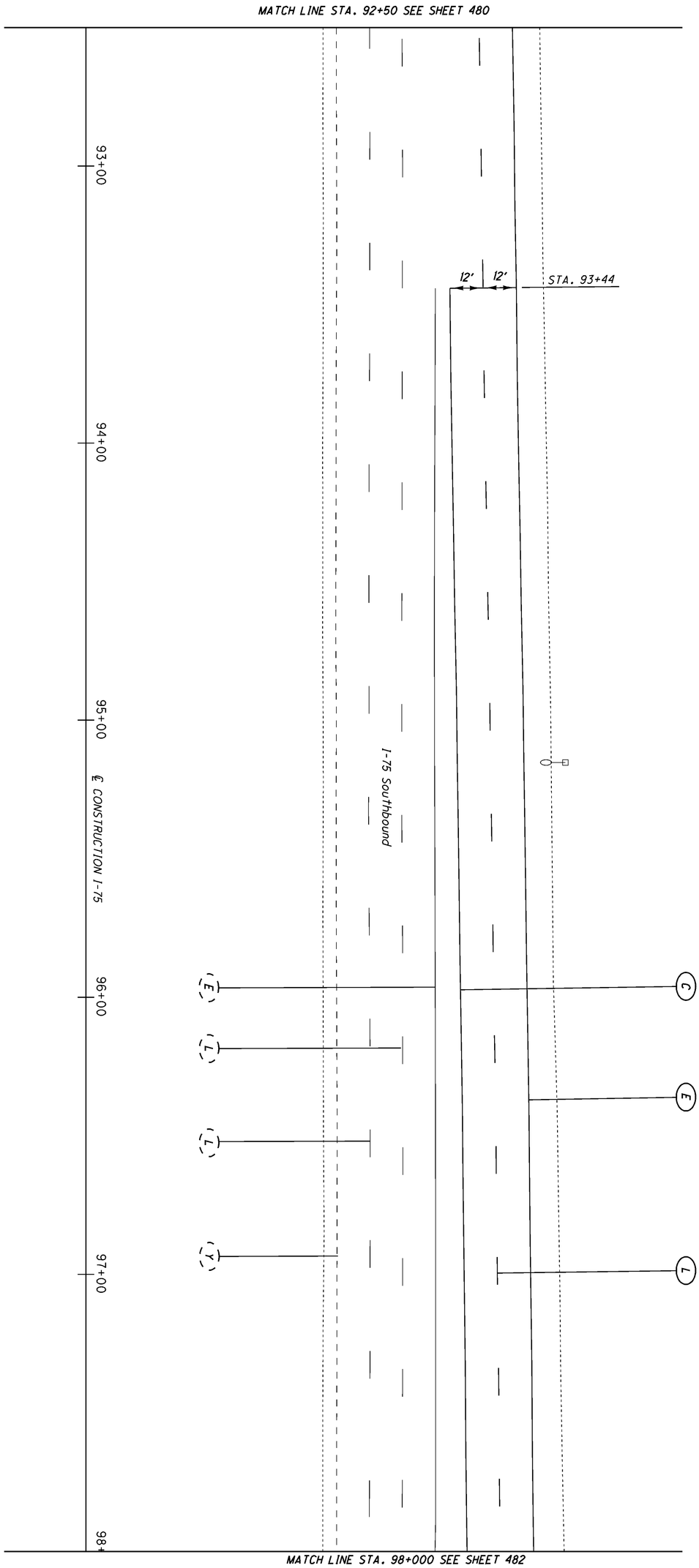

FOR PAVEMENT MARKING LEGEND, SEE SHEET 494.

481
773

MOT-75-0.75

PAVEMENT MARKING PLAN RAMP M AND I-75
STA. 92+50 TO STA. 98+00

CALCULATED GWA
CHECKED LAS

0 10 20 40
HORIZONTAL SCALE IN FEET

FOR PAVEMENT MARKING LEGEND, SEE SHEET 494.

N

0 10 20 40
HORIZONTAL SCALE IN FEET

CALCULATED GWA
CHECKED LAS

PAVEMENT MARKING PLAN RAMP M AND I-75
STA. 1+00 TO STA. 5+39

MOT-75-0.75

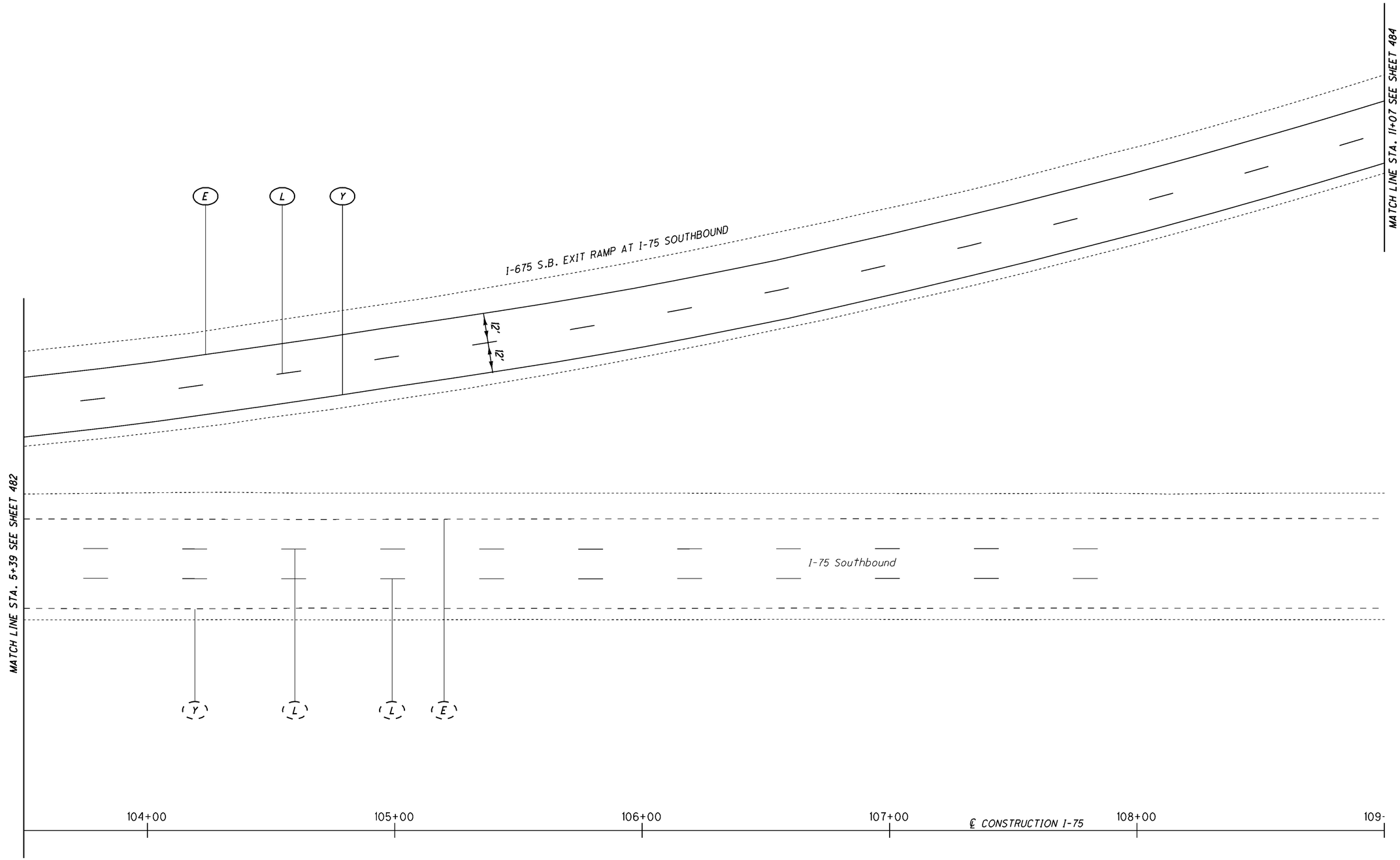

FOR PAVEMENT MARKING LEGEND, SEE SHEET 494.

HORIZONTAL SCALE IN FEET
0 10 20 40

CALCULATED GWA
CHECKED LAS

PAVEMENT MARKING PLAN RAMP M AND I-75
STA. 5+39 TO STA. 11+07

MOT-75-0.75

483
773

FOR PAVEMENT MARKING LEGEND, SEE SHEET 494.

N

0 10 20 40
HORIZONTAL SCALE IN FEET

CALCULATED GWA
CHECKED LAS

PAVEMENT MARKING PLAN RAMP M
STA. 11+07 TO STA. 16+50

MOT-75-0.75

484
773

FOR PAVEMENT MARKING LEGEND, SEE SHEET 494.

HORIZONTAL SCALE IN FEET
0 10 20 40

CALCULATED GWA
CHECKED LAS

PAVEMENT MARKING PLAN RAMP M
STA. 16+50 TO LIMIT OF WORK

MOT-75-0.75

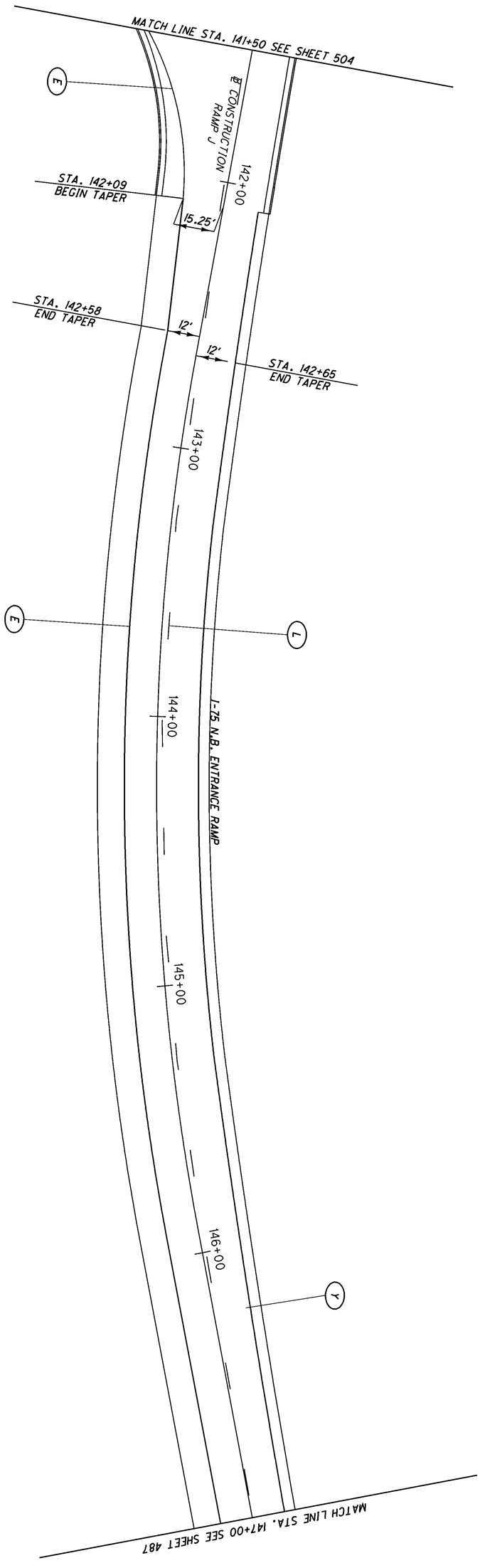

FOR PAVEMENT MARKING LEGEND, SEE SHEET 494.

486 / 773	MOT-75-0.75	PAVEMENT MARKING PLAN RAMP J STA. 141+50 TO STA. 147+00	CALCULATED GWA CHECKED LAS	0 20 10 40 HORIZONTAL SCALE IN FEET

FOR PAVEMENT MARKING LEGEND, SEE SHEET 494.

HORIZONTAL SCALE IN FEET
0 10 20 40

CALCULATED GWA
CHECKED LAS

PAVEMENT MARKING PLAN RAMP J
STA. 147+00 TO STA. 152+50

MOT-75-0.75

FOR PAVEMENT MARKING LEGEND, SEE SHEET 494.

N

0 10 20 40
HORIZONTAL SCALE IN FEET

CALCULATED GWA
CHECKED LAS

PAVEMENT MARKING PLAN RAMP J
STA. 152+50 TO STA. 158+00

MOT-75-0.75

488
773

FOR PAVEMENT MARKING LEGEND, SEE SHEET 494.

HORIZONTAL SCALE IN FEET
0 10 20 40

CALCULATED GWA
CHECKED LAS

PAVEMENT MARKING PLAN RAMP J AND I-75
STA. 158+00 RAMP J TO STA. 63+50 I-75

MOT-75-0.75

64+00

65+00

66+00

℄ CONSTRUCTION I-75

67+00

68+00

MATCH LINE STA. 63+50 SEE SHEET 489

MATCH LINE STA. 69+00 SEE SHEET 491

Y

L

L

I-75 Northbound

12'

12'

12'

12'

L

E

FOR PAVEMENT MARKING LEGEND, SEE SHEET 494.

N

0 10 20 40

HORIZONTAL SCALE IN FEET

CALCULATED GWA

CHECKED LAS

PAVEMENT MARKING PLAN RAMP J AND I-75 STA. 63+50 TO STA. 69+00

MOT-75-0.75

FOR PAVEMENT MARKING LEGEND, SEE SHEET 494.

HORIZONTAL SCALE IN FEET
0 10 20 40

CALCULATED GWA
CHECKED LAS

PAVEMENT MARKING PLAN RAMP J AND I-75
STA. 69+00 TO STA. 74+50

MOT-75-0.75

FOR PAVEMENT MARKING LEGEND, SEE SHEET 494.

HORIZONTAL SCALE IN FEET
0 10 20 40

CALCULATED GWA
CHECKED LAS

PAVEMENT MARKING PLAN RAMP J AND I-75
STA. 74+50 TO STA. 79+50

MOT-75-0.75

FOR PAVEMENT MARKING LEGEND, SEE SHEET 494.

HORIZONTAL SCALE IN FEET
0 10 20 40

CALCULATED GWA
CHECKED LAS

PAVEMENT MARKING PLAN RAMP J AND I-75 STA. 79+50 TO LIMIT OF WORK

MOT-75-0.75

NOTE:

RAISED PAVEMENT MARKERS SHALL
BE INSTALLED ON ALL CENTERLINES,
LANE LINES AND CHANNELIZING LINES
ACCORDING TO STANDARD CONSTRUCTION
DRAWINGS TC-65.10 AND TC-65.11

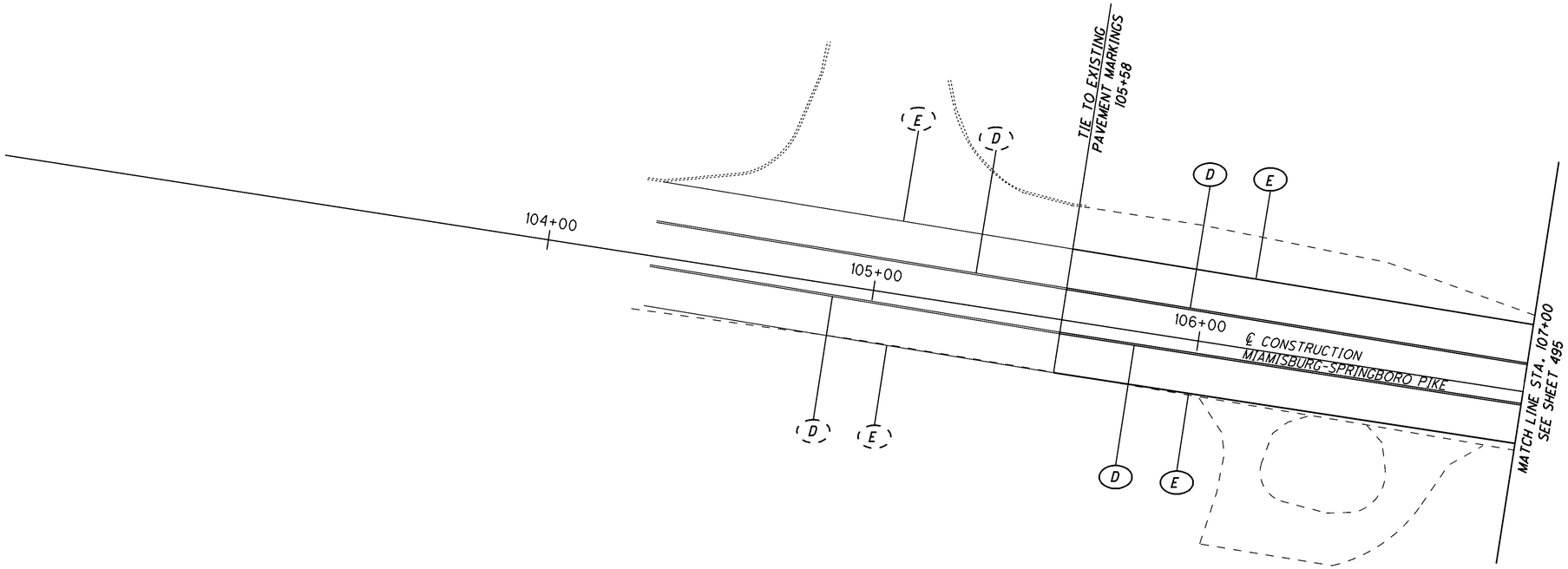

PAVEMENT MARKING LEGEND

(A)	= ARROW ON PAVEMENT (WHITE)	(S)	= STOP LINE (WHITE)
(B)	= CENTERLINE (BROKEN-SOLID, YELLOW)	(T)	= TRANSVERSE / DIAGONAL LINE (WHITE)
(C)	= CHANNELIZING LINE (WHITE)	(U)	= TRANSVERSE / DIAGONAL LINE (YELLOW)
(D)	= CENTER LINE (DOUBLE SOLID, YELLOW)	(W)	= WORD ON PAVEMENT (WHITE)
(E)	= EDGE LINE (WHITE)	(X)	= CROSSWALK (WHITE)
(I)	= ISLAND MARKING	(Y)	= EDGE LINE (YELLOW)
(K)	= DOTTED LINE (WHITE)	(Z)	= YIELD LINE
(L)	= LANE LINE (WHITE)	( )	= EXISTING PAVEMENT MARKING

HORIZONTAL SCALE IN FEET
0 10 20 40

CALCULATED GWA
CHECKED LAS

PAVEMENT MARKING PLAN MIAMISBURG-SPRINGBORO PIKE
LIMIT OF WORK TO STA. 107+00

MOT-75-0.75

494
773

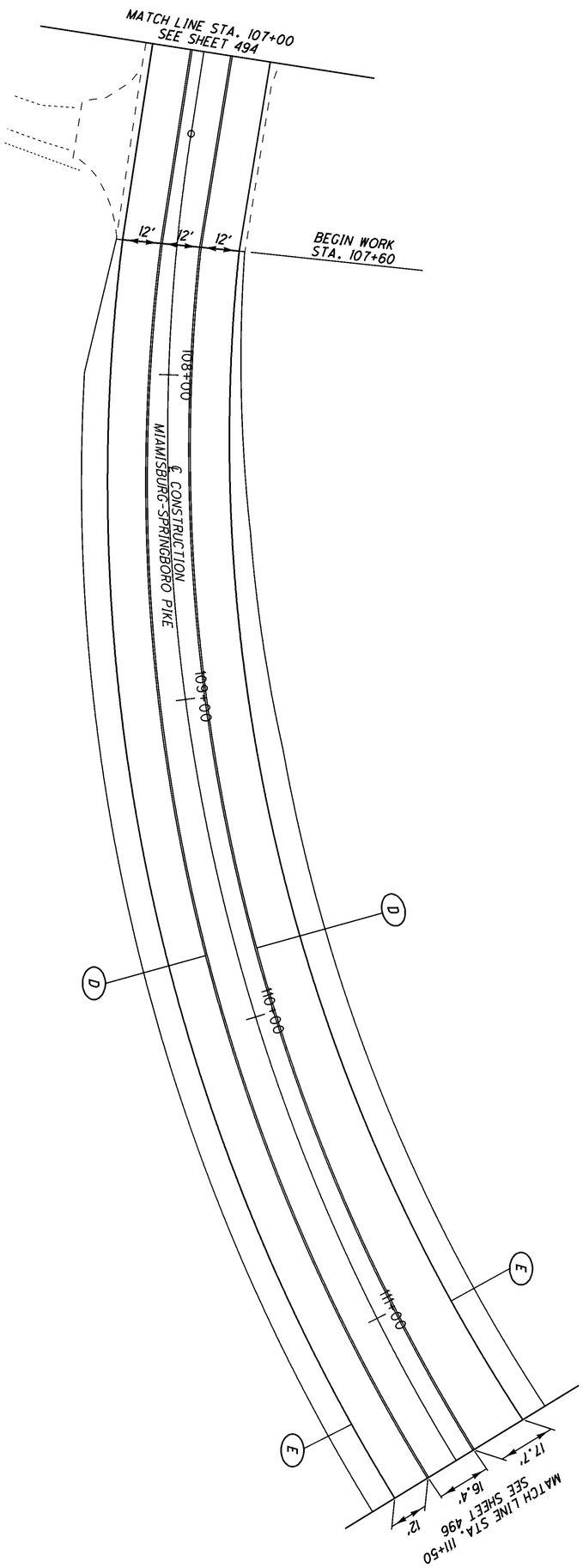

FOR PAVEMENT MARKING LEGEND, SEE SHEET 494.

495 / 773	MOT-75-0.75	PAVEMENT MARKING PLAN MIAMISBURG-SPRINGBORO PIKE STA. 107+00 TO STA. 111+50	CALCULATED GWA / CHECKED LAS	0 10 20 40 HORIZONTAL SCALE IN FEET	N

FOR PAVEMENT MARKING LEGEND, SEE SHEET 494.

N

0 10 20 40
HORIZONTAL SCALE IN FEET

CALCULATED GWA
CHECKED LAS

PAVEMENT MARKING PLAN MIAMISBURG-SPRINGBORO PIKE STA. 111+50 TO STA. 116+50

MOT-75-0.75

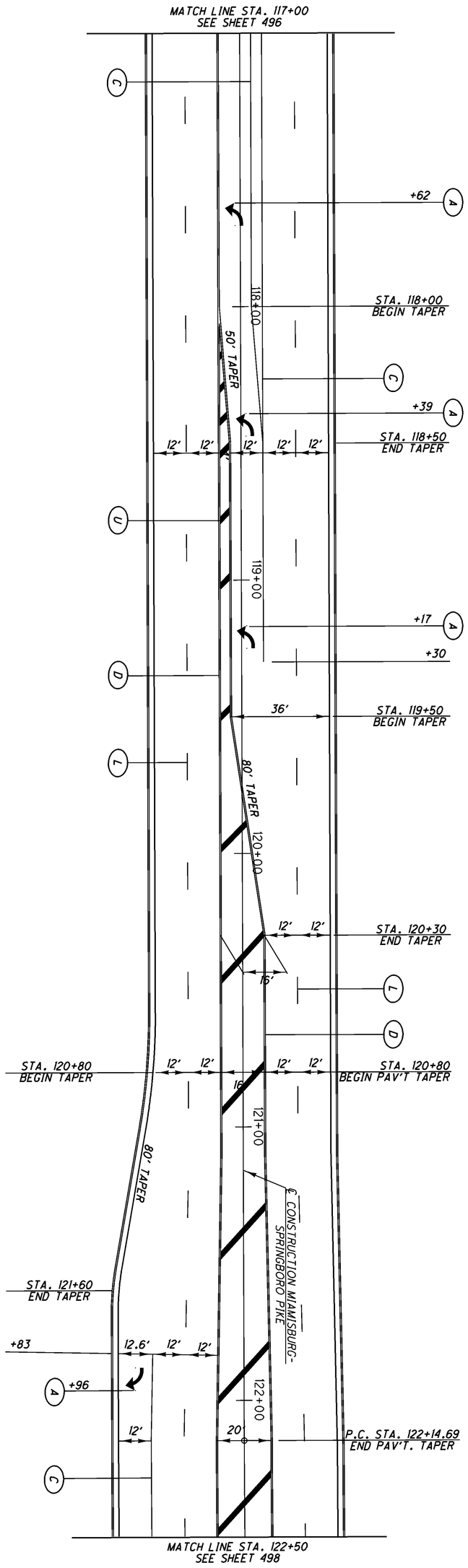

FOR PAVEMENT MARKING LEGEND, SEE SHEET 494.

497 / 773	MOT-75-0.75	PAVEMENT MARKING PLAN MIAMISBURG-SPRINGBORO PIKE STA. 117+00 TO STA. 122+50	CALCULATED GWA CHECKED LAS	0 20 10 40 HORIZONTAL SCALE IN FEET

YIELD LINE LAYOUT DETAIL

FOR PAVEMENT MARKING LEGEND, SEE SHEET 494.

HORIZONTAL SCALE IN FEET
0 10 20 40

CALCULATED GWA
CHECKED LAS

PAVEMENT MARKING PLAN MIAMISBURG-SPRINGBORO PIKE STA. 122+50 TO STA. 128+25

MOT-75-0.75

498
773

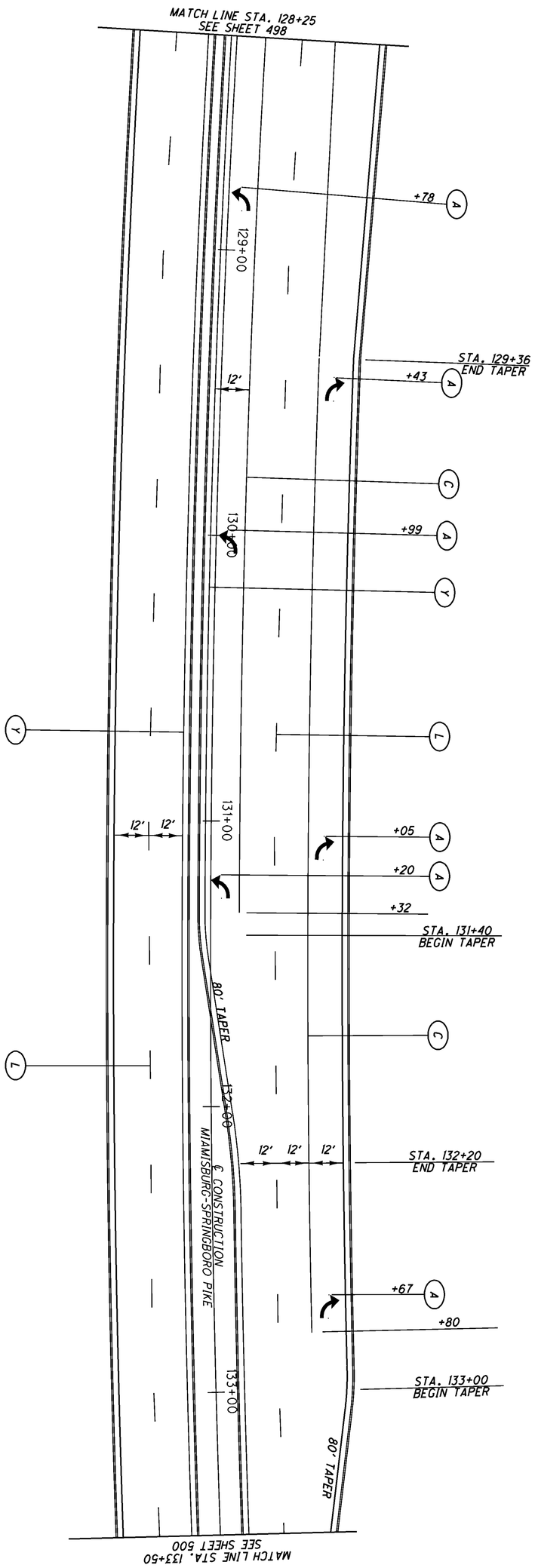

FOR PAVEMENT MARKING LEGEND, SEE SHEET 494.

499 / 773	MOT-75-0.75	PAVEMENT MARKING PLAN MIAMISBURG-SPRINGBORO PIKE STA. 128+25 TO STA. 133+50	CALCULATED GWA CHECKED LAS	0 10 20 40 HORIZONTAL SCALE IN FEET

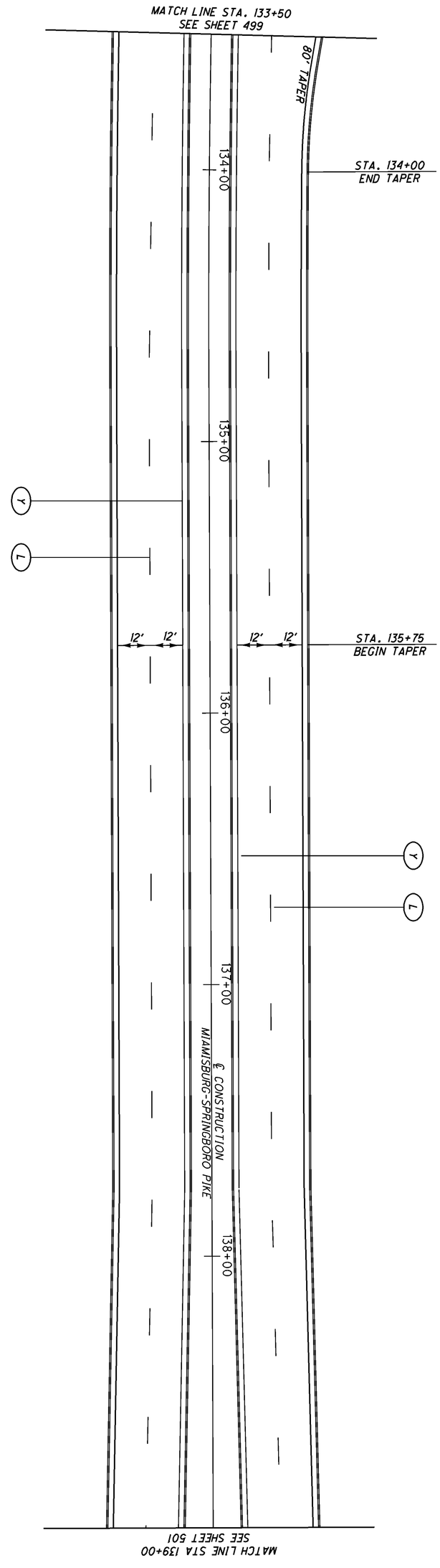

FOR PAVEMENT MARKING LEGEND, SEE SHEET 494.

500 / 773	MOT-75-0.75	PAVEMENT MARKING PLAN MIAMISBURG-SPRINGBORO PIKE STA. 133+50 TO STA. 139+00	CALCULATED GWA CHECKED LAS	0 10 20 40 HORIZONTAL SCALE IN FEET

FOR PAVEMENT MARKING LEGEND, SEE SHEET 494.

HORIZONTAL SCALE IN FEET
0 10 20 40

CALCULATED GWA
CHECKED LAS

PAVEMENT MARKING PLAN MIAMISBURG-SPRINGBORO PIKE
STA. 139+00 TO STA. 144+50

MOT-75-0.75

501
773

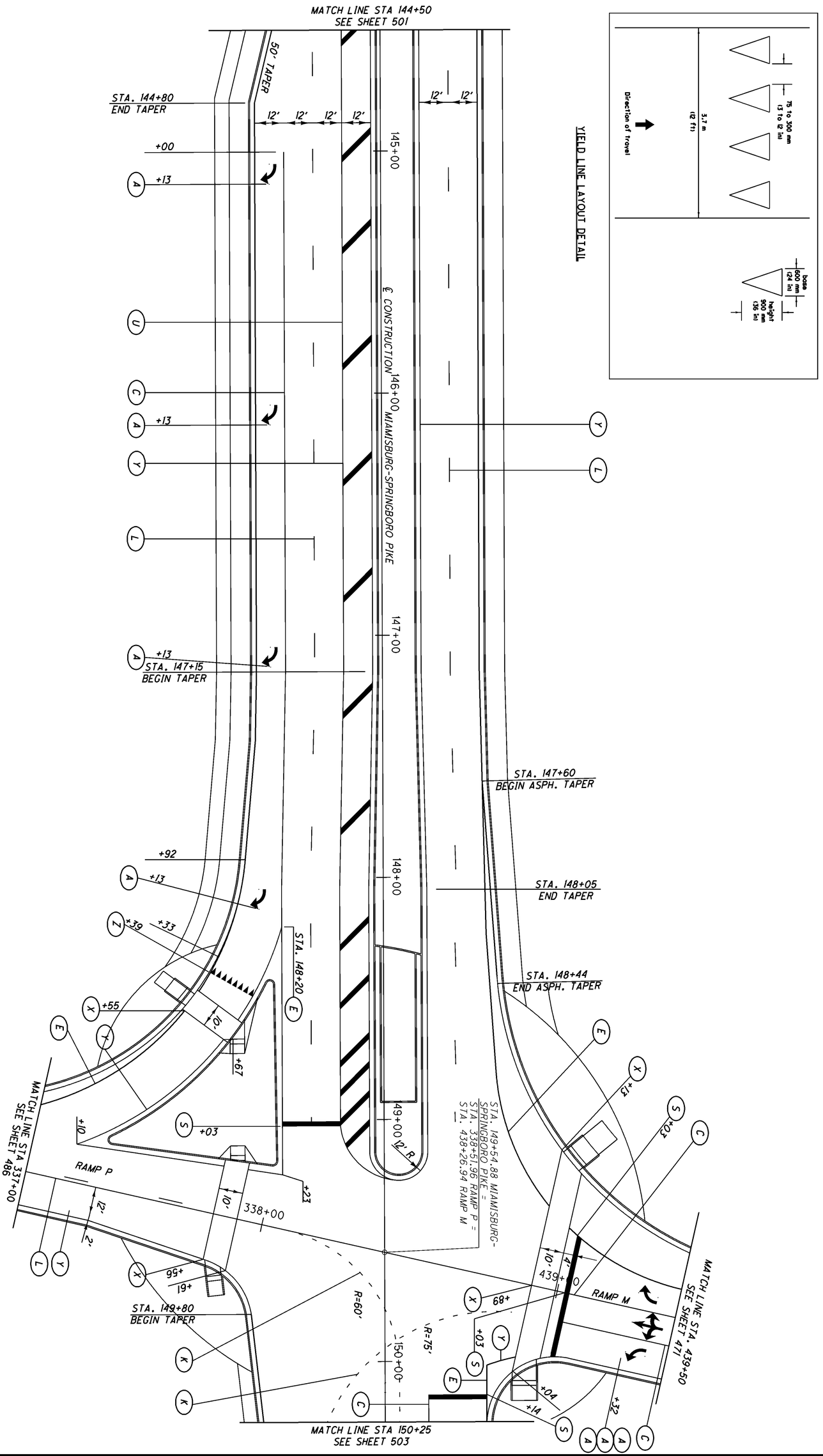

FOR PAVEMENT MARKING LEGEND, SEE SHEET 494.

502 / 773	MOT-75-0.75	PAVEMENT MARKING PLAN MIAMISBURG-SPRINGBORO PIKE STA. 144+50 TO STA. 150+25	CALCULATED GWA CHECKED LAS	0 20 10 40 HORIZONTAL SCALE IN FEET

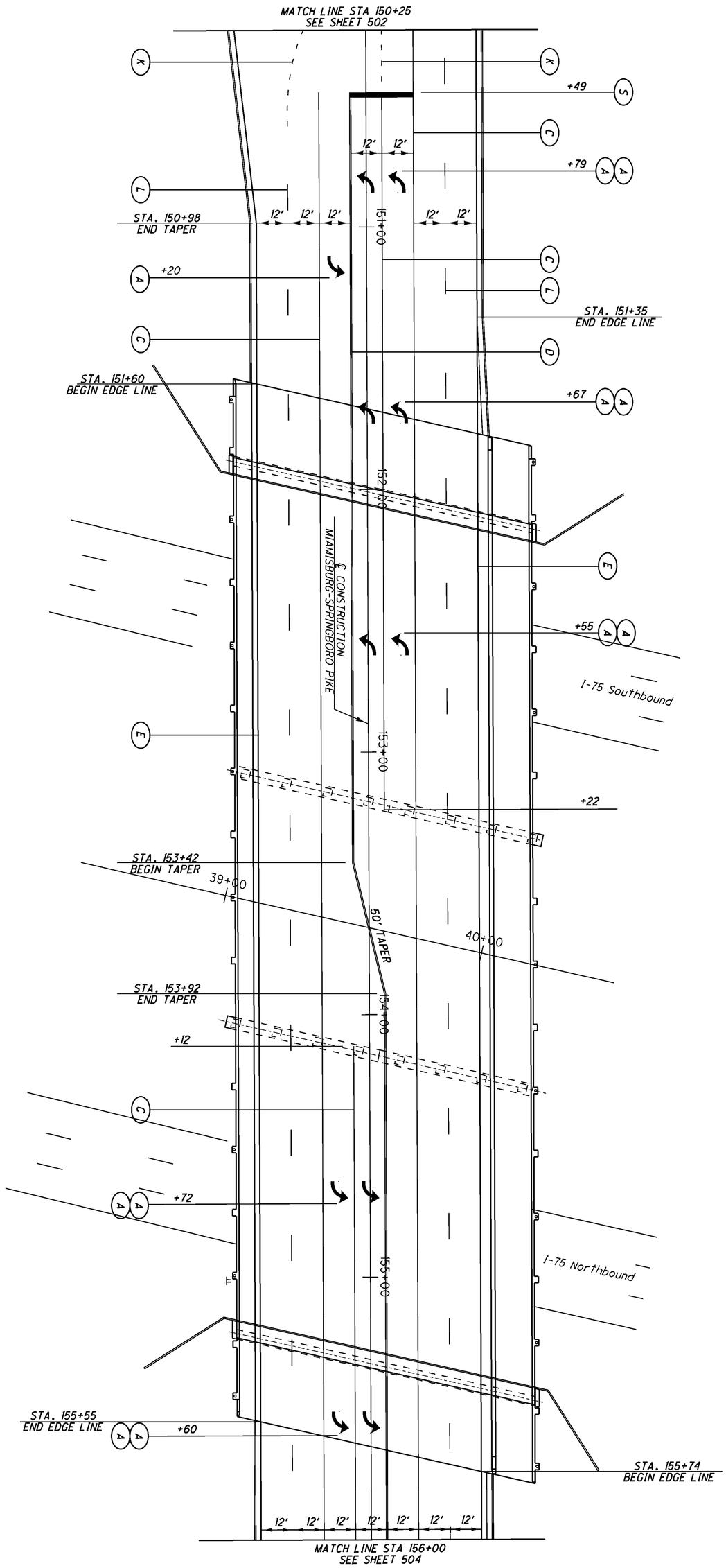

FOR PAVEMENT MARKING LEGEND, SEE SHEET 494.

503 / 773	MOT-75-0.75	PAVEMENT MARKING PLAN MIAMISBURG-SPRINGBORO PIKE STA. 150+25 TO STA. 156+00	CALCULATED GWA CHECKED LAS	0 10 20 40 HORIZONTAL SCALE IN FEET

MATCH LINE STA 141+50
SEE SHEET 486

MATCH LINE STA 156+00
SEE SHEET 503

STA. 157+72.88 MIAMISBURG-SPRINGBORO PIKE =
STA. 241+19.11 RAMP H =
STA 140+10.27 RAMP J

RAMP J

RAMP H

CONSTRUCTION
MIAMISBURG-SPRINGBORO PIKE

45:1 TAPER

45:1 TAPER

STA. 159+25
BEGIN TAPER

STA. 160+15
END TAPER

MATCH LINE STA 161+50
SEE SHEET 505

MATCH LINE STA. 239+50
SEE SHEET 470

YIELD LINE LAYOUT DETAIL

FOR PAVEMENT MARKING LEGEND, SEE SHEET 494.

HORIZONTAL SCALE IN FEET
0 10 20 40

CALCULATED GWA
CHECKED LAS

PAVEMENT MARKING PLAN MIAMISBURG-SPRINGBORO PIKE
STA. 156+00 TO STA. 161+50

MOT-75-0.75

504
773

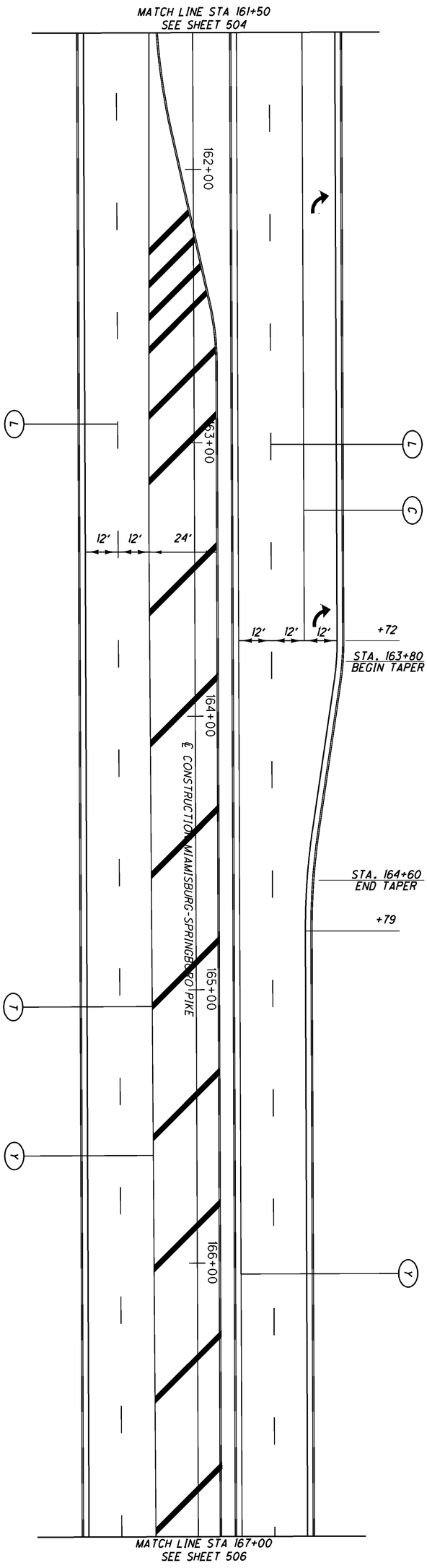

FOR PAVEMENT MARKING LEGEND, SEE SHEET 494.

505
773

MOT-75-0.75

PAVEMENT MARKING PLAN MIAMISBURG-SPRINGBORO PIKE
STA. 161+50 TO STA. 167+00

CALCULATED GWA
CHECKED LAS

0 10 20 40
HORIZONTAL SCALE IN FEET

N

FOR PAVEMENT MARKING LEGEND, SEE SHEET 494.

HORIZONTAL SCALE IN FEET
0 10 20 40

CALCULATED GWA
CHECKED LAS

PAVEMENT MARKING PLAN MIAMISBURG-SPRINGBORO PIKE
STA. 167+00 TO STA. 172+50

MOT-75-0.75

506
773

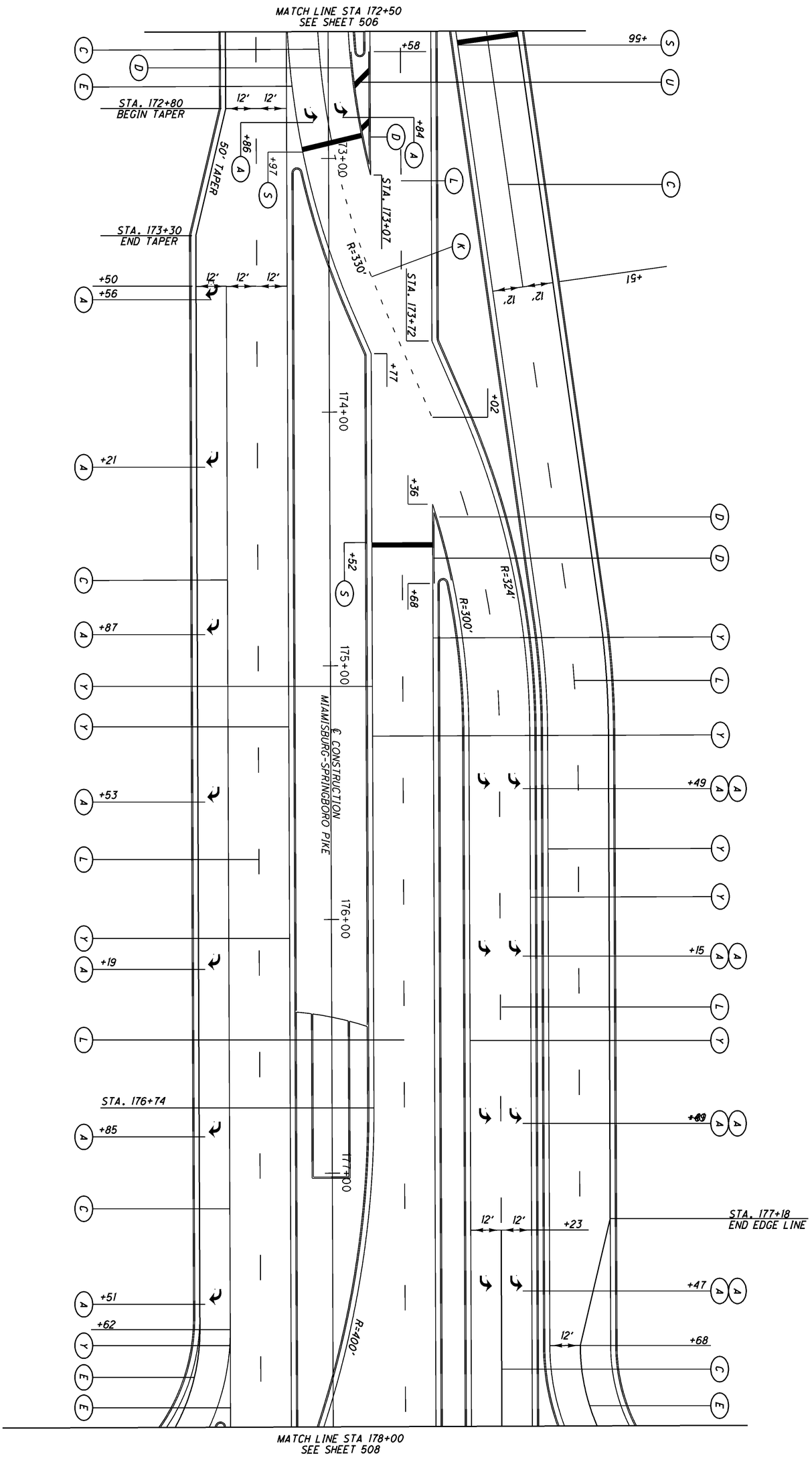

FOR PAVEMENT MARKING LEGEND, SEE SHEET 494.

507 / 773	MOT-75-0.75	PAVEMENT MARKING PLAN MIAMISBURG-SPRINGBORO PIKE STA. 172+50 TO STA. 178+00	CALCULATED GWA CHECKED LAS	0 20 10 40 HORIZONTAL SCALE IN FEET

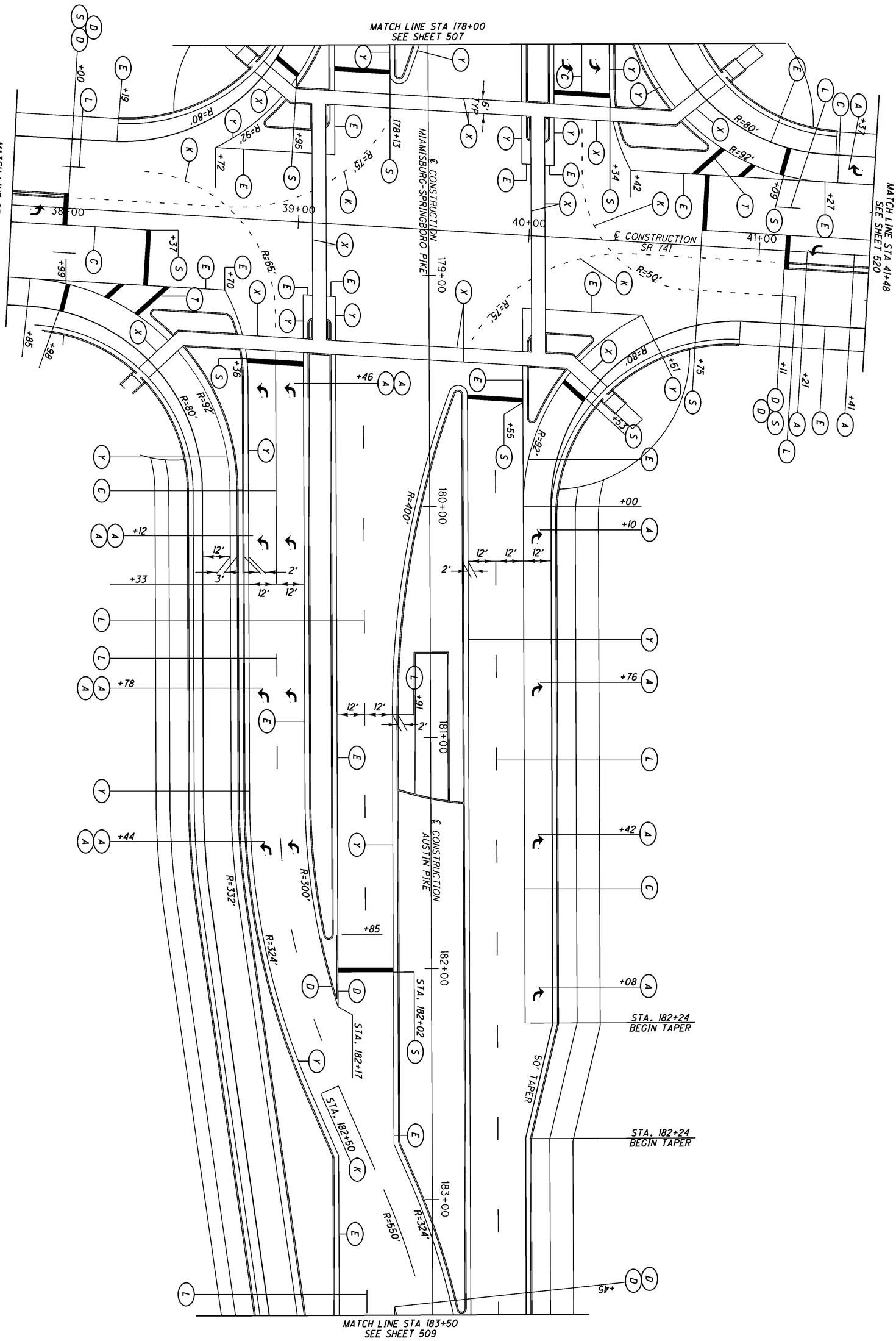

FOR PAVEMENT MARKING LEGEND, SEE SHEET 494.

508 / 773	MOT-75-0.75	PAVEMENT MARKING PLAN AUSTIN PIKE STA. 178+00 TO STA. 183+50	CALCULATED GWA CHECKED LAS	0 20 10 40 HORIZONTAL SCALE IN FEET

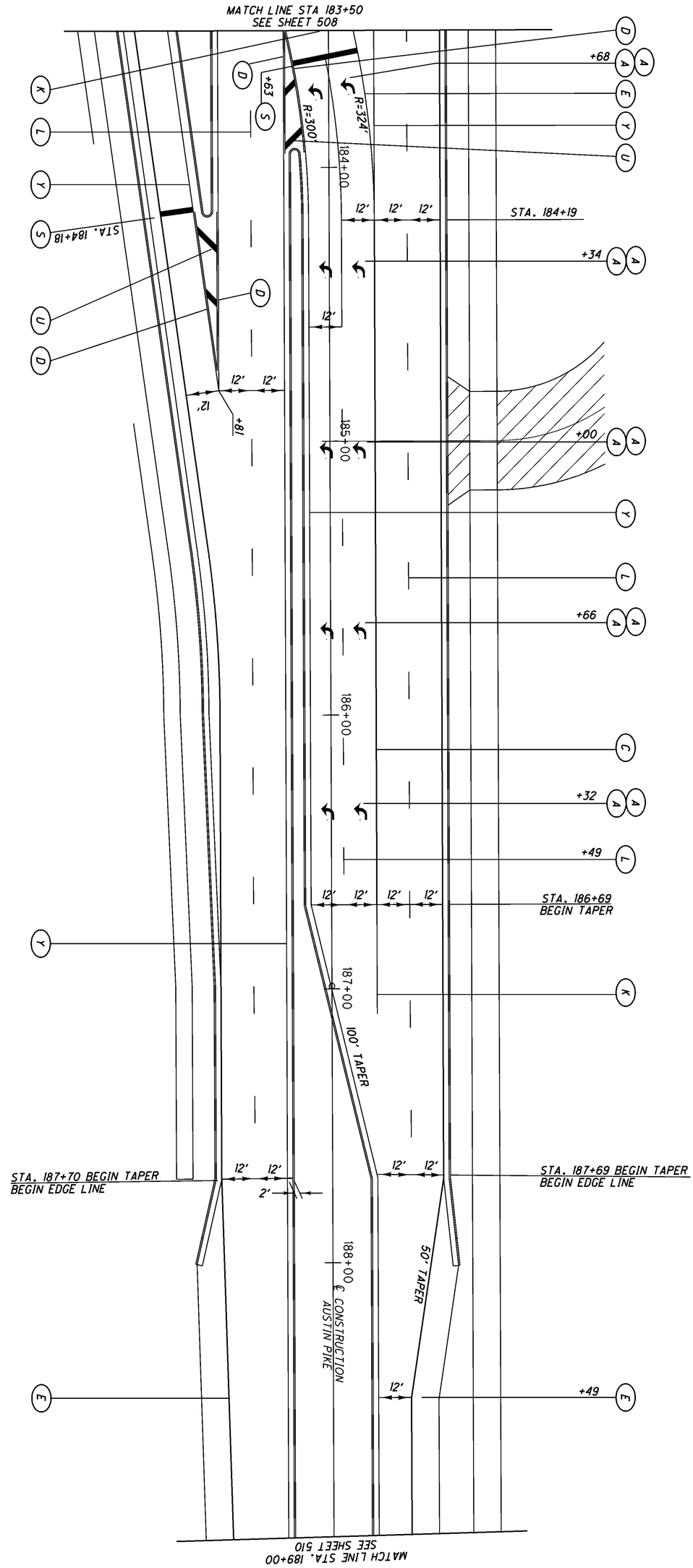

FOR PAVEMENT MARKING LEGEND, SEE SHEET 494.

509
773

MOT-75-0.75

PAVEMENT MARKING PLAN AUSTIN PIKE
STA. 183+50 TO STA. 189+00

CALCULATED GWA
CHECKED LAS

0 10 20 40
HORIZONTAL SCALE IN FEET

N

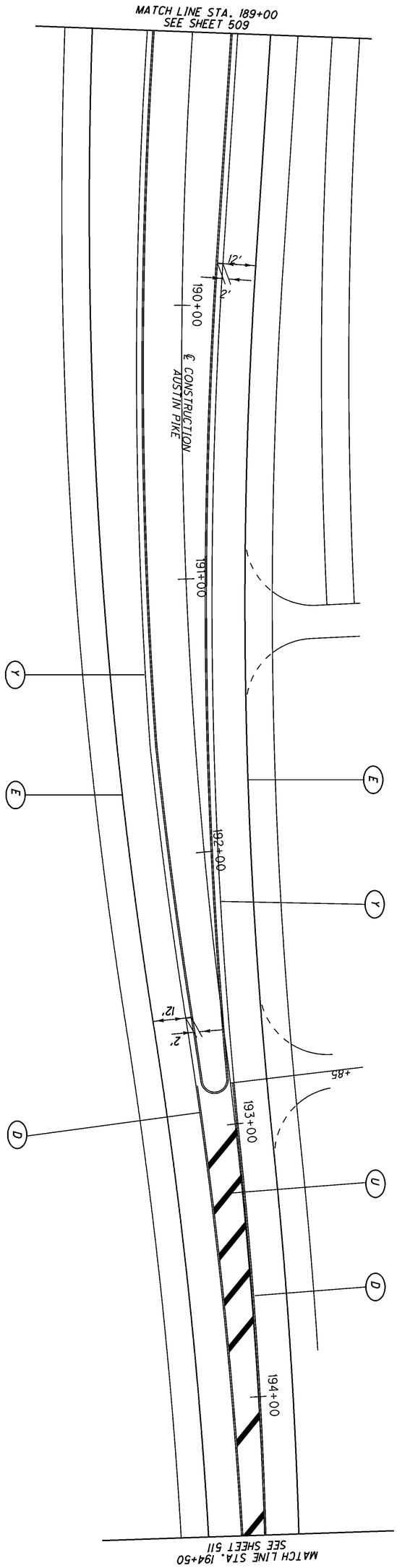

FOR PAVEMENT MARKING LEGEND, SEE SHEET 494.

510
773

MOT-75-0.75

PAVEMENT MARKING PLAN AUSTIN PIKE
STA. 189+00 TO STA. 194+50

CALCULATED GWA
CHECKED LAS

0 10 20 40
HORIZONTAL SCALE IN FEET

N

FOR PAVEMENT MARKING LEGEND, SEE SHEET 494.

HORIZONTAL SCALE IN FEET
0 10 20 40

CALCULATED GWA
CHECKED LAS

PAVEMENT MARKING PLAN AUSTIN PIKE
STA. 194+50 TO STA. 200+00

MOT-75-0.75

511
773

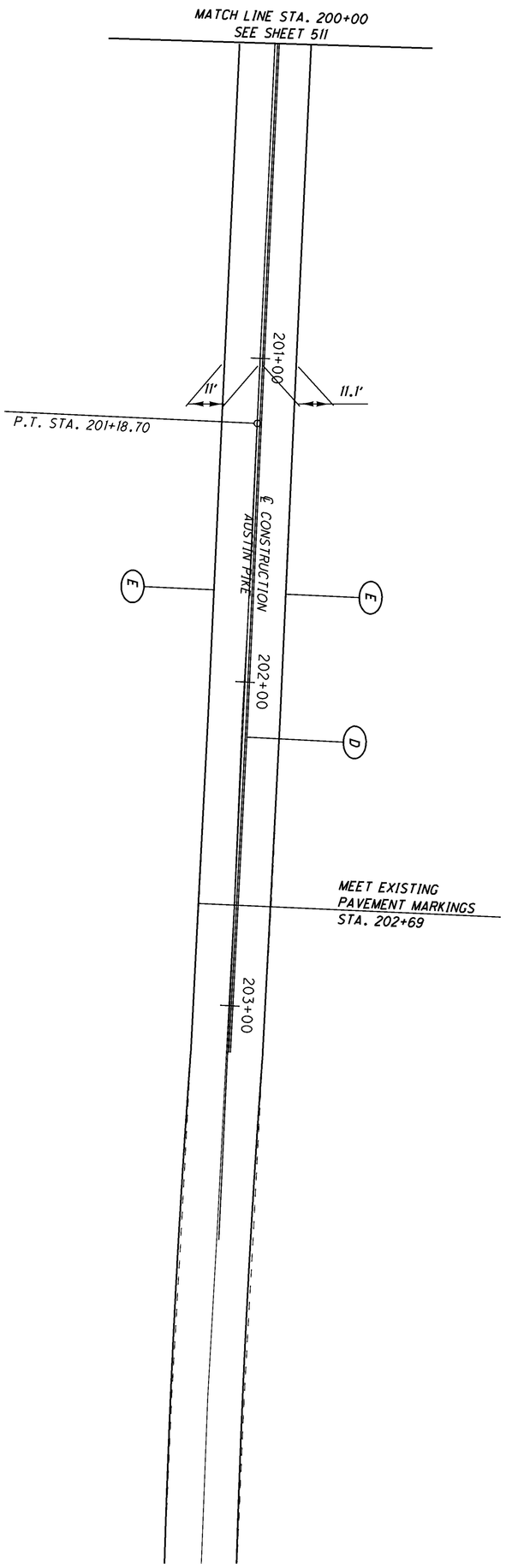

FOR PAVEMENT MARKING LEGEND, SEE SHEET 494.

512
773

MOT-75-0.75

PAVEMENT MARKING PLAN AUSTIN PIKE
STA. 200+00 TO STA. 203+00

CALCULATED GWA
CHECKED LAS

0 10 20 40
HORIZONTAL SCALE IN FEET

N

FOR PAVEMENT MARKING LEGEND, SEE SHEET 494.

PAVEMENT MARKING PLAN WOOD ROAD
LIMIT OF WORK TO STA. 37+50

MOT-75-0.75

CALCULATED GWA
CHECKED LAS

HORIZONTAL SCALE IN FEET
0 10 20 40

FOR PAVEMENT MARKING LEGEND, SEE SHEET 494.

HORIZONTAL SCALE IN FEET
0 10 20 40

CALCULATED GWA
CHECKED LAS

PAVEMENT MARKING PLAN WOOD ROAD STA. 37+50 TO STA. 42+50

MOT-75-0.75

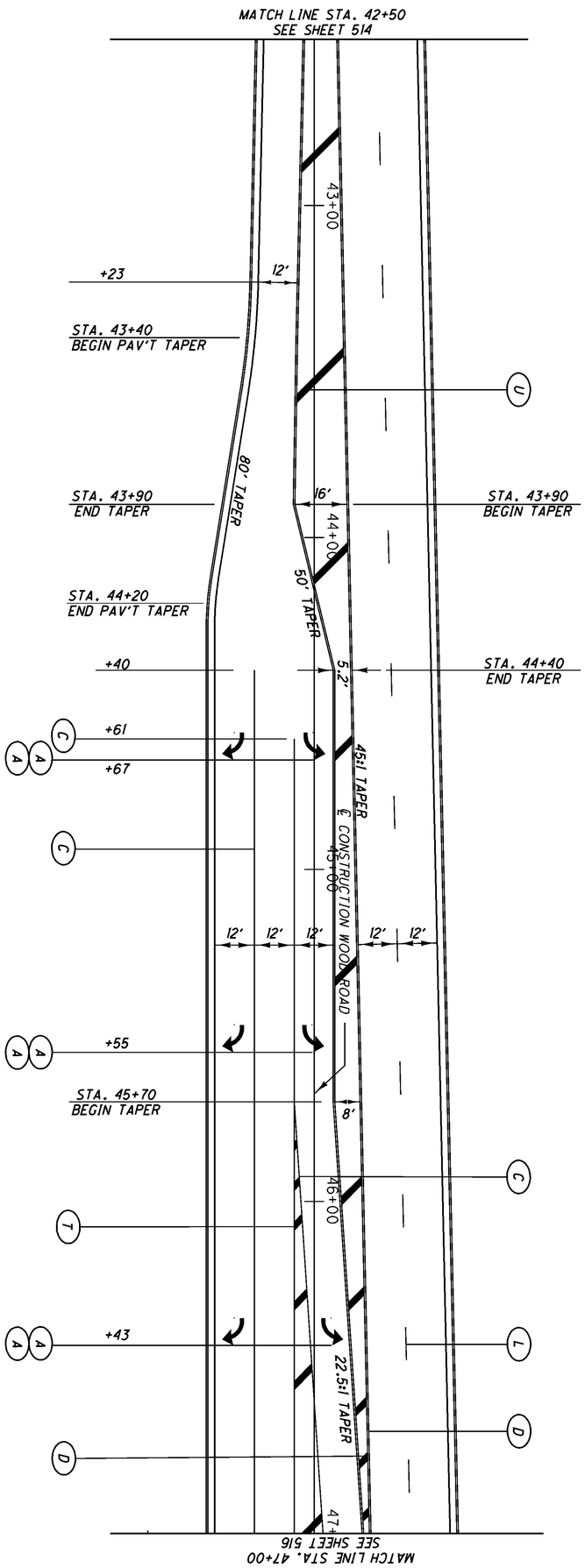

FOR PAVEMENT MARKING LEGEND, SEE SHEET 494.

515 / 773	MOT-75-0.75	PAVEMENT MARKING PLAN WOOD ROAD STA. 42+50 TO STA. 47+00	CALCULATED GWA CHECKED LAS	0 10 20 40 HORIZONTAL SCALE IN FEET

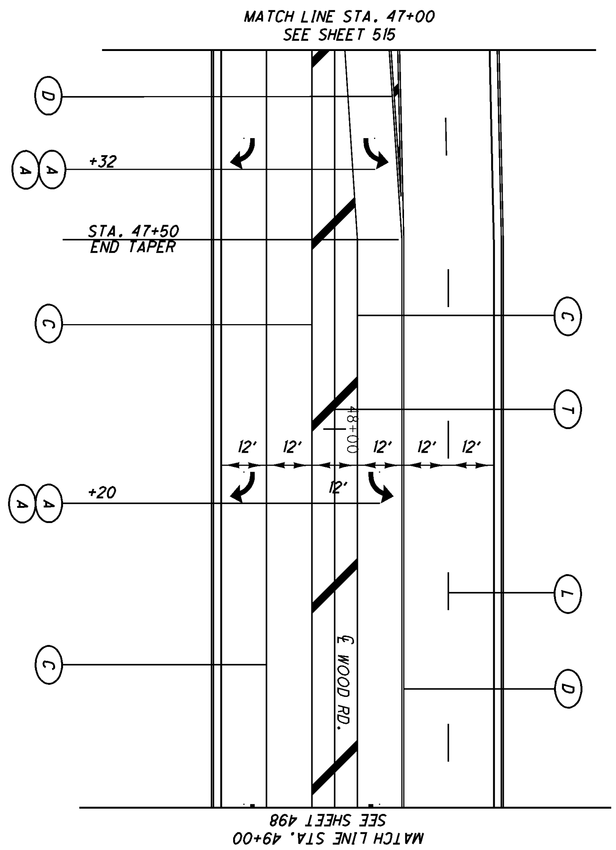

FOR PAVEMENT MARKING LEGEND, SEE SHEET 494.

516 / 773	MOT-75-0.75	PAVEMENT MARKING PLAN WOOD ROAD STA. 47+00 TO STA. 49+00	CALCULATED GWA CHECKED LAS	0 10 20 40 HORIZONTAL SCALE IN FEET	N

MATCH EXISTING PAVEMENT MARKINGS STA. 21+50

22+00

23+00

24+00

25+00

26+00

12'

12'

12'

12'

12'

+54

MATCH LINE STA 27+00
SEE SHEET 518

FOR PAVEMENT MARKING LEGEND, SEE SHEET 494.

HORIZONTAL SCALE IN FEET
0 10 20 40

CALCULATED GWA
CHECKED LAS

PAVEMENT MARKING PLAN SR 741
LIMIT OF WORK TO STA. 27+00

MOT-75-0.75

517
773

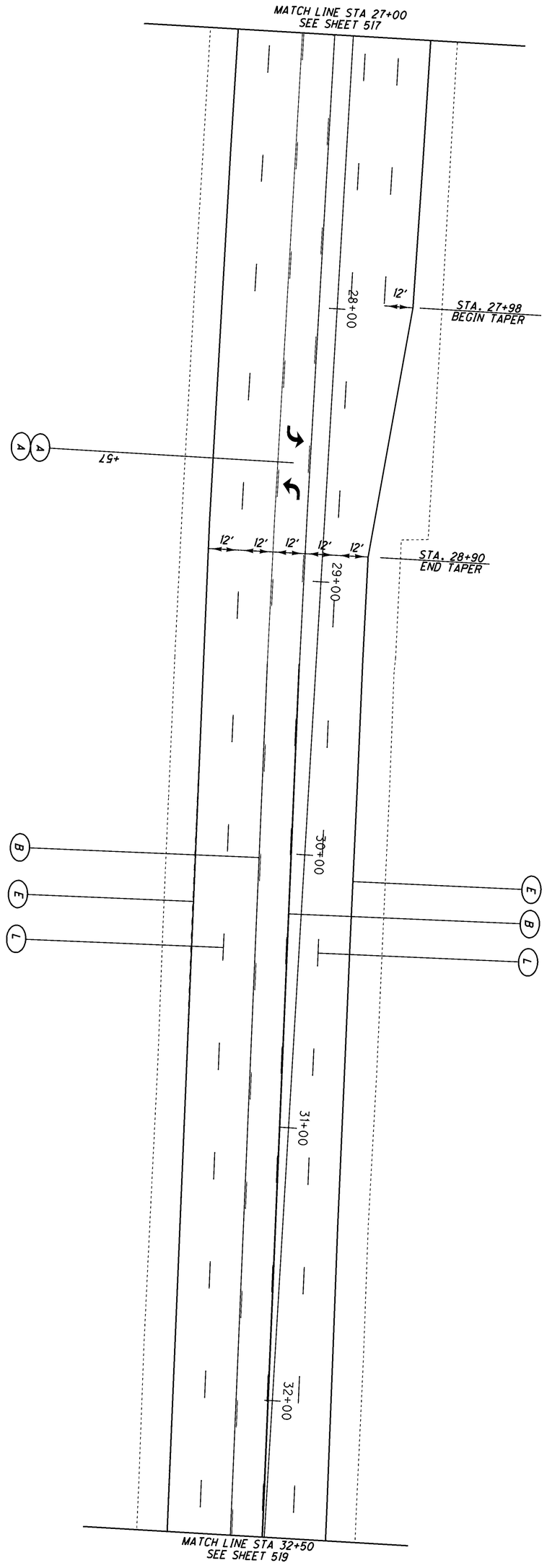

FOR PAVEMENT MARKING LEGEND, SEE SHEET 494.

518 / 773	MOT-75-0.75	PAVEMENT MARKING PLAN SR 741 STA. 27+00 TO STA. 32+50	CALCULATED GWA CHECKED LAS	0 10 20 40 HORIZONTAL SCALE IN FEET	N

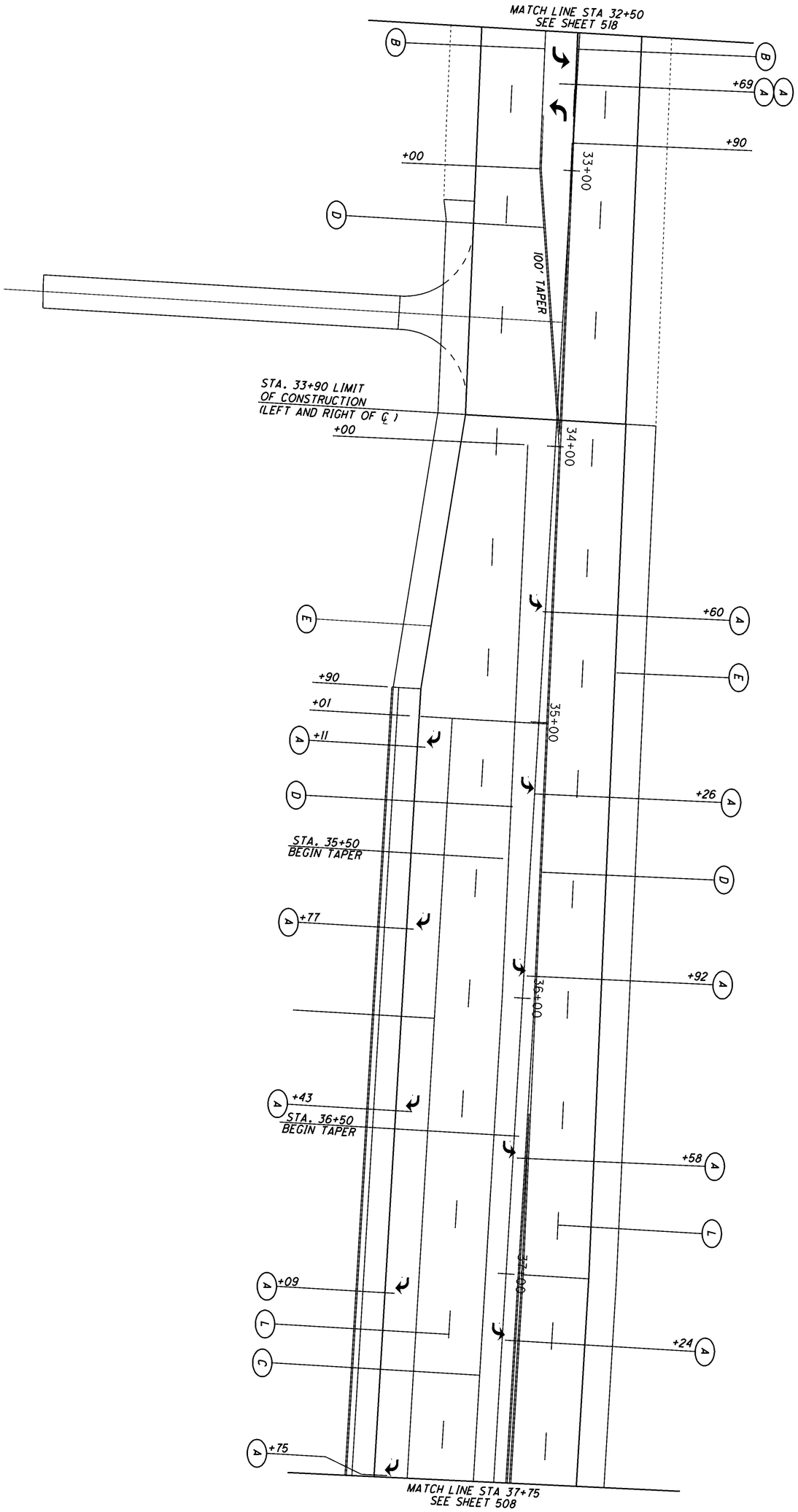

FOR PAVEMENT MARKING LEGEND, SEE SHEET 494.

519 / 773	MOT-75-0.75	PAVEMENT MARKING PLAN SR 741 STA. 32+50 TO STA. 37+75	CALCULATED GWA CHECKED LAS	0 10 20 40 HORIZONTAL SCALE IN FEET

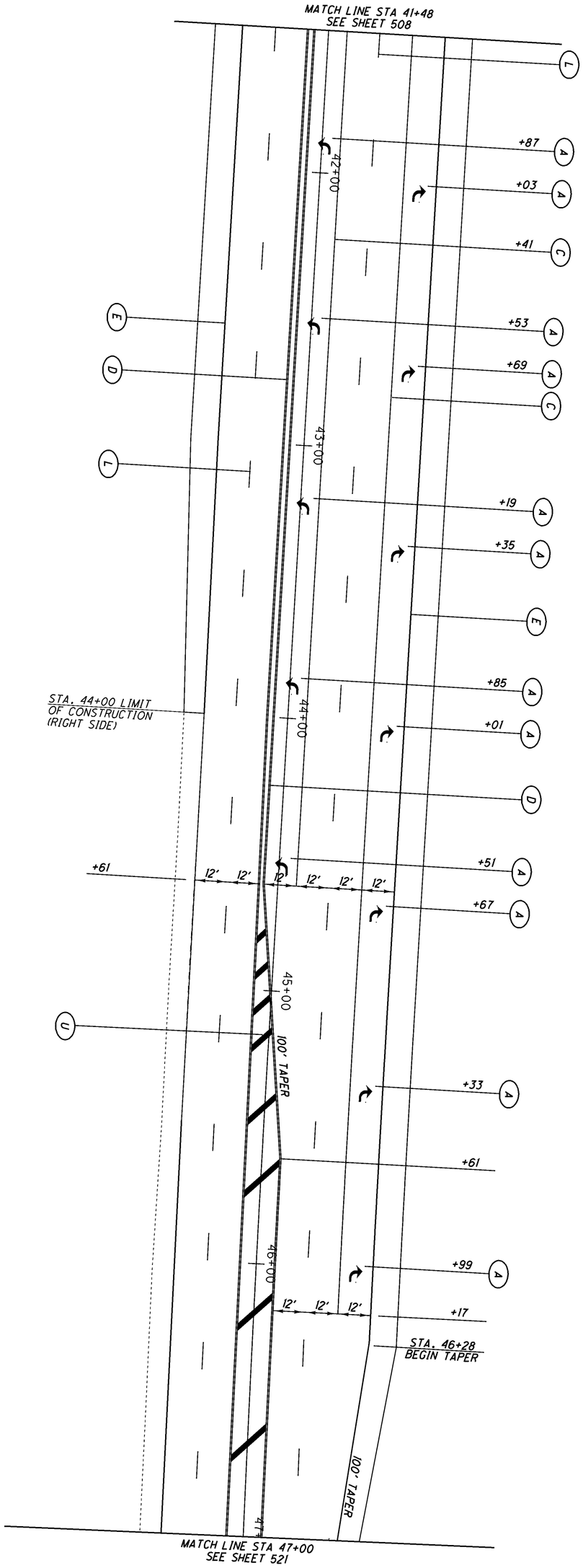

FOR PAVEMENT MARKING LEGEND, SEE SHEET 494.

520 / 773	MOT-75-0.75	PAVEMENT MARKING PLAN SR 741 STA. 41+48 TO STA. 47+00	CALCULATED GWA CHECKED LAS	0 20 10 40 HORIZONTAL SCALE IN FEET

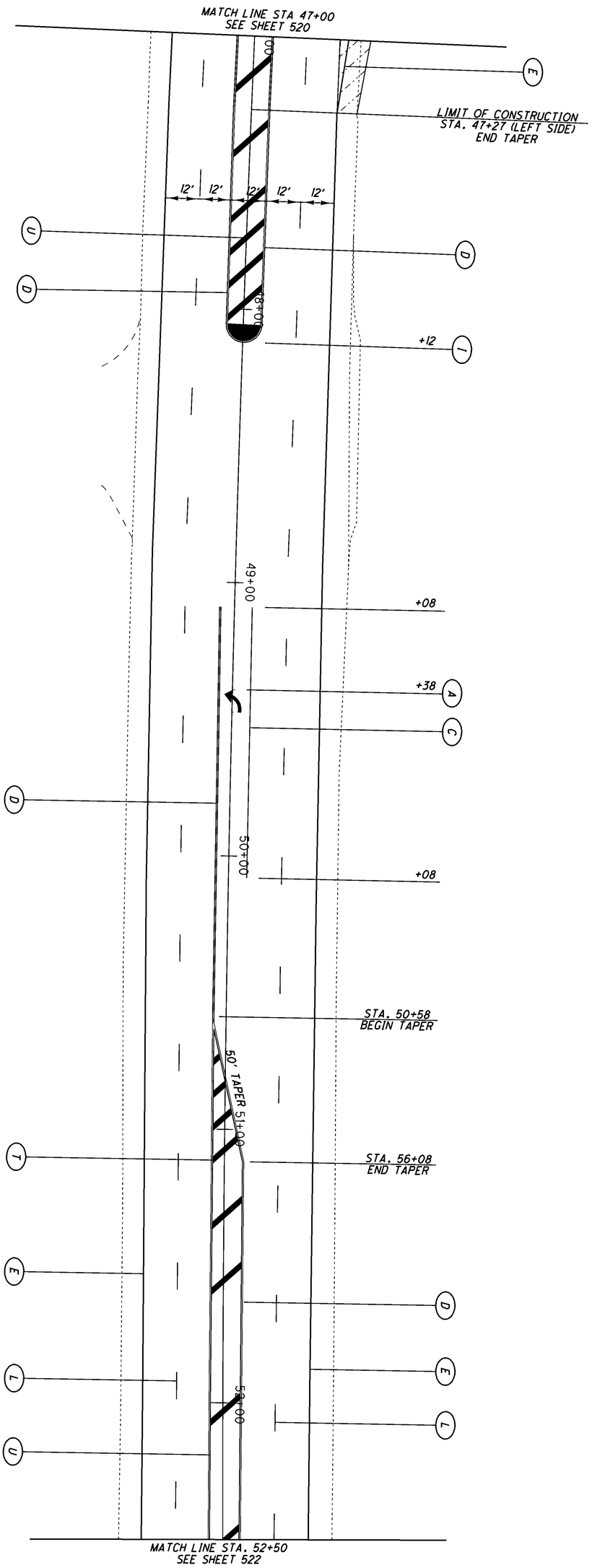

FOR PAVEMENT MARKING LEGEND, SEE SHEET 494.

521 / 773	MOT-75-0.75	PAVEMENT MARKING PLAN SR 741 STA. 47+00 TO STA. 52+50	CALCULATED GWA CHECKED LAS	0 20 10 40 HORIZONTAL SCALE IN FEET

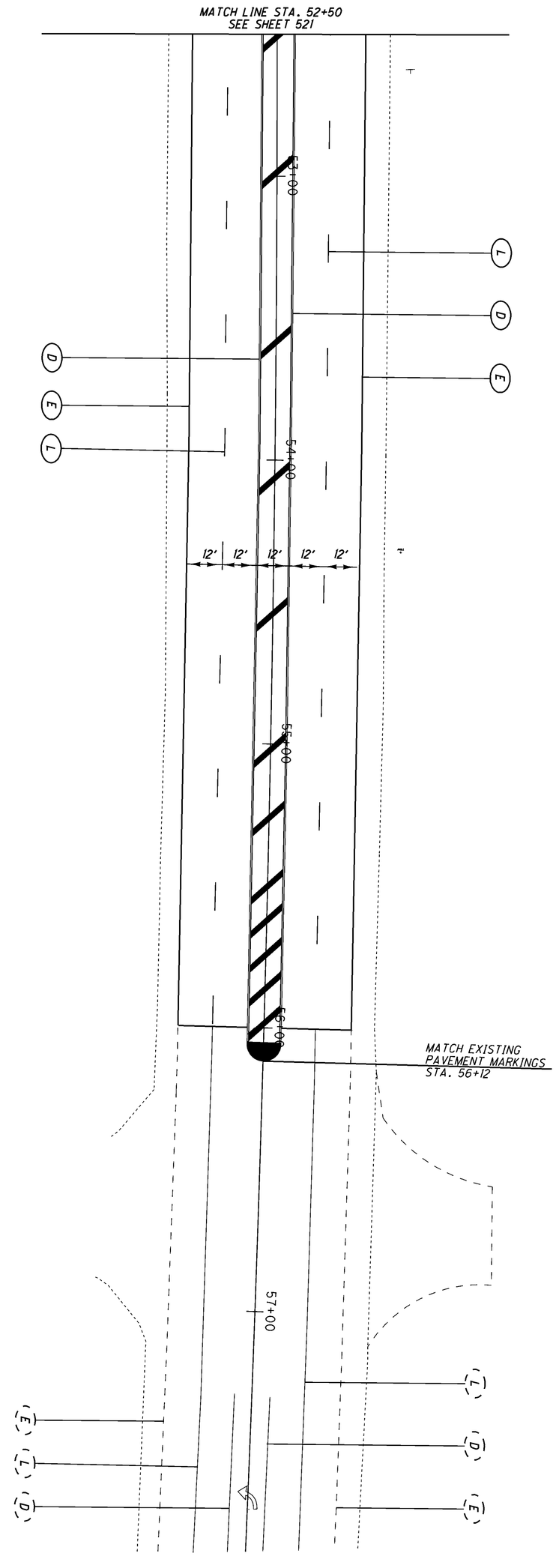

FOR PAVEMENT MARKING LEGEND, SEE SHEET 494.

522
773

MOT-75-0.75

PAVEMENT MARKING PLAN SR 741
STA. 52+50 TO LIMIT OF WORK

CALCULATED GWA
CHECKED LAS

0 10 20 40
HORIZONTAL SCALE IN FEET

N

FOR PAVEMENT MARKING LEGEND, SEE SHEET 494.

HORIZONTAL SCALE IN FEET
0 10 20 40

CALCULATED GWA
CHECKED LAS

PAVEMENT MARKING PLAN I-75
STA. 31+50 TO STA. 37+00

MOT-75-0.75

524
773

FOR PAVEMENT MARKING LEGEND, SEE SHEET 494.

N

HORIZONTAL SCALE IN FEET
0 10 20 40

CALCULATED GWA
CHECKED LAS

PAVEMENT MARKING PLAN I-75
STA. 37+00 TO STA. 42+50

MOT-75-0.75

525
773

FOR PAVEMENT MARKING LEGEND, SEE SHEET 494.

N

0 10 20 40
HORIZONTAL SCALE IN FEET

CALCULATED GWA
CHECKED LAS

PAVEMENT MARKING PLAN I-75
STA. 42+50 TO STA. 48+00

MOT-75-0.75

FOR PAVEMENT MARKING LEGEND, SEE SHEET 494.

HORIZONTAL SCALE IN FEET
0 10 20 40

CALCULATED GWA
CHECKED LAS

PAVEMENT MARKING PLAN I-75
STA. 48+00 TO RAMP J AND M

MOT-75-0.75

527
773

ITEM 630 - OVERHEAD SIGN SUPPORT, TYPE TC-12.30, (DESIGN NO.), AS PER PLAN

In addition to ODOT Item 630.06, and Item 730, the Contractor shall paint the overhead sign support as detailed in the separate PAINTING note.

Payment will be made at the contract unit price bid per each of ITEM 630 - OVERHEAD SIGN SUPPORT, TYPE TC-12.30, (DESIGN NO.), AS PER PLAN.

ITEM 630 - OVERHEAD SIGN SUPPORT, TYPE TC-16.20, (DESIGN NO.), AS PER PLAN

In addition to ODOT Item 630.06, and Item 730, the Contractor shall paint the overhead sign support as detailed in the separate PAINTING note.

Payment will be made at the contract unit price bid per each of ITEM 630 - OVERHEAD SIGN SUPPORT, TYPE TC-16.20, (DESIGN NO.), AS PER PLAN.

ITEM 632 - SIGNAL SUPPORT, MISC.: SINGLE-ARM OVERHEAD SIGNAL SUPPORT, TYPE TC-81.21, (DESIGN NO.), AS PER PLAN

In addition to ODOT Item 630.06, and Item 730, the Contractor shall:
Provide overhead sign support as detailed on sheet 604.
Paint the overhead sign support as detailed in the separate PAINTING note.

Payment will be made at the contract unit price bid per each of ITEM 632 - SIGNAL SUPPORT, MISC.: SINGLE-ARM OVERHEAD SIGNAL SUPPORT, TYPE TC-81.21, (DESIGN NO.), AS PER PLAN.

ITEM 630 - OVERHEAD SIGN SUPPORT, MISC.: OVERHEAD SIGN SUPPORT, TYPE TC-16.20, DESIGN SPECIAL, AS PER PLAN

In addition to ODOT Item 630.06, and Item 730, the Contractor shall:
Provide sign support as detailed on sheet 634A-634F.
Paint the overhead sign support as detailed in the separate PAINTING note.

Payment will be made at the contract unit price bid per each of ITEM 630 - OVERHEAD SIGN SUPPORT, MISC.: OVERHEAD SIGN SUPPORT, TYPE TC-16.20, DESIGN SPECIAL, AS PER PLAN.

PAINTING

Painting all poles, pedestals, mast arms, bracket arms and luminaires to be supplied are to be supplied with a primer finish. A minimum of two additional coats of paint will be required to complete the finish as indicated in the following specifications:

A) Surfaces to be painted shall be cleaned with stiff fiber wire brushes, scrapers or other hand or power tools.

B) Care shall be taken to protect freshly coated surfaces, and all appurtenances not intended to be painted. The wire brushed surfaces shall be cleaned and re-primed.

C) All fins, tears, slivers, and burred or sharp edges that are present on any steel member, or that appear during the cleaning operation, shall be removed by grinding.

D) In addition to the requirements of 105.10, the Contractor shall provide equipment suitable to attain access to inspect any portion of the poles during all phases of the cleaning and painting operations and after the painting is completed. The Contractor shall also furnish all necessary traffic control to permit this inspection during and after all phases of the project.

E) Any uncured paint damaged by rain, snow or condensation shall be permitted to dry; the damaged paint shall then be removed and the surface repainted.

F) The poles shall be painted gloss black federal color #FS-595-17038. The Contractor shall touch up any scrapes or marks to the pole finish in the field after installation.

G) All paint shall be first quality standard products of established manufacturers who have continuous performance in the manufacture of each product for 10 years as approved by the Engineer. The Contractor shall provide best quality, first line grade as regularly manufactured by acceptable paint material manufacturers. Materials not displaying manufacturer's identification as a standard, best grade, first line product will not be acceptable.

H) All materials shall be delivered to the site in unopened original containers, bearing the brand name and the manufacturer's name and having seals intact. Containers shall not be opened until contents are ready to be used.

I) Materials shall be thoroughly stirred and evenly spread without runs, skips, sags, streaks, brush marks, or other defects. The finish coat shall be applied by brush or roller. The Contractor shall apply two coats of finish paint to provide a minimum of total dry thickness of 6 mils. Application of a second coat of paint shall be applied only after the interceding drying time has expired.

J) The interceding drying time shall be as recommended by the paint manufacturer or as follows:

i) 48 hours at 40 to 50 degrees Fahrenheit
ii) 24 hours at 50 to 75 degrees Fahrenheit
iii) 2 hours at 75 to 100 degrees Fahrenheit

K) The temperature of the air, surface to be painted, and paint shall be between 50 and 95 degrees Fahrenheit. The air temperature shall be at least 5 degrees Fahrenheit above the dew point. The surface to be painted shall be completely dry; relative humidity shall be less than 90%. The paint label instructions shall be read and followed. If any differences exist between the label and the above restrictions, the more restrictive shall apply.

L) The Contractor shall provide and erect "fresh paint" signs on the poles. After the paint is completely dried, the Contractor shall remove the signs.

M) The project involves the painting of poles. Other items or equipment attached to the pole shall be protected from the painting process.

N) The Contractor may use a powder coating process in lieu of field painting, provided that the Contractor corrects any scratches or blemishes that occur during the delivery and installation process.

CALCULATED GWA CHECKED LAS

TRAFFIC CONTROL GENERAL NOTES (SIGNING)

MOT-75-0.75

SHEET NUMBER												PARTICIPATION		ITEM	ITEM EXT.	GRAND TOTAL	UNIT	DESCRIPTION	SEE SHEET NO.
530	531	532	533	534	535	536	537					I.R.	EAR MARK /LOCAL						
																		TRAFFIC CONTROL	
16			1	2	2	1						17	5	625	32000	22	EACH	GROUND ROD	
		273	220	170	65	255	184					509	658	630	02100	1167	FT	GROUND MOUNTED SUPPORT, NO. 2 POST	
		97	65	84	151	288	112					261	536	630	03100	797	FT	GROUND MOUNTED SUPPORT, NO. 3 POST	
107												107	0	630	06400	107	FT	GROUND MOUNTED SUPPORT, S4X7.7 BEAM	
97												97	0	630	07500	97	FT	GROUND MOUNTED SUPPORT, W10X22 BEAM	
82												82	0	630	07600	82	FT	GROUND MOUNTED SUPPORT, W10X12 BEAM	
	58											58	0	630	08000	58	FT	GROUND MOUNTED SUPPORT, W12X30 BEAM	
			30	30								60	0	630	08004	60	FT	ONE WAY SUPPORT, NO. 3 POST	
		15	13									0	28	630	08520	28	FT	STREET NAME SIGN SUPPORT, NO. 3 POST	
16												16	0	630	09000	16	EACH	BREAKAWAY BEAM CONNECTION	
					1							0	1	630	10301	1	EACH	OVERHEAD SIGN SUPPORT, TYPE TC-16.20, DESIGN 3, AS PER PLAN	528
2												1	1	630	20401	2	EACH	OVERHEAD SIGN SUPPORT, TYPE TC-12.30, DESIGN 4, AS PER PLAN	528
2												2	0	630	20600	2	EACH	OVERHEAD SIGN SUPPORT, TYPE TC-12.30, DESIGN 6	
4												4	0	630	20601	4	EACH	OVERHEAD SIGN SUPPORT, TYPE TC-12.30, DESIGN 6, AS PER PLAN	528
2												2	0	630	21000	2	EACH	OVERHEAD SIGN SUPPORT, TYPE TC-12.30, DESIGN 10	
1												1	0	630	45500	1	EACH	OVERHEAD SIGN SUPPORT, TYPE TC-7.65, DESIGN 8	
2												2	0	630	66500	2	EACH	OVERHEAD SIGN SUPPORT, TYPE TC-15.115	
			1	1								2	0	630	74500	2	EACH	OVERHEAD SIGN SUPPORT, MISC.: OVERHEAD SIGN SUPPORT, TYPE	528
																		TC-16.20, DESIGN SPECIAL, AS PER PLAN	
32.00		184.50	171.15	196.33	202.25	279.13	105.75					443.05	728.06	630	80100	1171.11	SQ FT	SIGN, FLAT SHEET	
542												542	0	630	80200	542	SQ FT	SIGN, GROUND MOUNTED EXTRUSHEET	
1270												1234	36	630	80224	1270	SQ FT	SIGN, OVERHEAD EXTRUSHEET	
		2	2									0	4	630	80500	4	EACH	SIGN, DOUBLE FACED, STREET NAME	
						1	3					4	0	630	81010	4	EACH	RAMP REFERENCE MARKER	
	16											16	0	630	84500	16	EACH	GROUND MOUNTED BEAM SUPPORT FOUNDATION	
	16			1	2	1						15	5	630	84510	20	EACH	RIGID OVERHEAD SIGN SUPPORT FOUNDATION	
		26	13		10	8	6					8	55	630	84900	63	EACH	REMOVAL OF GROUND MOUNTED SIGN AND DISPOSAL	
	4											2	2	630	85400	4	EACH	REMOVAL OF GROUND MOUNTED MAJOR SIGN AND DISPOSAL	
		14	10		8	11	10					12	41	630	86002	53	EACH	REMOVAL OF GROUND MOUNTED POST SUPPORT AND DISPOSAL	
	6											4	2	630	86102	6	EACH	REMOVAL OF GROUND MOUNTED BEAM SUPPORT AND DISPOSAL	
	10											10	0	630	87400	10	EACH	REMOVAL OF OVERHEAD MOUNTED SIGN AND DISPOSAL	
	5											5	0	630	89706	5	EACH	REMOVAL OF OVERHEAD SIGN SUPPORT AND DISPOSAL, TYPE TC-12.30	
					1							0	1	632	80700	1	EACH	SIGNAL SUPPORT, MISC.: SINGLE-ARM OVERHEAD SIGNAL SUPPORT, TYPE	528
																		TC-81.21, DESIGN 33, AS PER PLAN	
				1		1						0	2	632	80700	2	EACH	SIGNAL SUPPORT, MISC.: SINGLE-ARM OVERHEAD SIGNAL SUPPORT, TYPE	528
																		TC-81.21, DESIGN 34, AS PER PLAN	
																		SEE SHEET 443 FOR PAVEMENT MARKING GENERAL SUMMARY	

CALCULATED GWA
CHECKED LAS

TRAFFIC CONTROL GENERAL SUMMARY (SIGNING)

MOT-75-0.75

SHEET NO.	REFERENCE NO.	LOCATION	STATION	SIDE	CODE	SIZE (INCHES)	625 GROUND ROD EACH	630 SIGN, FLATSHEET SQFT	630 SIGN, GROUND MOUNTED EXTRUSHEET SQ FT	630 SIGN, OVERHEAD EXTRUSHEET SQ FT	630 BREAKAWAY BEAM CONNECTION EACH	630 OVERHEAD SIGN SUPPORT, TYPE TC-12.30, DESIGN 4, AS PER PLAN EACH	630 OVERHEAD SIGN SUPPORT, TYPE TC-12.30, DESIGN 6 EACH	630 OVERHEAD SIGN SUPPORT, TYPE TC-12.30, DESIGN 6, AS PER PLAN EACH	630 OVERHEAD SIGN SUPPORT, TYPE TC- 12.30, DESIGN 10 EACH	630 OVERHEAD SIGN SUPPORT, TYPE TC-7.65, DESIGN 8 EACH	630 OVERHEAD SIGN SUPPORT, TYPE TC-15.115 EACH	630 GROUND MOUNTED SUPPORT, S4X7.7 BEAM FT		630 GROUND MOUNTED SUPPORT, W10X12 BEAM FT	630 GROUND MOUNTED SUPPORT, W10X22 BEAM FT
568	M01	MS PIKE *	142+25	RT	M2-H5-108	108 X 48	1			36		1									
569	M02	MS PIKE *	148+00	RT	M2-H6-144	144 X 60	1			60				1							
569	M03	MS PIKE *	150+00	RT	M2-H6-108	108 X 84	1			63				1							
571	M04	MS PIKE *	157+25	LT	M2-H6-96	96 X 84	1			56				1							
571	M05	MS PIKE *	159+25	LT	M2-H6-132	132 x 60	1			55				1							
572	M06	MS PIKE #	165+00	LT	M2-H5-108	108 X 48	1			36		1									
582	M07	SR-741 #	33+00	RT																	
538	M08	I-75 *	183+50	RT	E1-H1	192 X 72	1			96					1						
					E1-H5-84	84 X 24				14											
538	M09	I-75 *	196+65	RT	E3-H1	204 X 60			85		2										23-25
					E1-H5-84	84 X 24			14												
538	M10	I-75 *	1+50	RT	E1-H1	156 X 108	2			117						1					
					E1-H5-84	84 X 24				14											
538	M11	I-75 *	1+50	RT	E1-H1	192 X 72				96											
					E1-H5-84	84 X 24				14											
538	M12	I-75 *	2+00	RT																	
541	M13	I-75 *	10+00	LT	R16-H15-120	120 X 60			50		2									20-21	
544	M14	I-75 *	27+29	LT																	
547	M15	RAMP H *	228+00	RT	E1-H3	156 X 72	1			78					1						
					E1-H5-84	84 X 24				14											
548	M16	I-75 *	30+36	RT	E5-H1A-72	72 X 60			30		2							16-16			
548	M17	I-75 *	31+16	RT																	
538	M18	I-75 *	39+17	RT																	
538	M19	I-75 *	41+50	RT	E3-H2	168 X 120			140		2										
					E1-H5-84	84 X 24			14												
538	M20	I-75 *	194+75 (WAR)	LT	E7-H1	192 X 60			80		2									21-20	
539	M21	I-75 *	45+06	LT																	
556	M22	I-75 *	49+98	RT																	
538	M23	I-75 *	204+81 (WAR)	LT	R2-H2b-48	48 X 96		32			2							20-20			
551	M24	I-75 *	50+47	LT	E5-H1A-72	72 X 60			30		2							17-18			
552	M25	RAMP M *	454+50	LT	E1-H3	204 X 84	2			119							1				
					E1-H5-84	84 X 24				14											
558	M26	I-75 *	62+50	RT	E1-H1	156 X 108	1			117			1								
					E1-H5-84	84 X 24				14											
558	M27	I-75 *	63+00	RT																	
539	M28	I-75 *	81+00	LT	E1-H3	228 X 84	2			133							1				
					E1-H5-84	84 X 24				14											
539	M29	I-75 *	94+50	LT	E3-H1	204 X 60			85		2										23-26
					E1-H5-84	84 X 24			14												
539	M30	I-75 *	107+50	LT	E1-H1	192 X 72	1			96			1								
					E1-H5-84	84 X 24				14											
		I.R. *					15	32	542	1234	16	1	2	4	2	1	2	107		82	97
		Earmark/Local #					1			36		1									
TOTALS CARRIED TO GENERAL SUMMARY							16	32	542	1270	16	2	2	4	2	1	2	107		82	97

CALCULATED GWA
CHECKED LAS

ESTIMATED QUANTITIES
SIGNING

MOT-75-0.75

SHEET NO.	REFERENCE NO.	LOCATION	STATION	SIDE	CODE	SIZE (INCHES)	630 GROUND MOUNTED SUPPORT, W12X30 BEAM FT	630 GROUND MOUNTED BEAM SUPPORT FOUNDATION EACH	630 RIGID OVERHEAD SIGN SUPPORT FOUNDATION EACH	630 REMOVAL OF GROUND MOUNTED MAJOR SIGN AND DISPOSAL EACH	630 REMOVAL OF GROUND MOUNTED BEAM SUPPORT AND DISPOSAL EACH	630 REMOVAL OF OVERHEAD MOUNTED SIGN AND DISPOSAL EACH	630 REMOVAL OF OVERHEAD SIGN SUPPORT AND DISPOSAL, TYPE TC-12.30 EACH
568	M01	MS PIKE *	142+25	RT	M2-H5-108	108 X 48			1				
569	M02	MS PIKE *	148+00	RT	M2-H6-120	120 X 60			1				
569	M03	MS PIKE *	150+00	RT	M2-H6-108	108 X 84			1				
571	M04	MS PIKE *	157+25	LT	M2-H6-96	96 X 84			1				
571	M05	MS PIKE *	159+25	LT	M2-H6-120	120 x 60			1				
572	M06	MS PIKE #	165+00	LT	M2-H5-108	108 X 48			1				
582	M07	SR-741 #	33+00	RT						2	2		
538	M08	I-75 *	183+50	RT	E1-H1	192 X 72			1				
					E1-H5-84	84 X 24							
538	M09	I-75 *	196+65	RT	E3-H1	204 X 60		2					
					E1-H5-84	84 X 24							
538	M10	I-75 *	1+50	RT	E1-H1	156 X 108			2				
					E1-H5-84	84 X 24							
538	M11	I-75 *	1+50	RT	E1-H1	192 X 72							
					E1-H5-84	84 X 24							
538	M12	I-75 *	2+00	RT								2	1
541	M13	I-75 *	10+00	LT	R16-H15-120	120 X 60		2					
544	M14	I-75 *	27+29	LT						1	2		
547	M15	RAMP H *	228+00	RT	E1-H3	156 X 72			1				
					E1-H5-84	84 X 24							
548	M16	I-75 *	30+41	RT	E5-H1A-72	72 X 60		2					
548	M17	I-75 *	31+16	RT								2	1
538	M18	I-75 *	39+17	RT								2	1
538	M19	I-75 *	41+50	RT	E3-H2	168 X 120	28-30	2					
					E1-H5-84	84 X 24							
538	M20	I-75 *	194+75 (WAR)	LT	E7-H1	192 X 60		2					
539	M21	I-75 *	45+06	LT						1	2		
556	M22	I-75 *	49+98	RT								2	1
538	M23	I-75 *	204+81 (WAR)	LT	R2-H2b-48	48 X 96		2					
551	M24	I-75 *	50+47	LT	E5-H1A-72	72 X 60		2					
552	M25	RAMP M *	454+50	LT	E1-H3	204 X 84			2				
					E1-H5-84	84 X 24							
558	M26	I-75 *	62+50	RT	E1-H1	156 X 108			1				
					E1-H5-84	84 X 24							
558	M27	I-75 *	63+00	RT								2	1
539	M28	I-75 *	81+00	LT	E1-H3	228 X 84			2				
					E1-H5-84	84 X 24							
539	M29	I-75 *	94+50	LT	E3-H1	204 X 60		2					
					E1-H5-84	84 X 24							
539	M30	I-75 *	107+50	LT	E1-H1	192 X 72			1				
					E1-H5-84	84 X 24							
		I.R. *					58	16	15	2	4	10	5
		Earmark/Local #							1	2	2		
TOTALS CARRIED TO GENERAL SUMMARY							58	16	16	4	6	10	5

CALCULATED GWA
CHECKED LAS

SIGNING ESTIMATED QUANTITIES

MOT-75-0.75

SHEET NO.	REFERENCE NO.	LOCATION	STATION	SIDE	CODE	SIZE (INCHES)	630 GROUND MOUNTED SUPPORT, NO. 2 POST FT	630 GROUND MOUNTED SUPPORT, NO. 3 POST FT	630 STREET NAME SIGN SUPPORT, NO. 3 POST FT	630 SIGN, FLAT SHEET SQ FT	630 SIGN, DOUBLE FACED, STREET NAME EACH	630 REMOVAL OF GROUND MOUNTED SIGN AND DISPOSAL EACH	630 REMOVAL OF GROUND MOUNTED POST SUPPORT AND DISPOSAL EACH
562	S01	MS PIKE	107+92	RT								2	1
562	S02	MS PIKE	108+66	RT								2	1
562	S03	MS PIKE	109+50	RT								2	1
562	S04	MS PIKE	109+89	RT	R2-1-24	24 X 30	13			5.00			
562	S05	MS PIKE	110+32	RT								2	1
562	S06	MS PIKE	111+13	RT								2	1
563	S07	MS PIKE	111+75	RT	W11-2-36	36 X 36		15		9.00			
563	S08	MS PIKE	111+93	RT								2	1
563	S09	MS PIKE	112+74	RT								2	1
563	S10	MS PIKE	113+20	RT	R3-H8BH-36	36 X 30		13		7.50			
563	S11	MS PIKE	114+50	LT	W4-2-36	36 X 36		15		9.00			
563	S12	MS PIKE	115+79	LT	R1-1-30	30 X 30		13		6.25			
563	S13	MS PIKE	115+92	LT								1	1
563	S14	MS PIKE	116+36	RT								3	1
563	S15	MS PIKE	116+50	LT	M7-1-12	12 X 9	13			0.75			
					D11-1-24	24 X 18				3.00			
					D11-1-24	24 X 18				3.00			
					M7-1-12	12 X 9				0.75			
563	S16	MS PIKE	116+50	RT	R1-1-30	30 X 30			15	6.25			
					D3-1-45	45 X 12					1		
					D3-1-69	69 X 12					1		
565	S17	MS PIKE	127+40	LT	R1-5R-30	30 X 30		13		6.25			
564	S18	MS PIKE	117+70	LT	M4-12-12	12 X 4	13			0.75			
					D11-1-24	24 X 18				3.00			
564	S19	MS PIKE	118+93	LT								2	1
564	S20	MS PIKE	120+30	LT	R3-H8CG-48	48 X 30	13-13			10.00			
564	S21	MS PIKE	120+85	RT	R3-H8CB-48	48 X 30	13-13			10.00			
564	S22	MS PIKE	122+00	LT	W11-2-36	36 X 36		15		9.00			
565	S23	MS PIKE	123+11	RT	R3-H8DA-54	54 X 30	13-13			11.25			
565	S24	MS PIKE	125+00	LT	R2-1-24	24 X 30	13			5.00			
565	S25	MS PIKE	125+79	LT	M7-5-12	12 X 9	13			0.75			
					D11-1-24	24 X 18				3.00			
					D11-1-24	24 X 18				3.00			
					M7-5-12	12 X 9				0.75			
565	S26	MS PIKE	125+90	RT	R3-H8DA-54	54 X 30	13-13			11.25			
565	S27	FUTURE BYERS	50+92	LT	R3-H8DG-60	60 X 30	13-13			12.50			
565	S28	MS PIKE	126+10	LT	M7-1-12	12 X 9	13			0.75			
					D11-1-24	24 X 18				3.00			
					D11-1-24	24 X 18				3.00			
					M7-1-12	12 X 9				0.75			
565	S29	MS PIKE	126+68	LT								3	2
565	S30	MS PIKE	126+88	RT								1	1
565	S31	MS PIKE	127+05	RT								2	1
565	S32	WOOD	49+21	RT	R3-H8B-48	48 x 30	13-13			10.00			
565	S33	MS PIKE	127+24	LT	M7-5-12	12 X 9	13			0.75			
					D11-1-24	24 X 18				3.00			
					D11-1-24	24 X 18				3.00			
					M7-5-12	12 X 9				0.75			
565	S34	MS PIKE	127+63	RT	R3-4-30	30 X 30		13		6.25			
					R4-7-24	24 X 30				5.00			
565	S35	MS PIKE	128+10	LT	R3-H8DA-54	54 X 30	13-13			11.25			
		Earmark/Local					273	97	15	184.5	2	26	14
TOTALS CARRIED TO GENERAL SUMMARY							273	97	15	184.5	2	26	14

CALCULATED GWA
CHECKED LAS

SIGNING ESTIMATED QUANTITIES

MOT-75-0.75

SHEET NO.	REFERENCE NO.	LOCATION	STATION	SIDE	CODE	SIZE (INCHES)	625 GROUND ROD EACH	630 GROUND MOUNTED SUPPORT, NO. 2 POST FT	630 GROUND MOUNTED SUPPORT, NO. 3 POST FT	630 ONE WAY SUPPORT, NO. 3 POST FT	630 STREET NAME SIGN SUPPORT, NO. 3 POST FT	630 SIGN, FLAT SHEET SQ FT	630 SIGN, DOUBLE FACED, STREET NAME EACH	630 OVERHEAD SIGN SUPPORT, MISC.: OVERHEAD SIGN SUPPORT, TYPE TC-16.20, DESIGN SPECIAL, AS PER PLAN EACH	630 REMOVAL OF GROUND MOUNTED POST SUPPORT AND DISPOSAL EACH	630 REMOVAL OF GROUND MOUNTED SIGN AND DISPOSAL EACH
566	S36	MS PIKE #	129+00	RT	R2-1-24	24 X 30		13				5.00				
567	S37	MS PIKE #	133+75	LT	R3-H8DA-54	54 X 30		13-13				11.25				
567	S38	MS PIKE #	135+11	LT											1	1
568	S39	MS PIKE #	141+28	RT											1	2
568	S40	MS PIKE #	141+32	RT											1	2
568	S41	MS PIKE #	141+32	RT											1	1
568	S42	MS PIKE #	141+39	RT											1	1
568	S43	MS PIKE #	141+43	RT											2	3
568	S44	BYERS #	70+10	LT	R6-1R-36	36 X 12		12				3.00				
568	S45	BYERS #	70+66	LT	D3-1-36	36 X 12					13		1			
					D3-1-45	45 X 12							1			
568	S46	MS PIKE #	141+36	LT	R1-1-30	30 X 30			13			6.25				
568	S47	BYERS #	71+23	RT	R2-1-24	24 X 30		13				5.00				
568	S48	BYERS #	71+05	RT											1	1
568	S49	MS PIKE *	141+84	RT											1	1
568	S50	MS PIKE *	143+03	RT											1	1
569	S51	MS PIKE *	145+00	RT	R3-H8CB-54	54 X 30		13-13				11.25				
565	S52	MS PIKE #	127+55	LT	R1-5L-30	30 X 30			13			6.25				
569	S53	MS PIKE *	148+35	RT	R1-5L-30	30 X 30			13			6.25				
569	S54	MS PIKE *	148+52	RT	R1-5R-30	30 X 30			13			6.25				
	S55	NOT USED														
569	S56	MS PIKE *	148+04	RT	R3-H8CB-48	48 X 30		13-13				10.00				
569	S57	MS PIKE *	147+10	LT	R2-1-24	24 X 30		13				5.00				
569	S58	RAMP P *	337+10	LT	R1-2-36	36 X 36 X 36		13				3.90				
569	S59	MS PIKE *	148+44	LT	M7-5-12	12 X 9		13				0.75				
					D11-1-24	24 X 18						3.00				
					D11-1-24	24 X 18						3.00				
					M7-5-12	12 X 9						0.75				
569	S60	MS PIKE *	149+19	LT	R3-18-30	30 X 30			13			6.25				
					R4-7-24	24 X 30						5.00				
569	S61	RAMP M *	439+30	LT	R6-1L-36	36 X 12				15		3.00				
					R6-1R-36	36 X 12						3.00				
					R5-1-30	30 X 30						6.25				
569	S62	MS PIKE *	149+49	LT	R3-H8CS-48	48 X 30		13-13				10.00				
569	S63	MS PIKE *	150+11	RT	R3-H8CS-48	48 X 30		13-13				10.00				
569	S64	RAMP M *	439+25	RT	R6-1L-36	36 X 12				15		3.00				
					R6-1R-36	36 X 12						3.00				
					R5-1-30	30 X 30						6.25				
570	S65	MS PIKE *	150+28	RT	M7-5-12	12 X 9		13				0.75				
					D11-1-24	24 X 18						3.00				
					D11-1-24	24 X 18						3.00				
					M7-5-12	12 X 9						0.75				
570	S66	MS PIKE *	153+33	LT	R3-5L-36	36 X 42	1					10.50		1		
570	S67	MS PIKE *	153+33	LT	R3-5L-36	36 X 42						10.50				
	S68	NOT USED														
	S69	NOT USED														
		I.R. *					1	156	39	30		134.40		1	2	2
		Earmark/Local #						64	26		13	36.75	2		8	11
TOTALS CARRIED TO GENERAL SUMMARY							1	220	65	30	13	171.15	2	1	10	13

CALCULATED GWA
CHECKED LAS

SIGNING ESTIMATED QUANTITIES

MOT-75-0.75

533
773

SHEET NO.	REFERENCE NO.	LOCATION	STATION	SIDE	CODE	SIZE (INCHES)	625 GROUND ROD EACH	630 GROUND MOUNTED SUPPORT, NO. 2 POST FT	630 GROUND MOUNTED SUPPORT, NO. 3 POST FT	630 ONE WAY SUPPORT, NO. 3 POST FT	630 SIGN, FLAT SHEET SQ FT	630 OVERHEAD SIGN SUPPORT, MISC.: OVERHEAD SIGN SUPPORT, TYPE TC-16.20, DESIGN SPECIAL, AS PER PLAN EACH	630 SIGNAL SUPPORT, MISC.: SINGLE-ARM OVERHEAD SIGNAL SUPPORT, TYPE TC-81.21, DESIGN 34, AS PER PLAN EACH	630 RIGID OVERHEAD SIGN SUPPORT FOUNDATION EACH
570	S70	MS PIKE *	154+30	RT	R3-5L-36	36 X 42	1				10.50	1		
570	S71	MS PIKE *	154+30	RT	R3-5L-36	36 X 42					10.50			
571	S72	MS PIKE *	158+60	LT	R1-5R-30	30 X 30			13		6.25			
571	S73	MS PIKE *	158+84	LT	R1-5L-30	30 X 30			13		6.25			
555	S74	RAMP J *	145+00	RT	W4-2-36	36 X 36			15		9.00			
571	S75	RAMP H *	239+75	LT	R3-H8CS-48	48 X 30		13-13			10.00			
571	S76	MS PIKE *	157+17	RT	R6-1L-36	36 X 12				15	3.00			
					R6-1R-36	36 X 12					3.00			
					R5-1-30	30 X 30					6.25			
571	S77	MS PIKE *	157+32	LT	M7-5-12	12 X 9		13			0.75			
					D11-1-24	24 X 18					3.00			
					D11-1-24	24 X 18					3.00			
					M7-5-12	12 X 9					0.75			
571	S78	RAMP H *	239+75	RT	R3-H8CS-48	48 X 30		13-13			10.00			
571	S79	MS PIKE *	157+91	LT	R3-4-30	30 X 30			13		6.25			
					R4-7-24	24 X 30					5.00			
571	S80	MS PIKE *	158+05	RT	R6-1L-36	36 X 12				15	3.00			
					R6-1R-36	36 X 12					3.00			
					R5-1-30	30 X 30					6.25			
571	S81	RAMP J *	141+47	RT	R1-2-36	36 X 36 X 36		13			3.90			
571	S82	MS PIKE *	158+87	LT	M7-5-12	12 X 9		13			0.75			
					D11-1-24	24 X 18					3.00			
					D11-1-24	24 X 18					3.00			
					M7-5-12	12 X 9					0.75			
571	S83	MS PIKE *	159+36	LT	R3-H8CB-48	48 X 30		13-13			10.00			
571	S84	MS PIKE *	160+75	RT	R2-1-24	24 X 30		13			5.00			
572	S85	MS PIKE *	163+50	LT	R3-H8CB-48	48 X 30		13-13			10.00			
	S86	NOT USED												
	S87	NOT USED												
572	S88	MS PIKE #	164+75	RT	M2-H8-72	72 X 36			14-16		18.00			
573	S89	MS PIKE #	167+50	LT	M2-1-21	21 X 15		14			2.18			
					M1-1-24	24 X 24					4.00			
	S90	NOT USED												
573	S91	MS PIKE #	169+50	RT	R3-H6D-60	60 X 36	1				15.00		1	1
	S92	NOT USED												
573	S93	MS PIKE #	169+50	RT	R3-H6D-60	60 X 36					15.00			
		I.R. *					1	156	54	30	142.15	1		
		Earmark/Local #					1	14	30		54.18		1	1
TOTALS CARRIED TO GENERAL SUMMARY							2	170	84	30	196.33	1	1	1

CALCULATED GWA
CHECKED LAS

SIGNING ESTIMATED QUANTITIES

MOT-75-0.75

534
773

SHEET NO.	REFERENCE NO.	LOCATION	STATION	SIDE	CODE	SIZE (INCHES)	625 GROUND ROD EACH	630 GROUND MOUNTED SUPPORT, NO. 2 POST FT	630 GROUND MOUNTED SUPPORT, NO. 3 POST FT	630 SIGN, FLAT SHEET SQ FT	630 OVERHEAD SIGN SUPPORT, TYPE TC-16.20, DESIGN 3, AS PER PLAN EACH	630 SIGNAL SUPPORT, MISC.: SINGLE-ARM OVERHEAD SIGNAL SUPPORT, TYPE TC-81.21, DESIGN 33, AS PER PLAN EACH	630 RIGID OVERHEAD SIGN SUPPORT FOUNDATION EACH	630 REMOVAL OF GROUND MOUNTED POST SUPPORT AND DISPOSAL EACH	630 REMOVAL OF GROUND MOUNTED SIGN AND DISPOSAL EACH
574	S94	MS PIKE	172+52	LT	R4-7-30	30 X 30			13	6.25					
					R3-4-24	24 X 30				5.00					
574	S95	MS PIKE	173+37	LT										1	1
574	S96	MS PIKE	173+50	RT	R3-H6D-60	60 X 36	1			15.00	1		1		
	S97	NOT USED													
574	S98	MS PIKE	174+00	LT	R5-1-30	30 X 30			13	6.25					
					R3-2-30	30 X 30				6.25					
574	S99	MS PIKE	174+75	LT	R3-1-30	30 X 30			13	6.25					
					R4-8-24	24 X 30				5.00					
574	S100	MS PIKE	175+40	LT	W3-3-36	36 X 36			15	9.00					
574	S101	MS PIKE	176+43	LT										1	1
574	S102	MS PIKE	177+65	LT	R4-8-24	24 X 30		13		5.00					
574	S103	MS PIKE	177+79	RT	R4-7-24	24 X 30			13	5.00					
					R3-18-30	30 X 30				6.25					
574	S104	MS PIKE	177+95	RT	R10-6-24	24 X 30		13		5.00					
575	S105	SR 741	41+00	LT	M7-5-12	12 X 15			15	0.75					
					D11-1-24	24 X 18				3.00					
					D11-1-24	24 X 18				3.00					
					M7-5-12	12 X 15				0.75					
					R9-5-12	12 X 18				1.50					
575	S106	MS PIKE	178+25	RT										1	1
575	S107	SR 741	41+17	LT	R10-6-24	24 X 30		13		5.00					
575	S108	SR 741	40+50	LT										1	2
575	S109	SR 741	40+59	RT										1	2
575	S110	SR 741	40+70	RT	M7-5-12	12 X 15			15	0.75					
					D11-1-24	24 X 18				3.00					
					D11-1-24	24 X 18				3.00					
					M7-5-12	12 X 15				0.75					
					R9-5-12	12 X 18				1.50					
575	S111	AUSTIN	179+60	LT	R10-6-24	24 X 30		13		5.00					
575	S112	SR 741	37+96	RT	R10-6-24	24 X 30		13		5.00					
575	S113	SR 741	38+13	RT										1	1
575	S114	AUSTIN	179+74	LT	R3-18-30	30 X 30			13	6.25					
					R4-7-24	24 X 30				5.00					
575	S115	AUSTIN	180+47	LT										1	1
575	S116	AUSTIN	181+26	RT	W3-3-36	36 X 36			15	9.00					
575	S117	AUSTIN	181+67	RT	R4-8-24	24 X 30			13	5.00					
					R3-1-30	30 X 30				6.25					
	S118	NOT USED													
575	S119	AUSTIN	182+00	LT	R3-H6D-60	60 X 36	1			15.00		1	1		
575	S120	AUSTIN	182+00	LT	R3-H6D-60	60 X 36				15.00					
575	S121	AUSTIN	182+00	LT	R3-H6D-60	60 X 36				15.00					
575	S122	AUSTIN	182+75	RT	R5-1-30	30 X 30			13	6.25					
					R3-2-30	30 X 30				6.25					
575	S123	AUSTIN	183+02	LT										1	1
		Earmark/Local					2	65	151	202.25	1	1	2	8	10
TOTALS CARRIED TO GENERAL SUMMARY							2	65	151	202.25	1	1	2	8	10

CALCULATED GWA
CHECKED LAS

SIGNING ESTIMATED QUANTITIES

MOT-75-0.75

535
773

SHEET NO.	REFERENCE NO.	LOCATION	STATION	SIDE	CODE	SIZE (INCHES)	625 GROUND ROD EACH	630 GROUND MOUNTED SUPPORT, NO. 2 POST FT	630 GROUND MOUNTED SUPPORT, NO. 3 POST FT	630 SIGN, FLAT SHEET SQ FT	630 RAMP REFERENCE MARKER EACH	630 SIGNAL SUPPORT, MISC.: SINGLE-ARM OVERHEAD SIGNAL SUPPORT, TYPE TC-81.21, DESIGN 34, AS PER PLAN EACH	630 RIGID OVERHEAD SIGN SUPPORT FOUNDATION EACH	630 REMOVAL OF GROUND MOUNTED POST SUPPORT AND DISPOSAL EACH	630 REMOVAL OF GROUND MOUNTED SIGN AND DISPOSAL EACH
576	S124	AUSTIN #	184+00	RT	R3-4-30	30 X 30			13	6.25					
					R4-7-24	24 X 30				5.00					
576	S125	AUSTIN #	184+98	RT	R6-1R-36	36 X 12		12		3.00					
576	S126	AUSTIN #	186+50	LT	R3-H6D-60	60 X 36	1			15.00		1	1		
577	S127	AUSTIN #	190+00	LT	M2-H8-72	72 X 36			14-14	18.00					
576	S128	AUSTIN #	186+50	LT	R3-H6D-60	60 X 36				15.00					
576	S129	AUSTIN #	188+04	LT										1	1
577	S130	AUSTIN #	192+50	RT	R3-1-24	24 X 30		13		5.00					
577	S131	AUSTIN #	192+86	RT	R4-7-24	24 X 30			13	5.00					
					R3-4-30	30 X 30				6.25					
578	S132	AUSTIN #	195+00	LT	R2-1-24	24 X 30		13		5.00					
578	S133	AUSTIN #	197+50	LT	W6-1-36	36 X 36			15	9.00					
580	S134	WOOD #	40+60	RT	R2-1-24	24 X 30		13		5.00					
580	S135	WOOD #	41+00	LT	R3-H8BB-30	30 X 30			13	6.25					
580	S136	WOOD #	43+30	RT	W3-3-36	36 X 36			15	9.00					
581	S137	WOOD #	43+50	LT	R3-7R-30	30 X 30			13	6.25					
581	S138	WOOD #	44+70	RT										1	1
581	S139	WOOD #	45+00	RT	R3-H8B-48	48 X 30		13-13		10.00					
581	S140	WOOD #	48+20	LT	R2-1-24	24 X 30		13		5.00					
582	S141	SR 741 #	32+68	RT	M4-5-24	24 X 12			15	2.00					
					M1-1-24	24 X 24				4.00					
					M5-1-21	21 X 15				2.19					
582	S142	SR 741 #	33+90	LT	R3-9B-36	36 X 42		13-13		10.50					
582	S143	SR 741 #	33+89	RT	R3-H9K-36	36 X 12			14-14	3.00					
					R3-9B-36	36 X 42				10.50					
582	S144	SR 741 #	35+48	RT	R3-H8DA-54	54 X 30		13-13		11.25					
582	S145	SR 741 #	35+98	LT										2	1
582	S146	SR 741 #	36+02	RT										2	2
582	S147	SR 741 #	36+75	LT	M3-3-36	36 X 18			16-16	4.50					
					M1-5-36	45 X 36				11.25					
582	S148	SR 741 #	37+04	RT	D3-H6-72	72 X 12		12-12		6.00					
582	S149	SR 741 #	37+48	LT										1	1
583	S150	SR 741 #	41+79	LT										2	1
583	S151	SR 741 #	42+00	RT	M3-1-36	36 X 18			16-16	4.50					
					M1-5-36	45 X 36				11.25					
583	S152	SR 741 #	43+52	LT	R3-H8DA-54	54 X 30		13-13		11.25					
584	S153	SR 741 #	47+06	LT										2	1
853	S154	SR 741 #	46+00	LT	R3-H8CB-48	48 X 30		13-13		10.00					
584	S155	SR 741 #	47+60	LT	D3-H6-72	72 X 12		12-12		6.00					
584	S156	SR 741 #	49+50	LT	M4-5-24	24 X 12			15	2.00					
					M1-1-24	24 X 24				4.00					
					M5-1-21	21 X 15				2.19					
585	S157	NOT USED													
585	S158	NOT USED													
544	S159	RAMP P *	327+42	RT	W4-1R-48	48 X 48			14-14	16.00					
544	S160	RAMP P *	331+00	LT	D10-H5A-30	30 X 30			13		1				
545	S161	RAMP P *	334+50	LT	W4-2-36	36 X 36			15	9.00					
545	S162	RAMP P *	335+95	LT	R5-10B-30	30 X 18		13		3.75					
		I.R. *						13	56	28.75	1				
		Earmark/Local #					1	242	232	250.38		1	1	11	8
TOTALS CARRIED TO GENERAL SUMMARY							1	255	288	279.13	1	1	1	11	8

CALCULATED GWA
CHECKED LAS

SIGNING ESTIMATED QUANTITIES

MOT-75-0.75

536
773

SHEET NO.	REFERENCE NO.	LOCATION	STATION	SIDE	CODE	SIZE (INCHES)	630 GROUND MOUNTED SUPPORT, NO. 2 POST FT	630 GROUND MOUNTED SUPPORT, NO. 3 POST FT	630 SIGN, FLAT SHEET SQ FT	630 RAMP REFERENCE MARKER EACH	630 REMOVAL OF GROUND MOUNTED SIGN AND DISPOSAL EACH	630 REMOVAL OF GROUND MOUNTED POST SUPPORT AND DISPOSAL EACH
570	S163	I-75	39+53	LT							1	2
570	S164	I-75	39+53	LT							1	2
538	S165	I-75	6+50	LT	M3-3-36	36 X 18		15-15	4.50			
					M1-1-36	36 X 36			9.00			
550	S166	RAMP M	441+10	RT	R5-1A-36	36 X 24	13		6.00			
550	S167	RAMP M	441+10	LT	R5-1A-36	36 X 24	13		6.00			
551	S168	RAMP M	445+40	RT	R3-H8CS-48	48 X 30	13-13		10.00			
551	S169	RAMP M	445+40	LT	R3-H8CS-48	48 X 30	13-13		10.00			
551	S170	RAMP M	448+00	LT	D10-H5A-30	30 X 30		13		1		
553	S171	I-75	57+38	LT							1	1
553	S172	I-75	57+38	LT	D10-2-12	12 X 36	14		3.00			
557	S173	I-75	57+39	RT							1	1
557	S174	I-75	57+39	RT	D10-2-12	12 X 36	14		3.00			
539	S175	I-75	67+86	LT							1	2
539	S176	I-75	76+21	LT							1	2
549	S177	RAMP H	235+00	RT	D10-H5A-30	30 X 30		13		1		
549	S178	RAMP H	236+40	RT	R3-H8CS-48	48 X 30	13-13		10.00			
549	S179	RAMP H	236+40	LT	R3-H8CS-48	48 X 30	13-13		10.00			
549	S180	RAMP H	238+50	RT	R5-1A-36	36 X 24	13		6.00			
549	S181	RAMP H	238+50	LT	R5-1A-36	36 X 24	13		6.00			
555	S182	RAMP J	142+15	RT	R5-10B-30	30 X 30		13	6.25			
555	S183	RAMP J	146+00	RT	D10-H5A-30	30 X 30		13		1		
556	S184	I-75	51+78	RT	W4-3R-48	48 X 48		15-15	16.00			
		I.R.					184	112	105.75	3	6	10
TOTALS CARRIED TO GENERAL SUMMARY							184	112	105.75	3	6	10

CALCULATED GWA
CHECKED LAS

SIGNING ESTIMATED QUANTITIES

MOT-75-0.75

SIGNING LEGEND

Existing Sign to Remain	Existing Sign to be Relocated	Existing Sign to be Removed	PROPOSED SIGN
STOP	STOP	STOP	STOP

FOR PAVEMENT MARKING INFORMATION
SEE SHEETS 460 TO 527.

HORIZONTAL SCALE IN FEET
0 100 200 400

CALCULATED GWA
CHECKED LAS

ADVANCE GUIDE SIGNS I-75 NORTHBOUND

MOT-75.075

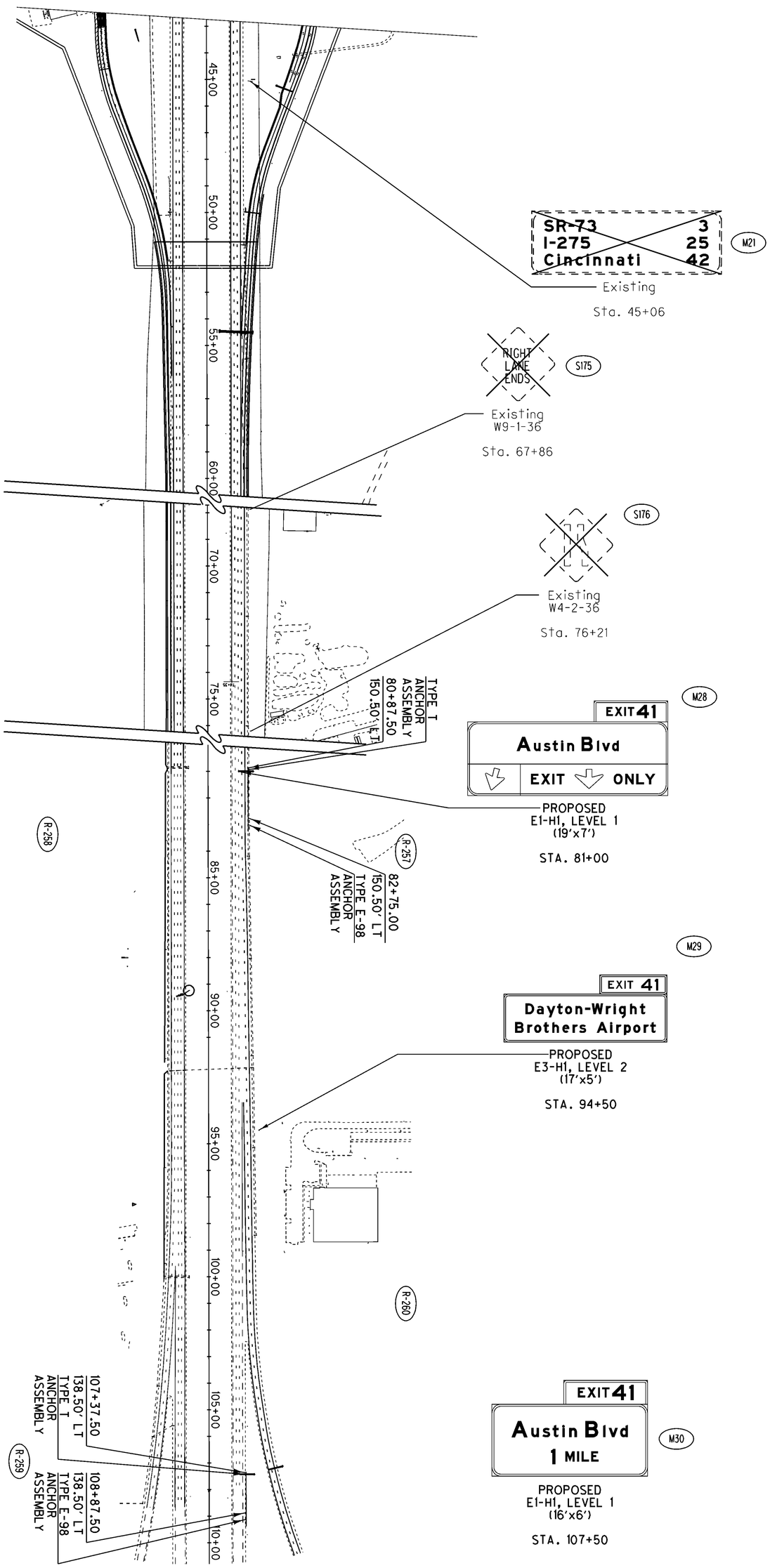

FOR SIGN LEGEND, SEE SHEET 538.

RAMP P

MATCH LINE STA. 9+50
SEE SHEET 541

5+00

6+00

7+00

℄ CONSTRUCTION I-75

8+00

9+00

FOR SIGNING LEGEND, SEE SHEET 538.

SIGNING PLAN RAMP P
STA. 7+50 TO LIMIT OF WORK

CALCULATED GWA
CHECKED LAS

0 10 20 40
HORIZONTAL SCALE IN FEET

MOT-75-0.75

FOR SIGNING LEGEND, SEE SHEET 538.

HORIZONTAL SCALE IN FEET
0 10 20 40

CALCULATED GWA
CHECKED LAS

SIGNING PLAN RAMP P
STA. 311+57.11 TO STA. 315+00

MOT-75-0.75

541
773

FOR SIGNING LEGEND, SEE SHEET 538.

HORIZONTAL SCALE IN FEET
0 10 20 40

CALCULATED GWA
CHECKED LAS

SIGNING PLAN RAMP P
STA. 315+00 TO STA. 320+50

MOT-75-0.75

542
773

FOR SIGNING LEGEND, SEE SHEET 538.

HORIZONTAL SCALE IN FEET
0 10 20 40

CALCULATED GWA
CHECKED LAS

SIGNING PLAN RAMP P
STA. 320+50 TO STA. 326+00

MOT-75-0.75

543
773

M14

STATE LAW
MOVE OVER OR SLOW DOWN
FOR STOPPED LAW ENFORCEMENT
AND PUBLIC SAFETY VEHICLES

Existing
R16-H15-120
Sta. 27+29

S159

PROPOSED
W4-1R-48
STA. 327+42

S160

PROPOSED
D10-H5A-30
STA. 331+00

RAMP
AUSTIN
TO
S 75

MATCH LINE STA. 326+00 SEE SHEET 543

MATCH LINE STA. 331+50 SEE SHEET 545

327+00

328+00

329+00

℄ CONSTRUCTION
RAMP P

330+00

331+00

I-75 Southbound

S
State
75
41/4

Existing
D10-H5-14
Sta. 27+59

27+00

℄ CONSTRUCTION I-75

28+00

EMERGENCY
AND
AUTHORIZED
VEHICLES
ONLY

Existing
R3-H4A-?
Sta. 28+58

Existing
R3-4-?
Sta. 28+64

FOR SIGNING LEGEND, SEE SHEET 538.

N

0 10 20 40
HORIZONTAL
SCALE IN FEET

CALCULATED MAG
CHECKED AJS

SIGNING PLAN RAMP P
STA. 326+00 TO STA. 331+50

MOT-75-0.75

544
773

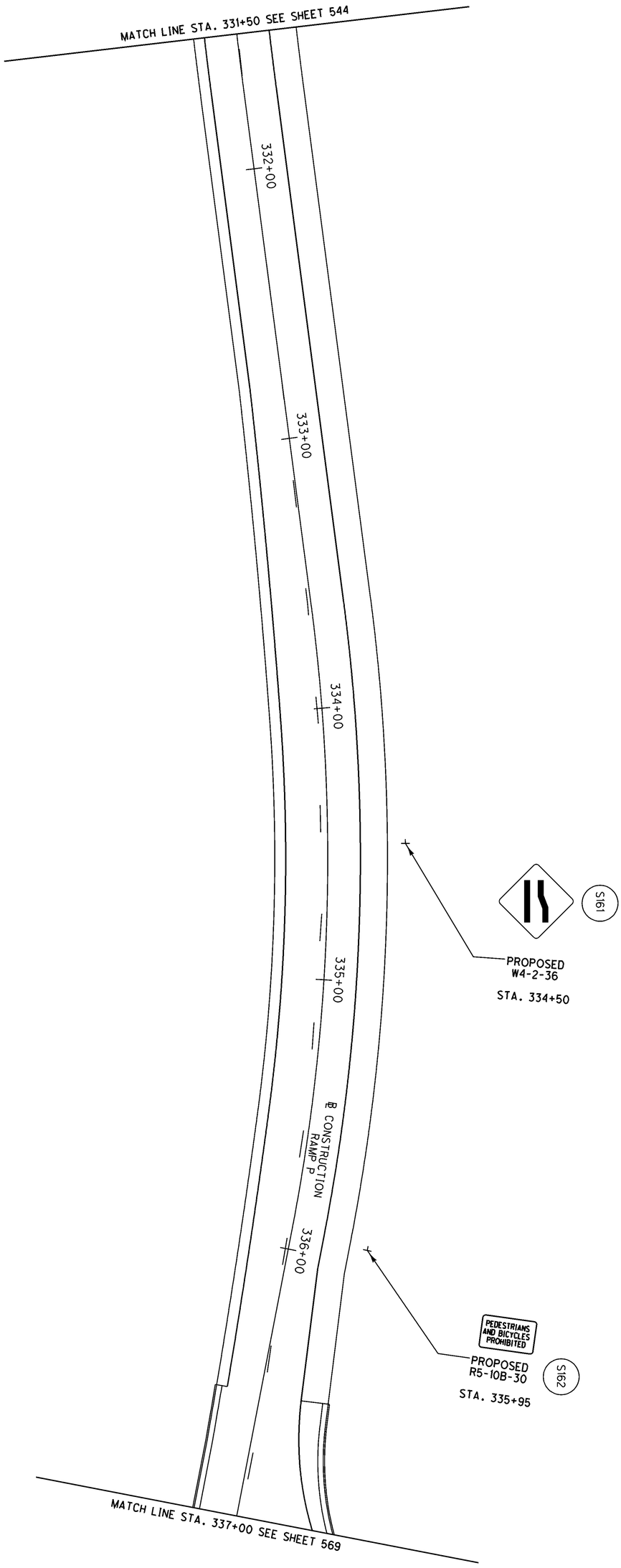

FOR SIGNING LEGEND, SEE SHEET 538.

545
773

MOT-75-0.75

SIGNING PLAN RAMP P
STA. 331+50 TO STA. 337+00

CALCULATED GWA
CHECKED LAS

0 10 20 40
HORIZONTAL SCALE IN FEET

FOR SIGNING LEGEND, SEE SHEET 538.

SIGNING PLAN RAMP H
STA. 21+69.38 TO STA. 223+00

CALCULATED GWA
CHECKED LAS

HORIZONTAL SCALE IN FEET
0 10 20 40

MOT-75-0.75

546
773

FOR SIGNING LEGEND, SEE SHEET 538.

HORIZONTAL SCALE IN FEET
0 10 20 40

CALCULATED GWA
CHECKED LAS

SIGNING PLAN RAMP H
STA. 223+00 TO STA. 228+50

MOT-75-0.75

I-75 Northbound

EMERGENCY AUTHORIZED VEHICLES ONLY

Existing R3-H4A-2 Sta. 28+70

Existing R3-4-2 Sta. 28+89

MATCH LINE STA. 228+50 SEE SHEET 547

229+00 ℄ CONSTRUCTION RAMP H

230+00

231+00

232+00

233+00

MATCH LINE STA. 234+00 SEE SHEET 549

EXIT 41

PROPOSED E5-H1A-72 STA. 30+36

M16

Wright State University FOLLOW

EXIT 43

Existing E1-H1-118 Sta. 31+16

M17

FOR SIGNING LEGEND, SEE SHEET 538.

N

0 10 20 40 HORIZONTAL SCALE IN FEET

CALCULATED GWA

CHECKED LAS

SIGNING PLAN H

STA. 228+50 TO STA. 234+00

MOT-75-0.75

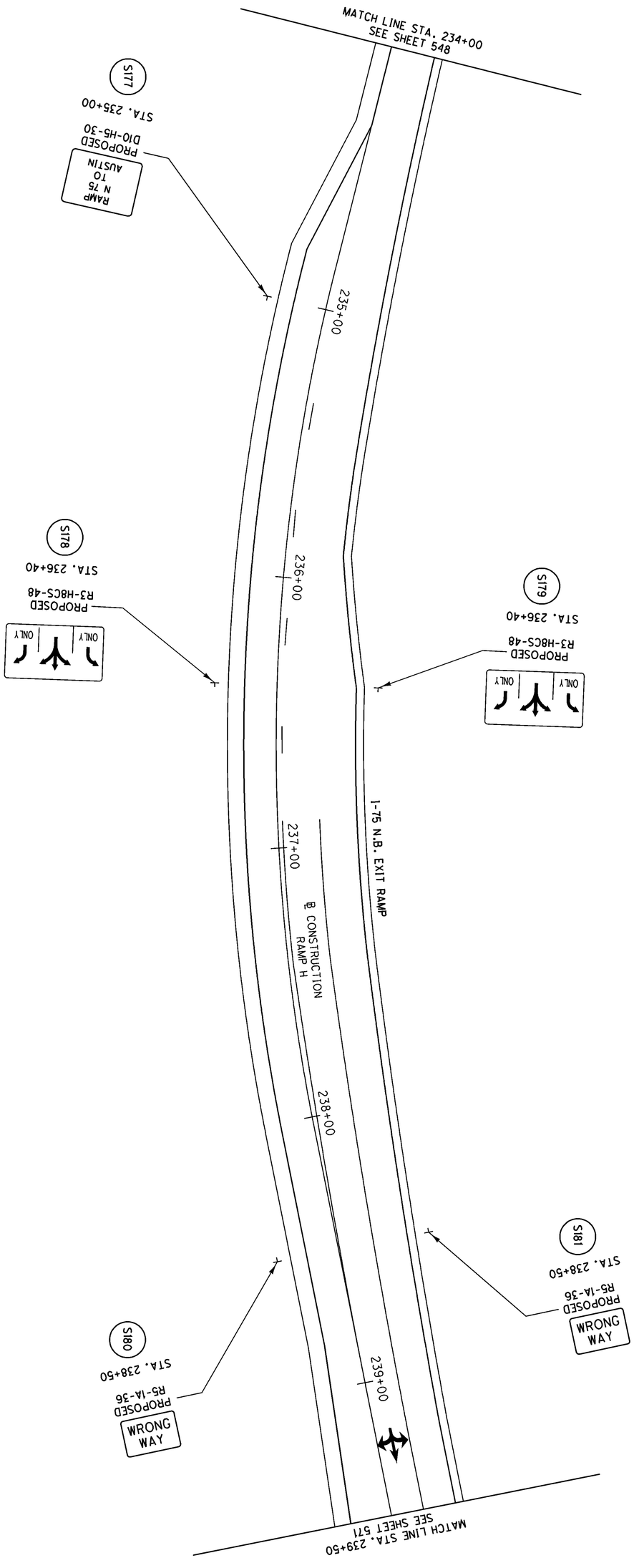

FOR SIGNING LEGEND, SEE SHEET 538.

549
773

MOT-75-0.75

SIGNING PLAN RAMP H
STA. 234+00 TO STA. 239+50

CALCULATED GWA
CHECKED LAS

0 10 20 40
HORIZONTAL SCALE IN FEET

N

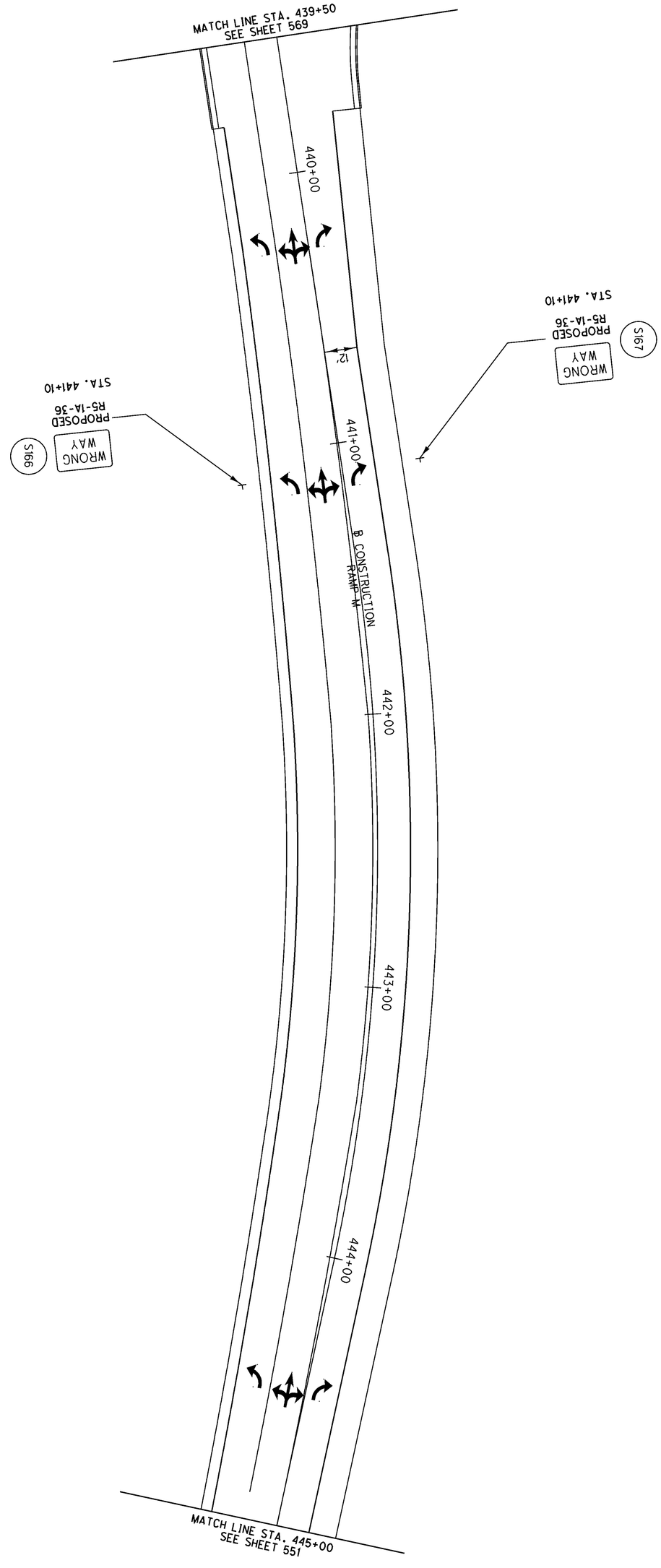

FOR SIGNING LEGEND, SEE SHEET 538.

550 / 773	MOT-75-0.75	SIGNING PLAN RAMP M STA. 439+50 TO STA. 445+00	CALCULATED GWA CHECKED LAS	0 10 20 40 HORIZONTAL SCALE IN FEET

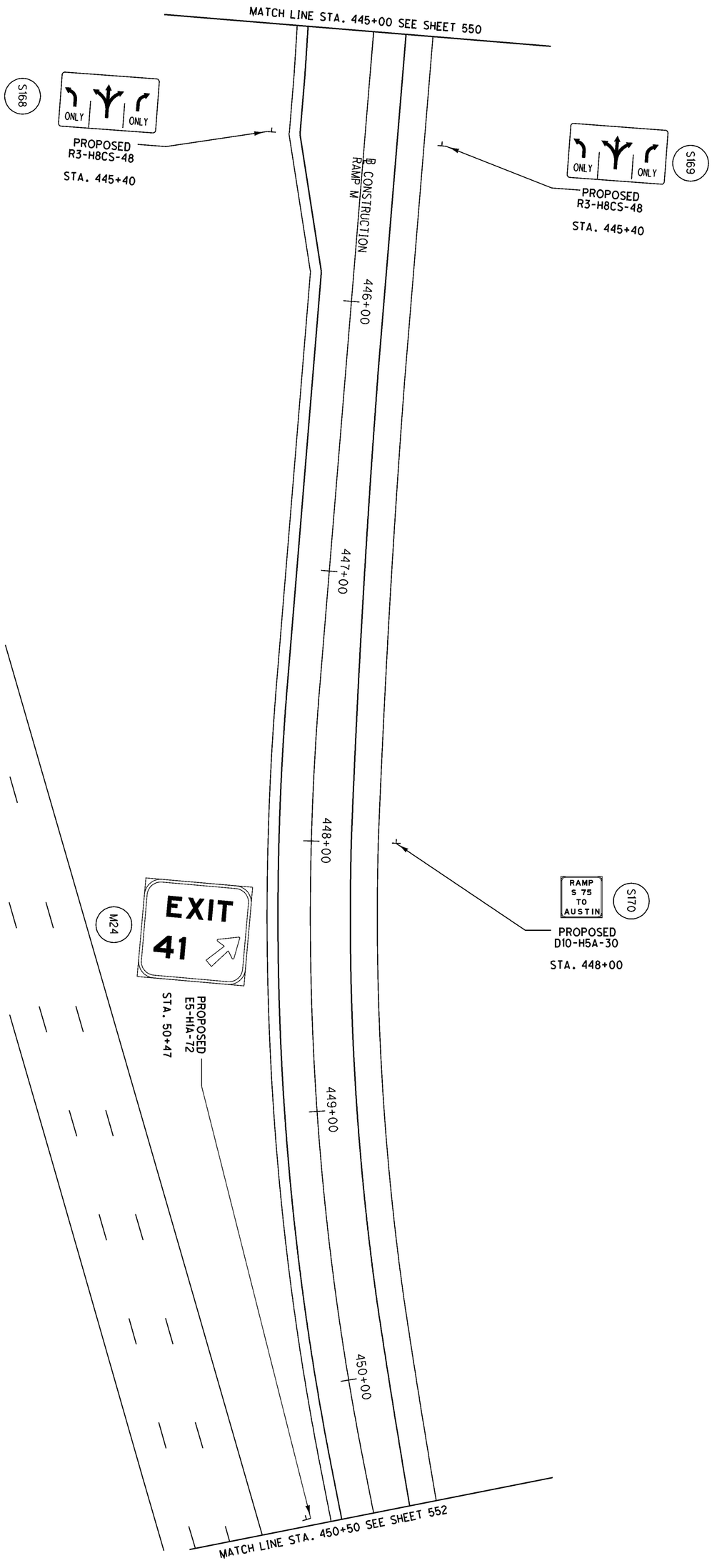

FOR SIGNING LEGEND, SEE SHEET 538.

551
773

MOT-75-0.75

SIGNING PLAN RAMP M
STA. 445+00 TO STA. 450+50

CALCULATED GWA
CHECKED LAS

0 10 20 40
HORIZONTAL SCALE IN FEET

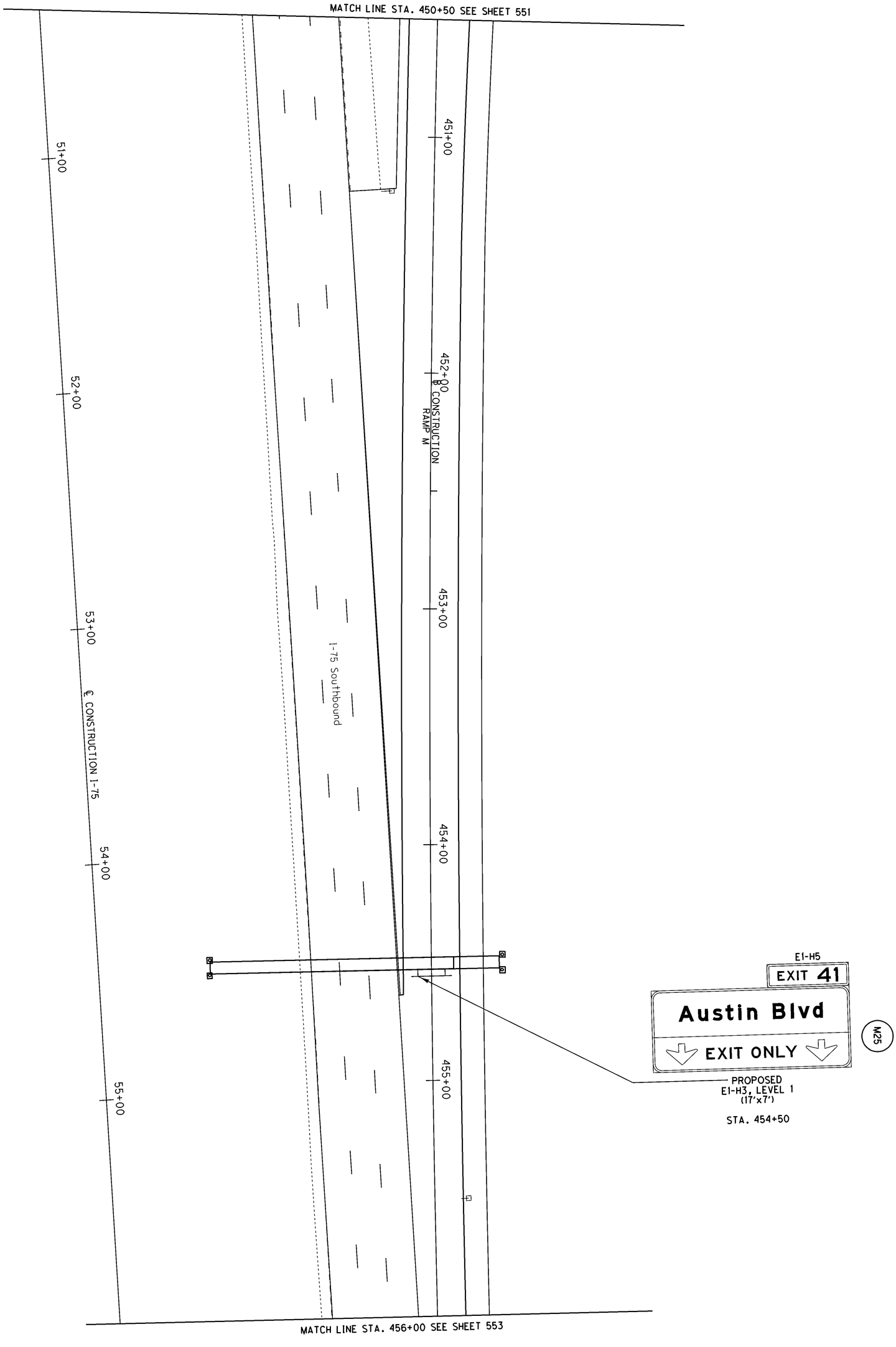

FOR SIGNING LEGEND, SEE SHEET 538.

552
773

MOT-75-0.75

SIGNING PLAN RAMP M
STA. 450+50 TO STA. 456+00

CALCULATED GWA
CHECKED LAS

0 10 20 40
HORIZONTAL SCALE IN FEET

FOR SIGNING LEGEND, SEE SHEET 538.

HORIZONTAL SCALE IN FEET
0 10 20 40

CALCULATED GWA
CHECKED LAS

SIGNING PLAN RAMP M AND I-75
STA. 456+00 RAMP M TO STA. 61+50 I-75

MOT-75-0.75

FOR SIGNING LEGEND, SEE SHEET 538.

HORIZONTAL SCALE IN FEET
0 10 20 40

CALCULATED GWA
CHECKED LAS

SIGNING PLAN RAMP M AND I-75
STA. 61+50 TO STA. 65+00

MOT-75-0.75

554
773

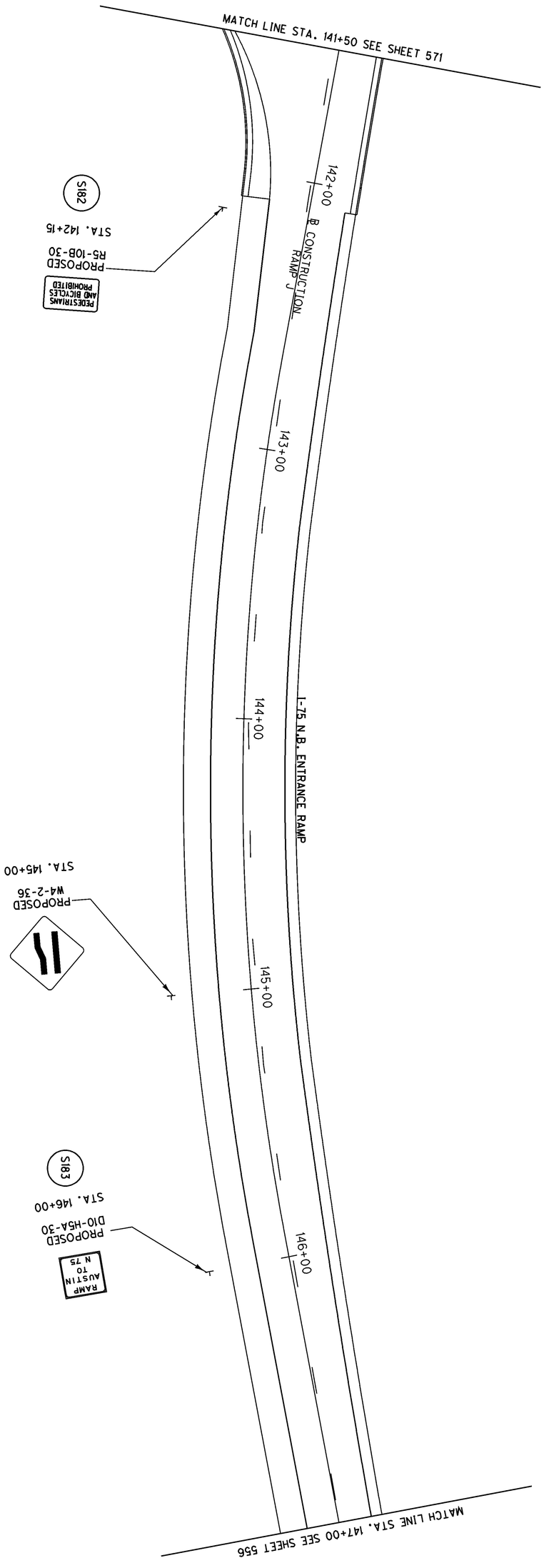

555 / 773	MOT-75-0.75	SIGNING PLAN RAMP J STA. 141+50 TO STA. 147+00	CALCULATED GWA CHECKED LAS	0 20 10 40 HORIZONTAL SCALE IN FEET

FOR SIGNING LEGEND, SEE SHEET 538.

SIGNING PLAN RAMP J
STA. 147+00 TO STA. 152+50

MOT-75-0.75

FOR SIGNING LEGEND, SEE SHEET 538.

HORIZONTAL SCALE IN FEET
0 10 20 40

CALCULATED GWA
CHECKED LAS

SIGNING PLAN RAMP J
STA. 152+50 TO STA. 158+00

MOT-75-0.75

FOR SIGNING LEGEND, SEE SHEET 538.

HORIZONTAL SCALE IN FEET
0 10 20 40

CALCULATED GWA
CHECKED LAS

SIGNING PLAN RAMP J AND I-75
STA. 158+00 RAMP J TO STA. 63+50 I-75

MOT-75-0.75

64+00 65+00 66+00 ℄ CONSTRUCTION I-75 67+00 68+00

N (75,) 42 2
Existing D10-H5-14
Sta. 67+71

MATCH LINE STA. 63+50
SEE SHEET 558

I-75 Northbound

MATCH LINE STA. 69+00
SEE SHEET 560

FOR SIGNING LEGEND, SEE SHEET 538.

HORIZONTAL SCALE IN FEET
0 10 20 40

CALCULATED GWA
CHECKED LAS

SIGNING PLAN RAMP J AND I-75
STA. 63+50 TO STA. 69+00

MOT-75-0.75

559
773

FOR SIGNING LEGEND, SEE SHEET 538.

N

0 10 20 40
HORIZONTAL
SCALE IN FEET

CALCULATED GWA
CHECKED LAS

SIGNING PLAN RAMP J AND I-75
STA. 69+00 TO STA. 74+50

MOT-75-0.75

560
773

FOR SIGNING LEGEND, SEE SHEET 538.

HORIZONTAL SCALE IN FEET
0 10 20 40

CALCULATED MAG
CHECKED AJS

SIGNING PLAN RAMP J AND I-75
STA. 74+50 TO STA. 79+00

MOT-75-0.75

561
773

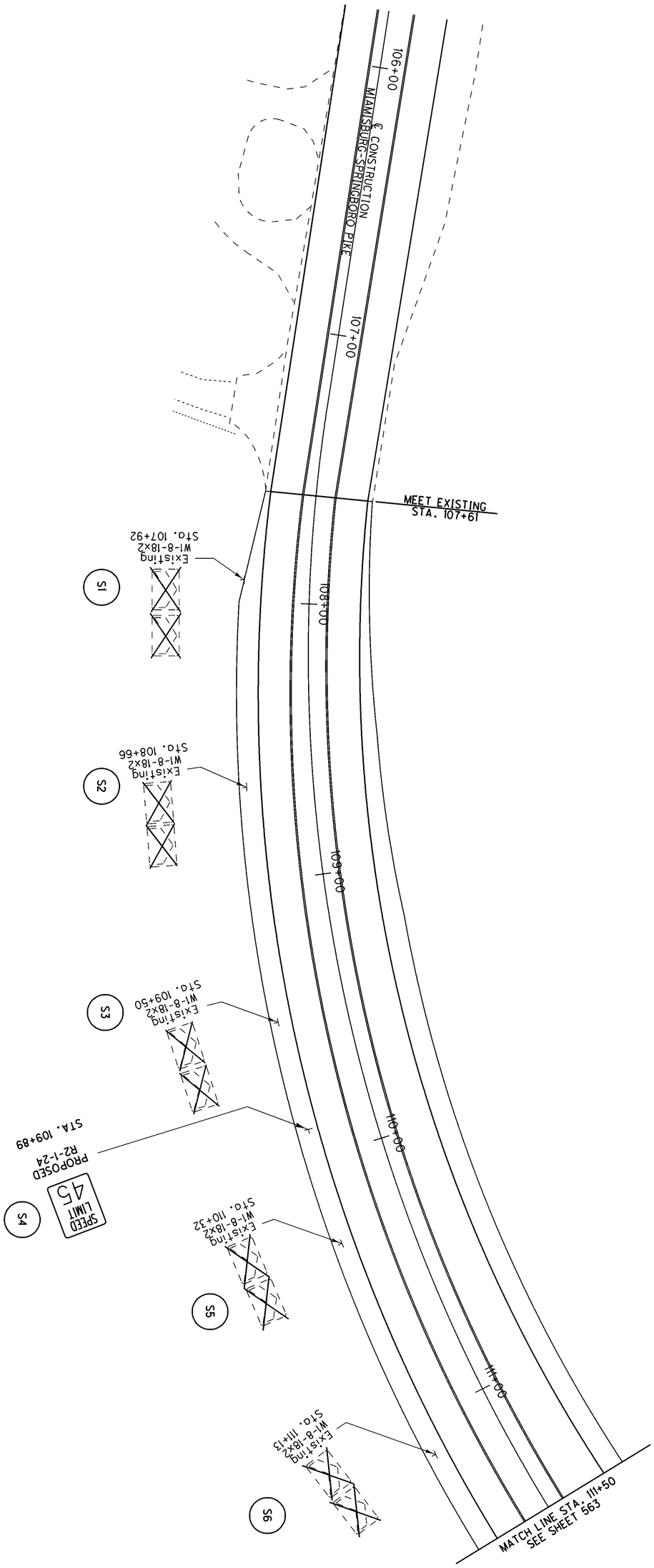

FOR SIGNING LEGEND, SEE SHEET 538.

562 / 773	MOT-75-0.75	SIGNING PLAN MIAMISBURG-SPRINGBORO PIKE STA. 107+60 TO STA. 111+50	CALCULATED GWA / CHECKED LAS	0 10 20 40 HORIZONTAL SCALE IN FEET	N

MATCH LINE STA. 111+50
SEE SHEET 562

112+00

℄ CONSTRUCTION MIAMISBURG-SPRINGBORO PIKE

113+00

114+00

115+00

116+00

MATCH LINE STA. 117+00
SEE SHEET 564

MIAMISBURG-SPRINGBORO PIKE

CRAINS CREEK ROAD

S7
PROPOSED
W11-2-36
STA. 111+75

S8
Existing
W1-8-18x2
Sta. 111+93

S9
Existing
W1-8-18x2
Sta. 112+74

S10
PROPOSED
R3-H8BH-36
ONLY
STA. 113+20

S11
PROPOSED
W4-2-36
STA. 114+50

S12
STOP
PROPOSED
R1-1-30
STA. 115+79

S13
STOP
Existing
R1-1-30
Sta. 115+92

S14
STOP
Existing
D3-1-Var.
D3-1-Var.
R1-1-30
Sta. 116+36

S15
PROPOSED
BIKE ROUTE
D11-1-24
M7-1-12
STA. 115+88

PROPOSED
BIKE ROUTE
D11-1-24
M7-1-12
STA. 116+50

S16
STOP
PROPOSED
D3-1-VAR.
D3-1-VAR.
R1-1-30
STA. 116+50

Cold Key Homes
Private Sign
REMOVE

NEW HOMES
CRAINS RUN
Private Sign
REMOVE

Cold Key Homes
Private Sign
REMOVE

Cold Key Homes
Private Sign
REMOVE

CRAINS CREEK RD

MIAMISBURG-SPRINGBORO PK

Crains Creek Rd

Austin Blvd

FOR SIGNING LEGEND, SEE SHEET 538.

N

0 10 20 40
HORIZONTAL SCALE IN FEET

CALCULATED GWA
CHECKED LAS

SIGNING PLAN MIAMISBURG- SPRINGBORO PIKE STA. 111+50 TO STA. 117+00

MOT-75-0.75

563
773

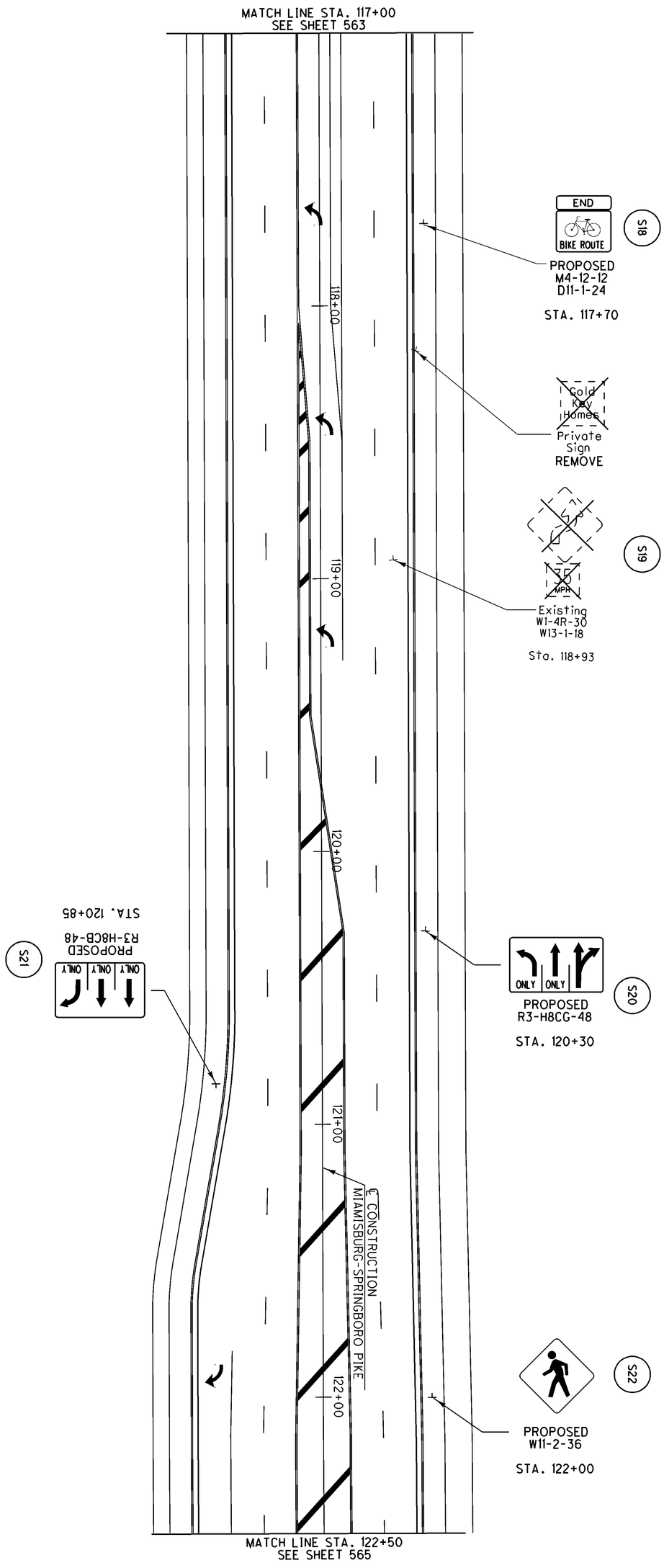

FOR SIGNING LEGEND, SEE SHEET 538.

564
773

MOT-75-0.75

SIGNING PLAN MIAMISBURG-SPRINGBORO PIKE
STA. 117+00 TO STA. 122+50

CALCULATED GWA
CHECKED LAS

0 20
10 40
HORIZONTAL SCALE IN FEET

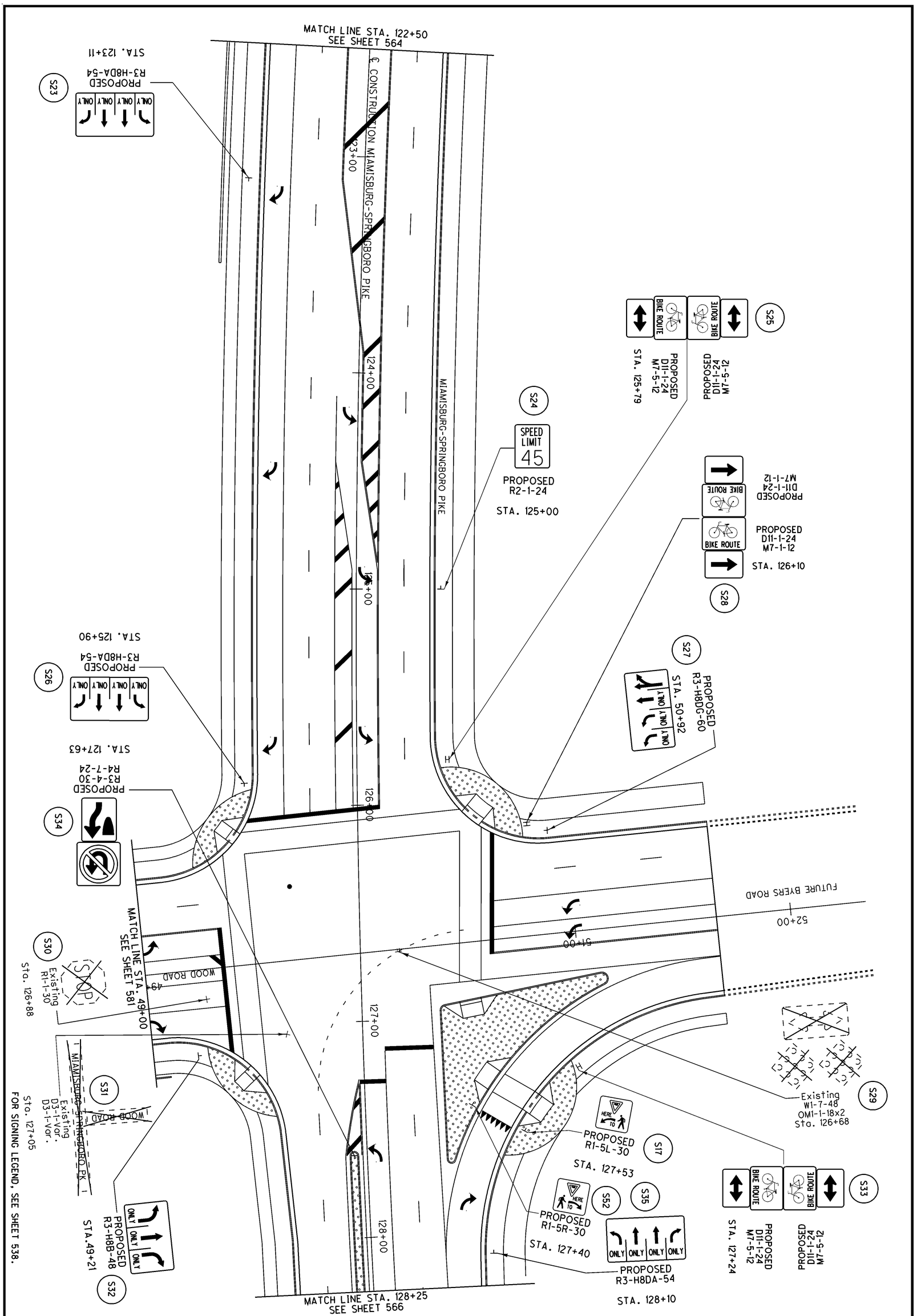

FOR SIGNING LEGEND, SEE SHEET 538.

565 / 773	MOT-75-0.75	SIGNING PLAN MIAMISBURG-SPRINGBORO PIKE STA. 122+50 TO STA. 128+25	CALCULATED GWA CHECKED LAS	0 20 10 40 HORIZONTAL SCALE IN FEET

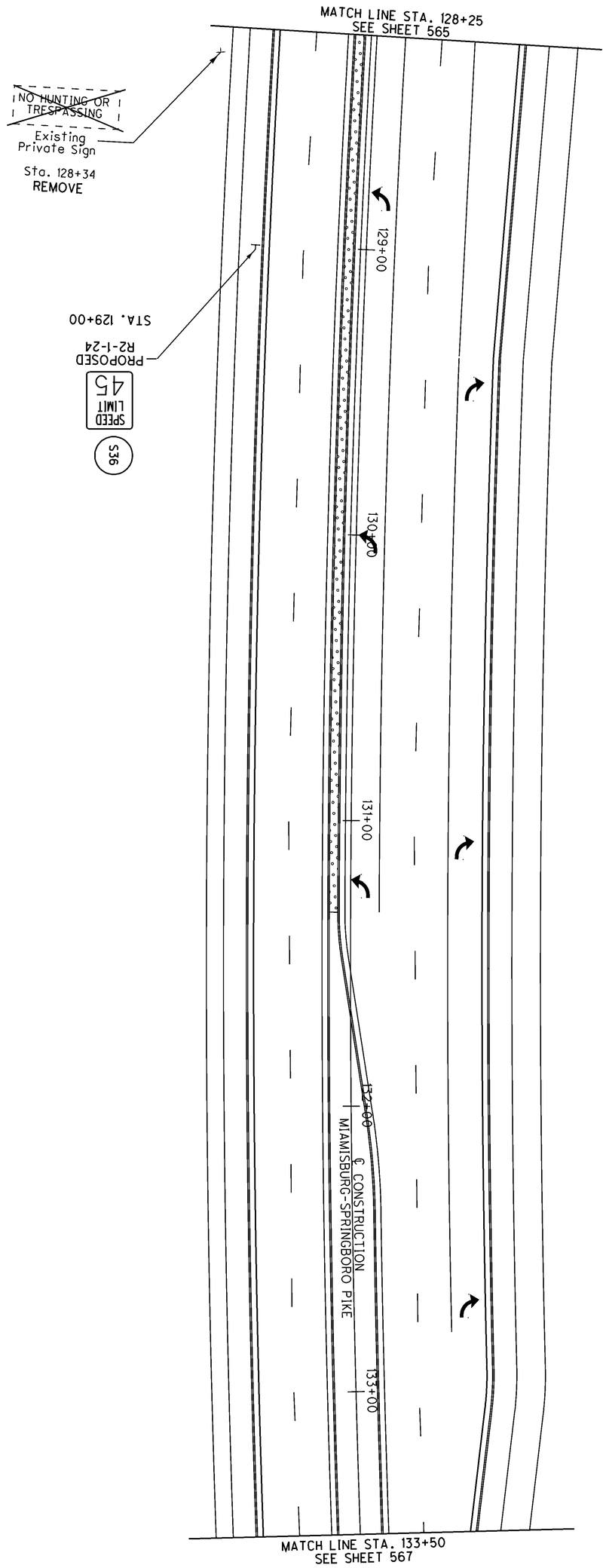

FOR SIGNING LEGEND, SEE SHEET 538.

566 / 773	MOT-75-0.75	SIGNING PLAN MIAMISBURG-SPRINGBORO PIKE STA. 128+25 TO STA. 133+50	CALCULATED GWA CHECKED LAS	0 10 20 40 HORIZONTAL SCALE IN FEET

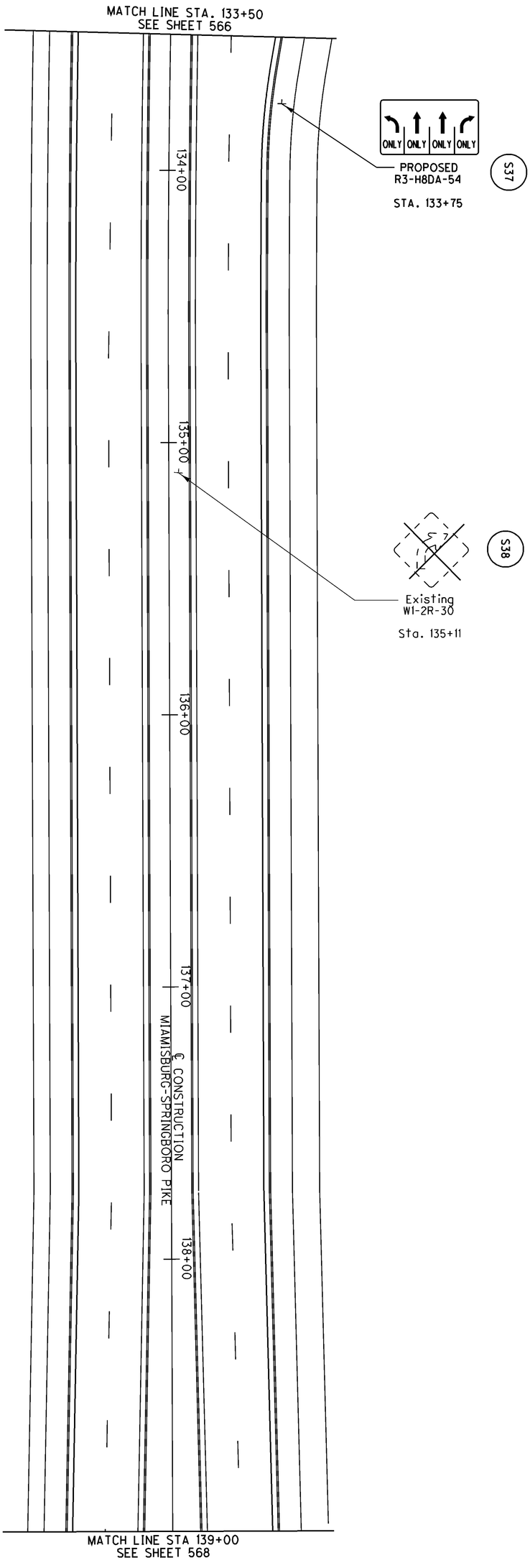

FOR SIGNING LEGEND, SEE SHEET 538.

567 / 773	MOT-75-0.75	SIGNING PLAN MIAMISBURG-SPRINGBORO PIKE STA. 133+50 TO STA. 139+00	CALCULATED GWA CHECKED LAS	0 10 20 40 HORIZONTAL SCALE IN FEET

S46 STOP
PROPOSED
R1-1-30
STA. 141+36

S45 Byers Rd
Austin Blvd
PROPOSED
D3-1-36
D3-1-45
STA. 70+66

S42 STOP
Existing
R1-1-30
Sta. 141+39

S40 BYERS ROAD
MIAMISBURG-SPRINGBORO PK
Existing
D3-1-Var.
D3-1-Var.
Sta. 141+32

S44 ONE WAY
PROPOSED
R6-1R-36
STA. 70+58

S39 TOWNSHIP MIAMI
Existing
Special
Sta. 141+28

BYERS ROAD

72+00

71+00

S47 SPEED LIMIT 35
PROPOSED
R2-1-24
STA. 71+23

S48 SPEED LIMIT 35
Existing
R2-1-24
Sta. 71+05

S49 CITY OF MIAMISBURG A NEIGHBORHOOD WATCH COMMUNITY
Existing
Special
Sta. 141+84

18" Dia. Pole
Billboard
(REMOVE)

MATCH LINE STA 139+00
SEE SHEET 567

140+00

141+00

142+00

143+00

144+00

℄ CONSTRUCTION MIAMISBURG-SPRINGBORO PIKE

MATCH LINE STA 144+50
SEE SHEET 569

S41
Existing
OM3R-1
Sta. 141+32

S43
Existing
W1-7-8
OM1-1-18x2
Sta. 141+43

M1
PROPOSED
M2-H5
(108"x48")
STA. 142+25

NORTH
LEFT LANE
75
SOUTH

S50
Existing
OM2-2V-12
Sta. 143+03

FOR SIGNING LEGEND, SEE SHEET 538.

N

HORIZONTAL SCALE IN FEET
0 10 20 40

CALCULATED GWA
CHECKED LAS

SIGNING PLAN MIAMISBURG-SPRINGBORO PIKE
STA. 139+00 TO STA. 144+50

MOT-75-0.75

568
773

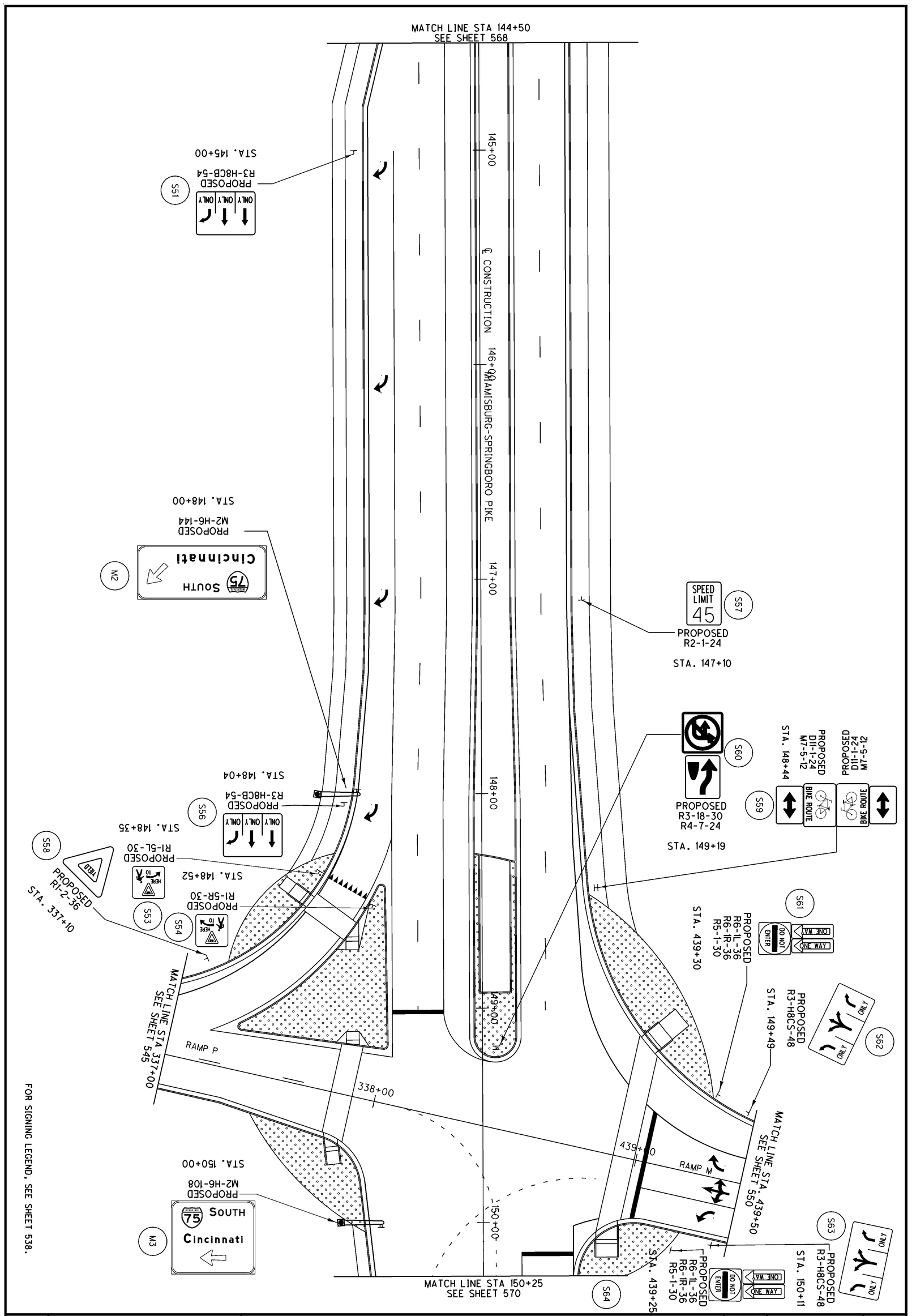

569 / 773	MOT-75-0.75	SIGNING PLAN MIAMISBURG-SPRINGBORO PIKE STA. 144+50 TO STA. 150+25	CALCULATED GWA CHECKED LAS	0 10 20 40 HORIZONTAL SCALE IN FEET

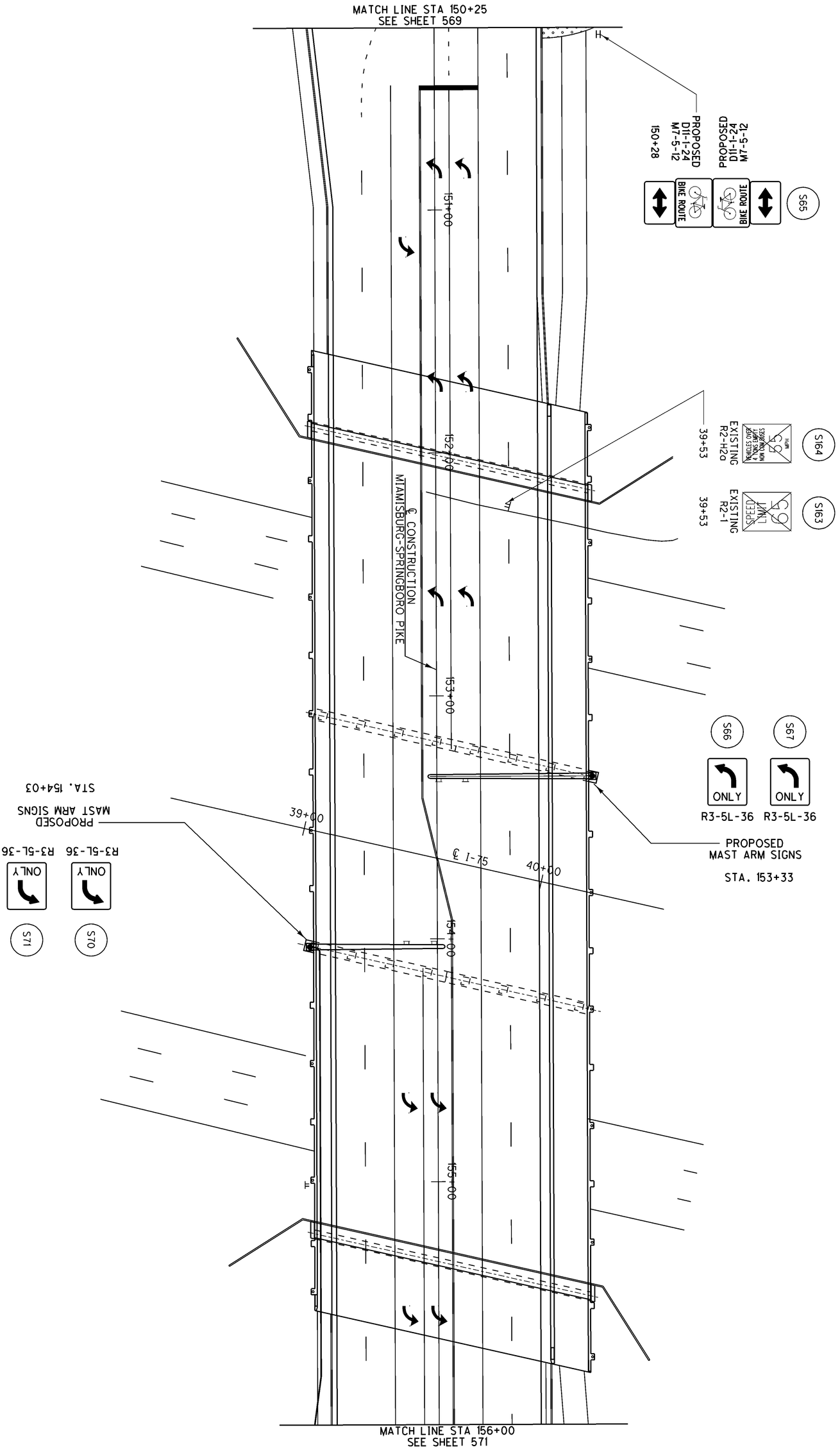

FOR SIGNING LEGEND, SEE SHEET 538.

570 / 773	MOT-75-0.75	SIGNING PLAN MIAMISBURG-SPRINGBORO PIKE STA. 150+25 TO STA. 156+00	CALCULATED GWA CHECKED LAS	0 20 10 40 HORIZONTAL SCALE IN FEET

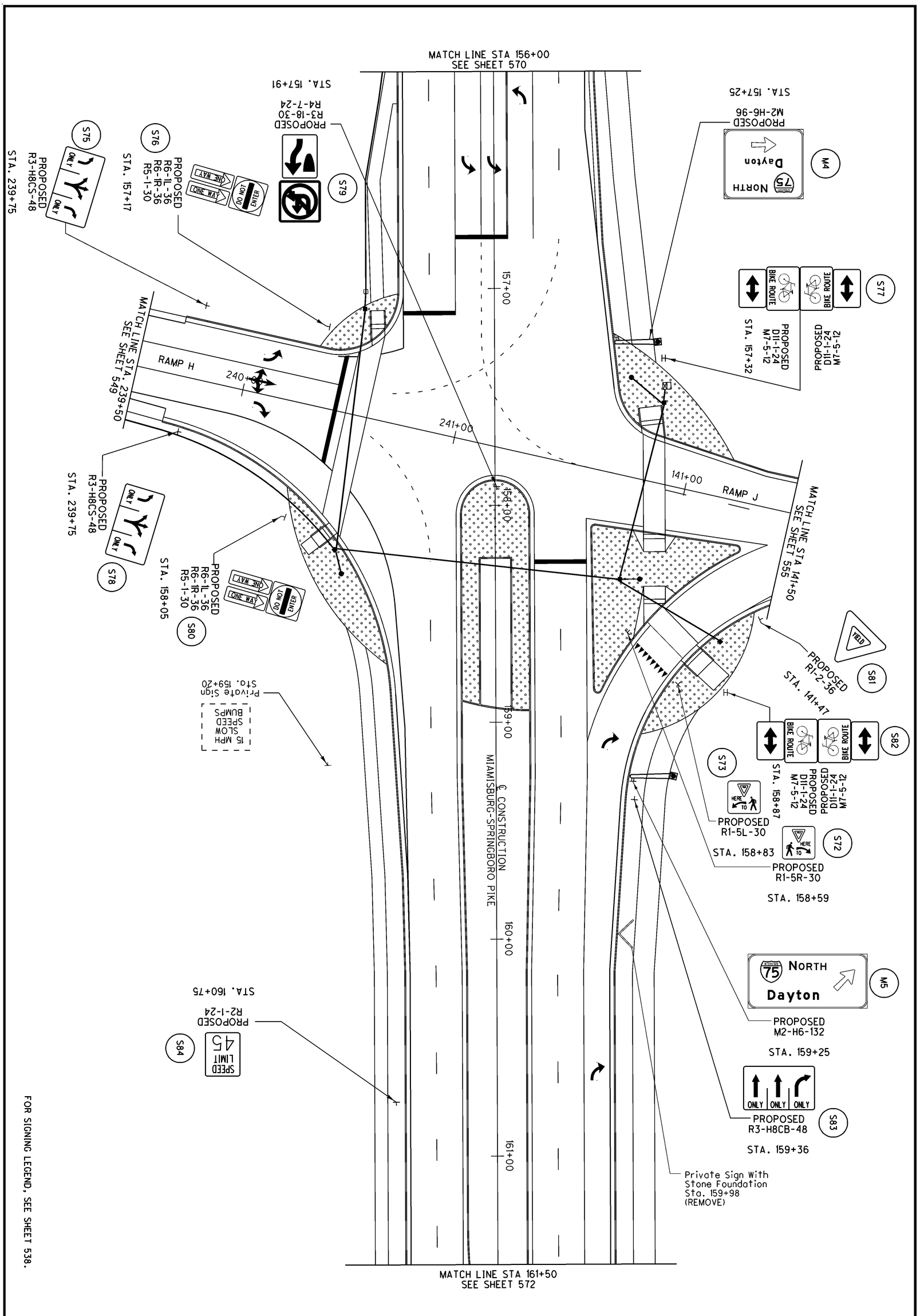

FOR SIGNING LEGEND, SEE SHEET 538.

571 / 773	MOT-75-0.75	SIGNING PLAN MIAMISBURG-SPRINGBORO PIKE STA. 156+00 TO STA. 161+50	CALCULATED GWA CHECKED LAS	0 20 40 10 HORIZONTAL SCALE IN FEET

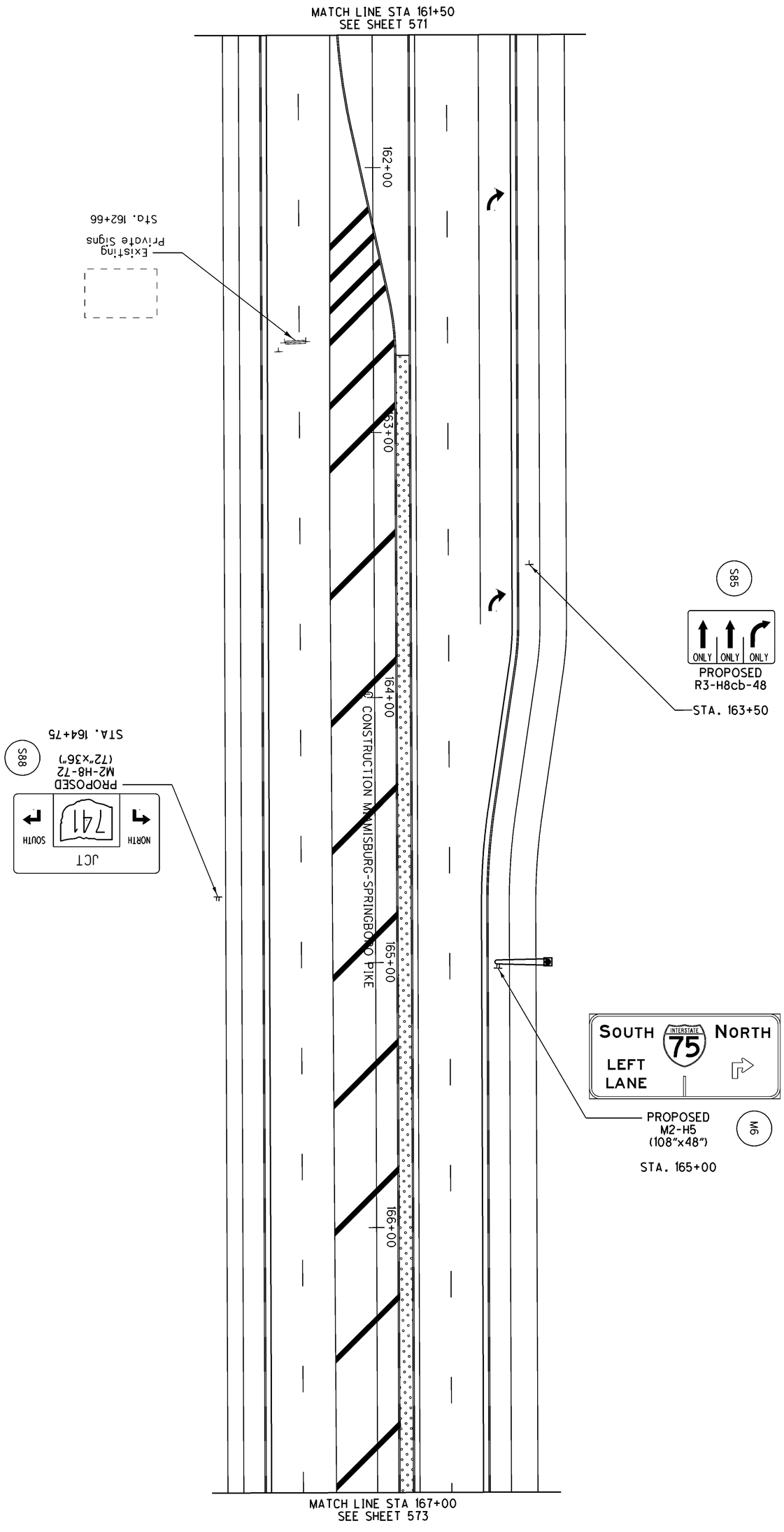

FOR SIGNING LEGEND, SEE SHEET 538.

572 / 773	MOT-75-0.75	SIGNING PLAN MIAMISBURG-SPRINGBORO PIKE STA. 161+50 TO STA. 167+00	CALCULATED GWA CHECKED LAS	0 20 10 40 HORIZONTAL SCALE IN FEET

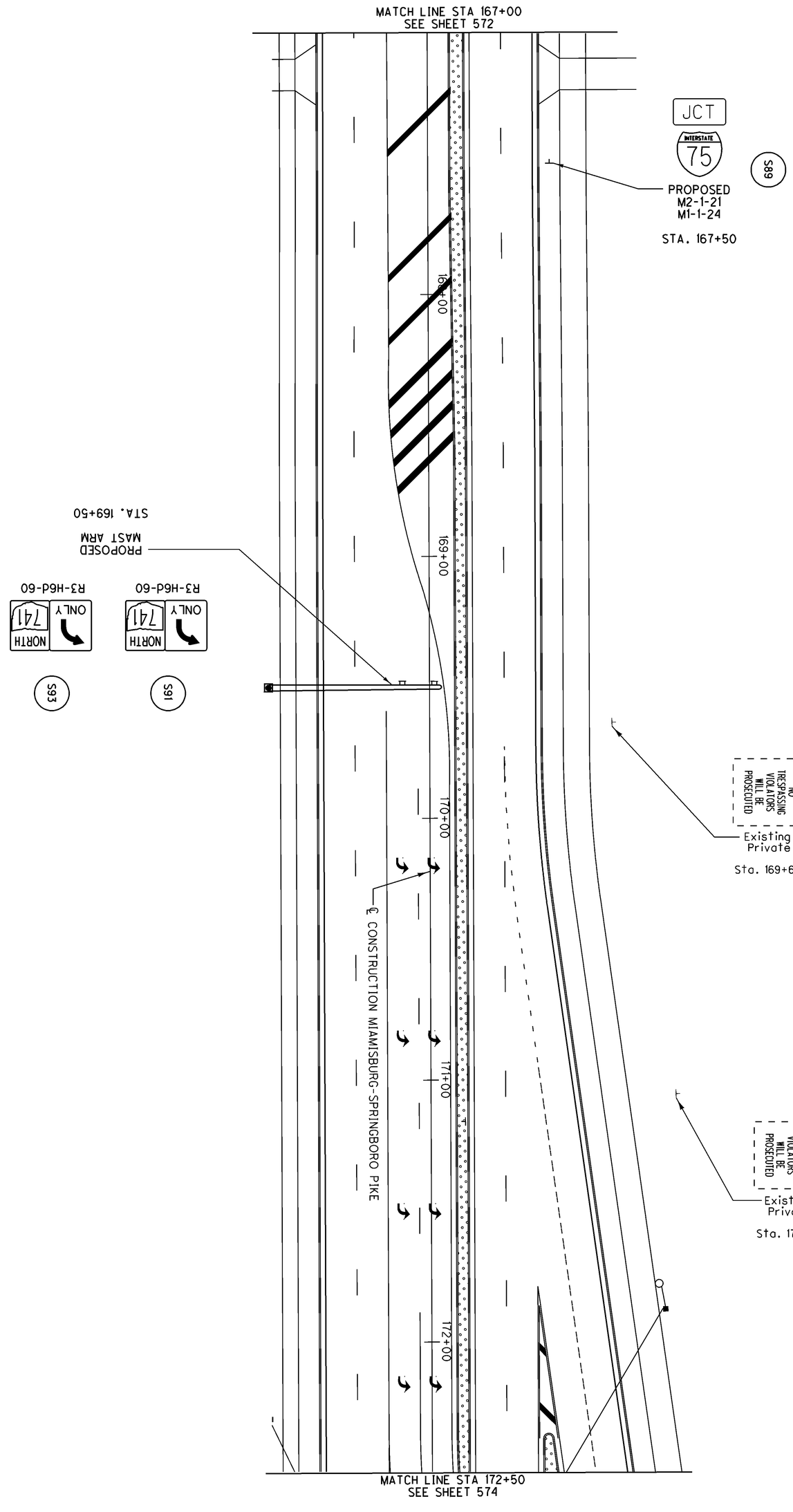

FOR SIGNING LEGEND, SEE SHEET 538.

573 / 773	MOT-75-0.75	SIGNING PLAN MIAMISBURG-SPRINGBORO PIKE STA. 167+00 TO STA. 172+50	CALCULATED GWA CHECKED LAS	0 20 10 40 HORIZONTAL SCALE IN FEET

SIGNING PLAN MIAMISBURG-SPRINGBORO PIKE
STA. 172+50 TO STA. 178+00

CALCULATED GWA
CHECKED LAS

HORIZONTAL SCALE IN FEET
0 10 20 40

MOT-75-0.75

574
773

MATCH LINE STA 172+50
SEE SHEET 573

MATCH LINE STA 178+00
SEE SHEET 575

173+00 174+00 175+00 176+00 177+00

℄ CONSTRUCTION
MIAMISBURG-SPRINGBORO PIKE

12' 12'

S94
PROPOSED
R4-7-30
R3-4-24
STA. 172+52

S95
Existing
W3-3-30
Sta. 173+37

S96
PROPOSED
MAST ARM SIGNS
STA. 173+50
SOUTH
741
ONLY
R3-H6d-60

S98
PROPOSED
R5-1-30
R3-2-30
STA. 174+00
DO NOT
ENTER

S99
PROPOSED
R3-1-30
R4-8-24
STA. 174+75

S100
PROPOSED
W3-3-30
STA. 175+40

S101
Existing
R3-H8BH-36
Sta. 176+43
ONLY

S102
PROPOSED
R4-8-24
STA. 177+65

S103
PROPOSED
R4-7-24
R3-18-30
STA. 177+79

Existing
Private
Sta. 177+45

S104
PROPOSED
R10-6-24
STA. 177+95
STOP
WHEN
RED

FOR SIGNING LEGEND, SEE SHEET 538.

SIGNING PLAN AUSTIN PIKE
STA. 178+00 TO STA. 183+50

MOT-75-0.75

CALCULATED GWA
CHECKED LAS

HORIZONTAL SCALE IN FEET
0 10 20 40

575
773

MATCH LINE STA 41+48
SEE SHEET 583

MATCH LINE STA 178+00
SEE SHEET 574

MATCH LINE STA 37+75
SEE SHEET 582

MATCH LINE STA 183+50
SEE SHEET 576

℄ CONSTRUCTION
MIAMISBURG-SPRINGBORO PIKE

℄ CONSTRUCTION
AUSTIN PIKE

℄ CONTRUCTION SR 741

PROPOSED MAST ARM
STA. 182+00

S105 PROPOSED D11-1-24 M7-5-12 R9-5-12
STA. 41+00
BIKE ROUTE
USE PED SIGNAL

PROPOSED R10-6-24
STA. 41+17

S107 STOP HERE ON RED

S105 PROPOSED D11-1-24 M7-5-12
STA. 41+00
BIKE ROUTE

S108 MIAMISBURG-SPRINGBORO PK
Existing D3-1-VAR. D3-1-VAR.
Sta. 40+50

S109 MIAMISBURG-SPRINGBORO PK
Existing D3-1-VAR. D3-1-VAR.
Sta. 40+59

S110 PROPOSED D11-1-24 M7-5-12 R9-5-12
STA. 40+70
PROPOSED D11-1-24 M7-5-12
STA. 40+70
BIKE ROUTE
USE PED SIGNAL

S111 STOP HERE ON RED
PROPOSED R10-6-24
STA. 179+60

S115 ONLY
Existing R3-H8bh-36
Sta. 180+47

S119 NORTH 741 ONLY
R3-H6d-60

S120 TO 75 ONLY
R3-H6d-60

S121 TO 75 ONLY
R3-H6d-60

S123 SPEED LIMIT 55
Existing R2-1-24
Sta. 183+02

S106 Springboro Corp. Limit
Existing E8-H2-Var.
Sta. 178+25

S113 ONLY ONLY
Existing R3-H8cg-54
Sta. 38+13

S112 STOP HERE ON RED
PROPOSED R10-6-24
STA. 37+96

S114 PROPOSED R3-18-30 R4-7-24
STA. 179+74

S116 PROPOSED W3-3-36
STA. 181+26

S117 PROPOSED R4-8-24 R3-1-30
STA. 181+67

Existing Private
TRESPASSING ON
Sta. 181+58

S122 PROPOSED R5-1-30 R3-2-30
STA. 182+75
DO NOT ENTER

Existing Private
TRESPASSING ON
Sta. 182+91

400' R

80' R

178+00 179+00 180+00 181+00 182+00 183+00

FOR SIGNING LEGEND, SEE SHEET 538.

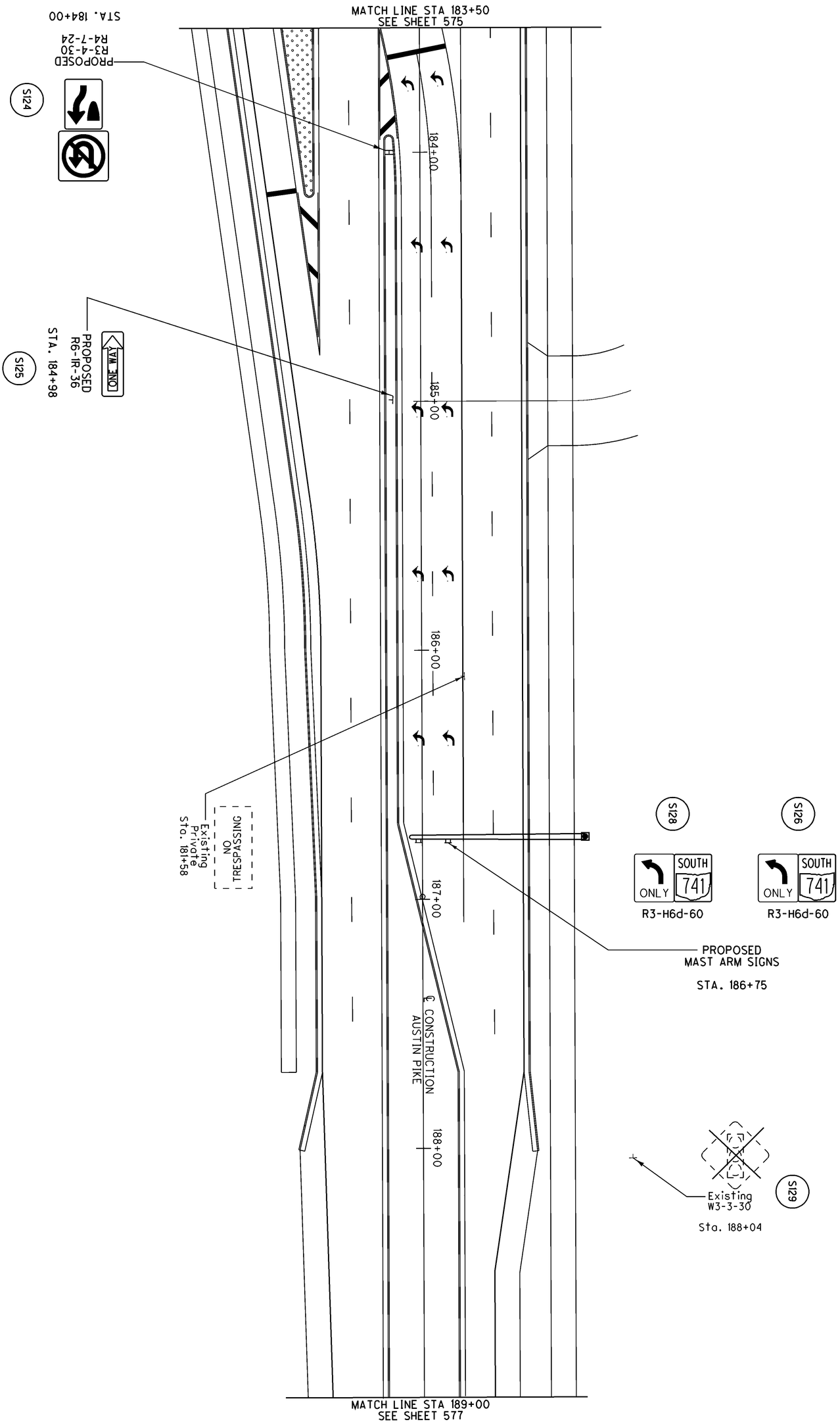

FOR SIGNING LEGEND, SEE SHEET 538.

576 / 773	MOT-75-0.75	SIGNING PLAN AUSTIN PIKE STA. 183+50 TO STA. 189+00	CALCULATED GWA CHECKED LAS	0 20 10 40 HORIZONTAL SCALE IN FEET

FOR SIGNING LEGEND, SEE SHEET 538.

HORIZONTAL SCALE IN FEET
0 10 20 40

CALCULATED GWA
CHECKED LAS

SIGNING PLAN AUSTIN PIKE
STA. 189+00 TO STA. 194+50

MOT-75-0.75

577
773

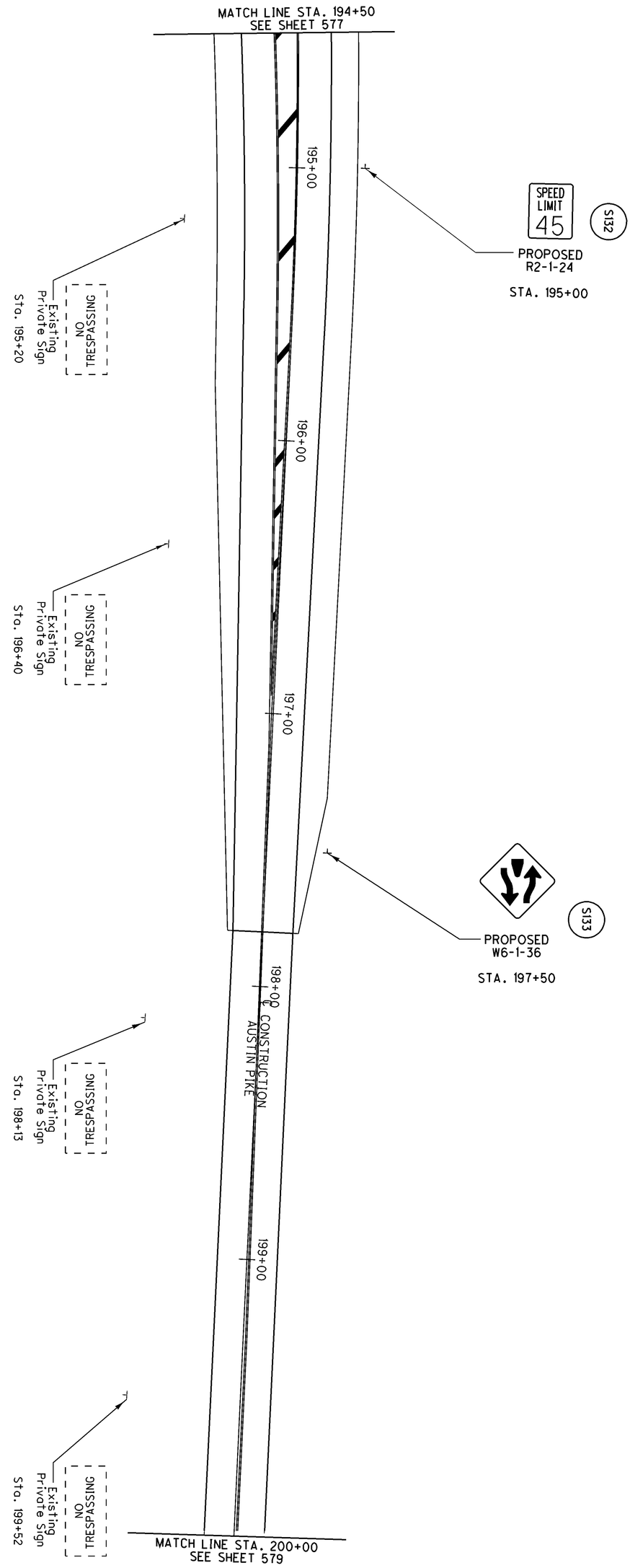

FOR SIGNING LEGEND, SEE SHEET 538.

578 / 773	MOT-75-0.75	SIGNING PLAN AUSTIN PIKE STA. 194+50 TO STA. 200+00	CALCULATED GWA / CHECKED LAS	0 10 20 40 HORIZONTAL SCALE IN FEET

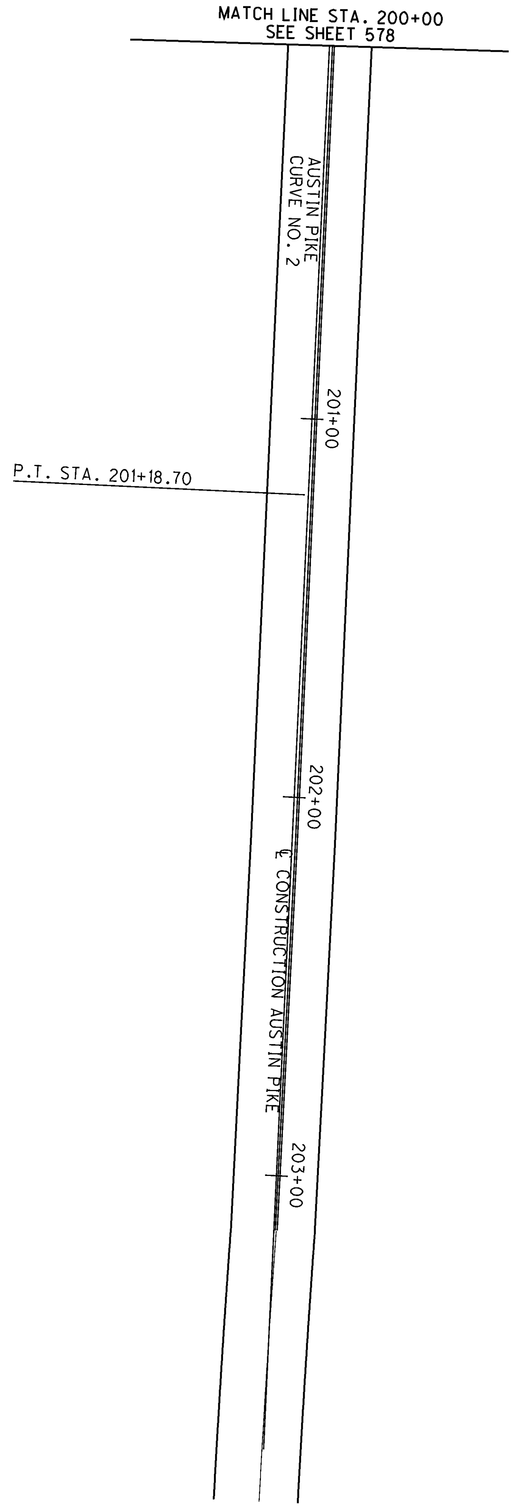

FOR SIGNING LEGEND, SEE SHEET 538.

579 / 773	MOT-75-0.75	SIGNING PLAN AUSTIN PIKE STA. 200+00 TO STA. 203+50	CALCULATED GWA CHECKED LAS	0 10 20 40 HORIZONTAL SCALE IN FEET

CRAINS RUN ROAD

WOOD ROAD

STOP

Existing
R1-1-30
D3-1-Var.
D3-1-Var

Sta. 38+20

S135

ONLY ONLY

PROPOSED
R3-H8BB-30

STA. 41+00

38+00 ℄ CONST. WOOD ROAD 39+00 40+00 41+00 42+00 43+00

MATCH LINE STA. 43+50
SEE SHEET 581

Existing
W1-7-60

Sta. 38+36

PROPOSED
R2-1-24

SPEED LIMIT 45

STA. 40+60

S134

PROPOSED
W3-3-36

STA. 43+30

S136

FOR SIGNING LEGEND, SEE SHEET 538.

HORIZONTAL SCALE IN FEET
0 10 20 40

CALCULATED GWA
CHECKED LAS

SIGNING PLAN WOOD ROAD
STA. 38+52 TO STA. 43+50

MOT-75-0.75

580
773

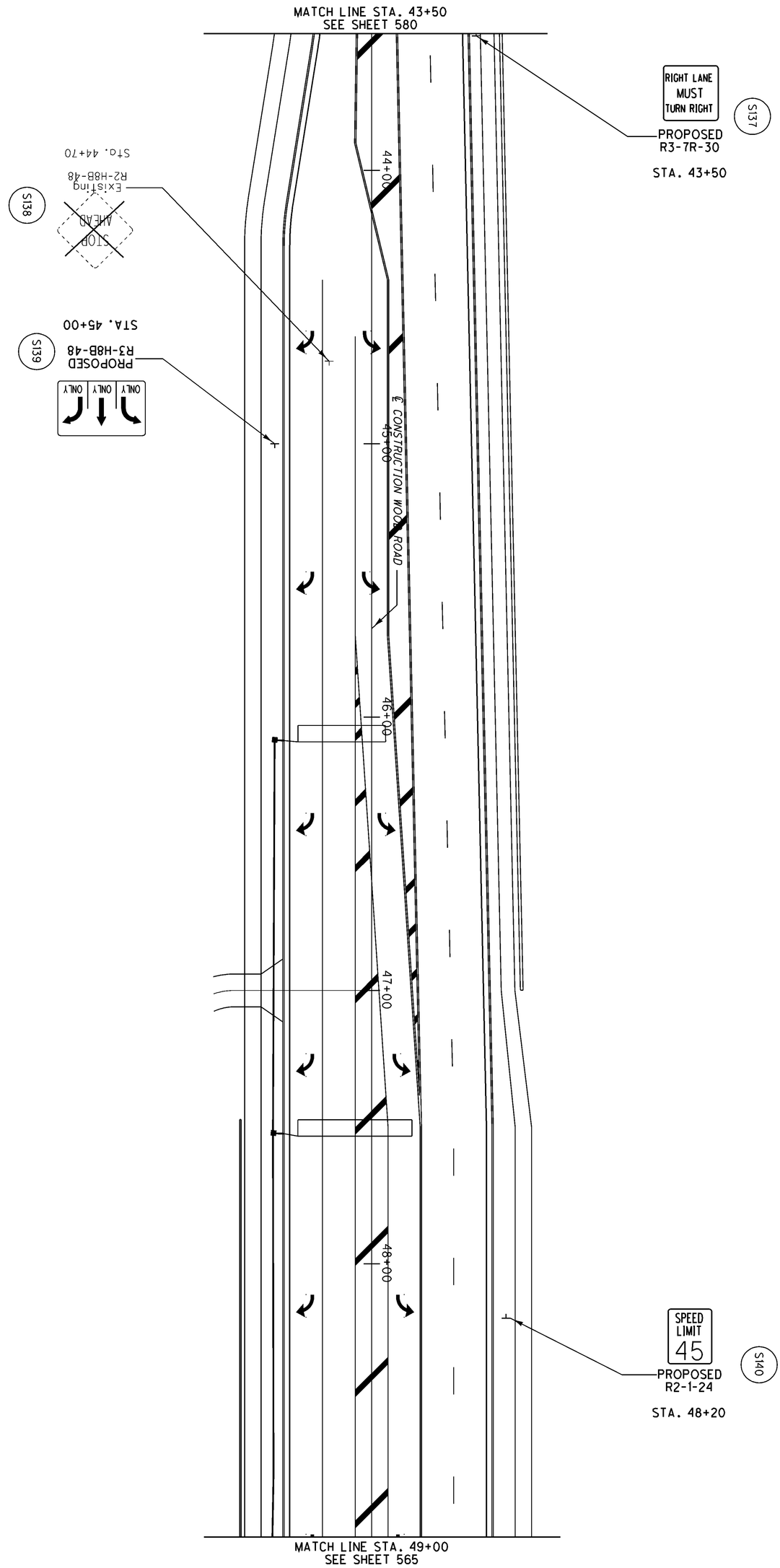

FOR SIGNING LEGEND, SEE SHEET 538.

581 / 773	MOT-75-0.75	SIGNING PLAN WOOD ROAD STA. 43+50 TO STA. 49+00	CALCULATED GWA / CHECKED LAS	0 10 20 40 HORIZONTAL SCALE IN FEET

SIGNING PLAN SR 741
STA. 33+00 TO STA. 37+75

MOT-75-0.75

CALCULATED GWA
CHECKED LAS

HORIZONTAL SCALE IN FEET
0 10 20 40

FOR SIGNING LEGEND, SEE SHEET 538.

FOR SIGNING LEGEND, SEE SHEET 538.

HORIZONTAL SCALE IN FEET
0 10 20 40

CALCULATED GWA
CHECKED LAS

SIGNING PLAN SR 741
STA. 41+48 TO STA. 47+00

MOT-75-0.75

FOR SIGNING LEGEND, SEE SHEET 538.

HORIZONTAL SCALE IN FEET
0 10 20 40

CALCULATED GWA
CHECKED LAS

SIGNING PLAN SR 741
STA. 47+00 TO STA. 52+50

MOT-75-0.75

584
773

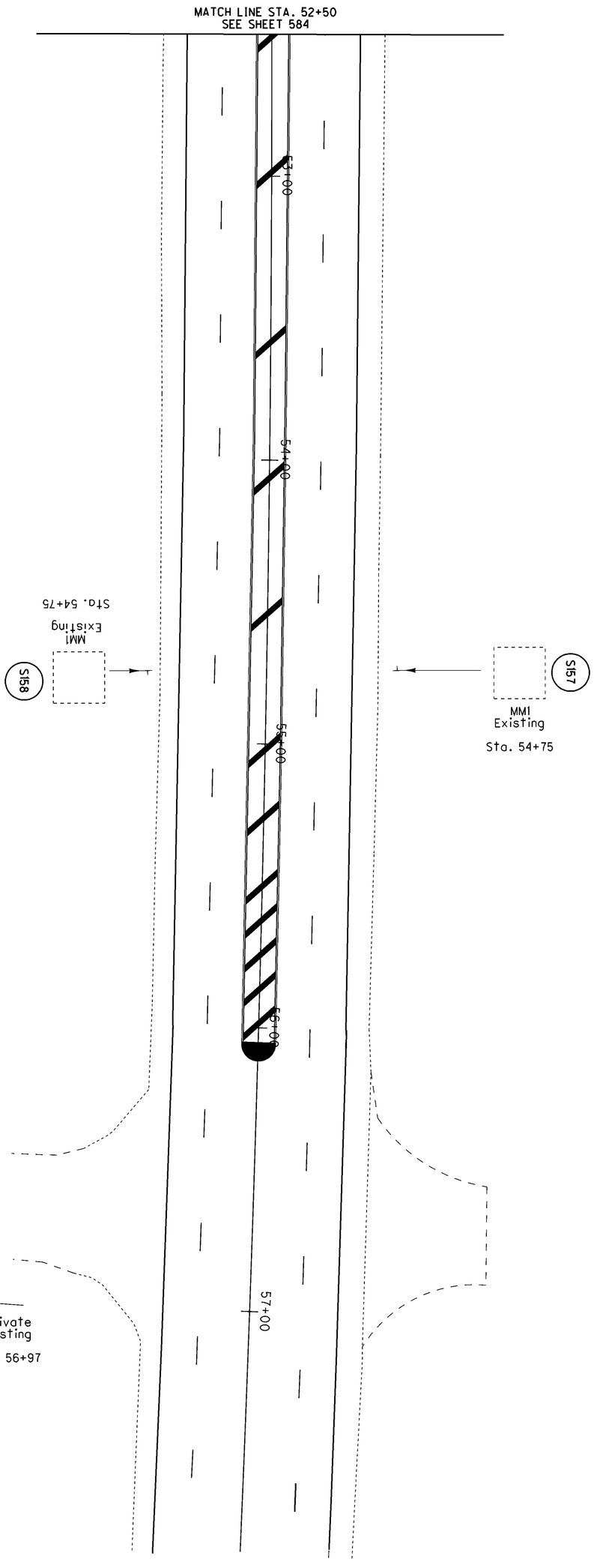

FOR SIGNING LEGEND, SEE SHEET 538.

585
773

MOT-75-0.75

SIGNING PLAN SR 741
STA. 52+50 TO LIMIT OF WORK

CALCULATED GWA
CHECKED LAS

0 20
10 40
HORIZONTAL SCALE IN FEET

N

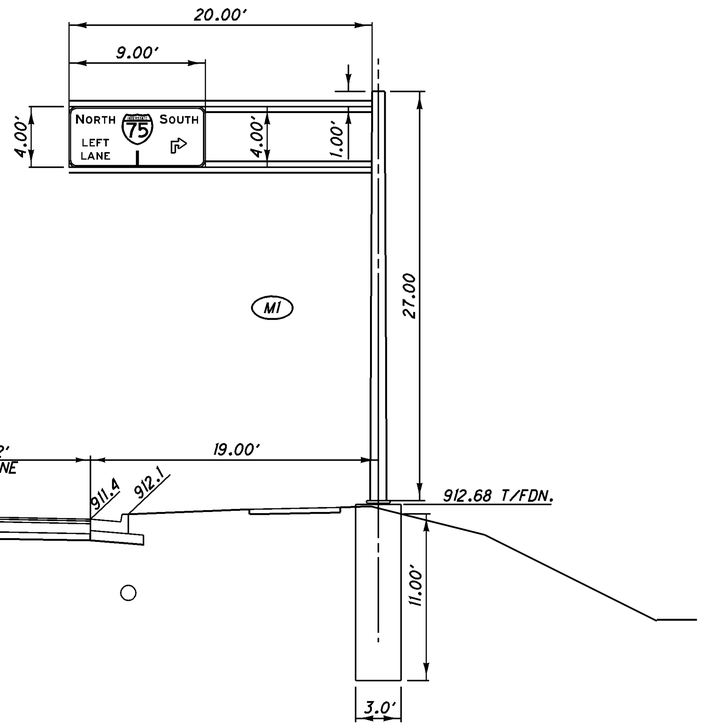

OVERHEAD SIGN SUPPORT M1

STA. 142+25 M-S PIKE
TC-12.30, DESIGN 4
ARM LENGTH = 20'
DESIGN VERTICAL CLEARANCE :
MIN. = 17.00'
ACTUAL = 22.8'

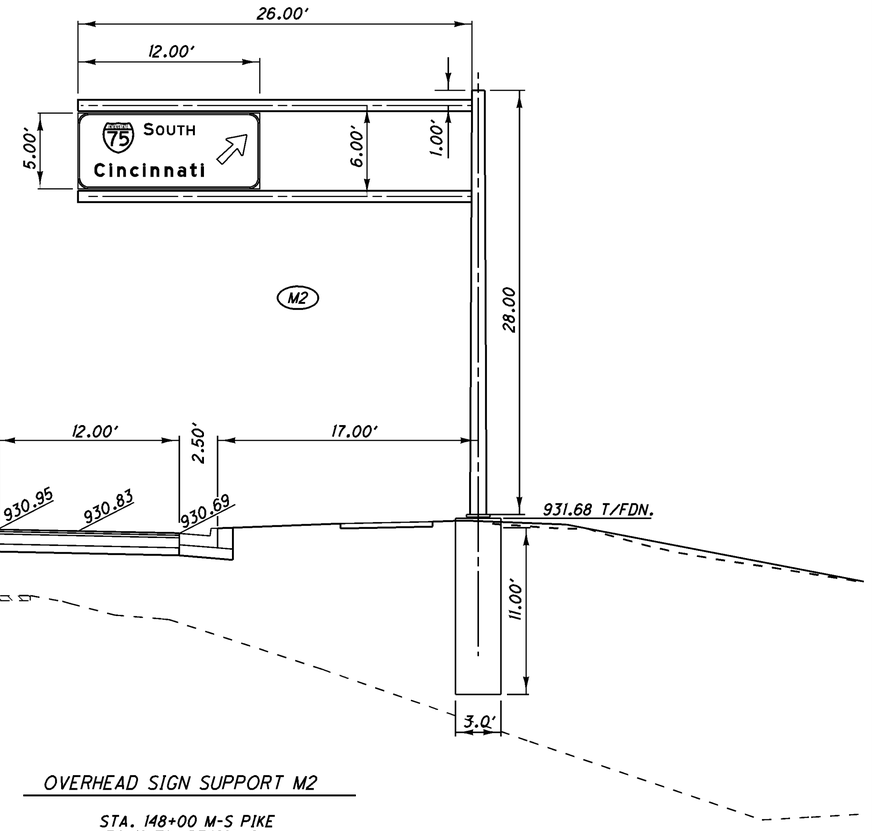

OVERHEAD SIGN SUPPORT M2

STA. 148+00 M-S PIKE
TC-12.30, DESIGN 6
ARM LENGTH = 26'
DESIGN VERTICAL CLEARANCE :
MIN. = 17.00'
ACTUAL = 22.71'

FOR ESTIMATED QUANTITIES SEE SHEETS, 530-531

HORIZONTAL SCALE IN FEET
0 2.5 5 10

CALCULATED GWA
CHECKED BH

SIGN ELEVATION
M1 STA. 142+50 AND M2 STA. 148+00

MOT-75-0.75

586
773

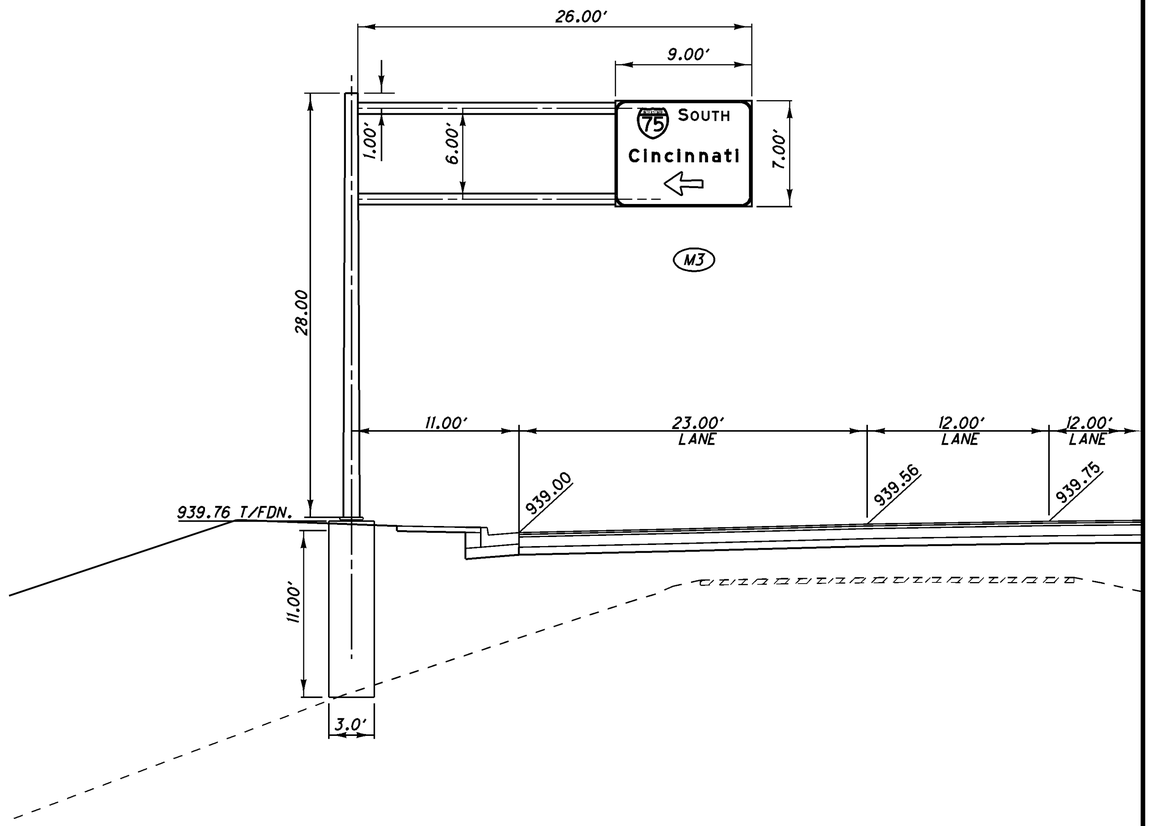

OVERHEAD SIGN SUPPORT M3

STA. 150+00 M-S PIKE
TC-12.30, DESIGN 6
DESIGN VERTICAL CLEARANCE :
MIN. = 17.00'
ACTUAL = 21.14'

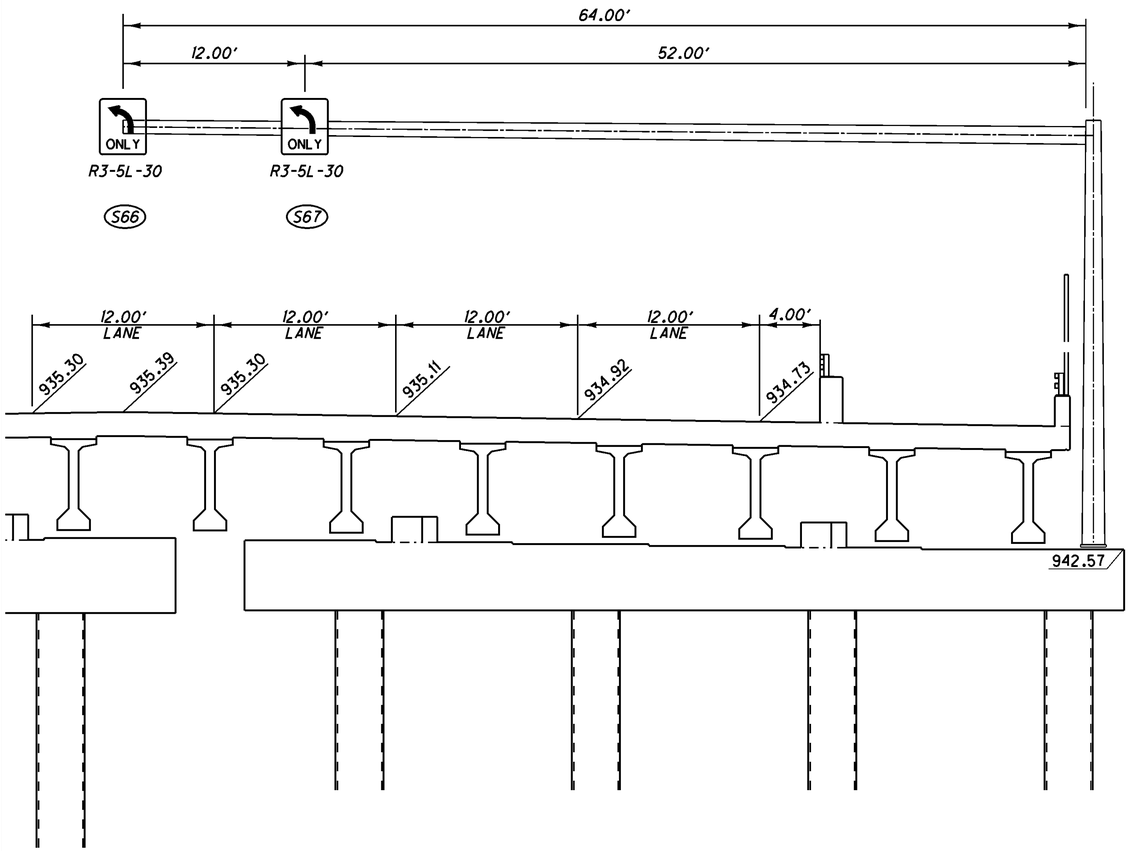

OVERHEAD SIGN SUPPORT S66

STA. 153+33 M.S. PIKE
TC-16.20, SPECIAL
ARM LENGTH = 64'
DESIGN VERTICAL CLEARANCE :
MIN. = 17.00'
ACTUAL = 17.00'

SEE SHEET 634A-634F FOR DETAILS

FOR ESTIMATED QUANTITIES SEE SHEETS, 530-531

HORIZONTAL SCALE IN FEET
0 2.5 5 10

CALCULATED GWA
CHECKED BH

SIGN ELEVATION
M3 STA. 150+00 AND S66, S67 STA. 153+33

MOT-75-0.75

587
773

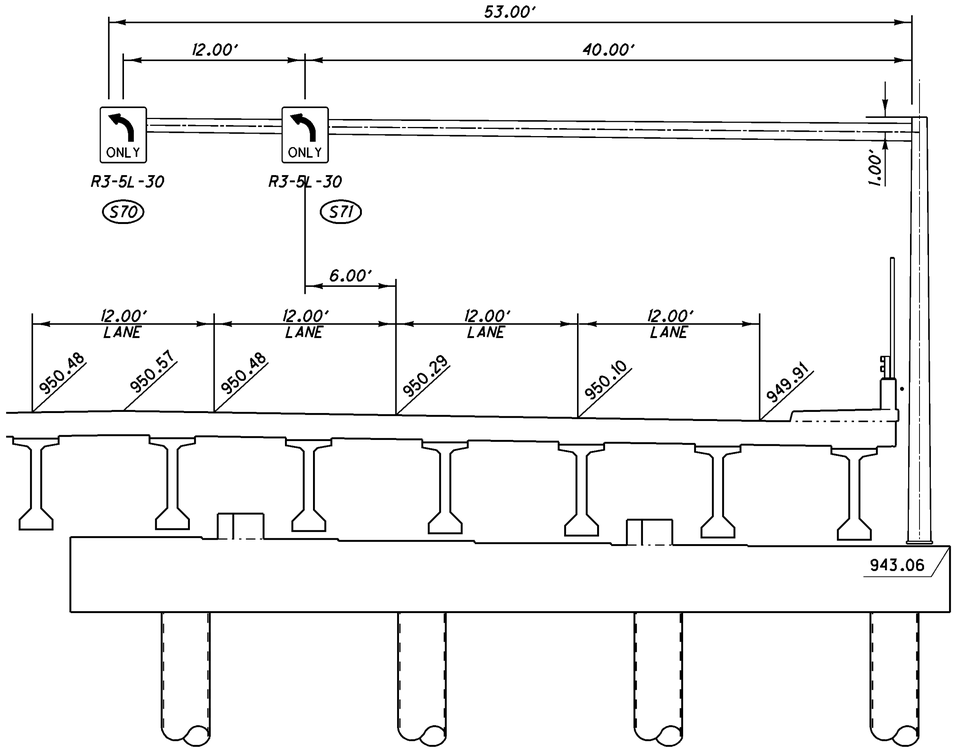

OVERHEAD SIGN SUPPORT S70

STA. 154+02.94 M-S PIKE
TC-16.20, SPECIAL
ARM LENGTH = 53'
DESIGN VERTICAL CLEARANCE :
MIN. = 17.00'
ACTUAL = 17.00'

SEE SHEET 634A-634F FOR DETAILS

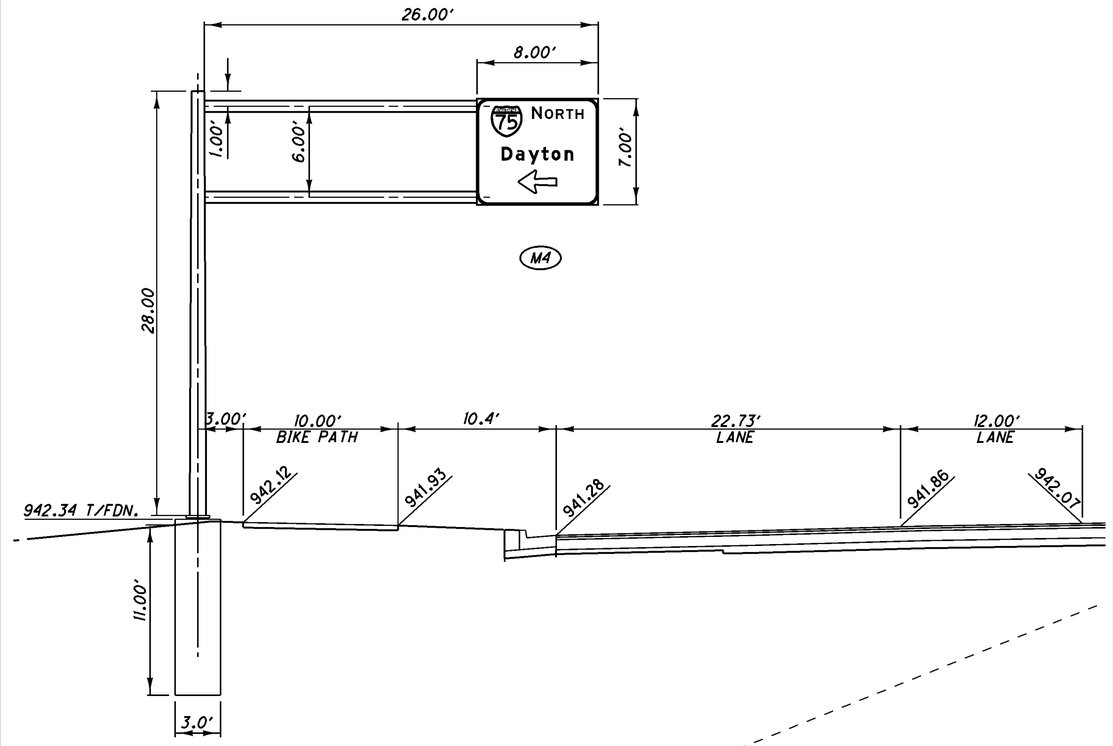

OVERHEAD SIGN SUPPORT M4

STA. 157+25 M-S PIKE
TC-12.30, DESIGN 6
DESIGN VERTICAL CLEARANCE :
MIN. = 17.00'
ACTUAL = 21.75'

FOR ESTIMATED QUANTITIES SEE SHEETS, 530-531

HORIZONTAL SCALE IN FEET
0 2.5 5 10

CALCULATED GWA
CHECKED BH

SIGN ELEVATION
S70 STA. 154+02.94, AND M4 STA. 157+25

MOT-75-0.75

588
773

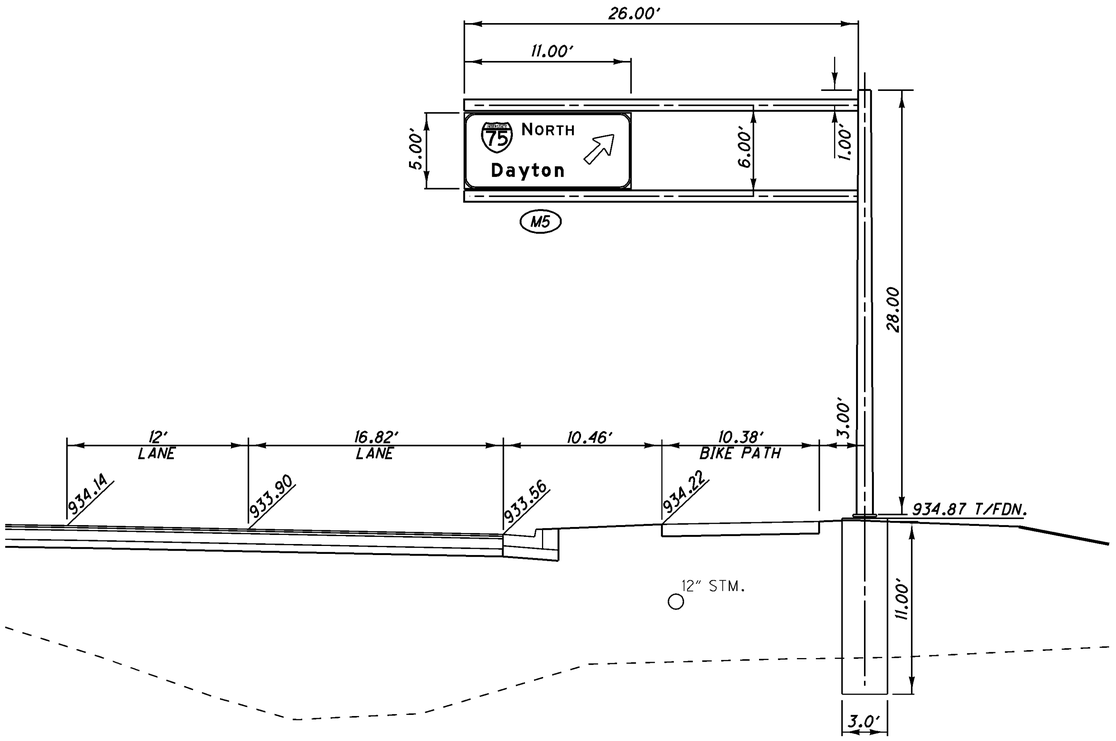

OVERHEAD SIGN SUPPORT M5

STA. 159+25 M-S PIKE
TC-12.30, DESIGN 6
ARM LENGTH = 26'
DESIGN VERTICAL CLEARANCE :
MIN. = 17.00'
ACTUAL = 22.89'
NOT LIGHTED

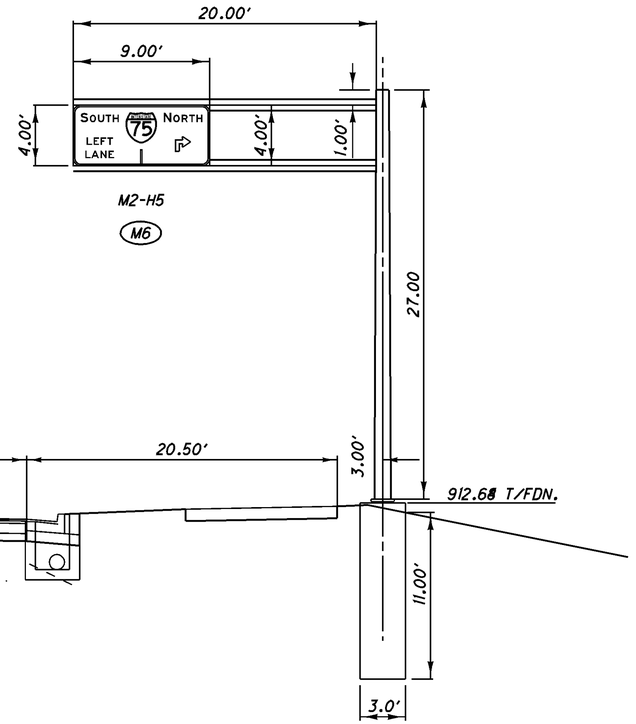

OVERHEAD SIGN SUPPORT M6

STA. 165+00 M-S PIKE
TC-12.30, DESIGN 4
ARM LENGTH = 20'
DESIGN VERTICAL CLEARANCE :
MIN. = 17.00'
ACTUAL = 23.0'

FOR ESTIMATED QUANTITIES SEE SHEETS, 530-531

HORIZONTAL SCALE IN FEET
0 2.5 5 10

CALCULATED GWA
CHECKED BH

SIGN ELEVATION
M5 STA. 159+25 AND M6 STA. 165+00

MOT-75-0.75

589
773

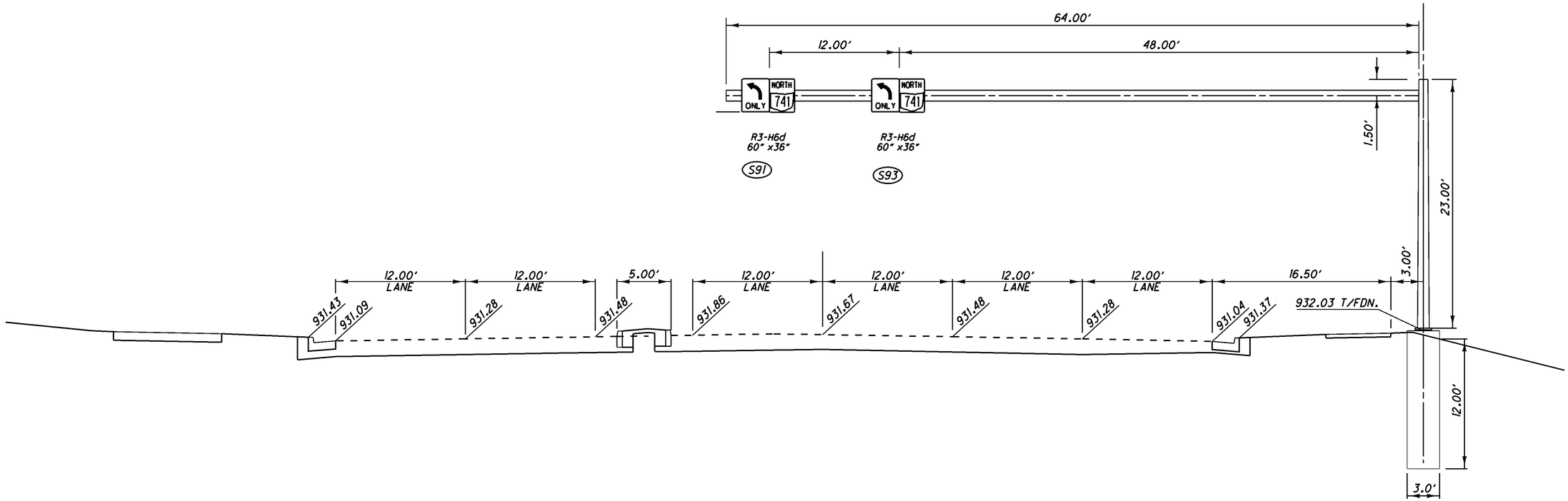

OVERHEAD SIGN SUPPORT S91

STA. 169+50 M.S. PIKE
TC-81.21, DESIGN 34
ARM LENGTH = 64'
DESIGN VERTICAL CLEARANCE :
MIN. = 17.00'
ACTUAL = 20.5'

HORIZONTAL SCALE IN FEET
0 2.5 5 10

CALCULATED GWA
CHECKED BH

SIGN ELEVATION
S19 AND S93 STA. 169+50

MOT-75-0.75

590
773

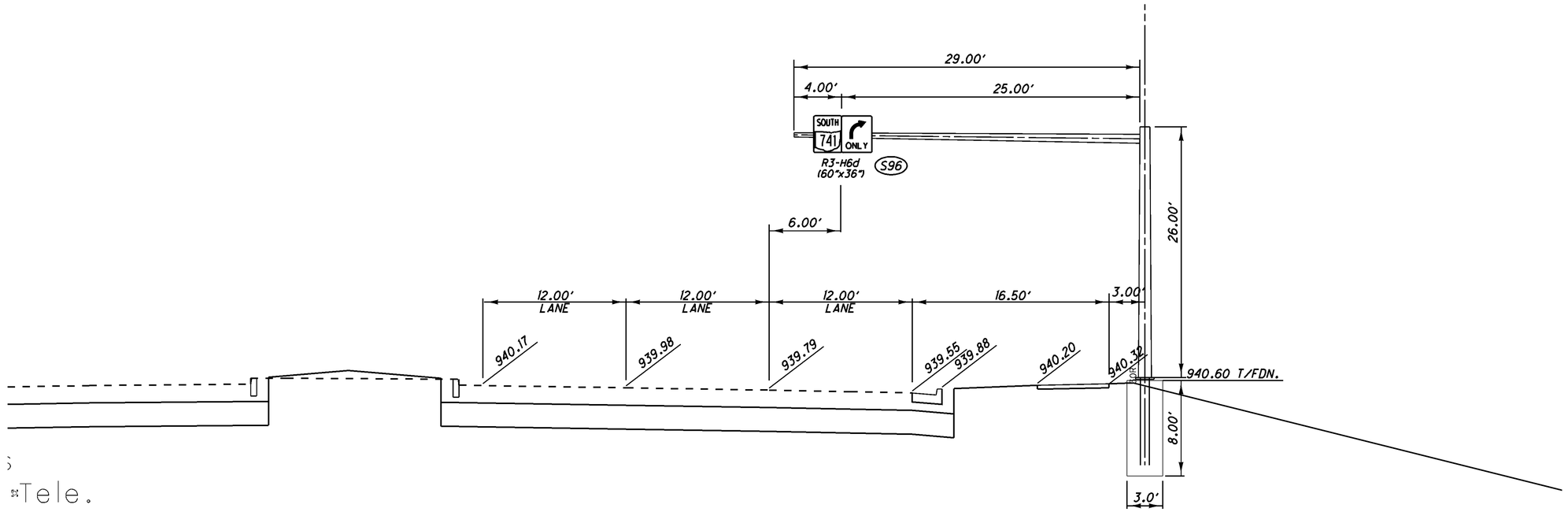

OVERHEAD SIGN SUPPORT S96

STA. 173+50 M-S PIKE
TC-16.20, DESIGN 3
ARM LENGTH = 29'
DESIGN VERTICAL CLEARANCE :
MIN. = 17.00'
ACTUAL = 19.98'

HORIZONTAL SCALE IN FEET
0 2.5 5 10

CALCULATED GWA
CHECKED BH

SIGN ELEVATION
S96 STA. 173+50

MOT-75-0.75

591
773

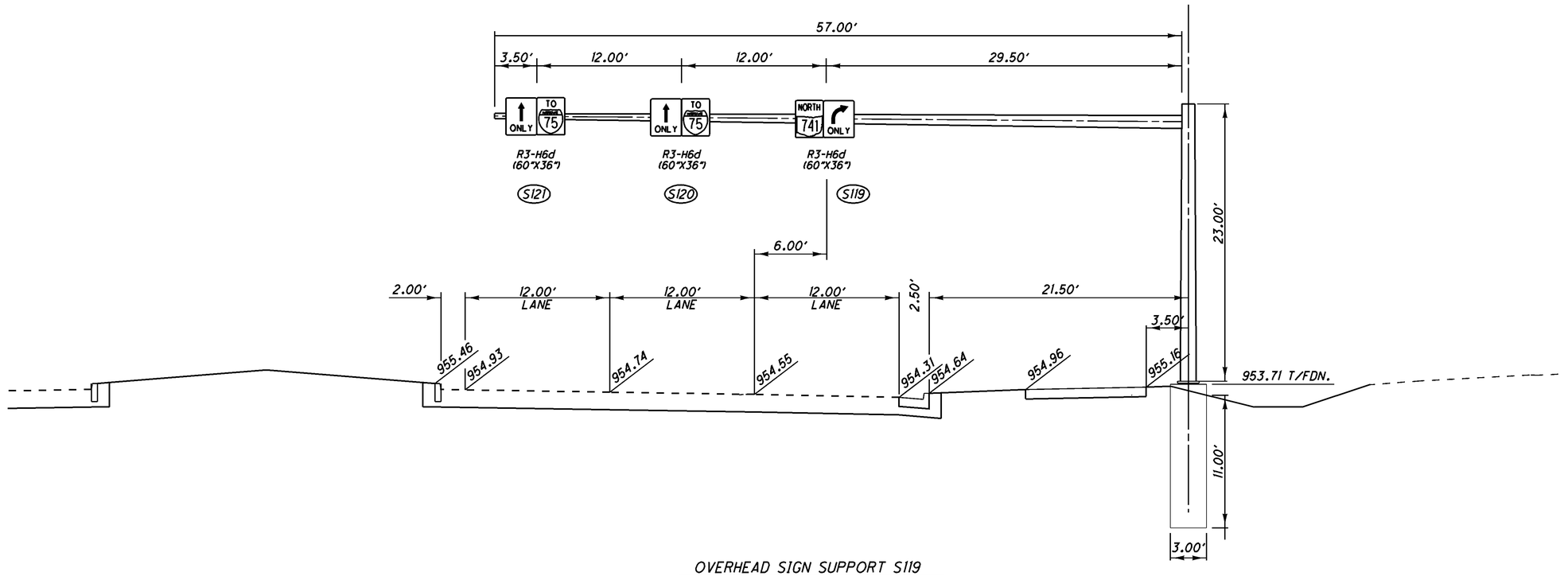

OVERHEAD SIGN SUPPORT S119

STA. 182+00 AUSTIN PIKE
TC-81.21, DESIGN 33
ARM LENGTH = 57'
DESIGN VERTICAL CLEARANCE :
MIN. = 17.00'
ACTUAL = 21.2'

FOR ESTIMATED QUANTITIES SEE SHEETS, 530-531

0 2.5 10
HORIZONTAL SCALE IN FEET

CALCULATED GWA
CHECKED BH

SIGN ELEVATION
S119, S120 AND S121 STA. 182+00

MOT-75-0.75

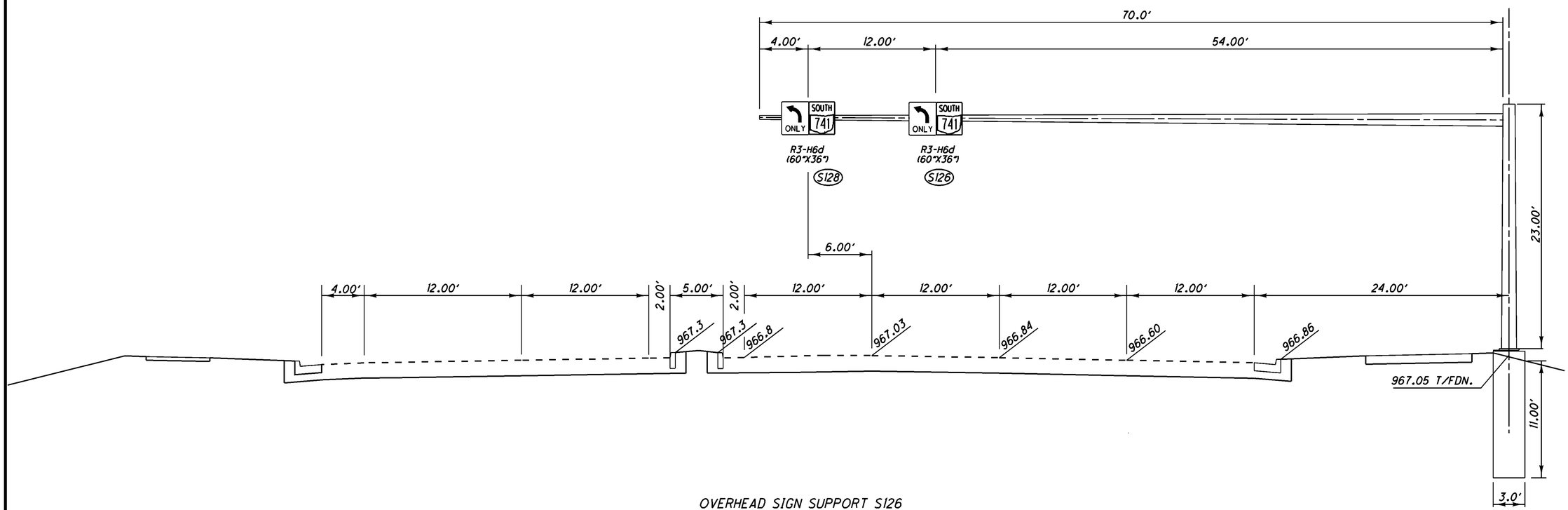

OVERHEAD SIGN SUPPORT S126

STA. 186+75 M-S PIKE
TC-81.21, DESIGN 34,
ARM LENGTH = 70'
DESIGN VERTICAL CLEARANCE :
MIN. = 17.00'
ACTUAL = 20.7'

HORIZONTAL SCALE IN FEET
0 2.5 5 10

CALCULATED GWA
CHECKED BH

SIGN ELEVATION
S126 STA. 186+75

MOT-75-0.75

593
773

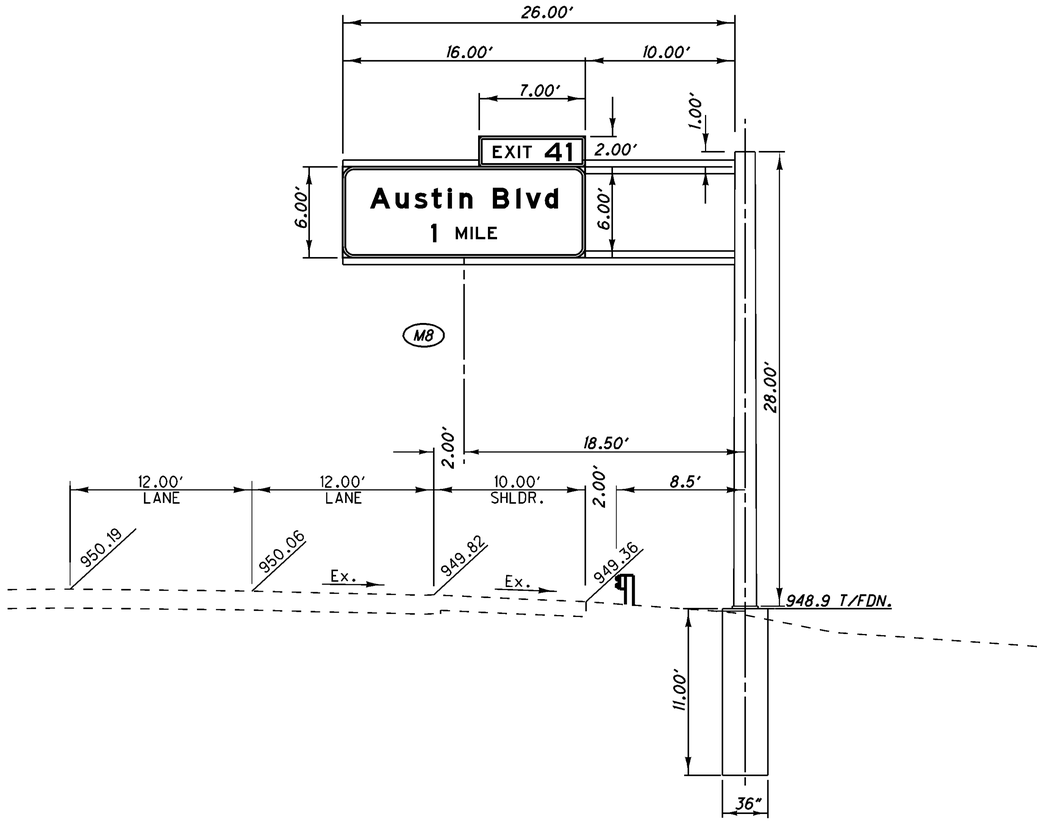

OVERHEAD SIGN SUPPORT M8

STA. 183+50 NB I-75
TC-12.30, DESIGN 6
ARM LENGTH = 26'
DESIGN VERTICAL CLEARANCE :
MIN. = 17.00'
ACTUAL = 21.70'

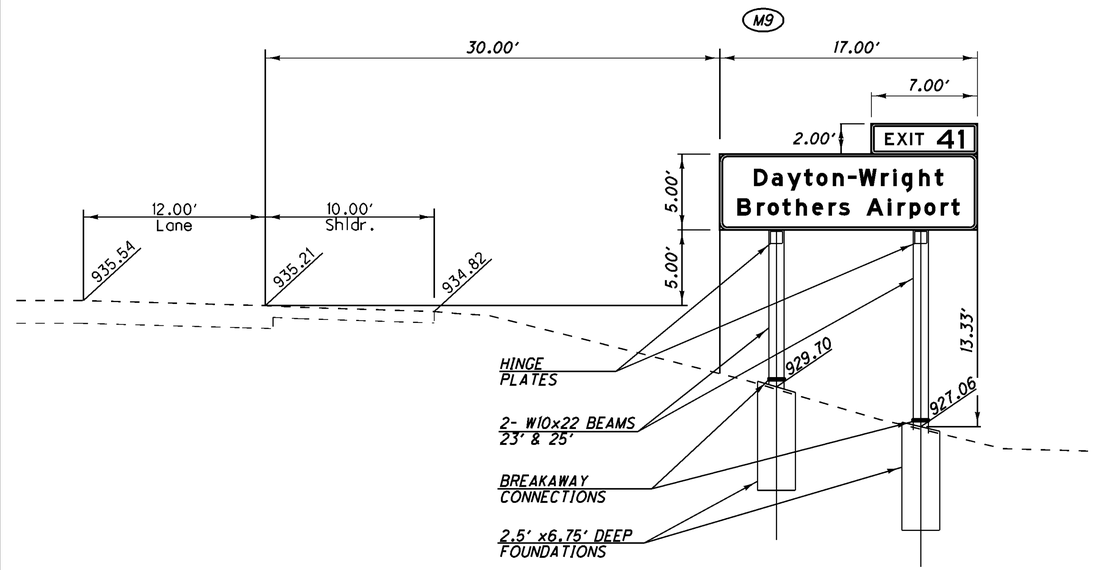

ROADSIDE SIGN SUPPORT M9

STA. 196+50 NB I-75
TC-42.10, W10x22

FOR ESTIMATED QUANTITIES SEE SHEETS, 530-531

HORIZONTAL SCALE IN FEET
0 2.5 5 10

CALCULATED GWA
CHECKED BH

SIGN ELEVATION
M8 STA. 183+50 AND M9 STA. 196+50

MOT-75-0.75

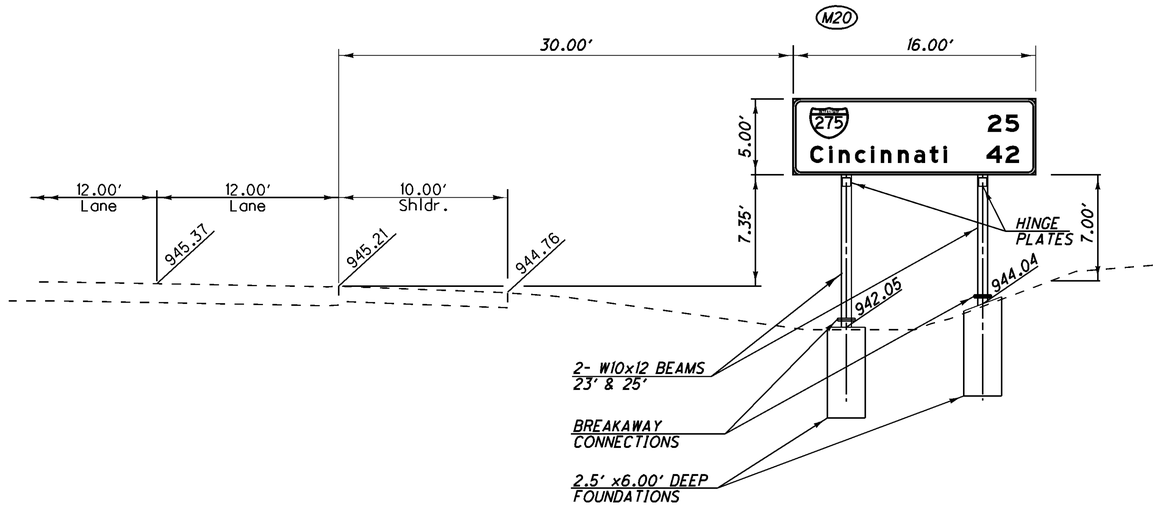

OVERHEAD SIGN SUPPORT M20

STA. 194+75 SB I-75
TC-42.10, W10x12

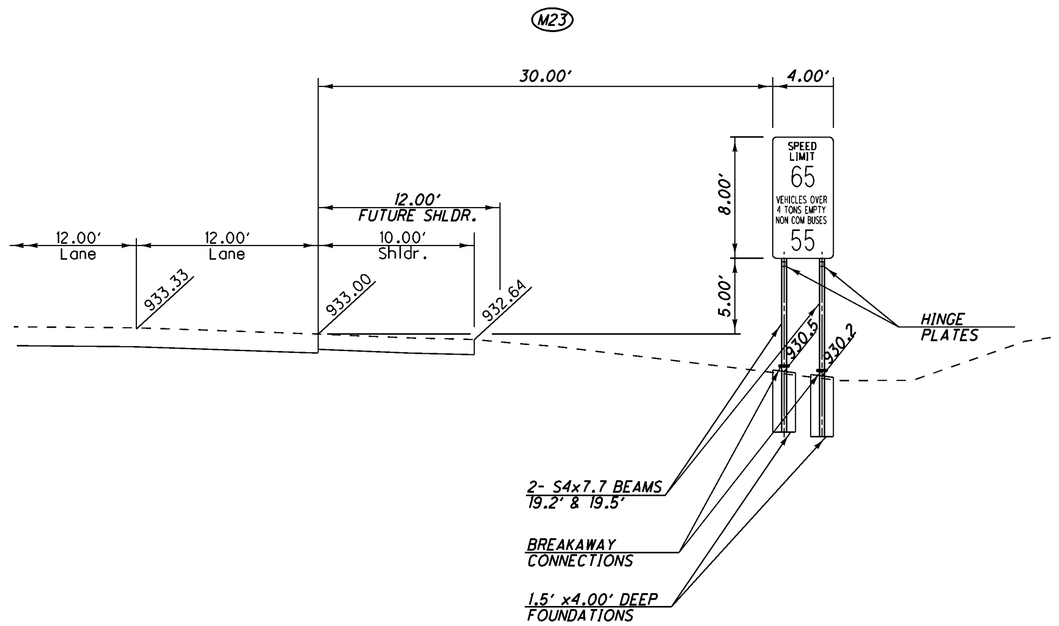

ROADSIDE SIGN SUPPORT M23

STA. 205+00 SB I-75
TC-42.20, S4x7.7

FOR ESTIMATED QUANTITIES SEE SHEETS, 530-531

HORIZONTAL SCALE IN FEET
0 2.5 5 10

CALCULATED GWA
CHECKED BH

SIGN ELEVATION
M20 STA. 194+75 AND M23 STA. 205+00

MOT-75-0.75

595
773

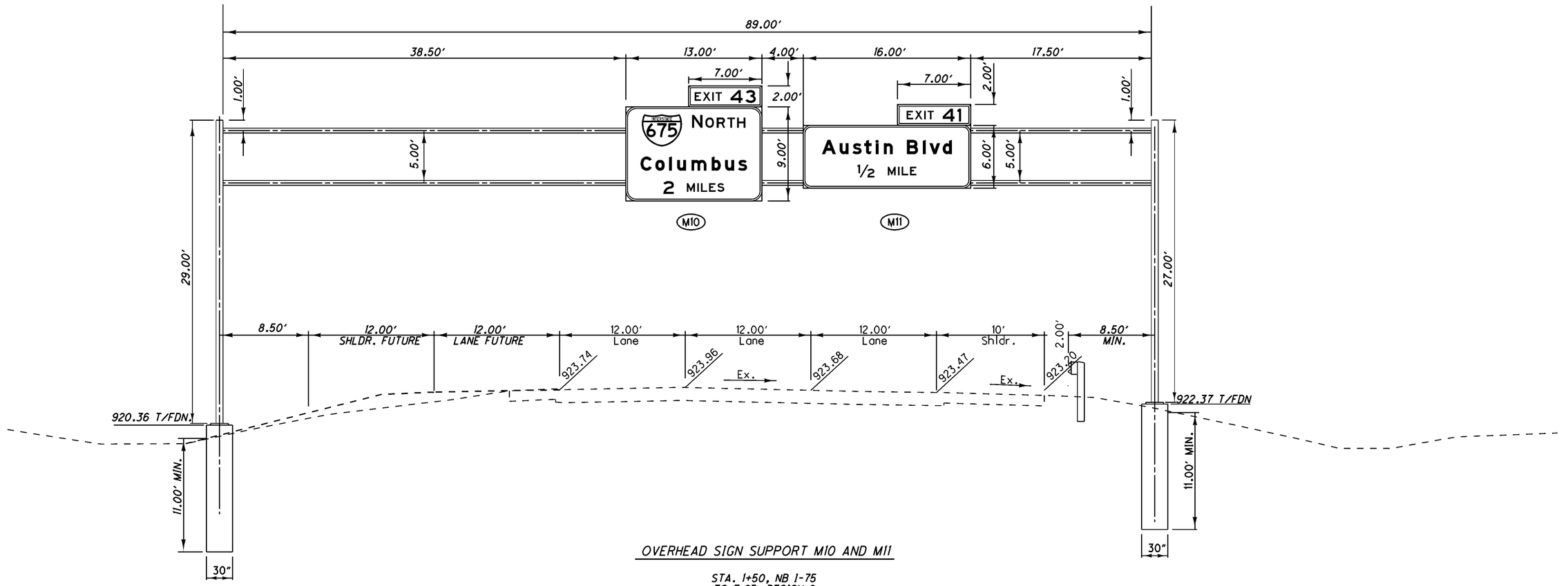

OVERHEAD SIGN SUPPORT M10 AND M11

STA. 1+50, NB I-75
TC-7.65, DESIGN 8
SPAN LENGTH = 89'
DESIGN VERTICAL CLEARANCE:
MIN. = 17'
ACTUAL = 17.33'

FOR ESTIMATED QUANTITIES SEE SHEETS, 530-531

HORIZONTAL SCALE IN FEET
0 2.5 5 10

CALCULATED GWA
CHECKED BH

SIGN ELEVATION
M10 AND M11 STA. 1+50

MOT-75-0.75

596
773

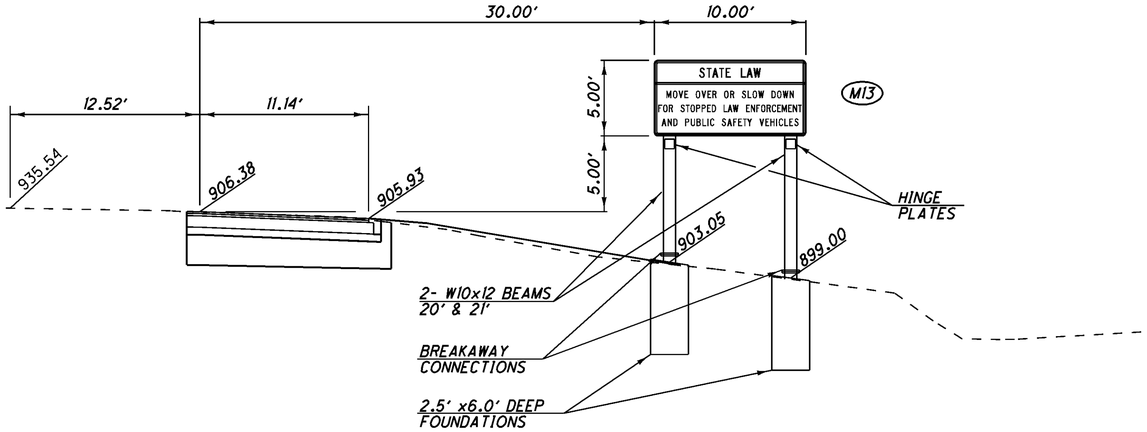

ROADSIDE SIGN SUPPORT M13

STA. 10+00 SB I-75
TC-42.10, W10x12

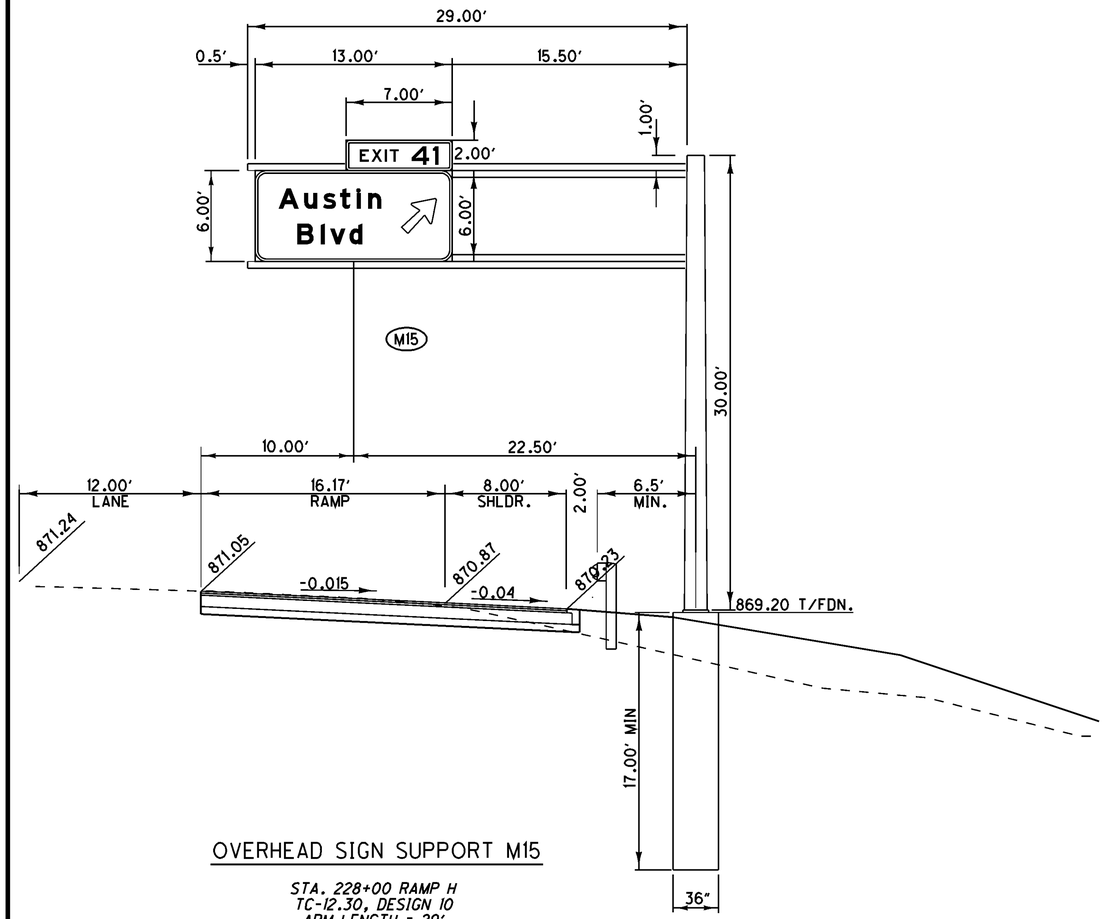

OVERHEAD SIGN SUPPORT M15

STA. 228+00 RAMP H
TC-12.30, DESIGN 10
ARM LENGTH = 29'
DESIGN VERTICAL CLEARANCE :
MIN. = 17.00'
ACTUAL = 21.8'

FOR ESTIMATED QUANTITIES SEE SHEETS, 530-531

HORIZONTAL SCALE IN FEET
0 2.5 5 10

CALCULATED GWA
CHECKED BH

SIGN ELEVATION
M13 STA. 1+50 AND M15 STA. 228+00

MOT-75-0.75

597
773

ROADSIDE SIGN SUPPORT M16

STA. 30+36 NB I-75
TC-42.10, S4x7.7

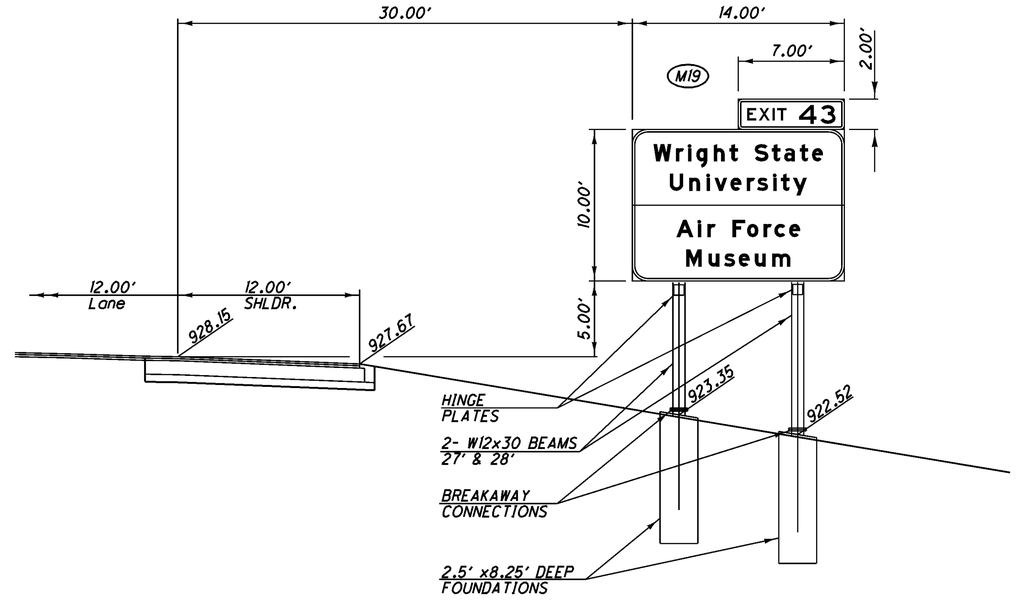

ROADSIDE SIGN SUPPORT M19

STA. 41+50 NB I-75
TC-42.10, W12x30

FOR ESTIMATED QUANTITIES SEE SHEETS, 530-531

0 2.5 10
HORIZONTAL
SCALE IN FEET

CALCULATED GWA
CHECKED BH

SIGN ELEVATION
M16 STA. 30+36 AND M19 STA. 41+50

MOT-75-0.75

598
773

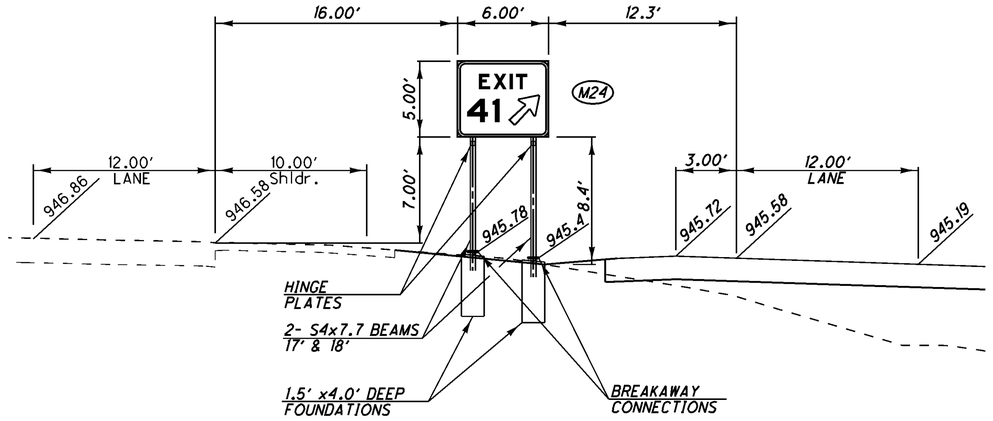

ROADSIDE SIGN SUPPORT M24

STA. 50+47 SB I-75
TC-42.10, S4x7.7

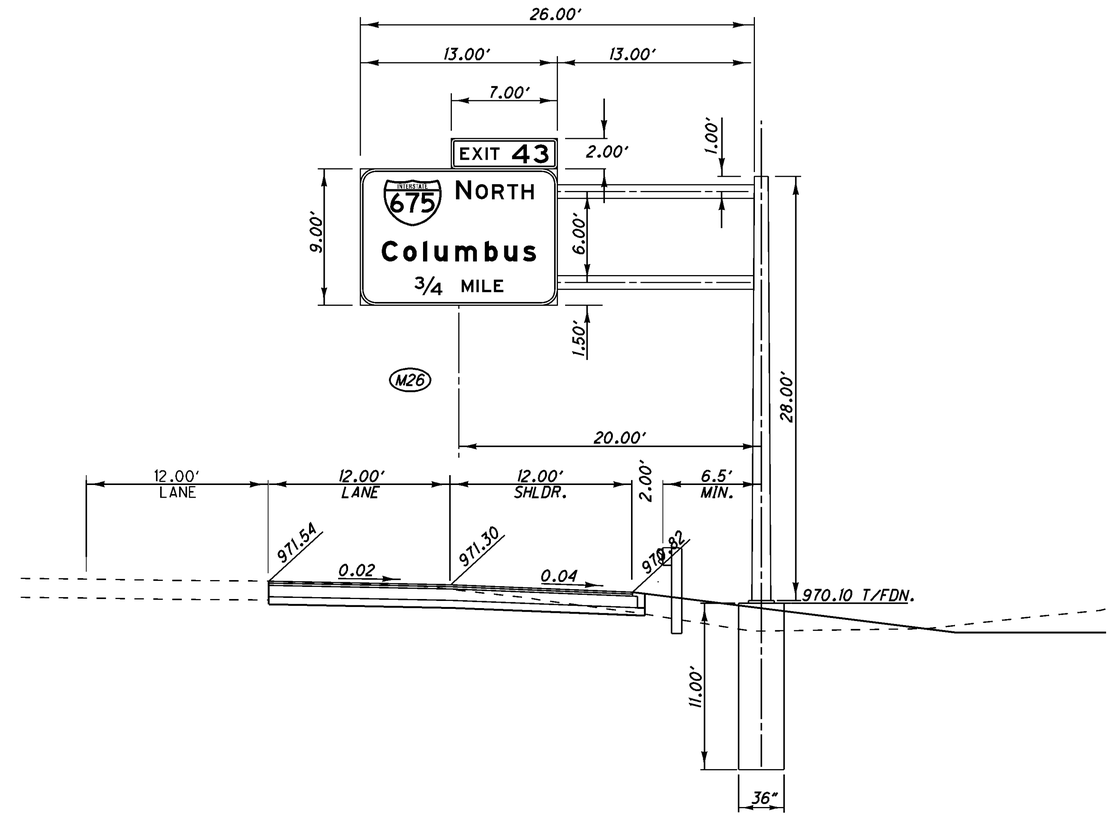

OVERHEAD SIGN SUPPORT M26

STA. 62+50 NB I-75
TC-12.30, DESIGN 6
ARM LENGTH = 26'
DESIGN VERTICAL CLEARANCE :
MIN. = 17.00'
ACTUAL = 18.3'
NOT LIGHTED

FOR ESTIMATED QUANTITIES SEE SHEETS, 530-531

HORIZONTAL SCALE IN FEET
0 2.5 5 10

CALCULATED GWA
CHECKED BH

SIGN ELEVATION
M24 STA. 50+47 AND M26 STA. 62+50

MOT-75-0.75

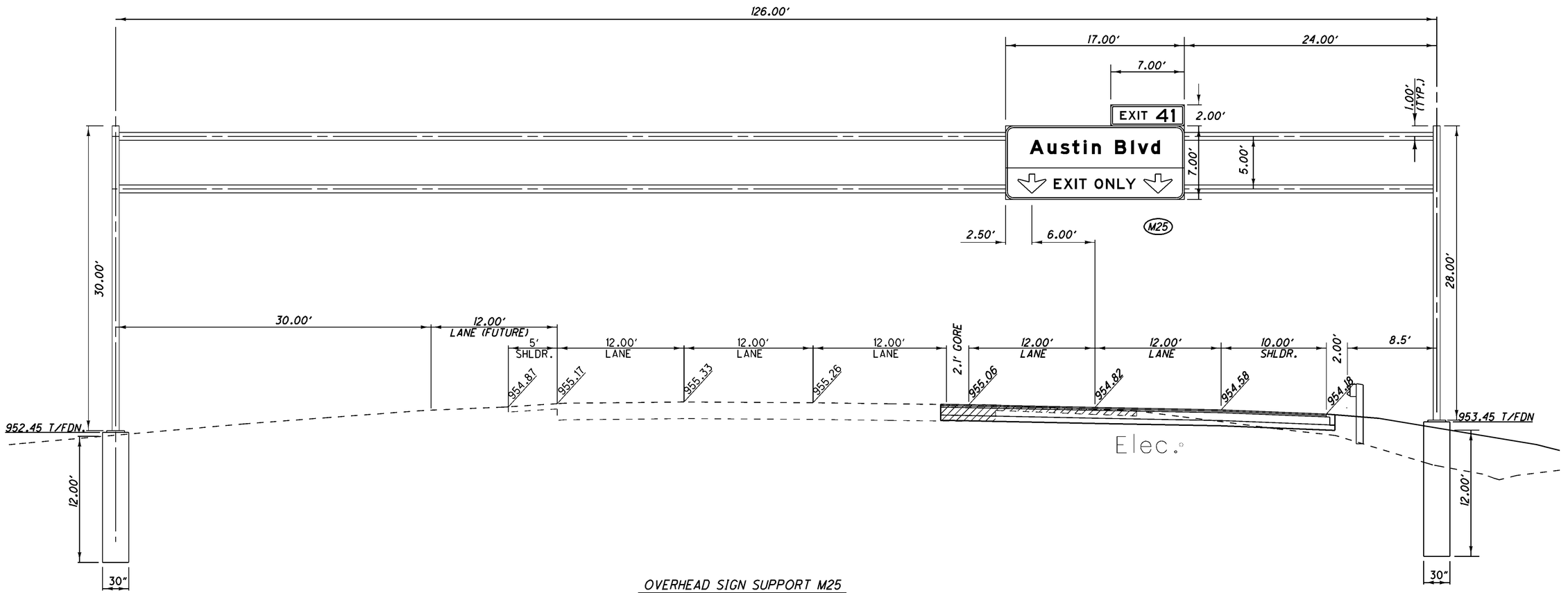

OVERHEAD SIGN SUPPORT M25

STA. 454+50, RAMP M
TC-15.115
SPAN LENGTH =126.00'
DESIGN VERTICAL CLEARANCE:
MIN. = 17'
ACTUAL = 17.8'

FOR ESTIMATED QUANTITIES SEE SHEETS, 530-531

HORIZONTAL SCALE IN FEET
0 2.5 5 10

CALCULATED GWA
CHECKED BH

SIGN ELEVATION
M25 STA. 454+50 RAMP M

MOT-75-0.75

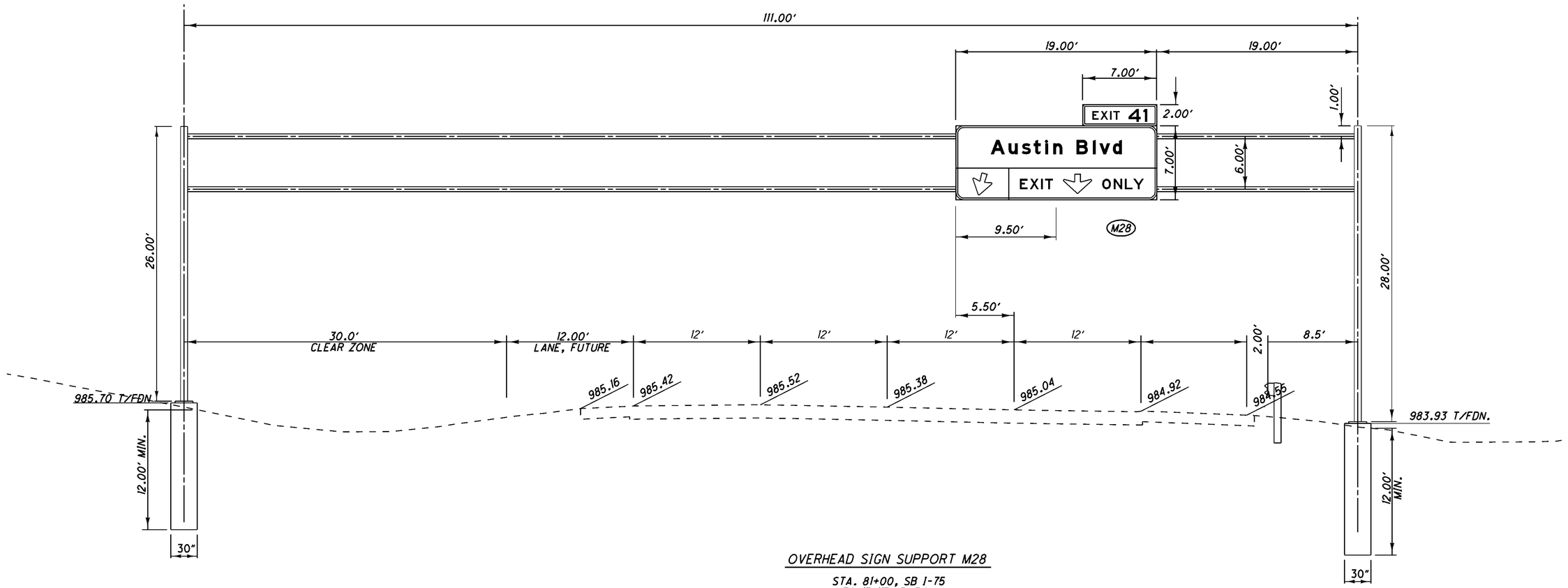

OVERHEAD SIGN SUPPORT M28

STA. 81+00, SB I-75
TC-15.115, 5' BOX
SPAN LENGTH =111.00'
DESIGN VERTICAL CLEARANCE:
MIN. = 17'
ACTUAL = 18.27

FOR ESTIMATED QUANTITIES SEE SHEETS, 530-531

0 2.5 10
HORIZONTAL SCALE IN FEET

CALCULATED GWA
CHECKED BH

SIGN ELEVATION
M28 STA. 81+00

MOT-75-0.75

602
773

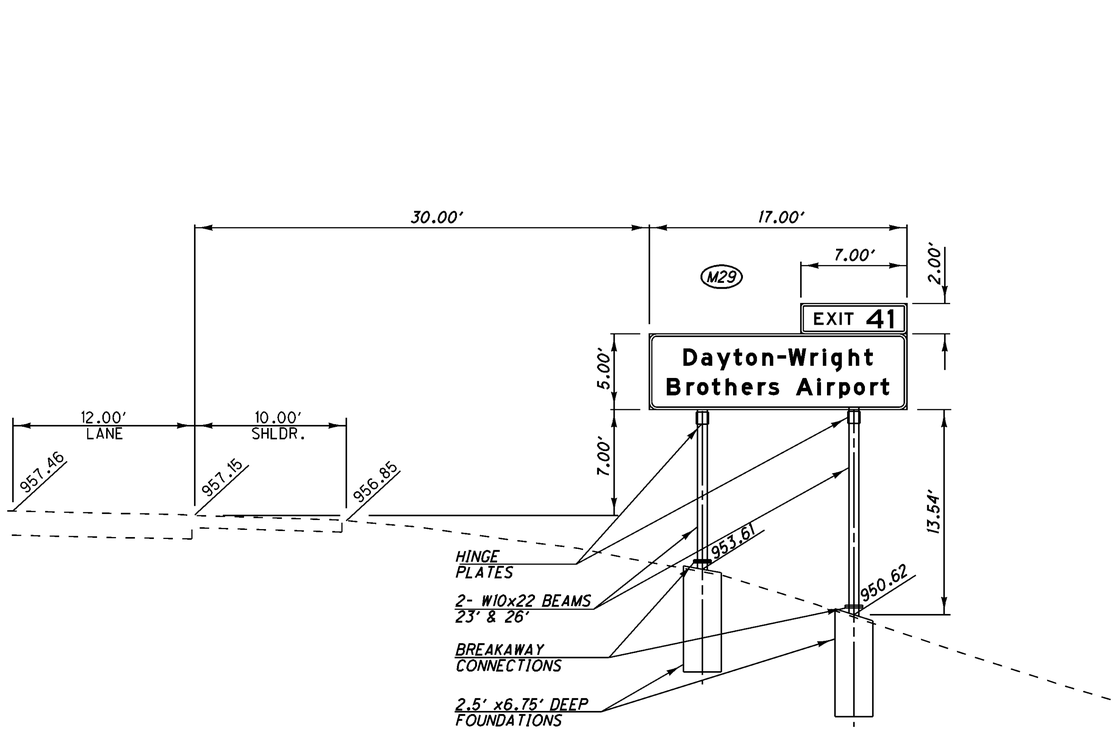

ROADSIDE SIGN SUPPORT M29

STA. 94+50 SB I-75
TC-42.10, W10x22

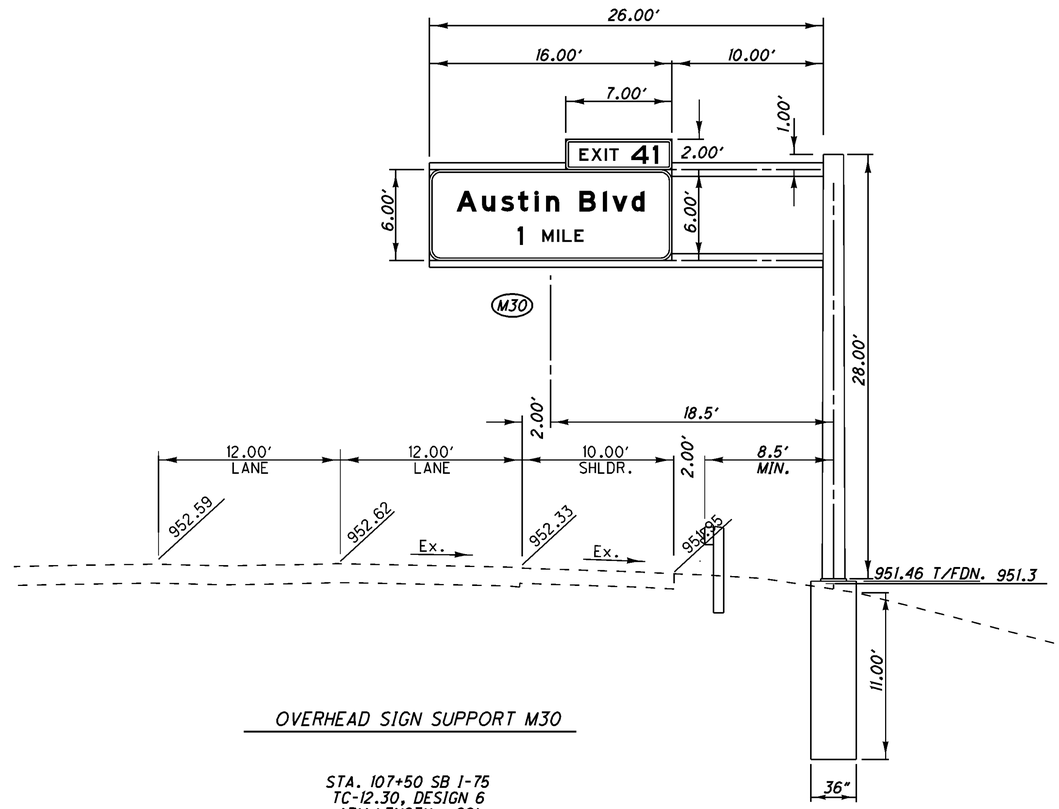

OVERHEAD SIGN SUPPORT M30

STA. 107+50 SB I-75
TC-12.30, DESIGN 6
ARM LENGTH = 26'
DESIGN VERTICAL CLEARANCE :
MIN. = 17.00'
ACTUAL = 19.83

FOR ESTIMATED QUANTITIES SEE SHEETS, 530-531

SIGN ELEVATIONS
M29 STA. 94+50 AND M30 STA. 107+50

CALCULATED GWA
CHECKED BH

0 2.5 10
HORIZONTAL SCALE IN FEET

MOT-75-0.75

603
773

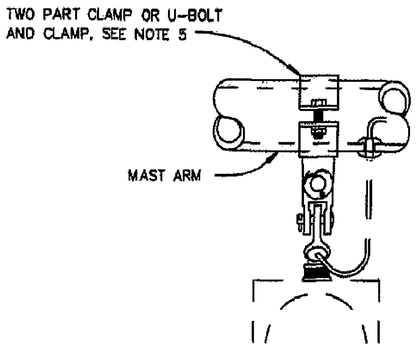

CLAMP

SEE NOTE 6.

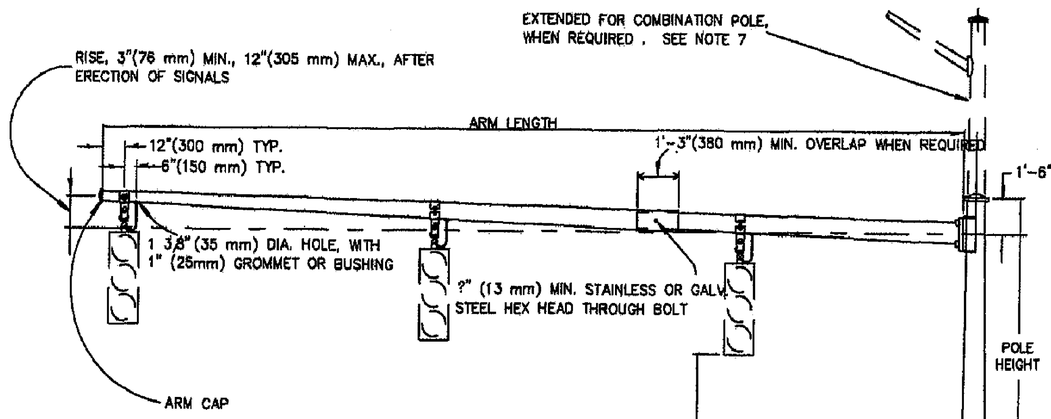

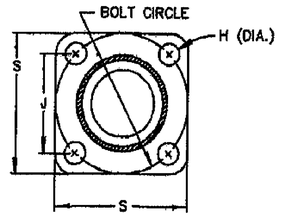

BASE PLATE

NOTES

1. Arm plate hole diameter shall be bolt diameter plus 1/8" (3.2 mm). Pole plate tapped hole shall have threads with 75% (min.) full profile height. Threads may be retapped after galvanizing.
2. For sign mounting details, see drawings TC-16.20 and TC-41.41.
3. For foundation details, see drawing TC-21.20.
4. The arm attachment plate shall be welded using a full penetration weld. The pole attachment to the base plate shall be welded using a full penetration weld.
5. The mast arm clamp shall have a minimum strength at yield to support a 200 pound (90 Kilogram) load.
6. For signal attachment details, see drawing TC-85.20.
7. For modification of pole to suport roadway lighting, see drawings TC-22.10 and HL-10.12.
8. A minimum of one bolt thread shall remain above the anchor nut.
9. All unused couplings shall be provided with a removable galvanized cast iron plug.
10. For pole and base plate dimensions, see sheet 2.
11. The wire entrance part of the signal head may be oriented in any direction to keep the cable drip loop from rubbing on the signal head. The signal head shall hang level and plumb.
12. For constuction details and location of handholes, see drawing TC-22.10.
13. The design loads were calculated as the equivalent amount of signal area that could be carried at the end of the arm.
14. The design loads were developed without applying galloping fatigue loads. Also, the stress requirements of note b, table 11-2 in the AASHTO code were not applied. This is a joint decision of the ODOT Engineers and the Consultants.
15. These structures should be inspected for excessive wind induced deflection in the vertical direction. If found, a damping plate should be placed on the arm.

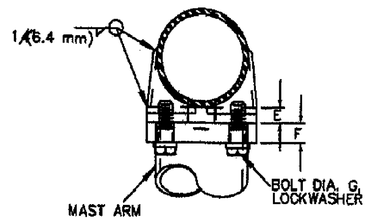

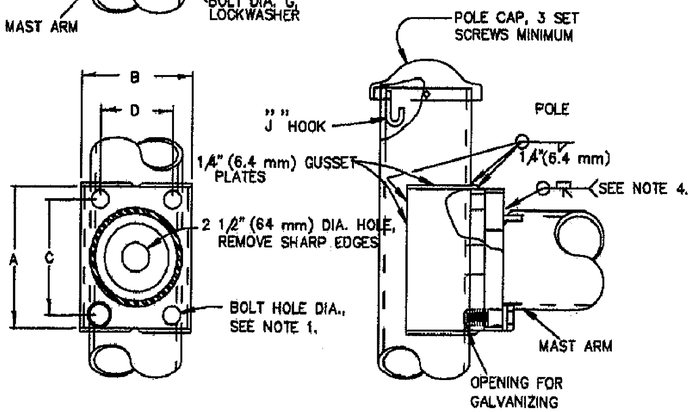

ARM ATTACHMENT

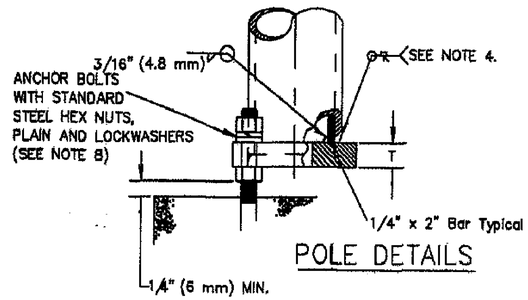

POLE DETAILS

SINGLE ARM OVERHEAD SIGNAL SUPPORT

01-02-08

OFFICE OF TRAFFIC ENGINEERING

DESIGNED | REVIEWED | CHECKED | REVISION DATE | PIS NUMBER

PLAN INSERT SHEET

TC-81.21 DETAILS

MOT-75-0.75

TC-81.20A

OFFICE OF TRAFFIC ENGINEERING

1/2

1/2

604
773

D:\SCADXML\WORK\07020-ODOT~DES Inc\TC-8120Z.dwg, Model, 2/1/2008 1:49:28 PM

THESE DESIGNS USE FULL PENN. WELDS AT THE ARM AND BASE PLATE CONNECTIONS

ALL DIMENSIONS ARE IN INCHES, UNLESS OTHERWISE NOTED.

DESIGN NO.	MAXIMUM DESIGN AREA SQ FT	DESIGN DISTANCE FROM CL FT	POLE		ARM		TWO PIECE ARM		ARM ATTACHMENT							ANCHOR BASE					ANCHOR BOLT	
			WALL THICK	SIZE	WALL THICK	SIZE	WALL THICK	SIZE	A	B	C	D	E	F	G	BOLT CIRCLE	S	J	T	H	DIA.	L
21	26	24.5	.179	10X6.78X23'	.179	7X3.50X25'			14.50	12	10.50	8	1.25	1.25	1.25	13.50	14.13	9.56	1.50	1.75	1.50	54
22	25	31.5	.179	11X7.78X23'	.179	8X3.52X32'			14.50	12	10.50	8	1.25	1.50	1.25	15	15.63	10.63	1.50	1.75	1.50	54
23	25	37.5	.179	12X8.78X23'	.179	9X3.68X38'			14.50	12	10.50	8	1.25	1.50	1.25	16	17	11.31	1.50	1.75	1.50	54
24	42	37.5	.239	13X9.78X23'	.239	10.32X5.00X38'			16.50	14.50	12.50	9.50	1.25	2	1.25	18	18.50	12.75	2	2.13	1.75	84
31	40	44.5	.239	14X10.78X23'	TOT. LENGTH = 45'		.239	11X8.62X17' +	16.50	14.50	12.50	9.50	1.25	2	1.25	20	20.50	14.13	2	2.13	1.75	84
							.179	9.19X5.10X29'-3"														
32	42	47.5	.299	14X10.78X23'	TOT. LENGTH = 48'		.299	11X8.62X17' +	16.50	14.50	12.50	9.50	1.25	2	1.38	20	20.50	14.13	2	2.38	2	90
							.179	9.19X4.68X32'-3"														
33	42	59.5	.299	16X12.78X23'	TOT. LENGTH = 60'		.299	13X8.80X30' +	19.50	16.50	15	12	1.50	2	1.38	22	23	16.26	2	2.38	2	90
							.239	9.62X5.14X32'														
34	40	71.5	.299	17X13.78X23'	TOT. LENGTH = 70'		.3125	14X8.82X37' +	19.50	16.50	15	12	1.50	2	1.38	22	23	16.26	2	2.38	2	90
							.239	9.60X4.42X37'														

ENGLISH UNITS

ALL DIMENSIONS ARE IN MILLIMETERS, UNLESS OTHERWISE NOTED.

DESIGN NO.	MAXIMUM DESIGN AREA SQ M	DESIGN DISTANCE FROM CL M	POLE		ARM		TWO PIECE ARM		ARM ATTACHMENT							ANCHOR BASE					ANCHOR BOLT	
			WALL THICK	SIZE	WALL THICK	SIZE	WALL THICK	SIZE	A	B	C	D	E	F	G	BOLT CIRCLE	S	J	T	H	DIA.	L
21	2.5	7.5	4.55	254x172x7.0 m	4.55	178x89x7.6 m			368	305	267	203	32	32	32	343	359	243	38	44	38	1.37 m
22	2.3	9.6	4.55	279x198x7.0 m	4.55	203x89x9.8 m			368	305	267	203	32	38	32	381	397	270	38	44	38	1.37 m
23	2.4	11.4	4.55	305x223x7.0 m	4.55	229x93x11.6 m			368	305	267	203	32	38	32	406	432	287	38	44	38	1.37 m
24	3.9	11.4	6.07	330x248x7.0 m	6.07	262x127x11.6 m			419	368	318	241	32	51	32	457	470	324	51	54	44	2.13 m
31	3.7	13.6	6.07	356x274x7.0 m	TOTAL LENGTH = 13.7 m		6.07	279x219x5.2 m +	419	368	318	241	32	51	32	508	521	359	51	54	44	2.13 m
							4.55	233x130x8.9 m														
32	3.9	14.5	7.59	356x274x7.0 m	TOTAL LENGTH = 14.6 m		7.59	279x219x5.2 m +	419	368	318	241	32	51	35	508	521	359	51	60	51	2.29 m
							4.55	233x119x9.8 m														
33	3.9	18.1	7.59	406x325x7.0 m	TOTAL LENGTH = 18.3 m		7.59	330x224x9.1 m +	495	419	381	305	38	51	35	559	584	413	51	60	51	2.29 m
							6.07	244x131x9.8 m														
34	3.7	21.8	7.59	432x350x7.0 m	TOTAL LENGTH = 21.3 m		7.94	356x224x11.3 m +	495	419	381	305	38	51	35	559	584	413	51	60	51	2.29 m
							6.07	244x112x11.3 m														

METRIC UNITS

SINGLE ARM OVERHEAD SIGNAL SUPPORT

01-02-08

OFFICE OF TRAFFIC ENGINEERING

DESIGNED | REVIEWED | CHECKED | REVISION DATE | PIS NUMBER

PLAN INSERT SHEET

TC-81.21 DETAILS

MOT-75-0.75

TC-81.20A

OFFICE OF TRAFFIC ENGINEERING

2/2

2/2

604A
773

D:\SCADXML\WORK\07020-ODOT~DES Inc\TC-8120Z.dwg, Model, 1/31/2008 4:32:42 PM

GENERAL REQUIREMENTS

The purpose of this specification and the associated plans is to result in the installation of new traffic signals and to expand the existing interconnect system to proposed traffic signals along Miamisburg-Springboro Pike in Montgomery County, Ohio. These plans and specifications are to result in the complete installation of a fully functional traffic signal system that shall operate according to the requirements of the Ohio Manual of Uniform Traffic Control Devices (OMUTCD).

The Ohio Department of Transportation Construction and Material Specification dated January 1, 2008, shall govern this project (except when otherwise noted). Items listed shall conform to the State of Ohio Department of Transportation Construction and Materials Specifications, to the ODOT Office of Traffic Engineering Standard Construction Drawings, and to any Supplemental Specifications and/or specific requirements noted. Bidders shall comply with all applicable provisions of the Ohio Revised Code and Administrative Code.

DEFINITIONS AND TERMS

The following definitions and terms apply to this contract in addition to or in lieu of definitions in ODOT Construction and Material Specifications.

CENTRAL OFFICE MONITOR
A combination of microcomputers, software, and related equipment designed to facilitate traffic operations by allowing maximum flexibility in centralized transportation management and control at the Traffic Management Center. The microcomputers include database servers, communications servers, and related equipment that have the ability to monitor operations, store the timing and maintenance database(s), display signal status and Measures of Effectiveness (MOE), and provide system control of the local intersection controller(s).

COMMUNICATION NETWORK
The aggregation of fiber optic interconnect between all local controllers and the Central Office Monitor.

LOGICAL ZONE
A logical zone defines a group of signalized intersections that operate timing patterns to provide progression within the designated area. Adjacent logical zones may also implement timing patterns to provide progression between zones during time-based and traffic responsive operations. Logical zones permit signalized intersections to be reassigned to different zones (or groups) that operate similar timing patterns regardless of the communication channel assignment.

LOCAL CONTROLLER
The local controller is a NEMA TS2-Type 2 microprocessor unit responsible for intersection operational, programming, and diagnostic features including coordination, preemption, sequence control, detector switching, and communication with the Central Office Monitor. The existing cabinets contain terminals and facilities panels that meet TSI standards as outlined in NEMA TS-1-1989, Section 10.

MOBILE OPERATOR INTERFACE UNIT
Hardware and software that enables the mobile user to communicate, store, view, document, and analyze the traffic control system. Users at remote and mobile workstations shall have full access to the Central Office Monitor via high speed internet or direct fiber-optic connection. The remote user shall also have access to all video capabilities at the Central Office Monitor.

PRIME VENDOR
The supplier of traffic signal software who is responsible to develop compatible protocols with peripheral equipment that interface with the signal system software as required. Peripheral equipment includes controller units, detector units, modems, Malfunction Management Units, and any other equipment necessary to establish reliable communication and data processing.

SYSTEM ADMINISTRATOR
The government agency selected to house the Central Office Monitor on behalf of the other government agencies. Each agency is responsible for maintenance of traffic signals within the system. The System Administrator is responsible for coordinating the review of the Traffic Responsive timing patterns during the construction period of the project.

SYSTEM ENGINEER
A traffic Engineer responsible for the optimization, development, and installation of traffic responsive parameters for the proposed central/distributed traffic signal system.

TRAFFIC MANAGEMENT CENTER (TMC)
An office at the ODOT District 7 Offices, 1001 St. Mary's Avenue, Sidney, Ohio 45365-0969 which will house the video control equipment.

ITEM 102 - PRE-QUALIFICATION OF BIDDERS

In addition to ODOT Item 102.01 and Supplemental Specification 1063, the Bidder shall have all the resources of personnel, equipment and material to provide the services outlined below. The Contractor shall have sufficient resources available at his/her local place of business to provide the requirements of this specification.

The Contractor must be prequalified for the work types listed below at the time that bids are due:

44) Traffic Signals - Standard: This work type includes the installation, replacement, and performance testing of electrical materials and equipment for traffic control signals.

55) Fiber Optic Cable Installation, Splicing, Termination and Testing - Traffic Signal System: This work type includes the installation, splicing, termination and performance testing of single mode and multimode fiber optic cable and related equipment necessary for the transmission of video, voice or data for outside plant applications. This work type includes fiber optic work associated with traffic signal projects.

56) Fiber Optic Cable Installation, Splicing, Termination and Testing - Intelligent Transportation System: This work type includes the installation, splicing, termination and performance testing of single mode and multimode fiber optic cable and related equipment necessary for the transmission of video, voice, or data for outside plant applications. This work type includes all Traffic Signal System fiber optic work and work associated with Intelligent Transportation Systems projects.

ITEM 632 - PEDESTRIAN PUSHBUTTON, AS PER PLAN

In addition to Items 632.08 and 732.06, the pedestrian pushbutton shall be of a large button design that is recommended by the Americans with Disabilities Act (ADA). Pedestrian pushbuttons shall be a round pole mount, 2" mushroom plunger, yellow, furnished and installed by the Contractor including pedestrian actuation signs.

Payment will be made at the contract unit bid price per each of ITEM 632 PEDESTRIAN PUSHBUTTON, AS PER PLAN.

ITEM 632 - REMOVAL OF TRAFFIC SIGNAL INSTALLATION FOR STORAGE, AS PER PLAN

In addition to ODOT Item 632.26, contact ODOT District 7 Traffic Engineer Craig Eley (937) 497-6832 for determination of equipment to be salvaged. Equipment the Engineer determines has no value shall be disposed of by the Contractor which may include cable no longer in service, partial pole foundations, miscellaneous cabinet equipment determined to be unserviceable, lashing rods, and illegible signs as determined by the Engineer. A controller cabinet to be salvaged shall include all equipment inside of the cabinet including but not limited to the controller, loop detector units, malfunction management unit, and load switches. Unless otherwise specified, equipment to be salvaged shall be transferred to a location within the project for storage.

Remove items not shown on the traffic signal plans as proposed or existing equipment. Payment will be made at the contract unit price bid per each of ITEM 632 REMOVAL OF TRAFFIC SIGNAL INSTALLATION FOR STORAGE, AS PER PLAN.

ITEM 632 - SIGNALIZATION, MISC.: PTZ CAMERA, AS PER PLAN

The Contractor shall furnish and install a closed circuit television (CCTV) system consisting of field equipment and other ancillary and incidental equipment required to assemble a fully-functioning integrated traffic surveillance system. The CCTV system shall be furnished by Honeywell, Axis or approved equal. All provided components shall provide a mean time between failures (MTBF) of 50,000 hours minimum. Compliance with applicable ISO quality assurance standards is required.

For each camera there shall be supplied, installed, connected to the camera and made operational a video/data transceiver. The transceiver shall be capable of Ethernet communications protocol. The transceiver shall be mounted within a NEMA 4 enclosure at the base of the pole on which the camera is mounted.

For each camera there shall be supplied, installed, connected to the camera and made operational an outdoor rated power supply. The power supply shall meet the same environmental performance standards as those of the camera and video/data transceiver. The power supply shall be mounted within the signal controller cabinet.

The CCTV field equipment required for the camera site shall include installation of the items described below. Process and control equipment for the viewing with the surveillance cameras is included as part of ITEM 633 SIGNALIZATION ITEM, MISC.: VIDEO MONITORING EQUIPMENT, AS PER PLAN.

CAMERA
The camera shall meet or exceed the following minimum requirements:

1. Color/monochrome advanced digital signal processing (DSP)
2. 18X optical (4.1mm to 73.8mm) with 8X digital (144X)
3. Utilize a Δ-inch CCD, using the most current technology
4. Provide a minimum horizontal resolution of 470 TVL (NTSC)
5. Provide sharp, detailed images down to 0.7 lux color, .05 lux color with Δ-second shutter, and .01 lux monochrome.
6. When switching to monochrome mode, the camera must automatically remove the IR cut filter when necessary, which will increase the infrared sensitivity. When enough ambient light is available to produce an acceptable color image, the camera must automatically enable the IR cut filter.
7. Continuous auto focus. When required, operator override of the auto focus settings must be allowed. Auto iris with manual override must also be allowed.

DOME
The camera housing/dome shall meet or exceed the following minimum requirements:

1. Be comprised of a high-speed pan/tilt assembly using precision motors and high-strength belt drive, resulting in quiet and accurate operation.
2. Incorporate a sealed slip ring to provide a continuous three hundred sixty degrees (360ß) of rotation and automatically adjust pan and tilt speed in proportion to the zoom position for greater control.
3. Manual pan speeds range from 0.1ß to 400ß per second
4. Manual tilt speeds must range from 0.1ß to 200ß per second
5. Auto-pivot tracking that allows the dome to automatically turn 180-degrees when reaching its lower limit so to allow the operator to automatically track an individual moving directly below the camera.
6. Dust tight, weatherproof, and able to withstand mechanical impact in accordance with the International Electrotechnical Commission standard IP549.
7. Bottom of dome shall available in either clear or smoked, and shall be attached with a key-lock to resist tampering.
8. Thermostat-controlled 24VAC heater and blower must be available to maintain a sufficient operating temperature.
9. Built-in power isolation and lightning surge protection.
10. Equipped with a sun shade
11. Pressurized housing Mil-Spec resistant to salt air, dust, humidity, or smog.

MOUNTING BRACKET
The mounting hardware shall permit the camera to be securely attached to the top or side of a wood or steel pole. All brackets, struts, and miscellaneous hardware to attach the housing and power supply shall be included as part of this item. All parts shall be made of corrosion resistant materials such as plastic, stainless steel, aluminum, or brass. The mounting height shall be a minimum of 20 feet above the roadway.

CABINET
A pole mounted NEMA 4X rated cabinet shall enclose the video transmission equipment and a power supply assembly. The housing shall meet the environmental requirements of the video transmission equipment. All equipment specified herein shall operate on a power service from 95 to 135 VAC, 60Hz, 3Hz, single phase.

LIGHTNING PROTECTION
The Contractor shall furnish and install a properly functioning lightning rod and transient surge suppresser to protect the field equipment from lightning strikes and supply voltage surges. This item is to include a lightning rod.

The Contractor shall video tape the location of the proposed camera at the specified height two weeks in advance of actual installation. The video shall show the 360 degree viewing area of the proposed camera over a 5 minute duration. Two (2) copies of the video tape shall be submitted to the Engineer for review.

Payment will be made at the contract unit price bid per each of ITEM 632 SIGNALIZATION, MISC.: PTZ CAMERA, AS PER PLAN, complete.

ITEM 632 - SIGNALIZATION, MISC.: VIDEO MONITORING EQUIPMENT, AS PER PLAN

This item shall include both hardware and software to view and control the PTZ cameras remotely through the proposed fiber-optic network. The video monitoring hardware shall be installed at the TMC as defined above. The video monitoring software shall be installed at the TMC as defined above and shall control the video monitoring hardware and equipment as a standalone software package. Each camera shall be selectable within the software and permit pan, tilt, and zoom control.

The video monitoring software shall be customizable to meet the needs of the operating staff, including thumbnail views of all available video feeds. The software shall communicate with the video server (as defined below) either from a direct network connection, a wireless connection or via a VPN connection. The video monitoring software shall allow both remote limited access (for http viewing) and remote full administrative access.

This item specifies equipment to be installed as defined for CCTV control equipment and installation items.

DIGITAL CONTROL SYSTEM
The Digital Control System shall consist of a rack-mounted video matrix switcher (located in the Traffic Management Center). The following items shall apply to the Digital Control System.

The Digital Control System shall be designed for NTSC signal and CCTV applications. The control system shall minimize the number of cable conductors to facilitate ease of system installation. The Digital Control System shall be capable of switching up to 32 video inputs to any of up to 8 video outputs. In addition to monitoring independent camera selection, salvo switching shall also be available. This mode switches video as a synchronized group from as many as 10 cameras at a time to as many as 4 monitors. The Digital Control System shall have the capacity to store up to four (4) salvos.

Video bandwidth shall be a minimum of 15 MHz.

A minimum of 16 pre-positioned (zoom, focus, pan and tilt) scenes per camera shall be selectable. The Digital Control System shall control the pan and tilt devices via the addressing (dip switch setting in the camera) on the on-board digital receiver. All presets shall be stored in the PTZ camera. Program data shall be stored in battery-backed memory.

The PTZ controller shall always be in the "on-line" condition with the system, however the user shall have the discretion to select a mode which requires the operator to "log-on" and "log-off" by entering a user name and password.

Remote camera/PTZ control shall be used for camera call-up, pan and tilt control, lens functions, preset activation. Remote camera/PTZ control shall support individual camera call-up, monitor output selection, activation of specific presets, routines and alarm processing for individual cameras.

The Digital Control System shall have a minimum of eight (8) full-function programmable controls, each having the capability to switch and control any of the system cameras. These can be assigned to important presets, tours etc., for quick and easy activation.

Receiver/driver units shall initiate a self-test feature upon power up of the monitoring equipment. Local testing of receiver/driver functions shall be accomplished without the need for external control code input. A switch within the receiver/driver unit shall allow site address selection.

All communication to remote PTZ cameras shall be via Ethernet communications protocol and shall be individually addressable. The software shall also be set up to permit remote viewing of the video detection feeds via Ethernet communications. Each camera shall be viewable as a thumbnail and enabled for enlarged view. Control or programming of the video detection cameras is not a part of this item.

DIGITAL VIDEO RECORDER
1. The DVR shall record a minimum of 48 hours and shall record up to 8 video inputs at one time.
2. Time/date generator display shall be 24-hour (a.m./p.m.) with battery back-up.
3. Automatic recycle at end of memory to start recording unless recycle record defeat is selected. DVR to be rack mounted.
4. Power shall be 120 Vac +/-10V, 50/60 Hz

In the designated Traffic Management Center, in the area designated for monitoring the traffic control system, the following equipment shall be installed:

1 Digital Control System
2 50" Flat Screen Monitors
4 21" Flat Screen Monitor
2 Remote camera/PTZ control joystick
3 Licenses of PTZ controller software to be used independent of joystick controls
1 Digital Video Recorder

Payment will be made at the contract unit price bid including testing, training, and documentation per lump sum of ITEM 632 SIGNALIZATION, MISC.: VIDEO MONITORING EQUIPMENT, AS PER PLAN.

ITEM 632 - POWER SERVICE, AS PER PLAN

In addition to Section 632.24, electric power shall be obtained from the Dayton Power and Light Company (DPL). Power shall be supplied at 120/240 volts. The Contractor shall be responsible for providing a 2" galvanized conduit from the controller to the power service point, as directed by the Engineer. The Contractor shall provide 5 feet of coiled slack at the splice point for additional connections. Disconnect switches shall be furnished and installed by the Contractor, as directed by the Engineer. An ODOT keyed padlock or device approved by the maintaining agency's maintenance forces is to be provided for the disconnect switch enclosure. The Contractor shall coordinate with DPL for final power service source location.

All electric services are to be underground. Meters and disconnect switches are to be mounted on the side of controller cabinets. Service cable must be run in a conduit separate from signal cable and loop lead-in wire.

The power service shall be installed in accordance with ODOT Standard Construction Drawing TC-83.10 (01/19/07).

Payment shall be made at the unit bid price for each of ITEM 632 POWER SERVICE, AS PER PLAN and shall include all other material, equipment, and incidentals necessary for making a complete power service connection.

ITEM 632 - SIGNALIZATION, MISC.: ADVANCE/DILEMMA ZONE DETECTION SYSTEM, AS PER PLAN

This item of work shall consist of furnishing and installing an advance/dilemma zone detection system capable of advanced detection control at the intersection of Miamisburg Springboro Pike at Byers Road/ Wood Road.

This item shall include, but is not limited to the materials/items installed at the locations shown on the plans, made operational and accepted by the Engineer.

Payment for Item 632 SIGNALIZATION, MISC.: ADVANCE/DILEMMA ZONE DETECTION SYSTEM, AS PER PLAN shall be made at the contract lump sum price, complete and in place including all required hardware, cables and connections.

ITEM 632 - SIGNALIZATION, MISC.: ADVANCE/DILEMMA ZONE DETECTION SYSTEM, AS PER PLAN (ALTERNATE BID)

The Contractor shall supply, install and make fully operational the following proprietary bid item at the intersection of Miamisburg Springboro Pike at Byers Road/ Wood Road in lieu of ITEM 632 SIGNALIZATION, MISC.: ADVANCE/DILEMMA ZONE DETECTION SYSTEM, AS PER PLAN:

Wavetronix SmartSensor Advance

This item shall include all mounting hardware, wiring, and installation. The Contractor shall coordinate with the Montgomery County Engineer for field location of each detector unit and programming of vehicle detection parameters.

Payment for ITEM 632 SIGNALIZATION, MISC.: ADVANCE/DILEMMA ZONE DETECTION SYSTEM, AS PER PLAN (ALTERNATE BID) shall be made at the contract unit price including testing at the contract lump sum price, complete and in place including all required hardware, mounting brackets, cables and connections.

ITEM 632 - (COMBINATION) SIGNAL SUPPORT, MISC.: TYPE 81.20, (BY SIZE), AS PER PLAN

In addition to ODOT Item 632.15, and Item 732.11, the Contractor shall furnish and install a round tapered signal support as specified on the respective traffic signal plan and as detailed in the elevation and pole details.

Structural aspects of design and materials were designed to comply with 2001 AASHTO Standard Specifications for Structural Supports for Highway Signs, Luminaires, and Traffic Signals. Loading is based on an isotach wind velocity of 55 kph (90 mph) times a 1.3 gust factor. The pole and mast arm shall be fabricated from coil or plate conforming to ASTM A595 Grade A with a minimum yield strength of 55ksi or ASTM A572 with a minimum yield strength of 65 ksi. Anchor bolts shall conform to the requirements of ASTM A687 and shall be in accordance with manufacturer recommendations.

The following design parameters were used:

1. Design yrs (life): 25 years
2. Fatigue: YES
3. Fatigue Category: two
4. Galloping: NO
5. Natural Wind: YES
6. Truck Gust: NO
7. Truck Speed: 65 MPH
8. Wind Speed: 90 MPH
9. All Signal heads to be aluminum, 5-Section, 12" Lens, 1-Way

The signal supports shall be furnished and installed in accordance with ODOT Standard Construction Drawing TC-81.20 with the following additional requirements:

1. Each load (signs, vehicular signals, video detection cameras, etc) shall be rigid mounted to the proposed mast arm.

2. The signal support reference number as listed on the pole orientation diagram shall be welded to the bottom of the base plate at the factory.

3. The signal support shall be painted as detailed in the separate PAINTING note.

Payment will be made at the contract unit price bid per each of ITEM 632 (COMBINATION) SIGNAL SUPPORT, MISC.: TYPE 81.20, (BY SIZE), AS PER PLAN.

ITEM 632 - PEDESTAL, 8', AS PER PLAN

In addition to ODOT Item 632.19, and Item 732.15, the Contractor shall paint the pedestal as detailed in the separate PAINTING note.

Payment will be made at the contract unit price bid per each of ITEM 632 PEDESTAL, 8', AS PER PLAN.

ITEM 625 - BRACKET ARM, (LENGTH), AS PER PLAN

In addition to ODOT Item 625.09, and Item 725.21, the Contractor shall paint the bracket arm as detailed in the separate PAINTING note.

Payment will be made at the contract unit price bid per each of ITEM 625 BRACKET ARM, (LENGTH), AS PER PLAN.

ITEM 625 - LUMINAIRE, CONVENTIONAL, (WATTAGE, TYPE, VOLTAGE), AS PER PLAN

In addition to ODOT Item 625.08, and Item 725.11, the Contractor shall paint the luminaire as detailed in the separate PAINTING note.

Payment will be made at the contract unit price bid per each of LUMINAIRE, CONVENTIONAL, (WATTAGE, TYPE, VOLTAGE), AS PER PLAN.

PAINTING

Painting all poles, pedestals, mast arms, bracket arms and luminaires to be supplied are to be supplied with a primer finish. A minimum of two additional coats of paint will be required to complete the finish as indicated in the following specifications:

A) Surfaces to be painted shall be cleaned with stiff fiber wire brushes, scrapers or other hand or power tools.

B) Care shall be taken to protect freshly coated surfaces, and all appurtenances not intended to be painted. The wire brushed surfaces shall be cleaned and re-primed.

C) All fins, tears, slivers, and burred or sharp edges that are present on any steel member, or that appear during the cleaning operation, shall be removed by grinding.

D) In addition to the requirements of 105.10, the Contractor shall provide equipment suitable to attain access to inspect any portion of the poles during all phases of the cleaning and painting operations and after the painting is completed. The Contractor shall also furnish all necessary traffic control to permit this inspection during and after all phases of the project.

E) Any uncured paint damaged by rain, snow or condensation shall be permitted to dry; the damaged paint shall then be removed and the surface repainted.

F) The poles shall be painted gloss black federal color #FS-595-17038. The Contractor shall touch up any scrapes or marks to the pole finish in the field after installation.

G) All paint shall be first quality standard products of established manufacturers who have continuous performance in the manufacture of each product for 10 years as approved by the Engineer. The Contractor shall provide best quality, first line grade as regularly manufactured by acceptable paint material manufacturers. Materials not displaying manufacturer's identification as a standard, best grade, first line product will not be acceptable.

H) All materials shall be delivered to the site in unopened original containers, bearing the brand name and the manufacturer's name and having seals intact. Containers shall not be opened until contents are ready to be used.

I) Materials shall be thoroughly stirred and evenly spread without runs, skips, sags, streaks, brush marks, or other defects. The finish coat shall be applied by brush or roller. The Contractor shall apply two coats of finish paint to provide a minimum of total dry thickness of 6 mils. Application of a second coat of paint shall be applied only after the interceding drying time has expired.

J) The interceding drying time shall be as recommended by the paint manufacturer or as follows:

i) 48 hours at 40 to 50 degrees Fahrenheit
ii) 24 hours at 50 to 75 degrees Fahrenheit
iii) 2 hours at 75 to 100 degrees Fahrenheit

K) The temperature of the air, surface to be painted, and paint shall be between 50 and 95 degrees Fahrenheit. The air temperature shall be at least 5 degrees Fahrenheit above the dew point. The surface to be painted shall be completely dry; relative humidity shall be less than 90%. The paint label instructions shall be read and followed. If any differences exist between the label and the above restrictions, the more restrictive shall apply.

L) The Contractor shall provide and erect "fresh paint" signs on the poles. After the paint is completely dried, the Contractor shall remove the signs.

M) The project involves the painting of poles. Other items or equipment attached to the pole shall be protected from the painting process.

N) The Contractor may use a powder coating process in lieu of field painting, provided that the Contractor corrects any scratches or blemishes that occur during the delivery and installation process.

ITEM 632 - SIGNAL SUPPORT FOUNDATION, AS PER PLAN

In addition to Items 632.14 and 732.11, the Contractor shall furnish and install a drilled shaft foundation in accordance with the ODOT Office of Traffic Engineering, Standard Construction Drawing TC-21.20 and details contained in these plans.

A 3" conduit ell in lieu of a standard 2" conduit ell shall be installed in each signal support foundation as required of ODOT Standard Construction Drawing TC-21.20. An additional conduit ell may be required in the signal support foundation to accommodate power service cable or lighting circuits. See the pole orientation diagram for the respective traffic signal plan for further information. Grounding may require additional conduits.

The foundation shall be constructed such that, where a signal support (bolt circle) is located at the edge of or as part of sidewalk and at the edge of curb ramp, the top of the foundation elevation shall be equal to the elevation of the concrete sidewalk. The width of the sidewalk shall not be reduced when measuring from back of walk to base plate of signal support.

Payment will be made at the contract unit price bid per each of ITEM 632 - SIGNAL SUPPORT FOUNDATION, AS PER PLAN.

ITEM 633 - CONTROLLER UNIT, TYPE TS2/A2, WITH CABINET, TYPE TS1, AS PER PLAN

In addition to Item 633.07 and Item 733.02, the controller shall meet, as a minimum, all applicable sections of the NEMA Standards Publication No. TS2-1992. This specification shall govern where differences occur in the ODOT Standard Construction and Material Specification. The TS2 Type 2 controller shall be an Eagle Traffic Control Systems brand furnished by Siemens ITS with the most recent software and provide all features of the latest model available. The proposed controllers shall be connected to and operate as part of the existing Actra signal system.

The microcomputer-based controller shall be capable of operating as full or semi-actuated volume density control with pedestrian timing in either an isolated location or as part of a coordinated system of controllers. The controller unit shall be furnished in accordance with NEMA TS 2 Type 2 (1992) standards and shall be connected to a malfunction management unit and to rack mounted detector amplifiers in a NEMA TS 1 cabinet with point to point wiring for the terminals and facilities.

LOCAL CONTROLLER EQUIPMENT
The local controller shall be able to operate time of day patterns that are compatible with the existing traffic signals. The following features shall be furnished in addition to all NEMA TS2 Type 2 standards, enhanced measures of effectiveness, and diagnostics that are available with the most recent version of controller.

The controller shall provide a LCD display and shall use an English menu format for data entry and information display. The LCD shall be a multiple angle display that has an adjustable intensity with backlighting.

Traffic responsive coordination patterns may be selected by either of the following 2 methods: a cycle-split-offset (COS) pattern or by a specific timing plan.

The pedestrian clearance interval shall be user programmable in the local controller to permit extending the flashing DONT WALK interval through the yellow change interval and/or the all-red clearance interval.

The pedestrian WALK and DONT WALK intervals shall be timed with the associated NEMA phase and shall operate independently of the opposite ring. Pedestrian movements shall be fully operational with the respective lead/lag vehicular movements and maintain progression.

The malfunction management unit shall be of a recording type and shall be prewired for a 16-position back panel.

Inductive loop detector units shall be 2 channel, delay and extension type.

CABINET EQUIPMENT
The cabinets shall be commercially smooth and free of defects that would impair serviceability or detract from general appearance. The cabinets shall be furnished fully equipped with the following features ready for controller installation as required:

The cabinet shall be furnished with two removable shelves mounted on adjustable channels. All mounting hardware shall be included.

A door alarm/light switch shall be furnished and installed in the cabinet. A 60W incandescent lamp (or energy efficient alternative that produces equivalent lumens) shall be furnished and installed with a 14-inch (minimum) flexible arm to illuminate the field terminals. The lamp shall be wired to either a 15 amp ON/OFF toggle switch mounted on the power panel or to a door activated switch mounted near the top of the door.

The cabinet shall be furnished with load switches for a 16-position backboard to allow for maximum phase utilization for which the cabinet is designed. All load switches shall be supported by a bracket extending at least half the length of the load switch.

All controller and malfunction management unit cables shall be of sufficient length to allow the units to be placed on either shelf or on the top of the cabinet in the operating mode. Connecting cables shall be sleeved in a braided nylon mesh. The use of exposed tie-wraps or interwoven cables is unacceptable.

The cabinet shall be equipped with a momentary pushbutton contact switch for substituting manual operation of internal timing for automatic interval timing. The switch is to be mounted on a 5 foot minimum flexible weatherproof extension cord in accordance with Item 733.03.A.2(j).

The cabinet shall be of a door in door type with a #1 key for the police door and a Corbin type tumble lock keyed for a #2 key on the main door. A resealable pouch shall be mounted to the inside door of the cabinet and shall be sufficient to accommodate one complete set of wiring, signal, and timing plans.

The eight (8) phase (16-position) cabinet shall be furnished with cabinet mounting hardware. The cabinet shall have a nominal cabinet dimension of 51"H x 36"W x 18"D (+2"/-0"for all dimensions).

CONTROLLER AND CABINET TESTING
The Contractor shall perform bench testing of the components of this section on the controller cabinet. Testing of the malfunction management unit shall be done by the Contractor before installing the intersection controller and cabinet in the field. Software and firmware shall be loaded on the controller and checked for correct operation of timing plans, phasing schemes, and pre-empts.

Testing of components by the Contractor for proper operation shall include the following minimum requirements:

Terminal screws tightened.
Correct terminal jumpers.
Fan & thermostat operation.
Door closer switch operation.
Malfunction management unit test.
Force hardwire conflicts for all phase combinations to verify stop timing and conflict indication.
GFI receptacle test.
Police panel operation.
Maintenance panel operation.
Detectors.
Test for phase operation, sequence and interval length on min recall, max recall and no call.
Shelves, mounting.
All panels, mounting.
ATSI malfunction management unit test to document the malfunction management unit operation. The test results are to be logged and furnished to the Engineer.
Proper flash sequence.
Auxiliary equipment operation.
Cabinet lamp.
Signal outputs are to be tested while connected to a min 60 watt load on each signal indication.

Repairs/corrections, if required, shall be made by the Contractor and recorded before delivery. The Engineer shall also be notified of any problems. The controller is to operate without problems on minimum recall of all minor phases for 48 hours with full load on each output. (Note that testing also requires operation with detectors in a no call and call to maximum configuration).

A written report stating the cabinet intersection number, date and time of test, signed off by the technician who performed the tests, shall be submitted to the Engineer upon successful completion of the above tests. The successful testing shall be demonstrated to the Engineer prior to installation if requested. The test area may be erected at a location determined by the Contractor. All costs related to inspect and observe the bench testing shall be included as part of controller testing.

The controller and all related components shall be in perfect working order and ready for installation/operation at the specified intersection as a result of the work described in this item. The cost for the controller and cabinet testing shall be included in the price of the controller furnished complete.

COMMUNICATIONS EQUIPMENT
All controllers shall communicate via Ethernet communications protocol and shall be individually addressable for remote access. Ethernet transceivers shall be included with each controller.

FIBER OPTIC ETHERNET TRANSCEIVER
The Contractor shall furnish and install a fully managed Ethernet switch that provides dual fiber optical Ethernet (10/100/1000Base T) ports using industry standard fiber optic connectors and Fast Ethernet (10/100/1000Base-Tx) ports. The transceiver shall operate on 120VAC, 10 Watts and shall meet or exceed NEMA TS2 environmental requirements.

The transceiver shall interface to the proposed fiber optic cable using industry standard connectors. It shall be capable of operating over a distance of at least 10km with an optical power budget of 17db. The transceiver shall be capable of operating in a fault-tolerant fiber optic loop.

The transceiver shall be fully compliant with IEEE 802.3, 802.3u and 802.3z. The transceiver shall provide full-duplex operation and flow control.

The transceiver shall provide a simple and intuitive user interface for configuration and monitoring of the transceiver via standard HTML graphical web browser, including detailed on-line help. Event logging and recording shall be included.

DOCUMENTATION
Two (2) complete sets of the following shall be provided for each cabinet:

1. User manuals
2. Device programming manuals
3. Wiring diagrams and parts lists
4. Installation and diagnostic manuals

Software or firmware updates shall be accompanied by complete documentation that references an upgrade version, provides a list of improved capabilities with the upgrade, and provides a list of problems resolved with the upgrade (if applicable). All functions, features, and capabilities not addressed shall operate as intended before the upgrade was implemented. All software and firmware upgrades and new releases for features furnished as a part of this contract shall be free of charge for two (2) years after the completion of the 10-day performance test.

Payment will be made at the contract unit price bid per each of ITEM 633 CONTROLLER UNIT, TYPE TS2/A2, WITH CABINET, TYPE TS1, AS PER PLAN in place including all connections, system analysis, tested and accepted.

ITEM 633 - CONTROLLER ITEM, MISC.; CONTROLLER UNIT, TYPE 2070, WITH ITS CABINET, TYPE 340, AS PER PLAN

CONTROLLER EQUIPMENT
As a minimum the controller shall meet all applicable sections of Item 633.07 and Item 733.02. This specification shall govern where differences occur in the ODOT Standard Construction and Material Specification. The 2070 controller shall be an Eagle Traffic Control Systems brand furnished by Siemens ITS with the most recent software and provide all features of the latest model available. The proposed controllers shall be connected to and operate as part of the existing Actra signal system.

The local controller shall be a Type 2070LC, unit chassis model 2070-2B, in accordance with Item 733 Traffic Signal Controller Material in the 2008 Construction and Materials Specifications. The traffic signal controller shall be programmed with the ODOT licensed version of Siemens SEPAC intersection management software for integration with the existing ACTRA system. The controller shall support the operations of 16 phases using 24 channels (load switch) in the Intelligent Transportation System (ITS) cabinet.

CABINET EQUIPMENT
The traffic signal controller shall be housed in an ITS cabinet, Series 340, Type 340 in conformance with the California Department of Transportation (CalTrans), specifications titled "Traffic Signal Control Equipment Specifications" and "Transportation Electrical Equipment Specifications," including all addenda. The ITS Cabinet shall consist of a package of items needed to carry out the specific Application. The Type 340 cabinet shall be a four door cabinet with "P" base ground mounted.

The cabinets shall be commercially smooth and free of defects that would impair serviceability or detract from general appearance. The cabinetshall be provided with the required components, control devices, equipment, and hardware to provide for a fully functional and operational traffic signal intersection. When equipment required for operations is not specified herein, the contractor shall provide the equipment required as part of the cabinet. As a minimum the cabinet shall support and contain the following:

The table below outlines the typical package items required as part of the ITS Cabinet Type 340

Typical Package Items for Type 340	
Housing #3 / Two Cage #1	PDA ITS
Assembly	
"J" Panel Cage #1	
Control / Serial Bus Harness	
Service Panel Assembly with AC-/EG Bus	Serial Bus 3 Harness
Raw./ Clean AC Power Assembly	Detection cards
Raw./ Clean AC Power Extension	Serial Interface
Units (SIU)	
AC Clean Module Assembly	Auxiliary
Monitor Units (AMU)	
DC Power / COMM Assembly	Cabinet
Monitoring Unit (CMU)	
DC Power / COMM Extension	Flash operations
Cabinet Shelf Assembly	Output
field distribution panel	
Input Assembly	
Input field distribution panel	
Six Pack Output Assembly *	
Fourteen Pack Output Assembly *	

* See Output Forms for available configurations

NOTE: Input Assembly includes a Model 218 SIU. Output Assembly includes a Model 218 SIU, Model 214 AMU and Model 205 Transfer Relays. The PDA ITS (Traffic Signal Application) includes two Model 204 Flasher Units, Model 212 CMU and two Model 216 Power Supply Units. The PDA ITS (Traffic Management System Application) includes Model 212 CMU and two Model 216 Power Supply Units.

Output forms available for the cabinet shall be either of the two below:

OUTPUT FORM 2 (14-0-14-0)
This output form consists of:
(1) 14-pack output assembly (pos #1 - addr 01)
(1) 14-pack output assembly (pos #3 - addr 03)

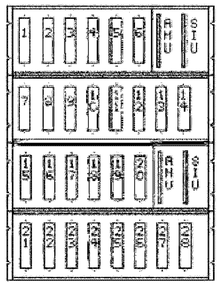

Channel ** = Load Switch **
Note: The 14-Pack Output Assemblies do not provide a Flash Relay for Load Switch positions 13, 14, 27 & 28.

OUTPUT FORM 4 (14-0-6-6)
This output form consists of:
(1) 14-pack output assembly (pos #1 - addr 01)
(1) 6-pack output assembly (pos #3 - addr 07)
(1) 6-pack output assembly (pos #4 - addr 04)

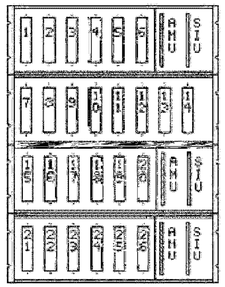

Channel ** = Load Switch **
Note: The 14-Pack Output Assembly does not provide a Flash Relay for Load Switch positions 13 & 14.

A door alarm/light switch shall be furnished and installed in the cabinet. Fluorescent lamps required. The lamps shall be wired to either a 15 amp ON/OFF toggle switch mounted on the power panel or to a door activated switch mounted near the top of the door.

The cabinet shall be furnished with a minimum of 24 channel (load switches) to allow for maximum phase utilization for which the cabinet is designed. All load switches required shall allow for flash operations.

All controller and malfunction management unit cables shall be of sufficient length to allow the units to be placed in one of the 19" racks with 4 rack units of separation. Connecting cables shall be sleeved in a braided nylon mesh. The use of exposed tie-wraps or interwoven cables is unacceptable.

The cabinet shall be equipped with a momentary pushbutton contact switch for substituting manual operation of internal timing for automatic interval timing. The switch is to be mounted on a 5 foot minimum flexible weatherproof extension cord in accordance with Item 733.03.A.2(j).

The cabinet shall be of a door in door type with a #1 key for the police door and a Corbin type tumble lock keyed for a #2 key on the main doors. A resealable pouch shall be mounted to the inside door of the cabinet and shall be sufficient to accommodate one complete set of wiring, signal, and timing plans.

The ITS cabinet shall be furnished with cabinet mounting hardware and concrete foundation. The cabinet shall have a nominal cabinet dimension of 66.38"H x 44.5"W x 26"D. The cabinet shall be mounted using galvanized steel "L" anchor bolts and sealed to the foundation.

CONTROLLER AND CABINET TESTING
The Contractor shall perform bench testing of the components of this section on the controller cabinet. Testing of the malfunction management unit shall be done by the Contractor before installing the intersection controller and cabinet in the field. Software and firmware shall be loaded on the controller and checked for correct operation of timing plans, phasing schemes, and pre-empts.

Testing of components by the Contractor for proper operation shall include the following minimum requirements:

Terminal screws tightened.
Correct terminal jumpers.
Fan & thermostat operation.
Door closer switch operation.
Malfunction management unit test.
Force hardwire conflicts for all phase combinations to verify stop timing and conflict indication.
GFI receptacle test.
Police panel operation.
Maintenance panel operation.
Detectors.
Test for phase operation, sequence and interval length on min recall, max recall and no call.
Shelves, mounting.
All panels, mounting.
CMU, AMU, and SIU tests to document the malfunction management unit operation. The test results are to be logged and furnished to the Engineer.
Proper flash sequence.
Auxiliary equipment operation.
Cabinet lamp.

Signal outputs are to be tested while connected to a min 60 watt load on each signal indication.

Repairs/corrections, if required, shall be made by the Contractor and recorded before delivery. The Engineer shall also be notified of any problems. The controller is to operate without problems on minimum recall of all minor phases for 48 hours with full load on each output. (Note that testing also requires operation with detectors in a no call and call to maximum configuration).

A written report stating the cabinet intersection number, date and time of test, signed off by the technician who performed the tests, shall be submitted to the Engineer upon successful completion of the above tests. The successful testing shall be demonstrated to the Engineer prior to installation if requested. The test area may be erected at a location determined by the Contractor. All costs related to inspect and observe the bench testing shall be included as part of controller testing.

The controller and all related components shall be in perfect working order and ready for installation/operation at the specified intersection as a result of the work described in this item. The cost for the controller and cabinet testing shall be included in the price of the controller furnished complete.

COMMUNICATIONS EQUIPMENT
All controllers shall communicate via Ethernet communications protocol and shall be individually addressable for remote access. Ethernet transceivers shall be included with each controller.

FIBER OPTIC ETHERNET TRANSCEIVER
The Contractor shall furnish and install a fully managed Ethernet switch that provides dual fiber optical Ethernet (10/100/1000Base T) ports using industry standard fiber optic connectors and Fast Ethernet (10/100/1000Base-Tx) ports. The transceiver shall operate on 120VAC, 10 Watts and shall meet or exceed NEMA TS2 environmental requirements.

The transceiver shall interface to the proposed fiber optic cable using industry standard connectors. It shall be capable of operating over a distance of at least 10km with an optical power budget of 17db. The transceiver shall be capable of operating in a fault-tolerant fiber optic loop.

The transceiver shall be fully compliant with IEEE 802.3, 802.3u and 802.3z. The transceiver shall provide full-duplex operation and flow control.

The transceiver shall provide a simple and intuitive user interface for configuration and monitoring of the transceiver via standard HTML graphical web browser, including detailed on-line help. Event logging and recording shall be included.

DOCUMENTATION
Two (2) complete sets of the following shall be provided for each cabinet:
1. User Manuals
2. Device Programming Manuals
3. Wiring Diagrams and Parts Lists
4. Installation and Diagnostic Manuals

Software or firmware updates shall be accompanied by complete documentation that references an upgrade version, provides a list of improved capabilities with the upgrade, and provides a list of problems resolved with the upgrade (if applicable). All functions, features, and capabilities not addressed shall operate as intended before the upgrade was implemented. All software and firmware upgrades and new releases for features furnished as a part of this contract shall be free of charge for two (2) years after the completion of the 10-day performance test.

Payment will be made at the contract unit price bid per each of ITEM 633 - CONTROLLER ITEM, MISC.: CONTROLLER UNIT, TYPE 2070, WITH ITS CABINET, TYPE 340, AS PER PLAN in place including all connections, system analysis, tested and accepted.

ITEM 633 - UNINTERRUPTIBLE POWER SUPPLY (UPS), AS PER PLAN

In addition to Item 633.18, the separate ventilated enclosure shall mount directly to the side of the proposed controller cabinet that is part of ITEM 633 CONTROLLER UNIT, TYPE TS2/A2, WITH CABINET, TYPE TS1, AS PER PLAN and ITEM 633 CONTROLLER ITEM, MISC.: CONTROLLER UNIT, TYPE 2070, WITH ITS CABINET, TYPE 340, AS PER PLAN.

The cabinet shall be painted as detailed in the separate PAINTING note.

Payment will be made at the contract unit price bid per each of ITEM 633 UNINTERRUPTIBLE POWER SUPPLY (UPS), AS PER PLAN in place including all connections, system analysis, tested and accepted.

ITEM 804 - FIBER OPTIC CABLE TESTING, AS PER PLAN

In addition to the requirements of 804.13, the following requirements are established:

AS-BUILT DOCUMENTATION
While installing and testing the installation, the Contractor is to mark prints with any field changes that were initiated during construction. These are commonly referred to as 'as-builts'.

As-built documentation shall include the following information:

1. Plan sheets with the location of conduit in roadway hand marked.
2. Plan sheets with the sizes of conduit hand marked.
3. Plan sheets with the locations of all pull boxes and splices hand marked.
4. Plan sheets with the sizes of fiber optic cables hand marked.
5. Revised splice diagrams hand marked.
6. The pre-installation, on-reel attenuation loss OTDR traces of each cable fiber in db/km showing cable/sheath length (not optical fiber length), 2-Point db loss, attenuation in db/km, fiber type, wavelength used, pulse width selection, and fiber/cable identification. OTDR traces shall be hard copy and electronic.
7. The installed attenuation loss OTDR traces of each cable fiber in db/km showing cable/sheath length (not optical fiber length), 2-Point db loss, attenuation in db/km, fiber type, wavelength used, pulse width selection, and fiber/cable identification. OTDR traces shall be hard copy and electronic.

All costs to perform the above testing and documentation shall be included in the bid lump sum price for ITEM 804 FIBER OPTIC CABLE TESTING, AS PER PLAN. Any link that fails the above tests shall be respliced or replaced until these requirements are met. The cost of resplicing, replacing and retesting cable is at the Contractor's expense.

ITEM 804 - FIBER OPTIC CABLE, MISC.: REUSE EXISTING CABLE, AS PER PLAN

The Contractor shall disconnect and pull back the existing aerial fiber optic interconnect cable back to the nearest pole, using proper storage and handling techniques, to safely store the cable in an location not impacted by project construction from which it can then be reinstalled and connected to the proposed equipment via the proposed pathway as specified in the these plans.

The Contractor shall be responsible for weather-proofing the exposed end(s) of the fiber optic cable.

The Contractor shall be responsible for maintaining the integrating of the existing interconnect cable such that no damage occurs to it physically or functionally. Should any damage occur the Contractor shall be responsible for and incur the expense of any and all necessary corrective actions, including but not limited to replacing the existing equipment and cable to the nearest splice or similar point where the fiber optic cable connection is interrupted.

Payment will be made at the contract unit price bid per each of ITEM 804 FIBER OPTIC CABLE, MISC.: REUSE EXISTING CABLE, AS PER PLAN in place including all connections, tested and accepted.

PROJECT COORDINATION

It shall be the responsibility of the General Contractor to coordinate the overall software and hardware communications for the entire traffic signal and video control system and to function as a Coordinator. The Coordinator shall be responsible for coordinating construction and installation between various equipment suppliers, Contractors and subcontractors, to facilitate the completion of a fully functional system. The Coordinator shall:

1. Coordinate the project schedule with the Ohio Department of Transportation, subcontractors and vendors to maintain a fluidity of construction and verify that all parties are communicating efficiently.
2. Troubleshoot the central system software, central system hardware, communications equipment and video monitoring equipment if problems arise during installation and determine the necessary course to meet the project requirements. This includes a determination of who is the at-fault Contractor or supplier a notification of such to the project Engineer.
3. Ensure that all pieces of the project function together as ONE integrated system.
4. Ensure that the communications network is operational as specified in the plans above, including fiber-optic, spread spectrum radio and twisted pair communications.
5. Ensure communications to all the project signals on the system from the Central Office Monitor and all interface units.
6. Ensure that the video monitoring hardware and software meets the specifications and requirements of this plan set.
7. Be responsible for communications and scheduling of all subcontractors and vendors/suppliers on the project.
8. Attend to and alleviate all concerns provided during construction by the Ohio Department of Transportation or their representatives.
9. Take steps to correct any items deemed unacceptable by the Ohio Department of Transportation that have been performed by subcontractors and vendors.

The work of the Coordinator, as described above, shall be incidental to the cost of this project and each item herein.

ITEM 633 - GUARANTEE

The Contractor shall guarantee that the traffic control system installed as part of this contract shall operate satisfactorily for a period of 90 days following completion of the 10-day performance test. In the event of unsatisfactory operation the Contractor shall correct faulty installations, make repairs and replace defective parts with new parts of equal or better quality. Equipment, material, and labor costs incurred in correcting an unsatisfactory operation due to poor workmanship or defective equipment shall be borne by the Contractor. Customary manufacturer's guarantees for all items shall be turned over to the Engineer following acceptance of the equipment.

The cost of guaranteeing satisfactory operation of the traffic control system will be incidental to the project and included in the unit cost of each item.

GROUNDING AND BONDING

The requirements of the Construction and Material Specifications (CMS) and the HL and TC series of Standard Construction Drawings are modified as follows:

1. All metallic parts containing electrical conductors shall be permanently joined to form an Effective Ground Fault Current Path back to the grounded conductor in the power service disconnect switch.

a. Provide an equipment grounding conductor in metallic conduits (725.04) in addition to the conductors specified and bond the conduit to this grounding conductor.

b. When an equipment grounding conductor is required in plastic conduit (725.05), the installation shall include a separate equipment grounding conductor in addition to the conductors specified.

c. Metallic conduit carrying the loop wires from in the pavement to the pull box splice location will only be bonded at the pull box end, and will not contain an equipment grounding conductor.

d. Metal pull box lids shall be bonded by attachment of the equipment grounding conductor to the frame diagonal as provided on HL-30.11.

e. If multiple conduit runs begin and end at the same points, only one equipment grounding conductor is required.

f. If an equipment grounding conductor is needed in conduit between signalized intersections for underground interconnect cable, the grounding system for each signalized intersection will be separated about midway between the intersections.

g. The messenger wire at signalized intersections will be used as the conductive path from corner to corner if conduit is not provided under the roadway. When conduit connects the corners of an intersection, an equipment grounding conductor shall be used in the conduit.

2. Conduits.

a. The 725.04 conduit shall have grounding bushings installed at all termination points. The bushing material shall be compatible with galvanized steel conduit and the grounding lug material shall be compatible for use with copper wire. Threaded or compression type bushings may be used.

b. The 725.05 conduit shall have the inside and outside diameters of the conduit deburred at all termination points.

c. Both ends of metallic conduit shall be bonded to the equipment grounding conductor.

d. Metallic conduit may be bonded to metallic boxes through the use of conduit fittings UL approved for this type of connection, with the box bonded to the equipment grounding conductor.

3. Wire for grounding and bonding.

a. Use insulated, copper wire for the equipment grounding conductor. Bonding jumpers in boxes and enclosures may be bare or insulated copper wire. Wire size shall be as follows:

i. Use 4 AWG between the power service and supports, poles, pedestals, controller or flasher cabinets.

ii. Use a minimum 8 AWG between loop detector pull boxes and the first conduit that requires a larger size as specified in 3.a.i above.

iii. Use a minimum 8 AWG between the "Prepare to Stop When Flashing" installation (including support) and the first conduit that requires a larger size as specified in 3.a.i above.

iv. The insulation shall be green or green with yellow stripe(s). For 4 AWG or larger, insulation may also be black with green tape/labels installed at all access points.

b. In a highway lighting system, the equipment grounding conductor shall be the same wire size as the duct cable or distribution cable circuit conductors, with the minimum conductor size of 4 AWG. Bonding jumpers will be minimum size 4 AWG.

4. Ground rod.

a. A 3/4 inch Schedule 40 PVC conduit will be used in foundations and concrete walls for the grounding conductor (ground wire) raceway to the ground rod. Should metallic conduit be used, both ends of the conduit shall be bonded to the grounding conductor.

b. The typical grounding conductor (ground wire) shall be 4 AWG insulated, copper.

5. The green conductor in signal cables (conductor #4) shall not be used to supply power to a signal indication. It will be connected to the signal body as an equipment ground in aluminum heads and it will be unused in plastic heads. Unused conductors shall be grounded in the cabinet. Typical use of conductors is as follows:

Cond. no. / Color / Vehicle signal / Pedestrian signal
1 / Black / green ball / #1 Walk
2 / White / AC neutral / AC neutral
3 / Red / red ball / #1 DW-FDW
4 / Green / equipment ground / equipment ground
5 / Orange / yellow ball / #2 DW-FDW
6 / Blue / green arrow / #2 Walk
7 / White with black stripe / yellow arrow/not used

6. Power Service and Disconnect Switch.

a. At the power service location, the grounding conductor (ground wire) from the disconnect switch neutral (AC-) bar to the ground rod shall be a continuous, unspliced conductor. If spliced, it shall be an exothermic weld butt splice.

b. The service neutral (AC-) shall only be connected to ground at the primary power service disconnect switch.

i. NEMA controller cabinets: If a power service disconnect switch is located before the controller cabinet, the neutral (AC-) and the grounding bars in the controller cabinet shall not be connected together as shown in NEMA TS-2, Figure 5-4.

ii. If secondary disconnect switches are connected after the primary disconnect switch, the neutral (AC-) shall only be grounded at the primary switch. Equipment grounding conductors shall be brought to the primary switch, but shall be grounded at both secondary and primary switches.

7. Structure Grounding: HL-50.21 shows a 1/0 AWG stranded copper cable used for structure grounding. Additionally, this same cable shall be insulated and any connections and bare copper strands exposed to concrete shall be covered with mastic to prevent contact with the concrete.

8. Payment.

a. All materials and work required to complete the Effective Ground Fault Current Path system are incidental to the conductors installed by contract.

b. Work on bridges may be included in the bid item for "Item 625, Structure Grounding."

c. In a 3-wire highway lighting system, the third conductor of the duct cable or distribution cable will be used as the equipment grounding conductor and may as such be part of the cable bid item.

CALCULATED AEC
CHECKED LAS

TRAFFIC SIGNAL SPECIFICATIONS

MOT-75-0.75

609A
773

SHEET NUMBER											PARTICIPATION			ITEM	ITEM EXT.	GRAND TOTAL	UNIT	DESCRIPTION	SEE SHEET NO.
						613	615	617	619	624	IR	EAR MARK /LOCAL	CFI MPO /LOCAL						
																		TRAFFIC SIGNALS	
							5			8		5	8	625	00500	13	EACH	CONNECTOR KIT, TYPE II	
							5			8		5	8	625	00600	13	EACH	CONNECTOR KIT, TYPE III	
										16			16	625	01500	16	EACH	CABLE SPLICING KIT	
										2			2	625	18001	2	EACH	BRACKET ARM, 10', AS PER PLAN	606
										6			6	625	18401	6	EACH	BRACKET ARM, 20', AS PER PLAN	606
							4					4		625	18511	4	EACH	BRACKET ARM, 30', AS PER PLAN	606
										4066			4066	625	23200	4066	FT	NO. 4 AWG 5000 VOLT DISTRIBUTION CABLE	
							500					500		625	23302	500	FT	NO. 6 AWG 5000 VOLT DISTRIBUTION CABLE	
							250			150		250	150	625	23400	400	FT	NO. 10 AWG POLE AND BRACKET CABLE	
						2500	100	270	600	415	2970	500	415	625	25400	3885	FT	CONDUIT, 2", 725.04	
							110					110		625	25402	110	FT	CONDUIT, 2", 725.05	
							350	410	450	1305	860	350	1305	625	25500	2515	FT	CONDUIT, 3", 725.04	
							100					100		625	25502	100	FT	CONDUIT, 3", 725.05	
										775			775	625	25600	775	FT	CONDUIT, 4", 725.04	
							4			8		4	8	625	26251	12	EACH	LUMINAIRE, CONVENTIONAL, 400W, HPS, 120 VOLT, AS PER PLAN	606
						2500	660	680	905	1105	3685	1060	1105	625	29000	5850	FT	TRENCH	
							4	1	3	30	4	4	30	625	30700	38	EACH	PULLBOX, 725.08, 18"	
						6	2	3	2		8	5		625	30706	13	EACH	PULLBOX, 725.08, 24"	
						1	1	1	1		2	2		625	30720	4	EACH	PULLBOX, 725.08, 36"	
							5	5	5	11	10	5	11	625	32000	26	EACH	GROUND ROD	
							11	6	6	52	12	11	52	630	79100	75	EACH	SIGN HANGER ASSEMBLY, MAST ARM	
							4	4	4		8	4		630	79500	12	EACH	SIGN SUPPORT ASSEMBLY, POLE MOUNTED	
							62.5	46	46	250	92	62.5	250	630	80100	404.5	SF	SIGN, FLAT SHEET	
							4	1	1		2	4		630	80510	6	EACH	SIGN, STREET NAME	
							9	10	10	34	20	9	34	632	04910	63	EACH	VEHICULAR SIGNAL HEAD, (LED), 3-SECTION, 12" LENS, 1-WAY WITH BACKPLATE (BLACK)	
							5					5		632	04920	5	EACH	VEHICULAR SIGNAL HEAD, (LED), 5-SECTION, 12" LENS, 1-WAY WITH BACKPLATE (BLACK)	
							6	4	4		8	6		632	20720	14	EACH	PEDESTRIAN SIGNAL HEAD (LED), TYPE D2	
							14	10	10	34	20	14	34	632	25000	68	EACH	COVERING OF VEHICULAR SIGNAL HEAD	
							6	4	4		8	6		632	25010	14	EACH	COVERING OF PEDESTRIAN SIGNAL HEAD	
							2	2		20	2	2	20	632	26001	24	EACH	PEDESTRIAN PUSHBUTTON, AS PER PLAN	605
							9	1	1	8	2	9	8	632	26500	19	EACH	DETECTOR LOOP	
							250					250		632	40300	250	FT	SIGNAL CABLE, 3 CONDUCTOR, NO. 14 AWG	
							2700	1800	1900	7135	3700	2700	7135	632	40700	13535	FT	SIGNAL CABLE, 7 CONDUCTOR, NO. 14 AWG	
										10			10	632	64010	10	EACH	SIGNAL SUPPORT FOUNDATION	
							4	3	3		6	4		632	64011	10	EACH	SIGNAL SUPPORT FOUNDATION, AS PER PLAN	607
								1	1	4	2		4	632	64020	6	EACH	PEDESTAL FOUNDATION	
							1050	250	450	3335	700	1050	3335	632	65300	5085	EACH	LOOP DETECTOR LEAD-IN CABLE, 2 CONDUCTOR, NO. 14 AWG	
										150			150	632	68300	150	FT	POWER CABLE, 3 CONDUCTOR, NO. 6 AWG	
							100	100	100	200	200	100	200	632	69800	500	FT	SERVICE CABLE, 3 CONDUCTOR, NO. 6 AWG	
							1	1	1	2	2	1	2	632	70001	5	EACH	POWER SERVICE, AS PER PLAN	606
										2			2	632	80101	2	EACH	SIGNAL SUPPORT, TYPE 81.20, DESIGN 1, AS PER PLAN	606
								1			1			632	80700	1	EACH	SIGNAL SUPPORT, MISC.: TYPE 81.20, WITH 47' MAST ARM, AS PER PLAN	606
									1		1			632	80700	1	EACH	SIGNAL SUPPORT, MISC.: TYPE 81.20, WITH 54' MAST ARM, AS PER PLAN	606
								1			1			632	80700	1	EACH	SIGNAL SUPPORT, MISC.: TYPE 81.20, WITH 63' MAST ARM, AS PER PLAN	606
									1		1			632	80700	1	EACH	SIGNAL SUPPORT, MISC.: TYPE 81.20, WITH 72' MAST ARM, AS PER PLAN	606
								1	1		2			632	80700	2	EACH	SIGNAL SUPPORT, MISC.: TYPE 81.20, WITH 73' MAST ARM, AS PER PLAN	606
										2			2	632	81700	2	EACH	COMBINATION SIGNAL SUPPORT, MISC.: TYPE TC-81.20, DESIGN 1, AS PER PLAN	606
										1			1	632	81700	1	EACH	COMBINATION SIGNAL SUPPORT, MISC.: TYPE TC-81.20, DESIGN 4, AS PER PLAN	606
										3			3	632	81700	3	EACH	COMBINATION SIGNAL SUPPORT, MISC.: TYPE TC-81.20, DESIGN 11, AS PER PLAN	606
							1					1		632	81700	1	EACH	COMBINATION SIGNAL SUPPORT, MISC.: TYPE TC-81.20, WITH 58' MAST ARM, AS PER PLAN	606
							1					1		632	81700	1	EACH	COMBINATION SIGNAL SUPPORT, MISC.: TYPE TC-81.20, WITH 67' MAST ARM, AS PER PLAN	606
							1					1		632	81700	1	EACH	COMBINATION SIGNAL SUPPORT, MISC.: TYPE TC-81.20, WITH 70' MAST ARM, AS PER PLAN	606
							1					1		632	81700	1	EACH	COMBINATION SIGNAL SUPPORT, MISC.: TYPE TC-81.20, WITH 75' MAST ARM, AS PER PLAN	606
										2			2	632	81700	2	EACH	COMBINATION SIGNAL SUPPORT, MISC.: TYPE TC-81.20,WITH 65' & 70' MAST ARMS, AS PER PLAN	606
								1	1	4	2		4	632	89601	6	EACH	PEDESTAL, 8', AS PER PLAN	606
										1			1	632	90103	1	EACH	REMOVAL OF TRAFFIC SIGNAL INSTALLATION FOR STORAGE, AS PER PLAN	605

CALCULATED GWA
CHECKED LAS

TRAFFIC SIGNAL GENERAL SUMMARY

MOT-75-0.75

610
773

SHEET NUMBER											PARTICIPATION			ITEM	ITEM EXT.	GRAND TOTAL	UNIT	DESCRIPTION	SEE SHEET NO.
							615	617	619	624	IR	EAR MARK /LOCAL	CFI MPO /LOCAL						
																		TRAFFIC SIGNALS - CONTINUED	
							1					1		632	90300	1	LUMP	SIGNALIZATION, MISC.: ADVANCE/DILEMMA ZONE DETECTION SYSTEM, AS PER PLAN	606
									1		1			632	90400	1	EACH	SIGNALIZATION, MISC.: PTZ CAMERA, AS PER PLAN	605
									1		1			632	90400	1	EACH	SIGNALIZATION, MISC.: VIDEO MONITORING EQUIPMENT, AS PER PLAN	606
							1	1	1		2	1		633	01581	3	EACH	CONTROLLER UNIT, TYPE TS2/A2, WITH CABINET, TYPE TS1, AS PER PLAN	607
							1	1	1	1	2	1	1	633	67100	4	EACH	CABINET FOUNDATION	
							1	1	1	1	2	1	1	633	67200	4	EACH	CONTROLLER WORK PAD	
							1	1	1	1	2	1	1	633	75001	4	EACH	UNINTERRUPTIBLE POWER SUPPLY (UPS), 1000 WATT, AS PER PLAN	609
										1			1	633	99000	1	EACH	CONTROLLER ITEM, MISC.: CONTROLLER UNIT, TYPE 2070, WITH ITS CABINET, TYPE 340, AS PER PLAN	608

CALCULATED GWA
CHECKED LAS

TRAFFIC SIGNAL GENERAL SUMMARY

MOT-75-0.75

SHEET NUMBER											PARTICIPATION			ITEM	ITEM EXT.	GRAND TOTAL	UNIT	DESCRIPTION	SEE SHEET NO.
						613	615	617	619	624	IR	EAR MARK /LOCAL	CFI MPO /LOCAL						
																		TRAFFIC SIGNALS - CONTINUED	
						3250					1950	1300		804	20034	3250	FEET	FIBER OPTIC CABLE, ARMORED, 24 FIBER	
						6					4	2		804	30010	6	EACH	FAN-OUT KIT, 12 FIBER	
						6					4	2		804	32000	6	EACH	DROP CABLE, 6 FIBER	
						14					10	4		804	33990	14	EACH	FIBER OPTIC PATCH CORD, 1 FIBER	
						3					2	1		804	34012	3	EACH	TERMINATION PANEL, 12 FIBER	
						108					72	36		804	35000	108	EACH	FUSION SPLICE	
						7					4	3		804	36000	7	EACH	SLACK INSTALLATION	
						4					2	2		804	37000	4	EACH	SPLICE ENCLOSURE	
						36					24	12		804	37500	36	EACH	FIBER OPTIC CONNECTOR	
						1					1			804	37701	1	LUMP	FIBER OPTIC CABLE TESTING, AS PER PLAN	609
						1						1		804	98000	1	EACH	FIBER OPTIC CABLE, MISC.: REUSE EXISTING CABLE, AS PER PLAN	609
							1	1			1	1		815	30000	2	EACH	SPREAD SPECTRUM RADIO	
							1					1		815	30100	1	LUMP	TRAINING FOR SPREAD SPECTRUM RADIO	
								1	1	1	2		1	816	30000	3	EACH	VIDEO DETECTION SYSTEM	
																		ALTERNATE BID ITEMS	
							1					1		632	90300	1	LUMP	SIGNALIZATION, MISC.: ADVANCE/DILEMMA ZONE DETECTION SYSTEM, AS PER PLAN (ALTERNATE BID)	606

CALCULATED GWA
CHECKED LAS

TRAFFIC SIGNAL GENERAL SUMMARY

MOT-75-0.75

612
773

CABLE	SHEET NO.	LOCATION	SIZE	625 PULL BOX, 725.08, 36" EACH	625 PULL BOX, 725.08, 24" EACH	625 CONDUIT, 2", 725.04 FEET	625 TRENCH FEET	804 DROP CABLE, 6 FIBER (MM) EACH	804 DROP CABLE, 6 FIBER (SM) EACH	804 FIBER OPTIC CABLE, ARMORED, 24 FIBER (HYBRID) FEET	804 SLACK INSTALLATION EACH	804 SPLICE ENCLOSURE EACH	804 FUSION SPLICE EACH	804 TERMINATION PANEL, 12 FIBER EACH	804 FIBER OPTIC CONNECTOR EACH	804 FIBER OPTIC PATCH CORD, 1 FIBER EACH	804 FIBER OPTIC CABLE, MISC.; REUSE EXISTING CABLE, AS PER PLAN EACH	804 FAN-OUT KIT, 12 FIBER EACH			
D2A	635	I-75 SOUTHBOUND *	6 MM					1					6	1	6	4		1			
D2B	635	I-75 SOUTHBOUND *	6 SM						1				6		6			1			
D3A	635	I-75 NORTHBOUND *	6 MM					1					6	1	6	4		1			
D3B	635	I-75 NORTHBOUND *	6 SM						1				6		6	2		1			
D4A	636	SR 741 #	6 MM					1					6	1	6	4		1			
D4B	636	SR 741 #	6 SM						1				6		6			1			
W0	636	SR 741 #	EX 12MM/12SM								1	1					1				
W1	635-636	AUSTIN BLVD #	12MM/12SM	1	3	400	400			1300	2	1	24								
W2	636	AUSTIN BLVD *	12MM/12SM		1	800	800			1000	2	1	24								
W3	636	AUSTIN BLVD *	12MM/12SM		2	1300	1300			950	2	1	24								
		I.R. *		0	3	2100	2100	2	2	1950	4	2	72	2	24	10	0	4			
		Earmark/Local #		1	3	400	400	1	1	1300	3	2	36	1	12	4	1	2			
TOTALS CARRIED TO GENERAL SUMMARY				1	6	2,500	2,500	6		3,250	7	4	108	3	36	14	1	6			

CALCULATED GWA
CHECKED LAS

INTERCONNECT ESTIMATED QUANTITIES

MOT-75-0.75

PROP. (2) - 3" PVC CONDUITS
PROP. 2" PVC CONDUIT
PROP. COMBINATION SIGNAL SUPPORT, P1, AS PER PLAN, STA. 125+88, 66' LT.
PROP. PEDESTRIAN SIGNAL HEADS, PS1 PS2
PROP. PEDESTRIAN PUSHBUTTON, B1, AS PER PLAN AND SIGN, Sn1
PROP. BRACKET ARM, 30'
PROP. LUMINAIRE, 400W, HPS
PROP. 2" PVC CONDUIT
PROP. 36" PULLBOX, PB1, STA. 125+82, 60' LT.
PROP. 2-3" PVC CONDUITS
PROP. GROUND-MOUNTED CABINET AND CONTROLLER, AS PER PLAN STA. 125+72, 84' LT.
PROP. WORKPAD
PROP. UNINTERRUPTIBLE POWER SUPPLY, AS PER PLAN
PROP. POWER SERVICE, AS PER PLAN
PROP. SPREAD SPECTRUM RADIO INTERCONNECT
PROP. 2" PVC CONDUIT WITH 2/C/S LOOP LEAD-IN CABLE
PROP. (2) - 3" PVC CONDUITS
PROP. 18" PULLBOX, Pb7, STA. 125+73,38' LT

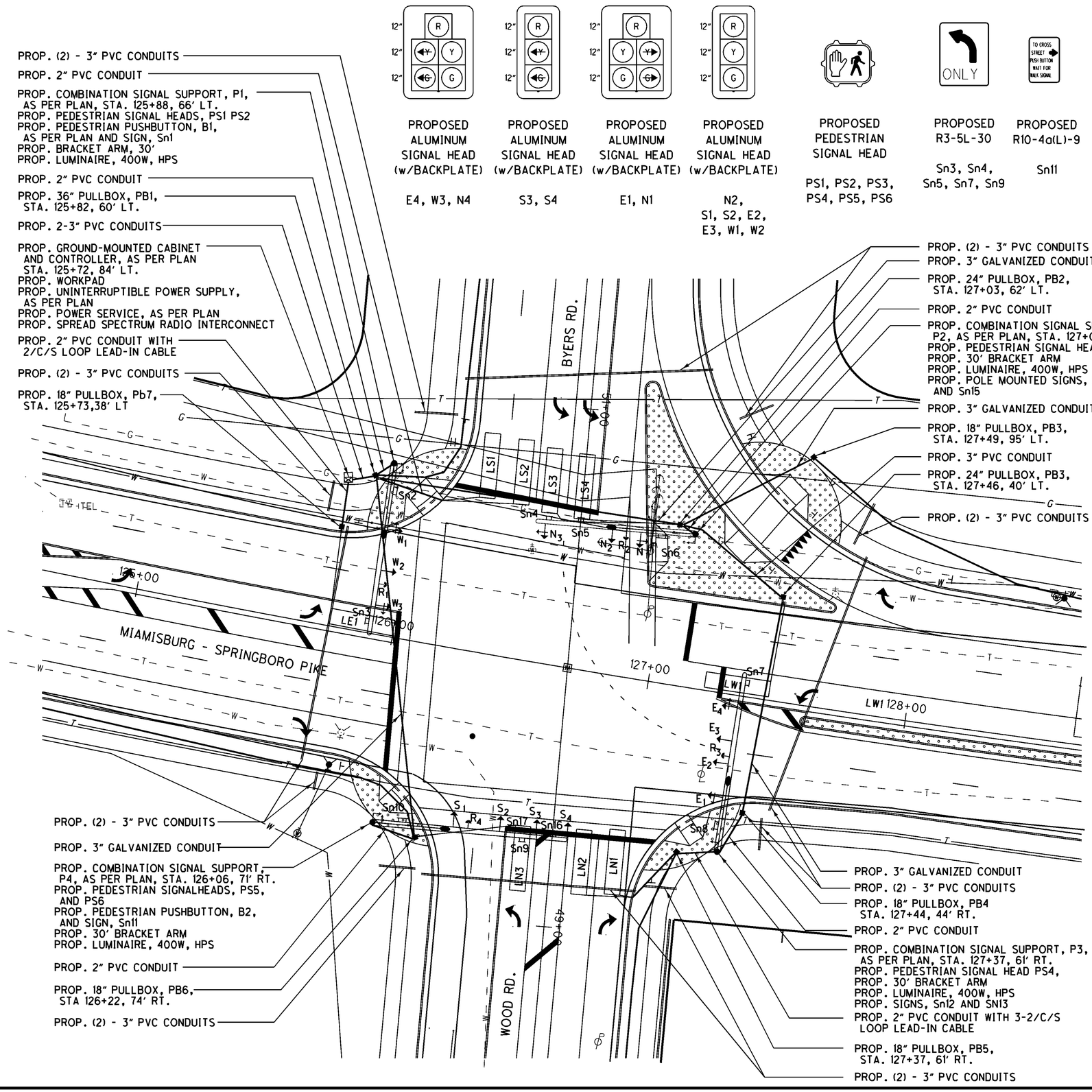

PROP. (2) - 3" PVC CONDUITS
PROP. 3" GALVANIZED CONDUIT
PROP. COMBINATION SIGNAL SUPPORT, P4, AS PER PLAN, STA. 126+06, 71' RT.
PROP. PEDESTRIAN SIGNALHEADS, PS5, AND PS6
PROP. PEDESTRIAN PUSHBUTTON, B2, AND SIGN, Sn11
PROP. 30' BRACKET ARM
PROP. LUMINAIRE, 400W, HPS
PROP. 2" PVC CONDUIT
PROP. 18" PULLBOX, PB6, STA 126+22, 74' RT.
PROP. (2) - 3" PVC CONDUITS

PROP. (2) - 3" PVC CONDUITS
PROP. 3" GALVANIZED CONDUIT
PROP. 24" PULLBOX, PB2, STA. 127+03, 62' LT.
PROP. 2" PVC CONDUIT
PROP. COMBINATION SIGNAL SUPPORT, P2, AS PER PLAN, STA. 127+09, 59' LT.
PROP. PEDESTRIAN SIGNAL HEAD, PS3
PROP. 30' BRACKET ARM
PROP. LUMINAIRE, 400W, HPS
PROP. POLE MOUNTED SIGNS, Sn14 AND Sn15
PROP. 3" GALVANIZED CONDUIT
PROP. 18" PULLBOX, PB3, STA. 127+49, 95' LT.
PROP. 3" PVC CONDUIT
PROP. 24" PULLBOX, PB3, STA. 127+46, 40' LT.
PROP. (2) - 3" PVC CONDUITS

PROP. 3" GALVANIZED CONDUIT
PROP. (2) - 3" PVC CONDUITS
PROP. 18" PULLBOX, PB4 STA. 127+44, 44' RT.
PROP. 2" PVC CONDUIT
PROP. COMBINATION SIGNAL SUPPORT, P3, AS PER PLAN, STA. 127+37, 61' RT.
PROP. PEDESTRIAN SIGNAL HEAD PS4,
PROP. 30' BRACKET ARM
PROP. LUMINAIRE, 400W, HPS
PROP. SIGNS, Sn12 AND SN13
PROP. 2" PVC CONDUIT WITH 3-2/C/S LOOP LEAD-IN CABLE
PROP. 18" PULLBOX, PB5, STA. 127+37, 61' RT.
PROP. (2) - 3" PVC CONDUITS

PROPOSED ALUMINUM SIGNAL HEAD (w/BACKPLATE)
E4, W3, N4

PROPOSED ALUMINUM SIGNAL HEAD (w/BACKPLATE)
S3, S4

PROPOSED ALUMINUM SIGNAL HEAD (w/BACKPLATE)
E1, N1

PROPOSED ALUMINUM SIGNAL HEAD (w/BACKPLATE)
N2, S1, S2, E2, E3, W1, W2

PROPOSED PEDESTRIAN SIGNAL HEAD
PS1, PS2, PS3, PS4, PS5, PS6

PROPOSED R3-5L-30
Sn3, Sn4, Sn5, Sn7, Sn9

PROPOSED R10-4a(L)-9
Sn11

PROPOSED R10-4A(R)-9
Sn1

PROPOSED D3-1-VAR
Sn2

PROPOSED D3-1-VAR
Sn8

PROPOSED D3-1-VAR
Sn6, Sn10

PROPOSED R19-3a-24
Sn12, Sn14

PROPOSED R9-3b(R)-18
Sn13

PROPOSED R9-3b(L)-18
Sn15

PROPOSED R10-10(L)-24
Sn16, Sn17

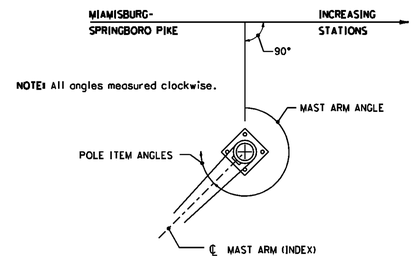

NOTES:

1. OMIT PHASES 1 AND 5 WHEN PHASES 2 AND 6 ARE ON, RESPECTIVELY.
2. THE RIGHT ARROWS IN HEADS E1, AND N1 SHALL BE HARDWIRED TO PHASES 7, AND 1, RESPECTIVELY.
3. RADAR DETECTION SYSTEM FOR ADVANCE DETECTION ON MIAMISBURG-SPRINGBORO PIKE FRONT EDGE ARRIVAL BOUNDARY = 245' FROM STOP LINE, BACK EDGE, ARRIVAL BOUNDARY = 380' FROM STOP LINE, (R1 + R3).
4. RADAR DETECTION SYSTEM FOR ADVANCE DETECTION ON WOOD/ BYERS-ROAD FRONT EDGE ARRIVAL BOUNDARY = 245' FROM STOP LINE, BACK EDGE, ARRIVAL BOUNDARY = 380' FROM STOP LINE, (R2 + R4).

FOR INTERCONNECT PLANS SEE SHEETS 635-636.

FOR ALTERNATE BID LOOP LOCATIONS SEE SHEET 615B.

HORIZONTAL SCALE IN FEET
0 10 20 40

CALCULATED GWA
CHECKED LAS

TRAFFIC SIGNAL PLAN
BYERS RD.\WOOD RD. AND MIAMISBURG SPRINGBORO PIKE

MOT-75-0.75

LOOP DETECTOR UNIT SUMMARY

LOOP	SIZE	TURNS	CONNECT TO PHASE	PRESENCE/ PULSE	LOCK/ NON-LOCK	LOOP UNIT	LOOP CHAN	EXTEND	DELAY
LS1	6 X 25	3	8	Presence	Non-Lock	1	1		8.0sec
LS2	6 X 25	3	8	Presence	Non-Lock	1	2		
LS3	6 X 25	3	3	Presence	Non-Lock	2	1		
LS4	6 X 25	3	3	Presence	Non-Lock	2	2		2.0sec
LS5	25 X 6	4	8	Presence	Non-Lock	3	1		
LS6	25 X 6	4	8	Presence	Non-Lock	3	2		
LN1	6 X 25	3	4	Presence	Non-Lock	4	1		8.0sec
LN2	6 X 25	3	4	Presence	Non-Lock	4	2		
LN3	6 X 25	3	7	Presence	Non-Lock	5	1		2.0sec
LN4	42 X 6	4	4	Presence	Non-Lock	5	2		
LN5	32 X 6	4	4	Presence	Non-Lock	6	1		
LE1	6 X 25	3	5	Presence	Non-Lock	6	2		2.0sec
LE2	42 X 6	4	2	Presence	Non-Lock	7	1		
LE3	30 X 6	4	2	Presence	Non-Lock	7	2		
LW1	6 X 25	3	1	Presence	Non-Lock	8	1		2.0sec
LW2	42 X 6	4	6	Presence	Non-Lock	8	2		
LW3	42 X 6	4	6	Presence	Non-Lock	9	1		

SUB-SUMMARY

ITEM	QUAN.	UNIT	DESCRIPTION
625	5	EACH	Connector Kit, Type II
625	5	EACH	Connector Kit, Type III
625	4	EACH	Bracket Arm, 30', AS PER PLAN
625	500	FT	No. 6 AWG 5000 Volt Distribution Cable
625	250	FT	No. 10 AWG Pole and Bracket Cable
625	350	FT	Conduit, 3", 725.04
625	110	FT	Conduit, 2", 725.05
625	100	FT	Conduit, 2", 725.04
625	100	FT	Conduit, 3", 725.05
625	4	EACH	Luminaire, Conventional, 400W, HPS, 120 Volt, As Per Plan
625	660	FT	Trench
625	4	EACH	Pullbox, 18", 725.08
625	2	EACH	Pullbox, 24", 725.08
625	1	EACH	Pullbox, 36", 725.08
625	5	EACH	Ground Rod
630	11	EACH	Sign Hanger Assembly, Mast Arm
630	4	EACH	Sign Support Assembly, Pole Mounted
630	62.5	SF	Sign, Flat Sheet
630	4	EACH	Sign, Street Name
632	9	EACH	Vehicular Signal Head, (LED), 3-Section, 12" Lens, 1-Way, with Backplate, (Black)
632	5	EACH	Vehicular Signal Head, (LED), 5-Section, 12" Lens, 1-Way, with Backplate, (Black)
632	6	EACH	Pedestrian Signal Head (LED), Type D2
632	14	EACH	Covering Of Vehicular Signal Head
632	6	EACH	Covering Of Pedestrian Signal Head
632	2	EACH	Pedestrian Pushbutton, As Per Plan
632	9	EACH	Detector Loop
632	250	FT	Signal Cable, 3 Conductor, No. 14 AWG
632	2700	FT	Signal Cable, 7 Conductor, No. 14 AWG
632	4	EACH	Signal Support Foundation, As Per Plan
632	1050	EACH	Loop Detector Lead-In Cable, 2 Conductor, No. 14 AWG
632	100	FT	Service Cable, 3 Conductor, No. 6 AWG
632	1	EACH	Power Service, As Per Plan
632	1	EACH	Combination Signal Support Misc.: Type 81.20, with 58' Mast Arm, As Per Plan
632	1	EACH	Combination Signal Support Misc.: Type 81.20, with 67' Mast Arm, As Per Plan
632	1	EACH	Combination Signal Support Misc.: Type 81.20, with 70' Mast Arm, As Per Plan
632	1	EACH	Combination Signal Support Misc.: Type 81.20, with 75' Mast Arm, As Per Plan
632	1	LS	Signalization, Misc.: Advance/Dilemma Zone Detection System, As Per Plan
632	1	LS	Signalization, Misc.: Advance/Dilemma Zone Detection System, As Per Plan (Alternate Bid)
633	1	EACH	Controller Unit, Type TS2/A2, With Cabinet, Type TS1, As Per Plan
633	1	EACH	Cabinet Foundation
633	1	EACH	Controller Work Pad
633	1	EACH	Uninterruptible Power Supply (UPS), 1000 Watt, As Per Plan
815	1	EACH	Spread Spectrum Radio
815	1	EACH	Training For Spread Spectrum Radio

TRAFFIC SIGNAL CONTROLLER TIMING CHART

INTERSECTION: MIAMISBURG-SPRINGBORO AT WOOD

START UP
START IN: Y/R FLASH- [X] ALL RED- [ ]
TIME FOR FLASH OR ALL RED: 5 SEC
FIRST PHASE(S): # - [2] & # - [6]
COLOR DISPLAYED: GREEN- [ ] YELLOW- [X]

DUAL ENTRY: [YES]
REST IN RED: RING 1- [ ] RING 2- [ ]
SIMULTANEOUS GAP [YES]

INTERVAL OR FEATURE		OVERLAP	A	B	C	D
		PHASES				
		CONTROLLER MOVEMENT No.				
		1	2	3	4	5	6	7	8
INTERSECTION MOVEMENT		WbL	Eb	SbL	Nb	EbL	Wb	NbL	Sb
MINIMUM GREEN (INITIAL)	(SEC.)	7	25	7	7	7	25	7	7
* ADDED INITIAL	(SEC./ACTUATION)								
MAXIMUM INITIAL	(SEC.)								
PASSAGE TIME (PRESET GAP)	(SEC.)	3.0	3.0	3.0	3.0	3.0	3.0	3.0	3.0
* MINIMUM GAP	(SEC.)								
TIME BEFORE REDUCTION	(SEC.)								
* TIME TO REDUCE	(SEC.)								
MAXIMUM GREEN I	(SEC.)	15	40	15	35	15	40	15	35
MAXIMUM GREEN II	(SEC.)	20	50	20	40	20	50	20	40
MAXIMUM GREEN III	(SEC.)								
YELLOW CHANGE	(SEC.)	3.0	4.3	3.0	4.3	3.0	4.3	3.0	4.3
ALL RED CLEARANCE	(SEC.)	2.0	1.7	2.0	2.0	2.0	1.7	2.0	2.0
WALK	(SEC.)		7				7		7
PED CLEAR	(SEC.)								
PED CLEAR THROUGH YELLOW	(SEC.)		28				20		28
ADJUST	(SEC.)								
LIMIT	(SEC.)								
SET	(SEC.)								
CLEAR	(SEC.)								
RECALL	MAX (NO/YES)	NO	NO	NO	NO	NO	NO	NO	NO
	MIN (NO/YES)	NO	YES	NO	NO	NO	YES	NO	NO
	PED (NO/YES)	NO	YES	NO	NO	NO	YES	NO	NO
FLASH MEMORY	(ON/OFF)	OFF	OFF	OFF	OFF	OFF	OFF	OFF	OFF
REST IN WALK	(NO/YES)	-	YES	-	-	-	YES	-	NO
CALL TO NON-ACTUATED	No. 1		X				X		
	No. 2								

NOTES: MAX II ENABLE FROM 06:00 TO 08:00 AND 16:00 TO 18:30

COORDINATION TIMING (SEC)

Plan No. - TOD		CYCLE LENGTH	OFFSET*	1	2	3	4	5	6	7	8
1 - 00:00	MTWTF	FREE	-	-	-	-	-	-	-	-	-
2 - 06:00	MTWTF	95	0	15	41	19	20	15	41	16	23
3 - 11:00	MTWTF	95	0	15	41	19	20	15	41	16	23
4 - 15:00	MTWTF	105	50	20	41	25	19	14	48	20	23
5 - 18:30	MTWTF	95	0	15	41	19	20	15	41	16	23
5 - 21:30	MTWTF	FREE	-	-	-	-	-	-	-	-	-
6 - 00:00	SAT,SUN	FREE	-	-	-	-	-	-	-	-	-
7 - 11:00	SAT,SUN	95	0	15	41	19	20	15	41	16	23
8 - 18:00	SAT,SUN	FREE	-	-	-	-	-	-	-	-	-

*OFFSET POINT IS BEGINNING OF YELLOW.

POLE ORIENTATION

POLE NUMBER	ODOT DESIGN NUMBER	POLE HEIGHT (FT)	FOUNDATION ELEVATION	MAST ARM A ANGLE (DEG)	ANGLES (DEG) FROM INDEX LINE: PEDESTRIAN SIGNALS	PEDESTRIAN PUSHBUTTONS	CONTROLLER/ CABINET	POWER SERVICE	WEATHERHEAD	CONDUIT ELL	BRACKET ARM	SIGN	HANDHOLE	DISTANCES (FT): L	L1	L2	L3	L4	L5	L6	L7	L8	L9
P1	SPEC*	34	930.4	0	0/270	270	-	-	-	45	0	-	180	67	11	23	40	49	57	63	-	-	-
P2	SPEC*	34	927.5	90	225/270	315	-	-	-	90	0	-	180	62	13	21	26	38	45	58	60	-	-
P3	SPEC*	34	928.9	0	0		-	-	-	45	0	-	180	70	10	21	34	37	45	56	66	-	-
P4	SPEC*	34	931.4	90	0/270	0	-	-	-	45	0	-	180	75	12	31	40	50	59	59	63	71	74

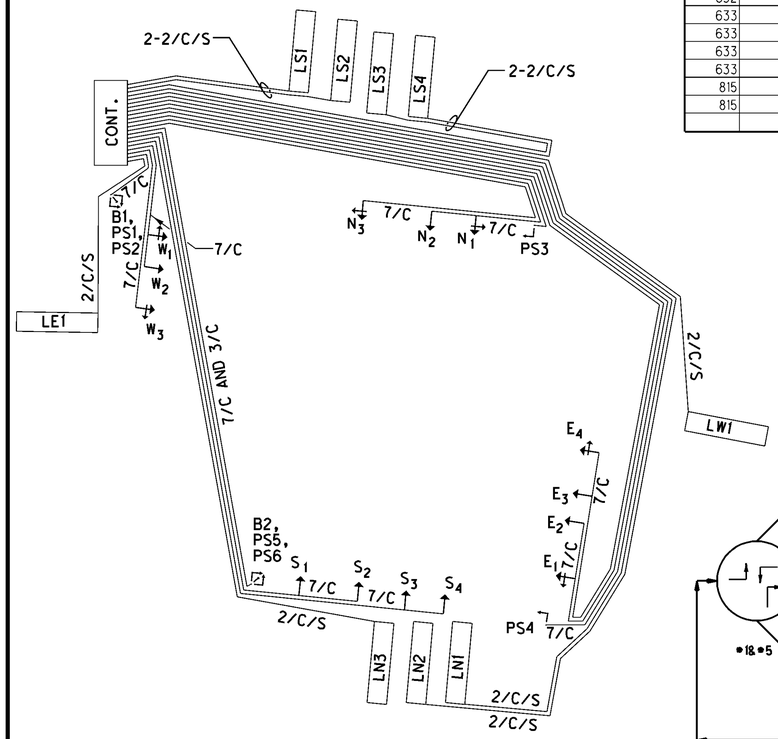

CABLE DIAGRAM

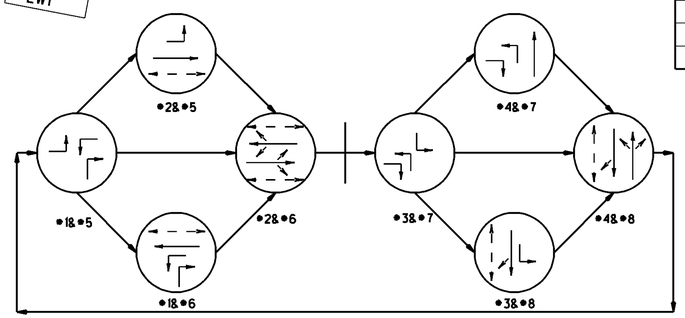

SIGNAL PHASING

N

HORIZONTAL SCALE IN FEET
0 10 20 40

CALCULATED GWA
CHECKED LAS

TRAFFIC SIGNAL PLAN
BYERS RD.\WOOD RD. AND MIAMISBURG SPRINGBORO PK.

MOT-75-0.75

615
773

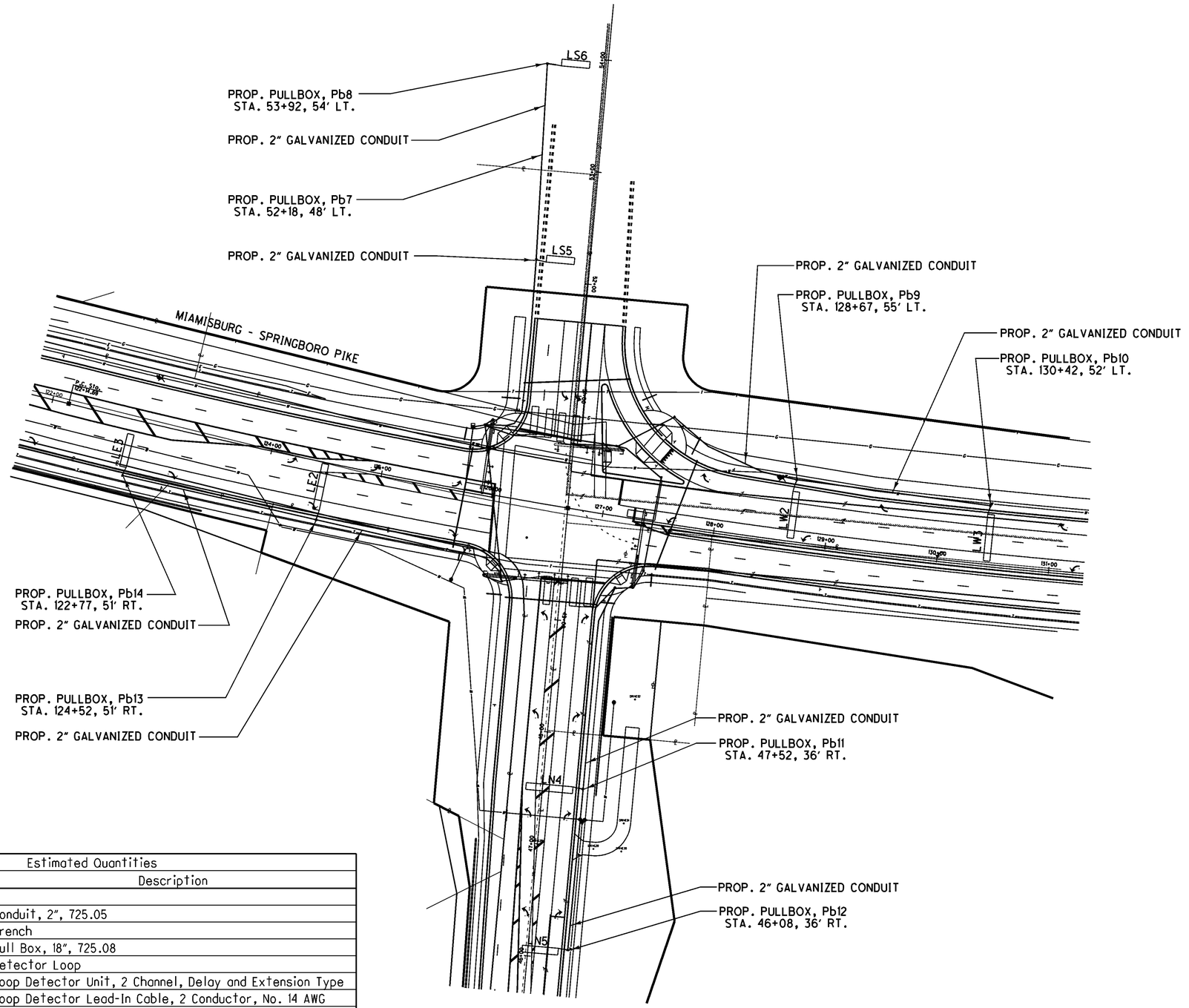

Estimated Quantities			
Item	Qty	Unit	Description
625	2100	FT	Conduit, 2", 725.05
625	2100	FT	Trench
625	8	EACH	Pull Box, 18", 725.08
632	8	EACH	Detector Loop
632	4	EACH	Loop Detector Unit, 2 Channel, Delay and Extension Type
632	3400	FT	Loop Detector Lead-In Cable, 2 Conductor, No. 14 AWG

Items included in Item 632 - Signalization, Misc.: Advance/Dilemma Zone Detection System, As Per Plan

HORIZONTAL SCALE IN FEET
0 25 50 100

CALCULATED GWA
CHECKED LAS

TRAFFIC SIGNAL PLAN
ALTERNATE BID LOOP LOCATIONS

MOT-75-75.00

615A
773

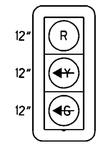

PROPOSED ALUMINUM SIGNAL HEAD (w/BACKPLATE)

W3, W4, S3, S4

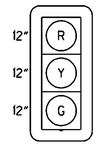

PROPOSED ALUMINUM SIGNAL HEAD (w/BACKPLATE)

W1, W2, E1, E2, S1, S2

PROPOSED PEDESTRIAN SIGNAL HEAD

PS1, PS2, PS3, PS4

PROPOSED R10-10L-24

Sn6, Sn7, Sn8, Sn9

PROPOSED R9-3a-18

Sn1, Sn2, Sn3, Sn5

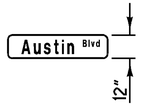

PROPOSED D3-1-VAR

Sn4

PROPOSED R10-H11F-24

Sn10

POLE ORIENTATION

POLE NUMBER	ODOT DESIGN NUMBER	POLE HEIGHT (FT)	FOUNDATION ELEVATION	MAST ARM A OR INDEX ANGLE	ANGLES (DEG) FROM INDEX LINE									DISTANCES (FT)								
					PEDESTRIAN SIGNALS	PEDESTRIAN PUSHBUTTONS	CONTROLLER/ CABINET	POWER SERVICE	WEATHERHEAD	CONDUIT ELL	BRACKET ARM	SIGN	HANDHOLE	L	L1	L2	L3	L4	L5	L6	L7	L8
P1	SPEC*	23	934.2	0	180	-	-	-	-	225	-	0	180	73	30	44	56	59	64	67	70	-
P2	PED	8	939.0	0	90	-	-	-	-	180	-	0	0	-	-	-	-	-	-	-	-	-
P3	SPEC*	23	938.7	0	180	-	-	-	-	180	-	0	180	47	24	45	-	-	-	-	-	-
P4	SPEC*	23	935.2	90	270	-	-	-	-	225	-	90/270	180	63	2	4	13	26	38	43	56	61

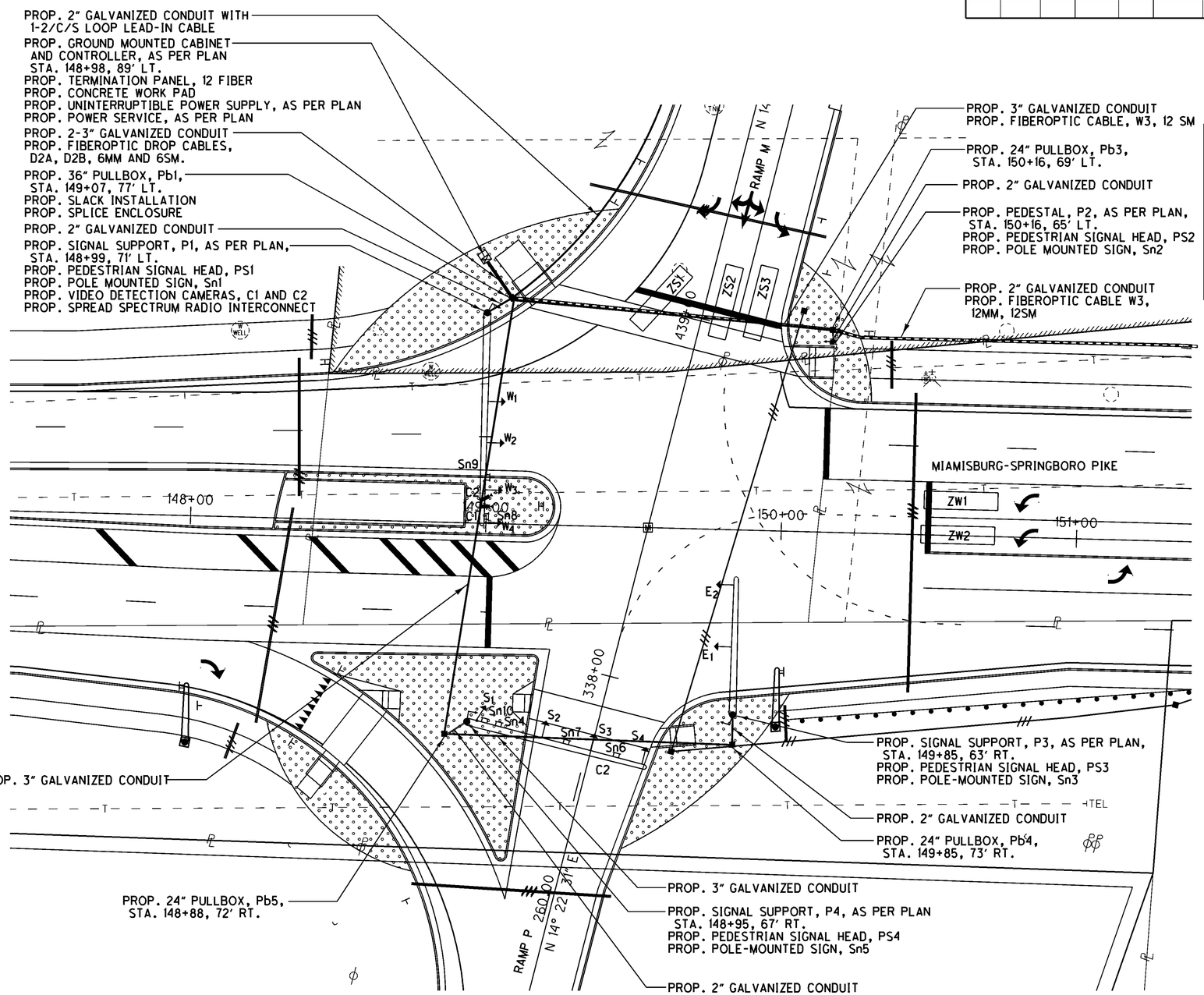

LOOP DETECTOR UNIT SUMMARY

LOOP	SIZE	TURNS	CAMERA	CONNECT TO PHASE	PRESENCE/ PULSE	LOCK/ NON-LOCK	LOOP UNIT	LOOP CHAN	EXTEND	DELAY
ZS1	6 X 25	VID	C2	8	Presence	Non-Lock	-	-		8.0sec
ZS2	6 X 25	VID	C2	8	Presence	Non-Lock	-	-		-
ZS3	6 X 25	VID	C2	8	Presence	Non-Lock	-	-		-
LS4	30 X 6	3	-	8	Presence	Non-Lock	1	1		-
ZW1	6 X 25	VID	C1	1	Presence	Non-Lock	-	-		-
ZW2	6 X 25	VID	C1	1	Presence	Non-Lock	-	-		2.0sec
ZW3	18 X 6	VID	C3	1	Presence	Non-Lock	-	-		-

SIGNAL PHASING

PHASE 1&6	PHASE 2&6	PHASE 8
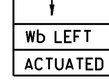	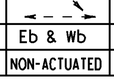	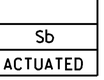
Wb LEFT	Eb & Wb	Sb
ACTUATED	NON-ACTUATED	ACTUATED

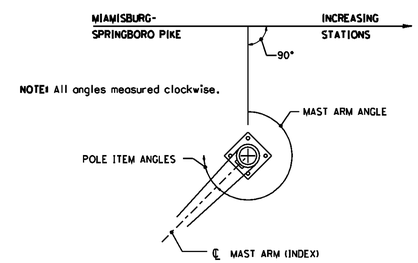

FOR INTERCONNECT PLANS SEE SHEETS 635-636.

FOR CAMERA C3 MOUNTED ON SIGN MAST ARM MOUNTED ON BRIDGE PIER SEE SHEET 570.

FOR ADVANCED LOOP LOCATIONS SEE SHEET 620.

N

HORIZONTAL SCALE IN FEET
0 10 20 40

CALCULATED GWA
CHECKED LAS

TRAFFIC SIGNAL PLAN
RAMP P, RAMP M AND MIAMISBURG-SPRINGBORO PIKE

MOT-75-75.00

SUB-SUMMARY

ITEM	QUAN.	UNIT	DESCRIPTION
625	410	FT	Conduit, 3", 725.04
625	270	FT	Conduit, 2", 725.04
625	680	FT	Trench
625	1	EACH	Pullbox, 18", 725.08
625	3	EACH	Pullbox, 24", 725.08
625	1	EACH	Pullbox, 36", 725.08
625	5	EACH	Ground Rod
630	6	EACH	Sign Hanger Assembly, Mast Arm
630	4	EACH	Sign Support Assembly, Pole Mounted
630	46	SF	Sign, Flat Sheet
630	1	EACH	Sign, Street Name
632	10	EACH	Vehicular Signal Head, (LED), 3-Section, 12" Lens, 1-Way with Backplate, (Black)
632	4	EACH	Pedestrian Signal Head (LED), Type D2
632	10	EACH	Covering Of Vehicular Signal Head
632	4	EACH	Covering Of Pedestrian Signal Head
632	2	EACH	Pedestrian Pushbutton, As Per Plan
632	1	EACH	Detector Loop
632	1800	FT	Signal Cable, 7 Conductor, No. 14 AWG
632	3	EACH	Signal Support Foundation, As Per Plan
632	1	EACH	Pedestal Foundation
632	250	EACH	Loop Detector Lead-In Cable, 2 Conductor, No. 14 AWG
632	100	FT	Service Cable, 3 Conductor, No. 6 AWG
632	1	EACH	Power Service, As Per Plan
632	1	EACH	Signal Support Misc.: Type 81.20, with 47' Mast Arm, As Per Plan
632	1	EACH	Signal Support Misc.: Type 81.20, with 63' Mast Arm, As Per Plan
632	1	EACH	Signal Support Misc.: Type 81.20, with 73' Mast Arm, As Per Plan
632	1	EACH	Pedestal, 8', As Per Plan
633	1	EACH	Controller Unit, Type TS2/A2, With Cabinet, Type TS1, As Per Plan
633	1	EACH	Cabinet Foundation
633	1	EACH	Controller Work Pad
633	1	EACH	Uninterruptible Power Supply (UPS), 1000 Watt, As Per Plan
815	1	EACH	Spread Spectrum Radio
816	1	EACH	Video Detection System

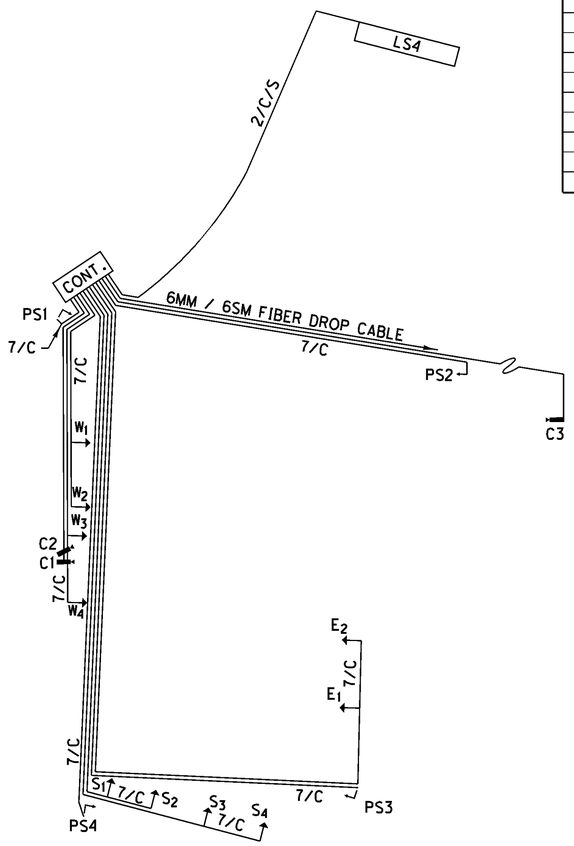

CABLE DIAGRAM

TRAFFIC SIGNAL CONTROLLER TIMING CHART

INTERSECTION: MIAMISBURG AT SB RAMPS

START UP
START IN: Y/R FLASH- [X] ALL RED- [ ]
TIME FOR FLASH OR ALL RED: 5 SEC
FIRST PHASE(S): # - [2] & # - [6]
COLOR DISPLAYED: GREEN- [ ] YELLOW- [X]

DUAL ENTRY: YES
REST IN RED: RING 1- [ ] RING 2- [ ]
SIMULTANEOUS GAP YES

INTERVAL OR FEATURE		OVERLAP	A	B	C	D
		PHASES				
		CONTROLLER MOVEMENT No.				
		1	2	3	4	5	6	7	8
INTERSECTION MOVEMENT		WbL	Eb				Wb		Sb
MINIMUM GREEN (INITIAL)	(SEC.)	7	25				25		7
* ADDED INITIAL	(SEC./ACTUATION)								
MAXIMUM INITIAL	(SEC.)								
PASSAGE TIME (PRESET GAP)	(SEC.)	3.0	3.0				3.0		3.0
* MINIMUM GAP	(SEC.)								
TIME BEFORE REDUCTION	(SEC.)								
* TIME TO REDUCE	(SEC.)								
MAXIMUM GREEN I	(SEC.)	25	40				40		30
MAXIMUM GREEN II	(SEC.)	35	50				50		40
MAXIMUM GREEN III	(SEC.)								
YELLOW CHANGE	(SEC.)	3.0	4.3				4.3		4.3
ALL RED CLEARANCE	(SEC.)	2.0	1.6				1.6		2.2
WALK	(SEC.)		7				7		
PED CLEAR	(SEC.)								
PED CLEAR THROUGH YELLOW	(SEC.)		20				8		
ADJUST	(SEC.)								
LIMIT	(SEC.)								
SET	(SEC.)								
CLEAR	(SEC.)								
RECALL	MAX (NO/YES)	NO	NO				NO		NO
	MIN (NO/YES)	NO	YES				YES		NO
	PED (NO/YES)	NO	YES				YES		NO
FLASH									
MEMORY	(ON/OFF)	OFF	OFF				OFF		OFF
REST IN WALK	(NO/YES)	-	YES				YES		-
CALL TO NON-ACTUATED	No. 1		X				X		
	No. 2								

NOTES: MAX II ENABLE FROM 06:00 TO 08:00 AND 16:00 TO 18:30

COORDINATION TIMING (SEC)

Plan No. - TOD		CYCLE LENGTH	OFFSET*	1	2	3	4	5	6	7	8
1 - 00:00	MTWTF	FREE	-	-	-	-	-	-	-	-	-
2 - 06:00	MTWTF	95	8	22	45				67		28
3 - 11:00	MTWTF	95	8	22	40				62		33
4 - 15:00	MTWTF	105	0	23	45				68		37
5 - 18:30	MTWTF	95	8	22	40				62		33
5 - 21:30	MTWTF	FREE	-	-	-	-	-	-	-	-	-
6 - 00:00	SAT,SUN	FREE	-	-	-	-	-	-	-	-	-
7 - 11:00	SAT,SUN	95	8	22	40				62		33
8 - 18:00	SAT,SUN	FREE	-	-	-	-	-	-	-	-	-

*OFFSET POINT IS BEGINNING OF YELLOW.

HORIZONTAL SCALE IN FEET
0 10 20 40

CALCULATED GWA
CHECKED LAS

TRAFFIC SIGNAL PLAN
RAMP P, RAMP M AND MIAMISBURG-SPRINGBORO PIKE

MOT-75-0.75

617
773

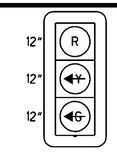

PROPOSED ALUMINUM SIGNAL HEAD (w/BACKPLATE)

E3, E4, N3, N4

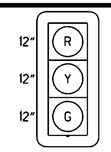

PROPOSED ALUMINUM SIGNAL HEAD (w/BACKPLATE)

N1, N2, W1, W2, E1, E2

PROPOSED PEDESTRIAN SIGNAL HEAD

PS1, PS2, PS3,PS4

PROPOSED R9-3a-18

Sn1, Sn3, Sn4, Sn5

PROPOSED R10-10L-24

Sn6, Sn7, Sn8, Sn9

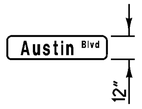

PROPOSED D3-1-VAR

Sn2

PROPOSED R10-H11F-24

Sn10

POLE ORIENTATION

POLE NUMBER	ODOT DESIGN NUMBER	POLE HEIGHT (FT)	FOUNDATION ELEVATION	MAST ARM A OR INDEX ANGLE	ANGLES (DEG) FROM INDEX LINE								DISTANCES (FT)								
					PEDESTRIAN SIGNALS	PEDESTRIAN PUSHBUTTONS	CONTROLLER/ CABINET	POWER SERVICE	WEATHERHEAD	CONDUIT ELL	PTZ CAMERA	SIGN	HANDHOLE	L	L1	L2	L3	L4	L5	L6	L7	L7
P1	SPEC*	42	941.1	0	180	-	-	-	-	225	45	0	180	54	28	51	-	-	-	-	-	-
P2	SPEC*	23	937.7	90	90	-	-	-	-	270	-	90/270	180	73	6	12	28	38	51	56	66	70
P3	SPEC*	23	937.5	0	180	-	-	-	-	270	-	0	180	72	33	52	58	61	64	68	71	-
P4	PED	8	943.3	0	90	-	-	-	-	90	-	0	0	-	-	-	-	-	-	-	-	-

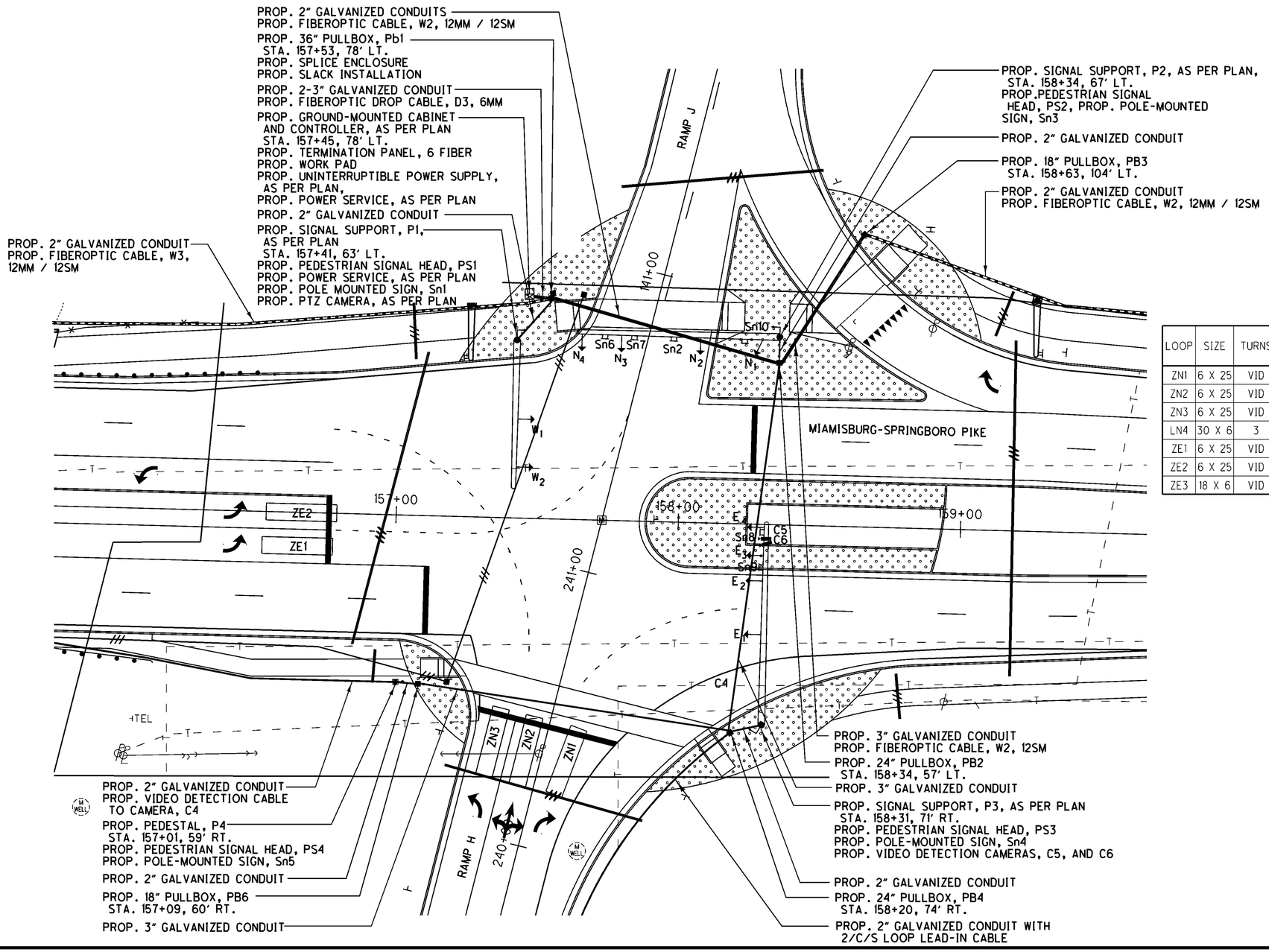

SIGNAL PHASING

PHASE 2&5	PHASE 2&6	PHASE 4
Eb Lt.	Eb & Wb	Nb
ACTUATED	NON-ACTUATED	ACTUATED

LOOP DETECTOR UNIT SUMMARY

LOOP	SIZE	TURNS	CAMERA	CONNECT TO PHASE	PRESENCE/ PULSE	LOCK/ NON-LOCK	LOOP UNIT	LOOP CHAN	EXTEND	DELAY
ZN1	6 X 25	VID	C6	4	Presence	Non-Lock	-	-		8.0sec
ZN2	6 X 25	VID	C6	4	Presence	Non-Lock	-	-		
ZN3	6 X 25	VID	C6	4	Presence	Non-Lock	-	-		
LN4	30 X 6	3	-	4	Presence	Non-Lock	1	1		
ZE1	6 X 25	VID	C5	5	Presence	Non-Lock	-	-		
ZE2	6 X 25	VID	C5	5	Presence	Non-Lock	-	-		2.0sec
ZE3	18 X 6	VID	C4	5	Presence	Non-Lock	-	-		

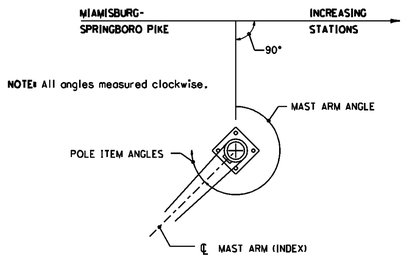

FOR INTERCONNECT PLANS SEE SHEETS 635-636.

FOR CAMERA C4 MOUNTED ON SIGN MAST ARM MOUNTED ON BRIDGE PIER SEE SHEET 570.

FOR ADVANCED LOOP LOCATIONS SEE SHEET 620.

N

HORIZONTAL SCALE IN FEET
0 10 20 40

CALCULATED GWA
CHECKED LAS

TRAFFIC SIGNAL PLAN
RAMP H, RAMP J AND MIAMISBURG-SPRINGBORO PIKE

MOT-75-0.75

SUB-SUMMARY

ITEM	QUAN.	UNIT	DESCRIPTION
625	450	FT	Conduit, 3", 725.04
625	600	FT	Conduit, 2", 725.04
625	905	FT	Trench
625	3	EACH	Pullbox, 18", 725.08
625	2	EACH	Pullbox, 24", 725.08
625	1	EACH	Pullbox, 36", 725.08
625	5	EACH	Ground Rod
630	6	EACH	Sign Hanger Assembly, Mast Arm
630	4	EACH	Sign Support Assembly, Pole Mounted
630	46	SF	Sign, Flat Sheet
630	1	EACH	Sign, Street Name
632	10	EACH	Vehicular Signal Head, (LED), 3-Section, 12" Lens, 1-Way, with Backplate, (Black)
632	4	EACH	Pedestrian Signal Head (LED), Type D2
632	10	EACH	Covering Of Vehicular Signal Head
632	4	EACH	Covering Of Pedestrian Signal Head
632	1	EACH	Detector Loop
632	1900	FT	Signal Cable, 7 Conductor, No. 14 AWG
632	3	EACH	Signal Support Foundation, As Per Plan
632	1	EACH	Pedestal Foundation
632	450	EACH	Loop Detector Lead-In Cable, 2 Conductor, No. 14 AWG
632	100	FT	Service Cable, 3 Conductor, No. 6 AWG
632	1	EACH	Power Service, As Per Plan
632	1	EACH	Signal Support Misc.: Type 81.20, with 54' Mast Arm, As Per Plan
632	1	EACH	Signal Support Misc.: Type 81.20, with 72' Mast Arm, As Per Plan
632	1	EACH	Signal Support Misc.: Type 81.20, with 73' Mast Arm, As Per Plan
632	1	EACH	Pedestal, 8', As Per Plan
632	1	EACH	Signalization, Misc.: PTZ Camera, As Per Plan
632	1	EACH	Signalization, Misc.: Video Monitoring Equipment, As Per Plan
633	1	EACH	Controller Unit, Type TS2/A2, With Cabinet, Type TS1, As Per Plan
633	1	EACH	Cabinet Foundation
633	1	EACH	Controller Work Pad
633	1	EACH	Uninterruptible Power Supply (UPS), 1000 Watt, As Per Plan
816	1	EACH	Video Detection System

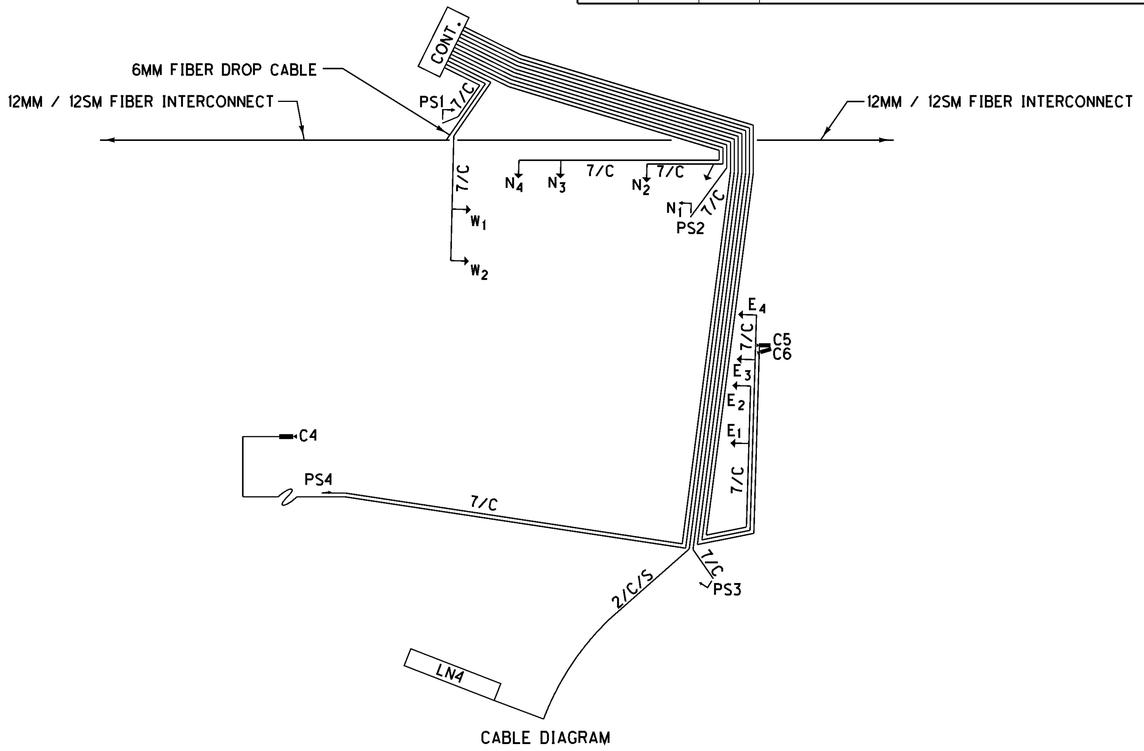

CABLE DIAGRAM

TRAFFIC SIGNAL CONTROLLER TIMING CHART

INTERSECTION: MIAMISBURG AT NB RAMPS

START UP
START IN: Y/R FLASH- [X] ALL RED- [ ]
TIME FOR FLASH OR ALL RED: 5 SEC
FIRST PHASE(S): # - [2] & # - [6]
COLOR DISPLAYED: GREEN- [ ] YELLOW- [X]

DUAL ENTRY: YES
REST IN RED: RING 1- [ ] RING 2- [ ]
SIMULTANEOUS GAP YES

INTERVAL OR FEATURE		OVERLAP PHASES	A	B	C	D
		CONTROLLER MOVEMENT No.				
		1	2	3	4	5	6	7	8
INTERSECTION MOVEMENT			Eb		Nb	EbL	Wb		
MINIMUM GREEN (INITIAL)	(SEC.)		25		7	7	25		
* ADDED INITIAL	(SEC./ACTUATION)								
MAXIMUM INITIAL	(SEC.)								
PASSAGE TIME (PRESET GAP)	(SEC.)		3.0		3.0	3.0	3.0		
* MINIMUM GAP	(SEC.)								
TIME BEFORE REDUCTION	(SEC.)								
* TIME TO REDUCE	(SEC.)								
MAXIMUM GREEN I	(SEC.)		40		30	25	40		
MAXIMUM GREEN II	(SEC.)		50		40	35	50		
MAXIMUM GREEN III	(SEC.)								
YELLOW CHANGE	(SEC.)		4.3		4.3	3.0	4.3		
ALL RED CLEARANCE	(SEC.)		1.6		2.1	2.0	1.6		
WALK	(SEC.)		7				7		
PED CLEAR	(SEC.)								
PED CLEAR THROUGH YELLOW	(SEC.)		22				8		
ADJUST	(SEC.)								
LIMIT	(SEC.)								
SET	(SEC.)								
CLEAR	(SEC.)								
RECALL	MAX (NO/YES)		NO		NO	NO	NO	NO	
	MIN (NO/YES)		YES		NO	NO	YES	NO	
	PED (NO/YES)		YES		NO	NO	YES	NO	
FLASH									
MEMORY	(ON/OFF)		OFF		OFF	OFF	OFF	OFF	
REST IN WALK	(NO/YES)		YES		-	-	YES	-	
CALL TO NON-ACTUATED	No. 1		X				X		
	No. 2								

NOTES: MAX II ENABLE FROM 06:00 TO 08:00 AND 16:00 TO 18:30

COORDINATION TIMING (SEC)

Plan No. - TOD		CYCLE LENGTH	OFFSET*	1	2	3	4	5	6	7	8
1 - 00:00	MTWTF	FREE	-	-	-	-	-	-	-	-	-
2 - 06:00	MTWTF	95	53		70		25	24	46		
3 - 11:00	MTWTF	95	56		68		27	24	44		
4 - 15:00	MTWTF	105	68		80		25	24	56		
5 - 18:30	MTWTF	95	56		68		27	24	44		
5 - 21:30	MTWTF	FREE	-	-	-	-	-	-	-	-	-
6 - 00:00	SAT,SUN	FREE	-	-	-	-	-	-	-	-	-
7 - 11:00	SAT,SUN	95	53		70		25	24	46		
8 - 18:00	SAT,SUN	FREE	-	-	-	-	-	-	-	-	-

*OFFSET POINT IS BEGINNING OF YELLOW.

HORIZONTAL SCALE IN FEET
0 10 20 40

CALCULATED GWA CHECKED LAS

TRAFFIC SIGNAL PLAN
RAMP H, RAMP J AND MIAMISBURG-SPRINGBORO PIKE

MOT-75-0.75

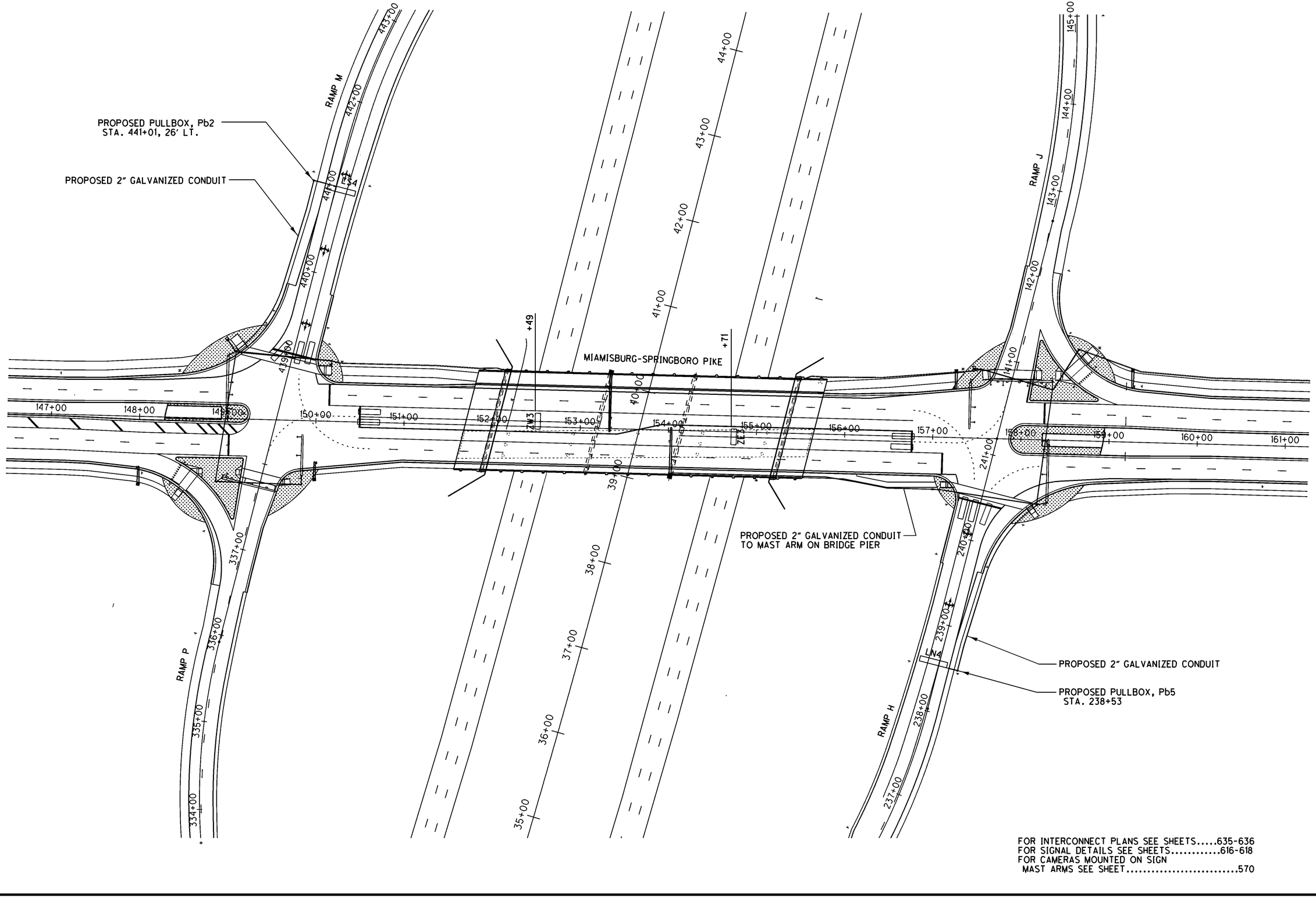

FOR INTERCONNECT PLANS SEE SHEETS.....635-636
FOR SIGNAL DETAILS SEE SHEETS.....616-618
FOR CAMERAS MOUNTED ON SIGN
MAST ARMS SEE SHEET.....570

HORIZONTAL SCALE IN FEET
0 25 50 100

CALCULATED GWA
CHECKED LAS

TRAFFIC SIGNAL PLAN
ADVANCE LOOP LOCATIONS

MOT-75-75.00

620
773

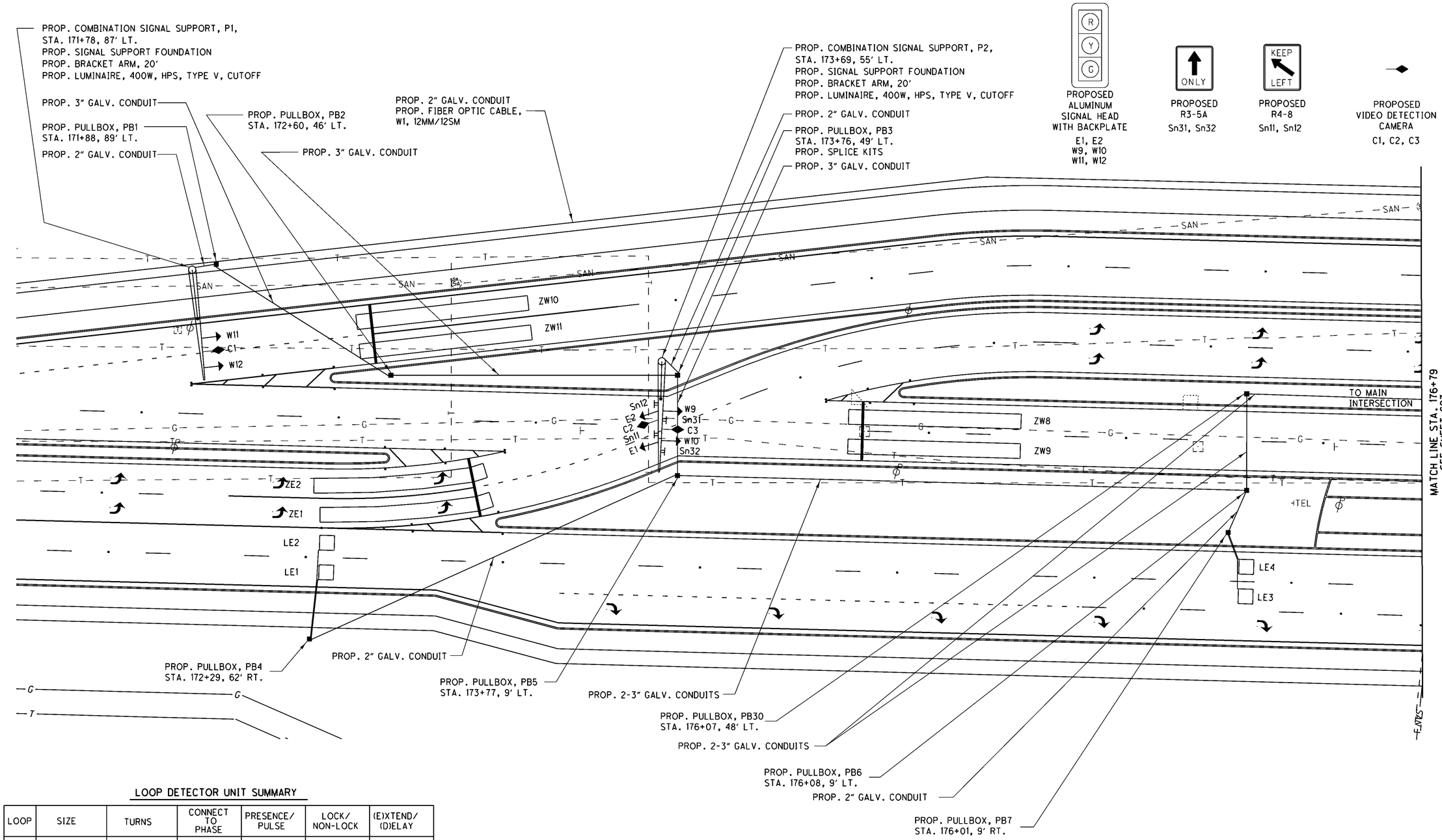

LOOP DETECTOR UNIT SUMMARY

LOOP	SIZE	TURNS	CONNECT TO PHASE	PRESENCE/ PULSE	LOCK/ NON-LOCK	(E)XTEND/ (D)ELAY
ZE1	6'x50'	-	14-16	PRESENCE	NON-LOCK	-
ZE2	6'x50'	-	14-16	PRESENCE	NON-LOCK	-
LE1	6'x6'	3	4	PRESENCE	NON-LOCK	-
LE2	6'x6'	3	4	PRESENCE	NON-LOCK	-
LE3	6'x6'	3	4	PRESENCE	NON-LOCK	-
LE4	6'x6'	3	4	PRESENCE	NON-LOCK	-
ZW8	6'x50'	-	1-2-15	PRESENCE	NON-LOCK	-
ZW9	6'x50'	-	1-2-15	PRESENCE	NON-LOCK	-
ZW10	6'x50'	-	3-14-16	PRESENCE	NON-LOCK	-
ZW11	6'x50'	-	3-14-16	PRESENCE	NON-LOCK	-

POLE ORIENTATION

POLE NO.	ODOT DESIGN NO.	POLE HEIGHT (FT)	FOUNDATION ELEVATION	Mast Arm A OR INDEX ANGLE (DEG)	ANGLE (DEG) FROM INDEX LINE							DISTANCES (FT)										
					PEDESTRIAN SIGNALS	PEDESTRIAN PUSHBUTTON	CONTROLLER/ CABINET	POWER SERVICE	WEATHERHEAD	CONDUIT ELL	LUMINAIRE BRACKET	L	L1	L2	L3	L4	L5	L6	L7	L8	L9	L10
P1	11	40	937.1	350°	-	-	-	-	45°	315 °	350°	45	28	33	38	-	-	-	-	-	-	-
P2	11	40	940.5	0°	-	-	-	-	180 °	90°	0°	45	18	20	21	24	24	28	31	33	34	37

POLE ORIENTATION DIAGRAM

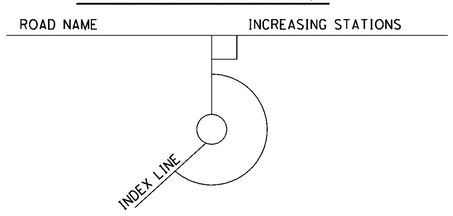

HORIZONTAL SCALE IN FEET
0 20 40

CALCULATED DSC
CHECKED LLL

TRAFFIC SIGNAL PLAN

MOT-75-0.75

621
773

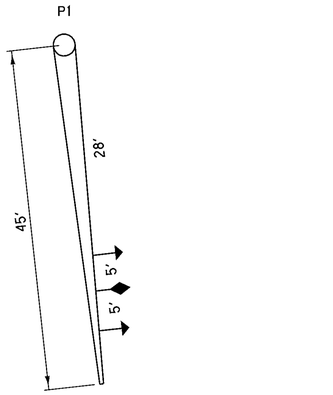

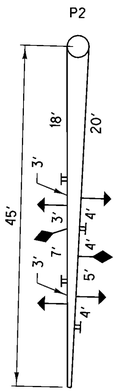

MAST ARM DIAGRAM

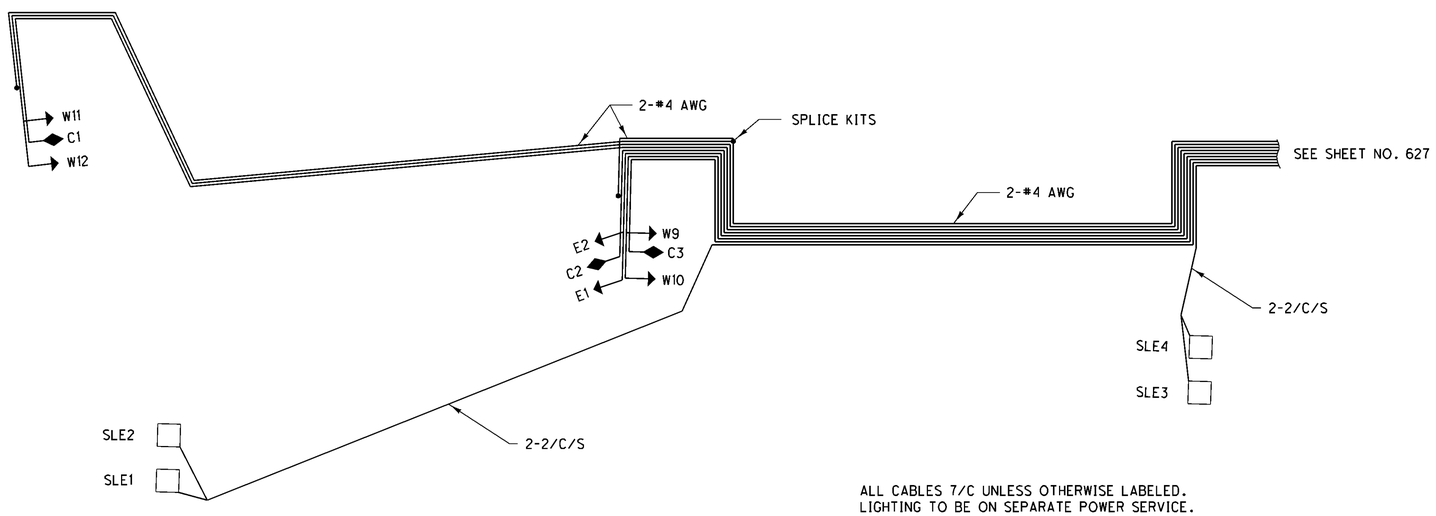

ALL CABLES 7/C UNLESS OTHERWISE LABELED.
LIGHTING TO BE ON SEPARATE POWER SERVICE.

SIGNAL WIRING DIAGRAM
(N.T.S.)

HORIZONTAL SCALE IN FEET
0 20 40

CALCULATED DSC
CHECKED LLL

TRAFFIC SIGNAL PLAN

MOT-75-0.75

622
773

RIGHT ON GREEN ARROW ONLY

PROPOSED
R10-5-R
Sn 1, Sn 4
Sn 13, Sn 24

LEFT TURN SIGNAL

PROPOSED
R10-10L
Sn 3, Sn 9
Sn 16, Sn 18
Sn 27, Sn 29

ONLY

PROPOSED
R3-SA
Sn 5, Sn 6
Sn 7, Sn 8
Sn 14, Sn 15
Sn 25, Sn 26

ONLY

PROPOSED
R3-SL
Sn 2, Sn 10
Sn 17, Sn 19
Sn 28, Sn 30

PROPOSED
R3-1
Sn 35, Sn 36

NO TURN ON RED

PROPOSED
R10-11A
Sn 57-Sn 60

PUSH BUTTON FOR

PROPOSED
R10-4B
Sn 37-Sn 44

PUSH BUTTON FOR

PROPOSED
R10-4B
Sn 45-Sn 52

PUSH BUTTON FOR

PROPOSED
R10-4B
Sn 53-Sn 56

PROPOSED
ALUMINUM
SIGNAL HEAD
WITH BACKPLATE
W5, W6
S1, S2
E5, E6
N1, N2

PROPOSED
ALUMINUM
SIGNAL HEAD
WITH BACKPLATE
W7, W8
S3, N3
E7, E8

PROPOSED
ALUMINUM
SIGNAL HEAD
WITH BACKPLATE
W3, W4
S4, S5
E3, E4
N4, N5

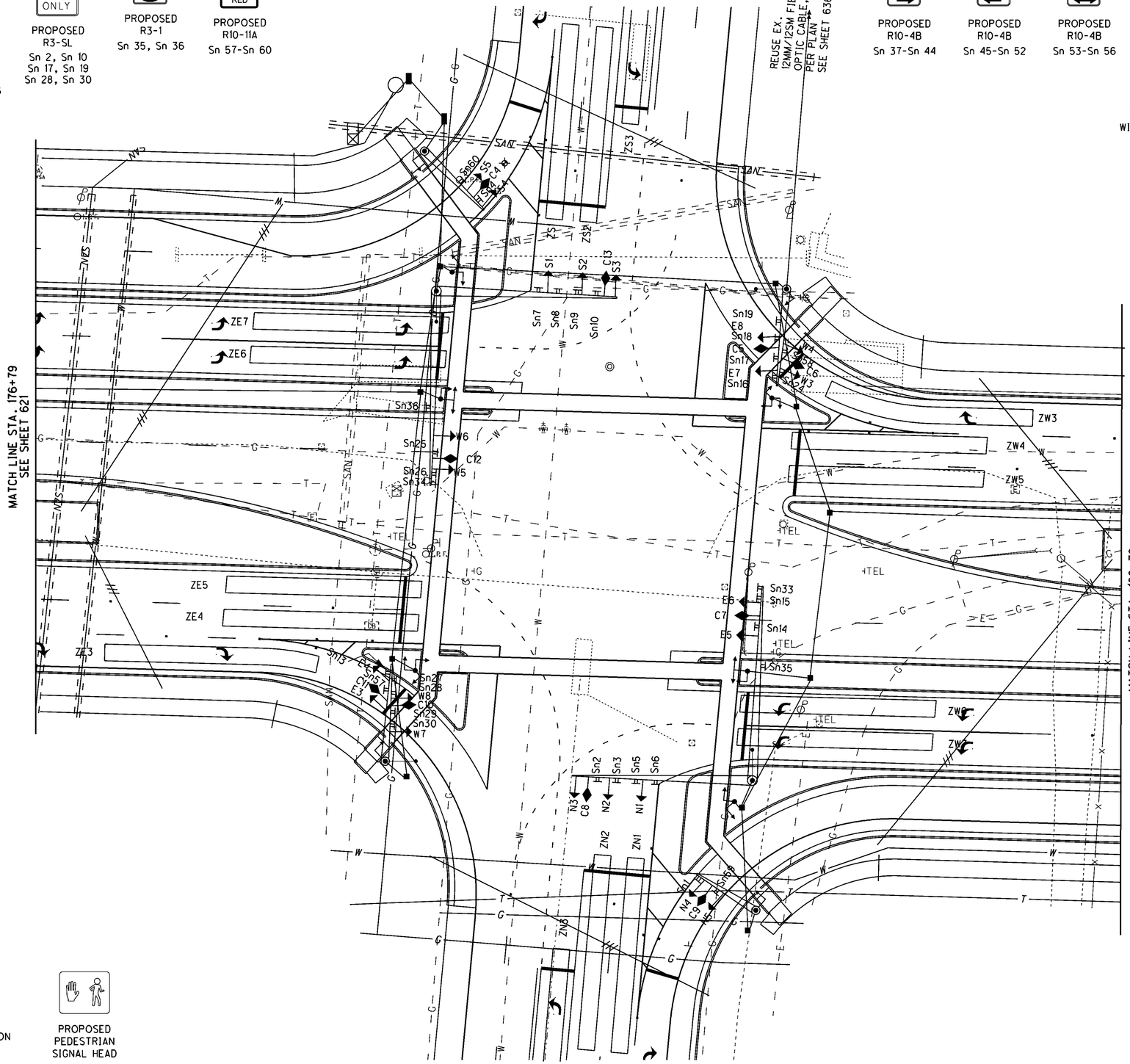

PROPOSED
R3-2
Sn 33, Sn 34

PROPOSED
VIDEO DETECTION
CAMERA
C4 - C13

PROPOSED
PEDESTRIAN
SIGNAL HEAD
PH1 - PH20

HORIZONTAL SCALE IN FEET
0 20 40

CALCULATED DSC
CHECKED LLL

TRAFFIC SIGNAL PLAN

MOT-75-0.75

623
773

PROPOSED R10-5-R
Sn 1, Sn 4
Sn 13, Sn 24

PROPOSED R10-10L
Sn 3, Sn 9
Sn 16, Sn 18
Sn 27, Sn 29

PROPOSED R3-5A
Sn 5, Sn 6
Sn 7, Sn 8
Sn 14, Sn 15
Sn 25, Sn 26

PROPOSED R3-5L
Sn 2, Sn 10
Sn 17, Sn 19
Sn 28, Sn 30

PROPOSED R3-1
Sn 35, Sn 36

PROPOSED R10-11A
Sn 57-Sn 60

PROP. SIGNAL SUPPORT, P3,
STA. 178+15, 137' LT.
PROP. PEDESTRIAN PUSHBUTTON,
B3 AND SIGN Sn37
PROP. PEDESTRIAN HEAD, PH3
PROP. SIGNAL SUPPORT FOUNDATION

PROP. PULLBOX, PB20, PB21,
STA. 178+09, 163' LT.
PROP. 3-4" GALV. CONDUITS
PROP. 3-4" GALV. CONDUITS
PROP. GROUND-MOUNTED
CONTROLLER AND CABINET,
PROP. POWER SERVICE, AS PER PLAN

PROP. 2" GALV. CONDUIT PROP. FIBER
OPTIC CABLE, W1, 12MM/12SM
PROP. 2-3" GALV. CONDUIT
PROP. 3-4" GALV. CONDUITS
PROP. PEDESTAL, 8', P11,
STA. 178+26, 94' LT.
PROP. PEDESTRIAN PUSHBUTTON,
B1, B2 AND SIGN Sn38, Sn46
PROP. PEDESTRIAN PUSHBUTTON, PH1, PH2
PROP. SIGNAL SUPPORT FOUNDATION
PROP. 2" GALV. CONDUIT
PROP. 2" GALV. CONDUIT
PROP. COMBINATION SIGNAL SUPPORT, P4,
STA. 178+21, 87' LT.
PROP. SIGNAL SUPPORT FOUNDATION
PROP. BRACKET ARM 10'
PROP. LUMINAIRE, 400W, HPS, TYPE V, CUTOFF
PROP. 2-4" GALV. CONDUITS
PROP. 2" GALV. CONDUIT
PROP. 2-3" GALV. CONDUIT
PROP. 2-3" GALV. CONDUITS
PROP. PULLBOX, PB16,
STA. 178+17, 50' LT.
PROP. SPLICE KITS
PROP. PEDESTAL, 8', P15,
STA. 178+24', 48' LT.
PROP. PEDESTRIAN PUSHBUTTON, B4,
B5, B6 AND SIGN SN39, SN47, & SN53
PROP. PEDESTRIAN HEAD, PH4, PH5, PH6
PROP. SIGNAL SUPPORT FOUNDATION
PROP. 2-3" GALV. CONDUIT
PROP. 2-3" GALV. CONDUIT
PROP. PEDESTAL, 8', P14,
STA. 178+17, 50' RT.
PROP. PEDESTRIAN PUSHBUTTON, B17,
B18, B19 AND SIGN Sn42, Sn50, & Sn55
PROP. PEDESTRIAN HEAD, PH17, PH18, PH19
PROP. SIGNAL SUPPORT FOUNDATION
PROP. 2" GALV. CONDUIT
PROP. PULLBOX, PB15,
STA. 178+09, 46' RT.

MATCH LINE STA. 176+79
SEE SHEET 621

PROP. 2-3" GALV. CONDUIT
PROP. COMBINATION SIGNAL SUPPORT, P8,
STA. 178+07, 83' RT.
PROP. PEDESTRIAN PUSHBUTTON,
B20 AND SIGN Sn49
PROP. PEDESTRIAN HEAD, PH20
PROP. SIGNAL SUPPORT FOUNDATION
PROP. BRACKET ARM, 20'
PROP. LUMINAIRE, 400 W, HPS, TYPE V, CUTOFF
PROP. 2" GALV. CONDUIT
PROP. PULLBOX, PB14
STA. 178+12, 88' RT.
PROP. 3" GALV. CONDUIT
PROP. 2-3" GALV. CONDUIT
PROP. SIGNAL SUPPORT, P7,
STA. 179+42, 133' RT.
PROP. PEDESTRIAN PUSHBUTTON,
B16 AND SIGN Sn41
PROP. PEDESTRIAN HEAD, PH16
PROP. SIGNAL SUPPORT FOUNDATION

REUSE EX. 12MM/12SM FIBER OPTIC CABLE, AS PER PLAN SEE SHEET 636

PROP. PULLBOX, PB18, PB19
STA. 178+22, 148' LT.
PROP. 2" GALV. CONDUIT
PROP. 2-3" GALV. CONDUIT
PROP. PULLBOX, PB17
STA. 178+22, 95' LT.
PROP. SPLICE KITS
PROP. 2-4" GALV. CONDUITS
PROP. 2" GALV. CONDUIT
PROP. COMBINATION SIGNAL SUPPORT, P5,
STA. 179+47, 91' LT.
PROP. PEDESTRIAN PUSHBUTTON,
B7 AND SIGN Sn45
PROP. PEDESTRIAN HEAD, PH7
PROP. SIGNAL SUPPORT FOUNDATION
PROP. BRACKET ARM, 20'
PROP. LUMINAIRE, 400W, HPS TYPE V, CUTOFF
PROP. 2-4" GALV. CONDUITS

PROP. PULLBOX, PB8
STA. 179+43, 93' LT.
PROP. SPLICE KITS
PROP. 2-3" GALV. CONDUIT
PROP. PULLBOX, PB9
STA. 179+51, 49' LT.
PROP. 2" GALV. CONDUIT
PROP. PEDESTAL, 8', P12,
STA. 179+43, 51' LT.
PROP. PEDESTRIAN PUSHBUTTON, B8,
B9, B10 AND SIGN Sn44, Sn52, & Sn56
PROP. PEDESTRIAN HEAD, PH8, PH9, PH10
PROP. SIGNAL SUPPORT FOUNDATION
PROP. 2-3" GALV. CONDUIT
PROP. 2-4" GALV. CONDUITS
PROP. PULLBOX, PB10
STA. 179+64, 11' LT.
PROP. SPLICE KITS
PROP. 2-3" GALV. CONDUITS
PROP. 2-3" GALV. CONDUITS
PROP. PEDESTAL, 8', P16,
STA. 179+37, 47' RT.
PROP. PEDESTRIAN PUSHBUTTON, B11,
B12, B13 AND SIGN SN40, SN48, & SN54
PROP. PEDESTRIAN HEAD, PH11, PH12, PH13
PROP. SIGNAL SUPPORT FOUNDATION
PROP. 2" GALV. CONDUIT
PROP. 2-3" GALV. CONDUIT
PROP. PULLBOX, PB11
STA. 179+59, 49' RT.
PROP. 3" GALV. CONDUIT
PROP. COMBINATION SIGNAL SUPPORT, P6,
STA. 179+40, 87' RT.
PROP. SIGNAL SUPPORT FOUNDATION
PROP. BRACKET ARM, 10'
PROP. LUMINAIRE, 400W, HPS, TYPE V, CUTOFF
PROP. 2" GALV. CONDUIT
PROP. 2" GALV. CONDUIT
PROP. PULLBOX, PB12
STA. 179+36, 96' RT.
PROP. PEDESTAL, 8', P13,
STA. 179+33, 94' RT.
PROP. PEDESTRIAN PUSHBUTTON,
B14, B15 AND SIGN Sn43, Sn51
PROP. PEDESTRIAN HEAD, PH14, PH15
PROP. SIGNAL SUPPORT FOUNDATION

PROP. 2-3" GALV. CONDUIT
PROP. 3" GALV. CONDUIT
PROP. 3" GALV. CONDUIT
PROP. PULLBOX, PB13,
STA. 179+39, 140' RT.

MATCH LINE STA. 180+70
SEE SHEET 629

PROPOSED R10-4B
Sn 37-Sn 44

PROPOSED R10-4B
Sn 45-Sn 52

PROPOSED R10-4B
Sn 53-Sn 56

PROPOSED ALUMINUM SIGNAL HEAD WITH BACKPLATE
W5, W6
S1, S2
E5, E6
N1, N2

PROPOSED ALUMINUM SIGNAL HEAD WITH BACKPLATE
W7, W8
S3, N3
E7, E8

PROPOSED ALUMINUM SIGNAL HEAD WITH BACKPLATE
W3, W4
S4, S5
E3, E4
N4, N5

PROPOSED R3-2
Sn 33, Sn 34

PROPOSED VIDEO DETECTION CAMERA
C4 - C13

PROPOSED PEDESTRIAN SIGNAL HEAD
PH1 - PH20

HORIZONTAL SCALE IN FEET
0 20 40

CALCULATED DSC
CHECKED LLL

TRAFFIC SIGNAL PLAN

MOT-75-0.75

623A
773

LOOP DETECTOR UNIT SUMMARY

LOOP	SIZE	TURNS	CONNECT TO PHASE	PRESENCE/ PULSE	LOCK/ NON-LOCK	(E)XTEND/ (D)ELAY
ZE3	6'x50'	-	1-13	PRESENCE	NON-LOCK	-
ZE4	6'x50'	-	4	PRESENCE	NON-LOCK	-
ZE5	6'x50'	-	4	PRESENCE	NON-LOCK	-
ZE6	6'x50'	-	8	PRESENCE	NON-LOCK	-
ZE7	6'x50'	-	8	PRESENCE	NON-LOCK	-
ZW3	6'x50'	-	5-9	PRESENCE	NON-LOCK	-
ZW4	6'x50'	-	4	PRESENCE	NON-LOCK	-
ZW5	6'x50'	-	4	PRESENCE	NON-LOCK	-
ZW6	6'x50'	-	12	PRESENCE	NON-LOCK	-
ZW7	6'x50'	-	12	PRESENCE	NON-LOCK	-
ZN1	6'x50'	-	6-7-18	PRESENCE	NON-LOCK	-
ZN2	6'x50'	-	6-7-18	PRESENCE	NON-LOCK	-
ZN3	6'x50'	-	1	PRESENCE	NON-LOCK	-
ZS1	6'x50'	-	2-3-18	PRESENCE	NON-LOCK	-
ZS2	6'x50'	-	2-3-18	PRESENCE	NON-LOCK	-
ZS3	6'x50'	-	5	PRESENCE	NON-LOCK	-

POLE ORIENTATION

POLE NO.	ODOT DESIGN NO.	POLE HEIGHT (FT)	FOUNDATION ELEVATION	MAST ARM A OR INDEX ANGLE (DEG)	ANGLE (DEG) FROM INDEX LINE							DISTANCES (FT)											
					PEDESTRIAN SIGNALS	PEDESTRIAN PUSHBUTTON	CONTROLLER/ CABINET	POWER SERVICE	WEATHERHEAD	CONDUIT ELL	HANDHOLE	L	L1	L2	L3	L4	L5	L6	L7	L8	L9	L10	L11	L12
P3	1	23'	949.7	315 °	60°	60°			300°	210°	135°	30	16	19.5	23	25	27.5	-	-	-	-	-	-	-
P4	SPEC*	34'	949.8	0°					295°	205°	180°	70	41.5	52	58	60	64	65.5	69	-	-	-	-	-
P4 - 2ND ARM				270 °								65	36.5	40	43.5	50.5	52.5	57.5	60	64	-	-	-	-
P5	1	34'	950.7	0°	330°	330°			135 °	45°	180°	35	12	17.5	18.5	19.5	21.5	22	24.5	25	28	29.5	30	32
P6	SPEC*	34'	949.6	0°					290°	200°	180°	70	41	52	55.5	59	64	65.5	69.5	-	-	-	-	-
P6 - 2ND ARM				270 °								65	35	39.5	42	49	51.5	55.5	58.5	63	-	-	-	-
P7	1	23'	948.5	300°	45°	45°			285°	195°	120°	25	13	15.5	18	21.5	23.5	-	-	-	-	-	-	-
P8	1	34'	947.8	0°	315°	315°			210°	120°	180°	35	13	15	19	20	22	22.5	25	26.5	27	29.5	31.5	32.5
P11		8'	949.8	0°	230° 270°	230° 270°				120°														
P12		8'	950.8	0°	0° 135° 270°	0° 135° 270°				305°														
P13		8'	949.4	0°	215° 270°	215° 270°				140°														
P14		8'	948.1	0°	90° 185° 320°	90° 185° 320°				120°														
P15		8'	949.5	0°	180° 270° 270°	180° 270° 270°				115 °														
P16		8'	950.1	0°	0° 180° 270°	0° 180° 270°				90 °														

* DESIGN EXCEEDS ODOT DESIGN NUMBERS.

POLE ORIENTATION DIAGRAM

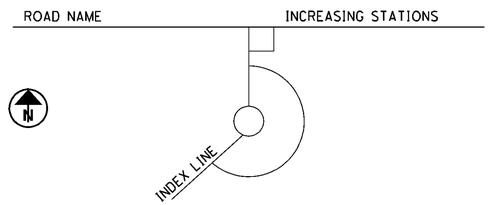

SUB-SUMMARY

ITEM	QUAN.	UNIT	DESCRIPTION
625	8	EACH	Connector Kit, Type II
625	8	EACH	Connector Kit, Type III
625	2	EACH	Bracket Arm, 10', As Per Plan
625	6	EACH	Bracket Arm, 20', As Per Plan
625	4066	FT	NO. 4 AWG 5000 Volt Distribution Cable
625	8	EACH	Luminaire, Conventional, 400W, HPS, 120 Volt, As Per Plan
625	16	EACH	Cable Splicing Kit
625	150	FT	No. 10 AWG Pole and Bracket Cable
625	415	FT	Conduit, 2" 725.04
625	1305	FT	Conduit, 3" 725.04
625	775	FT	Conduit, 4" 725.04
625	1105	FT	Trench
625	30	EACH	Pull Box, 725.08, 18"
625	11	EACH	Ground Rod
630	52	EACH	Sign Support Assembly, Mast Arm Mounted
630	250	SQFT	Sign, Flat Sheet
632	34	EACH	Vehicular Signal Head, (LED), 3-Section, 12" Lens, 1-Way, With Backplate (Black)
632	34	EACH	Covering of Vehicular Signal Head
632	20	EACH	Pedestrian Pushbutton, As Per Plan
632	6	EACH	Pedestal, 8', As Per Plan
632	6	EACH	Pedestal Foundation
632	8	EACH	Detector Loop
632	7135	FT	Signal Cable, 7 Conductor, No. 14 AWG
632	3335	FT	Loop Detector Lead-In Cable, 2 Conductor No. 14 AWG
632	150	FT	Power Cable, 3 Conductor, No. 6 AWG
632	200	FT	Service Cable, 3 Conductor, No. 6 AWG
632	2	EACH	Power Service, As Per Plan
632	2	EACH	Signal Support, Type TC-81.20, Design 1, As Per Plan
632	2	EACH	Combination Signal Support, Misc.: Type TC-81.20, Design 1, As Per Plan
632	1	EACH	Combination Signal Support, Misc.: Type TC-81.20, Design 4, As Per Plan
632	3	EACH	Combination Signal Support, Misc.: Type TC-81.20, Design 11, As Per Plan
632	2	EACH	Combination Signal Support, Misc.: Type TC-81.20, with 65' & 70' Mast Arms, As Per Plan
632	10	EACH	Signal Support Foundation
632	1	EACH	Removal of Traffic Signal Installation for Storage, As Per Plan
633	1	EACH	Controller Item, Misc., Controller Unit, Type 2070, With ITS Cabinet, Type 340, As Per Plan
633	1	EACH	Cabinet Foundation
633	1	EACH	Controller Work Pad
633	1	EACH	Uninterruptible Power Supply (UPS), 1000 Watt, As Per Plan
816	1	EACH	Video Detection System

HORIZONTAL SCALE IN FEET
0 20 40

CALCULATED DSC
CHECKED LLL

TRAFFIC SIGNAL PLAN

MOT-75-0.75

624
773

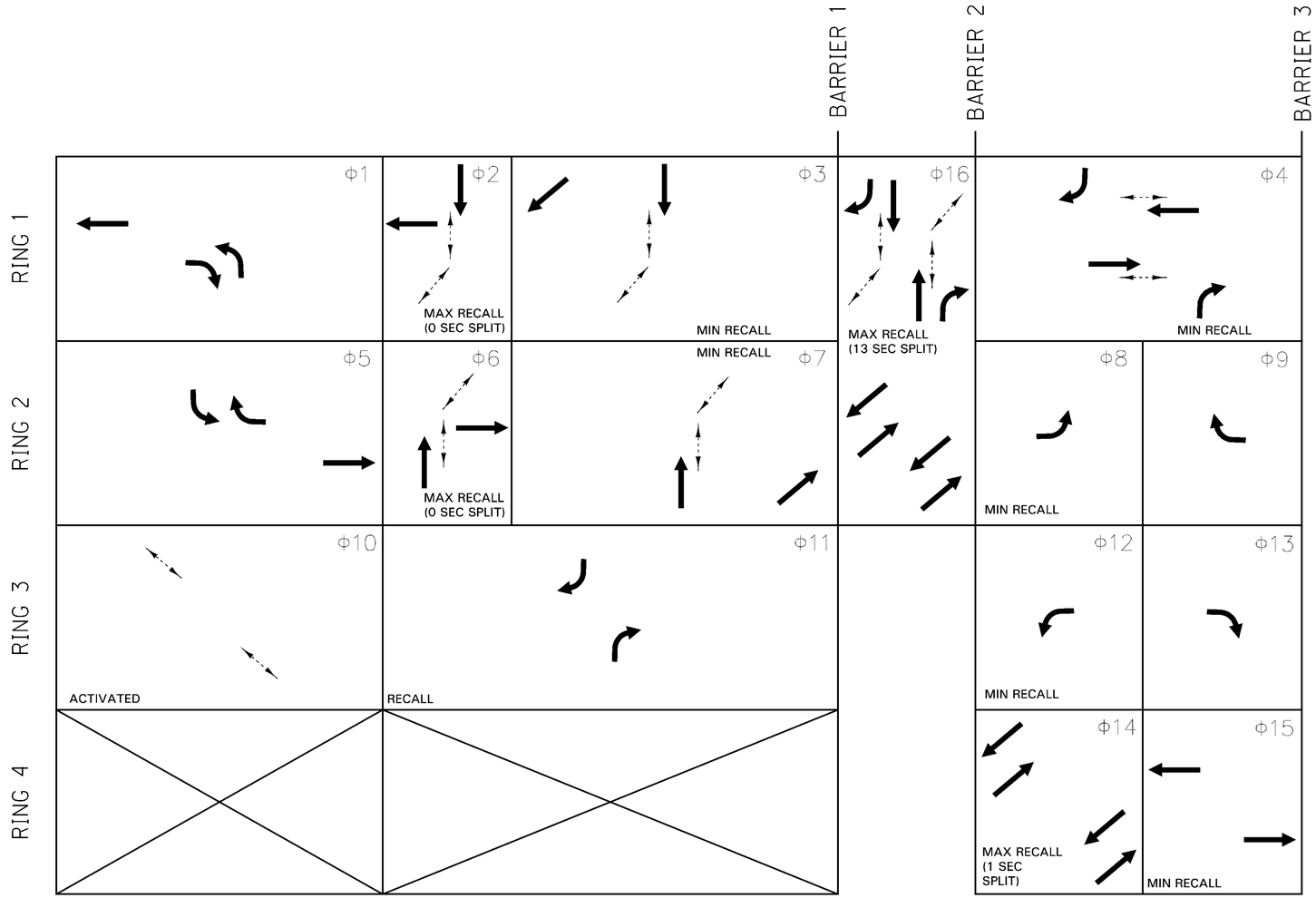

ITS CABINET IMPLEMENTATION

CH/load switch	PHASE	DESCRIPTION	OL
1	1	VEH	
2	4	EB VEH	
3	4	WB VEH	
4	5	VEH	
5	8	VEH	
6	12	VEH	
7	14+16	EB VEH	A
8	3+14+16	VEH	B
9	1+2+15	VEH	C
10	14+16	WBVEH	D
11	7+14+16	VEH	E
12	5+14+15	VEH	F
13	4+11+16	VEH	G
14	2+3+16	VEH	H
15	5+9	VEH	I
16	6+7+16	VEH	L
17	1+13	VEH	M
18	4	N PED	
19	4	S PED	
20	10	PED	
21	2+3+16	W PED LONG	
22	6+7+16	E PED LONG	
23	2+3+16	W PED SHORT	
24	6+7+16	E PED SHORT	

HORIZONTAL SCALE IN FEET
0 20 40

CALCULATED DSC
CHECKED LLL

TRAFFIC SIGNAL PLAN

MOT-75-0.75

625
773

WEST

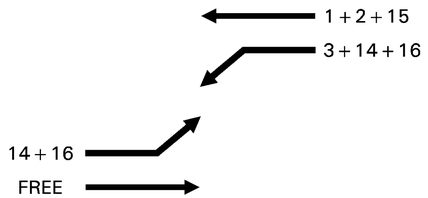

MAIN

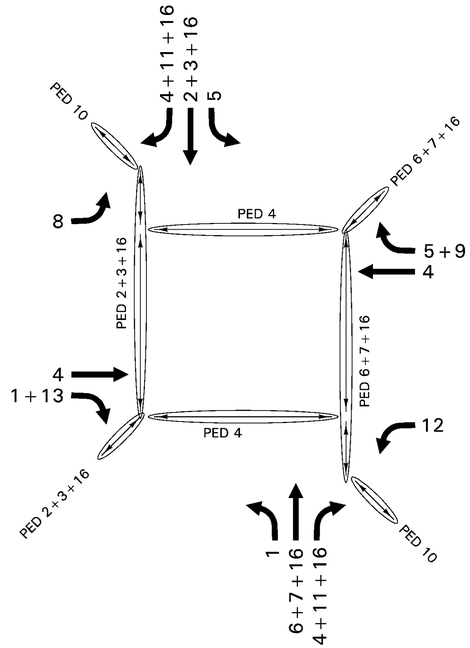

EAST

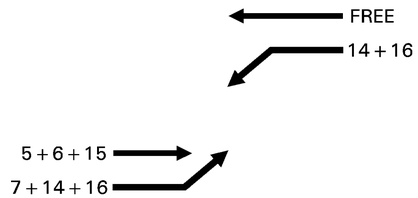

HORIZONTAL SCALE IN FEET
0 20 40

CALCULATED DSC
CHECKED LLL

TRAFFIC SIGNAL PLAN

MOT-75-0.75

626
773

INTERVALS/PHASES

MOVEMENT		PHASE		1-5-10			2-6-11			3-7-11			16			4-8-12-14			4-9-13-15		
		SIG.	FLASH	1	2	3	4	5	6	7	8	9	10	11	12	13	14	15	16	17	18
1	VEH	N1-2	R				G	G	G	G	G	G	G	Y	R						
	VEH	S1-2	R				G	G	G	G	G	G	G	Y	R						
2	VEH	N3	R	◄G	◄Y	R															
	VEH	S3	R	◄G	◄Y	R															
3	VEH	N4-5	Y				G►	G►	G►	G►	Y►	R									
	VEH	S4-5	Y				G►	G►	G►	G►	Y►	R									
4	VEH	E1-2	R										G	G	G	G	Y	R			
	VEH	W1-2	R										G	G	G	G	Y	R			
5	VEH	E3-4	R	G►	Y►	R													G►	G►	G►
	VEH	W3-4	R	G►	Y►	R													G►	G►	G►
6	VEH	E5-6	R													G	G	G	G	Y	R
	VEH	W5-6	R													G	G	G	G	Y	R
7	VEH	E7-8	R													G►	Y►	R			
	VEH	W7-8	R													G►	Y►	R			
8	VEH	E9-10	Y	G	G	G	G	Y	R										G	G	G
	VEH	W9-10	Y	G	G	G	G	Y	R										G	G	G
9	VEH	E11-12								G	Y	R									
	VEH	W11-12								G	Y	R									
10	PED	N-S	DK				W	W	W	FD	FD	FD	FD	DW	DW						
	PED	N-S	DK				W	W	W	FD	FD	FD	FD	DW	DW						
11	PED	E-W	DK													W	W	FD	FD	DW	DW
	PED	E-W	DK													W	W	FD	FD	DW	DW
12	PED	NW	DK	W	FD	DW															
	PED	SE	DK	W	FD	DW															
13	PED	NE	DK	W	FD	DW															
	PED	SW	DK	W	FD	DW															

TRAFFIC SIGNAL CONTROLLER TIMING CHART

INTERSECTION: STATE HWY. 741 AND AUSTIN PIKE

START UP
START IN: Y/R FLASH ●; ALL RED ○
TIME FOR FLASH OR ALL RED 5 sec
FIRST PHASE(S) #2 & #6
COLOR DISPLAYED: GREEN ●; YELLOW ○

DUAL ENTRY ●
REST IN RED: RING 1 ○; RING 2 ○

OVERLAP	A	B	C	D	E	F	G	H	I
PHASES									

INTERVAL OR FEATURE		CONTROLLER MOVEMENT No.																	
		1	2	3	4	5	6	7	8	9	10	11	12	13	14	15	16	PED 4	PED 10
INTERSECTION MOVEMENT		WBT L EBR M NBL M	WBT L SBT M PED SB PED SW	SBT M WBR L PED SB PED SW	EBT M WBT M PED EB PED WB	WBR M SBL M EBT L	NBT M EBT L PED NB PED NE	NBT M EBR L PED NB PED NE	EBL M	WBR M	PED NW PED SE	SBR M NBR M	WBL M	EBR M	WBR L EBL L EBR L WBL L	WBT L EBT L	SBT M NBT M W CFI E CFI	PED NB PED SB	PED EB PED WB
MINIMUM GREEN (INITIAL)	(SEC.)	1.0	1.0	1.0	5.0	1.0	1.0	1.0	1.0	1.0	1.0	1.0	1.0	1.0	1.0	1.0	1.0	1.0	1.0
* ADDED INITIAL(SEC/ACTUATION)																			
MAXIMUM INITIAL	(SEC.)																		
PASSAGE TIME (PRESET GAP)	(SEC.)	2.2	2.2	2.2	2.2	2.2	2.2	2.2	2.2	2.2	2.2	2.2	2.2	2.2	2.2	2.2	2.2	2.2	2.2
TIME BEFORE REDUCTION	(SEC.)																		
* MINIMUM GAP	(SEC.)																		
* TIME TO REDUCE	(SEC.)																		
MAXIMUM GREEN I	(SEC.)	15.0	3.0	13.0	22.0	14.0	3.0	14.0	15.0	1.0	0	43.0	4.0	7.0	5.0	11.0	7.0	0	0
MAXIMUM GREEN II	(SEC.)	15.0	3.0	13.0	22.0	14.0	3.0	14.0	15.0	1.0	0	43.0	4.0	7.0	5.0	11.0	7.0	0	0
YELLOW CHANGE	(SEC.)	6.6	5.9	5.9	4.8	6.6	5.9	5.9	4.7	5.0		5.0	4.7	5.0	5.3	5.1	5.9		
ALL RED CLEARANCE	(SEC.)	1.0	1.0	1.0	1.0	1.0	1.0	1.0	1.0	1.0		1.0	1.0	1.0	1.0	1.0	1.0		
WALK	(SEC.)										4.0						4.0	4.0	5.0
PED. CLEAR THRU YELLOW	(SEC.)										6.0						6.0	6.0	6.0
MAXIMUM GREEN III	(SEC.)																		
ADJUST	(SEC.)																		
LIMIT	(SEC.)																		
SET	(SEC.)																		
CLEAR	(SEC.)																		
RECALL	MAXIMUM (NO/YES)	N	Y	N	N	N	Y	N	N	N	N	N	N	N	Y	N	Y	N	N
	MINIMUM (NO/YES)	N	N	Y	Y	N	N	N	Y	N	N	N	Y	N	N	Y	N	N	N
	PEDESTRAIN (NO/YES)	N	N	N	N	N	N	N	N	N	Y	N	N	N	N	N	Y	Y	Y
MEMORY	(ON/OFF)																		
CALL TO NON-ACTUATED	NO. 1	X																	
	NO. 2																		

HORIZONTAL SCALE IN FEET 0 20 40

CALCULATED DSC
CHECKED LLL

TRAFFIC SIGNAL PLAN

MOT-75-0.75

627
773

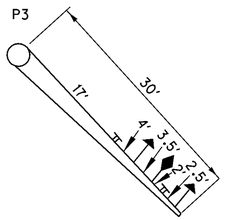

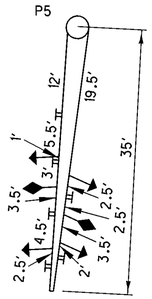

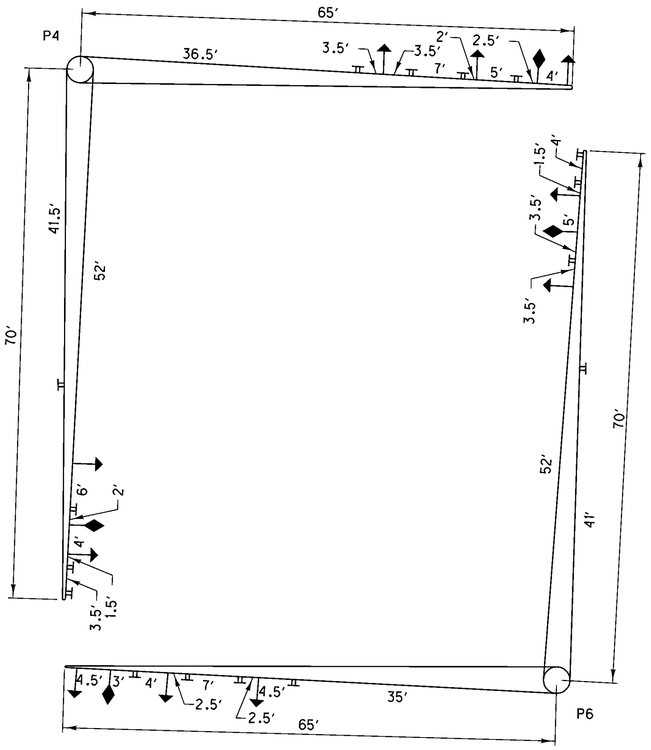

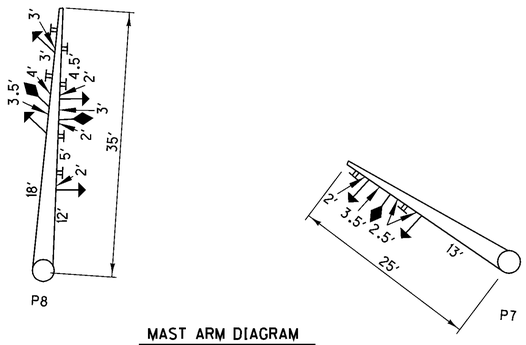

MAST ARM DIAGRAM

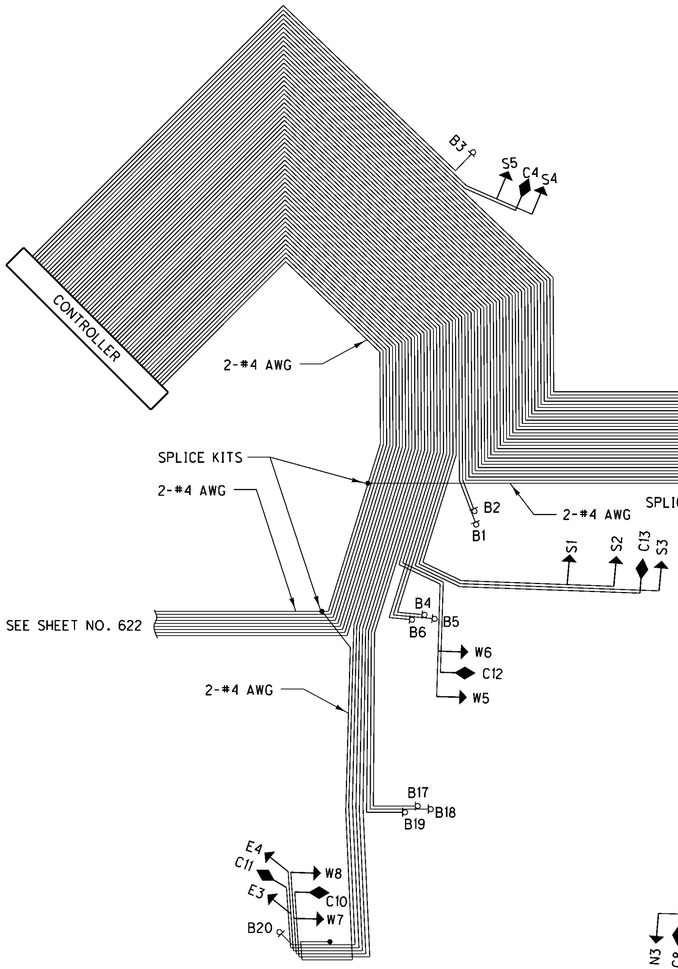

ALL CABLES 7/C UNLESS OTHERWISE LABELED.
LIGHTING TO BE ON SEPARATE POWER SERVICE.

SIGNAL WIRING DIAGRAM
(N.T.S.)

INTERCONNECT WIRING DIAGRAM

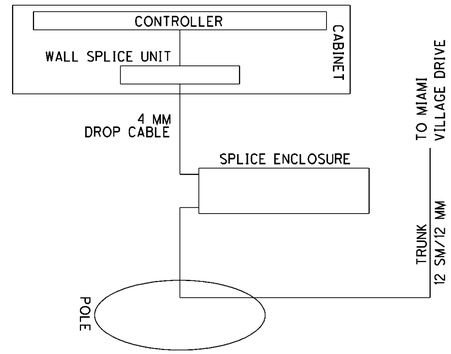

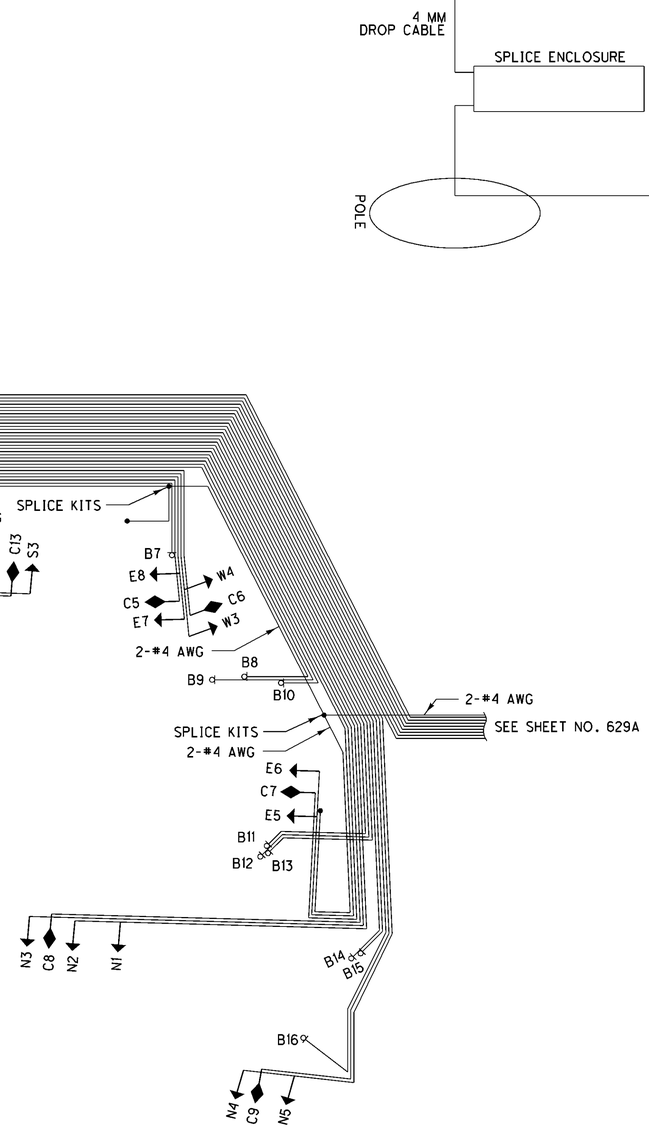

N

HORIZONTAL SCALE IN FEET
40
20

CALCULATED DSC
CHECKED LLL

TRAFFIC SIGNAL PLAN

MOT-75-0.75

628
773

LOOP DETECTOR UNIT SUMMARY

LOOP	SIZE	TURNS	CONNECT TO PHASE	PRESENCE/ PULSE	LOCK/ NON-LOCK	(E)XTEND/ (D)ELAY
ZE8	6'x50'	-	5-6-13	PRESENCE	NON-LOCK	-
ZE9	6'x50'	-	5-6-13	PRESENCE	NON-LOCK	-
ZE10	6'x50'	-	7-12-14	PRESENCE	NON-LOCK	-
ZW1	6'x50'	-	12-14	PRESENCE	NON-LOCK	-
ZW2	6'x50'	-	12-14	PRESENCE	NON-LOCK	-
LW1	6'x6'	3	8	PRESENCE	NON-LOCK	-
LW2	6'x6'	3	8	PRESENCE	NON-LOCK	-
LW3	6'x6'	3	8	PRESENCE	NON-LOCK	-
LW4	6'x6'	3	8	PRESENCE	NON-LOCK	-

PROPOSED ALUMINUM SIGNAL HEAD WITH BACKPLATE
W1, W2
E9, E10
E11, E12

PROPOSED R3-5A
Sn20, Sn21

PROPOSED R4-8
Sn22, Sn23

PROPOSED VIDEO DETECTION CAMERA
C14, C15, C16

POLE ORIENTATION

POLE NO.	ODOT DESIGN NO.	POLE HEIGHT (FT)	FOUNDATION ELEVATION	MAST ARM A OR INDEX ANGLE (DEG)	ANGLE (DEG) FROM INDEX LINE: PEDESTRIAN SIGNALS	PEDESTRIAN PUSHBUTTON	CONTROLLER/ CABINET	POWER SERVICE	WEATHERHEAD	CONDUIT ELL	LUMINARE BRACKET	DISTANCES (FT): L	L1	L2	L3	L4	L5	L6	L7	L8	L9	L10
P9	4	40	957.6	0 °	-	-	-	-	150 °	60 °	0 °	45	20	22	22	27	27	32	34	34	36	39
P10	11	40	964.3	350 °	-	-	-	-	340°	250°	350°	38	25	29	33	-	-	-	-	-	-	-

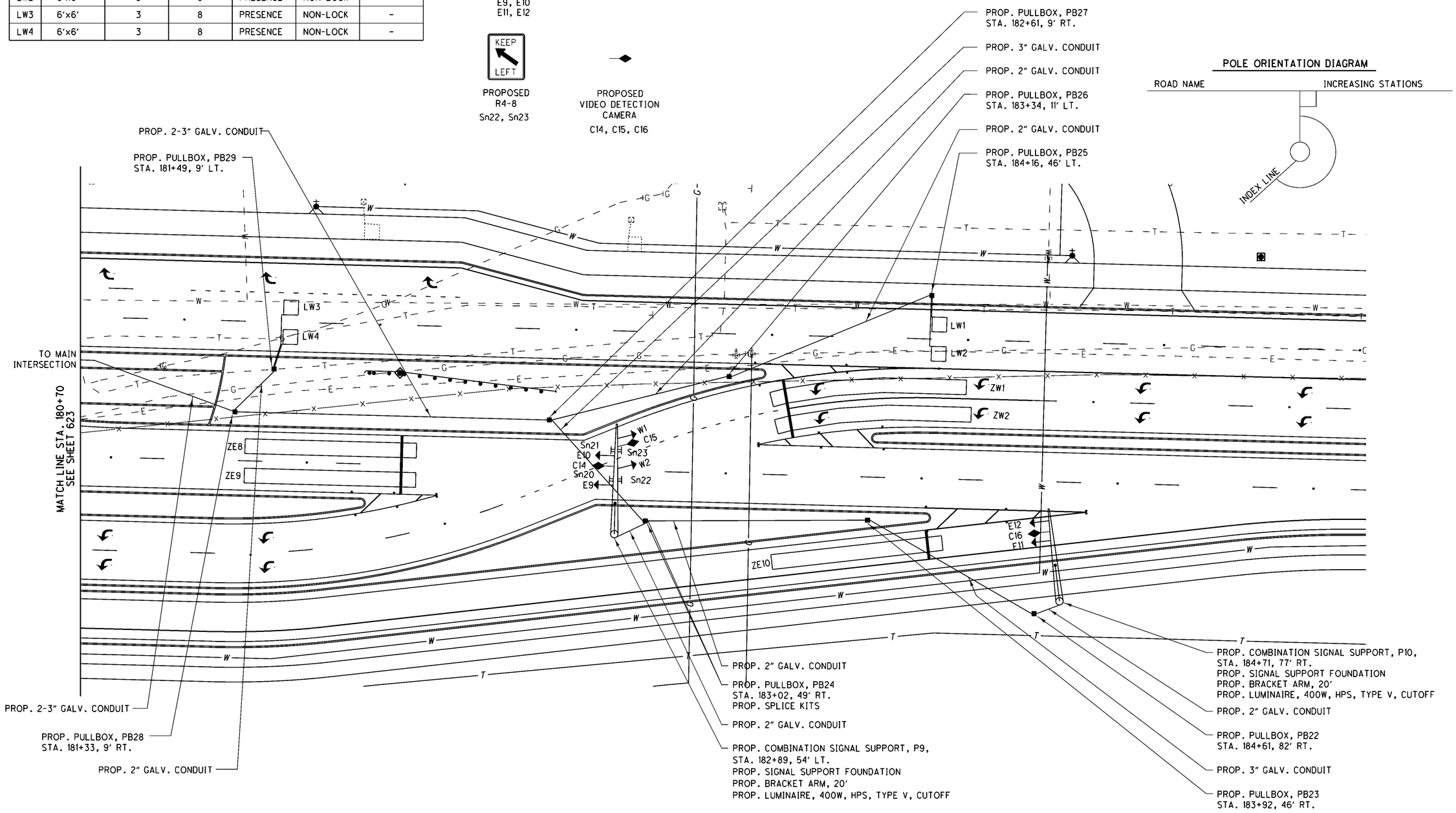

POLE ORIENTATION DIAGRAM

HORIZONTAL SCALE IN FEET
0 20 40

CALCULATED DSC
CHECKED LLL

TRAFFIC SIGNAL PLAN

MOT-75-0.75

629
773

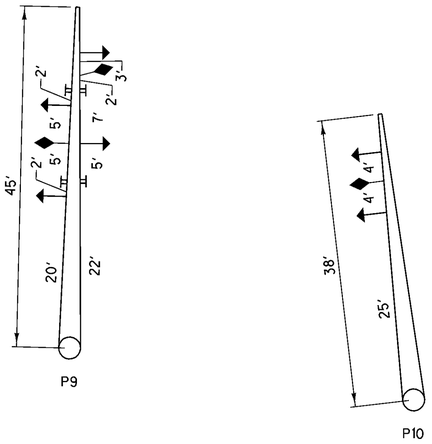

MAST ARM DIAGRAM

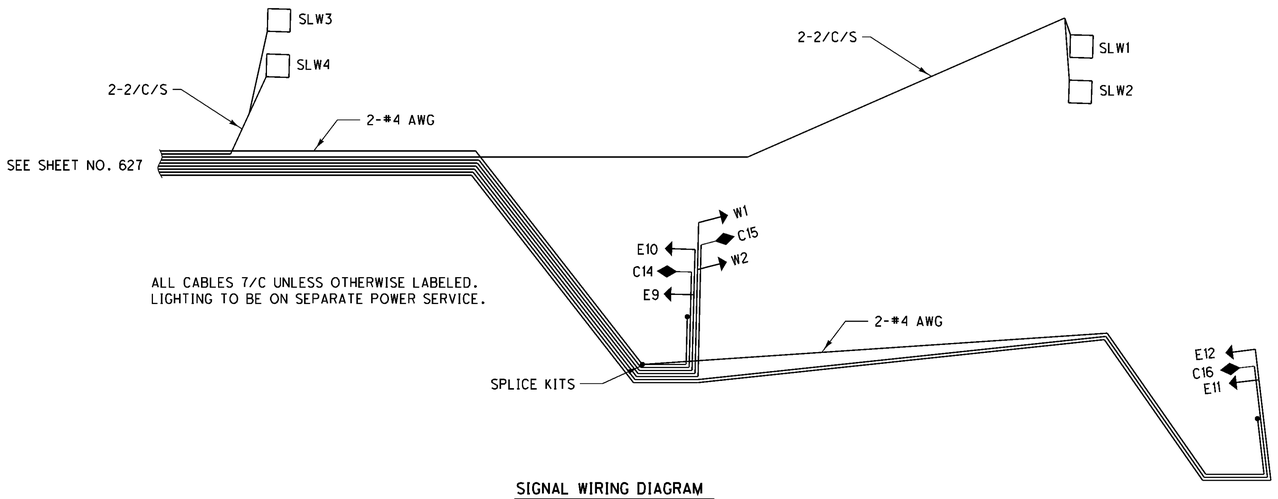

SIGNAL WIRING DIAGRAM
(N.T.S.)

HORIZONTAL SCALE IN FEET
0 20 40

CALCULATED DSC
CHECKED LLL

TRAFFIC SIGNAL PLAN

MOT-75-0.75

629A
773

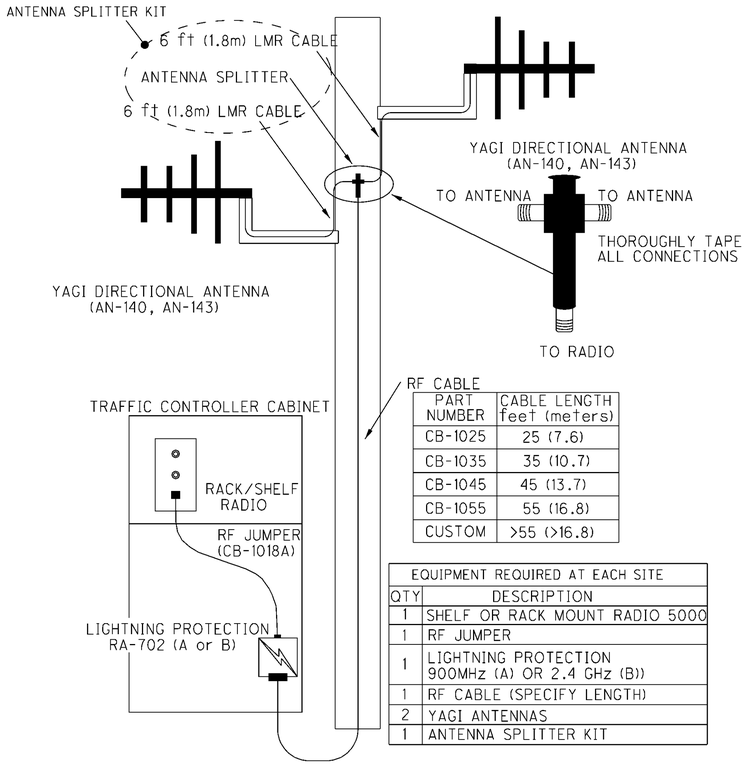

PART NUMBER	CABLE LENGTH feet (meters)
CB-1025	25 (7.6)
CB-1035	35 (10.7)
CB-1045	45 (13.7)
CB-1055	55 (16.8)
CUSTOM	>55 (>16.8)

EQUIPMENT REQUIRED AT EACH SITE	
QTY	DESCRIPTION
1	SHELF OR RACK MOUNT RADIO 5000
1	RF JUMPER
1	LIGHTNING PROTECTION 900MHz (A) OR 2.4 GHz (B))
1	RF CABLE (SPECIFY LENGTH)
2	YAGI ANTENNAS
1	ANTENNA SPLITTER KIT

ANTENNA SPLITTER KIT

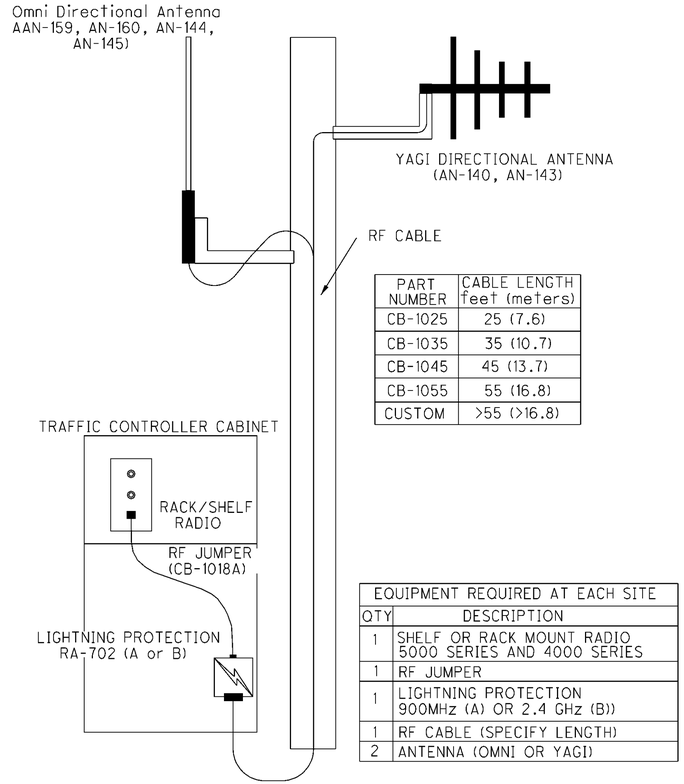

PART NUMBER	CABLE LENGTH feet (meters)
CB-1025	25 (7.6)
CB-1035	35 (10.7)
CB-1045	45 (13.7)
CB-1055	55 (16.8)
CUSTOM	>55 (>16.8)

EQUIPMENT REQUIRED AT EACH SITE	
QTY	DESCRIPTION
1	SHELF OR RACK MOUNT RADIO 5000 SERIES AND 4000 SERIES
1	RF JUMPER
1	LIGHTNING PROTECTION 900MHz (A) OR 2.4 GHz (B))
1	RF CABLE (SPECIFY LENGTH)
2	ANTENNA (OMNI OR YAGI)

OMNI OR YAGI DIRECTIONAL ANTENNA

CALCULATED GWA
CHECKED LAS

RADIO INTERCONNECT DETAILS

MOT-75-0.75

630
773

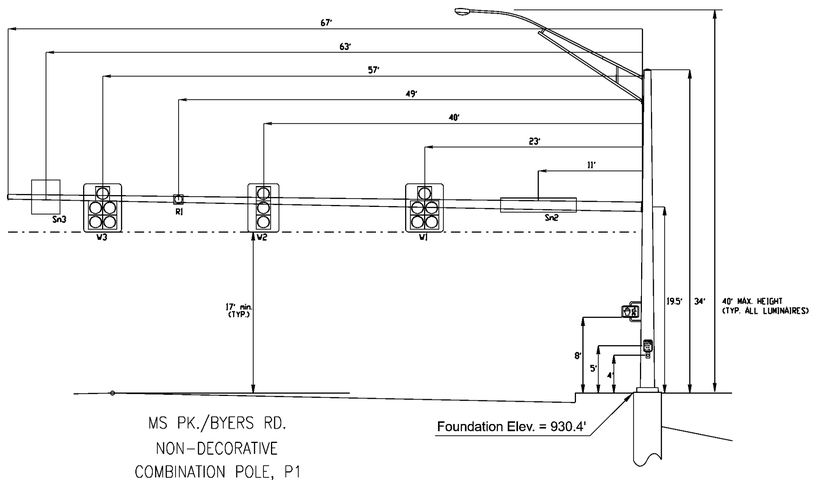

MS PK./BYERS RD.
NON-DECORATIVE
COMBINATION POLE, P1
ODOT TC-81.20

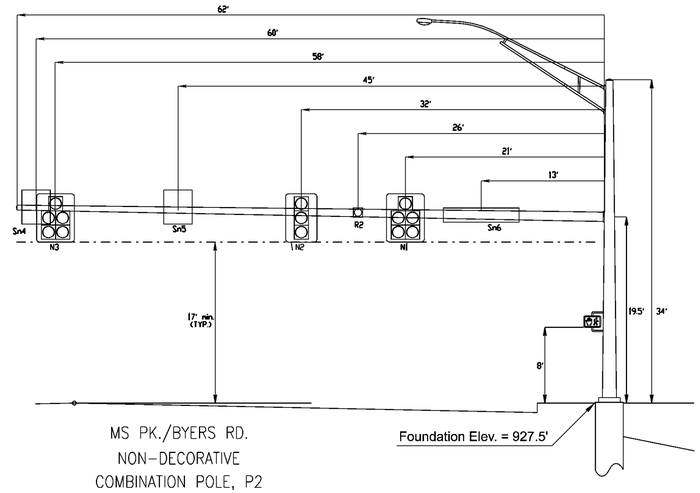

MS PK./BYERS RD.
NON-DECORATIVE
COMBINATION POLE, P2
ODOT TC-81.20

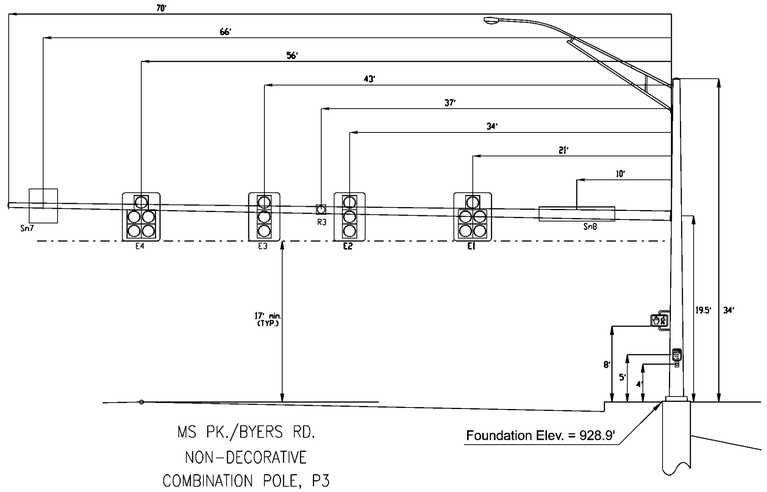

MS PK./BYERS RD.
NON-DECORATIVE
COMBINATION POLE, P3
ODOT TC-81.20

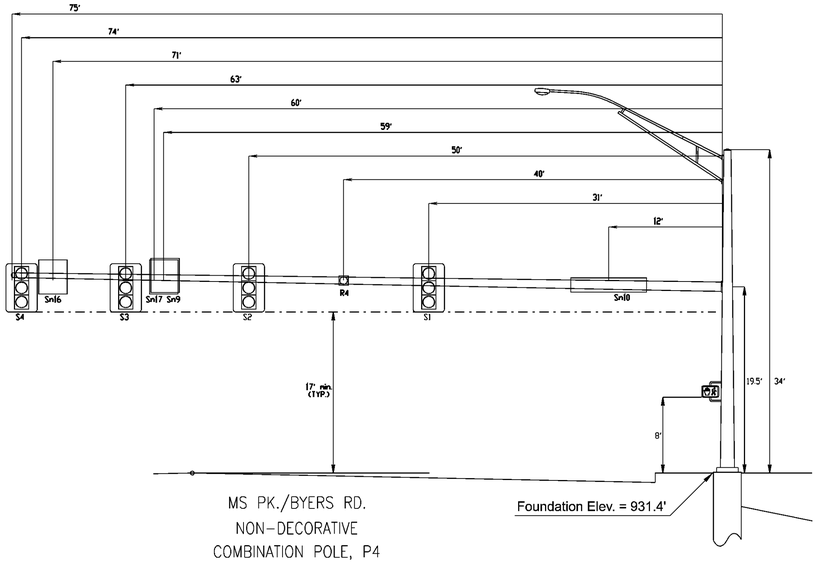

MS PK./BYERS RD.
NON-DECORATIVE
COMBINATION POLE, P4
ODOT TC-81.20

CALCULATED GWA
CHECKED LAS

TRAFFIC SIGNAL PLAN
MIAMISBURG-SPRINGBORO PIKE AND BYERS ROAD

MOT-75-0.75

631
773

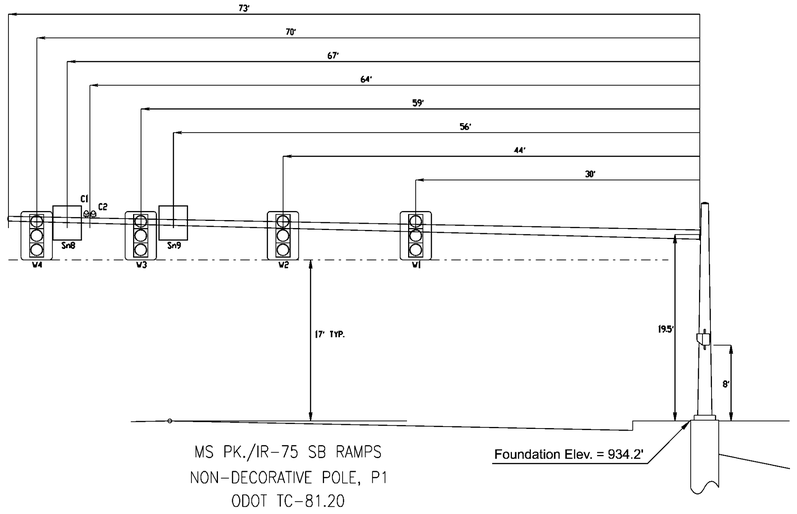

MS PK./IR-75 SB RAMPS
NON-DECORATIVE POLE, P1
ODOT TC-81.20

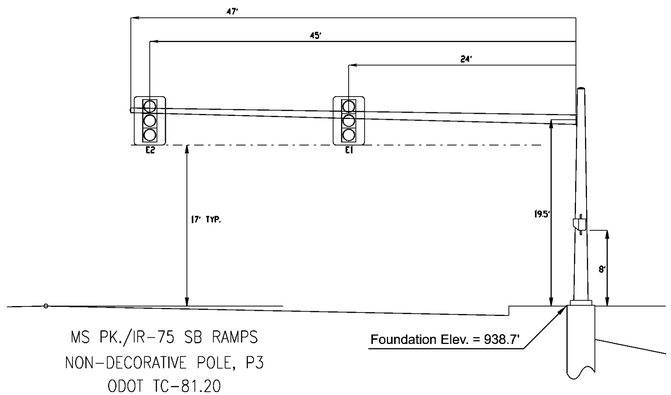

MS PK./IR-75 SB RAMPS
NON-DECORATIVE POLE, P3
ODOT TC-81.20

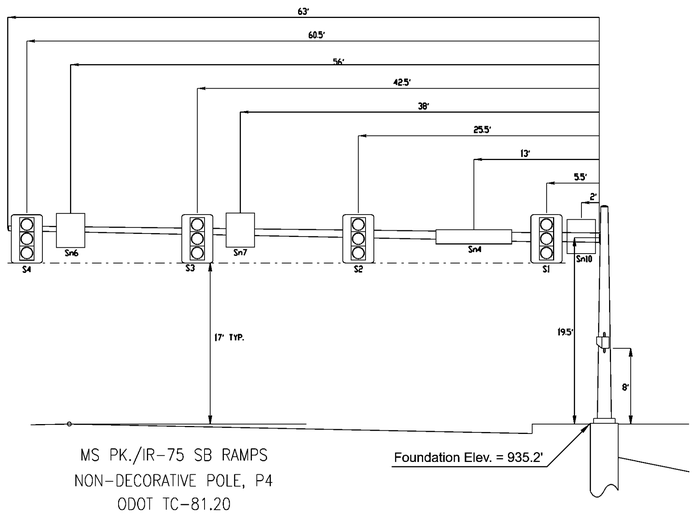

MS PK./IR-75 SB RAMPS
NON-DECORATIVE POLE, P4
ODOT TC-81.20

CALCULATED GWA
CHECKED LAS

TRAFFIC SIGNAL PLAN
MIAMISBURG-SPRINGBORO PIKE AND I-75 SOUTHBOUND RAMPS

MOT-75-0.75

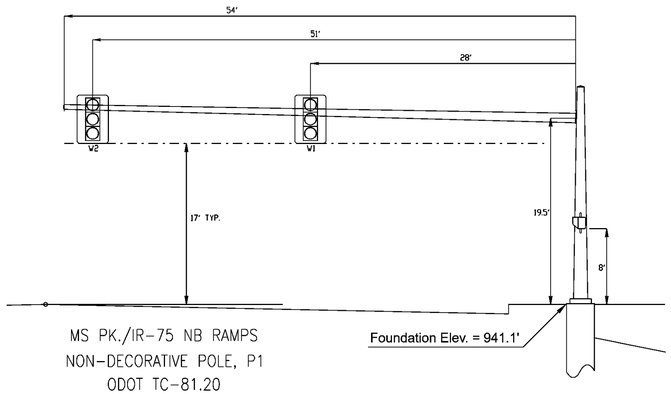

MS PK./IR-75 NB RAMPS
NON-DECORATIVE POLE, P1
ODOT TC-81.20

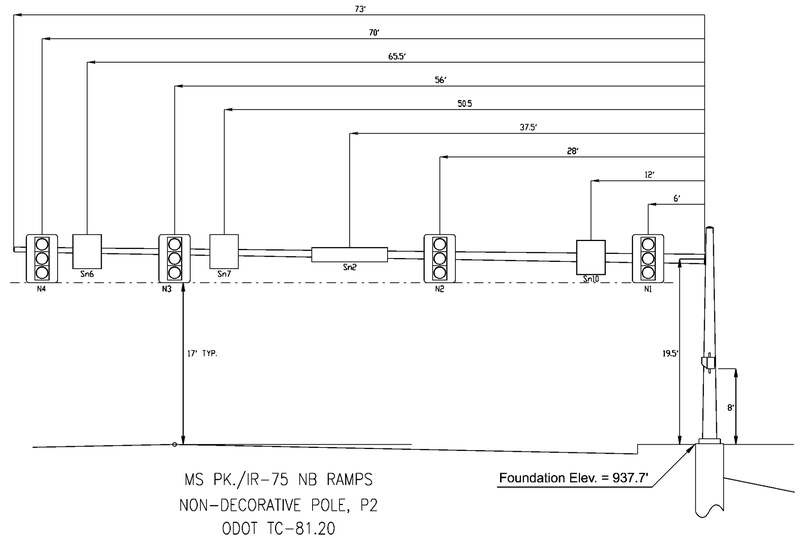

MS PK./IR-75 NB RAMPS
NON-DECORATIVE POLE, P2
ODOT TC-81.20

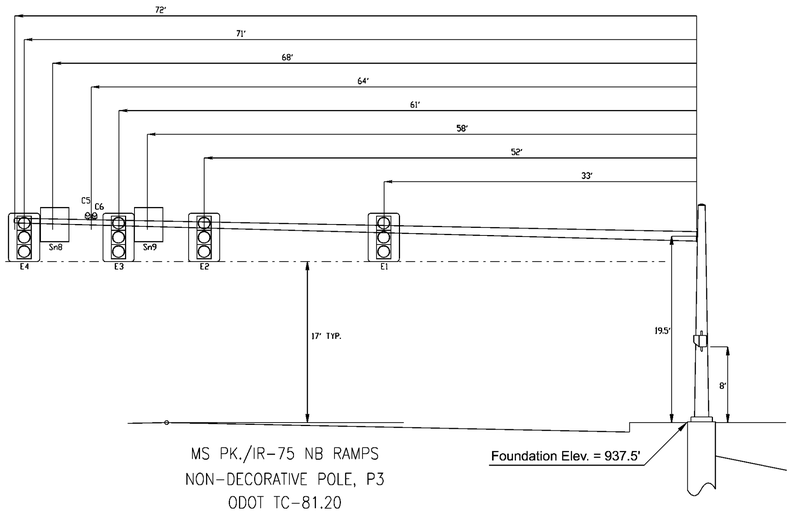

MS PK./IR-75 NB RAMPS
NON-DECORATIVE POLE, P3
ODOT TC-81.20

CALCULATED GWA
CHECKED LAS

TRAFFIC SIGNAL PLAN
MIAMISBURG-SPRINGBORO PIKE AND I-75 NORTHBOUND RAMPS

MOT-75-0.75

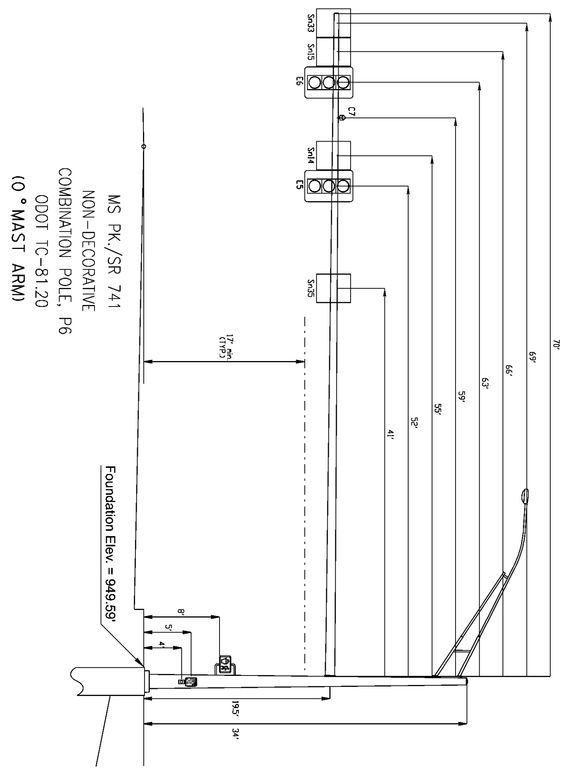

MS PK./SR 741
NON-DECORATIVE
COMBINATION POLE, P6
ODOT TC-81.20
(0 ° MAST ARM)

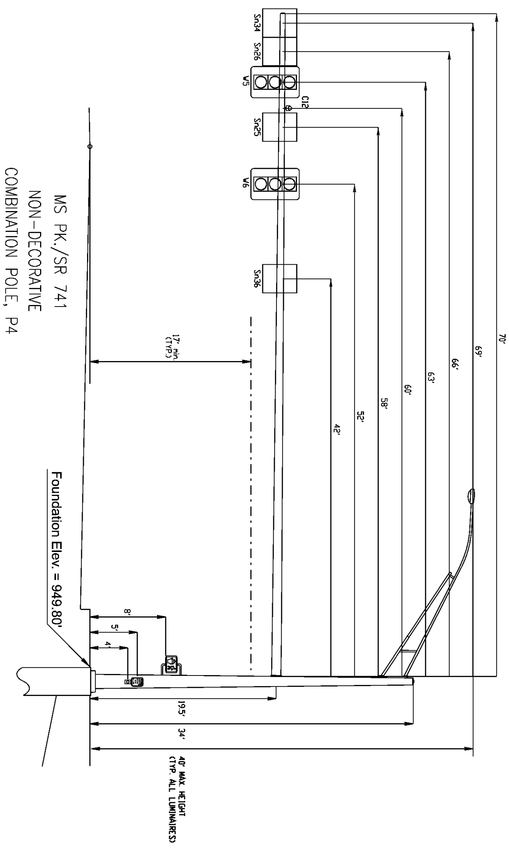

MS PK./SR 741
NON-DECORATIVE
COMBINATION POLE, P4
ODOT TC-81.20
(0 ° MAST ARM)

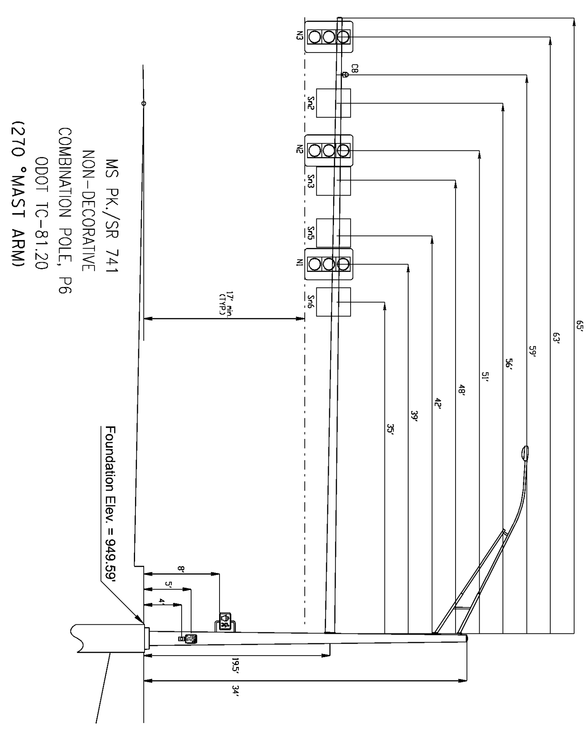

MS PK./SR 741
NON-DECORATIVE
COMBINATION POLE, P6
ODOT TC-81.20
(270 °MAST ARM)

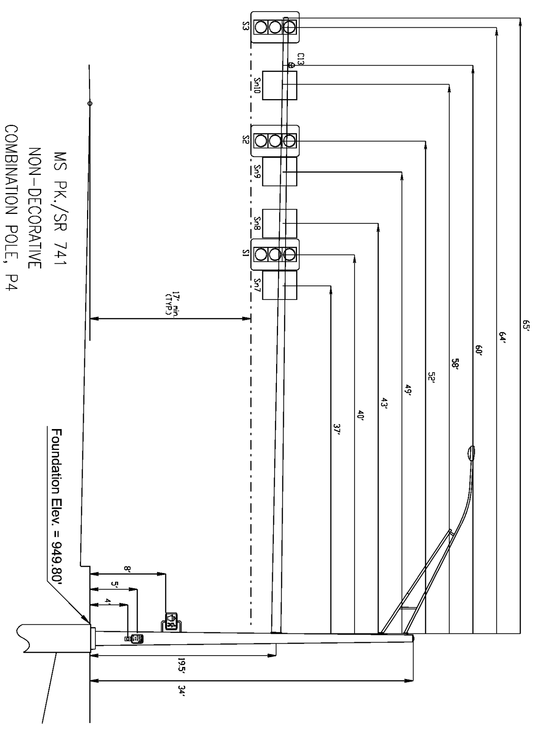

MS PK./SR 741
NON-DECORATIVE
COMBINATION POLE, P4
ODOT TC-81.20
(270 °MAST ARM)

634 / 773	MOT-75-0.75	TRAFFIC SIGNAL PLAN MIAMISBURG-SPRINGBORO PIKE AND S.R. 741	CALCULATED GWA CHECKED LAS

CUSTOMER DESIGN	DESIGN NO.	ARM SPREAD	RISE ANGLE	MAST ARM TUBE SIZE	JOINT LENGTH	ARM ORIENT	POLE TUBE SIZE	LUM ARM	LUM ORIENT	CLAMP SIGN
IR-75 SB, P1	50400-B113-Y1	73'-0"	4°	0E-18.64x13.29x38'-3" 7E-14.0x8.82x37'-0"	2'-3"	180°	3E-21.50x18.28x23'-0"	NO	-	NO
IR-75 SB, P3	50400-B113-Y2	47'-0"	3°	3E-12.0x8.64x24'-0" 11E-9.17x5.71x24'-9"	1'-9"	180°	3E-15.0x11.78x23'-0"	NO	-	NO
IR-75 SB, P4	50400-B113-Y3	63'-0"	4°	0E-15.50x10.81x33'-6" 7E-11.49x7.08x31'-6"	2'-0"	180°	3E-18.50x15.28x23'-0"	NO	-	
IR-75 NB, P1	50400-B113-Y4	54'-0"	3°	3E-12.0x8.64x24'-0" 11E-9.17x4.73x31'-9"	1'-9"	180°	3E-15.0x11.78x23'-0"	NO	-	NO
IR-75 NB, P2	50400-B113-Y5	73'-0"	4°	0E-18.64x13.29x38'-3" 7E-14.00x8.82x37'-0"	2'-3"	180°	3E-21.50x18.28x23'-0	NO	-	
IR-75 NB, P3	50400-B113-Y6	72'-0"	4°	0E-18.64x13.29x38'-3" 7E-14.0x8.96x36'-0"	2'-3"	180°	3E-21.50x18.28x23'-0"	NO	-	NO
BYERS RD, P1	50400-B113-Y7	67'-0"	4°	0E-15.0x10.31x33'-6" 7E-10.99x6.02x35'-6"	2'-0"	180°	3E-18.5x13.74x34'-0"	YES	180°	NO
BYERS RD, P2	50400-B113-Y8	62'-0"	4°	0E-15.0x10.31x33'-6" 7E-10.99x6.72x30'-6"	2'-0"	180°	3E-18.5x13.74x34'-0"	YES	180°	NO
BYERS RD, P3	50400-B113-Y9	70'-0"	4°	0E-16.0x11.10x35'-0" 7E-11.78x6.60x37'-0"	2'-0"	180°	3E-18.5x13.74x34'-0"	YES	180°	NO
BYERS RD, P4	50400-B113-Y10	75'-0"	4°	0E-18.64x13.29x38'-3" 7E-14.0x8.54x39'-0"	2'-3"	180°	3E-21.0x16.24x34'-0"	YES	180°	NO
STA. 153+33.00	50400-B113-Y11	64'-0"	4°	3E-14.0x9.45x32'-6" 11E-9.98x5.33x33'-3"	1'-9"	180°	3E-16.5x13.28x23'-0"	NO	-	NO
STA. 154+02.94	50400-B113-Y12	53'-0"	3°	3E-12.0x8.64x24'-0" 11E-9.17x4.87x30'-9"	1'-9"	180°	3E-15.0x11.78x23'-0"	NO	-	NO
SR 741, P4 & P6	50400-B113-Y13	70'-0"	4°	0E-16.5x11.60x35'-0" 7E-12.28x7.10x37'-0"	2'-0"	180°	3E-23.0x18.24x34'-0"	YES	225°	NO
		65'-0"	3°	0E-17.5x13.30x30'-0" 7E-14.01x8.80x37'-3"	2'-3"	90°				

11 GA = .120" WALL THICKNESS
7 GA = .179" WALL THICKNESS
3 GA = .250" WALL THICKNESS
0 GA = .313" WALL THICKNESS
E = ROUND STEEL MONOTUBE @ .14 in/ft TAPER

DESIGN CRITERIA

1. DESIGNED IN ACCORDANCE WITH 2001 AASHTO "STANDARD SPECIFICATIONS WITH 2002 & 2003 INTERIM REVISIONS FOR STRUCTURAL SUPPORTS FOR HIGHWAY SIGNS, LUMINAIRES, AND TRAFFIC SIGNALS" FOR 90 M.P.H. WIND ZONE
   THE DESIGN PARAMETERS INCLUDE:
   25 YEAR STRUCTURE DESIGN LIFE
   FATIGUE CATEGORY II CONSIDERATION FOR:
   NATURAL WIND GUSTS
2. ANCHOR BOLTS ANALYZED FOR STEEL STRENGTH ONLY. THE ANCHOR BOLT EMBEDMENT LENGTH SHOWN ON THIS DRAWING SHALL BE VERIFIED BY THE FOUNDATION ENGINEER.
3. THE EXPOSED LENGTH OF THE ANCHOR BOLT BETWEEN THE TOP OF THE FOUNDATION AND THE BOTTOM OF THE LEVELING NUT SHOULD NOT EXCEED ONE BOLT DIAMETER.
4. PER AASHTO THE MINIMUM LENGTH OF ANY TELESCOPIC FIELD JOINT SHALL BE 1.5 TIMES THE INSIDE DIAMETER OF THE END OF THE FEMALE SECTION.
5. VIBRATION IS MORE LIKELY TO OCCUR WHEN STRUCTURES ARE INSTALLED WITHOUT ATTACHING THE SIGNALS AND OR SIGNS. THEREFORE, THE INTENDED EQUIPMENT OR DAMPENING DEVICES MUST BE INSTALLED AT THE TIME OF ERECTION. BECAUSE VIBRATION IS GENERALLY UNPREDICTABLE, A MAINTENANCE PROGRAM SHOULD INCLUDE INSPECTION FOR INDICATIONS OF EXCESSIVE VIBRATION OR FATIGUE AND EXAMINATION FOR ANY STRUCTURAL DAMAGE OR BOLT LOOSENING.

MATERIAL SPECIFICATIONS	
MONOTUBE POLES & ARMS	ASTM-A595 GR A
PLATES	ASTM-A36
HANDHOLE FRAME (BAR)	ASTM-A529 GR 50 (PREFERRED) or ASTM-A572 GR 50 or ASTM-A709 GR 50
HANDHOLE COVER	ASTM-A36 OR A569 OR A1011
POLE TOP/ARM END CAP	ASTM-B26 (319F) OR ASTM-A1011
PIPE	ASTM-A501
TRAFFIC & LUM ARM CONN. BOLTS	ASTM-A325
TRAFFIC ARM CONN. NUTS	ASTM-A563 GR. DH
ANCHOR BOLTS	ASTM-F1554 GR. 105
ANCHOR BOLT NUTS	ASTM-A563 GR. DH
FLATWASHERS	ASTM-F436
ARM JOINT STUD	ASTM-A36
"ANCO" LOCK NUTS	ASTM-A563 GR. DH
SIGN CONN. STUDS	ASTM-A449
SIGN CONN. U-BOLTS	ASTM-A36
ALUMINUM ZEE	6061-T6
ST. STEEL HARDWARE	AISI-300 SERIES (18-8)
STRUCTURE FINISH	
HARDWARE FINISH	H.D. GALV TO ASTM-A153

DESIGN NUMBER	MAST ARM FLANGE CONNECTION DATA									BASE PLATE DATA						
	(QTY) & BOLT DIA.	X	Y	W	H	APT	PPT	G	GW	B.C.	S	F	P	T	H	A.BOLT SIZE
Y2, Y4, Y12	(4) 1 1/4"	9"	15"	16"	20"	1 1/4"	1 1/4"	5/16"	5/16"	20"	20"	14 1/8"	6 1/4"	1 1/2"	1 3/4"	1 1/2" x 54" x 6"
Y3, Y7, Y8, Y9	(4) 1 1/2"	13 3/4"	18"	19"	26"	1 1/2"	1 1/2"	1/2"	3/8"	23"	23"	16 1/4"	6 1/2"	1 3/4"	1 3/4"	1 1/2" x 54" x 6"
Y11	(4) 1 1/2"	12"	16"	17"	21"	1 1/2"	1 1/2"	3/8"	3/8"	23"	23"	16 1/4"	6 1/2"	1 3/4"	1 3/4"	1 1/2" x 54" x 6"
Y1, Y5, Y6, Y10	(6) 1 1/2"	25"	8"	30"	21"	2"	1 3/4"	3/4"	3/8"	25 1/2"	25 1/2"	18"	6 1/2"	1 3/4"	1 3/4"	1 1/2" x 54" x 6"
Y13	(4) 1 1/2"	16 1/2"	20"	24"	28"	1 1/2"	1 1/2"	1/2"	3/8"	28"	28 1/2"	19 13/15"	7 1/4"	1 3/4"	2 1/8"	1 3/4" x 84" x 6"

STATE OF OHIO
Paul Haig
PAUL E. HAIG
E-041183
5/22/08
REGISTERED
PROFESSIONAL ENGINEER

STATE: OHIO	REQ# / SO# : 21693-3	REV	DESCRIPTION	DATE	REV BY	CHK BY
PROJECT NAME: MOT-75-0.75 (WAR)			REVISIONS			

STEEL TRAFFIC CONTROL STRUCTURES

DESIGNED BY	CHECKED BY	DATE	SCALE	ENG REF
LRR	PEH	4/18/08	NTS	50700-B936
50400-B113			REVISION R0	SHEET 1 OF 5

CALCULATED GWA
CHECKED LAS

MOT-75-0.75

634A
773

Hardcopies of this document are considered uncontrolled and are to be used for reference only. Users using this document for reference must take all precautions available to ensure that this document matches the current revision maintained as digital format within the state storage and retrieval system.

Hardcopies of this document are considered uncontrolled and are to be used for reference only. Before using this document for reference make all precautions available to ensure that this document matches the current revision maintained in digital format, within but a single notice and protected by edit restrictions.

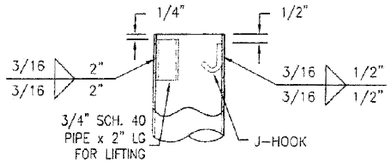

TOP OF POLE DETAIL

ORIENTATION OF PIPE & J-HOOK AS REQUIRED (PIPE REQUIRED FOR POLES WITHOUT LUM. ONLY)

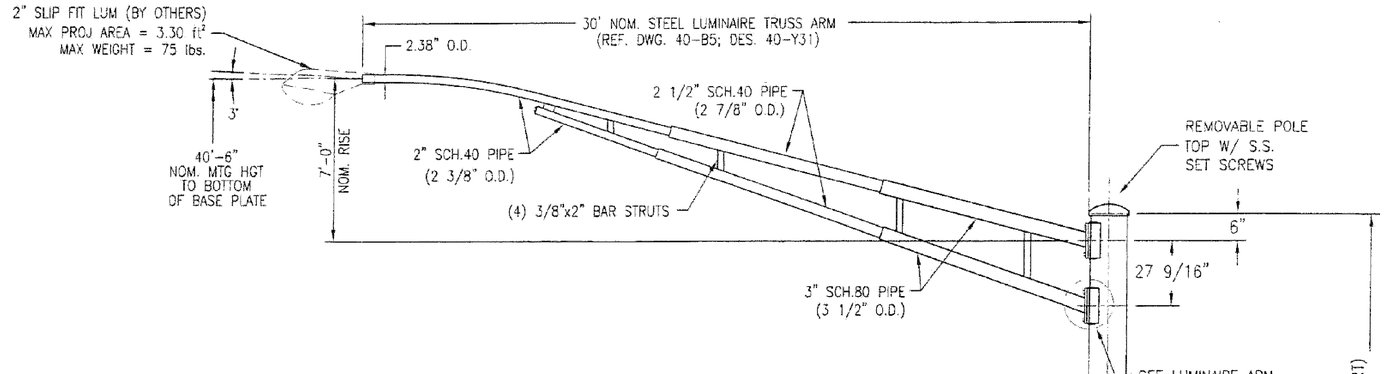

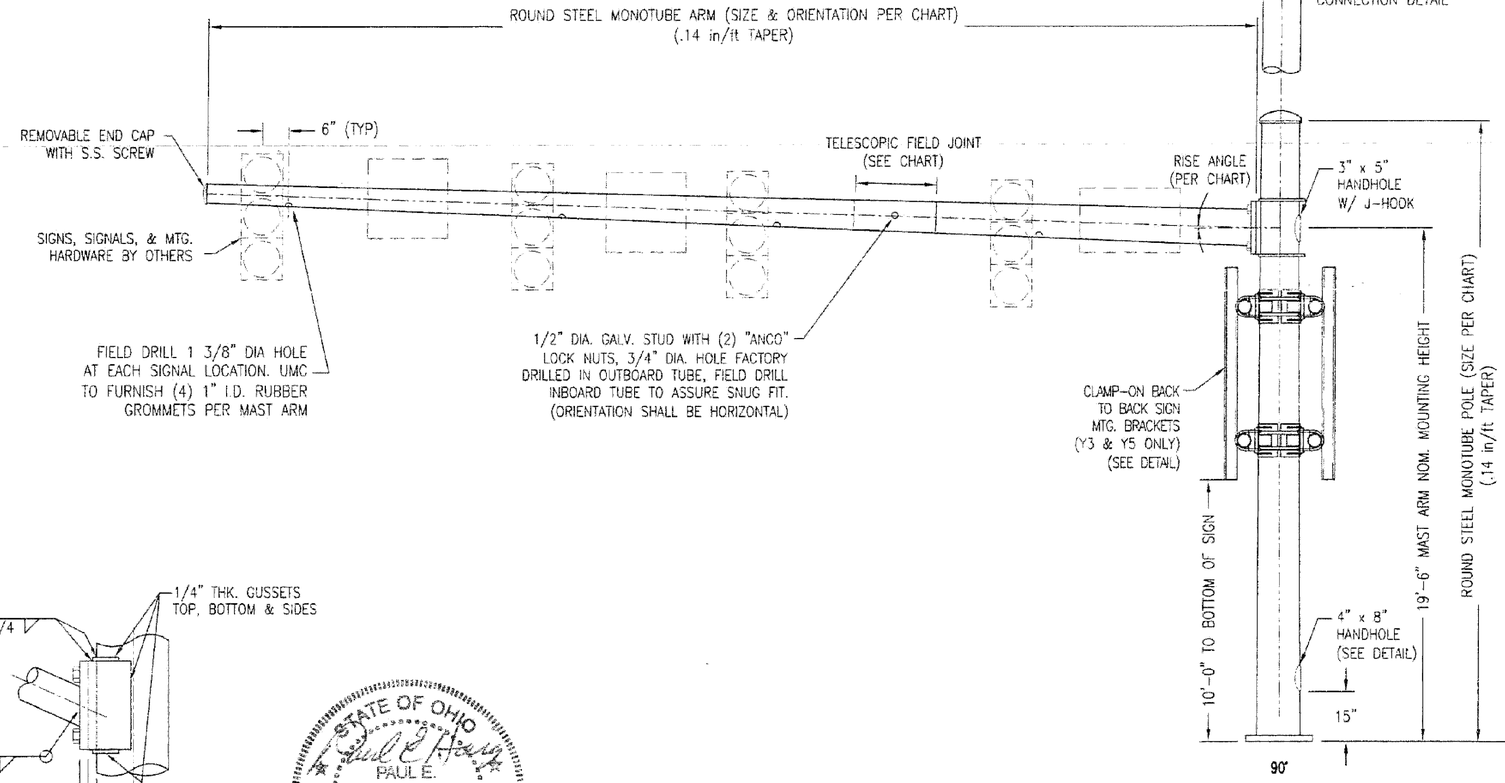

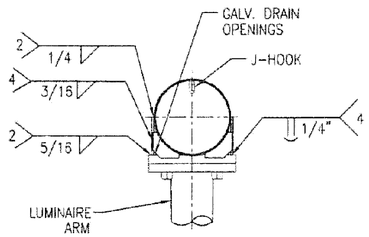

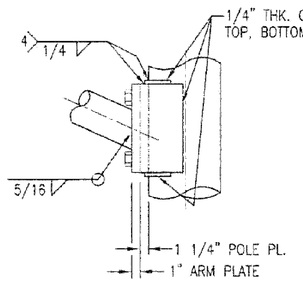

4-BOLT LUMINAIRE ARM CONNECTION DETAIL

STATE: OHIO	**REQ# / SO# :** 21693-3	**REV**	**DESCRIPTION**	**DATE**	**REV BY**	**CHK BY**
PROJECT NAME: MOT-75-0.75 (WAR)			**REVISIONS**			

STEEL TRAFFIC CONTROL STRUCTURES

DESIGNED BY	**CHECKED BY**	**DATE**	**SCALE**	**ENG REF**
LRR	JMW	4/18/08	NTS	50700-B936
50400-B113			**REVISION** R0	**SHEET** 2 OF 5

CALCULATED GWA
CHECKED LAS

STEEL TRAFFIC CONTROL STRUCTURES

MOT-75-0.75

634B
773

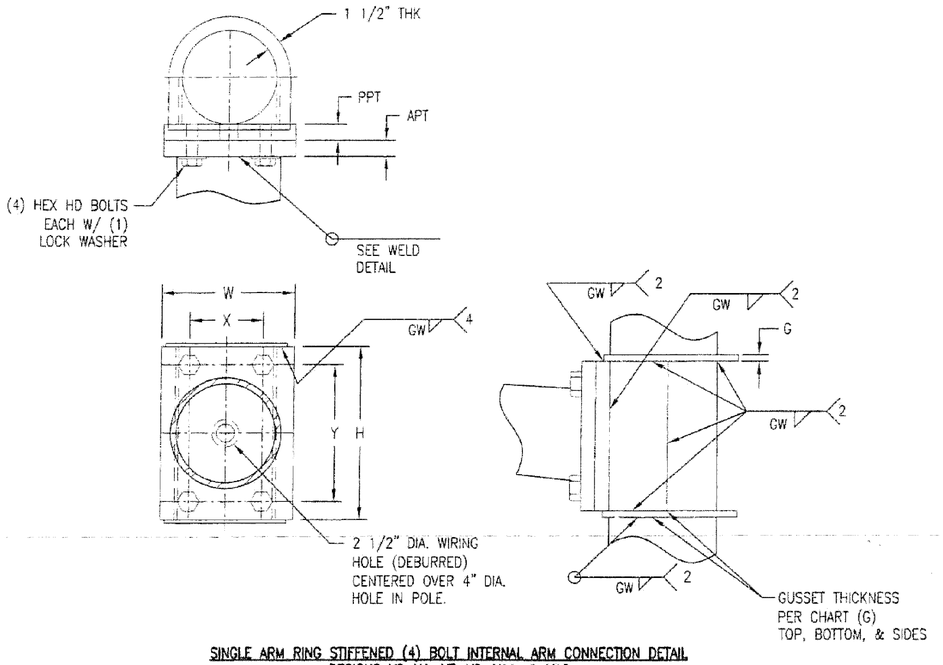

SINGLE ARM RING STIFFENED (4) BOLT INTERNAL ARM CONNECTION DETAIL
DESIGNS Y2-Y4, Y7-Y9, Y11, & Y12

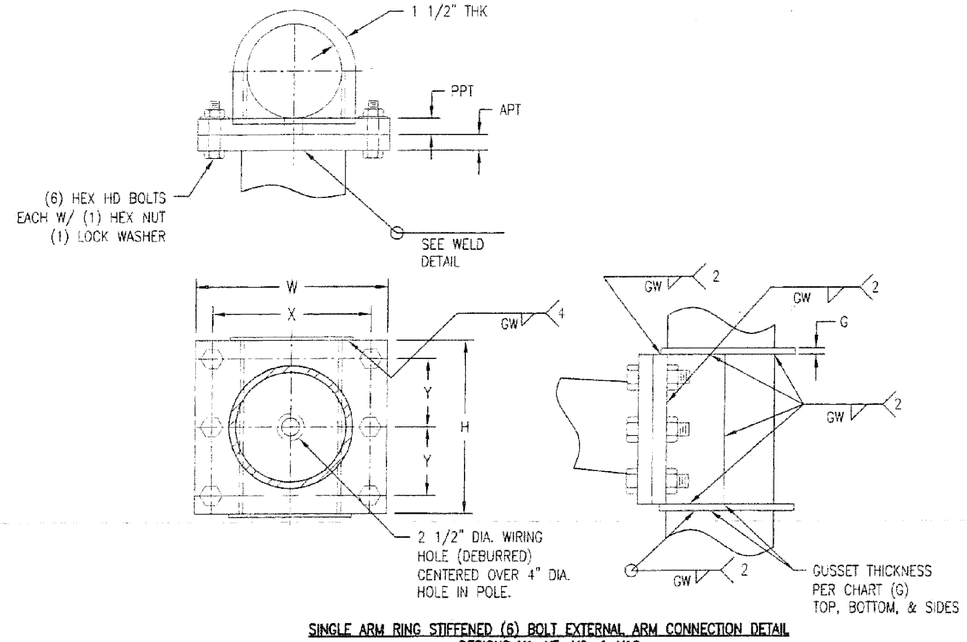

SINGLE ARM RING STIFFENED (6) BOLT EXTERNAL ARM CONNECTION DETAIL
DESIGNS Y1, Y5, Y6, & Y10

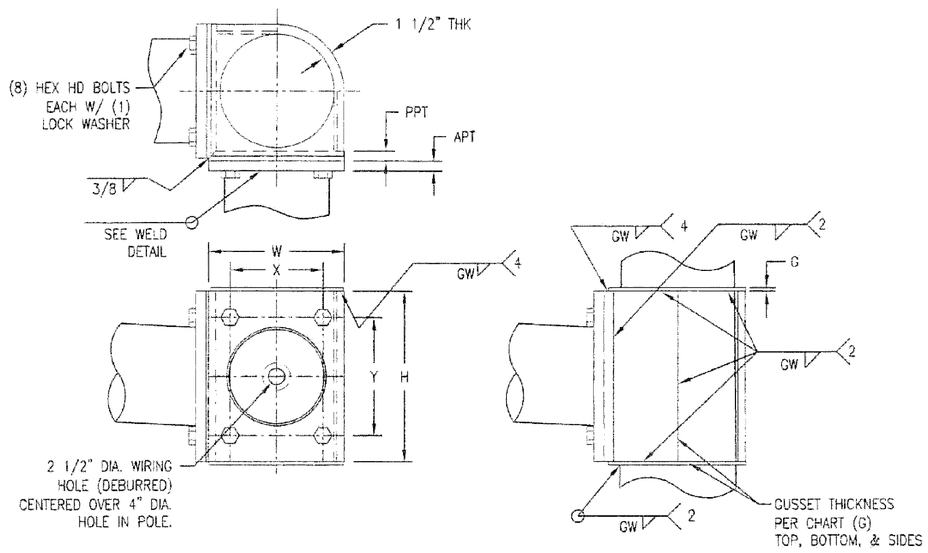

DUAL ARM RING STIFFENED (4) BOLT INTERNAL ARM CONNECTION DETAIL
DESIGN Y13

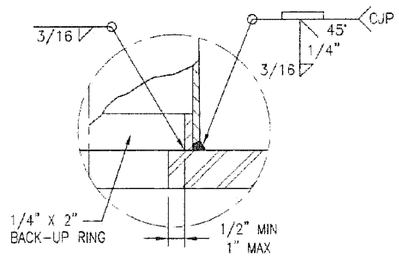

BASE & ARM WELD DETAIL

STATE: OHIO	REQ# / SO# : 21693-3	REV	DESCRIPTION	DATE	REV BY	CHK BY
PROJECT NAME: MOT-75-0.75 (WAR)			REVISIONS			

STEEL TRAFFIC CONTROL STRUCTURES

DESIGNED BY	CHECKED BY	DATE	SCALE	ENG REF
LRR	JHW	4/18/08	NTS	50700-B936
50400-B113			REVISION R0	SHEET 3 OF 5

CALCULATED GWA
CHECKED LAS

STEEL TRAFFIC CONTROL STRUCTURES

MOT-75-0.75

634C
773

Hard copies of this document are considered uncontrolled and are to be used for reference only. It is the user's responsibility to ensure that this document reflects the current revision maintained in digital format, within but a single source and protected by edit restrictions. Unauthorized use of this document is prohibited and all persons found guilty will be subject to civil and criminal penalties.

Hardcopies of this document are considered uncontrolled and are to be used for reference only. Those using this document for reference must take all precautions available to ensure that this document reflects the current revision maintained in digital format, within but a single source and protected by administrative

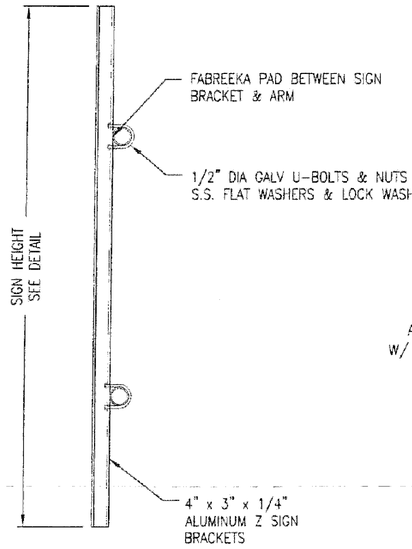

SECTION A-A

Z BRACKET MOUNTING DETAIL

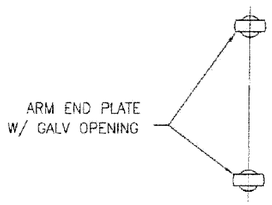

ARM END PLATE DETAIL

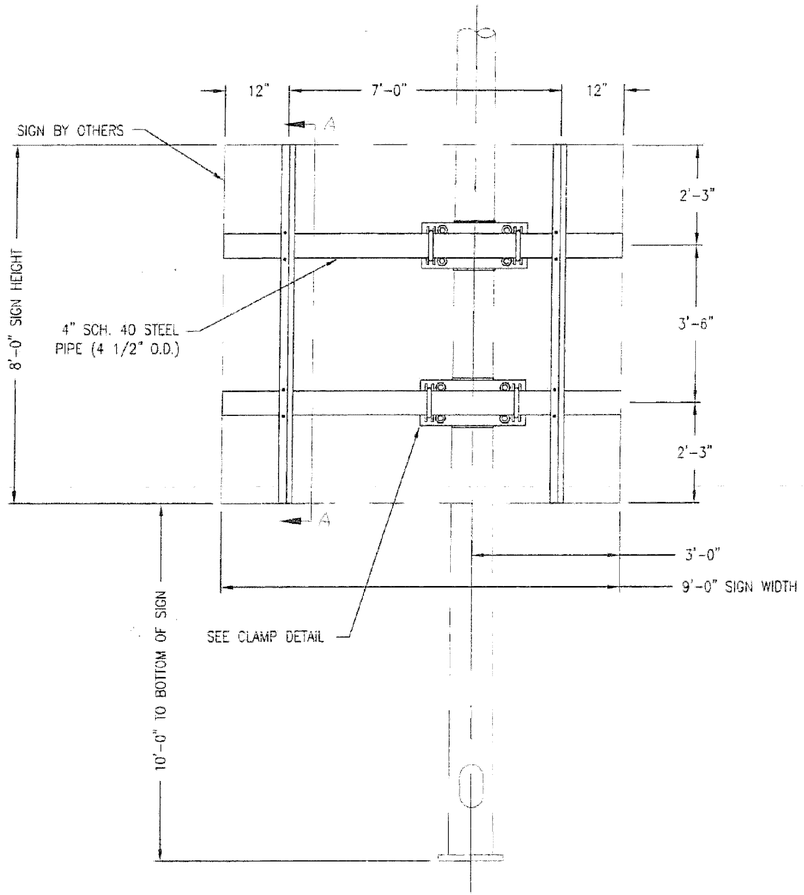

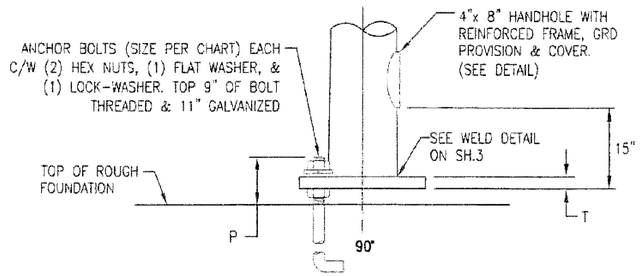

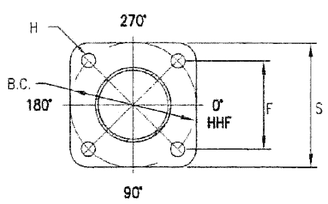

BASE DETAIL

CLAMP ON BACK TO BACK SIGN MOUNTING DETAIL
(REF DWG 30443-B258)
(DESIGNS Y3 & Y5 ONLY)

STATE: OHIO	REQ# / SO# : 21693-3	REV	DESCRIPTION	DATE	REV BY	CHK BY	
PROJECT NAME: MOT-75-0.75 (WAR)			REVISIONS				
STEEL TRAFFIC CONTROL STRUCTURES							
		DESIGNED BY	CHECKED BY	DATE	SCALE	ENG REF	
		LRR	LAS	4/18/08	NTS	50700-B936	
		50400-B113		REVISION R0	SHEET 4 OF 5		

CALCULATED GWA
CHECKED LAS

STEEL TRAFFIC CONTROL STRUCTURES

MOT-75-0.75

634D
773

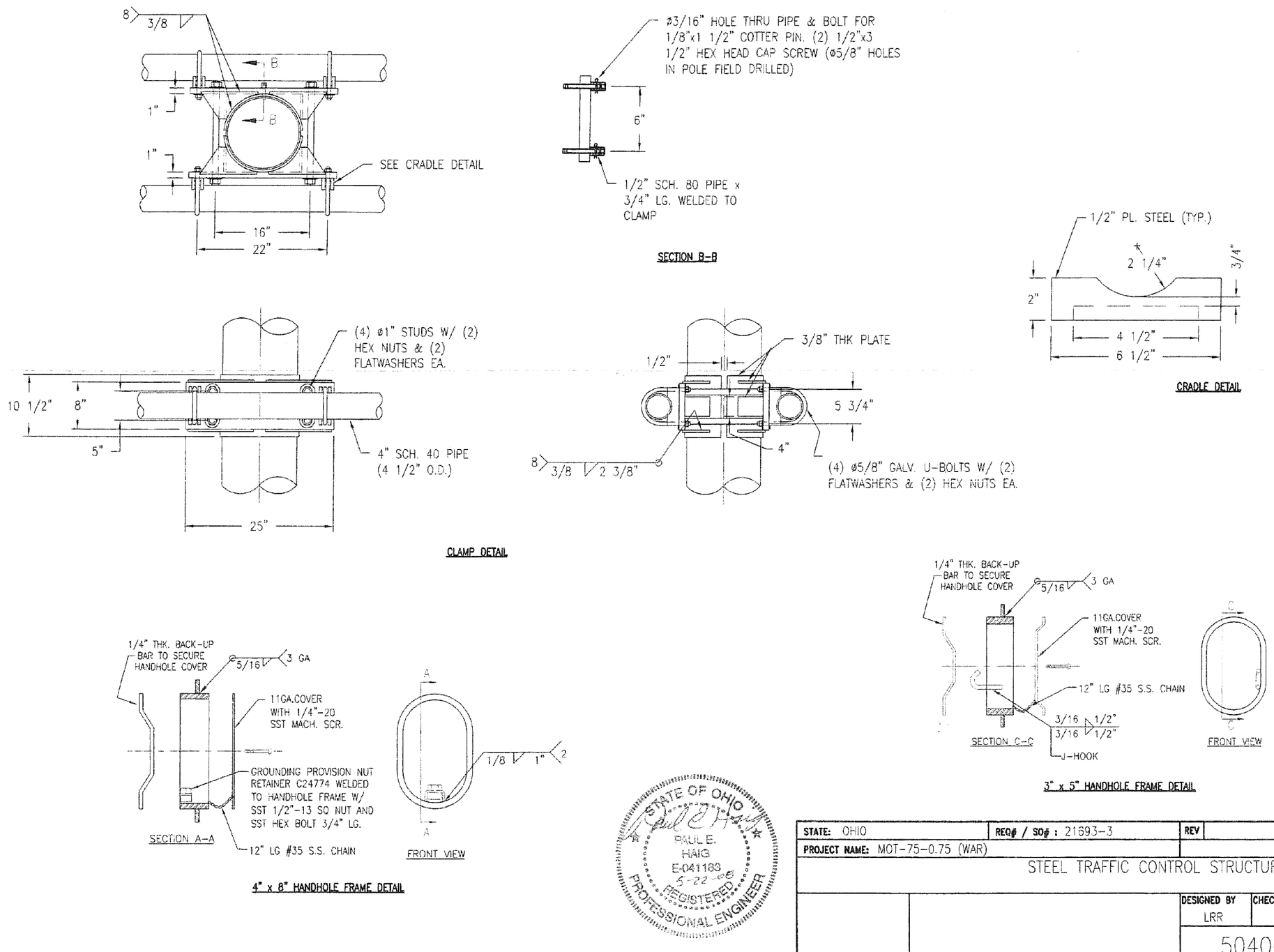

STATE: OHIO	REQ# / SO# : 21693-3	REV	DESCRIPTION	DATE	REV BY	CHK BY
PROJECT NAME: MOT-75-0.75 (WAR)			REVISIONS			

STEEL TRAFFIC CONTROL STRUCTURES

DESIGNED BY	CHECKED BY	DATE	SCALE	ENG REF
LRR	JMW	4/18/08	NTS	50700-B936
50400-B113			REVISION R0	SHEET 5 OF 5

CALCULATED GWA
CHECKED LAS

STEEL TRAFFIC CONTROL STRUCTURES

MOT-75-0.75

634E
773

Hardcopies of this document are considered uncontrolled and are to be used for reference only. Those using this document for reference must take all precautions available to ensure that this document matches the current revision maintained in digital format, within but a single source and protected by edit restrictions.

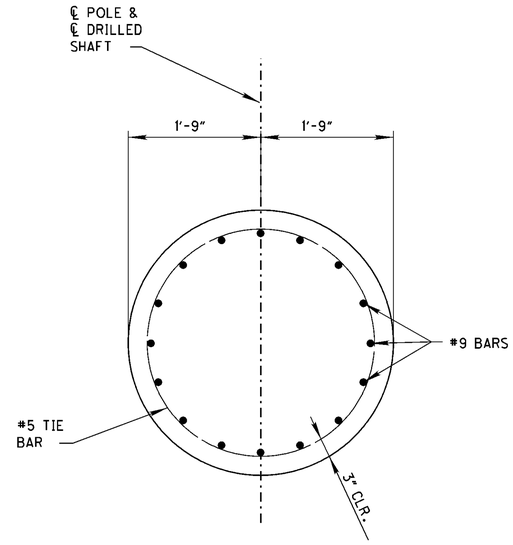

SECTION A-A

POLE DESIGN NO.	D	N
Y1	22'-0"	16
Y2	16'-0"	12
Y3	22'-0"	16
Y4	16'-0"	12
Y5	22'-0"	16
Y6	22'-0"	16
Y7	19'-0"	14
Y8	19'-0"	14
Y9	22'-0"	16
Y10	22'-0"	16
Y11	19'-0"	14
Y12	19'-0"	14
Y13	25'-0"	18

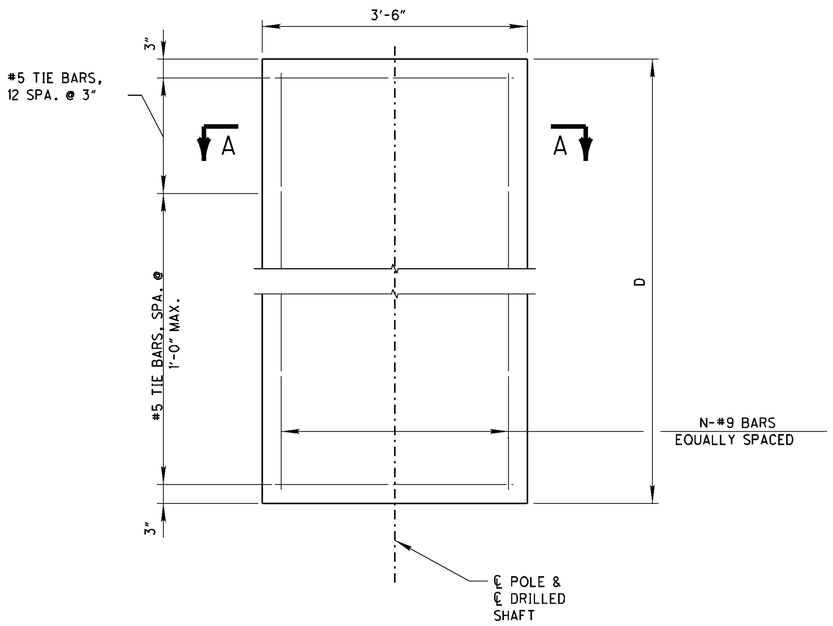

DRILLED SHAFT

STATE OF OHIO
MARK P. HENDERSON
E-50163
REGISTERED PROFESSIONAL ENGINEER

DATE: Mark P. Henderson 7-22-08

NOTES:

1. FOR ADDITIONAL DETAILS, REFER TO STD. DWG. TC-21.20.
2. REINFORCING STEEL - ASTM A615 OR A996 GRADE 60 MIN. YIELD STRENGTH 60,000 PSI.
3. ALL REINFORCING STEEL SHALL BE EPOXY COATED.
4. CONCRETE, CLASS C - COMPRESSIVE STRENGTH 4,000 PSI.
5. FOR POLE DETAILS, REFER TO SHEETS 634A THROUGH 634E.

CALCULATED DWS
CHECKED AMT

SIGNAL SUPPORT FOUNDATION, AS PER PLAN

MOT-75-0.75

634F
773

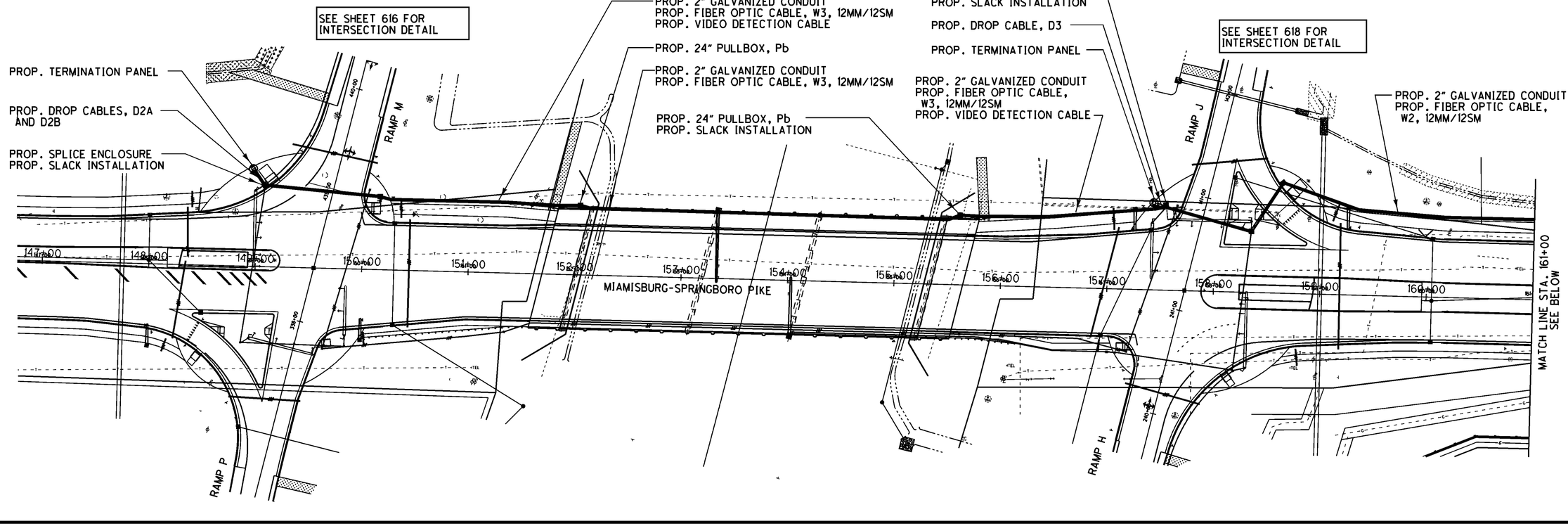

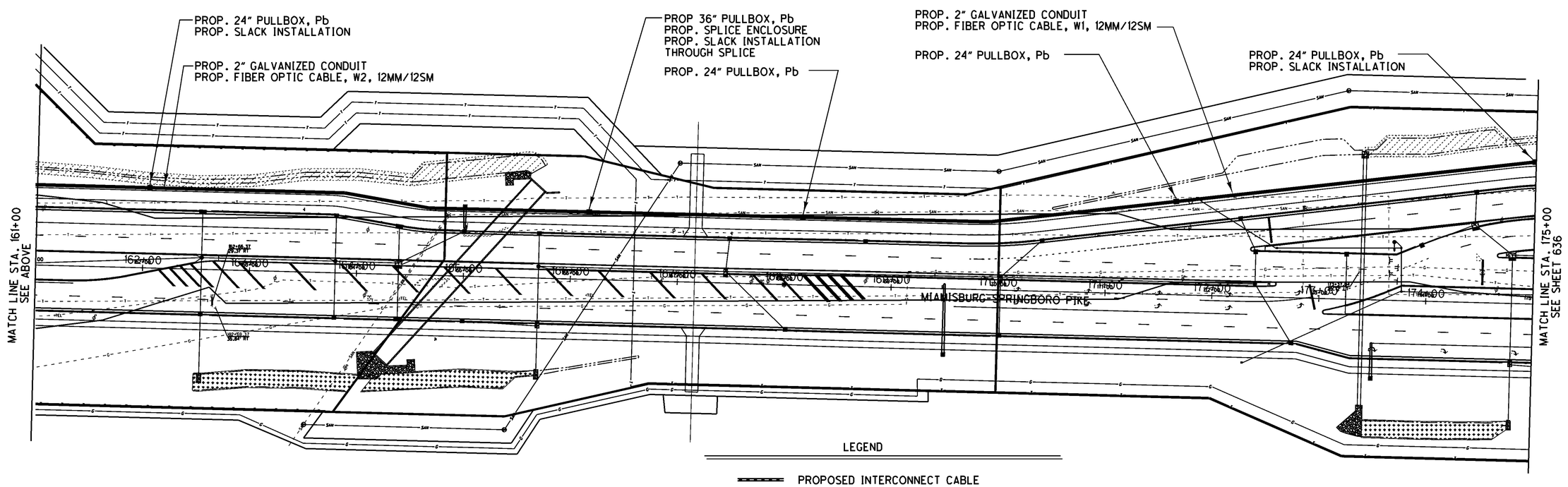

NOTE: SPREAD SPECTRUM RADIO INTERCONNECTORS TO BYERS RD. / WOOD RD. SIGNAL

LEGEND

- PROPOSED INTERCONNECT CABLE
- PROPOSED PULLBOX
- PROPOSED SIGNAL CABINET, TERMINATION PANEL

FOR SPLICE DIAGRAMS SEE SHEET 637.

HORIZONTAL SCALE IN FEET
0 25 50 100

CALCULATED LAS
CHECKED JDO

INTERCONNECT PLAN
STA. 147+00 TO STA. 175+00

MOT-75-0.75

635
773

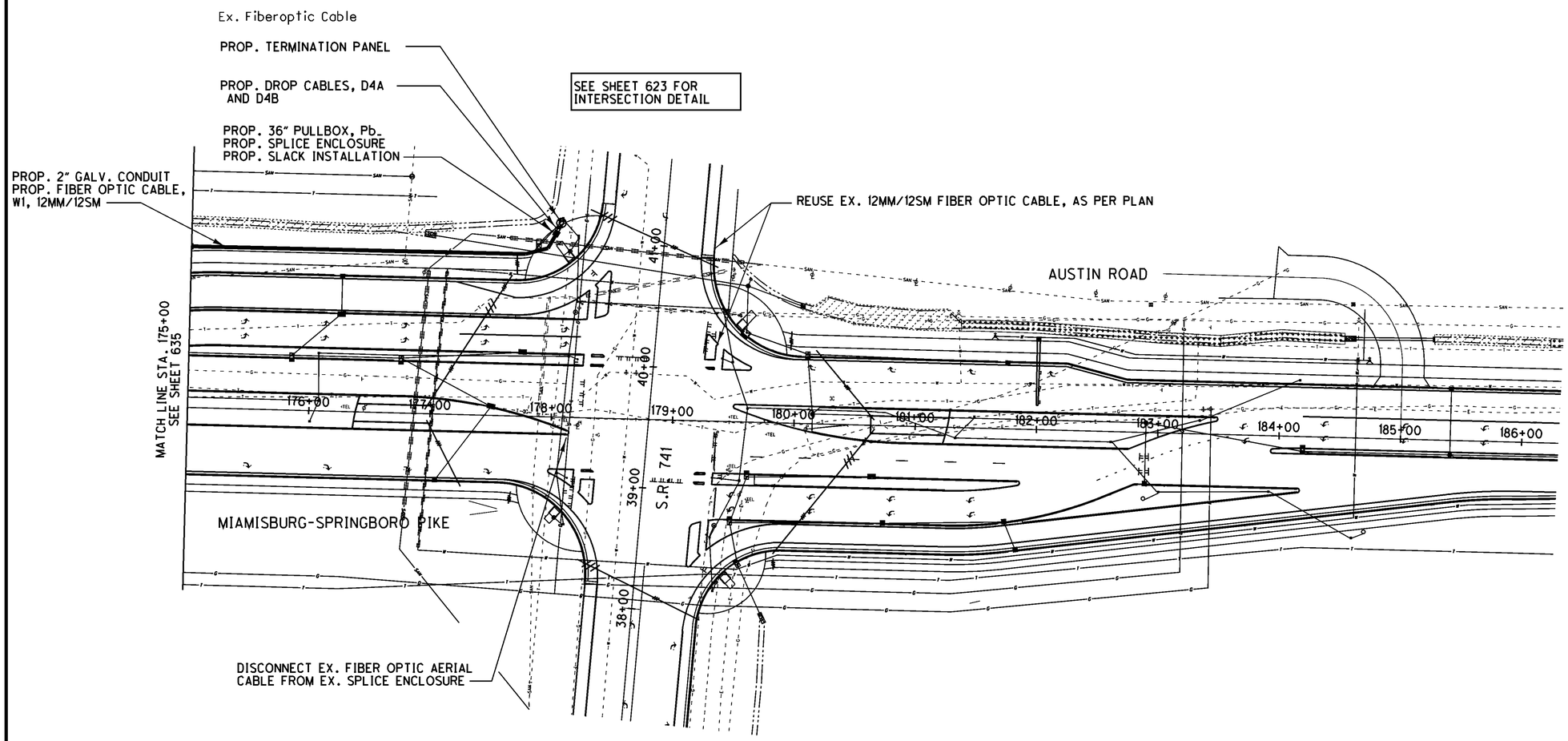

FOR SPLICE DIAGRAMS SEE SHEET 637.

FOR LEGEND SEE SHEET 635.

HORIZONTAL SCALE IN FEET
0 25 50 100

CALCULATED LAS
CHECKED JDO

INTERCONNECT PLAN
STA. 175+00 TO STA. 186+00

MOT-75-0.75

636
773

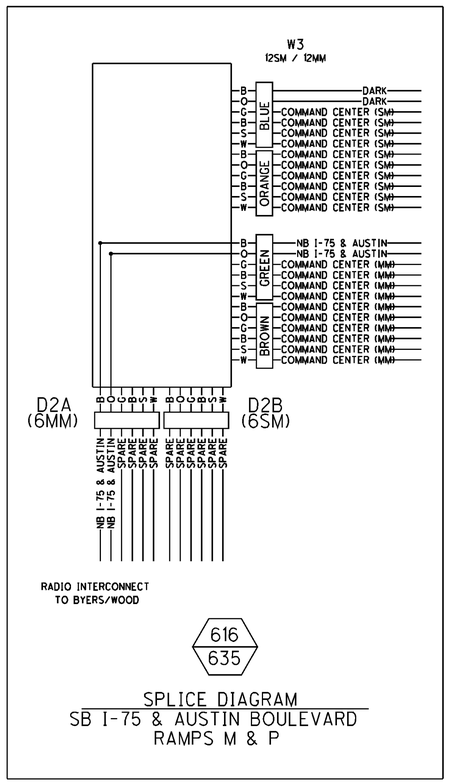

SPLICE DIAGRAM
SB I-75 & AUSTIN BOULEVARD
RAMPS M & P

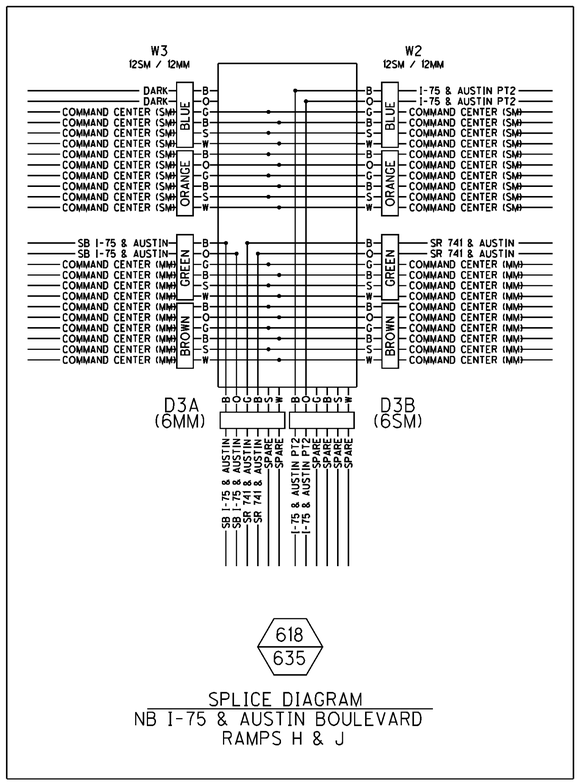

SPLICE DIAGRAM
NB I-75 & AUSTIN BOULEVARD
RAMPS H & J

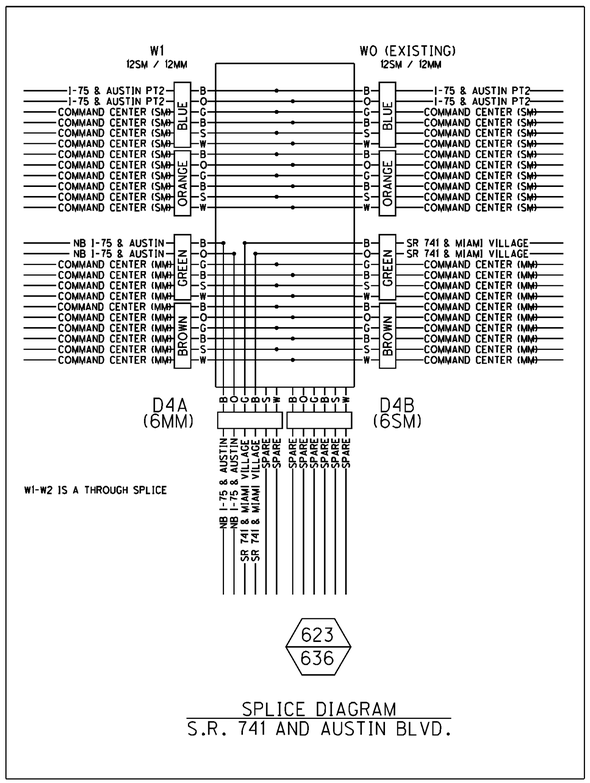

SPLICE DIAGRAM
S.R. 741 AND AUSTIN BLVD.

LEGEND

B,O,G,BR,S,W	INDICATES TUBE COLOR
	INDICATES PROPOSED SPLICE
	INDICATES POSSIBLE THROUGH SPLICE
	INDICATES EXISTING SPLICE
20 / 203	INDICATES INTERSECTION PLAN SHEET NUMBER INDICATES INTERCONNECT PLAN SHEET NUMBER
N9, S9, E9, W9	INDICATES TRUNK CABLE
D99, D99A, D99B	INDICATES DROP CABLE

CALCULATED GWA
CHECKED LAS

SPLICE DIAGRAMS

MOT-75-0.75

637
773

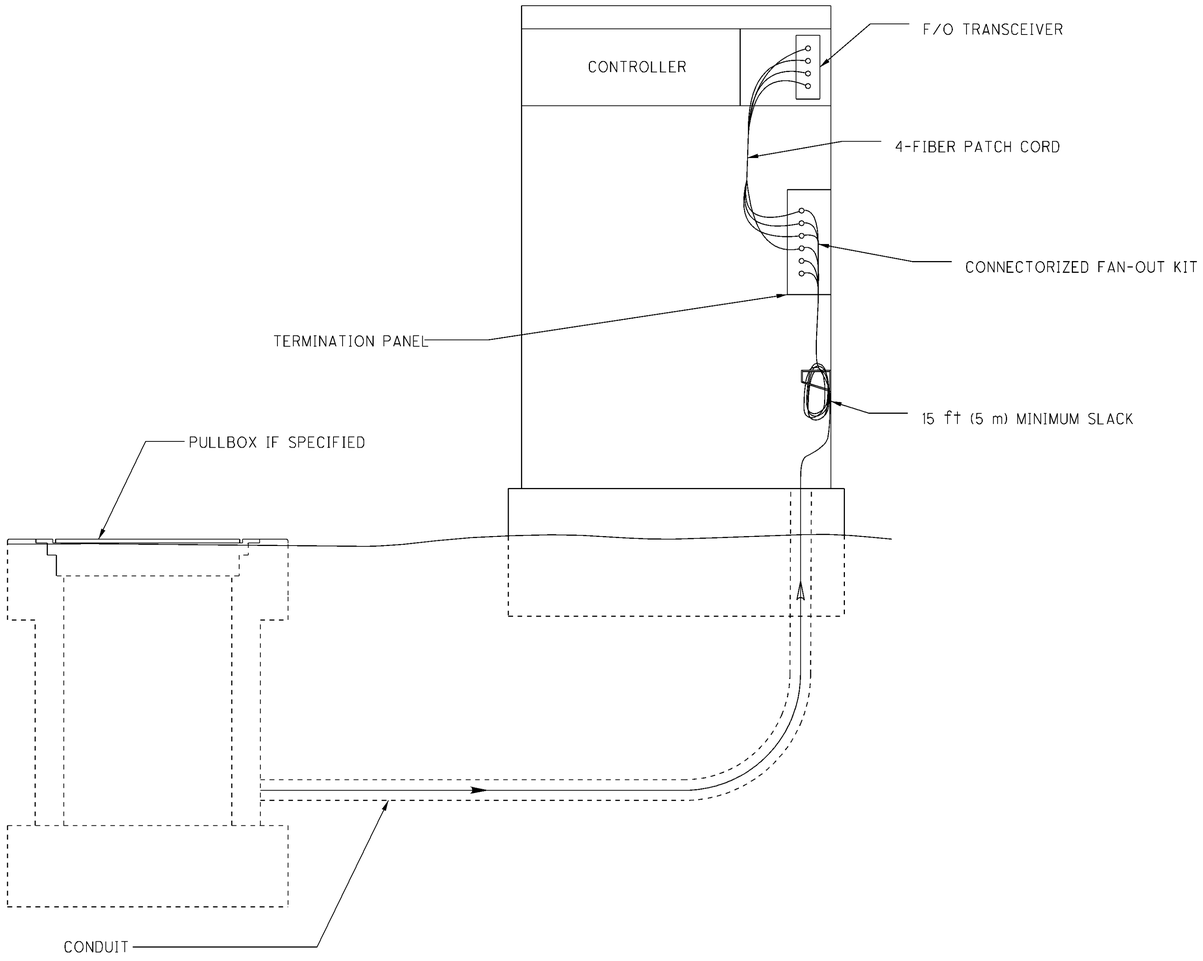

NOTE:

1. Conduit bends shall not exceed minimum bending radii of fiber optic cable.

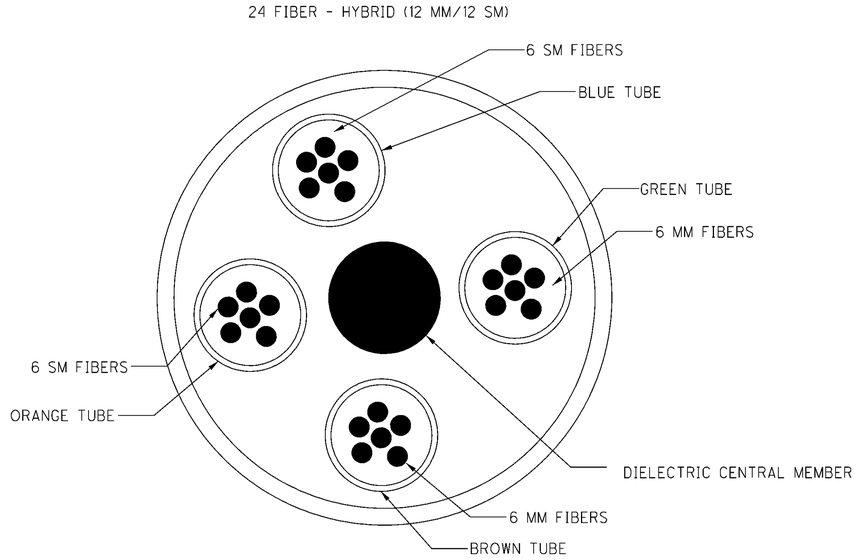

NOTES:

1) Cable construction shall be per and accepted by the rural utility service (RUS).

2) Tubes containg fibers shall be distinguished from each other by color coding. The tubes within each cable shall be colored blue, orange, and green.

3) Fibers within each tube shall be dinstinguishable from each other by color coding. Fibers within each tube shall be colored blue, orange, green, brown, slate, and white.

4) Filler tubes may be provided at the option of the cable manufacturer.

CALCULATED GWA
CHECKED LAS

CABLE CONSTRUCTION

MOT-75-0.75

638
773

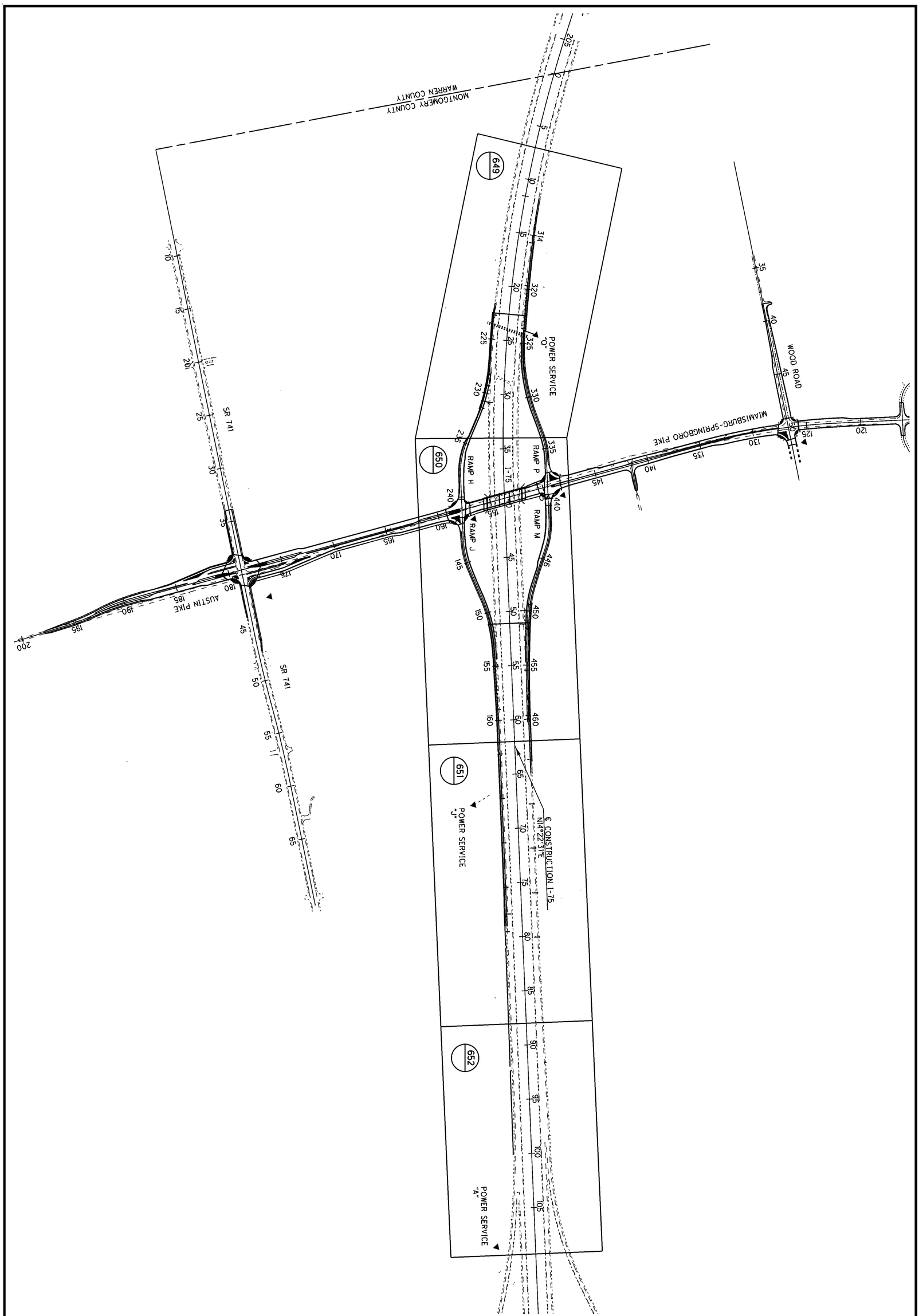

639
773

MOT-75-0.75

LIGHTING SCHEMATIC PLAN

CALCULATED GWA
CHECKED LAS

0 200 400 800
HORIZONTAL SCALE IN FEET

202, DISCONNECT EXISTING CIRCUIT, AS PER PLAN

THIS ITEM OF WORK SHALL CONSIST OF THE DISCONNECTION OF AN EXISTING LIGHT CIRCUIT AT A PULL BOX OR TRANSFORMER BASE. THE FOLLOWING ARE IN ADDITION TO THE REQUIREMENTS OF ITEM 202.

DISCONNECTION AT A TRANSFORMER BASE SHALL INVOLVE CUTTING THE EXISTING CIRCUIT. ALL DUCT-CABLE NOT TO BE REUSED SHALL BE REMOVED FROM THE TRANSFORMER BASE AND THE EXISTING CONDUIT IN THE FOUNDATION SHALL BE CLEANED OF ALL CABLE AND DEBRIS.

THOSE WIRES THAT ARE TO REMAIN ON ACTIVE CIRCUITS SHALL HAVE A WATER-RESISTANT SEAL AT THE CUT END. THE WATER-RESISTANT SEAL SHALL BE ACCOMPLISHED BY PLUGGING THE DEACTIVATED PORT OF AN EXISTING CONNECTOR KIT OR BY INSTALLING A CABLE SPLICE KIT ON THE CUT END OF THE CABLE.

PAYMENT SHALL BE MADE AT THE UNIT BID PRICE UNDER CMS ITEM 202, "DISCONNECT EXISTING CIRCUIT, AS PER PLAN" AT EACH LOCATION WHERE DISCONNECTION IS REQUIRED WHICH SHALL BE FULL COMPENSATION FOR ALL LABOR, MATERIALS INCLUDING CONNECTOR AND SPLICE KITS AND INCIDENTALS REQUIRED TO COMPLETE THIS ITEM IN A SATISFACTORY AND WORKMANLIKE MANNER.

LAMPS

HIGH PRESSURE SODIUM LAMPS SHALL BE GENERAL ELECTRIC "LUCALOX", OSRAM SYLVANIA "LUMALUX", PHILIPS "CERAMALUX", OR EQUAL APPROVED BY THE ENGINEER.

CONDUIT EXPANSION AND DEFLECTION

EXPANSION FITTINGS SHALL BE OZ TYPE AX, CROUSE HINDS TYPE XJG, APPLETON TYPE AX, OR EQUAL APPROVED BY THE ENGINEER. EACH EXPANSION FITTING SHALL PROVIDE EITHER 4 OR 8 INCHES TOTAL MOVEMENT AS SPECIFIED BY THE PLAN DETAILS AND SHALL HAVE AN EXTERNAL COPPER BONDING JUMPER, UNLESS SPECIFIED OTHERWISE BY THE PLAN DETAILS.

DEFLECTION COUPLINGS SHALL BE OZ TYPE DX, CROUSE HINDS TYPE XD, APPLETON TYPE DF, OR EQUAL APPROVED BY THE ENGINEER. EACH DEFLECTION COUPLING SHALL HAVE AN EXTERNAL COPPER BONDING JUMPER, UNLESS SPECIFIED OTHERWISE BY THE PLAN DETAILS.

625, POWER SERVICE, AS PER PLAN

IN ADDITION TO THE REQUIREMENTS OF THE SPECIFICATIONS, THE FOLLOWING IS ADDED. THE POWER SUPPLYING AGENCY FOR THIS PROJECT IS:

POWER COMPANY DAYTON POWER AND LIGHT CO.
1900 DRYDEN ROAD
DAYTON, OHIO 45439

CONTACT NAME: JOHN KENTON 937-331-4132
CONTACT NAME: FLOYD TIPTON 937-331-4618

THE ENGINEER SHALL ENSURE THAT EACH POWER SERVICE ELECTRICAL ENERGY ACCOUNT IS IN THE NAME OF AND THAT THE BILLING ADDRESS IS TO THE MAINTAINING AGENCY NOTED IN THE PLANS. THIS SHALL BE DONE NOT ONLY FOR EACH NEW POWER SERVICE ESTABLISHED BY THIS PROJECT BUT ALSO FOR EACH EXISTING POWER SERVICE, SINCE THERE MAY BE A REASSIGNMENT OF THE RESPONSIBILITY FOR AN EXISTING SERVICE AS A RESULT OF THE WORK PERFORMED BY THIS PROJECT.

UPON COMPLETION OF THE PROJECT, THE BILLING FOR LIGHTING POWER SERVICE SHALL BE TRANSFERRED TO:

STATE OF OHIO
ODOT DISTRICT 7
1001 ST. MARY'S AVENUE
SIDNEY, OH 45365-0969

PAYMENT WILL BE MADE AT THE UNIT BID PRICE FOR EACH CMS ITEM 625, "POWER SERVICE, AS PER PLAN" WHICH SHALL BE FULL COMPENSATION FOR ALL LABOR, MATERIALS AND INCIDENTALS REQUIRED TO COMPLETE THIS ITEM IN A SATISFACTORY AND WORKMANLIKE MANNER.

625, LIGHTING, MISC.: CLEAN AND RELAMP

INSPECT AND RELAMP THE LUMINAIRES INDICATED. CLEAN THE REFRACTOR AND LENS OF DIRT. PROVIDE AN APPROPRIATELY SIZED NEW LAMP AND DISPOSE OF THE OLD LAMP. ENERGIZE THE CIRCUIT USING THE "HAND-OFF-AUTOMATIC" SWITCH ON THE DISCONNECT LOCATED AT I-75 STATION 108+50, 350' RIGHT. REPORT ANY OUTAGES TO THE ENGINEER.

PAYMENT WILL BE MADE AT THE UNIT BID PRICE FOR EACH CMS ITEM 625, "LIGHTING, MISC.: CLEAN AND RELAMP" WHICH SHALL BE FULL COMPENSATION FOR ALL LABOR, MATERIALS AND INCIDENTALS REQUIRED TO COMPLETE THIS ITEM IN A SATISFACTORY AND WORKMANLIKE MANNER.

PADLOCKS AND KEYS

PADLOCKS FURNISHED SHALL BE EITHER BRASS OR BRONZE, EQUAL TO MASTER NO. 4BKA OR WILSON BOHANNAN 660A, AND SHALL BE KEYED IN ACCORDANCE WITH CMS 631.06. PAYMENT SHALL BE INCLUDED IN THE BID FOR THE ITEM(S) BEING LOCKED.

GROUNDING AND BONDING

THE REQUIREMENTS OF THE CONSTRUCTION AND MATERIAL SPECIFICATIONS (C&MS) AND THE HL AND TC SERIES OF STANDARD CONSTRUCTION DRAWINGS ARE MODIFIED AS FOLLOWS:

1. ALL METALLIC PARTS CONTAINING ELECTRICAL CONDUCTORS SHALL BE PERMANENTLY JOINED TO FORM AN EFFECTIVE GROUND FAULT CURRENT PATH BACK TO THE GROUNDED CONDUCTOR IN THE POWER SERVICE DISCONNECT SWITCH.

A. PROVIDE AN EQUIPMENT GROUNDING CONDUCTOR IN METALLIC CONDUITS (725.04) IN ADDITION TO THE CONDUCTORS SPECIFIED AND BOND THE CONDUIT TO THIS GROUNDING CONDUCTOR.

B. WHEN AN EQUIPMENT GROUNDING CONDUCTOR IS REQUIRED IN PLASTIC CONDUIT (725.05), THE INSTALLATION SHALL INCLUDE A SEPARATE EQUIPMENT GROUNDING CONDUCTOR IN ADDITION TO THE CONDUCTORS SPECIFIED.

C. METALLIC CONDUIT CARRYING THE LOOP WIRES FROM IN THE PAVEMENT TO THE PULL BOX SPLICE LOCATION WILL ONLY BE BONDED AT THE PULL BOX END, AND WILL NOT CONTAIN AN EQUIPMENT GROUNDING CONDUCTOR.

D. METAL PULL BOX LIDS SHALL BE BONDED BY ATTACHMENT OF THE EQUIPMENT GROUNDING CONDUCTOR TO THE FRAME DIAGONAL AS PROVIDED ON HL-30.11.

E. IF MULTIPLE CONDUIT RUNS BEGIN AND END AT THE SAME POINTS, ONLY ONE EQUIPMENT GROUNDING CONDUCTOR IS REQUIRED.

F. IF AN EQUIPMENT GROUNDING CONDUCTOR IS NEEDED IN CONDUIT BETWEEN SIGNALIZED INTERSECTIONS FOR UNDERGROUND INTERCONNECT CABLE, THE GROUNDING SYSTEM FOR EACH SIGNALIZED INTERSECTION WILL BE SEPARATED ABOUT MIDWAY BETWEEN THE INTERSECTIONS.

G. THE MESSENGER WIRE AT SIGNALIZED INTERSECTIONS WILL BE USED AS THE CONDUCTIVE PATH FROM CORNER TO CORNER IF CONDUIT IS NOT PROVIDED UNDER THE ROADWAY. WHEN CONDUIT CONNECTS THE CORNERS OF AN INTERSECTION, AN EQUIPMENT GROUNDING CONDUCTOR SHALL BE USED IN THE CONDUIT.

2. CONDUITS.

A. THE 725.04 CONDUIT SHALL HAVE GROUNDING BUSHINGS INSTALLED AT ALL TERMINATION POINTS. THE BUSHING MATERIAL SHALL BE COMPATIBLE WITH GALVANIZED STEEL CONDUIT AND THE GROUNDING LUG MATERIAL SHALL BE COMPATIBLE FOR USE WITH COPPER WIRE. THREADED OR COMPRESSION TYPE BUSHINGS MAY BE USED.

B. THE 725.05 CONDUIT SHALL HAVE THE INSIDE AND OUTSIDE DIAMETERS OF THE CONDUIT DEBURRED AT ALL TERMINATION POINTS.

C. BOTH ENDS OF METALLIC CONDUIT SHALL BE BONDED TO THE EQUIPMENT GROUNDING CONDUCTOR.

D. METALLIC CONDUIT MAY BE BONDED TO METALLIC BOXES THROUGH THE USE OF CONDUIT FITTINGS UL APPROVED FOR THIS TYPE OF CONNECTION, WITH THE BOX BONDED TO THE EQUIPMENT GROUNDING CONDUCTOR.

3. WIRE FOR GROUNDING AND BONDING.

A. USE INSULATED, COPPER WIRE FOR THE EQUIPMENT GROUNDING CONDUCTOR. BONDING JUMPERS IN BOXES AND ENCLOSURES MAY BE BARE OR INSULATED COPPER WIRE. WIRE SIZE SHALL BE AS FOLLOWS:

I. USE 4 AWG BETWEEN THE POWER SERVICE AND SUPPORTS, POLES, PEDESTALS, CONTROLLER OR FLASHER CABINETS.

II. USE A MINIMUM 8 AWG BETWEEN LOOP DETECTOR PULL BOXES AND THE FIRST CONDUIT THAT REQUIRES A LARGER SIZE AS SPECIFIED IN 3.A.I ABOVE.

III. USE A MINIMUM 8 AWG BETWEEN THE "PREPARE TO STOP WHEN FLASHING" INSTALLATION (INCLUDING SUPPORT) AND THE FIRST CONDUIT THAT REQUIRES A LARGER SIZE AS SPECIFIED IN 3.A.I ABOVE.

IV. THE INSULATION SHALL BE GREEN OR GREEN WITH YELLOW STRIPE(S). FOR 4 AWG OR LARGER, INSULATION MAY ALSO BE BLACK WITH GREEN TAPE/LABELS INSTALLED AT ALL ACCESS POINTS.

B. IN A HIGHWAY LIGHTING SYSTEM, THE EQUIPMENT GROUNDING CONDUCTOR SHALL BE THE SAME WIRE SIZE AS THE DUCT CABLE OR DISTRIBUTION CABLE CIRCUIT CONDUCTORS, WITH THE MINIMUM CONDUCTOR SIZE OF 4 AWG. BONDING JUMPERS WILL BE MINIMUM SIZE 4 AWG.

4. GROUND ROD.

A. A 3/4 INCH SCHEDULE 40 PVC CONDUIT WILL BE USED IN FOUNDATIONS AND CONCRETE WALLS FOR THE GROUNDING CONDUCTOR (GROUND WIRE) RACEWAY TO THE GROUND ROD. SHOULD METALLIC CONDUIT BE USED, BOTH ENDS OF THE CONDUIT SHALL BE BONDED TO THE GROUNDING CONDUCTOR.

B. THE TYPICAL GROUNDING CONDUCTOR (GROUND WIRE) SHALL BE 4 AWG INSULATED, COPPER.

5. THE GREEN CONDUCTOR IN SIGNAL CABLES (CONDUCTOR #4) SHALL NOT BE USED TO SUPPLY POWER TO A SIGNAL INDICATION. IT WILL BE CONNECTED TO THE SIGNAL BODY AS AN EQUIPMENT GROUND IN ALUMINUM HEADS AND IT WILL BE UNUSED IN PLASTIC HEADS. UNUSED CONDUCTORS SHALL BE GROUNDED IN THE CABINET. TYPICAL USE OF CONDUCTORS IS AS FOLLOWS:

COND. NO. / COLOR / VEHICLE SIGNAL / PEDESTRIAN SIGNAL
1 / BLACK / GREEN BALL / #1 WALK
2 / WHITE / AC NEUTRAL / AC NEUTRAL
3 / RED / RED BALL / #1 DW-FDW
4 / GREEN / EQUIPMENT GROUND / EQUIPMENT GROUND
5 / ORANGE / YELLOW BALL / #2 DW-FDW
6 / BLUE / GREEN ARROW / #2 WALK
7 / WHITE / BLACK STRIPE / YELLOW ARROW/NOT USED

6. POWER SERVICE AND DISCONNECT SWITCH.

A. AT THE POWER SERVICE LOCATION, THE GROUNDING CONDUCTOR (GROUND WIRE) FROM THE DISCONNECT SWITCH NEUTRAL (AC-) BAR TO THE GROUND ROD SHALL BE A CONTINUOUS, UNSPLICED CONDUCTOR. IF SPLICED, IT SHALL BE AN EXOTHERMIC WELD BUTT SPLICE.

B. THE SERVICE NEUTRAL (AC-) SHALL ONLY BE CONNECTED TO GROUND AT THE PRIMARY POWER SERVICE DISCONNECT SWITCH.

I. NEMA CONTROLLER CABINETS: IF A POWER SERVICE DISCONNECT SWITCH IS LOCATED BEFORE THE CONTROLLER CABINET, THE NEUTRAL (AC-) AND THE GROUNDING BARS IN THE CONTROLLER CABINET SHALL NOT BE CONNECTED TOGETHER AS SHOWN IN NEMA TS-2, FIGURE 5-4.

II. IF SECONDARY DISCONNECT SWITCHES ARE CONNECTED AFTER THE PRIMARY DISCONNECT SWITCH, THE NEUTRAL (AC-) SHALL ONLY BE GROUNDED AT THE PRIMARY SWITCH. EQUIPMENT GROUNDING CONDUCTORS SHALL BE BROUGHT TO THE PRIMARY SWITCH, BUT SHALL BE GROUNDED AT BOTH SECONDARY AND PRIMARY SWITCHES.

7. STRUCTURE GROUNDING: HL-50.21 SHOWS A 1/0 AWG STRANDED COPPER CABLE USED FOR STRUCTURE GROUNDING. ADDITIONALLY, THIS SAME CABLE SHALL BE INSULATED AND ANY CONNECTIONS AND BARE COPPER STRANDS EXPOSED TO CONCRETE SHALL BE COVERED WITH MASTIC TO PREVENT CONTACT WITH THE CONCRETE.

CALCULATED JRL
CHECKED LAS

LIGHTING GENERAL NOTES

MOT-75-0.75

8. PAYMENT.

A. ALL MATERIALS AND WORK REQUIRED TO COMPLETE THE EFFECTIVE GROUND FAULT CURRENT PATH SYSTEM ARE INCIDENTAL TO THE CONDUCTORS INSTALLED BY CONTRACT.

B. WORK ON BRIDGES MAY BE INCLUDED IN THE BID ITEM FOR "ITEM 625, STRUCTURE GROUNDING SYSTEM".

C. IN A 3-WIRE HIGHWAY LIGHTING SYSTEM, THE THIRD CONDUCTOR OF THE DUCT CABLE OR DISTRIBUTION CABLE WILL BE USED AS THE EQUIPMENT GROUNDING CONDUCTOR AND MAY AS SUCH BE PART OF THE CABLE BID ITEM.

625, PULL BOX REMOVED

THIS ITEM OF WORK WILL CONSIST OF REMOVING AND PROPERLY DISPOSING OF AN EXISTING PULL BOX. THE RESULTANT OPENING SHALL THEN BE BACKFILLED TO GRADE WITH SUITABLE COMPACTED SOIL AND RESTORED TO MATCH THE SURROUNDING AREA.

PAYMENT WILL BE MADE AT THE UNIT PRICE BID UNDER CMS ITEM 625, "PULL BOX REMOVED" FOR EACH PULL BOX REMOVED WHICH SHALL BE FULL COMPENSATION FOR ALL LABOR, MATERIALS AND INCIDENTALS REQUIRED TO COMPLETE THIS ITEM IN A SATISFACTORY AND WORKMANLIKE MANNER.

625, LUMINAIRE REMOVED

THIS ITEM OF WORK SHALL CONSIST OF REMOVING AN EXISTING LUMINAIRE. THE LUMINAIRE SHALL BECOME PROPERTY OF THE CONTRACTOR AND SHALL BE PROPERLY DISPOSED OF OFF OF THE PROJECT SITE.

PAYMENT WILL BE MADE AT THE UNIT PRICE BID UNDER CMS ITEM 625, "LUMINAIRE REMOVED" FOR EACH LUMINAIRE REMOVED WHICH SHALL BE FULL COMPENSATION FOR ALL LABOR, MATERIALS AND INCIDENTALS REQUIRED TO COMPLETE THIS ITEM IN A SATISFACTORY AND WORKMANLIKE MANNER.

625, LIGHT POLE REMOVED

THIS ITEM OF WORK SHALL CONSIST OF REMOVING AN EXISTING LIGHT POLE. THE LIGHT POLE SHALL BECOME THE PROPERTY OF THE CONTRACTOR AND SHALL BE PROPERLY DISPOSED OF OFF OF THE PROJECT SITE.

PAYMENT WILL BE MADE AT THE UNIT PRICE BID UNDER CMS ITEM 625, "LIGHT POLE REMOVED" FOR EACH POLE REMOVED WHICH SHALL BE FULL COMPENSATION FOR ALL LABOR, MATERIALS AND INCIDENTALS REQUIRED TO COMPLETE THIS ITEM IN A SATISFACTORY AND WORKMANLIKE MANNER.

625, LIGHT POLE FOUNDATION REMOVED

THIS ITEM OF WORK SHALL CONSIST OF REMOVING AN EXISTING LIGHT POLE FOUNDATION. THE LIGHT POLE FOUNDATION MATERIAL SHALL BE PROPERLY DISPOSED OF OFF OF THE PROJECT SITE.

PAYMENT WILL BE MADE AT THE UNIT PRICE BID UNDER CMS ITEM 625, "LIGHT POLE FOUNDATION REMOVED" FOR EACH POLE FOUNDATION REMOVED WHICH SHALL BE FULL COMPENSATION FOR ALL LABOR, MATERIALS AND INCIDENTALS REQUIRED TO COMPLETE THIS ITEM IN A SATISFACTORY AND WORKMANLIKE MANNER.

EXISTING LIGHT POLES REMOVED

THE FOLLOWING QUANTITIES ARE INCLUDED FOR REMOVAL OF LIGHT POLES AND FOUNDATIONS AT THE FOLLOWING LOCATIONS THROUGHOUT THE PROJECT AREA:

439+80 RT RAMP M WOOD POLE WITH LUMINAIRE (AT HOUSE)
141+91 LT RAMP J WOOD POLE WITH LUMINAIRE (CHURCH PARKING LOT)
142+07 RT RAMP J WOOD POLE WITH LUMINAIRE (CHURCH PARKING LOT)
157+38 LT M-S PIKE WOOD POLE WITH LUMINAIRE (CHURCH PARKING LOT)
158+20 LT M-S PIKE WOOD POLE WITH LUMINAIRE (CHURCH PARKING LOT)
163+24 RT M-S PIKE WOOD POLE WITH LUMINAIRE (END OF DRIVEWAY)
116+45 RT M-S PIKE DECORATIVE POLE AND FOUNDATION (DISCONNECT CIRCUIT AT INTERSECTION OF CRAINS CREEK ROAD AND PURPLE FINCH LANE)
127+25 RT M-S PIKE WOOD POLE WITH LUMINAIRE (DPL POLE)
239+26 RT RAMP H DECORATIVE POLE AND FOUNDATION (OFFICE BUILDING PARKING LOT)
238+28 RT RAMP H DECORATIVE POLE AND FOUNDATION (OFFICE BUILDING PARKING LOT)

625 LIGHT POLE REMOVED 9 EACH
625 LIGHT POLE FOUNDATION REMOVED 3 EACH
202 DISCONNECT EXISTING CIRCUIT, AS PER PLAN 1 EACH

625, POWER SERVICE REMOVED, AS PER PLAN

THIS ITEM OF WORK SHALL CONSIST OF THE REMOVAL AND DISPOSAL OF AN EXISTING POWER SERVICE. INCLUDED FOR REMOVAL WILL BE ALL POWER SERVICE COMPONENTS SUCH AS THE WOOD POLE, WEATHER HEAD AND ALL ABOVE GRADE WIRING, CONTROL CENTER ENCLOSURE, PHOTOELECTRIC CELL AND ALL OTHER APPURTENANCES. THE CABLE ENCLOSED IN THE 2-INCH (50-MILLIMETER) CONDUIT WHICH RUNS INTO THE GROUND SHALL BE CUT WHERE IT EXITS THE 2-INCH (50-MILLIMETER) CONDUIT, APPROXIMATELY 2 FEET (0.6 METER) BELOW THE GROUND, AND SHALL BE REMOVED WITH THE 2-INCH (50-MILLIMETER) CONDUIT. THE REMAINING BURIED CABLE SHALL BE ABANDONED. ALL DISTURBED AREAS SHALL BE RESTORED TO MATCH THE SURROUNDING AREA.

ALL POWER SERVICE COMPONENTS INCLUDING THE CONTROL CENTER, POLE, PHOTOELECTRIC CELL, 2-INCH (50-MILLIMETER) CONDUIT, WEATHER HEAD AND ALL ABOVE-GROUND WIRING SHALL BECOME THE PROPERTY OF THE CONTRACTOR AND SHALL BE PROPERLY DISPOSED OF OFF THE PROJECT SITE.

THIS ITEM WILL ALSO COMPENSATE THE CONTRACTOR FOR COORDINATING WITH THE POWER COMPANY TO INSURE THAT THE COMPANY DISCONNECTS THE SERVICE, AND THAT ITEMS WHICH BELONG TO THE POWER COMPANY AND ARE REMOVED BY THE CONTRACTOR SUCH AS THE METER BASE SHALL BE RETURNED TO THE POWER COMPANY.

PAYMENT WILL BE MADE AT THE UNIT PRICE BID UNDER CMS ITEM 625, "POWER SERVICE REMOVED, AS PER PLAN" FOR EACH SERVICE REMOVED WHICH SHALL INCLUDE ALL LABOR, MATERIALS AND INCIDENTALS REQUIRED TO COMPLETE THIS ITEM IN A SATISFACTORY AND WORKMANLIKE MANNER.

625, LUMINAIRE, CONVENTIONAL, AS PER PLAN

IN ADDITION TO THE REQUIREMENTS OF ODOT'S CONSTRUCTION AND MATERIAL SPECIFICATIONS, LUMINAIRES FOR CONVENTIONAL LIGHTING UNITS SHALL BE AS FOLLOWS:

LUMINAIRES FOR CONVENTIONAL LIGHTING UNITS WITH AN IES II-M-SC DISTRIBUTION AND 200 WATT HIGH PRESSURE SODIUM LAMPS SHALL BE AMERICAN ELECTRIC "SERIES 126" WITH PHOTOMETRIC DISTRIBUTION AE38491, COOPER "OVD" WITH PHOTOMETRIC DISTRIBUTION OVD2S2F, GENERAL ELECTRIC "M-400" WITH PHOTOMETRIC DISTRIBUTION 1014, OR EQUAL AS APPROVED BY THE ENGINEER.

PAYMENT WILL BE MADE AT THE UNIT BID PRICE FOR EACH CMS ITEM 625, "LUMINAIRE, CONVENTIONAL, AS PER PLAN (ADD SUPPLEMENTAL DESCRIPTION)" FOR EACH LUMINAIRE WHICH SHALL BE FULL COMPENSATION FOR ALL LABOR, MATERIALS AND INCIDENTALS REQUIRED TO COMPLETE THIS ITEM IN A SATISFACTORY AND WORKMANLIKE MANNER.

625, POWER SERVICE REFURBISHED, AS PER PLAN

THIS ITEM OF WORK SHALL CONSIST OF THE REMOVAL OF THOSE PORTIONS OF AN EXISTING POWER SERVICE NOT BEING REUSED AND THE INSTALLATION OF NEW POWER SERVICE COMPONENTS IN ACCORDANCE WITH THE CONTRACT DOCUMENTS.

ALL EXISTING LIGHTING CIRCUIT CABLES AND SPLICES SHALL BE REMOVED FROM THE ADJACENT EXISTING PULL BOX AND FROM CONDUIT BETWEEN THE PULL BOX AND THE POWER SERVICE ENCLOSURE. WHERE EXISTING CONDUIT IS TO BE REUSED, THE CONDUIT SHALL BE CLEANED OF MUD AND DEBRIS. THE ENCLOSURE AND OTHER RELATED COMPONENTS OF THE POWER SERVICE SHALL BE CLEANED OF ALL MUD, DEBRIS AND EXISTING FUSES SHALL BE REMOVED AND DISCARDED.

THE EXISTING CONTROL TRANSFORMER, PHOTOCELL AND CONTACTOR COIL SHALL BE REMOVED AND SHALL BE REPLACED WITH A NEW LINE VOLTAGE CONTACTOR COIL AND A NEW PHOTO CELL. THE POWER SERVICE SHALL BE WIRED AS SHOWN IN STANDARD DRAWINGS AND AS DETAILED IN THE PLANS.

THE GROUND AREA IN THE VICINITY OF THE POWER SERVICE SHALL BE FREE OF ALL DEBRIS, AND SHALL HAVE GRASS TRIMMED.

PAYMENT WILL BE MADE AT THE UNIT PRICE BID FOR EACH CMS ITEM 625, "POWER SERVICE REFURBISHED, AS PER PLAN" AND SHALL BE FULL COMPENSATION FOR ALL LABOR, MATERIALS AND INCIDENTALS REQUIRED TO COMPLETE THIS ITEM IN A SATISFACTORY WORKMANLIKE MANNER.

CALCULATED JRL
CHECKED LAS

LIGHTING GENERAL NOTES

MOT-75-0.75

SHEET NUMBER												PARTICIPATION		ITEM	ITEM EXT.	GRAND TOTAL	UNIT	DESCRIPTION	SEE SHEET NO.
			641	643	644	645	646	647	648	648A	648B	I.R.	EAR MARK /LOCAL						
																		LIGHTING	
			1	1		1						2	1	202	75801	3	EACH	DISCONNECT EXISTING CIRCUIT, AS PER PLAN	640
				18		14		18				50	0	625	00500	50	EACH	CONNECTOR KIT, TYPE II	
					9		9		12			30	0	625	01500	30	EACH	CABLE SPLICING KIT	
				9		7		9				25	0	625	10490	25	EACH	LIGHT POLE, CONVENTIONAL, DESIGN AT15B41.7	
				9		7		9				25	0	625	14100	25	EACH	LIGHT POLE FOUNDATION, 24" X 8' DEEP	
									9672			9672	0	625	23200	9672	FT	NO. 4 AWG 5000 VOLT DISTRIBUTION CABLE	
				1386		1078		1386				3850	0	625	23400	3850	FT	NO. 10 POLE AWG POLE AND BRACKET CABLE	
					2879		3414		3702			9995	0	625	24320	9995	FT	1-1/2" DUCT CABLE WITH THREE NO.4 AWG 5000 VOLT CABLES	
											816	816	0	625	25402	816	FT	CONDUIT, 2", 725.05	
					1030		810					1840	0	625	25500	1840	FT	CONDUIT, 3", 725.04	
					223		401					624	0	625	25900	624	FT	CONDUIT, JACKED OR DRILLED, 3"	
									4676			4676	0	625	25910	4676	FT	CONDUIT CLEANED AND CABLES REMOVED	
								6				6	0	625	26251	6	EACH	LUMINAIRE, CONVENTIONAL, 200W, HPS, 480 VOLT, AS PER PLAN	641
				9		7		3				19	0	625	26251	19	EACH	LUMINAIRE, CONVENTIONAL, 310W, HPS, 480 VOLT, AS PER PLAN	641
					2911		3269		3592			9772	0	625	29000	9772	FT	TRENCH	
					2							2	0	625	29910	2	EACH	TRANSITION JUNCTION BOX	
											18	18	0	625	29920	18	EACH	STRUCTURE JUNCTION BOX	
					10		8					18	0	625	30700	18	EACH	PULL BOX, 725.08, 18"	
				1						2		3	0	625	31510	3	EACH	PULL BOX REMOVED	641
				9		7		9				25	0	625	32000	25	EACH	GROUND ROD	
										1		1	0	625	33000	1	EACH	STRUCTURE GROUNDING SYSTEM	
				1								1	0	625	34001	1	EACH	POWER SERVICE, AS PER PLAN	640
								2				2	0	625	34011	2	EACH	POWER SERVICE REFURBISHED, AS PER PLAN	641
			9			3		1		1		5	9	625	75400	14	EACH	LIGHT POLE REMOVED	641
			3			3		1		1		5	3	625	75500	8	EACH	LIGHT POLE FOUNDATION REMOVED	641
						3		1		1		5	0	625	75506	5	EACH	LUMINAIRE REMOVED	641
				1		1						2	0	625	75511	2	EACH	POWER SERVICE REMOVED, AS PER PLAN	641
						6		8				14	0	625	98000	14	EACH	LIGHTING, MISC.: CLEAN AND RELAMP	640

CALCULATED GWA
CHECKED LAS

LIGHTING GENERAL SUMMARY

MOT-75-0.75

642
773

REFERENCE NO.	SHEET NO.	SIDE	ROADWAY	STATION TO STATION	625 CONNECTOR TYPE II KIT,			625 LIGHT POLE, CONVENTIONAL, DESIGN AT15B41.7		625 LUMINAIRE, CONVENTIONAL, 310 W, HPS, 480 VOLT, AS PER PLAN	625 LIGHT POLE FOUNDATION, 24" X 8' DEEP	625 GROUND ROD	625 POWER SERVICE, AS PER PLAN	625 NO. 10 AWG POLE AND BRACKET CABLE				202 POWER SERVICE REMOVED, AS PER PLAN	202 DISCONNECT EXISTING CIRCUIT, AS PER PLAN	202 PULL BOX REMOVED		
					EACH			EACH		EACH	EACH	EACH	EACH	FEET				EACH	EACH	EACH		
1	649	LT	I-75	15+75	2			1		1	1	1		154								
3	649	LT	I-75	19+75	2			1		1	1	1		154								
10	649	LT	I-75	23+75	2			1		1	1	1		154								
14	649	LT	I-75	24+28									1									
15	649	LT	I-75	195+77														1				
16	649	LT	I-75	2+00															1	1		
21	649	LT	I-75	22+76	2			1		1	1	1		154								
23	649	LT	I-75	29+25	2			1		1	1	1		154								
27	649	LT	I-75	30+75	2			1		1	1	1		154								
29	649	LT	I-75	31+20	2			1		1	1	1		154								
46	650	LT	RAMP M	449+40	2			1		1	1	1		154								
50	650	LT	I-75	50+00	2			1		1	1	1		154								
				ALL ITEM I.R. FUNDING PARTICIPATION																			
TOTALS CARRIED TO LIGHTING GENERAL SUMMARY					18			9		9	9	9	1	1,386				1	1	1		

CALCULATED GWA
CHECKED LAS

LIGHTING ESTIMATED QUANTITIES

MOT-75-0.75

643
773

REFERENCE NO.	SHEET NO.	SIDE	ROADWAY	STATION TO STATION			625 CABLE SPLICING KIT EACH			625 TRANSITION JUNCTION BOX EACH			625 1-1/2" DUCT CABLE WITH THREE NO.4 AWG 5000 VOLT CABLES FEET		625 CONDUIT, 3", 725.04 FEET	625 TRENCH FEET	625 CONDUIT, JACKED OR DRILLED, 3" FEET	625 PULL BOX, 725.08, 18" EACH				
2	649	LT	I-75	15+75	19+75								410			400						
4	649	LT	I-75	19+75	22+56								291			281						
5	649	LT	I-75	22+56			3											1				
6	649	LT	I-75	22+56	22+56								98				88					
7	649	LT	I-75	22+56														1				
8	649	LT & RT	I-75	22+56	22+56								164			154						
9	649	LT	I-75	22+56	23+75								129			119						
11	649	LT	I-75	23+75	24+00								35			25						
12	649	LT	I-75	24+00														1				
13	649	LT	I-75	24+00	24+28								120			110						
17	649	RT	I-75	22+58														1				
18	649	RT	I-75	22+58	22+58								85				75					
19	649	RT	I-75	22+58														1				
20	649	RT	I-75	22+58	22+76								28			18						
22	649	RT	I-75	22+76	29+25								659			649						
24	649	RT	I-75	29+25	30+65								150			140						
25	649	RT	I-75	30+65			3											1				
26	649	RT	I-75	30+65	30+75								70		60	60						
28	649	RT	I-75	30+65	31+20								70			60						
30	650	RT & LT	RAMP P	336+90											150	75						
31	650	RT	MS PIKE	148+25											20	10						
32	650	RT	MS PIKE	148+25											150	75						
33	650	LT	MS PIKE	148+25											80	40						
34	650	LT	MS PIKE	148+25											20	10						
35	650	RT	MS PIKE	149+65			3											1				
36	650	RT	MS PIKE	149+65	151+35								170			170						
37	650	RT	MS PIKE	150+00											20	10						
38	650	RT	MS PIKE	151+35														1				
39	650	RT	MS PIKE	151+35	BRIDGE					1			50			50						
40	651	RT	MS PIKE	BRIDGE	155+63					1			50			50						
41	650	RT & LT	MS PIKE	149+65	150+06								160		160	160						
42	650	LT	MS PIKE	150+06														1				
43	650	LT	MS PIKE	150+30											20	10						
44	650	RT & LT	MS PIKE	150+45											200	100						
45	650	RT & LT	RAMP M	439+35											150	75						
47	650	LT	RAMP M	449+40	450+00								70			60						
48	650	LT	RAMP M	450+00														1				
49	650	LT	RAMP M	450+00	50+00								70				60					
				ALL ITEM I.R. FUNDING PARTICIPATION																			
TOTALS CARRIED TO LIGHTING GENERAL SUMMARY							9			2			2,879		1,030	2,911	223	10				

CALCULATED GWA
CHECKED LAS

LIGHTING ESTIMATED QUANTITIES

MOT-75-0.75

644
773

REFERENCE NO.	SHEET NO.	SIDE	ROADWAY	STATION TO STATION	625 CONNECTOR TYPE II KIT, EACH		625 LIGHTING, MISC.: CLEAN AND RELAMP EACH	625 LIGHT POLE, CONVENTIONAL, DESIGN AT15B41.7 EACH	625 LUMINAIRE, CONVENTIONAL, 200W, HPS, 480 VOLT, AS PER PLAN EACH	625 LUMINAIRE, CONVENTIONAL, 310 W, HPS, 480 VOLT, AS PER PLAN EACH	625 LIGHT POLE FOUNDATION, 24" X 8' DEEP EACH	625 GROUND ROD EACH		625 NO. 10 AWG POLE AND BRACKET CABLE FEET	202 LUMINAIRE REMOVED EACH	202 LIGHT POLE REMOVED EACH	202 LIGHT POLE FOUNDATION REMOVED EACH	202 POWER SERVICE REMOVED, AS PER PLAN EACH	202 DISCONNECT EXISTING CIRCUIT, AS PER PLAN EACH			
53	650	LT	I-75	51+68	2			1		1	1	1		154								
55	650	LT	I-75	55+48	2			1		1	1	1		154								
56	650	LT	I-75	55+51											1	1	1					
58	650	LT	I-75	59+63	2			1		1	1	1		154								
59	650	LT	I-75	59+60											1	1	1					
73	650	LT	MS PIKE	158+59														1				
86	650	RT	I-75	54+90	2			1		1	1	1		154								
88	650	RT	I-75	59+00	2			1		1	1	1		154								
90	651	LT	I-75	63+72	2			1		1	1	1		154								
91	651	LT	I-75	63+72											1	1	1					
92	651	LT	I-75	67+82			1												1			
93	651	LT	I-75	71+90			1															
94	651	LT	I-75	76+02			1															
95	651	LT	I-75	80+12			1															
96	651	LT	I-75	84+20			1															
97	651	LT	I-75	88+06			1															
100	651	RT	I-75	63+10	2			1		1	1	1		154								
				ALL ITEM I.R. FUNDING PARTICIPATION																			
TOTALS CARRIED TO LIGHTING GENERAL SUMMARY					14		6	7		7	7	7		1,078	3	3	3	1	1			

CALCULATED GWA
CHECKED LAS

LIGHTING ESTIMATED QUANTITIES

MOT-75-0.75

REFERENCE NO.	SHEET NO.	SIDE	ROADWAY	STATION TO STATION			625							625		625	625	625	625				
							CABLE SPLICING KIT							1-1/2" DUCT WITH CABLE THREE NO.4 5000 AWG VOLT CABLES		CONDUIT, 3", 725.04	TRENCH	CONDUIT, JACKED OR DRILLED, 3"	PULL BOX, 725.08, 18"				
							EACH							FEET		FEET	FEET	FEET	EACH				
51	650	LT	RAMP M	450+00	451+06									116			106						
52	650	LT	RAMP M	451+06	51+68									72			62						
54	650	LT	I-75	51+68	55+48									390			380						
57	650	LT	I-75	55+48	59+63									425			415						
60	650	LT	I-75	59+63	63+72									419			400						
61	650	RT & LT	RAMP H	240+20												150	75						
62	650	RT	MS PIKE	157+19			3												1				
63	650	RT	MS PIKE	155+63	157+19									156			156						
64	650	RT	MS PIKE	155+63															1				
65	650	RT	MS PIKE	158+80												20	10						
66	650	RT & LT	MS PIKE	157+00												220	110						
67	650	LT	MS PIKE	157+00												20	10						
68	650	RT & LT	MS PIKE	157+19	157+65									145			145						
69	650	LT	MS PIKE	157+65															1				
70	650	RT & LT	RAMP J	141+35												150	75						
71	650	LT	MS PIKE	159+15												20	10						
72	650	RT & LT	MS PIKE	159+20												230	115						
74	650	LT	RAMP M	451+06															1				
75	650	LT & RT	RAMP M	451+06	51+10									70				60					
76	650	LT	I-75	51+10															1				
77	650	LT	I-75	51+10	51+10									88				78					
78	650	LT	I-75	51+10															1				
79	650	LT & RT	I-75	51+10	51+10									142				132					
80	650	RT	I-75	51+10																			
81	650	RT	I-75	51+10	51+10									91				81					
82	650	RT	I-75	51+10															1				
83	650	RT	I-75	51+10	51+10									60				50					
84	650	RT	I-75	51+10															1				
85	650	RT	I-75	51+10	54+90									390			380						
87	650	RT	I-75	54+90	59+00									420			410						
89	650	RT	I-75	59+00	63+05									415			405						
98	651	RT	I-75	63+05			6																
99	651	RT	I-75	63+05	63+10									15			5						
				ALL ITEM I.R. FUNDING PARTICIPATION																				
TOTALS CARRIED TO LIGHTING GENERAL SUMMARY							9							3,414		810	3,269	401	8				

CALCULATED GWA
CHECKED LAS

ESTIMATED QUANTITIES

LIGHTING

MOT-75-0.75

646
773

REFERENCE NO.	SHEET NO.	SIDE	ROADWAY	STATION TO STATION	625 CONNECTOR TYPE II KIT, EACH		625 LIGHTING, CLEAN MISC.: AND RELAMP EACH	625 LIGHT POLE, CONVENTIONAL, DESIGN AT15B41.7 EACH	625 LUMINAIRE, CONVENTIONAL, 200W, HPS, 480 VOLT, AS PER PLAN EACH	625 LUMINAIRE, CONVENTIONAL, 310 W, HPS, 480 VOLT, AS PER PLAN EACH	625 LIGHT POLE FOUNDATION, 24" X 8' DEEP EACH	625 GROUND ROD EACH	625 POWER SERVICE REFURBISHED, AS PER PLAN EACH	625 NO. 10 AWG POLE AND BRACKET CABLE FEET	202 LUMINAIRE REMOVED EACH	202 LIGHT POLE REMOVED EACH	202 LIGHT POLE FOUNDATION REMOVED EACH	202 POWER SERVICE REMOVED, AS PER PLAN EACH	202 DISCONNECT EXISTING CIRCUIT, AS PER PLAN EACH	202 PULL BOX REMOVED EACH		
103	651	RT	I-75	67+70			1						1										
							1																
105	651	RT	I-75	67+20	2			1	1		1	1		154									
107	651	RT	I-75	71+30	2			1	1		1	1		154									
109	651	RT	I-75	75+40	2			1	1		1	1		154									
110	651	RT	I-75	77+81											1	1	1						
112	651	RT	I-75	79+50	2			1	1		1	1		154									
116	651	RT	I-75	83+60	2			1	1		1	1		154									
118	651	RT	I-75	87+70	2			1	1		1	1		154									
125	652	LT	I-75	91+72			1																
129	652	LT	I-75	95+19			1																
131	652	LT	I-75	98+46			1																
134	652	RT	I-75	91+80	2			1		1	1	1		154									
137	652	RT	I-75	95+90	2			1		1	1	1		154									
139	652	RT	I-75	99+50	2			1		1	1	1		154									
143	652	RT	I-75	104+10			1																
145	652	RT	I-75	106+01			1																
147	652	RT	I-75	105+60			1																
150	652	RT	I-75	108+51									1										
				ALL ITEM I.R. FUNDING PARTICIPATION																				
TOTALS CARRIED TO LIGHTING GENERAL SUMMARY					18		8	9	6	3	9	9	2	1,386	1	1	1						

CALCULATED GWA
CHECKED LAS

LIGHTING ESTIMATED QUANTITIES

LIGHTING

MOT-75-0.75

647
773

REFERENCE NO.	SHEET NO.	SIDE	ROADWAY	STATION TO STATION			625 CABLE SPLICING KIT EACH		625 CONDUIT CLEANED AND CABLES REMOVED FEET	625 NO. 4 AWG, 5000 VOLT, DISTRIBUTION CABLE FEET			625 1-1/2" DUCT CABLE WITH THREE NO.4 AWG 5000 VOLT CABLES FEET			625 TRENCH FEET						
101	651	RT	I-75	63+05	66+65				450	920												
102	651	RT	I-75	66+65	67+70				200	420												
104	651	RT	I-75	63+70	67+20								360			350						
106	651	RT	I-75	67+20	71+30								420			410						
108	651	RT	I-75	71+30	75+40								420			410						
111	651	RT	I-75	75+40	79+50								420			410						
113	651	RT	I-75	79+50	80+90								150			140						
114	651	RT	I-75	80+90				3														
115	651	RT	I-75	80+90	83+60								280			270						
117	651	RT	I-75	83+60	87+70								420			410						
119	651	LT	I-75	67+82	71+90				408	836												
120	651	LT	I-75	71+90	76+02				412	844												
121	651	LT	I-75	76+02	80+12				410	840												
122	651	LT	I-75	80+12	84+20				408	836												
123	651	LT	I-75	84+20	88+03				366	752												
124	652	LT	I-75	88+06	91+72																	
126	652	LT	I-75	91+72	92+14				42	104												
127	652	LT	I-75	92+14				3														
128	652	LT	I-75	92+14	95+19				305	630												
130	652	LT	I-75	95+19	98+46				327	674												
132	652	RT & LT	I-75	92+14	92+14				322	664												
133	652	RT	I-75	87+70	91+80								420			410						
135	652	RT	I-75	92+26				3														
136	652	RT	I-75	92+26	95+90								374			364						
138	652	RT	I-75	95+90	99+50								370			360						
140	652	RT	I-75	99+50	100+08								68			58						
141	652	RT	I-75	100+08				3														
142	652	RT	I-75	100+08	104+10				402	824												
144	652	RT	I-75	104+10	106+01				191	402												
146	652	RT	I-75	106+01	105+60				90	200												
148	652	RT	I-75	106+01	108+52				251	522												
149	652	RT	I-75	108+52	108+51				92	204												
				ALL ITEM I.R. FUNDING PARTICIPATION																		
TOTALS CARRIED TO LIGHTING GENERAL SUMMARY							12		4,676	9,672			3,702			3,592						

CALCULATED GWA
CHECKED LAS

LIGHTING ESTIMATED QUANTITIES

MOT-75-0.75

REFERENCE NO.	SHEET NO.	SIDE	ROADWAY	STATION TO STATION									625 STRUCTURE GROUNDING SYSTEM EACH		202 LUMINAIRE REMOVED EACH	202 LIGHT POLE REMOVED EACH	202 LIGHT POLE FOUNDATION REMOVED EACH			202 PULL BOX REMOVED EACH		
164	581	CL	BRIDGE	153+65									1									
170	650	RT	I-75	42+15																1		
171	650	RT	I-75	50+10																1		
172	650	RT	I-75	51+23											1	1	1					
				ALL ITEM I.R. FUNDING PARTICIPATION																		
TOTALS CARRIED TO LIGHTING GENERAL SUMMARY													1		1	1	1			2		

CALCULATED GWA
CHECKED LAS

LIGHTING ESTIMATED QUANTITIES

MOT-75-0.75

REFERENCE NO.	SHEET NO.	SIDE	ROADWAY	STATION TO STATION							625 STRUCTURE JUNCTION BOX EACH			625 CONDUIT, 2", 725.05 FEET								
151	650	RT	BRIDGE	151+65							1			48								
152	650	RT	BRIDGE	152+10							1			48								
153	650	RT	BRIDGE	152+60							1			48								
154	650	RT	BRIDGE	153+05							1			48								
155	650	RT	BRIDGE	153+55							1			48								
156	650	RT	BRIDGE	154+00							1			48								
157	650	RT	BRIDGE	154+50							1			48								
158	650	RT	BRIDGE	155+00							1			48								
159	650	RT	BRIDGE	155+50							1			48								
160	650	LT	BRIDGE	151+90							1			48								
161	650	LT	BRIDGE	152+30							1											
162	650	LT	BRIDGE	152+80							1			48								
163	650	LT	BRIDGE	153+25							1			48								
165	650	LT	BRIDGE	153+75							1			48								
166	650	LT	BRIDGE	154+25							1			48								
167	650	LT	BRIDGE	154+75							1			48								
168	650	LT	BRIDGE	155+25							1			48								
169	650	LT	BRIDGE	155+70							1			48								
				ALL ITEM I.R. FUNDING PARTICIPATION																		
TOTALS CARRIED TO LIGHTING GENERAL SUMMARY											18			816								

CALCULATED GWA
CHECKED LAS

LIGHTING ESTIMATED QUANTITIES

MOT-75-0.75

UNUSED CONDUIT ELL

1 STA. 15+75, I-75, 150' LT. O1
PROP. 310 W, 41.7' HPS, M-II-SC

2 1½"

3 STA. 19+75, I-75, 160' LT. O2
PROP. 310 W, 40' HPS, M-II-SC

4 1½"

5 PROP. 18" PULLBOX, PB1
STA. 22+56, I-75, 165' LT.

6 1½" AND 3" SLEEVE

7 PROP. 18" PULLBOX, PB2
STA. 22+56, I-75, 77' LT.

8 1½"

9 1½"

10 STA. 23+75, I-75, 166' LT. O3
PROP. 310 W, 41.7' HPS, M-II-SC

11 1½"

12 PROP. 18" PULLBOX, PB3
STA. 24+00, I-75, 166' LT.

13 1½"

14 PROP. POWER SERVICE "O"
STA. 24+28, I-75, 262' LT.

15 REMOVE POWER SERVICE "H"
EX. SERVICE POLE AND
CONTROL CENTER
STA. 195+77, I-75, 210' RT.

ABANDON EX. CONDUIT

16 STA. 2+00
EX. SIGN 1A
REMOVE EX. PULLBOX, PB81
DISCONNECT EX. CIRCUIT

17 PROP. 18" PULLBOX, PB4
STA. 22+58, I-75, 77' RT.

18 1½" AND 3" SLEEVE

19 PROP. 18" PULLBOX, PB5
STA. 22+58, I-75, 152' RT.

20 1½"

21 STA. 22+76, I-75, 152' RT. O4
PROP. 310 W, 41.7' HPS, M-II-SC

22 1½"

23 STA. 29+25, I-75, 172' RT. O5
PROP. 310 W, 41.7' HPS, M-II-SC

24 1½"

25 PROP. 18" PULLBOX, PB6
STA. 30+65, I-75, 200' RT.

26 1½" AND 3" SLEEVE

27 STA. 30+75, I-75, 142' RT. O6
PROP. 310 W, 41.7' HPS, M-II-SC

28 1½"

UNUSED CONDUIT ELL.

29 STA. 31+20, I-75, 218' RT. O7
PROP. 310 W, 41.7' HPS, M-II-SC

UNUSED CONDUIT ELL.

195+00 0+00 15+00 20+00 25+00 30+00 315+00 320+00 325+00 330+00 225+00 230+00

RAMP P

RAMP H

MATCH LINE STA. 34+00
SEE SHEET 650

LIGHTING LEGEND

- EXISTING CONDUIT
- (X) SUB-SUMMARY REFERENCE NUMBER
- PROPOSED DUCT CABLE
- EXISTING LIGHT POLE
- PROPOSED LIGHT POLE
- PROPOSED PULLBOX
- EXISTING PULLBOX

POLE LEGEND

STATION/ ROADWAY	OFFSET FROM CENTER LINE	POLE/TOWER NUMBER
WATTAGE OF LUMINAIRE	MOUNTING HEIGHT	TYPE OF LUMINAIRE

HORIZONTAL SCALE IN FEET
0 50 100 200

CALCULATED GWA
CHECKED LAS

LIGHTING PLAN I-75
STA. 7+00.00 TO STA. 34+00.00

MOT-75-0.75

649
773

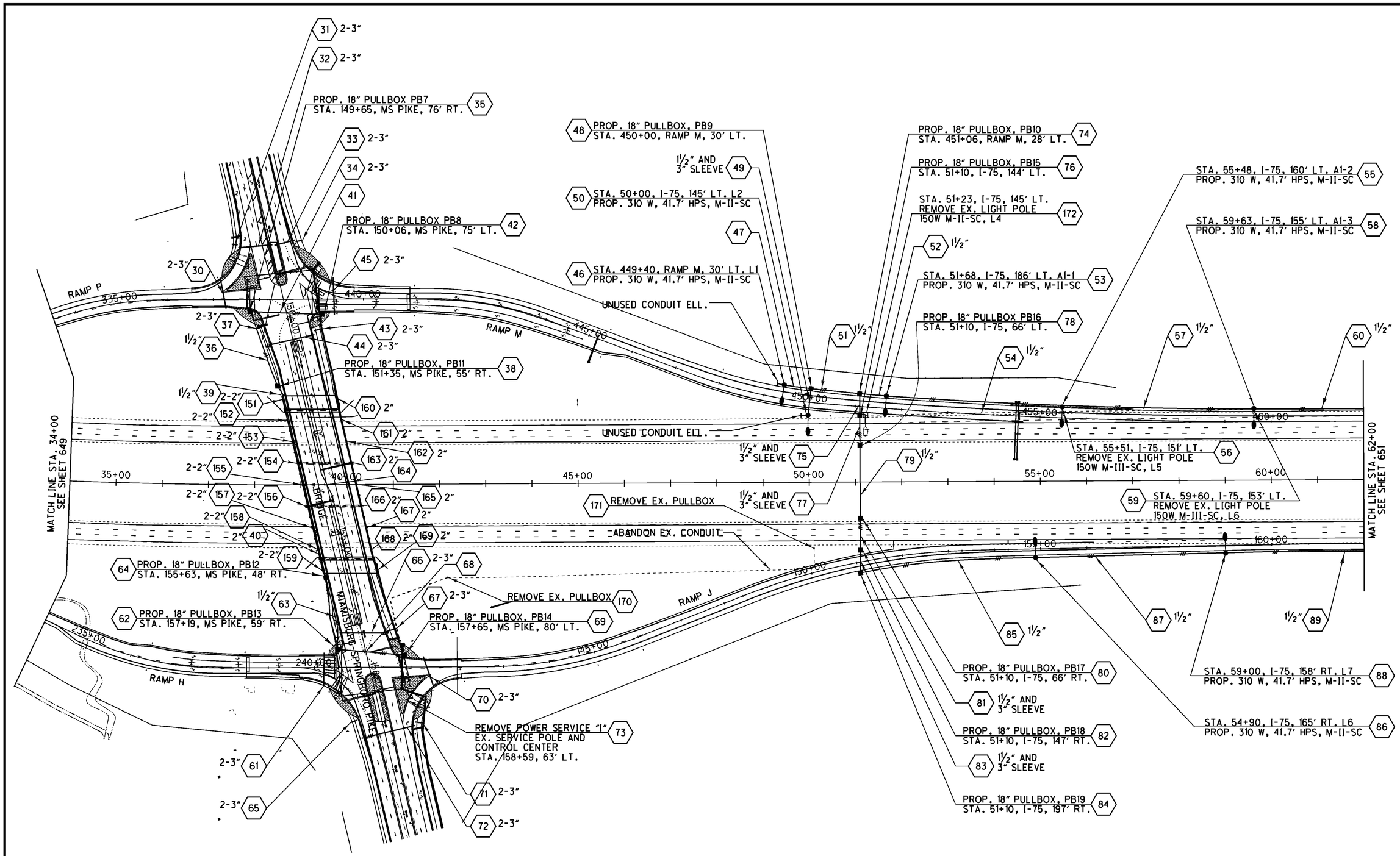

FOR LIGHTING AND POLE LEGENDS SEE SHEET 649.

HORIZONTAL SCALE IN FEET
0 50 100 200

CALCULATED GWA
CHECKED LAS

LIGHTING PLAN I-75
STA. 34+00.00 TO STA. 62+00.00

MOT-75-0.75

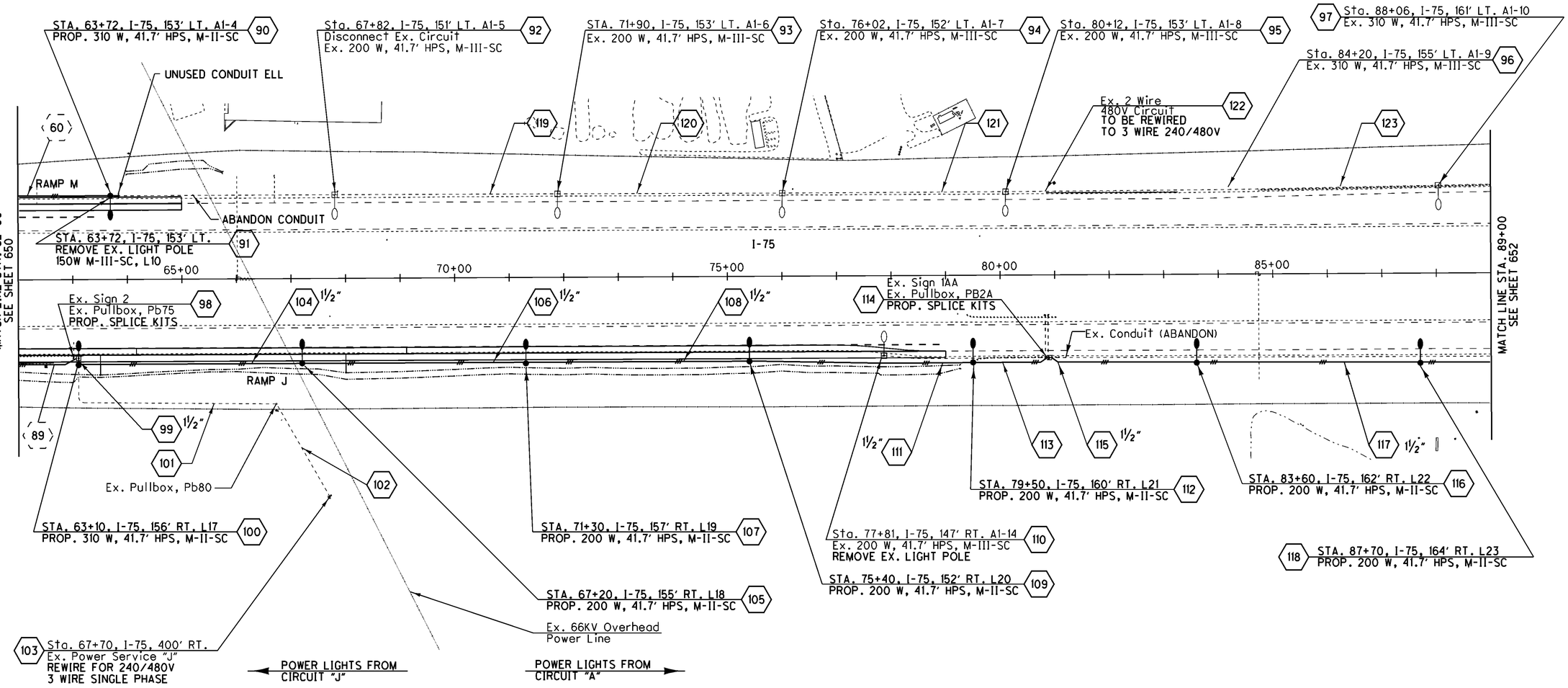

FOR LIGHTING AND POLE LEGENDS SEE SHEET 649.

HORIZONTAL SCALE IN FEET
0 50 100 200

CALCULATED GWA
CHECKED LAS

LIGHTING PLAN I-75
STA. 62+00.00 TO STA. 89+00.00

MOT-75-0.75

Sta. 91+72, I-75, 167' LT. A1-11
Ex. 310 W, 41.7' HPS, M-III-SC (125)

Sta. 92+14, I-75, 169' Lt., (127)
Ex. Pullbox, Pb1
PROP. SPLICE KITS

(126)

Sta. 95+19, I-75, 173' LT. A1-12 (129)
Ex. 310 W, 41.7' HPS, M-III-SC

Sta. 98+46, I-75, 178' LT. A1-13 (131)
Ex. 310 W, 41.7' HPS, M-III-SC

(124) (128) (130)

1+00 2+00 3+00 4+00 5+00 6+00 7+00

MATCH LINE STA. 89+00
SEE SHEET 651

(132)

I-75

90+00 95+00 100+00 105+00 110+00 115+00

(146)

Sta. 108+52, I-75, 250' Rt.
Ex. Pullbox, Pb4

(142) (144) (149) (148)

1½" (133) 1½" (136) 1½" (138)

Sta. 92+26, I-75, 153' Rt (135)
Ex. Pullbox, Pb2
PROP. SPLICE KITS

STA. 91+80, I-75, 166' RT. L27 (134)
PROP. 310 W, 41.7' HPS, M-III-SC

STA. 95+90, I-75, 168' RT. L28 (137)
PROP. 310 W, 41.7' HPS, M-III-SC

(140)

Ex. Sign 3
Sta. 100+08, I-75, 169' Rt. (141)
Ex. Pullbox, Pb3
PROP. SPLICE KITS

STA. 99+50, I-75, 173' RT. L29 (139)
PROP. 310 W, 41.7' HPS, M-III-SC

Ex. Power Service "A" (150)
Sta. 108+51, I-75, 342' RT.
REWIRE FOR 240/480V
3 WIRE SINGLE PHASE

Sta. 105+60, I-75, 140' RT. A1-17 (145)
Ex. 310 W, 41.7' HPS, M-III-SC

Sta. 106+01, I-75, 195' RT. A1-16 (147)
Ex. 310 W, 41.7' HPS, M-III-SC

Sta. 104+10, I-75, 195' RT. A1-15 (143)
Ex. 310 W, 41.7' HPS, M-III-SC

FOR LIGHTING AND POLE LEGENDS SEE SHEET 649.

N

0 50 100 200
HORIZONTAL SCALE IN FEET

CALCULATED GWA
CHECKED LAS

LIGHTING PLAN I-75
STA. 89+00.00 TO LIMIT OF WORK

MOT-75-0.75

652
773

CALCULATED GWA
CHECKED LAS

LIGHTING CIRCUIT DIAGRAM

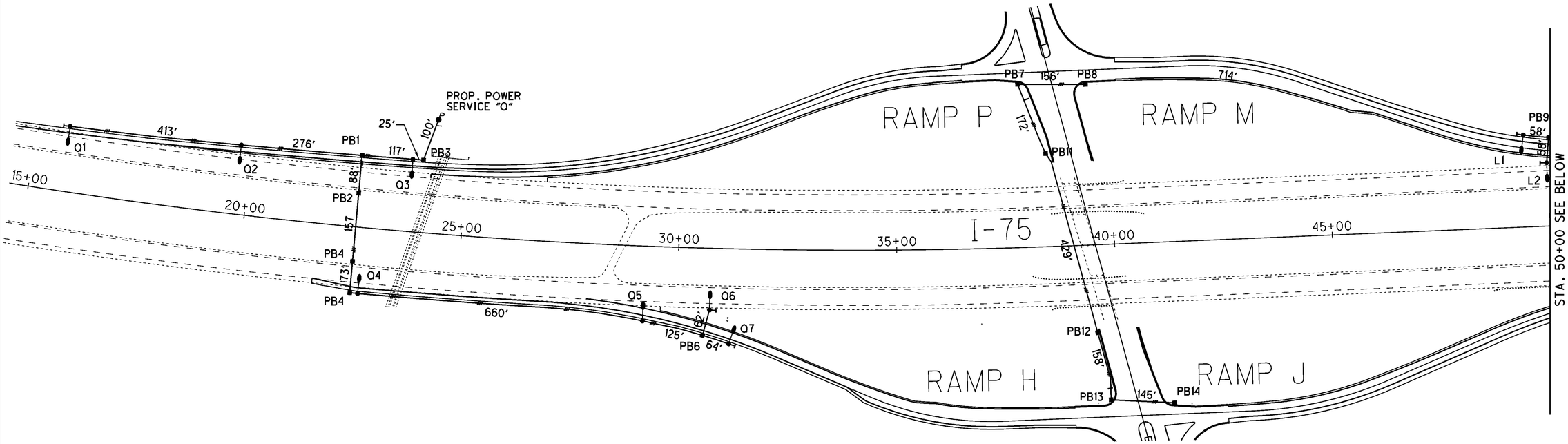

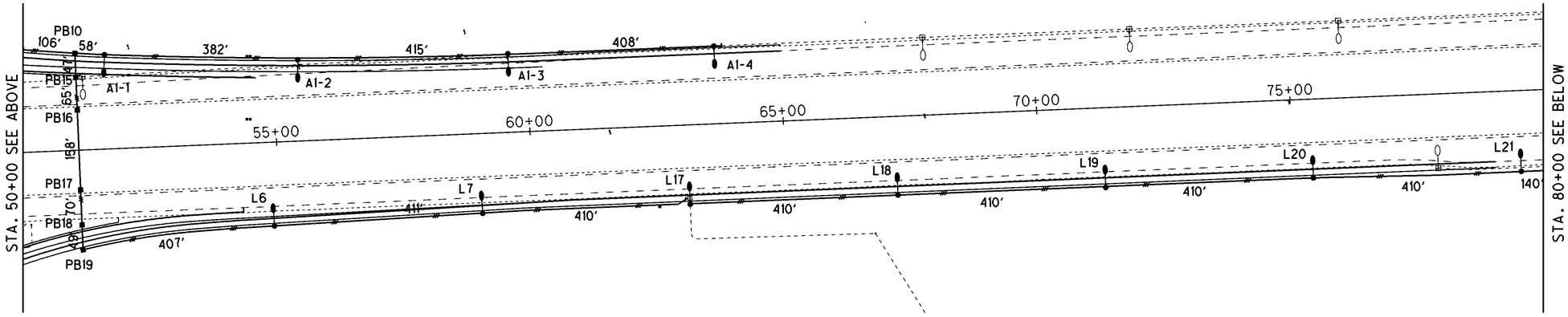

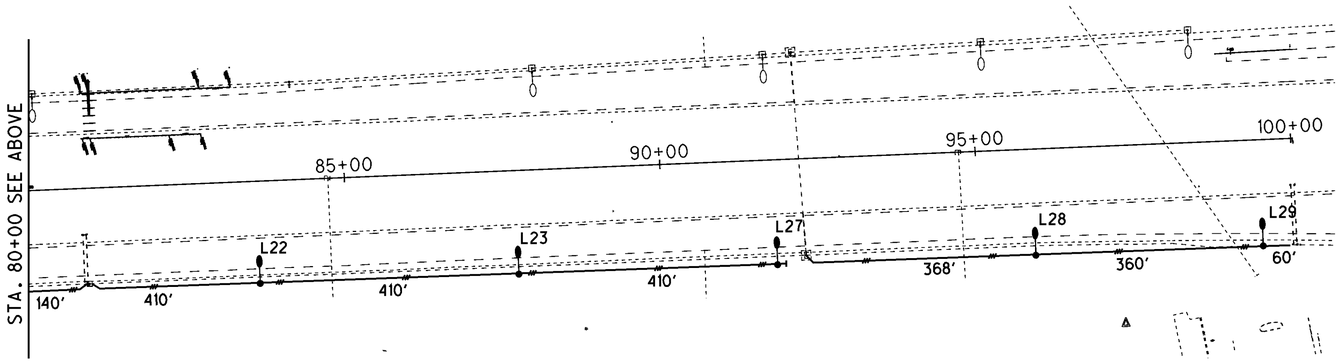

MOT-75-0.75

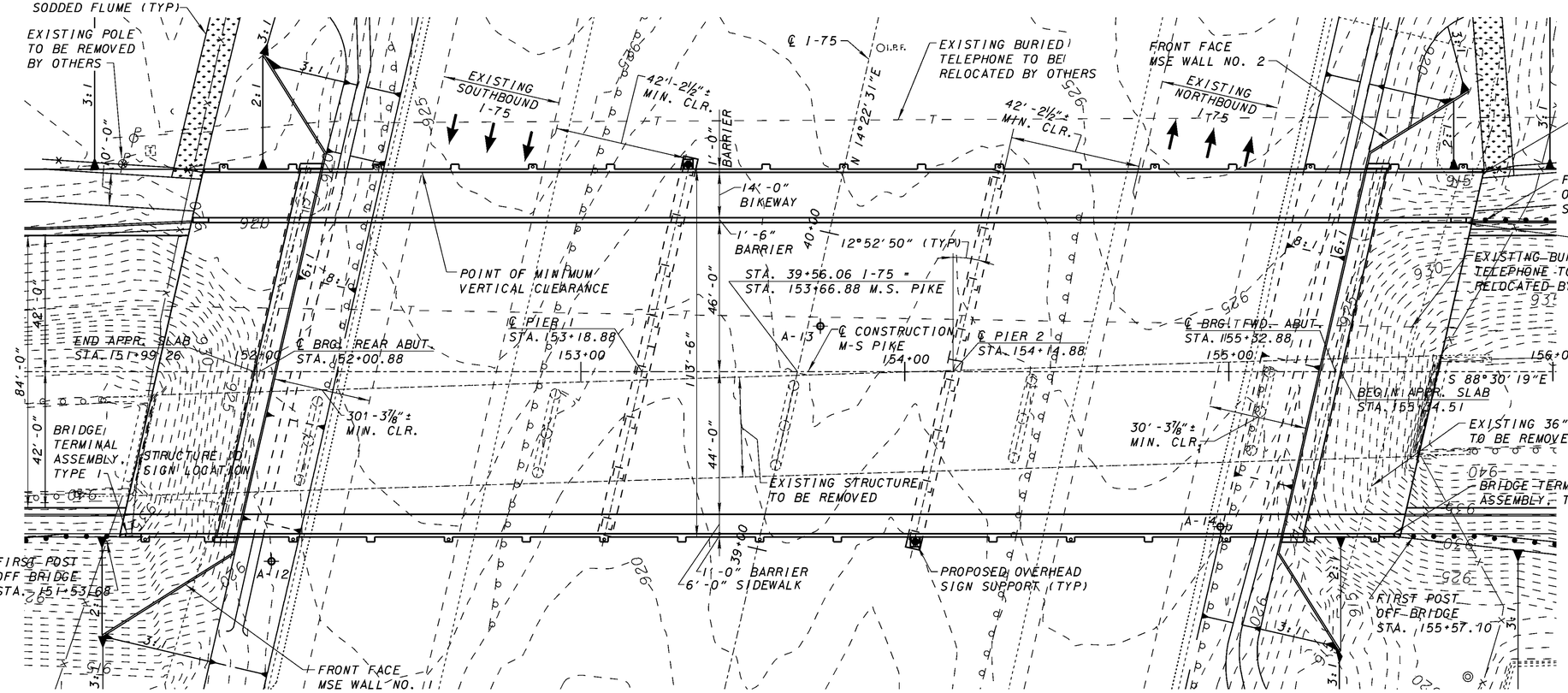

PLAN

BENCHMARK

PI7 - NORTHING 586300.47,
EASTING 1479573.14,
ELEV. 924.98

NOTES:

1. EARTH WORK LIMITS SHOWN ARE APPROXIMATE. ACTUAL SLOPES SHALL CONFORM TO ROADWAY PLAN CROSS SECTIONS.
2. ⊕ DENOTES BORING LOCATIONS.
3. PAYMENT OF BRIDGE TERMINAL ASSEMBLIES IS INCLUDED WITH ROADWAY QUANTITIES.

TRAFFIC DATA:

CURRENT A.D.T. (2015) = 19,800
DESIGN YEAR A.D.T. (2035) = 29,650
DESIGN YEAR A.D.T.T. (2035) = 1,186
T = 4%

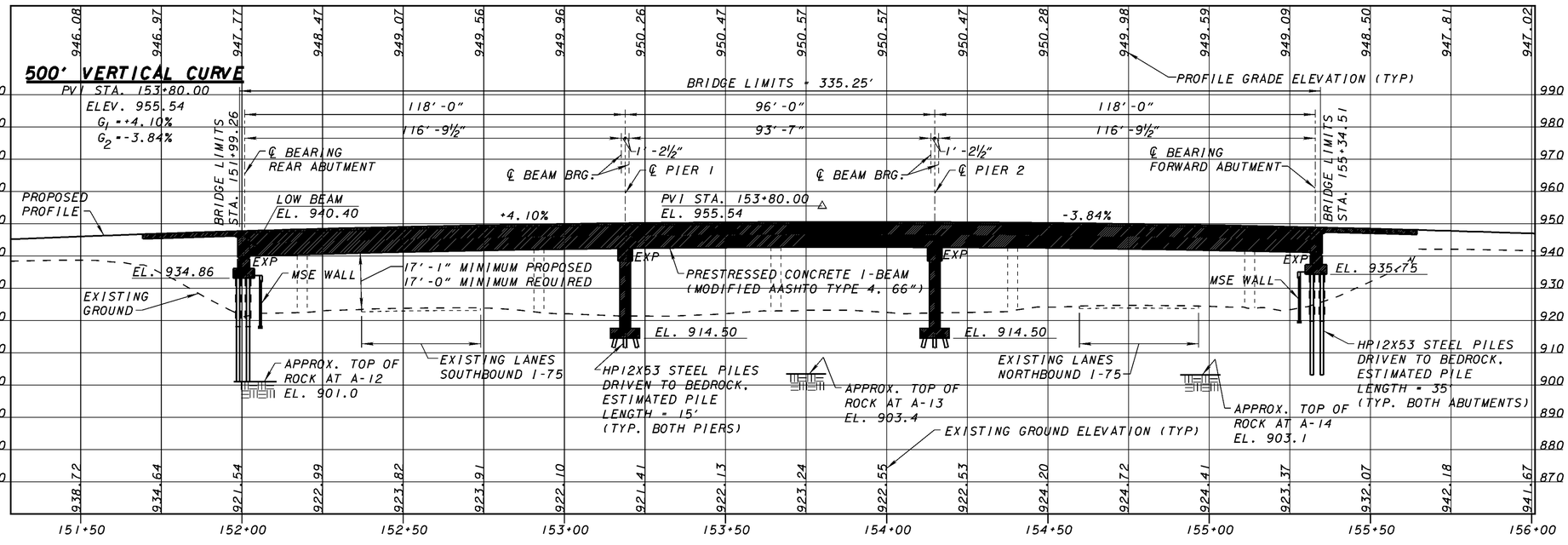

PROFILE ALONG ℄ CONSTRUCTION M-S PIKE

EXISTING STRUCTURE

TYPE: SIX SPAN CONTINUOUS STEEL BEAM WITH REINFORCED CONCRETE DECK AND SUBSTRUCTURE
SPANS: 51'-6", 4 @ 73'-6", 51'-6" C/C BEARINGS
ROADWAY: 24'-0"± F/F SAFETY CURBS
LOAD FREQUENCY: CF-130(57)
ALIGNMENT: TANGENT
CROWN: 3/16" PER FOOT
SKEW: 14°38'53"± LEFT FORWARD
WEARING SURFACE: MONOLITHIC CONCRETE
APPROACH SLABS: AS-1-54 (25'-0" LONG)
DATE BUILT: 1959±
STRUCTURE FILE NUMBER: 5706424

PROPOSED STRUCTURE

TYPE: THREE SPAN CONT. COMPOSITE PRESTRESSED CONCRETE I-BEAM WITH REINFORCED CONCRETE DECK ON STUB ABUTMENTS BEHIND MSE WALLS AND CAP AND COLUMN PIERS
SPANS: 116'-9½", 93'-7", 116'-9½" C/C BRG.
ROADWAY: 90'-0" TOE OF PARAPET TO FACE OF CURB
LOADING: HS25, THE ALTERNATE MILITARY LOADING AND 60 PSF FUTURE WEARING SURFACE
ALIGNMENT: TANGENT
CROWN: 3/16" PER FOOT
SKEW: 12°52'50" LEFT FORWARD
WEARING SURFACE: MONOLITHIC CONCRETE
APPROACH SLABS: AS-1-81 (30'-0" LONG)
LATITUDE: 39°35'49" N
LONGITUDE: 84°14'17" W

LJB Inc. • 3100 Research Blvd. • P.O. Box 20246
Dayton, OH 45420-0246
(937) 259-5000 tel • (937) 259-5100 fax • ljbinc.com

DESIGNED JJS | DRAWN JAL | REVIEWED MPH | DATE 3-08
CHECKED DWW | REVISED | STRUCTURE FILE NUMBER 5706416

MONTGOMERY COUNTY
STA. 151+99.26 TO STA. 155+34.51

SITE PLAN
BRIDGE NO. MOT-75-0075
MIAMISBURG-SPRINGBORO PIKE OVER I-75

MOT-75-0.75
PID 77246

GENERAL NOTES

REFER TO THE FOLLOWING STANDARD BRIDGE DRAWINGS: AS-1-81, REVISED 7-19-02; BR-2-98, REVISED 7-19-02; PSID-1-99, REVISED 4-20-07; SICD-1-96, REVISED 7-19-02; VPF-1-90, REVISED 7-19-02

AND TO THE FOLLOWING LIGHTING STANDARD DRAWINGS: HL-20.14, DATED 1-21-05; HL-30.32, DATED 4-19-02; HL-50.21, DATED 1-19-07

AND TO THE FOLLOWING SUPPLEMENTAL SPECIFICATION: 898, DATED 7-21-06; 840, DATED 1-19-07

DESIGN SPECIFICATIONS: THIS STRUCTURE CONFORMS TO "STANDARD SPECIFICATIONS FOR HIGHWAY BRIDGES" ADOPTED BY THE AMERICAN ASSOCIATION OF STATE HIGHWAY AND TRANSPORTATION OFFICIALS 2002, AND THE ODOT BRIDGE DESIGN MANUAL.

DESIGN LOADING: HS25, THE ALTERNATE MILITARY LOADING AND FUTURE WEARING SURFACE (FWS) OF 60 PSF.

DESIGN DATA:

CONCRETE CLASS OSC2 - COMPRESSIVE STRENGTH 4500 P.S.I.(SUPERSTRUCTURE)
CONCRETE CLASS OSC1 - COMPRESSIVE STRENGTH 4000 P.S.I.(SUBSTRUCTURE)
REINFORCING STEEL - ASTM A615 OR A996
GRADE 60 MINIMUM YIELD STRENGTH 60,000 P.S.I.

CONCRETE FOR PRESTRESSED BEAMS:
COMPRESSIVE STRENGTH (FINAL) - 7,000 PSI
COMPRESSIVE STRENGTH (RELEASE) - 5,500 PSI

PRESTRESSING STRAND:
AREA = 0.167 SQ.IN.
ULTIMATE STRENGTH = 270 KSI
INITIAL STRESS = 202.5 KSI (LOW RELAXATION STRANDS)

DECK PROTECTION METHOD:

EPOXY COATED REINFORCING STEEL
2½" CONCRETE COVER
SEALING OF CONCRETE SURFACES

MONOLITHIC WEARING SURFACE IS ASSUMED, FOR DESIGN PURPOSES, TO BE 1" THICK.

PILES TO BEDROCK: DRIVE PILES TO REFUSAL ON BEDROCK. THE DEPARTMENT WILL CONSIDER REFUSAL TO BE OBTAINED BY PENETRATING SOFT BEDROCK FOR SEVERAL INCHES WITH A MINIMUM RESISTANCE OF 20 BLOWS PER INCH OR BY CONTACTING HARD BEDROCK AND THE PILE RECEIVING AT LEAST 20 BLOWS. SELECT THE HAMMER SIZE TO ACHIEVE THE REQUIRED DEPTH TO BEDROCK AND REFUSAL.

THE ULTIMATE BEARING VALUE IS 130 TONS PER PILE FOR THE HP12x53 ABUTMENT PILES.

THE ULTIMATE BEARING VALUE IS 136 TONS PER PILE FOR THE HP12x53 PIER PILES.

ABUTMENT PILES:
96 PILES 40 FEET LONG, ORDER LENGTH

PIER PILES:
140 PILES 20 FEET LONG, ORDER LENGTH

ITEM 507, STEEL POINTS OR SHOES, AS PER PLAN: USE STEEL PILE POINTS TO PROTECT THE TIPS OF THE PROPOSED STEEL PILING. FURNISH STEEL POINTS FROM THE FOLLOWING MANUFACTURERS/ SUPPLIERS: ASSOCIATED PILE AND FITTING CORPORATION, 262 RUTHERFORD BLVD., CLIFTON, NEW JERSEY 07014, PHONE: (973) 773-8400, (800) 526-9047, FAX: (973) 773-8442; INTERNATIONAL CONSTRUCTION EQUIPMENT, INC., 301 WAREHOUSE DRIVE, MATTEWS, NORTH CAROLINA 28015, PHONE: (704) 821-8200, (888) 423-8721, FAX: (704) 821-8201; DOUGHERTY FOUNDATION PRODUCTS, INC., P.O. BOX 688, FRANKLIN LAKES, NEW JERSEY 07417, PHONE (201) 337-5748, FAX: (201) 337-9022; VERSA STEEL INC., 1618 N.E. FIRST AVE., PORTLAND, OREGON 97232, PHONE: (503) 287-9822, (800) 678-0814, FAX : (503) 287-7483; VERSABITE PILING ACCESSORIES, 1704 TOWER INDUSTRIAL DR., MONROE, NORTH CAROLINA 28110, PHONE: (800) 280-9950, (704) 225-1566, FAX: (704) 225-1567; OR BY A MANUFACTURER THAT CAN FURNISH A STEEL POINT THAT IS ACCEPTABLE TO DIRECTOR.THE MATERIAL USED FOR THE MANUFACTURING OF PILE POINTS SHALL CONFORM TO ASTM A27/A27M 65/35 [450/240] - CLASS 2 - HEAT TREATED OR AASHTO M103/M103M 65/35 [450/240] - HEAT TREATED. WELD THE PILE POINTS TO THE PILE IN ACCORDANCE WITH AWS D1.5 OR THE MANUFACTURER'S WRITTEN WELDING PROCEDURE SUPPLIED TO THE ENGINEER BEFORE THE WELDING IS PERFORMED. SUBMIT A NOTARIZED COPY OF THE MILL TEST REPORT TO THE ENGINEER.

UTILITY LINES: THE UTILITIES SHALL BEAR ALL EXPENSE INVOLVED IN RELOCATING (INSTALLING) THE AFFECTED UTILITY LINES. THE CONTRACTOR AND UTILITIES ARE TO COOPERATE BY ARRANGING THEIR WORK IN SUCH A MANNER THAT INCONVENIENCE TO EITHER WILL BE HELD TO A MINIMUM.

ITEM 517, RAILING (CONCRETE PARAPET WITH TWIN STEEL TUBE RAILING), AS PER PLAN: FURNISH RAILING CONFORMING TO CMS 517 EXCEPT CONCRETE SHALL BE IN ACCORDANCE WITH SUPPLEMENTAL SPECIFICATION 898, QC/QA CONCRETE, OSC2. THE CONCRETE PILASTERS, AS DETAILED ON SHEET 21/30, SHALL BE INCLUDED WITH ITEM 517, RAILING (CONCRETE PARAPET WITH TWIN STEEL TUBE RAILING), AS PER PLAN FOR PAYMENT.

ITEM 516, SEMI-INTEGRAL ABUTMENT EXPANSION JOINT SEAL, AS PER PLAN: INSTALL A 3 FOOT WIDE NEOPRENE SHEET AT LOCATIONS SHOWN IN THE PLANS. SECURE THE NEOPRENE SHEETING TO THE CONCRETE WITH 1¼" x #10 GAGE (LENGTH x SHANK DIAMETER) GALVANIZED BUTTON HEAD SPIKES THROUGH A 1 INCH OUTSIDE DIAMETER, #10 GAGE GALVANIZED WASHER. MAXIMUM FASTENER SPACING IS 9 INCHES. USE OF OTHER SIMILAR GALVANIZED DEVICES, WHICH WILL NOT DAMAGE EITHER THE NEOPRENE OR THE CONCRETE WILL BE USED SUBJECT TO THE APPROVAL OF THE ENGINEER.

CENTER THE NEOPRENE STRIPS ON ALL JOINTS. FOR HORIZONTAL JOINTS, SECURE THE HORIZONTAL NEOPRENE STRIP BY USING A SINGLE LINE OF FASTENERS, STARTING AT 6 INCHES (+/-) FROM THE TOP OF THE NEOPRENE STRIP. FOR THE VERTICAL JOINTS SECURE THE VERTICAL NEOPRENE STRIP BY USING A SINGLE VERTICAL LINE OF FASTENERS, STARTING AT 6 INCHES (+/-) FROM THE VERTICAL EDGE OF THE NEOPRENE STRIP NEAREST TO THE CENTERLINE OF ROADWAY. FOR VERTICAL JOINTS, INSTALL 2 ADDITIONAL FASTENERS AT 6 INCHES, CENTER TO CENTER, ACROSS THE TOP OF THE NEOPRENE STRIP ON THE SAME SIDE OF THE VERTICAL JOINT AS THE SINGLE VERTICAL ROW OF FASTENERS IS LOCATED.

THE VERTICAL NEOPRENE STRIPS SHALL COMPLETELY OVERLAP THE HORIZONTAL STRIPS. LAP LENGTHS OF THE HORIZONTAL STRIPS THAT ARE NOT VULCANIZED OR ADHESIVE BONDED SHALL BE AT LEAST 1 FOOT IN LENGTH, OR 6 INCHES IN LENGTH IF THE LAP IS VULCANIZED OR ADHESIVE BONDED. NO LAPS ARE ACCEPTABLE IN VERTICALLY INSTALLED NEOPRENE STRIPS.

THE NEOPRENE SHEETING SHALL BE 3/32 INCH THICK, GENERAL PURPOSE, HEAVY DUTY NEOPRENE SHEET WITH NYLON FABRIC REINFORCEMENT. THE SHEETING SHALL BE "FAIRPRENE NUMBER NN-0003", BY E.I. DUPONT DE NEMOURS AND COMPANY, INC., "WINGPRENE" BY THE GOODYEAR TIRE AND RUBBER COMPANY, OR AN APPROVED ALTERNATE. THE NEOPRENE SHEETING SHALL CONFORM TO THE FOLLOWING.

DESCRIPTION OF TEST	ASTM METHOD	REQUIREMENT
THICKNESS, INCHES	D 751	.094" ± .01
BREAKING STRENGTH, GRAB, LBS. MINIMUM (LONG X TRANS.)	D 751	700 X 700
ADHESIVE STRIP, 1" WIDE x 2" LONG, LBS MINIMUM	D 751	9
BURST STRENGTH, PSI MINIMUM	D 751	1400
HEAT AGING, 70 HRS. 212°F. 180° BEND WITHOUT CRACKING	D 2136	NO CRACKING OF COATING
LOW TEMP. BRITTLENESS 1 HR. -40°F.BEND AROUND ¼" MANDREL	D 2136	NO CRACKING OF COATING

METHOD OF MEASUREMENT: THE DEPARTMENT WILL MEASURE THE TOTAL LENGTH OF JOINT TO BE SEALED BY THE NUMBER OF FEET.

BASIS OF PAYMENT: THE DEPARTMENT WILL PAY FOR ACCEPTED QUANTITIES AT THE CONTRACT PRICE FOR ITEM 516, SEMI-INTEGRAL ABUTMENT EXPANSION JOINT SEAL, AS PER PLAN.

LJB Inc. - 3100 Research Blvd. - P.O. Box 20246
Dayton, OH 45420-0246
(937) 259-5000 tel - (937) 259-5100 fax ljbinc.com

DESIGNED DWS | DRAWN MHD | REVIEWED MPH | DATE 3-08
CHECKED AMT | REVISED | STRUCTURE FILE NUMBER 5706416

GENERAL NOTES
BRIDGE NO. MOT-75-0075
MIAMISBURG-SPRINGBORO PIKE OVER I-75

MOT-75-0.75
PID 77246

655/773

GENERAL NOTES CONTINUED

PROPRIETARY RETAINING WALL DATA: THE PROPRIETARY WALL SUPPLIER SHALL DESIGN THE INTERNAL STABILITY OF A MECHANICALLY STABILIZED EARTH (MSE) WALL IN ACCORDANCE WITH SUPPLEMENTAL SPEC. 840 TO SUPPORT THE ABUTMENT. THE DESIGN FOR INTERNAL STABILITY SHALL INCLUDE AN UNFACTORED HORIZONTAL STRIP LOAD FROM THE SUPERSTRUCTURE OF 3.8 K/FT APPLIED PERPENDICULAR TO THE FACE OF WALL AT THE BASE OF THE CONCRETE FOOTING.

ITEM 898, OC/OA CONCRETE, CLASS QSC2, SUPERSTRUCTURE (APPROACH SLAB), 17", AS PER PLAN: FURNISH APPROACH SLABS CONFORMING TO CMS 526 EXCEPT CONCRETE SHALL BE IN ACCORDANCE WITH SUPPLEMENTAL SPECIFICATION 898, QC/QA CONCRETE, CLASS QSC2. THE ACCEPTED QUANTITIES SHALL INCLUDE: CONCRETE, CURBS, REINFORCING STEEL, JOINT FILLERS, JOINT SEALERS, JOINT SEALS, WATERPROOFING AND SEALING OF APPROACH SLAB PARAPET CONCRETE SURFACES. THE DEPARTMENT WILL MEASURE APPROACH SLABS BY THE NUMBER OF SQUARE YARDS. THE DEPARTMENT WILL INITIALLY PAY THE FULL BID PRICE TO THE CONTRACTOR UPON COMPLETING THE WORK. THE DEPARTMENT WILL CALCULATE THE FINAL ADJUSTED PAYMENT ACCORDING TO 898.17 AND INCLUDE APPROACH SLAB CONCRETE AND DECK CONCRETE IN THE SAME LOT TO DETERMINE FINAL PAY FACTORS. PARAPETS ON THE APPROACH SLABS SHALL BE CONSTRUCTED IN ACCORDANCE WITH THE DETAILS SHOWN ON SHEETS 23/30 THRU 27/30, AND INCLUDED WITH THIS ITEM FOR PAYMENT.

ITEM 898, QC/QA CONCRETE, CLASS QSC2, SUPERSTRUCTURE (DECK), AS PER PLAN: THE DEPARTMENT WILL CALCULATE THE FINAL ADJUSTED PAYMENT ACCORDING TO 898.17 AND INCLUDE APPROACH SLAB CONCRETE AND DECK CONCRETE IN THE SAME LOT TO DETERMINE FINAL PAY FACTORS.

ITEM 898, QC/QA CONCRETE, CLASS QSC1, SUBSTRUCTURE (ABUTMENT), AS PER PLAN: THE UNREINFORCED CONCRETE SLAB BETWEEN THE ABUTMENT FOOTING AND MSE RETAINING WALL, INCLUDING THE 705.04 JOINT SEALER AND PEJF, SHALL BE INCLUDED IN ITEM 898, QC/QA CONCRETE, CLASS QSC1, SUBSTRUCTURE (ABUTMENT), AS PER PLAN FOR PAYMENT. JOINTS IN THE UNREINFORCED CONCRETE SLAB SHALL BE IN ACCORDANCE WITH CMS SECTION 601.11.

PILE DRIVING CONSTRAINTS: PRIOR TO DRIVING ABUTMENT PILES TO THE ULTIMATE BEARING VALUE (UBV) OR TO REFUSAL ON BEDROCK, CONSTRUCT THE MSE WALL AND THE BRIDGE APPROACH EMBANKMENT BEHIND THE ABUTMENT UP TO THE BOTTOM OF THE FOOTONG FOR A MINIMUM DISTANCE OF 100 FEET BEHIND EACH ABUTMENT. THE CONTRACTOR MAY PRE-DRIVE ABUTMENT PILES BEFORE CONSTRUCTING MSE WALLS. PRE-DRIVING CONSISTS OF INSTALLING THE ABUTMENT PILES INTO THE SOIL ONLY AS FAR AS NECESSARY SO THAT THE PILE WILL REMAIN VERTICAL DURING MSE WALL CONSTRUCTION. IF PRE-DRIVING PILES, INSTALL PILE SLEEVES AROUND PILE BEFORE CONSTRUCTING THE MSE WALL. AT LEAST THREE FEET OF PILE MUST EXTEND ABOVE THE TOP OF THE PILE SLEEVE TO MEET THE REQUIREMENTS OF CMS 507.09 REGARDING SPLICES. DO NOT DRIVE ABUTMENT PILES TO THE UBV OR TO REFUSAL ON BEDROCK UNTIL AFTER THE ABOVE REQUIRED MSE WALL AND EMBANKMENT HAVE BEEN CONSTRUCTED AND A 60 CALENDER DAY WAITING PERIOD HAS ELAPSED. THE ENGINEER MAY ADJUST THE LENGTH OF THE WAITING PERIOD BASED ON SETTLEMENT PLATFORM READINGS. AFTER THE SPECIFIED WAITING PERIOD HAS ELAPSED, DRIVE ABUTMENT PILES TO THE UBV OR TO REFUSAL ON BEDROCK. IN ORDER TO REMOVE ANY NEGATIVE SKIN FRICTION THAT HAS DEVELOPED DURING THE WAITING PERIOD, DRIVE EACH ABUTMENT PILE A DISTANCE OF AT LEAST 0.5 INCH.

IF NOT PRE-DRIVING ABUTMENT PILES, INSTALL THE ABUTMENT PILE THROUGH PILE SLEEVES AFTER THE ABOVE REQIURED MSE WALL AND EMBANKMENT HAVE BEEN CONSTRUCTED AND THE SPECIFIED WAITING PERIOD HAS ELAPSED.

PILE SPLICES: IN LIEU OF USING THE FULL PENETRATION BUTT WELDS SPECIFIED IN CMS 507.09 TO SPLICE STEEL H-PILES, THE CONTRACTOR MAY USE A MANUFACTURED H-PILE SPLICER. FURNISH SPLICERS FROM THE FOLLOWING MANUFACTURER:

ASSOCIATED PILE AND FITTING CORPORATION
262 RUTHERFORD BLVD.
CLIFTON, NEW JERSEY 07014

INSTALL AND WELD THE SPLICER TO THE PILE SECTIONS IN ACCORDANCE WITH THE MANUFACTURER'S WRITTEN ASSEMBLY PROCEDURE SUPPLIED TO THE ENGINEER BEFORE THE WELDING IS PERFORMED.

EXISTING STRUCTURE VERIFICATION: DETAILS AND DIMENSIONS SHOWN ON THESE PLANS PERTAINING TO THE EXISTING STRUCTURE HAVE BEEN OBTAINED FROM PLANS OF THE EXISTING STRUCTURE AND FROM FIELD OBSERVATIONS AND MEASUREMENTS. CONSEQUENTLY, THEY ARE INDICATIVE OF THE EXISTING STRUCTURE AND THE PROPOSED WORK BUT THEY SHALL BE CONSIDERED TENTATIVE AND APPROXIMATE. THE CONTRACTOR IS REFERRED TO CMS SECTIONS 102.05 AND 105.02.

BASE CONTRACT BID PRICES UPON A RECOGNITION OF THE UNCERTAINTIES DESCRIBED ABOVE AND UPON A PREBID EXAMINATION OF THE EXISTING STRUCTURE. HOWEVER, THE DEPARTMENT WILL PAY FOR ALL PROJECT WORK BASED UPON ACTUAL DETAILS AND DIMENSIONS WHICH HAVE BEEN VERIFIED IN THE FIELD.

EXISTING STRUCTURE PLANS: PLANS MAY BE EXAMINED BY PROSPECTIVE BIDDERS AT THE OHIO DEPARTMENT OF TRANSPORTATION DISTRICT 7 OFFICES, 1001 ST. MARY'S AVENUE, SYDNEY, OHIO 45365.
PHONE: 937-492-1141

ITEM 512, SEALING OF CONCRETE SURFACES (EPOXY-URETHANE): THE FINISH COAT COLOR FOR THE ABUTMENTS, PIERS, AND PARAPETS SHALL BE FEDERAL STANDARD COLOR, FS-595B-30475. THE FINISH COAT COLOR FOR THE PRESTRESSED CONCRETE BEAMS SHALL BE FEDERAL STANDARD, FS-595B-10091.

ITEM SPECIAL-FORMLINER: A FORMLINER IN ACCORDANCE WITH 508.03 SHALL BE USED TO PRODUCE THE ARCHITECTURAL SURFACES ACCORDING TO THE LIMITS SHOWN ON THE PLANS. THE FORMLINER USED TO PRODUCE THE ARCHITECTURAL SURFACE TEXTURE SHALL BE AS FOLLOWS, OR AN EQUAL FORMLINER MATERIAL APPROVED BY THE DIRECTOR.

PATTERN	DESCRIPTION	MANUFACTURER
1118	SHERMAN AVENUE STONE	CUSTOMROCK FORMLINERS
16999	GEORGIA ASHLAR	FITZGERALD FORMLINERS
1515	SC ASHLAR	SPEC FORMLINERS, INC.

FORMLINER MANUFACTURER INFORMATION:

CUSTOMROCK FORMLINERS 2020 WEST 7TH STREET, ST.PAUL, MN 55116, (651)699-1345
FITZGERALD FORMLINERS 1500 EAST CHESTNUT AVENUE, SANTA ANA, CA 92701, (800)547-7760
SPEC FORMLINERS, INC. 530 EAST DYER ROAD, SANTA ANA, CA 92707, (714)429-9500

METHOD OF MEASUREMENT: THE DEPARTMENT WILL MEASURE FORMLINERS BY THE NUMBER OF SQUARE FEET. THE DEPARTMENT WILL DETERMINE THE AREA OF THE FORMLINER FROM NOMINAL PLAN DIMENSIONS.

BASIS OF PAYMENT: THE DEPARTMENT WILL PAY FOR FALSEWORK, STRUCTURAL FORMWORK, FURNISHING, PLACING, CONSOLIDATING, FINISHING AND CURING PORTLAND CEMENT CONCRETE SEPARATELY. PAYMENT FOR ITEM SPECIAL.FORMLINER INCLUDES ALL MATERIALS AND LABOR REQUIRED TO PRODUCE THE TEXTURED CONCRETE SURFACES SHOWN ON THE PLANS AND DESCRIBED HERE IN.

ITEM 630 SIGN, FLAT SHEET, AS PER PLAN: THIS ITEM SHALL BE USED TO INSTALL A NEW STRUCTURE IDENTIFICATION SIGN ON THE SIDE OF THE CONCRETE PARAPET. SEE SHEET 1/30 FOR LOCATION OF SIGN.THE SIGN SIZE SHALL BE 24"x4". THE SIGN SHALL BE ALUMINUM WITH NON-REFLECTIVE WHITE SHEETING BACKGROUND AS PER CMS 730.20. LETTERS SHALL BE BLACK 2" HEIGHT, SERIES C STROKE WIDTH, AND SILK SCREENED AS PER CMS 730.22. SIGNS SHALL BE FASTENED TO THE CONCRETE PARAPET BY TWO 5/16" DIAMETER BOLTS x 3" LONG TAP CONS OR EQUIVALENT. PAYMENT SHALL INCLUDE ALL LABOR, MATERIAL AND EQUIPMENT REQUIRED TO PERFORM THE ITEM OF WORK AS DESCRIBED ABOVE.

LJB Inc. - 3100 Research Blvd. - P.O. Box 20246
Dayton, OH 45420-0246
(937) 259-5000 tel - (937) 259-5100 fax ljbinc.com

DESIGNED DWS | DRAWN MHD | REVIEWED MPH | DATE 3-08
CHECKED AMT | REVISED | STRUCTURE FILE NUMBER 5706416

GENERAL NOTES (CONTINUED)
BRIDGE NO. MOT-75-0075
MIAMISBURG-SPRINGBORO PIKE OVER I-75

MOT-75-0.75
PID 77246

656
773

ESTIMATED QUANTITIES

EARMARK/ LOCAL	IR 90/10	ITEM	ITEM EXTENSION	TOTAL	UNIT	DESCRIPTION	ABUTMENTS	PIERS	SUPERSTRUCTURE	GENERAL	AS PER PLAN SHEET NUMBER
	LUMP	202	11002	LUMP		STRUCTURE REMOVED, OVER 20 FOOT SPAN				LUMP	
	172	202	22900	172	SQ.YD.	APPROACH SLAB REMOVED				172	
	LUMP	503	11100	LUMP		COFFERDAMS, CRIBS AND SHEETING				LUMP	
	565	503	21100	565	CU.YD.	UNCLASSIFIED EXCAVATION		565			
	LUMP	505	11100	LUMP		PILE DRIVING EQUIPMENT MOBILIZATION				LUMP	
	6640	507	00200	6640	FT.	STEEL PILES HP12x53, FURNISHED	3840	2800			
	5460	507	00250	5460	FT.	STEEL PILES HP12x53, DRIVEN	3360	2100			
	236	507	93301	236	EACH	STEEL POINTS OR SHOES, AS PER PLAN	96	140			2 / 30
	619265	509	10000	619265	POUND	EPOXY COATED REINFORCING STEEL	17656	90322	511287		
	3006	512	10100	3006	SQ.YD.	SEALING OF CONCRETE SURFACES (EPOXY-URETHANE)	222	750	2034		
	171	512	33000	171	SQ.YD.	TYPE 2 WATERPROOFING	171				
	39	515	15040	39	EACH	DRAPED STRAND PRESTRESSED CONCRETE BRIDGE I-BEAM MEMBERS, LEVEL 3, TYPE 4 MOD. (66")			39		
	108	515	20001	108	EACH	INTERMEDIATE DIAPHRAGMS, AS PER PLAN			108		14 / 30
	102	516	14000	102	SQ.FT.	PREFORMED EXPANSION JOINT FILLER, MISC.: VARIABLE THICKNESS			102		
	256	516	14021	256	FT.	SEMI-INTEGRAL ABUTMENT EXPANSION JOINT SEAL, AS PER PLAN	256				2 / 30
	52	516	44201	52	EACH	ELASTOMERIC BEARING WITH INTERNAL LAMINATES AND LOAD PLATE (NEOPRENE), AS PER PLAN (3¼"x14"x18")			52		17 / 30
	26	516	44301	26	EACH	ELASTOMERIC BEARING WITH INTERNAL LAMINATES AND LOAD PLATE (NEOPRENE), AS PER PLAN (4 3/16"x15"x22")			26		17 / 30
	1006	517	75121	1006	FT.	RAILING (CONCRETE PARAPET WITH TWIN STEEL TUBE RAILING), AS PER PLAN			1006		2 / 30
	146	518	21200	146	CU.YD.	POROUS BACKFILL WITH FILTER FABRIC	146				
	240	518	40000	240	FT.	6" PERFORATED CORRUGATED PLASTIC PIPE	240				
	5768	SPECIAL	53013000	5768	SQ.FT.	FORMLINER		4393	1375		3 / 30
	671	SPECIAL	60740001	671	FT.	VANDAL PROTECTION FENCE, ORNAMENTAL STEEL FENCE SYSTEM, AS PER PLAN			671		19 / 30
	64	625	10614	64	EACH	LIGHT POLE ANCHOR BOLTS ON STRUCTURE				64	
	18	625	29920	18	EACH	STRUCTURE JUNCTION BOX				18	
	1	625	33000	1	EACH	STRUCTURE GROUNDING SYSTEM				1	
	2	630	80101	2	SQ.FT.	SIGN, FLAT SHEET, AS PER PLAN				2	3 / 30
	1430	898	10201	1430	CU.YD.	QC/QA CONCRETE, CLASS QSC2, SUPERSTRUCTURE (DECK), AS PER PLAN			1430		3 / 30
	760	898	10709	760	SQ.YD.	QC/QA CONCRETE, CLASS QSC2, SUPERSTRUCTURE (APPROACH SLAB), 17", AS PER PLAN			760		3 / 30
	314	898	20101	314	CU.YD.	QC/QA CONCRETE, CLASS QSC1, SUBSTRUCTURE (PIER ABOVE FOOTING), AS PER PLAN		314			13 / 30
	272	898	20151	272	CU.YD.	QC/QA CONCRETE, CLASS QSC1, SUBSTRUCTURE (ABUTMENT), AS PER PLAN	272				3 / 30
	153	898	20300	153	CU.YD.	QC/QA CONCRETE, CLASS QSC1, SUBSTRUCTURE (FOOTING)		153			

QUANTITIES COMPUTED BY: AMT
QUANTITIES CHECKED BY: AMM

LJB Inc. • 3100 Research Blvd. • P.O. Box 20246
Dayton, OH 45420-0246
(937) 259-5000 tel • (937) 259-5100 fax • ljbinc.com

DESIGNED DWS | DRAWN MHD | REVIEWED MPH | DATE 3-08
CHECKED AMT | REVISED | STRUCTURE FILE NUMBER 5706416

ESTIMATED QUANTITIES
BRIDGE NO. MOT-75-0075
MIAMISBURG-SPRINGBORO PIKE OVER I-75

MOT-75-0.75
PID 77246

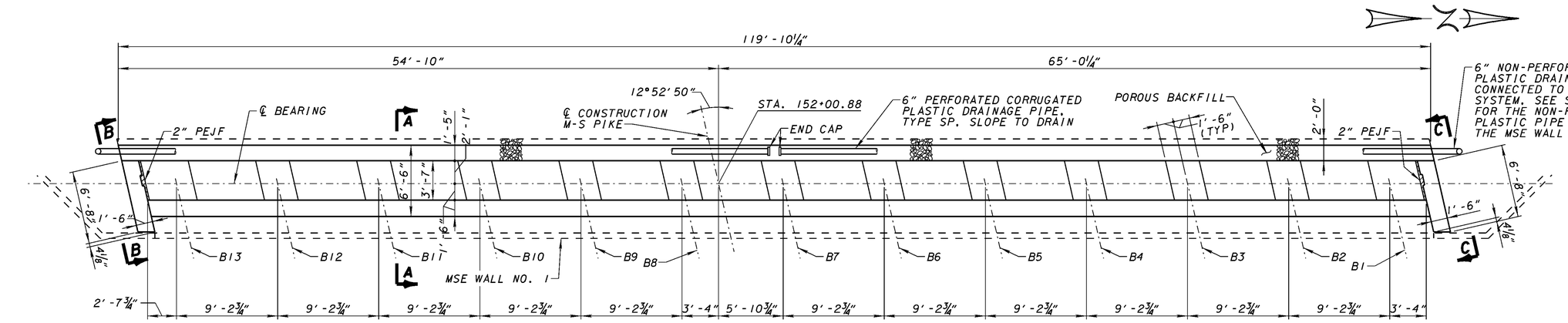

PLAN

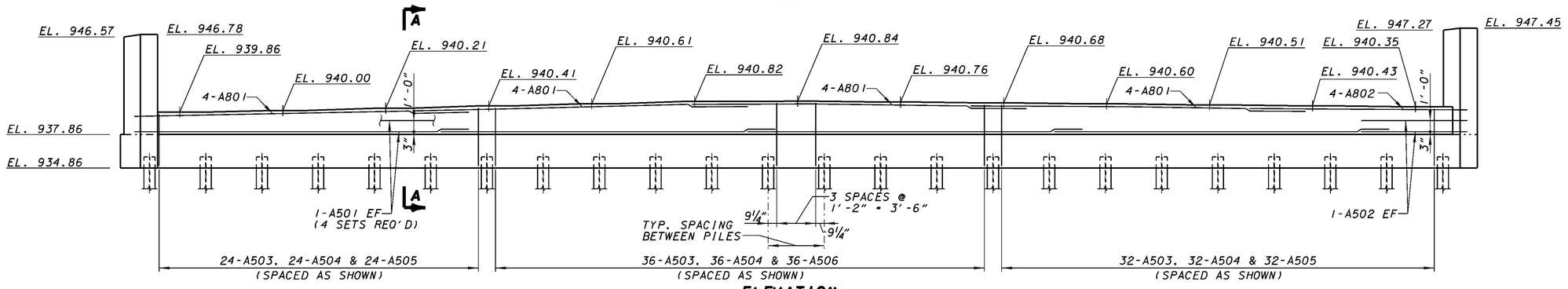

ELEVATION

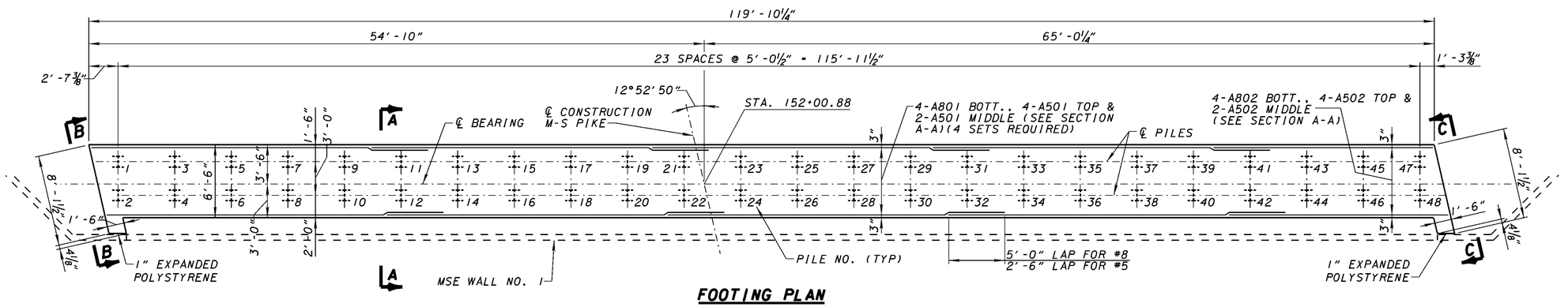

FOOTING PLAN

LEGEND

I - PROPOSED HP12x53 STEEL PILE. VERTICAL (SEE NOTE 7)
PEJF - PREFORMED EXPANSION JOINT FILLER
MSE - MECHANICALLY STABILIZED EARTH
EF - EACH FACE

NOTES

1. FOR GENERAL NOTES, SEE SHEETS 2 / 30 AND 3 / 30.
2. FOR REINFORCING STEEL LIST, SEE SHEET 28 / 30.
3. FOR SECTION A-A, SEE SHEET 7 / 30.
4. FOR VIEWS B-B AND C-C, SEE SHEET 7 / 30.
5. FOR END DIAPHRAGM DETAILS, SEE SHEET 8 / 30.
6. TOTAL HORIZONTAL FORCE TO MSE SOIL REINFORCEMENT ALONG ABUTMENT IS 3.8 k/ft (NOT INCLUDING SAFETY FACTOR). MSE SOIL REINFORCEMENT SHALL BE INCLUDED WITH MSE WALL FOR PAYMENT.
7. DENOTES VERTICAL HP 12x53 PILE INSIDE PILE SLEEVE. PILE SLEEVES SHALL BE CORRUGATED SMOOTH LINED PIPE, 707.33 OR 707.42. FILLED WITH BENTONITE SLURRY. PAYMENT FOR PILE SLEEVES AND BACKFILL SHALL BE INCLUDED WITH THE MSE WALLS.
8. FOR MSE WALL DETAILS, SEE SHEET 685.
9. POROUS BACKFILL WITH FILTER FABRIC, 2 FEET THICK SHALL EXTEND UP TO THE PLANE OF THE SUBGRADE, TO 1 FOOT BELOW THE EMBANKMENT SURFACE, AND LATERALLY TO THE ENDS OF THE FOOTING.

DESIGNED AMT | DRAWN MSD | REVIEWED MPH | DATE 3-08
CHECKED DWS | REVISED | STRUCTURE FILE NUMBER 570616

REAR ABUTMENT
BRIDGE NO. MOT-75-0075
MIAMISBURG-SPRINGBORO PIKE OVER I-75

MOT-75-0.75
PID 77246

5 / 30

658
773

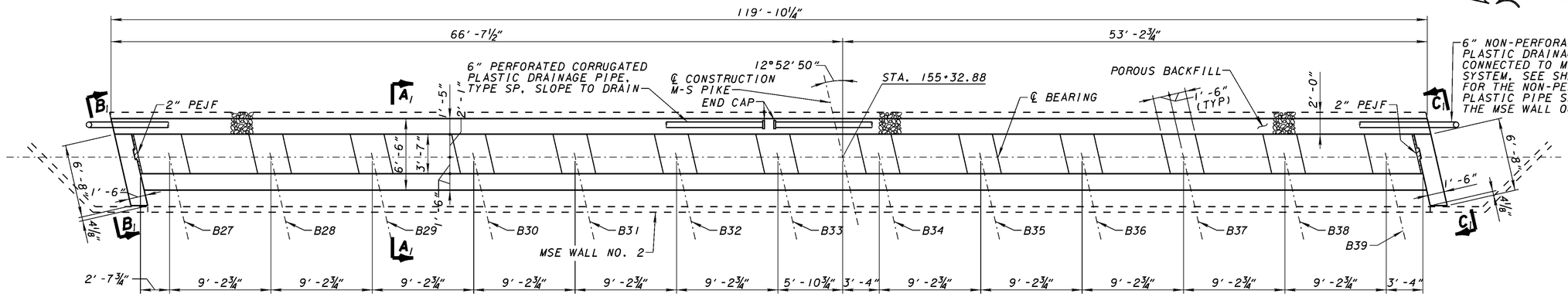

PLAN

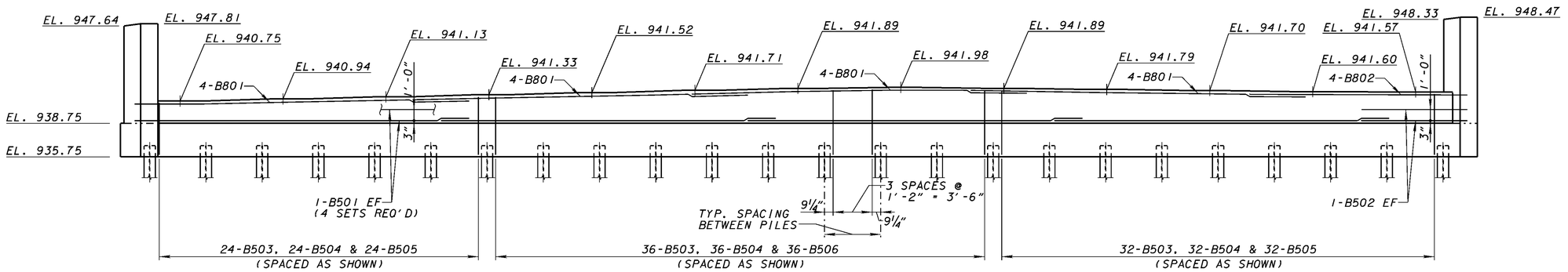

ELEVATION

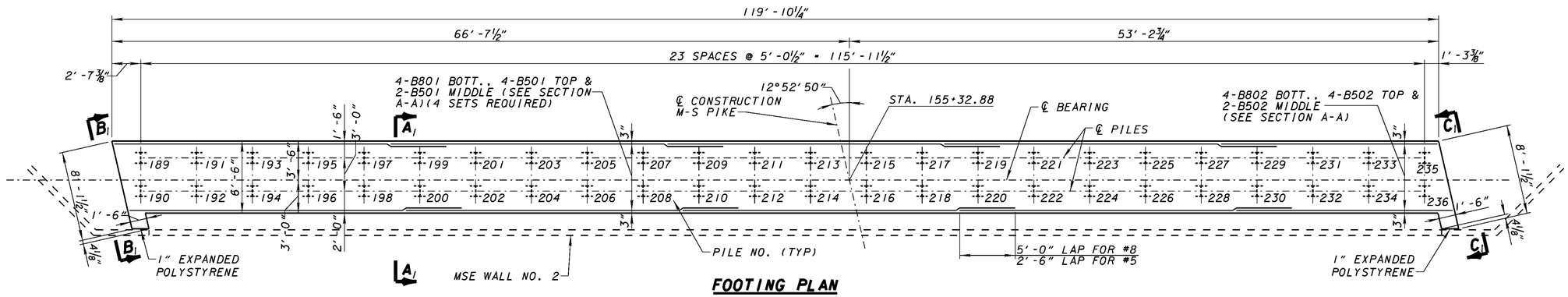

FOOTING PLAN

LEGEND

- ⌶ = PROPOSED HP12x53 STEEL PILE, VERTICAL (SEE NOTE 7)
- PEJF = PREFORMED EXPANSION JOINT FILLER
- MSE = MECHANICALLY STABILIZED EARTH
- EF = EACH FACE

NOTES

1. FOR GENERAL NOTES, SEE SHEETS 2 / 30 AND 3 / 30.
2. FOR REINFORCING STEEL LIST, SEE SHEET 28 / 30.
3. FOR SECTION A_1-A_1, SEE SHEET 7 / 30.
4. FOR VIEWS B_1-B_1 AND C_1-C_1, SEE SHEET 7 / 30.
5. FOR END DIAPHRAGM DETAILS, SEE SHEET 9 / 30.
6. TOTAL HORIZONTAL FORCE TO MSE SOIL REINFORCEMENT ALONG ABUTMENT IS 3.8 k/ft (NOT INCLUDING SAFETY FACTOR). MSE SOIL REINFORCEMENT SHALL BE INCLUDED WITH MSE WALL FOR PAYMENT.
7. DENOTES VERTICAL HP 12x53 PILE INSIDE PILE SLEEVE. PILE SLEEVES SHALL BE CORRUGATED SMOOTH LINED PIPE, 707.33 OR 707.42, FILLED WITH BENTONITE SLURRY. PAYMENT FOR PILE SLEEVES AND BACKFILL SHALL BE INCLUDED WITH THE MSE WALLS.
8. FOR MSE WALL DETAILS, SEE SHEET 686.
9. POROUS BACKFILL WITH FILTER FABRIC, 2 FEET THICK SHALL EXTEND UP TO THE PLANE OF THE SUBGRADE, TO 1 FOOT BELOW THE EMBANKMENT SURFACE, AND LATERALLY TO THE ENDS OF THE FOOTING.

LJB Inc. - 3100 Research Blvd. - P.O. Box 20246
Dayton, OH 45420-0246
(937) 259-5000 tel - (937) 259-5100 fax - ljbinc.com

DESIGNED AMT | DRAWN MSD | REVIEWED MPH | DATE 3-08
CHECKED DWS | REVISED | STRUCTURE FILE NUMBER 5706416

FORWARD ABUTMENT
BRIDGE NO. MOT-75-0075
MIAMISBURG-SPRINGBORO PIKE OVER I-75

MOT-75-0.75
PID 77246

6 / 30

659
773

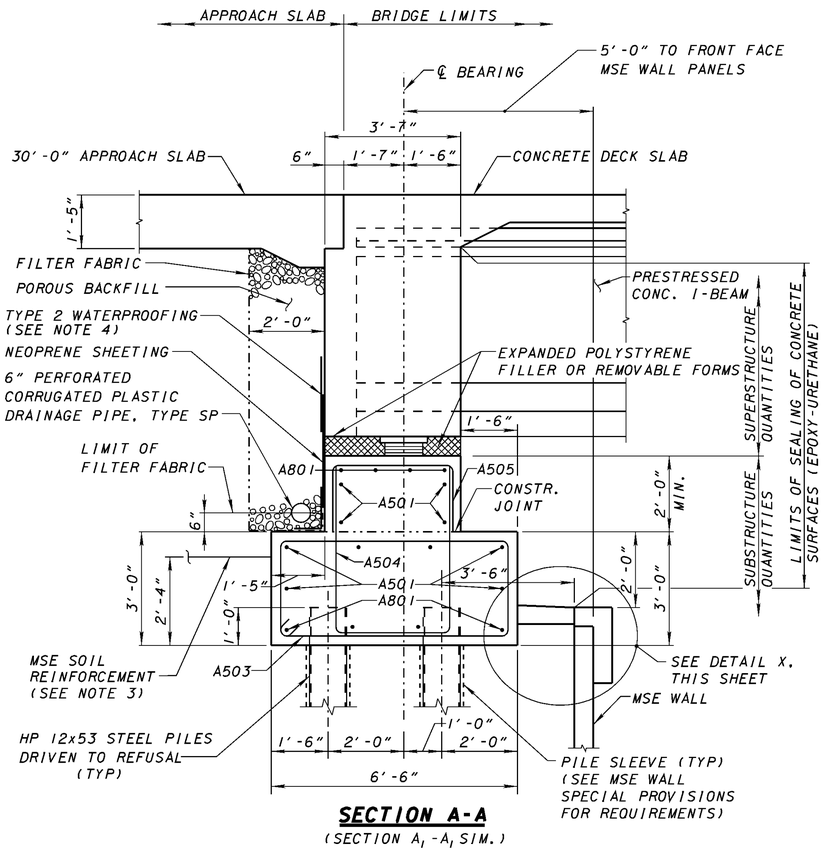

SECTION A-A
(SECTION A_1-A_1 SIM.)

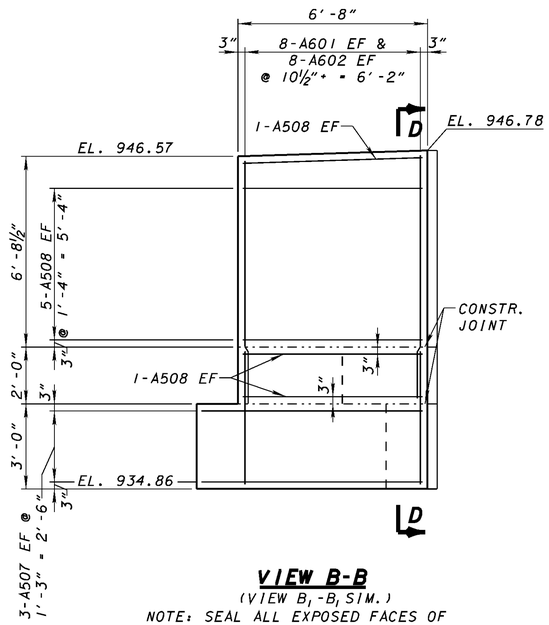

VIEW B-B
(VIEW B_1-B_1 SIM.)
NOTE: SEAL ALL EXPOSED FACES OF CURTAIN WALLS WITH EPOXY-URETHANE SEALER

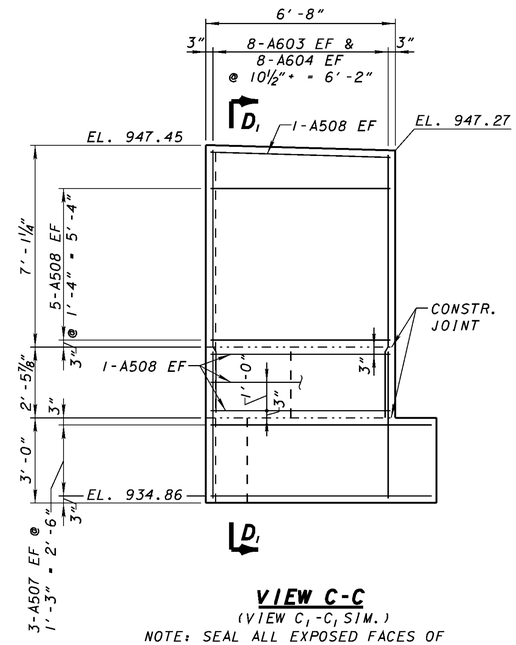

VIEW C-C
(VIEW C_1-C_1 SIM.)
NOTE: SEAL ALL EXPOSED FACES OF CURTAIN WALLS WITH EPOXY-URETHANE SEALER

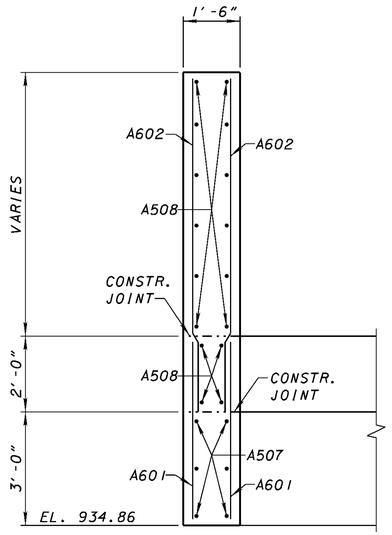

SECTION D-D
(SECTION D_1-D_1 SIM.)

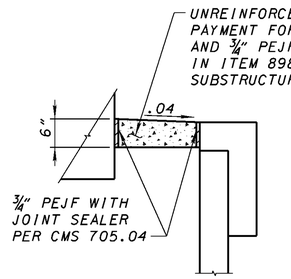

DETAIL X

NOTES

1. FOR GENERAL NOTES, SEE SHEETS 2 / 30 AND 3 / 30.
2. FOR REINFORCING STEEL LIST, SEE SHEET 28 / 30.
3. TOTAL HORIZONTAL FORCE TO MSE SOIL REINFORCEMENT ALONG ABUTMENT IS 3.8 k/ft (NOT INCLUDING SAFETY FACTOR). MSE SOIL REINFORCEMENT SHALL BE INCLUDED WITH MSE WALL FOR PAYMENT.
4. 3'-0" WIDE TYPE 2 WATERPROOFING, CENTERED OVER THE EDGE OF THE NEOPRENE SHEETING, SHALL BE PROVIDED.

LEGEND

PEJF - PREFORMED EXPANSION JOINT FILLER
MSE - MECHANICALLY STABILIZED EARTH
EF - EACH FACE

LJB Inc. - 3100 Research Blvd. - P.O. Box 20246
Dayton, OH 45420-0246
(937) 259-5000 tel - (937) 259-5100 fax ljbinc.com

DESIGNED	DRAWN	REVIEWED	DATE
AMT	MSD	MPH	3-08
CHECKED	REVISED	STRUCTURE FILE NUMBER	
DWS		5706416	

ABUTMENT SECTIONS AND DETAILS
BRIDGE NO. MOT-75-0075
MIAMISBURG-SPRINGBORO PIKE OVER I-75

MOT-75-0.75
PID 77246

7 / 30

660 / 773

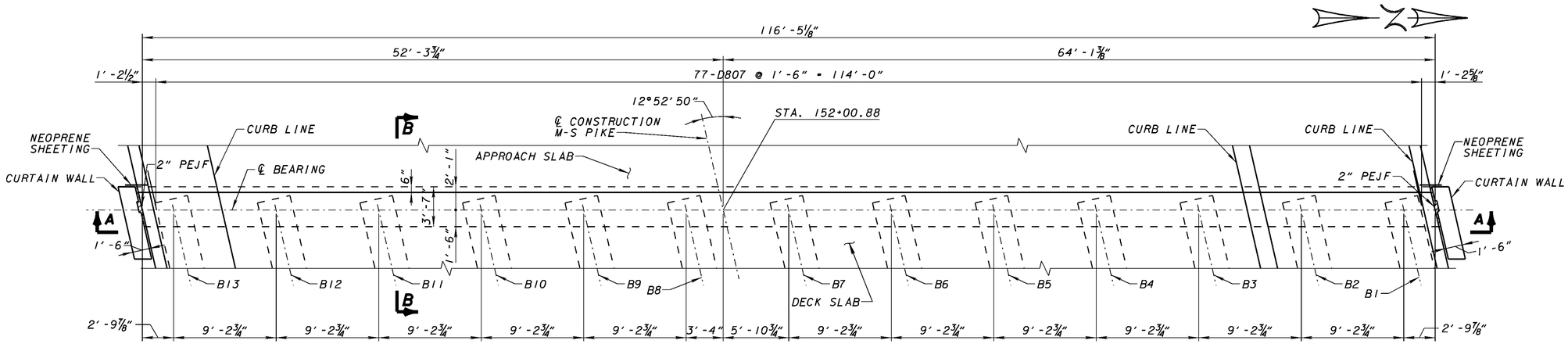

PLAN

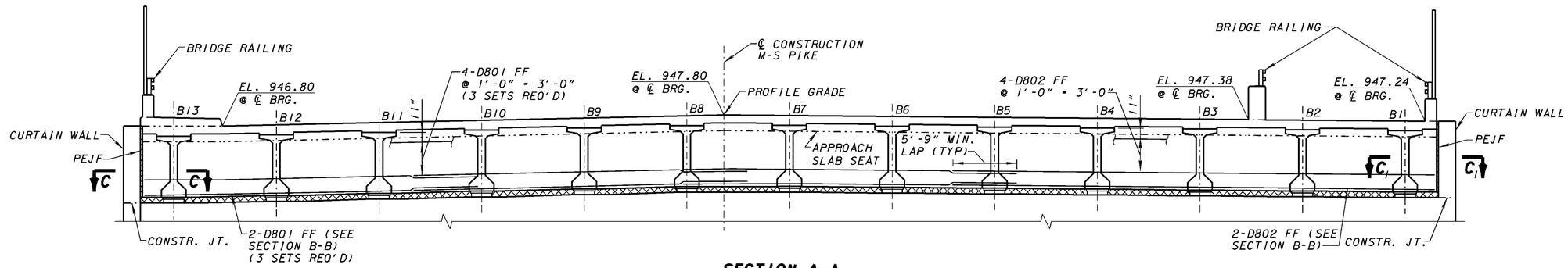

SECTION A-A

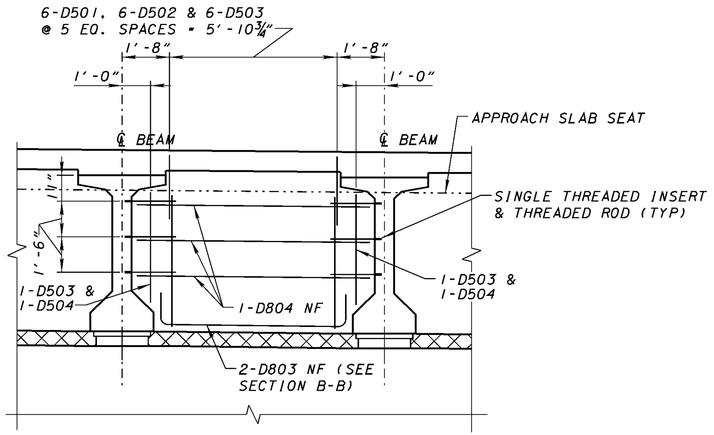

TYPICAL END DIAPHRAGM BAY
(REAR DIAPHRAGM SHOWN, FORWARD DIAPHRAGM SIM.)

LEGEND

FF = FAR FACE
NF = NEAR FACE
PEJF = PREFORMED EXPANSION JOINT FILLER

NOTES

1. FOR GENERAL NOTES, SEE SHEETS 2 / 30 AND 3 / 30.
2. FOR REINFORCING STEEL LIST, SEE SHEET 28 / 30.
3. FOR SECTIONS B-B AND C-C, SEE SHEET 9 / 30.
4. FOR TYPICAL FIRST AND LAST END DIAPHRAGM BAY DETAILS, SEE SHEET 9 / 30.
5. ABUTMENT DIAPHRAGM. PRESTRESSED I-BEAM SUPERSTRUCTURE: PLACE THE CONCRETE ENCASING THE PRESTRESSED I-BEAM STRUCTURAL MEMBERS AS PART OF THE DECK POUR.

LJB Inc. • 3100 Research Blvd. • P.O. Box 20246
Dayton, OH 45420-0246
(937) 259-5000 tel • (937) 259-5100 fax ljbinc.com

DESIGNED AMT | DRAWN MSD | REVIEWED MPH | DATE 3-08
CHECKED DWS | REVISED | STRUCTURE FILE NUMBER 5706416

END DIAPHRAGM AT REAR ABUTMENT
BRIDGE NO. MOT-75-0075
MIAMISBURG-SPRINGBORO PIKE OVER I-75

MOT-75-0.75
PID 77246

8 / 30

661 / 773

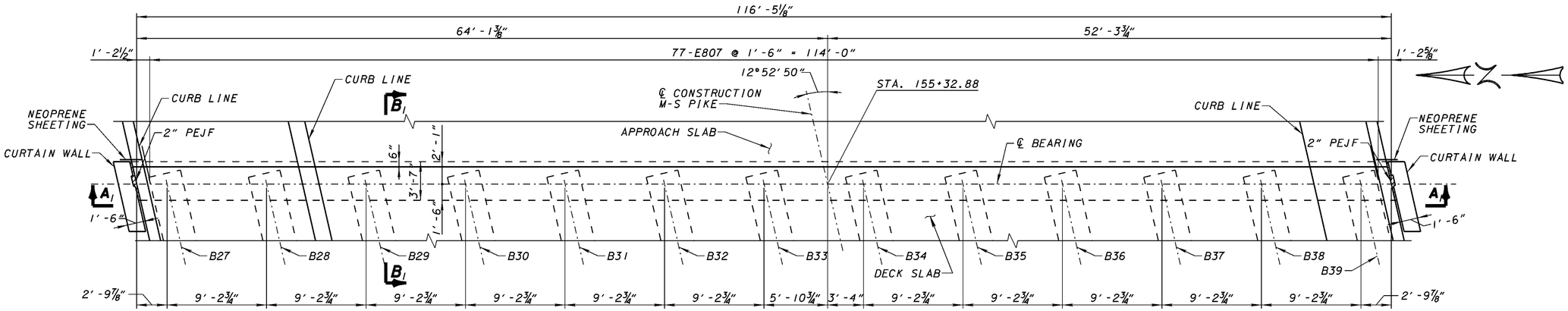

PLAN

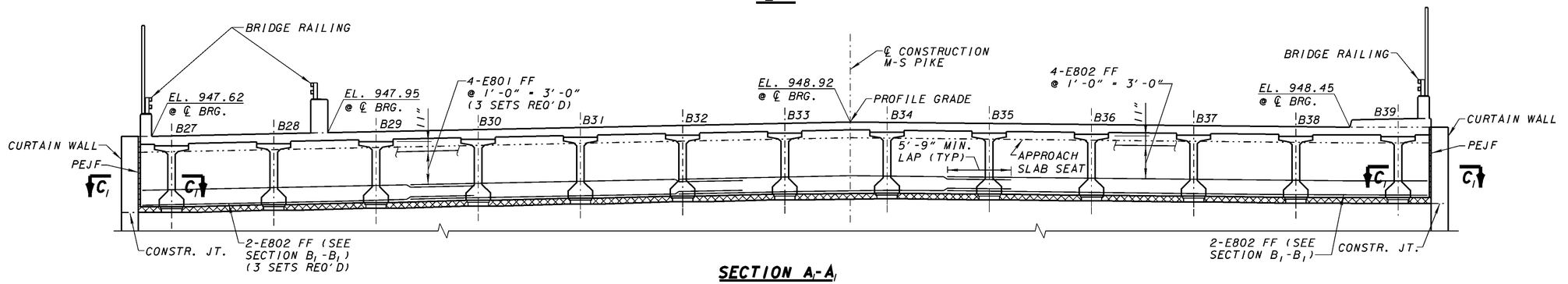

SECTION A-A1

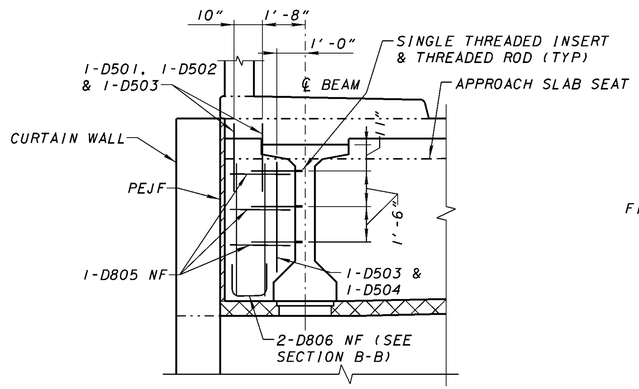

TYPICAL FIRST AND LAST END DIAPHRAGM BAY

(REAR DIAPHRAGM SHOWN. FORWARD DIAPHRAGM SIM.)

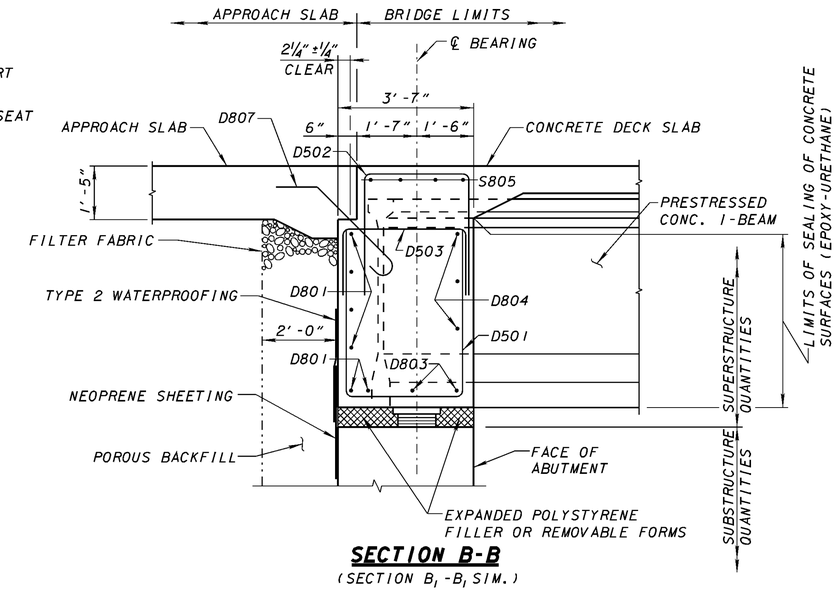

SECTION B-B

(SECTION B_1-B_1 SIM.)

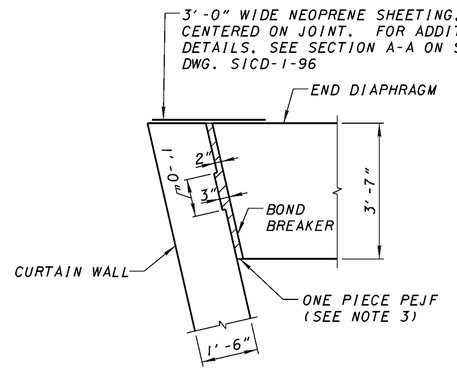

SECTION C-C

(SECTION C_1-C_1 SIM.)

LEGEND

FF - FAR FACE
NF - NEAR FACE
PEJF - PREFORMED EXPANSION JOINT FILLER

NOTES

1. FOR GENERAL NOTES, SEE SHEETS 2 / 30 AND 3 / 30.
2. FOR REINFORCING STEEL LIST, SEE SHEET 28 / 30.
3. ONE PIECE PEJF MAY BE FABRICATED FROM TWO PIECES PROVIDED THAT TRANSVERSE SHEAR TESTS ON SAMPLES DO NOT FAIL ON BOND LINES. LENGTHS SHALL BE AS LONG AS PRACTICABLE.
4. FOR TYPICAL END DIAPHRAGM BAY DETAILS, SEE SHEET 8 / 30.
5. ABUTMENT DIAPHRAGM. PRESTRESSED I-BEAM SUPERSTRUCTURE: PLACE THE CONCRETE ENCASING THE PRESTRESSED I-BEAM STRUCTURAL MEMBERS AS PART OF THE DECK POUR.

LJB Inc. • 3100 Research Blvd. • P.O. Box 20246
Dayton, OH 45420-0246
(937) 259-5000 tel • (937) 259-5100 fax ljbinc.com

DESIGNED AMT | DRAWN MSD | REVIEWED MPH | DATE 3-08
CHECKED DWS | REVISED | STRUCTURE FILE NUMBER 5706416

END DIAPHRAGM AT FORWARD ABUTMENT

BRIDGE NO. MOT-75-0075
MIAMISBURG-SPRINGBORO PIKE OVER I-75

MOT-75-0.75
PID 77246

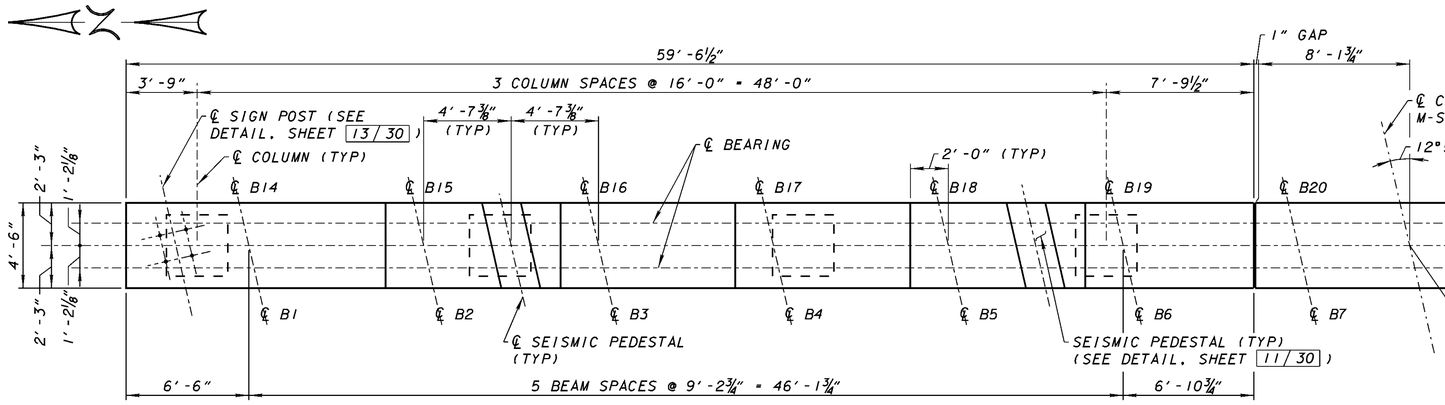

PLAN

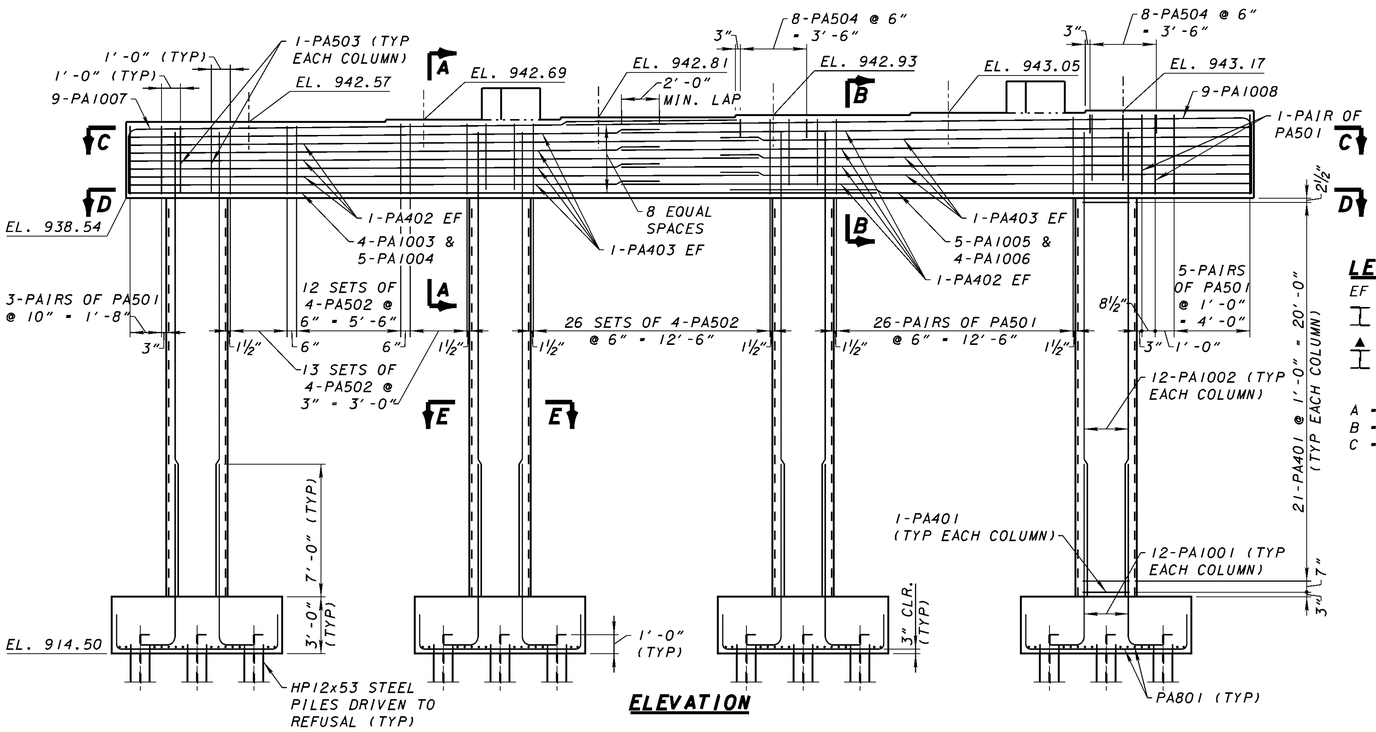

ELEVATION

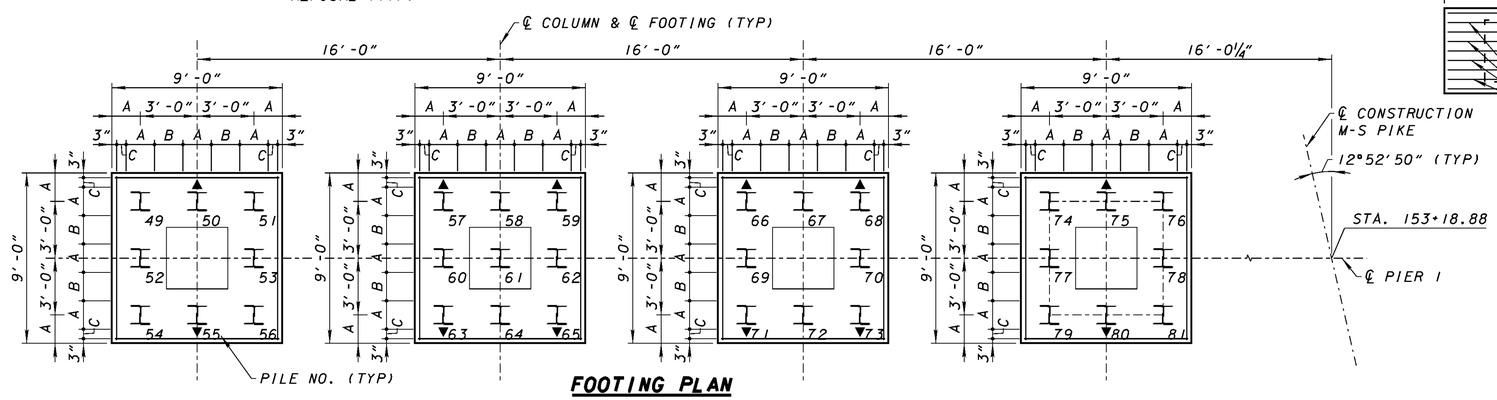

FOOTING PLAN

LEGEND

EF - EACH FACE

- HP12x53, VERTICAL
- HP12x53, BATTERED 4 VERTICAL TO 1 HORIZONTAL IN THE DIRECTION OF THE ARROW

A - 1'-6"
B - 5-PA801 @ 4½" = 1'-6"
C - 2-PA801 @ 6" = 6"

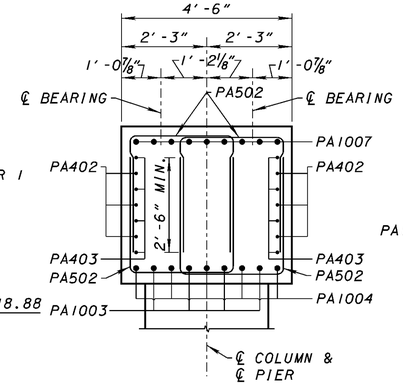

SECTION A-A

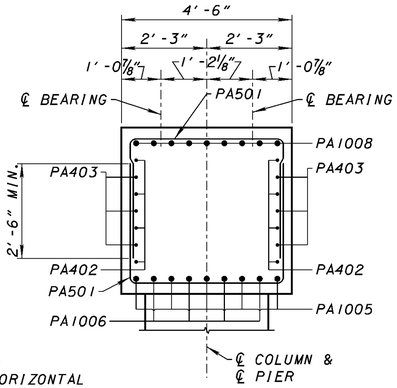

SECTION B-B

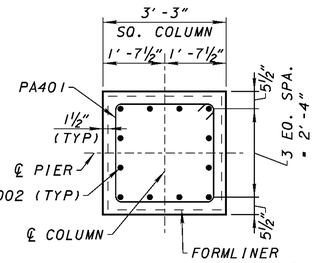

SECTION E-E

(SECTION E₁-E, SIMILAR)

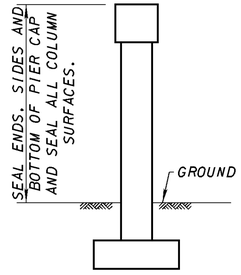

LIMITS OF SEALING OF CONCRETE SURFACES

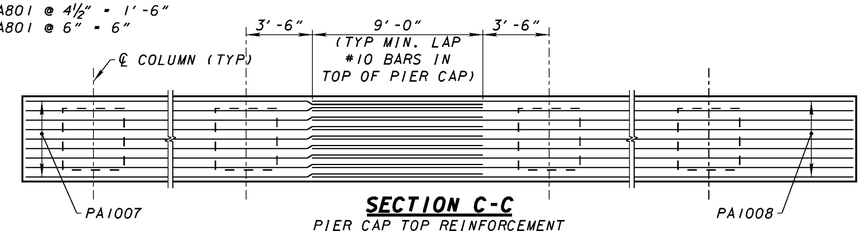

SECTION C-C

PIER CAP TOP REINFORCEMENT

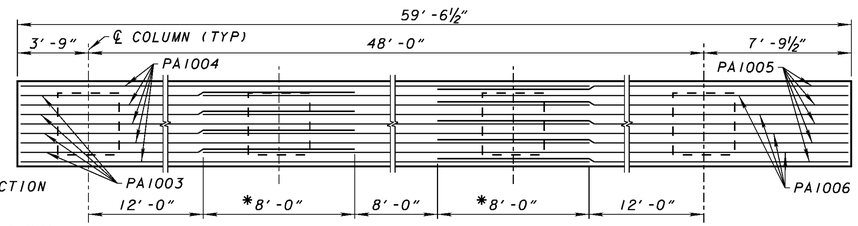

SECTION D-D

PIER CAP BOTTOM REINFORCEMENT

*TYP MIN. LAP #10 BARS IN BOTTOM OF PIER CAP

NOTES:

1. FOR GENERAL NOTES, SEE SHEETS 2/30 AND 3/30.
2. FOR REINFORCING STEEL LIST, SEE SHEET 29/30.
3. FOR FORMLINER REQUIREMENTS REFER TO GENERAL NOTES.

LJB Inc. - 3100 Research Blvd. - P.O. Box 20246
Dayton, OH 45420-0246
(937) 259-5000 tel - (937) 259-5100 fax ljbinc.com

DESIGNED DWS | DRAWN JAL | REVIEWED MPH | DATE 3-08
CHECKED KDC | REVISED | STRUCTURE FILE NUMBER 5706416

PARTIAL PIER 1 (LEFT)
BRIDGE NO. MOT-75-0075
MIAMISBURG-SPRINGBORO PIKE OVER I-75

MOT-75-0.75
PID 77246

10/30

663/773

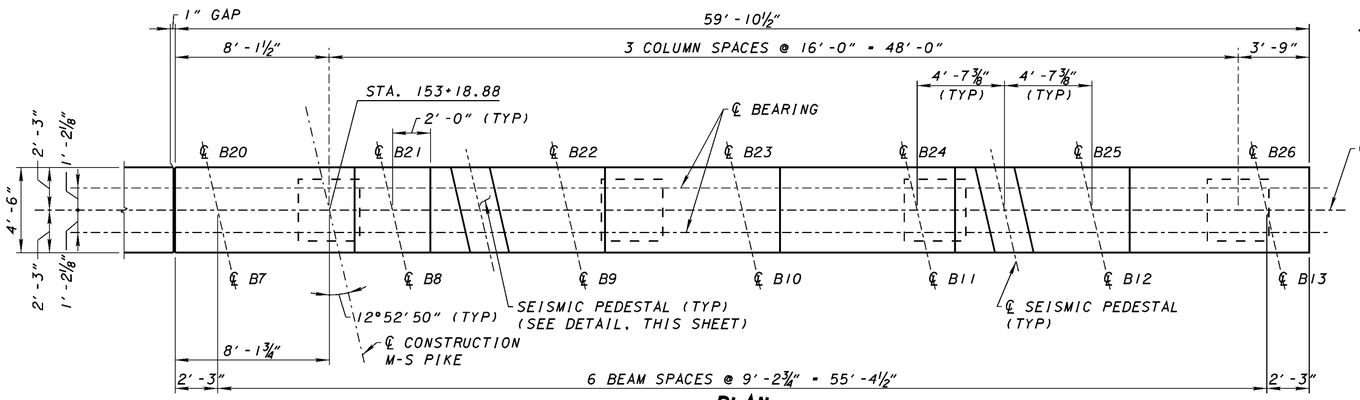

PLAN

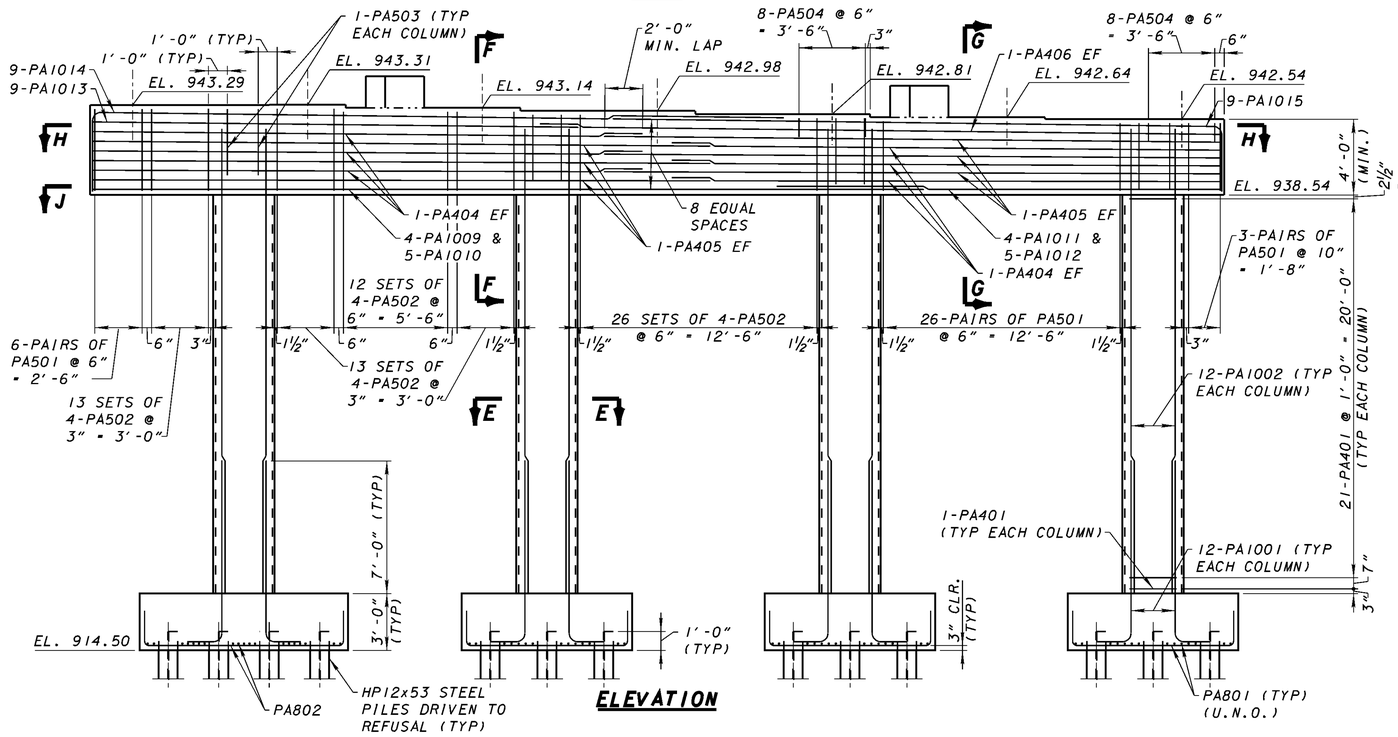

ELEVATION

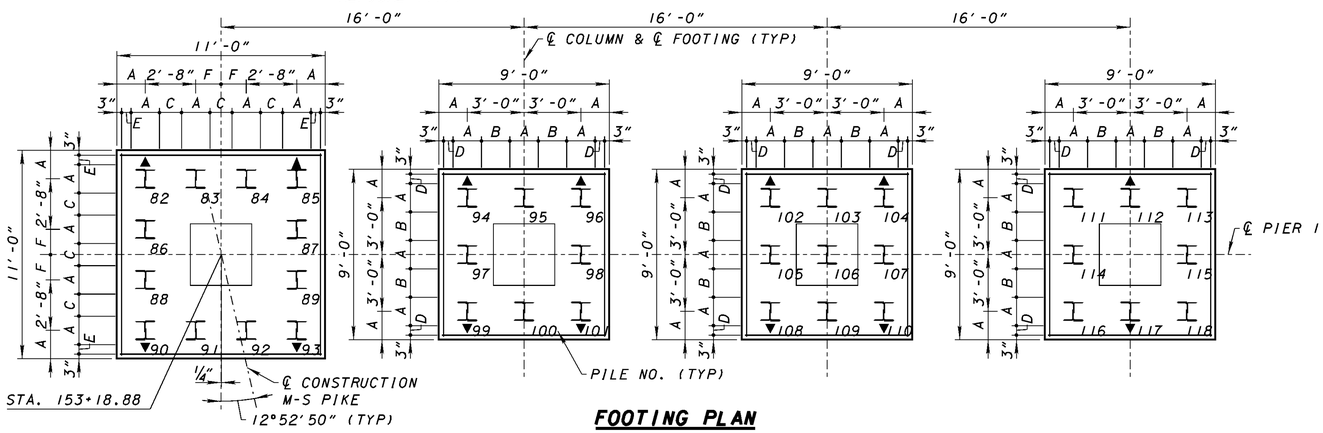

FOOTING PLAN

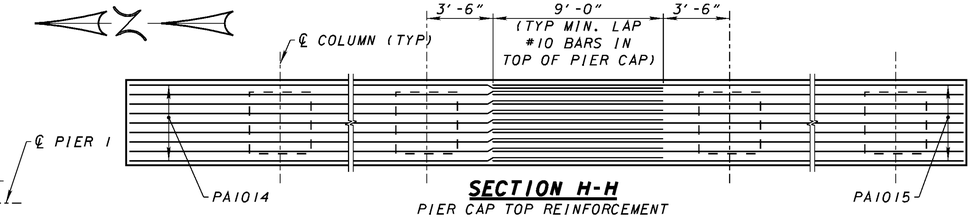

SECTION H-H

PIER CAP TOP REINFORCEMENT

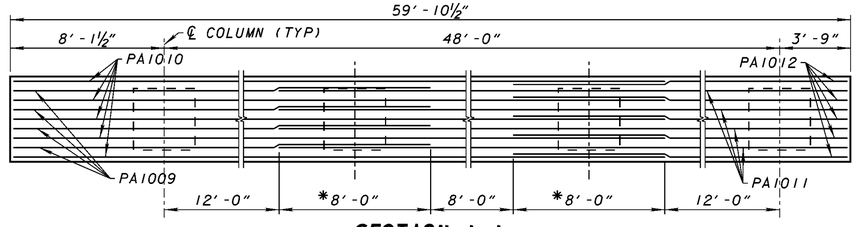

SECTION J-J

PIER CAP BOTTOM REINFORCEMENT

*TYP MIN. LAP #10 BARS IN BOTTOM OF PIER CAP

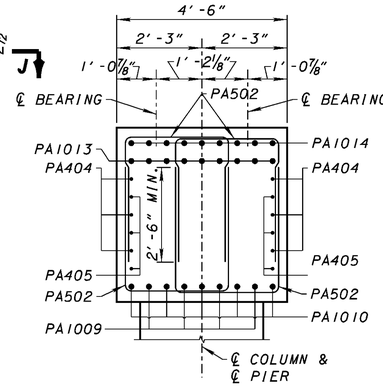

SECTION F-F

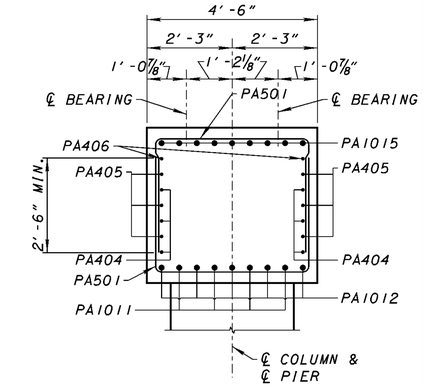

SECTION G-G

LEGEND

EF - EACH FACE
U.N.O. - UNLESS NOTED OTHERWISE
- HP12x53, VERTICAL
- HP12x53, BATTERED 4 VERTICAL TO 1 HORIZONTAL IN THE DIRECTION OF THE ARROW

A = 1'-6"
B = 5-PA801 @ 4½" = 1'-6"
C = 5-PA802 @ 3½" = 1'-2"
D = 2-PA801 @ 6" = 6"
E = 2-PA802 @ 6" = 6"
F = 1'-4"

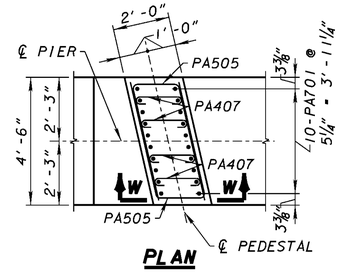

PLAN

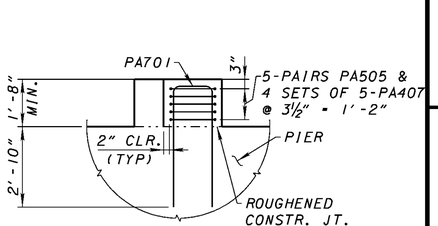

SECTION W-W

SEISMIC PEDESTAL DETAILS

(PIER 2 PEDESTAL DETAILS SIMILAR)

NOTES:

1. FOR GENERAL NOTES, SEE SHEETS 2/30 AND 3/30.
2. FOR REINFORCING STEEL LIST, SEE SHEET 29/30.
3. FOR LIMITS OF SEALING OF CONCRETE SURFACES, SEE SHEET 10/30.
4. FOR SECTION E-E, SEE SHEET 10/30.

LJB Inc. - 3100 Research Blvd. - P.O. Box 20246
Dayton, OH 45420-0246
(937) 259-5000 tel - (937) 259-5100 fax - ljbinc.com

DESIGNED DWS | DRAWN JAL | REVIEWED MPH | DATE 3-08
CHECKED KDC | REVISED | STRUCTURE FILE NUMBER 5706416

PARTIAL PIER 1 (RIGHT)
BRIDGE NO. MOT-75-0075
MIAMISBURG-SPRINGBORO PIKE OVER I-75

MOT-75-0.75
PID 77246

11/30

664/773

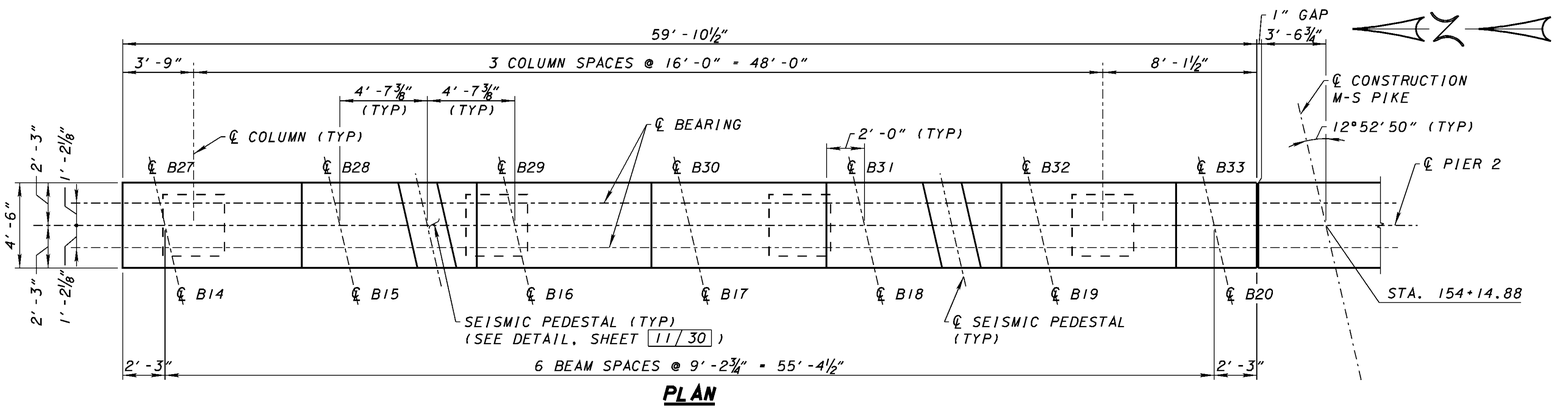

PLAN

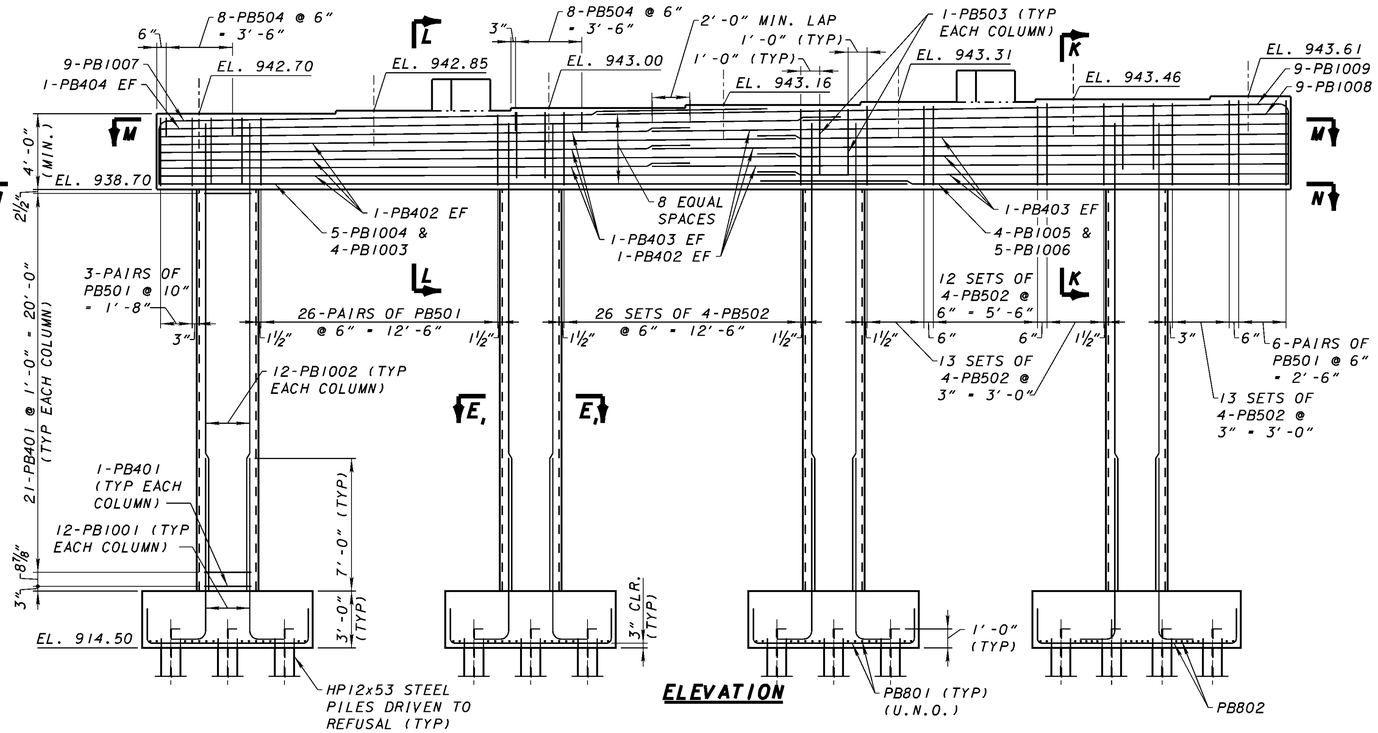

ELEVATION

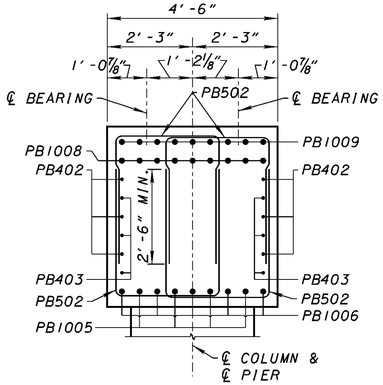

SECTION K-K

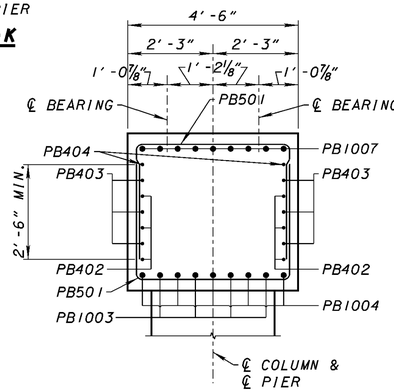

SECTION L-L

LEGEND

EF = EACH FACE
U.N.O. = UNLESS NOTED OTHERWISE

I = HP12x53, VERTICAL

I = HP12x53, BATTERED
4 VERTICAL TO 1 HORIZONTAL
IN THE DIRECTION OF THE ARROW

A = 1'-6"
B = 5-PB801 @ 4½" = 1'-6"
C = 5-PB802 @ 3½" = 1'-2"
D = 2-PB801 @ 6" = 6"
E = 2-PB802 @ 6" = 6"
F = 1'-4"

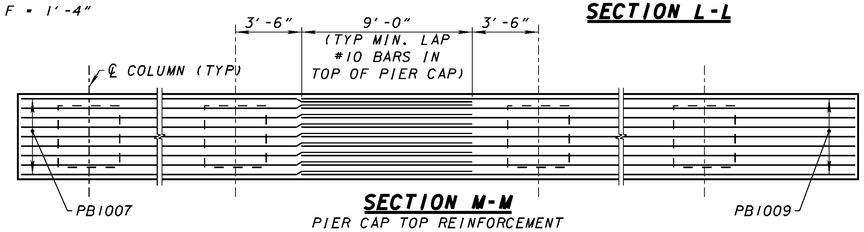

SECTION M-M
PIER CAP TOP REINFORCEMENT

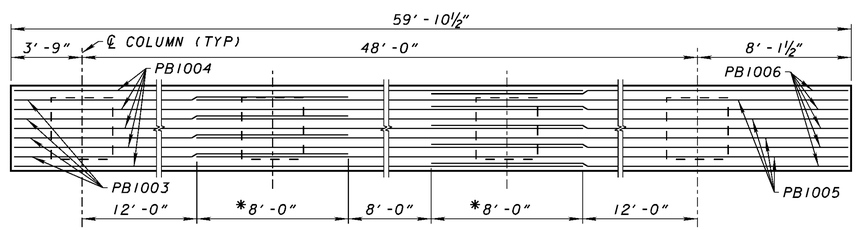

SECTION N-N
PIER CAP BOTTOM REINFORCEMENT
*TYP MIN. LAP #10 BARS IN BOTTOM OF PIER CAP

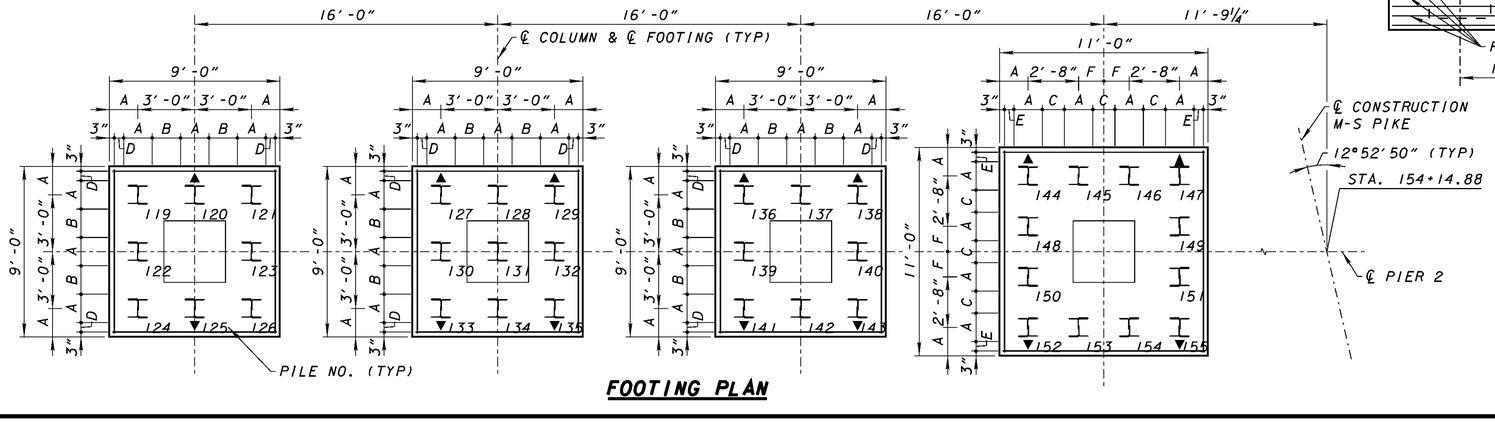

FOOTING PLAN

NOTES:

1. FOR GENERAL NOTES, SEE SHEETS 2/30 AND 3/30.
2. FOR REINFORCING STEEL LIST, SEE SHEET 29/30.
3. FOR LIMITS OF SEALING OF CONCRETE SURFACES, SEE SHEET 10/30.
4. FOR SECTION E,-E,, SEE SHEET 10/30.

LJB Inc. - 3100 Research Blvd. - P.O. Box 20246
Dayton, OH 45420-0246
(937) 259-5000 tel - (937) 259-5100 fax ljbinc.com

DESIGNED DWS | DRAWN JAL | REVIEWED MPH | DATE 3-08
CHECKED KDC | REVISED | STRUCTURE FILE NUMBER 5706416

PARTIAL PIER 2 (LEFT)

BRIDGE NO. MOT-75-0075
MIAMISBURG-SPRINGBORO PIKE OVER I-75

MOT-75-0.75
PID 77246

12/30

665/773

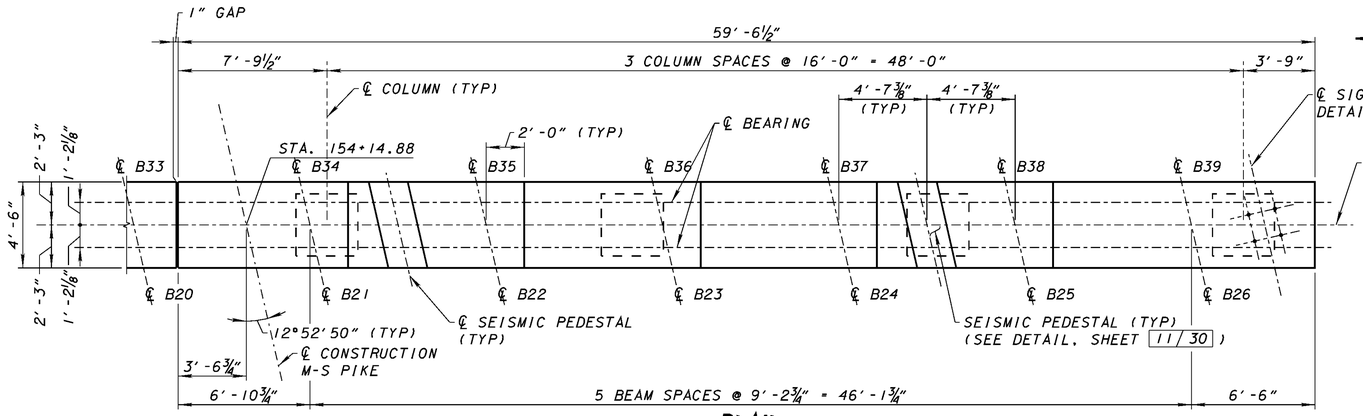

PLAN

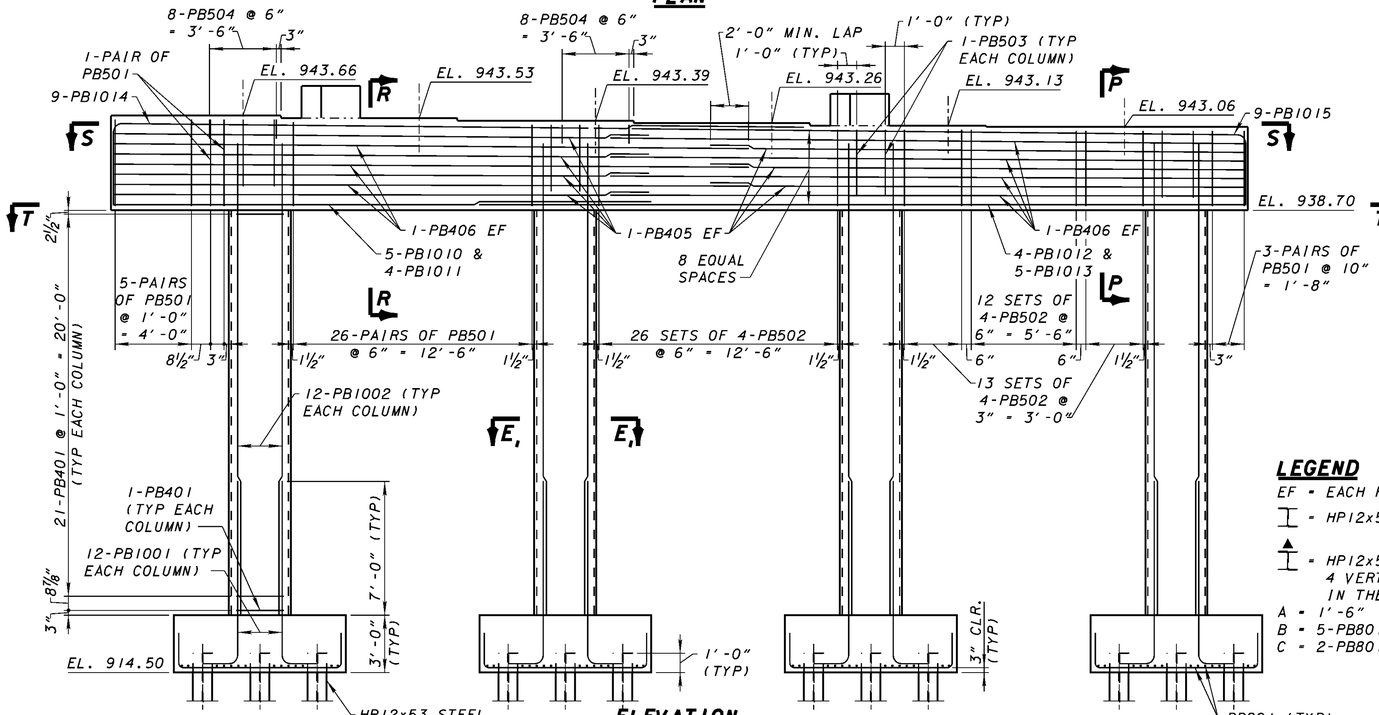

ELEVATION

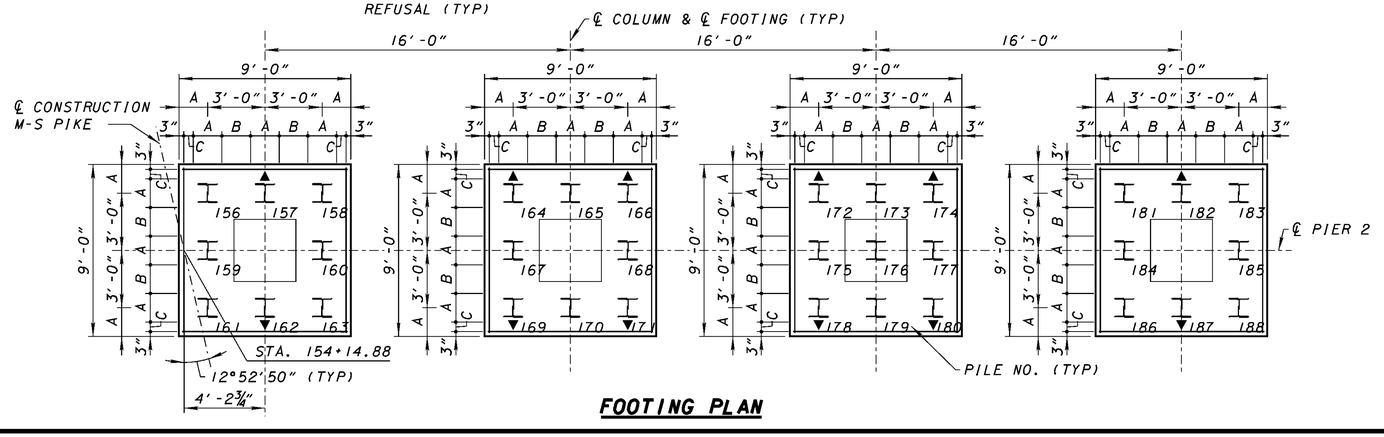

FOOTING PLAN

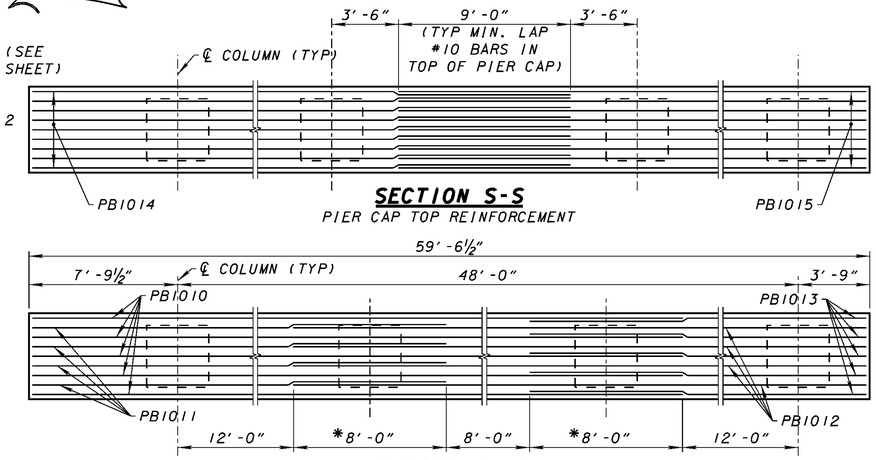

SECTION S-S

PIER CAP TOP REINFORCEMENT

SECTION T-T

PIER CAP BOTTOM REINFORCEMENT

*TYP MIN. LAP #10 BARS IN BOTTOM OF PIER CAP

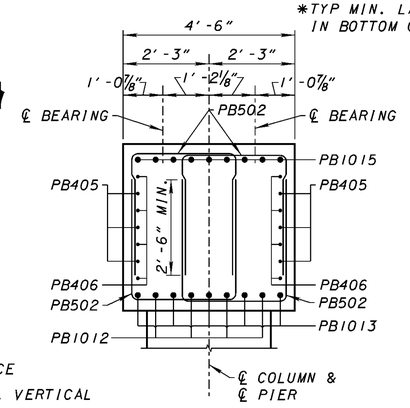

SECTION P-P

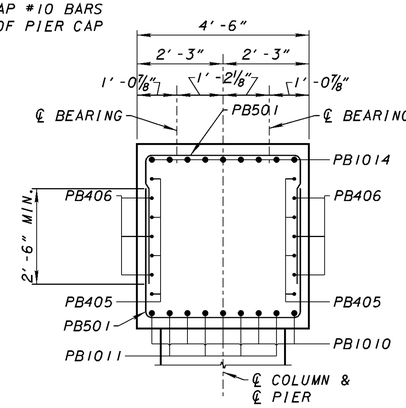

SECTION R-R

LEGEND

EF = EACH FACE

⊥ = HP12x53, VERTICAL

⊥ = HP12x53, BATTERED 4 VERTICAL TO 1 HORIZONTAL IN THE DIRECTION OF THE ARROW

A = 1'-6"

B = 5-PB801 @ 4½" = 1'-6"

C = 2-PB801 @ 6" = 6"

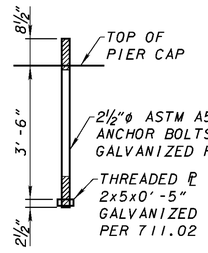

ANCHOR BOLT

(ANCHORS SHALL BE INCLUDED WITH ITEM 898 OC/OA CONCRETE, CLASS OSC1, SUBSTRUCTURE (PIER ABOVE FOOTING, AS PER PLAN FOR PAYMENT)

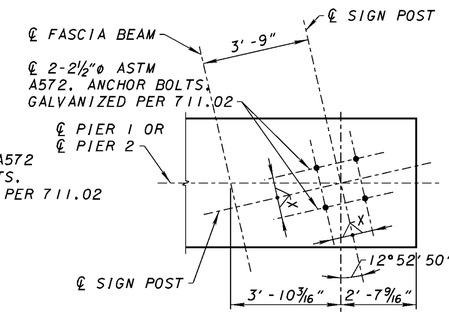

ANCHOR BOLT LAYOUT FOR SIGN POST

PIER	X
PIER 1 (LEFT)	8⅛"
PIER 2 (RIGHT)	7⅛"

NOTES:

1. FOR GENERAL NOTES, SEE SHEETS 2/30 AND 3/30.
2. FOR REINFORCING STEEL LIST, SEE SHEET 29/30.
3. FOR LIMITS OF SEALING OF CONCRETE SURFACES, SEE SHEET 10/30.
4. FOR SECTION E_1-E_1, SEE SHEET 10/30.
5. ACCURATELY PLACE REINFORCING STEEL IN THE VICINITY OF THE BRIDGE SEAT TO AVOID INTERFERENCE WITH THE PRE-SETTING OF ANCHORS.
6. ANCHOR BOLTS, LOCATED AND SUPPORTED BY TEMPLATES, SHALL BE CAST IN PLACE.

LJB Inc. • 3100 Research Blvd. • P.O. Box 20246
Dayton, OH 45420-0246
(937) 259-5000 tel • (937) 259-5100 fax ljbinc.com

DESIGNED DWS | DRAWN JAL | REVIEWED MPH | DATE 3-08
CHECKED KDC | REVISED | STRUCTURE FILE NUMBER 5706416

PARTIAL PIER 2 (RIGHT)
BRIDGE NO. MOT-75-0075
MIAMISBURG-SPRINGBORO PIKE OVER I-75

MOT-75-0.75
PID 77246

13/30

666/773

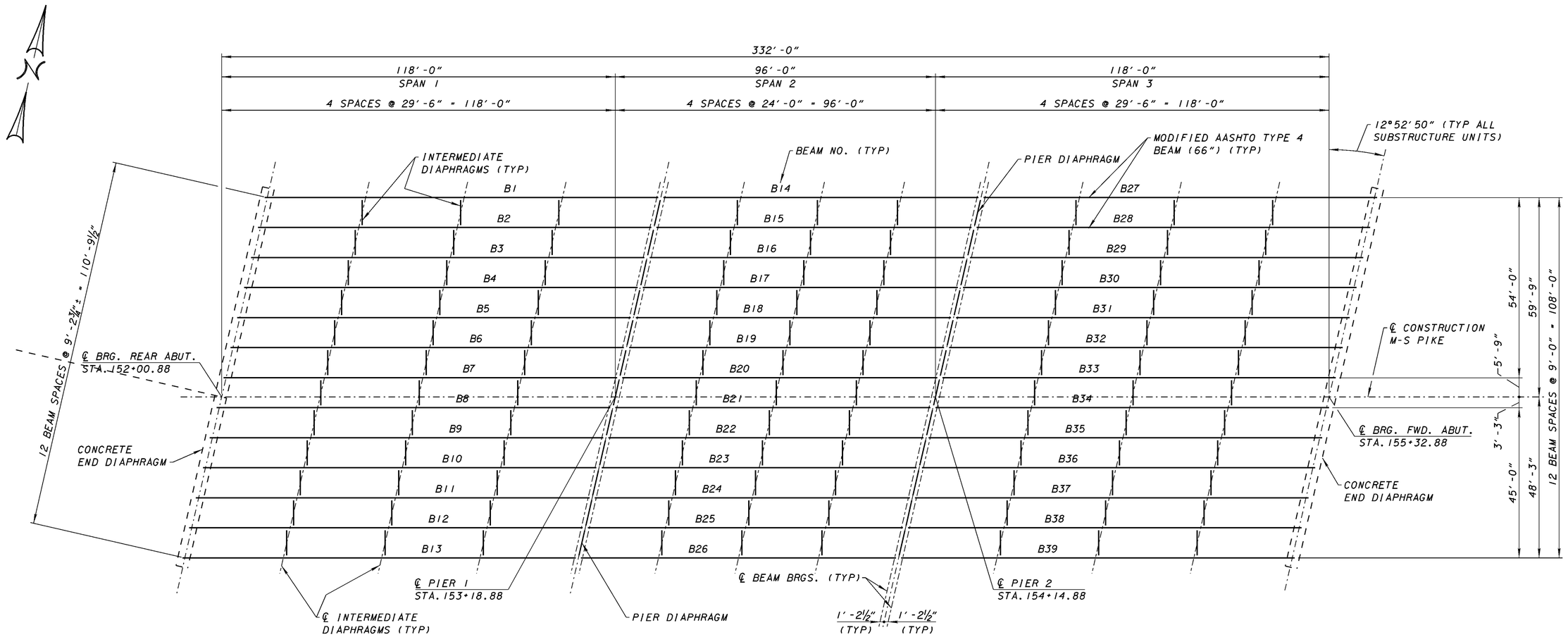

FRAMING PLAN

NOTES:

1. FOR GENERAL NOTES, SEE SHEETS 2 / 30 AND 3 / 30.
2. FOR PRESTRESSED CONCRETE I-BEAM DETAILS, SEE SHEET 15 / 30.
3. FOR PIER DIAPHRAGM DETAILS, SEE SHEET 16 / 30.
4. FOR END DIAPHRAGM DETAILS, SEE SHEETS 8 / 30 AND 9 / 30.
5. FOR INTERMEDIATE DIAPHRAGM DETAILS SEE STD. DRAWING PSID-1-99.
6. FOR BEAM END DETAILS, SEE SHEET 16 / 30.
7. FOR ELASTOMERIC BEARING DETAILS, SEE SHEET 17 / 30.
8. IF GALVANIZED STRUCTURAL STEEL INTERMEDIATE DIAPHRAGMS ARE SELECTED BY THE CONTRACTOR, THE SQUARE PLATE WASHERS, HIGH STRENGTH BOLTS, ROUND WASHERS AND NUTS ON THE EXTERIOR SIDE OF THE FASCIA BEAMS SHALL BE PAINTED WITH A FINISH COAT TO MATCH THE COLOR OF THE CONCRETE SEALER USED ON THE PRESTRESSED BEAMS. PAINT, SURFACE PREPARATION AND APPLICATION SHALL BE IN ACCORDANCE WITH 514.
9. TEMPORARY STABILITY FOR DECK PLACEMENT: THE CONTRACTOR IS RESPONSIBLE FOR THE DESIGN OF SUFFICIENT ADDITIONAL DIAPHRAGMS, SUPPORTS AND BRACING TO ASSURE THAT THE I-BEAMS WILL REMAIN STABLE AND IN THE CORRECT HORIZONTAL AND VERTICAL ALIGNMENT DURING AND AFTER PLACEMENT OF THE CONCRETE DECK. THE ADDITIONAL SUPPORT DESIGN SHALL CONSIDER THE WEIGHT OF THE WET CONCRETE IN THE DECK OVERHANGS, THE DECK FINISHING MACHINE AND ALL OTHER CONSTRUCTION LOADS PRESENT DURING PLACEMENT OF THE CONCRETE DECK. THE CONTRACTOR IS RESPONSIBLE FOR CORRECTING ANY DEFICIENCIES RESULTING FROM INSTABILITY ON THE CONCRETE I-BEAMS DUE TO INADEQUATE TEMPORARY CONSTRUCTION SUPPORT. TO THE SATISFACTION OF THE ENGINEER AT NO ADDITIONAL COST TO THE DEPARTMENT.

LJB Inc. • 3100 Research Blvd. • P.O. Box 20246
Dayton, OH 45420-0246
(937) 259-5000 tel • (937) 259-5100 fax • ljbinc.com

DESIGNED	DRAWN	REVIEWED	DATE
JJS	JAL	MPH	3-08
CHECKED	REVISED	STRUCTURE FILE NUMBER	
KDC		5706416	

FRAMING PLAN
BRIDGE NO. MOT-75-0075
MIAMISBURG-SPRINGBORO PIKE OVER I-75

MOT-75-0.75
PID 77246

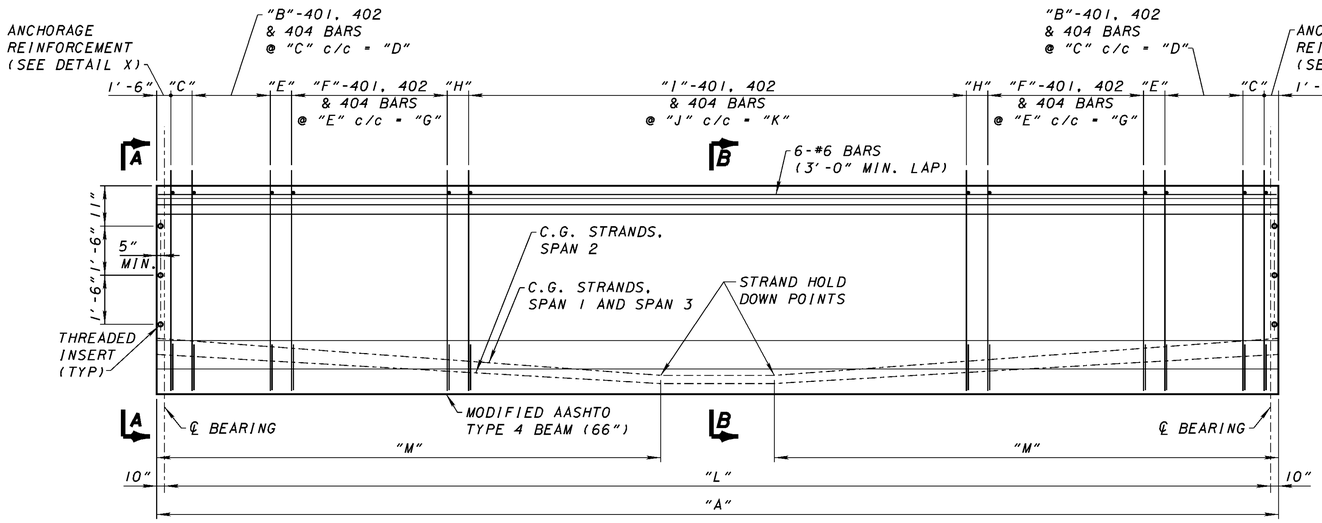

TYPICAL BEAM ELEVATION NOTE: ADJUST STIRRUPS OR INSERTS NEAR ENDS OF BEAMS TO AVOID INTERFERENCE

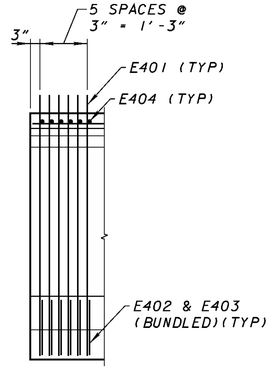

DETAIL X

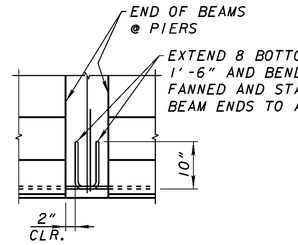

EXTENDED STRAND DETAIL

BEAM DIMENSIONS

BEAM MARK	DIMENSIONS													APPROXIMATE WEIGHT (lbs)
	A	B	C	D	E	F	G	H	I	J	K	L	M	
B1 THRU B13	118'-5½"	3	6"	1'-0"	9"	12	8'-3"	8¾"	94	1'-0"	93'-0"	116'-9½"	53'-2¾"	112,038
B14 THRU B26	95'-3"	5	6"	2'-0"	9"	8	5'-3"	7½"	75	1'-0"	74'-0"	93'-7"	42'-7½"	90,087
B27 THRU B39	118'-5½"	3	6"	1'-0"	9"	12	8'-3"	8¾"	94	1'-0"	93'-0"	116'-9½"	53'-2¾"	112,038

NUMBER OF ½"ø LO-LAX STRANDS (As = 0.167 in²) PER ROW

BEAM MARK	END (SECT. A-A)										MIDSPAN (SECT. B-B)						TOTAL NO.	CONCRETE STRENGTH (psi)		CONCRETE UNIT STRESS (psi)		E401 BARS REQ'D	E402 BARS REQ'D	E403 BARS REQ'D	E404 BARS REQ'D
	BOTTOM					TOP					BOTTOM														
	①	②	③	④	⑤	①	②	③	④	⑤	⑥	①	②	③	④	⑤	⑥		f'c1	f'c	COMPRESSION	TENSION				
B1 THRU B13	8	8	8	8	6	2	3	3	3	3	3	11	11	11	11	9	2	55	5500	7000	2800	502	136	136	12	136
B14 THRU B26	11	8	/	/	/	3	3	/	/	/	/	11	11	3	/	/	/	25	5500	7000	2800	502	113	113	12	113
B27 THRU B39	8	8	8	8	6	2	3	3	3	3	3	11	11	11	11	9	2	55	5500	7000	2800	502	136	136	12	136

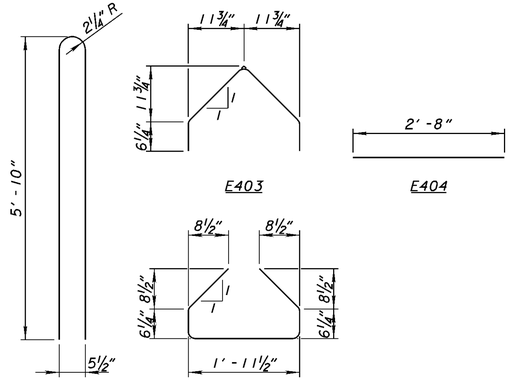

BENDING DIAGRAMS
(ALL DIMENSIONS ARE OUT-TO-OUT)

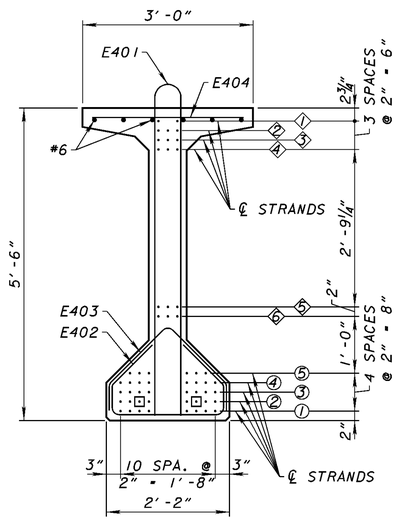

SECTION A-A
(PATTERN AT ENDS OF BEAMS IN SPANS 1 AND 3)

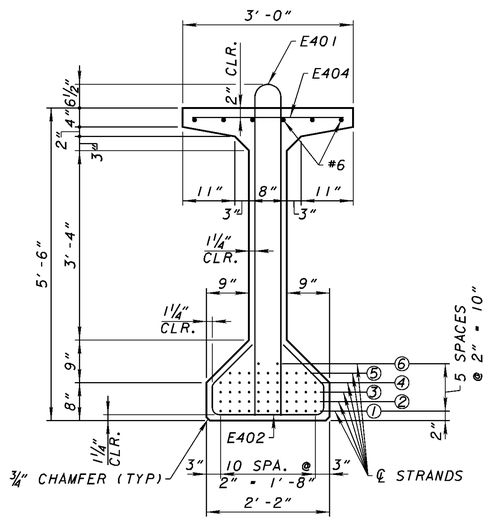

SECTION B-B
(PATTERN AT MIDSPAN OF BEAMS IN SPANS 1 AND 3)

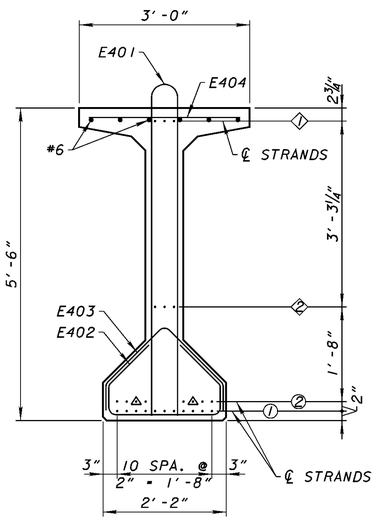

SECTION A-A
(PATTERN AT ENDS OF BEAMS IN SPAN 2)

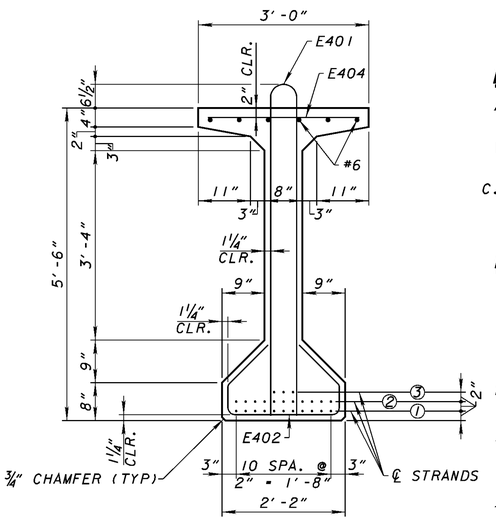

SECTION B-B
(PATTERN AT MIDSPAN OF BEAMS IN SPAN 2)

LEGEND:

△ = DEBOND 2'-0" FROM EACH END

⊡ = DEBOND 4'-0" FROM EACH END

C.G. = CENTER OF GRAVITY

NOTES:

1. ALL REINFORCEMENT FULLY OR PARTIALLY ENCASED IN BEAMS, EMBEDDED PLATES AND THREADED INSERTS AND RODS SHALL BE INCLUDED WITH ITEM 515, PRESTRESSED CONCRETE BRIDGE I-BEAM, FOR PAYMENT.
2. FOR ADDITIONAL PRESTRESSED BEAM NOTES AND DETAILS, SEE STD. DWG. PSID-1-99.
3. ALL STRUCTURAL STEEL, EMBEDDED PLATES AND THREADED INSERTS AND RODS SHALL BE GALVANIZED PER 711.02.
4. IF TEMPORARY STRANDS ARE PUT INTO THE BEAMS FOR PURPOSE OF TRANSPORT ONLY, SUBMIT A PLAN TO THE DEPARTMENT FOR DETENSIONING OF TEMPORARY STRANDS.

LJB Inc. - 3100 Research Blvd. - P.O. Box 20246
Dayton, OH 45420-0246
(937) 259-5000 tel - (937) 259-5100 fax - ljbinc.com

DESIGNED KDC | DRAWN JAL | REVIEWED MPH | DATE 3-08
CHECKED DWW | REVISED | STRUCTURE FILE NUMBER 5706416

PRESTRESSED BEAM DETAILS
BRIDGE NO. MOT-75-0075
MIAMISBURG-SPRINGBORO PIKE OVER I-75

MOT-75-0.75
PID 77246

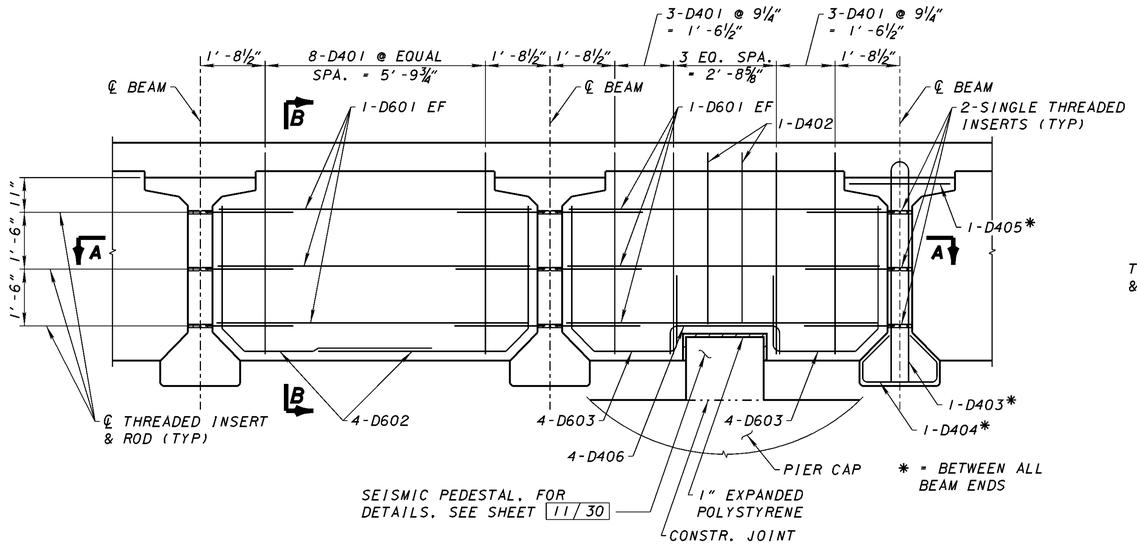

PIER DIAPHRAGM

NOTE: 1" EXPANDED POLYSTYRENE SHALL BE INCLUDED IN ITEM 898 OC/OA CONCRETE, CLASS OSC1, SUBSTRUCTURE (PIER ABOVE FOOTING) FOR PAYMENT.

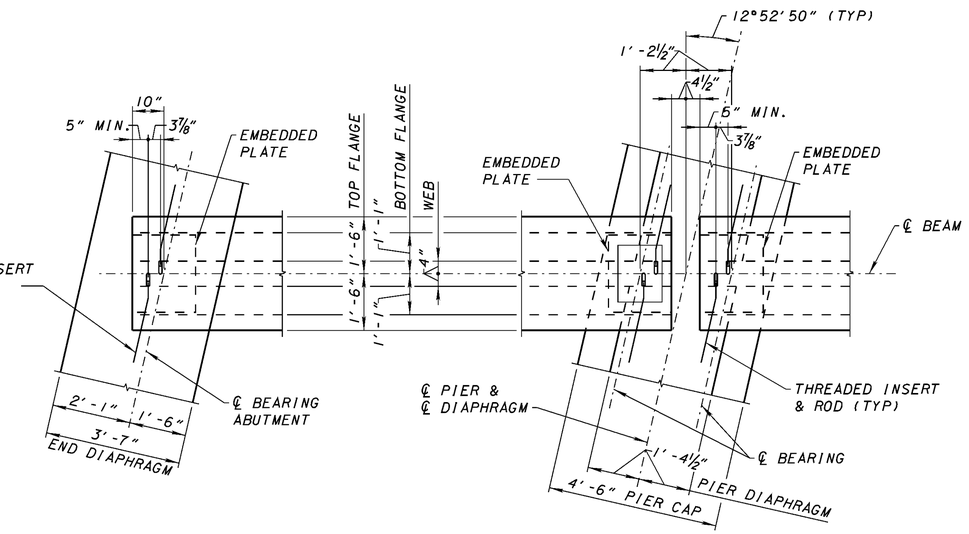

BEAM END DETAIL

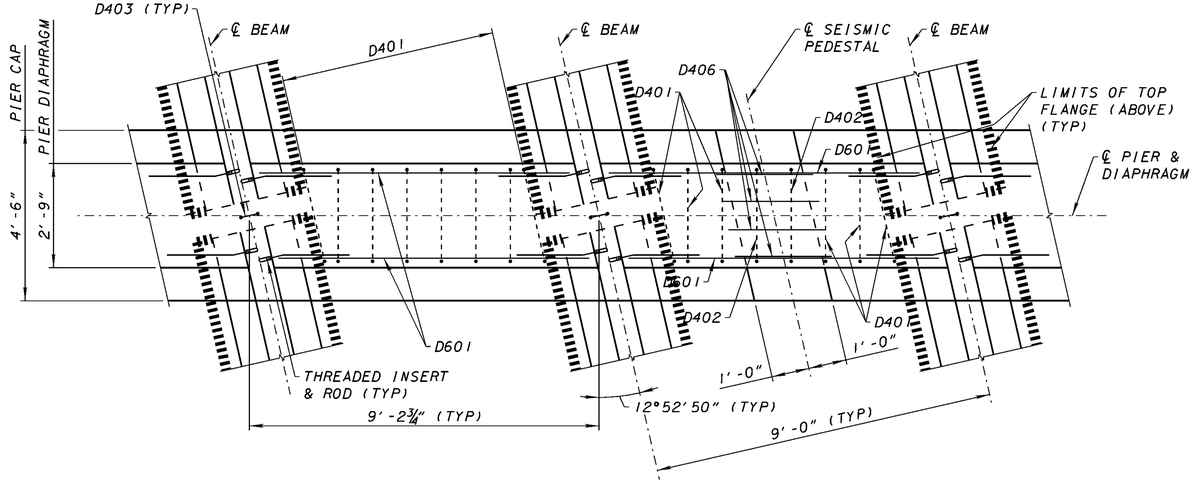

SECTION A-A

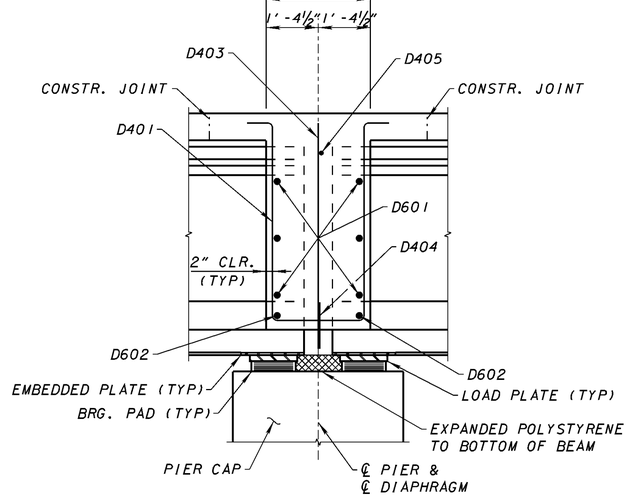

SECTION B-B

LEGEND

EF = EACH FACE

NOTES:

1. FOR GENERAL NOTES, SEE SHEETS 2/30 AND 3/30.
2. FOR REINFORCING STEEL LIST, SEE SHEET 29/30.
3. FOR PRESTRESSED BEAM DETAILS, SEE SHEET 15/30.
4. FOR ADDITIONAL DETAILS, REFER TO STD. DWG. PSID-1-99.

LJB Inc. - 3100 Research Blvd. - P.O. Box 20246
Dayton, OH 45420-0246
(937) 259-5000 tel - (937) 259-5100 fax ljbinc.com

DESIGNED DWW | DRAWN JAL | REVIEWED MPH | DATE 3-08
CHECKED DWS | REVISED | STRUCTURE FILE NUMBER 5706416

PIER DIAPHRAGM AND BEAM END DETAILS

BRIDGE NO. MOT-75-0075
MIAMISBURG-SPRINGBORO PIKE OVER I-75

MOT-75-0.75
PID 77246

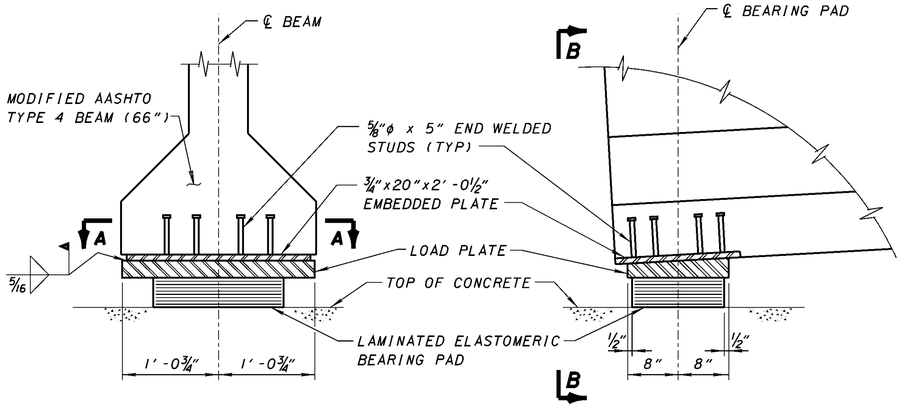

END VIEW B-B

ELEVATION AT END OF BEAM AT ABUTMENTS

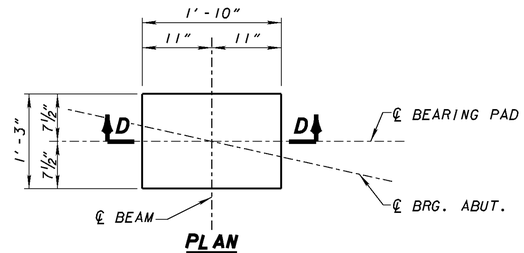

PLAN

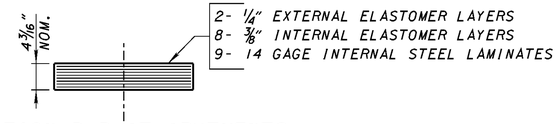

SECTION D-D AT ABUTMENTS

LIVE LOAD REACTION (W/O IMPACT): 104.3 KIPS
DEAD LOAD REACTION: 221.8 KIPS
MAXIMUM DESIGN LOAD: 326.1 KIPS

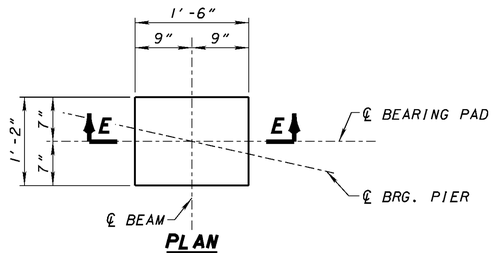

PLAN

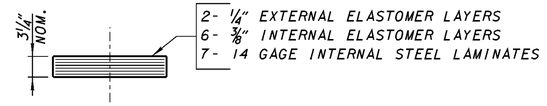

SECTION E-E AT PIERS

LIVE LOAD REACTION (W/O IMPACT): 69.4 KIPS
DEAD LOAD REACTION: 174.3 KIPS
MAXIMUM DESIGN LOAD: 243.7 KIPS

LAMINATED ELASTOMERIC BEARING PAD DETAILS

LOAD PLATE DIMENSIONS								
BEAM LINE	REAR ABUT. DIM. A	PIER 1 REAR DIM. B	PIER 1 FWD. DIM. C	PIER 1 FWD. DIM. D	PIER 2 REAR DIM. E	PIER 2 FWD. DIM. F	FORWARD ABUT. DIM. G	FORWARD ABUT. DIM. H
B1-B14-B27	2 3/8"	2 3/16"	2 3/8"	2 3/8"	2 1/8"	2 1/8"	2"	2 5/16"
B2-B15-B28	2 3/8"	2 3/16"	2 3/8"	2 3/8"	2 1/4"	2 1/4"	2 1/8"	2 5/16"
B3-B16-B29	2 3/8"	2 3/16"	2 3/8"	2 3/8"	2 1/4"	2 1/4"	2"	2 5/16"
B4-B17-B30	2 3/8"	2 3/16"	2 1/2"	2 1/2"	2 1/8"	2 1/8"	2"	2 5/16"
B5-B18-B31	2 3/8"	2 3/16"	2 1/2"	2 1/2"	2 1/8"	2 1/8"	2"	2 5/16"
B6-B19-B32	2 3/8"	2 3/16"	2 1/2"	2 1/2"	2 1/8"	2 1/8"	2"	2 5/16"
B7-B20-B33	2 3/8"	2 3/16"	2 3/8"	2 3/8"	2 1/8"	2 1/8"	2"	2 5/16"
B8-B21-B34	2 3/8"	2 3/16"	2 3/8"	2 3/8"	2 1/8"	2 1/8"	2"	2 5/16"
B9-B22-B35	2 3/8"	2 3/16"	2 1/2"	2 1/2"	2 1/8"	2 1/8"	2"	2 1/4"
B10-B23-B36	2 3/8"	2 1/4"	2 3/8"	2 3/8"	2 1/8"	2 1/8"	2"	2 1/4"
B11-B24-B37	2 3/8"	2 1/4"	2 1/2"	2 1/2"	2 1/8"	2 1/8"	2"	2 1/4"
B12-B25-B38	2 7/16"	2 1/4"	2 1/2"	2 1/2"	2"	2"	2"	2 1/4"
B13-B26-B39	2 7/16"	2 3/16"	2 1/2"	2 1/2"	2"	2"	2"	2 1/4"

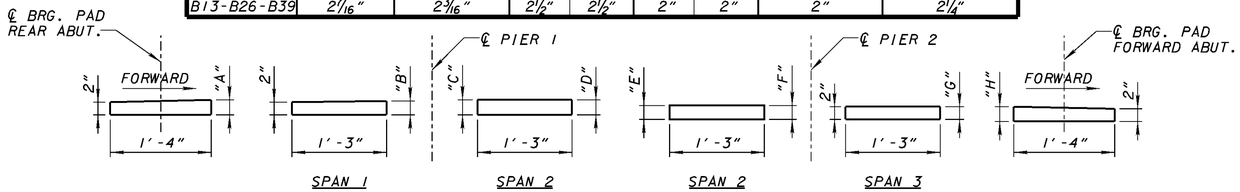

LOAD PLATE DETAILS

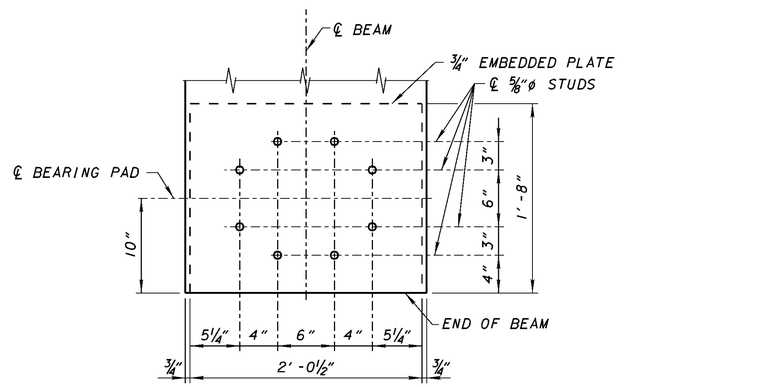

END VIEW C-C

ELEVATION AT END OF BEAM AT PIERS

SECTION A-A

NOTE: END WELDED STUDS MAY BE MOVED SLIGHTLY IN ORDER TO AVOID REINFORCING STEEL AND PRESTRESSING STRANDS.

EMBEDDED PLATE DETAIL

LAMINATED ELASTOMERIC BEARING NOTES:

1. ELASTOMERIC BEARINGS: THE ELASTOMER SHALL HAVE A HARDNESS OF 50 DUROMETER. THE BEARINGS WERE DESIGNED UNDER DIVISION I, SECTION 14.6.6 (METHOD A) OF THE AASHTO STANDARD SPECIFICATIONS FOR HIGHWAY BRIDGES.
2. WELDING: CONTROL WELDING SO THAT THE PLATE TEMPERATURE AT THE ELASTOMER BONDED SURFACE DOES NOT EXCEED 300°F AS DETERMINED BY USE OF PYROMETRIC STICKS OR OTHER TEMPERATURE MONITORING DEVICES.
3. THE STEEL LOAD PLATES SHALL CONFORM TO THE REQUIREMENTS OF ASTM A709 GRADE 50 AND SHALL BE BONDED TO THE ELASTOMER BY VULCANIZATION DURING THE MOLDING PROCESS. LOAD PLATES SHALL BE GALVANIZED PER 711.02 (SEE STD. DWG. PSID-1-99). TOP OF LOAD PLATES SHALL BE SHOP MARKED WITH PAINT INDICATING: BEAM, SUBSTRUCTURE UNIT AND FORWARD DIRECTION.
4. BASIS OF PAYMENT: THE UNIT BID PRICE SHALL INCLUDE ALL MATERIALS, LABOR AND INCIDENTALS NECESSARY TO FURNISH AND INSTALL ELASTOMERIC BEARINGS. PAYMENT WILL BE AT THE CONTRACT PRICE FOR ITEM 516, EACH, ELASTOMERIC BEARING WITH INTERAL LAMINATES AND LOAD PLATE AS LISTED UNDER THE ESTIMATED QUANTITIES.

LJB Inc. • 3100 Research Blvd. • P.O. Box 20246
Dayton, OH 45420-0246
(937) 259-5000 tel • (937) 259-5100 fax ljbinc.com

DESIGNED DWS | DRAWN MHD | REVIEWED MPH | DATE 3-08
CHECKED KDC | REVISED | STRUCTURE FILE NUMBER 5706416

LAMINATED ELASTOMERIC BEARING PAD DETAILS
BRIDGE NO. MOT-75-0075
MIAMISBURG-SPRINGBORO PIKE OVER I-75

MOT-75-0.75
PID 77246

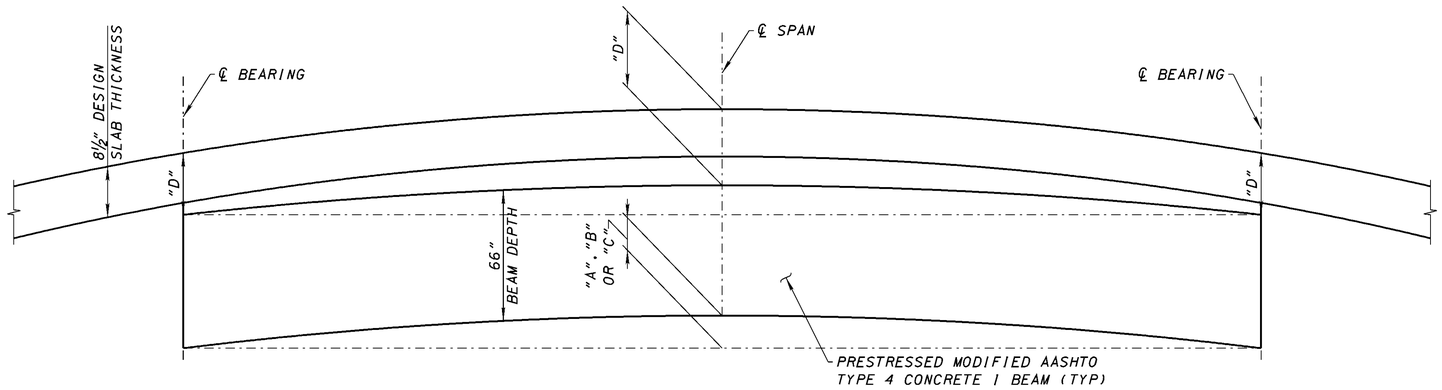

BEAM CAMBER DIAGRAM

(ONE SPAN SHOWN FOR CLARITY)

BEAM CAMBER AT MIDSPAN

LOCATION		CAMBER AT TIME OF RELEASE DUE TO PRESTRESSING	DEFLECTION DUE TO SELF WEIGHT OF BEAM	CAMBER AT TIME OF RELEASE (NET)	CAMBER AT TIME OF ERECTION	LONG TERM CAMBER
SPAN 1 "A"	B1	4 3/16"	1 7/8"	2 5/16"	4 1/16"	5 3/4"
	B2 THRU B12	4 3/16"	1 7/8"	2 5/16"	4 1/16"	5 3/4"
	B13	4 3/16"	1 7/8"	2 5/16"	4 1/16"	5 3/4"
SPAN 2 "B"	B14	1 1/2"	13/16"	11/16"	1 3/16"	1 3/4"
	B15 THRU B25	1 1/2"	13/16"	11/16"	1 3/16"	1 3/4"
	B26	1 1/2"	13/16"	11/16"	1 3/16"	1 3/4"
SPAN 3 "C"	B27	4 3/16"	1 7/8"	2 5/16"	4 1/16"	5 3/4"
	B28 THRU B38	4 3/16"	1 7/8"	2 5/16"	4 1/16"	5 3/4"
	B39	4 3/16"	1 7/8"	2 5/16"	4 1/16"	5 3/4"

DESIGN DIMENSION "D"

	LOCATION	B1	B2	B3	B4	B5	B6	B7	B8	B9	B10	B11	B12	B13
SPAN 1	℄ BRG. REAR ABUT.	10½"	10½"	10½"	10½"	10½"	10½"	10½"	10½"	10½"	10½"	10½"	10½"	10½"
	½	11 7/16"	11 7/8"	11 7/8"	11 7/8"	11 7/8"	11 7/8"	11 7/8"	11 7/8"	11 7/8"	11 7/8"	11 7/8"	11 7/8"	11 7/16"
	℄ BRG. PIER 1	10½"	10½"	10½"	10½"	10½"	10½"	10½"	10½"	10½"	10½"	10½"	10½"	10½"
	LOCATION	B14	B15	B16	B17	B18	B19	B20	B21	B22	B23	B24	B25	B26
SPAN 2	℄ BRG. PIER 1	10½"	10½"	10½"	10½"	10½"	10½"	10½"	10½"	10½"	10½"	10½"	10½"	10½"
	½	12"	12 3/16"	12 3/16"	12 3/16"	12 3/16"	12 3/16"	12 3/16"	12 3/16"	12 3/16"	12 3/16"	12 3/16"	12 3/16"	12"
	℄ BRG. PIER 2	10½"	10½"	10½"	10½"	10½"	10½"	10½"	10½"	10½"	10½"	10½"	10½"	10½"
	LOCATION	B27	B28	B29	B30	B31	B32	B33	B34	B35	B36	B37	B38	B39
SPAN 3	℄ BRG. PIER 2	10½"	10½"	10½"	10½"	10½"	10½"	10½"	10½"	10½"	10½"	10½"	10½"	10½"
	½	11 7/16"	11 7/8"	11 7/8"	11 7/8"	11 7/8"	11 7/8"	11 7/8"	11 7/8"	11 7/8"	11 7/8"	11 7/8"	11 7/8"	11 7/16"
	℄ BRG. FWD. ABUT.	10½"	10½"	10½"	10½"	10½"	10½"	10½"	10½"	10½"	10½"	10½"	10½"	10½"

NOTES:

1. FOR GENERAL NOTES, SEE SHEETS 2 / 30 AND 3 / 30.
2. FOR PRESTRESSED CONCRETE I-BEAM DETAILS, SEE SHEET 15 / 30.
3. FOR PIER DIAPHRAGM DETAILS, SEE SHEET 16 / 30.
4. FOR END DIAPHRAGM DETAILS, SEE SHEETS 8 / 30 AND 9 / 30.
5. FOR INTERMEDIATE DIAPHRAGM DETAILS SEE STD. DRAWING PSID-1-99.
6. FOR BEAM END DETAILS, SEE SHEET 16 / 30.
7. DECK SLAB THICKNESS FOR CONCRETE QUANTITY: THE TOPPING THICKNESS SHOWN FROM THE TOP OF THE DECK SLAB TO THE TOP OF THE FLANGE ALONG THE CENTERLINE OF THE I-BEAM (DESIGN DIMENSION "D") ARE THEORETICAL DIMENSIONS. THE HAUNCH DEPTH IS THE TOPPING THICKNESS MINUS THE DESIGN SLAB THICKNESS. THE DEPARTMENT WILL PAY FOR SUPERSTRUCTURE CONCRETE BASED ON THE DESIGN SLAB THICKNESS AND THE AVERAGE OF THE THEORETICAL HAUNCH DEPTHS AT MID-SPAN AND AT EACH BEAM BEARING EVEN THOUGH DEVIATION FROM THE DIMENSIONS SHOWN MAY BE NECESSARY TO PLACE THE DECK SURFACE AT THE FINISHED GRADE. ONCE ALL BEAMS ARE SET IN THEIR FINAL POSITION, THE ACTUAL CAMBER FOR EACH MEMBER WILL BE THE TOP OF BEAM ELEVATION AT MID-SPAN MINUS THE AVERAGE TOP OF BEAM ELEVATION AT EACH BEARING. THE ACTUAL TOPPING THICKNESS AT MID-SPAN WILL BE THE THEORETICAL DIMENSION PLUS OR MINUS THE DIFFERENCE BETWEEN THE ACTUAL AND THE ANTICIPATED CAMBER.

LJB Inc. • 3100 Research Blvd. • P.O. Box 20246
Dayton, OH 45420-0246
(937) 259-5000 tel • (937) 259-5100 fax • ljbinc.com

DESIGNED KDC | DRAWN JAL | REVIEWED MPH | DATE 3-08
CHECKED DWW | REVISED | STRUCTURE FILE NUMBER 5706416

CAMBER DIAGRAM AND ELEVATIONS

BRIDGE NO. MOT-75-0075
MIAMISBURG-SPRINGBORO PIKE OVER I-75

MOT-75-0.75
PID 77246

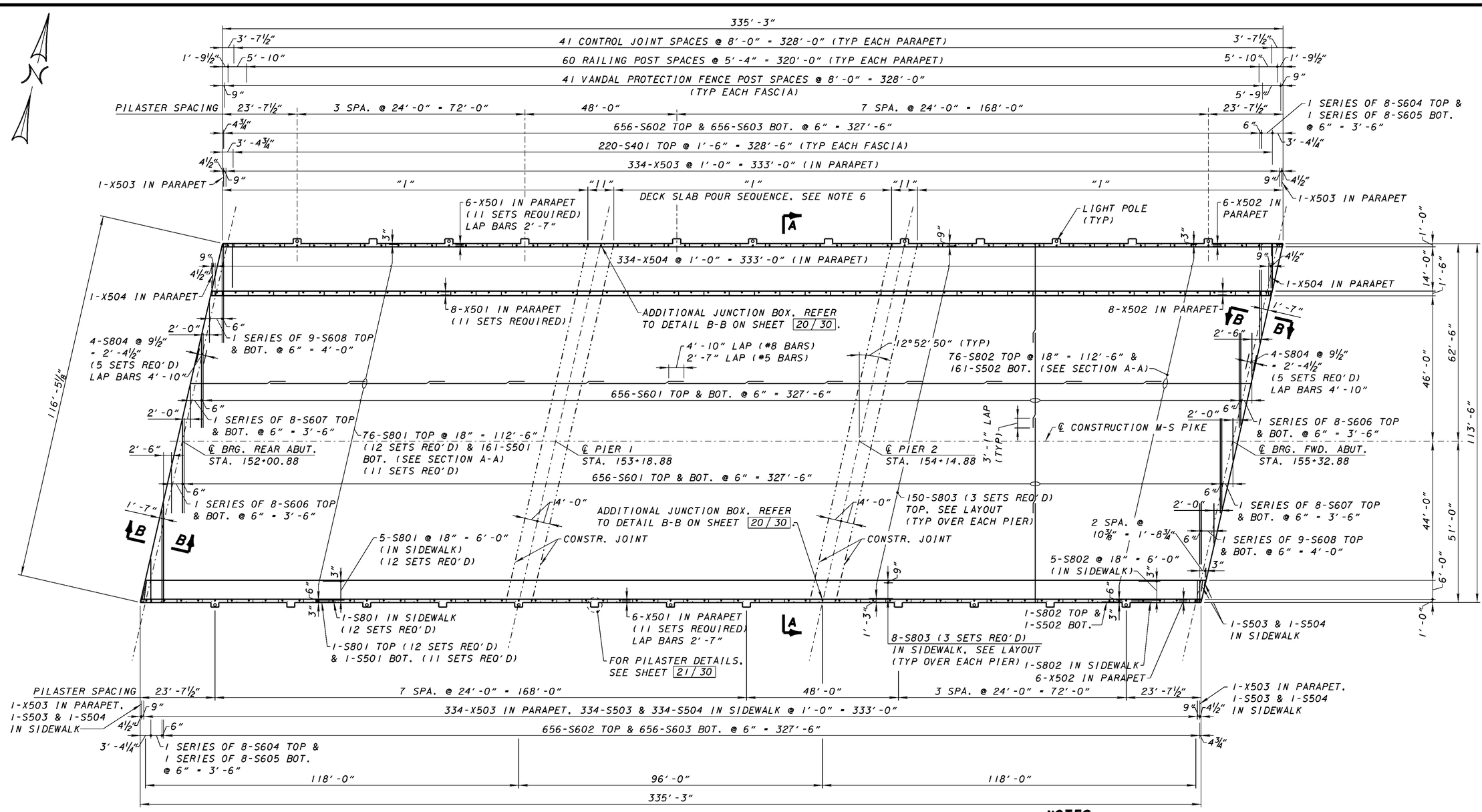

SLAB PLAN

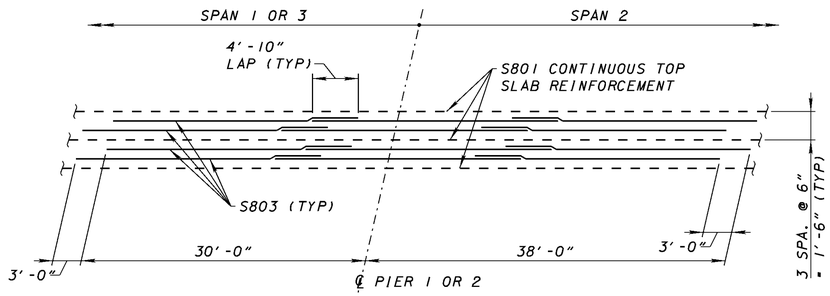

LAYOUT OF ADDITIONAL BARS OVER PIERS

NOTES:

1. FOR GENERAL NOTES, SEE SHEETS 2/30 & 3/30.
2. FOR REINFORCING STEEL LIST, SEE SHEET 30/30.
3. FOR TABLE OF SCREED ELEVATIONS, SEE SHEET 22/30.
4. FOR SECTION A-A, SEE SHEET 20/30.
5. FOR SECTION B-B AND ADDITIONAL END DIAPHRAGM DETAILS, SEE SHEETS 8/30 & 9/30.
6. SLAB AND DIAPHRAGM CONCRETE "II" SHALL NOT BE PLACED UNTIL THE CONCRETE IN THE ADJACENT SPANS "I" HAS BEEN PLACED. THE DIAPHRAGM AND DECK CONCRETE "II" MAY BE PLACED UPON COMPLETION OF CONCRETE PLACEMENT IN ADJACENT SPANS "I". ALTERNATE PLACEMENT PROCEDURES MAY BE USED WITH APPROVAL. SEE STD. DWG. PSID-1-99, SHEET 8 OF 8.
7. CONTROL JOINTS ARE SPACED SUCH THAT PARAPET REINFORCEMENT MAINTAINS A CLEARANCE OF 6" TYPICAL.
8. FOR LIGHTING DETAILS, SEE THE REFERENCED STANDARD DRAWINGS.
9. FOR VANDAL PROTECTION FENCE, REFER TO ORNAMENTAL STEEL FENCE SYSTEM SPECIFICATION. FOR ADDITIONAL VANDAL PROTECTION FENCE DETAILS, REFER TO STD. DWG. VPF-1-90. BASE PLATES PER MODIFIED DETAIL BP-1. SEE SHEET 20/30.

LJB Inc. - 3100 Research Blvd. - P.O. Box 20246
Dayton, OH 45420-0246
(937) 259-5000 tel - (937) 259-5100 fax ljbinc.com

DESIGNED	DRAWN	REVIEWED	DATE
DWW	JAL	MPH	3-08
CHECKED	REVISED	STRUCTURE FILE NUMBER	
KDC		5706416	

SLAB PLAN
BRIDGE NO. MOT-75-0075
MIAMISBURG-SPRINGBORO PIKE OVER I-75

MOT-75-0.75
PID 77246

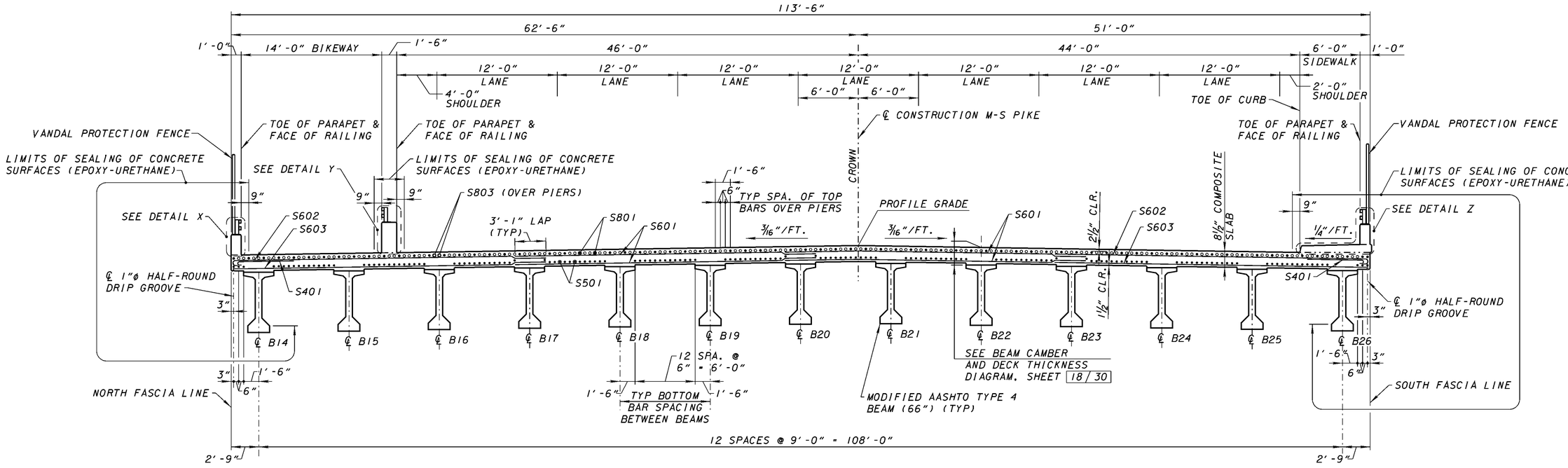

SECTION A-A

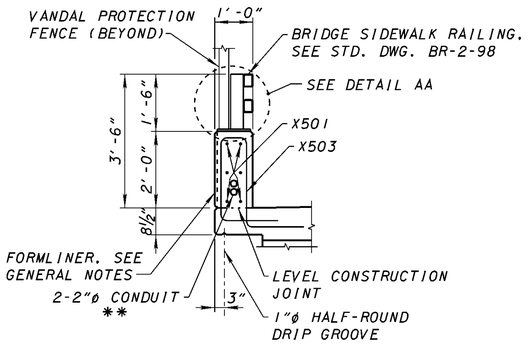

DETAIL X

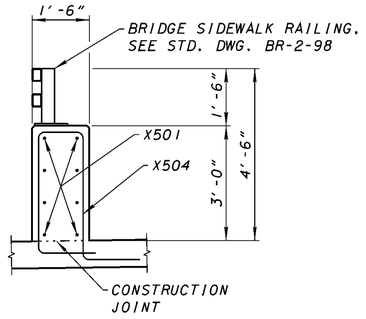

DETAIL Y

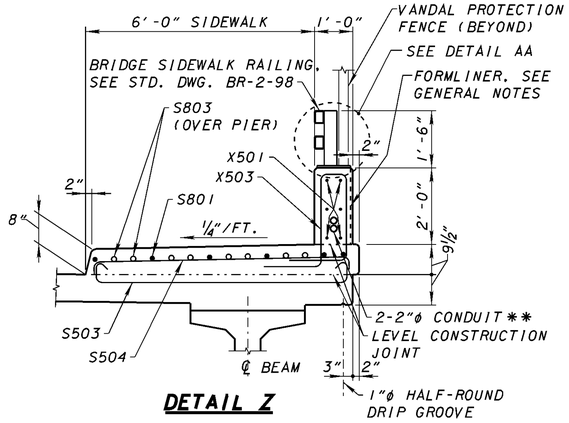

DETAIL Z

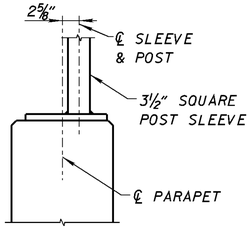

DETAIL AA
MODIFIED BASE PLATE BP-1

FOR ADDITIONAL DETAILS SEE STD. DWG. VPF-1-90. SHEET 3 / 7 .

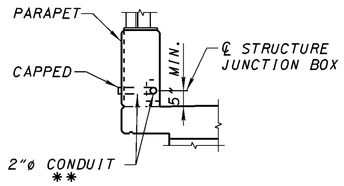

DETAIL B-B

(AT CENTERLINE OF PIER AND INSIDE FACE OF PARAPET)

**REFER TO LIGHTING AND SIGNAL PLANS FOR ADDITIONAL INFORMATION AND QUANTITIES.

NOTES

1.
2. FOR REINFORCING STEEL LIST, SEE SHEET 30 / 30 .
3. REFER TO CMS 512.03 FOR APPLICATION OF SILICA SAND IN SEALING OF SIDEWALK.

LJB Inc. · 3100 Research Blvd. · P.O. Box 20246
Dayton, OH 45420-0246
(937) 259-5000 tel · (937) 259-5100 fax · ljbinc.com

DESIGNED DWW | DRAWN JAL | REVIEWED MPH | DATE 3-08 | STRUCTURE FILE NUMBER 5706416
CHECKED KDC | REVISED

SLAB DETAILS
BRIDGE NO. MOT-75-0075
MIAMISBURG-SPRINGBORO PIKE OVER I-75

MOT-75-0.75
PID 77246

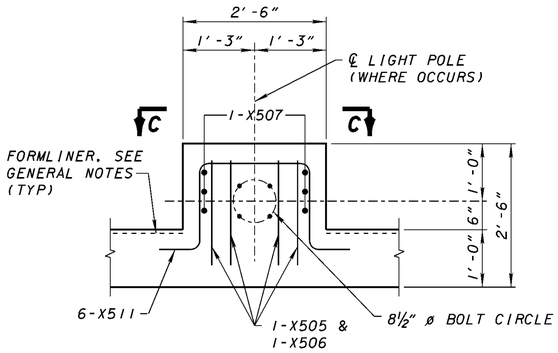

PLAN
(NORTH FASCIA)

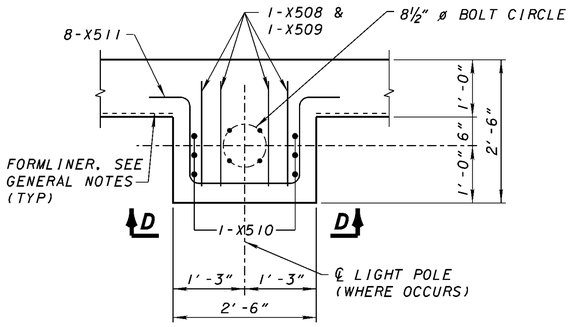

PLAN
(SOUTH FASCIA)

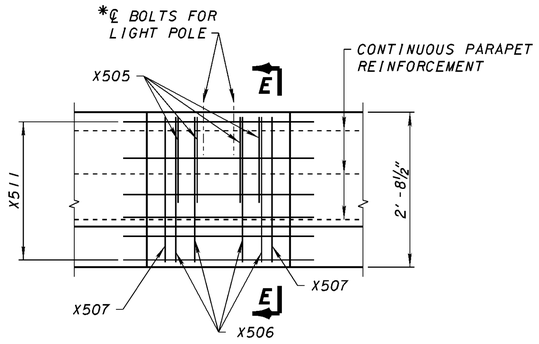

VIEW C-C

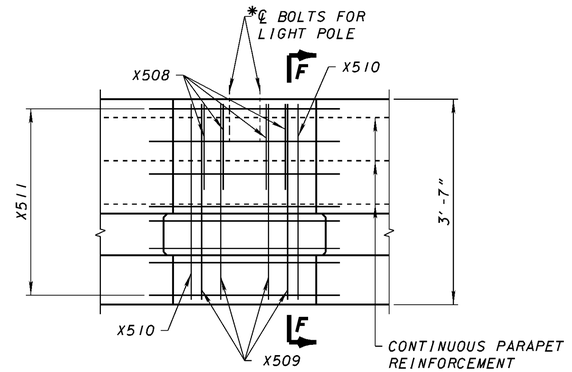

VIEW D-D

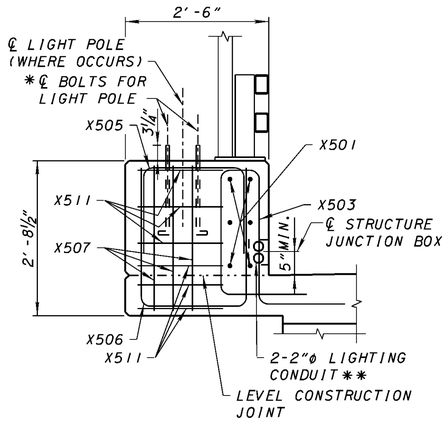

SECTION E-E

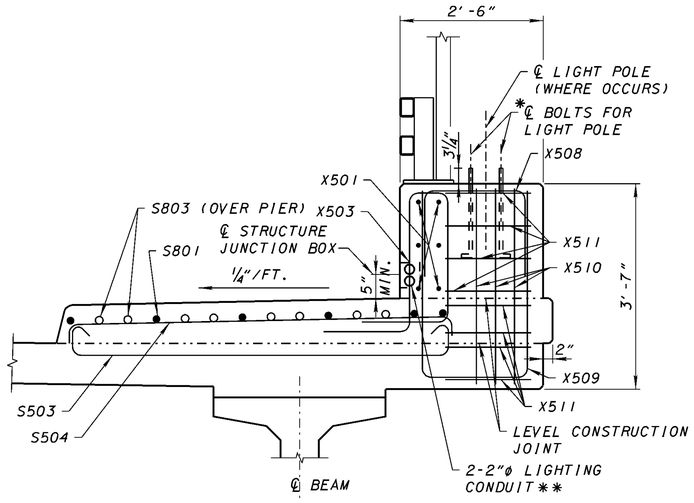

SECTION F-F

*¾" ø x 1'-6" BOLTS

**REFER TO LIGHTING AND SIGNAL PLANS FOR ADDITIONAL INFORMATION AND QUANTITIES.

NOTES

1. FOR GENERAL NOTES, SEE SHEETS 2 / 30 & 3 / 30 .
2. FOR REINFORCING STEEL LIST, SEE SHEET 30 / 30 .
3. FOR LIGHTING DETAILS, SEE THE REFERENCED STANDARD DRAWINGS.
4. FORMLINER SHALL NOT BE USED ON PILASTERS.

LJB Inc. - 3100 Research Blvd. - P.O. Box 20246
Dayton, OH 45420-0246
(937) 259-5000 tel - (937) 259-5100 fax ljbinc.com

DESIGNED DWW | DRAWN JAL | REVIEWED MPH | DATE 3-08
CHECKED KDC | REVISED | STRUCTURE FILE NUMBER 5706416

PILASTER DETAILS

BRIDGE NO. MOT-75-0075
MIAMISBURG-SPRINGBORO PIKE OVER I-75

MOT-75-0.75
PID 77246

SCREED STATIONS & ELEVATIONS

	LOCATION	FACE OF NORTH PARAPET	BEAM B1	BEAM B2	SOUTH FACE OF BIKEWAY PARAPET	BEAM B3	BEAM B4	BEAM B5	BEAM B6	BEAM B7	PROFILE GRADE	BEAM B8	BEAM B9	BEAM B10	BEAM B11	BEAM B12	FACE OF SOUTH CURB	BEAM B13
SPAN 1	℄ BRG. REAR ABUT.	152+14.94 947.24	152+14.54 947.25	152+12.49 947.34	152+11.40 947.38	152+10.43 947.42	152+08.37 947.50	152+06.31 947.58	152+04.25 947.67	152+02.19 947.75	152+00.88 947.80	152+00.14 947.72	151+98.08 947.52	151+96.02 947.32	151+93.96 947.11	151+91.90 946.91	151+90.82 946.80	151+89.85 946.77
	¼	152+44.14 948.08	152+43.74 948.10	152+41.68 948.22	152+40.60 948.27	152+39.63 948.31	152+37.57 948.41	152+35.51 948.50	152+33.45 948.59	152+31.39 948.68	152+30.08 948.73	152+29.33 948.66	152+27.28 948.47	152+25.22 948.28	152+23.16 948.08	152+21.10 947.89	152+20.02 947.76	152+19.04 947.73
	½	152+73.34 948.72	152+72.94 948.74	152+70.88 948.88	152+69.79 948.93	152+68.82 948.98	152+66.76 949.08	152+64.71 949.18	152+62.65 949.28	152+60.59 949.38	152+59.28 949.44	152+58.53 949.38	152+56.47 949.20	152+54.42 949.01	152+52.36 948.83	152+50.30 948.64	152+49.21 948.51	152+48.24 948.49
	¾	153+02.54 949.15	153+02.14 949.17	153+00.08 949.31	152+98.99 949.37	152+98.02 949.42	152+95.96 949.53	152+93.90 949.64	152+91.85 949.75	152+89.79 949.86	152+88.47 949.93	152+87.73 949.87	152+85.67 949.69	152+83.61 949.52	152+81.56 949.34	152+79.50 949.17	152+78.41 949.05	152+77.44 949.03
	℄ BRG. PIER 1	153+31.74 949.37	153+31.33 949.39	153+29.28 949.51	153+28.19 949.58	153+27.22 949.63	153+25.16 949.75	153+23.10 949.87	153+21.04 949.99	153+18.99 950.11	153+17.67 950.19	153+16.93 950.13	153+14.87 949.96	153+12.81 949.80	153+10.75 949.63	153+08.70 949.47	153+07.61 949.38	153+06.64 949.37
	LOCATION	FACE OF NORTH PARAPET	BEAM B14	BEAM B15	SOUTH FACE OF BIKEWAY PARAPET	BEAM B16	BEAM B17	BEAM B18	BEAM B19	BEAM B20	PROFILE GRADE	BEAM B21	BEAM B22	BEAM B23	BEAM B24	BEAM B25	FACE OF SOUTH CURB	BEAM B26
SPAN 2	℄ BRG. PIER 1	153+34.15 949.39	153+33.75 949.41	153+31.69 949.54	153+30.61 949.60	153+29.64 949.66	153+27.58 949.78	153+25.52 949.90	153+23.46 950.02	153+21.40 950.14	153+20.09 950.21	153+19.35 950.15	153+17.29 949.99	153+15.23 949.83	153+13.17 949.66	153+11.11 949.50	153+10.03 949.41	153+09.05 949.40
	¼	153+57.55 949.59	153+57.15 949.61	153+55.09 949.76	153+54.00 949.82	153+53.03 949.89	153+50.97 950.01	153+48.92 950.14	153+46.86 950.27	153+44.80 950.40	153+43.48 950.48	153+42.74 950.42	153+40.68 950.27	153+38.62 950.11	153+36.57 949.95	153+34.51 949.79	153+33.42 949.70	153+32.45 949.69
	½	153+80.94 949.67	153+80.54 949.70	153+78.49 949.85	153+77.40 949.93	153+76.43 949.99	153+74.37 950.13	153+72.31 950.26	153+70.25 950.40	153+68.19 950.53	153+66.88 950.62	153+66.14 950.56	153+64.08 950.42	153+62.02 950.27	153+59.96 950.12	153+57.90 949.97	153+56.82 949.87	153+55.85 949.87
	¾	154+04.34 949.64	154+03.94 949.67	154+01.88 949.83	154+00.79 949.90	153+99.82 949.97	153+97.76 950.12	153+95.71 950.26	153+93.65 950.40	153+91.59 950.55	153+90.28 950.64	153+89.53 950.58	153+87.47 950.44	153+85.42 950.30	153+83.36 950.16	153+81.30 950.02	153+80.21 949.93	153+79.24 949.93
	℄ BRG. PIER 2	154+27.74 949.50	154+27.33 949.53	154+25.28 949.68	154+24.19 949.76	154+23.22 949.83	154+21.16 949.98	154+19.10 950.13	154+17.04 950.28	154+14.99 950.43	154+13.67 950.53	154+12.93 950.48	154+10.87 950.35	154+08.81 950.22	154+06.75 950.08	154+04.70 949.95	154+03.61 949.87	154+02.64 949.88
	LOCATION	FACE OF NORTH PARAPET	BEAM B27	BEAM B28	SOUTH FACE OF BIKEWAY PARAPET	BEAM B29	BEAM B30	BEAM B31	BEAM B32	BEAM B33	PROFILE GRADE	BEAM B34	BEAM B35	BEAM B36	BEAM B37	BEAM B38	FACE OF SOUTH CURB	BEAM B39
SPAN 3	℄ BRG. PIER 2	154+30.15 949.48	154+29.75 949.51	154+27.69 949.66	154+26.61 949.74	154+25.64 949.82	154+23.58 949.97	154+21.52 950.12	154+19.46 950.27	154+17.40 950.42	154+16.09 950.52	154+15.35 950.47	154+13.29 950.34	154+11.23 950.21	154+09.17 950.07	154+07.11 949.94	154+06.03 949.87	154+05.05 949.87
	¼	154+59.35 949.33	154+58.95 949.36	154+56.89 949.55	154+55.81 949.64	154+54.83 949.71	154+52.78 949.87	154+50.72 950.04	154+48.66 950.20	154+46.60 950.36	154+45.29 950.46	154+44.54 950.41	154+42.49 950.29	154+40.43 950.17	154+38.37 950.05	154+36.31 949.92	154+35.22 949.83	154+34.25 949.83
	½	154+88.55 948.97	154+88.15 949.00	154+86.09 949.21	154+85.00 949.30	154+84.03 949.38	154+81.97 949.55	154+79.92 949.72	154+77.86 949.89	154+75.80 950.06	154+74.48 950.17	154+73.74 950.13	154+71.68 950.02	154+69.62 949.90	154+67.57 949.79	154+65.51 949.68	154+64.42 949.58	154+63.45 949.59
	¾	155+17.75 948.40	155+17.35 948.43	155+15.29 948.64	155+14.20 948.74	155+13.23 948.82	155+11.17 949.00	155+09.11 949.18	155+07.06 949.36	155+05.00 949.54	155+03.68 949.66	155+02.94 949.62	155+00.88 949.52	154+98.82 949.41	154+96.76 949.31	154+94.71 949.20	154+93.62 949.12	154+92.65 949.14
	℄ BRG. FWD. ABUT.	155+46.94 947.62	155+46.54 947.66	155+44.49 947.85	155+43.40 947.95	155+42.43 948.04	155+40.37 948.23	155+38.31 948.42	155+36.25 948.61	155+34.19 948.80	155+32.88 948.92	155+32.14 948.88	155+30.08 948.79	155+28.02 948.70	155+25.96 948.60	155+23.90 948.50	155+22.82 948.45	155+21.85 948.47

NOTE: SCREED ELEVATIONS SHOWN ARE FOR THE DECK SLAB SURFACE PRIOR TO CONCRETE PLACEMENT. ALLOWANCE HAS BEEN MADE FOR ANTICIPATED CALCULATED DEAD LOAD DEFLECTIONS.

LJB Inc. • 3100 Research Blvd. • P.O. Box 20246
Dayton, OH 45420-0246
(937) 259-5000 tel • (937) 259-5100 fax ljbinc.com

DESIGNED KDC | DRAWN MHD | CHECKED DWW | REVISED | REVIEWED MPH | DATE 3-08

STRUCTURE FILE NUMBER 5706416

SCREED TABLE

BRIDGE NO. MOT-75-0075
MIAMISBURG-SPRINGBORO PIKE OVER I-75

MOT-75-0.75
PID 77246

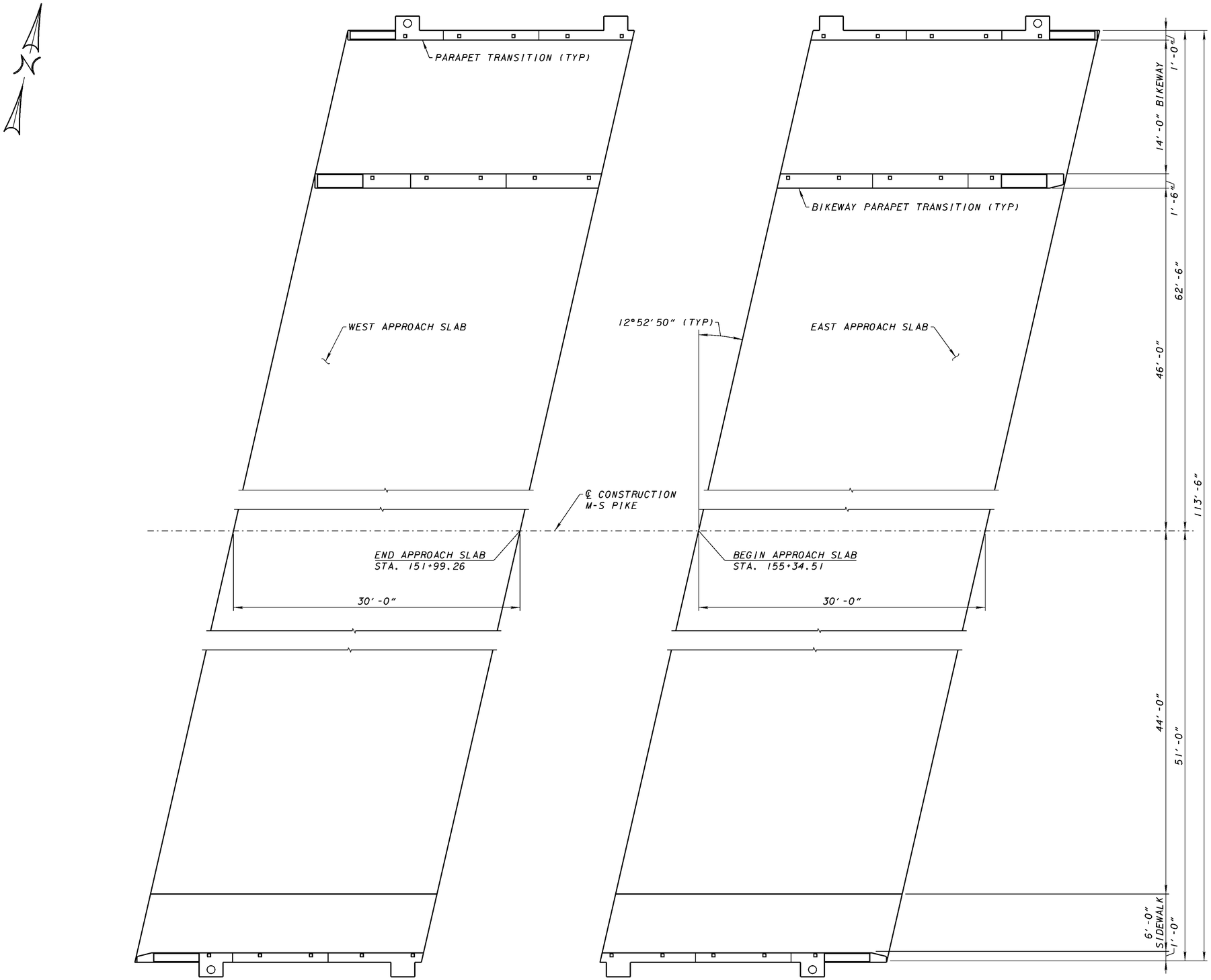

PLAN

NOTES:

1. FOR GENERAL NOTES, SEE SHEETS 2 / 30 AND 3 / 30 .
2. FOR PARAPET AND TRANSITION DETAILS. SEE SHEETS 24 / 30 THRU 27 / 30 .
3. FOR ADDITIONAL NOTES AND DETAILS, SEE STD. DWG. AS-1-81.

LJB Inc. • 3100 Research Blvd. • P.O. Box 20246
Dayton, OH 45420-0246
(937) 259-5000 tel • (937) 259-5100 fax • ljbinc.com

DESIGNED	DRAWN	REVIEWED	DATE
DWS	JAL	MPH	3-08
CHECKED	REVISED	STRUCTURE FILE NUMBER	
DWW		5706416	

APPROACH SLAB
BRIDGE NO. MOT-75-0075
MIAMISBURG-SPRINGBORO PIKE OVER I-75

MOT-75-0.75
PID 77246

23 / 30

676
773

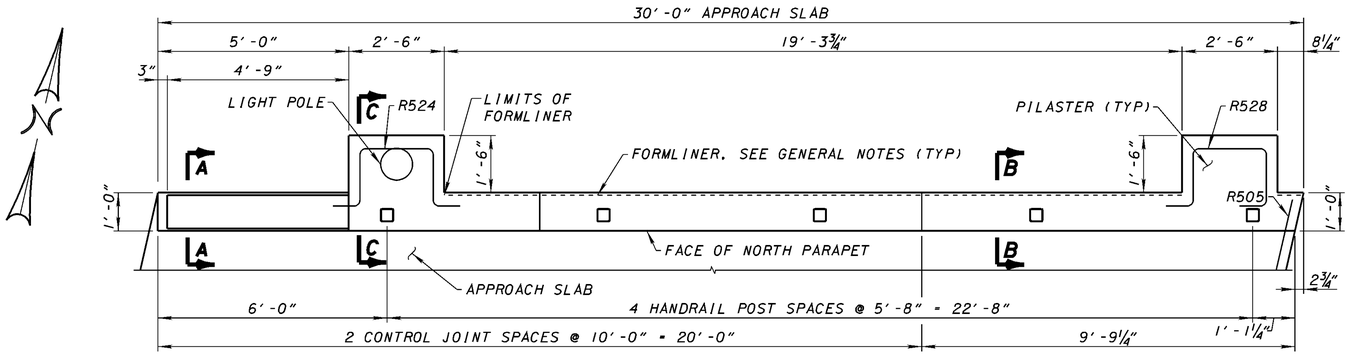

NORTHWEST PLAN

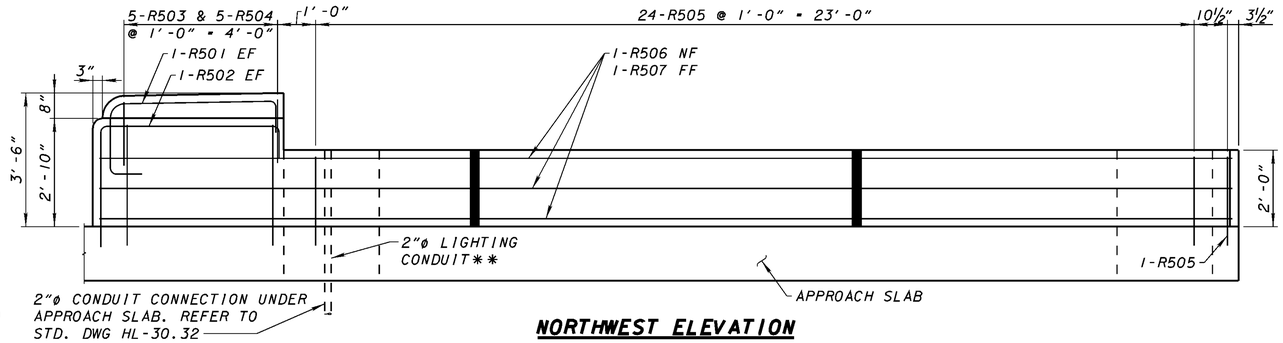

NORTHWEST ELEVATION

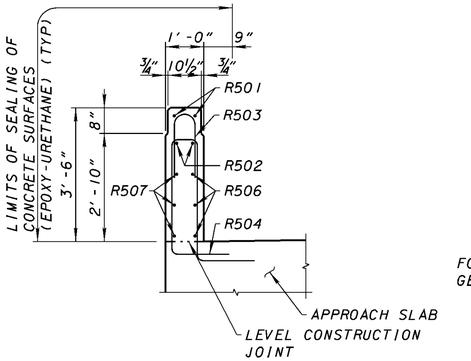

SECTION A-A

(SECTION A_1-A, SIMILAR)

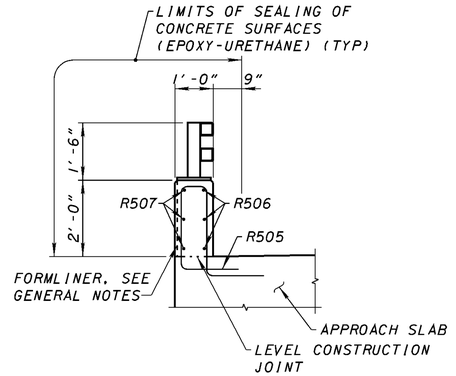

SECTION B-B

(SECTION B_1-B, SIMILAR)

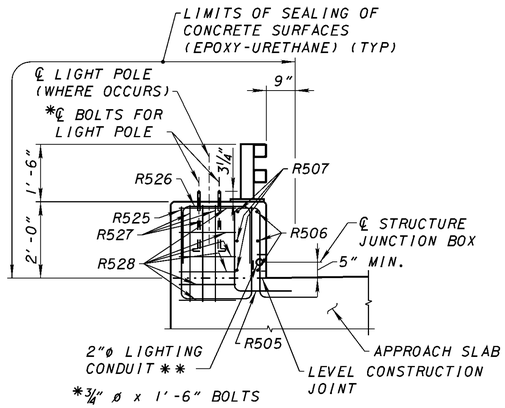

SECTION C-C

(SECTION C_1-C, SIMILAR)

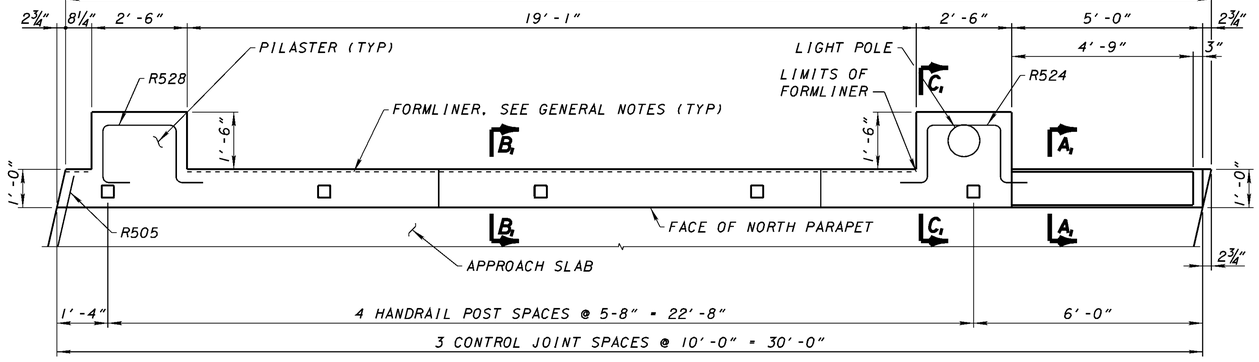

NORTHEAST PLAN

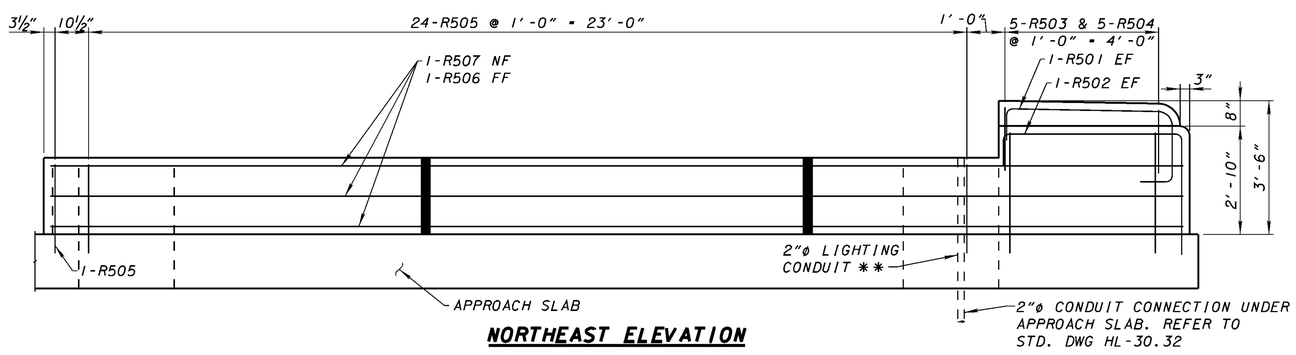

NORTHEAST ELEVATION

**REFER TO LIGHTING AND SIGNAL PLANS FOR ADDITIONAL INFORMATION AND QUANTITIES.

LEGEND

EF - EACH FACE
NF - NEAR FACE
FF - FAR FACE

NOTES:

1. FOR GENERAL NOTES, SEE SHEETS 2 / 30 AND 3 / 30 .
2. FOR REINFORCING STEEL LIST, SEE SHEET 30 / 30 .
3. FOR PILASTER DETAILS, SEE SHEET 27 / 30 .
4. FOR ADDITIONAL NOTES AND DETAILS, SEE STD. DWG. BR-2-98.
5. FORMLINER SHALL NOT BE USED ON PILASTERS.

LJB Inc. · 3100 Research Blvd. · P.O. Box 20246
Dayton, OH 45420-0246
(937) 259-5000 tel · (937) 259-5100 fax · ljbinc.com

DESIGNED DWS | DRAWN JAL | REVIEWED MPH | DATE 3-08
CHECKED AMT | REVISED | STRUCTURE FILE NUMBER 5706416

PARAPET TRANSITIONS ON APPROACH SLAB (NORTH)

BRIDGE NO. MOT-75-0075
MIAMISBURG-SPRINGBORO PIKE OVER I-75

MOT-75-0.75
PID 77246

24 / 30

677
773

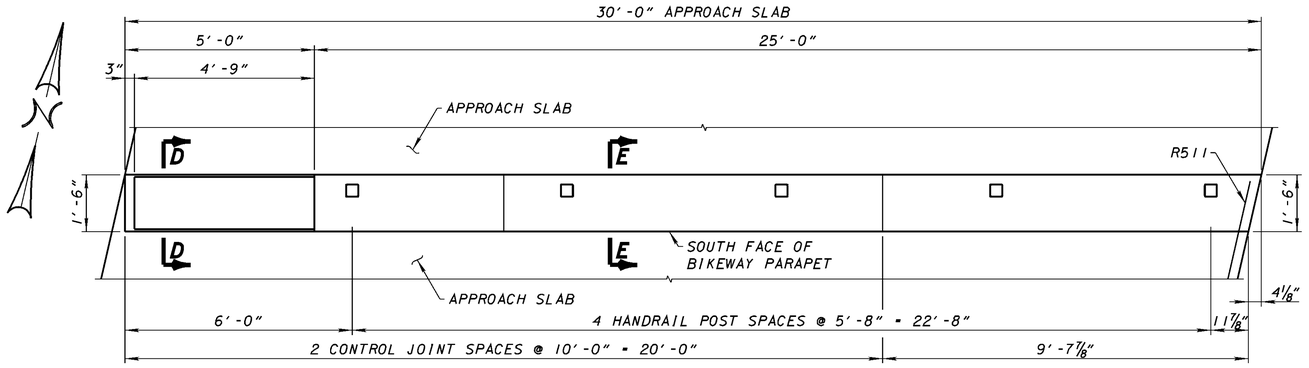

WEST BIKEWAY TRANSITION PLAN

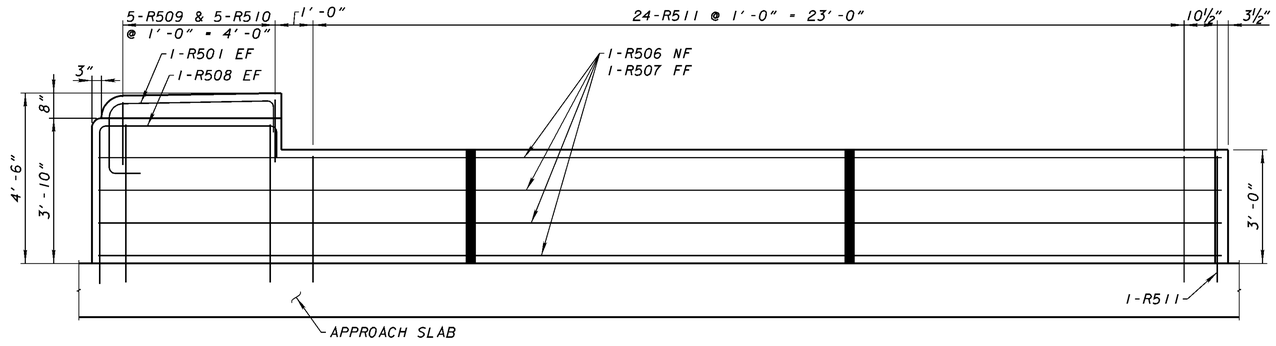

WEST BIKEWAY TRANSITION ELEVATION

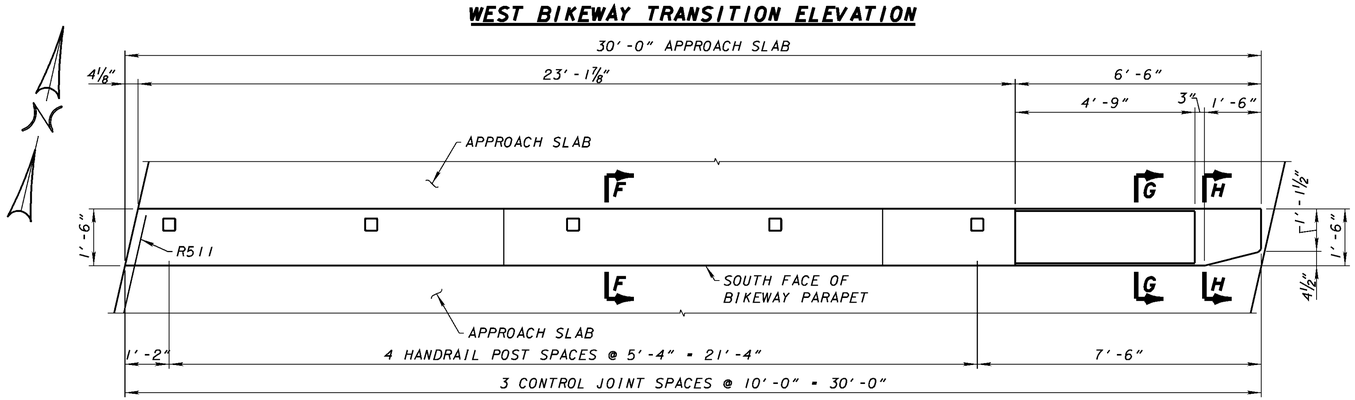

EAST BIKEWAY TRANSITION PLAN

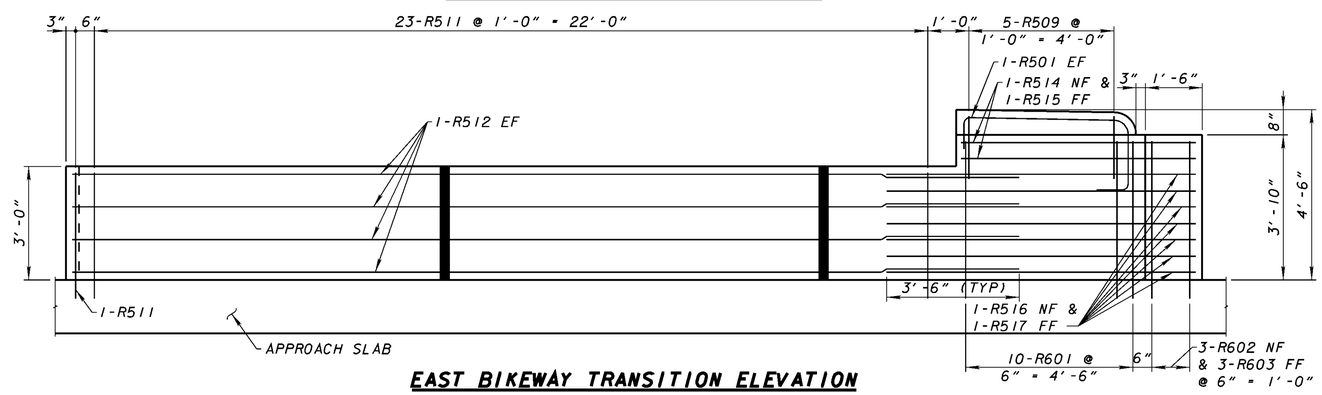

EAST BIKEWAY TRANSITION ELEVATION

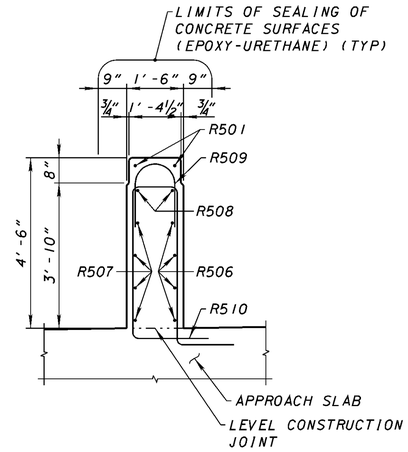

SECTION D-D

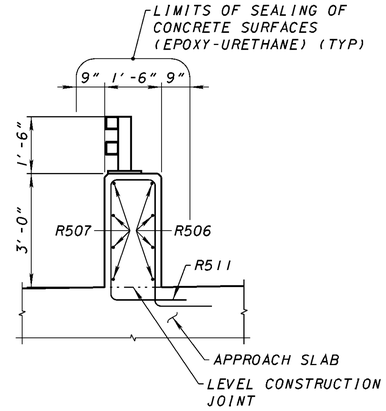

SECTION E-E

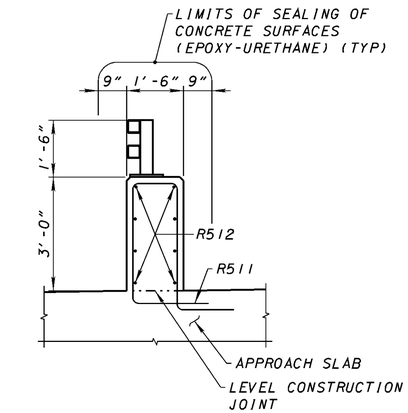

SECTION F-F

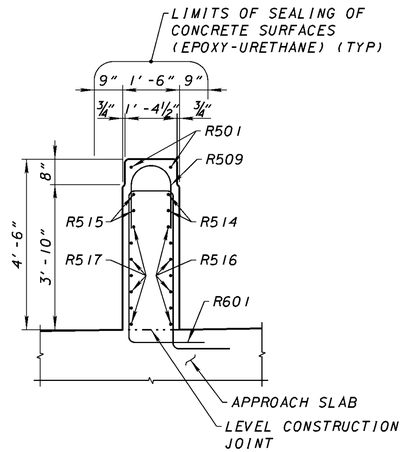

SECTION G-G

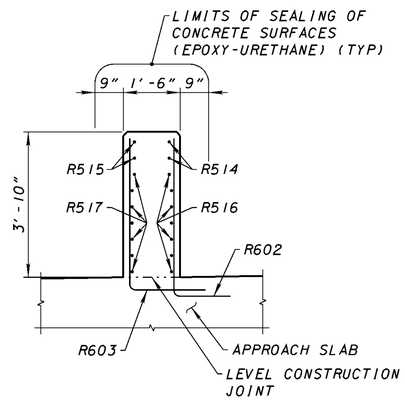

SECTION H-H

LEGEND

EF = EACH FACE
NF = NEAR FACE
FF = FAR FACE

NOTES:

1. FOR GENERAL NOTES, SEE SHEETS 2 / 30 AND 3 / 30 .
2. FOR REINFORCING STEEL LIST, SEE SHEET 30 / 30 .
3. FOR ADDITIONAL NOTES AND DETAILS, SEE STD. DWG. BR-2-98.

LJB Inc. - 3100 Research Blvd. - P.O. Box 20246
Dayton, OH 45420-0246
(937) 259-5000 tel - (937) 259-5100 fax ljbinc.com

DESIGNED DWS | DRAWN JAL | REVIEWED MPH | DATE 3-08
CHECKED AMT | REVISED | STRUCTURE FILE NUMBER 5706416

PARAPET TRANSITIONS ON APPROACH SLAB (BIKEWAY)
BRIDGE NO. MOT-75-0075
MIAMISBURG-SPRINGBORO PIKE OVER I-75

MOT-75-0.75
PID 77246

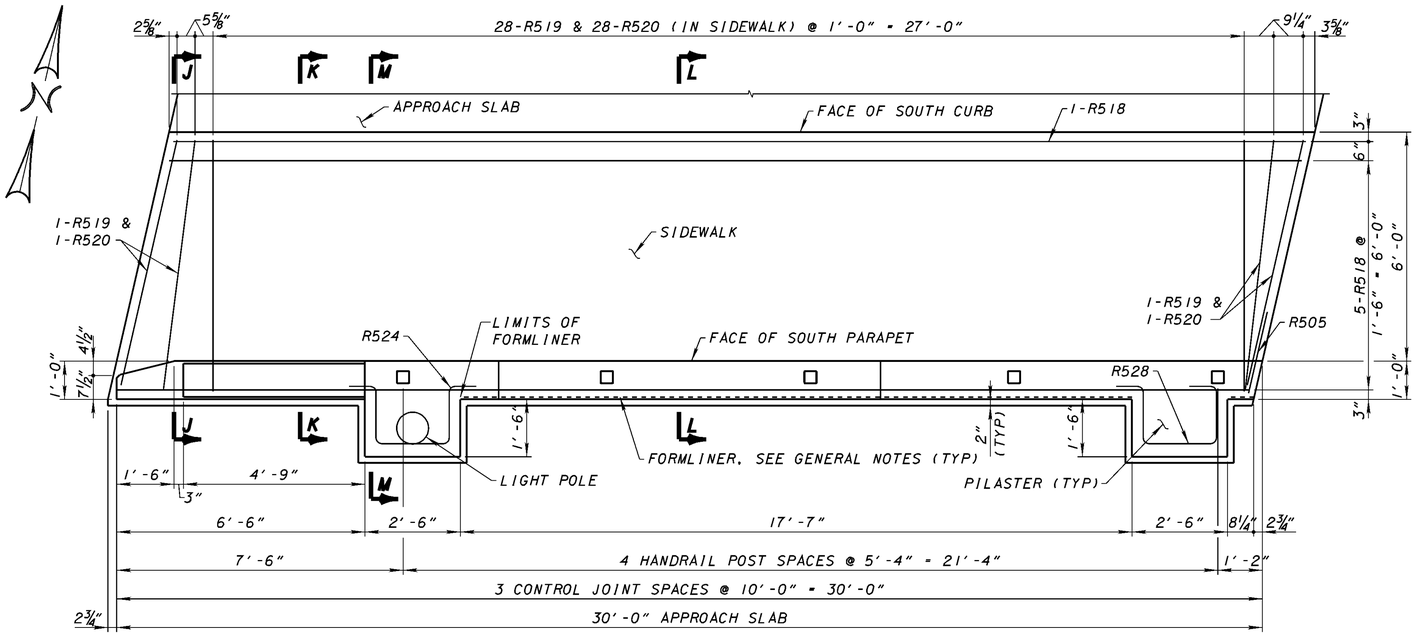

SOUTHWEST PLAN

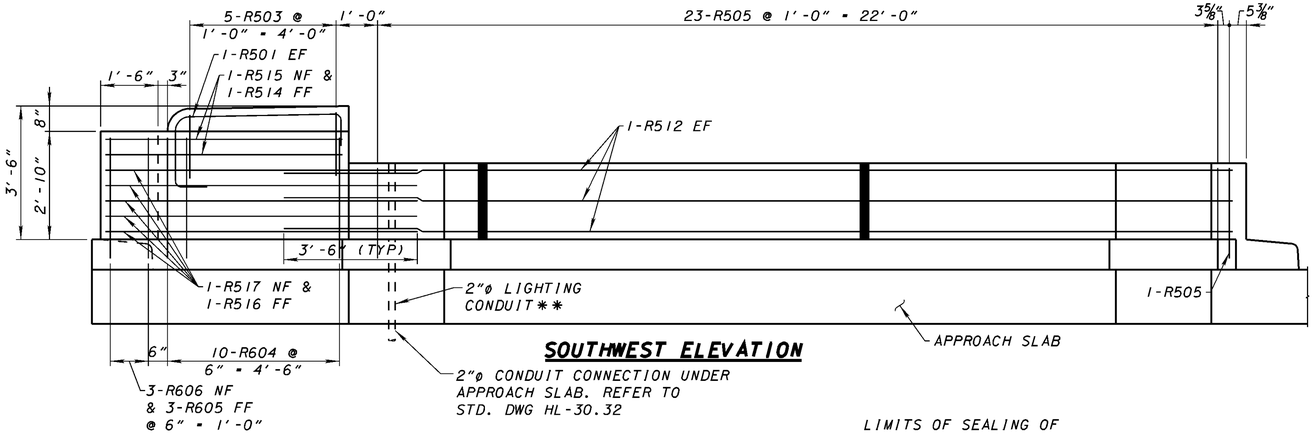

SOUTHWEST ELEVATION

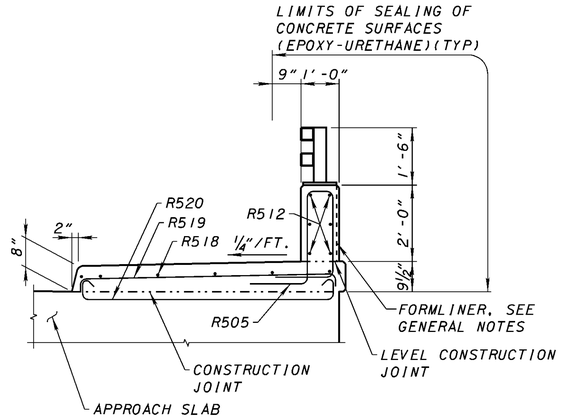

SECTION L-L

SECTION M-M

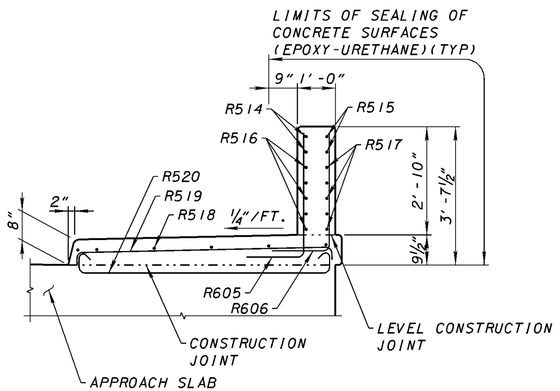

SECTION J-J

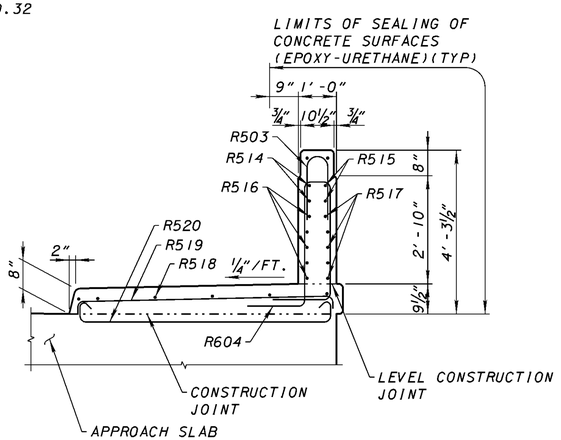

SECTION K-K

**REFER TO LIGHTING AND SIGNAL PLANS FOR ADDITIONAL INFORMATION AND QUANTITIES.

LEGEND

EF - EACH FACE
NF - NEAR FACE
FF - FAR FACE

NOTES:

1. FOR GENERAL NOTES, SEE SHEETS 2 / 30 AND 3 / 30 .
2. FOR REINFORCING STEEL LIST, SEE SHEET 30 / 30 .
3. FOR PILASTER DETAILS, SEE SHEET 27 / 30 .
4. FOR ADDITIONAL NOTES AND DETAILS, SEE STD. DWG. BR-2-98.
5. FOR LIGHTING DETAILS, SEE REFERENCED STANDARD DRAWINGS.
6. FORMLINER SHALL NOT BE USED ON PILASTERS.

LJB Inc. - 3100 Research Blvd. - P.O. Box 20246
Dayton, OH 45420-0246
(937) 259-5000 tel - (937) 259-5100 fax ljbinc.com

DESIGNED DWS | DRAWN JAL | REVIEWED MPH | DATE 3-08
CHECKED AMT | REVISED | STRUCTURE FILE NUMBER 5706416

PARAPET TRANSITION ON APPROACH SLAB (SOUTHWEST)

BRIDGE NO. MOT-75-0075
MIAMISBURG-SPRINGBORO PIKE OVER I-75

MOT-75-0.75
PID 77246

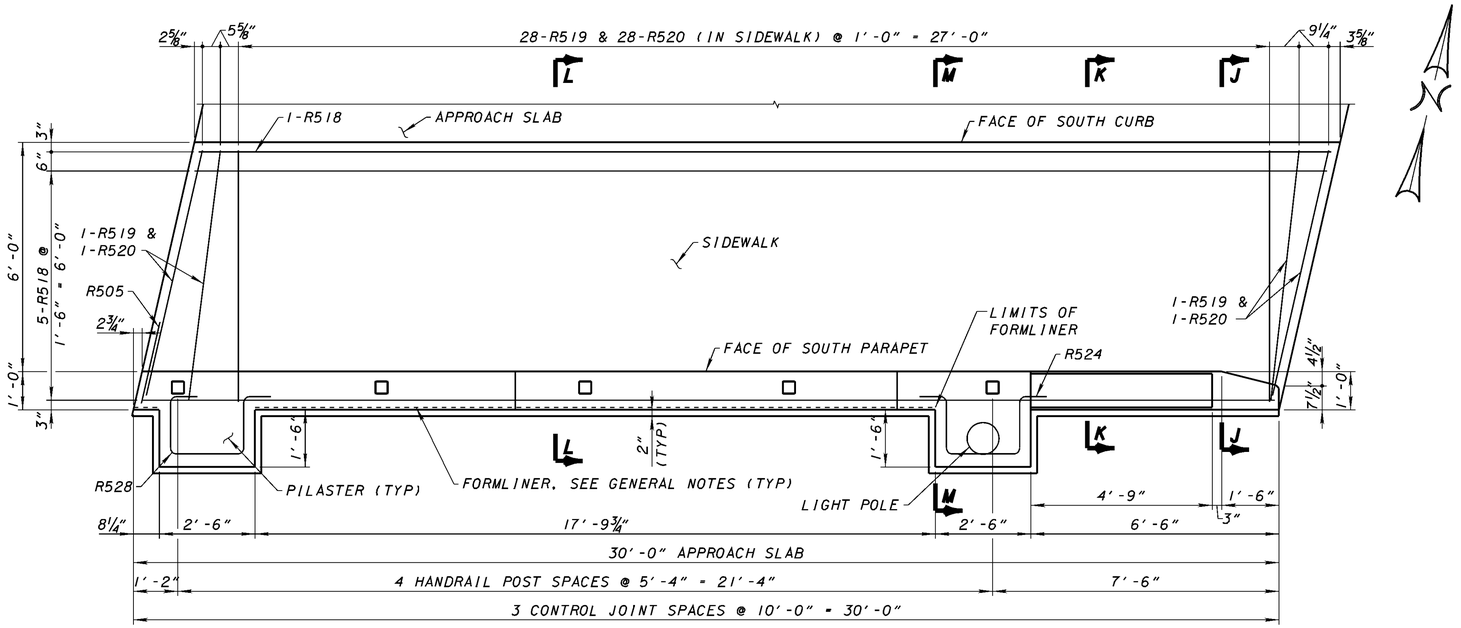

SOUTHEAST PLAN

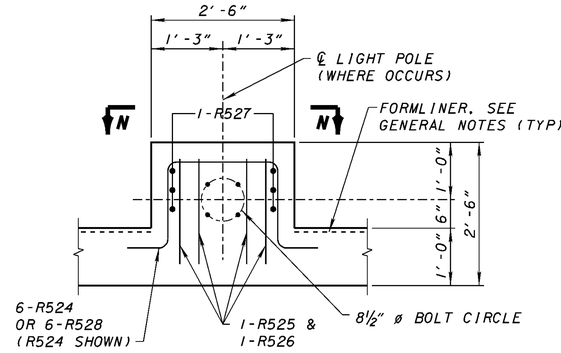

PLAN
(NORTH FASCIA)

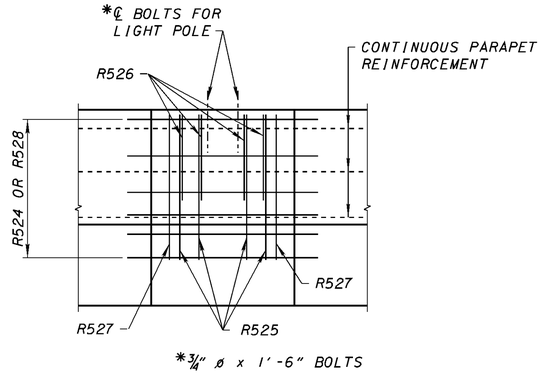

*¾" ø x 1'-6" BOLTS

VIEW N-N

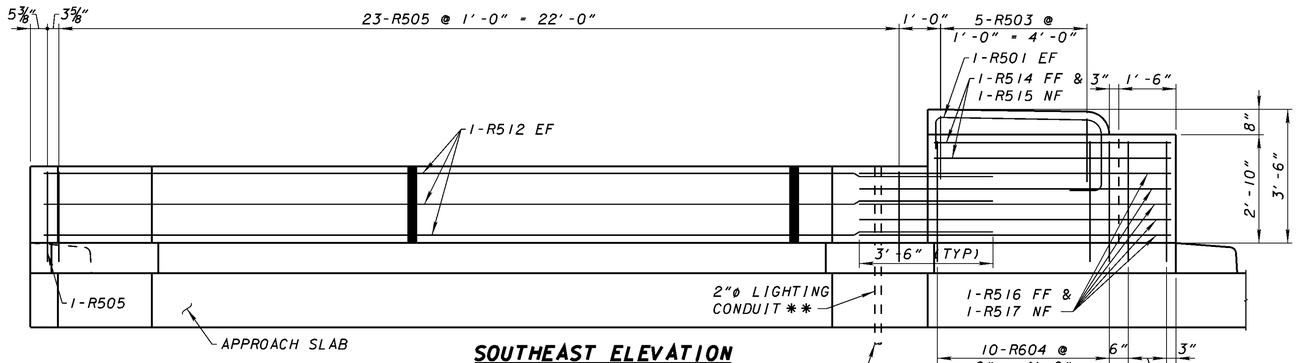

SOUTHEAST ELEVATION
2"ø CONDUIT CONNECTION UNDER APPROACH SLAB. REFER TO STD. DWG HL-30.32

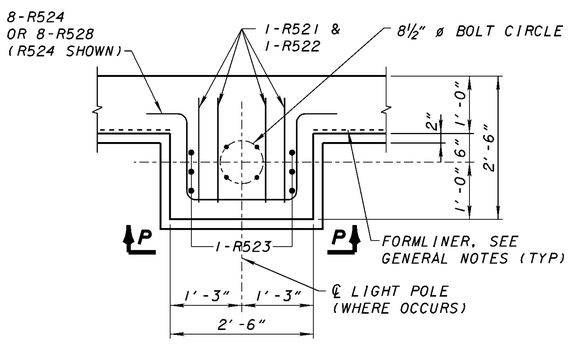

PLAN
(SOUTH FASCIA)

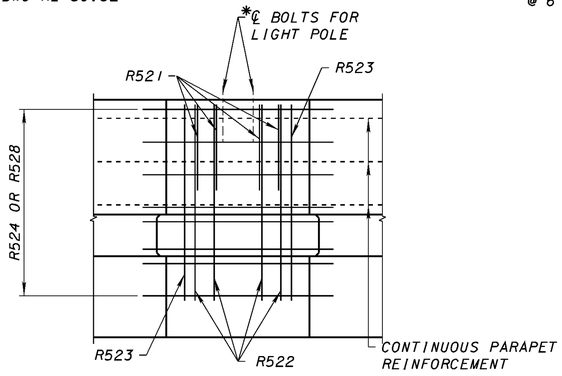

VIEW P-P

LEGEND
EF = EACH FACE
NF = NEAR FACE
FF = FAR FACE

NOTES:
1. FOR GENERAL NOTES, SEE SHEETS 2 / 30 AND 3 / 30 .
2. FOR REINFORCING STEEL LIST, SEE SHEET 30 / 30 .
3. FOR SECTIONS J-J, K-K, L-L AND M-M, SEE SHEET 26 / 30 .
4. FOR PILASTER SECTIONS, SEE SHEETS 24 / 30 AND 26 / 30 .
5. FOR ADDITIONAL NOTES AND DETAILS, SEE STD. DWG. BR-2-98.
6. FOR LIGHTING DETAILS, SEE REFERENCED STANDARD DRAWINGS.
7. FORMLINER SHALL NOT BE USED ON PILASTERS.

****REFER TO LIGHTING AND SIGNAL PLANS FOR ADDITIONAL INFORMATION AND QUANTITIES.**

LJB Inc. • 3100 Research Blvd. • P.O. Box 20246
Dayton, OH 45420-0246
(937) 259-5000 tel • (937) 259-5100 fax ljbinc.com

DESIGNED DWS | DRAWN JAL | REVIEWED | DATE 3-08
CHECKED AMT | REVISED | REVIEWED MPH | STRUCTURE FILE NUMBER 5706416

PARAPET TRANSITION ON APPROACH SLAB (SOUTHEAST)
BRIDGE NO. MOT-75-0075
MIAMISBURG-SPRINGBORO PIKE OVER I-75

MOT-75-0.75
PID 77246

REAR ABUTMENT

MARK	NO.	LENGTH	WEIGHT	TYPE	A	B	C	D	E	F	G	H	K	O	R
A501	40	30'-0"	1252	STR.											
A502	10	9'-6"	99	STR.											
A503	92	17'-7"	1687	12	5½"	6'-0"	2'-6"	6'-0"	2'-6"		5½"				
A504	92	12'-2"	1167	8			4'-8"	3'-1"	4'-8"						
A505	56	6'-4"	370	8			1'-9"	3'-1"	1'-9"						
A506	36	7'-6"	282	8			2'-4"	3'-1"	2'-4"						
A507	12	7'-9"	97	STR.											
A508	34	6'-4"	225	STR.											
A601	16	4'-8"	112	STR.											
A602	16	8'-6"	204	STR.											
A603	16	5'-2"	124	STR.											
A604	16	9'-3"	222	STR.											
A801	32	30'-0"	2563	STR.											
A802	8	19'-6"	417	STR.											
		TOTAL =	8821												

FORWARD ABUTMENT

MARK	NO.	LENGTH	WEIGHT	TYPE	A	B	C	D	E	F	G	H	K	O	R
B501	40	30'-0"	1252	STR.											
B502	10	9'-6"	99	STR.											
B503	92	17'-7"	1687	12	5½"	6'-0"	2'-6"	6'-0"	2'-6"		5½"				
B504	92	12'-2"	1167	8			4'-8"	3'-1"	4'-8"						
B505	56	6'-4"	370	8			1'-9"	3'-1"	1'-9"						
B506	36	7'-6"	282	8			2'-4"	3'-1"	2'-4"						
B507	12	7'-9"	97	STR.											
B508	34	6'-4"	225	STR.											
B601	16	4'-8"	112	STR.											
B602	16	8'-8"	208	STR.											
B603	16	5'-5"	130	STR.											
B604	16	9'-5"	226	STR.											
B801	32	30'-0"	2563	STR.											
B802	8	19'-6"	417	STR.											
		TOTAL =	8835												

REAR END DIAPHRAGM

MARK	NO.	LENGTH	WEIGHT	TYPE	A	B	C	D	E	F	G	H	K	O	R
D501	76	12'-2"	964	8			4'-7"	3'-3"	4'-7"						
D502	76	8'-4"	661	8			2'-11"	2'-9"	2'-11"						
D503	102	6'-0"	638	8			1'-6"	3'-3"	1'-6"						
D504	26	10'-8"	289	8			3'-10"	3'-3"	3'-10"						
D801	18	30'-0"	1442	STR.											
D802	6	43'-4"	694	STR.											
D803	24	8'-11"	571	2	13½"	6'-8"					13½"				
D804	36	8'-2"	785	STR.											
D805	6	1'-9"	28	STR.											
D806	4	3'-7"	38	2	13½"	1'-4"					13½"				
D807	77	5'-3"	1079	17	11"	2'-11"	1'-5"					1'-0"	1'-0"		
		TOTAL =	7189												

FORWARD END DIAPHRAGM

MARK	NO.	LENGTH	WEIGHT	TYPE	A	B	C	D	E	F	G	H	K	O	R
E501	76	12'-2"	964	8			4'-7"	3'-3"	4'-7"						
E502	76	8'-4"	661	8			2'-11"	2'-9"	2'-11"						
E503	102	6'-0"	638	8			1'-6"	3'-3"	1'-6"						
E504	26	10'-8"	289	8			3'-10"	3'-3"	3'-10"						
E801	18	30'-0"	1442	STR.											
E802	6	43'-4"	694	STR.											
E803	24	8'-11"	571	2	13½"	6'-8"					13½"				
E804	36	8'-2"	785	STR.											
E805	6	1'-9"	28	STR.											
E806	4	3'-7"	38	2	13½"	1'-4"					13½"				
E807	77	5'-3"	1079	17	11"	2'-11"	1'-5"					1'-0"	1'-0"		
		TOTAL =	7189												

BENDING DIAGRAMS

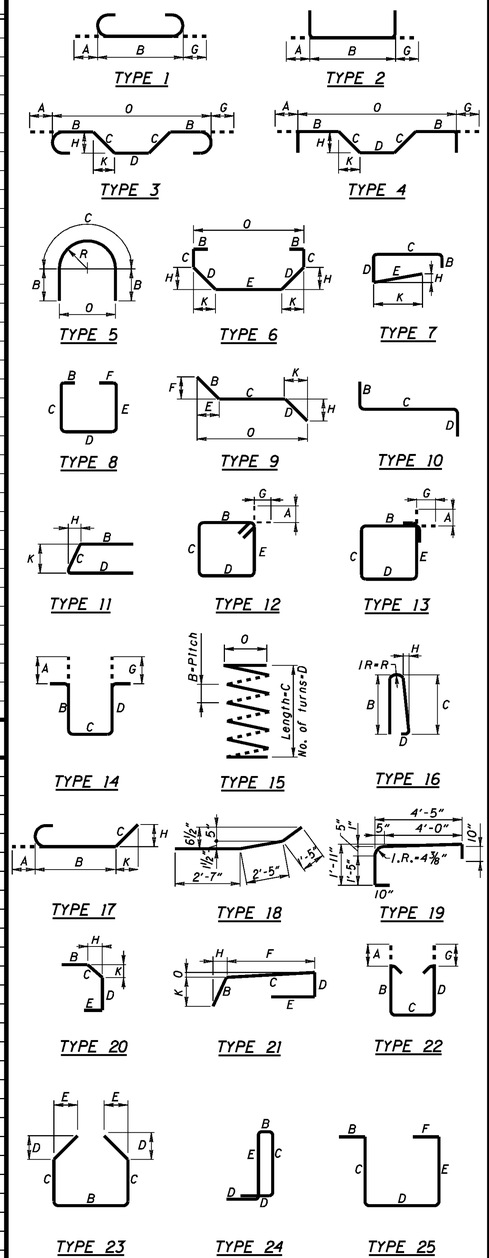

NOTES

1. ALL REINFORCING STEEL BARS SHALL BE EPOXY COATED.
2. ALL DIMENSIONS ARE OUT TO OUT OF BAR.
3. DIMENSIONS "A" AND "G" ARE STANDARD BEND DIMENSIONS. REFER TO SECTION 509.05 OF THE CMS.
4. RADIUS DIMENSION "R" IS TO THE OUTSIDE OF THE BAR.
5. THE BAR SIZE NUMBER IS SPECIFIED ON THE PLANS IN THE BAR MARK COLUMN. THE FIRST DIGIT WHERE THREE DIGITS ARE USED, AND THE FIRST TWO DIGITS WHERE FOUR ARE USED, INDICATES THE BAR SIZE NUMBER.
6. APPROACH SLAB PARAPETS STEEL LIST FOR INFORMATION ONLY.

LJB Inc. - 3100 Research Blvd. - P.O. Box 20246
Dayton, OH 45420-0246
(937) 259-5000 tel - (937) 259-5100 fax ljbinc.com

DESIGNED AMT | DRAWN MSD | REVIEWED MPH | DATE 3-08
CHECKED DWS | REVISED | STRUCTURE FILE NUMBER 5706416

REINFORCING STEEL LIST - ABUTMENTS & END DIAPHRAGMS

BRIDGE NO. MOT-75-0075
MIAMISBURG-SPRINGBORO PIKE OVER I-75

MOT-75-0.75
PID 77246

PIER 1

MARK	NO.	LENGTH	WEIGHT	TYPE	A	B	C	D	E	F	G	H	K	O	R
PA401	176	10'-6"	1234	12	4½"	2'-6"	2'-6"	2'-6"	2'-6"		4½"				
PA402	14	33'-6"	313	STR.											
PA403	14	28'-0"	262	STR.											
PA404	12	29'-0"	232	STR.											
PA405	12	32'-6"	261	STR.											
PA406	2	36'-0"	48	STR.											
PA407	80	2'-8"	143	1	6"	1'-8"					6"				
PA501	142	10'-11"	1617	8			3'-6"	4'-2"	3'-6"						
PA502	564	9'-7"	5637	8			3'-6"	2'-10"	3'-6"						
PA503	16	11'-3"	188	8			3'-8"	4'-2"	3'-8"						
PA504	32	5'-7"	186	2	8½"	4'-2"					8½"				
PA505	40	9'-9"	407	11		4'-2"	1'-8"	4'-2"				4½"	1'-7½"		
PA701	40	9'-10"	804	8			4'-3"	1'-8"	4'-3"						
PA801	196	10'-9"	5626	2	13½"	8'-6"					13½"				
PA802	38	12'-9"	1294	2	13½"	10'-6"					13½"				
PA1001	96	11'-3"	4647	2	1'-6"	9'-9"									
PA1002	96	24'-6"	10121	STR.											
PA1003	4	23'-7"	406	STR											
PA1004	5	39'-7"	852	STR.											
PA1005	5	27'-8"	595	STR.											
PA1006	4	43'-8"	752	STR.											
PA1007	9	35'-5"	1372	10		3'-8"	32'-1"								
PA1008	9	40'-0"	1549	10		4'-2"	36'-2"								
PA1009	4	28'-0"	482	STR.											
PA1010	5	44'-0"	947	STR.											
PA1011	4	39'-8"	683	STR.											
PA1012	5	23'-8"	509	STR.											
PA1013	9	25'-7"	991	STR.											
PA1014	9	40'-6"	1568	10		4'-4"	36'-6"								
PA1015	9	35'-6"	1375	10		3'-8"	32'-2"								
		TOTAL =	45101												

PIER 1 DIAPHRAGM

MARK	NO.	LENGTH	WEIGHT	TYPE	A	B	C	D	E	F	G	H	K	O	R
PD401	88	13'-11"	818	14	7"	5'-3"	2'-5"	5'-3"			7"				
PD402	8	12'-11"	69	14	7"	4'-9"	2'-5"	4'-9"			7"				
PD403	13	11'-9"	102	5		5'-8"	7"							5½"	2¼"
PD404	13	4'-10"	42	23		1'-11½"	6¼"	8½"	8½"						
PD405	13	2'-8"	23	STR.											
PD406	16	3'-8"	39	2	7"	2'-6"					7"				
PD601	72	8'-2"	883	STR.											
PD602	64	8'-11"	857	20		3'-3"	9⅞"	4'-11"				7"	7"		
PD603	32	6'-11"	332	20		3'-3"	9⅞"	2'-1"	1'-0"			7"	7"		
		TOTAL =	3165												

PIER 2

MARK	NO.	LENGTH	WEIGHT	TYPE	A	B	C	D	E	F	G	H	K	O	R
PB401	176	10'-6"	1234	12	4½"	2'-6"	2'-6"	2'-6"	2'-6"		4½"				
PB402	12	33'-6"	269	STR.											
PB403	12	28'-6"	228	STR.											
PB404	2	36'-0"	48	STR.											
PB405	14	29'-0"	271	STR.											
PB406	14	32'-6"	304	STR.											
PB407	80	2'-8"	143	1	6"	1'-8"					6"				
PB501	142	10'-11"	1617	8			3'-6"	4'-2"	3'-6"						
PB502	564	9'-7"	5637	8			3'-6"	2'-10"	3'-6"						
PB503	16	11'-3"	188	8			3'-8"	4'-2"	3'-8"						
PB504	32	5'-7"	186	2	8½"	4'-2"					8½"				
PB505	40	9'-9"	407	11		4'-2"	1'-8"	4'-2"				4½"	1'-7½"		
PB701	40	9'-10"	804	8			4'-3"	1'-8"	4'-3"						
PB801	196	10'-9"	5626	2	13½"	8'-6"					13½"				
PB802	38	12'-9"	1294	2	13½"	10'-6"					13½"				
PB1001	96	11'-3"	4647	2	1'-6"	9'-9"									
PB1002	96	24'-9"	10224	STR.											
PB1003	4	23'-8"	407	STR.											
PB1004	5	39'-8"	853	STR											
PB1005	4	44'-0"	757	STR.											
PB1006	5	28'-0"	602	STR.											
PB1007	9	35'-5"	1372	10		3'-8"	32'-1"								
PB1008	9	25'-7"	991	STR.											
PB1009	9	40'-7"	1572	10		4'-5"	36'-6"								
PB1010	5	43'-8"	939	STR.											
PB1011	4	27'-8"	476	STR.											
PB1012	4	39'-7"	681	STR.											
PB1013	5	23'-7"	507	STR.											
PB1014	9	40'-3"	1559	10		4'-5"	36'-2"								
PB1015	9	35'-7"	1378	10		3'-10"	32'-1"								
		TOTAL =	45221												

PIER 2 DIAPHRAGM

MARK	NO.	LENGTH	WEIGHT	TYPE	A	B	C	D	E	F	G	H	K	O	R
PE401	88	13'-11"	818	14	7"	5'-3"	2'-5"	5'-3"			7"				
PE402	8	12'-11"	69	14	7"	4'-9"	2'-5"	4'-9"			7"				
PE403	13	11'-9"	102	5		5'-8"	7"							5½"	2¼"
PE404	13	4'-10"	42	23		1'-11½"	6¼"	8½"	8½"						
PE405	13	2'-8"	23	STR.											
PE406	16	3'-8"	39	2	7"	2'-6"					7"				
PE601	72	8'-2"	883	STR.											
PE602	64	8'-11"	857	20		3'-3"	9⅞"	4'-11"				7"	7"		
PE603	32	6'-11"	332	20		3'-3"	9⅞"	2'-1"	1'-0"			7"	7"		
		TOTAL =	3165												

BENDING DIAGRAMS

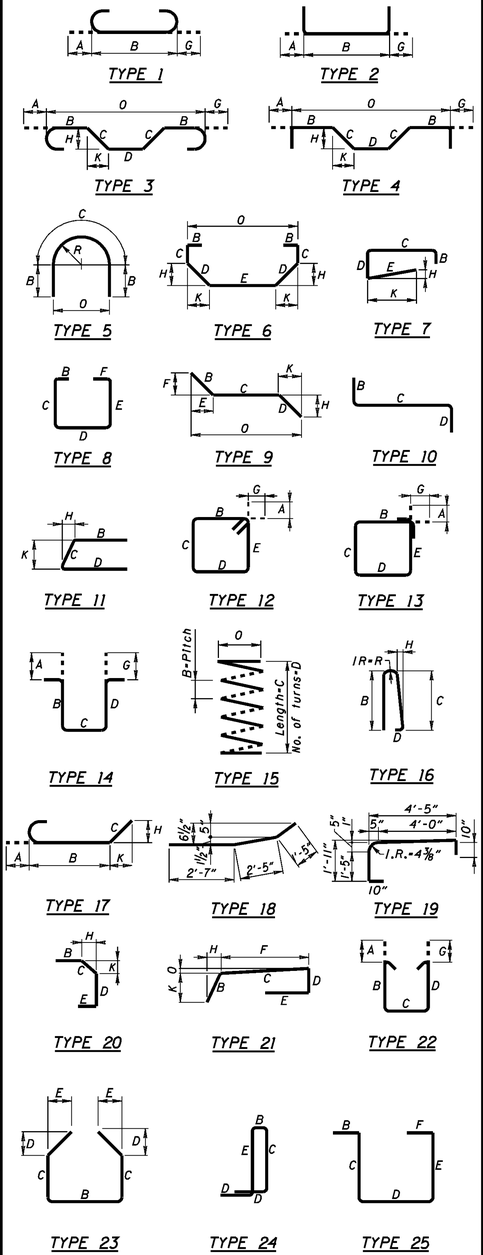

NOTES

1. ALL REINFORCING STEEL BARS SHALL BE EPOXY COATED.
2. ALL DIMENSIONS ARE OUT TO OUT OF BAR.
3. DIMENSIONS "A" AND "G" ARE STANDARD BEND DIMENSIONS. REFER TO SECTION 509.05 OF THE CMS.
4. RADIUS DIMENSION "R" IS TO THE OUTSIDE OF THE BAR.
5. THE BAR SIZE NUMBER IS SPECIFIED ON THE PLANS IN THE BAR MARK COLUMN. THE FIRST DIGIT WHERE THREE DIGITS ARE USED, AND THE FIRST TWO DIGITS WHERE FOUR ARE USED, INDICATES THE BAR SIZE NUMBER.
6. APPROACH SLAB PARAPETS STEEL LIST FOR INFORMATION ONLY.

LJB Inc. - 3100 Research Blvd. - P.O. Box 20246
Dayton, OH 45420-0246
(937) 259-5000 tel - (937) 259-5100 fax - ljbinc.com

DESIGNED AMT | DRAWN MSD | REVIEWED MPH | DATE 3-08
CHECKED DWS | REVISED | STRUCTURE FILE NUMBER 5706416

REINFORCING STEEL LIST - PIERS & PIER DIAPHRAGMS

BRIDGE NO. MOT-75-0075
MIAMISBURG-SPRINGBORO PIKE OVER I-75

MOT-75-0.75
PID 77246

SUPERSTRUCTURE SLAB

MARK	NO.	LENGTH	WEIGHT	TYPE	A	B	C	D	E	F	G	H	K	O	R
S401	440	6'-7"	1935	1	6"	6'-1"					/				
S501	1782	30'-0"	55759	STR.											
S502	162	33'-4"	5632	STR.											
S503	338	8'-4"	2938	22	5½"	7"	6'-6"	7"			5½"				
S504	338	7'-1"	2497	8		/	5"	6'-6"	5"	/					
S601	2624	30'-0"	118237	STR.											
S602	1312	31'-11"	62896	1	8"	31'-3"					/				
S603	1312	31'-3"	61582	STR.											
S604	2 SER	VAR 29'-9"	531	1	8"	VAR. 29'-1"					/				
	OF 8	TO 14'-5"				TO 13'-9"									
	• 16	INCR. 2'-2¼"				INCR. 2'-2¼"									
S605	2 SER	VAR. 29'-1"	515	STR.											
	OF 8	TO 13'-9"													
	• 16	INCR. 2'-2¼"													
S606	4 SER	VAR. 14'-0"	1041	STR.											
	OF 8	TO 29'-4"													
	• 32	INCR. 2'-2¼"													
S607	4 SER	VAR. 28'-8"	1009	STR.											
	OF 8	TO 13'-4"													
	• 32	INCR. 2'-2¼"													
S608	4 SER	VAR. 30'-2"	1158	STR.											
	OF 9	TO 12'-8"													
	• 36	INCR. 2'-2¼"													
S801	996	30'-0"	79779	STR.											
S802	83	32'-11"	7295	STR.											
S803	948	25'-11"	65599	STR.											
S804	40	27'-1"	2892	STR.											
		TOTAL =	471295												

APPROACH SLAB PARAPETS (SEE NOTE 6)

MARK	NO.	LENGTH	WEIGHT	TYPE	A	B	C	D	E	F	G	H	K	O	R
R501	12	7'-6"	94	19		SEE BENDING DIAGRAM									
R502	4	8'-5"	35	8		/	3'-2"	4'-8"	10"	/					
R503	20	3'-7"	75	5		1'-5"	10¼"							6½"	3¼"
R504	10	9'-4"	97	24		8"	3'-0"	1'-6"	3'-2"						
R505	98	7'-7"	775	24		7"	2'-2"	1'-6"	2'-4"						
R506	10	29'-5"	307	STR.											
R507	10	29'-7"	309	STR.											
R508	2	9'-5"	20	8		/	4'-2"	4'-8"	10"	/					
R509	10	4'-4"	45	5		1'-5"	1'-7⅝"							1'-0½"	6¼"
R510	5	11'-10"	62	24		1'-2"	4'-0"	1'-6"	4'-2"						
R511	49	10'-2"	520	24		1'-2"	3'-2"	1'-6"	3'-4"						
R512	20	24'-11"	520	STR.											
R513		BAR MARK	NOT USED												
R514	6	6'-1"	38	9		1'-4½"	4'-8"	/	1'-4"	4"		/	/	6'-0"	
R515	6	6'-2"	39	STR.											
R516	17	8'-3"	146	9		1'-4½"	6'-10"	/	1'-4"	4"		/	/	8'-2"	
R517	17	8'-3"	146	STR.											
R518	12	29'-7"	370	STR.											
R519	64	7'-1"	473	8		/	5"	6'-6"	5"	/					
R520	64	8'-4"	556	22	5½"	7"	6'-6"	7"			5½"				
R521	16	4'-9"	79	8		/	1'-6"	2'-0"	1'-6"	/					
R522	16	8'-1"	135	8		/	3'-2"	2'-0"	3'-2"	/					
R523	24	3'-2"	79	STR.											
R524	28	6'-10"	200	14	/	1'-0"	1'-8"	2'-0"		/		1'-8"	0"	4'-2"	
R525	16	6'-7"	110	8		/	2'-5"	2'-0"	2'-5"	/					
R526	16	4'-9"	79	8		/	1'-6"	2'-0"	1'-6"	/					
R527	24	2'-5"	60	STR.											
R528	28	6'-10"	200	25	/	1'-0"	1'-8"	2'-0"	1'-8"	1'-0"					
R601	10	12'-6"	188	24		1'-2"	4'-0"	1'-10"	4'-2"						
R602	3	5'-11"	27	10		1'-10"	4'-2"	/							
R603	3	5'-9"	26	10		1'-10"	4'-0"	/							
R604	20	10'-0"	300	24		8"	3'-0"	1'-10"	3'-2"						
R605	6	4'-11"	44	10		1'-10"	3'-2"	/							
R606	6	4'-9"	43	10		1'-10"	3'-0"	/							
		TOTAL =	6197												

SUPERSTRUCTURE PARAPETS

MARK	NO.	LENGTH	WEIGHT	TYPE	A	B	C	D	E	F	G	H	K	O	R
X501	220	30'-0"	6884	STR.											
X502	20	33'-4"	695	STR.											
X503	672	7'-7"	5315	24		7"	2'-2"	1'-6"	2'-4"						
X504	336	10'-2"	3563	24		1'-2"	3'-2"	1'-6"	3'-4"						
X505	48	4'-9"	238	8		/	1'-6"	2'-0"	1'-6"	/					
X506	48	6'-7"	330	8		/	2'-5"	2'-0"	2'-5"	/					
X507	72	2'-5"	181	STR.											
X508	48	4'-9"	238	8		/	1'-6"	2'-0"	1'-6"	/					
X509	48	8'-1"	405	8		/	3'-2"	2'-0"	3'-2"	/					
X510	72	3'-2"	238	STR.											
X511	168	6'-10"	1197	4	/	1'-0"	1'-8"	2'-0"			/	1'-8"	0"	4'-2"	
		TOTAL =	19284												

BENDING DIAGRAMS

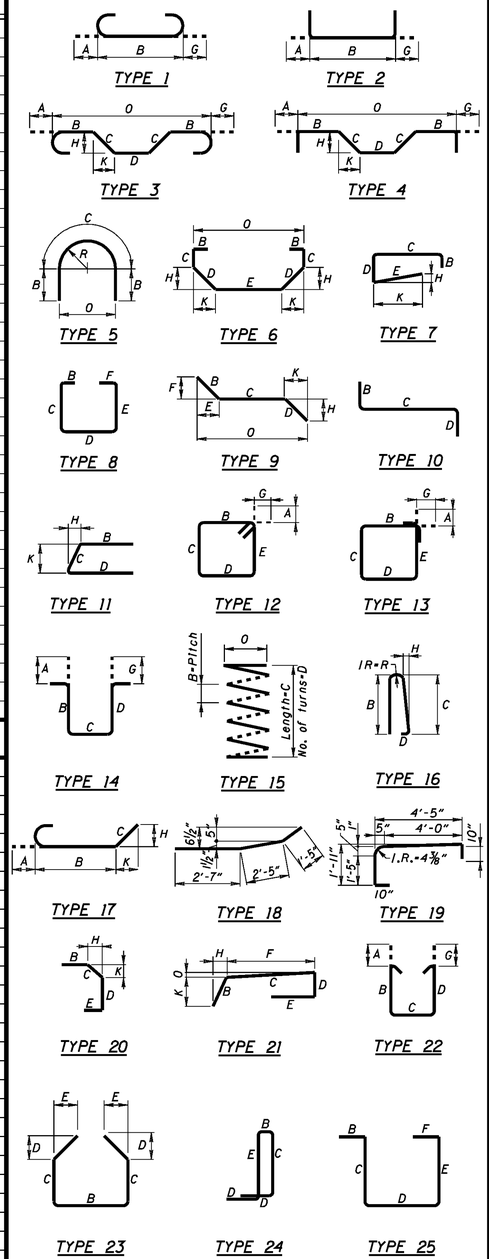

NOTES

1. ALL REINFORCING STEEL BARS SHALL BE EPOXY COATED.
2. ALL DIMENSIONS ARE OUT TO OUT OF BAR.
3. DIMENSIONS "A" AND "G" ARE STANDARD BEND DIMENSIONS. REFER TO SECTION 509.05 OF THE CMS.
4. RADIUS DIMENSION "R" IS TO THE OUTSIDE OF THE BAR.
5. THE BAR SIZE NUMBER IS SPECIFIED ON THE PLANS IN THE BAR MARK COLUMN. THE FIRST DIGIT WHERE THREE DIGITS ARE USED, AND THE FIRST TWO DIGITS WHERE FOUR ARE USED, INDICATES THE BAR SIZE NUMBER.
6. APPROACH SLAB PARAPETS STEEL LIST FOR INFORMATION ONLY.

LJB Inc. • 3100 Research Blvd. • P.O. Box 20246
Dayton, OH 45420-0246
(937) 259-5000 tel • (937) 259-5100 fax • ljbinc.com

DESIGNED AMT | DRAWN MSD | CHECKED DWS | REVIEWED MPH | DATE 3-08

STRUCTURE FILE NUMBER 5706416

REVISED

REINFORCING STEEL LIST - DECK SLAB & PARAPETS

BRIDGE NO. MOT-75-0075
MIAMISBURG-SPRINGBORO PIKE OVER I-75

MOT-75-0.75
PID 77246

GENERAL NOTES

REFER TO THE FOLLOWING STANDARD CONSTRUCTION DRAWING: DM-1.1, REVISED 04-21-06

AND TO THE FOLLOWING SUPPLEMENTAL SPECIFICATION: 840, DATED 01-19-07
878, DATED 04-21-06

DESIGN SPECIFICATIONS: THIS STRUCTURE CONFORMS TO "STANDARD SPECIFICATIONS FOR HIGHWAY BRIDGES" ADOPTED BY THE AMERICAN ASSOCIATION OF STATE HIGHWAY AND TRANSPORTATION OFFICIALS 2002. AND THE ODOT BRIDGE DESIGN MANUAL.

DESIGN DATA:
CONCRETE CLASS C - COMPRESSIVE STRENGTH 4000 P.S.I.(CONCRETE COPING AND LEVELING PAD)
REINFORCING STEEL - ASTM A615 OR A996 GRADE 60, MINIMUM YIELD STRENGTH 60,000 P.S.I.

UTILITY LINES: THE UTILITIES SHALL BEAR ALL EXPENSE INVOLVED IN RELOCATING (INSTALLING) THE AFFECTED UTILITY LINES. THE CONTRACTOR AND UTILITIES ARE TO COOPERATE BY ARRANGING THEIR WORK IN SUCH A MANNER THAT INCONVENIENCE TO EITHER WILL BE HELD TO A MINIMUM.

WALL DESIGN CRITERIA: THE ALLOWABLE BEARING CAPACITY AT THE BASE OF THE REINFORCED SOIL MASS IS 4,000 PSF.

PROPRIETARY RETAINING WALL DATA: THE PROPRIETARY WALL SUPPLIER SHALL DESIGN THE INTERNAL STABILITY OF A MECHANICALLY STABILIZED EARTH (MSE) WALL IN ACCORDANCE WITH SUPPLEMENTAL SPECIFICATION 840 TO SUPPORT THE ABUTMENT. THE DESIGN FOR INTERNAL STABILITY SHALL INCLUDE AN UNFACTORED HORIZONTAL STRIP LOAD FROM THE SUPERSTRUCTURE OF 3.8 K/FT APPLIED PERPENDICULAR TO THE FACE OF WALL AT THE BASE OF THE CONCRETE FOOTING.

ITEM 512, SEALING OF CONCRETE SURFACES (EPOXY-URETHANE): THE FINISH COAT COLOR FOR THE MSE WALLS SHALL BE FEDERAL STANDARD COLOR, FS-595B-30475.

AESTHETIC SURFACE TREATMENT: A FORMLINER IN ACCORDANCE WITH 508.03 SHALL BE USED TO PRODUCE THE ARCHITECTURAL SURFACES ACCORDING TO THE LIMITS SHOWN IN THE PLANS. THE FORMLINER USED TO PRODUCE THE ARCHITECTURAL SURFACE TEXTURE SHALL BE AS FOLLOWS, OR AN EQUAL FORMLINER MATERIAL APPROVED BY THE DIRECTOR.

PATTERN	DESCRIPTION	MANUFACTURER
1118	SHERMAN AVENUE STONE	CUSTOMROCK FORMLINERS
16999	GEORGIA ASHLAR	FITZGERALD FORMLINERS
1515	SC ASHLAR	SPEC FORMLINERS, INC.

FORMLINER MANUFACTURER INFORMATION:

CUSTOMROCK FORMLINERS (651)699-1345	2020 WEST 7TH STREET, ST.PAUL, MN 55116.
FITZGERALD FORMLINERS (800)547-7760	1500 EAST CHESTNUT AVENUE, SANTA ANA, CA 92701.
SPEC FORMLINERS, INC. (714)429-9500	530 EAST DYER ROAD, SANTA ANA, CA 92707

METHOD OF MEASUREMENT: THE DEPARTMENT WILL MEASURE AESTHETIC SURFACE TRATMENT BY THE NUMBER OF SQUARE FEET. THE DEPARTMENT WILL DETERMINE THE AREA OF THE AESTHETIC SURFACE TREATMENT FROM NOMINAL PLAN DIMENSIONS.

BASIS OF PAYMENT: THE DEPARTMENT WILL PAY FOR FALSEWORK, STRUCTURAL FORMWORK, FURNISHING, PLACING, CONSOLIDATING, FINISHING AND CURING PORTLAND CEMENT CONCRETE SEPARATELY. PAYMENT FOR AESTHETIC SURFACE TREATMENT INCLUDES ALL MATERIALS AND LABOR REQUIRED TO PRODUCE THE TEXTURED CONCRETE SURFACES SHOWN ON THE PLANS AND DESCRIBED HEREIN.

ESTIMATED QUANTITIES

ITEM	ITEM EXTENSION	TOTAL	UNIT	DESCRIPTION	MSE WALL #1	MSE WALL #2	AS PER PLAN SHEET NUMBER
203	20001	3570	CU.YD.	EMBANKMENT, AS PER PLAN	1650	1920	5 / 5
512	10100	680	SQ.YD.	SEALING OF CONCRETE SURFACES (EPOXY-URETHANE)	354	326	
604	36601	4	EACH	PRECAST REINFORCED CONCRETE OUTLET, AS PER PLAN	2	2	5 / 5
840	20000	7426	SQ.FT.	MECHANICALLY STABILIZED EARTH WALL	3850	3576	
840	21000	2885	CU.YD.	WALL EXCAVATION	1510	1375	
840	22000	1030	SQ.YD.	FOUNDATION PREPARATION	530	500	
840	23000	8650	CU.YD.	SELECT GRANULAR BACKFILL	4500	4150	
840	23050	355	CU.YD.	NATURAL SOIL	190	165	
840	25010	885	FT.	6" DRAINAGE PIPE, PERFORATED	455	430	
840	25020	100	FT.	6" DRAINAGE PIPE, NON-PERFORATED	50	50	
840	26000	467	FT.	CONCRETE COPING	239	228	
840	26050	7426	SQ.FT.	AESTHETIC SURFACE TREATMENT	3850	3576	
840	27000	5	DAY	ON-SITE ASSISTANCE	3	2	
840	28000	LUMP		SGB INSPECTION AND COMPACTION TESTING	LUMP	LUMP	

QUANTITIES COMPUTED BY: AMT
QUANTITIES CHECKED BY: AMM

LJB Inc. • 3100 Research Blvd. • P.O. Box 20246
Dayton, OH 45420-0246
(937) 259-5000 tel • (937) 259-5100 fax ljbinc.com

DESIGNED AMT | DRAWN MHD | REVIEWED MPH | DATE 3-08
CHECKED DWS | REVISED | STRUCTURE FILE NUMBER 5706416

MSE WALL NOTES AND QUANTITIES
BRIDGE NO. MOT-75-0075
MIAMISBURG-SPRINGBORO PIKE OVER I-75

MOT-75-0.75
PID 77246

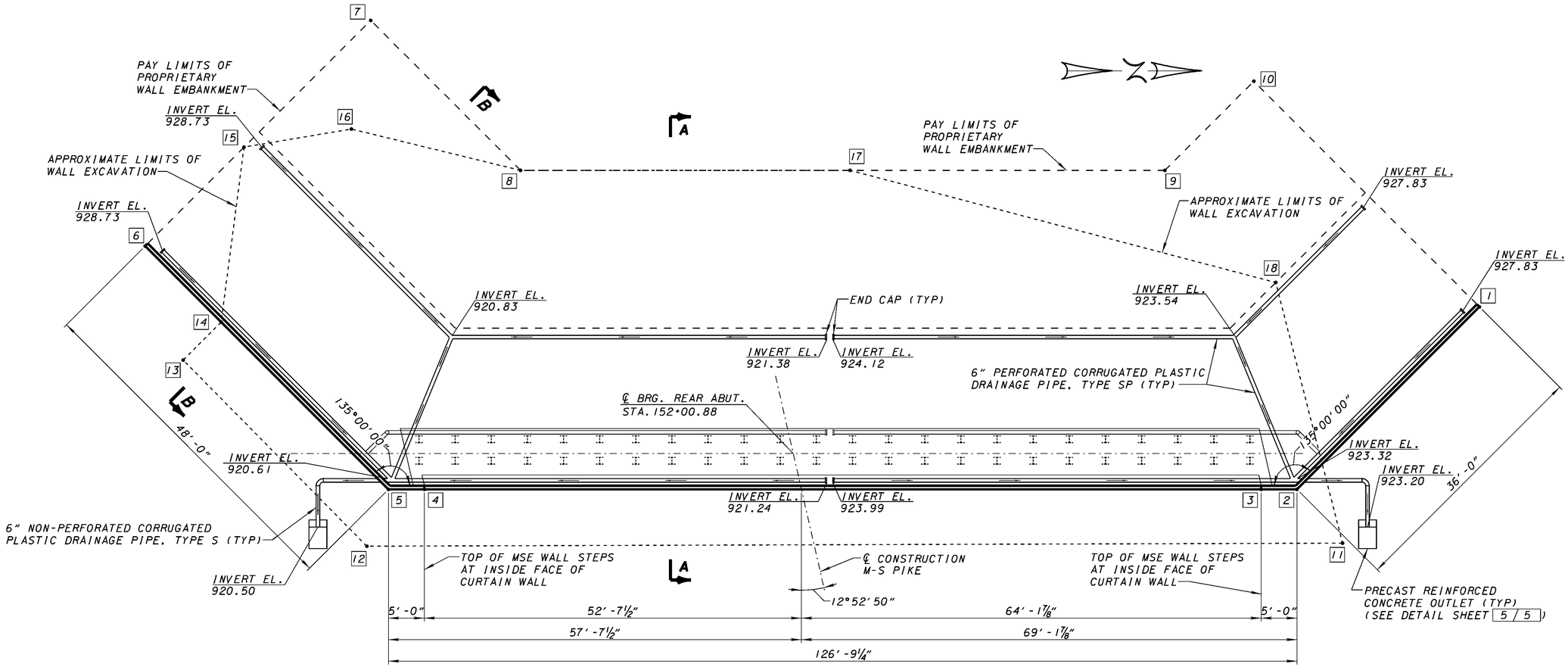

MSE WALL #1

STATION & OFFSET TABLE

POINT	STATION	OFFSET	POINT	STATION	OFFSET
1	152+02.29	97.90 LEFT	19	155+73.72	86.81 LEFT
2	152+21.43	67.41 LEFT	20	155+97.38	49.12 LEFT
3	152+20.31	62.54 LEFT	21	155+82.50	39.78 LEFT
4	151+94.28	51.30 RIGHT	22	155+62.45	47.86 RIGHT
5	151+93.17	56.17 RIGHT	23	155+71.80	62.74 RIGHT
6	151+52.52	81.69 RIGHT	24	155+34.11	86.40 RIGHT
7	151+28.86	44.00 RIGHT	25	155+14.97	55.91 RIGHT
8	151+53.90	28.28 RIGHT	26	155+16.08	51.04 RIGHT
9	151+73.94	59.36 LEFT	27	155+42.11	62.80 LEFT
10	151+64.60	74.24 LEFT	28	155+43.23	67.67 LEFT
11	152+30.15	71.94 LEFT	29	155+45.83	78.75 LEFT
12	152+00.22	60.87 RIGHT	30	155+62.85	52.54 LEFT
13	151+69.20	80.07 RIGHT	31	155+74.75	5.91 LEFT
14	151+65.22	73.72 RIGHT	32	155+66.24	31.33 RIGHT
15	151+42.14	65.18 RIGHT	33	155+45.19	61.73 RIGHT
16	151+43.02	50.01 RIGHT	34	155+09.18	61.73 RIGHT
17	151+64.14	16.54 LEFT	35	155+06.43	57.36 RIGHT
18	151+92.63	70.96 LEFT	36	155+36.17	72.68 LEFT

NOTE: POINTS ALONG MSE WALL ARE TAKEN AT THE FRONT FACE OF THE WALL.

NOTES

1. FOR GENERAL NOTES, SEE SHEET 1/5.
2. FOR SECTIONS A-A AND B-B, SEE SHEET 5/5.

LJB Inc. • 3100 Research Blvd. • P.O. Box 20246
Dayton, OH 45420-0246
(937) 259-5000 tel • (937) 259-5100 fax • ljbinc.com

DESIGNED JJS | DRAWN MSD | REVIEWED MPH | DATE 3-08
CHECKED DWW | REVISED | STRUCTURE FILE NUMBER 5706416

MSE WALL #1 LAYOUT
BRIDGE NO. MOT-75-0075
MIAMISBURG-SPRINGBORO PIKE OVER I-75

MOT-75-0.75
PID 77246

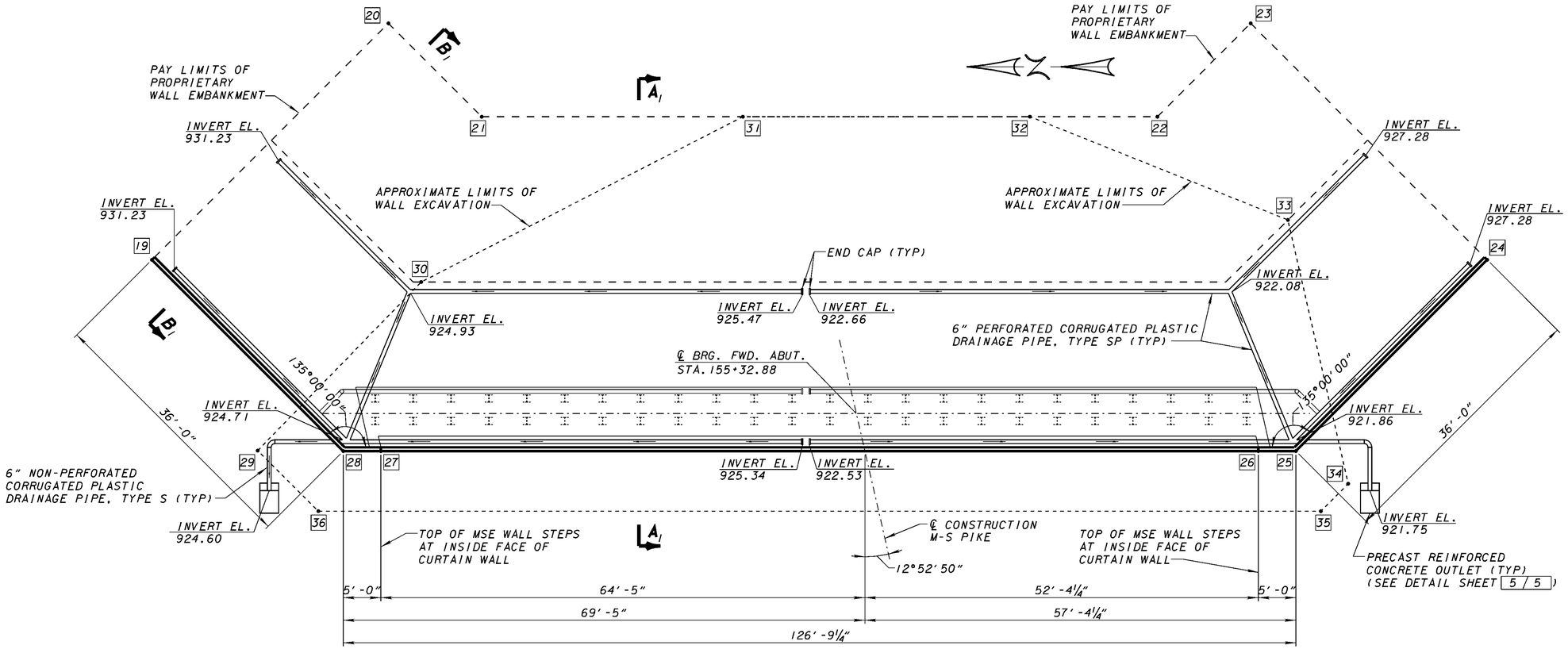

MSE WALL #2

NOTES

1. FOR GENERAL NOTES, SEE SHEET 1 / 5 .
2. FOR SECTIONS A_1-A_1 AND B_1-B_1 , SEE SHEET 5 / 5 .
3. FOR STATIONS AND OFFSET TABLE, SEE SHEET 2 / 5 .

LJB Inc. • 3100 Research Blvd. • P.O. Box 20246
Dayton, OH 45420-0246
(937) 259-5000 tel • (937) 259-5100 fax ljbinc.com

DESIGNED	DRAWN	REVIEWED	DATE
JJS	MSD	MPH	3-08
CHECKED	REVISED	STRUCTURE FILE NUMBER	
DWW		5706416	

MSE WALL #2 LAYOUT
BRIDGE NO. MOT-75-0075
MIAMISBURG-SPRINGBORO PIKE over I-75

MOT-75-0.75
PID 77246

3 / 5

686
773

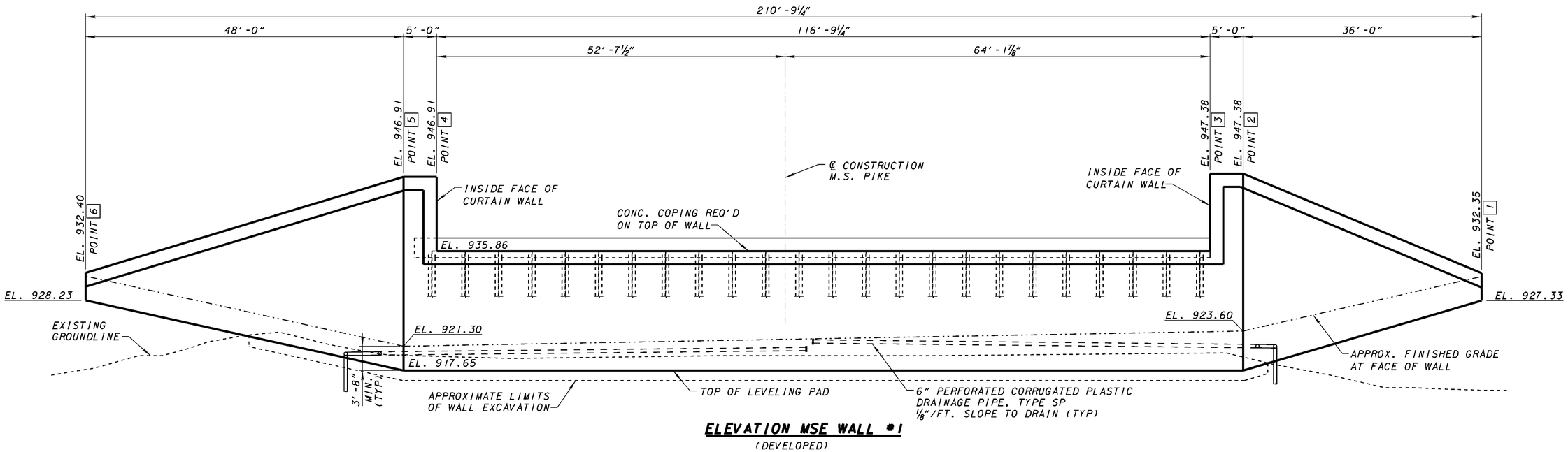

ELEVATION MSE WALL #1
(DEVELOPED)

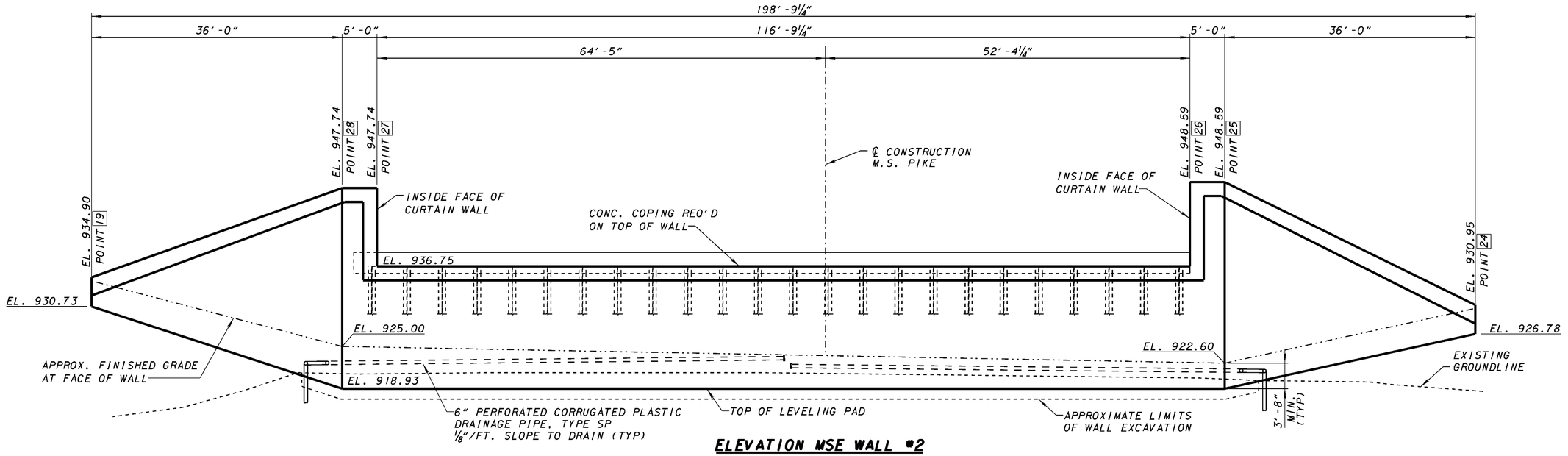

ELEVATION MSE WALL #2
(DEVELOPED)

NOTES

1. FOR GENERAL NOTES. SEE SHEET 1 / 5 .
2. FOR STATIONS AND OFFSET TABLE. SEE SHEET 2 / 5 .
3. ELEVATIONS GIVEN ALONG TOP OF WALL ARE REQUIRED TOP OF WALL ELEVATIONS. PROPOSED GRADE WILL BE APPROX. 6" BELOW TOP OF WALL.

LJB Inc. • 3100 Research Blvd. • P.O. Box 20246
Dayton, OH 45420-0246
(937) 259-5000 tel • (937) 259-5100 fax ljbinc.com

DESIGNED JJS | DRAWN MSD | REVIEWED MPH | DATE 3-08
CHECKED DWW | REVISED | STRUCTURE FILE NUMBER 5706416

MSE WALL ELEVATIONS
BRIDGE NO. MOT-75-0075
MIAMISBURG-SPRINGBORO PIKE OVER I-75

MOT-75-0.75
PID 77246

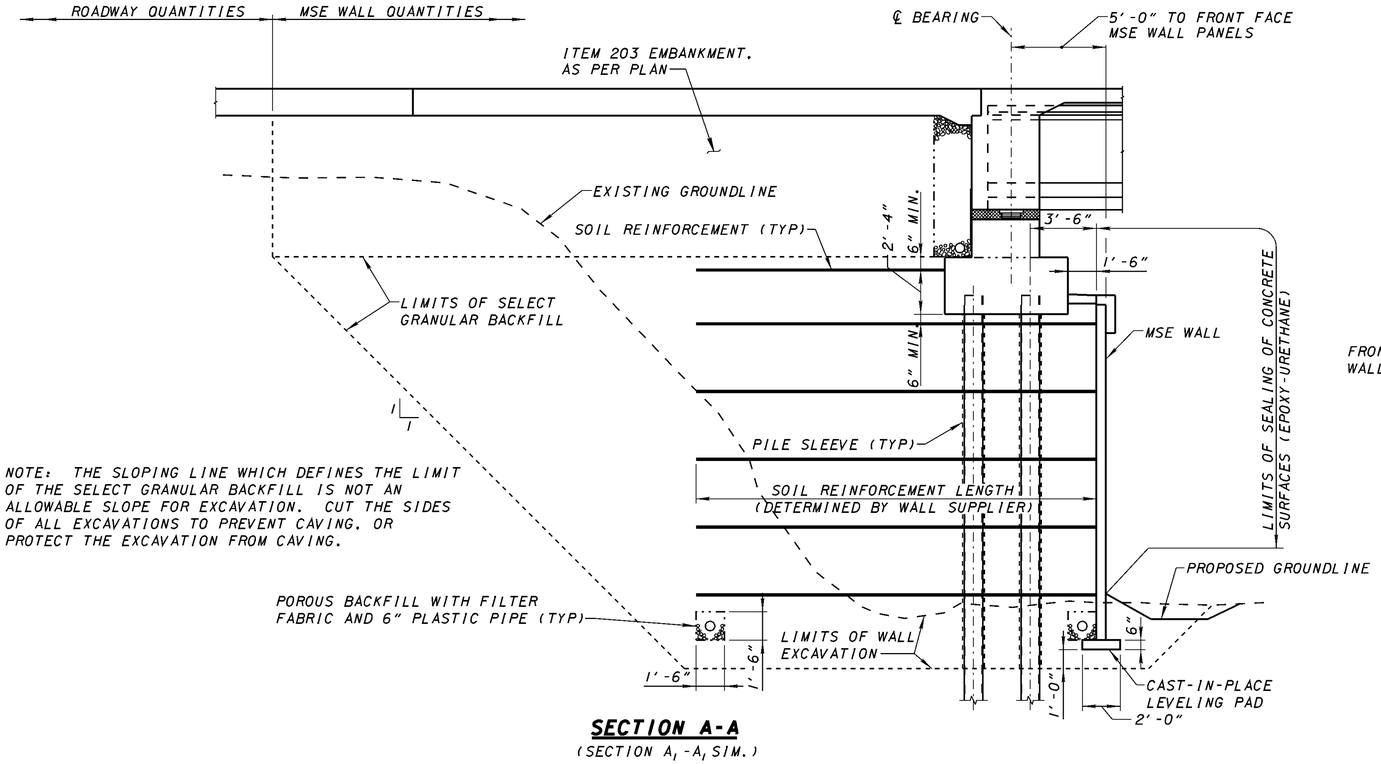

NOTE: THE SLOPING LINE WHICH DEFINES THE LIMIT OF THE SELECT GRANULAR BACKFILL IS NOT AN ALLOWABLE SLOPE FOR EXCAVATION. CUT THE SIDES OF ALL EXCAVATIONS TO PREVENT CAVING, OR PROTECT THE EXCAVATION FROM CAVING.

SECTION A-A
(SECTION A_1-A_1 SIM.)

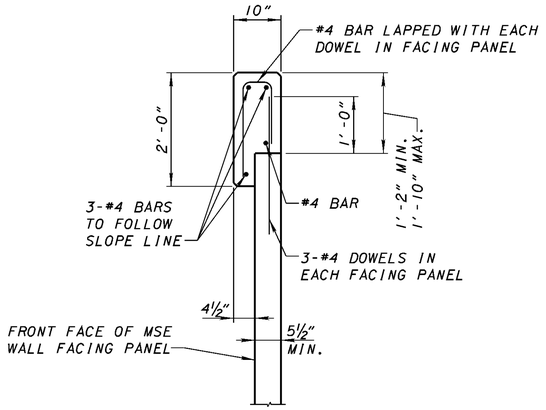

MSE WALL COPING
(ALL REINFORCING STEEL TO BE EPOXY COATED. THE REINFORCING STEEL SHALL BE INCLUDED WITH ITEM 840, CONCRETE COPING, FOR PAYMENT)

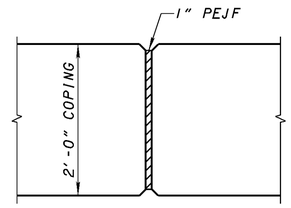

COPING EXPANSION JOINTS

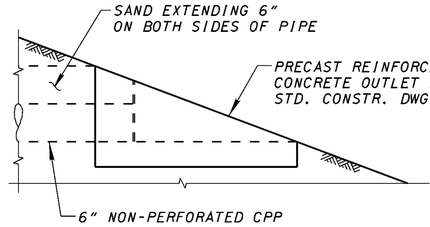

PIPE OUTLET DETAIL

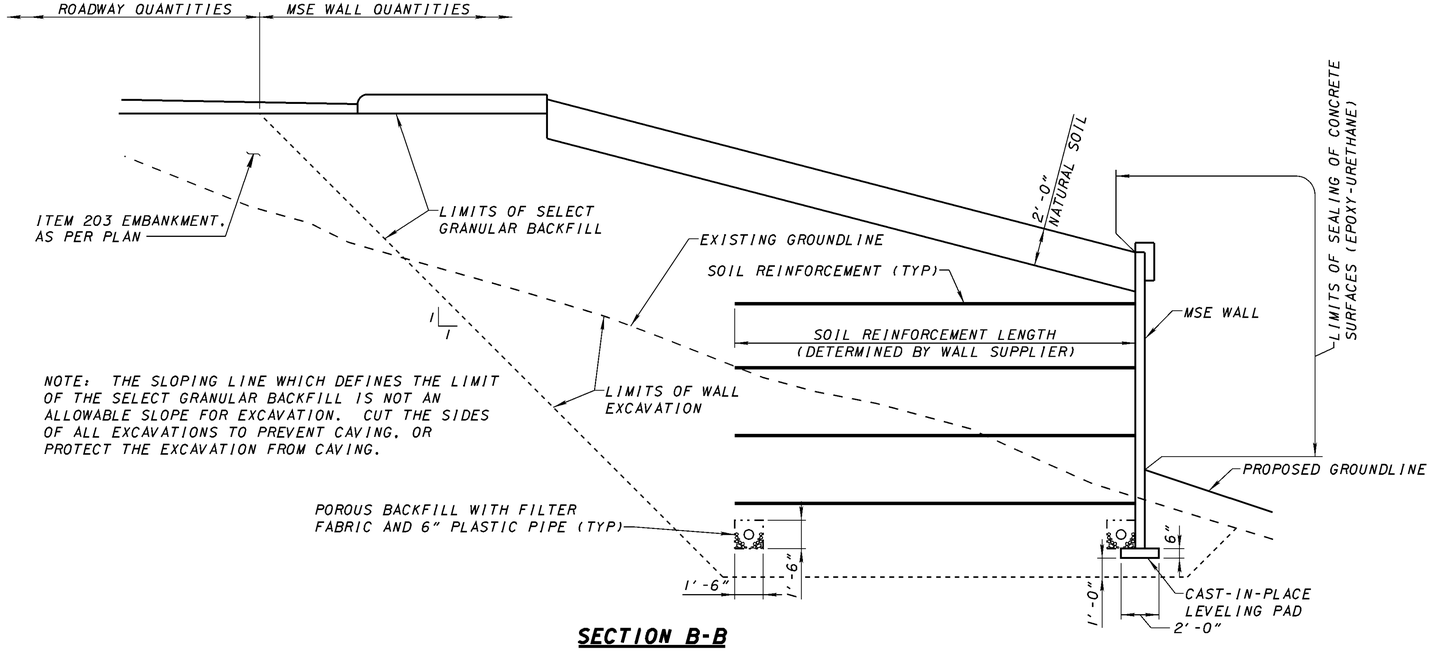

NOTE: THE SLOPING LINE WHICH DEFINES THE LIMIT OF THE SELECT GRANULAR BACKFILL IS NOT AN ALLOWABLE SLOPE FOR EXCAVATION. CUT THE SIDES OF ALL EXCAVATIONS TO PREVENT CAVING, OR PROTECT THE EXCAVATION FROM CAVING.

SECTION B-B
(SECTION B_1-B_1 SIM.)

NOTES
1. FOR GENERAL NOTES, SEE SHEET 1 / 5 .

LJB Inc. • 3100 Research Blvd. • P.O. Box 20246
Dayton, OH 45420-0246
(937) 259-5000 tel • (937) 259-5100 fax ljbinc.com

DESIGNED	DRAWN	REVIEWED	DATE
AMT	MSD	MPH	3-08
CHECKED	REVISED	STRUCTURE FILE NUMBER	
DWS		5706416	

MSE WALL DETAILS
BRIDGE NO. MOT-75-0075
MIAMISBURG-SPRINGBORO PIKE OVER I-75

MOT-75-0.75
PID 77246

RIGHT OF WAY LEGEND SHEET MOT-75-0.75 PHASE ONE

MONTGOMERY COUNTY
MIAMI TOWNSHIP
SEC. 16, T. 2 R. 5, M.R.S.

UTILITY OWNERS (ENTIRE PROJECT)	
ELECTRIC: DAYTON POWER & LIGHT 1900 DRYDEN ROAD DAYTON, OH 45439 JOHN KENTON (937) 331-4132	TELEPHONE: SBC 3233 WOODMAN DRIVE ROOM 225 KETTERING, OH 45420 GARY LEIS (937) 296-3650
GAS & ELECRIC: CINCINNATI GAS & ELECTRIC 139 EAST FOURTH STREET FLOOR 740M CINCINNATI, OH 45202 PETER WESTERLING (513) 287-4005	CABLE: TIME WARNER CABLE 275 LEO ST. DAYTON, OH 45404 REUBAN LEMASTER (937) 425-8871
GAS: VECTREN 4285 N. JAMES McGEE DRIVE DAYTON, OH 45420 GREGORY FISHMAN (937) 440-1951	SANITARY: MONTGOMERY COUNTY SANITARY ENGINEERING DAYTON, OH 45420 ED SCHLAACK (937) 781-2682
GAS: BP OIL 12011 HAMILTON AVE. CINCINNATI, OH 45231 KIMBLE MILLER (513) 646-6187	SANITARY: CITY OF MIAMISBURG 20 E. CENTRAL AVE. MIAMISBURG, OH 45342-2877 BOB STANLEY (937) 847-6531
TELEPHONE: MCI (VERIZON BUSINESS) 120 RAVINE ST. AKRON, OHIO 44303 AL GUEST (330) 253-8267	WATER: CRAIN'S RUN WATER 10383 DAYTON-CINCINNATI RD. MIAMISBURG, OH 45342 DOUG MAYO (937) 743-5828

NOTES: THE LOCATION OF THE UNDERGROUND UTILITIES SHOWN ON THE PLANS ARE OBTAINED FROM THE OWNER OF THE UTILITIES AS REQUIRED BY SECTION 153.64 O.R.C.

INDEX OF SHEETS:

TITLE SHEET 1
PROPERTY MAP 1A
SUMMARY OF ADDITIONAL RIGHT OF WAY 2
DETAIL RIGHT OF WAY PLAN SHEET 3

PAHSE TWO 1-13
PHASE THREE 1-58

PROJECT DESCRIPTION

THE PROJECT IS TO CONSTRUCT A NEW DIAMOND INTERCHANGE AT MIAMISBURG-SPRINGBORO PIKE (AUSTIN-PIKE) TO INTERSTATE 75. THE PROJECT LENGTH IS 1.3 MILES ALONG INTERSTATE 75, 2.8 MILES OF SIDE ROAD IMPROVEMENTS TO MIAMISBURG-SPRINGBORO PIKE, AUSTIN PIKE, WOOD ROAD, BYERS ROAD AND STATE ROUTE 741.

LIMITED ACCESS

THIS IMPROVEMENT IS ESPECIALLY DESIGNED FOR THROUGH TRAFFIC AND HAS BEEN DECLARED A LIMITED ACCESS HIGHWAY OR FREEWAY BY ACTION OF THE DIRECTOR IN ACCORDANCE WITH THE PRO-VISIONS OF SECTION 5511.02 OF THE REVISED CODE OF OHIO.

PROJECT CONTROL

STATE PLANE ZONE: OHIO SOUTH
HORIZONTAL DATUM: NAD 83 (1995)
VERTICAL DATUM: NAVD 88
UNITS: US SURVEY FOOT
ALL COORDINATES GIVEN ARE GROUND COORDINATES.
TO CONVERT TO STATE PLANE COORDINATES, MULTIPLY BY 0.99990331320 (PROJECT ADJUSTMENT FACTOR).

PLANS PREPARED BY:

FIRM NAME: CH2MHILL

PLANS PREPARED BY: R. DOUG BRIGGS, JOSEPH A. EVERETTE, JR.
CRAIG M. KETRON, MARTIN R. PIERCE

OWNERSHIP VERIFIED BY: MARTIN R. PIERCE
DATE COMPLETED: 5/4/07

DATE COMPLETED: 5/14/07

STRUCTURE KEY

- RESIDENTIAL
- STRUCTURE REMOVED
- COMMERCIAL

LEGEND

WL = FEE SIMPLE WITH LIMITATION OF ACCESS
WDV = WARRANTY DEED IN THE NAME OF ANOTHER STATE AGENCY, LPA, ETC.
CH = CHANNEL EASEMENT
U = UTILITY EASEMENT
T = TEMPORARY EASEMENT

CONVENTIONAL SIGNS

County Line
Township Line
Section Line
Corporation Line
Fence Line (Ex) (Pr)
Center Line
Right of Way (Ex) Ex R/W
Right of Way (Pr) R/W
Standard Highway Ease.(Ex) Ex SH
Temporary Right of Way TMP
Channel Ease. (Pr) CH
Utility Ease. (Ex) Ex U
Railroad or
Guardrail (Ex) (Pr)
Construction Limits
Edge of Pavement (Ex)
Edge of Pavement (Pr)
Edge of Shoulder (Ex)
Edge of Shoulder (Pr)

Ditch / Creek (Ex)
Ditch / Creek (Pr)
Tree Line (Ex)
Ownership Hook Symbol , Example
Property Line Symbol , Example
Break Line Symbol , Example
Tree (Pr) , Tree (Ex) , Shrub (Ex)
Tree (Remove) , Shrub (Remove)
Evergreen (Ex) , Stump
Evergreen (Remove) , Stump (Remove)
Wetland (Pr) , Grass (Pr) , Aerial Target
Post (Ex) , Mailbox (Ex) MB , Mailbox (Pr) MB
Light (Ex) , Telephone Marker (Ex) TEL
Fire Hydrant (Ex) , Water Meter (Ex) W
Water Valve (Ex) , Utility Valve Unknown (Ex.) U
Telephone Pole (Ex) , Power Pole (Ex) P
Light Pole (Ex)

I HEREBY CERTIFY THAT THIS PLAN IS A TRUE DELINEATION OF A SURVEY MADE FOR THE OHIO DEPARTMENT OF TRANSPORTATION IN 2004 BY LJB, INC.

THE ESTABLISHMENT OF THE PROPERTY LINES AND EXISTING RIGHT OF WAY LINES SHOWN ON THIS PLAN AS OF THIS DATE WERE PERFORMED BY ME OR UNDER MY DIRECT SUPERVISION AT CH2M HILL.

BY _____
R. DOUGLAS BRIGGS, P.E., P.S.

SURVEYOR NO. _____ DATE _____

FIELD SURVEYOR SEAL:

FIELD SURVEYOR SEAL:

JAMES P. BENEDICT, P.S.

SURVEYOR NO. _____ DATE _____

R/W & PROPERTY DETERMINATION SURVEYOR SEAL:

SIGNED: _____
DATE: _____

SIGNED: _____
DATE: _____

FEDERAL PROJECT NO.

PID NO. 77246

CALCULATED JAE/MRP
CHECKED RDB

RIGHT OF WAY LEGEND SHEET

MOT-75-0.75

MOT-75-0.75
MONTGOMERY COUNTY
MIAMI TOWNSHIP
SEC. 16, T. 2, R. 5, M.R.S.

BASIS FOR BEARINGS:

GPS Control Survey
Final Report
Austin Road Interchange
MOT I-75 / Austin Road Ground Control
Montgomery County, Ohio
Horizontal Datum: NAD 83 (1995)
Vertical Datum: NAVD 88
Units: US Survey Foot
State Plane Zone: Ohio South
Geiod Model: Geiod 03
Coordinate System: Ground

Control monuments used:
3-D: Southport AZ MK, Seimering RESET, and MOT 1083
2-D: MOT 1011 AZ MK and MOT 1079
1-D: F346ECC and N345

ALL COORDINATES GIVEN ARE GROUND COORDINATES. TO CONVERT TO STATE PLANE COORDINATES, MULTIPLY BY 0.99990331320 (PROJECT ADJUSTMENT FACTOR).

(122) Miamisburg Congregation of Jehovahs Witnesses

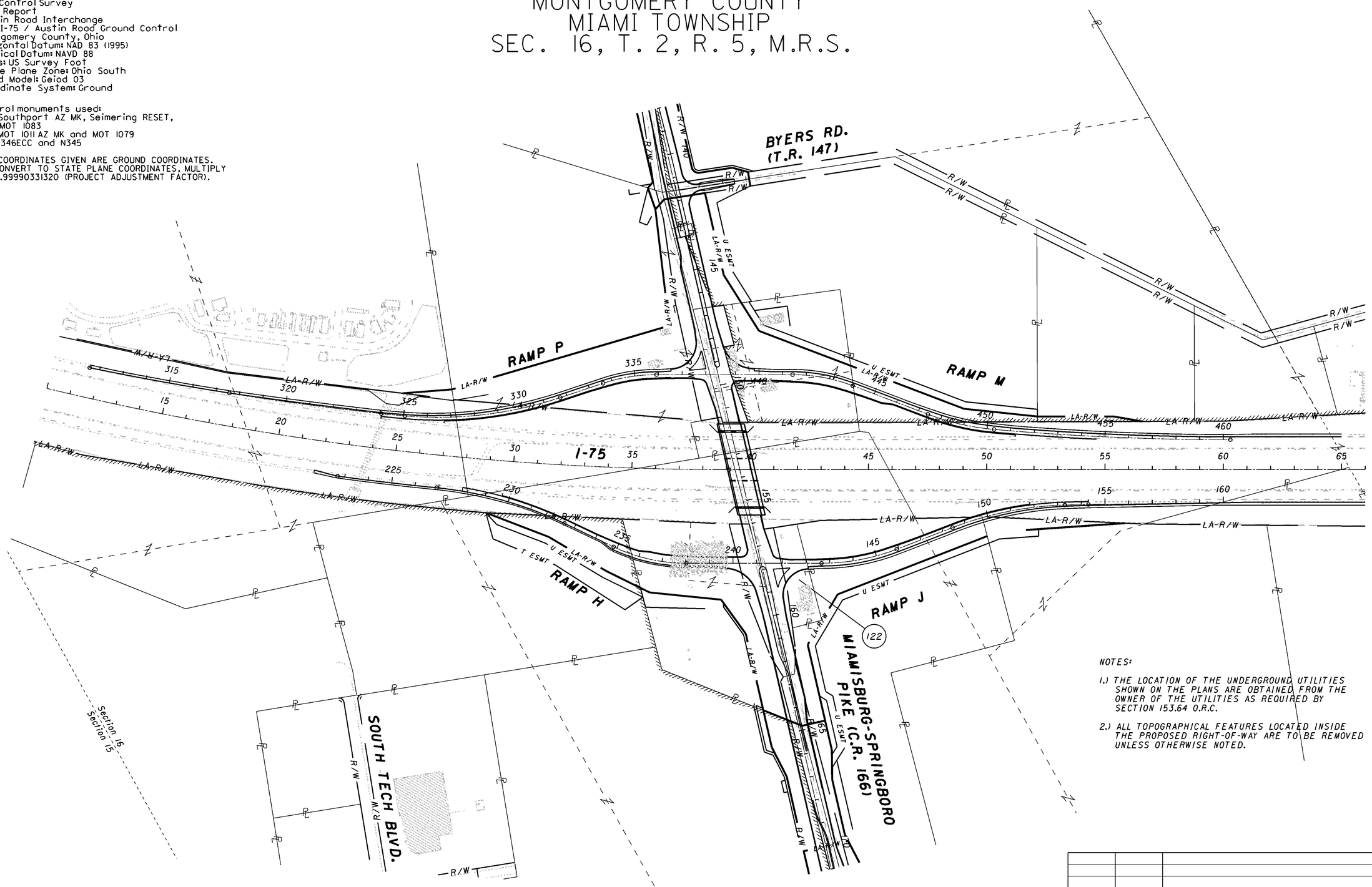

NOTES:

1.) THE LOCATION OF THE UNDERGROUND UTILITIES SHOWN ON THE PLANS ARE OBTAINED FROM THE OWNER OF THE UTILITIES AS REQUIRED BY SECTION 153.64 O.R.C.

2.) ALL TOPOGRAPHICAL FEATURES LOCATED INSIDE THE PROPOSED RIGHT-OF-WAY ARE TO BE REMOVED UNLESS OTHERWISE NOTED.

REV. BY	DATE	DESCRIPTION
DATE COMPLETED		

HORIZONTAL SCALE IN FEET
0 100 200 400

PID NO. 77246

R/W DESIGNER JAE
R/W REVIEWER RDB

PROPERTY MAP
PARCEL 122

MOT-75-0.75

IA / 3

690
773

1665rs122.dgn 29-JUN-2007

TOTAL NUMBER OF :

1 OWNERSHIPS
1 PARCELS
1 TOTAL TAKES
1 OWNERSHIPS WITH STRUCTURES INVOLVED
1 OWNERSHIPS WITH "P" ITEMS

NET RESIDUE = RECORD AREA - TOTAL PRO - NET TAKE

ALL AREAS IN ACRES

* DENOTES RIGHT OF WAY ENCROACHMENT

PARCEL NO.	OWNER	SHEET NO.	OWNERS RECORD BOOK	OWNERS RECORD PAGE	AUDITOR'S PARCEL	RECORD AREA	TOTAL P.R.O.	GROSS TAKE	P.R.O. IN TAKE	NET TAKE	STRUC-TURE	NET RESIDUE LEFT	NET RESIDUE RIGHT	TYPE FUND	REMARKS AND PERSONALTY	AS ACQUIRED BOOK	AS ACQUIRED PAGE
	Miamisburg Springboro Pike													*Federal*			
0-98	*NOT USED*																
99-117	*SEE PHASE THREE*																
118-121	*SEE PHASE TWO*																
122-WL	*Miamisburg Congregation of*	*3*	*Deed 2059*	*621*	*K45 02605 0035*	*1.08*	*0.00*	*1.08*	*0.00*	*1.08*	*Y*				*Total Take, 1 Sty. Brick & Frame*		
	Jehovahs Witnesses														*Sign Encroaches on Ex. R/W*		
															Calculated Gross take Area: 1.081 Acres		
	Total							*1.08*	*0.00*	*1.08*		*0.00*					
														Federal			

NOTE: ALL TEMPORARY PARCELS TO BE OF 24 MONTH DURATION.

NOTE: UNDER NO CIRCUMSTANCES ARE TEMPORARY EASEMENTS TO BE USED FOR STORAGE OF MATERIAL OR EQUIPMENT BY THE CONTRACTOR UNLESS NOTED OTHERWISE.

LEGEND:
WL = FEE SIMPLE WITH LIMITATION OF ACCESS
WDV = WARRANTY DEED IN THE NAME OF ANOTHER STATE AGENCY, LPA, ETC.
CH = CHANNEL EASEMENT
U = UTILITY EASEMENT
T = TEMPORARY EASEMENT

REV. BY	DATE	DESCRIPTION
JAE	*6-28-07*	*Added Structure Information Label for 122WL, added Parcels 0-121, Revised Legend*

FIELD REVIEW BY DATE:
OWNERSHIP VERIFIED BY DATE:
DATE COMPLETED

FEDERAL PROJECT NO.

PID NO. 77246

STATE JOB NO. 478220

R/W DESIGNER JAE
R/W REVIEWER RDB

SUMMARY OF ADDITIONAL RIGHT OF WAY (PARCELS 122)

MOT-75-0.75

691
773

MONTGOMERY COUNTY
MIAMI TOWNSHIP
SEC. 16, T. 2, R. 5, M.R.S.

NOTE:
EXISTING TOPO FEATURES TO BE REMOVED WITHIN PROPOSED RIGHT OF WAY

LA-R/W
100.50'
N05°47'44"E
156+45.38
184.10' LT.
122
Miamisburg Congregation of Jehovahs Witnesses
10465 Miamisburg Springboro Rd.
K45-02605-0035
Dense Vegetation
Frame Shed No Foundation
122-WL
156+37.84
83.89' LT.
271.63'
N88°10'27"W
R/W
142+00
141+00
N14°22'31"E
421.00'
N89°42'57"E
1 Sty. Brick & Frame
WV& Meter Pit
20' INGRESS AND EGRESS TO AND FROM ADJACENT PROPERTY DB. 2059 P.G. 621
129.16'
S00°17'03"E
160+66.18
197.17' LT.
U ESMT
LA-R/W
123
159+09.47
82.32' LT.
24" Conc. Lid
161.34'
N83°26'29"W
160+70.19
68.08' LT.
CONSTRUCTION LIMITS
SBC
SBC (Abandoned)
Sign W/ Stone Foundation
EXISTING RIGHT OF WAY ENCROACHMENT
N00°17'03"W
68.11'
Asphalt
Ameritech
158
CONSTRUCTION RAMP J
SBC Fiber
℄ CONSTRUCTION & PROP. R/W
MIAMISBURG-SPRINGBORO PIKE
157+00
S88°30'19"E
158+00
159+00
160+00
STA. 160+72.30
161+00
1,807.79
N 88° 30'19" W
(TO MON. BOX & S.R.7411 ℄
STA. 157+72.88 ℄ MIAMISBURG-SPRINGBORO PIKE=
STA. 241+19.11 ℄ CONSTRUCTION RAMP H
STA. 140+10.27 ℄ CONSTRUCTION RAMP J
241+00
CONSTRUCTION RAMP H
N14°22'31"E
240+00
151
Loran Smith
MCI Fiber Optic
Dense Vegetation
MCI Fiber
Kendell Investments Ingress And Egress M.F.# 83-0184 A01
U ESMT
CONSTRUCTION LIMITS
120
Kendell Investments
10460 Miamisburg Springboro Rd.
K45-02605-0056

STRUCTURE KEY

- RESIDENTIAL
- STRUCTURE REMOVED
- COMMERCIAL

REV. BY	DATE	DESCRIPTION
JAE	6-28-07	Added Structure Information Label

DATE COMPLETED: 9/26/07

SCALE IN FEET: 0, 10, 20, 40

PID NO. 77246

R/W DESIGNER JAE/MRP
R/W REVIEWER RDB

MIAMISBURG-SPRINGBORO PIKE PLAN
PARCEL 122

MOT-75-0.75

3 / 3

692
773

UTILITY OWNERS (ENTIRE PROJECT)	
ELECTRIC: DAYTON POWER AND LIGHT 1900 DRYDEN ROAD DAYTON, OH 45439 JOHN KENTON (937) 331-4132	TELEPHONE: AT&T OHIO 3233 WOODMAN DRIVE ROOM 225 KETTERING, OH 45420 GARY LEIS (937) 296-3604
GAS & ELECTRIC: DUKE ENERGY 139 EAST FOURTH STREET ROOM 460A CINCINNATI, OH 45202 BILL HOCTOR (513) 287-2916	CABLE: TIME WARNER CABLE 3691 TURNER ROAD DAYTON, OH 45415 REUBEN LEMASTER (937) 425-8871
GAS: VECTREN ENERGY DELIVERY OF OHIO 6500 CLYO ROAD CENTERVILLE, OHIO 45459 GREGORY FISHMAN (937) 312-2521	SANITARY & WATER MONTGOMERY COUNTY SANITARY ENGINEERING DEPATMENT 1850 SPAULDING ROAD DAYTON, OH 45420 ED SCHLAACK (937) 781-2632
GAS: BP PIPELINE (NORTH AMERICA) INC. 12011 HAMILTON AVE. CINCINNATI, OH 45231 KIMBLE MILLER (513) 646-6187 JEFF BOMER (513) 825-5250 x12	WATER CITY OF MIAMISBURG 20 E. CENTRAL AVE. MIAMISBURG, OH 45342-2877 BOB STANLEY (937) 847-6534
TELEPHONE: MCI (VERIZON BUISNESS) 120 RAVINE STREET AKRON, OH 44303 AL GUEST (330) 253-8267	WATER CRAIN'S RUN WATER AND SEWER 10383 DAYTON-CINCINNATI PK. MIAMISBURG, OH 45342 DOUG MAYO (937) 743-5828
TELEPHONE: CINCINNATI BELL TELEPHONE 221 E. FOURTH STREET BUILDING 343 CINCINNATI, OH 45202 KEITH GALEY (513) 565-7043T	

NOTES: THE LOCATION OF THE UNDERGROUND UTILITIES SHOWN ON THE PLANS ARE OBTAINED FROM THE OWNER OF THE UTILITIES AS REQUIRED BY SECTION 153.64 O.R.C.

RIGHT OF WAY LEGEND SHEET MOT-75-0.75 PHASE TWO

MONTGOMERY COUNTY
MIAMI TOWNSHIP
SEC. 16, T. 2 R. 5, M.R.S.
CITY OF MIAMISBURG

INDEX OF SHEETS:

TITLE SHEET	1
PROPERTY MAP	2
SUMMARY OF ADDITIONAL RIGHT OF WAY	3, 3A
DETAIL RIGHT OF WAY PLAN SHEET	4 - 13, 13A, 13B
PHASE ONE	1-3
PHASE THREE	1-58

PROJECT DESCRIPTION

THE PROJECT IS TO CONSTRUCT A NEW DIAMOND INTERCHANGE AT MIAMISBURG-SPRINGBORO PIKE (AUSTIN-PIKE) TO INTERSTATE 75. THE PROJECT LENGTH IS 1.3 MILES ALONG INTERSTATE 75, 2.8 MILES OF SIDE ROAD IMPROVEMENTS TO MIAMISBURG-SPRINGBORO PIKE, AUSTIN PIKE, WOOD ROAD, BYERS ROAD AND STATE ROUTE 741.

LIMITED ACCESS

THIS IMPROVEMENT IS ESPECIALLY DESIGNED FOR THROUGH TRAFFIC AND HAS BEEN DECLARED A LIMITED ACCESS HIGHWAY OR FREEWAY BY ACTION OF THE DIRECTOR IN ACCORDANCE WITH THE PRO-VISIONS OF SECTION 5511.02 OF THE REVISED CODE OF OHIO.

PROJECT CONTROL

STATE PLANE ZONE: OHIO SOUTH
HORIZONTAL DATUM: NAD 83 (1995)
VERTICAL DATUM: NAVD 88
UNITS: US SURVEY FOOT
ALL COORDINATES GIVEN ARE GROUND COORDINATES.
TO CONVERT TO STATE PLANE COORDINATES, MULTIPLY BY 0.99990331320 (PROJECT ADJUSTMENT FACTOR).

PLANS PREPARED BY:

FIRM NAME: CH2MHILL

PLANS PREPARED BY: R. DOUG BRIGGS, JOSEPH A. EVERETTE, JR.
CRAIG M. KETRON, MARTIN R. PIERCE

OWNERSHIP VERIFIED BY: Joseph A. Everette, Jr.
DATE COMPLETED: 9/25/07

DATE COMPLETED: 9/26/07

LEGEND

WL - FEE SIMPLE WITH LIMITATION OF ACCESS
WDV - WARRANTY DEED IN THE NAME OF ANOTHER STATE AGENCY, LPA, ETC.
CH - CHANNEL EASEMENT
U - UTILITY EASEMENT
T - TEMPORARY EASEMENT

STRUCTURE KEY

- RESIDENTIAL
- STRUCTURE REMOVED
- COMMERCIAL

CONVENTIONAL SIGNS

County Line
Township Line
Section Line
Corporation Line
Fence Line (Ex)
Fence Line (Pr)
Center Line
Right of Way (Ex) Ex R/W
Right of Way (Pr) R/W
Standard Highway Ease.(Ex) Ex SH
Temporary Right of Way TMP
Channel Ease. (Pr) CH
Utility Ease. (Ex) Ex U
Railroad or
Guardrail (Ex)
Guardrail (Pr)
Construction Limits
Edge of Pavement (Ex)
Edge of Pavement (Pr)
Edge of Shoulder (Ex)
Edge of Shoulder (Pr)

Ditch / Creek (Ex)
Ditch / Creek (Pr)
Tree Line (Ex)
Ownership Hook Symbol , Example
Property Line Symbol , Example
Break Line Symbol , Example
Tree (Pr) , Tree (Ex) , Shrub (Ex)
Tree (Remove) , Shrub (Remove)
Evergreen (Ex) , Stump
Evergreen (Remove) , Stump (Remove)
Wetland (Pr), Grass (Pr) , Aerial Target
Post (Ex) , Mailbox (Ex) MB , Mailbox (Pr) MB
Light (Ex) , Telephone Marker (Ex) TEL
Fire Hydrant (Ex) , Water Meter (Ex) W
Water Valve (Ex) , Utility Valve Unknown (Ex.)
Telephone Pole (Ex) , Power Pole (Ex)
Light Pole (Ex)

I HEREBY CERTIFY THAT THIS PLAN IS A TRUE DELINEATION OF A SURVEY MADE FOR THE OHIO DEPARTMENT OF TRANSPORTATION IN 2004 BY LJB, INC.

THE ESTABLISHMENT OF THE PROPERTY LINES AND EXISTING RIGHT OF WAY LINES SHOWN ON THIS PLAN AS OF THIS DATE WERE PERFORMED BY ME OR UNDER MY DIRECT SUPERVISION AT CH2M HILL.

BY _____
R. DOUGLAS BRIGGS, P.E., P.S.

SURVEYOR NO. _____ DATE _____

FIELD SURVEY PERFORMED BY ME OR UNDER MY DIRECT SUPERVISION AT LJB, INC.

_____
JAMES P. BENEDICT, P.S.

SURVEYOR NO. _____ DATE _____

R/W & PROPERTY DETERMINATION SURVEYOR SEAL:

SIGNED: _____
DATE: _____

FIELD SURVEYOR SEAL:

SIGNED: _____
DATE: _____

FEDERAL PROJECT NO.

PID NO. 77246

CALCULATED JAE/MRP
CHECKED RDB

RIGHT OF WAY LEGEND SHEET

MOT-75-0.75

1 / 13

693
773

1665earm02.dgn 26-SEP-2007

MOT-75-0.75
MONTGOMERY COUNTY
MIAMI TOWNSHIP
SEC. 16, T. 2, R. 5, M.R.S.
CITY OF MIAMISBURG

BASIS FOR BEARINGS:

GPS Control Survey Final Report
Austin Road Interchange
By: Woolpert LLP Date: June 2004
(Jack William Kuttrus, OH#8039)
MOT I-75 / Austin Road Ground Control
Montgomery County, Ohio
Horizontal Datum: NAD 83 (1995)
Vertical Datum: NAVD 88
Units: US Survey Foot
State Plane Zone: Ohio South
Geiod Model: Geiod 03
Coordinate System: Ground

Control monuments used:
3-D: Southport AZ MK, Seimering RESET, and MOT 1083
2-D: MOT 1011 AZ MK and MOT 1079
1-D: F346ECC and N345

ALL COORDINATES GIVEN ARE GROUND COORDINATES. TO CONVERT TO STATE PLANE COORDINATES, MULTIPLY BY 0.9999033320 (PROJECT ADJUSTMENT FACTOR).

NOTES:

1.) THE LOCATION OF THE UNDERGROUND UTILITIES SHOWN ON THE PLANS ARE OBTAINED FROM THE OWNER OF THE UTILITIES AS REQUIRED BY SECTION 153.64 O.R.C.

2.) ALL TOPOGRAPHICAL FEATURES LOCATED INSIDE THE PROPOSED RIGHT-OF-WAY ARE TO BE REMOVED UNLESS OTHERWISE NOTED.

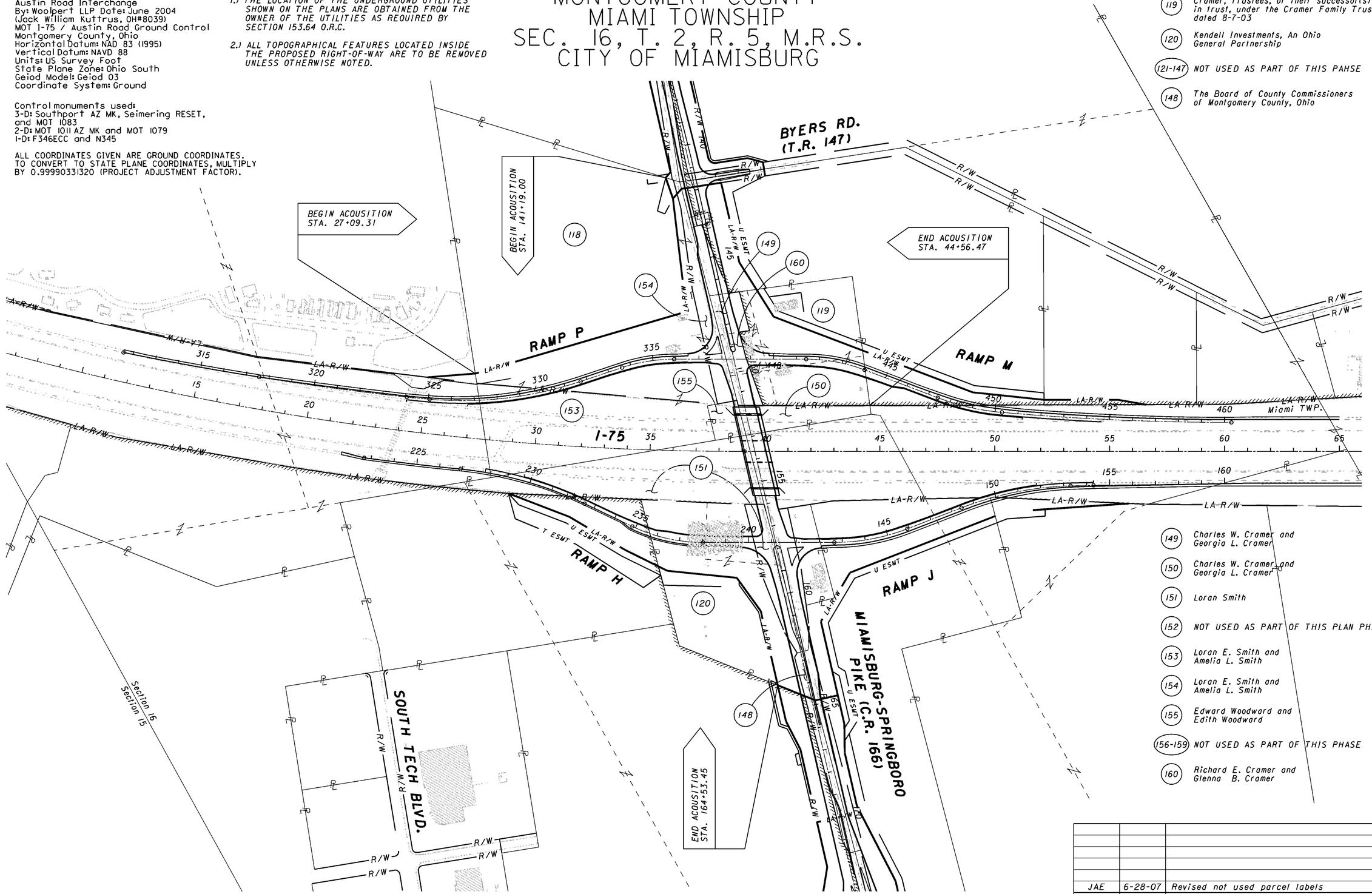

118 *MZM Austin Rd. Property, LLC An Ohio Limited Liability Company*

119 *Richard E. Cramer & Glenna B. Cramer, Trustees, or their successor(s) in trust, under the Cramer Family Trust, dated 8-7-03*

120 *Kendell Investments, An Ohio General Partnership*

121-147 *NOT USED AS PART OF THIS PAHSE*

148 *The Board of County Commissioners of Montgomery County, Ohio*

149 *Charles W. Cramer and Georgia L. Cramer*

150 *Charles W. Cramer and Georgia L. Cramer*

151 *Loran Smith*

152 *NOT USED AS PART OF THIS PLAN PHASE*

153 *Loran E. Smith and Amelia L. Smith*

154 *Loran E. Smith and Amelia L. Smith*

155 *Edward Woodward and Edith Woodward*

156-159 *NOT USED AS PART OF THIS PHASE*

160 *Richard E. Cramer and Glenna B. Cramer*

REV. BY	DATE	DESCRIPTION
JAE	6-28-07	Revised not used parcel labels

DATE COMPLETED: 9/26/07

HORIZONTAL SCALE IN FEET
0 100 200 400

PID NO. 77246

R/W DESIGNER JAE
R/W REVIEWER RDB

PROPERTY MAP
PARCELS 118, 119, AND 120

MOT-75-0.75

2 / 13

694
773

1665ears01.dgn 01-FEB-2008

TOTAL NUMBER OF :

9 OWNERSHIPS
11 PARCELS
8 TOTAL TAKES
3 OWNERSHIPS WITH STRUCTURES INVOLVED

NET RESIDUE = RECORD AREA - TOTAL PRO - NET TAKE

ALL AREAS IN ACRES

* DENOTES RIGHT OF WAY ENCROACHMENT

PARCEL NO.	OWNER	SHEET NO.	OWNERS RECORD BOOK	OWNERS RECORD PAGE	AUDITOR'S PARCEL	RECORD AREA	TOTAL P.R.O.	GROSS TAKE	P.R.O. IN TAKE	NET TAKE	STRUCTURE	NET RESIDUE LEFT	NET RESIDUE RIGHT	TYPE FUND	REMARKS AND PERSONALTY	AS ACQUIRED BOOK	AS ACQUIRED PAGE
	Miamisburg Springboro Pike													Federal			
0-98	NOT USED																
99-117	SEE PHASE THREE																
118-WL	MZM Austin Road Property, LLC	4,5,8,9,10	Deed-06	050268	K45 02605 0015	24.590	0.042	5.819	0.042	5.777	Y				2 1/2 Sty. Fr. and Fr. barn; Utility Overlap = 0.182 Ac.		
	An Ohio Limited Liability Company																
118-WDV		4	Deed-06	050268	K45 02605 0015		0.026	0.074	0.026	0.048	N				Utility Overlap = 0.023 Ac.; In the name of Board of County		
															Commissioner's of Montgomery County, Ohio		
	Grand Total					24.590	0.068	5.893	0.068	5.825			18.697				
118-U		4	Deed-06	050268	K45 02605 0015		0.000	0.011	0.000	0.011	N				In the name of Board of County		
															Commissioner's of Montgomery County, Ohio		
118-T		4	Deed-06	050268	K45 02605 0015		0.000	0.118	0.000	0.118	N				Reconstruct Drive		
119-WL	Richard E. Cramer & Glenna B.	5,6,7,10	Deed-03	182635	K46 01623 0001	0.13	0.00	0.13	0.00	0.13	N				Calculated Area of K46 01623 0001= 0.136 Acres		
	Cramer, Trustees, or their successor(s)		Deed-03	182635	K46 01623 0005	3.611	0.000	1.617	0.000	1.617	Y				1 Sty. Fr. garage and 2-1 Sty. Fr. and		
	in trust, under The Cramer Family Trust,		1777	40	K46 01623 0006	0.310	0.000	0.306	0.000	0.306	Y				1 Sty. Fr. and a block shed, residential		
	dated 8-7-03		1976	437	K46 01623 0007	0.350	0.000	0.231	0.000	0.231	Y						
			1976	437	K46 01623 0008	1.927	0.000	1.758	0.000	1.758	Y						
	Total					6.328	0.000	4.042	0.000	4.042		2.286			Net Residue Land Locked; Calc. Gross Take Area= 4.048 Ac.		
119-U		6,7	Deed-03	182635	K46 01623 0005	3.611	0.000	0.365	0.000	0.365	Y				In the name of Board of County		
															Commissioner's of Montgomery County, Ohio		
119-T		6	Deed-03	182635	K46 01623 0005	3.611	0.000	0.266	0.000	0.266	Y				For removal of 1 Sty. Fr. garage and driveway, residential		
120-WL	Kendell Investments, An Ohio	10,11,12,13	Deed 89-0709	A03	K45 02605 0046	6.617	0.000	3.137	0.000	3.137	Y				2 Sty. Brick, Commercial		
	General Partnership		Deed 89-0709	A03	K45 02605 0056	1.165	0.000	1.152	0.000	1.152	Y						
	Total					7.782	0.000	4.289	0.000	4.289			3.493		Net Residue Land Locked; Utility Overlap = 0.729 Ac.		
120-U		11,12,	Deed 89-0709	A03	K45 02605 0046	6.617	0.000	0.128	0.000	0.128	N				Utility Overlap = 0.025 Ac.; In the name of Montgomery County		
															Transportation Improvement District		
120-U1		12	Deed 89-0709	A03	K45 02605 0046	6.617	0.000	0.005	0.000	0.005	N				Utility Overlap = 0.005 Ac.; In the name of Board of County		
															Commissioner's of Montgomery County, Ohio		
120-T		11,13	Deed 89-0709	A03	K45 02605 0046	6.617	0.000	0.411	0.000	0.411	N				For removal of asphalt parking lot, light poles, trees, etc.		
121	SEE PHASE THREE																
122	SEE PHASE ONE																
123-147	SEE PHASE THREE													Federal			

NOTE: ALL TEMPORARY PARCELS TO BE OF 24 MONTH DURATION.

NOTE: UNDER NO CIRCUMSTANCES ARE TEMPORARY EASEMENTS TO BE USED FOR STORAGE OF MATERIAL OR EQUIPMENT BY THE CONTRACTOR UNLESS NOTED OTHERWISE.

LEGEND:
WL = FEE SIMPLE WITH LIMITATION OF ACCESS
WDV = WARRANTY DEED IN THE NAME OF ANOTHER STATE AGENCY, LPA, ETC.
CH = CHANNEL EASEMENT
U = UTILITY EASEMENT
T = TEMPORARY EASEMENT

REV. BY	DATE	DESCRIPTION
JAE	4-28-08	Revised Net Residue Parcel 118, 119, 120
JAE	2-1-08	Revised Utility Overlap Remarks 118WL, 118WDV
JAE	11-05-07	Added Overlap Acres for Parcels 118-WL, 118-WDV, 120-WL, 120-U, 120-U1
JAE	6-28-07	Corrected Parcels 118, 119, 120, 121-147

FIELD REVIEW BY: JAE/RDB DATE: 6/2007
OWNERSHIP VERIFIED BY: JAE DATE: 9/25/07
DATE COMPLETED: 9/26/07

FEDERAL PROJECT NO.

PID NO. 77246

STATE JOB NO. 478220

R/W DESIGNER JAE
R/W REVIEWER RDB

SUMMARY OF ADDITIONAL RIGHT OF WAY (PARCELS 118 - 120)

MOT-75-0.75

NET RESIDUE = RECORD AREA - TOTAL PRO - NET TAKE

ALL AREAS IN ACRES

* DENOTES RIGHT OF WAY ENCROACHMENT

PARCEL NO.	OWNER	SHEET NO.	OWNERS RECORD BOOK	OWNERS RECORD PAGE	AUDITOR'S PARCEL	RECORD AREA	TOTAL P.R.O.	GROSS TAKE	P.R.O. IN TAKE	NET TAKE	STRUCTURE	NET RESIDUE LEFT	NET RESIDUE RIGHT	TYPE FUND	REMARKS AND PERSONALTY	AS ACQUIRED BOOK	AS ACQUIRED PAGE
	Miamisburg Springboro Pike													Federal			
148-WL	The Board of County Commissioners	12	Deed 91-0276	C02	K45 02605 0058	0.186	0.186	0.186	0.186	0.000	N				Underlying ownership within existing right-of-way		
	of Montgomery County, Ohio																
149-WL	Charles W. Cramer and	5	1917	593	K45 02605 0027	0.52	0.52	0.52	0.52	0.00	N				Underlying ownership within existing right-of-way		
	Georgia L. Cramer														No tax record found		
150-WL	Charles W. Cramer and	5,10	1917	591	K45 02605 0025	0.65	0.65	0.65	0.65	0.00	N				Underlying ownership within existing right-of-way		
	Georgia L. Cramer														No tax record found. Record deed 0.35 Ac.; Tax Map 0.65 Ac.		
150-WL1		7,10	1917	592	K45 02605 0026	0.313	0.313	0.313	0.313	0.000	N				Record deed 1.16 Ac.; Tax Map 0.313 Ac.		
	Grand Total					0.96	0.96	0.96	0.96	0.00							
151-WL	Loran Smith	10,13-13B	1919	381	K45 02605 0036	4.97	4.97	4.97	4.97	0.00	N				Title defect, Underlying ownership within existing		
															right-of-way. No tax record found		
151-WL1		10,11,12	1919	382	K45 02605 0037	0.113	0.113	0.113	0.113	0.000	N				No tax record found. Record deed 1.13 Ac.; Tax Map 0.113 Ac.		
	Grand Total					5.083	5.083	5.083	5.083	0.000							
152	SEE PHASE THREE																
153-WL	Loran E. Smith and	8,9,10	1917	607	K45 02605 0029	6.65	6.65	6.65	6.65	0.00	N				Underlying ownership within existing right-of-way		
	Amelia L. Smith														No tax record found		
154-WL	Loran E. Smith and	4,5,10	1917	606	K45 02605 0028	1.26	1.26	1.26	1.26	0.00	N				Underlying ownership within existing right-of-way		
	Amelia L. Smith																
155-WL	Edward Woodward and	10	1917	617	K45 02605 0013	0.50	0.50	0.50	0.50	0.00	N				Underlying ownership within existing right-of-way		
	Edith Woodward																
156-159	SEE PHASE THREE																
160-WL	Richard E. Cramer and	5	1926	549	K45 02605 0032	1.34	1.34	1.34	1.34	0.00	N				Underlying ownership within existing right-of-way		
	Glenna B. Cramer														No tax record found. Record deed 0.34 Ac.; Tax Map 1.34 Ac.		
														Federal			

NOTE: ALL TEMPORARY PARCELS TO BE OF 24 MONTH DURATION.

NOTE: UNDER NO CIRCUMSTANCES ARE TEMPORARY EASEMENTS TO BE USED FOR STORAGE OF MATERIAL OR EQUIPMENT BY THE CONTRACTOR UNLESS NOTED OTHERWISE.

LEGEND:
WL = FEE SIMPLE WITH LIMITATION OF ACCESS
WDV = WARRANTY DEED IN THE NAME OF ANOTHER STATE AGENCY, LPA, ETC.
CH = CHANNEL EASEMENT
U = UTILITY EASEMENT
T = TEMPORARY EASEMENT

REV. BY	DATE	DESCRIPTION
JAE	6-28-07	Corrected Parcels 152, 156-159

FIELD REVIEW BY: JAE/RDB DATE: 6/2007
OWNERSHIP VERIFIED BY: JAE DATE: 9/25/07
DATE COMPLETED: 9/26/07

FEDERAL PROJECT NO.

PID NO. 77246

STATE JOB NO. 478220

R/W DESIGNER JAE R/W REVIEWER RDB

SUMMARY OF ADDITIONAL RIGHT OF WAY (PARCELS 118 - 120)

MOT-75-0.75

3A / 13

696 / 773

MONTGOMERY COUNTY
MIAMI TOWNSHIP
SEC. 16, T. 2, R. 5, M.R.S.

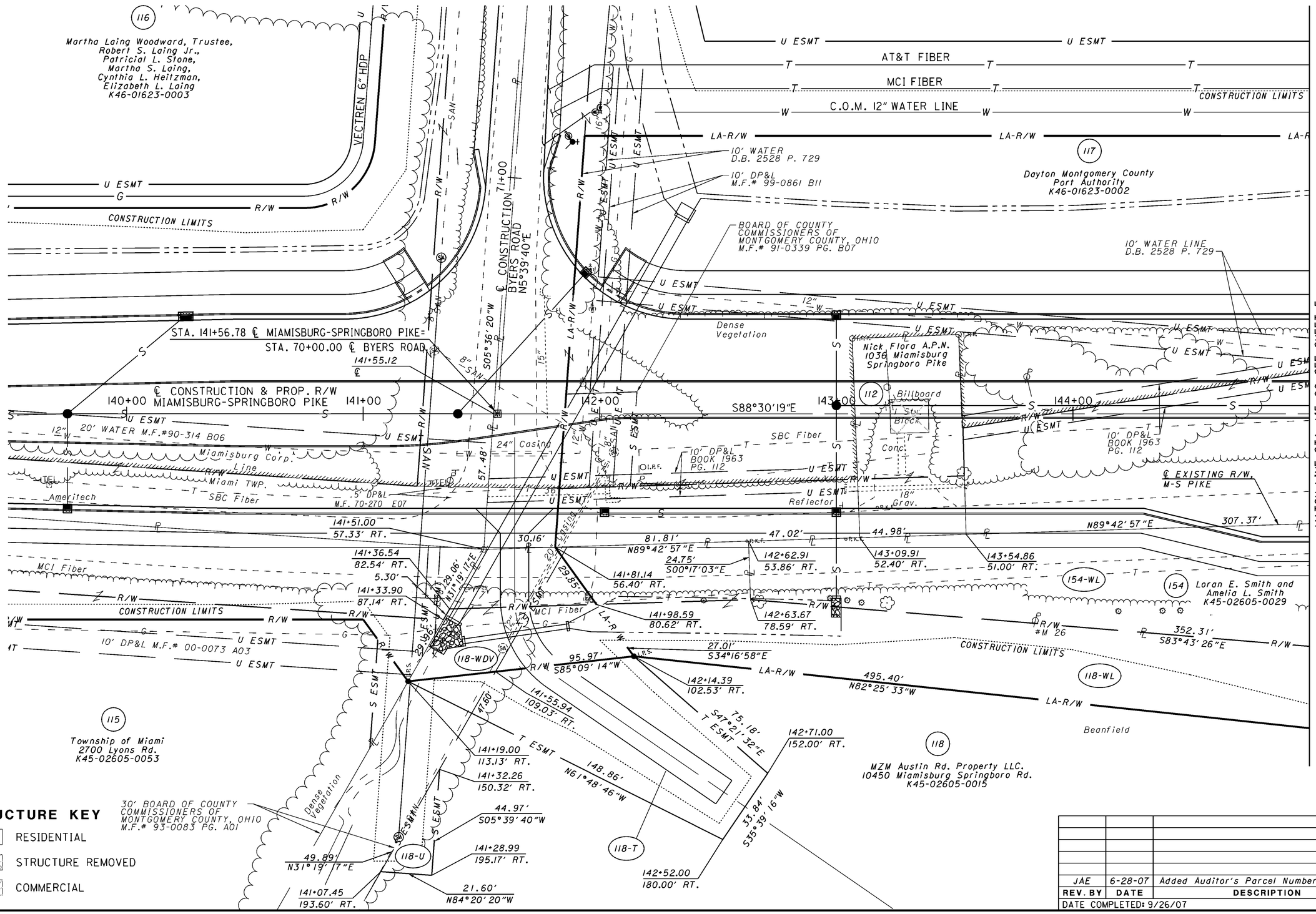

STRUCTURE KEY

- RESIDENTIAL
- STRUCTURE REMOVED
- COMMERCIAL

REV. BY	DATE	DESCRIPTION
JAE	6-28-07	Added Auditor's Parcel Number for 154

DATE COMPLETED: 9/26/07

SCALE IN FEET: 0, 10, 20, 40

PID NO. 77246

R/W DESIGNER JAE/MRP
R/W REVIEWER RDB

MIAMISBURG-SPRINGBORO PIKE PLAN
PARCELS 118 AND 119

MOT-75-0.75

4 / 13

697 / 773

MONTGOMERY COUNTY
MIAMI TOWNSHIP
SEC. 16, T. 2, R. 5, M.R.S.
CITY OF MIAMISBURG

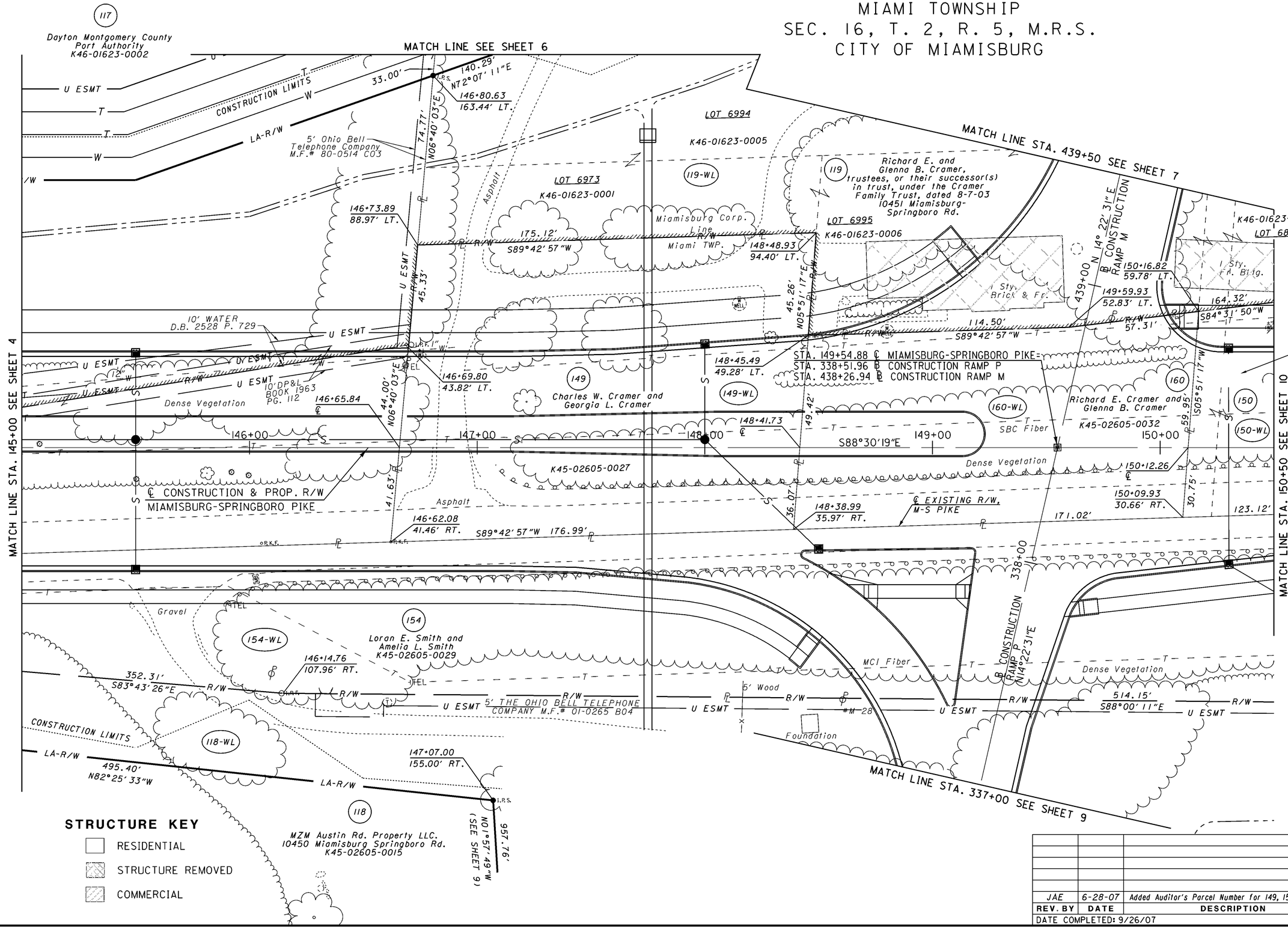

STRUCTURE KEY

- RESIDENTIAL
- STRUCTURE REMOVED
- COMMERCIAL

REV. BY	DATE	DESCRIPTION
JAE	6-28-07	Added Auditor's Parcel Number for 149, 150, 154, 160

DATE COMPLETED: 9/26/07

SCALE IN FEET: 0, 10, 20, 40

PID NO. 77246

R/W DESIGNER JAE/MRP

R/W REVIEWER RDB

MIAMISBURG-SPRINGBORO PIKE PLAN
PARCELS 118, 119 AND 149

MOT-75-0.75

5 / 13

698 / 773

MONTGOMERY COUNTY
SEC. 16, T. 2, R. 5, M.R.S.
CITY OF MIAMISBURG

117
Dayton Montgomery County Port Authority K46-01623-0002

119
Richard E. and Glenna B. Cramer, trustees, or their successor(s) in trust, under the Cramer Family Trust, dated 8-7-03
10451 Miamisburg-Springboro Rd.
LOT 6994
K46-01623-0005
LAND LOCKED

5' OHIO BELL TELEPHONE COMPANY M.F. # 80-0514 C03
U ESMT
℄
5' Ohio Bell Telephone Company M.F.# 80-0514 C03
U ESMT
℄
147+37.32
350.18' LT.
148+62.89
338.97' LT.
126.07'
S83°24'26"E
T ESMT
119-T
140.00'
N06°40'03"E
T ESMT
Gravel
Dense Vegetation
U ESMT
Sty. Fr. Garage
Gravel
147+93.57
234.96' LT.
I.P.S.
125.00'
U ESMT
T
T
262.61'
N35°10'31"E
T
MATCH LINE SEE SHEET 7
414.05'
N35°10'31"E LA-R/W
148+12.97
209.98' LT.
147+24.70
210.75' LT.
146+83.61
196.30' LT.
33.00'
N06°40'03"E
℄
43.56'
73.00'
U ESMT
N72°07'34"E
119-U
T
I.P.S.
Asphalt
140.29'
N72°07'11"E
CONSTRUCTION LIMITS
119-WL
LA-R/W
U ESMT
T
MATCH LINE SEE SHEET 5

STRUCTURE KEY
- RESIDENTIAL
- STRUCTURE REMOVED
- COMMERCIAL

REV. BY	DATE	DESCRIPTION

DATE COMPLETED: 9/26/07

SCALE IN FEET 0 10 20 40

PID NO. 77246

R/W DESIGNER JAE/MRP
R/W REVIEWER RDB

MIAMISBURG-SPRINGBORO PIKE PLAN
PARCELS 119

MOT-75-0.75

MONTGOMERY COUNTY
MIAMI TOWNSHIP
SEC. 16, T. 2, R. 5, M.R.S.
CITY OF MIAMISBURG

MATCH LINE SEE SHEET 6

CURVE RAMP M-1
P.I. STA. = 442+73.39
Δ = 20° 48' 00" (RT)
Dc = 8° 00' 00"
R = 716.20'
T = 131.45'
L = 260.00'
E = 11.96'

119

Richard E. and Glenna B. Cramer, trustees, or their successor(s) in trust, under the Cramer Family Trust, dated 8-7-03
10451 Miamisburg-Springboro Rd.

LOT 6994

119-U

LA-R/W

414.05'
N35°10'31"E

T

U ESMT

AT&T FIBER

MCI FIBER

262.61'
N35°10'31"E

44+19.65
473.62' LT.

44+24.34
439.75' LT.

117

Dayton-Montgomery County Port Authority
K46-01623-0002

S83°30'48"E
34.20'

24.38'

44+27.69
415.60' LT.

CONSTRUCTION LIMITS

119-WL

Dense Vegetation

442+00

443+00

CURVE RAMP M-1

441+00

440+00

B CONSTRUCTION RAMP M
N14°22'31"E

P.C. Sta.
441+41.94

444+00

P.T. Sta.
444+01.94

N35°10'31"E

MATCH LINE STA. 439+50 SEE SHEET 5

K46-01623-0006

1 Sty. Frame

Asphalt

TOB

LOT 6996
K46-01623-0007

Frame Shed No Foundation

217.51'
S83°13'42"E

44+56.47
200.00' LT.

38.78'

44+61.60
161.56' LT.

MATCH LINE SEE SHEET 10

LOT 6997

Richard E. and Glenna B. Cramer, trustees, or their successor(s) in trust, under the Cramer Family Trust, dated 8-7-03
10451 Miamisburg-Springboro Rd.

K46-01623-0008

464.39'
S14°22'40"W

Miamisburg Corp. Line
Miami TWP.

60" Ch. Link

150

Charles W. Cramer and Georgia, L. Cramer
K45-02605-0026

150-WLI

S04°55'31"W
551.82'

STRUCTURE KEY

- RESIDENTIAL
- STRUCTURE REMOVED
- COMMERCIAL

REV. BY	DATE	DESCRIPTION
JAE	6-28-07	Added Auditor's Parcel Number for 150

DATE COMPLETED: 9/26/07

SCALE IN FEET

PID NO. 77246

R/W DESIGNER JAE/MRP
R/W REVIEWER RDB

RAMP M PLAN
PARCEL 118 AND 150

MOT-75-0.75

7 / 13

700 / 773

MONTGOMERY COUNTY
MIAMI TOWNSHIP
SEC. 16, T. 2, R. 5, M.R.S.

CURVE RAMP P-4
P.I. STA. = 328+43.25
Δ = 23° 19' 01" (LT)
Dc = 3° 30' 00"
R = 1,637.02'
T = 337.77'
L = 666.20'
E = 34.48'

129
Sun Secured Financing LLC
K45-02605-0063

118
MZM Austin Rd. Property, LLC
10450 Miamisburg Springboro Rd.
K45-02605-015

118-WL

153
Loran E. Smith and
Amelia L. Smith
K45-02605-0029

153-WL

San. MH
Conc. Encasement
30' BOARD OF COUNTY COMMISSIONERS OF MONTGOMERY COUNTY, OHIO M.F.# 93-0083 A01
10' DP&L 81-0447 B04
SANITARY SEWER M.F.# 93-0688 B12
5' THE OHIO BELL TELEPHONE
5' THE OHIO BELL TELEPHONE COMPANY M.F.# 01-0265 B04
60" Ch. Link
54" Casing
18"
12"
15"
8"
S ESMT
CH ESMT
U ESMT
LA-R/W
CONSTRUCTION LIMITS
I-75 Southbound

27+09.31
281.85' LT.

27+20.18
240.00' LT.

N84°18'09"W 43.18'

957.76'
N01°57'49"W

1051.90'
S19°15'56"W

N84°18'09"W 415.05'

MATCH LINE STA. 331+50 SEE SHEET 9

327+00
328+00
329+00
330+00
331+00
27+00
28+00

℄ CONSTRUCTION
℄ RAMP P
CURVE RAMP P-4
℄ CONSTRUCTION & PROP. R/W I-75 CURVE I-75-2

(See Sheet 13B)

STRUCTURE KEY

- RESIDENTIAL
- STRUCTURE REMOVED
- COMMERCIAL

REV. BY	DATE	DESCRIPTION
JAE	6-28-07	Added Auditor's Parcel Number for 153

DATE COMPLETED: 9/26/07

SCALE IN FEET
0 10 20 40

PID NO. 77246

R/W DESIGNER JAE/MRP
R/W REVIEWER RDB

RAMP P PLAN
PARCEL 118

MOT-75-0.75

8 / 13

701
773

1665earp17.dgn 26-SEP-2007

MONTGOMERY COUNTY
MIAMI TOWNSHIP
SEC. 16, T. 2, R. 5, M.R.S.

LA-R/W

LA-R/W

LA-R/W 957.76' N01°57'49"W LA-R/W

(SEE SHEET 5)

CURVE RAMP P-4
P.I. STA. = 328+43.25
Δ = 23° 19' 01" (LT)
Dc = 3° 30' 00"
R = 1,637.02'
T = 337.77'
L = 666.20'
E = 34.48'

118

MZM Austin Rd. Property LLC.
10450 Miamisburg Springboro Rd.
K45-02605-0015

CONSTRUCTION LIMITS

Frame Barn

Conc. Slab

#108

2 1/2 Sty. Frame

118-WL

Dense Vegetation

P.T. Sta. 331+71.67

332+00

333+00

334+00

P.C. Sta. 333+61.96

CURVE RAMP P-5

335+00

336+00

P.T. Sta. 335+91.96

℄ CONSTRUCTION RAMP P N14°22'31"E

N4°01'29"W

MATCH LINE STA. 331+50 SEE SHEET 8

CURVE RAMP P-4

MATCH LINE STA. 337+00 SEE SHEET 5

LA-R/W U ESMT

LA-R/W U ESMT

LA-R/W U ESMT

5' THE OHIO BELL TELEPHONE COMPANY M.F.# 01-0265 B04

153

Loran E. Smith and Amelia L. Smith
K45-02605-0029

153-WL

LA-R/W U ESMT 1051.90' S19°15'56"W

LA-R/W U ESMT

(SEE SHEET 10)

CURVE RAMP P-5
P.I. STA. = 334+77.96
Δ = 18° 24' 00" (RT)
Dc = 8° 00' 00"
R = 716.20'
T = 116.00'
L = 230.00'
E = 9.33'

STRUCTURE KEY

- RESIDENTIAL
- STRUCTURE REMOVED
- COMMERCIAL

I-75 Southbound

REV. BY	DATE	DESCRIPTION
JAE	6-28-07	Added Auditor's Parcel Number for 153

DATE COMPLETED: 9/26/07

SCALE IN FEET 0 10 20 40

PID NO. 77246

R/W DESIGNER JAE/MRP
R/W REVIEWER RDB

RAMP P PLAN
PARCEL 118

MOT-75-0.75

9 / 13

702
773

MONTGOMERY COUNTY
MIAMI TOWNSHIP
SEC. 16, T. 2, R. 5, M.R.S.
CITY OF MIAMISBURG

Richard E. and Glenna B. Cramer, trustees, or their successor(s) in trust, under the Cramer Family Trust, dated 8-7-03
10451 Miamisburg-Springboro Rd.
LOT 6997
K46-01623-0008
(119)
CONSTRUCTION LIMITS
Asphalt
Block Shed
(119-WL)
LOT 6996
K46-01623-0007
Dense Vegetation
151+79.93
79.70 LT.
164.32'
R/W S84°31'50"W
Miamisburg Corp. Line
Miami TWP.
464.39'
S14°22'40"W
Charles W. Cramer and Georgia L. Cramer
K45-02605-0026
(150)
(150-WL)
I-75 Southbound
S04°55'31"W 551.82'
(156)
Virgil A. McCabe
K45-02605-0024
41+00
CB
6"
24"
I-75 Northbound
O.R.F.
STA. 153+66.88 ℄ MIAMISBURG-SPRINGBORO PIKE=
STA. 39+56.06 ℄ CONSTRUCTION I-75
54" Woven Wire
1 Str. Barb Wire
40+00
(150)
Charles W. Cramer and Georgia L. Cramer
SBC Fiber
Dense Vegetation
(150-WL)
151+00
151+61.70
℄
LA-R/W
81.76'
152+00
153+00
154+00
S88°30'19"E
℄ CONSTRUCTION & PROP. R/W
MIAMISBURG-SPRINGBORO PIKE
155+00
155+99.99
12.33' RT.
152+89.07
21.99' RT.
N89°42'57"E
311.08'
151+55.72
26.13' RT.
26.81'
O.R.K.F. 123.12'
151+32.99
26.84' RT.
22.74'
133.41'
36"
36"
MATCH LINE STA. 150+50 SEE SHEET 5
MATCH LINE STA. 156+00 SEE SHEET 11
℄ EXISTING R/W, M-S PIKE
39+00
(154-WL)
(154)
Loran E. Smith and Amiela L. Smith
K45-02605-0028
NO4°4'06"E
LA-R/W 85.73'
60" Cn. Link
MCI Fiber
TEL
514.15'
S88°00'11"E
151+28.89
112.47' RT.
5' THE OHIO BELL TELEPHONE COMPANY M.F.* 01-0265 B04
(155-WL)
(155)
Edward Woodward and Edith Woodward
K45-02605-0013
S04°55'31"W 135.34'
(151-WL)
(151)
Loran Smith
K45-02605-0036
℄ CONSTRUCTION & PROP. R/W I-75
85.35'
N14°22'10"E
LA-R/W
(151)
Loran Smith
K45-02605-0037
(151-WLI)
155+80.97
95.54' RT.
(118-WL)
(118)
MZM Austin Rd. Property LLC.
Miamisburg Springboro Rd.
K45-02605-0015
U ESMT 1051.90'
45.48'
S19°15'56"W
LA-R/W
CONSTRUCTION LIMITS
152+80.97
157.09' RT.
N88°48'12"W
154.25'
38+00
333.87'
S89°52'05"E
(120)
Kendell Investments
10460 Miamisburg Springboro Rd.
K45-02605-0056
450.98'
N17°00'53"E
(120-WL)
O.R.F.
CONSTRUCTION LIMITS
(SEE SHEET 13)
LA-R/W
(153-WL)
151+26.71
157.89' RT.
(153)
Loran E. Smith and Amelia L. Smith
K45-02605-0029
(See Sheet 13A)
989.28'
(SEE SHEET 9)

STRUCTURE KEY

- RESIDENTIAL
- STRUCTURE REMOVED
- COMMERCIAL

REV. BY	DATE	DESCRIPTION
JAE	9-25-07	Updated Owner for Parcel 156
JAE	6-28-07	Added Auditor's Parcel NumberS

DATE COMPLETED: 9/26/07

SCALE IN FEET: 0, 10, 20, 40

PID NO. 77246

R/W DESIGNER JAE/MRP
R/W REVIEWER RDB

MIAMISBURG-SPRINGBORO PIKE PLAN
STA. 150+50 TO STA. 156+00

MOT-75-0.75

10 / 13

703 / 773

MONTGOMERY COUNTY
MIAMI TOWNSHIP
SEC. 16, T. 2, R. 5, M.R.S.

MATCH LINE STA. 156+00 SEE SHEET 10

MATCH LINE STA. 161+50 SEE SHEET 12

MATCH LINE STA. 239+50 SEE SHEET 13

122 Miamisburg Congregation of Jehovahs Witnesses K45-02605-0035 10465 Miamisburg-Springboro Pike

Dense Vegetation

Frame Shed No Foundation

LA-R/W

R/W

141+00

20' INGRESS AND EGRESS TO AND FROM ADJACENT PROPERTY DB. 2059 P.G. 621

CONSTRUCTION LIMITS

123

24" Conc. Lid

SBC (Abandoned)

Sign W/ Stone Foundation

Asphalt

156 Virgil A. McCabe K45-02605-0023

℄ CONSTRUCTION RAMP J N14°22'31"E

℄ EXISTING R/W, M-S PIKE

SBC Fiber

℄ CONSTRUCTION & PROP. R/W MIAMISBURG-SPRINGBORO PIKE

157+00 S88°30'19"E 158+00 159+00 160+00 161+00

N89°42'57"E 631.27'

31.00'

156+30.98 11.37' RT.

241+00

STA. 157+72.88 ℄ MIAMISBURG-SPRINGBORO PIKE=
STA. 241+19.11 ℄ CONSTRUCTION RAMP H
STA. 140+10.27 ℄ CONSTRUCTION RAMP J

151-WLI

No # 151 Loran Smith K45-02605-0037

MCI Fiber Optic TEL

Ameritech

Dense Vegetation

MCI Fiber TEL

159+14.75 87.60' RT.

R/W N82°52'23"E 251.79'

KENDELL INVESTMENTS INGRESS AND EGRESS M.F.# 83-0184 A01

10' BOARD OF COUNTY COMMISSIONERS OF MONTGOMERY COUNTY, OHIO M.F.# 88-0266 A04 ALSO DP&L GAS EASEMENT, M.F.# 90-0052 A07 CURRENT M.F.# 00-0736 A04

U ESMT

CONSTRUCTION LIMITS

322.04' LA-R/W N88°30'19"W

241.25' U ESMT N88°30'19"W

160+50.00 130.00' RT.

160+52.02 140.00' RT.

120 Kendell Investments 10460 Miamisburg Springboro Rd. K45-02605-0056

240+00

120-WL

THE DAYTON POWER AND LIGHT COMPANY M.F.# 87-0384 B02

Asphalt

2 Sty. Brick

333.87' S89°52'05"E

159+02.71 191.92' RT.

158+85.38 199.20' RT.

159+17.40 196.59' RT.

159.77' S68°41'37"W

133.10'

120-U

159+29.31 191.58' RT.

12.92'

337.10' S15°55'47"W

120 Kendell Investments 10460 Miamisburg Springboro Rd. K45-02605-0046 LAND LOCKED

218.80'

I.P.S. 15.42' N70°52'17"W

303.68' S20°04'20"W

120-T

STRUCTURE KEY

- RESIDENTIAL
- STRUCTURE REMOVED
- COMMERCIAL

REV. BY	DATE	DESCRIPTION
JAE	9-25-07	Updated Owner/Revised Parcel 152 to 156
JAE	6-28-07	Added Auditor's Parcel Number for 151

DATE COMPLETED: 9/26/07

SCALE IN FEET 0 10 20 40

PID NO. 77246

R/W DESIGNER JAE/MRP

R/W REVIEWER RDB

MIAMISBURG-SPRINGBORO PIKE PLAN
STA. 156+00 TO STA. 161+50

MOT-75-0.75

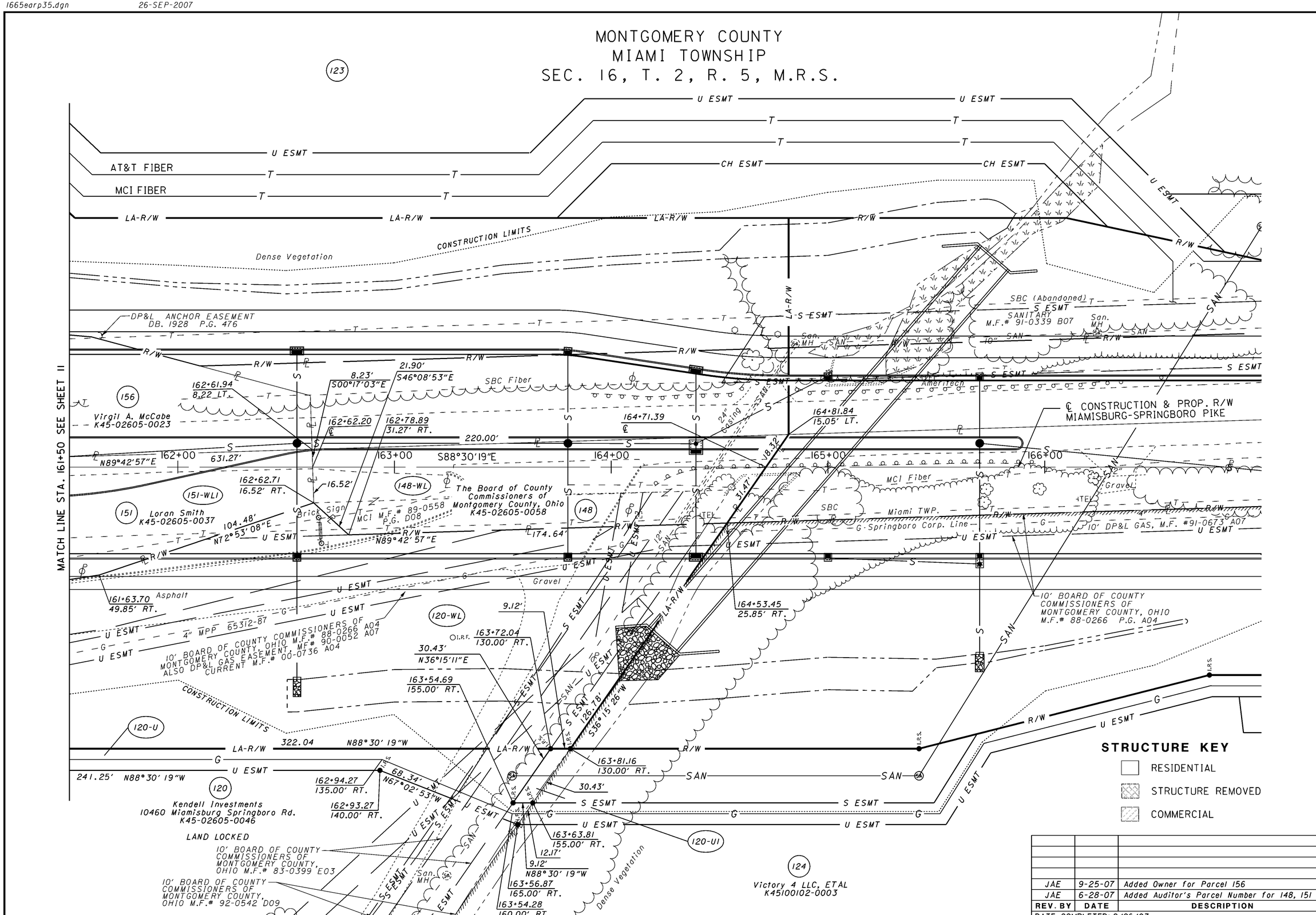

REV. BY	DATE	DESCRIPTION
JAE	9-25-07	Added Owner for Parcel 156
JAE	6-28-07	Added Auditor's Parcel Number for 148, 151

DATE COMPLETED: 9/26/07

SCALE IN FEET 0 10 20 40

PID NO. 77246

R/W DESIGNER JAE/MRP
R/W REVIEWER RDB

MIAMISBURG-SPRINGBORO PIKE PLAN
STA. 161+50 TO STA. 167+00

MOT-75-0.75

12/13

705/773

1665earp20.dgn 26-SEP-2007

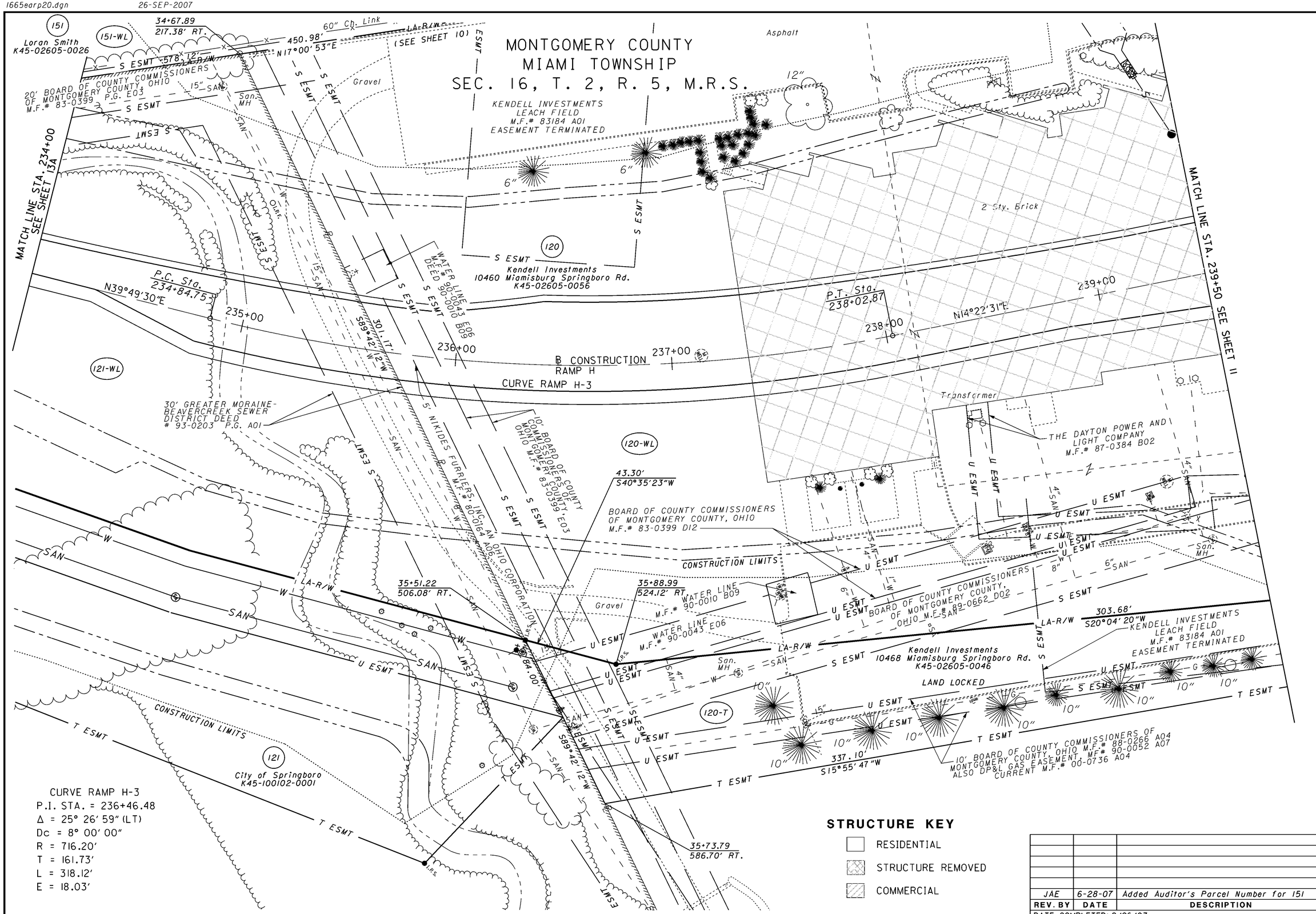

REV. BY	DATE	DESCRIPTION
JAE	6-28-07	Added Auditor's Parcel Number for 151

DATE COMPLETED: 9/26/07

SCALE IN FEET

PID NO. 77246

R/W DESIGNER JAE/MRP

R/W REVIEWER RDB

RAMP H PLAN
STA. 234+00 TO STA. 239+50

MOT-75-0.75

13/13

706/773

1665earp19.dgn 26-SEP-2007

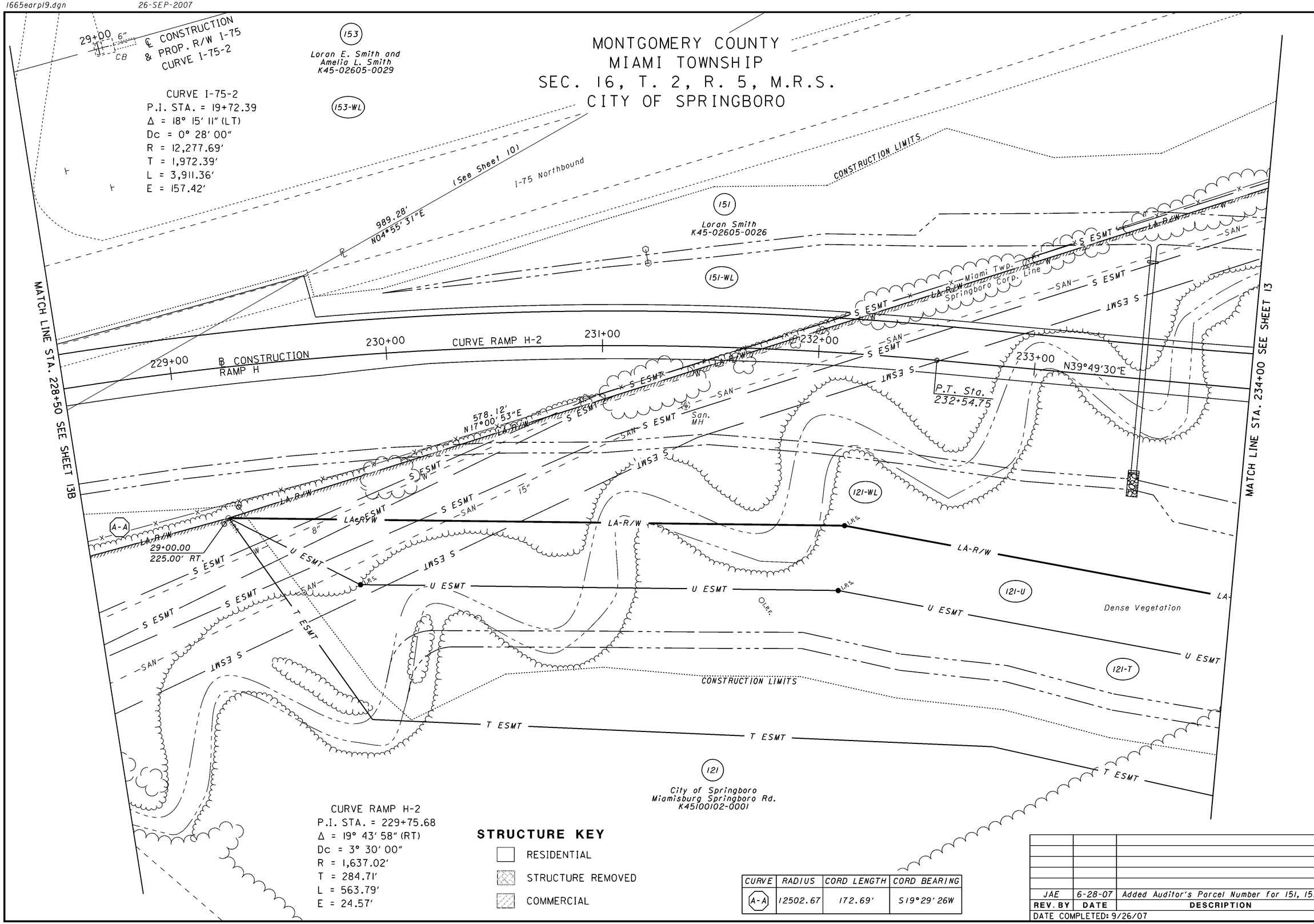

CURVE	RADIUS	CORD LENGTH	CORD BEARING
A-A	12502.67	172.69'	S19°29'26W

REV. BY	DATE	DESCRIPTION
JAE	6-28-07	Added Auditor's Parcel Number for 151, 153

DATE COMPLETED: 9/26/07

SCALE IN FEET 0 10 20 40

PID NO. 77246

R/W DESIGNER JAE/MRP
R/W REVIEWER RDB

RAMP H PLAN
STA. 228+50 TO STA. 234+00

MOT-75-0.75

13A/13

707/773

1665earp18.dgn 26-SEP-2007

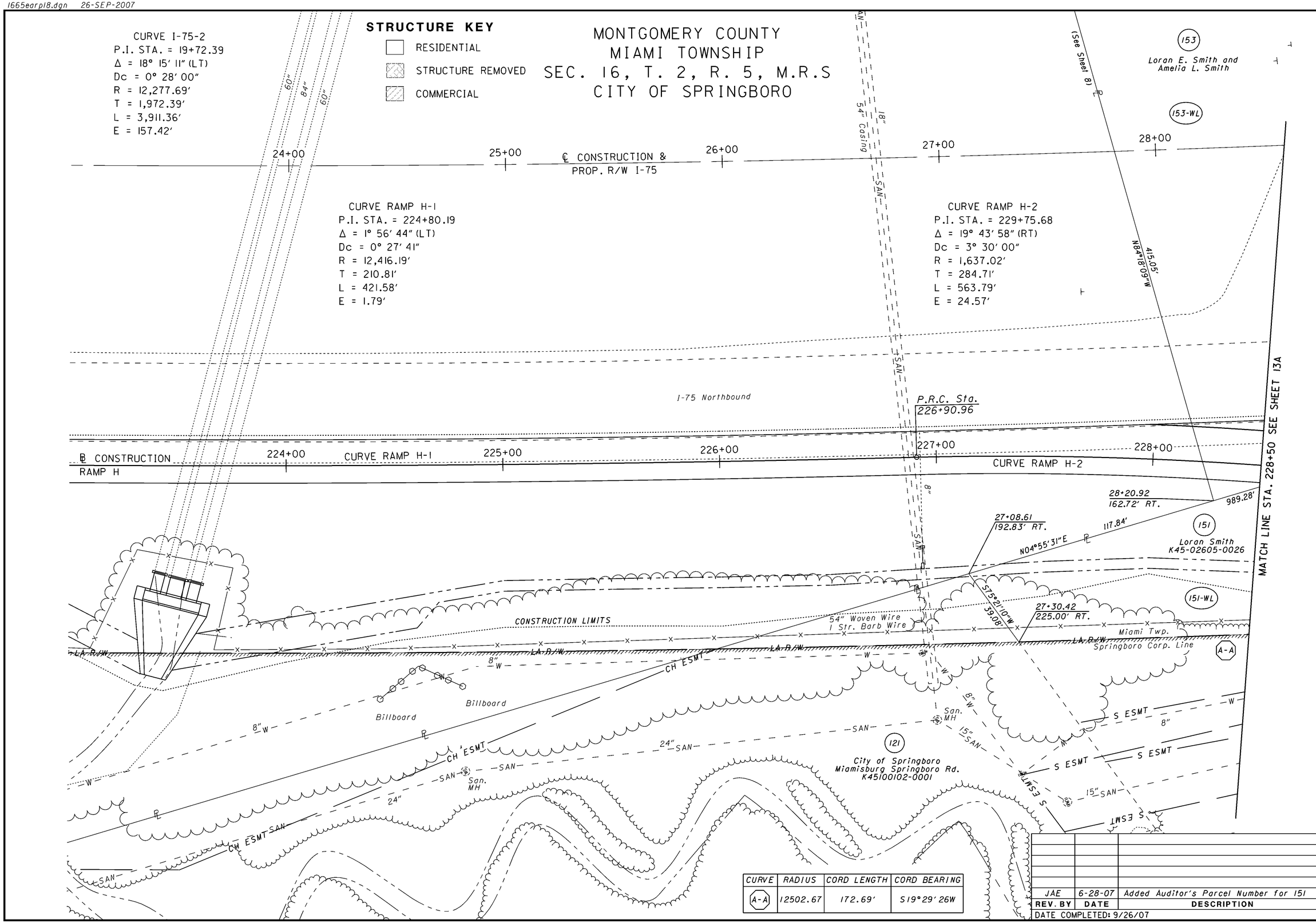

CURVE	RADIUS	CORD LENGTH	CORD BEARING
A-A	12502.67	172.69'	S19°29'26W

REV. BY	DATE	DESCRIPTION
JAE	6-28-07	Added Auditor's Parcel Number for 151

DATE COMPLETED: 9/26/07

SCALE IN FEET 0 10 20 40

PID NO. 77246

R/W DESIGNER JAE/MRP
R/W REVIEWER RDB

RAMP H PLAN
STA. 223+00 TO STA. 228+50

MOT-75-0.75

13B/13

708/773

UTILITY OWNERS (ENTIRE PROJECT)	
ELECTRIC: DAYTON POWER AND LIGHT 1900 DRYDEN ROAD DAYTON, OH 45439 JOHN KENTON (937) 331-4132	TELEPHONE: AT&T OHIO 3233 WOODMAN DRIVE ROOM 225 KETTERING, OH 45420 GARY LEIS (937) 296-3604
GAS & ELECTRIC: DUKE ENERGY 139 EAST FOURTH STREET ROOM 460A CINCINNATI, OH 45202 BILL HOCTOR (513) 287-2916	CABLE: TIME WARNER CABLE 3691 TURNER ROAD DAYTON, OH 45415 REUBEN LEMASTER (937) 425-8871
GAS: VECTREN ENERGY DELIVERY OF OHIO 6500 CLYO ROAD CENTERVILLE, OHIO 45459 GREGORY FISHMAN (937) 312-2521	SANITARY & WATER MONTGOMERY COUNTY SANITARY ENGINEERING DEPATMENT 1850 SPAULDING ROAD DAYTON, OH 45420 ED SCHLAACK (937) 781-2632
GAS: BP PIPELINE (NORTH AMERICA) INC. 12011 HAMILTON AVE. CINCINNATI, OH 45231 KIMBLE MILLER (513) 646-6187 JEFF BOMER (513) 825-5250 x12	WATER CITY OF MIAMISBURG 20 E. CENTRAL AVE. MIAMISBURG, OH 45342-2877 BOB STANLEY (937) 847-6534
TELEPHONE: MCI (VERIZON BUISNESS) 120 RAVINE STREET AKRON, OH 44303 AL GUEST (330) 253-8267	WATER CRAIN'S RUN WATER AND SEWER 10383 DAYTON-CINCINNATI PK. MIAMISBURG, OH 45342 DOUG MAYO (937) 743-5828
TELEPHONE: CINCINNATI BELL TELEPHONE 221 E. FOURTH STREET BUILDING 343 CINCINNATI, OH 45202 KEITH GALEY (513) 565-7043T	

NOTE: THE LOCATION OF THE UNDERGROUND UTILITIES SHOWN ON THE PLANS ARE OBTAINED FROM THE OWNER OF THE UTILITIES AS REQUIRED BY SECTION 153.64 O.R.C.

RIGHT OF WAY LEGEND SHEET MOT-75-0.75 PHASE THREE

MONTGOMERY COUNTY

MIAMI TOWNSHIP

SEC. 9, 10, 15, 16, 17 & 22,

T. 2 R. 5 M.R.S.

CITY OF MIAMISBURG

CITY OF SPRINGBORO

INDEX OF SHEETS:

TITLE SHEET	1
CENTERLINE PLAT	2-4
PROPERTY MAP	5-7
SCHEMATIC PLAN	8
SUMMARY OF ADDITIONAL RIGHT OF WAY	9-11, 11A, 12, 12A, 12B, 12C
UTILITY OVERLAP TABLE	12D
DETAIL RIGHT OF WAY PLAN SHEETS	13-20, 20A, 21-30, 32-50, 50A, 50B, 51-58, 58A
SHEET NOT USED	31
PHASE ONE	1-3
PHASE TWO	1-13

PROJECT DESCRIPTION

THE PROJECT IS TO CONSTRUCT A NEW DIAMOND INTERCHANGE AT MIAMISBURG-SPRINGBORO PIKE (AUSTIN-PIKE) TO INTERSTATE 75. THE PROJECT LENGTH IS 1.3 MILES ALONG INTERSTATE 75, 2.8 MILES OF SIDE ROAD IMPROVEMENTS TO MIAMISBURG-SPRINGBORO PIKE, AUSTIN PIKE, WOOD ROAD, BYERS ROAD AND STATE ROUTE 741.

LIMITED ACCESS

THIS IMPROVEMENT IS ESPECIALLY DESIGNED FOR THROUGH TRAFFIC AND HAS BEEN DECLARED A LIMITED ACCESS HIGHWAY OR FREEWAY BY ACTION OF THE DIRECTOR IN ACCORDANCE WITH THE PRO-VISIONS OF SECTION 5511.02 OF THE REVISED CODE OF OHIO.

PROJECT CONTROL

STATE PLANE ZONE: OHIO SOUTH
HORIZONTAL DATUM: NAD 83 (1995)
VERTICAL DATUM: NAVD 88
UNITS: US SURVEY FOOT
ALL COORDINATES GIVEN ARE GROUND COORDINATES.
TO CONVERT TO STATE PLANE COORDINATES, MULTIPLY BY 0.99990331320 (PROJECT ADJUSTMENT FACTOR).

PLANS PREPARED BY:

FIRM NAME: CH2MHILL

PLANS PREPARED BY: R. DOUG BRIGGS, JOSEPH A. EVERETTE, JR.
CRAIG M. KETRON, MARTIN R. PIERCE

OWNERSHIP VERIFIED BY: MARTIN R. PIERCE
DATE COMPLETED: 09/24/07

DATE COMPLETED: 09/26/07

NOTE: PARCELS DENOTED BY "#" IN THE SUMMARY SHEET ARE TO BE PURCHASED ONCE THE PHASE II CONSTRUCTION HAS BEEN APPROVED FOR THE NORTH SOUTH LEG OF THE PROPOSED CONTINUOUS FLOW INTERSECTION. THEY ARE NOT TO BE NEGOTIATED AS A PART OF THE PHASE 1 CONSTRUCTION OF THIS PROJECT.

CONVENTIONAL SIGNS

County Line
Township Line
Section Line
Corporation Line or
Fence Line (Ex) (Pr)
Center Line
Right of Way (Ex) Ex R/W
Right of Way (Pr) R/W
Standard Highway Ease.(Ex) Ex SH
Temporary Right of Way TMP
Channel Ease. (Pr) CH
Utility Ease. (Ex) Ex U
Railroad or
Guardrail (Ex) (Pr)
Construction Limits
Edge of Pavement (Ex)
Edge of Pavement (Pr)
Edge of Shoulder (Ex)
Edge of Shoulder (Pr)

Ditch / Creek (Ex)
Ditch / Creek (Pr)
Tree Line (Ex)
Ownership Hook Symbol , Example
Property Line Symbol , Example
Break Line Symbol , Example
Tree (Pr) , Tree (Ex) , Shrub (Ex)
Tree (Remove) , Shrub (Remove)
Evergreen (Ex) , Stump
Evergreen (Remove) , Stump (Remove)
Wetland (Pr) , Grass (Pr) , Aerial Target
Post (Ex) , Mailbox (Ex) MB , Mailbox (Pr) MB
Light (Ex) , Telephone Marker (Ex) TEL
Fire Hydrant (Ex) , Water Meter (Ex) M
Water Valve (Ex) , Utility Valve Unknown (Ex.)
Telephone Pole (Ex) , Power Pole (Ex)
Light Pole (Ex)

LEGEND

WL - FEE SIMPLE WITH LIMITATION OF ACCESS
WDV - WARRANTY DEED IN THE NAME OF BOARD OF COUNTY COMMISSIONERS OF MONTGOMERY COUNTY, OHIO
CH - CHANNEL EASEMENT
U - UTILITY EASEMENT
T - TEMPORARY EASEMENT

STRUCTURE KEY

RESIDENTIAL
STRUCTURE REMOVED
COMMERCIAL

I HEREBY CERTIFY THAT THIS PLAN IS A TRUE DELINEATION OF A SURVEY MADE FOR THE OHIO DEPARTMENT OF TRANSPORTATION IN 2004 BY LJB, INC.

THE ESTABLISHMENT OF THE PROPERTY LINES AND EXISTING RIGHT OF WAY LINES SHOWN ON THIS PLAN AS OF THIS DATE WERE PERFORMED BY ME OR UNDER MY DIRECT SUPERVISION AT CH2M HILL.

BY _____
R. DOUGLAS BRIGGS, P.E., P.S.

SURVEYOR NO. _____ DATE _____

FIELD SURVEY PERFORMED BY ME OR UNDER MY DIRECT SUPERVISION AT LJB, INC.

_____
JAMES P. BENEDICT, P.S.

SURVEYOR NO. _____ DATE _____

R/W & PROPERTY DETERMINATION SURVEYOR SEAL:

SIGNED: _____
DATE: _____

FIELD SURVEYOR SEAL:

SIGNED: _____
DATE: _____

FEDERAL PROJECT NO.

PID NO. 77246

CALCULATED JAE/MRP
CHECKED RDB

RIGHT OF WAY LEGEND SHEET

MOT-75-0.75

1/58

709/773

1665rc01.dgn 05-JUN-2007

PB 207 pg 128

I HEREBY CERTIFY THAT THIS PLAT IS A TRUE DELINEATION OF A SURVEY MADE FOR THE OHIO DEPARTMENT OF TRANSPORTATION IN 2004 BY LJB, INC.

THE ESTABLISHMENT OF THE PROPERTY LINES AND EXISTING RIGHT OF WAY LINES SHOWN ON THIS PLAN AS OF THIS DATE WERE PERFORMED BY ME OR UNDER MY DIRECT SUPERVISION AT CH2M HILL.

BY R. Douglas Briggs
R. DOUGLAS BRIGGS, P.E., P.S.

SURVEYOR NO. 7346 DATE 06/07/2007

FIELD SURVEY PERFORMED BY ME OR UNDER MY DIRECT SUPERVISION AT LJB, INC.

James Benedict
JAMES P. BENEDICT, P.S.

SURVEYOR NO. 6583 DATE June 5, 2007

MONUMENT LEGEND

- EXISTING R/W MONUMENT BOX
- PROPOSED R/W MONUMENT BOX
- EXISTING CONCRETE MONUMENT
- PROPOSED CONCRETE MONUMENT
- RAILROAD SPIKE FOUND
- RAILROAD SPIKE SET
- I.P.F. IRON PIN FOUND
- I.P.F. IRON PIN FOUND W/ ID CAP
- I.P.S. IRON PIN SET W/ ID CAP
- P.F. IRON PIPE FOUND
- P.S. IRON PIPE SET
- P.K.F. P.K. NAIL FOUND
- P.K.S. P.K. NAIL SET
- STONE FOUND
- NGS CONTROL MONUMENT FOUND

TRANSFERRED
07 JUN -8 AM 2:04
KARL L. KEITH
AUDITOR

$224.90 06/07/07 14:14:49
PLAT-07-048922 0000
Montgomery County
Willis E. Blackshear Recorder

MOT-75-0.75
MONTGOMERY COUNTY
MIAMI TOWNSHIP
SEC. 16 & 22, T. 2, R. 5 M.R.S.
CITY OF MIAMISBURG
CITY OF SPRINGBORO

NOTES:

1.) CENTERLINE MONUMENTS SHALL BE SET FROM THE CENTERLINE OF CONSTRUCTION & PROP. R/W.

2.) THIS IMPROVEMENT IS ESPECIALLY DESIGNED FOR THROUGH TRAFFIC AND HAS BEEN DECLARED A LIMITED ACCESS HIGHWAY OR FREEWAY BY ACTION OF THE DIRECTOR IN ACCORDANCE WITH THE PROVISIONS OF SECTION 5511.02 OF THE REVISED CODE OF OHIO.

3.) THE EXISTING ℄ R/W AND R/W WIDTH WERE DETERMINED USING DOCUMENTATION ON FILE AT THE DISTRICT 7 SIDNEY OFFICE, CENTRAL OFFICE COLUMBUS, AND THE MONTGOMERY COUNTY RECORDER, AUDITOR, AND ENGINEERS OFFICE.

4.) THE PROPOSED RIGHT OF WAY SHALL BE REFERENCED FROM THE CENTERLINE OF CONSTRUCTION.

ADJUSTABLE CENTERLINE MONUMENTS, REFERENCE MONUMENTS AND RIGHT OF WAY MONUMENTS ARE SHOWN ON STANDARD CONSTRUCTION DRAWING RM 1.1 (REV. 4-21-06) OF THE OHIO DEPARTMENT OF TRANSPORTATION. THE PLACING OF THE MONUMENTS SHALL BE UNDER THE DIRECTION OF A SURVEYOR REGISTERED IN THE STATE OF OHIO AND ARE TO BE SET, AS SHOWN BY THE HIGHWAY CONTRACTOR AT THE TIME OF CONSTRUCTION. ANY ALTERATIONS, WITH PRIOR APPROVAL OF THE OHIO DEPARTMENT OF TRANSPORTATION, SHALL BE NOTED AND O.D.O.T. SHALL BE NOTIFIED OF THE NEW LOCATIONS.

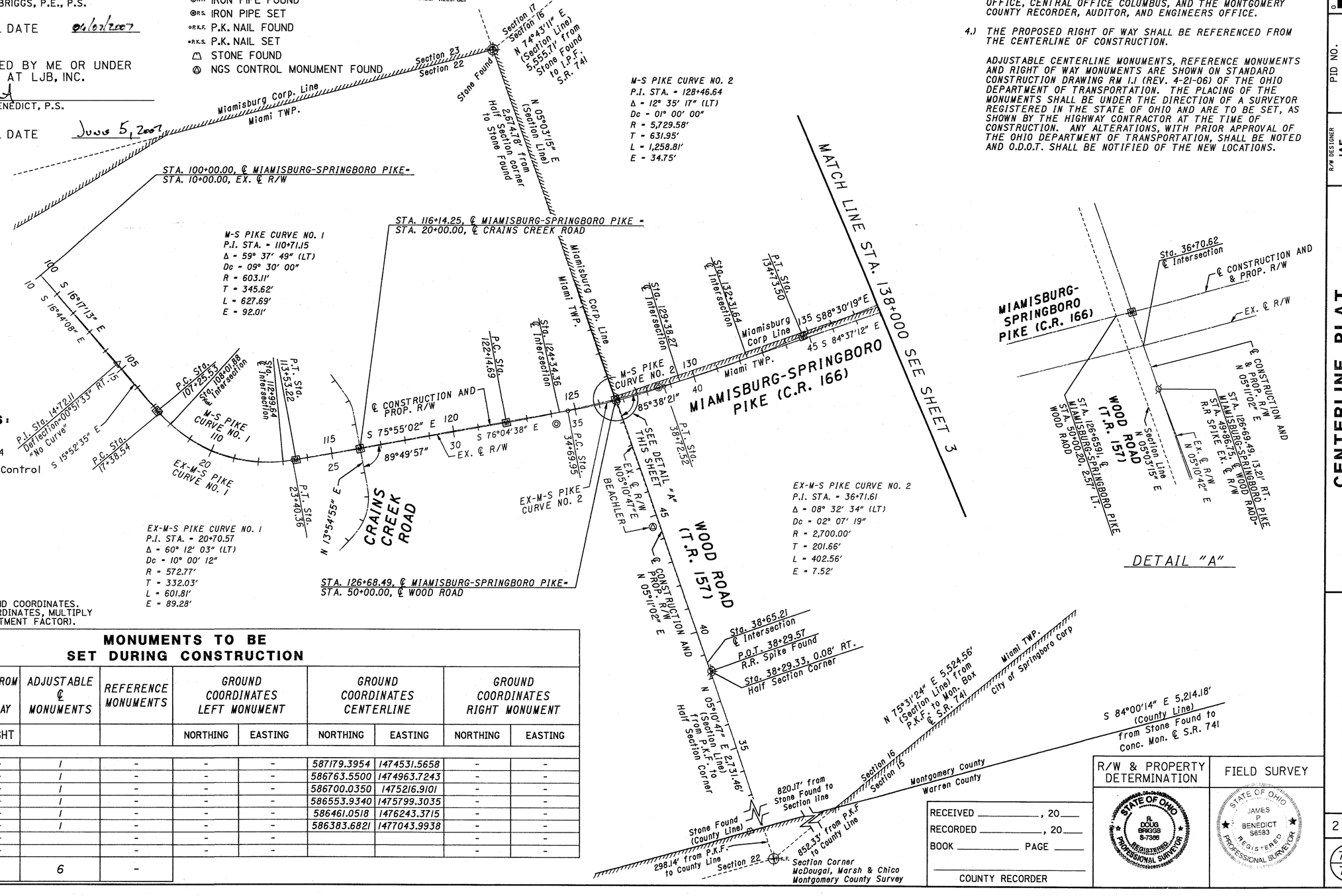

BASIS FOR BEARINGS:

GPS Control Survey Final Report
Austin Road Interchange
By: Woolpert LLP Date: June 2004
(Jack William Kuttrus, OH#8039)
MOT I-75 / Austin Road Ground Control
Montgomery County, Ohio
Horizontal Datum: NAD 83 (1995)
Vertical Datum: NAVD 88
Units: US Survey Foot
State Plane Zone: Ohio South
Geiod Model: Geiod 03
Coordinate System: Ground

Control monuments used:
3-D: Southport AZ MK, Seimering RESET, and MOT 1083
2-D: MOT 1011 AZ MK and MOT 1079
1-D: F346ECC and N345

ALL COORDINATES GIVEN ARE GROUND COORDINATES. TO CONVERT TO STATE PLANE COORDINATES, MULTIPLY BY 0.99990331320 (PROJECT ADJUSTMENT FACTOR).

MONUMENTS TO BE SET DURING CONSTRUCTION

℄ of RIGHT OF WAY STATION	DISTANCE FROM ℄ of RIGHT OF WAY		ADJUSTABLE ℄ MONUMENTS	REFERENCE MONUMENTS	GROUND COORDINATES LEFT MONUMENT		GROUND COORDINATES CENTERLINE		GROUND COORDINATES RIGHT MONUMENT	
ROAD	LEFT	RIGHT			NORTHING	EASTING	NORTHING	EASTING	NORTHING	EASTING
MIAMISBURG-SPRINGBORO PIKE										
P.C. 107+25.53	-	-	1	-	-	-	587179.3954	1474531.5658	-	-
P.T. 113+53.22	-	-	1	-	-	-	586763.5500	1474963.7243	-	-
INT. 116+14.25	-	-	1	-	-	-	586700.0350	1475216.9101	-	-
P.C. 122+14.69	-	-	1	-	-	-	586553.9340	1475799.3035	-	-
INT. 126+68.49	-	-	1	-	-	-	586461.0518	1476243.3715	-	-
P.T. 134+73.50	-	-	1	-	-	-	586383.6821	1477043.9938	-	-
	-	-		-	-	-			-	-
	-	-		-	-	-			-	-
TOTAL TO SHEET 3			6	-						

R/W & PROPERTY DETERMINATION

STATE OF OHIO R. DOUG BRIGGS S-7346 REGISTERED PROFESSIONAL SURVEYOR

FIELD SURVEY

STATE OF OHIO JAMES P. BENEDICT S-6583 REGISTERED PROFESSIONAL SURVEYOR

RECEIVED _____, 20___
RECORDED _____, 20___
BOOK _____ PAGE _____
COUNTY RECORDER

HORIZONTAL SCALE IN FEET
0 100 200 400

PID NO. 77246
R/W DESIGNER JAE
R/W REVIEWER RDB

CENTERLINE PLAT
STA. 100+00 TO STA. 138+00

MOT-75-0.75

2 / 57
710 / 773

PB 207 pg 12C

I HEREBY CERTIFY THAT THIS PLAT IS A TRUE DELINEATION OF A SURVEY MADE FOR THE OHIO DEPARTMENT OF TRANSPORTATION IN 2004 BY LJB, INC.

THE ESTABLISHMENT OF THE PROPERTY LINES AND EXISTING RIGHT OF WAY LINES SHOWN ON THIS PLAN AS OF THIS DATE WERE PERFORMED BY ME OR UNDER MY DIRECT SUPERVISION AT CH2M HILL.

BY _____
R. DOUGLAS BRIGGS, P.E., P.S.

SURVEYOR NO. 7366 DATE 06/07/2007

FIELD SURVEY PERFORMED BY ME OR UNDER MY DIRECT SUPERVISION AT LJB, INC.

_____
JAMES P. BENEDICT, P.S.

SURVEYOR NO. 6583 DATE June 5, 2007

TRANSFERRED
07 JUN -8 AM 2:01
KARL L. KEITH
AUDITOR

MOT-75-0.75
MONTGOMERY COUNTY
MIAMI TOWNSHIP
SEC. 16, T. 2, R. 5 M.R.S.
CITY OF MIAMISBURG
CITY OF SPRINGBORO

$224.40 06/07/07 14:15:18
PLAT-07-048422 0000
Montgomery County
Willis E. Blackshear Recorder

MATCH LINE STA. 138+00 SEE SHEET 2

MATCH LINE STA. 171+000 SEE SHEET 4

STA. 141+56.78, ℄ MIAMISBURG-SPRINGBORO PIKE-
STA. 70+00.00, ℄ BYERS ROAD
SEE DETAIL "B" THIS SHEET

BYERS RD. (T.R. 147)

EX. ℄ R/W N05°36'20"E
℄ CONSTRUCTION N05°39'40"E
℄ CONSTRUCTION AND PROP. R/W S88°30'19"E
EX. ℄ R/W N89°42'57"E
S84°37'12"E
167'
S88°19'30"E

DETAIL "B"

P.I. Sta. 51+54.99
Deflection = 05°39'51" LT.
"No Curve"

S 84°37'12" E
50
140
70
85°50'01"
Miamisburg Corp. Line
Miami TWP.
℄ CONSTRUCTION PROP. R/W
55
145
S 88°30'19" E
EX. ℄ R/W

STA. 153+66.88, ℄ MIAMISBURG-SPRINGBORO PIKE-
STA. 39+56.06, ℄ CONSTRUCTION I-75

CURVE RAMP M-1
P.I. STA. = 442+73.39
Δ = 20° 48' 00" (RT)
Dc = 08° 00' 00"
R = 716.20'
T = 131.45'
L = 260.00'
E = 11.96'

CURVE RAMP M-2
P.I. STA. = 448+87.01
Δ = 15° 48' 00" (LT)
Dc = 05° 30' 00"
R = 1,041.74'
T = 144.55'
L = 287.27'
E = 9.98'

CURVE RAMP M-3
P.I. STA. = 455+30.04
Δ = 05° 00' 00" (LT)
Dc = 00° 30' 00"
R = 11,459.16'
T = 500.32'
L = 1,000.00'
E = 10.92'

CURVE RAMP P-1
P.I. STA. = 314+57.08
Δ = 02° 49' 49" (LT)
Dc = 00° 28' 19"
R = 12,142.76'
T = 299.97'
L = 599.82'
E = 3.70'

CURVE RAMP P-2
P.I. STA. = 320+81.28
Δ = 03° 03' 45" (LT)
Dc = 00° 28' 20"
R = 12,133.52'
T = 324.35'
L = 648.54'
E = 4.33'

CURVE RAMP P-3
P.I. STA. = 324+55.48
Δ = 01° 15' 00" (LT)
Dc = 01° 15' 00"
R = 4,583.67'
T = 50.00'
L = 100.00'
E = 0.27'

CURVE RAMP P-4
P.I. STA. = 328+43.25
Δ = 23° 19' 01" (LT)
Dc = 03° 30' 00"
R = 1,637.02'
T = 337.77'
L = 666.20'
E = 34.48'

CURVE RAMP P-5
P.I. STA. = 334+77.96
Δ = 18° 24' 00" (RT)
Dc = 08° 00' 00"
R = 716.20'
T = 116.00'
L = 230.00'
E = 9.33'

STA. 149+54.88, ℄ MIAMISBURG-SPRINGBORO PIKE-
STA. 338+51.96, ℄ CONSTRUCTION RAMP P
STA. 438+26.94, ℄ CONSTRUCTION RAMP M

P.C. Sta. 311+37.11
P.C.C. Sta. 317+56.93
P.C.C. Sta. 324+05.47
P.C.C. Sta. 325+05.47
P.T. Sta. 331+71.61
P.C. Sta. 333+61.96
P.T. Sta. 335+91.96
P.T. Sta. 339+11.36
P.C. Sta. 441+41.94
P.T. Sta. 444+01.94
P.C. Sta. 447+42.45
P.C.C. Sta. 450+29.73
P.T. Sta. 460+29.73

CURVE RAMP P-1
315
CURVE RAMP P-2
320
15
20
1-75-2
25
CURVE RAMP P-3
325
RAMP P
℄ CONSTRUCTION
CURVE RAMP P-4
330
N04°01'29"W
335
77°07'10"
CURVE RAMP P-5
N14°22'31"E
340
CURVE RAMP M-1
440
77°07'10"
445
N35°10'31"E
CURVE RAMP M-2
450
RAMP M
℄ CONSTRUCTION
455
CURVE RAMP M-3
460
Section 17 Section 16
Miamisburg Corp. Line
Miami TWP.

P.C. Sta. 222+69.38
P.R.C. Sta. 226+90.96
℄ CONSTRUCTION AND PROP. R/W
225
CURVE RAMP H-1
230
CURVE RAMP H-2
℄ CONSTRUCTION
RAMP H
N39°49'30"E
235
CURVE RAMP H-3
P.C. Sta. 237+84.75
P.T. Sta. 238+02.87
P.T. Sta. 232+54.75
65
77°07'10"
155
N 14°22'31" E
77°07'10"
240
N14°22'31"E
N14°22'31"E
P.C. Sta. 142+65.27
CURVE RAMP J-1
145
P.T. Sta. 145+90.27
CURVE RAMP J-3
155
160
N 13°34'55" E
150
CURVE RAMP J-2
N06°44'59"W
P.C. Sta. 148+43.44
P.C.C. Sta. 153+29.86
P.T. Sta. 154+29.86
℄ CONSTRUCTION
RAMP J
Sta. 159+97.17 ℄ Intersection
160
70
N 89°42'57" E
MIAMISBURG-SPRINGBORO PIKE (C.R. 166)
165
75
80
170
Miami TWP.
Springboro Corp. Line

I-75
45
50
55
60
65

I-75-2
P.I. STA. = 19+72.39
Δ = 18° 15' 11" (LT)
Dc = 00° 28' 00"
R = 12,277.69'
T = 1,972.39'
L = 3,911.36'
E = 157.42'

CURVE RAMP H-1
P.I. STA. = 224+80.19
Δ = 01° 56' 44" (LT)
Dc = 00° 27' 41"
R = 12,416.19'
T = 210.81'
L = 421.58'
E = 1.79'

CURVE RAMP H-2
P.I. STA. = 229+75.68
Δ = 19° 43' 58" (RT)
Dc = 03° 30' 00"
R = 1,637.02'
T = 284.71'
L = 563.79'
E = 24.57'

CURVE RAMP H-3
P.I. STA. = 236+46.48
Δ = 25° 26' 59" (LT)
Dc = 08° 00' 00"
R = 716.20'
T = 161.73'
L = 318.12'
E = 18.03'

CURVE RAMP J-1
P.I. STA. = 144+29.64
Δ = 21° 07' 30" (LT)
Dc = 06° 30' 00"
R = 881.47'
T = 164.37'
L = 325.00'
E = 15.19'

CURVE RAMP J-2
P.I. STA. = 150+89.01
Δ = 19° 27' 24" (RT)
Dc = 04° 00' 00"
R = 1,432.39'
T = 245.57'
L = 486.42'
E = 20.90'

CURVE RAMP J-3
P.I. STA. = 153+79.86
Δ = 00° 52' 30" (RT)
Dc = 00° 52' 30"
R = 6,548.09'
T = 50.00'
L = 100.00'
E = 0.19'

STA. 157+72.88, ℄ MIAMISBURG-SPRINGBORO PIKE-
STA. 241+19.11, ℄ CONSTRUCTION RAMP H
STA. 140+10.27, ℄ CONSTRUCTION RAMP J

BASIS FOR BEARINGS:

GPS Control Survey Final Report
Austin Road Interchange
By: Woolpert LLP Date: June 2004
(Jack William Kuttrus, OH#8039)
MOT I-75 / Austin Road Ground Control
Montgomery County, Ohio
Horizontal Datum: NAD 83 (1995)
Vertical Datum: NAVD 88
Units: US Survey Foot
State Plane Zone: Ohio South
Geiod Model: Geiod 03
Coordinate System: Ground

Control monuments used:
3-D: Southport AZ MK, Seimering RESET, and MOT 1083
2-D: MOT 1011 AZ MK and MOT 1079
1-D: F346ECC and N345

ALL COORDINATES GIVEN ARE GROUND COORDINATES. TO CONVERT TO STATE PLANE COORDINATES, MULTIPLY BY 0.99990331320 (PROJECT ADJUSTMENT FACTOR).

MONUMENTS TO BE SET DURING CONSTRUCTION

℄ of RIGHT OF WAY STATION	DISTANCE FROM ℄ of RIGHT OF WAY		ADJUSTABLE ℄ MONUMENTS	REFERENCE MONUMENTS	GROUND COORDINATES LEFT MONUMENT		GROUND COORDINATES CENTERLINE		GROUND COORDINATES RIGHT MONUMENT	
ROAD	LEFT	RIGHT			NORTHING	EASTING	NORTHING	EASTING	NORTHING	EASTING
MIAMISBURG-SPRINGBORO PIKE										
INT. 141+56.78	-	-	1	-	-	-	586365.8594	1477727.0424	-	-
INT. 149+54.88			1				586345.0416	1478524.8745		
INT. 157+72.88			1				586323.7048	1479342.5962		
P.O.T. 168+00.00			1				586296.9135	1480369.3621		
TOTAL TO SHEET 3			4	-						

MONUMENT LEGEND

- EXISTING R/W MONUMENT BOX
- PROPOSED R/W MONUMENT BOX
- EXISTING CONCRETE MONUMENT
- PROPOSED CONCRETE MONUMENT
- RAILROAD SPIKE FOUND
- RAILROAD SPIKE SET
- I.R.F. IRON PIN FOUND
- I.R.F. IRON PIN FOUND W/ ID CAP
- I.R.S. IRON PIN SET W/ ID CAP
- P.R.F. IRON PIPE FOUND
- P.R.S. IRON PIPE SET
- P.K.F. P.K. NAIL FOUND
- P.K.S. P.K. NAIL SET
- STONE FOUND
- NGS CONTROL MONUMENT FOUND

NOTES:

1.) CENTERLINE MONUMENTS SHALL BE SET FROM THE CENTERLINE OF CONSTRUCTION & PROP. R/W.

2.) THIS IMPROVEMENT IS ESPECIALLY DESIGNED FOR THROUGH TRAFFIC AND HAS BEEN DECLARED A LIMITED ACCESS HIGHWAY OR FREEWAY BY ACTION OF THE DIRECTOR IN ACCORDANCE WITH THE PROVISIONS OF SECTION 5511.02 OF THE REVISED CODE OF OHIO.

3.) THE EXISTING ℄ R/W AND R/W WIDTH WERE DETERMINED USING DOCUMENTATION ON FILE AT THE DISTRICT 7 SIDNEY OFFICE, CENTRAL OFFICE COLUMBUS, AND THE MONTGOMERY COUNTY RECORDER, AUDITOR, AND ENGINEERS OFFICE.

4.) THE PROPOSED RIGHT OF WAY SHALL BE REFERENCED FROM THE CENTERLINE OF CONSTRUCTION.

ADJUSTABLE CENTERLINE MONUMENTS, REFERENCE MONUMENTS AND RIGHT OF WAY MONUMENTS ARE SHOWN ON STANDARD CONSTRUCTION DRAWING RM 1.1 (REV. 4-21-06) OF THE OHIO DEPARTMENT OF TRANSPORTATION. THE PLACING OF THE MONUMENTS SHALL BE UNDER THE DIRECTION OF A SURVEYOR REGISTERED IN THE STATE OF OHIO AND ARE TO BE SET, AS SHOWN BY THE HIGHWAY CONTRACTOR AT THE TIME OF CONSTRUCTION. ANY ALTERATIONS, WITH PRIOR APPROVAL OF THE OHIO DEPARTMENT OF TRANSPORTATION, SHALL BE NOTED AND O.D.O.T. SHALL BE NOTIFIED OF THE NEW LOCATIONS.

RECEIVED _____, 20____
RECORDED _____, 20____
BOOK _____ PAGE _____
_____
COUNTY RECORDER

R/W & PROPERTY DETERMINATION

STATE OF OHIO — R. DOUG BRIGGS — S-7366 — REGISTERED PROFESSIONAL SURVEYOR

FIELD SURVEY

STATE OF OHIO — JAMES P. BENEDICT — S6583 — REGISTERED PROFESSIONAL SURVEYOR

HORIZONTAL SCALE IN FEET
0 100 200 400

P.I.D. NO. 77246

R/W DESIGNER JAE
R/W REVIEWER RDB

CENTERLINE PLAT
STA. 138+00 TO STA. 171+00

MOT-75-0.75

3 / 57

711 / 773

PB 207 pg 12A

10-MAI-2007

$224.40 06/07/07 14:14:22
PLAT-07-040822 0000
Montgomery County
Willis E. Blackshear Recorder

TRANSFERRED
07 JUN -8 AM 2:03
KARL L. KEITH
AUDITOR

MOT-75-0.75
MONTGOMERY COUNTY
MIAMI TOWNSHIP
SEC. 10 & 16, T. 2, R. 5 M.R.S.
CITY OF SPRINGBORO

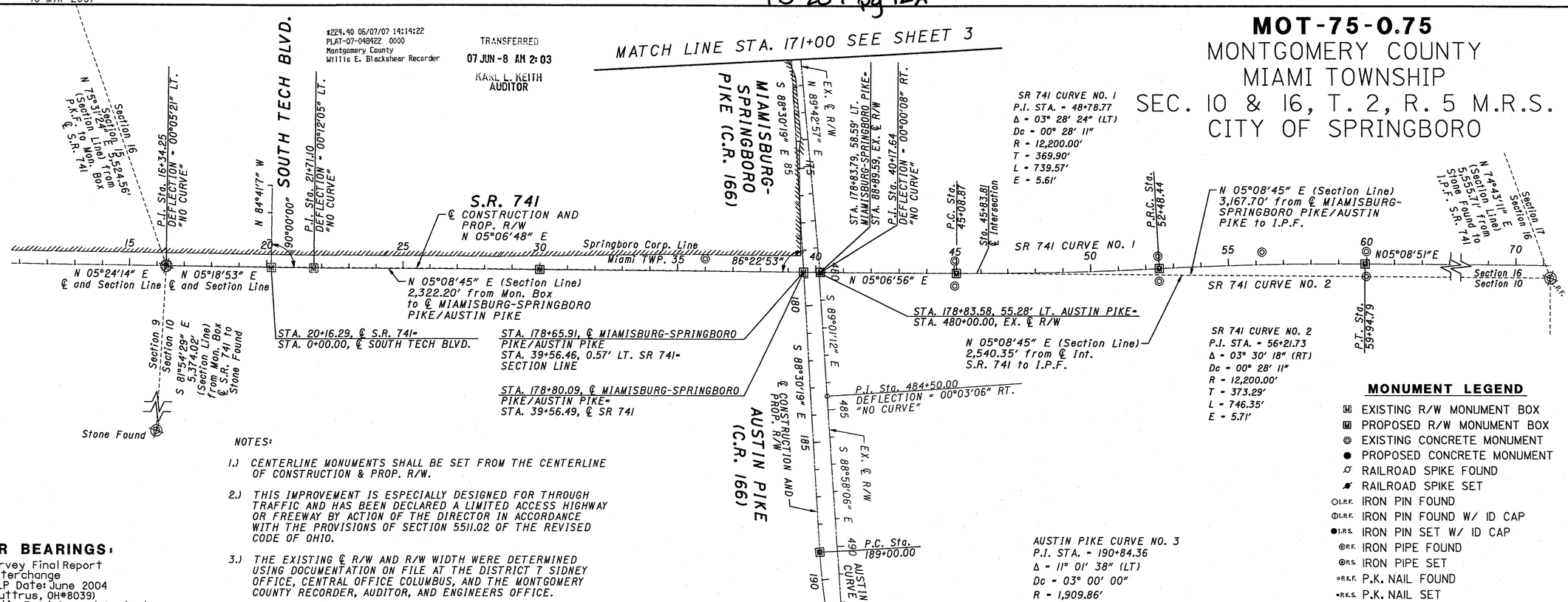

NOTES:

1.) CENTERLINE MONUMENTS SHALL BE SET FROM THE CENTERLINE OF CONSTRUCTION & PROP. R/W.

2.) THIS IMPROVEMENT IS ESPECIALLY DESIGNED FOR THROUGH TRAFFIC AND HAS BEEN DECLARED A LIMITED ACCESS HIGHWAY OR FREEWAY BY ACTION OF THE DIRECTOR IN ACCORDANCE WITH THE PROVISIONS OF SECTION 5511.02 OF THE REVISED CODE OF OHIO.

3.) THE EXISTING ℄ R/W AND R/W WIDTH WERE DETERMINED USING DOCUMENTATION ON FILE AT THE DISTRICT 7 SIDNEY OFFICE, CENTRAL OFFICE COLUMBUS, AND THE MONTGOMERY COUNTY RECORDER, AUDITOR, AND ENGINEERS OFFICE.

4.) THE PROPOSED RIGHT OF WAY SHALL BE REFERENCED FROM THE CENTERLINE OF CONSTRUCTION.

ADJUSTABLE CENTERLINE MONUMENTS, REFERENCE MONUMENTS AND RIGHT OF WAY MONUMENTS ARE SHOWN ON STANDARD CONSTRUCTION DRAWING RM 1.1 (REV. 4-21-06) OF THE OHIO DEPARTMENT OF TRANSPORTATION. THE PLACING OF THE MONUMENTS SHALL BE UNDER THE DIRECTION OF A SURVEYOR REGISTERED IN THE STATE OF OHIO AND ARE TO BE SET, AS SHOWN BY THE HIGHWAY CONTRACTOR AT THE TIME OF CONSTRUCTION. ANY ALTERATIONS, WITH PRIOR APPROVAL OF THE OHIO DEPARTMENT OF TRANSPORTATION, SHALL BE NOTED AND O.D.O.T. SHALL BE NOTIFIED OF THE NEW LOCATIONS.

BASIS FOR BEARINGS:

GPS Control Survey Final Report
Austin Road Interchange
By: Woolpert LLP Date: June 2004
(Jack William Kuttrus, OH#8039)
MOT I-75 / Austin Road Ground Control
Montgomery County, Ohio
Horizontal Datum: NAD 83 (1995)
Vertical Datum: NAVD 88
Units: US Survey Foot
State Plane Zone: Ohio South
Geiod Model: Geiod 03
Coordinate System: Ground

Control monuments used:
3-D: Southport AZ MK, Seimering RESET, and MOT 1083
2-D: MOT 1011 AZ MK and MOT 1079
1-D: F346ECC and N345

ALL COORDINATES GIVEN ARE GROUND COORDINATES. TO CONVERT TO STATE PLANE COORDINATES, MULTIPLY BY 0.99990331320 (PROJECT ADJUSTMENT FACTOR).

MONUMENTS TO BE SET DURING CONSTRUCTION

℄ of RIGHT OF WAY STATION	DISTANCE FROM ℄ of RIGHT OF WAY		ADJUSTABLE ℄ MONUMENTS	REFERENCE MONUMENTS	GROUND COORDINATES LEFT MONUMENT		GROUND COORDINATES CENTERLINE		GROUND COORDINATES RIGHT MONUMENT	
ROAD	LEFT	RIGHT			NORTHING	EASTING	NORTHING	EASTING	NORTHING	EASTING
STATE ROUTE 741										
P.O.T. 30+00.00	-	-	1	-	-	-	585316.0542	1481363.8332	-	-
INT. 39+56.49			1				586268.7404	1481449.0814		
P.I. 40+17.64			1				586329.6423	1481454.5310		
P.C. 45+08.87			1				586818.9217	1481498.3320		
P.R.C. 52+48.44			1				587557.0929	1481541.9148		
P.T. 59+94.79			1				588302.0149	1481586.1039		
AUSTIN PIKE										
P.C. 189+00.00			1				586242.1370	1482468.6474		
P.R.C. 192+67.58			1				586267.8594	1482834.7537		
P.T. 195+61.34			1				586294.0810	1483127.0596		
P.I. 199+26.24			1				586298.6632	1483491.9229		
TOTAL THIS SHEET			10							
TOTAL SHEET 1			6							
TOTAL SHEET 2			4							
TOTAL TO GENERAL SUMMARY			20	-						

MONUMENT LEGEND

- EXISTING R/W MONUMENT BOX
- PROPOSED R/W MONUMENT BOX
- EXISTING CONCRETE MONUMENT
- PROPOSED CONCRETE MONUMENT
- RAILROAD SPIKE FOUND
- RAILROAD SPIKE SET
- I.R.F. IRON PIN FOUND
- I.R.F. IRON PIN FOUND W/ ID CAP
- I.R.S. IRON PIN SET W/ ID CAP
- P.R.F. IRON PIPE FOUND
- P.R.S. IRON PIPE SET
- P.K.F. P.K. NAIL FOUND
- P.K.S. P.K. NAIL SET
- STONE FOUND
- NGS CONTROL MONUMENT FOUND

I HEREBY CERTIFY THAT THIS PLAT IS A TRUE DELINEATION OF A SURVEY MADE FOR THE OHIO DEPARTMENT OF TRANSPORTATION IN 2004 BY LJB, INC.

THE ESTABLISHMENT OF THE PROPERTY LINES AND EXISTING RIGHT OF WAY LINES SHOWN ON THIS PLAN AS OF THIS DATE WERE PERFORMED BY ME OR UNDER MY DIRECT SUPERVISION AT CH2M HILL.

BY R. Douglas Briggs
R. DOUGLAS BRIGGS, P.E., P.S.

SURVEYOR NO. 75646 DATE 06/07/2007

FIELD SURVEY PERFORMED BY ME OR UNDER MY DIRECT SUPERVISION AT LJB.

James Benedict
JAMES P. BENEDICT, P.S.

SURVEYOR NO. 6583 DATE June 5, 2007

CH2MHILL
Prepared by: R. Doug Briggs

R/W & PROPERTY DETERMINATION

STATE OF OHIO R. DOUGLAS BRIGGS E-7566 REGISTERED PROFESSIONAL SURVEYOR

FIELD SURVEY

STATE OF OHIO JAMES P. BENEDICT S-6583 REGISTERED PROFESSIONAL SURVEYOR

RECEIVED _____, 20__
RECORDED _____, 20__
BOOK _____ PAGE _____
COUNTY RECORDER

N
HORIZONTAL SCALE IN FEET
0 100 200 400

PID NO. 77246
R/W DESIGNER JAE
R/W REVIEWER RDB

CENTERLINE PLAT
STA. 171+00 TO STA. 203+00

MOT-75-0.75

4/57
712/773

MOT-75-0.75
MONTGOMERY COUNTY
MIAMI TOWNSHIP
SEC. 16 & 22, T. 2, R. 5 M.R.S.
CITY OF MIAMISBURG

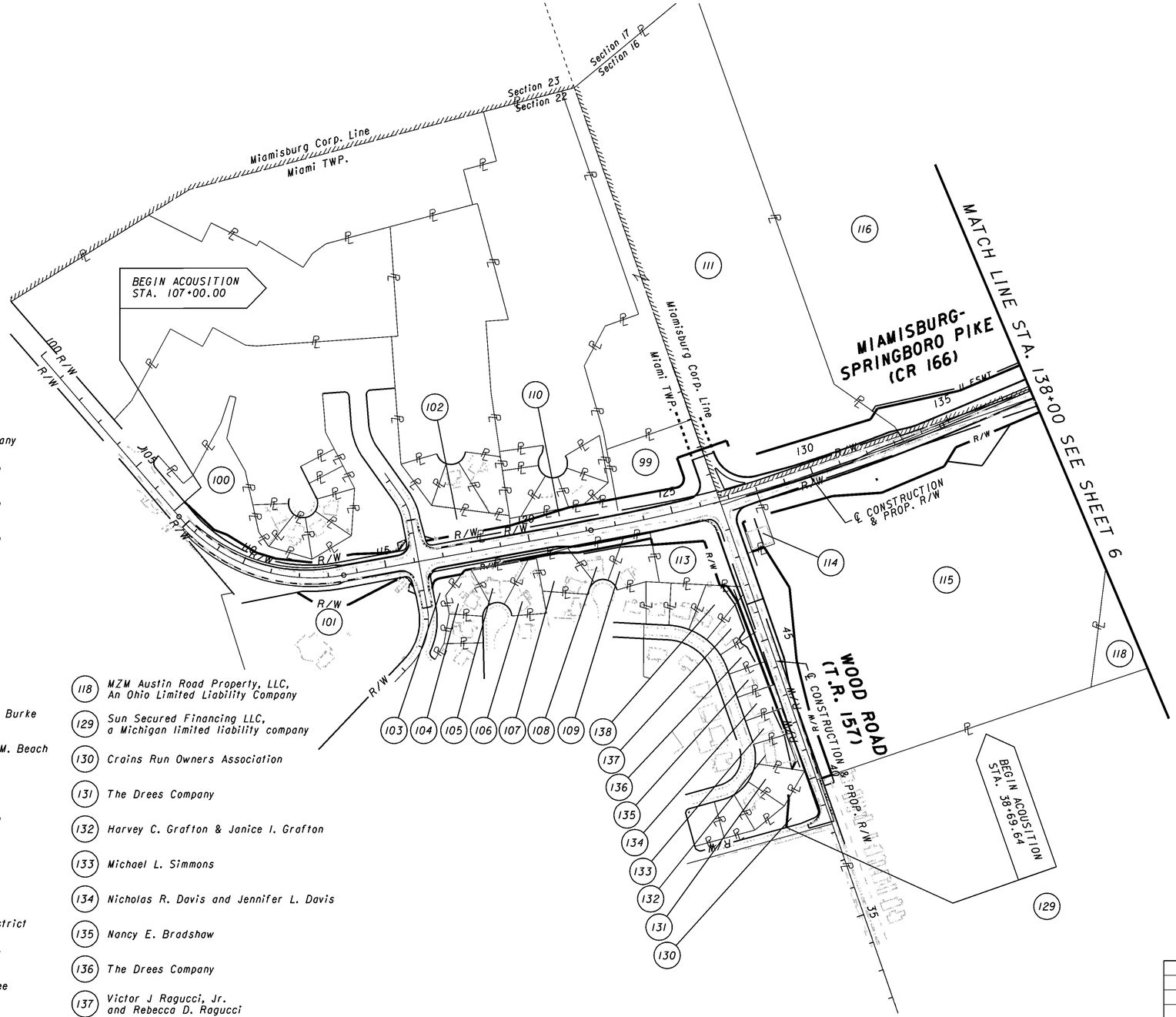

(99) Speedway SuperAmerica LLC, a Deleware limited liability company

(100) Crains Run Owners Association

(101) Crains Run Owners Association

(102) Crains Run Owners Association

(103) Crains Run Owner Association

(104) Daryl K. and Denise A. Wilson

(105) Keith A. Larson

(106) Peter J. Beuchat

(107) Michael A. Burke and Loann K. Burke

(108) Brandon L. Beach and Sharon M. Beach

(109) Jason Christopher Brown and Christine Marie Brown

(110) Crains Run Owners Association

(111) Oberer Development Co.

(113) Crains Run Owner Association

(114) Crains Run Water & Sewer District

(115) Township of Miami, Montgomery County, State of Ohio

(116) Martha Laing Woodward, Trustee
Robert S. Laing Jr.
Patricial L. Stone,
Martha S. Laing
Cynthia L. Heitzman
Elizabeth L. Laing

(118) MZM Austin Road Property, LLC, An Ohio Limited Liability Company

(129) Sun Secured Financing LLC, a Michigan limited liability company

(130) Crains Run Owners Association

(131) The Drees Company

(132) Harvey C. Grafton & Janice I. Grafton

(133) Michael L. Simmons

(134) Nicholas R. Davis and Jennifer L. Davis

(135) Nancy E. Bradshaw

(136) The Drees Company

(137) Victor J Ragucci, Jr. and Rebecca D. Ragucci

(138) Gary A. Burlingame and Stacia R. Burlingame

NOTES:

1.) THE LOCATION OF THE UNDERGROUND UTILITIES SHOWN ON THE PLANS ARE OBTAINED FROM THE OWNER OF THE UTILITIES AS REQUIRED BY SECTION 153.64 O.R.C.

2.) ALL TOPOGRAPHICAL FEATURES LOCATED INSIDE THE PROPOSED RIGHT-OF-WAY ARE TO BE REMOVED UNLESS OTHERWISE NOTED.

REV. BY	DATE	DESCRIPTION
JAE	10-18-07	Added Date Completed

DATE COMPLETED: 9/26/07

HORIZONTAL SCALE IN FEET
0 100 200 400

PID NO. 77246

R/W DESIGNER JAE
R/W REVIEWER RDB

PROPERTY MAP
STA. 100+00 TO STA. 138+00

MOT-75-0.75

5 / 58

713 / 773

MOT-75-0.75
MONTGOMERY COUNTY
MIAMI TOWNSHIP
SEC. 16 & 17, T. 2, R. 5 M.R.S.
CITY OF MIAMISBURG
CITY OF SPRINGBORO

(112) Nick Flora

(115) Township of Miami, Montgomery County, State of Ohio

(116) Martha Laing Woodward, Trustee
Robert S. Laing Jr.
Patricial L. Stone,
Martha S. Laing
Cynthia L. Heitzman
Elizabeth L. Laing

(117) Dayton-Montgomery County Port Authority

(118) WZM Austin Road Property, LLC, An Ohio Limited Liability Company

(119) Richard E. Cramer & Glenna B. Cramer, Trustees, or their successor(s) in trust, under The Cramer Family Trust, dated 8-7-03

(120) Kendell Investments, An Ohio General Partnership

(121) City of Springboro

(122) Miamisburg Congregation of Jehovah's Witnesses

(123) MV Austin Pike Land LLC, an Ohio limited liability company
RLG Miami LTD., an Ohio limited liability company
GCG Miami LTD., an Ohio limited liability company
KGS Miami LTD., an Ohio limited liability company

(123A) MV Austin Pike Land LLC, an Ohio limited liability company
RLG Miami LTD., an Ohio limited liability company
GCG Miami LTD., an Ohio limited liability company
KGS Miami LTD., an Ohio limited liability company

(124) Victory 4 LLC, an Ohio limited liability compnay
GCG AUSTIN LTD., an Ohio limited liability company
RLG AUSTIN LTD., an Ohio limited liability company

(129) Sun Secured Financing LLC, a Michigan limited liability company

(143) Mount Adams Properties LLC, an Ohio limited liability compnay

(144) Toga Investments, LTD, an Ohio limited liability company

(147) Board of County Commissioners of Montgomery County, Ohio

(148) Board of County Commissioners of Montgomery County, Ohio

(149) Charles W. Cramer and Georgia L. Cramer

(150) Charles W. Cramer and Georgia L. Cramer

(151) Loran Smith

(152) Board of County Commissioners of Montgomery County, Ohio

(153) Loran E. Smith and Amelia L. Smith

(154) Loran E. Smith and Amelia L. Smith

(155) Edward Woodward and Edith Woodward

(156) Virgil A. McCabe

(157) L. Pearl Long and Clyde C. Long

(158) Henry N. Hollencamp, Trustee of and for John G. Gephart

(159) Elizabeth Allen Doan

(160) Richard E. Cramer and Glenna B. Cramer

(161) Horst E. Glagowski and Jo Ann M. Glagowski

MATCH LINE STA. 138+000 SEE SHEET 5

BEGIN ACQUISITION STA. 25+00

END ACQUISITION STA. 56+58.09

MATCH LINE STA. 65+50 SEE THIS SHEET

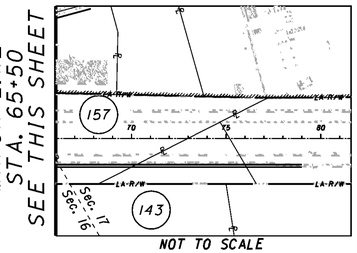

BYERS RD. (T.R. 147)

RAMP P

RAMP M

RAMP H

RAMP J

I-75

MIAMISBURG-SPRINGBORO PIKE (C.R. 166)

SOUTH TECH BLVD.

Miami TWP. Springboro Corp. Line

Miamisburg Corp. Line

Miami TWP.

Section 16 Section 15

Section 17 Section 16

℄ CONSTRUCTION & PROP. R/W

℄ CONSTRUCTION

U ESMT

T ESMT

R/W

LA-R/W

MATCH LINE STA. 171+000 SEE SHEET 7

NOTES:

1.) THE LOCATION OF THE UNDERGROUND UTILITIES SHOWN ON THE PLANS ARE OBTAINED FROM THE OWNER OF THE UTILITIES AS REQUIRED BY SECTION 153.64 O.R.C.

2.) ALL TOPOGRAPHICAL FEATURES LOCATED INSIDE THE PROPOSED RIGHT-OF-WAY ARE TO BE REMOVED UNLESS OTHERWISE NOTED.

REV. BY	DATE	DESCRIPTION
JAE	1-30-08	Added/Revised Parcels 123, 123A, 143
JAE	10-18-07	Added Insert for Parcel 157; Revised Heading

DATE COMPLETED: 9/26/07

HORIZONTAL SCALE IN FEET
0 100 200 400

R/W DESIGNER JAE
R/W REVIEWER RDB

PID NO. 77246

PROPERTY MAP
STA. 138+00 TO STA. 171+00
MATCH LINE STA. 65+50 SEE THIS SHEET

MOT-75-0.75

6 / 58

714 / 773

1665rm03.dgn 31-JAN-2008

MOT-75-0.75
MONTGOMERY COUNTY
MIAMI TOWNSHIP
SEC. 10 & 16, T. 2, R. 5 M.R.S.
CITY OF SPRINGBORO

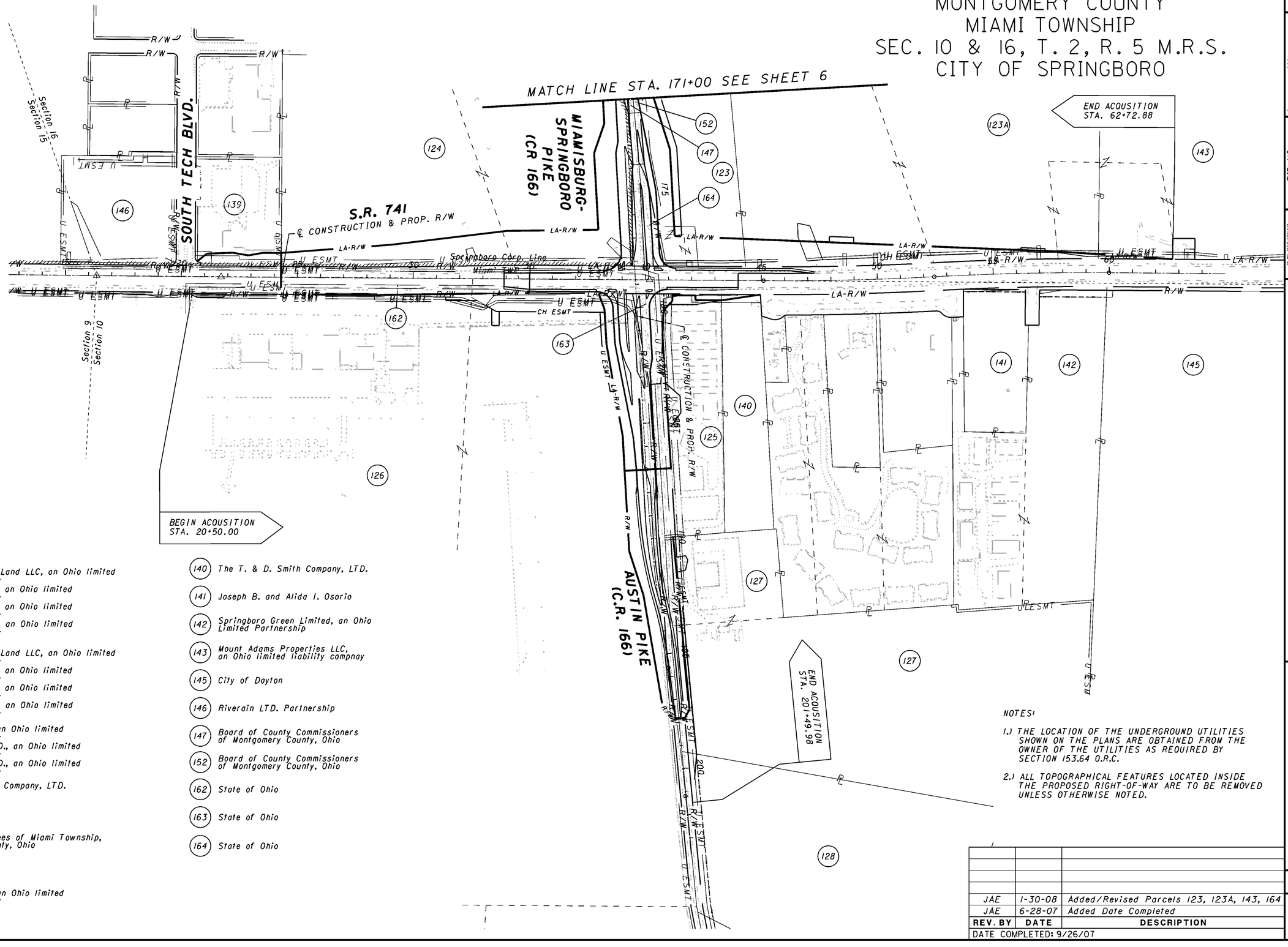

(123) MV Austin Pike Land LLC, an Ohio limited liability company
RLG Miami LTD., an Ohio limited liability company
GCG Miami LTD., an Ohio limited liability company
KGS Miami LTD., an Ohio limited liability company

(123A) MV Austin Pike Land LLC, an Ohio limited liability company
RLG Miami LTD., an Ohio limited liability company
GCG Miami LTD., an Ohio limited liability company
KGS Miami LTD., an Ohio limited liability company

(124) Victory 4 LLC, an Ohio limited liability compnay
GCG AUSTIN LTD., an Ohio limited liability company
RLG AUSTIN LTD., an Ohio limited liability company

(125) T. and D. Smith Company, LTD.

(126) City of Dayton

(127) Board of Trustees of Miami Township, Montgomery County, Ohio

(128) City of Dayton

(139) Helvetia, LTD., an Ohio limited liability company

(140) The T. & D. Smith Company, LTD.

(141) Joseph B. and Alida I. Osorio

(142) Springboro Green Limited, an Ohio Limited Partnership

(143) Mount Adams Properties LLC, an Ohio limited liability compnay

(145) City of Dayton

(146) Riverain LTD. Partnership

(147) Board of County Commissioners of Montgomery County, Ohio

(152) Board of County Commissioners of Montgomery County, Ohio

(162) State of Ohio

(163) State of Ohio

(164) State of Ohio

NOTES:

1.) THE LOCATION OF THE UNDERGROUND UTILITIES SHOWN ON THE PLANS ARE OBTAINED FROM THE OWNER OF THE UTILITIES AS REQUIRED BY SECTION 153.64 O.R.C.

2.) ALL TOPOGRAPHICAL FEATURES LOCATED INSIDE THE PROPOSED RIGHT-OF-WAY ARE TO BE REMOVED UNLESS OTHERWISE NOTED.

REV. BY	DATE	DESCRIPTION
JAE	1-30-08	Added/Revised Parcels 123, 123A, 143, 164
JAE	6-28-07	Added Date Completed

DATE COMPLETED: 9/26/07

HORIZONTAL SCALE IN FEET
0 100 200 400

PID NO. 77246

R/W DESIGNER JAE
R/W REVIEWER RDB

PROPERTY MAP
STA. 171+00 TO STA. 203+00

MOT-75-0.75

7 / 58

715 / 773

MOT-75-0.75

MONTGOMERY COUNTY
MIAMI TOWNSHIP
SEC. 9,10,15,16,17, & 22
T. 2, R. 5 M.R.S.
CITY OF MIAMISBURG
CITY OF SPRINGBORO

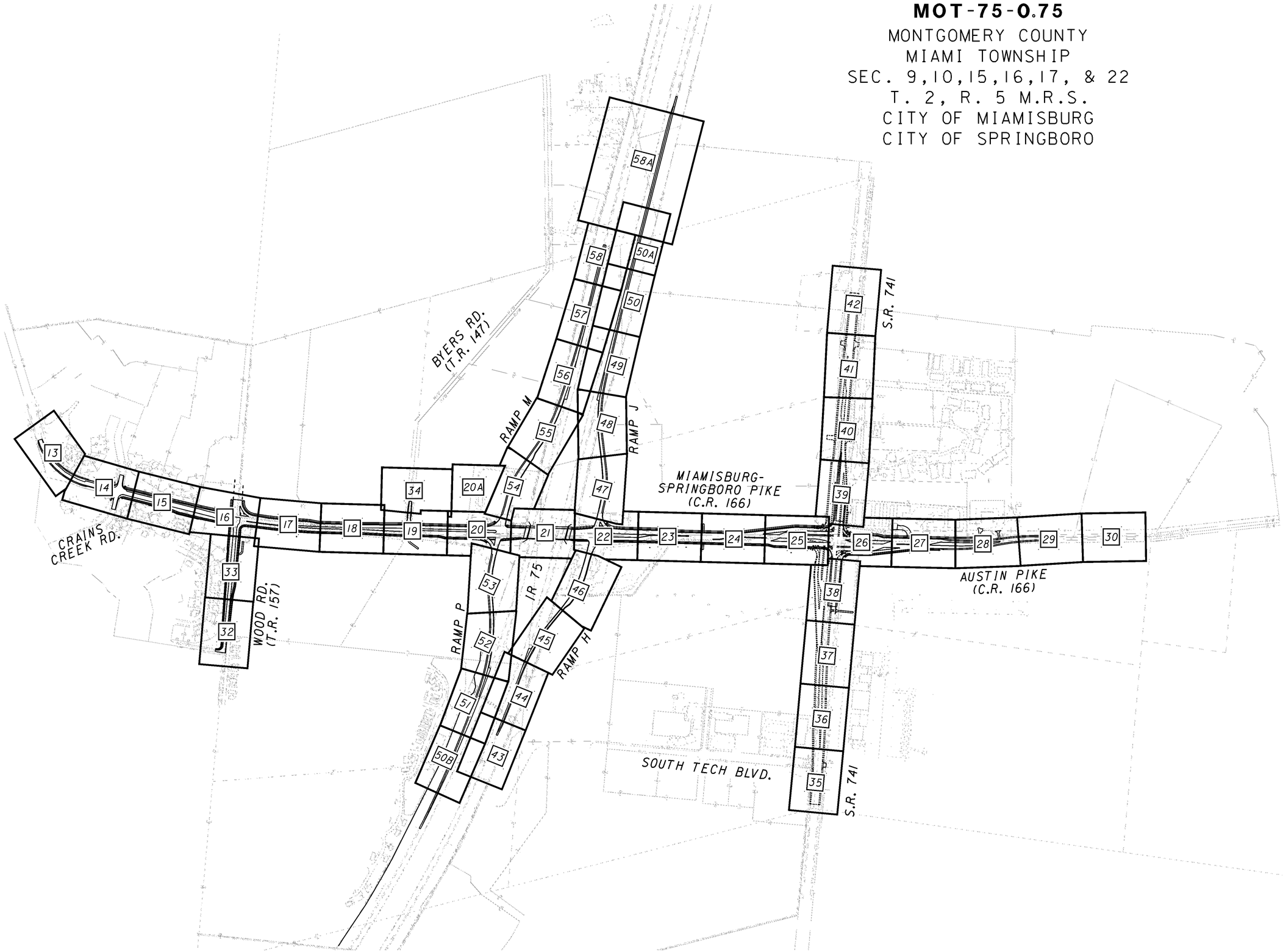

N

0 200 400 800 SCALE IN FEET

PID NO. 77246

R/W DESIGNER JAE/MRP
R/W REVIEWER RDB

RIGHT OF WAY SCHEMATIC PLAN

MOT-75-0.75

8 / 58

716 / 773

1665rs01.dgn 07-MAR-2008

TOTAL NUMBER OF :

37 OWNERSHIPS 1 OWNERSHIPS WITH STRUCTURES INVOLVED

50 PARCELS

8 TOTAL TAKES

NET RESIDUE = RECORD AREA - TOTAL PRO - NET TAKE

ALL AREAS IN ACRES

* DENOTES RIGHT OF WAY ENCROACHMENT

PARCEL NO.	OWNER	SHEET NO.	OWNERS RECORD BOOK	OWNERS RECORD PAGE	AUDITOR'S PARCEL	RECORD AREA	TOTAL P.R.O.	GROSS TAKE	P.R.O. IN TAKE	NET TAKE	STRUCTURE	NET RESIDUE LEFT	NET RESIDUE RIGHT	TYPE FUND	REMARKS AND PERSONALTY	AS ACQUIRED BOOK	AS ACQUIRED PAGE
														Federal			
1-98	NOT USED	-															
99-WDV	Speedway SuperAmerica LLC, a	16	Deed-06	039313	K45 26637 0001	1.771	0.000	0.545	0.000	0.545	N	1.226					
	Delaware limited liability company																
100-WDV	Crains Run Owners Association	13,14	Deed-02	037905	K45 26621 0015	3.531	0.000	0.227	0.000	0.227	N	3.304			2-1", 3-3" Trees, Portion of Landscape Area, Remove		
100-T		14					0.000	0.009	0.000	0.009	N				Construct Sidewalk and Grading		
101-WDV	Crains Run Owners Association	13,14	Deed-00	078096	K45 26614 0001	5.917	0.000	0.284	0.000	0.284	N				3-2", 2-3" Trees, Remove		
101-WDV1		14					0.000	0.006	0.000	0.006	N						
	Total					5.917	0.000	0.290	0.000	0.290			5.627				
101-T		14					0.000	0.011	0.000	0.011	N				Construct Sidewalk and Grading		
102-WDV	Crains Run Owners Association	14,15	Deed-06	107232	K45 26631 0010	1.351	0.000	0.120	0.000	0.120	N	1.231			3-2" Trees, Remove		
102-T		14					0.000	0.005	0.000	0.005	N						
103-WDV	Crains Run Owner Association	14,15,16	Deed-00	078096	K45 26615 0025	0.491	0.000	0.221	0.000	0.221	N	0.270			2-2", 16-3", 9-4" Trees, Portion of Landscape Area, Remove		
104	Daryl K. and Denise A. Wilson	14,15													No Take		
105-T	Keith A. Larson	15	Deed-05	011938	K45 26615 0004	0.386	0.000	0.018	0.000	0.018	N				Construct a Retaining Wall and Grading		
															166' of 6' Wood fence Disturbed		
106-T	Peter J. Beuchat	15	Deed-01	039888	K45 26615 0005	0.404	0.000	0.002	0.000	0.002	N				Construct a Retaining Wall and Grading		
107-WDV	Michael A. Burke and Loann K. Burke	15	Deed-01	074456	K45 26615 0012	0.522	0.000	0.016	0.000	0.016	N		0.506		4" Tree, Remove		
107-T		15					0.000	0.021	0.000	0.021	N				Construct a Retaining Wall and Grading		
108-WDV	Brandon L. Beach and Sharon M. Beach	15,16	Deed-04	104979	K45 26615 0013	0.361	0.000	0.086	0.000	0.086	N		0.275				
108-T		15,16					0.000	0.031	0.000	0.031	N				Construct a Retaining Wall and Grading		
109-WDV	Jason Christopher Brown and	16	Deed-01	074436	K45 26615 0014	0.524	0.000	0.048	0.000	0.048	N		0.476		5-2", 1-3" Trees, Remove		
	Christine Marie Brown																
109-T		16					0.000	0.035	0.000	0.035	N				Construct a Retaining Wall and Grading		
110-WDV	Crains Run Owners Association	15,16	Deed-06	107232	K45 28334 0018	0.355	0.000	0.297	0.000	0.297	N	0.058			4-2", 2-3" Trees, Remove		
111-WDV	Oberer Development Co.	16,17	Deed-06	024371	K45 02605 0049	22.422	0.373	0.373	0.373	0.000	N				No tax record found. Tax Map 0.452		
					K46 01623 0004		0.236	1.574	0.236	1.338	N				Calculated PRO: 0.236 Acres		
	Total					22.422	0.609	1.947	0.609	1.338			20.475		Record Area calc.: 24.568 (Deed Ac.) minus 2.146 (Outsale)		
112-WL	Nick Flora	19	Deed-02	107591	K45 02605 0017	0.097	0.026	0.097	0.026	0.071	Y				Total Take with overhead Billboard		
														Federal			

NOTE: ALL TEMPORARY PARCELS TO BE OF 24 MONTH DURATION.

NOTE: UNDER NO CIRCUMSTANCES ARE TEMPORARY EASEMENTS TO BE USED FOR STORAGE OF MATERIAL OR EQUIPMENT BY THE CONTRACTOR UNLESS NOTED OTHERWISE.

NOTE: ALL TOPOGRAPHICAL FEATURES LOCATED INSIDE THE PROPOSED RIGHT-OF-WAY ARE TO BE REMOVED UNLESS OTHERWISE NOTED.

LEGEND:
WL = FEE SIMPLE WITH LIMITATION OF ACCESS
WDV = WARRANTY DEED IN THE NAME OF BOARD OF COUNTY COMMISSIONERS OF MONTGOMERY COUNTY, OHIO
CH = CHANNEL EASEMENT
U = UTILITY EASEMENT
T = TEMPORARY EASEMENT

REV. BY	DATE	DESCRIPTION
JAE	3-7-08	Revised Parcel 111 Areas and Remarks
JAE	1-30-08	Revised Total Number of: Parcels, Total Takes
JAE	10-18-07	Revised Legend and Areas and Remarks for 111
JAE	9-25-07	Added Personality Items for 100, 101, 102, 103, 107, 109, 110

FIELD REVIEW BY: JAE/RDB DATE: 6/2007

OWNERSHIP VERIFIED BY: MRP DATE: 9/24/07

DATE COMPLETED: 9/26/07

FEDERAL PROJECT NO.

PID NO. 77246

STATE JOB NO. 478220

R/W DESIGNER JAE

R/W REVIEWER RDB

SUMMARY OF ADDITIONAL RIGHT OF WAY (PARCELS 99-112)

MOT-75-0.75

NET RESIDUE = RECORD AREA - TOTAL PRO - NET TAKE

ALL AREAS IN ACRES

* DENOTES RIGHT OF WAY ENCROACHMENT

PARCEL NO.	OWNER	SHEET NO.	OWNERS RECORD BOOK	OWNERS RECORD PAGE	AUDITOR'S PARCEL	RECORD AREA	TOTAL P.R.O.	GROSS TAKE	P.R.O. IN TAKE	NET TAKE	STRUCTURE	NET RESIDUE LEFT	NET RESIDUE RIGHT	TYPE FUND	REMARKS AND PERSONALTY	AS ACQUIRED BOOK	AS ACQUIRED PAGE
														Federal			
113-WDV	Crains Run Owner Association	16,33	Deed-02	037905	K45 26629 0008	1.203	0.000	0.576	0.000	0.576	N		0.627		3-2" Trees, Landscape Area, Block Sign, Remove		
114-WDV	Crains Run Water & Sewer District	16,33	M.F.# 99-0664	E05	K45 02605 0064	0.553	0.197	0.357	0.197	0.160	N		0.196				
114-T		16,33					0.000	0.102	0.000	0.102	N				Construct Retaining Wall, Driveway and Grading		
															143'-6' Chain Link Fence Disturbed		
115-WDV	Township of Miami, Montgomery County,	16,17,18,19	M.F.# 91-0484	B02	K45 02605 0053	25.108	0.942	2.543	0.942	1.601	N						
	State of Ohio																
115-WDV1		32,33					0.373	1.482	0.373	1.109	N						
	Total					25.108	1.315	4.025	1.315	2.710			21.083				
115-CH		18					0.000	0.288	0.000	0.288	N						
115-U		19					0.000	0.007	0.000	0.007	N				In the name of the Montgomery County		
															Transportation Improvement District		
116-WDV	Martha Laing Woodward, Trustee	17,18,19,34	M.F.# 90-0314	B06	K46 01623 0003	55.740	0.239	2.228	0.239	1.989	N						
	Robert S. Laing Jr.				K45 02605 0001		0.469	0.469	0.469	0.000	N				No tax record found. Tax Map 0.469 Acres		
	Patricia L. Stone,																
	Martha S. Laing																
	Cynthia L. Heitzman																
	Elizabeth L. Laing																
	Total					55.740	0.708	2.697	0.708	1.989		53.043					
116-U		17,18,19,34					0.000	0.246	0.000	0.246	N				In the name of the Montgomery County		
															Transportation Improvement District		
117-WL	Dayton-Montgomery County	19,20,20A	Deed-03	169184	K46 01623 0002	26.059	0.000	1.278	0.000	1.278	N						
	Port Authority				K45 02605 0003		0.072	0.072	0.072	0.000	N				No tax record found. Tax Map 0.367 Acres		
					K45 02605 0033		0.47	0.47	0.47	0.00	N				No tax record found. Tax Map 0.28 Acres		
	Total						0.540	1.818	0.540	1.278							
117-WL1		54,55,56					0.000	1.820	0.000	1.820	N						
117-WDV		19,34			K46 01623 0002		0.237	0.237	0.237	0.000	N				Existing Byers Road Right-of-Way		
					K45 02605 0003		0.017	0.017	0.017	0.000	N						
	Total						0.254	0.254	0.254	0.000							
	Grand Total					26.059	0.794	3.892	0.794	3.098		22.167					
117-U		19,20,20A,34					0.000	0.539	0.000	0.539					In the name of the Montgomery County		
															Transportation Improvement District		
117-U1		54,55,56					0.000	0.570	0.000	0.570					In the name of the Montgomery County		
															Transportation Improvement District		
														Federal			

NOTE: ALL TEMPORARY PARCELS TO BE OF 24 MONTH DURATION.

NOTE: UNDER NO CIRCUMSTANCES ARE TEMPORARY EASEMENTS TO BE USED FOR STORAGE OF MATERIAL OR EQUIPMENT BY THE CONTRACTOR UNLESS NOTED OTHERWISE.

NOTE: ALL TOPOGRAPHICAL FEATURES LOCATED INSIDE THE PROPOSED RIGHT-OF-WAY ARE TO BE REMOVED UNLESS OTHERWISE NOTED.

LEGEND:
WL = FEE SIMPLE WITH LIMITATION OF ACCESS
WDV = WARRANTY DEED IN THE NAME OF BOARD OF COUNTY COMMISSIONERS OF MONTGOMERY COUNTY, OHIO
CH = CHANNEL EASEMENT
U = UTILITY EASEMENT
T = TEMPORARY EASEMENT

REV. BY	DATE	DESCRIPTION
JAE	10-18-07	Revised Legend, 113 Remarks, 114 Sheet No. and Remarks, 116 Owners Name and Remarks, 117 Areas and Remarks
JAE	9-25-07	Added Personality Items for 113-WDV, 114-T

FIELD REVIEW BY: JAE/RDB DATE: 6/2007
OWNERSHIP VERIFIED BY: MRP DATE: 9/24/07
DATE COMPLETED: 9/26/07

FEDERAL PROJECT NO.

PID NO. 77246

STATE JOB NO. 478220

R/W DESIGNER JAE
R/W REVIEWER RDB

SUMMARY OF ADDITIONAL RIGHT OF WAY (PARCELS 113-117)

MOT-75-0.75

NET RESIDUE = RECORD AREA - TOTAL PRO - NET TAKE

ALL AREAS IN ACRES

* DENOTES RIGHT OF WAY ENCROACHMENT

PARCEL NO.	OWNER	SHEET NO.	OWNERS RECORD BOOK	OWNERS RECORD PAGE	AUDITOR'S PARCEL	RECORD AREA	TOTAL P.R.O.	GROSS TAKE	P.R.O. IN TAKE	NET TAKE	STRUCTURE	NET RESIDUE LEFT	NET RESIDUE RIGHT	TYPE FUND	REMARKS AND PERSONALTY	AS ACQUIRED BOOK	AS ACQUIRED PAGE
														Federal			
118-WL	MZM Austin Road Property, LLC,	-													Previously Acquired		
	An Ohio Limited Liability Company																
118-WDV		-													Previously Acquired		
118-U		-													Previously Acquired		
118-T		-													Previously Acquired		
119-WL	Richard E. Cramer & Glenna B.	-													Previously Acquired		
	Cramer, Trustees, or their successor(s)																
	in trust, under The Cramer Family Trust,																
	dated 8-7-03																
119-WD		-													Previously Acquired		
119-U		-													Previously Acquired		
119-T		-													Previously Acquired		
120-WL	Kendell Investments, An Ohio	-													Previously Acquired		
	General Partnership																
120-U		-													Previously Acquired		
120-UI		-													Previously Acquired		
121-WL	City of Springboro	45,46	Deed-04	132891	K45100102 0001	19.992	0.000	1.743	0.000	1.743	N		18.249				
121-U		45,46					0.000	0.489	0.000	0.489	N				In the name of Board of County		
															Commissioner's of Montgomery County, Ohio		
121-T		45,46					0.000	1.050	0.000	1.050	N				Construct a relocated channel		
122-WL	Miamisburg Congregation of	-													Previously Acquired		
	Jehovah's Witnesses																

NET RESIDUE = RECORD AREA - TOTAL PRO - NET TAKE

ALL AREAS IN ACRES

* DENOTES RIGHT OF WAY ENCROACHMENT

PARCEL NO.	OWNER	SHEET NO.	OWNERS RECORD BOOK	OWNERS RECORD PAGE	AUDITOR'S PARCEL	RECORD AREA	TOTAL P.R.O.	GROSS TAKE	P.R.O. IN TAKE	NET TAKE	STRUCTURE	NET RESIDUE LEFT	NET RESIDUE RIGHT	TYPE FUND	REMARKS AND PERSONALTY	AS ACQUIRED BOOK	AS ACQUIRED PAGE
123A-WL	MV Austin Pike Land LLC, an Ohio limited liability	48,49	Deed-06	117340	K45 02605 0039	66.7282	0.000	0.473	0.000	0.473	N			Federal			
	company, as to 50% undivided interest																
	RLG Miami LTD., an Ohio limited liability company,																
	as to 37.875% undivided interest																
	GCG Miami LTD., an Ohio limited liability company,																
	as to 7.125% undivided interest																
	KGS Miami LTD., an Ohio limited liability company,																
	as to 5% undivided interest																
123A-WLI		39,40			K45 02605 0066		0.000	0.317	0.000	0.317	N						
123A-WL2 #		39,40,41,42			K45 02605 0014		0.000	0.626	0.000	0.626	N						
					K45 02605 0036		0.000	0.101	0.000	0.101	N						
					K45 02605 0066		0.000	1.529	0.000	1.529	N						
	Total						0.000	2.256	0.000	2.256							
	Grand Total					66.7282	0.000	3.046	0.000	3.046	N	63.6822			In the name of the Montgomery County Transportation Improvement District		
123A-U		48			K45 02605 0039		0.000	0.150	0.000	0.150	N				Construct a Driveway and Grading		
123A-T #		40			K45 02605 0066		0.000	0.060	0.000	0.060	N				Construct a Driveway and Grading		
123A-TI #		41			K45 02605 0014		0.000	0.024	0.000	0.024	N						
124-WL	Victory 4 LLC, an Ohio limited liability company, an	24,25,26	Deed-05	115840	K45 100102 0003	53.549	0.000	2.687	0.000	2.687	N				2-Billboards		
	undivided 50% intrest; GCG AUSTIN LTD., an Ohio	36,37,38			K45 02605 0008		0.128	0.128	0.128	0.000	N				Tax record: 0.099 Acres		
	limited liability company, an undivided 7.5% intrest;																
	RLG AUSTIN LTD., an Ohio limited liability company,																
	an undivided 42.5% intrest																
	Total						0.128	2.815	0.128	2.687							
124-WLI #		25,37,38			K45 100102 0003		0.000	2.146	0.000	2.146	N				Overlaps all of Parcel 124-U2		
					K45 02605 0008		0.000	0.000	0.000	0.000	N						
	Total						0.000	2.146	0.000	2.146							
124-WDV		23,24			K45 100102 0003		0.000	1.194	0.000	1.194	N						
124-WDI #		36,37			K45 100102 0003		0.000	1.323	0.000	1.323	N						
					K45 02605 0008		0.000	0.000	0.000	0.000	N						
	Total						0.000	1.323	0.000	1.323							
	Grand Total					53.549	0.128	7.478	0.128	7.350		46.071					
124-U		23					0.000	0.107	0.000	0.107	N				In the name of Board of County Commissioners of Montgomery County, Ohio		
124-UI		23,24					0.000	0.137	0.000	0.137	N				In the name of Montgomery County Transportation Improvement District		
124-U2		25,38					0.000	0.164	0.000	0.164	N				In the name of Montgomery County Transportation Improvement District		
124-T		23,24					0.000	0.019	0.000	0.019	N				Construct a Driveway and Grading		
														Federal			

NOTE: ALL TEMPORARY PARCELS TO BE OF 24 MONTH DURATION.

NOTE: UNDER NO CIRCUMSTANCES ARE TEMPORARY EASEMENTS TO BE USED FOR STORAGE OF MATERIAL OR EQUIPMENT BY THE CONTRACTOR UNLESS NOTED OTHERWISE.

NOTE: ALL TOPOGRAPHICAL FEATURES LOCATED INSIDE THE PROPOSED RIGHT-OF-WAY ARE TO BE REMOVED UNLESS OTHERWISE NOTED.

NOTE: "#" = PARCELS BEING PURCHASED FOR THE PHASE II CONSTRUCTION OF THE NORTH AND SOUTH LEG OF THE PROPOSED CONTINUOUS FLOW INTERSECTION.

LEGEND:
WL = FEE SIMPLE WITH LIMITATION OF ACCESS
WDV = WARRANTY DEED IN THE NAME OF BOARD OF COUNTY COMMISSIONERS OF MONTGOMERY COUNTY, OHIO
CH = CHANNEL EASEMENT
U = UTILITY EASEMENT
T = TEMPORARY EASEMENT

REV. BY	DATE	DESCRIPTION
AJS	3-31-08	Revised 123A-WLI, 124-WL, 124-WDI; Added 123A-WL2 124-WLI, 124-U2
AJS	3-31-08	Created Sheet, Moved 123A from IIA, Added 124

FIELD REVIEW BY: JAE/RDB DATE: 6/2007
OWNERSHIP VERIFIED BY: MRP DATE: 9/24/07
DATE COMPLETED: 9/26/07

FEDERAL PROJECT NO.

PID NO. 77246

STATE JOB NO. 478220

R/W DESIGNER MAG R/W REVIEWER AJS

SUMMARY OF ADDITIONAL RIGHT OF WAY (PARCELS 123A-124)

MOT-75-0.75

NET RESIDUE = RECORD AREA - TOTAL PRO - NET TAKE

ALL AREAS IN ACRES

* DENOTES RIGHT OF WAY ENCROACHMENT

PARCEL NO.	OWNER	SHEET NO.	OWNERS RECORD BOOK	OWNERS RECORD PAGE	AUDITOR'S PARCEL	RECORD AREA	TOTAL P.R.O.	GROSS TAKE	P.R.O. IN TAKE	NET TAKE	STRUCTURE	NET RESIDUE LEFT	NET RESIDUE RIGHT	TYPE FUND	REMARKS AND PERSONALTY	AS ACQUIRED BOOK	AS ACQUIRED PAGE
														Federal			
123-WL	MV Austin Pike Land LLC, an Ohio limited liability	22,47,48	Deed-06	117341	K45 02605 0006	25.0000	0.000	3.174	0.000	3.174	N						
	company, as to 50% undivided interest				K45 02605 0039		0.000	0.744	0.000	0.744	N						
	RLG Miami LTD., an Ohio limited liability company,																
	as to 37.875% undivided interest																
	GCG Miami LTD., an Ohio limited liability company,																
	as to 7.125% undivided interest																
	KGS Miami LTD., an Ohio limited liability company,																
	as to 5% undivided interest																
	Total						0.000	3.918	0.000	3.918							
123-WL1		22,23			K45 02605 0006		0.000	0.656	0.000	0.656	N						
123-WL2		24,25,26,39			K45 02605 0006		0.125	1.728	0.125	1.603	N						
					K45 02605 0007		0.000	0.248	0.000	0.248	N						
	Total						0.125	1.976	0.125	1.851							
123-WL3#		39			K45 02605 0006		0.000	0.458	0.000	0.458							
					K45 02605 0007		0.000	0.072	0.000	0.072							
	Total						0.000	0.530	0.000	0.530							
123-WDV		23,24			K45 02605 0006		0.000	0.421	0.000	0.421	N						
	Grand Total					25.0000	0.125	7.501	0.125	7.376		17.499					
123-CH		23			K45 02605 0006		0.000	0.130	0.000	0.130	N						
123-U		22,23			K45 02605 0006		0.000	0.831	0.000	0.831	N				In the name of the Montgomery County Transportation Improvement District		
		47,48			K45 02605 0039		0.000	0.158	0.000	0.158	N						
	Total						0.000	0.989	0.000	0.989							
123-U1		23,24,25			K45 02605 0006		0.000	0.731	0.000	0.731	N				In the name of the Montgomery County Transportation Improvement District		
123-T		25			K45 02605 0006		0.000	0.029	0.000	0.029	N				Construct Sanitary Sewer		
														Federal			

NOTE: ALL TEMPORARY PARCELS TO BE OF 24 MONTH DURATION.

NOTE: UNDER NO CIRCUMSTANCES ARE TEMPORARY EASEMENTS TO BE USED FOR STORAGE OF MATERIAL OR EQUIPMENT BY THE CONTRACTOR UNLESS NOTED OTHERWISE.

NOTE: ALL TOPOGRAPHICAL FEATURES LOCATED INSIDE THE PROPOSED RIGHT-OF-WAY ARE TO BE REMOVED UNLESS OTHERWISE NOTED.

NOTE: "#" = PARCELS BEING PURCHASED FOR THE PHASE II CONSTRUCTION OF THE NORTH AND SOUTH LEG OF THE PROPOSED CONTINUOUS FLOW INTERSECTION.

LEGEND:
WL = FEE SIMPLE WITH LIMITATION OF ACCESS
WDV = WARRANTY DEED IN THE NAME OF BOARD OF COUNTY COMMISSIONERS OF MONTGOMERY COUNTY, OHIO
CH = CHANNEL EASEMENT
U = UTILITY EASEMENT
T = TEMPORARY EASEMENT

REV. BY	DATE	DESCRIPTION
AJS	5-28-08	Revised 123-WL2 includes PRO in take, Grand Total
AJS	3-31-08	Revised 123-WL2, Added 123-WL3
JAE	1-30-08	Created Sheet, Moved 123 from 11, Added 123A

FIELD REVIEW BY: JAE/RDB DATE: 6/2007
OWNERSHIP VERIFIED BY: MRP DATE: 9/24/07
DATE COMPLETED: 9/26/07

FEDERAL PROJECT NO.

PID NO. 77246

STATE JOB NO. 478220

R/W DESIGNER MAG
R/W REVIEWER AJS

SUMMARY OF ADDITIONAL RIGHT OF WAY (PARCEL 123)

MOT-75-0.75

IIA/58

720
773

1665rs04.dgn 18-FEB-2008

NET RESIDUE = RECORD AREA - TOTAL PRO - NET TAKE

ALL AREAS IN ACRES

* DENOTES RIGHT OF WAY ENCROACHMENT

PARCEL NO.	OWNER	SHEET NO.	OWNERS RECORD BOOK	OWNERS RECORD PAGE	AUDITOR'S PARCEL	RECORD AREA	TOTAL P.R.O.	GROSS TAKE	P.R.O. IN TAKE	NET TAKE	STRUCTURE	NET RESIDUE LEFT	NET RESIDUE RIGHT	TYPE FUND	REMARKS AND PERSONALTY	AS ACQUIRED BOOK	AS ACQUIRED PAGE
														Federal			
125-WL	T. and D. Smith Company, LTD.	26,39	M.F #96-0062	C03	K45 23025 0001	5.663	0.000	0.044	0.000	0.044	N				Landscape Area, Remove		
125-PRW		26					0.000	0.000	0.000	0.000	N				Access Rights Restricted		
125-WL1		26,27					0.432	0.432	0.432	0.000	N				Aluminum Yard Sign, Remove		
125-WL2#		39					0.000	0.079	0.000	0.079							
	Total					5.663	0.432	0.555	0.432	0.123			5.108				
125-T #		39					0.000	0.117	0.000	0.117	N				New Detention Basin Wall and Grading		
															231'-6' Iron Fence Disturbed		
125-T1		26,27					0.000	0.183	0.000	0.183	N				Construct Driveway and Grading		
															162'-6' Iron Fence Disturbed		
126-LA	The City of Dayton	26,27,38	M.F.#74-023	D06	K45 02602 0015	56.211	0.203	2.693	0.203	2.490	N				Total of 754' of 6' Chain Link Fence Disturbed		
126-PRW		37,38			K45 02602 0015	56.211	0.000	0.000	0.000	0.000	N				Access Rights Restricted		
					K45 02602 0010	96.729	0.000	0.000	0.000	0.000	N				Access Rights Restricted		
	Total						0.000	0.000	0.000	0.000							
126-SHV		27,28,29			K45 02602 0015	56.211	0.599	2.831	0.599	2.232	N				Total of 1044' of 6' Chain Link Fence Remove		
	Grand Total					152.940	0.802	5.524	0.802	4.722			147.416				
126-CH #		35,36			K45 02602 0010	96.729	0.000	0.023	0.000	0.023	N				Increase Existing Channel Easement		
126-CH1 #		37,38			K45 02602 0015	56.211	0.000	0.004	0.000	0.004	N				Increase Existing Channel Easement		
					K45 02602 0010	96.729	0.000	0.038	0.000	0.038	N						
	Total						0.000	0.042	0.000	0.042							
126-CH2		26,38			K45 02602 0015	56.211	0.000	0.810	0.000	0.810	N				Increase Existing Channel Easement		
126-U		26,27			K45 02602 0015	56.211	0.000	0.157	0.000	0.157	N				In the name of Board of County Commissioner's of Montgomery County, Ohio		
126-T		38			K45 02602 0015	56.211	0.000	0.046	0.000	0.046	N				Construct Driveway and Grading		
														Federal			

NOTE: ALL TEMPORARY PARCELS TO BE OF 24 MONTH DURATION.

NOTE: UNDER NO CIRCUMSTANCES ARE TEMPORARY EASEMENTS TO BE USED FOR STORAGE OF MATERIAL OR EQUIPMENT BY THE CONTRACTOR UNLESS NOTED OTHERWISE.

NOTE: ALL TOPOGRAPHICAL FEATURES LOCATED INSIDE THE PROPOSED RIGHT-OF-WAY ARE TO BE REMOVED UNLESS OTHERWISE NOTED.

NOTE: "#" = PARCELS BEING PURCHASED FOR THE PHASE II CONSTRUCTION OF THE NORTH AND SOUTH LEG OF THE PROPOSED CONTINUOUS FLOW INTERSECTION.

LEGEND:
WL = FEE SIMPLE WITH LIMITATION OF ACCESS
WDV = WARRANTY DEED IN THE NAME OF BOARD OF COUNTY COMMISSIONERS OF MONTGOMERY COUNTY, OHIO
CH = CHANNEL EASEMENT
U = UTILITY EASEMENT
T = TEMPORARY EASEMENT
LA = LIMITED ACCESS EASEMENT
PRW = PROPERTY RIGHT FEE SIMPLE
SHV = STANDARD HIGHWAY EASEMENT IN THE NAME OF BOARD OF COUNTY COMMISSIONERS OF MONTGOMERY COUNTY, OHIO

REV. BY	DATE	DESCRIPTION
AJS	3-31-08	Removed 124 From Sheet; Revised 125-WL; Added 125-WL2
JAE	2-18-08	Revised 124 Grand Totals
JAE	10-18-07	Revised Legend; 128-T Remarks; 132 Owner Name; 136-T Remarks
JAE	9-25-07	Added Personality Items for 130, 131, 132, 133, 135

FIELD REVIEW BY: JAE/RDB DATE: 6/2007
OWNERSHIP VERIFIED BY: MRP DATE: 9/24/07
DATE COMPLETED: 9/26/07

FEDERAL PROJECT NO.

PID NO. 77246

STATE JOB NO. 478220

R/W DESIGNER MAG R/W REVIEWER AJS

SUMMARY OF ADDITIONAL RIGHT OF WAY (PARCELS 125-126)

MOT-75-0.75

NET RESIDUE = RECORD AREA - TOTAL PRO - NET TAKE

ALL AREAS IN ACRES

* DENOTES RIGHT OF WAY ENCROACHMENT

PARCEL NO.	OWNER	SHEET NO.	OWNERS RECORD BOOK	OWNERS RECORD PAGE	AUDITOR'S PARCEL	RECORD AREA	TOTAL P.R.O.	GROSS TAKE	P.R.O. IN TAKE	NET TAKE	STRUCTURE	NET RESIDUE LEFT	NET RESIDUE RIGHT	TYPE FUND	REMARKS AND PERSONALTY	AS ACQUIRED BOOK	AS ACQUIRED PAGE
														Federal			
127-WDV	Board of Trustees of Miami Township,	28,29	M.F.#95-0248	D05	K45 02602 0003	63.794	0.233	0.449	0.233	0.216	N				Record Area - Deed Area minus Calculated Area		
	Montgomery County, Ohio				K45 02602 0060	4.271	0.222	0.365	0.222	0.143	N				Record Area Calculated		
	Total					68.065	0.455	0.814	0.455	0.359		67.251					
127-T		28,29			K45 02602 0003	63.794	0.000	0.250	0.000	0.250	N				Construct Two Driveways, Temporary		
					K45 02602 0060	4.271	0.000	0.169	0.000	0.169	N				Pavement, and Grading		
	Total						0.000	0.419	0.000	0.419							
128-T	City of Dayton	29,30	M.F.#83-011	B03	K45 02602 0058	23.744	0.000	0.091	0.000	0.091	N				Construct Temporary Pavement, and Grading		
129-WL	Sun Secured Financing LLC,	51,52	Deed-04	049478	K45 02605 0063	52.737	0.000	0.103	0.000	0.103	N	52.634			Record area different between both Auditor's		
	a Michigan limited liability company														web sites		
129-T		32					0.000	0.022	0.000	0.022	N				Construct a Sidewalk		
130-WDV	Crains Run Owners Association	32	Deed-02	037905	K45 26628 0024	0.511	0.000	0.284	0.000	0.284	N	0.227			5-4" Trees, Remove		
131-WDV	The Drees Company	32	Deed-02	053681	K45 26628 0005	0.362	0.000	0.070	0.000	0.070	N	0.292			6-4" Trees, Remove		
132-WDV	Harvey C. Grafton & Janice L. Grafton	32	Deed-06	077834	k45 26628 0004	0.338	0.000	0.056	0.000	0.056	N	0.282			Plat Book Information Mislabeled		
132-T		32					0.000	0.041	0.000	0.041	N				Construct Retaining Wall and Grading		
															101' of 4' Wood fence Disturbed; 3" Tree, Remove		
133-WDV	Michael L. Simmons	32	Deed-04	088902	K45 26628 0003	0.272	0.000	0.035	0.000	0.035	N	0.237					
133-T		32					0.000	0.026	0.000	0.026	N				Construct a Retaining Wall and Grading; 3-2" Tree Remove		
134-WDV	Nicholas R. Davis and	32,33	Deed-06	029497	K45 26628 0002	0.263	0.000	0.037	0.000	0.037	N	0.226					
	Jennifer L. Davis																
134-T		32,33					0.000	0.022	0.000	0.022	N				Construct a Retaining Wall and Grading		
															136' of 4' Wood fence Disturbed		
135-WDV	Nancy E. Bradshaw	33	Deed-04	040132	K45 26628 0001	0.263	0.000	0.040	0.000	0.040	N	0.223			1-3", 2-4" Trees, Remove		
135-T		33					0.000	0.021	0.000	0.021	N				Construct a Retaining Wall and Grading		
															3-3", 1-4" Tree, Remove		
136-WDV	The Drees Company	33	Deed-03	021999	K45 26629 0005	0.283	0.000	0.054	0.000	0.054	N	0.229					
136-T		33					0.000	0.051	0.000	0.051	N				Construct a Retaining Wall, Grading, and Install New Storm Sewer		
														Federal			

NOTE: ALL TEMPORARY PARCELS TO BE OF 24 MONTH DURATION.

NOTE: UNDER NO CIRCUMSTANCES ARE TEMPORARY EASEMENTS TO BE USED FOR STORAGE OF MATERIAL OR EQUIPMENT BY THE CONTRACTOR UNLESS NOTED OTHERWISE.

NOTE: ALL TOPOGRAPHICAL FEATURES LOCATED INSIDE THE PROPOSED RIGHT-OF-WAY ARE TO BE REMOVED UNLESS OTHERWISE NOTED.

NOTE: "#" = PARCELS BEING PURCHASED FOR THE PHASE II CONSTRUCTION OF THE NORTH AND SOUTH LEG OF THE PROPOSED CONTINUOUS FLOW INTERSECTION.

LEGEND:
WL = FEE SIMPLE WITH LIMITATION OF ACCESS
WDV = WARRANTY DEED IN THE NAME OF BOARD OF COUNTY COMMISSIONERS OF MONTGOMERY COUNTY, OHIO
CH = CHANNEL EASEMENT
U = UTILITY EASEMENT
T = TEMPORARY EASEMENT

REV. BY	DATE	DESCRIPTION
JAE	11-07-07	Added Ex. Channel Easmt. area to Remarks, 140-WL
JAE	10-18-07	Revised Legend, 114-WL Owners Record, 138 Remarks
JAE	9-25-07	Added Personality Items for 137-T

FIELD REVIEW BY: JAE/RDB DATE: 6/2007
OWNERSHIP VERIFIED BY: MRP DATE: 9/24/07
DATE COMPLETED: 9/26/07

FEDERAL PROJECT NO.

PID NO. 77246

STATE JOB NO. 478220

R/W DESIGNER JAE
R/W REVIEWER RDB

SUMMARY OF ADDITIONAL RIGHT OF WAY (PARCELS 137-150)

MOT-75-0.75

NET RESIDUE = RECORD AREA - TOTAL PRO - NET TAKE

ALL AREAS IN ACRES

* DENOTES RIGHT OF WAY ENCROACHMENT

PARCEL NO.	OWNER	SHEET NO.	OWNERS RECORD BOOK	OWNERS RECORD PAGE	AUDITOR'S PARCEL	RECORD AREA	TOTAL P.R.O.	GROSS TAKE	P.R.O. IN TAKE	NET TAKE	STRUCTURE	NET RESIDUE LEFT	NET RESIDUE RIGHT	TYPE FUND	REMARKS AND PERSONALTY	AS ACQUIRED BOOK	AS ACQUIRED PAGE
														Federal			
137-WDV	Victor J Ragucci, Jr. and	33	Deed-06	051226	K45 26629 0004	0.375	0.000	0.075	0.000	0.075	N	0.300					
	Rebecca D. Ragucci																
137-T		33					0.000	0.043	0.000	0.043	N				Construct a Retaining Wall and Grading and Install New Storm Sewer; 4-1" Tree, Landscape Area, Remove		
138-WDV	Gary A. Burlingame and	33	Deed-02	056996	K45 26629 0003	0.438	0.000	0.035	0.000	0.035	N	0.403					
	Stacia R. Burlingame																
138-T		33					0.000	0.023	0.000	0.023	N				Construct a Retaining Wall and Grading		
139-WDV #	Helvetia, LTD., an Ohio limited	35,36	M.F.# 98-0145	E02	K45100107 0001	4.000	0.000	0.433	0.000	0.433	N	3.567			Contains 0.078 Acres of Ex.Channel Easement		
	liability company														Landscape Area, Remove		
140-WL #	The T. & D. Smith Company, LTD.	39	Deed-07	028789	K45 02602 0021	4.458	0.000	0.050	0.000	0.050	N		4.408		Contains 0.018 Ac. of Ex. Channel Easmt.		
141	Joseph B. and Alida I. Osorio														NO TAKE		
142	Springboro Green Limited, an Ohio														NO TAKE		
	Limited Partnership																
143-WL #	Mount Adams Properties LLC,	42	Deed-06	117339	K45 02605 0038	49.7219	0.000	0.070	0.000	0.070	N		49.652		Contains 0.062 Acres of Ex.Channel Easement		
	an Ohio limited liability company																
144-WL	Toga Investments, LTD, an Ohio	56,57	Deed-99	056783	K46 01623 0010	10.000	0.000	0.193	0.000	0.193	N	9.807					
	limited liability company																
145	City of Dayton														NO TAKE (Waldruhe Park)		
146	Riverain LTD. Partnership														NO TAKE		
147-WL	Board of County Commissioners	24	M.F.# 91-0276	All	K45 02605 0059	0.629	0.140	0.140	0.140	0.000	N				Miamisburg Springboro Pike		
	of Montgomery County, Ohio														Existing Right-of-Way		
148-WL	Board of County Commissioners	-													Previously Acquired		
	of Montgomery County, Ohio																
149-WL	Charles W. Cramer and	-													Previously Acquired		
	Georgia L. Cramer																
150-WL	Charles W. Cramer and	-													Previously Acquired		
	Georgia L. Cramer																
150-WLI		-													Previously Acquired		
151-WL	Loran Smith	-													Previously Acquired		
151-WLI		-													Previously Acquired		
														Federal			

NOTE: ALL TEMPORARY PARCELS TO BE OF 24 MONTH DURATION.

NOTE: UNDER NO CIRCUMSTANCES ARE TEMPORARY EASEMENTS TO BE USED FOR STORAGE OF MATERIAL OR EQUIPMENT BY THE CONTRACTOR UNLESS NOTED OTHERWISE.

NOTE: ALL TOPOGRAPHICAL FEATURES LOCATED INSIDE THE PROPOSED RIGHT-OF-WAY ARE TO BE REMOVED UNLESS OTHERWISE NOTED.

NOTE: "#" = PARCELS BEING PURCHASED FOR THE PHASE II CONSTRUCTION OF THE NORTH AND SOUTH LEG OF THE PROPOSED CONTINUOUS FLOW INTERSECTION.

LEGEND:
WL = FEE SIMPLE WITH LIMITATION OF ACCESS
WDV = WARRANTY DEED IN THE NAME OF BOARD OF COUNTY COMMISSIONERS OF MONTGOMERY COUNTY, OHIO
CH = CHANNEL EASEMENT
U = UTILITY EASEMENT
T = TEMPORARY EASEMENT

REV. BY	DATE	DESCRIPTION
JAE	1-30-08	Moved 151 from 12C to 12B
JAE	10-18-07	Revised Legend, 157 Areas and Remarks
JAE	6-28-07	Revised 156 Remarks

FIELD REVIEW BY: JAE/RDB DATE: 6/2007
OWNERSHIP VERIFIED BY: MRP DATE: 9/24/07
DATE COMPLETED: 9/26/07

FEDERAL PROJECT NO.

PID NO. 77246

STATE JOB NO. 478220

R/W DESIGNER JAE
R/W REVIEWER RDB

SUMMARY OF ADDITIONAL RIGHT OF WAY (PARCELS 151-163)

MOT-75-0.75

12B / 58

723
773

NET RESIDUE = RECORD AREA - TOTAL PRO - NET TAKE

ALL AREAS IN ACRES

* DENOTES RIGHT OF WAY ENCROACHMENT

PARCEL NO.	OWNER	SHEET NO.	OWNERS RECORD BOOK	OWNERS RECORD PAGE	AUDITOR'S PARCEL	RECORD AREA	TOTAL P.R.O.	GROSS TAKE	P.R.O. IN TAKE	NET TAKE	STRUCTURE	NET RESIDUE LEFT	NET RESIDUE RIGHT	TYPE FUND	REMARKS AND PERSONALTY	AS ACQUIRED BOOK	AS ACQUIRED PAGE
														Federal			
152-WL	Board of County Commissioners	23	M.F.# 91-0276	B09	K45 02605 0057	0.827	0.211	0.211	0.211	0.000	N				Miamisburg Springboro Pike Existing Right-of-Way		
	of Montgomery County, Ohio																
152-WL1		24					0.139	0.139	0.139	0.000	N				Miamisburg Springboro Pike Existing Right-of-Way		
	Total					0.827	0.350	0.350	0.350	0.000		0.477					
153-WL	Loran E. Smith and	-													Previously Acquired		
	Amelia L. Smith																
154-WL	Loran E. Smith and	-													Previously Acquired		
	Amelia L. Smith																
155-WL	Edward Woodward and	-													Previously Acquired		
	Edith Woodward																
156-WL	Virgil A. McCabe	21,47	1911	562	K45 02605 0024	5.08	5.08	5.08	5.08	0.000	N				Underlying ownership within existing right-of-way		
		48,54,55													Tax Map 5.08 Ac.; Original Description of 4.89 Ac. + 0.19 Ac. (PRO)		
156-WL1		21,22,23	1911	561	K45 02605 0023	1.07	1.07	1.07	1.07	0.000	N				Underlying ownership within existing right-of-way		
															Tax Map 1.07 Ac.; Original Description of 0.71 Ac. + 0.36 Ac. (PRO)		
157-WL	L. Pearl Long and	48-50,50A,	500	94	K45 02605 0033	24.28	18.54	18.54	18.54	0.000	N				Underlying ownership within existing right-of-way		
	Clyde C. Long	54-58			K45 02606 0024		5.74	5.74	5.74	0.000	N				No tax record found. Tax Map 18.54 Acres and 5.656 Acres		
	Total						24.28	24.28	24.28	0.000							
158-WL	Henry N. Hollencamp, Trustee of	43,44,50B,	491	290	K45 02605 0021	10.03	10.03	10.03	10.03	0.000	N				Underlying ownership within existing right-of-way		
	and for John G. Gephart	51,52													No tax record found. Tax Map 10.03 Acres		
159-WL	Elizabeth Allen Doan	44	1922	695	K45 02605 0031	0.04	0.04	0.04	0.04	0.000	N				Underlying ownership within existing right-of-way. No tax record		
160-WL	Richard E. Cramer and	-													Previously Acquired		
	Glenna B. Cramer																
161-WL	Horst E. Glagowski and	49,50,50A	1911	551	K45 02605 0022	2.87	2.87	2.87	2.87	0.000	N				Underlying ownership within existing right-of-way		
	Jo Ann M. Glagowski														No tax record found. Tax Map 2.87 Acres		
162-WL *	State of Ohio	37,38	M.F.# 78-638	D08	K45 02602 0050	2.930	0.588	0.588	0.588	0.000	N		2.342		No tax record found. Tax Map 2.930 Acres		
			M.F.# 80-177	A01	K45 02605 0045	2.002	0.440	0.440	0.440	0.000	N	1.562					
			M.F.# 81-014	B06	K45 02605 0051	0.074	0.074	0.074	0.074	0.000	N	0.000			No tax record found. Tax Map 0.074 Acres		
	Total						1.102	1.102	1.102	0.000							
163-WL	State of Ohio	26	M.F.# 80-148	B03	K45 02602 0048	0.434	0.434	0.434	0.434	0.000	N				No tax record found. Tax Map 0.434 Acres		
			M.F.# 78-638	D04	K45 02602 0053	0.390	0.390	0.390	0.390	0.000	N				No tax record found. Tax Map 0.390 Acres		
	Total						0.824	0.824	0.824	0.000							
164-WL	State of Ohio	25,26	M.F.# 78-703	E09	K45 02605 0042	0.277	0.277	0.277	0.277	0.000	N				No tax record found. Tax Map 0.277 Acres		
			M.F.# 81-014	B06	K45 02605 0052	0.488	0.488	0.488	0.488	0.000	N				No tax record found. Tax Map 0.488 Acres		
			M.F.# 81-556	E04	K45 02605 0055	0.138	0.138	0.138	0.138	0.000	N				No tax record found. Tax Map 0.138 Acres		
	Total					0.903	0.903	0.903	0.903	0.000							
														Federal			

NOTE: ALL TEMPORARY PARCELS TO BE OF 24 MONTH DURATION.

NOTE: UNDER NO CIRCUMSTANCES ARE TEMPORARY EASEMENTS TO BE USED FOR STORAGE OF MATERIAL OR EQUIPMENT BY THE CONTRACTOR UNLESS NOTED OTHERWISE.

NOTE: ALL TOPOGRAPHICAL FEATURES LOCATED INSIDE THE PROPOSED RIGHT-OF-WAY ARE TO BE REMOVED UNLESS OTHERWISE NOTED.

NOTE: "#" = PARCELS BEING PURCHASED FOR THE PHASE II CONSTRUCTION OF THE NORTH AND SOUTH LEG OF THE PROPOSED CONTINUOUS FLOW INTERSECTION.

LEGEND:
WL = FEE SIMPLE WITH LIMITATION OF ACCESS
WDV = WARRANTY DEED IN THE NAME OF BOARD OF COUNTY COMMISSIONERS OF MONTGOMERY COUNTY, OHIO
CH = CHANNEL EASEMENT
U = UTILITY EASEMENT
T = TEMPORARY EASEMENT

REV. BY	DATE	DESCRIPTION
AJS	3-31-08	Revised 162-WL
JAE	1-30-08	Moved 151 to 12B, Added 164-WL
JAE	10-18-07	Revised Legend, 157 Areas and Remarks
JAE	6-28-07	Revised 156 Remarks

FIELD REVIEW BY: JAE/RDB DATE: 6/2007
OWNERSHIP VERIFIED BY: MRP DATE: 9/24/07
DATE COMPLETED: 9/26/07

FEDERAL PROJECT NO.
STATE JOB NO. 78220
PID NO. 77246
HORIZONTAL SCALE IN FEET
R/W DESIGNER MAG
R/W REVIEWER AJS

SUMMARY OF ADDITIONAL RIGHT OF WAY (PARCELS 152-164)

MOT-75-0.75

12C / 58

724
773

ALL AREAS IN ACRES

PARCEL NO.	OWNER	OVERLAP AREA
99-WDV	Speedway SuperAmerica LLC, a	0.078
	Delaware limited liability company	
100-WDV	Crains Run Owners Association	0.225
101-WDV1	Crains Run Owners Association	0.004
102-WDV	Crains Run Owners Association	0.069
103-WDV	Crains Run Owner Association	0.008
110-WDV	Crains Run Owners Association	0.048
111-WDV	Oberer Development Co.	0.041
115-WDV	Township of Miami, Montgomery County,	0.480
	State of Ohio	
115-CH		0.023
115-U		0.002
116-WDV	Martha Laing Woodward, Trustee	0.372
	Robert S. Laing Jr.	
	Patricia L. Stone,	
	Martha S. Laing	
	Cynthia L. Heitzman	
	Elizabeth L. Laing	
117-WL	Dayton-Montgomery County	0.232
	Port Authority	
117-WL1		0.112
117-U		0.077
117-U1		0.004
121-WL	City of Springboro	0.546
121-U		0.074

PARCEL NO.	OWNER	OVERLAP AREA
123-WL1	MV Austin Pike Land LLC, an Ohio limited liability	0.005
	company, as to 50% undivided interest	
	RLG Miami LTD., an Ohio limited liability company,	
	as to 37.875% undivided interest	
	GCG Miami LTD., an Ohio limited liability company,	
	as to 7.125% undivided interest	
	KGS Miami LTD., an Ohio limited liability company,	
	as to 5% undivided interest	
123-WL2		0.763
NOTE:	0.030 Ac. of utility easement contained within exist.	
	channel easement	
123-WL3		0.088
123-WDV		0.177
123A-WL1	MV Austin Pike Land LLC, an Ohio limited liability	0.141
	company, as to 50% undivided interest	
	RLG Miami LTD., an Ohio limited liability company,	
	as to 37.875% undivided interest	
	GCG Miami LTD., an Ohio limited liability company,	
	as to 7.125% undivided interest	
	KGS Miami LTD., an Ohio limited liability company,	
	as to 5% undivided interest	
NOTE:	0.092 Ac. of utility easement contained within exist.	
	channel easement	0.005
123A-WL2		1.422
NOTE:	0.047 Ac. of utility easement contained within exist.	
	channel easement	
124-WDV	Victory 4 LLC, an Ohio limited liability company, an	0.109
	undivided 50% intrest; GCG AUSTIN LTD., an Ohio	
	limited liability company, an undivided 7.5% intrest;	
	RLG AUSTIN LTD., an Ohio limited liability company,	
	an undivided 42.5% intrest	
124-WL		0.659
NOTE:	0.665 Ac. of utility easement contained within exist.	
	channel easement	
124-WL1		0.554
NOTE:	All of Parcel 124-U2 is contained within Parcel 124-WL1.	
	0.047 Ac. of utility easement contained within exist.	
	channel easement	
124-WD1		0.661
NOTE:	0.210 Ac. of utility easement contained within exist.	
	channel easement	
124-U2		0.069

PARCEL NO.	OWNER	OVERLAP AREA
125-WL	T. and D. Smith Company, LTD.	0.081
NOTE:	0.028 Ac. of utility easement contained within exist.	
	channel easement	
125-WL1		0.218
125-WL2		0.084
NOTE:	0.015 Ac. of utility easement contained within exist.	
	channel easement	
126-LA	The City of Dayton	0.376
126-SHV		0.251
126-CH		0.021
126-CH1		0.018
126-CH2		0.185
127-WDV	Board of Trustees of Miami Township,	0.359
	Montgomery County, Ohio	
129-WL	Sun Secured Financing LLC,	0.103
	a Michigan limited liability company	
130-WDV	Crains Run Owners Association	0.284
131-WDV	The Drees Company	0.032
132-WDV	Harvey C. Grafton & Janice L. Grafton	0.001
139-WDV	Helvetia, LTD., an Ohio limited	0.308
	liability company	
NOTE:	0.079 Ac. of utility easement contained within exist.	
	channel easement	
140-WL	The T. & D. Smith Company, LTD.	0.050
143-WL	Mount Adams Properties LLC,	0.005
	an Ohio limited liability company	
144-WL	Toga Investments, LTD, an Ohio	0.049
162-WL	State of Ohio	0.221

REV. BY	DATE	DESCRIPTION
AJS	5-2-08	Revised 123-WL2, 123-WL3, 123A-WL1, 123A-WL2,
		124-WL, 124-WL1, 124-U2, 124-WD1, 125-WL, 125-WL1,
		125-WL2, 126-LA, 126-SHV, 162-WL
JAE	1-30-08	Added 123, 123A, 143
JAE	11-07-07	Created Sheet

DATE COMPLETED 11-07-07

FEDERAL PROJECT NO.

PID NO. 77246

STATE JOB NO. 47822O

R/W DESIGNER MAG R/W REVIEWER AJS

UTILITY OVERLAP TABLE

MOT-75-0.75

12D / 58

725 / 773

MONTGOMERY COUNTY
MIAMI TOWNSHIP
SEC. 22, T. 2, R. 5 M.R.S.

CURVE	RADIUS	CHORD LENGTH	CHORD BEARING
(A)	527.77'	529.37'	N45°58'37"W

CRAIN'S RUN SECTION THREE
BOOK 179 PG. 32

LOT 99

LOT 90

LOT 91

Gregory M. Stall
10243 Feather Ct.
K45-26621-0006

Michael G. Lund
10251 Feather Ct.
K45-26621-0007

100

Crains Run Owners Association
Miamisburg Springboro Rd.
K45-26621-0015

RETENTION POND

BEGIN WORK STA. 107+00

BEGIN ACQUISITION STA. 107+00.00

Board of County Commissioners of Montgomery County, Ohio M.F.# 99-0622 C09

Park Bench

Site Line Easement Book 179 Pg. 32

10' Vectren Energy Delivery Of Ohio Inc. M.F.# 01-0278 E07

10' Easement Book 179 Pg. 32

100-WDV

107+00.00
47.07 LT.

38.85'
N15°52'35"W

S 16°17'13" E

107+00

P.C. Sta.
107+25.53

107+39.96
46.63' LT.

108+00

108+50.00
50.00' LT.

109+00.00
62.00' LT.

46.90'
S45°17'50"E

139.65'
S22°19'03"E

CONSTRUCTION LIMITS

110+30.00
52.00' LT.

117.91'
S34°11'58"E

70.31'
S48°52'08"E

120.27'
S59°16'12"E

111+07.00
52.00' LT.

MATCH LINE STA. 112+00 SEE SHEET 14

111+00

110+00 M-S PIKE CURVE NO. 1

℄ CONSTRUCTION & PROP. R/W
MIAMISBURG-SPRINGBORO PIKE

℄ EXISTING R/W, M-S PIKE

CONSTRUCTION LIMITS

111+97.65
52.03' RT.

Time Warner Fiber (Abandoned)

SBC Fiber

SBC Copper

MCI Fiber

Board of County Commissioners of Montgomery County, Ohio M.F.# 99-0622 C09

Crains Run Owners Association
10333 Miamisburg Springboro Rd.
K45-26614-0001

LOT 26

CRAIN'S RUN SECTION ONE
BOOK 177 PG. 11

Stanze Kellie
10122 Miamisburg Springboro Rd.
K45-02608-0006

Fence Post (Typ.)

Dense Vegetation

WOOD DECK

DECORATIVE BLOCK WALL

BRICK PAVERS

5' VINYL

SHRUB

LSA

Asph.

Gravel

Ornamental Conc.

6" Sweet Gum

18" Maple

18" Blue Spruce

18"

#10118

#10122

M-S PIKE CURVE NO. 1
P.I. STA. = 110+71.15
Δ = 59°37'49" (LT)
Dc = 9°30'00"
R = 603.11'
T = 345.62'
L = 627.69'
E = 92.01'

STRUCTURE KEY

- RESIDENTIAL
- STRUCTURE REMOVED
- COMMERCIAL

REV. BY	DATE	DESCRIPTION

DATE COMPLETED: 9/26/07

SCALE IN FEET (0, 10, 20, 40)

PID NO. 77246

R/W DESIGNER JAE/MRP
R/W REVIEWER RDB

MIAMISBURG-SPRINGBORO PIKE PLAN
STA. 107+60 TO STA. 112+00

MOT-75-0.75

13 / 58

726
773

MONTGOMERY COUNTY
MIAMI TOWNSHIP
SEC. 22, T. 2, R. 5 M.R.S.

Bruce W. and Brandy R. Davis
10250 Feather Ct.
K45-26621-0009

LOT 93

CRAIN'S RUN SECTION THREE
BOOK 179 PG. 32

Michael G. Lund
10251 Feather Ct.
K45-26621-0007

Marc S. Hawkey
10258 Feather Ct.
K45-26621-0008

LOT 92

LOT 91

Site Line Easement
Book 179 Pg. 32

ES ESMT

END WORK
STA. 21+50.00

100 Dense Vegetation

Crains Run Owners Association Miamisburg-Springboro Rd.
K45-26621-0015

LOT 99

CONSTRUCTION LIMITS

U ESMT

10' Storm Easemetn

10' Vectren Energy Delivery of Ohio Inc.
M.F.# 01-0278 E07

Crains Run Owners Association
Crains Creek Rd.
K45-26621-0010

10' The Ohio Bell Telephone Company Dba Sbc Ameritech Ohio
Ease-02-140670 0004

Emergency Water Tie-in

Time Warner Coaxial

CRAIN'S RUN SECTION SIX
BOOK 185 PG. 23

LOT 175

Block wall with Stone Facade D.N.D.

Block Sign with Stone Facade D.N.D.

Utility Cabnets D.N.D.

5-SteelPost with Braces D.N.D.

LSA D.N.D.

Asph.

SURVEY CONTROL

CONST. LIMITS

SBC Copper

SBC Fiber

Time Warner Fiber

(Abandoned) Ameritech

MCI Fiber

10' Easement

10' Storm Easement

Dense Vegetation

Wood Gazebo D.N.D.

Block wall with Stone Facade D.N.D.

LOT 26

CRAIN'S RUN SECTION ONE
BOOK 177 PG. 11

LOT 27

LOT 3

Crains Run Owners Association
10333 Miamisburg-Springboro Rd.
K45-26614-0001

Crains Run Owners Association
Crains Creek Rd.
K45-26615-0025

Daryl K. and Denise A. Wilson
10285 Cotinga Way
K45-26615-0003

10' Easement

CRAIN'S RUN SECTION ONE
BOOK 177 PG. 11

SAVE

CATV

Wood

M-S PIKE CURVE NO. 1

113+00 114+00 115+00 116+00 117+00

P.T. Sta. 113+53.22

S 75°55'02" E

℄ EXISTING R/W,

℄ CONSTRUCTION & PROP. R/W MIAMISBURG-SPRINGBORO PIKE

STA. 116+14.25 ℄ MIAMISBURG-SPRINGBORO PIKE=
STA. 20+00.00 ℄ CRAINS CREEK ROAD

℄ CONSTRUCTION CRAINS CREEK ROAD N 13°54'55" E

MATCH LINE STA. 112+00 SEE SHEET 13

MATCH LINE STA. 117+50 SEE SHEET 15

BEGIN WORK STA. 18+35.00

NOTE:
D.N.D. = Do not disturb

STRUCTURE KEY

- RESIDENTIAL
- STRUCTURE REMOVED
- COMMERCIAL

M-S PIKE CURVE NO. 1
P.I. STA. = 110+71.15
Δ = 59°37'49" (LT)
Dc = 9°30'00"
R = 603.11'
T = 345.62'
L = 627.69'
E = 92.01'

CURVE	RADIUS	CHORD LENGTH	CHORD BEARING
Ⓐ	527.77'	529.37'	N45°58'37"W
Ⓑ	19.74'	27.94'	S58°52'56"W
Ⓒ	617.77'	131.84'	S69°57'06"E
Ⓓ	20.74'	27.83'	S33°56'17"E
Ⓔ	19.88'	26.96'	N33°23'04"W
Ⓕ	30.00'	42.50'	S58°58'54"W
Ⓖ	20.00'	28.70'	N58°03'41"E

SCALE IN FEET 0 10 20 40

PID NO. 77246

R/W DESIGNER JAE/MRP
R/W REVIEWER RDB

MIAMISBURG-SPRINGBORO PIKE PLAN
STA. 112+00 TO STA. 117+50

MOT-75-0.75

REV. BY	DATE	DESCRIPTION

DATE COMPLETED: 9/26/07

STRUCTURE KEY

- RESIDENTIAL
- STRUCTURE REMOVED
- COMMERCIAL

MONTGOMERY COUNTY
MIAMI TOWNSHIP
SEC. 22, T. 2, R. 5 M.R.S.

M-S PIKE CURVE NO. 2
P.I. STA. = 128+46.64
Δ = 12°35'17" (LT)
Dc = 1°00'00"
R = 5,729.58'
T = 631.95'
L = 1,258.81'
E = 34.75'

Bryan P. Statzer and Kelly J. Ott-Statzer
10124 S. Cliff Swallow Ct.
K45-26631-0004

Jason D. Turkelson
10130 S. Cliff Swallow Ct.
K45-26631-0005

LOT 169
LOT 170
CRAIN'S RUN SECTION SIX
BOOK 185 PG. 23

David and Victoria Maki
10031 Oriole Ct.
K45-28334-0009

LOT 332
LOT 331
Oberer Development Company
10025 Oriole Ct.
K45-28334-0010
CRAIN'S RUN SECTION ELEVEN
BOOK 196 PG. 17

Christina Librodo
10030 Oriole Ct.
K45-28334-0008
LOT 330

Oberer Development Company
King Bird Ln.
K45-28333-0021

102
Crains Run Owners Association
Crains Creek Rd.
K45-26631-0010

LOT 175

10' The Ohio Bell Telephone Company Dba Sbc Ameritech Ohio Ease-02-140670 0004

10' The Ohio Bell Telephone Company Dba Sbc Ameritech Ohio Ease-02-140671 0004

Save if Possible

102-WDV

12 Trimtyton -12" Dia. 05115

119+47.82
65.31' LT.

17.45'
N13°50'43"E

S75°55'02"E 296.77'

276.97'
N76°04'38"W

10' Easement

12" SBC Copper

SBC Fiber

(Abandoned)

119+47.89
47.85' LT.

207.25'
S82°49'15"E

121+53.56
90.22' LT.

51.76'

43.17'

164.18'
S76°04'38"E

CONSTRUCTION LIMITS

LOT 348
110
Crains Run Owners Association
Oriole Ct.
K45-28334-0018

110-WDV

370.01'
N76°04'38"W

MATCH LINE STA. 117+50 SEE SHEET 14

MATCH LINE STA. 123+00 SEE SHEET 16

℄ EXISTING R/W, M-S PIKE

℄ CONSTRUCTION & PROP. R/W
MIAMISBURG-SPRINGBORO PIKE

S 75°55'02" E

118+00
119+00
120+00
121+00
122+00

P.C. Sta.
122+14.69

121+26.85
46.95' RT.

M-S PIKE CURVE NO. 2

117+85.15
57.72' RT.

4.22'
N04°27'52"W

748.51'
S76°04'38"E

LOT 27

202.95' S76°04'38"E

MCI Fiber #3640

5.13'
S52°43'39"W

25.58'

119+88.10
57.15' RT.

113.62'
S81°02'08"E

120+13.68
57.08' RT.

19.22'
S12°58'57"E

192.34'
S76°08'13"E

21.39'
N65°59'28"W

150.37'
N76°09'53"W

103
Crains Run Owners Association
Crains Creek Rd.
K45-26615-0025

103-WDV

Bush

6' Wood

21.38'

117+86.49
61.72' RT.

48.77'

105-T

198.40'
N76°04'38"W

Do Not Disturb

166'-6' Wood Disturbed

29.80'

106-T

119+84.89
61.16' RT.

Save if Possible

107-T

107-WDV

41.80'
85.42'
N65°59'28"W

120+94.42
56.86' RT.

80.74'
N76°04'38"W

120+57.40
60.69' RT.

43.71'
N76°04'38"W

4.00'
S13°55'49"W

120+13.69
61.08' RT.

85.38'

121+56.66
67.75' RT.

121+41.53
75.69' RT.

121+35.60
64.06' RT.

13.05'

33.77'

161.91'
N76°09'53"W

108-T

108-WDV

CONSTRUCTION LIMITS

117+63.77
57.78' RT.

17.25'
S61°22'14"W

117+51.10
69.48' RT.

LOT 4
105
Keith A. Larson
10276 Cotinga Way
K45-26615-0004

LOT 5
106
Peter J. Beuchat
10284 Cotinga Way
K45-26615-0005

LOT 12

LOT 3

104
Daryl K. and Denise A. Wilson
10285 Cotinga Way
K45-26615-0003

107
Michael A. & Loann K. Burke
10235 Bluebird Ct.
K45-26615-0012

108
Brandon L. and Sharon M. Beach
10228 Bluebird Ct.
K45-26615-0013

LOT 14
109
Jason Christopher and Christine Marie Brown
10236 Bluebird Ct.
K45-26615-0014

LOT 13

CRAIN'S RUN SECTION ONE
BOOK 177 PG. 11

U ESMT
T ESMT
R/W

SCALE IN FEET: 0, 10, 20, 40

PID NO. 77246

R/W DESIGNER JAE/MRP
R/W REVIEWER RDB

MIAMISBURG-SPRINGBORO PIKE
STA. 123+00 TO STA. 117+50

MOT-75-0.75

REV. BY	DATE	DESCRIPTION

DATE COMPLETED: 9/26/07

MONTGOMERY COUNTY
MIAMI TOWNSHIP
SEC. 16 & 22, T. 2, R. 5, M.R.S.
CITY OF MIAMISBURG

CURVE	RADIUS	CHORD LENGTH	CHORD BEARING
(H)	2745.00'	151.49'	S77°39'30"E
(J)	35.00'	36.47'	S33°30'42"E
(K)	2655.00'	193.57	N78°09'59"W
(L)	30.00'	45.54'	N54°33'12"E
(M)	30.00'	41.55'	S38°38'56"E
(M1)	2663.50'	176.10'	S38°38'58"E

M-S PIKE CURVE NO. 2
P.I. STA. = 128+46.64
Δ = 12° 35' 17" (LT)
Dc = 1° 00' 00"
R = 5,729.58'
T = 631.95'
L = 1,258.81'
E = 34.75'

SCALE IN FEET: 0, 10, 20, 40

PID NO. 77246

R/W DESIGNER JAE/MRP
R/W REVIEWER RDB

MIAMISBURG-SPRINGBORO PIKE PLAN
STA. 123+00 TO STA. 128+50

MOT-75-0.75

16 / 58

729 / 773

99 — Speedway, SuperAmerica LLC, Miamisburg Springboro Rd., K45-26637-0001

END WORK STA. 51+70.00

125+60.93, 181.16' LT.

127+46.47, 195.31' LT.

S05°11'02"W 44.41'

127+49.32, 150.98' LT.

III — Oberer Development Company, Miamisburg Springboro Rd., K46-01623-0004, PT. LOT 6992

461.62' S82°28'55"E R/W

127+80.57, 122.77' LT.

89.20' R/W S84°48'58"E

126+52.76, 188.89' LT.

90.80' R/W

N05°11'02"E 66.17'

125+67.33, 115.28' LT.

S N 05° 11' 02" E ℄ CONSTRUCTION WOOD ROAD

150.08' S04°57'31"W

CONSTRUCTION LIMITS

Dense Vegetation

125+35.23, 82.43' LT.

10' The Ohio Bell Telephone Company Dba Sbc Ameritech Ohio Ease-02-140671 0004

Crains Run Owners Association, Oriole Ct., K45-28334-0018, LOT 348

Oberer Development Company, King Bird Ln., K45-28333-0021

164.18' S76°04'38"E

123+19.38, 89.73' LT.

41.79' S13°51'40"W

99-WDV

212.72' S76°04'38"E

U ESMT / R/W / U ESMT

110

123+18.78, 47.95' LT.

110-WDV

SBC Copper

150.38' N76°04'38"W

SBC Fiber (Abandoned)

#D4947

#501092

370.01' N76°04'38"W

124+70.31, 43.65' LT.

Ameritech

SBC Fiber

10' THE OHIO BELL TELEPHONE COMPANY dba SBC AMERITECH OHIO EASE-02-140669 0004

126+65.26, 39.32' LT.

126+65.80, 36.20' LT.

6.74'

U ESMT

32.70'

12" W

SBC Fiber

M-1

Miamisburg Corp. Line, Miami Twp.

475.41' S84°37'53"E

MATCH LINE STA. 128+50 SEE SHEET 17

MATCH LINE STA. 123+00 SEE SHEET 15

℄ EXISTING R/W, M-S PIKE

℄ CONSTRUCTION & PROP. R/W MIAMISBURG-SPRINGBORO PIKE

93.65' S76°08'13"E

124+11.34, 44.25' RT.

STA. 126+68.49 ℄ MIAMISBURG-SPRINGBORO PIKE = STA. 50+00.00 ℄ WOOD ROAD

126+68.43 ℄

M-S PIKE CURVE NO. 2

13.25'

130.00' N84°37'12"W

30.06' S05°15'55"W

128+00.59, 35.28' RT.

71.66'

114-WDV

MCI Fiber

192.34' S76°08'13"E

103-WDV

748.51' S76°04'38"E

5.00'

55.71' S76°04'38"E

126+16.75, 50.32' RT.

126+69.49, 13.21' RT.

℄ CONSTRUCTION & PROP. R/W WOOD ROAD

MCI Fiber

#503246

99.96' N84°35'03"W

1338.91' R/W

Crains Run Owners Association, Crains Creek Rd., K45-26615-0025

103

108

123+18.34, 47.15' RT.

124+66.58, 46.27' RT.

LSA

Section 16 / Section 22

127+01.46, 41.04' RT.

155.41' S05°10'47"W

Board of County Commissioners of Montgomery County, Ohio M.E.# 95-0327 C03

#D2977

49+00

N05°10'47"E 185.53'

126+46.44, 100.32' RT.

200.44' S05°10'47"W

24.04' R/W

S02°06'43"E

12"

127+24.04, 89.04' RT.

Gravel

49.29'

U ESMT

CONSTRUCTION LIMITS

115-WDV

38.14' R/W

241.72' N80°58'37"W

128+03.10, 84.50' RT.

Cultivated Field

115

Township of Miami, Miamisburg Springboro Rd., K45-02605-0053

42.25' N84°38'36"W

127+65.57, 86.52' RT.

S05°18'22"W 105.80'

105.95' S05°11'02"W

T ESMT

24.17' N44°16'59"E

111.17' N69°47'36"W

20.21'

CONSTRUCTION LIMITS

Block Sign with Stone Facade

Dense Vegetation

178.36' N69°47'36"W

R/W

123+05.95, 67.84' RT.

9.13'

105.88' N76°09'53"W

20.79' S13°53'19"W

113-WDV

124+10.55, 70.03' RT.

124+09.94, 90.23' RT.

126+41.56, 76.79' RT.

125+83.00, 117.95' RT.

N04°51'37"E 161.88'

85.62'

123+01.30, 75.65' RT.

109-WDV

109-T

109

Jason Christopher and Christine Marie Brown, 10236 Bluebird Ct., K45-26615-0014

LOT 114

113

Crains Run Owner Association, 10333 Miamisburg Springboro Rd., K45-26629-0008

LOT 151

CRAIN'S RUN SECTION FIVE BOOK 182 PG. 34

Brandon L. & Shannon M. Beach, 10228 Bluebird Ct., K45-26615-0013

CRAIN'S RUN SECTION ONE BOOK 177 PG. 11

MATCH LINE STA. 48+50 SEE SHEET 33

114-T — 61'-6' chain Link Disturbed

114 — Crains Run Water & Sewer District, Miamisburg Springboro Rd., K45-02605-0064

K45-02605-0049

STRUCTURE KEY

- RESIDENTIAL
- STRUCTURE REMOVED
- COMMERCIAL

REV. BY	DATE	DESCRIPTION
JAE	9-25-07	Added Personality Item to 114-T

DATE COMPLETED: 9/26/07

1665rp05.dgn 14-SEP-2007

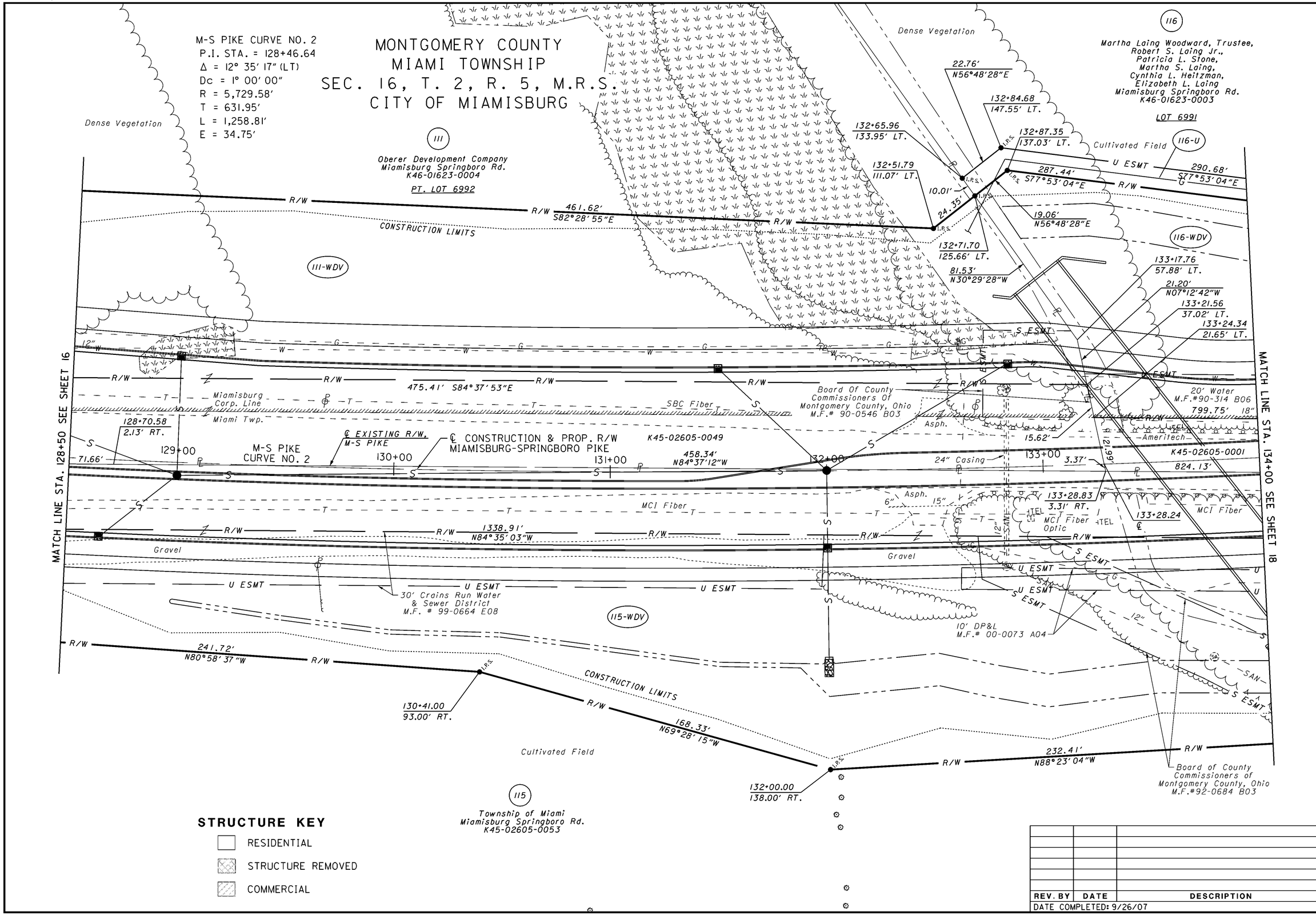

REV. BY	DATE	DESCRIPTION

DATE COMPLETED: 9/26/07

SCALE IN FEET 0 10 20 40

PID NO. 77246

R/W DESIGNER JAE/MRP
R/W REVIEWER RDB

MIAMISBURG-SPRINGBORO PIKE PLAN
STA. 128+50 TO STA. 134+00

MOT-75-0.75

MONTGOMERY COUNTY
MIAMI TOWNSHIP
SEC. 16, T. 2, R. 5, M.R.S.
CITY OF MIAMISBURG

M-S PIKE CURVE NO. 2
P.I. STA. = 128+46.64
Δ = 12° 35' 17" (LT)
Dc = 1° 00' 00"
R = 5,729.58'
T = 631.95'
L = 1,258.81'
E = 34.75'

MATCH LINE STA. 134+00 SEE SHEET 17

MATCH LINE STA. 139+50 SEE SHEET 19

116
Martha Laing Woodward, Trustee,
Robert S. Laing Jr.,
Patricia L. Stone,
Martha S. Laing,
Cynthia L. Heitzman,
Elizabeth L. Laing
Miamisburg Springboro Rd.
K46-01623-0003
LOT 6991

116-U

116-WDV

115-WDV

115-CH

115
Township of Miami
2700 Lyons Rd.
K45-02605-0053

K45-02605-0001

Cultivated Field

Dense Vegetation

CONSTRUCTION LIMITS

135+75.28
97.00' LT.

135+74.35
87.00' LT.

290.68'
S77°53'04"E

287.44'
S77°53'04"E

499.79'
S88°30'19"E

500.72'
S88°30'19"E

P.T. Sta.
134+73.50

799.75'
S84°37'12"E

824.13'
N84°37'12"W

1338.91'
N84°35'03"W

204.00'
N88°30'19"W

408.00'
N88°30'19"W

134+88.00
87.00' RT.

136+92.00
87.00' RT.

134+43.50
119.66' RT.

55.66'
S55°40'13"W

20.90'

172.26'
S58°49'10"W

120.39'
N58°22'43"W

134+27.00
132.00' RT.

135+47.00
180.00' RT.

232.41'
N88°23'04"W

M-S PIKE CURVE NO. 2

S88°30'19"E

135+00

136+00

137+00

138+00

139+00

℄ CONSTRUCTION & PROP. R/W
MIAMISBURG-SPRINGBORO PIKE

℄ EXISTING R/W,
M-S PIKE

CONSTRUCTION LIMITS

20' Water M.F.#90-314 B06

10' DP&L
M.F.# 00-0073 A04

12" SAN

S ESMT

CH ESMT

U ESMT

G

R/W

ESMT

S

W

SBC Fiber

MCI Fiber

Miamisburg Corp. Line
Miami Twp.

Board of County
Commissioners of
Montgomery County, Ohio
M.F. #92-0684 B03

I.P.S.

W WELL

STRUCTURE KEY

- RESIDENTIAL
- STRUCTURE REMOVED
- COMMERCIAL

REV. BY	DATE	DESCRIPTION

DATE COMPLETED: 9/26/07

SCALE IN FEET
0 10 20 40

PID NO. 77246

R/W DESIGNER JAE/MRP
R/W REVIEWER RDB

MIAMISBURG-SPRINGBORO PIKE PLAN
STA. 134+00 TO STA. 139+50

MOT-75-0.75

MONTGOMERY COUNTY
MIAMI TOWNSHIP
SEC. 16, T. 2, R. 5, M.R.S.
CITY OF MIAMISBURG

CURVE	RADIUS	CHORD LENGTH	CHORD BEARING
N	30.00'	40.86'	N48°34'40"E
P	20.00'	27.24'	N48°34'40"E

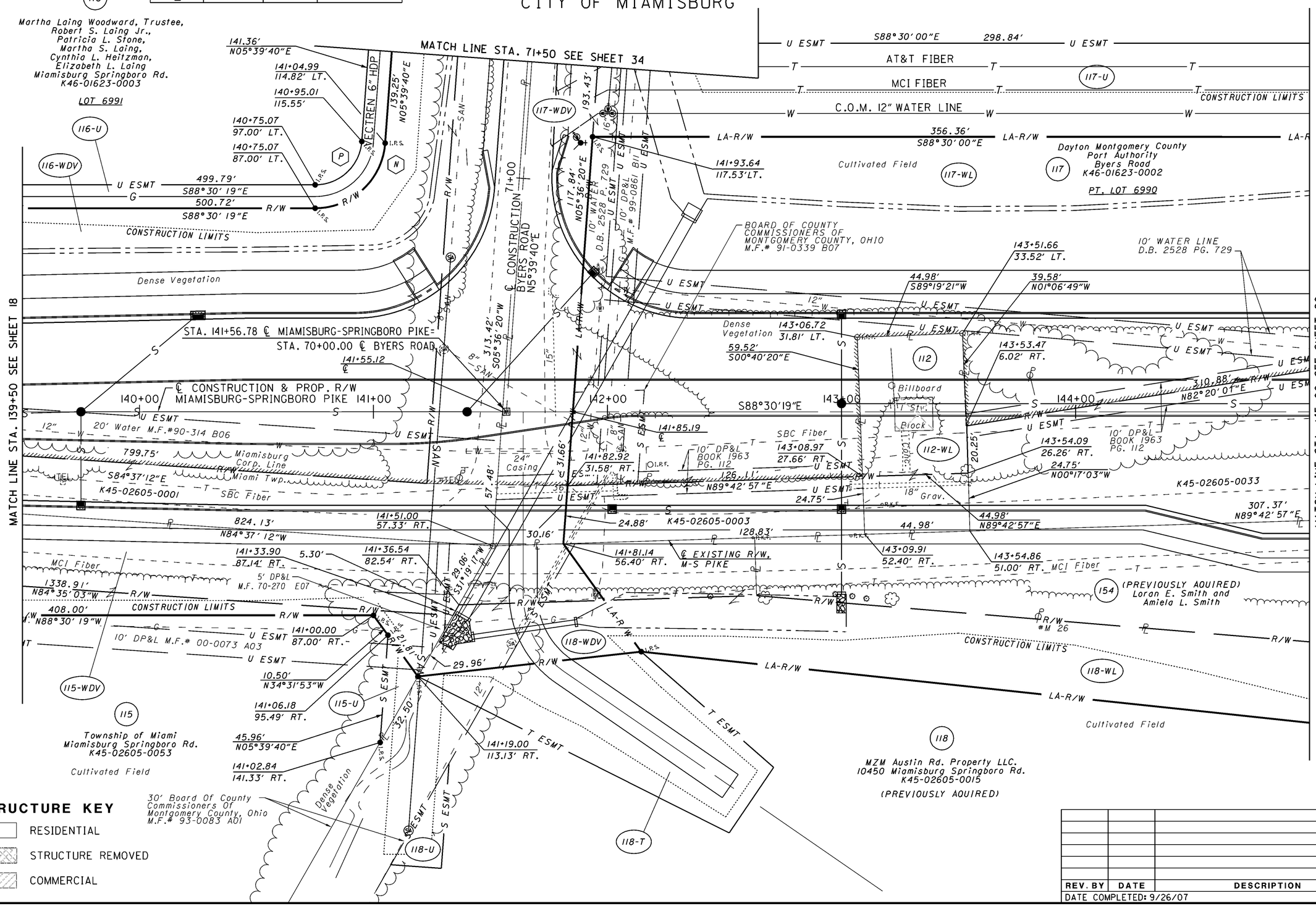

STRUCTURE KEY

- RESIDENTIAL
- STRUCTURE REMOVED
- COMMERCIAL

REV. BY	DATE	DESCRIPTION

DATE COMPLETED: 9/26/07

SCALE IN FEET

PID NO. 77246

R/W DESIGNER JAE/MRP

R/W REVIEWER RDB

MIAMISBURG-SPRINGBORO PIKE PLAN
STA. 139+50 TO STA. 145+00

MOT-75-0.75

MONTGOMERY COUNTY
MIAMI TOWNSHIP
SEC. 16, T. 2, R. 5, M.R.S.
CITY OF MIAMISBURG

MATCH LINE SEE SHEET 20A

MATCH LINE STA. 439+50 SEE SHEET 54

MATCH LINE STA. 145+00 SEE SHEET 19

MATCH LINE STA. 150+50 SEE SHEET 21

MATCH LINE STA. 337+00 SEE SHEET 53

117 Dayton Montgomery County Port Authority K46-01623-0002 PT. LOT 6990

145+43.17 157.50' LT.

298.84' S88°30'00"E U ESMT

149.91' N72°07'11"E

117-U

33.00'

146+80.63 163.44' LT.

CONSTRUCTION LIMITS

LA-R/W

138.47' N72°07'11"E

356.36' S88°30'00"E

145+50.00 117.50' LT.

5' Ohio Bell Telephone Company M.F.# 80-0514 C03

74.77' S06°40'03"W

LOT 6994 K46-01623-0005

LOT 6973 K46-01623-0001

119-WL

119 Richard E. and Glenna B. Cramer, trustees, or their successor(s) in trust, under the Cramer Family Trust, dated 8-7-03 10451 Miamisburg-Springboro Rd. (PREVIOUSLY AQUIRED)

LOT 6995 K46-01623-0006

K46-01623-0007 LOT 6896

146+73.89 88.97' LT.

Dense Vegetation

Asphalt

Miamisburg Corp. Line R/W Miami TWP.

117-WL

Cultivated Field

9.73' S89°42'56"W

146+60.08 43.52' LT.

U ESMT 45.33'

10' WATER D.B. 2528 P. 729

1 Sty. Brick & Fr.

1 Sty. Fr. Bldg.

439+00 ℄ CONSTRUCTION RAMP M N 14° 22' 31" E

#H 106

STA. 149+54.88 ℄ MIAMISBURG-SPRINGBORO PIKE
STA. 338+51.96 ℄ CONSTRUCTION RAMP P
STA. 438+26.94 ℄ CONSTRUCTION RAMP M

12" W

U ESMT

S 310.88' N82°20'01"E

10' DP&L BOOK 1963 PG. 112

146+65.84

44.00'

146+69.80 43.82' LT.

149 Charles W. Cramer and Georgia L. Cramer (PREVIOUSLY AQUIRED)

149-WL

160 Richard E. Cramer and Glenna B. Cramer (PREVIOUSLY AQUIRED)

160-WL

SBC Fiber

150 Charles W. Cramer and Georgia L. Cramer (PREVIOUSLY AQUIRED)

150-WL

146+00 147+00 148+00 149+00 150+00

S88°30'19"E

Dense Vegetation

℄ CONSTRUCTION & PROP. R/W MIAMISBURG-SPRINGBORO PIKE

K45-02605-0033

307.37' N89°42'57"E

41.63'

146+62.08 41.46' RT.

Asphalt

℄ EXISTING R/W, M-S PIKE

337+00 ℄ CONSTRUCTION RAMP P N14°22'31"E

Gravel

154 Loran E. Smith and Amelia L. Smith (PREVIOUSLY AQUIRED)

154-WL

Dense Vegetation

MCI Fiber

5' THE OHIO BELL TELEPHONE COMPANY M.F.# 01-0265 B04

5' Wood

#M 28

Foundation

CONSTRUCTION LIMITS

LA-R/W

118-WL

118 MZM Austin Rd. Property LLC. 10450 Miamisburg Springboro Rd. K45-02605-0015 (PREVIOUSLY AQUIRED)

STRUCTURE KEY

- RESIDENTIAL
- STRUCTURE REMOVED
- COMMERCIAL

REV. BY	DATE	DESCRIPTION

DATE COMPLETED: 9/26/07

SCALE IN FEET 0 10 20 40

PID NO. 77246

R/W DESIGNER JAE/MRP

R/W REVIEWER RDB

MIAMISBURG-SPRINGBORO PIKE PLAN
STA. 145+00 TO STA. 150+50

MOT-75-0.75

1665rp08a.dgn 14-SEP-2007

MONTGOMERY COUNTY
SEC. 16, T. 2, R. 5 M.R.S.
CITY OF MIAMISBURG

U ESMT

5' OHIO BELL TELEPHONE COMPANY
M.F. # 80-0514 C03

U ESMT

(119)

Richard E. and
Glenna B. Cramer,
trustees, or their successor(s)
in trust, under the Cramer
Family Trust, dated 8-7-03
10451 Miamisburg-
Springboro Rd.

LOT 6994

K46-01623-0005

LAND LOCKED

(PREVIOUSLY ACQUIRED)

(117)

Dayton Montgomery County
Port Authority
K46-01623-0002

PT. LOT 6990

Cultivated Field

5' Ohio Bell Telephone Company
M.F.# 80-0514 C03

U ESMT

℄

U ESMT

MATCH LINE SEE SHEET 54

T ESMT

(119-T)

Gravel

Dense Vegetation

U ESMT

1 Sty. fr. Garage

Gravel

U ESMT

T

T

LA-R/W

146+84.60
207.23' LT.

10.97'

146+83.61
196.30' LT.

33.00'
N06°40'03"E

℄

I.P.S.

I.P.S.

(119-U)

T

I.P.S.

(117-U)

149.91'
N72°07'11"E

U ESMT

T

Asphalt

U ESMT

LA-R/W

CONSTRUCTION LIMITS

(119-WL)

MATCH LINE SEE SHEET 20

STRUCTURE KEY

- RESIDENTIAL
- STRUCTURE REMOVED
- COMMERCIAL

REV. BY	DATE	DESCRIPTION

DATE COMPLETED: 9/26/07

N

SCALE IN FEET
0 10 20 40

PID NO. 77246

R/W DESIGNER JAE/MRP
R/W REVIEWER RDB

MIAMISBURG-SPRINGBORO PIKE PLAN
PARCELS 117 AND 119

MOT-75-0.75

20A / 58

734
773

MONTGOMERY COUNTY
MIAMI TOWNSHIP
SEC. 16, T. 2, R. 5, M.R.S.
CITY OF MIAMISBURG

Richard E. and Glenna B. Cramer, trustees, or their successor(s) in trust, under the Cramer Family Trust, dated 8-7-03
10451 Miamisburg-Springboro Rd.
(PREVIOUSLY AQUIRED)
LOT 6997
K46-01623-0008

Charles W. Cramer and Georgia L. Cramer

LOT 6996
K46-01623-0007

Virgil A. McCabe
K45-02605-0024

Charles W. Cramer and Georgia L. Cramer
(PREVIOUSLY AQUIRED)

Edward Woodward and Edith Woodward
(PREVIOUSLY AQUIRED)

Loran Smith
(PREVIOUSLY AQUIRED)

Loran E. Smith and Amiela L. Smith
(PREVIOUSLY AQUIRED)

Loran E. Smith and Amelia L. Smith
(PREVIOUSLY AQUIRED)

MZM Austin Rd. Property LLC.
Miamisburg Springboro Rd.
K45-02605-0015
(PREVIOUSLY AQUIRED)

Loran Smith
(PREVIOUSLY AQUIRED)
Kendell Investments
10460 Miamisburg-Springboro Pike
K45-02605-0056

STA. 153+66.88 ℄ MIAMISBURG-SPRINGBORO PIKE=
STA. 39+56.06 ℄ CONSTRUCTION I-75

℄ CONSTRUCTION & PROP. R/W MIAMISBURG-SPRINGBORO PIKE
S88°30'19"E

311.08' S89°42'57"W

℄ EXISTING R/W, M-S PIKE

℄ CONSTRUCTION & PROP. R/W I-75 CURVE I-75-2

CURVE I-75-2
P.I. STA. = 19+72.39
Δ = 18° 15' 11" (LT)
Dc = 0° 28' 00"
R = 12,277.69'
T = 1,972.39'
L = 3,911.36'
E = 157.42'

152+90.38 ℄
152+89.07 21.99' RT.
155+99.99 12.33' RT.
P.T. STA. 39+11.36

529.79' N04°55'31"E
N14°22'31"E

I-75 Southbound
I-75 Northbound
Miamisburg Corp. Line
Miami TWP.
CONSTRUCTION LIMITS
Asphalt
Block Shed
Dense Vegetation
R/W
SBC Fiber
MCI Fiber
5' THE OHIO BELL TELEPHONE COMPANY M.F.* 01-0265 B04
5' Ch. Link
54" Woven Wire
1 Str. Barb Wire
24"
36"
6"
CB
O.R.K.F.
O.I.R.F.
U Ecurt
LA-R/W

MATCH LINE STA. 150+50 SEE SHEET 20
MATCH LINE STA. 156+00 SEE SHEET 22

STRUCTURE KEY

- RESIDENTIAL
- STRUCTURE REMOVED
- COMMERCIAL

REV. BY	DATE	DESCRIPTION

DATE COMPLETED: 9/26/07

SCALE IN FEET

PID NO. 77246

R/W DESIGNER JAE/MRP
R/W REVIEWER RDB

MIAMISBURG-SPRINGBORO PIKE PLAN
STA. 150+50 TO STA. 156+00

MOT-75-0.75

MONTGOMERY COUNTY
MIAMI TOWNSHIP
SEC. 16, T. 2, R. 5, M.R.S.

MATCH LINE STA. 141+50 SEE SHEET 47

MATCH LINE STA. 156+00 SEE SHEET 21

MATCH LINE STA. 161+50 SEE SHEET 23

MATCH LINE STA. 239+50 SEE SHEET 46

123 — MV Austin Pike Land LLC, an Ohio Limited Liability Company RLG Miami LTD., an Ohio Limited Liability Company GCG Miami LTD., an Ohio Limited Liability Company KGS Miami LTD., an Ohio Limited Liability Company 10469 Miamisburg Springboro Rd.

122 — Miamisburg Congregation of Jehovahs Witnesses K45-02605-0035 10465 Miamisburg-Springboro Pike (PREVIOUSLY ACQUIRED)

156 — Virgil A. McCabe

120 — Kendell Investments 10460 Miamisburg-Springboro Pike K45-02605-0056 (PREVIOUSLY ACQUIRED)

151 — Loran Smith (PREVIOUSLY ACQUIRED)

K45-02605-0006

K45-02605-0056

K45-02605-0046

Virgil A. McCabe K45-02605-0023

THE DAYTON POWER AND LIGHT COMPANY M.F.# 87-0384 B02

KENDELL INVESTMENTS INGRESS AND EGRESS M.F.# 83-0184 A01

10' BOARD OF COUNTY COMMISSIONERS OF MONTGOMERY COUNTY, OHIO M.F.# 88-0266 A04 ALSO DP&L GAS EASEMENT, MF# 90-0052 A07 CURRENT M.F.# 00-0736 A04

20' INGRESS AND EGRESS TO AND FROM ADJACENT PROPERTY DB. 2059 P.G. 621

℄ EXISTING R/W, M-S PIKE

℄ CONSTRUCTION & PROP. R/W MIAMISBURG-SPRINGBORO PIKE

℄ CONSTRUCTION RAMP H N14°22'31"E

℄ CONSTRUCTION RAMP J N14°22'31"E

STA. 157+72.88 ℄ MIAMISBURG-SPRINGBORO PIKE

STA. 241+19.11 ℄ CONSTRUCTION RAMP H

STA. 140+10.27 ℄ CONSTRUCTION RAMP J

CONSTRUCTION LIMITS

STRUCTURE KEY

- RESIDENTIAL
- STRUCTURE REMOVED
- COMMERCIAL

REV. BY	DATE	DESCRIPTION
JAE	1-30-08	Added/Revised 123

DATE COMPLETED: 9/26/07

SCALE IN FEET

PID NO. 77246

R/W DESIGNER JAE/MRP

R/W REVIEWER RDB

MIAMISBURG-SPRINGBORO PIKE PLAN
STA. 156+00 TO STA. 161+50

MOT-75-0.75

22 / 58

736 / 773

MONTGOMERY COUNTY
MIAMI TOWNSHIP
SEC. 16, T. 2, R. 5, M.R.S.
CITY OF SPRINGBORO

STRUCTURE KEY

- RESIDENTIAL
- STRUCTURE REMOVED
- COMMERCIAL

(123) MV Austin Pike Land LLC, an Ohio Limited Liability Company RLG Miami LTD., an Ohio Limited Liability Company GCG Miami LTD., an Ohio Limited Liability Company KGS Miami LTD., an Ohio Limited Liability Company 10469 Miamisburg Springboro Rd. K45-02605-0006

MATCH LINE STA. 161+50 SEE SHEET 22

MATCH LINE STA. 167+00 SEE SHEET 24

225.25' S44°55'14"E

161+64.51 145.00' LT.

163+87.57 170.00' LT.

163+62.57 145.00' LT.

35.36' N46°29'41"E

198.07' S88°30'19"E

U ESMT

AT&T FIBER

MCI FIBER

T

(123-U)

35.36' S46°29'41"W

164+00.00 140.00' LT.

CH ESMT 200.00' N88°30'19"W CH ESMT

(123-CH)

166+00.00 140.00' LT.

166+12.43 170.00' LT.

224.85' S88°30'19"E

166+29.12 110.88' LT.

166+56.43 126.00' LT.

62.23' S43°30'19"E

339.76' S88°30'19"E

37.88'

(123-UI)

41.19' N43°30'19"W

128.16' S88°30'19"E

19.56'

55.33' N76°20'21"W

49.91'

I.P.S.

LA-R/W 222.49' S88°30'19"E LA-R/W

161+52.51 115.00' LT.

163+75.00 115.00' LT.

106.84' LA-R/W R/W

164+81.84 115.00' LT.

(123-WLI)

CONSTRUCTION LIMITS

90.45' S83°26'29"E

Dense Vegetation

(123-WDV)

166+10.00 115.00' LT.

166+83.21 99.22' LT.

161+60.28 60.09' LT.

DP&L ANCHOR EASEMENT DB. 1928 P.G. 476

162+10.31 46.64' LT.

162+61.17 32.96' LT.

24.75' S00°17'03"E

59.93' N01°29'41"E

164+81.84 55.07' LT.

S ESMT

SBC (Abandoned)

15' Board of County Commissioners Of Montgomery County, Ohio M.F.# 91-0339 B07

SAN

10" SAN

R/W

518.41' S89°42'57"W

51.81' S73°27'13"E

52.67'

271.66' N89°42'57"E

SBC Fiber

TS ESMT

℄ CONSTRUCTION & PROP. R/W MIAMISBURG-SPRINGBORO PIKE

℄ EXISTING R/W, M-S PIKE

156 (156-WLI) Virgil A. McCabe K45-02605-0023

220.00' N89°42'57"E

164+71.39

(152-WL)

152 The Board of County Commissioners of Montgomery County, Ohio K45 02605 0057

133.23' N89°42'57"E

40.02'

Casing

18.32'

631.27'

162+00 163+00 164+00 165+00 166+00

162+61.94 8.22' LT.

The Board of County Commissioners of Montgomery County, Ohio (PREVIOUSLY ACQUIRED)

S88°30'19"E

Gravel

147 MCI Fiber

151 (151-WLI) Loran Smith (PREVIOUSLY ACQUIRED)

Brick Sign

MCI M.F.# 89-0558 D08

148 (148-WL) SBC

R 31.47'

546.81' N89°42'57"E

12" SAN

Board of County Commissioners of Montgomery County, Ohio K45 02605 0059

10' Board of County Commissioners of Montgomery County, Ohio M.F.# 88-0266 A04

10' Dp&L Gas, M.F. #91-0673 A07

U ESMT

Asphalt

Gravel

50.82' S88°30'19"E

(120-WL)

I.R.F.

4" MPP 65312-87

10' BOARD OF COUNTY COMMISSIONERS OF MONTGOMERY COUNTY, OHIO M.F.# 88-0266 A04 MONTGOMERY COUNTY, OHIO M.F.# 90-0052 A07 ALSO DP&L GAS EASEMENT, MF# 00-0736 A04 CURRENT M.F.# 00-0736 A04

164+81.84 15.05' LT.

164+53.45 25.85' RT.

(124-WDV)

261.13' N88°30'19"W

166+76.00 96.00' RT.

CONSTRUCTION LIMITS

126.78' N36°15'26"E

165+68.75 123.21' RT.

110.65' S77°15'24"W

12.44'

165+42.01 130.00' RT.

27.59'

105.38' S77°15'24"W

166+77.25 106.00' RT.

166+89.69 106.00' RT.

16.74' N05°32'51"W

166+91.74 122.61' RT.

48.32' N88°30'19"W

(124-T)

120-U

LA-R/W 160.84' N88°30'19"W R/W

(124-U)

G

U ESMT

120 Kendell Investments 10460 Miamisburg Springboro Rd. K45-02605-0046

LAND LOCKED (PREVIOUSLY ACQUIRED)

163+81.16 130.00' RT.

30.43' N36°15'26"E

37.45' N33°25'44"E

165+75.11 131.92' RT.

S ESMT 185.12' N88°30'19"W S ESMT

38.98' S33°25'44"W

10' BOARD OF COUNTY COMMISSIONERS OF MONTGOMERY COUNTY, OHIO M.F.# 83-0399 E03

10' BOARD OF COUNTY COMMISSIONERS OF MONTGOMERY COUNTY, OHIO M.F.# 92-0542 D09

163+63.81 155.00' RT.

12.17'

163+56.87 165.00' RT.

Miami TWP. Springboro Corp. Line

Dense Vegetation

197.62' N88°30'19"W

(124) Victory 4 LLC, an Ohio limited liability compnay GCG AUSTIN LTD., an Ohio limited liability company RLG AUSTIN LTD., an Ohio limited liability company Miamisburg Springboro Rd. K45100102-0003

(124-UI)

165+48.94 155.00' RT.

165+54.49 165.00' RT.

REV. BY	DATE	DESCRIPTION
JAE	1-30-08	Added/Revised 123

DATE COMPLETED: 9/26/07

SCALE IN FEET 0 10 20 40

PID NO. 77246

R/W DESIGNER JAE/MRP

R/W REVIEWER RDB

MIAMISBURG-SPRINGBORO PIKE PLAN STA. 161+50 TO STA. 167+00

MOT-75-0.75

MONTGOMERY COUNTY
MIAMI TOWNSHIP
SEC. 16, T. 2, R. 5, M.R.S.
CITY OF SPRINGBORO

(123)

MV Austin Pike Land LLC,
an Ohio Limited Liability Company
RLG Miami LTD.,
an Ohio Limited Liability Company
GCG Miami LTD.,
an Ohio Limited Liability Company
KGS Miami LTD.,
an Ohio Limited Liability Company
10469 Miamisburg Springboro Rd.
K45-02605-0006

MATCH LINE STA. 167+00 SEE SHEET 23

U ESMT 339.76' S88°30'19"E U ESMT U ESMT

CONSTRUCTION LIMITS

169+96.19
126.00' LT.

170+00.00
96.65' LT.

335.68' U ESMT N77°00'11"E

SAN

335.52' LA-R/W N77°06'37"E

171+10.26
74.59' LT.

171+60.63
60.89' LT.

123-WL2

49.91'
S76°20'21"E

167+32.00
88.70' LT.

123-UI

Dense Vegetation

169+69.00
88.70' LT.

237.00' R/W S88°30'19"E AT&T FIBER R/W

25.49'
S01°29'41"W

S ESMT

30' Board of County Commissioners of
Montgomery County, Ohio
M.F.# 91-0339 B07

123-WDV

518.41' S89°42'57"W

32.00'
N77°06'37"E

170+00.00
71.16' LT.

110.31'
N89°42'57"E

52.20'
S73°17'48"E

SBC (Abandoned)

10" SAN

12"

222.74'
N89°44'57"E

#10586

Board of County
Commissioners of
Montgomery County, Ohio
K45 02605 0057

152

1402.63'
N89°42'57"E

170+00.00
31.14' LT.

31.14'
N01°29'41"E

40.02'

℄ EXISTING R/W,
M-S PIKE

152-WLI

161.47'

171+61.40
36.15' LT.

222.74'
N89°42'57"E

147-WL

147

Board of County
Commissioners of
Montgomery County, Ohio
K45 02605 0059

171+62.16
11.42' LT.

24.75'
S00°17'03"E

4" MPP 65312-87

222.74'
N89°51'45"E

#507406 M95 #1076
(Pole Mounted Elec. Box)

#507407 M96 #1074 & #1075
(Pole Mounted Elec. Box)

#456761

168+00 S88°30'19"E 169+00 170+00 ℄ CONSTRUCTION & PROP. R/W MIAMISBURG-SPRINGBORO PIKE 171+00 172+00

Dense Vegetation

Miami TWP.

Springboro Corp. Line

112.80' N89°42'57"E

546.81'

170+00.00
℄

170+00.00
8.88' RT.

171+12.74
5.38' RT.

171+28.56
℄

16.71'
N72°43'43"E

35.49'

4" MPP 67625-91

U ESMT

10' Board of County Commissioners of
Montgomery County, Ohio M.F.# 88-0266 A04
10' Dp&L Gas, M.F.# 91-0673 A07

MATCH LINE STA. 172+50 SEE SHEET 25

Cultivated Field

87.12'
N01°29'41"E

124-WL

124-WDV

CONSTRUCTION LIMITS

172+00.00
96.00' RT.

167+40.51
106.00' RT.

N88°30'19"W 261.13' 62.87' LA-R/W 200.00' N88°30'19"W LA-R/W

MCI FIBER

135.00'
N66°18'36"W

50.82' U ESMT VECTREN 4" MPP U ESMT 196.93' N88°30'19"W

169+37.13
96.00' RT.
10.00'
S00°17'05"E
169+37.44
106.00' RT.

170+00.00
96.00' RT.

16.62'
S03°02'34"W

167+40.06
122.61' RT.

48.32'
N88°30'19"W

T ESMT

124-UI

124-T

(124)

Victory 4 LLC, an Ohio limited liability compnay
GCG AUSTIN LTD., an Ohio limited liability company
RLG AUSTIN LTD., an Ohio limited liability company
Miamisburg Springboro Rd.
K45100102-0003

STRUCTURE KEY

- RESIDENTIAL
- STRUCTURE REMOVED
- COMMERCIAL

REV. BY	DATE	DESCRIPTION
AJS	4-11-08	Revised 123-WL2, 124-WL
JAE	1-30-08	Added/Revised 123

DATE COMPLETED: 9/26/07

SCALE IN FEET 0 10 20 40

PID NO. 77246

R/W DESIGNER JAE/MRP
R/W REVIEWER RDB

MIAMISBURG-SPRINGBORO PIKE PLAN
STA. 167+00 TO STA. 172+50

MOT-75-0.75

24 / 58

738 / 773

MONTGOMERY COUNTY
MIAMI TOWNSHIP
SEC. 16, T. 2, R. 5, M.R.S
CITY OF SPRINGBORO

MATCH LINE STA. 172+50 SEE SHEET 24

MATCH LINE STA. 178+00 SEE SHEET 26

335.68' N77°00'11"E
335.52' N77°06'31"E
334.95' N88°30'19"W
340.44' S88°30'19"E
448.73' N83°50'04"E
222.74' N89°44'57"E
222.74' N89°42'57"E
222.74' N89°51'45"E
50.93' S79°19'38"E
25.32' S00°17'03"E
24.18'
200.62' S85°47'23"E
184.16' S86°04'23"E
135.00' N66°18'36"W
395.68' N03°57'17"E
N38°56'50"W 164.17'
S05°06'48"W 125.20'
N05°06'48"E 404.46'
N84°53'12"W 15.00' (TIE 124-U2)
MCI FIBER 330.36' N88°30'19"W
VECTREN 4" MPP
SBC (Abandoned)
SBC Fiber
MCI Fiber
SBC
AT&T FIBER
4" MPP G 65312-87
MCSED 12" WATER LINE
10" Ohio Bell Telephone Company M.F.# 88-0358 A04
16" Force Main SAN
30" Board of County Commissioners

CONSTRUCTION LIMITS
℄ CONSTRUCTION & PROP. R/W MIAMISBURG-SPRINGBORO PIKE
℄ EXISTING R/W, M-S PIKE
Board of County Commissioners of Montgomery County, Ohio M.F.# 91-0339 B07
Springboro Corp. Line
Miami TWP.
Gravel
Asphalt
Dense Vegetation
Billboard
Casing
Ditch

123-UI
123
123-WL2
123-WL3
123-T
124
124-WL
124-WLI
124-U2
164
164-WL

K45-02605-0006
K45-02605-0007
K45-02605-0042
K45-02605-0052
K45-02605-0055

MV Austin Pike Land LLC, an Ohio Limited Liability Company
RLG Miami LTD., an Ohio Limited Liability Company
GCG Miami LTD., an Ohio Limited Liability Company
KGS Miami LTD., an Ohio Limited Liability Company
10469 Miamisburg Springboro Rd.

Victory 4 LLC, an Ohio limited liability company
GCG AUSTIN LTD., an Ohio limited liability company
RLG AUSTIN LTD., an Ohio limited liability company
Miamisburg Springboro Rd.
K45100102-0003

STRUCTURE KEY
- RESIDENTIAL
- STRUCTURE REMOVED
- COMMERCIAL

REV. BY	DATE	DESCRIPTION
AJS	4-11-08	Revised 123WL2, 123-WL3, 124-WLI, 124-U2
JAE	1-30-08	Added/Revised 123, 164

DATE COMPLETED: 9/26/07

SCALE IN FEET

PID NO. 77246

R/W DESIGNER JAE/MRP
R/W REVIEWER RDB

MIAMISBURG-SPRINGBORO PIKE PLAN
STA. 172+50 TO STA. 178+00

MOT-75-0.75

25 / 58

739 / 773

MONTGOMERY COUNTY
MIAMI TOWNSHIP
SEC. 10 & 16, T. 2, R. 5, M.R.S.
CITY OF SPRINGBORO

STRUCTURE KEY

- RESIDENTIAL
- STRUCTURE REMOVED
- COMMERCIAL

MATCH LINE STA. 41+00 SEE SHEET 39

MATCH LINE STA. 38+00 SEE SHEET 38

MATCH LINE STA. 178+00 SEE SHEET 25

MATCH LINE STA. 183+50 SEE SHEET 27

123 — MV Austin Pike Land LLC, an Ohio Limited Liability Company RLG Miami LTD., an Ohio Limited Liability Company GCG Miami LTD., an Ohio Limited Liability Company KGS Miami LTD., an Ohio Limited Liability Company 10469 Miamisburg Springboro Rd. K45-02605-0007

123-WL2

178+28.00
127.05' LT.
40+80.00
60.00' LT

448.73'
N83°50'04"E

164 — State of Ohio

164-WL

178+23.55
56.72' LT.

K45-02605-0055

K45-02605-0052

P.I. Sta. 40+17.64
DEFLECTION = 00°00'08"
"NO CURVE"

℄ CONSTRUCTION SR 741
N05°06'56"E

351.47'

70.47'

30" Casing
32"x48"

36.70'
N05°06'56"E

40+80.00
60.00' RT.
179+47.76
119.47' LT

U ESMT

3'x3' Conc. Gutter

6" Propane

93.10'
N83°20'42"W

87.34'
S83°20'42"E

181+27.47
103.25' LT.

K45-02602-0053

389.84' S89°01'12"E

℄ EXISTING R/W, M-S PIKE

℄ EXISTING R/W, AUSTIN PIKE

180+58.63

BP-8" Dayton-Bromley Pipeline

163

163-WL

10' DP&L State of Ohio M.F.# 81-174 A07

120.36'

277.37'
N84°12'44"E

K45-02602-0048

10' DP&L M.F.# 90-0099 D06
M.F.# 00-0735 B01

MCI Fiber

3'x3' Conc. Base

℄ CONSTRUCTION & PROP. R/W MIAMISBURG-SPRINGBORO PIKE

179+40.21
℄
15.29'
N05°06'52"E
179+00

180+00

181+00

182+00

℄ CONSTRUCTION & PROP. R/W AUSTIN PIKE
S88°30'19"E

183+00

178+19.97
℄
7.70'
S05°06'52"W
178+19.48
7.68' RT.
184.16'
S86°04'23"E

Fiber Optic

179+39.24
15.26' RT.
39+45.00
60.00' RT

STA. 178+80.09 ℄ MIAMISBURG-SPRINGBORO PIKE/AUSTIN PIKE=
STA. 39+56.49 ℄ S.R. 741

Gate (2)

4" MPP 65986-89

6' Ch. Link w/3 Str. Barb Wire

10' DP&L M.F. # 98-0489 B07
M.F. 00-0735 B01

Total of 1,281' of Ch. Link Disturbed

Gravel

6' Ch. Link

Cultivated Field

126-LA

2.5'x4.0' FLUSH

S05°06'48"W
140.54'(TIE 124-U2)

124-WL

6" Propane

DP&L BK. 1957 PG. 624

℄ CONSTRUCTION & PROP. R/W S.R. 741
N05°06'48"E

146.92'
N05°06'48"E

Section 16 39+0 Section 10

10' DP&L M.F.# 90-0099 D06
M.F.# 00-0735 B01

Gravel & Dirt

MCI FIBER

10' DP&L M.F.# 81-174 A07

126-CH2

CONSTRUCTION LIMITS

12.30'

LA-R/W

137.70'
N88°30'19"W

206.08'
S84°42'42"W

138.96'
N88°30'19"W

U ESMT

30' Board of County Commissioners of Montgomery County, Ohio M.F.# 93-0202 D10

Springboro Corp. Line Miami TWP. S05°06'48"W

45.00' LA-R/W

38+04.46
60.00' LT

N84°53'12"W
15.00'(TIE 124-U2)

124 — Victory 4 LLC, an Ohio limited liability compnay GCG AUSTIN LTD., an Ohio limited liability company RLG AUSTIN LTD., an Ohio limited liability company Miamisburg Springboro Rd. K45100102-0003

180+00.00
140.00' RT
38+24.34
128.51' RT.

20.04'
S05°06'48"W

68.01'
N74°08'39"E

38+00.00
65.00' RT.

38+25.12
140.79' RT.

38+05.08
140.79' RT.

181+50.00
140.00' RT.

181+50.00
160.00' RT.

126-U

126 — City of Dayton 10550-10600 Springboro Pike K45-02602-0015

SOUTH AIRPORT INNS OF AMERICA BOOK 167 PG. 9
LOT 1

125 — T. and D. Smith Company, LTD. Springboro Pike K45-23025-0001

1 Sty. Metal Frame

1 Sty. Brick

81.88'
N45°29'50"E

201.81'

183+33.20
104.91' LT.

125-WL

125-PRW

125-TI

125-WL1

Board of County Commissioners of Montgomery County, Ohio M.F.# 91-0360 E05

U ESMT Asphalt Drive

20' Vectren Energy Delivery of Ohio, Inc. An Ohio Corporation M.F.# 00-0736 A04

Exit Automatic Swing Gate

Miami Valley Corporation, An Ohio Corporation Bk. 1423 Pg. 535

Do Not Disturb

10' The Dayton Power And Light Company M.F. # 88-0358 A01

25.83'
S39°43'25"E

40+83.95
123.21' RT.
30.54'
S72°41'58"E

40+77.50
153.07' RT.
180+40.49
111.10' LT

8" SAN

6" Iron

LA-R/W

205.73' S88°58'06"E

16" Force Main

206.73' S83°20'49"E

CONSTRUCTION LIMITS

10" Vectren Energy Delivery of Ohio, Inc. An Ohio Corporation M.F.# 00-0736 A04

Bush

Aluminum yard Sign Boat & RV Storage Remove

183+33.36
84.66' LT.

183+33.56
59.32' LT.

24.16'
N01°01'54"E

183+33.78
35.16' LT.

366.45'
S88°58'06"E

366.23'
S88°58'06"E

REV. BY	DATE	DESCRIPTION
AJS	4-11-08	Revised 125-WLI, 126-LA
JAE	1-30-08	Added/Revised 123, 164

DATE COMPLETED: 9/26/07

SCALE IN FEET: 0, 10, 20, 40

PID NO. 77246

R/W DESIGNER JAE/MRP

R/W REVIEWER RDB

MIAMISBURG-SPRINGBORO/AUSTIN PIKE
PLAN STA. 178+00 TO STA. 183+50

MOT-75-0.75

AUSTIN PIKE PLAN
STA. 183+50 TO STA. 189+00

MOT-75-0.75

PID NO. 77246

R/W DESIGNER JAE/MRP
R/W REVIEWER RDB

SCALE IN FEET 0 10 20 40

N

MONTGOMERY COUNTY
MIAMI TOWNSHIP
SEC. 10, T. 2, R. 5 M.R.S.

SOUTH AIRPORT INNS OF AMERICA BOOK 167 PG. 9
LOT 1

125 T. and D. Smith Company, LTD. Springboro Pike K45-23025-0001

125-T1

125-WL1

126-LA

126-SHV

126-U

126 City of Dayton 10550-10600 Springboro Pike K45-02602-0015

Entrance Automatic Swing Gate

81.88' N45°29'50"E

183+90.80 163.81' LT.

184+62.72 163.81' LT.

72.64' S88°30'19"E

92.22' S50°06'54"E

POINT OF PERMISSIBLE ACCESS 60' WIDE LEFT OF STA. 184+85.05

184+85.05 106.13' LT

185+35.00 106.54' LT.

187+00.00 107.87' LT.

Board of County Commissioners of Montgomery County M.F. # 91-0360 E05

10' Vectren Energy Delivery of Ohio, Inc. An Ohio Corporation M.F. # 00-0736 A04

162'-6' Iron Fence Disturbed

6' Iron Fence

16" Force Main

8" Dayton-Bromley Pipeline

201.81' S88°58'06"E

165.01'

6" Propane

CONSTRUCTION LIMITS

Asphalt

Gravel

1 Sty. Metal Frame

366.45' S88°58'06"E

℄ EXISTING R/W, AUSTIN PIKE

20' Vectren Energy Delivery of Ohio, Inc. An Ohio Corporation M.F. # 00-0736 A04

297.64'

187+00.00 62.28' LT.

MCI Fiber

366.23' S88°58'06"E

10' DP&L M.F. # 98-0489 B07 M.F. #00-0735 B01

767.62'

4" MPP 67608-91

Total of 1,281' of Ch. Link Disturbed

187+00.00 38.12' LT.

S01°29'41"W 38.12'

℄ CONSTRUCTION & PROP. R/W AUSTIN PIKE

184+00 185+00 186+00 S88°30'19"E 187+00 188+00

P.C. Sta. 189+00.00

187+00.00 ℄

MCSED 12" WATER LINE

MCI FIBER

206.08' S84°42'42"W

196.74' S84°42'42"W

185+50.00 92.42' RT.

150.00' N88°30'19"W

187+00.00 92.42' RT.

346.89' N88°30'19"W

183+54.64 115.66' RT.

20.00' S01°29'41"W

183+54.64 135.66' RT.

206.08' S84°42'42"W

MATCH LINE STA. 183+50 SEE SHEET 26

MATCH LINE STA. 189+00 SEE SHEET 28

STRUCTURE KEY

- RESIDENTIAL
- STRUCTURE REMOVED
- COMMERCIAL

REV. BY	DATE	DESCRIPTION
AJS	4-11-08	Revised 126-LA, 126-SHV
DATE COMPLETED: 9/26/07		

MONTGOMERY COUNTY
MIAMI TOWNSHIP
SEC. 10, T. 2, R. 5 M.R.S.

M-S PIKE CURVE NO. 3
P.I. STA. = 190+84.36
Δ = 11° 01' 38" (LT)
Dc = 03° 00' 00"
R = 1,909.86'
T = 184.36'
L = 367.58'
E = 8.88'

M-S PIKE CURVE NO. 4
P.I. STA. = 194+14.75
Δ = 08° 48' 47" (RT)
Dc = 03° 00' 00"
R = 1,909.86'
T = 147.17'
L = 293.77'
E = 5.66'

SOUTH AIRPORT INNS OF AMERICA BOOK 167 PG. 9 LOT 1

(125) T. and D. Smith Company, LTD. Springboro Pike K45-23025-0001

(127) Board of Treasurers of Miami Township, Montgomery County, Ohio 2673 Austin Road K45-02602-0060

Board of Treasurers of Miami Township, Montgomery County, Ohio 2673 Austin Road K45-02602-0003

Board of County Commissioners of Montgomery County M.F. # 91-0360 E05

10' Vectren Energy Delivery of Ohio, Inc. An Ohio Corporation M.F. #00-0736 A04

Board of County Commissioners of Montgomery County, Ohio M.F. #90-0164 A01

20' DP&L BK. 1957 PG. 621

10' DP&L M.F. #95-0553 B10

10' DP&L M.F. # 98-0489 B07 M.F. 00-0735 B01

4" MPP G 67608-91

16" Force Main

6" Propane

MCI Fiber

CONSTRUCTION LIMITS

℄ EXISTING R/W, AUSTIN PIKE

℄ CONSTRUCTION & PROP. R/W AUSTIN PIKE

M-S PIKE CURVE NO. 3

M-S PIKE CURVE NO. 4

P.C. Sta. 189+00.00

P.R.C. Sta. 192+67.58

20.96' N65°39'14"E
190+94.55
139.59' LT.
Do Not Disturb
38.03' N05°02'43"W
190+02.19
107.69' LT.
9.79'
190+01.92
97.90' LT.
190+95.05
101.55' LT.
87.98' S88°58'06"E
190+01.64
87.44' LT.
10.47'
297.64'
190+00.96
61.10' LT.
25.34' N00°04'30"W
191+15.89
146.65' LT.
45.45' S72°37'28"E
191+60.93
128.88' LT.
191+62.43
96.25' LT.
32.66' S08°50'09"E
77.26'
469.51' S88°58'06"E
469.41' N88°58'06"W
767.62' S88°58'06"E
150.57' N80°59'25"E
193+15.86
98.26' LT.
16.87' S09°00'35"E
193+16.12
81.39' LT.
637.63' N89°16'50"E
747.21' N89°16'50"E
485.32' S84°57'40"W
346.89' N88°30'19"W
200.25' S76°48'01"W
192+30.00
71.13' RT.
190+39.86
97.80' RT.

Gravel
1 Sty. Metal Frame
8' Ch. Link
8' Ch. Link with Barb Wire Do not Disturb
Dense Vegetation
No Trespassing
Total of 1,281' of Ch. Link Disturbed

(126-SHV)

(127-T)

(127-WDV)

(126) City of Dayton 10550-10600 Springboro Pike K45-02602-0015

MATCH LINE STA. 189+00 SEE SHEET 27

MATCH LINE STA. 194+50 SEE SHEET 29

STRUCTURE KEY

- RESIDENTIAL
- STRUCTURE REMOVED
- COMMERCIAL

REV. BY	DATE	DESCRIPTION
AJS	4-11-08	Revised 126-SHV

DATE COMPLETED: 9/26/07

SCALE IN FEET

PID NO. 77246

R/W DESIGNER JAE/MRP
R/W REVIEWER RDB

AUSTIN PIKE PLAN
STA. 189+00 TO STA. 194+50

MOT-75-0.75

MONTGOMERY COUNTY
MIAMI TOWNSHIP
SEC. 10, T. 2, R. 5 M.R.S.

M-S PIKE CURVE NO. 4
P.I. STA. = 194+14.75
Δ = 08° 48' 47" (RT)
Dc = 03° 00' 00"
R = 1,909.86'
T = 147.17'
L = 293.77'
E = 5.66'

(127) Board of Treasurers of Miami Township, Montgomery County, Ohio 2673 Austin Road K45-02602-0003

(128) City of Dayton Austin Road K45-02602-0058

(126) City of Dayton 10550-10600 Springboro Pike K45-02602-0015

469.51' S88°58'06"E
194+73.33 30.32' LT.
127-WDV
127-T
Save if Possible
18"
197+50.00 53.00' LT.
197+85.00 28.22' LT.
35' Board of County Commissioners of Montgomery Coutny, Ohio M.F. #90-0164 AOI
199+44.08 64.98' LT.
128-T
209.21' S80°34'51"E
6" Propane
637.63' N89°16'50"E
747.21' N89°16'50"E
CONSTRUCTION LIMITS
20' DP&L BK. 1957 PG. 621
313.03' N89°16'25"E
42.89' S55°25'32"E
469.41' N88°58'06"W
25.38'
142.04' S89°16'25"W
6.77'
38.15' S14°46'48"W
216.14' S89°17'53"W
195+00
196+00
197+00
198+00
199+00
M-S PIKE CURVE NO. 3
M-S PIKE CURVE NO. 4
P.T. Sta. 195+61.34
313.42' N89°16'51"E
2.85'
197+85.00 2.85' LT.
℄ EXISTING R/W, AUSTIN PIKE
199+27.08 28.24' LT.
199+33.84 28.23' LT.
℄ CONSTRUCTION & PROP. R/W AUSTIN PIKE
N 89°16'51" E
194+71.78 4.95' LT.
313.79' S89°16'25"W
194+70.26 19.16' RT.
U ESMT
No Trespassing
72.45' S55°11'45"W
21.28' S00°43'10"E
10' DP&L M.F. # 98-0489 B07
M.F. #00-0735 B01
MCI Fiber
4" MPP 67608-91
N 89°12'35" E
P.I. Sta. 199+26.24 DEFLECTION = 00°04'15" "NO CURVE"
CONSTRUCTION LIMITS
126-SHV
485.32' S84°57'40"W
Total of 1,281' of Ch. Link Disturbed
197+25.00 61.88' RT.
197+85.00 21.28' RT.

MATCH LINE STA. 194+50 SEE SHEET 28

MATCH LINE STA. 200+00 SEE SHEET 30

STRUCTURE KEY

- RESIDENTIAL
- STRUCTURE REMOVED
- COMMERCIAL

REV. BY	DATE	DESCRIPTION
AJS	4-11-08	Revised 126-SHV

DATE COMPLETED: 9/26/07

SCALE IN FEET 0 10 20 40

PID NO. 77246

R/W DESIGNER JAE/MRP
R/W REVIEWER RDB

AUSTIN PIKE PLAN
STA. 194+50 TO STA. 200+00

MOT-75-0.75

29/58

743/773

MONTGOMERY COUNTY
MIAMI TOWNSHIP
SEC. 10, T. 2, R. 5 M.R.S.

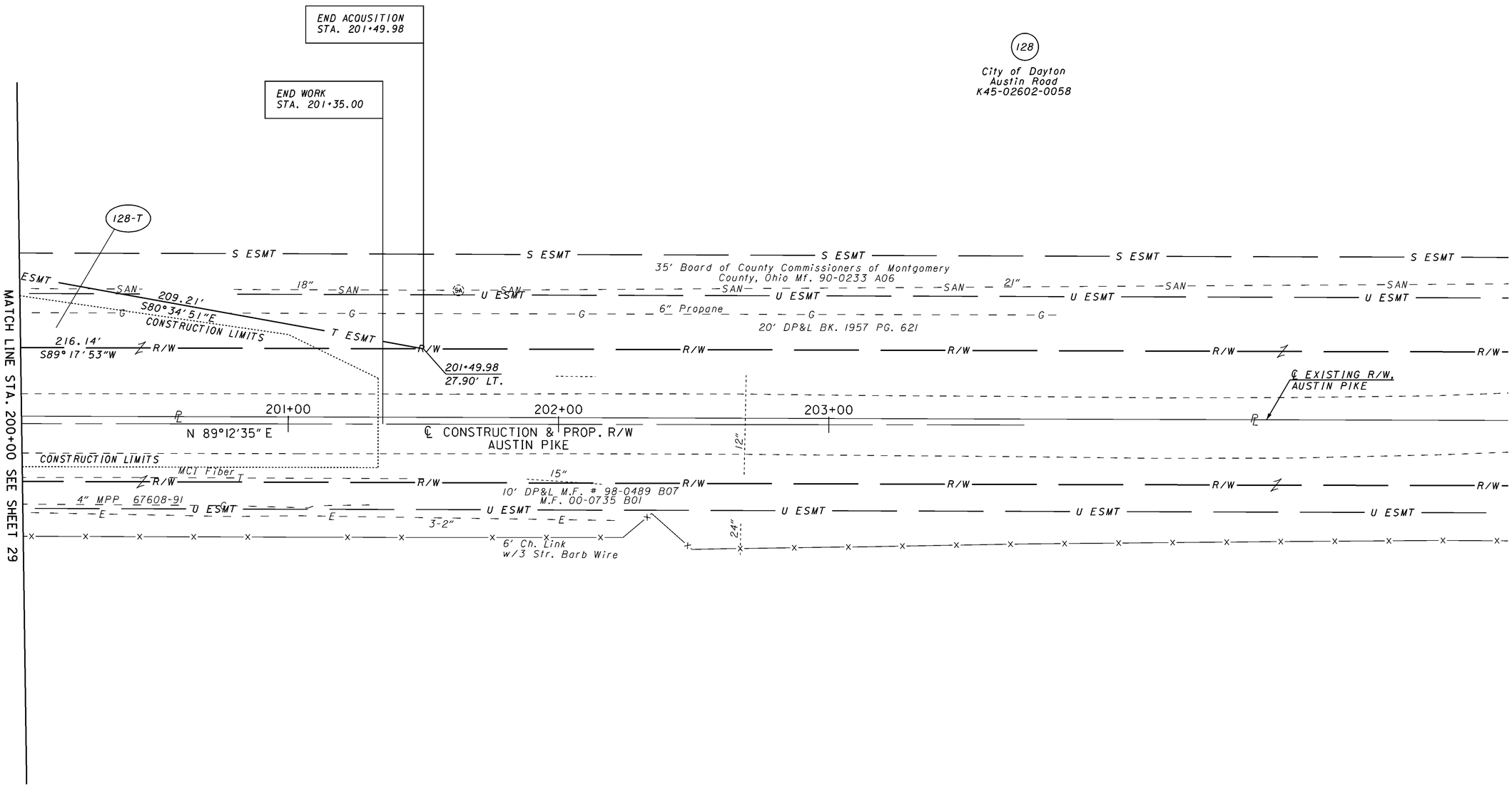

126
City of Dayton
10550-10600 Springboro Pike
K45-02602-0015

STRUCTURE KEY

- RESIDENTIAL
- STRUCTURE REMOVED
- COMMERCIAL

REV. BY	DATE	DESCRIPTION

DATE COMPLETED: 9/26/07

SCALE IN FEET 0 10 20 40

PID NO. 77246

R/W DESIGNER JAE/MRP
R/W REVIEWER RDB

AUSTIN PIKE PLAN
STA. 200+00 TO STA. 205+50

MOT-75-0.75

30/58

744/773

MONTGOMERY COUNTY MIAMI TOWNSHIP SEC. 16 & 22, T. 2, R. 5 M.R.S.

BEGIN ACOUSITION STA. 38+69.64

BEGIN WORK STA. 38+30

38+69.64 152.55' LT.

38+66.20 101.29' LT.

47.88' N88°06'08"W

38+68.94 53.49' LT.

38+85.02 29.92' LT.

51.38' N80°58'38"W

100.59' N29°11'26"E

57.95' N13°49'30"E

39+61.53 111.63' LT.

40+18.81 102.92' LT.

47.88' N50°42'06"E

43.80' N57°14'50"W

35.03'

107.96' N54°21'51"E

40+32.09 29.93' LT.

147.07' S05°10'47"W

39+89.07 0.07' RT.

27.00' N05°10'47"E

39+61.91 17.57' RT.

17.50'

812.15' N05°10'47"E

40+76.91 43.76' LT.

101'-4" Wood Disturbed

35.93' N84°18'09"E

39+61.59 53.50' RT.

27.00' S05°11'02"W

39+88.59 53.50' RT.

238.60' S05°11'02"W

39+88.91 17.57' RT.

35.93' N84°18'09"W

42+27.19 53.50' RT.

172.84' S10°15'19"W

647.86' N05°10'14"E

94.10' R/W

89.73' R/W

138.28' R/W

90.32' R/W

41+70.37 29.94' LT.

42+60.70 47.79' LT.

42+60.69 29.95' LT.

85.06'

85.06' N03°55'46"E

85.33' N10°01'38"E

89.73' N00°05'24"W

17.84' R/W

15.88' S84°46'01"E

9.61'

54.06'

35.74'

41+71.36 55.43' LT.

42+60.72 63.67' LT.

41+70.99 45.82' LT.

15.90' S82°34'59"E

119.74' N11°34'32"E

40+52.37 68.76' LT.

812.15' N05°10'47"E

WOOD ROAD N 05° 11' 02" E

CONSTRUCTION LIMITS

CRAIN'S RUN SECTION FIVE BOOK 182 PG. 34

MATCH LINE STA. 43+00 SEE SHEET 33

130 Crains Run Owners Association Miamisburg Springboro Rd. K45-26628-0024

131 Drees Company Home Site 29 Old Osprey Circle K45-26628-0005

132 Harvey C. & Janice L. Grafton 4229 Old Osprey Circle K45-26628-0004

133 Michael L. Simmons 4223 Old Osprey Circle K45-26628-0003

134 Nicholas R. and Jennifer L. Davis 4217 Old Osprey Circle K45-26628-0002

LOT 150 LOT 129 LOT 128 LOT 127 LOT 126

129 Sun Secured Financing LLC W. Valette Circle K45-02605-0063

115 Township of Miami Miamisburg Springboro Rd. K45-02605-0053

Board of County Commissioners of Montgomery County, Ohio M.F.# 95-0327 C03

GREATER MORAINE CREEK SEWER EASEMENT M.F.# 98-0197 D01

#503546 D2012

#504480 #5M33E #503538 #503537 #503536 #M11 #M12

42" Wire w/ 2 Str. Barb Wire

Section 22 Section 16

10' DP&L M.F.# 00-0409 A04 Easement-00-062568

10' DP&L Book 2390 PG. 96

10'x10' THE OHIO BELL TELEPHONE COMPANY M.F.# 86-0677 BIO

Bumper Blocks

Conc. Walk

Dense Vegetation

Cultivated Field

Wood Shed

Do Not Disturb

Save if Possible

CONSTRUCTION LIMITS

R/W U ESMT S ESMT T ESMT

130-WDV 131-WDV 132-WDV 133-WDV 134-WDV 115-WDV1 129-T 132-T 133-T 134-T

CURVE	RADIUS	CHORD LENGTH	CHORD BEARING
⓪	25.00'	28.53'	S60°52'59"W

STRUCTURE KEY

- RESIDENTIAL
- STRUCTURE REMOVED
- COMMERCIAL

REV. BY	DATE	DESCRIPTION

DATE COMPLETED: 9/26/07

SCALE IN FEET 0 10 20 40

PID NO. 77246

R/W DESIGNER JAE/MRP

R/W REVIEWER RDB

WOOD ROAD PLAN STA. 38+30 TO STA. 43+00

MOT-75-0.75

32 / 58

745 / 773

1665rp09.dgn 25-SEP-2007

MONTGOMERY COUNTY
MIAMI TOWNSHIP
SEC. 16 & 22, T. 2, R. 5 M.R.S.

MATCH LINE STA. 43+00 SEE SHEET 32

MATCH LINE STA. 48+50 SEE SHEET 16

LOT 126 | LOT 125 | LOT 124 | LOT 123 | LOT 122 | LOT 151

(134) Nicholas R. and Jennifer L. Davis 4217 Old Osprey Circle K45-26628-0002

(135) Nancy E. Bradshaw 4211 Old Osprey Circle K45-26628-0001

(136) Drees Company Old Osprey Circle Home Lot 124 K45-26629-0005

(137) Victor J. Jr. and Rebecca D. Ragucci 4199 Old Osprey Circle K45-26629-0004

(138) Gary A. and Stacia R. Burlingame 4193 Old Osprey Circle K45-26629-0003

CRAIN'S RUN SECTION FIVE BOOK 182 PG. 34

(113) Crains Run Owners Association 10333 Miamisburg Springboro Rd. K45-26629-0008

15' Easement

Wood Deck

Wood Play House

Dense Vegetation

10.66' Encroachment

CONSTRUCTION LIMITS

68'-4' Wood Disturbed

L.S.A. Do not Disturb

3-1" 5-Bushes L.S.A.

134-T | 135-T | 136-T | 137-T | 138-T | 113-WDV

134-WDV | 135-WDV | 136-WDV | 137-WDV | 138-WDV

BEACHLER

Section 22 | Section 16

CONSTRUCTION & PROP. R/W

WOOD ROAD N 05° 11' 02" E

Board of County Commissioners of Montgomery County, Ohio M.F.# 95-0327 C03

#M13 | #M14

Dense Vegetation

Cultivated Field

CONSTRUCTION LIMITS

82'-6' Chain Link Disturbed

6" Ch. Link w/ # Str. Barb Wire

114-WDV | 114-T | 115-WDV1

Crains Run Water & Sewer District Miamisburg Springboro Rd. K45-02605-0064 (114)

(115) Township of Miami Miamisburg Springboro Rd. K45-02605-0053

STRUCTURE KEY

- RESIDENTIAL
- STRUCTURE REMOVED
- COMMERCIAL

REV. BY	DATE	DESCRIPTION
JAE	9-25-07	Added Personality Item to 114-T
		Added Tree Removals to 135-T, 137-T

DATE COMPLETED: 9/26/07

SCALE IN FEET

PID NO. 77246

R/W DESIGNER JAE/MRP

R/W REVIEWER RDB

WOOD ROAD PLAN
STA. 43+00 TO STA. 48+50

MOT-75-0.75

33 / 58

746 / 773

MONTGOMERY COUNTY
MIAMI TOWNSHIP
SEC. 16, T. 2, R. 5, M.R.S.
CITY OF MIAMISBURG

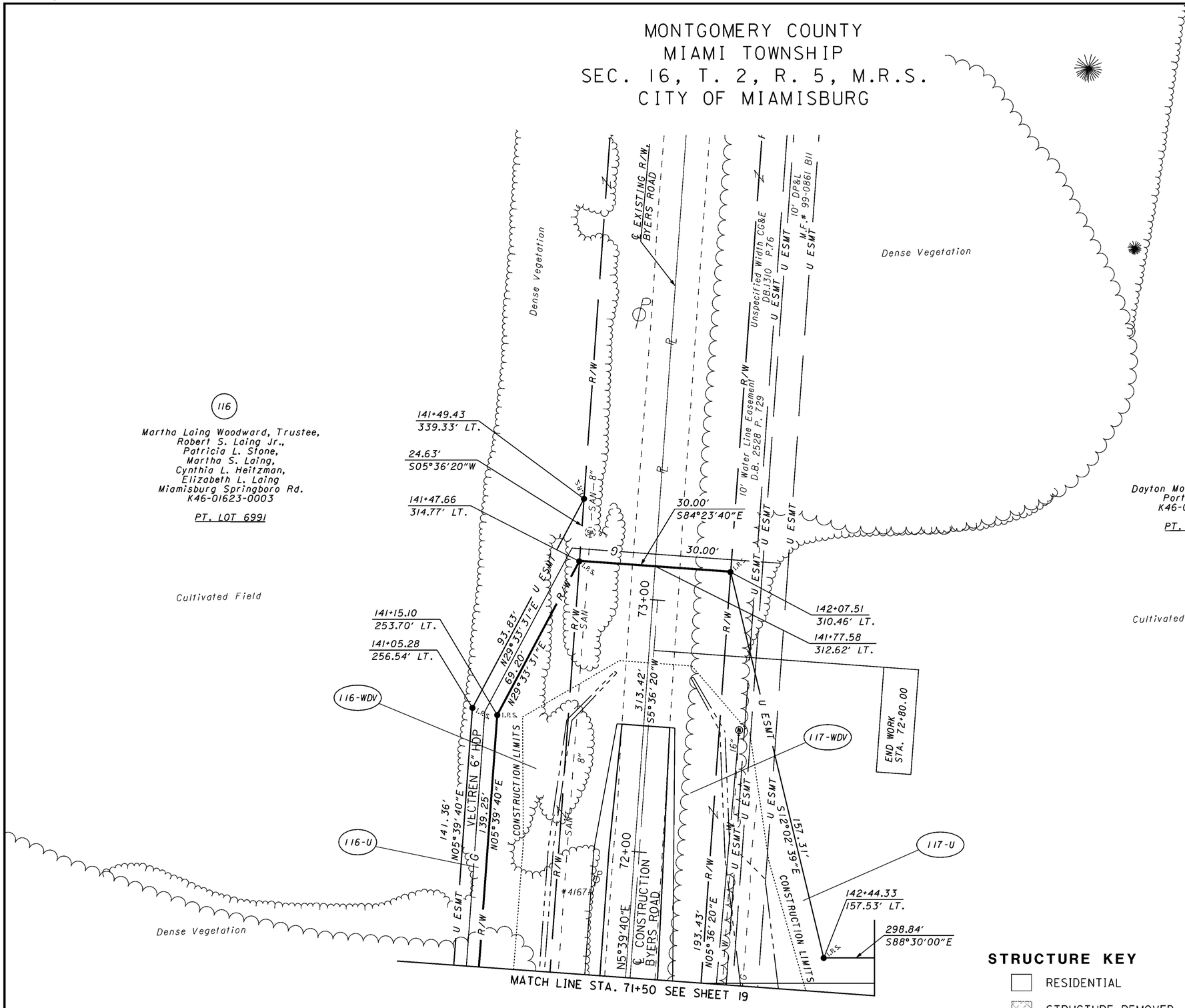

STRUCTURE KEY

- RESIDENTIAL
- STRUCTURE REMOVED
- COMMERCIAL

REV. BY	DATE	DESCRIPTION

DATE COMPLETED: 9/26/07

SCALE IN FEET: 0, 10, 20, 40

PID NO. 77246

R/W DESIGNER JAE/MRP

R/W REVIEWER RDB

BYERS ROAD PLAN
STA. 71+50 TO STA. 72+50

MOT-75-0.75

1665rp44.dgn 25-SEP-2007

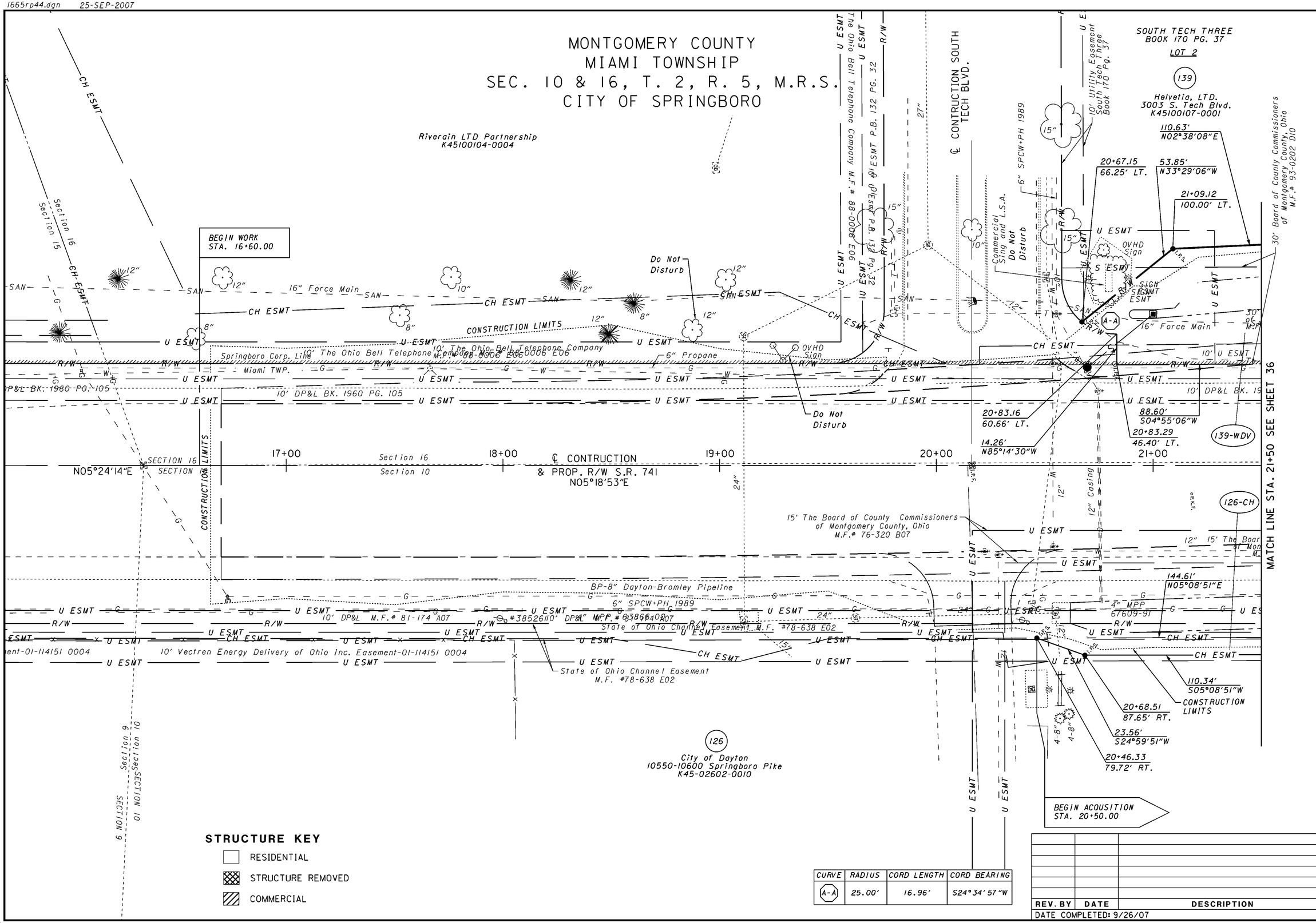

STRUCTURE KEY

- RESIDENTIAL
- STRUCTURE REMOVED
- COMMERCIAL

CURVE	RADIUS	CORD LENGTH	CORD BEARING
A-A	25.00'	16.96'	S24°34'57"W

REV. BY	DATE	DESCRIPTION

DATE COMPLETED: 9/26/07

SCALE IN FEET 0 10 20 40

PID NO. 77246

R/W DESIGNER JAE/MRP
R/W REVIEWER RDB

S.R. 741 PLAN
STA. 16+00 TO STA. 21+50

MOT-75-0.75

1665rp45.dgn 25-SEP-2007

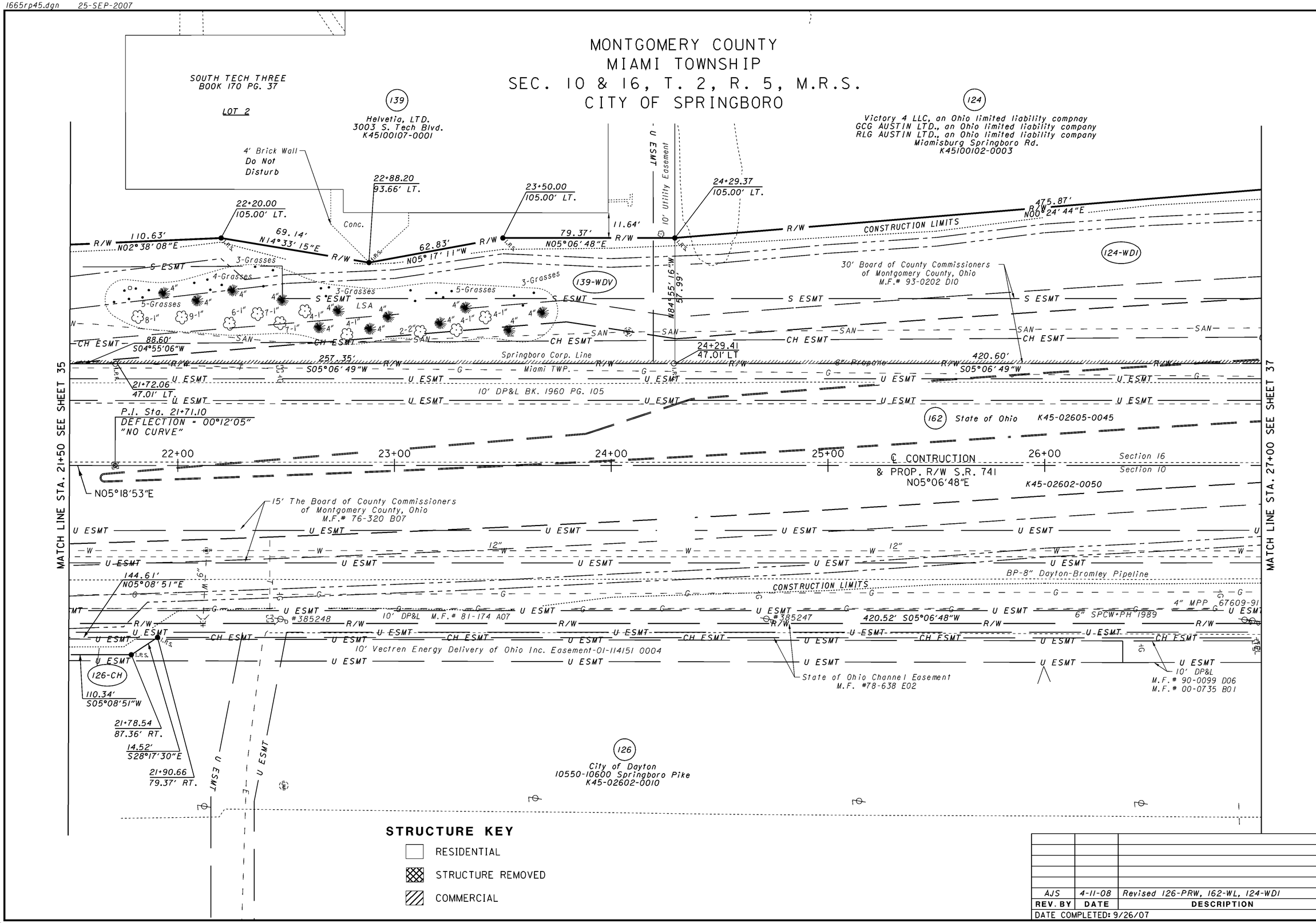

STRUCTURE KEY

- RESIDENTIAL
- STRUCTURE REMOVED
- COMMERCIAL

REV. BY	DATE	DESCRIPTION
AJS	4-11-08	Revised 126-PRW, 162-WL, 124-WDI

DATE COMPLETED: 9/26/07

SCALE IN FEET 0 10 20 40

PID NO. 77246

R/W DESIGNER JAE/MRP
R/W REVIEWER RDB

S.R. 741 PLAN
STA. 21+50 TO STA. 27+00

MOT-75-0.75

MONTGOMERY COUNTY
MIAMI TOWNSHIP
SEC. 10 & 16, T. 2, R. 5, M.R.S.
CITY OF SPRINGBORO

(124)
Victory 4 LLC, an Ohio limited liability compnay
GCG AUSTIN LTD., an Ohio limited liability company
RLG AUSTIN LTD., an Ohio limited liability company
Miamisburg Springboro Rd.
K45100102-0003

29+03.64
144.00' LT.
I.P.S.
R/W
197.94'
N 02° 07' 13" W
R/W
475.87'
N00°24'44"E
R/W
CONSTRUCTION LIMITS
31+00.00
168.92' LT
I.P.S.
LA-R/W
302.41'
N 02° 07' 13" W
LA-R/W
S 84° 53' 12" E
116.82'
124-WDI
124-WLI
CH ESMT
S ESMT
30' Board of County Commissioners of Montgomery County, Ohio
M.F.# 93-0202 D10
28+50.01
47.01' LT.
SAN
CH ESMT
Springboro Corp. Line
Miami TWP.
420.60'
S05°06'49"W
S03°58'05"W 250.04'
S03°58'05"W
200.04'
400.08'
16" Force Main
6" Propane
U ESMT
G
10' DP&L BK. 1960 PG. 105
31+00.00
52.00' LT
K45-02605-0045
162-WL
28+00
29+00
Section 16
Section 10
30+00
31+00
32+00
℄ CONTRUCTION
& PROP. R/W SR 741
N05°06'48"E
S 84° 53' 12" E
120.00'
162
State of Ohio
K45-02602-0050
15' The Board of County Commissioners of Montgomery County, Ohio
M.F.# 76-320 B07
12"
W
6" SPCW+PH 1989
28+50.00
73.00' RT.
420.52' S05°06'48"W
4" MPP
10' DP&L M.F.# 81-174 A07
#C4505
S03°58'03"W
CONSTRUCTION LIMITS
31+00.00
68.00' RT
S03°58'03"W 400.08'
BP-8" Dayton-Bromley Pipeline
S03°58'03"W 255.05'
126-PRW
110.00' N05°08'51"E
10' DP&L M.F.# 90-0099 D06
M.F.# 00-0735 B01
Time Warner Fiber
State of Ohio Channel Easement
M.F. #78-638 E02
10' DP&L
M.F.# 81-174 A07
Fiber Optic
31+40.00
79.93' RT.
15.07'
N84°53'12"W
31+40.00
95.00' RT.
136.57'
S05°06'48"W
126-CHI
32+50.00
80.00' RT.
128
City of Dayton
10550-10600 Springboro Pike
K45-02602-0015
126
City of Dayton
10550-10600 Springboro Pike
K45-02602-0010

MATCH LINE STA. 27+00 SEE SHEET 36
MATCH LINE STA. 32+50 SEE SHEET 38

STRUCTURE KEY
- RESIDENTIAL
- STRUCTURE REMOVED
- COMMERCIAL

REV. BY	DATE	DESCRIPTION
AJS	4-11-08	Revised 124-WDI, 124-WLI, 126-PRW, 162-WL

DATE COMPLETED: 9/26/07

N

SCALE IN FEET
0 10 20 40

PID NO. 77246

R/W DESIGNER JAE/MRP
R/W REVIEWER RDB

S.R. 741 PLAN
STA. 27+00 TO STA. 32+50

MOT-75-0.75

37 / 58

750
773

1665rp47.dgn 25-SEP-2007

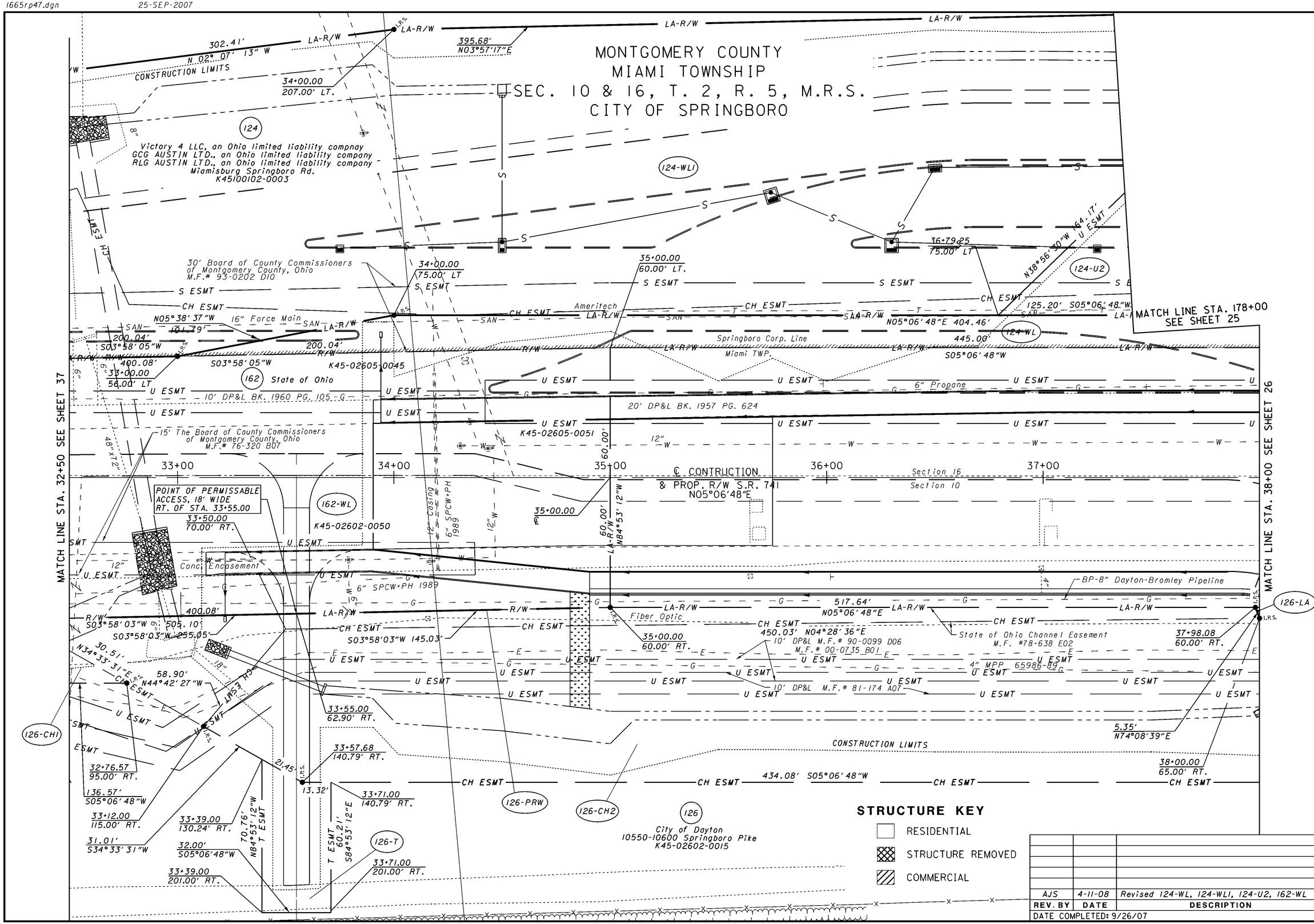

REV. BY	DATE	DESCRIPTION
AJS	4-11-08	Revised 124-WL, 124-WL1, 124-U2, 162-WL

DATE COMPLETED: 9/26/07

SCALE IN FEET

PID NO. 77246

R/W DESIGNER JAE/MRP

R/W REVIEWER RDB

S.R. 741 PLAN
STA. 32+50 TO STA. 38+00

MOT-75-0.75

38/58

751/773

MONTGOMERY COUNTY
MIAMI TOWNSHIP
SEC. 10 & 16,
T. 2, R. 5 M.R.S.

STRUCTURE KEY

- RESIDENTIAL
- STRUCTURE REMOVED
- COMMERCIAL

CURVE	RADIUS	CHORD LENGTH	CHORD BEARING
SR-4	12217.67'	295.89'	S04°26'23"W

SR 741 CURVE NO. 1
P.I. STA. = 48+78.77
Δ = 3° 28' 24" (LT)
Dc = 0° 28' 11"
R = 12,200.00'
T = 369.90'
L = 739.57'
E = 5.61'

123
MV Austin Pike Land LLC, an Ohio Limited Liability Company
RLG Miami LTD., an Ohio Limited Liability Company
GCG Miami LTD., an Ohio Limited Liability Company
KGS Miami LTD., an Ohio Limited Liability Company
10469 Miamisburg Springboro Rd.
K45-02605-0006

123A
MV Austin Pike Land LLC, an Ohio Limited Liability Company
RLG Miami LTD., an Ohio Limited Liability Company
GCG Miami LTD., an Ohio Limited Liability Company
KGS Miami LTD., an Ohio Limited Liability Company
ST RT 741
K45-02605-0066

K45-02605-0007
Board of County Commissioners of Montgomery County, Ohio M.F.# 91-0339 B07

Board of County Commissioners of Montgomery County, Ohio M.F.# 80-167 B09

Board of County Commissioners of Montgomery County, Ohio M.F.# 80-167 B04

Board of County Commissioners of Montgomery County, Ohio Bk. 2529 Pg. 215

THE OHIO BELL TELEPHONE COMPANY M.F.# 97-0559 A01

DP&L M.F.# 88-0358 A04

10' Vectren Energy Delivery of Ohio, Inc. An Ohio Corporation M.F. # 00-0736 A04

State of Ohio Channel Easement M.F. #81-020 B02

35' Board of County Commissioners of Montgomery County, Ohio M.F.# 91-0360 E05

35' Board of County Commissioners of Montgomery County, Ohio M.F.# 90-0546 A12

The T. & D. Smith Company, LTD. 10494 Springboro Pike K45-02602-0021

T. and D. Smith Company, LTD. Springboro Pike K45-23025-0001

SOUTH AIRPORT INNS OF AMERICA BOOK 167 PG. 9 LOT 1

MATCH LINE STA. 178+00 SEE SHEET 25

MATCH LINE STA. 41+00 SEE SHEET 26

MATCH LINE STA. 46+50 SEE SHEET 40

295.45' N07°01'18"E

351.47' S05°06'56"W

270.84' N08°17'25"E

424.64'

371.28'

79.23' N89°42'57"E

27.60' N02°37'38"E

100.00' LT. 44+00.00

101.20' LT. 44+27.58

180.08' LT. 44+20.12

N02°37'38"E 221.36'

71.20'

60.00' LT. 44+31.47

60.00' RT. 45+02.67

P.C. Sta. 45+08.87

60.27' N89°42'57"E

44+37.14

168.92' N05°06'56"E

43+27.14 60.00' RT.

5.50' N84°43'42"W

41+16.70 60.00' RT.

41+16.69 65.50' RT.

25.22' S84°43'42"E

25.83' S39°43'25"E

99.31' S05°06'56"W

20.25' S39°43'25"E

42+16.00 65.50' RT.

20.50' N84°53'04"W

41+16.62 90.72' RT.

41+02.26 105.00' RT.

42+16.00 86.00' RT.

42+16.00 105.00' RT.

43+27.72 86.00' RT.

36.70' N05°06'56"E

30.72' S84°43'42"E

210.44' N05°06'56"E

111.72' S05°06'56"W

113.74' S05°06'56"W

113.32' S04°32'10"E

26.01' S86°09'50"E

170.34' S03°39'52"E

44+96.06 60.00' RT.

168.92' N05°06'56"E

42+00 43+00 44+00 45+00 46+00

Section 16 Section 10

℄ CONTRUCTION & PROP. R/W S.R. 741 N05°06'56"E

SR 741 CURVE NO. 1

CONSTRUCTION LIMITS

Detention Basin

231'-6' Iron Fence Disturbed

6" MPP G 65312-87

L.S.A. 23-Bolders 3-4" trees 4-Hedge Bushes

L.S.A. Hedges

4' Wood

6' Iron

Asph.

1 Sty. Metal Frame

#248518

#248517

123-WL3 123A-WL2 123-WL2 123A-WL1 125-WL 125-T 25-WL2 140-WL

REV. BY	DATE	DESCRIPTION
AJS	4-11-08	Revised 123-WL2, 123-WL3, 123A-WL1, 123A-WL2, 125-WL, 125-WL2
JAE	1-30-08	Added/Revised 123, 123A

DATE COMPLETED: 9/26/07

SCALE IN FEET 0 10 20 40

PID NO. 77246

R/W DESIGNER JAE/MRP
R/W REVIEWER RDB

S.R. 741 PLAN
STA. 41+00 TO STA. 46+50

MOT-75-0.75

39/58
752/773

MONTGOMERY COUNTY
MIAMI TOWNSHIP
SEC. 10 & 16, T. 2, R. 5

CURVE	RADIUS	CHORD LENGTH	CHORD BEARING
SR-3	12217.67'	443.90'	S02°42'18"W
SR-4	12217.67'	295.89'	S04°26'23"W

SR 741 CURVE NO. 1
P.I. STA. = 48+78.77
Δ = 3° 28' 24" (LT)
Dc = 0° 28' 11"
R = 12,200.00'
T = 369.90'
L = 739.57'
E = 5.61'

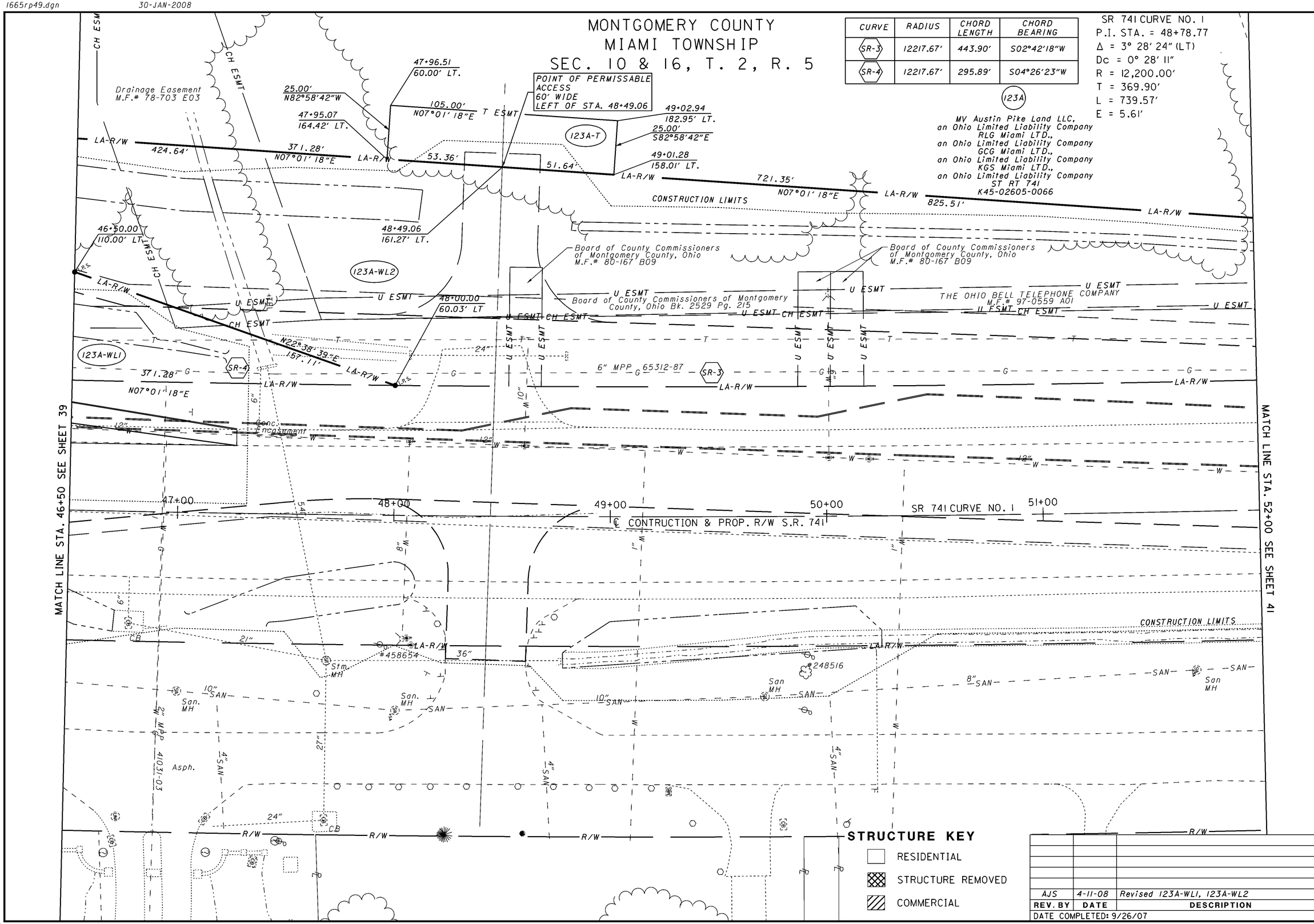

STRUCTURE KEY

- RESIDENTIAL
- STRUCTURE REMOVED
- COMMERCIAL

REV. BY	DATE	DESCRIPTION
AJS	4-11-08	Revised 123A-WL1, 123A-WL2

DATE COMPLETED: 9/26/07

SCALE IN FEET

PID NO. 77246

R/W DESIGNER JAE/MRP
R/W REVIEWER RDB

S.R. 741 PLAN
STA. 46+50 TO STA. 52+00

MOT-75-0.75

1665rp50.dgn 30-JAN-2008

MONTGOMERY COUNTY
MIAMI TOWNSHIP
SEC. 10 & 16, T. 2, R. 5

CURVE	RADIUS	CHORD LENGTH	CHORD BEARING
SR-2	12237.67	536.65'	S02°53'08"W
SR-3	12217.67'	443.90'	S02°42'18"W

SR 741 CURVE NO. 2
P.I. STA. = 56+21.73
Δ = 3° 30' 18" (RT)
Dc = 0° 28' 11"
R = 12,200.00'
T = 373.29'
L = 746.35'
E = 5.71'

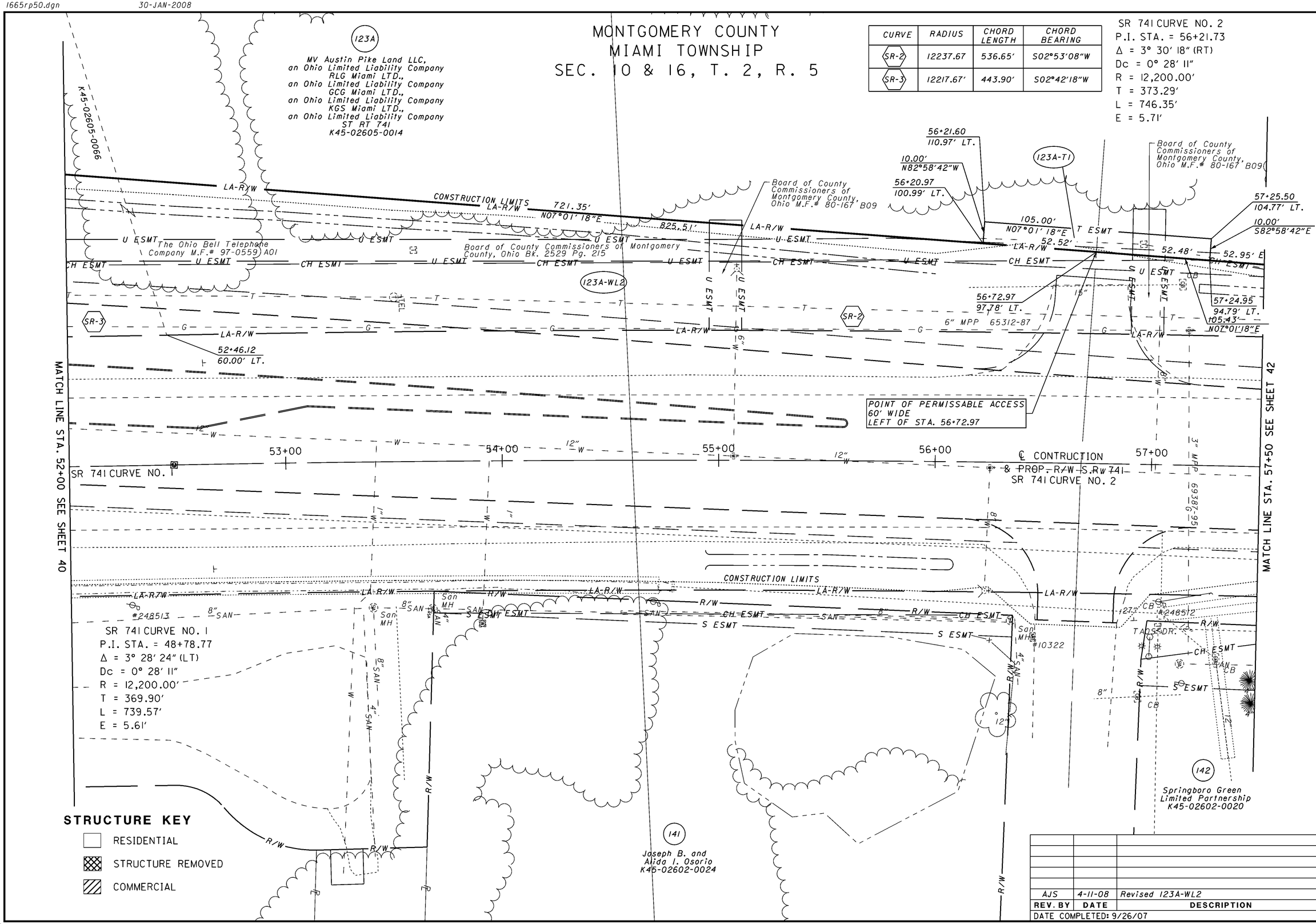

STRUCTURE KEY

- RESIDENTIAL
- STRUCTURE REMOVED
- COMMERCIAL

REV. BY	DATE	DESCRIPTION
AJS	4-11-08	Revised 123A-WL2

DATE COMPLETED: 9/26/07

SCALE IN FEET 0 10 20 40

PID NO. 77246

R/W DESIGNER JAE/MRP
R/W REVIEWER RDB

S.R. 741 PLAN
STA. 52+00 TO STA. 57+50

MOT-75-0.75

MONTGOMERY COUNTY
MIAMI TOWNSHIP
SEC. 10 & 16, T. 2, R. 5

SR 741 CURVE NO. 2
P.I. STA. = 56+21.73
Δ = 3° 30' 18" (RT)
Dc = 0° 28' 11"
R = 12,200.00'
T = 373.29'
L = 746.35'
E = 5.71'

CURVE	RADIUS	CHORD LENGTH	CHORD BEARING
SR	12237.67	47.02'	S05°03'35"W
SR-1	12237.67	173.23'	S04°32'38"W
SR-2	12237.67	536.65'	S02°53'08"W

(123A)
MV Austin Pike Land LLC,
an Ohio Limited Liability Company
RLG Miami LTD.,
an Ohio Limited Liability Company
GCG Miami LTD.,
an Ohio Limited Liability Company
KGS Miami LTD.,
an Ohio Limited Liability Company
ST RT 741
K45-02605-0036

(143)
Mount Adams Properties LLC,
an Ohio limited liability company
10187 Springboro Pike
K45 02605 0038

K45-02605-0014

105.43'
N07°01'18"E

57+77.43
92.00' LT.

U ESMT
LA-R/W
CH ESMT

Board of County Commissioners of Montgomery County, Ohio Bk. 2529 Pg. 215

177.00' N08°45'02"E

123A-WL2

SR-2 SR-1 SR

16" MPP 65312-87

59+52.73
79.00' LT.

19.00'
S84°38'40"E

143-WL

The Ohio Bell Telephone Company M.F.# 97-0559 A01

320.98'
N08°31'39"E

CONSTRUCTION LIMITS

273.47'
S05°08'51"W

END ACQUISITION
STA. 62+72.88

R/W

30" 6" Dia.

#10187

57+80.21
60.00' LT.

59+52.60
60.00' LT.

59+99.41
60.00' LT.

62+72.88
60.00' LT.

12" W

58+00 59+00 60+00 61+00 62+00 63+00

℄ CONTRUCTION
& PROP. R/W S.R. 741
SR 741 CURVE NO. 2
P.T. Sta.
59+94.79

N05°08'51"E

MATCH LINE STA. 57+50 SEE SHEET --

12" (Abandoned)

CONSTRUCTION LIMITS

#47.67.82

SAN

S ESMT

4" 6"

(142)
Springboro Green
Limited Partnership
K45-02602-0020

(145)
City of Dayton
K45-02602-0002

STRUCTURE KEY

- RESIDENTIAL
- STRUCTURE REMOVED
- COMMERCIAL

REV. BY	DATE	DESCRIPTION
AJS	4-11-08	Revised 123A-WL2

DATE COMPLETED: 9/26/07

N

SCALE IN FEET 0 10 20 40

PID NO. 77246

R/W DESIGNER JAE/MRP
R/W REVIEWER RDB

S.R. 741 PLAN
STA. 57+50 TO STA. 63.00

MOT-75-0.75

MONTGOMERY COUNTY
MIAMI TOWNSHIP
SEC. 16, T. 2, R. 5, M.R.S.
CITY OF SPRINGBORO

STRUCTURE KEY
- RESIDENTIAL
- STRUCTURE REMOVED
- COMMERCIAL

18+00 19+00 20+00 21+00 22+00

℄ CONSTRUCTION & PROP. R/W I-75 CURVE I-75-2

CURVE I-75-2
P.I. STA. = 19+72.39
Δ = 18° 15' 11" (LT)
Dc = 0° 28' 00"
R = 12,277.69'
T = 1,972.39'
L = 3,911.36'
E = 157.42'

CURVE RAMP H-1
P.I. STA. = 224+80.19
Δ = 1° 56' 44" (LT)
Dc = 0° 27' 41"
R = 12,416.19'
T = 210.81'
L = 421.58'
E = 1.79'

158

Henry N. Hollencamp, Trustee of and for John G. Gephart K45-02605-0021

158-WL

511.17'

36"

16" Casing

I-75 Northbound

P.C. Sta. 222+69.38

℄ CONSTRUCTION RAMP H CURVE RAMP H-1

MATCH LINE STA. 223+00 SEE SHEET 44

CONSTRUCTION LIMITS

S 85°37'33"W

Concrete Paved Ditch

54" Woven Wire 1 Str. Barb Wire

LA R/W

Miami Twp. Springboro Corp. Line

19+81.27 225.00' RT.

C-C

Dense Vegetation

8"

CH ESMT

SAN

S ESMT

8" W 8"

Board of County Commissioners of Montgomery County, Ohio M.F.# 90-0601 A07

CURVE	RADIUS	CHORD LENGTH	CHORD BEARING
C-C	12,502.67'	623.10'	S21°57'16"W

REV. BY	DATE	DESCRIPTION

DATE COMPLETED: 9/26/07

SCALE IN FEET 0 10 20 40

PID NO. 77246

R/W DESIGNER JAE/MRP R/W REVIEWER RDB

RAMP H PLAN STA. 21+69.38 TO STA. 223+00

MOT-75-0.75

MONTGOMERY COUNTY
MIAMI TOWNSHIP
SEC. 16, T. 2, R. 5, M.R.S
CITY OF SPRINGBORO

STRUCTURE KEY

- RESIDENTIAL
- STRUCTURE REMOVED
- COMMERCIAL

CURVE I-75-2
P.I. STA. = 19+72.39
Δ = 18° 15' 11" (LT)
Dc = 0° 28' 00"
R = 12,277.69'
T = 1,972.39'
L = 3,911.36'
E = 157.42'

CURVE RAMP H-1
P.I. STA. = 224+80.19
Δ = 1° 56' 44" (LT)
Dc = 0° 27' 41"
R = 12,416.19'
T = 210.81'
L = 421.58'
E = 1.79'

CURVE RAMP H-2
P.I. STA. = 229+75.68
Δ = 19° 43' 58" (RT)
Dc = 3° 30' 00"
R = 1,637.02'
T = 284.71'
L = 563.79'
E = 24.57'

℄ CONSTRUCTION & PROP. R/W I-75
CURVE I-75-2

℄ CONSTRUCTION RAMP H

24+00 | 25+00 | 26+00 | 27+00 | 28+00

224+00 | CURVE RAMP H-1 | 225+00 | 226+00 | 227+00 | 228+00 | CURVE RAMP H-2

MATCH LINE STA. 223+00 SEE SHEET 43

MATCH LINE STA. 228+50 SEE SHEET 45

I-75 Northbound

P.R.C. Sta. 226+90.96

153 — Loran E. Smith and Amelia L. Smith (PREVIOUSLY ACQUIRED)

153-WL

158 — Henry N. Hollencamp, Trustee of and for John G. Gephart K45-02605-0021

158-WL

151 — Loran Smith (PREVIOUSLY ACQUIRED)

151-WL

159 — Elizabeth Allen Doan K45-02605-0031

159-WL

121 — City of Springboro Miamisburg Springboro Rd. K45100102-0001

28+20.92 / 162.72' RT.

27+08.61 / 192.83' RT.

117.84' N04°55'31"E

415.05' N82°18'09"W

25+93.22 / 225.00' RT.

121.68'

S75°21'10"W 39.08'

27+30.42 / 225.00' RT.

CONSTRUCTION LIMITS

54" Woven Wire
1 Str. Barb Wire

Billboard

Dense Vegetation

Miami Twp.
Springboro Corp. Line

20' Board Of County Commissioners of Montgomery County, Ohio M.F.# 83-0399 E03

30' Greater Moraine-Beavercreek Sewer District M.F.# 93-0203 A01

60" 84" 60" 18" 54" Casing 8" 24" 15" SAN 8" W 8" S ESMT 15" SAN CH ESMT

CURVE	RADIUS	CHORD LENGTH	CHORD BEARING
B-B	12,502.67'	139.71'	S20°12'23"W
C-C	12,502.67'	623.10'	S21°57'16"W

REV. BY	DATE	DESCRIPTION

DATE COMPLETED: 9/26/07

SCALE IN FEET 0 10 20 40

PID NO. 77246

R/W DESIGNER JAE/MRP
R/W REVIEWER RDB

RAMP H PLAN
STA. 223+00 TO STA. 228+50

MOT-75-0.75

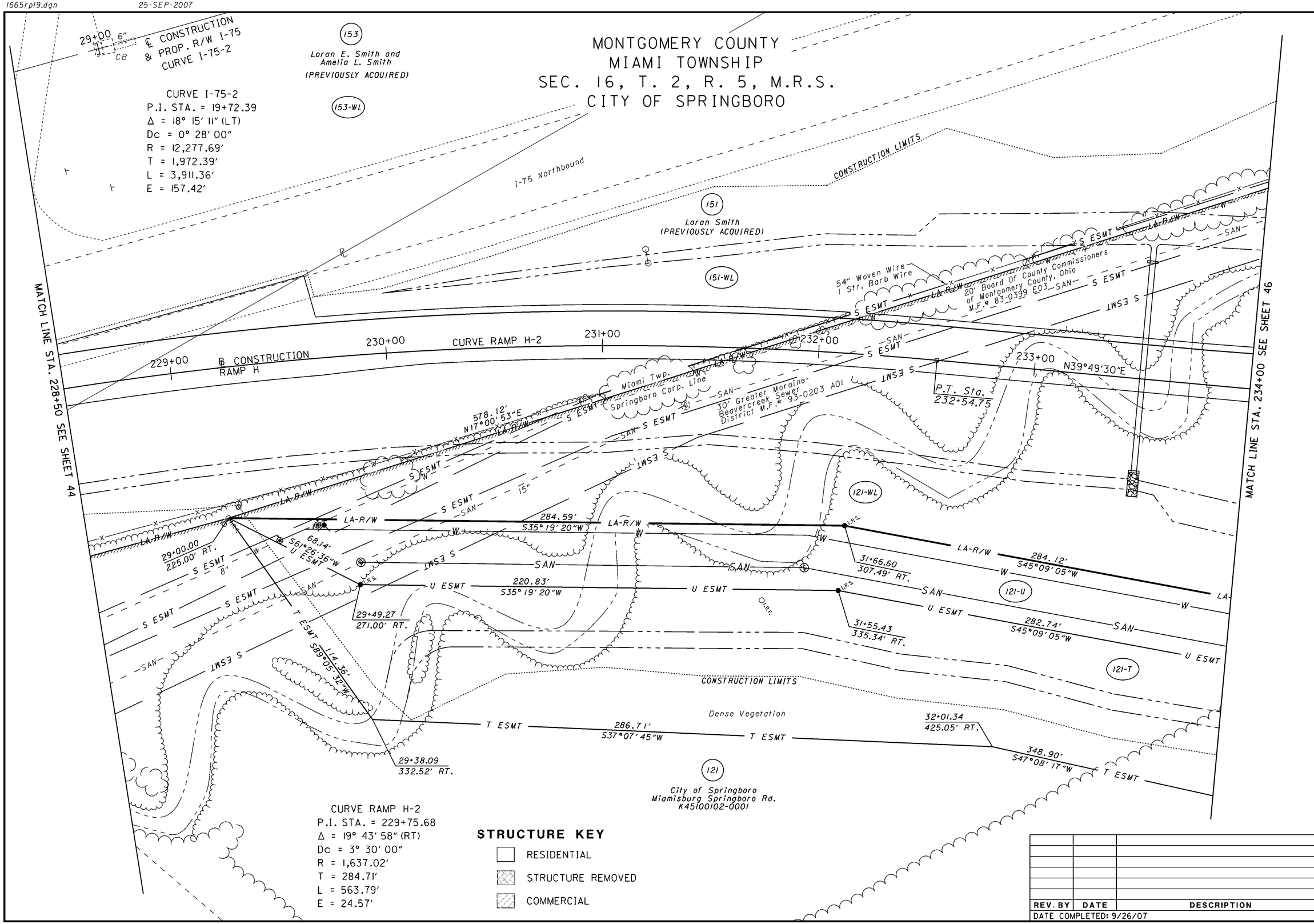

REV. BY	DATE	DESCRIPTION

DATE COMPLETED: 9/26/07

SCALE IN FEET 0 10 20 40

PID NO. 77246

R/W DESIGNER JAE/MRP
R/W REVIEWER RDB

RAMP H PLAN
STA. 228+50 TO STA. 234+00

MOT-75-0.75

1665rp20.dgn 25-SEP-2007

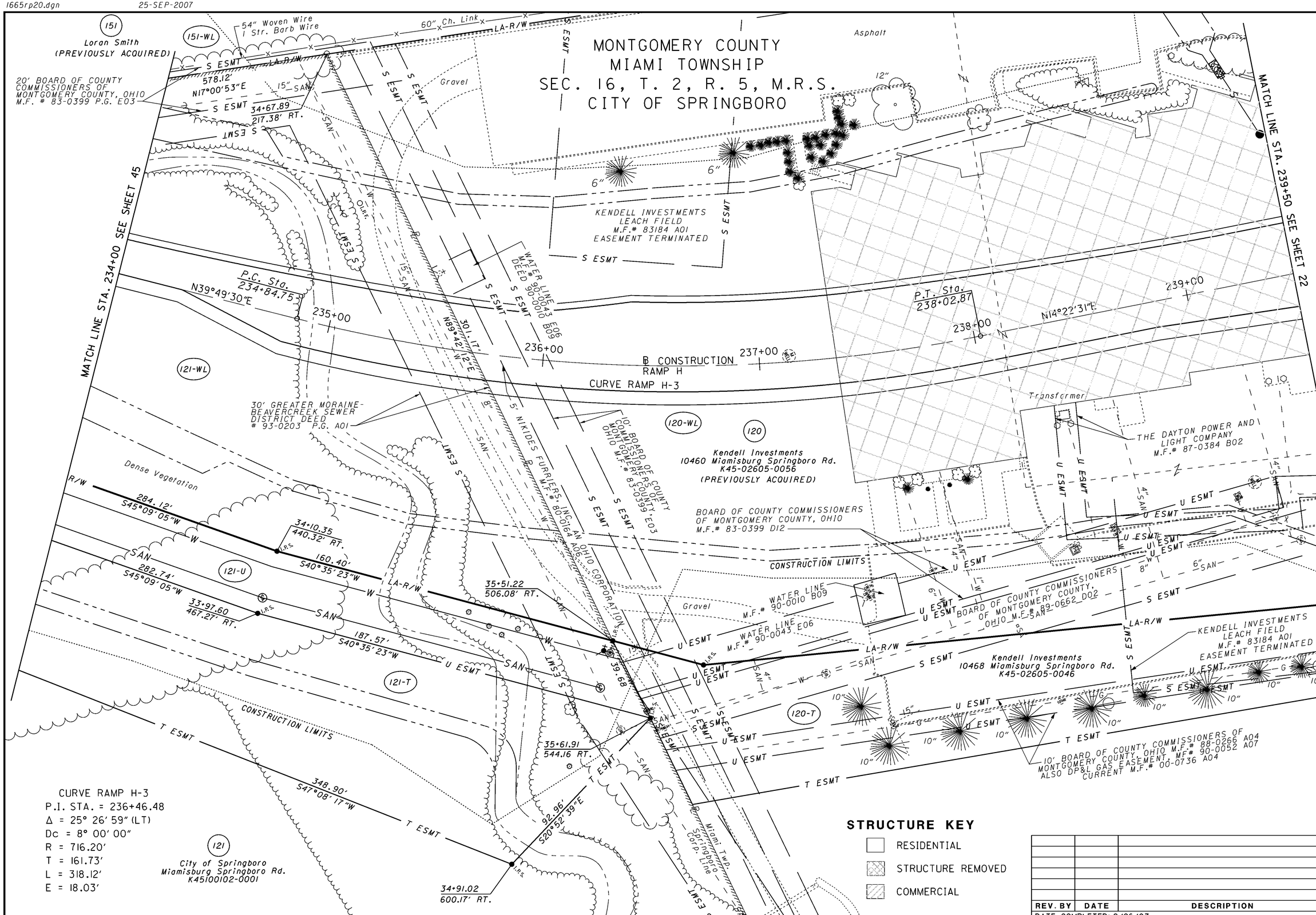

CURVE RAMP H-3
P.I. STA. = 236+46.48
Δ = 25° 26' 59" (LT)
Dc = 8° 00' 00"
R = 716.20'
T = 161.73'
L = 318.12'
E = 18.03'

STRUCTURE KEY

- RESIDENTIAL
- STRUCTURE REMOVED
- COMMERCIAL

REV. BY	DATE	DESCRIPTION

DATE COMPLETED: 9/26/07

SCALE IN FEET 0 10 20 40

PID NO. 77246

R/W DESIGNER JAE/MRP
R/W REVIEWER RDB

RAMP H PLAN
STA. 234+00 TO STA. 239+50

MOT-75-0.75

1665rp21.dgn 30-JAN-2008

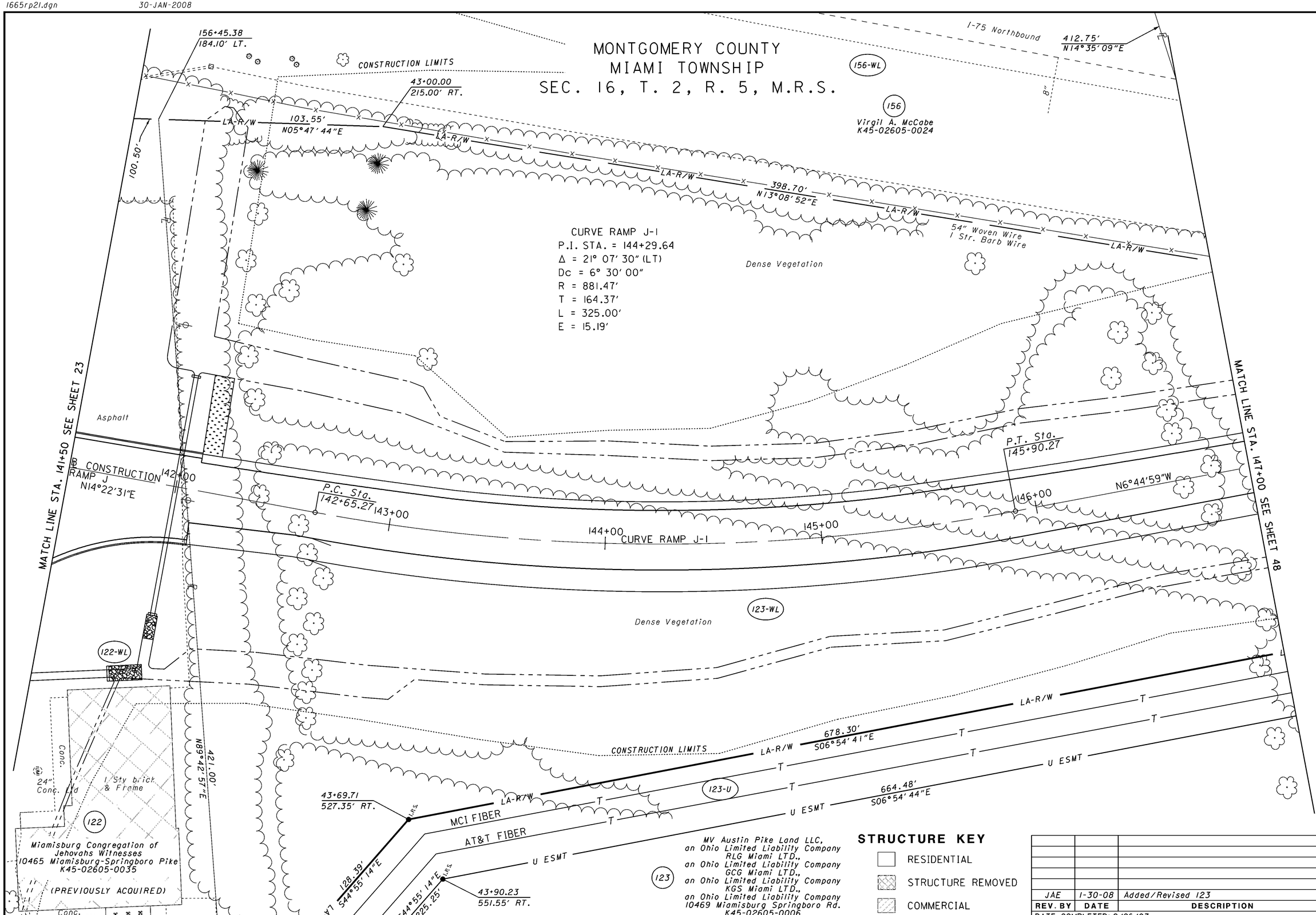

REV. BY	DATE	DESCRIPTION
JAE	1-30-08	Added/Revised 123

DATE COMPLETED: 9/26/07

SCALE IN FEET 0 10 20 40

PID NO. 77246

R/W DESIGNER JAE/MRP
R/W REVIEWER RDB

RAMP J PLAN
STA. 141+50 TO STA. 147+00

MOT-75-0.75

MONTGOMERY COUNTY
MIAMI TOWNSHIP
SEC. 16, T. 2, R. 5, M.R.S.

N

SCALE IN FEET 0 10 20 40

PID NO. 77246

R/W DESIGNER JAE/MRP
R/W REVIEWER RDB

RAMP J PLAN
STA. 147+00 TO STA. 152+50

MOT-75-0.75

48/58

761/773

51+00 ℄ CONSTRUCTION & PROP. R/W I-75 N14°22'31"E 52+00

156-WL

156 Virgil A. McCabe

N76°07'25"E 412.75'

46+98.60 206.46' RT.

LA-R/W 54" Woven Wire 1 Str. Barb Wire 282.09' N13°08'52"E LA-R/W

398.70' N13°08'52"E

MATCH LINE STA. 147+00 SEE SHEET 47

I-75 Northbound

157 L. Pearl Long and Clyde C. Long K45-02605-0033

157-WL

148+00 149+00 150+00 151+00 152+00

P.C. Sta. 148+43.44

℄ CONSTRUCTION RAMP J N6°44'59"W

CURVE RAMP J-2

19.38'

49+80.63 200.42' RT.

50+00.00 200.00' RT.

584.92' N16°57'47"E LA-R/W

83.41' N89°42'57"E

MATCH LINE STA. 152+50 SEE SHEET 49

Dense Vegetation

123-WL

CONSTRUCTION LIMITS

50+01.74 281.11' RT.

123A-WL

48.22'

50+46.66 263.60' RT.

LA-R/W 173.75' S10°25'05"W

52+20.00 251.61' RT.

LA-R/W 365.20'

LA-R/W 678.30' S06°54'41"E MCI FIBER

AT&T FIBER

U ESMT 664.48' S06°54'44"E

30.19'

123-U

123A-U

47.09'

U ESMT 167.15' S10°25'05"W

30.07' S75°47'29"E

50+09.38 310.31' RT.

50+53.25 293.22' RT.

52+20.00 281.68' RT.

K45-02605-0006

123 MV Austin Pike Land LLC, an Ohio Limited Liability Company RLG Miami LTD., an Ohio Limited Liability Company GCG Miami LTD., an Ohio Limited Liability Company KGS Miami LTD., an Ohio Limited Liability Company 10469 Miamisburg Springboro Rd. K45-02605-0039

123A MV Austin Pike Land LLC, an Ohio Limited Liability Company RLG Miami LTD., an Ohio Limited Liability Company GCG Miami LTD., an Ohio Limited Liability Company KGS Miami LTD., an Ohio Limited Liability Company ST RT 741 K45-02605-0039

STRUCTURE KEY

- RESIDENTIAL
- STRUCTURE REMOVED
- COMMERCIAL

CURVE RAMP J-2
P.I. STA. = 150+89.01
Δ = 19° 27' 24" (RT)
Dc = 4° 00' 00"
R = 1,432.39'
T = 245.57'
L = 486.42'
E = 20.90'

REV. BY	DATE	DESCRIPTION
JAE	1-30-08	Added/Revised 123, 123A

DATE COMPLETED: 9/26/07

MONTGOMERY COUNTY
MIAMI TOWNSHIP
SEC. 16, T. 2, R. 5, M.R.S.

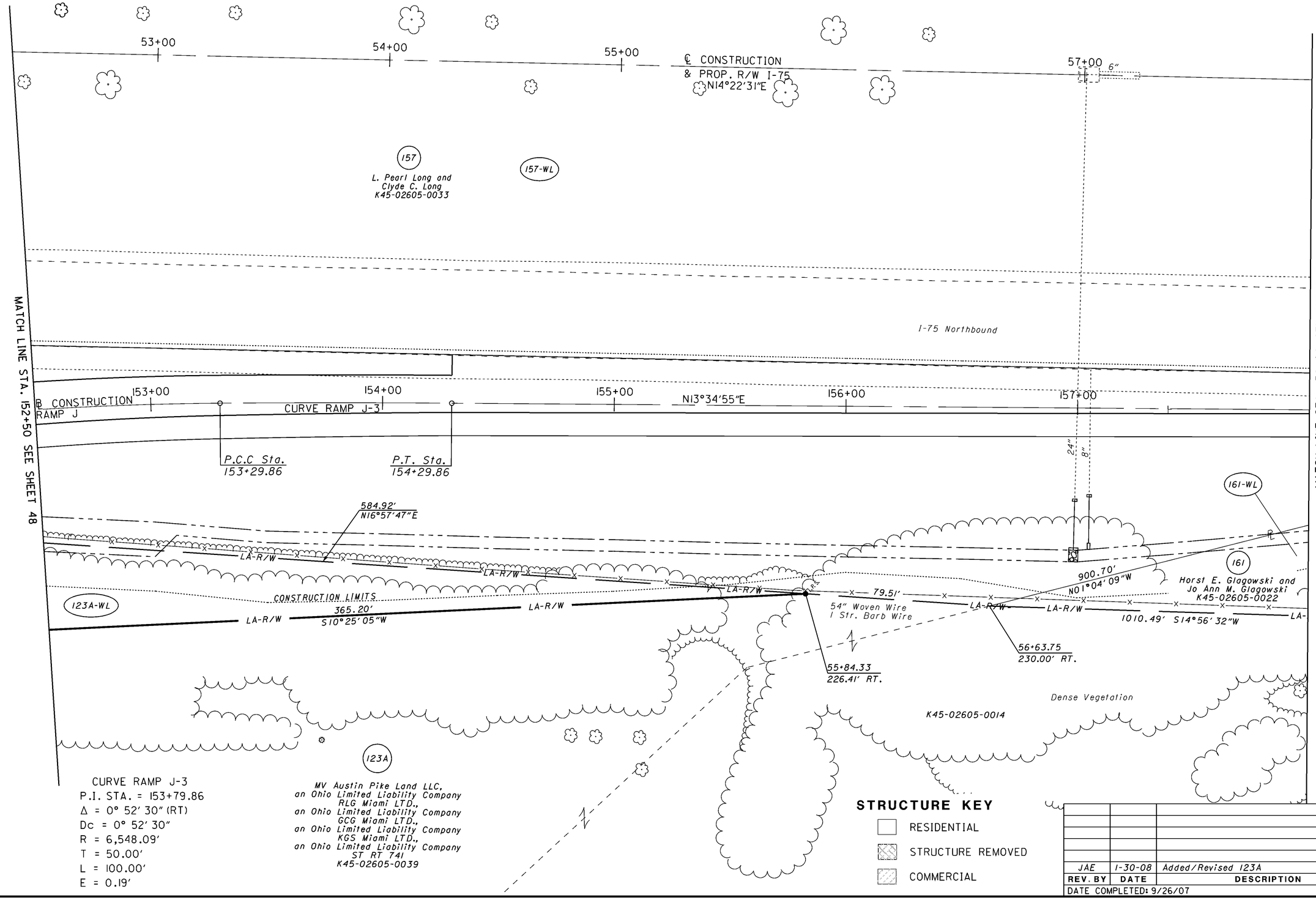

CURVE RAMP J-3
P.I. STA. = 153+79.86
Δ = 0° 52' 30" (RT)
Dc = 0° 52' 30"
R = 6,548.09'
T = 50.00'
L = 100.00'
E = 0.19'

STRUCTURE KEY

- RESIDENTIAL
- STRUCTURE REMOVED
- COMMERCIAL

REV. BY	DATE	DESCRIPTION
JAE	1-30-08	Added/Revised 123A

DATE COMPLETED: 9/26/07

SCALE IN FEET: 0, 10, 20, 40

PID NO. 77246

R/W DESIGNER: JAE/MRP
R/W REVIEWER: RDB

RAMP J PLAN
STA. 152+50 TO STA. 158+00

MOT-75-0.75

MONTGOMERY COUNTY
MIAMI TOWNSHIP
SEC. 16, T. 2, R. 5, M.R.S.

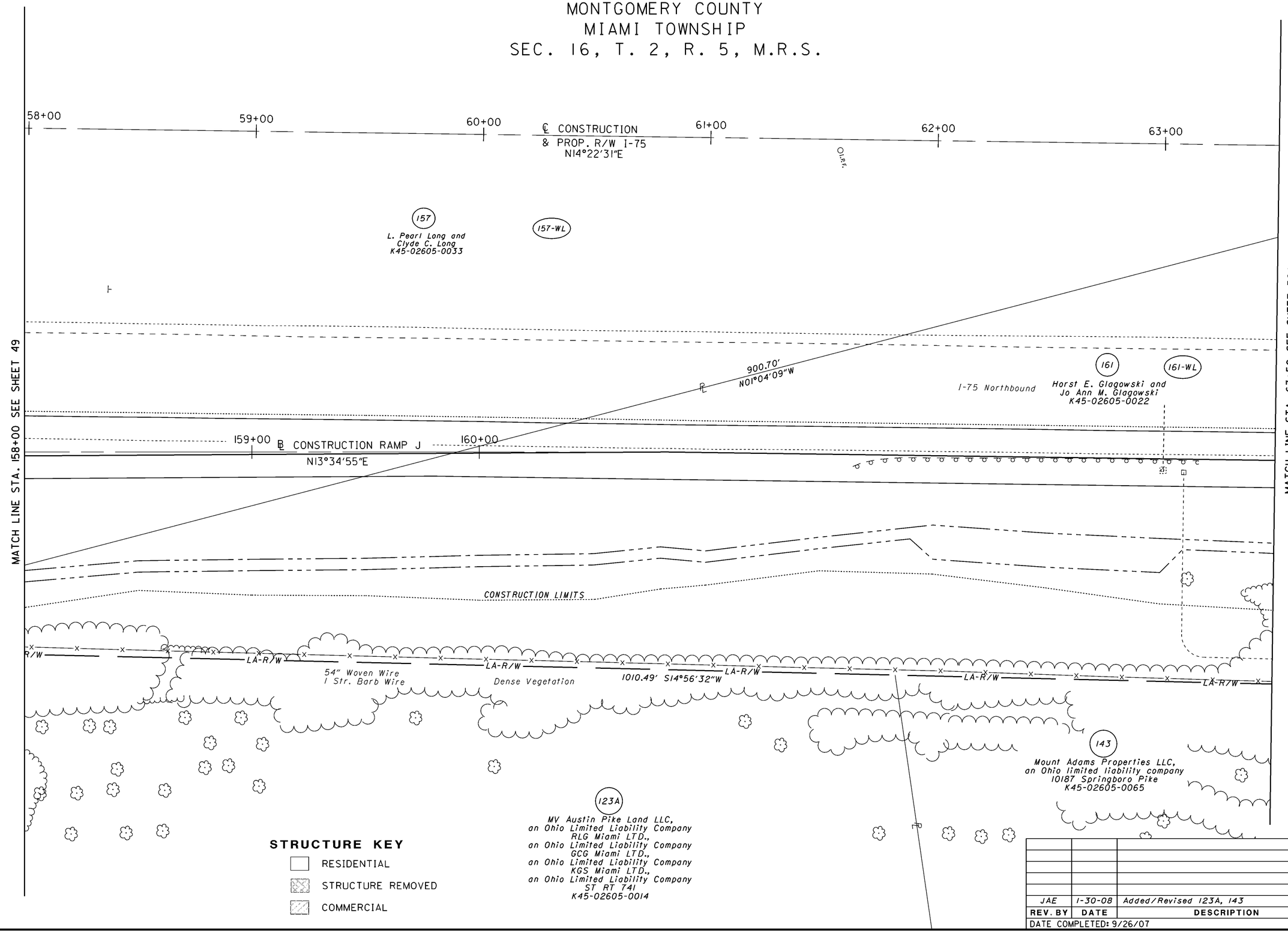

REV. BY	DATE	DESCRIPTION
JAE	1-30-08	Added/Revised 123A, 143

DATE COMPLETED: 9/26/07

SCALE IN FEET: 0, 10, 20, 40

PID NO. 77246

R/W DESIGNER JAE/MRP

R/W REVIEWER RDB

RAMP J AND I-75 PLAN

STA. 158+00 RAMP J TO STA. 63+50 I-75

MOT-75-0.75

50/58

763/773

MONTGOMERY COUNTY
MIAMI TOWNSHIP
SEC. 16, T. 2, R. 5, M.R.S.

157
L. Pearl Long and
Clyde C. Long
K45-02605-0033

157-WL

64+00 65+00 66+00 67+00 68+00

℄ CONSTRUCTION
& PROP. R/W I-75
N14°22'31"E

65+31.93
9.86' LT.

900.70'
N01°04'09"W

℄

SECTION 17
SECTION 16

161
Horst E. Glagowski and
Jo Ann M. Glagowski
K45-02605-0022

161-WL

287.52'
N74°43'11"E

℄

I-75 Northbound

CONSTRUCTION LIMITS

MATCH LINE STA. 63+50 SEE SHEET 50

CONSTRUCTION LIMITS

66+74.19
240.00' RT.

68+24.06
240.00' RT.

℄

LA-R/W 1010.49' S14°56'41"W LA-R/W LA-R/W LA-R/W LA-R/W 149.87' S14°22'31"W LA-R/W

54" Woven Wire
1 Str. Barb Wire

Dense Vegetation

143
Mount Adams Properties LLC,
an Ohio limited liability company
10187 Springboro Pike
K45-02605-0065

K45-02605-0068

STRUCTURE KEY

- RESIDENTIAL
- STRUCTURE REMOVED
- COMMERCIAL

REV. BY	DATE	DESCRIPTION
JAE	1-30-08	Added/Revised 143
JAE	10-18-07	Revised 157 Property Line Marker to Ownership Hook

DATE COMPLETED: 9/26/07

N

SCALE IN FEET
0 10 20 40

PID NO. 77246

R/W DESIGNER JAE/MRP
R/W REVIEWER RDB

RAMP J AND I-75 PLAN
STA. 63+50 TO STA. 69+00

MOT-75-0.75

MONTGOMERY COUNTY
MIAMI TOWNSHIP
SEC. 16, T. 2, R. 5, M.R.S.

CURVE RAMP P-1
P.I. STA. = 314+57.08
Δ = 2° 49′ 49″ (LT)
Dc = 0° 28′ 19″
R = 12,142.76′
T = 299.97′
L = 599.82′
E = 3.70′

CURVE RAMP P-2
P.I. STA. = 320+81.28
Δ = 3° 03′ 45″ (LT)
Dc = 0° 28′ 20″
R = 12,133.52′
T = 324.35′
L = 648.54′
E = 4.33′

(129) Sun Secured Financing LLC
W. Valette Circle
K45-02605-0063

10′ Dayton Power and Light Company M.F.# 81-0447 E04

U ESMT

5′ The Ohio Bell Telephone Company M.F.# 81-0088 E02

30′ Dayton Power and Light Company M.F.# 88-0427 D03

Dense Vegetation

SAN — 10″ — SAN — 12″

LA-R/W

CONSTRUCTION LIMITS

17+38.75
225.00′ LT.

746.83′

60″ Ch. Link

P.C.C. Sta. 317+56.93

8″

316+00 CURVE RAMP P-1 317+00 318+00 319+00 CURVE RAMP P-2 320+00

℄ CONSTRUCTION RAMP P

MATCH LINE STA. 320+50 SEE SHEET 51

CONSTRUCTION LIMITS
I-75 Southbound

S 51°17′ W

S 85°37′33″W

CURVE I-75-2
P.I. STA. = 19+72.39
Δ = 18° 15′ 11″ (LT)
Dc = 0° 28′ 00″
R = 12,277.69′
T = 1,972.39′
L = 3,911.36′
E = 157.42′

(158) Henry N. Hollencamp, Trustee of and for John G. Gephart K45-02605-0021

(158-WL)

16″ Casing

8″

16+00 17+00 ℄ CONSTRUCTION & PROP. R/W I-75 CURVE I-75-2 18+00 19+00 20+00

4″

36″

STRUCTURE KEY

- RESIDENTIAL
- STRUCTURE REMOVED
- COMMERCIAL

REV. BY	DATE	DESCRIPTION

DATE COMPLETED: 9/26/07

SCALE IN FEET 0 10 20 40

PID NO. 77246

R/W DESIGNER JAE/MRP
R/W REVIEWER RDB

RAMP P PLAN
STA. 315+00 TO STA. 320+50

MOT-75-0.75

50B / 58

765 / 773

1665rpl5.dgn 25-SEP-2007

MONTGOMERY COUNTY
MIAMI TOWNSHIP
SEC. 16, T. 2, R. 5, M.R.S.

129
Sun Secured Financing LLC
W. Valette Circle
K45-02605-0063

BEGIN ACQUSITION
STA. 25+00.00

CURVE RAMP P-2
P.I. STA. = 320+81.28
Δ = 3° 03′ 45″ (LT)
Dc = 0° 28′ 20″
R = 12,133.52′
T = 324.35′
L = 648.54′
E = 4.33′

5′ The Ohio Bell Telephone Company M.F.# 81-0088 E02

30′ Dayton Power and Light Company M.F.# 88-0427 D03

CH ESMT
U ESMT
Dense Vegetation
12″ SAN
LA-R/W
CONSTRUCTION LIMITS
746.83′
60″ Ch. Link
Conc. Encasement
129-WL
208.42′ N09° 49′ 26″E
215.87′ S21° 19′ 55″W
25+00.00 243.33′ LT.
P.R.S.

P.C.C Sta. 324+05.47
P.C.C Sta. 325+05.47

MATCH LINE STA. 320+50 SEE SHEET 50B
MATCH LINE STA. 326+00 SEE SHEET 52

321+00 322+00 323+00 324+00 325+00

CURVE RAMP P-2
℄ CONSTRUCTION RAMP P
CURVE RAMP P-3
CONSTRUCTION LIMITS
I-75 Southbound

158
Henry N. Hollencamp, Trustee of and for John G. Gephart
K45-02605-0021
158-WL

CURVE I-75-2
P.I. STA. = 19+72.39
Δ = 18° 15′ 11″ (LT)
Dc = 0° 28′ 00″
R = 12,277.69′
T = 1,972.39′
L = 3,911.36′
E = 157.42′

CURVE RAMP P-3
P.I. STA. = 324+55.48
Δ = 1° 15′ 00″ (LT)
Dc = 1° 15′ 00″
R = 4,583.67′
T = 50.00′
L = 100.00′
E = 0.27′

60″ 84″ 60″

21+00 22+00 23+00 24+00 25+00 26+00

℄ CONSTRUCTION & PROP. R/W I-75 CURVE I-75-2

STRUCTURE KEY
- RESIDENTIAL
- STRUCTURE REMOVED
- COMMERCIAL

REV. BY	DATE	DESCRIPTION

DATE COMPLETED: 9/26/07

SCALE IN FEET 0 10 20 40

PID NO. 77246

R/W DESIGNER JAE/MRP
R/W REVIEWER RDB

RAMP P PLAN
STA. 320+50 TO STA. 326+00

MOT-75-0.75

51 / 58

766 / 773

MONTGOMERY COUNTY
MIAMI TOWNSHIP
SEC. 16, T. 2, R. 5, M.R.S.

CURVE RAMP P-4
P.I. STA. = 328+43.25
Δ = 23° 19' 01" (LT)
Dc = 3° 30' 00"
R = 1,637.02'
T = 337.77'
L = 666.20'
E = 34.48'

129
Sun Secured Financing LLC
W. Valette Circle
K45-02605-0063

118
MZM Austin Rd. Property, LLC
10450 Miamisburg Springboro Rd.
K45-02605-015
(PREVIOUSLY ACQUIRED)

Board of County Commissioners of Montgomery County, Ohio M.F.# 93-0688 B12

30' BOARD OF COUNTY COMMISSIONERS OF MONTGOMERY COUNTY, OHIO M.F.# 93-0083 A01

30' Dayton Power and Light Company M.F.# 88-0427 D03

5' THE OHIO BELL TELEPHONE COMPANY M.F.# 80-088 E02

5' The Ohio Bell Telephone Company M.F.# 01-0265 B04

Conc. Encasement

S ESMT
CH ESMT
U ESMT
LA-R/W
SAN
12"
15"
8"
18"
54" Casing

27+09.31
281.85' LT.

27+20.18
240.00' LT.

208.42'
N09°49'26"E

215.87'
S21°19'55"W

43.18'
N84°18'09"W

415.05'
N84°18'09"W

Dense Vegetation

CONSTRUCTION LIMITS

1-75 Southbound

60" Ch. Link

℄ CONSTRUCTION
RAMP P

℄ CONSTRUCTION & PROP. R/W I-75
CURVE I-75-2

MATCH LINE STA. 326+00 SEE SHEET 51

MATCH LINE STA. 331+50 SEE SHEET 53

327+00 328+00 329+00 330+00 331+00

129-WL 118-WL 158-WL 153-WL

158
Henry N. Hollencamp, Trustee of and for John G. Gephart
K45-02605-0021

153
Loran E. Smith and Amelia L. Smith
(PREVIOUSLY ACQUIRED)

STRUCTURE KEY
- RESIDENTIAL
- STRUCTURE REMOVED
- COMMERCIAL

REV. BY	DATE	DESCRIPTION

DATE COMPLETED: 9/26/07

SCALE IN FEET
0 10 20 40

PID NO. 77246

R/W DESIGNER JAE/MRP
R/W REVIEWER RDB

RAMP P PLAN
STA. 326+00 TO STA. 331+50

MOT-75-0.75

52 / 58

767
773

1665rpl7.dgn 25-SEP-2007

MONTGOMERY COUNTY
MIAMI TOWNSHIP
SEC. 16, T. 2, R. 5

LA-R/W

CURVE RAMP P-4
P.I. STA. = 328+43.25
Δ = 23° 19' 01" (LT)
Dc = 3° 30' 00"
R = 1,637.02'
T = 337.77'
L = 666.20'
E = 34.48'

(PREVIOUSLY ACQUIRED)
118
MZM Austin Rd. Property LLC.
102 N. Westgate Ave.
Jacksonville, IL
K45-02605-0015

CONSTRUCTION LIMITS

Dense Vegetation

118-WL

Frame Barn
Anchor Easement Book 1936 Page 136
Conc. Slab
Anchor Easement Book 1936 Page 136
2 1/2 Sty. Frame

P.T. Sta. 331+71.67
332+00
333+00
334+00
P.C. Sta. 333+61.96
335+00
336+00
P.T. Sta. 335+91.96
CURVE RAMP P-5
℄ CONSTRUCTION RAMP P
N14°22'31"E
N4°01'29"W

MATCH LINE STA. 331+50 SEE SHEET 52
MATCH LINE STA. 337+00 SEE SHEET 20

CURVE RAMP P-4
U ESMT
LA-R/W
5' The Ohio Bell Telephone Company M.F.# 01-0265 B04
60" Ch. Link

153
Loran E. Smith and Amelia L. Smith
(PREVIOUSLY ACQUIRED)
153-WL

I-75 Southbound

STRUCTURE KEY
- RESIDENTIAL
- STRUCTURE REMOVED
- COMMERCIAL

CURVE RAMP P-5
P.I. STA. = 334+77.96
Δ = 18° 24' 00" (RT)
Dc = 8° 00' 00"
R = 716.20'
T = 116.00'
L = 230.00'
E = 9.33'

REV. BY	DATE	DESCRIPTION

DATE COMPLETED: 9/26/07

N

SCALE IN FEET 0 10 20 40

PID NO. 77246

R/W DESIGNER JAE/MRP
R/W REVIEWER RDB

RAMP P PLAN
STA. 331+50 TO STA. 337+00

MOT-75-0.75

53 / 58

768
773

MONTGOMERY COUNTY
MIAMI TOWNSHIP
SEC. 16, T. 2, R. 5, M.R.S.
CITY OF MIAMISBURG

MATCH LINE SEE SHEET 20A

CURVE RAMP M-1
P.I. STA. = 442+73.39
Δ = 20° 48' 00" (RT)
Dc = 8° 00' 00"
R = 716.20'
T = 131.45'
L = 260.00'
E = 11.96'

(PREVIOUSLY ACQUIRED)
Richard E. and Glenna B. Cramer, trustees, or their successor(s) in trust, under the Cramer Family Trust, dated 8-7-03
10451 Miamisburg-Springboro Rd.
LOT 6994

119 | 119-U | 119-WL | 117 | 117-U1 | 117-WL1 | 157 | 157-WL | 150 | 150-WLI | 156 | 156-WL

Dayton-Montgomery County Port Authority
K46-01623-0002
PT. LOT 6990

LA-R/W | U ESMT | AT&T FIBER | MCI FIBER | CONSTRUCTION LIMITS

44+19.65 / 473.62' LT.
44+24.34 / 439.75' LT.
N83°30'48"W 34.20'
R=24.38'
526.22' N35°10'31"E
513.71' N35°10'31"E
44+27.69 / 415.60' LT.

440+00 | 441+00 | 442+00 | 443+00 | 444+00

℄ CONSTRUCTION RAMP M N14°22'31"E

P.C. Sta. 441+41.94
CURVE RAMP M-1
P.T. Sta. 444+01.94
N35°10'31"E

Dense Vegetation

MATCH LINE STA. 439+50 SEE SHEET 20
MATCH LINE STA. 445+00 SEE SHEET 55
MATCH LINE SEE SHEET 21

K46-01623-0006
LOT 6996
K46-01623-0007

1 Sty. Frame
Asphalt
TOB

Frame Shed No Foundation

U ESMT R N83°13'42"W 217.51'
5' Ohio Bell Telephone Company M.F. # 80-0514 C03

757.96' S14°11'23"W
44+56.47 / 200.00' LT.
38.78'
41.87' N20°27'37"E
44+61.60 / 161.56' LT.

K46-01623-0008
LOT 6997

Miamisburg Corp. Line
Miami TWP.
60" Ch. Link

L. Pearl Long and Clyde C. Long
K45-02605-0033

Charles W. Cramer and Georgia, L. Cramer

Virgil A. McCabe
K45-02605-0024
529.79' N04°55'31"E

STRUCTURE KEY

- RESIDENTIAL
- STRUCTURE REMOVED
- COMMERCIAL

SCALE IN FEET: 0, 10, 20, 40

PID NO. 77246

R/W DESIGNER JAE/MRP
R/W REVIEWER RDB

RAMP M PLAN
STA. 439+50 TO STA. 445+00

MOT-75-0.75

54 / 58

769
773

REV. BY	DATE	DESCRIPTION

DATE COMPLETED: 9/26/07

MONTGOMERY COUNTY
MIAMI TOWNSHIP
SEC. 16, T. 2, R. 5, M.R.S.
CITY OF MIAMISBURG

CURVE RAMP M-2	CURVE RAMP M-3
P.I. STA. = 448+87.01	P.I. STA. = 455+30.04
Δ = 15° 48' 00" (LT)	Δ = 5° 00' 00" (LT)
Dc = 5° 30' 00"	Dc = 0° 30' 00"
R = 1,041.74'	R = 11,459.16'
T = 144.55'	T = 500.32'
L = 287.27'	L = 1,000.00'
E = 9.98'	E = 10.92'

(117)
Dayton-Montgomery County
Port Authority
K46-01623-0002
PT. LOT 6990

MATCH LINE STA. 445+00 SEE SHEET 54

U ESMT 526.22' N35° 10' 31"E

AT&T FIBER

MCI FIBER

(117-U1)

LA-R/W 513.71' N35° 10' 31"E

(117-WLI)

49+11.57
286.76' LT.

U ESMT 304.31' N20° 19' 57"E

LA-R/W 311.45' N20° 19' 57"E

CONSTRUCTION LIMITS

49+04.57
257.33' LT.

MATCH LINE STA. 450+50 SEE SHEET 56

P.C.C Sta.
450+29.73

℄ CONSTRUCTION
RAMP M
N35°10'31"E

446+00 447+00 448+00 449+00 450+00

P.C. Sta.
447+42.45

CURVE RAMP M-2

CURVE RAMP M-3

Dense Vegetation

5' Ohio Bell Telephone Company
M.F. # 80-0514 C03

757.96' S14° 11' 23"W

Miamisburg Corp. Line

Miami TWP.

8"

I-75 Southbound

(157)
L. Pearl Long and
Clyde C. Long
K45-02605-0033

(157-WL)

45+03.23
157.12' LT.

41.87'
N20° 27' 37"E

(156-WL)

(156)

412.75'
N76° 01' 25"E

Virgil A. McCabe
K45-02605-0024

STRUCTURE KEY

- RESIDENTIAL
- STRUCTURE REMOVED
- COMMERCIAL

REV. BY	DATE	DESCRIPTION

DATE COMPLETED: 9/26/07

SCALE IN FEET 0 10 20 40

PID NO. 77246

R/W DESIGNER JAE/MRP
R/W REVIEWER RDB

RAMP M PLAN
STA. 445+00 TO STA. 450+50

MOT-75-0.75

MONTGOMERY COUNTY
MIAMI TOWNSHIP
SEC. 16, T. 2, R. 5, M.R.S.
CITY OF MIAMISBURG

CURVE RAMP M-3
P.I. STA. = 455+30.04
Δ = 5° 00′ 00″ (LT)
Dc = 0° 30′ 00″
R = 11,459.16′
T = 500.32′
L = 1,000.00′
E = 10.92′

117
Dayton-Montgomery County Port Authority
Byers Rd.
K46-01623-0002
PT. LOT 6990

144
Toga Investments, Ltd.
Byers Rd.
K46-01623-0010
PT. LOT 6990

52+14.24
255.17′ LT.

52+14.35
225.00′ LT.

55+38.00
225.00′ LT.

U ESMT — 304.31′ N20° 19′ 57″E — U ESMT

T — T

T — T

117-U1

LA-R/W — 311.45′ N20° 19′ 57″E — LA-R/W

117-WL1

301.17′

I.P.S.

22.54′ N75° 49′ 24″W

LA-R/W — 323.65′ N14° 22′ 31″E — LA-R/W

144-WL

LA-R/W — 121.93′ N24° 20′ 38″E — LA-R/

CONSTRUCTION LIMITS

U ESMT — 757.96′ S14° 11′ 23″W — U ESMT

U ESMT — 443.67′ S14° 11′ 23″W — U ESMT

Miamisburg Corp. Line
Miami Twp.

5′ Ohio Bell Telephone Company
M.F. # 80-0514 C03

52+14.42
202.46′ LT.

MATCH LINE STA. 450+50 SEE SHEET 55

MATCH LINE STA. 456+00 SEE SHEET 57

451+00 452+00 453+00 454+00 455+00

℄ CONSTRUCTION RAMP M

CURVE RAMP M-3

CONSTRUCTION LIMITS

I-75 Southbound

157
L. Pearl Long and Clyde C. Long
K45-02605-0033

157-WL

51+00 52+00 53+00 54+00 55+00

℄ CONSTRUCTION & PROP. R/W I-75 N14°22′31″E

STRUCTURE KEY

- RESIDENTIAL
- STRUCTURE REMOVED
- COMMERCIAL

REV. BY	DATE	DESCRIPTION

DATE COMPLETED: 9/26/07

SCALE IN FEET
0 10 20 40

PID NO. 77246

R/W DESIGNER JAE/MRP
R/W REVIEWER RDB

RAMP M PLAN
STA. 450+50 TO STA. 456+00

MOT-75-0.75

56 / 58

771
773

MONTGOMERY COUNTY
MIAMI TOWNSHIP
SEC. 16 & 17, T. 2, R. 5, M.R.S.
CITY OF MIAMISBURG

James E. Robinson
Byers Rd.
K46-01622-0008

Dense Vegetation

Miamisburg Corp. Line
U ESMT
LA R/W
5' Ohio Bell Telephone Company
M.F. # 80-0514 C03
U ESMT
LA R/W
60" Ch. Link
Miami TWP.
601.02'
N11°02'12"E

U ESMT
LA R/W
66+00.00
240.00' LT.
U ESMT
LA R/W
1120.95'
N15°39'11"E

CONSTRUCTION LIMITS

2.5'x2.5'
Conc.
Base

SECTION 17
SECTION 16

2'x2'
Conc.
Pad

12"

I-75 Southbound

MATCH LINE STA. 61+50 SEE SHEET 57

MATCH LINE STA. 67+25 SEE SHEET 58A

157
L. Pearl Long and
Clyde C. Long
K45-02605-0033

157-WL

65+31.93
9.86' LT.

62+00 63+00 64+00 65+00 66+00 67+00

℄ CONSTRUCTION
& PROP. R/W I-75
N14°22'31"E

6"

15"

900.70'
N01°04'09"W

287.52'
N74°43'11"E

161
Horst E. Glagowski and
Jo Ann M. Glagowski
K45-02605-0022

161-WL

STRUCTURE KEY

- RESIDENTIAL
- STRUCTURE REMOVED
- COMMERCIAL

REV. BY	DATE	DESCRIPTION
JAE	10-18-07	Added Match Line and Bearings/Distance for 58A

DATE COMPLETED: 9/26/07

SCALE IN FEET
0 10 20 40

PID NO. 77246

R/W DESIGNER JAE/MRP
R/W REVIEWER RDB

RAMP M AND I-75 PLAN
STA. 61+50 TO STA. 67+25

MOT-75-0.75

58 / 58

772A
773

MONTGOMERY COUNTY
MIAMI TOWNSHIP
SEC. 16, T. 2, R. 5, M.R.S.
CITY OF MIAMISBURG

CURVE RAMP M-3
P.I. STA. = 455+30.04
Δ = 5° 00′ 00″ (LT)
Dc = 0° 30′ 00″
R = 11,459.16′
T = 500.32′
L = 1,000.00′
E = 10.92′

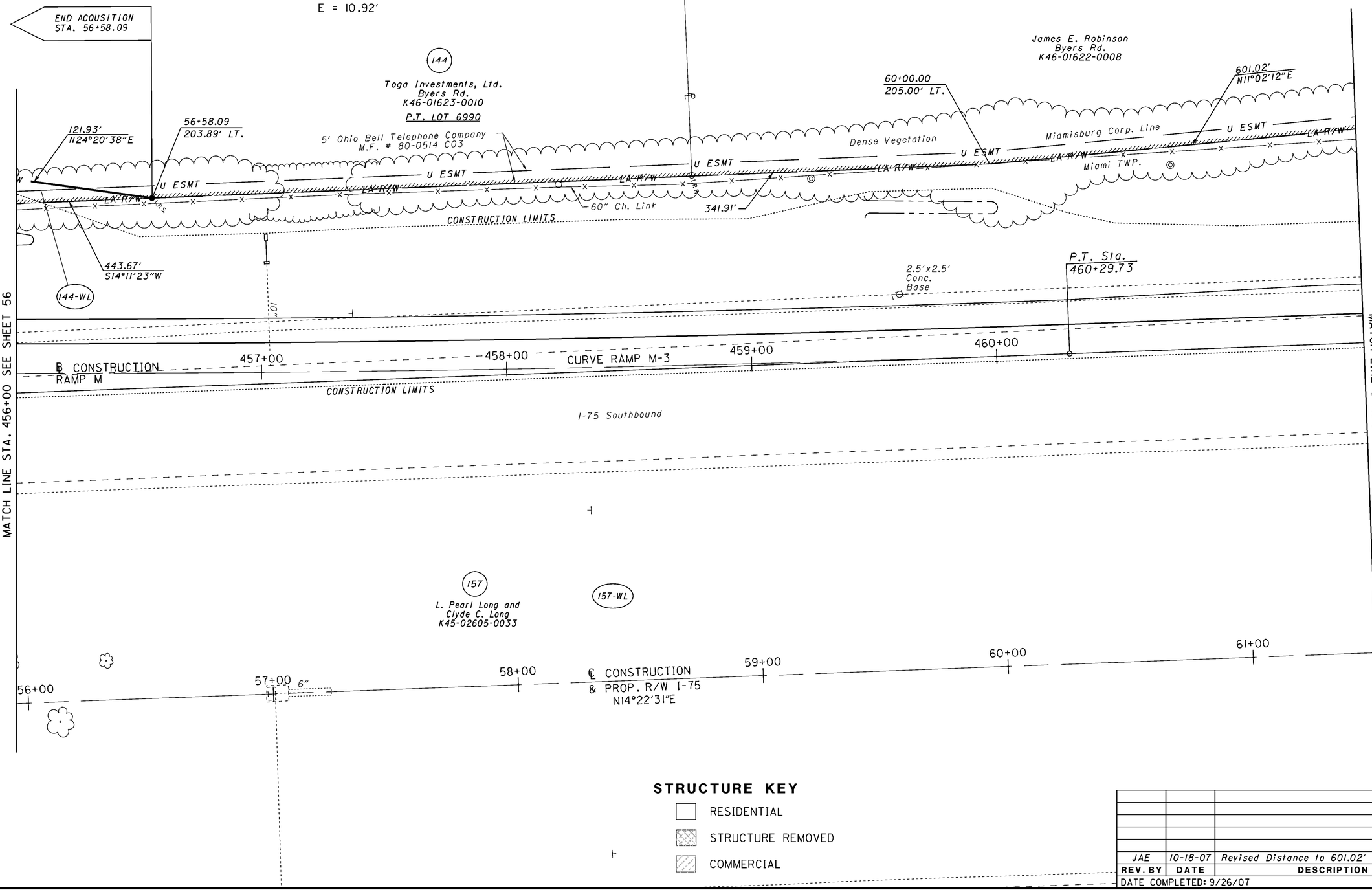

STRUCTURE KEY

- RESIDENTIAL
- STRUCTURE REMOVED
- COMMERCIAL

REV. BY	DATE	DESCRIPTION
JAE	10-18-07	Revised Distance to 601.02′

DATE COMPLETED: 9/26/07

SCALE IN FEET: 0, 10, 20, 40

PID NO. 77246

R/W DESIGNER JAE/MRP
R/W REVIEWER RDB

RAMP M
STA. 456+00 TO STA. 460+29.73

MOT-75-0.75

57 / 58

772
773

MONTGOMERY COUNTY
MIAMI TOWNSHIP
SEC. 16 & 17, T. 2, R. 5, M.R.S.
CITY OF MIAMISBURG

James E. Robinson
Byers Rd.
K46-01622-0008

Miamisburg Corp. Line
Miami TWP.
U ESMT
LA-R/W
5' Ohio Bell Telephone Company
M.F. # 80-0514 C03
60" Ch. Link
1120.95'
N15°39'11"E
Dense Vegetation
77+20.67
215.00' LT.

I-75 Southbound

157
L. Pearl Long and
Clyde C. Long
K45-02605-0033
157-WL

68+00 69+00 70+00 71+00 72+00 73+00 74+00 75+00 76+00 77+00

℄ CONSTRUCTION
& PROP. R/W I-75
N14°22'31"E

1005.45' S12°31'52"E

I-75 Northbound

MATCH LINE STA. 67+25 SEE SHEET 58

161-WL
161
287.52'
N74°43'11"E
149.87' S14°22'31"W
66+74.19
240.00' RT.
68+24.06
240.00' RT.
100.49'
S14°56'41"W
Horst E. Glogowski and
Jo Ann M. Glogowski
K45-02605-0022
SECTION 17
SECTION 16
K45-02605-0065

Dense Vegetation
54" Woven Wire
1 Str. Barb Wire
CONSTRUCTION LIMITS
LA-R/W

143
Mount Adams Properties LLC,
an Ohio limited liability company
10187 Springboro Pike
K45-02605-0068

STRUCTURE KEY
- RESIDENTIAL
- STRUCTURE REMOVED
- COMMERCIAL

REV. BY	DATE	DESCRIPTION
JAE	1-30-08	Added/Revised 143
JAE	10-18-07	Created sheet

DATE COMPLETED: 9/26/07

SCALE IN FEET
0 20 40 80

PID NO. 77246

R/W DESIGNER JAE/MRP
R/W REVIEWER RDB

I-75 PLAN
STA. 67+25 TO STA. 77+50

MOT-75-0.75

58A/58

773/773

PROJECT DESCRIPTION

CONSTRUCT A 2,960-FOOT-LONG NOISE WALL ALONG THE WEST SIDE OF I-75 TO PROPOSED RAMP "P" FOR THE I-75 AND AUSTIN PIKE INTERCHANGE PROJECT.

GEOLOGY AND OBSERVATIONS

ON MAY 23, 2007 A SITE RECONNAISSANCE VISIT WAS MADE. THE NOISE WALL ALIGNMENT IS BEYOND THE TOE OF THE EXISTING HIGHWAY EMBANKMENT. THE AREA IS COVERED WITH GRASS, SHRUBS AND SMALL TREES.
THE NOISE WALL ROUTE IS SITUATED IN A GLACIAL GROUND MORAINE CONSISTING OF TILL THAT IS COMPOSED OF AN UNSORTED, UNSTRATIFIED MIXTURE OF CLAY, SILT, SAND, GRAVEL, AND COARSE FRAGMENTS DEPOSITED DISCONTINUOUSLY BY RETREATING ICE FROM A GLACIER. THE GROUND MORAINE OVERLIES THE ORDOVICIAN AGE, RICHMOND GROUP BEDROCK COMPOSED OF SHALE AND LIMESTONE LAYERS. THIS AREA CONSISTS OF EMBANKMENT FILL THAT WAS PLACED DURING THE CONSTRUCTION OF THE EXISTING HIGHWAY.

SUBSURFACE EXPLORATION

SIXTEEN (16) SOIL BORINGS WERE COMPLETED AS PART OF THIS SUBSURFACE EXPLORATION, BETWEEN MAY 31 AND NOVEMBER 27, 2007.
EXPLORATION BORINGS WERE MADE USING A BORING RIG MOUNTED ON AN ALL-TERRAIN VEHICLE (ATV). HOLLOW-STEM AUGERS AND STANDARD PENETRATION METHOD (ASTM D-1586) WERE EMPLOYED AT MAXIMUM DEPTH INTERVALS OF FIVE FEET.

EXPLORATION FINDINGS

THE SUBGRADE SOILS INCLUDING THE EMBANKMENT FILL CONSISTED OF TOPSOIL, BROWN AND/OR GRAY SILT AND CLAY (A-6a), BROWN, DARK BROWN, OR GRAY SILTY CLAY (A-6b), BROWN AND/OR GRAY CLAY (A-7-6), BROWN AND/OR GRAY GRAVEL WITH SAND AND SILT (A-2-4), BROWN GRAVEL WITH SAND (A-1-b), BROWN COARSE AND FINE SAND (A-3a), BROWN, GRAY, BLUISH GRAY, AND/OR GRAYISH BROWN SANDY SILT (A-4a), BROWN AND/OR GRAY SILT (A-4b). GRAY WEATHERED SHALE WAS ENCOUNTERED AT THE BOTTOMS OF BORINGS NWB-001-0-01 THROUGH NWB-007-0-07. BORINGS NWB-001-0-07 THROUGH NWB-005-0-07 WERE TERMINATED AFTER CORING 10 FEET TO BEDROCK.

FREE GROUNDWATER WAS OBSERVED AT DEPTHS OF 3.0 TO 17.5 FEET DURING THE BORING OPERATIONS. FREE GROUNDWATER WAS NOT ENCOUNTERED IN BORING NWB-004-0-07 DURING THE BORING OPERATIONS.

AVAILABLE INFORMATION

ALL AVAILABLE SOIL AND BEDROCK INFORMATION THAT CAN BE CONVENIENTLY SHOWN ON THE SOIL PROFILE SHEETS HAS BEEN SO REPORTED. ADDITIONAL SUBSURFACE EXPLORATIONS MAY HAVE BEEN MADE TO STUDY SOME SPECIAL ASPECT OF THE PROJECT. COPIES OF THIS DATA, IF ANY, MAY BE INSPECTED IN THE DISTRICT DEPUTY DIRECTOR'S OFFICE, THE OFFICE OF GEOTECHNICAL ENGINEERING AT 1600 WEST BROAD STREET OF THE OFFICE OF STRUCTURAL ENGINEERING AT 1980 WEST BROAD STREET.

LEGEND

DESCRIPTION	OHIO CLASS	CLASSIFIED MECH/VISUAL	
GRAVEL AND/OR STONE WITH SAND	A-1-b	2	1
GRAVEL AND/OR STONE WITH SAND AND SILT	A-2-4	8	10
COARSE AND FINE SAND	A-3a	2	1
SANDY SILT	A-4a	33	33
SILT	A-4b	1	2
SILT AND CLAY	4-6a	7	16
SILTY CLAY	4-6b	3	10
CLAY	A-7-6	8	4
SHALE	VISUAL		
TOPSOIL	VISUAL		
EMBANKMENT OR UNDOCUMENTED FILL	VISUAL		

	BORING LOCATION - PLAN VIEW
WC	INDICATES WATER CONTENT IN PERCENT.
N_{60}	INDICATES STANDARD PENETRATION RESISTANCE NORMALIZED TO 60% DRILL ROD ENERGY RATIO.
W	INDICATES FREE WATER ELEVATION.
▼	INDICATES STATIC WATER ELEVATION.
	INDICATES A NON-PLASTIC MATERIAL WITH A MOISTURE CONTENT GREATER THAN 25 % OR GREATER THAN 19 % WITH A WET APPEARANCE.
*	INDICATES A SAMPLE TAKEN WITHIN 3 FT OF PROPOSED GRADE.
NP	INDICATES A NON-PLASTIC SAMPLE.
SS	INDICATES A SPLIT SPOON SAMPLE, STANDARD PENETRATION TEST.

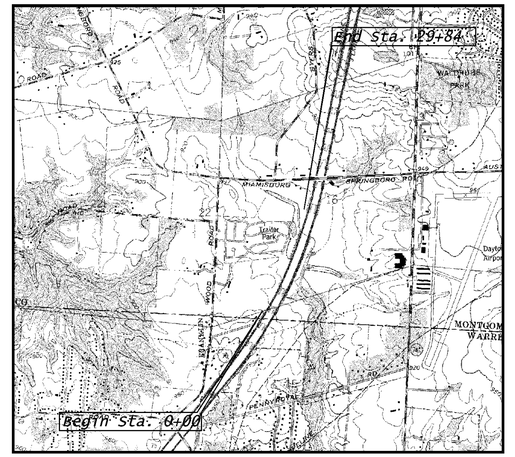

VICINITY MAP

0 1000 2000
SCALE IN FEET

N

PARTICLE SIZE DEFINITIONS

12"	3"	2.0 mm	0.42 mm	0.074 mm	0.005 mm
BOULDERS | COBBLES	GRAVEL	COARSE SAND	FINE SAND	SILT	CLAY
		No. 10 SIEVE	No. 40 SIEVE	No. 200 SIEVE	

BOWSER MORNER®
4518 Taylorsville Road
Dayton, Ohio 45424
Phone 937-236-4600
Fax 937-233-3016

CALCULATED SR CHECKED CR

NOISE BARRIER

MOT-75-0.75

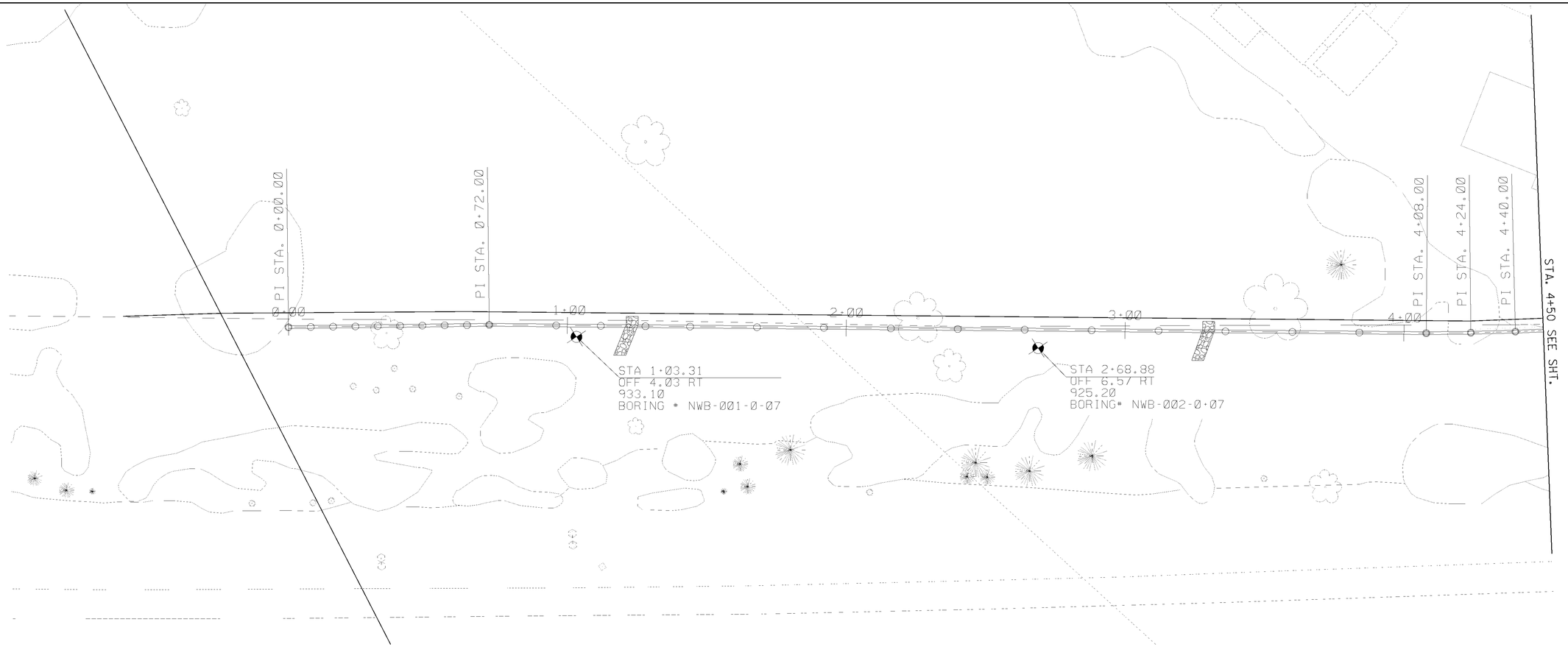

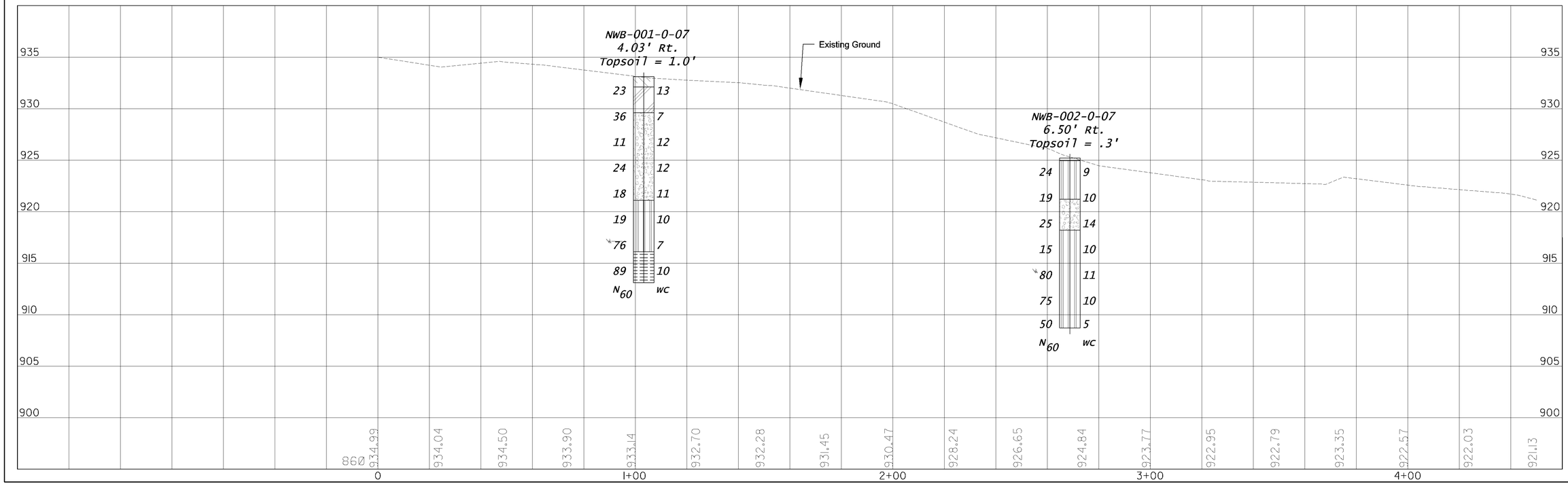

HORIZONTAL SCALE IN FEET

CALCULATED SR
CHECKED CR

NOISE BARRIER
STA. 0+00 TO STA. 4+50

MOT-75-0.75

2
15

STA. 4+50 SEE SHT.

PI STA. 4+56.00
PI STA. 4+80.00
PI STA. 5+04.00
PI STA. 5+28.00
PI STA. 5+52.00
PI STA. 5+76.00
PI STA. 6+00.00
PI STA. 6+24.00
PI STA. 6+48.00
PI STA. 6+72.00
PI STA. 6+96.00
PI STA. 7+20.00
PI STA. 7+44.00
PI STA. 7+68.00
PI STA. 7+92.00
PI STA. 8+16.00
PI STA. 8+40.00
PI STA. 8+64.00
PI STA. 8+88.00

5+00 6+00 7+00 8+00 9+00

STA. 10+00 SEE SHT.

STA 4+67.15
OFF 6.34 RT
920.10
BORING* NWB 003-0-07

STA 6+36.55
OFF 15.61 RT
912.44
BORING* NWB 004-0-07

STA 8+58.03
OFF 16.67 RT
910.51
BORING* NWB 005-0-07

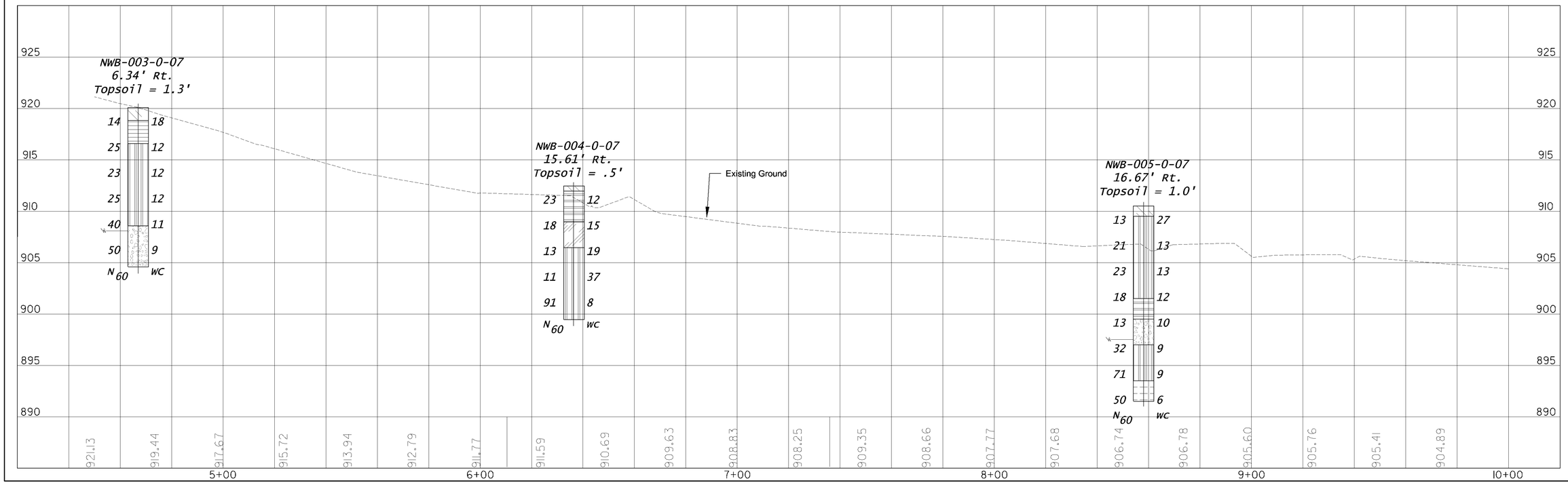

HORIZONTAL SCALE IN FEET
0 10 20 40

CALCULATED SR
CHECKED CR

NOISE BARRIER
STA. 4+50 TO STA. 10+00

MOT-75-0.75

3
15

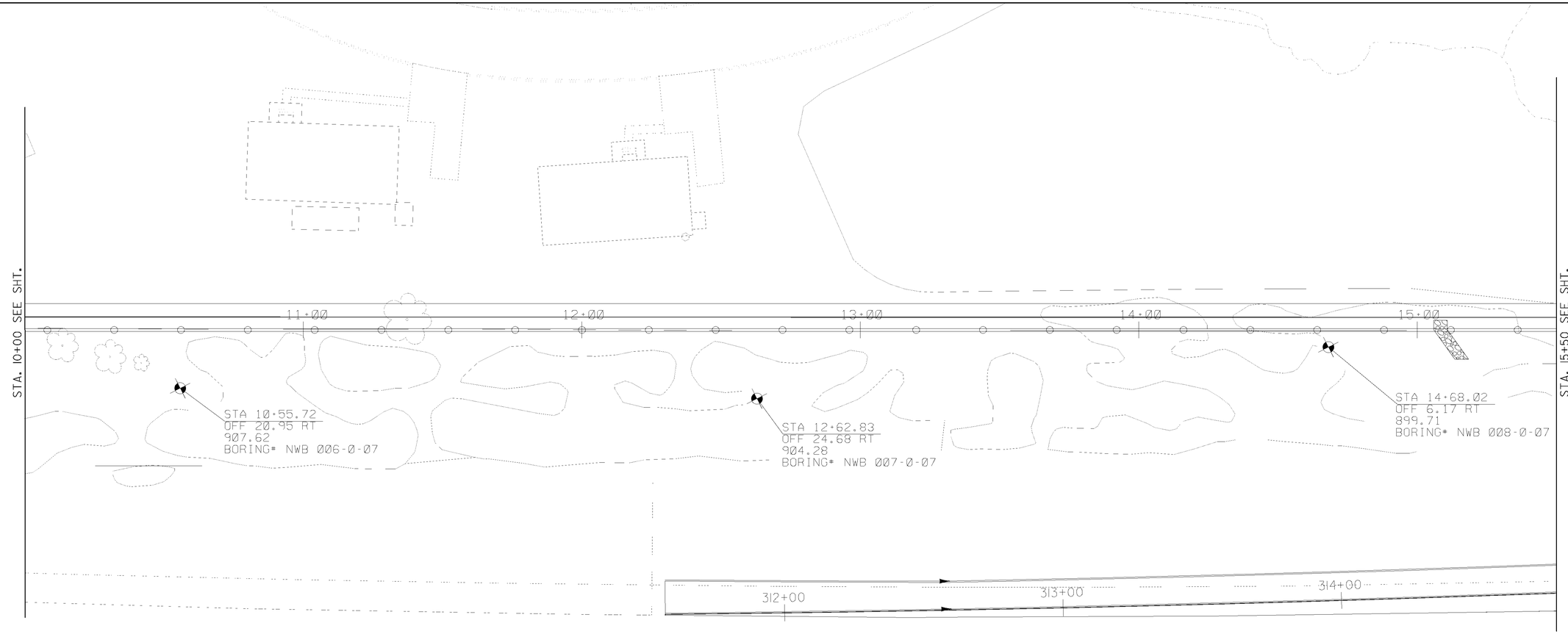

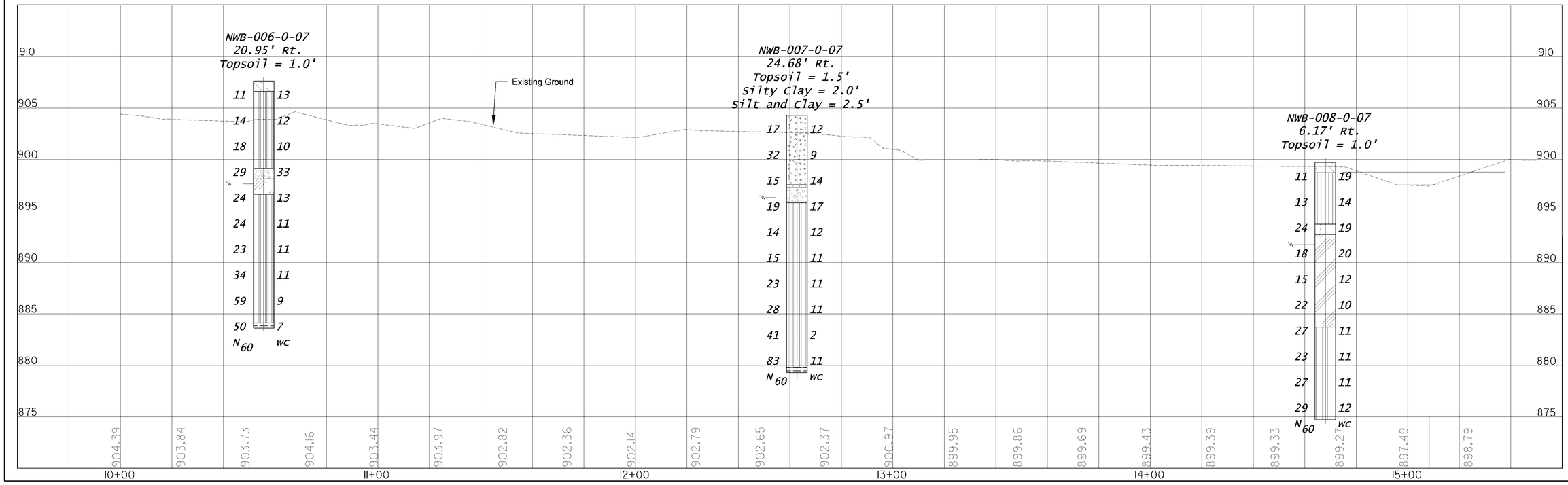

HORIZONTAL SCALE IN FEET

CALCULATED SR
CHECKED CR

NOISE BARRIER
STA. 10+00 TO STA. 15+50

MOT-75-0.75

4
15

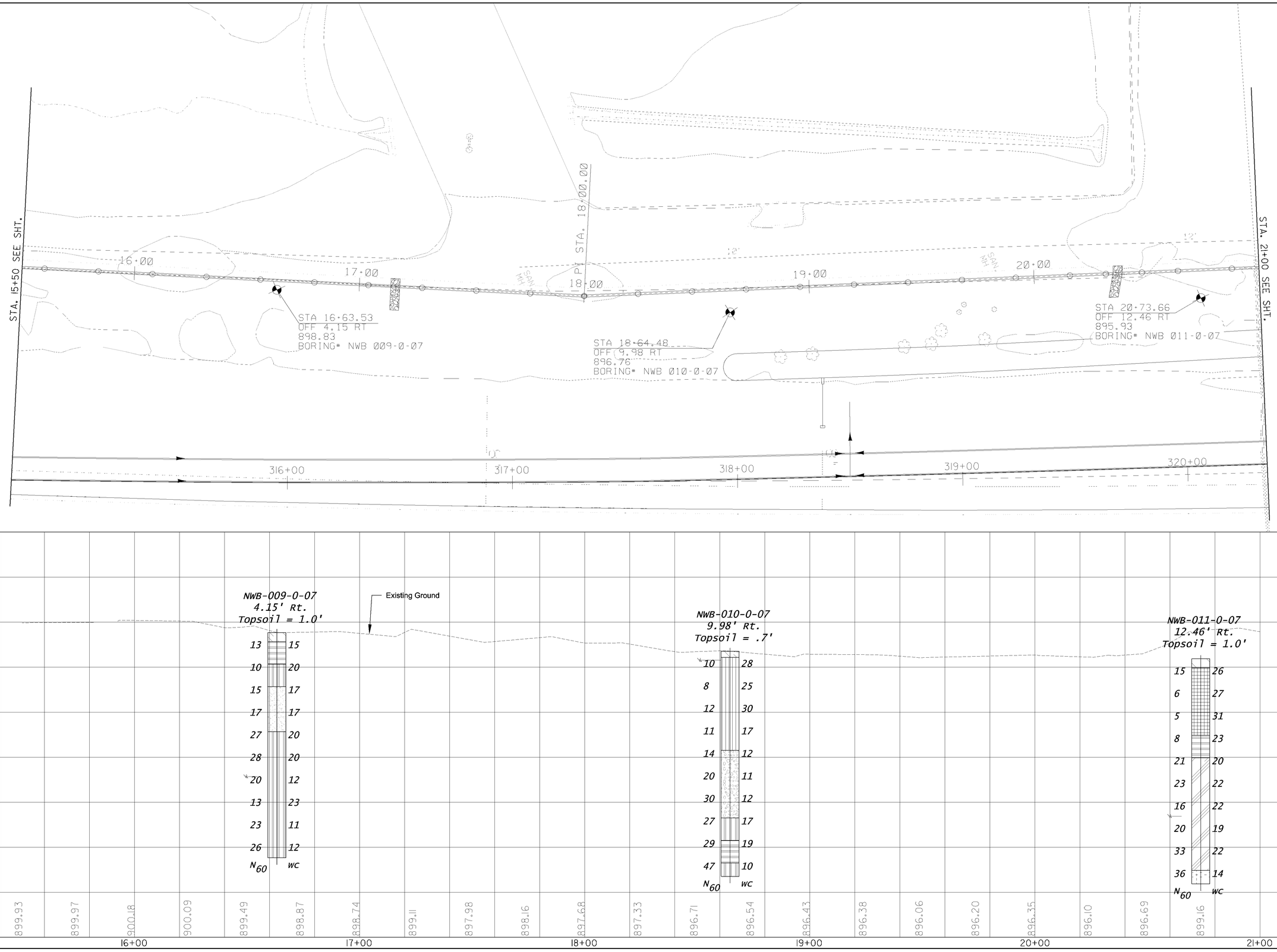

HORIZONTAL SCALE IN FEET

CALCULATED SR
CHECKED CR

NOISE BARRIER
STA. 15+50 TO STA. 20+00

MOT-75-0.75

5
15

STA. 22+28.46
OFF 14.15 R
895.63
BORING* NWB 012-0-07

STA 25+07.97
OFF 3.02 LT
895.46
BORING* NWB 013-0-07

STA 26+01.40
OFF 9.40 LT
896.87
BORING* NWB-014-0-07

STA. 21+00 SEE SHT.

STA. 26+50 SEE SHT.

PI STA. 23+52.00

PI STA. 24+96.00

PI STA. 25+92.00

22+00

23+00

24+00

25+00

26+00

STA. 23+92.00

321+00

322+00

323+00

324+00

325+00

HORIZONTAL SCALE IN FEET

CALCULATED SR

CHECKED CR

NOISE BARRIER

STA. 21+00 TO STA. 26+50

MOT-75-0.75

6

15

NWB-012-0-07
14.15' Rt.
Topsoil = .8'

13	24
8	32
23	19
19	18
14	20
16	19
16	20
17	22
15	22
17	22
N_{60}	wc

Existing Ground

NWB-013-0-07
3.02' Lt.
Topsoil = 1.0'
Silt and Clay = 2.5'
Silty Clay = 2.5'

12	15
10	22
20	19
26	17
17	16
20	18
12	19
12	24
38	15
30	16
N_{60}	wc

NWB-014-0-07
9.40' Lt.
Topsoil = 1.0'
Silty Clay = 5.0'

17	22
13	28
15	22
29	10
12	14
24	11
26	14
15	13
47	10
36	15
N_{60}	wc

905
900
895
890
885
880
875
870

899.43 899.31 898.45 900.40 899.93 897.83 898.49 897.84 896.37 896.56 895.16 894.91 894.70 894.49 895.15 895.95 895.78 892.66 894.58 896.37 896.15 895.87

21+00 22+00 23+00 24+00 25+00 26+00

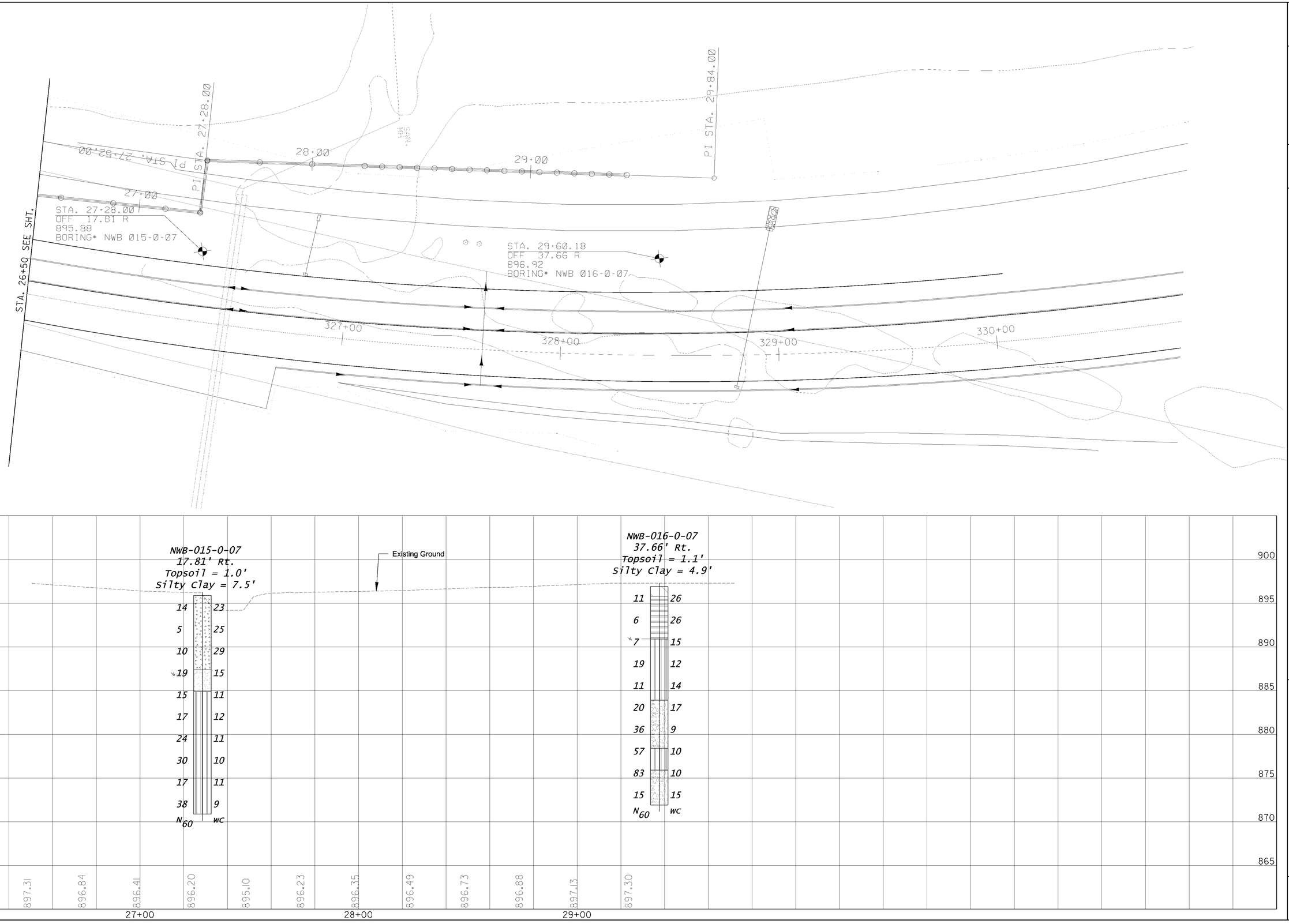

HORIZONTAL SCALE IN FEET

CALCULATED SR
CHECKED CR

NOISE BARRIER
STA. 26+50 TO STA. 29+84.00

MOT-75-0.75

7
15

Job Number: 140908

Date Started 06/01/07 Sampler: Type Split Spoon Dia. 1 3/8" Water Elev. (ft) 917.1

Client: LJB, Inc.

Date Completed 11/21/07 Casing: Length Dia.

Project Description: Soil Study for Noise Wall, Ramp "P",

Boring No. NWB-001-0-07

Austin Pike Interchange Project, MOT I-75-0.75,

Sheet 1 of 1 Station & Offset Sta. 1+03.31, 4.03' Rt. Surface Elev. (ft) 933.1

Montgomery County, Ohio

Elev. (ft)	Depth (ft)	Std. Pen./ RQD	N_{60}	Description	Sample No.	Physical Characteristics % Agg	% C.S.	% F.S.	% Silt	% Clay	L.L.	P.I.	W.C.	ODOT Class
933.1	0													
932.1				TOPSOIL (12")										
	2	5/8/11	23	Brown SILT and CLAY, little sand, trace gravel	1A	6	6	13	37	38	33	15	13	A-6a (10)
929.6														
	4	11/13/17	36	Brown GRAVEL with sand and silt, trace clay	2A	39	12	23	17	10	16	1	7	A-2-4 (0)
	6	4/5/4	11		3A								12	
	8	7/9/11	24		4A								12	
	10	6/8/7	18		5A								11	
921.1	12													
				Brown and gray SANDY SILT, some clay, little gravel										
	14	6/5/9	19		6A	14	11	17	35	23	16	4	10	A-4a (5)
917.1	16													
916.1		20/20/56	76	Gray SANDY SILT and gravel, some clay	7A	42	12	6	15	26	25	10	7	A-4a (1)
	18			Gray weathered SHALE										
914.1		26/30/36	89		8A								10	
	20	22%		LIMESTONE, gray, hard, moderately fractured, thin shale lenses										
	22													
	24													
	26													
	28													
904.1														

Bottom of Boring at 29.0'

Particle Sizes: Agg => 2.00mm, Coarse Sand = 2.00-0.42mm, Fine Sand = 0.42-0.074mm, Silt = 0.074-0.005mm, Clay =< 0.005mm.

Job Number: 140908

Date Started 05/31/07 Sampler: Type Split Spoon Dia. 1 3/8" Water Elev. (ft) 914.2

Client: LJB, Inc.

Date Completed 11/21/07 Casing: Length Dia.

Project Description: Soil Study for Noise Wall, Ramp "P",

Boring No. NWB-002-0-07

Austin Pike Interchange Project, MOT I-75-0.75,

Sheet 1 of 1 Station & Offset Sta. 2+68.88, 6.5' Rt. Surface Elev. (ft) 925.2

Montgomery County, Ohio

Elev. (ft)	Depth (ft)	Std. Pen./ RQD	N_{60}	Description	Sample No.	Physical Characteristics % Agg	% C.S.	% F.S.	% Silt	% Clay	L.L.	P.I.	W.C.	ODOT Class
925.2	0													
925.0				TOPSOIL (3")										
	2	7/9/11	24	Brown SANDY SILT, little clay, little gravel	1A	16	12	19	35	19	20	5	9	A-4a (4)
921.2	4	9/9/7	19		2A	34	20	20	17	9	15	1	10	A-2-4 (0)
				Brown GRAVEL with sand and silt, little clay, trace cobbles										
	6	7/12/9	25		3A								14	
918.2	8													
				Brown and gray SANDY SILT, some clay, little gravel										
	10	7/5/8	15		4A	19	9	15	34	23	20	7	10	A-4a (4)
913.2	12	6/30/50(5")	80		5A	32	10	12	25	21	20	7	11	A-4a (2)
	14	25/50(4")	75	Gray SANDY SILT, little clay, some gravel	6A								10	
911.2				Gray weathered SHALE										
	16	50(3")	50		7A								5	
907.2	18													
	20	8%		LIMESTONE, gray, highly fractured, thin shale lenses										
	22													
	24													
	26													
897.2	28													

Bottom of Boring at 28.0'

Particle Sizes: Agg => 2.00mm, Coarse Sand = 2.00-0.42mm, Fine Sand = 0.42-0.074mm, Silt = 0.074-0.005mm, Clay =< 0.005mm.

CALCULATED SR CHECKED CR

BOWSER MORNER®
4518 Taylorsville Road
Dayton, Ohio 45424
Ph 937-236-8805
Fax 937-233-2016

Job Number: 140908

Date Started 05/31/07 Sampler: Type Split Spoon Dia. 1 3/8" Water Elev. (ft) 908.1 Client: LJB, Inc.

Date Completed 11/21/07 Casing: Length ____ Dia. ____ Project Description: Soil Study for Noise Wall, Ramp "P",

Boring No. NWB-003-0-07 Austin Pike Interchange Project, MOT I-75-0.75,

Sheet 1 of 1 Station & Offset Sta. 4+67.15, 6.34' Rt. Surface Elev. (ft) 920.1 Montgomery County, Ohio

Elev. (ft)	Depth (ft)	Std. Pen./ RQD	N_{60}	Description	Sample No.	Physical Characteristics % Agg	% C.S.	% F.S.	% Silt	% Clay	L.L.	P.I.	W.C.	ODOT Class
920.1	0													
918.9				TOPSOIL (15")										
	2	4/5/7	14	Brown CLAY and silt, some sand, trace gravel	1A	7	6	15	34	38	43	23	18	A-7-6 (13)
916.6														
	4	8/9/12	25	Brown SANDY SILT, some clay, trace gravel	2A	10	9	18	35	28	19	5	12	A-4a (6)
	6	5/8/11	23		3A	13	11	17	31	29	19	5	12	A-4a (5)
	8	5/8/13	25		4A								12	
	10													
908.6		13/16/18	40		5A	29	22	21	18	10	15	2	11	A-2-4 (0)
	12			Brown and gray GRAVEL with sand and silt, trace clay										
906.6														
	14	50(4")	50	Gray weathered SHALE	6A								9	
904.6														
	16	14%		LIMESTONE, gray, highly fractured, thin shale lenses										
	18													
	20													
	22													
	24													
894.6														
				Bottom of Boring at 25.5'										

Particle Sizes: Agg => 2.00mm, Coarse Sand = 2.00-0.42mm, Fine Sand = 0.42-0.074mm, Silt = 0.074-0.005mm, Clay =< 0.005mm.

Job Number: 140908

Date Started 05/31/07 Sampler: Type Split Spoon Dia. 1 3/8" Water Elev. (ft) NONE Client: LJB, Inc.

Date Completed 11/21/07 Casing: Length ____ Dia. ____ Project Description: Soil Study for Noise Wall, Ramp "P",

Boring No. NWB-004-0-07 Austin Pike Interchange Project, MOT I-75-0.75,

Sheet 1 of 1 Station & Offset Sta. 6+36.55, 15.61' Rt. Surface Elev. (ft) 912.4 Montgomery County, Ohio

Elev. (ft)	Depth (ft)	Std. Pen./ RQD	N_{60}	Description	Sample No.	Physical Characteristics % Agg	% C.S.	% F.S.	% Silt	% Clay	L.L.	P.I.	W.C.	ODOT Class
912.4	0													
911.9				TOPSOIL (6")										
	2	8/9/10	23	Brown SILTY CLAY, some sand, little gravel	1A	13	11	19	22	35	33	17	12	A-6b (7)
908.9														
	4	10/7/8	18	Brown SILT and CLAY, little sand, trace gravel	2A	1	5	15	44	35	30	12	15	A-6a (9)
906.4	6													
		5/5/6	13	Brown SANDY SILT, some clay, trace gravel	3A	1	5	33	39	23	19	4	19	A-4a (5)
	8													
		5/4/5	11		4A	22	10	21	33	15	17	3	37	A-4a (2)
	10													
901.4														
	12	31/41/50	91	Gray weathered SHALE	5A								8	
	14													
897.9														
		19%		LIMESTONE, gray, hard, moderately fractured, thin shale lenses										
	16													
	18													
	20													
	22													
	24													
887.9														
				Bottom of Boring at 24.5'										

Particle Sizes: Agg => 2.00mm, Coarse Sand = 2.00-0.42mm, Fine Sand = 0.42-0.074mm, Silt = 0.074-0.005mm, Clay =< 0.005mm.

Bottom of Boring at 24.0'

CALCULATED SR CHECKED CR

BOWSER MORNER®
4518 Taylorsville Road
Dayton, Ohio 45424
Ph 937-236-8805
Fax 937-233-2016

Job Number: 140908

Date Started 06/01/07 Sampler: Type Split Spoon Dia. 1 3/8" Water Elev. (ft) 897.5

Client: LJB, Inc.

Date Completed 11/21/07 Casing: Length Dia.

Project Description: Soil Study for Noise Wall, Ramp "P",

Boring No. NWB-005-0-07

Austin Pike Interchange Project, MOT I-75-0.75,

Sheet 1 of 1 Station & Offset Sta. 8+58.03, 16.67' Rt. Surface Elev. (ft) 910.5

Montgomery County, Ohio

Elev. (ft)	Depth (ft)	Std. Pen./ RQD	N_{60}	Description	Sample No.	Physical Characteristics % Agg	% C.S.	% F.S.	% Silt	% Clay	L.L.	P.I.	W.C.	ODOT Class
910.5	0													
909.5				TOPSOIL (12")										
	2	5/5/6	13	Brown SANDY SILT, some clay, trace gravel	1A	8	10	32	22	29	23	9	27	A-4a (3)
	4	5/8/10	21		2A								13	
	6	6/7/12	23		3A	6	7	14	42	31	22	7	13	A-4a (8)
	8													
901.5		4/7/8	18		4A								12	
	10			Gray SILTY CLAY, trace sand, trace gravel										
899.5		12/6/5	13	Brown GRAVEL with sand, trace silt, trace clay	5A	46	29	10	9	7	16	1	10	A-1-b (0)
897.0	12													
	14	11/13/11	32	Gray SANDY SILT, some clay, little gravel	6A	12	11	16	34	27	21	7	9	A-4a (5)
	16	14/21/50(2")	71		7A								9	
893.0	18			Gray weathered SHALE										
		50(4")	50		8A								6	
890.5	20													
		18%		LIMESTONE, gray, hard, moderately fractured, thin shale lenses										
	22													
	24													
	26													
	28													
880.5	30													

Bottom of Boring at 30.0'

Particle Sizes: Agg => 2.00mm, Coarse Sand = 2.00-0.42mm, Fine Sand = 0.42-0.074mm, Silt = 0.074-0.005mm, Clay =< 0.005mm.

Job Number: 140908

Date Started 06/01/07 Sampler: Type Split Spoon Dia. 1 3/8" Water Elev. (ft) 897.6

Client: LJB, Inc.

Date Completed 06/01/07 Casing: Length Dia.

Project Description: Soil Study for Noise Wall, Ramp "P",

Boring No. NWB-006-0-07

Austin Pike Interchange Project, MOT I-75-0.75,

Sheet 1 of 1 Station & Offset Sta. 10+55.72, 20.95' Rt. Surface Elev. (ft) 907.6

Montgomery County, Ohio

Elev. (ft)	Depth (ft)	Std. Pen./ RQD	N_{60}	Description	Sample No.	Physical Characteristics % Agg	% C.S.	% F.S.	% Silt	% Clay	L.L.	P.I.	W.C.	ODOT Class
907.6	0													
906.6				TOPSOIL (12")										
	2	5/3/6	11	Brown SANDY SILT, some clay, trace gravel	1A								13	
	4	4/4/8	14		2A	9	8	15	40	29	26	10	12	A-4a (7)
	6	5/6/9	18		3A								10	
	8													
899.1		15/16/8	29	Brown GRAVEL with sand and silt, little clay	4A	40	16	16	13	15	15	2	33	A-2-4 (0)
898.1	10			Gray SILT and CLAY, trace sand, trace gravel										
896.6		9/7/13	24	Brown SANDY SILT, some clay, little gravel	5A	14	11	13	36	27	18	4	13	A-4a (5)
	12													
	14	10/10/8	24		6A								11	
	16	6/8/9	23		7A								11	
	18													
		12/13/12	34		8A	15	11	18	29	27	19	6	11	A-4a (4)
	20													
	22	8/19/20	59		9A								9	
884.1														
883.6	24	50(2")	50	Gray weathered SHALE	10A								7	

Bottom of Boring at 24.0'

Particle Sizes: Agg => 2.00mm, Coarse Sand = 2.00-0.42mm, Fine Sand = 0.42-0.074mm, Silt = 0.074-0.005mm, Clay =< 0.005mm.

CALCULATED SR CHECKED CR

BOWSER MORNER®
4518 Taylorsville Road
Dayton, Ohio 45424
Ph 937-236-8805
Fax 937-233-2016

Job Number: 140908

Date Started 06/04/07 Sampler: Type Split Spoon Dia. 1 3/8" Water Elev. (ft) 896.3 Client: LJB, Inc.

Date Completed 06/04/07 Casing: Length ____ Dia. ____ Project Description: Soil Study for Noise Wall, Ramp "P",

Boring No. NWB-007-0-07 Austin Pike Interchange Project, MOT I-75-0.75,

Sheet 1 of 1 Station & Offset Sta. 12+62.83, 24.68' Rt. Surface Elev. (ft) 904.3 Montgomery County, Ohio

Elev. (ft)	Depth (ft)	Std. Pen./ RQD	N_{60}	Description	Sample No.	Physical Characteristics								ODOT Class
						% Agg	% C.S.	% F.S.	% Silt	% Clay	L.L.	P.I.	W.C.	
904.3	0													
902.8	2	6/5/9	17	(FILL) TOPSOIL (18")	1A								12	
900.8	4	8/14/13	32	Brown SILTY CLAY, trace sand, trace gravel	2A								9	
898.3	6	5/5/8	15	Brown SILT and CLAY, trace sand, trace gravel	3A	27	18	25	19	12	17	2	14	A-2-4 (0)
897.3				Brown SANDY SILT, trace gravel										
895.8	▽ 8	9/7/9	19	Brown GRAVEL with sand and silt, trace clay	4A	0	0	1	37	62	29	10	17	A-4a (8)
	10	5/7/5	14	Brown SANDY SILT and clay	5A								12	
	12	5/7/4	15		6A								11	
	14	5/7/10	23		7A								11	
	16	6/10/11	28		8A	22	10	13	28	27	20	6	11	A-4a (4)
883.3	18	10/12/15	41	Brown and gray SANDY SILT, some clay, little gravel	9A	15	11	16	30	29	19	6	2	A-4a (5)
879.8	20	29/34/21	83		10A								11	
879.3	22			Gray weathered SHALE										
	24			Bottom of Boring at 25.0'										

Particle Sizes: Agg => 2.00mm, Coarse Sand = 2.00-0.42mm, Fine Sand = 0.42-0.074mm, Silt = 0.074-0.005mm, Clay =< 0.005mm.

Job Number: 140908

Date Started 06/04/07 Sampler: Type Split Spoon Dia. 1 3/8" Water Elev. (ft) 891.7 Client: LJB, Inc.

Date Completed 06/04/07 Casing: Length ____ Dia. ____ Project Description: Soil Study for Noise Wall, Ramp "P",

Boring No. NWB-008-0-07 Austin Pike Interchange Project, MOT I-75-0.75,

Sheet 1 of 1 Station & Offset Sta. 14+68.02, 6.17' Rt. Surface Elev. (ft) 899.7 Montgomery County, Ohio

Elev. (ft)	Depth (ft)	Std. Pen./ RQD	N_{60}	Description	Sample No.	Physical Characteristics								ODOT Class
						% Agg	% C.S.	% F.S.	% Silt	% Clay	L.L.	P.I.	W.C.	
899.7	0													
898.7	2	4/5/4	11	TOPSOIL (12")										
				Brown CLAY, some silt, little sand, trace gravel	1A	3	3	13	31	50	45	25	19	A-7-6 (15)
	4	5/6/5	13		2A								14	
893.7	6	5/10/10	24	Brown and gray SILT and clay, trace sand	3A	0	0	0	48	51	25	9	19	A-4b (8)
892.7	▽ 8			Gray SILT and CLAY, trace sand, trace gravel										
	10	6/7/8	18		4A								20	
	12	5/6/7	15		5A								12	
	14	6/9/7	22		6A								10	
883.7	16	7/9/11	27	Grayish brown SANDY SILT, some clay, little gravel	7A	13	10	15	32	30	20	6	11	A-4a (5)
	18	5/9/8	23		8A	12	11	14	31	32	19	6	11	A-4a (6)
	20	5/8/10	27		9A								11	
	22	6/9/10	29		10A								12	
874.7	24			Bottom of Boring at 25.0'										

Particle Sizes: Agg => 2.00mm, Coarse Sand = 2.00-0.42mm, Fine Sand = 0.42-0.074mm, Silt = 0.074-0.005mm, Clay =< 0.005mm.

CALCULATED SR CHECKED CR

BOWSER MORNER®
4518 Taylorsville Road
Dayton, Ohio 45424
Ph 937-236-8805
Fax 937-233-2016

Job Number: 140908

Date Started 06/04/07 Sampler: Type Split Spoon Dia. 1 3/8" Water Elev. (ft) 882.8 Client: LJB, Inc.

Date Completed 06/04/07 Casing: Length ____ Dia. ____ Project Description: Soil Study for Noise Wall, Ramp "P",

Boring No. NWB-009-0-07 Austin Pike Interchange Project, MOT I-75-0.75,

Sheet 1 of 1 Station & Offset Sta. 16+63.53, 4.15' Rt. Surface Elev. (ft) 898.8 Montgomery County, Ohio

Elev. (ft)	Depth (ft)	Std. Pen./ RQD	N_{60}	Description	Sample No.	Physical Characteristics % Agg	% C.S.	% F.S.	% Silt	% Clay	L.L.	P.I.	W.C.	ODOT Class
898.8	0													
897.8				TOPSOIL (12")										
	2	5/6/5	11	Brown SILTY CLAY, trace sand, trace gravel	1A								15	
895.3														
	4	5/4/4	13	Brown SANDY SILT, little clay, trace gravel	2A	3	6	32	45	14	17	1	20	A-4a (5)
892.8	6													
		5/5/8	24	Brown coarse and fine SAND, little gravel, trace silt, trace clay, trace cobbles	3A	11	33	42	9	5	Non-Plastic		17	A-3a (0)
	8													
		6/8/6	18		4A								17	
	10													
887.8														
		8/10/13	15	Gray SANDY SILT and clay, trace gravel	5A	1	0	1	39	58	28	9	20	A-4a (8)
	12													
	14	9/10/11	22		6A								20	
	▼ 16													
		5/7/8	27		7A								12	
	18													
		4/5/5	23		8A								23	
	20													
		5/8/7	27		9A	36	9	12	25	18	19	5	11	A-4a (2)
	22													
	24	5/8/9	29		10A								12	
873.8														
				Bottom of Boring at 25.0'										

Particle Sizes: Agg => 2.00mm, Coarse Sand = 2.00-0.42mm, Fine Sand = 0.42-0.074mm, Silt = 0.074-0.005mm, Clay =< 0.005mm.

Job Number: 140908

Date Started 06/05/07 Sampler: Type Split Spoon Dia. 1 3/8" Water Elev. (ft) 892.8 Client: LJB, Inc.

Date Completed 06/05/07 Casing: Length ____ Dia. ____ Project Description: Soil Study for Noise Wall, Ramp "P",

Boring No. NWB-010-0-07 Austin Pike Interchange Project, MOT I-75-0.75,

Sheet 1 of 1 Station & Offset Sta. 18+64.48, 9.98' Rt. Surface Elev. (ft) 896.8 Montgomery County, Ohio

Elev. (ft)	Depth (ft)	Std. Pen./ RQD	N_{60}	Description	Sample No.	Physical Characteristics % Agg	% C.S.	% F.S.	% Silt	% Clay	L.L.	P.I.	W.C.	ODOT Class
896.8	0													
896.1				TOPSOIL (8")										
	2	4/4/4	13	Gray CLAY, some silt, little sand, trace gravel	1A	0	2	9	30	59	52	31	28	A-7-6 (18)
893.3														
	▼ 4	3/3/4	10	Brown and gray CLAY, some silt, trace sand	2A								25	
	6													
		3/5/5	15		3A	0	1	3	32	64	43	21	30	A-7-6 (13)
	8													
		3/5/4	17		4A								17	
	10													
885.8														
		7/6/6	27	Gray GRAVEL with sand and silt, little clay	5A	26	25	15	19	15	20	6	12	A-2-4 (0)
	12													
	14	7/7/8	28		6A								11	
	16													
		6/7/15	20		7A								12	
	18													
878.3														
		5/7/13	13	Brown SANDY SILT, some clay, trace gravel	8A	8	10	13	35	34	23	8	17	A-4a (7)
	20													
875.8														
	22	6/8/11	23	Gray SILTY CLAY, trace sand, trace gravel	9A								19	
873.3														
	24	8/15/16	26	Gray SANDY SILT, trace gravel, trace cobbles	10A								10	
871.8														
				Bottom of Boring at 25.0'										

Particle Sizes: Agg => 2.00mm, Coarse Sand = 2.00-0.42mm, Fine Sand = 0.42-0.074mm, Silt = 0.074-0.005mm, Clay =< 0.005mm.

CALCULATED SR CHECKED CR

BOWSER MORNER®
4518 Taylorsville Road
Dayton, Ohio 45424
Ph 937-236-8805
Fax 937-233-2016

Job Number: 140908

Date Started 06/05/07 Sampler: Type Split Spoon Dia. 1 3/8" Water Elev. (ft) 878.4 Client: LJB, Inc.

Date Completed 06/05/07 Casing: Length ____ Dia. ____ Project Description: Soil Study for Noise Wall, Ramp "P",

Boring No. NWB-011-0-07 Austin Pike Interchange Project, MOT I-75-0.75,

Sheet 1 of 1 Station & Offset Sta. 20+73.66, 12.46' Rt. Surface Elev. (ft) 895.9 Montgomery County, Ohio

Elev. (ft)	Depth (ft)	Std. Pen./ RQD	N_{60}	Description	Sample No.	Physical Characteristics % Agg	% C.S.	% F.S.	% Silt	% Clay	L.L.	P.I.	W.C.	ODOT Class
895.9	0													
894.9				TOPSOIL (12")										
	2	3/6/7	15	Gray CLAY and silt, trace sand, trace gravel	1A	1	2	8	41	48	52	27	26	A-7-6 (17)
892.4														
	4	2/3/3	6	Brown CLAY and silt, trace sand, trace gravel	2A	0	1	7	40	52	49	26	27	A-7-6 (15)
	6	3/2/2	5		3A	0	2	7	39	52	46	23	31	A-7-6 (14)
887.4	8													
		3/4/3	8	Brown SILTY CLAY, trace sand, trace gravel	4A								23	
884.9	10													
	12	4/8/10	21	Brown SILT and CLAY, trace sand	5A	0	0	0	34	65	33	13	20	A-6a (9)
	14	4/6/11	23		6A								22	
	16	5/5/7	16		7A								22	
	▼ 18	7/6/9	20		8A								19	
	20	3/7/15	33		9A								22	
872.4	22													
	24	9/10/14	36	Bray SILT, some sand, trace gravel	10A								14	
870.9				Bottom of Boring at 25.0'										

Particle Sizes: Agg => 2.00mm, Coarse Sand = 2.00-0.42mm, Fine Sand = 0.42-0.074mm, Silt = 0.074-0.005mm, Clay =< 0.005mm.

Job Number: 140908

Date Started 06/05/07 Sampler: Type Split Spoon Dia. 1 3/8" Water Elev. (ft) 887.6 Client: LJB, Inc.

Date Completed 06/05/07 Casing: Length ____ Dia. ____ Project Description: Soil Study for Noise Wall, Ramp "P",

Boring No. NWB-012-0-07 Austin Pike Interchange Project, MOT I-75-0.75,

Sheet 1 of 1 Station & Offset Sta. 22+28.46, 14.15' Rt. Surface Elev. (ft) 895.6 Montgomery County, Ohio

Elev. (ft)	Depth (ft)	Std. Pen./ RQD	N_{60}	Description	Sample No.	Physical Characteristics % Agg	% C.S.	% F.S.	% Silt	% Clay	L.L.	P.I.	W.C.	ODOT Class
895.6	0													
894.9				TOPSOIL (9")										
	2	7/5/6	13	Brown CLAY and silt, trace sand, trace gravel	1A	0	1	5	49	45	42	17	24	A-7-6 (11)
	4	2/3/4	8		2A								32	
889.6	6													
	▼ 8	5/8/11	23	Brown SILT and CLAY, trace sand	3A	0	0	0	30	69	33	12	19	A-6a (9)
	10	8/6/10	19		4A								18	
	12	4/5/7	14		5A								20	
	14	6/6/6	16		6A								19	
879.6	16													
	18	3/5/7	16	Brown SANDY SILT and clay, trace gravel	7A	0	1	2	43	55	28	10	20	A-4a (8)
	20	5/7/6	17		8A								22	
	22	4/5/5	15		9A	0	0	0	34	65	33	13	22	A-6a (9)
	24	5/5/6	17		10A								22	
870.6				Bottom of Boring at 25.0'										

Particle Sizes: Agg => 2.00mm, Coarse Sand = 2.00-0.42mm, Fine Sand = 0.42-0.074mm, Silt = 0.074-0.005mm, Clay =< 0.005mm.

CALCULATED SR CHECKED CR

BOWSER MORNER®
4518 Taylorsville Road
Dayton, Ohio 45424
Ph 937-236-8805
Fax 937-233-2016

Job Number: 140908

Date Started 06/06/07 Sampler: Type Split Spoon Dia. 1 3/8" Water Elev. (ft) 880.5 Client: LJB, Inc.

Date Completed 06/06/07 Casing: Length Dia. Project Description: Soil Study for Noise Wall, Ramp "P",

Boring No. NWB-013-0-07 Austin Pike Interchange Project, MOT I-75-0.75,

Sheet 1 of 1 Station & Offset Sta. 25+07.97, 3.02' Lt. Surface Elev. (ft) 895.5 Montgomery County, Ohio

Elev. (ft)	Depth (ft)	Std. Pen./ RQD	N_{60}	Description	Sample No.	Physical Characteristics								ODOT Class
						% Agg	% C.S.	% F.S.	% Silt	% Clay	L.L.	P.I.	W.C.	
895.5	0													
894.5				(FILL) TOPSOIL (12")										
	2	4/5/5	12	Brown SILT and CLAY, trace sand, trace gravel	1A								15	
892.0														
	4	4/4/4	10	Brown SILTY CLAY, some sand, trace gravel	2A	5	6	18	40	32	38	18	22	A-6b (10)
889.5	6													
		5/8/9	20	Brown SILT and CLAY, trace sand, trace gravel	3A	0	0	1	28	72	34	12	19	A-6a (9)
	8													
		9/10/12	26		4A								17	
	10													
884.5														
		2/6/8	17	Gray SILT and CLAY, trace sand, trace gravel	5A								16	
	12													
	14	3/7/8	20		6A								18	
	▼													
879.5	16													
		3/3/6	12	Brown and gray SANDY SILT and clay, trace sand, trace gravel	7A	1	2	3	41	54	26	9	19	A-4a (8)
	18													
		3/4/5	12		8A								24	
	20													
		4/13/12	38		9A								15	
873.5	22													
872.0				Gray GRAVEL with sand and silt										
	24	10/11/9	30	Brown SANDY SILT, some gravel, little clay	10A	34	13	13	20	20	20	7	16	A-4a (1)
870.5														
				Bottom of Boring at 25.0'										

Particle Sizes: Agg => 2.00mm, Coarse Sand = 2.00-0.42mm, Fine Sand = 0.42-0.074mm, Silt = 0.074-0.005mm, Clay =< 0.005mm.

Job Number: 140908

Date Started 06/06/07 Sampler: Type Split Spoon Dia. 1 3/8" Water Elev. (ft) 885.9 Client: LJB, Inc.

Date Completed 06/06/07 Casing: Length Dia. Project Description: Soil Study for Noise Wall, Ramp "P",

Boring No. NWB-014-0-07 Austin Pike Interchange Project, MOT I-75-0.75,

Sheet 1 of 1 Station & Offset Sta. 26+01.40, 9.40' Lt. Surface Elev. (ft) 896.9 Montgomery County, Ohio

Elev. (ft)	Depth (ft)	Std. Pen./ RQD	N_{60}	Description	Sample No.	Physical Characteristics								ODOT Class
						% Agg	% C.S.	% F.S.	% Silt	% Clay	L.L.	P.I.	W.C.	
896.9	0													
895.9				(FILL) TOPSOIL (12")										
	2	6/6/8	17	Stiff dark brown and gray SILTY CLAY, trace sand, trace gravel	1A								22	
	4	7/6/5	13		2A								28	
890.9	6													
		3/6/7	15	Brown SILT and CLAY, trace sand, trace gravel	3A	2	0	1	26	71	36	14	22	A-6a (10)
888.9	8													
887.4		16/13/11	29	Brown GRAVEL with sand and silt	4A								10	
	10			Gray SILT and CLAY, trace sand, trace gravel										
885.9	▼													
884.9	12	3/5/5	12	Brown GRAVEL with sand and silt, little clay	5A	25	22	18	18	17	17	4	14	A-2-4 (0)
883.4				Brown SILT and CLAY, trace sand, trace gravel										
	14	8/9/9	24	Brown and gray SANDY SILT, some clay, little gravel	6A	18	9	13	30	30	20	6	11	A-4a (5)
	16													
		12/9/10	26		7A								14	
	18													
		4/5/6	15		8A								13	
	20													
875.9														
	22	10/13/18	47	Brown SANDY SILT, some clay, little gravel	9A	15	12	20	26	26	21	7	10	A-4a (3)
873.4														
	24	9/13/11	36	Brown SILT, come sand, trace gravel	10A								15	
871.9														
				Bottom of Boring at 25.0'										

Particle Sizes: Agg => 2.00mm, Coarse Sand = 2.00-0.42mm, Fine Sand = 0.42-0.074mm, Silt = 0.074-0.005mm, Clay =< 0.005mm.

CALCULATED SR CHECKED CR

BOWSER MORNER®
4518 Taylorsville Road
Dayton, Ohio 45424
Ph 937-236-8805
Fax 937-233-2016

Job Number: 140908

Date Started 06/06/07 Sampler: Type Split Spoon Dia. 1 3/8" Water Elev. (ft) 886.9 Client: LJB, Inc.

Date Completed 06/06/07 Casing: Length Dia. Project Description: Soil Study for Noise Wall, Ramp "P",

Boring No. NWB-015-0-07 Austin Pike Interchange Project, MOT I-75-0.75,

Sheet 1 of 1 Station & Offset Sta. 27+28.00, 17.81' Rt. Surface Elev. (ft) 895.9 Montgomery County, Ohio

Elev. (ft)	Depth (ft)	Std. Pen./ RQD	N_{60}	Description	Sample No.	Physical Characteristics								ODOT Class
						% Agg	% C.S.	% F.S.	% Silt	% Clay	L.L.	P.I.	W.C.	
895.9	0													
894.9				(FILL) TOPSOIL (12")										
	2	4/5/7	14	Brown SILTY CLAY, trace sand	1A								26	
	4	2/2/2	5		2A	0	1	2	49	48	38	17	25	A-6b (11)
	6	2/3/5	10		3A								29	
887.4	8													
	10	8/10/6	19	Brown coarse and fine SAND, some gravel, little silt, trace clay, trace cobbles	4A	22	28	24	17	10	13	1	15	A-3a (0)
884.9														
	12	4/6/7	15	Brown SANDY SILT, some clay, little gravel	5A	19	9	14	32	27	20	6	11	A-4a (5)
	14	3/5/8	17		6A								12	
	16	4/7/11	24		7A								11	
	18	7/10/12	30		8A	21	8	13	29	29	21	8	10	A-4a (5)
	20	5/6/5	17		9A								11	
	22	5/11/14	38		10A								9	
870.9	24													

Bottom of Boring at 25.0'

Particle Sizes: Agg => 2.00mm, Coarse Sand = 2.00-0.42mm, Fine Sand = 0.42-0.074mm, Silt = 0.074-0.005mm, Clay =< 0.005mm.

Job Number: 140908

Date Started 06/06/07 Sampler: Type Split Spoon Dia. 1 3/8" Water Elev. (ft) 890.9 Client: LJB, Inc.

Date Completed 06/06/07 Casing: Length Dia. Project Description: Soil Study for Noise Wall, Ramp "P",

Boring No. NWB-016-0-07 Austin Pike Interchange Project, MOT I-75-0.75,

Sheet 1 of 1 Station & Offset Sta. 29+60.18, 37.66' Rt. Surface Elev. (ft) 896.9 Montgomery County, Ohio

Elev. (ft)	Depth (ft)	Std. Pen./ RQD	N_{60}	Description	Sample No.	Physical Characteristics								ODOT Class
						% Agg	% C.S.	% F.S.	% Silt	% Clay	L.L.	P.I.	W.C.	
896.9	0													
895.8				(FILL) TOPSOIL (13")										
	2	5/4/5	11	Brown and gray SILTY CLAY, trace sand, trace gravel	1A								26	
	4	2/2/3	6		2A								26	
890.9	6													
	8	2/2/4	7	Brown SANDY SILT, some clay, little gravel	3A	11	8	12	42	27	19	4	15	A-4a (7)
887.9	10	3/7/9	19		4A								12	
885.9				Gray SANDY SILT, trace gravel										
	12	3/3/6	11	Brown SANDY SILT, some clay, some gravel	5A	20	9	16	32	23	20	6	13	A-4a (4)
883.9														
	14	6/6/9	20	Brown GRAVEL with sand and silt, trace clay	6A								17	
	16	8/11/16	36		7A	34	17	21	19	10	16	4	9	A-2-4 (0)
878.4	18													
	20	12/16/24	57	Bluish gray SANDY SILT, trace gravel	8A								10	
875.9														
	22	39/27/28	83	Brown GRAVEL with sand, trace silt, trace clay	9A	38	40	11	6	5	15	1	10	A-1-b (0)
	24	6/5/5	15		10A								15	
871.9														

Bottom of Boring at 25.0'

Particle Sizes: Agg => 2.00mm, Coarse Sand = 2.00-0.42mm, Fine Sand = 0.42-0.074mm, Silt = 0.074-0.005mm, Clay =< 0.005mm.

CALCULATED SR CHECKED CR

BOWSER MORNER®
4518 Taylorsville Road
Dayton, Ohio 45424
Ph 937-236-8805
Fax 937-233-2016

PROJECT DESCRIPTION
CONSTRUCT A 160 FOOT-LONG RETAINING WALL BY THE INTERSECTION OF WOOD ROAD AND MIAMISBURG-SPRINGBORO PIKE

GEOLOGY AND OBSERVATIONS
ON MAY 23, 2007 A SITE RECONNAISSANCE VISIT WAS MADE. THE SOIL BORING FOR THE RETAINING WALL WAS PERFORMED INSIDE THE FENCE FOR AN EXISTING WATER TOWER.
THE RETAINING WALL SITE IS SITUATED IN A GLACIAL GROUND MORAINE CONSISTING OF TILL THAT IS COMPOSED OF AN UNSORTED, UNSTRATIFIED MIXTURE OF CLAY, SILT, SAND, GRAVEL, AND COARSE FRAGMENTS DEPOSITED DISCONTINUOUSLY BY RETREATING ICE FROM A GLACIER. THE GROUND MORAINE OVERLIES THE ORDOVICIAN AGE, RICHMOND GROUP BEDROCK COMPOSED OF SHALE AND LIMESTONE LAYERS.

SUBSURFACE EXPLORATION
ONE (1) SOIL BORING WAS COMPLETED AS PART OF THIS SUBSURFACE EXPLORATION, ON JUNE 7, 2007. EXPLORATION BORINGS WERE MADE USING A BORING RIG MOUNTED ON AN ALL-TERRAIN VEHICLE (ATV). HOLLOW-STEM AUGERS AND STANDARD PENETRATION METHOD (ASTM D-1586) WERE EMPLOYED AT MAXIMUM DEPTH INTERVALS OF FIVE FEET.

INVESTIGATION FINDINGS AND OBSERVATIONS
THE SUBGRADE SOILS INCLUDING THE FILL ENCOUNTERED ON THE SITE CONSISTS OF TOPSOIL, CRUSHED STONE, GRAY SILT AND CLAY, BROWN GRAVEL WITH SAND (A-1-b), BROWN SANDY SILT (A-4a), AND BROWN SILT (A-4b).

FREE GROUNDWATER WAS OBSERVED AT DEPTHS OF 10.0 TO 12.0 FEET DURING THE BORING OPERATION.

BEDROCK WAS NOT ENCOUNTERED TO A DEPTH OF 30.0 FEET.

AVAILABLE INFORMATION
ALL AVAILABLE SOIL AND BEDROCK INFORMATION THAT CAN BE CONVENIENTLY SHOWN ON THE SOIL PROFILE SHEETS HAS BEEN SO REPORTED. ADDITIONAL SUBSURFACE EXPLORATIONS MAY HAVE BEEN MADE TO STUDY SOME SPECIAL ASPECT OF THE PROJECT. COPIES OF THIS DATA, IF ANY, MAY BE INSPECTED IN THE DISTRICT DEPUTY DIRECTOR'S OFFICE, THE OFFICE OF GEOTECHNICAL ENGINEERING AT 1600 WEST BROAD STREET OF THE OFFICE OF STRUCTURAL ENGINEERING AT 1980 WEST BROAD STREET.

LEGEND

DESCRIPTION	OHIO CLASS	CLASSIFIED MECH/VISUAL	
GRAVEL WITH SAND	A-1-b	1	0
SANDY SILT	A-4a	2	2
SILT	A-4b	1	0
SILT AND CLAY	VISUAL		
EMBANKMENT OR UNDOCUMENTED FILL	VISUAL		

BORING LOCATION - PLAN VIEW

WC — INDICATES WATER CONTENT IN PERCENT.

N_{60} — INDICATES STANDARD PENETRATION RESISTANCE NORMALIZED TO 60% DRILL ROD ENERGY RATIO.

W — INDICATES FREE WATER ELEVATION.

INDICATES STATIC WATER ELEVATION.

INDICATES A NON-PLASTIC MATERIAL WITH A MOISTURE CONTENT GREATER THAN 25 % OR GREATER THAN 19 % WITH A WET APPEARANCE.

* — INDICATES A SAMPLE TAKEN WITHIN 3 FT OF PROPOSED GRADE.

NP — INDICATES A NON-PLASTIC SAMPLE.

SS — INDICATES A SPLIT SPOON SAMPLE, STANDARD PENETRATION TEST.

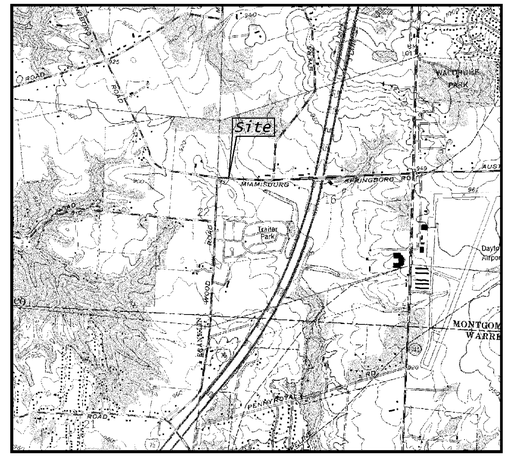

VICINITY MAP

0 1000 2000
SCALE IN FEET

N

PARTICLE SIZE DEFINITIONS

12"	3"	2.0 mm	0.42 mm	0.074 mm	0.005 mm
BOULDERS	COBBLES	GRAVEL	COARSE SAND	FINE SAND	SILT	CLAY
		No. 10 SIEVE	No. 40 SIEVE	No. 200 SIEVE		

BOWSER MORNER®
4518 Taylorsville Road
Dayton, Ohio 45424
Phone 937-236-9600
Fax 937-233-3016

CALCULATED SR
CHECKED CR

SOLDIER PILE WALL ALONG WOOD ROAD
MIAMISBURG-SPRINGBORO PIKE OVER I-75

MOT-75-0.75
PID 77246

1
3

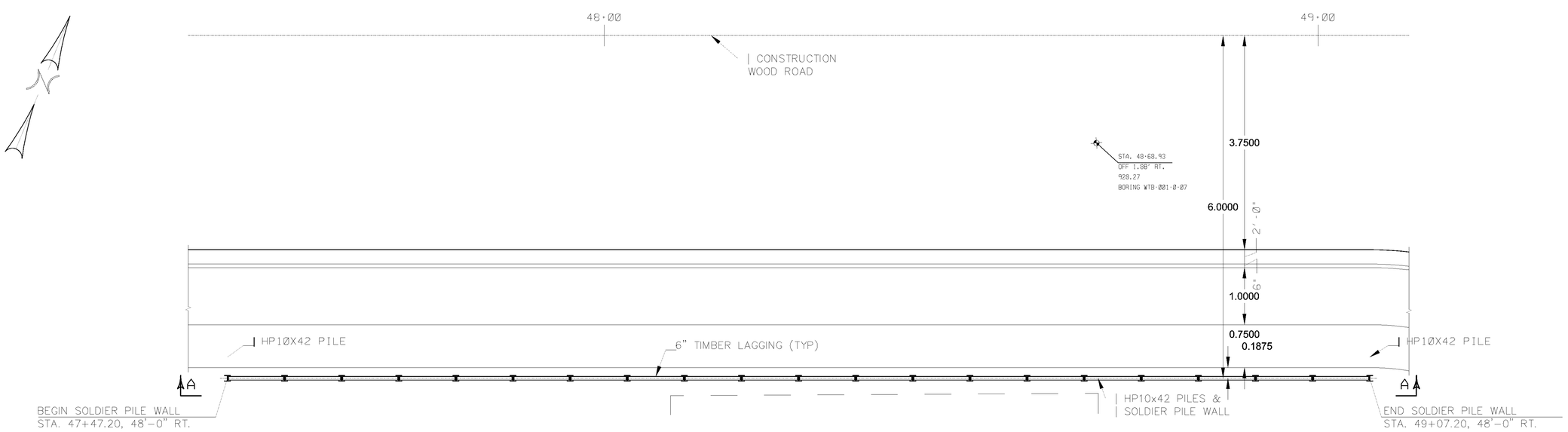

20 SPACES @ 8'-0" = 20.0000

[508.00]\X(LIMITS OF SOLDIER PILE WALL)

PLAN

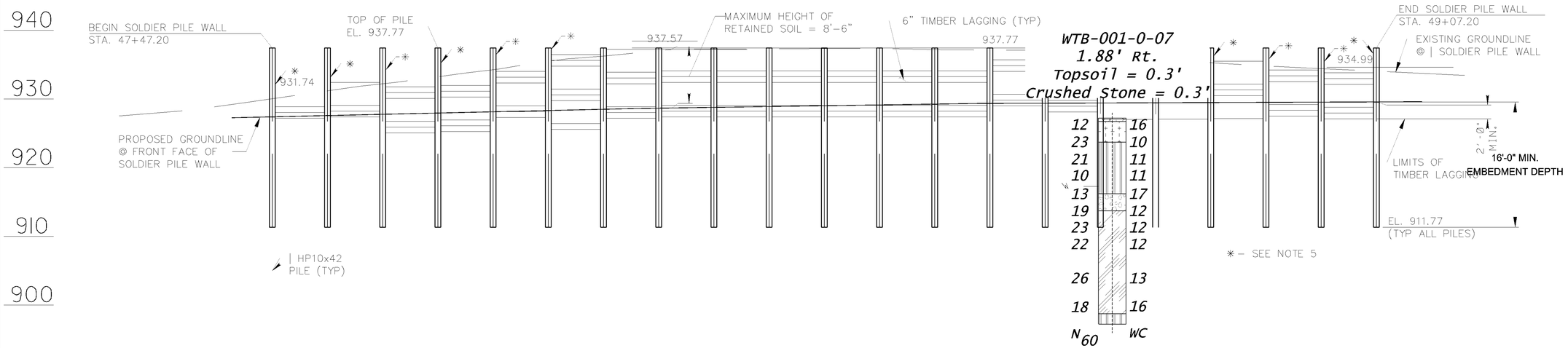

21-HP10x42 PILES @ 8'-0" = 20.0000

ELEVATION A-A

VERTICAL SCALE IN FEET

CALCULATED SR
CHECKED CR

SOLDIER PILE WALL ALONG WOOD ROAD
MIAMISBURG-SPRINGBORO PIKE OVER I-75

MOT-75-0.75
PID 77246

2
3

Bowser-Morner, Inc.

Job Number: 140908

Date Started 06/07/07 Sampler: Type Split Spoon Dia. 1 3/8" Water Elev. (ft) 918.3

Client: LJB, Inc.

Date Completed 06/07/07 Casing: Length Dia.

Project Description: Soil Study for Noise Wall, Ramp "P", Austin Pike Interchange Project, MOT I-75-0.75, Montgomery County, Ohio

Boring No. WTB-001-0-07

Sheet 1 of 1 Station & Offset Sta. 48+68.93, 1.88' Rt. (Wood Road) Surface Elev. (ft) 928.3

Elev. (ft)	Depth (ft)	Std. Pen./ RQD	N_{60}	Description	Sample No.	Physical Characteristics % Agg	% C.S.	% F.S.	% Silt	% Clay	L.L.	P.I.	W.C.	ODOT Class
928.3	0													
928.0				TOPSOIL (3")										
927.8				Crushed STONE (3")										
	2	3/5/5	12	Brown SILT, some sand, little clay, trace gravel	1A	4	8	19	47	22	20	4	16	A-4b (7)
924.8														
	4	7/8/11	23	Brown SANDY SILT, little clay, little gravel	2A								10	
	6	6/8/10	21		3A	15	14	18	35	18	16	3	11	A-4a (3)
	8	4/3/5	10		4A								11	
	▼ 10													
917.3		3/5/6	13	Brown GRAVEL with sand, trace silt, trace clay	5A	22	57	13	5	3	Non-Plastic		17	A-1-b (0)
	12													
914.8														
	14	4/5/9	19	Gray SILT and CLAY, trace sand, trace gravel	6A								12	
	16	6/7/10	23		7A								12	
	18	6/7/9	22		8A								12	
	20													
	22													
	24	6/7/10	26		9A								13	
	26													
	28													
899.8		3/5/7	18	Brown SANDY SILT, some clay	10A	0	6	13	42	39	22	7	16	A-4a (8)
898.3	30			Bottom of Boring at 30.0'										

Particle Sizes: Agg => 2.00mm, Coarse Sand = 2.00-0.42mm, Fine Sand = 0.42-0.074mm, Silt = 0.074-0.005mm, Clay =< 0.005mm.

BOWSER MORNER®
4518 Taylorsville Road
Dayton, Ohio 45424
Ph 937-236-8805
Fax 937-233-2016

GEOLOGY OF THE SITE

The bridge site is situated in a glacial ground moraine consisting of till that is composed of an unsorted, unstratified mixture of clay, silt, sand, gravel, and coarse fragments deposited discontinuously by retreating ice from a glacier. The ground moraine overlies the Ordovician age, Richmond Group bedrock composed of shale and limestone layers. This area consists of embankment fill which was placed during the construction of the existing highway.

EXPLORATION

Exploration borings were made using a truck-mounted boring rig. Hollow-stem augers and standard penetration method (ASTM D-1586) were employed at maximum depth intervals of five feet. The drilling was performed between August 3, 2005 and August 9, 2005.

INVESTIGATION FINDINGS AND OBSERVATIONS

The subgrade soils including the fill encountered on the site consisted of brown or gray gravel with sand (A-2-4) sandy silts (A-4a), silts (A-4b), silt and clays (A-6a), silty clays (A-6b), and clay (A-7-6). Discontinuous layers of brown gravel with clay and sand were also encountered. Some sections along the culverts were covered with topsoil, while some sections were covered with 8.5 feet of undocumented embankment fill.

Ground water was encountered at depths of 4.0 to 23.5 feet below the existing ground surface in Borings A-17A, A-17B, N-7A, and SO-7A .

No bedrock was encountered during the boring operations.

SYMBOLS OF ROCK TYPES

- COAL
- FIRE CLAY OR UNDERCLAY
- WEATHERED MUDSTONE
- MUDSTONE
- WEATHERED SHALE
- SHALE
- WEATHERED CLAY-SHALE
- CLAY-SHALE
- BOULDERS OR COBBLES
- WEATHERED SILTSTONE
- SILTSTONE
- WEATHERED SANDSTONE
- SANDSTONE
- LEACHED DOLOMITE
- DOLOMITE
- LEACHED LIMESTONE
- LIMESTONE

PARTICLE SIZE DEFINITIONS

11.8"	3"	0.1"		0.02"	0.003"	0.0002"
Boulders	Cobbles	Gravel	Coarse Sand	Fine Sand	Silt	Clay
		No. 10 SIEVE		No. 40 SIEVE	No. 200 SIEVE	

LEGEND

- AUGER BORING LOCATION
- TR — TOP OF ROCK
- W — INDICATES FREE WATER ELEVATION
- INDICATES STATIC WATER ELEVATION
- HORIZONTAL BAR ON BORING INDICATES THE DEPTH THE SAMPLE WAS TAKEN - PROFILE VIEW
- X/Y/Z — FIGURES BESIDE THE BORING IN PROFILE INDICATE THE NUMBER OF BLOWS FOR STANDARD PENETRATION TEST
  - X = NUMBER OF BLOWS FOR FIRST 6"
  - Y = NUMBER OF BLOWS FOR SECOND 6"
  - Z = NUMBER OF BLOWS FOR THIRD 6"

GENERAL INFORMATION

DRIVE SAMPLES

Drive sample borings are made by means of a mechanically-powered, rotary-type drill rig employing a 2" O.D., 1-1/2" I.D., split-spoon sampler, at continuous, 2-1/2 to 5-foot depth intervals driven by means of a 140-pound hammer with a free fall of 30 inches. The number of blows required to drive the sampler three 6-inch increments is considered the standard penetration test.

PRESS SAMPLES

Press samples are taken by means of mechanically-powered, rotary-type drill rig, employing a 3" O.D. thin-wall press sampling tube. The press sampling tube is advanced by continuous uniform pressure applied by the drill rig.

CORE BORINGS

Core borings are made by means of a mechanically-powered, rotary-type drill rig, employing NW core barrel with an industrial diamond cutting head. Core borings were not made for this project.

SAMPLING AND TESTING

The boring log sheets show a graphic plot of the information obtained, including depth and elevation of the sample, type of sample, number of blows for the standard penetration test in three 6-inch increments, and a sample description based on laboratory test results, utilizing the ODOT classification system. Results of strength and consolidation testing, if performed on undisturbed samples, appear graphically on separate enclosures. Rock samples are displayed on the log sheets, including depth and elevation of the sample, amount of recovery, and a visual classification based on type, color, degree of hardness, grain size, deterioration, bedding, acid reaction, and other qualifying factors.

DAYTON, OHIO
TOLEDO, OHIO
LEXINGTON, KY
BOWSER MORNER®

DRAWN HGW | REVIEWED RJYT | DATE 10-05 | PROJECT NO. 132049
CLIENT: LJB, INC.

STRUCTURE FOUNDATION INVESTIGATION
AUSTIN ROAD BRIDGE OVER I-75

MOT I-75-0.75

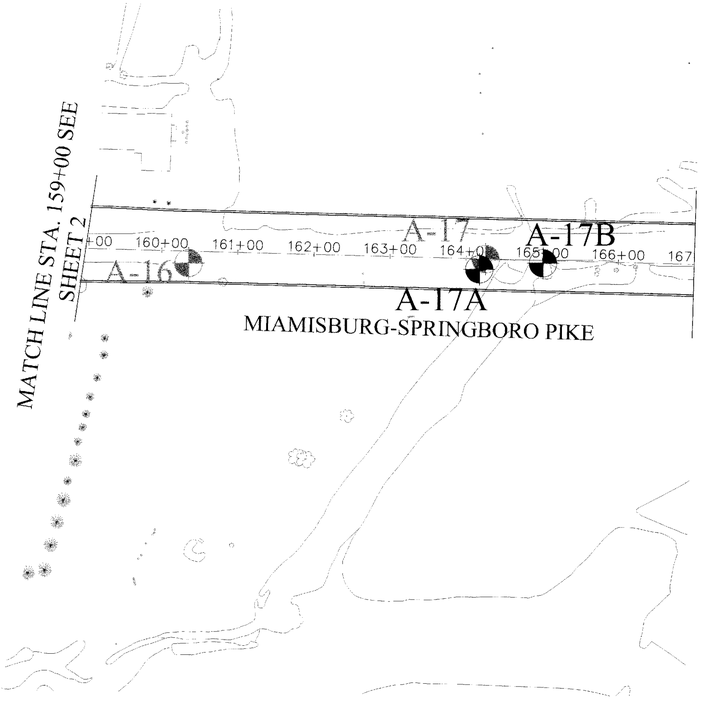

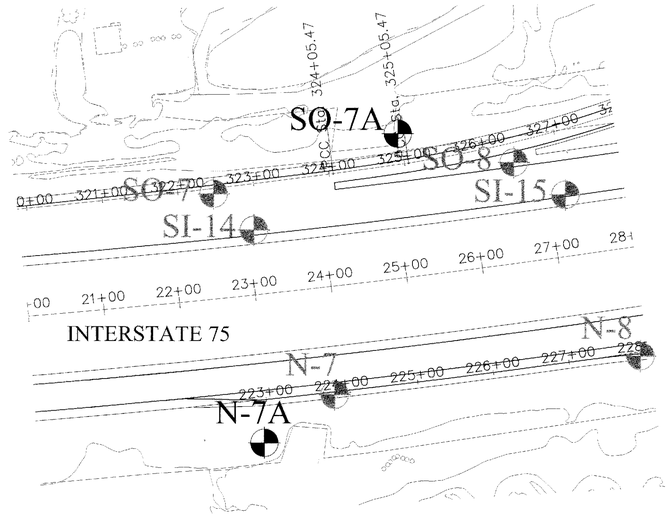

FOR BORINGS A-16, A-17, SO-7, SI-14, SI-15, N-7, AND N-8 SEE THE ROAD DRAWINGS

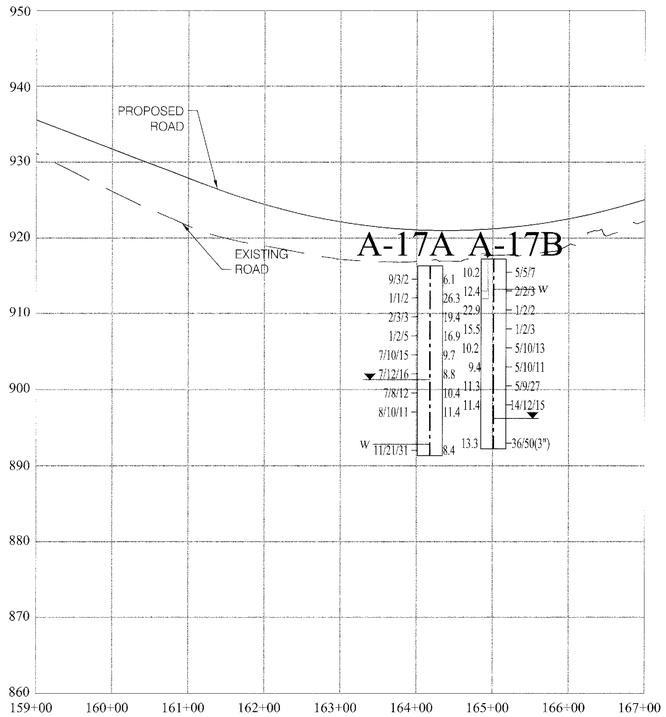

MIAMISBURG-SPRINGBORO PIKE

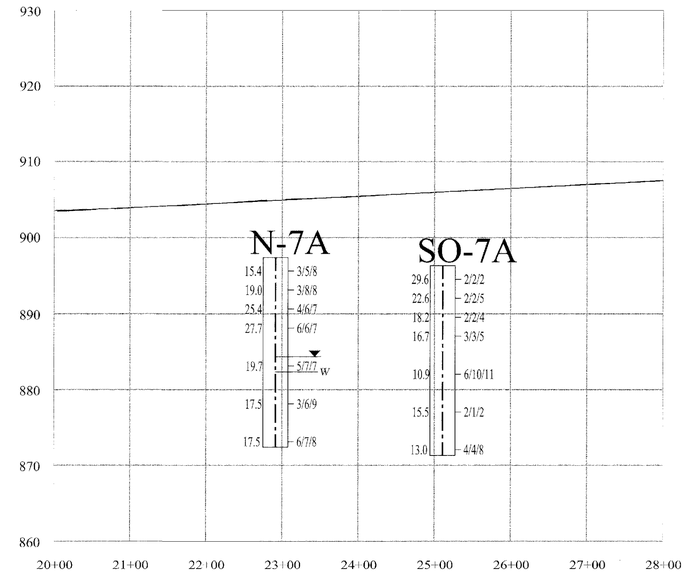

INTERSTATE 75

STRUCTURE FOUNDATION INVESTIGATION
AUSTIN ROAD BRIDGE OVER I-75

MOT I-75-0.75

DRAWN	REVIEWED	DATE	PROJECT NO.
HGW	RJYT	10-05	132049

CLIENT: LJB, INC.

Date Started 8/3/05 | Sampler: Type Split Spoon | Dia. 1-3/8" | Water Elev. (ft) 901.3
Date Completed 8/3/05 | Casing: Length | Dia.

Boring No. A-17A | Station & Offset Sta 164+17.66 14.02 Rt | Surface Elev. (ft) 916.3

Elev. (ft)	Depth (ft)	Std. Pen./ RQD	Rec. (ft)	Loss (ft)	Description	Sample No.	Physical Characteristics: % Agg	% C.S.	% F.S.	% Silt	% Clay	L.L.	P.I.	W.C.	ODOT Class
916.3	0														
915.8		9/3/2			(FILL) TOPSOIL (6") (FILL) Brown GRAVEL with SAND, trace silt	1A								6.1	Visual
912.8	5	1/1/2			(FILL) Dark brown SILTY CLAY, little sand, trace gravel	2A	7.0	5.7	11.2	43.3	32.8	37	16	26.3	A-6b (10)
		2/3/3			(FILL) Dark brown SILTY CLAY, little sand, trace gravel	3A								19.4	Visual
907.8	10	1/2/5			(ORIGINAL) Brown SILT and CLAY, some sand, some gravel	4A								16.9	Visual
		7/10/15			Brown SILT and CLAY, some sand, some gravel	5A								9.7	Visual
902.8	15 ▽	7/12/16			Gray SANDY SILT, some sand, little gravel	6A	14.0	12.0	18.9	36.8	18.3	20	7	8.8	A-4a (4)
		7/8/12			Gray SANDY SILT, some sand, little gravel	7A								10.4	Visual
897.8	20	8/10/11			Brown SILT and CLAY, some sand, some clay	8A								11.4	Visual
892.8		11/21/31			Gray GRAVEL with SAND, silt and clay	9A								8.4	Visual
891.3	25														

Bottom of Boring at 25.0'

Date Started 8/3/05 | Sampler: Type Split Spoon | Dia. 1-3/8" | Water Elev. (ft) 896.2
Date Completed 8/3/05 | Casing: Length | Dia.

Boring No. A-17B | Station & Offset Sta 165+01.20 3.86 Rt | Surface Elev. (ft) 917.2

Elev. (ft)	Depth (ft)	Std. Pen./ RQD	Rec. (ft)	Loss (ft)	Description	Sample No.	Physical Characteristics: % Agg	% C.S.	% F.S.	% Silt	% Clay	L.L.	P.I.	W.C.	ODOT Class
917.2	0														
916.7		5/5/7			(FILL) TOPSOIL (6") (FILL) Brown SILT and CLAY, some sand, some gravel	1A								10.2	Visual
913.7	5	2/2/3			(FILL) Gray SILT and CLAY, some sand, trace gravel	2A								12.4	Visual
		1/2/2			(FILL) Gray SILT and CLAY, some sand, trace gravel	3A	6.2	8.6	18.8	35.5	30.9	33	15	22.9	A-6a (8)
907.7	10	1/2/3			(FILL) Gray SILT and CLAY, some sand, trace gravel	4A								15.5	Visual
		5/10/13			(ORIGINAL) Brown SILT and CLAY, some sand, little gravel	5A								10.2	Visual
903.7	15	5/10/11			Gray SILT and CLAY, some sand, little gravel	6A								9.4	Visual
		5/9/27			Gray SILT and CLAY, some sand, little gravel	7A								11.3	Visual
	20 ▽	14/12/15			Gray SILT and CLAY, some sand, little gravel	8A								10.0	Visual
892.2	25	36/50(3")			Gray SILT and CLAY, some sand, little gravel	9A								13.3	Visual

Bottom of Boring at 25.0'

Date Started 8/9/05 | Sampler: Type Split Spoon | Dia. 1-3/8" | Water Elev. (ft) 882.4
Date Completed 8/9/05 | Casing: Length | Dia.

Boring No. N-7A | Station & Offset Sta 22+91.55 194.99 Rt | Surface Elev. (ft) 897.4

Elev. (ft)	Depth (ft)	Std. Pen./ RQD	Rec. (ft)	Loss (ft)	Description	Sample No.	Physical Characteristics: % Agg	% C.S.	% F.S.	% Silt	% Clay	L.L.	P.I.	W.C.	ODOT Class
897.4	0														
896.6		3/5/8			TOPSOIL (9") Brown SILT and CLAY, little sand, trace gravel	1A								15.4	Visual
	4	3/8/8			Brown SILT and CLAY, little sand, trace gravel	2A								19.0	Visual
891.4	6	4/6/7			Brown CLAY and silt, trace sand	3A	0.1	0.5	3.0	53.9	42.5	46	25	25.4	A-7-6 (14)
888.9	8	6/6/7			Brown SILT, trace clay, trace sand, trace gravel	4A								27.7	Visual
	10														
	12														
	14 ▽	5/7/7			Brown SILT and CLAY, trace sand, trace gravel	5A	0.0	0.2	0.8	53.4	45.6	26	7	19.7	A-4b (8)
	16														
878.9	18	3/6/9			Gray SILTY CLAY, trace sand	6A								17.5	Visual
	20														
	22														
872.4	24	6/7/8			Gray SILTY CLAY, trace sand	7A								17.5	Visual

Bottom Of Boring at 25.0'

Date Started 8/9/05 | Sampler: Type Split Spoon | Dia. 1-3/8" | Water Elev. (ft) 889.3
Date Completed 8/9/05 | Casing: Length | Dia.

Boring No. SO-7A | Station & Offset Sta 25+11.00 189.60 Lt | Surface Elev. (ft) 896.3

Elev. (ft)	Depth (ft)	Std. Pen./ RQD	Rec. (ft)	Loss (ft)	Description	Sample No.	Physical Characteristics: % Agg	% C.S.	% F.S.	% Silt	% Clay	L.L.	P.I.	W.C.	ODOT Class
896.3	0														
895.5		2/2/2			TOPSOIL (9") Brown CLAY, trace sand, trace roots	1A								29.6	Visual
	4	2/2/5			Brown CLAY, trace sand, trace roots	2A								22.6	Visual
890.3	6 ▽	2/2/4			Brown SILT and CLAY, trace sand, trace gravel	3A								18.2	Visual
887.8	8	3/3/5			Brown SILT, some sand	4A								16.7	Visual
	10														
	12														
882.8	14	6/10/11			Brown GRAVEL with SAND, some silt, trace clay	5A								10.9	Visual
	16														
	18														
	20	2/1/2			Brown GRAVEL with SAND, some silt, trace clay	6A	39.7	18.7	11.6	21.2	8.8	21	3	15.5	A-2-4 (0)
	22														
871.3	24	4/4/8			Brown GRAVEL with SAND, some silt, trace clay	7A								13.0	Visual

Bottom of Boring at 25.0'

DAYTON, OHIO
TOLEDO, OHIO
LEXINGTON, KY

BOWSER MORNER®

PROJECT NO. 132049
DATE 10-05
REVIEWED RJYT
DRAWN HGW
CLIENT LJB, INC.

STRUCTURE FOUNDATION INVESTIGATION
AUSTIN ROAD BRIDGE OVER I-75

MOT I-75-0.75

3 / 3

GENERAL INFORMATION

GEOLOGY OF THE SITE

The site is situated in a glacial ground moraine consisting of till that is composed of an unsorted, unstratified mixture of clay, silt, sand, gravel, and coarse fragments deposited discontinuously by retreating ice from a glacier. The ground moraine overlies the Ordovician age, Richmond Group bedrock composed of shale and limestone layers. This area consists of embankment fill which was placed during the construction of the existing highway.

EXPLORATION

Exploration borings were made using a truck-mounted boring rig. Hollow-stem augers and standard penetration method (ASTM D-1586) were employed at maximum depth intervals of five feet. The drilling was performed between August 24, 2004 and August 8, 2005.

INVESTIGATION FINDINGS AND OBSERVATIONS

The subgrade soils including the fill encountered on the site consisted of brown silty clay (A-6b), brown gravel with sand and silt (A-2-4), brown gravel with sand, silt and clay (A-2-6), brown gravel with sand (A-1-b), brown gravel (A-1-a), brown sandy silt (A-4a), brown or gray silt and clay (A-6a), brown, dark brown, or gray clay (A-7-6), brown or gray silt (A-4b), and brown coarse and fine sand (A-3a). Some sections along the alignment were covered with topsoil, while some sections were covered with 1.5 to more than 10.0 feet of undocumented embankment fill.
Ground water was encountered at depths of 4.0 to 11.0 feet below the existing ground surface in some of the borings.
Reddish brown or gray shale was encountered at depths of 5.0 to 8.5 feet below the existing ground surface in Borings N-20 and SI-27. Auger refusal occurred at depths of 3.5 to 6.5 feet below the existing ground surface in Boring N-18, SO-11 and SO-12A. No bedrock was encountered in the remaining borings.

LEGEND FOR PROJECT AVERAGE RESULTS OF TESTS

DESCRIPTION	AASHTO CLASS	OHIO CLASS	% AGG.	% C.S.	% F.S.	% SILT	% CLAY	LIQUID LIMIT	PLASTICITY INDEX	WATER CONTENT	SAMPLES TESTED
GRAVEL	A-1-a	A-1-a	63.7	19.4	8.9	5.9	2.1	18	3	5.3	3
GRAVEL WITH SAND	A-1-b	A-1-b	43.3	23.1	16.2	11.7	5.7	16	4	6.5	8
COARSE AND FINE SAND	-	A-3a	10.1	22.4	37.4	24.0	6.1	17	2	15.5	1
GRAVEL WITH SAND AND SILT	A-2-4	A-2-4	41.5	17.6	13.1	16.7	11.1	21	7	9.8	8
GRAVEL WITH SAND, SILT AND CLAY	A-2-6	A-2-6	60.5	17.4	6.7	10.0	5.4	18	4	5.2	1
SANDY SILT	A-4	A-4a	16.8	11.5	14.4	32.5	24.9	23	8	10.1	68
SILT	A-4	A-4b	1.7	3.4	8.4	61.8	24.7	24	7	15.3	6
SILT AND CLAY	A-6	A-6a	13.9	7.8	10.9	35.5	31.9	29	12	12.3	46
SILTY CLAY	A-6	A-6b	8.1	5.6	9.9	39.4	37.0	36	17	16.0	32
CLAY	A-7-6	A-7-6	2.5	2.9	7.0	41.7	45.9	48	27	20.8	25
SHALE	VISUAL CLASSIFICATION										
SOD and/or TOPSOIL	VISUAL CLASSIFICATION										
ORGANIC SOIL	VISUAL CLASSIFICATION										
ASPHALT	VISUAL CLASSIFICATION										
CONCRETE	VISUAL CLASSIFICATION										

INDICATES BORING LOCATION

DRIVE SAMPLE AND/OR CORE BORING PLOTTED TO VERTICAL SCALE ONLY

WATER CONTENT NEARLY EQUAL TO OR GREATER THAN LIQUID LIMIT

INDICATES A NON PLASTIC MATERIAL WITH A HIGH WATER CONTENT

W FREE WATER

STATIC WATER LEVEL

NUMBER OF BLOWS FOR "STANDARD PENETRATION" TEST.
X=NUMBER OF BLOWS FOR FIRST 150 mm
Y=NUMBER OF BLOWS FOR SECOND 150 mm
Z=NUMBER OF BLOWS FOR THIRD 150 mm

NOTE: FIGURES BESIDE BORINGS INDICATE WATER CONTENT IN PERCENT. e.g. 15

VICINITY MAP

PROJECT INDEX
MIAMISBURG-SPRINGOBORO PIKE

STATIONS FROM	STATIONS TO	SOIL PROFILE SHEET
108+00	138+00	5
138+00	167+00	6
167+00	191+00	7
191+00	209+00	8

PROJECT INDEX
INTERSTATE 75

STATIONS FROM	STATIONS TO	SOIL PROFILE SHEET
170+00	182+00	9
182+00	1+00	10
1+00	28+00	11
28+00	47+00	12
47+00	76+00	13
47+00	76+00	14
76+00	104+00	15
104+00	119+00	16

PROJECT INDEX
RAMP P

STATIONS FROM	STATIONS TO	SOIL PROFILE SHEET
328+00	338+00	12a
RAMP M		
439+00	448+00	12a
RAMP H		
228+00	241+00	12b
RAMP J		
140+00	150+00	12b

PROJECT INDEX
I675 RAMP

STATIONS FROM	STATIONS TO	SOIL PROFILE SHEET
10+00	14+00	16

DAYTON, OHIO
TOLEDO, OHIO
LEXINGTON, KY
BOWSER MORNER

PROJECT NO. 132049
DATE 07-05
REVIEWED RJYT
DRAWN HGW
CLIENT LJB, INC.

STRUCTURE FOUNDATION INVESTIGATION
AUSTIN ROAD BRIDGE OVER I-75

MOT I-75-0.75

SUMMARY OF SOIL TEST DATA

Boring Number	Station & Offset	Depth		% Agg.	% C.S.	% F.S.	% Silt	% Clay	L.L.	P.I.	% W.C.	ODOT Class
SI-10	6+47.01, 86.30' Lt.	1.0	3.0	13.1	11.9	17.6	33.0	24.4	26	11	12.6	A-6a(5)
		3.0	5.0	20.1	5.8	10.1	39.1	24.9	28	11	13.0	A-6a(6)
SI-11	10+64.95, 82.69' Lt.	0.0	2.0	Topsoil (2")							-	Visual
		2.0	4.0	5.6	6.8	12.6	46.6	28.4	34	17	15.8	A-6b(11)
		4.0	6.0	5.1	6.4	10.7	46.5	31.3	32	14	13.3	A-6a(10)
		8.5	10.0	Brown silt and clay, little sand, trace gravel							12.8	Visual
SI-12	14+81.88, 86.02' Lt.	1.0	3.0	35.5	20.8	17.3	16.4	10.0	22	8	12.6	A-2-4(0)
		3.0	5.0	5.9	6.8	11.9	40.6	34.8	33	15	13.0	A-6b(10)
SI-13	18+89.74, 83.62' Lt.	0.0	2.0	32.8	22.3	20.1	19.8	5.0	19	5	11.3	A-1-b(0)
		2.0	4.0	5.1	6.4	17.4	37.9	28.0	27	12	13.5	A-6a(7)
		4.0	6.0	Brown silt and clay, some sand, little gravel							12.8	Visual
		8.5	10.0	Dark brown silty clay, some sand, trace gravel, trace organic materials							12.8	Visual
SI-14	23+05.95, 85.30' Lt.	1.0	3.0	43.4	17.2	15.4	14.5	9.5	19	6	9.4	A-1-b(0)
		3.0	5.0	8.1	8.6	16.2	38.4	28.7	28	12	13.9	A-6b(7)
SI-15	27+20.11, 80.84' Lt.	0.0	2.0	8.1	5.1	6.9	51.6	28.3	29	11	15.0	A-6a(8)
		2.0	4.0	5.1	4.6	7.4	38.2	44.7	31	14	12.2	A-6a(10)
		4.0	6.0	Greenish gray silt and clay, little sand, trace gravel							12.4	Visual
		8.5	10.0	Greenish gray silt and clay, little sand, trace gravel							11.6	Visual
SI-16	31+40.47, 84.92' Lt.	1.0	3.0	48.5	14.1	7.3	16.0	14.1	23	9	9.4	A-2-4(0)
		3.0	5.0	45.2	26.3	8.0	11.1	9.4	Non-Plastic		8.3	Visual
SI-17	35+55.95, 82.31' Lt.	0.0	2.0	Brown sandy silt, some gravel							5.7	Visual
		2.0	4.0	0.0	0.7	6.7	39.2	53.4	29	12	14	A-6a(9)
		4.0	6.0	8.3	5.2	8.7	37.4	40.4	38	19	19.0	A-6b(12)
		8.5	10.0	Brown and dark brown silty clay, little sand, trace gravel, trace organic material							20.2	Visual
SI-18	39+73.99, 87.79' Lt.	1.0	3.0	24.5	10.4	10.4	28.1	26.6	25	8	13.5	A-4a(4)
		3.0	5.0	12.0	5.8	7.3	39.8	35.1	29	13	12.8	A-6a(9)
SI-19	43+92.75, 83.17' Lt.	0.0	2.0	Brown silt and clay, some sand, little gravel							8.7	Visual
		2.0	4.0	2.5	4.4	9.9	42.1	41.1	54	35	23.0	A-6a(9)
		4.0	6.0	24.2	10.9	12.5	30.3	22.1	26	11	8.8	A-6b(12)
		8.5	10.0	Brown silt and clay, some sand, some gravel							6.6	Visual
SI-20	48+10.37, 87.13' Lt.	1.0	3.0	55.8	19.3	15.2	6.9	2.8	Non-Plastic		6.1	A-1a(0)
		3.0	5.0	0.0	0.1	0.7	47.9	51.3	53	32	25.8	A-7-6(19)
SI-21	52+30.40' 82.48' Lt.	0.0	2.0	11.0	7.1	8.4	33.4	40.1	25	9	10.2	A-6a(8)
		2.0	4.0	2.3	4.1	8.8	32.9	51.9	48	29	19.4	A-6a(10)
		4.0	6.0	Brown silt and clay, some sand, little gravel							9.5	Visual
		8.5	10.0	Greenish gray silt and clay, some sand, little gravel							10.1	Visual
SI-22	56+54.86, 86.18' Lt.	1.0	3.0	17.7	6.8	8.0	32.9	34.6	25	9	38.0	A-4a(6)
		3.0	5.0	0.0	2.1	4.6	56.9	36.4	36	16	20.3	A-6b(10)
SI-23	60+70.82, 83.07' Lt.	0.0	2.0	20.4	13.4	11.3	35.5	19.4	26	10	10.5	A-4a(4)
		2.0	4.0	8.7	6.5	9.6	40.8	34.4	26	10	11.5	A-4a(8)
		4.0	6.0	Brown sandy silt, some clay, trace gravel							-	Visual
		8.5	10.0	Greenish gray and brown silty clay, some sand, trace gravel							14.1	Visual
SI-24	64+61.64, 85.58' Lt.	1.0	3.0	10.5	10.6	9.5	32.9	34.5	Non-Plastic		5.4	Visual
SI-25	68+98.85' 82.94 Lt.	0.0	2.0	18.6	18.1	10.7	27.6	25.0	18	5	5.9	A-4a(3)
		2.0	4.0	46.0	15.2	8.9	19.6	10.3	20	5	3.8	A-2-4(0)
		4.0	6.0	Brown gravel with sand, and silt, little clay							-	Visual
SI-26	73+10.66, 86.97' Lt.	1.0	3.0	35.4	18.8	14.1	17.4	14.3	20	7	4.9	A-2-4(0)
		3.0	5.0	11.5	10.5	8.1	37.0	32.9	25	8	3.2	A-4a(7)
SI-27	77+17.46, 82.61' Lt.	0.0	2.0	10.1	13.7	12.1	27.9	36.2	21	6	8.1	A-4a(6)
		2.0	4.0	30.1	10.7	7.2	24.7	27.3	25	9	4.3	A-4a(3)
		4.0	6.0	Greenish gray sandy silt and clay, little to some gravel							7.2	Visual
		8.5	10.0	Shale, reddish brown, soft, highly weathered							6.1	Visual
SI-28	81+17.53, 85.89' Lt.	1.0	3.0	14.5	10.9	10.6	38.4	25.6	22	9	8.0	A-4a(6)
		3.0	5.0	34.9	13.1	7.6	24.4	20.0	22	8	6.5	A-4a(2)
SI-29	85+27.78, 82.88' Lt.	0.0	2.0	24.1	15.5	18.8	25.0	16.6	21	8	5.6	A-4a(1)
		2.0	4.0	16.6	12.3	17.5	35.7	17.9	21	8	9.5	A-4a(4)
		4.0	6.0	Brown sandy silt, little clay, some gravel							14.0	Visual
		8.5	10.0	Greenish gray silty clay, some sand, trace gravel							12.1	Visual
SI-30	89+42.01, 86.54' Lt.	1.0	3.0	17.3	11.7	17.6	34.0	19.4	19	5	8.4	A-4a(4)
		3.0	5.0	12.4	11.9	18.5	36.4	20.8	20	7	7.9	A-4a(4)

Boring Number	Station & Offset	Depth		% Agg.	% C.S.	% F.S.	% Silt	% Clay	L.L.	P.I.	% W.C.	ODOT Class
SI-31	93+55.96, 83.64' Lt.	0.0	2.0	2.7	7.2	8.9	52.7	26.5	27	11	12.1	A-6a(8)
		2.0	4.0	22.6	10.0	16.1	33.7	17.6	21	7	7.2	A-4a(3)
		4.0	6.0	Greenish gray silt and clay, some sand, little gravel							9.6	Visual
		8.5	10.0	Brown sandy silt, trace gravel							9.6	Visual
SI-32	97+70.36, 86.58' Lt.	1.0	3.0	11.5	15.3	18.0	34.0	21.2	19	5	6.1	A-4a(4)
		3.0	5.0	28.5	11.1	16.1	28.0	16.3	20	6	7.4	A-4a(2)
SI-33	101+86.81, 82.83' Lt.	0.0	2.0	16.0	12.9	15.2	31.4	24.5	23	9	9.9	A-4a(4)
		2.0	4.0	11.9	12.6	19.0	36.9	19.6	22	8	8.6	A-4a(4)
		4.0	6.0	Brown sandy silt, some clay, little grave							7.6	Visual
		8.5	10.0	Dark brown organic clay, with organic odor							12.2	Visual
SI-34	106+01.24, 86.85' Lt.	1.0	3.0	14.4	17.1	20.8	31.7	16.0	21	7	8.4	A-4a(3)
		3.0	5.0	10.1	10.8	16.2	36.7	26.2	25	10	10.3	A-4a(6)
SI-35	110+15.48, 83.41' Lt.	0.0	2.0	22.1	17.6	11.0	28.2	21.1	31	12	12.9	A-6a(4)
		2.0	4.0	19.3	7.9	9.4	29.9	33.5	26	10	9.4	A-4a(6)
		4.0	6.0	Greenish gray clay, some silt, trace sand							13.0	Visual
		8.5	10.0	Greenish gray clay, some silt, trace sand							11.9	Visual
SI-36	114+26.10, 87.53' Lt.	1.0	3.0	18.7	13.6	20.7	28.9	18.1	24	10	11.0	A-4a(2)
		3.0	5.0	22.7	8.0	9.8	26.7	32.8	30	12	12.3	A-6a(6)
SI-37	118+36.93, 82.98' Lt.	0.0	2.0	71.2	13.0	7.0	6.8	2.0	NonPlastic		6.3	A-1-a(0)
		2.0	4.0	Brown gravel, some sand, trace clay							9.1	Visual
		4.0	6.0	9.6	6.9	12.0	30.9	40.6	36	18	16.1	A-6b(10)
		8.5	10.0	Brown and dark brown silty clay, little sand, trace organic materials, trace gravel							18.3	Visual
SO-1	0+03.30, 142.47' Lt.	0.0	2.0	6.5	8.7	13.0	44.6	27.2	22	7	9.1	A-4a(7)
		2.0	4.0	13.4	13.0	16.7	35.2	21.7	22	7	9.9	A-4a(4)
		4.0	6.0	Brown sandy silt, some clay, little gravel							9.4	Visual
		8.5	9.0	Gray gravel and sand							-	Visual
SO-2	2+48.19, 132.99' Lt.	1.0	3.0	10.1	5.2	17.3	44.9	22.5	25	8	11.2	A-4a(6)
		3.0	5.0	15.8	9.1	15.5	34.9	24.7	24	9	11.2	A-4a(5)
SO-3	6+52.27, 139.94' Lt.	0.0	2.0	5.4	12.7	18.2	40.4	23.3	24	9	10.2	A-4a(6)
		2.0	4.0	8.7	8.7	14.1	41.5	27.0	24	9	10.4	A-4a(7)
		4.0	6.0	Brown sandy silt, some clay, trace gravel							9.4	Visual
		8.5	10.0	Brown sandy silt, some sand, trace gravel							-	Visual
SO-4	10+53.17, 132.97' Lt.	1.0	3.0	8.6	12.1	15.7	39.0	24.6	27	12	13.7	A-6a(7)
		3.0	5.0	4.9	3.8	12.4	45.9	33.0	35	15	17.6	A-6a(10)
SO-5	14+53.33, 141.07' Lt.	0.0	2.0	12.1	12.1	19.8	34.2	21.8	25	10	10.5	A-4a(4)
		2.0	4.0	15.6	10.4	14.7	36.9	22.4	22	8	8.2	A-4a(5)
		4.0	6.0	Brown sandy silt, some clay, little gravel							10.9	Visual
		8.5	10.0	Dark brown silty clay, some sand, with organic odor							12.3	Visual
SO-6	18+55.60, 132.52' Lt.	1.0	3.0	9.4	12.3	17.0	37.4	23.9	22	8	9.2	A-4a(5)
		3.0	5.0	7.5	9.8	17.1	37.7	27.9	25	10	12.2	A-4a(6)
SO-7	22+57.92, 138.31' Lt.	0.0	2.0	18.0	12.3	16.3	33.2	20.2	26	11	9.3	A-6a(4)
		2.0	4.0	3.9	5.1	12.2	48.7	30.1	28	11	17.4	A-6a(8)
		4.0	6.0	Brown silt and clay, some sand, little gravel							9.1	Visual
		8.5	10.0	Brown silt and clay, some sand, little gravel							8.7	Visual
SO-8	26+58.19, 132.31' Lt.	1.0	3.0	60.5	17.4	6.7	10.0	5.4	18	4	5.2	A-2-6(2)
		3.0	5.0	27.0	7.1	6.0	27.4	32.5	31	13	12.9	A-6a(6)
SO-9	300+98.22 0.83 Lt.	0.5	2.0	0.0	2.1	5.2	48.1	44.6	51	27	22.3	A-7-6(17)
		2.0	3.5	0.0	2.7	5.5	59.9	31.9	38	17	22.0	A-6b(11)
		3.5	5.0	Brown silt and clay, little sand, trace gravel							14.2	Visual
		8.5	10.0	Brown silt and clay, little sand, trace gravel							13.8	Visual
SO-10	334+90.17 2.96 Rt.	0.5	2.0	0.0	1.4	5.5	50.7	42.4	50	28	19.7	A-7-6(17)
		2.0	3.5	8.1	12.4	16.6	33.5	29.4	29	13	12.2	A-6b(11)
		3.5	5.0	Brown silt and clay, some sand, trace gravel							13.5	Visual
		8.5	10.0	Brown silt and clay, some sand, trace gravel, trace limestone fragments							10.2	Visual
SO-11	442+07.80 6.47 Lt.	0.5	2.0	0.0	3.4	10.6	45.2	40.8	41	21	13.4	A-7-6(13)
		2.0	3.5	3.1	3.7	16.7	36.9	39.6	35	16	16.1	A-6b(10)
		3.5	5.0	Brown silt and clay, some sand, trace gravel							9.0	Visual
		8.5	10.0	Brown silt and clay, some sand, trace gravel, trace limestone fragments							4.5	Visual

DAYTON, OHIO
TOLEDO, OHIO
LEXINGTON, KY
BOWSER MORNER®

DRAWN: HGW
REVIEWED: RJYT
DATE: 07-05
PROJECT NO. 132049
CLIENT: LJB, INC.

STRUCTURE FOUNDATION INVESTIGATION
AUSTIN ROAD BRIDGE OVER I-75

MOT I-75-0.75

SUMMARY OF SOIL TEST DATA

Boring Number	Station & Offset	Depth		% Agg.	% C.S.	% F.S.	% Silt	% Clay	L.L.	P.I.	% W.C.	ODOT Class
SO-12	46+66.05, 140.95' Lt.	0.0	2.0	25.9	13.6	12.1	26.9	21.5	25	9	12.7	A-4a(2)
		2.0	4.0	Brosn silty clay, some sand, trace gravel							-	Visual
		4.0	6.0	Brosn silty clay, some sand, trace gravel							17.1	Visual
		8.5	9.6	Gray gravel with sand							10.8	Visual
SO-12A	446+93.50 64.38 Lt.	0.5	2.0	0.0	3.1	5.1	54.3	37.5	38	16	15.0	A-6b(10)
		2.0	3.5	13.3	15.0	12.4	30.5	28.8	23	8	10.2	A-4a(5)
		3.5	5.0	Brown silt and clay, some sand, trace gravel							7.5	Visual
		8.5	10.0	Brown silt and clay, some sand, trace gravel, trace limestone fragments							2.3	Visual
SO-13	50+63.85, 130.42' Lt.	2.0	4.0	4.8	3.1	8.2	35.8	48.1	32	13	17.2	A-6a(9)
		4.0	6.0	0.5	1.8	5.3	47.0	45.4	49	27	23.6	A-7-6(17)
SO-14	54+63.21, 148.74' Lt.	0.0	2.0	Topsoil (24")							13.0	Visual
		2.0	4.0	44.6	6.9	8.5	17.1	22.9	26	11	8.0	A-6a(1)
		4.0	6.0	10.4	10.8	24.1	29.8	22.9	30	13	10.5	A-6a(5)
		8.5	9.6	Gray gravel with sand							-	Visual
SO-15	58+59.04, 137.92' Lt.	2.0	4.0	9.3	7.9	11.1	29.4	42.3	26	10	7.7	A-4a(7)
		4.0	6.0	0.7	1.9	4.4	44.4	48.6	43	22	22.5	A-7-6(14)
SO-16	62+52.57, 150.78' Lt.	0.0	2.0	Topsoil (1")							8.0	Visual
		2.0	4.0	3.6	3.7	7.0	41.1	44.6	42	22	20.2	A-7-6(13)
		4.0	6.0	3.3	2.8	4.7	39.2	50.0	52	32	23.3	A-7-6(18)
		8.5	10.0	Greenish gray silty clay, some sand, trace gravel							12.6	Visual
N-1	0+18.53, 140.59' Rt.	0.0	2.0	28.0	12.0	9.9	30.2	19.9	31	14	10.9	A-6a(5)
		2.0	4.0	0.8	0.8	4.7	62.5	31.2	40	20	21.2	A-6b(12)
		4.0	6.0	Brown silty clay, trace sand, trace gravel							15.3	Visual
		8.5	10.0	Gray sandy silt, some sand, little gravel							5.5	Visual
N-2	4+10.79, 138.54' Rt.	1.0	3.0	47.7	27.2	11.4	8.9	4.8	NonPlastic		5.1	A-1-b(0)
		3.0	5.0	19.2	11.0	11.2	31.8	26.8	27	12	10.2	A-6a(5)
N-3	8+05.40, 142.87' Rt.	0.0	2.0	15.2	9.1	16.9	35.3	23.5	27	12	12.2	A-6a(5)
		2.0	4.0	Brown silt and clay, some sand, trace gravel							-	Visual
		4.0	6.0	Brown silt and clay, some sand, trace gravel							-	Visual
		8.5	10.0	Brown silt and clay, some sand, little gravel							8.7	Visual
N-4	12+02.37, 142.31' Rt.	1.0	3.0	18.4	12.3	11.9	28.3	29.1	33	16	13.0	A-6b(7)
		3.0	5.0	5.7	8.5	15.9	41.9	28.0	25	10	12.6	A-6a(7)
N-5	15+98.12, 140.05' Rt.	0.0	2.0	Brown gravel with sand, trace silt, trace clay							7.2	Visual
		2.0	4.0	2.7	4.0	8.4	43.6	41.3	44	25	22.8	A-7-6(15)
		4.0	6.0	15.9	12.9	18.0	31.7	21.5	25	10	12.1	A-4a(4)
		8.5	10.0	Brown sandy silt, some sand, little gravel							8.3	Visual
N-6	19+91.28, 143.82' Rt.	1.0	3.0	43.3	25.0	18.4	8.6	4.7	NonPlastic		5.4	A-1-b(0)
		3.0	5.0	10.0	11.0	17.9	37.6	23.5	24	9	10.4	A-4a(5)
N-7	22+87.90, 142.31' Rt.	0.0	2.0	Topsoil (24")							6.4	Visual
		2.0	4.0	12.2	10.7	17.7	33.9	25.5	22	8	9.8	A-4a(5)
		4.0	6.0	14.1	6.0	13.8	37.6	28.5	33	16	15.3	A-6b(8)
		8.5	10.0	Gray and brown silty clay, trace organic material, trace gravel, with organic odor							12.6	Visual
N-8	27+87.43, 143.84' Rt.	1.0	3.0	53.6	18.5	9.2	10.0	8.7	19	5	6.2	A-1-b(0)
		3.0	5.0	20.8	7.2	7.2	26.1	38.7	32	14	13.4	A-6a(8)
N-9	233+51.53 3.77 Lt.	0.0	2.0	0.0	1.4	5.7	60.5	32.4	35	12	12.6	A-6a(9)
		2.0	4.0	0.0	0.4	2.5	46.8	50.3	48	25	20.9	A-7-6(16)
		4.0	5.5	Brown silt and clay, some sand, trace gravel							13.6	Visual
		8.5	10.0	Brown silt and clay, some sand, trace gravel							12.5	Visual
N-10	236+99.35 .030 Rt.	0.0	2.0	10.5	4.6	6.1	29.5	49.3	36	16	10.1	A-6b(10)
		2.0	4.0	28.5	14.9	13.1	23.4	20.1	27	10	9.8	A-4a(2)
		4.0	5.5	Brown sandy silt, some gravel, some clay							13.6	Visual
		8.5	10.0	Brown silt and clay, some sand, little gravel							12.5	Visual
N-11	143+98.81 1.45 Lt.	0.0	2.0	13.1	4.9	7.9	33.5	40.6	43	22	13.7	A-7-6(13)
		2.0	3.5	20.3	36.6	17.7	16.6	8.8	22	7	6.5	A-2-4(0)
		3.5	5.0	Brown silt and clay, some sand, little ravel							11.7	Visual
		8.5	10.0	Grecnish-gray silt and clay, little sand, little gravel							16.0	Visual
N-12	147+57.56 5.70 Lt.	0.5	2.0	4.5	5.5	10.5	32.2	47.3	41	21	14.8	A-7-6(13)
		2.0	3.5	15.0	10.3	12.6	31.7	30.4	25	8	9.2	A-4a(5)
		3.5	5.0	Brown silty clay, some sand, little ravel							13.1	Visual
		8.5	10.0	Grecnish-gray silt and clay, some sand, some gravel, trace limestone fragments							13.4	Visual

Boring Number	Station & Offset	Depth		% Agg.	% C.S.	% F.S.	% Silt	% Clay	L.L.	P.I.	% W.C.	ODOT Class
N-13	52+13.94, 143.80' Rt.	1.0	3.0	13.1	8.3	13.4	30.3	34.9	30	14	13.0	A-6a(8)
		3.0	5.0	24.1	7.1	9.4	24.9	34.5	26	9	10.6	A-4a(5)
N-14	56+17.47, 142.10' Rt.	0.0	2.0	15.8	10.8	8.5	34.8	30.1	25	10	9.2	A-4a(6)
		2.0	4.0	26.4	8.8	7.7	23.2	33.9	31	14	12.8	A-6a(6)
		4.0	6.0	Brown silt and clay, some gravel, little sand							14.5	Visual
		8.5	10.0	Black organic clay, some silt, trace sand							14.3	Visual
N-15	60+18.35, 141.97' Rt.	1.0	3.0	10.9	6.4	10.3	31.3	41.1	27	11	4.8	A-6a(8)
		3.0	5.0	0.6	1.0	3.6	62.3	32.5	39	17	23.3	A-6b(11)
N-16	64+21.75, 142.27' Rt.	0.0	2.0	35.2	12.9	10.5	23.1	18.3	24	9	7.9	A-4a(1)
		2.0	4.0	Brown sandy silt and gravel, trace cobble							9.8	Visual
		4.0	6.0	0.0	0.2	6.9	60.4	32.5	24	9	10.2	A-4b(8)
		8.5	10.0	Brown and gray silt, some clay, trace sand							7.7	Visual
N-17	68+27.30, 133.65' Rt.	1.0	3.0	20.2	12.3	13.3	29.3	24.9	26	11	10.8	A-6a(4)
		3.0	5.0	69.7	10.5	4.4	10.7	4.7	18	4	1.4	A-1-b(0)
N-18	73+10.66, 86.97' Lt.	0.0	2.0	32.1	13.1	15.7	22.7	16.9	27	9	12.2	A-4a(1)
		2.0	4.0	Brown sandy silt, some gravel, little clay							-	Visual
N-19	76+29.28, 132.88' Rt.	1.0	3.0	18.8	8.6	11.4	32.7	28.5	28	13	11.6	A-6a(6)
		3.0	5.0	80.3	6.0	3.5	5.7	4.5	20	7	22.7	A-2-4(0)
N-20	80+16.99, 144.4' Rt.	1.0	3.0	22.0	8.6	6.9	29.0	33.5	25	10	13.1	A-4a(6)
		3.0	5.0	0.0	0.5	1.3	34.1	64.1	35	15	11.4	A-6a(10)
		5.0	7.0	Shale, gray, highly weathered, highly fractured							-	Visual
		8.5	10.0	Shale, gray, highly weathered, highly fractured							-	Visual
N-21	84+25.96, 145.36' Rt.	1.0	3.0	29.0	11.3	12.3	25.3	22.1	24	9	9.6	A-4a(2)
		3.0	5.0	9.6	13.2	12.3	28.5	36.4	27	11	10.3	A-6a(6)
675-1	10+00.12 4.60 Rt.	1.0	2.0	0.0	0.5	2.4	48.5	48.6	29	11	12.0	A-6a(9)
		2.0	4.0	0.0	0.4	1.7	41.6	56.3	30	11	10.4	A-6a(9)
		4.0	5.5	Brown silt and clay, trace sand							10.9	Visual
675-2	13+99.61 15.02 Lt.	1.0	2.0	0.0	0.8	3.6	39.9	55.7	50	26	19.2	A-7-6(16)
		2.0	4.0	24.0	9.6	10.1	25.6	30.7	27	10	10.0	A-4a(4)
		4.0	5.5	Brown sandy silt, some clay, some gravel							12.3	Visual

DAYTON, OHIO
TOLEDO, OHIO
LEXINGTON, KY

BOWSER MORNER®

DRAWN HGW | REVIEWED RJYT | DATE 07-05 | PROJECT NO 132049

CLIENT
LJB, INC.

STRUCTURE FOUNDATION INVESTIGATION
AUSTIN ROAD BRIDGE OVER I-75

MOT I-75-0.75

MATCH LINE STA. 138+00 SEE SHEET 5

MATCH LINE STA. 167+00 SEE SHEET 7

BYERS ROAD

MIAMISBURG-SPRINGBORO PIKE

INTERSTATE 75

A-8 A-9 A-10 A-11 A-12 A-13 A-14 A-15 A-16 A-17 A-17A A-17B SI-17 SI-18

FOR BORINGS A-11, A-12, A-13, A-14, A-15
SEE BRIDGE DRAWINGS

FOR BORINGS SI-18 AND SI-17, SEE SHEET 12
OF THE ROAD DRAWINGS

PROPOSED ROAD

EXISTING ROAD

A-8
48.34 Rt.
4" Asphalt Pavement
29.9
25.2
14.6
W Sat.

A-9
42.94 Rt.
1" Topsoil
7.3
23.2
12.9
W 10.1

A-10
31.60 Lt.
3" Topsoil
5.5
9.5
11.2
25.3

A-16
15.93 Rt.
2" Topsoil
13.5
12.6
18.1
8.1

A-17
0.46R t.
6" Topsoil
16.4
12.5
19.2
9.3

960 950 940 930 920 910 900 890 880 870 860

138+00 139+00 140+00 141+00 142+00 143+00 144+00 145+00 146+00 147+00 148+00 149+00 150+00 151+00 152+00 153+00 154+00 155+00 156+00 157+00 158+00 159+00 160+00 161+00 162+00 163+00 164+00 165+00 166+00 167+00

MIAMISBURG-SPRINGBORO PIKE

N

HORIZONTAL SCALE IN FEET 0 100 200

DRAWN HGW | REVIEWED RJYT | DATE 07-05 | PROJECT NO. 132049

CLIENT
LJB, INC.

STRUCTURE FOUNDATION INVESTIGATION
AUSTIN ROAD BRIDGE OVER I-75

MOT I-75-0.75

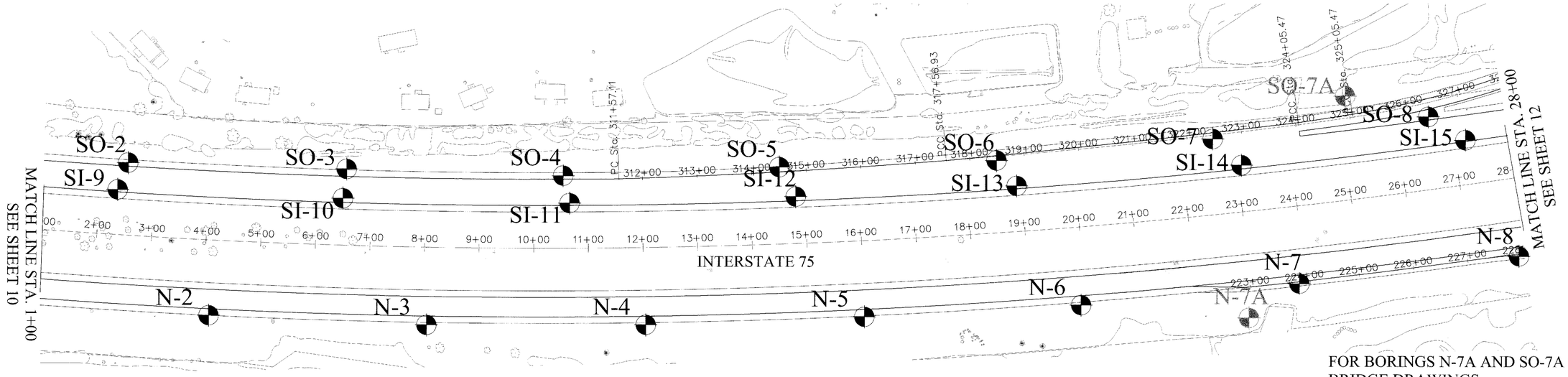

FOR BORINGS N-7A AND SO-7A SEE BRIDGE DRAWINGS

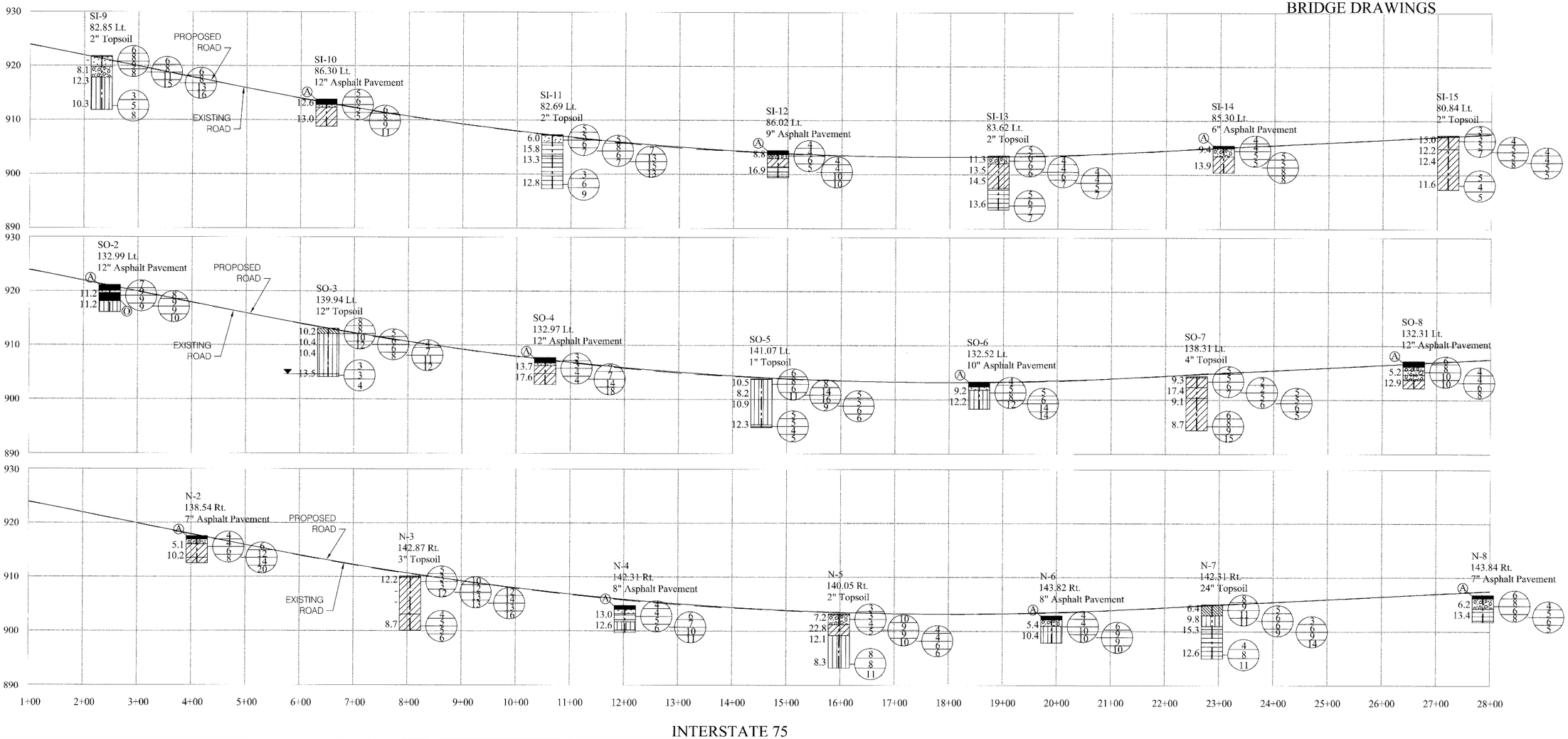

STRUCTURE FOUNDATION INVESTIGATION
AUSTIN ROAD BRIDGE OVER I-75

MOT I-75-0.75

DRAWN HGW | REVIEWED RJYT | DATE 07-05 | PROJECT NO. 132049

CLIENT LJB, INC.

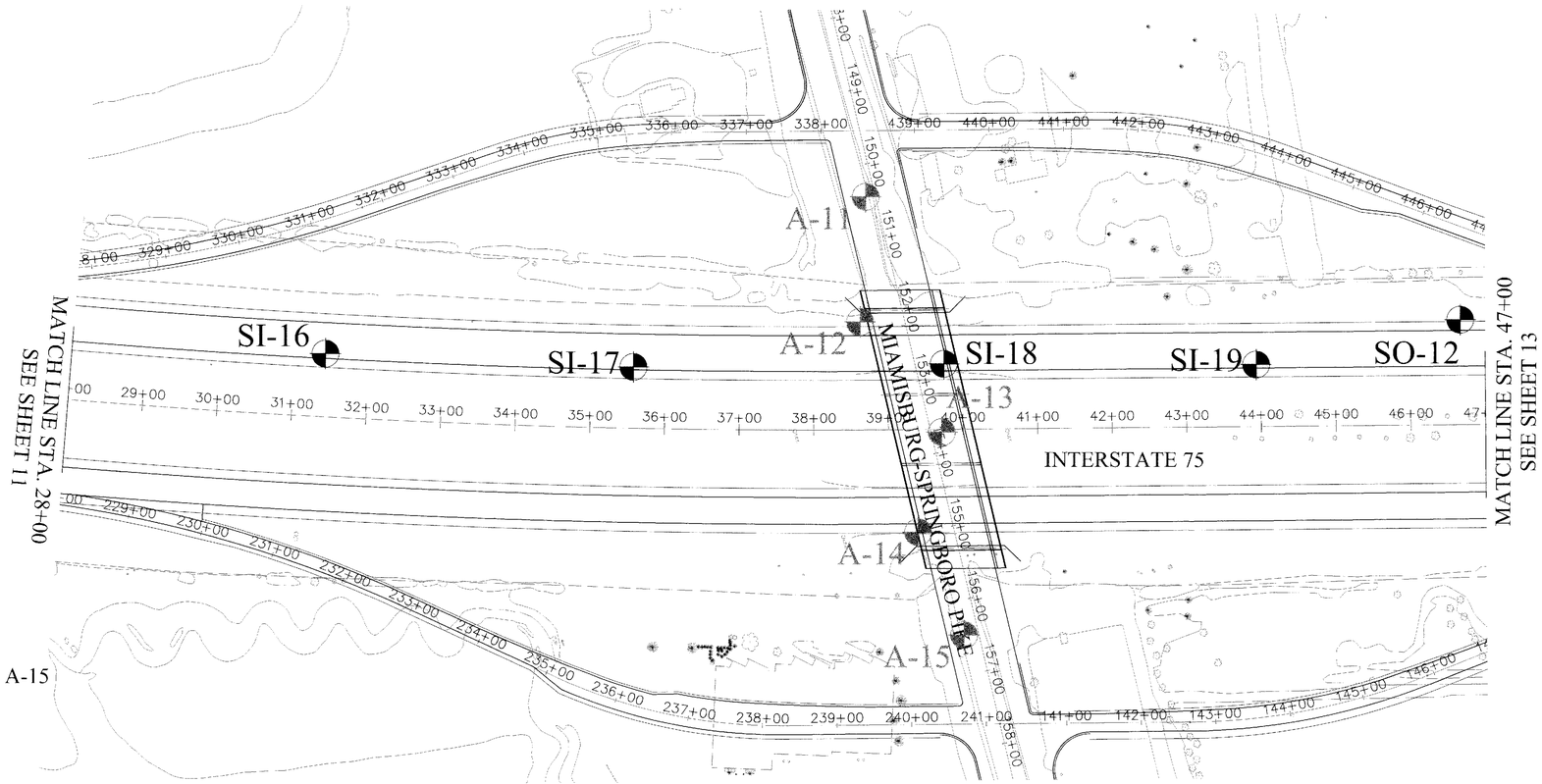

FOR BORINGS A-11, A-12, A-13, A-14, A-15
SEE BRIDGE DRAWINGS

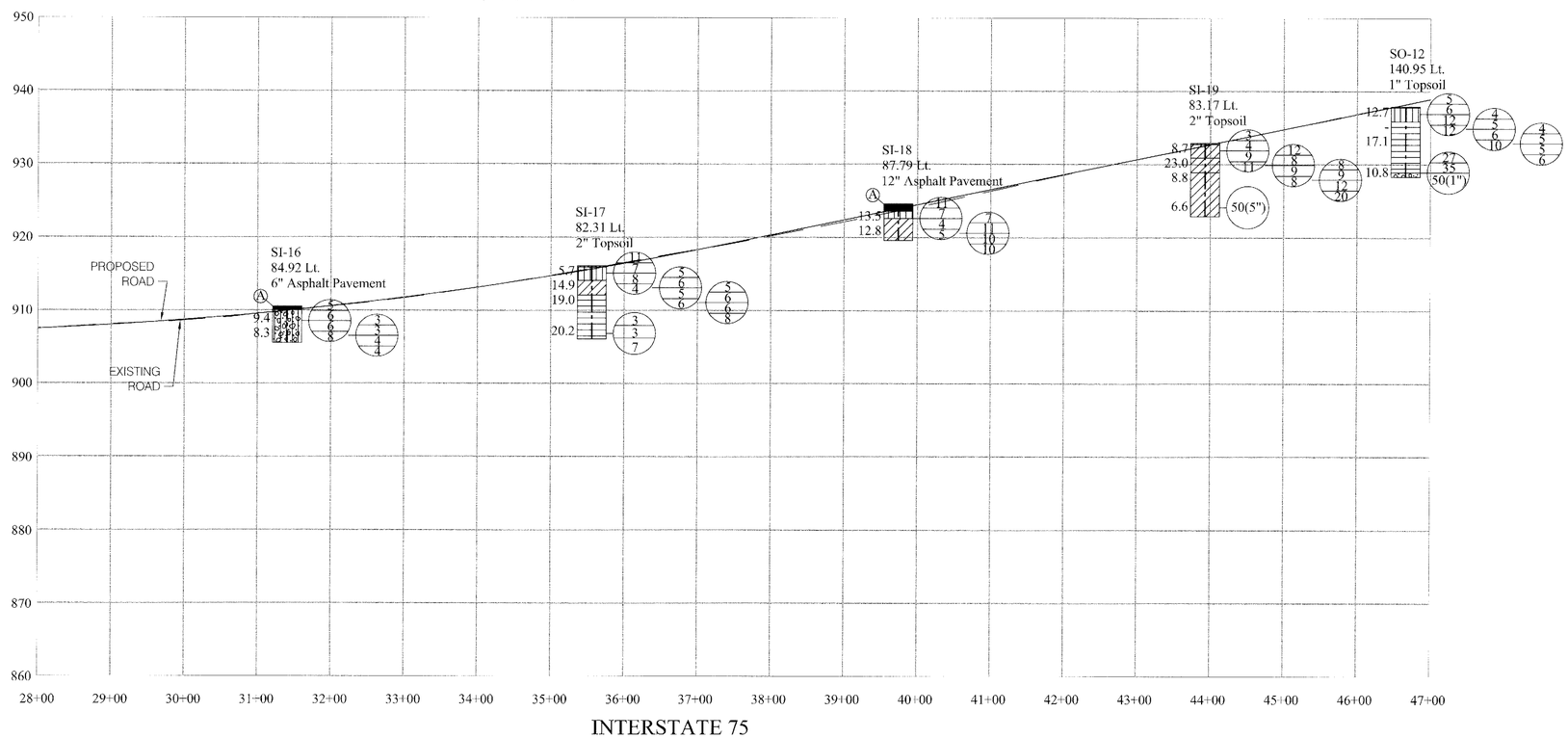

STRUCTURE FOUNDATION INVESTIGATION
AUSTIN ROAD BRIDGE OVER I-75

MOT I-75-0.75

CLIENT: LJB, INC.
DRAWN: HGW
REVIEWED: RJYT
DATE: 07-05
PROJECT NO.: 132049

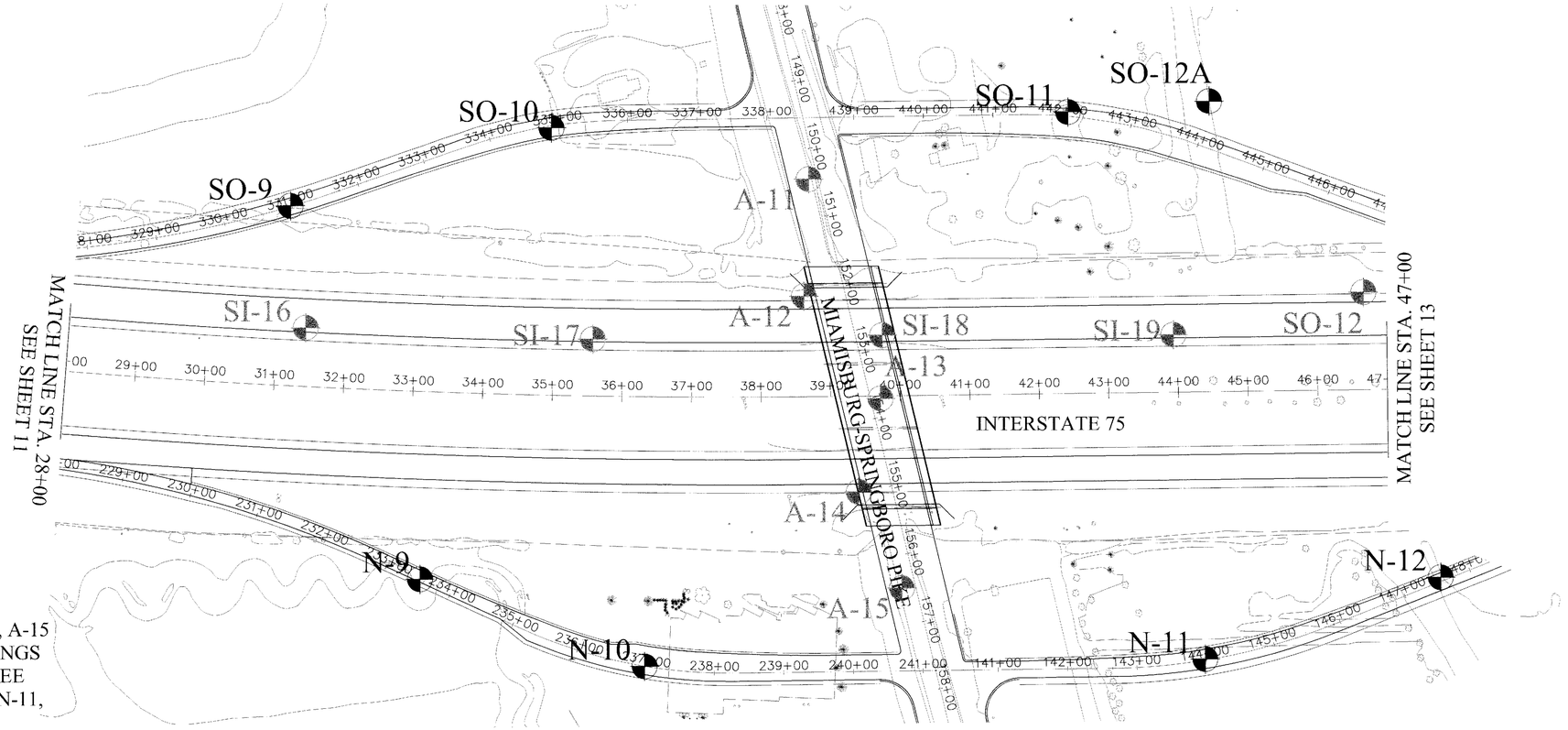

FOR BORINGS A-11, A-12, A-13, A-14, A-15 SEE BRIDGE DRAWINGS. FOR BORINGS SI-16, SI-17, SI-18, SI-19, AND SO-12 SEE SHEET 12. FOR BORINGS N-9, N-10, N-11, AND N-12 SEE SHEET 12b.

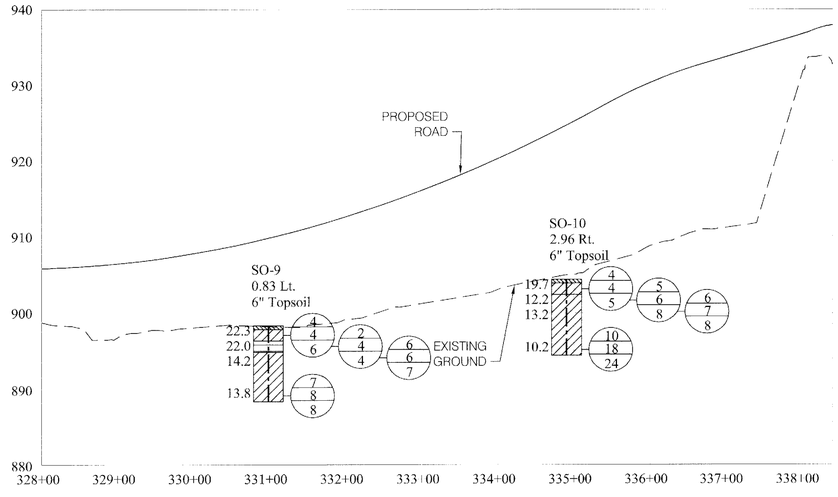

RAMP P

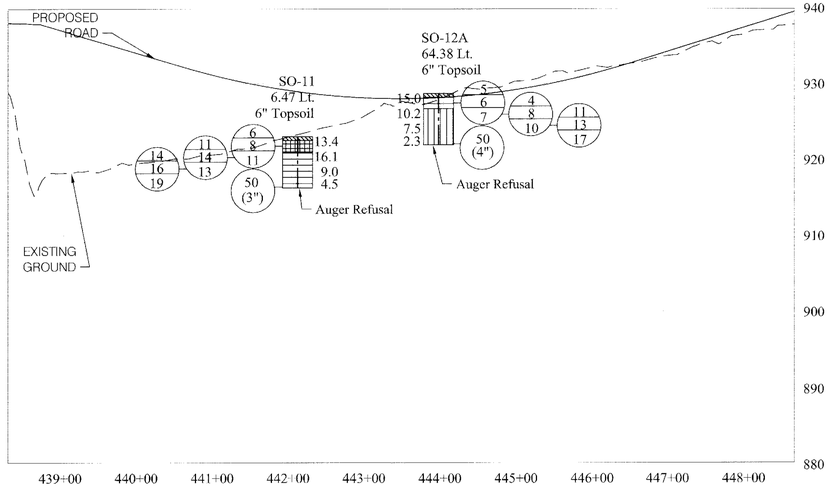

RAMP M

STRUCTURE FOUNDATION INVESTIGATION
AUSTIN ROAD BRIDGE OVER I-75

MOT I-75-0.75

DRAWN HGW | REVIEWED RJYT | DATE 10-05 | PROJECT NO. 132049

CLIENT: LJB, INC.

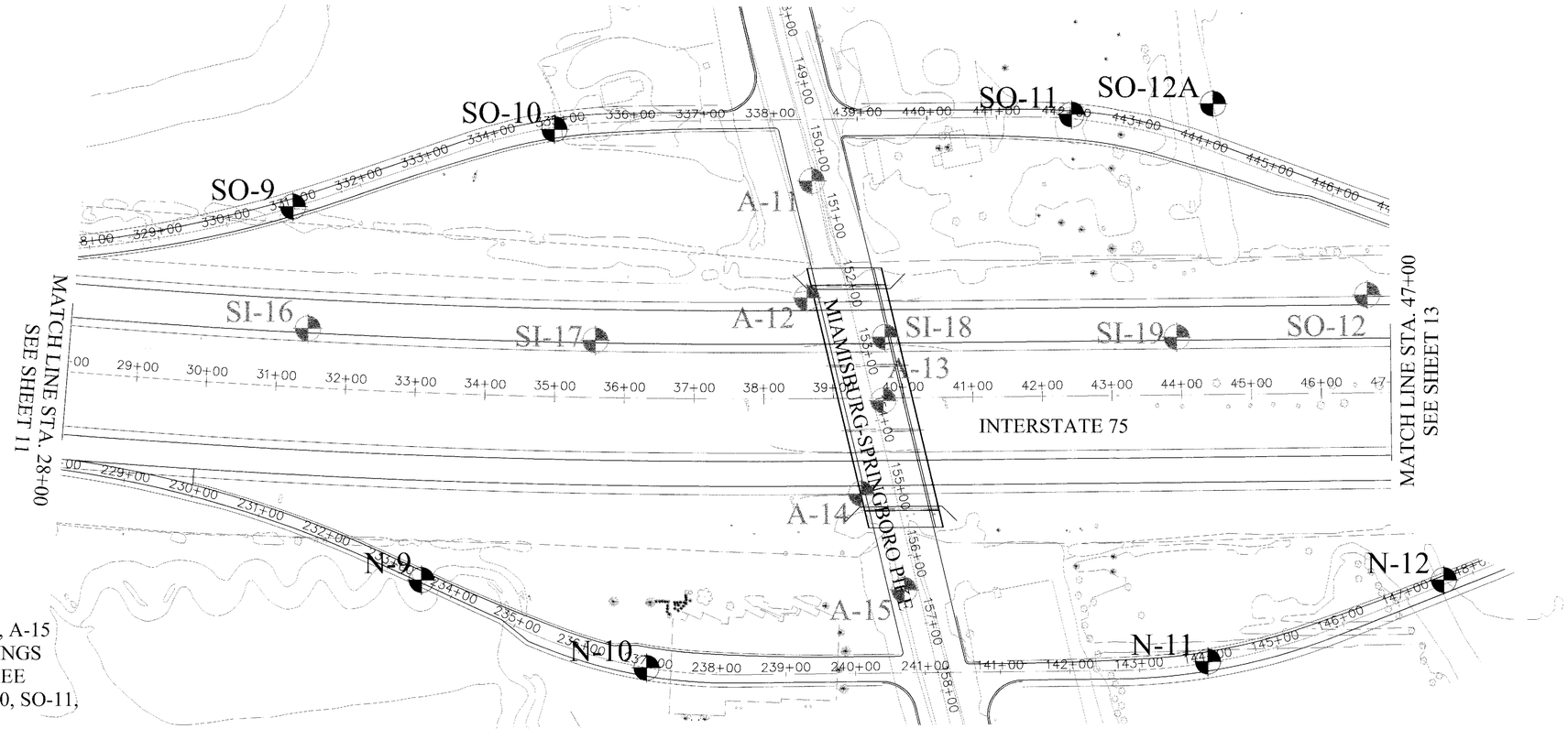

FOR BORINGS A-11, A-12, A-13, A-14, A-15 SEE BRIDGE DRAWINGS. FOR BORINGS SI-16, SI-17, SI-18, SI-19, AND SO-12 SEE SHEET 12. FOR BORINGS SO-9, SO-10, SO-11, AND SO-12 SEE SHEET 12a.

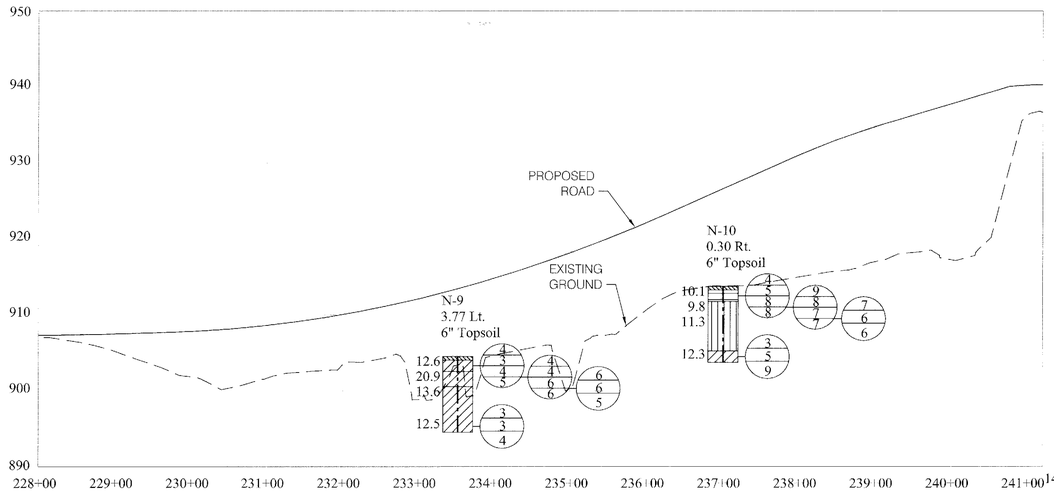

RAMP H

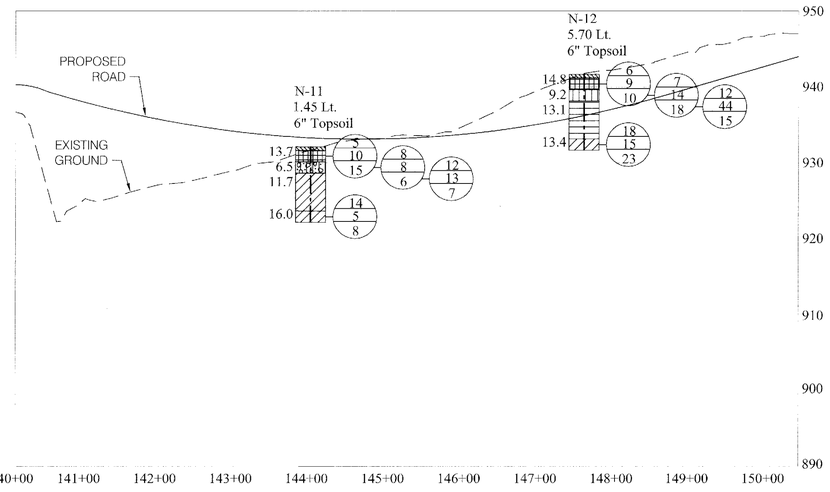

RAMP J

STRUCTURE FOUNDATION INVESTIGATION
AUSTIN ROAD BRIDGE OVER I-75

MOT I-75-0.75

8 / 9

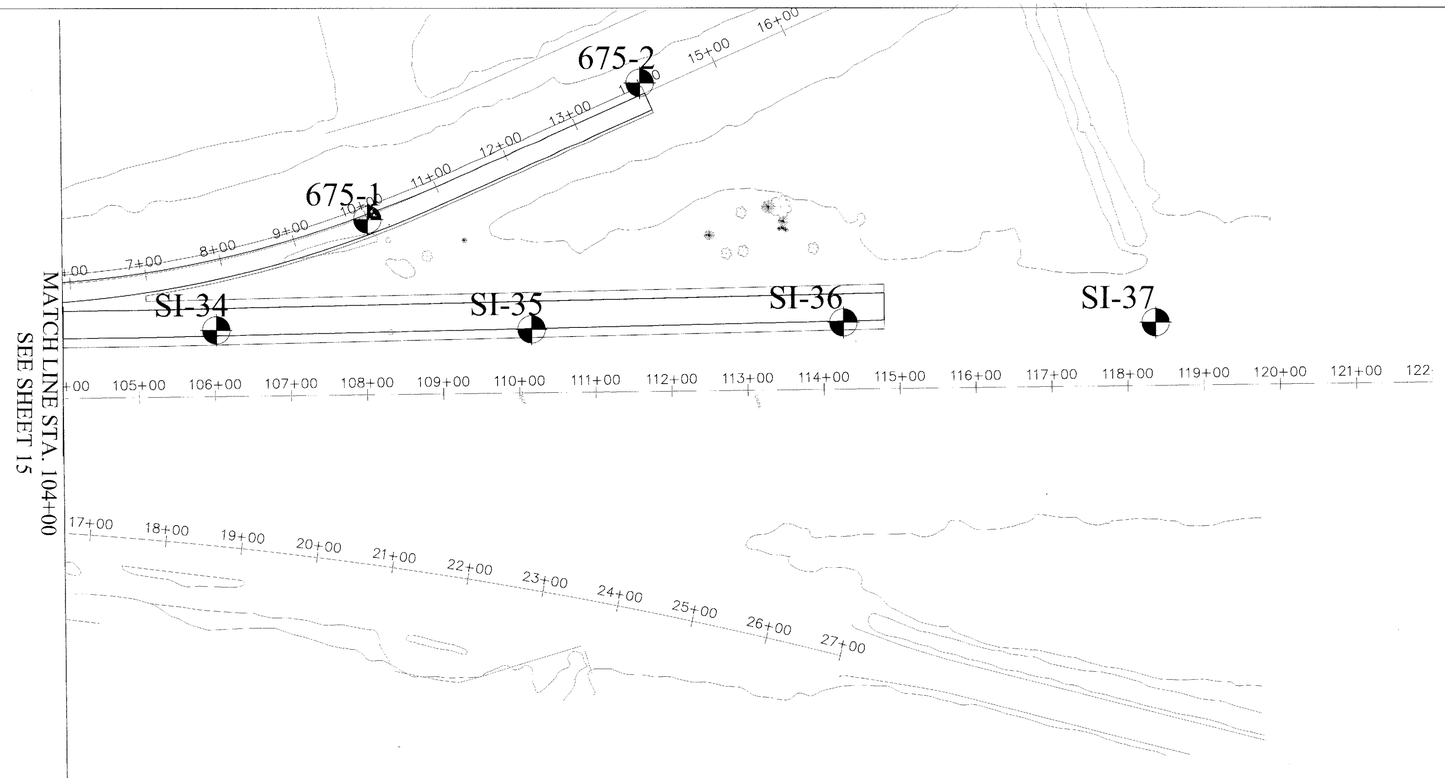

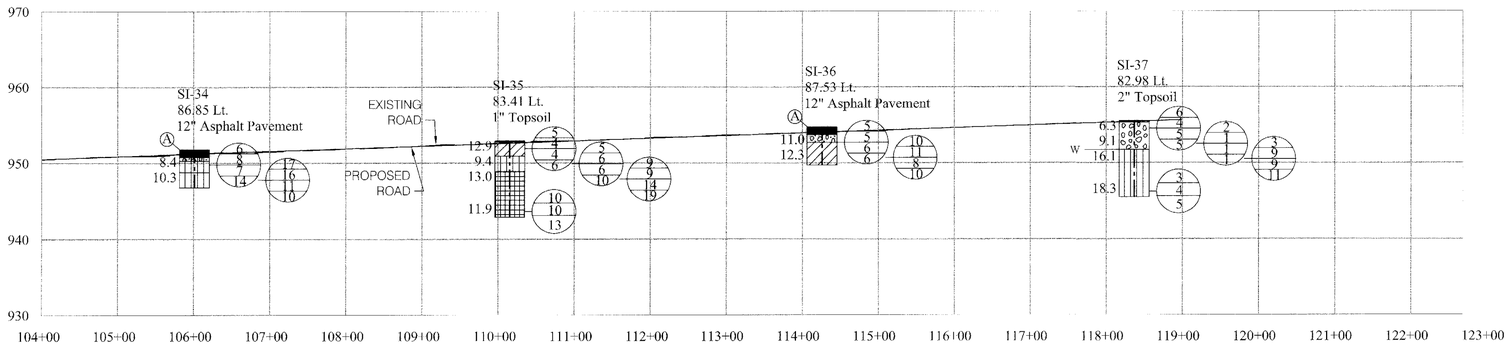

INTERSTATE 75

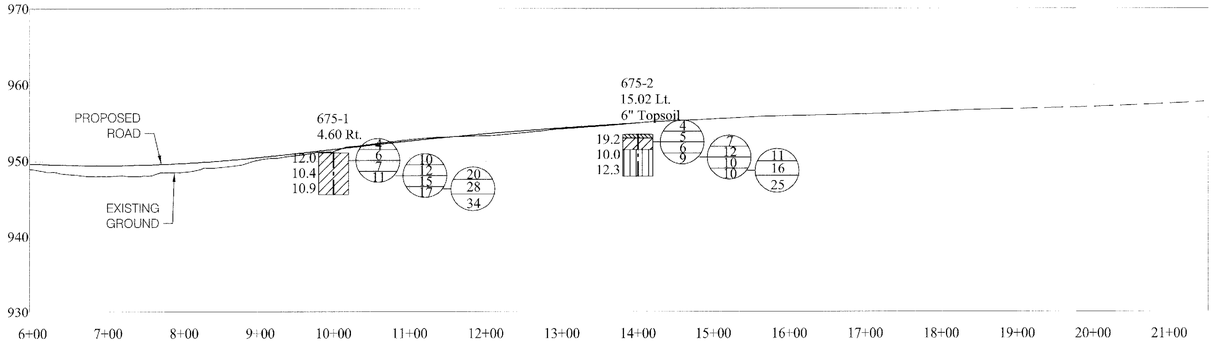

INTERSTATE 675

STRUCTURE FOUNDATION INVESTIGATION
AUSTIN ROAD BRIDGE OVER I-75

MOT I-75-0.75

9 / 9

CLIENT: LJB, INC.
DRAWN: HGW
REVIEWED: RJYT
DATE: 07-05
PROJECT NO. 132049

HORIZONTAL SCALE IN FEET
0 100 200

GEOLOGY OF THE SITE

The bridge site is situated in a glacial ground moraine consisting of till that is composed of an unsorted, unstratified mixture of clay, silt, sand, gravel, and coarse fragments deposited discontinuously by retreating ice from a glacier. The ground moraine overlies the Ordovician age, Richmond Group bedrock composed of shale and limestone layers. This area consists of embankment fill which was placed during the construction of the existing highway.

EXPLORATION

Exploration borings were made using a truck-mounted boring rig. Hollow-stem augers and standard penetration method (ASTM D-1586) were employed at maximum depth intervals of five feet. The drilling was performed between August 3, 2005 and August 9, 2005.

INVESTIGATION FINDINGS AND OBSERVATIONS

The subgrade soils including the fill encountered on the site consisted of brown or gray gravel with sand (A-2-4), coarse and fine sand (A-3a), sandy silts (A-4a), silts (A-4b), silt and clays (A-6a), silty clays (A-6b), and clay (A-7-6). Discontinuous layers of brown gravel with clay and sand were also encountered. Some sections along the culverts were covered with topsoil, while some sections were covered with 8.5 feet of undocumented embankment fill.

Ground water was encountered at depths of 4.0 to 23.5 feet below the existing ground surface in Borings A-6, A-17A, A-17B, N-7A, and SO-7A .

No bedrock was encountered during the boring operations.

SYMBOLS OF ROCK TYPES

- COAL
- FIRE CLAY OR UNDERCLAY
- WEATHERED MUDSTONE
- MUDSTONE
- WEATHERED SHALE
- SHALE
- WEATHERED CLAY-SHALE
- CLAY-SHALE
- BOULDERS OR COBBLES
- WEATHERED SILTSTONE
- SILTSTONE
- WEATHERED SANDSTONE
- SANDSTONE
- LEACHED DOLOMITE
- DOLOMITE
- LEACHED LIMESTONE
- LIMESTONE

PARTICLE SIZE DEFINITIONS

11.8"	3"	0.1"		0.02"	0.003"	0.0002"
Boulders	Cobbles	Gravel	Coarse Sand	Fine Sand	Silt	Clay
		No. 10 SIEVE		No. 40 SIEVE	No. 200 SIEVE	

LEGEND

- AUGER BORING LOCATION
- TR — TOP OF ROCK
- W—— INDICATES FREE WATER ELEVATION
- INDICATES STATIC WATER ELEVATION
- HORIZONTAL BAR ON BORING INDICATES THE DEPTH THE SAMPLE WAS TAKEN - PROFILE VIEW
- X/Y/Z — FIGURES BESIDE THE BORING IN PROFILE INDICATE THE NUMBER OF BLOWS FOR STANDARD PENETRATION TEST
  - X = NUMBER OF BLOWS FOR FIRST 6"
  - Y = NUMBER OF BLOWS FOR SECOND 6"
  - Z = NUMBER OF BLOWS FOR THIRD 6"

GENERAL INFORMATION

DRIVE SAMPLES

Drive sample borings are made by means of a mechanically-powered, rotary-type drill rig employing a 2" O.D., 1-1/2" I.D., split-spoon sampler, at continuous, 2-1/2 to 5-foot depth intervals driven by means of a 140-pound hammer with a free fall of 30 inches. The number of blows required to drive the sampler three 6-inch increments is considered the standard penetration test.

PRESS SAMPLES

Press samples are taken by means of mechanically-powered, rotary-type drill rig, employing a 3" O.D. thin-wall press sampling tube. The press sampling tube is advanced by continuous uniform pressure applied by the drill rig.

CORE BORINGS

Core borings are made by means of a mechanically-powered, rotary-type drill rig, employing NW core barrel with an industrial diamond cutting head. Core borings were not made for the study of culverts.

SAMPLING AND TESTING

The boring log sheets show a graphic plot of the information obtained, including depth and elevation of the sample, type of sample, number of blows for the standard penetration test in three 6-inch increments, and a sample description based on laboratory test results, utilizing the ODOT classification system. Results of strength and consolidation testing, if performed on undisturbed samples, appear graphically on separate enclosures. Rock samples are displayed on the log sheets, including depth and elevation of the sample, amount of recovery, and a visual classification based on type, color, degree of hardness, grain size, deterioration, bedding, acid reaction, and other qualifying factors.

DAYTON, OHIO
TOLEDO, OHIO
LEXINGTON, KY
BOWSER MORNER®

DRAWN HGW | REVIEWED RJYT | DATE 10-05 | PROJECT NO. 132049

CLIENT LJB, INC.

STRUCTURE FOUNDATION INVESTIGATION
CULVERTS

MOT I-75-0.75

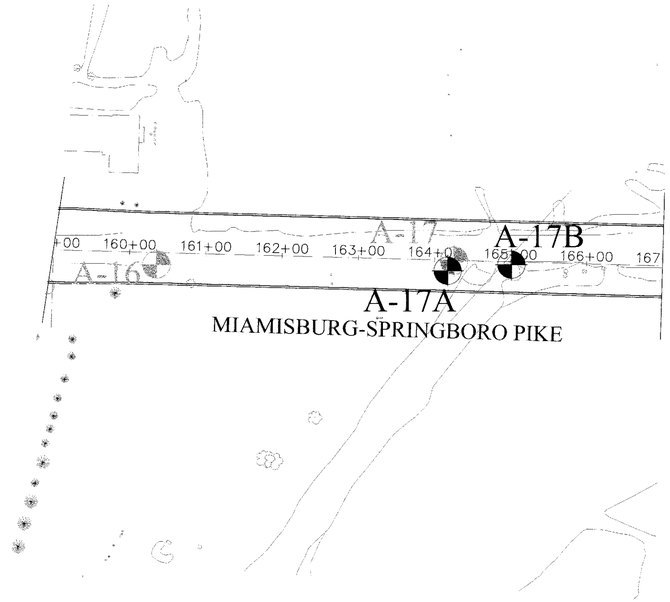

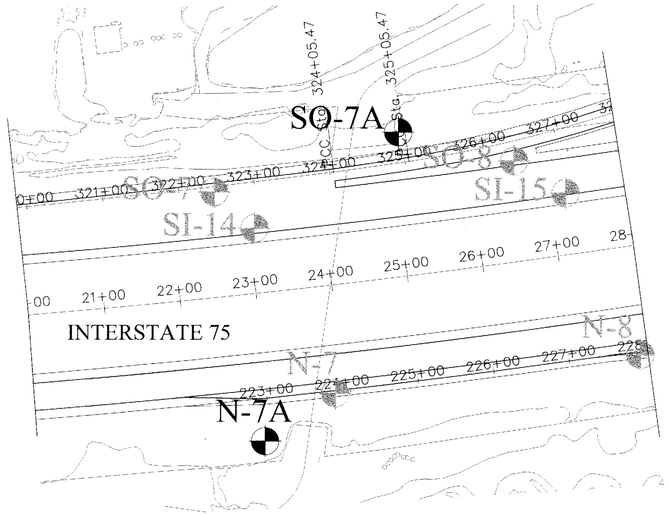

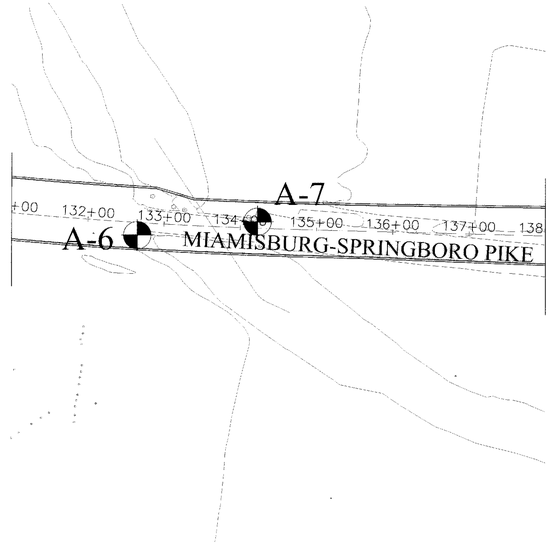

FOR BORINGS A-16, A-17, SO-7, SI-14, SI-15, N-7, AND N-8 SEE THE ROAD DRAWINGS

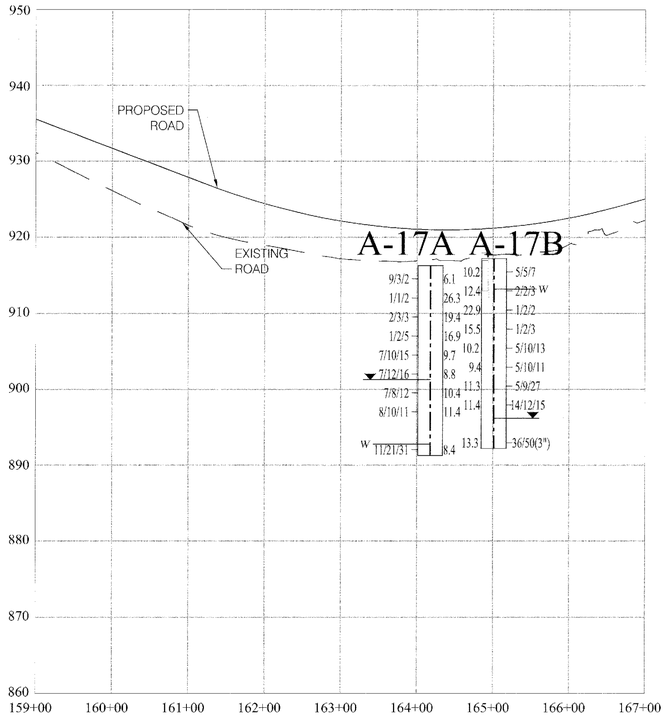

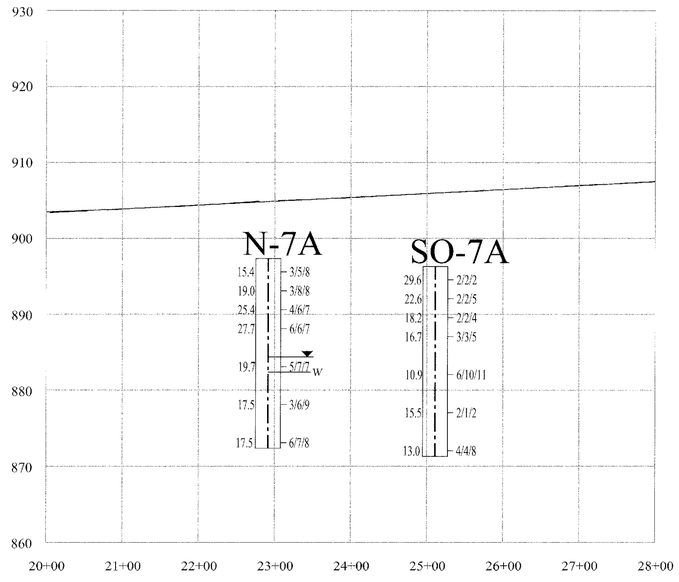

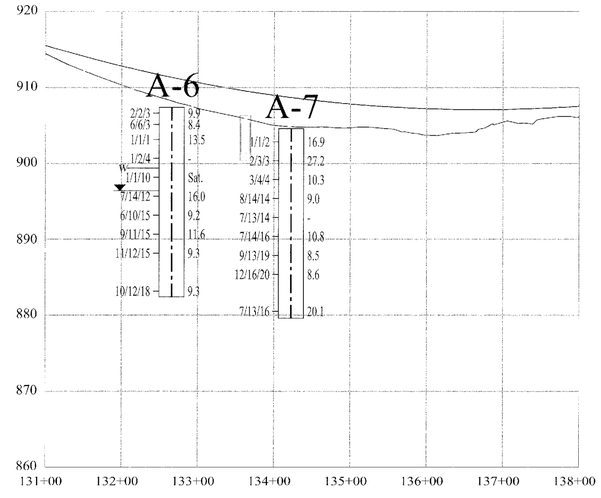

STRUCTURE FOUNDATION INVESTIGATION
CULVERTS

MOT I-75-0.75

DRAWN HGW | REVIEWED RJYT | DATE 10-05 | PROJECT NO. 132049

CLIENT
LJB, INC.

Date Started 8/3/05 Sampler: Type Split Spoon Dia. 1-3/8" Water Elev. (ft) 901.3
Date Completed 8/3/05 Casing: Length Dia.

Boring No. A-17A Station & Offset Sta 164+17.66 14.02 Rt Surface Elev. (ft) 916.3

Elev. (ft)	Depth (ft)	Std. Pen./ RQD	Rec. (ft)	Loss (ft)	Description	Sample No.	Physical Characteristics % Agg	% C.S.	% F.S.	% Silt	% Clay	L.L.	P.I.	W.C.	ODOT Class
916.3	0														
915.8		9/3/2			(FILL) TOPSOIL (6") (FILL) Brown GRAVEL with SAND, trace silt	1A								6.1	Visual
912.8	5	1/1/2			(FILL) Dark brown SILTY CLAY, little sand, trace gravel	2A	7.0	5.7	11.2	43.3	32.8	37	16	26.3	A-6b (10)
		2/3/3			(FILL) Dark brown SILTY CLAY, little sand, trace gravel	3A								19.4	Visual
907.8	10	1/2/5			(ORIGINAL) Brown SILT and CLAY, some sand, some gravel	4A								16.9	Visual
		7/10/15			Brown SILT and CLAY, some sand, some gravel	5A								9.7	Visual
902.8	▼ 15	7/12/16			Gray SANDY SILT, some sand, little gravel	6A	14.0	12.0	18.9	36.8	18.3	20	7	8.8	A-4a (4)
		7/8/12			Gray SANDY SILT, some sand, little gravel	7A								10.4	Visual
897.8	20	8/10/11			Brown SILT and CLAY, some sand, some clay	8A								11.4	Visual
892.8		11/21/31			Gray GRAVEL with SAND, silt and clay	9A								8.4	Visual
891.3	25														

Bottom of Boring at 25.0'

Date Started 8/3/05 Sampler: Type Split Spoon Dia. 1-3/8" Water Elev. (ft) 896.2
Date Completed 8/3/05 Casing: Length Dia.

Boring No. A-17B Station & Offset Sta 165+01.20 3.86 Rt Surface Elev. (ft) 917.2

Elev. (ft)	Depth (ft)	Std. Pen./ RQD	Rec. (ft)	Loss (ft)	Description	Sample No.	Physical Characteristics % Agg	% C.S.	% F.S.	% Silt	% Clay	L.L.	P.I.	W.C.	ODOT Class
917.2	0														
916.7		5/5/7			(FILL) TOPSOIL (6") (FILL) Brown SILT and CLAY, some sand, some gravel	1A								10.2	Visual
913.7	5	2/2/3			(FILL) Gray SILT and CLAY, some sand, trace gravel	2A								12.4	Visual
		1/2/2			(FILL) Gray SILT and CLAY, some sand, trace gravel	3A	6.2	8.6	18.8	35.5	30.9	33	15	22.9	A-6a (8)
907.7	10	1/2/3			(FILL) Gray SILT and CLAY, some sand, trace gravel	4A								15.5	Visual
		5/10/13			(ORIGINAL) Brown SILT and CLAY, some sand, little gravel	5A								10.2	Visual
903.7	15	5/10/11			Gray SILT and CLAY, some sand, little gravel	6A								9.4	Visual
		5/9/27			Gray SILT and CLAY, some sand, little gravel	7A								11.3	Visual
	20 ▼	14/12/15			Gray SILT and CLAY, some sand, little gravel	8A								10.0	Visual
892.2	25	36/50(3")			Gray SILT and CLAY, some sand, little gravel	9A								13.3	Visual

Bottom of Boring at 25.0'

Date Started 8/9/05 Sampler: Type Split Spoon Dia. 1-3/8" Water Elev. (ft) 882.4
Date Completed 8/9/05 Casing: Length Dia.

Boring No. N-7A Station & Offset Sta 22+91.55 194.99 Rt Surface Elev. (ft) 897.4

Elev. (ft)	Depth (ft)	Std. Pen./ RQD	Rec. (ft)	Loss (ft)	Description	Sample No.	Physical Characteristics % Agg	% C.S.	% F.S.	% Silt	% Clay	L.L.	P.I.	W.C.	ODOT Class
897.4	0														
896.6	2	3/5/8			TOPSOIL (9") Brown SILT and CLAY, little sand, trace gravel	1A								15.4	Visual
	4	3/8/8			Brown SILT and CLAY, little sand, trace gravel	2A								19.0	Visual
891.4	6	4/6/7			Brown CLAY and silt, trace sand	3A	0.1	0.5	3.0	53.9	42.5	46	25	25.4	A-7-6 (14)
888.9	8	6/6/7			Brown SILT, trace clay, trace sand, trace gravel	4A								27.7	Visual
	10														
	12														
	14 ▼	5/7/7			Brown SILT and CLAY, trace sand, trace gravel	5A	0.0	0.2	0.8	53.4	45.6	26	7	19.7	A-4b (8)
	16														
878.9	18	3/6/9			Gray SILTY CLAY, trace sand	6A								17.5	Visual
	20														
	22														
872.4	24	6/7/8			Gray SILTY CLAY, trace sand	7A								17.5	Visual

Bottom Of Boring at 25.0'

Date Started 8/9/05 Sampler: Type Split Spoon Dia. 1-3/8" Water Elev. (ft) 889.3
Date Completed 8/9/05 Casing: Length Dia.

Boring No. SO-7A Station & Offset Sta 25+11.00 189.60 Lt Surface Elev. (ft) 896.3

Elev. (ft)	Depth (ft)	Std. Pen./ RQD	Rec. (ft)	Loss (ft)	Description	Sample No.	Physical Characteristics % Agg	% C.S.	% F.S.	% Silt	% Clay	L.L.	P.I.	W.C.	ODOT Class
896.3	0														
895.5	2	2/2/2			TOPSOIL (9") Brown CLAY, trace sand, trace roots	1A								29.6	Visual
	4	2/2/5			Brown CLAY, trace sand, trace roots	2A								22.6	Visual
890.3	6 ▼	2/2/4			Brown SILT and CLAY, trace sand, trace gravel	3A								18.2	Visual
887.8	8	3/3/5			Brown SILT, some sand	4A								16.7	Visual
	10														
	12														
882.8	14	6/10/11			Brown GRAVEL with SAND, some silt, trace clay	5A								10.9	Visual
	16														
	18														
	20	2/1/2			Brown GRAVEL with SAND, some silt, trace clay	6A	39.7	18.7	11.6	21.2	8.8	21	3	15.5	A-2-4 (0)
	22														
871.3	24	4/4/8			Brown GRAVEL with SAND, some silt, trace clay	7A								13.0	Visual

Bottom of Boring at 25.0'

BOWSER MORNER
DAYTON, OHIO
TOLEDO, OHIO
LEXINGTON, KY

DRAWN HGW | REVIEWED RJYT | DATE 10-05 | PROJECT NO. 132049
CLIENT LJB, INC.

STRUCTURE FOUNDATION INVESTIGATION
CULVERT BORING LOGS

MOT I-75-0.75

Date Started 8/27/04 Sampler: Type Split Spoon Dia. _____ Water Elev. (ft) 896.4
Date Completed 8/27/04 Casing: Length _____ Dia. _____

Boring No. A-6 Station & Offset Sta 132+65.75 16.78 Lt Surface Elev. (ft) 907.4

Elev. (ft)	Depth (ft)	Std. Pen./ RQD	Rec. (ft)	Loss (ft)	Description	Sample No.	Physical Characteristics % Agg	% C.S.	% F.S.	% Silt	% Clay	L.L.	P.I.	W.C.	ODOT Class
907.4	0														
906.9		2/2/3			(FILL) TOPSOIL (6")	1A								9.9	Visual
	2	6/6/3			(FILL) Brown SILT and CLAY, trace gravel, trace roots, trace cinders	2A								8.4	Visual
904.9					(FILL) Brown GRAVEL with sand										
903.4	4	1/1/1			(ORIGINAL) Brown and CLAY, some sand, trace gravel	3A	4.6	10.1	20.4	38.4	26.5	31	13	20.7	A-6a (7)
	6	1/2/4			Brown and dark brown SILT and CLAY, some sand, trace gravel	4A									Visual
899.4	8														
	10	1/1/10			Brown coarse and fine SAND, little silt, little gravel, trace clay	5A	20.0	42.6	11.0	19.8	6.6	21	6	18.9	A-3a (0)
896.4	12	7/14/12			Brown SILT and CLAY, trace sand	6A	0.0	0.2	1.9	62.4	35.5	23	7	16.2	A-4b (8)
894.4	14	6/10/15			Brown sandy SILT, some clay, some sand, little gravel	7A								9.2	Visual
	16	9/11/15			Brown sandy SILT, some clay, some sand, little gravel	8A	14.8	12.2	14.9	32.5	25.6	22	8	11.6	A-4a (5)
	18														
	20	11/12/15			Brown sandy SILT, some clay, some sand, little gravel	9A								9.3	Visual
	22														
882.4	24	10/12/18			Brown sandy SILT, some clay, some sand, little gravel	10A								9.3	Visual

Bottom of Boring at 25.0'

Date Started 8/30/04 Sampler: Type Split Spoon Dia. _____ Water Elev. (ft) None
Date Completed 8/30/04 Casing: Length _____ Dia. _____

Boring No. A-7 Station & Offset Sta 134+22.35 8.64 Rt Surface Elev. (ft) 904.6

Elev. (ft)	Depth (ft)	Std. Pen./ RQD	Rec. (ft)	Loss (ft)	Description	Sample No.	Physical Characteristics % Agg	% C.S.	% F.S.	% Silt	% Clay	L.L.	P.I.	W.C.	ODOT Class
904.6	0														
	2	1/1/2			(FILL) Dark brown SILT and CLAY, trace gravel	1A								16.9	Visual
901.6	4	2/3/3			(ORIGINAL) Brown CLAY and SILT, trace sand	2A	0.0	1.7	6.1	43.2	49.0	60	40	27.2	A-7-6 (20)
	6	3/4/4			Brown CLAY and SILT, trace sand (Some gravel at 6.5')	3A								10.3	Visual
896.6	8														
	10	8/14/14			Brown SANDY SILT, some clay, some gravel	4A	21.8	6.8	12.1	34.4	24.9	22	7	9.4	A-4a (5)
892.6	12	7/13/14			Brown SILT and CLAY, little sand, trace gravel	5A								-	Visual
	14	7/14/16			Gray sandy SILT, some clay, little gravel	6A	10.0	10.6	15.2	43.6	20.6	23	9	10.8	A-4a (6)
	16	9/13/19			Gray sandy SILT, some clay, little gravel	7A								8.5	Visual
	18														
	20	12/16/20			Gray sandy SILT, some clay, little gravel	8A								8.6	Visual
883.6	22														
879.6	24	7/13/16			Gray SANDY SILT, trace gravel	9A								20.1	Visual

Bottom of Boring at 25.0'

BOWSER MORNER®
DAYTON, OHIO
TOLEDO, OHIO
LEXINGTON, KY

PROJECT NO. 132049
DATE 07-05
REVIEWED RJYT
DRAWN HGW
CLIENT LJB, INC.

STRUCTURE FOUNDATION INVESTIGATION
CULVERT BORING LOGS

MOT I-75-0.75

GEOLOGY OF THE SITE

The bridge site is situated in a glacial ground moraine consisting of till that is composed of an unsorted, unstratified mixture of clay, silt, sand, gravel, and coarse fragments deposited discontinuously by retreating ice from a glacier. The ground moraine overlies the Ordovician age, Richmond Group bedrock composed of shale and limestone layers. This area consists of embankment fill which was placed during the construction of the existing highway.

EXPLORATION

Exploration borings were made using a truck-mounted boring rig. Hollow-stem augers and standard penetration method (ASTM D-1586) were employed at maximum depth intervals of five feet. The drilling was performed between August 30, 2004 and February 4, 2005.

INVESTIGATION FINDINGS AND OBSERVATIONS

The subgrade soils including the fill encountered on the site consisted of brown or gray sandy silts (A-4a), silt and clays (A-6a), silty clays (A-6b) and clay (A-7-6). Discontinuous layers of brown gravel with clay and sand were also encountered. Some sections along the bridge were covered with topsoil, while some sections were covered with 3.5 to 18.0 feet of undocumented embankment fill.

Ground water was encountered at depths of 5.0 to 40.0 feet below the existing ground surface in Borings A-11, A-12, and A-13.

Gray shale or limestone was encountered at depths of 20.0 to 47.0 feet below the existing grade in Borings A-11 through A-14. No bedrock was encountered in Boring A-15.

SYMBOLS OF ROCK TYPES

- COAL
- FIRE CLAY OR UNDERCLAY
- WEATHERED MUDSTONE
- MUDSTONE
- WEATHERED SHALE
- SHALE
- WEATHERED CLAY-SHALE
- CLAY-SHALE
- BOULDERS OR COBBLES
- WEATHERED SILTSTONE
- SILTSTONE
- WEATHERED SANDSTONE
- SANDSTONE
- LEACHED DOLOMITE
- DOLOMITE
- LEACHED LIMESTONE
- LIMESTONE

PARTICLE SIZE DEFINITIONS

11.8"	3"	0.1"		0.02"	0.003"	0.0002"
Boulders	Cobbles	Gravel	Coarse Sand	Fine Sand	Silt	Clay
		No. 10 SIEVE		No. 40 SIEVE	No. 200 SIEVE	

LEGEND

- AUGER BORING LOCATION
- TR — TOP OF ROCK
- W — INDICATES FREE WATER ELEVATION
- INDICATES STATIC WATER ELEVATION
- HORIZONTAL BAR ON BORING INDICATES THE DEPTH THE SAMPLE WAS TAKEN - PROFILE VIEW
- X/Y/Z — FIGURES BESIDE THE BORING IN PROFILE INDICATE THE NUMBER OF BLOWS FOR STANDARD PENETRATION TEST
  - X = NUMBER OF BLOWS FOR FIRST 6"
  - Y = NUMBER OF BLOWS FOR SECOND 6"
  - Z = NUMBER OF BLOWS FOR THIRD 6"

GENERAL INFORMATION

DRIVE SAMPLES

Drive sample borings are made by means of a mechanically-powered, rotary-type drill rig employing a 2" O.D., 1-1/2" I.D., split-spoon sampler, at continuous, 2-1/2 to 5-foot depth intervals driven by means of a 140-pound hammer with a free fall of 30 inches. The number of blows required to drive the sampler three 6-inch increments is considered the standard penetration test.

PRESS SAMPLES

Press samples are taken by means of mechanically-powered, rotary-type drill rig, employing a 3" O.D. thin-wall press sampling tube. The press sampling tube is advanced by continuous uniform pressure applied by the drill rig.

CORE BORINGS

Core borings are made by means of a mechanically-powered, rotary-type drill rig, employing NW core barrel with an industrial diamond cutting head.

SAMPLING AND TESTING

The boring log sheets show a graphic plot of the information obtained, including depth and elevation of the sample, type of sample, number of blows for the standard penetration test in three 6-inch increments, and a sample description based on laboratory test results, utilizing the ODOT classification system. Results of strength and consolidation testing, if performed on undisturbed samples, appear graphically on separate enclosures. Rock samples are displayed on the log sheets, including depth and elevation of the sample, amount of recovery, and a visual classification based on type, color, degree of hardness, grain size, deterioration, bedding, acid reaction, and other qualifying factors.

DAYTON, OHIO
TOLEDO, OHIO
LEXINGTON, KY

BOWSER MORNER®

DRAWN HGW | REVIEWED RJYT | DATE 07-05 | PROJECT NO. 132049

CLIENT
LJB, INC.

STRUCTURE FOUNDATION INVESTIGATION
AUSTIN ROAD BRIDGE OVER I-75

MOT I-75-0.75

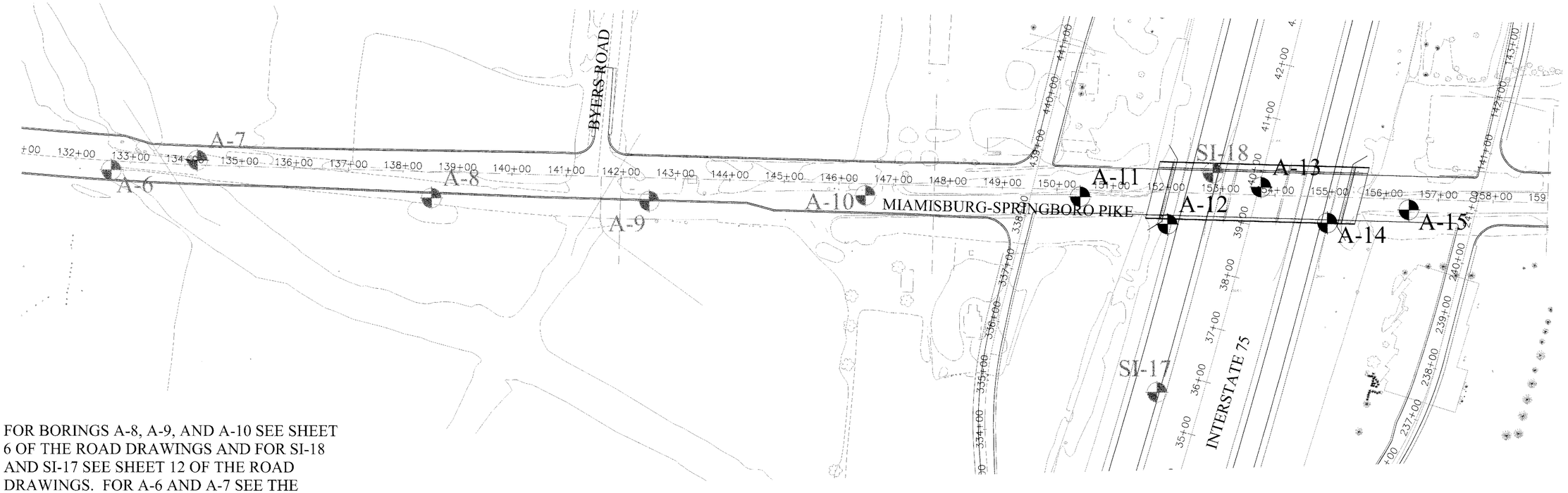

FOR BORINGS A-8, A-9, AND A-10 SEE SHEET 6 OF THE ROAD DRAWINGS AND FOR SI-18 AND SI-17 SEE SHEET 12 OF THE ROAD DRAWINGS. FOR A-6 AND A-7 SEE THE CULVERT DRAWINGS.

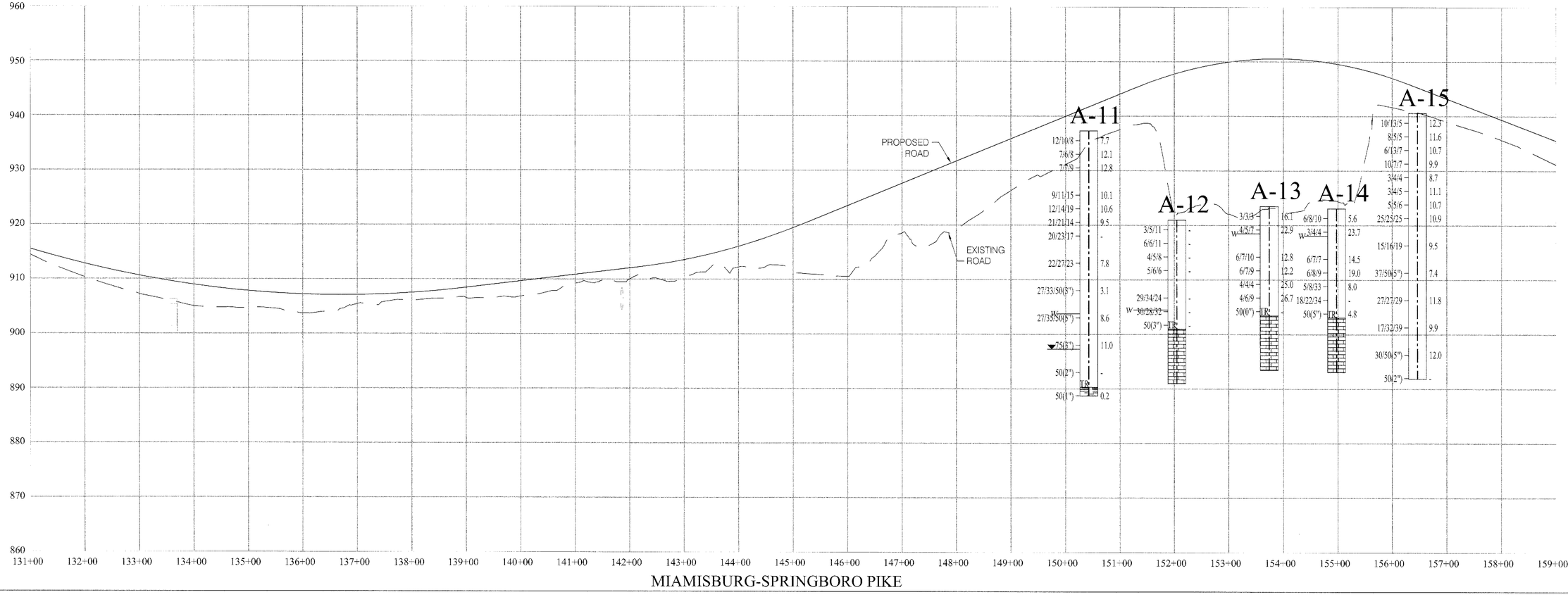

STRUCTURE FOUNDATION INVESTIGATION
AUSTIN ROAD BRIDGE OVER I-75

MOT I-75-0.75

DRAWN	REVIEWED	DATE	PROJECT NO.
HGW	RJYT	07-05	132049

CLIENT
LJB, INC.

Date Started 8/30/04 Sampler: Type Split Spoon Dia. ____ Water Elev. (ft) 897.3
Date Completed 8/30/04 Casing: Length ____ Dia. ____

Boring No. A-11 Station & Offset Sta 150+42.71 12.65 Rt Surface Elev. (ft) 937.3

Elev. (ft)	Depth (ft)	Std. Pen./ RQD	Rec. (ft)	Loss (ft)	Description	Sample No.	Physical Characteristics % Agg	% C.S.	% F.S.	% Silt	% Clay	L.L.	P.I.	W.C.	ODOT Class
937.3	0														
937.0					(FILL) GRAVEL base (4")										
	2	12/10/8			(FILL) Brown and gray SILT and CLAY, some gravel	1A								7.7	Visual
933.8															
	4	7/6/8			(ORIGINAL) Brown SILT and CLAY, little sand, trace gravel	2A	7.6	7.1	8.9	37.3	39.1	29	13	14.4	A-6a (9)
	6	7/7/9			Brown and gray SILT and CLAY, trace gravel	3A								12.8	Visual
	8					4C								-	
	10														
	12	9/11/15			Brown and gray SILT and CLAY, trace gravel	5A								10.1	Visual
	14	12/14/19			Brown and gray SILT and CLAY, trace gravel	6A								10.6	Visual
					(Becomes gray at 13.5')										
	16	21/21/14			Brown and gray SILT and CLAY, trace gravel	7A								9.5	Visual
	18				(Some gravel at 16.0')										
918.8		20/23/17			Brown SILT and CLAY, some sand, little gravel	8A	17.7	11.1	10.9	30.4	29.9	28	12	-	A-6a (6)
	20														
	22														
	24	22/27/23			Brown SILT and CLAY, some sand, little gravel	9A								7.8	Visual
	26														
	28														
	30	27/33/50(3")			Brown SILT and CLAY, some sand, little gravel (Trace cobbles at 28.5')	10A								3.1	Visual
	32														
904.3															
	34	27/35/50(5")			Gray/brown SILTY CLAY, some gravel, little sand	11A	30.6	12.2	6.2	22.9	28.1	34	18	13.7	A-6b (6)
	36														
	38														
	40	75(3")			Gray GRAVEL with sand, trace silt	12A								11.0	Visual
	42														
	44	50(2")			Gray GRAVEL with sand, trace silt	13A								-	Visual
					Top of Rock										
890.3	46														
888.7	48	50(1")	0.1	0.0	Gray SHALE, weathered	14A								0.2	Visual

Bottom of Boring at 48.6'

Date Started 1/26/05 Sampler: Type Split Spoon Dia. ____ Water Elev. (ft) 904.5
Date Completed 1/26/05 Casing: Length ____ Dia. ____

Boring No. A-12 Station & Offset Sta 152+04.56 58.48 Rt Surface Elev. (ft) 921.0

Elev. (ft)	Depth (ft)	Std. Pen./ RQD	Rec. (ft)	Loss (ft)	Description	Sample No.	Physical Characteristics % Agg	% C.S.	% F.S.	% Silt	% Clay	L.L.	P.I.	W.C.	ODOT Class
921.0	0														
920.9					(FILL) TOPSOIL (2")										
	2	3/5/11			(FILL) Brown and gray SILT and CLAY, trace gravel	1A								12.3	Visual
	4	6/6/11			(FILL) Brown SANDY SILT, little clay, little gravel	2A	10.5	10.9	11.4	48.8	18.4	18	3	9.4	A-4a (6)
915.5															
	6	4/5/8			(ORIGINAL) Dark brown SILT and CLAY, trace gravel (With trace organic material at 6.0')	3A								17.5	Visual
	8														
	10	5/6/6			Brown SILT and CLAY, little sand, trace gravel	4A	8.0	5.3	11.3	48.7	26.7	34	15	16.8	A-6a (10)
	12					5C									
907.5															
	14	29/34/24			Gray SILT and CLAY, trace gravel	6A								5.2	Visual
	16	30/28/32			Gray SILT and CLAY, trace gravel	7A								9.1	Visual
	18				Top of Rock										
	20	50(3")			Gray SILT and CLAY, trace gravel	8A								5.1	Visual
901.0															
	22		9.8	0.2	LIMESTONE, gray, fractured, hard	9B									
					RQD=16.7%										
	24														
	26														
	28														
891.0	30														

Bottom of Boring at 30.0'

FAILURE SKETCHES

CONTROLLED STRESS
CONTROLLED STRAIN

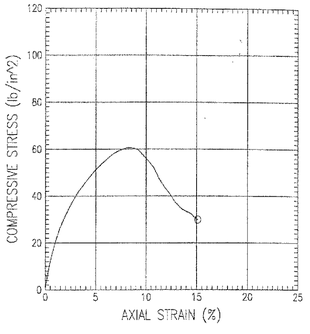

SYMBOL			O
TEST NO.			1
TYPE OF SPECIMEN			Undisturb
INITIAL: WATER CONTENT %		w_c	15.77
INITIAL: VOID RATIO		e_c	
INITIAL: SATURATION %		S_o	
INITIAL: DRY DENSITY (lb/ft^3)		γ_d	120.94
TIME TO FAILURE (min)		t_f	8.0
UNCONFINED COMPRESSIVE STRENGTH (lb/in^2)		q_u	60.62
UNDRAINED SHEAR STRENGTH (lb/in^2)		s_u	30.31
RATE OF STRAIN (%/min)			1
INITIAL SPECIMEN DIAMETER (in)		D_o	2.812
INITIAL SPECIMEN HEIGHT (in)		H_o	5.784

DESCRIPTION OF SPECIMENS: 1) green/grey CLAY with sand and gravel (visual)

LL : PL : PI : GS :

REMARKS:
1) LJB Inc

PROJECT Austin Pike Interchange
BORING NO. A-11 SAMPLE NO. 4 8-10
TECH. BM/SV DEPTH/ELEV 8.5-9.0
LABORATORY DATE 6-15-05

UNCONFINED COMPRESSION TEST REPORT

BOWSER MORNER
DAYTON, OHIO
TOLEDO, OHIO
LEXINGTON, KY

PROJECT NO. 132049
DATE 07-05
REVIEWED RJYT
DRAWN HGW
CLIENT LJB, INC.

STRUCTURE FOUNDATION INVESTIGATION
AUSTIN ROAD BRIDGE OVER I-75 BORING LOGS

MOT I-75-0.75

3 / 5

Date Started 1/31/05 Sampler: Type Split Spoon Dia. ____ Water Elev. (ft) 918.4
Date Completed 1/31/05 Casing: Length ____ Dia. ____

Boring No. A-13 Station & Offset Sta 153+73.92 14.07 Lt Surface Elev. (ft) 923.4

Elev. (ft)	Depth (ft)	Std. Pen./ RQD	Rec. (ft)	Loss (ft)	Description	Sample No.	Physical Characteristics % Agg	% C.S.	% F.S.	% Silt	% Clay	L.L.	P.I.	W.C.	ODOT Class
923.4	0				TOPSOIL (3")										
923.2	2	3/3/3			Brown and gray SILTY CLAY, trace gravel	1A								16.1	Visual
919.9	4	4/5/7			Dark brown CLAY	2A								22.9	Visual
						3C	0.4	2.5	5.3	54.8	36.4	53	32	25.4	A-7-6(19)
917.4	6														
	8														
	10	6/7/10			Brown SANDY SILT, some clay, trace gravel	4A	7.3	9.6	16.8	42.7	23.6	22	8	12.5	A-4a (6)
	12	6/7/9			Brown SILT and CLAY, trace gravel	5A								12.2	Visual
910.4	14	4/4/4			Dark brown SILT and CLAY, some organic material with organic odor	6A								25.0	Visual
	16	4/6/9			Dark brown SILT and CLAY, some organic material with organic odor	7A	4.1	7.5	16.6	43.0	25.2	27	12	26.7	A-6a(7)
906.4	18				Top of Rock										
903.4	20	50(0")			Brown SILTY CLAY, trace gravel	8A								-	Visual
			8.9	1.1	LIMESTONE, gray, fractured	9B									
	22				RQD=30.0%										
	24														
	26														
	28														
893.4	30														

Bottom of Boring at 30.0'

Date Started 2/4/05 Sampler: Type Split Spoon Dia. ____ Water Elev. (ft) None
Date Completed 2/4/05 Casing: Length ____ Dia. ____

Boring No. A-14 Station & Offset Sta 154+97.39 47.79 Rt Surface Elev. (ft) 923.1

Elev. (ft)	Depth (ft)	Std. Pen./ RQD	Rec. (ft)	Loss (ft)	Description	Sample No.	Physical Characteristics % Agg	% C.S.	% F.S.	% Silt	% Clay	L.L.	P.I.	W.C.	ODOT Class
923.1	0														
922.6					(FILL) ASPHALT pavement (6")										
	2	6/8/10			(FILL) Brown GRAVEL with sand and silt	1A								5.6	Visual
920.6															
	4	3/4/4			(FILL) Brown SILT, some clay, little sand, trace gravel	2A	1.3	2.1	6.8	55.0	34.8	30	9	21.8	A-4b (8)
	6					3C									
916.1	8				(ORIGINAL) Brown SANDY SILT, trace gravel										
	10	6/7/7				4A								14.5	Visual
	12	6/8/9			(Becomes very stiff at 11.0')	5A	9.0	12.8	19.1	39.7	13.6	20	7	19.0	A-4a(4)
909.6	14	5/18/33			Brown SILT and CLAY, trace gravel, trace iron stains	6A								8.0	Visual
	16	18/22/34			Greenish gray SILTY CLAY, some gravel	7A								-	Visual
906.6	18				Top of Rock										
903.1	20	50(5")				8A								4.8	Visual
			10.0	0.0	LIMESTONE, gray, fractured	9B									
	22				RQD=12.9%										
	24														
	26														
	28														
893.1	30														

Bottom of Boring at 30.0'

BOWSER MORNER®
DAYTON, OHIO
TOLEDO, OHIO
LEXINGTON, KY

PROJECT NO. 132049
DATE 07-05
CLIENT LJB, INC.
REVIEWED RJYT
DRAWN HGW

STRUCTURE FOUNDATION INVESTIGATION
AUSTIN ROAD BRIDGE OVER I-75 BORING LOGS

MOT I-75-0.75

Date Started 8/27/04 Sampler: Type Split Spoon Dia. _____ Water Elev. (ft) None

Date Completed 8/27/04 Casing: Length _____ Dia. _____

Boring No. A-15 Station & Offset Sta 156+46.29 19.68 Rt Surface Elev. (ft) 940.6

Elev. (ft)	Depth (ft)	Std. Pen./ RQD	Rec. (ft)	Loss (ft)	Description	Sample No.	Physical Characteristics % Agg	% C.S.	% F.S.	% Silt	% Clay	L.L.	P.I.	W.C.	ODOT Class
940.6	0														
940.1					(FILL) ASPHALT pavement (6")										
939.1					(FILL) GRAVEL base (12")										
	2	10/13/5			(FILL) Gray and brown SILT and CLAY, some sand, trace gravel	1A								12.3	Visual
	4	8/5/5			(FILL) Brown SILT and CLAY, little sand, trace gravel	2A	1.5	1.7	8.4	43.0	45.4	27	11	14.3	A-6a (8)
	6	6/13/7			(FILL) Gray and brown SILT and CLAY, some sand, trace gravel	3A								10.7	Visual
	8														
	10	10/7/7			(FILL) Gray and brown SILT and CLAY, some sand, trace gravel (Becomes brown and gray at 8.5')	4A								9.9	Visual
	12	3/4/4			(FILL) Gray and brown SILT and CLAY, some sand, trace gravel	5A								8.7	Visual
	14	3/4/5			(FILL) Gray and brown SILT and CLAY, some sand, trace gravel	6A								11.1	Visual
	16	5/5/6			(FILL) Gray and brown SILT and CLAY, some sand, trace gravel	7A								10.7	Visual
922.6	18														
	20	25/25/25			(ORIGINAL) Brown SANDY SILT, some clay, little gravel	8A	13.5	13.6	16.5	32.3	24.1	22	7	10.9	A-4a (4)
	22														
	24	15/16/19			Brown SANDY SILT, some clay, little gravel	9A								9.5	Visual
	26														
	28														
	30	37/50(5")			Brown SANDY SILT, some clay, little gravel (With iron stains at 28.5')	10A								7.4	Visual
	32														
907.6															
	34	27/27/29			Gray SILT and CLAY, some sand, little gravel	11A	11.6	8.8	14.2	32.7	32.7	29	13	11.8	A-6a (7)
	36														
	38														
	40	17/32/39			Gray SILT and CLAY, some sand, little gravel	12A								9.9	Visual
	42														
	44	30/50(5")			Gray SILT and CLAY, some sand, little gravel	13A								12.0	Visual
	46														
	48														
891.9		50(2")			Gray SILT and CLAY, some sand, little gravel (Some gravel at 48.5')	14A								-	Visual

Bottom of Boring at 48.7'

BOWSER MORNER®
DAYTON, OHIO
TOLEDO, OHIO
LEXINGTON, KY

DRAWN HGW | REVIEWED RJYT | DATE 07-05 | PROJECT NO. 132049

CLIENT LJB, INC.

STRUCTURE FOUNDATION INVESTIGATION
AUSTIN ROAD BRIDGE OVER I-75 BORING LOGS

MOT I-75-0.75

GENERAL INFORMATION

GEOLOGY OF THE SITE

The site is situated in a glacial ground moraine consisting of till that is composed of an unsorted, unstratified mixture of clay, silt, sand, gravel, and coarse fragments deposited discontinuously by retreating ice from a glacier. The ground moraine overlies the Ordovician age, Richmond Group bedrock composed of shale and limestone layers. This area consists of embankment fill which was placed during the construction of the existing highway.

EXPLORATION

Exploration borings were made using a truck-mounted boring rig. Hollow-stem augers and standard penetration method (ASTM D-1586) were employed at maximum depth intervals of five feet. The drilling was performed between August 24, 2004 and August 8, 2005.

INVESTIGATION FINDINGS AND OBSERVATIONS

The subgrade soils including the fill encountered on the site consisted of brown silty clay (A-6b), brown gravel with sand and silt (A-2-4), brown gravel with sand, silt and clay (A-2-6), brown gravel with sand (A-1-b), brown gravel (A-1-a), brown sandy silt (A-4a), brown or gray silt and clay (A-6a), brown, dark brown, or gray clay (A-7-6), brown or gray silt (A-4b), and brown coarse and fine sand (A-3a). Some sections along the alignment were covered with topsoil, while some sections were covered with 1.5 to more than 10.0 feet of undocumented embankment fill.
Ground water was encountered at depths of 4.0 to 11.0 feet below the existing ground surface in some of the borings.
Reddish brown or gray shale was encountered at depths of 5.0 to 8.5 feet below the existing ground surface in Borings N-20 and SI-27. Auger refusal occurred at depths of 3.5 to 6.5 feet below the existing ground surface in Boring N-18, SO-11 and SO-12A. No bedrock was encountered in the remaining borings.

LEGEND FOR PROJECT AVERAGE RESULTS OF TESTS

DESCRIPTION	AASHTO CLASS	OHIO CLASS	% AGG.	% C.S.	% F.S.	% SILT	% CLAY	LIQUID LIMIT	PLASTICITY INDEX	WATER CONTENT	SAMPLES TESTED
GRAVEL	A-1-a	A-1-a	63.7	19.4	8.9	5.9	2.1	18	3	5.3	3
GRAVEL WITH SAND	A-1-b	A-1-b	43.3	23.1	16.2	11.7	5.7	16	4	6.5	8
COARSE AND FINE SAND	-	A-3a	10.1	22.4	37.4	24.0	6.1	17	2	15.5	1
GRAVEL WITH SAND AND SILT	A-2-4	A-2-4	41.5	17.6	13.1	16.7	11.1	21	7	9.8	8
GRAVEL WITH SAND, SILT AND CLAY	A-2-6	A-2-6	60.5	17.4	6.7	10.0	5.4	18	4	5.2	1
SANDY SILT	A-4	A-4a	16.9	11.4	14.4	32.5	24.8	23	8	10.1	72
SILT	A-4	A-4b	1.9	4.8	8.4	59.5	25.4	24	7	15.4	8
SILT AND CLAY	A-6	A-6a	13.8	7.9	10.8	36.2	31.3	30	12	12.9	55
SILTY CLAY	A-6	A-6b	8.1	5.5	9.5	40.1	36.8	36	17	16.5	37
CLAY	A-7-6	A-7-6	2.4	3.2	6.7	43.7	44.0	47	26	21.3	32
SHALE	VISUAL CLASSIFICATION										
SOD and/or TOPSOIL	VISUAL CLASSIFICATION										
ORGANIC SOIL	VISUAL CLASSIFICATION										
ASPHALT	VISUAL CLASSIFICATION										
CONCRETE	VISUAL CLASSIFICATION										

INDICATES BORING LOCATION

DRIVE SAMPLE AND/OR CORE BORING PLOTTED TO VERTICAL SCALE ONLY

WATER CONTENT NEARLY EQUAL TO OR GREATER THAN LIQUID LIMIT

INDICATES A NON PLASTIC MATERIAL WITH A HIGH WATER CONTENT

NOTE: FIGURES BESIDE BORINGS INDICATE WATER CONTENT IN PERCENT. e.g. 15

W FREE WATER

STATIC WATER LEVEL

NUMBER OF BLOWS FOR "STANDARD PENETRATION" TEST.
X=NUMBER OF BLOWS FOR FIRST 150 mm
Y=NUMBER OF BLOWS FOR SECOND 150 mm
Z=NUMBER OF BLOWS FOR THIRD 150 mm

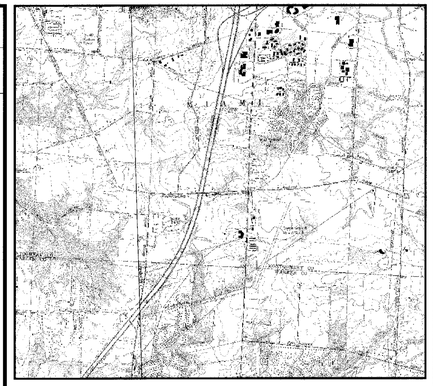

VICINITY MAP

PROJECT INDEX
MIAMISBURG-SPRINGOBORO PIKE

STATIONS FROM	STATIONS TO	SOIL PROFILE SHEET
108+00	138+00	5
138+00	167+00	6
167+00	191+00	7
191+00	209+00	8

PROJECT INDEX
INTERSTATE 75

STATIONS FROM	STATIONS TO	SOIL PROFILE SHEET
170+00	182+00	9
182+00	1+00	10
1+00	28+00	11
28+00	47+00	12
47+00	76+00	13
47+00	76+00	14
76+00	104+00	15
104+00	119+00	16

PROJECT INDEX
RAMP P

STATIONS FROM	STATIONS TO	SOIL PROFILE SHEET
328+00	338+00	12a
RAMP M		
439+00	448+00	12a
RAMP H		
228+00	241+00	12b
RAMP J		
140+00	150+00	12b

PROJECT INDEX
I675 RAMP

STATIONS FROM	STATIONS TO	SOIL PROFILE SHEET
10+00	14+00	16

PROJECT INDEX
WOOD ROAD

STATIONS FROM	STATIONS TO	SOIL PROFILE SHEET
34+00	52+00	17

PROJECT INDEX
STATE ROUTE 741

STATIONS FROM	STATIONS TO	SOIL PROFILE SHEET
16+00	44+00	18
44+00	71+00	19

BOWSER MORNER
DAYTON, OHIO
CLEVELAND, OHIO
LEXINGTON, KY

DRAWN HGW
REVIEWED RJYT
DATE 07-05
PROJECT NO. 132049
CLIENT LJB, INC.

SOIL PROFILE
SR 741, WOOD ROAD, I-675

MOT I-75-0.75

SUMMARY OF SOIL TEST DATA

Boring Number	Station & Offset	Depth From	Depth To	% Agg.	% C.S.	% F.S.	% Silt	% Clay	L.L.	P.I.	% W.C.	ODOT Class
A-1	112+77.78; 31.60' Lt.	0.0	1.5	8.1	7.2	18.2	37.6	28.9	40	19	14.3	A-6b(10)
		1.5	3.0	5.6	5.6	17.7	35.4	35.7	40	21	13.3	A-6b(11)
		3.5	5.0	Brown gravel with sand, trace silt							2.6	Visual
		8.5	10.0	Brown gravel with sand, trace silt							Sat.	Visual
		13.5	15.0	Brown sandy silt, trace gravel							10.9	Visual
A-2	116+71.65; 29.57' Rt.	0.0	1.5	13.9	8.7	15.1	28.5	33.8	39	20	11.4	A-6b(9)
		1.5	3.0	Brown gravel and sand, trace silt							3.4	Visual
		3.5	5.0	35.6	14.4	16.1	19.6	14.3	21	7	13.7	A-2-4(0)
		8.5	10.0	Brown gravel with sand and silt							7.5	Visual
A-3	120+69.44; 29.36' Rt.	0.0	1.5	7.7	18.0	25.2	30.1	19.0	19	6	8.4	A-4a(3)
		1.5	3.0	13.5	14.1	23.0	29.4	20.0	18	4	11.3	A-4a(3)
		3.5	5.0	Brown sandy silt, little clay, trace gravel							8.1	Visual
		8.5	10.0	Gray sandy silt, trace gravel							10.8	Visual
A-4	124+72.57; 19.29' Rt.	0.0	1.5	19.7	16.5	19.6	28.0	16.2	23	8	11.3	A-4a(2)
		1.5	3.0	14.1	43.9	31.5	8.6	1.9	Non-Plastic		5.4	A-1-b(0)
		3.5	5.0	Brown gravel with sand, trace silt, trace clay							Sat.	Visual
		8.5	10.0	Gray silt, some clay, trace sand, trace gravel							18.8	Visual
A-5	128+65.66; 31.91' Lt.	0.0	1.5	3.1	14.0	28.4	35.7	18.8	26	10	9.3	A-4a(4)
		1.5	3.0	Brown sandy silt, trace gravel							9.1	Visual
		3.5	5.0	6.5	5.9	11.4	47.3	28.9	24	8	12.6	A-4a(8)
		8.5	10.0	Gray silt and clay, some sand, trace gravel, with iron stains							9.3	Visual
A-8	138+52.96; 48.34' Rt.	1.5	3.0	1.7	3.5	10.8	35.8	48.2	50	26	29.9	A-7-6(16)
		3.5	5.0	3.6	3.2	9.0	29.4	54.8	55	31	25.2	A-7-6(19)
		6.0	7.5	Brown and dark brown clay, trace sand, trace gravel							14.6	Visual
		8.5	10.0	Brown and dark brown clay, trace sand, trace gravel							Sat.	Visual
A-9	142+52.60; 42.94' Rt.	0.0	1.5	Topsoil (1")							7.3	Visual
		1.5	3.0	1.7	3.2	8.9	36.8	49.4	52	30	23.2	A-7-6(18)
		3.5	5.0	17.0	11.5	13.3	32.7	25.5	29	13	12.9	A-6a(6)
		8.5	10.0	Brown silt and clay, some sand, little gravel							10.1	Visual
A-10	146+48.82; 21.46' t.	0.0	1.5	20.3	14.3	8.6	28.6	28.2	26	10	5.5	A-4a(4)
		1.5	3.0	17.3	7.4	9.1	32.6	33.6	26	10	9.5	A-4a(6)
		3.5	5.0	Brown and gray sandy silt, some clay, little gravel							11.2	Visual
		8.5	10.0	Dark brown and gray clay, some sand, trace gravel, with organic odor							25.3	Visual
A-16	160+35.47; 15.93' Rt.	0.0	1.5	9.9	5.1	6.5	34.0	44.5	31	14	13.5	A-6a(10)
		1.5	3.0	Brown silt and clay, little sand, trace gravel, tracc roots							12.6	Visual
		3.5	5.0	11.3	5.1	8.5	38.9	36.2	39	19	18.1	A-6b(12)
		8.5	10.0	Brown silt and clay, some sand, trace gravel							8.1	Visual
A-17	164+25.61; 0.46' Rt.	0.0	1.5	9.8	12.9	19.3	36.5	21.5	38	20	16.4	A-6b(9)
		1.5	3.0	Brown gravel with sand and silt							12.5	Visual
		3.5	5.0	28.6	8.9	12.9	25.7	23.9	35	16	19.2	A-6b(5)
		8.5	10.0	Brown silt and clay,some sand, little gravel							8.1	Visual
A-18	168+24.40; 47.40' Lt.	0.0	1.5	Topsoil (8")							4.4	Visual
		1.5	3.0	8.9	10.7	13.6	35.2	31.6	27	11	11.7	A-6a(7)
		3.5	5.0	14.0	9.8	13.6	29.7	32.9	28	12	12.0	A-6a(6)
		8.5	10.0	Brown silt and clay some sand, trace gravel							4.7	Visual
A-19	172+27.07, 49.60' Lt.	0.0	1.5	2.6	5.9	18.0	37.4	36.1	38	21	18.6	A-6b(12)
		1.5	3.0	8.0	12.1	15.9	32.3	31.7	25	10	14.5	A-6a(6)
		3.5	5.0	Brown sandy silt, some clay, trace gravel							11.1	Visual
		8.5	10.0	Brown silt and clay, some sand, little gravel							9.4	Visual
A-20	176+27.99; 72.59' Lt.	0.0	1.5	25.2	14.3	9.1	32.0	19.4	35	15	12.3	A-6b(5)
		1.5	3.0	5.9	8.1	11.5	36.5	38.0	31	14	17.1	A-6b(10)
		3.5	5.0	Brown silty clay, little sand, trace gravel							12.2	Visual
		8.5	10.0	Brown silt and clay, some sand, little gravel, tracc cobbles							9.5	Visual
A-21	180+95.05; 26.98' Lt.	0.0	1.5	2.1	4.2	8.4	44.4	40.9	45	23	18.6	A-7-6(14)
		1.5	3.0	14.4	8.7	11.7	31.6	33.6	26	10	11.8	A-4a(6)
		3.5	5.0	Brown sandy silt, some clay, little gravel							11.1	Visual
		8.5	10.0	Brown silt and clay, some sand, little gravel							9.4	Visual
A-22	184+95.80; 32.13' Lt.	0.0	1.5	Topsoil (10")							19.9	Visual
		1.5	3.0	37.5	2.6	1.8	18.6	39.5	40	21	11.7	A-6b(9)
		3.5	5.0	0.0	0.8	0.6	25.0	73.6	37	16	16.2	A-6b(10)
		8.5	10.0	Gray silty clay, trace sand							12.7	Visual
A-23	189+01.81; 33.54' Lt.	0.0	1.5	Topsoil (8")							12.8	Visual
		1.5	3.0	43.7	11.2	7.3	16.3	21.5	39	20	9.6	A-6a(1)
		3.5	5.0	3.3	6.0	16.9	52.2	21.6	22	5	12.9	A-4b(8)
		8.5	10.0	Greenish gray clay, some silt, trace sand, trace gravel							9.9	Visual

Boring Number	Station & Offset	Depth From	Depth To	% Agg.	% C.S.	% F.S.	% Silt	% Clay	L.L.	P.I.	% W.C.	ODOT Class
A-24	193+03.39; 15.81' Lt.	0.0	1.5	0.0	0.5	1.9	62.4	35.2	37	16	16.7	A-6b(10)
		1.5	3.0	2.9	5.6	8.1	33.2	54.5	47	27	18.1	A-7-6(16)
		3.5	5.0	Brown clay, some silt, trace sand, trace gravel							11.4	Visual
		8.5	10.0	Brown gravel with sand, trace silt, trace cobbles							12.9	Visual
A-25	197+01.88; 10.78' Rt.	0.0	1.5	Topsoil (18")							20.3	Visual
		1.5	3.0	3.1	3.3	3.6	38.9	51.1	34	16	18.6	A-6b(10)
		3.5	5.0	Gray and brown clay, trace sand, trace gravel							11.7	Visual
		8.5	10.0	Gray and brown clay, trace sand, trace gravel							14.3	Visual
A-26	200+95.07; 27.78' Rt.	0.0	1.5	Topsoil (10")							16.0	Visual
		1.5	3.0	0.0	0.9	4.4	48.9	45.8	55	32	22.6	A-7-6(19)
		3.5	5.0	0.9	3.3	7.3	48.9	39.6	43	23	21.7	A-7-6(13)
		8.5	10.0	Gray clay, and silt, trace sand							14.8	Visual
B-1	38+80.63; 23.01 Lt.	0.0	1.5	Topsoil (6")							0.7	Visual
		1.5	3.0	0.0	0.8	4.7	48.9	45.6	50	28	23.0	A-7-6(18)
		3.5	5.0	10.1	22.4	37.4	24.0	6.1	17	2	15.5	A-3a(0)
		8.5	10.0	Brown silt and clay, some sand, trace gravel							13.8	Visual
B-2	41+70.00; 41.90 Lt.	0.0	1.5	5.6	5.0	9.6	43.0	36.8	36	19	13.8	A-6b(12)
		1.5	3.0	2.9	6.5	16.8	36.3	37.5	40	22	11.2	A-6b(12)
		3.5	5.0	Brown silty clay, little sand, trace gravel							8.9	Visual
		8.5	10.0	Brown silty clay, little sand, trace gravel							8.4	Visual
B-3	45+19.00; 44.11 Lt.	0.0	1.5	22.4	7.6	11.0	34.2	24.8	30	12	10.5	A-6a(5)
		1.5	3.0	Brown silty clay, little sand, some gravel							-	Visual
		3.5	5.0	15.8	11.4	18.6	31.0	23.2	25	9	10.0	A-4a(4)
		8.5	10.0	Brown sandy silt, some clay, little gravel							9.2	Visual
B-4	48+68.45 26.97 Lt.	0.0	1.5	10.8	12.1	18.9	34.9	23.3	27	11	10.4	A-6a(5)
		1.5	3.0	3.9	7.6	13.2	51.7	23.6	21	5	13.7	A-4b(8)
		3.5	5.0	Brown silt, some clay, some sand, trace gravel							8.7	Visual
		8.5	10.0	Brown silt and clay, some sand, trace gravel, trace cobbles							-	Visual
SI-1	177+13.89; 82.66' Lt.	0.0	2.0	30.5	14.7	20.0	22.5	12.3	17	4	8.7	A-2-4(0)
		2.0	4.0	10.3	13.1	21.9	31.4	23.3	19	5	11.4	A-4a(4)
		4.0	6.0	Gray silty clay, some sand, trace gravel							9.2	Visual
		8.5	9.8	Gray silty clay, some sand, trace gravel							9.8	Visual
SI-2	181+29.13; 86.23' Lt.	1.0	3.0	15.7	12.8	16.5	41.7	13.3	20	4	11.7	A-4a(4)
		3.0	5.0	1.9	3.3	3.3	75.0	16.5	26	4	14.3	A-4b(8)
SI-3	185+43.71; 83.15' Lt.	0.0	2.0	17.8	10.9	15.4	34.4	21.5	20	8	9.8	A-4a(4)
		2.0	4.0	11.0	6.5	13.2	40.6	28.7	20	5	13.5	A-4a(7)
		4.0	6.0	Brown sandy silt, some clay, little gravel							11.2	Visual
		8.5	8.8	Brown sandy silt, sand, trace gravel							5.8	Visual
SI-4	189+64.16; 85.96' Lt.	1.0	3.0	64.1	25.8	4.6	3.9	1.6	18	3	3.5	A-1-a-(0)
		3.0	5.0	10.5	10.8	17.0	29.7	32.0	32	16	15.3	A-6b(8)
SI-5	193+79.96; 84.43' Lt.	0.0	2.0	Topsoil (2")							6.5	Visual
		2.0	4.0	2.7	3.7	9.1	45.0	39.5	41	22	17.1	A-7-6(13)
		4.0	6.0	15.5	12.3	14.0	31.4	26.8	23	8	9.7	A-4a(5)
		8.5	8.8	Gray gravel with sand, trace silt							8.1	Visual
SI-6	197+98.56; 86.88' Lt.	1.0	3.0	21.3	9.7	17.6	31.4	20.0	28	14	15.0	A-6a(5)
		3.0	5.0	17.4	11.6	14.4	30.7	25.9	22	7	10.4	A-4a(4)
SI-7	202+21.43; 83.62' Lt.	0.0	2.0	14.9	6.0	9.7	37.3	32.1	53	36	16.2	A-7-6(15)
		2.0	4.0	40.3	13.3	19.1	17.5	19.8	21	7	6.7	A-4a(0)
		4.0	6.0	Brown sandy silt and gravel, little clay							7.2	Visual
		8.5	8.6	Gray gravel, some sand, trace silt								Visual
SI-8	46+66.05, 140.95' Lt.	1.0	3.0	25.3	9.0	14.7	25.5	25.2	26	11	13.3	A-6a(3)
		3.0	5.0	34.2	11.1	7.0	26.1	21.6	22	6	9.9	A-4a(2)
SI-9	2+31.98, 82.85' Lt.	0.0	2.0	Brown coarse and fine sand, little gravel, trace silt							-	Visual
		2.0	4.0	41.4	20.0	20.3	12.1	6.2	20	2	8.1	A-1-b(0)
		4.0	6.0	9.1	10.5	16.2	37.3	26.9	26	10	12.3	A-4a(6)
		8.5	10.0	Brown sandy silt, some clay, little gravel							10.3	Visual

DAYTON, OHIO
TOLEDO, OHIO
LEXINGTON, KY

BOWSER MORNER®

DRAWN: HGW
REVIEWED: RJYT
DATE: 07-05
PROJECT NO: 132049
CLIENT: LJB, INC.

SOIL PROFILE
SR 741, WOOD ROAD, I-675

MOT I-75-0.75

SUMMARY OF SOIL TEST DATA

Boring Number	Station & Offset	Depth		% Agg.	% C.S.	% F.S.	% Silt	% Clay	L.L.	P.I.	% W.C.	ODOT Class
SI-10	6+47.01, 86.30' Lt.	1.0	3.0	13.1	11.9	17.6	33.0	24.4	26	11	12.6	A-6a(5)
		3.0	5.0	20.1	5.8	10.1	39.1	24.9	28	11	13.0	A-6a(6)
SI-11	10+64.95, 82.69' Lt.	0.0	2.0	Topsoil (2")							-	Visual
		2.0	4.0	5.6	6.8	12.6	46.6	28.4	34	17	15.8	A-6b(11)
		4.0	6.0	5.1	6.4	10.7	46.5	31.3	32	14	13.3	A-6a(10)
		8.5	10.0	Brown silt and clay, little sand, trace gravel							12.8	Visual
SI-12	14+81.88, 86.02' Lt.	1.0	3.0	35.5	20.8	17.3	16.4	10.0	22	8	12.6	A-2-4(0)
		3.0	5.0	5.9	6.8	11.9	40.6	34.8	33	15	13.0	A-6b(10)
SI-13	18+89.74, 83.62' Lt.	0.0	2.0	32.8	22.3	20.1	19.8	5.0	19	5	11.3	A-1-b(0)
		2.0	4.0	5.1	6.4	17.4	37.9	28.0	27	12	13.5	A-6a(7)
		4.0	6.0	Brown silt and clay, some sand, little gravel							12.8	Visual
		8.5	10.0	Dark brown silty clay, some sand, trace gravel, trace organic materials							12.8	Visual
SI-14	23+05.95, 85.30' Lt.	1.0	3.0	43.4	17.2	15.4	14.5	9.5	19	6	9.4	A-1-b(0)
		3.0	5.0	8.1	8.6	16.2	38.4	28.7	28	12	13.9	A-6b(7)
SI-15	27+20.11, 80.84' Lt.	0.0	2.0	8.1	5.1	6.9	51.6	28.3	29	11	15.0	A-6a(8)
		2.0	4.0	5.1	4.6	7.4	38.2	44.7	31	14	12.2	A-6a(10)
		4.0	6.0	Greenish gray silt and clay, little sand, trace gravel							12.4	Visual
		8.5	10.0	Greenish gray silt and clay, little sand, trace gravel							11.6	Visual
SI-16	31+40.47, 84.92' Lt.	1.0	3.0	48.5	14.1	7.3	16.0	14.1	23	9	9.4	A-2-4(0)
		3.0	5.0	45.2	26.3	8.0	11.1	9.4	Non-Plastic		8.3	Visual
SI-17	35+55.95, 82.31' Lt.	0.0	2.0	Brown sandy silt, some gravel							5.7	Visual
		2.0	4.0	0.0	0.7	6.7	39.2	53.4	29	12	14	A-6a(9)
		4.0	6.0	8.3	5.2	8.7	37.4	40.4	38	19	19.0	A-6b(12)
		8.5	10.0	Brown and dark brown silty clay, little sand, trace gravel, trace organic material							20.2	Visual
SI-18	39+73.99, 87.79' Lt.	1.0	3.0	24.5	10.4	10.4	28.1	26.6	25	8	13.5	A-4a(4)
		3.0	5.0	12.0	5.8	7.3	39.8	35.1	29	13	12.8	A-6a(9)
SI-19	43+92.75, 83.17' Lt.	0.0	2.0	Brown silt and clay, some sand, little gravel							8.7	Visual
		2.0	4.0	2.5	4.4	9.9	42.1	41.1	54	35	23.0	A-6a(9)
		4.0	6.0	24.2	10.9	12.5	30.3	22.1	26	11	8.8	A-6b(12)
		8.5	10.0	Brown silt and clay, some sand, some gravel							6.6	Visual
SI-20	48+10.37, 87.13' Lt.	1.0	3.0	55.8	19.3	15.2	6.9	2.8	Non-Plastic		6.1	A-1a(0)
		3.0	5.0	0.0	0.1	0.7	47.9	51.3	53	32	25.8	A-7-6(19)
SI-21	52+30.40' 82.48' Lt.	0.0	2.0	11.0	7.1	8.4	33.4	40.1	25	9	10.2	A-6a(8)
		2.0	4.0	2.3	4.1	8.8	32.9	51.9	48	29	19.4	A-6a(10)
		4.0	6.0	Brown silt and clay, some sand, little gravel							9.5	Visual
		8.5	10.0	Greenish gray silt and clay, some sand, little gravel							10.1	Visual
SI-22	56+54.86, 86.18' Lt.	1.0	3.0	17.7	6.8	8.0	32.9	34.6	25	9	38.0	A-4a(6)
		3.0	5.0	0.0	2.1	4.6	56.9	36.4	36	16	20.3	A-6b(10)
SI-23	60+70.82, 83.07' Lt.	0.0	2.0	20.4	13.4	11.3	35.5	19.4	26	10	10.5	A-4a(4)
		2.0	4.0	8.7	6.5	9.6	40.8	34.4	26	10	11.5	A-4a(8)
		4.0	6.0	Brown sandy silt, some clay, trace gravel							-	Visual
		8.5	10.0	Greenish gray and brown silty clay, some sand, trace gravel							14.1	Visual
SI-24	64+61.64, 85.58' Lt.	1.0	3.0	10.5	10.6	9.5	32.9	34.5	Non-Plastic		5.4	Visual
SI-25	68+98.85' 82.94 Lt.	0.0	2.0	18.6	18.1	10.7	27.6	25.0	18	5	5.9	A-4a(3)
		2.0	4.0	46.0	15.2	8.9	19.6	10.3	20	5	3.8	A-2-4(0)
		4.0	6.0	Brown gravel with sand, and silt, little clay							-	Visual
SI-26	73+10.66, 86.97' Lt.	1.0	3.0	35.4	18.8	14.1	17.4	14.3	20	7	4.9	A-2-4(0)
		3.0	5.0	11.5	10.5	8.1	37.0	32.9	25	8	3.2	A-4a(7)
SI-27	77+17.46, 82.61' Lt.	0.0	2.0	10.1	13.7	12.1	27.9	36.2	21	6	8.1	A-4a(6)
		2.0	4.0	30.1	10.7	7.2	24.7	27.3	25	9	4.3	A-4a(3)
		4.0	6.0	Greenish gray sandy silt and clay, little to some gravel							7.2	Visual
		8.5	10.0	Shale, reddish brown, soft, highly weathered							6.1	Visual
SI-28	81+17.53, 85.89' Lt.	1.0	3.0	14.5	10.9	10.6	38.4	25.6	22	9	8.0	A-4a(6)
		3.0	5.0	34.9	13.1	7.6	24.4	20.0	22	8	6.5	A-4a(2)
SI-29	85+27.78, 82.88' Lt.	0.0	2.0	24.1	15.5	18.8	25.0	16.6	21	8	5.6	A-4a(1)
		2.0	4.0	16.6	12.3	17.5	35.7	17.9	21	8	9.5	A-4a(4)
		4.0	6.0	Brown sandy silt, little clay, some gravel							14.0	Visual
		8.5	10.0	Greenish gray silty clay, some sand, trace gravel							12.1	Visual
SI-30	89+42.01, 86.54' Lt.	1.0	3.0	17.3	11.7	17.6	34.0	19.4	19	5	8.4	A-4a(4)
		3.0	5.0	12.4	11.9	18.5	36.4	20.8	20	7	7.9	A-4a(4)

Boring Number	Station & Offset	Depth		% Agg.	% C.S.	% F.S.	% Silt	% Clay	L.L.	P.I.	% W.C.	ODOT Class
SI-31	93+55.96, 83.64' Lt.	0.0	2.0	2.7	7.2	8.9	52.7	26.5	27	11	12.1	A-6a(8)
		2.0	4.0	22.6	10.0	16.1	33.7	17.6	21	7	7.2	A-4a(3)
		4.0	6.0	Greenish gray silt and clay, some sand, little gravel							9.6	Visual
		8.5	10.0	Brown sandy silt, trace gravel							9.6	Visual
SI-32	97+70.36, 86.58' Lt.	1.0	3.0	11.5	15.3	18.0	34.0	21.2	19	5	6.1	A-4a(4)
		3.0	5.0	28.5	11.1	16.1	28.0	16.3	20	6	7.4	A-4a(2)
SI-33	101+86.81, 82.83' Lt.	0.0	2.0	16.0	12.9	15.2	31.4	24.5	23	9	9.9	A-4a(4)
		2.0	4.0	11.9	12.6	19.0	36.9	19.6	22	8	8.6	A-4a(4)
		4.0	6.0	Brown sandy silt, some clay, little gravc							7.6	Visual
		8.5	10.0	Dark brown organic clay, with organic odor							12.2	Visual
SI-34	106+01.24, 86.85' Lt.	1.0	3.0	14.4	17.1	20.8	31.7	16.0	21	7	8.4	A-4a(3)
		3.0	5.0	10.1	10.8	16.2	36.7	26.2	25	10	10.3	A-4a(6)
SI-35	110+15.48, 83.41' Lt.	0.0	2.0	22.1	17.6	11.0	28.2	21.1	31	12	12.9	A-6a(4)
		2.0	4.0	19.3	7.9	9.4	29.9	33.5	26	10	9.4	A-4a(6)
		4.0	6.0	Greenish gray clay, some silt, trace sand							13.0	Visual
		8.5	10.0	Greenish gray clay, some silt, trace sand							11.9	Visual
SI-36	114+26.10, 87.53' Lt.	1.0	3.0	18.7	13.6	20.7	28.9	18.1	24	10	11.0	A-4a(2)
		3.0	5.0	22.7	8.0	9.8	26.7	32.8	30	12	12.3	A-6a(6)
SI-37	118+36.93, 82.98' Lt.	0.0	2.0	71.2	13.0	7.0	6.8	2.0	NonPlastic		6.3	A-1-a(0)
		2.0	4.0	Brown gravel, some sand, trace clay							9.1	Visual
		4.0	6.0	9.6	6.9	12.0	30.9	40.6	36	18	16.1	A-6b(10)
		8.5	10.0	Brown and dark brown silty clay, little sand, trace organic materials, trace gravel							18.3	Visual
SO-1	0+03.30, 142.47' Lt.	0.0	2.0	6.5	8.7	13.0	44.6	27.2	22	7	9.1	A-4a(7)
		2.0	4.0	13.4	13.0	16.7	35.2	21.7	22	7	9.9	A-4a(4)
		4.0	6.0	Brown sandy silt, some clay, little gravel							9.4	Visual
		8.5	9.0	Gray gravel and sand							-	Visual
SO-2	2+48.19, 132.99' Lt.	1.0	3.0	10.1	5.2	17.3	44.9	22.5	25	8	11.2	A-4a(6)
		3.0	5.0	15.8	9.1	15.5	34.9	24.7	24	9	11.2	A-4a(5)
SO-3	6+52.27, 139.94' Lt.	0.0	2.0	5.4	12.7	18.2	40.4	23.3	24	9	10.2	A-4a(6)
		2.0	4.0	8.7	8.7	14.1	41.5	27.0	24	9	10.4	A-4a(7)
		4.0	6.0	Brown sandy silt, some clay, trace gravel							9.4	Visual
		8.5	10.0	Brown sandy silt, some sand, trace gravel							-	Visual
SO-4	10+53.17, 132.97' Lt.	1.0	3.0	8.6	12.1	15.7	39.0	24.6	27	12	13.7	A-6a(7)
		3.0	5.0	4.9	3.8	12.4	45.9	33.0	35	15	17.6	A-6a(10)
SO-5	14+53.33, 141.07' Lt.	0.0	2.0	12.1	12.1	19.8	34.2	21.8	25	10	10.5	A-4a(4)
		2.0	4.0	15.6	10.4	14.7	36.9	22.4	22	8	8.2	A-4a(5)
		4.0	6.0	Brown sandy silt, some clay, little gravel							10.9	Visual
		8.5	10.0	Dark brown silty clay, some sand, with organic odor							12.3	Visual
SO-6	18+55.60, 132.52' Lt.	1.0	3.0	9.4	12.3	17.0	37.4	23.9	22	8	9.2	A-4a(5)
		3.0	5.0	7.5	9.8	17.1	37.7	27.9	25	10	12.2	A-4a(6)
SO-7	22+57.92, 138.31' Lt.	0.0	2.0	18.0	12.3	16.3	33.2	20.2	26	11	9.3	A-6a(4)
		2.0	4.0	3.9	5.1	12.2	48.7	30.1	28	11	17.4	A-6a(8)
		4.0	6.0	Brown silt and clay, some sand, little gravel							9.1	Visual
		8.5	10.0	Brown silt and clay, some sand, little gravel							8.7	Visual
SO-8	26+58.19, 132.31' Lt.	1.0	3.0	60.5	17.4	6.7	10.0	5.4	18	4	5.2	A-2-6(2)
		3.0	5.0	27.0	7.1	6.0	27.4	32.5	31	13	12.9	A-6a(6)
SO-9	300+98.22 0.83 Lt.	0.5	2.0	0.0	2.1	5.2	48.1	44.6	51	27	22.3	A-7-6(17)
		2.0	3.5	0.0	2.7	5.5	59.9	31.9	38	17	22.0	A-6b(11)
		3.5	5.0	Brown silt and clay, little sand, trace gravel							14.2	Visual
		8.5	10.0	Brown silt and clay, little sand, trace gravel							13.8	Visual
SO-10	334+90.17 2.96 Rt.	0.5	2.0	0.0	1.4	5.5	50.7	42.4	50	28	19.7	A-7-6(17)
		2.0	3.5	8.1	12.4	16.6	33.5	29.4	29	13	12.2	A-6b(11)
		3.5	5.0	Brown silt and clay, some sand, trace gravel							13.5	Visual
		8.5	10.0	Brown silt and clay, some sand, trace gravel, trace limestone fragments							10.2	Visual
SO-11	442+07.80 6.47 Lt.	0.5	2.0	0.0	3.4	10.6	45.2	40.8	41	21	13.4	A-7-6(13)
		2.0	3.5	3.1	3.7	16.7	36.9	39.6	35	16	16.1	A-6b(10)
		3.5	5.0	Brown silt and clay, some sand, trace gravel							9.0	Visual
		8.5	10.0	Brown silt and clay, some sand, trace gravel, trace limestone fragments							4.5	Visual

DAYTON, OHIO
TOLEDO, OHIO
LEXINGTON, KY
BOWSER MORNER®

DRAWN HGW
REVIEWED RJYT
DATE 07-05
PROJECT NO. 132049
CLIENT LJB, INC.

SOIL PROFILE
SR 741, WOOD ROAD, I-675
MOT I-75-0.75

SUMMARY OF SOIL TEST DATA

Boring Number	Station & Offset	Depth		% Agg.	% C.S.	% F.S.	% Silt	% Clay	L.L.	P.I.	% W.C.	ODOT Class
SO-12	46+66.05, 140.95' Lt.	0.0	2.0	25.9	13.6	12.1	26.9	21.5	25	9	12.7	A-4a(2)
		2.0	4.0	Brosn silty clay, some sand, trace gravel							-	Visual
		4.0	6.0	Brosn silty clay, some sand, trace gravel							17.1	Visual
		8.5	9.6	Gray gravel with sand							10.8	Visual
SO-12A	446+93.50 64.38 Lt.	0.5	2.0	0.0	3.1	5.1	54.3	37.5	38	16	15.0	A-6b(10)
		2.0	3.5	13.3	15.0	12.4	30.5	28.8	23	8	10.2	A-4a(5)
		3.5	5.0	Brown silt and clay, some sand, trace gravel							7.5	Visual
		8.5	10.0	Brown silt and clay, some sand, trace gravel, trace limestone fragments							2.3	Visual
SO-13	50+63.85, 130.42' Lt.	2.0	4.0	4.8	3.1	8.2	35.8	48.1	32	13	17.2	A-6a(9)
		4.0	6.0	0.5	1.8	5.3	47.0	45.4	49	27	23.6	A-7-6(17)
SO-14	54+63.21, 148.74' Lt.	0.0	2.0	Topsoil (24")							13.0	Visual
		2.0	4.0	44.6	6.9	8.5	17.1	22.9	26	11	8.0	A-6a(1)
		4.0	6.0	10.4	10.8	24.1	29.8	22.9	30	13	10.5	A-6a(5)
		8.5	9.6	Gray gravel with sand							-	Visual
SO-15	58+59.04, 137.92' Lt.	2.0	4.0	9.3	7.9	11.1	29.4	42.3	26	10	7.7	A-4a(7)
		4.0	6.0	0.7	1.9	4.4	44.4	48.6	43	22	22.5	A-7-6(14)
SO-16	62+52.57, 150.78' Lt.	0.0	2.0	Topsoil (1")							8.0	Visual
		2.0	4.0	3.6	3.7	7.0	41.1	44.6	42	22	20.2	A-7-6(13)
		4.0	6.0	3.3	2.8	4.7	39.2	50.0	52	32	23.3	A-7-6(18)
		8.5	10.0	Greenish gray silty clay, some sand, trace gravel							12.6	Visual
N-1	0+18.53, 140.59' Rt.	0.0	2.0	28.0	12.0	9.9	30.2	19.9	31	14	10.9	A-6a(5)
		2.0	4.0	0.8	0.8	4.7	62.5	31.2	40	20	21.2	A-6b(12)
		4.0	6.0	Brown silty clay, trace sand, trace gravel							15.3	Visual
		8.5	10.0	Gray sandy silt, some sand, little gravel							5.5	Visual
N-2	4+10.79, 138.54' Rt.	1.0	3.0	47.7	27.2	11.4	8.9	4.8	NonPlastic		5.1	A-1-b(0)
		3.0	5.0	19.2	11.0	11.2	31.8	26.8	27	12	10.2	A-6a(5)
N-3	8+05.40, 142.87' Rt.	0.0	2.0	15.2	9.1	16.9	35.3	23.5	27	12	12.2	A-6a(5)
		2.0	4.0	Brown silt and clay, some sand, trace gravel							-	Visual
		4.0	6.0	Brown silt and clay, some sand, trace gravel							-	Visual
		8.5	10.0	Brown silt and clay, some sand, little gravel							8.7	Visual
N-4	12+02.37, 142.31' Rt.	1.0	3.0	18.4	12.3	11.9	28.3	29.1	33	16	13.0	A-6b(7)
		3.0	5.0	5.7	8.5	15.9	41.9	28.0	25	10	12.6	A-6a(7)
N-5	15+98.12, 140.05' Rt.	0.0	2.0	Brown gravel with sand, trace silt, trace clay							7.2	Visual
		2.0	4.0	2.7	4.0	8.4	43.6	41.3	44	25	22.8	A-7-6(15)
		4.0	6.0	15.9	12.9	18.0	31.7	21.5	25	10	12.1	A-4a(4)
		8.5	10.0	Brown sandy silt, some sand, little gravel							8.3	Visual
N-6	19+91.28, 143.82' Rt.	1.0	3.0	43.3	25.0	18.4	8.6	4.7	NonPlastic		5.4	A-1-b(0)
		3.0	5.0	10.0	11.0	17.9	37.6	23.5	24	9	10.4	A-4a(5)
N-7	22+87.90, 142.31' Rt.	0.0	2.0	Topsoil (24")							6.4	Visual
		2.0	4.0	12.2	10.7	17.7	33.9	25.5	22	8	9.8	A-4a(5)
		4.0	6.0	14.1	6.0	13.8	37.6	28.5	33	16	15.3	A-6b(8)
		8.5	10.0	Gray and brown silty clay, trace organic material, trace gravel, with organic odor							12.6	Visual
N-8	27+87.43, 143.84' Rt.	1.0	3.0	53.6	18.5	9.2	10.0	8.7	19	5	6.2	A-1-b(0)
		3.0	5.0	20.8	7.2	7.2	26.1	38.7	32	14	13.4	A-6a(8)
N-9	233+51.53 3.77 Lt.	0.0	2.0	0.0	1.4	5.7	60.5	32.4	35	12	12.6	A-6a(9)
		2.0	4.0	0.0	0.4	2.5	46.8	50.3	48	25	20.9	A-7-6(16)
		4.0	5.5	Brown silt and clay, some sand, trace gravel							13.6	Visual
		8.5	10.0	Brown silt and clay, some sand, trace gravel							12.5	Visual
N-10	236+99.35 .030 Rt.	0.0	2.0	10.5	4.6	6.1	29.5	49.3	36	16	10.1	A-6b(10)
		2.0	4.0	28.5	14.9	13.1	23.4	20.1	27	10	9.8	A-4a(2)
		4.0	5.5	Brown sandy silt, some gravel, some clay							13.6	Visual
		8.5	10.0	Brown silt and clay, some sand, little gravel							12.5	Visual
N-11	143+98.81 1.45 Lt.	0.0	2.0	13.1	4.9	7.9	33.5	40.6	43	22	13.7	A-7-6(13)
		2.0	3.5	20.3	36.6	17.7	16.6	8.8	22	7	6.5	A-2-4(0)
		3.5	5.0	Brown silt and clay, some sand, little ravel							11.7	Visual
		8.5	10.0	Greenish-gray silt and clay, little sand, little gravel							16.0	Visual
N-12	147+57.56 5.70 Lt.	0.5	2.0	4.5	5.5	10.5	32.2	47.3	41	21	14.8	A-7-6(13)
		2.0	3.5	15.0	10.3	12.6	31.7	30.4	25	8	9.2	A-4a(5)
		3.5	5.0	Brown silty clay, some sand, little ravel							13.1	Visual
		8.5	10.0	Greenish-gray silt and clay, some sand, some gravel, trace limestone fragments							13.4	Visual
N-13	52+13.94, 143.80' Rt.	1.0	3.0	13.1	8.3	13.4	30.3	34.9	30	14	13.0	A-6a(8)
		3.0	5.0	24.1	7.1	9.4	24.9	34.5	26	9	10.6	A-4a(5)
N-14	56+17.47, 142.10' Rt.	0.0	2.0	15.8	10.8	8.5	34.8	30.1	25	10	9.2	A-4a(6)
		2.0	4.0	26.4	8.8	7.7	23.2	33.9	31	14	12.8	A-6a(6)
		4.0	6.0	Brown silt and clay, some gravel, little sand							14.5	Visual
		8.5	10.0	Black organic clay, some silt, trace sand							14.3	Visual

Boring Number	Station & Offset	Depth		% Agg.	% C.S.	% F.S.	% Silt	% Clay	L.L.	P.I.	% W.C.	ODOT Class
N-15	60+18.35, 141.97' Rt.	1.0	3.0	10.9	6.4	10.3	31.3	41.1	27	11	4.8	A-6a(8)
		3.0	5.0	0.6	1.0	3.6	62.3	32.5	39	17	23.3	A-6b(11)
N-16	64+21.75, 142.27' Rt.	0.0	2.0	35.2	12.9	10.5	23.1	18.3	24	9	7.9	A-4a(1)
		2.0	4.0	Brown sandy silt and gravel, trace cobble							9.8	Visual
		4.0	6.0	0.0	0.2	6.9	60.4	32.5	24	9	10.2	A-4b(8)
		8.5	10.0	Brown and gray silt, some clay, trace sand							7.7	Visual
N-17	68+27.30, 133.65' Rt.	1.0	3.0	20.2	12.3	13.3	29.3	24.9	26	11	10.8	A-6a(4)
		3.0	5.0	69.7	10.5	4.4	10.7	4.7	18	4	1.4	A-1-b(0)
N-18	73+10.66, 86.97' Lt.	0.0	2.0	32.1	13.1	15.7	22.7	16.9	27	9	12.2	A-4a(1)
		2.0	4.0	Brown sandy silt, some gravel, little clay							-	Visual
N-19	76+29.28, 132.88' Rt.	1.0	3.0	18.8	8.6	11.4	32.7	28.5	28	13	11.6	A-6a(6)
		3.0	5.0	80.3	6.0	3.5	5.7	4.5	20	7	22.7	A-2-4(0)
N-20	80+16.99, 144.4' Rt.	1.0	3.0	22.0	8.6	6.9	29.0	33.5	25	10	13.1	A-4a(6)
		3.0	5.0	0.0	0.5	1.3	34.1	64.1	35	15	11.4	A-6a(10)
		5.0	7.0	Shale, gray, highly weathered, highly fractured							-	Visual
		8.5	10.0	Shale, gray, highly weathered, highly fractured							-	Visual
N-21	84+25.96, 145.36' Rt.	1.0	3.0	29.0	11.3	12.3	25.3	22.1	24	9	9.6	A-4a(2)
		3.0	5.0	9.6	13.2	12.3	28.5	36.4	27	11	10.3	A-6a(6)
675-1	10+00.12 4.60 Rt.	1.0	2.0	0.0	0.5	2.4	48.5	48.6	29	11	12.0	A-6a(9)
		2.0	4.0	0.0	0.4	1.7	41.6	56.3	30	11	10.4	A-6a(9)
		4.0	5.5	Brown silt and clay, trace sand							10.9	Visual
675-2	13+99.61 15.02 Lt.	1.0	2.0	0.0	0.8	3.6	39.9	55.7	50	26	19.2	A-4a(4)
		2.0	4.0	24.0	9.6	10.1	25.6	30.7	27	10	10.0	A-7-6(16)
		4.0	5.5	Brown sandy silt, some clay, some gravel							12.3	Visual
741-1	16+27.79 21.16 Lt.	1.0	3.0	12.2	10.2	7.9	44.4	25.3	37	15	17.5	A-6a(9)
		3.0	5.0	0.0	2.8	3.3	49.2	44.7	49	28	24.8	A-7-6(15)
741-2	20+17.04 20.07 Lt.	1.0	3.0	5.0	12.8	9.7	50.7	21.8	26	7	15.3	A-4b(8)
		3.0	5.0	0.0	3.9	7.1	54.7	34.3	41	20	22.5	A-7-6(12)
741-3	23+96.16 21.56 Lt.	1.0	3.0	11.2	3.7	6.6	49.8	28.7	34	12	15.2	A-6a(9)
		3.0	5.0	8.4	11.7	14.6	30.8	34.5	30	13	15.3	A-6a(7)
741-4	27+83.67 18.69 Lt.	1.0	3.0	3.8	3.0	5.6	57.3	30.3	39	17	19.5	A-6b(11)
		3.0	5.0	0.0	1.7	6.2	55.6	36.5	43	21	23.0	A-7-6(13)
741-5	31+68.99 16.75 Lt.	1.0	3.0	31.1	14.0	8.9	29.4	16.6	31	12	12.3	A-6a(3)
		3.0	5.0	0.0	7.4	6.5	54.4	31.7	44	24	21.9	A-7-6(14)
741-6	35+72.84 23.34 Lt.	1.0	3.0	18.0	5.2	6.4	42.0	28.4	34	14	15.0	A-6a(9)
		3.0	5.0	0.0	2.0	2.3	56.7	39.0	45	20	23.7	A-7-6(13)
741-7	40+86.99 44.33 Lt.	0.0	2.0	8.3	8.7	8.9	43.0	31.1	37	17	18.3	A-6b(10)
		2.0	4.0	10.9	8.6	9.4	41.5	29.6	37	16	21.8	A-7-6(11)
		4.0	5.5	Brown silty clay, little sand, little gravel							13.7	Visual
		8.5	10.0	Brown silty and clay, some sand, little gravel							12.2	Visual
741-8	44+47.63 32.91 Lt.	1.0	3.0	Gray gravel with sand, silt, and clay, trace asphalt							15.0	A-6a(9)
		3.0	5.0	11.8	13.1	10.8	38.0	26.3	33	14	17.0	A-6a(7)
741-9	48+43.94 52.63 Lt.	1.0	3.0	0.0	3.1	5.8	48.8	42.3	39	17	21.6	A-6b(11)
		3.0	5.0	15.2	8.7	9.3	35.4	31.4	27	10	13.6	A-4a(6)
741-10	52+30.36 38.11 Lt.	1.0	3.0	11.5	4.2	6.5	42.5	35.3	36	17	18.6	A-6b(11)
		3.0	5.0	5.8	2.5	5.4	41.5	44.8	47	20	25.0	A-7-6(11)
741-11	56+24.99 44.45 Lt.	0.0	2.0	12.1	6.9	8.4	33.6	39.0	37	17	16.3	A-6b(11)
		2.0	4.0	15.2	7.2	11.3	31.8	34.5	30	12	16.1	A-6a(7)
		4.0	6.0	Brown silt and clay, little sand, little gravel							19.1	Visual
		8.5	10.0	Dark brown silt and clay, little sand, trace gravel							25.4	Visual
741-12	60+11.89 36.16 Lt.	1.0	2.5	18.1	9.7	11.6	33.3	27.3	24	8	10.3	A-4a(5)
		2.5	4.0	32.1	11.2	10.0	22.4	24.3	25	9	8.2	A-4a(2)
		4.0	5.0	Greenish-gray silt and clay, some sand, some gravel							13.3	Visual
741-13	64+04.47 47.58 Lt.	0.0	2.0	11.2	8.6	24.3	40.3	15.6	26	4	12.2	A-4a(4)
		2.0	4.0	0.0	5.4	7.0	54.9	32.7	24	5	15.6	A-4b(8)
		4.0	6.0	Greenish-gray silt and clay, some sand, little gravel							17.8	Visual
		8.5	10.0	Greenish-gray silt and clay, some sand, little gravel							12.5	Visual
741-14	67+78.70 36.76 Lt.	1.0	3.0	5.3	3.4	4.1	58.8	28.4	32	11	19.7	A-6a(9)
		3.0	5.0	3.8	7.6	19.3	33.4	35.9	32	15	17.9	A-6a(9)

BOWSER MORNER®
DAYTON, OHIO
TOLEDO, OHIO
LEXINGTON, KY

DRAWN HGW
REVIEWED RJYT
DATE 07-05
PROJECT NO. 132049
CLIENT LJB, INC.

SOIL PROFILE
SR 741, WOOD ROAD, I-675

MOT I-75-0.75

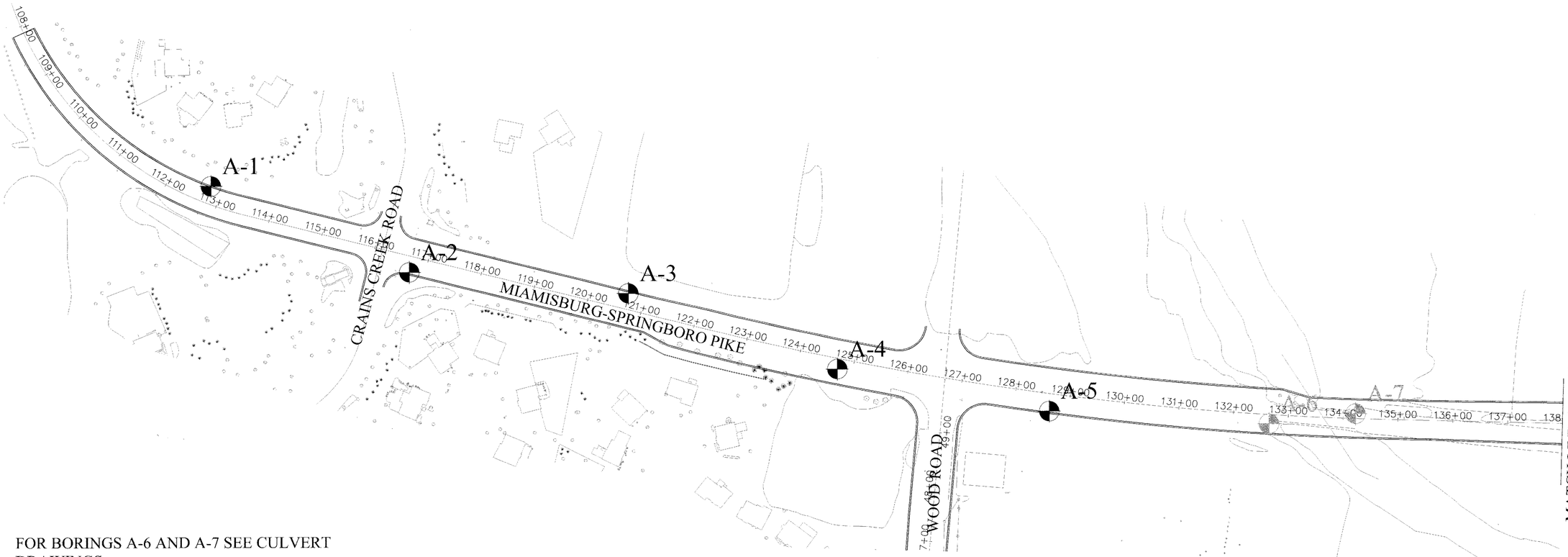

FOR BORINGS A-6 AND A-7 SEE CULVERT DRAWINGS

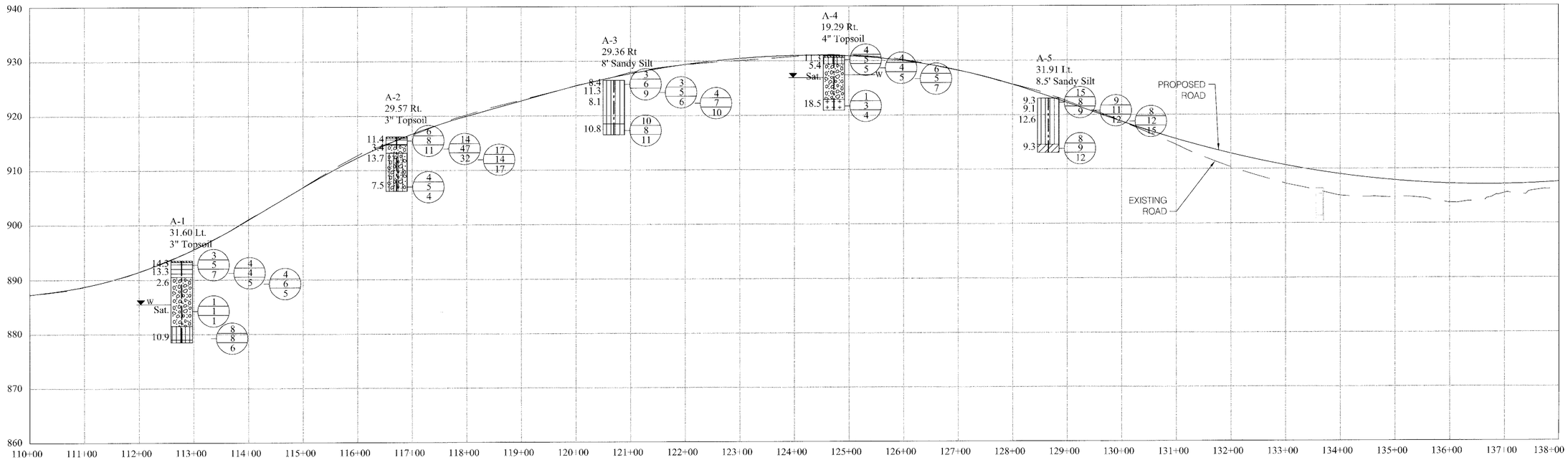

MIAMISBURG-SPRINGBORO PIKE

SOIL PROFILE
MIAMISBURG-SPRINGBORO PIKE

MOT I-75-0.75

DRAWN HGW | REVIEWED RJYT | DATE 07-05 | PROJECT NO 132049
CLIENT LJB, INC.

5 / 19

MATCH LINE STA. 138+00 SEE SHEET 5

MATCH LINE STA. 167+00 SEE SHEET 7

BYERS ROAD

MIAMISBURG-SPRINGBORO PIKE

INTERSTATE 75

SI-18

SI-17

A-8 A-9 A-10 A-11 A-12 A-13 A-14 A-15 A-16 A-17 A-17A A-17B

FOR BORINGS A-11, A-12, A-13, A-14, A-15
SEE BRIDGE DRAWINGS

FOR BORINGS SI-18 AND SI-17, SEE SHEET 12
OF THE ROAD DRAWINGS

PROPOSED ROAD

EXISTING ROAD

A-8
48.34 Rt.
4" Asphalt Pavement

A-9
42.94 Rt.
1" Topsoil

A-10
31.60 Lt.
3" Topsoil

A-16
15.93 Rt.
2" Topsoil

A-17
0.46R t.
6" Topsoil

MIAMISBURG-SPRINGBORO PIKE

SOIL PROFILE

MOT I-75-0.75

DRAWN HGW | REVIEWED RJYT | DATE 07-05 | PROJECT NO. 132049

CLIENT
LJB, INC.

6 / 19

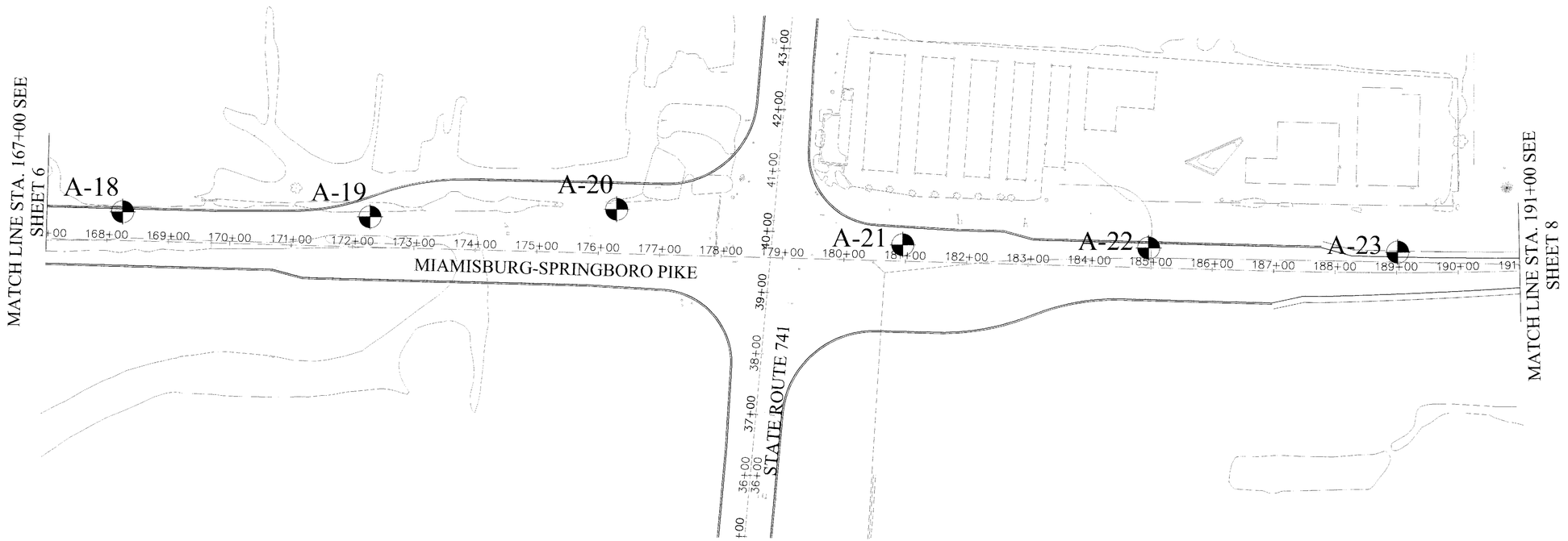

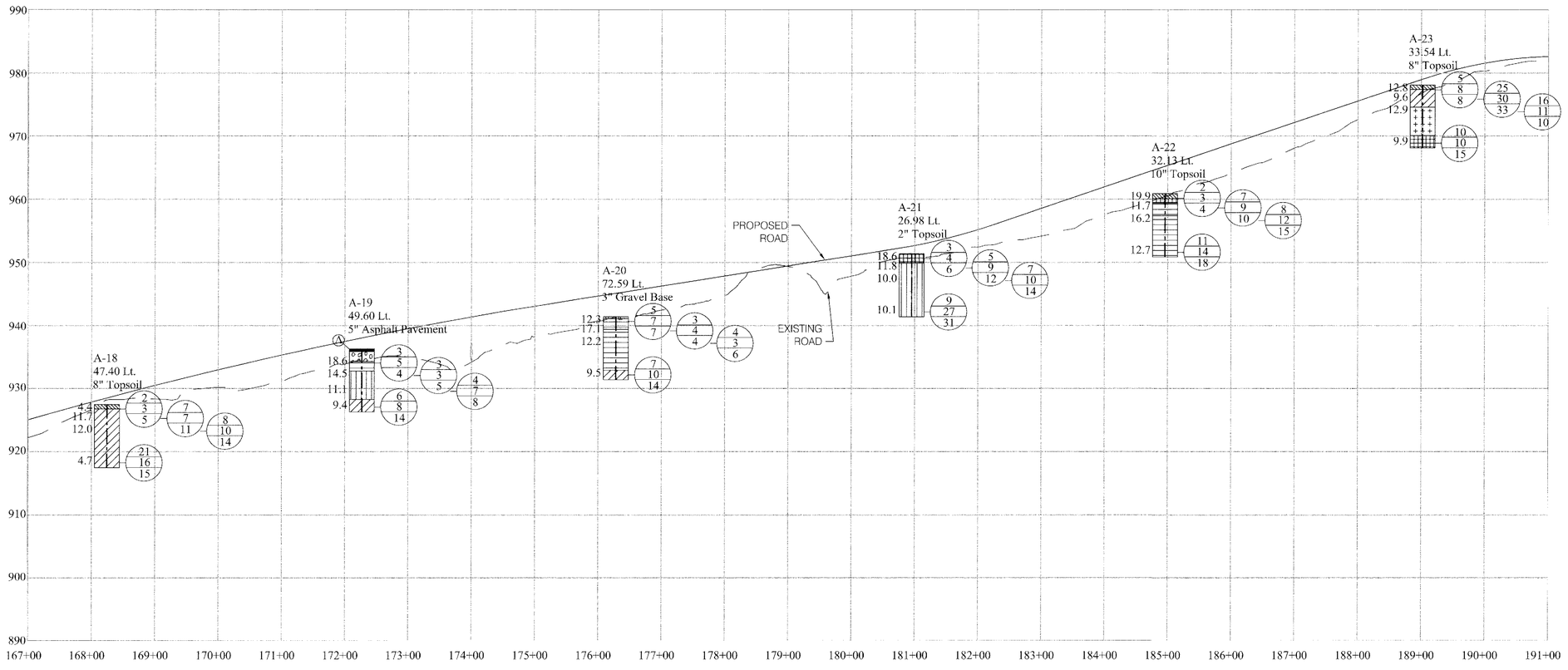

SOIL PROFILE
MIAMISBURG-SPRINGBORO PIKE

MOT I-75-0.75

7 / 19

DRAWN HGW
REVIEWED RJYT
DATE 07-05
PROJECT NO. 132049
CLIENT LJB, INC.

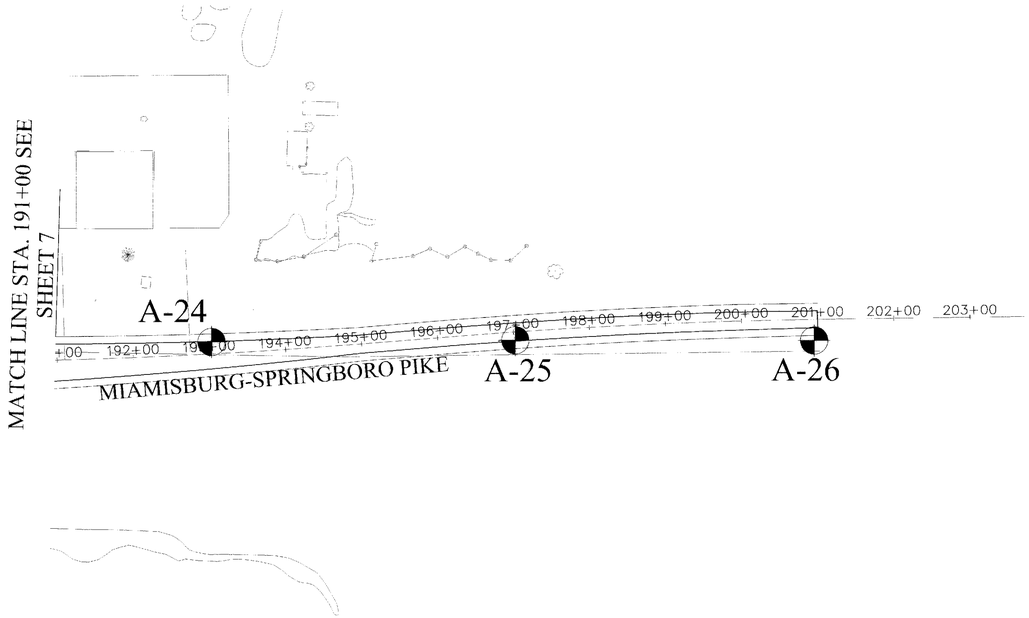

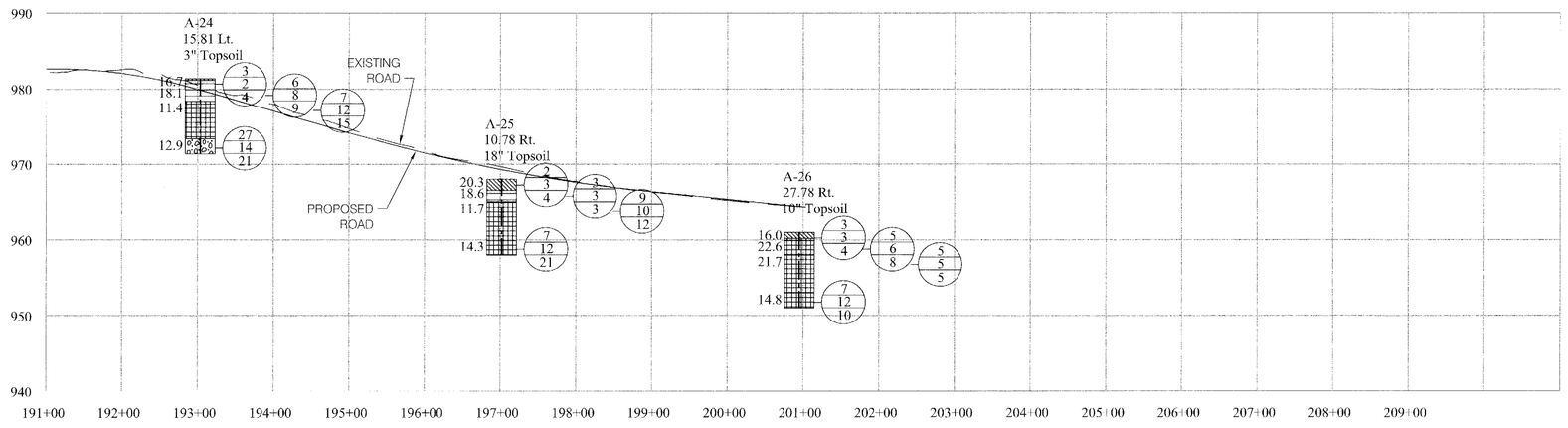

MIAMISBURG-SPRINGBORO PIKE

N

HORIZONTAL SCALE IN FEET

DRAWN	REVIEWED	DATE	PROJECT NO.
HGW	RJYT	07-05	132049

CLIENT
LJB, INC.

SOIL PROFILE
MIAMISBURG-SPRINGBORO PIKE

MOT I-75-0.75

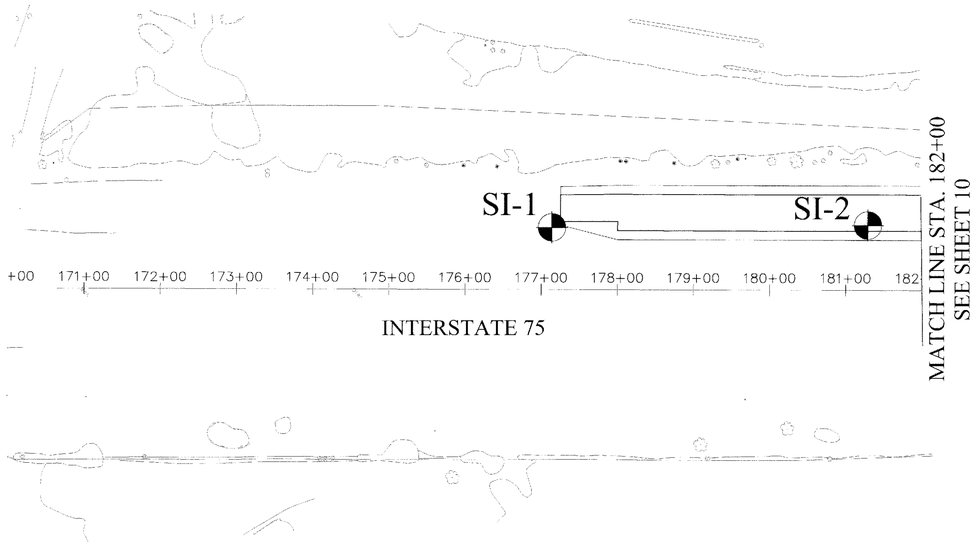

INTERSTATE 75

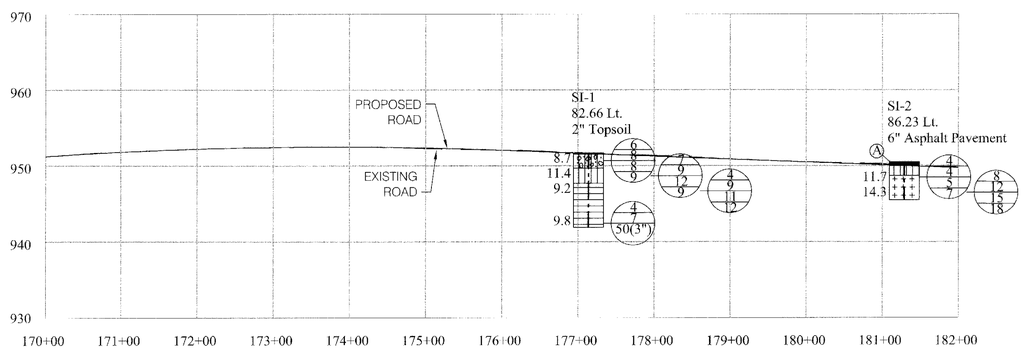

INTERSTATE 75

SOIL PROFILE
INTERSTATE 75

MOT I-75-0.75

DRAWN HGW
REVIEWED RJYT
DATE 07-05
PROJECT NO. 132049
CLIENT LJB, INC.

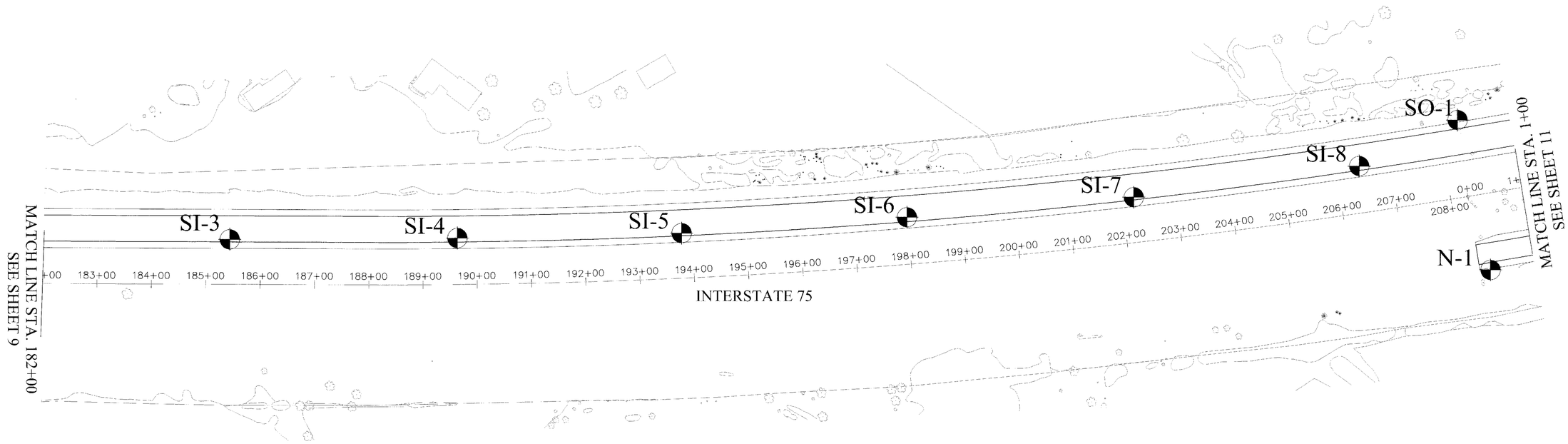

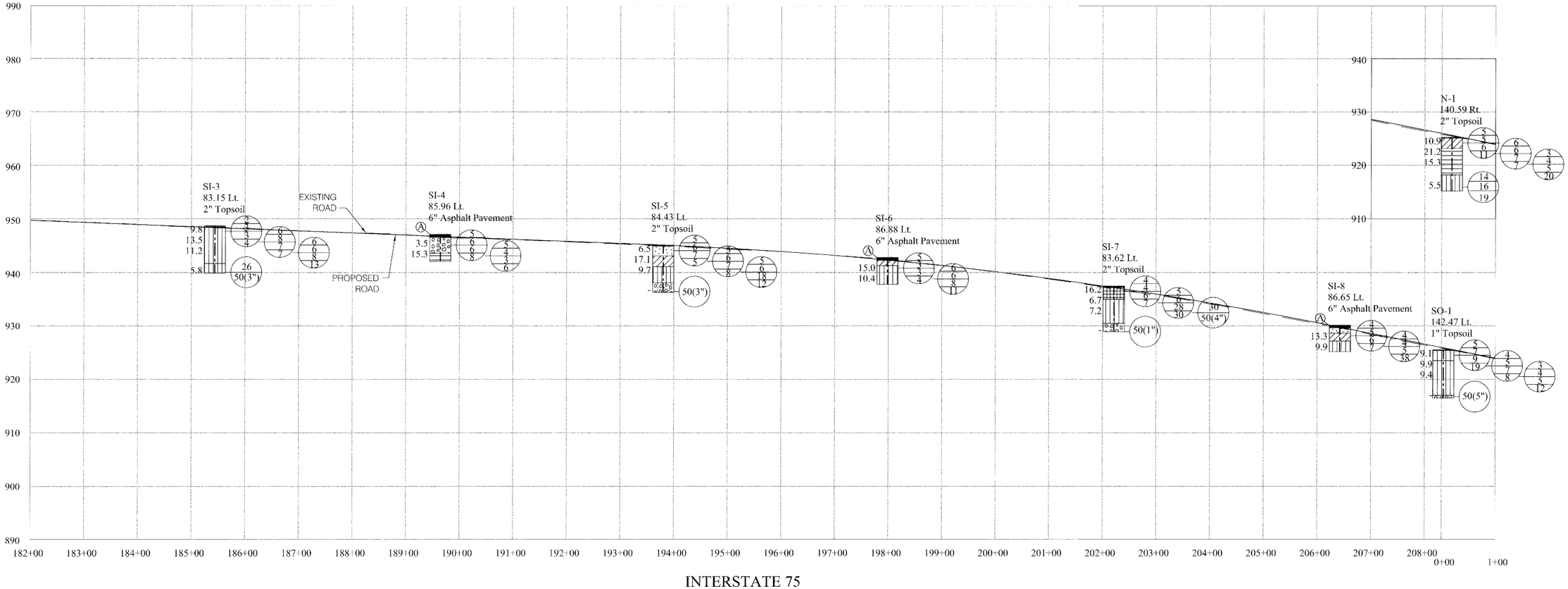

SOIL PROFILE
INTERSTATE 75

MOT I-75-0.75

10 / 19

DRAWN HGW
REVIEWED RJYT
DATE 07-05
PROJECT NO. 132049
CLIENT LJB, INC.

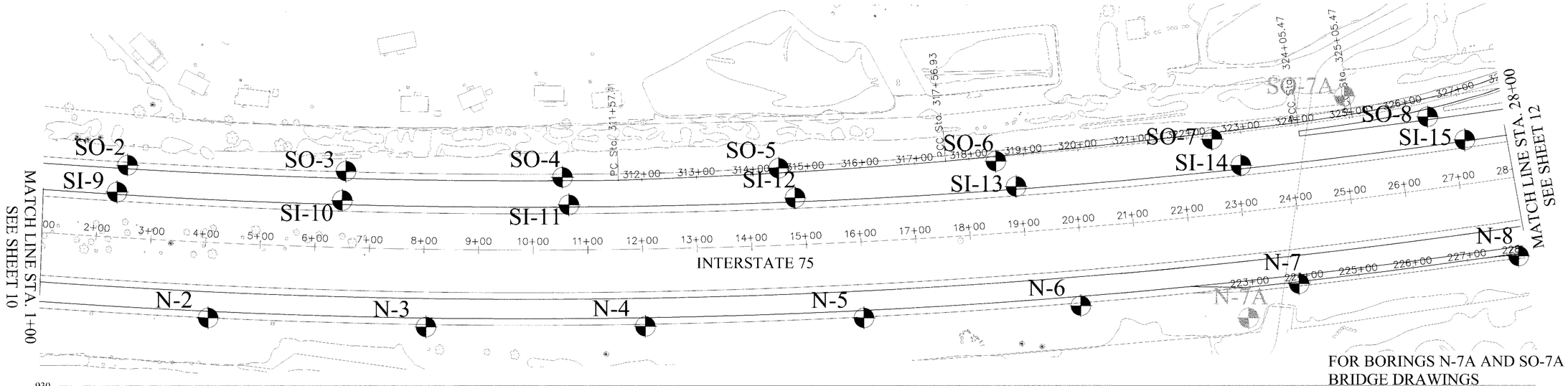

FOR BORINGS N-7A AND SO-7A SEE BRIDGE DRAWINGS

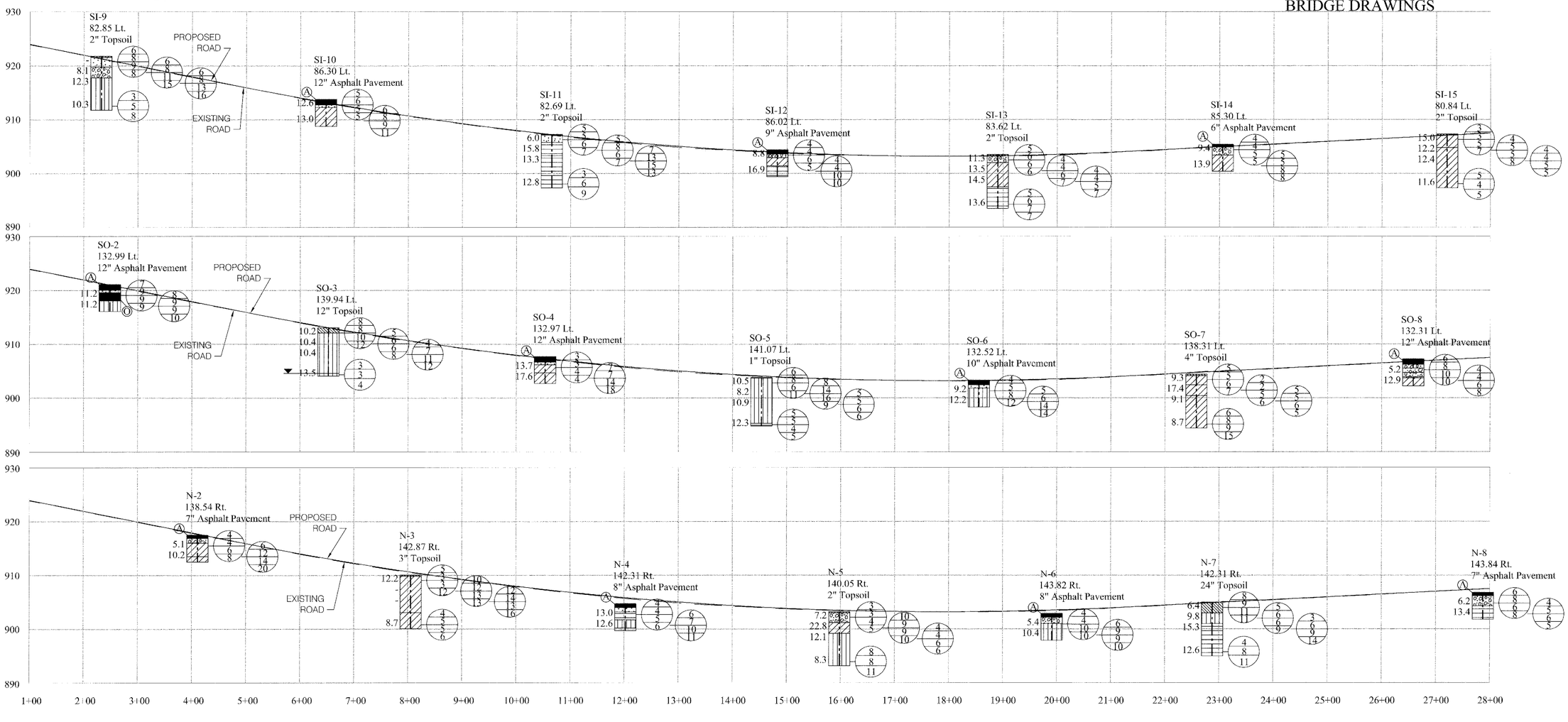

SOIL PROFILE
INTERSTATE 75

MOT I-75-0.75

DRAWN HGW
REVIEWED RJYT
DATE 07-05
PROJECT NO. 132049
CLIENT LJB, INC.

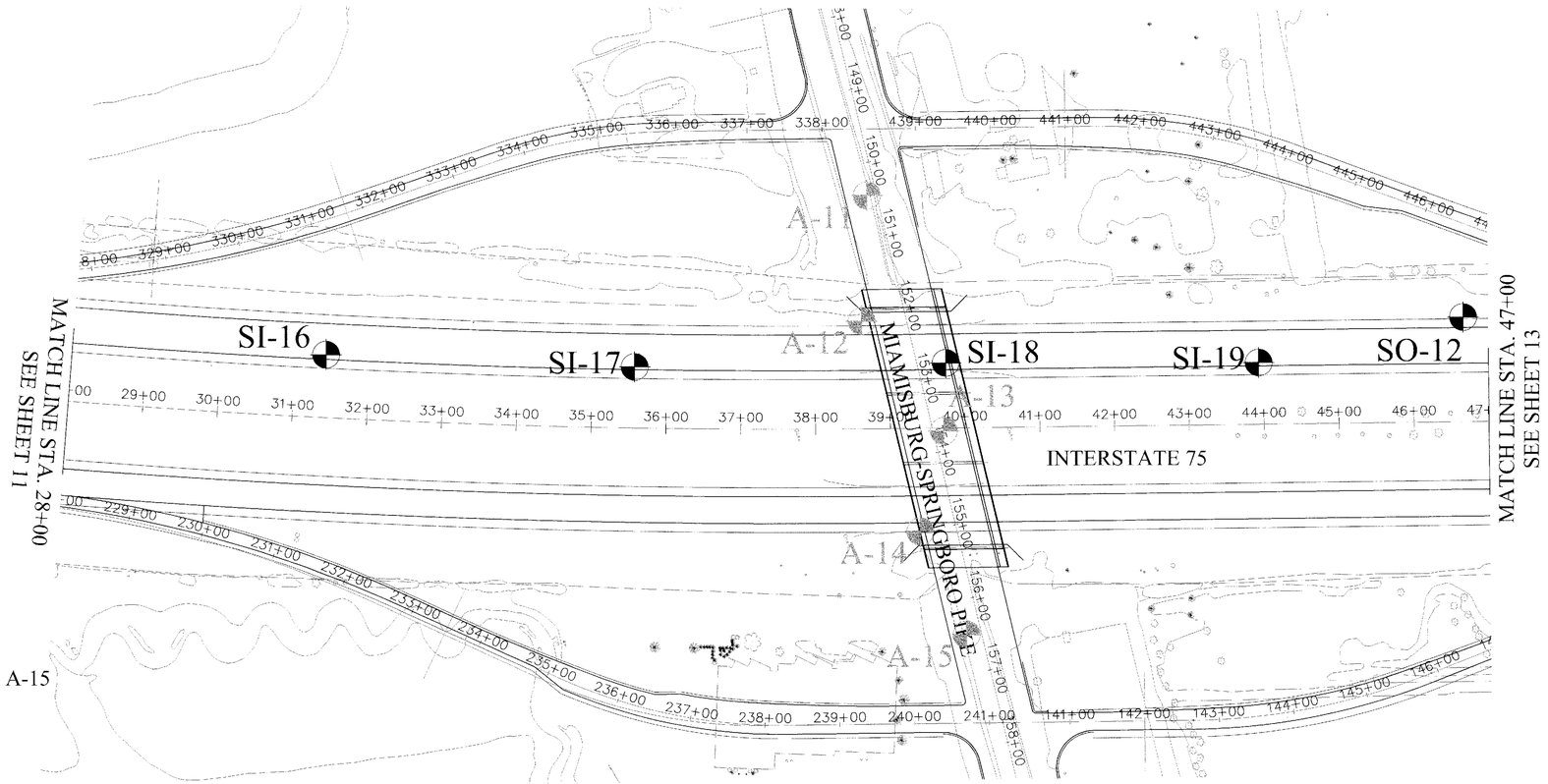

FOR BORINGS A-11, A-12, A-13, A-14, A-15
SEE BRIDGE DRAWINGS

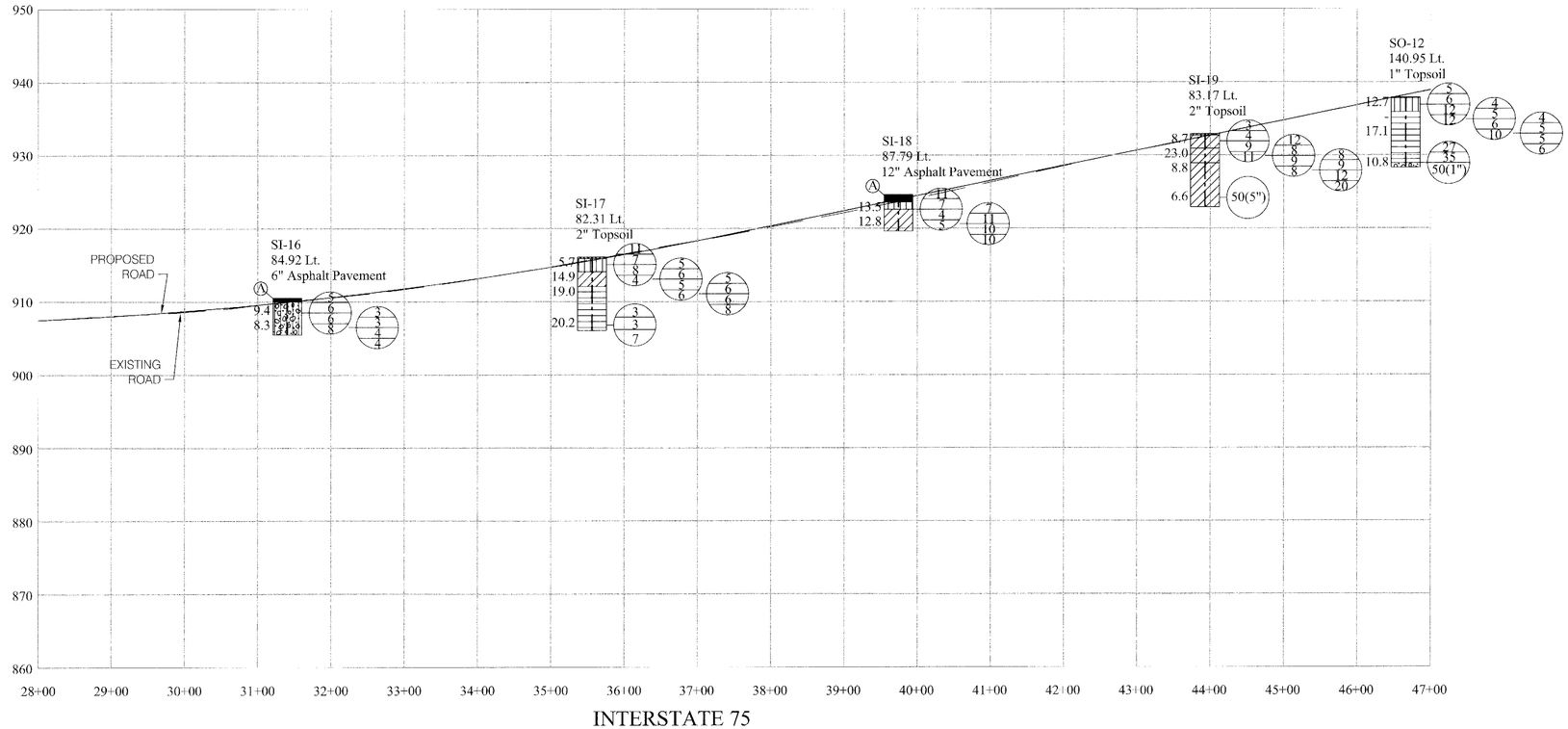

SOIL PROFILE
INTERSTATE 75

MOT I-75-0.75

12 / 19

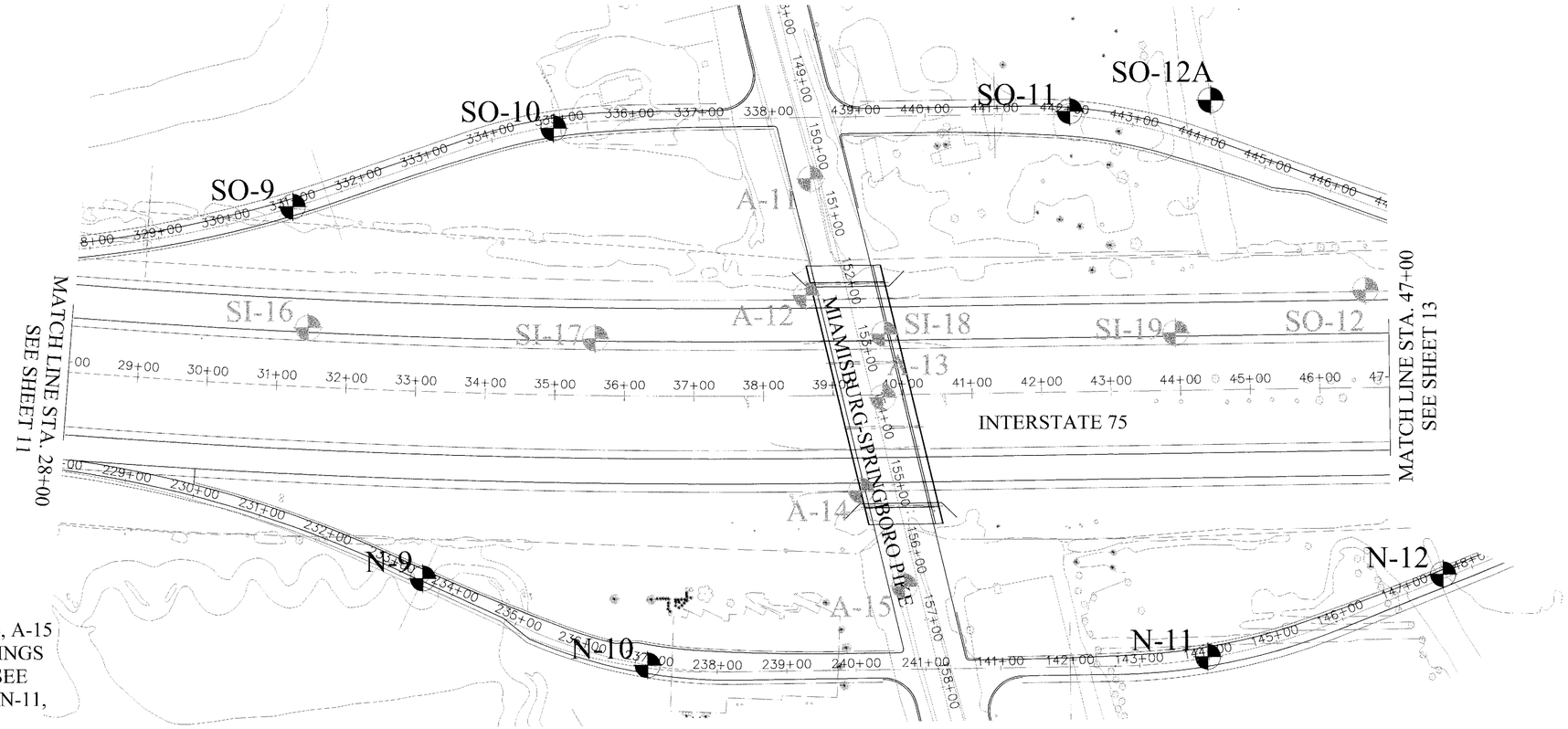

FOR BORINGS A-11, A-12, A-13, A-14, A-15 SEE BRIDGE DRAWINGS. FOR BORINGS SI-16, SI-17, SI-18, SI-19, AND SO-12 SEE SHEET 12. FOR BORINGS N-9, N-10, N-11, AND N-12 SEE SHEET 12b.

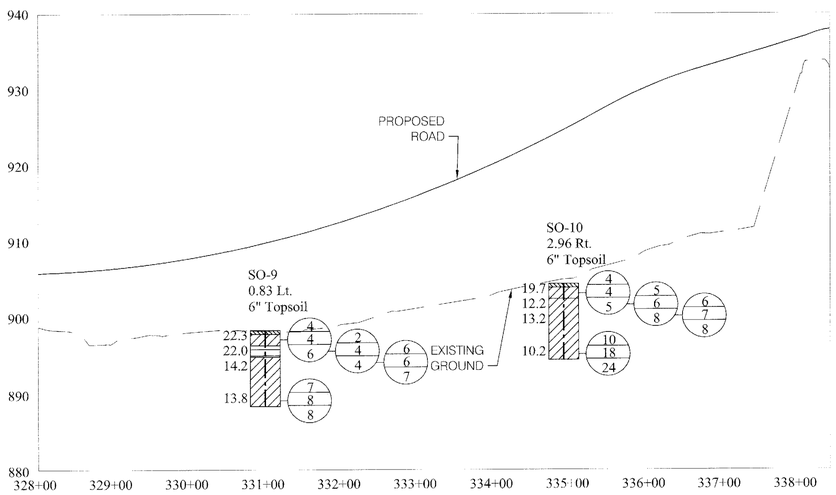

RAMP P

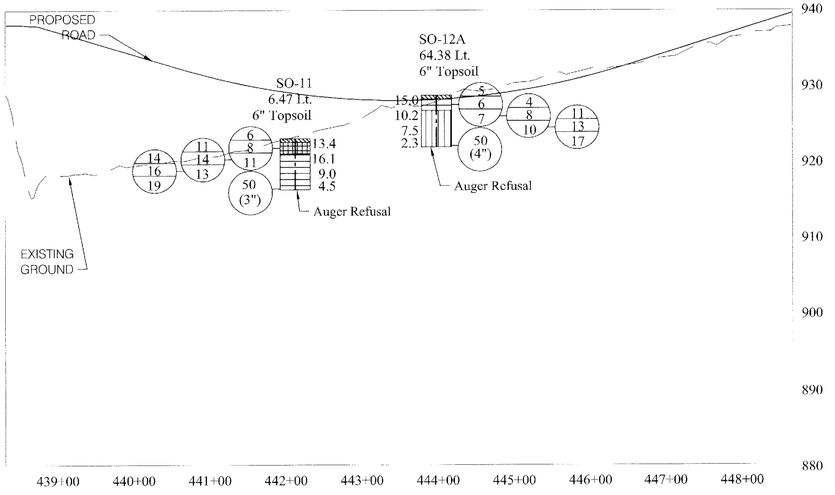

RAMP M

DRAWN HGW | REVIEWED RJYT | DATE 10-05 | PROJECT NO. 132049

CLIENT LJB, INC.

SOIL PROFILE
RAMP P AND RAMP M

MOT I-75-0.75

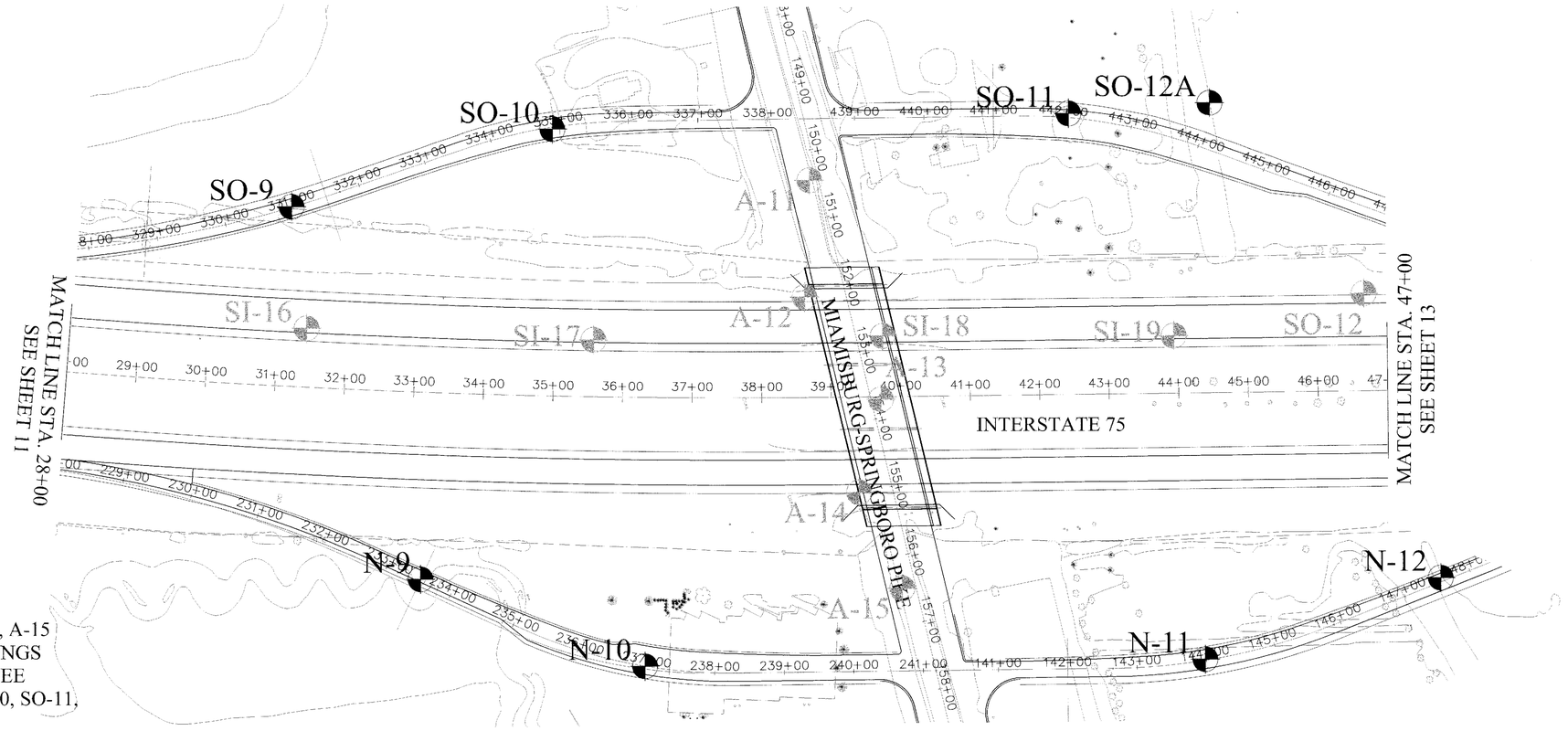

FOR BORINGS A-11, A-12, A-13, A-14, A-15 SEE BRIDGE DRAWINGS. FOR BORINGS SI-16, SI-17, SI-18, SI-19, AND SO-12 SEE SHEET 12. FOR BORINGS SO-9, SO-10, SO-11, AND SO-12 SEE SHEET 12a.

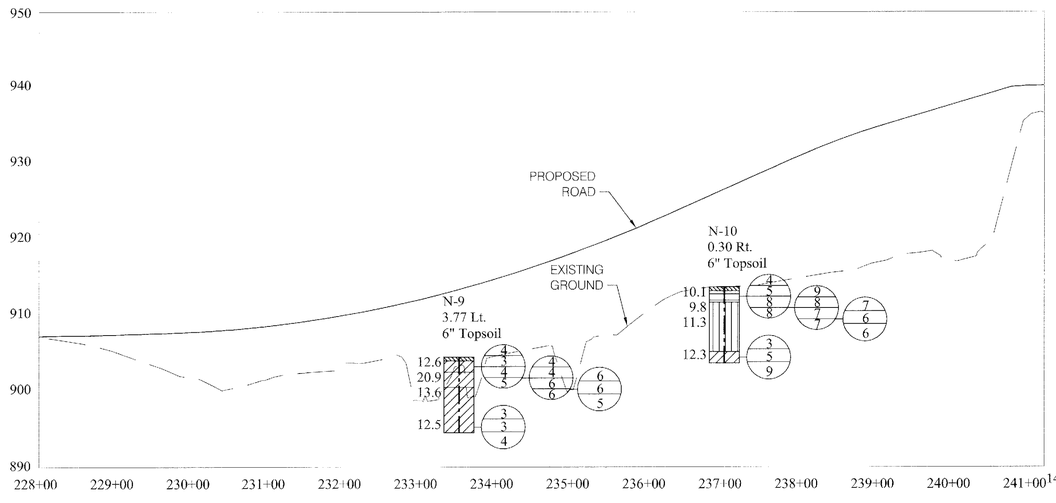

RAMP H

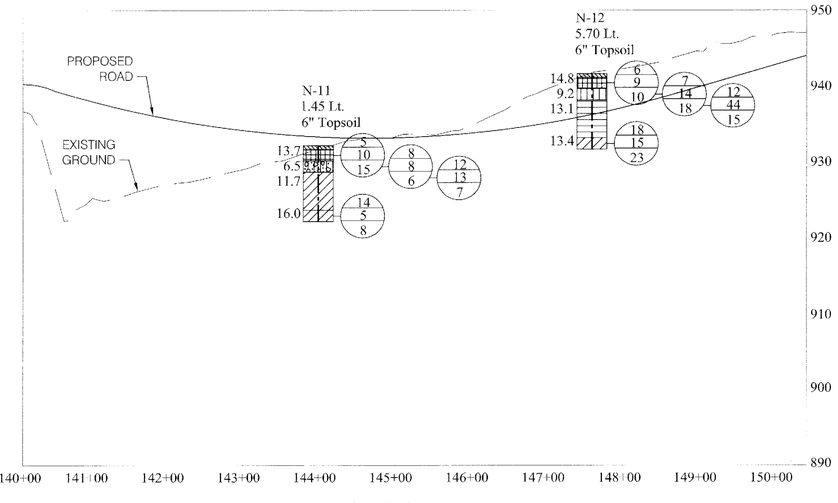

RAMP J

DRAWN HGW
REVIEWED RJYT
DATE 10-05
PROJECT NO. 132049
CLIENT LJB, INC.

SOIL PROFILE
RAMP H AND RAMP J

MOT I-75-0.75

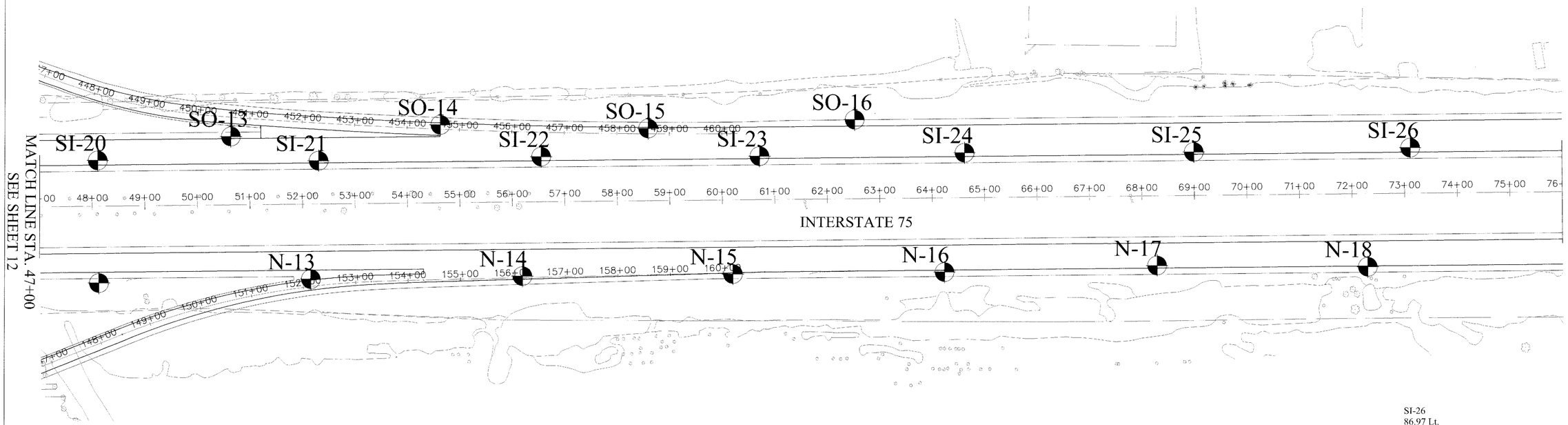

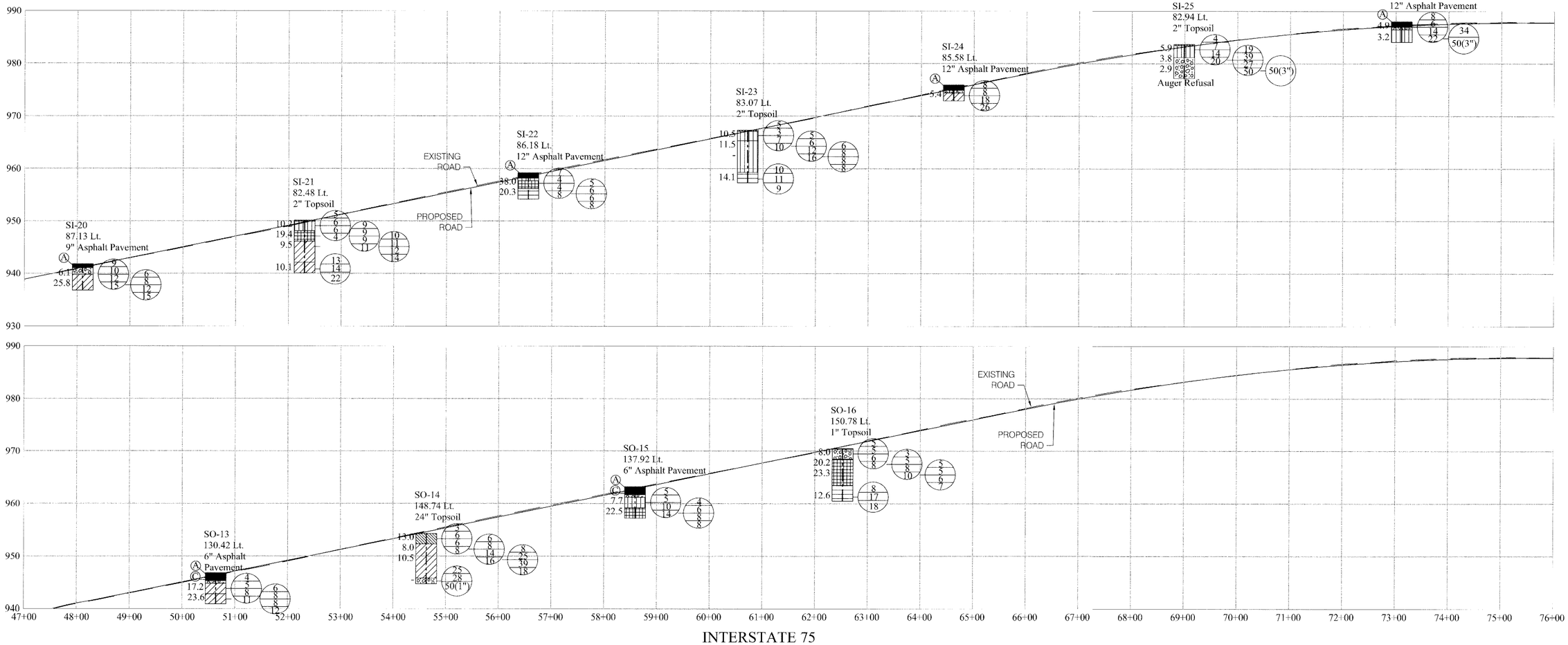

DRAWN HGW
REVIEWED RJYT
DATE 07-05
PROJECT NO. 132049
CLIENT LJB, INC.

SOIL PROFILE
INTERSTATE 75

MOT I-75-0.75

13 / 19

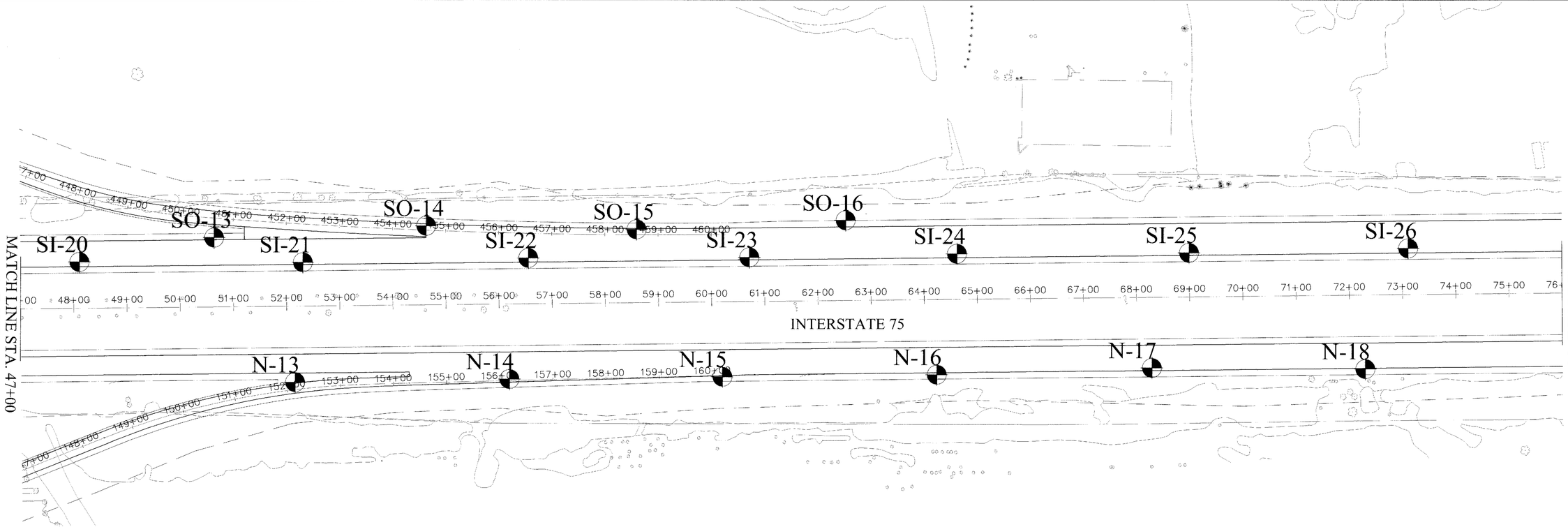

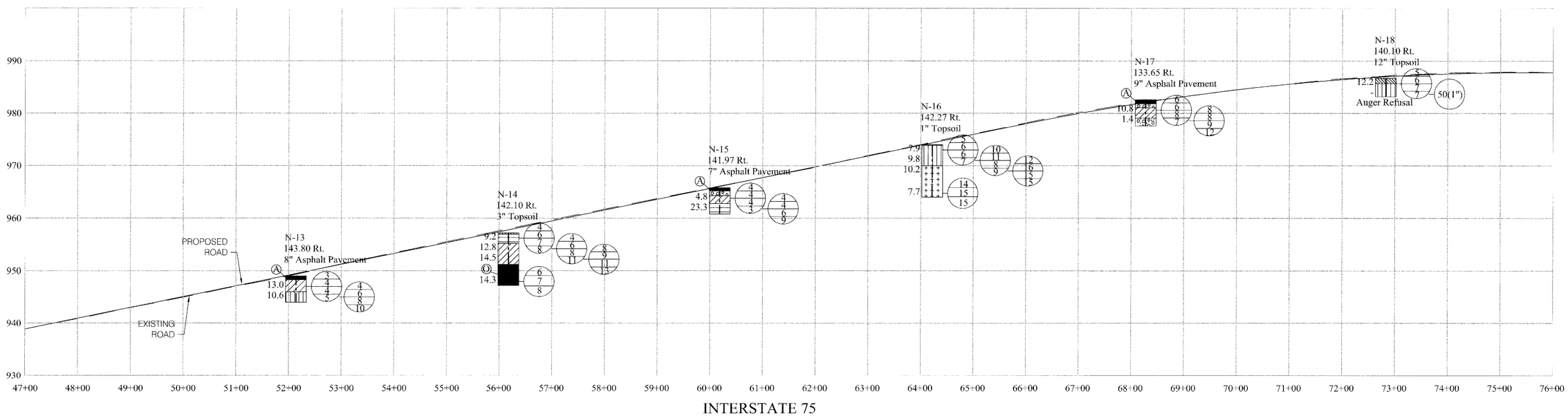

SOIL PROFILE
INTERSTATE 75

MOT I-75-0.75

14 / 19

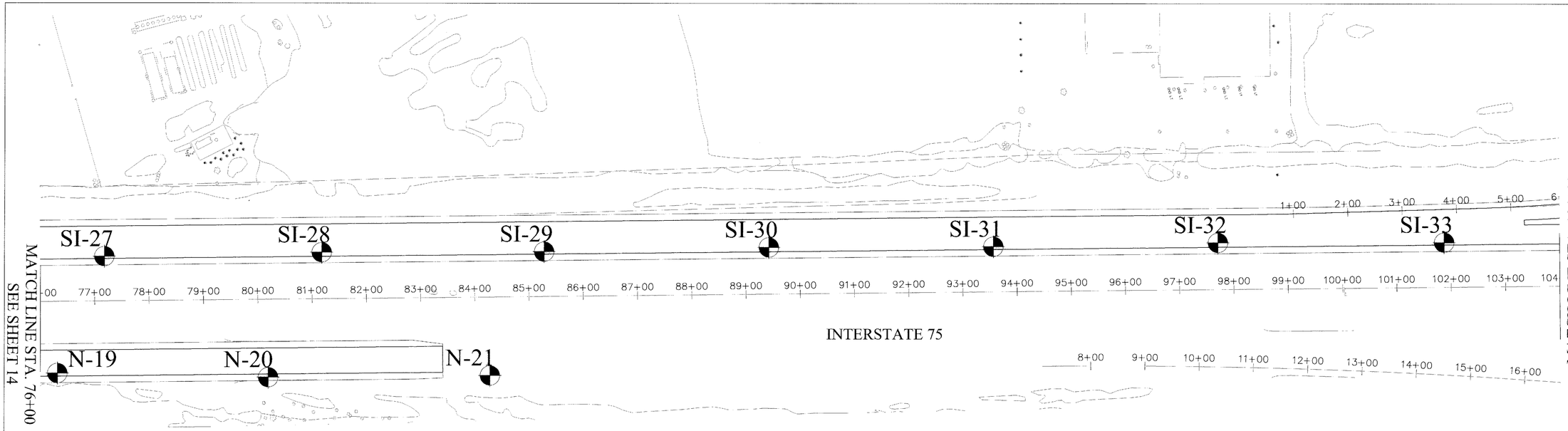

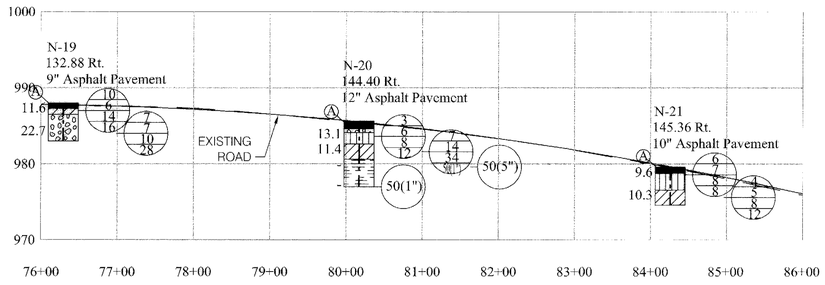

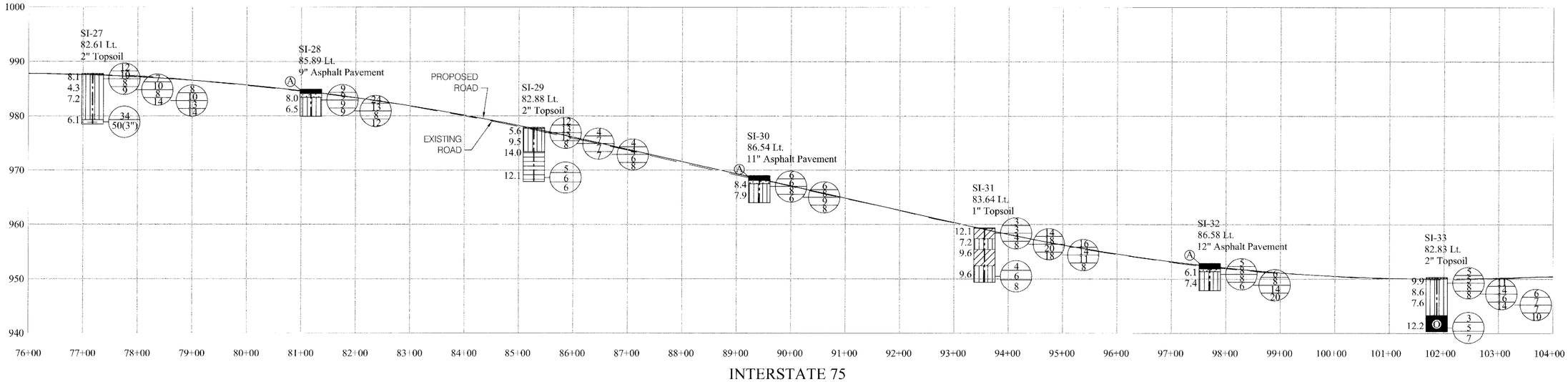

SOIL PROFILE
INTERSTATE 75

MOT I-75-0.75

15 / 19

DRAWN HGW
REVIEWED RJYT
DATE 07-05
PROJECT NO. 132049
CLIENT LJB, INC.

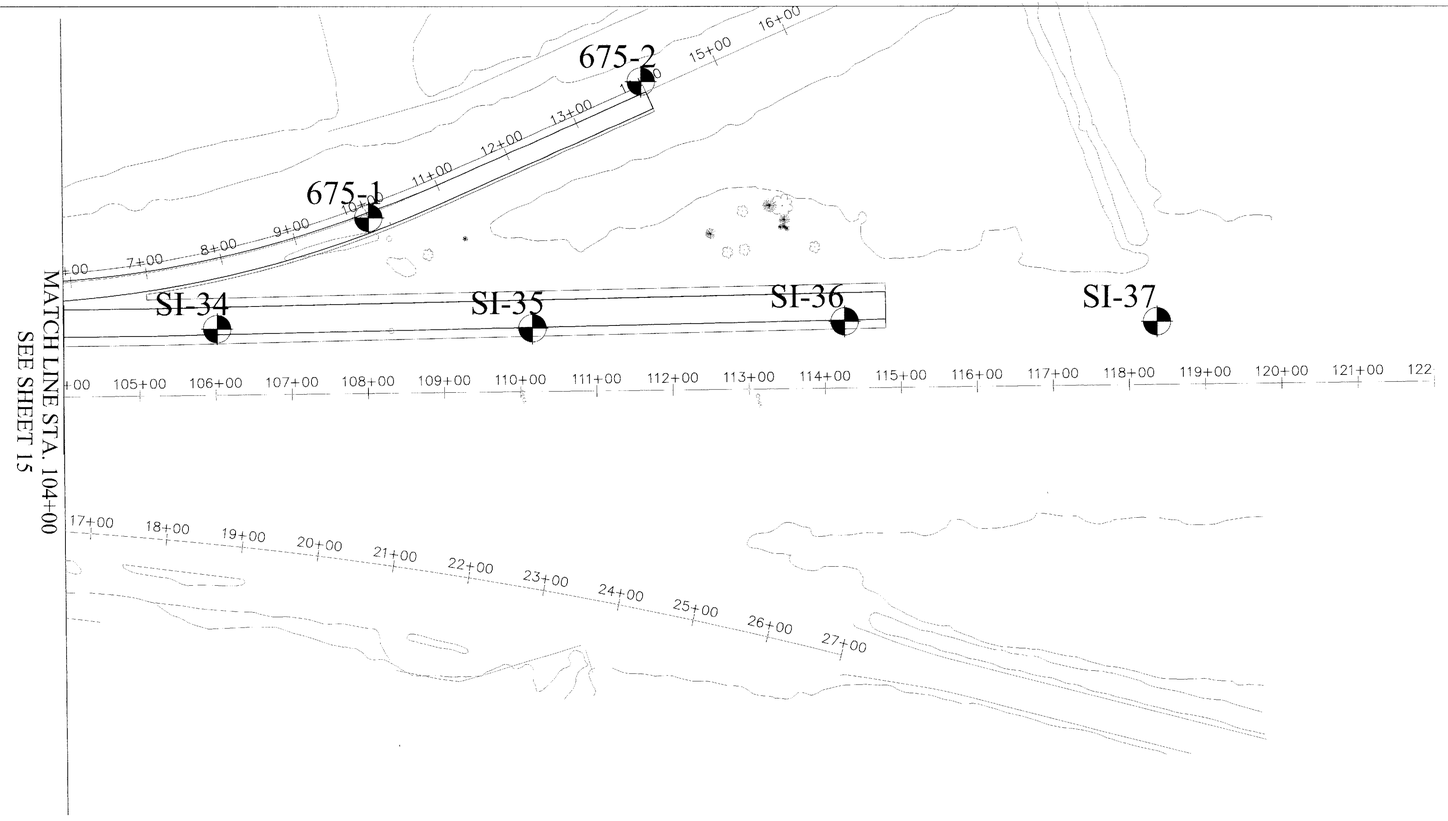

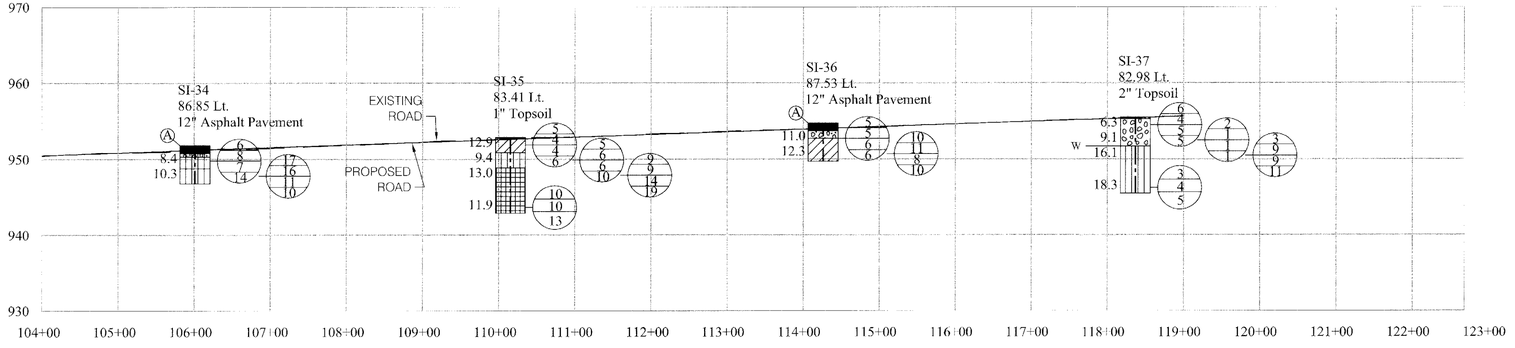

INTERSTATE 75

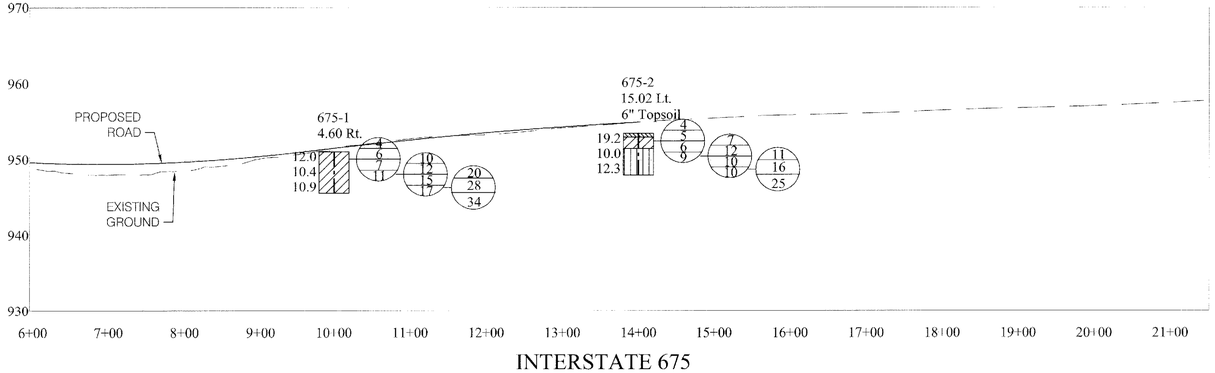

INTERSTATE 675

N

SCALE IN FEET
0
100
200
HORIZONTAL SCALE IN FEET

DRAWN	REVIEWED	DATE	PROJECT NO.
HGW	RJYT	07-05	132049

CLIENT
LJB, INC.

SOIL PROFILE
INTERSTATE 75 & INTERSTATE 675

MOT I-75-0.75

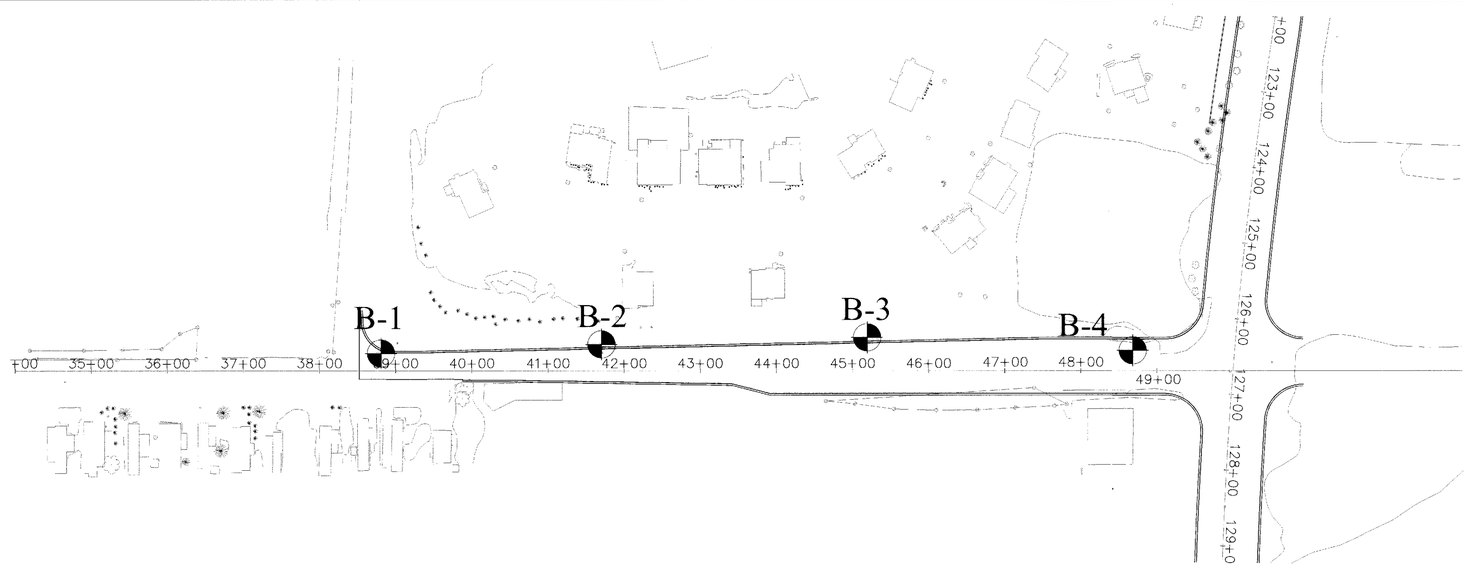

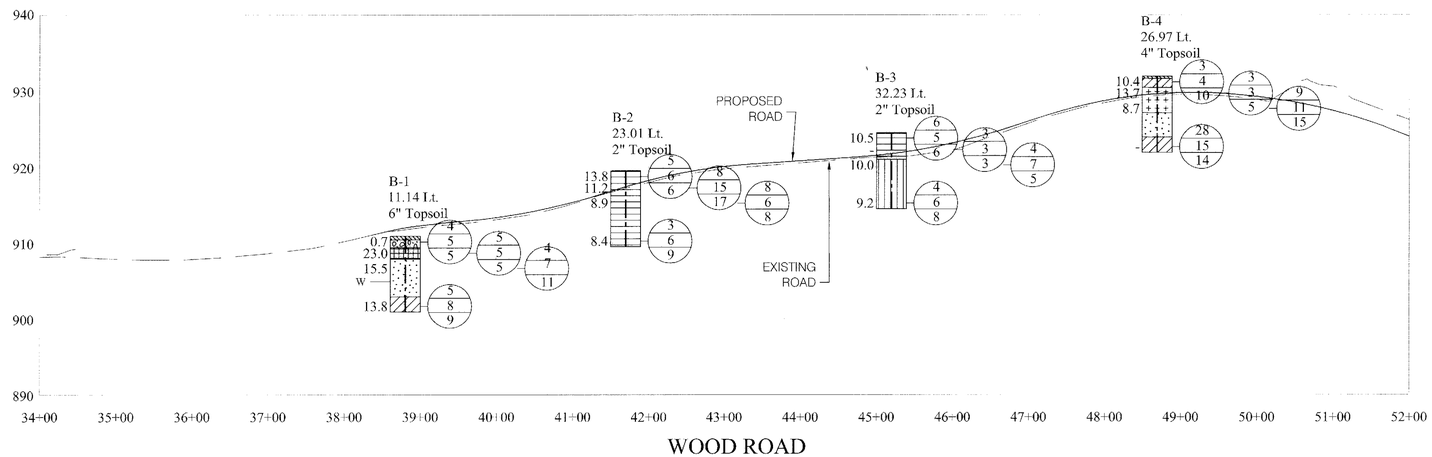

WOOD ROAD

SOIL PROFILE
WOOD ROAD

MOT I-75-0.75

17 / 19

CLIENT
LJB, INC.

DRAWN	REVIEWED	DATE	PROJECT NO.
HGW	RJYT	06-06	132049

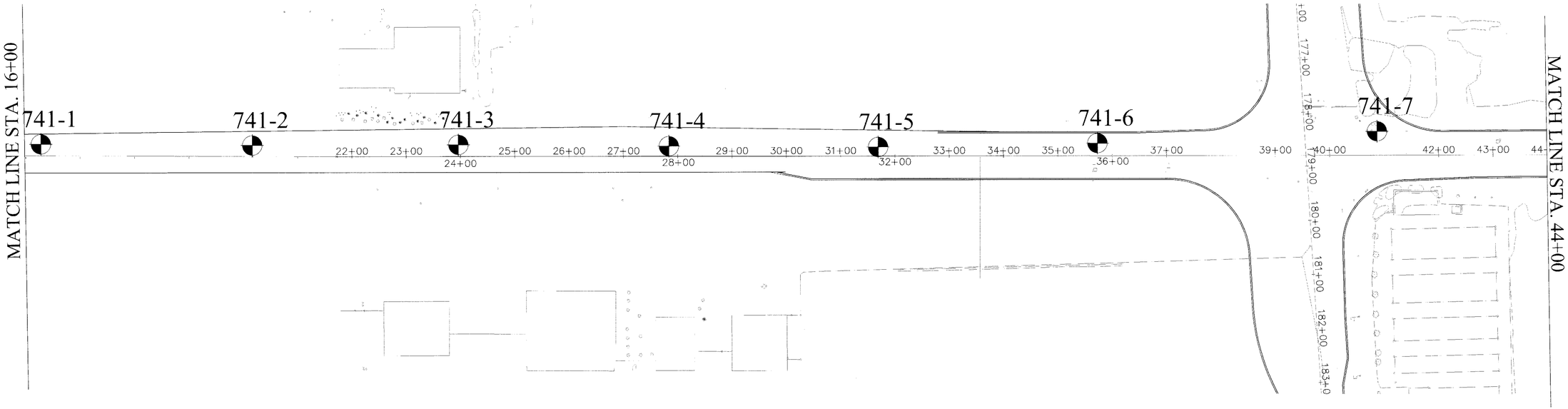

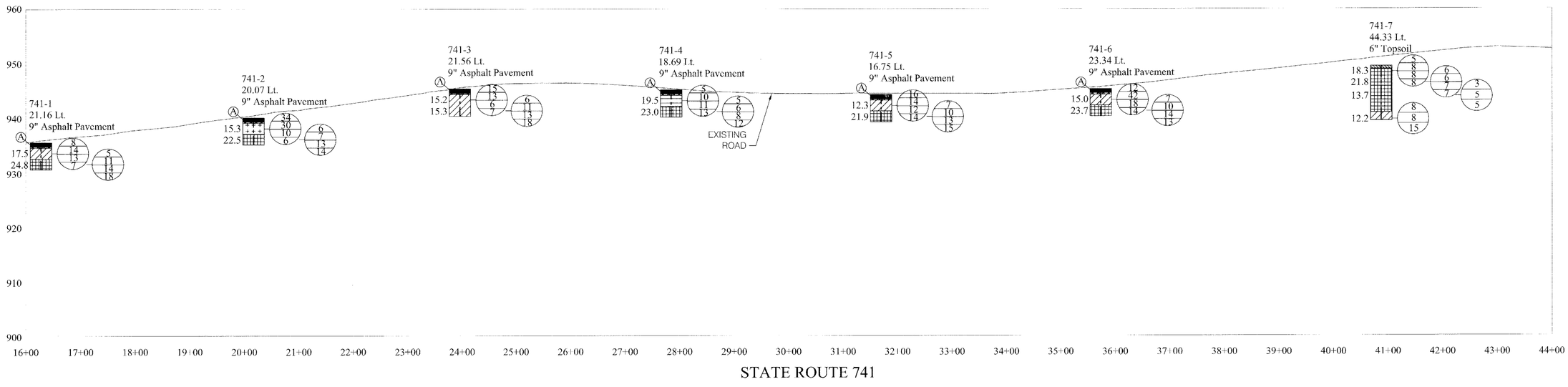

SOIL PROFILE
STATE ROUTE 741

MOT I-75-0.75

DRAWN HGW
REVIEWED RJYT
DATE 06-06
PROJECT NO. 132049
CLIENT LJB, INC.

MATCH LINE STA. 44+00

741-8 741-9 741-10 741-11 741-12 741-13 741-14

00 45+00 46+00 47+00 48+00 49+00 50+00 51+00 52+00 53+00 54+00 55+00 56+00 57+00 58+00 59+00 60+00 61+00 62+00 63+00 64+00

741-8
32.91 Lt.
6" Asphalt Pavement
6.7
17.0
8 12 6 8
4 4 6 7

741-9
52.63 Lt.
6" Asphalt Pavement
21.6
13.6
3 3 5 7
5 6 7

741-10
38.11 Lt.
6" Asphalt Pavement
18.6
25.0
2 4 6 6
4 5 7 9

741-11
44.45 Lt.
6" Topsoil
16.3
16.1
19.1
25.4
5 8 7 10
5 6 6 5
8 7 9
5 5 7

EXISTING ROAD

741-12
36.16 Lt.
6" Asphalt Pavement
10.3
8.2
13.3
10 30 26
10 8 12
12 12

741-13
47.58 Lt.
6" Sand and gravel
12.2
15.6
17.8
12.5
7 8 8 15
8 10 10 11
4 5
23 50(5")

741-14
36.76 Lt.
6" Asphalt Pavement
19.7
17.9
5 5 5 5
4 5 6 7

960 950 940 930 920 910 900

44+00 45+00 46+00 47+00 48+00 49+00 50+00 51+00 52+00 53+00 54+00 55+00 56+00 57+00 58+00 59+00 60+00 61+00 62+00 63+00 64+00 65+00 66+00 67+00 68+00 69+00 70+00 71+00

STATE ROUTE 741

N

0 100 200
HORIZONTAL SCALE IN FEET

DRAWN	HGW
REVIEWED	RJYT
DATE	06-06
PROJECT NO.	132049

CLIENT
LJB, INC.

SOIL PROFILE
STATE ROUTE 741

MOT I-75-0.75

19 / 19