F/F 24

STATE OF OHIO
DEPARTMENT OF TRANSPORTATION

MOT-75-0.031

CITY OF MIAMISBURG
CITY OF WEST CARROLLTON
MIAMI TOWNSHIP
MONTGOMERY COUNTY

metric units

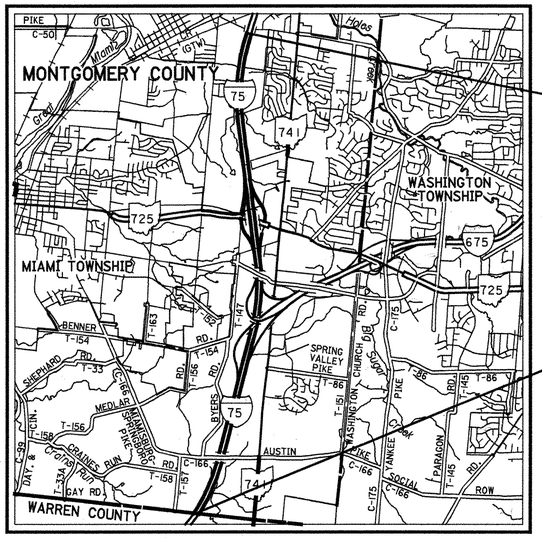

LOCATION MAP

LATITUDE: 39°38′05″ LONGITUDE: 84°13′50″

SCALE IN KILOMETERS

0 1 2 3 4

N

PORTION TO BE IMPROVED
STATE & FEDERAL ROUTES
OTHER ROADS

DESIGN DESIGNATION

	SOUTH OF S.R. 725	NORTH OF S.R. 725
CURRENT ADT (1997)	73280	83210
DESIGN YEAR ADT (2007)	87930	99360
DESIGN HOURLY VOLUME (2007)	8790	9940
DIRECTIONAL DISTRIBUTION	60%	60%
TRUCKS (24 HOUR B&C)	16%	12%
DESIGN SPEED	120 km/h	120 km/h
LEGAL SPEED	65 MPH	65 MPH

DESIGN FUNCTIONAL CLASSIFICATION - URBAN INTERSTATE

DESIGN EXCEPTIONS

NONE

INDEX OF SHEETS:

TITLE SHEET	1
SCHEMATIC PLAN	2-3
TYPICAL SECTIONS	4-7
TRANSITION DETAIL	8
GENERAL NOTES	9-10
MAINTENANCE OF TRAFFIC	11-27
GENERAL SUMMARY	28-29
PAVEMENT CALCULATIONS	30-32
ESTIMATED QUANTITIES	33-34
I.R.-75 PLANS	35-54
CROSS SECTIONS I.R.-75	55-70
I.R.-75 AND S.R.-725 INTERCHANGE RAMPS A, B, D AND D-2 PLANS	71-73
FENCE PLAN	74-89
TRAFFIC CONTROL	90-104
LIGHTING PLAN	105-107
STRUCTURE OVER 20′ SPAN (MOT-75-1200) MIAMISBURG-SPRINGBORO RD. OVER I.R.-75	108-114
STRUCTURE OVER 20′ SPAN (MOT-675-0000) I.R.-675 WESTBOUND OVER I.R.-75	115
STRUCTURE OVER 20′ SPAN (MOT-75-6000) I.R.-75 OVER S.R.-725	116-120,120A,121-145

PROJECT DESCRIPTION

IMPROVEMENT OF 9.86 KILOMETERS OF I.R. 75 BY RESURFACING THE EXISTING PAVEMENT, INCLUDING THE REHABILITATION OF THREE BRIDGES: 2 OVER S.R. 725 (MOT-75-6000 L&R) AND ONE OVER I.R.-75 ON MIAMISBURG-SPRINGBORO RD. (MOT-75-1200)

LIMITED ACCESS

THIS IMPROVEMENT IS ESPECIALLY DESIGNED FOR THROUGH TRAFFIC AND HAS BEEN DECLARED A LIMITED ACCESS HIGHWAY OR FREEWAY BY ACTION OF THE DIRECTOR IN ACCORDANCE WITH THE PROVISIONS OF SECTION 5511.02 OF THE REVISED CODE OF OHIO.

1997 SPECIFICATIONS

THE STANDARD SPECIFICATIONS OF THE STATE OF OHIO, DEPARTMENT OF TRANSPORTATION, INCLUDING CHANGES AND SUPPLEMENTAL SPECIFICATIONS LISTED IN THE PROPOSAL SHALL GOVERN THIS IMPROVEMENT.

I HEREBY APPROVE THESE PLANS AND DECLARE THAT THE MAKING OF THIS IMPROVEMENT WILL NOT REQUIRE THE CLOSING TO TRAFFIC OF THE HIGHWAY EXCEPT FOR MIAMISBURG-SPRINGBORO RD. AND S.R.-725 AS DESCRIBED ON SHTS. 11-27 AND THAT PROVISIONS FOR THE MAINTENANCE AND SAFETY OF TRAFFIC WILL BE AS SET FORTH ON THE PLANS AND ESTIMATES.

UNDER AUTHORITY OF SECTION 4511.21, DIVISION (I) OF THE REVISED CODE OF OHIO, THE REVISED PRIMA FACIE SPEED LIMITS AS INDICATED HEREIN ARE DETERMINED TO BE REASONABLE AND SAFE, AND ARE HEREBY ESTABLISHED FOR THE DURATION OF THIS PROJECT. THE PRIMA FACIE SPEED LIMIT OR LIMITS HEREBY ESTABLISHED SHALL BECOME EFFECTIVE WHEN APPROPRIATE SIGNS GIVING NOTICE THEREOF ARE ERECTED.

APPROVED William R. Harrison
DATE 8-22-97 DISTRICT DEPUTY DIRECTOR

APPROVED Gary Suer
DATE 9-2-97 DIRECTOR, DEPARTMENT OF TRANSPORTATION

UNDERGROUND UTILITIES
TWO WORKING DAYS
BEFORE YOU DIG
CALL 1-800-362-2764 (TOLL FREE)
OHIO UTILITIES PROTECTION SERVICE
NON-MEMBERS
MUST BE CALLED DIRECTLY

PLAN PREPARED BY:

DISTRICT NO. 7
OHIO DEPARTMENT OF TRANSPORTATION

STANDARD CONSTRUCTION DRAWINGS

												SUPPLEMENTAL SPECIFICATIONS	
BP-2.2M	10-28-94	GR-1.1M	11-30-94	A-1-69M	03-20-95	HL-10.31M	03-31-95	TC-18.24M	02-01-94	MT-35.10M	01-30-95		
		GR-1.2M	01-03-96	AS-1-81M	10-25-94			TC-18.26M	02-01-94	MT-35.11M	01-30-95		
BP-3.1M	10-28-94	GR-2.1M	11-30-94			HL-20.21M	08-31-94					815	07-17-95
		GR-3.1M	11-30-94	BR-1M	12-15-94	HL-20.22M	03-31-95	TC-22.10M	02-01-94	MT-95.30M	04-25-94	910	07-17-95
BP-8.1M	10-28-94	GR-3.2M	11-30-94	BS-1-93M	12-15-94	HL-20.23M	03-31-95	TC-22.20M	02-01-94				
		GR-3.6M	11-30-94							MT-98.12M	06-24-93	1011	01-31-94
BP-9.1M	12-18-96			IRJ-8-95M	07-06-95	HL-30.11M	03-31-95	TC-31.21M	03-31-94	MT-98.13M	06-24-93		
BP-9.2M	12-18-96	GR-4.3M	11-30-94	EXJ-4-87M	03-20-95	HL-30.21M	05-01-95	TC-32.10M	03-31-94				
		GR-4.4M	11-30-94					TC-32.11M	03-31-94	MT-98.15M	06-24-93		
F-2.1M	4-21-95	GR-5.1M	04-21-95	FB-1-82M	12-19-94	HL-50.11M	03-31-95			MT-98.16M	06-24-93		
		GR-6.1M	01-03-96	PCB-91M	03-20-95					MT-98.17M	04-25-94		
F-3.1M	4-21-95					HL-60.11M	05-01-95			MT-98.18M	04-25-94		
F-3.3M	4-21-95	RM-4.2M	06-30-95			HL-60.21M	03-31-95						
F-3.4M	4-21-95									MT-101.60	04-25-94		
		DM-1.2M	06-30-95										
		DM-4.1M	06-30-95							MT-102.10	01-30-95		

FEDERAL PROJECT NO. IM-75-1(162)
PID NO. 14360
CONSTRUCTION PROJECT NO.
RAILROAD INVOLVEMENT NONE
MOT-75-0.031 (PROGRAMMED AS:)

MOT-75-0.031
970800 12-03-97
145PGS DIST. 07

THE EXISTING SLOPE PROTECTION SHALL BE ADDED TO LOCATIONS WHERE THE TOP OF FOOTING IS EXPOSED. THE TOP OF SLOPE SHALL BE A MINIMUM OF 300 mm ABOVE THE TOP OF FOOTING. THE PROPOSED SLOPE SHALL MATCH EXISTING TOP OF SLOPE OR MINIMUM ELEVATION AS PROVIDED ABOVE.

AN ALLOWANCE OF 100 SQ METERS HAS BEEN ADDED TO THE ESTIMATED QUANTITIES TO REESTABLISH THE EXISTING SLOPE PROTECTION, AS DETERMINED BY THE ENGINEER.

PILES ARE HP 250x62. THE ESTIMATED AVERAGE PAY LENGTHS ARE:
REAR ABUTMENT - 14 m
ALL PIERS - 9 m
FORWARD ABUTMENT - 13 m

EARTH LIMITS SHOWN ARE APPROXIMATE. ACTUAL SLOPES SHALL CONFORM TO PLAN CROSS SECTIONS.

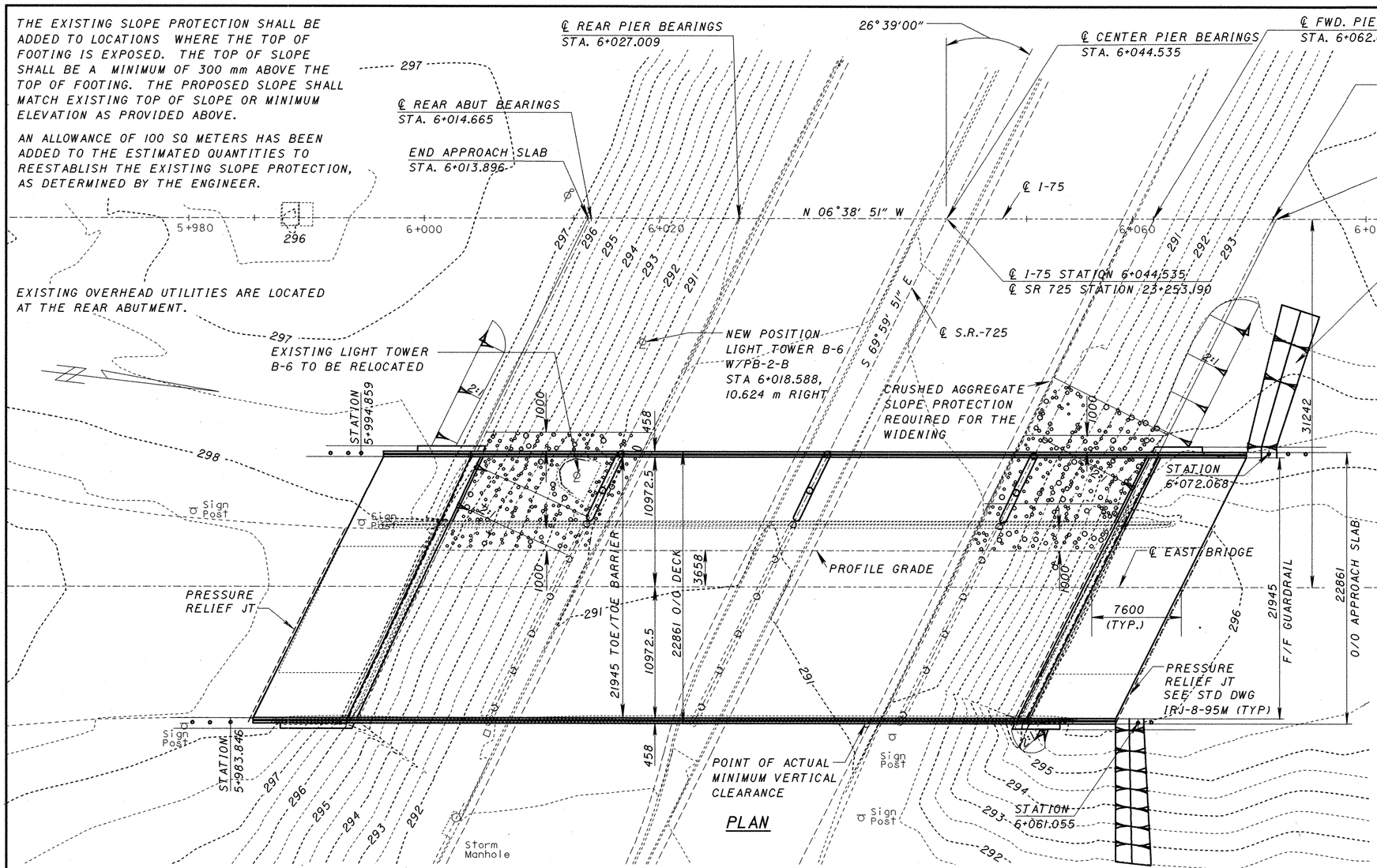

DESIGN TRAFFIC:

1997 ADT - 73,280 1997 ADTT - 11,730

2017 ADT - 87,930 2017 ADTT - 14,070

LEGEND:

F - FIXED

E - EXPANSION

PILES FOR THE NEW PIERS ARE NOT SHOWN.

ALL BRIDGE STATIONING IS GIVEN AT ℄ OF I-75.

ELEVATIONS AND STATIONS ARE IN METERS. ALL OTHER DIMENSIONS ARE IN MILLIMETERS, UNLESS OTHERWISE NOTED.

ELEVATIONS SHOWN ARE ALONG ℄ EAST BRIDGE, NOT PROFILE GRADE.

* 4700 REQUIRED MINIMUM VERTICAL CLEARANCE
4752 ACTUAL MINIMUM VERTICAL CLEARANCE

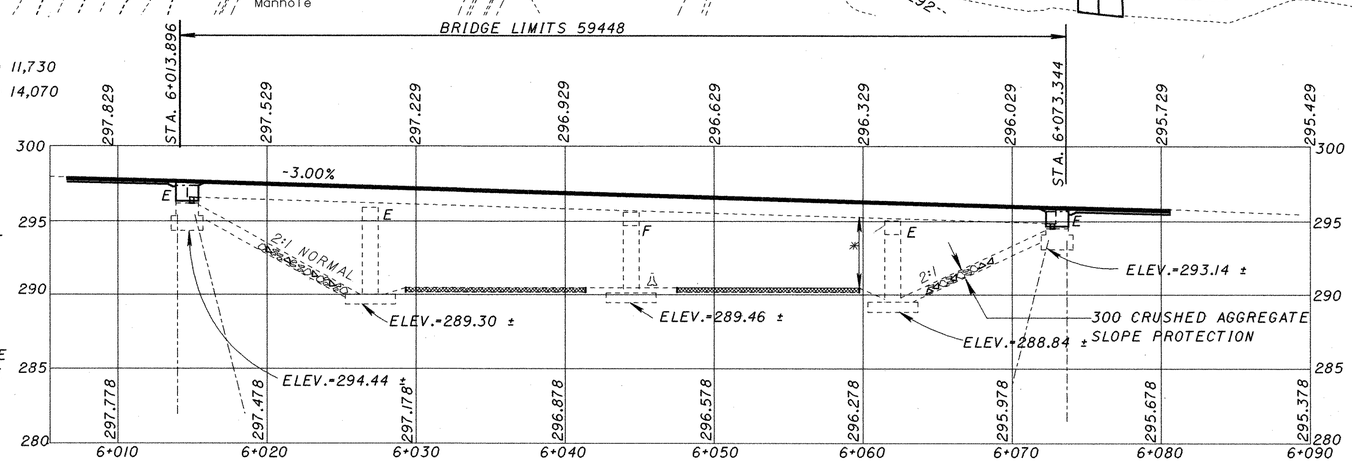

PROFILE ALONG ℄ EAST BRIDGE

EXISTING STRUCTURE

TYPE: TWIN CONTINUOUS STEEL BEAM WITH REINFORCED CONCRETE DECK AND SUBSTRUCTURES.

SPANS: 12344, 17526, 17526, 10516 C/C OF BEARINGS.

ROADWAYS: 2 @ 16459 TOE/TOE BARRIERS

LOADING: CF2000 (57) ADEQUATE FOR A.A.S.H.T.O. ALTERNATE LOADING

SKEW: 26°39'00" L. F.

WEARING SURFACE: 25 MONOLITHIC CONCRETE

ALIGNMENT: TANGENT

APPROACH SLABS: AS-I-54 (7620 LONG)

DATE BUILT: 1960

SFN: RIGHT 5706513

PROPOSED STRUCTURE

PROPOSED WORK: WIDEN THE RIGHT SUPERSTRUCTURE BY ADDING 3 NEW BEAM LINES AND WIDEN SUBSTRUCTURE TO ACCOMMODATE A ROADWAY WIDTH OF 21945 TOE/TOE OF BARRIERS. REHABILITATE THE ABUTMENTS TO BE SEMI-INTEGRAL AND ADD NEW COMPOSITE DECK.

TYPE: 4-SPAN CONTINUOUS STEEL BEAM WITH COMPOSITE REINFORCED CONCRETE DECK SUPPORTED BY NEW AND EXISTING PIERS AND REHABILITATED SEMI-INTEGRAL ABUTMENTS.

SPANS: 12344, 17526, 17526, 10516 C/C OF BEARINGS.

ROADWAY: 21945 TOE/TOE BARRIERS

LOADING: MS18 (CASE I) AND THE ALTERNATE MILITARY LOADING.

SKEW: 26°39'00" L. F.

WEARING SURFACE: MONOLITHIC CONCRETE

ALIGNMENT: TANGENT

APPROACH SLABS: AS-I-81M (7600 LONG)

CROWN: 0.016

LONGITUDE: 84°13'55" LATITUDE: 39°38'22"

OHIO DEPT. OF TRANSPORTATION
STRUCTURAL ENGINEERING AND PRODUCTION

DESIGNED	DRAWN	REVIEWED	DATE
MRG	RJS	RLE	10-24-96
CHECKED	REVISED	STRUCTURE FILE NUMBER	
JC		5706513	

MONTGOMERY COUNTY
STA. 6+013.896
STA. 6+073.344

SITE PLAN
BRIDGE NO MOT-75-6000 R (EAST)
IR 75 OVER SR 725

MOT-75-00.00

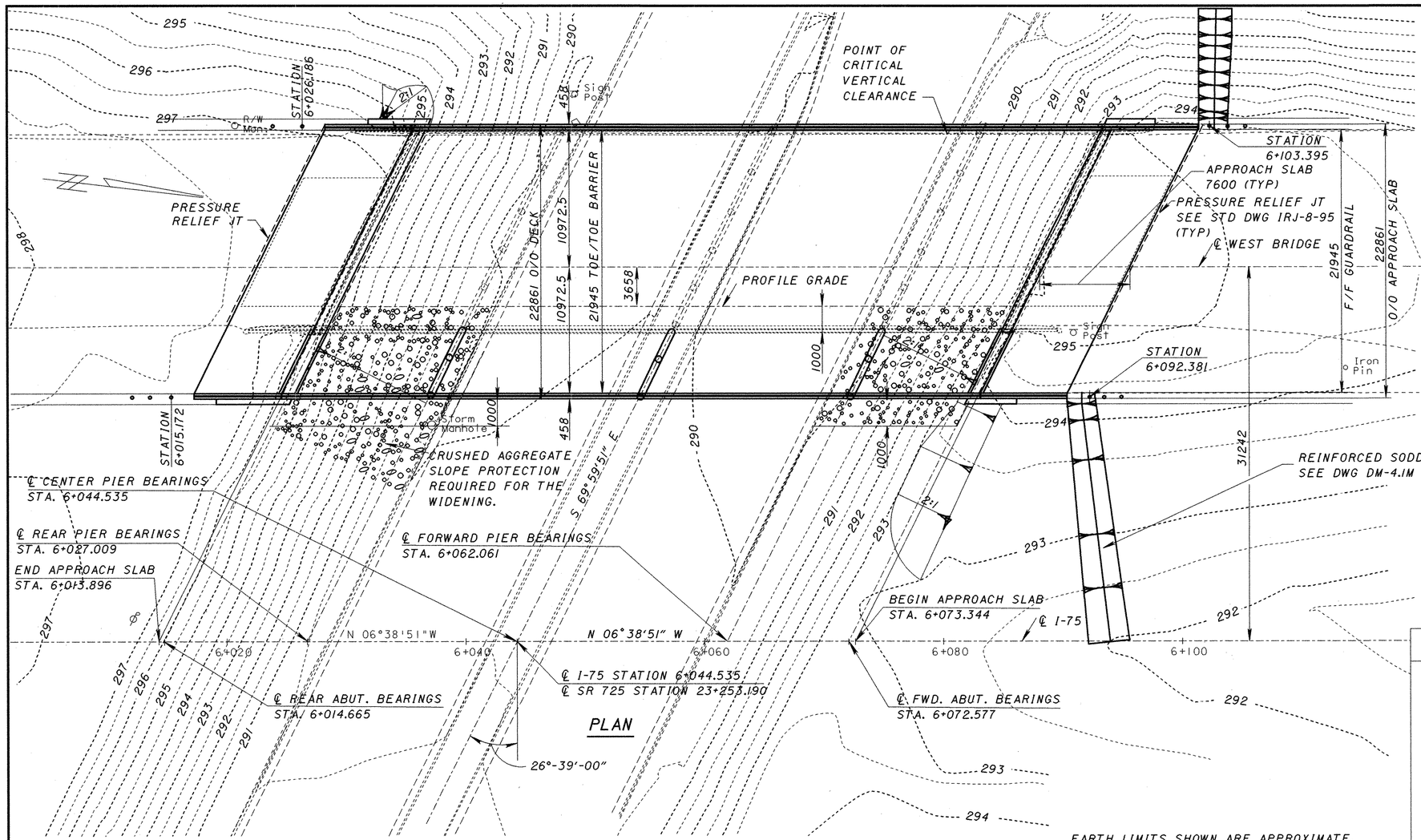

PLAN

PILES ARE HP 250x62. THE ESTIMATED AVERAGE PAY LENGTHS ARE:
REAR ABUTMENT - 14 m
ALL PIERS - 9 m
FORWARD ABUTMENT - 13 m

THE EXISTING SLOPE PROTECTION SHALL BE ADDED TO LOCATIONS WHERE THE TOP OF FOOTING IS EXPOSED. THE TOP OF SLOPE SHALL BE A MINIMUM OF 300 mm ABOVE THE TOP OF FOOTING. THE PROPOSED SLOPE SHALL MATCH EXISTING TOP OF SLOPE OR MINIMUM ELEVATION AS PROVIDED ABOVE.

AN ALLOWANCE OF 100 SQ METERS HAS BEEN ADDED TO THE ESTIMATED QUANTITIES TO REESTABLISH THE EXISTING SLOPE PROTECTION, AS DETERMINED BY THE ENGINEER.

EXISTING OVERHEAD UTILITIES ARE LOCATED AT THE REAR ABUTMENT.

EXISTING STRUCTURE

TYPE: TWIN CONTINUOUS STEEL BEAM WITH REINFORCED CONCRETE DECK AND SUBSTRUCTURES.

SPANS: 12344, 17526, 17526, 10516 C/C OF BEARINGS.

ROADWAYS: 2 @ 16459 TOE/TOE BARRIERS

LOADING: CF2000 (57) ADEQUATE FOR A.A.S.H.T.O. ALTERNATE LOADING

SKEW: 26°39'00" L. F.

WEARING SURFACE: 25 MONOLITHIC CONCRETE

ALIGNMENT: TANGENT

APPROACH SLABS: AS-1-54 (7620 LONG)

DATE BUILT: 1960

SFN: LEFT 5706483

DESIGN TRAFFIC:
1997 ADT =73,280 ADTT =11,730
2017 ADT =87,930 ADTT =14,070

LEGEND:
E: EXPANSION BEARINGS
F: FIXED BEARINGS

PILES FOR THE NEW PIERS ARE NOT SHOWN.

ALL BRIDGE STATIONING IS GIVEN AT ℄ I-75.

ELEVATIONS AND STATIONS ARE IN METERS. ALL OTHER DIMENSIONS ARE IN MILLIMETERS, UNLESS OTHERWISE NOTED.

ELEVATIONS SHOWN ARE ALONG ℄ WEST BRIDGE (NOT PROFILE GRADE).

EARTH LIMITS SHOWN ARE APPROXIMATE. ACTUAL SLOPES SHALL CONFORM TO PLAN CROSS SECTIONS.

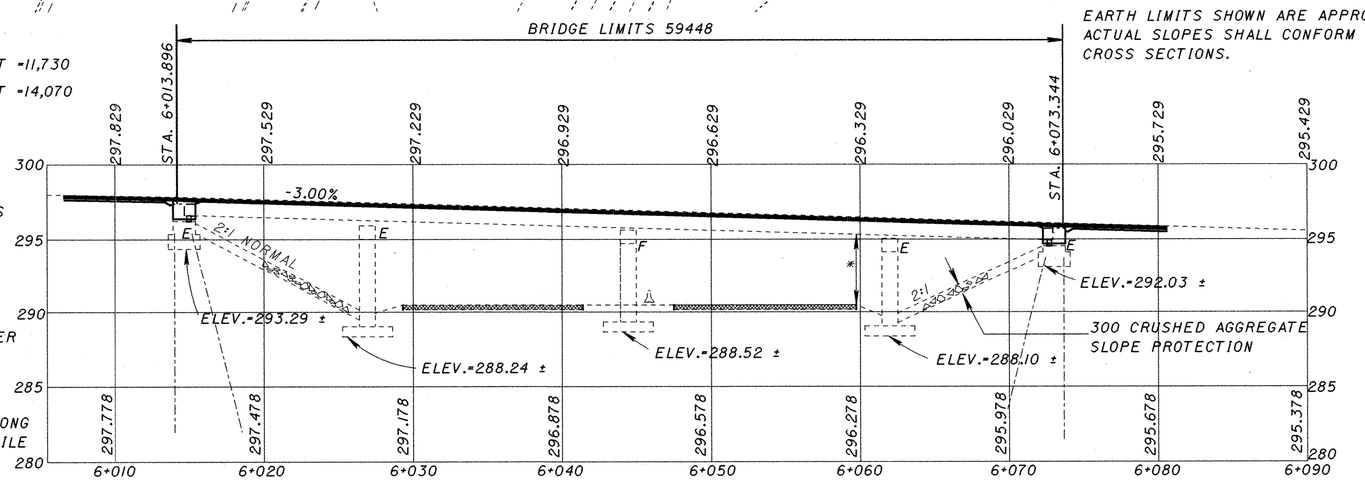

PROFILE ALONG ℄ WEST BRIDGE

* 4700 REQUIRED MINIMUM VERTICAL CLEARANCE
4715 ACTUAL MINIMUM VERTICAL CLEARANCE

PROPOSED STRUCTURE

PROPOSED WORK: WIDEN THE LEFT SUPERSTRUCTURE BY ADDING THREE NEW BEAM LINES AND WIDEN SUBSTRUCTURE TO ACCOMMODATE A ROADWAY WIDTH OF 21945 TOE/TOE OF BARRIERS AND REHABILITATE THE ABUTMENTS TO BE SEMI-INTEGRAL AND ADD NEW COMPOSITE DECK.

TYPE: 4-SPAN CONTINUOUS STEEL BEAM WITH COMPOSITE REINFORCED CONCRETE DECK SUPPORTED BY NEW AND EXISTING PIERS AND REHABILITATED SEMI-INTEGRAL ABUTMENTS.

SPANS: 12344, 17526, 17526, 10516 C/C OF BEARINGS.

ROADWAYS: 21945 TOE/TOE BARRIERS

LOADING: MS18 (CASE I) AND THE ALTERNATE MILITARY LOADING.

SKEW: 26°39'00" L. F.

WEARING SURFACE: MONOLITHIC CONCRETE

ALIGNMENT: TANGENT

APPROACH SLABS: AS-1-81M (7600 LONG)

CROWN: 0.016

LONGITUDE: 84°13'55" LATITUDE: 39°38'22"

DESIGN AGENCY: STRUCTURAL ENGINEERING AND PRODUCTION

DRAWN	REVIEWED	DATE
RJS	RLE	10-24-96
REVISED	STRUCTURE FILE NUMBER	
	5706483	
DESIGNED	CHECKED	
MRG	JC	

MONTGOMERY COUNTY
STA. 6+013.896
STA. 6+073.344

SITE PLAN
BRIDGE NO. MOT-75-6000 L (WEST)
IR 75 OVER SR 725

MOT-75-00.00

PROPOSED WORK

1. REMOVE DECK, BACKWALL AND APPROACH SLAB UP TO REMOVAL LINE. REMOVE WINGWALLS, DESIGNATED CROSS-FRAMES AND ANY NECESSARY DECK ARMOR AS SHOWN IN CONSTRUCTION PROCEDURES.
2. JACK STEEL FRAME.
3. BUILD PIER CAP STEPS AND NEW PIER.
4. INSTALL NEW ELASTOMERIC BEARINGS.
5. ADD NEW BEAMS AND CROSSFRAMES. ADD SHEAR STUDS TO NEW AND EXISTING BEAMS.
6. BUILD ABUTMENT BACKWALL AND APPROACH SLAB WITH RELIEF JOINT TO ℄ CONSTRUCTION JOINT ALONG APPROACH SLAB AND BACKWALL.
7. BUILD BRIDGE SLAB UP TO CLOSURE POUR.
8. REPEAT STEPS 1 - 7.
9. INSTALL NEW CROSSFRAMES IN BAY OF CLOSURE SECTION AND POUR THE CLOSURE SECTION.
10. PAINT STRUCTURAL STEEL.

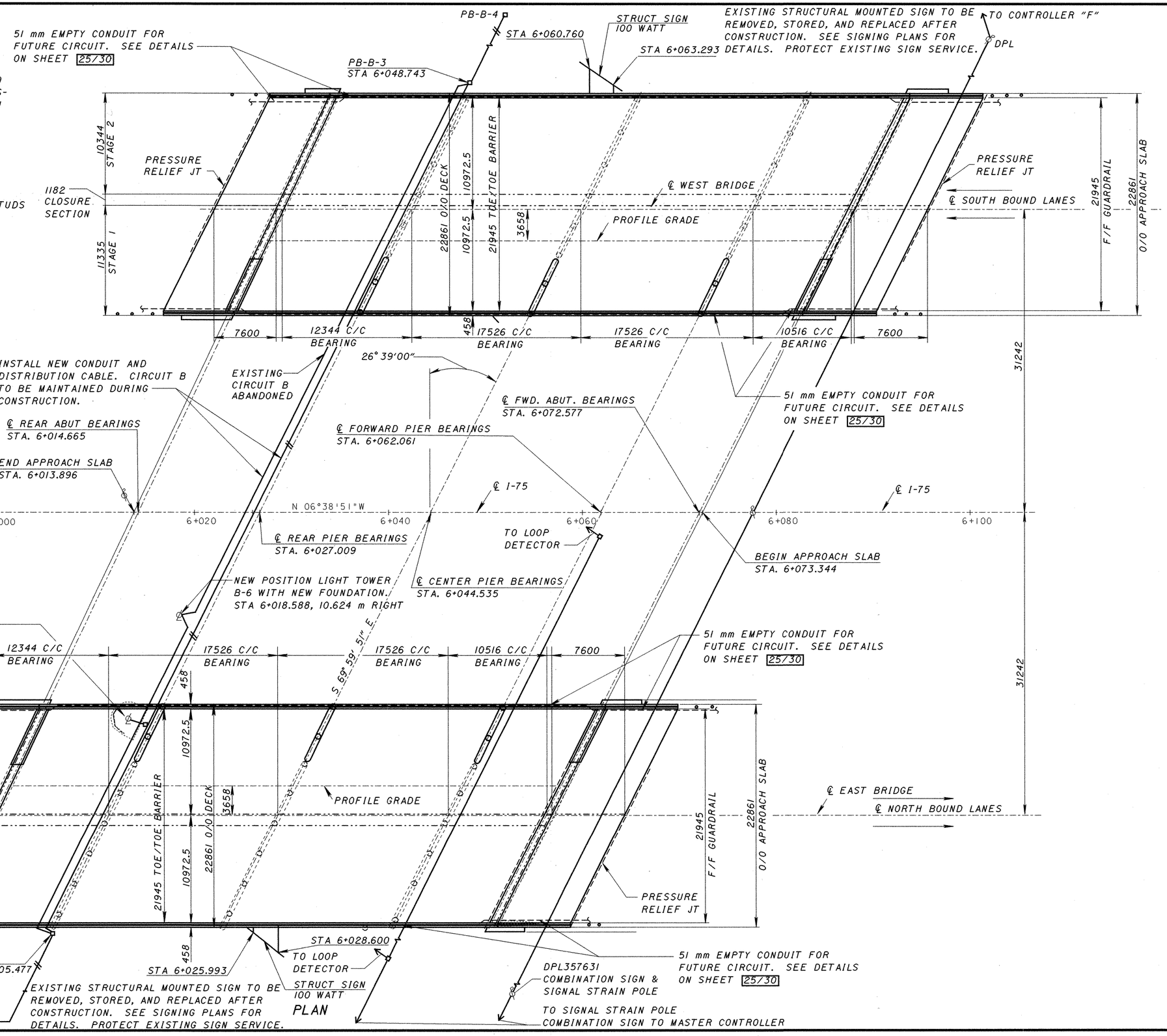

DESIGN AGENCY	STRUCTURAL ENGINEERING AND PRODUCTION
DATE	10-24-96
REVIEWED	DFT/JB
STRUCTURE FILE NUMBER	5706483 5706513
DRAWN	BRC
REVISED	
DESIGNED	BRC/JCW
CHECKED	MRG

GENERAL PLAN
BRIDGE NO MOT-75-6000 L/R
IR 75 OVER SR 725

MOT-75-00.00

ESTIMATED QUANTITIES					MOT-75-6000 (LEFT)					MOT-75-6000 (RIGHT)				
ITEM	EXTENSION	TOTAL	UNIT	DESCRIPTION	ABUT.	PIERS	SUPER.	GEN.	TOTAL	ABUT.	PIERS	SUPER.	GEN.	TOTAL
202	11201	LUMP	LUMP	PORTIONS OF STRUCTURE REMOVED, AS PER PLAN	LUMP		LUMP	LUMP	LUMP	LUMP		LUMP	LUMP	LUMP
SPECIAL	45130000	62.2	METER	PRESSURE RELIEF JOINT, TYPE A				31.1	31.1				31.1	31.1
503	11100	LUMP	LUMP	COFFERDAMS, CRIBS AND SHEETING				LUMP	LUMP				LUMP	LUMP
503	21101	526	CU METER	UNCLASSIFIED EXCAVATION, AS PER PLAN	151	140			291	130	105			235
505	11100	LUMP	LUMP	PILE DRIVING EQUIPMENT MOBILIZATION	LUMP	LUMP			LUMP	LUMP	LUMP			LUMP
507	00100	972	METER	STEEL PILES HP250x62, FURNISHED	324	162			486	324	162			486
507	00150	972	METER	STEEL PILES HP 250 x 62, DRIVEN	324	162			486	324	162			486
507	50500	42	EACH	STEEL PILES SPLICES	12	9			21	12	9			21
SPECIAL	51148000	728	CU METER	HIGH PERFORMANCE CONCRETE, SUPERSTRUCTURE (DECK), (SEE PROPOSAL NOTE)			357		357			371		371
SPECIAL	51148020	98	CU METER	HIGH PERFORMANCE CONCRETE, SUPERSTRUCTURE (PARAPET), (SEE PROPOSAL NOTE)			39	10	49			39	10	49
SPECIAL	51148040	318	CU METER	HIGH PERFORMANCE CONCRETE, SUBSTRUCTURE, (SEE PROPOSAL NOTE)	83	80			163	75	80			155
SPECIAL	51149000	LUMP	CU METER	HIGH PERFORMANCE CONCRETE, TRIAL MIX, (SEE PROPOSAL NOTE)				LUMP	LUMP				LUMP	LUMP
SPECIAL	51149010	LUMP	LUMP	HIGH PERFORMANCE CONCRETE TESTING (SEE PROPOSAL NOTE)				LUMP	LUMP				LUMP	LUMP
SPECIAL	51267502	1331	SQ METER	SEALING OF CONCRETE SURFACES (EPOXY) (LIGHT GRAY) (SEE PROPOSAL NOTE)	105	564			669	98	564			662
SPECIAL	51267510	882	SQ METER	SEALING OF CONCRETE SURFACES (EPOXY-URETHANE)			367	74	441			367	74	441
SPECIAL	51273000	144	SQ METER	TREATING CONCRETE BRIDGE DECKS WITH HMWM RESIN (SEE PROPOSAL NOTE)			72		72			72		72
513	11100	77032	KILOGRAM	STRUCTURAL STEEL, AISC CATEGORY I (SEE PROPOSAL NOTE)			38516		38516			38516		38516
513	20000	10494	EACH	WELDED STUD SHEAR CONNECTOR			5247		5247			5247		5247
816	00610	77032	KILOGRAM	FIELD PAINTING OF NEW STEEL, SYSTEM IZEU, BLUE			38516		38516			38516		38516
516	13600	3	SQ METER	25 mm PREFORMED EXPANSION JOINT FILLER	1.5				1.5	1.5				1.5
516	13900	26	SQ METER	51 mm PREFORMED EXPANSION JOINT FILLER	13				13	13				13
516	44100	44	EACH	ELASTOMERIC BEARING (240x405x39) WITH INTERNAL LAMINATES AND LOAD PLATE (50x266x431) (NEOPRENE)		22			22		22			22
				** (SEE PROPOSAL NOTE)										
516	44101	22	EACH	ELASTOMERIC BEARING (240x380x45) WITH INTERNAL LAMINATES AND LOAD PLATE (50x226x530) (NEOPRENE)		11			11		11			11
				AS PER PLAN (SEE PROPOSAL NOTE) **										
516	44101	44	EACH	ELASTOMERIC BEARING (216x305x50) WITH INTERNAL LAMINATES AND LOAD PLATE (40x276x331) (NEOPRENE)	22				22	22				22
				AS PER PLAN (SEE PROPOSAL NOTE)										
516	47001	LUMP	LUMP	JACKING AND TEMPORARY SUPPORT OF SUPERSTRUCTURE, AS PER PLAN			LUMP		LUMP			LUMP		LUMP
518	21201	130	CU METER	POROUS BACKFILL WITH FILTER FABRIC, AS PER PLAN	68				68	62				62
518	40001	104	METER	150 mm PERFORATED CORRUGATED PLASTIC PIPE, AS PER PLAN	52				52	52				52
518	40011	36	METER	150 mm NON-PERFORATED CORRUGATED PLASTIC PIPE, INCLUDING SPECIALS, AS PER PLAN	18				18	18				18
SPECIAL	51911502	3	SQ METER	PATCHING CONCRETE STRUCTURES WITH TROWELABLE MORTAR (SEE PROPOSAL NOTE)		1.5			1.5		1.5			1.5
601	20000	542	SQ METER	CRUSHED AGGREGATE SLOPE PROTECTION	230			50	280	212			50	262
611	25001	696	SQ METER	REINFORCED CONCRETE APPROACH SLAB (T=380 mm), AS PER PLAN				348	348				348	348
625	25401	324	METER	CONDUIT, 51 mm, 713.04, AS PER PLAN				162	162				162	162
				SEE SHEET 105/145 FOR LIGHTING SUMMARY										
815	00050	2968	SQ METER	SURFACE PREPARATION OF EXISTING STEEL, SYSTEM OZEU *			1484		1484			1484		1484
815	00056	2968	SQ METER	FIELD PAINTING OF EXISTING STEEL, PRIME COAT, SYSTEM OZEU *			1484		1484			1484		1484
815	00060	2968	SQ METER	FIELD PAINTING OF EXISTING STEEL, INTERMEDIATE COAT, SYSTEM OZEU *			1484		1484			1484		1484
815	00066	2968	SQ METER	FIELD PAINTING OF EXISTING STEEL, FINISH COAT, SYSTEM OZEU (BLUE) *			1484		1484			1484		1484
815	00504	130	MAN HOUR	GRINDING FINS, TEARS, SLIVERS			65		65			65		65
815	00508	2244	METER	GRINDING FLANGE EDGES			1122		1122			1122		1122

* 25% ADDED TO NOMINAL BEAM AREA FOR INCIDENTALS
** BEVELED STEEL LOAD PLATE

STANDARD DRAWINGS AND SPECIFICATIONS:

REFERENCE SHALL BE MADE TO STANDARD DRAWINGS:

AS-1-81M	DATED 10-25-94
BR-1M	DATED 12-15--94
BS-1-93M	DATED 12-15-94
IRJ-8-95M	DATED 7-06-95
PCB-91M	DATED 3-20-95
GR-3.1M	DATED 11-30-94
GR-3.2M	DATED 11-30-94
DM-4.1M	DATED 6-30-95

AND TO SUPPLEMENTAL SPECIFICATIONS:

815	DATED 7-17-95
910	DATED 7-17-95
944	DATED 12-7-95
1011	DATED 1-31-94

DESIGN SPECIFICATIONS:

THIS STRUCTURE CONFORMS TO "STANDARD SPECIFICATIONS FOR HIGHWAY BRIDGES" ADOPTED BY THE AMERICAN ASSOCIATION OF STATE HIGHWAY AND TRANSPORTATION OFFICIALS, 1992, INCLUDING THE 1993-95 INTERIM SPECIFICATIONS AND THE ODOT BRIDGE DESIGN MANUAL.

GENERAL NOTES

DESIGN LOADING:

MS18, CASE I AND THE ALTERNATE MILITARY LOADING.

DESIGN DATA:

HIGH PERFORMANCE CONCRETE - COMPRESSIVE STRENGTH 31.0 MPA (SUPERSTRUCTURE)

HIGH PERFORMANCE CONCRETE - COMPRESSIVE STRENGTH 27.5 MPA (SUBSTRUCTURE)

REINFORCING STEEL - ASTM A615M, A616M OR A617M GRADE 400 MINIMUM YIELD STRENGTH 400 MPa.

SPIRAL REINFORCEMENT MAY BE PLAIN BARS, ASTM A82M OR A615M.

STRUCTURAL STEEL - A36M - YIELD STRENGTH 250 MPa

DECK PROTECTION METHOD - EPOXY COATED REINFORCING STEEL AND 65 mm CONCRETE COVER. MONOLITHIC WEARING SURFACE IS ASSUMED, FOR DESIGNED PURPOSES, TO BE 25 mm THICK.

DESIGN AGENCY: STRUCTURAL ENGINEERING AND PRODUCTION

REVIEWED DFT | DATE 10-24-96 | STRUCTURE FILE NUMBER 5706483, 5706513

DRAWN BRC | REVISED

DESIGNED BRC | CHECKED MRG

ESTIMATED QUANTITIES AND GENERAL NOTES
BRIDGE NO MOT-75-6000 L/R
IR 75 OVER SR 725

MOT-75-00.00

PORTIONS OF STRUCTURE REMOVED, AS PER PLAN:
DESCRIPTION:
THIS WORK SHALL CONSIST OF THE REMOVAL OF CONCRETE DECKS INCLUDING PARAPETS, RAILINGS, DECK JOINTS AND OTHER APPURTENANCES FROM STEEL BEAM SUPPORT SYSTEMS, APPROACH SLABS, ABUTMENT BACKWALLS AND WINGWALLS. EXISTING INTERMEDIATE CROSSFRAMES SHALL BE REMOVED AS DETAILED IN THE PLANS. END CROSSFRAMES AND END DAM SHALL BE REMOVED AS NECESSARY TO RAISE THE SUPERSTRUCTURE.
CARE SHALL BE TAKEN DURING DECK REMOVALS TO PROTECT PORTIONS OF SUCH SYSTEMS THAT ARE TO BE SALVAGED AND INCORPORATED INTO THE PROPOSED STRUCTURE. IN THIS RESPECT, THE USE OF EXPLOSIVES, HEADACHE BALLS AND/OR HOE RAM TYPE OF EQUIPMENT IS PROHIBITED.
PROTECTION OF TRAFFIC:
PRIOR TO DEMOLITION OF ANY PORTIONS OF THE EXISTING SUPERSTRUCTURE, THE CONTRACTOR SHALL SUBMIT PLANS FOR THE PROTECTION OF TRAFFIC (VEHICULAR, PEDESTRIAN, ETC.) ADJACENT TO AND/OR UNDER THE STRUCTURE TO THE DIRECTOR FOR APPROVAL. THESE PLANS SHALL INCLUDE PROVISIONS FOR ANY DEVICES AND STRUCTURES THAT MAY BE NECESSARY TO ENSURE SUCH PROTECTION. TEMPORARY VERTICAL CLEARANCES SPECIFIED ON THE PLANS OR IN THE PROPOSAL SHALL BE MAINTAINED AT ALL TIMES EXCEPT AS OTHERWISE APPROVED BY THE DIRECTOR.
PROTECTION OF STEEL SUPPORT SYSTEMS:
BEFORE DECK SLAB CUTTING IS PERMITTED, THE OUTLINE OF PRIMARY STEEL MEMBERS IN CONTACT WITH THE BOTTOM OF THE DECK SHALL BE DRAWN ON THE SURFACE OF DECK. SMALL DIAMETER PILOT HOLES SHALL BE DRILLED 50 mm OUTSIDE THESE LINES TO CONFIRM THE LOCATION OF FLANGE EDGES. DECK CUTS OVER OR WITHIN 50 mm OF FLANGE EDGES SHALL NOT EXTEND LOWER THAN THE BOTTOM LAYER OF DECK SLAB REINFORCING STEEL. CUTS MADE OUTSIDE 50 mm OF FLANGE EDGES MAY EXTEND THE FULL DEPTH OF THE DECK. DURING CUTTING OF THE DECK SLAB, CARE SHALL BE TAKEN NOT TO DAMAGE STEEL MEMBERS THAT ARE TO BE INCORPORATED INTO THE PROPOSED STRUCTURE.
REMOVAL METHODS:
CONCRETE MAY BE REMOVED BY CUTTING AND BY MEANS OF HAND OPERATED PNEUMATIC HAMMERS EMPLOYING POINTED OR BLUNTED CHISEL TYPE TOOLS. FOR REMOVALS ABOVE STEEL MEMBERS, A HAMMER HEAVIER THAN 16 KILOGRAM BUT NOT TO EXCEED 41 KILOGRAM MAY BE USED AT THE APPROVAL OF THE ENGINEER, TO ENSURE ADEQUATE DEPTH CONTROL AND TO PREVENT NICKING OR GOUGING THE PRIMARY STEEL MEMBERS.
DECK REMOVALS:
DUE TO THE POSSIBLE PRESENCE OF WELDED ATTACHMENTS TO EXISTING STRUCTURAL STEEL (FINISHING MACHINE, SCUPPER AND FORM SUPPORTS, ETC.), CARE SHALL BE TAKEN DURING DECK REMOVAL TO AVOID DAMAGING STRINGERS WHICH ARE TO REMAIN. STRINGERS DAMAGED BY THE CONTRACTOR'S REMOVAL OPERATIONS SHALL, AT NO COST TO THE PROJECT, BE REPLACED OR REPAIRED. PROPOSED REPAIRS, DEVELOPED BY A REGISTERED PROFESSIONAL ENGINEER, SHALL BE SUBMITTED IN WRITING FOR REVIEW AND APPROVAL BY THE DIRECTOR.
EXTRANEOUS MEMBERS:
EXISTING EXTRANEOUS MEMBERS (I.E., FINISHING MACHINE AND FORM SUPPORTS, ETC., AND THE SUPPORT FOR SCUPPERS AND BULB ANGLES WHICH ARE TO BE REMOVED) ATTACHED BY WELDED CONNECTIONS TO PORTIONS OF THE TOP FLANGES DESIGNATED "TENSION" SHALL BE REMOVED AND THE FLANGE SURFACES GROUND SMOOTH. GRINDING SHALL BE CAREFULLY DONE AND PARALLEL TO THE FLANGES. CARE SHALL BE TAKEN WHEN REMOVING EXISTING EXPANSION AND FIXED BEARINGS. CAREFULLY GRIND SMOOTH AND PARALLEL TO THE FLANGES.

PAYMENT: THIS WORK WILL BE PAID FOR AT THE CONTRACT LUMP SUM PRICE BID, WHICH PRICE AND PAYMENT SHALL BE FULL COMPENSATION FOR ALL LABOR, EQUIPMENT, MATERIALS AND INCIDENTALS NECESSARY TO COMPLETE THE WORK IN CONFORMANCE WITH THESE REQUIREMENTS, WITH PERTINENT PROVISIONS OF 202, AND TO THE SATISFACTION OF THE ENGINEER.

CONSTRUCTION SEQUENCE:
FOR PHASE CONSTRUCTION PROCEDURES, SEE SHEET 24/30

ITEM 503, UNCLASSIFIED EXCAVATION, AS PER PLAN:
UNCLASSIFIED EXCAVATION SHALL BE IN ACCORDANCE WITH 503 EXCEPT THAT THE BACKFILL MATERIAL BEHIND THE ABUTMENTS SHALL BE PLACED IN 150 mm LIFTS AND COMPACTED IN ACCORDANCE WITH 304.04.

ITEM 511 HIGH PERFORMANCE CONCRETE SUPERSTRUCTURE (DECK), AS PER PLAN:
INSTALL A 900 mm WIDE STRIP, 2.5 mm THICK, GENERAL PURPOSE, HEAVY DUTY NEOPRENE SHEET WITH NYLON FABRIC REINFORCEMENT AT LOCATIONS SHOWN IN THE PLANS. SECURE THE 900 mm WIDE NEOPRENE SHEETING TO THE CONCRETE WITH 32 X 3 mm (LENGTH X SHANK DIAMETER) GALVANIZED BUTTON HEAD SPIKES THROUGH A 25 mm OUTSIDE DIAMETER, 3 mm GALVANIZED WASHER. MAXIMUM FASTENER SPACING IS 225 mm. OTHER SIMILAR GALVANIZED DEVICES WHICH WILL NOT DAMAGE EITHER THE NEOPRENE OR THE CONCRETE MAY BE USED SUBJECT TO THE APPROVAL OF THE ENGINEER.

CENTER THE NEOPRENE STRIPS ON ALL JOINTS. FOR HORIZONTAL JOINTS, SECURE THE HORIZONTAL NEOPRENE STRIP BY USING A SINGLE LINE OF FASTENERS, STARTING AT 150 mm (+/-) FROM THE TOP OF THE NEOPRENE STRIP. LAPS IN THE LENGTH OF THE HORIZONTAL STRIP DUE TO MATERIAL MANUFACTURING SHALL BE AT LEAST 300 mm IN LENGTH, IF NOT VULCANIZED OR ADHESIVE BONDED, OR 150 mm IN LENGTH IF THE LAP IS VULCANIZED OR ADHESIVE BONDED.

THE NEOPRENE SHEETING SHALL BE 2.5 mm THICK GENERAL PURPOSE, HEAVY DUTY NEOPRENE SHEET WITH NYLON FABRIC REINFORCEMENT. THE SHEETING SHALL BE "FAIRPRENE NUMBER NN-0003", BY E. I. DUPONT DE NEMOURS AND COMPANY, INC., "WINGPRENE" BY THE GOODYEAR TIRE AND RUBBER COMPANY, OR AN APPROVED ALTERNATE. THE NEOPRENE SHEETING SHALL CONFORM TO THE FOLLOWING:

DESCRIPTION OF TEST	ASTM METHOD	REQUIREMENT
THICKNESS, mm	D 751	2.5 ± .25
BREAKING STRENGTH,	D 751	3130 X 3130
ADHESIVE 25 mm STRIP, 50 mm MINIMUM, N MINIMUM	D 751	27
BURST STRENGTH(MULLEN) MPa, MINIMUM	D 751	9.65
HEAT AGING 70 HOURS T 100° C, 180 BEND WITHOUT CRACKING	D 2136	NO CRACKING OF COATING
LOW TEMPERATURE BRITTLENESS 1 HOUR AT -40 C, BEND AROUND 6 mm MANDREL	D 2136	NO CRACKING OF COATING

PAYMENT FOR LABOR, MATERIALS AND INSTALLATION OF THESE ITEMS SHALL BE INCLUDED IN ITEM 511 HIGH PERFORMANCE CONCRETE, SUPERSTRUCTURE, AS PER PLAN.

EXISTING STRUCTURE PLANS:
THE ORIGINAL DESIGN PLANS MAY BE EXAMINED BY PROSPECTIVE BIDDERS AT THE DEPARTMENT OF TRANSPORTATION, DISTRICT 7 OFFICE, 1001 ST MARY'S AVE, BOX 969 SIDNEY, OHIO 45365 (513) 492-1141.

MAINTENANCE OF TRAFFIC:
TWO LANES OF TRAFFIC WITH A MINIMUM HORIZONTAL WIDTH OF 8000 AND MINIMUM VERTICAL CLEARANCE OF 4570 SHALL BE MAINTAINED ON SR 725 AT ALL TIMES.

ITEM 516, JACKING AND TEMPORARY SUPPORT OF SUPERSTRUCTURE, AS PER PLAN:
THIS ITEM SHALL CONSIST OF FURNISHING ALL NECESSARY LABOR, MATERIALS, AND EQUIPMENT TO RAISE OR REPOSITION ANY EXISTING STRUCTURES TO THE DIMENSIONS AND REQUIREMENTS DEFINED IN THE PROJECT PLANS.

THE CONTRACTOR SHALL BE RESPONSIBLE FOR THE DESIGN, INSTALLATION AND OPERATION OF AN ADEQUATE JACKING SYSTEM, INCLUDING ANY TEMPORARY OR PERMANENT SUPPORTS NECESSARY TO PERFORM THE WORK DESCRIBED IN THE PROJECT PLANS. THREE (3) SETS OF JACKING PLANS, WHICH INCLUDE THE INFORMATION DESCRIBED IN THIS NOTE, SHALL BE SUBMITTED TO THE DIRECTOR FOR APPROVAL AT LEAST THIRTY (30) DAYS BEFORE ACTUAL WORK IS TO BEGIN. THE PLANS SHALL BE PREPARED AND STAMPED BY A REGISTERED PROFESSIONAL ENGINEER.

JACKING SUBMITTALS SHALL INCLUDE AT LEAST THE FOLLOWING:

1. THE SIGNATURE AND NUMBER, OR PROFESSIONAL SEAL, OF THE REGISTERED PROFESSIONAL ENGINEER WHO PREPARED THE SUBMITTAL.

2. CALCULATIONS AND ANALYSIS OF THE STRUCTURE TO DETERMINE AND DEFINE THE ACTUAL LOADING APPLIED AT THE CONTRACTOR'S SELECTION JACKING POINTS.

3. A DRAWING SHOWING THE PHYSICAL AND DIMENSIONAL POSITION OF THE JACKS WITH RESPECT TO THE STRUCTURE INCLUDING CLEARANCES AND CENTER OF LIFT.

4. A SCHEMATIC LAYOUT OF JACKS, CHECK VALVES, PUMPS WITH 3 WAY RETRACTOR VALVE, PRESSURE GAGES, FLOW CONTROL VALVES, ETC. IN ACCORDANCE WITH MANUFACTURER'S RECOMMENDATIONS. ALL JACKS FOR EACH ABUTMENT OR PIER SHALL BE CONNECTED TOGETHER. ALL JACKS AT EACH ABUTMENT OR PIER SHALL BE THE SAME SIZE.

5. ANALYSIS AND CALCULATIONS OF THE STRESSES INDUCED OR CREATED IN THE STRUCTURE AND ANY TEMPORARY OR PERMANENT SUPPORTS. DESIGN CALCULATIONS FOR ANY TEMPORARY OR PERMANENT SUPPORTS.

6. PHYSICAL DIMENSIONS, MATERIALS, AND FABRICATION DETAILS OF ANY TEMPORARY OR PERMANENT SUPPORTS. HORIZONTAL AND VERTICAL MOVEMENT RESTRAINT SHALL BE PROVIDED.

7. A STEP BY STEP PROCEDURE DETAILING ALL STEPS IN THE JACKING OPERATION.

8. METHOD OF ATTACHMENT TO STRUCTURAL MEMBERS. WELDING TO TENSION AREAS WILL NOT BE PERMITTED.

THE ENTIRE SYSTEM INCLUDING JACKS SHALL HAVE 20% MORE CAPACITY THAN REQUIRED BASED ON CALCULATED LOADS.

FOR LIFTS GREATER THAN 25 mm, JACKS SHALL HAVE LOCKING NUTS TO POSITIVELY LOCK AND SUPPORT THE STRUCTURE DURING THE LIFT.

JACKS SHALL HAVE A SWIVEL LOAD CAP, A DOMED PISTON HEAD OR SOME OTHER DEVICE TO PROTECT AGAINST THE EFFECTS OF SIDE LOAD ON THE JACK.

JACKS ALONE SHALL NOT BE USED TO SUPPORT LOADS EXCEPT DURING THE ACTUAL JACKING OPERATION. TEMPORARY SUPPORTS, BLOCKING OR OTHER METHODS APPROVED BY THE DIRECTOR SHALL BE USED.

SINGLE ACTING RAMS WITH NO OVER-TRAVEL PROTECTION SYSTEM SHALL NOT BE USED.

SPARE EQUIPMENT SHALL BE AVAILABLE ON SITE FOR THE REQUIRED STRUCTURE RAISING TO PROCEED IN THE EVENT OF BREAKDOWN. A LIST OF SPARE EQUIPMENT SHALL BE PROVIDED TO THE ENGINEER.

MAXIMUM DIFFERENTIAL JACKING HEIGHT BETWEEN ANY ADJACENT ABUTMENTS OR PIERS SHALL BE 25 mm OR LESS. PAYMENT SHALL BE MADE AT THE LUMP SUM PRICE BID FOR ITEM 516, JACKING AND TEMPORARY SUPPORT OF SUPERSTRUCTURE, AS PER PLAN AND SHALL INCLUDE ALL NECESSARY TOOLS, LABOR, EQUIPMENT AND MATERIALS NECESSARY TO COMPLETE THIS ITEM OF WORK.

ITEM 518, 150 mm NON-PERFORATED CORRUGATED PLASTIC PIPE, INCLUDING SPECIALS, AS PER PLAN:
CORRUGATED PIPE USED IN ABUTMENT DRAINAGE SHALL BE 150 mm DIAMETER, PLASTIC CORRUGATED AS PER SUPPLEMENTAL SPECIFICATION 944, AASHTO M294, TYPE S. THIS ITEM SHALL INCLUDE ALL ELBOWS, TEES AND END CAPS REQUIRED TO COMPLETE THE ABUTMENT DRAINAGE SYSTEM.

ITEM 518, 150 mm PERFORATED CORRUGATED PLASTIC PIPE, AS PER PLAN:
CORRUGATED PIPE USED IN ABUTMENT DRAINAGE SHALL BE 150 mm DIAMETER PLASTIC CORRUGATED AS PER SUPPLEMENTAL SPECIFICATION 944, AASHTO M294, TYPE SP.

~~**PILES:**~~
~~PILES SHALL BE DRIVEN TO REFUSAL ON BEDROCK. REFUSAL SHALL BE CONSIDERED AS OBTAINED BY PENETRATING SOFT BEDROCK FOR SEVERAL MILLIMETERS WITH A MINIMUM RESISTANCE OF 20 BLOWS PER 25 mm OR REFUSAL SHALL BE CONSIDERED AS OBTAINED AFTER THE PILE HAS CONTACTED HARD BEDROCK AND THE PILE HAS THEN RECEIVED AT LEAST 20 BLOWS.~~

~~THE DESIGN LOAD IS 300 KN PER PILE FOR THE ABUTMENT PILES AND [illegible] KN PER PILE FOR THE PIER PILES.~~

EXISTING STRUCTURE VERIFICATION:
DETAILS AND DIMENSIONS SHOWN ON THESE PLANS PERTAINING TO THE EXISTING STRUCTURE HAVE BEEN OBTAINED FROM PLANS OF THE EXISTING STRUCTURE AND FROM FIELD OBSERVATIONS AND MEASUREMENTS. CONSEQUENTLY, THEY ARE INDICATIVE OF THE EXISTING STRUCTURE AND THE PROPOSED WORK BUT THEY SHALL BE CONSIDERED TENTATIVE AND APPROXIMATE. THE CONTRACTOR IS REFERRED TO CMS SECTIONS 102.05, 105.02 AND 513.02.

CONTRACT BID PRICES SHALL BE BASED UPON A RECOGNITION OF THE UNCERTAINTIES DESCRIBED ABOVE AND UPON A PREBID EXAMINATION OF THE EXISTING STRUCTURE BY THE CONTRACTOR. HOWEVER, ALL PROJECT WORK SHALL BE BASED UPON ACTUAL DETAILS AND DIMENSIONS WHICH HAVE BEEN VERIFIED BY THE CONTRACTOR IN THE FIELD.

INSPECTION OF STRUCTURAL STEEL:
THE ENGINEER SHALL VISUALLY INSPECT ALL EXISTING BUTT-WELDED SPLICES AND/OR TOP FLANGE COVER PLATE FILLET WELDS TO ENSURE THAT THEY ARE FREE OF DEFECTS. THE DECK SLAB HAUNCH FORMS IMMEDIATELY ADJACENT TO SUCH WELDS SHALL NOT BE ERECTED UNTIL AFTER THE ENGINEER HAS COMPLETED THIS INSPECTION. THIS INSPECTION SHALL NOT TAKE PLACE UNTIL AFTER THE TOP FLANGES ARE CLEANED AS SPECIFIED IN 511.08, BUT IT SHALL BE DONE BEFORE THE DECK SLAB REINFORCEMENT IS INSTALLED. THE COST ASSOCIATED WITH THIS INSPECTION

SHALL BE INCLUDED WITH ITEM 511, HIGH PERFORMANCE CONCRETE, SUPERSTRUCTURE, AS PER PLAN FOR PAYMENT.

ITEM 611 REINFORCED CONCRETE APPROACH SLAB(T-380mm), AS PER PLAN:
THE REINFORCING STEEL FOR THE APPROACH SLABS OF THIS STRUCTURE SHALL BE EPOXY COATED IN CONFORMANCE WITH 509.

TWO SEPARATE THICKNESSES OF CLEAR OR OPAQUE POLYETHYLENE FILM, 705.06, SHALL BE PLACED ON THE PREPARED SUBBASE AND WHERE THE APPROACH SLAB IS TO BE CONSTRUCTED. THE POLYETHYLENE FILMS SHALL COMPLETELY COVER THE FULL LENGTH AND WIDTH OF THE SUBBASE BETWEEN THE SIDEWALL FORMS FOR THE APPROACH SLAB.

MATERIALS, LABOR AND INSTALLATION SHALL BE INCLUDED FOR WITH APPROACH SLABS FOR PAYMENT.

HIGH PERFORMANCE CONCRETE SUPERSTRUCTURE (PARAPET):
AS SOON AS A CONCRETE SAW CAN BE OPERATED WITHOUT DAMAGING THE FRESHLY PLACED CONCRETE, 25 mm DEEP CONTROL JOINTS SHALL BE SAWED INTO THE PERIMETER OF THE CONCRETE PARAPET. THE SAW CUT SHALL BE MADE IN THE COMPLETE CIRCUMFERENCE OF THE PARAPET, STARTING AND ENDING AT THE ELEVATION OF THE CONCRETE DECK. THE SAWCUTS SHALL BE PLACED AT A MINIMUM OF 2000 mm AND A MAXIMUM OF 3000 mm CENTERS. THE USE OF AN EDGE GUIDE, FENCE, OR JIG IS REQUIRED TO INSURE THAT THE CUT JOINT IS STRAIGHT, TRUE, AND ALIGNED ON ALL FACES OF THE PARAPET. THE JOINT WIDTH SHALL BE THE WIDTH OF THE SAW BLADE, A NOMINAL WIDTH OF 6 mm. THE PERIMETER OF THE DEFLECTION CONTROL JOINT SHALL BE SEALED TO A MINIMUM DEPTH OF 25 mm WITH A CAULKING MATERIAL CONFORMING TO FEDERAL SPECIFICATION, TT-S-00227E TO A MINIMUM DEPTH OF 25 mm.

ITEM SPECIAL 519 - PATCHING CONCRETE STRUCTURES WITH TROWELABLE MORTAR:
PATCH CONCRETE PIERS AS DIRECTED BY PROJECT ENGINEER SEE SHEET 15/30 FOR PIER PATCHING LOCATIONS. ALL SURFACES TO BE PATCHED AND THE EXPOSED REINFORCING STEEL WITHIN SHALL BE THOROUGHLY CLEANED BY ABRASIVE BLASTING PRIOR TO THE CLEANING SPECIFIED BY 519.04. CLEANING SHALL PRECEDE APPLICATION OF THE PATCHING MATERIAL OR ERECTION OF THE FORMS BY NOT MORE THAN 24 HOURS.

ITEM 815 GRINDING FLANGE EDGES:
GRIND BOTTOM FLANGES OF EXISTING BEAMS OVER TWO MIDDLE SPANS.

REINFORCING STEEL: NEW REINFORCING STEEL MAY REQUIRE FIELD CUTTING OR BENDING TO BE PROPERLY FITTED. PAYMENT SHALL BE INCLUDED IN 509.

DESIGN AGENCY
STRUCTURAL ENGINEERING AND PRODUCTION

DESIGNED	DRAWN	REVIEWED	DATE
BRC	BRC	DFT	10-24-96
CHECKED	REVISED	STRUCTURE FILE NUMBER	
MRG		5706483 5706513	

GENERAL NOTES
BRIDGE NO MOT-75-6000 R/L
IR 75 OVER SR 725

MOT-75-00.00

DOWEL HOLES

THE COST OF DOWEL HOLES SHALL BE INCLUDED IN ITEM SPECIAL HIGH PERFORMACE CONCRETE. THE QUANTITIES SHOWN BELOW ARE FOR INFOMATION ONLY:

336 DOWELS SHALL BE USED FOR MOT-75-6000 L/R PIERS
96 DOWELS SHALL BE USED FOR MOT-75-6000 L/R ABUTMENTS

PILES

PILES SHALL BE DRIVEN TO REFUSAL ON BEDROCK. REFUSAL SHALL BE CONSIDERED AS OBTAINED BY PENETRATING SOFT BEDROCK FOR SEVERAL MILLIMETERS WITH A MINIMUM RESISTANCE OF 20 BLOWS PER 25 mm OR REFUSAL SHALL BE CONSIDERED AS OBTAINED AFTER THE PILE HAS CONTACTED HARD BEDROCK AND THE PILE HAS THEN RECEIVED AT LEAST 20 BLOWS. THE ULTIMATE BEARING VALUE IS 600 KN PER PILE FOR THE ABUTMENT PILES AND 980 KN PER PILE FOR THE PIER PILES.

ABUTMENT PILES:
48 PILES 13.5 METERS LONG, ESTIMATED LENGTH
48 PILES OF ORDER LENGTH 13.5 METERS LONG
24 SPLICES

PIER PILES
36 PILES 9 METERS LONG, ESTIMATED LENGTH
36 PILES OF ORDER 9METERS LONG
18 SPLICES

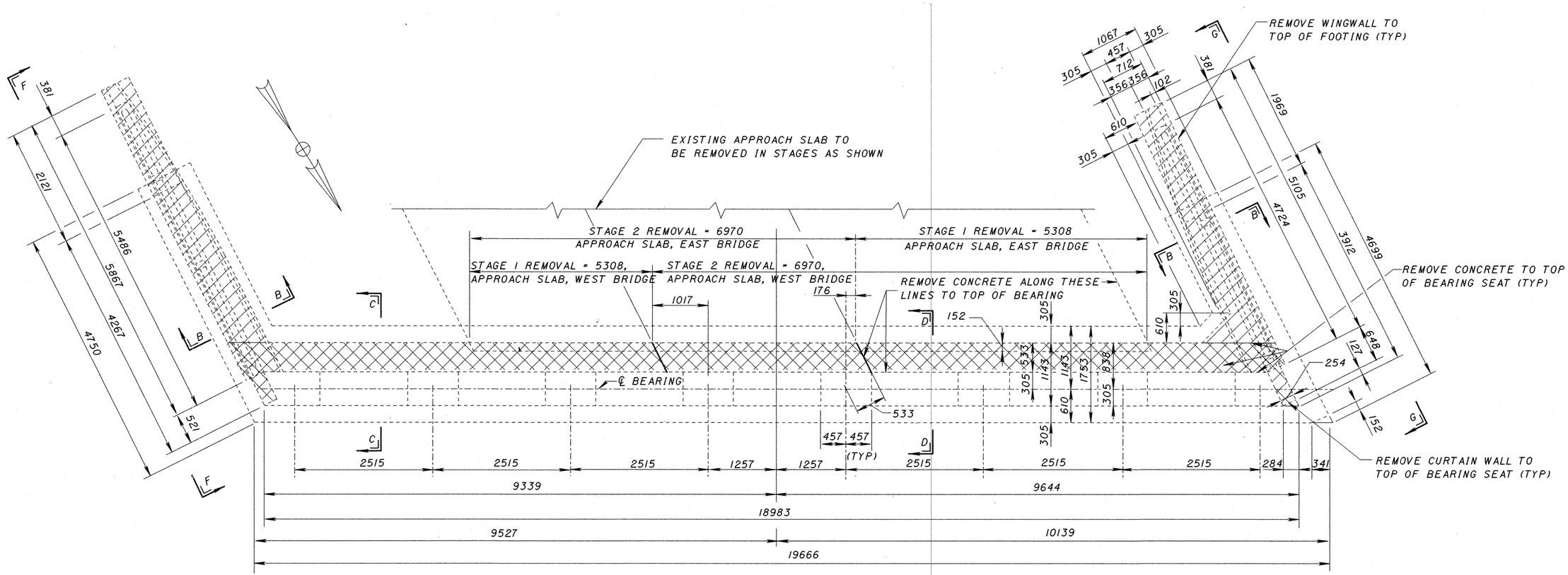

EXISTING PLAN

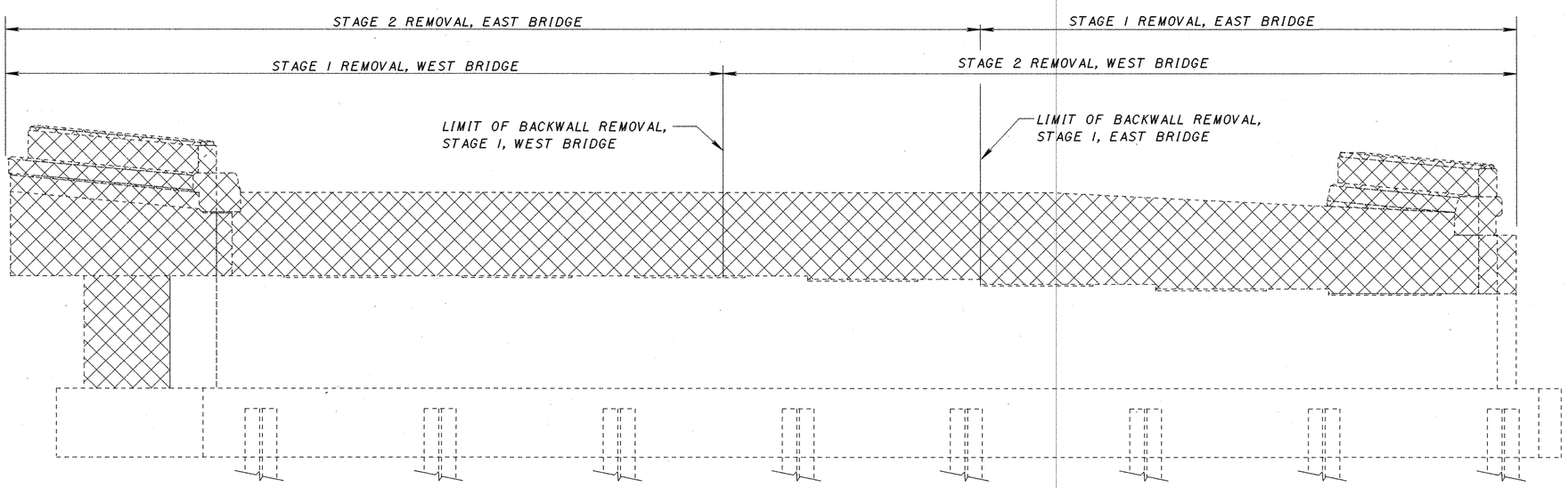

EXISTING ELEVATION

LEGEND

CONCRETE TO BE REMOVED

FOR CROSS SECTIONS, SEE SHEET 8/30

DESIGN AGENCY: STRUCTURAL ENGINEERING AND PRODUCTION

REVIEWED	DATE	STRUCTURE FILE NUMBER
DFT	10-24-96	5706513 5706483

DRAWN	REVISED
BRC	

DESIGNED	CHECKED
BRC	MRG

EXISTING REAR ABUTMENT PLAN AND ELEVATION

BRIDGE NO MOT-75-6000 L/R
IR 75 OVER SR 725

MOT-75-00.00

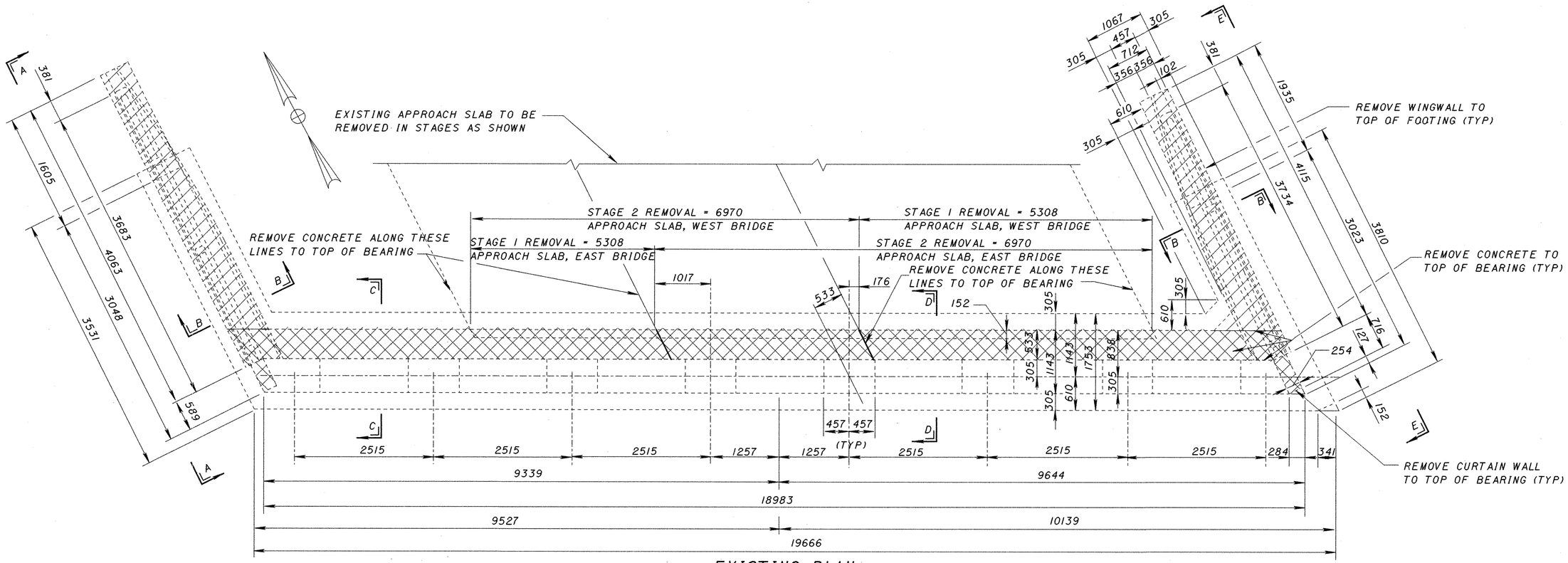

EXISTING PLAN

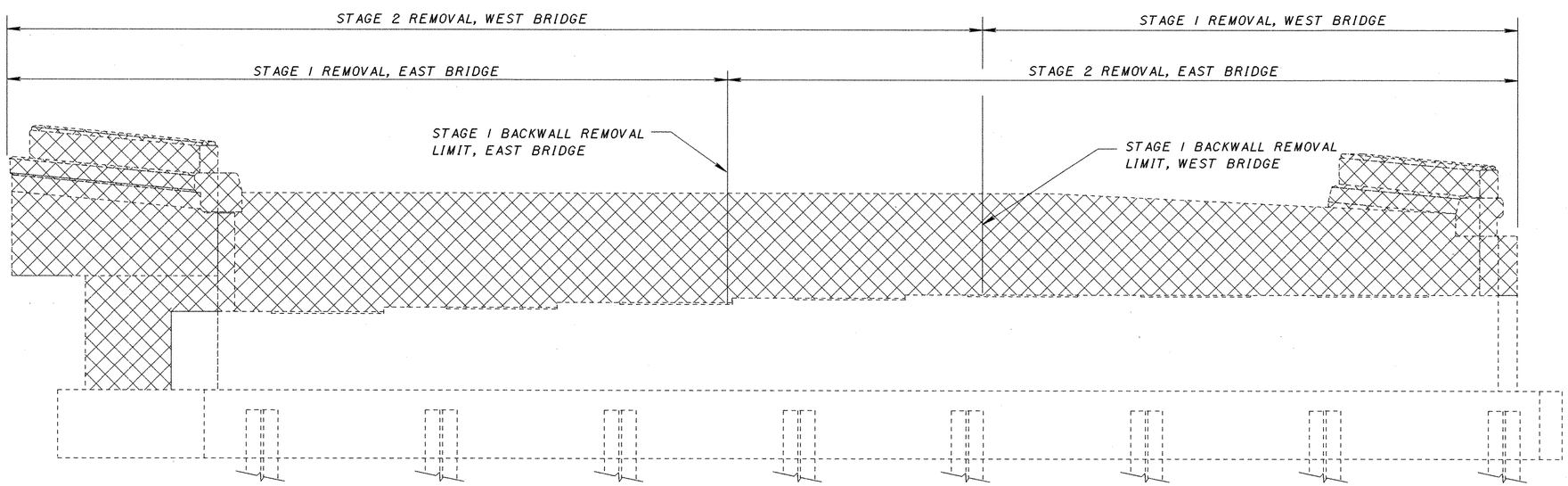

EXISTING ELEVATION

LEGEND

CONCRETE TO BE REMOVED

FOR CROSS SECTIONS, SEE SHEET 8/30

DESIGN AGENCY: STRUCTURAL ENGINEERING AND PRODUCTION

REVIEWED DFT | DATE 10-24-96

STRUCTURE FILE NUMBER 5706513, 5706483

DRAWN BRC | REVISED

DESIGNED BRC | CHECKED MRG

EXIST FORWARD ABUTMENT PLAN AND ELEVATION

BRIDGE NO MOT-75-6000 L/R

IR 75 OVER SR 725

MOT-75-00.00

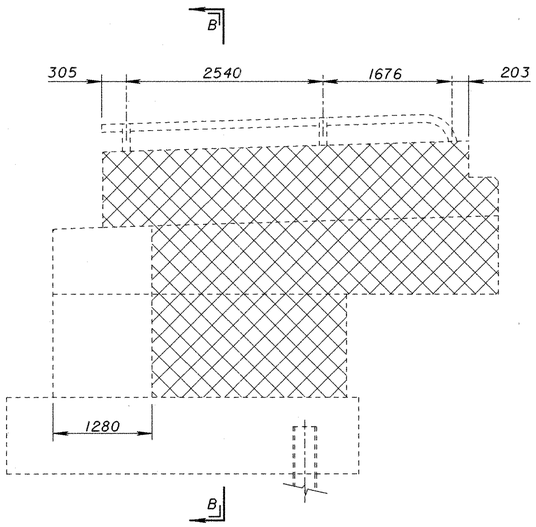

ELEVATION G-G

REAR ABUTMENT

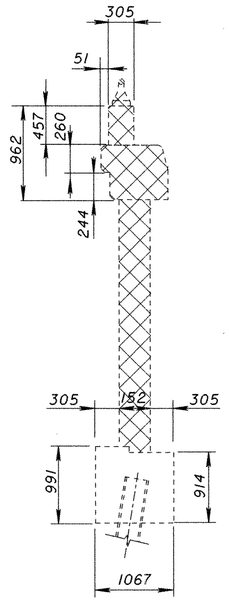

SECTION B-B

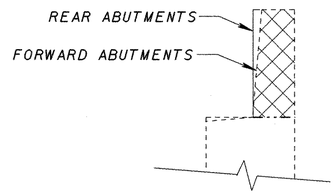

SECTION C-C

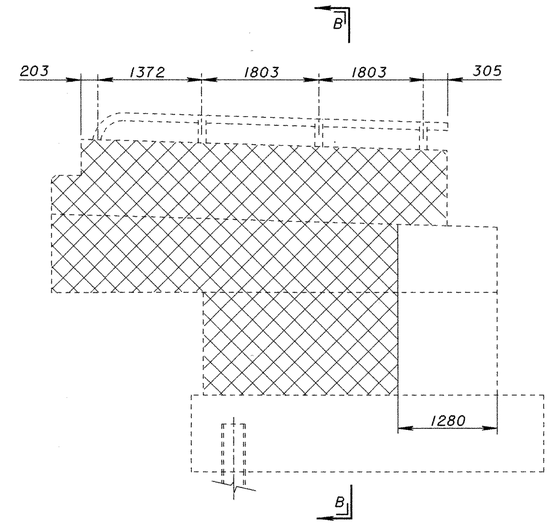

ELEVATION F-F

REAR ABUTMENT

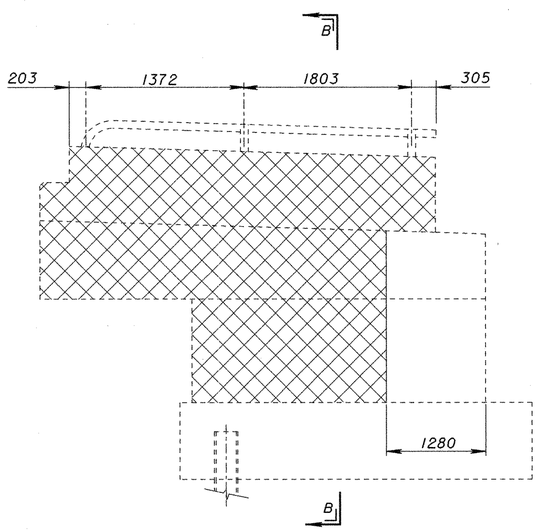

ELEVATION A-A

FORWARD ABUTMENT

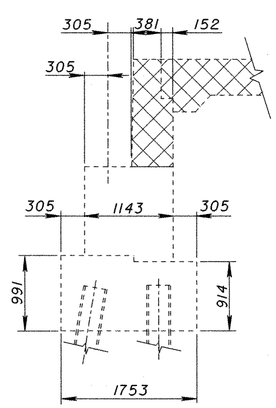

SECTION D-D

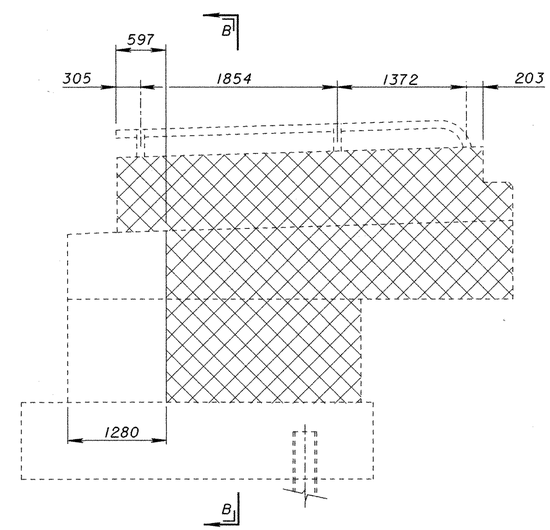

ELEVATION E-E

FORWARD ABUTMENT

LEGEND

CONCRETE TO BE REMOVED

DESIGN AGENCY
STRUCTURAL ENGINEERING AND PRODUCTION

DESIGNED	DRAWN	REVIEWED	DATE
BRC	BRC	DFT	10-24-96
CHECKED	REVISED	STRUCTURE FILE NUMBER	
MRG		5706513 5706483	

EXISTING ABUTMENT DETAILS
BRIDGE NO MOT-75-6000 L/R
IR 75 OVER SR 725

MOT-75-00.00

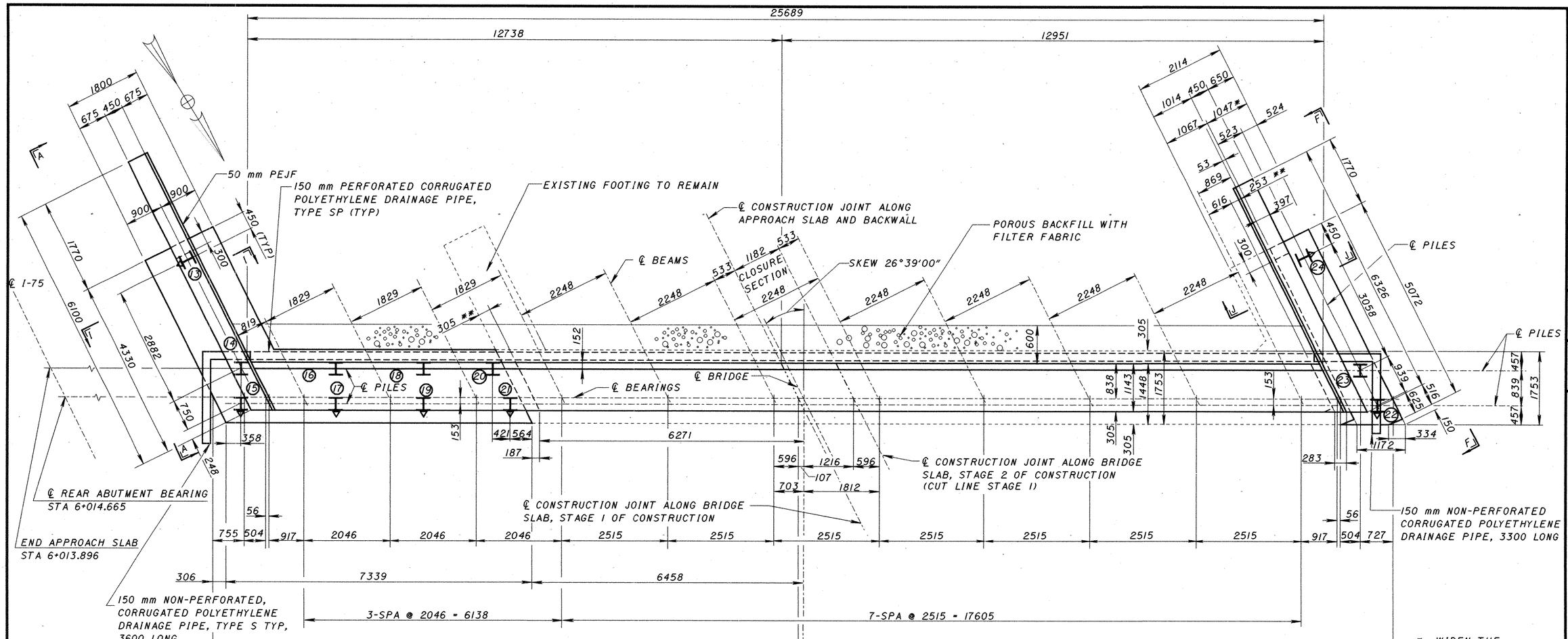

PLAN

* WIDEN THE EXISTING FOOTING.

** WIDEN THE EXISTING ABUTMENT BEARING SEAT.

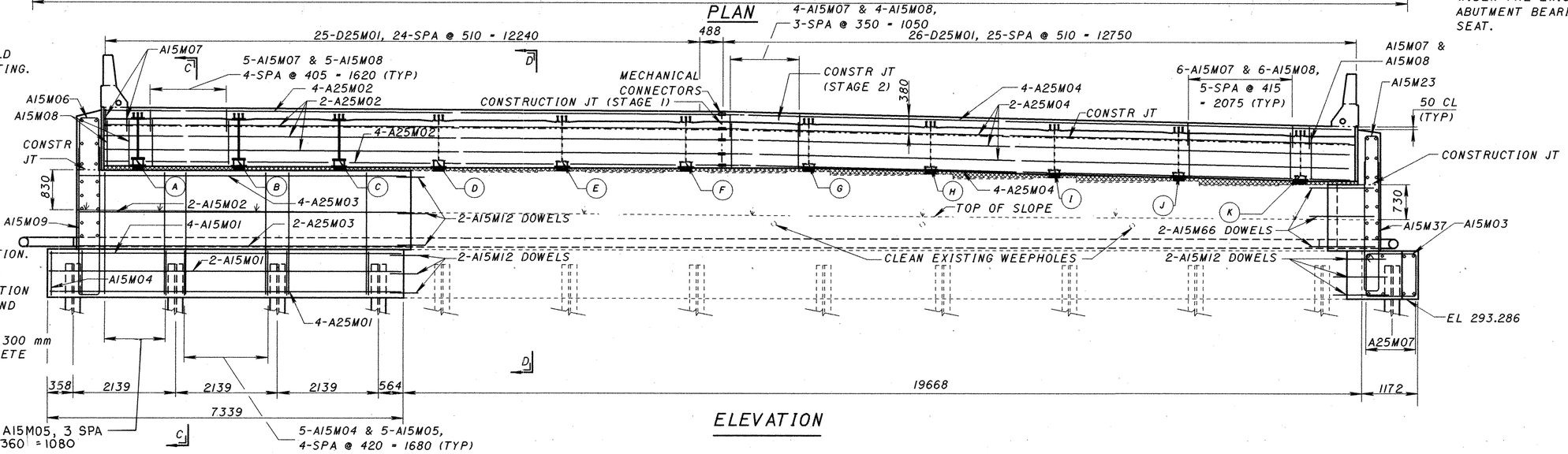

ELEVATION

NOTES:

1. CLEANING OF EXISTING WEEPHOLES INCLUDED WITH POROUS BACKFILL FOR PAYMENT.
2. FOOTING ELEVATION SHOULD MATCH THE EXISTING FOOTING.
3. FOR SECTIONS & DETAILS SEE SHEETS 13/30 AND 14/30
4. FOR BOTTOM OF BEAM ELEVATION, SEE SHEET 21/30
5. BATTERED PILE 1:4
6. PILES LOCATIONS MAY BE ADJUSTED TO PROVIDE CLEARANCE FOR INSTALLATION.
7. SHEETING SHALL BE USED DURING STAGED CONSTRUCTION OF ABUTMENT BACKWALL AND APPROACH SLAB.
8. DOWEL A15M12 AND A15M66 300 mm INTO THE EXISTING CONCRETE SEE GENERAL NOTE.

LEGEND:

FF: FAR FACE
NF: NEAR FACE
(16) - PILE NUMBER

DESIGN AGENCY: STRUCTURAL ENGINEERING AND PRODUCTION

DESIGNED	DRAWN	REVIEWED	DATE
BRC	BRC	DFT	10-24-96
CHECKED	REVISED	STRUCTURE FILE NUMBER	
MRG		5706483	

REAR ABUTMENT DETAILS

BRIDGE NO MOT-75-6000 L (WEST)
IR 75 OVER SR 725

MOT-75-00.00

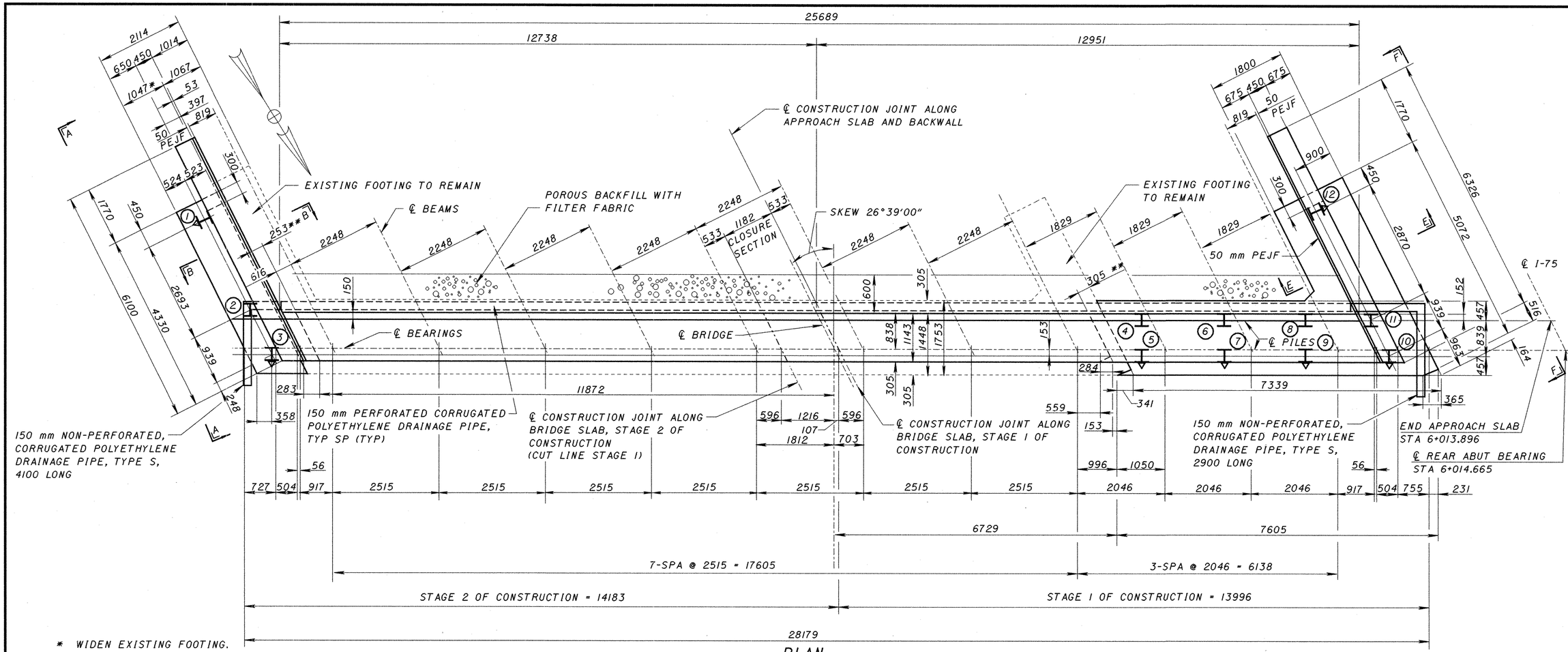

* WIDEN EXISTING FOOTING.

** WIDEN EXISTING ABUTMENT BEARING SEAT.

PLAN

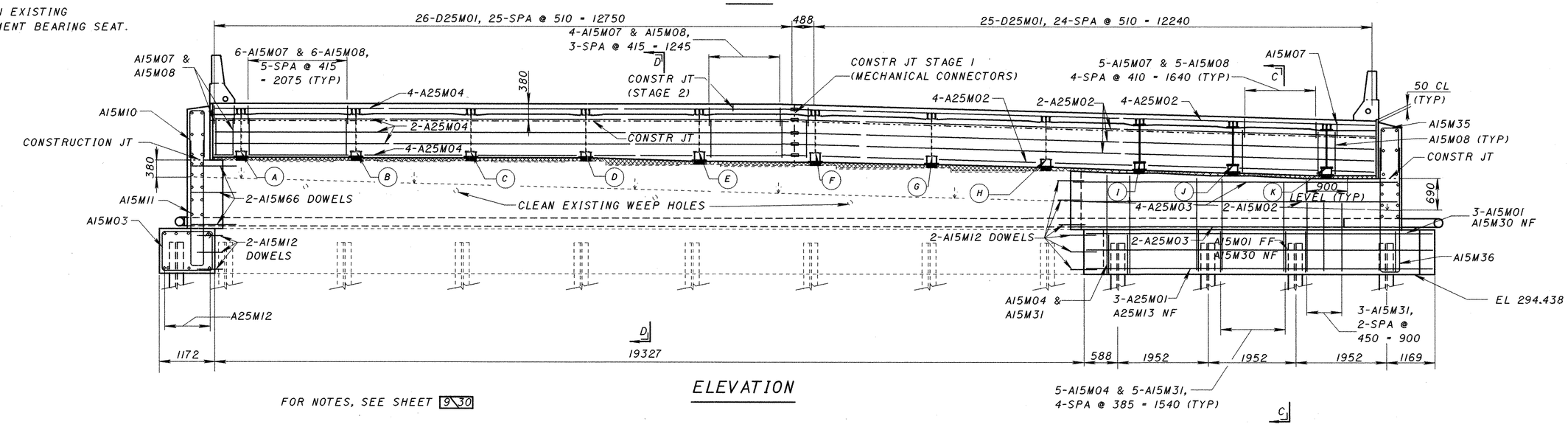

ELEVATION

FOR NOTES, SEE SHEET 9/30

DESIGN AGENCY: STRUCTURAL ENGINEERING AND PRODUCTION

DESIGNED	DRAWN	REVIEWED	DATE
BRC	BRC	DFT	10-24-96
CHECKED	REVISED	STRUCTURE FILE NUMBER	
MRG		5706513	

REAR ABUTMENT DETAILS

BRIDGE NO MOT-75-6000 R (EAST)
IR 75 OVER SR 725

MOT-75-00.00

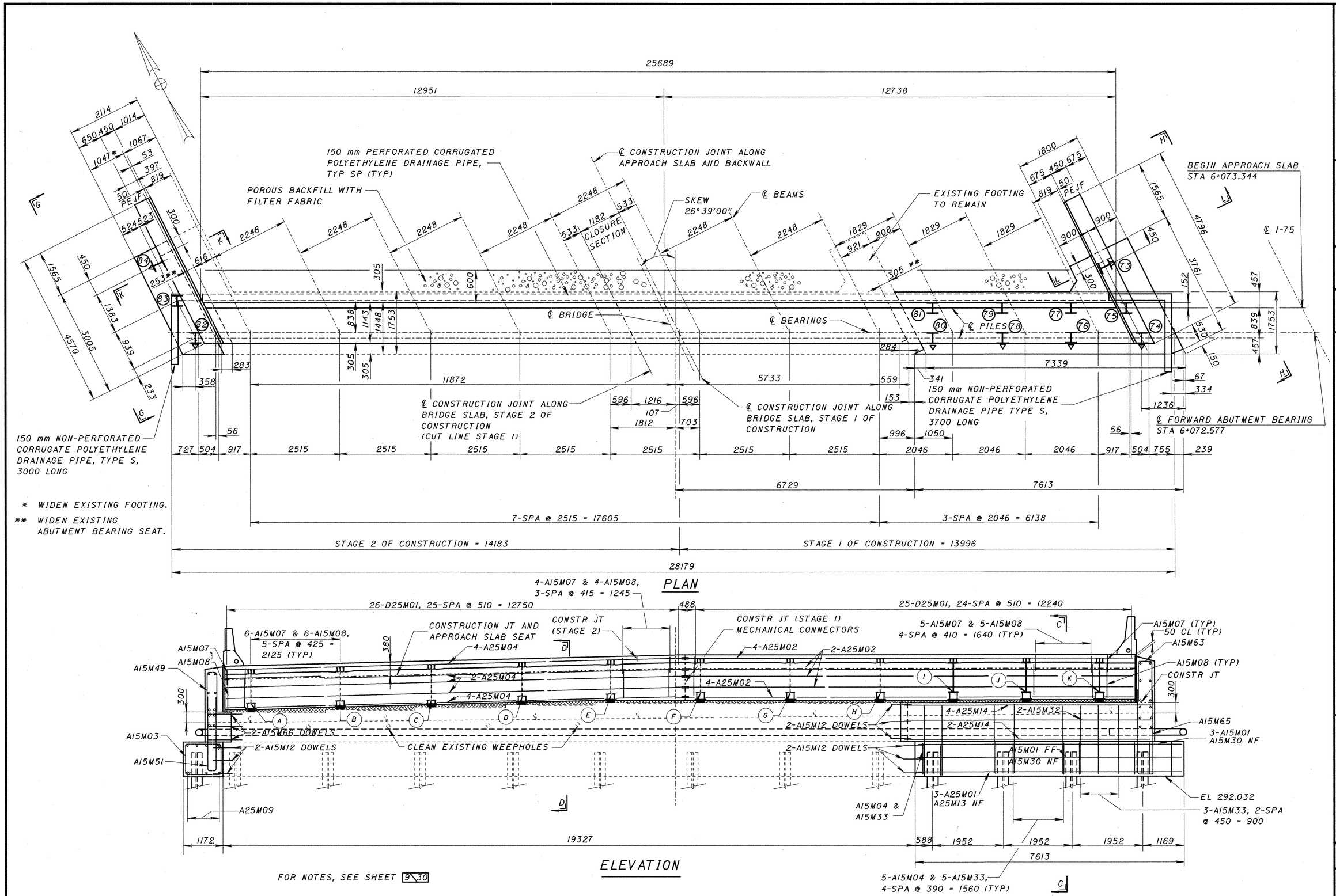

FOR NOTES, SEE SHEET 9/30

DESIGN AGENCY: STRUCTURAL ENGINEERING AND PRODUCTION

DESIGNED	DRAWN	REVIEWED	DATE
BRC	BRC	DFT	10-24-96
CHECKED	REVISED	STRUCTURE FILE NUMBER	
MRG		5706483	

FORWARD ABUTMENT DETAILS

BRIDGE NO MOT-75-6000 L (WEST)
IR 75 OVER SR 725

MOT-75-00.00

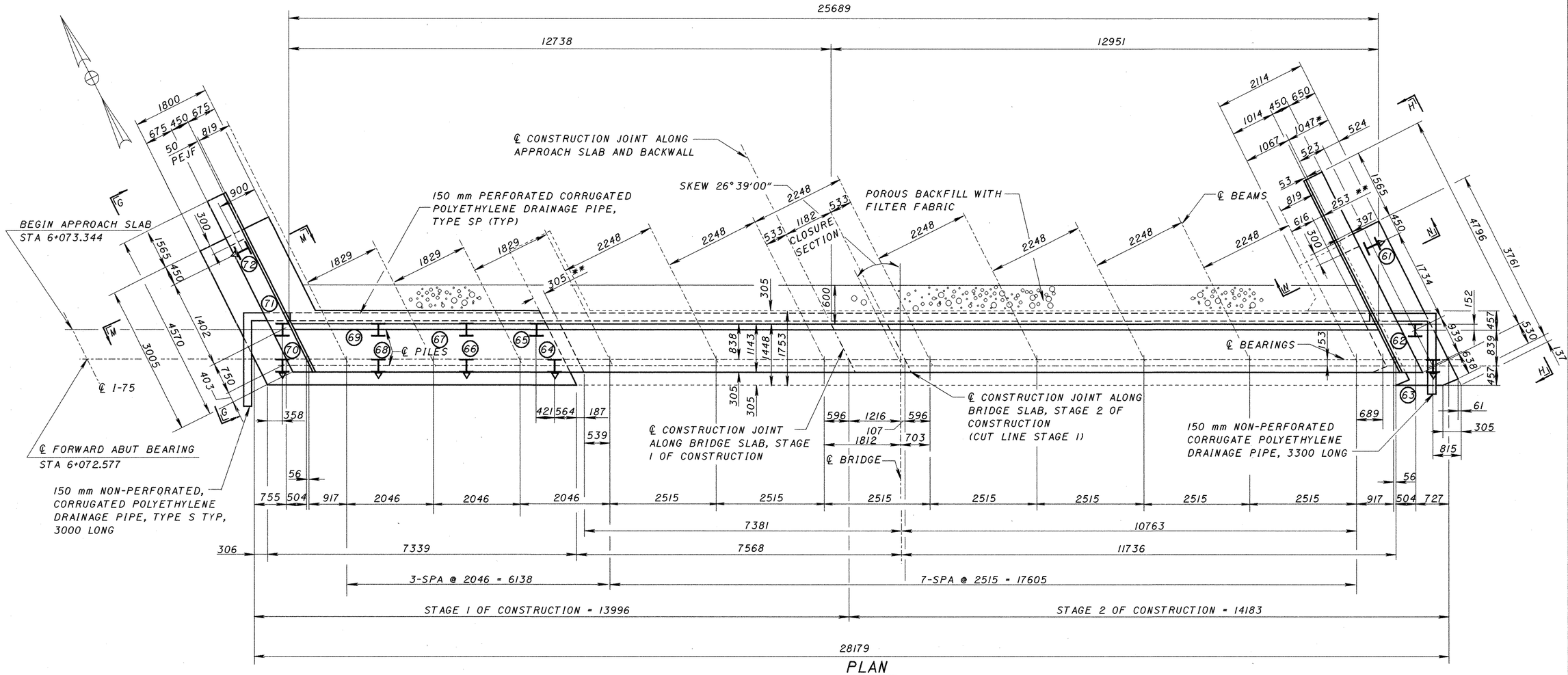

PLAN

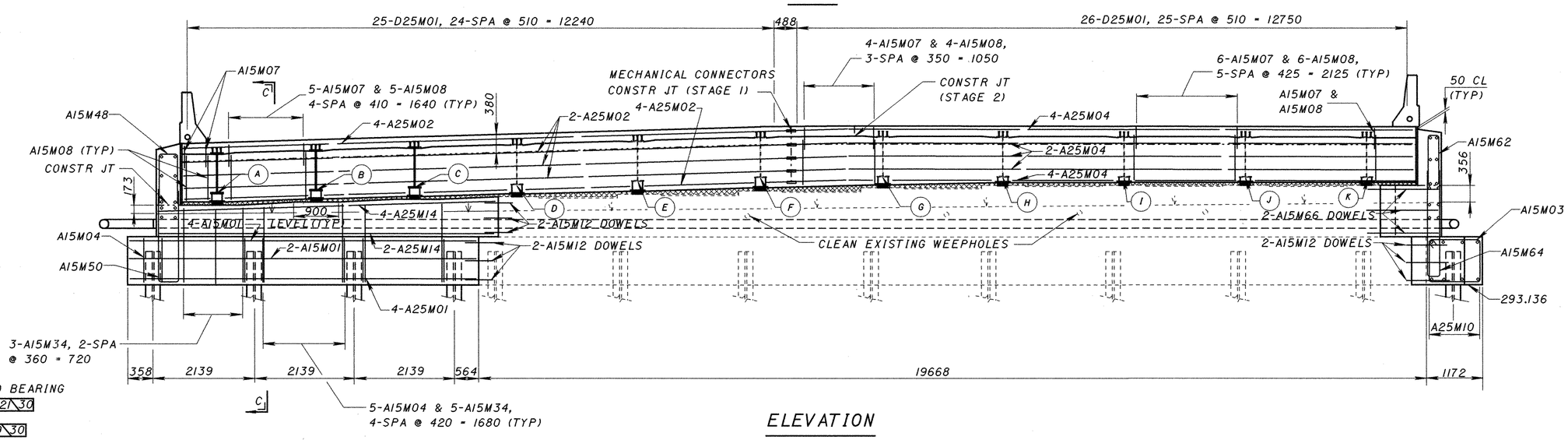

ELEVATION

FOR BOTTOM OF BEAM AND BEARING ELEVATIONS, SEE SHEET 2/30

FOR NOTES, SEE SHEET 9/30

DESIGN AGENCY	REVIEWED	DATE	DRAWN	REVISED	DESIGNED	CHECKED
STRUCTURAL ENGINEERING AND PRODUCTION	DFT	10-24-96	BRC		BRC	MRG
	STRUCTURE FILE NUMBER					
	5706513					

FORWARD ABUTMENT DETAILS

BRIDGE NO MOT-75-6000 R (EAST)
IR 75 OVER SR 725

MOT-75-00.00

12/30

127/145

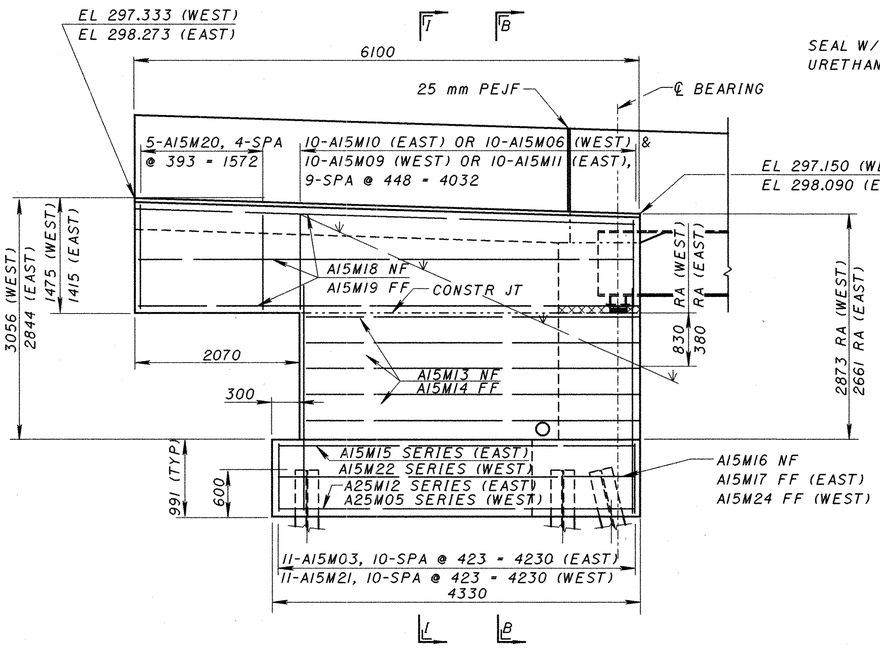

SECTION A-A

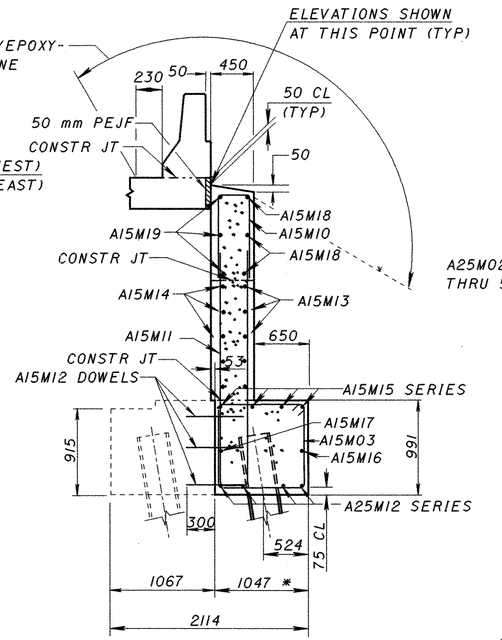

SECTION B-B

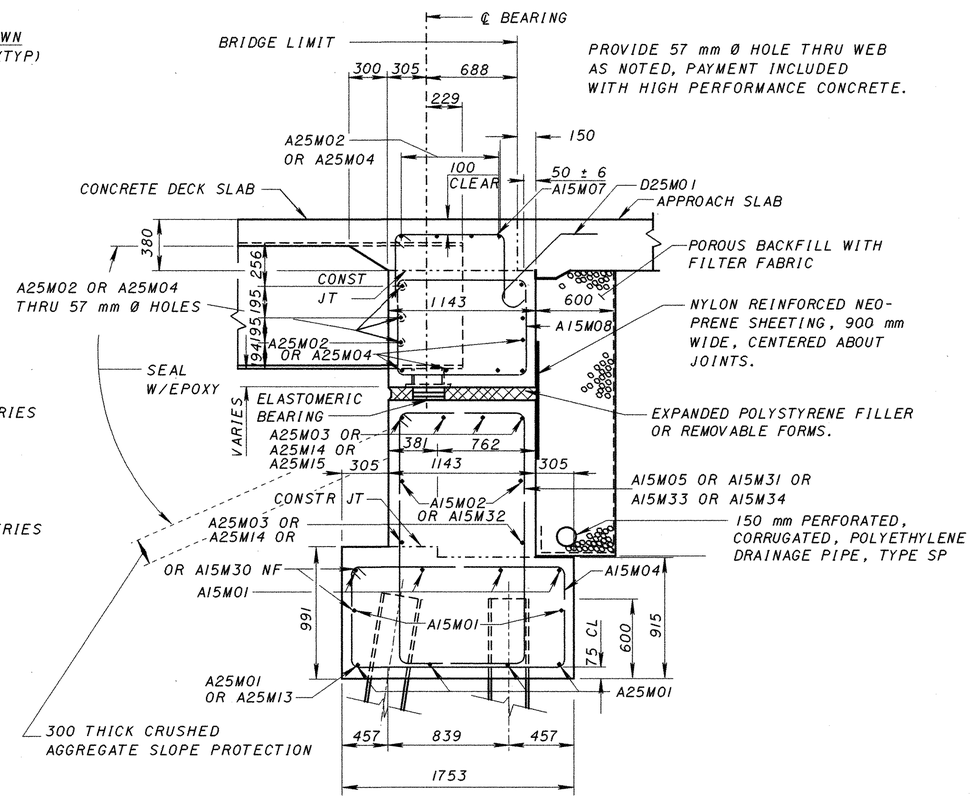

SECTION C-C

NOTES:

POROUS BACKFILL:
POROUS BACKFILL WITH FILTER FABRIC, AS PER PLAN, 600 mm THICK, SHALL COVER THE VERTICAL FACE BETWEEN THE POROUS BACKFILL AND THE EXCAVATION, THE BOTTOM OF THE POROUS BACKFILL AND THE EXCAVATION AND INCLUDE A 150 mm VERTICAL UPTURN BETWEEN THE POROUS BACKFILL AND THE ABUMENT BACKWALL. 0.06 CUBIC METERS OF BAGGED NO 3 AGGREGATE SHALL BE PLACED AT EACH WEEPHOLE. BAGGED AGGREGATE IS INCLUDED WITH POROUS BACKFILL FOR PAYMENT.

* WIDEN EXISTING FOOTING

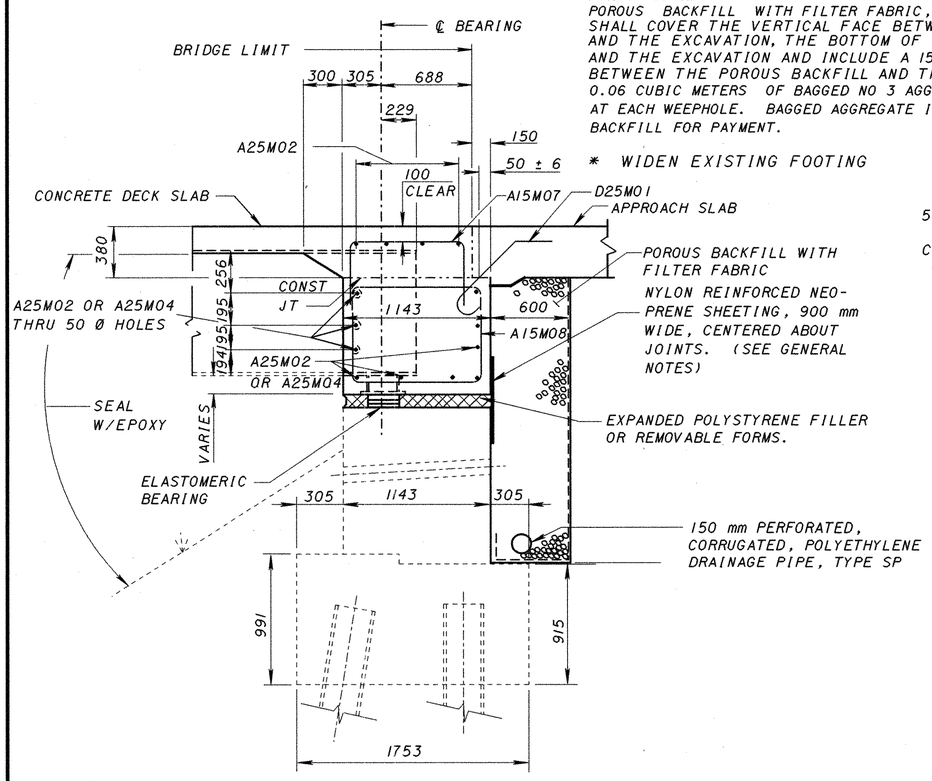

SECTION D-D

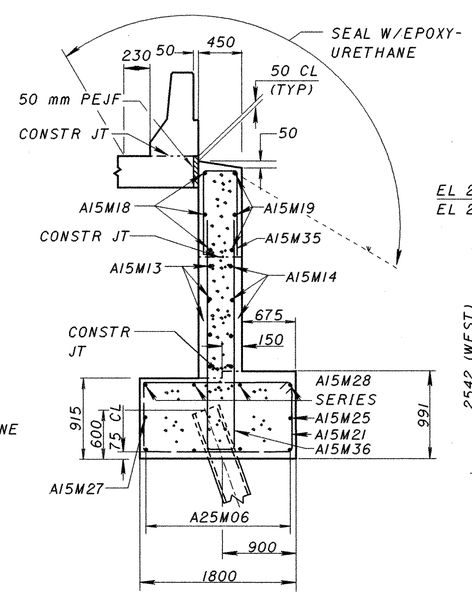

SECTION E-E

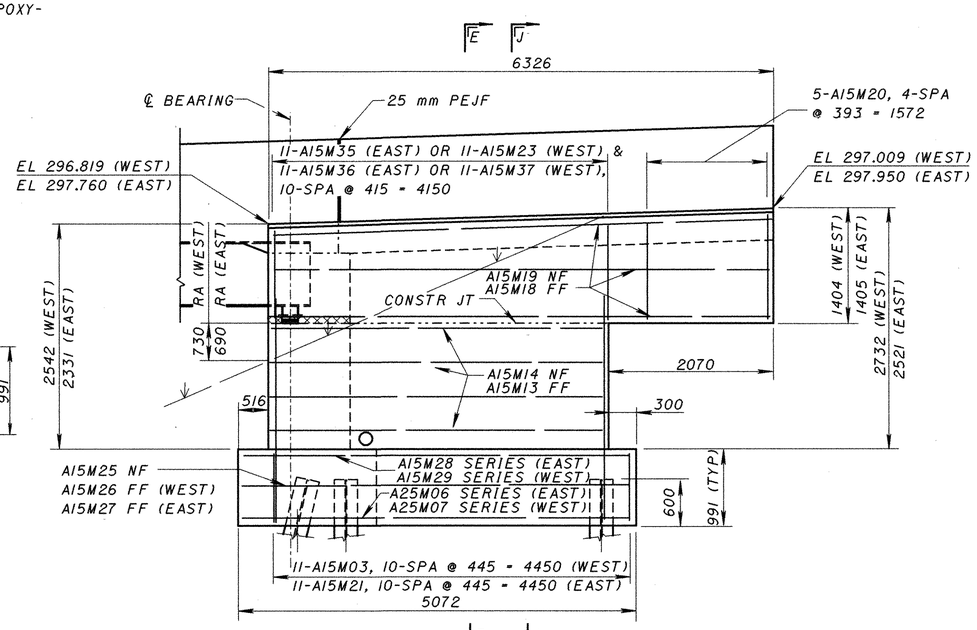

SECTION F-F

DESIGN AGENCY	STRUCTURAL ENGINEERING AND PRODUCTION
REVIEWED DFT	DATE 10-24-96
STRUCTURE FILE NUMBER	5706483 5706513
DRAWN BRC	REVISED
DESIGNED BRC	CHECKED MRG

ABUTMENT DETAILS
BRIDGE NO MOT-75-6000 L/R
IR 75 OVER SR 725

MOT-75-00.00

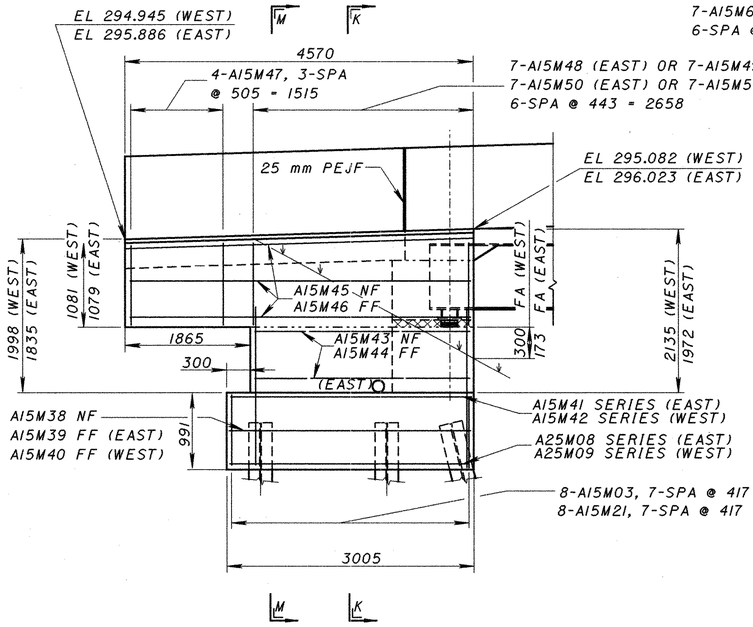

SECTION G-G

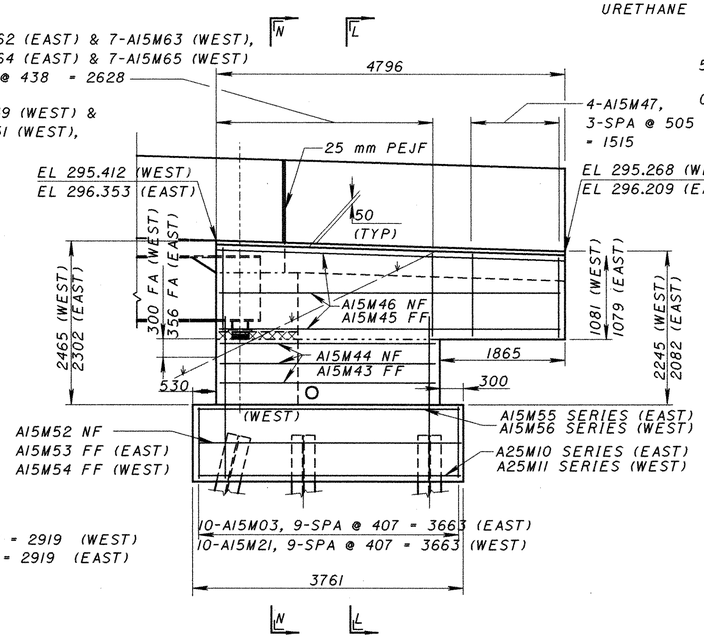

SECTION H-H

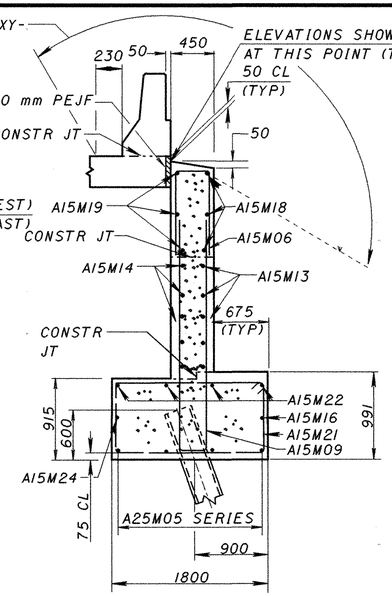

SECTION I-I

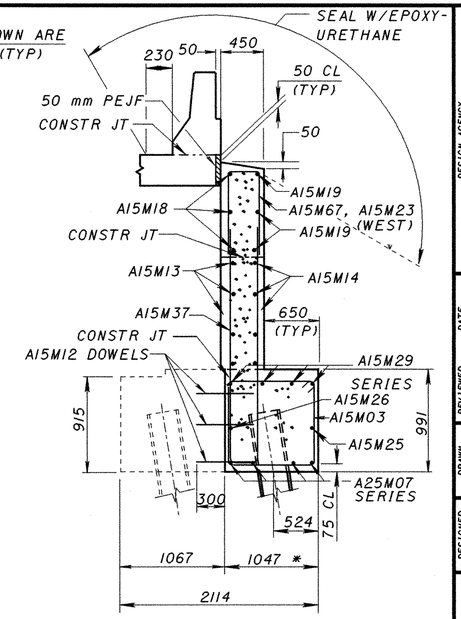

SECTION J-J

NOTES:

DIAPHRAGM CONCRETE ENCASING THE STRUCTURAL MEMBER SECTIONS SHALL BE PLACED AT LEAST 48 HOURS BEFORE THE ACTUAL DECK CONCRETE IS PLACED.

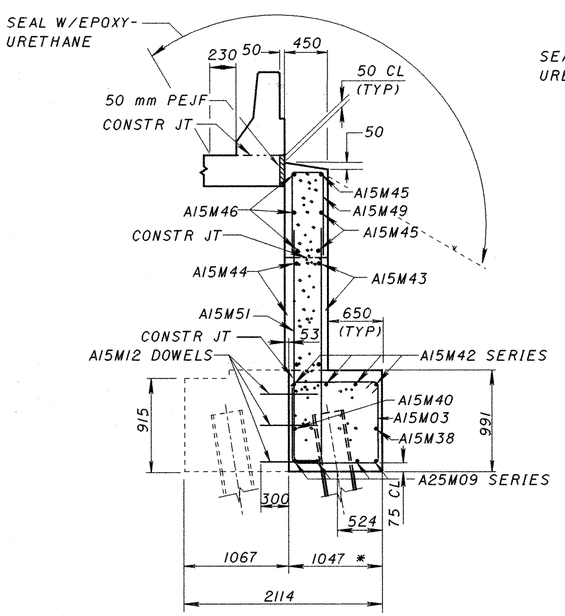

SECTION K-K

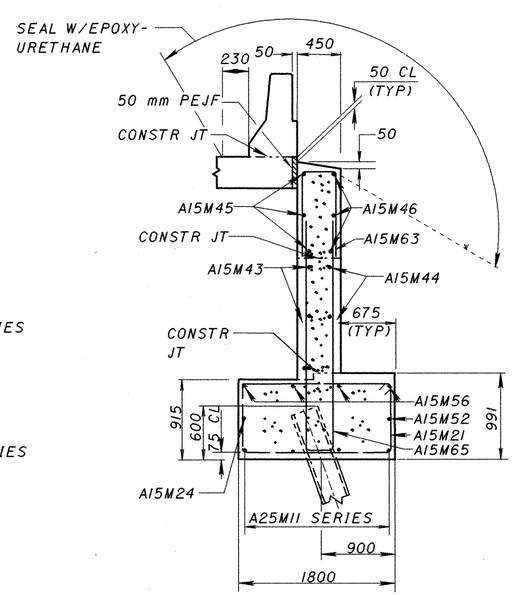

SECTION L-L

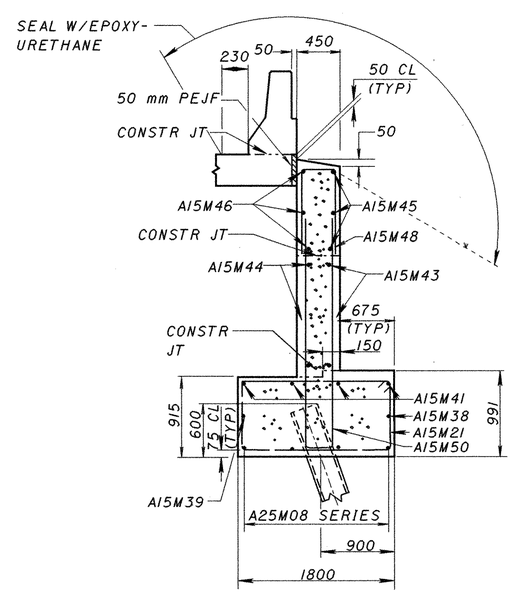

SECTION M-M

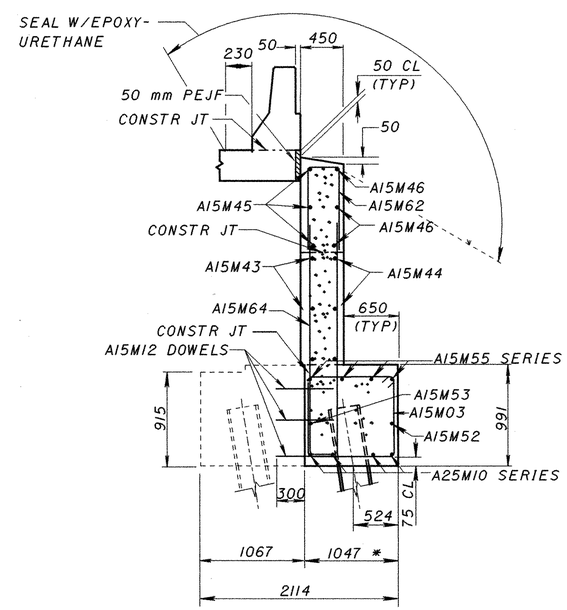

SECTION N-N

FOR NOTES SEE SHEET NO 13/30

DESIGN AGENCY: STRUCTURAL ENGINEERING AND PRODUCTION

DATE	REVIEWED	STRUCTURE FILE NUMBER
10-24-96	DFT	5706483

DRAWN	REVISED
BRC	

DESIGNED	CHECKED
BRC	MRG

ABUTMENT DETAILS
BRIDGE NO MOT-75-6000 L/R
IR 75 OVER S5 725

MOT-75-00.00

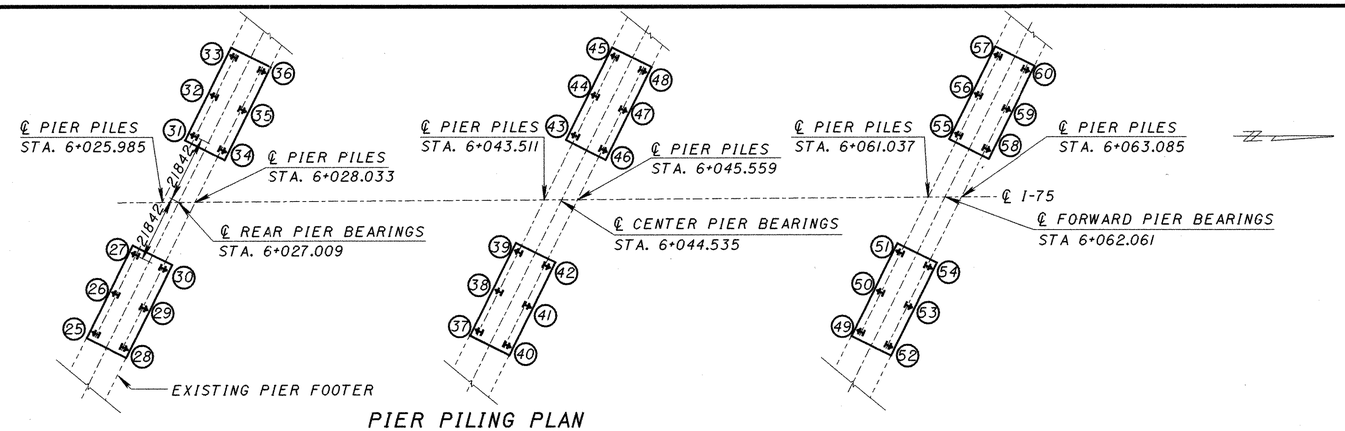

PIER PILING PLAN

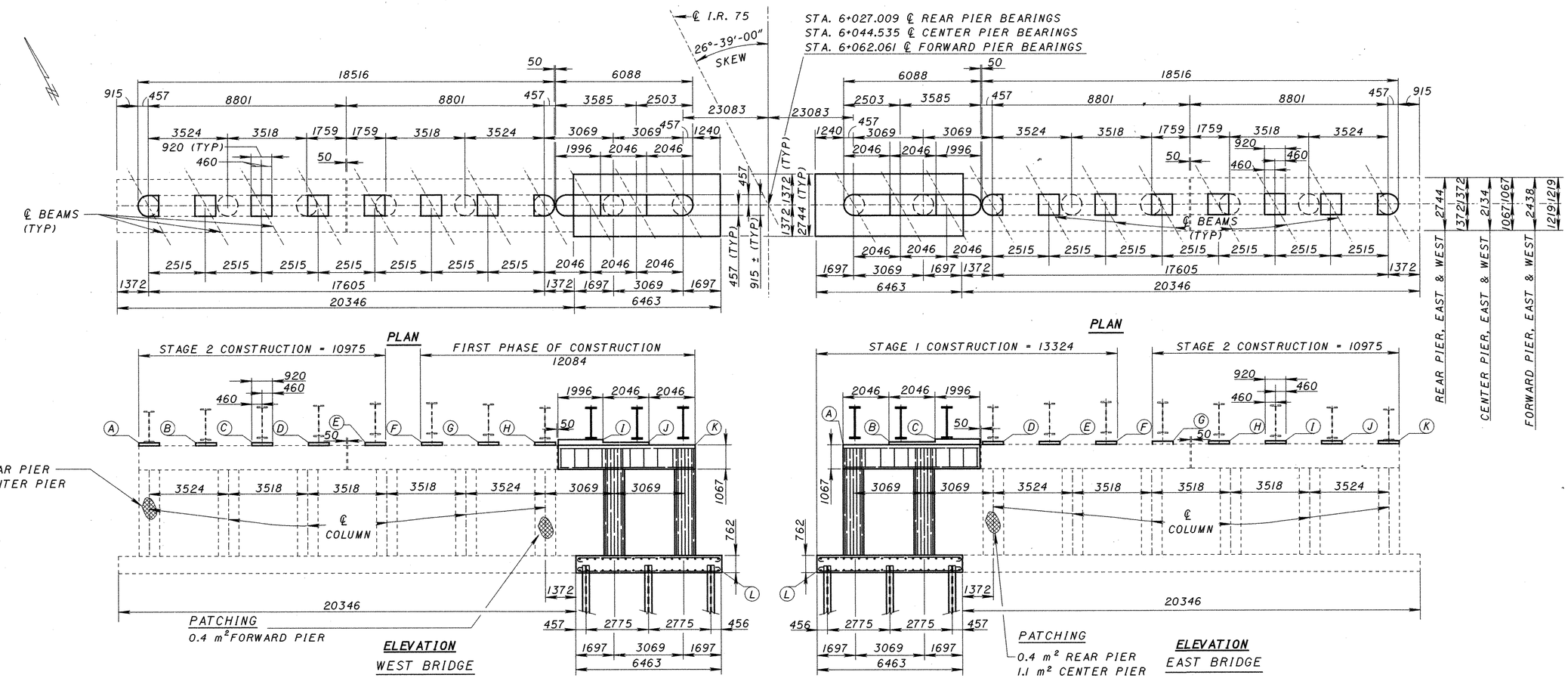

PIER BRGS.		A	B	C	D	E	F	G	H	I	J	K	L*
WEST BRIDGE	REAR	295.365	295.434	295.503	295.572	295.641	295.690	295.689	295.688	295.700	295.699	295.698	288.240
	CENTER	294.834	294.903	294.972	295.041	295.109	295.159	295.158	295.156	295.168	295.167	295.166	288.520
	FORWARD	294.314	294.383	294.452	294.521	294.590	294.639	294.638	294.636	294.648	294.647	294.646	288.100
EAST BRIDGE	REAR	296.319	296.375	296.431	296.474	296.543	296.612	296.631	296.629	296.628	296.627	296.626	289.300
	CENTER	295.787	295.843	295.899	295.943	296.012	296.081	296.099	296.098	296.096	296.095	296.094	289.460
	FORWARD	295.267	295.323	295.379	295.423	295.492	295.561	295.579	295.578	295.577	295.575	295.574	288.840

* NEW FOOTING SHALL BE PLACED AT THE SAME ELEVATION AS THE EXISTING FOOTING, THE LENGTH OF SP15M AND P30M SHOULD BE ADJUSTED.

FOR MORE DETAILS SEE SHEET 16/30

DESIGN AGENCY
STRUCTURAL ENGINEERING AND PRODUCTION

DESIGNED	DRAWN	REVIEWED	DATE
MRG	RJS	DFT	10-24-96
CHECKED	REVISED	STRUCTURE FILE NUMBER	
BRC		5706583 5706513	

PIER DETAILS
BRIDGE NO MOT-75-6000 L/R
IR 75 OVER SR 725

MOT-75-00.00

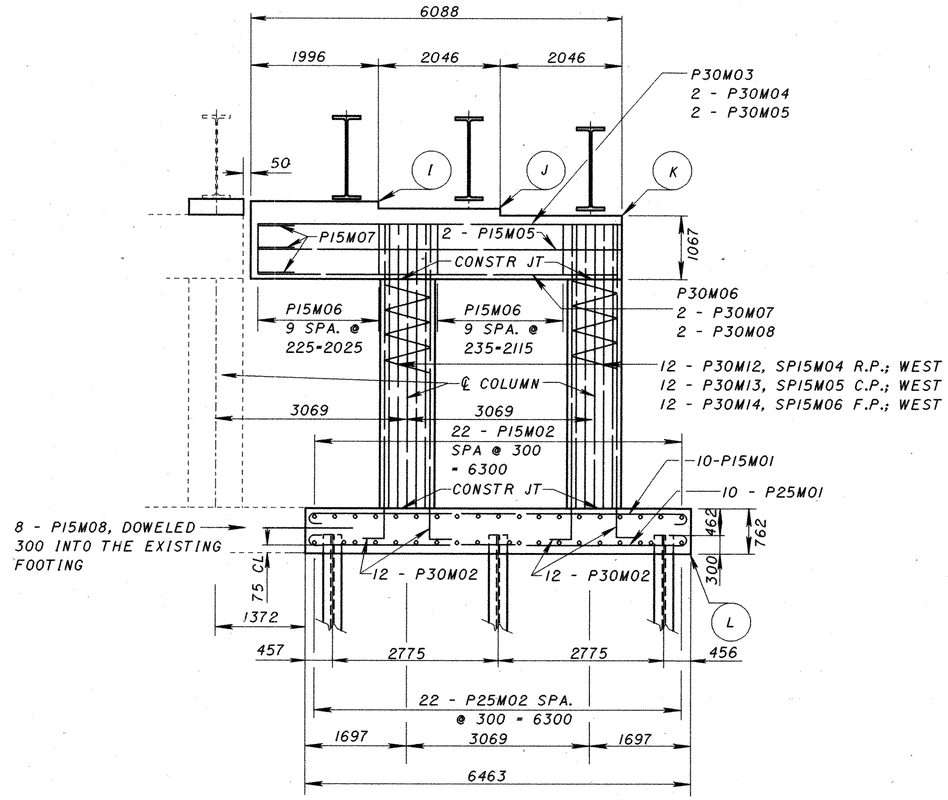

ELEVATION
WEST BRIDGE

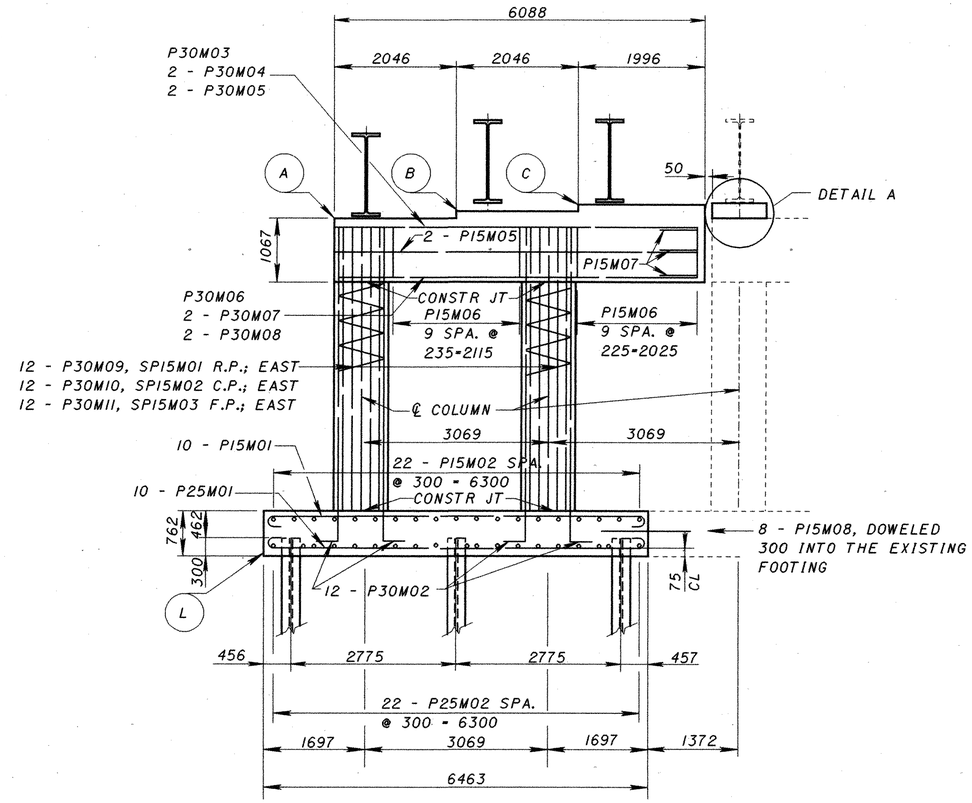

ELEVATION
EAST BRIDGE

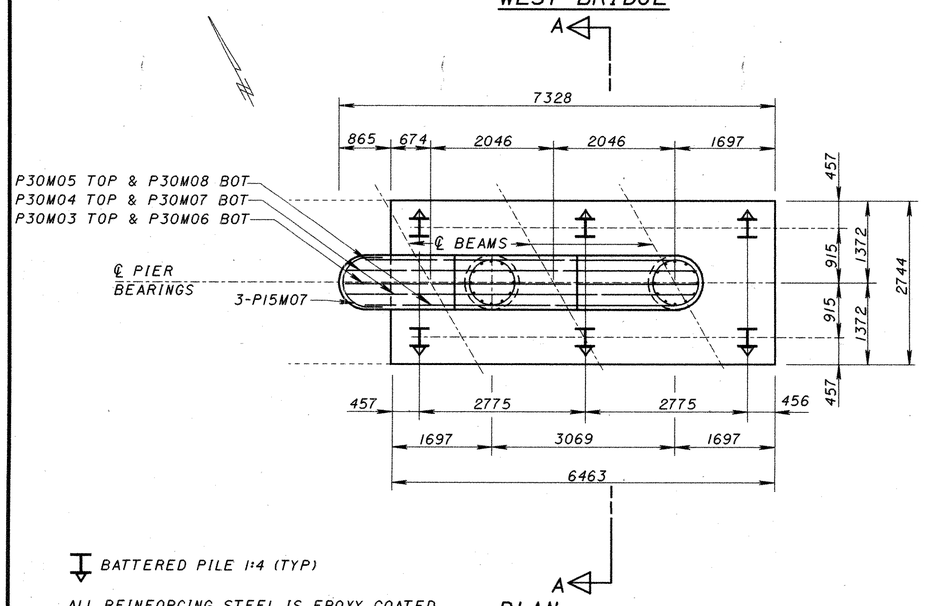

BATTERED PILE 1:4 (TYP)

ALL REINFORCING STEEL IS EPOXY COATED.
PILES ARE HP250x62 BATTERED 1:4.

PLAN

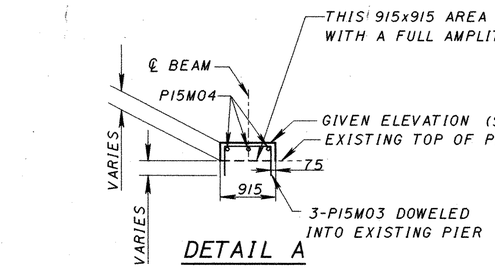

DETAIL A

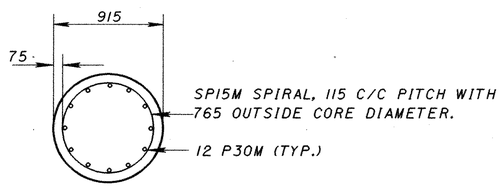

SECTION B-B

WARNING:
DOWELLING OF P15M03 INTO THE BRIDGE SEAT SHALL AVOID DAMAGING THE EXISTING PIER CAP REINFORCING STEEL.

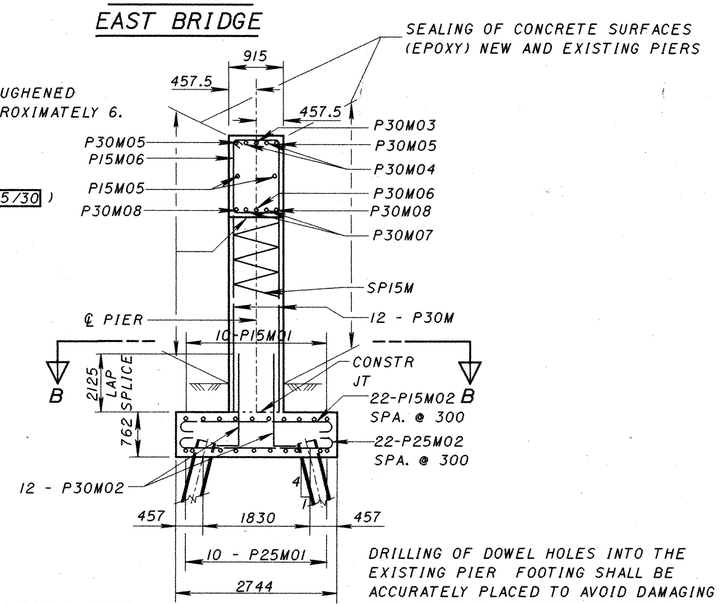

SECTION A-A

DRILLING OF DOWEL HOLES INTO THE EXISTING PIER FOOTING SHALL BE ACCURATELY PLACED TO AVOID DAMAGING THE EXISTING REINFORCING STEEL, SEE GENERAL NOTE

DESIGN AGENCY
STRUCTURAL ENGINEERING AND PRODUCTION

DESIGNED	DRAWN	REVIEWED	DATE
MRG	RJS	DFT	10-24-96
CHECKED	REVISED	STRUCTURE FILE NUMBER	
BRC		5706483 5706513	

PIER DETAILS
BRIDGE NO MOT-75-6000 L/R
IR 75 OVER SR 725

MOT-75-00.00

16/30

131/145

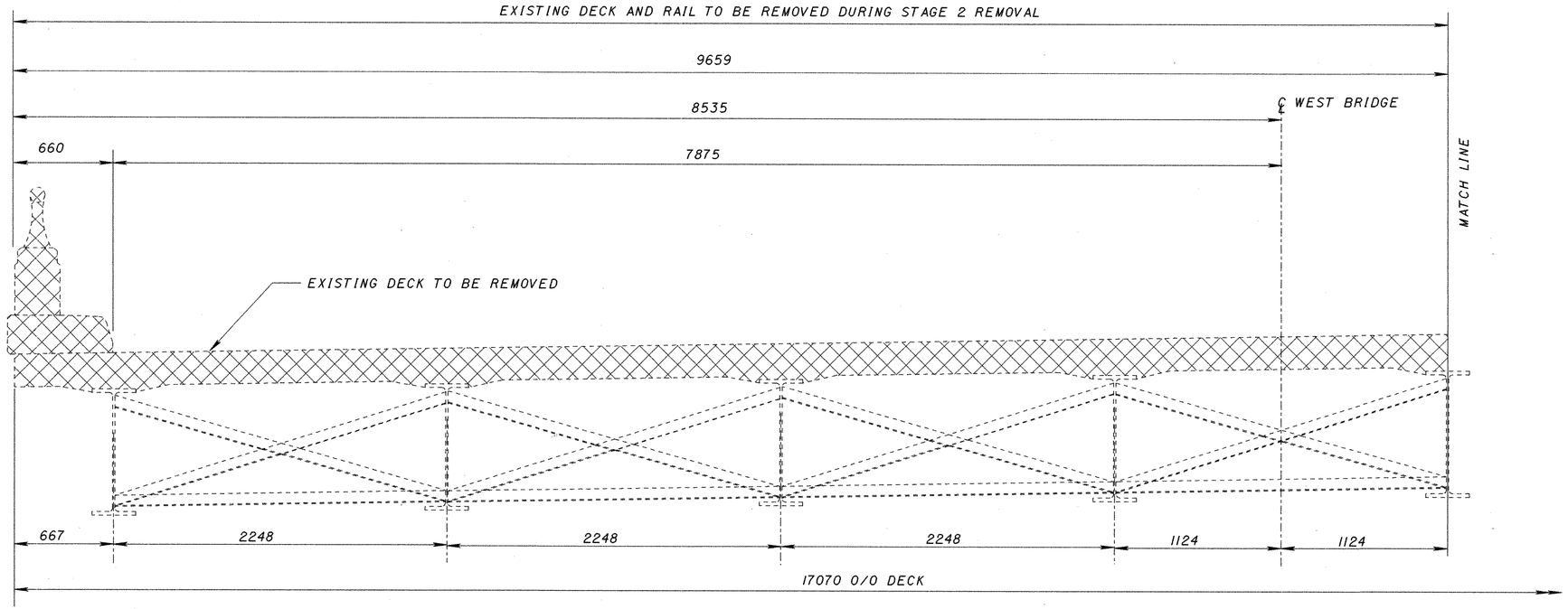

EXISTING TRANSVERSE CROSS-SECTION

(SOUTH BOUND LANES- AS SHOWN)
(NORTH BOUND LANES- OPPOSITE HAND)

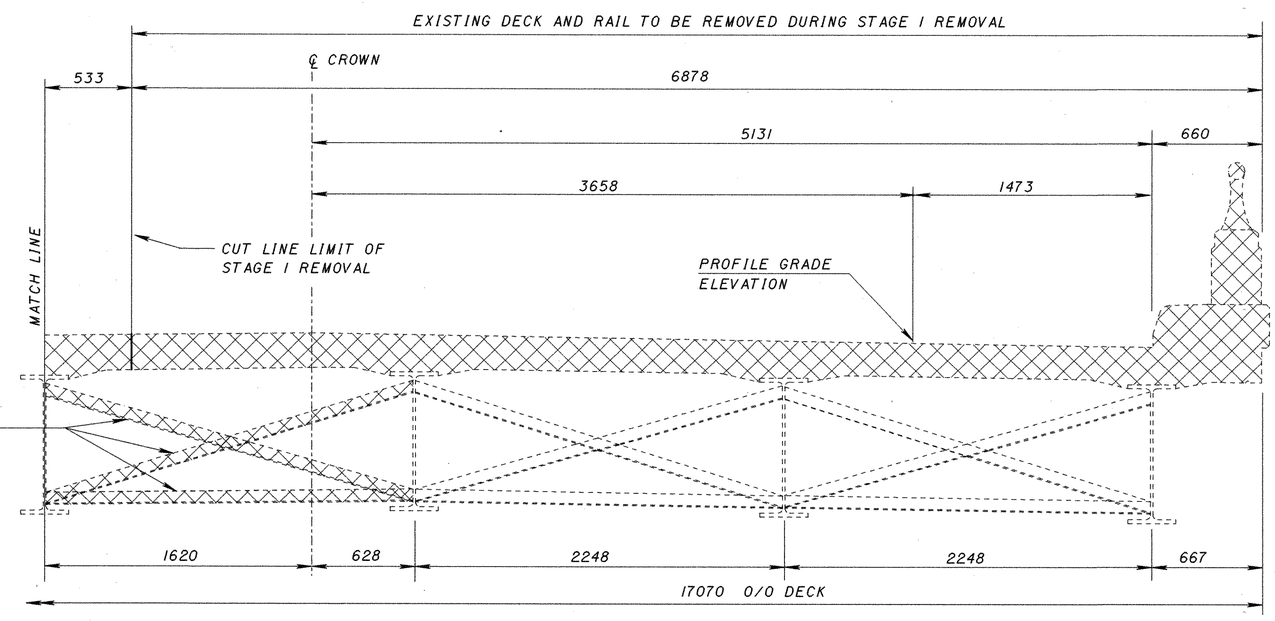

ONLY EXISTING CROSSFRAMES IN BAY OF CLOSURE SECTION TO BE REMOVED (BEFORE JACKING) AND REPLACED PRIOR TO PLACING CONCRETE IN THE CLOSURE SECTION. EXISTING INTERMEDIATE CROSSFRAMES TO BE COMPLETELY REMOVED AND GRIND WELD FLUSH WITH WEB. END CROSSFRAMES AND END DAM SHALL BE REMOVED AS NECESSARY TO RAISE THE SUPERSTRUCTURE. PAYMENT INCLUDED WITH ITEM 202, PORTIONS OF STRUCTURE REMOVED.

LEGEND

PORTION OF STRUCTURE TO BE REMOVED

DESIGN AGENCY: STRUCTURAL ENGINEERING AND PRODUCTION

REVIEWED: DFT DATE: 10-24-96

STRUCTURE FILE NUMBER: 5706513, 5706483

DRAWN: BRC REVISED:

DESIGNED: BRC CHECKED: MRG

EXISTING SUPERSTRUCTURE DETAIL

BRIDGE NO MOT-75-6000 L/R
IR 75 OVER SR 725

MOT-75-00.00

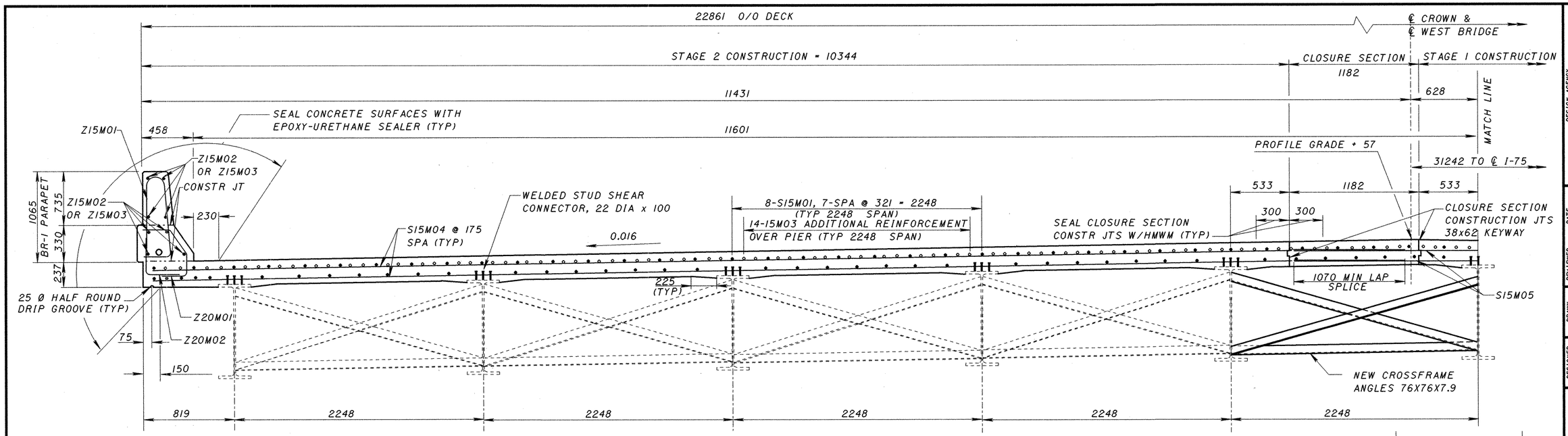

DECK SLAB DEPTH: THE DISTANCE SHOWN FROM THE TOP OF DECK SLAB TO TOP OF STEEL BEAM IS THE THEORETICAL DESIGN DIMENSION. THE QUANTITY OF DECK CONCRETE TO BE PAID FOR SHALL BE BASED ON THIS DIMENSION EVEN THOUGH DEVIATION FROM IT MAY BE NECESSARY BECAUSE THE TOP FLANGE OF THE BEAM MAY NOT HAVE THE EXACT CAMBER OR CONFORMATION REQUIRED TO PLACE IT PARALLEL TO THE FINISHED GRADE. A HAUNCH WIDTH OF 225 mm SHALL BE USED FOR COMPUTING QUANTITY OF CONCRETE. HOWEVER, THE HAUNCH WIDTH MAY VARY BETWEEN 150 mm AND 300 mm.

PROPOSED TRANSVERSE CROSS-SECTION AND CONSTRUCTION PHASES

(WEST BRIDGE - AS SHOWN)
(EAST BRIDGE - OPPOSITE HAND)

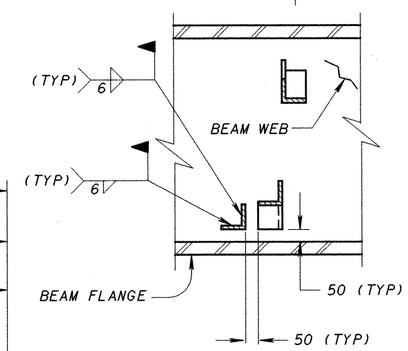

SECTION A-A

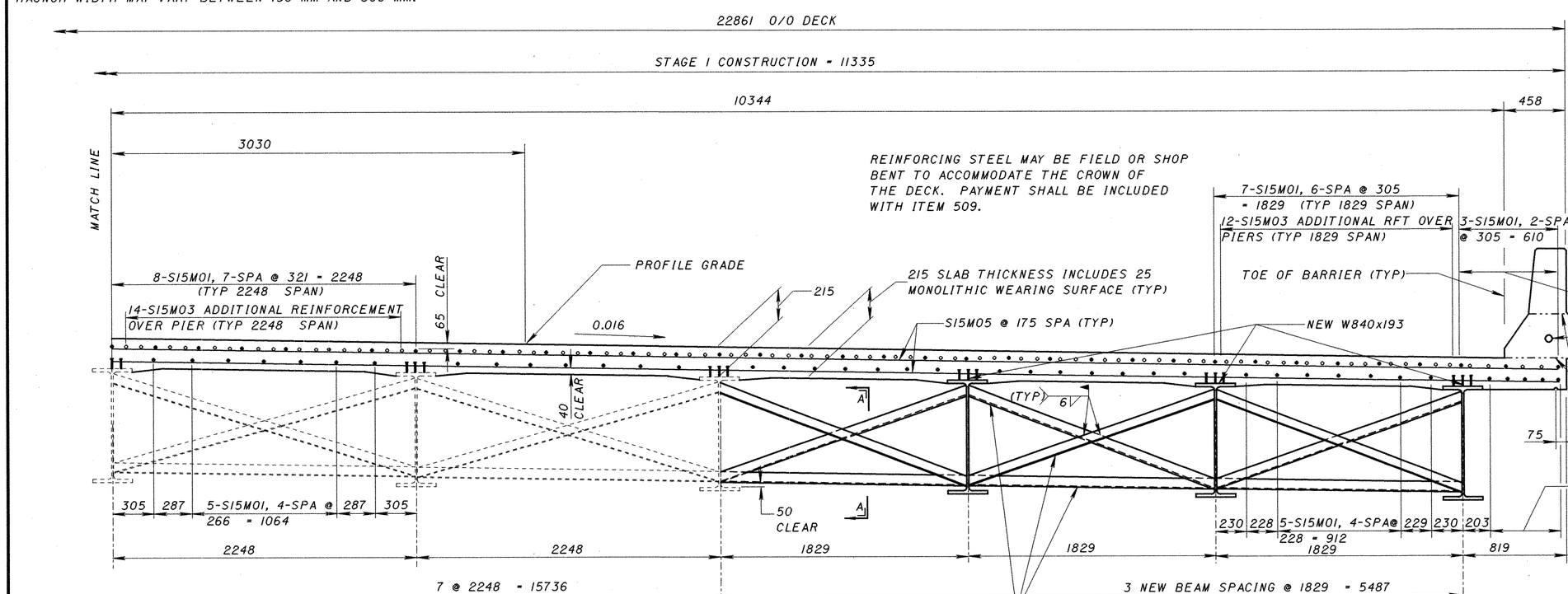

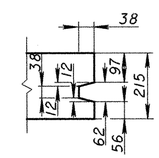

KEYWAY DETAILS
AT CLOSURE SECTION

NOTE:
1. HMWM: HIGH MOLECULAR WEIGHT METHACRYLATE, SEE PROPOSAL NOTE
2. LONGITUDINAL REINFORCEMENTS IN DECK ARE 7-SETS OF 179-S15M01 AND ONE SET OF 179-S15M02. LAP REQUIRED FOR SIZE S15M IS 1070.
3. LONGITUDINAL REINFORCING IN PARAPET ARE 7-SETS OF 8-Z15M02 AND ONE SET OF 8-Z15M03.
4. ALL REINFORCING STEEL IS EPOXY COATED.

EXISTING BEAMS W840X193

INTERMEDIATE CROSSFRAME ANGLES 76X76X7.9, WELD BOTH SIDES OF VERTICAL LEG AND TOP SIDE OF HORIZONTAL LEG TO BEAM WITH 6 mm CONTINUOUS FILLET WELD.

NOTE: FOR PARAPET DETAILS, SEE STANDARD DRAWING BR-1M AND SHEET 23/30

DESIGN AGENCY: STRUCTURAL ENGINEERING AND PRODUCTION

DESIGNED	DRAWN	REVIEWED	DATE
MRG/BRC	BRC	DFT	10-24-96
CHECKED	REVISED	STRUCTURE FILE NUMBER	
MRG		23-0643 / 510613	

SUPERSTRUCTURE DETAILS
BRIDGE NO MOT-75-6000 L/R
IR 75 OVER SR 725

MOT-75-00.00

18/30

133/145

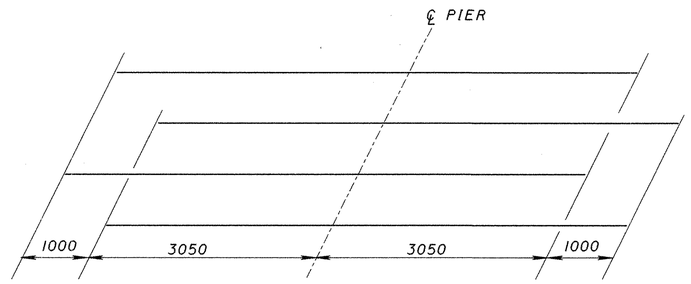

STAGGER OF S15M03 BARS OVER PIERS

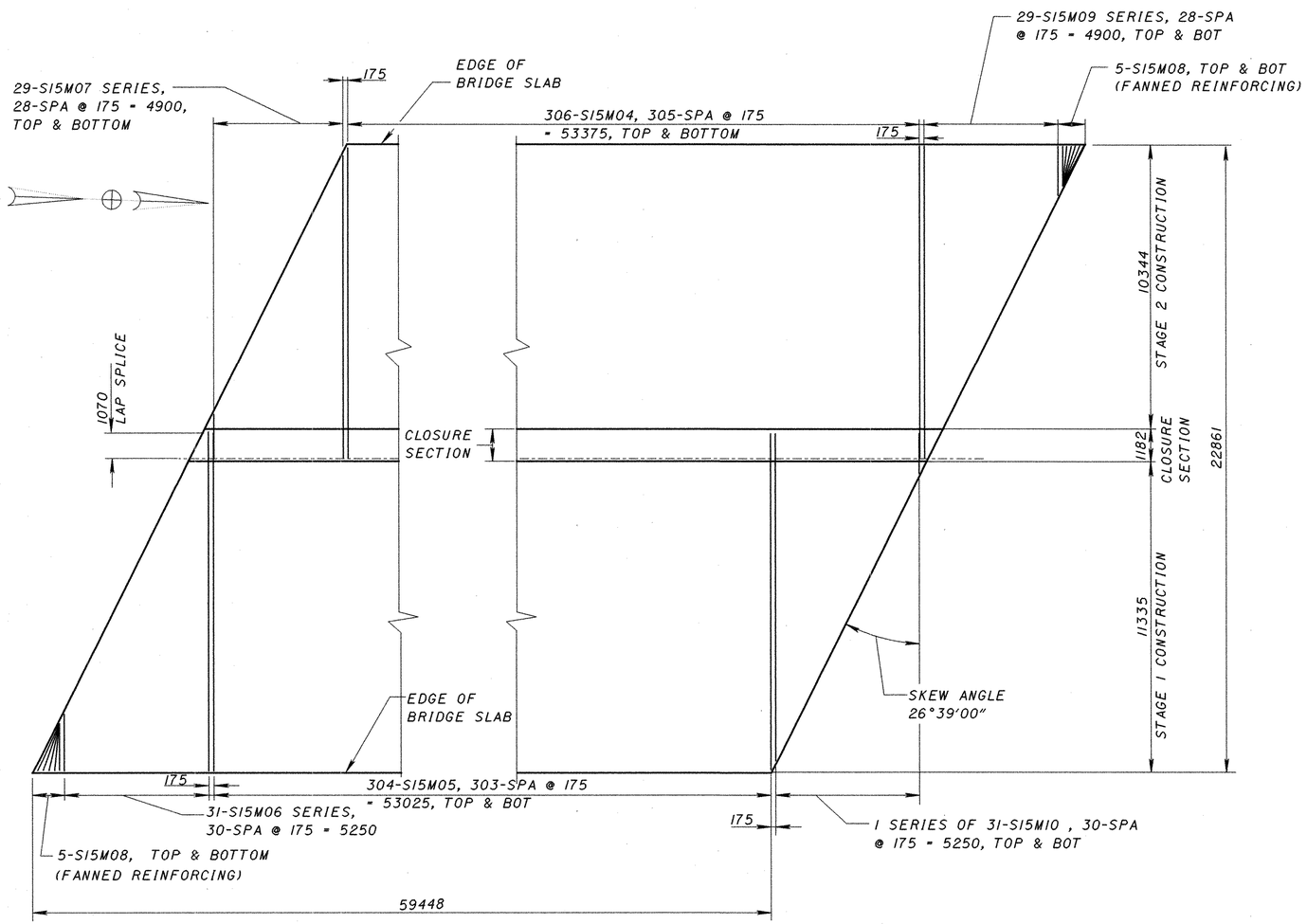

TRANSVERSE REINFORCING STEEL LAYOUT

WEST BRIDGE AS SHOWN
(EAST BRIDGE OPPPOSITE HAND)

SCREED ELEVATION WEST BRIDGE

LOCATION	RIGHT CURB		LEFT CURB	
	STATION	ELEVATION	STATION	ELEVATION
℄ REAR ABUTMENT	6+024.837	297.213	6+035.851	296.882
	6+030.000	297.060	6+040.000	296.758
MIDSPAN	6+031.009	297.029	6+042.023	296.699
℄ REAR PIER	6+037.181	296.843	6+048.195	296.512
	6+040.000	296.760	6+050.000	296.458
FIELD SPLICE #1	6+040.446	296.747	-	-
MIDSPAN	6+045.944	296.584	6+056.958	296.253
	6+050.000	296.461	6+060.000	296.161
℄ CENTER PIER	6+054.707	296.317	6+065.721	295.986
FIELD SPLICE #2	6+058.517	296.205	-	-
	6+060.000	296.162	6+070.00	295.860
MIDSPAN	6+063.470	296.059	6+074.484	295.728
	6+070.000	295.860	6+080.000	295.560
℄ FORWARD PIER	6+072.233	295.791	6+083.247	295.460
MIDSPAN	6+077.491	295.634	6+088.505	295.303
	6+080.000	295.559	6+090.000	295.258
℄ FORWARD ABUTMENT	6+082.749	295.476	6+093.763	295.145

SCREED ELEVATION EAST BRIDGE

LOCATION	RIGHT CURB		LEFT CURB	
	STATION	ELEVATION	STATION	ELEVATION
℄ REAR ABUTMENT	5+993.479	298.154	6+004.493	297.823
	5+999.651	297.971	6+010.000	297.659
MIDSPAN	6+000.000	297.960	6+010.665	297.639
℄ REAR PIER	6+005.823	297.784	6+016.837	297.453
	6+010.000	297.661	6+020.000	297.360
FIELD SPLICE #1	-	-	6+020.114	297.356
MIDSPAN	6+014.586	297.525	6+025.600	297.194
	6+020.000	297.360	6+030.000	297.060
℄ CENTER PIER	6+023.349	297.258	6+034.363	296.927
FIELD SPLICE #2	-	-	6+038.173	296.815
	6+030.000	297.063	6+040.000	296.762
MIDSPAN	6+032.112	297.000	6+043.126	296.669
	6+040.000	296.759	6+050.000	296.459
℄ FORWARD PIER	6+040.875	296.732	6+051.889	296.401
MIDSPAN	6+046.133	296.575	6+057.147	296.244
	6+050.000	296.459	6+060.000	296.158
℄ FORWARD ABUTMENT	6+051.391	296.417	6+062.405	296.086

ELEVATIONS SHOWN ARE LOCATED AT TOE OF CURB, TOP OF CONCRETE DECK AND ARE REQUIRED PRIOR TO PLACEMENT OF CONCRETE. THEY INCLUDE AN ALLOWANCE FOR THE DEAD LOAD DEFLECTION CAUSED BY THE WEIGHT OF THE CONCRETE.

DESIGN AGENCY: STRUCTURAL ENGINEERING AND PRODUCTION
DATE: 10-24-96
REVIEWED: DFT
STRUCTURE FILE NUMBER: 5706513, 5706483
DRAWN: BRC
REVISED:
DESIGNED: BRC
CHECKED: MRG

SUPERSTRUCTURE DETAILS
BRIDGE NO MOT-75-6000
IR 75 OVER SR 725

MOT-75-00.00

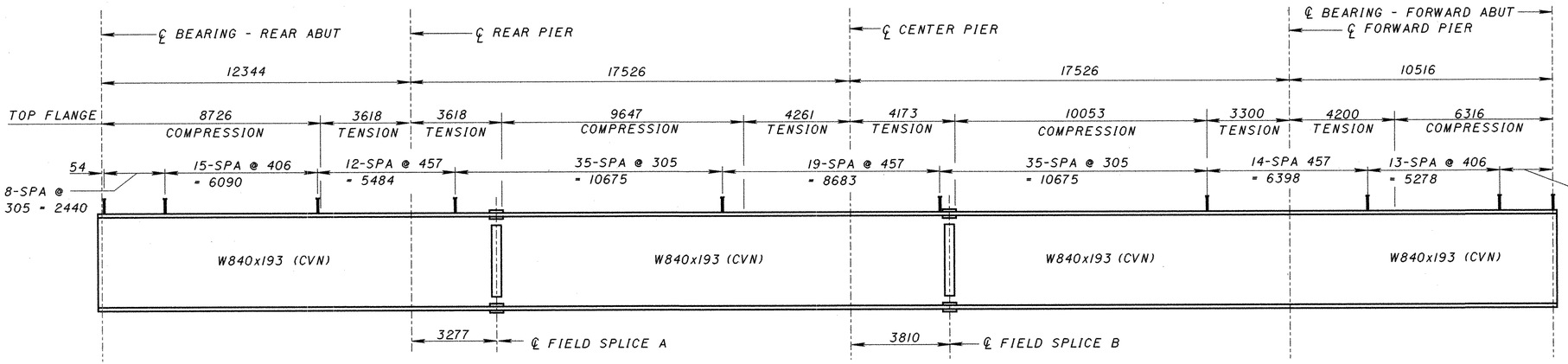

BEAM ELEVATION

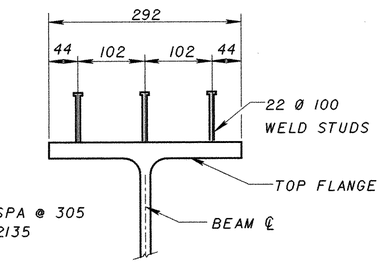

TYPICAL SECTION
SHEAR CONNECTOR DETAIL

NOTES:

1. WELDED ATTACHMENT OF SUPPORTS FOR CONCRETE DECK FINISHING MACHINE MAY BE MADE TO AREAS OF THE FACIA STRINGER FLANGES DESIGNATED "COMPRESSION." ATTACHMENTS SHALL NOT BE MADE TO AREAS DESIGNATED "TENSION." FILLET WELDS TO COMPRESSION FLANGES SHALL NOT BE CLOSER THAN 25 mm FROM EDGE OF FLANGE, BUT NOT MORE THAN 50 mm LONG AND NOT SMALLER THAN THE MINIMUM SIZE REQUIRED BY SUPPLEMENTAL SPECIFICATION 1011.
2. FOR FIELD SPLICE DETAILS, SEE STANDARD DRAWING BS-1-93M SHEETS NO 1 AND 2.
3. PLACE BOLT HEADS ON EXPOSED SIDE OF FASCIA BEAM WEBS AND PLACE NUTS ON TOP OF LOWER FLANGE SPLICE.
4. HIGH STRENGTH BOLTS SHALL BE 27 mm DIAMETER A325M, GALVANIZED, UNLESS OTHERWISE NOTED.
5. ALL NEW BEAMS W840x193 ARE DESIGNATED (CVN), THE MATERIAL SHALL MEET SPECIFIED MINIMUM NOTCH TOUGHNESS REQUIREMENTS AS SPECIFIED IN 711.01 OF CMS.
6. LATERAL AND LONGITUDINAL SPACING OF WELDED STUD CONNECTORS MAY BE ALTERED AT FIELD SPLICE LOCATIONS TO AVOID INTERFERENCE WITH FLANGE SPLICE BOLTS PROVIDED THAT AT LEAST THE NUMBER OF STUDS SPECIFIED IN THE BEAM ELEVATION ARE PROVIDED.
7. CROSSFRAME LOCATIONS MAY BE RELOCATED TO AVOID CONFLICT WITH BOLTED SPLICES AS REQUIRED IN THE FIELD.
8. EXISTING BEAMS HAVE WELDED MOMENT PLATES AT EACH PIER.

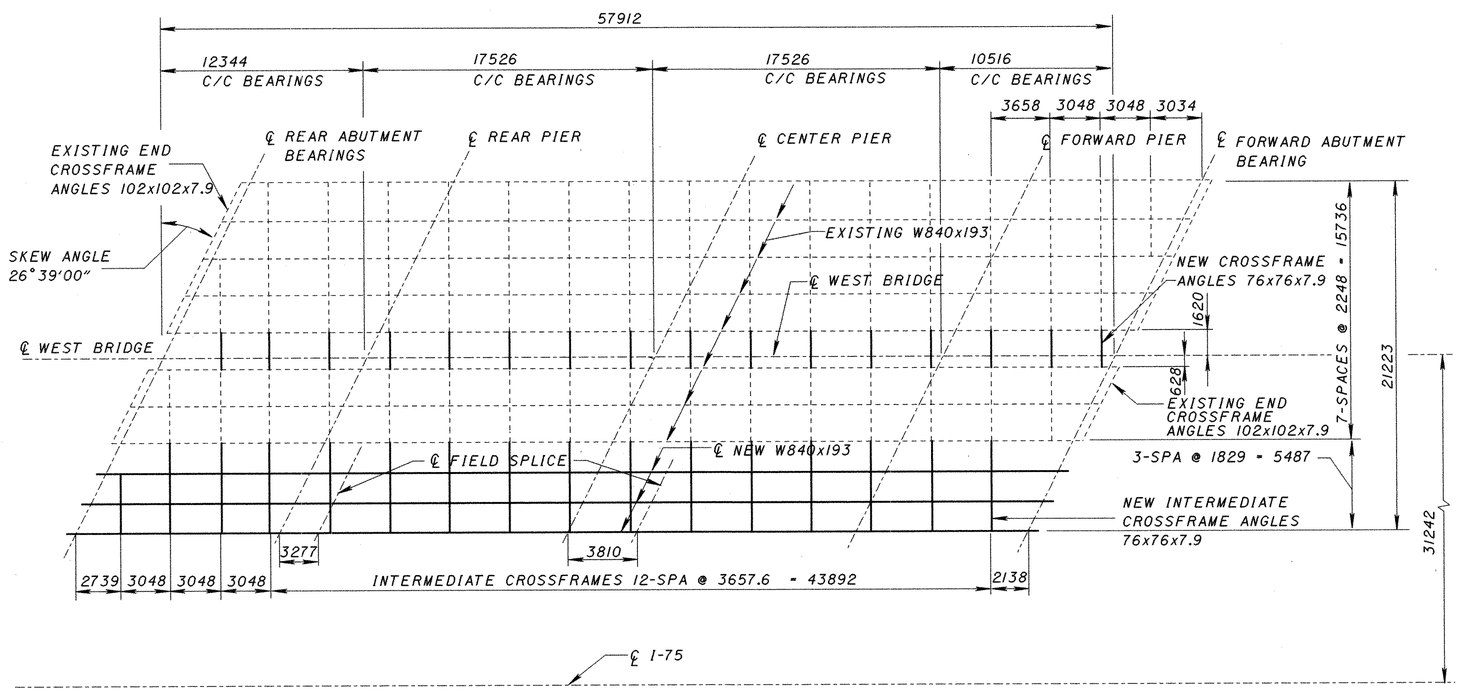

STEEL FRAMING PLAN, WEST BRIDGE

EAST BRIDGE OPPOSITE HAND

DESIGN AGENCY: STRUCTURAL ENGINEERING AND PRODUCTION

DESIGNED	DRAWN	REVIEWED	DATE
BRC	BRC	DFT	10-24-96
CHECKED	REVISED	STRUCTURE FILE NUMBER	
MRG		5700483	

SUPERSTRUCTURE DETAILS
BRIDGE NO MOT-75-6000
IR 75 OVER SR 725

MOT-75-00.00

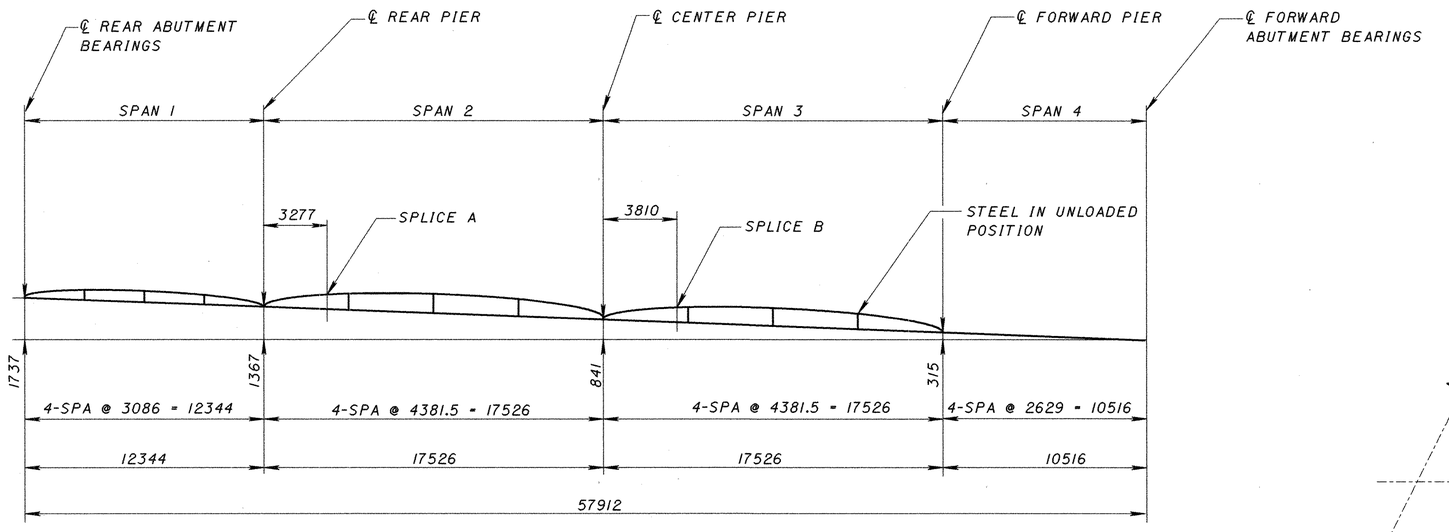

BLOCKING AND CAMBER DIAGRAM

FOR BEAMS NO 9, 10 & 11 FOR THE WEST BRIDGE
AND FOR BEAMS NO 1 ,2 & 3 FOR THE EAST BRIDGE.

DEFLECTION AND CAMBER, mm														
	SPAN 1			SPAN 2				SPAN 3				SPAN 4		
LOCATION OF POINT	1/4	1/2	3/4	SPL	1/4	1/2	3/4	SPL	1/4	1/2	3/4	1/4	1/2	3/4
BEAM DEFLECTION	0	0	0	0	0	1	0	0	0	1	0	0	0	0
REMAINING DL DEFLECTION	1	2	1	2	3	5	3	2	3	6	4	0	0	0
SHOP CAMBER	1	2	1	2	3	6	3	2	3	7	4	0	0	0

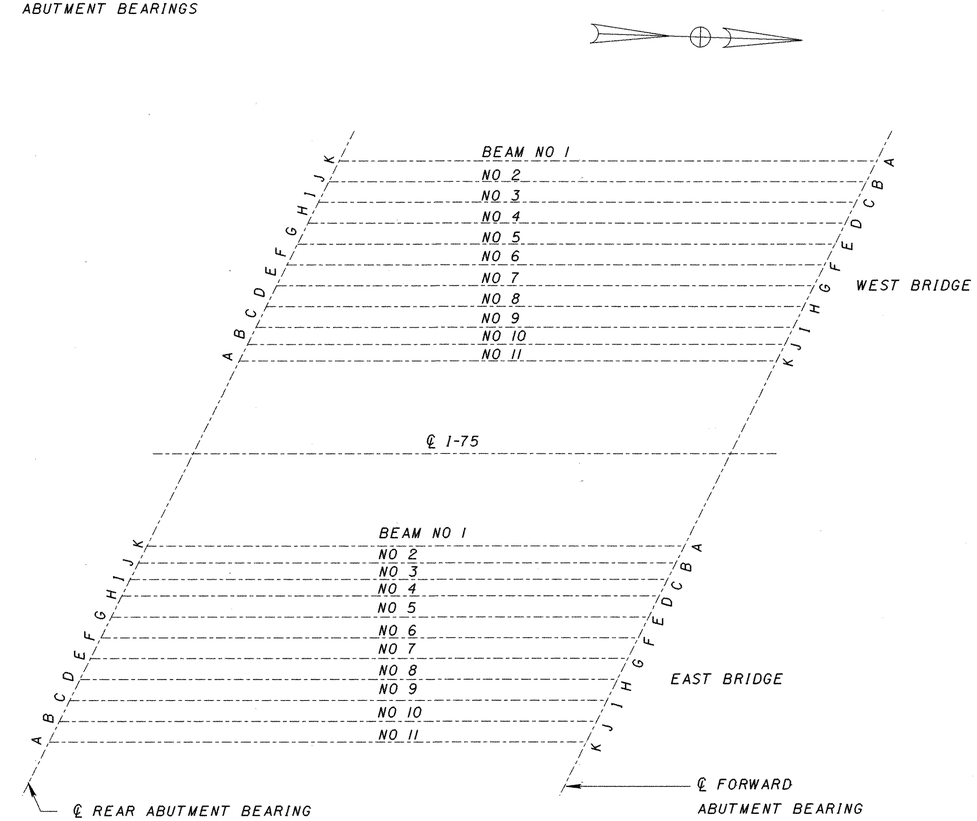

BEAM LAYOUT

ABUTMENT ELEVATIONS													
BRIDGE	ABUTMENT		A	B	C	D	E	F	G	H	I	J	K
WEST BRIDGE	REAR	ELEVATION	296.157	296.158	296.158	296.160	296.161	296.162	296.113	296.044	295.974	295.906	295.837
		H	143	143	143	126	150	142	141	144	133	143	142
	FORWARD	ELEVATION	294.100	294.169	294.238	294.307	294.375	294.425	294.424	294.422	294.421	294.420	294.419
		H	146	145	143	145	145	145	146	153	143	143	143
EAST BRIDGE	REAR	ELEVATION	297.097	297.099	297.100	297.101	297.102	297.084	297.015	296.946	296.890	296.834	296.778
		H	149	140	136	143	135	138	144	150	143	143	143
	FORWARD	ELEVATION	295.041	295.097	295.153	295.209	295.278	295.347	295.365	295.364	295.362	295.361	295.360
		H	143	143	143	142	132	135	141	141	139	138	139

NOTES:

1. ELEVATIONS SHOWN ARE AT THE BOTTOM OF THE BEAM W840x193 AT ℄ ABUTMENT BEARINGS. SEE SECTION A-A SHEET NO 22/30
2. DIMENSION H SHOWN ARE APPROXIMATE HEIGHT OF THE HP 250x85. THIS DIMENSION SHOULD BE MEASURED IN THE FIELD TO INSURE PLACING THE BEAM AT THE ELEVATION SHOWN FOR THE BOTTOM OF THE BEAM.

DESIGN AGENCY: STRUCTURAL ENGINEERING AND PRODUCTION

DESIGNED BRC | CHECKED MRG | DRAWN BRC | REVISED | REVIEWED DFT | DATE 10-24-96 | STRUCTURE FILE NUMBER 5706313, 5706483

SUPERSTRUCTURE DETAILS
BRIDGE NO MOT-75-6000 L/R
IR 75 OVER SR 725

MOT-75-00.00

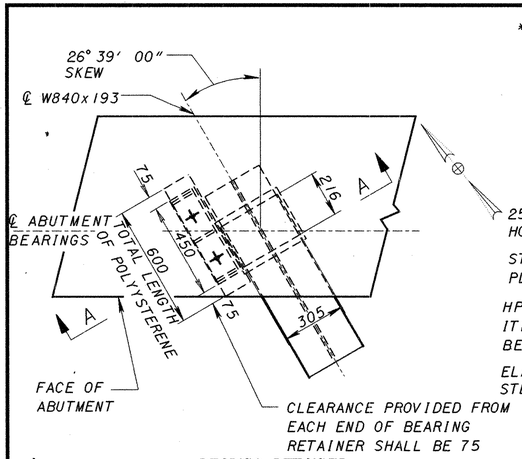

BEARING RETAINER

PLACE RETAINER ASSEMBLY ON ACUTE ANGLE SIDE OF BEARINGS AT ABUTMENTS, FOR BEAMS NUMBER 6, 11 & 1 FOR THE WEST BRIDGE AND BEAMS 1, 6 & 11 FOR THE EAST BRIDGE.

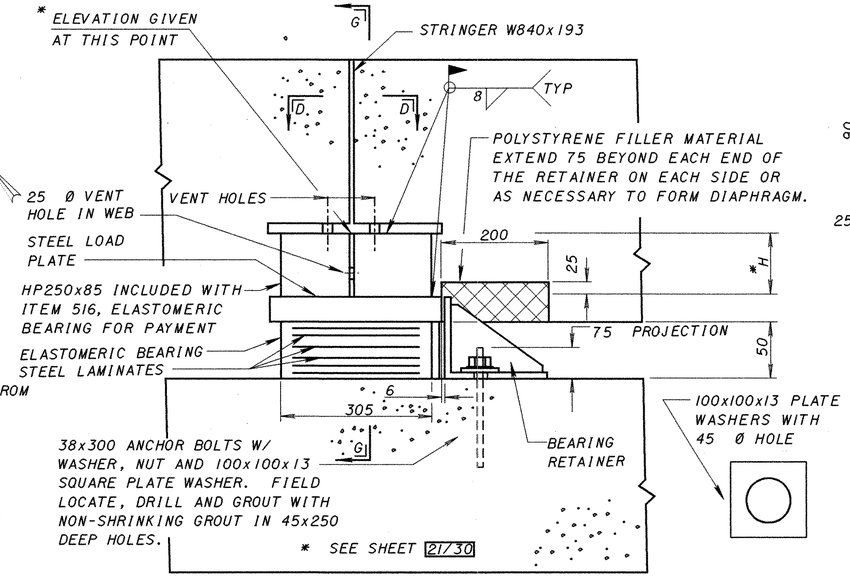

SECTION A-A

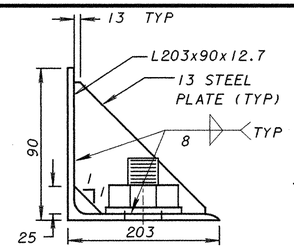

SECTION B-B

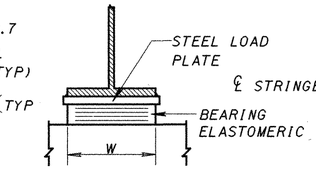

SECTION C-C

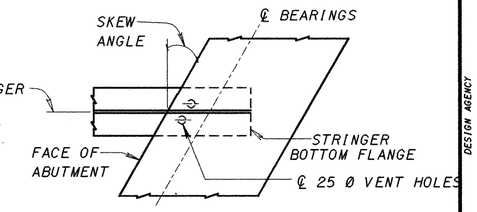

SECTION D-D

BEARING TABLE												
BEARING LOCATION	TYPE	L	W	t_1	t_e	n_1	n_2	STEEL LOAD PL	TOTAL HEIGHT*	DL, kN	LL, kN	TOTAL, kN
ABUTMENT	EXP	216	305	6	4	5	6	40x276x331	90	203	232	435
REAR & FORWARD PIERS	EXP	240	405	7	5	3	4	50x266x431 (BEVELED)	89	351	281	632
CENTER PIER	FIXED	240	380	6.5	4.5	4	5	50x266x530 (BEVELED)	95	390	274	664

n_1 = NUMBER OF INTERNAL ELASTOMER LAYERS, t_1 ELASTOMER LAYERS ARE 50 DUROMETERS
n_2 = NUMBER OF STEEL LAMINATES, 1.89 THICKNESS
* TOTAL HEIGHT INCLUDES LOAD PLATE

NOTES:

INSTALLATION PROCEDURE: ANCHOR BOLTS SHALL BE EITHER CAST IN PLACE BY USE OF A TEMPLATE OR FIELD DRILLED AND GROUTED AFTER ERECTION OF THE STRUCTURAL STEEL BEAMS. CARE SHALL BE TAKEN TO ASSURE THAT THE ANCHOR BOLTS DO NOT INTERFERE WITH REINFORCING STEEL. THE RETAINER SHALL BE POSITIONED AND TIGHTEND BEFORE CONCRETE IS POURED FOR THE BEAM ENCASEMENT. A BLOCK OF POLYSTYRENE FILLER MATERIAL, 200 mm WIDTH x 65 mm HEIGHT x 600 mm LENGTH SHALL BE INSTALLED OVER THE TOP OF THE RETAINER ASSEMBLY DURING CONCRETE PLACEMENT.

MATERIALS: THE STEEL RETAINER ASSEMBLY, SQUARE PLATE WASHERS AND THE HP SHAPE (SUPPORT MEMBER) SHALL BE THE SAME GRADE OF STEEL AS THE MAIN STRUCTURAL MEMBERS. ANCHOR BOLTS, NUTS AND WASHERS SHALL BE ASTM A325M. STEEL RETAINER ASSEMBLIES AND THE HP SHAPE SHALL HAVE THE SAME PROTECTIVE COATING AS THE MAIN STRUCTURAL STEEL. ANCHOR BOLTS, NUTS AND SQUARE PLATE WASHERS SHALL BE GALVANIZED AS PER 711.02.

PAYMENT FOR MATERIALS, LABOR, FABRICATION, PROTECTIVE COATING, GALVANIZING AND INSTALLATION OF THE RETAINER ASSEMBLIES SHALL BE INCLUDED WITH ITEM 516 ABUTMENT ELASTOMERIC BEARINGS, AS PER PLAN, FOR PAYMENT.

WELDING: WELDING OF THE LOAD PLATE TO THE SUPERSTRUCTURE SHALL BE CONTROLLED SO THAT THE PLATE TEMPERATURE AT THE ELASTOMER BONDED SURFACE SHALL NOT EXCEED 150°C AS DETERMINED BY THE USE OF PYROMETRIC STICKS OR OTHER TEMPERATURE MONITORING DEVICES. THE STEEL LOAD PLATE SHALL BE BONDED BY VULCANIZATION TO THE ELASTOMER DURING THE MOLDING PROCESS.

BRIDGE SEAT REINFORCING:

1. DRILLING OF BEARING ANCHOR HOLES IN THE VICINITY OF THE EXISTING BRIDGE SEAT SHALL BE ACCURATELY PLACED TO AVOID DAMAGING THE EXISTING REINFORCING STEEL.
2. REINFORCING STEEL IN THE WIDENING PART SHALL BE ACCURATELY PLACED TO AVOID INTERFERENCE WITH THE DRILLING OF BEARING ANCHOR HOLES OR THE PRE-SETTING OF BEARING ANCHORS.

BEARING ANCHOR RODS: BEARING ANCHOR RODS (OR FORMED HOLES), LOCATED AND SUPPORTED BY TEMPLATES, MAY BE CAST-IN-PLACE.

BEARING REPOSITIONING: IF DECK CONCRETE IS PLACED AT AN AMBIENT TEMPERATURE HIGHER THAN 27°C OR LOWER THAN 4°C AND THE BEARING SHEAR DEFLECTION EXCEEDS ONE-SIXTH OF THE BEARING HEIGHT AT 15°C ± 5°C, THE BEAMS SHALL BE RAISED TO ALLOW THE BEARING TO RETURN TO THEIR UNDERFORMED SHAPE AT 15°C ± 5°C.

ELASTOMERIC BEARINGS SHALL COMPLY WITH ITEM 516 AND SECTIONS 18.2.5 THRU 18.2.8 OF AASHTO, DIVISION II, CONSTRUCTION. BEARING MATERIAL SHALL BE GRADE 3, 50 DUROMETER ELASTOMER AND THE BEARING SHALL MEET THE LOAD TEST REQUIREMENTS FOR DESIGN METHOD A. TESTING SHALL BE INCLUDED IN THE UNIT PRICE BID FOR THE BEARINGS, EACH.

BASIS OF PAYMENT: THE UNIT BID PRICE SHALL INCLUDE ALL MATERIALS, LABOR, TESTING, ANCHOR RODS, BEARING RETAINER AND INCIDENTALS NECESSARY TO FURNISH AND INSTALL LAMINATED ELASTOMERIC BEARINGS, EITHER FIXED OR EXPANSION. PAYMENT WILL BE MADE AT THE CONTRACT PRICE FOR ITEM 516, EACH, ELASTOMERIC BEARINGS WITH INTERNAL LAMINATES AND LOAD PLATE (NEOPRENE):

216 x 305 x 50 WITH 40 x 276 x 331 LOAD PLATE, AS PER PLAN.
240 x 405 x 39 WITH 50 x 266 x 431 LOAD PLATE.
240 x 380 x 45 WITH 50 x 266 x 530 LOAD PLATE, AS PER PLAN.

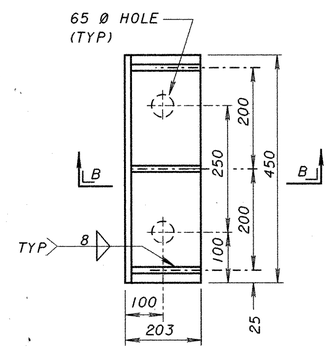

BEARING RETAINER ASSEMBLY

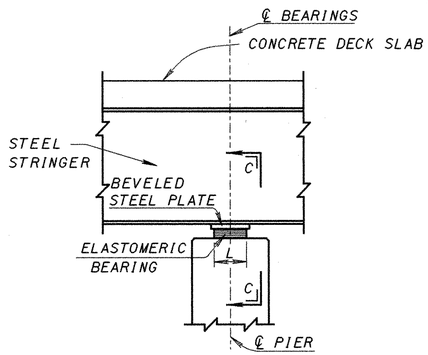

SECTION THRU PIER

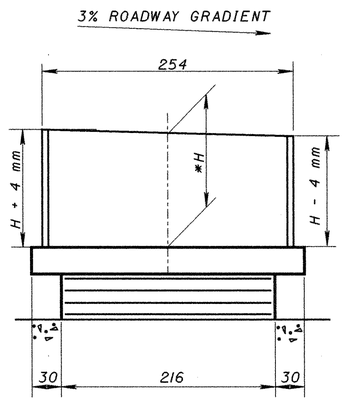

SECTION G-G

LAMINATED ELASTOMERIC EXPANSION ABUTMENT BEARING

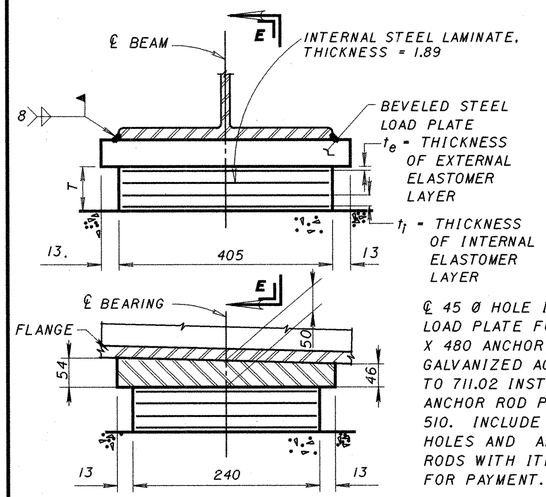

SECTION E-E

LAMINATED ELASTOMERIC EXPANSION PIER BEARING

℄ 45 Ø HOLE IN STEEL LOAD PLATE FOR 32 Ø X 480 ANCHOR ROD, GALVANIZED ACCORDING TO 711.02 INSTALL ANCHOR ROD PER 510. INCLUDE DOWEL HOLES AND ANCHOR RODS WITH ITEM 516 FOR PAYMENT.

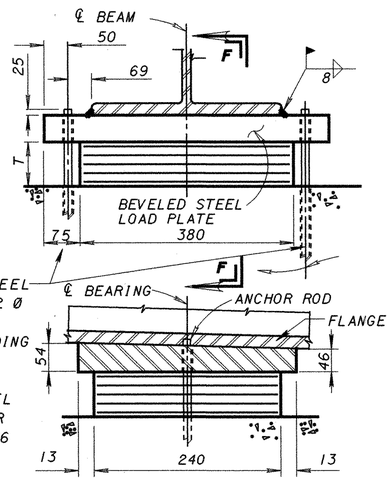

SECTION F-F

LAMINATED ELASTOMERIC FIXED PIER BEARING

DESIGN AGENCY: STRUCTURAL ENGINEERING AND PRODUCTION

REVIEWED DFT | DATE 10-24-96 | STRUCTURE FILE NUMBER 5706483

DRAWN RJS | REVISED

DESIGNED BRC/MRG | CHECKED MRG

BEARING DETAILS
BRIDGE NO MOT-75-6000 L/R
IR 75 OVER SR 725

MOT-75-00.00

22/30

137/145

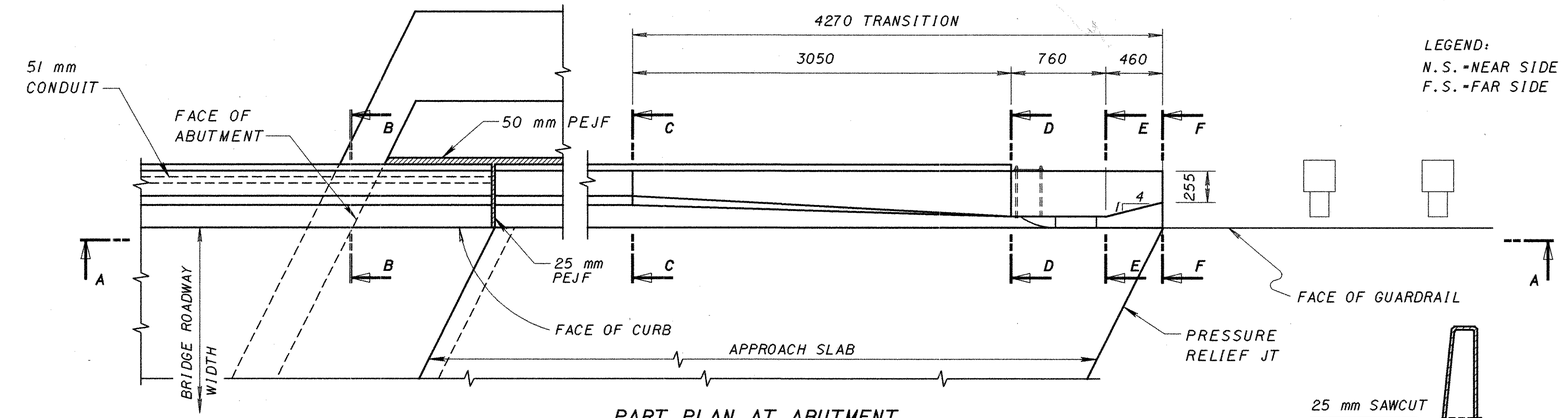

PART PLAN AT ABUTMENT

LEGEND:
N.S.-NEAR SIDE
F.S.-FAR SIDE

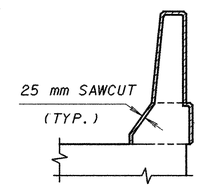

DETAIL A
(section through sawcut)
Sawcut Perimeter= 2464

CONTROL JOINTS FOR CONCRETE PARAPETS: THE JOINTS SHALL BE CONSTRUCTED BY SAWING 25 mm DEEP ALONG PERIMETER OF THE PARAPET AS SOON AS THE SAW CAN BE OPERATED WITH OUT DAMAGING THE CONCRETE.

THE USE OF AN EDGE GUIDE, FENCE, OR JIG IS REQUIRED TO INSURE THAT THE CUT JOINT IS STRAIGHT, TRUE, AND ALIGNED ON ALL FACES OF THE PARAPET. THE JOINT WIDTH SHALL BE THE WIDTH OF THE SAW BLADE, A NOMINAL WIDTH OF 6 mm.

THE PERIMETER OF THE DEFLECTION CONTROL JOINT SHALL BE SEALED WITH A CAULKING MATERIAL TO A MINIMUM DEPTH OF 25 mm CONFORMING TO FEDERAL SPECIFICATION TT-S-00227E. THE BOTTOM 13 mm OF BOTH THE INSIDE AND OUTSIDE FACES OF THE PARAPET SHOULD BE LEFT UNSEALED TO ALLOW ANY WATER WHICH MAY ENTER THE JOINT TO ESCAPE.

* COST FOR THE APPROACH SLAB PARAPET CONCRETE SHALL BE INCLUDED WITH ITEM 511, HIGH PERFORMANCE CONCRETE, SUPERSTRUCTURE (PARAPET), AS PER PLAN, APPROACH SLAB PARAPET REINFORCING SHALL BE INCLUDED WITH ITEM 509, EPOXY COATED REINFORCING STEEL, GRADE 400, SUPERSTRUCTURE, FOR PAYMENT AND SEALING SHALL BE INCLUDED WITH SEALING OF SUPERSTRUCTURE. FOR APPROACH SLAB DETAILS AND REINFORCING STEEL SEE STD DWG AS-1-81M. A PRESSURE RELIEF JOINT IS SPECIFIED AT THE END OF APPROACH SLAB, THE DOWELS SHOWN AT THAT LOCATION ON STANDARD DRAWING AS-1-81M ARE NOT REQUIRED.

FOR DETAILS OF THE PRESSURE RELIEF JOINT SEE STD DRWG IRJ-8-95M.

FOR BRIDGE TERMINAL ASSEMBLY SEE STANDARD CONSTRUCTION DRAWING GR-3.1M AND GR-3.2M.

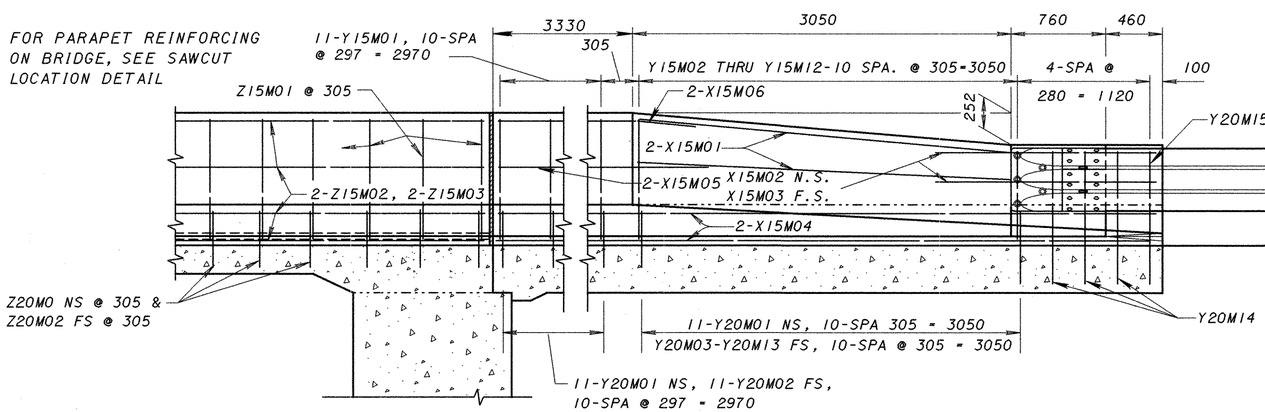

SECTION A-A

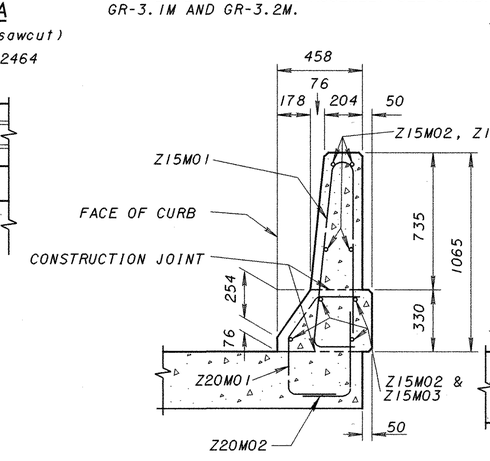

SECTION B-B

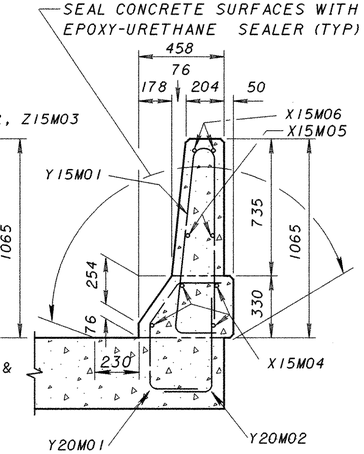

SECTION C-C

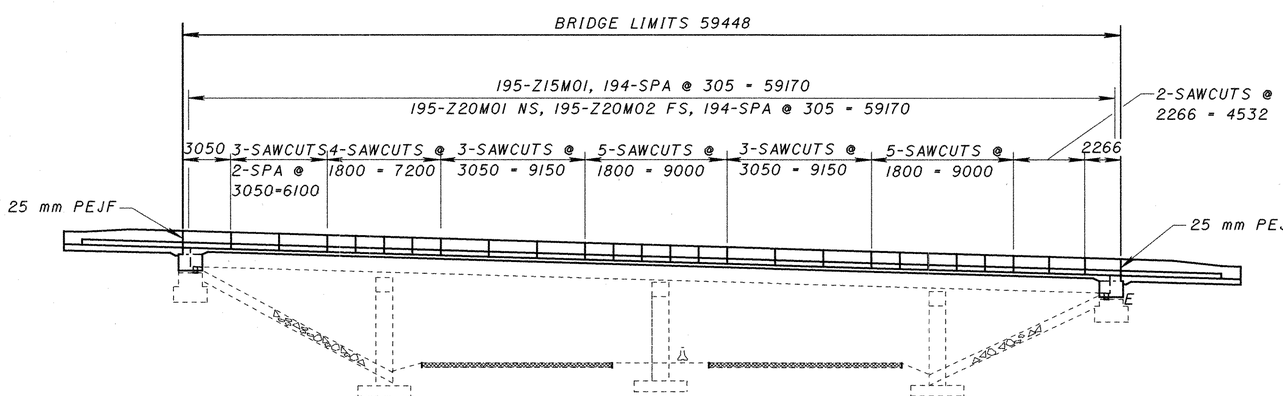

LONGITUDINAL REINFORCING IN PARAPETS ARE 7-SETS OF 8-Z15M02 AND ONE SET OF 8-Z15M03. LAP REQUIRED FOR SIZE 15M IS 1070.

SAWCUT LOCATIONS

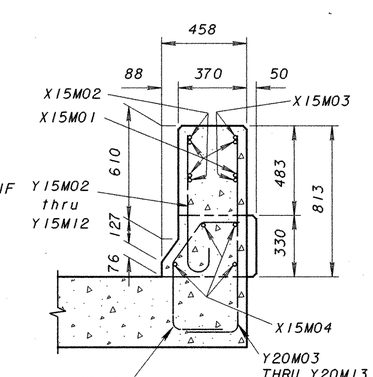

SECTION D-D

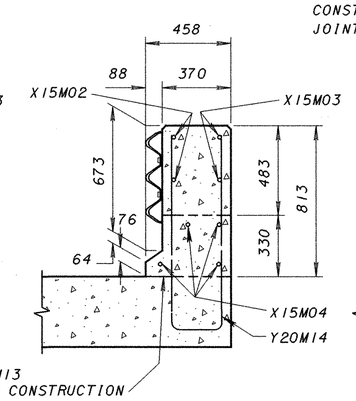

SECTION E-E

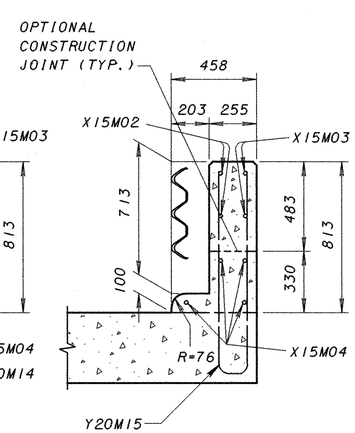

SECTION F-F

DESIGN AGENCY: BUREAU OF BRIDGES AND STRUCTURAL DESIGN

DATE	REVIEWED	STRUCTURE FILE NUMBER
10-24-96	DFT	57065-13 57065-14 57065-15 57065-16 57065-17 57065-18 57065-19 57065-20 57065-21 57065-22 57065-23 57065-24 57065-25 57065-26 57065-27 57065-28 57065-29 57065-30 57065-31 57065-32 57065-33 57065-34 57065-35 57065-36 57065-37 57065-38 57065-39 57065-40 57065-41 57065-42 57065-43 57065-44 57065-45 57065-46 57065-47 57065-48 57065-49 57065-50 57065-51 57065-52 57065-53 57065-54 57065-55 57065-56 57065-57 57065-58 57065-59 57065-60 57065-61 57065-62 57065-63 57065-64 57065-65 57065-66 57065-67 57065-68 57065-69 57065-70 57065-71 57065-72 57065-73 57065-74 57065-75 57065-76 57065-77 57065-78 57065-79 57065-80 57065-81 57065-82 57065-83
DRAWN BRC	REVISED	
DESIGNED BRC	CHECKED MRG	

BRIDGE RAILING DETAILS
BRIDGE NO MOT-75-6000 L/R
IR 75 OVER SR 725

MOT-75-00.00

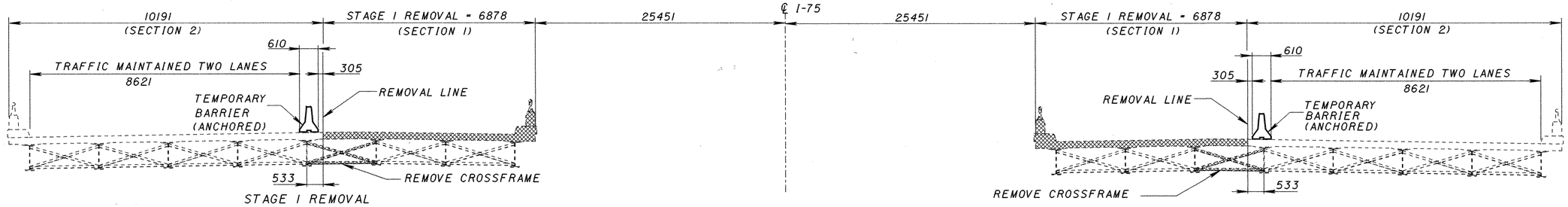

STAGE 1 REMOVAL

STAGE 1 REMOVAL

DETOUR THE TRAFFIC TO THE EXTERIOR PART (SECTION 2) OF THE BRIDGE DECK. REMOVE DECK, BACKWALL, AND APPROACH SLAB UP TO THE REMOVAL LINE. REMOVE CROSSFRAME AS SHOWN AND PORTIONS OF DECK JOINT ARMOR AS NECESSARY.

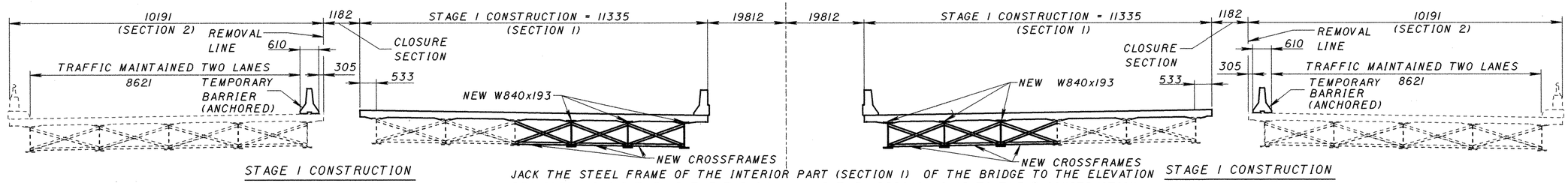

STAGE 1 CONSTRUCTION

STAGE 1 CONSTRUCTION

JACK THE STEEL FRAME OF THE INTERIOR PART (SECTION 1) OF THE BRIDGE TO THE ELEVATION REQUIRED. BUILD THE ABUTMENT BACKWALL AND THE APPROACH SLAB TO THE ℄ CONSTRUCTION JOINT ALONG APPROACH SLAB AND BACKWALL AS SHOWN ON ABUTMENT SHEETS. ADD NEW BEAMS AND CROSSFRAMES. BUILD THE BRIDGE SLAB UP TO THE CLOSURE SECTION.

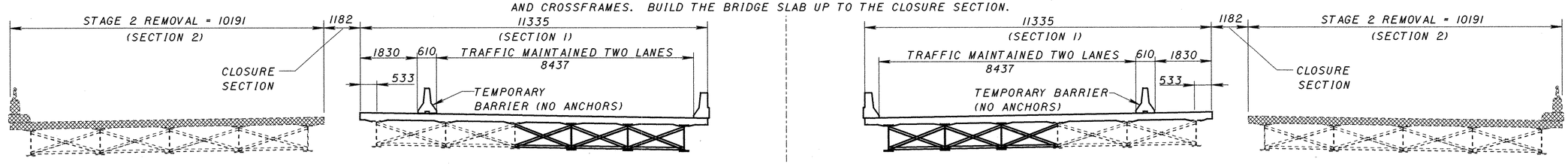

STAGE 2 REMOVAL

STAGE 2 REMOVAL

DETOUR TRAFFIC TO THE INTERIOR PART (SECTION 1) OF THE BRIDGE. REMOVE THE REMAINING EXTERIOR SLAB (SECTION 2).

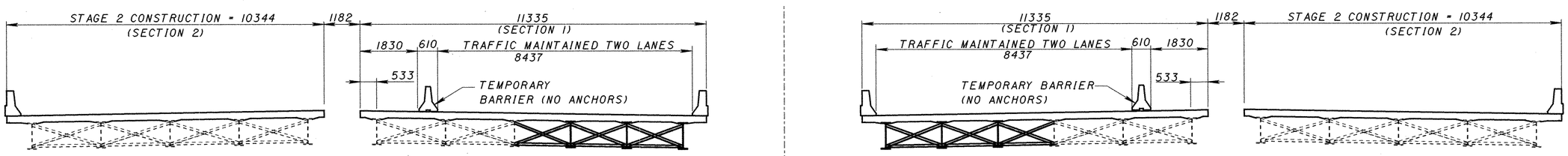

STAGE 2 CONSTRUCTION

STAGE 2 CONSTRUCTION

JACK THE STEEL FRAME OF THE EXTERIOR PART (SECTION 2) TO THE REQUIRED ELEVATION. COMPLETE THE BACKWALL USING MECHANICAL CONNECTIONS. COMPLETE THE APPROACH SLAB WITH THE RELIEF JOINT AND BUILD THE BRIDGE SLAB UP TO THE CLOSURE SECTION.

FOR PORTABLE CONCRETE BARRIER DETAILS AND ANCHORAGE, SEE STANDARD DRAWING PCB-91M.

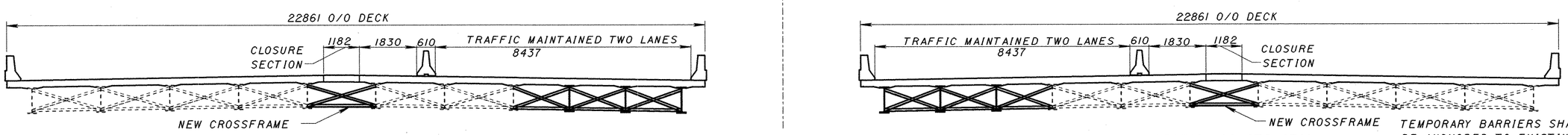

CLOSURE SECTION CONSTRUCTION

CLOSURE SECTION CONSTRUCTION

FIRST INSTALL AND WELD THE NEW CROSSFRAME, THEN POUR THE CLOSURE SECTION AS SHOWN. REMOVE THE TEMPORARY BARRIER AND OPEN ROAD TO TRAFFIC.

TEMPORARY BARRIERS SHALL ONLY BE ANCHORED TO EXISTING BRIDGE DECK. TEMPORARY BARRIERS SHALL NOT BE ANCHORED TO THE NEW DECK. THREE (3) ANCHORS PER TEMPORARY BARRIER SEGMENT ARE REQUIRED ON THE TRAFFIC SIDE OF THE BARRIER. THE ANCHOR BOLT PATTERN SHALL BE SYMMETRICAL ABOUT THE CENTER OF EACH SEGMENT.

WEST BRIDGE

LOOKING UP STATION

CONSTRUCTION PROCEDURES

EAST BRIDGE

LOOKING UP STATION

DESIGNED	DRAWN	REVIEWED	DATE
BRC	BRC	DFT	10-24-96
CHECKED	REVISED	STRUCTURE FILE NUMBER	
MRG		5706483 5706513	

DESIGN AGENCY
STRUCTURAL ENGINEERING AND PRODUCTION

CONSTRUCTION PROCEDURES
BRIDGE NO MOT-75-6000 L/R
IR 75 OVER SR 725

MOT-75-00.00

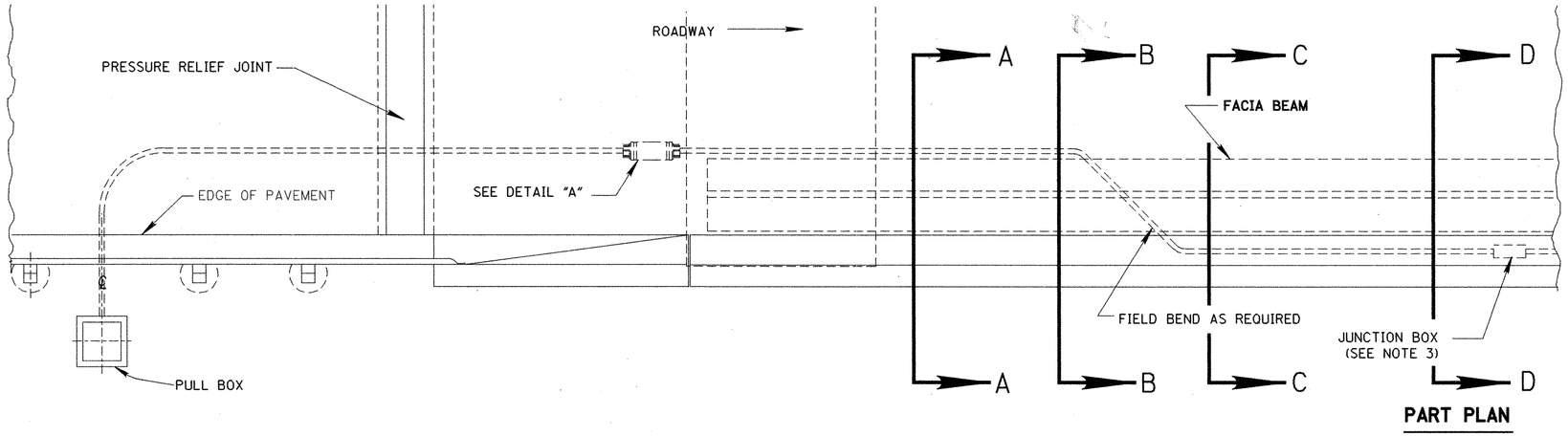

PART PLAN

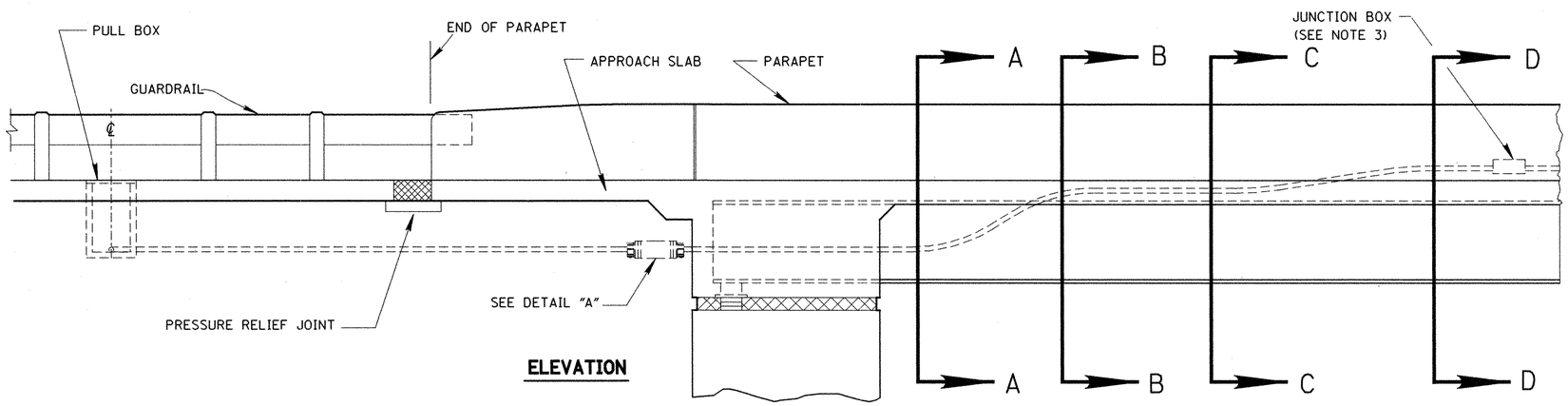

ELEVATION

CONDUIT DETAILS FOR INTEGRAL AND SEMI-INTEGRAL BRIDGES

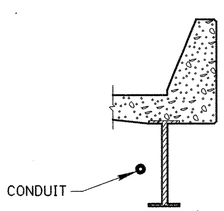

SECTION A-A

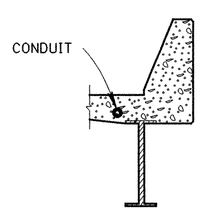

SECTION B-B

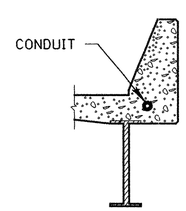

SECTION C-C

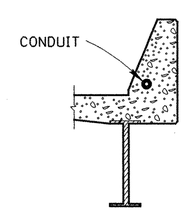

SECTION D-D

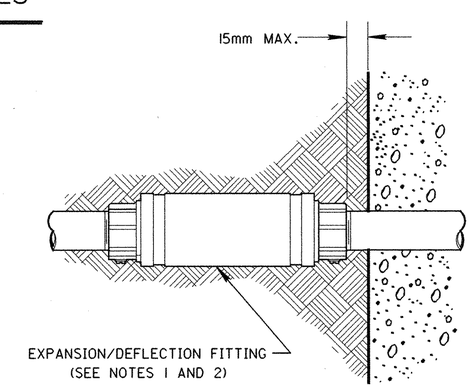

DETAIL "A"

NOTES

1. THE EXPANSION/DEFLECTION FITTING (NEMA 4 RATING) SHALL CONSIST OF IRON OR BRONZE END COUPLINGS IN A HEAVY-DUTY NEOPRENE SLEEVE HELD IN PLACE BY STAINLESS STEEL BANDS. A COPPER BRAID BONDING JUMPER SHALL BE INSTALLED INSIDE THE SLEEVE BETWEEN THE END COUPLINGS FOR GROUNDING CONTINUITY.
2. AT THE END OF THE ABUTMENT, PLACE CONDUIT IN CONCRETE WITH THREADS ONLY EXPOSED, COMPACT BACKFILL UP TO LEVEL OF CONDUIT, THEN ATTACH EXPANSION/DEFLECTION FITTING ALONG WITH REMAINING CONDUIT AND COMPLETE COMPACTION OF BACKFILL.
3. IF NO OTHER PULLING CAPABILITY IS LOCATED NEAR THE END OF THE BRIDGE, AN INTERNAL-FLANGE JUNCTION BOX MEETING 713.10 AND A MINIMUM LENGTH OF 5 CONDUIT DIAMETERS, SHALL BE INSTALLED.
4. THE CONDUIT SIZE IS 51 mm Ø. SEE SHEET 3/30 FOR LOCATION.

DESIGN AGENCY	OFFICE OF TRAFFIC ENGINEERING
DATE	10-24-96
REVIEWED	JDB
STRUCTURE FILE NUMBER	5706513
DRAWN	GT
REVISED	
DESIGNED	JM
CHECKED	

STRUCTURE CONDUIT DETAILS
BRIDGE NO MOT-75-6000 L/R
IR 75 OVER SR 725

MOT-75-00.00

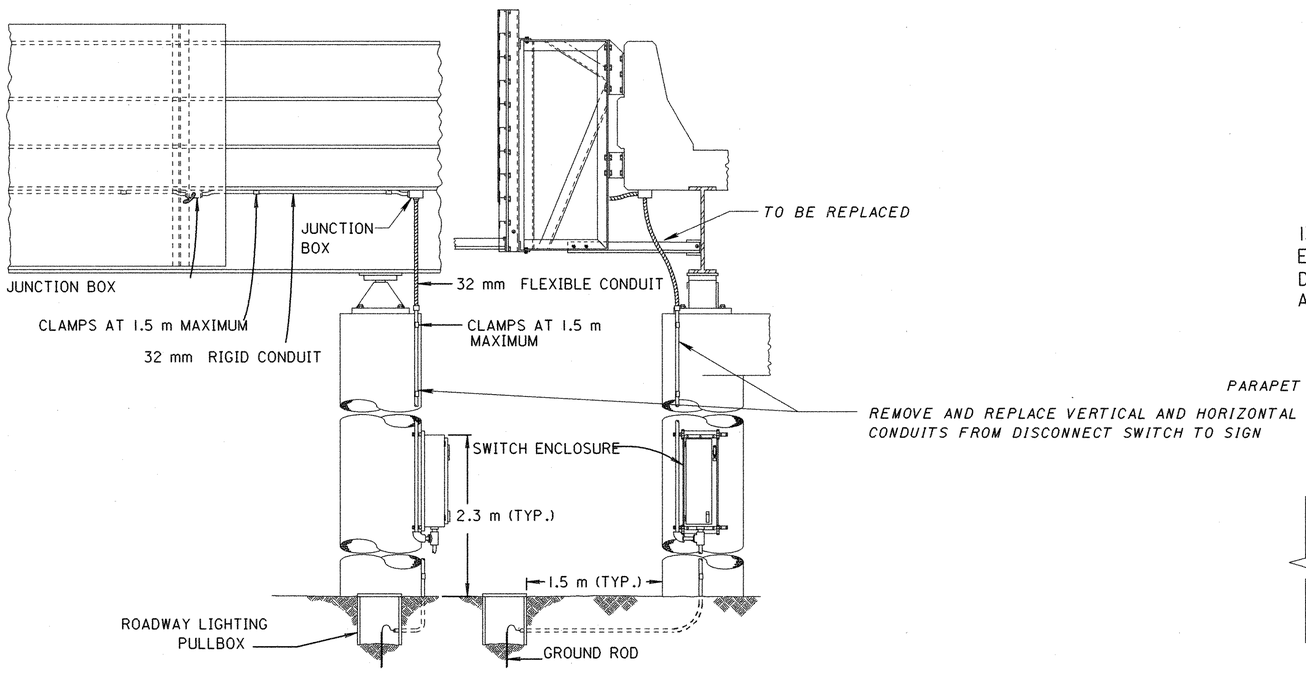

OVERPASS STRUCTURE MOUNTED SIGN

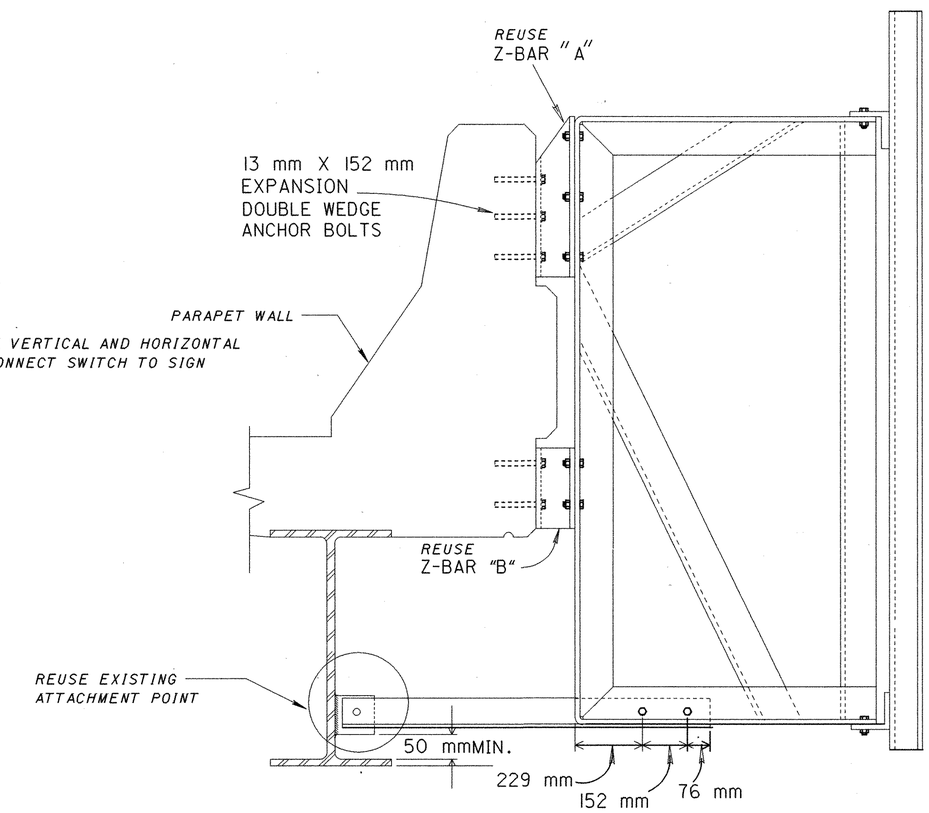

BEAM BRIDGE MOUNT

DESIGNED JCW	DRAWN BRC	REVIEWED JDB	DATE 10-24-96
CHECKED	REVISED	STRUCTURE FILE NUMBER 5706483 5706513	

DESIGN AGENCY
OFFICE OF TRAFFIC ENGINEERING

STRUCTURE MOUNTED SIGN DETAILS
BRIDGE NO MOT-75-6000
IR 75 OVER SR 725

MOT-75-00.00

NOTE: ALL REINFORCING STEEL SHALL BE EPOXY COATED AND INCLUDED IN THE COST FOR ITEM SPECIAL, HIGH PERFORMANCE CONCRETE

REINFORCEMENT LIST MOT-75-6000 L (WEST)

MARK	NUMBER REAR	NUMBER FWD	NUMBER TOTAL	LENGTH	WEIGHT	TYPE	DIMENSIONS A	B	C	D	E	R	INC.
ABUTMENTS													
A15M01	6	4	10	6975	109.5	STR							
A15M02	2	-	2	7185	22.6	12	6825						
A15M03	11	8	19	3760	112.2	2	950	850					
A15M04	16	17	33	5010	259.6	2	1650	775					
A15M05	14	-	14	7210	158.5	2	1025	2500					
A15M06	10	-	10	2550	40.0	1	350	1140					
A15M07	58	58	116	3510	639.2	1	890	1350					
A15M08	58	58	116	3740	681.1	2	1040	750					
A15M09	10	-	10	7020	110.2	1	350	3375					
A15M12	18	18	36	900	50.9	STR							
A15M13	9	-	9	3950	55.8	STR							
A15M14	9	-	9	4130	58.3	STR							
A15M16	1	-	1	4250	6.8	STR							
A15M18	6	-	6	6025	56.8	STR							
A15M19	6	-	6	6200	58.4	STR							
A15M20	10	-	10	2770	43.5	1	350	1250					
A15M21	11	10	21	5140	169.5	2	1700	790					
	1-SET			4255									
A15M22	0F	-	4	T0	29.4	STR							285
	4			5110									
A15M23	11	-	11	2320	45.2	1	300	1050					
A15M24	1	-	1	5100	8.0	STR							
A15M25	1	-	1	4975	7.8	STR							
A15M26	1	-	1	4450	7.0	STR							
	1-SET			4450									
A15M29	0F	-	4	T0	29.6	STR							175
	4			4975									
A15M30	-	2	2	6875	21.6	STR							
A15M32	-	2	2	7185	22.7	12	6825						
A15M33	-	14	14	6260	137.6	2	1025	2025					
A15M37	11	-	11	6470	111.7	1	350	3100					
A15M38	-	1	1	2950	4.6	STR							
A15M40	-	1	1	3425	5.3	STR							
		1-SET		2930									
A15M42	-	0F	4	T0	19.9	STR							157
		4		3400									
A15M43	-	5	5	2625	20.6	STR							
A15M44	-	5	5	2800	22.2	STR							
A15M45	-	6	6	4500	42.4	STR							
A15M46	-	6	6	4675	44.0	STR							
A15M47	-	8	8	2120	26.6	1	350	950					
A15M49	-	7	7	2220	24.4	1	300	1000					
A15M51	-	7	7	5880	64.6	1	300	2830					
A15M52	-	1	1	3650	5.7	STR							

REINFORCEMENT LIST MOT-75-6000 L (WEST)

MARK	NUMBER REAR	NUMBER FWD	NUMBER TOTAL	LENGTH	WEIGHT	TYPE	DIMENSIONS A	B	C	D	E	R	INC.
ABUTMENTS													
A15M54	-	1	1	2900	4.6	STR							
		1-SET		2900									
A15M56	-	0F	4	T0	20.6	STR							253
		4		3660									
A15M63	-	7	7	2370	26.0	1	350	1050					
A15M65	-	7	7	6020	66.2	1	350	2875					
A15M66	6	6	12	1100	20.7	STR							
A25M01	4	3	7	6975	191.6	STR							
A25M02	14	14	28	12625	1387.5	STR							
A25M03	6	-	6	7385	173.9	12	6825						
A25M04	14	14	28	12850	1412.2	STR							
	1-SET			4255									
A25M05	0F	-	4	T0	73.5	STR							285
	4			5110									
	1-SET			4450									
A25M07	0F	-	4	T0	74.0	STR							175
	4			4975									
		1-SET		2930									
A25M09	-	0F	4	T0	19.9	STR							157
		4		3400									
		1-SET		2908									
A25M11	-	0F	4	T0	51.6	STR							251
		4		3661									
A25M13	-	1	1	6875	27.0	STR							
A25M14	-	6	6	7385	173.9	12	6825						
D25M01	51	51	102	1583	633.8	4	305	882					

DESIGN AGENCY: STRUCTURAL ENGINEERING AND PRODUCTION

REVIEWED DFT | DATE 10-24-96 | STRUCTURE FILE NUMBER 5706483

DRAWN BRC | REVISED

DESIGNED BRC | CHECKED MRG

REINFORCEMENT LIST
BRIDGE NO MOT-75-6000 L (WEST)
IR 75 OVER SR 725

MOT-75-00.00

NOTE: ALL REINFORCING STEEL SHALL BE EPOXY COATED AND INCLUDED IN THE COST OF ITEM SPECIAL, HIGH PERFORMANCE CONCRETE.

REINFORCEMENT LIST MOT-75-6000 R (EAST)

MARK	NUMBER REAR	NUMBER FWD	NUMBER TOTAL	LENGTH	WEIGHT	TYPE	DIMENSIONS A	B	C	D	E	R	INC.
ABUTMENTS													
A15M01	4	6	10	6975	109.5	STR							
A15M02	2	-	2	7185	22.6	12	6825						
A15M03	11	10	21	3760	124.0	2	950	850					
A15M04	17	16	33	5010	259.6	2	1650	775					
A15M07	58	58	116	3510	639.2	1	890	1350					
A15M08	58	58	116	3740	681.1	2	1040	750					
A15M10	10	-	10	2430	38.1	1	350	1080					
A15M11	10	-	10	7150	112.3	1	350	3440					
A15M12	18	18	36	900	50.9	STR							
A15M13	9	-	9	3950	55.8	STR							
A15M14	9	-	9	4125	58.3	STR							
	1-SET			4250									
A15M15	0F	-	4	TO	28.2	STR							160
	4			4730									
A15M16	1	-	1	4250	6.7	STR							
A15M17	1	-	1	4725	7.4	STR							
A15M18	6	-	6	6025	56.7	STR							
A15M19	6	-	6	6200	58.4	STR							
A15M20	10	-	10	2770	43.5	1	350	1250					
A15M21	11	8	19	5140	153.3	2	1700	790					
A15M25	1	-	1	4975	7.8	STR							
A15M27	1	-	1	4200	6.6	STR							
	1-SET			4220									
A15M28	0F	-	4	TO	28.9	STR							250
	4			4970									
A15M30	2	-	2	6875	21.6	STR							
A15M31	14	-	14	6210	136.5	2	1025	2000					
A15M34	-	13	13	5310	108.4	2	1025	1550					
A15M35	11	-	11	2370	40.9	1	350	1050					
A15M36	11	-	11	6070	104.8	1	350	2900					
A15M38	-	1	1	2950	9.3	STR							
A15M39	-	1	1	3800	6.0	STR							
		1-SET		2945									
A15M41	-	0F	4	TO	21.2	STR							285
		4		3800									

REINFORCEMENT LIST MOT-75-6000 R (EAST)

MARK	NUMBER REAR	NUMBER FWD	NUMBER TOTAL	LENGTH	WEIGHT	TYPE	DIMENSIONS A	B	C	D	E	R	INC.
A15M43	-	5	5	2625	20.6	STR							
A15M44	-	5	5	2800	22.0	STR							
A15M45	-	6	6	4500	42.4	STR							
A15M46	-	6	6	4675	44.0	STR							
A15M47	-	8	8	2170	26.6	1	350	950					
A15M48	-	7	7	2270	24.9	1	350	1000					
A15M50	-	7	7	5750	63.2	1	350	2740					
A15M52	-	1	1	3650	5.7	STR	300						
A15M53	-	1	1	3275	5.1	STR	300						
		1-SET		3286									
A15M55	-	0F	4	TO	21.8	STR							125
		4		3661									
A15M62	-	7	7	2320	25.5	1	300	1050					
A15M64	-	7	7	5670	62.4	1	300	2725					
A15M66	6	6	12	1100	20.7	STR							
A25M01	3	4	7	6975	191.6	STR							
A25M02	14	14	28	12625	1387.5	STR							
A25M03	6	-	6	7385	173.9	12	6825						
A25M04	14	14	28	12850	1412.2	STR							
	1-SET			4220									
A25M06	0F	-	4	TO	72.1	STR							250
	4			4970									
		1-SET		2945									
A25M08	-	0F	4	TO	52.9	STR							285
		4		3800									
		1-SET		3286									
A25M10	-	0F	4	TO	54.5	STR							125
		4		3661									
	1-SET			4250									
A25M12	0F	-	4	TO	70.5	STR							160
	4			4730									
A25M13	1		1	6875	27.0	STR							
A25M14	-	6	6	7385	173.9	12	6825						
D25M01	51	51	102	1583	633.8	4	305	882					

STRUCTURAL ENGINEERING AND PRODUCTION

DESIGNED	DRAWN	REVIEWED	DATE
BRC	BRC	DFT	10-24-96
CHECKED	REVISED	STRUCTURE FILE NUMBER	
MRG		5706513	

REINFORCEMENT LIST
BRIDGE NO MOT-75-6000 R (EAST)
IR 75 OVER SR 725

MOT-75-00.00

NOTE: ALL REINFORCING STEEL SHALL BE EPOXY COATED AND INCLUDED IN THE COST OF ITEM SPECIAL, HIGH PERFORMANCE CONCRETE.

REINFORCEMENT LIST MOT-75-6000 L/R

MARK	NUMBER			LENGTH	WEIGHT	TYPE	DIMENSIONS						
	WEST	EAST	TOTAL				A	B	C	D	E	R	INC.
SUPERSTRUCTURE													
S15M01	1226	1226	2452	9144	35201.1	STR							
S15M02	179	179	358	2830	1590.6	STR							
S15M03	156	156	312	7100	3477.9	STR							
S15M04	307	307	614	11364	10954.7	STR							
S15M05	304	304	608	12350	11788.8	STR							
	2-SETS	2-SETS		1917									
S15M06	0F	0F	116	T0	40462.9	STR							350
	31	31	58	12417									
	2-SETS	2-SETS		1267									
S15M07	0F	0F	116	T0	32570.9	STR							350
	29	29	58	11067									
S15M08	20	20	40	1925	120.9	STR							
	2-SETS	2-SETS		1626									
S15M09	0F	0F	116	T0	34466.9	STR							350
	29	29	58	11426									
	2-SETS	2-SETS		1506									
S15M10	0F	0F	124	T0	40773.0	STR							350
	31	31	58	12006									
PIERS													
P15M01	30	30	60	6710	632.1	12	6350						
P15M02	66	66	132	2985	618.6	12	2625						
P15M03	72	72	144	1270	287.1	1	750	375					
P15M04	72	72	144	800	180.9	STR							
P15M05	6	6	12	5175	97.5	STR							
P15M06	60	60	120	3660	689.4	2	800	950					
P15M07	9	9	18	2548	72.0	5	720	750					
P15M08	24	24	48	600	45.3	STR							
P25M01	30	30	60	6910	1627.3	12	6350						
P25M02	66	66	132	3185	1650.1	12	2625						
P30M02	72	72	144	3675	2907.9	3	3175	590					
P30M03	3	3	6	7695	253.7	1	5975	950					
P30M04	6	6	12	7460	491.9	1	5740	950					

REINFORCEMENT LIST MOT-75-6000 L/R

MARK	NUMBER			LENGTH	WEIGHT	TYPE	DIMENSIONS						
	WEST	EAST	TOTAL				A	B	C	D	E	R	INC.
P30M05	6	6	12	6890	454.3	1	5170	950					
P30M06	3	3	6	5975	197.0	STR							
P30M07	6	6	12	5740	378.5	STR							
P30M08	6	6	12	5170	340.9	STR							
P30M09	-	12	12	6200	408.8	STR							
P30M10	-	12	12	5500	362.7	STR							
P30M11	-	12	12	5600	369.3	STR							
P30M12	12	-	12	6650	438.5	STR							
P30M13	12	-	12	5825	384.1	STR							
P30M14	12	-	12	5725	377.5	STR							
SP15M01	-	2	2	5190	176.5	6	115	765					
SP15M02	-	2	2	4498	154.4	6	115	765					
SP15M03	-	2	2	4598	157.6	6	115	765					
SP15M04	2	-	2	5629	190.5	6	115	765					
SP15M05	2	-	2	4817	164.6	6	115	765					
SP15M06	2	-	2	4717	161.4	6	115	765					
PARAPET													
X15M01	16	16	32	3050	153.2	STR							
X15M02	8	8	16	1725	43.3	11	555	738	432	38	165		
X15M03	8	8	16	1725	43.3	STR							
X15M04	16	16	32	7500	376.8	STR							
X15M05	8	8	16	4350	109.3	STR							
X15M06	8	8	16	4350	109.3	13	3280	1070	88				
Y15M01	44	44	88	2130	294.3	9	915	990	1.25	205			
Y15M02	4	4	8	1170	14.7	10	990						
Y15M03	4	4	8	1145	14.4	10	965						
Y15M04	4	4	8	1120	14.1	10	940						
Y15M05	4	4	8	1095	13.8	10	915						
Y15M06	4	4	8	1070	13.4	10	890						
Y15M07	4	4	8	1045	13.1	10	865						
Y15M08	4	4	8	1020	12.8	10	840						
Y15M09	4	4	8	995	12.5	10	815						
Y15M10	4	4	8	970	12.2	10	790						
Y15M11	4	4	8	945	11.9	10	765						
Y15M12	4	4	8	920	11.6	10	740						

DESIGN AGENCY: STRUCTURAL ENGINEERING AND PRODUCTION

DATE: 10-24-96
REVIEWED: DFT
STRUCTURE FILE NUMBER: 5706283, 5706513

DRAWN: BRC
REVISED:

DESIGNED: BRC
CHECKED: MRG

REINFORCEMENT LIST
BRIDGE NO MOT-75-6000 L/R
IR 75 OVER SR 725

MOT-75-00.00

NOTE: ALL REINFORCING STEEL SHALL BE EPOXY COATED AND INCLUDED IN THE COST OF ITEM SPECIAL, HIGH PERFORMANCE CONCRETE.

REINFORCEMENT LIST MOT-75-6000 L/R

MARK	NUMBER WEST	NUMBER EAST	NUMBER TOTAL	LENGTH	WEIGHT	TYPE	DIMENSIONS A	B	C	D	E	R	INC.
PARAPET													
Y20M01	88	88	176	930	385.4	7	380	216	230	152	125		
Y20M02	44	44	88	816	169.1	3	586	280					
Y20M03	4	4	8	1323	24.9	3	1093	280					
Y20M04	4	4	8	1348	25.4	3	1118	280					
Y20M05	4	4	8	1373	25.8	3	1143	280					
Y20M06	4	4	8	1398	26.3	3	1168	280					
Y20M07	4	4	8	1423	26.8	3	1193	280					
Y20M08	4	4	8	1448	27.3	3	1218	280					
Y20M09	4	4	8	1473	27.8	3	1243	280					
Y20M10	4	4	8	1498	28.2	3	1268	280					
Y20M11	4	4	8	1523	28.7	3	1293	280					
Y20M12	4	4	8	1548	29.2	3	1318	280					
Y20M13	4	4	8	1573	29.6	3	1343	280					
Y20M14	12	12	24	2356	133.2	1	270	1093					
Y20M15	4	4	8	2241	42.2	1	155	1093					
Z15M01	390	390	780	2130	2608.4	9	915	990	1.25	205			
Z15M02	112	112	224	9144	3215.8	STR							
Z15M03	16	16	32	2830	142.2	STR							
Z20M01	390	390	780	765	1405.2	7	215	216	230	152	125		
Z20M02	390	390	780	707	1298.7	3	477	280					

BENDING DIAGRAMS

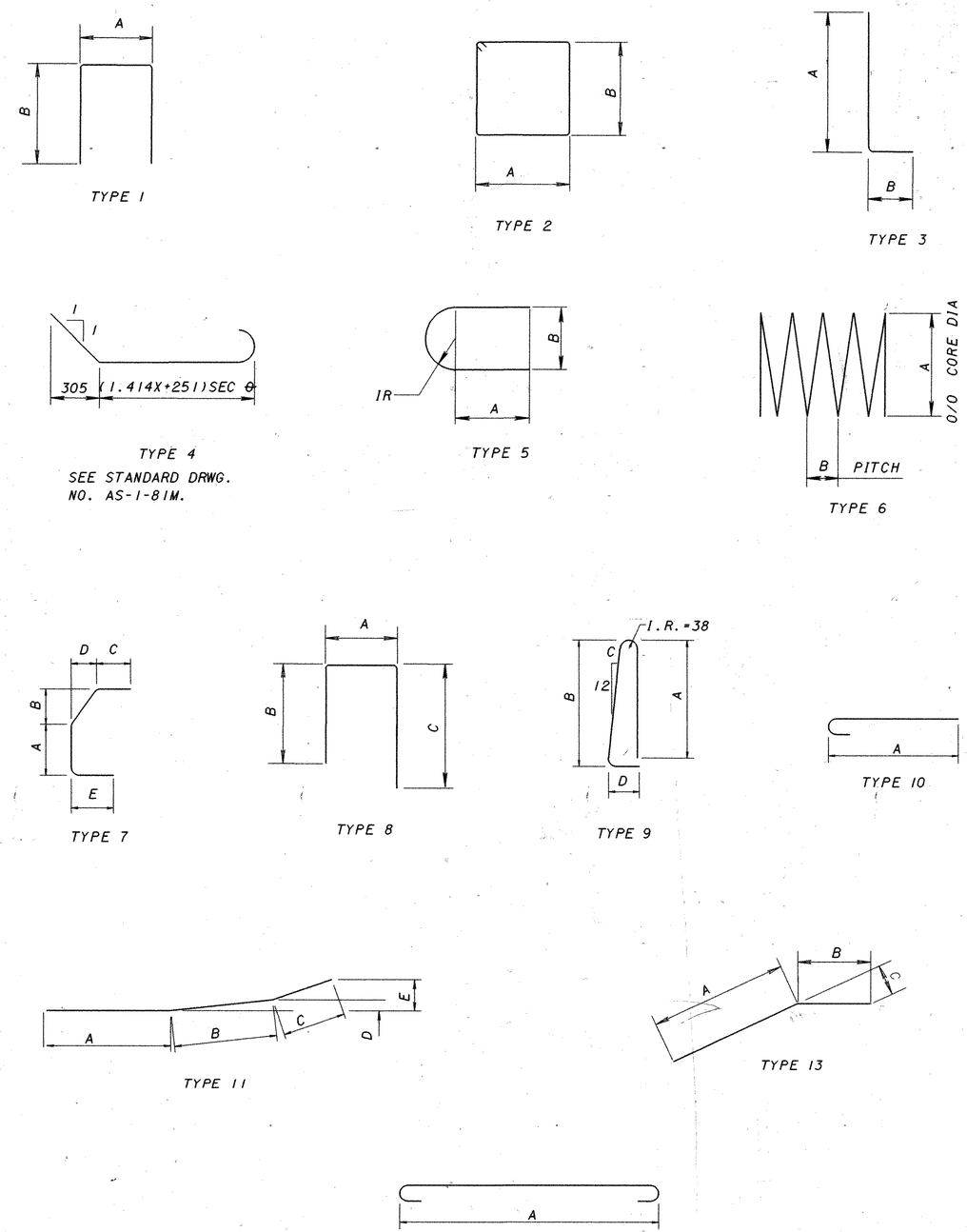

ALL DIMENSIONS ARE OUT TO OUT OF BAR EXCEPT FOR STANDARD 180° AND 135° HOOKS.

STRUCTURAL ENGINEERING AND PRODUCTION

DESIGNED	DRAWN	REVIEWED	DATE
BRC	BRC	DFT	10-24-96
CHECKED	REVISED	STRUCTURE FILE NUMBER	
MRG		5706513 5706483	

REINFORCEMENT LIST
BRIDGE NO MOT-75-6000 L/R
IR 75 OVER SR 725

MOT-75-00.00

30/30

145/145