BU #2 - STRUCTURE 1130 OVER S.R. 48

MOT-70-1130

RECORD DRAWING

ISSUE NO.	ISSUE DATE	SHEET NO.	SHEET TITLE
RD	02/20/2019	1	INDEX OF SHEETS
RD	02/20/2019	2	SITE PLAN
RD	02/20/2019	3-4	GENERAL PLANS
RD	02/20/2019	5-6	GENERAL NOTES
RD	02/20/2019	7	STAGE CONSTRUCTION DETAILS
RD	02/20/2019	8-10	TEMPORARY SHORING DETAILS
RD	02/20/2019	11	TEMPORARY MSE DETAILS
RD	02/20/2019	12-15	PIER & ABUTMENT REMOVAL DETAILS
RD	02/20/2019	16-17	FOUNDATION PLANS
RD	02/20/2019	18-26	ABUTMENT PLAN DETAILS
RD	02/20/2019	26	ABUTMENT DIAPHRAGM
RD	02/20/2019	27-28	FRAMING PLANS
RD	02/20/2019	29-31	BEAM DETAILS
RD	02/20/2019	32	MISCELLANEOUS BEAM DETAILS
RD	02/20/2019	33	CAMBER AND LONGITUDINAL DECK SECTION
RD	02/20/2019	34	BEARING DETAILS
RD	02/20/2019	35-42	DECK PLANS
RD	02/20/2019	43-45	APPROACH SLAB PLAN & DETAILS
RD	02/20/2019	46	REINFORCING STEEL DETAILS
RD	02/20/2019	47	REINFORCING LIST (1 OF 3)
RD	02/20/2019	48	REINFORCING LIST (2 OF 3)
RD	02/20/2019	49	REINFORCING LIST (3 OF 3)
RD	02/20/2019	50	AESTHETIC DETAILS
RD	02/20/2019	51-52	UNDERPASS LIGHTING PLAN & DETAILS
RD	02/20/2019	53-77	BRIDGE REPAIR ATTACHMENT
RD	02/20/2019	78-87	LIGHTING ATTACHMENT

URS CORPORATION

DATE REC'D: BUILDABLE UNIT NO.: 02

Record Drawing Completion

By: JEFF NOBLE

Date: 02/20/2019

STANDARD CONSTRUCTION DRAWINGS				SUPPLEMENTAL SPECIFICATIONS	
PSID-1-13	10-18-13			800	7-19-13
AS-1-81	1-18-13			832	10-18-13
PCB-91	1-18-13			840	10-18-13
SBR-1-13	1-17-14				
SBR-2-13	1-17-14				
SICD-1-96	7-19-02				
HL-30.11	1-17-14				
HL-30.22	1-17-14				
HL-40.20	1-17-14				
HL-50.21	1-17-14			SPECIAL PROVISIONS	
HL-60.31	1-17-14				

PLANS PREPARED BY:

URS AKRON CLEVELAND
564 WHITE POND DRIVE
AKRON, OHIO 44320-1100
(330) 836-9111

ENGINEERS SEAL:

STATE OF OHIO
MICHAEL S GUTER
E-79126
7/17/2014
REGISTERED
PROFESSIONAL ENGINEER

NO	DATE	DESCRIPTION
RD	02/20/19	RECORD DRAWING
6	10/21/2014	DIAPHRAGM RESTEEL DETAILS
5	10/06/2014	ABUT STAGE 2 RESTEEL REVISIONS
4	07/17/2014	ABUTMENT DIAPHRAGM REINFORCING
3	07/10/2014	BU#2C - FULL SET RFC
2	06/19/2014	BU#2B - TEMP SHORING RFC
1	06/05/2014	BU#2A - BEAM RFC

FEDERAL PROJECT NO. E090(431)

PID NO. 76667

CONSTRUCTION PROJECT NO. 133024

RAILROAD INVOLVEMENT NONE

MOT-70-10.79

076667_BU02-SR48 Bridge_AsBuilt
G:\GrandRapids\DCS\Projects\12944308\structures\MOT070_1130_SR48\sheets\070_1130GT001_S2C.dgn 4/5/2019 11:00:03 AM niles j

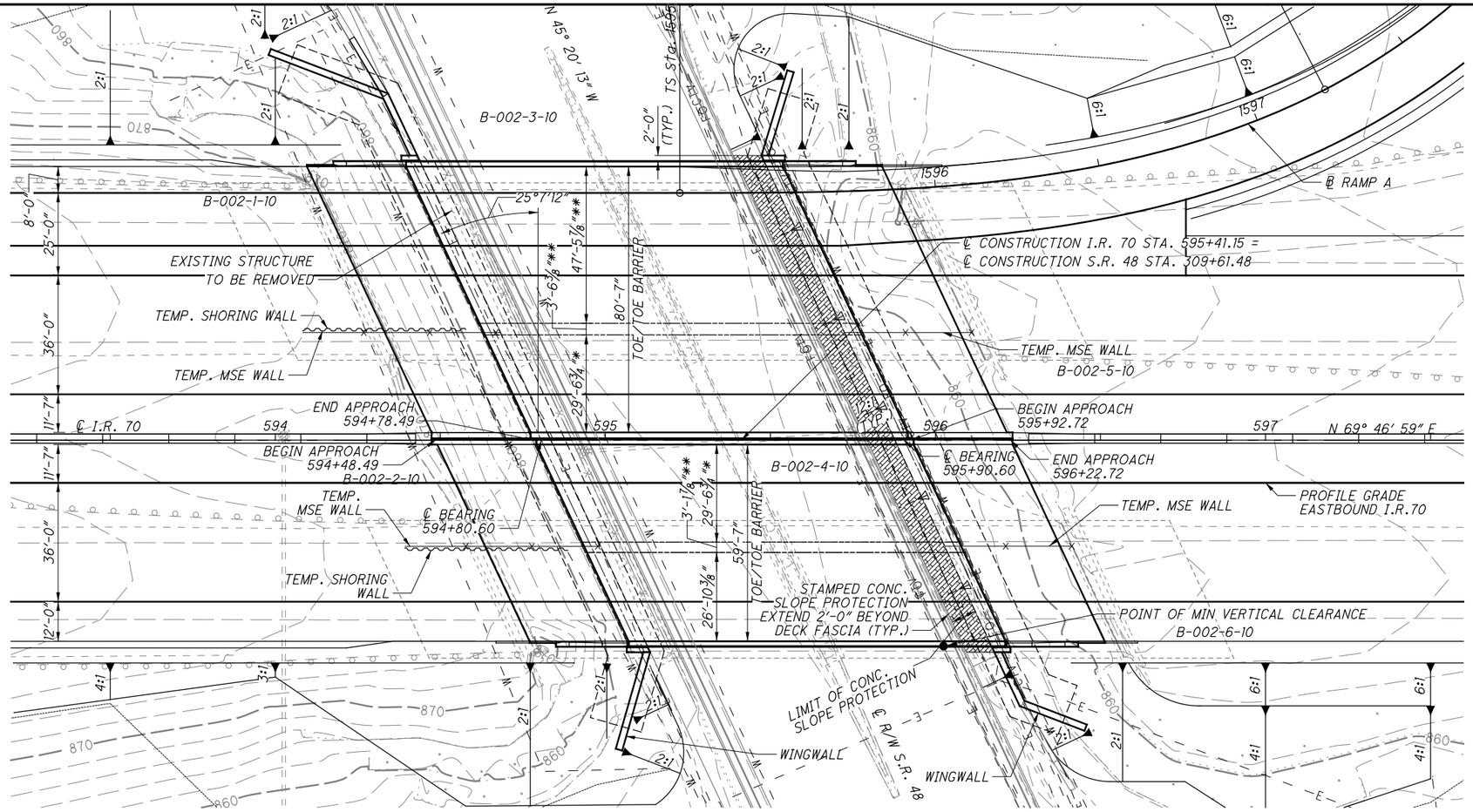

PLAN

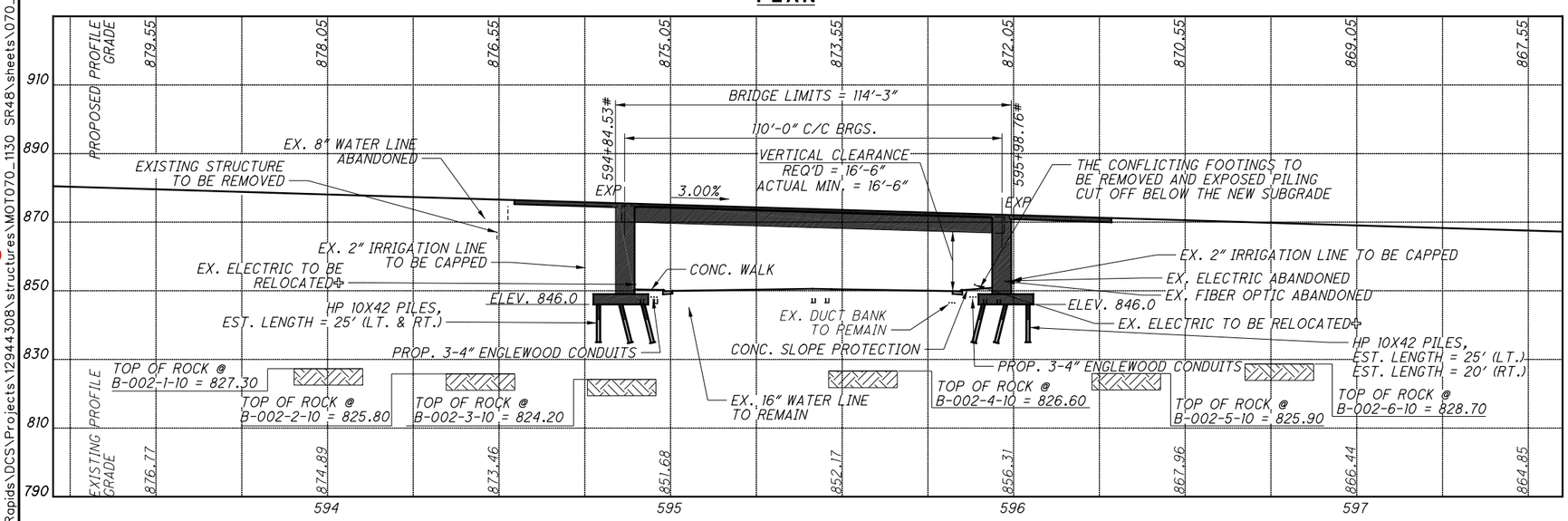

✠EX. ELECTRIC POWERS INTERCHANGE LIGHTING ON EAST SIDE AND SR-48 LIGHTING ON WEST SIDE. POWER SUPPLY MUST BE MAINTAINED AT ALL TIMES DURING CONSTRUCTION.

PROFILE

#ALONG PROFILE GRADE, EASTBOUND I.R.70

BENCHMARK DATA

BM #4 STA. 594+77.00, ELEV. 873.48, OFFSET 68.83, RT
BM #6 STA. 607+10.54, ELEV. 838.69 OFFSET 116.80, RT

NOTES

EARTHWORK LIMITS SHOWN ARE APPROXIMATE. ACTUAL SLOPES SHALL CONFORM TO PLAN CROSS SECTIONS.

DESIGN TRAFFIC:
2012 ADT = 71320 2012 ADTT = 21396
2032 ADT = 87220 2032 ADTT = 26166
DIRECTIONAL DISTRIBUTION = 53%

LEGEND

✠ BORING LOCATION
* - STAGE 1 CONSTRUCTION
** - STAGE 2 CONSTRUCTION

● 16'-6" REQUIRED MINIMUM VERTICAL CLEARANCE
16'-6" ACTUAL MINIMUM VERTICAL CLEARANCE

EXISTING STRUCTURE

TYPE: FOUR SPAN CONTINUOUS STEEL BEAM WITH REINFORCED CONCRETE DECK AND SUBSTRUCTURE

SPANS: 40'-0"±, 50'-0"±, 50'-0"±, 40'-0"± C/C BRGS
ROADWAY: EB 38'-2"±, WB 50'-2"± F/F SAFETY CURB
LOADING: CF 2000
WEARING SURFACE: 1 1/4" LATEX MODIFIED CONCRETE OVERLAY
SKEW: 25°0'0"±
APPROACH SLABS: AS-1-54 (25 FT)
ALIGNMENT: TANGENT
CROWN: 0.0156 FT/FT
STRUCTURAL FILE NUMBER: 5705495 AND 5705525
DATE BUILT: 1957
DISPOSITION: REMOVAL

PROPOSED STRUCTURE

TYPE: SINGLE SPAN PRESTRESSED CONCRETE I-BEAM WITH COMPOSITE REINFORCED CONCRETE DECK SUPPORTED BY SEMI-INTEGRAL TYPE ABUTMENTS

SPANS: 110'-0" C/C BEARING
ROADWAY: EB 59'-7", WB 80'-7" TOE/TOE BARRIER
LOADING: HL93 AND 60 PSF FWS
SKEW: 25°7'12" RIGHT FORWARD
APPROACH SLABS: 30 FT LONG (AS-1-81)
ALIGNMENT: TANGENT
CROWN: 0.016 FT/FT
WEARING SURFACE: 1" MONOLITHIC CONCRETE
COORDINATES: LATITUDE 39°51'30" N
LONGITUDE 84°16'48" W

DESIGN-BUILDER
DESIGNER URS
DATE 06/2014 | REVIEWED MSG | STRUCTURE FILE NUMBER 5705533/5705509
DRAWN AK | REVISED
DESIGNED CC | CHECKED KAB
MONTGOMERY CO.
STA. 594+76.48
STA. 595+94.72
ISSUE NO. 1 | ISSUE DATE 07/10/14 | RD 10/25/18
SITE PLAN
BRIDGE NO. MOT-70-1130 L&R
OVER S.R. 48
MOT-70-10.79
PID No. 76667

076667_BU02-SR48 Bridge_AsBuilt
G:\GrandRapids\DCS\Projects\1294308\structures\MOT070_1130 SR48\sheets\070_1130LSP001.dgn 4/5/2019 11:00:13 AM niles j

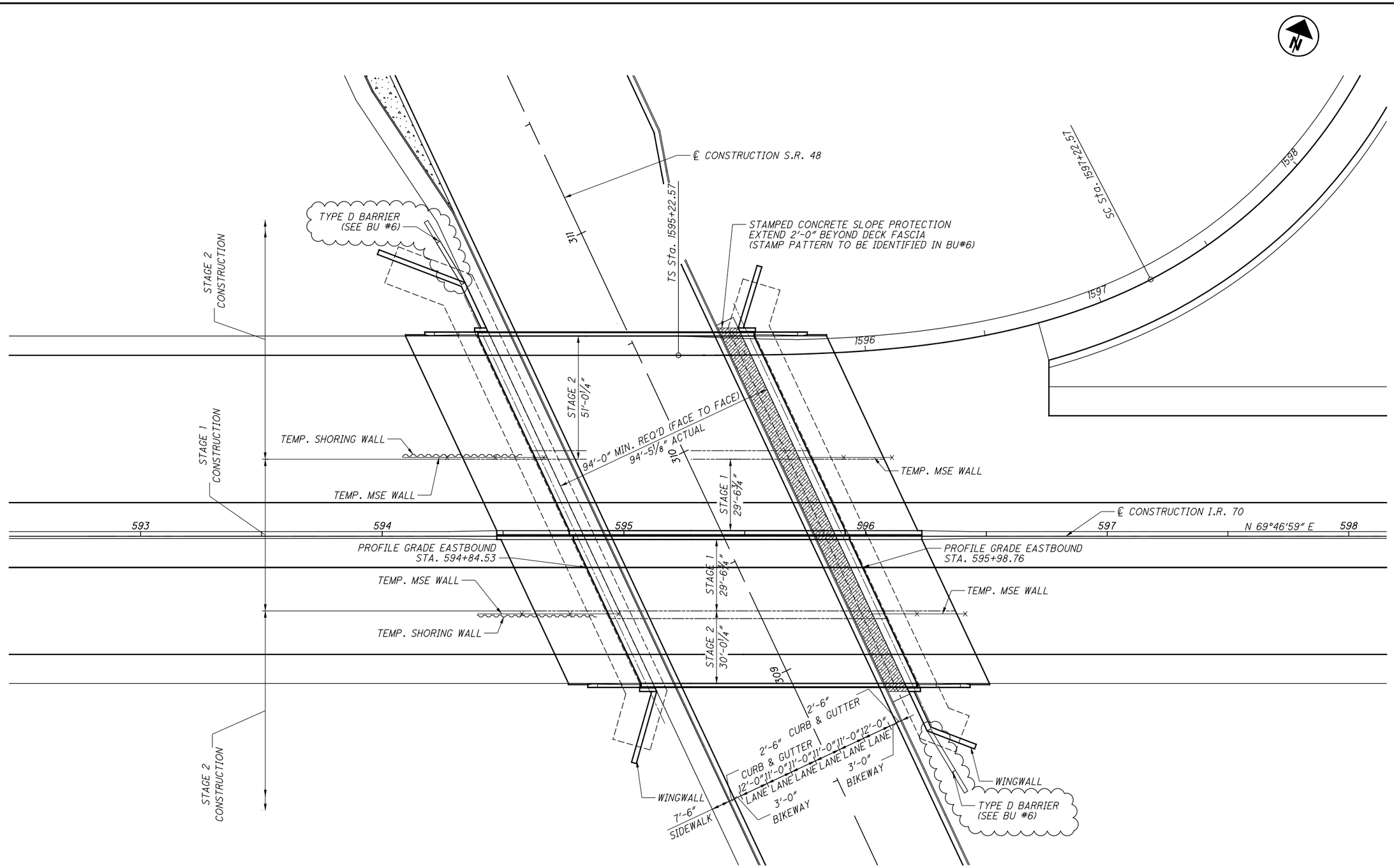

076667_BU02-SR48 Bridge_AsBuilt

G:\GrandRapids\DCS\Projects\12944308\structures\MOT070_1130 SR48\sheets\070_1130LGP001.dgn 4/5/2019 11:00:17 AM niles j

ISSUE NO.	ISSUE DATE	DESIGNED	DRAWN	REVIEWED	DATE
1	07/10/14	CC	AJK	MSG	06/2014
2	09/23/14	CHECKED	REVISED	STRUCTURE FILE NUMBER	
RD	10/25/18	KAB		5705533/5705509	

DESIGN-BUILDER

DESIGNER URS

GENERAL PLAN

BRIDGE NO. MOT-70-1130 L&R
OVER S.R. 48

MOT-70-10.79

PID No. 76667

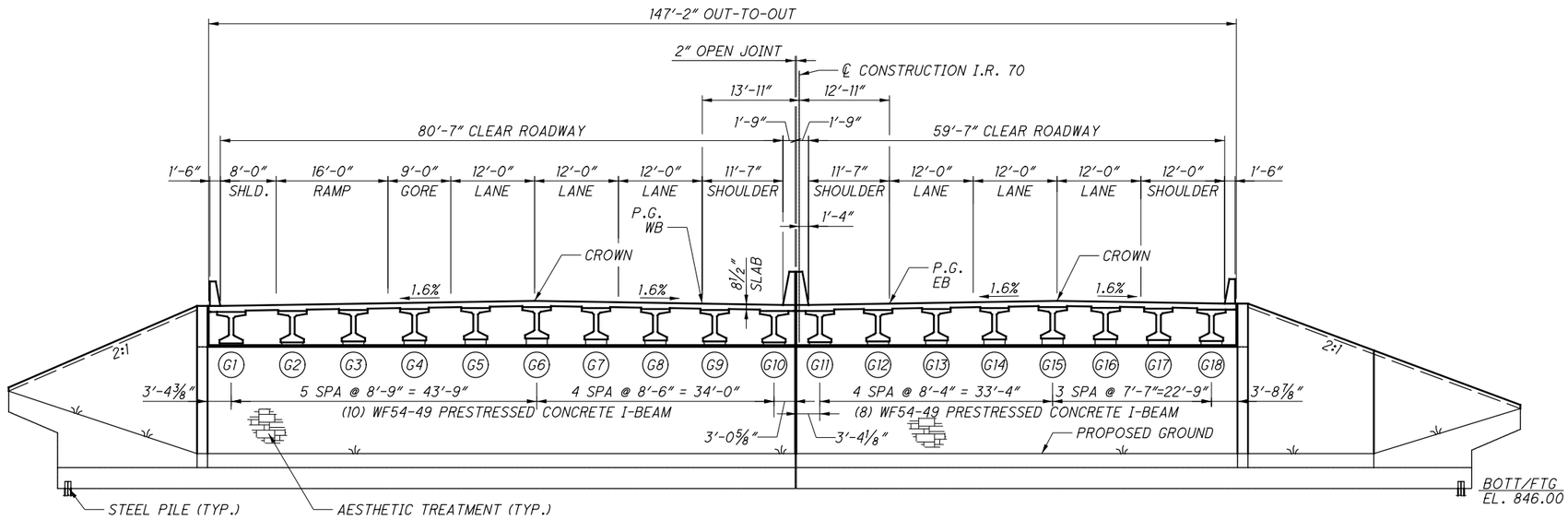

076667_BU02-SR48 Bridge_AsBuilt

G:\GrandRapids\DCS\Projects\12944308\structures\MOT070_1130 SR48\sheets\070_1130LGP002.dgn 4/5/2019 11:00:18 AM niles j

DESIGN-BUILDER	DESIGNER	REVIEWED	DATE	DRAWN	REVISED	DESIGNED	CHECKED	ISSUE NO.	ISSUE DATE
	URS	MSG	06/2014	AJK		CC	KAB	1	07/10/14
		STRUCTURE FILE NUMBER 5705533/5705509						RD	10/25/18

GENERAL PLAN OF STRUCTURE

BRIDGE NO. MOT-70-1130 L&R OVER S.R. 48

MOT-70-10.79

PID No. 76667

STANDARD DRAWINGS AND SUPPLEMENTAL SPECIFICATIONS

REFER TO THE FOLLOWING STANDARD BRIDGE DRAWING(S):
AS-1-81 DATED/REVISED 01/18/13
PSID-1-13 DATED/REVISED 10/18/13
PCB-91 DATED/REVISED 01/18/13
SBR-1-13 DATED/REVISED 01/17/14
SBR-2-13 DATED/REVISED 01/17/14
SICD-1-96 DATED/REVISED 07/19/02

AND TO THE FOLLOWING SUPPLEMENTAL SPECIFICATION(S):
SS 800 DATED 7/19/13
SS 832 DATED 10/18/13
SS 840 DATED 10/18/13

DESIGN SPECIFICATIONS

DESIGN SPECIFICATIONS: THIS STRUCTURE CONFORMS TO THE "LRFD BRIDGE DESIGN SPECIFICATIONS" ADOPTED BY THE AMERICAN ASSOCIATION OF STATE HIGHWAY AND TRANSPORTATION OFFICIALS, 2012, AND THE ODOT BRIDGE DESIGN MANUAL, 2007.

LOAD MODIFIER FOR OPERATIONAL IMPORTANCE

OPERATIONAL IMPORTANCE: A LOAD MODIFIER OF 1.05 HAS BEEN ASSUMED FOR THE DESIGN OF THIS STRUCTURE IN ACCORDANCE WITH THE AASHTO LRFD BRIDGE DESIGN SPECIFICATIONS, ARTICLE 1.3.5 AND THE ODOT BRIDGE DESIGN MANUAL, 2007.

DESIGN LOADING

DESIGN LOADING: HL-93
FUTURE WEARING SURFACE (FWS) OF 0.060 KIPS/SQ.FT.

DESIGN DATA

CONCRETE FOR PRESTRESSED BEAMS-
COMPRESSIVE STRENGTH (FINAL) - 8 KSI
COMPRESSIVE STRENGTH (RELEASE) - 6 KSI

PRESTRESSING STRAND-
AREA = 0.217 SQ.IN.
ULTIMATE STRENGTH = 270 KSI
INITIAL STRESS = 202.5 KSI (LOW RELAXATION STRANDS)

CONCRETE CLASS QC2 - COMPRESSIVE STRENGTH 4.5 KSI (SUPERSTRUCTURE)
CONCRETE CLASS QC1 - COMPRESSIVE STRENGTH 4.0 KSI (SUBSTRUCTURE)
REINFORCING STEEL - MINIMUM YIELD STRENGTH 60 KSI
STRUCTURAL STEEL - ASTM A709 GRADE 50 - YIELD STRENGTH 50 KSI
STEEL H-PILES - ASTM A572 - YIELD STRENGTH 50 KSI

DECK PROTECTION METHOD

EPOXY COATED REINFORCING STEEL
2.5" CONCRETE COVER

MONOLITHIC WEARING SURFACE

MONOLITHIC WEARING SURFACE IS ASSUMED, FOR DESIGN PURPOSES, TO BE 1 INCH THICK.

CITY OF ENGLEWOOD TRAILBLAZING AND LOGO

"CITY OF ENGLEWOOD" IMPRINT IS TO BE PLACED ON EACH BRIDGE PARAPET, CENTERED OVER SR48. CITY OF ENGLEWOOD LOGO SHALL BE PLACED ON THE VERTICAL FACE OF THE WINGWALLS. DETAILS ARE SPECIFIED ON SHEET 50. IMPRINT AND LOGO LOCATIONS ARE DETAILED IN THE PLANS.

EPOXY-URETHANE SEALER

SEALING OF CONCRETE SURFACES SHALL BE AS REQUIRED IN THE SCOPE OF SERVICE, AS SHOWN IN THE PLANS, AND IN ACCORDANCE WITH CMS 512. THE TOP COAT COLOR FOR THE EPOXY-URETHANE SEALER SHALL MEET THE FEDERAL COLOR NUMBER FS 17778 - LIGHT NEUTRAL UNLESS SPECIFIED OTHERWISE. BEAM FASCIAS SHALL MEET THE FEDERAL COLOR NUMBER FS 10324 - DARK NEUTRAL. CITY OF ENGLEWOOD TRAILBLAZING AND LOGO SEALING AND COLORS ARE SPECIFIED ON SHEET 50 .

FORMLINERS

FORMLINER TREATMENT SHALL BE APPLIED TO ANY FLAT VERTICAL FACE TRANSVERSE AND PARALLEL TO SR-48, AS SHOWN IN THE PLAN. ACCEPTABLE FORMLINERS INCLUDE:

1. SCOTT SYSTEM, RUGGED FLAGSTONE (160B).
2. FITZGERALD FORMLINERS, COLORADO SPLIT FACE (16979).
3. US FORMLINER (RACK1), STIENWALD (2/156).
4. CITY OF ENGLEWOOD APPROVED EQUAL.

STAMPED CONCRETE

STAMPED CONCRETE SHALL BE PROVIDED AS A SURFACE TREATMENT FOR THE IR-70/SR-48 INTERCHANGE. ALL GROUND SURFACE UNDERNEATH STRUCTURES SHALL BE PROTECTED PER THE LIMITS SHOWN IN THE PLANS, INCLUDING AREA ADJACENT TO ROADWAY CURBS AND SIDEWALKS/PATH. STAMPED CONCRETE SHALL ALSO BE PROVIDED FOR THE PEDESTRIAN PATH ALONG SR-48. THE STAMPED CONCRETE DESIGN WILL BE COORDINATED WITH THE CITY OF ENGLEWOOD AND DETAILED WITHIN BU #6.

EXISTING STRUCTURE VERIFICATION

EXISTING STRUCTURE VERIFICATION: DETAILS AND DIMENSIONS SHOWN ON THESE PLANS PERTAINING TO THE EXISTING STRUCTURE HAVE BEEN OBTAINED FROM PLANS OF THE EXISTING STRUCTURE AND FROM FIELD OBSERVATIONS AND MEASUREMENTS. CONSEQUENTLY, THEY ARE INDICATIVE OF THE EXISTING STRUCTURE AND THE PROPOSED WORK BUT THEY SHALL BE CONSIDERED TENTATIVE AND APPROXIMATE. THE CONTRACTOR IS REFERRED TO CMS SECTIONS 102.05, 105.02 AND 513.04.

TEMPORARY MSE WALLS

TEMPORARY MSE WALLS 1 TO 4 ARE NEEDED TO SUPPORT THE STAGED CONSTRUCTION OF THE BRIDGE ABUTMENTS. THE TEMPORARY MSE WALLS SHALL NOT BE REMOVED, BUT SHALL BE INCORPORATED INTO THE EMBANKMENT FOR THE ABUTMENTS AS CONSTRUCTION IS COMPLETED IN STAGES. THIS ITEM SHALL INCLUDE THE DESIGN AND CONSTRUCTION OF SELF-SUPPORTING, TEMPORARY MSE WALLS USED TO SUPPORT THE LONGITUDINAL STAGE CONSTRUCTION AND BACKFILL, THE APPROACH SLAB, AND THE APPROACH PAVEMENT, OVER THE LIMITS OF THE EXCAVATION FOR THE PROPOSED ABUTMENTS. THE TEMPORARY MSE WALLS SHALL BE DESIGNED TO SUPPORT STAGE 1 CONSTRUCTION. THE DESIGN FOR THE TEMPORARY MSE WALLS SHALL BE IN ACCORDANCE WITH THE SAME SPECIFICATIONS AND REQUIREMENTS AS PERMANENT MSE RETAINING WALLS.

ITEM 203 EMBANKMENT, AS PER PLAN

ITEM 203 EMBANKMENT, AS PER PLAN: PLACE AND COMPACT EMBANKMENT MATERIAL IN 6 INCH LIFTS FOR THE CONSTRUCTION OF THE APPROACH EMBANKMENT.

PILES TO BEDROCK

PILES TO BEDROCK: DRIVE PILES TO REFUSAL ON BEDROCK. THE DEPARTMENT WILL CONSIDER REFUSAL TO BE OBTAINED BY PENETRATING WEAK BEDROCK FOR SEVERAL INCHES TO A MINIMUM RESISTANCE OF 20 BLOWS PER INCH OR BY CONTACTING STRONG BEDROCK AND THE PILE RECEIVING AT LEAST 20 BLOWS. SELECT THE HAMMER SIZE TO ACHIEVE THE REQUIRED DEPTH TO BEDROCK AND REFUSAL. INSTEAD OF DRIVING TO REFUSAL, THE CONTRACTOR MAY PERFORM DYNAMIC LOAD TESTING ACCORDING TO C&MS 523 TO ESTABLISH A DRIVING CRITERIA FOR EACH PILE TYPE AND CAPACITY. ESTABLISH THE DRIVING CRITERIA TO ACHIEVE AN ULTIMATE BEARING VALUE THAT IS 1.5 TIMES THE TOTAL FACTORED LOAD GIVEN BELOW FOR THE PILES. PAYMENT FOR DYNAMIC LOAD TESTING PERFORMED AT THE CONTRACTOR'S OPTION IS INCLUDED IN THE UNIT PRICE PAY ITEM FOR PILES DRIVEN.

THE TOTAL FACTORED LOAD IS 265 KIPS PER PILE FOR THE 168 ABUTMENT PILES ON THE LEFT BRIDGE.
THE TOTAL FACTORED LOAD IS 284 KIPS PER PILE FOR THE 116 ABUTMENT PILES ON THE RIGHT BRIDGE.

REAR ABUTMENT PILES:
92 PILES 25 FEET LONG, ESTIMATED LENGTH - LEFT BRIDGE
57 PILES 25 FEET LONG, ESTIMATED LENGTH - RIGHT BRIDGE

FORWARD ABUTMENT PILES:
76 PILES 25 FEET LONG, ESTIMATED LENGTH - LEFT BRIDGE
59 PILES 20 FEET LONG, ESTIMATED LENGTH - RIGHT BRIDGE

IN LIEU OF USING PILE POINTS FOR PILES BEARING ON ROCK, THE CONTRACTOR SHALL USE DYNAMIC LOAD TESTING TO EVALUATE THE STRESSES WITHIN THE PILE DURING DRIVING TO DETERMINE ANY DAMAGE TO THE PILE ENDS. THE PILE LOCATIONS FOR THE DYNAMIC TESTING ARE IDENTIFIED ON THE FOUNDATION PLAN. PENDING THE RESULTS OF THE DYNAMIC LOAD TESTING, THE CONTRACTOR MAY HAVE THE OPTION TO UTILIZE PILE POINTS AT NO ADDITIONAL COST TO THE DEPARTMENT.

DECK PLACEMENT DESIGN ASSUMPTIONS:

DECK PLACEMENT DESIGN ASSUMPTIONS:
THE FOLLOWING ASSUMPTIONS OF CONSTRUCTION MEANS AND METHODS WERE MADE FOR THE ANALYSIS AND DESIGN OF THE SUPERSTRUCTURE. THE CONTRACTOR IS RESPONSIBLE FOR THE DESIGN OF THE FALSEWORK SUPPORT SYSTEM WITHIN THESE PARAMETERS AND WILL ASSUME RESPONSIBILITY FOR SUPERSTRUCTURE ANALYSIS FOR DEVIATION FROM THESE DESIGN ASSUMPTIONS.

AN EIGHT WHEEL FINISHING MACHINE WITH A MAXIMUM WHEEL LOAD OF 1.0 KIPS FOR A TOTAL MACHINE LOAD OF 7.9 KIPS DURING STAGE 1 CONSTRUCTION FOR BOTH THE LEFT AND RIGHT STRUCTURES.

DURING STAGE 2 CONSTRUCTION AN EIGHT WHEEL FINISHING MACHINE WITH A MAXIMUM WHEEL LOAD OF 1.2 KIPS FOR A TOTAL MACHINE LOAD OF 9.6 KIPS ON THE LEFT STRUCTURE AND A MAXIMUM WHEEL LOAD OF 1.0 KIPS FOR A TOTAL MACHINE LOAD OF 7.6 KIPS ON THE RIGHT STRUCTURE.

A MINIMUM OUT-TO-OUT WHEEL SPACING AT EACH END OF THE MACHINE OF 103".

A MAXIMUM SPACING OF OVERHANG FALSEWORK BRACKETS OF 48 IN.

A MAXIMUM DISTANCE FROM THE CENTERLINE OF THE FASCIA GIRDER TO THE FACE OF THE SAFETY HANDRAIL OF 65".

ABBREVIATIONS:

THE FOLLOWING ABBREVIATIONS HAVE BEEN USED THROUGHOUT THESE PLANS TO INDICATE THE DESIGNATIONS CONTAINED IN THE LEGEND BELOW:

AASHTO - AMERICAN ASSOCIATION OF STATE HIGHWAY AND TRANSPORTATION OFFICIALS
ABUT. - ABUTMENT
ADT - AVERAGE DAILY TRAFFIC
ADTT - AVERAGE DAILY TRUCK TRAFFIC
A.P.P - AS PER PLAN
APPR. - APPROACH
APPROX. - APPROXIMATE
ASTM - AMERICAN SOCIETY OF TESTING MATERIALS

℄ - BASELINE
B.F. - BACK FACE
BOTT. - BOTTOM
BRGS. - BEARINGS
BTA - BRIDGE TERMINAL ASSEMBLY
BTW. - BETWEEN

℄ - CENTERLINE
C.B. - CATCH BASIN
C/C - CENTER TO CENTER
CIP - CAST-IN-PLACE
C.J. - CONSTRUCTION JOINT
CLR. - CLEARANCE
CMS - CONSTRUCTION MATERIAL SPECIFICATIONS
CONC. - CONCRETE
CONN. - CONNECTION
CONST. - CONSTRUCTION
CU YD - CUBIC YARD
CVN - CHARPY V-NOTCH

DEFL. - DEFLECTION
DIA./ϕ - DIAMETER
DIM. - DIMENSION
DWG. - DRAWING

EB - EASTBOUND
E.F. - EACH FACE
E/P - EDGE OF PAVEMENT
E/S - EDGE OF SHOULDER
EL. - ELEVATION
EQ. - EQUAL
EX. - EXISTING
EXP. - EXPANSION
EXT. - EXTENSION

F.A. - FORWARD ABUTMENT
F.F. - FRONT FACE
F.S. - FIELD SPLICE
FT/FT - FOOT PER FOOT
FTG. - FOOTING
FWD. - FORWARD

GEN. - GENERAL
G.R. - GUARDRAIL

HMWM - HIGH MOLECULAR WEIGHT METHACRYLATE
HORZ. - HORIZONTAL
HPC - HIGH PERFORMANCE CONCRETE

INV. - INVERT
I.R. - INTERSTATE ROUTE

JT.- JOINT

LT. - LEFT
LOC. - LOCATION

MAX. - MAXIMUM
M.C. - MECHANICAL CONNECTORS
MIN. - MINIMUM
MISC. - MISCELLANEOUS
MOT - MAINTENANCE OF TRAFFIC
MSE - MECHANICALLY STABILIZED EARTH

N.C.P.P. - NON-PERFORATED CORRUGATED PLASTIC PIPE
NO./# - NUMBER
N.T.S. - NOT TO SCALE

O/O - OUT TO OUT

℗ - PLATE
PC - POINT OF CURVATURE
P.C.P.P. - PERFORATED CORRUGATED PLASTIC PIPE
P.E.J.F. - PREFORMED EXPANSION JOINT FILLER
P.G. - PROFILE GRADE
PI - POINT OF INTERSECTION
PROP. - PROPOSED
PT - POINT OF TANGENCY
PVC - POINT OF VERTICAL CURVATURE
PVI - POINT OF VERTICAL INTERSECTION
PVT - POINT OF VERTICAL TANGENCY

R. - RADIUS
R.A. - REAR ABUTMENT
REQ'D - REQUIRED
RT. - RIGHT
R/W - RIGHT OF WAY

SAN. - SANITARY
SER. - SERIES
S.O. - SERIES OF
SPA. - SPACES OR SPACING
S.R. - STATE ROUTE
STA. - STATION
STD. - STANDARD
STM. - STORM
STR. - STRAIGHT

TBM - TEMPORARY BENCH MARK
TEMP. - TEMPORARY
T.O.S. - TOP OF SLOPE
T/PARAPET - TOE OF PARAPET
T/T - TOE TO TOE
TYP. - TYPICAL

U.G. - UNDERGROUND
U.N.O - UNLESS NOTED OTHERWISE

VAR. - VARIOUS
VC - VERTICAL CURVE
VERT. - VERTICAL

W/O - WITHOUT
WB - WESTBOUND

076667_BU02-SR48 Bridge_AsBuilt
G:\GrandRapids\DCS\Projects\12944308\structures\MOT070_1130_SR48\sheets\070_1130LGN002.dgn 4/5/2019 11:00:22 AM niles j

STAGE 1:

1. INSTALL TRAFFIC CONTROL DEVICES ON SR48 AND DIVERT TRAFFIC TO THE INSIDE OR OUTSIDE, DEPENDING ON CONSTRUCTION REQUIREMENTS.
2. INSTALL TRAFFIC CONTROL DEVICES ON I.R. 70 EASTBOUND AND WESTBOUND AND DIVERT TRAFFIC TO THE OUTSIDE.
3. CONSTRUCT PORTIONS OF TEMPORARY SHORING BEHIND EXISTING ABUTMENTS OF THE EASTBOUND AND WESTBOUND BRIDGES.
4. REMOVE INSIDE PORTIONS OF EXISTING DECK, ABUTMENTS, PIERS, AND APPROACH SLABS AS SHOWN IN THE PLANS.
5. PRE-EXCAVATE AREA BETWEEN EXISTING REAR ABUTMENT AND PIER 1 AS SHOWN IN THE PLANS.
6. CONSTRUCT REMAINING PORTIONS OF TEMPORARY SHORING AT EASTBOUND AND WESTBOUND BRIDGES.
7. CONSTRUCT INSIDE PORTIONS OF EASTBOUND AND WESTBOUND BRIDGES INCLUDING TEMPORARY MSE WALLS AS SHOWN IN THE PLANS.

STAGE 2:

1. INSTALL TRAFFIC CONTROL DEVICES ON THE NEWLY CONSTRUCTED PORTIONS OF THE DECK.
2. DIVERT WESTBOUND AND EASTBOUND TRAFFIC TO THE NEWLY CONSTRUCTED PORTIONS OF THE DECK.
3. REMOVE REMAINING PORTIONS OF THE DECK, ABUTMENTS, PIERS, AND APPROACH SLABS OF THE EXISTING WESTBOUND AND EASTBOUND BRIDGE AS SHOWN IN THE PLANS.
4. REMOVE TEMPORARY SHORING AT WESTBOUND AND EASTBOUND BRIDGE.
5. CONSTRUCT OUTSIDE PORTIONS OF THE WESTBOUND AND EASTBOUND BRIDGE AS SHOWN IN THE PLANS.
6. CONSTRUCT CLOURE POURS FOR WESTBOUND AND EASTBOUND BRIDGE DECK AND DIAPHRAGM.

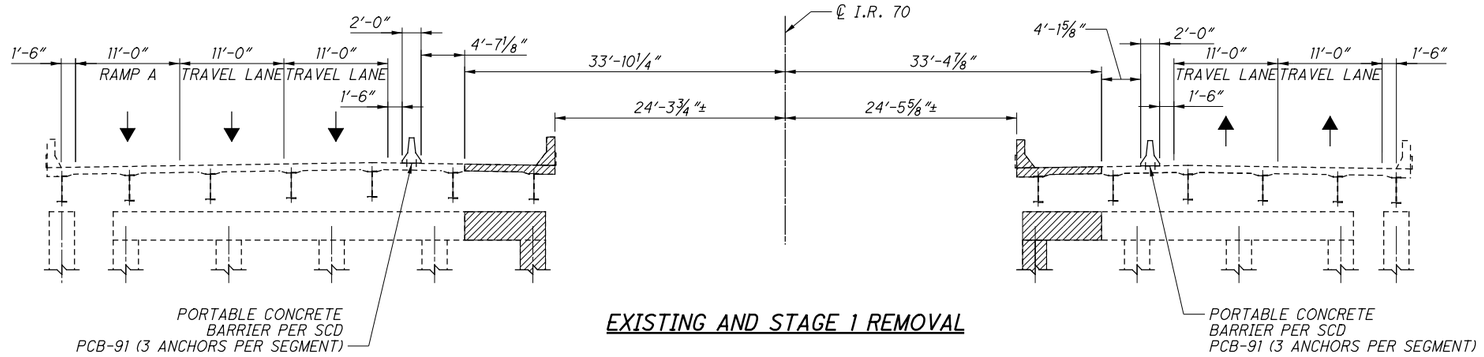

EXISTING AND STAGE 1 REMOVAL

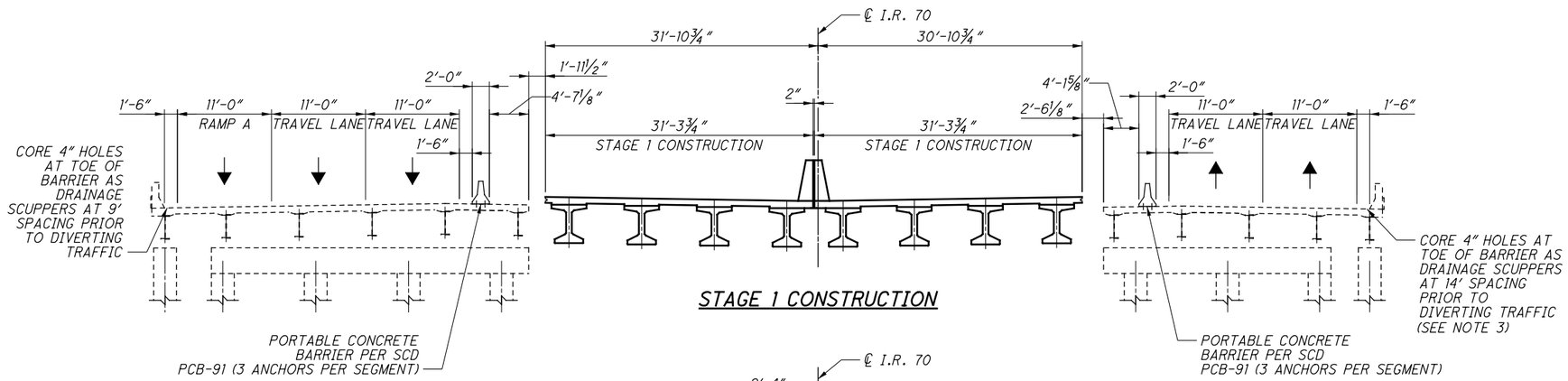

STAGE 1 CONSTRUCTION

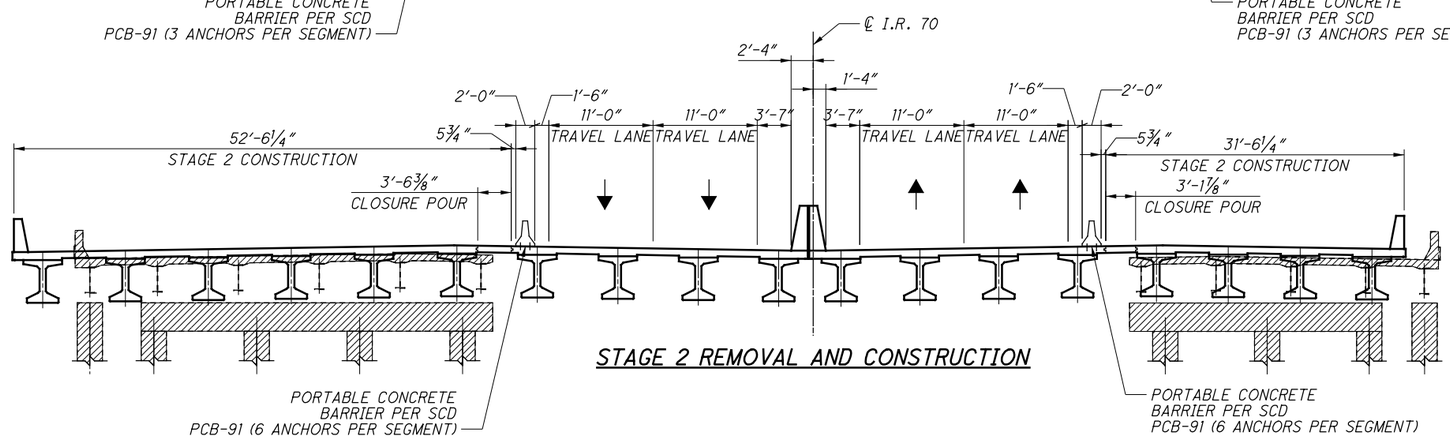

STAGE 2 REMOVAL AND CONSTRUCTION

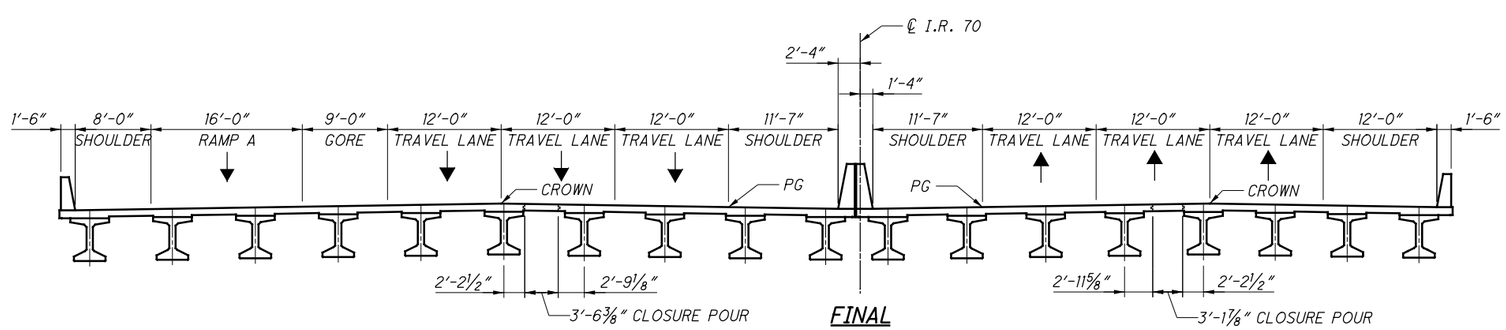

FINAL

NOTE:

1. PORTABLE CONCRETE BARRIER (PCB) IS REQUIRED ON THE EXISTING AND PROPOSED APPROACH SLABS. ANCHOR PCB AS SHOWN ON THIS SHEET.
2. STAGES 1 & 2 PIER REMOVAL SHOWN APPLIES TO PIERS 1, 2, & 3.
3. ADJUST SCUPPER SPACING IN THE FIELD AS REQUIRED TO AVOID DRAINING WATER ONTO SR48 TRAFFIC.

LEGEND

TO BE REMOVED

DESIGN-BUILDER

DESIGNER URS

REVIEWED	DATE
MSG	06/2014
STRUCTURE FILE NUMBER	
5705533/5705509	

DRAWN	REVISED
AJK	

DESIGNED	CHECKED
CC	KAB

ISSUE NO.	ISSUE DATE
1	07/10/14
RD	10/25/18

STAGE CONSTRUCTION DETAILS

BRIDGE NO. MOT-70-1130 L&R OVER S.R. 48

MOT-70-10.79

PID No. 76667

076667_BU02-SR48 Bridge_AsBuilt
G:\GrandRapids\DCS\Projects\12944308\structures\MOT070_1130 SR48\sheets\070_1130LPC001.dgn 4/5/2019 11:00:23 AM niles j

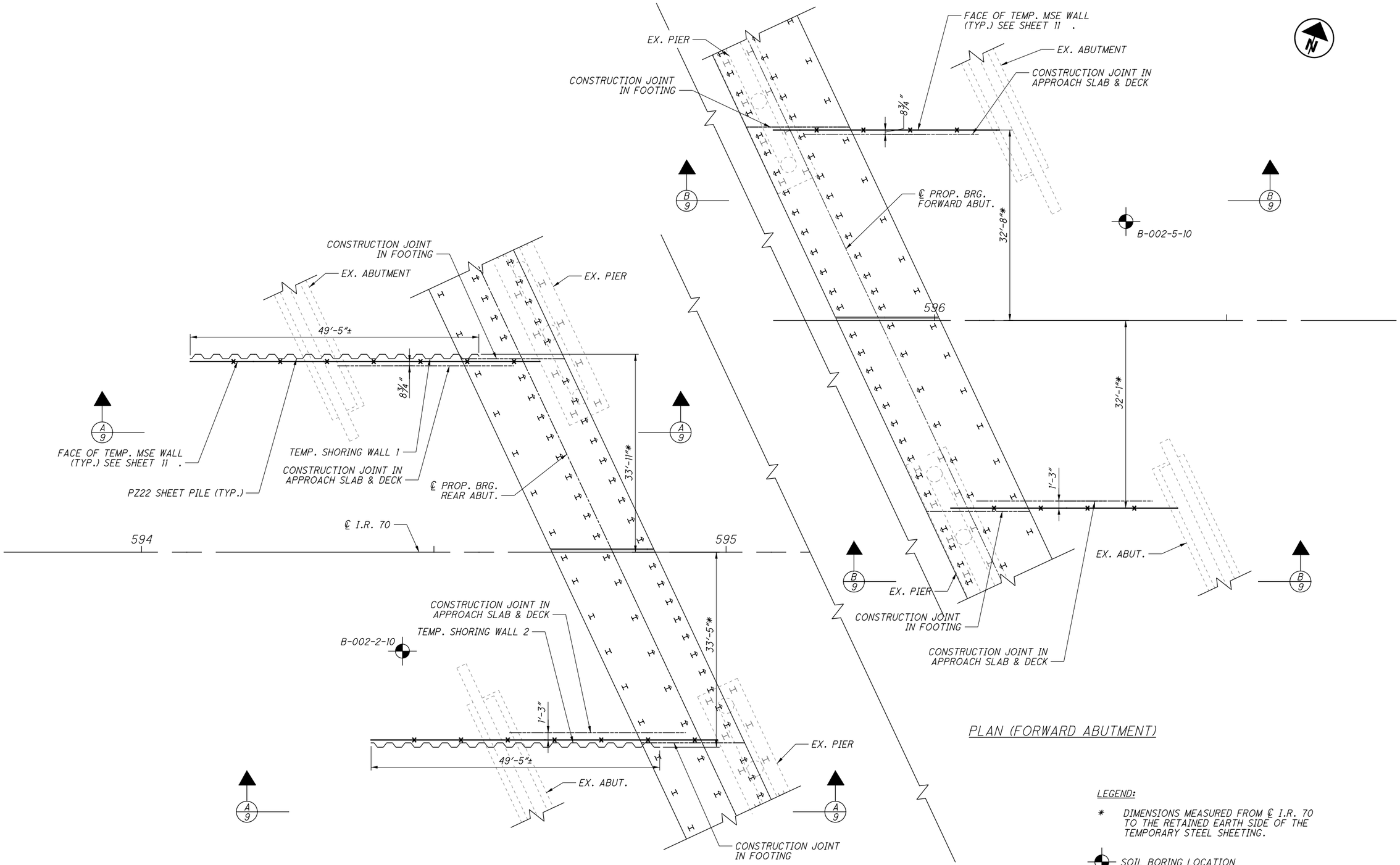

076667_BU02-SR48 Bridge_AsBuilt

G:\GrandRapids\DCS\Projects\12944308\structures\MOT070_1130 SR48\sheets\070_1130LSH001.dgn 4/5/2019 11:00:28 AM niles j

DESIGN-BUILDER

DESIGNER URS

REVIEWED	DATE
MSG	06/2014
STRUCTURE FILE NUMBER	
5705533/5705509	

DRAWN	REVISED
AJK	

DESIGNED	CHECKED
KAB	CC

ISSUE NO.	ISSUE DATE
1	06/19/14
RD	10/25/18

TEMPORARY SHORING DETAILS (1 OF 3)

BRIDGE NO. MOT-70-1130 L&R OVER S.R. 48

MOT-70-10.79

PID No. 76667

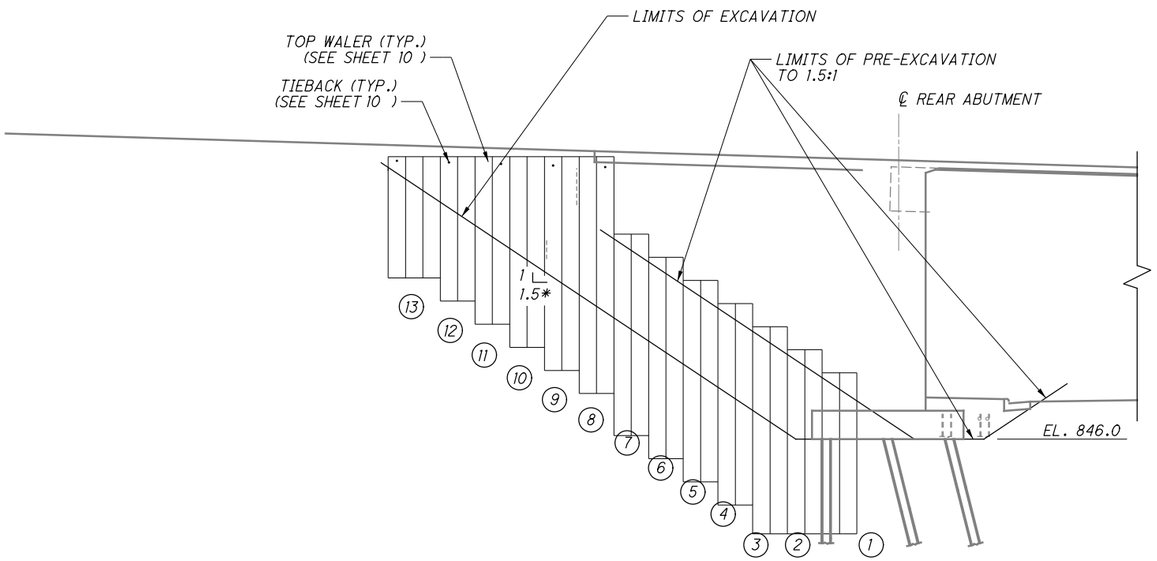

A/8 TEMPORARY SHORING ELEVATION - WALLS 1 & 2 (REAR ABUTMENT)

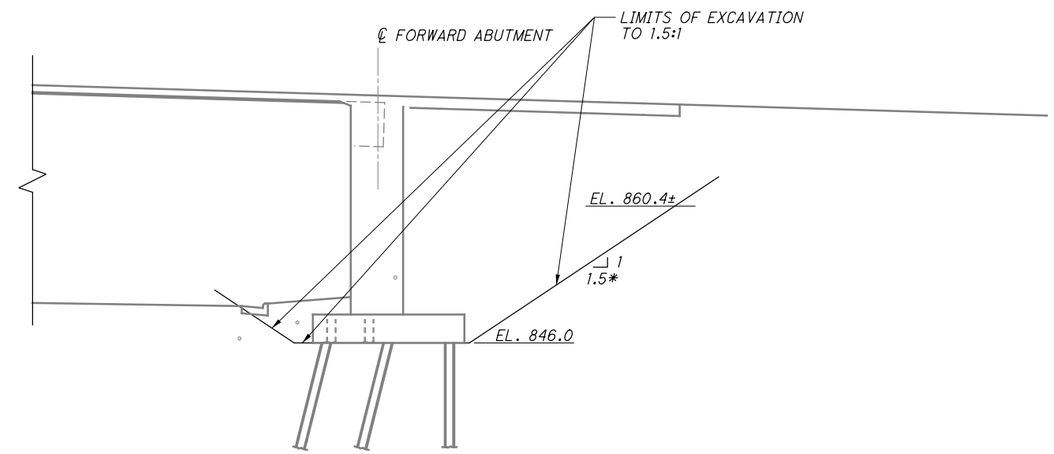

B/8 ELEVATION (FORWARD ABUTMENT)

PZ22 SHEET PILE ELEVATIONS				
SHEET PILE	TOP OF SHEET PILE	BOTTOM OF SHEET PILE	MINIMUM EMBEDMENT	TIEBACK ELEVATION
1	853.0	836.0	10'-0"	
2	855.4	836.0	10'-0"	
3	857.9	836.0	10'-0"	
4	860.3	839.0	10'-0"	
5	862.8	841.4	10'-0"	
6	865.2	843.9	10'-0"	
7	867.6	846.4	10'-0"	
8	875.8	850.8	8'-0"	874.7
9	875.8	853.2	8'-0"	874.9
10	875.8	855.7	8'-0"	
11	875.8	858.1	8'-0"	875.1
12	875.8	860.5	8'-0"	875.2
13	875.8	863.0	8'-0"	875.4

* SLOPE MEASURED PERPENDICULAR TO ABUTMENT. THE SLOPE IS APPROXIMATELY 1:1.65 ALONG CENTERLINE OF I.R. 70.

NOTE:

FOR TEMPORARY SHEET PILE WALL NOTES AND TIEBACK DETAILS, SEE SHEET 10 .

DESIGN-BUILDER

DESIGNER URS

REVIEWED	DATE
MSG	06/2014
STRUCTURE FILE NUMBER	
5705533/5705509	

DRAWN	REVISED
AJK	

DESIGNED	CHECKED
KAB	CC

ISSUE NO.	ISSUE DATE
1	06/19/14
RD	10/25/18

TEMPORARY SHORING DETAILS (2 OF 3)

BRIDGE NO. MOT-70-1130 L&R
OVER S.R. 48

MOT-70-10.79
PID No. 76667

076667_BU02-SR48 Bridge_AsBuilt
G:\GrandRapids\DCS\Projects\12944308\structures\MOT070_1130_SR48\sheets\070_1130LSH002.dgn 4/5/2019 11:00:30 AM niles j

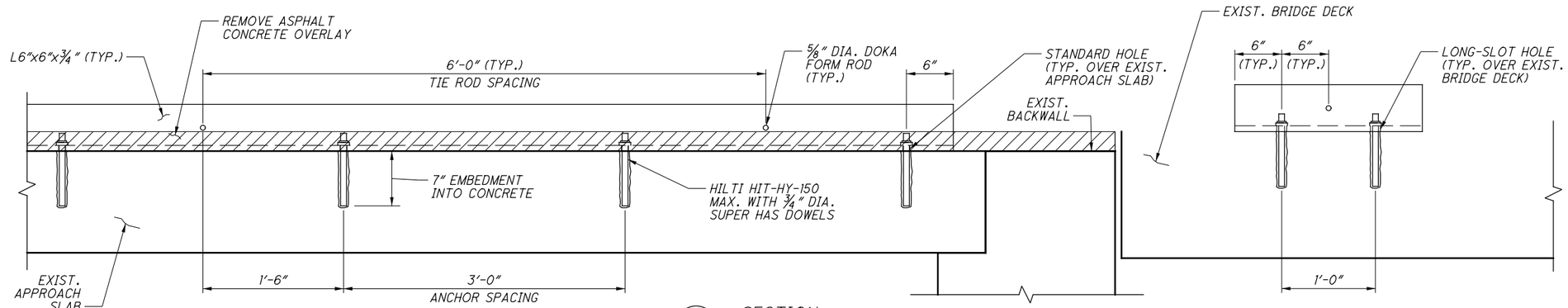

A/10 SECTION

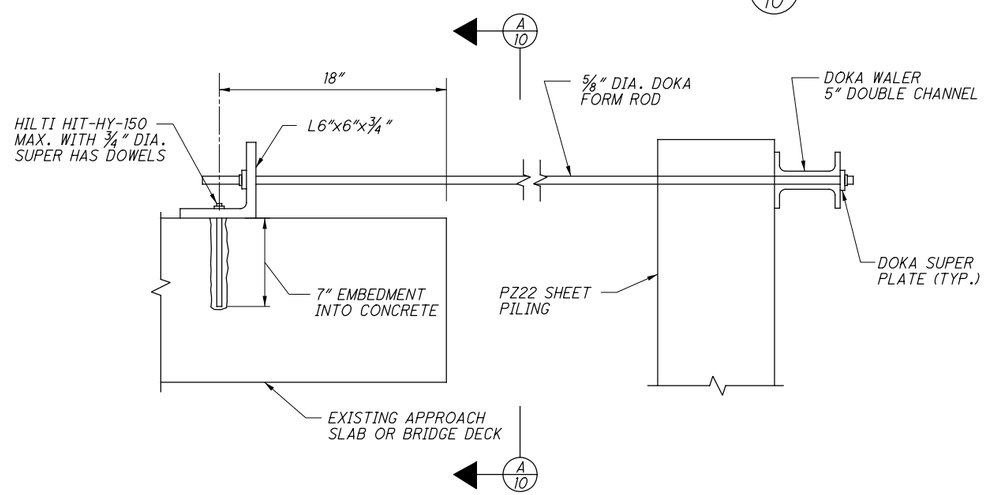

TIEBACK SECTION

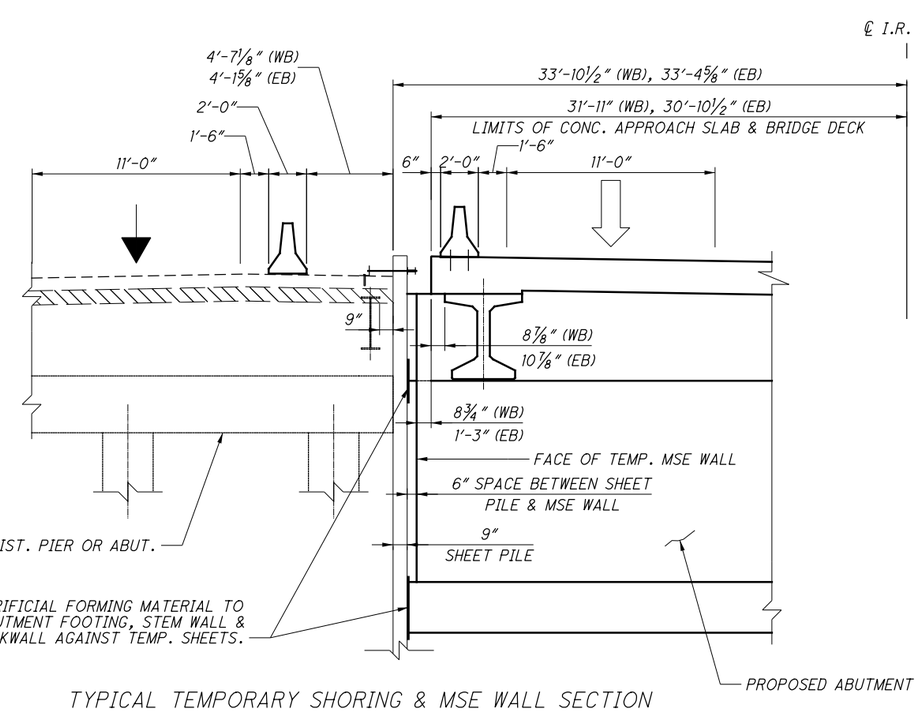

TYPICAL TEMPORARY SHORING & MSE WALL SECTION

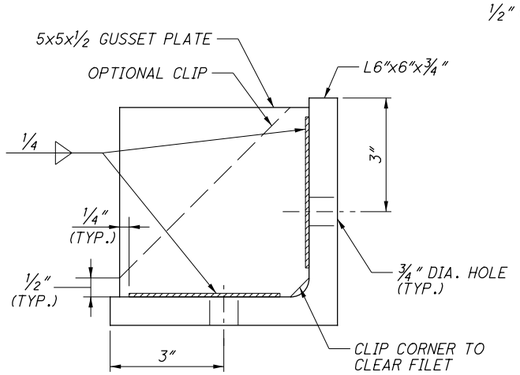

B/10 SECTION

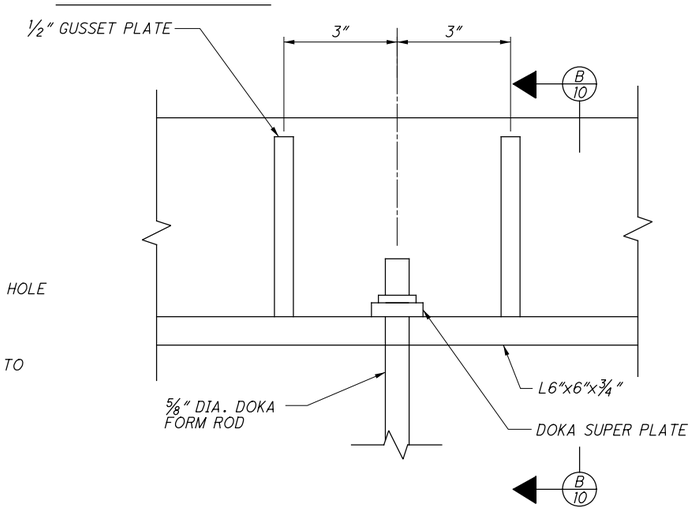

WALER AT APPROACH SLAB PLAN

NOTES:

1. THE PZ22 SHEET PILE SHALL BE GRADE 50 (Fy = 50 KSI).
2. THE STEEL PLATES AND ANGLES USED IN THE CONNECTION OF THE TIEBACK TO THE PILE SHALL BE GRADE 50 (Fy = 50 KSI).
3. THE TIEBACKS ARE TO BE INSTALLED PRIOR TO EXCAVATION. SHEET PILES 8 AND 9 WILL REQUIRE EXCAVATION AND REMOVAL OF PORTIONS OF EXISTING ABUTMENT PRIOPR TO THEIR INSTALLATION AND SUBSEQUENT TIEBACK INSTALLATION.

NOTES:

4. CONSTRUCT TEMPORARY SHORING WALLS 1 & 2 DURING STAGE 1 REMOVAL.
5. FOR ABUTMENT PILE LAYOUT, SEE PLAN ON SHEETS 16 & 17 .
6. FOR TEMPORARY SHORING ELEVATIONS SEE SHEET 9 .
7. CONTRACTOR SHALL TAKE CARE DURING INSTALLATION AND REMOVAL OF TEMPORARY SHORING TO AVOID DAMAGING THE EXISTING AND PROPOSED UNDERGROUND UTILITY.

DESIGN-BUILDER

DESIGNER URS

REVIEWED	DATE
MSG	06/2014
STRUCTURE FILE NUMBER	
5705533/5705509	

DRAWN	REVISED
AJK	

DESIGNED	CHECKED
KAB	CC

ISSUE NO.	ISSUE DATE
1	06/19/14
RD	10/25/18

TEMPORARY SHORING DETAILS (3 OF 3)

BRIDGE NO. MOT-70-1130 L&R
OVER S.R. 48

MOT-70-10.79
PID No. 76667

076667_BU02-SR48 Bridge_AsBuilt
G:\GrandRapids\DCS\Projects\12944308\structures\MOT070_1130_SR48\sheets\070_1130LSH003.dgn 4/5/2019 11:00:32 AM niles j

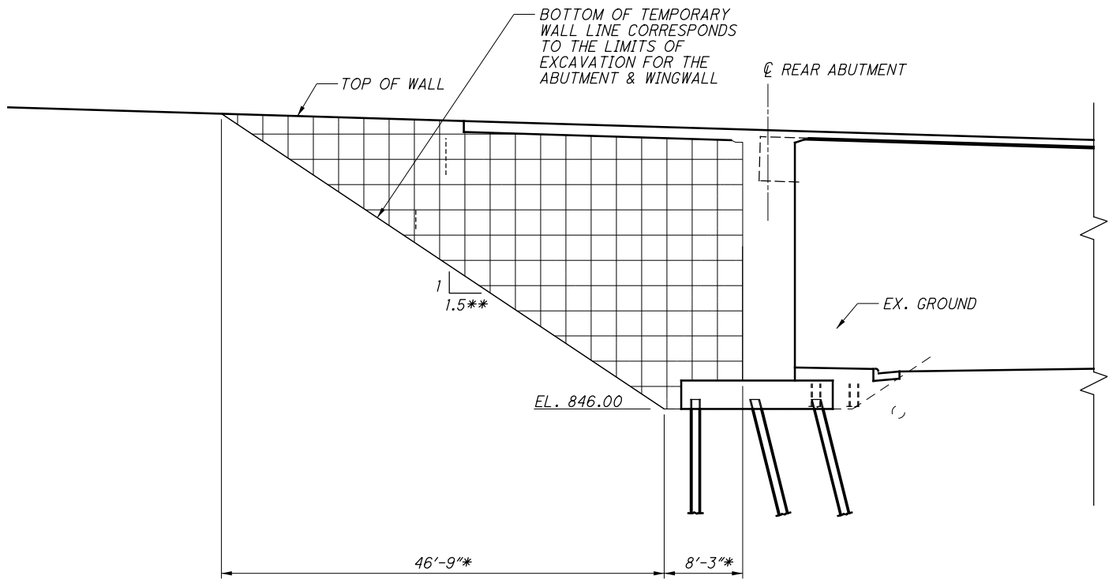

TEMPORARY MSE WALL 1 & 2 - ELEVATION

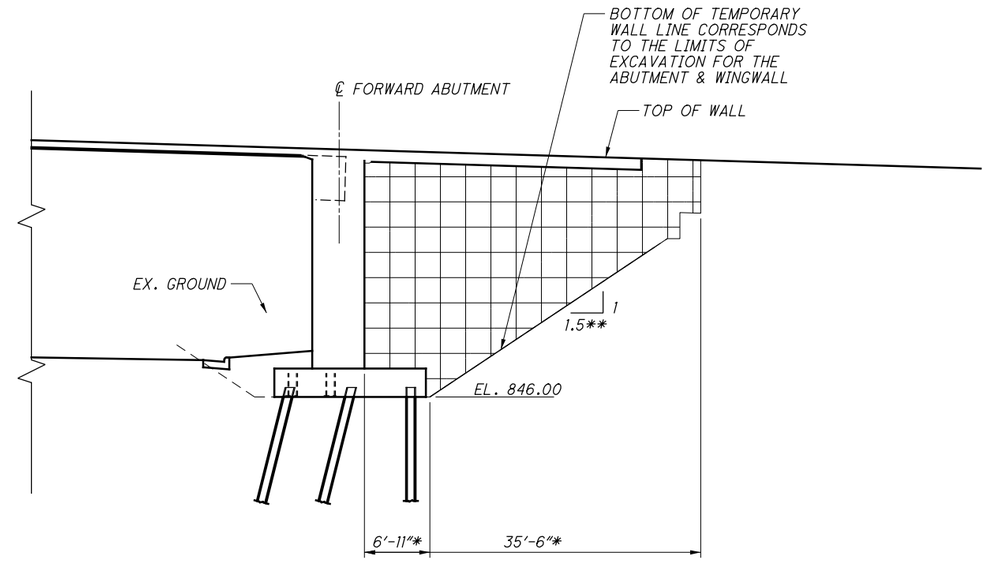

TEMPORARY MSE WALL 3 & 4 - ELEVATION

LEGEND:

TEMPORARY MSE WALL FACE

* - MEASURED PARALLEL TO ℄ I.R. 70

** - SLOPE MEASURED PERPENDICULAR TO ABUTMENT WALL

DESIGN-BUILDER	DESIGNER	REVIEWED	DATE	DRAWN	REVISED	DESIGNED	CHECKED	ISSUE NO.	ISSUE DATE
	URS	MSG	06/2014	AJK		KAB	CC	1	07/10/14
		STRUCTURE FILE NUMBER						RD	10/25/18
		5705533/5705509							

TEMPORARY MSE WALL DETAILS

BRIDGE NO. MOT-70-1130 L&R

OVER S.R. 48

MOT-70-10.79

PID No. 76667

076667_BU02-SR48 Bridge_AsBuilt
G:\GrandRapids\DCS\Projects\12944308\structures\MOT070_1130_SR48\sheets\070_1130LMD001.dgn 4/5/2019 11:00:34 AM niles j

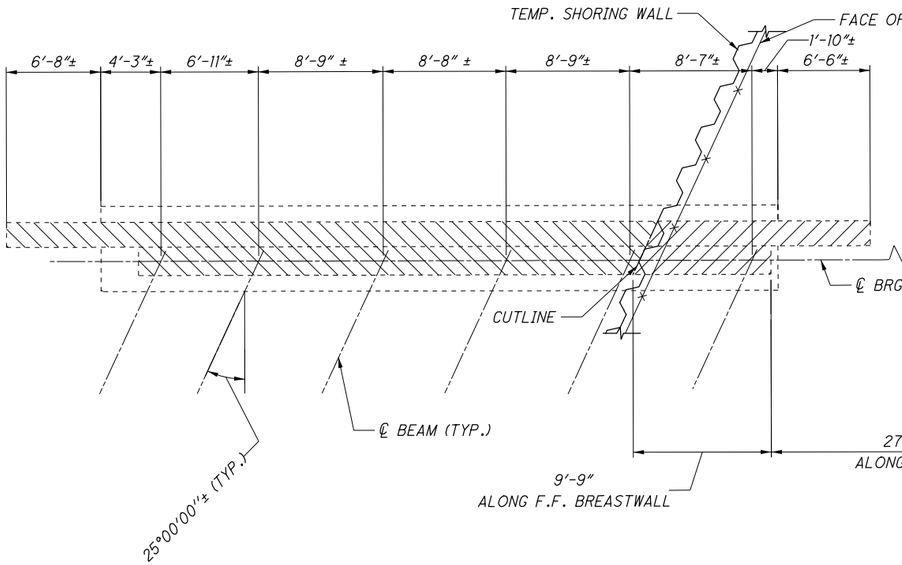

RIGHT BRIDGE PLAN

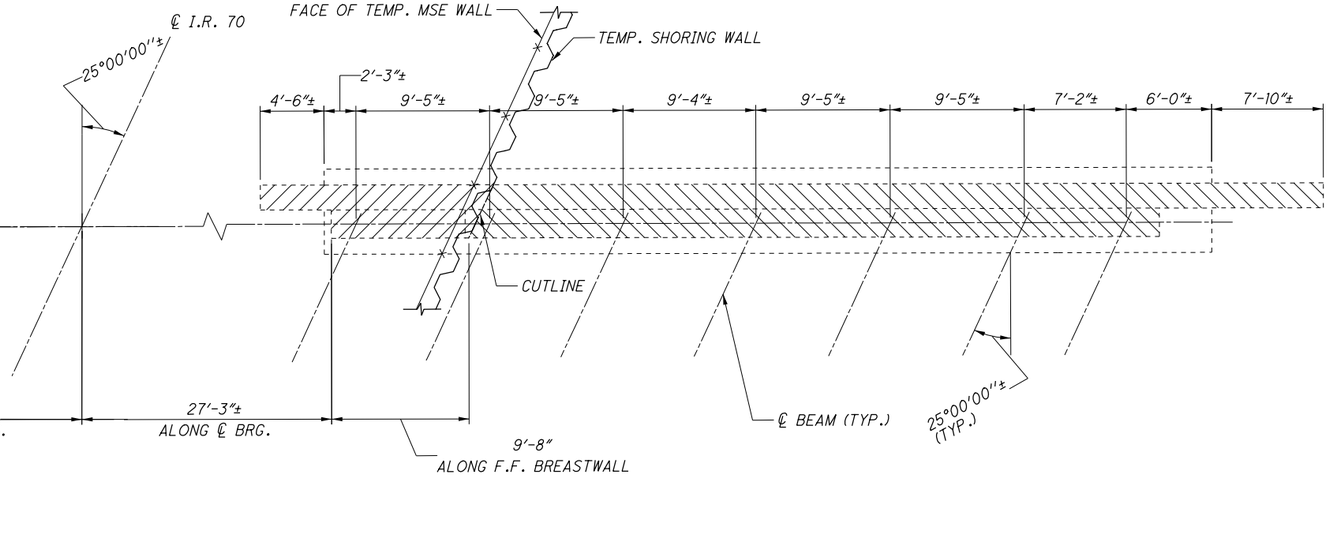

LEFT BRIDGE PLAN

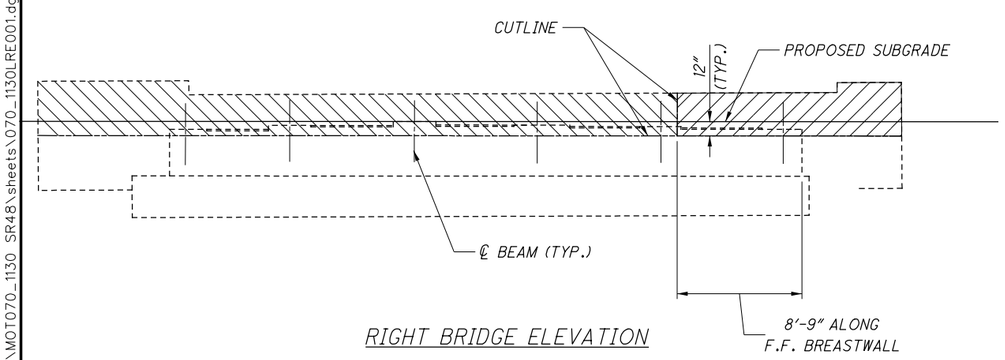

RIGHT BRIDGE ELEVATION

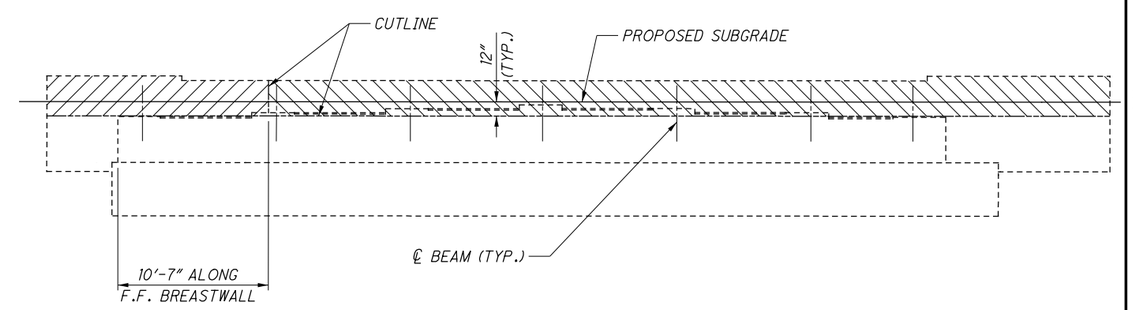

LEFT BRIDGE ELEVATION

NOTES:

1. ALL EXISTING DIMENSIONS ARE FROM FIELD SURVEY/EXISTING DRAWING AND SHALL BE FIELD VERIFIED BY THE CONTRACTOR.
2. CUTLINE IS PARALLEL TO CENTERLINE OF BEAM.

LEGEND

STAGE 1 REMOVAL

STAGE 2 REMOVAL

DESIGN-BUILDER

DESIGNER URS

DESIGNED	DRAWN	REVIEWED	DATE
CC	AJK	MSG	06/2014
CHECKED	REVISED	STRUCTURE FILE NUMBER	
CAR		5705533/5705509	

ISSUE NO.	ISSUE DATE
1	07/10/14
RD	10/25/18

REAR ABUTMENT REMOVAL DETAILS

BRIDGE NO. MOT-70-1130 L&R OVER S.R. 48

MOT-70-10.79

PID No. 76667

076667_BU02-SR48 Bridge_AsBuilt
G:\GrandRapids\DCS\Projects\12944308\structures\MOT070_1130 SR48\sheets\070_1130LRE001.dgn 4/5/2019 11:00:36 AM niles j

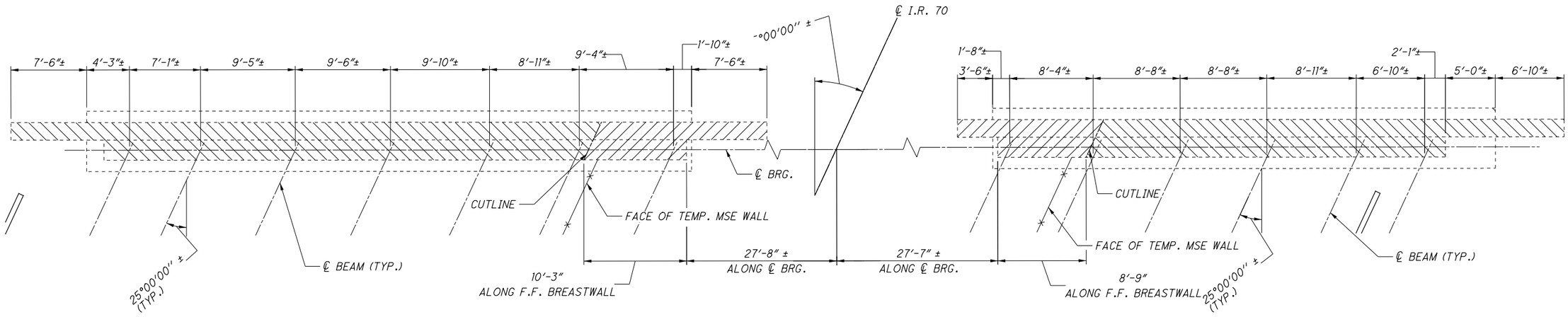

LEFT BRIDGE PLAN

RIGHT BRIDGE PLAN

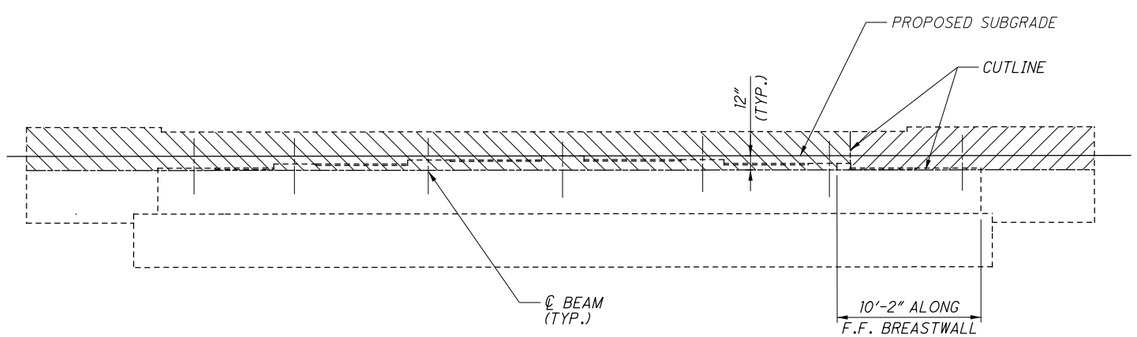

LEFT BRIDGE ELEVATION

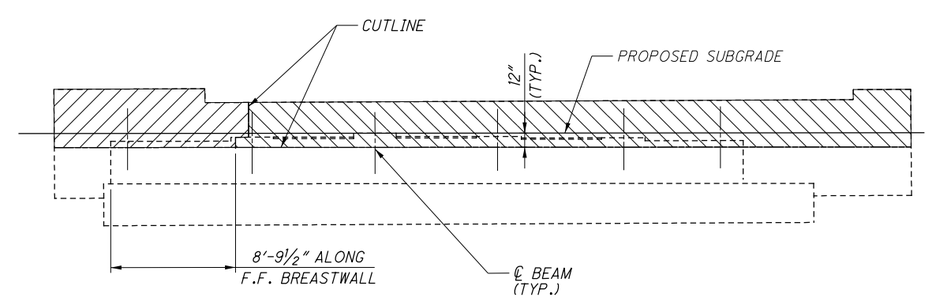

RIGHT BRIDGE ELEVATION

NOTES:

1. ALL EXISTING DIMENSIONS ARE FROM FIELD SURVEY/EXISTING DRAWING AND SHALL BE FIELD VERIFIED BY THE CONTRACTOR.
2. CUTLINE IS PARALLEL TO CENTERLINE OF BEAM.

LEGEND

STAGE 1 REMOVAL

STAGE 2 REMOVAL

DESIGN-BUILDER

DESIGNER URS

REVIEWED	DATE
MSG	06/2014
STRUCTURE FILE NUMBER	
5705533/5705509	

DRAWN	DESIGNED	ISSUE NO.	ISSUE DATE
AJK	CC	1	07/10/14
REVISED	CHECKED	RD	10/25/18
	CAR		

FORWARD ABUTMENT REMOVAL DETAILS

BRIDGE NO. MOT-70-1130 L&R
OVER S.R. 48

MOT-70-10.79

PID No. 76667

076667_BU02-SR48 Bridge_AsBuilt
G:\GrandRapids\DCS\Projects\1294430B\structures\MOT070_1130_SR48\sheets\070_1130LRE002.dgn 4/5/2019 11:00:38 AM nilesj

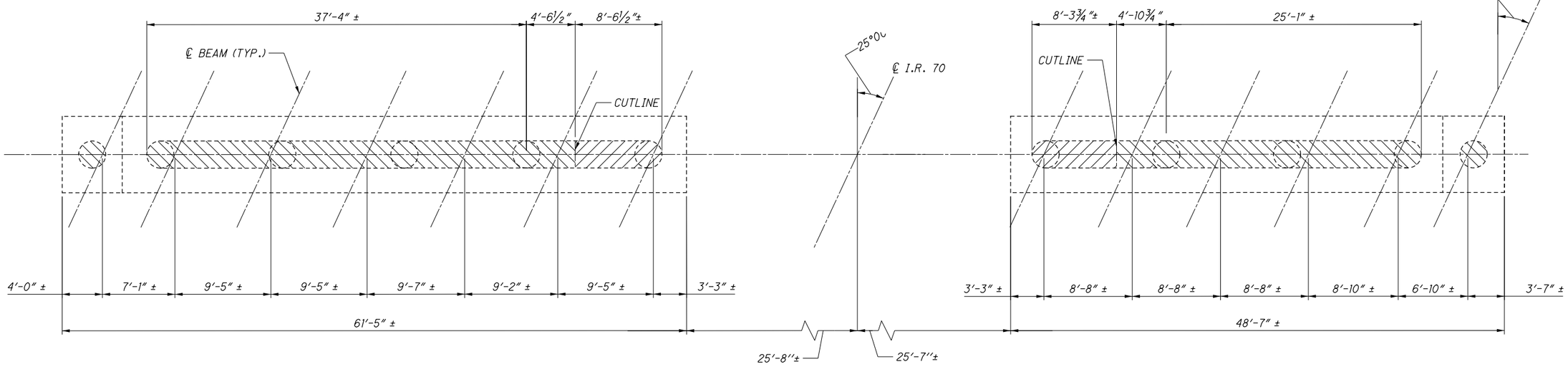

LEFT BRIDGE PLAN

RIGHT BRIDGE PLAN

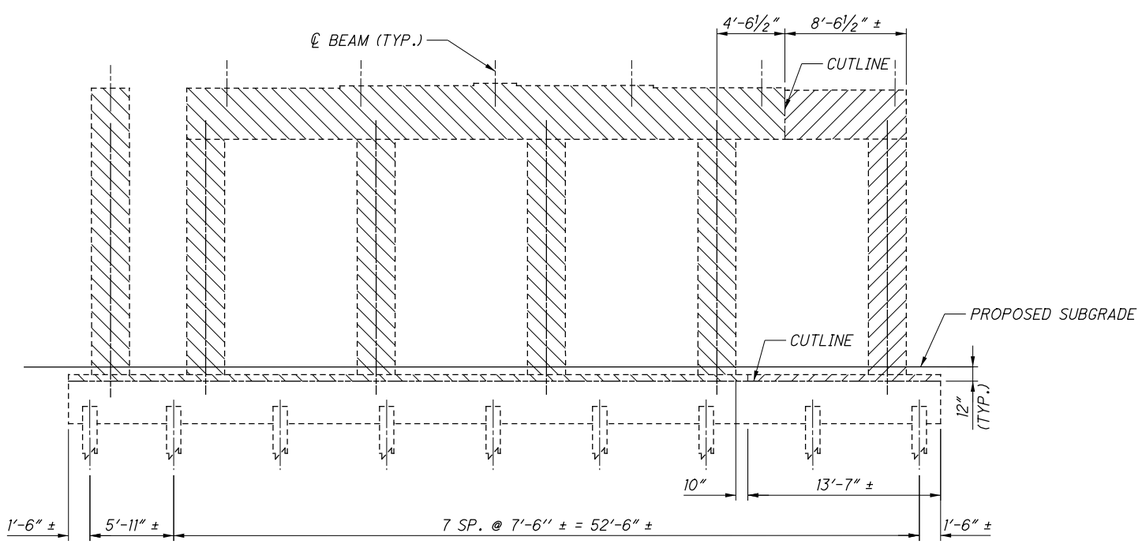

LEFT BRIDGE LEVATION

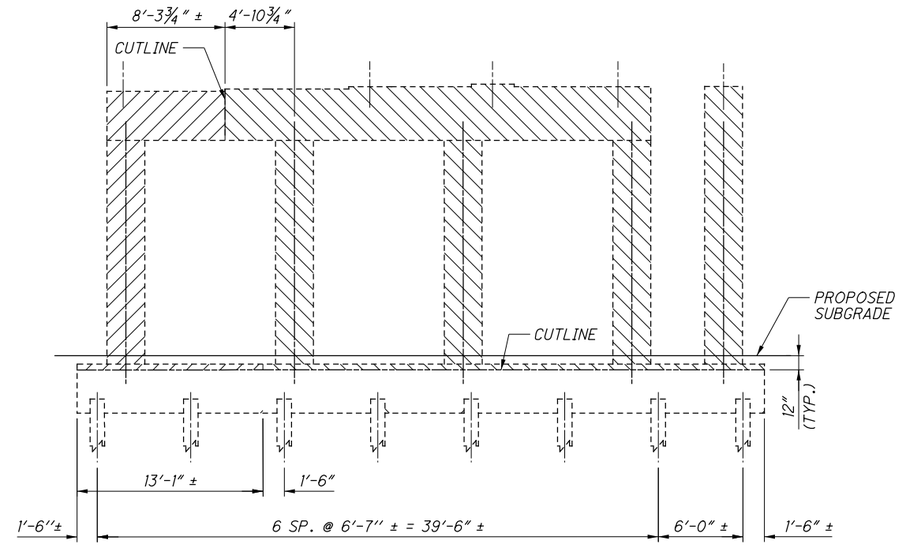

RIGHT BRIDGE ELEVATION

NOTES:

1. ALL EXISTING DIMENSIONS ARE FROM FIELD SURVEY/EXISTING DRAWING AND SHALL BE FIELD VERIFIED BY THE CONTRACTOR.

LEGEND

STAGE 1 REMOVAL

STAGE 2 REMOVAL

076667_BU02-SR48 Bridge_AsBuilt

G:\GrandRapids\DCS\Projects\12944308\structures\MOT070_1130_SR48\sheets\070_1130LRE003.dgn 4/5/2019 11:00:40 AM niles j

DESIGN-BUILDER	DESIGNER	REVIEWED	DATE	DRAWN	REVISED	DESIGNED	CHECKED	ISSUE NO.	ISSUE DATE
	URS	MSG	06/2014	AJK		CC	CAR	1	07/10/14
		STRUCTURE FILE NUMBER 5705533/5705509						RD	10/25/18

PIER 2 REMOVAL DETAILS

BRIDGE NO. MOT-70-1130 L&R

OVER S.R. 48

MOT-70-10.79

PID No. 76667

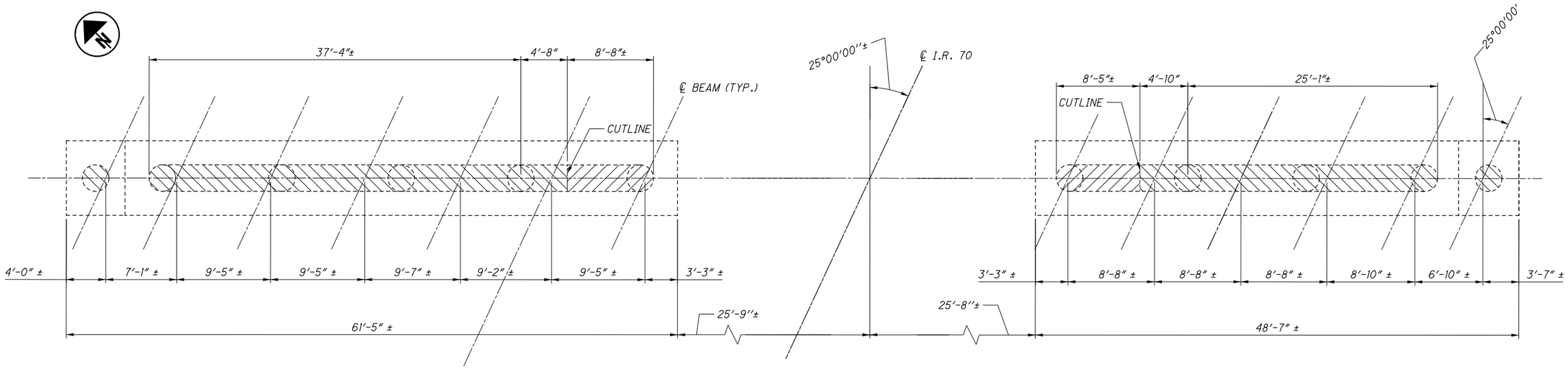

LEFT BRIDGE PLAN

RIGHT BRIDGE PLAN

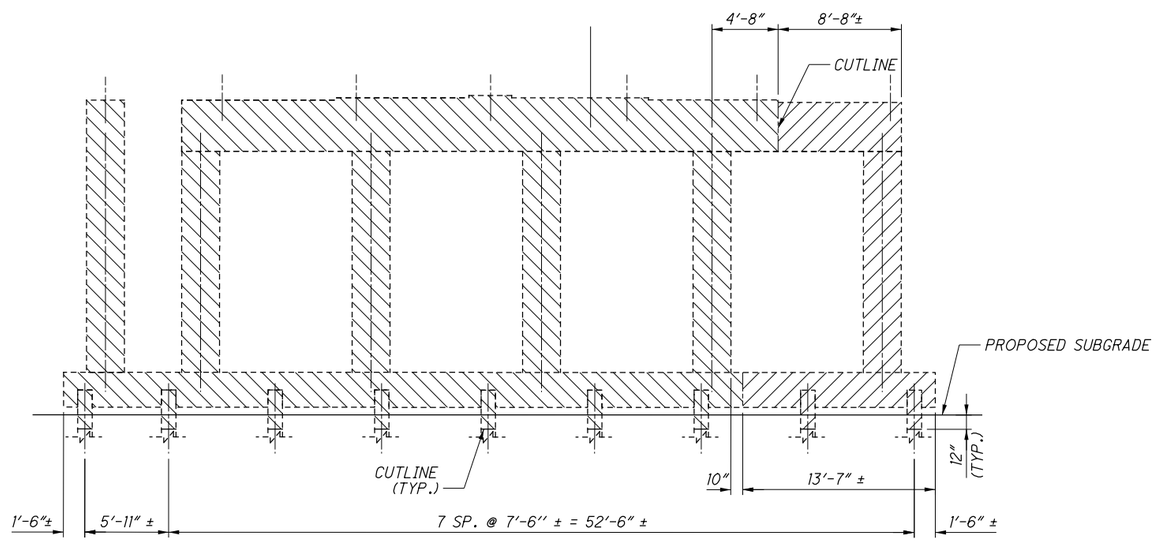

LEFT BRIDGE ELEVATION

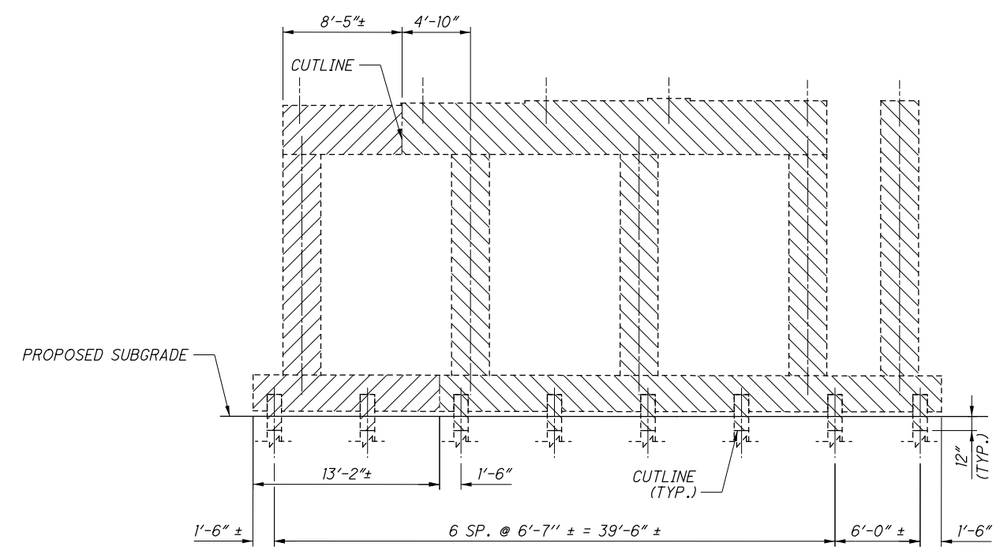

RIGHT BRIDGE ELEVATION

NOTES:

1. ALL EXISTING DIMENSIONS ARE FROM FIELD SURVEY/EXISTING DRAWING AND SHALL BE FIELD VERIFIED BY THE CONTRACTOR.
2. EXISTING PILES SHALL BE REMOVED TO 1'-0" BELOW THE NEW SUBGRADE.

LEGEND

STAGE 1 REMOVAL

STAGE 2 REMOVAL

DESIGN-BUILDER

DESIGNER URS

REVIEWED	DATE
MSG	06/2014
STRUCTURE FILE NUMBER	
5705533/5705509	

DRAWN	REVISED
AJK	

DESIGNED	CHECKED
CC	CAR

ISSUE NO.	ISSUE DATE
1	07/10/14
RD	10/25/18

PIER 1 & 3 REMOVAL DETAILS

BRIDGE NO. MOT-70-1130 L&R

OVER S.R. 48

MOT-70-10.79

PID No. 76667

076667_BU02-SR48 Bridge_AsBuilt
G:\GrandRapids\DCS\Projects\1294308\structures\MOT070_1130_SR48\sheets\070_1130LRE004.dgn 4/5/2019 11:00:42 AM niles j

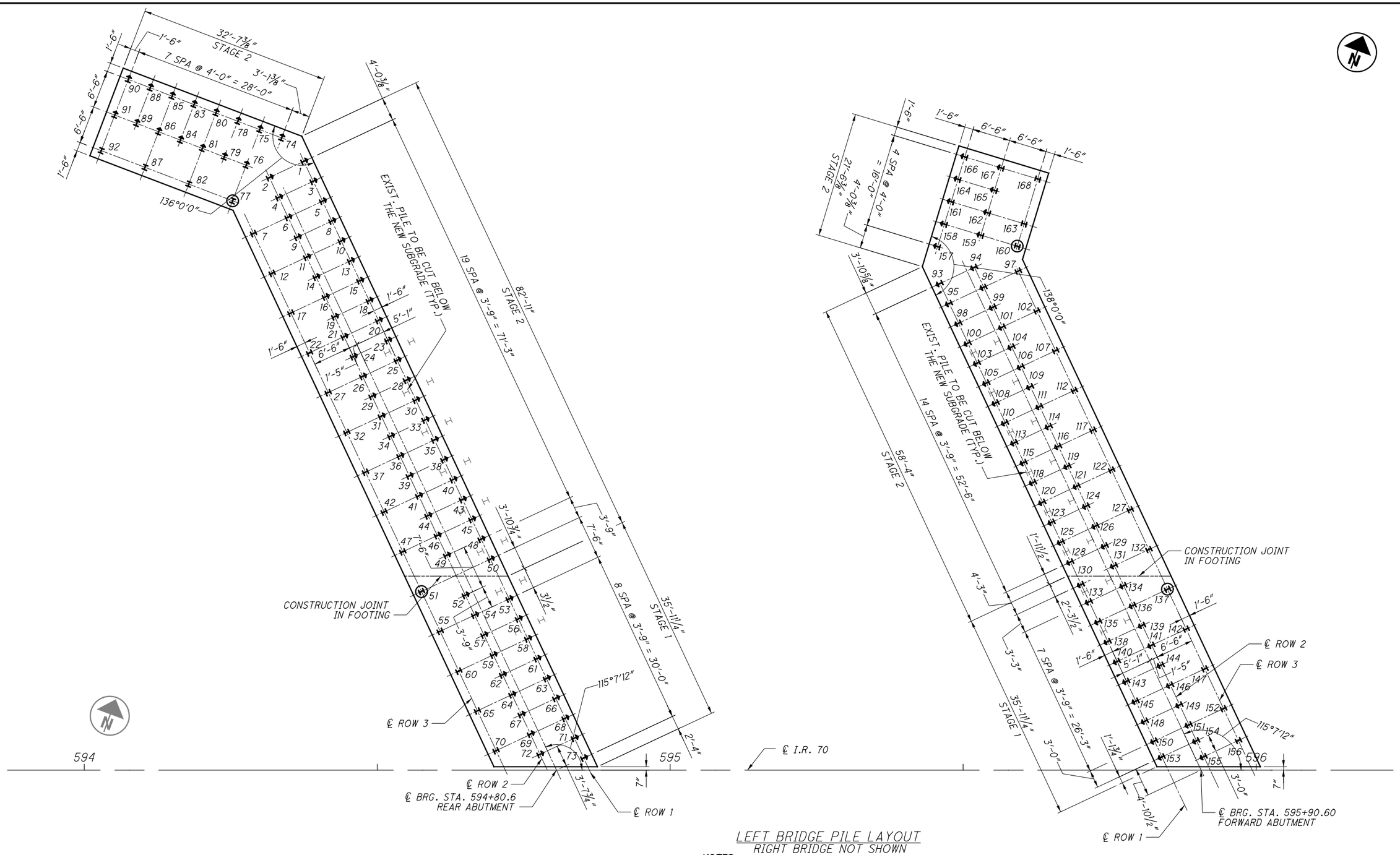

LEFT BRIDGE PILE LAYOUT
RIGHT BRIDGE NOT SHOWN

NOTES:

1. FOR GENERAL NOTES REGARDING PILE DESIGN LOADS, PILE DRIVING CONSTRAINTS AND PILE INSTALLATION, SEE SHEET 5 .

LEGEND

- 1H:4V BATTERED HP 10x42 PILE
- VERTICAL HP 10x42 PILE
- DYNAMIC LOAD TEST HP 10x42 PILE

PILING TABLE

LOCATION	PILE NO.	PILE TYPE	CUT-OFF ELEVATION	ESTIMATED LENGTH (FT.)
REAR ABUTMENT	1 THRU 92	HP10X42	847.0	25
FWD. ABUTMENT	93 THRU 168	HP10X42	847.0	25

ISSUE NO.	ISSUE DATE	DESIGNED	DRAWN	REVIEWED	DATE
1	07/10/14	CC	AJK	MSG	06/2014
RD	10/25/18	CHECKED KAB	REVISED	STRUCTURE FILE NUMBER 5705533/5705509	

DESIGN-BUILDER

DESIGNER URS

FOUNDATION PLAN - LEFT BRIDGE
BRIDGE NO. MOT-70-1130 L&R
OVER S.R. 48

MOT-70-10.79
PID No. 76667

076667_BU02-SR48 Bridge_AsBuilt
G:\GrandRapids\DCS\Projects\12944308\structures\MOT070_1130_SR48\sheets\070_1130LFP001.dgn 4/5/2019 11:00:46 AM niles j

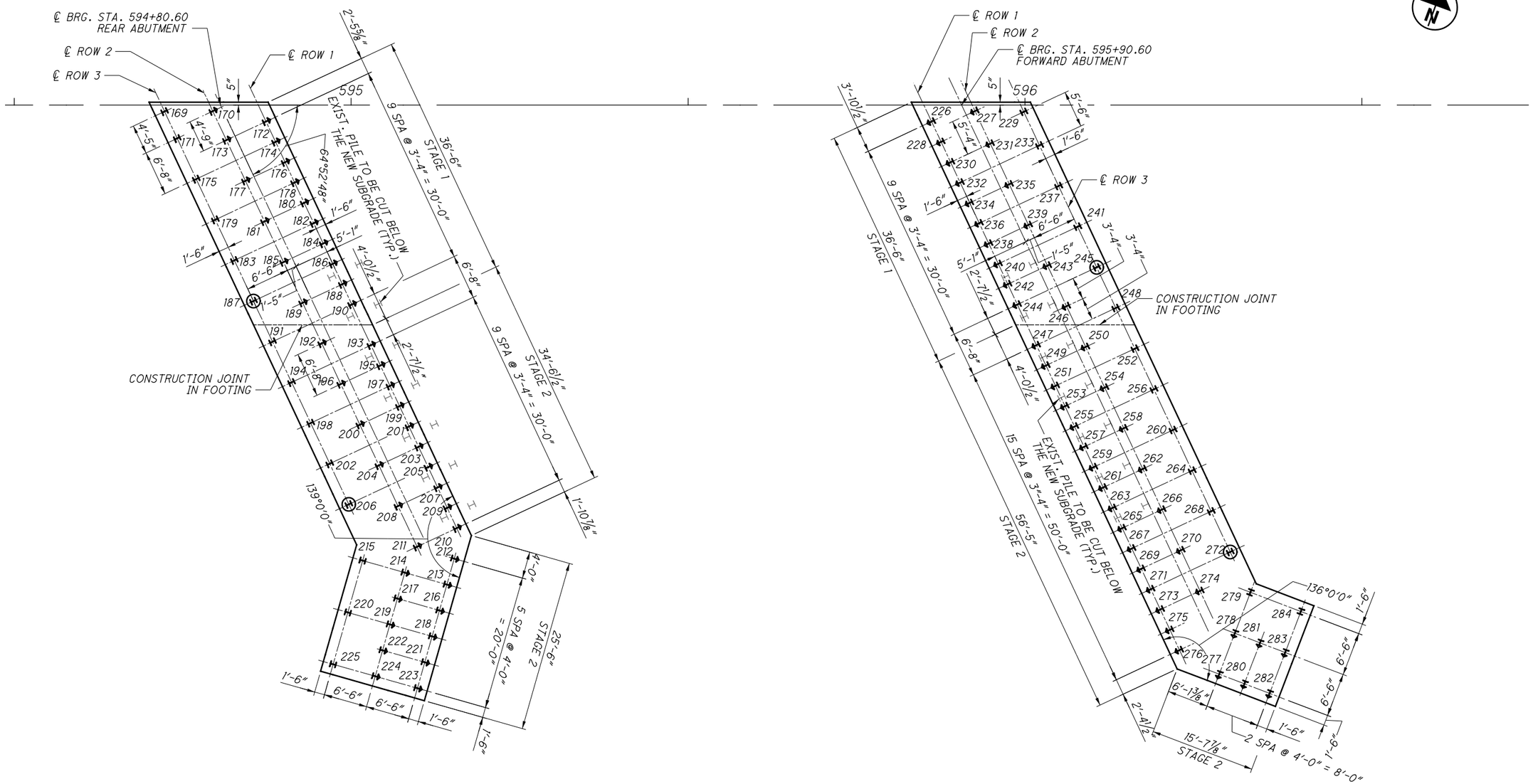

RIGHT BRIDGE PILE LAYOUT

LEFT BRIDGE NOT SHOWN

NOTES:

1. FOR GENERAL NOTES REGARDING PILE DESIGN LOADS, PILE DRIVING CONSTRAINTS AND PILE INSTALLATION, SEE SHEET 5 .

PILING TABLE

LOCATION	PILE NO.	PILE TYPE	CUT-OFF ELEVATION	ESTIMATED LENGTH (FT.)
REAR ABUTMENT	169 THRU 225	HP10X42	847.00	25
FWD. ABUTMENT	226 THRU 284	HP10X42	847.00	20

LEGEND

- : 1H:4V BATTERED HP 10x42 PILE
- : VERTICAL HP 10x42 PILE
- : DYNAMIC LOAD TEST HP 10x42 PILE

DESIGN-BUILDER

DESIGNER URS

REVIEWED	DATE
MSG	06/2014
STRUCTURE FILE NUMBER	
5705533/5705509	

DRAWN	DESIGNED
AJK	CC
REVISED	CHECKED
	KAB

ISSUE NO	ISSUE DATE
1	07/10/14
RD	10/25/18

FOUNDATION PLAN - RIGHT BRIDGE

BRIDGE NO. MOT-70-1130 L&R
OVER S.R. 48

MOT-70-10.79
PID No. 76667

076667_BU02-SR48 Bridge_AsBuilt
G:\GrandRapids\DCS\Projects\12944308\structures\MOT070_1130_SR48\sheets\070_1130LFP002.dgn 4/5/2019 11:00:47 AM niles

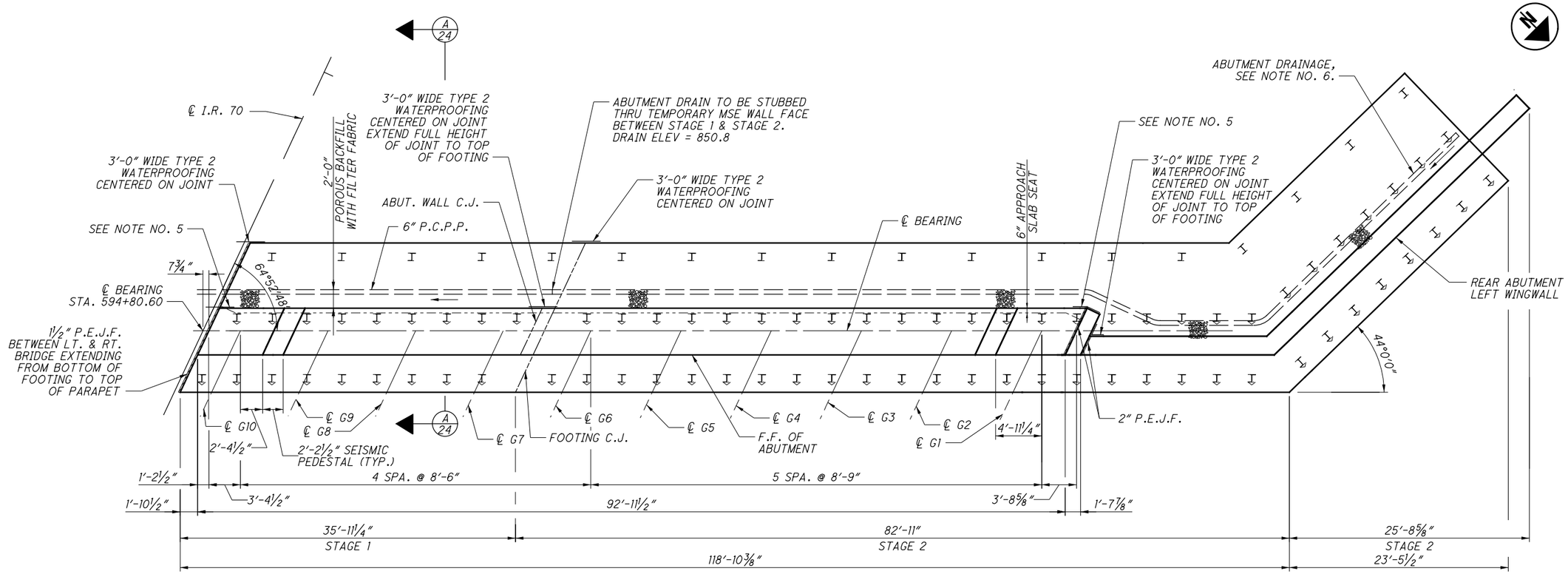

PLAN

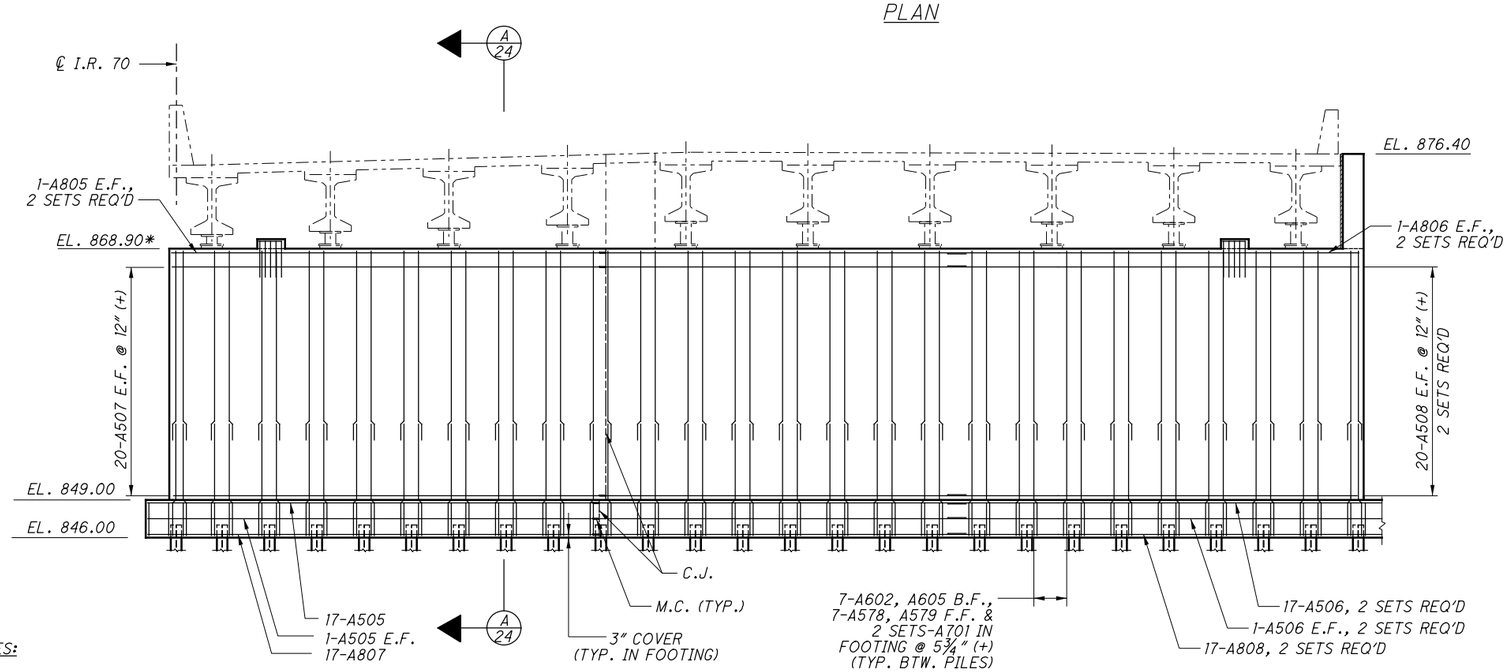

ELEVATION

MIN. LAP SPLICES:

#5 = 3'-5"
#6 = 3'-10"
#8 = 7'-3"

* ELEVATION GIVEN AT ℄ BEARING

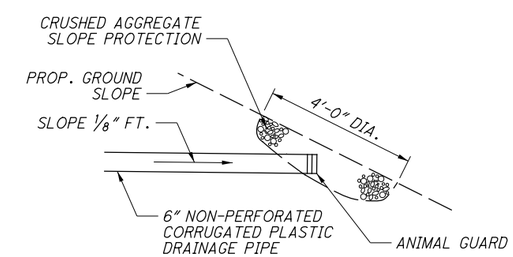

INTERIM PIPE TERMINATION DETAIL

NOTES:

1. SEE SHEET 22 FOR WINGWALL DETAILS.
2. SEE SHEET 24 FOR SEISMIC PEDIESTAL DETAILS.
3. SEE SHEET 16 & 17 FOR PILE LAYOUT.
4. SEE STAGE 34 FOR BEARING DETAILS.
5. 3'-0" WIDE TYPE 2 WATERPROOFING CENTERED ON ABUT. WALL JOINT. 3'-0" WIDE NEOPRENE SHEETING CENTERED ON ABUT. DIAPHRAGM JOINT.
6. OUTLET LEFT AND RIGHT BRIDGE UNDERDRAIN TO DRAINAGE STRUCTURE ALONG SR48 AT APPROXIMATE SR48 STA 308+50 (DETAILS PROVIDED IN BU #6). UNDERDRAIN SHALL BE INSTALLED BEHIND ABUTMENT WITH 1% SLOPE DOWN TO DRAINAGE STRUCTURE.

DESIGN-BUILDER

DESIGNER URS

REVIEWED	DATE
MSG	06/2014
STRUCTURE FILE NUMBER	
5705533/5705509	

DRAWN	REVISED
AJK	

DESIGNED	CHECKED
CC	KAB

ISSUE NO.	ISSUE DATE
1	07/10/14
RD	10/25/18

REAR ABUTMENT PLAN & ELEVATION - LEFT BRIDGE

BRIDGE NO. MOT-70-1130 L&R
OVER S.R. 48

MOT-70-10.79
PID No. 76667

076667_BU02-SR48 Bridge_AsBuilt
G:\GrandRapids\DCS\Projects\12944308\structures\MOT070_1130 SR48\sheets\070_1130LAR001.dgn 4/5/2019 11:00:49 AM niles j

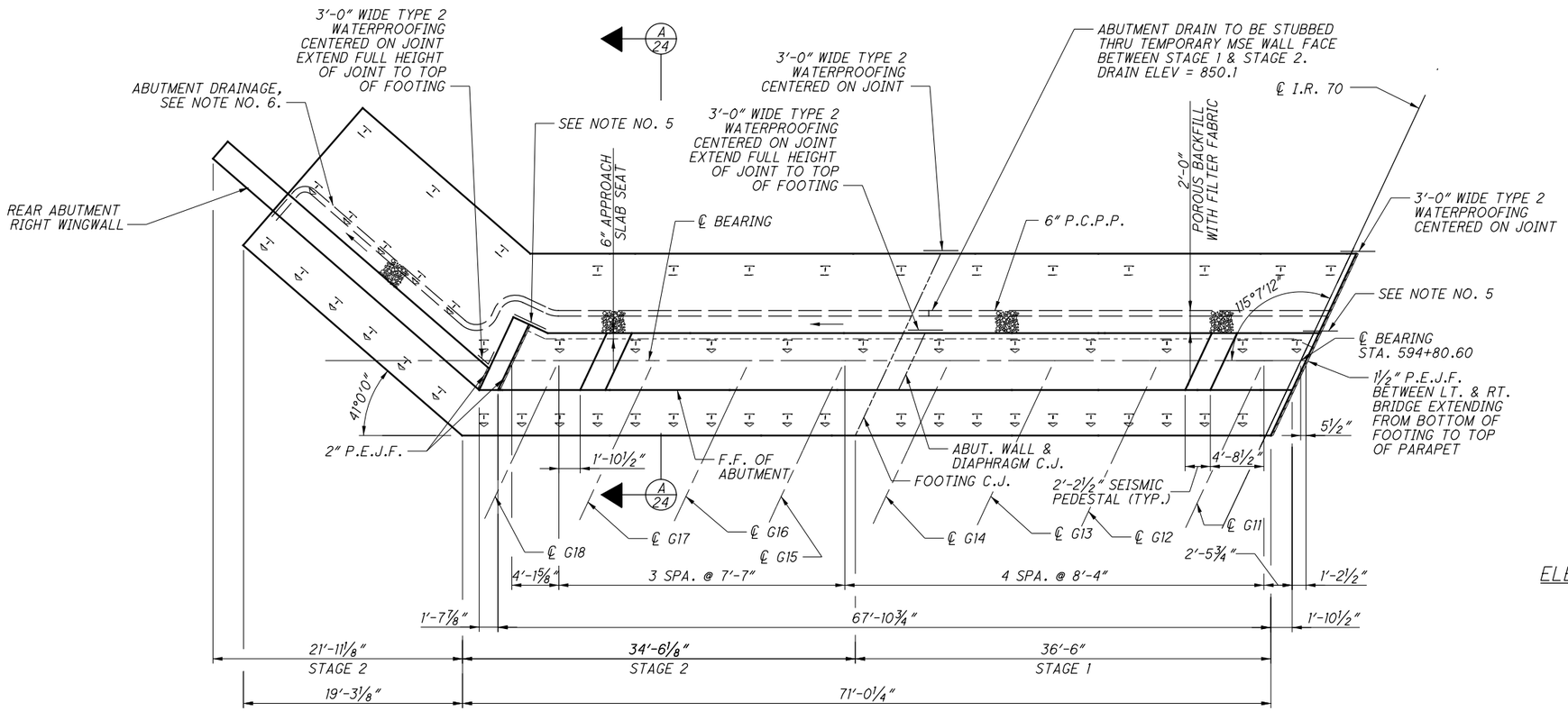

PLAN

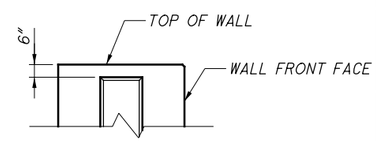

ELEVATION OF VERTICAL JOINT

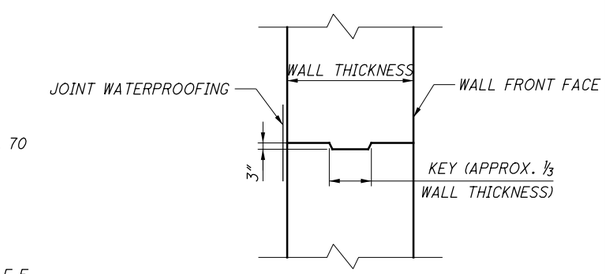

SECTION

TYP. CONSTRUCTION JOINT DETAIL

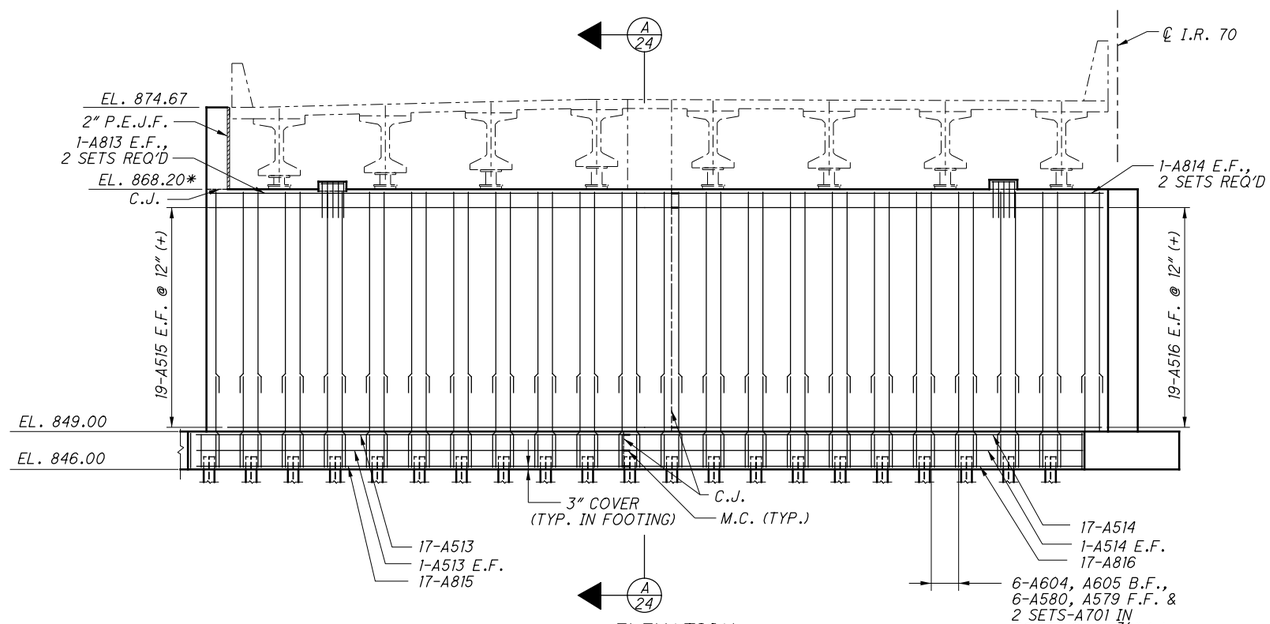

ELEVATION

* ELEVATION GIVEN AT ℄ BEARING

MIN. LAP SPLICES:

#5 = 3'-5"
#6 = 3'-10"
#8 = 7'-3"

NOTES:

1. SEE SHEET 22 FOR WINGWALL DETAILS.
2. SEE SHEET 24 FOR SEISMIC PEDIESTAL DETAILS.
3. SEE SHEET 16 & 17 FOR PILE LAYOUT.
4. SEE STAGE 34 FOR BEARING DETAILS.
5. 3'-0" WIDE TYPE 2 WATERPROOFING CENTERED ON ABUT. WALL JOINT. 3'-0" WIDE NEOPRENE SHEETING CENTERED ON ABUT. DIAPHRAGM JOINT.
6. OUTLET LEFT AND RIGHT BRIDGE UNDERDRAIN TO DRAINAGE STRUCTURE ALONG SR48 AT APPROXIMATE SR48 STA 308+50 (DETAILS PROVIDED IN BU #6). UNDERDRAIN SHALL BE INSTALLED BEHIND ABUTMENT WITH 1% SLOPE DOWN TO DRAINAGE STRUCTURE. OPTIONALLY OUTLET THROUGH BOTTOM OF WINGWALL AT ABUTMENT/WINGWALL CORNER.

DESIGN-BUILDER

DESIGNER URS

REVIEWED	DATE
MSG	06/2014
STRUCTURE FILE NUMBER	
5705533/5705509	

DRAWN	REVISED
AJK	

DESIGNED	CHECKED
CC	KAB

ISSUE NO.	ISSUE DATE
1	07/10/14
RD	10/25/18

REAR ABUTMENT PLAN & ELEVATION - RIGHT BRIDGE

BRIDGE NO. MOT-70-1130 L&R
OVER S.R. 48

MOT-70-10.79
PID No. 76667

076667_BU02-SR48 Bridge_AsBuilt
G:\GrandRapids\DCS\Projects\12944308\structures\MOT070_1130 SR48\sheets\070_1130LAR002.dgn 4/5/2019 11:00:51 AM niles j

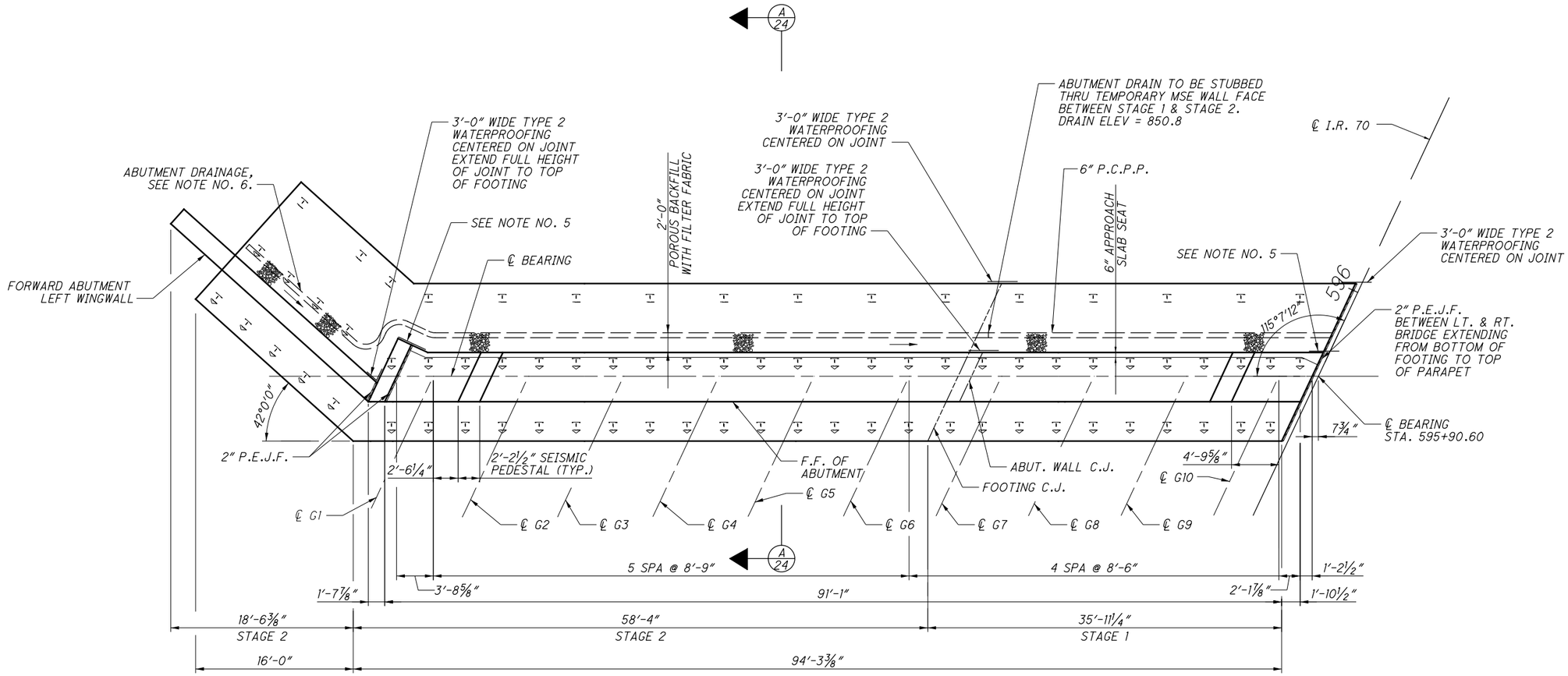

PLAN

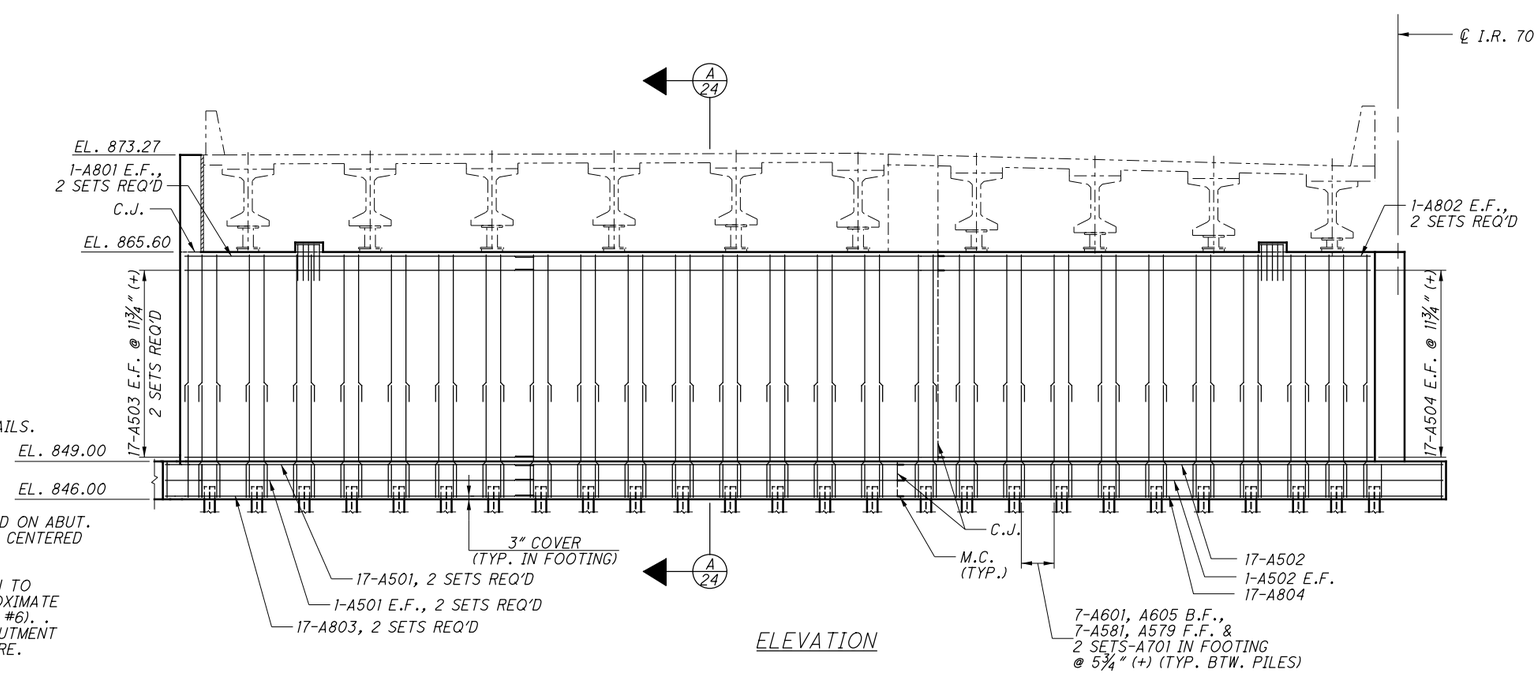

ELEVATION

NOTES:

1. SEE SHEET 23 FOR WINGWALL DETAILS.
2. SEE SHEET 24 FOR SEISMIC PEDIESTAL DETAILS.
3. SEE SHEET 16 & 17 FOR PILE LAYOUT.
4. SEE STAGE 34 FOR BEARING DETAILS.
5. 3'-0" WIDE TYPE 2 WATERPROOFING CENTERED ON ABUT. WALL JOINT. 3'-0" WIDE NEOPRENE SHEETING CENTERED ON ABUT. DIAPHRAGM JOINT.
6. OUTLET LEFT AND RIGHT BRIDGE UNDERDRAIN TO DRAINAGE STRUCTURE ALONG SR48 AT APPROXIMATE SR48 STA 308+50 (DETAILS PROVIDED IN BU #6). . UNDERDRAIN SHALL BE INSTALLED BEHIND ABUTMENT WITH 1% SLOPE DOWN TO DRAINAGE STRUCTURE.

MIN. LAP SPLICES:

#5 = 3'-5"
#6 = 3'-10"
#8 = 7'-3"

DESIGN-BUILDER

DESIGNER URS

REVIEWED	DATE	STRUCTURE FILE NUMBER
MSG	06/2014	5705533/5705509

DRAWN	REVISED
AJK	

DESIGNED	CHECKED
CC	KAB

ISSUE NO.	ISSUE DATE
1	07/10/14
RD	12/11/17

FORWARD ABUTMENT PLAN & ELEVATION - LEFT BRIDGE

BRIDGE NO. MOT-70-1130 L&R OVER S.R. 48

MOT-70-10.79

PID No. 76667

076667_BU02-SR48 Bridge_AsBuilt
G:\GrandRapids\DCS\Projects\12944308\structures\MOT070_1130_SR48\sheets\070_1130LAF001.dgn 4/5/2019 11:00:53 AM niles j

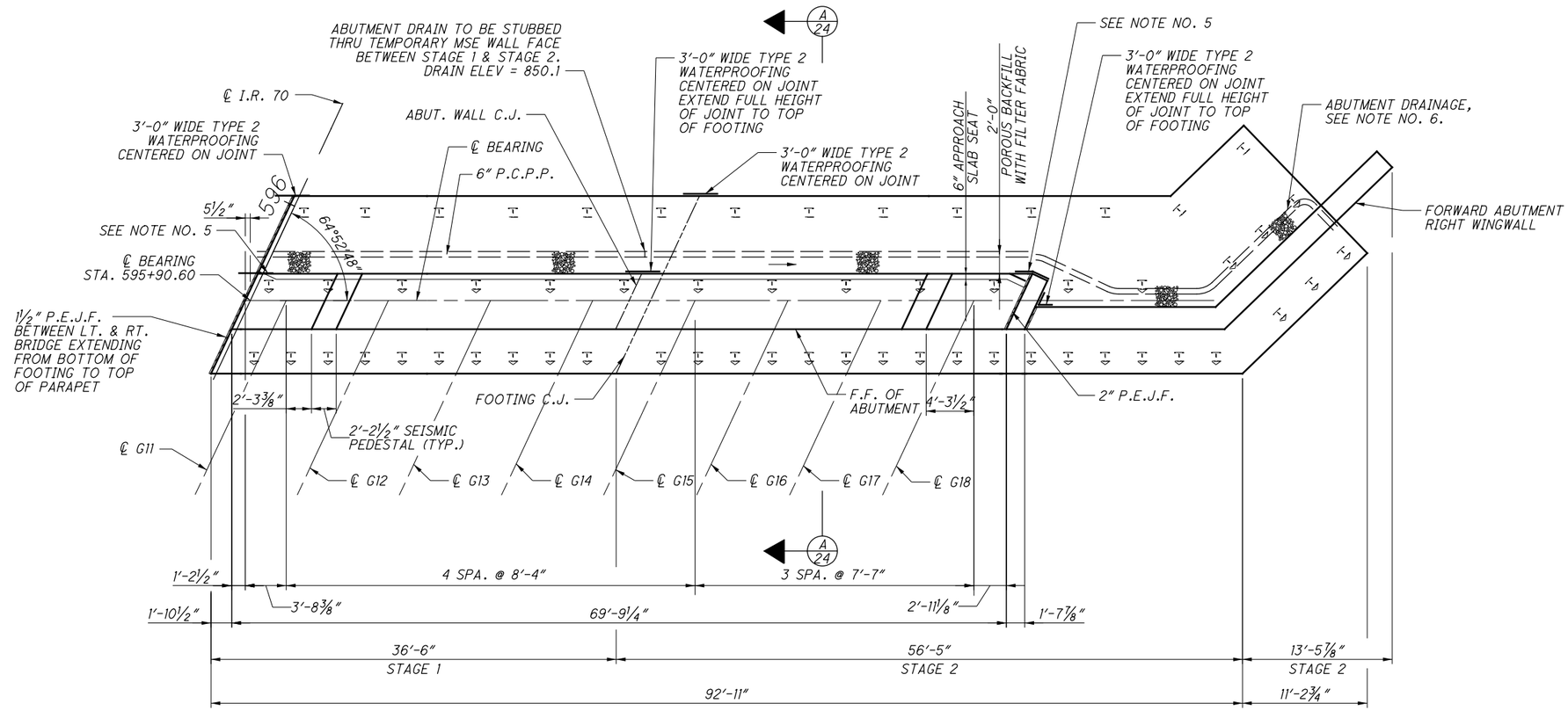

PLAN

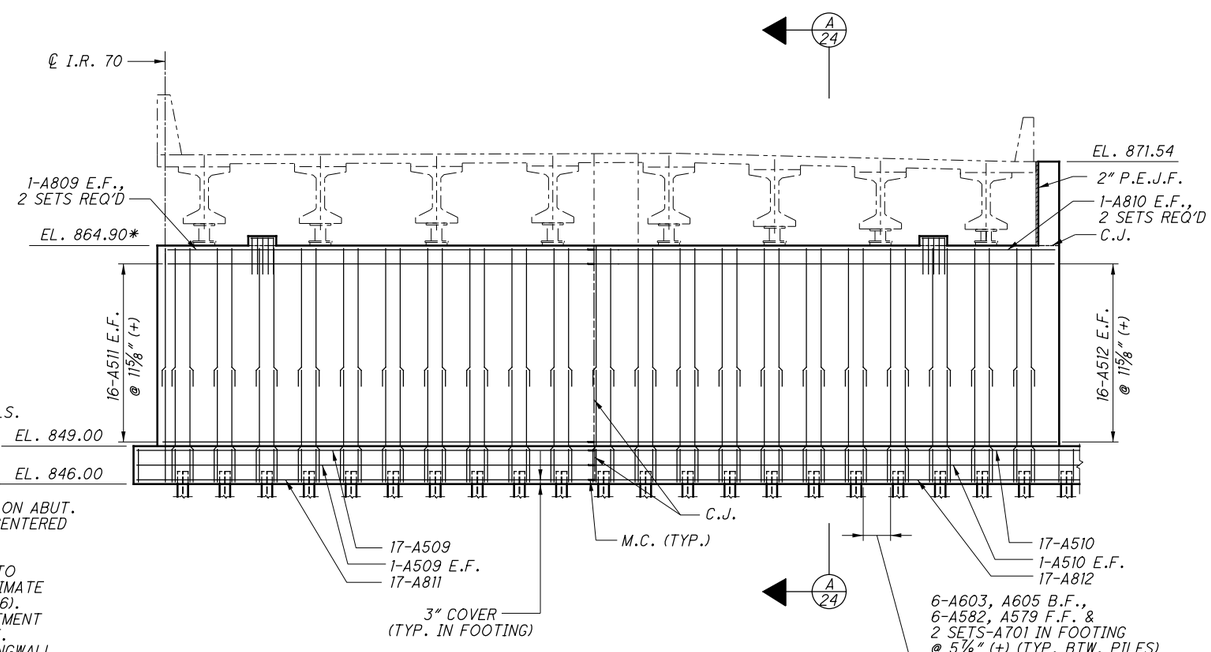

ELEVATION

* ELEVATION GIVEN AT ℄ BEARING

NOTES:

1. SEE SHEET 23 FOR WINGWALL DETAILS.
2. SEE SHEET 24 FOR SEISMIC PEDIESTAL DETAILS.
3. SEE SHEET 16 & 17 FOR PILE LAYOUT.
4. SEE STAGE 34 FOR BEARING DETAILS.
5. 3'-0" WIDE TYPE 2 WATERPROOFING CENTERED ON ABUT. WALL JOINT. 3'-0" WIDE NEOPRENE SHEETING CENTERED ON ABUT. DIAPHRAGM JOINT.
6. OUTLET LEFT AND RIGHT BRIDGE UNDERDRAIN TO DRAINAGE STRUCTURE ALONG SR48 AT APPROXIMATE SR48 STA 308+50 (DETAILS PROVIDED IN BU #6). UNDERDRAIN SHALL BE INSTALLED BEHIND ABUTMENT WITH 1% SLOPE DOWN TO DRAINAGE STRUCTURE. OPTIONALLY OUTLET THROUGH BOTTOM OF WINGWALL AT ABUTMENT/WINGWALL CORNER.

MIN. LAP SPLICES:

#5 = 3'-5"
#6 = 3'-10"
#8 = 7'-3"

DESIGN-BUILDER

DESIGNER URS

REVIEWED	DATE
MSG	06/2014
STRUCTURE FILE NUMBER	
5705533/5705509	

DRAWN	REVISED
AJK	

DESIGNED	CHECKED
CC	KAB

ISSUE NO.	ISSUE DATE
1	07/10/14
RD	12/11/17

FORWARD ABUTMENT PLAN & ELEVATION - RIGHT BRIDGE

BRIDGE NO. MOT-70-1130 L&R
OVER S.R. 48

MOT-70-10.79
PID No.76667

076667_BU02-SR48 Bridge_AsBuilt
G:\GrandRapids\DCS\Projects\1294308\structures\MOT070_1130 SR48\sheets\070_1130LAF002.dgn 4/5/2019 11:00:56 AM niles

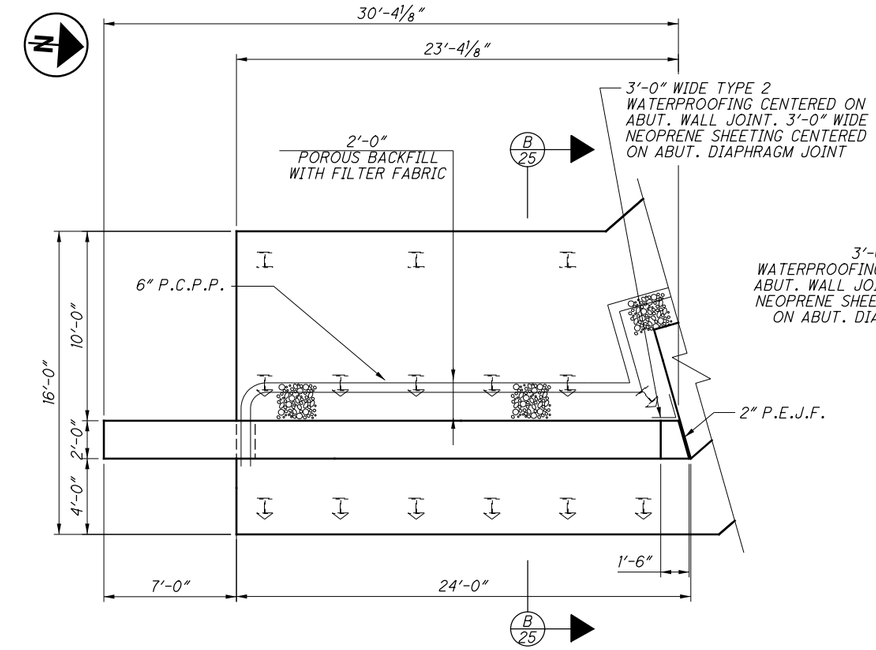

WINGWALL PLAN

REAR ABUTMENT - RIGHT WINGWALL

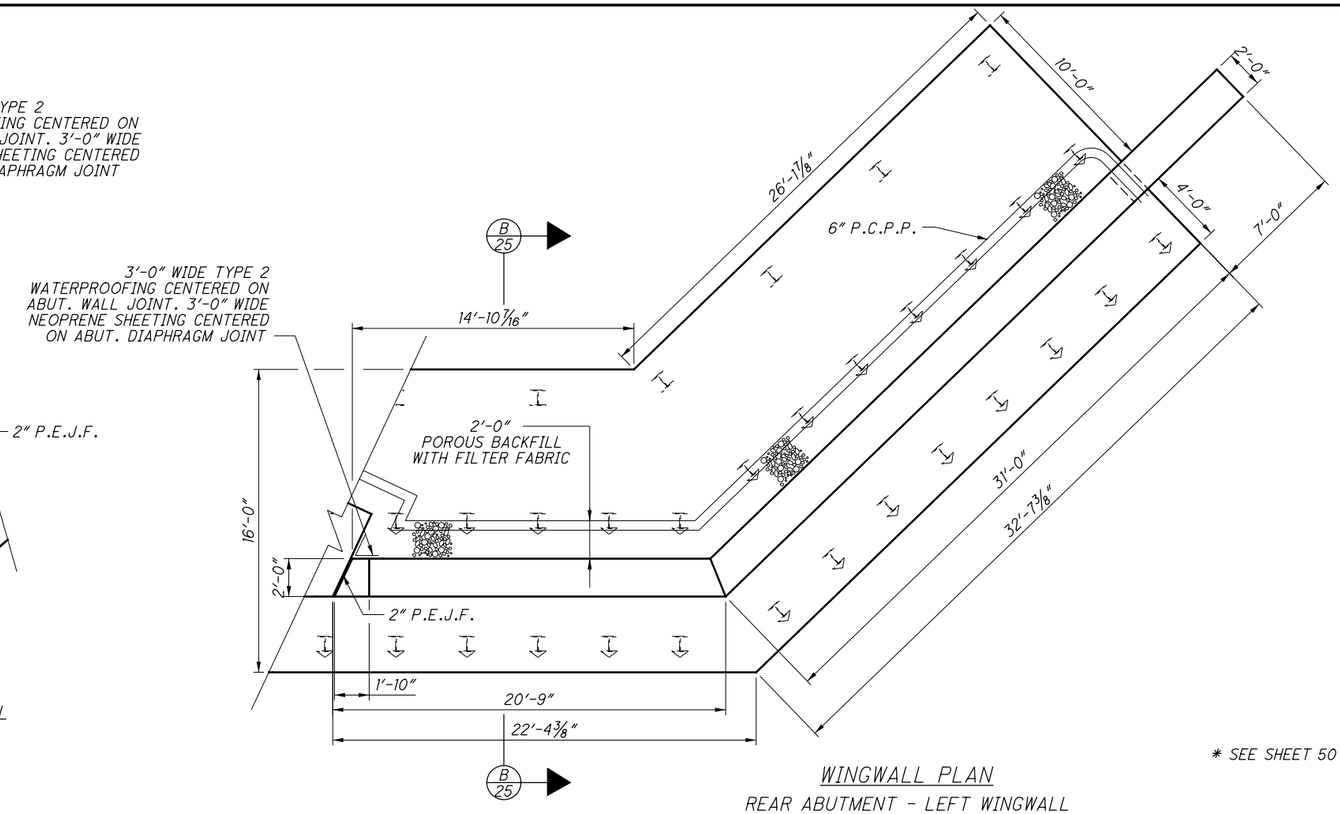

WINGWALL PLAN

REAR ABUTMENT - LEFT WINGWALL

MIN. LAP SPLICES:

#5 = 3'-2"
#6 = 3'-10"
#7 = 4'-10" (WALL)
#7 = 5'-6" (FOOTING)
#8 = 6'-4"
#9 = 8'-1"

* SEE SHEET 50 FOR DETAIL AND NOTE.

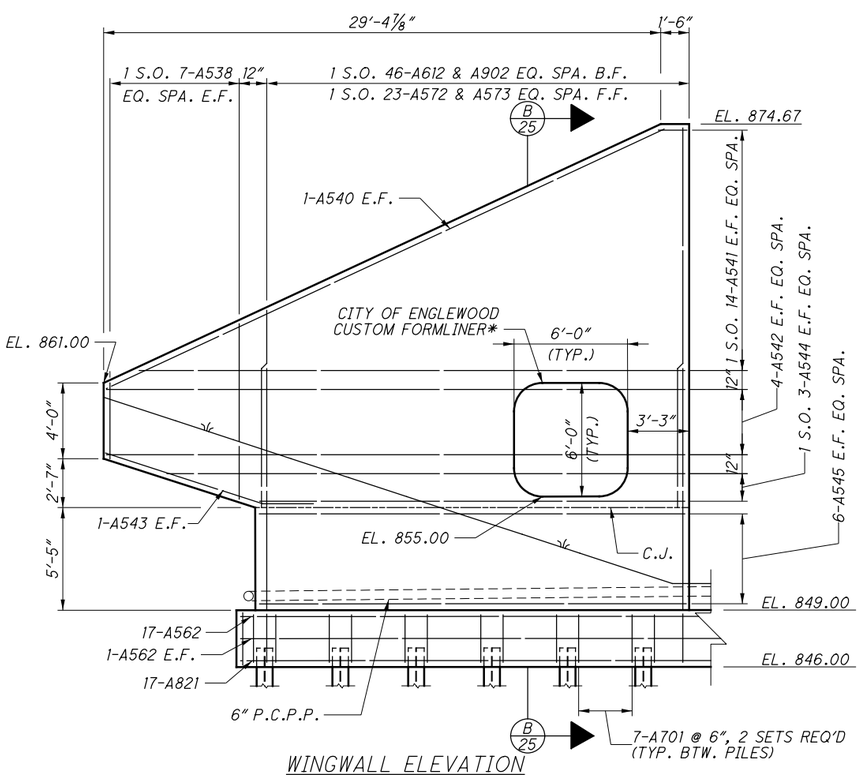

WINGWALL ELEVATION

REAR ABUTMENT - RIGHT WINGWALL

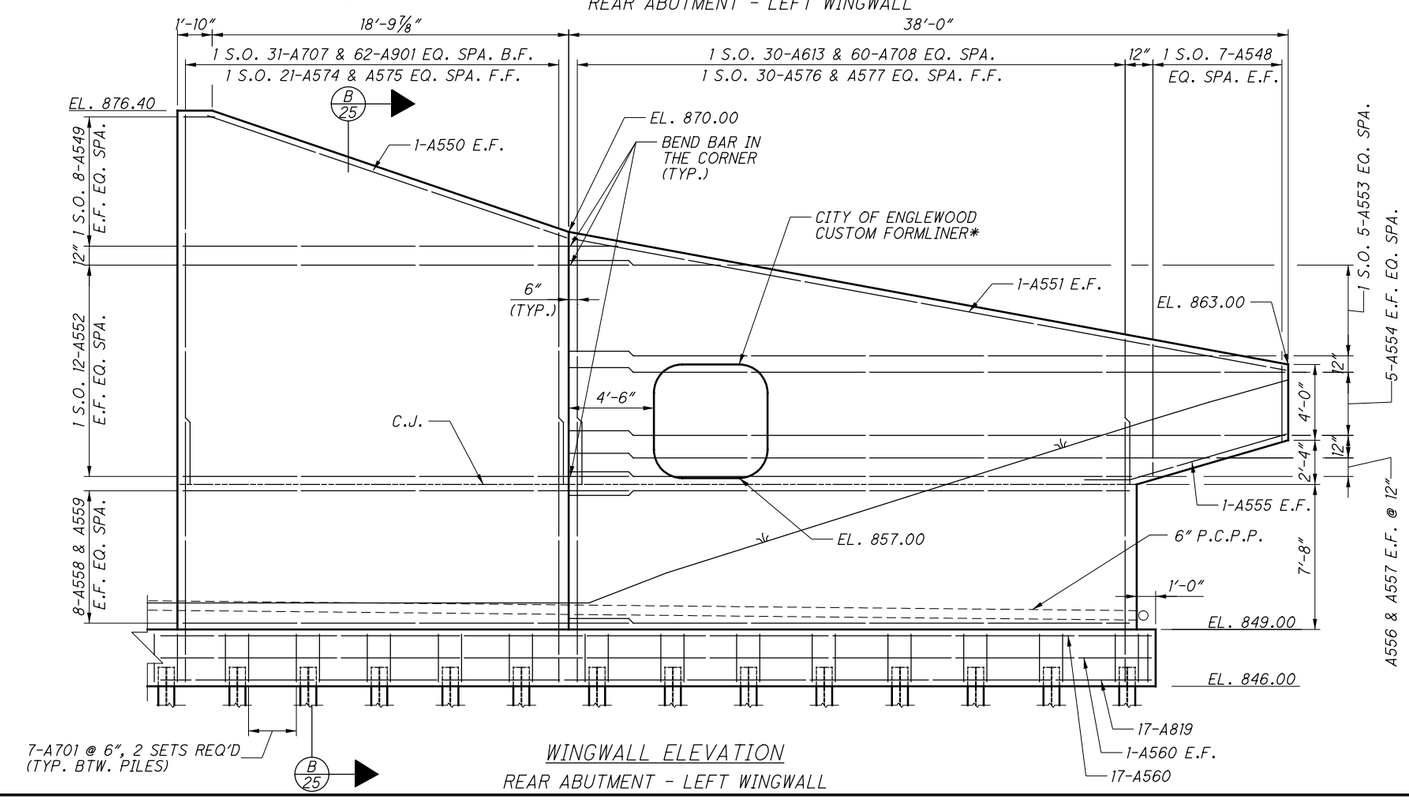

WINGWALL ELEVATION

REAR ABUTMENT - LEFT WINGWALL

ISSUE NO.	ISSUE DATE	DESIGNED	CHECKED	DRAWN	REVISED	REVIEWED	DATE	DESIGNER	DESIGN-BUILDER
1	07/10/14	CC	KAB	AJK		MSG	06/2014	URS	
RD	10/25/18					STRUCTURE FILE NUMBER 5705533/5705509			

REAR ABUTMENT WINGWALL DETAILS

BRIDGE NO. MOT-70-1130 L&R
OVER S.R. 48

MOT-70-10.79
PID No. 76667

076667_BU02-SR48 Bridge_AsBuilt
G:\GrandRapids\DCS\Projects\12944308\structures\MOT070_1130 SR48\sheets\070_1130LAR003.dgn 4/5/2019 11:00:59 AM niles j

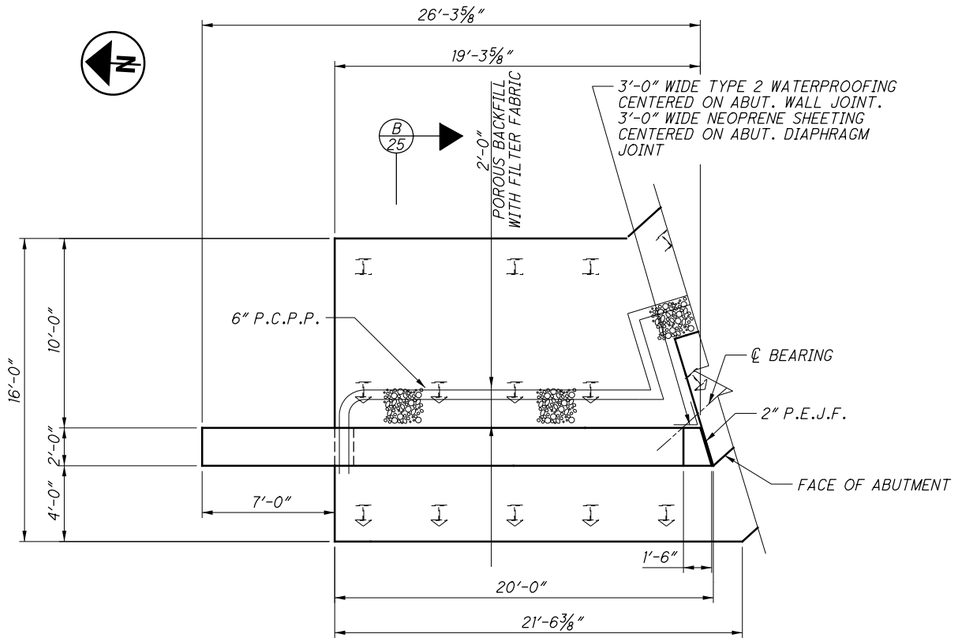

WINGWALL PLAN

FORWARD ABUTMENT - LEFT WINGWALL

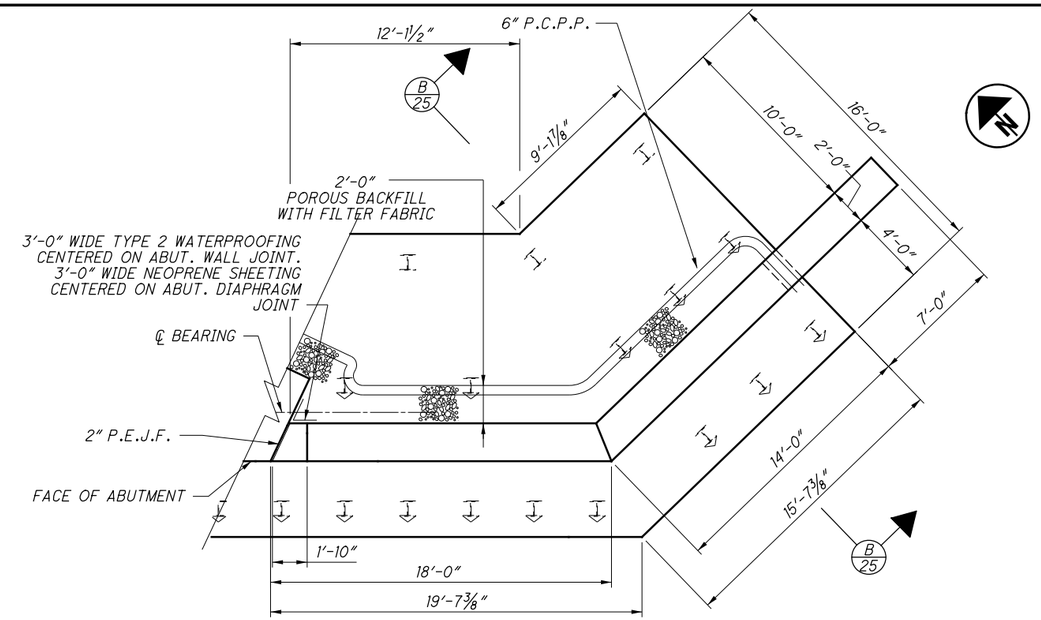

WINGWALL PLAN

FORWARD ABUTMENT - RIGHT WINGWALL

* SEE SHEET 50 FOR DETAIL AND NOTE.

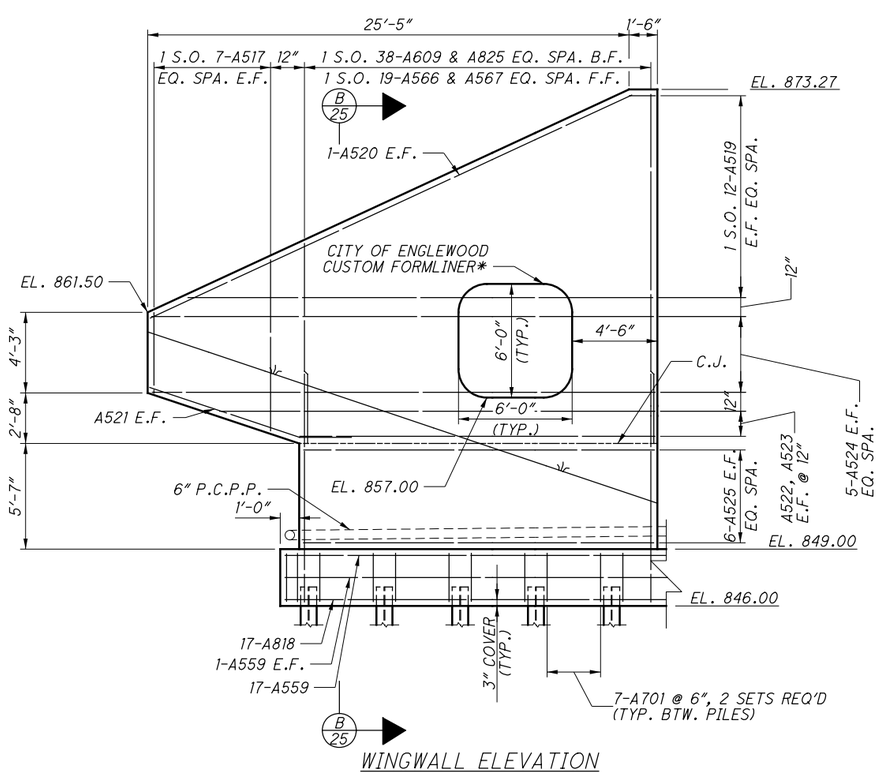

WINGWALL ELEVATION

FORWARD ABUTMENT - LEFT WINGWALL

MIN. LAP SPLICES:

#5 = 3'-2"
#6 = 3'-10"
#7 = 5'-6"
#8 = 6'-4"

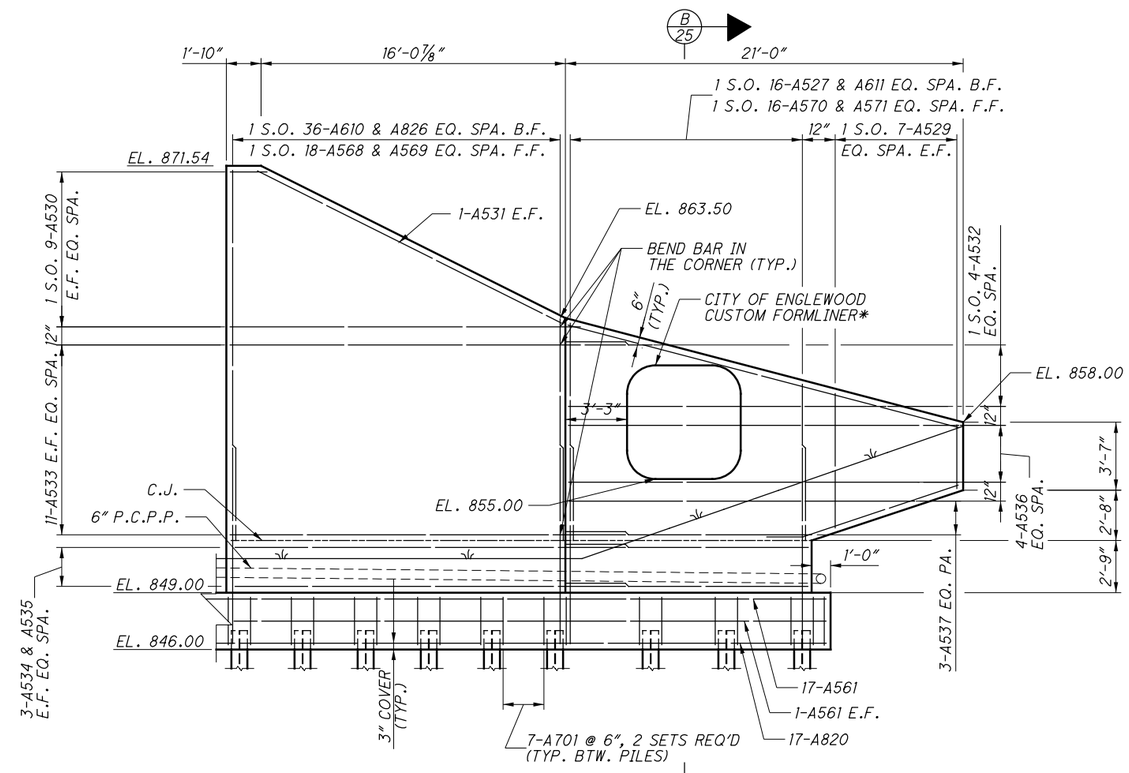

WINGWALL ELEVATION

FORWARD ABUTMENT - RIGHT WINGWALL

DESIGN-BUILDER

DESIGNER URS

REVIEWED	DATE
MSG	06/2014
STRUCTURE FILE NUMBER	
5705533/5705509	

DRAWN	DESIGNED
AJK	CC
REVISED	CHECKED
	KAB

ISSUE NO.	ISSUE DATE
1	07/10/14
RD	12/11/17

FORWARD ABUTMENT WINGWALL DETAILS

BRIDGE NO. MOT-70-1130 L&R
OVER S.R. 48

MOT-70-10.79

PID No. 76667

076667_BU02-SR48 Bridge_AsBuilt
G:\GrandRapids\DCS\Projects\12944308\structures\MOT070_1130 SR48\sheets\070_1130LAF003.dgn 4/5/2019 11:01:00 AM niles j

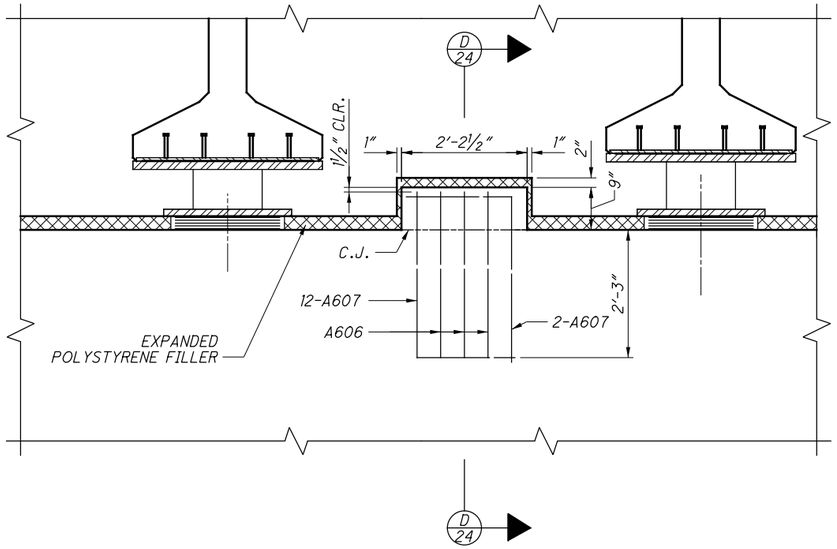

SEISMIC PEDESTAL ELEVATION

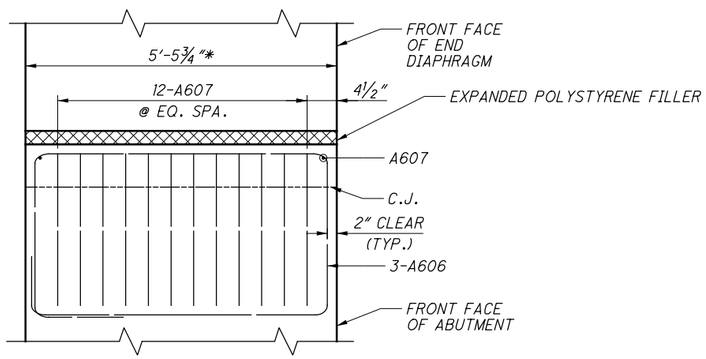

D/24 SECTION
SEISMIC PEDESTAL

* - MEASURE PARALLEL TO BEAM ℄

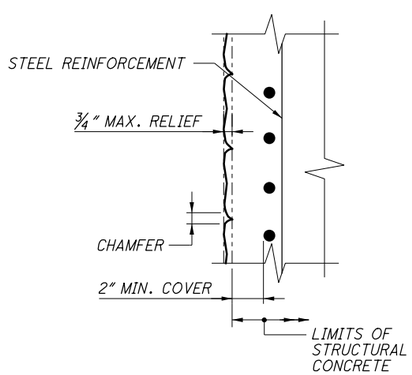

FORMLINER DETAIL

NOTES:

1. FORM LINER DETAILS SHOWN ON THIS SHEET ARE FOR FORM LINER TREATMENT ONLY. REFER TO OTHER STRUCTURE SHEETS FOR REINFORCING, DIMENSIONS, ETC.
2. WHERE SHOWN ON THE PLANS, THE CONTRACTOR SHALL UTILIZE CONCRETE FORM LINERS TO SIMULATE STONE MASONRY CONSTRUCTION.
3. IN ADDITION TO THE DETAILS SHOWN ON THIS SHEET, ALL EXPOSED EDGES SHALL RECEIVE A 1"x1" BEVEL UNLESS DIMENSIONED OTHERWISE.
4. TERMINATE THE CONCRETE FORMLINER 1'-0" BELOW THE TOP OF WALL, FOR ALL WINGWALLS BEYOND THE FASCIA LIMITS.

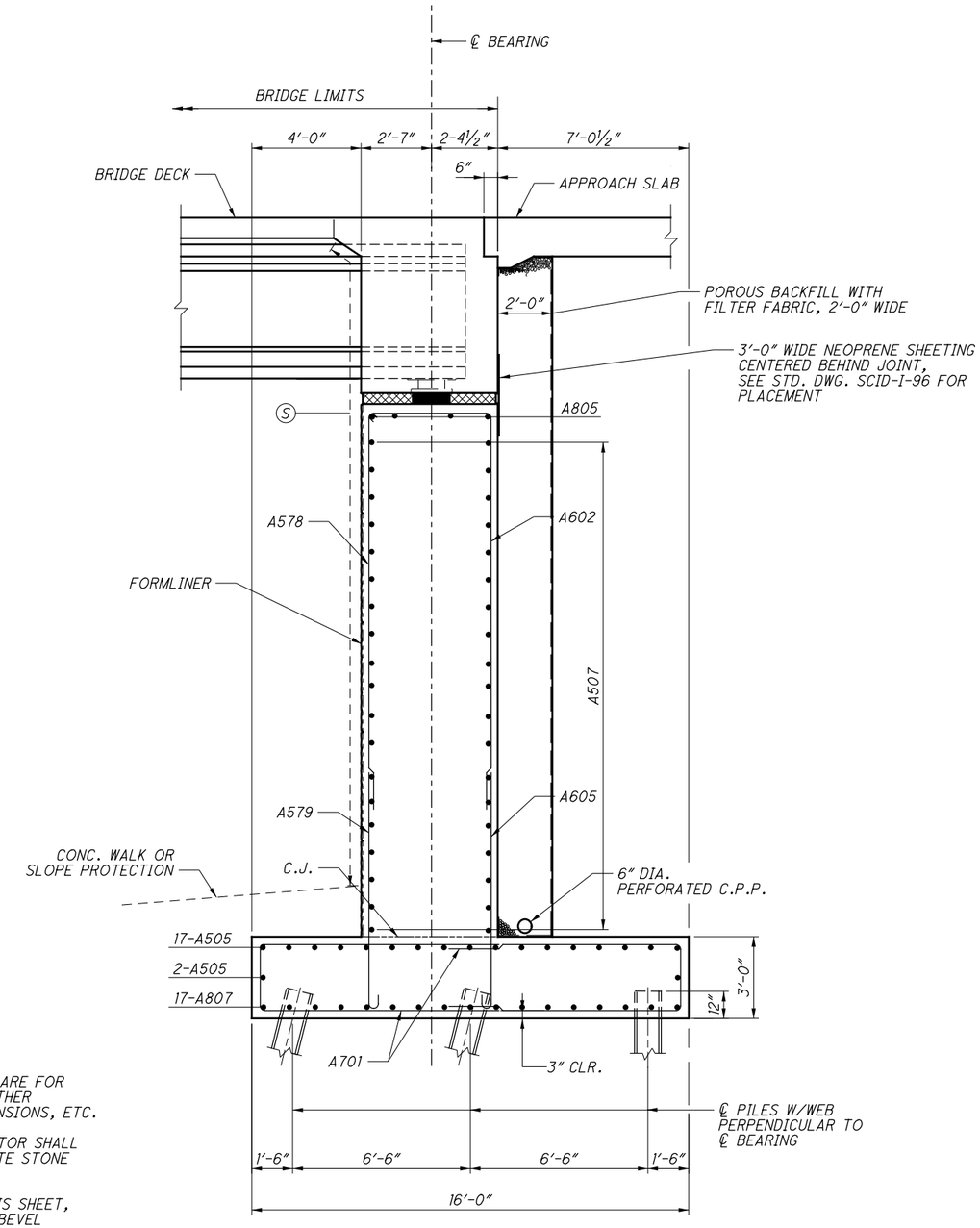

A/24 TYPICAL ABUTMENT SECTION
REAR ABUTMENT LEFT BRIDGE (STAGE 1) SHOWN, OTHERS SIMILAR, SEE SHEET 18 , 19 , 20 & 21 ABUTMENT ELEVATIONS FOR REINFORCEMENT

(S) DENOTES CONCRETE SURFACE TO BE SEALED WITH EPOXY-URETHANE

DESIGN-BUILDER

DESIGNER URS

REVIEWED	DATE
MSG	06/2014
STRUCTURE FILE NUMBER	
5705533/5705509	

DRAWN	REVISED
AJK	

DESIGNED	CHECKED
CC	KAB

ISSUE NO.	ISSUE DATE
1	07/10/14
RD	10/25/18

ABUTMENT DETAILS (1 OF 2)
BRIDGE NO. MOT-70-1130 L&R
OVER S.R. 48

MOT-70-10.79
PID No. 76667

076667_BU02-SR48 Bridge_AsBuilt
G:\GrandRapids\DCS\Projects\12944308\structures\MOT070_1130_SR48\sheets\070_1130LAR004.dgn 4/5/2019 11:01:02 AM niles j

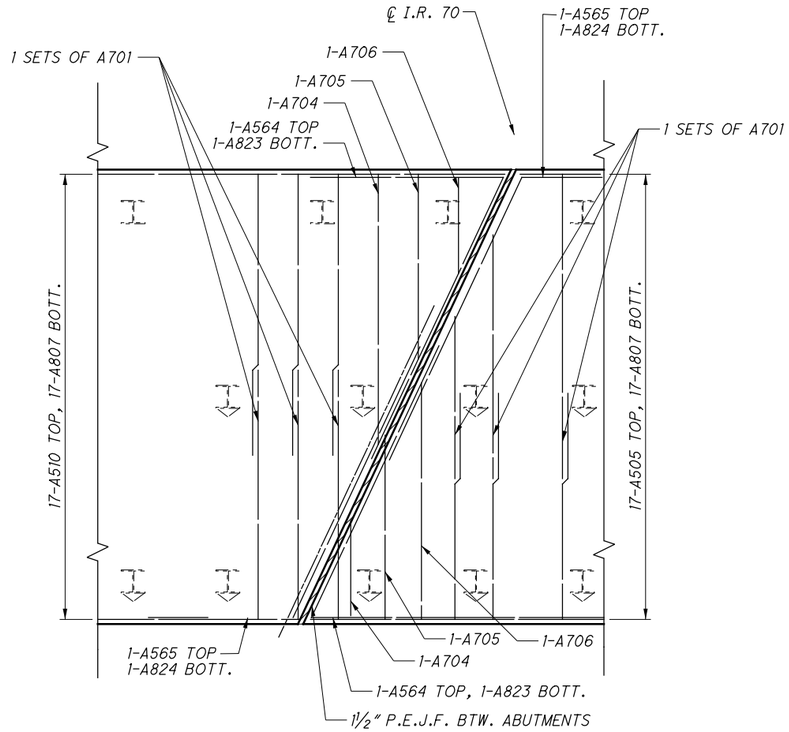

TYPICAL FOOTING REINFORCING AT ℄ I.R. 70
REAR ABUTMENT SHOWN, FORWARD ABUTMENT SIMILAR

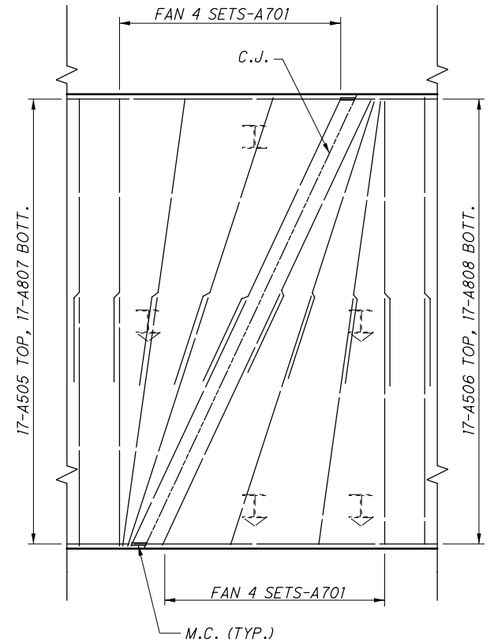

TYPICAL FOOTING REINFORCING AT CONSTRUCTION JOINT
REAR ABUTMENT - LEFT BRIDGE SHOWN, OTHERS SIMILAR

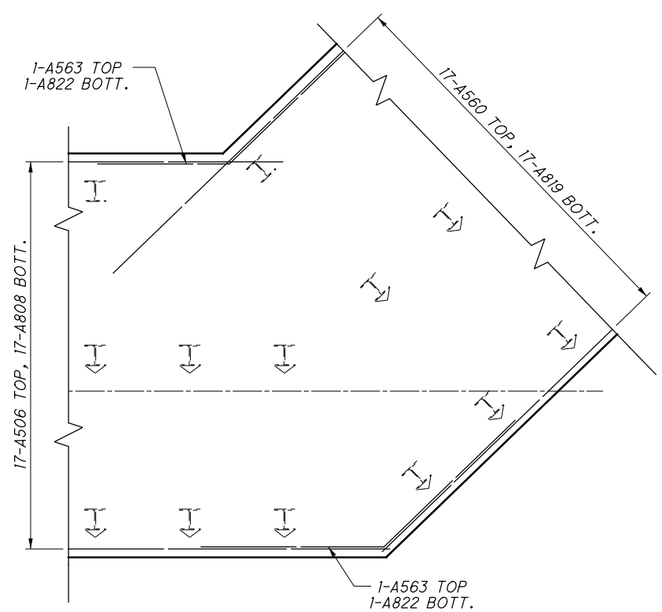

TYPICAL FOOTING REINFORCING ABUTMENT & WINGWALL
REAR ABUTMENT - LEFT BRIDGE SHOWN, FORWARD ABUT. RIGHT BRIDGE SIMILAR

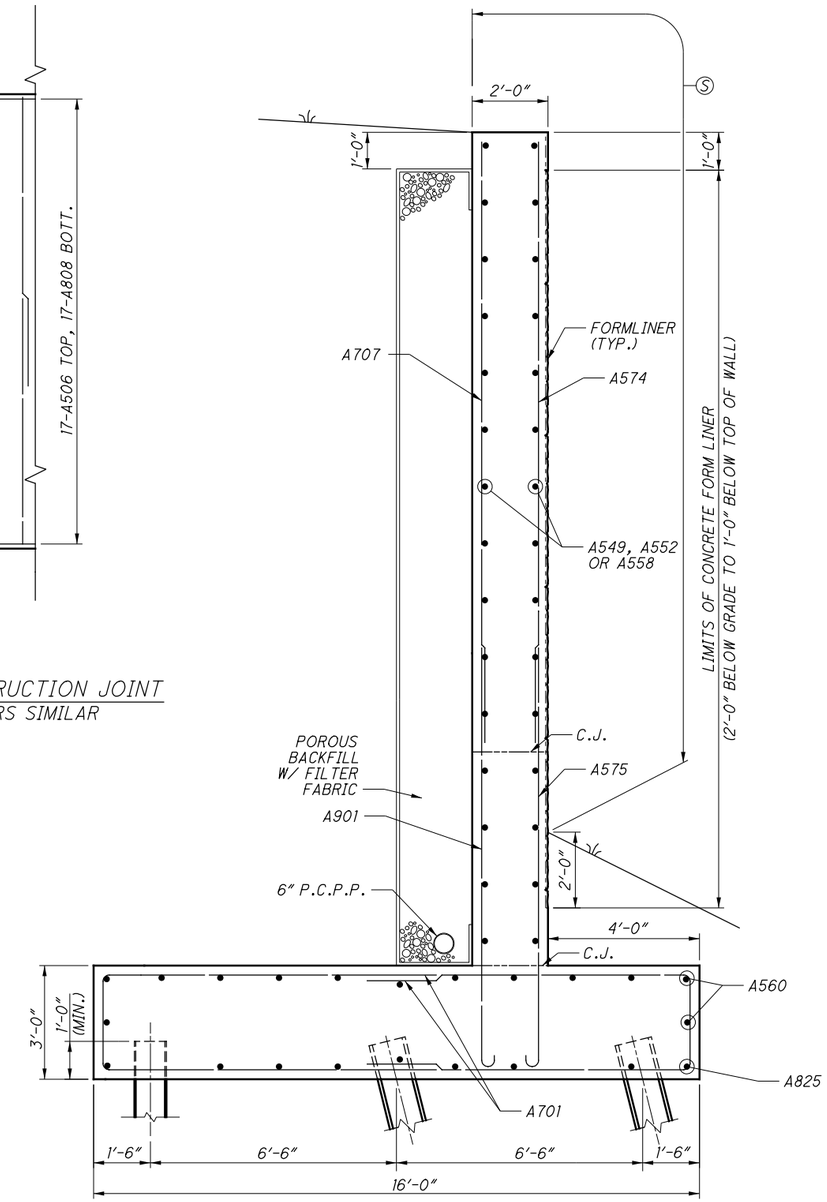

(B/25) WINGWALL SECTION
REAR ABUTMENT - LEFT WINGWALL SHOWN
(OTHERS SIMILAR, SEE SHEET 22 AND 23
WINGWALL DETAILS FOR REINFORCEMENT)

Ⓢ DENOTES CONCRETE SURFACE TO BE SEALED WITH EPOXY-URETHANE.
THE TOP COAT COLOR FOR THE EPOXY-URETHANE SEALER SHALL MEET
THE FEDERAL COLOR NUMBER FS17778-LIGHT NEUTRAL

DESIGN-BUILDER

DESIGNER URS

REVIEWED	DATE
MSG	06/2014
STRUCTURE FILE NUMBER	
5705533/5705509	

DRAWN	DESIGNED	CHECKED
AJK	CC	KAB
REVISED		

ISSUE NO.	ISSUE DATE
1	07/10/14
RD	10/25/18

ABUTMENT DETAILS (2 OF 2)
BRIDGE NO. MOT-70-1130
OVER S.R. 48

MOT-70-10.79
PID No. 76667

076667_BU02-SR48 Bridge_AsBuilt
G:\GrandRapids\DCS\Projects\12944308\structures\MOT070_1130_SR48\sheets\070_1130LAR005.dgn 4/5/2019 11:01:07 AM niles j

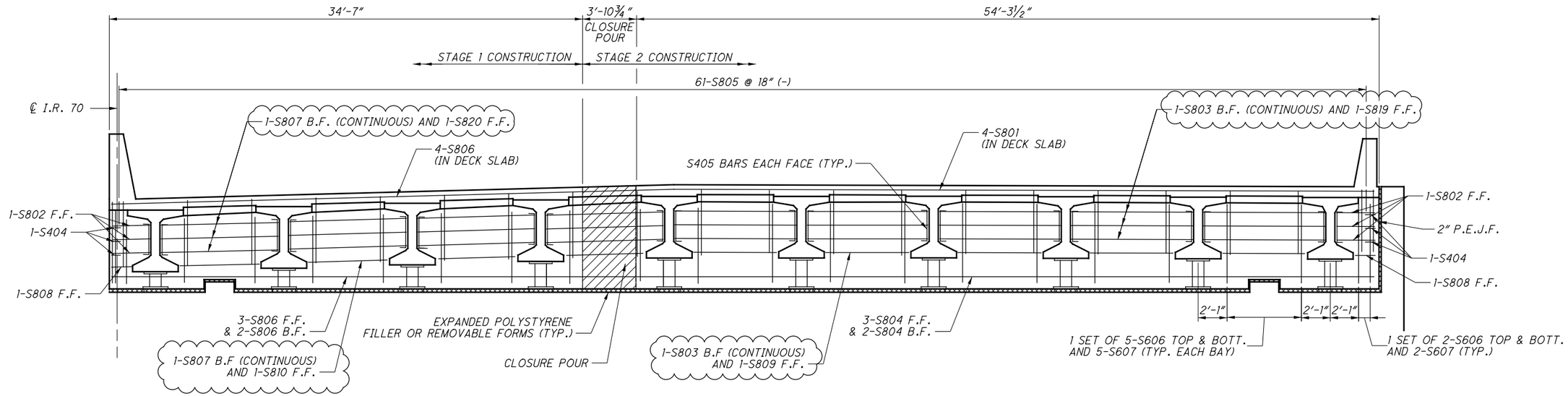

LEFT BRIDGE - ELEVATION
REAR ABUTMENT SHOWN
FWD. ABUTMENT SIMILAR

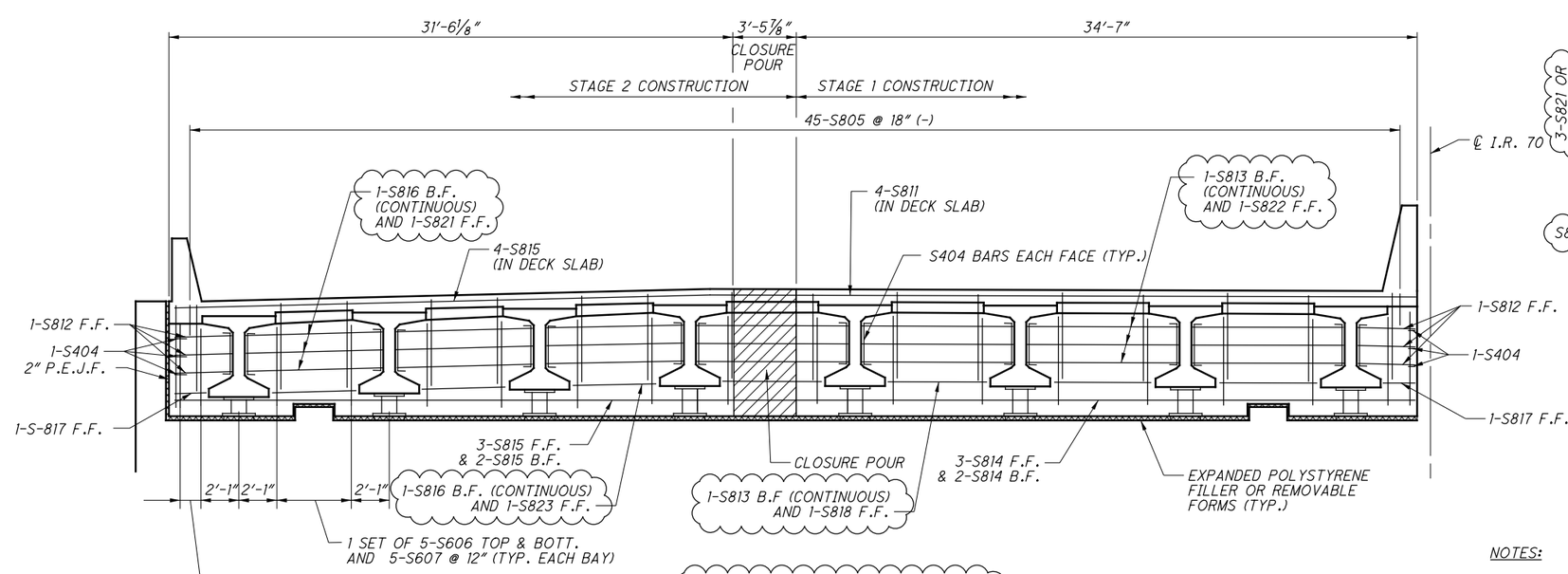

RIGHT BRIDGE - ELEVATION
REAR ABUTMENT SHOWN
FWD. ABUTMENT SIMILAR

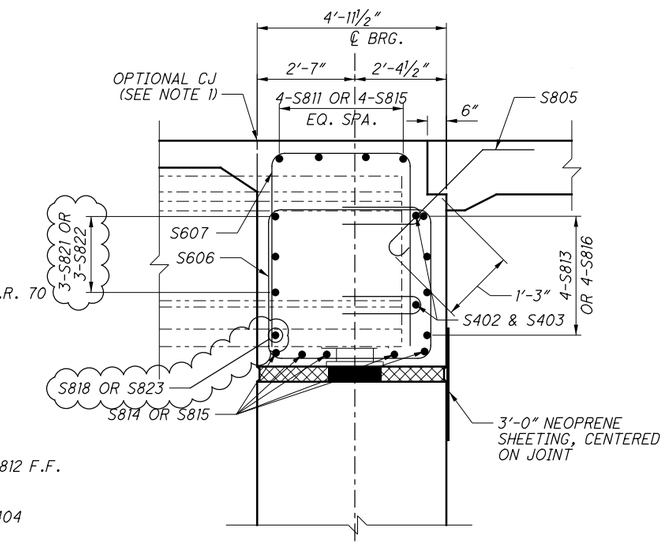

SECTION
REAR ABUTMENT
RIGHT BRIDGE SHOWN

MIN. LAP SPLICES:

#8 = 3'-5"

NOTES:

1. PLACE THE DIAPHRAGM CONCRETE ENCASING THE STRUCTURAL MEMBER ENDS AFTER THE DECK PLACEMENT IN THE ADJACENT SPAN IS COMPLETE. PROCEDURES THAT PLACE THE ABUTMENT DIAPHRAGM WITH THE DECK CONCRETE MAY BE APPROVED BY THE ENGINEER IF THE PLACEMENT SUBMITTAL CAN ASSURE THAT THE DECK CONCRETE IN THE ADJACENT SPAN WILL BE PLACED BEFORE CONCRETE IN THE DIAPHRAGM HAS REACHED ITS INITIAL SET.
2. SEE SHEET 24 FOR SEISMIC PEDIESTAL DETAILS.
3. SEE SHEET 34 FOR BEARING DETAILS.
4. FOR ADDITIONAL REBAR DETAILS, SEE STD. DWG. PSID-1-13 SHEET 7/10.

DESIGN-BUILDER

DESIGNER URS

DRAWN	REVIEWED	DATE
AJK	MSG	07/2014
DESIGNED	REVISED	STRUCTURE FILE NUMBER
CC	CDU	5705533/5705509
CHECKED		
KAB		

ISSUE NO.	ISSUE DATE
1	07/10/14
2	07/17/14
RD	10/25/18

ABUTMENT DIAPHRAGM
BRIDGE NO. MOT-70-1130 L&R
OVER S.R. 48

MOT-70-10.79
PID No. 76667

076667_BU02-SR48 Bridge_AsBuilt
G:\GrandRapids\DCS\Projects\12944308\structures\MOT070_1130_SR48\sheets\070_1130LAR006.dgn 4/5/2019 11:01:10 AM nilesj

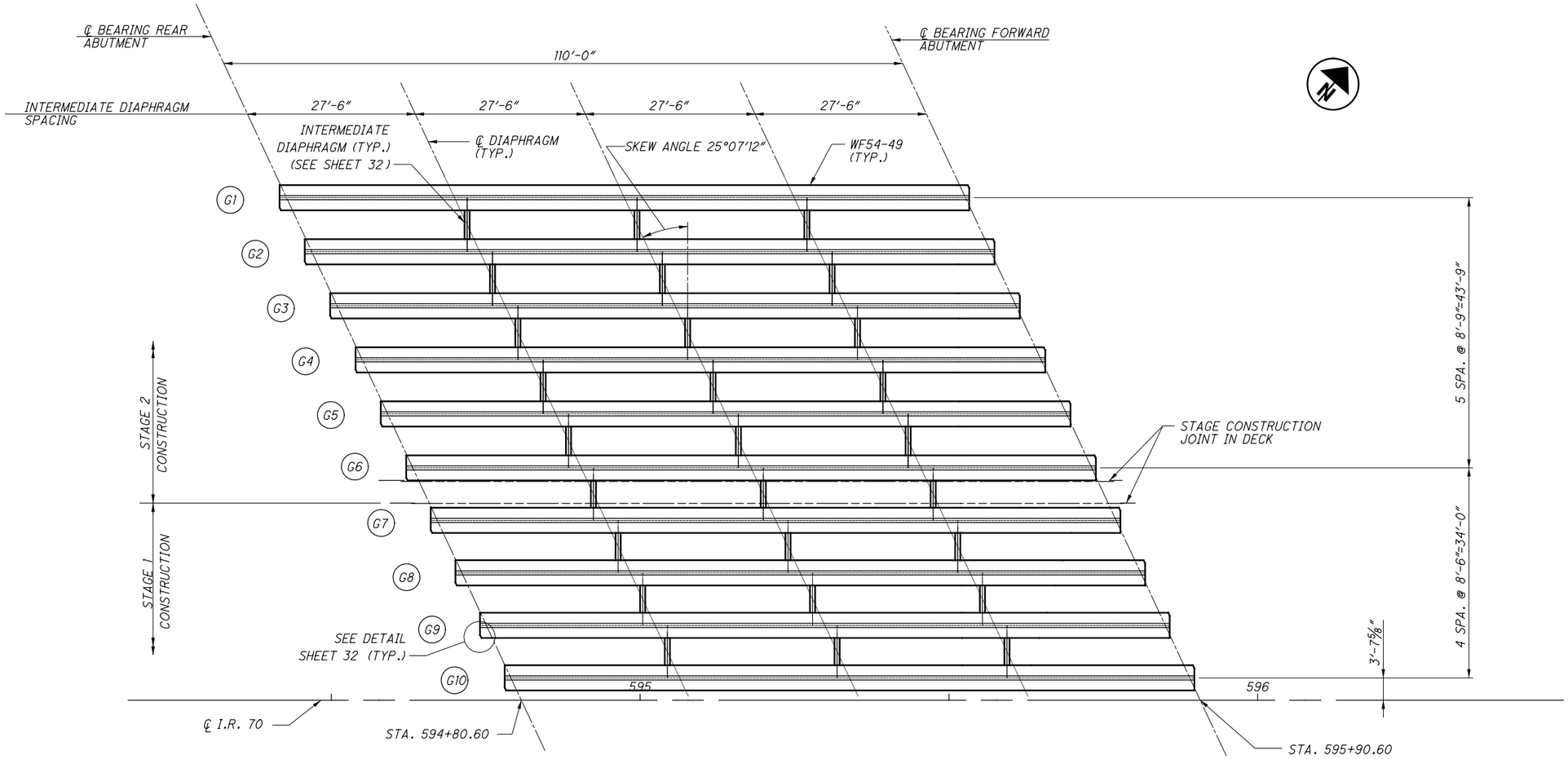

FRAMING PLAN - LEFT BRIDGE

NOTES:

1. FOR BEAM ELEVATIONS AND DETAILS, SEE SHEET 29 .
2. FOR END DIAPHRAGM DETAILS, SEE SHEET 26 .
3. FOR INTERMEDIATE DIAPHRAGM DETAILS, REFER TO SHEET 32 .

ISSUE NO.	ISSUE DATE	DESIGNED	DRAWN	REVIEWED	DATE
1	06/05/14	KAB	AJK	MSG	06/2014
RD	10/25/18	CHECKED	REVISED	STRUCTURE FILE NUMBER	
		CC		5705533/5705509	

DESIGN-BUILDER

DESIGNER URS

FRAMING PLAN (LEFT BRIDGE)
BRIDGE NO. MOT-70-1130 L&R
OVER S.R. 48

MOT-70-10.79
PID No. 76667

076667_BU02-SR48 Bridge_AsBuilt
G:\GrandRapids\DCS\Projects\1294430B\structures\MOT070_1130_SR48\sheets\070_1130LSD001.dgn 4/5/2019 11:01:12 AM niles

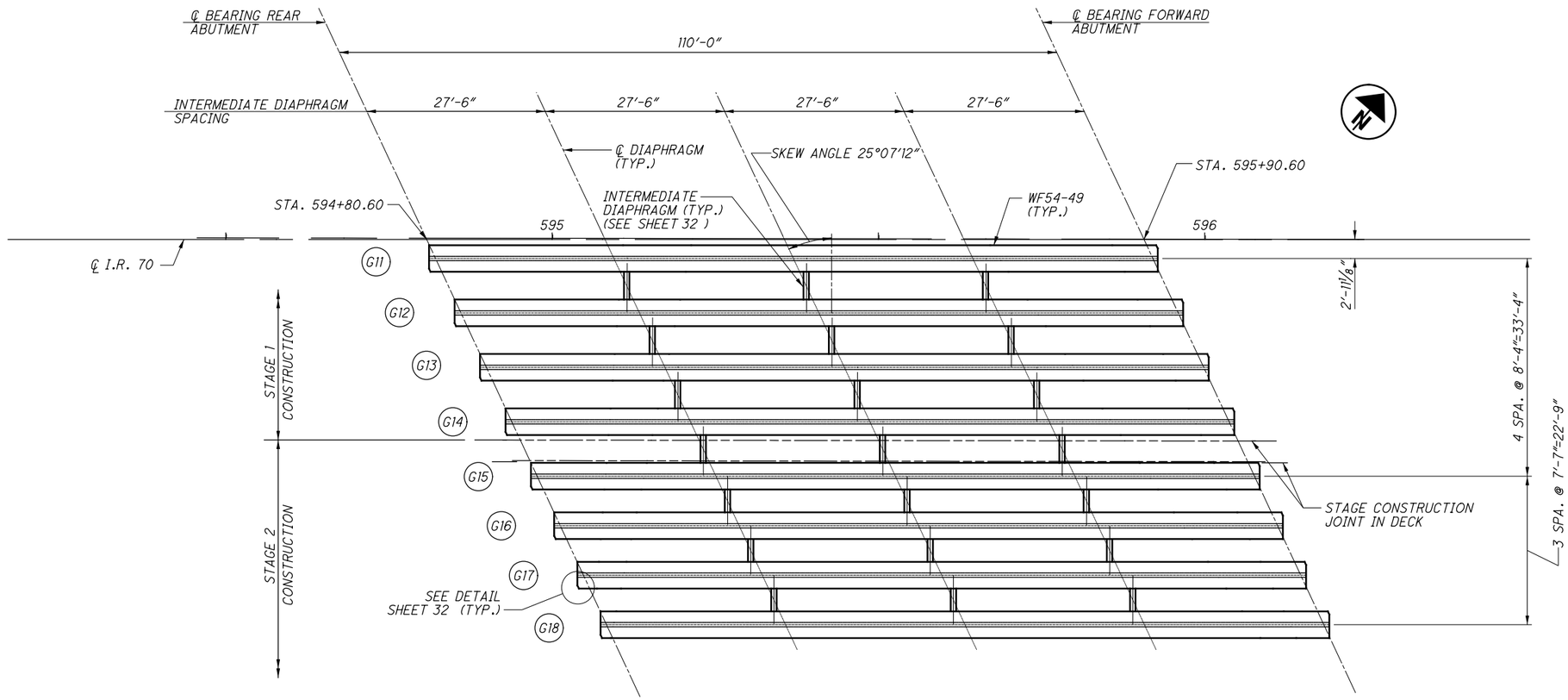

FRAMING PLAN - RIGHT BRIDGE

NOTES:

1. FOR BEAM ELEVATIONS AND DETAILS, SEE SHEET 30
2. FOR END DIAPHRAGM DETAILS, SEE SHEET 26
3. FOR INTERMEDIATE DIAPHRAGM DETAILS, REFER TO SHEET 32

DESIGN-BUILDER

DESIGNER URS

REVIEWED	DATE
MSG	06/2014
STRUCTURE FILE NUMBER	
5705533/5705509	

DRAWN	REVISED
AJK	

DESIGNED	CHECKED
KAB	CC

ISSUE NO.	ISSUE DATE
1	06/05/14
RD	10/25/18

FRAMING PLAN (RIGHT BRIDGE)
BRIDGE NO. MOT-70-1130 L&R
OVER S.R. 48

MOT-70-10.79
PID No. 76667

076667_BU02-SR48 Bridge_AsBuilt
G:\GrandRapids\DCS\Projects\12944308\structures\MOT070_1130_SR48\sheets\070_1130LSD002.dgn 4/5/2019 11:01:13 AM niles j

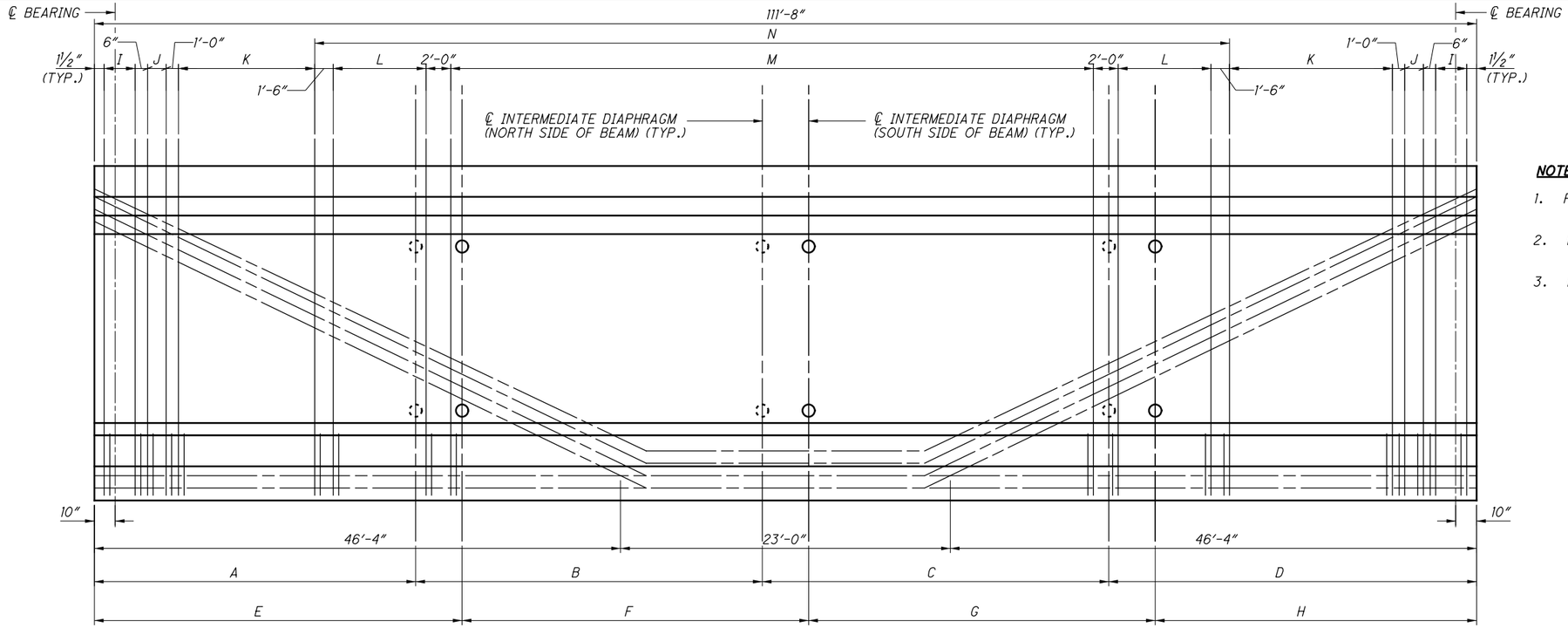

BEAM ELEVATION

NOTES:

1. FOR BEAM REINFORCING SCHEDULE AND BAR BENDING DIAGRAMS SEE SHEET 32
2. FOR MISCELLANEOUS BEAM DETAILS SEE SHEET 31 & SHEET 32
3. FOR INTERMEDIATE DIAPHRAGM CONNECTION BOLT HOLE LOCATIONS IN BEAM SEE SHEET 32

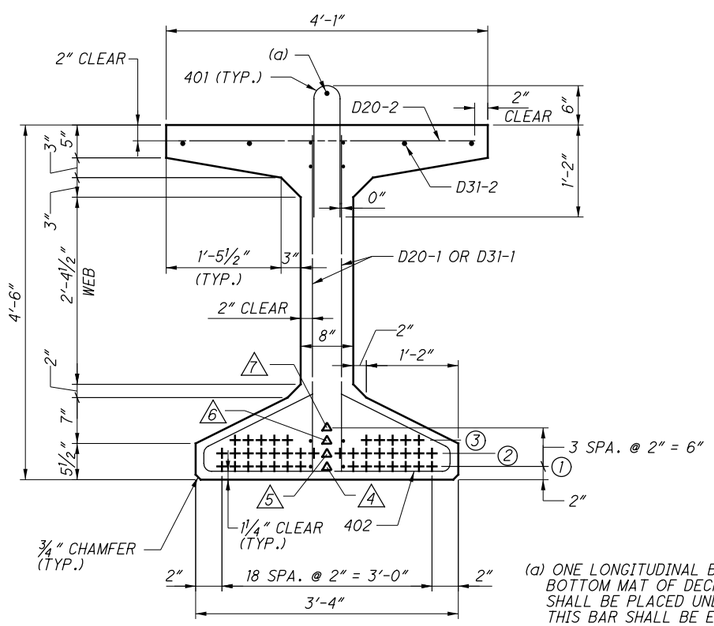

(a) ONE LONGITUDINAL BAR FORM THE BOTTOM MAT OF DECK REINFORCEMENT SHALL BE PLACED UNDER EACH 401 BAR. THIS BAR SHALL BE EPOXY COATED.

SECTION AT MIDSPAN

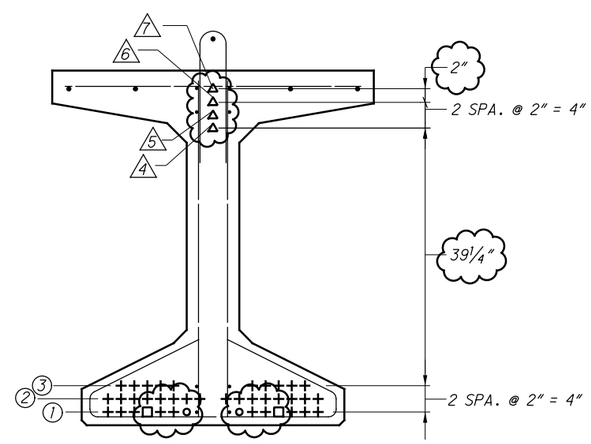

SECTION AT BEARING

LOCATION OF INTERMEDIATE DIAPHRAGM								
BEAM MARK	A	B	C	D	E	F	G	H
G1	NA	NA	NA	NA	30'-4⅝"	27'-6"	27'-6"	26'-3⅜"
G2-G5	26'-3⅜"	27'-6"	27'-6"	30'-4⅝"	30'-4⅝"	27'-6"	27'-6"	26'-3⅜"
G6	26'-3⅜"	27'-6"	27'-6"	30'-4⅝"	30'-3⅞"	27'-6"	27'-6"	26'-4⅛"
G7-G9	26'-4⅛"	27'-6"	27'-6"	30'-3⅞"	30'-3⅞"	27'-6"	27'-6"	26'-4⅛"
G10	26'-4⅛"	27'-6"	27'-6"	30'-3⅞"	NA	NA	NA	NA

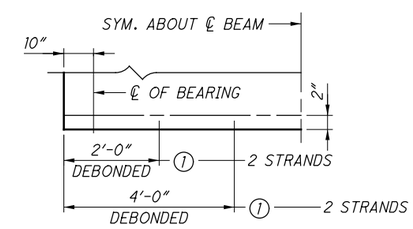

SCHEMATIC DETAIL FOR DEBOND STRANDS

LEGEND

- + STRAIGHT STRAND
- ○ DEBONDED STRAND (4'-0")
- □ DEBONDED STRAND (2'-0")
- △ DRAPED STRAND

SHEAR REINFORCEMENT SPACING TABLE	
LOCATION	SPACING
I	13 - 401, 402, D31-1 & D20-2 @ 2½" C/C = 2'-6"
J	17 - 401, 402, D20-1 & D20-2 @ 6" C/C = 8'-0"
K	11 - 401, 402, D20-1 & D20-2 @ 12" C/C = 10'-0"
L	5 - 401, 402 & D20-1 @ 18" C/C = 6'-0"
M	26 - 401, 402 & D20-1 @ 24" C/C = 48'-5"
N	68 - D20-2 @ 12" C/C = 67'-5"

NUMBER OF STRANDS PER ROW									CONCRETE STRENGTHS		PRESTRESSING STRAND STRENGTHS (LOW RELAXATION STRAND)		
BEAM MARK	STRAND GROUP 1	2	3	4 △	5 △	6 △	7 △	TOTAL STRANDS	f'ci	f'c	AREA	ULTIMATE	INITIAL
G1-G10	14	16	10	1	1	1	1	44	6 KSI	8 KSI	0.217 SQ. IN.	270 KSI	202.5 KSI

△ = DRAPED STRAND

DESIGN-BUILDER

DESIGNER URS

REVIEWED	DATE
MSG	06/2014
STRUCTURE FILE NUMBER	
5705533/5705509	

DRAWN	DESIGNED	CHECKED
AJK	KAB	CC
REVISED		

ISSUE NO.	ISSUE DATE
1	06/05/14
2	07/31/14
RD	10/25/18

GIRDER ELEVATION & DETAILS (LEFT BRIDGE)

BRIDGE NO. MOT-70-1130 L&R
OVER S.R. 48

MOT-70-10.79
PID No. 76667

076667_BU02-SR48 Bridge_AsBuilt
G:\GrandRapids\DCS\Projects\1294430B\structures\MOT070_1130_SR48\sheets\070_1130LSD003.dgn 4/5/2019 11:01:15 AM niles j

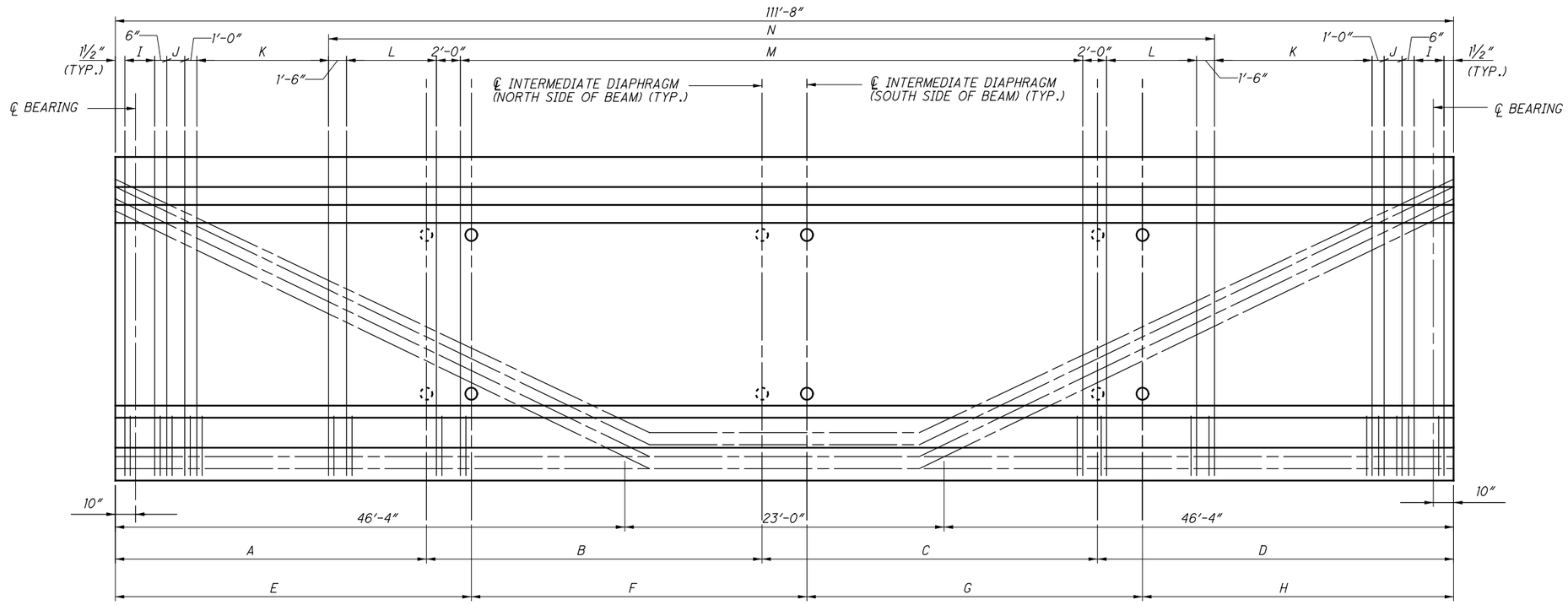

BEAM ELEVATION

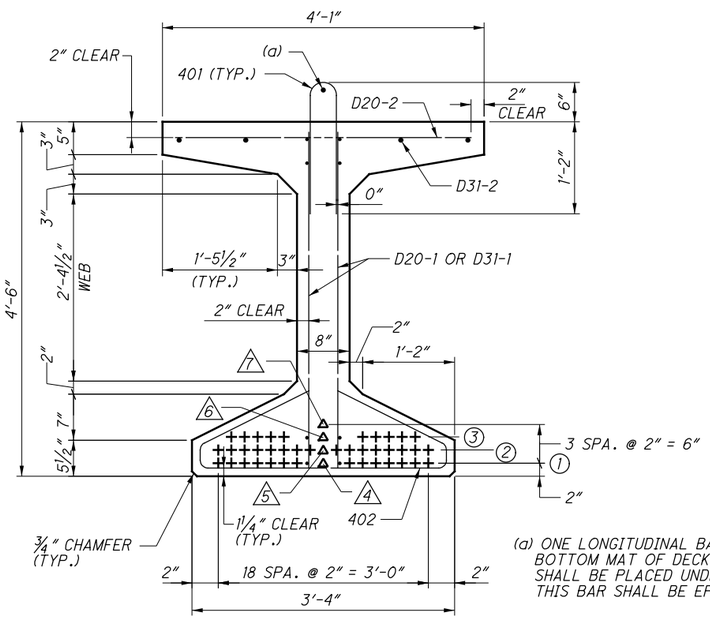

(a) ONE LONGITUDINAL BAR FORM THE BOTTOM MAT OF DECK REINFORCEMENT SHALL BE PLACED UNDER EACH 401 BAR. THIS BAR SHALL BE EPOXY COATED.

SECTION AT MIDSPAN

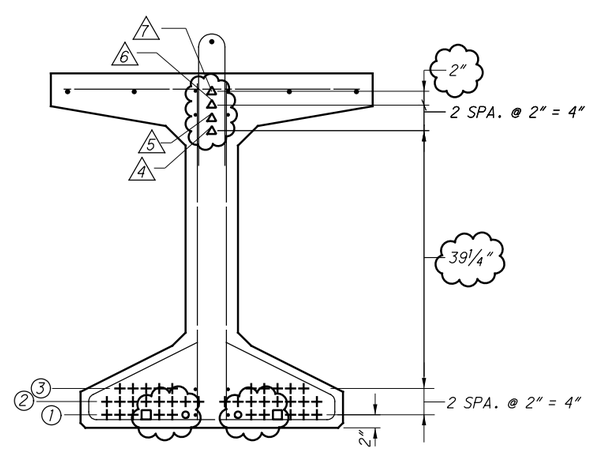

SECTION AT BEARING

LOCATION OF INTERMEDIATE DIAPHRAGM								
BEAM MARK	A	B	C	D	E	F	G	H
G11	NA	NA	NA	NA	30'-3½"	27'-6"	27'-6"	26'-4½"
G12-G14	26'-4½"	27'-6"	27'-6"	30'-3½"	30'-3½"	27'-6"	27'-6"	26'-4½"
G15	26'-4½"	27'-6"	27'-6"	30'-3½"	30'-1⅜"	27'-6"	27'-6"	26'-6⅝"
G16-G17	26'-6⅝"	27'-6"	27'-6"	30'-1⅜"	30'-1⅜"	27'-6"	27'-6"	26'-6⅝"
G18	26'-6⅝"	27'-6"	27'-6"	30'-1⅜"	NA	NA	NA	NA

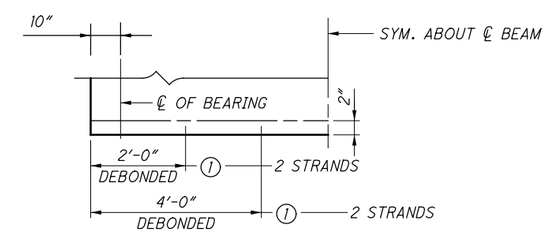

SCHEMATIC DETAIL FOR DEBOND STRANDS

NOTES:

1. FOR BEAM REINFORCING SCHEDULE AND BAR BENDING DIAGRAMS SEE SHEET 32
2. FOR MISCELLANEOUS BEAM DETAILS SEE SHEET 31 TO SHEET 32
3. FOR INTERMEDIATE DIAPHRAGM CONNECTION BOLT HOLE LOCATIONS IN BEAM SEE SHEET 32

LEGEND

- + STRAIGHT STRAND
- ○ DEBONDED STRAND (4'-0")
- □ DEBONDED STRAND (2'-0")
- △ DRAPED STRAND

SHEAR REINFORCEMENT SPACING TABLE	
LOCATION	SPACING
I	13 - 401, 402, D31-1 & D20-2 @ 2½" C/C = 2'-6"
J	17 - 401, 402, D20-1 & D20-2 @ 6" C/C = 8'-0"
K	11 - 401, 402, D20-1 & D20-2 @ 12" C/C = 10'-0"
L	5 - 401, 402 & D20-1 @ 18" C/C = 6'-0"
M	26 - 401, 402 & D20-1 @ 24" C/C = 48'-5"
N	68 - D20-2 @ 12" C/C = 67'-5"

NUMBER OF STRANDS PER ROW									CONCRETE STRENGTHS		PRESTRESSING STRAND STRENGTHS (LOW RELAXATION STRAND)		
BEAM MARK	STRAND GROUP ①	②	③	△④	△⑤	△⑥	△⑦	TOTAL STRANDS	f'ci	f'c	AREA	ULTIMATE	INITIAL
G11-G18	14	16	10	1	1	1	1	44	6 KSI	8 KSI	0.217 SQ. IN.	270 KSI	202.5 KSI

△ = DRAPED STRAND

DESIGN-BUILDER

DESIGNER URS

REVIEWED	DATE
MSG	06/2014
STRUCTURE FILE NUMBER	
5705533/5705509	

DRAWN	DESIGNED	CHECKED
AJK	KAB	CC
REVISED		

ISSUE NO.	ISSUE DATE
1	06/05/14
2	07/31/14
RD	10/25/18

GIRDER ELEVATION & DETAILS (RIGHT BRIDGE)

BRIDGE NO. MOT-70-1130 L&R OVER S.R. 48

MOT-70-10.79

PID No. 76667

076667_BU02-SR48 Bridge_AsBuilt
G:\GrandRapids\DCS\Projects\12944308\structures\MOT070_1130 SR48\sheets\070_1130LSD004.dgn 4/5/2019 11:01:18 AM niles j

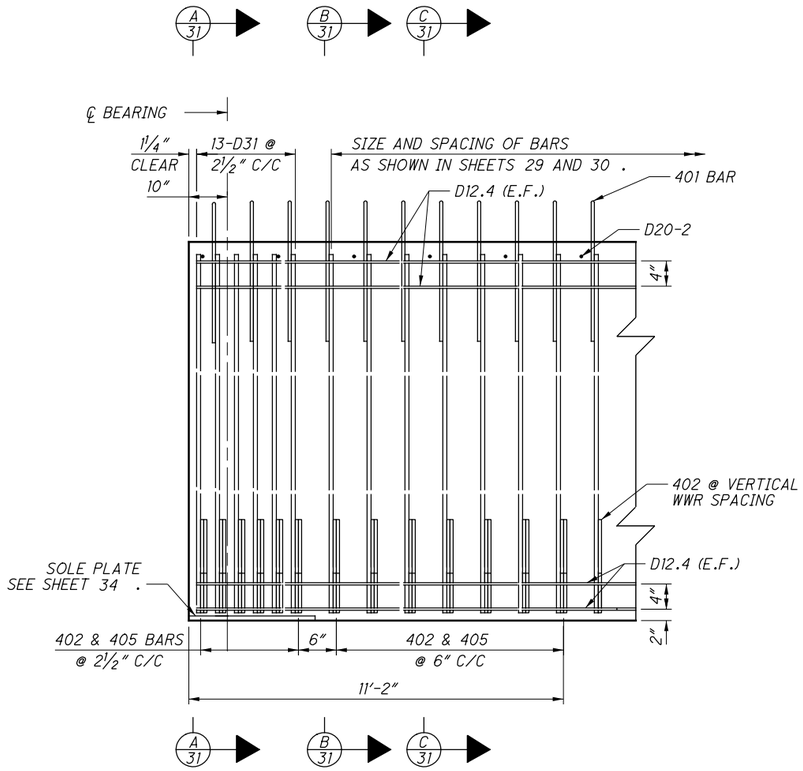

ANCHORAGE ZONE REINFORCING STEEL

STRANDS NOT SHOWN FOR CLARITY

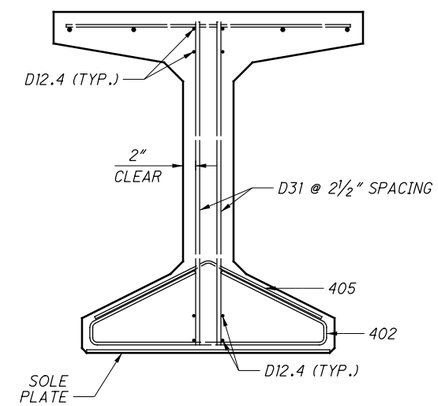

A/31 SECTION

STRANDS & 401 BARS NOT SHOWN FOR CLARITY

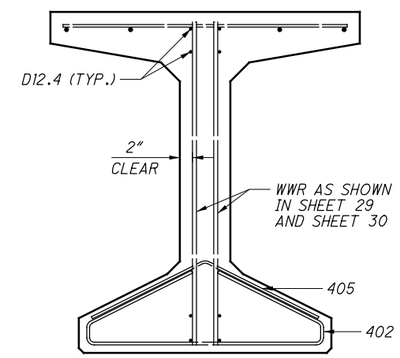

B/31 SECTION

STRANDS & 401 BARS NOT SHOWN FOR CLARITY

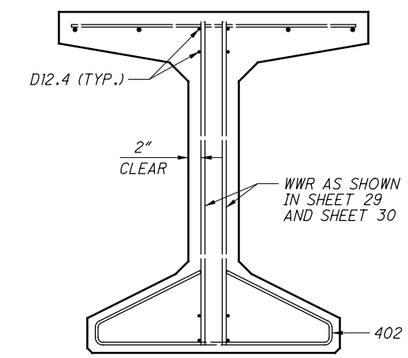

C/31 SECTION

STRANDS & 401 BARS NOT SHOWN FOR CLARITY

NOTES:

1. 401 BAR SHALL BE EPOXY COATED.
2. TROWEL EXTERIOR 9″ OF TOP FLANGE SMOOTH. APPLY 30 POUND BONDED ROOFING FELT IN THE FIELD ONLY OVER EXTERIOR 9 INCHES. FOR ADDITIONAL INFORMATION, SEE STANDARD DRAWING PSID-1-13.
3. THE FASCIA BEAMS SHALL BE PAINTED FEDERAL COLOR FS 10324 - DARK NEUTRAL TO THE LIMITS SHOWN ON THE PLANS

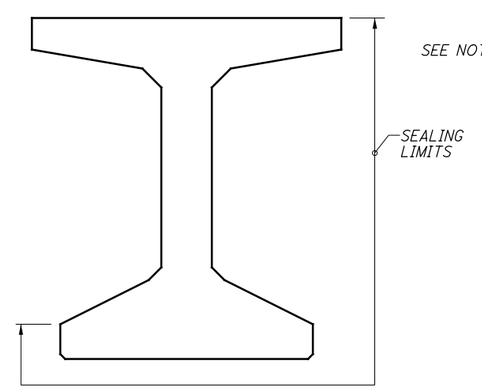

SEALING OF FASCIA BEAMS

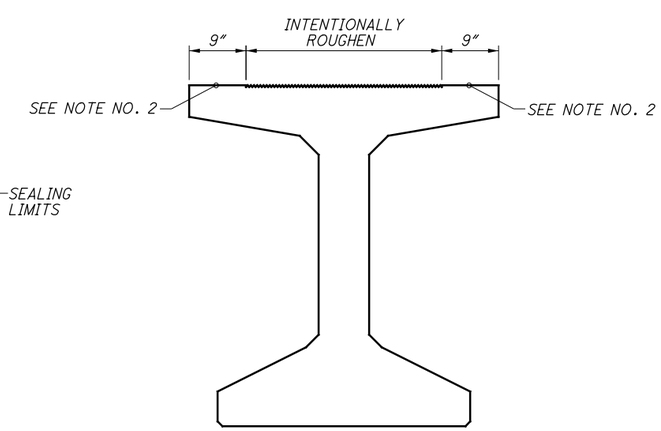

TOP FLANGE FINISHING

DESIGN-BUILDER

DESIGNER URS

DATE	REVIEWED	DRAWN	DESIGNED	ISSUE DATE	ISSUE NO.
06/2014	MSG	AJK	KAB	06/05/14	1
STRUCTURE FILE NUMBER 5705533/5705509		REVISED	CHECKED CC	10/25/18	RD

MISCELLANEOUS BEAM DETAILS (1 OF 2)

BRIDGE NO. MOT-70-1130 L&R OVER S.R. 48

MOT-70-10.79

PID No. 76667

076667_BU02-SR48 Bridge_AsBuilt
G:\GrandRapids\DCS\Projects\12944308\structures\MOT070_1130 SR48\sheets\070_1130LSD005.dgn 4/5/2019 11:01:20 AM niles j

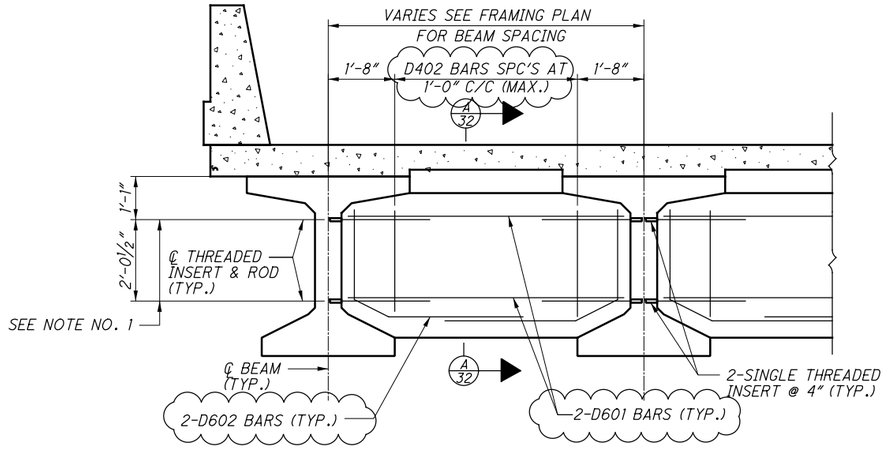

CONCRETE INTERMEDIATE DIAPHRAGM

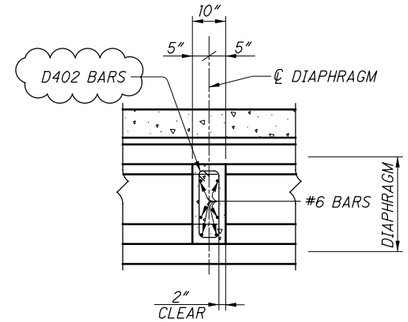

A/32 SECTION

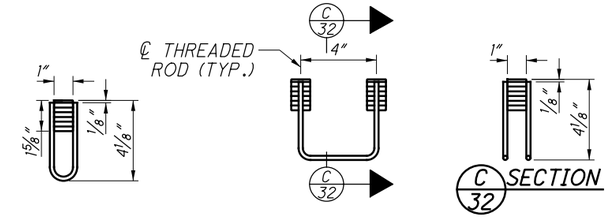

SINGLE THREADED INSERT

(3,000 POUND PROOF LOAD)

DOUBLE THREADED INSERT

(6,000 POUND PROOF LOAD)

NOTE - THE GIRDER FABRICATOR MAY USE DOUBLE THREADED INSERTS IN LIEU OF TWO SINGLE INSERTS SPACED AT 4" ON CENTER AT THE CONCRETE INTERMEDIATE DIAPHRAGM LOCATIONS.

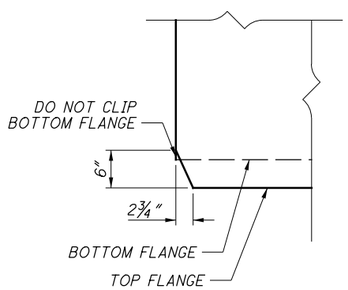

CLIPPED TOP FLANGE DETAIL

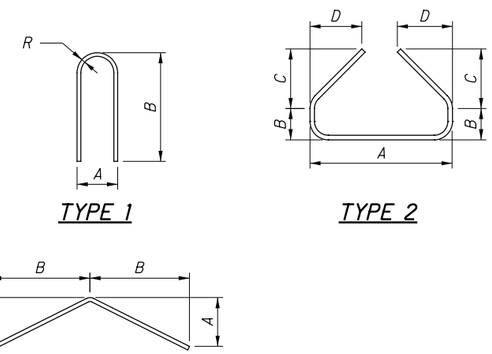

TYPE 1

TYPE 2

TYPE 5

BENDING DIAGRAMS

(ALL DIMENSIONS ARE OUT-TO-OUT)

MARK	TYPE	DIMENSIONS				
		A	B	C	D	R
402	2	3'-1½"	3½"	7½"	1'-3"	
405	5	9"	1'-6"			
401	1	4"	1'-8"			

NOTES:

1. ¾" DIA. x 2'-2" THREADED ROD SHALL CONFORM TO 709.01 709.3, OR 709.05 WITH THREADS FORMED PRIOR TO GALVANIZING.
2. LOCATE BOLT HOLES IN THE I-BEAM WEBS TO AVOID PRESTRESS PRESTRESSING STRANDS. THE MINIMUM CLEAR DISTANCE SHALL BE 1½".
3. ALL VERTICAL BARS SHALL BE PLACED PARALLEL TO BEAMS.

CONCRETE DIAPHRAGM BARS

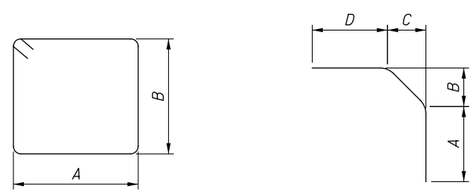

TYPE-3

TYPE-13

BEAM SPACING	MARK	TYPE	DIMENSIONS				
			A	B	C	D	E
ALL	D402	3	7"	2'-11"			
7'-7"	D601	STR	6'-7"				
8'-4"			7'-4"				
8'-6"			7'-6"				
8'-9"			7'-9"				
7'-7"	D602	13	2'-4"	8"	1'-2"	3'-11"	
8'-4"			2'-4"	8"	1'-2"	4'-4"	
8'-6"			2'-4"	8"	1'-2"	4'-5"	
8'-9"			2'-4"	8"	1'-2"	4'-6"	

DESIGN-BUILDER

DESIGNER URS

DATE	REVIEWED	STRUCTURE FILE NUMBER
06/2014	MSG	5705533/5705509

DRAWN	REVISED
AJK	

DESIGNED	CHECKED
KAB	CC

ISSUE NO.	ISSUE DATE
2	07/10/14
3	10/21/14
RD	02/20/19

MISCELLANEOUS BEAM DETAILS (2 OF 2)

BRIDGE NO. MOT-70-1130 L&R
OVER S.R. 48

MOT-70-10.79
PID No. 76667

076667_BU02-SR48 Bridge_AsBuilt
G:\GrandRapids\DCS\Projects\12944308\structures\MOT070_1130_SR48\sheets\070_1130LSD006.dgn 4/5/2019 11:01:21 AM niles j

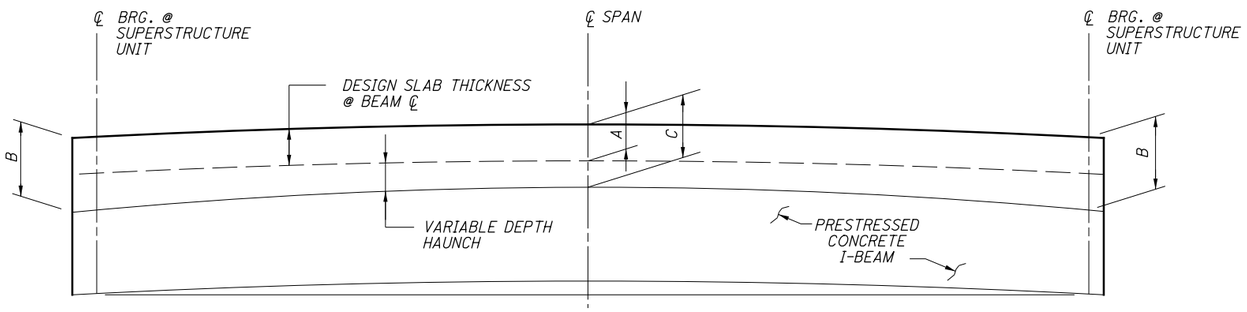

SLAB THICKNESS DIAGRAM

NOTE:

DECK SLAB THICKNESS FOR CONCRETE QUANTITY. THE TOPPING THICKNESSES SHOWN FROM THE TOP OF THE DECK SLAB TO THE TOP OF THE TOP FLANGE ALONG THE CENTERLINE OF THE I-BEAM ARE THEORETICAL DIMENSIONS. THE HAUNCH DEPTH IS THE TOPPING THICKNESS MINUS THE DESIGN SLAB THICKNESS. ONCE ALL BEAMS ARE SET IN THEIR FINAL POSITION, THE ACTUAL CAMBER FOR EACH MEMBER WILL BE THE TOP OF BEAM ELEVATION AT MID-SPAN MINUS THE AVERAGE TOP OF BEAM ELEVATION AT EACH BEARING. THE ACTUAL TOPPING THICKNESS AT MID-SPAN WILL BE THE THEORETICAL DIMENSION PLUS OR MINUS THE DIFFERENCE BETWEEN THE ACTUAL AND ANTICIPATED CAMBER.

CAMBER (INCHES) - EXTERIOR BEAMS

BRIDGE	BEAM NUMBER	DECK THICKNESS	DECK THICKNESS @ CL BRG.	DECK THICKNESS @ MIDSPAN	CALCULATED CAMBER AT TIME OF RELEASE	CALCULATED CAMBER AT TIME OF ERECTION	CALCULATED LONG-TERM CAMBER
		A	B	C			
LEFT	G1	8.5	13.529	10.5	2.613	4.607	6.498
	G10	8.5	13.550	10.5	2.613	4.607	6.498
RIGHT	G11	8.5	13.479	10.5	2.615	4.611	6.503
	G18	8.5	13.520	10.5	2.615	4.611	6.503

CAMBER (INCHES) - INTERIOR BEAMS

BRIDGE	BEAM NUMBER	DECK THICKNESS	DECK THICKNESS @ CL BRG.	DECK THICKNESS @ MIDSPAN	CALCULATED CAMBER AT TIME OF RELEASE	CALCULATED CAMBER AT TIME OF ERECTION	CALCULATED LONG-TERM CAMBER
		A	B	C			
LEFT	G2 - G5	8.5	13.295	10.5	2.613	4.607	6.498
	G6	8.5	13.317	10.5	2.613	4.607	6.498
	G7 - G9	8.5	13.339	10.5	2.613	4.607	6.498
RIGHT	G12 - G14	8.5	13.363	10.5	2.615	4.611	6.503
	G15	8.5	13.405	10.5	2.615	4.611	6.503
	G16 & G17	8.5	13.449	10.5	2.615	4.611	6.503

DESIGN-BUILDER

DESIGNER URS

REVIEWED	DATE
MSG	06/2014
STRUCTURE FILE NUMBER	
5705533/5705509	

DRAWN	DESIGNED
AJK	KAB
REVISED	CHECKED
	CC

ISSUE NO.	ISSUE DATE
1	06/05/14
RD	10/25/18

CAMBER AND LONGITUDINAL DECK SECTION

BRIDGE NO. MOT-7--1130 L&R
OVER S.R. 48

MOT-70-10.79
PID No. 76667

076667_BU02-SR48 Bridge_AsBuilt
G:\GrandRapids\DGS\Projects\12944308\structures\MOT070_1130_SR48\sheets\070_1130LSD007.dgn 4/5/2019 11:01:23 AM niles j

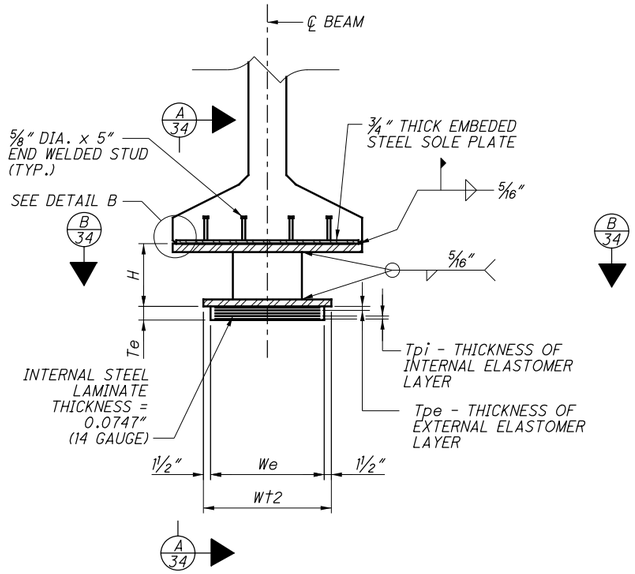

LAMINATED ELASTOMERIC EXPANSION BEARING AT ABUTMENTS

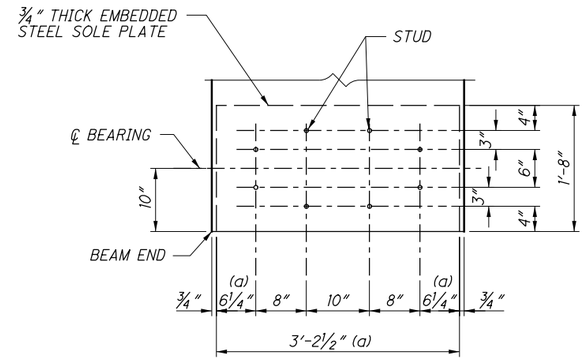

B 34 SECTION
(BEARING AND LOAD PLATE NOT SHOWN)

NOTE:

(a) - IN ORDER TO ALLOW FOR FIT-UP, THE PLATE WIDTH MAY BE DECREASED BY 3/8". DIMENSION SHALL BE CORRECTED ACCORDINGLY.

NOTES:

1. ELASTOMERIC BEARINGS: THE ELASTOMER SHALL HAVE A HARDNESS OF 60 DUROMETER. THE BEARINGS WERE DESIGNED IN ACCORDANCE WITH SECTION 14.7.6 (METHOD A) OF THE AASHTO LRFD BRIDGE DESIGN SPECIFICATIONS. THE LONG TERM COMPRESSION PROOF LOAD TEST (AASHTO STANDARD SPECIFICATIONS FOR HIGHWAY BRIDGES, DIVISION II, SECTION 18.7.2.6) IS NOT REQUIRED.
2. CONTROL WELDING SO THAT THE PLATE TEMPERATURE AT THE ELASTOMER BONDED SURFACE DOES NOT EXCEED 300°F AS DETERMINED BY USE OF PYROMETRIC STICKS OR OTHER TEMPERATURE MONITORING DEVICES.
3. BEARING REPOSITIONING: IF THE CONCRETE BEAM IS ERECTED AT AN AMBIENT TEMPERATURE HIGHER THEN 80°F OR LOWER THAN 40°F AND THE BEARING SHEAR DEFLECTION EXCEEDS 1/8 OF THE BEARING HEIGHT AT 60°F (+/- 10°F. RAISE THE BEAMS OR GIRDERS TO ALLOW THE BEARINGS TO RETURN TO THEIR UNDEFORMED SHAPE AT 60°F (+/-) 10°F.
4. THE STEEL LOAD PLATE, EMBEDED STEEL SOLE PLATE AND THE HP 14X73 SHALL BE ASTM A572/A709 GRADE 50 STEEL, GALVANIZED ACCORDING TO 711.02.
5. THE STEEL LOAD PLATE SHALL BE BONDED BY VULCANIZATION TO THE ELASTOMER DURING THE MOLDING PROCESS.
6. ALL BEARINGS SHALL BE MARKED PRIOR TO SHIPPING. THE MARKS SHALL INCLUDE THE BEARING LOCATION ON THE BRIDGE, AND A DIRECTION ARROW THAT POINTS UP-STATION. ALL MARKS SHALL BE PERMANENT AND BE VISIBLE AFTER THE BEARING IS INSTALLED.
7. TOTAL DESIGN LOAD FOR BEARINGS EQUALS THE SUM OF THE SERVICE DEAD LOADS AND SERVICE LIVE LOADS WITHOUT IMPACT TABULATED IN THE BEARING TABLE.
8. A PAIR OF INSERTS WILL BE INSTALLED IN THE EDGE OF THE TOP FLANGES ON THE INSIDE OF THE SKEWS NEAR BOTH ENDS OF ALL BEAMS FOR THE BEAM TEMPORARY SUPPORTS AT THE ABUTMENTS. A PAIR OF THROUGH TUBES IN EACH WEB NEAR CENTER OF SPAN FOR 3/4" BOLTS WILL BE INSTALLED TO MOUNT TEMPORARY CROSS FRAMES. THE BEAM TEMPORARY SUPPORT DETAILS WILL BE PROVIDED WITH THE SHOP DRAWINGS.

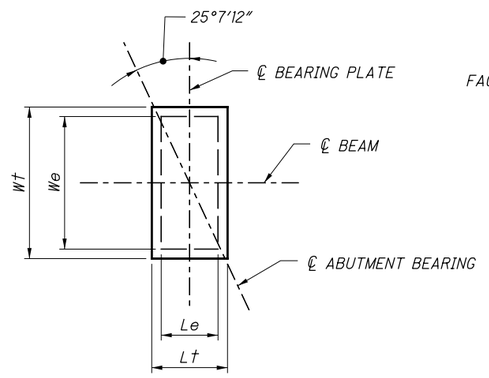

BEARING PLAN

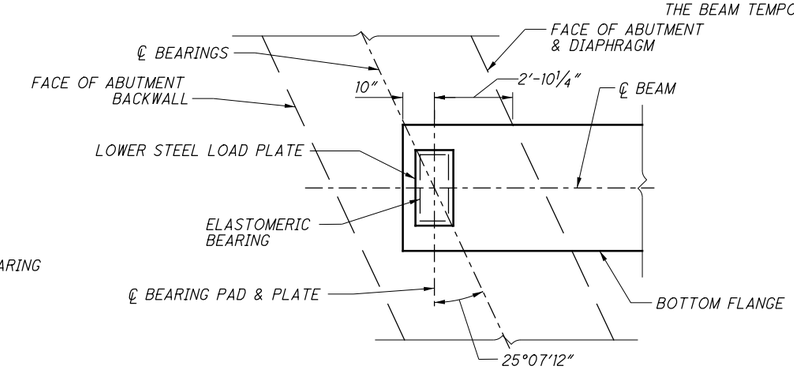

BEARING ORIENTATION PLAN ABUTMENT

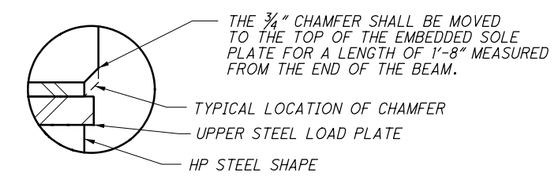

DETAIL B

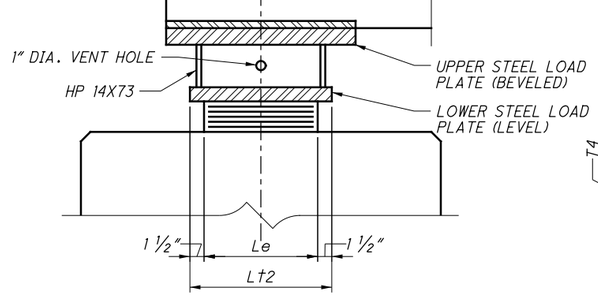

A 34 BEARING SECTION

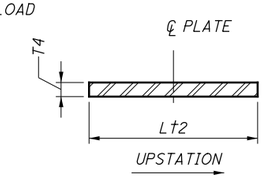

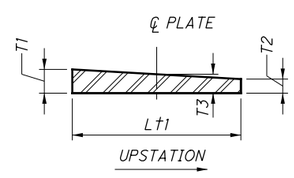

LEFT BRIDGE BEARING ASSEMBLY HEIGHT "H" REAR & FORWARD ABUTMENTS									
G1	G2	G3	G4	G5	G6	G7	G8	G9	G10
1"-9 3/4"	1'-10 3/16"	1'-10 3/8"	1'-10 5/8"	1'-10 13/16"	1'-10 7/8"	1'-7 13/16"	1'-4 11/16"	1'-1 5/8"	0'-10 3/8"

RIGHT BRIDGE BEARING ASSEMBLY HEIGHT "H" REAR & FORWARD ABUTMENTS							
G11	G12	G13	G14	G15	G16	G17	G18
1'-6"	1'-6 5/16"	1'-6 1/2"	1'-6 11/16"	1'-6 5/8"	1'-3 7/8"	1'-1 1/8"	0'-10 5/16"

BEARING LOCATION	BEARING TYPE	NO. REQ'D	DEAD LOAD KIPS	LIVE LOAD KIPS	TOTAL LOAD (DL+LL) KIPS	Le (IN.)	We (IN.)	Tpi (IN.)	NO. OF Tpi'S	Tpe (TOP)	Tpe (BOTT.)	NUMBER OF INTERNAL LAMINATES (14 GAGE)	Te (IN.)	UPPER STEEL LOAD PLATE (IN.)					LOWER STEEL LOAD PLATE (IN.)		
														Wt1	Lt1	T1	T2	T3	Wt2	Lt2	T4
RIGHT BRIDGE REAR ABUTMENT	EXP.	8	183.6	91.3	274.9	12.00	24.00	0.50	4	0.25	0.25	5	2.873	40	20	2 1/16	1 7/16	1 3/4	27	15	1 1/2
RIGHT BRIDGE FORWARD ABUTMENT	EXP.	8	183.6	91.3	274.9	12.00	24.00	0.50	4	0.25	0.25	5	2.873	40	20	2 1/16	1 7/16	1 3/4	27	15	1 1/2
LEFT BRIDGE REAR ABUTMENT	EXP.	10	188.2	94.5	282.7	12.00	24.00	0.50	4	0.25	0.25	5	2.873	40	20	2 1/16	1 7/16	1 3/4	27	15	1 1/2
LEFT BRIDGE FORWARD ABUTMENT	EXP.	10	188.2	94.5	282.7	12.00	24.00	0.50	4	0.25	0.25	5	2.873	40	20	2 1/16	1 7/16	1 3/4	27	15	1 1/2

LOWER STEEL LOAD PLATE

UPPER STEEL LOAD PLATE

DESIGN-BUILDER

DESIGNER URS

DATE	REVIEWED	DRAWN	DESIGNED	ISSUE NO.	ISSUE DATE
06/2014	MSG	AJK	KAB	1	06/05/14
STRUCTURE FILE NUMBER 5705533/5705509		REVISED	CHECKED CC	RD	10/25/18

BEARING DETAILS

BRIDGE NO. MOT-70-1130 L&R OVER S.R. 48

MOT-70-10.79

PID No. 76667

076667_BU02-SR48 Bridge_AsBuilt
G:\GrandRapids\DCS\Projects\12944308\structures\MOT070_1130 SR48\sheets\070_1130LBR001.dgn 4/5/2019 11:01:24 AM niles j

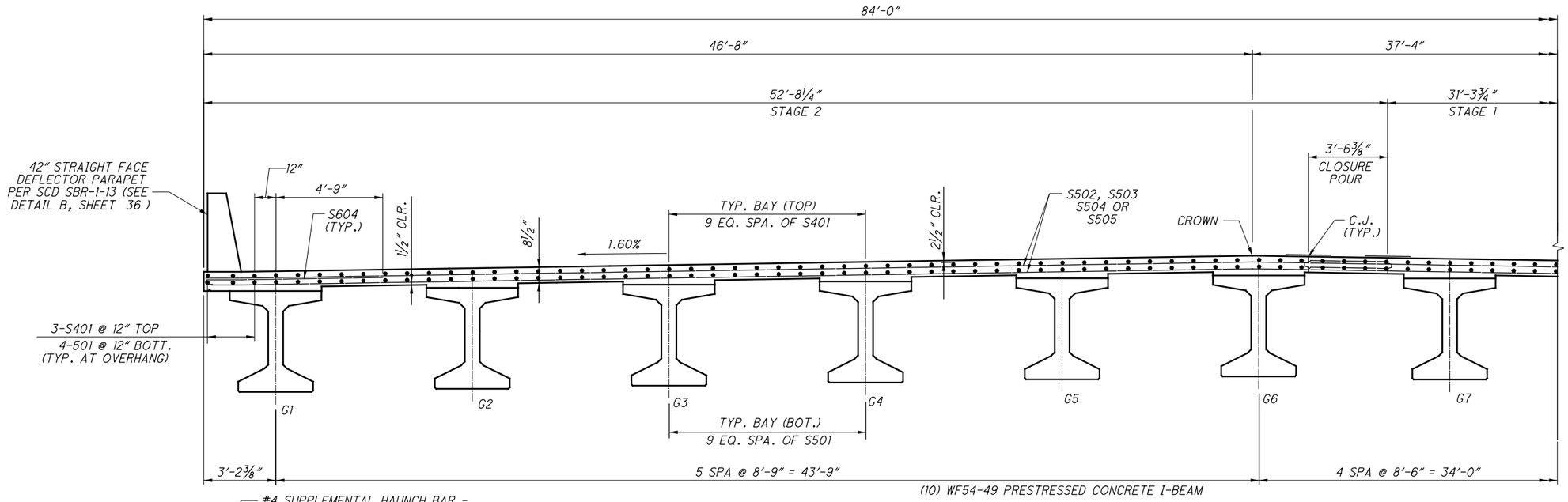

TRANSVERSE SECTION

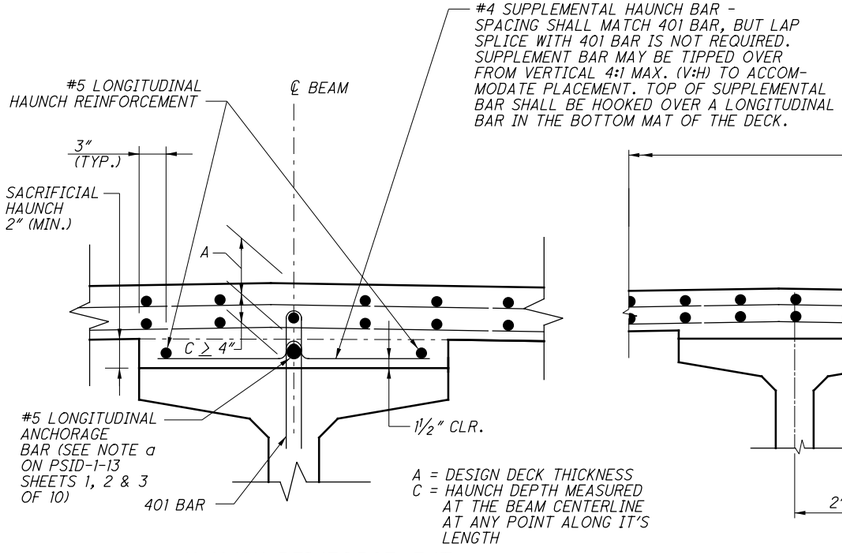

HAUNCH REINFORCEMENT

NOTE - THE SUPPLEMENTAL HAUNCH BAR IS NOT REQUIRED WHERE C < 4"

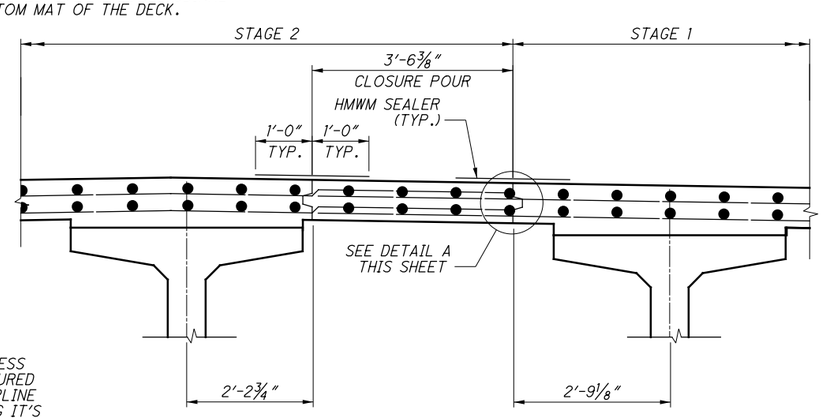

STAGE CONSTRUCTION JOINT DETAIL

NOTE: ADJUST LONGITUDINAL REINFORCEMENT TO CLEAR STAGE CONSTRUCTION JOINT

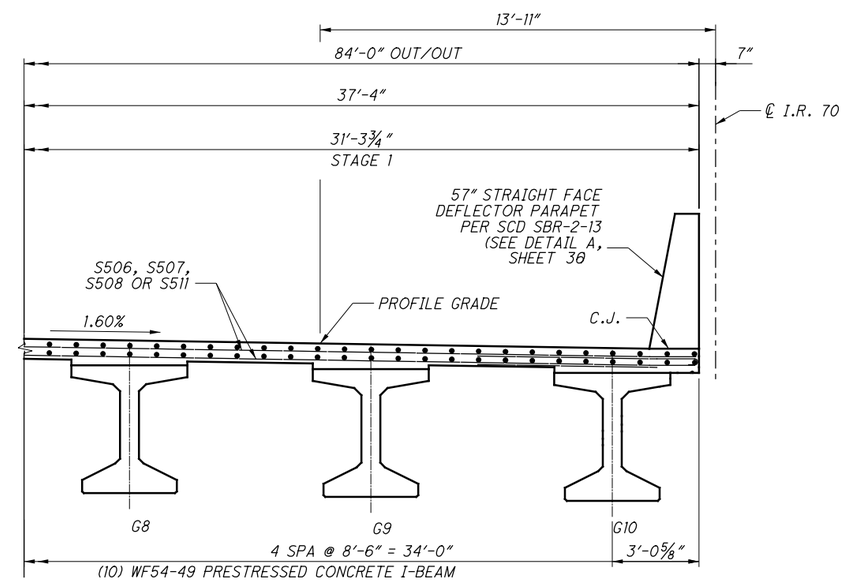

TRANSVERSE SECTION

MIN. LAP SPLICE:

#4 BARS - 2'-0"
#5 BARS - 3'-2"
#6 BARS - 4'-4"

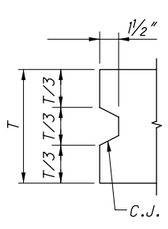

DETAIL A

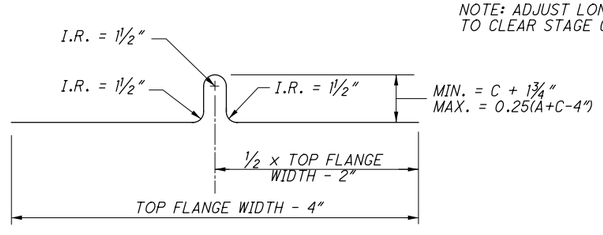

#4 SUPPLEMENT HAUNCH BAR

NOTES:

1. SLAB THICKNESS DIAGRAM PROVIDED ON SHEET 33.
2. CONCRETE INTERMEDIATE DIAPHRAGM SHALL NOT BE CASTED IN THE CLOSURE POUR LOCATION UNTILTHE CONCRETE ON BOTH SIDES OF THE CLOSURE POUR LOCATION HAVE BEEN COMPLETED. CONCRETE INTERMEDIATE DIAPHRAGM SHALL BE CASTED PRIOR TO THE PLACEMENT OF CLOSURE POUR CONCRETE.
3. SEE PDF PAGES 53-80 FOR CONTRUCTION RELATED BRIDGE REPAIRS.

DESIGN-BUILDER

DESIGNER URS

REVIEWED	DATE
MSG	04/2014
STRUCTURE FILE NUMBER	
5705533/5705509	

DRAWN	REVISED
AJK	

DESIGNED	CHECKED
KAB	CC

ISSUE NO.	ISSUE DATE
1	07/10/14
RD	10/25/18

TRANSVERSE SECTION - LEFT BRIDGE

BRIDGE NO. MOT-70-1130 L&R OVER S.R. 48

MOT-70-10.79

PID No. 76667

076667_BU02-SR48 Bridge_AsBuilt
G:\GrandRapids\DCS\Projects\12944308\structures\MOT070_1130_SR48\sheets\070_1130LTS001.dgn 4/5/2019 11:01:26 AM nilesj

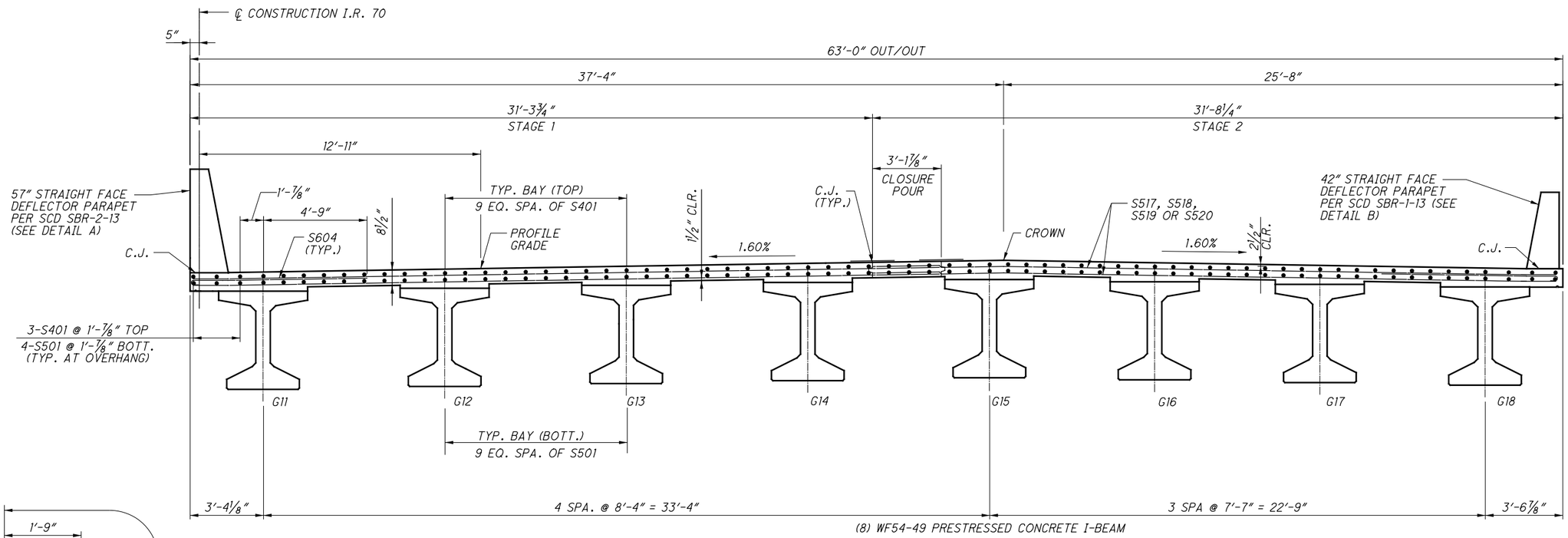

TRANSVERSE SECTION

MIN. LAP SPLICE:

#4 BARS - 2'-0"
#5 BARS - 3'-2"

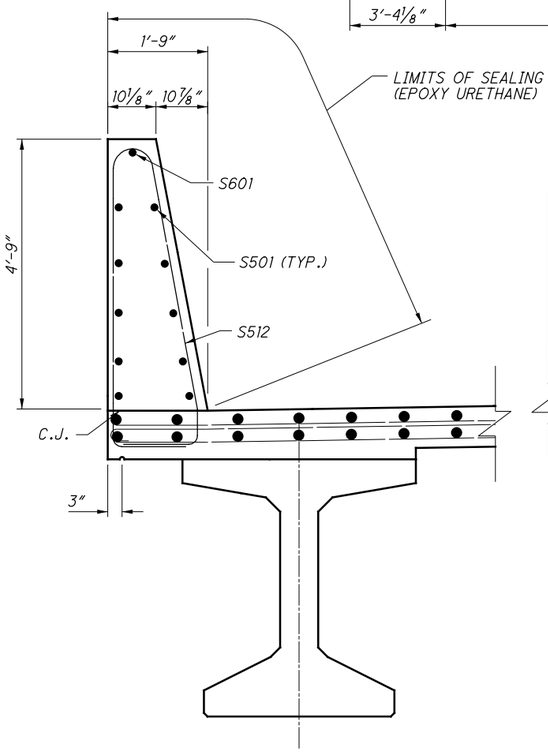

DETAIL A: MEDIAN PARAPET DETAILS

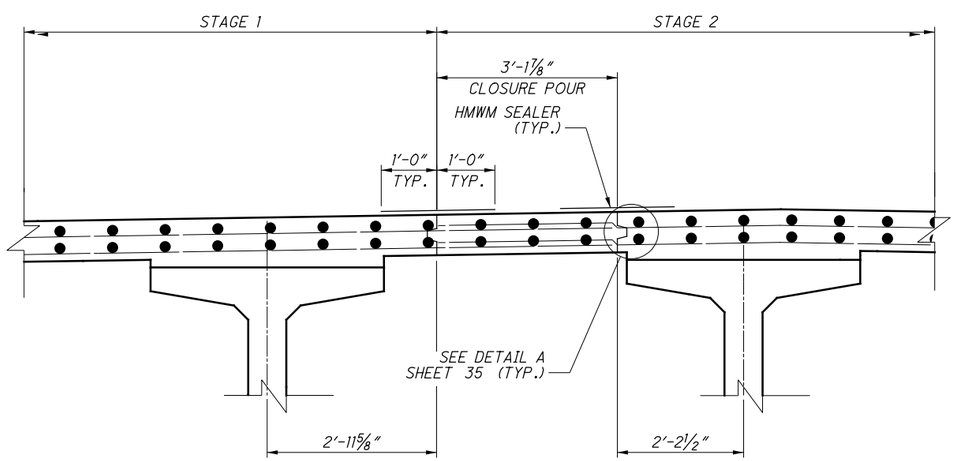

STAGE CONSTRUCTION JOINT DETAIL

NOTE: ADJUST LONGITUDINAL REINFORCEMENT TO CLEAR STAGE CONSTRUCTION JOINT

NOTES:

1. THE TOP COAT COLOR FOR THE EPOXY-URETHANE SEALER SHALL MEET THE FEDERAL COLOR NUMBER FS17778-LIGHT NEUTRAL.
2. SLAB THICKNESS DIAGRAM PROVIDED ON SHEET 33 .
3. REFER TO NOTES ON SHEET 35
4. FOR LETTERING ON EXTERIOR PARAPET DETAIL AND NOTE, SEE SHEET 50
5. SEE PDF PAGES 53-80 FOR CONSTRUCTION RELATED BRIDGE REPAIRS

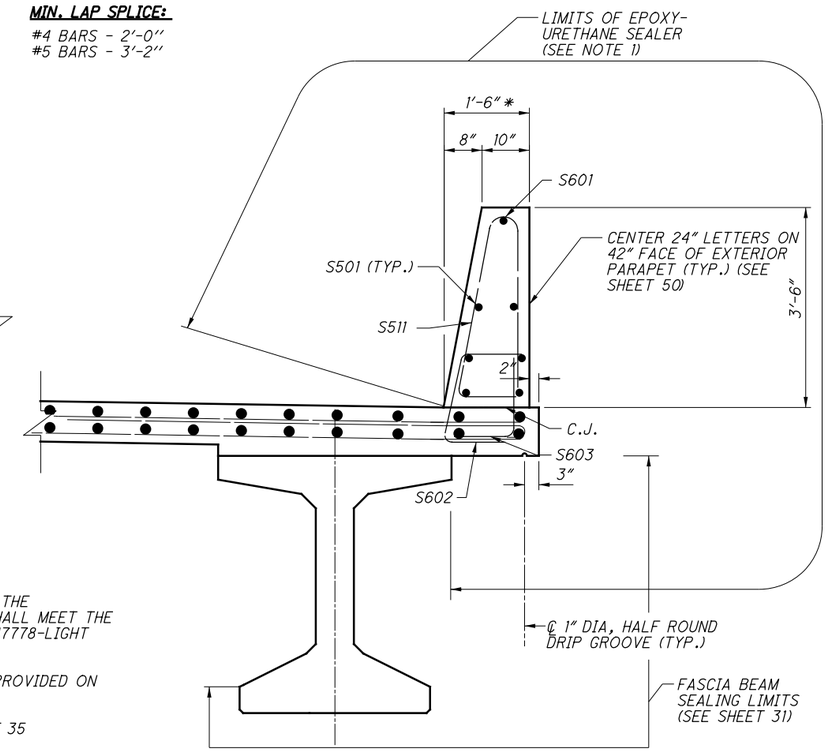

DETAIL B: EXTERIOR PARAPET DETAILS

* WIDEN PARAPET TO 1'-8" THRU AESTHETIC LETTERING SECTION (SEE SHEET 50)

DESIGN-BUILDER

DESIGNER URS

REVIEWED	DATE
MSG	04/2014
STRUCTURE FILE NUMBER	
57055533/57055509	

DRAWN	REVISED
AJK	

DESIGNED	CHECKED
KAB	CC

ISSUE NO.	ISSUE DATE
1	07/10/14
RD	10/25/18

TRANSVERSE SECTION - RIGHT BRIDGE

BRIDGE NO. MOT-70-1130 L&R OVER S.R. 48

MOT-70-10.79

PID No. 76667

076667_BU02-SR48 Bridge_AsBuilt
G:\GrandRapids\DCS\Projects\1294430B\structures\MOT070_1130_SR48\sheets\070_1130LTS002.dgn 4/5/2019 11:01:28 AM niles j

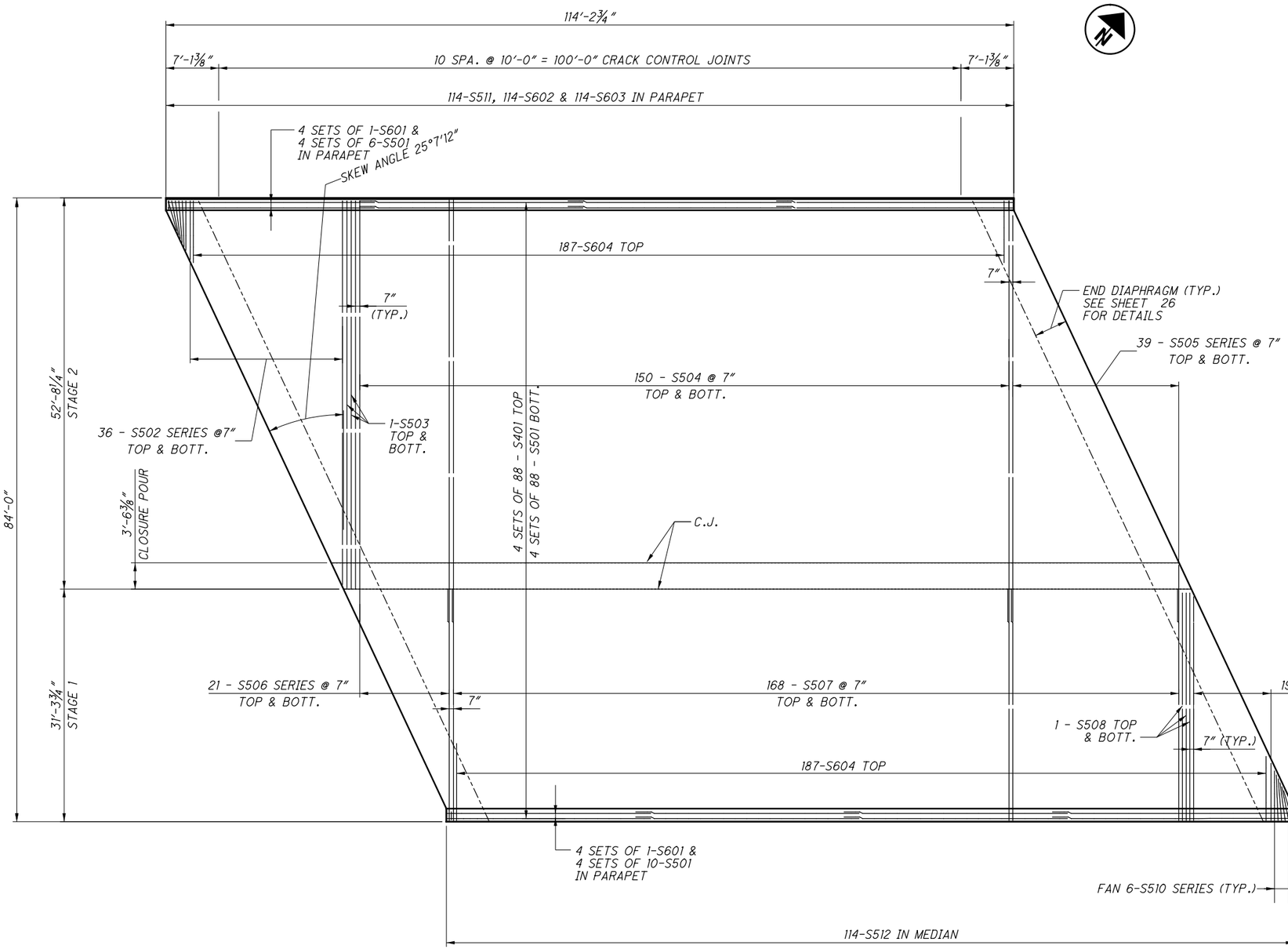

DECK PLAN - LEFT BRIDGE

MINIMUM LAP LENGTH:

#4 BARS - 2'-0"
#5 BARS - 3'-2"
#6 BARS - 4'-4"

NOTES:

1. THE TRANSVERSE SECTION AND ADDITIONAL NOTES, SEE SHEET 35
2. SEAL ALL DECK CONSTRUCTION JOINTS WITH A 2'-0" WIDE STRIP OF HIGH MOLECULAR WEIGHT METHACRYLATE (H.M.W.M.) RESIN PER CMS 511.19.
3. THE PLACEMENT OF DECK CONCRETE SHALL NOT PROCEED UNTIL ALL INTERMEDIATE DIAPHRAGMS WITHIN CONSTRUCTION PHASE HAVE BEEN PROPERLY INSTALLED.
4. INTERMEDIATE CONCRETE DIAPHRAGM AT CLOSURE POUR SHALL BE PLACED AFTER STAGE 1 AND 2 CONSTRUCTION, BUT BEFORE THE CLOSURE POUR.
5. SEE PDF PAGES 53-80 FOR CONTRUCTION RELATED BRIDGE REPAIRS.

DESIGN-BUILDER

DESIGNER URS

REVIEWED	DATE
MSG	04/2014
STRUCTURE FILE NUMBER	
5705533/5705509	

DRAWN	REVISED
AJK	

DESIGNED	CHECKED
KAB	CC

ISSUE NO.	ISSUE DATE
1	07/10/14
RD	10/25/18

DECK REINFORCING PLAN - LEFT BRIDGE
BRIDGE NO. MOT-70-1130 L&R
OVER S.R. 48

MOT-70-10.79
PID No. 76667

076667_BU02-SR48 Bridge_AsBuilt
G:\GrandRapids\DCS\Projects\12944308\structures\MOT070_1130_SR48\sheets\070_1130LDP001.dgn 4/5/2019 11:01:30 AM niles j

NOTES:

1. THE TRANSVERSE SECTION AND ADDITIONAL NOTES, SEE SHEET 36.
2. FOR ADDITIONAL INFORMATION OF DEFLECTION JOINT DETAILS, SEE STANDARD DRAWING SBR-1-13 AND SBR-2-13.
3. SEE PDF PAGES 52-80 FOR CONSTRUCTION RELATED BRIDGE REPAIRS.

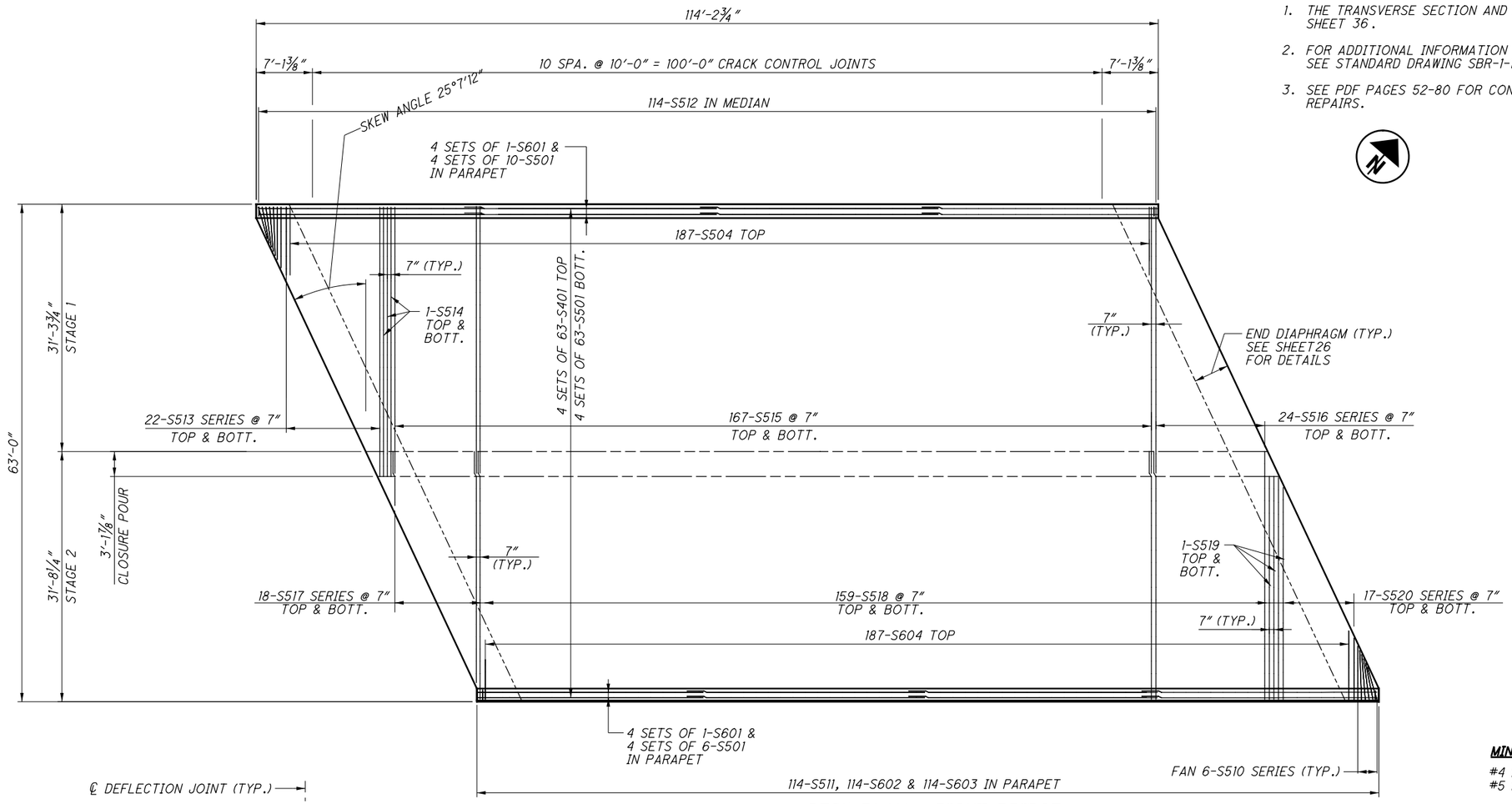

DECK PLAN - RIGHT BRIDGE

MINIMUM LAP LENGTH:

#4 BARS - 2'-0"
#5 BARS - 3'-2"

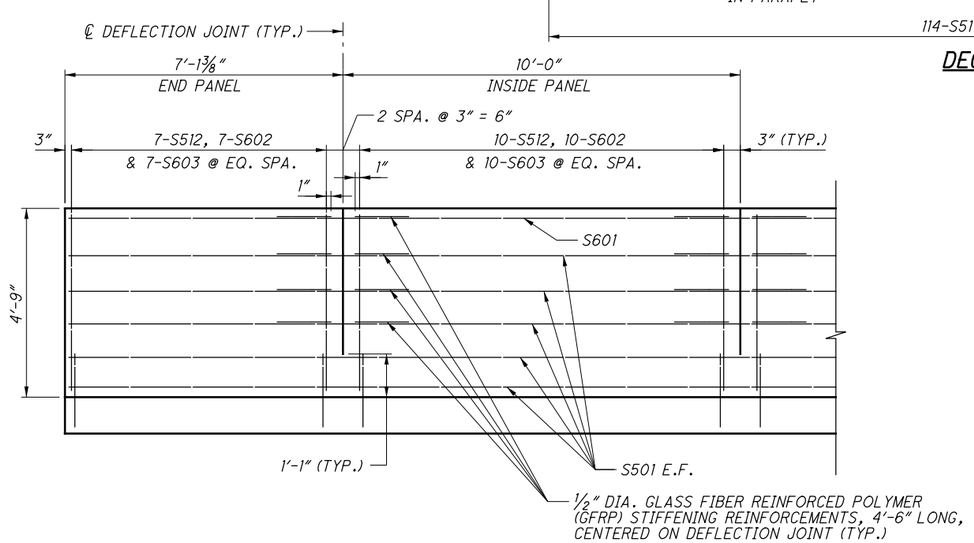

TYPICAL MEDIAN PARAPET DETAILS

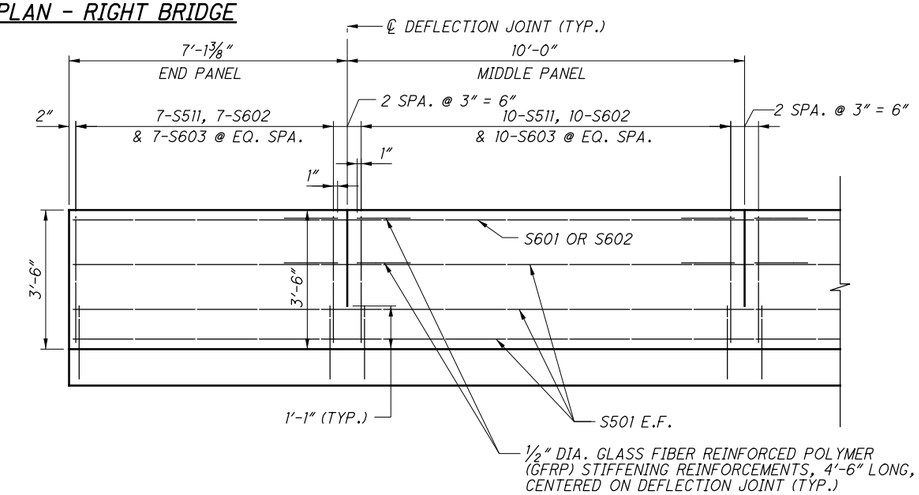

TYPICAL EXTERIOR PARAPET DETAILS

DESIGN-BUILDER

DESIGNER URS

DRAWN	REVIEWED	DATE
AJK	MSG	06/2014
DESIGNED	REVISED	STRUCTURE FILE NUMBER
KAB		5705533/5705509
CHECKED		
CC		

ISSUE NO.	ISSUE DATE
1	07/10/14
RD	10/25/18

DECK REINFORCING PLAN - RIGHT BRIDGE

BRIDGE NO. MOT-70-1130 L&R
OVER S.R. 48

MOT-70-10.79
PID No. 76667

076667_BU02-SR48 Bridge_AsBuilt
G:\GrandRapids\DCS\Projects\12944308\structures\MOT070_1130_SR48\sheets\070_1130LDP002.dgn 4/5/2019 11:01:33 AM niles j

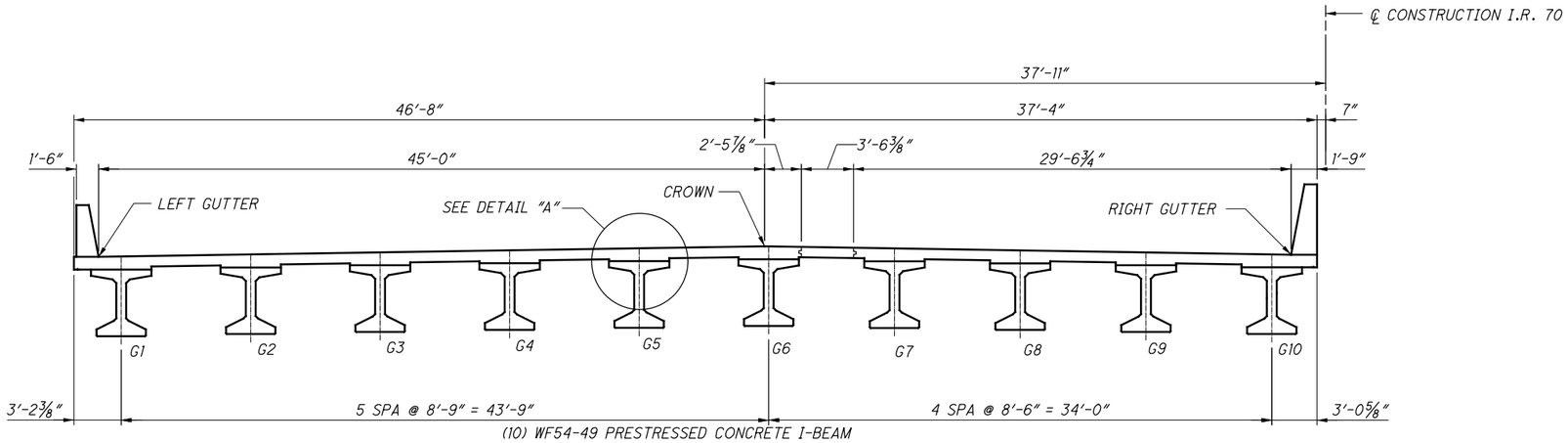

ELEVATION LOCATIONS TRANSVERSE SECTION

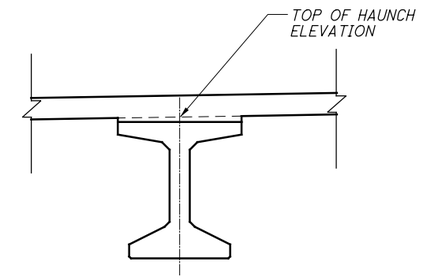

DETAIL A

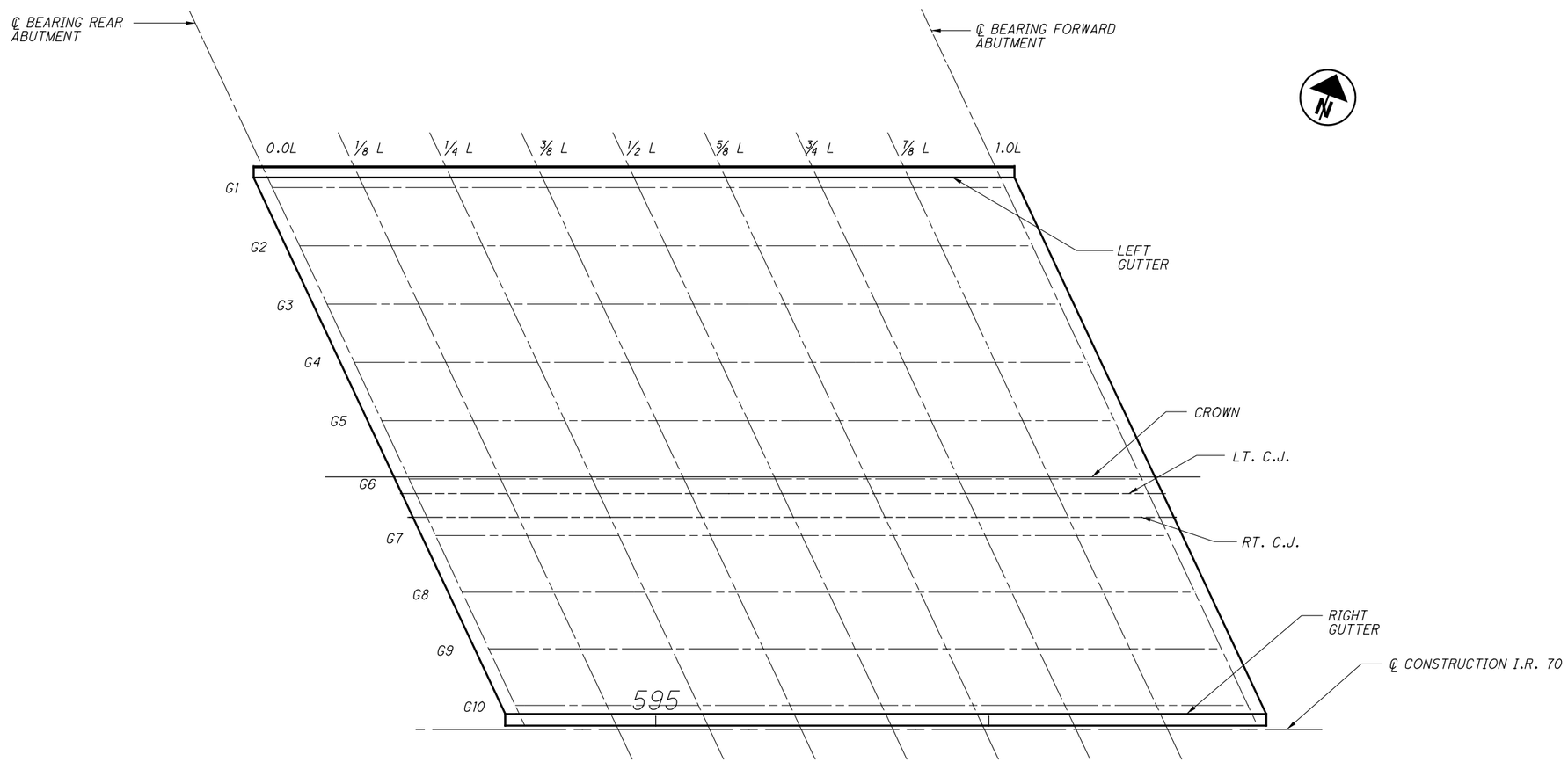

ELEVATION LOCATIONS PLAN

DESIGN-BUILDER

DESIGNER URS

REVIEWED	DATE
MSG	06/2014
STRUCTURE FILE NUMBER	
5705533/5705509	

DRAWN	REVISED
AJK	

DESIGNED	CHECKED
KAB	CC

ISSUE NO.	ISSUE DATE
1	07/10/14
RD	10/25/18

DECK ELEVATIONS - LEFT BRIDGE (1 OF 2)
BRIDGE NO. MOT-70-1130 L&R
OVER S.R. 48

MOT-70-10.79
PID No. 76667

076667_BU02-SR48 Bridge_AsBuilt
G:\GrandRapids\DCS\Projects\12944308\structures\MOT070_1130 SR48\sheets\070_1130LSD008.dgn 4/5/2019 11:01:34 AM niles j

FINAL DECK SURFACE ELEVATIONS																		
LOCATION	0.0 L		1/8 L		1/4 L		3/8 L		1/2 L		5/8 L		3/4 L		7/8 L		1.0 L	
	STATION	ELEVATION	STATION	ELEVATION	STATION	ELEVATION	STATION	ELEVATION	STATION	ELEVATION	STATION	ELEVATION	STATION	ELEVATION	STATION	ELEVATION	STATION	ELEVATION
LT. GUTTER	594+41.72	876.46	594+55.47	876.05	594+69.22	875.64	594+82.97	875.23	594+96.72	874.81	595+10.47	874.40	595+24.22	873.99	595+37.97	873.58	595+51.72	873.16
G1	594+42.44	876.47	594+56.19	876.05	594+69.94	875.64	594+83.69	875.23	594+97.44	874.82	595+11.19	874.40	595+24.94	873.99	595+38.69	873.58	595+52.44	873.17
G2	594+46.54	876.48	594+60.29	876.07	594+74.04	875.66	594+87.79	875.25	595+01.54	874.83	595+15.29	874.42	595+29.04	874.01	595+42.79	873.60	595+56.54	873.18
G3	594+50.65	876.50	594+64.40	876.09	594+78.15	875.68	594+91.90	875.26	595+05.65	874.85	595+19.40	874.44	595+33.15	874.03	595+46.90	873.61	595+60.65	873.20
G4	594+54.75	876.52	594+68.50	876.11	594+82.25	875.69	594+96.00	875.28	595+09.75	874.87	595+23.50	874.46	595+37.25	874.04	595+51.00	873.63	595+64.75	873.22
G5	594+58.85	876.53	594+72.60	876.12	594+86.35	875.71	595+00.10	875.30	595+13.85	874.88	595+27.60	874.47	595+41.35	874.06	595+55.10	873.65	595+68.85	873.23
CROWN	594+62.81	876.55	594+76.56	876.14	594+90.31	875.73	595+04.06	875.31	595+17.81	874.90	595+31.56	874.49	595+45.31	874.08	595+59.06	873.66	595+72.81	873.25
G6	594+62.95	876.54	594+76.70	876.13	594+90.45	875.72	595+04.20	875.30	595+17.95	874.89	595+31.70	874.48	595+45.45	874.07	595+59.20	873.65	595+72.95	873.24
LT. C.J.	594+63.91	876.48	594+77.66	876.07	594+91.41	875.66	595+05.16	875.24	595+18.91	874.83	595+32.66	874.42	595+46.41	874.01	595+60.16	873.59	595+73.91	873.18
RT. C.J.	594+65.64	876.37	594+79.39	875.96	594+93.14	875.55	595+06.89	875.13	595+20.64	874.72	595+34.39	874.31	595+48.14	873.89	595+61.89	873.48	595+75.64	873.07
G7	594+66.94	876.29	594+80.69	875.87	594+94.44	875.46	595+08.19	875.05	595+21.94	874.64	595+36.69	874.22	595+49.44	873.81	595+63.19	873.40	595+76.94	872.99
G8	594+70.92	876.03	594+84.67	875.62	594+98.42	875.21	595+12.17	874.79	595+25.92	874.38	595+39.67	873.97	595+53.42	873.56	595+67.17	873.14	595+80.92	872.73
G9	594+74.91	875.78	594+88.66	875.36	595+02.41	874.95	595+16.16	874.54	595+29.91	874.13	595+43.66	873.71	595+57.41	873.30	595+71.16	872.89	595+84.91	872.48
G10	594+78.90	875.52	594+92.65	875.11	595+06.40	874.69	595+20.15	874.28	595+33.90	873.87	595+47.65	873.46	595+61.40	873.04	595+75.15	872.63	595+88.90	872.22
RT. GUTTER	594+79.51	875.48	594+93.26	875.07	595+07.01	874.66	595+20.76	874.24	595+34.51	873.83	595+48.26	873.42	595+62.01	873.01	595+75.76	872.59	595+89.51	872.18

NOTE:

1. FINAL DECK SURFACE ELEVATIONS SHOWN REPRESENT THE DECK SURFACE LOCATION AFTER ALL ANTICIPATED DEAD LOAD DEFLECTIONS HAVE OCCURRED.

TOP OF HAUNCH ELEVATIONS																		
LOCATION	0.0 L		1/8 L		1/4 L		3/8 L		1/2 L		5/8 L		3/4 L		7/8 L		1.0 L	
	STATION	ELEVATION	STATION	ELEVATION	STATION	ELEVATION	STATION	ELEVATION	STATION	ELEVATION	STATION	ELEVATION	STATION	ELEVATION	STATION	ELEVATION	STATION	ELEVATION
G1	594+42.44	875.76	594+56.19	875.39	594+69.94	875.02	594+83.69	874.64	594+97.44	874.24	595+11.19	873.82	595+24.94	873.37	595+38.69	872.92	595+52.44	872.46
G2	594+46.54	875.78	594+60.29	875.42	594+74.04	875.06	594+87.79	874.68	595+01.54	874.28	595+15.29	873.85	595+29.04	873.41	595+42.79	872.94	595+56.54	872.48
G3	594+50.65	875.79	594+64.40	75.44	594+78.15	875.07	594+91.90	874.69	595+05.65	874.29	595+19.40	873.87	595+33.15	873.42	595+46.90	872.96	595+60.65	872.49
G4	594+54.75	875.81	594+68.50	875.45	594+82.25	875.09	594+96.00	874.71	595+09.75	874.31	595+23.50	873.88	595+37.25	873.44	595+51.00	872.98	595+64.75	872.51
G5	594+58.85	875.83	594+72.60	875.47	594+86.35	875.11	595+00.10	874.73	595+13.85	874.33	595+27.60	873.90	595+41.35	873.46	595+55.10	872.99	595+68.85	872.53
G6	594+62.95	875.83	594+76.70	875.48	594+90.45	875.11	595+04.20	874.73	595+17.95	874.33	595+31.70	873.91	595+45.45	873.46	595+59.20	873.00	595+72.95	872.53
G7	594+66.94	875.58	594+80.69	875.22	594+94.44	874.86	595+08.19	874.48	595+21.94	874.08	595+35.69	873.65	595+49.44	873.21	595+63.19	872.74	595+76.94	872.28
G8	594+70.92	875.32	594+84.67	874.96	594+98.42	874.60	595+12.17	874.22	595+25.92	873.82	595+39.67	873.39	595+53.42	872.95	595+67.17	872.49	595+80.92	872.02
G9	594+74.91	875.07	594+88.66	874.71	595+02.41	874.34	595+16.16	873.96	595+29.91	873.56	595+43.66	873.14	595+57.41	872.69	595+71.16	872.23	595+84.91	871.77
G10	594+78.90	874.81	594+92.65	874.45	595+06.40	874.08	595+20.15	873.69	595+33.90	873.29	595+47.65	872.87	595+61.40	872.43	595+75.15	871.97	595+88.90	871.51

NOTE:

1. TOP OF HAUNCH ELEVATIONS SHOWN REPRESENT THE THEORETICAL LOCATION OF THE BOTTOM OF THE DECK ABOVE THE BEAM/GIRDER HAUNCH PRIOR TO DEFLECTIONS CAUSED BY DECK PLACEMENT AND OTHER ANTICIPATED DEAD LOADS.

DECK SCREED ELEVATIONS																		
LOCATION	0.0 L		1/8 L		1/4 L		3/8 L		1/2 L		5/8 L		3/4 L		7/8 L		1.0 L	
	STATION	ELEVATION	STATION	ELEVATION	STATION	ELEVATION	STATION	ELEVATION	STATION	ELEVATION	STATION	ELEVATION	STATION	ELEVATION	STATION	ELEVATION	STATION	ELEVATION
LT. GUTTER	594+41.72	876.46	594+55.47	876.10	594+69.22	875.73	594+82.97	875.35	594+96.72	874.95	595+10.47	874.52	595+24.22	874.08	595+37.97	873.62	595+51.72	873.16
CROWN	594+62.81	876.55	594+76.56	876.19	594+90.31	875.83	595+04.06	875.45	595+17.81	875.05	595+31.56	874.62	595+45.31	874.18	595+59.06	873.72	595+72.81	873.25
LT. C.J.	594+63.91	876.48	594+77.66	876.12	594+91.41	875.76	595+05.16	875.38	595+18.91	874.98	595+32.66	874.55	595+46.41	874.11	595+60.16	73.65	595+73.91	873.18
RT. C.J.	594+65.64	876.37	594+79.39	876.01	594+93.14	875.65	595+06.89	875.27	595+20.64	874.87	595+34.39	874.44	595+48.14	874.00	595+61.89	873.54	595+75.64	873.07
RT.GUTTER	594+79.51	875.48	594+93.26	875.12	595+07.01	874.75	595+20.76	874.37	595+34.51	973.97	595+48.26	873.54	595+62.01	873.10	595+75.76	872.64	595+89.51	872.18

NOTE:

1. SCREED ELEVATIONS SHOWN REPRESENT THE THEORETICAL DECK SURFACE LOCATION PRIOR TO DEFLECTIONS CAUSED BY DECK PLACEMENT AND OTHER ANTICIPATED DEAD LOADS.

076667_BU02-SR48 Bridge_AsBuilt
G:\GrandRapids\DCS\Projects\12944308\structures\MOT070_1130 SR48\sheets\070_1130LSD009.dgn 4/5/2019 11:01:36 AM niles j

DESIGN-BUILDER

DESIGNER URS

REVIEWED	DATE
MSG	06/2014
STRUCTURE FILE NUMBER	
5705533/5705509	

DRAWN	REVISED
AJK	

DESIGNED	CHECKED
KAB	CC

ISSUE NO.	ISSUE DATE
1	07/10/14
RD	10/25/18

DECK ELEVATIONS - LEFT BRIDGE (2 OF 2)
BRIDGE NO. MOT-70-1130 L&R
OVER S.R. 48

MOT-70-10.79
PID No. 76667

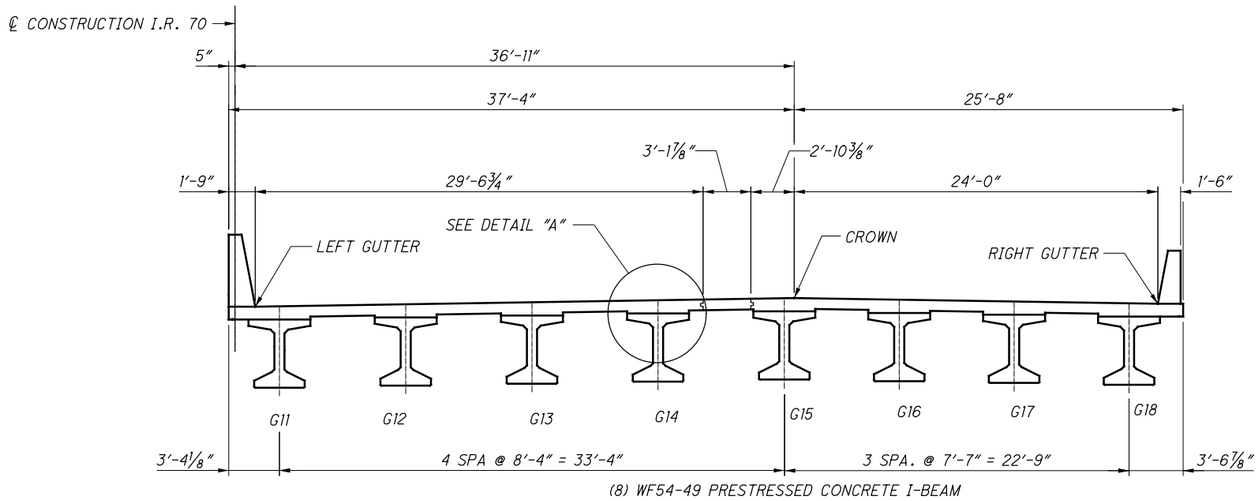

ELEVATION LOCATIONS TRANSVERSE SECTION

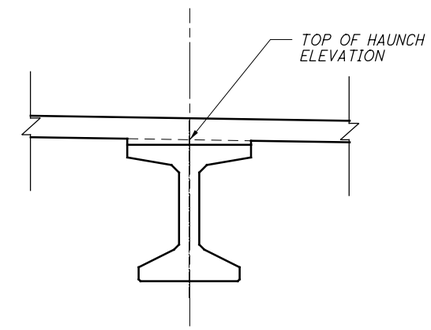

DETAIL A

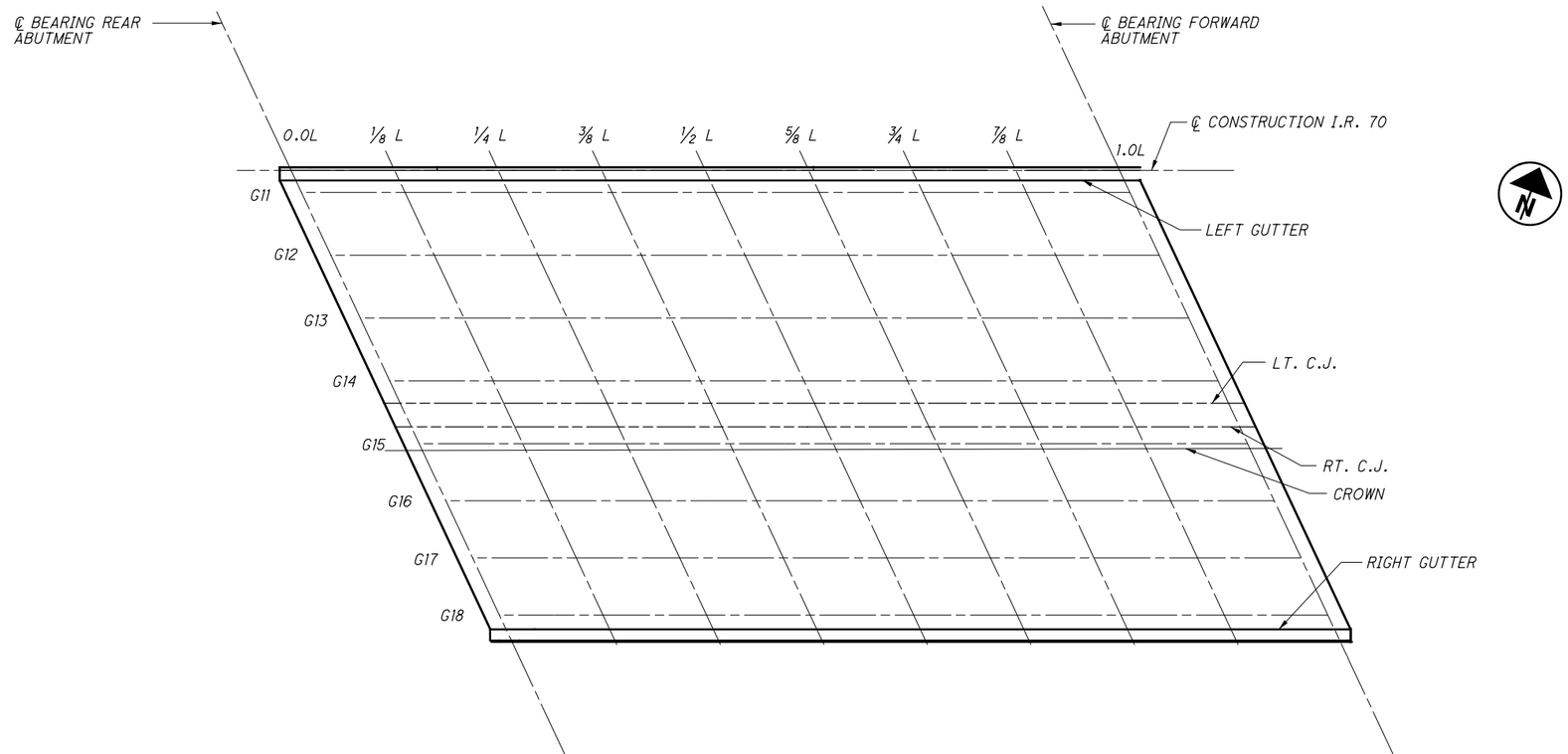

ELEVATION LOCATIONS PLAN

DESIGN-BUILDER

DESIGNER URS

REVIEWED	DATE
MSG	06/2014
STRUCTURE FILE NUMBER	
5705533/5705509	

DRAWN	REVISED
AJK	

DESIGNED	CHECKED
KAB	CC

ISSUE NO.	ISSUE DATE
1	07/10/14
RD	10/25/18

DECK ELEVATIONS - RIGHT BRIDGE (1 OF 2)

BRIDGE NO. MOT-70-1130 L&R
OVER S.R. 48

MOT-70-10.79
PID No. 76667

076667_BU02-SR48 Bridge_AsBuilt
G:\GrandRapids\DCS\Projects\12944308\structures\MOT070_1130_SR48\sheets\070_1130LSD010.dgn 4/5/2019 11:01:39 AM niles j

FINAL DECK SURFACE ELEVATIONS																		
LOCATION	0.0 L		1/8 L		1/4 L		3/8 L		1/2 L		5/8 L		3/4 L		7/8 L		1.0 L	
	STATION	ELEVATION	STATION	ELEVATION	STATION	ELEVATION	STATION	ELEVATION	STATION	ELEVATION	STATION	ELEVATION	STATION	ELEVATION	STATION	ELEVATION	STATION	ELEVATION
LT. GUTTER	594+81.21	875.43	594+94.96	875.02	595+08.71	874.60	595+22.46	874.19	595+36.21	873.78	595+49.96	873.37	595+63.71	872.95	595+77.46	872.54	595+91.21	872.13
G11	594+81.97	875.43	594+95.72	875.02	595+09.47	874.61	595+23.22	874.20	595+36.97	873.78	595+50.72	873.37	595+64.47	872.96	595+78.22	872.55	595+91.97	872.13
G12	594+85.88	875.45	594+99.63	875.04	595+13.38	874.62	595+27.13	874.21	595+40.88	873.80	595+54.63	873.39	595+68.38	872.97	595+82.13	872.56	595+95.88	872.15
G13	594+89.79	875.46	595+03.54	875.05	595+17.29	874.64	595+31.04	874.23	595+44.79	873.81	595+58.54	873.40	595+72.29	872.99	595+86.04	872.58	595+99.79	872.16
G14	594+93.69	875.48	595+07.44	875.07	595+21.19	874.66	595+34.94	874.24	595+48.69	873.83	595+62.44	873.42	595+76.19	873.01	595+89.94	872.59	596+03.69	872.18
LT. C.J.	594+95.08	875.49	595+08.83	875.07	595+22.58	874.66	595+36.33	874.25	595+50.08	873.84	595+63.83	873.42	595+77.58	873.01	595+91.33	872.60	596+05.08	872.19
RT. C.J.	594+96.64	875.49	595+10.39	875.08	595+24.14	874.67	595+37.89	874.26	595+51.64	873.84	595+65.39	873.43	595+79.14	873.02	595+92.89	872.61	596+06.64	872.19
G15	594+97.60	875.50	595+11.35	875.08	595+25.10	874.67	595+38.85	874.26	595+52.60	873.85	595+66.35	873.43	595+80.10	873.02	595+93.85	872.61	596+07.60	872.20
CROWN	594+97.90	875.50	595+11.65	875.09	595+25.40	874.67	595+39.15	874.26	595+52.90	873.85	595+66.65	873.44	595+80.40	873.02	595+94.15	872.61	596+07.90	872.20
G16	595+01.16	875.29	595+14.91	874.88	595+28.66	874.46	595+42.41	874.05	595+56.16	873.64	595+69.91	873.23	595+83.66	872.81	595+97.41	872.40	596+11.16	871.99
G17	595+04.71	875.06	595+18.46	874.65	595+32.21	874.24	595+45.96	873.82	595+59.71	873.41	595+73.46	873.00	595+87.21	872.59	596+00.96	872.17	596+14.71	872.76
G18	595+08.27	874.83	595+22.02	874.42	595+35.77	874.01	595+49.52	873.60	595+63.27	873.18	595+77.02	872.77	595+90.77	872.36	596+04.52	871.95	596+18.27	871.53
RT. GUTTER	595+09.15	874.78	595+22.90	874.36	595+36.65	873.95	595+50.40	873.54	595+64.15	873.13	595+77.90	872.71	595+91.65	872.30	596+05.40	871.89	596+19.15	871.48

NOTE:

1. FINAL DECK SURFACE ELEVATIONS SHOWN REPRESENT THE DECK SURFACE LOCATION AFTER ALL ANTICIPATED DEAD LOAD DEFLECTIONS HAVE OCCURRED.

TOP OF HAUNCH ELEVATIONS																		
LOCATION	0.0 L		1/8 L		1/4 L		3/8 L		1/2 L		5/8 L		3/4 L		7/8 L		1.0 L	
	STATION	ELEVATION	STATION	ELEVATION	STATION	ELEVATION	STATION	ELEVATION	STATION	ELEVATION	STATION	ELEVATION	STATION	ELEVATION	STATION	ELEVATION	STATION	ELEVATION
G11	594+81.97	874.72	594+95.72	874.36	595+09.47	873.99	595+23.22	873.61	595+36.97	873.21	595+50.72	872.79	595+64.47	872.34	595+78.22	871.89	595+91.97	871.42
G12	594+85.88	874.74	594+99.63	874.38	595+13.38	874.02	595+27.13	873.64	595+40.88	873.24	595+54.63	872.81	595+68.38	872.37	595+82.13	871.91	595+95.88	871.44
G13	594+89.79	874.76	595+03.54	874.40	595+17.29	874.03	595+31.04	873.65	595+44.79	873.25	595+58.54	872.83	595+72.29	872.38	595+86.04	871.92	595+99.79	871.46
G14	594+93.69	874.77	595+07.44	874.41	595+21.19	874.05	595+34.94	873.67	595+48.69	873.27	595+62.44	872.84	595+76.19	872.40	595+89.94	871.94	596+03.69	871.47
G15	594+97.60	874.79	595+11.35	874.43	595+25.10	874.06	595+38.85	873.68	595+52.60	873.28	595+66.35	872.86	595+80.10	872.41	595+93.85	871.95	596+07.60	871.49
G16	595+01.16	874.58	595+14.91	874.22	595+28.66	873.85	595+42.41	873.47	595+56.16	873.07	595+69.91	872.65	595+83.66	872.20	595+97.41	871.74	596+11.16	871.28
G17	595+04.71	874.35	595+18.46	873.99	595+32.21	873.62	595+45.96	873.24	595+59.71	872.84	595+73.46	872.42	595+87.21	871.97	596+00.96	871.52	596+14.71	871.05
G18	595+08.27	874.13	595+22.02	873.76	595+35.77	873.39	595+49.52	873.01	595+63.27	872.61	595+77.02	872.18	595+90.77	871.74	596+04.52	871.29	596+18.27	870.83

NOTE:

1. TOP OF HAUNCH ELEVATIONS SHOWN REPRESENT THE THEORETICAL LOCATION OF THE BOTTOM OF THE DECK ABOVE THE BEAM/GIRDER HAUNCH PRIOR TO DEFLECTIONS CAUSED BY DECK PLACEMENT AND OTHER ANTICIPATED DEAD LOADS.

DECK SCREED ELEVATIONS																		
LOCATION	0.0 L		1/8 L		1/4 L		3/8 L		1/2 L		5/8 L		3/4 L		7/8 L		1.0 L	
	STATION	ELEVATION	STATION	ELEVATION	STATION	ELEVATION	STATION	ELEVATION	STATION	ELEVATION	STATION	ELEVATION	STATION	ELEVATION	STATION	ELEVATION	STATION	ELEVATION
LT. GUTTER	594+81.21	875.43	594+94.96	875.07	595+08.71	874.71	595+22.46	874.33	595+36.21	873.93	595+49.96	873.50	595+63.71	873.06	595+77.46	872.60	595+91.21	872.13
LT. C.J.	594+95.08	875.49	595+08.83	875.13	595+22.58	874.76	595+36.33	874.38	595+50.08	873.98	595+63.83	873.55	595+77.58	873.11	595+91.33	872.65	596+05.08	872.19
RT. C.J.	594+96.64	875.49	595+10.39	875.13	595+24.14	874.76	595+37.89	874.38	595+51.64	873.98	595+65.39	873.56	595+79.14	873.11	595+92.89	872.66	596+06.64	872.19
CROWN	594+97.90	875.50	595+11.65	875.14	595+25.40	874.77	595+39.15	874.39	595+52.90	873.99	595+66.65	873.56	595+80.40	873.12	595+94.15	872.66	596+07.90	872.20
RT. GUTTER	595+09.15	874.78	595+22.90	874.41	595+36.65	874.04	595+50.40	873.66	595+64.15	873.26	595+77.90	872.84	595+91.65	872.39	596+05.40	871.94	596+19.15	871.48

NOTE:

1. SCREED ELEVATIONS SHOWN REPRESENT THE THEORETICAL DECK SURFACE LOCATION PRIOR TO DEFLECTIONS CAUSED BY DECK PLACEMENT AND OTHER ANTICIPATED DEAD LOADS.

076667_BU02-SR48 Bridge_AsBuilt
G:\GrandRapids\DCS\Projects\12944308\structures\MOT070_1130 SR48\sheets\070_1130LSD011.dgn 4/5/2019 11:01:40 AM nilesj

DESIGN-BUILDER

DESIGNER URS

REVIEWED	DATE
MSG	06/2014
STRUCTURE FILE NUMBER	
5705533/5705509	

DRAWN	DESIGNED
AJK	KAB
REVISED	CHECKED
	CC

ISSUE NO.	ISSUE DATE
1	07/10/14
RD	10/25/18

DECK ELEVATIONS - RIGHT BRIDGE (2 OF 2)
BRIDGE NO. MOT-70-1130 L&R
OVER S.R. 48

MOT-70-10.79
PID No. 76667

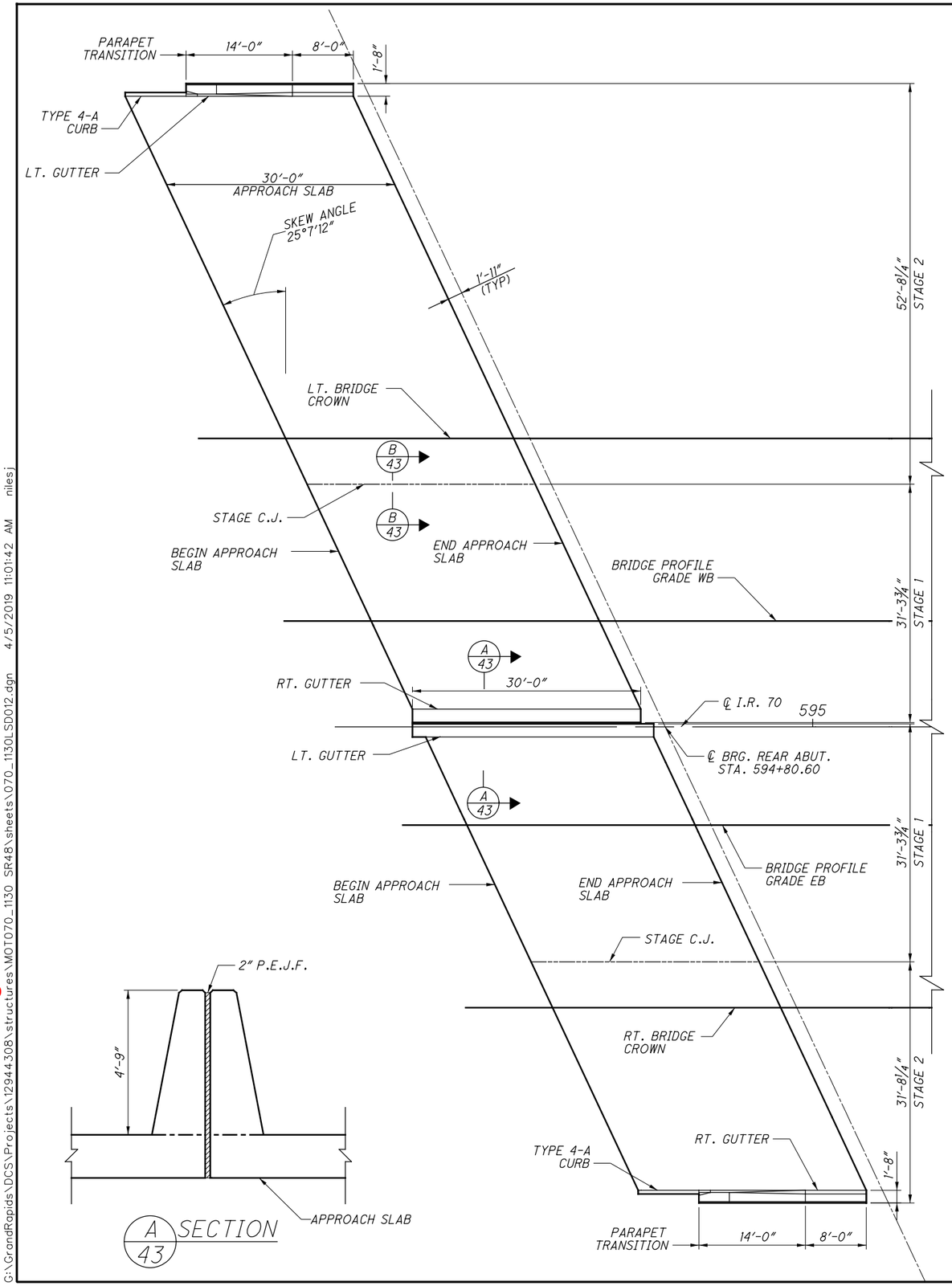

A 43 SECTION

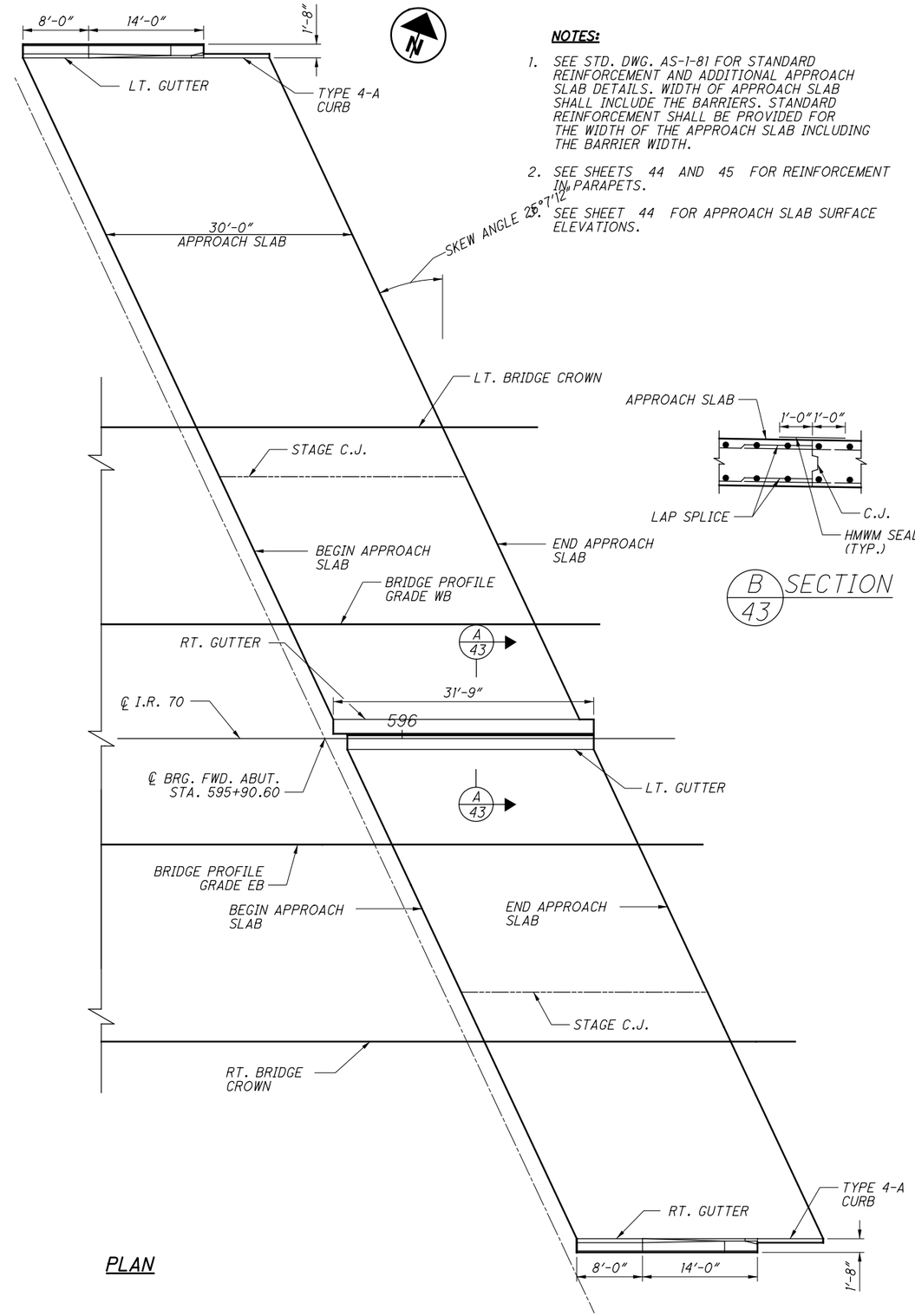

PLAN

NOTES:

1. SEE STD. DWG. AS-1-81 FOR STANDARD REINFORCEMENT AND ADDITIONAL APPROACH SLAB DETAILS. WIDTH OF APPROACH SLAB SHALL INCLUDE THE BARRIERS. STANDARD REINFORCEMENT SHALL BE PROVIDED FOR THE WIDTH OF THE APPROACH SLAB INCLUDING THE BARRIER WIDTH.
2. SEE SHEETS 44 AND 45 FOR REINFORCEMENT IN PARAPETS.
3. SEE SHEET 44 FOR APPROACH SLAB SURFACE ELEVATIONS.

B 43 SECTION

DESIGN-BUILDER

DESIGNER URS

DATE	REVIEWED	DRAWN	DESIGNED	ISSUE DATE	ISSUE NO.
06/2014	MSG	AJK	KAB	07/10/14	1
STRUCTURE FILE NUMBER 5705533/5705509		REVISED	CHECKED CC	10/25/18	RD

APPROACH SLAB PLAN

BRIDGE MOT-70-1130 L&R
OVER S.R. 48

MOT-70-10.79

PID No. 76667

076667_BU02-SR48 Bridge_AsBuilt
G:\GrandRapids\DCS\Projects\12944308\structures\MOT070_1130_SR48\sheets\070_1130LSD012.dgn 4/5/2019 11:01:42 AM niles j

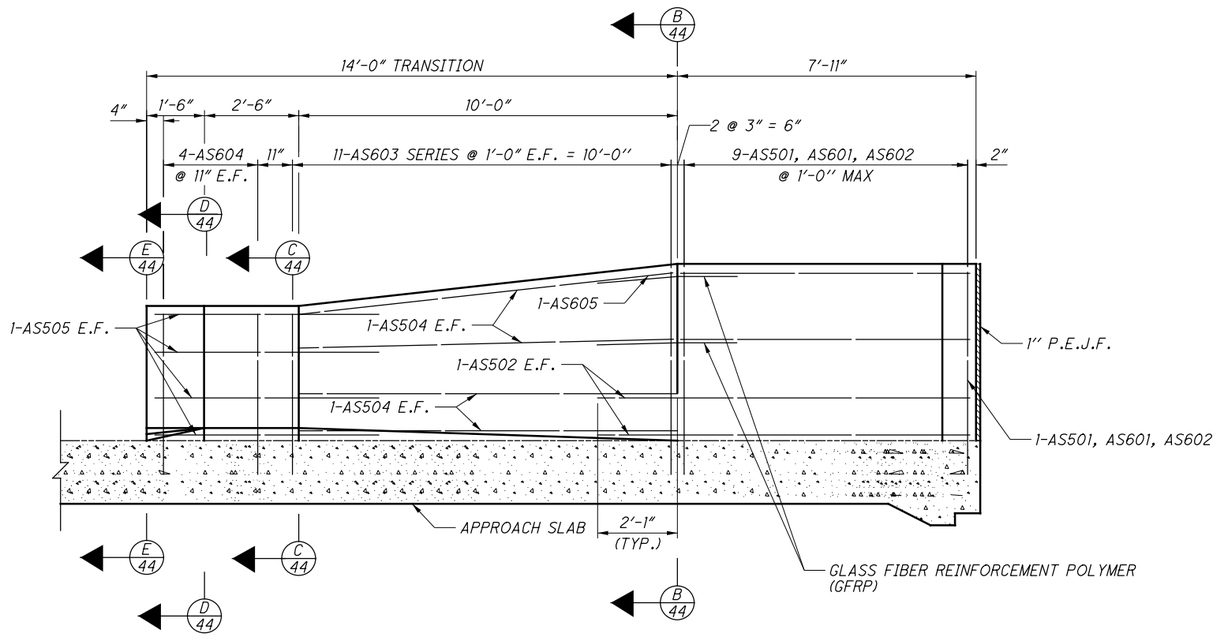

DEFLECTOR PARAPET ELEVATION - OUTSIDE APPROACH SLAB AT REAR ABUT.
(OTHER SIMILAR)

LEFT BRIDGE - REAR APPROACH SLAB SURFACE ELEVATIONS				
LOCATION	BEGIN APPROACH SLAB		END APPROACH SLAB	
	STATION	ELEVATION	STATION	ELEVATION
LT. GUTTER	594+09.60	877.61	594+39.60	876.71
CROWN	594+30.70	877.70	594+60.70	876.80
LT. C.J.	594+31.79	877.63	594+61.79	876.73
RT. C.J.	594+33.52	877.52	594+63.52	876.62
RT. GUTTER	594+47.39	876.63	594+77.39	875.73

LEFT BRIDGE - FORWARD APPROACH SLAB SURFACE ELEVATIONS				
LOCATION	BEGIN APPROACH SLAB		END APPROACH SLAB	
	STATION	ELEVATION	STATION	ELEVATION
LT. GUTTER	595+53.83	873.29	595+83.83	872.39
CROWN	595+74.93	873.37	596+04.93	872.47
LT. C.J.	595+76.03	873.30	596+06.03	872.40
RT. C.J.	595+77.75	873.19	596+07.75	872.29
RT. GUTTER	595+91.62	872.30	596+21.62	871.40

RIGHT BRIDGE - REAR APPROACH SLAB SURFACE ELEVATIONS				
LOCATION	BEGIN APPROACH SLAB		END APPROACH SLAB	
	STATION	ELEVATION	STATION	ELEVATION
LT. GUTTER	594+49.09	876.58	594+79.09	875.68
LT. C.J.	594+62.96	876.64	594+92.96	875.74
RT. C.J.	594+64.53	876.64	594+94.53	875.74
CROWN	594+65.78	876.65	594+95.78	875.75
RT. GUTTER	594+77.03	875.93	595+07.03	875.03

RIGHT BRIDGE - FORWARD APPROACH SLAB SURFACE ELEVATIONS				
LOCATION	BEGIN APPROACH SLAB		END APPROACH SLAB	
	STATION	ELEVATION	STATION	ELEVATION
LT. GUTTER	595+93.32	872.25	596+23.32	871.35
LT. C.J.	596+07.19	872.31	596+37.19	871.41
RT. C.J.	596+08.76	872.32	596+38.76	871.42
CROWN	596+10.02	872.32	596+40.02	871.42
RT. GUTTER	596+21.27	871.60	596+51.27	870.70

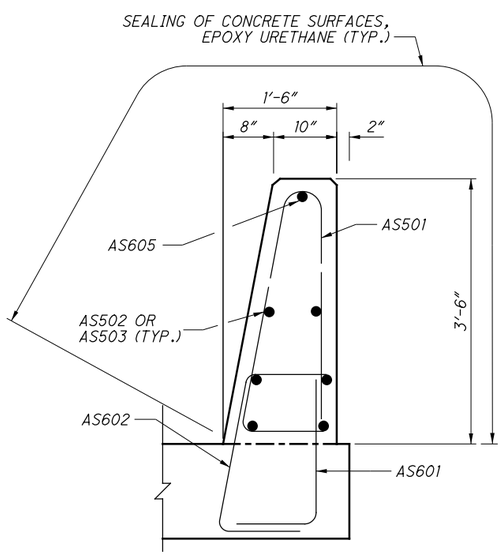

B 44 SECTION

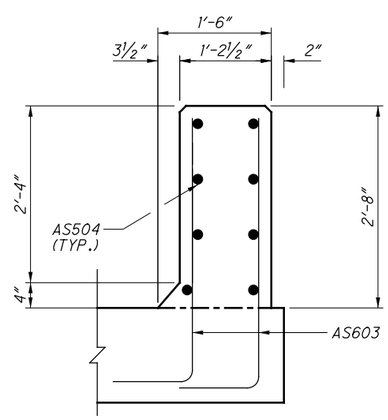

C 44 SECTION

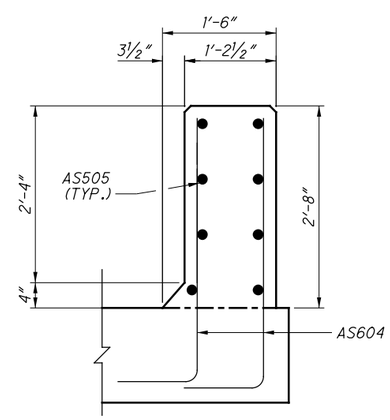

D 44 SECTION

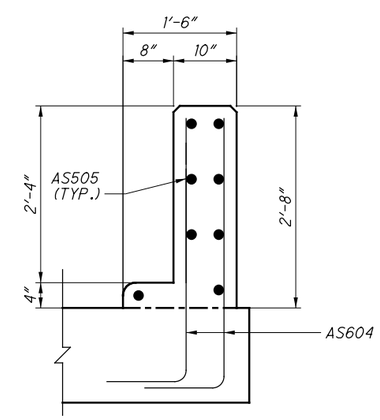

E 44 SECTION

NOTES:

1. FOR ADDITIONAL DETAILS FOR TRANSITION AND TERMINAL ASSEMBLY, SEE STD. DWG. SBR-1-13.
2. THE TOP COAT COLOR FOR THE EPOXY-URETHANE SEALER SHALL MEET THE FEDERAL COLOR NUMBER FS17778-LIGHT NEUTRAL.

DESIGN-BUILDER

DESIGNER URS

DATE	REVIEWED	DRAWN	DESIGNED	ISSUE NO.	ISSUE DATE
06/2014	MSG	AJK	KAB	1	07/10/14
STRUCTURE FILE NUMBER 5705533/5705509		REVISED	CHECKED CC	RD	10/25/18

APPROACH SLAB DETAILS (1 OF 2)
BRIDGE NO. MOT70-1130 L&R
OVER S.B. 48

MOT-70-10.79
PID No. 76667

076667_BU02-SR48 Bridge_AsBuilt
G:\GrandRapids\DCS\Projects\12944308\structures\MOT070_1130 SR48\sheets\070_1130LSD013.dgn 4/5/2019 11:01:43 AM niles j

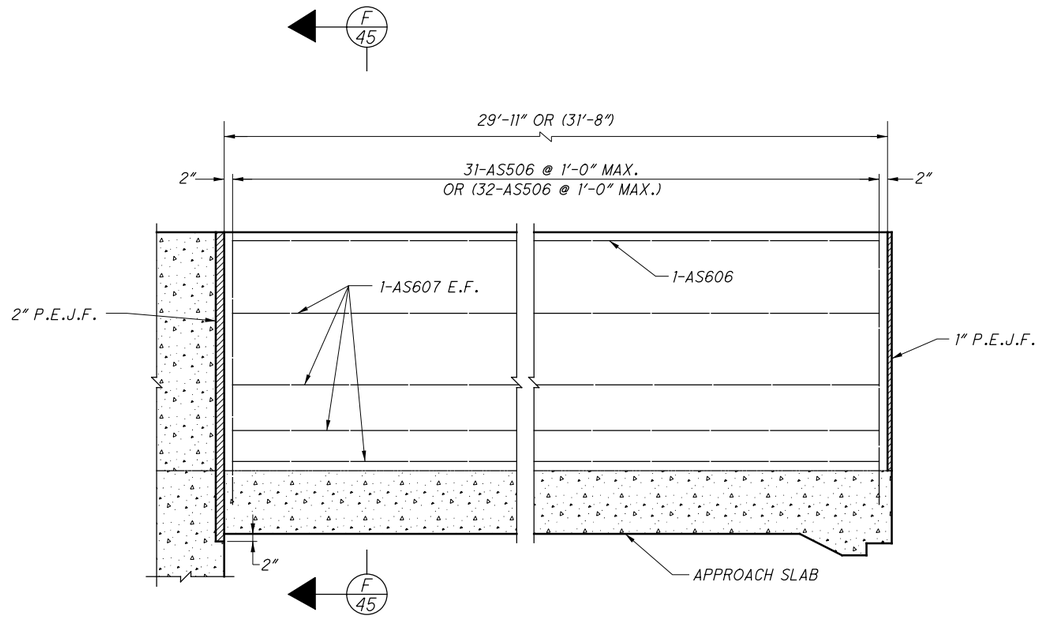

DEFLECTOR PARAPET ELEVATION - INSIDE APPROACH SLAB AT FORWARD ABUTMENT

(DEFLECTOR PARAPET ELEVATION - INSIDE APPROACH SLAB AT FORWARD ABUTMENT OPPOSITE HAND)

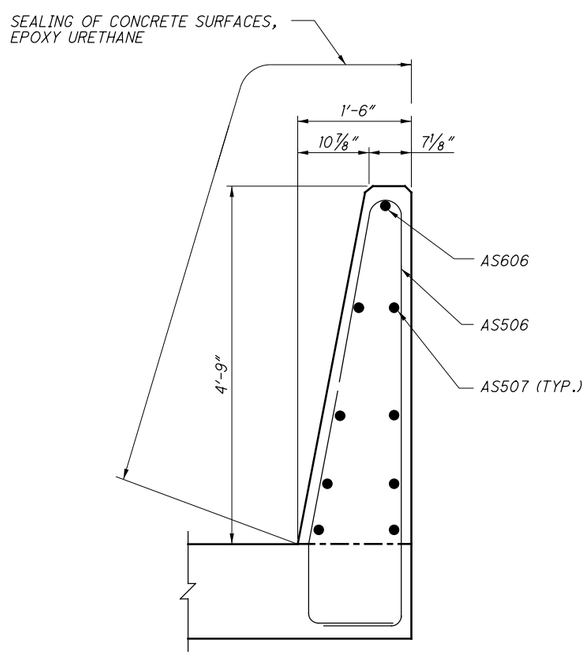

F/45 **SECTION**

NOTES:

1. THE TOP COAT COLOR FOR THE EPOXY-URETHANE SEALER SHALL MEET THE FEDERAL COLOR NUMBER FS17778-LIGHT NEUTRAL.

ISSUE NO.	ISSUE DATE	DESIGNED	DRAWN	REVIEWED	DATE
1	07/10/14	KAB	AJK	MSG	06/2014
RD	10/25/18	CHECKED	REVISED	STRUCTURE FILE NUMBER	
		CC		5705533/5705509	

DESIGNER URS

DESIGN-BUILDER

APPROACH SLAB DETAILS (2 OF 2)

BRIDGE NO. MOT-70-1130 L&R
OVER S.R. 48

MOT-70-10.79
PID No. 76667

076667_BU02-SR48 Bridge_AsBuilt
G:\GrandRapids\DCS\Projects\1294430B\structures\MOT070_1130_SR48\sheets\070_1130LSD014.dgn 4/5/2019 11:01:45 AM niesj

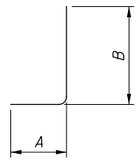

TYPE-1

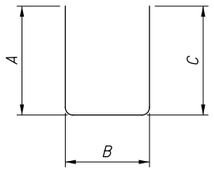

TYPE-2

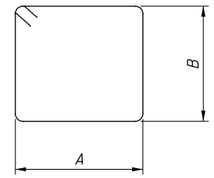

TYPE-3

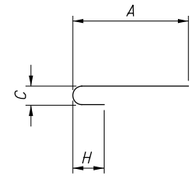

TYPE-16

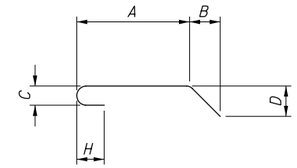

TYPE-18

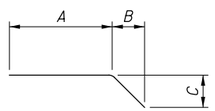

TYPE-19

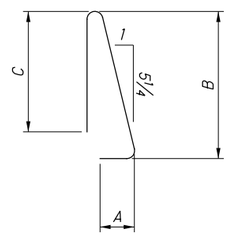

TYPE-23

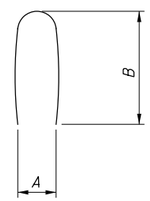

TYPE-24

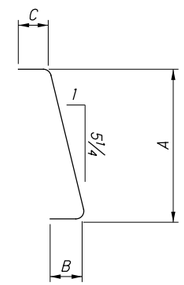

TYPE-43

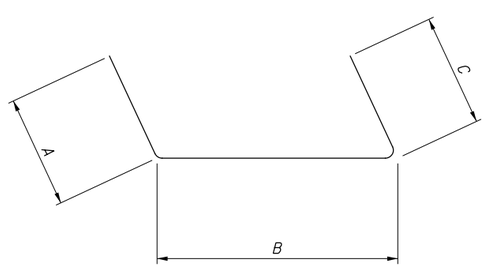

TYPE-5

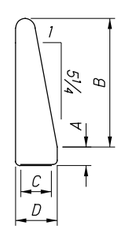

TYPE-34

DESIGN-BUILDER

DESIGNER URS

REVIEWED	DATE
MSG	06/2014
STRUCTURE FILE NUMBER	
5705533/5705509	

DRAWN	DESIGNED
AJK	DJB
REVISED	CHECKED
	CAR

ISSUE NO.	ISSUE DATE
1	07/10/14
RD	10/25/18

BAR BENDING DETAILS

BRIDGE NO. MOT-70-1130 L&R
OVER S.R. 48

MOT-70-10.79

PID No. 76667

076667_BU02-SR48 Bridge_AsBuilt
G:\GrandRapids\DCS\Projects\12944308\structures\MOT070_1130_SR48\sheets\070_1130LRL001.dgn 4/5/2019 11:01:46 AM niles j

LEFT BRIDGE SUPERSTRUCTURE

MARK	NUMBER TOTAL	LENGTH	WEIGHT	TYPE	DIMENSIONS A	B	C	D	E	H	R	INC
S401	352	30'-0"	7055	STR	30'-0"							
S402	40	3'-6"	94	24	0'-5"	1'-8"						
S403	40	4'-1"	110	STR	4'-1"							
S404	12	7'-0"	58	5	1'-0"	5'-2"	1'-0"					
S405	40	2'-10"	76	2	0'-5"	2'-2"	0'-5"					
S501	408	31'-0"	13192	STR	31'-0"							
S502 L	72	29'-10"	2241	STR	52'-4"							
S502 S					7'-4"							
S503	6	52'-4"	328	STR	52'-4"							
S504	300	52'-4"	16376	STR	52'-4"							
S505 L	78	27'-10"	2265	STR	52'-4"							
S505 S					3'-4"							
S506 L	42	21'-2"	928	STR	34'-6"							
S506 S					7'-10"							
S507	336	34'-6"	12091	STR	34'-6"							
S508	6	34'-6"	216	STR	34'-6"							
S509 L	38	19'-2"	760	STR	31'-0"							
S509 S					7'-4"							
S510 L	12	5'-3"	67	STR	6'-7"							
S510 S					4'-0"							
S511	114	7'-4"	872	23	0'-11"	3'-3"	3'-0"				0'-2¾"	
S512	114	13'-0"	1546	34	0'-7½"	4'-7"	1'-0"	1'-5"			0'-3"	
S601	8	31'-9"	382	STR	31'-9"							
S602	114	3'-2"	536	43	1'-6½"	1'-0"	0'-11"					
S603	114	2'-5"	407	1	1'-0"	1'-6½"						
S604	374	8'-4"	4682	16	7'-8"	0'-6"			0'-5¾"			
S606	98	16'-8"	2454	3	4'-8"	4'-0"						
S607	98	13'-5"	1976	2	5'-1"	3'-7"	5'-1"					
S801	16	32'-6"	1390	STR	32'-6"							
S802	12	2'-4"	76	STR	2'-4"							
S803	16	32'-6"	1390	STR	32'-6"							
S804	36	32'-6"	3124	STR	32'-6"							
S805	122	5'-5"	1764	18	3'-1"	1'-0"		1'-0"				
S806	18	37'-9"	1676	STR	37'-9"							
S807	8	37'-9"	746	STR	37'-9"							
S808	4	1'-4"	16	STR	1'-4"							
S809	10	5'-1"	136	STR	5'-1"							
S810	8	4'-10"	104	STR	4'-10"							
S819	30	7'-9"	622	STR	7'-9"							
S820	24	7'-6"	482	STR	7'-6"							
		SUB-TOTAL	80238									

RIGHT BRIDGE SUPERSTRUCTURE

MARK	NUMBER TOTAL	LENGTH	WEIGHT	TYPE	DIMENSIONS A	B	C	D	E	H	R	INC
S401	280	30'-0"	5612	STR	30'-0"							
S402	32	3'-6"	76	24	0'-5"	1'-8"						
S403	32	4'-1"	88	STR	4'-1"							
S404	12	7'-0"	58	5	1'-0"	5'-2"	1'-0"					
S405	32	2'-10"	62	2	0'-5"	2'-2"	0'-5"					
S501	336	31'-0"	10864	STR	31'-0"							
S510 L	12	5'-3"	67	STR	6'-7"							
S510 S					4'-0"							
S511	114	7'-4"	872	23	0'-11"	3'-3"	3'-0"				0'-2¾"	
S512	114	13'-0"	1546	34	0'-7½"	4'-7"	1'-0"	1'-5"			0'-3"	
S513 L	44	20'-10"	955	STR	34'-3"							
S513 S					7'-4"							
S514	6	34'-3"	215	STR	34'-3"							
S515	334	34'-3"	11932	STR	34'-3"							
S516 L	48	18'-8"	933	STR	34'-3"							
S516 S					3'-0"							
S517 L	36	19'-0"	714	STR	31'-4"							
S517 S					6'-8"							
S518	318	31'-4"	10393	STR	31'-4"							
S519	6	31'-4"	197	STR	31'-4"							
S520 L	34	17'-9"	630	STR	28'-2"							
S520 S					7'-4"							
S601	8	31'-9"	382	STR	31'-9"							
S602	114	3'-2"	536	43	1'-6½"	1'-0"	0'-11"					
S603	114	2'-5"	407	1	1'-0"	1'-6½"						
S604	374	8'-4"	4682	16	7'-8"		0'-6"			0'-5¾"		
S606	78	16'-8"	1954	3	4'-8"	4'-0"						
S607	78	13'-5"	1572	2	5'-1"	3'-7"	5'-1"					
S805	90	5'-5"	1302	18	3'-1"	1'-0"	0'-8"	1'-0"		0'-8"		
S811	8	38'-1"	814	STR	38'-1"							
S812	12	3'-1"	100	STR	3'-1"							
S813	8	38'-1"	814	STR	38'-1"							
S814	18	38'-1"	1832	STR	38'-1"							
S815	18	34'-8"	1664	STR	34'-8"							
S816	8	34'-8"	740	STR	34'-8"							
S817	4	2'-8"	30	STR	2'-8"							
S818	8	5'-6"	118	STR	5'-6"							
S821	24	7'-4"	470	STR	7'-4"							
S822	18	6'-4"	306	STR	6'-4"							
S823	6	3'-8"	60	STR	3'-8"							
		SUB-TOTAL	62997									

NOTES:

1. THE BAR SIZE NUMBER IS SPECIFIED ON THE PLANS IN THE BAR MARK COLUMN. THE FIRST DIGIT WHERE THREE DIGITS ARE USED, AND THE FIRST TWO DIGITS WHERE FOUR ARE USED, INDICATES THE BAR SIZE NUMBER. FOR EXAMPLE, P601 IS A NO. 6 BAR. BAR DIMENSIONS SHOWN ARE OUT TO OUT UNLESS OTHERWISE INDICATED. R INDICATES INSIDE RADIUS. "STD." WRITTEN IN PLACE OF A DIMENSION INDICATES A STANDARD BEND AT THE END OF THE BAR.
2. ALL REINFORCING STEEL TO BE EPOXY COATED.
3. STRAIGHT BARS DENOTED WITH * IMPLEMENT A MECHANICAL CONNECTOR. DIMENSION PROVIDED IS TO THE END OF THE CONNECTOR.
4. STRAIGHT BARS DENOTED WITH ** WILL BE THREADED INTO A MECHANICAL CONNECTOR. DIMENSION PROVIDED DOES NOT INCLUDE PORTION THREADED INTO CONNECTOR.

DESIGN-BUILDER

DESIGNER URS

DRAWN	REVIEWED	DATE
AJK	MSG	07/2014
REVISED	STRUCTURE FILE NUMBER	
CDU	5705533/5705509	

DESIGNED	CHECKED
DJB	CAR
REVISED	
CDU	

ISSUE NO.	ISSUE DATE
1	07/10/14
2	07/17/14
RD	10/25/18

REINFORCING LIST (1 OF 3)
BRIDGE NO. MOT-70-1130 L&R
OVER S.R. 48

MOT-70-10.79
PID No. 76667

076667_BU02-SR48 Bridge_AsBuilt
G:\GrandRapids\DCS\Projects\12944308\structures\MOT070_1130_SR48\sheets\070_1130LRL002.dgn 4/5/2019 11:01:47 AM niles j

LEFT FORWARD SUBSTRUCTURE

MARK	NUMBER TOTAL	LENGTH	WEIGHT	TYPE	DIMENSIONS A	B	C	D	E	H	R	INC
A501	38	34'-4"	1361	STR	34'-4"							
A502	19	35'-5"	702	STR	35'-5"							
A503	64	32'-6"	2170	STR	32'-6"							
A504	32	35'-7"	1188	STR	35'-7"							
A517 L	7	14'-7"	107	2	9'-4"	1'-6"	9'-4"					
A517 S					4'-0"	1'-6"	4'-0"					
A519 L	24	13'-0"	327	STR	24'-7"							
A519 S					1'-6"							
A520	2	28'-1"	59	STR	28'-1"							
A521	2	11'-4"	24	19	8'-5"	3'-0"	1'-0"					
A522	2	22'-11"	48	STR	22'-11"							
A523	2	18'-0"	38	STR	18'-0"							
A524	10	26'-2"	273	STR	26'-2"							
A525	12	18'-3"	229	STR	18'-3"							
A559	19	21'-0"	417	STR	21'-0"							
A563	2	6'-8"	14	19	3'-5"	2'-7"	2'-4"					
A564	1	13'-6"	15	5	3'-5"	10'-4"	0'-0"					
A565	1	13'-6"	15	5	0'-0"	10'-4"	3'-5"					
A566 l	19	14'-9"	293	STR	18'-9"							
A566 s					10'-9"							
A567	19	12'-1"	240	16	11'-6"		0'-5"			0'-5"		
A579	178	6'-9"	1731	16	6'-2"		0'-5"			0'-5"		
A581	178	21'-1"	3427	1	16'-5"	4'-8"						
A601	178	21'-1"	5169	1	16'-5"	4'-8"						
A605	178	7'-2"	2518	16	6'-7"		0'-6"			0'-5¾"		
A606	6	15'-4"	139	3	5'-2"	2'-10"						
A607	28	8'-4"	351	3	1'-8"	2'-10"						
A609 l	38	14'-9"	842	STR	18'-9"							
A609 s					10'-9"							
A701	442	24'-2"	21834	2	11'-0"	2'-6"	11'-0"					
A704	1	19'-2"	40	2	8'-6"	2'-6"	8'-6"					
A705	1	14'-0"	29	2	5'-11"	2'-6"	5'-11"					
A706	1	8'-6"	18	2	3'-2"	2'-6"	3'-2"					
A801	8	36'-4"	777	STR	36'-4"							
A802	4	35'-5"	379	STR	35'-5"							
A803	34	38'-2"	3465	STR	38'-2"							
A804	17	35'-5"	1608	STR	35'-5"							
A818	17	21'-0"	954	STR	21'-0"							
A822	2	14'-2"	76	19	7'-3"	5'-5"	4'-10"					
A823	1	19'-1"	52	5	7'-3"	12'-3"	0'-0"					
A824	1	19'-1"	52	5	0'-0"	12'-3"	7'-3"					
A825	38	15'-7"	1582	16	14'-8"		0'-8"			0'-8"		
		SUB-TOTAL	52554									

LEFT REAR SUBSTRUCTURE

MARK	NUMBER TOTAL	LENGTH	WEIGHT	TYPE	DIMENSIONS A	B	C	D	E	H	R	INC
A505	19	35'-5"	702	STR	35'-5"							
A506	38	42'-6"	1685	STR	42'-6"							
A507	38	35'-7"	1411	STR	35'-7"							
A508	76	32'-7"	2583	STR	32'-7"							
A548 L	14	5'-5"	79	STR	7'-3"							
A548 S					3'-6"							
A549 L	16	10'-7"	177	STR	19'-8"							
A549 S					1'-6"							
A550	2	20'-0"	42	STR	20'-0"							
A551	2	38'-6"	81	STR	38'-6"							
A552	40	23'-1"	964	19	20'-1"	2'-5"	2'-2"					
A553 L	10	21'-9"	227	STR	34'-5"							
A553 S					9'-1"							
A554	10	37'-10"	395	STR	37'-10"							
A555	2	11'-2"	24	19	8'-2"	2'-5"	2'-2"					
A556	2	31'-2"	66	STR	31'-2"							
A557	2	34'-8"	73	STR	34'-8"							
A558	16	29'-10"	498	STR	29'-10"							
A560	19	32'-1"	636	STR	32'-1"							
A563	2	6'-8"	14	19	3'-5"	2'-7"	2'-4"					
A564	1	13'-6"	15	5	3'-5"	10'-4"	0'-0"					
A565	1	13'-6"	15	5	0'-0"	10'-4"	3'-5"					
A574 L	21	16'-5"	361	STR	19'-9"							
A574 S					13'-2"							
A575	21	14'-2"	311	16	13'-7"		0'-5"			0'-5"		
A576 L	30	10'-5"	325	STR	13'-0"							
A576 S					7'-9"							
A577	30	14'-2"	443	16	13'-7"		0'-5"			0'-5"		
A578	178	24'-4"	4031	1	19'-8"	4'-8"						
A579	178	6'-9"	1731	16	6'-2"		0'-5"			0'-5"		
A602	178	24'-4"	6038	1	19'-8"	4'-8"						
A605	178	7'-2"	2518	16	6'-7"		0'-6"			0'-5¾"		
A606	6	15'-4"	139	3	5'-2"	2'-10"						
A607	28	8'-4"	351	3	1'-8"	2'-10"						
A613 L	30	10'-5"	468	STR	13'-0"							
A613 S					7'-9"							
A701	556	24'-2"	27466	2	11'-0"	2'-6"	11'-0"					
A704	1	19'-2"	40	2	8'-6"	2'-6"	8'-6"					
A705	1	14'-0"	29	2	5'-11"	2'-6"	5'-11"					
A706	1	8'-6"	18	2	3'-2"	2'-6"	3'-2"					
A707 L	31	16'-5"	1043	STR	19'-9"							
A707 S					13'-2"							
A708	60	31'-8"	3884	2	15'-3"		0'-7"			0'-7½"		
A805	4	35'-7"	381	STR	35'-7"							
A806	8	36'-5"	778	STR	36'-5"							
A807	17	35'-5"	1608	STR	35'-5"							
A808	34	46'-4"	4207	STR	46'-4"							
A819	17	32'-1"	1457	STR	32'-1"							
A822	2	14'-2"	76	19	7'-3"	5'-5"	4'-10"					
A823	1	19'-1"	52	5	7'-3"	12'-3"	0'-0"					
A824	1	19'-1"	52	5	0'-0"	12'-3"	7'-3"					
A901	62	19'-9"	4162	16	18'-6"		0'-11¾"			0'-10"		
		SUB-TOTAL	69746									

NOTES:

1. THE BAR SIZE NUMBER IS SPECIFIED ON THE PLANS IN THE BAR MARK COLUMN. THE FIRST DIGIT WHERE THREE DIGITS ARE USED, AND THE FIRST TWO DIGITS WHERE FOUR ARE USED, INDICATES THE BAR SIZE NUMBER. FOR EXAMPLE, P601 IS A NO. 6 BAR. BAR DIMENSIONS SHOWN ARE OUT TO OUT UNLESS OTHERWISE INDICATED. R INDICATES INSIDE RADIUS. "STD." WRITTEN IN PLACE OF A DIMENSION INDICATES A STANDARD BEND AT THE END OF THE BAR.
2. ALL REINFORCING STEEL TO BE EPOXY COATED.
3. STRAIGHT BARS DENOTED WITH * IMPLEMENT A MECHANICAL CONNECTOR. DIMENSION PROVIDED IS TO THE END OF THE CONNECTOR.
4. STRAIGHT BARS DENOTED WITH ** WILL BE THREADED INTO A MECHANICAL CONNECTOR. DIMENSION PROVIDED DOES NOT INCLUDE PORTION THREADED INTO CONNECTOR.

076667_BU02-SR48 Bridge_AsBuilt
G:\GrandRapids\DCS\Projects\12944308\structures\MOT070_1130 SR48\sheets\070_1130LRL003.dgn 4/5/2019 11:01:48 AM niles j

DESIGN-BUILDER

DESIGNER URS

REVIEWED	DATE
MSG	06/2014
STRUCTURE FILE NUMBER	
5705533/5705509	

DRAWN	REVISED
AJK	

DESIGNED	CHECKED
DJB	CAR

ISSUE NO.	ISSUE DATE
1	07/10/14
2	10/06/14
RD	10/25/18

REINFORCING LIST (2 OF 3)

BRIDGE NO. MOT-70-1130 L&R
OVER S.R. 48

MOT-70-10.79
PID No. 76667

MARK	NUMBER TOTAL	LENGTH	WEIGHT	TYPE	DIMENSIONS A	B	C	D	E	H	R	INC
RIGHT FORWARD SUBSTRUCTURE												
A509	19	36'-0"	714	STR	36'-0"							
A510	38	28'-7"	1133	STR	28'-7"							
A511	30	36'-2"	1132	STR	36'-2"							
A512	30	34'-5"	1077	STR	34'-5"							
A521	2	11'-4"	24	19	8'-5"	3'-0"	1'-0"					
A527 L	16	9'-8"	161	STR	11'-1"							
A527 S					8'-2"							
A529 L	14	5'-5"	79	STR	7'-6"							
A529 S					3'-3"		3'-3"					
A530 L	18	9'-0"	169	STR	16'-8"							
A530 S					1'-4"							
A531	2	17'-10"	38	STR	17'-10"							
A532 L	8	11'-2"	94	STR	17'-4"							
A532 S					5'-0"							
A533	28	19'-10"	580	19	16'-10"	2'-5"	2'-2"					
A534	2	21'-3"	45	STR	21'-3"							
A535	6	12'-10"	81	STR	12'-10"							
A536	8	20'-10"	174	STR	20'-10"							
A537 L	6	15'-11"	100	STR	19'-0"							
A537 S					12'-10"							
A561	19	15'-1"	299	STR	15'-1"							
A563	2	6'-8"	14	19	3'-5"	2'-7"	2'-4"					
A564	1	13'-6"	15	5	3'-5"	10'-4"	0'-0"					
A565	1	13'-6"	15	5	0'-0"	10'-4"	3'-5"					
A568 L	18	15'-8"	295	STR	19'-9"							
A568 S					11'-7"							
A569	18	9'-3"	174	16	8'-8"		0'-5"			0'-5"		
A570 L	16	9'-8"	161	STR	11'-1"							
A570 S					8'-2"							
A571	16	9'-3"	155	16	8'-8"		0'-5"			0'-5"		
A579	154	6'-9"	1498	16	6'-2"		0'-5"			0'-5"		
A582	154	20'-4"	2845	1	15'-8"	4'-8"						
A603	154	20'-4"	4299	1	15'-8"	4'-8"						
A605	154	7'-2"	2179	16	6'-7"		0'-6"			0'-5¾"		
A606	6	15'-4"	139	3	5'-2"	2'-10"						
A607	28	8'-4"	351	3	1'-8"	2'-10"						
A610 L	36	15'-8"	848	STR	19'-9"							
A610 S					11'-7"							
A611	16	10'-0"	241	16	9'-4"		0'-6"			0'-5¾"		
A701	444	24'-2"	21933	2	11'-0"	2'-6"	11'-0"					
A704	1	19'-2"	40	2	8'-6"	2'-6"	8'-6"					
A705	1	14'-0"	29	2	5'-11"	2'-6"	5'-11"					
A706	1	8'-6"	18	2	3'-2"	2'-6"	3'-2"					
A809	4	36'-2"	387	STR	36'-2"							
A810	4	34'-5"	368	STR	34'-5"							
A811	17	36'-0"	1635	STR	36'-0"							
A812	34	32'-5"	2943	STR	32'-5"							
A820	17	15'-1"	685	STR	15'-1"							
A822	2	14'-2"	76	19	7'-3"	5'-5"	4'-10"					
A823	1	19'-1"	52	5	7'-3"	12'-3"	0'-0"					
A824	1	19'-1"	52	5	0'-0"	12'-3"	7'-3"					
A826	36	12'-9"	1226	16	11'-10"		0'-8"			0'-8"		
		SUB-TOTAL	48573									

MARK	NUMBER TOTAL	LENGTH	WEIGHT	TYPE	DIMENSIONS A	B	C	D	E	H	R	INC
RIGHT REAR SUBSTRUCTURE												
A513	19	41'-8"	826	STR	41'-8"							
A514	19	36'-0"	1290	STR	36'-0"							
A515	36	34'-4"	1290	STR	34'-4"							
A516	36	36'-2"	1358	STR	36'-2"							
A538 L	14	6'-7"	97	STR	9'-6"							
A538 S					3'-8"							
A540	2	32'-7"	68	STR	32'-7"							
A541 L	28	15'-3"	445	STR	29'-3"							
A541 S					1'-2"							
A542	8	30'-5"	254	STR	30'-5"							
A543	2	10'-2"	22	19	7'-3"	3'-0"	1'-0"					
A544 L	6	25'-2"	158	STR	27'-11"							
A544 S					22'-5"							
A545	12	23'-3"	291	STR	23'-3"							
A562	19	25'-0"	496	STR	25'-0"							
A563	2	6'-8"	14	19	3'-5"	2'-7"	2'-4"					
A564	1	13'-6"	15	5	3'-5"	10'-4"	0'-0"					
A565	1	13'-6"	15	5	0'-0"	10'-4"	3'-5"					
A572 L	23	15'-7"	373	STR	20'-5"							
A572 S					10'-8"							
A573	23	11'-11"	286	16	11'-4"		0'-5"			0'-5"		
A579	147	6'-9"	1430	16	6'-2"		0'-5"			0'-5"		
A580	147	23'-8"	3227	1	19'-0"	4'-8"						
A604	147	23'-8"	4840	1	19'-0"	4'-8"						
A605	147	7'-2"	2080	16	6'-7"		0'-6"			0'-5¾"		
A606	6	15'-4"	139	3	5'-2"	2'-10"						
A607	28	8'-4"	351	3	1'-8"	2'-10"						
A612 L	46	15'-7"	1074	STR	20'-5"							
A612 S					10'-8"							
A701	402	24'-2"	19859	2	11'-0"	2'-6"	11'-0"					
A704	1	19'-2"	40	2	8'-6"	2'-6"	8'-6"					
A705	1	14'-0"	29	2	5'-11"	2'-6"	5'-11"					
A706	1	8'-6"	18	2	3'-2"	2'-6"	3'-2"					
A813	4	34'-4"	367	STR	34'-4"							
A814	4	36'-2"	387	STR	36'-2"							
A815	17	45'-6"	2066	STR	45'-6"							
A816	17	36'-2"	1642	STR	36'-2"							
A821	17	25'-0"	1135	STR	25'-0"							
A822	2	14'-2"	76	19	7'-3"	5'-5"	4'-10"					
A823	1	19'-1"	52	5	7'-3"	12'-3"	0'-0"					
A824	1	19'-1"	52	5	0'-0"	12'-3"	7'-3"					
A902	46	17'-6"	2736	16	16'-3"		0'-11¾"			0'-10"		
		SUB-TOTAL	48322									

NOTES:

1. THE BAR SIZE NUMBER IS SPECIFIED ON THE PLANS IN THE BAR MARK COLUMN. THE FIRST DIGIT WHERE THREE DIGITS ARE USED, AND THE FIRST TWO DIGITS WHERE FOUR ARE USED, INDICATES THE BAR SIZE NUMBER. FOR EXAMPLE, P601 IS A NO. 6 BAR. BAR DIMENSIONS SHOWN ARE OUT TO OUT UNLESS OTHERWISE INDICATED. R INDICATES INSIDE RADIUS. "STD." WRITTEN IN PLACE OF A DIMENSION INDICATES A STANDARD BEND AT THE END OF THE BAR.
2. ALL REINFORCING STEEL TO BE EPOXY COATED.
3. STRAIGHT BARS DENOTED WITH * IMPLEMENT A MECHANICAL CONNECTOR. DIMENSION PROVIDED IS TO THE END OF THE CONNECTOR.
4. STRAIGHT BARS DENOTED WITH ** WILL BE THREADED INTO A MECHANICAL CONNECTOR. DIMENSION PROVIDED DOES NOT INCLUDE PORTION THREADED INTO CONNECTOR.

DESIGN-BUILDER

DESIGNER URS

REVIEWED	DATE
MSG	06/2014
STRUCTURE FILE NUMBER	
5705533/5705509	

DRAWN	REVISED
AJK	

DESIGNED	CHECKED
DJB	CAR

ISSUE NO.	ISSUE DATE
1	07/10/14
2	10/06/14
RD	10/25/18

REINFORCING LIST (3 OF 3)

BRIDGE NO. MOT-70-1130 L&R
OVER S.R. 48

MOT-70-10.79
PID No. 76667

076667_BU02-SR48 Bridge_AsBuilt
G:\GrandRapids\DCS\Projects\12944308\structures\MOT070_1130_SR48\sheets\070_1130LRL004.dgn 4/5/2019 11:01:49 AM niles j

ISOMETRIC OF LOGO AND LETTERING ON BRIDGE

SECTION OF LOGO AND LETTERING ON BRIDGE

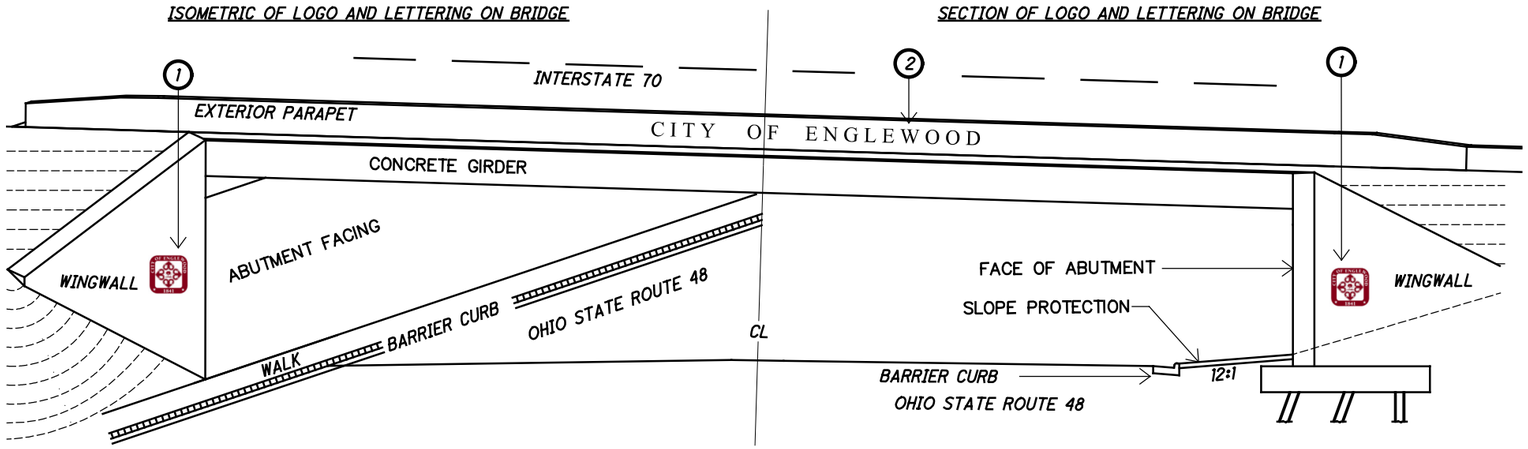

(#) NOTES:

1. CITY OF ENGLEWOOD CUSTOM FORMLINER FURNISHED BY CONTRACTOR. IMAGE PROVIDED BY LANDSCAPE ARCHITECT OR CITY OF ENGLEWOOD. 6'x6' – 1/2" DEPRESSION FORMLINER TO BE AT ALL FOUR WINGWALLS. APPLY ODOT APPROVED EPOXY PRIMER COAT AND ODOT APPROVED URETHANE SEALER FINISH COLORS – TWO COLORS, MAROON FS 11136 AND INSIGNIA WHITE FS 17925 TO BE APPROVED BY CITY OF ENGLEWOOD. SEE WINGWALL DETAILS FOR MORE INFORMATION.
2. 'CITY OF ENGLEWOOD' CUSTOM FORMLINER LETTERS IN TIMES NEW ROMAN FONT TO BE 24" HEIGHT. LETTERS SHOULD HAVE A WIDE BODY WITH A RECESSED THICKNESS OF APPROXIMATELY 2". SPACING PER PLAN ON BOTH EXTERIOR PARAPETS. APPLY ODOT APPROVED EPOXY PRIMER COAT AND ODOT APPROVED URETHANE SEALER FINISH COLORS – MAROON FS 11136.
3. FORMLINERS AVAILABLE AT:
   1. DAYTON SUPERIOR 937–866–0711
   2. SPEC FORMLINERS 888–429–9550
   3. CUSTOMROCK FORMLINER 800–637–2447
   4. OR EQUAL

1 6' x 6' EMBLEM

2

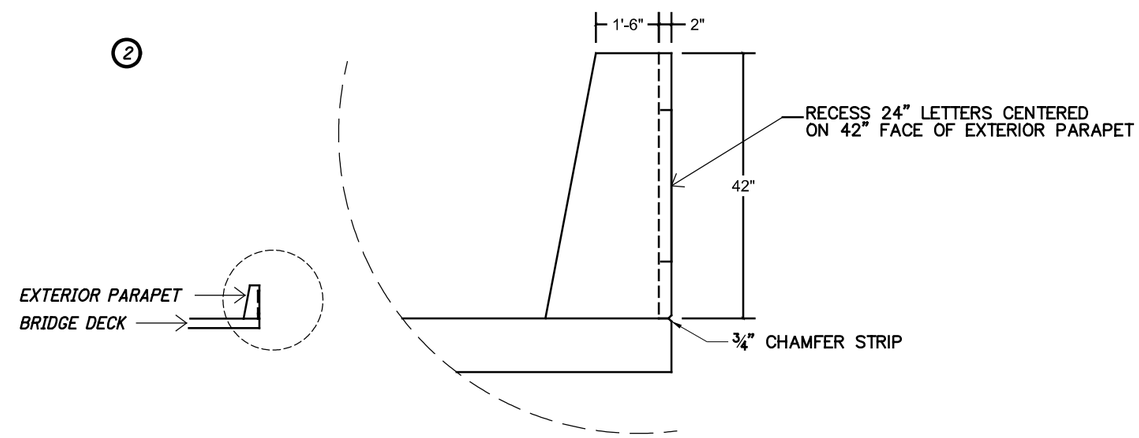

LETTERING ON EXTERIOR PARAPET

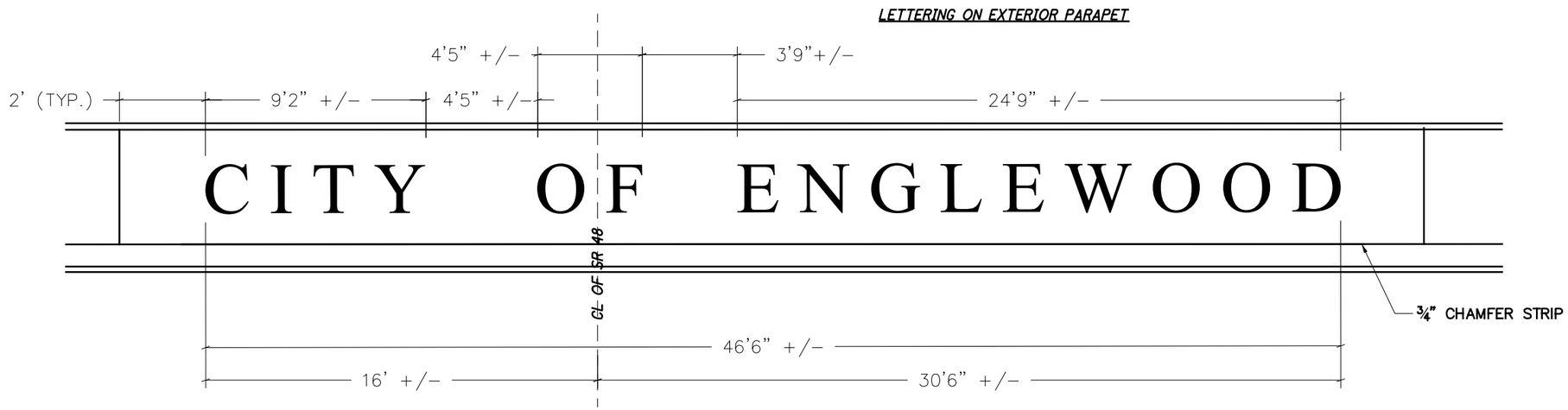

DESIGN-BUILDER

DESIGNER URS

DATE	REVIEWED	STRUCTURE FILE NUMBER
06/2014	MSG	5705533/5705509

DRAWN	REVISED
CC	

DESIGNED	CHECKED
AB	NV

ISSUE NO.	ISSUE DATE
1	07/10/14
RD	10/25/18

FRAMING PLAN (LEFT BRIDGE)

BRIDGE NO. MOT-70-1130 L&R OVER S.R. 48

MOT-70-10.79

PID No. 76667

076667_BU02-SR48 Bridge_AsBuilt
G:\GrandRapids\DCS\Projects\12944308\structures\MOT070_1130_SR48\sheets\070_1130LMD005.dgn 4/5/2019 11:01:50 AM niles j

LEGEND

UNDERPASS LUMINAIRE, 150 WATT HPS, S-N-IV IES DISTRIBUTION

C-1 LUMINAIRE IDENTIFICATION NUMBER

PB-1 PULL BOX, SIZE AS NOTED WITH IDENTIFICATION NUMBER

PROPOSED LIGHTING CONDUIT, 725.04 (NUMBER AND SIZE CONDUCTORS AND CONDUIT SIZE AS NOTED)

"C" CIRCUIT IDENTIFICATION

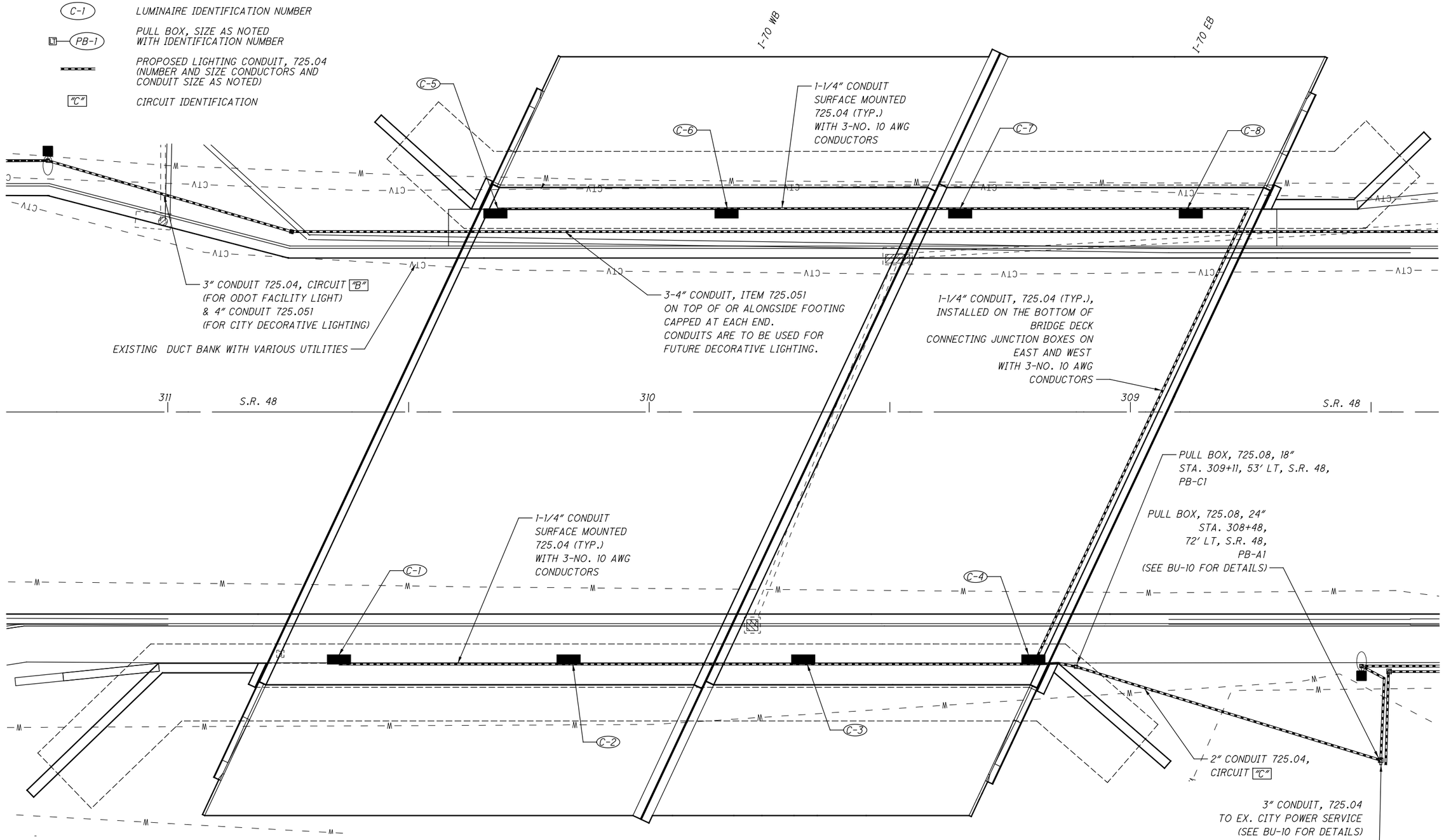

310+64, 52' LT, S.R. 48, UNDERPASS LUMINAIRE 150 WATT HPS — C-1

310+16, 52' LT, S.R. 48, UNDERPASS LUMINAIRE 150 WATT HPS — C-2

309+68, 52' LT, S.R. 48, UNDERPASS LUMINAIRE 150 WATT HPS — C-3

309+20, 52' LT, S.R. 48, UNDERPASS LUMINAIRE 150 WATT HPS — C-4

310+32, 42' RT, S.R. 48, UNDERPASS LUMINAIRE 150 WATT HPS — C-5

309+84, 42' RT, S.R. 48, UNDERPASS LUMINAIRE 150 WATT HPS — C-6

309+35, 42' RT, S.R. 48, UNDERPASS LUMINAIRE 150 WATT HPS — C-7

308+87, 42' RT, S.R. 48, UNDERPASS LUMINAIRE 150 WATT HPS — C-8

DESIGN-BUILDER

DESIGNER URS

DESIGNED CX CHECKED MSG

ISSUE NO.	ISSUE DATE
1	01/10/14
RD	02/20/19

UNDERPASS LIGHTING PLAN
I.R. 70 BRIDGE OVER S.R. 48

MOT-70-10.79

PID No. 76667

0 5 10 20 HORIZONTAL SCALE IN FEET

076667_BU02-SR48 Bridge_AsBuilt
G:\GrandRapids\DCS\Projects\12944308\lighting\sheets\BU • 2 Lighting\76667LD001.dgn 4/5/2019 11:01:59 AM niles;

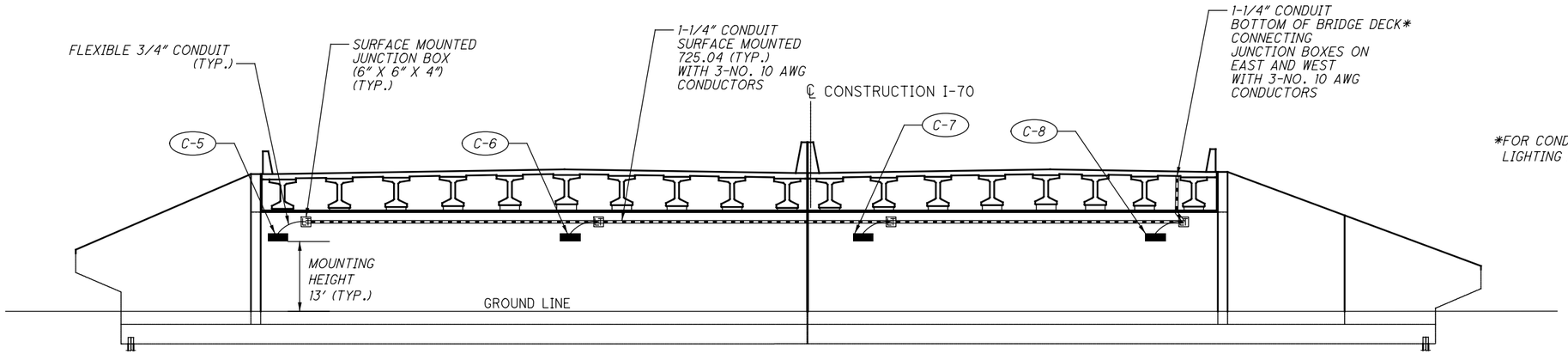

*FOR CONDUIT ATTACHMENT DETAILS REFER TO LIGHTING ATTACHMENT SHEETS 80-89.

I-70 OVER S.R. 48 (S. MAIN STREET)
UNDERPASS ELEVATION VIEW OF FORWARD ABUTMENT
S.R. 48 LOOKING EAST
(NOT TO SCALE)

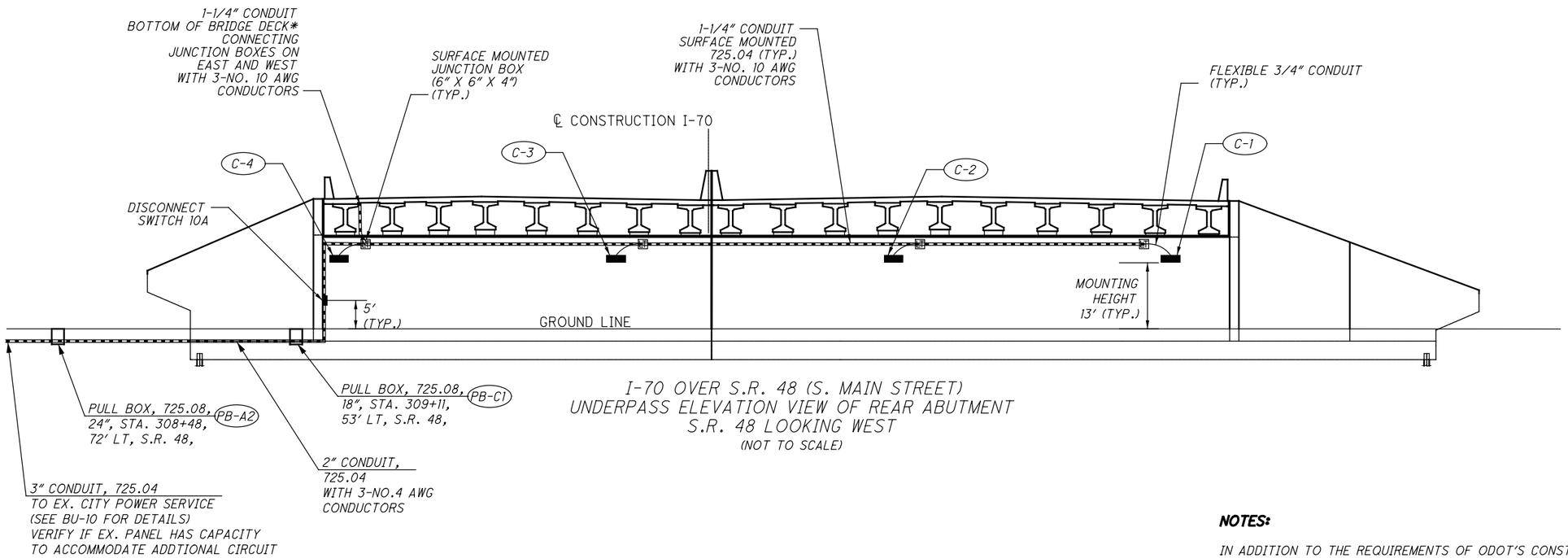

I-70 OVER S.R. 48 (S. MAIN STREET)
UNDERPASS ELEVATION VIEW OF REAR ABUTMENT
S.R. 48 LOOKING WEST
(NOT TO SCALE)

310+64, 52' LT, S.R. 48, UNDERPASS LUMINAIRE 150 WATT HPS (C-1)
310+16, 52' LT, S.R. 48, UNDERPASS LUMINAIRE 150 WATT HPS (C-2)
309+68, 52' LT, S.R. 48, UNDERPASS LUMINAIRE 150 WATT HPS (C-3)
309+20, 52' LT, S.R. 48, UNDERPASS LUMINAIRE 150 WATT HPS (C-4)
310+32, 52' RT, S.R. 48, UNDERPASS LUMINAIRE 150 WATT HPS (C-5)
309+84, 52' RT, S.R. 48, UNDERPASS LUMINAIRE 150 WATT HPS (C-6)
309+35, 52' RT, S.R. 48, UNDERPASS LUMINAIRE 150 WATT HPS (C-7)
308+87, 52' RT, S.R. 48, UNDERPASS LUMINAIRE 150 WATT HPS (C-8)

POWER SERVICE DATA

POWER SERVICE	CIRCUIT NO.	CIRCUIT LOAD (AMPS)	CIRCUIT FUSE SIZE (AMPS)	CIRCUIT CABLE SIZE (AWG)	MAINTAINING AGENCY
EX. 240 VOLT 3-WIRE, SINGLE PHASE	C	6.48	10	4	CITY OF ENGLEWOOD

NOTES:

IN ADDITION TO THE REQUIREMENTS OF ODOT'S CONSTRUCTION AND MATERIAL SPECIFICATIONS, LUMINAIRES FOR UNDERPASS LIGHTING SHALL BE AS FOLLOWS:

LUMINAIRES FOR UNDERPASS LIGHTING UNITS SHALL BE AMERICAN ELECTRIC "SIDELIGHT SERIES 582" WITH PHOTOMETRIC DISTRIBUTION AE2081I, COOPER "WALL LIGHT" WITH PHOTOMETRIC DISTRIBUTION WPK15SXX, GENERAL ELECTRIC "VERSAFLOOD II WALLIGHTER" WITH PHOTOMETRIC DISTRIBUTION 8578, HOLOPHANE "WALLPACK II" TEST WITH PHOTOMETRIC DISTRIBUTION 33263, OR EQUAL AS APPROVED BY THE ENGINEER.

LUMINAIRES FOR UNDERPASS LIGHTING UNIT WHICH ARE WALL MOUNTED SHALL BE FURNISHED WITH AN INTEGRAL FUSE HOLDER AND 10-AMPERE FUSES.

LIGHTING CONDUIT WAS ATTACHED TO THE BOTTOM OF THE BRIDGE DECK. FOR CONDUIT ATTACHMENT DETAILS REFER TO LIGHTING ATTACHMENT SHEETS 80-89.

DESIGN-BUILDER
DESIGNER URS
DESIGNED CX CHECKED MSG

ISSUE NO.	ISSUE DATE
1	07/10/14
RD	02/20/19

UNDERPASS LIGHTING DETAILS I.R.70 OVER S.R. 48

MOT-70-10.79
PID No. 76667

HORIZONTAL SCALE IN FEET

076667_BU02-SR48 Bridge_AsBuilt
G:\GrandRapids\DCS\Projects\12944308\lighting\sheets\BU • 2 Lighting\76667LD002.dgn 4/5/2019 11:02:01 AM niles j

076667_BU02-SR48 Bridge_AsBuilt

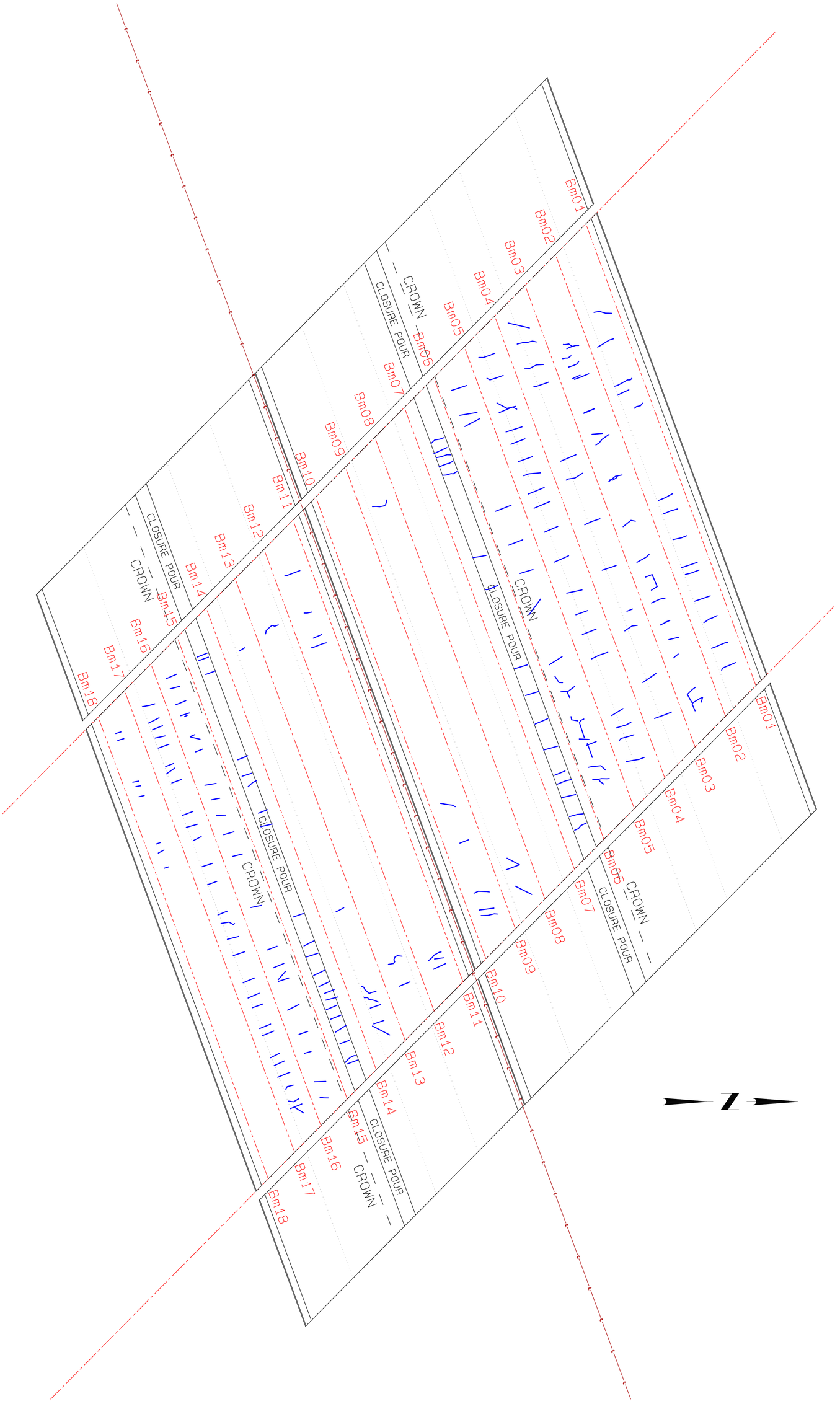

SHELLY & SANDS, INC.
1515 Harmon Ave
Columbus, OH 43216
Phone 614/444-5100 Fax 614/444-5481

Job: B3024-013 I70 Bridges, Dayton-JRJ
Drawn By: John Dowalter, PE PS
Print Date: 5/17/2017
Survey Info: 5/5/17, 5/10/17 GJ, CR, PLJ

CRACK MAPPING OF BOTTOM OF DECK

#1 - Bridge 1130 _ I70 over SR48

GRAPHIC SCALE 1"=10'
0 10 20 30

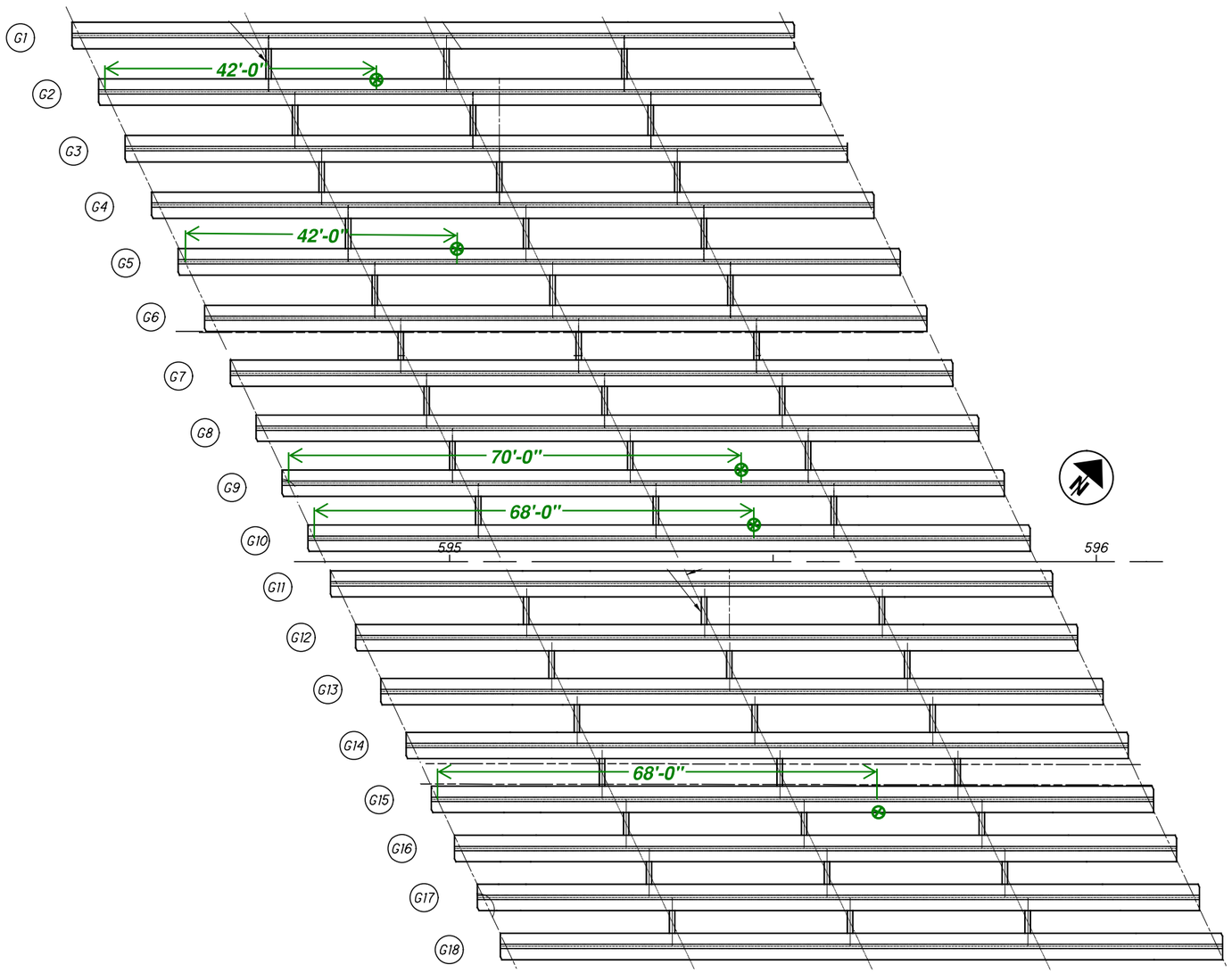

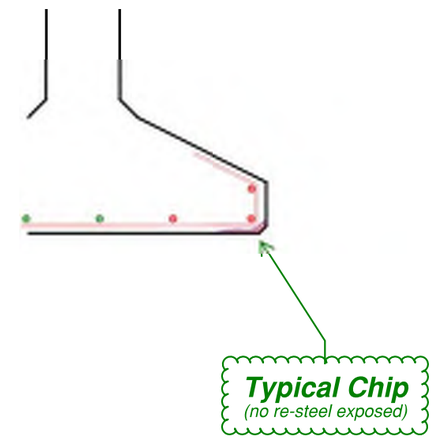

076667_BU02-SR48 Bridge_AsBuilt