4055

# STATE OF OHIO
# DEPARTMENT OF TRANSPORTATION
# OTT-2-16.60

ERIE TOWNSHIP
BAY TOWNSHIP
OTTAWA COUNTY

| OTTAWA COUNTY OTT-2-16.60 | OHIO |
|---|---|
| | FHWA REGION 5 |
| NH-79(51) PID:3586 | FEDERAL PROJECT |

1/367

## DESIGN DESIGNATION

| | | |
|---|---|---|
| Current ADT (1996) | = | 13,200 |
| Design Year ADT (2016) | = | 21,100 |
| D.H.V. | = | 1700 |
| D | = | 60% |
| $T_{24}$ | = | 21% |
| Design Speed | = | 55 MPH/65 MPH |
| Legal Speed | = | 55 MPH/65 MPH |
| Functional Classification | = | Rural Principal Arterial |
| Design Exceptions | = | Shoulder Width Approved: 10-19-95 |
| | = | Superelevation Approved: 10-19-95 |

UNDERGROUND UTILITIES
TWO WORKING DAYS BEFORE YOU DIG
CALL 800-362-2764 (TOLL FREE)
OHIO UTILITIES PROTECTION SERVICE
NON-MEMBERS
MUST BE CALLED DIRECTLY

MICROFILMED
JUL 25 1997

## CONVENTIONAL SIGNS

County Line
Township Line
Section Line
Corporation Line or
Fence Line (existing) (proposed)
Center Line 352 353
Trees, Stumps, (to be removed)
Utility Poles: Telephone, Power, Light

Limited Access (only) LA
Right of Way (only) RW
Limited Access & Right of Way LA & RW
Existing Right of Way
Property Line (in existing fence)
Railroad or
Guardrail (existing) (proposed)

## INDEX OF SHEETS


| | |
|---|---|
| Title Sheet | 1 |
| Schematic Plan | 2-3 |
| Typical Sections | 4-12, 9A |
| General Notes | 13-15 |
| Maintenance of Traffic | 16-63, 20A, 22A |
| General Summary | 64-67 |
| Calculations & Subsummaries | 68-96, 96A |
| Superelevation Table | 97 |
| Storm Water Pollution Prevention Plan | 98 |
| Plan & Profile (Mainline) | 99-124 |
| Plan & Profile (Ramps, SR 53) | 125-129 |
| Cross-Sections (Mainline) | 130-181 |
| Cross-Sections (Ramps, SR 53) | 182-198, 181A |
| Slope Repair | 199-223, 200A |
| Miscellaneous Details | 224-238, 224A |
| Structures | 263-363, 270A, 336A |
| Right-of-Way | 364-367 |


NOTE:
SHEETS NO. 72, 73, 75 & 232
HAVE BEEN OMITTED

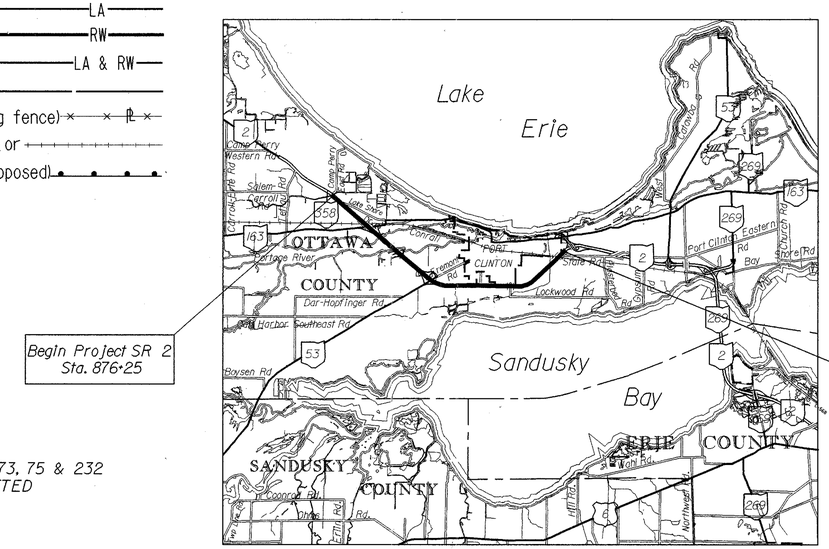


LOCATION MAP
LATITUDE 41°30′ LONGITUDE 82°58′
SCALE IN MILES
0 2 4 6 8

Portion to be improved
State and Federal Routes
Other Roads

## SCALES

Plan 0 50 100
Profile: Horizontal 0 50 100, Vertical 0 5 10
Cross Section: Horizontal 0 5 10, Vertical 0 5 10

## LINE DATA

Project Length SR 2 (rural)
Sta. 876+25 to 1094+86.19 = 21861.19
Sta. 1104+99.33 to 1147+96.70 = 4297.37
Sta. 1154+96.84 to 1222+84.36 = 6787.52
Sta. 1230+80.99 to 1235+60 = 479.01
33,425.09 Lin. Ft.

Project Length SR 2 (Port Clinton)
Sta. 1094+86.19 to Sta. 1104+99.33 = 1013.14
Sta 1147+96.70 to Sta. 1154+96.84 = 700.14
Sta. 1222+84.36 to Sta. 1230+80.99 = 796.63
2509.91 Lin. Ft.

Total Lenth of Project = 35,935.00 Lin. Ft.
= 6.806 Miles

Work Length SR 2
Sta. 876+00 to 1236+50 = 36,050 Lin. Ft.
SR 53
Sta. 262+50 to 287+50 = 2500 Lin. Ft.
Length of Work = 38,550 Lin. Ft.
= 7.301 Miles

Project: OTT-2-16.60
Date of Letting _____ 19_ , Contract No. _____

Plan Prepared By
OHIO DEPARTMENT
OF TRANSPORTATION
DISTRICT 2

## LIMITED ACCESS

This improvement is especially designed for through traffic and has been declared a limited access highway or freeway by action of the Director, Department of Transportation, in accordance with the provisions of Section 5510.02 of the Revised Code of Ohio.

## 1995 SPECIFICATIONS

The standard specifications of the State of Ohio, Department of Transportation, including changes and supplemental specifications listed in the proposal shall govern this improvement.

I hereby approve these plans and declare that the making of this improvement will not require the closing to traffic of the mainline SR 2. Ramp detours, where required, are shown on sheet nos.20 & 20A . Provisions for the maintenance and safety of traffic will be as set forth on the plans and estimates.

'UNDER AUTHORITY OF SECTION 4511.21, DIVISION (I) OF THE REVISED CODE OF OHIO, THE REVISED PRIMA FACIE SPEED LIMITS AS INDICATED HEREIN ARE DETERMINED TO BE REASONABLE AND SAFE, AND ARE HEREBY ESTABLISHED FOR THE DURATION OF THIS PROJECT. THE PRIMA FACIE SPEED LIMIT OR LIMITS HEREBY ESTABLISHED SHALL BECOME EFFECTIVE WHEN APPROPRIATE SIGNS GIVING NOTICE THEREOF ARE ERECTED.'

Approved James L McCarty
Date 9-21-95 District Deputy Director of Transportation

Approved Richard L Engel
Date 10/10/95 Engineer, Bureau of Bridges and Structural Design

| SUPPLEMENTAL SPECIFICATIONS | | |
|---|---|---|
| 802 | 3-23-95 | |
| 820 | 6-14-95 | |
| 839 | 6-14-95 | |
| 931 | 7-17-95 | |
| 944 | 3-23-95 | |
| 910 | 7-17-95 | |
| 815 | 7-17-95 | |

Approved
Date 11-13-95 Director, Department of Transportation

DEPARTMENT OF TRANSPORTATION
FEDERAL HIGHWAY ADMINISTRATION

APPROVED:

DIVISION ADMINISTRATOR DATE

SUPPLEMENTAL PRINTS OF STANDARD CONSTRUCTION DRAWINGS

| | | | | | | | | | | | | | | | |
|---|---|---|---|---|---|---|---|---|---|---|---|---|---|---|---|
| BP-1.1 | 2-21-92 | CB-3A | 5-1-79 | GR-3.1 | 5-6-91 | HW-4B | 4-1-80 | MT-95.30 | 10-10-88 | MT-99.10 | 11-14-86 | TC-52.20 | 4-3-79 | AS-1-81 | 11-27-81 |
| BP-2.1 | 10-28-94 | CB-4 | 11-10-83 | GR-3.2 | 5-6-91 | | | MT-95.31 | 10-10-88 | MT-99.20 | 4-29-88 | TC-61.10 | 4-5-82 | BR-1 | 5-29-79 |
| BP-2.2 | 10-28-94 | CB-6 | 5-1-79 | GR-3.4 | 5-6-91 | | | MT-95.32 | 8-25-89 | MT-100.00 | 2-23-90 | TC-65.10 | 2-1-90 | DBR-2-73 | 4-10-73 |
| BP-2.3 | 2-21-92 | CB-8 | 11-10-83 | GR-4.2 | 5-6-91 | MC-1 | 6-13-69 | MT-95.40 | 10-1-92 | MT-105.10 | 7-1-92 | TC-65.11 | 2-1-90 | RB-1-55 | 2-2-59 |
| BP-2.4 | 2-21-92 | I-3A&B | 4-1-80 | GR-4.3 | 2-21-92 | MC-4 | 7-26-76 | MT-95.70 | 2-23-90 | MT-105.11 | 7-1-92 | TC-65.12 | 2-1-90 | | |
| BP-2.5 | 2-21-92 | F-2 | 5-1-76 | GR-4.4 | 2-21-92 | MC-6 | 1-30-84 | MT-95.80 | 2-23-90 | TC-35.10 | 8-29-84 | TC-65.13 | 2-1-90 | | |
| BP-3.1 | 2-21-92 | F-3 | 5-1-76 | GR-5.1 | 10-30-92 | MC-7 | 10-15-76 | MT-95.81 | 2-23-90 | TC-41.10 | 8-29-84 | TC-71.10 | 9-10-91 | | |
| BP-4.1 | 2-21-92 | F-5 | 5-1-76 | GR-5.2 | 10-30-92 | MC-9.1 | 10-30-92 | MT-97.10 | 4-29-88 | TC-41.20 | 6-21-94 | TC-72.20 | 2-26-82 | | |
| BP-5.1 | 10-28-94 | F-6 | 5-1-76 | GR-5.3 | 10-30-92 | MC-9.2 | 5-6-91 | MT-97.11 | 10-4-89 | TC42.10 | 8-19-77 | | | | |
| BP-6.1 | 2-21-92 | GR-1.1 | 5-6-91 | GR-6 | 2-5-82 | MC-9.3 | 10-30-92 | MT-98.12 | 6-24-93 | TC-42.20 | 3-26-79 | | | | |
| CB-2-2A&B | 5-1-79 | GR-1.2 | 10-30-92 | GR-7.1 | 10-30-92 | MC-9.4 | 10-30-92 | MT-98.13 | 6-24-93 | TC-51.11 | 9-30-94 | | | | |
| CB-2-3&2-4 | 5-1-79 | GR-1.3 | 2-21-92 | GR-8.1 | 1-31-94 | MC-11 | 8-1-78 | MT-98.14 | 6-24-93 | | | | | | |
| CB-3 | 5-1-79 | GR-2.1 | 5-6-91 | HW-4A | 4-1-80 | | | MT-98.15 | 6-24-93 | TC-52.10 | 4-3-79 | | | | |

I:/pd/ottawa/ott2/ott2l6ts.dgn

| FHWA REGION | STATE | PROJECT | |
|---|---|---|---|
| 5 | OHIO | | |



OTT-2-16.60

**CURVE DATA**

P. I. STA. 874+35.18
$\Delta$ = 11°-13'-38" RT.
$D_c$ = 1°-28'
T = 383.98'
R = 3906.53'
L = 765.49'
▲ *max = 0.025

▲ *DESIGN EXCEPTION*
*Superelevation: Proposed = 0.025 max.*
*Required = 0.036 max.*

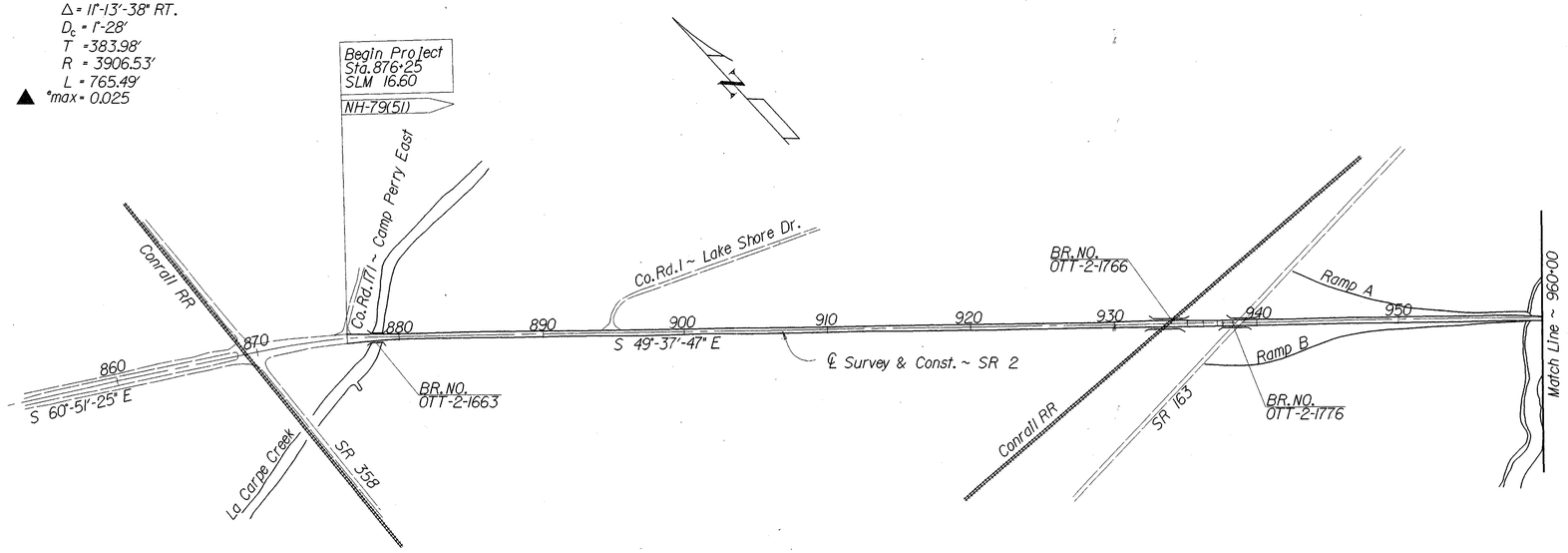


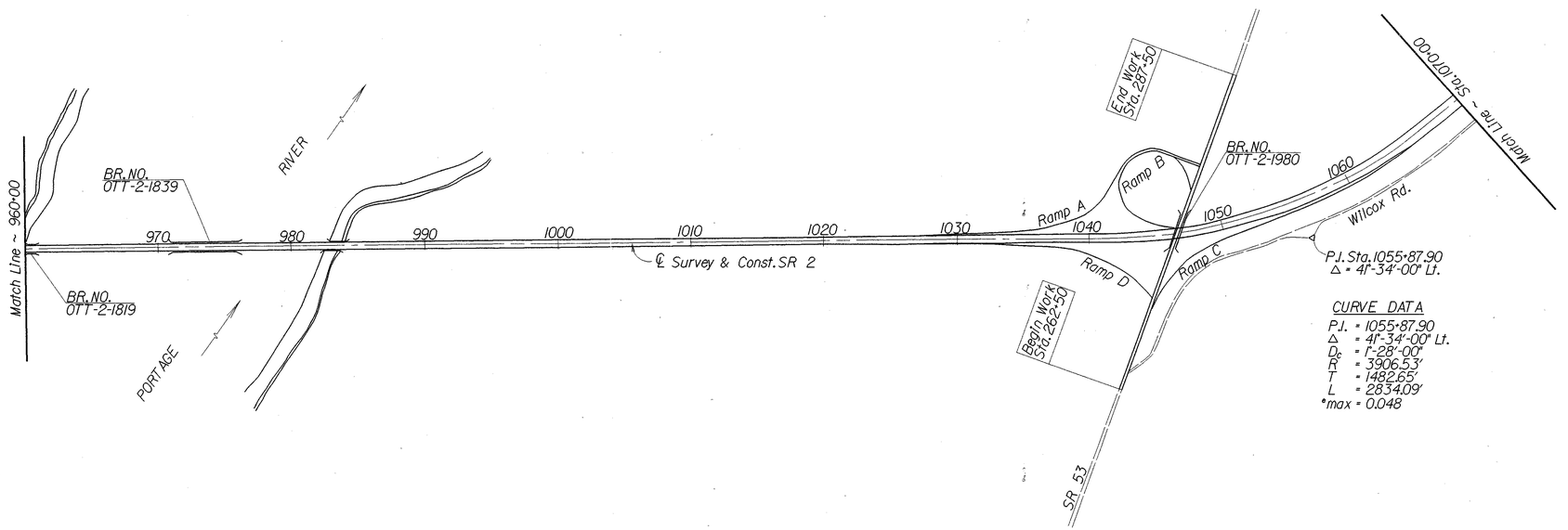


**CURVE DATA**

P.I. = 1055+87.90
$\Delta$ = 41°-34'-00" Lt.
$D_c$ = 1°-28'-00"
R = 3906.53'
T = 1482.65'
L = 2834.09'
*max = 0.048

1:/pd/ottawa/ott2/ot2schem.dgn

SCHEMATIC PLAN

| FHWA REGION | STATE | PROJECT | |
|---|---|---|---|
| 5 | OHIO | | |

3/367

OTT-2-16.60

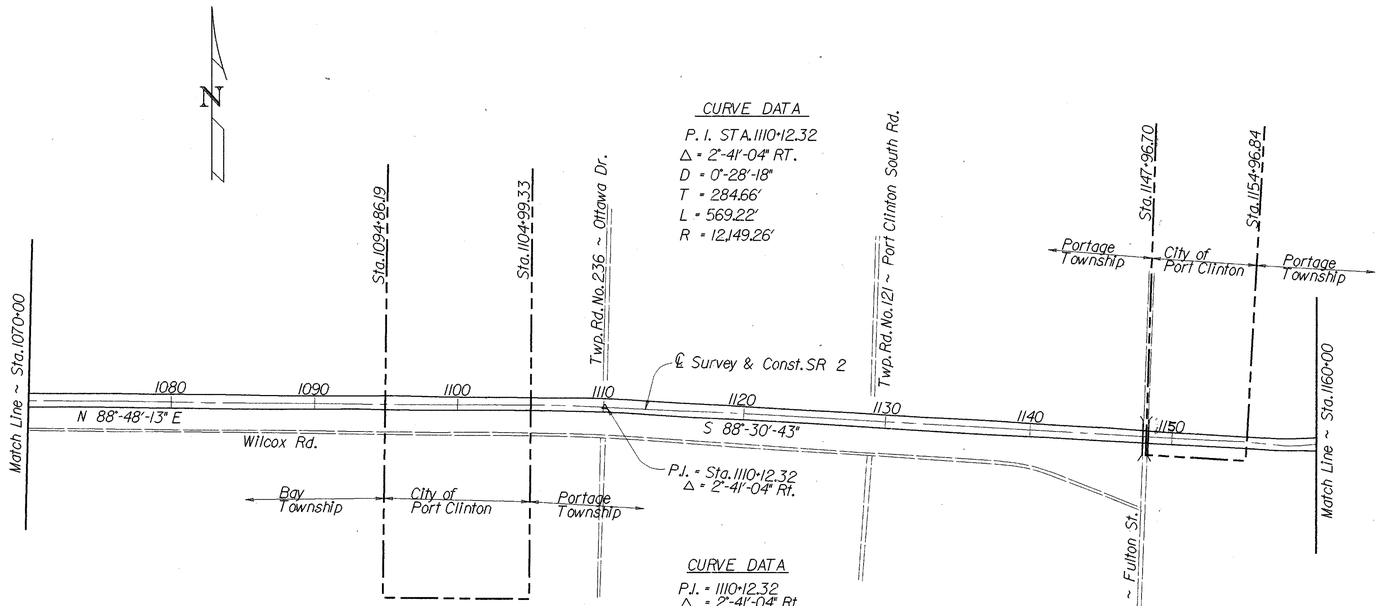


I:/pd/ottawa/ott2/ot2schem.dgn

SCHEMATIC PLAN

| FHWA REGION | STATE | PROJECT | |
|---|---|---|---|
| 5 | OHIO | | |

OTT-2-16.60



# TYPICAL SECTIONS

## TYPE 446

### TYPICAL SECTION A

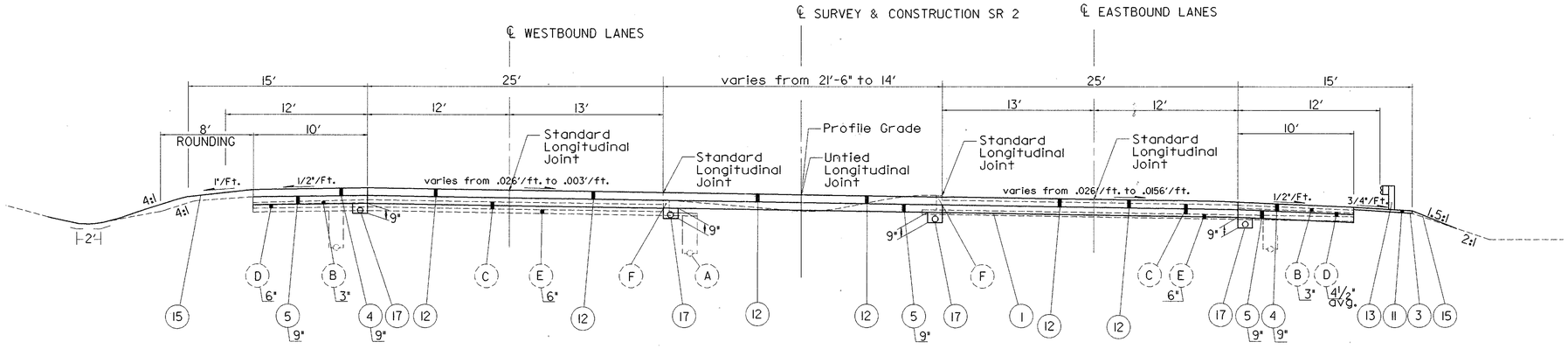


### SUPERELEVATION SECTION

The above Section applies from:

Sta. 876+25 to Sta. 878+00 = 175 Lin. Ft.

#### PAVEMENT LEGEND

(1) Item 203, Subgrade Compaction
(2) Item 609 Curb, Type 2-A
(3) Item 203, Linear Grading
(4) Item 301, Bituminous Aggregate Base, AC-20 (thickness as shown)
(5) Item 304, Aggregate Base (thickness as shown)
(6) Item 407, Tack Coat
(7) Item 611, Reinforced Concrete Approach Slab (T=15")
(8) Item 446, 1¼" Asphalt Concrete Surface Course, Type 1, AC-20
(9) Item 446, 2¼" Asphalt Concrete Intermediate Course, Type 2, AC-20
(10) Item 448, Variable Thickness Asphalt Concrete Intermediate Course Type 2, AC-20
(11) Item 448, 2" Asphalt Concrete Intermediate Course, Type 1(under guardrail),AC-20 as per plan
(12) Item 451, 9" Reinforced Concrete, As Per Plan
(13) Item 606, Type 5 Guardrail
(14) Item 622, Concrete Median Barrier, Type B50
(15) Item 659, Seeding and Mulching
(16) Item 605, Shallow Underdrain, As Per Plan
(17) Item 605, 4" Shallow Pipe Underdrain, 707.15, as per plan
(18) Item 612, Concrete Median
(19) Item 617, Compacted Aggregate, Type A
(20) Item 609, Combination Curb and Gutter, Type 2
(21) Item 305, 9" Concrete Base, As Per Plan

#### EXISTING PAVEMENT

(A) 6" Pipe Underdrains
(B) Bituminous Surface Treated Shoulder (thickness as shown)
(C) 9" Reinforced Concrete
(D) Base Course (thickness as shown)
(E) Subbase (thickness as shown)
(F) Curb, Type 2-A
(G) 3 " Asphalt Concrete
(H) 3" Bituminous Aggregate Base
(I) 2½" Asphalt Concrete

I:/pd/OTTAWA/OTT2/OT216TP.DGN

| FHWA REGION | STATE | PROJECT | |
|---|---|---|---|
| 5 | OHIO | | |

5/367

OTT-2-16.60

# TYPICAL SECTIONS

## TYPE 446

### TYPICAL SECTION B

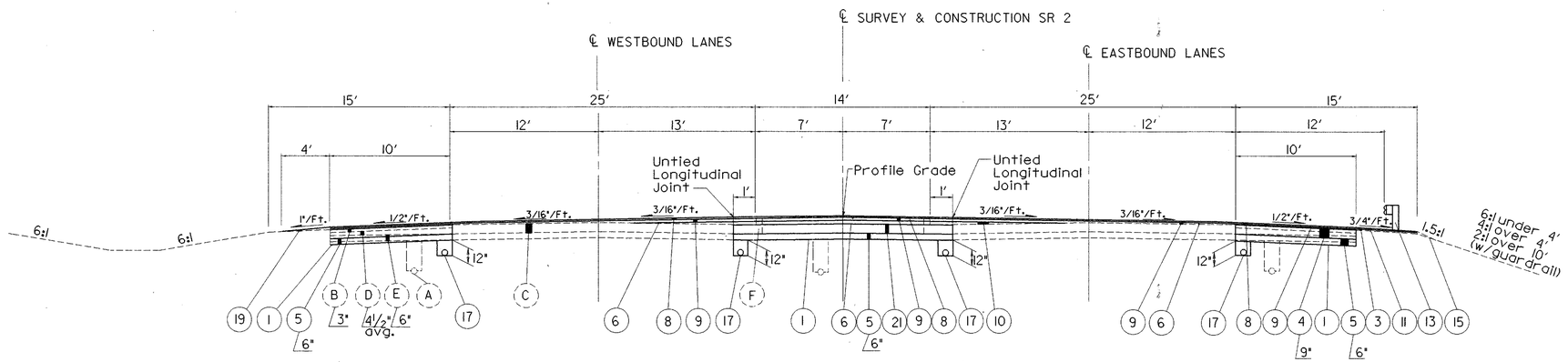


### NORMAL SECTION

The above Section applies from:
Sta. 879+16.5 to Sta. 911+30 = 3213.5 Lin. Ft.

### DETAIL OF EXISTING CURB AND GUARDRAIL MEDIAN

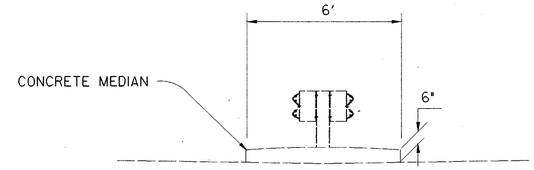


STA. 905+05 TO STA. 1042+95

### TYPICAL SECTION C

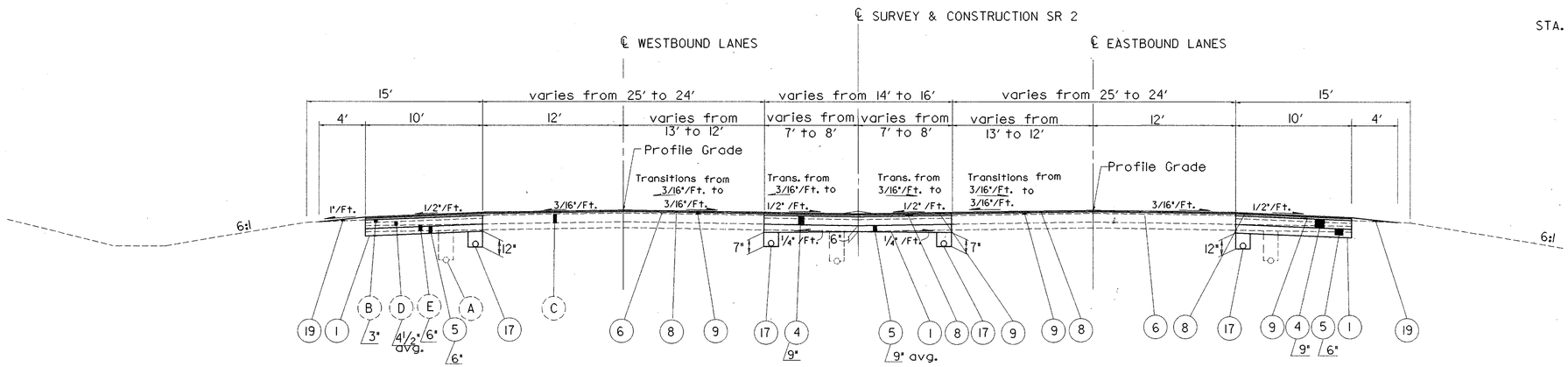


### TRANSITION SECTION

The above Section applies from:
Sta. 911+30 to Sta. 913+50 = 220 Lin. Ft.

I:/pd/OTTAWA/OTT2/OT2I6TPLDGN

| FHWA REGION | STATE | PROJECT | |
|---|---|---|---|
| 5 | OHIO | | |

6/367

OTT-2-16.60

# TYPICAL SECTIONS

## TYPE 446

### TYPICAL SECTION D

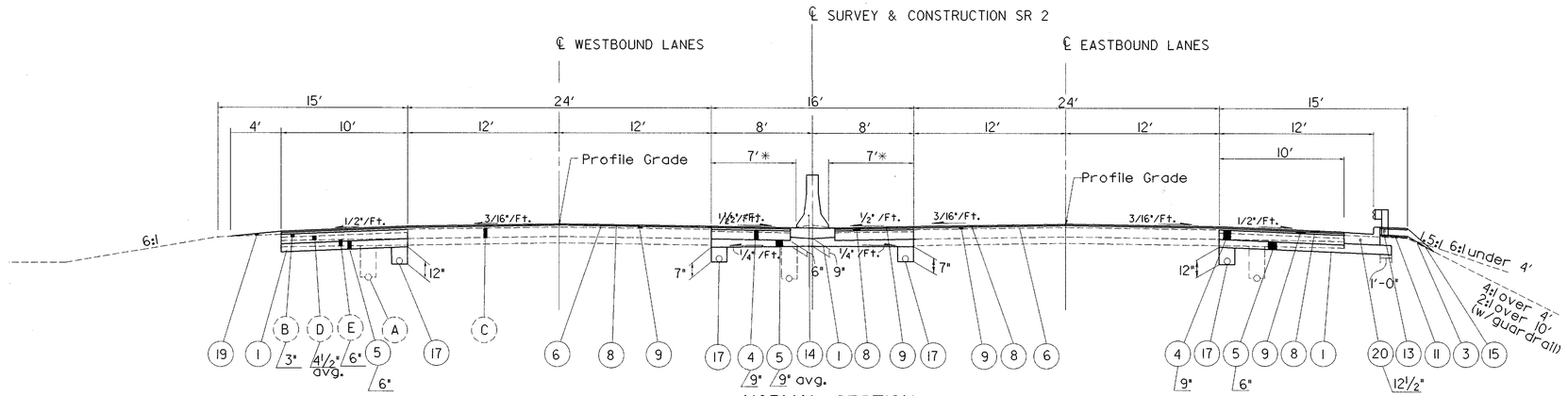


### NORMAL SECTION

The above Section applies from:

| | | | | | | |
|---|---|---|---|---|---|---|
| Sta. | 913+50.00 | to | Sta. | 932+49.05 | = | 1899.05 Lin. Ft. |
| Sta. | 940+06.74 | to | Sta. | 960+25.90 | = | 2019.16 Lin. Ft. |
| Sta. | 960+97.90 | to | Sta. | 970+72.49 | = | 974.59 Lin. Ft. |
| Sta. | 976+30.99 | to | Sta. | 1041+05.06 | = | 6474.07 Lin. Ft. |
| | | | | Total Length | = | 11366.87 Lin. Ft. |

### TYPICAL SECTION E

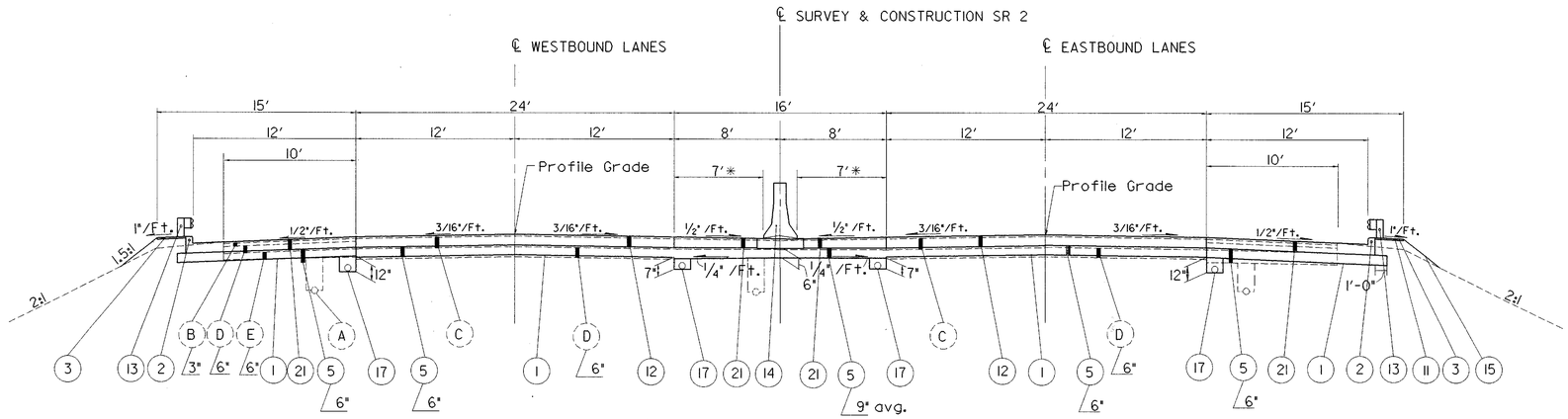


### NORMAL SECTION

The above Section applies from:
Sta. 935+27.36 to Sta. 937+55.41 = 228.05 Lin. Ft.

* Shoulder width Design Exception - 9′ Required

i/pd/OTTAWA/OTT2/OT216TP2.DGN

| FHWA REGION | STATE | PROJECT | |
|---|---|---|---|
| 5 | OHIO | | |

7/367

OTT-2-16.60

# TYPICAL SECTIONS
## TYPE 446

### TYPICAL SECTION F

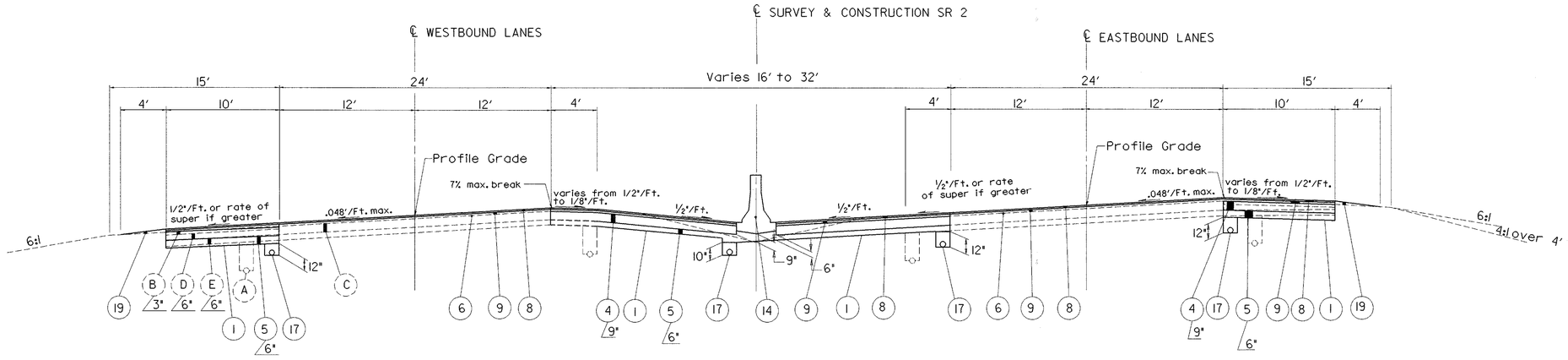


### SUPERELEVATED SECTION

The above Section applies from:
Sta. 1041+05.06 to Sta. 1049+50 = 844.94 Lin. Ft.

### TYPICAL SECTION G

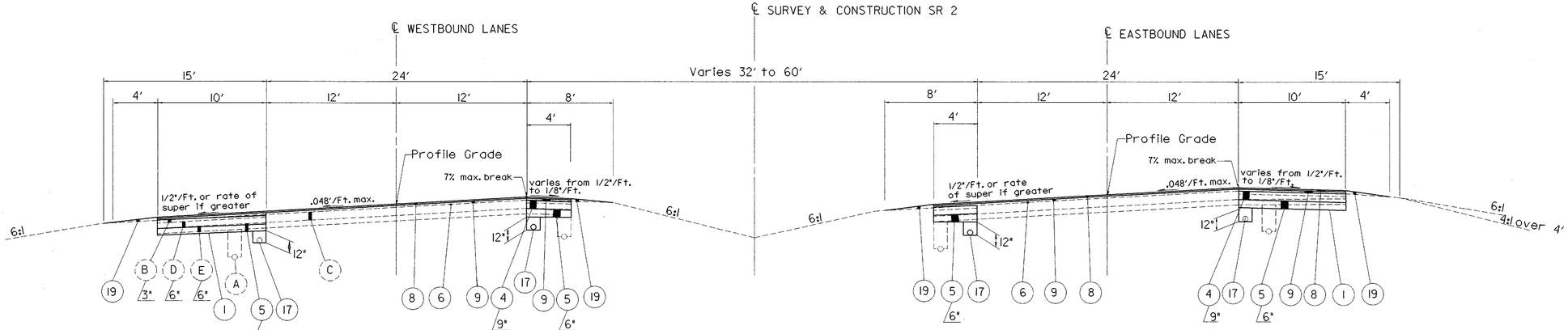


### SUPERELEVATED SECTION

The above Section applies from:
Sta. 1049+50 to Sta. 1069+39.15 = 1989.15 Lin. Ft.

I/pd/OTTAWA/OTT2/OT216TYP3.DGN

| FHWA REGION | STATE | PROJECT | |
|---|---|---|---|
| 5 | OHIO | | |



OTT-2-16.60

## TYPICAL SECTION H

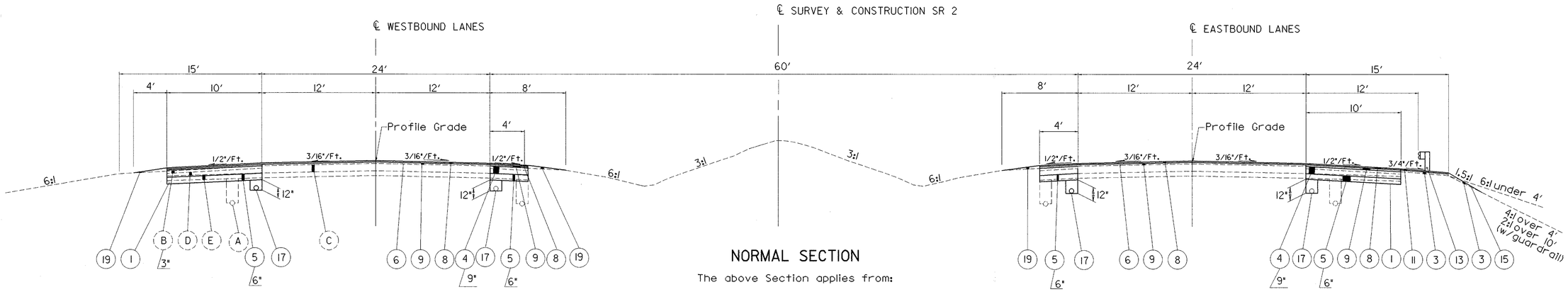


### NORMAL SECTION

The above Section applies from:

| | | | | | | | |
|---|---|---|---|---|---|---|---|
| Sta. | 1069+39.15 | to | Sta. | 1107+27.66 | = | 3788.51 | Lin. Ft. |
| Sta. | 1112+96.88 | to | Sta. | 1156+26.87 | = | 4329.99 | Lin. Ft. |
| Sta. | 1189+19.72 | to | Sta. | 1220+77.35 | = | 3157.63 | Lin. Ft. |
| Sta. | 1226+63.15 | to | Sta. | 1230+52.79 | = | 389.64 | Lin. Ft. |
| | | | | Total Length | = | 11,665.77 | Lin. Ft. |

## TYPICAL SECTION I

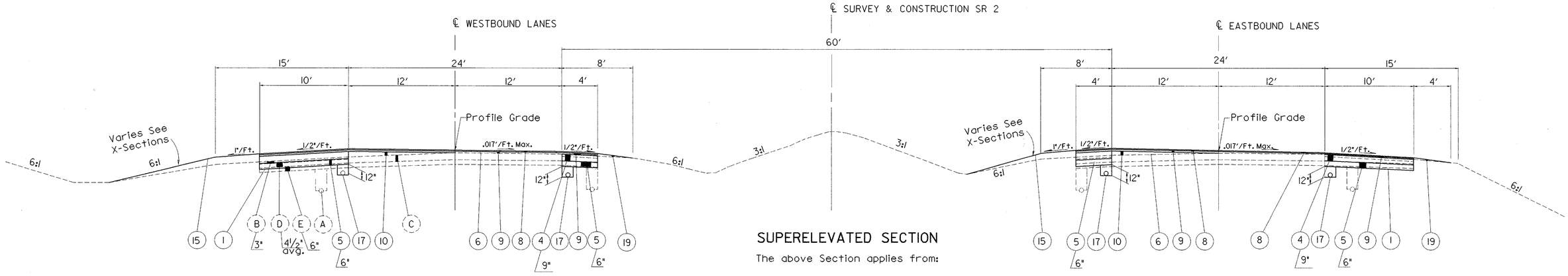


### SUPERELEVATED SECTION

The above Section applies from:

Sta. 1107+27.66 to Sta. 1112+96.88 = 569.22 Lin. Ft.

I:/pd/OTTAWA/OTT2/OT216TP7.DGN

| FHWA REGION | STATE | PROJECT | |
|---|---|---|---|
| 5 | OHIO | | |

OTT-2-16.60



# TYPICAL SECTIONS

## TYPE 446

### TYPICAL SECTION J

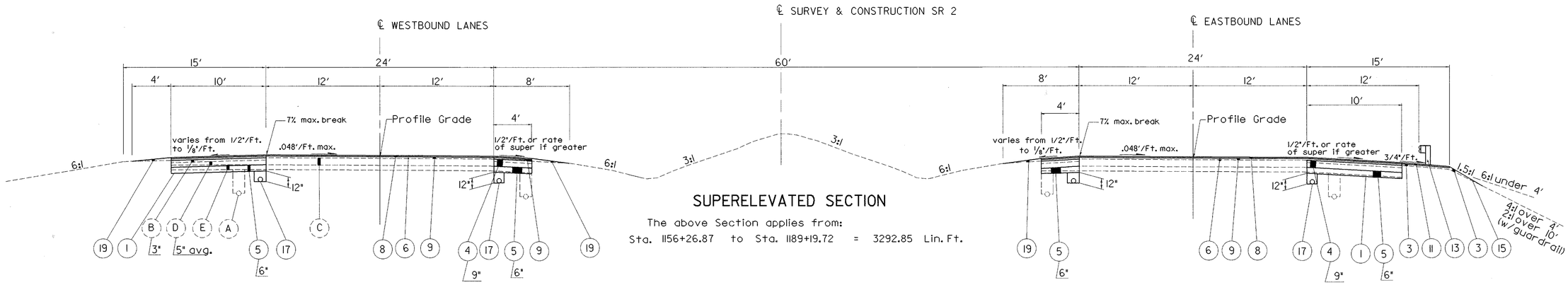


SUPERELEVATED SECTION

The above Section applies from:

Sta. 1156+26.87 to Sta. 1189+19.72 = 3292.85 Lin. Ft.

### TYPICAL SECTION K

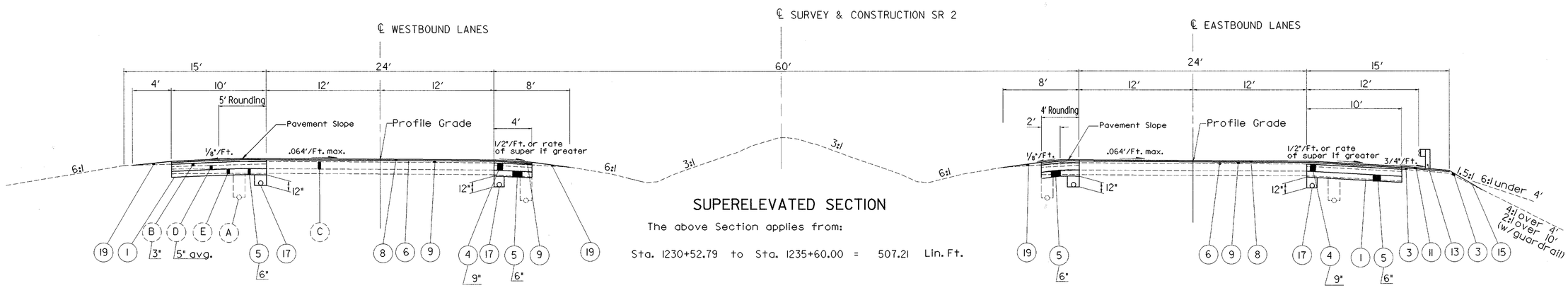


SUPERELEVATED SECTION

The above Section applies from:

Sta. 1230+52.79 to Sta. 1235+60.00 = 507.21 Lin. Ft.

i:/pd/OTTAWA/OTT2/OT216TP6.DGN

| FHWA REGION | STATE | PROJECT | |
|---|---|---|---|
| 5 | OHIO | | |

9A
367

OTT-2-16.60

# TYPICAL SECTIONS
## TYPE 446

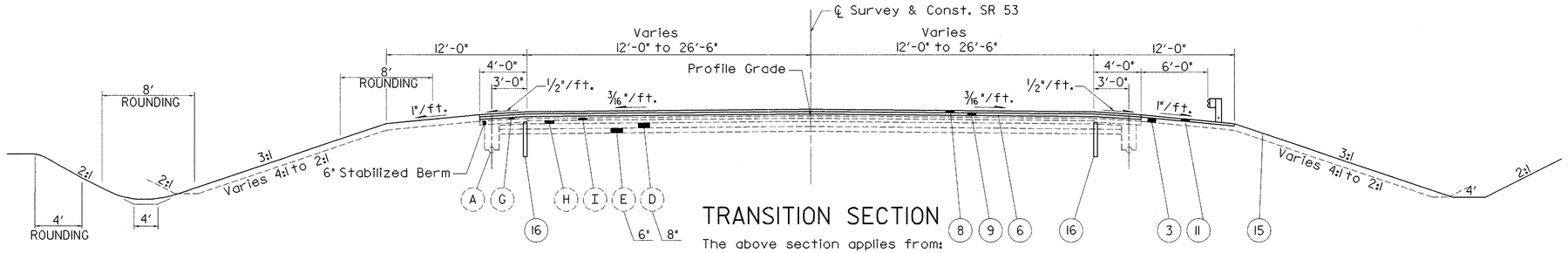


### TRANSITION SECTION

The above section applies from:

SR 53 Sta. 263+25 to 268+44 = 519.0 Lin. Ft.
Sta. 280+97 to 286+75 = 578.0 Lin Ft.
Total length = 1097.0 Lin. Ft.

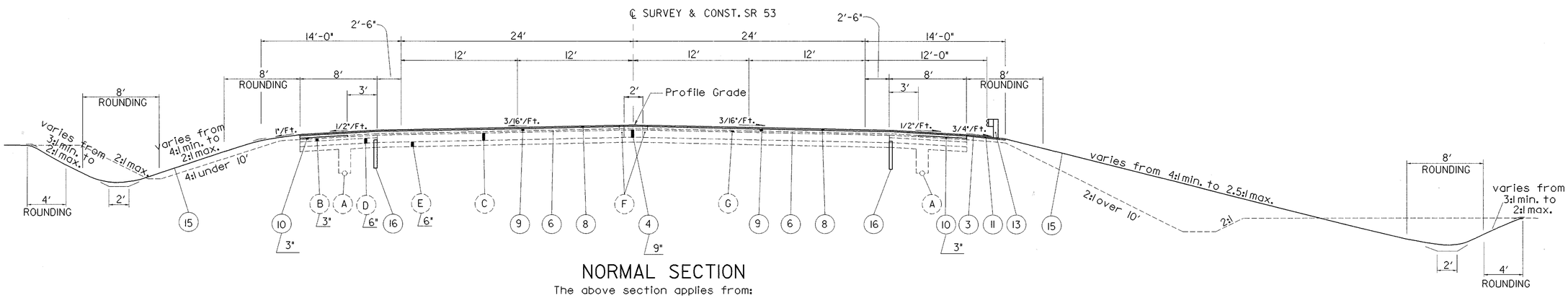


### NORMAL SECTION

The above section applies from:

SR 53 Sta. 268+44 to 273+42.3 = 498.3 Lin. Ft.
Sta. 276+52.4 to 280+97 = 444.6 Lin Ft.
Total length = 942.9 Lin. Ft.

I:/pd/OTTAWA/OTT2/OT216TP9.DGN

| FHWA REGION | STATE | PROJECT | |
|---|---|---|---|
| 5 | OHIO | | |

10
367

OTT-2-16.60

# TYPICAL SECTIONS

## TYPE 446

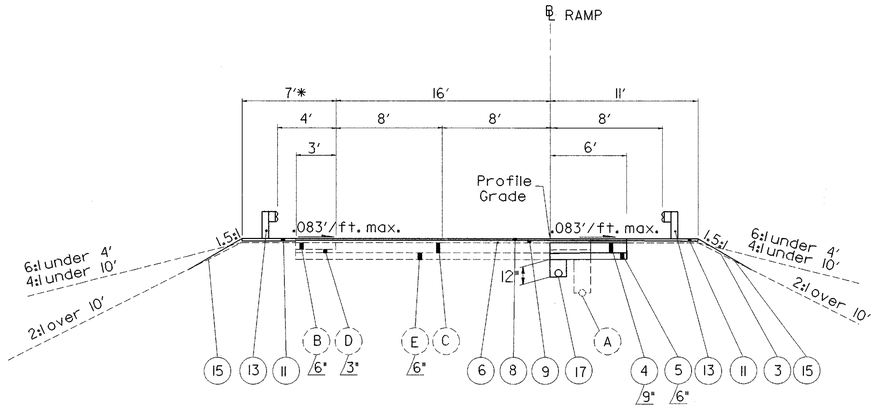


### SUPERELEVATED RAMP SECTION

* Shoulder Width Design Exception - 7' Required

** Shoulder Width Design Exception - 3' Required

The above section applies from:

SR 163 Interchange:

| | | | | |
|---|---|---|---|---|
| Ramp A, | Sta. 5+59.56 | to 1+03.94 | = | 455.62 Lin. Ft. |
| Ramp B, | Sta. 5+91.88 | to 8+41.88 | = | 250.00 Lin. Ft. |
| | | Total Length | = | 705.62 Lin. Ft. |

SR 53 Interchange:

| | | | | |
|---|---|---|---|---|
| Ramp A, | Sta. 10+29.48 | to 5+00.00 | = | 529.48 Lin. Ft. |
| Ramp B, | Sta. 7+32.61 | to 12+79.48 | = | 546.87 Lin. Ft. |
| | Sta. 17+74.10 | to 18+67.14 | = | 93.04 Lin. Ft. |
| Ramp C, | Sta. 3+97.08 | to 7+38.41 | = | 341.33 Lin. Ft. |
| Ramp D, | Sta. 2+00.00 | to 5+01.87 | = | 301.87 Lin. Ft. |
| | | Total Length | = | 1812.59 Lin. Ft. |

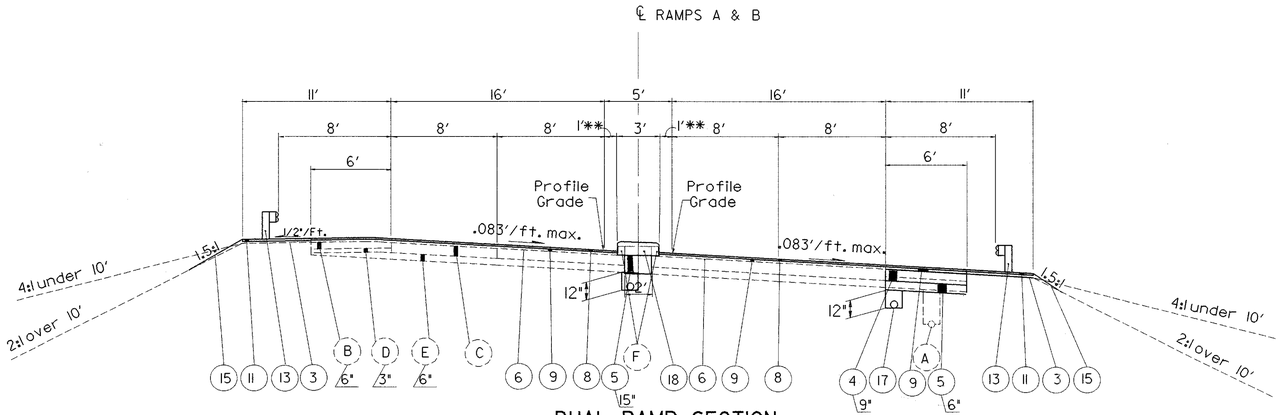


### DUAL RAMP SECTION

The above section applies from:

SR 53 Interchange:

Ramps A & B Sta. 12+79.48 to 16+17.89 = 338.41 Lin. Ft.

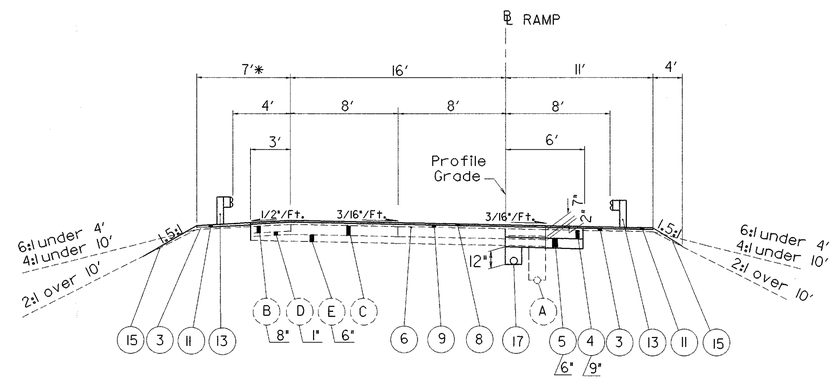


### NORMAL RAMP SECTION

This section applies from:

SR 163 Interchange:

Ramp B, Sta. 2+00.51 to 5+91.88 = 391.37 Lin. Ft. Total Length

SR 53 Interchange:

| | | | | |
|---|---|---|---|---|
| Ramp A, | Sta. 10+29.48 | to 12+79.48 | = | 250.00 Lin. Ft. |
| | Sta. 16+17.89 | to 17+69.55 | = | 151.66 Lin. Ft. |
| Ramp D, | Sta. 5+01.87 | to 7+09.11 | = | 207.24 Lin. Ft. |
| | | Total Length | = | 608.90 Lin. Ft. |

i/pd/OTTAWA/OTT2/OT216TYP4.DGN

# TYPICAL SECTIONS

## APPROACH SLAB
### TYPICAL SECTIONS

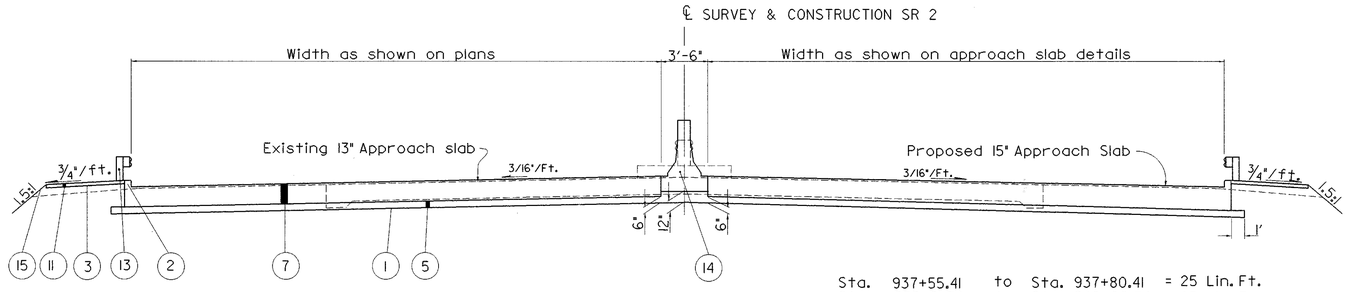


The above section applies from:

Sta. 932+49.05 to Sta. 932+74.05 = 25 Lin. Ft.
Sta. 935+02.36 to Sta. 935+27.36 = 25 Lin. Ft.

Sta. 937+55.41 to Sta. 937+80.41 = 25 Lin. Ft.
Sta. 939+81.74 to Sta. 940+06.74 = 25 Lin. Ft.
Sta. 960+25.90 to Sta. 960+50.90 = 25 Lin. Ft.
Sta. 960+72.90 to Sta. 960+97.90 = 25 Lin. Ft.
Sta. 970+72.49 to Sta. 971+97.49 = 25 Lin. Ft.
Sta. 976+05.99 to Sta. 976+30.99 = 25 Lin. Ft.

Total Length = 200 Lin. Ft.

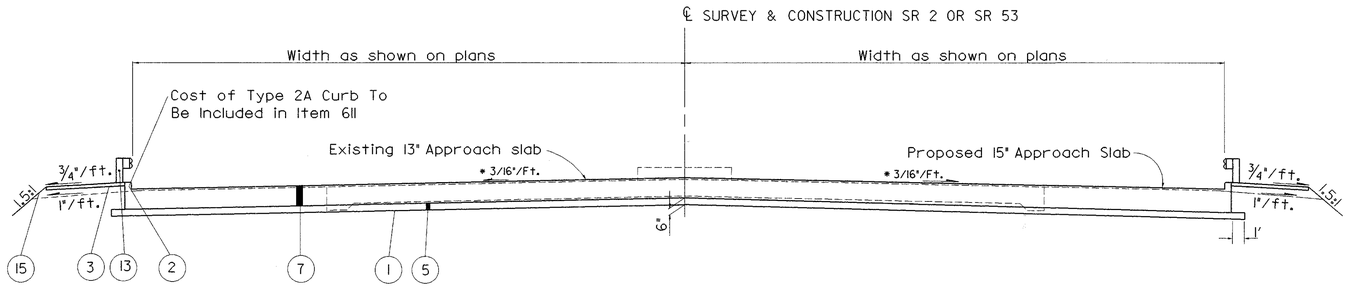


The Above Section Applies From:

Sta. 878+00.0 to Sta. 878+25.0 = 25 Lin. Ft.
Sta. 878+91.5 to Sta. 879+16.5 = 25 Lin. Ft.

Total Length = 50 Lin. Ft.

* Or as shown in the plans

I/PD/OTTAWA/OTT2/OT216TYP5.DGN

| FHWA REGION | STATE | PROJECT | |
|---|---|---|---|
| 5 | OHIO | | |

12/367

OTT-2-16.60

# TYPICAL SECTIONS
## APPROACH SLAB

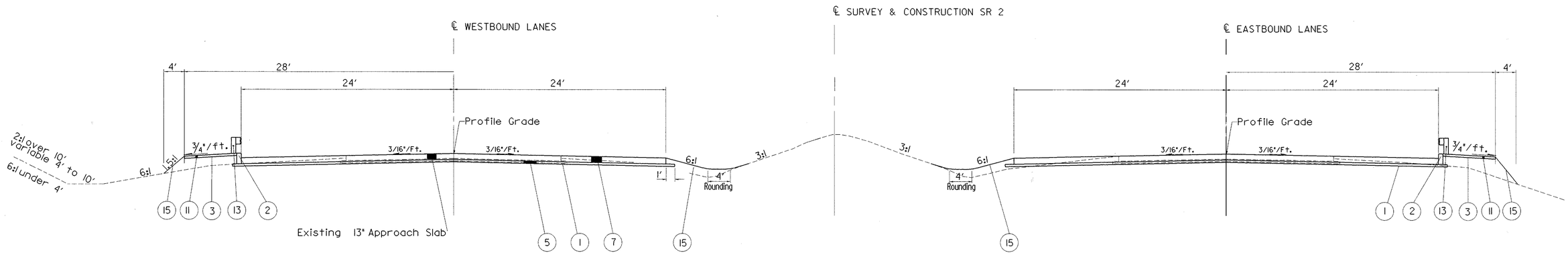


The above Section applies from:

Sta. 1220+77.35 to Sta. 1221+02.35 = 25 Lin. Ft.
Sta. 1226+38.15 to Sta. 1226+63.15 = 25 Lin. Ft.
Total Length = 50 Lin. Ft.

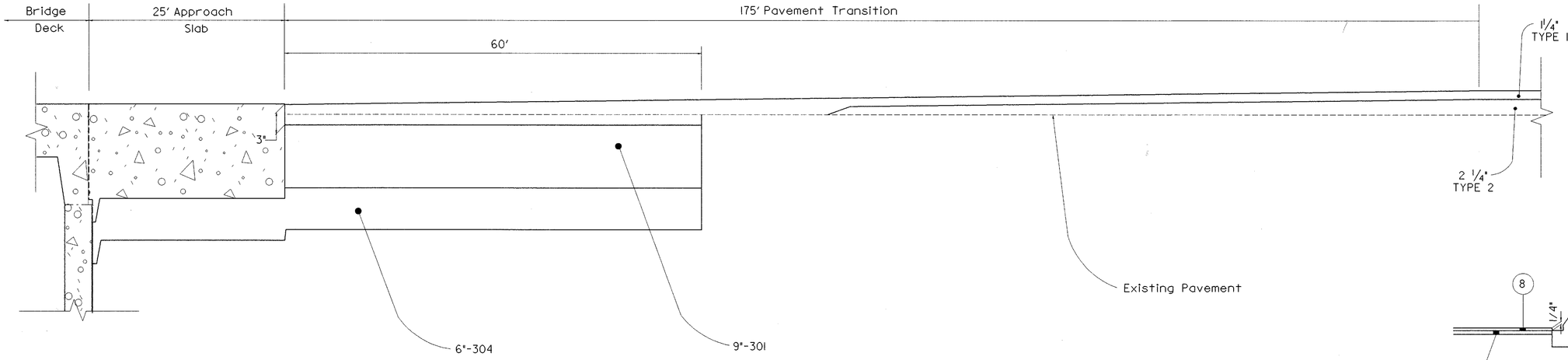


PAVEMENT TRANSITION
AT STRUCTURES

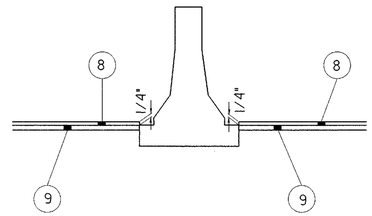


DETAIL OF PAVEMENT
AT THE MEDIAN BARRIER

I:/pd/OTTAWA/OTT2/OT2/GTP8.DGN

# GENERAL NOTES

QUANTITIES
CALC BY ALS DATE 7-14-94
CKD BY MTG DATE 7-18-94

| FHWA REGION | STATE | PROJECT | |
|---|---|---|---|
| 5 | OHIO | | |

OTT-2-16.60

13/367

## ROUNDING OF CORNERS SHOWN ON CROSS SECTIONS:

THE ROUNDED CORNERS SHOWN ON THE TYPICAL SECTIONS APPLY TO ALL CROSS SECTIONS EVEN THOUGH OTHERWISE SHOWN.

## UTILITY OWNERSHIP:

LISTED BELOW ARE ALL UTILITIES LOCATED WITHIN THE PROJECT CONSTRUCTION LIMITS TOGETHER WITH THEIR RESPECTIVE OWNERS:

OHIO EDISON CO.
76 S. MAIN ST.
AKRON, OHIO 44308
(216) 384-7928

AT&T COMMUNICATIONS
3833 WEYMOUTH RD.
MEDINA, OHIO 44256
(216) 723-9100

WILTEL INC.
1468 W. 9TH ST.
SUITE 100
CLEVELAND, OHIO 44113
(216) 579-1010

COLUMBIA GAS CO.
2110 CALDWELL ST.
SANDUSKY, OHIO 44870
(419) 625-4532

GENERAL TELEPHONE COMPANY OF OHIO
300 WEST GYPSY LANE RD.
BOWLING GREEN, OHIO 43402
(419) 354-3521

TCI CABLEVISION OF OHIO
129 MAPLE ST.
PORT CLINTON, OHIO 43452
(419) 734-5905

FRONT ROW CABLEVISION
236 W. WATER ST.
OAK HARBOR, OHIO 43449
(419) 898-0157

## UNDERGROUND UTILITIES:

THE LOCATIONS OF UNDERGROUND UTILITIES SHOWN ON THE PLANS ARE AS OBTAINED FROM THE UTILITES AS REQUIRED BY SECTION 153.64 ORC.

## PROFILE AND ALIGNMENT:

THE PROPOSED PAVEMENT RESURFACING SHALL FOLLOW THE ALIGNMENT AND PROFILE OF THE EXISTING PAVEMENT, (PREVIOUS CONSTRUCTION PLANS, SHOWING THE ORIGINAL ALIGNMENT AND PROFILE ARE AVAILABLE FOR INSPECTION AT THE ODOT OFFICE.) THE PROPOSED ASPHALT CONCRETE OVERLAY SHALL HAVE A UNIFORM THICKNESS OF 3½ INCHES.

## ELEVATION DATUM:

ALL ELEVATION ARE BASED ON THE N.G.S. N.A.V.D. 1988 ADJUSTMENT.

## CONTRACTION JOINTS IN CONCRETE PAVEMENT OR BASE WIDENING:

WHERE NEW CONCRETE IS PLACED ADJACENT TO EXISTING CONCRETE, CONTRACTION JOINTS SHALL BE PROVIDED IN THE NEW CONCRETE SO AS TO FORM CONTINUOUS JOINTS WITH THOSE IN THE EXISTING CONCRETE.

## CONTRACTION AND/OR EXPANSION JOINTS:

ALTHOUGH SPECIFIC LOCATIONS OF CERTAIN CONTRACTION AND EXPANSION JOINTS HAVE BEEN DETAILED ON THIS PLAN, NO WAIVER OF THE SPECIFICATIONS IS INTENDED. PROVISION OF EXPANSION JOINTS AT ALL MAJOR STRUCTURES AND THE MAXIMUM SPACING BETWEEN CONTRACTION JOINTS SHALL, AN ALL CASES, BE IN ACCORDANCE WITH STANDARD CONSTRUCTION DRAWING BP-2.2 AND THE SPECIFICATIONS.

## WORK LIMITS:

THE WORK LIMITS SHOWN ON THESE PLANS ARE FOR PHYSICAL CONSTRUCTION ONLY. THE INSTALLATION AND OPERATION OF ALL TEMPORARY TRAFFIC CONTROL AND TEMPORARY TRAFFIC CONTROL DEVICES REQUIRED BY THESE PLANS SHALL BE PROVIDED BY THE CONTRACTOR WHETHER INSIDE OR OUTSIDE THE WORK LIMITS.

## ITEM 203, PROOF ROLLING, AS PER PLAN:

THE FIRST SENTENCE AND SECOND PARAGRAPH OF 203.14(b) SHALL NOT APPLY.

GRANULAR MATERIAL SHALL BE USED IF NEEDED TO PROVIDE A UNIFORM SURFACE UPON WHICH TO ROLL AND TO FILL DEPRESSIONS IF THEY OCCUR. ROLLING SHALL CONTINUE UNTIL NO DEPRESSIONS OCCUR. THE GRANULAR MATERIAL SHALL BE CONSIDERED AS INCIDENTAL TO THE ROLLING OPERATION.

ITEM 203 PROOF ROLLING, AS PER PLAN 3 HOURS

## LOCATION OF GUARDRAIL:

THE LOCATIONS OF GUARDRAIL RUNS, AS SHOWN IN THE THESE PLANS, ARE SUBJECT TO ADJUSTMENT PRIOR TO FINAL ACCEPTANCE . THE ENGINEER SHALL BE SATISFIED THAT ALL INSTALLATIONS WILL AFFORD MAXIMUM PROTECTION FOR TRAFFIC.

## GUARDRAIL REPLACEMENT:

NO HAZARD SHALL BE LEFT UNPROTECTED EXCEPT FOR THE ACTUAL TIME NECESSARY TO REMOVE, GRADE, AND REINSTALL IN A CONTINUOUS OPERATION. THE REMOVAL OF ALL GUARDRAIL SHALL AT ALL TIMES BE AS DIRECTED BY THE ENGINEER. NO GUARDRAIL SHALL BE REMOVED UNTIL THE REPLACEMENT MATERIAL IS ON THE SITE, READY FOR INSTALLATION. FAILURE TO COMPLY WITH THIS REQUIREMENT SHALL BE DEEMED AS SUFFICIENT CAUSE TO ORDER WORK SUSPENDED ON THIS PROJECT UNTIL SUCH TIME THAT THE ENGINEER IS ASSURED OF SAID COMPLIANCE.

## PAVING UNDER GUARDRAIL:

THIS OPERATION SHALL INCLUDE PREPARATION OF THE GRADED SHOULDER USING 203, LINEAR GRADING, AND PAVING UNDER THE GUARDRAIL USING 448, ASPHALT CONCRETE INTERMEDIATE COURSE, TYPE I (UNDER GUARDRAIL), AS PER PLAN.

ITEM 203, LINEAR GRADING, SHALL CONSIST OF EXCAVATING TOPSOIL, PLACING GRANULAR MATERIAL AND APPLY HERBICIDE AS SPECIFIED IN THE PLANS AND IN ACCORDANCE WITH THE FOLLOWING:

ALL COLLECTED DEBRIS AND TOPSOIL, INCLUDING RHIZOMES, ROOTS AND OTHER VEGETATIVE PLANT MATERIAL SHALL BE REMOVED AND DISPOSED OF AS SPECIFIED IN 203.05

THE REMOVED MATERIAL SHALL BE REPLACED WITH COMPACTABLE GRANULAR MATERIAL CONFORMING TO 203.02 PLACED TO GRADE AS DETAILED ON THE TYPICAL SECTION OR AS APPROVED BY THE ENGINEER.

HERBICIDE SHALL BE TREFLAN E. C., SPIKE OR AN APPROVED EQUAL AND SHALL BE APPLIED TO THE PREPARED AREA AFTER FINAL LEVELING AND GRADING HAS BEEN COMPLETED. THE APPLICATION SHALL BE JUST PRIOR TO PAVING AND SHALL STRICTLY ADHERE TO THE MANUFACTURER'S INSTRUCTIONS.

ONLY PROPERLY LICENSED PERSONNEL SHALL APPLY HERBICIDES BY THE OHIO REVISED CODE.

ALL EQUIPMENT, MATERIALS AND LABOR REQUIRED TO PERFORMED THE WORK OUTLINED ABOVE, EXCEPT FOR THE ASPHALT, SHALL BE INCLUDED FOR PAYMENT UNDER ITEM 203, LINEAR GRADING.

PAVING UNDER GUARDRAIL SHALL CONSIST OF PLACING ITEM 448 TO THE DEPTH SPECIFIED USING ONE OF THE FOLLOWING METHODS:

METHOD A: 1) SET GUARDRAIL POSTS
2) PLACE ITEM 448

ALL EQUIPMENT, MATERIALS AND LABOR REQUIRED TO PERFORM THE WORK OUTLINED ABOVE, WITH THE EXCEPTION OF SETTING GUARDRAIL POSTS, SHALL BE INCLUDED FOR PAYMENT UNDER ITME 448, ASPHALT CONCRETE INTERMEDIATE COURSE, TYPE I (UNDER GUARDRAIL) AS PER PLAN.

## ITEM 606, ANCHOR ASSEMBLY, TYPE E:

THIS ITEM SHALL CONSIST OF FURNISHING AND INSTALLING AN ET-2000, OPTION "B", GUARDRAIL END TERMINAL AS MANUFACTURED BY SYRO STEEL COMPANY, 1170 N. STATE STREET, GIRARD, OHIO 44420 (TELEPHONE: 216-545-4373).

THE LENGTH OF THE ET-2000 SYSTEM IS CONSIDERED TO BE 50', INCLUSIVE OF TWO 25' LONG RAIL ELEMENTS. INSTALLATION SHALL BE IN ACCORDANCE WITH THE MANUFACTURER'S SPECIFICATIONS AND AT THE LOCATIONS SHOWN IN THE PLANS.

PAYMENT FOR THE ABOVE WORK SHALL BE MADE AT THE UNIT BID PRICE FOR ITEM 606, EACH, ANCHOR ASSEMBLY, TYPE E AND SHALL INCLUDE ALL LABOR, TOOLS, EQUIPMENT, AND MATERIALS NECESSARY TO CONSTRUCT A COMPLETE AND FUNCTIONAL ANCHOR ASSEMBLY SYSTEM, INCLUDING ALL RELATED HARDWARE, NOT SEPARATELY SPECIFIED, AS REQUIRED BY THE MANUFACTURER.

## ITEM SPECIAL - MAILBOX SUPPORTS:

THIS WORK SHALL CONSIST OF FURNISHING AND ERECTING MAILBOX SUPPORTS AND ANY ASSOCIATED MOUNTING HARDWARE IN ACCORDANCE WITH PLAN DETAILS, AND ATTACHING AN OWNER-SUPPLIED MAILBOX AT LOCATIONS SPECIFIED IN THE PLAN, OR OTHERWISE ESTABLISHED BY THE ENGINEER.

WOOD POSTS SHALL BE NOMINAL 4"X4" SQUARE OR 4-1/2" DIAMETER ROUND, AND CONFORM TO 710.14.

STEEL POSTS SHALL BE NOMINAL PIPE SIZE 2" I.D., AND CONFORM AASHTO M 181.

HARDWARE (PLATES, SCREWS, BOLTS, ETC.) SHALL BE COMMERCIAL-GRADE GALVANIZED STEEL.

POSTS SHALL BE SET PER THE FIRST PARAGRAPH OF 606.03, AND SHALL IN NO INSTANCE BE INCASED IN CONCRETE.

SUPPORT HARDWARE SHALL ACCOMODATE EITHER A SINGLE OR A DOUBLE MAILBOX INSTALLATION, AND NO MORE THAN TWO BOXES MAY BE MOUNTED ON A SINGLE POST.

THE MAILBOX SHALL BE SECURELY AND NEATLY ATTACHED BY THE CONTRACTOR TO THE NEW SUPPORT. THE CONTRACTOR SHALL FURNISH ALL NECESSARY ATTACHMENT HARDWARE (NUTS, BOLTS, PLATES, SPACERS, AND WASHERS) AS NECESSARY TO ACCOMMODATE THE COMPLETE INSTALLATION.

IN THE ABSENCE OF A NEW BOX SUPPLIED BY THE OWNER, THE CONTRACTOR SHALL SALVAGE THE EXISTING BOX AND PLACE IT ON THE NEW SUPPORT. DUE CARE SHALL BE EXERCISED IN SUCH AN OPERATION, AND THE CONTRACTOR SHALL BE RESPONSIBLE FOR REPAIRING ANY BOX DAMAGED BY IMPROPER HANDLING ON HIS PART, AS JUDGED AND DIRECTED BY THE ENGINEER.

THE CONTRACTOR SHALL BE RESPONSIBLE FOR COORDINATING WITH LOCAL POST MASTER REGARDING THE TIMING OF THE MOVEMENT OF ANY MAILBOX TO A NEW LOCATION.

PAYMENT UNDER THIS ITEM SHALL BE LIMITED TO FINAL PERMANENT INSTALLATIONS. TEMPORARY INSTALLATIONS SHALL BE IN ACCORDANCE WITH 107.12. HOWEVER, THE SAME MATERIAL AND SIZE LIMITATIONS AS FOR PERMANENT INSTALLATIONS SHALL APPLY.

MAILBOX SUPPORTS, COMPLETE IN PLACE, WILL BE PAID FOR AT THE CONTRACT UNIT PRICE PER EACH, FOR ITEM SPECIAL MAILBOX SUPPORT, (SINGLE) (DOUBLE).

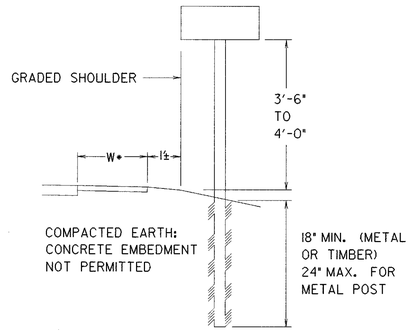


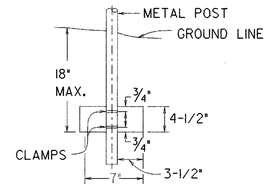


ANTI-TWIST PLATE

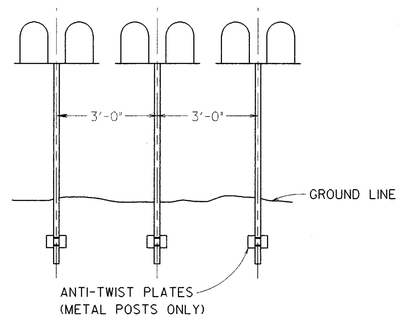


GROUP MAILBOX INSTALLATION

I/PD/OTTAWA/OTT/OT2GNL.DGN

# GENERAL NOTES

QUANTITIES
CALC BY ALS DATE 7-14-94
CKD BY MTG DATE 7-18-94

| FHWA REGION | STATE | PROJECT | |
|---|---|---|---|
| 5 | OHIO | | |

OTT-2-16.60

14
367

## CONTINGENCY QUANTITIES:

THE CONTRACTOR SHALL NOT ORDER MATERIALS OR PERFORM WORK LISTED IN THE GENERAL SUMMARY FOR ITEMS DESIGNATED BY PLAN NOTE TO BE USED "AS DIRECTED BY THE ENGINEER" UNLESS AUTHORIZED BY THE ENGINEER. THE ACTUAL WORK LOCATIONS AND QUANTITES USED AT THE ENGINEER'S DISCRETION SHALL BE MADE A MATTER OF RECORD BY INCORPORATION INTO THE FINAL CHANGE ORDER GOVERNING COMPLETION OF THIS PROJECT.

## ITEM 659, SEEDING AND MULCHING:

SEEDING AND MULCHING SHALL BE APPLIED TO ALL AREAS OF EXPOSED SOIL BETWEEN THE RIGHT-OF-WAY LINES, AND WITHIN THE CONSTRUCTION LIMITS FOR AREAS OUTSIDE THE RIGHT-OF-WAY LINES COVERED BY WORK AGREEMENT OR SLOPE EASEMENT. QUANTITY CALCULATIONS FOR ITEM 659, SEEDING AND MULCHING, ARE BASED ON THESE LIMITS.

## WATERING PERMANENT SEEDED AREAS:

THE FOLLOWING ESTIMATED QUANTITY IS TO BE USED AS DIRECTED BY THE ENGINEER TO PROMOTE GROWTH AND TO CARE FOR PERMANENT SEEDED AREAS.

ITEM 659 WATER 66 MGAL

QUANTITIES CARRIED TO THE GENERAL SUMMARY.

## TEMPORARY SOIL EROSION AND SEDIMENT CONTROL:

THE FOLLOWING ESTIMATED QUANTITIES ARE TO BE USED AS DIRECTED BY THE ENGINEER FOR TEMPORARY EROSION CONTROL MEASURES:

| | | | |
|---|---|---|---|
| ITEM 207 | STRAW OR HAY BALES | 82 | EACH |
| ITEM 207 | TEMPORARY SEEDING AND MULCHING | 6157 | SQ. YD. |
| ITEM 659 | REPAIR SEEDING AND MULCHING | 1539 | SQ. YD. |
| ITEM 659 | WATER | 66 | MGAL. |
| ITEM 659 | COMMERCIAL FERTILIZER | 2.42 | TON |

QUANTITIES CARRIED TO THE GENERAL SUMMARY.

## EROSION CONTROL:

ITEM 601 IS PROVIDED IN THE PLAN FOR EROSION CONTROL. ROCK OF A STABLE NATURE SHALL NOT BE REMOVED IN ORDER TO PLACE THIS ITEM. THE ENGINEER SHALL CHECK AND NON-PERFORM QUANTITIES OR ADJUST LOCATIONS AND QUANTITIES OF THIS ITEM WHERE INDICATED BY FIELD CONDITIONS DURING CONSTRUCTION. IN ADDITION, THESE ITEMS SHALL MEET THE REQUIREMENT OF 108.04.

## REVIEW OF DRAINAGE FACILITIES:

BEFORE ANY WORK IS STARTED ON THE PROJECT AND AGAIN BEFORE FINAL ACCEPTANCE BY THE STATE, REPRESENTATIVES OF THE STATE AND THE CONTRACTOR, ALONG WITH LOCAL REPRESENTATIVES, SHALL MAKE AN INSPECTION OF ALL EXISTING SEWERS WHICH ARE TO REMAIN IN SERVICE AND WHICH MAY BE AFFECTED BY THE WORK. THE CONDITION OF THE EXISTING CONDUITS AND THEIR APPURTENANCES SHALL BE DETERMINED FROM FIELD OBSERVATIONS. RECORDS OF THE INSPECTION SHALL BE KEPT IN WRITING BY THE STATE.

ALL NEW CONDUITS, INLETS, CATCH BASINS, AND MANHOLES CONSTRUCTED AS A PART OF THE PROJECT SHALL BE FREE OF ALL FOREIGN MATTER AND IN A CLEAN CONDITION BEFORE THE PROJECT WILL BE ACCEPTED BY THE STATE.

ALL EXISTING SEWERS INSPECTED INITIALLY BY THE ABOVE MENTIONED PARTIES SHALL BE MAINTAINED AND LEFT IN A CONDITION REASONBLY COMPARABLE TO THAT DETERMINED BY THE ORIGINAL INSPECTION. ANY CHANGE IN THE CONDITION RESULTING FROM THE CONTRACTOR'S OPERATIONS SHALL BE CORRECTED BY THE CONTRACTOR TO THE SATISFACTION OF THE ENGINEER.

PAYMENT FOR ALL OPERATIONS DESCRIBED ABOVE SHALL BE INCLUDED IN THE CONTRACT PRICE FOR THE PERTINENT 603 CONDUIT ITEMS.

## ITEM 407, TACK COAT:

THE RATE OF APPLICATION OF THE 407 TACK COAT SHALL BE SUBJECT TO ADJUSTMENT AS DIRECTED BY THE ENGINEER. PLAN QUANTITIES INDICATE AN AVERAGE APPLICATION RATE OF .05 GALLONS PER SQUARE YARD OF TACK COAT FOR ESTIMATING PURPOSES ONLY.

## ITEM 255 FULL DEPTH PAVEMENT REMOVAL AND RIGID REPLACEMENT, AS PER PLAN

WHERE PAVEMENT REPAIR LENGTHS EXCEED 10 FT. AND WHERE ONE OR MORE REPAIR LIMITS ARE LOCATED MORE THAN 3 FT. FROM AN EXISTING JOINT TO REMAIN IN PLACE, THE CONTRACTOR WILL BE REQUIRED, AT THE DIRECTION OF THE ENGINEER, TO PLACE CONTRACTION JOINTS WITH DOWEL BASKET ASSEMBLIES IN ACCORDANCE WITH ITEM 451 AND BP-2.2. THE PLACEMENT AND LOCATION OF THE CONTRACTION JOINTS SHALL BE AT THE SAME LOCATION AND IN ALIGNMENT WITH EXISTING JOINT(S) WHICH ARE TO REMAIN IN PLACE. REQUIREMENTS FOR JOINT SAWING SHALL BE AS PER ITEM 451. REQUIREMENTS FOR JOINT SEALING SHALL BE AS PER ITEM 451 FOR PAVEMENT WHICH IS TO REMAIN EXPOSED. REQUIREMENTS FOR JOINT SEALING SHALL BE AS PER ITEM 305 FOR PAVEMENT WHICH WILL BE OVERLAID WITH ASPHALT CONCRETE. THE COSTS ASSOCIATED WITH THE PLACEMENT OF DOWEL BASKET ASSEMBLIES, THE REQUIREMENTS FOR SAWING AND SEALING SHALL BE INCIDENTAL TO ITEM 255 FULL DEPTH PAVEMENT REMOVAL AND RIGID REPLACEMENT, AS PER PLAN.

IN ADDITION TO THE REQUIREMENTS OF 255.09, ACCEPTED QUANTITIES WILL BE PAID FOR AT THE CONTRACT UNIT PRICE PER SQUARE YARD, WHICH PRICE AND PAYMENT SHALL BE FULL COMPENSATION FOR ALL JOINT SEALING AND CLEANING.

## ITEM 255, FULL DEPTH PAVEMENT SAWING:

THE ESTIMATED QUANTITIES AS SHOWN ON SHEETS 82 THRU 89 WERE CALCULATED BY ALOTTING TWO TRANSVERSE CUTS FOR EACH REPAIR ALONG WITH ONE LONGITUDINAL CUT ALONG THE ℄ OF LANES FOR THE LENGTH OF THE REPAIR.

## ITEM SPECIAL, IMPACT ATTENUATOR (G.R.E.A.T. TYPE):

THIS WORK SHALL CONSIST OF FURNISHING IMPACT ATTENUATORS AS REQUIRED IN THE PLANS. THIS ITEM SHALL INCLUDE ALL RELATED HARDWARE, NOT SEPERATELY SPECIFIED, AS REQUIRED BY THE MANUFACTURER TO CONSTRUCT COMPLETE AND FUNCTIONAL G.R.E.A.T. IMPACT ATTENUATOR SYSTEMS. THE ATTENUATORS SHALL BE PLACED IN ACCORDANCE WITH THE MANUFACTURER'S SPECIFICATIONS AND AT THE LOCATIONS SHOWN ON THE PLANS. THE IMPACT ATTENUATOR SHALL BE MANUFACTURED BY THE ENERGY ABSORPTION SYSTEMS, INC., ONE EAST WACKER DRIVE, CHICAGO, ILLINOIS 60601: TELEPHONE: (312) 467-6750.

THE BACKUP SYSTEM SHALL BE TRANSITIONED FROM THE CONCRETE BARRIER SHAPE TO A RECTANGULAR SHAPE FOR USE AS A CONCRETE BACKUP FOR THE G.R.E.A.T. SYSTEM AS DETAILED BY THE MANUFACTURER.

THE NOSE COVER OF THE ATTENUATOR SHALL HAVE A DIAMOND SHAPED OBJECT MARKER DESIGN X-1 AS PER OMUTCD. THIS 18"x18" FLAT SHEET, TYPE G SHALL HAVE YELLOW REFLECTIVE MATERIAL OVER ITS ENTIRE SURFACE AREA MEETING THE REQUIREMENTS OF 730.19. IT SHALL BE CENTERED AND FASTENED USING 5/8" DIAMETER NUTS AND BOLTS WITH FENDER WASHERS ON THE INTERIOR SIDE OF THE NOSE PIECE. ALL HARDWARE SHALL MEET THE REQUIREMENTS OF 630.02.

THE CONTRACTOR SHALL BE RESPONSIBLE FOR INSPECTION, REPAIRING, AND OTHERWISE RESTORING THE IMPACT ATTENUATOR IN ACCORDANCE WITH THE MANUFACTURER'S MAINTENANCE INSTRUCTIONS WHILE IT IS IN USE ON THE PROJECT. SUCH REPAIRS SHALL BE PERFORMED WITHIN 24 HOURS OF THE INCIDENT WHICH CAUSED DAMAGE TO THE PROJECT. THE CONTRACTOR SHALL BE RESPONSIBLE FOR SUPPLYING ALL NECESSARY MATERIALS, LABOR AND EQUIPMENT REQUIRED TO PERFORM THE ABOVE DESCRIBED RESTORATION OF THE ATTENUATOR.

AN ESTIMATED QUANTITY AS LISTED BELOW SHALL BE USED AS DIRECTED BY THE ENGINEER FOR USE IN THE ABOVE MENTIONED RESTORATION ONLY WHEN IT IS DECIDED THAT MINOR OR MAJOR REPAIRS CANNOT BE PERFORMED IN A SAFE AND TIMELY MANOR:

FOR LOCATIONS OF THE ATTENUATOR SEE PLAN SHEETS 101 & 111. THESE PERMANENTLY LOCATED ATTENUATORS SHALL BE BID PER EACH PER THE FOLLOWING ITEM DESCRIPTION:

ITEM SPECIAL, IMPACT ATTENUATOR, G.R.E.A.T. TYPE, MODEL NO. 206206SF8Y, BIDIRECTIONAL.....2 EACH.

PAYMENT FOR THE ABOVE SHALL BE MADE AT THE UNIT PRICE BID FOR EACH, ITEM SPECIAL, IMPACT ATTENUATOR AND SHALL BE CONSIDERED FULL PAYMENT FOR FURNISHING, INSTALLING AT THE SPECIFIED LOCATIONS, RESTORATION AFTER EACH VEHICLE IMPACT, INCLUDING ALL LABOR, TOOLS, EQUIPMENT AND MISCELLANEOUS HARDWARE AND MATERIALS NECESSARY TO COMPLETE THESE ITEMS OF WORK.

## FENCE GROUNDING:

THE FENCE SHALL BE GROUNDED DIRECTLY WHERE A POWER LINE PASSES OVER IT. FENCE SHALL ALSO BE GROUNDED WHERE PARALLEL POWER LINE EASEMENT IS WITHIN 50 FEET OF THE FENCE. THE FENCE SHALL BE GROUNDED AT A 300' MAXIMUM INTERVAL. THE FOLLOWING QUANTITY HAS BEEN CARRIED TO THE GENERAL SUMMARY TO BE USED AS DIRECTED BY THE ENGINEER.

ITEM 625 GROUND ROD 10 EACH

## EXTENSION OVER ONE CONSTRUCTION SEASON:

IF THIS PROJECT EXTENDS OVER ONE CONSTRUCTION SEASON, THE SURFACE COURSE MUST BE IN PLACE OVER WINTER. NO BINDER COURSE, LEVELING COURSE, BASE COURSE OR INTERMEDIATE COURSE WILL BE PERMITTED EXPOSED OVER THE WINTER MONTHS BETWEEN CONSTRUCTION SEASONS. THE CONTRACTOR SHALL BE RESPONSIBILE FOR SCHEDULING THE RESURFACING TO BE COMPLETE BY THE END OF THE CONSTRUCTION SEASON.

## ITEM 413 , SAWING AND SEALING ASPHALT CONCRETE PAVEMENT JOINTS, 705.04:

THE ESTIMATED QUANTITIES AS SHOWN ON SHEETS 82 THRU 89 WERE CALCULATED BY REQUIRING TWO TRANSVERSE SAW CUTS FOR EACH REPAIR SECTION.

## ITEM 202, CURB REMOVED:

REMOVE CURB FULL DEPTH AT VARIOUS AREAS AS INDICATED IN THE PLANS. FILL VOIDS WITH ITEM 301 BITUMINOUS AGGREGATE BASE, AC-20. PAYMENT FOR THE BITUMINOUS AGGREGATE BASE SHALL BE MADE SEPARATELY.

## SUBBASE/SUBGRADE FAILURES

IF AFTER THE REMOVAL OF THE RIGID PAVEMENT, THE ENGINEER DETERMINES THAT THE SUBBASE OR SUBGRADE HAS FAILED OR IS PUMPING, HE SHALL DIRECT THE CONTRACTOR TO EXCAVATE THE UNSUITABLE MATERIAL AND REPLACE IT WITH ITEM 304 AGGREGATE BASE.

ITEM 203 EXCAVATION NOT INCLUDING EMBANKMENT CONSTRUCTION 2000 CUBIC YARDS

ITEM 304 AGGREGATE BASE 2000 CUBIC YARDS

## COOPERATION WITH RAILROADS:

THE CONTRACTOR IS REQUIRED TO COOPERATE AT ALL TIMES WITH THE LOCAL OFFICIALS OF THE RAILROAD COMPANY. THE CONTRACTOR SHALL USE ALL REASONABLE CARE AND DILIGENCE IN THE WORK IN ORDER TO AVOID ACCIDENTS, DAMAGE AND UNNECESSARY DELAY TO, OR INTERFERENCE WITH THE TRAINS AND OTHER PROPERTY OF THE RAILROAD. THE CONTRACTOR SHALL NOTIFY THE LOCAL OFFICIALS OF THE RAILROAD PRIOR TO STARTING WORK THAT MAY AFFECT THE RAILROAD PROPERTY AND FACILITIES AND SHALL PAY THE RAILROAD COMPANY THE COST OF FLAGMEN FURNISHED BY THE RAILROAD COMPANY AND MADE NECESSARY BECAUSE OF ANY OF THE CONTRACTOR'S OPERATIONS OVER OR ADJACENT TO THE TRACKS.

NO SCAFFOLD, PLANKS OR OTHER EQUIPMENT SHALL BE SUSPENDED OR ERECTED ABOVE OR WITHIN 10 FEET OF A RAIL OVER WHICH TRAINS ARE OPERATING WITHOUT PRIOR WRITTEN APPROVAL OF THE CHIEF ENGINEER OF THE RAILROAD COMPANY, OR HIS/HER AUTHORIZED REPRESENTATIVE.

FAILURE TO NOTIFY THE RAILROAD COMPANY AS NOTED ABOVE SHALL BE CAUSE FOR STOPPING WORK UNTIL ALL PROVISIONS FOR PROTECTING RAILROAD PROPERTY HAVE BEEN PROVIDED.

(METHODS AND PROCEDURES FOR PERFORMING WORK ON PROPERTY OF CONRAIL CORP. TRANSPORTATION, INC. MUST BE APPROVED BY MR. J. D. COSSEL, CHIEF ENGINEER, DESIGN AND CONSTRUCTION, CONRAIL CORPORATION, 2001 MARKET STREET/P.O. 41412, PHILADELPHIA, PA 19101-1412)

/I/PD/OTTAWA/OTT2/OT2GNL.DGN

# GENERAL NOTES

QUANTITIES
CALC BY ALS DATE 7-14-94
CKD BY MTG DATE 7-18-94

| FHWA REGION | STATE | PROJECT | |
|---|---|---|---|
| 5 | OHIO | | |

15/367

OTT-2-16.60

## MONUMENTS:

CARE SHALL BE TAKEN NOT TO DISTURB EXISTING MONUMENTS WHICH ARE TO REMAIN IN PLACE.

## ITEM 604, REFERENCE MONUMENTS, AS PER PLAN:

REFERENCE MONUMENTS SHALL BE SET AT THE LOCATIONS SHOWN ON SHEET NO. 76. A ½" DIAMETER BY 6" LONG STEEL ROD SHALL BE SET FLUSH WITH THE TOP OF THE TYPE B-50 CONCRETE BARRIER. ALL LABOR AND MATERIALS REQUIRED TO PERFORM THE WORK SHALL BE INCLUDED IN THE CONTRACT PRICE PER EACH FOR ITEM 604, REFERENCE MONUMENT, AS PER PLAN.

## ITEM 604, MONUMENT BOX RECONSTRUCTED TO GRADE:

EXISTING MONUMENT BOXES AS SHOWN ON SHEET NO.76 SHALL BE RECONSTRUCTED TO GRADE. THE EXISTING STEEL ROD INSIDE THE BOX SHALL NOT BE DISTURBED. ALL LABOR AND MATERIALS REQUIRED TO PERFORM THE WORK SHALL BE INCLUDED IN THE CONTRACT PRICE PER EACH FOR ITEM 604, MONUMENT BOX RECONSTRUCTED TO GRADE.

## CROSSING AND CONNECTIONS TO EXISTING PIPES AND UTILITIES:

WHERE PLANS PROVIDE FOR A PROPOSED CONDUIT TO BE CONNECTED TO, OR CROSS OVER OR UNDER AN EXISTING SEWER OR UNDERGROUND UTILITY, THE CONTRACTOR SHALL LOCATE THE EXISTING PIPES OR UTILITIES BOTH AS TO LINE AND GRADE BEFORE STARTING TO LAY THE PROPOSED CONDUIT.

IF IT IS DETERMINED THAT THE ELEVATION OF THE EXISTING CONDUIT, OR EXISTING APPURTENANCE TO BE CONNECTED, DIFFERS FROM THE PLAN ELEVATION OR RESULTS IN A CHANGE IN THE PLAN CONDUIT SLOPE, THE ENGINEER SHALL BE NOTIFIED BEFORE STARTING CONSTRUCTION OF ANY PORTION OF THE PROPOSED CONDUIT WHICH WILL BE AFFECTED BY THE VARIANCE IN THE EXISTING ELEVATIONS.

IF IT IS DETERMINED THAT THE PROPOSED CONDUIT WILL INTERSECT AN EXISTING SEWER OR UNDERGROUND UTILITY IF CONSTRUCTED AS SHOWN ON THE PLAN, THE ENGINEER SHALL BE NOTIFIED BEFORE STARTING CONSTRUCTION OF ANY PORTION OF THE PROPOSED CONDUIT WHICH WOULD BE AFFECTED BY THE INTERFERENCE WITH AN EXISTING FACILITY.

PAYMENT FOR ALL THE OPERATIONS DESCRIBED ABOVE SHALL BE INCLUDED IN THE CONTRACT PRICE FOR THE PERTINENT 603 CONDUIT ITEM.

## RETROFIT DOWELLED CONSTRUCTION JOINT TYPE Y

9" ITEM 451 REINFORCED CONCRETE PAVEMENT, AS PER PLAN
9" ITEM 305 CONCRETE BASE, AS PER PLAN
9" ITEM 452 PLAIN CONCRETE PAVEMENT, AS PER PLAN

WHERE THE NEW PAVEMENT BUTTS INTO THE EXISTING PAVEMENT, A DOWELLED TYPE Y JOINT PER BP-2.5 SHALL BE PROVIDED. GROUTING AND DRILLING REQUIREMENTS SHALL BE PER ITEM 255 AND BP-2.5. ALL WORK AND MATERIALS REQUIRED TO PROVIDE THESE JOINTS SHALL BE INCIDENTAL TO

9" ITEM 451 REINFORCED CONCRETE PAVEMENT, AS PER PLAN
9" ITEM 305 CONCRETE BASE, AS PER PLAN
9" ITEM 452 PLAIN CONCRETE PAVEMENT, AS PER PLAN

## DITCH CLEANOUT:

THIS WORK SHALL CONSIST OF RE-ESTABLISING THE CROSS-SECTION OF AN EXISTING DITCH. SURPLUS OR UNSUITABLE MATERIAL, AS DETERMINED BY THE ENGINEER, SHALL BE DISPOSED OF AS PER 203.05. EMBANKMENT REQUIRED FOR ERODED CONDITIONS SHALL MEET THE REQUIREMENTS OF 203.07 EXCEPT THAT THE COMPACTION REQUIREMENTS ARE WAIVED.

MEASUREMENT OF THE DITCH CLEANOUT SHALL BE THE ACTUAL LINEAR FEET MEASURED LONG THE CENTERLINE OF THE DITCH.

PAYMENT FOR ALL THE ABOVE SHALL BE INCLUDED IN THE UNIT PRICE BID FOR ITEM 203, DITCH CLEANOUT.

THE EXISTING DITCHES SHALL BE CLEANED OUT AS SHOWN ON SHEET NO. 232. THE EXCAVATED MATERIAL SHALL NOT BE STOCKPILED ALONG THE DITCH BANK NOR SHALL IT BE DISPOSED OF INTO AN EXISTING WETLAND ON OR OFF OF THE PROJECT.

## FARM DRAINS:

ALL FARMS DRAINS, WHICH ARE ENCOUNTERED DURING CONSTRUCTION, SHALL BE PROVIDED WITH UNOBSTRUCTED OUTLETS. EXISTING COLLECTORS WHICH ARE LOCATED BELOW THE ROADWAY DITCH ELEVATIONS, AND WHICH CROSS THE ROADWAY, SHALL BE REPLACED WITHIN THE (RIGHT-OF-WAY) (CONSTRUCTION) LIMITS BY ITEM 603 CONDUIT, TYPE B, ONE COMMERCIAL SIZE LARGER THAN THE EXISTING CONDUIT.

EXISTING COLLECTORS AND ISOLATED FARM DRAINS, WHICH ARE ENCOUNTERED ABOVE THE ELEVATION OF THE ROADWAY DITCHES, SHALL BE OUTLETTED INTO THE ROADWAY DITCH BY 603 TYPE F CONDUIT. THE OPTIMUM OUTLET ELEVATION SHALL BE ONE FOOT ABOVE THE FLOWLINE ELEVATION OF THE DITCH. LATERAL FIELD TILES WHICH CROSS THE ROADWAY SHALL BE INTERCEPTED BY 603, TYPE E CONDUIT, AND CARRIED IN A LONGITUDINAL DIRECTION TO AN ADEQUATE OUTLET OR ROADWAY CROSSING.
THE LOCATION, TYPE, SIZE AND GRADE OF REPLACEMENTS SHALL BE DETERMINED BY THE ENGINEER, AND PAYMENT SHALL BE MADE ON FINAL MEASUREMENTS.

EROSION CONTROL PADS AND ANIMAL GUARDS SHALL BE PROVIDED AT THE OUTLET END OF ALL FARM DRAINS AS PER STANDARD CONSTRUCTION DRAWING MC-4, EXCEPT WHEN THEY OUTLET INTO A DRAINAGE STRUCTURE. PAYMENT FOR THE EROSION CONTROL PADS AND ANIMAL GUARDS AND ANY NECESSARY BENDS OR BRANCHES SHALL BE INCLUDED FOR PAYMENT IN THE PERTINENT CONDUIT ITEM.

THE FOLLOWING ESTIMATED QUANTITIES HAVE BEEN INCLUDED IN THE GENERAL SUMMARY FOR THE WORK NOTED ABOVE:

ITEM 603 15" CONDUIT, TYPE B 200 LIN. FT.
ITEM 603 12" CONDUIT, TYPE E 200 LIN. FT.
ITEM 603 8" CONDUIT, TYPE F 200 LIN. FT.
ITEM 603 10" CONDUIT, TYPE F 200 LIN. FT.
ITEM 603 12" CONDUIT, TYPE F 200 LIN. FT.
ITEM 601 ROCK CHANNEL PROTECTION TYPE C WITH FILTER 20 CU. YDS.

## DRAINAGE INFORMATION:

EXISTING UNDERDRAINS SHOULD BE CONNECTED TO THE PROPOSED UNDERDRAINS AS SHOWN ON SHEETS NO. 233 AND 234, EXCEPT BETWEEN STA. 876+25 AND STA. 1049+50 IN THE MEDIAN WHERE SPACE IS LIMITED. AT THAT LOCATION ADDITIONAL QUANTITIES OF PIPE WERE PROVIDED IN THE DRAINAGE TABLE TO CONNECT THE EXISTING UNDERDRAINS IN THE MEDIAN DIRECTLY TO THE DRAINAGE STRUCTURE.

WHEN A DRAINAGE ITEM IS DESIGNATED TO BE REMOVED, REMOVAL SHALL MEAN THAT THE ENTIRE ITEM IS REMOVED.

ALL EXISTING MEDIAN INLETS HAVE EITHER A 6' OR 8' OPENING.

## CLEARING AND GRUBBING:

ALTHOUGH THERE ARE NO TREES AND/OR STUMPS SPECIFICALLY MARKED FOR REMOVAL WITHIN THE LIMITS OF THIS PROJECT, A LUMP SUM QUANTITY HAS BEEN INCLUDED IN THE GENERAL SUMMARY FOR ITEM 201, CLEARING AND GRUBBING. ALL PROVISIONS AS SET FORTH IN THE SPECIFICATIONS UNDER THIS ITEM SHALL BE INCLUDED IN THE LUMP SUM PRICE BID FOR ITEM 201, CLEARING AND GRUBBING.

## SLOPE REPAIR

## ITEM 203, EMBANKMENT USING GRANULAR MATERIALS, AS PER PLAN:

MATERIALS FURNISHED FOR THIS ITEM SHALL BE AS DEFINED IN 203.02, EXCEPT THAT AT LEAST 85 PER CENT BY WEIGHT OF THE GRAINS OR PARTICLES SHALL BE RETAINED ON A NO. 200 SIEVE.

IN THE AREA BETWEEN STATIONS 919+70 AND 921+10, STATIONS 976+00 AND 983+00, AND BRIDGE APPROACHES AT OTT-2-1839 , GRANULAR MATERIAL, AS SHOWN ON THE CROSS-SECTIONS, MAY BE PLACED BY THE METHOD OF END DUMPING IF SURFACE WATER IS PRESENT AT THE TIME OF CONSTRUCTION. END DUMPING METHODS MAY BE USED UP TO AN ELEVATION TWO FEET ABOVE THE WATER LEVEL. ABOVE THIS ELEVATION, EMBANKMENT CONSTRUCTION SHALL BE IN ACCORDANCE WITH 203.07 TO 202.12 INCLUSIVE. WHERE END DUMPING IS PERMITTED, NORMAL CLEARING AND GRUBBING SHALL BE PERFORMED BUT THE REQUIREMENTS OF 201.04 FOR SCALPING SHALL BE WAIVED.

## EROSION CONTROL AT BRIDGE APPROACHES:

NOTE THAT THE QUANTITIES FOR CRUSHED AGGREGATE SLOPE PROTECTION AND ROCK CHANNEL PROTECTION, TYPE C ARE ESTIMATED FOR THE BRIDGE APPROACHES AT OTT-2-1839 AND OTT-2-2313 AND INCLUDED WITH THE EARTHWORK TABLE AS SHOWN ON SHEET NO. 78.

## BENCHING OF FOUNDATION SLOPES:

PLEASE NOTE THAT THE INTENT OF THE BENCHES IS TO REMOVE FAILED OR SLUMPED FILL MATERIAL AND PROVIDE ADEQUATE EQUIPMENT ROOM TO COMPACT THE NEW FILL. THE BENCHES MAY BE ADJUSTED AS DIRECTED BY THE ENGINEER TO SUIT EITHER INTENT.

ALTHOUGH CROSS-SECTIONS INDICATE SPECIFIC DIMENSIONS FOR PROPOSED BENCHING OF THE EMBANKMENT FOUNDATION IN CERTAIN AREAS, NO WAIVER OF THE SPECIFICATIONS IS INTENDED. ALL OTHER SLOPED EMBANKMENT AREAS SHALL BE BENCHED AS SET FORTH IN 203.09. NO ADDITIONAL PAYMENT WILL BE MADE FOR BENCHING REQUIRED UNDER THE PROVISIONS OF 203.09

PLACEMENT OF THE 203 MATERIAL NEEDS TO FOLLOW IMMEDIATELY BEHIND THE EXCAVATION OF THE BOTTOM BENCH SO THAT THERE IS NEVER MORE THEN 10' BETWEEN THE BASE OF CUT OF THE ADVANCING EXCAVATION AND THE TOE OF THE ADVANCING END DUMPED GRANULAR MATERIAL. THE EXCAVATION/REPLACEMENT SHALL PROCEED PARALLEL TO CENTERLINE WITH THE ADVANCING TAIL OF THE EXCAVATION AND FRONT OF THE GRANULAR MATERIAL MORE OR LESS PERPENDICULAR TO CENTERLINE.

THE CONTRACTOR HOWEVER , MAY ADJUST THE BENCHES, AT THE APPROVAL OF THE ENGINEER FOR EASE OF CONSTRUCTION. (PLAN INTENT IS TO PROVIDE 4' WIDE BENCHES AT THE LOCATIONS SHOWN.)

/I/PD/OTTAWA/OTT2/OT2GNLDGN

# MAINTENANCE OF TRAFFIC

| QUANTITIES | | | |
|---|---|---|---|
| CALC BY BAG | DATE 2-8-94 | | |
| CKD BY MTG | DATE 11-2-94 | | |

| FHWA REGION | STATE | PROJECT | |
|---|---|---|---|
| 5 | OHIO | | |

16
367

OTT-2-16.60

## MAINTENANCE OF TRAFFIC INDEX OF SHEETS


GENERAL NOTES ..... 16-18
SUBSUMMARIES ..... 19
DETAILS ..... 20-22, 20A, 22A
PHASE 1 ..... 23-34
PHASE 2 ..... 35-42
PHASE 3 ..... 43-55
PHASE 4 ..... 56-60
PHASE 5 ..... 61-63


## ITEM 614, MAINTAINING TRAFFIC:

THE CONTRACTOR SHALL MAINTAIN TRAFFIC, AT ALL TIMES, IN ACCORDANCE WITH THE REQUIREMENTS OF SPECIFICATION 614. TWO-LANES OR ONE-LANE (WHEN NOTED IN THE PLAN) SHALL BE MAINTAINED AT ALL TIMES BY THE USE OF THE EXISTING OR COMPLETED PAVEMENT. DETOURS OFF THE PROJECT WILL BE SIGNED AND MAINTAINED BY THE STATE OF OHIO.

## HOLIDAYS AND SPECIAL EVENTS:

NO WORK SHALL BE PERFORMED AND ALL EXISTING LANES SHALL BE OPEN TO TRAFFIC DURING THE FOLLOWING DESIGNATED HOLIDAYS OR EVENTS.

MEMORIAL DAY
FOURTH OF JULY
LABOR DAY

THE PERIOD OF TIME THAT THE LANES ARE TO BE OPEN DEPENDS ON THE DAY OF THE WEEK ON WHICH THE HOLIDAY OR EVENT FALLS. THE FOLLOWING SCHEDULE SHALL BE USED TO DETERMINE THIS PERIOD:

| DAY OF THE WEEK | TIME ALL LANES MUST BE OPEN TO TRAFFIC |
|---|---|
| SUNDAY | 12:00N FRIDAY THROUGH 12:00N MONDAY |
| MONDAY | 12:00N FRIDAY THROUGH 12:00N TUESDAY |
| TUESDAY | 12:00N MONDAY THROUGH 12:00N WEDNESDAY |
| WEDNESDAY | 12:00N TUESDAY THROUGH 12:00N THURSDAY |
| THURSDAY | 12:00N WEDNESDAY THROUGH 12:00N MONDAY |
| FRIDAY | 12:00N THURSDAY THROUGH 12:00N MONDAY |
| SATURDAY | 12:00N FRIDAY THROUGH 12:00N MONDAY |

SHOULD THE CONTRACTOR FAIL TO MEET ANY OF THESE REQUIREMENTS, THE CONTRACTOR SHALL BE ASSESSED LIQUIDATED DAMAGES IN ACCORDANCE WITH 108.07 OF THE CONSTRUCTION AND MATERIAL SPECIFICATIONS.
ALL LANES CLOSURES SHALL BE PUT INTO EFFECT WITH THE DIRECTION OF TRAFFIC AND SHALL BE REMOVED AGAINST THE FLOW OF TRAFFIC.

LANE WIDTHS FOR TRAFFIC CONTROL SHALL BE AS INDICATED IN THE PLAN, HOWEVER, THE MINIMUM LANE WIDTH SHALL NOT BE LESS THAN 11 FEET.

NORMAL RESURFACING SHALL BE ACCOMPLISHED AS PER THE STANDARD DRAWINGS. A MINIMUM OF ONE LANE IN EACH DIRECTION SHALL BE MAINTAINED AT ALL TIMES DURING WORKING HOURS.

## WINTER TRAFFIC LIMITATIONS:

ALL EXISTING LANES SHALL BE OPEN TO TRAFFIC NOVEMBER 30 THROUGH APRIL 1. NOVEMBER 30 SHALL BE CONSIDERED TO CONSTITUTE AN INTERIM COMPLETION DATE AND LIQUIDATED DAMAGES SHALL BE ASSESSED IN ACCORDANCE WITH SECTION 108.07 OF THE CONSTRUCTION AND MATERIAL SPECIFICATIONS FOR EACH CALENDAR DAY THAT ALL LANES ARE NOT OPEN AND AVAILABLE TO TRAFFIC.

## SEQUENCE OF CONSTRUCTION:

PHASE 1:

A 1.) CLOSE OUTSIDE LANES FROM STA. 876+00 TO STA. 913+00 FOR BOTH EAST BOUND AND WEST BOUND LANES.
2.) PERFORM THE FOLLOWING WORK:
CONSTRUCT OUTSIDE SHOULDERS
PLACE UNDERDRAINS
NOTE: THE OUTSIDE LANES WILL ONLY BE ALLOWED TO BE CLOSED ONE WEEK FOR EACH DIRECTION TO COMPLETE THE SHOULDER WORK AND UNDERDRAINS.

B 1.) CLOSE INSIDE LANES FROM STATION 876+00 TO 1018+50 FOR BOTH EAST BOUND AND WEST BOUND LANES.
2.) PERFORM THE FOLLOWING WORK IN THE INSIDE LANES AND MEDIAN:
REMOVE MEDIAN CURB AND GUARDRAIL
CONSTRUCT MEDIAN BARRIER
PLACE PERMANENT IMPACT ATTENUATOR AT STA. 913+00
REPLACE SHOULDERS
PERFORM JOINT REPAIRS TO STA. 913+00
NEW PAVEMENT (WHERE REQUIRED)
PERFORM STRUCTURE WORK ON OTT-2-1663
CONSTRUCT MEDIAN CROSSOVERS AT STA. 909+22.96 & STA. 1013+22.96 AND INSTALL TEMPORARY IMPACT ATTENUATOR AT STA. 1009+00

C 1.) CLOSE OUTSIDE LANES FROM STATION 876+00 TO STATION 913+00 FOR BOTH EAST BOUND AND WEST BOUND LANES.
2.) PERFORM THE FOLLOWING WORK IN THE OUTSIDE LANES:
PERFORM JOINT REPAIRS
PERFORM STRUCTURE WORK ON OTT-2-1663
NEW PAVEMENT (WHERE REQUIRED)

PHASE 2:

A 1.) RUN TWO-WAY TRAFFIC ON THE WEST BOUND LANES STA. 909+30 TO STA. 1012+30
2.) PERFORM THE FOLLOWING WORK IN THE EAST BOUND LANES FROM STA. 913+00 TO STA. 1012+00:
CONSTRUCT SHOULDERS
PLACE UNDERDRAINS
PERFORM JOINT REPAIRS
PERFORM GUARDRAIL WORK
PERFORM DRAINAGE WORK
PERFORM SLOPE REPAIR WORK
PERFORM NEW PAVEMENT WORK (WHERE REQUIRED)
CONSTRUCT MEDIAN BARRIER
PERFORM TRAFFIC CONTROL WORK
PERFORM STRUCTURE WORK & APPROACH SLABS FOR OTT-2-1766, OTT-2-1776, OTT-2-1819, AND OTT-2-1839.
3.) CLOSE ENTRANCE RAMP FROM STATE ROUTE 163 TO EAST BOUND STATE ROUTE 2 AND PERFORM NECESSARY WORK. (SEE SHEET NUMBER 20 FOR DETOURS)
4.) REMOVE PORTABLE CONCRETE BARRIER AT STRUCTURES AND PLACE PERMANENT BARRIER.

B 1.) RUN TWO-WAY TRAFFIC ON THE EAST BOUND LANES STA. 911+47 TO STA. 1011+00.
2.) PERFORM WORK IN WEST BOUND LANES FROM STA. 913+00 TO STA. 1012+00:
CONSTRUCT SHOULDERS
PLACE UNDERDRAINS
PERFORM JOINT REPAIRS
PERFORM GUARDRAIL WORK
PERFORM DRAINAGE WORK
PERFORM SLOPE REPAIR WORK
PERFORM NEW PAVEMENT WORK (WHERE REQUIRED)
PERFORM TRAFFIC CONTROL WORK
PERFORM STRUCTURE WORK & APPROACH SLABS FOR OTT-2-1766, OTT-2-1776, OTT-2-1819, AND OTT-2-1839.
3.) CLOSE EXIT RAMP FROM STATE ROUTE 2 TO STATE ROUTE 163 AND PERFORM NECESSARY WORK. (SEE SHEET NUMBER 20 FOR DETOURS)

PHASE 3:

A 1.) CLOSE OUTSIDE LANES FROM STATION 1012+00 TO STATION 1236+47 FOR BOTH EAST BOUND AND WEST BOUND LANES.
2.) PERFORM THE FOLLOWING WORK:
CONSTRUCT THE OUTSIDE SHOULDERS
PLACE UNDERDRAINS

B 1.) CLOSE INSIDE LANES FROM STATION 1012+00 TO STATION 1236+47 FOR BOTH EAST BOUND AND WEST BOUND LANES.
2.) PERFORM THE FOLLOWING WORK:
CONSTRUCT TEMPORARY CROSSOVERS AT STA. 1195+66.20 AND STA. 1229+48.61
CONSTRUCT MEDIAN SHOULDERS
CONSTRUCT MEDIAN BARRIER
PERFORM JOINT REPAIRS
PERFORM GUARDRAIL WORK
PERFORM DRAINAGE WORK
PERFORM TRAFFIC CONTROL WORK
PLACE PERMANENT IMPACT ATTENUATOR AT STA. 1049+50

C 2.) CLOSE OUTSIDE LANES FROM STATION 1012+00 TO STATION 1236+47 FOR BOTH EAST BOUND AND WEST BOUND LANES.
3.) PERFORM THE FOLLOWING WORK:
PERFORM JOINT REPAIRS
PERFORM GUARDRAIL WORK
PERFORM TRAFFIC CONTROL WORK

PHASE 4:

A 1.) RUN TWO-WAY TRAFFIC ON WEST BOUND LANES.
2.) PERFORM THE FOLLOWING WORK IN THE EAST BOUND LANES FROM STA. 1195+50 TO STA. 1230+00:
PERFORM STRUCTURE WORK & APPROACH SLABS FOR OTT-2-2313
PERFORM GUARDRAIL WORK

B 1.) RUN TWO-WAY TRAFFIC ON EAST BOUND LANES.
2.) PERFORM THE FOLLOWING WORK IN THE WEST BOUND LANES FORM STA. 1195+50 TO STA. 1230+00:
PERFORM STRUCTURE WORK & APPROACH SLABS FOR OTT-2-2313
PERFORM GUARDRAIL WORK

PHASE 5:

A 1.) CLOSE SR 53 RAMPS ONE AT A TIME TO PERFORM THE FOLLOWING WORK: (EACH RAMP SHALL BE OPENED TO TRAFFIC NO LATER THAN 48 HOURS AFTER THE RAMP IS CLOSED) SEE SHEET 20A.
EARTHWORK (WHERE REQUIRED)
JOINT REPAIRS (USING FS CONCRETE)
GUARDRAIL
2.) REMOVE MEDIAN CURBS ON STATE ROUTE 53 OVERPASS.

B 1.) USE THE SOUTH BOUND SR 53 LANES TO MAINTAIN TRAFFIC AND PERFORM THE FOLLOWING WORK ON THE NORTH BOUND LANES:
EARTHWORK (WHERE REQUIRED)
GUARDRAIL
STRUCTURE WORK

C 1.) USE THE NORTH BOUND SR 53 LANES TO MAINTAIN TRAFFIC AND PERFORM THE FOLLOWING WORK ON THE SOUTH BOUND LANES:
EARTHWORK (WHERE REQUIRED)
GUARDRAIL
STRUCTURE WORK

D 1.) PERFORM THE RESURFACING AND REMAINING TRAFFIC CONTROL ITEMS ON SR 53 AS PER STANDARD DRAWINGS AND INSERT SHEET (21-22).

PHASE 6:

A 1.) DURING PHASE 6 ALL LANES MUST BE OPEN TO TRAFFIC BETWEEN 4:00 PM FRIDAY AND 8:00 AM MONDAY FOR ALL WEEKENDS BETWEEN MEMORIAL DAY AND LABOR DAY.
2.) PERFORM RESURFACING ON THE MAINLINE USING THE STANDARD DRAWINGS MT-95.30, MT-95.31, MT-95.32 AND MT-99.10
3.) PERFORM RAMP RESURFACING. (SEE SHEET NUMBER 20 AND 20A FOR DETOURS) EACH RAMP SHALL BE OPENED TO TRAFFIC NO LATER THAN 8 HOURS AFTER THE RAMP IS CLOSED FOR RESURFACING.
4.) COMPLETE THE PROJECT BY REMOVING THE TEMPORARY CROSS-OVERS AND FINISHING ALL REMAINING TRAFFIC CONTROL ITEMS.

NOTE: THE DRAWINGS WHICH ACCOMPANY EACH PHASE SHOW THE INTENT OF THE MAINTENANCE OF TRAFFIC. THE STANDARD DRAWINGS SHOULD BE CONFORMED TO UNLESS DIRECTED OTHERWISE BY THE ENGINEER. ALSO NOTE THAT THE SEQUENCE OF CONSTRUCTION STATES THE MAJOR WORK TO BE PERFORMED DURING EACH PHASE AND THAT OTHER WORK MAY NEED TO BE PERFORMED DURING THAT PHASE TO ENSURE A MINIMUM OF INCONVENIENCE TO THE TRAVELLING PUBLIC.

THE FOLLOWING ESTIMATED QUANTITIES HAVE BEEN INCLUDED IN THE MAINTENANCE OF TRAFFIC SUB-SUMMARY TO BE USED AS DIRECTED BY THE ENGINEER FOR THE MAINTENANCE OF TRAFFIC AND DUST CONTROL:

| | | |
|---|---|---|
| ITEM 616 | CALCIUM CHLORIDE | 20 TON |
| ITEM 616 | WATER | 200 MGAL |

ALL PAVEMENT MARKING QUANTITIES SHOWN IN THE MAINTENANCE OF TRAFFIC PLANS SHALL BE UNDERSTOOD TO BE TEMPORARY PAVEMENT MARKINGS AND SHALL BE PAID FOR UNDER THE APPROPRIATE ITEM 614 TEMPORARY PAVEMENT MARKING ITEMS.

SEPARATE PAYMENT SHALL BE MADE FOR ITEMS 448, 614 WORK ZONE PAVEMENT MARKINGS, 616, AND ITEMS SPECIAL FOR REPLACING DRUMS AND SIGNS.
ALL OTHER WORK REQUIRED FOR TRAFFIC MAINTENANCE, EXCEPT PROVIDING LAW ENFORCEMENT OFFICERS, SHALL BE INCLUDED WITH PAYMENT FOR ITEM 614, MAINTAINING TRAFFIC.

/I/PD/OTTAWA/OTT2/OT2MTGNI.DGN

MAINTENANCE OF TRAFFIC NOTES

# MAINTENANCE OF TRAFFIC

QUANTITIES
CALC BY BAG DATE 2-8-94
CKD BY MTG DATE 11-2-94

| FHWA REGION | STATE | PROJECT | |
|---|---|---|---|
| 5 | OHIO | | |

17
367

OTT-2-16.60

ALL TRAFFIC CONTROL DEVICES SHALL BE KEPT IN PROPER POSITION, CLEAN, LEGIBLE AND IN GOOD WORKING CONDITION AT ALL TIMES.

NO EQUIPMENT SHALL BE PARKED OR STORED IN THE MEDIAN OR WITHIN 30 FEET OF THE OUTSIDE EDGE OF THE PAVEMENT IN ACCORDANCE WITH 614.03, UNLESS OTHERWISE NOTED IN THE PLAN.

THE MAINTENANCE OF TRAFFIC PLANS AS DETAILED, ARE THE MINIMUM REQUIREMENTS AND ANY ADDITIONAL MODIFICATIONS REQUESTED BY THE PROJECT ENGINEER, TO ACCOMPLISH PLAN INTENT, SHALL BE INCLUDED IN THE LUMP SUM BID FOR ITEM 614, MAINTAINING TRAFFIC.

## ALTERNATE METHODS:

IF THE CONTRACTOR SO ELECTS, HE MAY SUBMIT ALTERNATE METHODS FOR THE MAINTENANCE OF TRAFFIC, PROVIDED THE INTENT OF THE PROVISIONS NOTED IN THE MAINTENANCE OF TRAFFIC PLAN ARE FOLLOWED AND NO ADDITIONAL INCONVENIENCE TO THE TRAVELING PUBLIC RESULTS THEREFROM. NO ALTERNATIVE PLAN SHALL BE PLACED INTO EFFECT UNTIL APPROVAL HAS BEEN GRANTED, IN WRITING, BY THE ENGINEER.

## DUST CONTROL:

THE CONTRACTOR'S ATTENTION IS DIRECTED TO PARAGRAPH 614.02(B) OF THE SPECIFICATIONS RELATIVE TO THE CONTROL OF DUST AND DIRT AND THE MAINTENANCE OF HIGHWAY SURFACE. THE PROVISIONS OF THIS PORTION OF THE SPECIFICATIONS SHALL BE STRICTLY ADHERED TO THROUGHOUT THE LIFE OF THIS CONTRACT.

ALL HAUL ROADS AND STREETS WITHIN THE PROJECT LIMITS ON WHICH TRAFFIC IS TO BE MAINTAINED TO THE SATISFACTION OF THE ENGINEER, MAY REQUIRE THE USE OF MECHANICAL CLEANING EQUIPMENT TO REMOVE DUST AND DIRT FROM THE ROADWAY SURFACE AND MINIMIZE THE CHANCES OF PARTICLES FROM BECOMING AIRBORNE.

## ITEM SPECIAL, REPLACEMENT SIGNS:

FLAT SHEET SIGNS FURNISHED BY THE CONTRACTOR IN ACCORDANCE WITH THE REQUIREMENTS OF THE PLANS, SPECIFICATIONS AND PROPOSAL WHICH BECOME DAMAGED BY TRAFFIC, FOR REASONS BEYOND THE CONTROL OF THE CONTRACTOR, SHALL BE REPLACED IN KIND WHEN ORDERED BY THE ENGINEER. PAYMENT FOR THE NEW SIGNS SHALL BE MADE AT THE BID PRICE, PER SQUARE FOOT, FOR "ITEM SPECIAL, REPLACEMENT SIGNS", AND SHALL INCLUDE THE COST OF REMOVING AND DISPOSING OF THE DAMAGED SIGNS, HARDWARE, SUPPORTS, ETC. REPLACEMENT SIGNS SHALL BE NEW.

ITEM SPECIAL, REPLACEMENT SIGNS 200 SQ. FT.

QUANTITY CARRIED TO THE MAINTENANCE OF TRAFFIC SUB-SUMMARY.

## ITEM SPECIAL, REPLACEMENT DRUMS:

DRUMS FURNISHED BY THE CONTRACTOR IN ACCORDANCE WITH THE REQUIREMENTS OF THE PLAN, SPECIFICATIONS, AND PROPOSAL WHICH BECOME DAMAGED BY TRAFFIC FOR REASONS BEYOND THE CONTROL OF THE CONTRACTOR SHALL BE REPLACED IN KIND WHEN ORDERED BY THE ENGINEER AND PAID FOR UNDER "ITEM SPECIAL, REPLACEMENT DRUMS". PAYMENT FOR EACH NEW DRUM SHALL INCLUDE THE COST OF REMOVING AND DISPOSING OF THE DAMAGED DRUM AND PROVIDING AND MAINTAINING NEW DRUM IN ACCORDANCE WITH THE CONTRACT REQUIREMENTS FOR THE ORIGINAL DRUMS.

ITEM SPECIAL, REPLACEMENT DRUMS 100 EACH

QUANTITY CARRIED TO THE MAINTENANCE OF TRAFFIC SUB-SUMMARY

## ITEM 614, PORTABLE CHANGEABLE MESSAGE SIGNS, AS PER PLAN (PCMS)

THE CONTRACTOR SHALL FURNISH, INSTALL, MAINTAIN AND REMOVE, WHEN NO LONGER NEEDED CHANGEABLE MESSAGE SIGNS ON SITE, FOR THE DURATION OF THE PROJECT. THE SIGNS SHALL BE OF A TYPE SHOWN ON A LIST OF APPROVED PCMS UNITS MAINTAINED BY THE DIRECTOR. THE LIST CURRENTLY CONTAINS CLASS III AND II UNITS WITH MINIMUM LEGIBILITY DISTANCES OF 650 FEET AND 850 FEET RESPECTIVELY.

EACH SIGN SHALL BE TRAILER MOUNTED AND EQUIPPED WITH A FUNCTIONAL DIMMING MECHANISM TO DIM THE SIGN DURING DARKNESS AND A TAMPER AND VANDAL PROOF ENCLOSURE. EACH SIGN SHALL BE PROVIDED WITH APPROPRIATE TRAINING AND OPERATING INSTRUCTIONS TO ENABLE ON-SITE PERSONNEL TO OPERATE AND TROUBLESHOOT THE UNIT. THE SIGN SHALL ALSO BE CAPABLE OF BEING POWERED BY AN ELECTRICAL SERVICE DROP FROM A LOCAL UTILITY COMPANY.

PLACEMENT, OPERATION, MAINTENANCE AND ALL ACTIVATION OF THE SIGNS BY THE CONTRACTOR SHALL BE AS DIRECTED BY THE ENGINEER. THE PCMS SHALL BE LOCATED IN A HIGHLY VISIBLE POSITION, YET BE PROTECTED FROM TRAFFIC. THE CONTRACTOR SHALL, AT THE DIRECTION OF THE ENGINEER, RELOCATE THE PCMS TO IMPROVE VISIBILITY OR ACCOMMODATE CHANGED CONDITIONS. WHEN NOT IN USE, THE PCMS WILL BE OFF, FACING AWAY FROM ALL TRAFFIC AND SHALL DISPLAY ONE OR MORE HIGH INTENSITY YELLOW REFLECTIVE SHEETING SURFACES OF 9-INCH BY 15-INCH MINIMUM SIZE FACING TRAFFIC.

THE ENGINEER SHALL BE PROVIDED ACCESS TO EACH SIGN UNIT AND SHALL BE PROVIDED WITH APPROPRIATE TRAINING AND OPERATING INSTRUCTIONS TO ENABLE ODOT PERSONNEL TO OPERATE AND TROUBLESHOOT THE UNIT AND TO REVISE SIGN MESSAGES, IF NECESSARY.

ALL MESSAGES TO BE DISPLAYED ON THE SIGN WILL BE PROVIDED BY THE ENGINEER. A LIST OF ALL REQUIRED PREPROGRAMMED MESSAGES WILL BE GIVEN TO THE CONTRACTOR AT THE PROJECT PRECONSTRUCTION CONFERENCE. THE SIGN SHALL HAVE THE CAPABILITY TO STORE UP TO 99 MESSAGES. MESSAGE MEMORY OR PRE-PROGRAMMED DISPLAYS SHALL NOT BE LOST AS A RESULT OF POWER FAILURES TO THE ON BOARD COMPUTER. THE SIGN LEGEND SHALL BE CAPABLE OF BEING CHANGED IN THE FIELD. THREE-LINE PRESENTATION FORMATS WITH UP TO SIX MESSAGE PHASES SHALL BE SUPPORTED BUT NORMALLY, NOT MORE THAN TWO MESSAGE PHASES SHOULD BE EMPLOYED, ALTHOUGH THREE PHASES MAY BE USED IN UNUSUAL CONDITIONS. PCMS FORMAT SHALL PERMIT THE COMPLETE MESSAGE FOR EACH PHASE TO BE READ AT LEAST ONCE.

THE PCMS SHALL CONTAIN AN ACCURATE CLOCK AND PROGRAMMING LOGIC WHICH WILL ALLOW THE SIGN TO BE ACTIVATED, DEACTIVATED OR MESSAGES CHANGED AUTOMATICALLY AT DIFFERENT TIMES OF THE DAY FOR DIFFERENT DAYS OF THE WEEK.

THE PMCS UNIT SHALL BE MAINTAINED IN GOOD WORKING ORDER BY THE CONTRACTOR IN ACCORDANCE WITH THE PROVISIONS OF 614.03 (c). THE CONTRACTOR SHALL, PRIOR TO ACTIVATING THE UNIT, MAKE ARRANGEMENTS WITH AN AUTHORIZED SERVICE AGENT FOR THE PCMS TO ASSURE PROMPT SERVICE IN THE EVENT OF FAILURE. ANY FAILURE SHALL NOT RESULT IN THE SIGN BEING OUT OF SERVICE FOR MORE THAN 12 HOURS INCLUDING WEEKENDS. FAILURE TO COMPLY MAY RESULT IN AN ORDER TO STOP WORK AND OPEN ALL TRAFFIC LANES AND/OR IN THE DEPARTMENT TAKING APPROPRIATE ACTION TO SAFELY CONTROL TRAFFIC AND THE ENTIRE COST TO CONTROL TRAFFIC ACCRUED BY THE DEPARTMENT WILL BE DEDUCTED FROM MONEYS DUE, OR TO BECOME DUE THE CONTRACTOR ON HIS CONTRACT.

THE CONTRACTOR SHALL BE RESPONSIBLE FOR 24 HOURS PER DAY OPERATION AND MAINTENANCE OF THESE SIGNS ON THE PROJECT FOR THE DURATION OF THE PHASES WHEN THE PLAN REQUIRES THEIR USE.

THE REQUIREMENT TO FURNISH, INSTALL, MAINTAIN AND REMOVE A PCMS UNIT ON THIS PROJECT SHALL NOT IN ANY WAY RELIEVE THE CONTRACTOR OF HIS RESPONSIBILITIES AS OUTLINED IN 104.04.

PAYMENT FOR THE ABOVE DESCRIBED ITEM SHALL BE AT THE CONTRACT UNIT PRICE BID PER SIGN-MONTH FOR EACH ITEM 614 PORTABLE CHANGEABLE MESSAGE SIGN, AS PER PLAN AND SHALL INCLUDE ALL LABOR, MATERIALS, EQUIPMENT, FUELS, LUBRICATING OILS, SOFTWARE, HARDWARE AND INCIDENTALS TO PERFORM THE ABOVE DESCRIBED WORK.

ITEM 614 PORTABLE CHANGEABLE MESSAGE SIGN, BY CLASS, AS PER PLAN
3 SIGNS X 2 CONST. SEASONS X 8 MONTHS = 48 SIGN MONTHS

QUANTITY CARRIED TO THE MAINTENANCE OF TRAFFIC SUB-SUMMARY.

## ITEM 614, BARRIER REFLECTOR:

BARRIER REFLECTORS SHALL BE INSTALLED ON ALL PORTABLE CONCRETE BARRIER USED FOR TRAFFIC CONTROL. THE TYPE OF REFLECTOR AND THE INSTALLATION SHALL CONFORM TO SUPPLEMENTAL SPECIFICATION 802. THE SPACING OF THE REFLECTORS SHALL BE 25 FEET, AND THE REFLECTORS SHALL BE PLACED AT A UNIFORM HEIGHT OF 26 INCHES ABOVE THE PAVEMENT. THE ESTIMATED QUANTITY OF REFLECTORS SHOWN BELOW REFLECTS THE ACCUMULATIVE NUMBER OF REFLECTORS REQUIRED FOR EACH PHASE. THIS DOES NOT NECESSARILY INDICATE THE ACTUAL NUMBER OF REFLECTORS THAT NEED TO BE FURNISHED SINCE THE REFLECTORS MAY BE RE-USED FROM PHASE TO PHASE. REUSED REFLECTORS SHALL BE PAID FOR EACH TIME THEY ARE INSTALLED. BASIS OF PAYMENT SHALL BE AT THE UNIT PRICE BID FOR EACH REFLECTOR AND SHALL INCLUDE ALL LABOR, EQUIPMENT, HARDWARE, AND INCIDENTALS REQUIRED TO PERFORM THE WORK.

## ITEM 614, WORK ZONE SPEED LIMIT SIGNS:

THE CONTRACTOR SHALL FURNISH, INSTALL MAINTAIN, COVER DURING SUSPENSION OF WORK, AND REMOVE WORK ZONE SPEED LIMIT SIGNS AND SUPPORTS (R-10-48) 45 MPH WITHIN THE WORK LIMITS IN ACCORDANCE WITH THE FOLLOWING REQUIREMENTS.

THE CONTRACTOR SHALL COVER OR REMOVE ANY EXISTING SPEED LIMIT OR MINIMUM SPEED SIGNS WITHIN THE REDUCED SPEED ZONE. THESE SIGNS SHALL BE RESTORED DURING SUSPENSION OR TERMINATION OF THE REDUCED SPEED LIMIT. THE EXPENSE OF COVERING OR REMOVAL AND RESTORATION OF EXISTING SPEED LIMIT OR MINIMUM SPEED SIGNS IS INCIDENTAL TO THE PAY ITEM FOR THE WORK ZONE SPEED LIMIT SIGNS.

THE WORK ZONE SPEED LIMIT SIGNS MAY BE ERECTED AND COVERED PRIOR TO STARTING WORK OR MAY BE ERECTED UNCOVERED NO MORE THAN FOUR HOURS BEFORE THE ACTUAL START OF WORK. THE SIGNS SHALL BE REMOVED OR COVERED NO LATER THAN 4 HOURS FOLLOWING RESTORATION OF ALL LANES TO TRAFFIC WITH NO RESTRICTIONS OR SOONER AS DIRECTED BY THE ENGINEER.

THE CONTRACTOR SHALL ERECT WORK ZONE SPEED LIMIT SIGNS IN ADVANCE OF ANY LANE RESTRICTION WHICH IS ½ MILE OR MORE IN LENGTH AND WHICH IS EXPECTED TO LAST AT LEAST 30 CONSECUTIVE CALENDAR DAYS OR AS DIRECTED BY THE ENGINEER. THE SIGN SHALL BE MOUNTED ON BOTH SIDES OF DIVIDED HIGHWAYS, 500 FEET IN ADVANCE OF THE LANE REDUCTION TAPER. THE SIGN SHALL BE MOUNTED ON THE RIGHT SIDE, 250 FEET IN ADVANCE OF THE LANE REDUCTION TAPER ON UNDIVIDED HIGHWAYS. THE SIGN SHALL BE REPEATED, ON THE SIDE NEAREST TRAFFIC EVERY ½ MILE. THESE SIGNS SHALL ALSO BE ERECTED IMMEDIATELY AFTER EACH OPEN ENTRANCE RAMP WITHIN THE ZONE. A SIGN TO INDICATE THE RESUMPTION OF THE STATUTORY SPEED LIMIT SHALL BE ERECTED AT THE END OF ANY REDUCED SPEED ZONE. THIS SIGN SHALL BE AN R-8A.

THE CONTRACTOR MAY USE SIGNS AND SUPPORTS IN USED BUT GOOD CONDITION, PROVIDED THE SIGNS MEET CURRENT ODOT SPECIFICATIONS. SIGN FACES SHALL BE REFLECTORIZED WITH TYPE G SHEETING COMPLYING WITH THE REQUIREMENTS OF 730.19 AND U.S. DEPARTMENT OF TRANSPORTATION SUPPLEMENTAL SPECIFICATION FOR TYPE III SHEETING, FP-85. WORK ZONE SPEED LIMIT SIGNS SHALL BE MOUNTED ON TWO (2) ITEM 630 GROUND MOUNTED SUPPORTS, NO. 4 POST.

WORK ZONE SPEED LIMIT SIGNS AND SUPPORTS WILL BE MEASURED AS THE NUMBER OF SIGN INSTALLATIONS, INCLUDING THE SIGNS AND NECESSARY SUPPORTS. IF A SIGN AND SUPPORT COMBINATION IS REMOVED AND REERECTED AT ANOTHER LOCATION WITHIN THE PROJECT DUE TO CHANGES IN THE SPEED ZONE DIRECTED BY THE ENGINEER, IT SHALL BE CONSIDERED ANOTHER UNIT.

PAYMENT FOR ACCEPTED QUANTITIES, COMPLETE, IN PLACE WILL BE MADE AT THE CONTRACT UNIT PRICE. PAYMENT SHALL BE FULL COMPENSATION FOR ALL MATERIALS, LABOR, INCIDENTALS AND EQUIPMENT FOR FURNISHING, ERECTION, MAINTENANCE, COVERING DURING SUSPENSION OF WORK, AND REMOVAL OF THE SIGNS AND SUPPORTS.

ITEM 614 WORK ZONE SPEED LIMIT SIGN 92 EACH

QUANTITY CARRIED TO THE MAINTENANCE OF TRAFFIC SUB-SUMMARY.

/1/PD/OTTAWA/OTT2/OT2MTGN.DGN.

# MAINTENANCE OF TRAFFIC

QUANTITIES
CALC BY BAG DATE 2-8-94
CKD BY MTG DATE 11-2-94

| FHWA REGION | STATE | PROJECT | |
|---|---|---|---|
| 5 | OHIO | | |

18/367

OTT-2-16.60

## ITEM 614, WORK ZONE MARKING SIGNS:

A QUANTITY OF 89 WORK ZONE MARKING SIGNS ("NO EDGE LINE" OW-167-48) IS CARRIED TO THE MAINTENANCE OF TRAFFIC SUMMARY TO BE USED AS DIRECTED BY THE ENGINEER, DURING PHASE 6 CONSTRUCTION.

## ITEM 614, LAW ENFORCEMENT WITH PATROL CAR

A LAW ENFORCEMENT OFFICER AND PATROL CAR SHALL NOT BE USED IN SITUATIONS FOR WHICH THE USE OF A FLAGGER IS INTENDED UNDER THE "OHIO MANUAL OF UNIFORM TRAFFIC CONTROL DEVICES."

WHERE ONE LANE OF FREEWAY IS TO BE CLOSED AND DIRECTIONAL TRAFFIC CHANNELIZED INTO THE OTHER LANE. A LAW ENFORCEMENT OFFICER AND PATROL CAR SHALL BE REQUIRED TO BE PRESENT DURING THE INITIAL FIRST DAY SET-UP PERIOD AND LAST DAY TEAR-DOWN PERIOD, BUT WILL NOT BE NECESSARY DURING THE REMAINDER OF THE PERIOD OF CONTINUED USE OF A GIVEN CLOSURE ARRANGMENT OR COMBINATION THEREOF. A FLASHING ARROW BARRICADE AND A CONTRACTOR'S WORK TRUCK, AS SHOWN IN THE STANDARD DRAWINGS, WILL BE SUFFICIENT SUPPLEMENTAL INDICATION TO THE STANDARD SIGNING AND DRUMS AT THE APPROACH END OF SUCH ARRANGEMENT AFTER THE SET-UP PERIOD. THE DOWNSTREAM EXTENSION OF SUCH AN ARRANGEMENT SHOULD NOT REQUIRE THE USE OF A LAW ENFORCEMENT OFFICER AND A PATROL CAR.

WHEN THE BEGINNING POINT OF A LANE CLOSURE OPERATION IS SHIFTED SUBSTANTIALLY, OR A NEW LANE CLOSURE ARRANGEMENT IS INITIATED IN ANOTHER PART OF THE PROJECT AREA, THE PRESENCE OF A LAW ENFORCEMENT OFFICER AND PATROL CAR SHALL AGAIN BE REQUIRED.

USE OF A LAW ENFORCEMENT OFFICER IS REQUIRED DURING THE ENTIRE ADVANCE PREPARATION AND CLOSURE SEQUENCE WHERE COMPLETE BLOCKAGE OF TRAFFIC IS REQUIRED.

LAW ENFORCEMENT OFFICERS AND PATROL CARS, REQUIRED BY THE PLAN TRAFFIC MAINTENANCE PROVISIONS AND/OR AUTHORIZED BY THE ENGINEER, SHALL BE PAID FOR UNDER

ITEM 614, LAW ENFORCEMENT OFFICER WITH PATROL CAR 200 HOURS

QUANTITY CARRIED TO THE MAINTENANCE OF TRAFFIC SUB-SUMMARY.

IT SHALL BE THE RESPONSIBILITY OF THE CONTRACTOR TO MAKE ARRANGEMENTS REGARDING SCHEDULING AND PAYMENT OF LAW ENFORCEMENT OFFICER(S) WITH PATROL CAR(S). A PRELIMINARY AGREEMENT SHALL BE REACHED PRIOR TO THE PRE-CONSTRUCTION CONFERENCE FOR THIS PROJECT. INFORMATION REGARDING ARRANGEMENTS FOR THESE SERVICES MAY BE OBTAINED BY CONTACTING:

OHIO STATE HIGHWAY PATROL: SANDUSKY POST (419) 625-6565

SHOULD THE HIGHWAY PATROL NOT BE AVAILABLE, LOCAL LAW ENFORCEMENT OFFICERS MAY BE USED.

## ITEM 614, TEMPORARY IMPACT ATTENUATOR (G.R.E.A.T. TYPE):

THIS WORK SHALL CONSIST OF FURNISHING TEMPORARY IMPACT ATTENUATORS AS REQUIRED IN THE PLANS. THE ITEM SHALL INCLUDE ALL RELATED HARDWARE, NOT SEPARATELY SPECIFIED, AS REQUIRED BY THE MANUFACTURER TO CONSTRUCT COMPLETE AND FUNCTIONAL G.R.E.A.T. IMPACT ATTENUATOR SYSTEMS. THE ATTENUATORS SHALL BE PLACED IN ACCORDANCE WITH THE MANUFACTURER'S SPECIFICATIONS AND AT THE LOCATIONS SHOWN ON THE PLANS. THE IMPACT ATTENUATOR SHALL BE MANUFACTURED BY THE ENERGY ABSORPTION SYSTEMS, INC. ONE EAST WACKER DRIVE, CHICAGO, ILLINOIS 60601: TELEPHONE: (312)-467-6750.

THE NOSE COVER OF THE ATTENUATOR SHALL BE MARKED WITH THREE EVENLY SPACED FOUR (4) INCH WIDE HORIZONTAL STRIPES OF WHITE REFLECTIVE MATERIAL MEETING THE REQUIREMENTS OF STANDARD DRAWING MT-95-81.

THE CONTRACTOR SHALL BE RESPONSIBLE FOR INSPECTING, REPAIRING AND OTHERWISE RESTORING THE IMPACT ATTENUATOR IN ACCORDANCE WITH THE MANUFACTURER'S MAINTENANCE INSTRUCTIONS WHILE IT IS IN USE ON THE PROJECT. SUCH REPAIRS SHALL BE PERFORMED WITHIN 24 HOURS OF THE INCIDENT WHICH CAUSED DAMAGE TO THE IMPACT ATTENUATOR. IN ADDITION TO ANY EXTRA UNITS SUPPLIED FOR THIS PROJECT, THE CONTRACTOR SHALL BE RESPONSIBLE FOR SUPPLYING ALL NECESSARY MATERIALS, LABOR AND EQUIPMENT REQUIRED TO PERFORM THE ABOVE DESCRIBED RESTORATION OF THE ATTENUATOR.
TEMPORARY IMPACT ATTENUATORS SHALL BE BID PER EACH PER THE FOLLOWING ITEM DESCRIPTIONS:

ITEM 614 - TEMPORARY IMPACT ATTENUATORS, G.R.E.A.T. TYPE,
MODEL NO. 206206NF6GCZ, BIDIRECTIONAL 1 EACH

FOR LOCATIONS OF THE ATTENUATORS SEE PLAN SHEET NUMBER 38 OF THESE PLANS.

PAYMENT FOR THE ABOVE WORK SHALL BE MADE AT THE UNIT PRICE BID FOR EACH, ITEM 614, TEMPORARY IMPACT ATTENUATOR AND SHALL BE CONSIDERED FULL PAYMENT FOR FURNISHING, INSTALLING AT THE SPECIFIED LOCATION, RESTORATION AFTER EACH VEHICLE IMPACT, INCLUDING ALL LABOR, TOOLS, EQUIPMENT AND MISCELLANEOUS HARDWARE AND MATERIALS NECESSARY TO COMPLETE THESE ITEMS OF WORK.

AN ESTIMATED QUANTITY AS LISTED BELOW SHALL BE USED AS DIRECTED BY THE ENGINEER FOR USE IN THE ABOVE MENTIONED RESTORATION ONLY WHEN IT IS DECIDED THAT MINOR OR MAJOR REPAIRS CANNOT BE PERFORMED IN A SAFE AND TIMELY MANNER:

ITEM 614 -TEMPORARY IMPACT ATTENUATOR, (REPLACEMENT), G.R.E.A.T. TYPE,
MODEL NO. 206206NF6GCZ, BIDIRECTIONAL 1 EACH

## OPEN TRENCH FOR SHOULDER WIDENING:

TRENCH EXCAVATION FOR SHOULDERS SHALL ONLY BE ALLOWED ON ONE SIDE OF THE PAVEMENT AT A TIME. THE OPEN TRENCH SHALL BE ADEQUATELY MAINTAINED AS PER PLAN INSERT SHEET TITLED DROPOFFS IN WORK ZONES" (SEE SHEET NO. 22A). PLACEMENT OF PROPOSED SUBBASE AND BASE MATERIAL SHALL FOLLOW AS CLOSELY AS POSSIBLE BEHIND THE EXCAVATION OPERATIONS. THE LENGTH OF WIDENING TRENCH WHICH IS OPEN AT ANY ONE TIME SHALL BE HELD TO A MINIMUM AND SHALL, AT ALL TIMES, BE SUBJECT TO APPROVAL OF THE ENGINEER.

## POSTING OF SIGNS ADVISING THAT TRAFFIC FINES ARE DOUBLED WITHIN CONSTRUCTION ZONES.

THE CONTRACTOR SHALL ADHERE TO THE FOLLOWING RULES WITH REGARD TO THE PLACEMENT OF SIGNS ADVISING THAT TRAFFIC FINES ARE DOUBLED WITHIN CONSTRUCTION ZONES.

THE SIGNS POSTED SHALL BEAR THE LEGEND "CONSTRUCTION/ZONE/FINES/DOUBLED" AND SHALL BE OF THE SIZE, COLORS, SHAPE, AND LEGEND SIZES AS SHOWN.

THE SIGNS SHALL BE MOUNTED ON BOTH SIDES (DUAL) OF S.R. 2 WHERE IT IS DIVIDED, BUT NEED ONLY BE MOUNTED ON THE RIGHT SIDE OF S.R. 2 WHERE THE ROADWAY IS UNDIVIDED OR AT RAMP LOCATIONS.

THE FIRST SIGN(S) SHALL BE PLACED BETWEEN THE "ROAD CONSTRUCTION AHEAD" (OW- 128) SIGN AND THE NEXT SIGN IN THE SEQUENCE. ADDITIONAL SIGNS ARE REQUIRED FOR LONG CONSTRUCTION ZONES OR RAMPS WITHIN THE CONSTRUCTION PROJECT WORK LIMITS. SIGNS SHALL BE ERECTED ON EACH ENTRANCE RAMP TO ADVISE ENTERING OR TURNING TRAFFIC AND AT LEAST ONCE EVERY TWO MILES THROUGH THE CONSTRUCTION WORK LIMITS.

THE SIGNS SHALL BE FURNISHED, ERECTED, MAINTAINED IN GOOD CONDITION AND/OR REPLACED BY THE CONTRACTOR AS DIRECTED BY THE ENGINEER AND SUBSEQUENTLY REMOVED BY THE CONTRACTOR.

SIGNS SHALL BE MOUNTED AT THE APPROPRIATE OFFSETS AND ELEVATIONS AS PRESCRIBED BY THE OHIO MANUAL OF UNIFORM TRAFFIC CONTROL DEVICES. THEY SHALL BE MOUNTED ON SUPPORTS MEETING CURRENT SAFETY CRITERIA.

SIGN(S) SHALL BE ERECTED FOR CONSTRUCTION ZONES ONLY IF THE PLANNED WORK LENGTH IS AT LEAST ONE HALF MILE LONG AND THE WORK WILL LAST FOR AT LEAST 30 DAYS.

WHERE WORKERS AND CONSTRUCTION EQUIPMENT ARE BEYOND THE TRAFFIC LANES AND PAVED SHOULDER, SIGNS SHOULD NOT BE PROVIDED.

WHERE CONSTRUCTION ACTIVITY AFFECTS ONLY ONE DIRECTION OF S.R. 2 WHICH CONTAINS A BARRIER OR WIDE MEDIAN, SIGNS SHALL NOT BE ERECTED FOR TRAFFIC ON THE OPPOSING DIRECTIONAL ROADWAY OR RAMP OF S.R. 2.

SIGNS SHALL BE COVERED OR REMOVED WHEN A CONSTRUCTION ZONE IS DISCONTINUED FOR A PERIOD OF 30 DAYS OR MORE.

DOUBLED FINES IN WORK ZONE SPEED LIMIT SIGNS AND SUPPORTS WILL BE MEASURED AS THE NUMBER OF SIGN INSTALLATIONS, INCLUDING THE SIGNS AND NECESSARY SUPPORTS. IF A SIGN AND SUPPORT COMBINATION IS REMOVED AND REERECTED AT ANOTHER LOCATION WITH IN THE PROJECT DUE TO CHANGES IN THE SPEED ZONE DIRECTED BY THE ENGINEER, IT SHALL BE CONSIDERED ANOTHER UNIT.

PAYMENT FOR ACCEPTED QUANTITIES , COMPLETE IN PLACE, WILL BE FULL COMPENSATION FOR ALL MATERIALS, LABOR, INCIDENTALS AND EQUIPMENT FOR FURINSHING, ERECTING, MAINTAING, COVERING DURING SUSPENSION OF WORK, AND REMOVING THE SIGNS AND SUPPORTS.

614, DOUBLED FINES IN WORK ZONE SIGNS 32 EA.

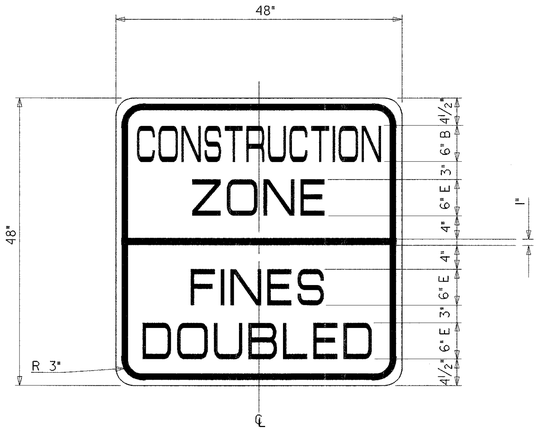


1" BORDER
¾" MARGIN

/1/PD/OTTAWA/OTT2/OT2MTGNL.DGN.

QUANTITIES
CALC BY ALS DATE 2-23-94
CKD BY MTG DATE 11-2-94
REVISED 12-14-95

| FHWA REGION | STATE | PROJECT | |
|---|---|---|---|
| 5 | OHIO | | |

19/367

OTT-2-16.60

# MAINTENANCE OF TRAFFIC SUBSUMMARY

| | | STATION | | 614 | | | | | | | | | | | | | | | | | | | | 615 | 615 | 616 | 622 | |
|---|---|---|---|---|---|---|---|---|---|---|---|---|---|---|---|---|---|---|---|---|---|---|---|---|---|---|---|---|
| SHEET NO. | PHASE | FROM | TO | TEMP. 8" WHITE CHANNELIZING LINE, CLASS I | TEMP. YELLOW CENTER LINE, DOUBLE-SOLID, CLASS I | TEMP. WHITE STOP LINE, CLASS I | TEMP. WORD ON PAVEMENT | TEMP. LANE ARROW | TEMP. EDGE LINES, CLASS I | LAW ENFORCEMENT OFFICER WITH PATROL CAR | TEMP. IMPACT ATTENUATOR | TEMP. IMPACT ATTENUATOR, (REPLACEMENT) | TEMP. WHITE LANE LINE, CLASS II | REPLACEMENT DRUM | REPLACEMENT SIGN | MAINTAIN TRAFFIC | WORK ZONE MARKING SIGN | DOUBLED FINES IN WORK ZONE SIGNS | WORK ZONE SPEED LIMIT SIGN | TEMP. LIGHTING CROSS-OVER SYSTEM | BARRIER REFLECTOR TYPE B (YELLOW) | TEMP. RAISED PAVEMENT MARKER | OBJECT MARKER | PORTABLE CHANGEABLE MESSAGE SIGN | TEMP. PAVEMENT CLASS A | CALCIUM CHLORIDE | TEMP. ROAD | WATER | PORTABLE CONCRETE BARRIER, 32" | PORTABLE CONCRETE BARRIER, 50" |
| | | | | LIN.FT. | LIN.FT. | LIN.FT. | EACH | EACH | LIN.FT. | HOURS | EACH | EACH | LIN.FT. | EACH | SQ.FT. | LUMP | EACH | EACH | EACH | EACH | EACH | EACH | EACH | EACH | SQ.YD. | TON | LUMP | M.GAL. | LIN.FT. | LIN.FT. |
| 23 | I-A | 806+60 | 876+00 | | | | | | | | | | | | | | | | | | | | | | | | | | | |
| 24 | I-A | 876+00 | 916+00 | | | | | | | | | | | | | | | | | | | | | | | | | | | |
| 25 | I-A | 916+00 | 976+80 | | | | | | 660 | | | | | | | | | | | | | | | | | | | | | |
| 26 | I-B | 806+60 | 876+00 | | | | | | | | | | | | | | | | | | | | | | | | | | | |
| 27 | I-B | 876+00 | 952+60 | | | | | | 14835 | | | | | | | | | | | | | | | | | | | | | |
| 28 | I-B | 952+60 | 1033+00 | | | | | | 13490 | | | | | | | | | | | | | | | | | | | | | |
| 29 | I-B | 1033+00 | 1080+70 | | | | | | | | | | | | | | | | | | | | | | | | | | | |
| 30 | I-B | 904+10 | 914+60 | | | | | | | | | | | | | | | | | 1 | | | | | 5844 | | LUMP | | | |
| 31 | I-B | 1007+40 | 1018+90 | | | | | | | | | | | | | | | | | 1 | | | | | 5720 | | LUMP | | | |
| 32 | I-C | 806+60 | 876+00 | | | | | | | | | | | | | | | | | | | | | | | | | | | |
| 33 | I-C | 876+00 | 916+00 | | | | 1 | 2 | 7790 | | | | | | | | | | | | | | | | | | | | | |
| 34 | I-C | 916+00 | 1021+00 | | | | | | 660 | | | | | | | | | | | | | | | | | | | | 960 | |
| 35 | 2-A | 829+60 | 897+30 | 550 | 440 | | | | 1020 | | | | | | | | | | | | | | | | | | | | | |
| 36 | 2-A | 897+00 | 945+00 | | | | | | 9283 | | | | | | | | | | | | 286 | 12 | 152 | | | | | | 4220 | 690 |
| 37 | 2-A | 945+00 | 1014+00 | | | | | | 13796 | | | | | | | | | | | | 547 | 42 | 74 | | | | | | 7610 | 330 |
| 38 | 2-A | 1013+40 | 1077+00 | | | | | | 860 | | | | | | | | | | | | 7 | | 16 | | | | | | | 510 |
| 39 | 2-B | 830+40 | 906+00 | | | | | | 1990 | | | | | | | | | | | | 8 | | 13 | | | | | | | 320 |
| 40 | 2-B | 906+00 | 961+00 | | | | | | 11107 | | | | | | | | | | | | 440 | 43 | 220 | | | | | | 4650 | 860 |
| 41 | 2-B | 961+00 | 1020+00 | | | | | | 11630 | | | | | | | | | | | | 442 | 45 | 221 | | | | | | 4840 | 880 |
| 42 | 2-B | 1020+00 | 1093+00 | | | | | | 1950 | | | | | | | | | | | | | | | | | | | | | |
| 43 | 3-A | 945+00 | 1027+00 | | | | | | 4060 | | | | | | | | | | | | | | | | | | | | | |
| 44 | 3-A | 1027+00 | 1094+00 | | | | | | 13400 | | | | | | | | | | | | | | | | | | | | | |
| 45 | 3-A | 1094+00 | 1223+00 | | | | | | 21254 | | | | | | | | | | | | | | | | | | | | | |
| 46 | 3-A | 1223+00 | 1298+00 | | | | | | 8368 | | | | | | | | | | | | | | | | | | | | | |
| 47 | 3-B | 946+00 | 1052+00 | | | | | | 660 | | | | | | | | | | | | | | | | | | | | | |
| 48 | 3-B | 1052+00 | 1220+00 | | | | | | | | | | | | | | | | | | | | | | | | | | | |
| 49 | 3-B | 1220+00 | 1298+87 | | | | | | 660 | | | | | | | | | | | | | | | | | | | | | |
| 50 | 3-B | 1192+00 | 1199+32.40 | | | | | | | | | | | | | | | | | 1 | | | | | 15417 | | LUMP | | | |
| 51 | 3-B | 1225+93.19 | 1233+00 | | | | | | | | | | | | | | | | | 1 | | | | | 11181 | | LUMP | | | |
| 52 | 3-C | 945+00 | 1027+00 | | | | | | 4060 | | | | | | | | | | | | | | | | | | | | | |
| 53 | 3-C | 1027+00 | 1094+00 | | | | | | 13400 | | | | | | | | | | | | | | | | | | | | | |
| 54 | 3-C | 1094+00 | 1223+00 | | | | | | | | | | | | | | | | | | | | | | | | | | | |
| 55 | 3-C | 1223+00 | 1298+00 | | | | | | 29146 | | | | | | | | | | | | | | | | | | | | | |
| 56 | 4-A | 1116+00 | 1186+00 | | | | | | 1710 | | | | | | | | | | | | | | | | | | | | | |
| 57 | 4-A | 1186+00 | 1231+00 | | | | | | 8410 | | | | | | | | | | | | 275 | 167 | 153 | | | | | | 2680 | 1120 |
| 58 | 4-A | 1231+00 | 1292+00 | | | | | | 860 | | | | | | | | | | | | | | 9 | | | | | | | 300 |
| 59 | 4-B | 1134+00 | 1228+00 | | | | | | 2050 | | | | | | | | | | | | 262 | 56 | 144 | | | | | | 2680 | 990 |
| 60 | 4-B | 1228+00 | 1309+00 | | | | | | 3365 | | | | | | | | | | | | | 60 | 8 | | | | | | 60 | 130 |
| 61 | 5-A | 210+00 | 339+50 | | | | | | 3570 | | | | | | | | | | | | | | 34 | | | | | | | |
| 62 | 5-B | 210+00 | 339+50 | | 2171 | | | | 1776 | | | | 320 | | | | | | | | | 13 | | | | | | | | |
| 63 | 5-C | 210+00 | 339+50 | | 1815 | 60 | | | 1330 | | | | | | | | | | | | | 13 | | | | | | | 840 | |
| QUANTITIES CARRIED FROM MOT NOTES | | | | | | | | | | 200 | 1 | 1 | | 100 | 200 | LUMP | 89 | 32 | 92 | | | | | 3 | | 20 | | 200 | | |
| TOTAL | | | | 550 | 4426 | 60 | 1 | 2 | 207150 | 200 | 1 | 1 | 320 | 100 | 200 | | 89 | 32 | 92 | 4 | 2267 | 451 | 1044 | 3 | 38162 | 20 | LUMP | 200 | 28540 | 6130 |
| TOTAL / 5280 FT./MI. | | | | | .83 MI. | | | | 39.23 | | | | .06 MI. | | | | | | | | | | | | | | | | | |
| TOTALS CARRIED TO GENERAL SUMMARY | | | | 550 | .83 MI. | 60 | 1 | 2 | 39.23 | 200 | 1 | 1 | .06 MI. | 100 | 200 | LUMP | 89 | 32 | 92 | 4 | 2267 | 451 | 1044 | 3 | 38162 | 20 | LUMP | 200 | 28540 | 6130 |

I:/PD/ottawa/ott2/ott2mtss.dgn

| FHWA REGION | STATE | PROJECT | |
|---|---|---|---|
| 5 | OHIO | | |

20/367

OTT-2-16.60

## DETOUR NOTES

1.) The District Traffic Engineer shall be notified a minimum of fourteen days prior to closing any ramps.

2.) The District Traffic Department will cordinate and set up and maintain the detour with the exception of the following:

a.) The contractor shall be responsible for either covering signs or overlaying all conflicting guide signs with black on orange "Closed" signs at the direction of the Traffic Engineer. The overlays shall be placed diagonally over the existing signs. The Minimum letter size for each sign is 12". Removal of these overlays or uncovering of signs immediately after the ramp is open is also the contractors responsibility.

b.) The Portable message signs shall be transported by the contractor and contain the messages and located as required by the District Traffic Engineer.

A list of all required preprogrammed messages will be given to the contractor at the project precon - struction conference.

100 drums and Type III barricades (see standard dwg. MT-101.60) shall be made available for use as directed by the District Traffic Engineer.

The above items which are under the contractors responsibility are to be included with Item 614, Maintaining Traffic.

## LEGEND

Detour Route ➡

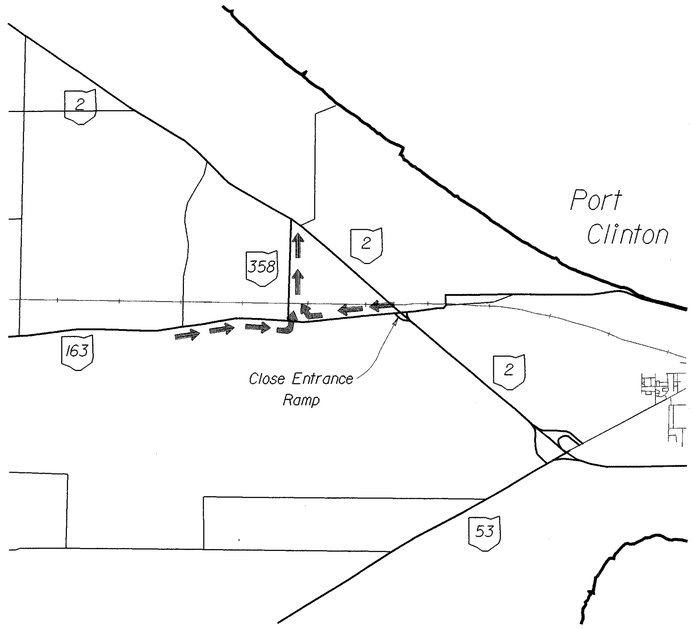


MOT PHASE 2-A,6

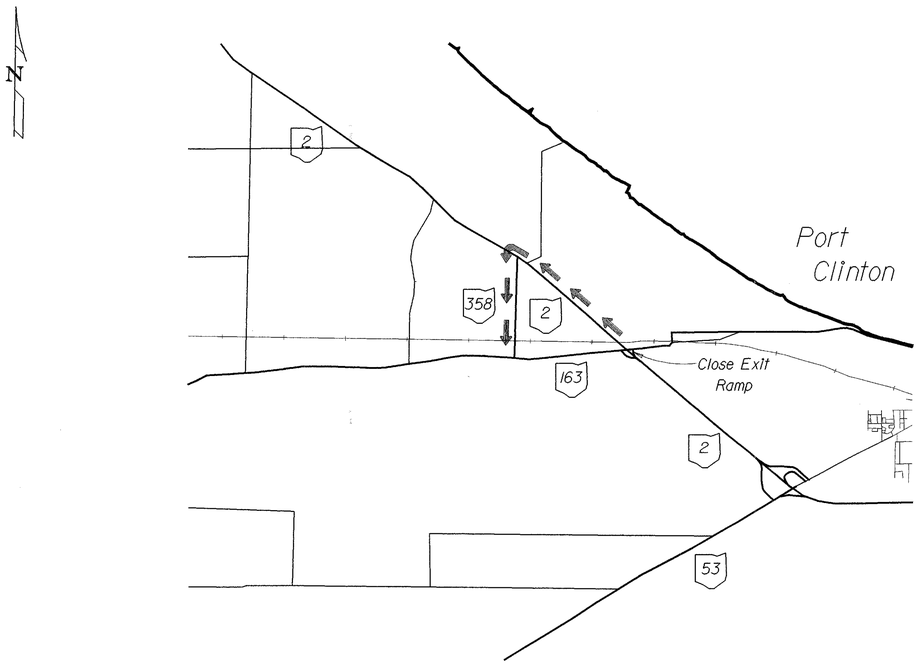


MOT PHASE 2-B,6

I:/pd/OTT-HWY-16.60/2.40T2DTOUR.DGN

MAINTENANCE OF TRAFFIC DETOURS

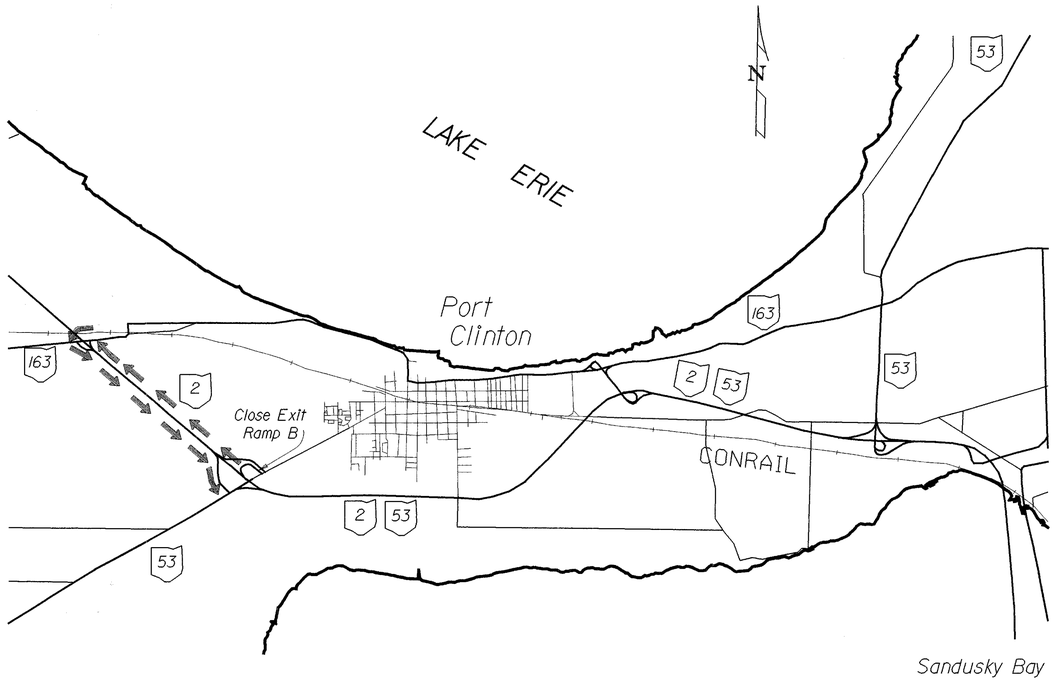


MOT PHASE 5-A,6

See Notes Sheet No.16

| FHWA REGION | STATE | PROJECT | |
|---|---|---|---|
| 5 | OHIO | | |

20A 367

OTT-2-16.60

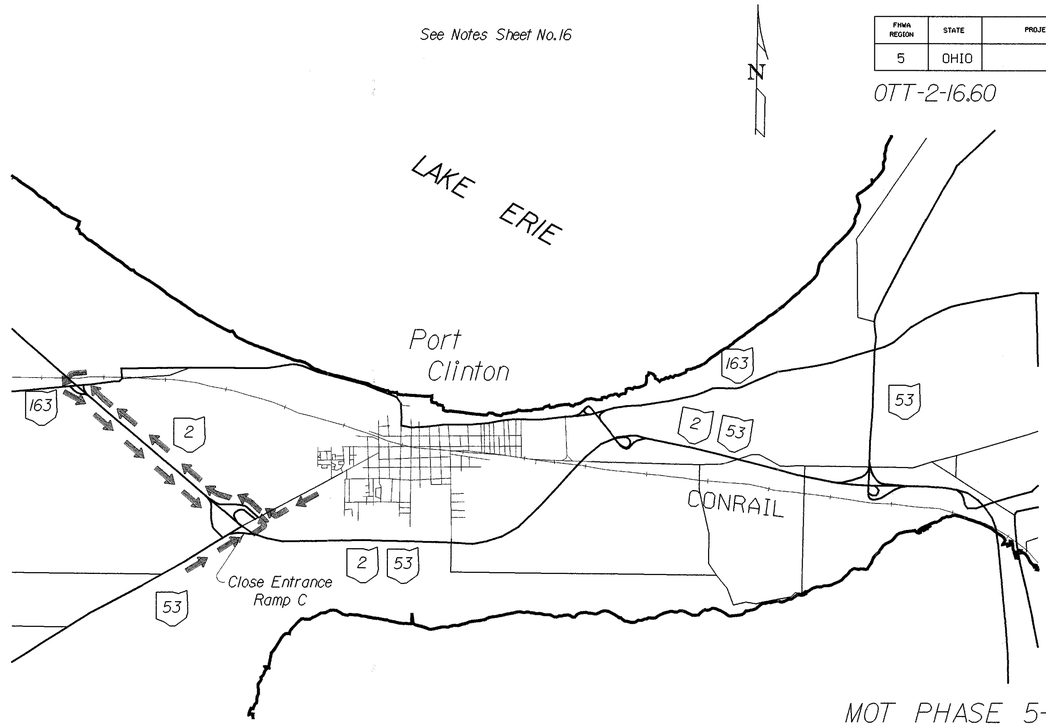


MOT PHASE 5-A,6

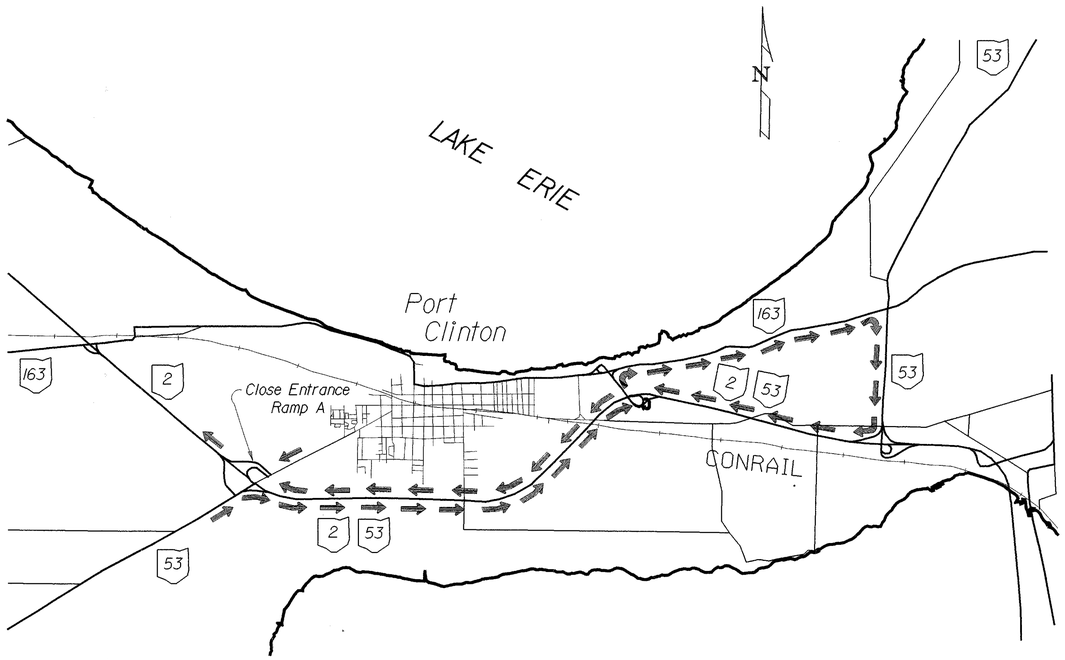


MOT PHASE 5-A,6

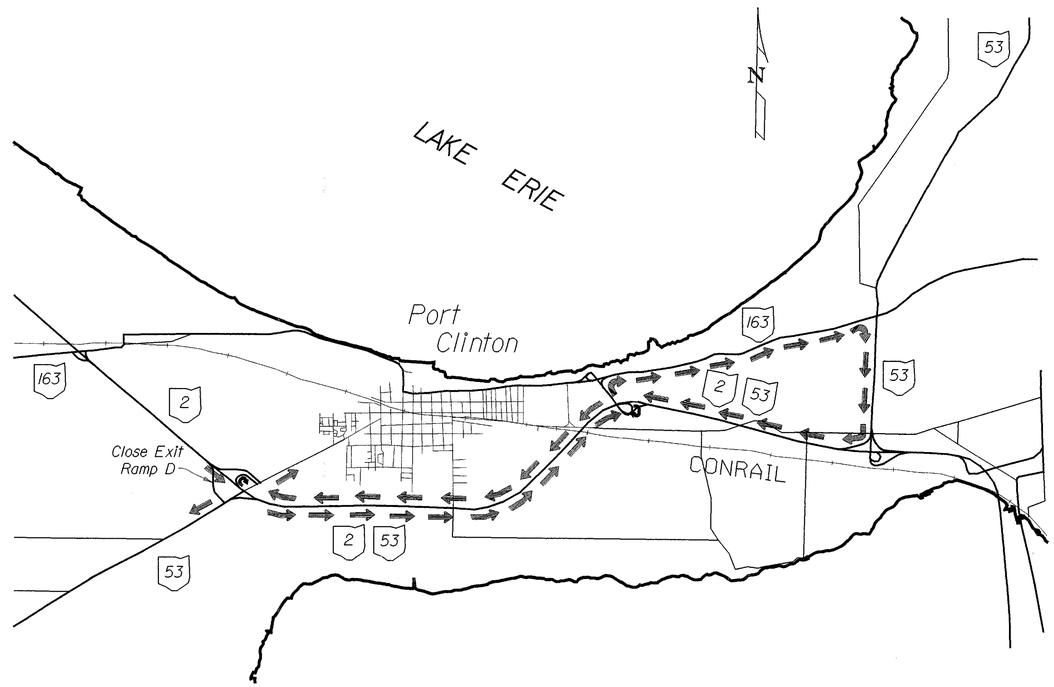


MOT PHASE 5-A,6

I:/pd/OTTAWA/OTT2/OT2DTOUR.DGN

MAINTENANCE OF TRAFFIC DETOURS

| CALC BY DATE | | OHIO | 21 |
|---|---|---|---|
| CHKD BY DATE | | FHWA REGION 5 | 367 |

OTT-2-16.60

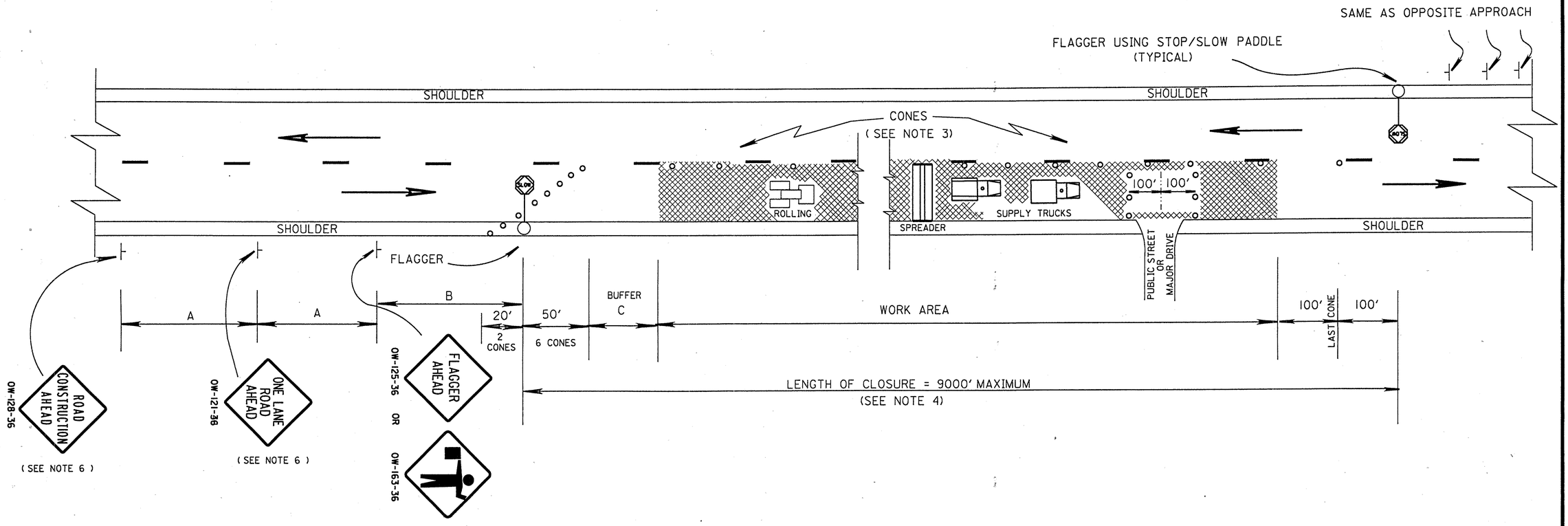


## GENERAL NOTES:

1. THE LOCATION OF THE ADVANCE WARNING SIGNS SHOULD ONLY BE ADJUSTED TO PROVIDE FOR ADEQUATE SIGHT DISTANCE FOR THE EXISTING VERTICAL AND HORIZONTAL ROADWAY ALIGNMENT.

2. FLAGGERS, ONE FOR EACH DIRECTION SHALL BE USED TO CONTROL TRAFFIC CONTINUOUSLY FOR AS LONG AS A ONE LANE OPERATION IS IN EFFECT. THE FLAGGERS SHALL BE ABLE TO COMMUNICATE WITH EACH OTHER AT ALL TIMES.

3. CONES ON THE TAPERS SHALL BE SPACED AT 10' CENTER TO CENTER. CONES SHALL BE SPACED AT 200' CENTER TO CENTER PARALLEL TO THE CENTER LANE BUT 1 TO 2 FT. WITHIN THE CLOSED LANE. CONES MAY BE TEMPORARILY MOVED OFF THE ROAD IN THE IMMEDIATE VICINITY OF THE SUPPLY TRUCKS, PAVING SPREADER OR ROLLERS BUT SHALL BE IMMEDIATELY REPLACED WHEN THAT ACTIVITY HAS PASSED BY THE CONE LOCATION. CONES SHALL HAVE A MINIMUM HEIGHT OF 28 INCHES AND SHALL BE STABILIZED TO PREVENT THEM FROM BLOWING OVER. CLOSURES AT NIGHT SHALL USE DRUMS RATHER THAN CONES.

4. IT IS REQUIRED THAT THE LENGTH OF CLOSURE BE KEPT TO A MINIMUM AT ALL TIMES, AS DIRECTED BY THE ENGINEER.

   WHEN THE AMBIENT TEMPERATURE EXCEEDS 80 DEGREES F, THE ENGINEER MAY INCREASE THE LENGTH OF CLOSURE TO ALLOW FOR SUFFICIENT COOLING OF NEW PAVEMENT.

4. CONT. THE ENGINEER MAY SHORTEN THE MAXIMUM ALLOWABLE LENGTH OF CLOSURE TO RELIEVE EXCESSIVE TRAFFIC BACKUPS OR TO IMPROVE TRAFFIC OPERATION.

   ALL TRAFFIC CONTROL SIGNS, CONES (OR DRUMS), AND THE FLAGGER SHALL BE MOVED FORWARD AS A GROUP BEFORE THE CLOSURE REACHES THE MAXIMUM ALLOWABLE LENGTH. ONLY ONE SIDE OF THE ROAD SHALL BE CLOSED AT ANY TIME.

5. WITHIN THE LENGTH OF CLOSURE, PROVISION SHALL BE MADE TO CONTROL TRAFFIC ENTERING FROM INTERSECTING STREETS AND MAJOR DRIVES AS NECESSARY TO PREVENT WRONG WAY MOVEMENTS AND TO KEEP VEHICLES OFF OF NEW PAVEMENT NOT READY FOR TRAFFIC. AS A MINIMUM, THE CONTRACTOR SHALL:

   A) PROVIDE AN ADDITIONAL FLAGGER AT EVERY PUBLIC STREET INTERSECTION AND MAJOR DRIVEWAY AND -
   B) PLACE A ROW OF 3 CONES ACROSS THE CLOSED LANE APPROXIMATELY 100 FT. ON EACH SIDE OF AN INTERSECTION.
   C) ADDITIONAL ROWS OF 3 CONES EACH SHALL BE PLACED ACROSS THE CLOSED LANE AT A MAXIMUM SPACING OF 1000 FT. BETWEEN ROWS OF CONES.

   ROWS OF CONES MAY BE MOVED OFF THE ROAD TO ALLOW PASSAGE OF ROLLERS, PAVING SPREADER OR SUPPLY TRUCKS BUT SHALL BE MOVED BACK ONTO THE ROAD WHEN THE ACTIVITY HAS PASSED.

6. THE TYPE A FLASHING WARNING LIGHTS ARE REQUIRED ON THE "ROAD CONSTRUCTION AHEAD" (OW-128) AND THE "ONE LANE ROAD AHEAD" (OW-121) SIGNS WHENEVER A NIGHT LANE CLOSURE IS NECESSARY.

7. TYPE C STEADY BURNING WARNING LIGHTS SHALL BE ERECTED ON EACH DRUM FOR NIGHT LANE CLOSURES.

8. ADEQUATE AREA ILLUMINATION OF EACH FLAGGER STATION SHALL BE PROVIDED AT NIGHT BY USING 150 WATT MINIMUM HIGH PRESSURE SODIUM LUMINAIRES OR 250 WATT MINIMUM MERCURY LUMINAIRES. LUMINAIRES SHALL BE LOCATED ADJACENT TO ONE FLAGGER STATION FOR EACH DIRECTION OF TRAFFIC.

| DISTANCE | A | B | C |
|---|---|---|---|
| URBAN | 200 | 350 | 100 |
| RURAL | 500 | 650 | 200 |

ALL WORK AND TRAFFIC CONTROL DEVICES SHALL BE IN ACCORDANCE WITH 614 AND OTHER APPLICABLE PORTIONS OF THE C & M SPECIFICATIONS AS WELL AS IN ACCORDANCE WITH PART 7 OF OMUTCD. PAYMENT FOR ALL LABOR, EQUIPMENT AND MATERIALS TO PROVIDE THIS METHOD OF TRAFFIC CONTROL SHALL BE INCLUDED IN THE LUMP SUM BID FOR 614 MAINTAINING TRAFFIC, UNLESS SEPARATELY ITEMIZED IN THE PLAN.

| REVISED BY: | DATE: |
|---|---|

| 20971IFED | DATE 04/05/89 |
|---|---|
| FLAGGER CLOSING 1 LANE OF A 2 LANE HIGHWAY FOR PAVING OPERATIONS WITH CONES | |
| PLAN INSERT SHEET | |

WCC

## GENERAL

THIS ITEM OF WORK SHALL CONSIST OF FURNISHING, INSTALLING, MAINTAINING, AND SUBSEQUENTLY REMOVING TEMPORARY RAISED PAVEMRNT MARKERS (TRPM'S). THE MARKERS SHALL BE YELLOW OR WHITE, AS DESCRIBED IN THE PLAN.

## MATERIAL

ALL MARKERS SHALL BE OF SUFFICIENT STRENGTH AND PROPERLY SHAPED SO AS NOT TO BE DISLODGED OR BROKEN, OR THE REFLECTOR DISLODGED OR BROKEN, OR THE REFLECTOR DISLODGED OR DAMAGED BY IMPACTS FROM VEHICLES TIRES, INCLUDING THOSE OF HIGH PRESSURE TRUCK TIRES LOADED TO 4500 POUNDS.

RETROREFLECTORS SHALL BE PROVIDED IN ONE OR TWO DIRECTIONS ON EACH MARKER AS REQUIRED BY THE USAGE AND SHALL RETURN WHITE OR YELLOW LIGHT AS IS APPROPRIATE FOR THE APPLICATION.

THE REFLECTOR SHALL HAVE AN EFFECTIVE AREA OF Ø.35 SQUARE INCHES FOR TYPE A OR 3.Ø SQUARE INCHES FOR TYPE B. ITS BRIGHTNESS OR SPECIFIC INTENSITY (WHEN TESTED AT Ø.2 DEGREE ANGLE OF OBSERVATION AND THE FOLLOWING ANGLES OF INCIDENCE) SHALL MEET OR EXCEED THE FOLLOWING:

SPECIFIC INTENSITY

TYPE A

| INCIDENCE ANGLE (DEGREES) | WHITE | YELLOW |
|---|---|---|
| Ø | 1.Ø | Ø.6 |
| 2Ø | Ø.4 | Ø.24 |
| 45 | — | — |

TYPE B

| | WHITE | YELLOW |
|---|---|---|
| Ø | 3.Ø | 1.8 |
| 2Ø | 1.2 | Ø.72 |
| 45 | Ø.3 | Ø.2 |

ANGLE OF INCIDENCE FORMED BY A RAY FROM LIGHT SOURCE TO THE MARKER AND THE NORMAL TO THE LEADING EDGE OF THE MARKER FACE (ALSO HORIZONTAL ENTRANCE ANGLE).

ANGLE OF OBSERVATION FORMED BY A RAY FROM LIGHT SOURCE TO THE MARKER AND THE RETURNED RAY FROM THE MARKER TO THE MEASURING RECEPTOR.

SPECIFIC INTENSITY IS THE MEAN CANDLEPOWER OF THE REFLECTED LIGHT (AT GIVEN INCIDENCE AND DIVERGENCE ANGLES) FOR EACH FOOT-CANDLE AT THE REFLECTOR (ON A PLANE PERPENDICULAR TO THE INCIDENT LIGHT).

TYPE A MARKERS ARE INTENDED TO PROVIDE HIGH VISIBILITY BOTH DAY AND NIGHT. THEIR DAY TIME VISIVILITY SHALL BE ASSURED BY SIZE, SHAPE AND COLOR AS FOLLOWS:

1) THE MARKERS SHALL BE A HIGH VISIBILITY YELLOW OR WHITE COLOR WHICH WILL NOT DEGRADE SUBSTANTIALLY DUE TO TRAFFIC WEAR AND WHICH WILL MATCH THE COLOR OF THE REFLECTOR.

2) WHEN VIEWED FROM ABOVE, THE MARKERS SHALL HAVE A VISIBLE AREA OF NOT LESS THAN 14 SQUARE INCHES.

3) WHEN VIEWED FROM THE FRONT, PARALLEL TO THE PAVEMENT, AS FROM APPROACHING TRAFFIC, THE MARKER SHALL HAVE A WIDTH OF APPROXIMATELY 4 INCHES AND A VISIBLE AREA OF NOT LESS THAN 1.5 SQUARE INCHES.

TYPE B MARKERS ARE INTENDED TO PROVIDE HIGH VISIBILITY AT NIGHT BY RETROREFLECTING AUTOMOTIVE HEADLIGHT BACK TO DRIVER.

## INSTALLATION

TEMPORARY RAISED PAVEMENT MARKERS SHALL BE ATTACHED TO CLEAN, DRY PAVEMENT BY A BUTYL ADHESIVE PAD, ABITUMINOUS ADHESIVE OR OTHER CONSTRUCTION GRADE ADHESIVES (SUCH AS FRANKLIN PANEL AND METAL ADHESIVE) SUITABLE TO ANCHOR THE MARKER UNDER THE ABOVE CONDITIONS. WHEN IT IS NEDESSARY TO ATTACH MARKERS TO NEW CONCRETE PAVEMENT WITH CURING COMPOUND REMAINING, THE CURING COMPOUND MEMBRANE SHALL BE REMOVED BY SANDBLASTING OR OTHER MECHANICAL CLEANING METHOD. MARKERS SHALL BE INSTALLED IN ACCORDANCE WITH THE MANUFACTURER'S RECOMMENDATIONS.

THE CONTRACTOR SHALL IMMEDIATELY REPLACE, AT HIS EXPENSE, ANY MARKERS WHICH FAIL (BROKEN HOUSING, HOUSING WORN TO THE EXTENT THAT DAYTIME VISIBILITY IS SIGNIFICANTLY DIMINISHED OR OF AN UNACCEPTABLE COLOR, DETACHED OR BROKEN REFLECTOR, HOUSING DETACHED FROM ADHESIVE).

MARKERS ARE LIKELY TO BE REMOVED BY SNOW PLOWING OPERATIONS, THUS THEY ARE NOT CONSIDERED SUITABLE FOR USE DURING THE PERIOD FROM OCTOBER 15 UNTIL APRIL 3Ø. THE CONTRACTOR IS ADVISED TO SCHEDULE HIS WORK AND/OR THE USE OF THESE DEVICES TO AVOID THIS PERIOD. SHOULD THE CONTRACTOR CHOOSE TO USE TRPM'S DURING THIS PERIOD AND THEY ARE SUBSEQUENTLY REMOVED OR DESTROYED BY SNOW AND ICE CONTROL ACTIVITIES. THE CONTRACTOR SHALL IMMEDIATELY, AT HIS EXPENSE, PROVIDE A SUBSTITUTE TRAFFIC GUIDANCE SYSTEM EFFECTIVE DURING DAY AND NIGHT AND WHICH IS ACCEPTABLE TO THE ENGINEER.

THE MARKERS SHALL BE PLACED ACCURATELY TO DEPICT STRAIGHT OR UNIFORMLY CURVING INES. WHEN USED TO SUPPLEMENT TEMPORARY PAVEMENT MARKINGS, THEY SHALL BE PLACED ON OR IMMEDIATELY ADJACENT TO THE PAVEMENT MARKING. LOCATIONS SHALL BE ADJUSTED UP TO ONE FOOT LONGITUDINALLY OR SIX INCHES LATERALLY TO AVOID PLACEMENT ON JOINTS, OR ON CRACKED OR DETERIORATED PAVEMENT. MARKERS SHALL NOT BE PLACED DIRECTLY ON PAVEMENT MARKINGS IF THIS DESTRACTS FROM THEIR ABILITY TO REMAIN ATTACHED TO THE PAVEMENT.

## APPLICATION

1) WHEN REQUIRED TO SUPPLEMENT PAVEMENT MARKING, TEMPORARY RAISED PAVEMENT MARKERS SHALL BE PLACED AS FOLLOWS:

| LINE | TYPE | SPACING |
|---|---|---|
| EDGE LINE | A OR B | 20'C/C |
| LANE LINE | A OR B | 40'C/C* |
| CENTER LINE (SINGLE/BROKEN) | A OR B | 40'C/C* |
| CENTER LINE (DOUBLE/SOLID) | A OR B | 2 UNITS SIDE BY SIDE 4 INCHES APART 20'C/C |
| CHANNELIZING LINE (INCLUDES EXIT GORE NOSE) | A OR B | 10'C/C |

* CENTERED IN GAP

2) WHEN USED TO SIMULATE (REPLACE) PAVEMENT MARKING, TEMPORARY RAISED PAVEMENT MARKERS SHALL BE PLACED AS FOLLOWS:

| LINE | TYPE | SPACING |
|---|---|---|
| EDGE LINE | A | 5' C/C |
| LANE LINE | A | 4 @ 3.33'C/C 30'GAP (40'CYCLE) |
| CENTER LINE (DOUBLE/SOLID) | A | 2 UNITS SIDE BY SIDE 5' C/C |
| CENTER LINE (SINGLE/BROKEN) | A | 4 @ 3.33'C/C 30'GAP (40'CYCLE) |
| CHANNELIZING LINE (INCLUDES EXIT GORE NOSE) | A | 5' C/C |
| EDGE LINE (TWO COLOR) (WHITE/YELLOW) | A | BACK TO BACK 5' C/C |

YELLOW MARKERS USED TO SEPARATE OPPOSITE FLOWS OF TRAFFIC (CENTER LINES) SHALL INCLUDE REFLECTIONS FOR BOTH DIRECTIONS. ALL OTHER YELLOW AND WHITE MARKERS SHALL PROVIDE RETROREFLECTIVITY FOR ONE DIRECTION ONLY.

## REMOVAL

REMOVAL SHALL BE ACCOMPLISHED IN A MANNER THAT LITTLE OR NONE OF THE ADHESIVE REMAINS ON THE PAVEMENT. PERMANENT PAVEMENT SURFACES SHALL NOT BE SCARRED, BROKEN OR ROUGHENED SIGNIFICANTLY.

## PAVEMENT

BASIS OF PAYMENT SHALL BE AT THE CONTRACT UNIT PRICE PER EACH MARKER AND SHALL INCLUDE ALL LABOR, EQUIPMENT, HARDWARE AND INCIDENTALS REQUIRED TO PERFORM THE WORK. IT SHALL ALSO INCLUDE REPLACEMENT AT NO ADDITIONAL COST OF ALL TEMPORARY RAISED PAVEMENT MARKERS WHICH, IN THE JUDGEMENT OF THE ENGINEER, FAIL FOR ANY REASON, EXECPT DUE TO FAILURE OF THE PAVEMENT TO WHICH THEY ARE ATTACHED.

| ITEM | UNIT | DESCRIPTION |
|---|---|---|
| 614 | EACH | TEMPORARY RAISED PAVEMENT MARKERS. |

| STATIONING | | | SPACING | TYPE A | | | | TYPE B OR A | | | | REMARKS |
|---|---|---|---|---|---|---|---|---|---|---|---|---|
| FROM | TO | SIDE | (FT) | W | Y | Y/Y | | W | Y | Y/Y | | (LINE TYPE) |
| | | | | | | | | | | | | |
| | | | | | | | | | | | | |
| | | | | | | | | | | | | |
| | | | | | | | | | | | | |
| | | | | | | | | | | | | |
| | | | | | | | | | | | | |
| | | | | | | | | | | | | |
| | | | | | | | | | | | | |
| | | | | | | | | | | | | |
| | | | | | | | | | | | | |
| | | | | | | | | | | | | |
| | | | | | | | | | | | | |
| TOTALS | | | | | | | | | | | | |

REVISED BY: DATE:

| 210120 | DATE |
|---|---|
| 614 TEMPORARY RAISED PAVEMENT MARKERS | 03/30/88<br>03/23/90<br>03/28/90<br>07/03/90 |
| PLAN INSERT SHEET | |

WCC

# GENERAL NOTES

1. It is intended that this drawing be used for treatment of drop-offs that develop during construction operations, and that are not otherwise provided for in the construction plans. Where the plans do not provide specific items for labor, equipment, or materials to implement the drop-off treatments specified hereon, they shall be included for payment in the lump sum bid for Item 614 - Maintaining Traffic.
2. While the need for certain advisory signing is noted hereon, it is not intended that this be indicative of all signing that may be required to advise or warn motorists, and all requirements of the Ohio Manual of Uniform Traffic Control Devices (OMUTCD) must be fulfilled.
3. In urban or otherwise heavily developed areas where pedestrians and/or bicyclists may be present in significant numbers, additional signing and protective measures other than those shown hereon may be required.
4. The drop-off treatment selected for use at any given location shall be as appropriate for the prevailing conditions at the site.
5. Where concrete barrier is specified, it shall be in accordance with Standard Construction Drawing MC-9.2 and Item 622.
6. When drums are specified for a dropoff condition, a minimum number of four drums shall be used. Spacing shall be as indicated in the plans or as specified in the OMUTCD.
7. When OW-15I (Low Shoulder) signs or OW-17I (Uneven Lanes) and OWP-17I signs are required, they shall be placed 750' in advance of the condition, on all intersecting entrance ramps within the limits of the condition and immediately beyond all intersecting roadways within the limits of the condition. When the dropoff condition extends more than one-half mile, additional signs should be erected at intervals of one mile or less.
8. For locations, such as at ramps, lane shifts, lane closures, etc., where traffic is required to negotiate any difference in elevation between pavements, a 3:1 slope treatment similar to the Optional Wedge Treatment shall be provided.
9. Portable concrete barrier shall be placed on the same level as the traffic surface and shall not encroach on lane width(s) designated as the minimum required for traffic use. Where drums are used, and their presence would reduce traveled lane widths to less than 10', drums may be placed on the opposite level from that of traffic provided the dropoff depth does not exceed 5" and approval is granted by the Project Engineer.
10. Pavement Repairs (or similar work):
    a. Lengths greater than 60 feet - utilize appropriate treatment from Condition I.
    b. Lengths of 60 feet or less - repairs shall be effected in accordance with 255.08. Drums may be used as a separator adjacent to the traveled lane.

# OPTIONAL WEDGE TREATMENT
## (MILLING OR RESURFACING)

1. This treatment may be used when permitted for Condition I only.
2. OW-17I and OWP-17I signs required.

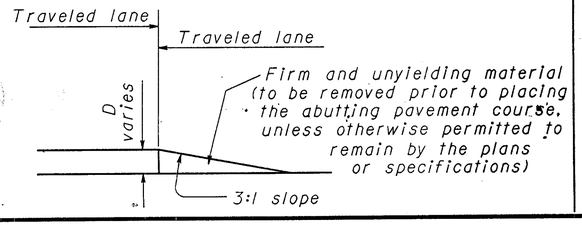


# CONDITION I
## DROPOFFS BETWEEN TRAVELED LANES

1. These treatments are to be used for resurfacing, pavement planing, excavation, etc. between or within traveled lanes.

| D (In.) | Treatment |
|---|---|
| ≤1½ | Erect OW-17I and OWP-17I signs. |
| >1½-3 | 1) Lane closure utilizing drums* as shown below<br>OR 2) Optional Wedge Treatment |
| >3-5 | Lane closure utilizing drums as shown below. |
| >5 | Lane closure utilizing portable concrete barrier as shown below. |

*Cones may be used for daytime only conditions.

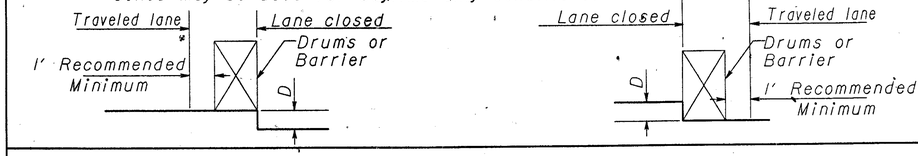


# CONDITION II
## DROPOFFS WITHIN GRADED SHOULDER AREA

1. The treatments indicated below are for use in conjunction with resurfacing, planing, or excavations within the graded shoulder area.
2. The graded shoulder area is that flat or gradually sloping area between the edge of a normally traveled lane and the more steeply sloping ditch foreslope or embankment slope. Its surface may be soil or turf, and/or it may be inclusive of a "treated" area (improved with aggregates, asphaltic materials, or concrete). For the purposes herein, its maximum width shall be considered to be twelve (12) feet.

| D (In.) | Treatment |
|---|---|
| ≤1½ | 1) If edgelines are present, no treatment necessary.<br>OR 2) Erect OW-17I and OWP-17I signs. |
| >1½-5 | 1) If min. lane width* requirements can be met, maintain lanes utilizing drums as shown below<br>OR 2) If min. lane width* requirements cannot be met, close adjacent lane utilizing drums<br>OR 3) Optional Shoulder Treatment. |
| >5-12 Daylight only | If min. lane width* requirements can be met, maintain lanes utilizing drums as shown below. |
| >5-24 | 1) If min. lane width* requirements can be met, maintain lanes utilizing portable concrete barrier as shown below.<br>OR 2) If min. lane width* requirements cannot be met, close adjacent lane utilizing drums. |
| >24 | Lane closure utilizing portable concrete barrier as shown below. |

*Minimum lane widths shall be 10' unless otherwise specified in the plans.

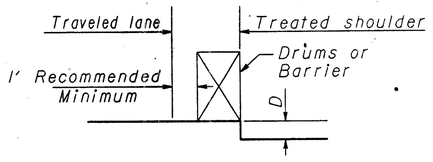


# OPTIONAL SHOULDER TREATMENT

1. This treatment may not be used within a bituminous shoulder where a hot longitudnal joint per 401.15 is required.
2. OW-15I signs required.

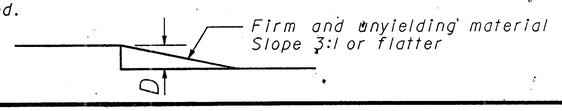


OTT-2-16.60 | OHIO | FHWA REGION 5 | 22A 367

# CONDITION III
## DROPOFFS BEYOND GRADED SHOULDER OR BACK OF CURB

1. See Note 2 under Condition II.
2. Use Chart A or B below, as applicable.

## CHART A

USE FOR:
1. Uncurbed Facilities.
2. Curbed Facilities, where:
   a. Curbs are less than 6" in height.
   b. Curbs are 6" or greater in height and the legal speed is greater than 40 mph.

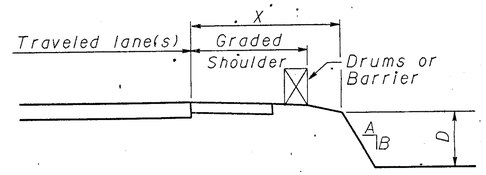


| X (Ft.) | D (In.) | A/B | Treatment Required Day | Treatment Required Night |
|---|---|---|---|---|
| 0-4 | Any | Any | (a) | (a) |
| 4-30 | Any | 3:1 or Flatter | None | None |
| 4-12 | ≤3 | Steeper than 3:1 | None | None |
| 4-12 | >3-≤12 | Steeper than 3:1 | Drums | Drums |
| 4-12 | >12 | Steeper than 3:1 | Drums | Barrier |
| >12-20 | ≤12 | Steeper than 3:1 | None | None |
| >12-20 | >12-≤24 | Steeper than 3:1 | Drums | Drums |
| >12-20 | >24 | Steeper than 3:1 | Drums | Barrier |
| >20-30 | ≤24 | Steeper than 3:1 | None | Drums |
| >20-30 | >24 | Steeper than 3:1 | Drums | Barrier |
| >30 | Any | Any | None | None |

(a) Use treatment specified under Condition II.

## CHART B

USE FOR: Curbed facilities, where the curb is 6" or greater in height and the legal speed is 40 mph or less.

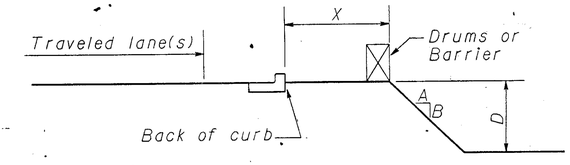


| X (Ft.) | D (In.) | A/B | Treatment Required Day | Treatment Required Night |
|---|---|---|---|---|
| 0-10 | <12 | Any | None | Drums |
| 0-10 | >12 | Any | Drums | Drums |
| >10 | Any | Any | None | None |

STATE OF OHIO
DEPARTMENT OF TRANSPORTATION
BUREAU OF LOCATION AND DESIGN

# DROPOFFS IN WORK ZONES

| DESIGNED | DRAWN | TRACED | CHECKED | REVIEWED | DATE | REVISED |
|---|---|---|---|---|---|---|
| | | | | | | |

| FHWA REGION | STATE | PROJECT | |
|---|---|---|---|
| 5 | OHIO | | |



OTT-2-16.60

NOTE: Remove all conflicting pavement markings.

LEGEND

- Drums
- Temporary Raised Pavement Marker
- Work Area
- Remove Conflicting Lane Lines

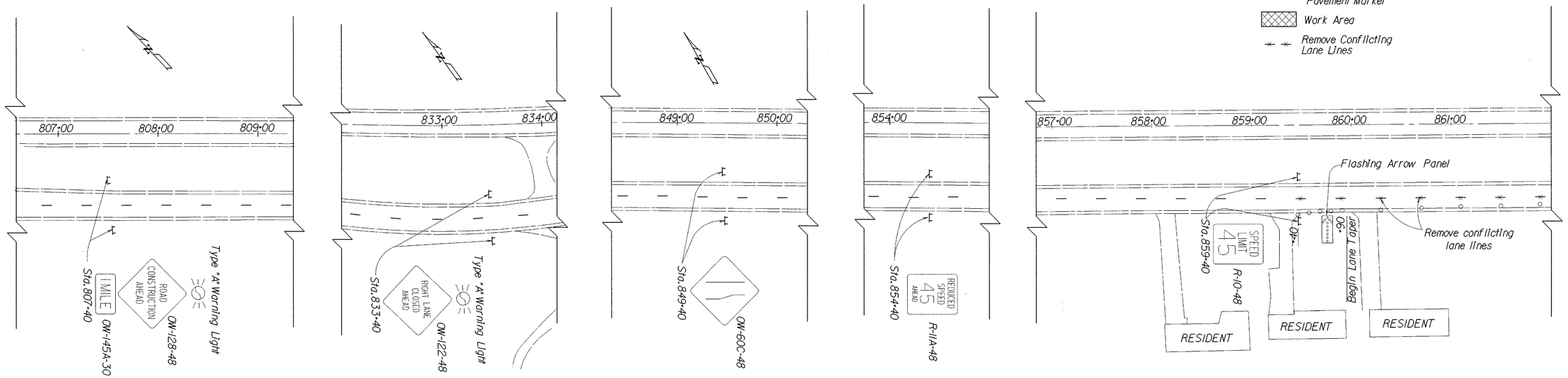


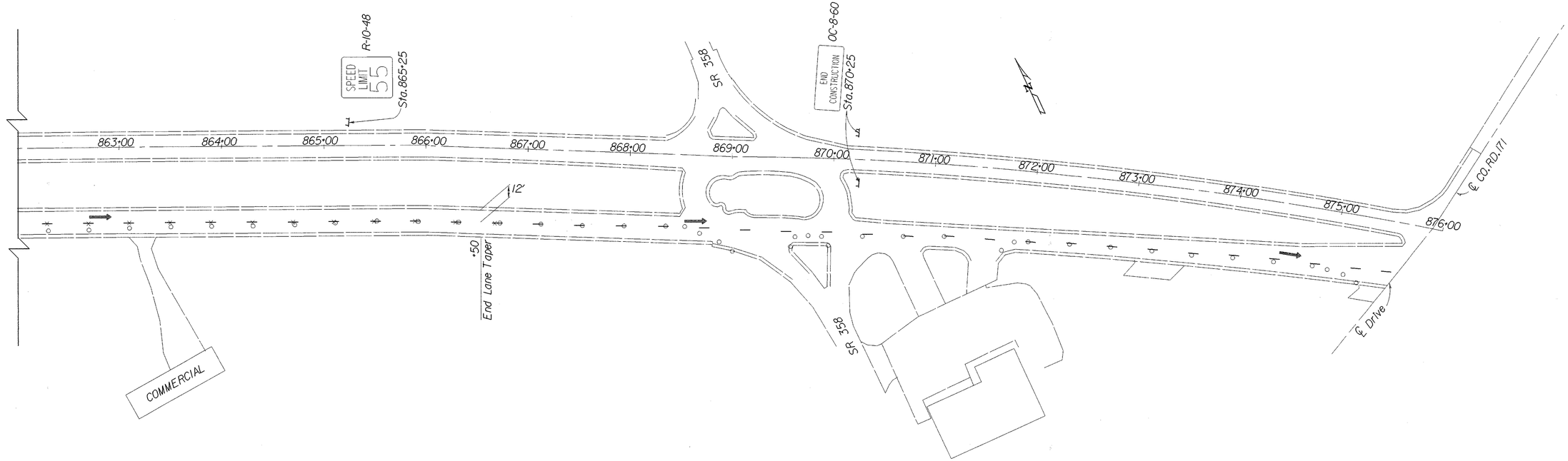


PHASE I-A MAINTENANCE OF TRAFFIC STA.806+60 TO STA.876+00

I:/pd/ottawa/ott2/2phs/pl1.dgn

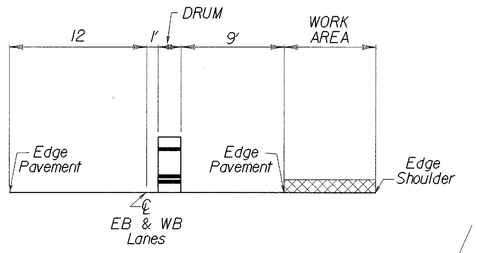


MOT TYPICAL ~ PHASE I-A

NOTE: Remove all conflicting pavement markings.

See sht. no. 23 for Maintenance of Traffic Legend.

| FHWA REGION | STATE | PROJECT | |
|---|---|---|---|
| 5 | OHIO | | |

24/367

OTT-2-16.60

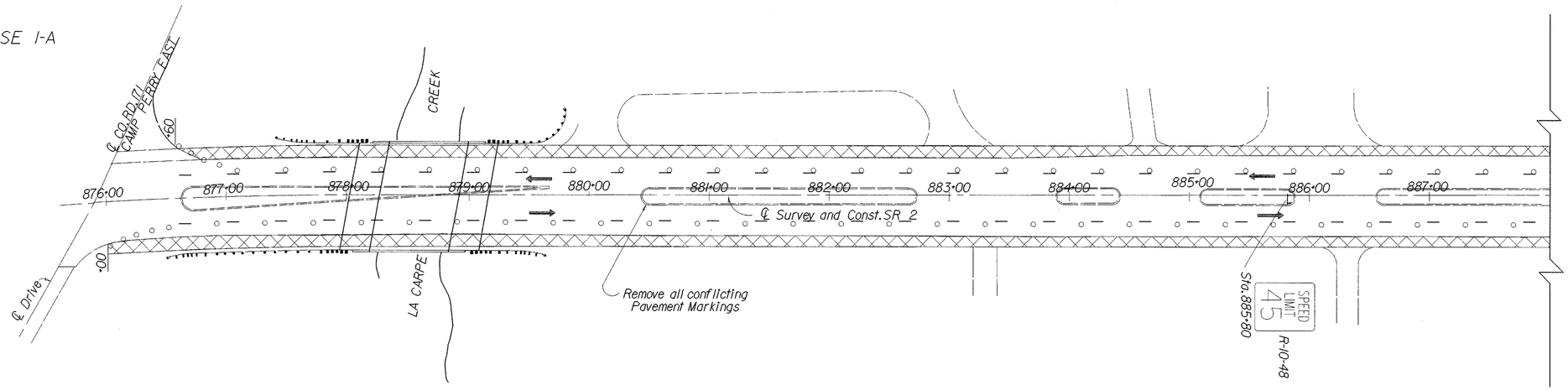


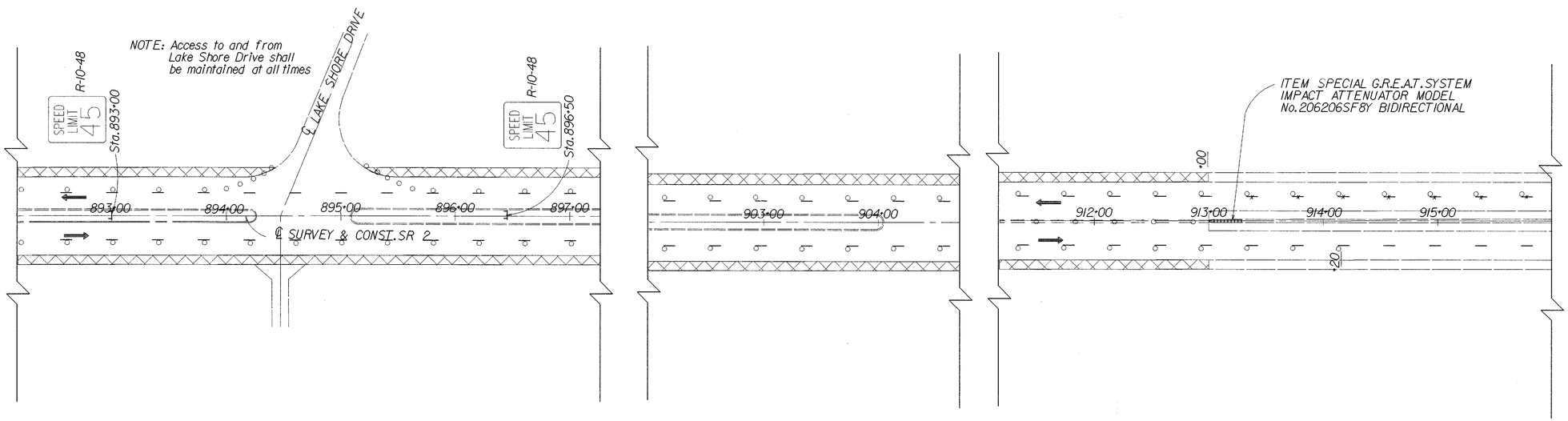


PHASE I-A MAINTENANCE OF TRAFFIC ~ STA. 876+00 TO STA. 916+00

I:/pd/ottawa/ott2/2phslpt1.dgn

NOTE: Remove all conflicting pavement markings.

See sht.no.23 for Maintenance of Traffic Legend.

| FHWA REGION | STATE | PROJECT | |
|---|---|---|---|
| 5 | OHIO | | |

25/367

OTT-2-16.60

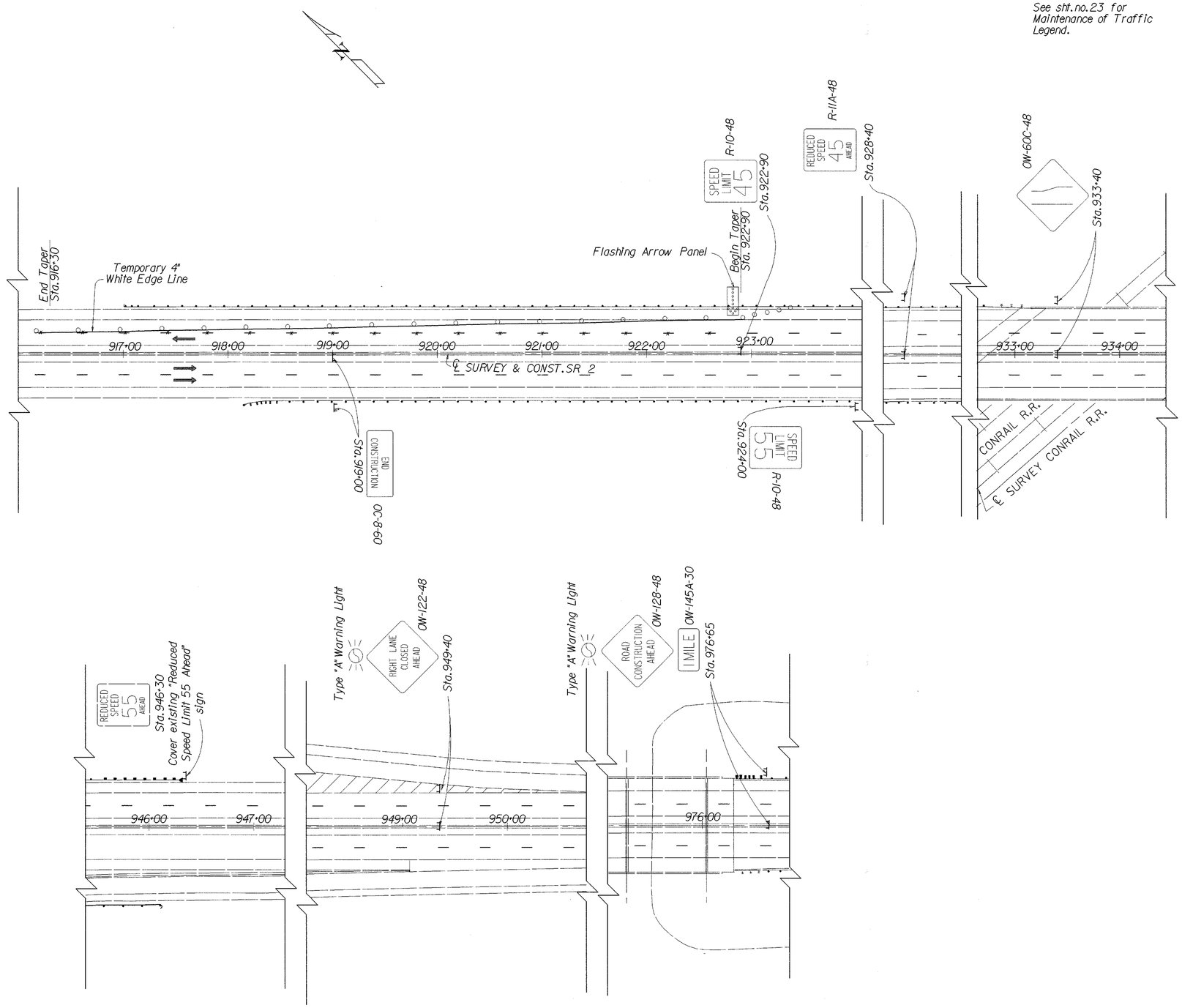


I:/pd/ottawa/ott2/2phs/ph1.dgn

PHASE I-A MAINTENANCE OF TRAFFIC ~ STA.916+00 TO STA.976+80

NOTE: Remove all conflicting pavement markings.

See sht.no.23 for Maintenance of Traffic Legend.

| FHWA REGION | STATE | PROJECT | |
|---|---|---|---|
| 5 | OHIO | | |

26/367

OTT-2-16.60

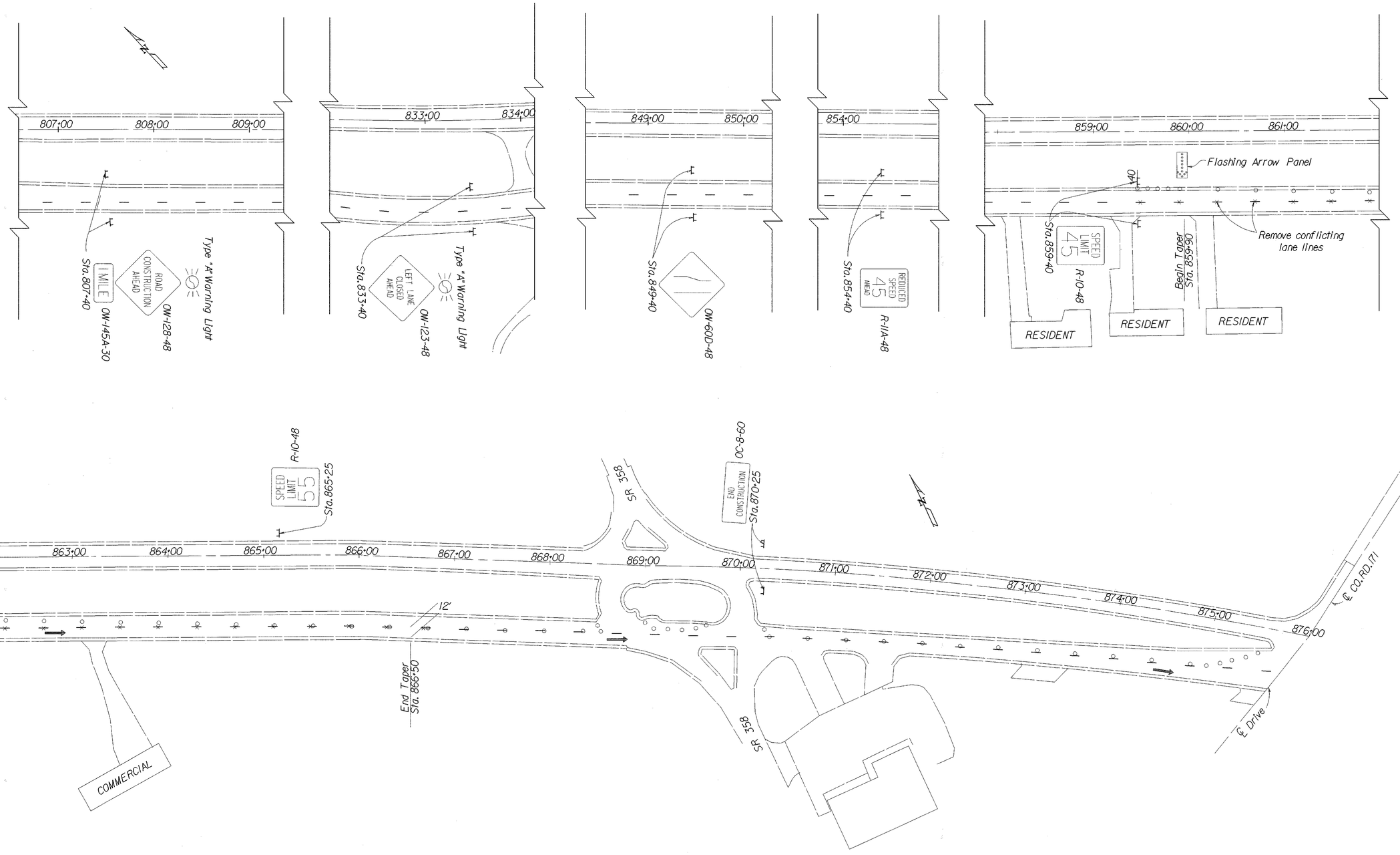


PHASE I-B MAINTENANCE OF TRAFFIC STA.806+60 TO STA.876+00

I:/pd/ottawa/ott2/2phsIpt2.dgn

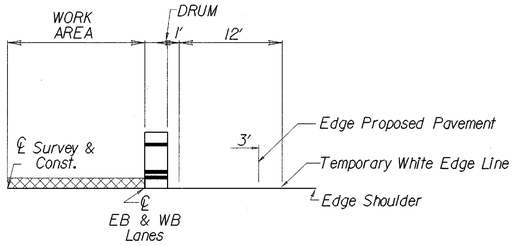


MOT TYPICAL
PHASE I-B
(Eastbound & Westbound)

NOTE: Remove all conflicting pavement markings.

See sht. no. 23 for Maintenance of Traffic Legend.

| FHWA REGION | STATE | PROJECT | |
|---|---|---|---|
| 5 | OHIO | | |

27/367

OTT-2-16.60

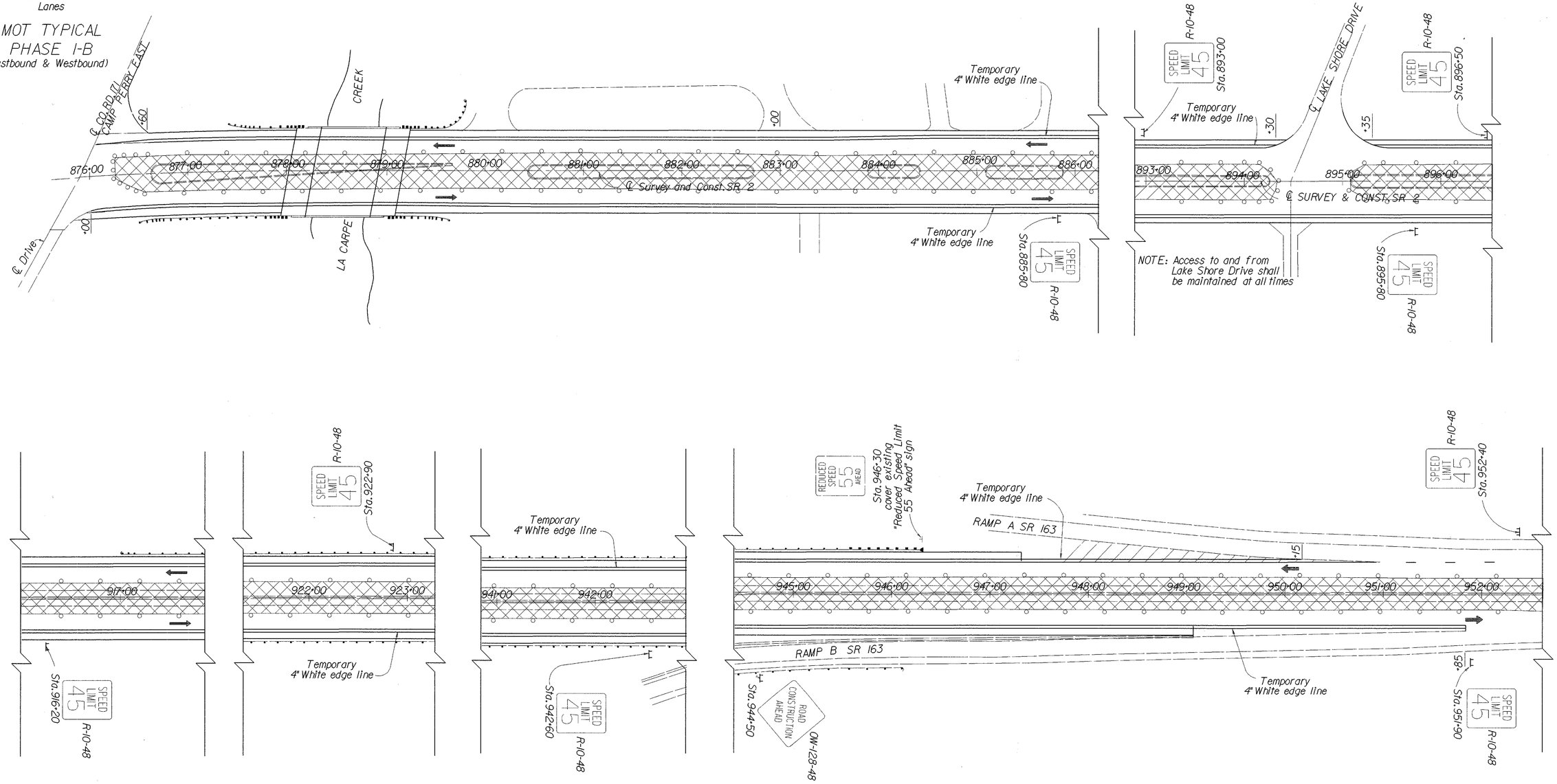


PHASE I-B MAINTENANCE OF TRAFFIC ~ STA. 876+00 TO STA. 952+60

I:/pd/ottawa/ott2/2phsIplt2.dgn

NOTE: Remove all conflicting pavement markings.

See sht.no.23 for Maintenance of Traffic Legend.

| FHWA REGION | STATE | PROJECT | |
|---|---|---|---|
| 5 | OHIO | | |

28/367

OTT-2-16.60

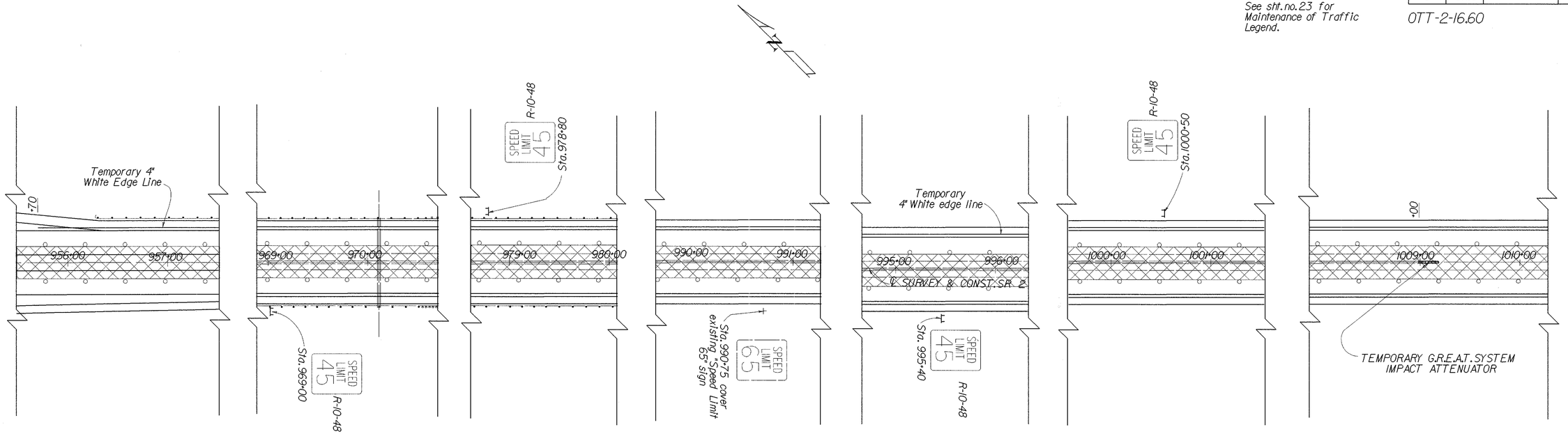


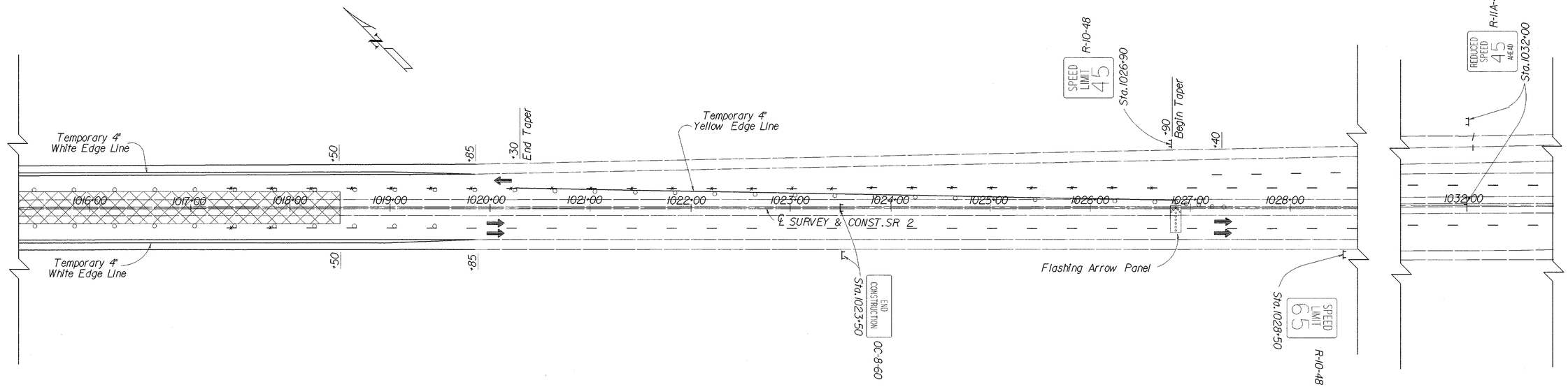


I:/pd/ottawa/att2/2phsIpt2.dgn

PHASE I-B MAINTENANCE OF TRAFFIC ~ STA.952+60 TO STA.1033+00

NOTE: Remove all conflicting pavement markings.

See sht.no 23 for Maintenance of Traffic Legend.

| FHWA REGION | STATE | PROJECT | |
|---|---|---|---|
| 5 | OHIO | | |

29/367

OTT-2-16.60

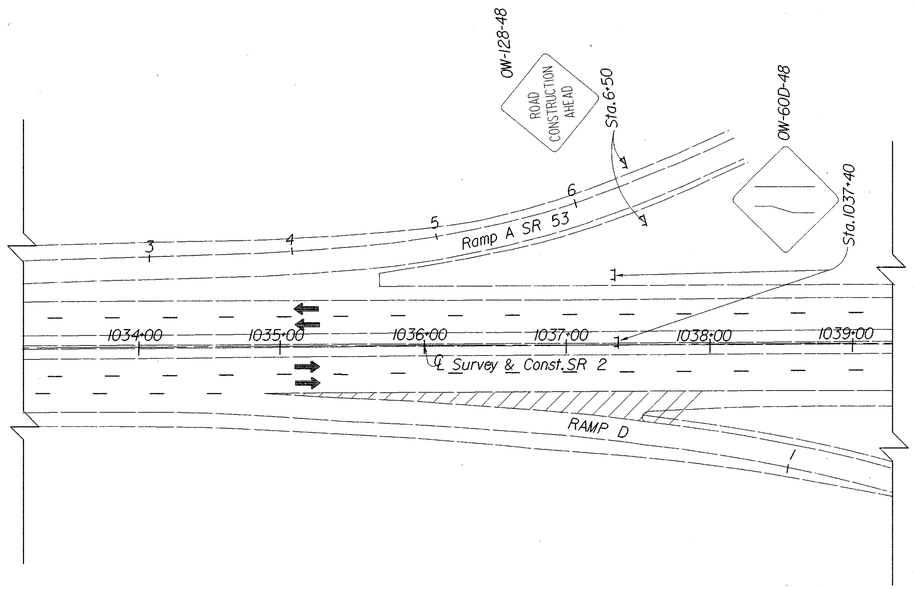


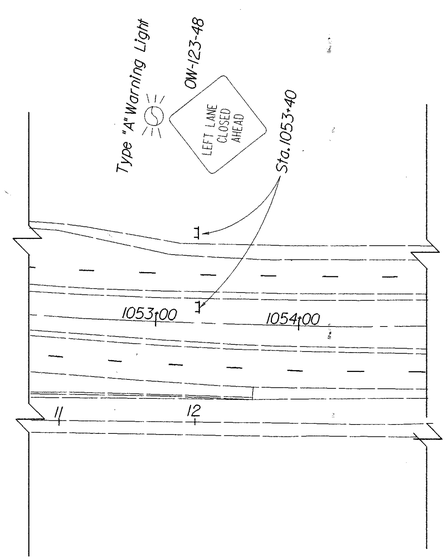


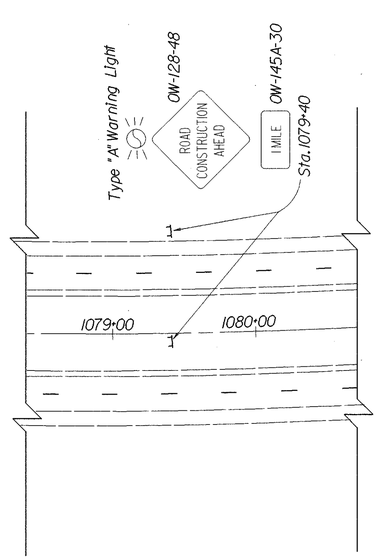


I:/pd/ottawa/oh12/2phslpl2.dgn

PHASE I-B MAINTENANCE OF TRAFFIC ~ STA.1033+00 TO STA.1080+70

| FHWA REGION | STATE | PROJECT | |
|---|---|---|---|
| 5 | OHIO | | |

30/367

OTT-2-16.60

**Crossover Curve Data**

P. I., Sta. 908+11.61
P. I., Sta. 910+34.57
$\Delta$ = 6°-41'-20"
$D_c$ = 3°
T = 111.61'
L = 222.96'
R = 1909.86

**LEGEND**

Temporary Pavement

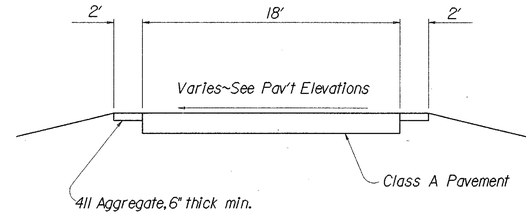


TYPICAL SECTION
TEMPORARY PAVEMENT CROSSOVER

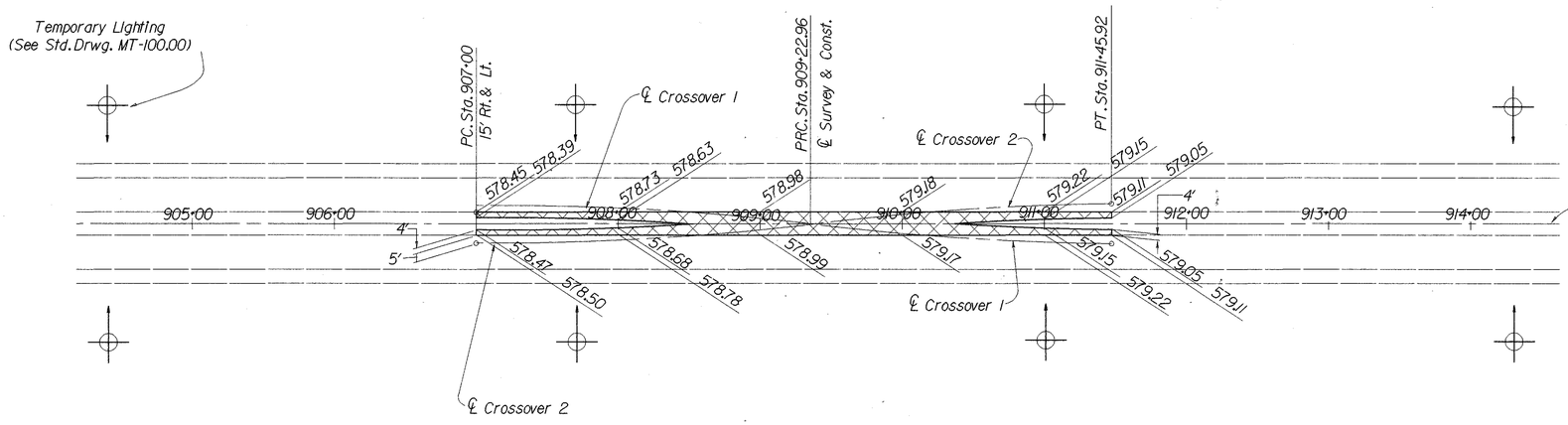


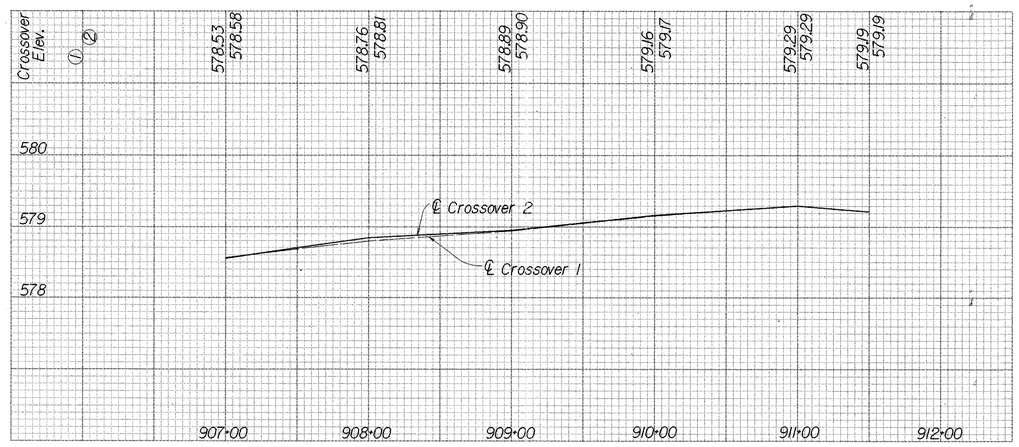


i/pd/ottawa/ott2/ot2xover.dgn

PHASE I-B MAINTENANCE OF TRAFFIC STA. 904+10 TO 914+60

| FHWA REGION | STATE | PROJECT | |
|---|---|---|---|
| 5 | OHIO | | |

31
367

OTT-2-16.60
367

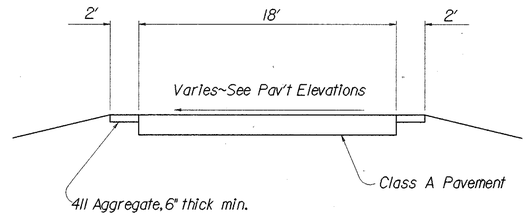


TYPICAL SECTION
TEMPORARY PAVEMENT CROSSOVER

Crossover Curve Data

P. I., Sta. 1012+11.61
P. I.$_e$ Sta. 1014+44.86
$\Delta$ = 6°-41'-20"
$D_e$ = 3°
T = 111.61'
L = 222.96'
R = 1909.86'

LEGEND

Temporary Pavement

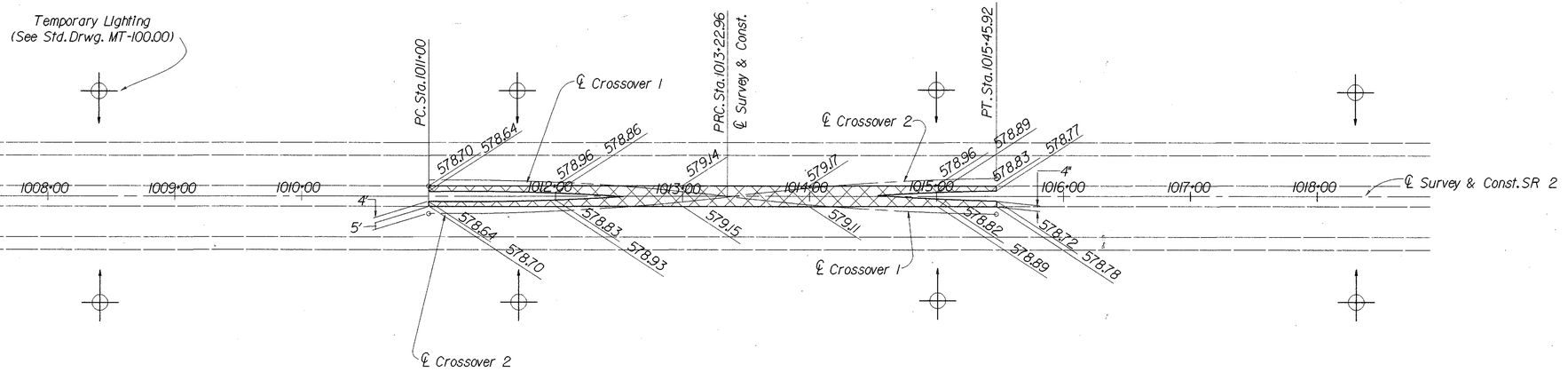


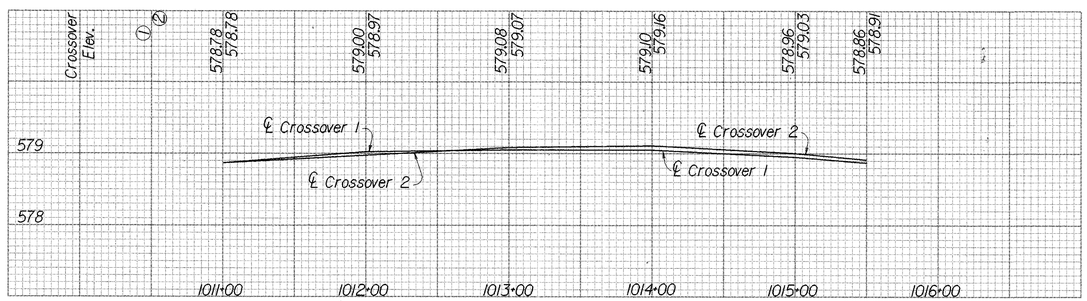


PHASE I-B MAINTENANCE OF TRAFFIC STA. 1007+40 TO 1018+90

i/pd/ottawa/ott2/ot2xover.dgn

NOTE: Remove all conflicting pavement markings.

See sht. no. 23 for Maintenance of Traffic Legend.

| FHWA REGION | STATE | PROJECT | |
|---|---|---|---|
| 5 | OHIO | | |

32/367

OTT-2-16.60

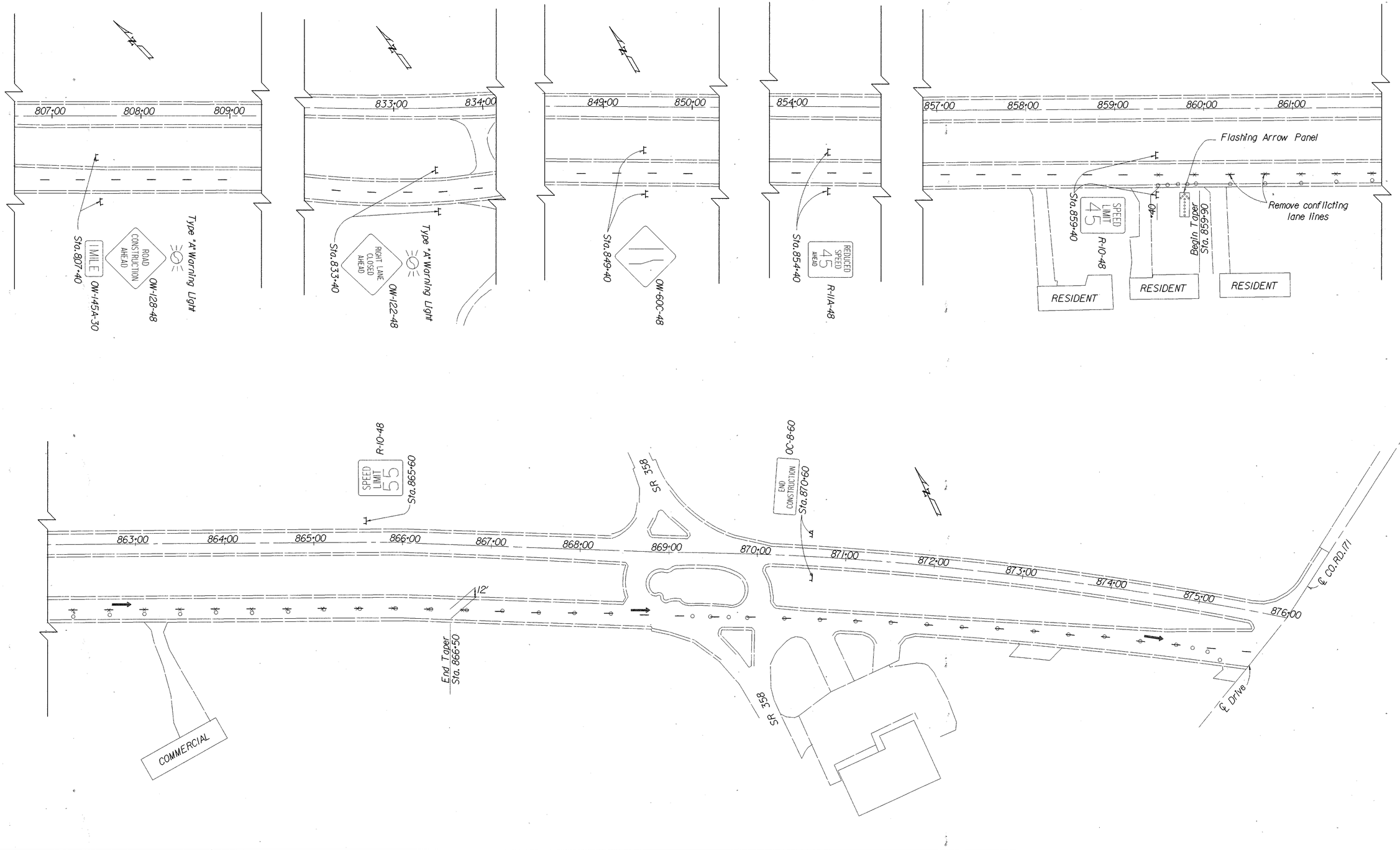


I:/pd/ottawa/att2/2phs/pt3.dgn

PHASE I-C MAINTENANCE OF TRAFFIC STA. 806+60 TO STA. 876+00

NOTE: Remove all conflicting pavement markings.

See sht. no. 23 for Maintenance of Traffic Legend.

| FHWA REGION | STATE | PROJECT | |
|---|---|---|---|
| 5 | OHIO | | |

33/367

OTT-2-16.60

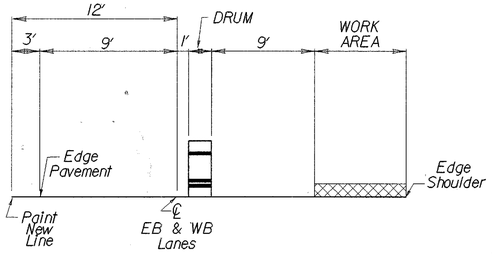


MOT TYPICAL ~ PHASE I-C

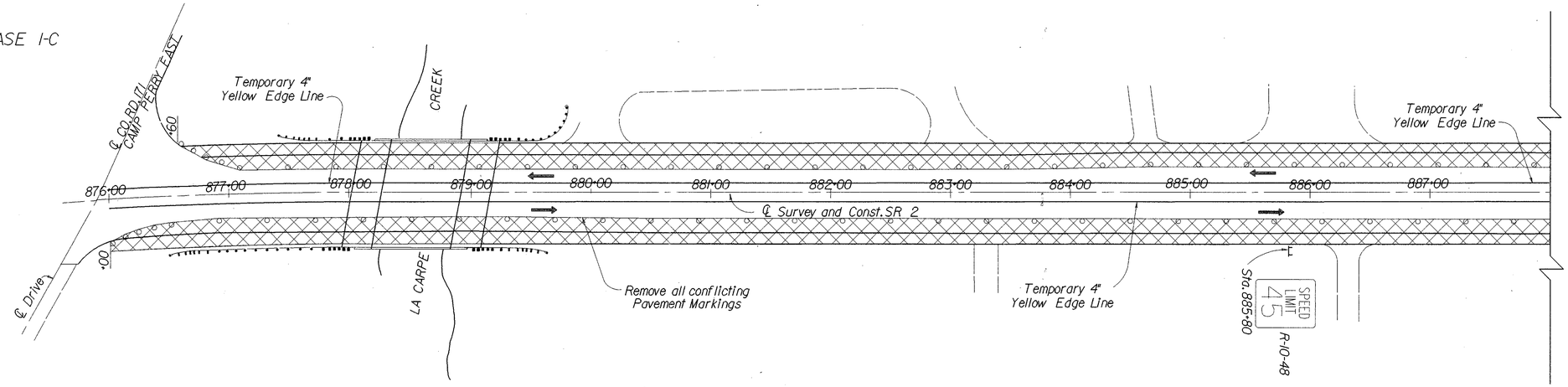


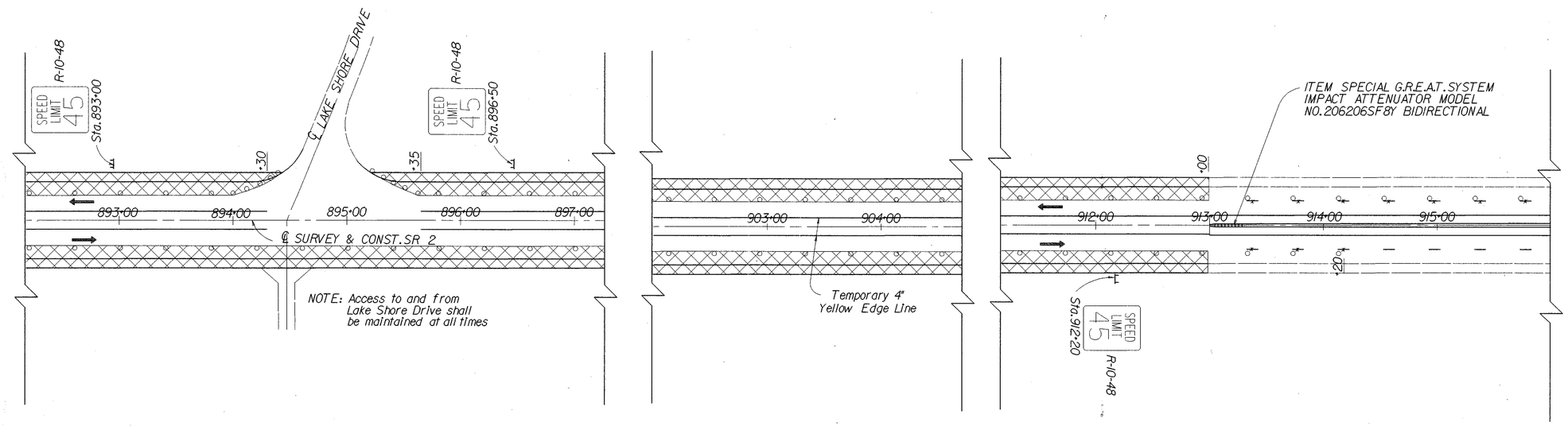


PHASE I-C MAINTENANCE OF TRAFFIC ~ STA. 876+00 TO STA. 916+00

I:/pd/ottawa/ott2/2phs/pt3.dgn

NOTE: Remove all conflicting pavement markings.

See sht. no. 23 for Maintenance of Traffic Legend.

| FHWA REGION | STATE | PROJECT | |
|---|---|---|---|
| 5 | OHIO | | |

34/367

OTT-2-16.60

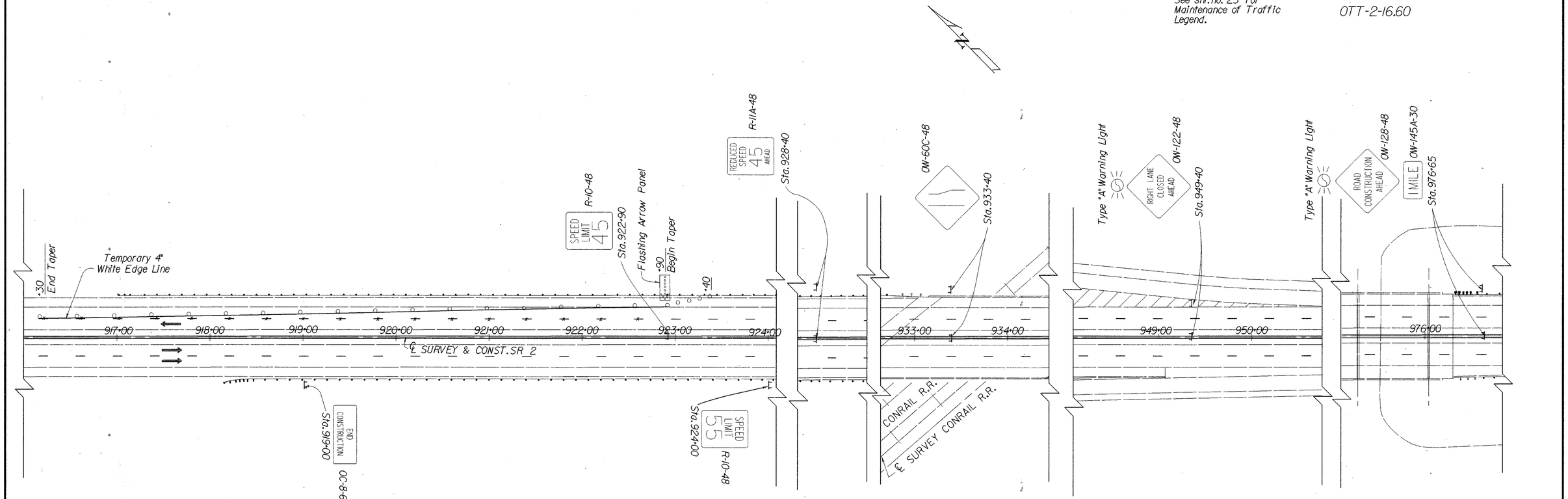


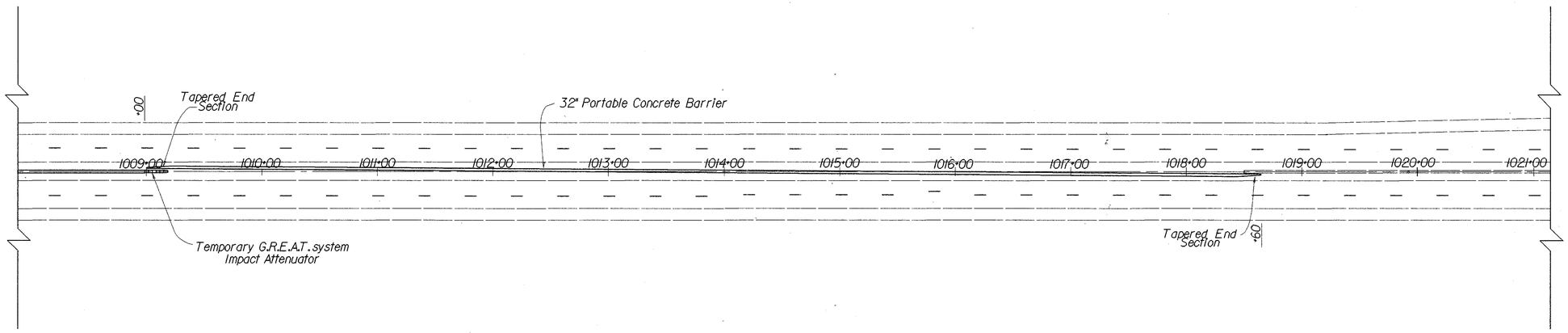


I:/pd/ottawa/ott2/2phslpt3.dgn

PHASE 1-C MAINTENANCE OF TRAFFIC ~ STA. 916+00 TO STA. 1021+00

NOTE: Remove any conflicting pavement markings.

See sht.no. 23 for Maintenance of Traffic Legend.

| FHWA REGION | STATE | PROJECT | |
|---|---|---|---|
| 5 | OHIO | | |

35/367

OTT-2-16.60

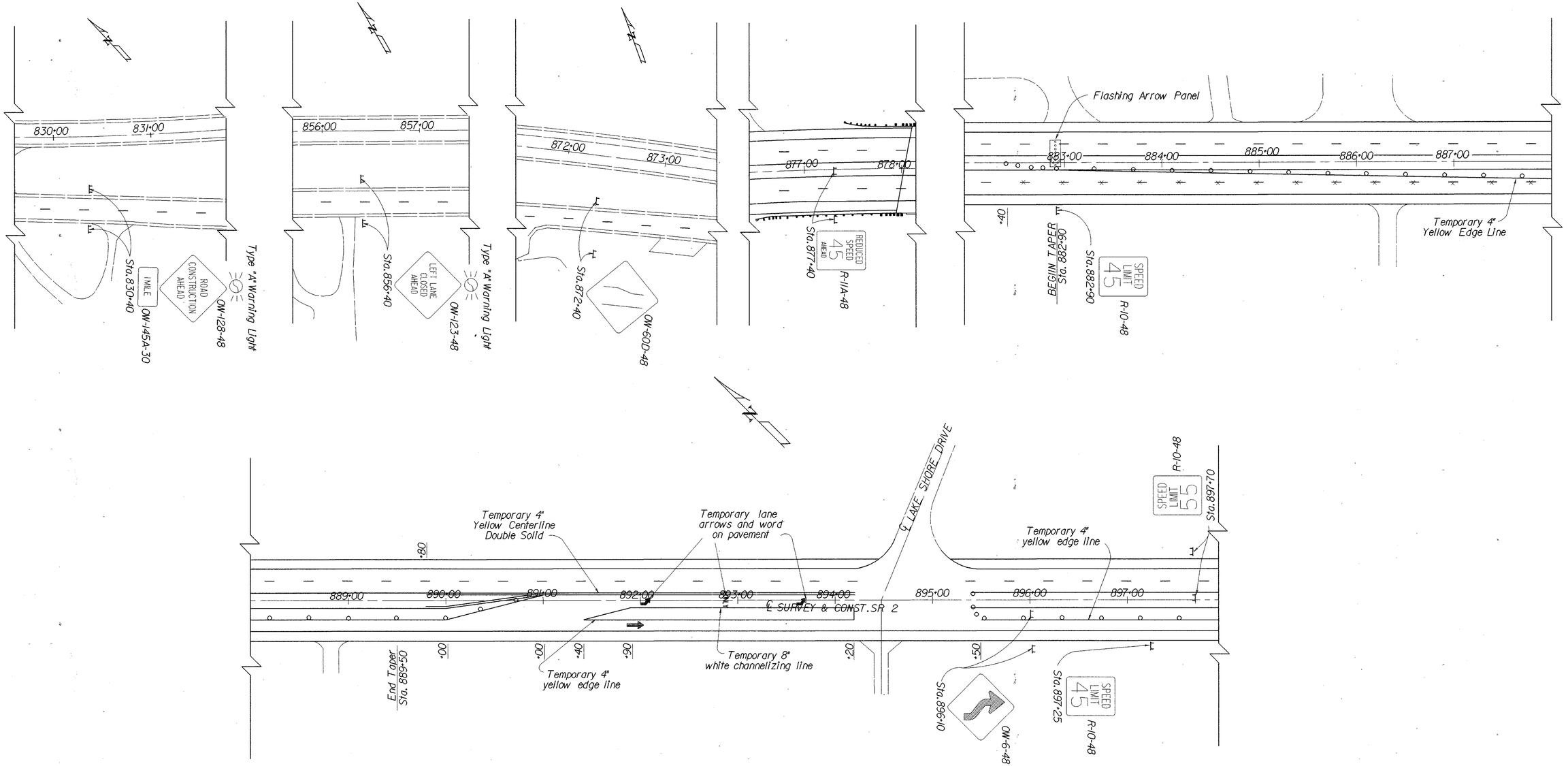


i:/pd/OTTAWA/OTT2/2phs2pf2.dgn

PHASE 2-A MAINTENANCE OF TRAFFIC ~ STA.829+60 TO STA.897+30

| FHWA REGION | STATE | PROJECT | |
|---|---|---|---|
| 5 | OHIO | | |



OTT-2-16.60

NOTE: Remove any conflicting pavement markings.

See sht. no. 23 for Maintenance of Traffic Legend.

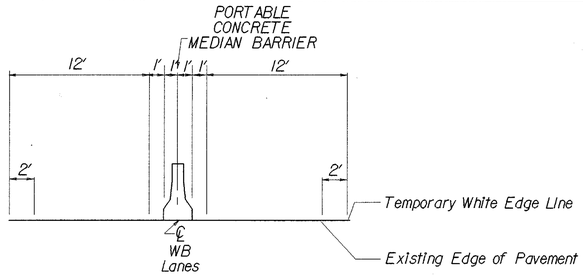


MOT TYPICAL ~ PHASE 2-A

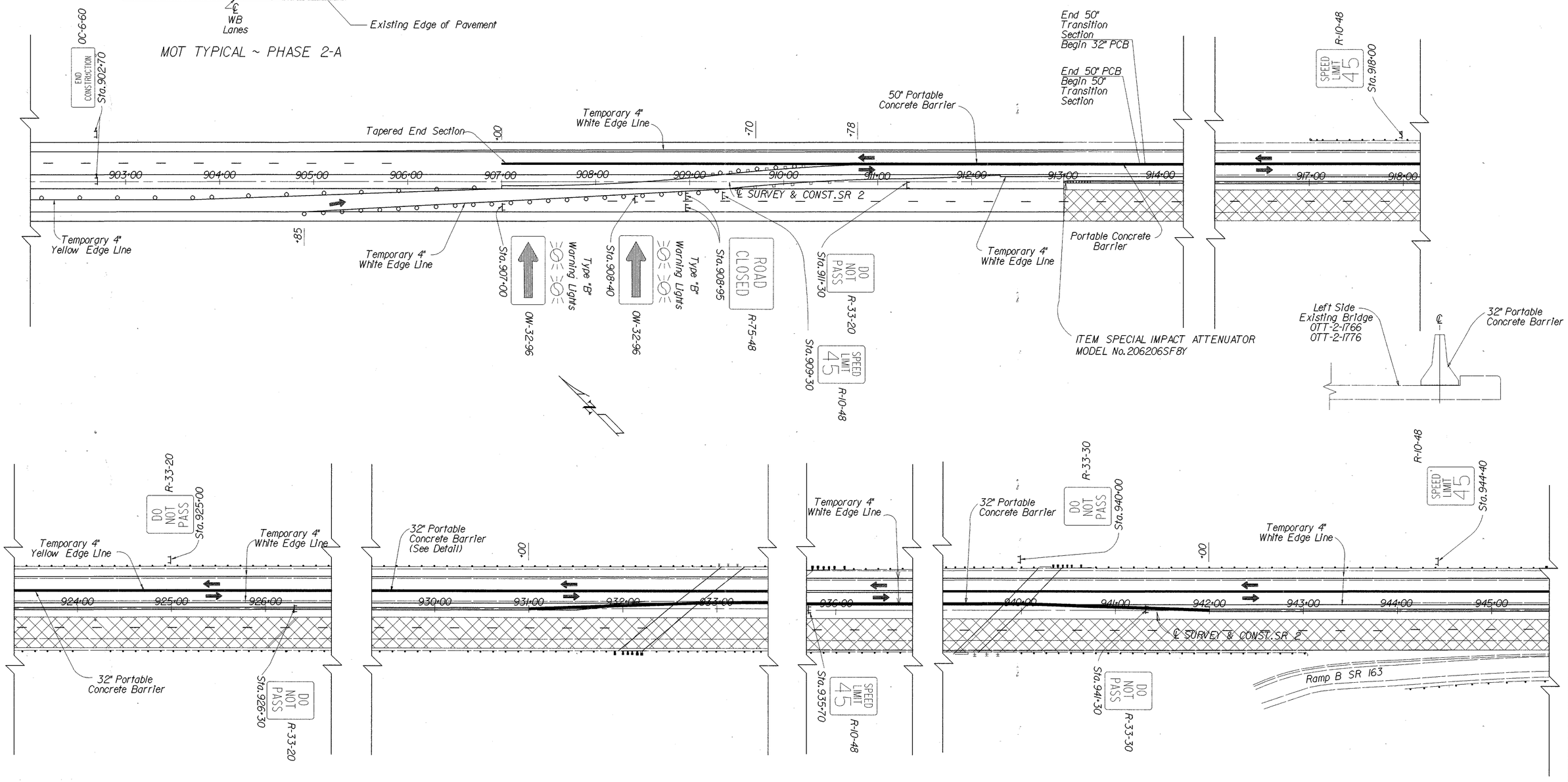


PHASE 2-A MAINTENANCE OF TRAFFIC ~ STA.897+80 TO STA.945+60

I:/pd/OTTAWA/OTT2/2phs2plt2.dgn

| FHWA REGION | STATE | PROJECT | |
|---|---|---|---|
| 5 | OHIO | | |

37/367

OTT-2-16.60

NOTE: Remove any conflicting pavement markings.

See sht. no. 23 for Maintenance of Traffic Legend.

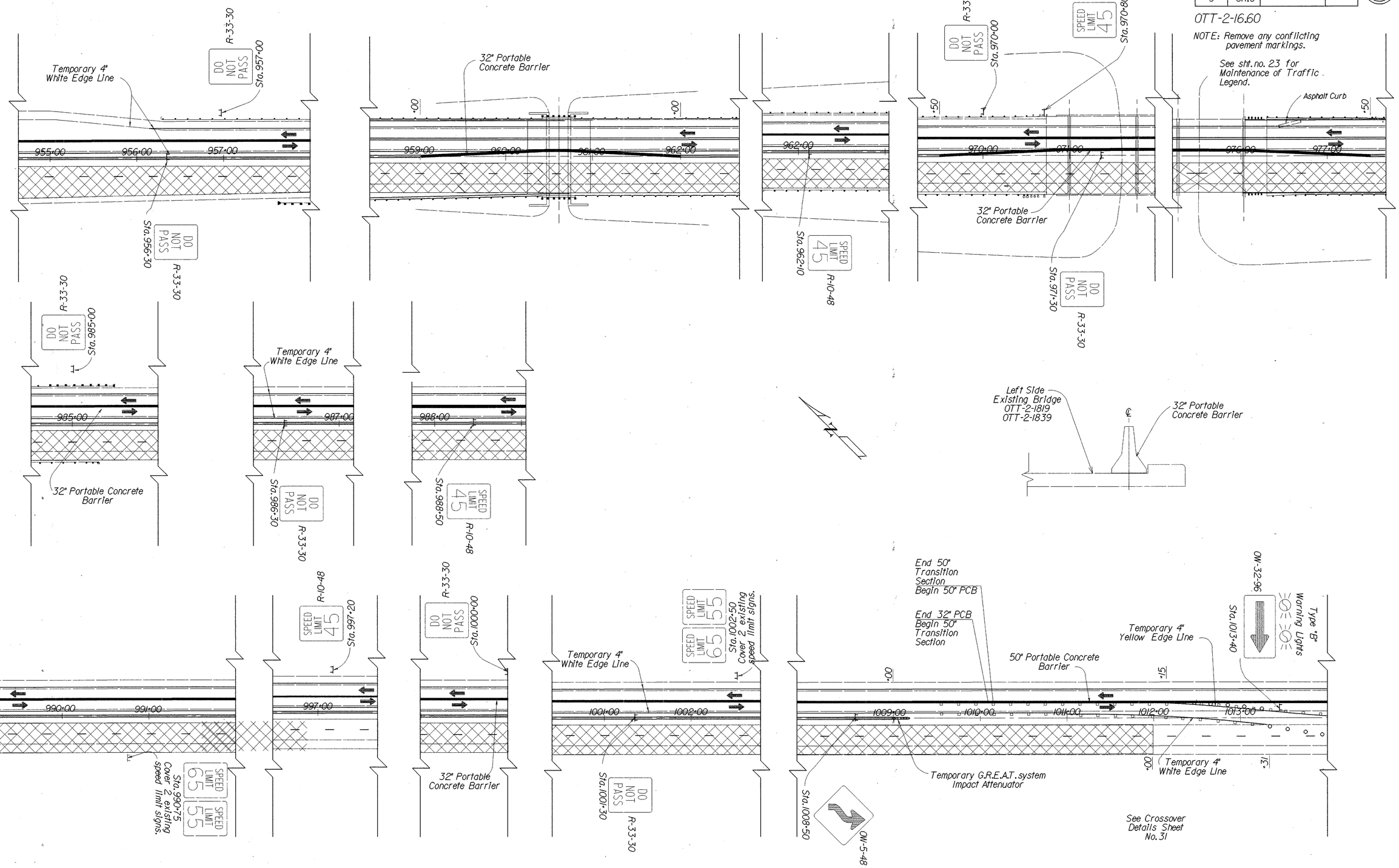


PHASE 2-A MAINTENANCE OF TRAFFIC ~ STA. 945+60 TO STA. 1014+00

I:/pd/OTTAWA/OTT2/2phs2pt2.DGN

| FHWA REGION | STATE | PROJECT | |
|---|---|---|---|
| 5 | OHIO | | |



OTT-2-16.60

NOTE: Remove any conflicting pavement markings.

See sht.no. 23 for Maintenance of Traffic Legend.

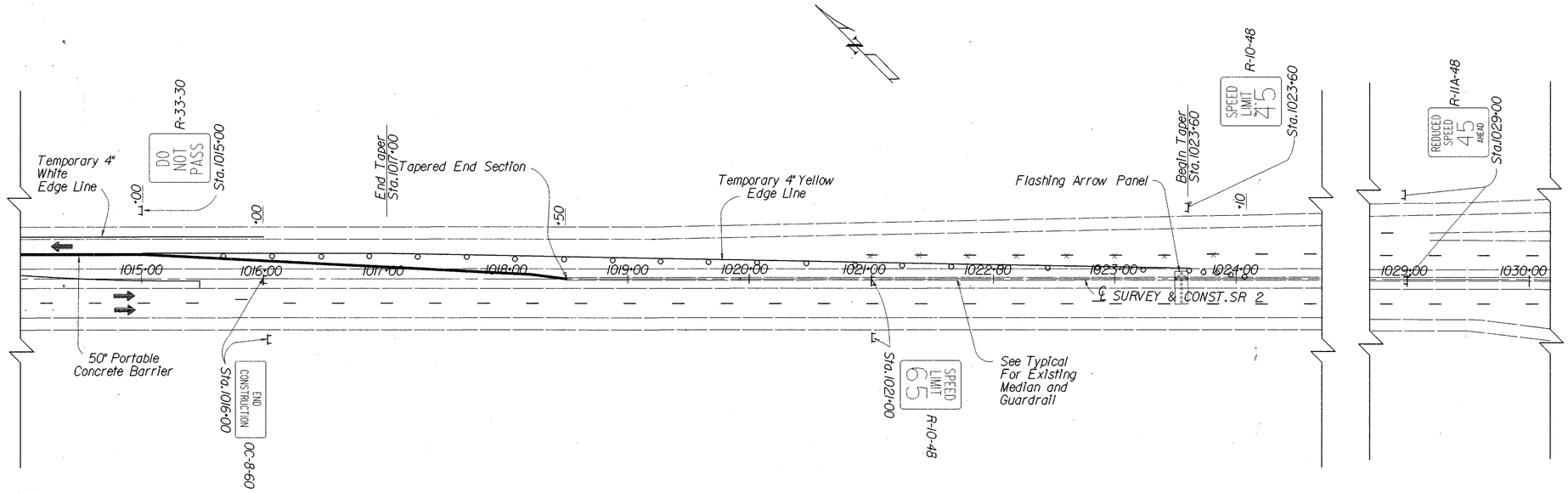


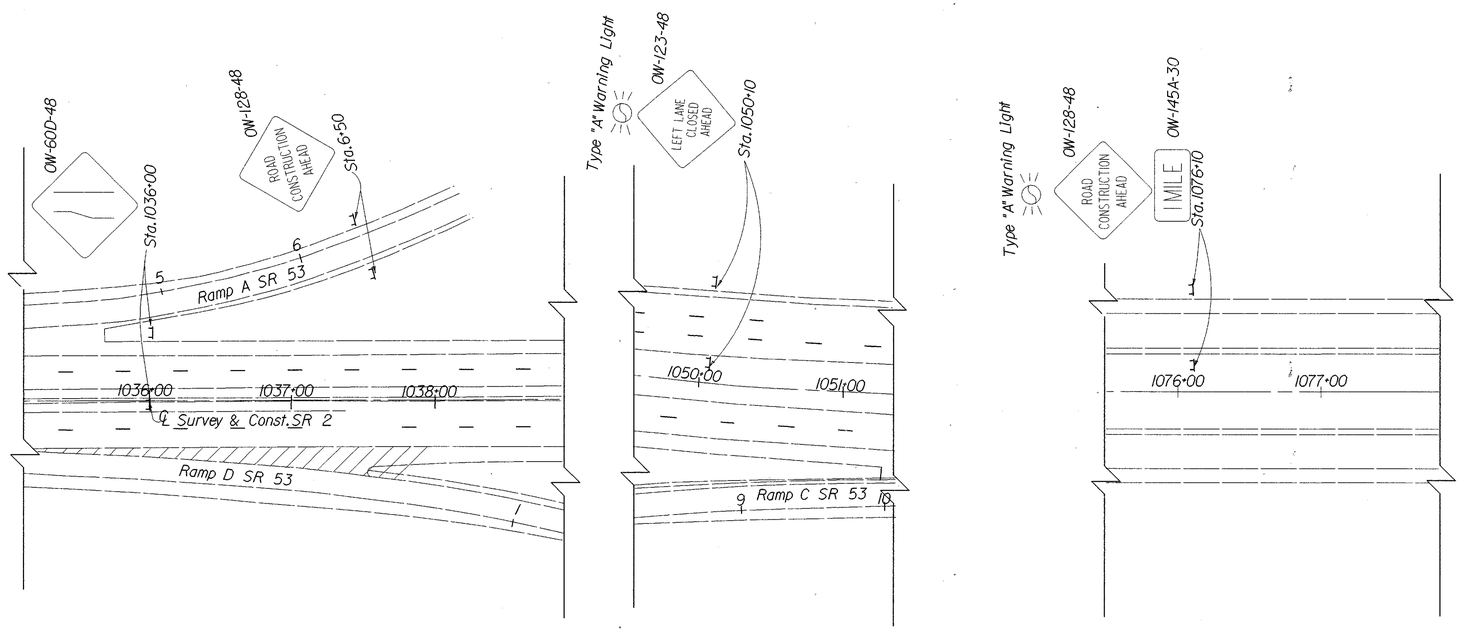


i:/pd/OTTAWA/OTT2/2phs2of2.dgn

PHASE 2-A MAINTENANCE OF TRAFFIC ~ STA.1014+00 TO STA.1077+80

NOTE: Remove any conflicting pavement markings.

See sht. no. 23 for Maintenance of Traffic Legend.

| FHWA REGION | STATE | PROJECT | |
|---|---|---|---|
| 5 | OHIO | | |

OTT-2-16.60

39
367

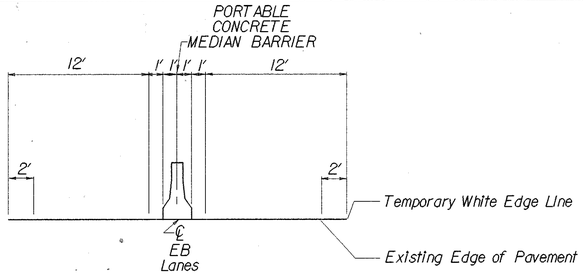


MOT TYPICAL ~ PHASE 2-B

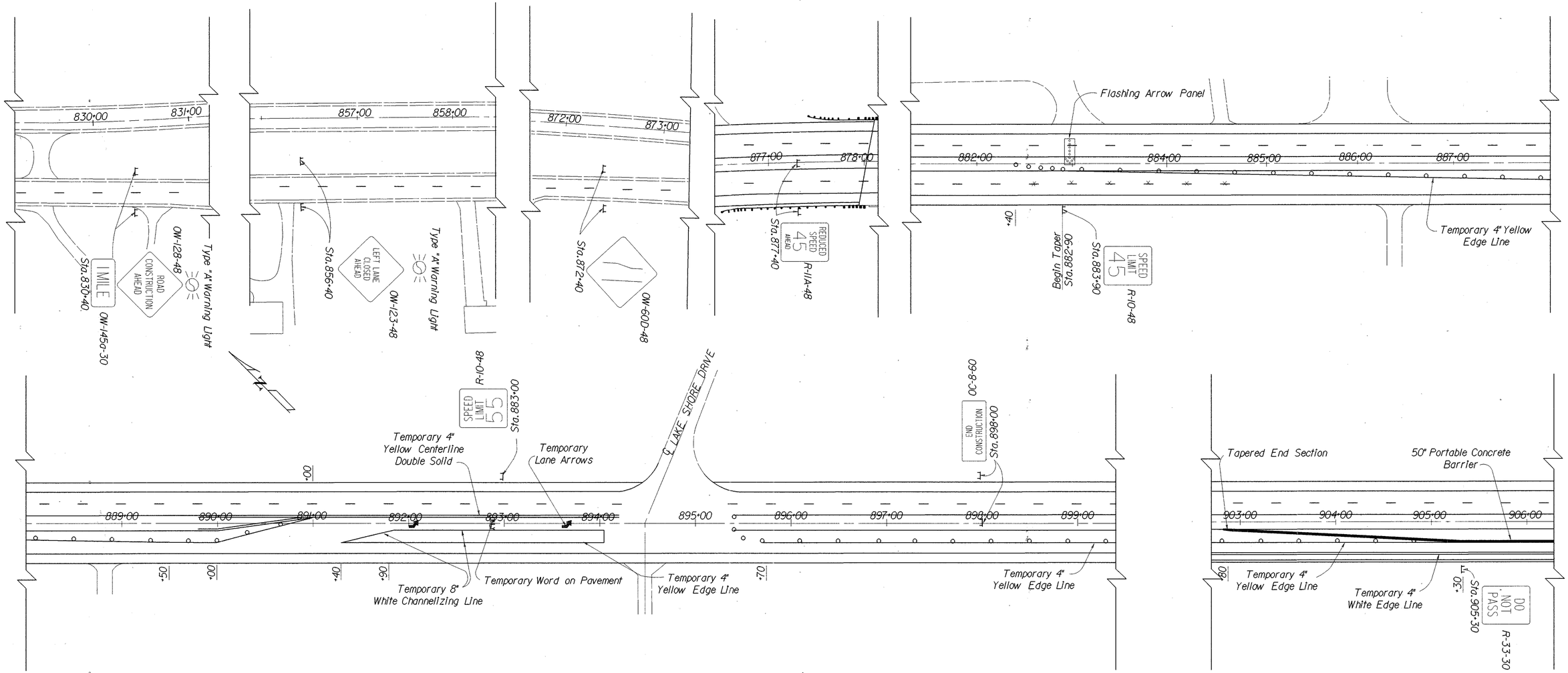


PHASE 2-B MAINTENANCE OF TRAFFIC ~ STA. 829+20 TO 906+30

I:/pd/OTTAWA/OTT2/2phs2pt3.dgn

| FHWA REGION | STATE | PROJECT | |
|---|---|---|---|
| 5 | OHIO | | |



OTT-2-16.60

NOTE: Remove any conflicting pavement markings

See sht.no. 23 for Maintenance of Traffic Legend.

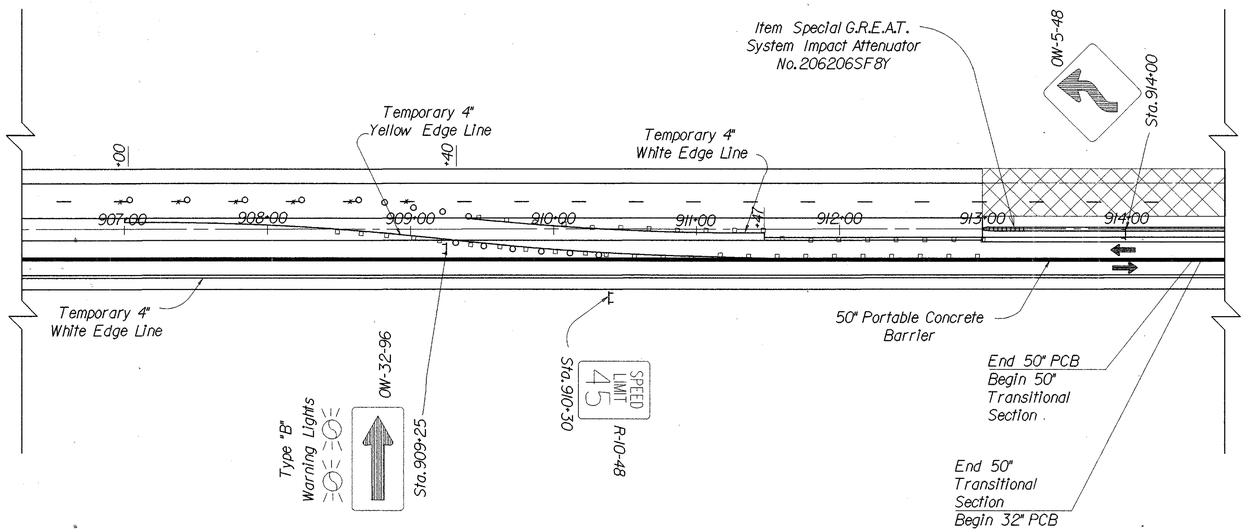


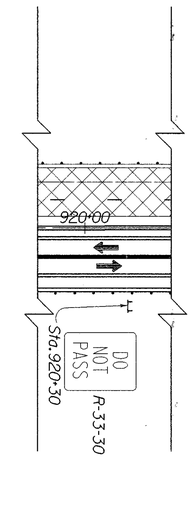


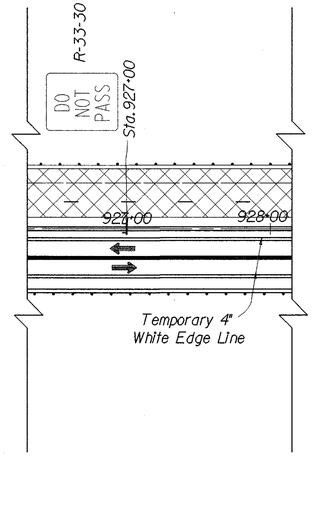


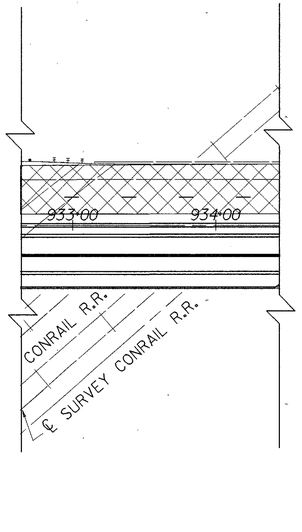


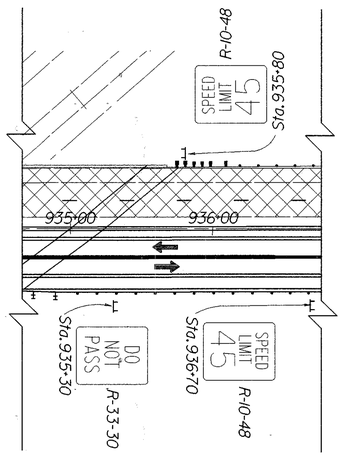


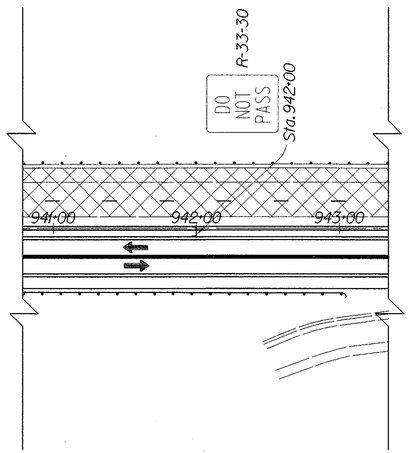


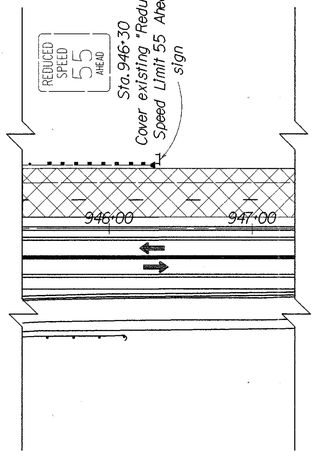


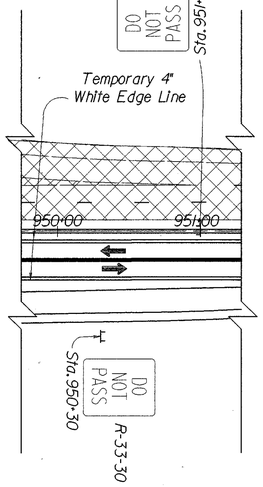


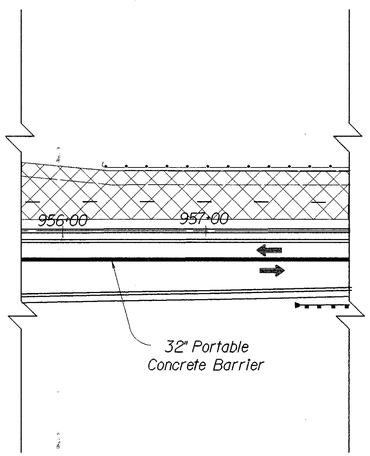


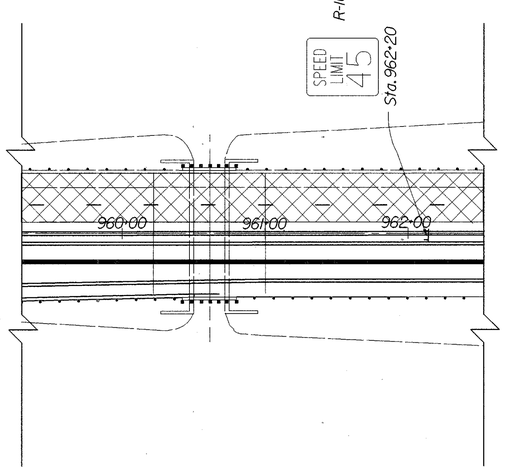


I:/pd/OTTAWA/OTT2/2phs2pl3.dgn

PHASE 2-B MAINTENANCE OF TRAFFIC ~ STA.906+30 TO STA.962+50

NOTE: Remove any conflicting pavement markings

See sht.no. 23 for Maintenance of Traffic Legend.

| FHWA REGION | STATE | PROJECT | |
|---|---|---|---|
| 5 | OHIO | | |

41/367

OTT-2-16.60

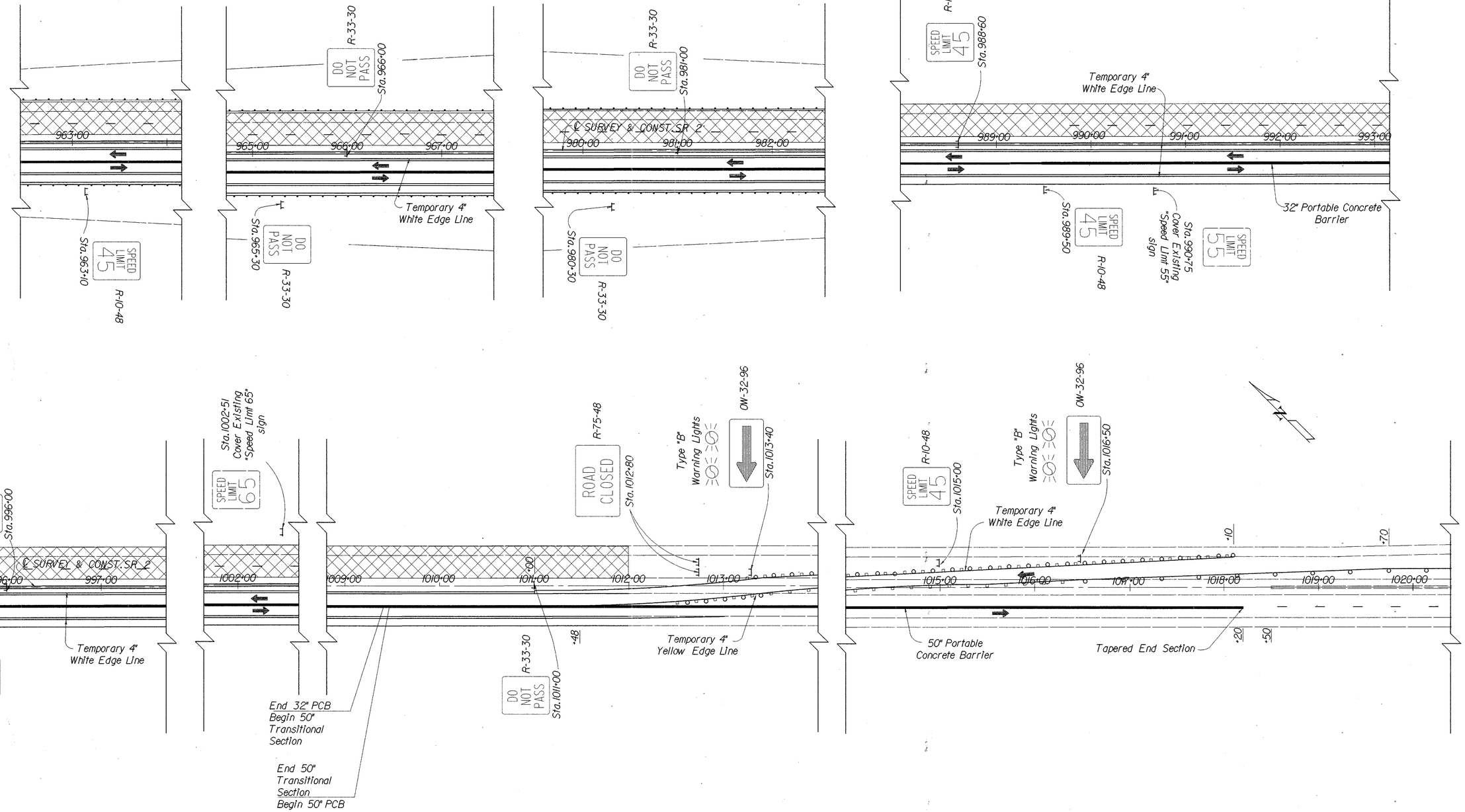


I:/pd/OTTAWA/OTT2/2phs2ph3.dgn

PHASE 2-B MAINTENANCE OF TRAFFIC ~ STA.962+50 TO STA.1020+40

NOTE: Remove any conflicting pavement markings

See sht.no. 23 for Maintenance of Traffic Legend.

| FHWA REGION | STATE | PROJECT | |
|---|---|---|---|
| 5 | OHIO | | |

42/367

OTT-2-16.60

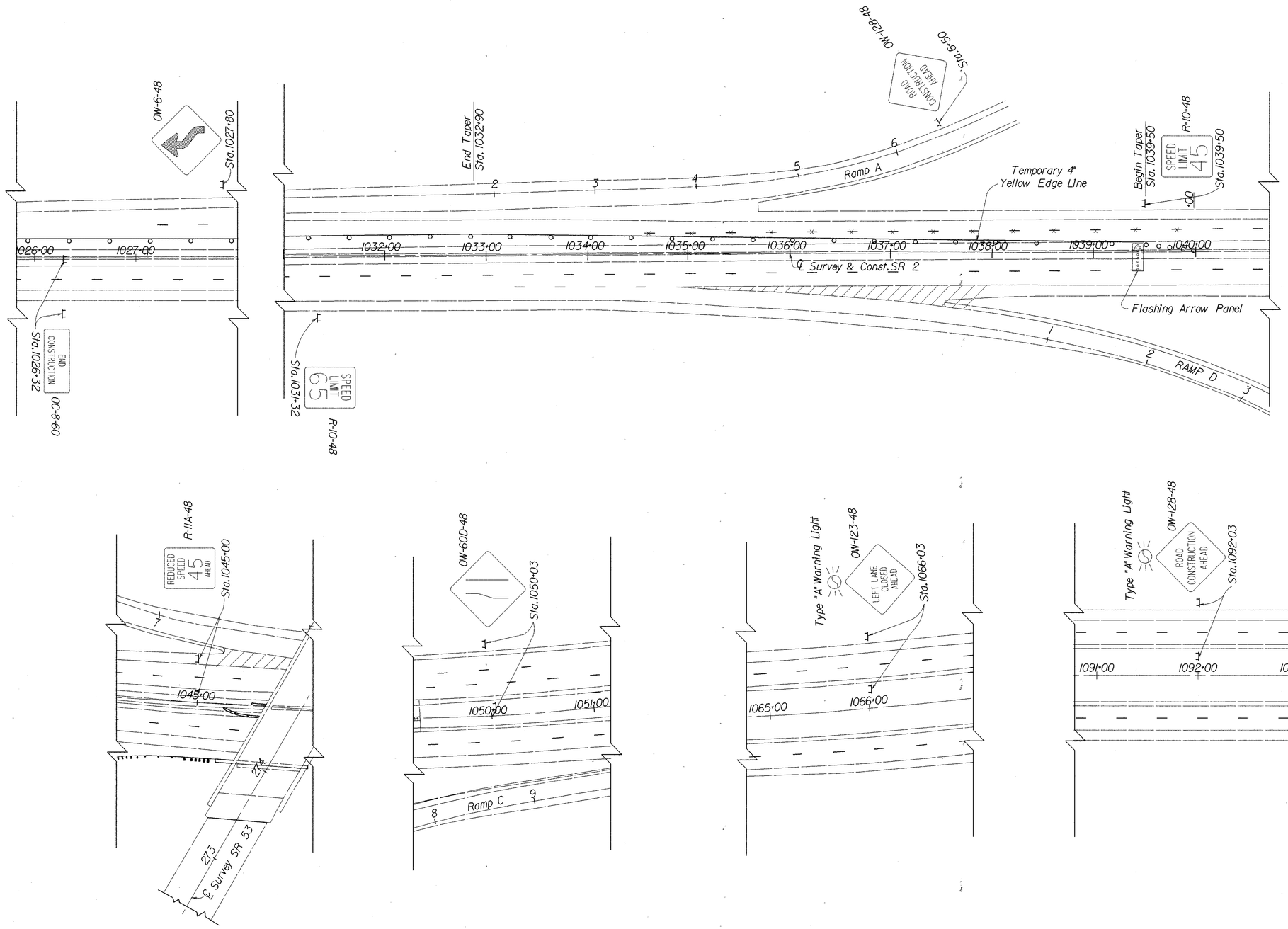


I/pd/OTTAWA/OTT2/2phs2pl3.DGN

PHASE 2-B MAINTENANCE OF TRAFFIC ~ STA.1020+40 TO STA.1093+30

NOTE: Remove all Conflicting Pavement Markings.

See Sht. No. 23 for Maintenance of Traffic Legend.

| FHWA REGION | STATE | PROJECT | |
|---|---|---|---|
| 5 | OHIO | | |

43/367

OTT-2-16.60

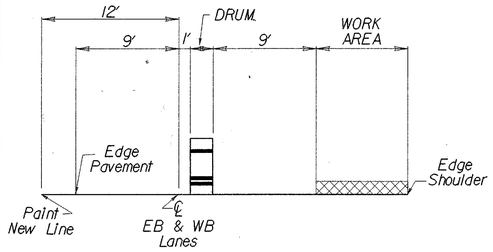


MOT TYPICAL ~ PHASE 3-A

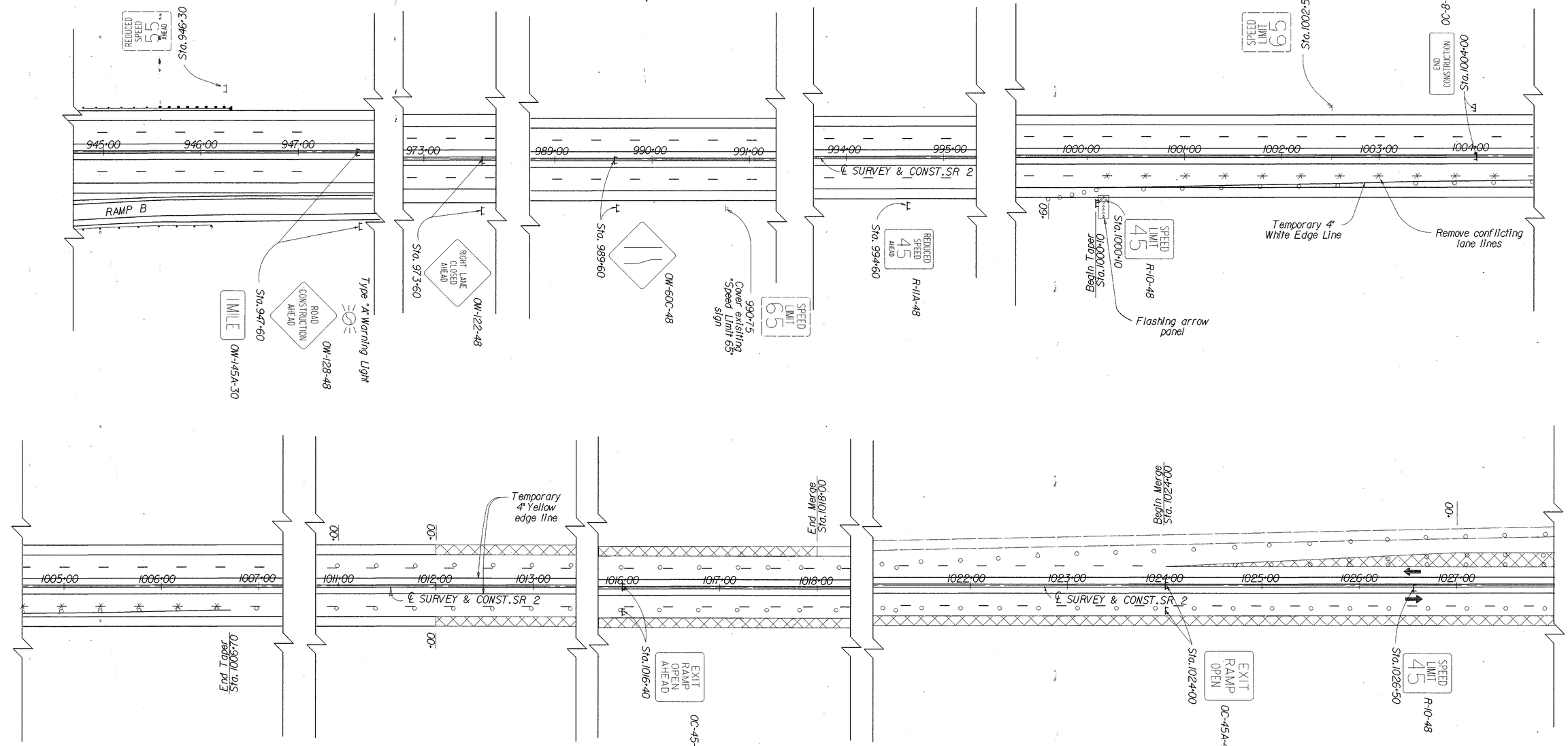


PHASE 3-A MAINTENANCE OF TRAFFIC ~ STA.944+70 TO STA.1028+00

I:/PD/OTT AWA/OTT 2/2phs3pht.dgn

| FHWA REGION | STATE | PROJECT | |
|---|---|---|---|
| 5 | OHIO | | |



NOTE: Remove all Conflicting Pavement Markings.

See Sht. No. 23 For Maintenance of Traffic Legend.

OTT-2-16.60

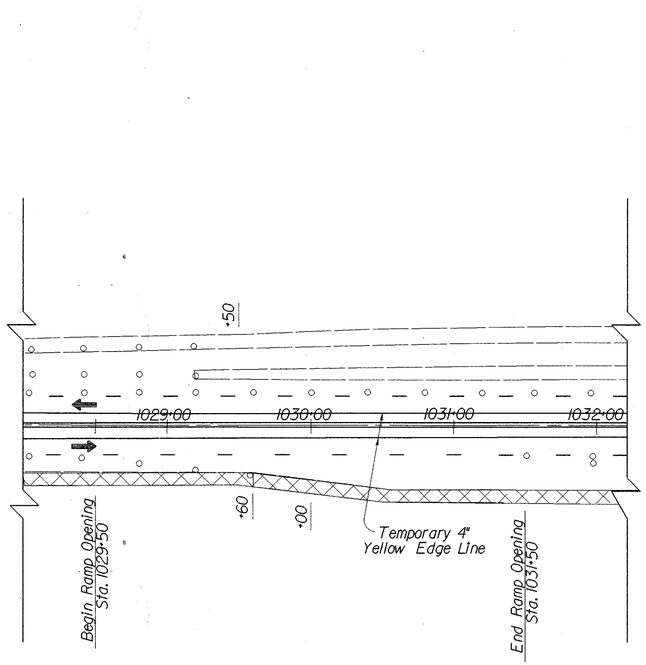


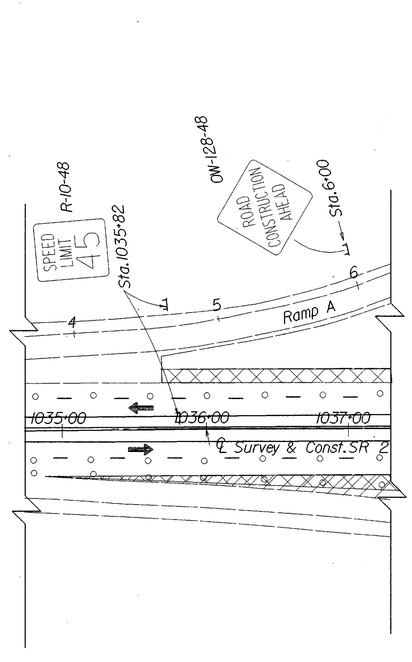


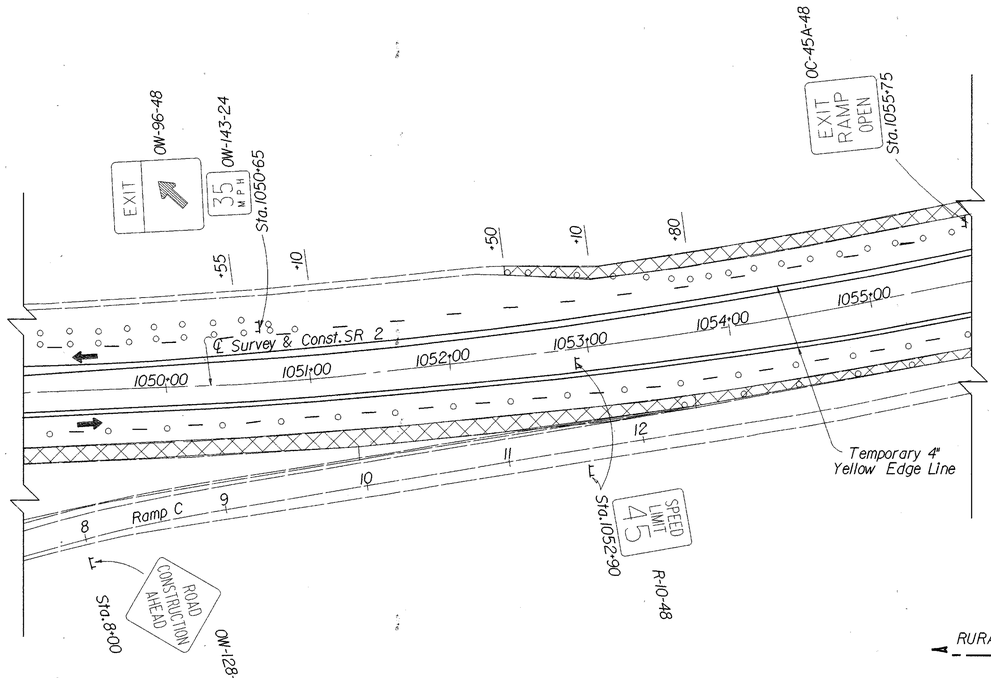


RURAL — CITY OF PORT CLINTON

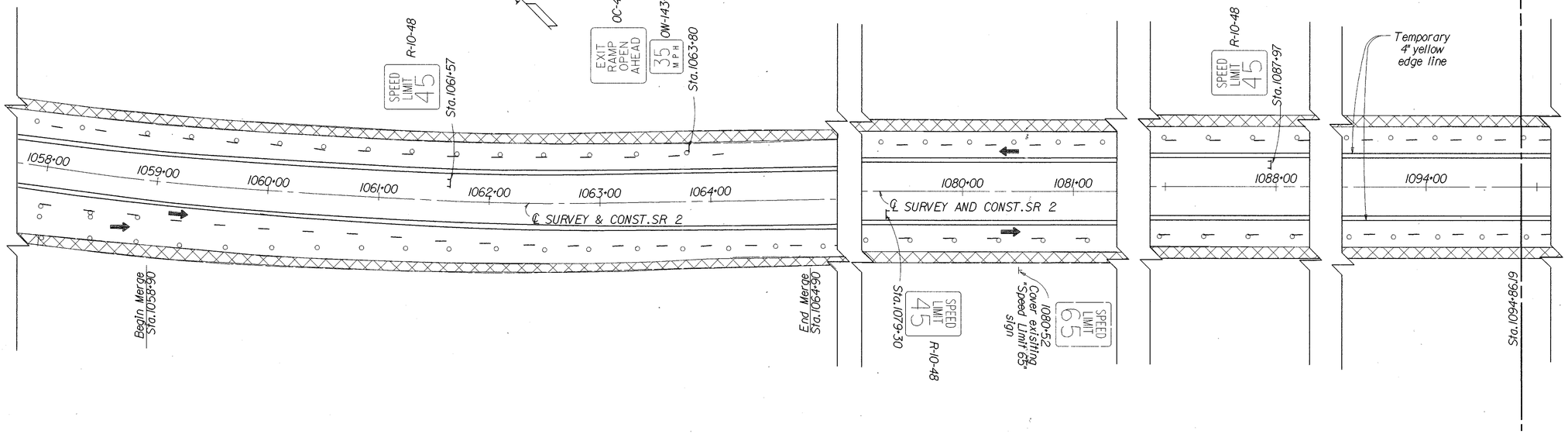


I:/pd/OTTAWA/OTT2/2phs3pll.dgn

PHASE 3-A MAINTENANCE OF TRAFFIC ~ STA.1028+00 TO STA.1095+00

NOTE: Remove all Conflicting Pavement Markings.

See Sht. No. 23 for Maintenance of Traffic Legend.

| FHWA REGION | STATE | PROJECT | |
|---|---|---|---|
| 5 | OHIO | | |

OTT-2-16.60



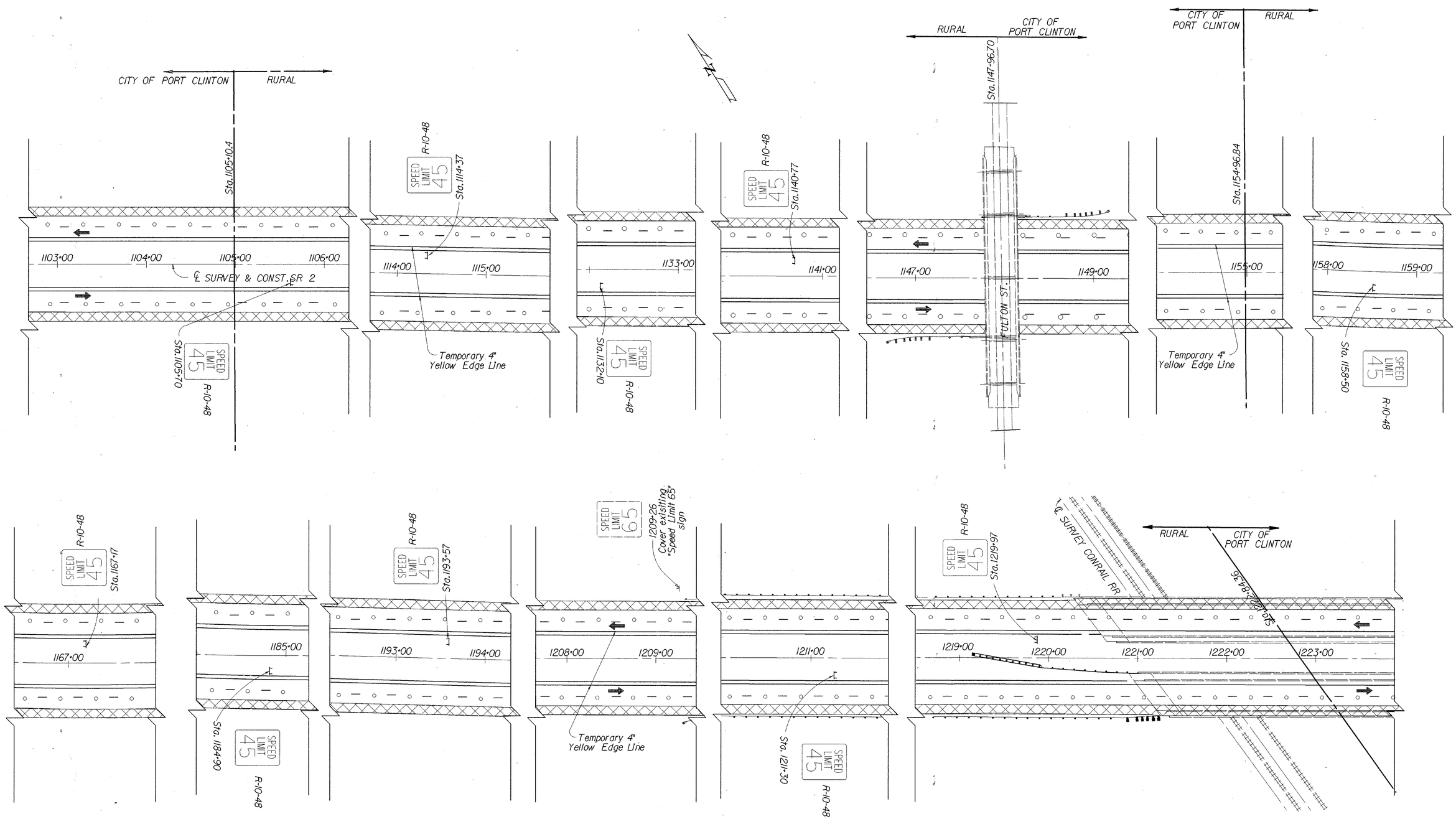


I:/PD/OTTAWA/OTT2/2phs3pht.dgn

PHASE 3-A MAINTENANCE OF TRAFFIC ~ STA.1095+00 TO STA.1224+00

NOTE: Remove all Conflicting Pavement Markings.

See Sht. No. 23 for Maintenance of Traffic Legend.

| FHWA REGION | STATE | PROJECT | |
|---|---|---|---|
| 5 | OHIO | | |

46/367

OTT-2-16.60

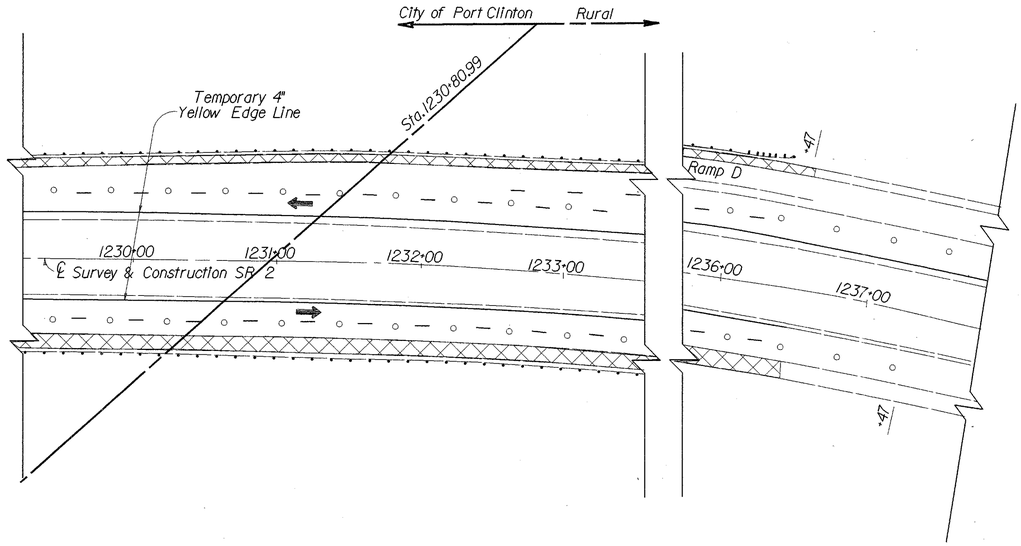


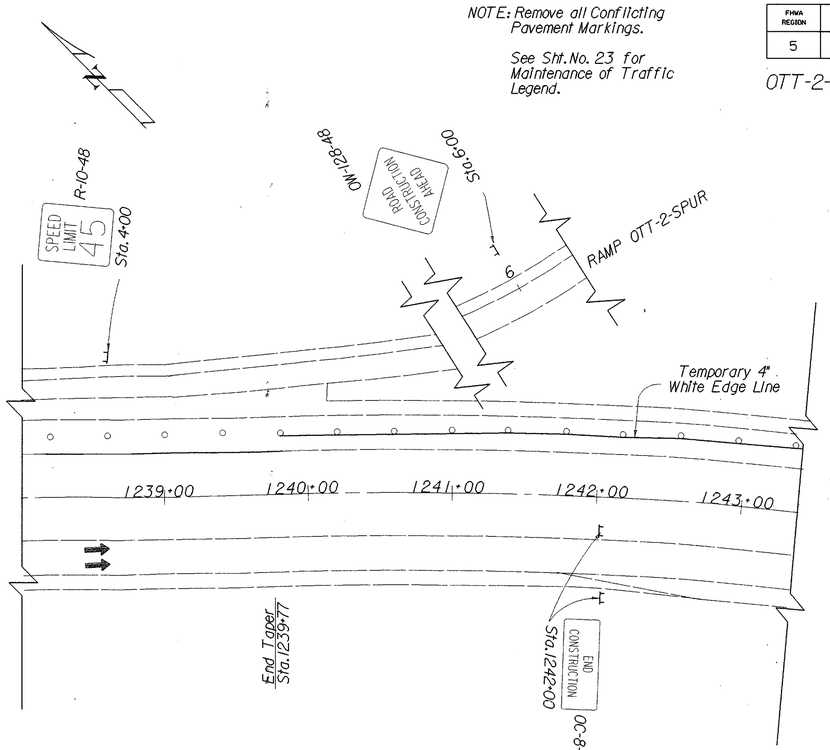


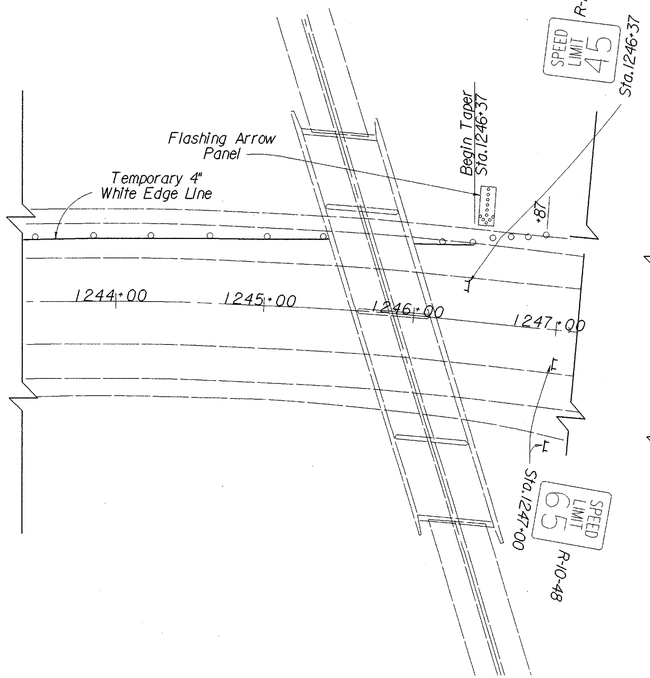


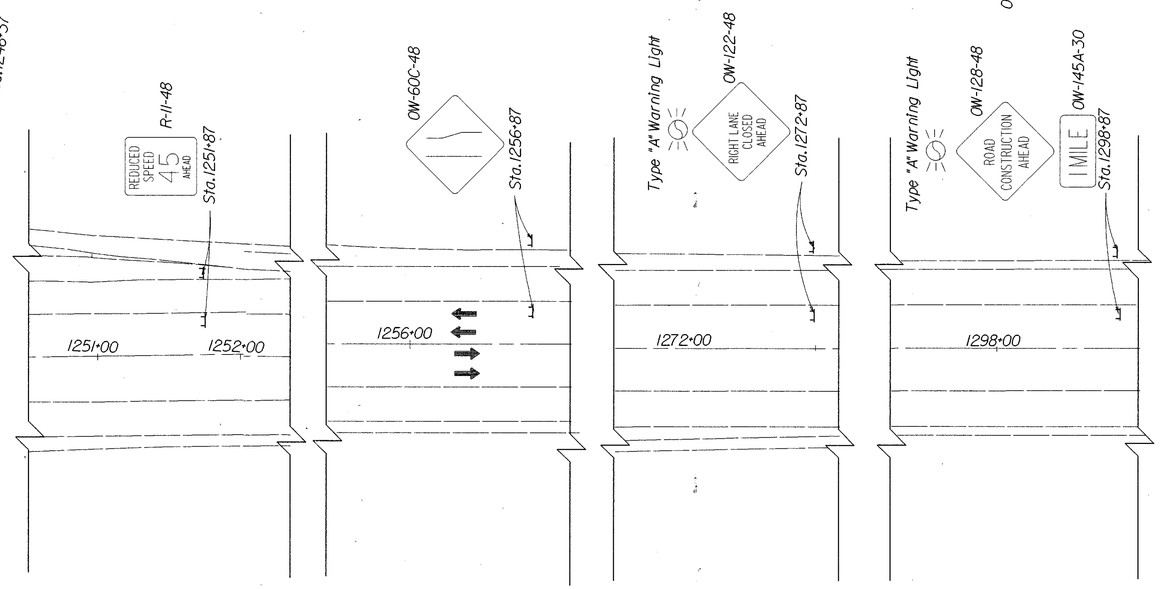


I:/PD/OTT AWA/OTT2/2phs3ph1.dgn

PHASE 3-A MAINTENANCE OF TRAFFIC ~ STA.1224+00 TO STA.1299+00

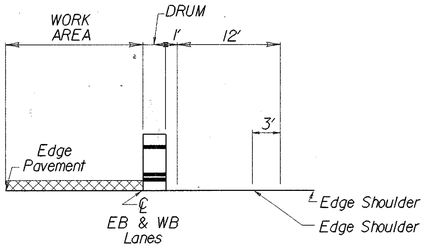


MOT TYPICAL PHASE 3-B

NOTE: Remove all conflicting Pavement Marking.

See Sht. No. 23 for Maintenance of Traffic Legend.

| FHWA REGION | STATE | PROJECT | |
|---|---|---|---|
| 5 | OHIO | | |

47/367

OTT-2-16.60

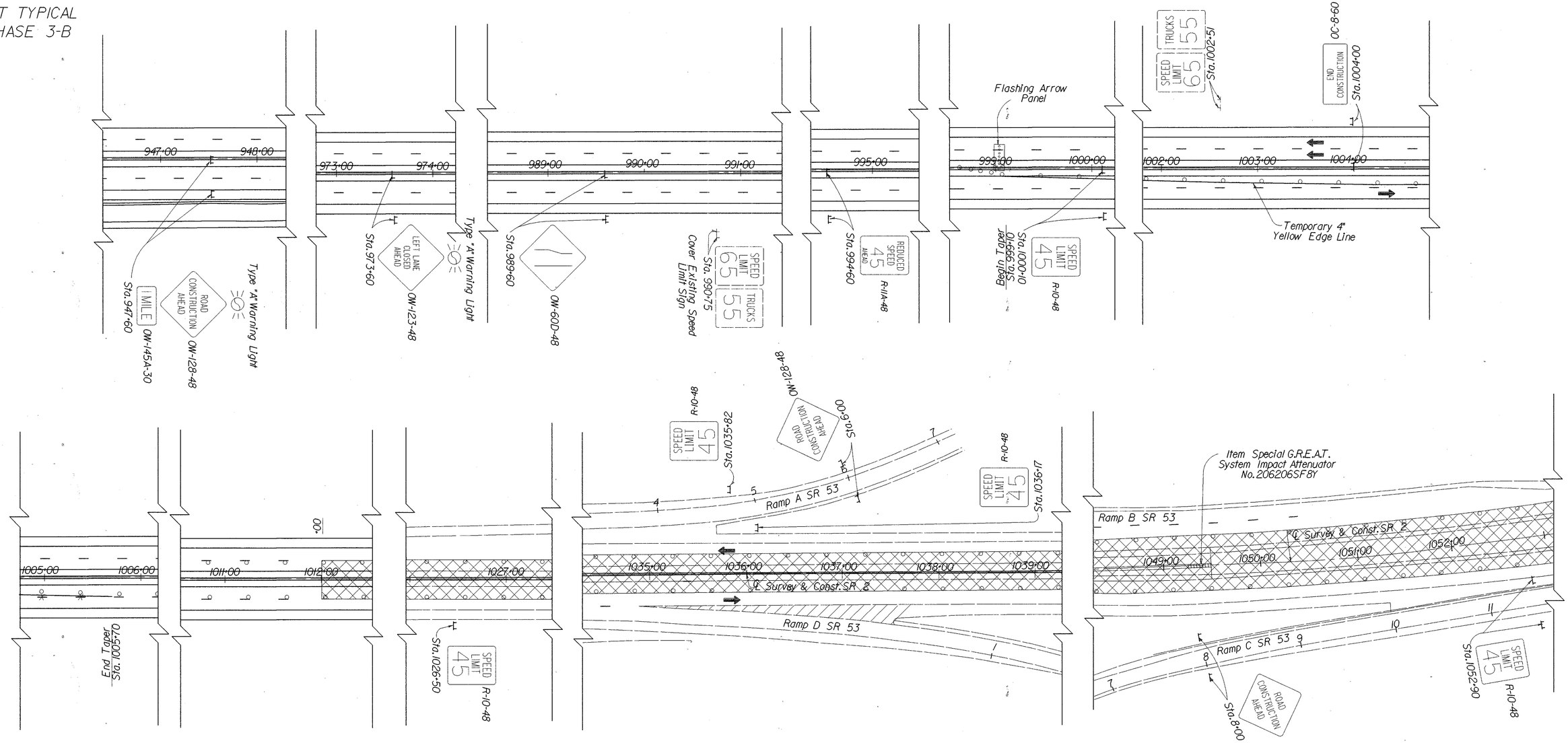


I:/pd/ottawa/ott2/2phs3prf2.dgn

PHASE 3-B MAINTENANCE OF TRAFFIC ~ STA.945+50 TO STA.1053+10

NOTE: Remove all conflicting Pavement Marking.

See Sht. No. 23 for Maintenance of Traffic Legend.

| FHWA REGION | STATE | PROJECT | |
|---|---|---|---|
| 5 | OHIO | | |

OTT-2-16.60



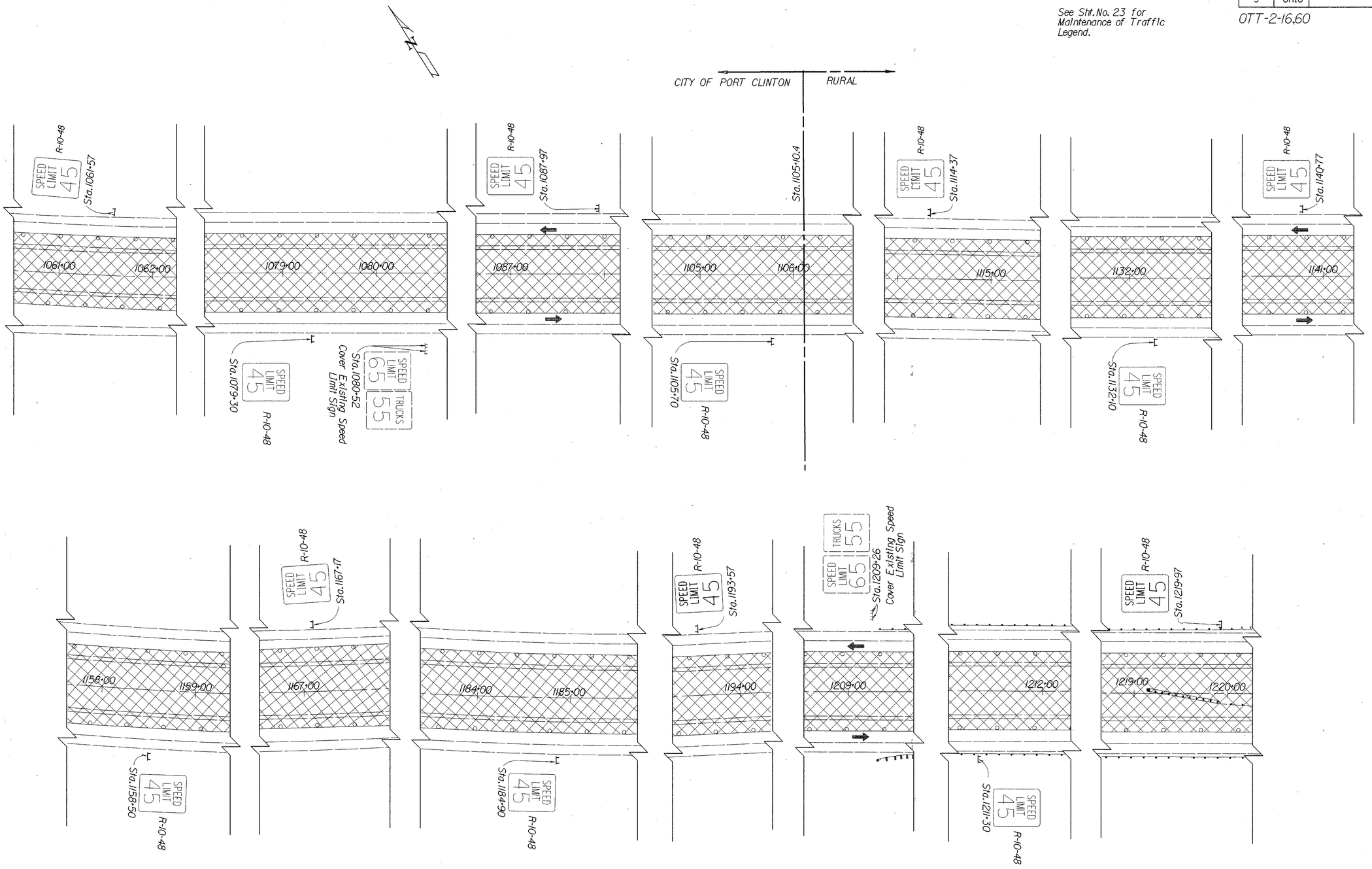


I:/pd/OTTAWA/OTT2/2phs3pt2.dgn

PHASE 3-B MAINTENANCE OF TRAFFIC ~ STA.1053+10 TO STA.1220+30

| FHWA REGION | STATE | PROJECT | |
|---|---|---|---|
| 5 | OHIO | | |



NOTE: Remove all conflicting Pavement Marking.

See Sht. No. 23 for Maintenance of Traffic Legend.

OTT-2-16.60

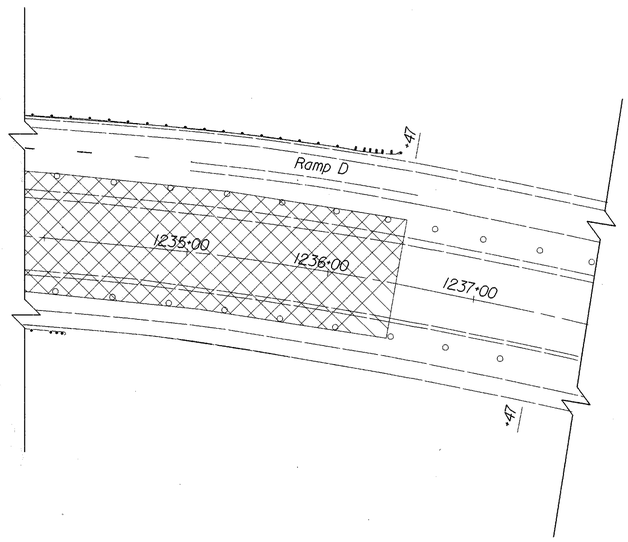


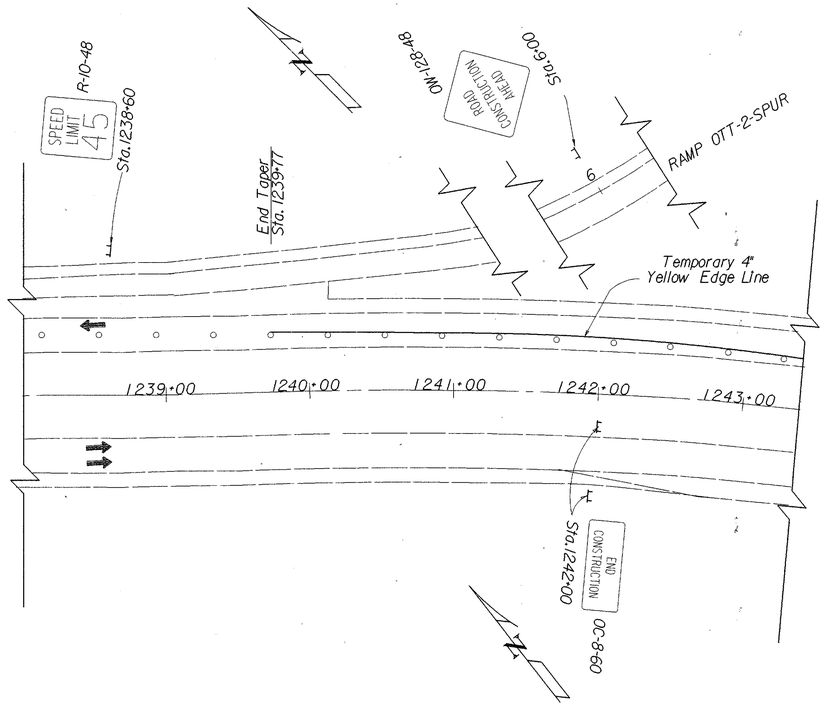


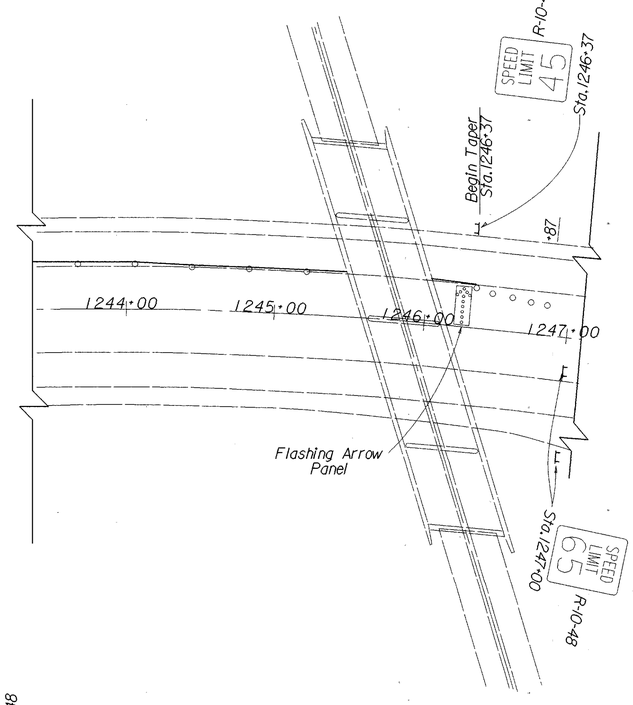


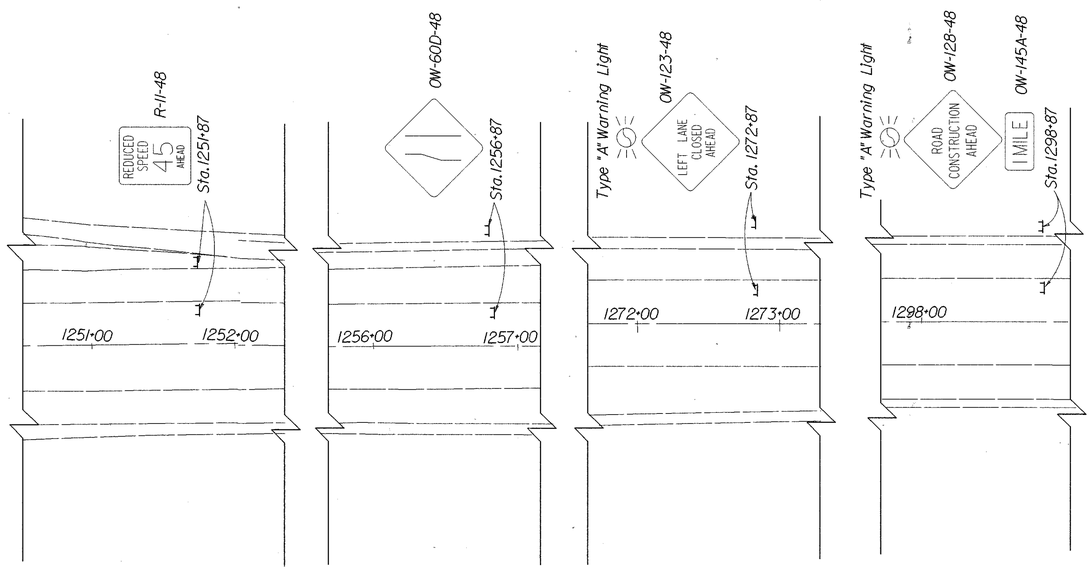


I:/pd/OTTAWA/OTT2-/2phs3pt2.dgn

| FHWA REGION | STATE | PROJECT | |
|---|---|---|---|
| 5 | OHIO | | |



OTT-2-16.60

## CROSSOVER CURVE DATA

P. I.$_1$ STA. 1193+83.66
P.I.$_2$ STA. 1195+66.20
$\Delta$ = 10°-59'-09"
$D_c$ = 3°
T = 183.66'
L = 366.20'
R = 1909.86'

## LEGEND

Temporary Pavement

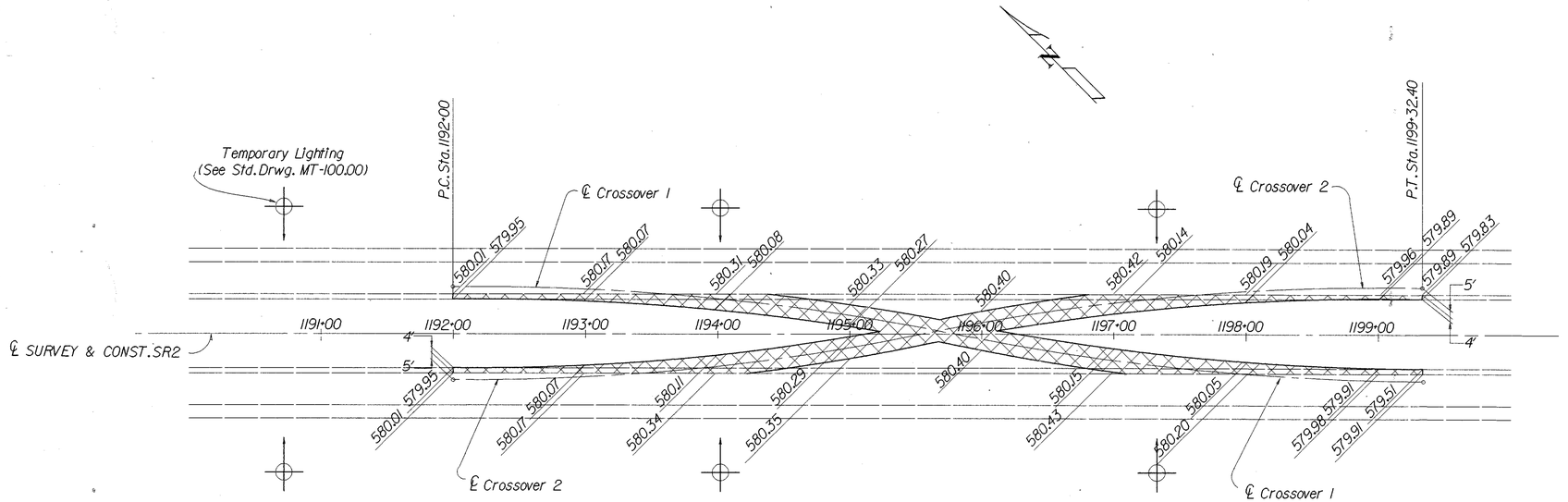


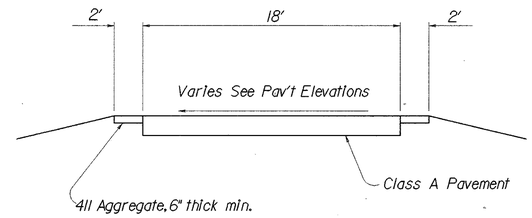


TYPICAL SECTION
TEMPORARY PAVEMENT CROSSOVER

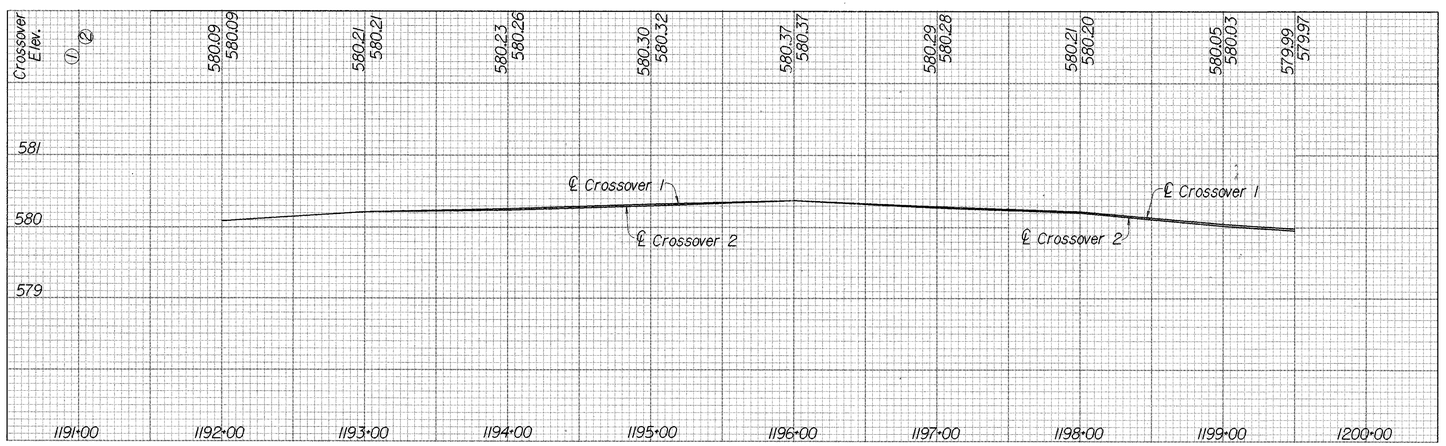


I:/PD/OTTAWA/OTT2/of2.xover.dgn

PHASE 3-B MAINTENANCE OF TRAFFIC ~ CROSSOVER CURVE DATA STA. 1190+00 TO 1200+00

| FHWA REGION | STATE | PROJECT | |
|---|---|---|---|
| 5 | OHIO | | |



OTT-2-16.60

LEGEND

Temporary Pavement

Crossover #2

| Curve #1 | Curve #2 |
|---|---|
| P.C. STA. 1225+95.65 | P.C. STA. 1229+48.61 |
| P. I. STA. 1227+72.74 | P. I. STA. 1231+25.70 |
| P.T. STA. 1229+48.61 | P.T. STA. 1233+00 |
| Δ = 11°-40'-04" | Δ = 17°-36'-39" |
| D = 3°-18'-21" | D = 5°-00'-42" |
| T = 177.09' | T = 177.09' |
| R = 1733.22' | R = 1143.22' |
| L = 352.96' | L = 351.39' |

NOTES: Tangent Bearing at Sta. 1233+00 was taken as N 49°-09'-32" E

Curve Data is measured off of curve stationing.

Crossover #1

| Curve #1 | Curve #2 |
|---|---|
| P.C. STA. 1225+93.19 | P.C. STA. 1229+46.14 |
| P. I. STA. 1227+70.22 | P. I. STA. 1231+23.19 |
| P.T. STA. 1229+46.14 | P.T. STA. 1233+00 |
| Δ = 11°-08'-02" | Δ = 5°-11'-27" |
| D = 3°-09'-16" | D = 1°-28'-01" |
| T = 177.03' | T = 177.05' |
| R = 1816.28 | R = 3905.84' |
| L = 352.95' | L = 353.86' |

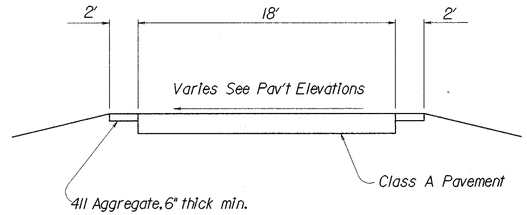


TYPICAL SECTION
TEMPORARY PAVEMENT CROSSOVER

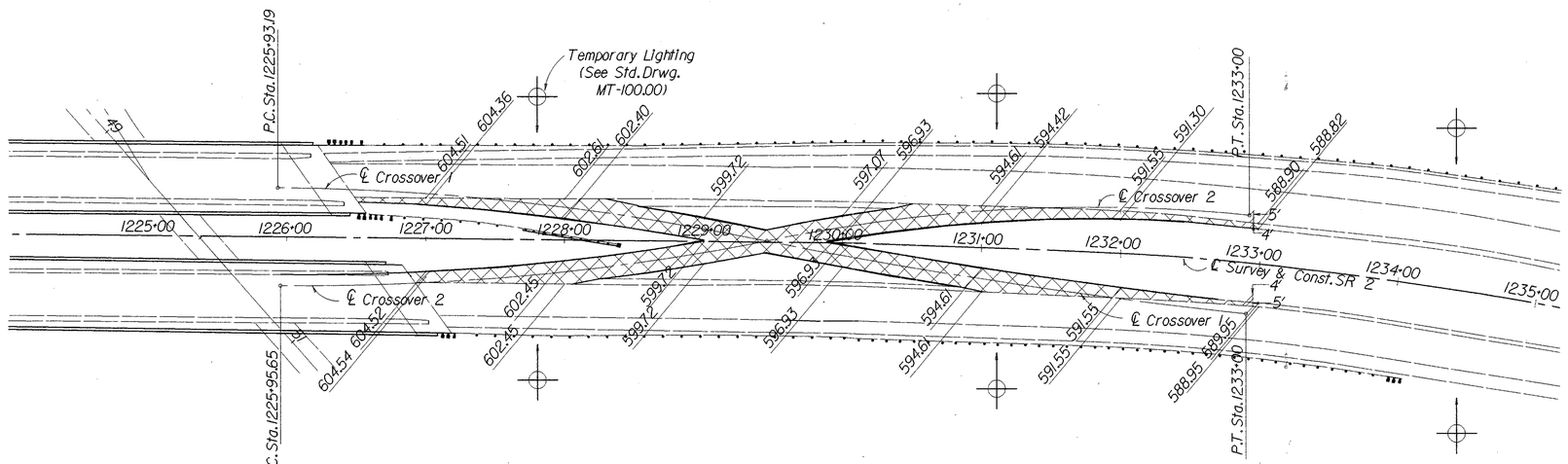


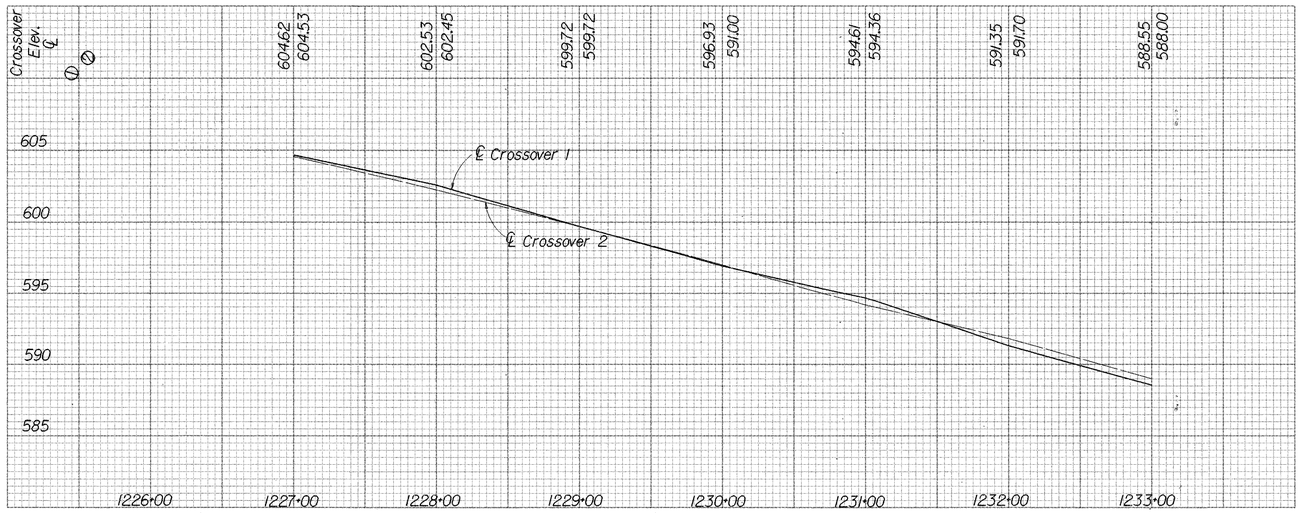


i/pd/ottawa/ott2/ot2xover.dgn

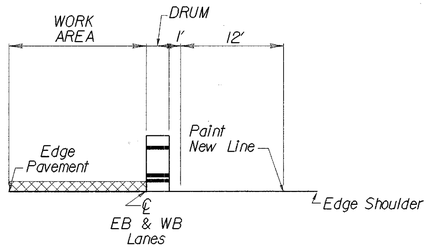


MOT TYPICAL PHASE 3-C

NOTE: Remove all Conflicting Pavement Markings.

See Sht. No. 23 for Maintenance of Traffic Legend.

| FHWA REGION | STATE | PROJECT | |
|---|---|---|---|
| 5 | OHIO | | |

52/367

OTT-2-16.60

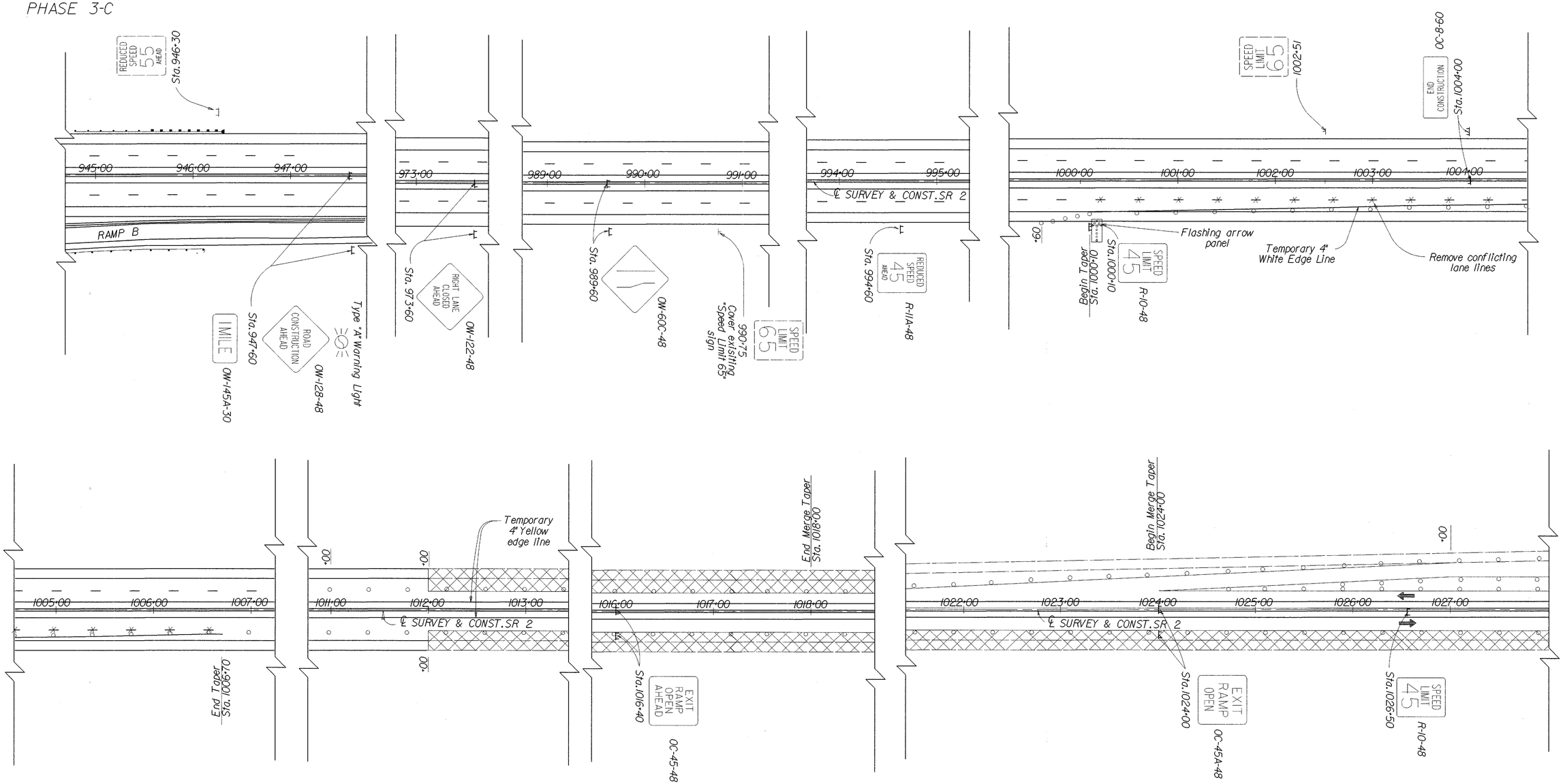


I:/PD/OTT AWA/OTT 2/2phs3pt3.dgn

PHASE 3-C MAINTENANCE OF TRAFFIC ~ STA. 944+70 TO STA. 1028+00

| FHWA REGION | STATE | PROJECT | |
|---|---|---|---|
| 5 | OHIO | | |

53/367

OTT-2-16.60

NOTE: Remove all Conflicting Pavement Markings.

See Sht. No. 23 for Maintenance of Traffic Legend.

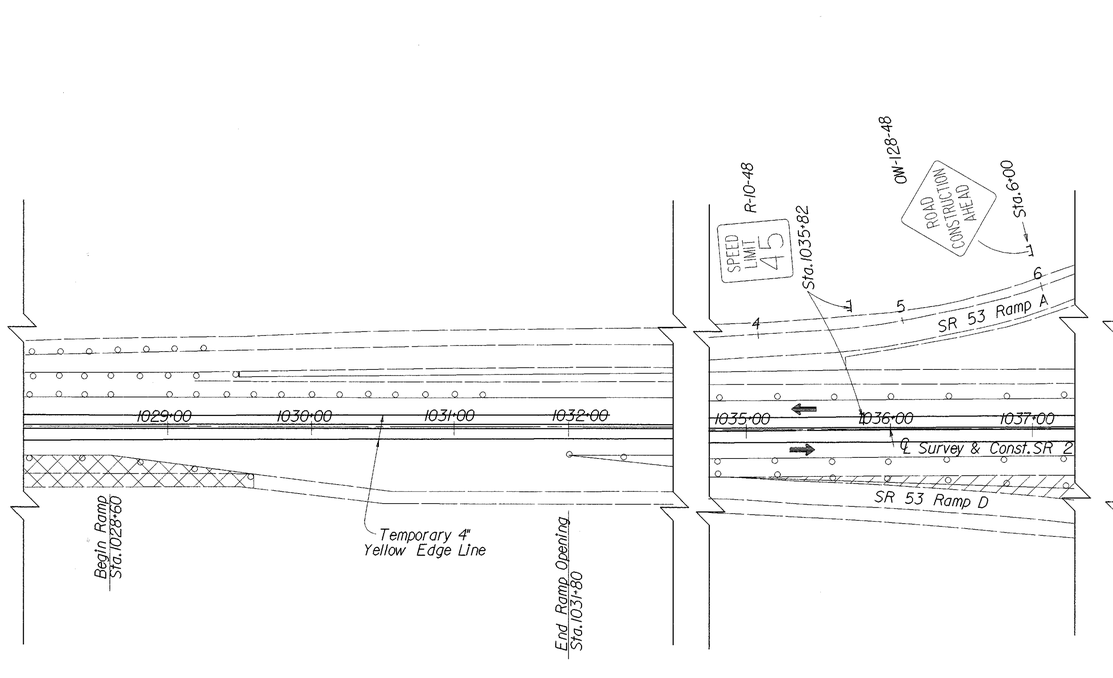


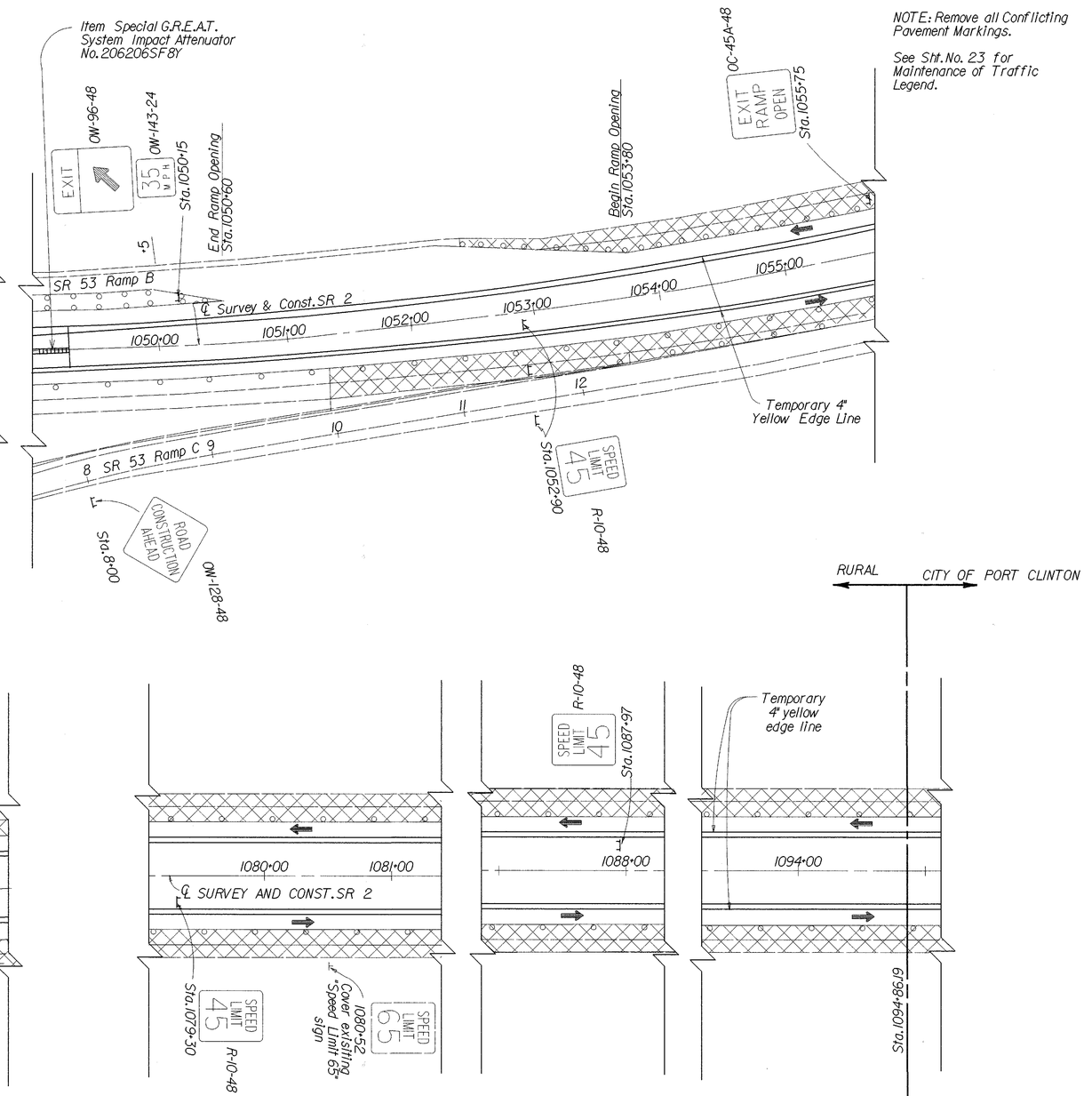


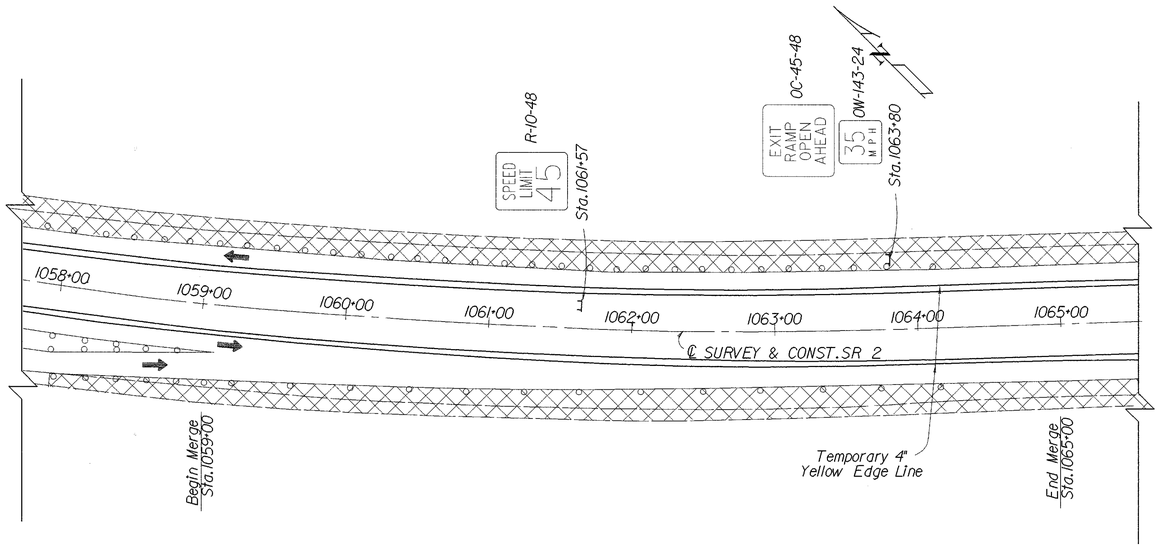





PHASE 3-C MAINTENANCE OF TRAFFIC ~ STA.1028+00 TO STA.1095+10

I:/pd/OTTAWA/OTT2/2phs3pf3.dgn

| FHWA REGION | STATE | PROJECT | |
|---|---|---|---|
| 5 | OHIO | | |



OTT-2-16.60

NOTE: Remove all Conflicting Pavement Markings.

See Sht. No. 23 for Maintenance of Traffic Legend.

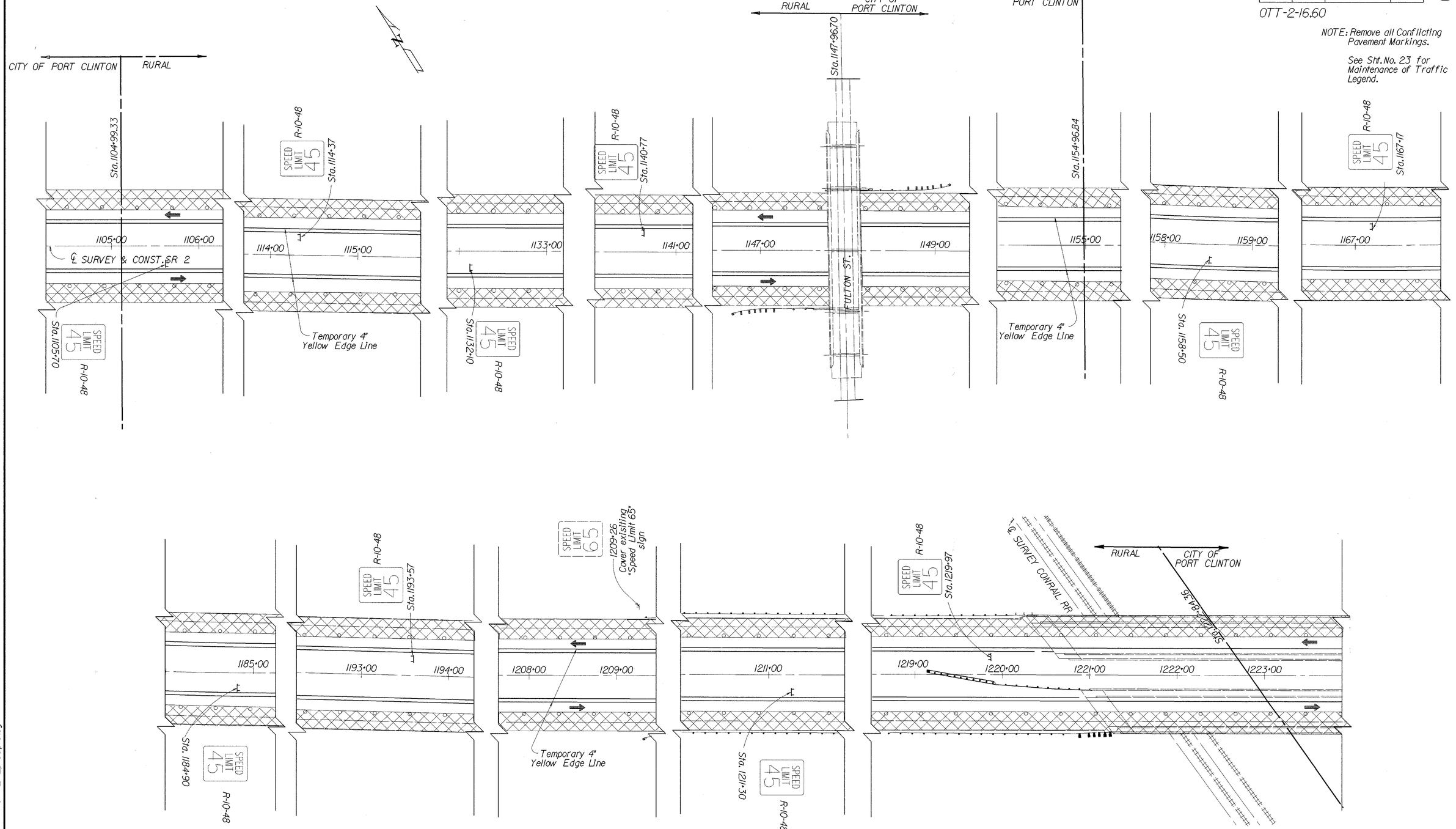


I:/PD/OTT AWA/OTT 2/2phs3plt3.dgn

PHASE 3-C MAINTENANCE OF TRAFFIC ~ STA.1095+10 TO STA.1224+00

NOTE: Remove all Conflicting Pavement Markings.

See Sht. No. 23 for Maintenance of Traffic Legend.

| FHWA REGION | STATE | PROJECT | |
|---|---|---|---|
| 5 | OHIO | | |

55/367

OTT-2-16.60

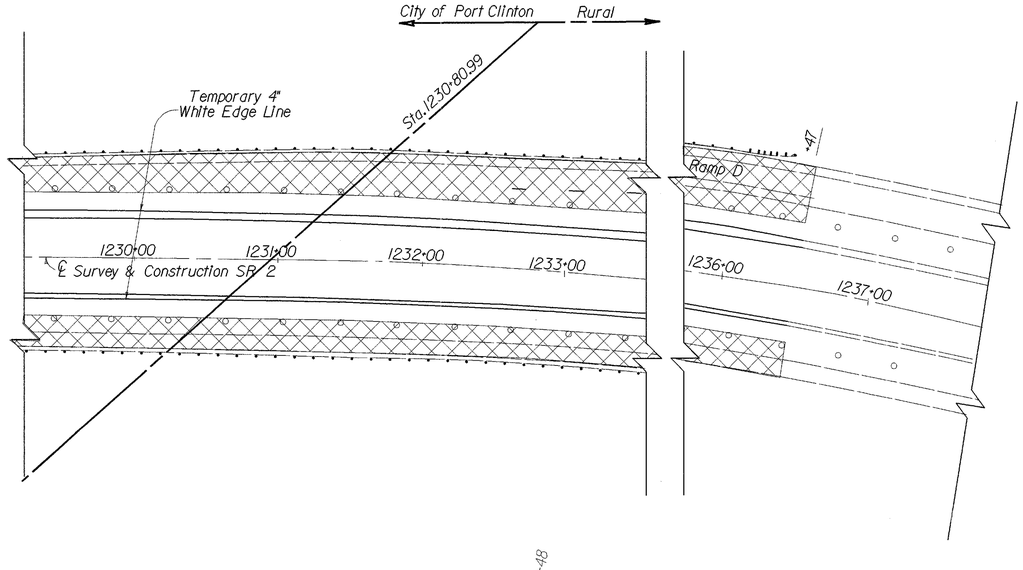


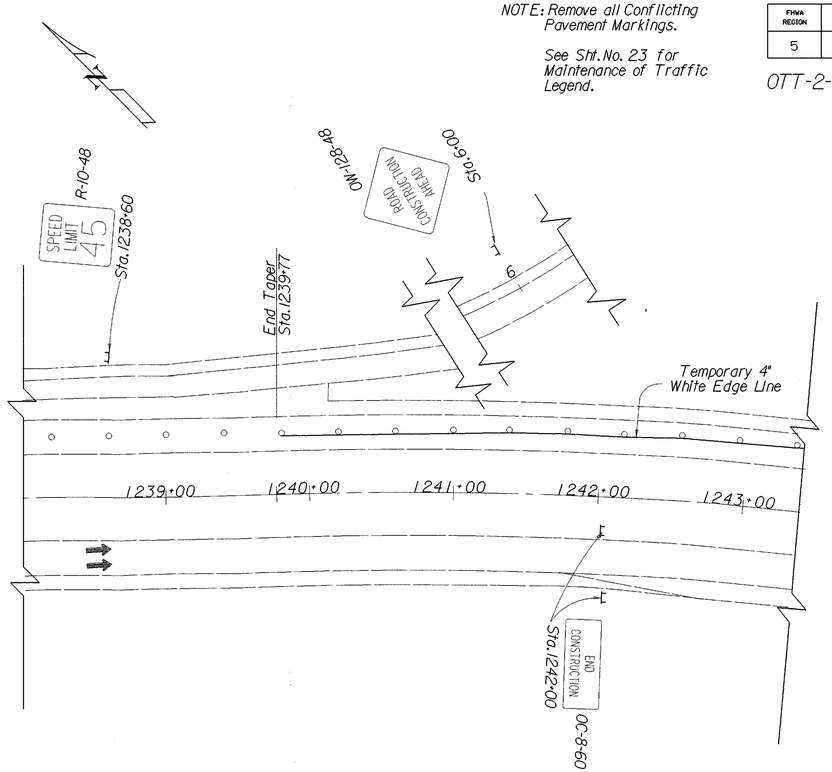


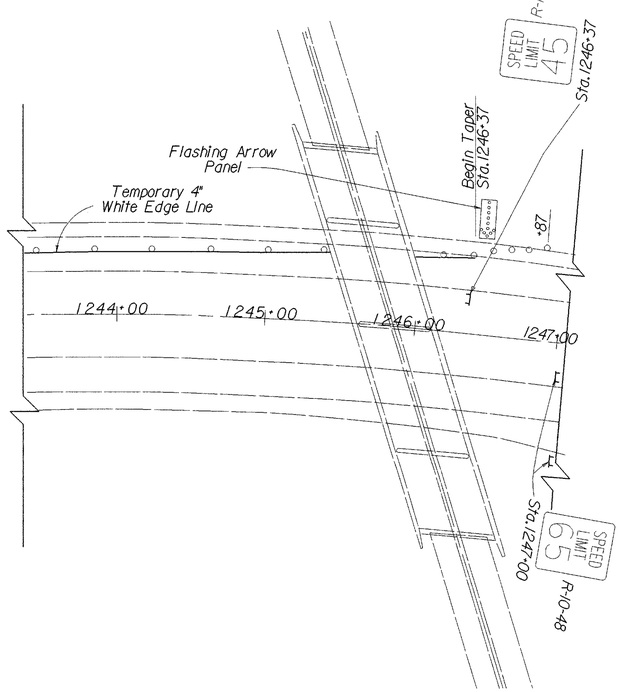


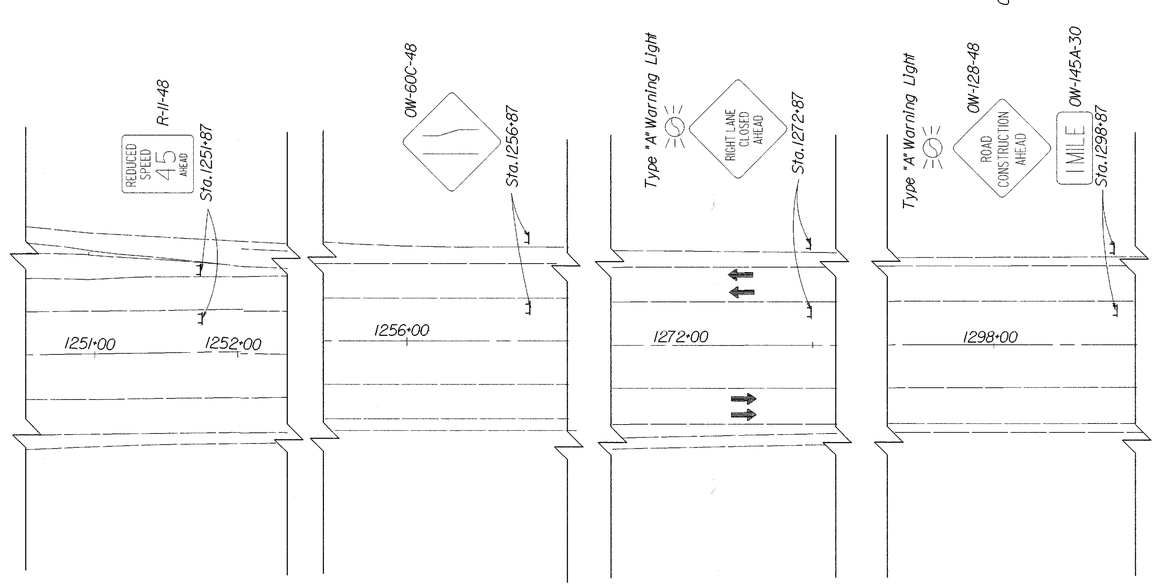


PHASE 3-C MAINTENANCE OF TRAFFIC ~ STA.1224+00 TO STA.1298+00

I:/PD/OTT AWA/OTT2/2phs3pf3.dgn

NOTE: Remove all conflicting Pavement Markings

See Sht. No. 23 for Maintenance of Traffic Legend.

| FHWA REGION | STATE | PROJECT | |
|---|---|---|---|
| 5 | OHIO | | |

OTT-2-16.60



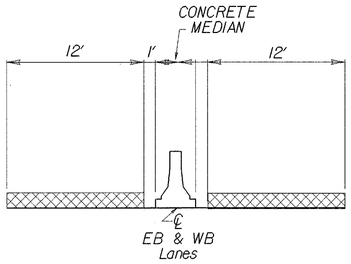


MOT TYPICAL ~ PHASE 4-A

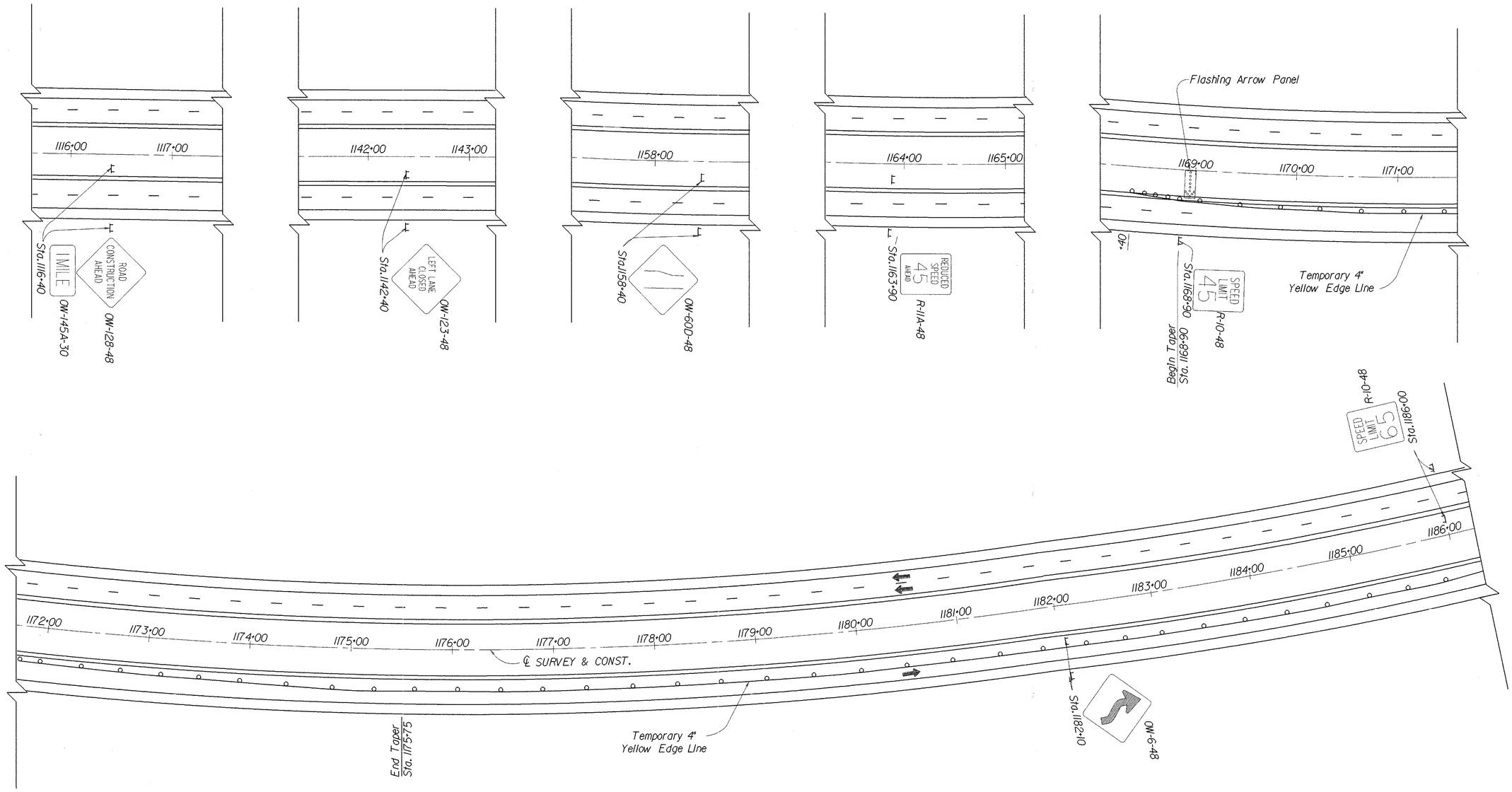


PHASE 4-A MAINTENANCE OF TRAFFIC ~ STA.1115+60 TO STA.1186+30

I:/pd/ottawa/oh12/2phs4ptl.dgn

NOTE: Remove all conflicting Pavement Markings

See Sht. No. 23 for Maintenance of Traffic Legend.

| FHWA REGION | STATE | PROJECT | |
|---|---|---|---|
| 5 | OHIO | | |

OTT-2-16.60



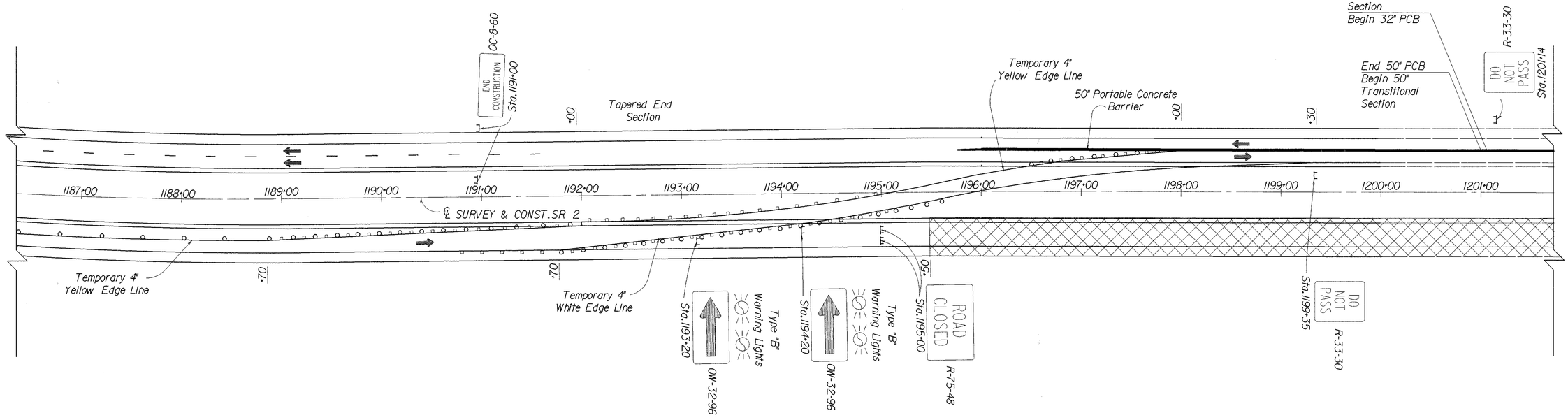


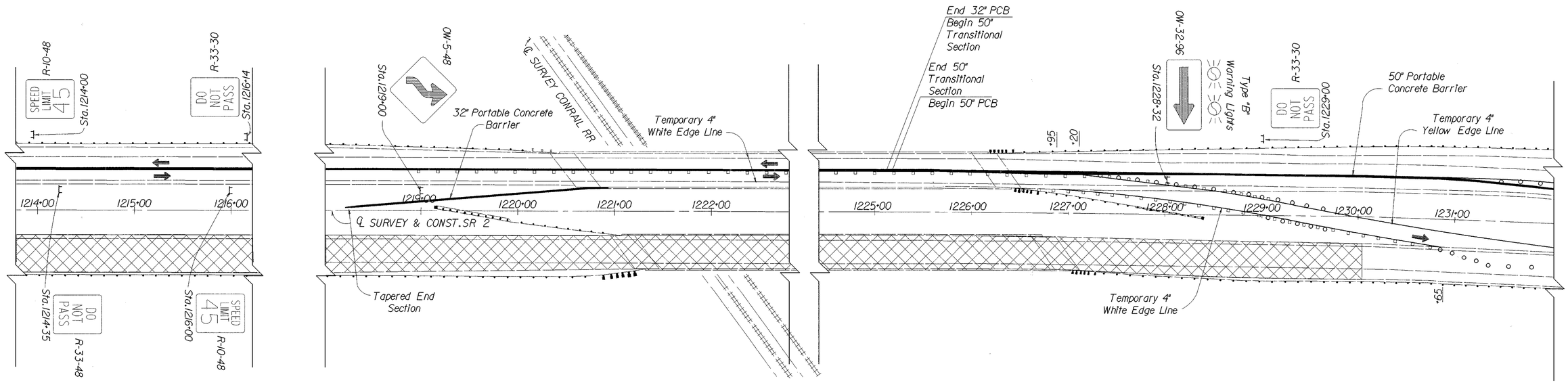


PHASE 4-A MAINTENANCE OF TRAFFIC ~ STA.1186+30 TO STA.1232+00

I:/pd/ottawa/ott2/2phs4pt1.dgn

NOTE: Remove all conflicting Pavement Markings

See Sht.No. 23 for Maintenance of Traffic Legend.

| FHWA REGION | STATE | PROJECT | |
|---|---|---|---|
| 5 | OHIO | | |

58/367

OTT-2-16.60

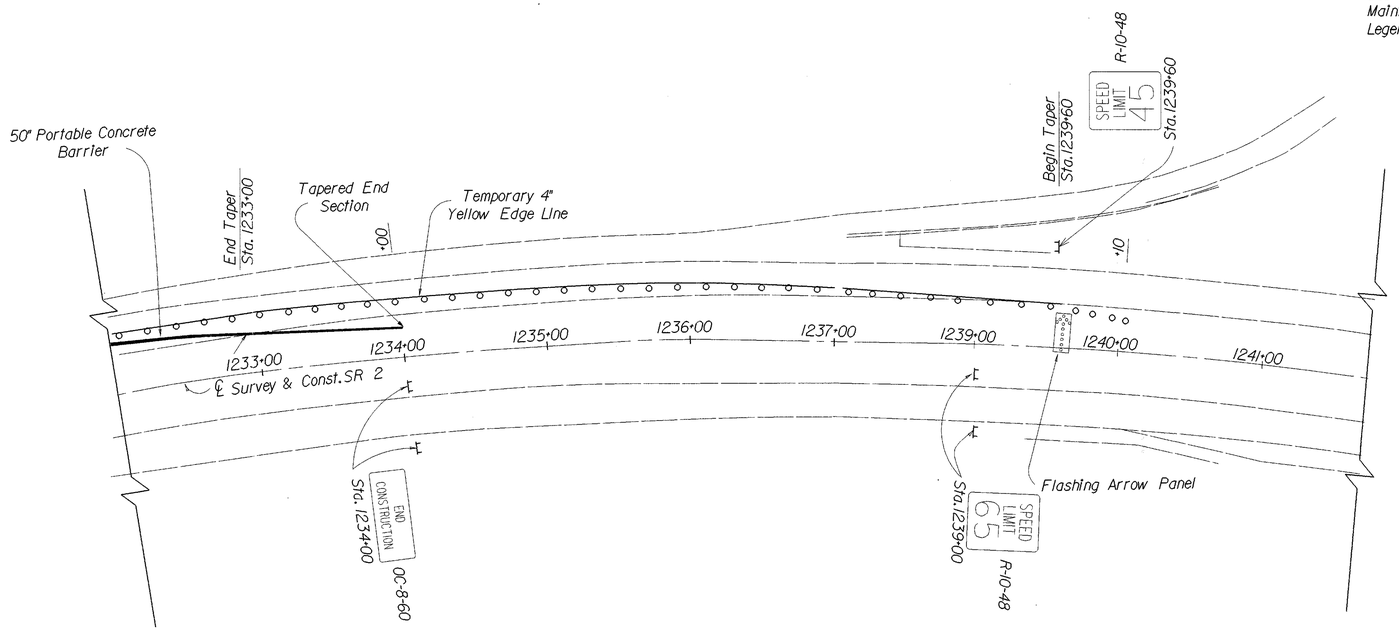


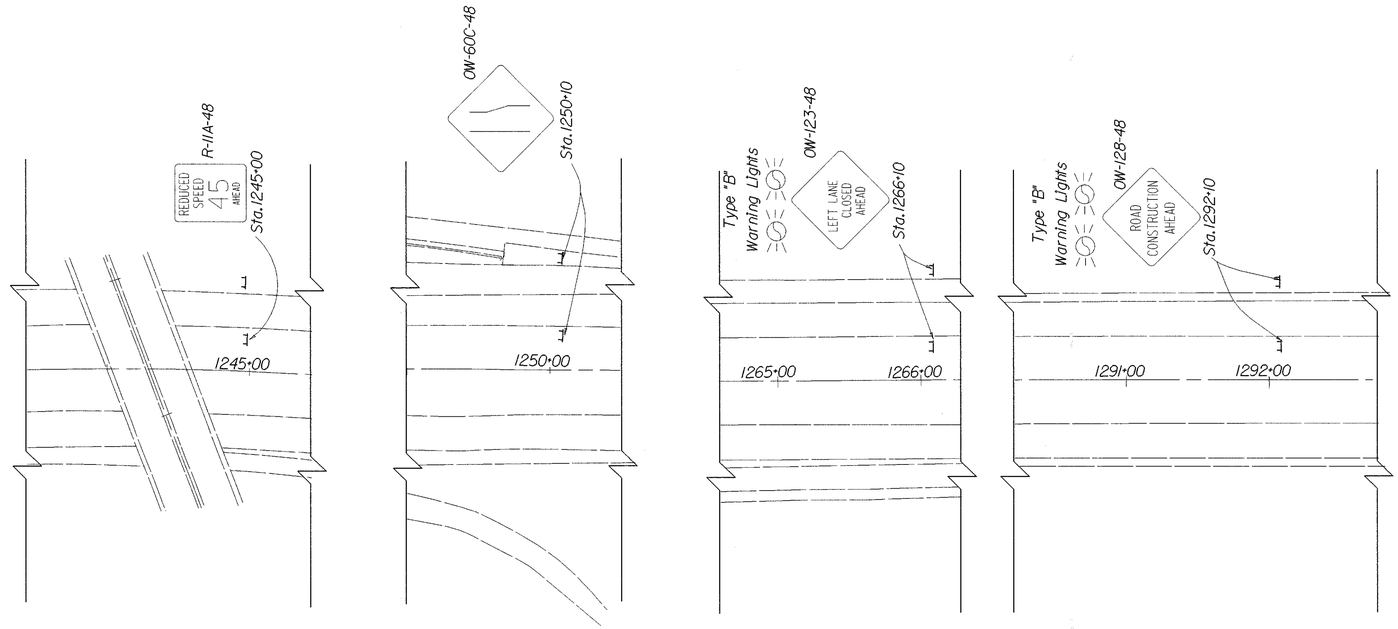


i/pd/ottawa/ott2/2phs4ptl.dgn

PHASE 4-A MAINTENANCE OF TRAFFIC ~ STA. 1232+00 TO STA. 1293+00

NOTE: Remove All Conflicting Pavement Markings

See Sht. No. 23 for Maintenance of Traffic Legend.

| FHWA REGION | STATE | PROJECT | |
|---|---|---|---|
| 5 | OHIO | | |

OTT-2-16.60

59/367

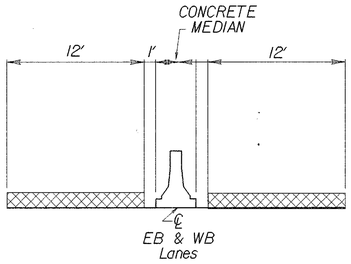


MOT TYPICAL ~ PHASE 4-B

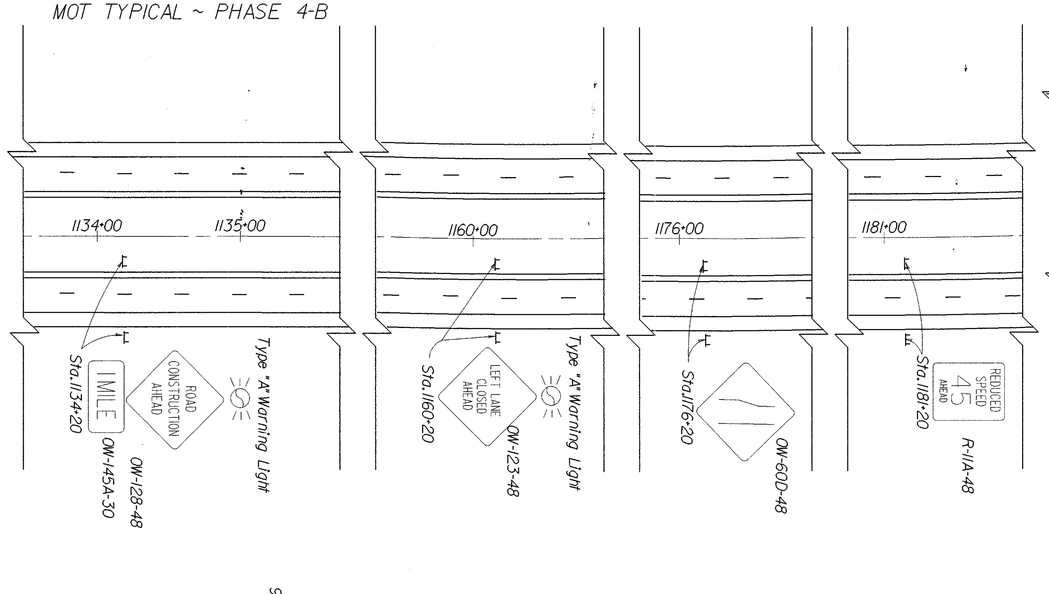


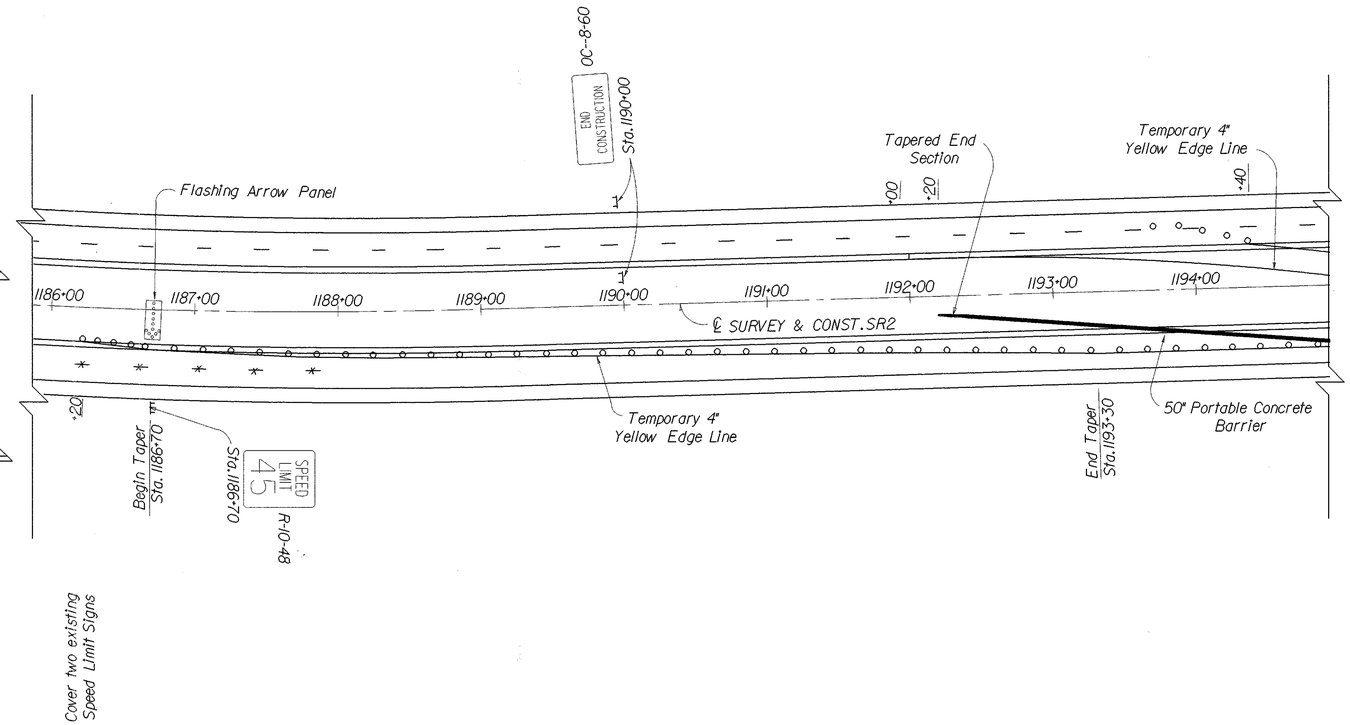


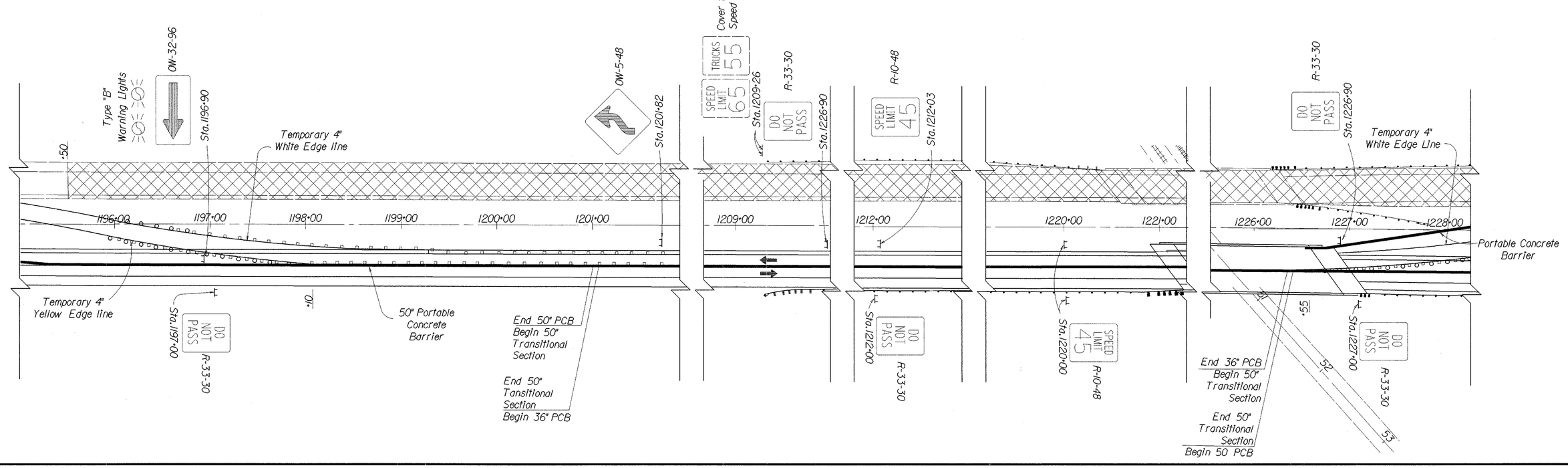


PHASE 4-B MAINTENANCE OF TRAFFIC ~ STA.1133+50 TO STA.1228+20

I:\pd\ottawa\ott2\2phs4pt2.dgn

NOTE: Remove All Conflicting Pavement Markings

See Sht. No. 23 for Maintenance of Traffic Legend.

| FHWA REGION | STATE | PROJECT | |
|---|---|---|---|
| 5 | OHIO | | |

60/367

OTT-2-16.60

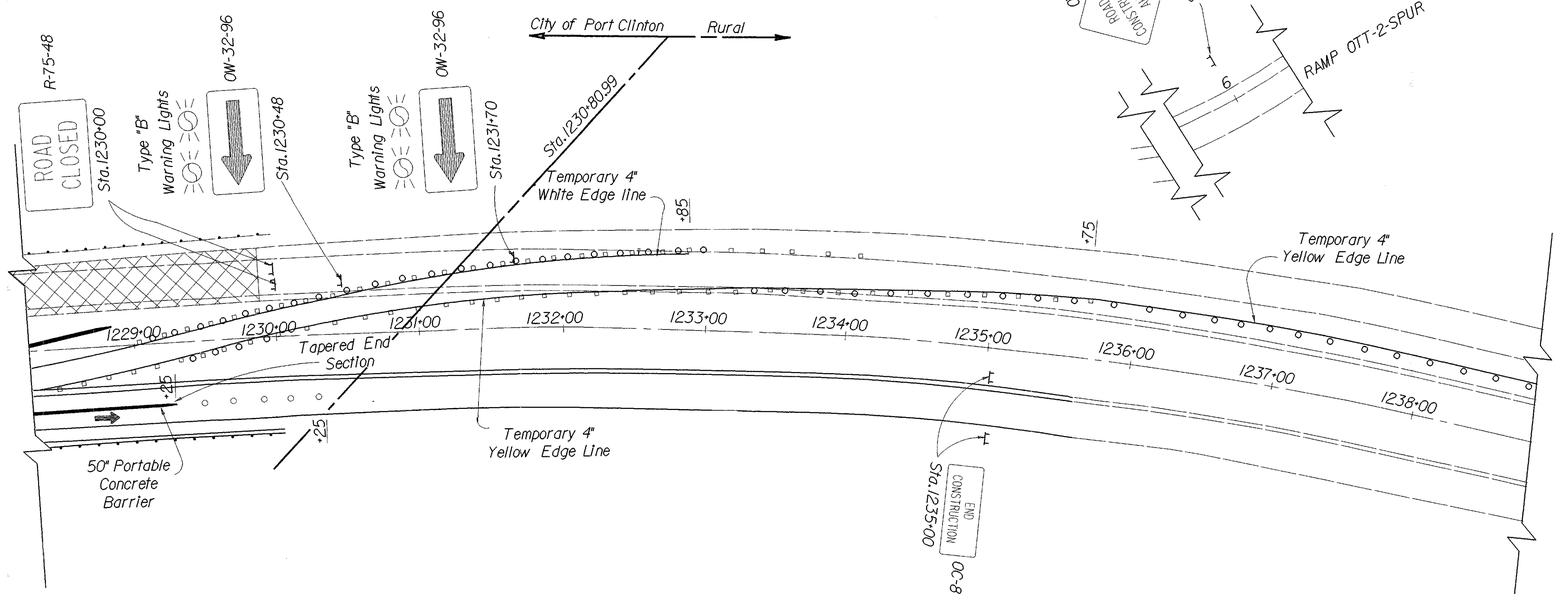


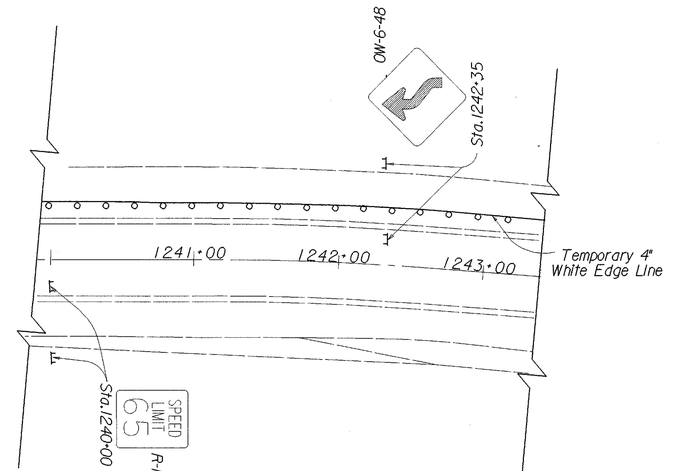


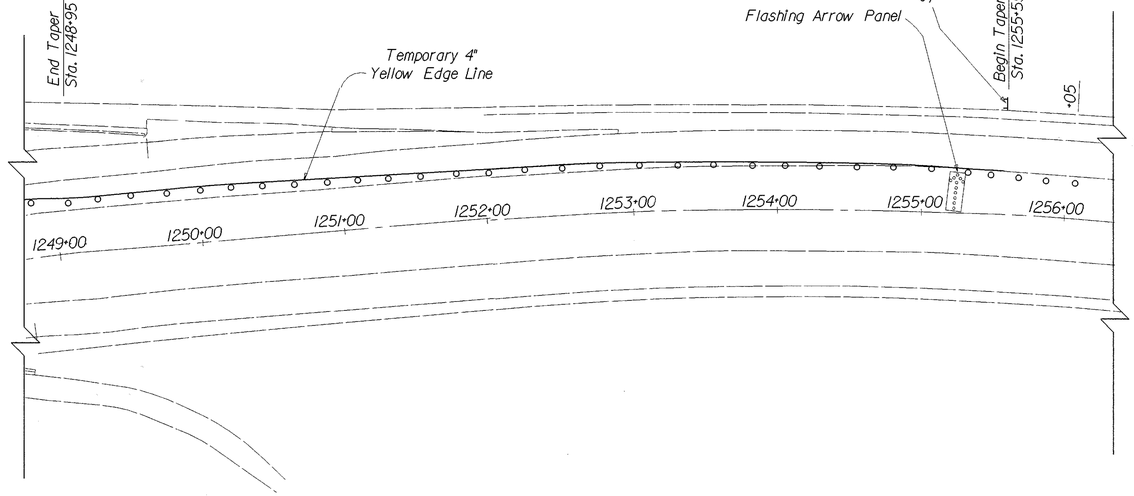


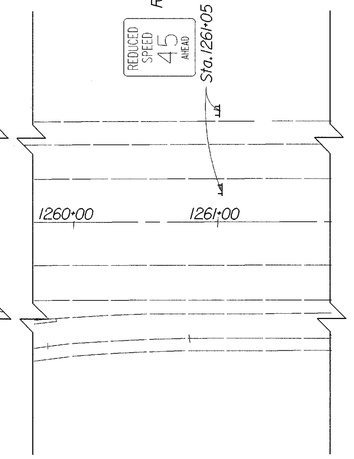


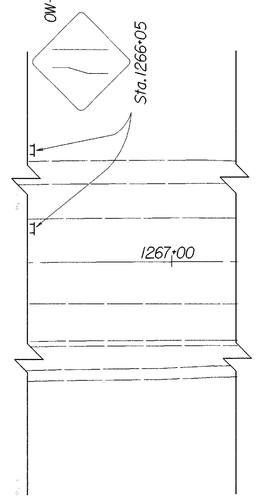


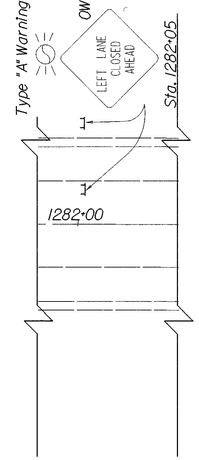


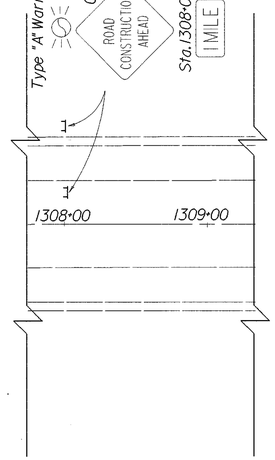


I/pd/ottawa/ott2/2phs4pt2.dgn

PHASE 4-B MAINTENANCE OF TRAFFIC ~ STA.1228+20 TO STA.1309+00

| FHWA REGION | STATE | PROJECT | |
|---|---|---|---|
| 5 | OHIO | | |

61
367

OTT-2-16.60

NOTE: Remove all Conflicting Pavement Markings

See sht. no. 23 for Maintenance of Traffic Legend.

Begin Work Sta. 262+50

SPEED LIMIT 55

SOUTH 53

Fremont 12

STOP DO NOT ENTER

Ramp D

STOP DO NOT ENTER

EAST 2 Cleveland

Cover Sign

Sta. 273+10

1044

Ramp B

1045

Temporary 4" Yellow Edge Line

210 211 263 .75 264 265 266 267 268 269 270 .70 .65 271 .00 272 .50 273 274 1046 275

℄ SURVEY & CONST. SR. 53

188

4" Temporary Yellow Edge Line

189

Port Clinton 2 Business District

TO Cedar Point

Sta. 268+50

25

Remove this sign

Ramp C

EAST 2 Cedar Point

ONE WAY

YIELD

WEST 2 Toledo LEFT LANE

PROHIBITED PEDESTRIANS FARM MACHINERY ANIMALS BICYCLES OR MOTORCYCLES LESS THAN 5 BRAKE HP

WEST 2

1047

℄ Survey SR 2

1048

END SHEET ~ STA. 276+00

Type "A" Warning Light

ROAD CONSTRUCTION AHEAD

1 MILE

OW-145A-48

Sta. 210+50

OW-128-48

EAST 2 Cleveland Columbus Cedar Point

53

WEST 2 Toledo LEFT LANE

BEGIN SHEET ~ STA. 276+00

EAST 2

STOP DO NOT ENTER

YIELD

Ramp B

17 18 19 20 276 277 278 279 .45 280 .35 281 282 283 .80 284 .85 285 .00 286 287 288

Ramp A

PROHIBITED PEDESTRIANS FARM MACHINERY ANIMALS BICYCLES OR MOTORCYCLES LESS THAN 5 BRAKE HP

KEEP RIGHT

WEST 2 LEFT LANE

Sta. 280+85

Overlay this sign with M-26-21

4" Temporary Yellow Edge Line

Cleveland 77 Toledo 36

℄ Wonnell Rd. 32 31

STOP STOP

End Work Sta. 287+50

℄ Survey & Const. Fremont Rd.

WEST 2

SOUTH 53

NORTH 53

EAST 2

Type "A" Warning Light

ROAD CONSTRUCTION AHEAD

OW-128-48

1 MILE

OW-145A-48

Sta. 339+50

339

Sta. 276+90

4" Temporary Yellow Edge Line

Cover Sign

REDUCED SPEED AHEAD

Begin County Highway Maintenance

Fremont

Sta. 280+50

28

27

Sta. 280+90

Adopt a Road Maintained by Port Clinton Kiwanis Club

Remove sign

Business District

Jet Express Parking

HOSPITAL

SPEED LIMT 45

I/PD/OTT AWA/OTT 2/2PHS5PT1.DGN

PHASE 5-A MAINTENANCE OF TRAFFIC ~ STA. 210+00 TO STA. 339+50

| FHWA REGION | STATE | PROJECT | |
|---|---|---|---|
| 5 | OHIO | | |

62
367

OTT-2-16.60

NOTE: Remove all Conflicting Pavement Markings

See sht. no. 23 for Maintenance of Traffic Legend.

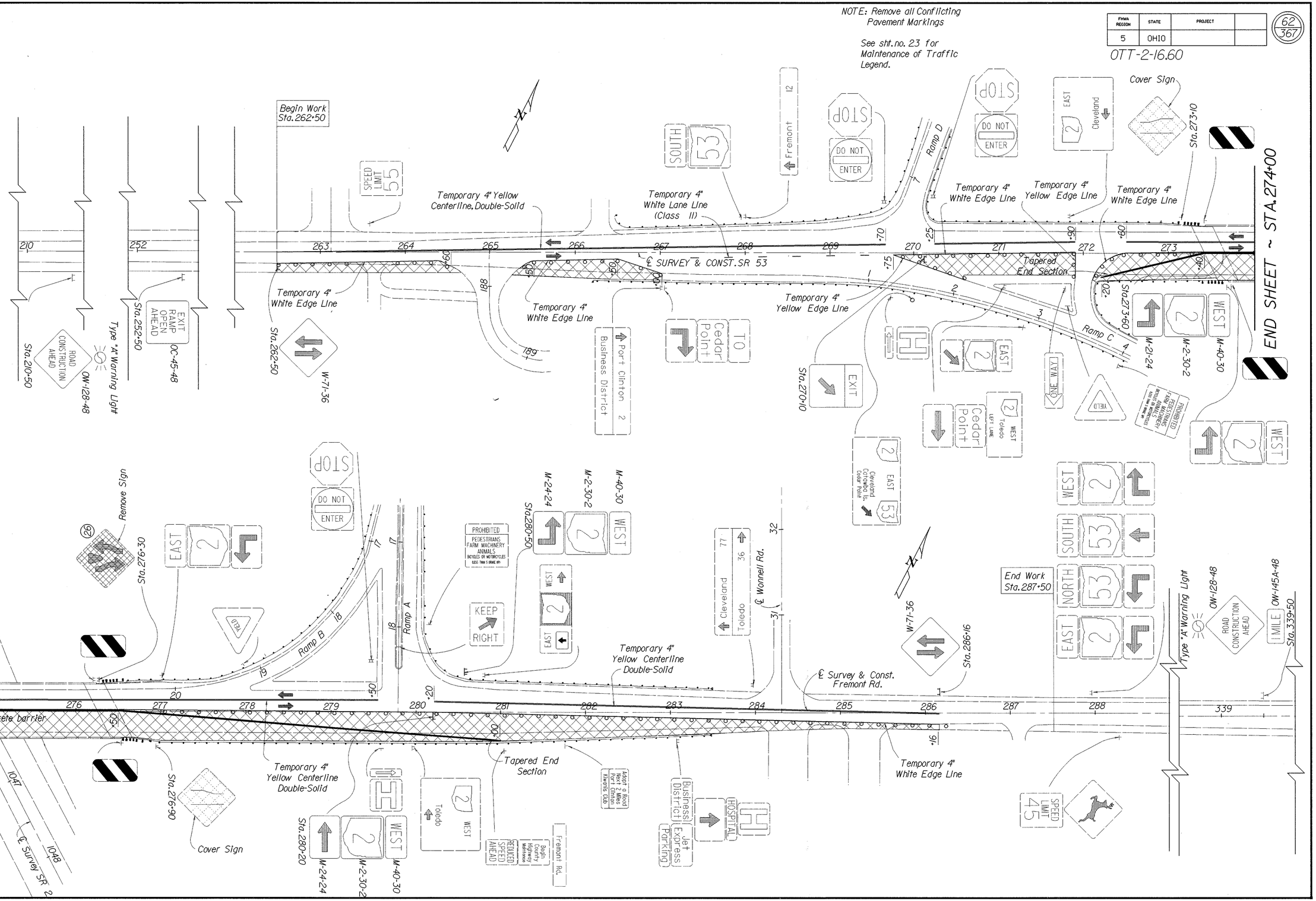


PHASE 5-B MAINTENANCE OF TRAFFIC ~ STA. 210+00 TO STA. 339+50

NOTE: Remove all Conflicting Pavement Markings

See sht.no. 23 for Maintenance of Traffic Legend.

| FHWA REGION | STATE | PROJECT | |
|---|---|---|---|
| 5 | OHIO | | |

OTT-2-16.60

63/367

Begin Work Sta.262+50

SPEED LIMIT 55

Temporary 4" White Edge Line

Temporary 4" Yellow Centerline, Double-Solid

Temporary 20" White Stop Line

Sta.262+50

W-71-36

Sta.252+50

EXIT RAMP OPEN AHEAD

OC-45-48

Type "A" Warning Light

Sta.210+50

ROAD CONSTRUCTION AHEAD

OW-128-48

℄ SURVEY & CONST. SR 53

SOUTH 53

Fremont 12

Ramp D

Sta.7+30

Sta.7+95

Sta.7+10

R-1-48

R-41B-48

DO NOT ENTER

STOP

Cover Existing "Do Not Enter" and "Stop" Signs

Tapered End Section

Cover Sign

Sta.273+10

EAST 2 Cleveland

END SHEET ~ STA.274+00

Sta.273+60

WEST 2

Ramp C

ONE WAY

YIELD

ENDORSED

Port Clinton 2 Business District

TO Cedar Point

Cleveland Cedar Point Is.

EAST 2 Cedar Point

WEST 2 Toledo LEFT LANE

Temporary 4" White Edge Line

Sta.18+50

Sta.18+90

Sta.17+60

M-21-24

M-2-30-2

M-38-30

SOUTH 53

Ramp B

Ramp A

Temporary 4" Yellow Centerline Double-Solid

Tapered End Section

Portable concrete barrier

℄ Survey SR 2

Sta.276-90

Cover Sign

PROHIBITED PEDESTRIANS FARM MACHINERY ANIMALS BICYCLES OR MOTORCYCLES LESS THAN 5 BRAKE HP

KEEP RIGHT

EAST 2 WEST

M-38-30

M-2-30-2

M-24-30

Sta.280-85

Cleveland 77

Toledo 36

℄ Wonnell Rd. 32

Temporary 20" White Stop Line

Temporary 4" Yellow Edge Line

Sta.280-20

Toledo WEST 2

Temporary 4" White Edge Line

Adopt a Road Next 2 Miles Port Clinton Kiwanis Club

REDUCED SPEED AHEAD

Begin Highway Maintenance

Fremont Rd.

Business District Jet Express Parking

HOSPITAL

℄ Survey & Const. Fremont Rd.

End Work Sta.287+50

WEST 2

SOUTH 53

NORTH 53

EAST 2

SPEED LIMIT 45

Type "A" Warning Light

ROAD CONSTRUCTION AHEAD

OW-128-48

1 MILE

OW-145A-48

Sta.339+50

BEGIN SHEET ~ STA.274+00

I:/PD/OTT AWA/OTT 2/2PHS5PT3.DGN

PHASE 5-C MAINTENANCE OF TRAFFIC ~ STA. 210+00 TO STA. 339+50

# GENERAL SUMMARY

QUANTITIES
CALC BY ALS DATE 7-17-72
CKD BY MTG DATE 9-8-95
REVISED 12-14-95

| FHWA REGION | STATE | PROJECT | |
|---|---|---|---|
| 5 | OHIO | | |

64/367

OTT-2-16.60

| SHEET NUMBER | | | | | | | | | | | | | | | | | | ITEM | ITEM EXT. | GRAND TOTAL | UNIT | DESCRIPTION | SEE SHEET NO. |
|---|---|---|---|---|---|---|---|---|---|---|---|---|---|---|---|---|---|---|---|---|---|---|---|
| 14 | 15 | 19 | 74 | 76 | 77 | 79 | 80 | 81 | 89 | 92 | 96 | 96A | 98 | | | | | | | | | | |
| | | | | | | | | | | | | | | | | | | | | | | ~ ROADWAY ~ | |
| | LUMP | | | | | | | | | | | | | | | | | 201 | 11000 | LUMP | | CLEARING AND GRUBBING | |
| | | | | 2726 | | | | | | | | | | | | | | 202 | 23000 | 2726 | SQ YD | PAVEMENT REMOVED | |
| | | | 2631 | | | | | | | | | | | | | | | 202 | 23500 | 2631 | SQ YD | WEARING COURSE REMOVED | |
| | | | | | | | | 12313 | | | | | | | | | | 202 | 30600 | 12313 | SQ YD | CONCRETE MEDIAN REMOVED | |
| | | | | | | | | 8995 | | | | | | | | | | 202 | 32000 | 8995 | LIN FT | CURB REMOVED | |
| | | | | | | | 20638 | | | | | | | | | | | 202 | 38000 | 20638 | LIN FT | GUARDRAIL REMOVED | |
| | | | | | | | 100 | | | | | | | | | | | 202 | 38200 | 100 | LIN FT | GUARDRAIL REMOVED FOR REUSE | |
| | | | | | | | 13946 | | | | | | | | | | | 202 | 38300 | 13946 | LIN FT | GUARDRAIL REMOVED, BARRIER DESIGN | |
| | | | | | | | | | | 21 | | | | | | | | 202 | 58100 | 21 | EACH | CATCH BASIN REMOVED | |
| | | | | | | | | | | 39 | | | | | | | | 202 | 58200 | 39 | EACH | INLET REMOVED | |
| | | | | | | | | | | 1 | | | | | | | | 202 | 58500 | 1 | EACH | CATCH BASIN ABANDONED | |
| | | | | 56579 | | | | | | | | | | | | | | 202 | 75000 | 56579 | LIN FT | FENCE REMOVED | |
| 2000 | | | | | 487 | 84191 | | | | | | | | | | | | 203 | 12000 | 86678 | CU YD | EXCAVATION NOT INCLUDING EMBANKMENT CONSTRUCTION | |
| | | | | | | 30390 | | 30 | | | | | | | | | | 203 | 20000 | 30420 | CU YD | EMBANKMENT | |
| | | | | | | 4757 | | | | | | | | | | | | 203 | 21001 | 4757 | CU YD | EMBANKMENT USING GRANULAR MATERIAL, AS PER PLAN | 15 |
| | | | | | | 1885 | | | | | | | | | | | | 203 | 21200 | 1885 | CU YD | EMBANKMENT USING ROCK | |
| | | | | | | 3 | | | | | | | | | | | | 203 | 45000 | 3 | HOUR | PROOF ROLLING | |
| | | | 130810 | | | | | | | | | | | | | | | 203 | 50000 | 130810 | SQ YD | SUBGRADE COMPACTION | |
| | | | | | | | | | | | | 47759 | | | | | | 203 | 55000 | 47759 | LIN FT | DITCH CLEANOUT | |
| | | | | | | | 195 | | | | | | | | | | | 203 | 60000 | 195 | STA. | LINEAR GRADING | |
| | | | 29554 | | | | | 29 | | | | | | | | | | 301 | 10002 | 29583 | CU YD | BITUMINOUS AGGREGATE BASE, AC-20 | |
| | | | | 2 | | | | | | | | | | | | | | 604 | 38500 | 2 | EACH | MONUMENT ASSEMBLY | |
| | | | | 1 | | | | | | | | | | | | | | 604 | 39500 | 1 | EACH | MONUMENT BOX ADJUSTED TO GRADE | |
| | | | | 1 | | | | | | | | | | | | | | 604 | 39600 | 1 | EACH | MONUMENT BOX RECONSTRUCTED TO GRADE | 14 |
| | | | | 15 | | | | | | | | | | | | | | 604 | 40501 | 15 | EACH | REFERENCE MONUMENT, AS PER PLAN | |
| | | | | | | | 18918 | | | | | | | | | | | 606 | 13000 | 18918 | LIN FT | GUARDRAIL, TYPE 5 | |
| | | | | | | | 100 | | | | | | | | | | | 606 | 15500 | 100 | LIN FT | GUARDRAIL, BARRIER DESIGN, TYPE 5 | |
| | | | | | | | 100 | | | | | | | | | | | 606 | 16000 | 100 | LIN FT | GUARDRAIL REBUILT | |
| | | | | | | | 2 | | | | | | | | | | | 606 | 25500 | 2 | EACH | ANCHOR ASSEMBLY, BARRIER DESIGN, TYPE A | |
| | | | | | | | 10 | | | | | | | | | | | 606 | 26000 | 10 | EACH | ANCHOR ASSEMBLY, TYPE B | |
| | | | | | | | 11 | | | | | | | | | | | 606 | 26100 | 11 | EACH | ANCHOR ASSEMBLY, TYPE E | |
| | | | | | | | 15 | | | | | | | | | | | 606 | 26500 | 15 | EACH | ANCHOR ASSEMBLY, TYPE T | |
| | | | | | | | 22 | | | | | | | | | | | 606 | 35000 | 22 | EACH | BRIDGE TERMINAL ASSEMBLY, TYPE 1 | |
| | | | | | | | 8 | | | | | | | | | | | 606 | 35100 | 8 | EACH | BRIDGE TERMINAL ASSEMBLY, TYPE 2 | |
| | | | | | | | 4 | | | | | | | | | | | 606 | 35140 | 4 | EACH | BRIDGE TERMINAL ASSEMBLY, TYPE 4 | |
| | | | | 55788 | | | | | | | | | | | | | | 607 | 15000 | 55788 | LIN FT | FENCE, TYPE 47 | |

I:/pd/ottawa/ott2/ot6SUM.dgn

# GENERAL SUMMARY

QUANTITIES
CALC BY ALS DATE 7-17-72
CKD BY MTG DATE 9-8-95
REVISED 12-14-95

| FHWA REGION | STATE | PROJECT | |
|---|---|---|---|
| 5 | OHIO | | |

65
367

OTT-2-16.60

| SHEET NUMBER | | | | | | | | | | | | | | | | | ITEM | ITEM EXT. | GRAND TOTAL | UNIT | DESCRIPTION | SEE SHEET NO. |
|---|---|---|---|---|---|---|---|---|---|---|---|---|---|---|---|---|---|---|---|---|---|---|
| 14 | 15 | 19 | 74 | 76 | 77 | 79 | 80 | 81 | 89 | 92 | 96 | 98 | 96A | | | | | | | | | |
| | | | | | | | | 1635 | | | | | | | | | 609 | 12000 | 1635 | LIN FT | COMBINATION CURB AND GUTTER, TYPE 2 | |
| | | | | | | | | 807 | | | | | | | | | 609 | 14000 | 807 | LIN FT | CURB, TYPE 2-A | |
| | | | | | | | | 399 | | | | | | | | | 609 | 26000 | 399 | LIN FT | CURB, TYPE 6 | |
| | | | | | | | 12553 | | | | | | | | | | 622 | 23404 | 12553 | LIN FT | CONCRETE BARRIER, TYPE B-50 | |
| | | | | | | | 296 | | | | | | | | | | 622 | 24000 | 296 | LIN FT | CONCRETE BARRIER, TYPE D | |
| 10 | | | | | | | | | | | | | | | | | 625 | 32000 | 10 | EACH | GROUND ROD | |
| 2 | | | | | | | | | | | | | | | | | SPECIAL | 69010200 | 2 | EACH | IMPACT ATTENUATOR, G.R.E.A.T. TYPE MODEL NO. 206206SF8Y, BI-DIRECTIONAL | 14 |
| | | | | | 6 | | | | | | | | | | | | SPECIAL | 69050100 | 6 | EACH | MAILBOX SUPPORT SYSTEM, SINGLE | 13 |
| | | | | | | | | | | | | | | | | | | | | | ~ EROSION CONTROL ~ | |
| 6157 | | | | | | | | | | | | | | | | | 207 | 10000 | 6157 | SQ YD | TEMPORARY SEEDING AND MULCHING | |
| | | | | | | | | | | | | 1305 | | | | | 207 | 30000 | 1305 | LIN FT | FILTER FABRIC FENCE | |
| 82 | | | | | | | | | | | | 120 | | | | | 207 | 70000 | 202 | EACH | STRAW OR HAY BALES | |
| | 20 | | | | | 3930 | | | | 25.5 | | | | | | | 601 | 32200 | 3976 | CU YD | ROCK CHANNEL PROTECTION, TYPE C WITH FILTER | |
| | | | | | | 1600 | | | | | | | 147834 | | | | 659 | 10000 | 149434 | SQ YD | SEEDING AND MULCHING | |
| 1539 | | | | | | | | | | | | | | | | | 659 | 14000 | 1539 | SQ YD | REPAIR SEEDING AND MULCHING | |
| 2.4 | | | | | | | | | | | | | 13.4 | | | | 659 | 20000 | 16 | TON | COMMERCIAL FERTILIZER | |
| 132 | | | | | | | | | | | | | 320 | | | | 659 | 35000 | 452 | M GAL | WATER | |
| | | | | | | 1399 | | | | | | | | | | | 660 | 30000 | 1399 | SQ YD | SODDING | |
| | | | | | | 30225 | | | | | | | | | | | 670 | 41000 | 30225 | SQ YD | SLOPE EROSION PROTECTION | |
| | | | | | | | | | | | | | | | | | | | | | ~ DRAINAGE ~ | |
| | | | | | | | | | | 13.7 | | | | | | | 602 | 20000 | 13.7 | CU YD | CONCRETE MASONRY | |
| | | | | | | | | | | 544 | | | | | | | 603 | 00900 | 544 | LIN FT | 6" CONDUIT, TYPE B | |
| | | | | | | | | | | | 906 | | | | | | 603 | 00900 | 906 | LIN FT | 6" CONDUIT, TYPE B, 707.17, NONPERFORATED, ASTM D 3034 SDR 35, SS 931 OR SS 944 | |
| | | | | | | | | | | 4 | | | | | | | 603 | 01100 | 4 | LIN FT | 6" CONDUIT, TYPE C | |
| | | | | | | | | | | | 5153 | | | | | | 603 | 01500 | 5153 | LIN FT | 6" CONDUIT, TYPE F, 707.17, NONPERFORATED, ASTM D 3034 SDR 35, SS 931 OR SS 944 | |
| | | | | | | | | | | 64 | | | | | | | 603 | 01800 | 64 | LIN FT | 8" CONDUIT, TYPE B, 706.08 | |
| | 200 | | | | | | | | | | | | | | | | 603 | 02600 | 200 | LIN FT | 8" CONDUIT, TYPE F | |
| | | | | | | | | | | 40 | | | | | | | 603 | 03100 | 40 | LIN FT | 10" CONDUIT, TYPE B, 706.08 | |
| | 200 | | | | | | | | | | | | | | | | 603 | 03700 | 200 | LIN FT | 10" CONDUIT, TYPE F | |
| | | | | | | | | | | 412 | | | | | | | 603 | 04400 | 412 | LIN FT | 12" CONDUIT, TYPE B, 706.02 | |
| | | | | | | | | | | 216 | | | | | | | 603 | 04600 | 216 | LIN FT | 12" CONDUIT, TYPE C, 706.02 | |
| | 200 | | | | | | | | | | | | | | | | 603 | 05100 | 200 | LIN FT | 12" CONDUIT, TYPE E | |
| | 200 | | | | | | | | | | | | | | | | 603 | 05200 | 200 | LIN FT | 12" CONDUIT, TYPE F | |
| | | | | | | | | | | 1027 | | | | | | | 603 | 05200 | 1027 | LIN FT | 12" CONDUIT, TYPE F, 707.05, TYPE C | |
| | 200 | | | | | | | | | | | | | | | | 603 | 05900 | 200 | LIN FT | 15" CONDUIT, TYPE B | |
| | | | | | | | | | | 106 | | | | | | | 603 | 05900 | 106 | LIN FT | 15" CONDUIT, TYPE B, 706.02 | |
| | | | | | | | | | | 128 | | | | | | | 603 | 06100 | 128 | LIN FT | 15" CONDUIT, TYPE C | |

I:/pd/ottawa/ott2/of6SUM.dgn

# GENERAL SUMMARY

** WILL BE DESCRIBED IN BRIDGE NOTES

QUANTITIES
CALC BY ALS DATE 7-17-72
CKD BY MTG DATE 9-8-95
REVISED 12-14-95

| FHWA REGION | STATE | PROJECT | |
|---|---|---|---|
| 5 | OHIO | | |

66/367

OTT-2-16.60

| SHEET NUMBER | | | | | | | | | | | | | | | | | | ITEM | ITEM EXT. | GRAND TOTAL | UNIT | DESCRIPTION | SEE SHEET NO. |
|---|---|---|---|---|---|---|---|---|---|---|---|---|---|---|---|---|---|---|---|---|---|---|---|
| 14 | 15 | 19 | 74 | 76 | 77 | 79 | 80 | 81 | 89 | 92 | 96 | 96A | 98 | | | | | | | | | | |
| | | | | | | | | | | 401 | | | | | | | | 603 | 10400 | 401 | LIN FT | 24" CONDUIT, TYPE B | |
| | | | | | | | | | | 24 | | | | | | | | 603 | 10400 | 24 | LIN FT | 24" CONDUIT, TYPE B, 706.02 | |
| | | | | | | | | | | 8 | | | | | | | | 603 | 10600 | 8 | LIN FT | 24" CONDUIT, TYPE C, 706.02 | |
| | | | | | | | | | | | 88 | | | | | | | SPECIAL | 60436600 | 88 | EACH | PRECAST REINFORCED CONCRETE OUTLET | 233 |
| | | | | | | | | | | 16 | | | | | | | | 604 | 00800 | 16 | EACH | CATCH BASIN, NO. 3A | |
| | | | | | | | | | | 2 | | | | | | | | 604 | 01201 | 2 | EACH | CATCH BASIN, NO. 4, AS PER PLAN | 235 |
| | | | | | | | | | | 4 | | | | | | | | 604 | 02000 | 4 | EACH | CATCH BASIN, NO. 6 | |
| | | | | | | | | | | 24 | | | | | | | | 604 | 02801 | 24 | EACH | CATCH BASIN, NO.8, AS PER PLAN | 235 |
| | | | | | | | | | | 1 | | | | | | | | 604 | 04500 | 1 | EACH | CATCH BASIN, NO. 2-2B | |
| | | | | | | | | | | 3 | | | | | | | | 604 | 04900 | 3 | EACH | CATCH BASIN, NO. 2-3 | |
| | | | | | | | | | | 32 | | | | | | | | 604 | 14602 | 32 | EACH | INLET, NO. 3B50 | |
| | | | | | | | | | | | 139095 | | | | | | | 605 | 05101 | 139095 | LIN FT | 4" SHALLOW PIPE UNDERDRAIN, 707.15, AS PER PLAN, 707.15 | 233 |
| | | | | | | | | | | | | | | | | | | | | | | ~ PAVEMENT ~ | |
| | | | | | | | | | 31714 | | | | | | | | | 255 | 10000 | 31714 | SQ YD | FULL DEPTH PAVEMENT REMOVAL AND RIGID REPLACEMENT, CLASS C | |
| | | | | | | | | | 1038 | | | | | | | | | 255 | 10100 | 1038 | SQ YD | FULL DEPTH PAVEMENT REMOVAL AND RIGID REPLACEMENT, CLASS FS | |
| | | | | | | | | | 92271 | | | | | | | | | 255 | 20000 | 92271 | LIN FT | FULL DEPTH PAVEMENT SAWING | |
| 2000 | | | 24319 | | 354 | | | | | | | | | | | | | 304 | 20000 | 26673 | CU YD | AGGREGATE BASE | |
| | | | 6650 | | | | | | | | | | | | | | | 305 | 13000 | 6650 | SQ YD | 9" CONCRETE BASE | |
| | | | | | 78 | | | | | | | | | | | | | 402 | 20010 | 78 | CU YD | ASPHALT CONCRETE, AC-20 (DRIVEWAYS) | |
| | | | | | 55 | | | | | | | | | | | | | 404 | 25000 | 56 | CU YD | ASPHALT CONCRETE, AC-20 (DRIVEWAYS) | |
| | | | 11324 | | | | | | | | | | | | | | | 407 | 10000 | 11324 | GALLON | TACK COAT | |
| | | | | | 638 | | | | | | | | | | | | | 408 | 10000 | 638 | GALLON | BITUMINOUS PRIME COAT | |
| | | | | | | | | | 80454 | | | | | | | | | 413 | 14000 | 80454 | LIN FT | SAWING AND SEALING ASPHALT CONCRETE PAVEMENT JOINTS, 705.04 | 14 |
| | | | 22719 | | | | | | | | | | | | | | | 446 | 01200 | 22719 | CU YD | ASPHALT CONCRETE INTERMEDIATE COURSE, TYPE 2, AC-20 | |
| | | | 11821 | | | | | | | | | | | | | | | 446 | 01400 | 11821 | CU YD | ASPHALT CONCRETE SURFACE COURSE, TYPE 1, AC-20 | |
| | | | | | | | 603 | | | | | | | | | | | 448 | 14101 | 603 | CU YD | ASPHALT CONCRETE INTERMEDIATE COURSE, TYPE 1, (UNDER GUARDRAIL), AS PER PLAN | 13 |
| | | | 17102 | | | | | | | | | | | | | | | 451 | 14000 | 17102 | SQ YD | 9" REINFORCED CONCRETE PAVEMENT | |
| | | | 2899 | | | | | | | | | | | | | | | 611 | 25001 | 2899 | SQ YD | REINFORCED CONCRETE APPROACH SLAB (T=15"), AS PER PLAN | ** |
| | | | | | | | | 3 | | | | | | | | | | 612 | 14000 | 3 | SQ YD | 6" CONCRETE TRAFFIC ISLAND | |
| | | | | | | | | 281 | | | | | | | | | | 612 | 42000 | 281 | SQ YD | CONCRETE MEDIAN | |
| | | | 2370 | | | | | | | | | | | | | | | 617 | 10100 | 2370 | CU YD | COMPACTED AGGREGATE, TYPE A | |

I:/pd/ottawa/oh12/ohGSUM.dgn

# GENERAL SUMMARY

* SEE PROPOSAL NOTE

QUANTITIES
CALC BY ALS DATE 7-17-72
CKD BY MTG DATE 9-8-95
REVISED 12-14-95

| FHWA REGION | STATE | PROJECT | |
|---|---|---|---|
| 5 | OHIO | | |

67/367

OTT-2-16.60

| SHEET NUMBER | | | | | | | | | | | | | | | | | | ITEM | ITEM EXT. | GRAND TOTAL | UNIT | DESCRIPTION | SEE SHEET NO. |
|---|---|---|---|---|---|---|---|---|---|---|---|---|---|---|---|---|---|---|---|---|---|---|---|
| 14 | 15 | 19 | 74 | 76 | 77 | 79 | 80 | 81 | 89 | 92 | 96 | 96A | 98 | | | | | | | | | | |
| | | | | | | | | | | | | | | | | | | | | | | ~ MAINTAINING TRAFFIC ~ | |
| | | 200 | | | | | | | | | | | | | | | | 614 | 11100 | 200 | HRS. | LAW ENFORCEMENT OFFICER WITH PATROL CAR | 18 |
| | | 1 | | | | | | | | | | | | | | | | 614 | 12350 | 1 | EACH | TEMPORARY IMPACT ATTENUATOR, (G.R.E.A.T. TYPE) | 18 |
| | | | | | | | | | | | | | | | | | | | | | | MODEL NO. 206206NF6GCZ, BIDIRECTIONAL | |
| | | 1 | | | | | | | | | | | | | | | | 614 | 12360 | 1 | EACH | TEMPORARY IMPACT ATTENUATOR, (REPLACEMENT), | 18 |
| | | | | | | | | | | | | | | | | | | | | | | G.R.E.A.T. TYPE, MODEL NO. 206206NF6GCZ, BIDIRECTIONAL | |
| | | 89 | | | | | | | | | | | | | | | | 614 | 12460 | 89 | EACH | WORK ZONE MARKING SIGN | |
| | | 92 | | | | | | | | | | | | | | | | 614 | 12470 | 92 | EACH | WORK ZONE SPEED LIMIT SIGN | |
| | | 32 | | | | | | | | | | | | | | | | 614 | 12480 | 32 | EACH | DOUBLE FINES IN WORK ZONES SIGNS | |
| | | 200 | | | | | | | | | | | | | | | | SPECIAL | 61412500 | 200 | SQ FT | REPLACEMENT SIGNS | 17 |
| | | 100 | | | | | | | | | | | | | | | | SPECIAL | 61412600 | 100 | EACH | REPLACEMENT DRUMS | 17 |
| | | 4 | | | | | | | | | | | | | | | | 614 | 12756 | 4 | EACH | TEMPORARY CROSSOVER LIGHTING SYSTEM | |
| | | 451 | | | | | | | | | | | | | | | | 614 | 12800 | 451 | EACH | TEMPORARY RAISED PAVEMENT MARKER | |
| | | 2267 | | | | | | | | | | | | | | | | 614 | 13300 | 2267 | EACH | BARRIER REFLECTOR, TYPE B | |
| | | 1044 | | | | | | | | | | | | | | | | 614 | 13350 | 1044 | EACH | OBJECT MARKER | |
| | | 3 | | | | | | | | | | | | | | | | 614 | 18500 | 3 | EACH | PORTABLE CHANGEABLE MESSAGE SIGN | |
| | | .06 | | | | | | | | | | | | | | | | 614 | 20400 | 0.06 | MILE | TEMPORARY LANE LINE, CLASS II | |
| | | .83 | | | | | | | | | | | | | | | | 614 | 21000 | 0.83 | MILE | TEMPORARY CENTER LINE, CLASS I | |
| | | 39.23 | | | | | | | | | | | | | | | | 614 | 22000 | 39.23 | MILE | TEMPORARY EDGE LINE, CLASS I | |
| | | 550 | | | | | | | | | | | | | | | | 614 | 23000 | 550 | LIN FT | TEMPORARY CHANNELIZING LINE, CLASS I | |
| | | 60 | | | | | | | | | | | | | | | | 614 | 26000 | 60 | LIN FT | TEMPORARY STOP LINE, CLASS I | |
| | | 2 | | | | | | | | | | | | | | | | 614 | 30000 | 2 | EACH | TEMPORARY LANE ARROW, CLASS I | |
| | | 1 | | | | | | | | | | | | | | | | 614 | 31650 | 1 | EACH | TEMPORARY WORD ON PAVEMENT, 96", CLASS I, 642 PAINT | |
| | | | | | | | | | | | | | | | | | | 615 | 10000 | LUMP | | TEMPORARY ROAD | |
| | | 38162 | | | | | | | | | | | | | | | | 615 | 20000 | 38162 | SQ YD | TEMPORARY PAVEMENT, CLASS A | |
| | | 200 | | | | | | | | | | | | | | | | 616 | 10000 | 200 | M GAL | WATER | |
| | | 20 | | | | | | | | | | | | | | | | 616 | 20000 | 20 | TON | CALCIUM CHLORIDE | |
| | | 28540 | | | | | | | | | | | | | | | | 622 | 40020 | 28540 | LIN FT | PORTABLE CONCRETE BARRIER, 32" | |
| | | 6130 | | | | | | | | | | | | | | | | 622 | 40030 | 6130 | LIN FT | PORTABLE CONCRETE BARRIER, 50" | |
| | | | | | | | | | | | | | | | | | | 614 | 11000 | LUMP | | MAINTAINING TRAFFIC | |
| | | | | | | | | | | | | | | | | | | 619 | 15020 | LUMP | | FIELD OFFICE, TYPE C | |
| | | | | | | | | | | | | | | | | | | SPECIAL | 61925010 | LUMP | | SPECIAL - COMPUTER EQUIPMENT FOR TYPE B OR C OFFICE | ✳ |
| | | | | | | | | | | | | | | | | | | 623 | 10000 | LUMP | | CONSTRUCTION LAYOUT STAKES | |
| | | | | | | | | | | | | | | | | | | 624 | 10000 | LUMP | | MOBILIZATION | |
| | | | | | | | | | | | | | | | | | | | | | | **BRIDGE QUANITIES FOUND ON SHEETS 265, 275, 292, 308, 317, 340, & 351** | |
| | | | | | | | | | | | | | | | | | | | | | | **TRAFFIC CONTROL QUANITIES FOUND ON SHEETS 244** | |
| | | | | | | | | | | | | | | | | | | | | | | **LIGHTING SUMMARY FOUND ON SHEET 335** | |

I:/pd/ottawa/ott2/ot6SUM.dgn

QUANTITIES
CALC BY DAB DATE 9-14-94
CKD BY MTG DATE 8-23-95

| FHWA REGION | STATE | PROJECT | |
|---|---|---|---|
| 5 | OHIO | | |

68/367

OTT-2-16.60

# PAVEMENT AREA TABLE

| SHEET NO. | STATION FROM | STATION TO | LOCATION | SIDE | LINEAL FEET | ITEM 203 SUBGRADE COMPACTION WIDTH LF. | ITEM 203 SUBGRADE COMPACTION AREA S.F. | ITEM 301 9" BITUMINOUS AGGREGATE BASE AC-20 WIDTH LF. | ITEM 301 9" BITUMINOUS AGGREGATE BASE AC-20 AREA S.F. | ITEM 304 6" AVG. AGGREGATE BASE WIDTH LF. | ITEM 304 6" AVG. AGGREGATE BASE AREA S.F. | ITEM 304 9" AVG. AGGREGATE BASE WIDTH LF. | ITEM 304 9" AVG. AGGREGATE BASE AREA S.F. | ITEM 407 TACK COAT @ 0.05 GAL/S.Y. WIDTH LF. | ITEM 407 TACK COAT @ 0.05 GAL/S.Y. AREA S.F. |
|---|---|---|---|---|---|---|---|---|---|---|---|---|---|---|---|
| 99 | 876+25 | 878+00 | S.R.2 | LT&RT | 175 | 88 | 15400 | 20 | 3500 | | | 88 | 15400 | | |
| 99-101 | 879+16.53 | 911+30 | S.R.2 | LT&RT | 3213.47 | 36 | 115685 | 20 | 64269 | 36 | 115685 | | | 64 | 205662 |
| 101 | 911+30 | 913+00 | S.R.2 | LT&RT | 170 | 35 | 5950 | 35 | 5950 | 35 | 5950 | | | 50 | 8500 |
| 101 | 913+00 | 913+50 | S.R.2 | LT&RT | 50 | 36 | 1800 | 33 | 1650 | 36 | 1800 | | | 50 | 2500 |
| 101-103 | 913+50 | 932+49.05 | S.R.2 | LT&RT | 1899.05 | 36 | 68366 | 33 | 62669 | 20 | 37981 | 16 | 30385 | 48 | 91154 |
| 103 | 935+27.36 | 937+55.41 | S.R.2 | LT&RT | 228.05 | 90 | 20525 | | | 74 | 16876 | 16 | 3649 | | |
| 103-104 | 940+06.74 | 948+38.22 | S.R.2 | LT | 831.48 | 18 | 14967 | 16.5 | 13719 | 10 | 8315 | 8 | 6652 | 24 | 19956 |
| 104 | 948+38.22 | 956+20 | S.R.2 | LT | 781.78 | 8 | 6254 | 6.5 | 5082 | | | 8 | 6254 | 24 | 18762 |
| 104-105 | 956+20 | 960+25.77 | S.R.2 | LT | 405.77 | 18 | 7304 | 16.5 | 6695 | 10 | 4058 | 8 | 3246 | 24 | 9738 |
| 103-104 | 940+06.74 | 944+15 | S.R.2 | RT | 408.26 | 18 | 7349 | 16.5 | 6736 | 10 | 4083 | 8 | 3266 | 24 | 9798 |
| | | | | | | | | | | | | | | | |
| 104-105 | 944+15 | 960+25.77 | S.R.2 | RT | 1610.77 | 8 | 12886 | 6.5 | 10470 | | | 8 | 12886 | 24 | 38658 |
| 105 | 960+97.77 | 970+72.49 | S.R.2 | LT&RT | 974.72 | 36 | 35090 | 33 | 32166 | 20 | 19494 | 16 | 15596 | 48 | 46786 |
| 106-109 | 976+30.99 | 1019+04.91 | S.R.2 | LT&RT | 4273.92 | 36 | 153861 | 33 | 141039 | 20 | 85478 | 16 | 68383 | 48 | 205148 |
| 109-110 | 1019+04.91 | 1035+55 | S.R.2 | LT | 1650.09 | 8 | 13200 | 6.5 | 10725 | | | 8 | 13201 | 24 | 39602 |
| 110 | 1035+55 | 1041+05.06 | S.R.2 | LT | 550.06 | 18 | 9901 | 16.5 | 9076 | 10 | 5500 | 8 | 4400 | 24 | 13201 |
| 109-110 | 1019+04.91 | 1029+50.97 | S.R.2 | RT | 1046.06 | 18 | 18829 | 16.5 | 17260 | 10 | 10461 | 8 | 8368 | 24 | 25105 |
| 110 | 1029+50.97 | 1037+49.09 | S.R.2 | RT | 798.12 | 8 | 6385 | 6.5 | 5188 | | | 8 | 6385 | 24 | 19155 |
| 110 | 1037+49.09 | 1041+05.06 | S.R.2 | RT | 355.97 | 18 | 6408 | 16.5 | 5874 | 10 | 3560 | 8 | 2848 | 24 | 8543 |
| 110-111 | 1041+05.06 | 1045+25.68 | S.R.2 | LT | 420.62 | 22 | 9254 | 20.5 | 8623 | 22 | 9254 | | | 24 | 10095 |
| 111 | 1045+25.68 | 1049+50 | S.R.2 | LT | 424.32 | 14 | 5940 | 12.5 | 5304 | 14 | 5940 | | | 24 | 10184 |
| | | | | | | | | | | | | | | | |
| 110-111 | 1041+05.06 | 1049+50 | S.R.2 | RT | 844.94 | 34 | 28728 | 32.5 | 27461 | 34 | 28728 | | | 24 | 20279 |
| 111 | 1049+50 | 1051+30 | S.R.2 | RT | 180 | 10 | 1800 | 14 | 2520 | 14 | 2520 | | | 24 | 4320 |
| 111-112 | 1051+30 | 1064+50 | S.R.2 | RT | 1320 | | | 4 | 5280 | 4 | 5280 | | | 24 | 31680 |
| 112 | 1064+50 | 1069+39.15 | S.R.2 | RT | 489.15 | 14 | 6848 | 14 | 6848 | 14 | 6848 | | | 24 | 11740 |
| 111 | 1049+50 | 1053+20 | S.R.2 | LT | 370 | | | 4 | 1480 | 4 | 1480 | | | 24 | 8880 |
| 111-112 | 1053+20 | 1069+39.15 | S.R.2 | LT | 1619.15 | 14 | 22668 | 14 | 22668 | 14 | 22668 | | | 24 | 38860 |
| 112-114 | 1069+39.15 | 1094+86.19 | S.R.2 | LT&RT | 2547.04 | 28 | 71317 | 28 | 71317 | 28 | 71317 | | | 48 | 122258 |
| 114-115 | 1094+86.19 | 1105+10.4 | S.R.2 | LT&RT | 1024.21 | 28 | 28678 | 28 | 28678 | 28 | 28678 | | | 48 | 49162 |
| 115 | 1105+10.4 | 1107+27.66 | S.R.2 | LT&RT | 217.26 | 28 | 6083 | 28 | 6083 | 28 | 6083 | | | 48 | 10428 |
| 115-116 | 1107+27.66 | 1112+96.88 | S.R.2 | LT&RT | 569.22 | 28 | 15938 | 28 | 15938 | 28 | 15938 | | | 48 | 27322 |
| | | | | | | | | | | | | | | | |
| 116-118 | 1112+96.88 | 1147+96.70 | S.R.2 | LT&RT | 3499.82 | 28 | 97995 | 28 | 97995 | 28 | 97995 | | | 48 | 167991 |
| 118-119 | 1147+96.70 | 1154+96.84 | S.R.2 | LT&RT | 700.14 | 28 | 19604 | 28 | 19604 | 28 | 19604 | | | 48 | 33606 |
| 119 | 1154+96.84 | 1156+26.87 | S.R.2 | LT&RT | 130.03 | 28 | 3641 | 28 | 3641 | 28 | 3641 | | | 48 | 6241 |
| 119-121 | 1156+26.87 | 1189+19.72 | S.R.2 | LT&RT | 3292.85 | 28 | 92200 | 28 | 92200 | 28 | 92200 | | | 48 | 158056 |
| 121-123 | 1189+19.72 | 1220+77.35 | S.R.2 | LT&RT | 3157.63 | 28 | 88414 | 28 | 88414 | 28 | 88414 | | | 48 | 151566 |
| 124 | 1226+63.15 | 1230+52.79 | S.R.2 | LT&RT | 389.64 | 28 | 10910 | 28 | 10910 | 28 | 10910 | | | 48 | 18703 |
| 124 | 1230+52.79 | 1230+80.99 | S.R.2 | LT&RT | 28.20 | 28 | 790 | 28 | 790 | 28 | 790 | | | 48 | 1354 |
| 124 | 1230+80.99 | 1235+60 | S.R.2 | LT&RT | 479.01 | 28 | 13412 | 28 | 13412 | 28 | 13412 | | | 48 | 22992 |
| | | | | | | | | | | | | | | | |
| | | | | | | | | | | | | | | | |
| | | | | | | | | | | | | | | | |
| 125 | 262+50 | 268+44 | S.R.53 | LT&RT | 594 | | | | | | | | | 46.5 | 27621 |
| 125 | 268+44 | 273+67.3 | S.R.53 | LT&RT | 523.3 | | | | | | | | | 69 | 36108 |
| 125-126 | 276+27.4 | 280+97 | S.R.53 | LT&RT | 469.6 | | | | | | | | | 69 | 32402 |
| 126 | 280+97 | 287+50 | S.R.53 | LT&RT | 653 | | | | | | | | | 46.5 | 30365 |
| | | | | | | | | | | | | | | | |
| | | | | | | | | | | | | | | | |
| | | | | | | | | | | | | | | | |
| | | | | | | | | | | | | | | | |
| TOTALS TO PAVEMENT CALCULATIONS (SHEET 74 ) | | | | | | | 1044380 | | 931234 | | 850941 | | 200919 | | 1794481 |

I:/pd/ottawa/ott2/of2pat.dgn-1/4

# PAVEMENT AREA TABLE

QUANTITIES
CALC BY DAB DATE 9-14-94
CKD BY MTG DATE 8-23-95

| FHWA REGION | STATE | PROJECT | |
|---|---|---|---|
| 5 | OHIO | | |

69/367

OTT-2-16.60

| SHEET NO. | STATION FROM | STATION TO | LOCATION | SIDE | LINEAL FEET | ITEM 202 WEARING COURSE REMOVED WIDTH LF. | ITEM 202 WEARING COURSE REMOVED AREA S.F. | ITEM 305 9" CONCRETE BASE WIDTH LF. | ITEM 305 9" CONCRETE BASE AREA S.F. | | | ITEM 446 1.25" ASPHALT CONCRETE AC-20 SURFACE COURSE TYPE 1 WIDTH LF. | ITEM 446 1.25" ASPHALT CONCRETE AC-20 SURFACE COURSE TYPE 1 AREA S.F. | ITEM 446 2.25" ASPHALT CONCRETE AC-20 INTERMED. COURSE TYPE 2 WIDTH LF. | ITEM 446 2.25" ASPHALT CONCRETE AC-20 INTERMED. COURSE TYPE 2 AREA S.F. | ITEM 446 3.8" AVG. ASPHALT CONCRETE INTERMED. COURSE AC-20 TYPE 2 WIDTH LF. | ITEM 446 3.8" AVG. ASPHALT CONCRETE INTERMED. COURSE AC-20 TYPE 2 AREA S.F. | | | ITEM 451 9" REINFORCED CONCRETE WIDTH LF. | ITEM 451 9" REINFORCED CONCRETE AREA S.F. | ITEM 617 COMPACTED AGGREGATE TYPE A WIDTH LF. | ITEM 617 COMPACTED AGGREGATE TYPE A AREA S.F. | | | | |
|---|---|---|---|---|---|---|---|---|---|---|---|---|---|---|---|---|---|---|---|---|---|---|---|---|---|---|---|---|
| 99 | 876+25 | 878+00 | S.R.2 | LT&RT | 175 | | | | | | | | | | | | | | | 67.75 | 11856 | | | | | | |
| 99-101 | 879+16.53 | 911+30 | S.R.2 | LT&RT | 3213.47 | | | 16 | 51416 | | | 84 | 269931 | 84 | 269931 | 34 | 109258 | | | | | 8 | 25708 | | | | |
| 100 | | Lake Shore Drive | S.R.2 | | | | 2872 | | | | | | | | | | | | | | | | | | | | |
| 101 | 911+30 | 913+00 | S.R.2 | LT&RT | 170 | | | | | | | 84 | 14280 | 84 | 14280 | | | | | | | 8 | 1360 | | | | |
| 101 | 913+00 | 913+50 | S.R.2 | LT&RT | 50 | | | | | | | 81 | 4050 | 81 | 4050 | | | | | | | 8 | 400 | | | | |
| 101-103 | 913+50 | 932+49.05 | S.R.2 | LT&RT | 1899.05 | | | | | | | 81 | 153823 | 81 | 153823 | | | | | | | 8 | 15192 | | | | |
| 103 | 935+27.36 | 937+55.41 | S.R.2 | LT&RT | 228.05 | | | 37 | 8438 | | | | | | | | | | | 48 | 10946 | | | | | | |
| 103-104 | 940+06.74 | 948+38.22 | S.R.2 | LT | 831.48 | | | | | | | 40.5 | 33675 | 40.5 | 33675 | | | | | | | 4 | 3326 | | | | |
| 104 | 948+38.22 | 956+20 | S.R.2 | LT | 781.78 | | | | | | | 30.5 | 23844 | 30.5 | 23844 | | | | | | | | | | | | |
| 104-105 | 956+20 | 960+25.77 | S.R.2 | LT | 405.77 | | | | | | | 40.5 | 16439 | 40.5 | 16439 | | | | | | | 4 | 1624 | | | | |
| 103-104 | 940+06.74 | 944+15 | S.R.2 | RT | 408.26 | | | | | | | 40.5 | 16535 | 40.5 | 16535 | | | | | | | 4 | 1633 | | | | |
| 104-105 | 944+15 | 960+25.77 | S.R.2 | RT | 1610.77 | | | | | | | 30.5 | 49128 | 30.5 | 49128 | | | | | | | | | | | | |
| 105 | 960+97.77 | 970+72.49 | S.R.2 | LT&RT | 974.72 | | | | | | | 81 | 78952 | 81 | 78952 | | | | | | | 8 | 7798 | | | | |
| 106-109 | 976+30.99 | 1019+04.91 | S.R.2 | LT&RT | 4273.92 | | | | | | | 81 | 346188 | 81 | 346188 | | | | | | | 8 | 34191 | | | | |
| 109-110 | 1019+04.91 | 1035+55 | S.R.2 | LT | 1650.09 | | | | | | | 30.5 | 50328 | 30.5 | 50328 | | | | | | | | | | | | |
| 110 | 1035+55 | 1041+05.06 | S.R.2 | LT | 550.06 | | | | | | | 40.5 | 22277 | 40.5 | 22277 | | | | | | | 4 | 2200 | | | | |
| 109-110 | 1019+04.91 | 1029+50.97 | S.R.2 | RT | 1046.06 | | | | | | | 40.5 | 42365 | 40.5 | 42365 | | | | | | | 4 | 4184 | | | | |
| 110 | 1029+50.97 | 1037+49.09 | S.R.2 | RT | 798.12 | | | | | | | 30.5 | 24342 | 30.5 | 24342 | | | | | | | | | | | | |
| 110 | 1037+49.09 | 1041+05.06 | S.R.2 | RT | 355.94 | | | | | | | 40.5 | 14416 | 40.5 | 14416 | | | | | | | 4 | 1424 | | | | |
| 110-111 | 1041+05.06 | 1045+25.68 | S.R.2 | LT | 420.62 | | | | | | | 46 | 19349 | 46 | 19349 | | | | | | | 4 | 1682 | | | | |
| 111 | 1045+25.68 | 1049+50 | S.R.2 | LT | 424.32 | | | | | | | 36 | 15275 | 36 | 15275 | | | | | | | | | | | | |
| 111 | 1041+05.06 | 1049+50 | S.R.2 | RT | 844.94 | | | | | | | 46 | 38867 | 46 | 38867 | | | | | | | 4 | 3380 | | | | |
| 111 | 1049+50 | 1051+30 | S.R.2 | RT | 180 | | | | | | | 38 | 6840 | 38 | 6840 | | | | | | | 4 | 720 | | | | |
| 111-112 | 1051+30 | 1064+50 | S.R.2 | RT | 1320 | | | | | | | 28 | 36960 | 28 | 36960 | | | | | | | 4 | 5280 | | | | |
| 112 | 1064+50 | 1069+39.15 | S.R.2 | RT | 489.15 | | | | | | | 38 | 18588 | 38 | 18588 | | | | | | | 8 | 3913 | | | | |
| 111 | 1049+50 | 1053+20 | S.R.2 | LT. | 370 | | | | | | | 28 | 10360 | 28 | 10360 | | | | | | | 4 | 1480 | | | | |
| 111-112 | 1053+20 | 1069+39.15 | S.R.2 | LT. | 1619.15 | | | | | | | 38 | 61528 | 38 | 61528 | | | | | | | 8 | 12953 | | | | |
| 112-114 | 1069+39.15 | 1094+86.19 | S.R.2 | LT&RT | 2547.04 | | | | | | | 76 | 193575 | 76 | 193575 | | | | | | | 16 | 40753 | | | | |
| 114-115 | 1094+86.19 | 1105+10.4 | S.R.2 | LT&RT | 1024.21 | | | | | | | 76 | 77840 | 76 | 77840 | | | | | | | 16 | 16387 | | | | |
| 115 | 1105+10.4 | 1107+27.66 | S.R.2 | LT&RT | 217.26 | | | | | | | 76 | 16512 | 76 | 16512 | | | | | | | 16 | 3476 | | | | |
| 115-116 | 1107+27.66 | 1112+96.88 | S.R.2 | LT&RT | 569.22 | | | | | | | 76 | 43261 | 76 | 43261 | 24 | 13661 | | | | | 16 | 9108 | | | | |
| 116-118 | 1112+96.88 | 1147+96.70 | S.R.2 | LT&RT | 3499.82 | | | | | | | 76 | 265986 | 76 | 265986 | | | | | | | 16 | 55997 | | | | |
| 118-119 | 1147+96.70 | 1154+96.84 | S.R.2 | LT&RT | 700.14 | | | | | | | 76 | 53211 | 76 | 53211 | | | | | | | 16 | 11202 | | | | |
| 119 | 1154+96.84 | 1156+26.87 | S.R.2 | LT&RT | 130.03 | | | | | | | 76 | 9882 | 76 | 9882 | | | | | | | 16 | 2080 | | | | |
| 119-121 | 1156+26.87 | 1189+19.72 | S.R.2 | LT&RT | 3292.85 | | | | | | | 76 | 250257 | 76 | 250257 | | | | | | | 16 | 52686 | | | | |
| 121-123 | 1189+19.72 | 1220+77.35 | S.R.2 | LT&RT | 3157.63 | | | | | | | 76 | 239980 | 76 | 239980 | | | | | | | 16 | 50522 | | | | |
| 124 | 1226+63.15 | 1230+52.79 | S.R.2 | LT&RT | 389.64 | | | | | | | 76 | 29613 | 76 | 29613 | | | | | | | 16 | 6234 | | | | |
| 124 | 1230+52.79 | 1236+47 | S.R.2 | LT&RT | 594.21 | | 2603 | | | | | 66 | 39218 | 66 | 39218 | | | | | | | 12 | 7131 | | | | |
| | | | | | | | | | | | | | | | | | | | | | | | | | | | |
| | | | | | | | | | | | | | | | | | | | | | | | | | | | |
| 125 | 262+50 | 268+44 | S.R.53 | LT&RT | 594 | | 4047 | | | | | 46.5 | 27621 | 46.5 | 27621 | | | | | | | | | | | | |
| 125 | 268+44 | 273+67.3 | S.R.53 | LT&RT | 523.3 | | 2156 | | | | | 69 | 36108 | 69 | 36108 | | | | | | | | | | | | |
| 125 | 276+27.4 | 280+97 | S.R.53 | LT&RT | 469.6 | | 2156 | | | | | 69 | 32402 | 69 | 32402 | | | | | | | | | | | | |
| 126 | 280+97 | 287+50 | S.R.53 | LT&RT | 653 | | 3963 | | | | | 46.5 | 30365 | 46.5 | 30365 | | | | | | | | | | | | |
| | | | | | | | | | | | | | | | | | | | | | | | | | | | |
| | | | | | | | | | | | | | | | | | | | | | | | | | | | |
| | | | | | | | | | | | | | | | | | | | | | | | | | | | |
| | | | | | | | | | | | | | | | | | | | | | | | | | | | |
| | | | | | | | | | | | | | | | | | | | | | | | | | | | |
| | | | | | | | | | | | | | | | | | | | | | | | | | | | |
| | | | | | | | | | | | | | | | | | | | | | | | | | | | |
| TOTALS TO PAVEMENT CALCULATION (SHEET 74) | | | | | | | 17797 | | 59854 | | | | 2714171 | | 2714171 | | 122919 | | | | 22802 | | 384024 | | | | |

1:/pd/ottawa/ott2/ot2pat.dgn 2/4

# PAVEMENT AREA TABLE

QUANTITIES
CALC BY DAB DATE 9-14-94
CKD BY MTG DATE 8-23-95
REVISED 12-14-95

| FHWA REGION | STATE | PROJECT | |
|---|---|---|---|
| 5 | OHIO | | |

OTT-2-16.60

70/367

| SHEET NO. | STATION FROM | STATION TO | LOCATION | SIDE | LINEAL FEET | ITEM 203 SUBGRADE COMPACTION WIDTH L.F. | ITEM 203 AREA S.F. | ITEM 301 9" BITUMINOUS AGGREGATE BASE AC-20 WIDTH L.F. | ITEM 301 AREA S.F. | ITEM 304 6" AVG. AGGREGATE BASE WIDTH L.F. | ITEM 304 AREA S.F. | ITEM 304 12" AVG. AGGREGATE BASE WIDTH L.F. | ITEM 304 AREA S.F. | ITEM 407 TACK COAT @ 0.05 GAL/S.Y. WIDTH L.F. | ITEM 407 AREA | ITEM 446 1.25" ASPHALT CONCRETE AC-20 SURFACE COURSE TYPE 1 WIDTH L.F. | ITEM 446 AREA S.F. | ITEM 446 2.25" ASPHALT CONCRETE AC-20 INTERMEDIATE COURSE TYPE 2 WIDTH L.F. | ITEM 446 AREA S.F. | ITEM 611 15" REINFORCED CONCRETE APPROACH SLAB WIDTH L.F. | ITEM 611 AREA S.F. | ITEM 617 COMPACTED AGGREGATE TYPE A WIDTH L.F. | ITEM 617 AREA S.F. |
|---|---|---|---|---|---|---|---|---|---|---|---|---|---|---|---|---|---|---|---|---|---|---|---|
| | | | APPROACH SLABS | | | | | | | | | | | | | | | | | | | | |
| 99 | 878+00 | 878+25 | S.R.2 | LT&RT | 25 | 89.9 | 2248 | | | 89.9 | 2248 | | | | | | | | | 87.9 | 2197.5 | | |
| 99 | 878+91.5 | 879+16.5 | S.R.2 | LT&RT | 25 | 89.9 | 2248 | | | 89.9 | 2248 | | | | | | | | | 87.9 | 2197.5 | | |
| 103 | 932+49.05 | 932+74.05 | S.R.2 | LT&RT | 25 | 89 | 2225 | | | 86.5 | 2163 | 3.5 | 87.5 | | | | | | | 84.5 | 2112.5 | | |
| 103 | 935+02.36 | 935+27.36 | S.R.2 | LT&RT | 25 | 89 | 2225 | | | 86.5 | 2163 | 3.5 | 87.5 | | | | | | | 84.5 | 2112.5 | | |
| 103 | 937+55.41 | 937+80.41 | S.R.2 | LT&RT | 25 | 89 | 2225 | | | 86.5 | 2163 | 3.5 | 87.5 | | | | | | | 84.5 | 2112.5 | | |
| 103 | 939+81.74 | 940+06.74 | S.R.2 | LT&RT | 25 | 89 | 2225 | | | 86.5 | 2163 | 3.5 | 87.5 | | | | | | | 84.5 | 2112.5 | | |
| 105 | 960+25.9 | 960+50.9 | S.R.2 | LT&RT | 25 | 89 | 2225 | | | 86.5 | 2163 | 3.5 | 87.5 | | | | | | | 84.5 | 2112.5 | | |
| 105 | 960+72.9 | 960+97.9 | S.R.2 | LT&RT | 25 | 89 | 2225 | | | 86.5 | 2163 | 3.5 | 87.5 | | | | | | | 84.5 | 2112.5 | | |
| 105 | 970+72.49 | 971+97.49 | S.R.2 | LT&RT | 25 | 89 | 2225 | | | 86.5 | 2163 | 3.5 | 87.5 | | | | | | | 84.5 | 2112.5 | | |
| 106 | 976+05.99 | 976+30.99 | S.R.2 | LT&RT | 25 | 89 | 2225 | | | 86.5 | 2163 | 3.5 | 87.5 | | | | | | | 84.5 | 2112.5 | | |
| 123 | 1220+77.35 | 1221+02.35 | S.R.2 | LT&RT | 25 | 96 | 2400 | | | 100 | 2500 | | | | | | | | | 96 | 2400 | | |
| 124 | 1226+38.15 | 1226+63.15 | S.R.2 | LT&RT | 25 | 96 | 2400 | | | 100 | 2500 | | | | | | | | | 96 | 2400 | | |
| 224 | 1093+00 | 1098+00 | X-Over S.R.2 | Median | 500 | | 3241 | | 3241 | | 3241 | | | | | | 3241 | | 3241 | | | | |
| 224-A | 1193+60 | 1198+60 | X-Over S.R.2 | Median | 500 | | 3241 | | 3241 | | 3241 | | | | | | 3241 | | 3241 | | | | |
| | PAVEMENT TRANSITIONS | | | | | | | | 26880 | | 26880 | | | | | | | | | | | | |
| | | ACCELERATION - DECELERATION LANES | | | | | | | | | | | | | | | | | | | | | |
| 104 | 948+38.22 | 955+00 | SR 163 Ramp A | | 661.78 | 8 | 5294 | 8 | 5294 | 8 | 5294 | | | 21 | 13897 | 29 | 19192 | 29 | 19192 | | | 4 | 2647 |
| 104 | 955+00 | 956+20 | SR 163 Ramp A | | 120 | 9 | 1080 | 9 | 1080 | 9 | 1080 | | | 6 | 720 | 15 | 1800 | 15 | 1800 | | | 4 | 480 |
| 104 | 944+15 | 949+06.37 | SR 163 Ramp B | | 491.37 | 10 | 4914 | 10 | 4914 | 10 | 4914 | | | | | 10 | 4914 | 10 | 4914 | | | | |
| 104-105 | 949+06.37 | 960+25.9 | SR 163 Ramp B | | 1119.53 | 8 | 8956 | 8 | 8956 | 8 | 8956 | | | 12.5 | 13994 | 29 | 32466 | 29 | 32466 | | | 4 | 4478 |
| 127 | 9+91.88 | 12+91.88 | SR 163 Ramp B | | 300 | 8 | 2400 | 8 | 2400 | 8 | 2400 | | | 16 | 4800 | 24 | 7200 | 24 | 7200 | | | 4 | 1200 |
| 109 | 1019+04.91 | 1020+04.91 | SR 53 Ramp A | | 100 | 9 | 900 | 9 | 900 | 9 | 900 | | | .80 | 80 | 9.8 | 980 | 9.8 | 980 | | | 4 | 400 |
| 109-110 | 1020+04.91 | 1031+05.74 | SR 53 Ramp A | | 1100.83 | 8 | 8807 | 8 | 8807 | 8 | 8807 | | | 21.5 | 23668 | 21.5 | 23668 | 21.5 | 23668 | | | 4 | 4403 |
| 110 | 1031+05.74 | 1035+55 | SR 53 Ramp A GORE | | 449.26 | | | | | | | | | 14.5 | 6514 | 14.5 | 6514 | 14.5 | 6514 | | | | |
| 111 | 1045+25.68 | 1051+70 | SR 53 Ramp B | | 644.32 | 8 | 5155 | 8 | 5155 | 8 | 5155 | | | 21 | 13531 | 29 | 18685 | 29 | 18685 | | | 4 | 2577 |
| 111 | 1051+70 | 1053+20 | SR 53 Ramp B | | 150 | 9 | 1350 | 9 | 1350 | 9 | 1350 | | | 6 | 900 | 15 | 2250 | 15 | 2250 | | | 4 | 600 |
| 111 | 1051+30 | 1053+68.33 | SR 53 Ramp C | | 238.33 | | | | | | | | | 15.5 | 3694 | 15.5 | 3694 | 15.5 | 3694 | | | | |
| 111-112 | 1053+68.33 | 1063+00 | SR 53 Ramp C | | 931.67 | 8 | 7453 | 8 | 7453 | 8 | 7453 | | | 21 | 19565 | 29 | 27018 | 29 | 27018 | | | 4 | 3727 |
| 112 | 1063+00 | 1064+50 | SR 53 Ramp C | | 150 | 9 | 1350 | 9 | 1350 | 9 | 1350 | | | 6 | 900 | 15 | 2250 | 15 | 2250 | | | 4 | 600 |
| 110 | 1029+65 | 1030+50 | SR 53 Ramp D | | 85 | 9 | 765 | 9 | 765 | 9 | 765 | | | 6 | 510 | 15 | 1275 | 15 | 1275 | | | 4 | 340 |
| 110 | 1030+50 | 1037+49.09 | SR 53 Ramp D | | 699.09 | 8 | 5993 | 8 | 5993 | 8 | 5993 | | | 21 | 14681 | 29 | 20274 | 29 | 20274 | | | 4 | 2796 |
| TOTALS TO PAVEMENT CALCULATIONS (SHEET 74) | | | | | | | 87995 | | 87779 | | 114579 | | 700 | | 117454 | | 178662 | | 178662 | | 26095 | | 24248 |

I:/pd/ottawa/ott2/ot2pat.dgn-3/4

# PAVEMENT AREA TABLE

QUANTITIES
CALC BY DAB DATE 9-14-94
CKD BY MTG DATE 8-23-95

| FHWA REGION | STATE | PROJECT | |
|---|---|---|---|
| 5 | OHIO | | |

71/367

OTT-2-16.60

| SHEET NO. | STATION FROM | STATION TO | LOCATION | SIDE | LINEAL FEET | ITEM 202 WEARING COURSE REMOVED WIDTH LF. | ITEM 202 WEARING COURSE REMOVED AREA S.F. | ITEM 203 SUBGRADE COMPACTION WIDTH LF. | ITEM 203 SUBGRADE COMPACTION AREA S.F. | ITEM 301 9" BITUMINOUS AGGREGATE BASE AC-20 WIDTH LF. | ITEM 301 9" BITUMINOUS AGGREGATE BASE AC-20 AREA S.F. | ITEM 304 6" AVG. AGGREGATE BASE WIDTH LF. | ITEM 304 6" AVG. AGGREGATE BASE AREA S.F. | ITEM 407 TACK COAT @ 0.05 GAL./SY. WIDTH LF. | ITEM 407 TACK COAT @ 0.05 GAL./SY. AREA S.F. | ITEM 446 1.25" ASPHALT CONCRETE AC-20 SURFACE COURSE TYPE I WIDTH LF. | ITEM 446 1.25" ASPHALT CONCRETE AC-20 SURFACE COURSE TYPE I AREA S.F. | ITEM 446 2.25" ASPHALT CONCRETE AC-20 INTERMEDIATE COURSE TYPE 2 WIDTH LF. | ITEM 446 2.25" ASPHALT CONCRETE AC-20 INTERMEDIATE COURSE TYPE 2 AREA S.F. | ITEM 617 COMPACTED AGGREGATE TYPE A WIDTH LF. | ITEM 617 COMPACTED AGGREGATE TYPE A AREA S.F. |
|---|---|---|---|---|---|---|---|---|---|---|---|---|---|---|---|---|---|---|---|---|---|
| | | | RAMP A | | | | | | | | | | | | | | | | | | |
| 127 | 0+00 | 0+89 | S.R.163 | LT&RT | 89 | | 3014 | | | | | | | 19 | 8657 | 25 | 11391 | 25 | 11391 | 8 | 3645 |
| 127 | 1+03.94 | 5+59.56 | S.R.163 | LT&RT | 455.62 | | | 6 | 2734 | 6 | 2734 | 6 | 2734 | | | | | | | | |
| 127 | 5+59.56 | 7+09.56 | S.R.163 | LT&RT | 150 | | | 7 | 1050 | 7 | 1050 | 7 | 1050 | 19 | 2850 | 26 | 3900 | 26 | 3900 | 8 | 1200 |
| | | | RAMP B | | | | | | | | | | | | | | | | | | |
| 127 | 2+00.51 | 5+91.88 | S.R.163 | LT&RT | 391.37 | | 2869 | 6 | 2348 | 6 | 2348 | 6 | 2348 | 19 | 7436 | 25 | 9784 | 25 | 9784 | 8 | 3131 |
| 127 | 5+91.88 | 8+41.88 | S.R.163 | LT&RT | 250 | | | 6 | 1500 | 6 | 1500 | 6 | 1500 | 19 | 4750 | 25 | 6250 | 25 | 6250 | 8 | 2000 |
| 127 | 8+41.88 | 9+91.88 | S.R.163 | LT&RT | 150 | | | 7 | 1050 | 7 | 1050 | 7 | 1050 | 16 | 2400 | 23 | 3450 | 23 | 3450 | 4 | 600 |
| 127 | 9+91.88 | 12+91.88 | S.R.163 | LT&RT | 300 | | | 8 | 2400 | 8 | 2400 | 8 | 2400 | 16 | 4800 | 24 | 7200 | 24 | 7200 | 4 | 1200 |
| | | | RAMP A | | | | | | | | | | | | | | | | | | |
| 128 | 0+00 | 3+00 | S.R.53 | LT&RT | 300 | | | 8 | 2400 | 8 | 2400 | 8 | 2400 | 16 | 4800 | 24 | 7200 | 24 | 7200 | 4 | 1200 |
| 128 | 3+00 | 5+00 | S.R.53 | LT&RT | 200 | | | 7 | 1400 | 7 | 1400 | 7 | 1400 | 19 | 3800 | 25 | 5000 | 25 | 5000 | 4 | 800 |
| 128 | 5+00 | 12+10 | S.R.53 | LT&RT | 710 | | | 6 | 4260 | 6 | 4260 | 6 | 4260 | 19 | 13490 | 25 | 17750 | 25 | 17750 | 8 | 5680 |
| 128 | 12+10 | 12+79.48 | S.R.53 | LT&RT | 69.48 | | | 6 | 417 | 6 | 417 | 6 | 417 | 19 | 1320 | 25 | 1737 | 25 | 1737 | | |
| 128 | 16+17.89 | 18+70 | S.R.53 | LT&RT | 252.11 | | | 6 | 1513 | 6 | 1513 | 6 | 1513 | 17 | 4286 | 23 | 5799 | 23 | 5799 | | |
| 128 | 12+79.48 | 16+17.89 | S.R.53 | LT. | 338.41 | | | 6 | 2030 | 6 | 2030 | 6 | 2030 | 17 | 5753 | 23 | 7783 | 23 | 7783 | | |
| | | | RAMP B | | | | | | | | | | | | | | | | | | |
| 128 | 6+32.61 | 8+32.61 | S.R.53 | LT&RT | 200 | | | 7 | 1400 | 7 | 1400 | 7 | 1400 | 21 | 4200 | 27 | 5400 | 27 | 5400 | 8 | 1600 |
| 128 | 8+32.61 | 12+79.48 | S.R.53 | LT&RT | 446.87 | | | 6 | 2681 | 6 | 2681 | 6 | 2681 | 19 | 8491 | 25 | 11172 | 25 | 11172 | 8 | 3575 |
| 128 | 12+79.48 | 16+17.89 | S.R.53 | LT&RT | 338.41 | | | 6 | 2030 | 6 | 2030 | 6 | 2030 | 17 | 5753 | 23 | 7783 | 23 | 7783 | | |
| 128 | 16+17.89 | 17+24.10 | S.R.53 | LT&RT | 106.21 | | | 6 | 637 | 6 | 637 | 6 | 637 | 17 | 1806 | 23 | 2443 | 23 | 2443 | | |
| 128 | 17+24.10 | 19+58 | S.R.53 | LT&RT | 233.9 | | | 7 | 1637 | 7 | 1637 | 7 | 1637 | 19 | 4441 | 26 | 6081 | 26 | 6081 | | |
| | | | RAMP C | | | | | | | | | | | | | | | | | | |
| 129 | 0+00 | 1+00 | S.R.53 | LT&RT | 100 | | | 7 | 700 | 7 | 700 | 7 | 700 | 2 | 200 | 7 | 700 | 7 | 700 | 8 | 800 |
| 129 | 1+00 | 7+38.41 | S.R.53 | LT&RT | 638.41 | | | 6 | 3830 | 6 | 3830 | 6 | 3830 | 19 | 12130 | 25 | 15960 | 25 | 15960 | | |
| 129 | 7+38.41 | 9+38.41 | S.R.53 | LT&RT | 200 | | | 7 | 1400 | 7 | 1400 | 7 | 1400 | 19 | 3800 | 26 | 5200 | 26 | 5200 | | |
| 129 | 9+38.41 | 12+38.41 | S.R.53 | LT&RT | 300 | | | 9 | 2700 | 9 | 2700 | 9 | 2700 | 19 | 5700 | 28 | 8400 | 28 | 8400 | 4 | 1200 |
| 129 | ADD | LANE | S.R.53 | LT&RT | 50 | | | | | | | | | 18 | 900 | 27 | 1350 | 27 | 1350 | | |
| | | | RAMP D | | | | | | | | | | | | | | | | | | |
| 129 | 0+00 | 2+00 | S.R.53 | LT&RT | 200 | | | 7 | 1400 | 7 | 1400 | 7 | 1400 | 19 | 3800 | 26 | 5200 | 26 | 5200 | 8 | 1600 |
| 129 | 2+00 | 7+65.69 | S.R.53 | LT&RT | 565.69 | | | 6 | 3396 | 6 | 3396 | 6 | 3396 | 19 | 10748 | 25 | 14142 | 25 | 14142 | 4 | 2263 |
| TOTALS TO PAVEMENT CALCULATIONS (SHEET 74) | | | | | | | 5883 | | 44913 | | 44913 | | 44913 | | 126311 | | 171075 | | 171075 | | 30494 |

I:/pd/ottawa/ott2/of2pat.dgn 4/4

NOTES: Totals are carried to the General Summary.

# PAVEMENT CALCULATIONS

| QUANTITIES | | | | | |
|---|---|---|---|---|---|
| CALC BY MTG | DATE 8-29-95 | FHWA REGION | STATE | PROJECT | |
| CKD BY TWB | DATE 9-1-95 | 5 | OHIO | | |

REVISED 12-14-95

OTT-2-16.60

74
367

| ITEM | TOTAL QUANITY | UNIT |
|---|---|---|
| **Item 202 Wearing Course Removed** | | |
| Carried From Sheet No.69 = 17797 SF | | |
| No.71 = 5883 SF | | |
| Total = 23680 SF | | |
| 23680 SF x 1/9 = Total | 2631 | S.Y. |
| **Item 203 Subgrade Compaction** | | |
| Carried From Sheet No.68 = 1044380 SF | | |
| No.70 = 87995 SF | | |
| No.71 = 44913 SF | | |
| Total = 1177288 SF | | |
| 1177288 SF x 1/9 = Total | 130810 | S.Y. |
| **Item 301 9" Bituminous Aggregate Base AC-20** | | |
| Carried From Sheet No.68 = 931234 SF | | |
| No.70 = 87779 SF | | |
| No.71 = 44913 SF | | |
| Total = 1063926 SF | | |
| 1063926 SF x 9/12 x 1/27 = Total | 29554 | C.Y. |
| **Item 304 Aggregate Base** | | |
| Carried From Sheet No.68 = 850941 SF | | |
| No.70 = 114579 SF | | |
| No.71 = 44913 SF | | |
| Total = 1010433 SF | | |
| 1010433 SF x 6"/12 x 1/27 = | 18712 | C.Y. |
| Carried From Sheet No.68 = 200919 SF | | |
| 200919 SF x 9"/12 x 1/27 = | 5581 | C.Y. |
| Carried From Sheet No.70 = 700 SF | | |
| 700 SF x 12"/12 x 1/27 = | 26 | C.Y. |
| **TOTAL QUANTITY OF ITEM 304** | 24319 | C.Y. |
| **Item 305 9" Concrete Base** | | |
| Carried From Sheet No.69 = 59854 SF | | |
| 59854 SF x 1/9 = Total | 6650 | S.Y. |
| **Item 407 Tack Coat @ 0.05 GAL/S.Y.** | | |
| Carried From Sheet No.68 = 1794481 SF | | |
| No.70 = 117454 SF | | |
| No.71 = 126311 SF | | |
| Total = 2038246 SF | | |
| 2038246 SF x 1/9 x .05 = Total | 11324 | GAL |
| **Item 446 1.25" Asphalt Concrete AC-20 Surface Course Type 1** | | |
| Carried From Sheet No.69 = 2714171 SF | | |
| No.70 = 178662 SF | | |
| No.71 = 171075 SF | | |
| Total = 3063908 SF | | |
| 3063908 SF x 1.25/12 x 1/27 = Total | 11821 | C.Y. |
| **Item 446 2.25" Asphalt Concrete AC-20 Intermediate Course Type 2** | | |
| Carried From Sheet No.69 = 2714171 SF | | |
| No.70 = 178662 SF | | |
| No.71 = 171075 SF | | |
| Total = 3063908 SF | | |
| 3063908 SF x 2.25/12 x 1/27 = Total | 21277 | C.Y. |
| **Item 446 3.8" AVG. Asphalt Concrete Intermediate Course AC-20 Type 2** | | |
| Carried From Sheet No.69 = 122919 SF | | |
| 122919 SF x 3.8/12 x 1/27 = | 1442 | C.Y. |
| **TOTAL QUANTITY OF ITEM 446 INTERMEDIATE COURSE TYPE 2** | 22719 | C.Y. |

| ITEM | TOTAL QUANITY | UNIT |
|---|---|---|
| **Item 451 9" Reinforced Concrete** | | |
| Carried From Sheet No.69 = 22802 SF | | |
| 22802 SF x 9/12 = Total | 17102 | S.Y. |
| **Item 611 15" Reinforced Concrete Approach Slab, As Per Plan** | | |
| Carried From Sheet No.70 = 26095 SF | | |
| 26095 SF x 1/9 = Total | 2899 | S.Y. |
| **Item 617 Compacted Aggregate Type A** | | |
| Carried From Sheet No.69 = 384024 SF | | |
| No.70 = 24248 SF | | |
| No.71 = 30494 SF | | |
| Total = 438766 SF | | |
| 438766 SF x 1/2 (0.3 1/2) x 1/12 x 1/27 = Total | 2370 | C.Y. |

| ITEM | TOTAL QUANITY | UNIT |
|---|---|---|

l:/pd/ottawa/ott2/ot2pcalc.dgn

QUANTITIES
CALC BY ALS DATE 8-10-94
CKD BY MTG DATE 8-29-95

| FHWA REGION | STATE | PROJECT | |
|---|---|---|---|
| 5 | OHIO | | |

76
367

OTT-2-16.60

# MONUMENT TABLE

| REFERENCE NO. | STATION | 604 | | | | | |
|---|---|---|---|---|---|---|---|
| | | MONUMENT BOX RECONST. TO GRADE | MONUMENT BOX ADJUSTED TO GRADE | MONUMENT ASSEMBLY | REFERENCE MONUMENT AS PER PLAN | | |
| 1-M | 878+16.69 | | 1 | | | | |
| 2-M | 887+51.20 | | | 1 | | | |
| 3-M | 897+51.20 | | | 1 | | | |
| 4-M | 907+51.20 | 1 | | | | | |
| 5-M | 917+51.20 | | | | 1 | | |
| 6-M | 927+51.20 | | | | 1 | | |
| 7-M | 935+51.56 | | | | 1 | | |
| 8-M | 941+52.04 | | | | 1 | | |
| 9-M | 949+51.84 | | | | 1 | | |
| 10-M | 959+51.81 | | | | 1 | | |
| 11-M | 969+51.74 | | | | 1 | | |
| 12-M | 976+51.74 | | | | 1 | | |
| 13-M | 984+51.74 | | | | 1 | | |
| 14-M | 922+51.74 | | | | 1 | | |
| 15-M | 1000+51.84 | | | | 1 | | |
| 16-M | 1009+51.84 | | | | 1 | | |
| 17-M | 1017+51.84 | | | | 1 | | |
| 18-M | 1025+51.84 | | | | 1 | | |
| 19-M | 1033+50.97 | | | | 1 | | |
| Totals Carried to General Summary | | 1 | 1 | 2 | 15 | | |

# FENCE TABLE

| SHEET | STATION | | SIDE | ITEM 202 FENCE REMOVED | | | ITEM 607 FENCE | |
|---|---|---|---|---|---|---|---|---|
| | | | | SPLIT RAIL | CL | TYPE 39 | CL | TYPE 47 |
| | FROM | TO | | LIN.FT. | LIN.FT. | LIN.FT. | LIN.FT. | LIN.FT. |
| 99 | 876+00 | 888+00 | Lt. | 225 | | 359 | | |
| | | | Rt. | | | | | |
| 100 | 888+00 | 902+00 | Lt. | | | 1474 | | 1261 |
| | | | Rt. | | | 1254 | | 1274 |
| 101 | 902+00 | 916+00 | Lt. | | | 1380 | | 1380 |
| | | | Rt. | | | 1380 | | 1380 |
| 102 | 916+00 | 930+00 | Lt. | | | 283 | | 276 |
| | | | Rt. | | | 305 | | 300 |
| 103 | 930+00 | 944+00 | Lt. | | | 1109 | | 1109 |
| | | | Rt. | | | 1277 | | 1277 |
| 104 | 944+00 | 958+00 | Lt. | | | 1385 | | 1385 |
| | | | Rt. | | | 1400 | | 1400 |
| 105 | 958+00 | 972+00 | Lt. | | | 103 | | 103 |
| | | | Rt. | | | 100 | | 100 |
| 106 | 972+00 | 986+00 | Lt. | | | 145 | | 144 |
| | | | Rt. | | | 281 | | 281 |
| 107 | 986+00 | 1000+00 | Lt. | | | 1400 | | 1400 |
| | | | Rt. | | | 1400 | | 1400 |
| 108 | 1000+00 | 1014+00 | Lt. | | | 1400 | | 1400 |
| | | | Rt. | | | 1400 | | 1400 |
| 109 | 1014+00 | 1028+00 | Lt. | | | 1401 | | 1400 |
| | | | Rt. | | | 1400 | | 1400 |
| 112 | 1056+00 | 1070+00 | Lt. | | | 1346 | | 1346 |
| | | | Rt. | | | 1446 | | 1446 |
| 113 | 1070+00 | 1084+00 | Lt. | | | 1380 | | 1380 |
| | | | Rt. | | | 1380 | | 1380 |
| 114 | 1084+00 | 1094+86.19 | Lt. | | | 1086.19 | | 1086.19 |
| | | | Rt. | | | 1086.19 | | 1086.19 |
| 114 | 1094+86.19 | 1098+00 | Lt. | | | 313.81 | | 313.81 |
| | | | Rt. | | | 313.81 | | 313.81 |
| 115 | 1098+00 | 1104+99.33 | Lt. | | | 699.33 | | 699.33 |
| | | | Rt. | | | 699.33 | | 699.33 |
| 115 | 1104+99.33 | 1112+00 | Lt. | | | 700.67 | | 700.67 |
| | | | Rt. | | | 700.67 | | 700.67 |
| 116 | 1112+00 | 1126+00 | Lt. | | | 1400 | | 1400 |
| | | | Rt. | | | 1400 | | 1400 |
| 117 | 1126+00 | 1140+00 | Lt. | | | 1380 | | 1380 |
| | | | Rt. | | | 1380 | | 1380 |
| 118 | 1140+00 | 1147+96.70 | Lt. | | | 801.97 | | 801.97 |
| | | | Rt. | | | 802.97 | | 802.97 |
| 118 | 1147+96.70 | 1154+00 | Lt. | | | 606.03 | | 606.03 |
| | | | Rt. | | | 608.03 | | 608.03 |
| 119 | 1154+00 | 1154+96.84 | Lt. | | | 96.84 | | 96.84 |
| | 1154+00 | 1154+96.84 | Rt. | | | 96.84 | | 96.84 |
| 119 | 1154+96.84 | 1168+00 | Lt. | | | 1303.16 | | 1303.16 |
| | 1154+96.84 | 1168+00 | Rt. | | | 1303.16 | | 1303.16 |
| 120 | 1168+00 | 1182+00 | Lt. | | | 1366 | | 1366 |
| | | | Rt. | | | 1456 | | 1456 |
| 121 | 1182+00 | 1196+00 | Lt. | | | 1373 | | 1373 |
| | | | Rt. | | | 1472 | | 1472 |
| 122 | 1196+00 | 1210+00 | Lt. | | | 1400 | | 1400 |
| | | | Rt. | | | 1400 | | 1400 |
| 123 | 1210+00 | 1224+00 | Lt. | | | 1110 | | 1110 |
| | | | Rt. | | | 1345 | | 1345 |
| 124 | 1224+00 | 1237+08.79 | Lt. | | | 1409 | | 1409 |
| | | | Rt. | | | 1056 | | 1056 |
| Totals Carried to General Summary | | | | 225 | | 56,354.00 | | 55,788.00 |

I:/pd/ott2/OTTAWA/OT2RDSSI.DGN.

FENCE AND MONUMENT TABLES

| QUANTITIES | |
|---|---|
| CALC BY ALS | DATE 7-17-95 |
| CKD BY MTG | DATE 7-21-95 |

| FHWA REGION | STATE | PROJECT | |
|---|---|---|---|
| 5 | OHIO | | |

77
367

OTT-2-16.60

## DRIVE TABLE

| SHEET NO. | REFERENCE NUMBER | STATION | LOCATION | SIDE | DIMENSIONS DRIVE TYPE 2 A (FEET) | DIMENSIONS DRIVE TYPE 2 B & C (FEET) | AREA (SQ.FT.) | ANGLE | TYPE | 203 If EXCAVATION NOT INC. EMBANK. CONST. (CU.YD.) | 304 AGGREGATE BASE 8" (CU.YD.) | 402 ASPHALT CONCRETE 1 3/4" (CU.YD.) | 404 ASPHALT CONCRETE 1 1/4" (CU.YD.) | 408 BITUMINOUS PRIME COAT 0.4 GAL/SQ.YD. (GAL.) |
|---|---|---|---|---|---|---|---|---|---|---|---|---|---|---|
| 99 | 1-DR | 883+30 | S.R.2 | RT | 20 | 20 | 1390 | 90 | ASPHALT | 47.2 | 34.3 | 7.5 | 5.4 | 61.8 |
| 99 | 2-DR | 884+67 | S.R.2 | LT | 19 | 20 | 1009 | 96 | ASPHALT | 34.3 | 24.9 | 5.5 | 3.9 | 44.8 |
| 99 | 3-DR | 886+01 | S.R.2 | LT | 35 | 20 | 1763 | 90 | ASPHALT | 59.9 | 43.5 | 9.5 | 6.8 | 78.4 |
| 99 | 4-DR | 886+32 | S.R.2 | RT | 18 | 20 | 1041 | 90 | ASPHALT | 35.3 | 25.7 | 5.6 | 4.0 | 46.3 |
| 100 | 5-DR | 888+61 | S.R.2 | LT | 35 | 20 | 1718 | 90 | ASPHALT | 58.3 | 42.4 | 9.3 | 6.6 | 76.4 |
| 100 | 6-DR | 888+82 | S.R.2 | RT | 16 | 20 | 855 | 90 | ASPHALT | 29.0 | 21.1 | 4.6 | 3.3 | 38.0 |
| 100 | 7-DR | 894+47 | S.R.2 | RT | 14 | 20 | 962 | 90 | ASPHALT | 32.7 | 23.8 | 5.2 | 3.7 | 42.8 |
| 101 | 8-DR | 904+50 | S.R.2 | RT | 17 | 20 | 1251 | 90 | ASPHALT | 42.5 | 30.9 | 6.8 | 4.8 | 55.6 |
| 101 | 9-DR | 904+50 | S.R.2 | LT | 14 | 20 | 1001 | 90 | ASPHALT | 34.0 | 24.7 | 5.4 | 3.9 | 44.5 |
| 125 | 10-DR | 263+12 | S.R.53 | LT | 35 | 20 | 1263 | 90 | ASPHALT | 42.9 | 31.2 | 6.8 | 4.9 | 56.1 |
| 125 | 11-DR | 263+64 | S.R.53 | RT | 15 | 20 | 491 | 90 | ASPHALT | 16.7 | 12.1 | 2.7 | 1.9 | 21.8 |
| 125 | 12-DR | 266+30 | S.R.53 | LT | 21 | 20 | 1595 | 90 | ASPHALT | 54.2 | 39.4 | 8.6 | 6.2 | 70.9 |
| Totals To General Summary | | | | | | | | | | 487.0 | 354.0 | 77.5 | 55.4 | 637.4 |

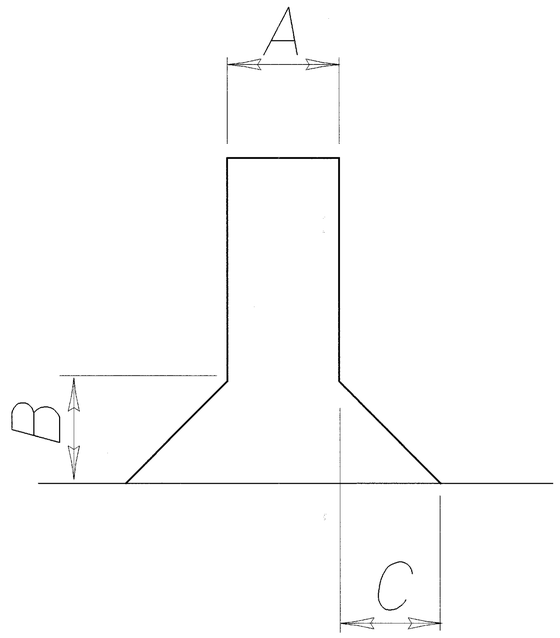


# TYPE 2 DRIVEWAY

## MAILBOX SUPPORTS

| SHEET NO. | REFERENCE NUMBER | STATION | LOCATION | SIDE | SPECIAL MAILBOX SUPPORT (SINGLE) 4"X4" WOOD POST (EACH) | | | | | |
|---|---|---|---|---|---|---|---|---|---|---|
| 99 | 1-MB | 884+35 | S.R.2 | LT | 1 | | | | | |
| 99 | 2-MB | 885+54 | S.R.2 | LT | 1 | | | | | |
| 99 | 3-MB | 887+00 | S.R.2 | LT | 1 | | | | | |
| 100 | 4-MB | 888+25 | S.R.2 | LT | 1 | | | | | |
| 125 | 5-MB | 262+77 | S.R.2 | LT | 1 | | | | | |
| 125 | 6-MB | 262+80 | S.R.2 | LT | 1 | | | | | |
| Totals To General Summary | | | | | 6 | | | | | |

## PAVEMENT REMOVAL

| SHEET NO. | REFERENCE NUMBER | STATION FROM | STATION TO | LOCATION | ITEM 202 PAVEMENT REMOVED (SQ. YDS.) | | | | | |
|---|---|---|---|---|---|---|---|---|---|---|
| 99 | 1-R | 876+25 | 878+00 | S.R.2 | 1081 | | | | | |
| 99 | 2-R | 879+16.53 | 880+43 | S.R.2 | 213 | | | | | |
| 99 | 3-R | 882+74 | 883+89 | S.R.2 | 211 | | | | | |
| 99 | 4-R | 884+43 | 885+09 | S.R.2 | 122 | | | | | |
| 99 | 5-R | 885+88 | 886+55 | S.R.2 | 118 | | | | | |
| 100 | 6-R | 888+47 | 889+27 | S.R.2 | 142 | | | | | |
| 100 | 7-R | 890+01 | 895+08 | S.R.2 | 672 | | | | | |
| 101 | 8-R | 904+05 | 905+00 | S.R.2 | 167 | | | | | |
| Totals To General Summary | | | | | 2726 | | | | | |

I:/pd/ottawa/ott2/ot2sb.dgn

# EARTHWORK AND EROSION CONTROL TABLE

QUANTITIES
CALC BY JEH DATE 2-23-95
CKD BY MTG DATE 2-27-95
REVISED 12-14-95

| FHWA REGION | STATE | PROJECT | |
|---|---|---|---|
| 5 | OHIO | | |

78
367

OTT-2-16.60

| ROUTE | SHEET NO. | STATION FROM | STATION TO | ITEM 203 Excavation not Incl. Embankment Cu.Yd. | ITEM 203 Embankment Cu.Yd. | ITEM 203 Embankment Using Granular Material Cu.Yd. | ITEM 203 Embankment Using Rock Cu.Yd. | ITEM 203 Proof Rolling Hour | ITEM 601 Rock Channel Protection Type C W/Filter Cu.Yd. | ITEM 659 Seeding and Mulching Sq.Yd. | ITEM 660 Sodding Sq.Yd. | ITEM 670 Slope Erosion Protection Sq.Yd. |
|---|---|---|---|---|---|---|---|---|---|---|---|---|
| S.R.2 | 130 | 876+00 | 878+00 | 321 | 11 | | | | | 616 | | |
| S.R.2 | 131 | 878+00 | 883+00 | 1133 | 6 | | | | | | | |
| S.R.2 | 132 | 883+00 | 888+00 | 909 | 0 | | | | | | | |
| S.R.2 | 133 | 888+00 | 893+00 | 776 | 0 | | | | | | | |
| S.R.2 | 134 | 893+00 | 898+00 | 950 | 0 | | | | | | | |
| S.R.2 | 135 | 898+00 | 903+00 | 1029 | 0 | | | | | | | |
| S.R.2 | 136 | 903+00 | 908+00 | 792 | 0 | | | | | | | |
| S.R.2 | 137 | 908+00 | 913+00 | 816 | 0 | | | | | | | |
| S.R.2 | 138 | 913+00 | 918+00 | 1473 | 0 | | | | | | | |
| S.R.2 | 139 | 918+00 | 923+00 | 7462 | 0 | 2796 | 1885 | 3 | | | | |
| S.R.2 | 140 | 923+00 | 928+00 | 864 | 0 | | | | | | | |
| S.R.2 | 141 | 928+00 | 937+00 | 1722 | 0 | | | | | | | |
| S.R.2 | 142 | 937+00 | 945+00 | 1506 | 0 | | | | | | | |
| S.R.2 | 143 | 945+00 | 950+00 | 611 | 0 | | | | | | | |
| S.R.2 | 144 | 950+00 | 955+00 | 849 | 0 | | | | | | | |
| S.R.2 | 145 | 955+00 | 960+00 | 850 | 0 | | | | | | | |
| S.R.2 | 146 | 960+00 | 965+00 | 864 | 0 | | | | | | | |
| S.R.2 | 147 | 965+00 | 970+00 | 865 | 0 | | | | | | | |
| S.R.2 | 148 | 970+00 | 980+00 | 1576 | 0 | | | | | | | |
| S.R.2 | 149 | 980+00 | 985+00 | 852 | 0 | | | | | | | |
| S.R.2 | 150 | 985+00 | 990+00 | 857 | 0 | | | | | | | |
| S.R.2 | 151 | 990+00 | 995+00 | 847 | 0 | | | | | | | |
| S.R.2 | 152 | 995+00 | 1000+00 | 850 | 0 | | | | | | | |
| S.R.2 | 153 | 1000+00 | 1005+00 | 852 | 0 | | | | | | | |
| S.R.2 | 154 | 1005+00 | 1010+00 | 849 | 0 | | | | | | | |
| S.R.2 | 155 | 1010+00 | 1015+00 | 831 | 0 | | | | | | | |
| S.R.2 | 156 | 1015+00 | 1020+00 | 829 | 0 | | | | | | | |
| S.R.2 | 157 | 1020+00 | 1025+00 | 777 | 0 | | | | | | | |
| S.R.2 | 158 | 1025+00 | 1030+00 | 822 | 0 | | | | | | | |
| S.R.2 | 159 | 1030+00 | 1035+00 | 748 | 0 | | | | | | | |
| S.R.2 | 160 | 1035+00 | 1038+00 | 493 | 0 | | | | | | | |
| S.R.2 | 161 | 1038+00 | 1043+00 | 876 | 0 | | | | | | | |
| S.R.2 | 162 | 1043+00 | 1047+00 | 847 | 0 | | | | | | | |
| S.R.2 | 163 | 1047+00 | 1052+00 | 912 | 0 | | | | | 684 | | |
| S.R.2 | 164 | 1052+00 | 1057+00 | 599 | 0 | | | | | | | |
| S.R.2 | 165 | 1057+00 | 1062+00 | 706 | 0 | | | | | | | |
| S.R.2 | 166 | 1062+00 | 1067+00 | 354 | 0 | | | | | | | |
| S.R.2 | 167 | 1062+00 | 1067+00 | 362 | 0 | | | | | | | |
| S.R.2 | 168 | 1067+00 | 1093+00 | 1765 | 0 | | | | | | | |
| S.R.2 | 169 | 1067+00 | 1093+00 | 1778 | 0 | | | | | | | |
| S.R.2 | 170 | 1093+00 | 1118+00 | 1713 | 0 | | | | | | | |
| S.R.2 | 171 | 1093+00 | 1118+00 | 1749 | 0 | | | | | | | |
| S.R.2 | 172 | 1118+00 | 1143+00 | 1713 | 0 | | | | | | | |
| S.R.2 | 173 | 1118+00 | 1143+00 | 1714 | 0 | | | | | | | |
| S.R.2 | 174 | 1143+00 | 1168+00 | 1695 | 0 | | | | | | | |
| S.R.2 | 175 | 1143+00 | 1168+00 | 1754 | 0 | | | | | | | |

| ROUTE | SHEET NO. | STATION FROM | STATION TO | ITEM 203 Excavation not Incl. Embankment Cu.Yd. | ITEM 203 Embankment Cu.Yd. | ITEM 203 Embankment Using Granular Material Cu.Yd. | ITEM 203 Embankment Using Rock Cu.Yd. | ITEM 203 Proof Rolling Hour | ITEM 601 Rock Channel Protection Type C W/Filter Cu.Yd. | ITEM 659 Seeding and Mulching Sq.Yd. | ITEM 660 Sodding Sq.Yd. | ITEM 670 Slope Erosion Protection Sq.Yd. |
|---|---|---|---|---|---|---|---|---|---|---|---|---|
| S.R.2 | 176 | 1168+00 | 1193+00 | 1733 | 0 | | | | | | | |
| S.R.2 | 177 | 1168+00 | 1193+00 | 1787 | 0 | | | | | | | |
| S.R.2 | 178 | 1193+00 | 1218+00 | 1665 | 0 | | | | | | | |
| S.R.2 | 179 | 1193+00 | 1218+00 | 1667 | 0 | | | | | | | |
| S.R.2 | 180 | 1218+00 | 1235+00 | 1077 | 0 | | | | | | | |
| S.R.2 | 181 | 1218+00 | 1235+00 | 1222 | 0 | | | | | | | |
| S.R.2 | 224 | 1093+00 | 1098+00 | 300 | 0 | | | | | 150 | | |
| S.R.2 | 224-A | 1193+60 | 1198+60 | 300 | 0 | | | | | 150 | | |
| TOTAL S.R.2 | | | | 63263 | 17 | 2796 | 1885 | 3 | | 1600 | | |
| S.R.163 | 182 | 1+00 RAMP "A" | 7+00 RAMP "A" | 192 | 0 | | | | | | | |
| S.R.163 | 183 | 2+00 RAMP "B" | 8+00 RAMP "B" | 180 | 0 | | | | | | | |
| S.R.163 | 184 | 8+00 RAMP "B" | 12+00 RAMP "B" | 152 | 0 | | | | | | | |
| TOTAL S.R.163 | | | | 524 | 0 | | | | | | | |
| S.R.53 | 185 | 6+00 RAMP "A" | 12+00 RAMP "A" | 171 | 0 | | | | | | | |
| S.R.53 | 186 | 12+00 RAMP "A" | 18+00 RAMP "A" | 187 | 0 | | | | | | | |
| S.R.53 | 187 | 14+00 RAMP "A"&"B" | 15+00 RAMP "A"&"B" | 62 | 0 | | | | | | | |
| S.R.53 | 188 | 15+00 RAMP "A"&"B" | 16+50 RAMP "A"&"B" | 93 | 0 | | | | | | | |
| S.R.53 | 189 | 7+00 RAMP "B" | 12+00 RAMP "B" | 150 | 0 | | | | | | | |
| S.R.53 | 190 | 12+00 RAMP "B" | 18+50 RAMP "B" | 191 | 0 | | | | | | | |
| S.R.53 | 191 | 18+50 RAMP "B" | 19+00 RAMP "B" | 14 | 0 | | | | | | | |
| S.R.53 | 192 | 2+00 RAMP "C" | 4+00 RAMP "C" | 51 | 0 | | | | | | | |
| S.R.53 | 193 | 5+00 RAMP "C" | 7+00 RAMP "C" | 76 | 0 | | | | | | | |
| S.R.53 | 194 | 7+00 RAMP "C" | 11+00 RAMP "C" | 145 | 0 | | | | | | | |
| S.R.53 | 195 | 11+00 RAMP "C" | 13+00 RAMP "C" | 80 | 0 | | | | | | | |
| S.R.53 | 196 | 0+00 RAMP "D" | 3+00 RAMP "D" | 93 | 0 | | | | | | | |
| S.R.53 | 197 | 3+50 RAMP "D" | 5+00 RAMP "D" | 56 | 0 | | | | | | | |
| S.R.53 | 198 | 5+00 RAMP "D" | 7+00 RAMP "D" | 57 | 0 | | | | | | | |
| TOTAL S.R.53 | | | | 1426 | 0 | | | | | | | |
| S.R.2 | 102 | 930+00 | | | | | | | | | | 231 |
| S.R.2 | 103 | 939+72 | 940+57 | | | | | | | | | 190 |
| S.R.2 | 105 | 969+50 | | | | | | | | | | 174 |
| S.R.2 | 106 | 977+50 | | | | | | | | | | 178 |
| S.R.2 | 123 | 1218+50 | | | | | | | | | | 120 |
| S.R.2 | 124 | 1226+25 | 1227+25 | | | | | | | | | 120 |
| TOTAL S.R.2 | | | | | | | | | | | | 1013 |
| S.R.53 | 125 | 272+50 | | | | | | | | | | 188 |
| S.R.53 | 126 | 277+00 | 277+50 | | | | | | | | | 198 |
| TOTAL S.R.53 | | | | | | | | | | | | 386 |
| TOTALS TO SHEET NUMBER 79 | | | | 65213 | 17 | 2796 | 1885 | 3 | | 1600 | 1399 | |

I/pd/ottawa/ott2/of2ew.dgn

# EARTHWORK AND EROSION CONTROL TABLE

QUANTITIES
CALC BY JEH DATE 2-23-95
CKD BY MTG DATE 2-27-95
REVISED 12-14-95

| FHWA REGION | STATE | PROJECT | |
|---|---|---|---|
| 5 | OHIO | | |

OTT-2-16.60

79
367

| ROUTE | SHEET NO. | STATION FROM | STATION TO | ITEM 203 Excavation not Incl. Embankment Cu.Yd. | ITEM 203 Embankment Cu.Yd. | ITEM 203 Embankment Using Granular Material Cu.Yd. | ITEM 203 Embankment Using Rock Cu.Yd. | ITEM 203 Proof Rolling Hour | ITEM 601 Rock Channel Protection Type C W/Filter Cu.Yd. | ITEM 659 Seeding and Mulching Sq.Yd. | ITEM 660 Sodding Sq.Yd. | ITEM 670 Slope Erosion Protection Sq.Yd. |
|---|---|---|---|---|---|---|---|---|---|---|---|---|
| | | | | | | | | | | | | |
| S.R.2 | 201 | 929+00 | 931+00 | 2045 | 2511 | | | | | | | 1583 |
| S.R.2 | 202 | 935+00 | 937+00 | 2767 | 5060 | | | | | | | 3356 |
| S.R.2 | 203 | 936+50 | 937+00 | 1586 | 2426 | | | | | | | 1073 |
| S.R.2 | 204 | 976+00 | 979+00 | 2270 | 2307 | 443 | | | 894 | | | 1962 |
| S.R.2 | 205 | 976+00 | 979+00 | 2436 | 2094 | 474 | | | 894 | | | 1954 |
| S.R.2 | 206 | 979+00 | 983+00 | 1375 | 1393 | 532 | | | 1045 | | | 1234 |
| S.R.2 | 207 | 979+00 | 983+00 | 1787 | 1584 | 512 | | | 1045 | | | 1489 |
| S.R.2 | 200A | 1040+95 | | | | | | | 6 | | | |
| | | | | | | | | | | | | |
| TOTALS S.R.2 | | | | 14266 | 17375 | 1961 | | | 3884 | | | 12651 |
| | | | | | | | | | | | | |
| S.R.53 | 208 | 266+00 | 269+00 | 604 | 1060 | | | | | | | 1774 |
| S.R.53 | 209 | 266+60 | 269+00 | 612 | 984 | | | | | | | 1561 |
| S.R.53 | 200A | 267+47 | | | | | | | 21 | | | |
| S.R.53 | 210 | 269+00 | 270+00 | 327 | 523 | | | | | | | 675 |
| S.R.53 | 211 | 271+00 | 271+50 | 68 | 612 | | | | | | | 603 |
| S.R.53 | 212 | 272+00 | 273+50 | 348 | 576 | | | | | | | 667 |
| S.R.53 | 213 | 271+50 | 273+00 | 295 | 1860 | | | | | | | 1766 |
| S.R.53 | 200 | 276+22 | | | | | | | 11 | | | |
| S.R.53 | 214 | 277+00 | 279+00 | 728 | 1309 | | | | | | | 1597 |
| S.R.53 | 215 | 279+00 | 279+00 | 64 | 747 | | | | | | | 633 |
| S.R.53 | 216 | 279+00 | 281+50 | 738 | 1045 | | | | | | | 1515 |
| S.R.53 | 217 | 14+00 RAMP "A"&"B" | 15+50 RAMP "A"&"B" | | 120 | | | | | | | 1010 |
| S.R.53 | 218 | 15+50 RAMP "A"&"B" | 16+50 RAMP "A"&"B" | 10 | 203 | | | | | | | 714 |
| S.R.53 | 200 | 6+15 RAMP "B" | | | | | | | 11 | | | |
| S.R.53 | 219 | 17+00 RAMP "B" | 18+00 RAMP "B" | 88 | 733 | | | | | | | 970 |
| S.R.53 | 220 | 18+00 RAMP "B" | 19+00 RAMP "B" | 121 | 1124 | | | | | | | 1150 |
| S.R.53 | 221 | 2+00 RAMP "C" | 3+00 RAMP "C" | 513 | 665 | | | | | | | 767 |
| S.R.53 | 200A | 3+13 RAMP "C" | | | | | | | 3 | | | |
| S.R.53 | 222 | 2+50 RAMP "D" | 4+00 RAMP "D" | 29 | 174 | | | | | | | 394 |
| S.R.53 | 223 | 4+00 RAMP "D" | 6+00 RAMP "D" | 167 | 1263 | | | | | | | 1778 |
| | | | | | | | | | | | | |
| TOTALS S.R.53 | | | | 4712 | 12998 | | | | 46 | | | 17574 |
| | | | | | | | | | | | | |
| | | | | | | | | | | | | |
| | | | | | | | | | | | | |
| | | | | | | | | | | | | |
| | | | | | | | | | | | | |
| TOTALS FROM SHEET NUMBER 78 | | | | 65213 | 17 | 2796 | 1885 | 3 | | 1600 | 1399 | |
| | | | | | | | | | | | | |
| TOTALS CARRIED TO GENERAL SUMMARY | | | | 84191 | 30390 | 4757 | 1885 | 3 | 3930 | 1600 | 1399 | 30225 |
| | | | | | | | | | | | | |
| | | | | | | | | | | | | |
| | | | | | | | | | | | | |
| | | | | | | | | | | | | |
| | | | | | | | | | | | | |
| | | | | | | | | | | | | |
| | | | | | | | | | | | | |
| | | | | | | | | | | | | |
| | | | | | | | | | | | | |

I:/pd/ottawa/ott2/of2sw.dgn

| QUANTITIES | | | | | |
|---|---|---|---|---|---|
| CALC BY ALS | DATE 2-2-95 | FHWA REGION | STATE | PROJECT | |
| CKD BY MTG | DATE 8-15-95 | 5 | OHIO | | |

80
367

OTT-2-16.60

# GUARDRAIL TABLE

| REFERENCE NUMBER | STATION FROM | STATION TO | SIDE | 202 GUARDRAIL REMOVED | 202 GUARDRAIL REMOVED FOR REUSE | 202 BARRIER GUARDRAIL REMOVED | 203 LINEAR GRADING | 448 2" ASPHALT CONCRETE INTERMEDIATE COURSE TYPE 1, AC-20, AS PER PLAN | 606 ANCHOR ASSEMBLY TYPE B | 606 ANCHOR ASSEMBLY TYPE T | 606 ANCHOR ASSEMBLY TYPE E | 606 BRIDGE TERMINAL ASSEMBLY TYPE 1 | 606 BRIDGE TERMINAL ASSEMBLY TYPE 2 | 606 BRIDGE TERMINAL ASSEMBLY TYPE 4 | 606 GUARDRAIL BARRIER DESIGN TYPE 5 | 606 ANCHOR ASSEMBLY BARRIER DESIGN TYPE A | 606 GUARDRAIL REBUILT | 606 GUARDRAIL TYPE 5 | |
|---|---|---|---|---|---|---|---|---|---|---|---|---|---|---|---|---|---|---|---|
| | | | | | | | | | | | | | | | | | | LIN.FT. | RADIUS LIN.FT. |
| | | | | LIN.FT. | LIN.FT. | LIN.FT. | STA. | CU.YD. | EACH | EACH | EACH | EACH | EACH | EACH | LIN.FT. | EACH | LIN.FT. | | |
| 1-G | 876+50.6 | 878+19.3 | RT. | 147 | | | 1.67 | 5.56 | 1 | | | 1 | | | | | | 156.25 | |
| 2-G | 877+53.6 | 878+34.8 | LT. | 51 | | | .80 | 2.78 | 1 | | | 1 | | | | | | 68.75 | |
| 3-G | 878+81.6 | 879+62.9 | RT. | 49 | | | .80 | 2.78 | 1 | | | 1 | | | | | | 68.75 | |
| 4-G | 878+97.1 | 879+48.3 | LT. | 73 | | | .32 | 0.99 | | 1 | | 1 | | | | | | 18.75 | 25 |
| 5-G | 905+05.4 | 1042+95.5 | ℄ | | | 13794 | | | | | | | | | | | | | |
| 6-G | 917+06 | 933+31.0 | LT. | 1573 | | | 16.23 | 50.09 | | 1 | | | 1 | | | | | 1612.5 | |
| 7-G | 918+16.75 | 932+23.0 | RT. | 1385 | | | 14.04 | 43.33 | | | 1 | 1 | | | | | | 1381.25 | |
| 8-G | 934+45.4 | 937+20.8 | RT. | 265 | | | 2.71 | 8.36 | | | | 1 | 1 | | | | | 275.4 | |
| 9-G | 935+53.4 | 938+11.9 | LT. | 254 | | | 2.55 | 7.87 | | | | 1 | 1 | | | | | 258.5 | |
| 10-G | 939+50.3 | 943+00.3 | RT. | 399 | | | 3.73 | 11.51 | | 1 | | | 1 | | | | | 362.5 | |
| 11-G | 940+41.4 | 946+35.2 | LT. | 600 | | | 6.04 | 18.64 | | | 1 | 1 | | | | | | 581.25 | |
| 12-G | 957+55.9 | 960+43.34 | RT. | 301 | | | 2.88 | 8.89 | | | 1 | | | 1 | | | | 262.50 | |
| 13-G | 956+30.9 | 960+43.34 | LT. | 410 | 50 | | 4.13 | 12.75 | | 1 | | | | 1 | | | 50 | 350 | |
| 14-G | 960+43.34 | 960+80.9 | RT. | 37.5 | | | | | | | | | | | | | | | |
| 15-G | 960+43.34 | 960+80.9 | LT. | 37.5 | | | | | | | | | | | | | | | |
| 16-G | 960+80.9 | 970+99.6 | RT. | 1015 | | | 10.17 | 31.39 | | | | 1 | | 1 | | | | 1018.75 | |
| 17-G | 960+80.9 | 970+99.6 | LT. | 1015 | | | 10.17 | 31.39 | | | | | 1 | 1 | | | | 1018.75 | |
| 18-G | 976+03.9 | 985+28.9 | RT. | 924 | 50 | | 9.23 | 28.49 | | 1 | | | 1 | | | | 50 | 862.5 | |
| 19-G | 976+03.9 | 985+47.7 | LT. | 848 | | | 9.47 | 29.07 | | | 1 | 1 | | | | | | 918.75 | |
| 20-G | 1033+78.5 | 1034+41 | RT. | 50 | | | 1.50 | 4.94 | 1 | | | | | | | | | 50 | |
| 21-G | 1043+99.85 | 1045+21.1 | RT. | 136 | | | 1.22 | 4.07 | 1 | | | 1 | | | | | | 108.75 | |
| 22-G | 1045+25.9 | 1046+57.1 | ℄ RT. | 136 | | | | | | | | | | | | | | | |
| 23-G | 1045+53.5 | 1046+90.1 | ℄ LT. | 137 | | | | | | | | | | | | | | | |
| 24-G | 1047+07.9 | 1047+89.15 | LT. | 141 | | | 1.88 | 6.11 | 1 | | | 1 | | | | | | 68.75 | |
| 25-G | 1146+69.35 | 1147+63.1 | RT. | 156 | | | 1.48 | 3.96 | 1 | | | 1 | | | | | | 81.25 | |
| 26-G | 1148+12.9 | 1149+19.15 | LT. | 102 | | | 1.60 | 5.25 | 1 | | | 1 | | | | | | 93.75 | |
| 27-G | 1209+35.75 | 1221+54.5 | RT. | 1215.5 | | | 12.17 | 37.87 | 1 | | | 1 | | | | | | 1206.25 | |
| 28-G | 1209+30.5 | 1220+55.5 | LT. | 1138 | | | 11.23 | 34.66 | | 1 | | | 1 | | | | | 1125 | |
| 29-G | 1219+11.55 | 1221+17.8 | ℄ RT. | 164 | | 76 | | | | | | 1 | | | 50 | 1 | | 131.25 | |
| 30-G | 1226+85.1 | 1234+35.1 | RT. | 772 | | | 7.48 | 23.09 | | 1 | | | 1 | | | | | 737.5 | |
| 31-G | 1225+86.0 | 1236+42.25 | LT. | 1017 | | | 10.54 | 32.84 | 1 | | | 1 | | | | | | 1043.75 | |
| 32-G | 1226+22.7 | 1228+28.95 | ℄ LT. | 164 | | 76 | | | | | | 1 | | | 50 | 1 | | 131.25 | |
| 33-G | 266+20 SR 53 | 8+00 RAMP C | RT. | 1075 | | | 11.13 | 34.35 | | 1 | 1 | | | | | | | 1075 | |
| 34-G | 266+60 SR 53 | 2+50 RAMP D | LT. | 1075 | | | 10.87 | 33.55 | | 2 | 1 | | | | | | | 977 | 60 |
| 35-G | 8+00 RAMP C | 273+72.1 SR 53 | RT. | 600 | | | 6.04 | 18.64 | | 2 | | 1 | | | | | | 511.25 | 70 |
| 36-G | 2+50 RAMP D | 273+40.3 | LT. | 775 | | | 2.69 | 8.30 | | | 1 | 1 | | | | | | 245.75 | |
| 37-G | 276+54.7 SR 53 | 283+48.5 SR 53 | RT. | 675 | | | 6.91 | 21.33 | | | 1 | 1 | | | | | | 667.75 | |
| 38-G | 276+23.0 SR 53 | 16+00 RAMP B | LT. | 475 | | | 1.23 | 3.80 | | | 1 | 1 | | | | | | 106.25 | |
| 39-G | 15+00 RAMP A | 283+50 SR 53 | LT. | 650 | | | 5.75 | 17.75 | | 2 | 1 | | | | | | | 525 | 100 |
| 40-G | 4+00 RAMP B SR 163 | 10+00 RAMP B | RT. | 600 | | | 6.00 | 18.52 | | 1 | 1 | | | | | | | 562.5 | |
| QUANTITIES CARRIED TO GENERAL SUMMARY | | | | 20638 | 100 | 13946 | 195 | 603 | 10 | 15 | 11 | 22 | 8 | 4 | 100 | 2 | 100 | 18918 | |

# CONCRETE BARRIER TABLE "CM"

| REFERENCE NUMBER | STATION FROM | STATION TO | SIDE | 622 CONCRETE BARRIER, TYPE B50 | 622 CONCRETE BARRIER, TYPE D | | |
|---|---|---|---|---|---|---|---|
| | | | | LIN.FT. | LIN.FT. | | |
| 1-CM | 913+50 | 932+76 | ℄ | 1926 | | | |
| 2-CM | 935+02 | 937+80 | ℄ | 278 | | | |
| 3-CM | 939+82 | 960+51 | ℄ | 2069 | | | |
| 4-CM | 960+73 | 970+97 | ℄ | 1024 | | | |
| 5-CM | 976+06 | 1035+78 | ℄ | 5972 | | | |
| 6-CM | 1036+16 | 1049+00 | ℄ | 1284 | | | |
| 7-CM | 1045+19 | 1046+13 | RT. | | 94 | | |
| 8-CM | 1046+16 | 1047+10 | LT. | | 94 | | |
| 9-CM | 1147+61 | 1148+15 | RT. | | 54 | | |
| 10-CM | 1147+75 | 1148+29 | LT. | | 54 | | |
| TOTALS CARRIED TO GENERAL SUMMARY | | | | 12553 | 296 | | |



/1/pd/ottawa/ott2/ot2grtbl.dgn

# CURB SUB-SUMMARY

QUANTITIES
CALC BY ALS DATE 1-26-95
CKD BY TWB DATE 9-5-95

| FHWA REGION | STATE | PROJECT | |
|---|---|---|---|
| 5 | OHIO | | |

OTT-2-16.60

81
367

| FROM SHEET NUMBER | SIGN REFERENCE NUMBER | ROUTE | STATION FROM | STATION TO | SIDE | 202 CURB REMOVED LIN.FT. | 202 | 202 | 202 | 202 CONCRETE MEDIAN REMOVED SQ.YD. | 203 EMBANKMENT CU.YD. | 301 BITUMINOUS AGGREGATE BASE AC-20 CU.YD. | 609 COMBINATION CURB AND GUTTER, TYPE 2 LIN.FT. | 609 CURB, TYPE 2-A LIN.FT. | 609 CURB TYPE 6 LIN.FT. | 612 4" CONCRETE TRAFFIC ISLAND SQ.YD. | 612 CONCRETE MEDIAN SQ.YD. |
|---|---|---|---|---|---|---|---|---|---|---|---|---|---|---|---|---|---|
| 99 | 1-C | SR 2 | 876+60 | 879+65 | Med. | 628 | | | | | | | | | | | |
| 99 | 2-C | SR 2 | 880+43 | 882+73 | Med. | 474 | | | | | | | | | | | |
| 99 | 3-C | SR 2 | 883+88 | 884+42 | Med. | 121 | | | | | | | | | | | |
| 99 | 4-C | SR 2 | 885+08 | 885+88 | Med. | 172 | | | | | | | | | | | |
| 99-100 | 5-C | SR 2 | 886+55 | 888+47 | Med. | 431 | | | | | | | | | | | |
| 100 | 1-C | SR 2 | 889+27 | 894+21 | Med. | 996 | | | | | | | | | | | |
| 100-101 | 2-C | SR 2 | 895+08 | 904+08 | Med. | 1812 | | | | | | | | | | | |
| 101-103 | 1-C | SR 2 | 905+00 | 932+74 | Med. | | | | | 1850 | | | | | | | |
| 102-103 | 1-C | SR 2 | 929+95 | 931+98.3 | Rt. | | | | | | | | 203 | | | | |
| 103 | | SR 2 | 931+98.3 | 932+20.9 | | | | | | | | | | 23 | | | |
| 102-103 | 2-C | SR 2 | 929+95 | 933+02.17 | Lt. | | | | | | | | 307 | | | | |
| 103 | | SR 2 | 933+02.17 | 933+27.17 | | | | | | | | | | 25 | | | |
| 103 | 1-C | SR 2 | 935+02 | 937+80 | Med. | | | | | 185 | | | | | | | |
| 103 | 2-C | SR 2 | 934+47.4 | 937+18.7 | Rt. | | | | | | | | | 271 | | | |
| 103 | 3-C | SR 2 | 935+55.5 | 938+09.7 | Lt. | | | | | | | | | 254 | | | |
| 103 | 4-C | SR 2 | 939+52.3 | 939+63.3 | Rt. | | | | | | | | | 11 | | | |
| 103 | | SR 2 | 939+63.3 | 939+68.3 | | | | | | | | | 5 | | | | |
| 103 | 5-C | SR 2 | 940+43.4 | 940+48.2 | Lt. | | | | | | | | | 5 | | | |
| 103 | | SR 2 | 940+48.2 | 940+62 | | | | | | | | | 14 | | | | |
| 103-105 | 6-C | SR 2 | 939+82 | 960+25.77 | Med. | | | | | 1363 | | | | | | | |
| 127 | 7-C | SR 2 | Ramp B SR 163 | 6+50 to 12+91.88 | Ramp | 642 | | | | | | | | | | | |
| 104 | 1-C | SR 2 | 947+38 | 948+38 | Lt. | 208 | | | | 92 | | 15 | | | | | |
| 105 | 1-C | SR 2 | 960+97.77 | 970+72.49 | Med. | | | | | 649 | | | | | | | |
| 105 | 2-C | SR 2 | 969+45 | 970+72.49 | Rt. | | | | | | | | 128 | | | | |
| 105 | | SR 2 | 970+72.49 | 970+97.49 | | | | | | | | | | 25 | | | |
| 105 | 3-C | SR 2 | 969+45 | 970+72.49 | Lt. | | | | | | | | 128 | | | | |
| 105 | | | 970+72.49 | 970+97.49 | | | | | | | | | | 25 | | | |
| 106 | 1-C | SR 2 | 976+05.99 | 976+30.99 | Rt. | | | | | | | | | 25 | | | |
| 106 | | SR 2 | 976+30.99 | 977+55 | | | | | | | | | 124 | | | | |
| 106 | 2-C | SR 2 | 976+05.99 | 976+30.99 | Lt. | | | | | | | | | 25 | | | |
| 106 | | SR 2 | 976+30.99 | 977+55 | | | | | | | | | 124 | | | | |
| 106-110 | 3-C | SR 2 | 976+30.99 | 1035+05.8 | Med. | | | | | 5875 | | | | | | | |
| 110J28 | 1-C | SR 2 | 1031+05.91 | Ramp A SR 53 547 | Lt. | 547 | | | | | 28 | | | | | | |
| 110 | 2-C | SR 2 | 1035+05.8 | 1035+20 | Med. | | | | | 14.2 | | 7 | | | | | |
| 110 | 3-C | SR 2 | 1035+58.5 | 1035+72.5 | Med. | | | | | 14 | | | | | | | |
| 110-111 | 4-C | SR 2 | 1035+72.5 | 1049+50 | Med. | | | | | 1378 | | | | | | | |
| 110 | 5-C | SR 2 | 1037+48.90 | 1038+48.90 | Rt. | 200 | | | | 38 | 2 | 7 | | | | | |
| 111 | 1-C | SR 2 | 1044+25.68 | 1045+25.68 | Lt. | 200 | | | | | | | | | | | |
| 111J29 | 2-C | SR 2 | Ramp C SR 53 7+38.41 | 12+68 | Rt. | 530 | | | | | | | | | | | |
| 123 | 1-C | SR 2 | 1218+45 | 1221+26.28 | Rt. | | | | | | | | 281 | | | | |
| 123 | | SR 2 | 1221+26.28 | 1221+38 | | | | | | | | | | 12 | | | |
| 123 | 2-C | SR 2 | 1218+45 | 1220+29.9 | Lt. | | | | | | | | 185 | | | | |
| 123 | | SR 2 | 1220+29.9 | 1220+39.0 | | | | | | | | | | 9 | | | |
| TOTALS CARRIED TO COLUMN II | | | | | | 6961 | | | | 11458.2 | 30 | 29 | 1499 | 710 | | | |

| FROM SHEET NUMBER | SIGN REFERENCE NUMBER | ROUTE | STATION FROM | STATION TO | SIDE | 202 CURB REMOVED LIN.FT. | 202 | 202 | 202 | 202 CONCRETE MEDIAN REMOVED SQ.YD. | 203 EMBANKMENT CU.YD. | 301 BITUMINOUS AGGREGATE BASE AC-20 CU.YD. | 609 COMBINATION CURB AND GUTTER, TYPE 2 LIN.FT. | 609 CURB, TYPE 2-A LIN.FT. | 609 CURB TYPE 6 LIN.FT. | 612 6" CONCRETE TRAFFIC ISLAND SQ.YD. | 612 CONCRETE MEDIAN SQ.YD. |
|---|---|---|---|---|---|---|---|---|---|---|---|---|---|---|---|---|---|
| 124 | 1-C | SR 2 | 1227+01.5 | 1227+10.6 | Rt. | | | | | | | | | 9 | | | |
| 124 | | SR 2 | 1227+10.6 | 1227+30 | | | | | | | | | 20 | | | | |
| 124 | 2-C | SR 2 | 1225+14.2 | 1226+02.5 | Lt. | | | | | | | | | 88 | | | |
| 124 | | SR 2 | 1225+14.2 | 1226+30 | | | | | | | | | 116 | | | | |
| 125 | 1-C | SR 53 | 268+44.95 | 269+75 | Med. | 260 | | | | 72 | | | | | | | |
| 125 | 2-C | SR 53 | 270+75 | 271+93 | Med. | 236 | | | | 79 | | | | | | | |
| 125-126 | 3-C | SR 53 | 272+58 | 279+30 | Med. | 1344 | | | | 448 | | | | | | | |
| 125 | 4-C | SR 53 | 272+45 | 273+38 | Lt. | | | | | | | | | | 93 | | |
| 125 | 5-C | SR 53 | 272+45 | 273+69 | Rt. | | | | | | | | | | 124 | | |
| 125-126 | 6-C | SR 53 | 276+25 | 277+05 | Lt. | | | | | | | | | | 80 | | |
| 125-126 | 7-C | SR 53 | 276+57 | 277+55 | Rt. | | | | | | | | | | 98 | | |
| 126 | 1-C | SR 53 | 280+40 | 280+97.19 | Med. | 114 | | | | 46 | | | | | | | |
| 128 | 1-C | RAMP B/SR 53 | 11+30 | 12+10 | Lt. | 80 | | | | | | | | | 4 | | |
| 128 | 2-C | RAMP N/SR 53 | 12+10 | 12+79.48 | Med. | | | | | 23 | | | | | | 3 | |
| 126J28 | 3-C | RAMP N/SR 53 | 12+79.48 | 18+40 | Med. | | | | | 187 | | | | | | | 281 |
| COLUMN TOTALS | | | | | | 2034 | | | | 855 | | | 136 | 97 | 399 | 3 | 281 |
| TOTALS CARRIED COLUMN I | | | | | | 6961 | | | | 11458.2 | 30 | 29 | 1499 | 710 | | | |
| TOTALS CARRIED TO GENERAL SUMMARY | | | | | | 8995 | | | | 12313.2 | 30 | 29 | 1635 | 807 | 399 | 3 | 281 |

/1/PD/OTTAWA/OTT2/02CREMTL.DGN

# PAVEMENT REPAIR LOCATIONS

## EASTBOUND LANES

QUANTITIES
CALC BY ALS DATE 8-10-94
CKD BY MTG DATE 8-29-95

| FHWA REGION | STATE | PROJECT | |
|---|---|---|---|
| 5 | OHIO | | |

OTT-2-16.60

82/367

| LOCATION | 255 FULL DEPTH PAVEMENT REMOVAL AND RIGID REPLACEMENT TYPE T-Y DRIVING LANE | 255 FULL DEPTH PAVEMENT REMOVAL AND RIGID REPLACEMENT TYPE T-Y PASSING LANE | 255 FULL DEPTH PAVEMENT REMOVAL AND RIGID REPLACEMENT TYPE Y-Y DRIVING LANE | 255 FULL DEPTH PAVEMENT REMOVAL AND RIGID REPLACEMENT TYPE Y-Y PASSING LANE | 255 FULL DEPTH PAVEMENT SAWING | 413 SAWING AND SEALING ASPHALT CONCRETE PAVEMENT JOINTS, 705.04 |
|---|---|---|---|---|---|---|
| | LIN.FT. | | | | LIN.FT. | LIN.FT. |
| 882+48 (midspan) | 6 | | | | 30 | 24 |
| 889+31 (midspan) | 6 | 6 | | | 54 | 48 |
| 895+15 (midspan) | | 6 | | | 30 | 24 |
| 899+85 (midspan) | | 6 | | | 30 | 24 |
| 911+47 (midspan) | | 6 | | | 30 | 24 |
| 922+68 (midspan) | 6 | 6 | | | 54 | 48 |
| 927+00 (midspan) | 6 | 6 | | | 54 | 48 |
| 927+47 (midspan) | 6 | 6 | | | 54 | 48 |
| 927+71 (midspan) | 6 | 6 | | | 54 | 48 |
| 928+05 (midspan) | 6 | | | | 30 | 24 |
| 928+28 (midspan) | 6 | 6 | | | 54 | 48 |
| 928+70 (midspan) | 6 | 6 | | | 54 | 48 |
| 929+30 (midspan) | 6 | 6 | | | 54 | 48 |
| 929+86 (midspan) | 6 | 6 | | | 54 | 48 |
| 930+09 (midspan) | 6 | 6 | | | 54 | 48 |
| 930+49 (midspan) | 6 | 6 | | | 54 | 48 |
| 931+64 (midspan) | 6 | 6 | | | 54 | 48 |
| 931+81 (midspan) | 6 | 6 | | | 54 | 48 |
| 935+46 (midspan) | 6 | 6 | | | 54 | 48 |
| 935+97 (midspan) | 6 | 6 | | | 54 | 48 |
| 936+42 (midspan) | 6 | 6 | | | 54 | 48 |
| 936+76 (midspan) | 6 | 6 | | | 54 | 48 |
| 952+84 (midspan) | 6 | 6 | | | 54 | 48 |
| 953+67 (midspan) | 6 | 6 | | | 54 | 48 |
| 958+25 (midspan) | 6 | 6 | | | 54 | 48 |
| 959+22 (midspan) | 6 | 6 | | | 54 | 48 |
| 962+47 (midspan) | 6 | 6 | | | 54 | 48 |
| 963+16 (midspan) | 6 | 6 | | | 54 | 48 |
| 963+92 (midspan) | 6 | 6 | | | 54 | 48 |
| 964+29 (midspan) | 6 | 6 | | | 54 | 48 |
| 964+97 (midspan) | 6 | 6 | | | 54 | 48 |
| 966+22 (midspan) | 6 | 6 | | | 54 | 48 |
| 968+62 (midspan) | 6 | 6 | | | 54 | 48 |
| 969+20 (midspan) | 6 | 6 | | | 54 | 48 |
| 969+32 (midspan) | 6 | 6 | | | 54 | 48 |
| 977+93 (midspan) | | | 10 | 10 | 58 | 48 |
| 978+60 (midspan) | 6 | 6 | | | 54 | 48 |
| 978+77 (midspan) | 6 | | | | 30 | 24 |
| 979+05 (midspan) | 6 | 6 | | | 54 | 48 |
| 979+21 (midspan) | 6 | 6 | | | 54 | 48 |
| 980+30 (midspan) | 6 | 6 | | | 54 | 48 |
| 980+88 (midspan) | 6 | 6 | | | 54 | 48 |
| 981+04 (midspan) | 6 | 6 | | | 54 | 48 |
| 981+46 (midspan) | 6 | 6 | | | 54 | 48 |
| 982+29 (midspan) | 6 | 6 | | | 54 | 48 |
| 982+73 (midspan) | | 6 | | | 30 | 24 |
| 984+42 (midspan) | 6 | 6 | | | 54 | 48 |
| 985+07 (midspan) | 6 | 6 | | | 54 | 48 |
| 986+27 (midspan) | 6 | 6 | | | 54 | 48 |
| 986+50 (midspan) | 6 | 6 | | | 54 | 48 |
| | | | | | | |
| | | | | | | |
| | | | | | | |
| | | | | | | |
| | | | | | | |
| Column Totals | 270 | 276 | 10 | 10 | 2536 | 2232 |

| LOCATION | 255 FULL DEPTH PAVEMENT REMOVAL AND RIGID REPLACEMENT TYPE T-Y DRIVING LANE | 255 FULL DEPTH PAVEMENT REMOVAL AND RIGID REPLACEMENT TYPE T-Y PASSING LANE | 255 FULL DEPTH PAVEMENT REMOVAL AND RIGID REPLACEMENT TYPE Y-Y DRIVING LANE | 255 FULL DEPTH PAVEMENT REMOVAL AND RIGID REPLACEMENT TYPE Y-Y PASSING LANE | 255 FULL DEPTH PAVEMENT SAWING | 413 SAWING AND SEALING ASPHALT CONCRETE PAVEMENT JOINTS, 705.04 |
|---|---|---|---|---|---|---|
| | LIN.FT. | | | | LIN.FT. | LIN.FT. |
| 989+47 (midspan) | 6 | 6 | | | 54 | 48 |
| 990+60 (midspan) | 6 | 6 | | | 54 | 48 |
| 991+88 (midspan) | 6 | 6 | | | 54 | 48 |
| 992+25 (midspan) | 6 | 6 | | | 54 | 48 |
| 995+54 (midspan) | 6 | 6 | | | 54 | 48 |
| 996+11 (midspan) | 6 | 6 | | | 54 | 48 |
| 999+13 (midspan) | 6 | 6 | | | 54 | 48 |
| 999+50 (midspan) | 6 | 6 | | | 54 | 48 |
| 1001+93 (midspan) | 6 | 6 | | | 54 | 48 |
| 1002+53 (midspan) | 6 | 6 | | | 54 | 48 |
| 1003+16 (midspan) | 6 | 6 | | | 54 | 48 |
| 1008+06 (midspan) | 6 | 6 | | | 54 | 48 |
| 1011+07 (midspan) | 6 | 6 | | | 54 | 48 |
| 1011+74 (midspan) | 6 | 6 | | | 54 | 48 |
| 1014+15 (midspan) | 6 | 6 | | | 54 | 48 |
| 1016+90 (midspan) | 6 | 6 | | | 54 | 48 |
| 1018+65 (midspan) | 6 | 6 | | | 54 | 48 |
| 1018+92 (midspan) | 6 | 6 | | | 54 | 48 |
| 1019+34 (midspan) | 6 | 6 | | | 54 | 48 |
| 1019+53 (midspan) | 6 | 6 | | | 54 | 48 |
| 1019+90 (midspan) | 6 | 6 | | | 54 | 48 |
| 1022+35 (midspan) | 6 | 6 | | | 54 | 48 |
| 1023+53 (midspan) | 6 | 6 | | | 54 | 48 |
| 1023+74 (midspan) | 6 | | | | 30 | 24 |
| 1024+34 (midspan) | 6 | 6 | | | 54 | 48 |
| 1025+92 (midspan) | 6 | 6 | | | 54 | 48 |
| 1026+52 (midspan) | 6 | 6 | | | 54 | 48 |
| 1027+14 (midspan) | 6 | 6 | | | 54 | 48 |
| 1027+35 (midspan) | 6 | 6 | | | 54 | 48 |
| 1027+75 Ahd. | | | 40 | | 64 | 48 |
| 1028+32 (midspan) | 6 | 6 | | | 54 | 48 |
| 1029+51 (midspan) | 6 | 6 | | | 54 | 48 |
| 1029+85 (midspan) | 6 | | | | 30 | 24 |
| Repair all Expansion Joints from Sta. 879+00 to Sta. 1029+85 (241 Joints) | 1446 | 1446 | | | 13,014 | 5784 |
| 1031+10 | 6 | 6 | | | 54 | 48 |
| 1031+70 | 6 | 6 | | | 54 | 48 |
| 1032+52 (midspan) | 6 | 6 | | | 54 | 48 |
| 1032+72 (midspan) | 6 | 6 | | | 54 | 48 |
| 1033+50 | 6 | 6 | | | 54 | 48 |
| 1034+48 (midspan) | | | 15 | 15 | 63 | 48 |
| 1034+55 (midspan) | 6 | 6 | | | 54 | 48 |
| 1034+70 | 6 | 6 | | | 54 | 48 |
| 1034+95 (midspan) | 6 | 6 | | | 54 | 48 |
| 1035+72 (midspan) | 6 | 6 | | | 54 | 48 |
| 1035+90 | 6 | 6 | | | 54 | 48 |
| 1036+08 (midspan) | 6 | 6 | | | 54 | 48 |
| 1036+50 | 6 | 6 | | | 54 | 48 |
| 1036+70 (midspan) | 6 | 6 | | | 54 | 48 |
| 1037+10 | 6 | 6 | | | 54 | 48 |
| 1037+38 (midspan) | 6 | 6 | | | 54 | 48 |
| 1037+70 | 6 | 6 | | | 54 | 48 |
| 1038+30 | 6 | 6 | | | 54 | 48 |
| 1038+51 (midspan) | 6 | 6 | | | 54 | 48 |
| | | | | | | |
| | | | | | | |
| Column Totals | 1746 | 1734 | 55 | 15 | 15793 | 8232 |

| LOCATION | 255 FULL DEPTH PAVEMENT REMOVAL AND RIGID REPLACEMENT TYPE T-Y DRIVING LANE | 255 FULL DEPTH PAVEMENT REMOVAL AND RIGID REPLACEMENT TYPE T-Y PASSING LANE | 255 FULL DEPTH PAVEMENT REMOVAL AND RIGID REPLACEMENT TYPE Y-Y DRIVING LANE | 255 FULL DEPTH PAVEMENT REMOVAL AND RIGID REPLACEMENT TYPE Y-Y PASSING LANE | 255 FULL DEPTH PAVEMENT SAWING | 413 SAWING AND SEALING ASPHALT CONCRETE PAVEMENT JOINTS, 705.04 |
|---|---|---|---|---|---|---|
| | LIN.FT. | | | | LIN.FT. | LIN.FT. |
| 1038+90 | 6 | 6 | | | 54 | 48 |
| 1039+50 | 6 | 6 | | | 54 | 48 |
| 1039+70 (midspan) | 6 | 6 | | | 54 | 48 |
| 1040+10 | 6 | 6 | | | 54 | 48 |
| 1040+29 (midspan) | 6 | 6 | | | 54 | 48 |
| 1040+56 (midspan) | 6 | 6 | | | 54 | 48 |
| 1040+70 | 6 | 6 | | | 54 | 48 |
| 1040+89 (midspan) | 6 | 6 | | | 54 | 48 |
| 1041+90 | 6 | 6 | | | 54 | 48 |
| 1042+17 (midspan) | 6 | 6 | | | 54 | 48 |
| 1042+50 | 6 | 6 | | | 54 | 48 |
| 1042+90 (midspan) | 6 | 6 | | | 54 | 48 |
| 1043+10 | 6 | 6 | | | 54 | 48 |
| 1044+30 | 6 | 6 | | | 54 | 48 |
| 1044+62 (midspan) | 6 | 6 | | | 54 | 48 |
| 1044+86 | 6 | 6 | | | 54 | 48 |
| 1046+29 (midspan) | 6 | 6 | | | 54 | 48 |
| 1047+66 | 6 | 6 | | | 54 | 48 |
| 1048+26 | 6 | 6 | | | 54 | 48 |
| 1048+65 | 6 | 6 | | | 54 | 48 |
| 1051+56 | 6 | 6 | | | 54 | 48 |
| 1052+95 | 6 | 6 | | | 54 | 48 |
| 1053+95 (midspan) | 6 | 6 | | | 54 | 48 |
| 1055+14 (midspan) | 6 | 6 | | | 54 | 48 |
| 1055+51 | 6 | 6 | | | 54 | 48 |
| 1056+13 | | | 15 | 15 | 63 | 48 |
| 1057+90 | 6 | 6 | | | 54 | 48 |
| 1059+10 | 6 | 6 | | | 54 | 48 |
| 1059+70 | 6 | 6 | | | 54 | 48 |
| 1060+30 | 6 | 6 | | | 54 | 48 |
| 1060+90 | 6 | 6 | | | 54 | 48 |
| 1061+50 | 6 | 6 | | | 54 | 48 |
| 1062+10 | 6 | 6 | | | 54 | 48 |
| 1062+70 | 6 | 6 | | | 54 | 48 |
| 1063+30 | 6 | 6 | | | 54 | 48 |
| 1063+90 | 6 | 6 | | | 54 | 48 |
| 1064+50 | 6 | 6 | | | 54 | 48 |
| 1064+93 (midspan) | 6 | 6 | | | 54 | 48 |
| 1066+90 | 6 | 6 | | | 54 | 48 |
| 1067+50 | 6 | 6 | | | 54 | 48 |
| 1068+05 | 6 | 6 | | | 54 | 48 |
| 1069+72 (midspan) | 6 | 6 | | | 54 | 48 |
| 1071+33 | 6 | 6 | | | 54 | 48 |
| 1071+48 (midspan) | 6 | 6 | | | 54 | 48 |
| 1072+08 | 6 | 6 | | | 54 | 48 |
| 1072+55 | 6 | 6 | | | 54 | 48 |
| 1073+12 | 6 | 6 | | | 54 | 48 |
| 1073+74 | 6 | 6 | | | 54 | 48 |
| 1074+34 | 6 | 6 | | | 54 | 48 |
| 1074+94 | 6 | 6 | | | 54 | 48 |
| 1075+52 | 6 | 6 | | | 54 | 48 |
| 1076+12 | 6 | 6 | | | 54 | 48 |
| | | | | | | |
| | | | | | | |
| Column Totals | 306 | 306 | 15 | 15 | 2817 | 2496 |
| | | | | | | |
| Sheet Totals | 2322 | 2316 | 80 | 40 | 21146 | 12,960 |

PAVEMENT REPAIR TABLE

I:\pd\OTT\MA\OTT2\OT2PRTBL.DGN

# PAVEMENT REPAIR LOCATIONS

## EASTBOUND LANES

QUANTITIES
CALC BY ALS DATE 8-10-94
CKD BY MTG DATE 8-10-95

| FHWA REGION | STATE | PROJECT | |
|---|---|---|---|
| 5 | OHIO | | |

OTT-2-16.60

83
367

| LOCATION | 255 FULL DEPTH PAVEMENT REMOVAL AND RIGID REPLACEMENT TYPE T-Y DRIVING LANE | 255 FULL DEPTH PAVEMENT REMOVAL AND RIGID REPLACEMENT TYPE T-Y PASSING LANE | 255 FULL DEPTH PAVEMENT REMOVAL AND RIGID REPLACEMENT TYPE Y-Y DRIVING LANE | 255 FULL DEPTH PAVEMENT REMOVAL AND RIGID REPLACEMENT TYPE Y-Y PASSING LANE | 255 FULL DEPTH PAVEMENT SAWING | 413 SAWING AND SEALING ASPHALT CONCRETE PAVEMENT JOINTS, 705.04 |
|---|---|---|---|---|---|---|
| | LIN.FT. | | | | LIN.FT. | LIN.FT. |
| 1076+31 (mldspan) | 6 | 6 | | | 54 | 48 |
| 1076+49 (mldspan) | 6 | 6 | | | 54 | 48 |
| 1076+72 | 6 | 6 | | | 54 | 48 |
| 1077+32 | 6 | 6 | | | 54 | 48 |
| 1077+92 | 6 | 6 | | | 54 | 48 |
| 1078+52 | 6 | 6 | | | 54 | 48 |
| 1079+12 | 6 | 6 | | | 54 | 48 |
| 1079+54 (mldspan) | 6 | 6 | | | 54 | 48 |
| 1079+71 | 6 | 6 | | | 54 | 48 |
| 1079+84 (mldspan) | 6 | 6 | | | 54 | 48 |
| 1080+32 | 6 | 6 | | | 54 | 48 |
| 1080+92 | 6 | 6 | | | 54 | 48 |
| 1081+95 (mldspan) | 6 | 6 | | | 54 | 48 |
| 1082+57 (mldspan) | 6 | 6 | | | 54 | 48 |
| 1083+31 | 6 | 6 | | | 54 | 48 |
| 1084+10 (mldspan) | 6 | 6 | | | 54 | 48 |
| 1084+67 (mldspan) | 6 | 6 | | | 54 | 48 |
| 1085+55 (mldspan) | 6 | 6 | | | 54 | 48 |
| 1085+72 | 6 | 6 | | | 54 | 48 |
| 1086+16 | 6 | 6 | | | 54 | 48 |
| 1086+92 | 6 | 6 | | | 54 | 48 |
| 1087+33 (mldspan) | 6 | 6 | | | 54 | 48 |
| 1087+52 | 6 | 6 | | | 54 | 48 |
| 1088+72 | 6 | 6 | | | 54 | 48 |
| 1088+92 (mldspan) | 6 | 6 | | | 54 | 48 |
| 1089+31 | 6 | 6 | | | 54 | 48 |
| 1089+91 | 6 | 6 | | | 54 | 48 |
| 1090+51 | 6 | 6 | | | 54 | 48 |
| 1091+14 | 6 | 6 | | | 54 | 48 |
| 1091+72 | 6 | 6 | | | 54 | 48 |
| 1092+11 (mldspan) | 6 | 6 | | | 54 | 48 |
| 1092+52 (mldspan) | 6 | 6 | | | 54 | 48 |
| 1092+92 | 6 | 6 | | | 54 | 48 |
| 1093+52 | 6 | 6 | | | 54 | 48 |
| 1093+72 (mldspan) | 6 | 6 | | | 54 | 48 |
| 1094+47 (mldspan) | 6 | 6 | | | 54 | 48 |
| 1094+76 | 6 | 6 | | | 54 | 48 |
| 1094+94 (mldspan) | 6 | 6 | | | 54 | 48 |
| 1095+36 | 6 | 6 | | | 54 | 48 |
| 1095+59 (mldspan) | 6 | 6 | | | 54 | 48 |
| 1095+96 | 6 | 6 | | | 54 | 48 |
| 1096+15 (mldspan) | 6 | 6 | | | 54 | 48 |
| 1096+81 (mldspan) | 6 | 6 | | | 54 | 48 |
| 1097+16 | 6 | 6 | | | 54 | 48 |
| 1097+76 | 6 | 6 | | | 54 | 48 |
| 1097+96 (mldspan) | 6 | 6 | | | 54 | 48 |
| 1098+36 | 6 | 6 | | | 54 | 48 |
| 1098+96 | 6 | 6 | | | 54 | 48 |
| 1099+80 (mldspan) | 6 | 6 | | | 54 | 48 |
| 1100+16 | 6 | 6 | | | 54 | 48 |
| 1100+76 | 6 | 6 | | | 54 | 48 |
| | | | | | | |
| | | | | | | |
| | | | | | | |
| | | | | | | |
| Column Totals | 306 | 306 | | | 2754 | 2448 |

| LOCATION | 255 FULL DEPTH PAVEMENT REMOVAL AND RIGID REPLACEMENT TYPE T-Y DRIVING LANE | 255 FULL DEPTH PAVEMENT REMOVAL AND RIGID REPLACEMENT TYPE T-Y PASSING LANE | 255 FULL DEPTH PAVEMENT REMOVAL AND RIGID REPLACEMENT TYPE Y-Y DRIVING LANE | 255 FULL DEPTH PAVEMENT REMOVAL AND RIGID REPLACEMENT TYPE Y-Y PASSING LANE | 255 FULL DEPTH PAVEMENT SAWING | 413 SAWING AND SEALING ASPHALT CONCRETE PAVEMENT JOINTS, 705.04 |
|---|---|---|---|---|---|---|
| | LIN.FT. | | | | LIN.FT. | LIN.FT. |
| 1101+36 | 6 | 6 | | | 54 | 48 |
| 1101+96 | 6 | 6 | | | 54 | 48 |
| 1102+56 | 6 | 6 | | | 54 | 48 |
| 1103+16 | 6 | 6 | | | 54 | 48 |
| 1103+31 (mldspan) | 6 | 6 | | | 54 | 48 |
| 1103+76 | 6 | 6 | | | 54 | 48 |
| 1104+10 (mldspan) | 6 | 6 | | | 54 | 48 |
| 1104+36 | 6 | 6 | | | 54 | 48 |
| 1104+96 | 6 | 6 | | | 54 | 48 |
| 1105+56 | 6 | 6 | | | 54 | 48 |
| 1106+16 | 6 | 6 | | | 54 | 48 |
| 1106+76 | 6 | 6 | | | 54 | 48 |
| 1107+96 | 6 | 6 | | | 54 | 48 |
| 1108+56 | 6 | 6 | | | 54 | 48 |
| 1109+16 | 6 | 6 | | | 54 | 48 |
| 1110+22 (mldspan) | 6 | 6 | | | 54 | 48 |
| 1110+36 | 6 | 6 | | | 54 | 48 |
| 1110+54 (mldspan) | 6 | 6 | | | 54 | 48 |
| 1110+96 | 6 | 6 | | | 54 | 48 |
| 1111+56 | 6 | 6 | | | 54 | 48 |
| 1111+83 (mldspan) | 6 | 6 | | | 54 | 48 |
| 1112+16 | 6 | 6 | | | 54 | 48 |
| 1112+47 (mldspan) | 6 | 6 | | | 54 | 48 |
| 1112+76 | 6 | 6 | | | 54 | 48 |
| 1113+36 | 6 | 6 | | | 54 | 48 |
| 1113+55 (mldspan) | 6 | 6 | | | 54 | 48 |
| 1113+96 | 6 | 6 | | | 54 | 48 |
| 1114+56 | 6 | 6 | | | 54 | 48 |
| 1115+16 | 6 | 6 | | | 54 | 48 |
| 1115+97 (mldspan) | 6 | 6 | | | 54 | 48 |
| 1116+36 | 6 | 6 | | | 54 | 48 |
| 1116+96 | 6 | 6 | | | 54 | 48 |
| 1118+35 (mldspan) | 6 | 6 | | | 54 | 48 |
| 1119+16 (mldspan) | 6 | 6 | | | 54 | 48 |
| 1119+36 | 6 | 6 | | | 54 | 48 |
| 1119+96 | 6 | 6 | | | 54 | 48 |
| 1120+31 (mldspan) | 6 | 6 | | | 54 | 48 |
| 1120+56 | 6 | 6 | | | 54 | 48 |
| 1121+16 | 6 | 6 | | | 54 | 48 |
| 1122+36 | 6 | 6 | | | 54 | 48 |
| 1122+77 (mldspan) | 6 | 6 | | | 54 | 48 |
| 1122+96 | 6 | 6 | | | 54 | 48 |
| 1123+35 (mldspan) | 6 | 6 | | | 54 | 48 |
| 1123+56 | 6 | 6 | | | 54 | 48 |
| 1124+16 | 6 | 6 | | | 54 | 48 |
| 1124+76 | 6 | 6 | | | 54 | 48 |
| 1125+36 | 6 | 6 | | | 54 | 48 |
| 1126+56 | 6 | 6 | | | 54 | 48 |
| 1126+83 (mldspan) | 6 | 6 | | | 54 | 48 |
| 1127+42 (mldspan) | 6 | 6 | | | 54 | 48 |
| 1127+76 | 6 | 6 | | | 54 | 48 |
| 1128+36 | 6 | 6 | | | 54 | 48 |
| | | | | | | |
| | | | | | | |
| | | | | | | |
| | | | | | | |
| Column Totals | 312 | 312 | | | 2808 | 2496 |

| LOCATION | 255 FULL DEPTH PAVEMENT REMOVAL AND RIGID REPLACEMENT TYPE T-Y DRIVING LANE | 255 FULL DEPTH PAVEMENT REMOVAL AND RIGID REPLACEMENT TYPE T-Y PASSING LANE | 255 FULL DEPTH PAVEMENT REMOVAL AND RIGID REPLACEMENT TYPE Y-Y DRIVING LANE | 255 FULL DEPTH PAVEMENT REMOVAL AND RIGID REPLACEMENT TYPE Y-Y PASSING LANE | 255 FULL DEPTH PAVEMENT SAWING | 413 SAWING AND SEALING ASPHALT CONCRETE PAVEMENT JOINTS, 705.04 |
|---|---|---|---|---|---|---|
| | LIN.FT. | | | | LIN.FT. | LIN.FT. |
| 1128+60 (mldspan) | 6 | 6 | | | 54 | 48 |
| 1128+96 | 6 | 6 | | | 54 | 48 |
| 1129+15 (mldspan) | 6 | 6 | | | 54 | 48 |
| 1129+56 | 6 | 6 | | | 54 | 48 |
| 1129+86 (mldspan) | | | 14 | 14 | 62 | 48 |
| 1130+16 | 6 | 6 | | | 54 | 48 |
| 1130+47 (mldspan) | 6 | 6 | | | 54 | 48 |
| 1130+76 | 6 | 6 | | | 54 | 48 |
| 1131+20 (mldspan) | 6 | 6 | | | 54 | 48 |
| 1131+36 | 6 | 6 | | | 54 | 48 |
| 1131+55 (mldspan) | 6 | 6 | | | 54 | 48 |
| 1131+75 (mldspan) | 6 | 6 | | | 54 | 48 |
| 1131+96 | 6 | 6 | | | 54 | 48 |
| 1132+35 (mldspan) | 6 | 6 | | | 54 | 48 |
| 1132+56 | 6 | 6 | | | 54 | 48 |
| 1133+16 | 6 | 6 | | | 54 | 48 |
| 1133+62 (mldspan) | 6 | 6 | | | 54 | 48 |
| 1134+36 | 6 | 6 | | | 54 | 48 |
| 1134+96 | 6 | 6 | | | 54 | 48 |
| 1135+56 | 6 | 6 | | | 54 | 48 |
| 1136+16 | 6 | 6 | | | 54 | 48 |
| 1136+76 | 6 | 6 | | | 54 | 48 |
| 1137+36 | 6 | 6 | | | 54 | 48 |
| 1137+96 | 6 | 6 | | | 54 | 48 |
| 1138+56 | 6 | 6 | | | 54 | 48 |
| 1139+76 | 6 | 6 | | | 54 | 48 |
| 1140+10 (mldspan) | 6 | 6 | | | 54 | 48 |
| 1140+36 | 6 | 6 | | | 54 | 48 |
| 1140+96 | 6 | 6 | | | 54 | 48 |
| 1141+56 | 6 | 6 | | | 54 | 48 |
| 1141+73 | 6 | | | | 30 | 24 |
| 1142+16 | 6 | 6 | | | 54 | 48 |
| 1142+76 | 6 | 6 | | | 54 | 48 |
| 1143+00 (mldspan) | 6 | 6 | | | 54 | 48 |
| 1143+36 | 6 | 6 | | | 54 | 48 |
| 1143+96 | 6 | 6 | | | 54 | 48 |
| 1144+56 to 1145+16 | | | 60 | 60 | 108 | 96 |
| 1145+76 | | | 200 | 200 | 248 | 264 |
| 1146+36 | 6 | 6 | | | 54 | 48 |
| 1146+78 to 1148+78 | | | 200 | 200 | 248 | 264 |
| 1149+02 (mldspan) | 6 | 6 | | | 54 | 48 |
| 1149+36 | 6 | 6 | | | 54 | 48 |
| 1149+60 (mldspan) | 6 | 6 | | | 54 | 48 |
| 1150+39 (mldspan) | 6 | 6 | | | 54 | 48 |
| 1150+81 (mldspan) | 6 | 6 | | | 54 | 48 |
| 1151+16 | 6 | 6 | | | 54 | 48 |
| 1151+31 (mldspan) | 6 | 6 | | | 54 | 48 |
| 1152+36 | 6 | 6 | | | 54 | 48 |
| 1152+82 (mldspan) | 6 | 6 | | | 54 | 48 |
| 1153+36 (mldspan) | 6 | 6 | | | 54 | 48 |
| 1153+58 | 6 | 6 | | | 54 | 48 |
| 1154+18 | 6 | 6 | | | 54 | 48 |
| | | | | | | |
| Column Totals | 288 | 282 | 474 | 474 | 3234 | 2952 |
| | | | | | | |
| | | | | | | |
| Sheet Totals | 906 | 900 | 474 | 474 | 8796 | 7896 |

I:/pd/OTT/WA/OTT2/02PRTBL2.DGN

PAVEMENT REPAIR TABLE

# PAVEMENT REPAIR LOCATIONS

## EASTBOUND LANES

QUANTITIES
CALC BY ALS DATE 8-10-94
CKD BY MTG DATE 8-29-95

| FHWA REGION | STATE | PROJECT | |
|---|---|---|---|
| 5 | OHIO | | |

OTT-2-16.60

84/367

| LOCATION | 255 FULL DEPTH PAVEMENT REMOVAL AND RIGID REPLACEMENT TYPE T-Y DRIVING LANE | 255 FULL DEPTH PAVEMENT REMOVAL AND RIGID REPLACEMENT TYPE T-Y PASSING LANE | 255 FULL DEPTH PAVEMENT REMOVAL AND RIGID REPLACEMENT TYPE Y-Y DRIVING LANE | 255 FULL DEPTH PAVEMENT REMOVAL AND RIGID REPLACEMENT TYPE Y-Y PASSING LANE | 255 FULL DEPTH PAVEMENT SAWING | 413 SAWING AND SEALING ASPHALT CONCRETE PAVEMENT JOINTS, 705.04 |
|---|---|---|---|---|---|---|
| | LIN.FT. | | | | LIN.FT. | LIN.FT. |
| *1154+58 to 1155+38 | | | 80 | 80 | 128 | 120 |
| 1155+98 | 6 | 6 | | | 54 | 48 |
| 1156+58 | 6 | 6 | | | 54 | 48 |
| 1157+78 | 6 | 6 | | | 54 | 48 |
| 1158+98 | 6 | 6 | | | 54 | 48 |
| 1159+58 | 6 | 6 | | | 54 | 48 |
| 1160+32 (midspan) | 6 | 6 | | | 54 | 48 |
| 1160+78 | 6 | 6 | | | 54 | 48 |
| 1161+38 | 6 | 6 | | | 54 | 48 |
| 1162+58 | 6 | 6 | | | 54 | 48 |
| 1163+18 | 6 | 6 | | | 54 | 48 |
| 1163+78 | 6 | 6 | | | 54 | 48 |
| 1164+21 (midspan) | 6 | 6 | | | 54 | 48 |
| 1165+58 | 6 | 6 | | | 54 | 48 |
| 1166+18 | 6 | 6 | | | 54 | 48 |
| 1166+36 (midspan) | 6 | 6 | | | 54 | 48 |
| 1167+74 to 1167+98 | | | 24 | 24 | 72 | 48 |
| 1168+58 | 6 | 6 | | | 54 | 48 |
| 1169+18 | 6 | 6 | | | 54 | 48 |
| 1172+07 | 6 | 6 | | | 54 | 48 |
| 1172+67 | 6 | 6 | | | 54 | 48 |
| 1173+27 | 6 | 6 | | | 54 | 48 |
| 1174+47 | 6 | 6 | | | 54 | 48 |
| 1175+07 | 6 | 6 | | | 54 | 48 |
| 1177+32 | 6 | 6 | | | 54 | 48 |
| 1178+52 | 6 | 6 | | | 54 | 48 |
| 1179+12 | 6 | 6 | | | 54 | 48 |
| 1180+92 | 6 | 6 | | | 54 | 48 |
| 1181+95 (midspan) | 6 | 6 | | | 54 | 48 |
| 1183+14 to 1183+28 | | | 14 | 14 | 62 | 48 |
| 1184+52 | 6 | 6 | | | 54 | 48 |
| 1185+07 | 6 | 6 | | | 54 | 48 |
| 1185+67 | 6 | 6 | | | 54 | 48 |
| 1185+82 (midspan) | 6 | | | | 30 | 24 |
| 1186+27 | 6 | 6 | | | 54 | 48 |
| 1186+87 | 6 | 6 | | | 54 | 48 |
| 1187+47 | 6 | 6 | | | 54 | 48 |
| 1188+07 | 6 | 6 | | | 54 | 48 |
| 1188+67 | 6 | 6 | | | 54 | 48 |
| 1189+03 (midspan) | 6 | 6 | | | 54 | 48 |
| 1189+27 | 6 | 6 | | | 54 | 48 |
| 1189+87 | 6 | 6 | | | 54 | 48 |
| 1190+47 | 6 | 6 | | | 54 | 48 |
| 1191+07 | 6 | 6 | | | 54 | 48 |
| 1191+22 (midspan) | 6 | 6 | | | 54 | 48 |
| 1191+67 | 6 | 6 | | | 54 | 48 |
| 1192+27 | 6 | 6 | | | 54 | 48 |
| 1192+87 | 6 | 6 | | | 54 | 48 |
| 1193+47 | 6 | 6 | | | 54 | 48 |
| 1193+76 (midspan) | 6 | 6 | | | 54 | 48 |
| 1194+04 | 6 | 6 | | | 54 | 48 |
| 1194+64 | 6 | 6 | | | 54 | 48 |
| 1194+99 to 1195+23 | | | 24 | 24 | 72 | 48 |
| | | | | | | |
| | | | | | | |
| | | | | | | |
| Column Totals | 294 | 288 | 142 | 142 | 2956 | 2592 |

| LOCATION | 255 FULL DEPTH PAVEMENT REMOVAL AND RIGID REPLACEMENT TYPE T-Y DRIVING LANE | 255 FULL DEPTH PAVEMENT REMOVAL AND RIGID REPLACEMENT TYPE T-Y PASSING LANE | 255 FULL DEPTH PAVEMENT REMOVAL AND RIGID REPLACEMENT TYPE Y-Y DRIVING LANE | 255 FULL DEPTH PAVEMENT REMOVAL AND RIGID REPLACEMENT TYPE Y-Y PASSING LANE | 255 FULL DEPTH PAVEMENT SAWING | 413 SAWING AND SEALING ASPHALT CONCRETE PAVEMENT JOINTS, 705.04 |
|---|---|---|---|---|---|---|
| | LIN.FT. | | | | LIN.FT. | LIN.FT. |
| 1197+24 (midspan) | 6 | 6 | | | 54 | 48 |
| 1197+45 (midspan) | 6 | 6 | | | 54 | 48 |
| 1198+24 | 6 | 6 | | | 54 | 48 |
| 1198+59 (midspan) | 6 | 6 | | | 54 | 48 |
| 1199+44 | 6 | 6 | | | 54 | 48 |
| 1201+84 | 6 | 6 | | | 54 | 48 |
| 1202+44 | 6 | 6 | | | 54 | 48 |
| 1202+85 (midspan) | 6 | 6 | | | 54 | 48 |
| 1203+64 | 6 | 6 | | | 54 | 48 |
| 1203+86 (midspan) | 6 | 6 | | | 54 | 48 |
| 1204+24 | 6 | 6 | | | 54 | 48 |
| 1204+58 (midspan) | 6 | 6 | | | 54 | 48 |
| 1204+84 | 6 | 6 | | | 54 | 48 |
| 1205+44 | 6 | 6 | | | 54 | 48 |
| 1206+04 to 1286+04 | | | 80 | 80 | 128 | 120 |
| 1207+24 | 6 | 6 | | | 54 | 48 |
| 1207+57 (midspan) | 6 | 6 | | | 54 | 48 |
| 1207+84 | 6 | 6 | | | 54 | 48 |
| 1208+44 | 6 | 6 | | | 54 | 48 |
| 1208+86 (midspan) | 6 | 6 | | | 54 | 48 |
| 1209+04 | 6 | 6 | | | 54 | 48 |
| 1209+64 | 6 | 6 | | | 54 | 48 |
| 1210+24 | 6 | 6 | | | 54 | 48 |
| 1210+46 (midspan) | 6 | 6 | | | 54 | 48 |
| 1210+84 | 6 | 6 | | | 54 | 48 |
| 1211+23 (midspan) | 6 | 6 | | | 54 | 48 |
| 1211+44 | 6 | 6 | | | 54 | 48 |
| 1211+87 (midspan) | 6 | 6 | | | 54 | 48 |
| 1212+32 (midspan) | 6 | 6 | | | 54 | 48 |
| 1212+62 | 6 | 6 | | | 54 | 48 |
| 1212+82 (midspan) | 6 | | | | 30 | 24 |
| 1213+48 to 1213+64 | | | 16 | | 40 | 24 |
| 1214+10 (midspan) | 6 | 6 | | | 54 | 48 |
| 1214+64 (midspan) | 6 | 6 | | | 54 | 48 |
| 1215+22 Ahd. | | | 22 | 22 | 70 | 48 |
| 1215+65 | 6 | 6 | | | 54 | 48 |
| 1216+11 (midspan) | 6 | | | | 30 | 24 |
| 1216+25 | 6 | 6 | | | 54 | 48 |
| 1216+42 (midspan) | 6 | 6 | | | 54 | 48 |
| 1216+62 (midspan) | 6 | | | | 30 | 24 |
| 1216+85 | 6 | 6 | | | 54 | 48 |
| 1217+11 (midspan) | 6 | | | | 30 | 24 |
| 1217+59 (midspan) | 6 | 6 | | | 54 | 48 |
| 1217+85 (midspan) | 6 | | | | 30 | 24 |
| 1218+30 (midspan) | 6 | 6 | | | 54 | 48 |
| 1218+65 | 6 | 6 | | | 54 | 48 |
| 1218+92 (midspan) | 6 | 6 | | | 54 | 48 |
| 1219+12 (midspan) | 6 | | | | 30 | 24 |
| 1219+25 | 6 | 6 | | | 54 | 48 |
| 1219+48 (midspan) | 6 | 6 | | | 54 | 48 |
| 1219+65 Ahd. | | | 20 | 20 | 68 | 48 |
| 1227+19 | 6 | 6 | | | 54 | 48 |
| | | | | | | |
| | | | | | | |
| | | | | | | |
| Column Totals | 288 | 252 | 138 | 122 | 2754 | 2400 |

| LOCATION | 255 FULL DEPTH PAVEMENT REMOVAL AND RIGID REPLACEMENT TYPE T-Y DRIVING LANE | 255 FULL DEPTH PAVEMENT REMOVAL AND RIGID REPLACEMENT TYPE T-Y PASSING LANE | 255 FULL DEPTH PAVEMENT REMOVAL AND RIGID REPLACEMENT TYPE Y-Y DRIVING LANE | 255 FULL DEPTH PAVEMENT REMOVAL AND RIGID REPLACEMENT TYPE Y-Y PASSING LANE | 255 FULL DEPTH PAVEMENT SAWING | 413 SAWING AND SEALING ASPHALT CONCRETE PAVEMENT JOINTS, 705.04 |
|---|---|---|---|---|---|---|
| | LIN.FT. | | | | LIN.FT. | LIN.FT. |
| 1227+46 (midspan) | 6 | 6 | | | 54 | 48 |
| 1227+69 | 6 | 6 | | | 54 | 48 |
| 1227+84 (midspan) | 6 | 6 | | | 54 | 48 |
| 1228+04 | 6 | 6 | | | 54 | 48 |
| 1228+37 (midspan) | 6 | 6 | | | 54 | 48 |
| 1228+64 | 6 | 6 | | | 54 | 48 |
| 1229+21 | 6 | 6 | | | 54 | 48 |
| 1229+41 to 1229+51 | | | 10 | 10 | 58 | 48 |
| 1229+80 | 6 | 6 | | | 54 | 48 |
| 1230+40 | 6 | 6 | | | 54 | 48 |
| 1231+05 | 6 | 6 | | | 54 | 48 |
| 1231+65 | 6 | 6 | | | 54 | 48 |
| 1232+25 | 6 | 6 | | | 54 | 48 |
| 1232+85 | 6 | 6 | | | 54 | 48 |
| 1233+45 | 6 | 6 | | | 54 | 48 |
| 1233+74 (midspan) | 6 | 6 | | | 54 | 48 |
| 1234+08 | 6 | 6 | | | 54 | 48 |
| 1234+68 | 6 | 6 | | | 54 | 48 |
| 1235+28 | 6 | 6 | | | 54 | 48 |
| | | | | | | |
| 1030+45 To End Project. Joints which need sawing and sealing only (96 Joints) | | | | | | 2304 |
| | | | | | | |
| | | | | | | |
| Column Totals | 108 | 108 | 10 | 10 | 1030 | 3216 |
| Totals This Sheet | 690 | 648 | 290 | 274 | 6740 | 8208 |
| Totals From Sheet 82 | 2322 | 2316 | 80 | 40 | 21146 | 12960 |
| Totals From Sheet 83 | 906 | 900 | 474 | 474 | 8796 | 7896 |
| Eastbound Totals (Lin.Ft.) | 3918 | 3864 | 844 | 788 | 36682 | 29064 |
| Eastbound Totals (Sq.Yds.) | 5224 | 5152 | 1125 | 1051 | | |

I:/pd/OTT.AWA/OTT2.102PRTBL3.DGN

PAVEMENT REPAIR TABLE

# PAVEMENT REPAIR LOCATIONS

## WESTBOUND LANES

QUANTITIES
CALC BY ALS DATE 8-10-94
CKD BY MTG DATE 8-29-95

| FHWA REGION | STATE | PROJECT | |
|---|---|---|---|
| 5 | OHIO | | |

OTT-2-16.60

85/367

| LOCATION | 255 FULL DEPTH PAVEMENT REMOVAL AND RIGID REPLACEMENT TYPE T-Y DRIVING LANE | 255 FULL DEPTH PAVEMENT REMOVAL AND RIGID REPLACEMENT TYPE T-Y PASSING LANE | 255 FULL DEPTH PAVEMENT REMOVAL AND RIGID REPLACEMENT TYPE Y-Y DRIVING LANE | 255 FULL DEPTH PAVEMENT REMOVAL AND RIGID REPLACEMENT TYPE Y-Y PASSING LANE | 255 FULL DEPTH PAVEMENT SAWING | 413 SAWING AND SEALING ASPHALT CONCRETE PAVEMENT JOINTS, 705.04 |
|---|---|---|---|---|---|---|
| | LIN.FT. | | | | LIN.FT. | LIN.FT. |
| 880+30 (mldspan) | 6 | 6 | | | 54 | 48 |
| 884+17 (mldspan) | 6 | 6 | | | 54 | 48 |
| 886+34 (mldspan) | 6 | 6 | | | 54 | 48 |
| 887+52 (mldspan) | 6 | 6 | | | 54 | 48 |
| 888+75 (mldspan) | 6 | 6 | | | 54 | 48 |
| 889+38 (mldspan) | 6 | 6 | | | 54 | 48 |
| 892+11 (mldspan) | 6 | 6 | | | 54 | 48 |
| 892+67 (mldspan) | 6 | | | | 30 | 24 |
| 893+24 (mldspan) | 6 | 6 | | | 54 | 48 |
| 893+48 (mldspan) | | 6 | | | 30 | 24 |
| 894+10 (mldspan) | 6 | | | | 30 | 24 |
| 895+14 (mldspan) | 6 | 6 | | | 54 | 48 |
| 896+65 (mldspan) | 6 | 6 | | | 54 | 48 |
| 897+30 (mldspan) | 6 | | | | 30 | 24 |
| 897+46 (mldspan) | 6 | 6 | | | 54 | 48 |
| 897+81 (mldspan) | 6 | | | | 30 | 24 |
| 897+97 (mldspan) | 6 | 6 | | | 54 | 48 |
| 898+64 (mldspan) | 6 | | | | 30 | 24 |
| 899+27 (mldspan) | 6 | 6 | | | 54 | 48 |
| 899+68 (mldspan) | 6 | 6 | | | 54 | 48 |
| 899+94 (mldspan) | 6 | | | | 30 | 24 |
| 900+28 (mldspan) | | 6 | | | 30 | 24 |
| 901+00 (mldspan) | 6 | 6 | | | 54 | 48 |
| 901+61 (mldspan) | 6 | 6 | | | 54 | 48 |
| 902+00 (mldspan) | 6 | | | | 30 | 24 |
| 902+40 (mldspan) | 6 | 6 | | | 54 | 48 |
| 902+70 (mldspan) | 6 | | | | 30 | 24 |
| 903+49 (mldspan) | 6 | 6 | | | 54 | 48 |
| 903+89 (mldspan) | 6 | 6 | | | 54 | 48 |
| 904+55 (mldspan) | 6 | 6 | | | 54 | 48 |
| 904+82 (mldspan) | 6 | 6 | | | 54 | 48 |
| 905+26 (mldspan) | 6 | 6 | | | 54 | 48 |
| 905+86 (mldspan) | 6 | 6 | | | 54 | 48 |
| 906+82 (mldspan) | 6 | 6 | | | 54 | 48 |
| 907+55 (mldspan) | 6 | 6 | | | 54 | 48 |
| 907+71 (mldspan) | 6 | 6 | | | 54 | 48 |
| 908+26 (mldspan) | 6 | 6 | | | 54 | 48 |
| 909+24 (mldspan) | 6 | 6 | | | 54 | 48 |
| 909+81 (mldspan) | 6 | 6 | | | 54 | 48 |
| 911+04 (mldspan) | 6 | | | | 30 | 24 |
| 911+29 (mldspan) | 6 | | | | 30 | 24 |
| 911+87 (mldspan) | 6 | 6 | | | 54 | 48 |
| 912+34 (mldspan) | 6 | 6 | | | 54 | 48 |
| 914+21 (mldspan) | 6 | 6 | | | 54 | 48 |
| 916+39 (mldspan) | 6 | 6 | | | 54 | 48 |
| 916+53 (mldspan) | 6 | 6 | | | 54 | 48 |
| 917+88 (mldspan) | 6 | 6 | | | 54 | 48 |
| 921+25 (mldspan) | 6 | 6 | | | 54 | 48 |
| 921+85 (mldspan) | 6 | | | | 30 | 24 |
| 923+64 (mldspan) | 6 | 6 | | | 54 | 48 |
| 924+85 to 924+95 | | | 10 | 10 | 58 | 48 |
| | | | | | | |
| | | | | | | |
| | | | | | | |
| | | | | | | |
| | | | | | | |
| Column Totals | 288 | 234 | 10 | 10 | 2446 | 2136 |

| LOCATION | 255 FULL DEPTH PAVEMENT REMOVAL AND RIGID REPLACEMENT TYPE T-Y DRIVING LANE | 255 FULL DEPTH PAVEMENT REMOVAL AND RIGID REPLACEMENT TYPE T-Y PASSING LANE | 255 FULL DEPTH PAVEMENT REMOVAL AND RIGID REPLACEMENT TYPE Y-Y DRIVING LANE | 255 FULL DEPTH PAVEMENT REMOVAL AND RIGID REPLACEMENT TYPE Y-Y PASSING LANE | 255 FULL DEPTH PAVEMENT SAWING | 413 SAWING AND SEALING ASPHALT CONCRETE PAVEMENT JOINTS, 705.04 |
|---|---|---|---|---|---|---|
| | LIN.FT. | | | | LIN.FT. | LIN.FT. |
| 926+79 (mldspan) | 6 | 6 | | | 54 | 48 |
| 928+09 (mldspan) | 6 | | | | 30 | 24 |
| 929+68 (mldspan) | 6 | 6 | | | 54 | 48 |
| 930+31 (mldspan) | 6 | 6 | | | 54 | 48 |
| 930+87 (mldspan) | 6 | 6 | | | 54 | 48 |
| 931+76 (mldspan) | 6 | 6 | | | 54 | 48 |
| 936+17 (mldspan) | 6 | | | | 30 | 24 |
| 936+34 to 936+64 | | | 30 | 30 | 78 | 72 |
| 936+94 (mldspan) | 6 | | | | 30 | 24 |
| 940+87 (mldspan) | 6 | 6 | | | 54 | 48 |
| 943+97 (mldspan) | 6 | 6 | | | 54 | 48 |
| 944+52 (mldspan) | 6 | 6 | | | 54 | 48 |
| 946+79 to 946+89 | | | 10 | 10 | 58 | 48 |
| 951+70 (mldspan) | 6 | 6 | | | 54 | 48 |
| 953+14 (mldspan) | 6 | 6 | | | 54 | 48 |
| 954+98 (mldspan) | 6 | | | | 30 | 24 |
| 956+05 (mldspan) | 6 | 6 | | | 54 | 48 |
| 958+88 (mldspan) | 6 | 6 | | | 54 | 48 |
| 959+25 (mldspan) | 6 | 6 | | | 54 | 48 |
| 961+89 Ahd. (mldspan) | 6 | | | | 30 | 24 |
| 963+79 (mldspan) | 6 | | | | 30 | 24 |
| 964+39 (mldspan) | 6 | 6 | | | 54 | 48 |
| 964+93 (mldspan) | 6 | 6 | | | 54 | 48 |
| 966+36 (mldspan) | 6 | 6 | | | 54 | 48 |
| 966+97 (mldspan) | 6 | | | | 30 | 24 |
| 968+34 to 969+22 | | | 10 | | 34 | 24 |
| 969+12 (mldspan) | 6 | | | | 30 | 24 |
| 977+56 (mldspan) | 6 | 6 | | | 54 | 48 |
| 980+14 to 980+74 | | | 60 | 60 | 108 | 96 |
| 981+15 (mldspan) | 6 | 6 | | | 54 | 48 |
| 982+33 to 983+93 | | | 160 | 160 | 208 | 216 |
| 985+34 (mldspan) | 6 | 6 | | | 54 | 48 |
| 986+92 (mldspan) | 6 | 6 | | | 54 | 48 |
| 987+64 (mldspan) | 6 | 6 | | | 54 | 48 |
| 992+50 to 993+00 | | | 50 | 50 | 98 | 96 |
| 993+50 (mldspan) | 6 | 6 | | | 54 | 48 |
| 994+98 (mldspan) | 6 | 6 | | | 54 | 48 |
| 995+37 to 996+47 | | | 10 | 10 | 58 | 48 |
| 996+35 to 996+95 (mldspan) | | | 60 | | 84 | 48 |
| 998+32 (mldspan) | 6 | 6 | | | 54 | 48 |
| 999+10 (mldspan) | 6 | 6 | | | 54 | 48 |
| 1003+34 (mldspan) | 6 | 6 | | | 54 | 48 |
| 1006+72 (mldspan) | 6 | 6 | | | 54 | 48 |
| 1006+86 (mldspan) | 6 | 6 | | | 54 | 48 |
| 1007+37 (mldspan) | 6 | 6 | | | 54 | 48 |
| 1017+79 (mldspan) | 6 | 6 | | | 54 | 48 |
| 1018+42 (mldspan) | 6 | 6 | | | 54 | 48 |
| 1018+72 (mldspan) | 6 | 6 | | | 54 | 48 |
| 1019+02 (mldspan) | 6 | 6 | | | 54 | 48 |
| | | | | | | |
| | | | | | | |
| | | | | | | |
| | | | | | | |
| | | | | | | |
| Column Totals | 246 | 198 | 390 | 320 | 2748 | 2424 |

| LOCATION | 255 FULL DEPTH PAVEMENT REMOVAL AND RIGID REPLACEMENT TYPE T-Y DRIVING LANE | 255 FULL DEPTH PAVEMENT REMOVAL AND RIGID REPLACEMENT TYPE T-Y PASSING LANE | 255 FULL DEPTH PAVEMENT REMOVAL AND RIGID REPLACEMENT TYPE Y-Y DRIVING LANE | 255 FULL DEPTH PAVEMENT REMOVAL AND RIGID REPLACEMENT TYPE Y-Y PASSING LANE | 255 FULL DEPTH PAVEMENT SAWING | 413 SAWING AND SEALING ASPHALT CONCRETE PAVEMENT JOINTS, 705.04 |
|---|---|---|---|---|---|---|
| | LIN.FT. | | | | LIN.FT. | LIN.FT. |
| 1024+24 (mldspan) | 6 | 6 | | | 54 | 48 |
| 1027+30 (mldspan) | 6 | 6 | | | 54 | 48 |
| 1027+70 (mldspan) | 6 | 6 | | | 54 | 48 |
| 1030+15 (mldspan) | 6 | 6 | | | 54 | 48 |
| | | | | | | |
| | | | | | | |
| | | | | | | |
| Repair All Expansion Joints From 879+00 to 1030+94 (237 Joints) | | | | | | |
| | 1422 | 1422 | | | 12,798 | 11,376 |
| | | | | | | |
| 1031+54 | 6 | 6 | | | 54 | 48 |
| 1032+75 | 6 | 6 | | | 54 | 48 |
| 1033+35 | 6 | 6 | | | 54 | 48 |
| 1034+82 (mldspan) | 6 | 6 | | | 54 | 48 |
| 1035+12 | 6 | 6 | | | 54 | 48 |
| 1035+58 (mldspan) | 6 | 6 | | | 54 | 48 |
| 1035+72 | 6 | 6 | | | 54 | 48 |
| 1036+10 (mldspan) | 6 | 6 | | | 54 | 48 |
| 1036+29 | 6 | 6 | | | 54 | 48 |
| 1036+64 | 6 | 6 | | | 54 | 48 |
| 1037+55 | 6 | 6 | | | 54 | 48 |
| 1037+75 (mldspan) | 6 | 6 | | | 54 | 48 |
| 1038+15 | 6 | 6 | | | 54 | 48 |
| 1038+75 | 6 | 6 | | | 54 | 48 |
| 1039+35 | 6 | 6 | | | 54 | 48 |
| 1039+72 (mldspan) | 6 | 6 | | | 54 | 48 |
| 1039+95 | 6 | 6 | | | 54 | 48 |
| 1040+55 | 6 | 6 | | | 54 | 48 |
| 1040+75 (mldspan) | 6 | 6 | | | 54 | 48 |
| 1041+15 | 6 | 6 | | | 54 | 48 |
| 1041+39 (mldspan) | 6 | 6 | | | 54 | 48 |
| 1041+64 (mldspan) | 6 | | | | 30 | 24 |
| 1041+75 | 6 | 6 | | | 54 | 48 |
| 1042+10 (mldspan) | 6 | 6 | | | 54 | 48 |
| 1042+35 | 6 | 6 | | | 54 | 48 |
| 1042+78 (mldspan) | 6 | 6 | | | 54 | 48 |
| 1042+97 | 6 | 6 | | | 54 | 48 |
| 1043+34 (mldspan) | 6 | 6 | | | 54 | 48 |
| 1043+56 | 6 | 6 | | | 54 | 48 |
| 1044+16 | 6 | 6 | | | 54 | 48 |
| 1044+40 (mldspan) | 6 | 6 | | | 54 | 48 |
| 1044+76 | 6 | 6 | | | 54 | 48 |
| | | | | | | |
| | | | | | | |
| Column Totals | 1638 | 1632 | | | 14718 | 13080 |
| | | | | | | |
| | | | | | | |
| | | | | | | |
| | 246 | | | | | |
| | | | | | | |
| | 288 | | | | | |
| | | | | | | |
| | | | | | | |
| | | | | | | |
| | | | | | | |
| Sheet Totals | 2172 | 2064 | 400 | 330 | 19912 | 17640 |

I:/pd/OTTAWA/OTT2/02PRTBL4.DGN

PAVEMENT REPAIR TABLE

# PAVEMENT REPAIR LOCATIONS

## WESTBOUND LANES

QUANTITIES
CALC BY ALS DATE 8-10-95
CKD BY MTG DATE 8-10-95

| FHWA REGION | STATE | PROJECT | |
|---|---|---|---|
| 5 | OHIO | | |

86/367

OTT-2-16.60

| LOCATION | 255 FULL DEPTH PAVEMENT REMOVAL AND RIGID REPLACEMENT TYPE T-Y DRIVING LANE | 255 FULL DEPTH PAVEMENT REMOVAL AND RIGID REPLACEMENT TYPE T-Y PASSING LANE | 255 FULL DEPTH PAVEMENT REMOVAL AND RIGID REPLACEMENT TYPE Y-Y DRIVING LANE | 255 FULL DEPTH PAVEMENT REMOVAL AND RIGID REPLACEMENT TYPE Y-Y PASSING LANE | 255 FULL DEPTH PAVEMENT SAWING | 413 SAWING AND SEALING ASPHALT CONCRETE PAVEMENT JOINTS, 705.04 |
|---|---|---|---|---|---|---|
| | LIN.FT. | | | | LIN.FT. | LIN.FT. |
| 1045+37 | 6 | 6 | | | 54 | 48 |
| 1045+97 | 6 | 6 | | | 54 | 48 |
| 1046+54 | 6 | 6 | | | 54 | 48 |
| 1047+13 | 6 | 6 | | | 54 | 48 |
| 1047+73 | 6 | 6 | | | 54 | 48 |
| 1048+36 to 1048+79 | | | 43 | | 67 | 36 |
| 1049+08 | 6 | 6 | | | 54 | 48 |
| 1049+69 | 6 | 6 | | | 54 | 48 |
| 1050+23 | 6 | 6 | | | 54 | 48 |
| 1050+82 | 6 | 6 | | | 54 | 48 |
| 1051+46 | 6 | 6 | | | 54 | 48 |
| 1052+06 to 1052+68 | | | 62 | | 86 | 48 |
| 1052+86 (mldspan) | 6 | 6 | | | 54 | 48 |
| 1053+07 (mldspan) | 6 | 6 | | | 54 | 48 |
| 1053+25 | 6 | 6 | | | 54 | 48 |
| 1053+81 | 6 | 6 | | | 54 | 48 |
| 1054+58 to 1055+08 | | | 50 | 50 | 98 | 96 |
| 1055+63 | 6 | 6 | | | 54 | 48 |
| 1055+90 (mldspan) | 6 | 6 | | | 54 | 48 |
| 1056+62 (mldspan) | 6 | 6 | | | 54 | 48 |
| 1056+85 | 6 | 6 | | | 54 | 48 |
| 1057+46 | 6 | 6 | | | 54 | 48 |
| 1057+61 (mldspan) | 6 | 6 | | | 54 | 48 |
| 1058+05 | 6 | 6 | | | 54 | 48 |
| 1058+40 (mldspan) | 6 | 6 | | | 54 | 48 |
| 1058+67 | 6 | 6 | | | 54 | 48 |
| 1059+07 (mldspan) | 6 | 6 | | | 54 | 48 |
| 1059+28 | 6 | 6 | | | 54 | 48 |
| 1059+88 | 6 | 6 | | | 54 | 48 |
| 1060+04 to 1060+24 | | | 20 | 20 | 68 | 48 |
| 1060+49 | 6 | 6 | | | 54 | 48 |
| 1060+95 (mldspan) | 6 | 6 | | | 54 | 48 |
| 1061+08 | 6 | 6 | | | 54 | 48 |
| 1061+68 | 6 | 6 | | | 54 | 48 |
| 1061+86 (mldspan) | 6 | 6 | | | 54 | 48 |
| 1062+09 (mldspan) | 6 | 6 | | | 54 | 48 |
| 1062+29 | 6 | 6 | | | 54 | 48 |
| 1062+88 to 1064+40 | | | 152 | 152 | 200 | 216 |
| 1064+72 | 6 | 6 | | | 54 | 48 |
| 1064+92 (mldspan) | 6 | 6 | | | 54 | 48 |
| 1065+15 (mldspan) | 6 | 6 | | | 54 | 48 |
| 1065+31 | 6 | 6 | | | 54 | 48 |
| 1065+47 (mldspan) | 6 | 6 | | | 54 | 48 |
| 1065+92 | 6 | 6 | | | 54 | 48 |
| 1066+50 to 1067+15 | | | 65 | 65 | 113 | 96 |
| 1067+31 (mldspan) | 6 | 6 | | | 54 | 48 |
| 1067+53 (mldspan) | 6 | 6 | | | 54 | 48 |
| 1067+74 | 6 | 6 | | | 54 | 48 |
| 1068+20 (mldspan) | 6 | 6 | | | 54 | 48 |
| 1068+37 | 6 | 6 | | | 54 | 48 |
| 1068+51 | 6 | 6 | | | 54 | 48 |
| 1068+74 | 6 | 6 | | | 54 | 48 |
| 1068+95 | 6 | 6 | | | 54 | 48 |
| 1069+58 | 6 | 6 | | | 54 | 48 |
| | | | | | | |
| | | | | | | |
| Column Totals | 288 | 288 | 392 | 287 | 3224 | 2844 |

| LOCATION | 255 FULL DEPTH PAVEMENT REMOVAL AND RIGID REPLACEMENT TYPE T-Y DRIVING LANE | 255 FULL DEPTH PAVEMENT REMOVAL AND RIGID REPLACEMENT TYPE T-Y PASSING LANE | 255 FULL DEPTH PAVEMENT REMOVAL AND RIGID REPLACEMENT TYPE Y-Y DRIVING LANE | 255 FULL DEPTH PAVEMENT REMOVAL AND RIGID REPLACEMENT TYPE Y-Y PASSING LANE | 255 FULL DEPTH PAVEMENT SAWING | 413 SAWING AND SEALING ASPHALT CONCRETE PAVEMENT JOINTS, 705.04 |
|---|---|---|---|---|---|---|
| | LIN.FT. | | | | LIN.FT. | LIN.FT. |
| 1070+18 | 6 | 6 | | | 54 | 48 |
| 1070+40 TO 1070+55 | | | 15 | 15 | 63 | 48 |
| 1070+76 | 6 | 6 | | | 54 | 48 |
| 1071+22 (mldspan) | 6 | 6 | | | 54 | 48 |
| 1071+38 | 6 | 6 | | | 54 | 48 |
| 1071+66 TO 1071+81 | | | 15 | 15 | 63 | 48 |
| 1072+16 (mldspan) | 6 | 6 | | | 54 | 48 |
| 1072+30 (mldspan) | 6 | | | | 30 | 24 |
| 1072+80 (mldspan) | 6 | 6 | | | 54 | 48 |
| 1072+95 (mldspan) | 6 | 6 | | | 54 | 48 |
| 1073+15 | 6 | 6 | | | 54 | 48 |
| 1073+30 (mldspan) | 6 | 6 | | | 54 | 48 |
| 1073+56 (mldspan) | 6 | 6 | | | 54 | 48 |
| 1073+75 | 6 | 6 | | | 54 | 48 |
| 1074+05 to 1074+20 | | | 15 | 15 | 63 | 48 |
| 1074+35 | 6 | 6 | | | 54 | 48 |
| 1074+58 (mldspan) | 6 | 6 | | | 54 | 48 |
| 1074+76 (mldspan) | 6 | 6 | | | 54 | 48 |
| 1074+95 | 6 | 6 | | | 54 | 48 |
| 1075+15 (mldspan) | 6 | 6 | | | 54 | 48 |
| 1075+33 (mldspan) | 6 | 6 | | | 54 | 48 |
| 1075+54 | 6 | 6 | | | 54 | 48 |
| 1075+75 (mldspan) | 6 | 6 | | | 54 | 48 |
| 1075+93 (mldspan) | 6 | 6 | | | 54 | 48 |
| 1076+12 to 1079+20 | | | 308 | 308 | 356 | 408 |
| 1079+33 (mldspan) | 6 | 6 | | | 54 | 48 |
| 1079+75 | 6 | 6 | | | 54 | 48 |
| 1079+95 (mldspan) | 6 | 6 | | | 54 | 48 |
| 1080+26 (mldspan) | 6 | 6 | | | 54 | 48 |
| 1080+40 | 6 | 6 | | | 54 | 48 |
| 1080+57 (mldspan) | 6 | 6 | | | 54 | 48 |
| 1081+24 (mldspan) | 6 | 6 | | | 54 | 48 |
| 1081+57 | 6 | 6 | | | 54 | 48 |
| 1082+19 | 6 | 6 | | | 54 | 48 |
| 1082+47 (mldspan) | 6 | 6 | | | 54 | 48 |
| 1082+78 | 6 | 6 | | | 54 | 48 |
| 1082+95 (mldspan) | 6 | 6 | | | 54 | 48 |
| 1083+39 to 1083+99 | | | 60 | 60 | 108 | 96 |
| 1084+18 to 1084+38 | | | 20 | 20 | 68 | 48 |
| 1084+90 | 6 | 6 | | | 54 | 48 |
| 1085+56 | 6 | 6 | | | 54 | 48 |
| 1086+10 | 6 | 6 | | | 54 | 48 |
| 1086+38 | 6 | 6 | | | 54 | 48 |
| 1086+52 to 1086+72 | | | 20 | 20 | 68 | 48 |
| 1087+21 to 1087+42 | | | 21 | 21 | 69 | 48 |
| 1087+54 | 6 | 6 | | | 54 | 48 |
| 1087+68 | 6 | 6 | | | 54 | 48 |
| 1087+94 | 6 | 6 | | | 54 | 48 |
| 1088+45 to 1088+65 | | | 20 | 20 | 68 | 48 |
| 1088+80 | 6 | 6 | | | 54 | 48 |
| 1088+97 | 6 | 6 | | | 54 | 48 |
| 1089+20 | 6 | 6 | | | 54 | 48 |
| 1089+39 | 6 | 6 | | | 54 | 48 |
| 1089+55 to 1089+75 | | | 20 | 20 | 68 | 48 |
| | | | | | | |
| Column Totals | 264 | 258 | 514 | 514 | 3346 | 2976 |

| LOCATION | 255 FULL DEPTH PAVEMENT REMOVAL AND RIGID REPLACEMENT TYPE T-Y DRIVING LANE | 255 FULL DEPTH PAVEMENT REMOVAL AND RIGID REPLACEMENT TYPE T-Y PASSING LANE | 255 FULL DEPTH PAVEMENT REMOVAL AND RIGID REPLACEMENT TYPE Y-Y DRIVING LANE | 255 FULL DEPTH PAVEMENT REMOVAL AND RIGID REPLACEMENT TYPE Y-Y PASSING LANE | 255 FULL DEPTH PAVEMENT SAWING | 413 SAWING AND SEALING ASPHALT CONCRETE PAVEMENT JOINTS, 705.04 |
|---|---|---|---|---|---|---|
| | LIN.FT. | | | | LIN.FT. | LIN.FT. |
| 1089+95 | 6 | 6 | | | 54 | 48 |
| 1090+15 (mldspan) | 6 | 6 | | | 54 | 48 |
| 1090+44 (mldspan) | 6 | 6 | | | 54 | 48 |
| 1090+57 | 6 | 6 | | | 54 | 48 |
| 1090+95 (mldspan) | 6 | 6 | | | 54 | 48 |
| 1091+20 | 6 | 6 | | | 54 | 48 |
| 1091+58 (mldspan) | 6 | 6 | | | 54 | 48 |
| 1091+78 | 6 | 6 | | | 54 | 48 |
| 1092+35 | 6 | 6 | | | 54 | 48 |
| 1092+95 | 6 | 6 | | | 54 | 48 |
| 1093+32 (mldspan) | 6 | 6 | | | 54 | 48 |
| 1093+55 | 6 | 6 | | | 54 | 48 |
| 1094+00 (mldspan) | 6 | 6 | | | 54 | 48 |
| 1094+41 (mldspan) | 6 | 6 | | | 54 | 48 |
| 1094+59 (mldspan) | 6 | 6 | | | 54 | 48 |
| 1094+78 | 6 | 6 | | | 54 | 48 |
| 1095+17 (mldspan) | 6 | 6 | | | 54 | 48 |
| 1095+36 | 6 | 6 | | | 54 | 48 |
| 1095+74 (mldspan) | 6 | 6 | | | 54 | 48 |
| 1096+09 (mldspan) | 6 | 6 | | | 54 | 48 |
| 1096+43 (mldspan) | 6 | 6 | | | 54 | 48 |
| 1096+57 | 6 | 6 | | | 54 | 48 |
| 1096+78 (mldspan) | 6 | 6 | | | 54 | 48 |
| 1096+95 (mldspan) | 6 | 6 | | | 54 | 48 |
| 1097+15 | 6 | 6 | | | 54 | 48 |
| 1097+75 | 6 | 6 | | | 54 | 48 |
| 1098+05 (mldspan) | 6 | 6 | | | 54 | 48 |
| 1098+36 | 6 | 6 | | | 54 | 48 |
| 1098+78 (mldspan) | 6 | 6 | | | 54 | 48 |
| 1098+95 | 6 | 6 | | | 54 | 48 |
| 1099+56 | 6 | 6 | | | 54 | 48 |
| 1099+95 (mldspan) | 6 | 6 | | | 54 | 48 |
| 1100+75 | 6 | 6 | | | 54 | 48 |
| 1101+00 (mldspan) | 6 | 6 | | | 54 | 48 |
| 1101+35 to 1101+47 | | | 12 | 12 | 60 | 48 |
| 1101+74 (mldspan) | 6 | 6 | | | 54 | 48 |
| 1102+78 (mldspan) | 6 | 6 | | | 54 | 48 |
| 1103+15 | 6 | 6 | | | 54 | 48 |
| 1103+56 (mldspan) | 6 | 6 | | | 54 | 48 |
| 1103+75 | 6 | 6 | | | 54 | 48 |
| 1104+36 | 6 | 6 | | | 54 | 48 |
| 1104+53 (mldspan) | 6 | 6 | | | 54 | 48 |
| 1104+75 (mldspan) | 6 | 6 | | | 54 | 48 |
| 1104+95 | 6 | 6 | | | 54 | 48 |
| 1105+17 to 1105+29 | | | 12 | 12 | 60 | 48 |
| 1105+56 | 6 | 6 | | | 54 | 48 |
| 1105+95 (mldspan) | 6 | 6 | | | 54 | 48 |
| 1106+16 | 6 | 6 | | | 54 | 48 |
| 1106+76 | 6 | 6 | | | 54 | 48 |
| 1106+90 (mldspan) | 6 | 6 | | | 54 | 48 |
| 1107+37 | 6 | 6 | | | 54 | 48 |
| 1107+75 (mldspan) | 6 | 6 | | | 54 | 48 |
| 1107+95 | 6 | 6 | | | 54 | 48 |
| 1108+37 (mldspan) | 6 | 6 | | | 54 | 48 |
| Column Totals | 312 | 312 | 24 | 24 | 2928 | 2592 |
| | | | | | | |
| Sheet Totals | 864 | 858 | 930 | 825 | 9498 | 8412 |

PAVEMENT REPAIR TABLE

I:/pd/OTTAWA/OTT2/02PRTBL5.DGN

# PAVEMENT REPAIR LOCATIONS

## WESTBOUND LANES

QUANTITIES
CALC BY ALS DATE 8-10-94
CKD BY MTG DATE 8-29-95

| FHWA REGION | STATE | PROJECT | |
|---|---|---|---|
| 5 | OHIO | | |

OTT-2-16.60

87/367

| LOCATION | 255 FULL DEPTH PAVEMENT REMOVAL AND RIGID REPLACEMENT TYPE T-Y DRIVING LANE | 255 FULL DEPTH PAVEMENT REMOVAL AND RIGID REPLACEMENT TYPE T-Y PASSING LANE | 255 FULL DEPTH PAVEMENT REMOVAL AND RIGID REPLACEMENT TYPE Y-Y DRIVING LANE | 255 FULL DEPTH PAVEMENT REMOVAL AND RIGID REPLACEMENT TYPE Y-Y PASSING LANE | 255 FULL DEPTH PAVEMENT SAWING | 413 SAWING AND SEALING ASPHALT CONCRETE PAVEMENT JOINTS, 705.04 |
|---|---|---|---|---|---|---|
| | LIN.FT. | | | | LIN.FT. | LIN.FT. |
| 1108+55 | 6 | 6 | | | 54 | 48 |
| 1109+17 | | 6 | | | 30 | 24 |
| 1109+17 to 1109+77 | | | 60 | | 84 | 48 |
| 1110+00 (mldspan) | | 6 | | | 30 | 24 |
| 1110+39 | 6 | 6 | | | 54 | 48 |
| 1110+50 (mldspan) | 6 | 6 | | | 54 | 24 |
| 1110+68 (mldspan) | 6 | 6 | | | 54 | 48 |
| 1110+98 | 6 | 6 | | | 54 | 48 |
| 1111+17 (mldspan) | 6 | 6 | | | 54 | 48 |
| 1111+35 (mldspan) | 6 | 6 | | | 54 | 48 |
| 1112+14 | 6 | 6 | | | 54 | 48 |
| 1112+53 (mldspan) | 6 | 6 | | | 54 | 48 |
| 1112+91 (mldspan) | 6 | 6 | | | 54 | 48 |
| 1113+21 (mldspan) | 6 | 6 | | | 54 | 48 |
| 1113+74 (mldspan) | 6 | 6 | | | 54 | 48 |
| 1114+16 (mldspan) | 6 | 6 | | | 54 | 48 |
| 1115+17 | 6 | 6 | | | 54 | 48 |
| 1115+33 (mldspan) | 6 | 6 | | | 54 | 48 |
| 1115+58 | 6 | 6 | | | 54 | 48 |
| 1116+10 (mldspan) | 6 | 6 | | | 54 | 48 |
| 1116+95 | 6 | 6 | | | 54 | 48 |
| 1117+21 | 6 | 6 | | | 54 | 48 |
| 1117+77 (mldspan) | 6 | 6 | | | 54 | 48 |
| 1118+00 (mldspan) | 6 | 6 | | | 54 | 48 |
| 1118+14 | 6 | 6 | | | 54 | 48 |
| 1118+75 | 6 | 6 | | | 54 | 48 |
| 1119+37 | 6 | 6 | | | 54 | 48 |
| 1119+96 | 6 | 6 | | | 54 | 48 |
| 1120+14 (mldspan) | 6 | 6 | | | 54 | 48 |
| 1120+36 (mldspan) | 6 | 6 | | | 54 | 48 |
| 1120+75 | 6 | 6 | | | 54 | 48 |
| 1121+17 | 6 | 6 | | | 54 | 48 |
| 1121+42 (mldspan) | 6 | 6 | | | 54 | 48 |
| 1121+61 (mldspan) | 6 | 6 | | | 54 | 48 |
| 1121+77 to 1122+97 | | | 120 | | 144 | 84 |
| 1121+77 | | 6 | | | 30 | 24 |
| 1122+02 (mldspan) | | 6 | | | 30 | 24 |
| 1122+34 | | 6 | | | 30 | 24 |
| 1122+96 | | 6 | | | 30 | 24 |
| 1123+15 (mldspan) | 6 | 6 | | | 54 | 48 |
| 1123+37 (mldspan) | 6 | | | | 30 | 24 |
| 1124+16 | 6 | 6 | | | 54 | 48 |
| 1124+76 | 6 | 6 | | | 54 | 48 |
| 1125+02 (mldspan) | 6 | 6 | | | 54 | 48 |
| 1125+65 (mldspan) | 6 | 6 | | | 54 | 48 |
| 1125+95 | 6 | 6 | | | 54 | 48 |
| 1126+59 | 6 | 6 | | | 54 | 48 |
| 1126+77 (mldspan) | 6 | 6 | | | 54 | 48 |
| 1127+19 | 6 | 6 | | | 54 | 48 |
| 1127+79 | 6 | 6 | | | 54 | 48 |
| 1128+13 (mldspan) | 6 | 6 | | | 54 | 48 |
| 1128+31 | 6 | 6 | | | 54 | 48 |
| 1128+74 | 6 | 6 | | | 54 | 48 |
| Column Totals | 270 | 300 | 180 | | 2814 | 2388 |

| LOCATION | 255 FULL DEPTH PAVEMENT REMOVAL AND RIGID REPLACEMENT TYPE T-Y DRIVING LANE | 255 FULL DEPTH PAVEMENT REMOVAL AND RIGID REPLACEMENT TYPE T-Y PASSING LANE | 255 FULL DEPTH PAVEMENT REMOVAL AND RIGID REPLACEMENT TYPE Y-Y DRIVING LANE | 255 FULL DEPTH PAVEMENT REMOVAL AND RIGID REPLACEMENT TYPE Y-Y PASSING LANE | 255 FULL DEPTH PAVEMENT SAWING | 413 SAWING AND SEALING ASPHALT CONCRETE PAVEMENT JOINTS, 705.04 |
|---|---|---|---|---|---|---|
| | LIN.FT. | | | | LIN.FT. | LIN.FT. |
| 1128+94 | 6 | 6 | | | 54 | 48 |
| 1129+11 (midspan) | 6 | 6 | | | 54 | 48 |
| 1130+13 | 6 | 6 | | | 54 | 48 |
| 1130+55 (midspan) | 6 | 6 | | | 54 | 48 |
| 1131+76 (midspan) | 6 | 6 | | | 54 | 48 |
| 1131+95 | 6 | 6 | | | 54 | 48 |
| 1132+59 to 1133+16 | | | 57 | | 81 | 48 |
| 1132+59 | | 6 | | | 30 | 24 |
| 1132+73 | | 6 | | | 30 | 24 |
| 1132+95 (midspan) | | 6 | | | 30 | 24 |
| 1133+16 | | 6 | | | 30 | 24 |
| 1133+64 (midspan) | 6 | 6 | | | 54 | 48 |
| 1134+00 to 1134+16 | | | 16 | 16 | 64 | 48 |
| 1134+50 (midspan) | 6 | 6 | | | 54 | 48 |
| 1134+95 | 6 | 6 | | | 54 | 48 |
| 1135+52 | 6 | 6 | | | 54 | 48 |
| 1135+68 (midspan) | 6 | 6 | | | 54 | 48 |
| 1136+13 | 6 | 6 | | | 54 | 48 |
| 1136+74 | 6 | 6 | | | 54 | 48 |
| 1137+03 (midspan) | 6 | 6 | | | 54 | 48 |
| 1137+35 | 6 | 6 | | | 54 | 48 |
| 1137+94 | 6 | 6 | | | 54 | 48 |
| 1138+17 (midspan) | 6 | 6 | | | 54 | 48 |
| 1138+40 (midspan) | 6 | 6 | | | 54 | 48 |
| 1138+57 | 6 | 6 | | | 54 | 48 |
| 1139+00 (midspan) | 6 | 6 | | | 54 | 48 |
| 1139+17 | 6 | 6 | | | 54 | 48 |
| 1139+48 (midspan) | 6 | 6 | | | 54 | 48 |
| 1139+78 | 6 | 6 | | | 54 | 48 |
| 1140+05 (midspan) | 6 | 6 | | | 54 | 48 |
| 1140+30 | 6 | 6 | | | 54 | 48 |
| 1140+50 (midspan) | 6 | 6 | | | 54 | 48 |
| 1140+93 | 6 | 6 | | | 54 | 48 |
| 1141+30 (midspan) | 6 | 6 | | | 54 | 48 |
| 1141+52 | 6 | 6 | | | 54 | 48 |
| 1141+98 (midspan) | 6 | 6 | | | 54 | 48 |
| 1142+15 | 6 | 6 | | | 54 | 48 |
| 1142+59 (midspan) | 6 | 6 | | | 54 | 48 |
| 1142+75 | 6 | 6 | | | 54 | 48 |
| 1143+05 | 6 | 6 | | | 54 | 48 |
| 1143+13 (midspan) | 6 | 6 | | | 54 | 48 |
| 1143+34 | 6 | 6 | | | 54 | 48 |
| 1143+77 (midspan) | 6 | 6 | | | 54 | 48 |
| 1143+96 to 1144+56 | | | 60 | 60 | 108 | 96 |
| 1144+83 (midspan) | 6 | 6 | | | 54 | 48 |
| 1145+17 | 6 | 6 | | | 54 | 48 |
| 1145+33 (midspan) | 6 | 6 | | | 54 | 48 |
| 1145+49 | 6 | 6 | | | 54 | 48 |
| 1146+10 | 6 | 6 | | | 54 | 48 |
| 1146+26 (midspan) | 6 | 6 | | | 54 | 48 |
| 1146+71 | 6 | 6 | | | 54 | 48 |
| 1146+85 (midspan) | 6 | 6 | | | 54 | 48 |
| | | | | | | |
| | | | | | | |
| | | | | | | |
| Column Totals | 270 | 294 | 133 | 76 | 2803 | 2448 |

| LOCATION | 255 FULL DEPTH PAVEMENT REMOVAL AND RIGID REPLACEMENT TYPE T-Y DRIVING LANE | 255 FULL DEPTH PAVEMENT REMOVAL AND RIGID REPLACEMENT TYPE T-Y PASSING LANE | 255 FULL DEPTH PAVEMENT REMOVAL AND RIGID REPLACEMENT TYPE Y-Y DRIVING LANE | 255 FULL DEPTH PAVEMENT REMOVAL AND RIGID REPLACEMENT TYPE Y-Y PASSING LANE | 255 FULL DEPTH PAVEMENT SAWING | 413 SAWING AND SEALING ASPHALT CONCRETE PAVEMENT JOINTS, 705.04 |
|---|---|---|---|---|---|---|
| | LIN.FT. | | | | LIN.FT. | LIN.FT. |
| 1147+07 (midspan) | 6 | 6 | | | 54 | 48 |
| 1147+30 | 6 | 6 | | | 54 | 48 |
| 1147+68 (midspan) | 6 | 6 | | | 54 | 48 |
| 1147+91 | 6 | 6 | | | 54 | 48 |
| 1148+30 (midspan) | 6 | | | | 30 | 24 |
| 1148+50 | 6 | 6 | | | 54 | 48 |
| 1149+32 (midspan) | 6 | 6 | | | 54 | 48 |
| 1149+70 | 6 | 6 | | | 54 | 48 |
| 1150+34 | 6 | 6 | | | 54 | 48 |
| 1150+92 | 6 | 6 | | | 54 | 48 |
| 1151+13 (midspan) | 6 | 6 | | | 54 | 48 |
| 1152+11 | 6 | 6 | | | 54 | 48 |
| 1152+61 | 6 | 6 | | | 54 | 48 |
| 1152+82 | 6 | 6 | | | 54 | 48 |
| 1153+40 | 6 | 6 | | | 54 | 48 |
| 1153+98 | 6 | 6 | | | 54 | 48 |
| 1154+17 (midspan) | 6 | 6 | | | 54 | 48 |
| 1154+59 | 6 | 6 | | | 54 | 48 |
| 1155+19 | 6 | 6 | | | 54 | 48 |
| 1155+37 (midspan) | 6 | 6 | | | 54 | 48 |
| 1155+80 | 6 | 6 | | | 54 | 48 |
| 1156+41 | 6 | 6 | | | 54 | 48 |
| 1156+61 (midspan) | 6 | 6 | | | 54 | 48 |
| 1157+00 | 6 | 6 | | | 54 | 48 |
| 1157+61 | 6 | 6 | | | 54 | 48 |
| 1158+22 | 6 | 6 | | | 54 | 48 |
| 1158+83 | 6 | 6 | | | 54 | 48 |
| 1159+67 (midspan) | 6 | 6 | | | 54 | 48 |
| 1160+03 | 6 | 6 | | | 54 | 48 |
| 1160+64 | 6 | 6 | | | 54 | 48 |
| 1161+23 | 6 | 6 | | | 54 | 48 |
| 1161+69 (midspan) | 6 | 6 | | | 54 | 48 |
| 1161+85 | 6 | 6 | | | 54 | 48 |
| 1162+46 | 6 | 6 | | | 54 | 48 |
| 1162+86 (midspan) | 6 | 6 | | | 54 | 48 |
| 1163+07 | 6 | 6 | | | 54 | 48 |
| 1163+23 (midspan) | 6 | 6 | | | 54 | 48 |
| 1163+66 (midspan) | 6 | 6 | | | 54 | 48 |
| 1164+88 | 6 | 6 | | | 54 | 48 |
| 1165+10 (midspan) | 6 | | | | 30 | 24 |
| 1165+29 (midspan) | 6 | 6 | | | 54 | 48 |
| 1165+47 | 6 | 6 | | | 54 | 48 |
| 1166+08 | 6 | 6 | | | 54 | 48 |
| 1166+69 | 6 | 6 | | | 54 | 48 |
| 1167+29 | 6 | 6 | | | 54 | 48 |
| 1167+89 | 6 | 6 | | | 54 | 48 |
| 1168+30 (midspan) | 6 | 6 | | | 54 | 48 |
| 1168+49 | 6 | 6 | | | 54 | 48 |
| 1169+08 | 6 | 6 | | | 54 | 48 |
| 1169+69 | 6 | 6 | | | 54 | 48 |
| 1170+30 | 6 | 6 | | | 54 | 48 |
| 1170+91 to 1172+15 | | | 124 | 124 | 172 | 192 |
| | | | | | | |
| Column Totals | 306 | 294 | 124 | 124 | 2878 | 2592 |
| | | | | | | |
| Sheet Totals | 846 | 888 | 437 | 200 | 8495 | 7428 |

I:/pd/OTT/4WA/OTT2/02PRTBL6.DGN

PAVEMENT REPAIR TABLE

# PAVEMENT REPAIR LOCATIONS

## WESTBOUND LANES

QUANTITIES
CALC BY ALS DATE 8-10-94
CKD BY MTG DATE 8-29-95

| FHWA REGION | STATE | PROJECT | |
|---|---|---|---|
| 5 | OHIO | | |

OTT-2-16.60

88
367

| LOCATION | 255 FULL DEPTH PAVEMENT REMOVAL AND RIGID REPLACEMENT TYPE T-Y DRIVING LANE | 255 FULL DEPTH PAVEMENT REMOVAL AND RIGID REPLACEMENT TYPE T-Y PASSING LANE | 255 FULL DEPTH PAVEMENT REMOVAL AND RIGID REPLACEMENT TYPE Y-Y DRIVING LANE | 255 FULL DEPTH PAVEMENT REMOVAL AND RIGID REPLACEMENT TYPE Y-Y PASSING LANE | 255 FULL DEPTH PAVEMENT SAWING | 413 SAWING AND SEALING ASPHALT CONCRETE PAVEMENT JOINTS, 705.04 |
|---|---|---|---|---|---|---|
| | LIN.FT. | | | | LIN.FT. | LIN.FT. |
| 1172+52 (midspan) | 6 | | | | 30 | 24 |
| 1172+74 | 6 | 6 | | | 54 | 48 |
| 1173+33 | 6 | 6 | | | 54 | 48 |
| 1173+94 | 6 | 6 | | | 54 | 48 |
| 1174+54 | 6 | 6 | | | 54 | 48 |
| 1175+15 | 6 | 6 | | | 54 | 48 |
| 1175+74 | 6 | 6 | | | 54 | 48 |
| 1176+14 | 6 | 6 | | | 54 | 48 |
| 1176+37 | | 6 | | | 30 | 24 |
| 1176+37 to 1176+55 | | | 18 | | 42 | 24 |
| 1176+96 | 6 | 6 | | | 54 | 48 |
| 1177+57 | 6 | 6 | | | 54 | 48 |
| 1178+16 | 6 | 6 | | | 54 | 48 |
| 1178+41 (midspan) | 6 | 6 | | | 54 | 48 |
| 1178+79 | 6 | 6 | | | 54 | 48 |
| 1179+38 | 6 | 6 | | | 54 | 48 |
| 1179+68 | 6 | 6 | | | 54 | 48 |
| 1179+98 | 6 | 6 | | | 54 | 48 |
| 1180+58 | 6 | 6 | | | 54 | 48 |
| 1181+20 | 6 | 6 | | | 54 | 48 |
| 1181+79 | 6 | 6 | | | 54 | 48 |
| 1182+40 | 6 | 6 | | | 54 | 48 |
| 1182+81 (midspan) | 6 | 6 | | | 54 | 48 |
| 1183+00 | 6 | 6 | | | 54 | 48 |
| 1183+62 | 6 | 6 | | | 54 | 48 |
| 1184+23 | 6 | 6 | | | 54 | 48 |
| 1184+80 | 6 | 6 | | | 54 | 48 |
| 1185+50 | 6 | 6 | | | 54 | 48 |
| 1186+04 | 6 | 6 | | | 54 | 48 |
| 1186+28 (midspan) | 6 | 6 | | | 54 | 48 |
| 1186+66 | 6 | 6 | | | 54 | 48 |
| 1187+01 (midspan) | 6 | 6 | | | 54 | 48 |
| 1187+28 | 6 | 6 | | | 54 | 48 |
| 1187+87 | 6 | 6 | | | 54 | 48 |
| 1188+02 (midspan) | 6 | | | | 30 | 24 |
| 1188+48 | 6 | 6 | | | 54 | 48 |
| 1188+65 (midspan) | 6 | 6 | | | 54 | 48 |
| 1189+11 | 6 | 6 | | | 54 | 48 |
| 1189+71 | 6 | 6 | | | 54 | 48 |
| 1190+00 (midspan) | 6 | 6 | | | 54 | 48 |
| 1190+25 | 6 | 6 | | | 54 | 48 |
| 1190+68 (midspan) | 6 | 6 | | | 54 | 48 |
| 1190+87 | 6 | 6 | | | 54 | 48 |
| 1191+27 (midspan) | 6 | 6 | | | 54 | 48 |
| 1191+45 | 6 | 6 | | | 54 | 48 |
| 1192+07 | 6 | 6 | | | 54 | 48 |
| 1192+28 (midspan) | 6 | 6 | | | 54 | 48 |
| 1192+65 | 6 | 6 | | | 54 | 48 |
| 1193+07 (midspan) | 6 | | | | 30 | 24 |
| 1193+24 | 6 | 6 | | | 54 | 48 |
| 1193+86 | 6 | 6 | | | 54 | 48 |
| 1194+16 (midspan) | 6 | 6 | | | 54 | 48 |
| | | | | | | |
| | | | | | | |
| | | | | | | |
| Column Totals | 300 | 288 | 18 | | 2700 | 2376 |

| LOCATION | 255 FULL DEPTH PAVEMENT REMOVAL AND RIGID REPLACEMENT TYPE T-Y DRIVING LANE | 255 FULL DEPTH PAVEMENT REMOVAL AND RIGID REPLACEMENT TYPE T-Y PASSING LANE | 255 FULL DEPTH PAVEMENT REMOVAL AND RIGID REPLACEMENT TYPE Y-Y DRIVING LANE | 255 FULL DEPTH PAVEMENT REMOVAL AND RIGID REPLACEMENT TYPE Y-Y PASSING LANE | 255 FULL DEPTH PAVEMENT SAWING | 413 SAWING AND SEALING ASPHALT CONCRETE PAVEMENT JOINTS, 705.04 |
|---|---|---|---|---|---|---|
| | LIN.FT. | | | | LIN.FT. | LIN.FT. |
| 1194+32 (midspan) | 6 | 6 | | | 54 | 48 |
| 1194+72 (midspan) | 6 | 6 | | | 54 | 48 |
| 1195+52 (midspan) | 6 | 6 | | | 54 | 48 |
| 1195+88 | 6 | 6 | | | 54 | 48 |
| 1196+13 | 6 | 6 | | | 54 | 48 |
| 1196+31 | 6 | 6 | | | 54 | 48 |
| 1196+47 (midspan) | 6 | 6 | | | 54 | 48 |
| 1196+66 (midspan) | 6 | 6 | | | 54 | 48 |
| 1196+89 | 6 | 6 | | | 54 | 48 |
| 1197+35 (midspan) | 6 | 6 | | | 54 | 48 |
| 1197+49 | 6 | 6 | | | 54 | 48 |
| 1197+61 (midspan) | 6 | 6 | | | 54 | 48 |
| 1197+80 (midspan) | 6 | 6 | | | 54 | 48 |
| 1198+08 | 6 | 6 | | | 54 | 48 |
| 1198+51 (midspan) | 6 | 6 | | | 54 | 48 |
| 1199+12 (midspan) | 6 | 6 | | | 54 | 48 |
| 1199+67 (midspan) | 6 | 6 | | | 54 | 48 |
| 1200+05 (midspan) | 6 | 6 | | | 54 | 48 |
| 1200+46 to 1200+58 | | | 12 | 12 | 60 | 48 |
| 1200+72 (midspan) | 6 | | | | 30 | 24 |
| 1200+90 (midspan) | 6 | 6 | | | 54 | 48 |
| 1201+66 | 6 | 6 | | | 54 | 48 |
| 1201+78 (midspan) | 6 | | | | 30 | 24 |
| 1202+03 (midspan) | 6 | 6 | | | 54 | 48 |
| 1202+27 | 6 | 6 | | | 54 | 48 |
| 1202+87 | 6 | 6 | | | 54 | 48 |
| 1203+45 | 6 | 6 | | | 54 | 48 |
| 1203+70 (midspan) | 6 | 6 | | | 54 | 48 |
| 1204+21 (midspan) | 6 | 6 | | | 54 | 48 |
| 1204+40 (midspan) | 6 | 6 | | | 54 | 48 |
| 1204+67 | 6 | 6 | | | 54 | 48 |
| 1205+00 (midspan) | 6 | 6 | | | 54 | 48 |
| 1205+28 | 6 | 6 | | | 54 | 48 |
| 1205+69 (midspan) | 6 | 6 | | | 54 | 48 |
| 1206+50 | 6 | 6 | | | 54 | 48 |
| 1206+90 (midspan) | 6 | 6 | | | 54 | 48 |
| 1207+10 | 6 | 6 | | | 54 | 48 |
| 1207+40 (midspan) | 6 | 6 | | | 54 | 48 |
| 1207+66 | 6 | 6 | | | 54 | 48 |
| 1208+29 | 6 | 6 | | | 54 | 48 |
| 1208+47 (midspan) | 6 | 6 | | | 54 | 48 |
| 1208+86 | 6 | 6 | | | 54 | 48 |
| 1209+47 | 6 | 6 | | | 54 | 48 |
| 1209+88 (midspan) | 6 | 6 | | | 54 | 48 |
| 1210+11 | 6 | 6 | | | 54 | 48 |
| 1210+51 (midspan) | 6 | 6 | | | 54 | 48 |
| 1210+69 | 6 | 6 | | | 54 | 48 |
| 1211+11 (midspan) | 6 | 6 | | | 54 | 48 |
| 1211+30 | 6 | 6 | | | 54 | 48 |
| 1211+71 (midspan) | 6 | 6 | | | 54 | 48 |
| 1211+90 | 6 | 6 | | | 54 | 48 |
| | | | | | | |
| | | | | | | |
| | | | | | | |
| Column Totals | 300 | 288 | 12 | 12 | 2712 | 2400 |

| LOCATION | 255 FULL DEPTH PAVEMENT REMOVAL AND RIGID REPLACEMENT TYPE T-Y DRIVING LANE | 255 FULL DEPTH PAVEMENT REMOVAL AND RIGID REPLACEMENT TYPE T-Y PASSING LANE | 255 FULL DEPTH PAVEMENT REMOVAL AND RIGID REPLACEMENT TYPE Y-Y DRIVING LANE | 255 FULL DEPTH PAVEMENT REMOVAL AND RIGID REPLACEMENT TYPE Y-Y PASSING LANE | 255 FULL DEPTH PAVEMENT SAWING | 413 SAWING AND SEALING ASPHALT CONCRETE PAVEMENT JOINTS, 705.04 |
|---|---|---|---|---|---|---|
| | LIN.FT. | | | | LIN.FT. | LIN.FT. |
| 1212+50 | 6 | 6 | | | 54 | 48 |
| 1212+80 (midspan) | 6 | 6 | | | 54 | 48 |
| 1213+08 | 6 | 6 | | | 54 | 48 |
| 1213+70 | 6 | 6 | | | 54 | 48 |
| 1214+03 (midspan) | 6 | 6 | | | 54 | 48 |
| 1214+28 | 6 | 6 | | | 54 | 48 |
| 1214+51 (midspan) | 6 | 6 | | | 54 | 48 |
| 1214+70 (midspan) | 6 | 6 | | | 54 | 48 |
| 1214+88 | 6 | 6 | | | 54 | 48 |
| 1215+19 (midspan) | 6 | 6 | | | 54 | 48 |
| 1215+47 | 6 | 6 | | | 54 | 48 |
| 1215+72 (midspan) | 6 | 6 | | | 54 | 48 |
| 1216+35 (midspan) | 6 | 6 | | | 54 | 48 |
| 1216+67 | 6 | 6 | | | 54 | 48 |
| 1217+00 (midspan) | 6 | 6 | | | 54 | 48 |
| 1217+25 | 6 | 6 | | | 54 | 48 |
| 1217+41 (midspan) | 6 | 6 | | | 54 | 48 |
| 1217+66 (midspan) | 6 | 6 | | | 54 | 48 |
| 1217+87 to 1219+74 | | | 187 | 187 | 235 | 264 |
| 1220+02 (midspan) | 6 | 6 | | | 54 | 48 |
| 1226+63 | 6 | 6 | | | 54 | 48 |
| 1227+65 | 6 | 6 | | | 54 | 48 |
| 1228+04 to 1229+22 | | | 118 | 118 | 166 | 168 |
| 1229+41 | 6 | 6 | | | 54 | 48 |
| 1229+99 | 6 | 6 | | | 54 | 48 |
| 1230+36 to 1230+46 | | | 10 | 10 | 58 | 48 |
| 1230+62 | 6 | 6 | | | 54 | 48 |
| 1231+16 | 6 | 6 | | | 54 | 48 |
| 1231+76 | 6 | 6 | | | 54 | 48 |
| 1232+27 | 6 | 6 | | | 54 | 48 |
| 1232+40 | | | 13 | 13 | 61 | 48 |
| 1232+87 | 6 | 6 | | | 54 | 48 |
| 1233+47 | 6 | 6 | | | 54 | 48 |
| 1234+07 | 6 | 6 | | | 54 | 48 |
| 1234+67 | 6 | 6 | | | 54 | 48 |
| 1235+27 | 6 | 6 | | | 54 | 48 |
| | | | | | | |
| | | | | | | |
| | | | | | | |
| 1030+94 to End Project Exp. Joints which need sawing and sealing only (47 joints) | 282 | 282 | | | | 2256 |
| Estimated additional joints and midspan cracks to be repaired as directed by the Engineer (20 joints & cracks) | 120 | 120 | | | 1080 | 960 |
| Column Totals | 594 | 594 | 328 | 328 | 3328 | 5280 |
| Sheet Totals | 1194 | 1170 | 358 | 340 | 8740 | 10056 |
| Sheet 85 Totals | 2172 | 2064 | 400 | 330 | 19912 | 17640 |
| Sheet 86 Totals | 864 | 858 | 930 | 825 | 9498 | 8412 |
| Sheet 87 Totals | 846 | 888 | 437 | 200 | 8495 | 7428 |
| Westbound Totals (LIN.FT) | 5076 | 4980 | 2125 | 1695 | 46645 | 43536 |
| Westbound Totals (SQ.YDS.) | 6768 | 6640 | 2833 | 2260 | | |

I:/pd/OTTAWA/OTT2/02PRTBL7.DGN

PAVEMENT REPAIR TABLE

# PAVEMENT REPAIR LOCATIONS

## RAMP LANES

| QUANTITIES | |
|---|---|
| CALC BY ALS | DATE 8-10-94 |
| CKD BY MTG | DATE 8-29-95 |

| FHWA REGION | STATE | PROJECT | |
|---|---|---|---|
| 5 | OHIO | | |

89/367

OTT-2-16.60

| LOCATION | 255 FULL DEPTH PAVEMENT REMOVAL AND RIGID REPLACEMENT, CLASS C | | | | FULL DEPTH PAVEMENT SAWING | 255 FULL DEPTH PAVEMENT REMOVAL AND RIGID REPLACEMENT, CLASS FS | | | | | 413 SAWING AND SEALING ASPHALT CONCRETE PAVEMENT JOINTS, 705.04 |
|---|---|---|---|---|---|---|---|---|---|---|---|
| | TYPE T-Y | | TYPE Y-Y | | | TYPE T-Y | | TYPE Y-Y | | | |
| | DRIVING LANE | PASSING LANE | DRIVING LANE | PASSING LANE | | DRIVING LANE | PASSING LANE | DRIVING LANE | PASSING LANE | | |
| | LIN.FT. | | | | LIN.FT. | LIN.FT. | | | | | LIN.FT. |
| Entrance Ramp | | | | | | | | | | | |
| SR 163 to EB SR 2 | 126 | | | | 1326 | | | | | | 1200 |
| Pavement Repair | | | | | | | | | | | |
| (959+60 to 960+26) | | | 66 | | 90 | | | | | | 24 |
| **Totals | 126 | | 66 | | 1416 | | | | | | 1224 |
| Exit Ramp | | | | | | | | | | | |
| SR 2 WB to SR 163 | 180 | | | | 1334 | | | | | | 1154 |
| **Totals | 180 | | | | 1334 | | | | | | 1154 |
| Exit Ramp | | | | | | | | | | | |
| SR 2 EB to SR 53 | | | | | 1476 | 90 | | | | | 1260 |
| Radii Returns SR 53 | | | | | 260 | | | 70 | | | 190 |
| **Totals | | | | | 1736 | 90 | | 70 | | | 1450 |
| Entrance Ramp | | | | | | | | | | | |
| SR 53 to SR 2 EB | | | | | 1136 | 96 | | | | | 1040 |
| Pavement Repair | | | | | | | | | | | |
| 7+66 to 8+26 | | | | | 92 | | | 60 | | | 32 |
| 22+40 to 23+40 | | | | | 106 | | | 100 | | | 6 |
| **Totals | | | | | 1334 | 96 | | 160 | | | 1070 |
| Exit Ramp | | | | | | | | | | | |
| SR 2 WB to SR 53 | | | | | 1192 | 48 | | | | | 1144 |
| **Totals | | | | | 1192 | 48 | | | | | 1144 |
| Entrance Ramp | | | | | | | | | | | |
| SR 53 to SR 2 WB | | | | | 1932 | 120 | | | | | 1812 |
| **Totals | | | | | 1932 | 120 | | | | | 1812 |
| Column Totals (LIN.FT.) | 306 | | 66 | | 8944 | 354 | | 230 | | | 7854 |
| | SQ. YDS. | | | | LIN. FT. | SQ. YDS. | | | | | LIN. FT. |
| Ramp Totals | 544 | | 117 | | 8944 | 629 | | 409 | | | 7854 |
| Westbound Totals | 6768 | 6640 | 2833 | 2260 | 46645 | | | | | | 43536 |
| Eastbound Totals | 5224 | 5152 | 1125 | 1051 | 36682 | | | | | | 29064 |
| Totals | 12536 | 11792 | 4075 | 3311 | 92271 | 629 | | 409 | | | 80454 |
| Totals Carried to General Summary | 31714 | | | | 92271 | 1038 | | | | | 80454 |

I:/pd/OTTAWA/OTT2/02PRTBL8.DGN

PAVEMENT REPAIR TABLE

QUANTITIES
CALC BY SKL DATE 11-1-94
CKD BY MTG DATE 11-4-94

| FHWA REGION | STATE | PROJECT | |
|---|---|---|---|
| 5 | OHIO | | |

90/367

OTT-2-16.60

# DRAINAGE TABLE

| SHEET NO. | REFERENCE NO. | ROUTE | STATION | 202 | | | | | 601 | 602 | | 603 | | | | | | | | | | | | 604 | | | | | | | |
|---|---|---|---|---|---|---|---|---|---|---|---|---|---|---|---|---|---|---|---|---|---|---|---|---|---|---|---|---|---|---|---|
| | | | | | CATCH BASIN ABANDONED | CATCH BASIN REMOVED | | INLET REMOVED | ROCK CHANNEL PROTECTION TYPE C W/FILTER | CONCRETE MASONRY | | 6" CONDUIT TYPE B | 8" CONDUIT TYPE B 706.08 | 10" CONDUIT TYPE B 706.08 | 12" CONDUIT TYPE B 706.02 | 15" CONDUIT TYPE B 706.02 | 24" CONDUIT TYPE B | 6" CONDUIT TYPE C | 12" CONDUIT TYPE C 706.02 | 15" CONDUIT TYPE C | 24" CONDUIT TYPE C 706.02 | 12" CONDUIT TYPE F 707.05, TYPE C | 24" CONDUIT TYPE B 706.02 | CATCH BASIN NO.2-3 | INLET NO.3B50 | CATCH BASIN NO.2-2B | CATCH BASIN NO.3A | | CATCH BASIN NO.4, AS PER PLAN | CATCH BASIN NO.6 | CATCH BASIN NO.8, AS PER PLAN |
| | | | | | EACH | | | EACH | CU.YD. | | | LIN.FT. | | | | | | | | | | | | EACH | | | | | | | |
| 99 | 1-D | SR 2 | 876+76 | | | 1 | | 1 | | | | | | | | | | | | | | | | | | | | | | | |
| 99 | 2-D | SR 2 | 882+58 | | | | | 2 | | | | | 8 | | 20 | | | | | | | | | | | | | | | | |
| 99 | 3-D | SR 2 | 886+66 | | | | | 2 | | | | | 16 | | | | | | | | | | | 24 | | | | | | | |
| 99 | 4-D | SR 2 | 882+60 | | 1 | | | | | | | | | | | | 160 | | | | | | | | | | | | | | |
| 99 | 5-D | SR 2 | 884+25 | | | | | | | | | | | | | | 75 | | | | | | | 1 | | | | | | | |
| 99 | 6-D | SR 2 | 885+00 | | | | | | | | | | | | | | 166 | | | | | | | 1 | | | | | | | |
| 99 | 7-D | SR 2 | 886+66 | | | | | | | | | | | | | | | | | | 8 | | | 1 | | | | | | | |
| 100 | 1-D | SR 2 | 889+47 | | | | | 2 | | | | 8 | | | 20 | | | | | | | | | | | | | | | | |
| 100 | 2-D | SR 2 | 890+51 | | | | | 1 | | | | | | | | | | | | | | | | | | | | | | | |
| 100 | 3-D | SR 2 | 899+90 | | | | | 2 | | | | 8 | | | | | | | | | | | | | | | | | | | |
| 101 | 1-D | SR 2 | 902+51 | | | | | 2 | | .20 | | 16 | | | 20 | | | | 8 | | | | | | | | | | | | |
| 101 | 2-D | SR 2 | 905+05 | | | | | 1 | | .20 | | | | 8 | 20 | | | | 8 | | | | | | | | | | | | |
| 101 | 3-D | SR 2 | 907+01 | | | | | 1 | | | | | | 8 | 20 | | | | | | | | | | | | | | | | |
| 101 | 4-D | SR 2 | 914+00 | | | | | 1 | | | | | | 8 | 8 | | | | | | | | | | 1 | | | | | | |
| 102 | 1-D | SR 2 | 916+26 | | | 2 | | | | | | 8 | | 8 | | 8 | | | | | | | | | 1 | | | | | | |
| 102 | 2-D | SR 2 | 917+21 | | | | | 1 | | | | 8 | | 8 | | | | | | | | | | | 1 | | | | | | |
| 102 | 3-D | SR 2 | 919+01 | | | | | 1 | | .25 | | 320 | | | 8 | 58 | | | | | | | | | 1 | | | | | | |
| 102 | 4-D | SR 2 | 923+51 | | | | | 1 | | | | 8 | | | 8 | | | | | | | | | | 1 | | | | | | |
| 102 | 5-D | SR 2 | 930+00 | | | | | | 2.5 | | | | | | | | | | | | | | 86 | | | | 1 | | | | |
| 102 | 6-D | SR 2 | 930+00 | | | | | | 2.5 | | | | | | | | | | | | | | 80 | | | | 1 | | | | |
| 103 | 1-D | SR 2 | 937+47 | | | | | 1 | | | | 8 | | | 8 | | | | | | | | | | 1 | | | | | | |
| 103 | 2-D | SR 2 | 939+72 | | | | | | 1.7 | | | | | | | | | | | | | | 60 | | | | 1 | | | | |
| 103 | 3-D | SR 2 | 940+57 | | | | | | 1.7 | | | | | | | | | | | | | | 88 | | | | 1 | | | | |
| 104 | 1-D | SR 2 | 948+33 | | | 1 | | | | .20 | | | | | 8 | | | | 8 | | | | | | | | | | | 1 | |
| 104 | 2-D | SR 2 | 949+00 | | | 1 | | | | .20 | | | | | 16 | | | | 8 | | | | | | | | | | | 1 | |
| 104 | 3-D | SR 2 | 949+00 | | | | | 1 | | | | 8 | | | 8 | | | | | | | | | | 1 | | | | | | |
| 104 | 4-D | SR 2 | 951+00 | | | | | 1 | | | | 8 | | | 8 | | | | | | | | | | 1 | | | | | | |
| 104 | 5-D | SR 2 | 954+53 | | | | | 1 | | | | 8 | | | 8 | | | | | | | | | | 1 | | | | | | |
| 104 | 6-D | SR 2 | 957+00 | | | 2 | | | | | | 8 | | | 16 | | | | | | | | | | 1 | | | | | | |
| 104 | 7-D | SR 2 | 957+97 | | | | | 1 | | | | | 8 | | 8 | | | | | | | | | | 1 | | | | | | |
| 105 | 1-D | SR 2 | 961+05 | | | | | 1 | | .20 | | 8 | | | 8 | | | | 8 | | | | | | 1 | | | | | | |
| 105 | 2-D | SR 2 | 969+50 | | | | | | | .20 | | | | | | | | | | | | | 52 | | | | 1 | | | | |
| 105 | 3-D | SR 2 | 969+50 | | | | | | | .20 | | | | | | | | | | | | | 52 | | | | 1 | | | | |
| 106 | 1-D | SR 2 | 977+50 | | | | | | | .20 | | | | | | | | | | | | | 55 | | | | 1 | | | | |
| 106 | 2-D | SR 2 | 977+50 | | | | | | | .20 | | | | | | | | | | | | | 52 | | | | 1 | | | | |
| 107 | 1-D | SR 2 | 986+02 | | | | | 1 | | .20 | | | 8 | | 8 | | | | 8 | | | | | | 1 | | | | | | |
| 107 | 2-D | SR 2 | 989+06 | | | | | 1 | | | | 8 | | | 8 | | | | | | | | | | 1 | | | | | | |
| 107 | 3-D | SR 2 | 990+07 | | | 2 | | | | | | | | | 16 | 8 | | | | | | | | | 1 | | | | | | |
| 107 | 4-D | SR 2 | 991+06 | | | | | 1 | | | | 8 | | | 8 | | | | | | | | | | 1 | | | | | | |
| 107 | 5-D | SR 2 | 994+52 | | | | | 1 | | .20 | | 8 | | | 8 | | | | 8 | | | | | | 1 | | | | | | |
| Sheet Totals | | | | | 1 | 9 | | 28 | 8.4 | 2.45 | | 448 | 40 | 40 | 260 | 74 | 401 | | 56 | | 8 | 525 | 24 | 3 | 17 | | 8 | | | 2 | |

I:/pd/ottawa/ott2/ot2drtbl.dgn

QUANTITIES
CALC BY SKL DATE 11-1-94
CKD BY MTG DATE 11-4-94

| FHWA REGION | STATE | PROJECT | |
|---|---|---|---|
| 5 | OHIO | | |

91/367

OTT-2-16.60

# DRAINAGE TABLE

| SHEET NO. | REFERENCE NO. | ROUTE | STATION | 202 | | | | | 601 | 602 | 603 | | | | | | | | | | | 604 | | | | | | | | |
|---|---|---|---|---|---|---|---|---|---|---|---|---|---|---|---|---|---|---|---|---|---|---|---|---|---|---|---|---|---|
| | | | | | CATCH BASIN ABANDONED | CATCH BASIN REMOVED | | INLET REMOVED | ROCK CHANNEL PROTECTION TYPE C W/FILTER | CONCRETE MASONRY | 6" CONDUIT TYPE B | 8" CONDUIT TYPE B 706.08 | 10" CONDUIT TYPE B 706.08 | 12" CONDUIT TYPE B 706.02 | 15" CONDUIT TYPE B 706.02 | 24" CONDUIT TYPE B | 6" CONDUIT TYPE C | 12" CONDUIT TYPE C 706.02 | 15" CONDUIT TYPE C | 24" CONDUIT TYPE C 706.02 | 12" CONDUIT TYPE F 707.05 TYPE C | 24" CONDUIT TYPE B 706.02 | CATCH BASIN NO.2-3 | INLET NO.3B50 | CATCH BASIN NO.2-2B | CATCH BASIN NO.3A | | CATCH BASIN NO.4, AS PER PLAN | CATCH BASIN NO.6 | CATCH BASIN NO.8, AS PER PLAN |
| | | | | | EACH | | | EACH | CU.YD. | | LIN.FT. | | | | | | | | | | | | EACH | | | | | | | |
| 108 | 1-D | SR 2 | 1001+51.5 | | | | | 1 | | | 8 | | | 8 | | | | | | | | | 1 | | | | | | | |
| 108 | 2-D | SR 2 | 1004+52 | | | | | 1 | | | 8 | | | 8 | | | | | | | | | 1 | | | | | | | |
| 108 | 3-D | SR 2 | 1005+52 | | | 2 | | | | .25 | | | | 16 | | | | | 8 | | | | 1 | | | | | | | |
| 108 | 4-D | SR 2 | 1006+51 | | | | | 1 | | | 8 | | | 8 | | | | | | | | | 1 | | | | | | | |
| 108 | 5-D | SR 2 | 1010+02 | | | | | 1 | | .20 | 8 | | | 8 | | | | 8 | | | | | 1 | | | | | | | |
| 109 | 1-D | SR 2 | 1017+02 | | | | | 1 | | | 8 | | | 8 | | | | | | | | | 1 | | | | | | | |
| 109 | 2-D | SR 2 | 1020+03 | | | | | 1 | | | 8 | | | 8 | | | | | | | | | 1 | | | | | | | |
| 109 | 3-D | SR 2 | 1021+02 | | | 2 | | | | .25 | | | | 16 | 8 | | | | 8 | | | | 1 | | | | | | | |
| 109 | 4-D | SR 2 | 1022+01 | | | | | 1 | | | 8 | | | 8 | | | | | | | | | 1 | | | | | | | |
| 109 | 5-D | SR 2 | 1025+02 | | | | | 1 | | | | | | 8 | | | | | | | | | 1 | | | | | | | |
| 110 | 1-D | SR 2 | 1032+51 | | | | | 1 | | | 8 | | | 8 | | | | | | | | | 1 | | | | | | | |
| 110 | 2-D | SR 2 | 1036+51 | | | 2 | | | | | 24 | | | 16 | | | | | | | | | 1 | | | | | | | |
| 110 | 3-D | SR 2 | 1037+48 | | | | | 1 | | | 8 | | | 8 | 8 | | | | | | | | 1 | | | | | | | |
| 110 | 4-D | SR 2 | 1037+56 | | | 1 | | | | | | | | | 16 | | | | 8 | | | | | | | | | 1 | | |
| 110 | 5-D | SR 2 | 1041+01 | | | | | 1 | | .25 | | 8 | | 8 | | | | | | | | | 1 | | | | | | | |
| 111 | 1-D | SR 2 | 1044+51 | | | 1 | | | | | | 16 | | 8 | | | | | | | | | 1 | | | | | | | |
| 111 | 2-D | SR 2 | 1045+21 | | | 1 | | | | | | | | 8 | | | | 8 | | | | | | | | | | | 1 | |
| 111 | 3-D | SR 2 | 1052+00 | | | | | | | .20 | | | | | | | | | 4 | | | | 1 | | | | | | | |
| 112 | 1-D | SR 2 | 1067+00 | | | | | | | | | | | | | | | | 12 | | | | 1 | | | | | | | |
| | | | | | | | | | | .25 | | | | | | | | | | | | | | | | | | | | |
| 113 | 1-D | SR 2 | 1082+76 | | | | | | | | | | | | | | | 8 | 12 | | | | | | | | | | | 2 |
| | | | | | | | | | | .25 | | | | | | | | | | | | | | | | | | | | |
| 114 | 1-D | SR 2 | 1087+51 | | | | | | | | | | | | | | | 8 | 4 | | | | | | | | | | | 2 |
| 115 | 1-D | SR 2 | 1102+51 | | | | | | | | | | | | | | | 8 | 4 | | | | | | | | | | | 2 |
| 116 | 1-D | SR 2 | 1117+63 | | | | | | | | | | | | | | | 8 | 4 | | | | | | | | | | | 2 |
| 117 | 1-D | SR 2 | 1133+97 | | | | | | | | | | | | | | | 8 | 4 | | | | | | | | | | | 2 |
| 118 | 1-D | SR 2 | 1150+17 | | | | | | | .25 | | | | | | | | 8 | 12 | | | | | | | | | | | 2 |
| 119 | 1-D | SR 2 | 1157+14 | | | | | | | | | | | | | | | 8 | 4 | | | | | | | | | | | 2 |
| 120 | 1-D | SR 2 | 1172+14 | | | | | | | | | | | | | | | 8 | 4 | | | | | | | | | | | 2 |
| 121 | 1-D | SR 2 | 1188+15 | | | | | | | .25 | | | | | | | | 8 | 12 | | | | | | | | | | | 2 |
| 122 | 1-D | SR 2 | 1204+03 | | | | | | | | | | | | | | | 8 | 4 | | | | | | | | | | | 2 |
| 123 | 1-D | SR 2 | 1211+15 | | | | | | | | | | | | | | | 8 | 12 | | | | | | | | | | | 2 |
| 123 | 2-D | SR 2 | 1218+50 | | | | | | 1.7 | .20 | | | | | | | | | | | 52 | | | | | 1 | | | | |
| 123 | 3-D | SR 2 | 1218+50 | | | | | | 2.5 | .20 | | | | | | | | | | | 55 | | | | | 1 | | | | |
| 124 | 1-D | SR 2 | 1226+25 | | | | | | 1.7 | .20 | | | | | | | | | | | 78 | | | | | 1 | | | | |
| 124 | 2-D | SR 2 | 1227+25 | | | | | | 2.8 | .20 | | | | | | | | | | | 85 | | | | | 1 | | | | |
| 124 | 3-D | SR 2 | 1234+14 | | | | | | | .25 | | | | | | | | 8 | 12 | | | | | | | | | | | 2 |
| Sheet Totals | | | | | | 9 | | 11 | 8.7 | 3.20 | 96 | 24 | | 152 | 32 | | | 112 | 128 | | 270 | | 15 | | 4 | | 2 | 2 | 24 |

1/pd/ottawa/ott2/ot2drtbl.dgn

QUANTITIES
CALC BY SKL DATE 11-1-94
CKD BY MTG DATE 11-4-94

| FHWA REGION | STATE | PROJECT | |
|---|---|---|---|
| 5 | OHIO | | |

92/367

OTT-2-16.60

# DRAINAGE TABLE

| SHEET NO. | REFERENCE NO. | ROUTE | STATION | 202 | | | | | 601 | 602 | | 603 | | | | | | | | | | | | 604 | | | | | | | | |
|---|---|---|---|---|---|---|---|---|---|---|---|---|---|---|---|---|---|---|---|---|---|---|---|---|---|---|---|---|---|---|---|---|
| | | | | | CATCH BASIN ABANDONED | CATCH BASIN REMOVED | | INLET REMOVED | ROCK CHANNEL PROTECTION TYPE C W/FILTER | CONCRETE MASONRY | | 6" CONDUIT TYPE B | 8" CONDUIT TYPE B 706.08 | 10" CONDUIT TYPE B 706.08 | 12" CONDUIT TYPE B 706.02 | 15" CONDUIT TYPE B 706.02 | 24" CONDUIT TYPE B | 6" CONDUIT TYPE C | 12" CONDUIT TYPE C 706.02 | 15" CONDUIT TYPE C | 24" CONDUIT TYPE C 706.02 | 12" CONDUIT TYPE F 707.05 TYPE C | 24" CONDUIT TYPE B 706.02 | CATCH BASIN NO.2-3 | INLET NO.3B50 | CATCH BASIN NO.2-2B | CATCH BASIN NO.3A | | CATCH BASIN NO.4 AS PER PLAN | CATCH BASIN NO.6 | CATCH BASIN NO.8, AS PER PLAN |
| | | | | | EACH | | | EACH | CU.YD. | | | LIN.FT. | | | | | | | | | | | | EACH | | | | | | | | |
| 125 | 1-D | SR 53 | 272+50 | | | | | | 2.5 | 2.0 | | | | | | | | | | | | | 88 | | | | | 1 | | | | |
| 125 | 2-D | SR 53 | 272+50 | | | | | | 1.7 | 2.0 | | | | | | | | | | | | | 28 | | | | | 1 | | | | |
| 125 | 3-D | SR 53 | 277+00 | | | | | | 2.5 | 2.0 | | | | | | | | | | | | | 62 | | | | | 1 | | | | |
| 125 | 4-D | SR 53 | 270+95 | | | 1 | | | | | | | | | | | | | | | | | | | | | | | | | | |
| 125 | 5-D | SR 53 | 271+85 | | | 1 | | | | | | | | | | | | | | | | | | | | | | | | | | |
| 125 | 6-D | SR 53 | 263+35 | | | 1 | | | | | | | | | | | | | 14 | | | | | | | | | | | | | |
| 126 | 1-D | RAMP B | 18+00 | | | | | | | | | | | | | | | | | | | | | | | | | | | | | |
| 126 | 2-D | SR 53 | 277+50 | | | | | | 1.7 | 2.0 | | | | | | | | 4 | 34 | | | | 54 | | | 1 | 1 | | | | |
| Sheet Totals | | | | | | 3 | | | 8.4 | 8.00 | | | | | | | | 4 | 48 | | | | 232 | | | | 1 | 4 | | | | |
| Totals from Sheet No. 90 | | | | | 1 | 9 | | 28 | 8.4 | 2.45 | | 448 | 40 | 40 | 260 | 74 | 401 | | 56 | | 8 | 525 | 24 | 3 | 17 | | 8 | | | 2 | |
| Totals from Sheet No. 91 | | | | | | 9 | | 11 | 8.7 | 3.20 | | 96 | 24 | | 152 | 32 | | | 112 | 128 | | 270 | | | 15 | | 4 | | 2 | 2 | 24 |
| Totals to General Summary | | | | | 1 | 21 | | 39 | 25.5 | 13.65 | | 544 | 64 | 40 | 412 | 106 | 401 | 4 | 216 | 128 | 8 | 1027 | 24 | 3 | 32 | 1 | 16 | | 2 | 4 | 24 |

I:/pd/ottawa/ott2/ot2drtbl.dgn

# UNDERDRAIN TABLE

QUANTITIES
CALC BY SKL DATE 11-1-94
CKD BY MTG DATE 8-16-95

| FHWA REGION | STATE | PROJECT | |
|---|---|---|---|
| 5 | OHIO | | |

93/367

OTT-2-16.60

* 707.17 NONPERFORATED, ASTM D 3034 SDR 35, SS931 OR SS944

| SHEET NUMBER | REF. NUMBER | ROUTE | LOCATION STATION FROM | LOCATION STATION TO | SIDE | 603 6" TYPE B CONDUIT * LIN.FT. | 603 6" TYPE F CONDUIT * LIN.FT. | 605 SHALLOW UNDERDRAIN, AS PER PLAN LIN.FT. | BENDS AND BRANCHES 45° BEND EACH | BENDS AND BRANCHES 90° BEND EACH | BENDS AND BRANCHES TEE EACH | BENDS AND BRANCHES END CAP EACH | SPECIAL PRECAST REINFORCED CONCRETE OUTLET EACH |
|---|---|---|---|---|---|---|---|---|---|---|---|---|---|
| 99 | 1-U | SR 2 | 876+14 | 877+94 | RT. | | 20 | 167 | 1 | | | 1 | |
| 99 | 2-U | SR 2 | 879+10 | 886+66 | RT. | | 40 | 738 | 1 | | | 1 | |
| 99 | 3-U | SR 2 | 879+22 | 882+64 | LT. | | 10 | 342 | | | | 1 | |
| 99 | 4-U | SR 2 | 882+64 | 886+66 | LT. | | 40 | 386 | 1 | | | | |
| 99 | 5-U | SR 2 | 886+66 | 888+00 | RT. | | 40 | 119 | 1 | | | | |
| 99 | 6-U | SR 2 | 886+66 | 888+00 | LT. | | 40 | 115 | 1 | | | | |
| 99 | 7-U | SR 2 | 876+75 | 878+00 | LT.MEDIAN | | | 115 | | | 1 | 1 | |
| 99 | 8-U | SR 2 | 876+72 | 878+02 | RT.MEDIAN | 90 | | 120 | | 1 | | 1 | |
| 99 | 9-U | SR 2 | 876+80 | 878+10 | LT. | | | 120 | | | 1 | | |
| 99 | 10-U | SR 2 | 879+15 | 882+65 | RT.MEDIAN | 10 | | 340 | | 1 | | 1 | |
| 99 | 11-U | SR 2 | 879+20 | 882+65 | LT.MEDIAN | 10 | | 335 | | | | 1 | |
| 99 | 12-U | SR 2 | 882+66 | 886+65 | RT.MEDIAN | 10 | | 399 | 1 | | | 1 | |
| 99 | 13-U | SR 2 | 882+66 | 886+65 | LT.MEDIAN | 10 | | 399 | 1 | | | 1 | |
| 99 | 14-U | SR 2 | 886+65 | 888+00 | RT.MEDIAN | 10 | | 135 | 1 | | | | |
| 99 | 15-U | SR 2 | 886+65 | 888+00 | LT.MEDIAN | 10 | | 135 | 1 | | | | |
| 100 | 1-U | SR 2 | 888+00 | 889+45 | RT. | | | 145 | | | | 1 | |
| 100 | 2-U | SR 2 | 889+47 | 894+47 | RT. | | 40 | 470 | 1 | | | 1 | |
| 100 | 3-U | SR 2 | 888+00 | 894+16 | LT. | | | 616 | | | | 1 | |
| 100 | 4-U | SR 2 | 894+47 | 899+52 | RT. | | 45 | 503 | | 1 | | 1 | 1 |
| 100 | 5-U | SR 2 | 895+41 | 899+50 | LT. | | 42 | 410 | | 1 | | 1 | 1 |
| 100 | 6-U | SR 2 | 900+00 | 902+00 | RT. | | | 200 | | | | 1 | |
| 100 | 7-U | SR 2 | 900+00 | 902+00 | LT. | | | 200 | | | | 1 | |
| 100 | 8-U | SR 2 | 888+00 | 889+45 | RT.MEDIAN | | | 145 | | | | 1 | |
| 100 | 9-U | SR 2 | 888+00 | 889+45 | LT.MEDIAN | | | 145 | | | | 1 | |
| 100 | 10-U | SR 2 | 889+94 | 894+17 | RT.MEDIAN | 10 | | 413 | | 1 | | 1 | |
| 100 | 11-U | SR 2 | 889+94 | 894+17 | LT.MEDIAN | 10 | | 413 | | | | 1 | |
| 100 | 12-U | SR 2 | 895+41 | 899+98 | RT.MEDIAN | 10 | | 447 | | | | 1 | |
| 100 | 13-U | SR 2 | 895+41 | 899+98 | LT.MEDIAN | 10 | | 447 | | | | 1 | |
| 100 | 14-U | SR 2 | 900+03 | 902+00 | RT.MEDIAN | | | 197 | | | | 1 | |
| 100 | 15-U | SR 2 | 900+03 | 902+00 | LT.MEDIAN | | | 197 | | | | 1 | |
| 101 | 1-U | SR 2 | 902+00 | 902+55 | RT. | | 40 | 55 | | | 1 | | 1 |
| 101 | 2-U | SR 2 | 902+00 | 902+08 | LT. | | 43 | 8 | | 1 | | | 1 |
| 101 | 3-U | SR 2 | 902+55 | 910+58 | RT. | | | 805 | | | | 1 | |
| 101 | 4-U | SR 2 | 902+95 | 905+47 | LT. | | 43 | 252 | | 1 | | 1 | 1 |
| 101 | 5-U | SR 2 | 905+49 | 907+42 | LT. | | 41 | 193 | | 1 | | 1 | 1 |
| 101 | 6-U | SR 2 | 907+43 | 910+58 | LT. | | 40 | 315 | | 1 | | 1 | 1 |
| 101 | 7-U | SR 2 | 910+60 | 916+00 | RT. | | | 542 | | | | 1 | |
| 101 | 8-U | SR 2 | 910+58 | 913+65 | LT. | | 36 | 307 | | 1 | | 1 | 1 |
| 101 | 9-U | SR 2 | 910+60 | 914+00 | RT.MEDIAN | 8 | | 340 | | 1 | | 1 | |
| 101 | 10-U | SR 2 | 910+60 | 914+00 | LT.MEDIAN | 8 | | 340 | | 1 | | 1 | |
| 101 | 11-U | SR 2 | 914+00 | 916+00 | RT.MEDIAN | 8 | | 200 | | | | 1 | |
| 101 | 12-U | SR 2 | 914+00 | 916+00 | LT.MEDIAN | 8 | | 200 | | | | 1 | |
| 101 | 13-U | SR 2 | 913+65 | 916+00 | LT. | | | 235 | | | | 1 | |
| 101 | 14-U | SR 2 | 902+00 | 902+52 | RT.MEDIAN | 10 | | 52 | 1 | | | | |
| 101 | 15-U | SR 2 | 902+00 | 902+52 | LT.MEDIAN | 10 | | 42 | 1 | | | | |
| 101 | 16-U | SR 2 | 902+52 | 905+02 | RT.MEDIAN | 10 | | 240 | 1 | | | 1 | |
| 101 | 17-U | SR 2 | 902+52 | 905+02 | LT.MEDIAN | 10 | | 240 | 1 | | | 1 | |
| 101 | 18-U | SR 2 | 905+04 | 906+98 | RT.MEDIAN | 10 | | 184 | 1 | | | 1 | |
| 101 | 19-U | SR 2 | 905+04 | 906+98 | LT.MEDIAN | 10 | | 184 | 1 | | | 1 | |
| 101 | 20-U | SR 2 | 907+00 | 910+58 | RT.MEDIAN | 10 | | 348 | 1 | | | 1 | |
| 101 | 21-U | SR 2 | 907+00 | 910+58 | LT.MEDIAN | 10 | | 348 | 1 | | | 1 | |
| COLUMN TOTALS | | | | | | 302 | 560 | 14,343 | 18 | 12 | 3 | 41 | 8 |

| SHEET NUMBER | REF. NUMBER | ROUTE | LOCATION STATION FROM | LOCATION STATION TO | SIDE | 603 6" TYPE B CONDUIT * LIN.FT. | 603 6" TYPE F CONDUIT * LIN.FT. | 605 SHALLOW UNDERDRAIN, AS PER PLAN LIN.FT. | BENDS AND BRANCHES 45° BEND EACH | BENDS AND BRANCHES 90° BEND EACH | BENDS AND BRANCHES TEE EACH | BENDS AND BRANCHES END CAP EACH | SPECIAL PRECAST REINFORCED CONCRETE OUTLET EACH |
|---|---|---|---|---|---|---|---|---|---|---|---|---|---|
| 102 | 1-U | SR 2 | 916+00 | 916+28 | RT. | | 30 | 28 | | | 1 | | 1 |
| 102 | 2-U | SR 2 | 916+00 | 916+28 | RT.MEDIAN | 8 | | 28 | | | 1 | | |
| 102 | 3-U | SR 2 | 916+00 | 916+28 | LT.MEDIAN | 8 | | 28 | | | 1 | | |
| 102 | 4-U | SR 2 | 916+00 | 916+15 | LT. | | 34 | 254 | | 1 | | | 1 |
| 102 | 5-U | SR 2 | 916+28 | 923+74 | RT. | | | 746 | | | | 1 | |
| 102 | 6-U | SR 2 | 916+28 | 917+21 | RT.MEDIAN | | | 93 | | | | 1 | |
| 102 | 7-U | SR 2 | 916+28 | 917+21 | LT.MEDIAN | | | 93 | | | | 1 | |
| 102 | 8-U | SR 2 | 916+43 | 919+09 | LT. | | 34 | 255 | | 1 | | 1 | 1 |
| 102 | 9-U | SR 2 | 917+21 | 919+01 | LT.MEDIAN | 8 | | 180 | | 1 | | 1 | |
| 102 | 10-U | SR 2 | 919+01 | 923+51 | RT.MEDIAN | 8 | | 450 | | 1 | | 1 | |
| 102 | 11-U | SR 2 | 919+01 | 923+51 | LT.MEDIAN | 8 | | 450 | | 1 | | 1 | |
| 102 | 12-U | SR 2 | 919+11 | 923+83 | LT. | | 32 | 472 | | 1 | | 1 | 1 |
| 102 | 13-U | SR 2 | 923+83 | 930+00 | RT. | | 44 | 617 | | 1 | | | 1 |
| 102 | 14-U | SR 2 | 923+51 | 930+00 | RT.MEDIAN | 8 | | 649 | | 1 | | | |
| 102 | 15-U | SR 2 | 923+51 | 930+00 | LT.MEDIAN | 8 | | 649 | | 1 | | | |
| 102 | 16-U | SR 2 | 923+83 | 930+00 | LT. | | 44 | 617 | | 1 | | | |
| 102 | 17-U | SR 2 | 917+21 | 919+01 | RT.MEDIAN | 8 | | 180 | | 1 | | 1 | |
| 103 | 1-U | SR 2 | 930+00 | 932+13 | RT. | | | 213 | | | | 1 | |
| 103 | 2-U | SR 2 | 930+00 | 932+42 | RT.MEDIAN | | | 242 | | | | 1 | |
| 103 | 3-U | SR 2 | 930+00 | 932+63 | LT.MEDIAN | | | 263 | | | | 1 | |
| 103 | 4-U | SR 2 | 930+00 | 932+90 | LT. | | | 290 | | | | 1 | |
| 103 | 5-U | SR 2 | 934+81 | 937+00 | RT. | | 38 | 216 | | | 1 | 1 | 1 |
| 103 | 6-U | SR 2 | 935+14 | 937+47 | RT.MEDIAN | 8 | | 225 | | 1 | | 1 | |
| 103 | 7-U | SR 2 | 935+34 | 937+47 | LT.MEDIAN | 8 | | 204 | | 1 | | 1 | |
| 103 | 8-U | SR 2 | 935+63 | 937+69 | LT. | | 25 | 206 | | | 1 | 1 | 1 |
| 103 | 9-U | SR 2 | 939+73 | 944+00 | RT. | | | 427 | | | | 1 | |
| 103 | 10-U | SR 2 | 940+00 | 944+00 | RT.MEDIAN | | | 400 | | | | 1 | |
| 103 | 11-U | SR 2 | 940+15 | 944+00 | LT.MEDIAN | | | 385 | | | | 1 | |
| 103 | 12-U | SR 2 | 940+37 | 944+00 | LT. | | | 363 | | | | 1 | |
| 104 | 1-U | SR 2 | 944+00 | 948+66 | RAMP B/RT. | | 33 | 466 | | | 1 | | 1 |
| 104 | 2-U | SR 2 | 944+00 | 949+00 | RT. | 13 | | 492 | | 1 | | | |
| 104 | 3-U | SR 2 | 944+00 | 949+00 | RT.MEDIAN | 8 | | 500 | | | 1 | | |
| 104 | 4-U | SR 2 | 944+00 | 949+00 | LT.MEDIAN | 8 | | 500 | | | 1 | | |
| 104 | 5-U | SR 2 | 944+00 | 948+30 | LT. | 23 | | 413 | | 1 | | | |
| 104 | 6-U | SR 2 | 948+66 | 957+00 | RT. | | 25 | 834 | | | 1 | 1 | 1 |
| 104 | 7-U | SR 2 | 949+00 | 951+00 | RT.MEDIAN | 8 | | 200 | | | | 1 | |
| 104 | 8-U | SR 2 | 949+00 | 951+00 | LT.MEDIAN | 8 | | 200 | | | | 1 | |
| 104 | 9-U | SR 2 | 948+33 | 956+62 | RAMP A/LT. | 8 | | 830 | | | | 1 | |
| 104 | 10-U | SR 2 | 951+00 | 954+53 | RT.MEDIAN | 8 | | 353 | | | | 1 | |
| 104 | 11-U | SR 2 | 951+00 | 954+53 | LT.MEDIAN | 8 | | 353 | | | | 1 | |
| 104 | 12-U | SR 2 | 954+53 | 957+00 | RT.MEDIAN | 8 | | 247 | | | 1 | 1 | |
| 104 | 13-U | SR 2 | 954+53 | 957+00 | LT.MEDIAN | 8 | | 247 | | | 1 | 1 | |
| 104 | 14-U | SR 2 | 957+00 | 958+00 | RT. | | | 100 | | | | | |
| 104 | 15-U | SR 2 | 957+00 | 957+90 | RT.MEDIAN | | | 90 | | | | | |
| 104 | 16-U | SR 2 | 957+00 | 957+90 | LT.MEDIAN | | | 90 | | | | | |
| 104 | 17-U | SR 2 | 957+34 | 958+00 | LT. | | 32 | 66 | | | 1 | | 1 |
| 104 | 18-U | SR 2 | 957+90 | 980+00 | RT.MEDIAN | 8 | | 10 | | | 1 | | |
| 104 | 19-U | SR 2 | 957+90 | 980+00 | LT.MEDIAN | 8 | | 10 | | | 1 | | |
| COLUMN TOTALS | | | | | | 204 | 371 | 15,224 | | 4 | 24 | 6 | 29 | 10 |
| TOTALS CARRIED FROM COLUMN 1 | | | | | | 302 | 560 | 14,343 | | 18 | 12 | 3 | 41 | 8 |
| Sheet Totals | | | | | | 506 | 931 | 29,567 | | 22 | 36 | 9 | 70 | 18 |

i/PD/ottawa/ott2/ot2udtbl.dgn

# UNDERDRAIN TABLE

QUANTITIES
CALC BY SKL DATE 11-1-94
CKD BY MTG DATE 8-16-95

| FHWA REGION | STATE | PROJECT | |
|---|---|---|---|
| 5 | OHIO | | |

94/367

OTT-2-16.60

* 707.17 NONPERFORATED, ASTM D 3034 SDR 35, SS931 OR SS944

| SHEET NUMBER | REF. NUMBER | ROUTE | LOCATION STATION FROM | LOCATION STATION TO | SIDE | 603 6" TYPE B CONDUIT * LIN.FT. | 603 6" TYPE F CONDUIT * LIN.FT. | 605 SHALLOW UNDERDRAIN, AS PER PLAN LIN.FT. | BENDS AND BRANCHES 45° BEND EACH | BENDS AND BRANCHES 90° BEND EACH | BENDS AND BRANCHES TEE EACH | BENDS AND BRANCHES END CAP EACH | SPECIAL PRECAST REINFORCED CONCRETE OUTLET EACH |
|---|---|---|---|---|---|---|---|---|---|---|---|---|---|
| 105 | 1-U | SR 2 | 958+00 | 960+22 | RT. | | | 222 | | | | 1 | |
| 105 | 2-U | SR 2 | 958+00 | 960+22 | RT. MEDIAN | | | 222 | | | | 1 | |
| 105 | 3-U | SR 2 | 958+00 | 960+22 | LT. MEDIAN | | | 222 | | | | 1 | |
| 105 | 4-U | SR 2 | 958+00 | 960+22 | LT. | | | 222 | | | | 1 | |
| 105 | 5-U | SR 2 | 961+00 | 970+73 | RT. | | 25 | 973 | | 1 | | 1 | 1 |
| 105 | 6-U | SR 2 | 961+05 | 970+73 | RT. MEDIAN | 8 | | 960 | 1 | | | 1 | |
| 105 | 7-U | SR 2 | 961+05 | 970+73 | LT. MEDIAN | 8 | | 960 | 1 | | | 1 | |
| 105 | 8-U | SR 2 | 961+28 | 970+73 | LT. | | 26 | 945 | | 1 | | 1 | 1 |
| 106 | 1-U | SR 2 | 976+30 | 985+44 | RT. | | 56 | 914 | | 1 | | 1 | 1 |
| 106 | 2-U | SR 2 | 976+30 | 986+00 | RT. MEDIAN | | | 970 | | | | 1 | |
| 106 | 3-U | SR 2 | 976+30 | 986+00 | LT. MEDIAN | | | 970 | | | | 1 | |
| 106 | 4-U | SR 2 | 976+30 | 985+44 | LT. | | 56 | 914 | | 1 | | 1 | 1 |
| 106 | 5-U | SR 2 | 985+45 | 986+00 | LT. | | | 55 | | | | 1 | |
| 106 | 6-U | SR 2 | 985+45 | 986+00 | RT. | | | 55 | | | | 1 | |
| 107 | 1-U | SR 2 | 986+00 | 990+07 | RT. | | 65 | 407 | | | 1 | 1 | 1 |
| 107 | 2-U | SR 2 | 986+05 | 989+06 | RT. MEDIAN | 8 | | 301 | | 1 | | 1 | |
| 107 | 3-U | SR 2 | 986+05 | 989+06 | LT. MEDIAN | 8 | | 301 | | 1 | | 1 | |
| 107 | 4-U | SR 2 | 986+00 | 989+37 | LT. | | 67 | 337 | | 1 | | 1 | 1 |
| 107 | 5-U | SR 2 | 989+06 | 990+07 | RT. MEDIAN | 8 | | 101 | | | 1 | 1 | |
| 107 | 6-U | SR 2 | 989+06 | 990+07 | LT. MEDIAN | 8 | | 101 | | | 1 | 1 | |
| 107 | 7-U | SR 2 | 990+07 | 991+06 | RT. MEDIAN | | | 99 | | | | 1 | |
| 107 | 8-U | SR 2 | 990+07 | 991+06 | LT. MEDIAN | | | 99 | | | | 1 | |
| 107 | 9-U | SR 2 | 990+75 | 995+20 | LT. | | 67 | 445 | | 1 | | 1 | 1 |
| 107 | 10-U | SR 2 | 991+06 | 994+52 | RT. MEDIAN | 8 | | 346 | | 1 | | 1 | |
| 107 | 11-U | SR 2 | 991+06 | 994+52 | LT. MEDIAN | 8 | | 346 | | 1 | | 1 | |
| 107 | 12-U | SR 2 | 995+22 | 998+00 | LT. | | 69 | 278 | | 1 | | 1 | 1 |
| 107 | 13-U | SR 2 | 994+52 | 998+00 | RT. MEDIAN | 8 | | 348 | | 1 | | 1 | |
| 107 | 14-U | SR 2 | 994+52 | 998+00 | LT. MEDIAN | 8 | | 348 | | 1 | | 1 | |
| 107 | 15-U | SR 2 | 998+01 | 1000+00 | RT. | | | 199 | | | | 1 | |
| 107 | 16-U | SR 2 | 998+01 | 1000+00 | RT. MEDIAN | | | 199 | | | | 1 | |
| 107 | 17-U | SR 2 | 998+01 | 1000+00 | LT. MEDIAN | | | 199 | | | | 1 | |
| 107 | 18-U | SR 2 | 998+01 | 1000+00 | LT. | | | 199 | | | | 1 | |
| 107 | 19-U | SR 2 | 990+07 | 998+00 | RT. | | | 793 | | | | 1 | 1 |
| 107 | 20-U | SR 2 | 986+00 | 986+05 | LT. MEDIAN | 8 | | 5 | | 1 | | | |
| 107 | 21-U | SR 2 | 986+00 | 986+05 | RT. MEDIAN | 8 | | 5 | | 1 | | | |
| 108 | 1-U | SR 2 | 1000+00 | 1004+80 | RT. | | 67 | 480 | | 1 | | | 1 |
| 108 | 2-U | SR 2 | 1000+00 | 1001+52 | RT. MEDIAN | 8 | | 152 | | 1 | | | |
| 108 | 3-U | SR 2 | 1000+00 | 1001+52 | LT. MEDIAN | 8 | | 152 | | 1 | | | |
| 108 | 4-U | SR 2 | 1000+00 | 1001+04 | LT. | | 48 | 104 | | 1 | | | 1 |
| 108 | 5-U | SR 2 | 1001+52 | 1004+52 | RT. MEDIAN | 8 | | 300 | | 1 | | 1 | |
| 108 | 6-U | SR 2 | 1001+52 | 1004+52 | LT. MEDIAN | 8 | | 300 | | 1 | | 1 | |
| 108 | 7-U | SR 2 | 1004+52 | 1005+52 | RT. MEDIAN | 8 | | 100 | | | 1 | 1 | |
| 108 | 8-U | SR 2 | 1004+52 | 1005+52 | LT. MEDIAN | 8 | | 100 | | | 1 | 1 | |
| 108 | 9-U | SR 2 | 1001+05 | 1005+59 | LT. | | 35 | 454 | | | 1 | 1 | 1 |
| 108 | 10-U | SR 2 | 1006+21 | 1010+00 | RT. | | 67 | 379 | | 1 | | 1 | 1 |
| 108 | 11-U | SR 2 | 1005+52 | 1006+51 | RT. MEDIAN | | | 99 | | | | 1 | |
| 108 | 12-U | SR 2 | 1005+52 | 1006+51 | LT. MEDIAN | | | 99 | | | | 1 | |
| 108 | 13-U | SR 2 | 1006+51 | 1010+02 | RT. MEDIAN | 8 | | 351 | | 1 | | 1 | |
| COLUMN TOTALS | | | | | | 152 | 648 | 17,130 | 2 | 23 | 6 | 42 | 13 |

| SHEET NUMBER | REF. NUMBER | ROUTE | LOCATION STATION FROM | LOCATION STATION TO | SIDE | 603 6" TYPE B CONDUIT * LIN.FT. | 603 6" TYPE F CONDUIT * LIN.FT. | 605 SHALLOW UNDERDRAIN, AS PER PLAN LIN.FT. | BENDS AND BRANCHES 45° BEND EACH | BENDS AND BRANCHES 90° BEND EACH | BENDS AND BRANCHES TEE EACH | BENDS AND BRANCHES END CAP EACH | SPECIAL PRECAST REINFORCED CONCRETE OUTLET EACH |
|---|---|---|---|---|---|---|---|---|---|---|---|---|---|
| 108 | 14-U | SR 2 | 1006+51 | 1010+02 | LT. MEDIAN | 8 | | 351 | | 1 | | 1 | |
| 108 | 15-U | SR 2 | 1010+02 | 1013+60 | RT. MEDIAN | 8 | | 358 | | 1 | | 1 | |
| 108 | 16-U | SR 2 | 1010+02 | 1013+60 | LT. MEDIAN | 8 | | 358 | | 1 | | 1 | |
| 108 | 17-U | SR 2 | 1010+02 | 1013+60 | RT. | | | 358 | | | | 1 | |
| 108 | 18-U | SR 2 | 1005+59 | 1013+60 | LT. | | | 801 | | | | 1 | |
| 108 | 19-U | SR 2 | 1013+62 | 1014+00 | RT. | | | 38 | | | | 1 | |
| 108 | 20-U | SR 2 | 1013+62 | 1014+00 | RT. MEDIAN | | | 38 | | | | 1 | |
| 108 | 21-U | SR 2 | 1013+62 | 1014+00 | LT. MEDIAN | | | 38 | | | | 1 | |
| 108 | 22-U | SR 2 | 1013+62 | 1014+00 | RT. | | | 38 | | | | 1 | |
| 109 | 1-U | SR 2 | 1014+00 | 1016+26 | RT. | | 72 | 226 | | 1 | | | 1 |
| 109 | 2-U | SR 2 | 1014+00 | 1017+02 | RT. MEDIAN | 8 | | 302 | | 1 | | | |
| 109 | 3-U | SR 2 | 1014+00 | 1017+02 | LT. MEDIAN | 8 | | 302 | | 1 | | | |
| 109 | 4-U | SR 2 | 1014+00 | 1021+00 | LT. | | 35 | 700 | | | 1 | | 1 |
| 109 | 5-U | SR 2 | 1016+30 | 1020+63 | RT. | | 36 | 433 | | 1 | | 1 | 1 |
| 109 | 6-U | SR 2 | 1017+02 | 1020+00 | RT. MEDIAN | 8 | | 298 | | 1 | | 1 | |
| 109 | 7-U | SR 2 | 1020+00 | 1021+02 | RT. MEDIAN | 8 | | 100 | | | 1 | 1 | |
| 109 | 8-U | SR 2 | 1017+02 | 1020+00 | LT. MEDIAN | 8 | | 298 | | 1 | | 1 | |
| 109 | 9-U | SR 2 | 1020+00 | 1021+02 | LT. MEDIAN | 8 | | 100 | | | 1 | 1 | |
| 109 | 10-U | SR 2 | 1021+40 | 1025+51 | RT. | | 36 | 411 | | 1 | | 1 | 1 |
| 109 | 11-U | SR 2 | 1021+02 | 1022+01 | LT. MEDIAN | | | 99 | | | | 1 | |
| 109 | 12-U | SR 2 | 1021+02 | 1022+01 | RT. MEDIAN | | | 99 | | | | 1 | |
| 109 | 13-U | SR 2 | 1022+01 | 1025+02 | RT. MEDIAN | 8 | | 301 | | | | 1 | |
| 109 | 14-U | SR 2 | 1022+01 | 1025+02 | LT. MEDIAN | 8 | | 301 | | | | 1 | |
| 109 | 15-U | SR 2 | 1025+57 | 1028+00 | RT. | | 54 | 243 | | 1 | | | 1 |
| 109 | 16-U | SR 2 | 1025+02 | 1028+00 | RT. MEDIAN | 8 | | 298 | | 1 | | | |
| 109 | 17-U | SR 2 | 1025+02 | 1028+00 | LT. MEDIAN | 8 | | 298 | | 1 | | | |
| 109 | 18-U | SR 2 | 1021+00 | 1028+00 | LT. | | | 700 | | | | | |
| 110 | 1-U | SR 2 | 1028+00 | 1029+00 | RT. | | | 100 | | | | 1 | |
| 110 | 2-U | SR 2 | 1028+00 | 1029+00 | RT. MEDIAN | | | 100 | | | | 1 | |
| 110 | 3-U | SR 2 | 1028+00 | 1029+00 | LT. MEDIAN | | | 100 | | | | 1 | |
| 110 | 4-U | SR 2 | 1028+00 | 1029+00 | LT. | | | 100 | | | | 1 | |
| 110 | 5-U | SR 2 | 1029+01 | 1032+10 | RAMP D/RT. | | 51 | 310 | | | 1 | | 1 |
| 110 | 6-U | SR 2 | 1029+01 | 1032+51 | RT. MEDIAN | 8 | | 350 | | | 1 | | 1 |
| 110 | 7-U | SR 2 | 1029+01 | 1032+51 | LT. MEDIAN | 8 | | 350 | | | 1 | | 1 |
| 110 | 8-U | SR 2 | 1029+01 | 1032+34 | RAMP A/LT. | | 28 | 333 | | | 1 | | 1 |
| 110 | 9-U | SR 2 | 1031+04 | 1032+51 | LT. | 10 | | 137 | | | 1 | | 1 |
| 110 | 10-U | SR 2 | 1032+12 | 1037+09 | RAMP D/RT. | | 49 | 497 | | | 1 | | 1 |
| 110 | 11-U | SR 2 | 1032+51 | 1036+51 | RT. MEDIAN | 8 | | 400 | | | | 1 | 1 |
| 110 | 12-U | SR 2 | 1032+51 | 1036+51 | LT. MEDIAN | 8 | | 400 | | | | 1 | 1 |
| 110 | 13-U | SR 2 | 1032+51 | 1036+51 | LT. | | 10 | 390 | | | | 1 | 1 |
| 110 | 14-U | SR 2 | 1036+51 | 1037+48 | RT. MEDIAN | 8 | | 97 | | | | | 1 |
| 110 | 15-U | SR 2 | 1036+51 | 1037+48 | LT. MEDIAN | 8 | | 97 | | | | | 1 |
| 110 | 16-U | SR 2 | 1037+56 | 1041+45 | RT. | | 18 | 380 | | | 1 | | 1 |
| 110 | 17-U | SR 2 | 1037+48 | 1041+01 | RT. MEDIAN | | | 353 | | | | | 1 |
| 110 | 18-U | SR 2 | 1037+48 | 1041+01 | LT. MEDIAN | | | 353 | | | | | 1 |
| 110 | 19-U | SR 2 | 1041+46 | 1042+00 | RT. | | 42 | 54 | | | | 1 | |
| 110 | 20-U | SR 2 | 1041+01 | 1042+00 | RT. MEDIAN | 8 | | 99 | | | | 1 | |
| 110 | 21-U | SR 2 | 1041+01 | 1042+00 | LT. MEDIAN | 8 | | 99 | | | | 1 | |
| 110 | 22-U | SR 2 | 1036+51 | 1042+00 | LT. | | 10 | 539 | | | | | |
| COLUMN TOTALS | | | | | | 178 | 441 | 13525 | 1 | 24 | 6 | 37 | 9 |
| TOTALS CARRIED FROM COLUMN 1 | | | | | | 152 | 648 | 17,130 | 2 | 23 | 6 | 42 | 13 |
| Sheet Totals | | | | | | 330 | 1089 | 30655 | 3 | 47 | 12 | 79 | 22 |

i:/pd/ottawa/ott2/ot2udtbl.dgn

# UNDERDRAIN TABLE

QUANTITIES
CALC BY SKL DATE 11-1-94
CKD BY MTG DATE 8-16-95

| FHWA REGION | STATE | PROJECT | |
|---|---|---|---|
| 5 | OHIO | | |

95/367

OTT-2-16.60

* 707.17 NONPERFORATED, ASTM D 3034 SDR 35, SS931 OR SS944

| SHEET NUMBER | REF. NUMBER | ROUTE | LOCATION STATION FROM | LOCATION STATION TO | SIDE | 603 6" TYPE B CONDUIT * LIN.FT. | 603 6" TYPE F CONDUIT * LIN.FT. | 605 SHALLOW UNDERDRAIN, AS PER PLAN LIN.FT. | | BENDS AND BRANCHES 45° BEND EACH | 90° BEND EACH | TEE EACH | END CAP EACH | SPECIAL PRECAST REINFORCED CONCRETE OUTLET EACH |
|---|---|---|---|---|---|---|---|---|---|---|---|---|---|---|
| 111 | 1-U | SR 2 | 1042+00 | 1042+98 | RT. MEDIAN | | | 98 | | | | | 1 | |
| 111 | 2-U | SR 2 | 1042+00 | 1042+98 | LT. | | | 98 | | | | | 1 | |
| 111 | 3-U | SR 2 | 1043+02 | 1044+51 | RT. MEDIAN | 8 | | 145 | | 1 | | | 1 | |
| 111 | 4-U | SR 2 | 1043+02 | 1045+21 | LT. | | 18 | 212 | | 1 | | | 1 | |
| 111 | 5-U | SR 2 | 1045+08 | 1051+78 | RAMP B/LT. | | 20 | 670 | | | 1 | | 1 | 1 |
| 111 | 6-U | SR 2 | 1044+51 | 1052+00 | RT. MEDIAN | | 18 | 749 | | | | 1 | 1 | |
| 111 | 7-U | SR 2 | 1051+83 | 1056+00 | RAMP C/RT. | | | 417 | | | | | | |
| 111 | 8-U | SR 2 | 1052+00 | 1056+00 | RT. MEDIAN | | | 400 | | | | | | |
| 111 | 9-U | SR 2 | 1052+24 | 1056+00 | LT. | | 20 | 376 | | 1 | | | | 1 |
| 111 | 10-U | SR 2 | 1042+00 | 1042+98 | RT. | | | 98 | | | | | 1 | |
| 111 | 11-U | SR 2 | 1042+00 | 1042+98 | LT. MEDIAN | | | 98 | | | | | 1 | |
| 111 | 12-U | SR 2 | 1043+02 | 1052+00 | RT. | | 10 | 898 | | | | 1 | 1 | |
| 111 | 13-U | SR 2 | 1043+02 | 1044+50 | LT. MEDIAN | 8 | | 148 | | | 1 | | 1 | |
| 111 | 14-U | SR 2 | 1044+50 | 1052+00 | LT. MEDIAN | 22 | | 750 | | 1 | | | 1 | |
| 111 | 15-U | SR 2 | 1052+00 | 1056+00 | RT. | 22 | | 400 | | | | | | |
| 111 | 16-U | SR 2 | 1052+00 | 1056+00 | LT. MEDIAN | 10 | | 400 | | 1 | | | | |
| 112 | 1-U | SR 2 | 1056+00 | 1059+55 | RT. | | | 355 | | | | | 1 | |
| 112 | 2-U | SR 2 | 1056+00 | 1059+55 | RT. MEDIAN | | | 355 | | | | | 1 | |
| 112 | 3-U | SR 2 | 1056+00 | 1059+55 | LT. | | | 355 | | | | | 1 | |
| 112 | 4-U | SR 2 | 1059+56 | 1063+02 | RT. MEDIAN | | 10 | 336 | | 1 | | | 1 | |
| 112 | 5-U | SR 2 | 1059+56 | 1062+57 | LT. | | 28 | 301 | | | 1 | | 1 | 1 |
| 112 | 6-U | SR 2 | 1063+08 | 1067+00 | RT. MEDIAN | | 35 | 380 | | 1 | | | 1 | |
| 112 | 7-U | SR 2 | 1062+98 | 1067+00 | LT. | | 40 | 402 | | | | 1 | 1 | 1 |
| 112 | 8-U | SR 2 | 1067+47 | 1070+00 | RT. | | 69 | 253 | | | 1 | | | 1 |
| 112 | 9-U | SR 2 | 1067+00 | 1070+00 | RT. MEDIAN | | 35 | 300 | | 1 | | | | |
| 112 | 10-U | SR 2 | 1067+00 | 1070+00 | LT. MEDIAN | | | 300 | | | | | | |
| 112 | 11-U | SR 2 | 1067+00 | 1070+00 | LT. | | | 300 | | | | | | |
| 112 | 12-U | SR 2 | 1056+00 | 1059+55 | LT. MEDIAN | | | 355 | | | | | 1 | |
| 112 | 13-U | SR 2 | 1059+56 | 1063+06 | RT. MEDIAN | | 10 | 340 | | 1 | | | 1 | |
| 112 | 14-U | SR 2 | 1059+56 | 1062+95 | LT. MEDIAN | | 10 | 329 | | 1 | | | 1 | |
| 112 | 15-U | SR 2 | 1063+14 | 1066+62 | RT. | | 69 | 348 | | | 1 | | 1 | 1 |
| 112 | 16-U | SR 2 | 1063+03 | 1067+00 | LT. MEDIAN | | 30 | 397 | | | | 1 | 1 | |
| 113 | 1-U | SR 2 | 1070+00 | 1077+88 | RT. | | | 788 | | | | | 1 | |
| 113 | 2-U | SR 2 | 1070+00 | 1077+89 | RT. MEDIAN | | | 789 | | | | | 1 | |
| 113 | 3-U | SR 2 | 1070+00 | 1077+92 | LT. MEDIAN | | | 792 | | | | | 1 | |
| 113 | 4-U | SR 2 | 1070+00 | 1077+93 | LT. | | | 793 | | | | | 1 | |
| 113 | 5-U | SR 2 | 1078+05 | 1082+00 | RT. | | 73 | 395 | | | 1 | | 1 | 1 |
| 113 | 6-U | SR 2 | 1078+06 | 1082+76 | RT. MEDIAN | | 16 | 460 | | 1 | | | 1 | |
| 113 | 7-U | SR 2 | 1078+09 | 1082+76 | LT. MEDIAN | | 16 | 465 | | | | 1 | 1 | |
| 113 | 8-U | SR 2 | 1078+10 | 1082+76 | LT. | | 65 | 466 | | | | 1 | 1 | 1 |
| 113 | 9-U | SR 2 | 1083+50 | 1084+00 | RT. | | 73 | 50 | | | 1 | | | 1 |
| 113 | 10-U | SR 2 | 1082+76 | 1084+00 | RT. MEDIAN | | 16 | 120 | | 1 | | | | |
| 113 | 11-U | SR 2 | 1082+76 | 1084+00 | LT. MEDIAN | | | 124 | | | | | | |
| 113 | 12-U | SR 2 | 1082+76 | 1084+00 | LT. | | | 124 | | | | | | |
| COLUMN TOTALS | | | | | | 70 | 681 | 16,729 | | 12 | 7 | 6 | 31 | 9 |

| SHEET NUMBER | REF. NUMBER | ROUTE | LOCATION STATION FROM | LOCATION STATION TO | SIDE | 603 6" TYPE B CONDUIT * LIN.FT. | 603 6" TYPE F CONDUIT * LIN.FT. | 605 SHALLOW UNDERDRAIN, AS PER PLAN LIN.FT. | | BENDS AND BRANCHES 45° BEND EACH | 90° BEND EACH | TEE EACH | END CAP EACH | SPECIAL PRECAST REINFORCED CONCRETE OUTLET EACH |
|---|---|---|---|---|---|---|---|---|---|---|---|---|---|---|
| 114 | 1-U | SR 2 | 1084+00 | 1088+24 | RT. | | | 424 | | | | | 1 | |
| 114 | 2-U | SR 2 | 1084+00 | 1087+56 | RT. MEDIAN | | | 356 | | | | | 1 | |
| 114 | 3-U | SR 2 | 1084+00 | 1087+56 | LT. MEDIAN | | | 356 | | | | | 1 | |
| 114 | 4-U | SR 2 | 1084+00 | 1088+07 | LT. | | | 407 | | | | | 1 | |
| 114 | 5-U | SR 2 | 1088+25 | 1095+56 | RT. | | 71 | 731 | | | 1 | | 1 | 1 |
| 114 | 6-U | SR 2 | 1087+51 | 1095+56 | RT. MEDIAN | | 18 | 795 | | 1 | | | 1 | |
| 114 | 7-U | SR 2 | 1087+51 | 1095+56 | LT. MEDIAN | | 18 | 795 | | 1 | | | 1 | |
| 114 | 8-U | SR 2 | 1088+09 | 1095+56 | LT. | | 71 | 747 | | | 1 | | 1 | 1 |
| 114 | 9-U | SR 2 | 1095+58 | 1098+00 | RT. | | | 242 | | | | | 1 | |
| 114 | 10-U | SR 2 | 1095+58 | 1098+00 | RT. MEDIAN | | | 242 | | | | | 1 | |
| 114 | 11-U | SR 2 | 1095+58 | 1098+00 | LT. MEDIAN | | | 242 | | | | | 1 | |
| 114 | 12-U | SR 2 | 1095+58 | 1098+00 | LT. | | | 242 | | | | | 1 | |
| 115 | 1-U | SR 2 | 1098+00 | 1101+77 | RT. | | 71 | 377 | | | 1 | | | 1 |
| 115 | 2-U | SR 2 | 1098+00 | 1102+51 | RT. MEDIAN | | 18 | 451 | | 1 | | | | |
| 115 | 3-U | SR 2 | 1098+00 | 1102+51 | LT. MEDIAN | | 16 | 451 | | | | 1 | | |
| 115 | 4-U | SR 2 | 1098+00 | 1102+51 | LT. | | 70 | 451 | | | | 1 | | 1 |
| 115 | 5-U | SR 2 | 1103+25 | 1110+48 | RT. | | 71 | 723 | | | 1 | | 1 | 1 |
| 115 | 6-U | SR 2 | 1102+51 | 1110+48 | RT. MEDIAN | | 18 | 797 | | 1 | | | 1 | |
| 115 | 7-U | SR 2 | 1102+51 | 1110+48 | LT. MEDIAN | | | 797 | | | | | 1 | |
| 115 | 8-U | SR 2 | 1102+51 | 1110+48 | LT. | | | 797 | | | | | 1 | |
| 115 | 9-U | SR 2 | 1110+50 | 1112+00 | RT. | | | 150 | | | | | 1 | |
| 115 | 10-U | SR 2 | 1110+50 | 1112+00 | LT. MEDIAN | | | 150 | | | | | 1 | |
| 115 | 11-U | SR 2 | 1110+50 | 1112+00 | RT. | | | 150 | | | | | 1 | |
| 115 | 12-U | SR 2 | 1110+50 | 1112+00 | LT. | | | 150 | | | | | 1 | |
| 116 | 1-U | SR 2 | 1112+00 | 1117+24 | RT. | | 28 | 524 | | | 1 | | 1 | 1 |
| 116 | 2-U | SR 2 | 1112+00 | 1117+64 | RT. MEDIAN | | 18 | 560 | | 1 | | | 1 | |
| 116 | 3-U | SR 2 | 1112+00 | 1117+64 | LT. MEDIAN | | 16 | 564 | | | | 1 | 1 | |
| 116 | 4-U | SR 2 | 1112+00 | 1117+64 | LT. | | 70 | 564 | | | | 1 | 1 | 1 |
| 116 | 5-U | SR 2 | 1118+06 | 1125+11 | RT. | | 28 | 705 | | | 1 | | 1 | 1 |
| 116 | 6-U | SR 2 | 1117+64 | 1125+11 | RT. MEDIAN | | 18 | 740 | | 1 | | | 1 | |
| 116 | 7-U | SR 2 | 1117+64 | 1125+11 | LT. MEDIAN | | | 747 | | | | | 1 | |
| 116 | 8-U | SR 2 | 1117+64 | 1125+11 | LT. | | | 747 | | | | | 1 | |
| 116 | 9-U | SR 2 | 1125+14 | 1126+00 | RT. | | | 86 | | | | | 1 | |
| 116 | 10-U | SR 2 | 1125+14 | 1126+00 | RT. MEDIAN | | | 86 | | | | | 1 | |
| 116 | 11-U | SR 2 | 1125+14 | 1126+00 | LT. MEDIAN | | | 86 | | | | | 1 | |
| 116 | 12-U | SR 2 | 1125+14 | 1126+00 | LT. | | | 86 | | | | | 1 | |
| 117 | 1-U | SR 2 | 1126+00 | 1133+78 | RT. | | 45 | 778 | | | 1 | | | 1 |
| 117 | 2-U | SR 2 | 1126+00 | 1133+78 | RT. MEDIAN | | 10 | 768 | | | 1 | | | |
| 117 | 3-U | SR 2 | 1126+00 | 1133+78 | LT. MEDIAN | | 10 | 778 | | | 1 | | | |
| 117 | 4-U | SR 2 | 1126+00 | 1133+05 | LT. | | 72 | 705 | | | 1 | | | 1 |
| 117 | 5-U | SR 2 | 1134+29 | 1140+00 | RT. | | 44 | 571 | | | 1 | | | 1 |
| 117 | 6-U | SR 2 | 1133+97 | 1140+00 | RT. MEDIAN | | 17 | 603 | | | 1 | | | |
| 117 | 7-U | SR 2 | 1133+97 | 1140+00 | LT. MEDIAN | | 17 | 603 | | | 1 | | | |
| 117 | 8-U | SR 2 | 1134+57 | 1140+00 | LT. | | 72 | 543 | | | 1 | | | 1 |
| COLUMN TOTALS | | | | | | | 907 | 21867 | | 6 | 14 | 4 | 32 | 12 |
| TOTALS CARRIED FROM COLUMN 1 | | | | | | 70 | 681 | 16729 | | 12 | 7 | 6 | 31 | 9 |
| Sheet Totals | | | | | | 70 | 1588 | 38596 | | 18 | 21 | 10 | 63 | 21 |

i:/pd/ottawa/ott2/ot2udtbl.dgn

# UNDERDRAIN TABLE

QUANTITIES
CALC BY SKL DATE 11-1-94
CKD BY MTG DATE 8-16-95

| FHWA REGION | STATE | PROJECT | |
|---|---|---|---|
| 5 | OHIO | | |

96/367

OTT-2-16.60

* 707.17 NONPERFORATED, ASTM D 3034 SDR 35, SS931 OR SS944

| SHEET NUMBER | REF. NUMBER | ROUTE | LOCATION STATION FROM | LOCATION STATION TO | SIDE | 603 6" TYPE B CONDUIT * LIN.FT. | 603 6" TYPE F CONDUIT * LIN.FT. | 605 SHALLOW UNDERDRAIN, AS PER PLAN LIN.FT. | BENDS AND BRANCHES 45° BEND EACH | 90° BEND EACH | TEE EACH | END CAP EACH | SPECIAL PRECAST REINFORCED CONCRETE OUTLET EACH |
|---|---|---|---|---|---|---|---|---|---|---|---|---|---|
| 118 | 1-U | SR 2 | 1140+00 | 1141+48 | RT. | | | 148 | | | | 1 | |
| 118 | 2-U | SR 2 | 1140+00 | 1141+48 | RT. MEDIAN | | | 148 | | | | 1 | |
| 118 | 3-U | SR 2 | 1140+00 | 1141+48 | LT. MEDIAN | | | 148 | | | | 1 | |
| 118 | 4-U | SR 2 | 1140+00 | 1141+48 | LT. | | | 148 | | | | 1 | |
| 118 | 5-U | SR 2 | 1141+50 | 1149+75 | RT. | | 42 | 825 | | 1 | | 1 | 1 |
| 118 | 6-U | SR 2 | 1141+50 | 1150+17 | RT. MEDIAN | | 22 | 860 | 1 | | | 1 | |
| 118 | 7-U | SR 2 | 1141+50 | 1150+17 | LT. MEDIAN | | 22 | 860 | 1 | | | 1 | |
| 118 | 8-U | SR 2 | 1141+50 | 1150+17 | LT. | | 35 | 867 | | 1 | | 1 | 1 |
| 118 | 9-U | SR 2 | 1149+77 | 1154+00 | RT. | | | 423 | | | | 1 | |
| 118 | 10-U | SR 2 | 1150+06 | 1154+00 | RT. MEDIAN | | | 394 | | | | 1 | |
| 118 | 11-U | SR 2 | 1150+06 | 1154+00 | LT. MEDIAN | | | 394 | | | | 1 | |
| 118 | 12-U | SR 2 | 1150+17 | 1154+00 | LT. | | | 383 | | | | 1 | |
| 119 | 1-U | SR 2 | 1154+00 | 1156+45 | RT. | | 73 | 245 | | 1 | | | 1 |
| 119 | 2-U | SR 2 | 1154+00 | 1157+14 | RT. MEDIAN | | 18 | 304 | 1 | | | | |
| 119 | 3-U | SR 2 | 1154+00 | 1157+14 | LT. MEDIAN | | 16 | 314 | | | 1 | | |
| 119 | 4-U | SR 2 | 1154+00 | 1157+14 | LT. | | 40 | 314 | | | 1 | | 1 |
| 119 | 5-U | SR 2 | 1157+14 | 1165+21 | RT. MEDIAN | | 18 | 807 | 1 | | | 1 | |
| 119 | 6-U | SR 2 | 1157+14 | 1165+32 | LT. | | | 818 | | | | 1 | |
| 119 | 7-U | SR 2 | 1165+34 | 1168+00 | RT. MEDIAN | | | 266 | | | | 1 | |
| 119 | 8-U | SR 2 | 1165+47 | 1168+00 | LT. | | | 253 | | | | 1 | |
| 119 | 9-U | SR 2 | 1157+87 | 1165+16 | RT. | | 73 | 729 | | 1 | | 1 | 1 |
| 119 | 10-U | SR 2 | 1157+14 | 1165+28 | LT. MEDIAN | | | 814 | | | | 1 | |
| 119 | 11-U | SR 2 | 1165+30 | 1168+00 | RT. | | | 270 | | | | 1 | |
| 119 | 12-U | SR 2 | 1165+40 | 1168+00 | LT. MEDIAN | | | 260 | | | | 1 | |
| 120 | 1-U | SR 2 | 1168+00 | 1171+60 | RT. | | 67 | 360 | | 1 | | | 1 |
| 120 | 2-U | SR 2 | 1168+00 | 1172+14 | RT. MEDIAN | | 18 | 408 | 1 | | | | |
| 120 | 3-U | SR 2 | 1168+00 | 1172+14 | LT. MEDIAN | | 16 | 414 | | | 1 | | |
| 120 | 4-U | SR 2 | 1168+00 | 1172+14 | LT. | | 35 | 414 | | | 1 | | 1 |
| 120 | 5-U | SR 2 | 1172+76 | 1179+00 | RT. | | 67 | 624 | | 1 | | 1 | |
| 120 | 6-U | SR 2 | 1172+14 | 1179+00 | RT. MEDIAN | | 18 | 680 | 1 | | | 1 | |
| 120 | 7-U | SR 2 | 1172+14 | 1179+00 | LT. MEDIAN | | | 686 | | | | 1 | |
| 120 | 8-U | SR 2 | 1172+14 | 1179+00 | LT. | | | 686 | | | | 1 | |
| 120 | 9-U | SR 2 | 1179+02 | 1182+00 | RT. | | | 298 | | | | 1 | |
| 120 | 10-U | SR 2 | 1179+02 | 1182+00 | RT. MEDIAN | | | 298 | | | | 1 | |
| 120 | 11-U | SR 2 | 1179+02 | 1182+00 | LT. MEDIAN | | | 298 | | | | 1 | |
| 120 | 12-U | SR 2 | 1179+02 | 1182+00 | LT. | | | 298 | | | | 1 | |
| 121 | 1-U | SR 2 | 1182+00 | 1187+63 | RT. | | 53 | 563 | | 1 | | | 1 |
| 121 | 2-U | SR 2 | 1182+00 | 1188+15 | RT. MEDIAN | | 18 | 610 | 1 | | | | |
| 121 | 3-U | SR 2 | 1182+00 | 1188+15 | LT. MEDIAN | | 16 | 615 | | | 1 | | |
| 121 | 4-U | SR 2 | 1182+00 | 1188+15 | LT. | | 30 | 615 | | | 1 | | 1 |
| 121 | 5-U | SR 2 | 1188+65 | 1196+00 | RT. | | 53 | 735 | | 1 | | 1 | 1 |
| 121 | 6-U | SR 2 | 1188+15 | 1196+00 | RT. MEDIAN | | 18 | 775 | 1 | | | 1 | |
| 121 | 7-U | SR 2 | 1188+15 | 1196+00 | LT. MEDIAN | | | 785 | | | | 1 | |
| 121 | 8-U | SR 2 | 1188+15 | 1196+00 | LT. | | | 785 | | | | 1 | |
| COLUMN TOTALS | | | | | | | 768 | 21,939 | 8 | 8 | 6 | 32 | 10 |

| SHEET NUMBER | REF. NUMBER | ROUTE | LOCATION STATION FROM | LOCATION STATION TO | SIDE | 603 6" TYPE B CONDUIT * LIN.FT. | 603 6" TYPE F CONDUIT * LIN.FT. | 605 SHALLOW UNDERDRAIN, AS PER PLAN LIN.FT. | BENDS AND BRANCHES 45° BEND EACH | 90° BEND EACH | TEE EACH | END CAP EACH | SPECIAL PRECAST REINFORCED CONCRETE OUTLET EACH |
|---|---|---|---|---|---|---|---|---|---|---|---|---|---|
| 122 | 1-U | SR 2 | 1196+00 | 1204+02 | RT. | | 40 | 802 | | | 1 | 1 | 1 |
| 122 | 2-U | SR 2 | 1196+00 | 1204+02 | RT. MEDIAN | | 16 | 802 | | | 1 | 1 | |
| 122 | 3-U | SR 2 | 1196+00 | 1204+02 | LT. MEDIAN | | 18 | 794 | 1 | | | 1 | |
| 122 | 4-U | SR 2 | 1196+00 | 1203+30 | LT. | | 71 | 730 | | 1 | | 1 | 1 |
| 122 | 5-U | SR 2 | 1204+02 | 1210+00 | RT. | | | 598 | | | | | |
| 122 | 6-U | SR 2 | 1204+02 | 1210+00 | RT. MEDIAN | | | 598 | | | | | |
| 122 | 7-U | SR 2 | 1204+02 | 1210+00 | LT. MEDIAN | | 18 | 592 | 1 | | | | |
| 122 | 8-U | SR 2 | 1204+75 | 1210+00 | LT. | | 71 | 525 | | 1 | | | 1 |
| 123 | 1-U | SR 2 | 1210+00 | 1213+23 | RT. | | | 323 | | | | 1 | |
| 123 | 2-U | SR 2 | 1210+00 | 1211+23 | RT. MEDIAN | | | 123 | | | | 1 | |
| 123 | 3-U | SR 2 | 1210+00 | 1211+23 | LT. MEDIAN | | | 123 | | | | 1 | |
| 123 | 4-U | SR 2 | 1210+00 | 1211+52 | LT. | | | 152 | | | | 1 | |
| 123 | 5-U | SR 2 | 1213+25 | 1221+17 | RT. | | 21 | 792 | | 1 | | 1 | 1 |
| 123 | 6-U | SR 2 | 1211+15 | 1221+00 | RT. MEDIAN | | 18 | 976 | 1 | | | 1 | |
| 123 | 7-U | SR 2 | 1211+15 | 1220+56 | LT. MEDIAN | | 18 | 931 | 1 | | | 1 | |
| 123 | 8-U | SR 2 | 1211+56 | 1220+38 | LT. | | 60 | 882 | | 1 | | 1 | 1 |
| 124 | 1-U | SR 2 | 1227+09 | 1233+82 | RT. | | 22 | 673 | | | 1 | 1 | 1 |
| 124 | 2-U | SR 2 | 1226+92 | 1234+14 | RT. MEDIAN | | 18 | 722 | 1 | | | 1 | |
| 124 | 3-U | SR 2 | 1226+50 | 1234+14 | LT. MEDIAN | | 18 | 764 | 1 | | | 1 | |
| 124 | 4-U | SR 2 | 1226+32 | 1233+71 | LT. | | 22 | 739 | | 1 | | 1 | 1 |
| 127 | 1-U | SR 163 | 0+89 | 2+63 | LT/RAMP A | | 33 | 174 | | | 1 | 1 | 1 |
| 127 | 2-U | SR 163 | 3+36 | 6+10 | LT/RAMP A | | 33 | 274 | | | 1 | 1 | 1 |
| 127 | 3-U | SR 163 | 1+47 | 3+32 | RT/RAMP B | | 29 | 185 | | | 1 | 1 | 1 |
| 127 | 4-U | SR 163 | 3+34 | 7+25 | RT/RAMP B | | 33 | 391 | | | 1 | 1 | 1 |
| 127 | 5-U | SR 163 | 7+27 | 12+42 | RT/RAMP B | | 42 | 515 | | | 1 | 1 | 1 |
| 128 | 1-U | SR 53 | 2+94 | 9+27 | LT/RAMP A | | 32 | 633 | | | 1 | 1 | 1 |
| 128 | 2-U | SR 53 | 9+29 | 18+00 | LT/RAMP A | | 28 | 871 | | | 1 | 1 | 1 |
| 128 | 3-U | SR 53 | 6+76 | 18+00 | RT/RAMP B | | 31 | 1124 | | | 1 | 1 | 1 |
| 128 | 4-U | SR 53 | 18+00 | 20+00 | RT/RAMP B | | 10 | 200 | 1 | | | 1 | |
| 129 | 1-U | SR 53 | 3+67 | 10+47 | RT/RAMP C | | 35 | 680 | | | | 1 | 1 | 1 |
| 129 | 2-U | SR 53 | 0+50 | 7+00 | RT/RAMP D | | 40 | 650 | | | 1 | 1 | 1 |
| COLUMN TOTALS | | | | | | | 777 | 18,338 | | 7 | 15 | 3 | 27 | 17 |
| TOTALS CARRIED FROM COLUMN 1 | | | | | | | 768 | 21,939 | | 8 | 8 | 6 | 32 | 10 |
| Sheet Totals | | | | | | -- | 1545 | 40,277 | | 15 | 23 | 9 | 59 | 27 |
| Totals Carried from Sheet No. 93 | | | | | | 506 | 931 | 29567 | | 22 | 36 | 9 | 70 | 18 |
| Totals Carried from Sheet No. 94 | | | | | | 330 | 1089 | 30655 | | 3 | 47 | 12 | 79 | 22 |
| Totals Carried from Sheet No. 95 | | | | | | 70 | 1588 | 38596 | | 18 | 21 | 10 | 63 | 21 |
| Totals Carried to the General Summary | | | | | | 906 | 5153 | 139095 | | | | | | |
| Totals For Informational Purposes Only | | | | | | | | | | 58 | 127 | 40 | 271 | 88 |



i:/pd/ottawa/ott2/ot2udtbl.dgn

# DITCH CLEANOUT SUMMARY

QUANTITIES
CALC BY ALS DATE 1-3-95
CKD BY MTG DATE 1-17-95

| FHWA REGION | STATE | PROJECT | |
|---|---|---|---|
| 5 | OHIO | | |

96A 367

OTT-2-16.60

## TABLE I EASTBOUND

| ROUTE | FROM STA. | ELEVATION | SLOPE | SECTION REFERENCE | ROUTE | TO STA. | ELEVATION | 203 DITCH CLEANOUT LIN.FT. | 659 SEEDING AND MULCHING SQ.YD. | 659 COMMERCIAL FERTILIZER TONS | 659 WATER M GAL. |
|---|---|---|---|---|---|---|---|---|---|---|---|
| RT. | | | | | | | | | | | |
| SR 163/Ramp B | 3+00 | 573.36 | -.1% | | SR 2 | 944+00 | 572.88 | | | | |
| SR 2 | 944+00 | 572.88 | -.3% | B | SR 2 | 951+00 | 570.78 | 1900 | 4750 | .4 | 10.3 |
| SR 2 | 951+00 | 570.78 | -.1% | | SR 2 | 958+00 | 570.08 | | | | |
| SR 2 | 983+30 | 569.23 | -.05% | A | SR 2 | 1010+00 | 571.24 | 2700 | 5400 | .5 | 11.7 |
| SR 2 | 1010+00 | 571.24 | -.2% | | SR 2 | 1020+00 | 573.24 | | | | |
| SR 2 | 1020+00 | 573.24 | +.3% | | SR 2 | 1021+00 | 572.94 | | | | |
| SR 2 | 1021+00 | 572.94 | +.1% | B | SR 2 | 1025+00 | 572.54 | 1882 | 4705 | .4 | 10.2 |
| SR 2 | 1025+00 | 572.54 | +.15% | | SR 2 | 1032+50 | 571.42 | | | | |
| SR 2 | 1032+50 | 571.42 | +.1% | | SR 53 | 267+47 | 570.08 | | | | |
| SR 53/Ramp C | 3+10 | 573.30 | -.1% | A | SR 2 | 1055+00 | 572.91 | 2300 | 4600 | .4 | 9.9 |
| SR 2 | 1055+00 | 572.91 | -.2% | | SR 2 | 1063+00 | 571.31 | | | | |
| SR 2 | 1063+00 | 571.41 | +.1% | A | SR 2 | 1078+00 | 572.91 | 1500 | 3000 | .3 | 6.5 |
| SR 2 | 1078+00 | 571.90 | +.2% | | SR 2 | 1092+50 | 574.80 | | | | |
| SR 2 | 1092+50 | 574.80 | +.1% | B | SR 2 | 1102+50 | 575.80 | 4022 | 12587 | 1.3 | 27.2 |
| SR 2 | 1102+50 | 575.80 | +.05% | | SR 2 | 1128+35 | 576.88 | | | | |
| SR 2 | 1128+35 | 576.88 | -.1% | C | SR 2 | 1133+86 | 576.21 | 551 | 2449 | .2 | 5.3 |
| SR 2 | 1133+86 | 574.50 | +.05% | B | SR 2 | 1147+00 | 575.16 | 1314 | 3285 | .3 | 7.1 |
| SR 2 | 1148+50 | 574.36 | +.01% | C | SR 2 | 1165+05 | 572.70 | 1655 | 7356 | .7 | 15.9 |
| SR 2 | 1165+05 | 571.50 | +.05% | A | SR 2 | 1188+15 | 572.66 | 2895 | 5790 | .5 | 12.5 |
| SR 2 | 1188+15 | 572.66 | +.8% | | SR 2 | 1194+00 | 577.34 | | | | |
| SR 2 | 1194+00 | 577.34 | -.2% | C | SR 2 | 1212+76 | 573.60 | 1876 | 8738 | .8 | 18.9 |
| SR 2 | 1212+76 | 574.30 | +.1% | A | SR 2 | 1221+90 | 575.21 | 914 | 1828 | .2 | 4.0 |
| TOTAL CARRIED TO TABLE II | | | | | | | | 23509 | 64488 | 6.0 | 139.5 |

## TABLE II WESTBOUND

| ROUTE | FROM STA. | ELEVATION | SLOPE | SECTION REFERENCE | ROUTE | TO STA. | ELEVATION | 203 DITCH CLEANOUT LIN.FT. | 659 SEEDING AND MULCHING SQ.YD. | 659 COMMERCIAL FERTILIZER TONS | 659 WATER M GAL. |
|---|---|---|---|---|---|---|---|---|---|---|---|
| LT. | | | | | | | | | | | |
| SR 163/Ramp A | 1+00 | 572.16 | -.1% | | SR 2 | 949+50 | 571.44 | | | | |
| SR 2 | 951+02 | 570.98 | -.3% | B | SR 2 | 954+53 | 569.93 | 601 | 1502.5 | .1 | 3.3 |
| SR 2 | 954+53 | 569.93 | -.1% | | SR 2 | 959+00 | 569.49 | | | | |
| SR 2 | 984+10 | 570.92 | +.1% | | SR 2 | 1005+52 | 573.06 | | | | |
| SR 2 | 1005+52 | 573.06 | +.2% | B | SR 2 | 1019+25 | 574.36 | 3515 | 8787 | .8 | 19.0 |
| SR 2 | 1019+25 | 574.36 | -.05% | C | SR 2 | 1032+51 | 572.30 | 1326 | 5893 | .5 | 12.7 |
| SR 2 | 1032+51 | 572.30 | +.1% | B | SR 53/Ramp A | 18+00 | 573.96 | 1299 | 3247.5 | .3 | 7.0 |
| SR 53/Ramp A | 9+00 | 573.83 | +.05% | C | SR 2 | 1043+00 | 574.18 | 300 | 1333 | .1 | 2.9 |
| SR 2 | 1045+21 | 573.03 | -.1% | C | SR 2 | 1062+90 | 571.26 | 1769 | 7862 | .7 | 17.0 |
| SR 2 | 1062+90 | 571.06 | +.05% | C | SR 2 | 1078+01 | 571.82 | 1511 | 6715.5 | .6 | 14.5 |
| SR 2 | 1078+11 | 572.12 | +.05% | | SR 2 | 1082+50 | 572.34 | | | | |
| SR 2 | 1082+50 | 572.34 | +.2% | A | SR 2 | 1096+50 | 575.14 | 5014 | 12028 | 1.1 | 26 |
| SR 2 | 1096+50 | 575.14 | +.1% | | SR 2 | 1109+50 | 576.44 | | | | |
| SR 2 | 1109+50 | 576.44 | +.05% | | SR 2 | 1128+25 | 576.92 | | | | |
| SR 2 | 1128+25 | 576.92 | -.1% | B | SR 2 | 1133+83 | 576.02 | 558 | 1395 | .1 | 3.0 |
| SR 2 | 1133+83 | 576.02 | +.05% | B | SR 2 | 1147+00 | 576.68 | 1317 | 3292.5 | .3 | 7.1 |
| SR 2 | 1149+00 | 573.65 | -.1% | C | SR 2 | 1165+48 | 572.00 | 1648 | 7323 | .7 | 15.8 |
| SR 2 | 1165+58 | 572.00 | +.05% | C | SR 2 | 1194+00 | 573.42 | 2842 | 12631 | 1.1 | 27.3 |
| SR 2 | 1195+00 | 573.31 | -.1% | C | SR 2 | 1212+76 | 571.54 | 1776 | 7896 | .7 | 17.1 |
| SR 2 | 1212+76 | 571.54 | +.1% | C | SR 2 | 1220+50 | 572.31 | 774 | 3440 | .3 | 7.4 |
| TOTALS THIS TABLE | | | | | | | | 24250 | 83346 | 7.4 | 180.1 |
| TOTALS CARRIED FROM TABLE I | | | | | | | | 23509 | 64488 | 6.0 | 139.5 |
| TOTALS CARRIED TO GENERAL SUMMARY | | | | | | | | 47759 | 147834 | 13.4 | 319.6 |

# DITCH CLEANOUT DETAILS

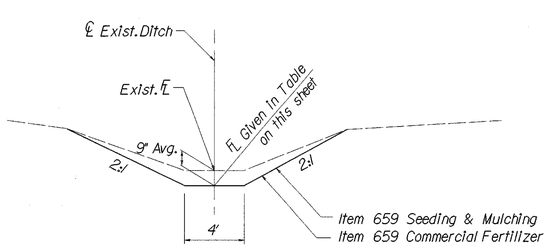


SECTION ~ A
Average width ~ 18'

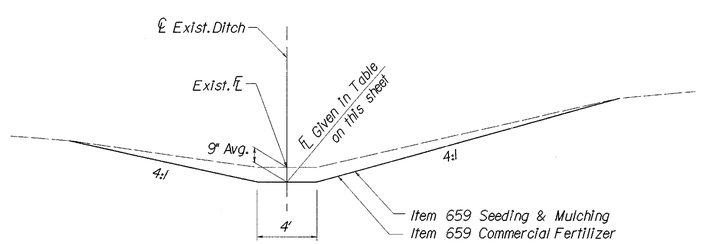


SECTION ~ B
Average width ~ 22.5'

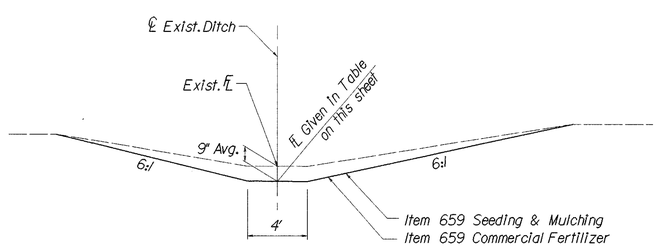


SECTION ~ C
Average width ~ 40'

I:/pd/ottawa/ott2/of2dtcol.dgn

| FHWA REGION | STATE | PROJECT | |
|---|---|---|---|
| 5 | OHIO | | |

97/367

OTT-2-16.60

# SUPERELEVATION TABLES

PI Station 874+35.18 Dc = 1°-28'

| STATION | EP ELEV. WB LANES | OFFSET DISTANCE LEFT | SUPER RATE | ℄ PROFILE ELEV. | OFFSET DISTANCE LEFT | SUPER RATE | EP ELEV. EB LANES |
|---|---|---|---|---|---|---|---|
| | | | | | | | |
| 876+25 | 578.71 | 35.25 | .026 → | 577.78 | 35.75 | .025 → | 576.89 |
| 876+50 | 578.84 | 35.21 | .025 → | 577.96 | 35.21 | .025 → | 577.08 |
| 876+75 | 578.84 | 34.68 | .021 → | 578.12 | 34.68 | .025 → | 577.25 |
| 877+00 | 578.89 | 34.14 | .018 → | 578.28 | 34.14 | .025 → | 577.43 |
| 877+25 | 578.91 | 33.61 | .014 → | 578.44 | 33.61 | .025 → | 577.60 |
| 877+50 | 578.93 | 33.07 | .010 → | 578.60 | 33.07 | .023 → | 577.84 |
| 877+75 | 578.99 | 32.54 | .007 → | 578.76 | 32.54 | .019 → | 578.14 |
| 878+00 | 579.02 | 32.00 | .003 → | 578.92 | 32.00 | .0156 → | 578.42 |
| 878+25 | | | | | | | |
| 878+50 | | | SEE BRIDGE PLANS | | | | |
| 878+75 | | | | | | | |
| 879+00 | 579.02 | 32.00 | ← .012 | 579.40 | 32.00 | .0156 → | 578.90 |
| 879+25 | 578.97 | 32.00 | ← .0156 | 579.47 | 32.00 | .0156 → | 578.97 |
| 879+50 | 579.02 | 32.00 | ← .0156 | 579.52 | 32.00 | .0156 → | 579.02 |
| 879+75 | 579.05 | 32.00 | ← .0156 | 579.55 | 32.00 | .0156 → | 579.05 |
| | | | | | | | |
| | | | | | | | |
| | | | | | | | |

PI Station 1110+12.32 Dc = 0°-28'-18"

| WESTBOUND PROP. ELEV. | | | | | STATION | EASTBOUND PROP. ELEV. | | | | |
|---|---|---|---|---|---|---|---|---|---|---|
| LT. | SUPER | ℄ | SUPER | RT. | | LT. | SUPER | ℄ | SUPER | RT. |
| | | | | | | | | | | |
| 582.46 | .0156 ← | 582.65 | → .0156 | 582.46 | 1105+74 | 582.52 | .0156 ← | 582.71 | → .0156 | 582.52 |
| 582.53 | .0154 ← | 582.71 | → .0156 | 582.52 | 1105+75 | 582.59 | .0154 ← | 582.77 | → .0156 | 582.58 |
| 582.63 | .0113 ← | 582.77 | → .0156 | 582.58 | 1106+00 | 582.69 | .0113 ← | 582.83 | → .0156 | 582.64 |
| 582.75 | .0072 ← | 582.84 | → .0156 | 582.65 | 1106+25 | 582.81 | .0072 ← | 582.90 | → .0156 | 582.71 |
| 582.88 | .0031 ← | 582.92 | → .0156 | 582.73 | 1106+50 | 582.94 | .0031 ← | 582.98 | → .0156 | 582.79 |
| 582.97 | 0 → | 582.97 | → .0156 | 582.78 | 1106+68 | 583.04 | 0 → | 583.04 | → .0156 | 582.85 |
| 583.01 | .0012 ← | 583.00 | → .0156 | 582.81 | 1106+75 | 583.07 | .0012 ← | 583.06 | → .0156 | 582.87 |
| 583.14 | .0053 ← | 583.08 | → .0156 | 582.89 | 1107+00 | 583.20 | .0053 ← | 583.14 | → .0156 | 582.95 |
| 583.25 | .0094 ← | 583.14 | → .0156 | 582.95 | 1107+25 | 583.30 | .0094 ← | 583.19 | → .0156 | 583.00 |
| 583.36 | .0136 ← | 583.20 | → .0156 | 583.01 | 1107+50 | 583.41 | .0136 ← | 583.25 | → .0156 | 583.06 |
| 583.42 | .0156 ← | 583.22 | → .0156 | 583.03 | 1107+62 | 583.46 | .0156 ← | 583.27 | → .0156 | 583.08 |
| 583.45 | .017 ← | 583.25 | → .017 | 583.05 | 1107+70 | 583.50 | .017 ← | 583.30 | → .017 | 583.10 |
| 583.46 | .017 ← | 583.26 | → .017 | 583.06 | 1107+75 | 583.51 | .017 ← | 583.31 | → .017 | 583.11 |
| 583.53 | .017 ← | 583.33 | → .017 | 583.13 | 1108+00 | 583.56 | .017 ← | 583.36 | → .017 | 583.16 |
| 583.59 | .017 ← | 583.39 | → .017 | 583.19 | 1108+25 | 583.62 | .017 ← | 583.42 | → .017 | 583.22 |
| 583.65 | .017 ← | 583.45 | → .017 | 583.25 | 1108+50 | 583.68 | .017 ← | 583.48 | → .017 | 583.28 |
| 583.71 | .017 ← | 583.51 | → .017 | 583.31 | 1108+75 | 583.73 | .017 ← | 583.53 | → .017 | 583.33 |
| 583.78 | .017 ← | 583.58 | → .017 | 583.38 | 1109+00 | 583.78 | .017 ← | 583.58 | → .017 | 583.38 |
| 583.84 | .017 ← | 583.64 | → .017 | 583.44 | 1109+25 | 583.83 | .017 ← | 583.63 | → .017 | 583.43 |
| 583.90 | .017 ← | 583.70 | → .017 | 583.50 | 1109+50 | 583.88 | .017 ← | 583.68 | → .017 | 583.48 |
| 583.95 | .017 ← | 583.75 | → .017 | 583.55 | 1109+75 | 583.92 | .017 ← | 583.72 | → .017 | 583.52 |
| 583.97 | .017 ← | 583.77 | → .017 | 583.57 | 1110+00 | 583.95 | .017 ← | 583.75 | → .017 | 583.55 |
| 583.98 | .017 ← | 583.78 | → .017 | 583.58 | 1110+25 | 583.96 | .017 ← | 583.76 | → .017 | 583.56 |
| 583.97 | .017 ← | 583.77 | → .017 | 583.57 | 1110+50 | 583.97 | .017 ← | 583.77 | → .017 | 583.57 |
| 583.96 | .017 ← | 583.76 | → .017 | 583.56 | 1110+75 | 583.95 | .017 ← | 583.75 | → .017 | 583.55 |
| 583.94 | .017 ← | 583.74 | → .017 | 583.54 | 1111+00 | 583.92 | .017 ← | 583.72 | → .017 | 583.52 |
| 583.90 | .017 ← | 583.70 | → .017 | 583.50 | 1111+25 | 583.89 | .017 ← | 583.69 | → .017 | 583.49 |
| 583.86 | .017 ← | 583.66 | → .017 | 583.46 | 1111+50 | 583.85 | .017 ← | 583.65 | → .017 | 583.45 |
| 583.81 | .017 ← | 583.61 | → .017 | 583.41 | 1111+75 | 583.80 | .017 ← | 583.60 | → .017 | 583.40 |
| 583.75 | .017 ← | 583.55 | → .017 | 583.35 | 1112+00 | 583.74 | .017 ← | 583.54 | → .017 | 583.34 |
| 583.69 | .017 ← | 583.49 | → .017 | 583.29 | 1112+25 | 583.69 | .017 ← | 583.49 | → .017 | 583.29 |
| 583.62 | .017 ← | 583.42 | → .017 | 583.22 | 1112+50 | 583.64 | .017 ← | 583.44 | → .017 | 583.24 |
| 583.61 | .017 ← | 583.41 | → .017 | 583.21 | 1112+55 | 583.63 | .017 ← | 583.43 | → .017 | 583.23 |
| 583.57 | .0156 ← | 583.38 | → .0156 | 583.19 | 1112+63 | 583.60 | .0156 ← | 583.41 | → .0156 | 583.22 |
| 583.51 | .0135 ← | 583.35 | → .0156 | 583.16 | 1112+75 | 583.55 | .0135 ← | 583.39 | → .0156 | 583.20 |
| 583.39 | .0094 ← | 583.28 | → .0156 | 583.09 | 1113+00 | 583.45 | .0094 ← | 583.34 | → .0156 | 583.15 |
| 583.30 | .0053 ← | 583.24 | → .0156 | 583.05 | 1113+25 | 583.34 | .0053 ← | 583.28 | → .0156 | 583.09 |
| 583.21 | .0012 ← | 583.20 | → .0156 | 583.01 | 1113+50 | 583.23 | .0012 ← | 583.22 | → .0156 | 583.03 |
| 583.19 | 0 → | 583.19 | → .0156 | 583.00 | 1113+57 | 583.20 | 0 → | 583.20 | → .0156 | 583.01 |
| 583.12 | .0030 ← | 583.16 | → .0156 | 582.97 | 1113+75 | 583.12 | .0030 ← | 583.16 | → .0156 | 582.97 |
| 583.03 | .0071 ← | 598.12 | → .0156 | 582.93 | 1114+00 | 583.00 | .0071 ← | 583.09 | → .0156 | 582.90 |
| 582.92 | .0113 ← | 583.06 | → .0156 | 582.87 | 1114+25 | 582.89 | .0113 ← | 583.03 | → .0156 | 582.84 |
| 582.82 | .0154 ← | 583.00 | → .0156 | 582.81 | 1114+50 | 582.79 | .0154 ← | 582.97 | → .0156 | 582.78 |
| 583.81 | .0156 ← | 583.00 | → .0156 | 582.81 | 1114+51 | 582.78 | .0156 ← | 582.97 | → .0156 | 582.78 |
| | | | | | | | | | | |
| | | | | | | | | | | |
| | | | | | | | | | | |
| | | | | | | | | | | |
| | | | | | | | | | | |

I:/PD/OTTAWA/OT2SETBL.DGN.

QUANTITIES
CALC BY ALS DATE 5-10-94
CKD BY JEH DATE 3-9-95

| FHWA REGION | STATE | PROJECT | |
|---|---|---|---|
| 5 | OHIO | | |

98/367

OTT-2-16.60

## ESTIMATED QUANTITIES

| Location | Side | Filter Fabric Fence | | Straw or Hay Bales | | |
|---|---|---|---|---|---|---|
| | | Lin.Ft. | | Each | | |
| At Ditch Checks | | | | 72 | | |
| At Catch Basins | | | | 48 | | |
| 930+00 to 931+70 | RT | 170 | | | | |
| 931+90 to 934+50 | LT | 260 | | | | |
| 933+90 to 936+85 | RT | 295 | | | | |
| 935+75 to 939+50 | LT | 375 | | | | |
| 941+20 to 943+25 | LT | 205 | | | | |
| | | | | | | |
| Totals Carried to Gen.Sum. | | 1305 | | 120 | | |

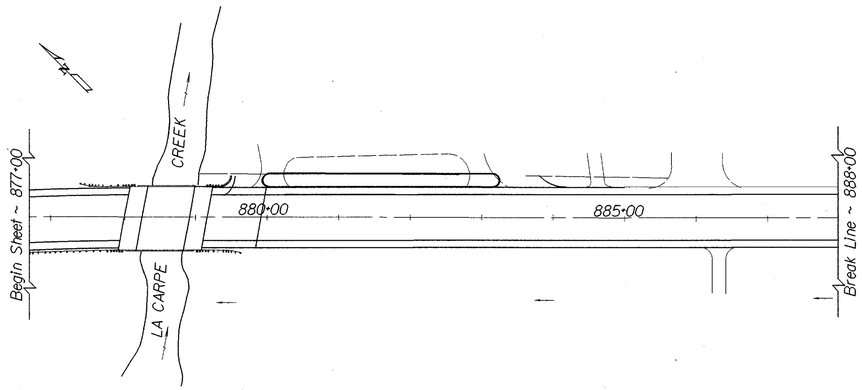


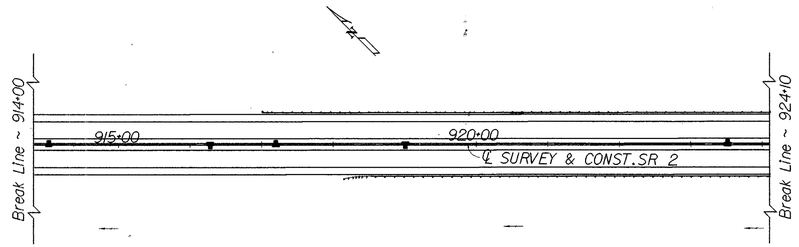


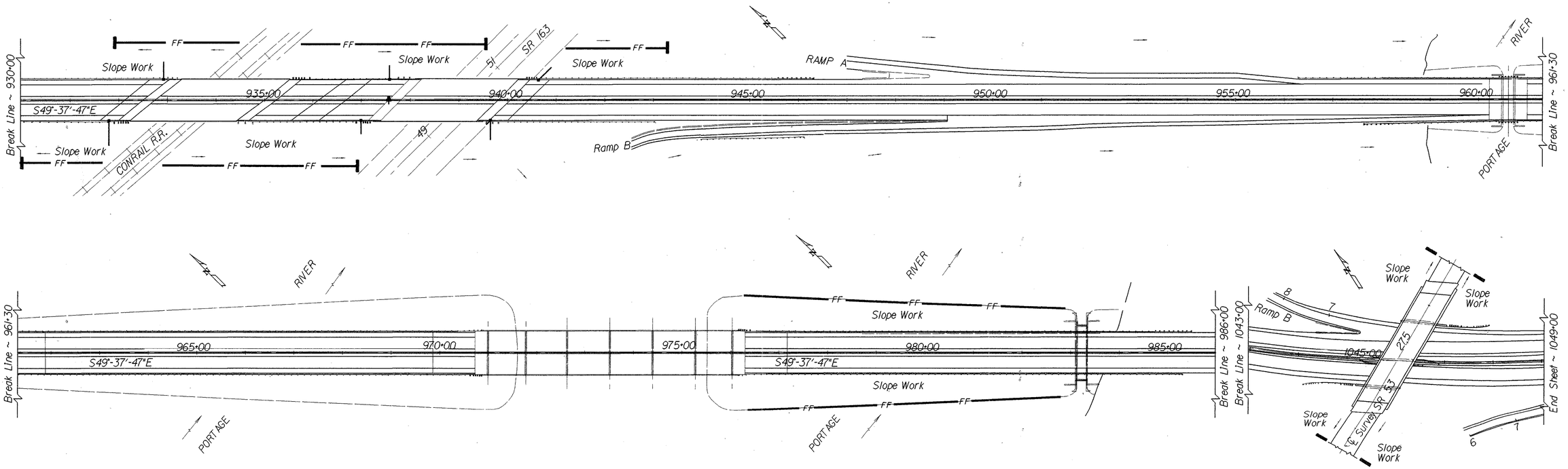


*Project Description:*

*This Project consists of the following work: Joint Repair, Resurfacing, Rebuilding Shoulders, Removing Curb Median and Adding a Lane Between Sta. 876+25 to Sta. 913+00, Guardrail upgrades, Traffic Control upgrades, Bridge Repairs, Rest Area upgrades, and Slope Erosion Repair which consists of approximately 3 areas of improvement to a four-lane, divided, limited axcess, urban expressway in Northern Ottawa County.*

*Total Earth Disturbing Area (Work Zone) : 39 acres*

| | | |
|---|---|---|
| *Area to undergo Excavation, Filing or Grading :* | *15 acres* | *USGS Quadrant No. N4130-W8252.5/7.5 Port Clinton, Ohio* |
| *Soil Data :* | *See Soil Profile Shts. or original plans on file at ODOT Dist. 2* | *No. N4130-W8300/7.5 Lacarne, Ohio* |
| *Immediate recieving Waters :* | *Roadside Ditches* | |
| *Subsequent recieving Water :* | *Portage River ~ Lake Erie* | |

*Legend*

- ▪ *Catch Basin ( 8 Bales Each )*
- FF *Filter Fabric Fence*
- ▬ *Bale Ditch Check (8 Bales Each)*

I:/pd/ottawa/ott2/ot2swppp.dgn

STORM WATER POLLUTION PREVENTION PLAN

MON. BOX
℄ SURVEY SR 2
PC ~ STA. 870+51.20

CURVE DATA
P. I. STA. 874+35.18
Δ = 11°-13'-38" RT.
$D_c$ = 1°-28'
T = 383.98'
R = 3906.53'
L = 765.49'
$e_{max}$ = 0.025

MON. BOX
℄ SURVEY SR 2
PT ~ STA. 878+16.69

NOTE: IT IS PROPOSED TO RESURFACE THE EXISTING CONCRETE PAVEMENT WITH 3½" OF ASPHALT CONCRETE. STOPPING SIGHT DISTANCE, GRADES, HORIZONTAL AND VERTICAL CURVES, BRIDGE WIDTH AND VERTICAL ALIGNMENT AT THE INTERSECTIONS WILL MATCH THE EXISTING CONDITIONS WHICH MEETS CURRENT ODOT L&D CRITERIA, UNLESS OTHERWISE NOTED.

IRON PIN IN CONC. MEDIAN
℄ SURVEY SR 2
POT ~ STA. 887+51.20

NOTE: SEE SHT. NO.'S 68-96 FOR QUANTITIES

LEGEND

BUTT JOINT AS PER BP 3.1
Proposed Driveway See Drive Table Sht. No. 77 for Materials
Proposed Median Crossover
Proposed Pavement Transition See Sht. No. 12 for details.

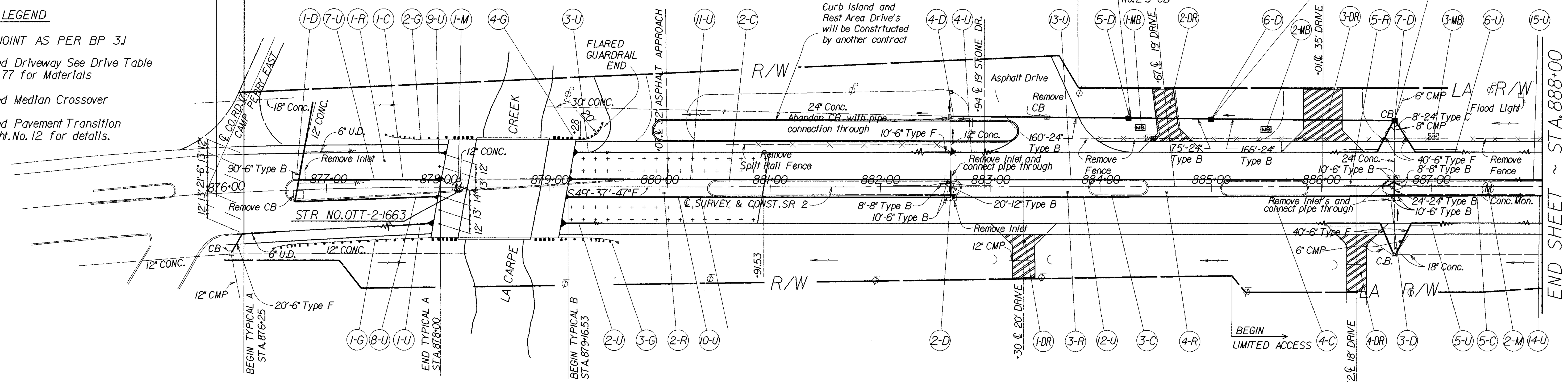


BM ~ STA. 869+99, 82.9' LT. ℄ SURVEY
USGS BM NE CORN. SR 2 & SR 358
ELEV.= 574.79

BM ~ STA. 878+82, 45' RT. ℄ SURVEY
CUT "□" SE CORN. TOP CURB ON BRIDGE
ELEV.= 579.21

i/pd/ottawa/ott2/ott2ppl.dgn

STA. 876+00 TO STA. 888+00

| FHWA REGION | STATE | PROJECT | |
|---|---|---|---|
| 5 | OHIO | | |

OTT-2-16.60

100 / 367

IRON PIN IN CONC. MEDIAN
℄ SURVEY SR 2
POT ~ 897+51.20

NOTE: SEE SHT. NO.'S 68-96 FOR SUBSUMMARIES

SEE SHT. NO. 99 FOR LEGEND

BEGIN SHEET ~ STA. 888+00

END SHEET ~ STA. 902+00

894+92 212' Lt. E.P.A.
896+46 221' Lt. E.P.A.
889+26 87' Lt. E.P.A.
891+09 87' Lt. C.P.A.
895+51 152' Lt. C.P.A.
895+73 103' Lt. C.P.A.
889+26 88' Rt. E.P.A.
894+37 100' Rt. E.P.A.
894+57 101' Rt. E.P.A.
899+50 113' Lt. I.A.E.P.A.

9-U, 4-WB, 5-DR, 6-R, 1-D, 2-D, 7-R, 11-U, 3-U, 5-U, 13-U, 3-M, 3-D, 7-U, 15-U
8-U, 6-DR, 1-U, 2-U, 1-C, 10-U, 7-DR, 4-U, 12-U, 2-C, 6-U, 14-U, 5-C see sheet 99

+61 ℄ 35' Drive
+82 ℄ 16' DRIVE
+47 ℄ LAKE SHORE DR.
+85
+47 ℄ 14' DRIVE

Wagon Wheel On Post
Grass Median
6" CMP
8'-6" Type B
10'-6" Type B
20'-12" Type B
Conc. Median
Remove Inlets
Remove Inlet
Abandon 12" Conc. Pipe
12" Conc.
18" Conc.
CB
40'-6" Type F
15" Conc.
℄ SURVEY & CONST. SR 2
Conc. Mon.
42'-6" Type F
6" C.M.P.
36" Conc.
12" Conc.
6" CMP
8'-6" Type B
10'-6" Type B
Remove Inlet
36" Conc.
42'-6" Type F
6" C.M.P.

888+00 889+00 890+00 891+00 892+00 893+00 894+00 895+00 896+00 897+00 898+00 899+00 900+00 901+00

70'
S 49° 37' 47" E

LA R/W

BM ~ STA. 900+01, 70' RT. ℄ SURVEY
CUT "□" TOP OF CONC. PIPE
ELEV. = 574.29

Prop. Profile Elev. ℄ Survey
578.44 578.68 578.92 579.16 579.40 579.64 579.82 579.87 579.91 579.93 579.95 579.93 579.91 579.87 579.82 579.76 579.52 579.28 579.04 578.80 578.56 578.44 578.39 578.35

585
580
575
570

Proposed Profile Grade
PVI STA. 894+75
ELEV. 580.06
-0.24%
-0.24%
200' VC

Remove Inlets Lt. & Rt.
Remove Inlet
CB Rt.
℄ EB LANES
℄ WB LANES
18" Rt
12" Rt.
12" Rt.
12"

Remove Inlet Rt.
Remove Inlet Lt.
Ex. 12" Conc. Rt.
36" Conc. Rt.
6" Type B
℄ = 573.00
Ex. 12" Conc. Lt.
Ex. 36" Conc. Lt.
℄ EB & WB LANES

Exist.
6" Type B, Med. Lt. = 574.50
12" Type B, Med. Lt. = 574.40
12" Type B, Med. Rt. = 574.20

Exist.
15" ℄ N = 573.78
12" ℄ S. = 573.91
6" ℄ SW = 573.95
18" ℄ E = 573.53

Prop.
6" ℄ SW = 574.36

Prop.
6" Type B, Med. Lt. = 574.50±
12" Type B, Med Lt. = 574.40
12" Type B, Med. Rt. = 574.20

Exist. ℄ Pav't ELEV.
WB 577.78 578.10 578.38 578.52 578.80 579.03 579.32 579.31 579.17 578.90 578.68 578.44 578.18 577.92 577.73
EB 577.83 578.16 578.36 578.56 578.82 579.07 579.34 579.34 579.14 578.94 578.68 578.44 578.18 577.92 577.76

Prop. Profile Elev. ℄ Survey
585
580
575
570
Exist. ℄ Pav't ELEV.
WB
EB

STA. 888+00 TO STA. 902+00

I:/pd/ottawa/ott2/OTT2PPL.DGN

| FHWA REGION | STATE | PROJECT | |
|---|---|---|---|
| 5 | OHIO | | |

(101/367)

OTT-2-16.60

Note: See Sht. Nos. 68-96 For Subsummaries

See Sht. No. 99 for legend.

MON. BOX

℄ SURVEY SR 2

POT ~ STA. 907+51.20

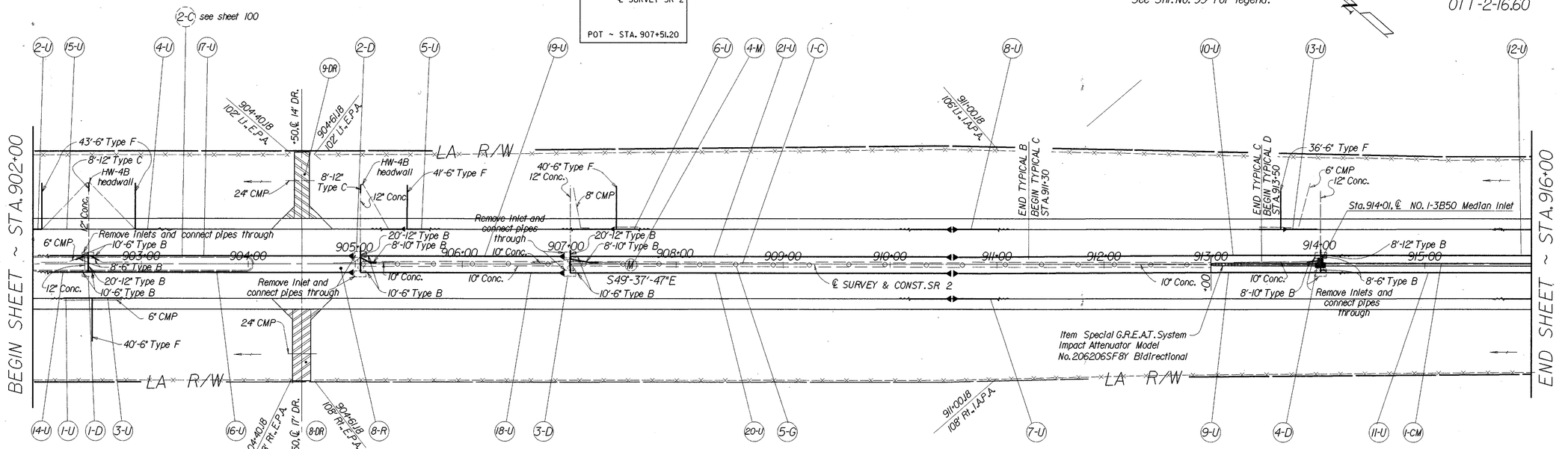


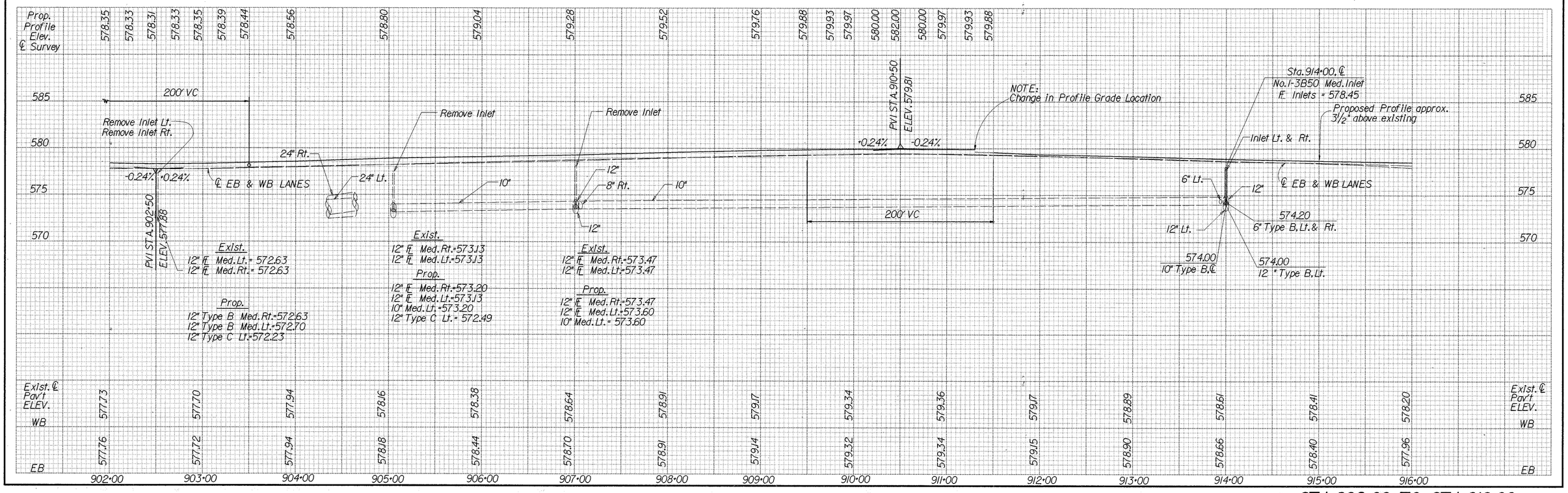


STA. 902+00 TO STA. 916+00

I:/pd/ottawa/ott2/OTT 2PP2.DGN

| FHWA REGION | STATE | PROJECT | |
|---|---|---|---|
| 5 | OHIO | | |

OTT-2-16.60



MON. BOX
℄ SURVEY SR 2
POT ~ STA. 917+51.20

LEGEND
Subbase Reconstruction
See Cross Sections
sheets no.138 & 139 for details.

Note: See Sht. Nos. 68-96 For Subsummaries

See Sht. No. 99 for legend.

MON. BOX
℄ SURVEY SR 2
POT ~ STA. 927+51.20

BEGIN SHEET ~ STA. 916+00

END SHEET ~ STA. 930+00

LA R/W

917+34.09 98' Lt. E.P.A.

919+04.63 98' Rt. E.P.A.

928+51.20 138' Lt. E.P.A.

see sheet 101

see sheet 101

see sheet 101

31'-6" Type F
15" Conc.
8" C.M.P.
6" Conc.
8'-15" Type B
10" Conc.
C.B. Removed
8'-10" Type B
8'-6" Type B
30'-6" Type F
No.1-3B50 Inlet Sta.916+26, ℄
connect to exist. 6" conduit
No.1-3B50 Inlet Sta.917+21, ℄
8'-10" Type B
Ex.6" Conc.
Remove Median Inlet
8'-6" Type B
58'-15" Type B
12" Conc.
HW-4B Headwall
32'-6" Type F
8" C.M.P.
95'-6" Type B
Ex.6" CMP
8'-6" Type B
Median Inlet
225'-6" Type B
℄ SURVEY & CONST. SR 2
No.1-3B50 Inlet Sta.919+01, ℄
connect to exist. 6" conduit
12" C.M.P.
44'-6" Type F
No.1-3B50 Inlet Sta.923+51, ℄
Ex.6" C.M.P.
8'-12" Type B
Remove Median Inlet
Ex.6" C.M.P.
8'-6" Type B
S49°-37'-47"E
8'-6" Type B
44'-6" Type F
Ex.6" CMP
No.3A CB Sta.930+00, 43' Lt.
86'-12" Type F
No.3A CB Sta.930+00, 43' Rt.
80'-12" Type F
HW-4B Headwall
Rock Channel Protection, Type C with Filter
123' Lt.
Sod Detail MC-7
See detail sht. no. 236
118' Rt.
Sod Detail MC-7
See detail sht. no. 236

BM ~ STA. 917+54.8, 51.3' LT. ℄ SURVEY
CUT "+" CONC. BASE SIGN POST
ELEV. = 577.49

Sta. 916+26, ℄
No.1-3B50 Med. Inlet
℄ Inlets = 578.11
Sta. 917+21, ℄
No.1-3B50 Med. Inlet
℄ Inlets = 578.21
Sta. 919+01, ℄
No.1-3B50 Med. Inlet
℄ Inlets = 579.73
Sta. 923+51, ℄
No.1-3B50 Med. Inlet
℄ Inlets = 588.63
Sta. 930+00, 43' Lt. & Rt.
No.3A CB
Top of Grate Elev. = 604.35
Proposed Profile approx. 3½" above existing
℄ WB Lanes
℄ EB Lanes
℄ EB & WB Lanes
573.89 15" Type B, Lt.
573.89 10" Type B, Med.
573.89 6" Type B, Med. Lt.
10" Conc.
574.53 10" Type B, Med.
574.55 6" Type B, Med. Lt. & Rt.
574.53 6" Type B, Med.
574.42 15" Type F, Med.
8" Lt.
574.80 6" Type B, Med.
574.80 6" Type B, Med. Lt. & Rt.
573.44 15" Type F, Lt.
583.59 12" Type B, Lt.
6"
583.59 6" Type B, Med.
584.41 6" Type B, Med. Lt. & Rt.
583.59 6" Type B, Med.
12" Lt.
Sta. 930+00, 120' Lt.
12" Type F,
℄ = 574.20
Sta. 930+00, 119' Rt.
12" Type F,
℄ = 572.00

Exist. ℄ Pav't ELEV.

| | 916+00 | 917+00 | 918+00 | 919+00 | 920+00 | 921+00 | 922+00 | 923+00 | 924+00 | 925+00 | 926+00 | 927+00 | 928+00 | 929+00 | 930+00 |
|---|---|---|---|---|---|---|---|---|---|---|---|---|---|---|---|
| WB | 578.20 | 578.35 | 578.84 | 578.89 | 580.79 | 582.71 | 584.87 | 587.39 | 590.29 | 593.27 | 596.28 | 598.96 | 601.32 | 603.40 | 605.04 |
| EB | 577.96 | 578.36 | 578.82 | 579.79 | 580.96 | 582.59 | 584.83 | 587.38 | 590.21 | 593.24 | 596.21 | 598.94 | 601.36 | 603.34 | 605.04 |

Exist.
15" ℄ Lt. = 573.51
15" ℄ Med. Lt. = 573.89
12" ℄ Med. Lt. = 573.89
12" ℄ Med. Rt. = 574.21
8" ℄ Lt. = 573.84
6" ℄ ℄ = 573.89

STA. 916+00 TO STA. 930+00

I:\pd\ottawa\ott2\OTT2PP2.DGN

| FHWA REGION | STATE | PROJECT | |
|---|---|---|---|
| 5 | OHIO | | |

OTT-2-16.60



Note: See Sht. Nos. 68-96 For Subsummaries

See Sht. No. 99 for legend.
See Sht. No. 127 for Ramp B details.

MON. BOX
℄ SURVEY SR 2
POT ~ STA. 935+51.56

MON. BOX
℄ SURVEY SR 2
POT ~ STA. 941+52.04

BEGIN SHEET ~ STA. 930+00

END SHEET ~ STA. 944+00

123' Lt. Sod Detail MC-7 See detail sht. no. 236

Rock Channel Protection, Type C with Filter
HW-4A Headwall
86' ~ 12" Type F, 707.05 Type C
No. 3A CB Sta. 930+00', 43' Lt.

118' Rt. Sod Detail MC-7 See detail sht. no. 236

80' ~ 12" Type F, 707.05 Type C 931+39.68
HW-4A Headwall 110' Rt. E.P.A.
Rock Channel Protection, Type C with Filter
No. 3A CB Sta. 930+00', 43' Rt.

see sheet 102 (2-E, 5-D, 6-D, 1-E, 7-G, 1-U, 2-U, 1-C)
see sheet 101 (1-C)

LA R/W

STR NO. OTT-2-1766

STR NO. OTT-2-1776

℄ Survey & Const. SR 2

CONRAIL R.R.
℄ SURVEY CONRAIL R.R.

Abutment Connection

Suspend Typical D Sta. 932+49.05

Begin Typical E Sta. 935+27.36

End Typical E Sta. 937+55.41

933+27 137' Rt. C.P.A.

936+41 137' Rt. C.P.A.

934+41.08 137' Lt. C.P.A.

936+60 138' Lt. C.P.A.

939+09 137' Lt. C.P.A.

939+03.08 174' Rt. E.P.A.

936+81 125' Rt.

943+52.04 145' Rt. LA P.A.

74.05

69

12

51

52

49

48

47

SR 163

12" Conc. 30'-6" Type F 6" C.M.P.

6" CMP

8'-6" Type B

8'-12" Type B

No. 1-3B50 Inlet Sta 937+47, ℄

Remove Median Inlet

100' Rt. Sod Detail MC-7 See detail sht. no. 236
Rock Channel Protection, Type C with Filter
60' ~ 12" Type F, 707.05 Type C
HW-4A Headwall
No. 3A CB Sta 939+72, 43' Rt.

Resume Typical D Sta. 940+06.74

100' Lt. Sod Detail MC-7
Rock Channel Protection, Type C with Filter
HW-4A Headwall
88' ~ 12" Type F, 707.05 Type C
No. 3A CB Sta 940+57, 43' Lt.
See detail sht. no. 236

Ramp B

61.74

930+00 931+00 932+00 933+00 934+00 935+00 936+00 937+00 938+00 939+00 940+00 941+00 942+00 943+00

BM ~ STA. 932+23, 43.5' RT. ℄ SURVEY
CUT "□" SW CORN. TOP CURB ON BRIDGE
ELEV. = 608.02

BM ~ STA. 939+39, 43.5' RT. ℄ SURVEY
CUT "□" SE COR. TOP CURB ON BRIDGE
ELEV. = 603.01

Proposed Profile Grade: 607.90 607.77 607.60 607.43 607.21 606.99 606.73 606.46 606.16 605.83 605.30

℄ EB & WB Lanes

Inlet Lt. & Rt.

Sta. 937+47, ℄
No. 1-3B50 Median Inlet
IE Inlets = 605.35

175' Butt Joint

12" Lt. 603.50 6" Type B Med. Lt. & Rt.

6" Lt. 601.10 6" Type F

600.36 6" Type B, Med.

600.36 12" Type B, Lt.

598.10 12" Type F

596.00 12" Type F

Sta. 939+72, 43' Rt. No. 3A CB Top of grade elev. = 601.30

Sta. 940+57, 43' Lt. No. 3A CB Top of grade elev. = 599.20

Proposed Profile approx. 3½" above existing

Exist. Min. Vert. Clear. = 22.93'
Prop. Min. Vert. Clear. = 22.93'

Min. Exist. Hor. Clear. = 18'-1¾" (from ℄ of Track)
Min. Prop. Hor. Clear. = 18'-1¾" (from ℄ of Track)

Min. Exist. Hor. Clear. = 14'-1¾" (from ℄ of Track)
Min. Prop. Hor. Clear. = 14'-1¾" (from ℄ of Track)

22.79' Min. Vert. Clearance

Sta. 939+72, 103' Rt. 12" Type F, IE = 578.00

Sta. 941+20, 105' Lt. 12" Type F, IE = 573.00

| | 930+00 | 931+00 | 932+00 | 933+00 | 934+00 | 935+00 | 936+00 | 937+00 | 938+00 | 939+00 | 940+00 | 941+00 | 942+00 | 943+00 | 944+00 |
|---|---|---|---|---|---|---|---|---|---|---|---|---|---|---|---|
| Exist. ℄ Pav't ELEV. WB | 605.04 | 606.33 | 607.26 | 608.01 | 608.24 | 608.04 | 607.24 | 606.30 | 604.96 | 603.14 | 601.16 | 598.64 | 595.87 | 592.93 | 589.99 |
| EB | 605.04 | 606.35 | 607.28 | 608.08 | 608.24 | 607.91 | 607.20 | 606.22 | 604.96 | 603.20 | 601.19 | 598.65 | 595.87 | 592.89 | 590.07 |

STA. 930+00 TO STA. 944+00

1:/pd/ottawa/ott2/OTT2PP3.DGN

| FHWA REGION | STATE | PROJECT | |
|---|---|---|---|
| 5 | OHIO | | |

OTT-2-16.60

104
367

Note: See Sht. Nos. 68-96 For Subsummaries

See Sht. No. 99 for legend.
See Sht. No. 127 for Ramp A details.

MON. BOX
℄ SURVEY SR 2
POT ~ STA. 949+51.84

BEGIN SHEET ~ STA. 944+00

BEGIN SHEET ~ STA. 958+00

946+52.04 288' Rt., I.A.P.A.

952+02.56 118' Rt., I.A.P.A.

950+12.04 131' Rt., I.A.P.A.

956+72.04 119' Rt., I.A.P.A.

5-U 4-U 11-G see sheet 103 1-D 9-U 8-U 9-M 11-U 6-C see sheet 103 5-D 13-U 13-G 6-D 17-U 16-U 7-D 19-U

2-U 3-U 7-C see sheet 103 1-U 3-D 2-D 6-U 7-U 4-D 10-U 5-G see sheet 101 12-U 14-U 15-U 12-G 18-U

LA R/W

RAMP A

RAMP B

S49°-37'-47"E

945·00 946·00 947·00 948·00 949·00 950·00 951·00 952·00 953·00 954·00 955·00 956·00 957·00

No.6 CB
Sta. 948·33, 48' Lt.

HW-4B Headwall
8'-12" Type C
12" Conc.

No.1-3B50 Inlet
Sta. 949·00, ℄

No.1-3B50 Inlet
Sta. 951·00, ℄

Remove CB

23'-6" Type B

8'-12" Type B

6" C.M.P.

8'-6" Type B

Remove Median Inlet

13'-6" Type B

33'-6" Type F

No.6 CB
Sta. 949·01, 39' Rt.

12" Conc.
8'-12" Type C
HW-4B Headwall

6" CMP

No.1-3B50 Inlet
Sta. 954·53, ℄

No.1-3B50 Inlet
Sta. 957·00, ℄

No.1-3B50 Inlet
Sta. 957·97, ℄

Remove C.B.

32'-6" Type F

25'-6" Type F

8'-8" Type B

12" Conc. 8'-12" Type B

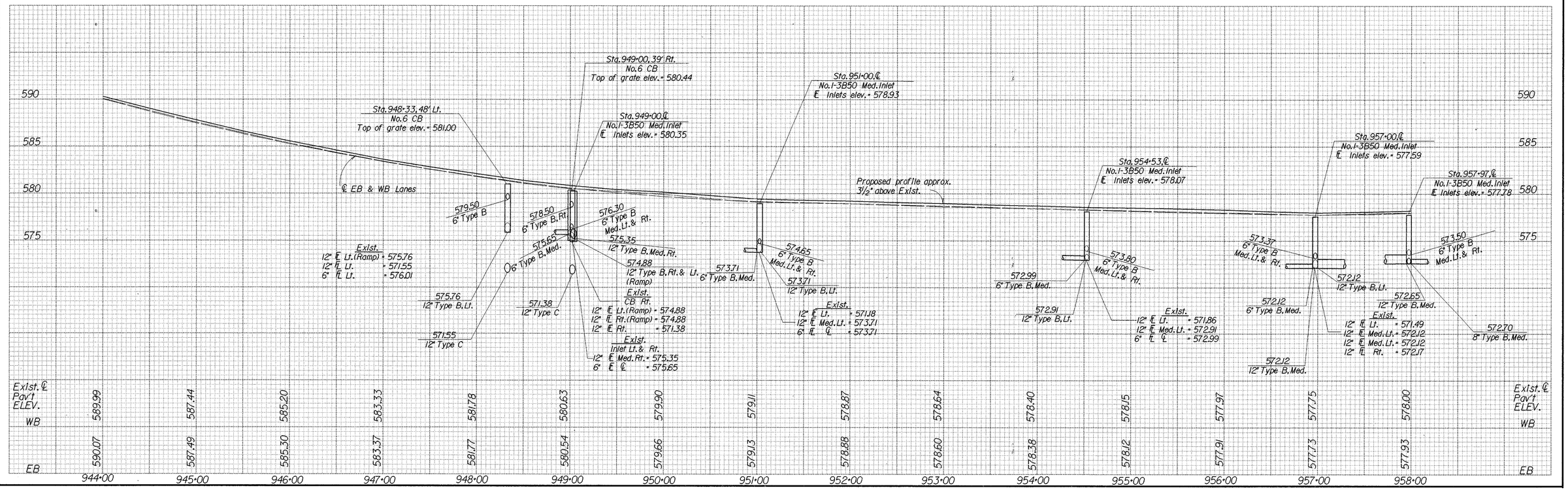


STA. 944+00 TO STA. 958+00

1:/pd/ottawa/ott2/ott2pp3.dgn

| FHWA REGION | STATE | PROJECT | |
|---|---|---|---|
| 5 | OHIO | | |

OTT-2-16.60

105
367

NOTE: See Sht. Nos. 68-96 for Subsummaries

See Sht. No. 99 for legend.

MON. BOX
℄ SURVEY SR 2
POT ~ STA. 959+51.81

MON. BOX
℄ SURVEY SR 2
POT ~ STA. 969+51.74

see sheet 103
see sht. no. 104
see sht. no. 101
see sht. no. 103
see sheet no. 101

959-03.98
174' Lt. E.P.A.
958-99.77
117' Lt. E.P.A.

BEGIN SHEET ~ STA. 958+00

END SHEET ~ STA 972+00

PORTAGE RIVER

HW-4B Headwall
8'-12" Type C
12" CONC.
No. 1-3B 50 Inlet
Sta. 961+02.℄
26'-6" Type F
8'-6" Type B
6" CMP
8" Conc.
8'-12" Type B
Median Inlet
25'-6" Type F
S49°-37'-47"E
℄ SURVEY & CONST. SR 2
STR. NO. OTT-2-18.19
STR. NO. OTT-2-18.39
Suspend Typical D Sta. 960+25.77
Resume Typical D Sta. 960+97.77
Suspend Typical D Sta. 970+12.49

No. 3A CB
Sta. 969+50, 43' Lt.
Rock Channel Protection, Type C with Filter
92' Lt.
Sod Detail MC-7
See Detail Sht. No. 236
52' ~ 12" Type F, 707.05 Type C
HW-4A Headwall

No. 3A CB
Sta. 969+50, 43' Rt.
HW-4A Headwall
52' ~ 12" Type F, 707.05 Type C
Rock Channel Protection, Type C with Filter
92' Rt.
Sod Detail MC-7
See Detail Sht. No. 236

959·00 960·00 961·00 962·00 963·00 964·00 965·00 966·00 967·00 968·00 969·00 970·00 971·00

BM ~ STA. 960+78.5, 46' RT. ℄ SURVEY
CUT "□" TOP OF SE WINGWALL
ELEV. = 580.20

BM ~ STA. 971+01, 36.5' RT ℄ SURVEY
CUT "□" SE COR. TOP CURB ON BRIDGE
ELEV. = 603.44

Proposed Profile approx. 3½" above existing

Sta. 961+02.℄
No. 1-3B50 Med. Inlet
℄ Inlets elev. = 580.50
Inlet Lt. & Rt.
576.32
6" Type B, Med.
175' Butt Joint
576.32
12" Type B, Lt.
576.25
6" Type B
Med. Rt. & Lt.
577.00
12" Type C, 61' Lt.

Sta. 969+50, 43' Rt. & Lt.
No. 3A CB's
Top of grate elev. = 600.10
℄ EB & WB Lanes
586.50
12" Type F, Rt. & Lt.
175' Butt Joint
Sta. 969+50, 92' Lt.
579.00
12" Type F
Sta. 969+50, 92' Rt.
579.00
12" Type F

| | 958·00 | 959·00 | 960·00 | 961·00 | 962·00 | 963·00 | 964·00 | 965·00 | 966·00 | 967·00 | 968·00 | 969·00 | 970·00 | 971·00 | 972·00 |
|---|---|---|---|---|---|---|---|---|---|---|---|---|---|---|---|
| Exist. ℄ Pav't ELEV. WB | 580.00 | 578.64 | 579.57 | 580.95 | 582.86 | 585.16 | 587.80 | 590.56 | 593.40 | 596.03 | 598.22 | 600.07 | 601.65 | 602.85 | 603.54 |
| EB | 577.93 | 578.62 | 579.57 | 581.53 | 582.88 | 585.14 | 587.77 | 590.60 | 593.40 | 595.99 | 598.23 | 600.02 | 601.56 | 602.88 | 603.42 |

EXIST. ℄ PAV'T ELEV. WB / EB

605 600 595 590 585 580 575

/1/pd/ottawa/att2/ott2pp4.dgn

STA. 958+00 TO STA. 972+00

| FHWA REGION | STATE | PROJECT | |
|---|---|---|---|
| 5 | OHIO | | |

106
367

OTT-2-16.60

NOTE: See Sht. Nos. 68-96 for Subsummaries

See Sht. No. 99 for legend.

MON. BOX
℄ SURVEY SR 2
POT ~ STA. 976+51.74

MON. BOX
℄ SURVEY SR 2
POT ~ STA. 984+51.74

BEGIN SHEET ~ STA 972+00

END SHEET ~ STA. 986+00

PORTAGE RIVER

PORTAGE RIVER

See Slope Repair Sht. No. 199 for Grading work in this area.

see sht. no. 101

12-M 4-U 3-U 2-C 2-D 2-E 19-G 5-CM 3-C 5-G 13-M 5-U 6-U 1-U 2-U 1-C 1-E 1-D 18-G

No. 3A CB
Sta. 977+50, 43' Lt.

HW-4A Headwall

94' Rt.
Sod Detail MC-7
See detail sht. no. 237

52' ~ 12" Type F, 707.05 Type C

Asphalt Curb

Asphalt Curb

973+00 974+00 975+00 976+00 977+00 978+00 979+00 980+00 981+00 982+00 983+00 984+00 985+00

43'-15" Type "B"

S 49°-37'-47" E

℄ SURVEY & CONST. SR 2

105.99

HW-4A Headwall

94' Rt.
Sod Detail MC-7
See detail sht. no. 237

55' ~ 12" Type F, 707.05 Type C

Resume Typical D
Sta. 976+30.99

No. 3A CB
Sta. 977+50, 43' Rt.

STR. NO. OTT-2-1862
(Earth Filled Structure)

984+55.77
133' Lt. E.P.A.

985+85.23
133' Lt. I.A.P.A.

56'-6" Type F

8" Conc.

56'-6" Type F

983+18.58
142' Rt. E.P.A.

984+40.32
143' Rt. I.A.P.A.

985+53.37
141' Rt. I.A.P.A.

LA R/W

BM ~ STA. 983+31.5, 55' RT. ℄ SURVEY
CUT "□" TOP OF BOX CULVERT, SE COR.
ELEV. = 583.26

Sta. 977+50, Lt. & Rt.
No. 3A CB
Top of grate elev. = 600.00

175' Butt Joint

596.00
12" Type F

Proposed Profile approx. 3½" above existing

℄ EB & WB Lanes

Sta. 977+50, 91' Lt.
579.00
12" Type F

Sta. 977+50, 94' Rt.
579.00
12" Type F

600 595 590 585 580

Exist. ℄ Pav't ELEV.

WB: 603.54 603.92 603.92 603.60 602.87 601.49 599.93 598.07 595.98 593.34 590.45 587.59 584.82 582.66 580.71

EB: 603.42 604.02 604.00 603.63 602.89 601.60 599.90 598.07 595.90 593.29 590.37 587.62 584.89 582.62 580.80

972+00 973+00 974+00 975+00 976+00 977+00 978+00 979+00 980+00 981+00 982+00 983+00 984+00 985+00 986+00

STA. 972+00 TO STA. 986+00

I:/pd/ottawa/ott2/ott2pp4.dgn

| FHWA REGION | STATE | PROJECT | |
|---|---|---|---|
| 5 | OHIO | | |

107
367

OTT-2-16.60

NOTE: See Sht. Nos. 68-96 for Subsummaries.

See Sht. No. 99 for legend.

MON. BOX
℄ SURVEY SR 2
POT ~ STA. 992+51.74

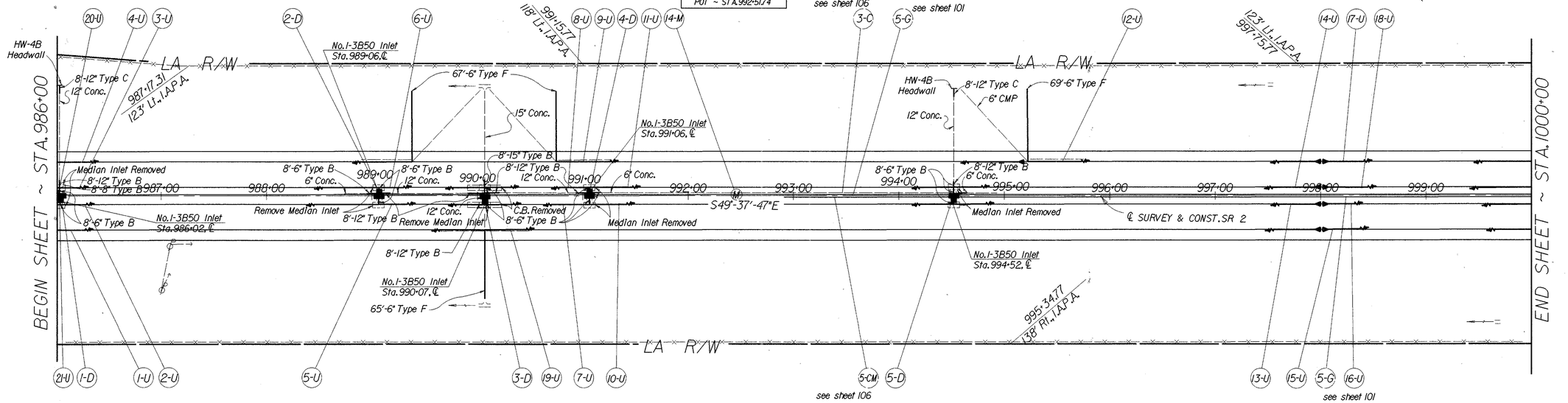


BM ~ STA. 998+15.63' RT. OF ℄ SURVEY
CUT "□" IN CONC. SIGN BASE
ELEV. = 576.62

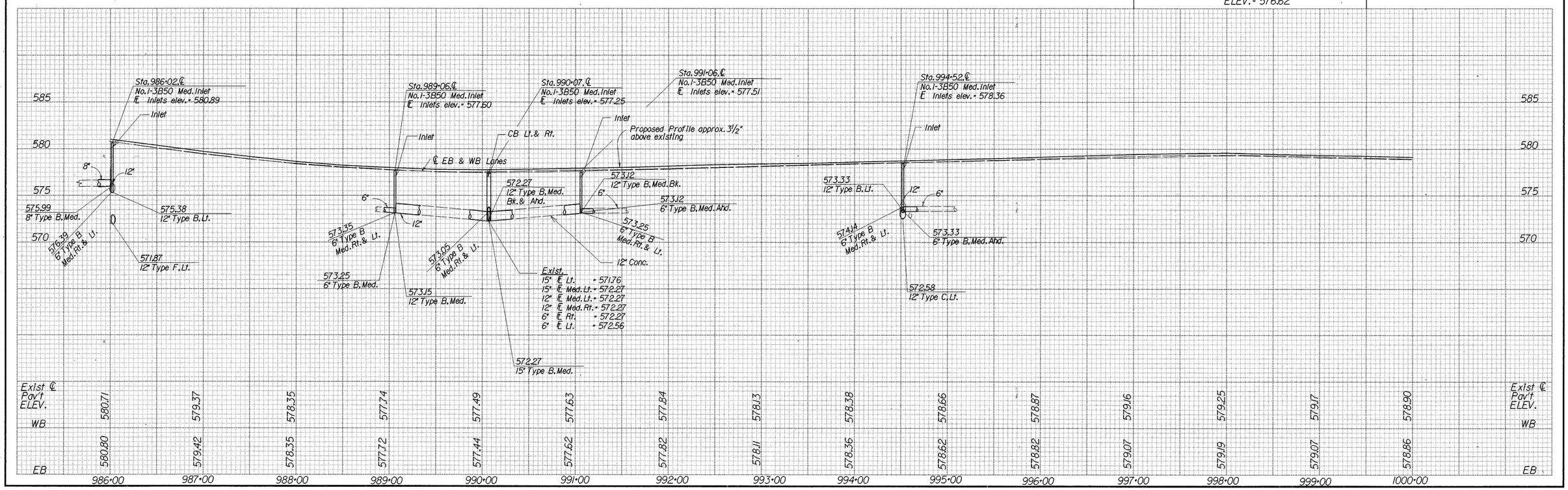


STA. 986+00 TO STA. 1000+00

/1/pd/ottawa/ott2/ott2pp5.dgn

| FHWA REGION | STATE | PROJECT | |
|---|---|---|---|
| 5 | OHIO | | |

108
367

OTT-2-16.60

NOTE: See Sht. Nos. 88-96 for Subsummaries.

See Sht. No. 99 for legend.

MON. BOX
℄ SURVEY SR 2
POT ~ STA. 1000+51.84

MON. BOX
℄ SURVEY SR 2
POT ~ STA. 1009+51.84

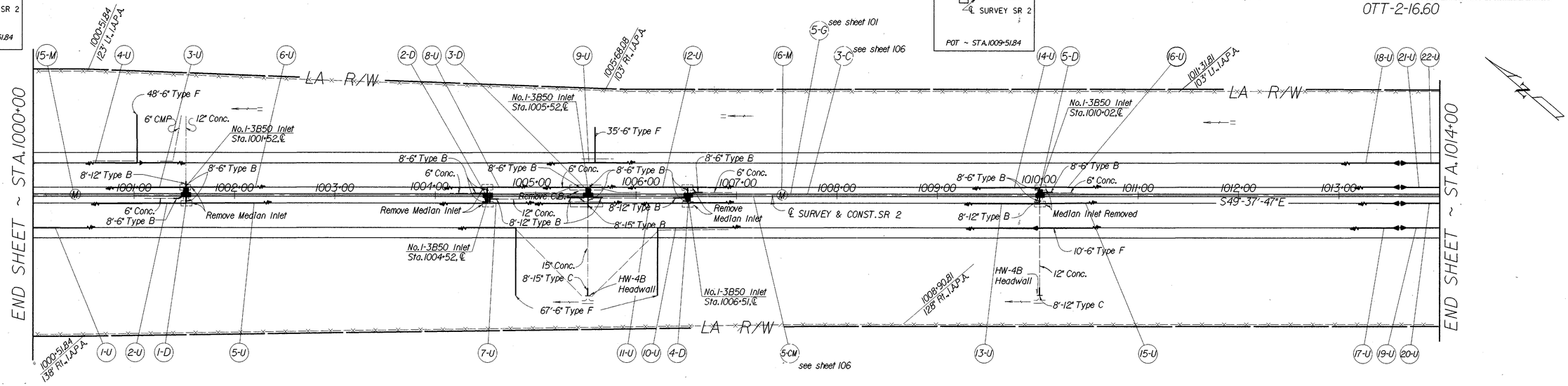


BM ~ STA. 1010+79.66' RT. OF ℄ SURVEY
CUT "□" CONC. SIGN BASE
ELEV. = 576.42

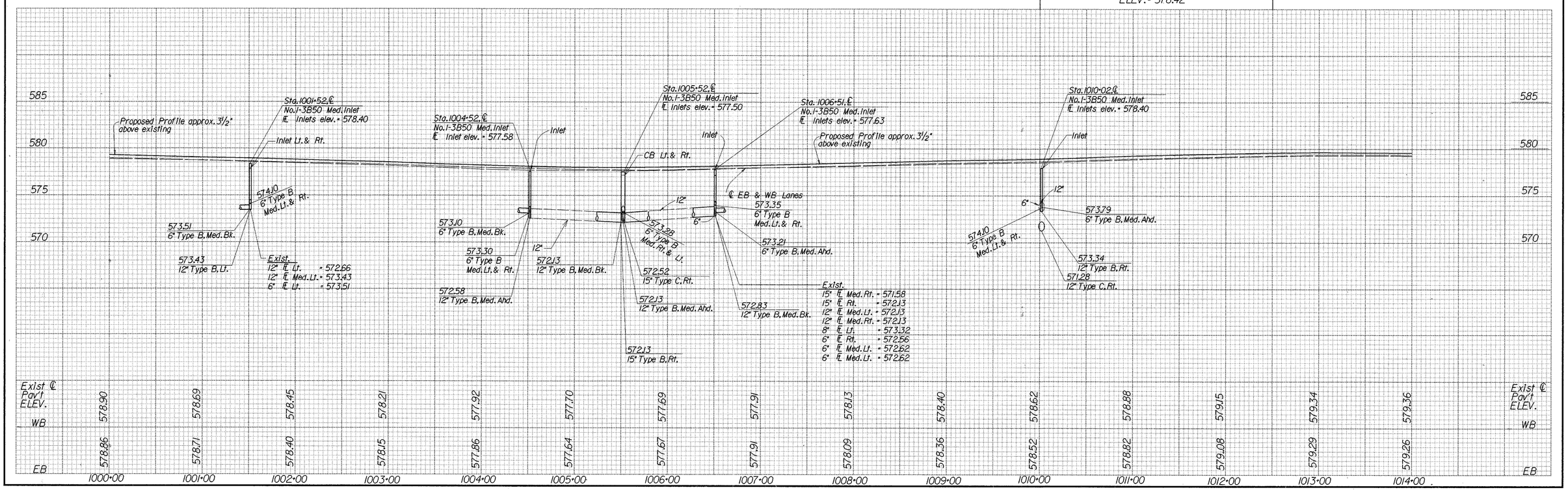


STA. 1000+00 TO STA. 1014+00

/1/pd/ottawa/ott2/ott2pp5.dgn

MON. BOX
℄ SURVEY SR 2
POT ~ STA.1017+51.84

MON. BOX
℄ SURVEY SR 2
POT ~ STA.1025+51.84

NOTE: See Sht. Nos. 68-96 for Subsummaries.

See Sht. No. 99 for legend.

| FHWA REGION | STATE | PROJECT | |
|---|---|---|---|
| 5 | OHIO | | |

OTT-2-16.60

109 / 367

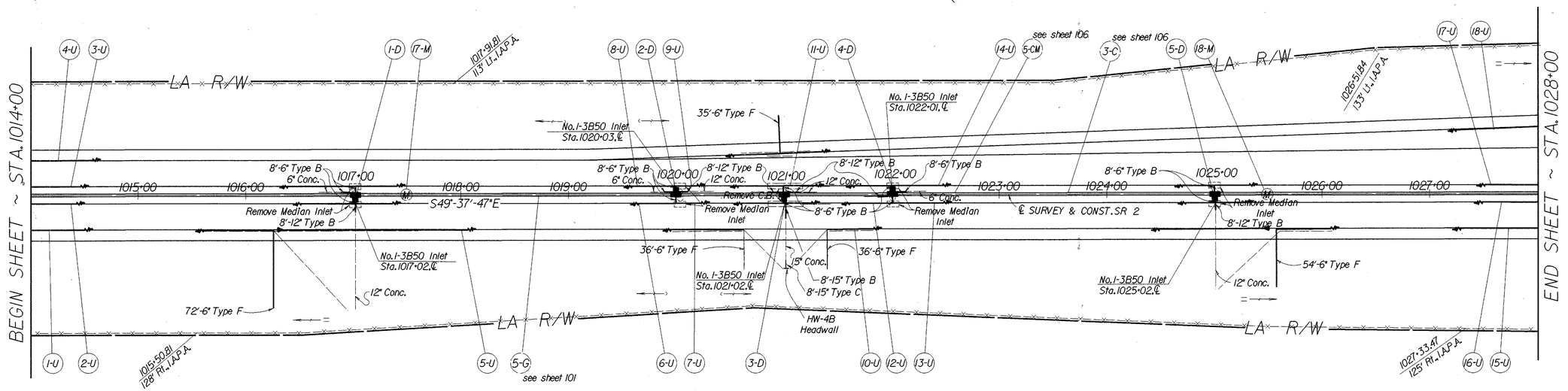


BM ~ STA.1026+27.63' RT.℄ SURVEY
CUT "□" IN CONC. SIGN BASE
ELEV. = 576.92

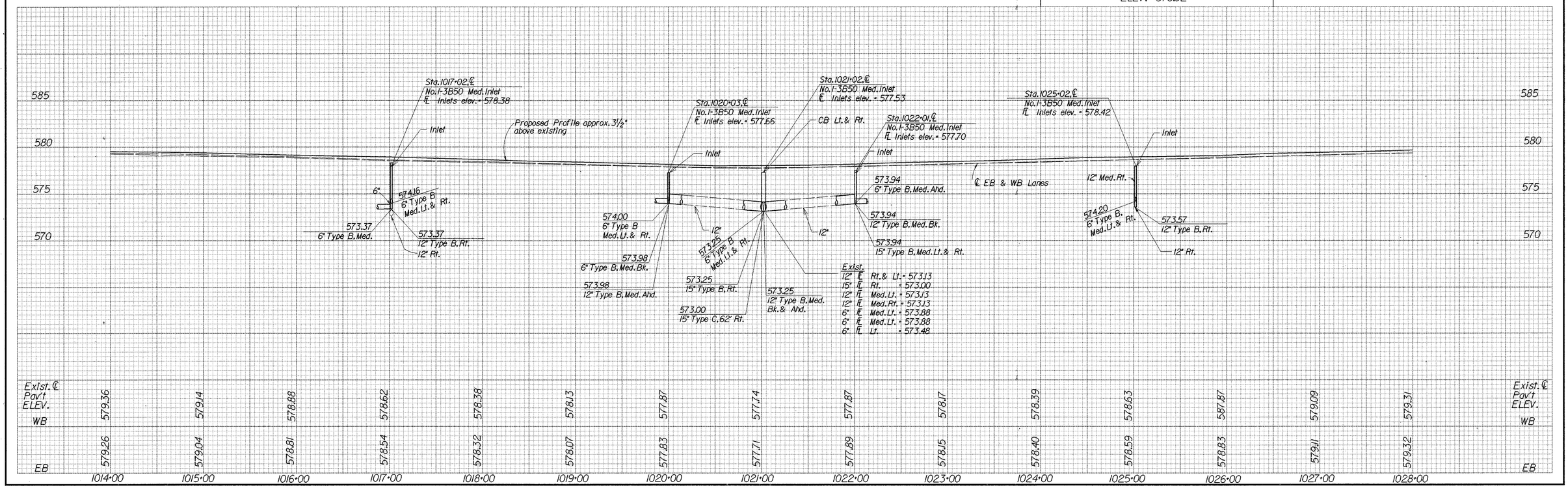


STA.1014+00 TO STA.1028+00

/1/pd/ottawa/pd/ott2pp6.dgn

| FHWA REGION | STATE | PROJECT | |
|---|---|---|---|
| 5 | OHIO | - | |

110
367

OTT-2-16.60

NOTE: See Sht. Nos. 68-96 for Subsummaries.

See Sht. No. 99 for legend.
See Sht. No. 128 for Ramp A details.
See Sht. No. 129 for Ramp D details.
See Sht. No. 125-126 for SR 53 details.

MON. BOX
℄ SURVEY SR 2
P.O.T.~Sta. 1033+50.97

"+" in conc. median inlet
P.C.~Sta. 1041+05.06

BEGIN SHEET ~ STA. 1028+00

END SHEET~STA. 1042+00

LA R/W

see sheet 106

1035-51
145' Lt. E.P.A.

PC Sta. 1041+05.06 End Typical D
Begin Typical F

No. I-3B50 Inlet
Sta. 1041+01, ℄

Ramp A

Ramp D

28'-6" Type F

No. I-3B50 Inlet
Sta. 1032-51, ℄

10'-6" Type B
6" Conc.

8'-6" Type B

Remove Curb Inlet

8'-12" Type B
8'-6" Type B

℄ Survey & Const. SR 2

Existing to Remain

6" CMP

No. I-3B50 Inlet
Sta. 1036-51, ℄

10'-6" Type F

12" Conc.

8'-6" Type B
6" CMP

8'-12" Type B

8'-12" Type B
8'-6" Type B

6" VSP

Curb Inlet Removed

15'-6" Type B

8-15" Type B

No. I-3B50 Inlet
Sta. 1037-48, ℄

No. 6 CB
Sta. 1037+56, 47 Rt.
15"
8'-15" Type C

49'-6" Type F

HW-4B
Headwall

42" Conc.

51'-6" Type F

1037-51
140' Rt. E.P.A.

1039-51
185' Rt. E.P.A.

8'-8" Type B

8'-6" Type B

8" VSP

Curb Inlet
8'-12" Type B

12" Conc.

42'-6" Type F

21' Conc.

BM~Sta. 1035+42, ℄ Survey
Top SE Bolt NE leg on sign
Elev.=579.92

1028+00 1029+00 1030+00 1031+00 1032+00 1033+00 1034+00 1035+00 1036+00 1037+00 1038+00 1039+00 1040+00 1041+00 1042+00

585
580
575
570

Exist. ℄ Pav't. Elev. WB
579.31 579.40 579.33 579.15 578.86 578.64 578.38 578.17 578.02 577.99 578.18 578.39 578.37 578.35 578.43

EB
579.32 579.42 579.26 579.16 578.89 578.64 578.40 578.14 577.95 577.89 578.15 578.40 578.66 578.94 579.40

Sta. 1032+51, ℄
No. I-3B50 Med. Inlet
℄ Inlets = 578.57

Inlet Rt. & Lt.

℄ EB & WB Lanes

Proposed Profile approx. 3½" above existing

574.35
6" Type B. Med. Lt. & Rt.

42" Lt.

42" Rt.

Exist.
6" ℄ Med. Lt. = 573.31
6" ℄ Med. Rt. = 573.31

573.31
6" Type B. Med. Bk.

573.31
12" Type B. Med. Ahd.

Exist.
12" ℄ Med. Lt. = 573.51
6" ℄ Med. Rt. = 573.51

12"

Sta. 1036+51, ℄
No. I-3B50 Med. Inlet
℄ Inlets = 577.76

CB Lt. & Rt.

Inlet Rt. & Lt.

573.54
6" Type B. Med. Lt. & Rt.

573.11
12" Type B. Med. Rt. Bk.

573.26
6" Type B. Med. Lt. Bk. & Ahd.

Exist.
6" ℄ Med. Lt. = 573.26
6" ℄ Med. Rt. = 573.26

572.93
12" Type B. Med. Rt. Ahd.

Exist.
15" ℄ Med. Rt. = 572.38
15" ℄ Rt. = 571.57
12" ℄ Med. Rt. = 572.45 = 573.45
6" ℄

572.45
12" Type B

Sta. 1037+48, ℄
No. I-3B50 Med. Inlet
℄ Inlets = 577.86

Inlets Lt. & Rt.

Sta. 1037+56.47' Rt.
No. 6 CB
Top of grate elev. = 577.90

CB Rt.

573.64
6" Type B. Med. Lt. & Rt.

573.70
6" Type B

571.79
15" Type B. Rt.

571.57
15" Type B

573.45
6" Type B. Med. Bk. & Ahd.

572.38
15" Type B

Sta. 1041+01, ℄
No. I-3B50 Med. Inlet
℄ Inlets = 578.65

℄ WB Pav't.

℄ EB Pav't.

Inlet Lt. & Rt.

574.43
6" Type B. Med. Lt. & Rt.

2' Conc. Ramp D

573.79
8" Type B. Med. Lt. Bk.

573.79
12" Type B. Rt.

Exist.
12" ℄ Med. Rt. = 573.79
12" ℄ Rt. = 573.29
8" ℄ Med. Lt. = 573.79

STA. 1028+00 TO STA. 1042+00

/1/pd/ottawa/ott2/ott2ppl5.dgn

| FHWA REGION | STATE | PROJECT | |
|---|---|---|---|
| 5 | OHIO | | |

111
367

OTT-2-16.60

NOTE: See Sht. Nos. 68-96 for Subsummaries.
See Sht. No. 99 for legend.
See Sht. No. 128 for Ramp B details.
See Sht. No. 129 for Ramp C details.
See Sht. No. 125-126 for SR 53 details.

CURVE DATA
Δ = 41°-34'-00" LT.
D = 1°-28'
R = 3906.53'
T = 1482.65'
L = 2834.09'
E = 271.89'
P.C. = 1041+05.06
P.I. = 1055+87.71
P.T. = 1069+39.15

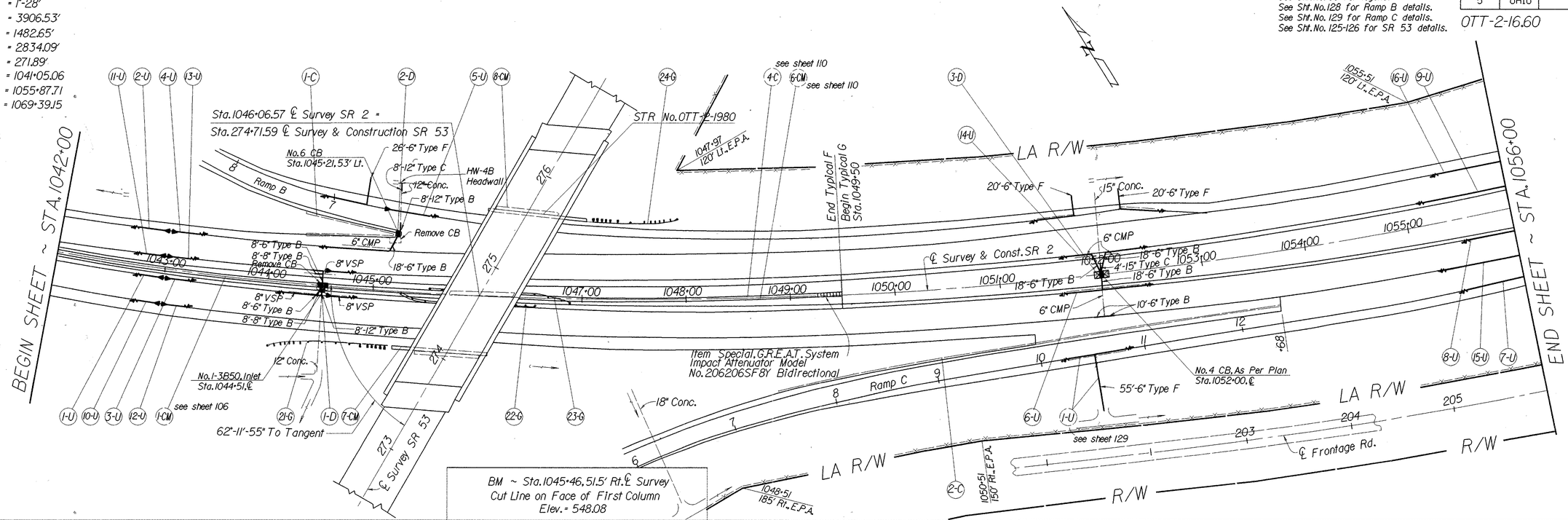


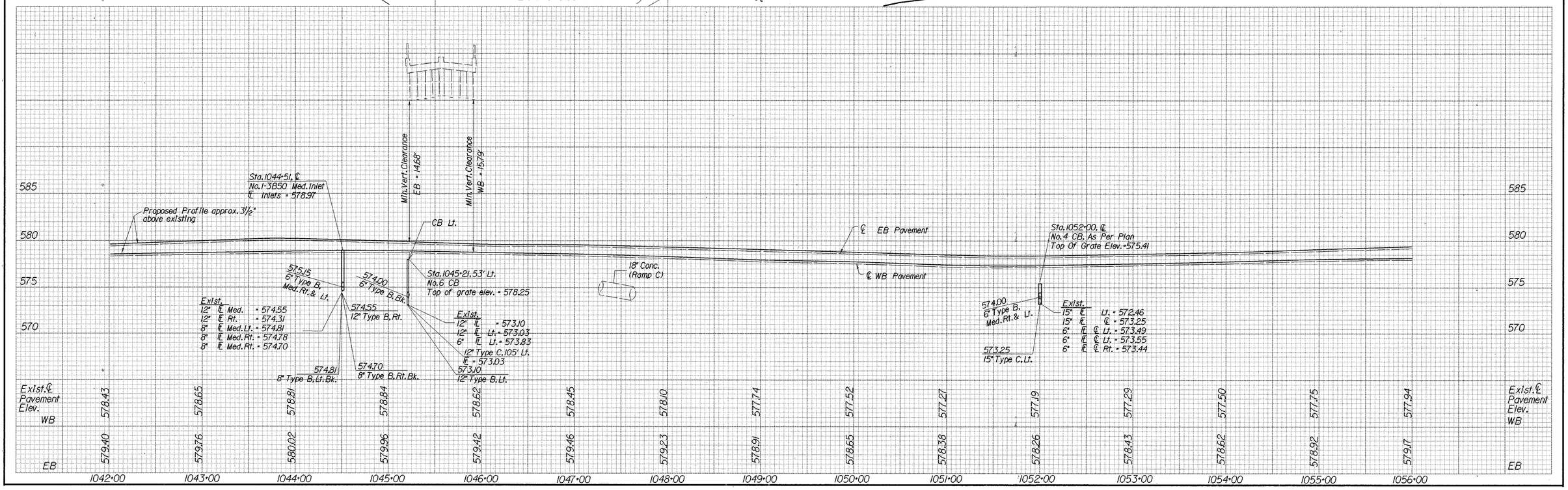


STA. 1042+00 TO STA. 1056+00

/i/pd/ottawa/ott2/ott2ppl4.dgn

| FHWA REGION | STATE | PROJECT | |
|---|---|---|---|
| 5 | OHIO | | |

OTT-2-16.60

112
367

NOTE: See Sht. Nos. 68-96 for Subsummaries.

See Sht. No. 99 for legend.

7/8" DIA. STEEL PIPE
℄ SURVEY SR 2
POC ~ STA. 1059+50.78

7/8" DIA. STEEL PIPE
℄ SURVEY SR 2
PT ~ STA. 1069+39.15

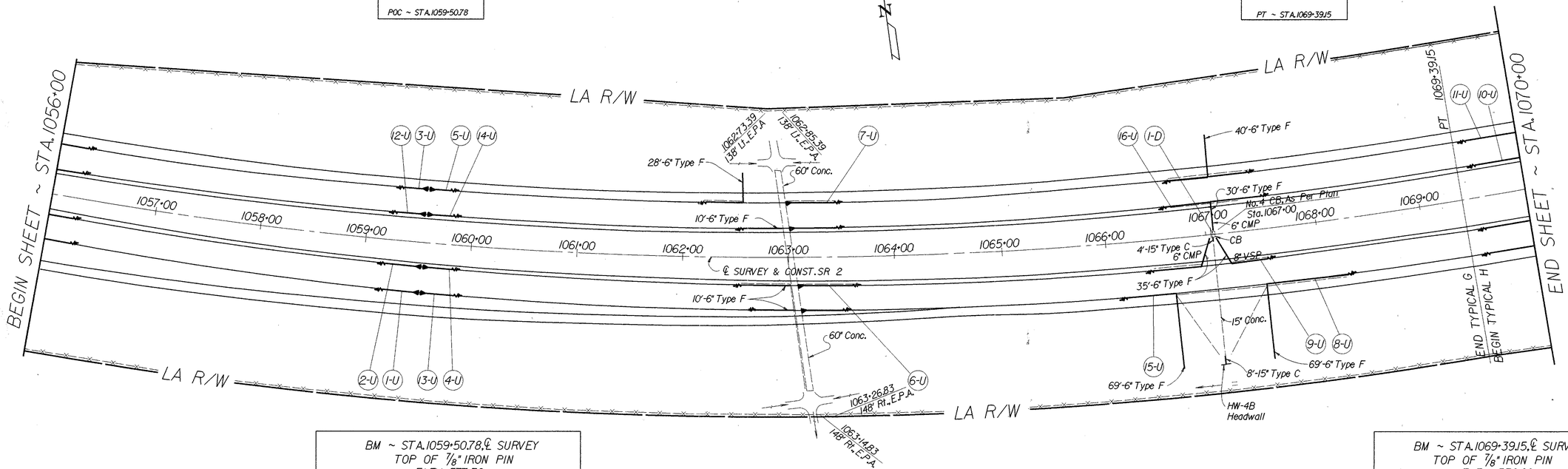


BM ~ STA. 1059+50.78, ℄ SURVEY
TOP OF 7/8" IRON PIN
ELEV. = 577.36

BM ~ STA. 1069+39.15, ℄ SURVEY
TOP OF 7/8" IRON PIN
ELEV. = 530.60

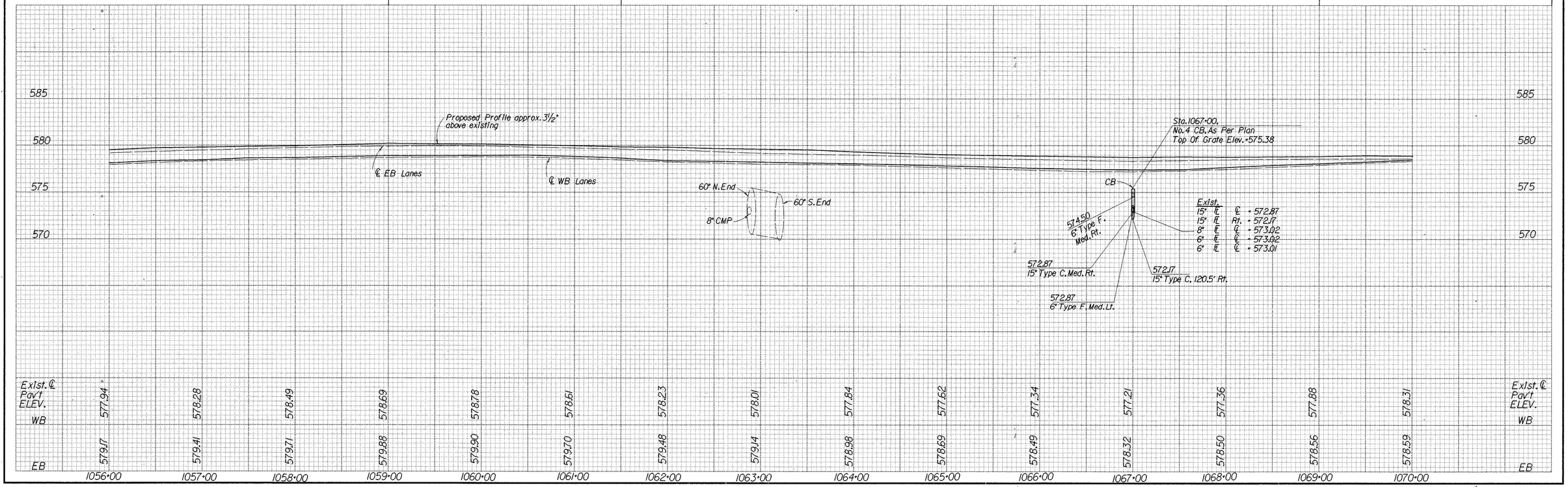


STA. 1056+00 TO STA. 1070+00

/1/pd/ottawa/ott2/ott2pp6.dgn

NOTE: See Sht. Nos. 68-96 for Subsummaries.

See Sht. No. 99 for legend.

| FHWA REGION | STATE | PROJECT | |
|---|---|---|---|
| 5 | OHIO | | |

113/367

OTT-2-16.60

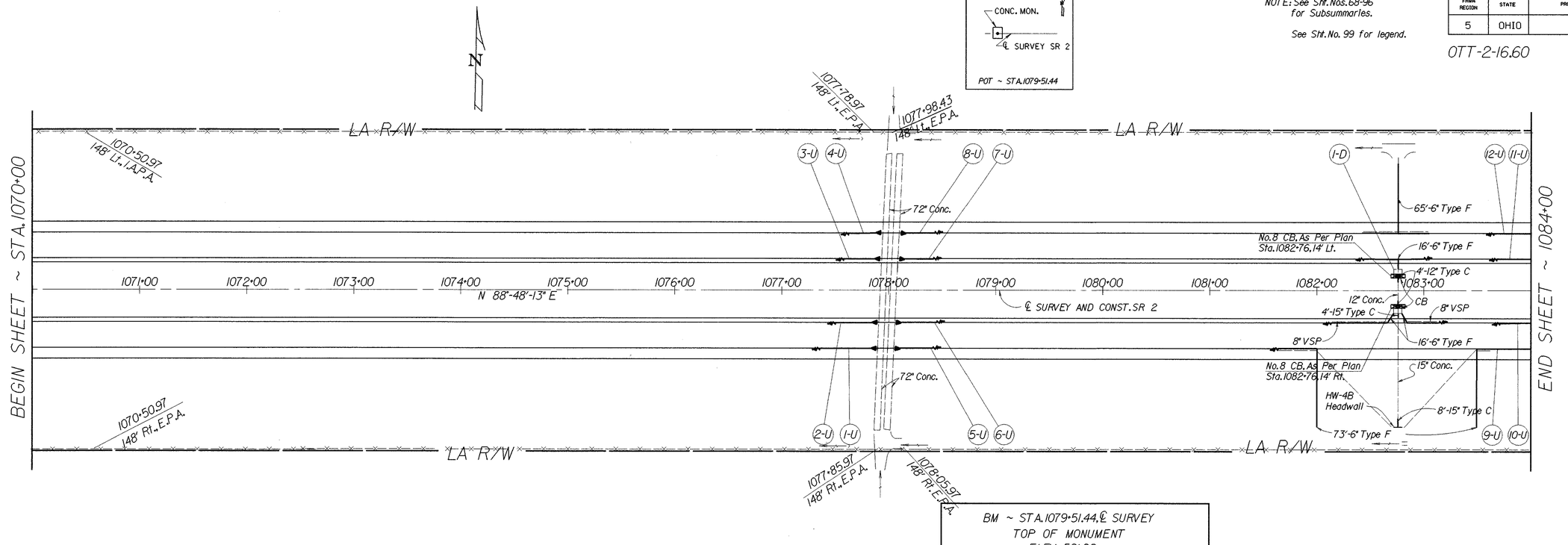


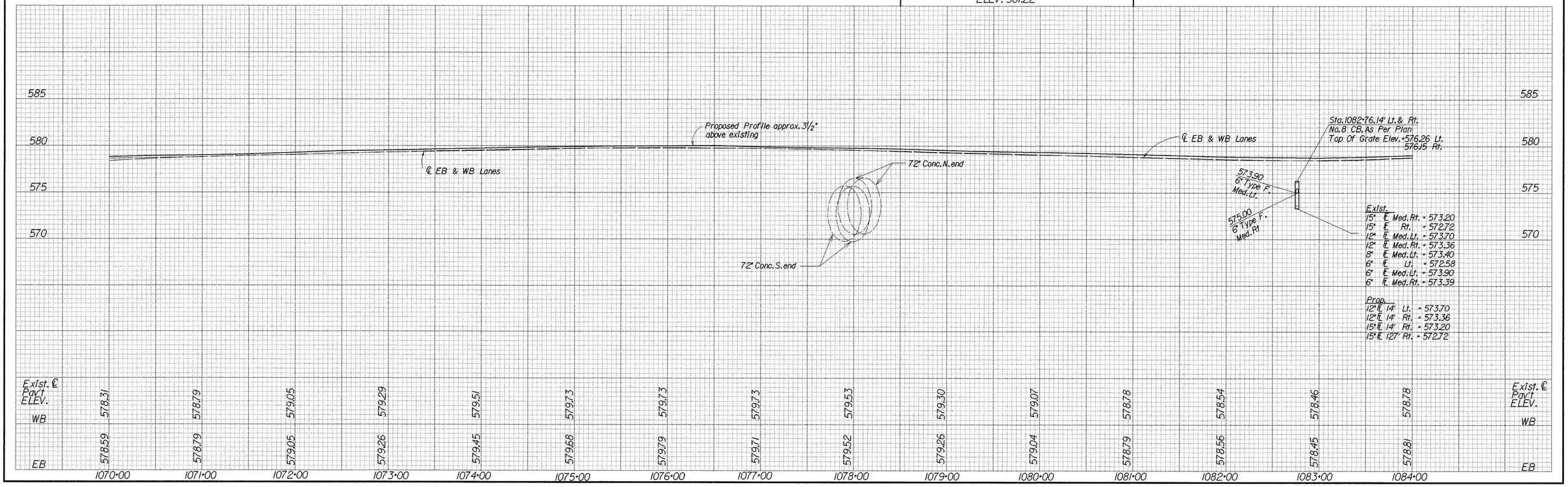


STA.1070+00 TO STA.1084+00

/1/pd/ottawa/ott2/ott2ppl7.dgn

| FHWA REGION | STATE | PROJECT | |
|---|---|---|---|
| 5 | OHIO | | |

114
367

OTT-2-16.60

NOTE: See Sht. Nos. 68-96 for Subsummaries.

See Sht. No. 99 for legend.

CONC. MON.
℄ SURVEY SR 2
POT ~ STA. 1089+51.44

RURAL CITY OF PORT CLINTON

BEGIN SHEET ~ STA. 1084+00

END SHEET ~ STA. 1098+00

1085+10.97
148' Lt. I.A.P.A.

1085+10.97
148' Rt. I.A.P.A.

1091+70.97
148' Lt. I.A.P.A.

1091+70.97
148' Rt. I.A.P.A.

STA. 1094+86.19

LA R/W

LA R/W

LA R/W

3-U 1-D 7-U 4-U 8-U

71'-6" Type F

No. 8 CB. As Per Plan
Sta. 1087+51.13' Lt.

18'-6" Type F

4'-12" Type C

12" Conc.

No. 8 CB. As Per Plan
Sta. 1087+51.13' Rt.

4'-15" Type C

18'-6" Type F

15" Conc.

71'-6" Type F

2-U 1-U 6-U 5-U

1085+00 1086+00 1087+00 CB 1088+00 1089+00 1090+00 1091+00 1092+00 1093+00 1094+00 1095+00 1096+00 1097+00

N 88°-48'-13" E

℄ SURVEY AND CONST. SR 2

To a Pump Station

12" Conc.

Conc. erosion pad

12-U 11-U

See Detail Sht. No. 224

9-U 10-U

BM ~ STA. 1089+51.44, ℄ SURVEY
TOP OF MONUMENT
ELEV. = 582.90

Sta. 1087+51.13' Lt. & Rt.
No. 8 CB. As Per Plan
Top Of Grate Elev. = 578.00 Lt.
578.25 Rt.

577.00
6" Type F
Med. Lt. & Rt.

℄ EB & WB Lanes

Proposed Profile approx. 3½" above existing

℄ EB & WB Lanes

Exist.
15" ℄ Med. Rt. = 574.77
15" ℄ Rt. = 573.82
12" ℄ Med. Lt. = 575.12
12" ℄ Med. Rt. = 575.00
8" ℄ Rt. = 574.59
6" ℄ Med. Rt. = 575.01

Prop.
12" ℄ 13' Lt. = 575.12
12" ℄ 13' Rt. = 575.00
15" ℄ 13' Rt. = 574.77

585 580 575 570

| | 1084+00 | 1085+00 | 1086+00 | 1087+00 | 1088+00 | 1089+00 | 1090+00 | 1091+00 | 1092+00 | 1093+00 | 1094+00 | 1095+00 | 1096+00 | 1097+00 | 1098+00 |
|---|---|---|---|---|---|---|---|---|---|---|---|---|---|---|---|
| Exist. ℄ Pav't ELEV. WB | 578.78 | 579.17 | 579.52 | 580.01 | 580.40 | 580.77 | 581.08 | 581.50 | 581.89 | 582.34 | 582.80 | 583.10 | 583.19 | 583.03 | 582.76 |
| EB | 578.81 | 579.22 | 579.61 | 580.09 | 580.41 | 580.77 | 581.18 | 581.60 | 581.98 | 582.42 | 582.80 | 583.14 | 583.23 | 583.03 | 582.80 |

STA. 1084+00 TO STA. 1098+00

/i:/pd/ottawa/ott2/ott2pp7.dgn

| FHWA REGION | STATE | PROJECT | |
|---|---|---|---|
| 5 | OHIO | | |

115/367

OTT-2-16.60

CONC. MON.
℄ SURVEY SR 2
POT ~ STA.1099+51.65

CONC. MON.
℄ SURVEY SR 2
PC ~ STA.1107+27.66

CURVE DATA
P.I. STA.1110+12.32
Δ = 2°-41'-04" RT.
D = 0°-28'-18"
T = 284.66'
L = 569.22'
R = 12,149.26'

NOTE: See Sht. Nos. 68-96 for Subsummaries.

See Sht. No. 99 for legend.

N

CITY OF PORT CLINTON — RURAL

BEGIN SHEET ~ STA.1098+00

END SHEET ~ STA.1112+00

LA R/W

1098+30.97 148' Lt. I.A.P.A.

1098+30.97 148' Rt. I.A.P.A.

1104+90.97 148' Lt. I.A.P.A.

1104+99.33

1104+30.97 148' Rt. I.A.P.A.

1111+50.97 138' Lt. I.A.P.A.

1111+50.97 138' Rt. I.A.P.A.

Suspend Typical H
Begin Typical I

PC 1107+27.66

3-U 4-U 1-D 8-U 7-U

70'-6" Type F

No.8 CB, As Per Plan
Sta.1102+51.13' Lt.

4'-12" Type C

16'-6" Type F

1099+00 1100+00 1101+00 1102+00 1103+00 1104+00 1105+00 1106+00 1107+00 1108+00 1109+00 1110+00 1111+00

N 88°-48'-13" E

12" Conc.

CB

4'-15" Type C

℄ SURVEY & CONST. SR 2

8" VSP
18'-6" Type F

6" CMP

No.8 CB, As Per Plan
Sta.1102+51.13' Rt.

1-U 2-U

15" Conc.

6-U 5-U

71'-6" Type F

10-U 12-U

9-U 11-U

BM ~ STA.1099+51.65, ℄ SURVEY
TOP OF MONUMENT
ELEV.=584.40

BM ~ STA.1107+27.66, ℄ SURVEY
TOP OF MONUMENT
ELEV.=584.75

590
585
580
575

Sta.1102+51.13' Lt. & Rt.
No.8 CB, As Per Plan
Top Of Grate Elev.=579.45 Lt.
579.28 Rt.

Proposed Profile approx. 3½" above existing

℄ EB & WB Lanes

578.50
6" Type F
Med. Lt. & Rt.

Exist.
15" ℄ Med. Rt. = 576.34
15" ℄ Rt. = 575.81
12" ℄ Med. Lt. = 576.96
12" ℄ Med. Rt. = 576.96
8" ℄ Med. Rt. = 576.42
8" ℄ Rt. = 576.81
8" ℄ Lt. = 575.89
6" ℄ Lt. = 575.89
6" ℄ Med. Lt. = 577.22
6" ℄ Med. Rt. = 576.46

Prop.
12" ℄ 13' Lt. = 577.22
12" ℄ 13' Rt. = 576.46
15" ℄ 13' Rt. = 575.81

| | 1098+00 | 1099+00 | 1100+00 | 1101+00 | 1102+00 | 1103+00 | 1104+00 | 1105+00 | 1106+00 | 1107+00 | 1108+00 | 1109+00 | 1110+00 | 1111+00 | 1112+00 |
|---|---|---|---|---|---|---|---|---|---|---|---|---|---|---|---|
| Exist. ℄ Pav't ELEV. WB | 582.76 | 582.55 | 582.29 | 582.04 | 581.83 | 581.82 | 582.01 | 582.23 | 582.48 | 582.79 | 583.04 | 583.29 | 583.48 | 583.44 | 583.26 |
| EB | 582.80 | 582.56 | 582.29 | 582.10 | 581.86 | 581.85 | 582.01 | 582.28 | 582.54 | 582.85 | 583.07 | 583.29 | 583.46 | 583.43 | 583.25 |

STA.1098+00 TO STA.1112+00

i/pd/ottawa/ott2/ott2pp8.dgn

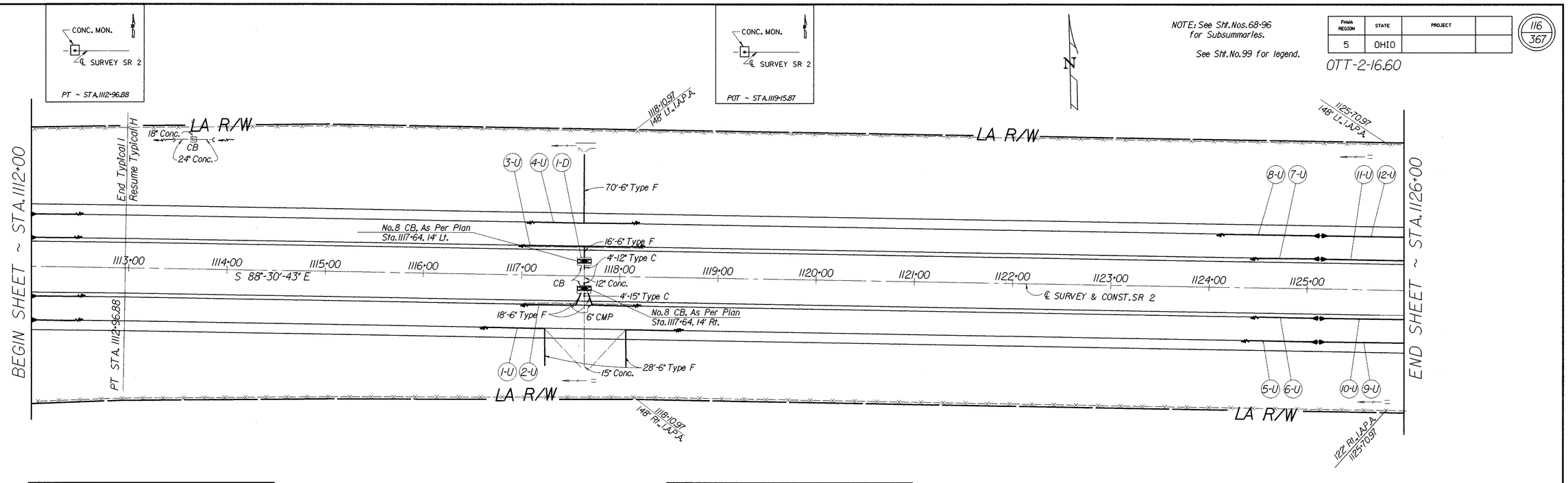


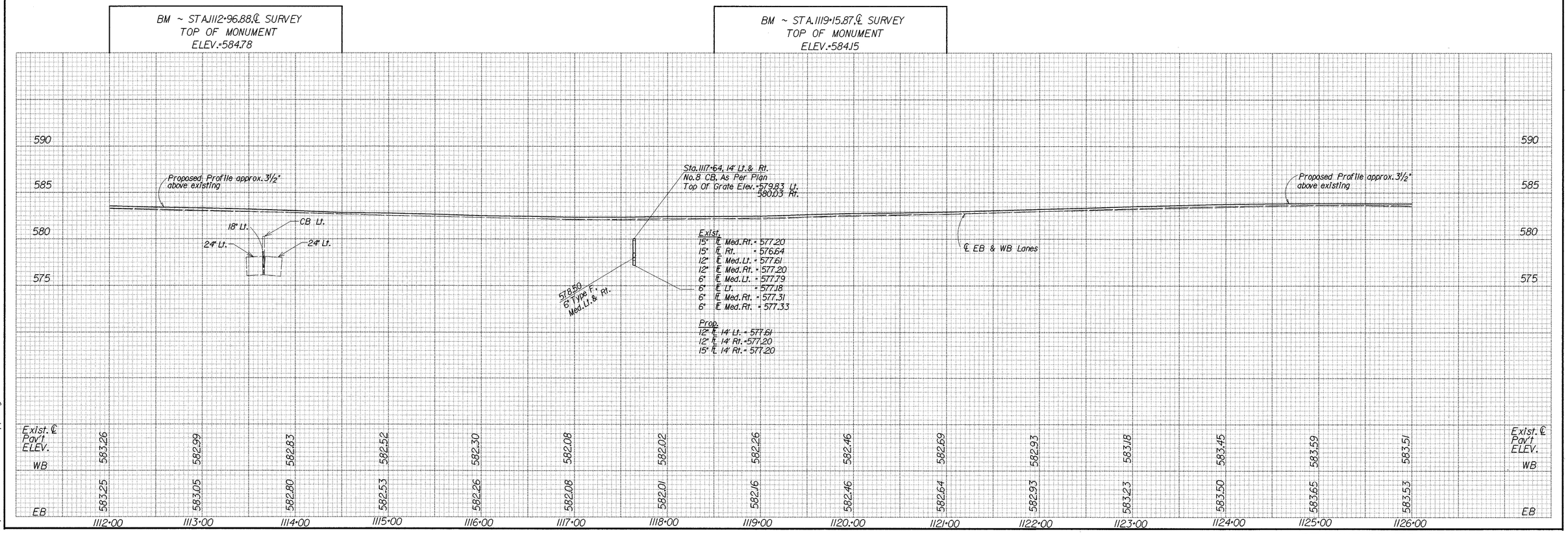


STA.1112+00 TO STA.1126+00

I:/pd/ottawa/ott2/oh12pp8.dgn

| FHWA REGION | STATE | PROJECT | |
|---|---|---|---|
| 5 | OHIO | | |

117/367

OTT-2-16.60

CONC. MON.
℄ SURVEY SR 2
POT ~ STA.1129+15.95

CONC. MON.
℄ SURVEY SR 2
POT ~ STA.1139+16.11

NOTE: See Sht.Nos.68-96 for Subsummaries.

See Sht.No.99 for legend.

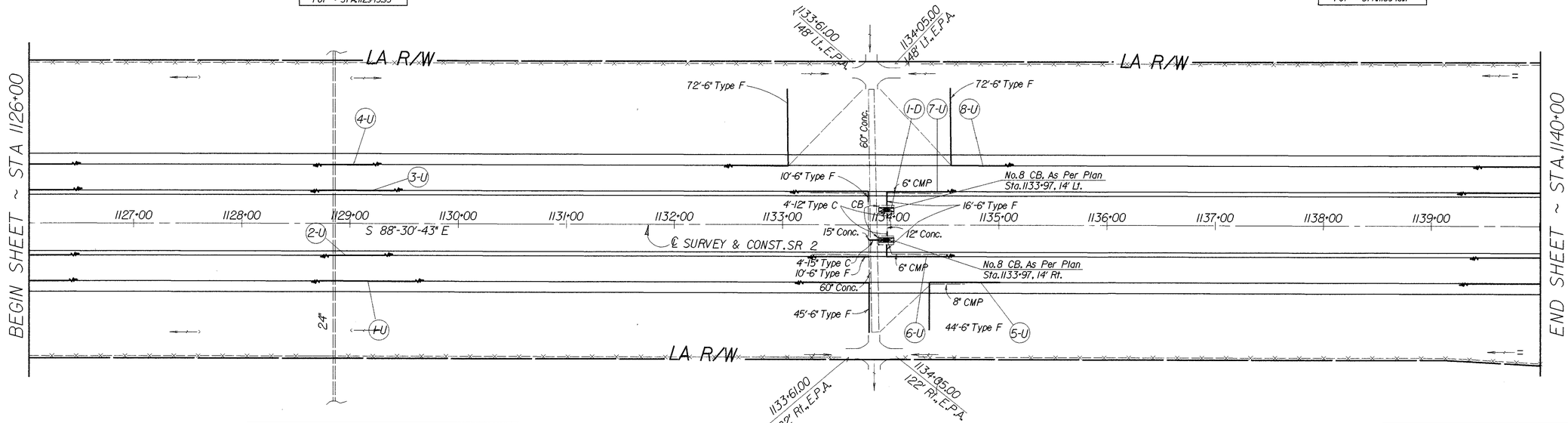


BM ~ STA.1129+15.95,℄ SURVEY
TOP OF MONUMENT
ELEV.=584.83

BM ~ STA.1139+16.11,℄ SURVEY
TOP OF MONUMENT
ELEV.=584.83

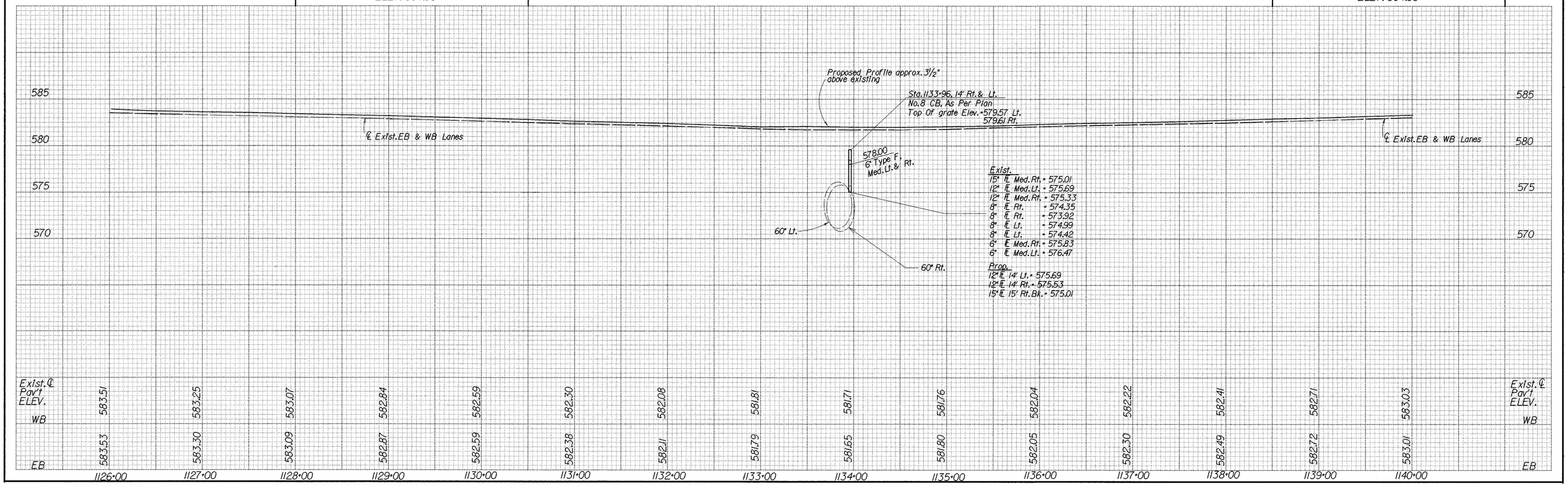


STA.1126+00 TO STA.1140+00

11/pd/ottawa/ott2/ott2pp9.dgn

NOTE: See Sht. Nos. 68-96 for Subsummaries.

See Sht. No. 99 for legend.

| FHWA REGION | STATE | PROJECT | |
|---|---|---|---|
| 5 | OHIO | | |

118 / 367

OTT-2-16.60

RURAL — CITY OF PORT CLINTON

Sta. 1147+96.70

CONC. MON. ℄ SURVEY SR 2

POT ~ STA. 1149+14.59

N

BEGIN SHEET ~ STA. 1140+00

END SHEET ~ STA. 1154+00

LA R/W

1142+10.97 148' Lt. - I.A.P.A.

1147+02.97 148' Lt. - C.P.A.

1147+02.57 120' Lt. - C.P.A.

1148+71.97 148' Lt. - C.P.A.

1148+71.97 120' Lt. - C.P.A.

STR. NO. OTT-2-2174

3-U 4-U 10-CM 26-G 8-U 7-U 1-D 11-U 12-U

35'-6" Type F

No. 8 CB, As Per Plan Sta. 1150+17, 14' Lt.

22'-6" Type F

CB

4'-12" Type C

12" Conc.

4'-15" Type C

22'-6" Type F

6" CMP

No. 8 CB, As Per Plan Sta. 1150+17, 14' Rt.

15" Conc.

HW-4B Headwall

8'-15" Type C

42'-6" Type F

1141+00 1142+00 1143+00 1144+00 1145+00 1146+00 1147+00 1149+00 1150+00 1151+00 1152+00 1153+00

S 88°-30'-43" E

℄ SURVEY & CONST. SR 2

FULTON ST.

1-U 2-U 1142+10.97 138' Rt. - I.A.P.A.

25-G 9-CM 5-U 6-U 9-U 10-U

1147+06.97 148' Rt. - C.P.A.

1147+06.97 120' Rt. - C.P.A.

1149+78.97 120' Rt. - C.P.A.

1149+78.97 148' Rt. - C.P.A.

BM ~ STA. 1149+14.59, ℄ SURVEY
TOP OF MONUMENT
ELEV. = 582.68

Proposed Profile approx. 3½" above exist.

Min. Vert. Clearance EB = 15.01

Min. Vert. Clearance WB = 15.08'

℄ EB & WB Lanes

Sta. 1150+17, 14' Lt. & Rt.
No. 8 CB, As Per Plan
Top Of Grate Elev. = 578.71 Lt.
578.55 Rt.

577.50 6" Type F Med. Lt. & Rt.

574.76 15" Type C, Rt.

Exist.
6" ℄ Med. Rt. = 576.05
12" ℄ Med. Lt. = 576.32
12" ℄ Med. Rt. = 575.88
15" ℄ Med. = 575.75
15" ℄ Rt. = 574.76

Prop.
12" ℄ 14' Lt. = 576.32
12" ℄ 14' Rt. = 575.88
15" ℄ 14' Rt. = 574.76

585 580 575 570

| Exist. ℄ Pav't ELEV. | 1140+00 | 1141+00 | 1142+00 | 1143+00 | 1144+00 | 1145+00 | 1146+00 | 1147+00 | 1148+00 | 1149+00 | 1150+00 | 1151+00 | 1152+00 | 1153+00 | 1154+00 | Exist. ℄ Pav't ELEV. |
|---|---|---|---|---|---|---|---|---|---|---|---|---|---|---|---|---|
| WB | 583.03 | 583.22 | 583.21 | 582.99 | 582.65 | 582.23 | 581.98 | 581.69 | 581.44 | 581.17 | 580.81 | 580.53 | 580.21 | 579.94 | 579.66 | WB |
| EB | 583.01 | 583.22 | 583.19 | 582.95 | 582.63 | 582.33 | 582.00 | 581.63 | 581.44 | 581.19 | 580.88 | 580.56 | 580.28 | 579.97 | 579.65 | EB |

STA. 1140+00 TO STA. 1154+00

//pd/ottawa/ott2/ott2pp9.dgn

| FHWA REGION | STATE | PROJECT | |
|---|---|---|---|
| 5 | OHIO | | |

119/367

OTT-2-16.60

NOTE: See Sht. Nos. 68-96 for Subsummaries.

See Sht. No. 99 for legend.

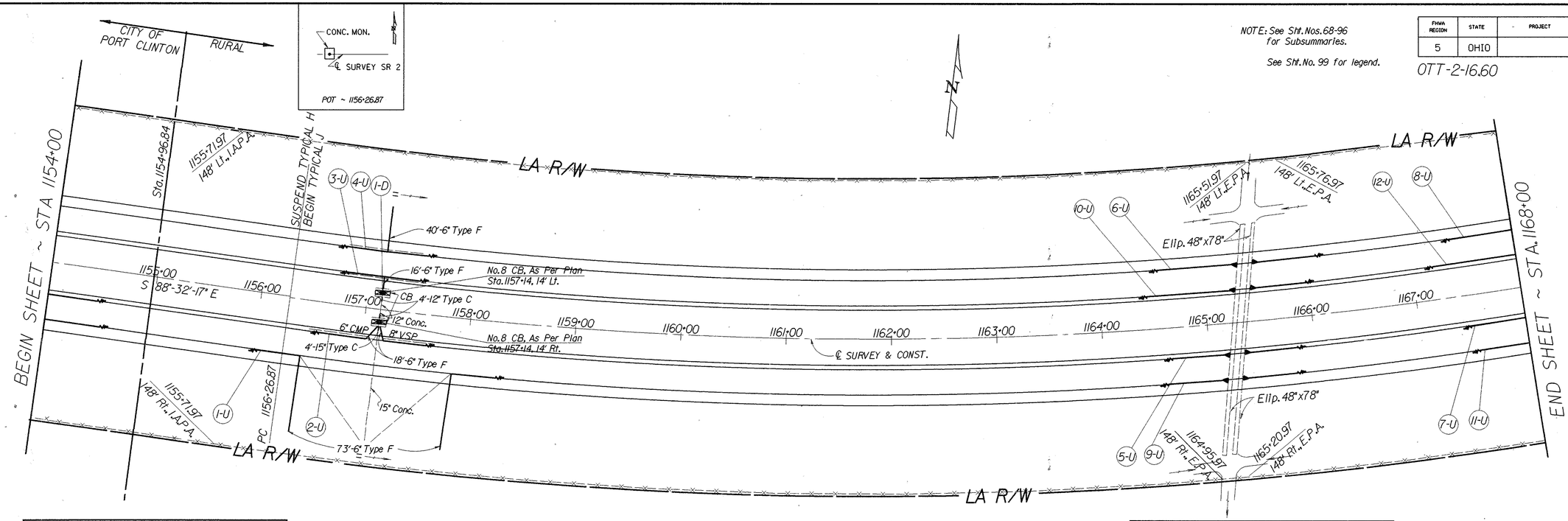


BM ~ STA. 1156+27.21, ℄ SURVEY
TOP OF MONUMENT
ELEV. = 580.87

BM ~ STA. 1164+14.41, ℄ SURVEY
TOP OF MONUMENT
ELEV. = 582.14

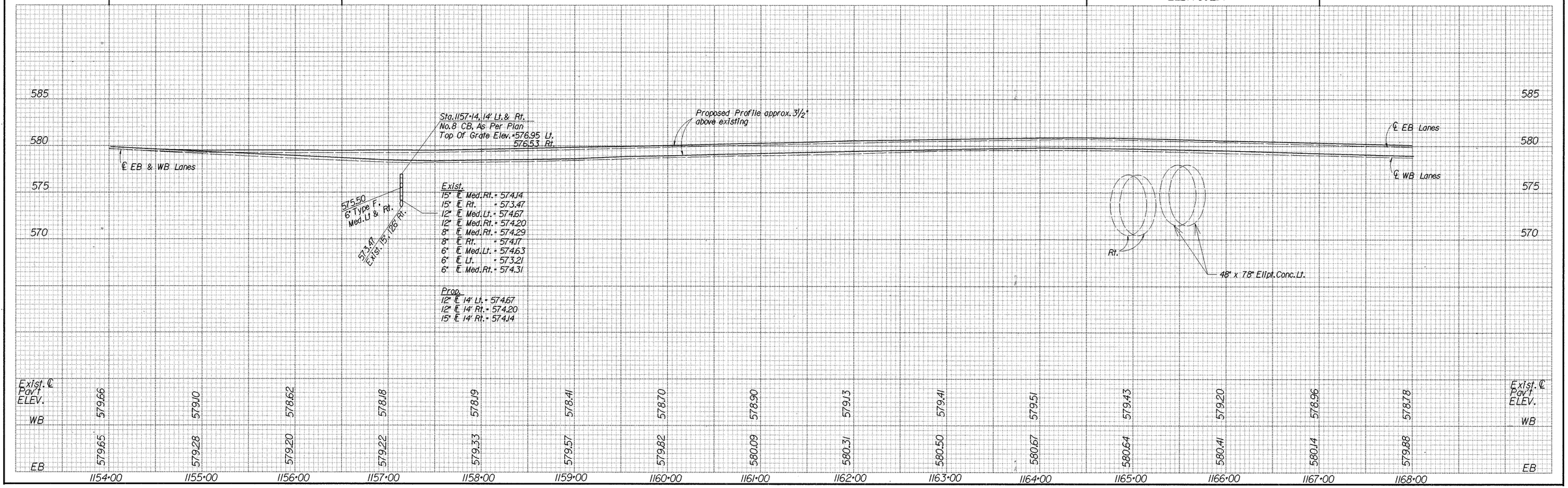


STA. 1154+00 TO STA. 1168+00

/1/pd/ottawa/ott2/ott2ppl0.dgn

| FHWA REGION | STATE | PROJECT | |
|---|---|---|---|
| 5 | OHIO | | |

120
367

OTT-2-16.60

CONC. MON.
℄ SURVEY SR 2
POC ~ STA.1173+14.18

CURVE DATA
P.I. = Sta. 1173+78.13
Δ = 48°-16'-20" Lt.
$D_c$ = 1°-27'-57"
R = 3908.38'
T = 1751.26'
L = 3292.85'
*max = 0.048

NOTE: See Sht.Nos.68-96 for Subsummaries.

See Sht.No.99 for legend.

CONC. MON.
℄ SURVEY SR 2
POC ~ STA.1181+13.98

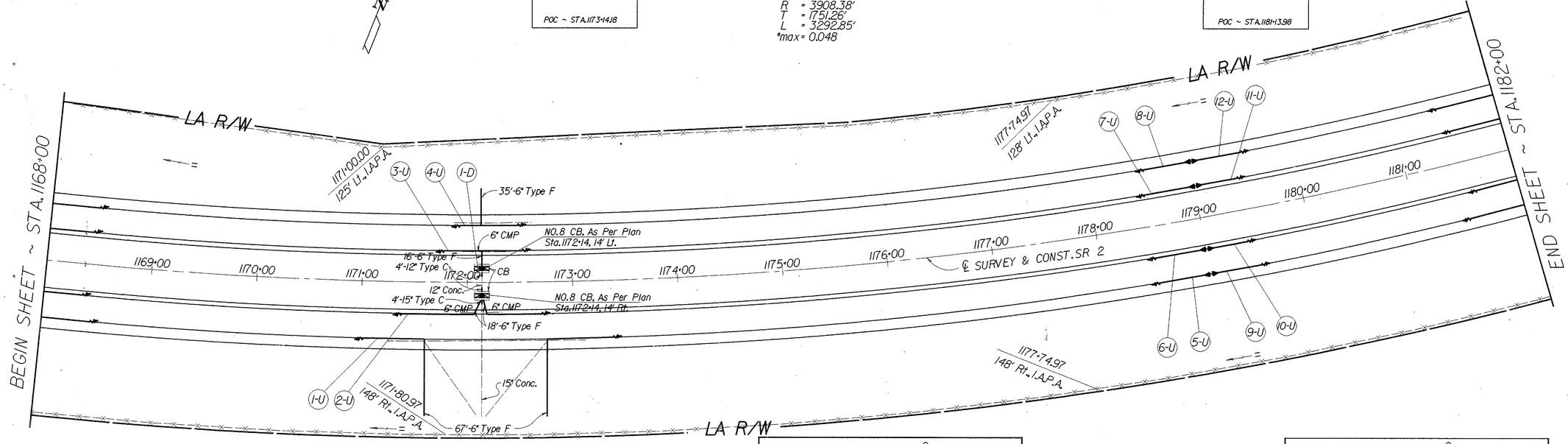


BM ~ STA.1173+14.18, ℄ SURVEY
TOP OF MONUMENT
ELEV.=580.53

BM ~ STA.1181+13.98, ℄ SURVEY
TOP OF MONUMENT
ELEV.=582.00

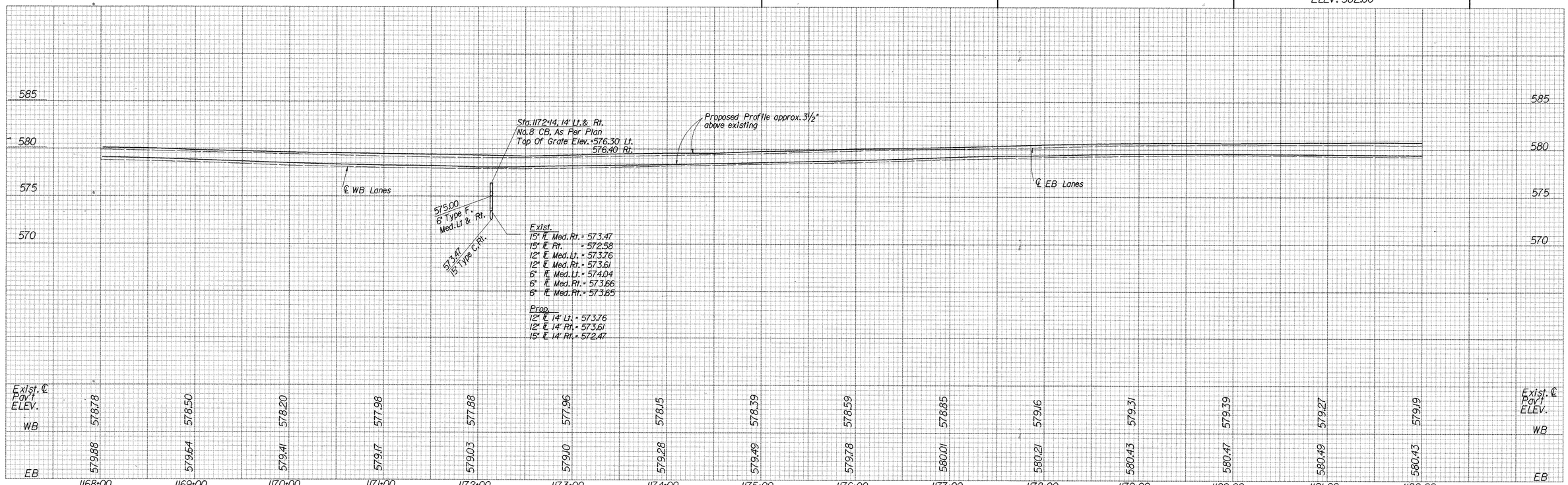


STA.1168+00 TO STA.1182+00

/1/pd/ottawa/ott2/ott2ppl0.dgn

NOTE: See Sht. No. 68-96 for Subsummaries.

See Sht. No. 99 for legend.

| FHWA REGION | STATE | PROJECT | |
|---|---|---|---|
| 5 | OHIO | | |

OTT-2-16.60

121/367

CONC. MON.
℄ SURVEY SR 2
PT ~ STA. 1189+19.72

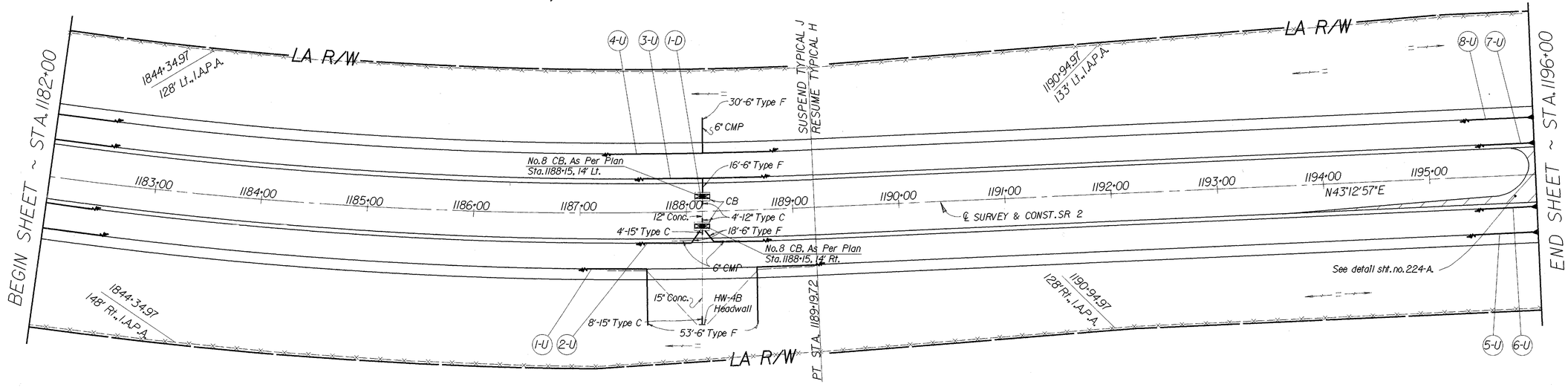


BM ~ STA. 1189+19.72, ℄ SURVEY
TOP OF MONUMENT
ELEV. = 581.58

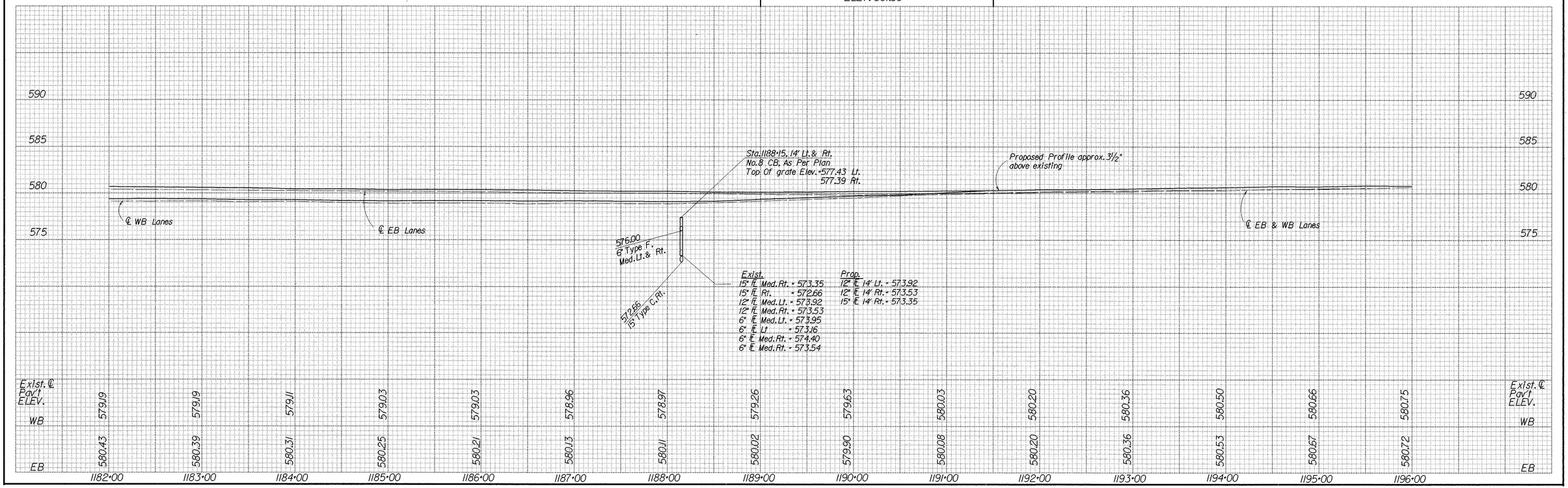


STA. 1182+00 TO STA. 1196+00

/1/pd/ottawa/ott2/ott2ppli.dgn

| FHWA REGION | STATE | PROJECT | |
|---|---|---|---|
| 5 | OHIO | | |

OTT-2-16.60

122
367

NOTE: See Sht. No. 68-96 for Subsummaries.

See Sht. No. 99 for legend.

CONC. MON.
℄ SURVEY SR 2
POT ~ STA. 1199+15.34

CONC. MON.
℄ SURVEY SR 2
POT ~ STA. 1209+15.27

BEGIN SHEET ~ STA. 1196+00

END SHEET ~ STA. 1210+00

LA R/W

1197+54.97
148' Lt. - I.A.P.A.

1197+54.97
128' Rt. - I.A.P.A.

1204+14.97
148' Lt. - I.A.P.A.

1204+14.97
135' Rt. - I.A.P.A.

4-U 3-U 1-U 2-U 7-U 8-U 28-G 6-U 5-U 27-G 1-D

See detail sht. no. 224-A.

71'-6" Type F

℄ 15" Conc.

6" CMP

18'-6" Type F

4'-15" Type C

No. 8 CB, As Per Plan
Sta. 1204+02, 14' Lt.

CB

4'-12" Type C

12" Conc.

℄ SURVEY & CONST.

6" CMP

No. 8 CB, As Per Plan
Sta. 1204+02, 14' Rt.

16'-6" Type F

40'-6" Type F

1197+00 1198+00 1199+00 1200+00 1201+00 1202+00 1203+00 1204+00 1205+00 1206+00 1207+00 1208+00 1209+00

N 43°-12'-57" E

BM ~ STA. 1199+15.34, ℄ SURVEY
TOP OF MONUMENT
ELEV. = 581.79

BM ~ STA. 1209+14.97, ℄ SURVEY
TOP OF CONC. MONUMENT
ELEV. = 585.39

590
585
580
575

Proposed Profile approx. 3½" above existing

℄ EB & WB Lanes

Sta. 1204+02, 14' Lt. & Rt.
No. 8 CB, As Per Plan
Top Of Grate Elev. = 576.56 Lt.
576.83 Rt.

575.50
6" Type F.
Med. Lt. & Rt.

572.41
Exist. 15" 128' Lt.

Exist.
15" ℄ Lt. - 572.41
15" ℄ Med. Lt. = 573.02
12" ℄ Med. Lt. = 573.26
12" ℄ Med. Rt. = 573.40
6" ℄ Med. - 573.86
6" ℄ Med. Rt. = 573.14
6" ℄ Med. Lt. = 573.32

Prop.
12" ℄ 14' Lt. = 573.26
12" ℄ 14' Rt. = 573.40
15" ℄ 14' Lt. = 573.02

| | 1196+00 | 1197+00 | 1198+00 | 1199+00 | 1200+00 | 1201+00 | 1202+00 | 1203+00 | 1204+00 | 1205+00 | 1206+00 | 1207+00 | 1208+00 | 1209+00 | 1210+00 |
|---|---|---|---|---|---|---|---|---|---|---|---|---|---|---|---|
| Exist. ℄ Pavt. ELEV. WB | 580.75 | 580.61 | 580.38 | 580.15 | 579.92 | 579.68 | 579.43 | 579.19 | 578.97 | 579.06 | 579.55 | 580.45 | 581.69 | 583.39 | 585.59 |
| EB | 580.72 | 580.62 | 580.39 | 580.17 | 579.94 | 579.66 | 579.48 | 579.17 | 579.00 | 579.10 | 579.57 | 580.45 | 581.69 | 583.43 | 585.61 |

STA. 1196+00 TO STA. 1210+00

/1/pd/ottawa/ott2/ott2pll1.dgn

| FHWA REGION | STATE | PROJECT | |
|---|---|---|---|
| 5 | OHIO | | |

OTT-2-16.60

123 / 367

NOTE: See Sht. Nos. 68-96 for Subsummaries.

See Sht. No. 99 for legend.

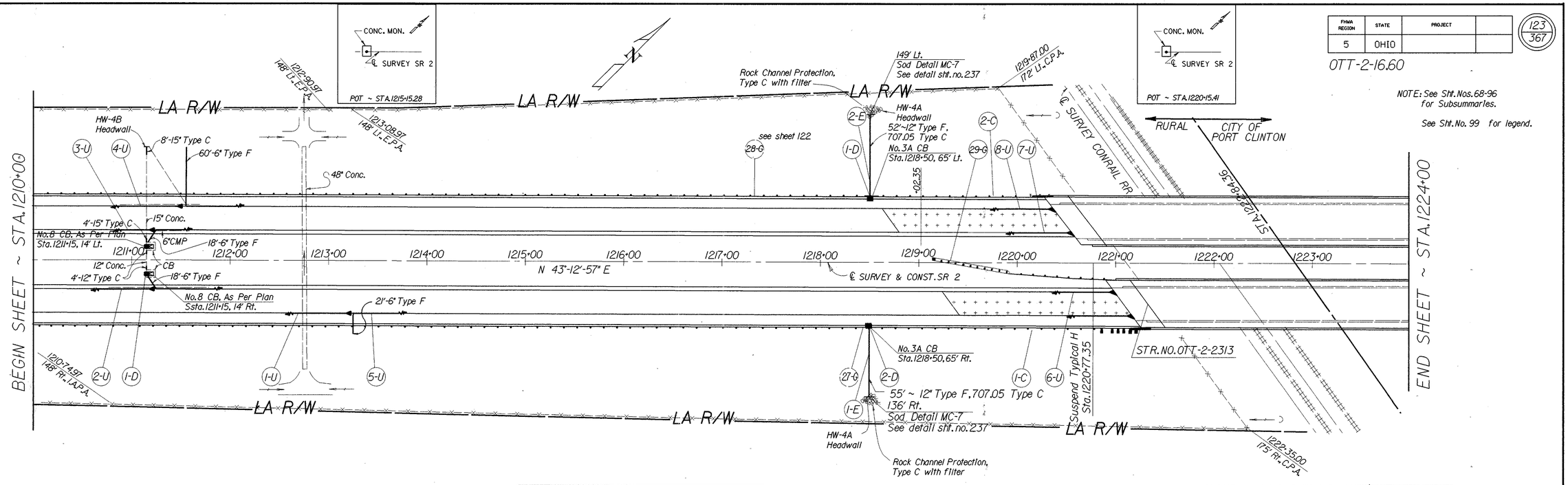


BM ~ STA.1215+15.28, ℄ SURVEY
TOP OF CONC. MONUMENT
ELEV. = 601.77

BM ~ STA.1220+15.41, ℄ SURVEY
TOP OF CONC. MONUMENT
ELEV. = 607.26

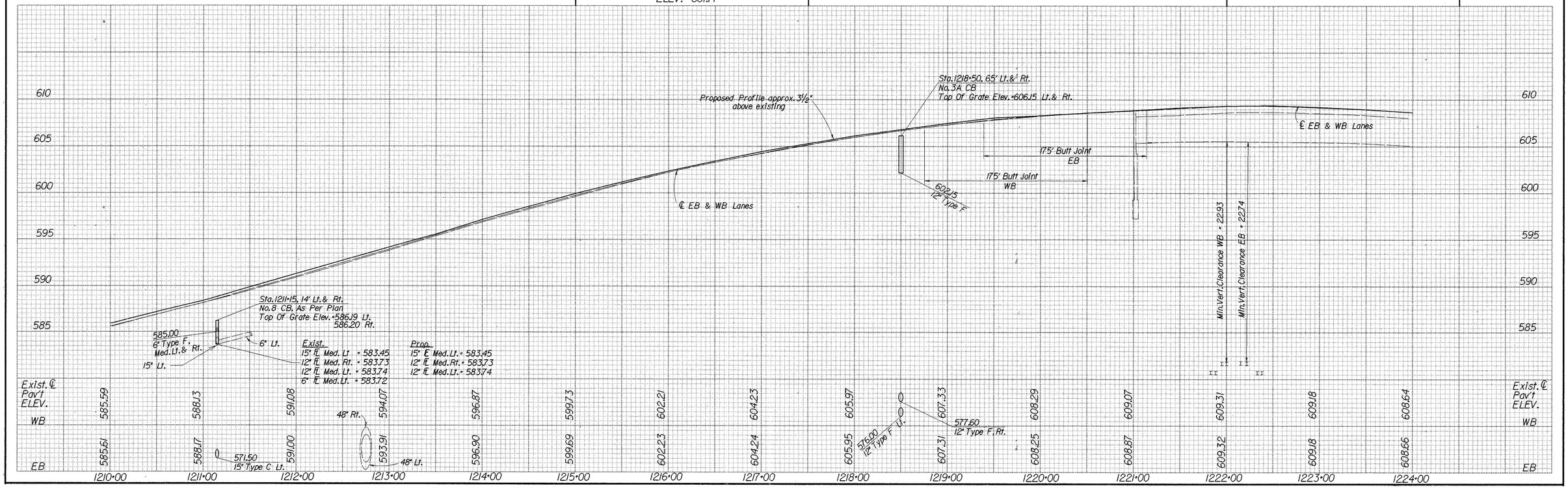


STA.1210+00 TO STA.1224+00

I:\pd\ottawa\ott2\ott2ppl2.dgn

| FHWA REGION | STATE | PROJECT | |
|---|---|---|---|
| 5 | OHIO | | |

124 / 367

OTT-2-16.60

NOTE: See Sht. Nos. 68-96 for Subsummaries.

See Sht. No. 99 for legend.

MATCH LINE ~ STA. 1224+00

State St.

Sta. 1225+29.88 ℄ Survey SR 2 = Sta. 50+00 ℄ Survey State St.

N 43°-10'-43" E

47°-35'-15"

No. 3A CB Sta. 1226+25.65' Lt.

137' Lt. Sod Detail MC-7 See Sht. no. 237 for details.

Sta. 1225+30.66, 145' Lt. CPA

CONC. MON. ℄ SURVEY SR 2

POT ~ STA. 1227+12.85

PC ~ STA. 1230+52.79

PCC ~ STA. 1232+52.76

HW-4A Headwall

78' ~ 12" Type C

Rock Channel Protection, Type C with filter

2-E, 1-D, 2-C, 32-G, 31-G

Resume Typical H Sta. 1226+63.15

End Typical H Resume Typical J Sta. 1230+80.99

Sta. 1230+52.79, 69' Lt. CPA

City of Port Clinton — Rural

LA R/W

Sta. 1236+12.79, 169' Lt. CPA

Sta. 1237+12.79, 188' Lt. EPA

End Project Sta. 1235+60 SLM 23.40

End Work Sta. 1236+47

NH-79(51)

3-U, 4-U, 3-D

8'-15° Type C

15" Conc.

HW-4B Headwall

22'-6" Type F

18'-6" Type F Ramp D

8" VSP

NO.8 CB, As Per Plan Sta. 1234+14, 14' Lt.

4'-15° Type C

4'-12° Type C

12" Conc.

CB

Exist. to Remain

NO.8 CB, As Per Plan Sta. 1234+14, 14' Rt.

18'-6" Type F

22'-6" Type F

1225+00 1226+00 1227+00 1228+00 1229+00 1230+00 1231+00 1232+00 1233+00 1234+00 1235+00 1236+00 1237+00 1238+00 1239+00

℄ Survey & Construction SR 2

No. 3A CB Sta. 1227+25.65' Rt.

85' ~ 12" Type C Rock Channel Protection, Type C with filter

HW-4A Headwall

2-D, 2-U, 1-U

1-C, 1-E

STA. 1227+47.12, 147' Rt. CPA

116' Rt. Sod Detail MC-7 See Sht. No 237 for details.

30-G

PC Sta. 1230+52.79

STA. 1232+52.76, 129' Rt. CPA

End Typical J Sta. 1235+60

STA. 1237+12.79, 130 RT. EPA

MEET EXISTING FENCE

Curve Data

P.I.₁ = 1231+52.80
Δ₁ = 3°-02'-30"
Dc₁ = 1°-31'-16"
R₁ = 3766.89'
T₁ = 100.01'
L₁ = 199.97'

P.I.₂ = 1247+11.92
Δ₂ = 53°-59'-00"
Dc₂ = 2°-00'
R₂ = 2864.79'
T₂ = 1459.16'
L₂ = 2699.17'

BM ~ Sta. 1227+12.85, ℄ Survey
Top of Concrete Monument
Elev. = 602.99

BM ~ Sta. 1230+52.79, ℄ Survey
Top of Concrete Monument
Elev. = 598.07

BM ~ Sta. 1232+52.76, ℄ Survey
Top of Concrete Monument
Elev. = 591.90

Sta. 1226+23.43' Lt.
No. 3-CB
Top of Grate elev. = 605.70

Proposed Profile approx. 3½" above existing

Sta. 1227+19.43' Rt.
No. 3-CB
Top of Grate elev. = 603.78

℄ EB & WB Lanes

602.48
12" Type F, Lt.

175' Butt Joint

175' Butt Joint

599.83
12" Type F, Rt.

Min. Vert. Clearance EB = 24.29'
Min. Vert. Clearance WB = 25.65'

Sta. 1234+14, 14' Lt & Rt.
No. 8 CB, As Per Plan
Top Of Grate Elev. = 584.31 Lt.
585.26 Rt.

℄ Eastbound Pavement

℄ Westbound Pavement

87' Butt Joint

583.50
6" Type B. Med. Lt. & RT.

574.90
15" Type C, Lt.

Sta. 1226+23.137' Lt.
575.20
12" Type F

Sta. 1227+60.128' Rt.
577.80
12" Type F

| Exist. | Prop. |
|---|---|
| 15" ℄ Med Lt. = 581.57 | 12" ℄ Med. Rt. = 581.86 |
| 12" ℄ Med Lt. = 581.80 | 12" ℄ Med. Lt. = 581.80 |
| 12" ℄ Med Rt. = 581.86 | 15" ℄ Med. Lt. = 581.57 |
| 8" ℄ Med Lt. = 581.84 | |

| | 1224+00 | 1225+00 | 1226+00 | 1227+00 | 1228+00 | 1229+00 | 1230+00 | 1231+00 | 1232+00 | 1233+00 | 1234+00 | 1235+00 | 1236+00 | 1237+00 | 1238+00 | 1239+00 |
|---|---|---|---|---|---|---|---|---|---|---|---|---|---|---|---|---|
| Exist. ℄ Pav't. Elev. WB | | 608.64 | 607.75 | 606.43 | 604.67 | 602.72 | 600.29 | 597.76 | 595.03 | 592.26 | 589.71 | 587.37 | 585.42 | 583.95 | 582.73 | 581.98 |
| EB | | 608.66 | 607.76 | 606.51 | 604.69 | 602.79 | 600.32 | 597.42 | 595.22 | 590.97 | 588.17 | 585.86 | 583.90 | 582.45 | 581.17 | 580.48 |
| Exist. ℄ Pav't. Elev. WB | | | | | | | | | | | | | | | 581.71 | 580.27 |
| EB | | | | | | | | | | | | | | | | |

610 605 600 595 590 585 580 575

/1/pd/OTT AWA/OTT2/OTT2PP13.DGN

STA. 1224+00 TO STA. 1235+60

| FHWA REGION | STATE | PROJECT | |
|---|---|---|---|
| 5 | OHIO | | |

125/367

OTT-2-16.60

NOTE: See Sht. No. 99 for Pavement Legend

NOTE: See Sht. Nos. 68-96 for Subsummaries.

MON. BOX — ℄ SURVEY SR 53 — P.O.T. STA. 265+00

MON. BOX — ℄ SURVEY SR 53 — PI STA. 266+62.47

MON. BOX — ℄ SURVEY SR 53 — P.O.T. STA. 273+00.60

Begin Work Sta. 262+50

5-MB, 6-MB, 10-DR, 12-DR, 11-DR

12, 35' Drive

30.21' Drive

64.15' Drive

15" CONC.

12" C.M.P.

34-G

72" Conc.

1-C

℄ R/W

LA R/W

Ramp D

117' Lt. Sod Detail MC-7 See Sht. No. 238 for details.

88' ~ 12" Type F, 707.05 Type C

HW-4A Headwall

Rock Channel Protection Type C with filter

2-E, 1-D, 4-C, 2-C, 36-G, 3-C

Sta. 272+50, 33.5' Lt.
No. 3A CB

Sta. 263+35.27' Rt.
No. 2-2B

Remove CB

6-D

10'-12" Type C

4'-12" Type C

ASPHALT APPROACH

12" CONC.

72" Conc.

PI 266+62.47
Δ=0°04'47" Lt.

189, 190, 191, 192, 193

℄ Wilcox Rd.

℄ Wonnell Rd.

R/W

Remove CB

Abandon Existng 12" Pipe

CB To Remain

18" Conc.

Remove CB

Ramp C

4-D

12" C.M.P.

Sta. 272+50, 33.5' Rt.
No. 3A CB
28' ~ 12" Type F, 707.05 Type C
HW-4A Headwall

81' Rt.
Sod Detail MC-7
See Sht. No. 238 for details.

Rock Channel Protection Type C with filter

33-G, 5-D, 2-D, 1-E, 35-G, 5-C

1044, 1045, 1046, 1047, 1048

Ramp B

℄ Survey SR 2

Sta. 274+71.59 ℄ Survey & Const. SR 53+
Sta. 1046+06.76 ℄ Survey SR 2
62' ~ 12" Type F, 707.05 Type C

Rock Channel Protection Type C with filter

HW-4A Headwall

126' Lt.
Sod Detail MC-7
See Sht. No. 238 for details.

38-G, 3-D, 3-E

No. 3A CB
Sta. 277+00, 34' Lt.

6-C, 7-C, 37-G

END SHEET ~ STA. 277+00

262, 263, 264, 265, 266, 267, 268, 269, 270, 271, 272, 273, 274, 275, 276

℄ SURVEY & CONST. SR 53

BM ~ STA. 262+09, 32' Lt. ℄ SURVEY
CUT "X" TOP OF 15" CONC. PIPE
ELEV. = 575.80

BM ~ STA. 273+53, 30' LT. ℄ SURVEY
CUT "X" TOP OF CONC. WALK
ELEV. = 599.52

BM ~ STA. 1045+46, 51.5' RT. ℄ SURVEY
CUT LINE ON FACE OF FIRST COLUMN
ELEV. = 584.08

Sta. 272+50, 33.5 Lt & Rt.
No. 3A CB
Top Of Grate Elev. = 592.50 Lt. & Rt.
125' BUTT JOINT

Sta. 277+00, 34' Lt.
No. 3A CB
Top Of Grate Elev. = 597.50
125' BUTT JOINT

C.B. Lt.

12" Conc. Lt.

594.00 12" Type F

87' Butt Joint

Proposed Profile approx. 3½" above existing

Sta. 263+35.27' Rt.
No. 2-2B
Top of Grate Elev. = 575.30

Exist. CB Rt.
12" E S = 573.62
12" E N = 573.62

573.65 12" Type C

573.62 12" Type C

72" Conc. Rt.

72" Conc. Lt

600, 595, 590, 585, 580, 575, 570

| EXIST ℄ SURVEY ELEV. | 577.87 | 578.29 | 579.63 | 581.49 | 584.27 | 587.34 | 590.06 | 593.03 | 595.51 | 597.45 | 598.79 | 599.66 | 599.78 | 599.30 | 598.04 | EXIST ℄ SURVEY ELEV. |
|---|---|---|---|---|---|---|---|---|---|---|---|---|---|---|---|---|
| | 262+00 | 263+00 | 264+00 | 265+00 | 266+00 | 267+00 | 268+00 | 269+00 | 270+00 | 271+00 | 272+00 | 273+00 | 274+00 | 275+00 | 276+00 | 277+00 |

I:/PD/OTTAWA/OTT2/OTT2SR53.DGN

STA. 260+00 TO STA. 277+00 SR 53

NOTE: See Sht. No. 99 for Pavement Legend

NOTE: See Sht. Nos. 68-96 for Subsummaries.

| FHWA REGION | STATE | PROJECT | |
|---|---|---|---|
| 5 | OHIO | | |

126/367

OTT-2-16.60

℄ SURVEY
MON. BOX
PI STA. 279+55.59

℄ WONNELL
℄ SURVEY
MON. BOX
PI STA. 279+55.59

℄ Wonnell Rd.

End Work Sta. 287+50

℄ Survey & Const. Fremont Rd.

BEGIN SHEET ~ STA. 277+00

LA R/W

R/W

Rock Channel Protection Type C with filter
HW-4A Headwall
see sheet 125
126' Lt. Sod Detail MC-7 See Sht. No. 238 for details.
3-D
2-E
4-U see sheet 128
6-C see sheet 125
38-G see sheet 125
1-D
30'~12" Type C
HW-4B Headwall
12" CMP
Remove Exist. Headwall
4'-12" Type C
No. 2-2B CB
Sta. 18+00, 41' Lt. Ramp B
6" CMP
Ramp A
Ramp B
Ex. CB
12" Conc.
4'-6" Type C
1-C
39-G
Rock Channel Protection Type C with filter
HW-4A Headwall
Sta. 277+50, 34' Rt.
No. 3A CB
2-D
37-G see sheet 125
54'~12" Type F, 707.05 Type C
82' Rt.
Sod Detail MC-7
See Sht. No. 238 for details.
1-E
3-C see sheet 125
7-C see sheet 125
P.I. 279+55.59
Δ = 0°12'-43" Rt.
12" Conc.
CB
12" Conc.
12" Conc.
24"
24"
278 279 280 281 282 283 284 285 286 287 288 289
20
+.51
19
18
32
31
+.80
+.63

BM ~ STA. 286+90.5, 38.5' Rt ℄ SURVEY
RR SPK. SS OF TEL. POLE
577.36

125' Butt Joint
Sta. 277+50, 30.5 Rt.
No. 3A CB
Top Of Grate Elev. =596.95
593.00
12" Type F
Sta. 18+00, 41' Lt. Ramp B
No. 2-2B CB
Top Of Grate Elev. =590.08
CB Lt.
Exist. ℄ Survey
12" Conc.
6" CMP
586.77
12" Type C
586.85
6" Type F
Proposed Profile approx. 3½' above existing
87' Butt Joint
CB Rt.
12" Conc.
12" Conc.
Exist. ℄ Survey
12" Conc.

600 595 590 585 580 575 570

EXIST ℄ SURVEY ELEV.
598.04 596.40 594.26 591.34 588.07 585.07 582.57 580.04 578.32 577.38 577.33

277+00 278+00 279+00 280+00 281+00 282+00 283+00 284+00 285+00 286+00 287+00 288+00

I/PD/OTTAWA/OTT2/OTT2SR53.DGN

STA. 277+00 TO STA. 289+00 SR 53

| FHWA REGION | STATE | PROJECT | |
|---|---|---|---|
| 5 | OHIO | | |



OTT-2-16.60

NOTE: For pavement legend
See sht no.99

NOTE: See Sht. Nos. 68-96
for Subsummaries.

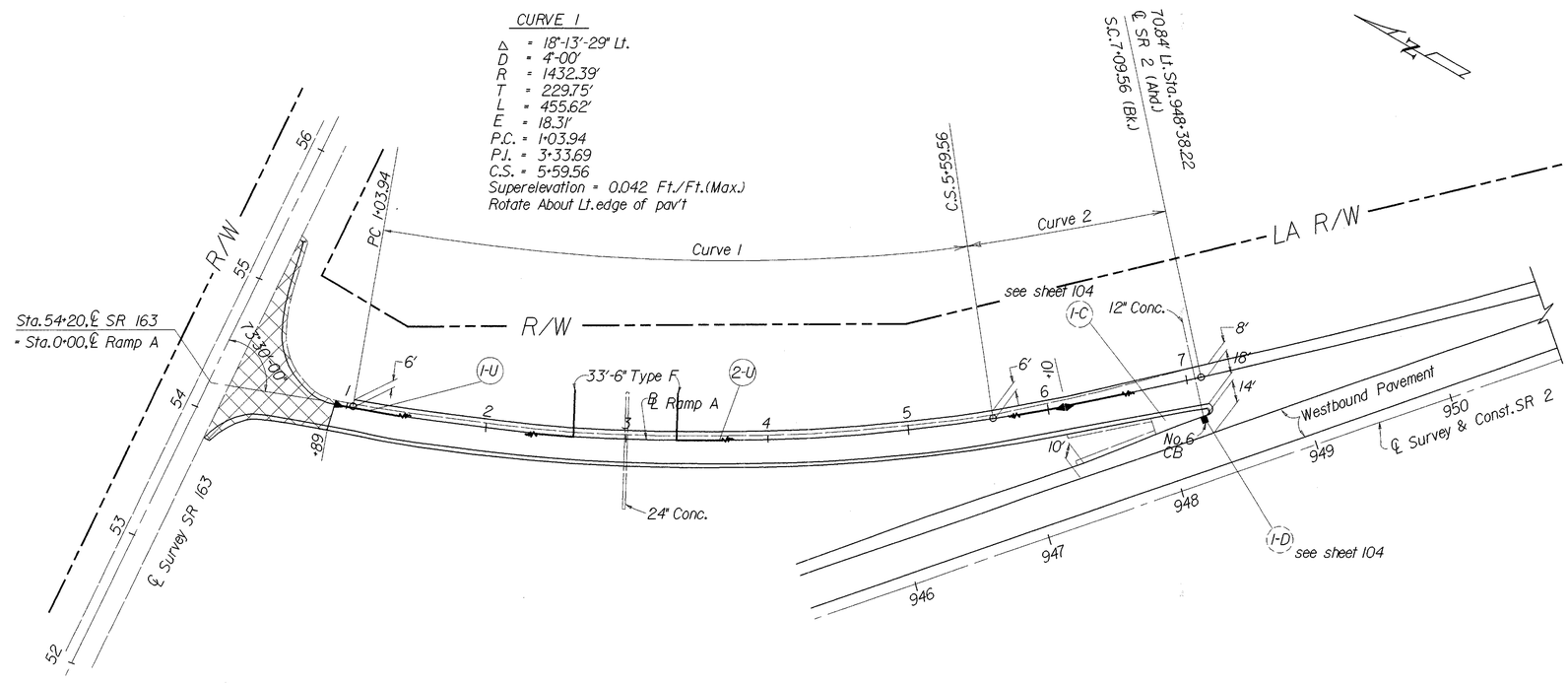


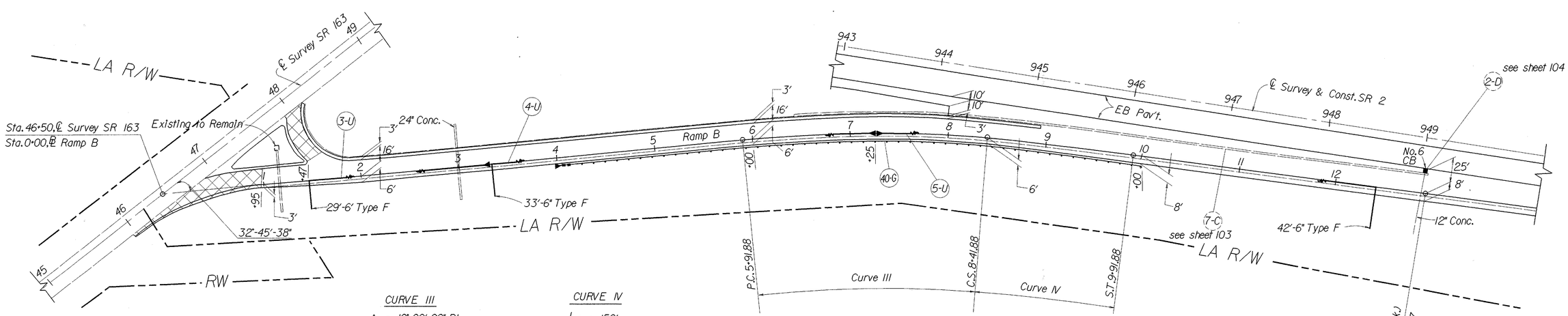


i:/pd/OTT AWA/OTT 2/OT 2SR163.DGN

SR 163 RAMPS A & B

| FHWA REGION | STATE | PROJECT | |
|---|---|---|---|
| 5 | OHIO | | |

128/367

OTT-2-16.60

NOTE: See Sht. Nos. 68-96 for Subsummaries.

For Pavement Legend See Sht. No. 99

**CURVE I**
$L_s$ = 200'
θ = 8°-00' Lt.
LT = 133.47'
ST = 66.79'
LC = 199.83'
TS = 3+00
SC = 5+00
Superelevation varies from 0.0156 Ft./Ft. to 0.083 Ft./Ft.
Rotate about Lt. edge of pavement

**CURVE II**
Δ = 42°-21'-30" Lt.
D = 8°-00'
R = 716.20'
T = 277.50'
L = 529.48'
E = 51.88'
PI = 7+77.50
PT = 10+29.48
Superelevation = 0.083 Ft./Ft.
Rotate about Lt. edge of pavement

**CURVE III**
Δ = 72°-12'-52"
R = 268.50'
T = 195.85'
L = 338.41'
E = 63.84'
PC = 12+79.48
PI = 14+75.33
PT = 16+17.89
Superelevation = 0.083 Ft./Ft.
Rotate about median edge of pav't.

**CURVE IV**
$L_s$ = 200'
$\theta_s$ = 25°-55'-06" Rt.
LT = 127.52'
ST = 75.96'
CS = 6+32.61
SC = 8+32.61
Superelevation varies from 0.048 to 0.083 Ft./Ft.
Rotate about Rt. edge of pavement

**CURVE V**
Δ = 102°-24'-55" Rt.
R = 250.00'
T = 311.02'
L = 446.87'
E = 149.04'
SC = 8+32.61
PI = 11+43.63
PCC = 12+79.48
Superelevation = 0.083 Ft./Ft.
Rotate about Rt. edge of pavement

**CURVE VI**
Δ = 89°-47'-00" Rt.
R = 250.00'
T = 249.06'
L = 391.75'
E = 102.89'
PCC = 16+17.89
PT = 20+09.64
Superelevation = 0.060 Ft./Ft.
Rotate about Rt. edge of pavement

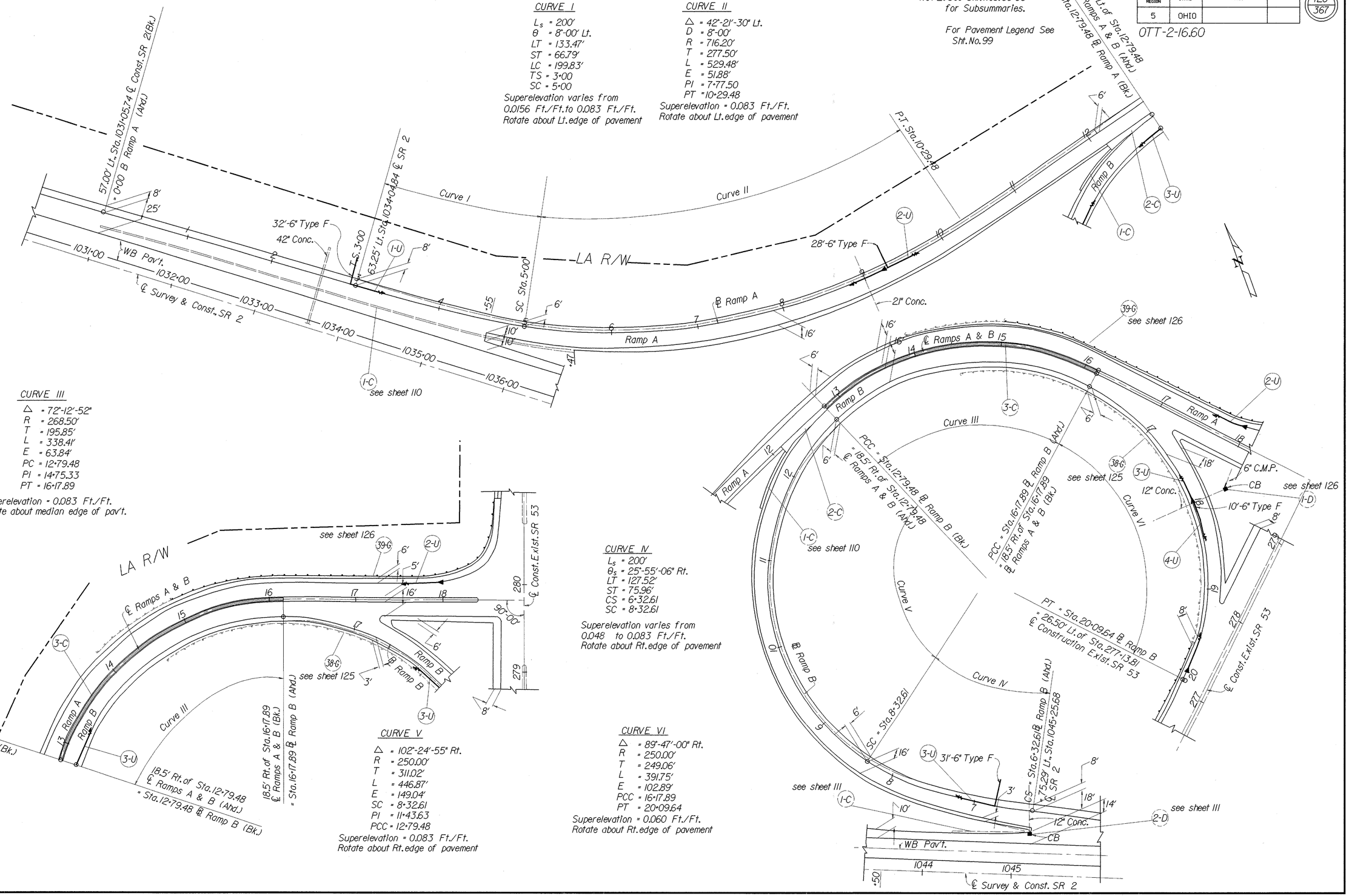


i:/pd/OTTAW/A/OTT2/SR53RAMP.DGN

SR 53 & SR 2 Ramps A & B

| FHWA REGION | STATE | PROJECT | |
|---|---|---|---|
| 5 | OHIO | | |

129/367

OTT-2-16.60

NOTE: See Sht. Nos. 68-96 for Subsummaries.

For Pavement Legend see sht. no. 99

**CURVE VII**

△ = 44°-18'-16" Rt.
D = 6°-00'
R = 954.93'
T = 388.77'
L = 738.41'
E = 76.11'
P.C. = 0+00, ℄ Ramp C
= 26.5' Rt., Sta. 268+44.95
℄ Const. SR 53
P.I. = Sta. 3+88.77
C.S. = Sta. 7+38.41

Superelevation = 0.063 Ft./Ft. (Max.)
Rotate about Rt. edge of pavement

**CURVE VIII**

L.S. = 200'
θ = 6°-00' Rt.
L.T. = 133.41'
S.T. = 66.74'
L.S. = 199.90'
C.S. = 7+38.41

S.T. = 9+38.41, ℄ Ramp C
= 83.87' Rt., Sta. 1050+74.19
SR 2

Superelevation varies from 0.063 Ft./Ft. to 0.0156 Ft./Ft.
Rotate about Rt. edge of pavement

**CURVE IX**

Ls = 200'
θs = 9°-30' Rt.
L.T. = 123.06'
S.T. = 77.40'
L.C. = 199.81'
C.S. = 0+00, ℄ Ramp D
= 70.84' Rt., Sta. 1037+49.09
℄ SR 2
S.C. = 2+00

Superelevation varies from 0.0156 Ft./Ft. to 0.083 Ft./Ft.

**CURVE X**

△ = 24°-08'-59" Rt.
D = 8°-00'
R = 716.20'
T = 153.31'
L = 301.87'
E = 16.20'
S.C. = 2+00
P.I. = 3+53.21
P.T. = 5+01.87

Superelevation = 0.0083 Ft./Ft. (Max.)
Rotate about Rt. edge of pavement

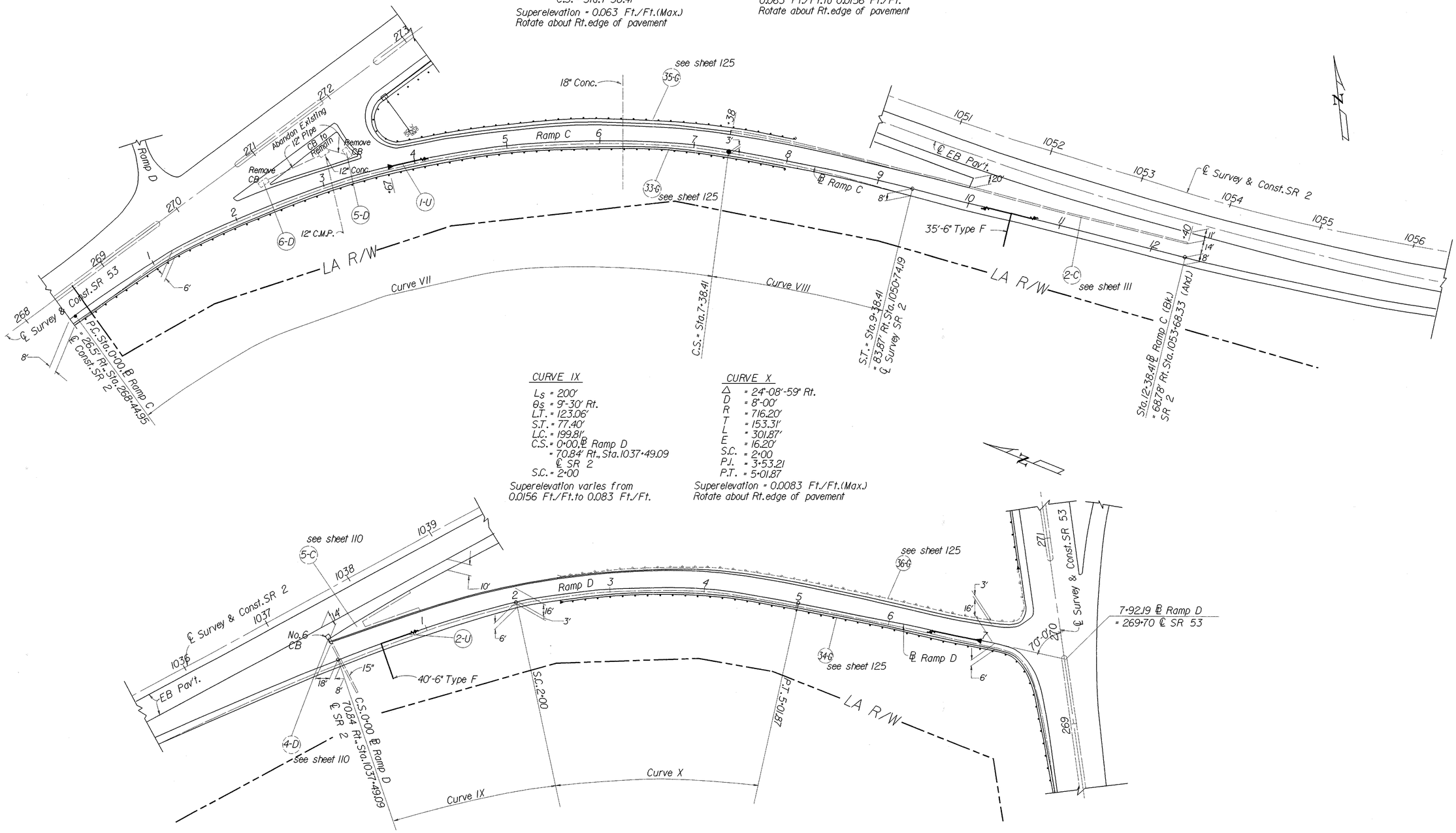


SR 53 Ramps C & D

1/pd/OTT AWA/OTT2/SR53RPCD.DGN

| QUANTITIES | |
|---|---|
| CALC BY SKL | DATE 2-23-95 |
| CKD BY TWB | DATE 8-17-95 |

| FHWA REGION | STATE | PROJECT | |
|---|---|---|---|
| 5 | OHIO | | |

130/367

OTT-2-16.60

| SEEDING END WIDTH | SEEDING SQ. YDS. | END AREA CUT | END AREA FILL | VOLUME CUT | VOLUME FILL |
|---|---|---|---|---|---|
| 25 | | | | | |
| | 69 | 78 | 1 | | |
| 25 | | | | 169 | 1 |
| | 167 | 105 | 0 | | |
| 35 | | | | 199 | 1 |
| | 186 | 110 | 1 | | |
| 32 | | | | 182 | 5 |
| | 194 | 87 | 4 | | |
| 38 | | | | 40 | 2 |
| | | 0 | 0 | | |
| | | | | -270 | |
| 616 | Sheet Totals | | | 321 | 9 |

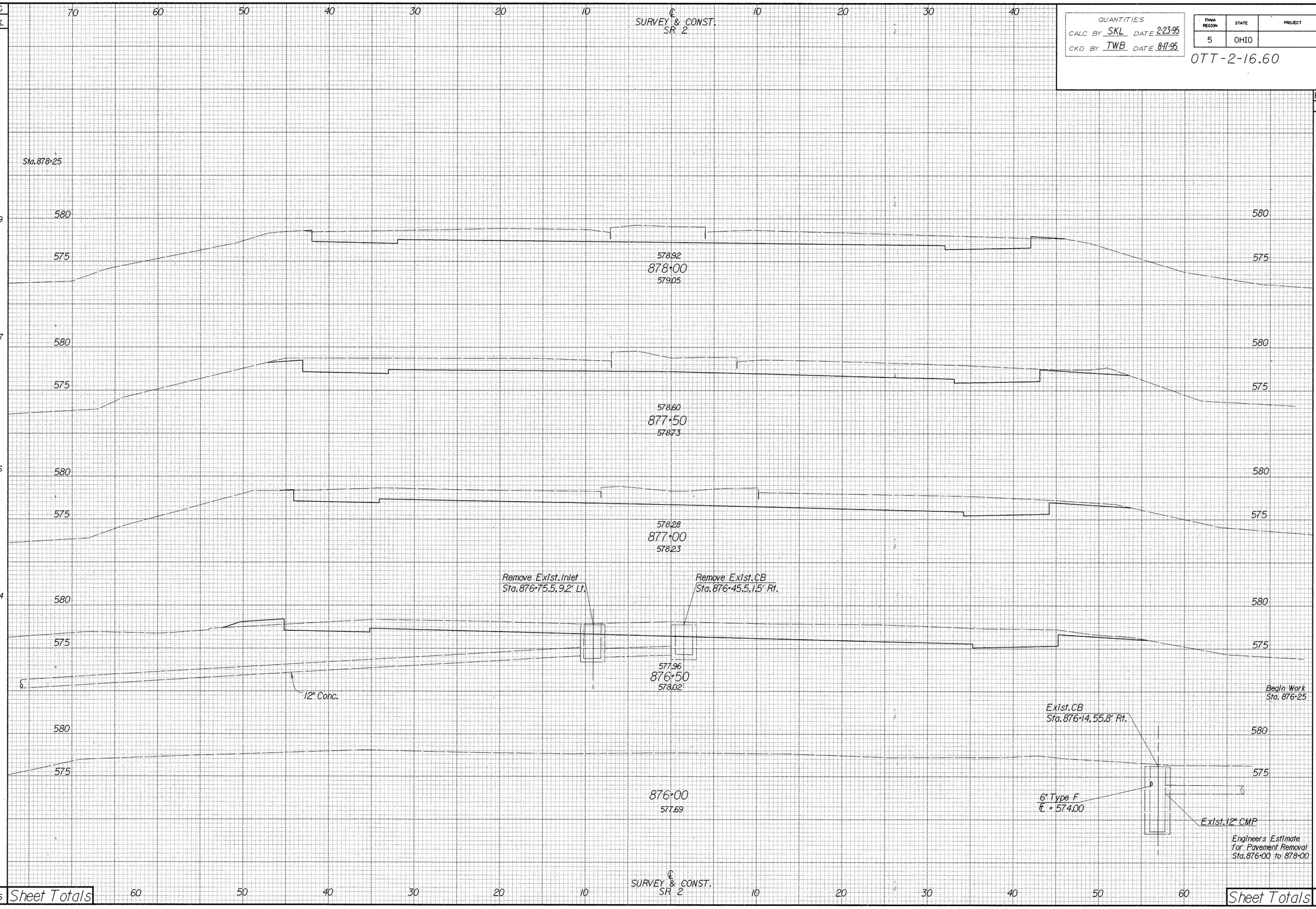


CROSS SECTION STA. 876+00 TO STA. 878+00

/i/pd/ottawa/ott2/ott2x2.dgn

| QUANTITIES | |
|---|---|
| CALC BY SKL | DATE 2-23-95 |
| CKD BY TWB | DATE 8-17-95 |

| FHWA REGION | STATE | PROJECT | |
|---|---|---|---|
| 5 | OHIO | | |

OTT-2-16.60



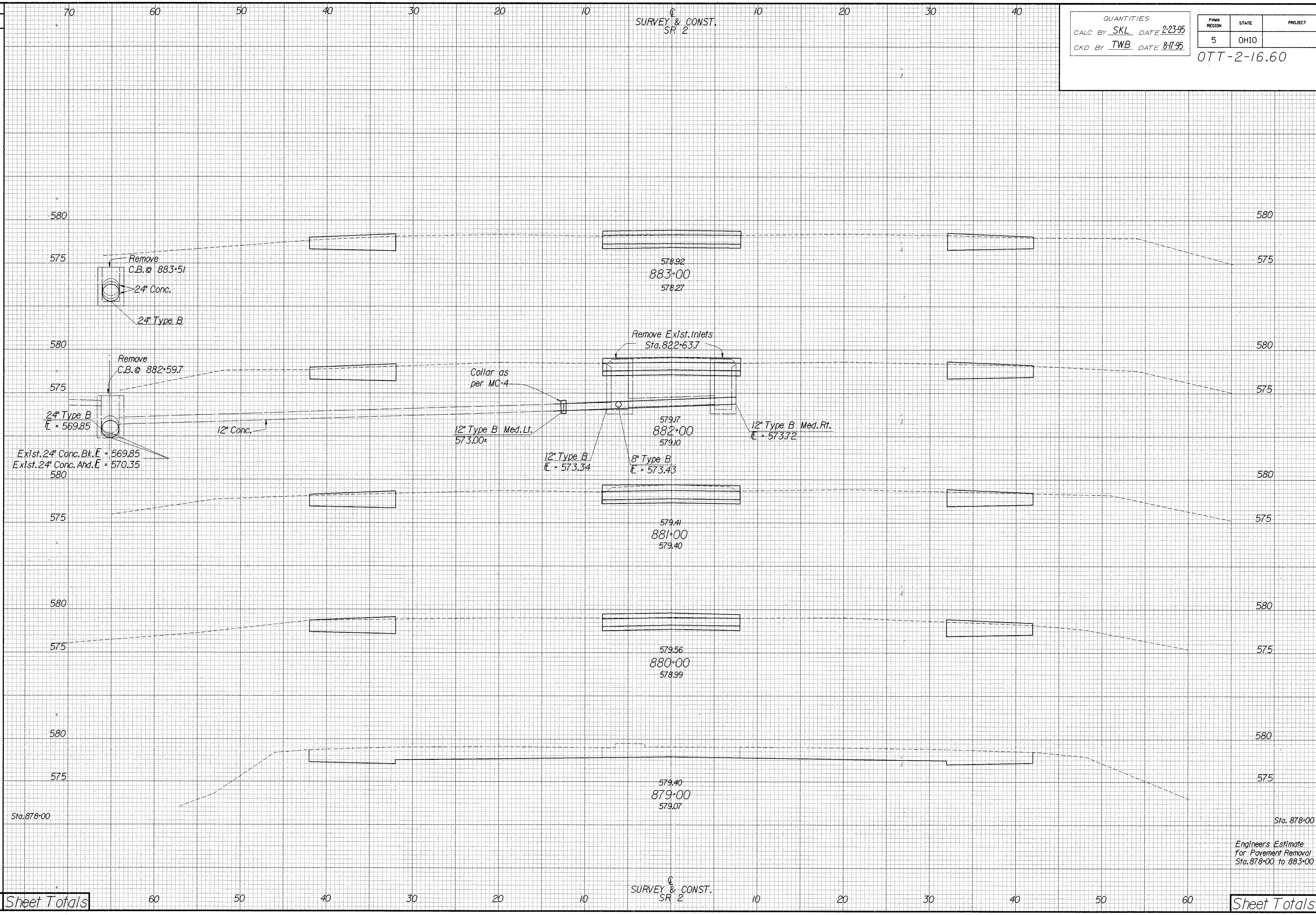


| SEEDING | |
|---|---|
| END WIDTH | SQ. YDS. |
| 30 | |
| | 306 Sta. 878+00 |
| 25 | |
| Sheet Totals | 306 |

| | END AREA | | VOLUME | |
|---|---|---|---|---|
| | CUT | FILL | CUT | FILL |
| 883+00 | 51 | 0 | | |
| | | | 202 | 0 |
| 882+00 | 58 | 0 | | |
| | | | 269 | 0 |
| 881+00 | 87 | 0 | | |
| | | | 256 | 0 |
| 880+00 | 51 | 0 | | |
| | | | 231 | 2 |
| 879+00 | 74 | 1 | | |
| | | | 281 | 4 |
| Sta. 878+00 | 78 | 1 | | |
| Engineers Estimate for Pavement Removal Sta. 878+00 to 883+00 | | | -106 | |
| Sheet Totals | | | 1133 | 6 |

/i/pd/ottawa/ott2/ott2x2.dgn

CROSS SECTIONS STA. 879+00 TO STA. 883+00

SEEDING

| END WIDTH | SQ. YDS. |
|---|---|

70 60 50 40 30 20 10 ℄ 10 20 30 40

SURVEY & CONST.
SR 2

| QUANTITIES | |
|---|---|
| CALC BY | SKL |
| DATE | 2-23-95 |
| CKD BY | TWB |
| DATE | 8-17-95 |

| FHWA REGION | STATE | PROJECT | |
|---|---|---|---|
| 5 | OHIO | | |

132
367

OTT-2-16.60

580
575

578.44
888+00
578.40

580
6" Type F
℄ = 573.50 Bk.& Ahd.
575

Sta. 886+66.59' Lt.
No. 2-3CB
Top of Grate Elev. = 574.84

24" Type B, Med. Lt.
572.25±

24" Type B, Med. Rt.
℄ = 572.68

6" Type F Rt., Bk & Ahd.
℄ = 574.00

Exist. C.B.
Sta. 886+66, 58.8' Lt.
8" ℄ S = 572.49
8" ℄ SW = 573.01
24" ℄ SW = 571.53
6" ℄ E = 571.90
24" ℄ NW = 571.45

24" Type C
℄ = 571.53

24" Type C, Bk.
℄ = 571.45

Conc. collar as per MC-4

Remove Exist. Inlet & connect pipes through
Sta. 886+66, 7' Lt.
6" ℄ NW = 572.48
24" ℄ SW = 572.40

578.23
887+00
578.10

Remove Exist. Inlet & connect pipe through
Sta. 886+66, 7' Rt.
18" ℄ SW = 572.68
18" ℄ NE = 572.68

Conc. collar as per MC-4

Exist. C.B.
Sta. 886+66, 58.5' Rt.
18" ℄ SE = 572.76
6" ℄ NE = 572.92
6" ℄ NW = 572.86
18" ℄ NE = 572.71

580
575

24" Type B

578.23
886+00
577.57

580
575

Sta. 885+00, 62' Lt.
No. 2-3 CB
Top of Grate Elev. = 575.00

578.44
885+00
577.17

24" Type B
℄ = 570.80 Ahd.& Bk.

580
575

Sta. 884+25, 62' Lt.
No. 2-3 CB
Top of Grate Elev. = 575.00

578.68
884+00
578.80

Sta. 882+65 to Sta. 884+25
160'+24" Type B

24" Type C
℄ = 570.51 Ahd.& Bk.

Remove Exist. C.B.
Sta. 883+51, 63.6' Lt.
24" ℄ SE = 571.14
24" ℄ NW = 570.77

Inlet Sta. 883+17, 66.3' RT.
Outlet Sta. 883+41.3, 65.5' RT.
12" Inlet ℄, 574.84
12" Outlet ℄, 574.76

Engineers Estimate
for Pavement Removal
Sta. 883+00 to 888+00

70 60 50 40 30 20 10 ℄ 10 20 30 40 50 60

SURVEY & CONST.
SR 2

| END AREA CUT | END AREA FILL | VOLUME CUT | VOLUME FILL |
|---|---|---|---|
| | | | |
| 56 | 0 | | |
| | | 204 | 0 |
| 54 | 0 | | |
| | | 191 | 0 |
| 49 | 0 | | |
| | | 178 | 0 |
| 47 | 0 | | |
| | | 194 | 0 |
| 58 | 0 | | |
| | | 202 | 0 |
| 51 | 0 | | |
| | | -60 | |
| Sheet Totals | | 909 | 0 |

CROSS SECTIONS STA. 884+00 TO STA. 888+00

/1/pd/ottawa/ott2/ott2x2.dgn

| SEEDING | |
|---|---|
| END WIDTH | SQ. YDS. |

QUANTITIES
CALC BY SKL DATE 2-23-95
CKD BY TWB DATE 8-17-95

| FHWA REGION | STATE | PROJECT | |
|---|---|---|---|
| 5 | OHIO | | |

133
367

OTT-2-16.60

70 60 50 40 30 20 10 ℄ SURVEY & CONST. SR 2 10 20 30 40 50 60

580
575

579.64
893+00
578.79

579.40
892+00
578.54

579.16
891+00
578.26

Remove Exist. Inlet
Sta. 890+51.2, 0.06' Rt.
Abandon 12" ℄ NW = 574.00

578.92
890+00
578.65

Remove Exist. Inlet
Sta. 889+47.7' Lt.

Remove Exist. Inlet
Sta. 889+47.7' Rt.

Inlet @ 889+47

Conc. collar as per MC-4

578.68
889+00
578.09

12" Type B Med. Lt.
574.40

12" Type B Med. Rt.
574.20±

6" Conc.

C.B. @ 889+51.2

6" Type F
℄ = 574.36

18" Conc.

15" Conc.

Sta. 888+00

Exist. C.B.
Sta. 889+51.2, 60.5' Rt.
6" ℄ NE = 573.95
12" ℄ NE = 573.91
15" ℄ SW = 573.78
18" ℄ NW = 573.53

Engineers Estimate
for Pavement Removal
Sta. 888+00 to 893+00

| END AREA | | VOLUME | |
|---|---|---|---|
| CUT | FILL | CUT | FILL |
| 47 | 0 | | |
| | | 174 | 0 |
| 47 | 0 | | |
| | | 170 | 0 |
| 45 | 0 | | |
| | | 178 | 0 |
| 51 | 0 | | |
| | | 181 | 0 |
| 47 | 0 | | |
| | | 191 | 0 |
| 56 | 0 | | |
| | | -120 | |
| Sheet Totals | | 775 | 0 |

/i/pd/ottawa/ott2/ott2x3.dgn

CROSS SECTIONS STA. 889+00 TO STA. 893+00

| SEEDING | |
|---|---|
| END WIDTH | SQ. YDS. |

QUANTITIES
CALC BY SKL DATE 2-23-95
CKD BY TWB DATE 8-17-95

| FHWA REGION | STATE | PROJECT | |
|---|---|---|---|
| 5 | OHIO | | |

OTT-2-16.60

134
367

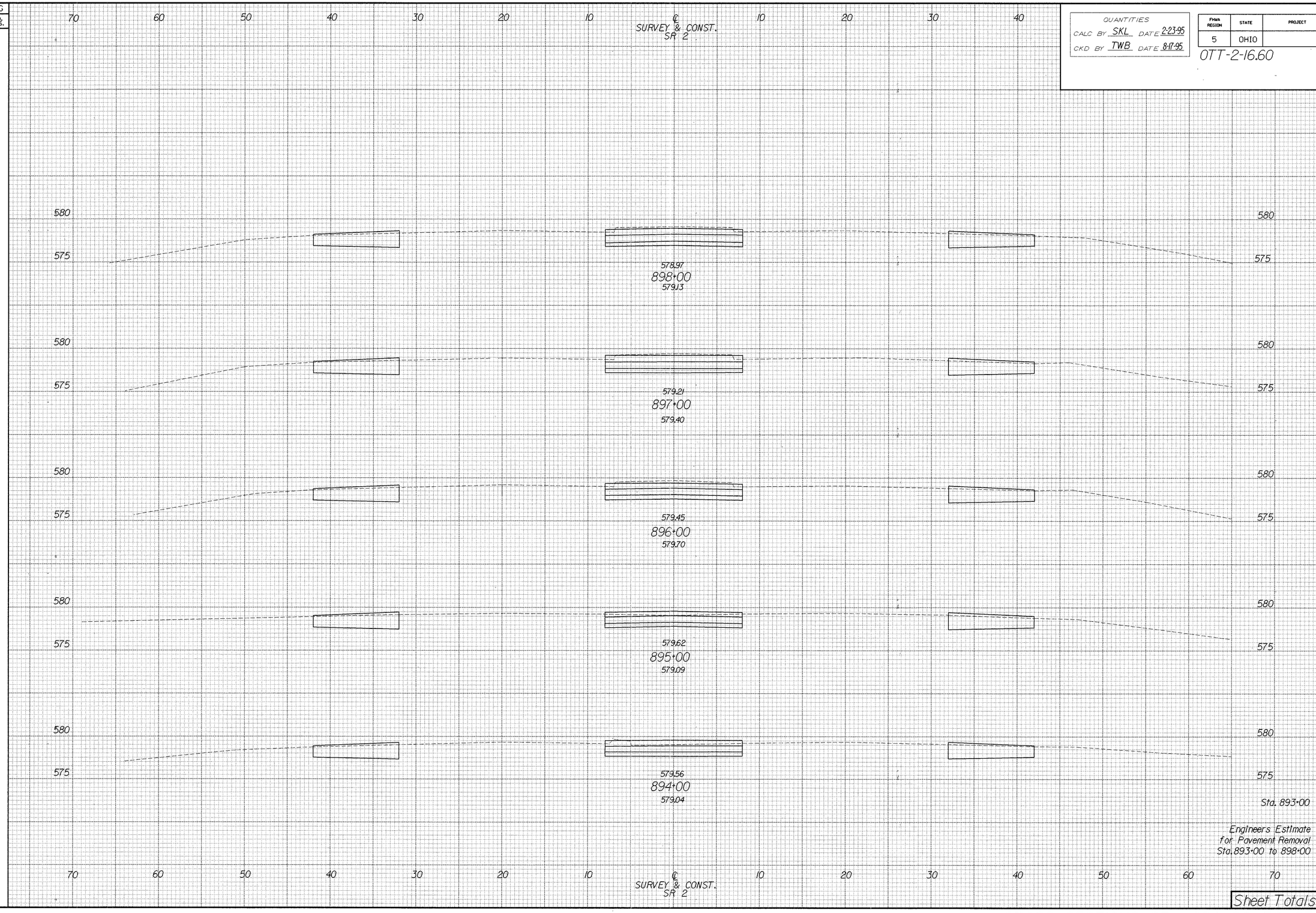


| | END AREA | | VOLUME | |
|---|---|---|---|---|
| | CUT | FILL | CUT | FILL |
| | 62 | 0 | 228 | 0 |
| | 61 | 0 | 226 | 0 |
| | 61 | 0 | 207 | 0 |
| | 51 | 0 | 191 | 0 |
| | 52 | 0 | 183 | 0 |
| Sta. 893+00 | 47 | 0 | -85 | |
| Engineers Estimate for Pavement Removal Sta. 893+00 to 898+00 | | | | |
| Sheet Totals | | | 950 | 0 |

/1/pd/ottawa/ott2/ott2x3.dgn

CROSS SECTIONS STA. 894+00 TO STA. 898+00

| SEEDING | |
|---|---|
| END WIDTH | SQ. YDS. |

70 60 50 40 30 20 10 ℄ SURVEY & CONST. SR 2 10 20 30 40 50 60

| QUANTITIES | |
|---|---|
| CALC BY | SKL |
| DATE | 2-23-95 |
| CKD BY | TWB |
| DATE | 8-17-95 |

| FHWA REGION | STATE | PROJECT | |
|---|---|---|---|
| 5 | OHIO | | |

OTT-2-16.60

135/367

580 / 575

578.35
903+00
578.00

Remove Exist. Inlet
Sta. 902+51, 7' Lt.
12" ℄ NE = 572.63

Remove Exist. Inlet
Sta. 902+51, 7.0' Rt.
12" ℄ SW = 572.63

12" Type C
℄ = 572.23

HW-4B

Conc. collar as per MC-4

Conc. collar as per MC-4

12" Conc.

12" Type B
℄ = 572.70

12" Conc.
578.35
902+00
578.20

12" C.M.P.

12" Type B
℄ = 572.63

Exist. Conc.
Sta. 900+01, 74.5' Lt.
36" ℄ NE = 570.37

Exist. Conc.
Sta. 900+01, 72' Rt.
36" ℄ SW = 570.86

578.56
901+00
578.50

578.80
900+00
578.60

Remove Exist. Inlet
Sta. 899+90, 7' Lt.
12" ℄ NE = 572.96
12" ℄ SE = 574.00

Remove Exist. Inlet
Sta. 899+90, 7' Rt.
12" ℄ SW = 573.25

36" Conc.

579.04
899+00
578.93

℄ SURVEY & CONST. SR 2

Sta. 898+00

| END AREA | | VOLUME | |
|---|---|---|---|
| CUT | FILL | CUT | FILL |
| 53 | 0 | | |
| | | 204 | 0 |
| 57 | 0 | | |
| | | 202 | 0 |
| 52 | 0 | | |
| | | 193 | 0 |
| 52 | 0 | | |
| | | 206 | 0 |
| 59 | 0 | | |
| | | 224 | 0 |
| 62 | 0 | | |
| Sheet Totals | | 1029 | 0 |

CROSS SECTIONS STA. 899+00 TO STA. 903+00

/i/pd/ottawa/ott2/ott2x4.dgn

| SEEDING | |
|---|---|
| END WIDTH | SQ. YDS. |

| QUANTITIES | |
|---|---|
| CALC BY SKL | DATE 2-23-95 |
| CKD BY TWB | DATE 8-17-95 |

| FHWA REGION | STATE | PROJECT | |
|---|---|---|---|
| 5 | OHIO | | |

136/367

OTT-2-16.60

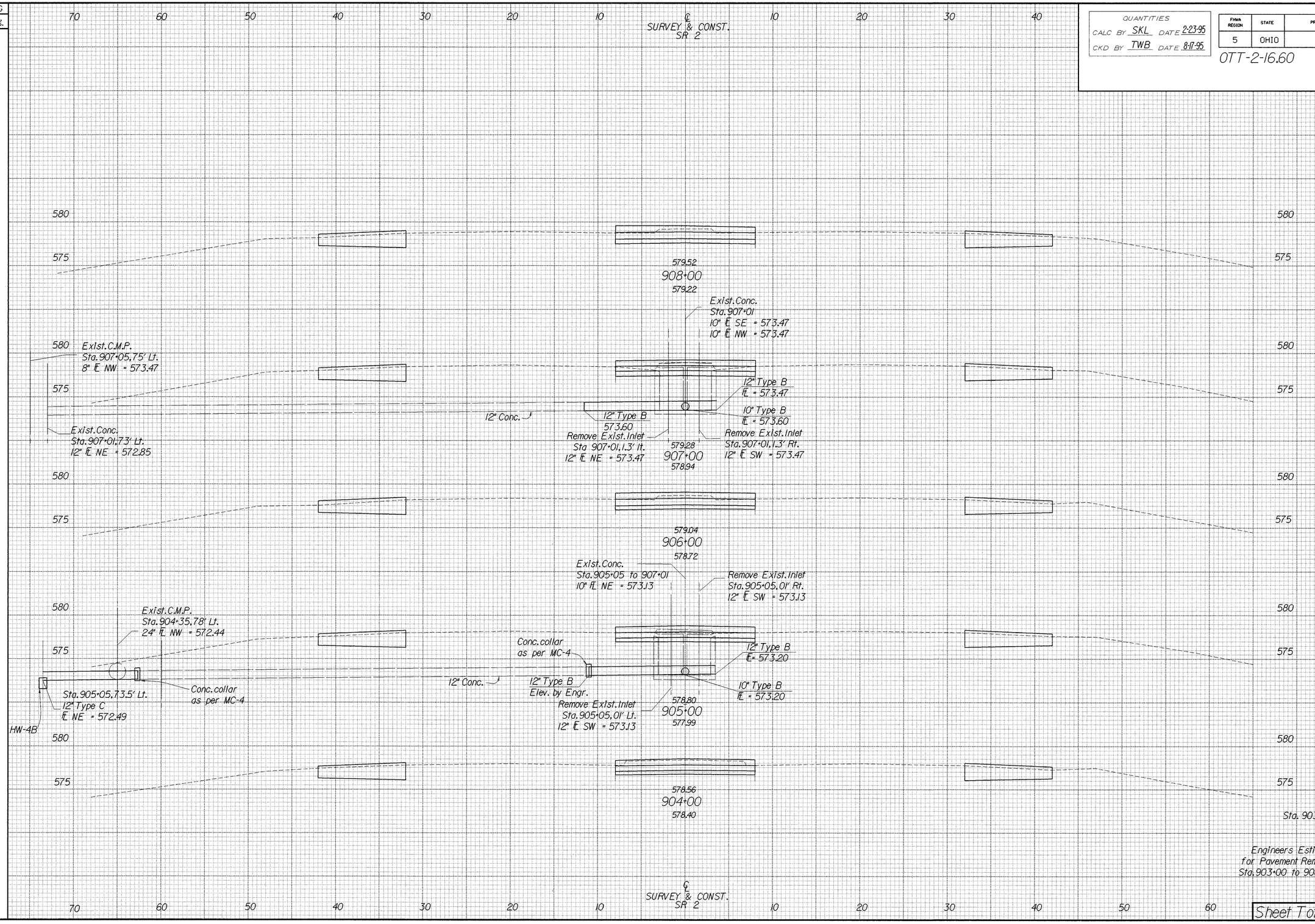


| END AREA | | VOLUME | |
|---|---|---|---|
| CUT | FILL | CUT | FILL |
| 45 | 0 | | |
| | | 157 | 0 |
| 40 | 0 | | |
| | | 152 | 0 |
| 42 | 0 | | |
| | | 157 | 0 |
| 43 | 0 | | |
| | | 174 | 0 |
| 51 | 0 | | |
| | | 193 | 0 |
| Sta. 903+00 | 53 | 0 | |
| | | -42 | |
| Sheet Totals | | 791 | 0 |

/1/pd/ottawa/ott2/ott2x4.dgn

CROSS SECTIONS STA. 904+00 TO STA. 908+00

| SEEDING | |
|---|---|
| END WIDTH | SQ. YDS. |

70 60 50 40 30 20 10 ℄ SURVEY & CONST. SR 2 10 20 30 40 50 60

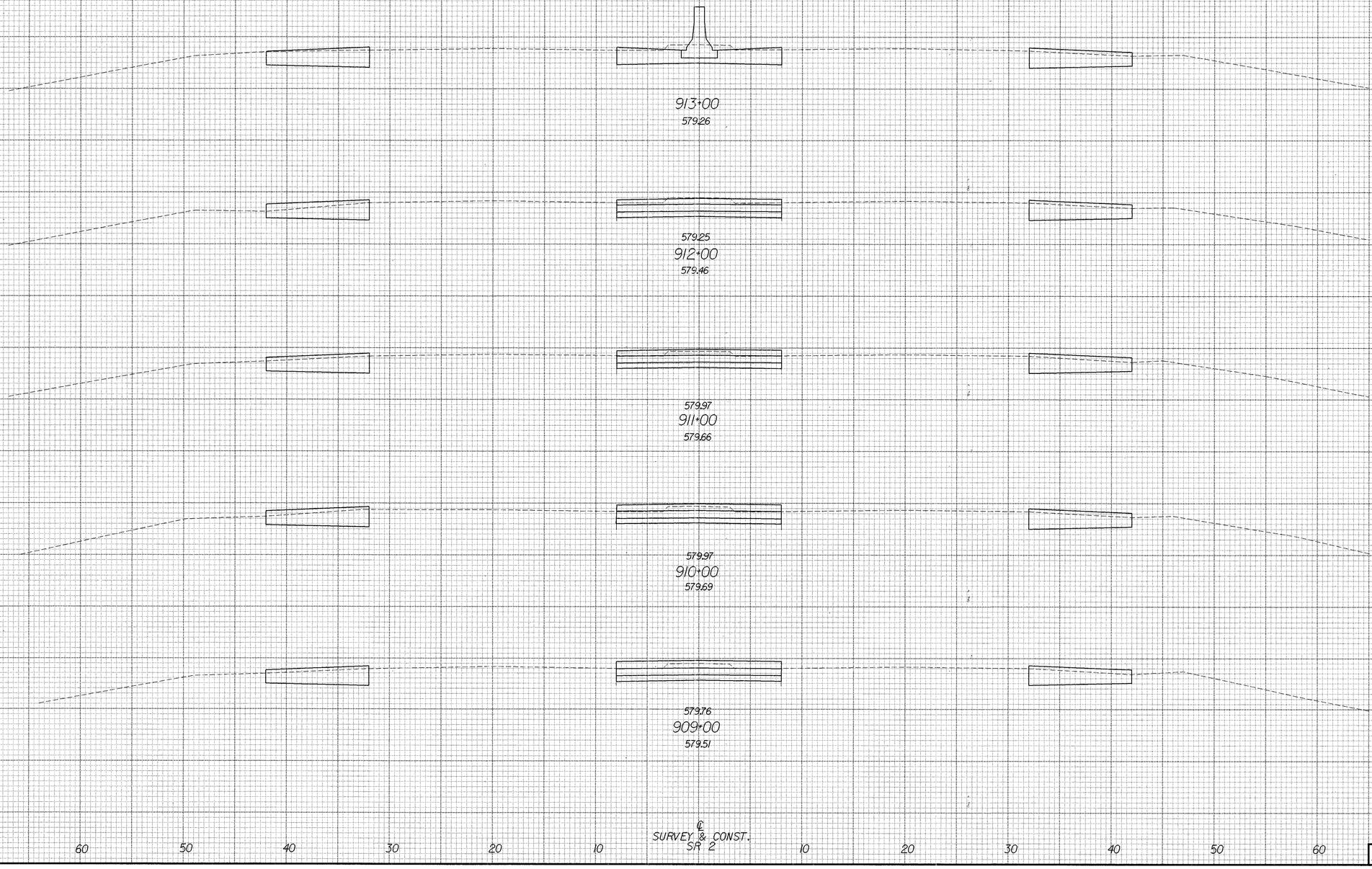


70 60 50 40 30 20 10 ℄ SURVEY & CONST. SR 2 10 20 30 40 50 60

QUANTITIES
CALC BY SKL DATE 2-23-95
CKD BY TWB DATE 8-17-95

| FHWA REGION | STATE | PROJECT | |
|---|---|---|---|
| 5 | OHIO | | |

OTT-2-16.60

137
367

| END AREA | | VOLUME | |
|---|---|---|---|
| CUT | FILL | CUT | FILL |
| 580 | | | |
| 48 | 0 | | |
| 575 | | | |
| | | 172 | 0 |
| 580 | | | |
| 45 | 0 | | |
| 575 | | | |
| | | 163 | 0 |
| 580 | | | |
| 43 | 0 | | |
| 575 | | | |
| | | 157 | 0 |
| 580 | | | |
| 42 | 0 | | |
| 575 | | | |
| | | 159 | 0 |
| 580 | | | |
| 44 | 0 | | |
| 575 | | | |
| | | 165 | 0 |
| Sta. 908+00 | 45 | 0 | |
| Sheet Totals | | 816 | 0 |

I:/pd/ottawa/ott2/ott2x5.dgn

CROSS SECTIONS STA. 909+00 TO STA. 913+00

| SEEDING | |
|---|---|
| END WIDTH | SQ. YDS. |

| QUANTITIES | |
|---|---|
| CALC BY SKL | DATE 2-23-95 |
| CKD BY TWB | DATE 8-17-95 |

| FHWA REGION | STATE | PROJECT | |
|---|---|---|---|
| 5 | OHIO | | |

OTT-2-16.60

138
367

℄ SURVEY & CONST. SR 2

Estimated Quantities, Sta. 918+07 to Sta. 921+10, Subgrade Repair, for the Following Items Have Been Carried To Sheet No.78:

Item 203 Embankment Using Granular Material - 2796 Cu.Yds.
Item 203 Embankment Using Rock - 1885 Cu.Yds.
Item 203 Proof Rolling - 3 Hrs.

NOTE: Begin Subgrade Repair at Sta. 918+07




| END AREA | | VOLUME | |
|---|---|---|---|
| CUT | FILL | CUT | FILL |
| | | | |
| 393 | 0 | | |
| | | 813 | 0 |
| 46 | 0 | | |
| | | 165 | 0 |
| 43 | 0 | | |
| | | 163 | 0 |
| 45 | 0 | | |
| | | 163 | 0 |
| 43 | 0 | | |
| | | 169 | 0 |
| Sta. 913+00 | 48 | 0 | |
| Sheet Totals | | 1473 | 0 |

/1/pd/ottawa/ott2/ott2x5.dgn

CROSS SECTIONS STA. 914+00 TO STA. 918+00

| SEEDING | |
|---|---|
| END WIDTH | SQ. YDS. |

70 60 50 40 30 20 10 ℄ 10 20 30 40

SURVEY & CONST.
SR 2

Remove Exist. Inlet
Sta. 923+51
12" ℄ SW = 583.59
6" ℄ SE = 583.59

Sta. 923+51, ℄
No. I-3B50 Med. Inlet
℄ = 588.63

Exist. Conc.
Sta. 923+51
12" ℄ NE = 574.55

12" C.M.P.

6" Type B. Med. Lt.
℄ = 584.41

6" C.M.P.

6" Type B. Med. Rt.
℄ = 584.41

12" Type B. Lt.
℄ = 583.59

923+00
587.79

6" Type B. Med. Bk. & Ahd.
℄ = 583.59

922+00
585.21

NOTE: End Subgrade Repair at Sta. 921+10

921+00
582.93

Fill to Base of Pavement with Item 203, Embankment using Granular Materials

Item 203, Proof Rolling, APP see sht. no. 15

920+00
580.75

Fill to Base of Pavement with Item 203, Embankment using Granular Materials

Item 203, Proof Rolling, APP see sht. no. 15

Sta. 919+01, ℄
No. I-3B50 Med. Inlet
℄ = 579.73

8" Type B. Lt.
℄ = 574.80

15" Type B. Lt.
℄ = 573.44

Exist. C.M.P.
Sta. 919+04, 59' Lt.
8" ℄ N = 574.07

HW-4B

Exist. Conc.
Sta. 919+01, 59' Lt.
12" ℄ NE = 573.44

12" Conc.

15" Type B. Med.
℄ = 574.42

12" ℄ SW = 574.42

6" Type B. Rt.
℄ = 574.80

Exist. Inlet
Sta. 919+01

919+00
579.91

6" Type B. Med.
℄ = 574.80

Fill to Base of Pavement with Item 203, Embankment using Granular Materials

Item 203, Proof Rolling, APP see sht. no. 15

70 60 50 40 30 20 10 ℄ 10 20 30 40 50 60

SURVEY & CONST.
SR 2

| QUANTITIES | |
|---|---|
| CALC BY | SKL DATE 2-23-95 |
| CKD BY | TWB DATE 8-17-95 |

| FHWA REGION | STATE | PROJECT | |
|---|---|---|---|
| 5 | OHIO | | |

OTT-2-16.60

139
367

| END AREA | | VOLUME | |
|---|---|---|---|
| CUT | FILL | CUT | FILL |
| | | | |
| 48 | 0 | | |
| | | 176 | 0 |
| 47 | 0 | | |
| | | 1404 | 0 |
| 711 | 0 | | |
| | | 2363 | 0 |
| 565 | 0 | | |
| | | 1919 | 0 |
| 471 | 0 | | |
| | | 1600 | 0 |
| Sta. 918+00 393 | 0 | | |
| Sheet Totals | | 7462 | 0 |

/1/pd/ottawa/ott2/ott2x6.dgn

CROSS SECTIONS STA. 919+00 TO STA. 923+00

| SEEDING | |
|---|---|
| END WIDTH | SQ. YDS. |

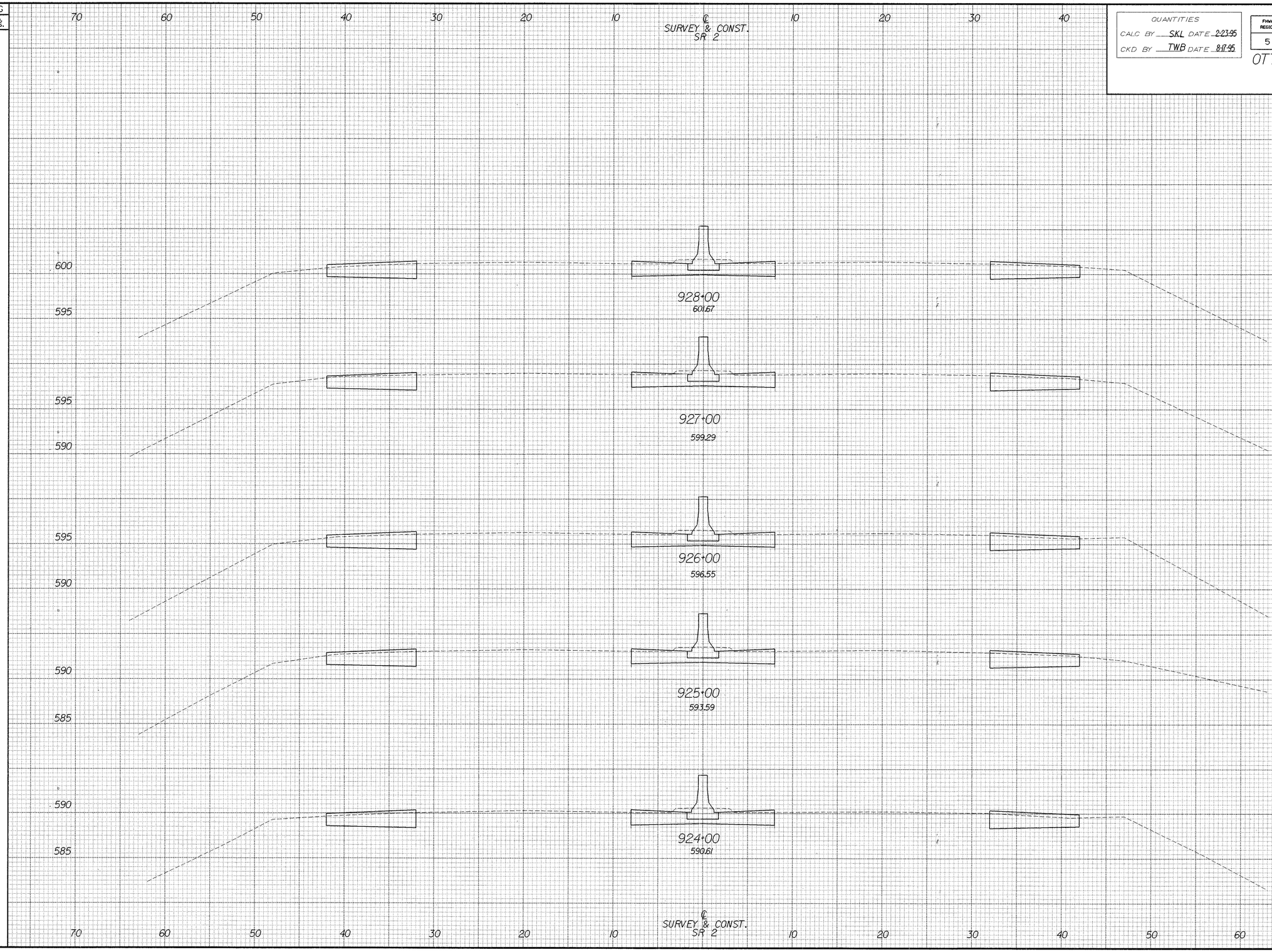


| QUANTITIES | |
|---|---|
| CALC BY | SKL DATE 2-23-95 |
| CKD BY | TWB DATE 8-17-95 |

| FHWA REGION | STATE | PROJECT | |
|---|---|---|---|
| 5 | OHIO | | |

140
367

OTT-2-16.60

| | END AREA | | VOLUME | |
|---|---|---|---|---|
| | CUT | FILL | CUT | FILL |
| 928+00 | | | | |
| | 47 | 0 | | |
| | | | 174 | 0 |
| 927+00 | | | | |
| | 47 | 0 | | |
| | | | 172 | 0 |
| 926+00 | | | | |
| | 46 | 0 | | |
| | | | 172 | 0 |
| 925+00 | | | | |
| | 47 | 0 | | |
| | | | 172 | 0 |
| 924+00 | | | | |
| | 46 | 0 | | |
| | | | 174 | 0 |
| Sta. 923+00 | 48 | 0 | | |
| Sheet Totals | | | 864 | 0 |

CROSS SECTIONS STA. 924+00 TO STA. 928+00

I:\pd\ottawa\ott2\ott2x6.dgn

| SEEDING | |
|---|---|
| END WIDTH | SQ. YDS. |

70 60 50 40 30 20 10 ℄ SURVEY & CONST. SR 2 10 20 30 40

| QUANTITIES | | | |
|---|---|---|---|
| CALC BY | SKL | DATE | 2-23-95 |
| CKD BY | TWB | DATE | 8-17-95 |

| FHWA REGION | STATE | PROJECT | |
|---|---|---|---|
| 5 | OHIO | | |

OTT-2-16.60

141 / 367

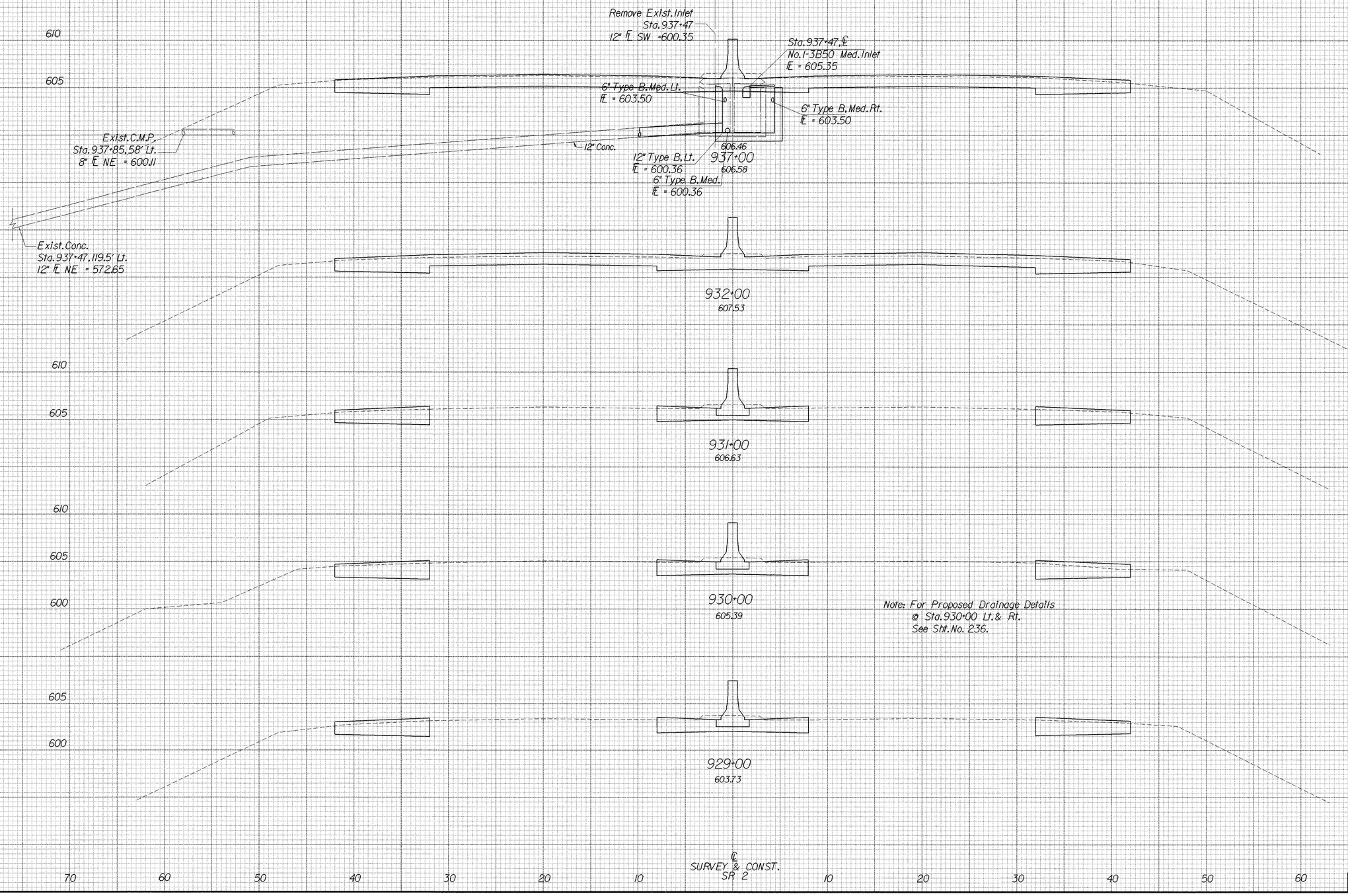


Note: For Proposed Drainage Details
@ Sta. 930+00 Lt. & Rt.
See Sht. No. 236.

| | END AREA | | VOLUME | |
|---|---|---|---|---|
| | CUT | FILL | CUT | FILL |
| | 63 | 0 | | |
| | | | 1028 | 0 |
| | 48 | 0 | | |
| | | | 178 | 0 |
| | 48 | 0 | | |
| | | | 172 | 0 |
| | 45 | 0 | | |
| | | | 170 | 0 |
| | 47 | 0 | | |
| | | | 174 | 0 |
| Sta. 928+00 | 47 | 0 | | |
| Sheet Totals | | | 1722 | 0 |

CROSS SECTIONS STA. 929+00 TO STA. 937+00

/1/pd/ottawa/ott2/ott2x1.dgn

| SEEDING | |
|---|---|
| END WIDTH | SQ. YDS. |

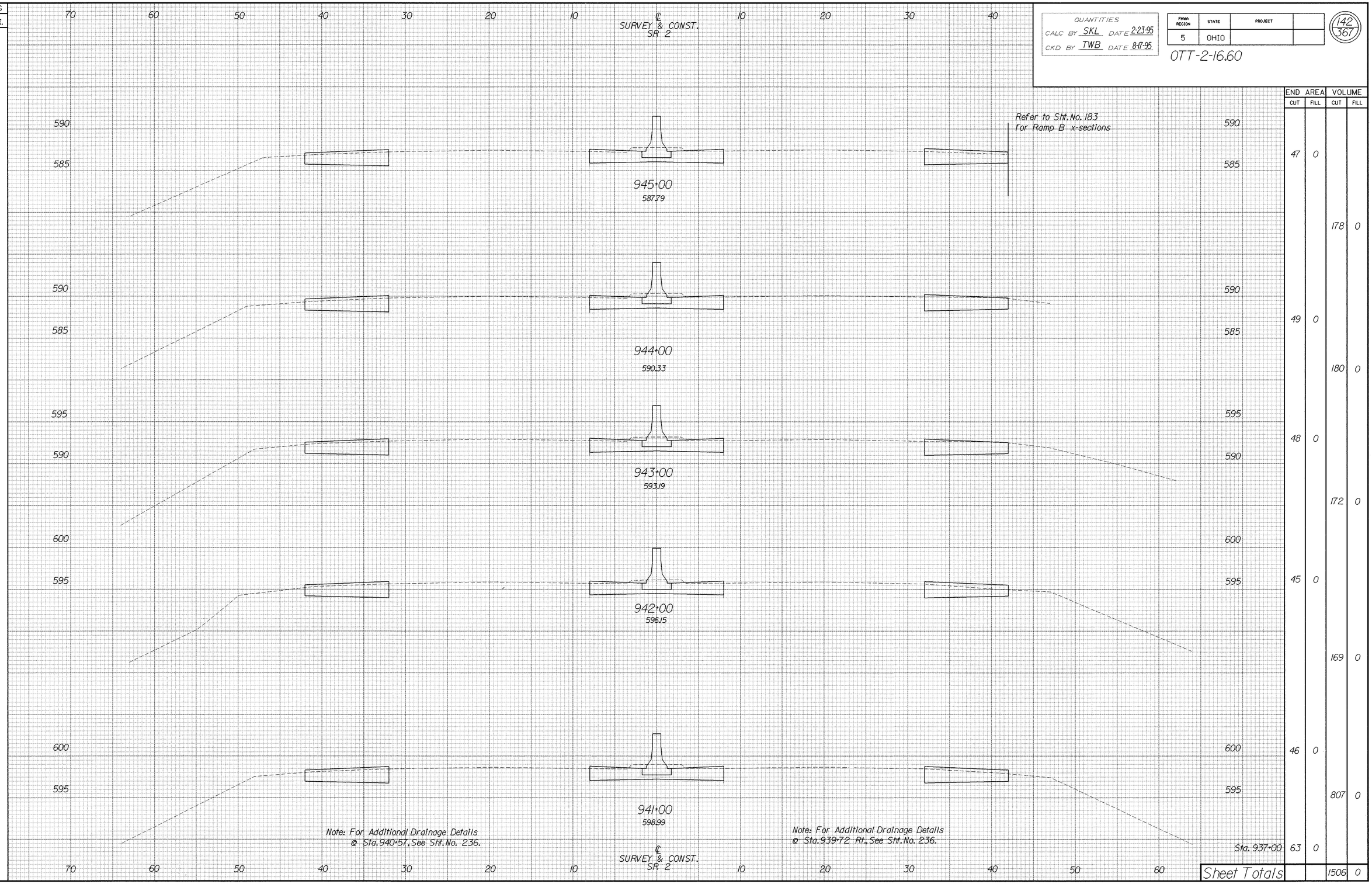


| QUANTITIES | |
|---|---|
| CALC BY | SKL |
| DATE | 2-23-95 |
| CKD BY | TWB |
| DATE | 8-17-95 |

| FHWA REGION | STATE | PROJECT | |
|---|---|---|---|
| 5 | OHIO | | |

OTT-2-16.60

142
367

| | END AREA | | VOLUME | |
|---|---|---|---|---|
| | CUT | FILL | CUT | FILL |
| | 47 | 0 | | |
| | | | 178 | 0 |
| | 49 | 0 | | |
| | | | 180 | 0 |
| | 48 | 0 | | |
| | | | 172 | 0 |
| | 45 | 0 | | |
| | | | 169 | 0 |
| | 46 | 0 | | |
| | | | 807 | 0 |
| Sta. 937+00 | 63 | 0 | | |
| Sheet Totals | | | 1506 | 0 |

CROSS SECTIONS STA. 938+00 STA. 945+00

\\pd\ottawa\ott2\ott2x8.dgn

| SEEDING | |
|---|---|
| END WIDTH | SQ. YDS. |

| QUANTITIES | |
|---|---|
| CALC BY SKL | DATE 2-23-95 |
| CKD BY TWB | DATE 8-17-95 |

| FHWA REGION | STATE | PROJECT | |
|---|---|---|---|
| 5 | OHIO | | |

143 / 367

OTT-2-16.60

70 60 50 40 30 20 10 ℄ SURVEY & CONST. SR 2 10 20 30 40 50 60

580 575 585

950+00
579.97

Sta. 949+00.℄
No 1-3B50 Med. Inlet
℄ = 580.35

Remove Exist. Inlet
Sta. 949+01.5
12" ℄ NE = 575.35

6" C.M.P.

6" Type B Lt., Med.
℄ = 576.30

6" Type B Lt. Med. Bk. & Ahd.
℄ = 575.65

12" Type B
℄ = 575.65

6" Type B Rt., Med.
℄ = 576.30

949+00
580.83

Sta. 949+00, 39' Rt.
No. 2-2B CB
Top of Grate Elev. = 580.44

M.H. @ 949+01.5

6" Type B
℄ = 578.50

12" Conc.

12" Type B, Lt.
℄ = 574.88

12" Type B, Rt.
℄ = 574.88

Exist. C.B.
Sta. 949+01.5, 41.5' Rt.
12" ℄ SW = 574.88
12" ℄ NE = 574.88

12" Type C
℄ = 571.38
(See Ramp x-section Shts. No. 183)

12" Conc.

Exist. Conc.
Sta. 949+01.5, 99.5' Rt.
12" ℄ SW = 571.38

See Sheet No. 182
For Curb Removal Detail

Sta. 948+33.48' Lt.
No. 6-CB
Top of Grate Elev. = 581.00

Remove exist. CB @ 948+33

6" Type B
℄ = 579.50

12" Conc.

6" C.M.P.

12" Type B Lt.
℄ = 575.76

Exist. Conc.
Sta. 948+41, 115' Lt.
12" ℄ NE = 567.55

12" Type C
℄ = 570.55
(See Ramp x-sections Sht. No. 182)

948+00
582.09

Refer to Sht. No. 183
for Ramp B x-sections

Refer to Sht. No. 182
for Ramp A x-sections

947+00
583.66

Refer to Sht. No. 183
for Ramp B x-sections

946+00
585.54

Refer to Sht. No. 183
for Ramp B x-sections

℄ SURVEY & CONST. SR 2

| | END AREA | | VOLUME | |
|---|---|---|---|---|
| | CUT | FILL | CUT | FILL |
| | 47 | 0 | | |
| | | | 144 | 0 |
| | 31 | 0 | | |
| | | | 93 | 0 |
| | 19 | 0 | | |
| | | | 98 | 0 |
| | 34 | 0 | | |
| | | | 126 | 0 |
| | 34 | 0 | | |
| | | | 150 | 0 |
| Sta. 945+00 | 47 | 0 | | |
| Sheet Totals | | | 611 | 0 |

/1/pd/ottawwa/ott2/ott2x9.dgn

CROSS SECTIONS STA. 946+00 TO STA. 950+00

| SEEDING | |
|---|---|
| END WIDTH | SQ. YDS. |

70 60 50 40 30 20 10 ℄ SURVEY & CONST. SR 2 10 20 30 40 50 60

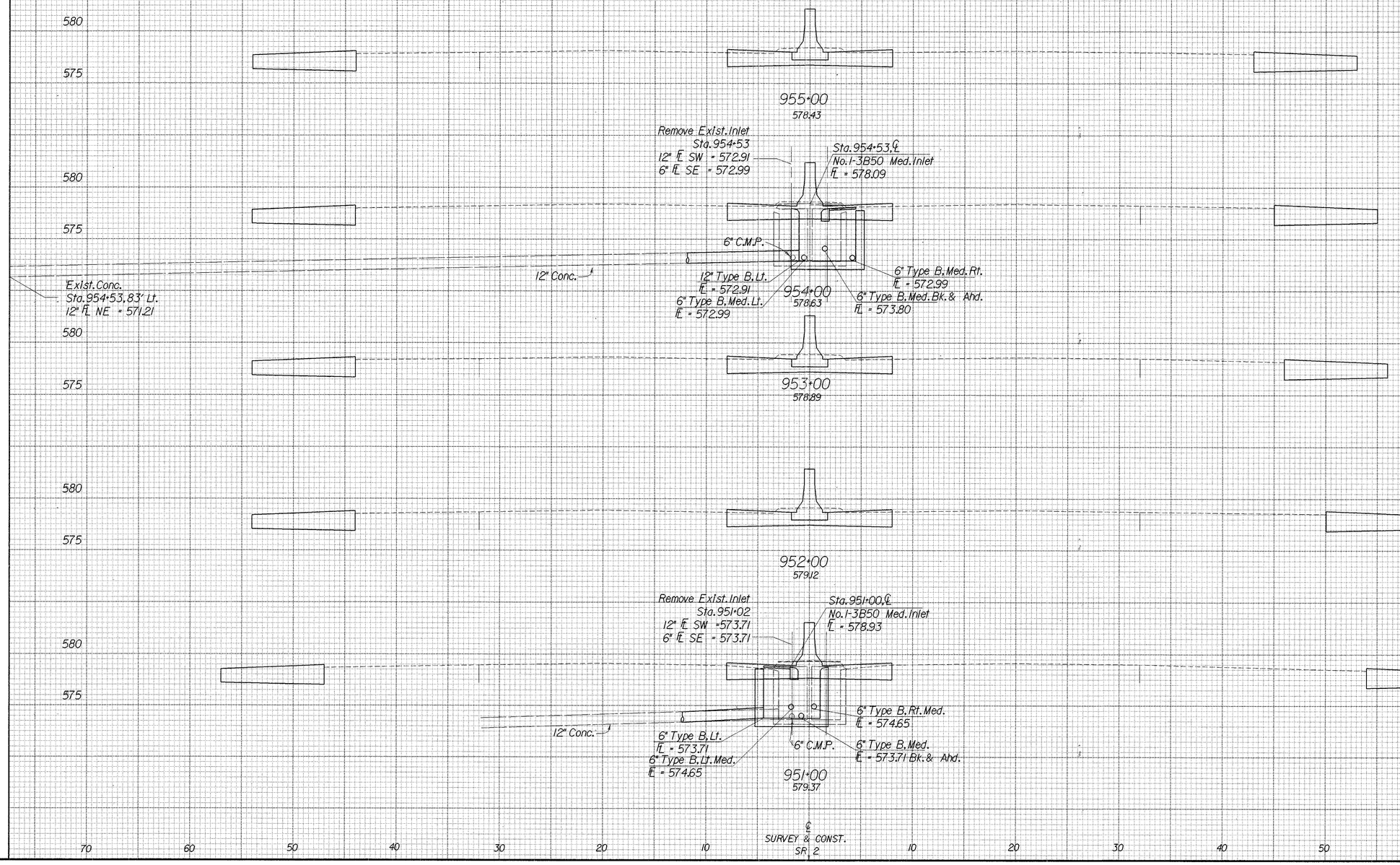


℄ SURVEY & CONST. SR 2

70 60 50 40 30 20 10 10 20 30 40 50 60

| QUANTITIES | | | |
|---|---|---|---|
| CALC BY | SKL | DATE | 2-23-95 |
| CKD BY | TWB | DATE | 8-17-95 |

| FHWA REGION | STATE | PROJECT | |
|---|---|---|---|
| 5 | OHIO | | |

144 / 367

OTT-2-16.60

| | END AREA | | VOLUME | |
|---|---|---|---|---|
| | CUT | FILL | CUT | FILL |
| 580 | | | | |
| 575 | | | | |
| | 46 | 0 | | |
| | | | 170 | 0 |
| 580 | | | | |
| 575 | | | | |
| | 46 | 0 | | |
| | | | 170 | 0 |
| 580 | | | | |
| 575 | | | | |
| | 46 | 0 | | |
| | | | 170 | 0 |
| 580 | | | | |
| 575 | | | | |
| | 46 | 0 | | |
| | | | 169 | 0 |
| 580 | | | | |
| 575 | | | | |
| | 45 | 0 | | |
| | | | 170 | 0 |
| Sta. 950+00 | 47 | 0 | | |
| Sheet Totals | | | 849 | 0 |

/1/pd/ottawa/ott2/ott2x10.dgn

CROSS SECTIONS STA. 951+00 TO STA. 955+00

| SEEDING | |
|---|---|
| END WIDTH | SQ. YDS. |

| QUANTITIES | | | |
|---|---|---|---|
| CALC BY | SKL | DATE | 2-23-95 |
| CKD BY | TWB | DATE | 8-17-95 |

| FHWA REGION | STATE | PROJECT | |
|---|---|---|---|
| 5 | OHIO | | |

145/367

OTT-2-16.60

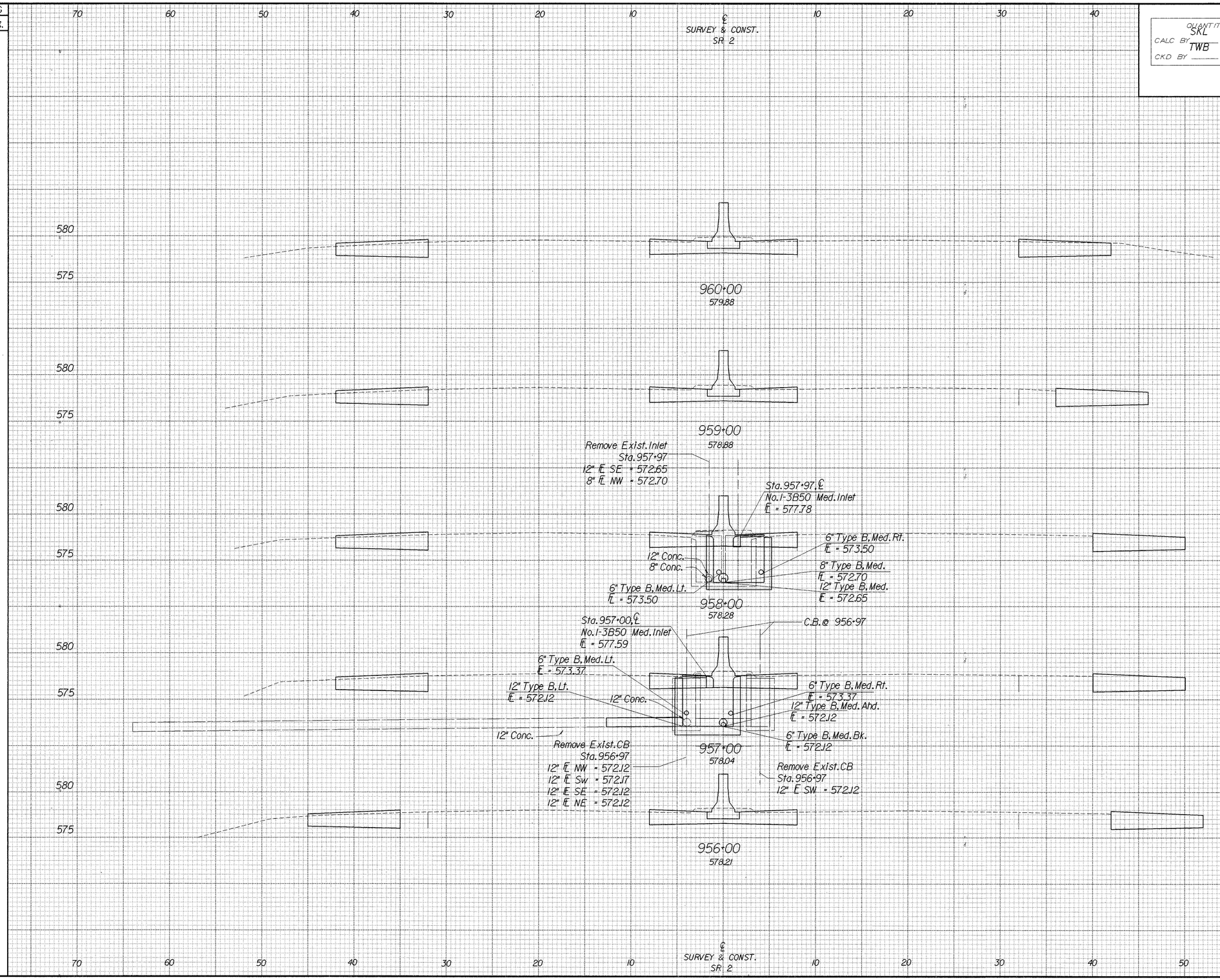


| | END AREA | | VOLUME | |
|---|---|---|---|---|
| | CUT | FILL | CUT | FILL |
| | | | | |
| 47 | 0 | | | |
| | | | 172 | 0 |
| 46 | 0 | | | |
| | | | 169 | 0 |
| 45 | 0 | | | |
| | | | 169 | 0 |
| 46 | 0 | | | |
| | | | 170 | 0 |
| 46 | 0 | | | |
| | | | 170 | 0 |
| Sta. 955+00 | 46 | 0 | | |
| Sheet Totals | | | 850 | 0 |

CROSS SECTIONS STA. 956+00 TO STA. 960+00

I:/pd/ottawa/ott2/ott2x10.dgn

| SEEDING | |
|---|---|
| END WIDTH | SQ. YDS. |

QUANTITIES
CALC BY SKL DATE 2-23-95
CKD BY TWB DATE 8-11-95

| FHWA REGION | STATE | PROJECT | |
|---|---|---|---|
| 5 | OHIO | | |

146
367

OTT-2-16.60

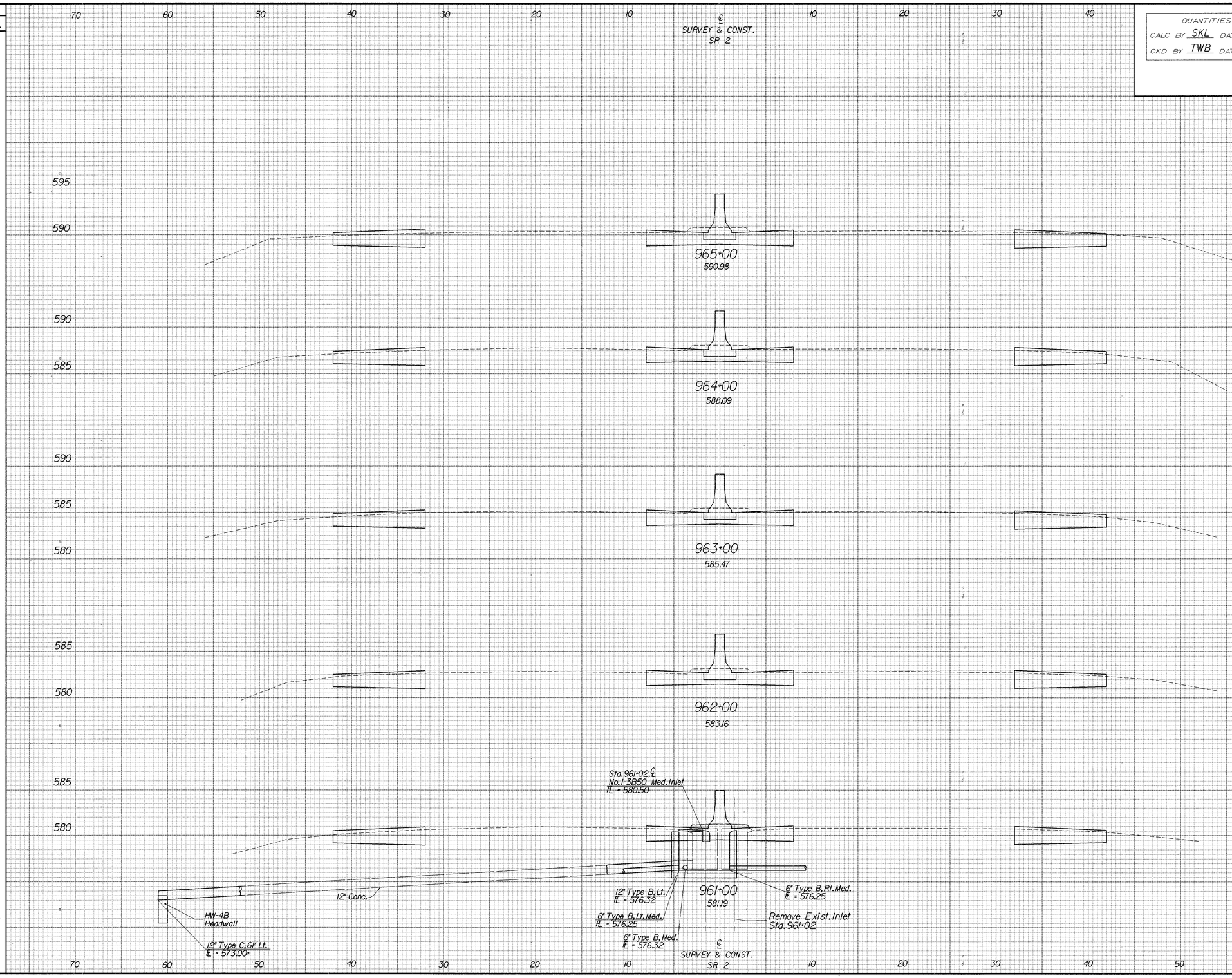


| END AREA | | VOLUME | |
|---|---|---|---|
| CUT | FILL | CUT | FILL |
| 48 | 0 | | |
| | | 176 | 0 |
| 47 | 0 | | |
| | | 174 | 0 |
| 47 | 0 | | |
| | | 174 | 0 |
| 47 | 0 | | |
| | | 170 | 0 |
| 45 | 0 | | |
| | | 170 | 0 |
| Sta. 960+00 | 47 | 0 | |
| Sheet Totals | | 864 | 0 |

CROSS SECTIONS STA. 961+00 TO STA. 965+00

/1/pd/ottawa/ott2/ott2x11.dgn

| SEEDING | |
|---|---|
| END WIDTH | SQ. YDS. |

70 60 50 40 30 20 10 ℄ SURVEY & CONST. SR 2 10 20 30 40 50 60

| QUANTITIES | | | |
|---|---|---|---|
| CALC BY SKL | DATE 2-23-95 | | |
| CKD BY TWB | DATE 8-17-95 | | |

| FHWA REGION | STATE | PROJECT | |
|---|---|---|---|
| 5 | OHIO | | |

147 / 367

OTT-2-16.60

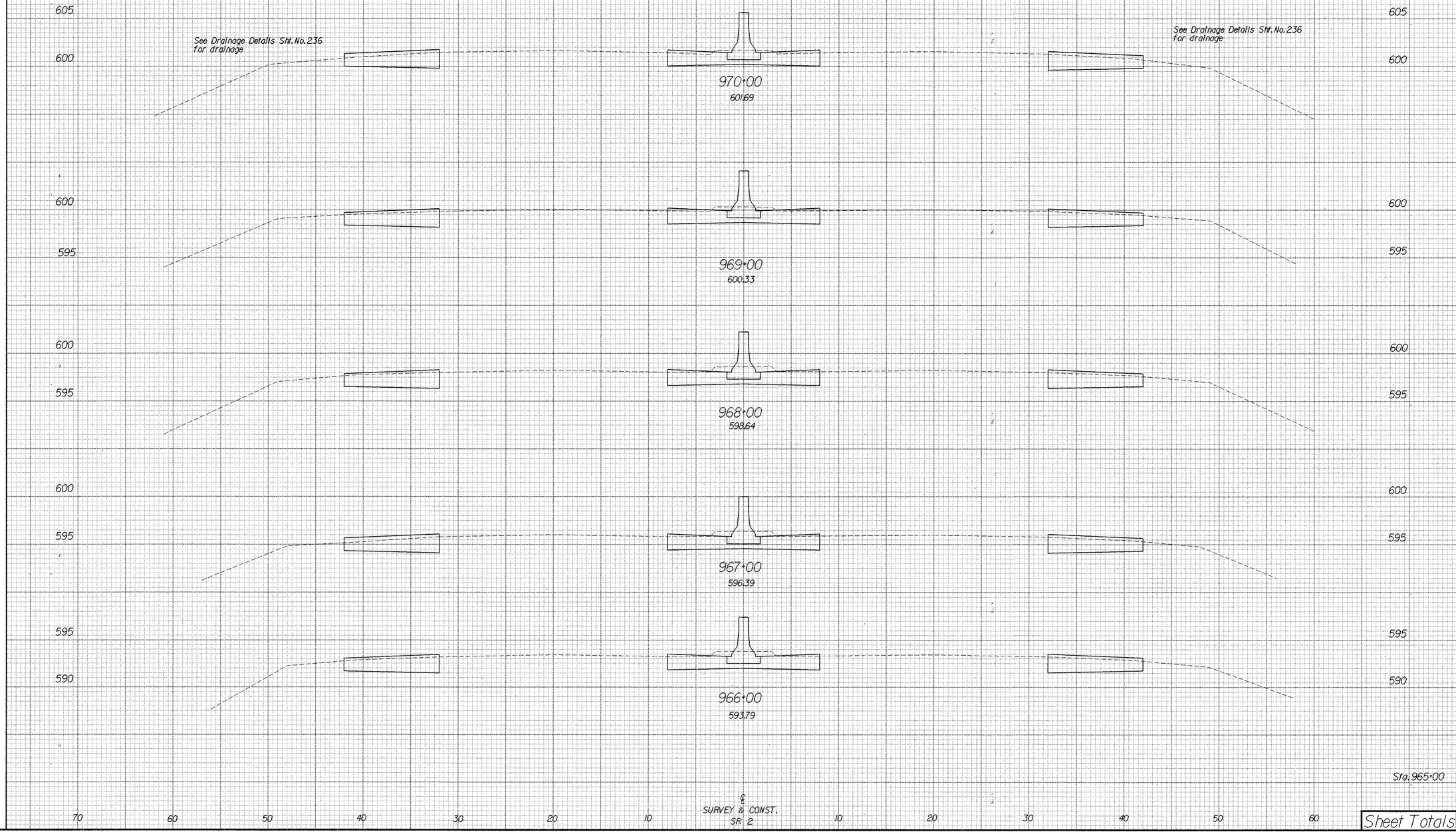


| END AREA | | VOLUME | |
|---|---|---|---|
| CUT | FILL | CUT | FILL |
| | | | |
| 43 | 0 | | |
| | | 165 | 0 |
| 46 | 0 | | |
| | | 174 | 0 |
| 48 | 0 | | |
| | | 174 | 0 |
| 46 | 0 | | |
| | | 174 | 0 |
| 48 | 0 | | |
| | | 178 | 0 |
| Sta. 965+00 | 48 | 0 | |
| Sheet Totals | | 865 | 0 |

CROSS SECTIONS STA. 966+00 TO STA. 970+00

/1/pd/ottawa/ott2/ott2xl.dgn

| SEEDING | |
|---|---|
| END WIDTH | SQ. YDS. |

QUANTITIES
CALC BY SKL DATE 2-23-95
CKD BY TWB DATE 8-17-95

| FHWA REGION | STATE | PROJECT | |
|---|---|---|---|
| 5 | OHIO | | |

148
367

OTT-2-16.60

70 60 50 40 30 20 10 ℄ SURVEY & CONST. SR 2 10 20 30 40 50 60

Refer To Slope Repair Cross Sections

600
595

980+00
596.39

Refer To Slope Repair Cross Sections

600
595

979+00
598.53

Refer To Slope Repair Cross Sections

600
595

978+00
600.44

Refer To Slope Repair Cross Sections

600
595

977+00
601.72

Note: For Additional Drainage Details @ Sta. 977+50 See Sht. No. 237

Note: For Additional Drainage Details @ Sta. 977+50 See Sht. No. 237

70 60 50 40 30 20 10 ℄ SURVEY & CONST. SR 2 10 20 30 40 50 60

| | END AREA | | VOLUME | |
|---|---|---|---|---|
| | CUT | FILL | CUT | FILL |
| 600 | | | | |
| | 48 | 0 | | |
| 595 | | | | |
| | | | 178 | 0 |
| 600 | | | | |
| | 48 | 0 | | |
| 595 | | | | |
| | | | 169 | 0 |
| 600 | | | | |
| | 43 | 0 | | |
| 595 | | | | |
| | | | 154 | 0 |
| 600 | | | | |
| | 40 | 0 | | |
| 595 | | | | |
| | | | 1076 | 0 |
| Sta. 970+00 | 43 | 0 | | |
| Sheet Totals | | | 1577 | 0 |

CROSS SECTIONS STA. 971+00 TO STA. 980+00

I:\pd\ottawa\ott2\ott2x12.dgn

| SEEDING | |
|---|---|
| END WIDTH | SQ. YDS. |

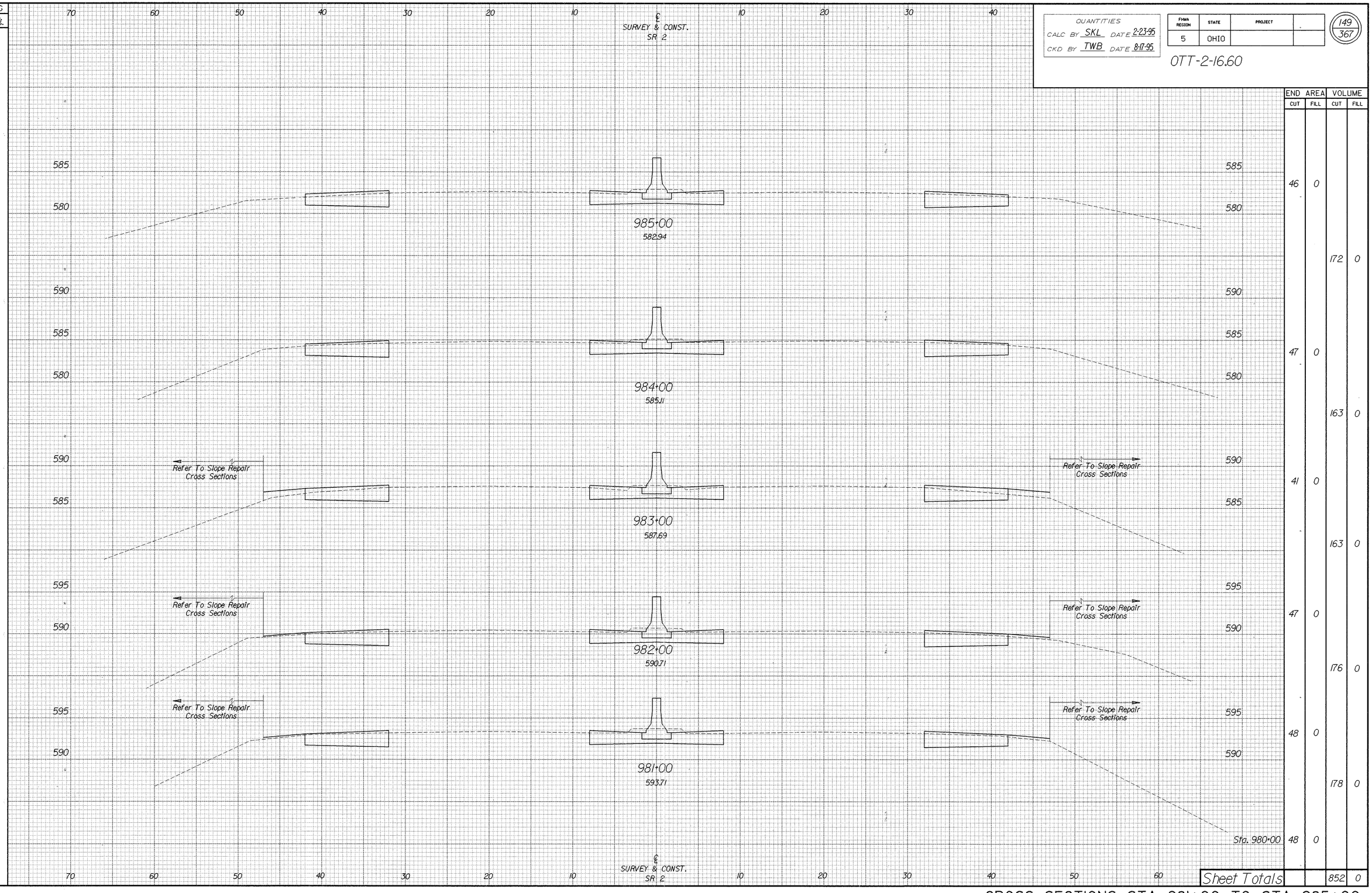


QUANTITIES
CALC BY SKL DATE 2-23-95
CKD BY TWB DATE 8-17-95

| FHWA REGION | STATE | PROJECT | |
|---|---|---|---|
| 5 | OHIO | | |

149
367

OTT-2-16.60

| END AREA | | VOLUME | |
|---|---|---|---|
| CUT | FILL | CUT | FILL |
| 46 | 0 | | |
| | | 172 | 0 |
| 47 | 0 | | |
| | | 163 | 0 |
| 41 | 0 | | |
| | | 163 | 0 |
| 47 | 0 | | |
| | | 176 | 0 |
| 48 | 0 | | |
| | | 178 | 0 |
| Sta. 980+00 | 48 | 0 | |
| Sheet Totals | | | 852 | 0 |

CROSS SECTIONS STA. 981+00 TO STA. 985+00

I:\pd\ottawa\ott2\ott2x13.dgn

| SEEDING | |
|---|---|
| END WIDTH | SQ. YDS. |

| QUANTITIES | |
|---|---|
| CALC BY | SKL DATE 2-23-95 |
| CKD BY | TWB DATE 8-17-95 |

| FHWA REGION | STATE | PROJECT | |
|---|---|---|---|
| 5 | OHIO | | |

150
367

OTT-2-16.60




| END AREA | | VOLUME | |
|---|---|---|---|
| CUT | FILL | CUT | FILL |
| 45 | 0 | | |
| | | 167 | 0 |
| 45 | 0 | | |
| | | 172 | 0 |
| 48 | 0 | | |
| | | 176 | 0 |
| 47 | 0 | | |
| | | 172 | 0 |
| 46 | 0 | | |
| | | 170 | 0 |
| Sta. 985+00 46 | 0 | | |
| Sheet Totals | | 857 | 0 |

CROSS SECTIONS STA. 986+00 TO STA. 990+00

I:\pd\ottawa\ott2\ott2xs3.dgn

| SEEDING | |
|---|---|
| END WIDTH | SQ. YDS. |

| QUANTITIES | |
|---|---|
| CALC BY | SKL DATE 2-23-95 |
| CKD BY | TWB DATE 8-17-95 |

| FHWA REGION | STATE | PROJECT | |
|---|---|---|---|
| 5 | OHIO | - | |

(151/367)

OTT-2-16.60

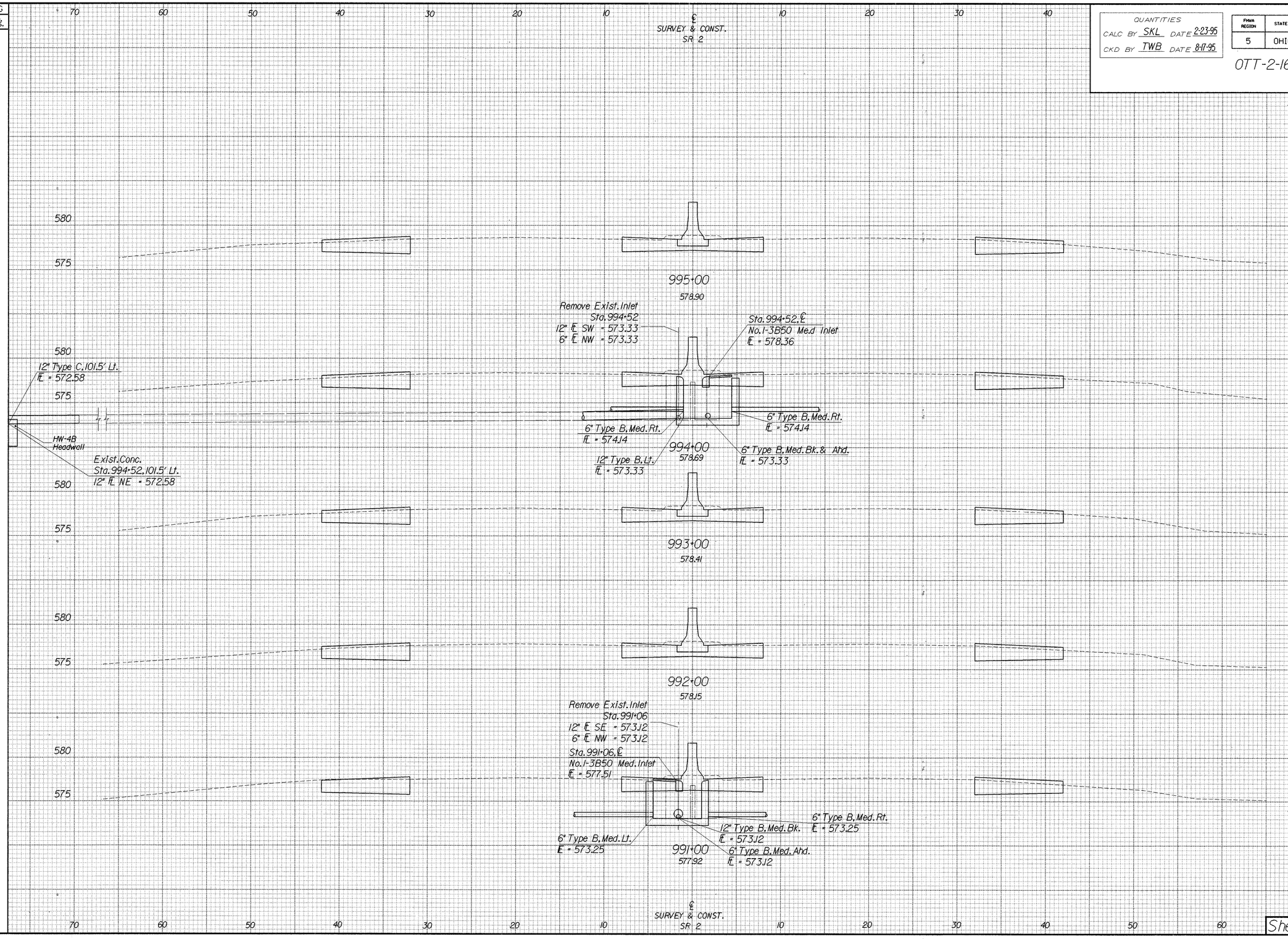


| END AREA | | VOLUME | |
|---|---|---|---|
| CUT | FILL | CUT | FILL |
| 46 | 0 | | |
| | | 169 | 0 |
| 45 | 0 | | |
| | | 167 | 0 |
| 45 | 0 | | |
| | | 169 | 0 |
| 46 | 0 | | |
| | | 172 | 0 |
| 47 | 0 | | |
| | | 170 | 0 |
| Sta. 990+00 45 | 0 | | |
| Sheet Totals | | 847 | 0 |

CROSS SECTIONS STA. 991+00 TO STA. 995+00

/i/pd/ottawa/ot12/ot12x14dgn

| SEEDING | |
|---|---|
| END WIDTH | SQ. YDS. |

70 60 50 40 30 20 10 ℄ SURVEY & CONST. SR 2 10 20 30 40 50 60

| QUANTITIES | |
|---|---|
| CALC BY | SKL |
| DATE | 2-23-95 |
| CKD BY | TWB |
| DATE | 8-17-95 |

| FHWA REGION | STATE | PROJECT | |
|---|---|---|---|
| 5 | OHIO | | |

152
367

OTT-2-16.60

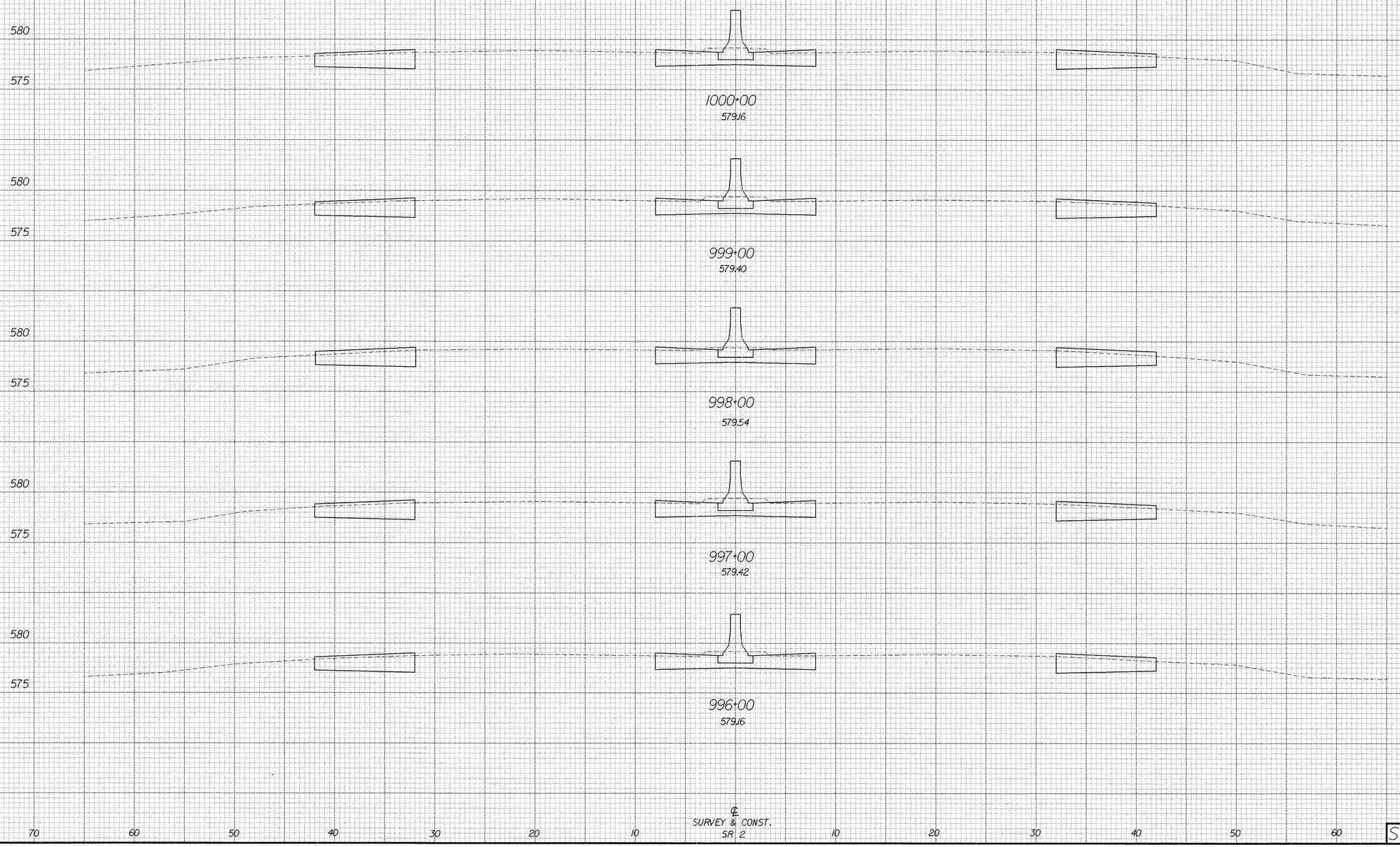


| END AREA | | VOLUME | |
|---|---|---|---|
| CUT | FILL | CUT | FILL |
| 47 | 0 | | |
| | | 172 | 0 |
| 46 | 0 | | |
| | | 167 | 0 |
| 44 | 0 | | |
| | | 169 | 0 |
| 47 | 0 | | |
| | | 172 | 0 |
| 46 | 0 | | |
| | | 170 | 0 |
| Sta. 995+00 | 46 | 0 | |
| Sheet Totals | | | 850 | 0 |

CROSS SECTIONS STA. 996+00 TO STA. 1000+00

\\pd\ottawa\ott2\ott2x14.dgn

| SEEDING | |
|---|---|
| END WIDTH | SQ. YDS. |

SURVEY & CONST.
SR 2

| QUANTITIES | |
|---|---|
| CALC BY | SKL |
| DATE | 2-23-95 |
| CKD BY | TWB |
| DATE | 8-17-95 |

| FHWA REGION | STATE | PROJECT | |
|---|---|---|---|
| 5 | OHIO | | |

153
367

OTT-2-16.60

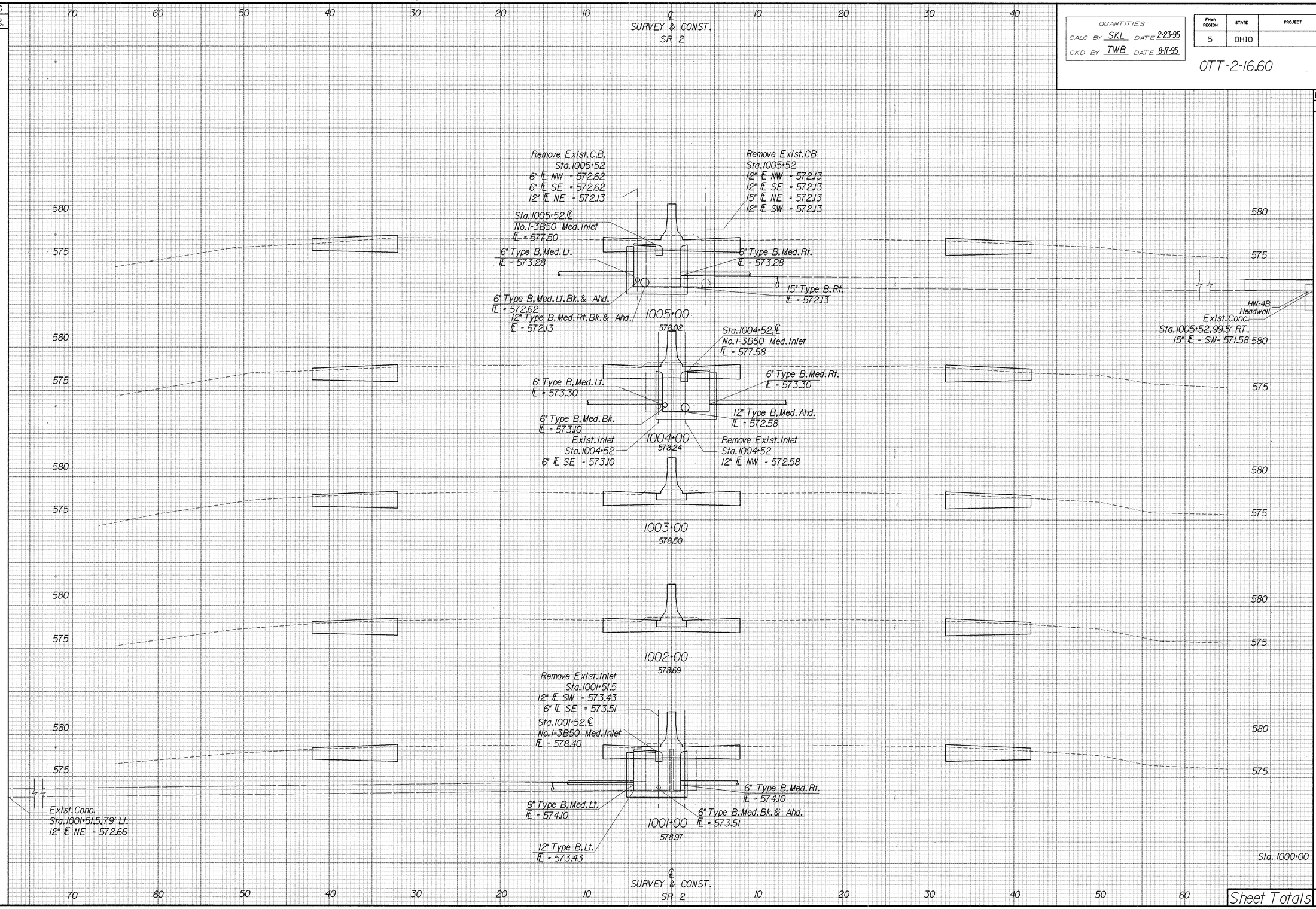


| END AREA | | VOLUME | |
|---|---|---|---|
| CUT | FILL | CUT | FILL |
| 45 | 0 | | |
| | | 167 | 0 |
| 45 | 0 | | |
| | | 169 | 0 |
| 46 | 0 | | |
| | | 170 | 0 |
| 46 | 0 | | |
| | | 172 | 0 |
| 47 | 0 | | |
| | | 174 | 0 |
| 47 | 0 | | |
| Sheet Totals | | 852 | 0 |

CROSS SECTIONS STA. 1001+00 TO STA. 1005+00

/1/pd/ottawa/ott2/ott2w15.dgn

| SEEDING | |
|---|---|
| END WIDTH | SQ. YDS. |

| QUANTITIES | |
|---|---|
| CALC BY SKL | DATE 2-23-95 |
| CKD BY TWB | DATE 8-17-95 |

| FHWA REGION | STATE | PROJECT | |
|---|---|---|---|
| 5 | OHIO | | |

154
367

OTT-2-16.60

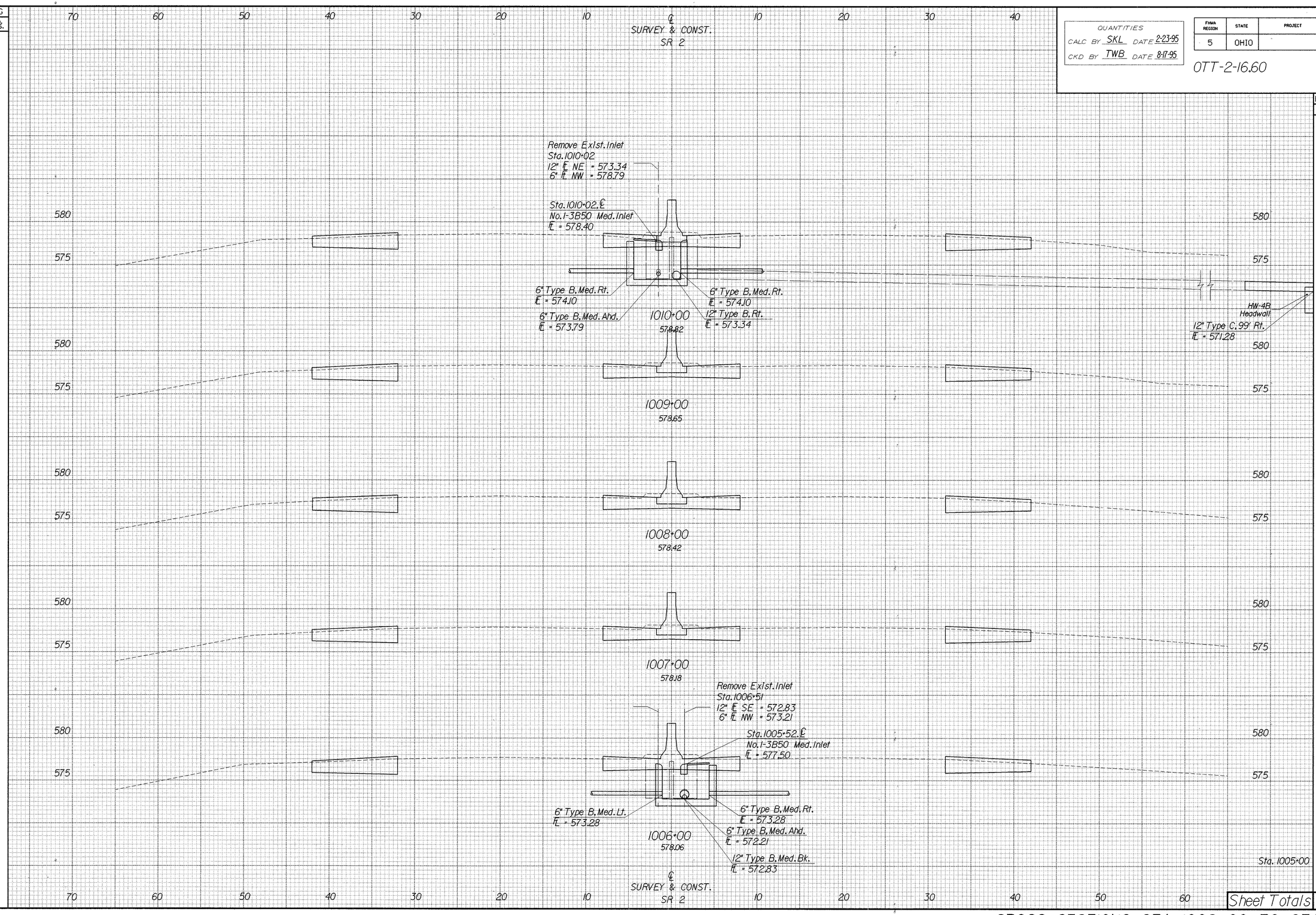


| END AREA | | VOLUME | |
|---|---|---|---|
| CUT | FILL | CUT | FILL |
| 44 | 0 | | |
| | | 167 | 0 |
| 46 | 0 | | |
| | | 170 | 0 |
| 46 | 0 | | |
| | | 170 | 0 |
| 46 | 0 | | |
| | | 172 | 0 |
| 47 | 0 | | |
| | | 170 | 0 |
| 45 | 0 | | |
| Sheet Totals | | 849 | 0 |

CROSS SECTIONS STA. 1006+00 TO STA. 1010+00

I:\pd\ottawa\ott2\ott2x15.dgn

| SEEDING | |
|---|---|
| END WIDTH | SQ. YDS. |
| | |

| QUANTITIES | |
|---|---|
| CALC BY | SKL |
| DATE | 2-23-95 |
| CKD BY | TWB |
| DATE | 8-17-95 |

| FHWA REGION | STATE | PROJECT | |
|---|---|---|---|
| 5 | OHIO | | |

155
367

OTT-2-16.60

70 60 50 40 30 20 10 ℄ 10 20 30 40

SURVEY & CONST.
SR 2

580
575

1015+00
579.36

580
575

1014+00
579.56

580
575

1013+00
579.57

580
575

1012+00
579.38

580
575

1011+00
579.19

70 60 50 40 30 20 10 ℄ 10 20 30 40 50 60

SURVEY & CONST.
SR 2

| END AREA | | VOLUME | |
|---|---|---|---|
| CUT | FILL | CUT | FILL |
| | | | |
| 44 | 0 | | |
| | | 165 | 0 |
| 45 | 0 | | |
| | | 165 | 0 |
| 44 | 0 | | |
| | | 165 | 0 |
| 45 | 0 | | |
| | | 169 | 0 |
| 46 | 0 | | |
| | | 167 | 0 |
| Sta. 1010+00 | 44 | 0 | |
| Sheet Totals | | | 831 | 0 |

CROSS SECTIONS STA. 1011+00 TO STA. 1015+00

/1/pd/ottawa/ott2/ott2x16.dgn

| SEEDING | |
|---|---|
| END WIDTH | SQ. YDS. |

℄ SURVEY & CONST. SR 2

70 60 50 40 30 20 10 ℄ 10 20 30 40 50 60 70

| QUANTITIES | | | |
|---|---|---|---|
| CALC BY SKL | DATE 2-23-95 | | |
| CKD BY TWB | DATE 8-17-95 | | |

| FHWA REGION | STATE | PROJECT | |
|---|---|---|---|
| 5 | OHIO | | |

156/367

OTT-2-16.60

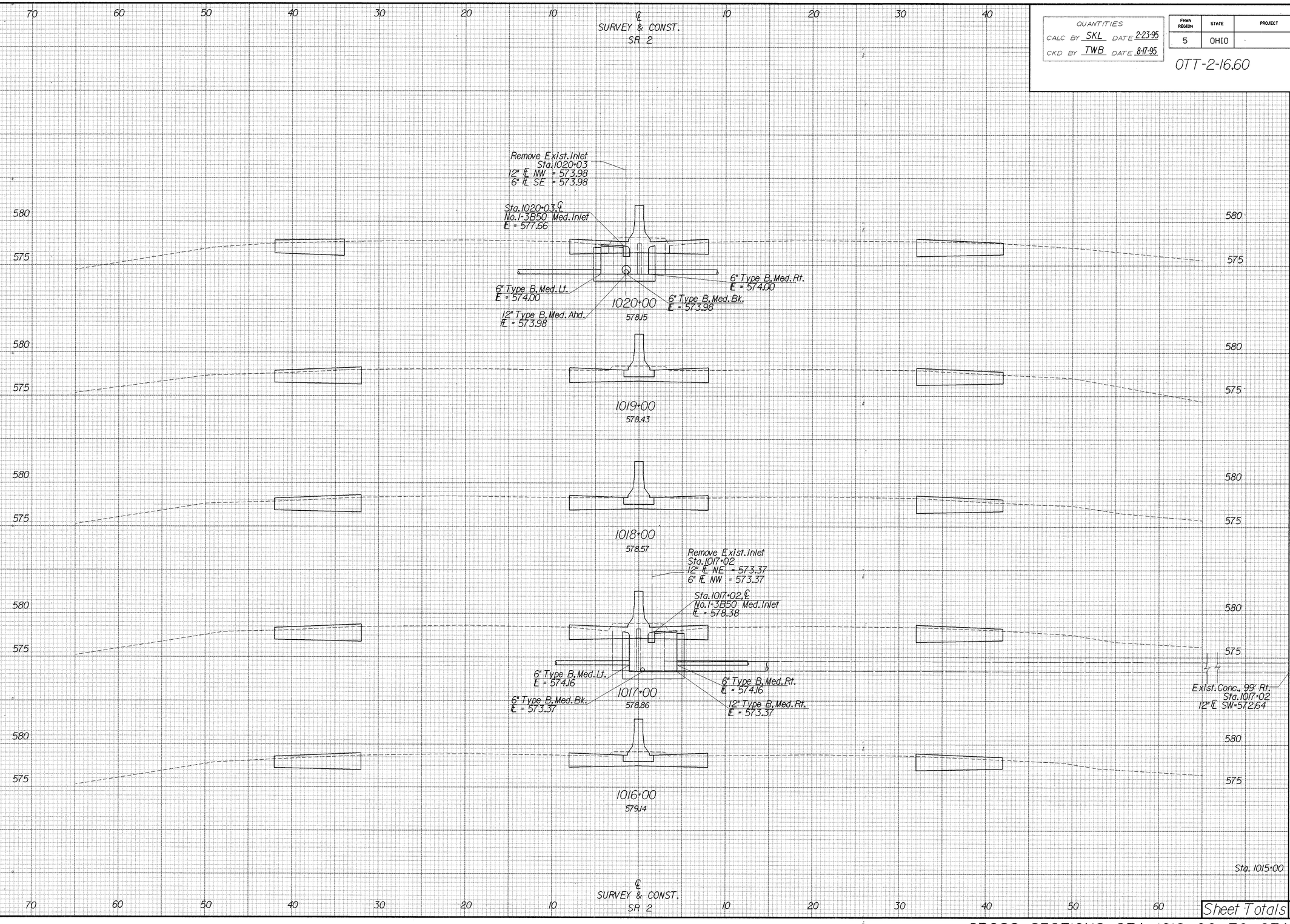


| END AREA | | VOLUME | |
|---|---|---|---|
| CUT | FILL | CUT | FILL |
| | | | |
| 43 | 0 | | |
| | | 165 | 0 |
| 46 | 0 | | |
| | | 167 | 0 |
| 44 | 0 | | |
| | | 163 | 0 |
| 44 | 0 | | |
| | | 167 | 0 |
| 46 | 0 | | |
| | | 167 | 0 |
| Sta. 1015+00 | 44 | 0 | |
| Sheet Totals | | 829 | 0 |

CROSS SECTIONS STA. 1016+00 TO STA. 1020+00

//pd/ottawa/ott2/ott2x16.dgn

| SEEDING | |
|---|---|
| END WIDTH | SQ. YDS. |

QUANTITIES
CALC BY SKL DATE 2-23-95
CKD BY TWB DATE 8-17-95

| FHWA REGION | STATE | PROJECT | |
|---|---|---|---|
| 5 | OHIO | | |

157/367

OTT-2-16.60

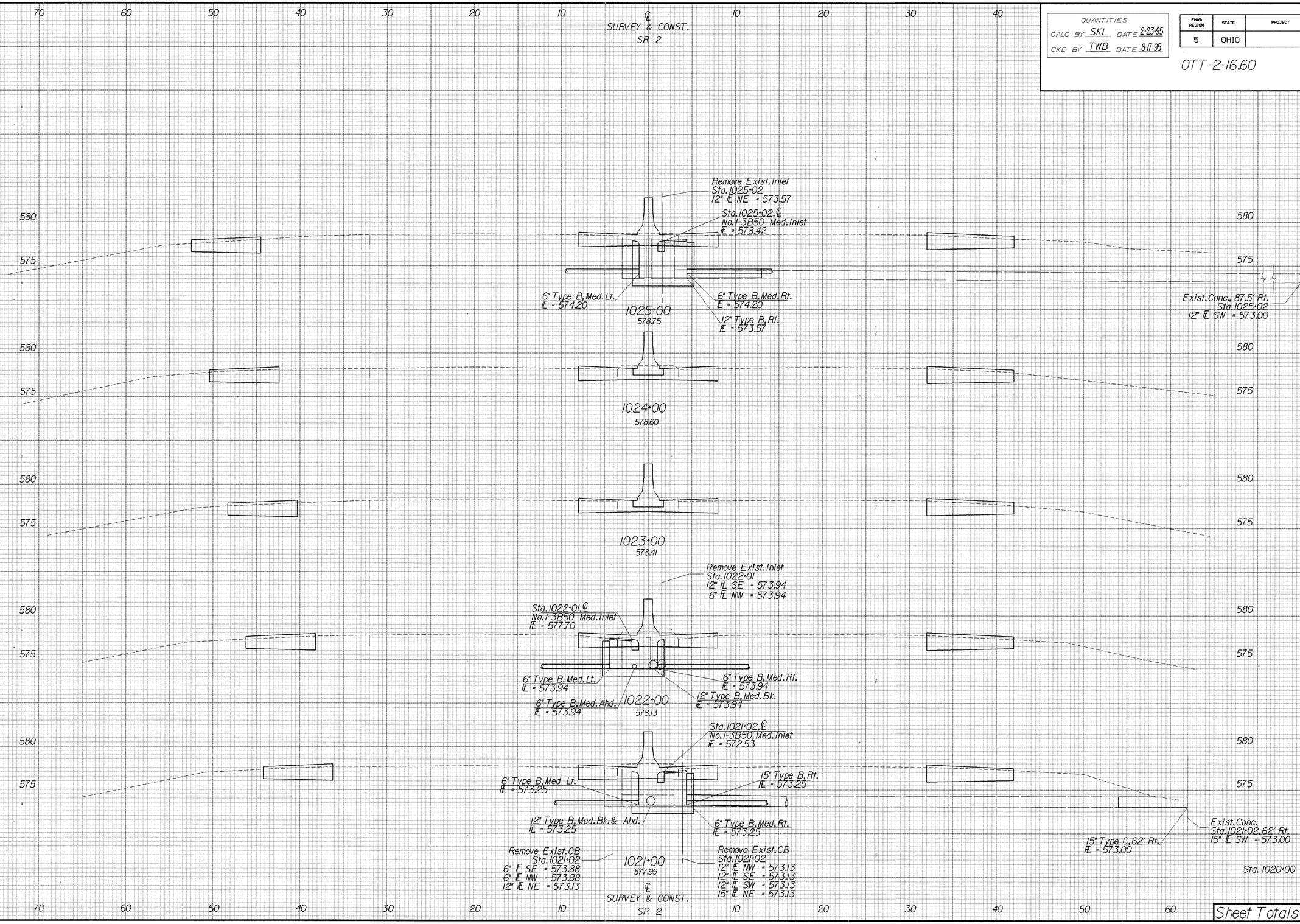


| END AREA | | VOLUME | |
|---|---|---|---|
| CUT | FILL | CUT | FILL |
| 40 | 0 | | |
| | | 154 | 0 |
| 43 | 0 | | |
| | | 156 | 0 |
| 41 | 0 | | |
| | | 152 | 0 |
| 41 | 0 | | |
| | | 156 | 0 |
| 43 | 0 | | |
| | | 159 | 0 |
| 43 | 0 | | |
| Sheet Totals | | 777 | 0 |

CROSS SECTIONS STA. 1021+00 TO STA. 1025+00

//pd/ottawa/ott2/ott2xit.dgn

| SEEDING | |
|---|---|
| END WIDTH | SQ. YDS. |

70 60 50 40 30 20 10 ℄ 10 20 30 40

SURVEY & CONST.
SR 2

| QUANTITIES | |
|---|---|
| CALC BY | SKL |
| DATE | 2-23-95 |
| CKD BY | TWB |
| DATE | 8-17-95 |

| FHWA REGION | STATE | PROJECT | |
|---|---|---|---|
| 5 | OHIO | | |

158
367

OTT-2-16.60

580
575

1030+00
579.58

580
575

1029+00
579.72

580
575

1028+00
579.60

580
575

1027+00
579.38

580
575

1026+00
579.14

70 60 50 40 30 20 10 ℄ 10 20 30 40 50 60

SURVEY & CONST.
SR 2

| | END AREA | | VOLUME | |
|---|---|---|---|---|
| | CUT | FILL | CUT | FILL |
| | | | | |
| 580 | | | | |
| 575 | | | | |
| | 38 | 0 | | |
| | | | 170 | 0 |
| 580 | | | | |
| 575 | | | | |
| | 54 | 0 | | |
| | | | 180 | 0 |
| 580 | | | | |
| 575 | | | | |
| | 43 | 0 | | |
| | | | 156 | 0 |
| 580 | | | | |
| 575 | | | | |
| | 41 | 0 | | |
| | | | 159 | 0 |
| 580 | | | | |
| 575 | | | | |
| | 45 | 0 | | |
| | | | 157 | 0 |
| Sta. 1025+00 | 40 | 0 | | |
| Sheet Totals | | | 822 | 0 |

/1/pd/ottawa/ott2/ott2x17.dgn

CROSS SECTIONS STA. 1026+00 TO STA. 1030+00

| SEEDING | |
|---|---|
| END WIDTH | SQ. YDS. |

| QUANTITIES | | | |
|---|---|---|---|
| CALC BY SKL | DATE 2-23-95 | | |
| CKD BY TWB | DATE 8-17-95 | | |

| FHWA REGION | STATE | PROJECT | |
|---|---|---|---|
| 5 | OHIO | | |

159/367

OTT-2-16.60

℄ SURVEY & CONST. SR 2

70 60 50 40 30 20 10 ℄ 10 20 30 40 50 60

For Curb Details See Shr. No.

Exist. Conc. Sta. 1032+62.92' Lt. 42" ℄ NE = 572.00

Exist. Conc. Sta. 1032+62.96.5' Rt. 42" ℄ SW = 571.58

Sta. 1032+51 ℄ No. 1-3B50 Med. Inlet ℄ = 578.51

Remove Exist. Inlet Sta. 1032+51 6" ℄ S=573.31 6" ℄ E=573.31 12" ℄ W=573.31

6" Type B Med. Lt. ℄ = 574.35

6" Type B Med. Rt. ℄ = 574.35

6" Type B Rt. ℄ = 573.31

12" Type B Med. Abd. ℄ = 573.31

1035+00 578.49

1034+00 578.70

1033+00 579.00

1032+00 579.19

1031+00 579.47

580 575

| END AREA | | VOLUME | |
|---|---|---|---|
| CUT | FILL | CUT | FILL |
| 42 | 0 | | |
| | | 152 | 0 |
| 40 | 0 | | |
| | | 152 | 0 |
| 42 | 0 | | |
| | | 152 | 0 |
| 40 | 0 | | |
| | | 148 | 0 |
| 40 | 0 | | |
| | | 144 | 0 |
| Sta. 1030+00 38 | 0 | | |
| Sheet Totals | | 748 | 0 |

CROSS SECTIONS STA. 1031+00 TO STA. 1035+00

/1/pd/OTTAWA/OTT2/OTT2X18.DGN

| SEEDING | |
|---|---|
| END WIDTH | SQ. YDS. |

70 60 50 40 30 20 10 ℄ 10 20 30 40

SURVEY & CONST.
SR 2

| QUANTITIES | |
|---|---|
| CALC BY SKL | DATE 2-23-95 |
| CKD BY TWB | DATE 8-17-95 |

| FHWA REGION | STATE | PROJECT | |
|---|---|---|---|
| 5 | OHIO | | |

160
367

OTT-2-16.60

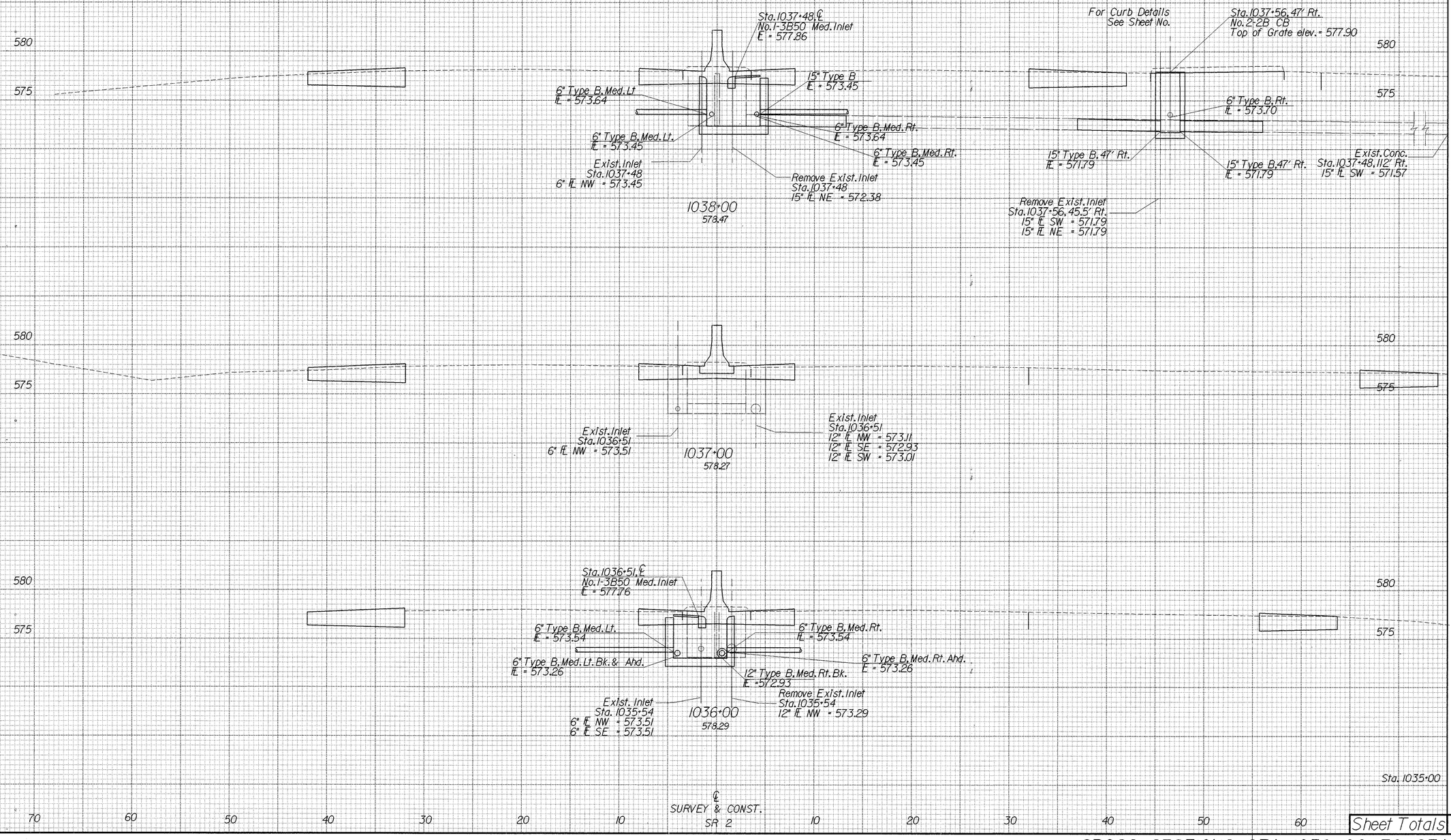


| END AREA | | VOLUME | |
|---|---|---|---|
| CUT | FILL | CUT | FILL |
| 48 | 0 | | |
| | | 169 | 0 |
| 43 | 0 | | |
| | | 163 | 0 |
| 45 | 0 | | |
| | | 161 | 0 |
| Sta. 1035+00 42 | 0 | | |
| Sheet Totals | | 493 | 0 |

℄
SURVEY & CONST.
SR 2

70 60 50 40 30 20 10 10 20 30 40 50 60

CROSS SECTIONS STA. 1036+00 TO STA. 1038+00

I:\pd\OTT\AWA\OTT2\OTT2XI9.DGN

| SEEDING | |
|---|---|
| END WIDTH | SQ. YDS. |

QUANTITIES
CALC BY SKL DATE 2-23-95
CKD BY TWB DATE 8-17-95

| FHWA REGION | STATE | PROJECT | |
|---|---|---|---|
| 5 | OHIO | | |

161
367

OTT-2-16.60

50 40 30 20 10 ℄ SURVEY & CONST. SR 2 10 20 30 40

585 580 575

1043+00
579.59

Sta.1041+01,℄
No.1-3B50 Med.Inlet
IE = 578.85
6" Type B,Rt.
IE =574.43
6" Type B,Lt.
IE = 574.43
8" Type B,Med.Lt.Ahd.
IE = 573.79
1042+00
579.42
Remove Exist.Inlet
Sta.1041+01
12" E NE = 573.79
8" E W = 573.79
12" Type B,Rt.
IE = 573.79

Exist.Conc.
Sta.1041+01.77' Rt.
12" E Sw = 573.29

1041+00
579.15

1040+00
578.95

1039+00
578.72 Existing ℄ Survey Elevation

70 60 50 40 30 20 10 ℄ SURVEY & CONST. SR 2 10 20 30 40 50

| | END AREA | | VOLUME | |
|---|---|---|---|---|
| | CUT | FILL | CUT | FILL |
| | 51 | 0 | | |
| | | | 178 | 0 |
| | 45 | 0 | | |
| | | | 170 | 0 |
| | 47 | 0 | | |
| | | | 176 | 0 |
| | 48 | 0 | | |
| | | | 176 | 0 |
| | 47 | 0 | | |
| | | | 176 | 0 |
| Sta. 1038+00 | 48 | 0 | | |
| Sheet Totals | | | 876 | 0 |

CROSS SECTIONS STA. 1039+00 TO STA. 1043+00

I:/pd/OTT AWA/OTT2/OTT2X19.DGN

| SEEDING | |
|---|---|
| END WIDTH | SQ. YDS. |

| QUANTITIES | |
|---|---|
| CALC BY SKL | DATE 2-23-95 |
| CKD BY TWB | DATE 8-17-95 |

| FHWA REGION | STATE | PROJECT | |
|---|---|---|---|
| 5 | OHIO | | |

162/367

OTT-2-16.60

℄ SURVEY & CONST. SR 2

70 60 50 40 30 20 10 ℄ 10 20 30 40 50 60 70

580 575 585

1047+00
579.30

Sta.1045+21.53' Lt.
No.6 CB
Top of Grate elev.= 578.25

HW-4B Headwall

Ex.Conc.
Sta.1045+21.105' Lt.
12" ℄ NE = 573.03

12" Type C, 105' Lt.
℄ = 573.03

12" Type B, Lt.
℄ = 573.10

Remove Ex.CB
Sta.1045+21.49' Lt.
12" ℄ SW = 573.10
6" ℄ NE = 573.10

6" Type B, 53' Lt. Bk.
℄ = 574.00

1046+00
579.70

Remove Ex.CB
Sta.1044+51
12" ℄ NE = 574.55
8" ℄ SW = 574.81
8" ℄ NW = 574.78
8" ℄ NE = 574.70

Sta.1044+51 ℄
No.1-3B50 Med.Inlet
℄ = 578.97

6" Type B, Med. Lt.
℄ = 575.15

8" Type B, Med. Lt. Bk.
℄ = 574.81

1045+00
579.10

6" Type B, Med. Rt.
℄ = 575.15

12" Type B, Rt.
℄ = 574.55

8" Type B, Rt. Bk.
℄ = 574.70

Ex. conc.
Sta.1044+51, 82' Rt.

1044+00
579.20 Existing ℄ Survey Elevation

Sta. 1043+00

℄ SURVEY & CONST. SR 2

| | END AREA | | VOLUME | |
|---|---|---|---|---|
| | CUT | FILL | CUT | FILL |
| 62 | 0 | | | |
| | | | 228 | 0 |
| 61 | 0 | | | |
| | | | 220 | 0 |
| 58 | 0 | | | |
| | | | 206 | 0 |
| 53 | 0 | | | |
| | | | 193 | 0 |
| 51 | 0 | | | |
| Sheet Totals | | | 847 | 0 |

CROSS SECTIONS STA. 1044+00 TO STA. 1047+00

\\pd\ottawa\ott2\ott2x20.dgn

| QUANTITIES | | | | FHWA REGION | STATE | PROJECT | | 163 / 367 |
|---|---|---|---|---|---|---|---|---|
| CALC BY SKL | DATE 2-23-95 | | | 5 | OHIO | | | |
| CKD BY TWB | DATE 8-17-95 | | | | | | | |

OTT-2-16.60

| SEEDING | | END AREA | | VOLUME | |
|---|---|---|---|---|---|
| END WIDTH | SQ. YDS. | CUT | FILL | CUT | FILL |
| | | | | | |
| | | 39 | 0 | | |
| | | | | 144 | 0 |
| | | 39 | 0 | | |
| | | | | 144 | 0 |
| | | 39 | 0 | | |
| | | | | 181 | 0 |
| | | 59 | 0 | | |
| | | | | 219 | 0 |
| | | 59 | 0 | | |
| | | | | 224 | 0 |
| | | 62 | 0 | | |
| .684 | Sheet Totals | | | 912 | 0 |

70 60 50 40 30 20 10 ℄ 10 20 30 40 50 60

SURVEY & CONST.
SR 2

580 / 575

Sta.1052+00,℄
No.4 CB,as per plan
Top of Grate elev.= 575.41

6" Type B.Med.Rt.
IE = 574.00

15" Type C Lt.
E = 573.25

6" Type B.Med.Lt.Bk & Ahd.
E = 574.00

Remove Exist.Inlet
Sta.1052+00
15" IE SW = 573.25
6" IE S = 573.49
6" IE SW = 573.55
6" IE NE = 573.44

Exist.Conc.
Sta.1052+00,80' Lt.
15" IE NE = 572.46

1052+00
575.33

1051+00
577.30

Estimated Seeding For
Sta.1049+50 to Sta.1052+00

1050+00
577.50

1049+00
577.70

1048+00
578.30 Existing ℄ Survey Elevation

Sta. 1047+00

SURVEY & CONST.
SR 2

CROSS SECTIONS STA. 1048+00 TO STA. 1052+00

/1/pd/ottawa/ott2/ott2x20.dgn

| SEEDING | |
|---|---|
| END WIDTH | SQ. YDS. |

| QUANTITIES | |
|---|---|
| CALC BY SKL | DATE 2-23-95 |
| CKD BY TWB | DATE 8-18-95 |

| FHWA REGION | STATE | PROJECT | |
|---|---|---|---|
| 5 | OHIO | | |

164
367

OTT-2-16.60

60 50 40 30 20 10 ℄ SURVEY & CONST. 10 20 30 40

858

580 585

575 580

1057+00
576.80

575

580 580

575 575

1056+00
576.50

570 570

580 580

575 575

1055+00
576.30

580 See Ramp C Sheet Nos. 192-195 580

575 575

1054+00
576.30

580 See Ramp C Sheet Nos. 192-195 580

575 575

1053+00
576.20 Existing ℄ Survey Elevation

Sta. 1052+00

70 60 50 40 30 20 10 ℄ SURVEY & CONST. SR 2 10 20 30 40 50 60 70

| | END AREA | | VOLUME | |
|---|---|---|---|---|
| | CUT | FILL | CUT | FILL |
| | 38 | 0 | | |
| | | | 141 | 0 |
| | 38 | 0 | | |
| | | | 139 | 0 |
| | 37 | 0 | | |
| | | | 115 | 0 |
| | 25 | 0 | | |
| | | | 89 | 0 |
| | 23 | 0 | | |
| | | | 115 | 0 |
| | 39 | 0 | | |
| Sheet Totals | | | 599 | 0 |

CROSS SECTIONS STA. 1053+00 TO STA. 1057+00

I:\pd\OTTAWA\OTT2\OTT2X2LDGN

| SEEDING | |
|---|---|
| END WIDTH | SQ. YDS. |

70 60 50 40 30 20 10 ℄ SURVEY & CONST. 10 20 30 40 50 60 70

| QUANTITIES | | | |
|---|---|---|---|
| CALC BY SKL | DATE 2-23-95 | | |
| CKD BY TWB | DATE 8-18-95 | | |

| FHWA REGION | STATE | PROJECT | |
|---|---|---|---|
| 5 | OHIO | | |

165
367

OTT-2-16.60

585 580 575

1062+00
576.60

1061+00
577.00

1060+00
577.30

1059+00
577.10

1058+00
577.10

| | END AREA | | VOLUME | |
|---|---|---|---|---|
| | CUT | FILL | CUT | FILL |
| 1062+00 | 39 | 0 | | |
| | | | 144 | 0 |
| 1061+00 | 39 | 0 | | |
| | | | 143 | 0 |
| 1060+00 | 38 | 0 | | |
| | | | 139 | 0 |
| 1059+00 | 37 | 0 | | |
| | | | 139 | 0 |
| 1058+00 | 38 | 0 | | |
| | | | 141 | 0 |
| Sta. 1057+00 | 38 | 0 | | |
| Sheet Totals | | | 706 | 0 |

/1/pd/OTTAWA/OTT2/OTT2X21.DGN

CROSS SECTIONS STA. 1058+00 TO STA. 1062+00

| SEEDING | |
|---|---|
| END WIDTH | SQ. YDS. |

QUANTITIES
CALC BY SKL DATE 2-23-95
CKD BY TWB DATE 8-18-95

| FHWA REGION | STATE | PROJECT | |
|---|---|---|---|
| 5 | OHIO | | |

166
367

OTT-2-16.60

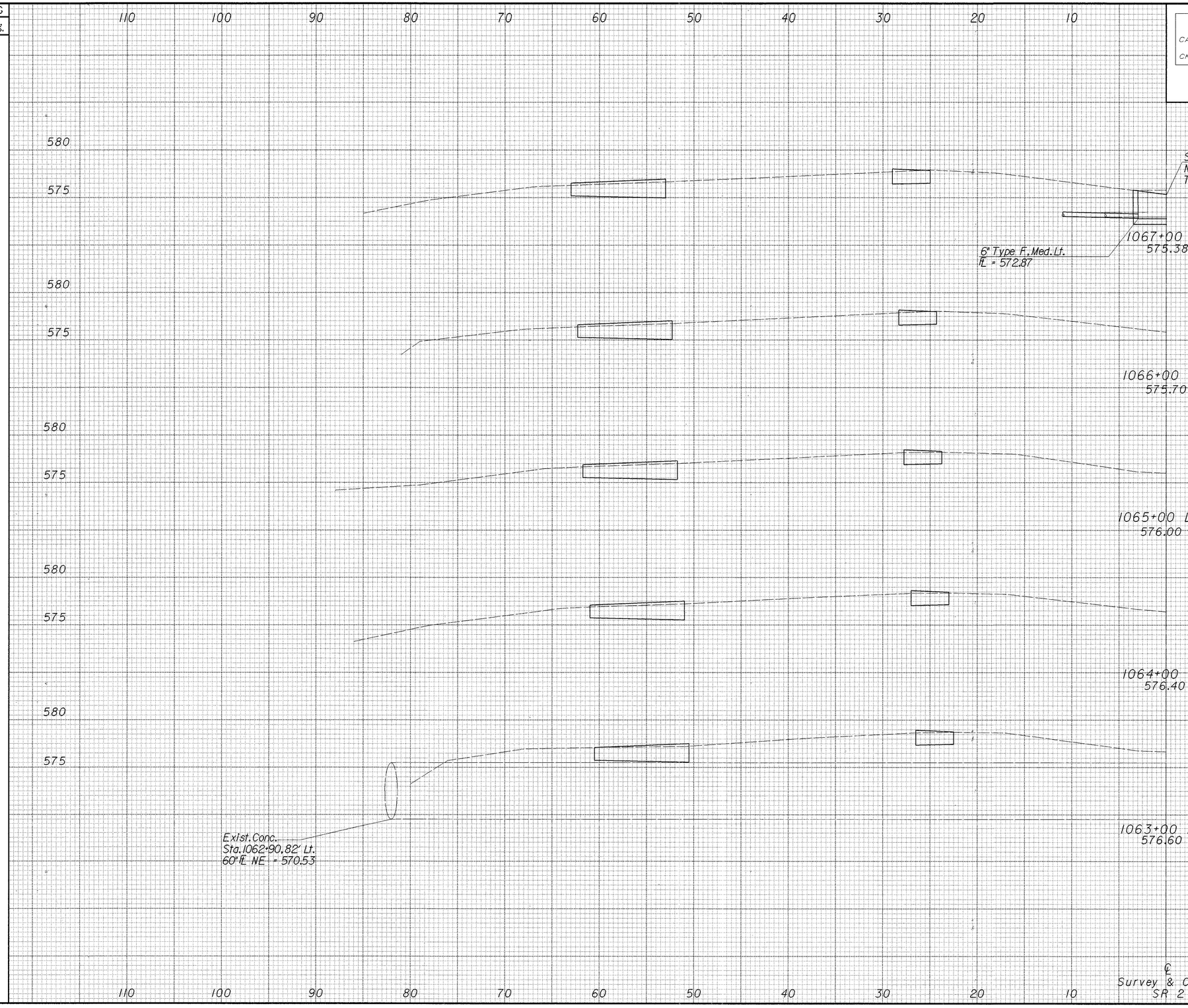


| | END AREA | | VOLUME | |
|---|---|---|---|---|
| | CUT | FILL | CUT | FILL |
| | 19 | 0 | | |
| | | | 70 | 0 |
| | 19 | 0 | | |
| | | | 70 | 0 |
| | 19 | 0 | | |
| | | | 70 | 0 |
| | 19 | 0 | | |
| | | | 72 | 0 |
| | 20 | 0 | | |
| | | | 72 | 0 |
| Sta. 1062+00 | 19 | 0 | | |
| Sheet Totals | | | 354 | 0 |

STA 1063+00 LT. TO STA. 1067+00 LT.

/i/pd/ottawa/ott2/ott2x22.dgn

| SEEDING | |
|---|---|
| END WIDTH | SQ. YDS. |
| | |

| QUANTITIES | |
|---|---|
| CALC BY SKL | DATE 2-23-95 |
| CKD BY TWB | DATE 8-18-95 |

| FHWA REGION | STATE | PROJECT | |
|---|---|---|---|
| 5 | OHIO | | |

OTT-2-16.60

167/367

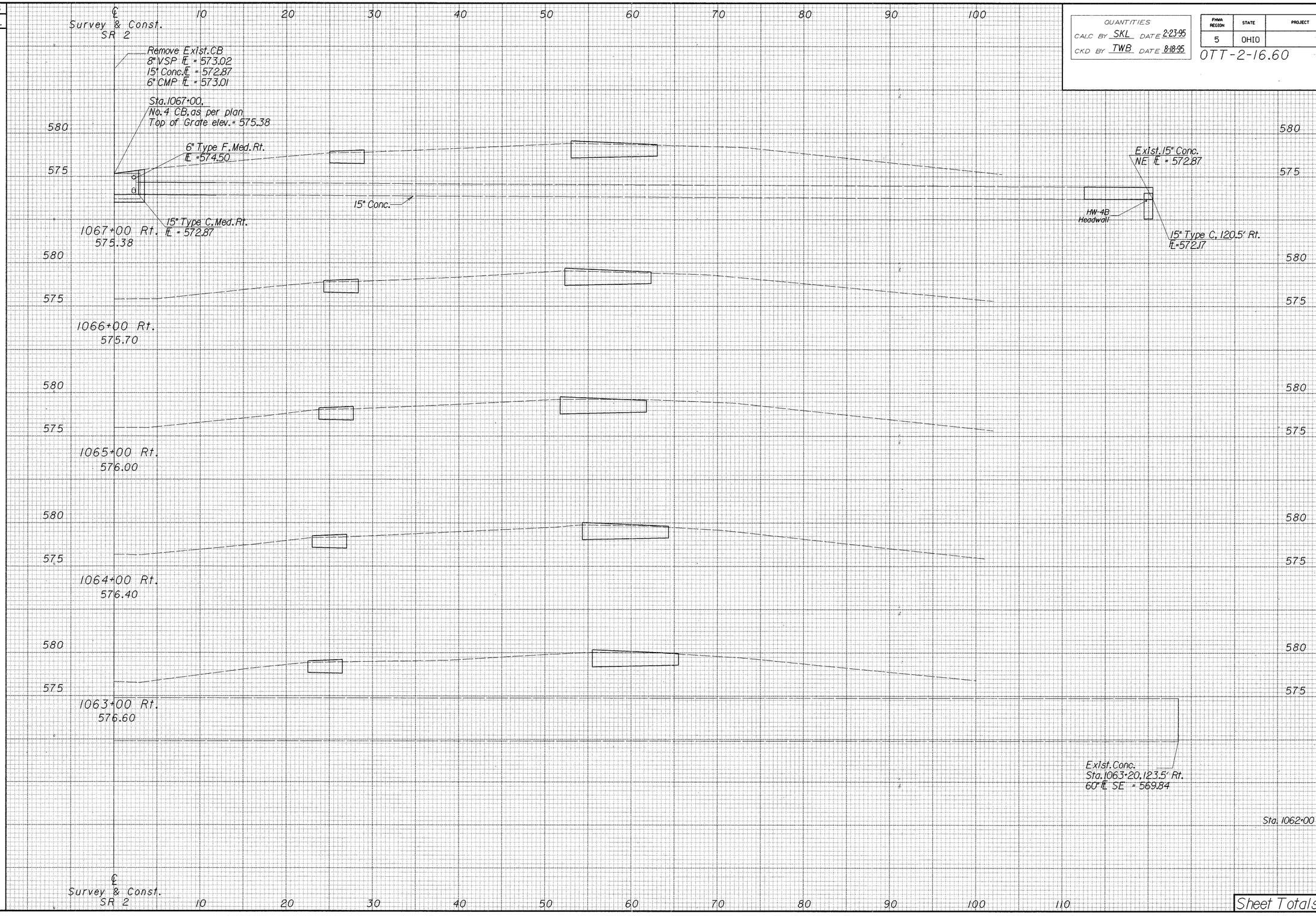


| | END AREA | | VOLUME | |
|---|---|---|---|---|
| | CUT | FILL | CUT | FILL |
| | 20 | 0 | | |
| | | | 72 | 0 |
| | 19 | 0 | | |
| | | | 72 | 0 |
| | 20 | 0 | | |
| | | | 72 | 0 |
| | 19 | 0 | | |
| | | | 72 | 0 |
| | 20 | 0 | | |
| | | | 74 | 0 |
| Sta. 1062+00 | 20 | 0 | | |
| Sheet Totals | | | 362 | 0 |

STA. 1063+00 RT. TO STA. 1067+00 RT.

/i/pd/ottawa/ott2/ott2x22.dgn

| SEEDING | |
|---|---|
| END WIDTH | SQ. YDS. |

| QUANTITIES | |
|---|---|
| CALC BY SKL | DATE 2-23-95 |
| CKD BY TWB | DATE 8-18-95 |

| FHWA REGION | STATE | PROJECT | |
|---|---|---|---|
| 5 | OHIO | | |

168/367

OTT-2-16.60

110 100 90 80 70 60 50 40 30 20 10

585 580 575 580 575 580 575 580 575 570

1093+00 Lt.
584.23

Sta.1087+51.13' Lt.
No.8 CB, as per plan
Top of Grate elev. = 578.00 Lt.

Remove CB
Sta.1087+51.13' Lt.
12" E SW = 575.12

1088+00 Lt.
582.13

12" Type C, Lt.
E = 575.12

Sta.1082+76.14' Lt.
No.8 CB, as per plan
Top of Grate elev. = 576.26

Exist. CMP
Sta.1082+76.25' Lt.
6" E NE = 572.58

1083+00 Lt.
580.44

6" Type F, Lt.
E = 573.90

12" Type C, Rt. Med.
E = 573.70

Remove Exist. C.B.
Sta.1082+76.14' Lt.
12" E NE = 573.79
6" E SW = 573.90

1078+00 Lt.
581.14

Exist. Conc.
Sta.1078+01.128.5' Lt.
72" E NE = 570.52
Sta.1078+11.128.5' Lt.
72" E NE = 570.56

1073+00 Lt.
581.10

1068+00 Lt.
579.90

℄
Survey & Const.
SR 2

| | END AREA | | VOLUME | |
|---|---|---|---|---|
| | CUT | FILL | CUT | FILL |
| | 18 | 0 | | |
| | | | 333 | 0 |
| | 18 | 0 | | |
| | | | 333 | 0 |
| | 18 | 0 | | |
| | | | 343 | 0 |
| | 19 | 0 | | |
| | | | 343 | 0 |
| | 18 | 0 | | |
| | | | 343 | 0 |
| | 19 | 0 | | |
| | | | 70 | 0 |
| Sta. 1067+00 Lt. | 19 | 0 | | |
| Sheet Totals | | | 1765 | 0 |

STA. 1068+00 LT. TO STA. 1093+00 LT.

/i/pd/ottawa/ott2/ott2x23.dgn

| SEEDING | |
|---|---|
| END WIDTH | SQ. YDS. |

| QUANTITIES | | | |
|---|---|---|---|
| CALC BY SKL | DATE 2-23-95 | | |
| CKD BY TWB | DATE 8-18-95 | | |

| FHWA REGION | STATE | PROJECT | |
|---|---|---|---|
| 5 | OHIO | | |

OTT-2-16.60

169/367

| END AREA | | VOLUME | |
|---|---|---|---|
| CUT | FILL | CUT | FILL |
| 18 | 0 | | |
| | | 343 | 0 |
| 19 | 0 | | |
| | | 352 | 0 |
| 19 | 0 | | |
| | | 352 | 0 |
| 19 | 0 | | |
| | | 315 | 0 |
| 15 | 0 | | |
| | | 65 | 0 |
| 20 | 0 | | |
| Sheet Totals | | 1779 | 0 |

℄ Survey & Const. SR 2

10 20 30 40 50 60 70 80 90 100 110

585 580 575

1093+00 Rt. 584.23

Sta. 1087+51.13' Rt.
No. 8 CB, as per plan
Top of Grate elev. = 578.25

Remove Exist. CB
Sta. 1087+51.13' Rt.
15" ℄ NE = 574.77
12" ℄ Sw = 575.00
6" ℄ N = 575.01

1088+00 Rt. 582.13

6" Type F, Med. Rt.
℄ = 577.00

12" Type C, Med. Rt.
℄ = 575.00

15" Type C, Rt.
℄ = 574.77

Exist. Conc.
Sta. 1087+51.126.5' Rt.
15" ℄ Sw = 573.82

Sta. 1082+76.14' Rt.
No. 8 CB, as per plan
Top of Grate elev. = 576.15

1083+00 Rt. 580.44

6" Type F, Rt. & Lt.
℄ = 575.00

12" Type C, Med. Rt.
℄ = 573.36

Remove Exist. CB
Sta. 1082+76.14' Rt.
6" ℄ NE = 573.39
8" ℄ N = 573.40
12" ℄ SW = 573.36
15" ℄ NE = 573.20

15" Type C, Rt.
℄ = 573.20

Ex. Conc.
Sta. 1082+76.127' Rt.
15" ℄ SW = 572.72

HW-4B Headwall

15" Type C, 127' Rt.
℄ = 572.72

1078+00 Rt. 581.14

1073+00 Rt. 581.10

Ex. Conc.
Sta. 1077+90.130.5' Rt.
72" ℄ SW = 569.75
Sta. 1077+99.130.5' Rt.
72" ℄ SW = 569.71

1068+00 Rt. 579.90

Sta. 1067+00 Rt.

℄ Survey & Const. SR 2

STA. 1068+00 RT. TO STA. 1093+00 RT.

//pd/ottawa/ott2/ott2x23.dgn

| SEEDING | |
|---|---|
| END WIDTH | SQ. YDS. |

| QUANTITIES | |
|---|---|
| CALC BY | SKL DATE 2-23-95 |
| CKD BY | TWB DATE 8-18-95 |

| FHWA REGION | STATE | PROJECT | |
|---|---|---|---|
| 5 | OHIO | | |

OTT-2-16.60

170 / 367

110 100 90 80 70 60 50 40 30 20 10

585 580

Exist. CMP
Sta. 1117+64.126'
6" E NE = 577.18

Exist. C.B.
Sta. 1113+66.131' Lt.
18" E SW = 576.18
24" E NW = 576.12
24" E SE = 576.12

Exist. Conc.
Sta. 1102+51.123.5' Lt.
6" E NE = 575.89

Sta. 1117+64.14' Lt.
No. 8 CB, as per plan
Top of Grate elev. = 579.83

12" Type C, Lt. Med.
E = 577.61

1118+00 Lt.
583.93

6" Type F, Lt.
E = 578.50

Remove Exist. C.B.
Sta. 1117+64.14' Lt.
6" E SW = 577.79
12" E NE = 577.61

1113+00 Lt.
584.72

1108+00 Lt.
584.92

Sta. 1102+51.13' Lt.
No. 8 CB, as per plan
Top of Grate elev. = 579.45

1103+00 Lt.
583.69

6" Type F, Lt.
E = 578.50

12" Type C, Med. Lt.
E = 577.22

Remove Exist. CB
Sta. 1102+51.13' Lt.
12" E NE = 576.96
6" E SW = 577.22

1098+00 Lt.
584.59

℄
Survey & Const.
SR 2

| END AREA | | VOLUME | |
|---|---|---|---|
| CUT | FILL | CUT | FILL |
| 19 | 0 | | |
| | | 352 | 0 |
| 19 | 0 | | |
| | | 352 | 0 |
| 19 | 0 | | |
| | | 343 | 0 |
| 18 | 0 | | |
| | | 333 | 0 |
| 18 | 0 | | |
| | | 333 | 0 |
| Sta. 1093+00 Lt. 18 | 0 | | |
| Sheet Totals | | 1713 | 0 |

STA. 1094+00 Lt. TO STA. 1118+00 LT.

I:/pd/ottawa/ott2/ott2x24.dgn

| SEEDING | |
|---|---|
| END WIDTH | SQ. YDS. |

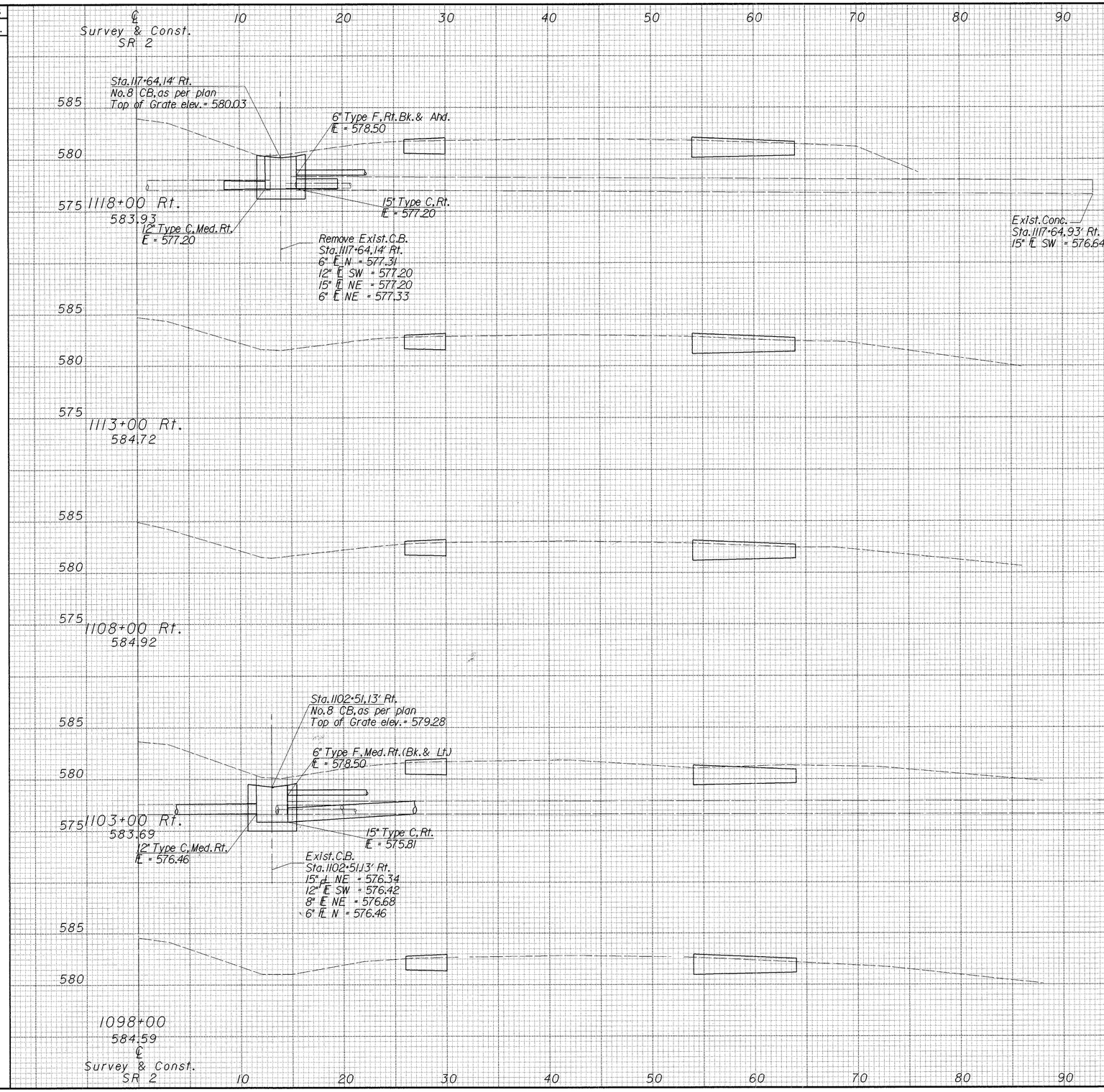


| QUANTITIES | | | |
|---|---|---|---|
| CALC BY SKL | DATE 2-23-95 | | |
| CKD BY TWB | DATE 8-18-95 | | |

| FHWA REGION | STATE | PROJECT | |
|---|---|---|---|
| 5 | OHIO | | |

OTT-2-16.60

171/367

| | END AREA | | VOLUME | |
|---|---|---|---|---|
| | CUT | FILL | CUT | FILL |
| | 19 | 0 | | |
| | | | 343 | 0 |
| | 18 | 0 | | |
| | | | 333 | 0 |
| | 18 | 0 | | |
| | | | 370 | 0 |
| | 22 | 0 | | |
| | | | 370 | 0 |
| | 18 | 0 | | |
| | | | 333 | 0 |
| Sta. 1093+00 Rt. | 18 | 0 | | |
| Sheet Totals | | | 1749 | 0 |

STA. 1094+00 RT. TO STA. 1118+00 RT.

//i/pd/ottawa/ott2/ott2x24.dgn

| SEEDING | |
|---|---|
| END WIDTH | SQ. YDS. |

QUANTITIES
CALC BY SKL DATE 2-23-95
CKD BY TWB DATE 8-18-95

| FHWA REGION | STATE | PROJECT | |
|---|---|---|---|
| 5 | OHIO | | |

OTT-2-16.60

172
367

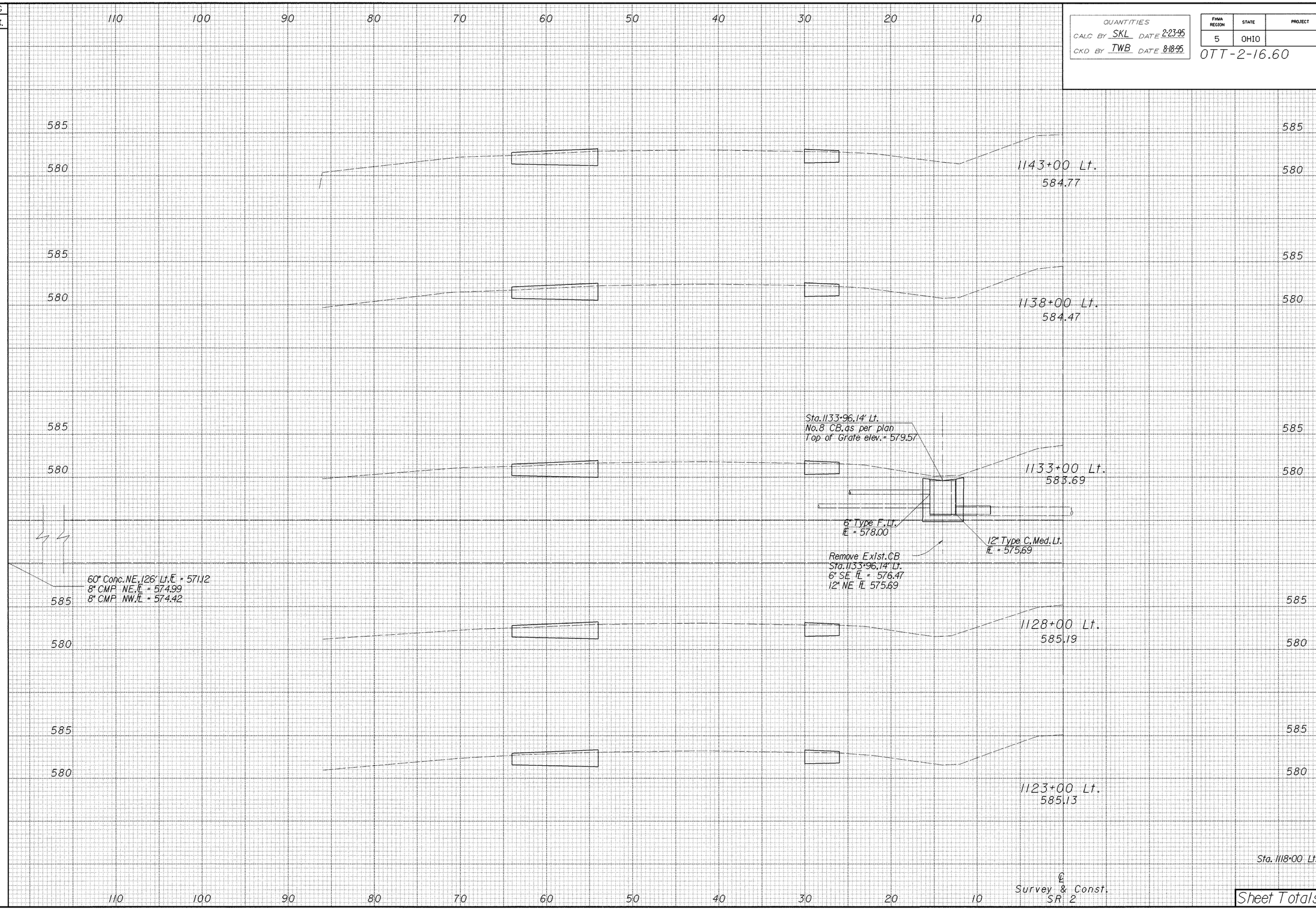


| END AREA | | VOLUME | |
|---|---|---|---|
| CUT | FILL | CUT | FILL |
| 18 | 0 | | |
| | | 333 | 0 |
| 18 | 0 | | |
| | | 333 | 0 |
| 18 | 0 | | |
| | | 343 | 0 |
| 19 | 0 | | |
| | | 352 | 0 |
| 19 | 0 | | |
| | | 352 | 0 |
| Sta. 1118+00 Lt. 19 | 0 | | |
| Sheet Totals | | 1713 | 0 |

STA. 1119+00 LT. TO STA. 1143+00 LT.

/i/pd/ottawa/ott2/ott2x25.dgn

SEEDING

| END WIDTH | SQ. YDS. |
|---|---|

℄ Survey & Const. SR 2

10 20 30 40 50 60 70 80 90 100

585
580
1143+00 Rt.
584.77

585
580
1138+00 Rt.
584.47

Remove Exist.CB
Sta.1133+96.14' Rt.
12" SE ℄ = 575.33
6" NE ℄ = 575.83
15" E ℄ = 575.01

Sta.1133+96.14' Rt.
No.8 CB, as per plan
Top of Grate elev. = 579.61

585
580
575
1133+00 Rt.
583.69

6" Type F, Rt.
℄ = 578.00

12" Type C, Med. Rt.
℄ = 575.53

15" Type C, Med. Rt. Bk.
℄ = 575.01

8" CMP, SE ℄ = 573.92
8" CMP, WE ℄ = 574.35

60" Conc. NE, 99' Rt. ℄ = 570.79

585
580
1128+00 Rt.
585.19

585
580
1123+00 Rt.
585.13

℄ Survey & Const. SR 2

10 20 30 40 50 60 70 80 90 100 110

QUANTITIES
CALC BY SKL DATE 2-23-95
CKD BY TWB DATE 8-18-95

| FHWA REGION | STATE | PROJECT | |
|---|---|---|---|
| 5 | OHIO | | |

OTT-2-16.60

173
367

| | END AREA | | VOLUME | |
|---|---|---|---|---|
| | CUT | FILL | CUT | FILL |
| 585 | | | | |
| | 18 | 0 | | |
| 580 | | | | |
| | | | 343 | 0 |
| 585 | | | | |
| | 19 | 0 | | |
| 580 | | | | |
| | | | 352 | 0 |
| 585 | | | | |
| | 19 | 0 | | |
| 580 | | | | |
| | | | 343 | 0 |
| 585 | | | | |
| | 18 | 0 | | |
| 580 | | | | |
| | | | 333 | 0 |
| 585 | | | | |
| | 18 | 0 | | |
| 580 | | | | |
| | | | 343 | 0 |
| Sta. 1118+00 Rt. | 19 | 0 | | |
| Sheet Totals | | | 1714 | 0 |

STA. 1119+00 RT. TO STA. 1143+00 RT.

//pd/ottawa/ott2/ott2x25.dgn

| SEEDING | |
|---|---|
| END WIDTH | SQ. YDS. |

| QUANTITIES | | | |
|---|---|---|---|
| CALC BY | SKL | DATE | 2-23-95 |
| CKD BY | TWB | DATE | 8-18-95 |

| FHWA REGION | STATE | PROJECT | |
|---|---|---|---|
| 5 | OHIO | | |

OTT-2-16.60

174
367

110 100 90 80 70 60 50 40 30 20 10

585
580
575

Sta.1165+48.92' Lt.
48" x 78" Ellpt.Conc.N ℄ = 571.49
Sta.1165+58.92' Lt.
48" x 78" Ellpt.Conc.N ℄ = 571.49

1168+00 Lt.
581.16

1163+00 Lt.
582.17

Remove Exist.CB
Sta.1157+14.14' Lt.
6" S ℄ = 574.63
12" N ℄ = 574.67

Sta.1157+14.14' Lt.
No.8 CB.as per plan
Top of Grate elev.= 576.95

1158+00 Lt.
580.87

6" Type F.Lt.
℄ = 575.50

12" Type C,Lt.Med.
℄ = 574.67

6" CMP,96' Lt.
℄ = 573.21

1153+00 Lt.
581.86

Remove Exist.CB
Sta.1150+17.14' Lt.
12" N ℄ = 576.32

Sta.1150+17.14' Lt.
No.8 CB.as per plan
Top of Grate elev.= 578.71

1149+00 Lt.
582.76

6" Type F.Lt.
℄ = 577.50

12" Type C,Lt.Med.
℄ = 576.32

℄
Survey & Const.
SR 2

| | END AREA | | VOLUME | |
|---|---|---|---|---|
| | CUT | FILL | CUT | FILL |
| | 19 | 0 | | |
| | | | 352 | 0 |
| | 19 | 0 | | |
| | | | 343 | 0 |
| | 18 | 0 | | |
| | | | 333 | 0 |
| | 18 | 0 | | |
| | | | 267 | 0 |
| | 18 | 0 | | |
| | | | 400 | 0 |
| Sta. 1143+00 Lt. | 18 | 0 | | |
| Sheet Totals | | | 1695 | 0 |

STA. 1144+00 LT. TO STA. 1168+00 LT.

/i/pd/ottawa/ott2/ott2x26.dgn

SEEDING

| END WIDTH | SQ. YDS. |
|---|---|

℄ Survey & Const. SR 2

10 20 30 40 50 60 70 80 90 100 110

590
585
580
575

1168+00 Rt.
581.16

1163+00 Rt.
582.17

Remove Exist.CB
Sta.1157+14.14' Rt.
12" N ℄ = 574.20
8" NW ℄ = 574.29
15" N ℄ = 574.14
6" NE ℄ = 574.31

Sta.1157+14' 14' Rt.
No.8 CB, as per plan
Top of Grate elev.= 576.53

6" Type F, Bk.& Ahd.
℄ = 575.50

1158+00 Rt.
580.87

12" Type C, Med. Rt.
℄ = 574.20

15" Type C, Rt.
℄ = 574.14

1153+00 Rt.
581.86

Remove Exist.CB
Sta.1150+17.14' Rt.
12" S ℄ = 575.88
15" N ℄ = 575.75
6" NE ℄ = 576.05

Sta.1150+17.14' Rt.
No.8 CB, as per plan
Top of Grate elev.= 578.55

6" Type F, Rt. Bk
℄ = 577.50

1149+00 Rt.
582.76

12" Type C, Med. Rt.
℄ = 575.88

15" Type C, Rt.
℄ = 575.75

Sta.1164+95, 127' Rt.
48" x 78" Ellipt. Conc. N ℄ = 570.44
Sta.1165+05, 127' Rt.
48" x 78" Ellipt. Conc. N ℄ = 570.43

15" Conc. S. 126' Rt. ℄ = 573.47

15" Conc., S ℄ = 574.76

HW-4B Headwall

15" Type C, 95' Rt.
℄ = 574.76

℄ Survey & Const. SR 2

/i/pd/ottawa/ott2/ott2x26.dgn

QUANTITIES
CALC BY SKL DATE 2-23-95
CKD BY TWB DATE 8-18-95

| FHWA REGION | STATE | PROJECT | |
|---|---|---|---|
| 5 | OHIO | | |

OTT-2-16.60

175
367

| | END AREA | | VOLUME | |
|---|---|---|---|---|
| | CUT | FILL | CUT | FILL |
| | 19 | 0 | | |
| | | | 361 | 0 |
| | 20 | 0 | | |
| | | | 380 | 0 |
| | 21 | 0 | | |
| | | | 343 | 0 |
| | 16 | 0 | | |
| | | | 259 | 0 |
| | 19 | 0 | | |
| | | | 411 | 0 |
| Sta. 1143+00 Rt. | 18 | 0 | | |
| Sheet Totals | | | 1754 | 0 |

STA. 1144+00 RT. TO STA. 1168+00 RT.

| SEEDING | |
|---|---|
| END WIDTH | SQ. YDS. |

| QUANTITIES | |
|---|---|
| CALC BY SKL | DATE 2-23-95 |
| CKD BY TWB | DATE 8-18-95 |

| FHWA REGION | STATE | PROJECT | |
|---|---|---|---|
| 5 | OHIO | | |

OTT-2-16.60

176
367

110 100 90 80 70 60 50 40 30 20 10

580
575

1193+00 Lt.
582.19

Remove Exist.CB
Sta.1188+15,14' Lt.
6" S I.E. = 573.95
12" N I.E. = 573.92

Sta.1188+15,14' Lt.
No.8 CB.as per plan
Top of Grate elev.= 577.43

1188+00 Lt.
581.34

6" Type F,Lt.
I.E. = 576.00

12" Type C,Med.Lt.
I.E. = 573.92

6" Conc.N,88' Lt.I.E. = 573.16

1183+00 Lt.
581.94

1178+00 Lt.
581.72

Sta.1172+14,14' Lt.
No.8 CB.as per plan
Top of Grate elev.= 576.30

6" Type F,Lt.
I.E. = 575.00

12" Type C,Med.Lt.
I.E. = 573.76

1173+00 Lt.
580.62

℄
Survey & Const.
SR 2

| | END AREA | | VOLUME | |
|---|---|---|---|---|
| | CUT | FILL | CUT | FILL |
| | | | | |
| | 18 | 0 | | |
| | | | 343 | 0 |
| | 19 | 0 | | |
| | | | 352 | 0 |
| | 19 | 0 | | |
| | | | 352 | 0 |
| | 19 | 0 | | |
| | | | 343 | 0 |
| | 18 | 0 | | |
| | | | 343 | 0 |
| Sta.1168+00 Lt. | 19 | 0 | | |
| Sheet Totals | | | 1733 | 0 |

STA. 1169+00 LT. TO STA. 1193+00 LT.

//pd/ottawa/ott2/ott2x27.dgn

| SEEDING | |
|---|---|
| END WIDTH | SQ. YDS. |

| QUANTITIES | | | |
|---|---|---|---|
| CALC BY SKL | DATE 2-23-95 | | |
| CKD BY TWB | DATE 8-18-95 | | |

| FHWA REGION | STATE | PROJECT | |
|---|---|---|---|
| 5 | OHIO | | |

OTT-2-16.60

177
367

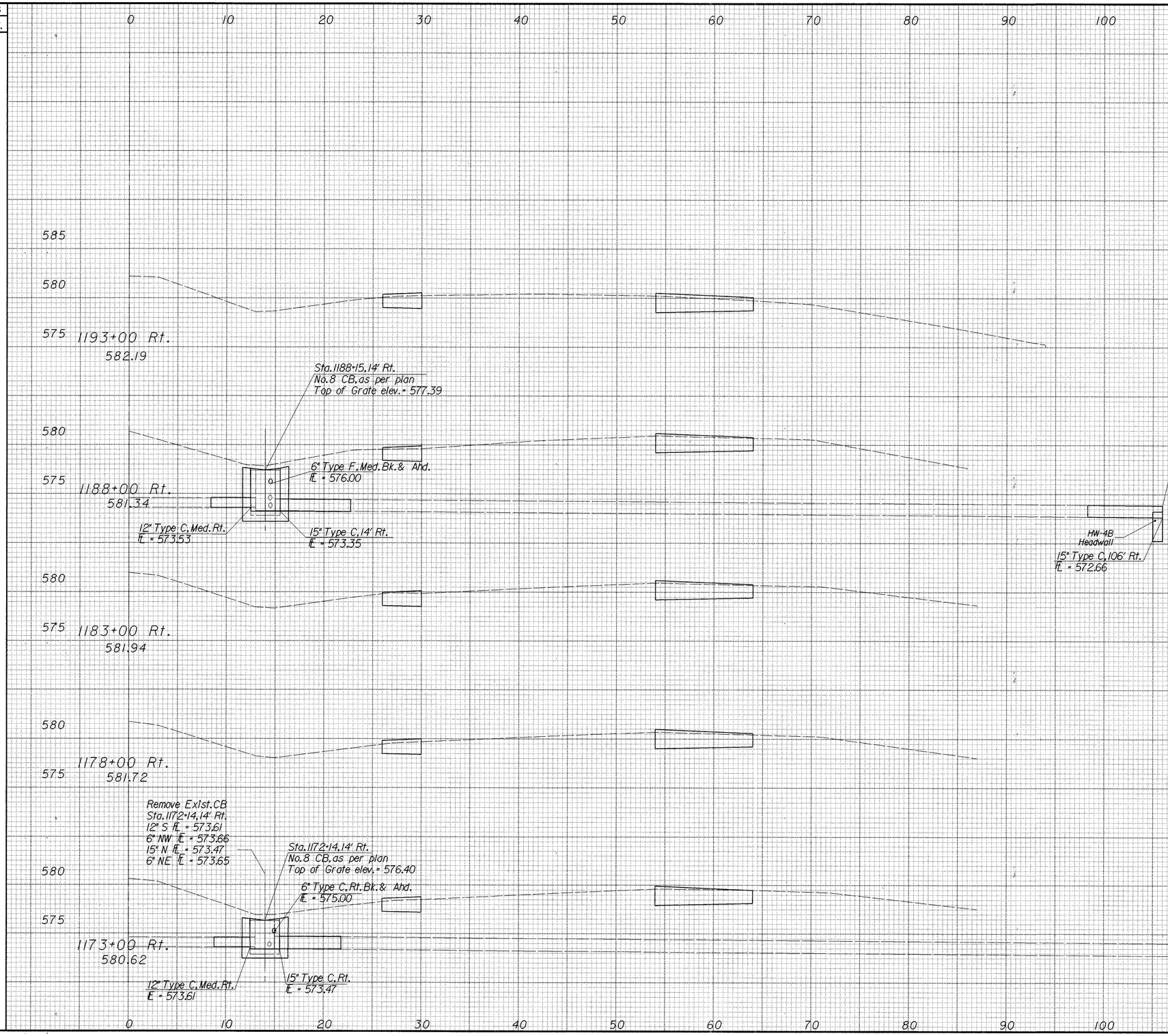


| | END AREA | | VOLUME | |
|---|---|---|---|---|
| | CUT | FILL | CUT | FILL |
| 585 | | | | |
| 580 | 18 | 0 | | |
| 575 | | | 343 | 0 |
| 580 | | | | |
| 575 | 19 | 0 | | |
| | | | 361 | 0 |
| 580 | 20 | 0 | | |
| 575 | | | 361 | 0 |
| 580 | 19 | 0 | | |
| 575 | | | 361 | 0 |
| 580 | 20 | 0 | | |
| 575 | | | 361 | 0 |
| | 19 | 0 | | |
| Sheet Totals | | | 1787 | 0 |

STA. 1169+00 RT. TO STA. 1193+00RT.

//rpd/ottawa/ott2/ott2x27.dgn

| SEEDING | |
|---|---|
| END WIDTH | SQ. YDS. |

QUANTITIES
CALC BY SKL DATE 2-23-95
CKD BY TWB DATE 8-18-95

| FHWA REGION | STATE | PROJECT | |
|---|---|---|---|
| 5 | OHIO | | |

178/367

OTT-2-16.60

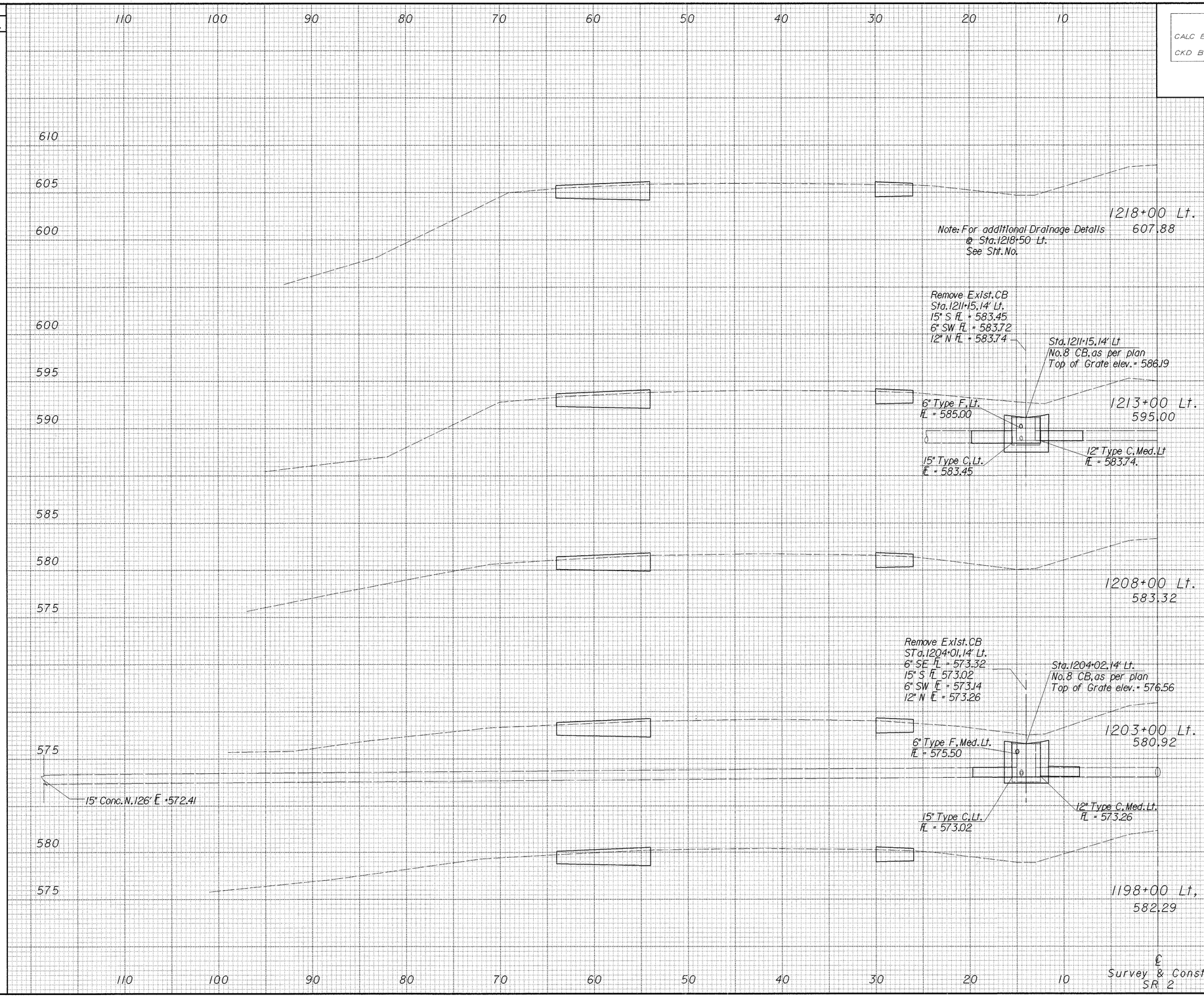


| | END AREA | | VOLUME | |
|---|---|---|---|---|
| | CUT | FILL | CUT | FILL |
| 610 | | | | |
| 605 | 18 | 0 | | |
| 600 | | | 333 | 0 |
| 595 | 18 | 0 | | |
| 590 | | | 333 | 0 |
| 585 | | | | |
| 580 | 18 | 0 | | |
| 575 | | | 333 | 0 |
| 580 | 18 | 0 | | |
| 575 | | | 333 | 0 |
| 580 | 18 | 0 | | |
| 575 | | | 333 | 0 |
| Sta. 1193+00 Lt. | 18 | 0 | | |
| Sheet Totals | | | 1665 | 0 |

STA. 1194+00 LT. TO STA. 1218+00 LT.

I:/PD/OTTAWA/OTT2/OTT2X28.DGN

| SEEDING | |
|---|---|
| END WIDTH | SQ. YDS. |

℄ Survey & Const. SR 2

10 20 30 40 50 60 70 80 90 100 110

610
605
600
595
590
585
580
575
570

1218+00 Rt.
607.88

Note: For additional Drainage Details @ Sta.1218+50 Rt. See Sht. No.237

Remove Exist.CB Sta.1211+15,14' Rt. 12" S FL = 583.73

Sta.1211+15,14' Rt. No.8 CB, as per plan Top of Grate elev.= 586.20

1213+00 Rt.
595.00

6" Type F, Rt. FL = 585.00

12" Type C, Med. Rt. FL = 583.73

1208+00 Rt.
583.32

Sta.1204+02,14' Rt. No.8 CB, as per plan Top of Grate elev.= 576.63

1203+00 Rt.
580.92

6" Type F, Rt. FL = 575.50

12" Type C, Med. Rt. FL = 573.40

1198+00 Rt.
582.29

℄ Survey & Const. SR 2

| QUANTITIES | | | |
|---|---|---|---|
| CALC BY SKL | DATE 2-23-95 | | |
| CKD BY TWB | DATE 8-18-95 | | |

| FHWA REGION | STATE | PROJECT | |
|---|---|---|---|
| 5 | OHIO | | |

OTT-2-16.60

179
367

| END AREA | | VOLUME | |
|---|---|---|---|
| CUT | FILL | CUT | FILL |
| | | | |
| 18 | 0 | | |
| | | 343 | 0 |
| 19 | 0 | | |
| | | 343 | 0 |
| 18 | 0 | | |
| | | 333 | 0 |
| 18 | 0 | | |
| | | 324 | 0 |
| 17 | 0 | | |
| | | 324 | 0 |
| Sta. 1193+00 Rt. 18 | 0 | | |
| Sheet Totals | | 1667 | 0 |

STA. 1194+00 RT. TO STA. 1218+00 RT.

//pd/ottawa/ott2/ott2x28.dgn

| SEEDING | |
|---|---|
| END WIDTH | SQ. YDS. |

| QUANTITIES | |
|---|---|
| CALC BY SKL | DATE 2-23-95 |
| CKD BY TWB | DATE 8-19-95 |

| FHWA REGION | STATE | PROJECT | |
|---|---|---|---|
| 5 | OHIO | | |

180
367

OTT-2-16.60

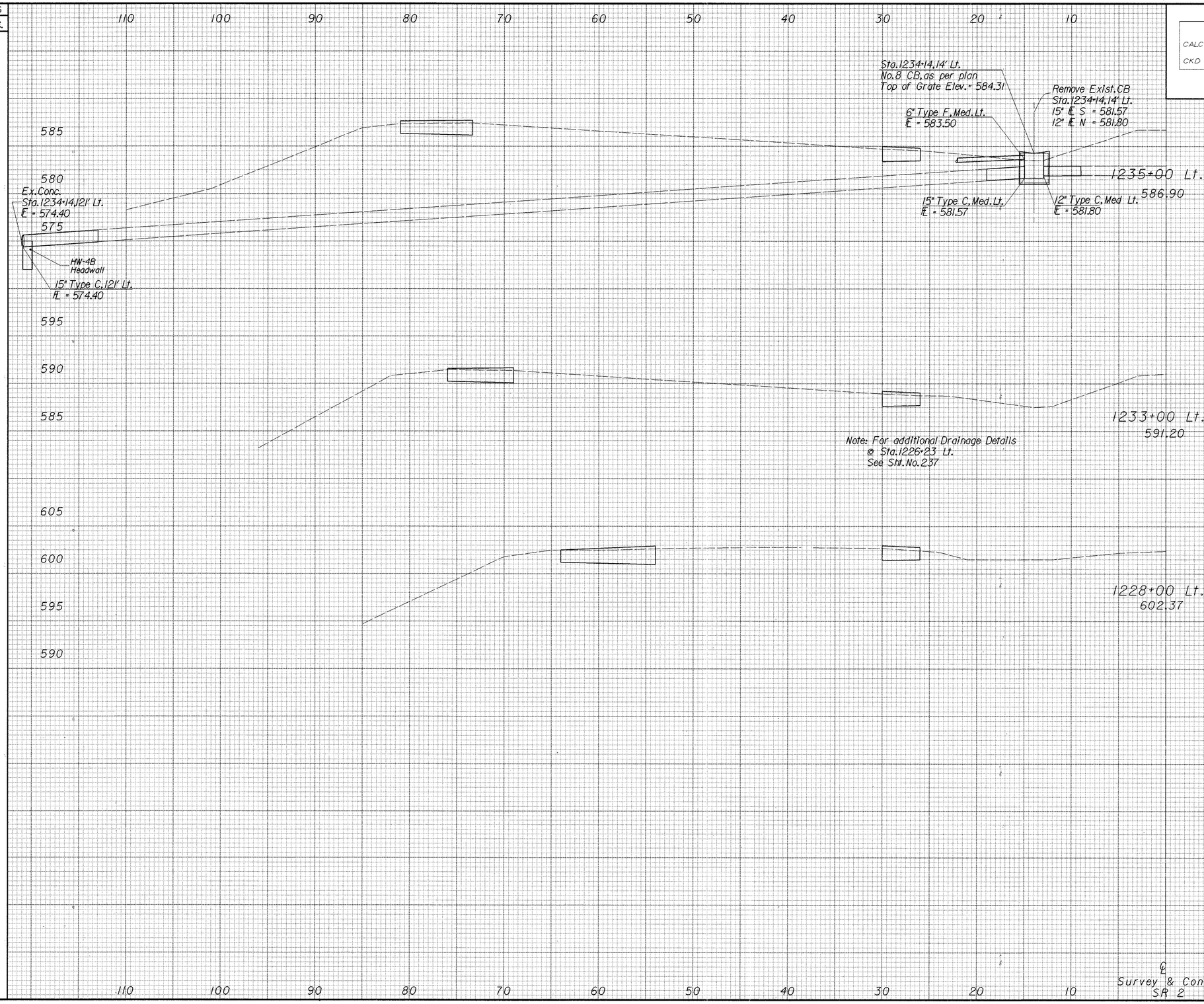


| | END AREA | | VOLUME | |
|---|---|---|---|---|
| | CUT | FILL | CUT | FILL |
| | 13 | 0 | | |
| | | | 96 | 0 |
| | 13 | 0 | | |
| | | | 296 | 0 |
| | 19 | 0 | | |
| | | | 685 | 0 |
| Sta.1218+00 Lt. | 18 | 0 | | |
| Sheet Totals | | | 1077 | 0 |

STA. 1219+00 LT. TO STA. 1235+00 LT.

/17pd/ottawa/ott2/6tt2x29.dgn

| SEEDING | |
|---|---|
| END WIDTH | SQ. YDS. |

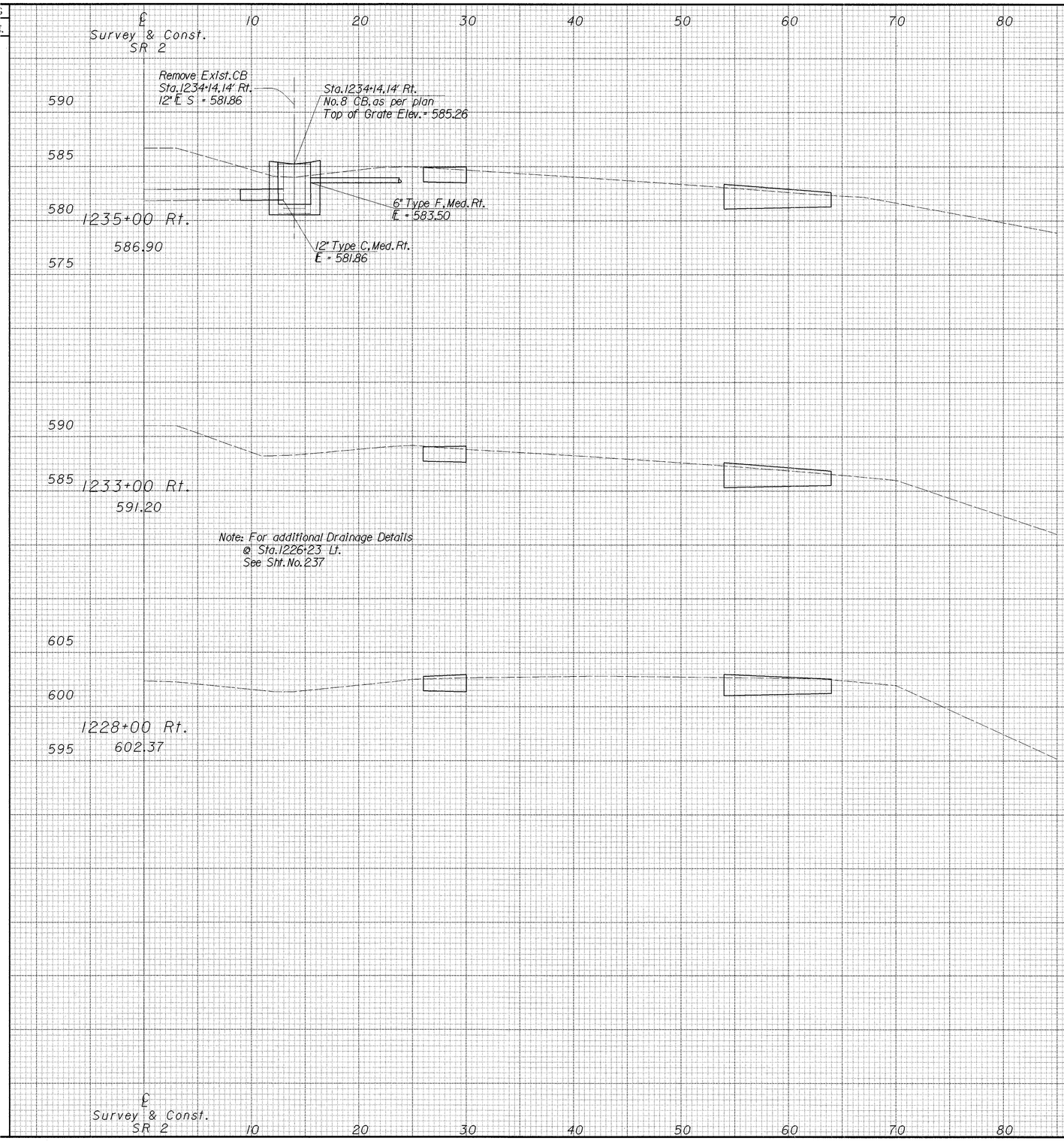


| QUANTITIES | | | |
|---|---|---|---|
| CALC BY SKL | DATE 2-23-95 | | |
| CKD BY TWB | DATE 8-19-95 | | |

| FHWA REGION | STATE | PROJECT | |
|---|---|---|---|
| 5 | OHIO | | |

181/367

OTT-2-16.60

| | END AREA | | VOLUME | |
|---|---|---|---|---|
| | CUT | FILL | CUT | FILL |
| 585 | | | | |
| 580 | 20 | 0 | | |
| 575 | | | | |
| | | | 148 | 0 |
| 590 | | | | |
| | 20 | 0 | | |
| 585 | | | | |
| | | | 370 | 0 |
| 605 | | | | |
| | 20 | 0 | | |
| 600 | | | | |
| 595 | | | | |
| | | | 704 | 0 |
| Sta. 1218+00 Rt. | 18 | 0 | | |
| Sheet Totals | | | 1222 | 0 |

STA. 1219+00 RT. TO STA. 1235+00 RT

I:/PD/OTTAWA/OTT2/OTT2X29.DGM

| SEEDING | |
|---|---|
| END WIDTH | SQ. YDS. |

NOTE: For additional X-Sections on SR 53 see Slope Repair Sht. nos. 208-216.

℄ SURVEY & CONST. SR 2

264+00
577.68

263+50
577.94

263+00
577.86

262+50
577.70

262+00
577.68

℄ SURVEY & CONST. SR 2

15" Conc.

Sta. 263+35.27' Rt
No. 2-2B
Top of Grate Elev. = 575.30

12" Type C, Ahd.
℄ = 573.62

12" Type C, Bk.
℄ = 573.65

Exist. C.B.
Sta. 263+44.26.5' Rt.
12" ℄ S = 573.62
12" ℄ N = 573.62

| QUANTITIES | |
|---|---|
| CALC BY | SKL |
| DATE | 2-23-95 |
| CKD BY | TWB |
| DATE | 8-18-95 |

| FHWA REGION | STATE | PROJECT | |
|---|---|---|---|
| 5 | OHIO | | |

181A
367

OTT-2-16.60

| END AREA | | VOLUME | |
|---|---|---|---|
| CUT | FILL | CUT | FILL |

/USR2/OTTAWA/OTT2/OTT2XSOI.DGN

SR 53 ~ CROSS SECTIONS STA. 262+00 TO STA. 264+00

| SEEDING | |
|---|---|
| END WIDTH | SQ. YDS. |

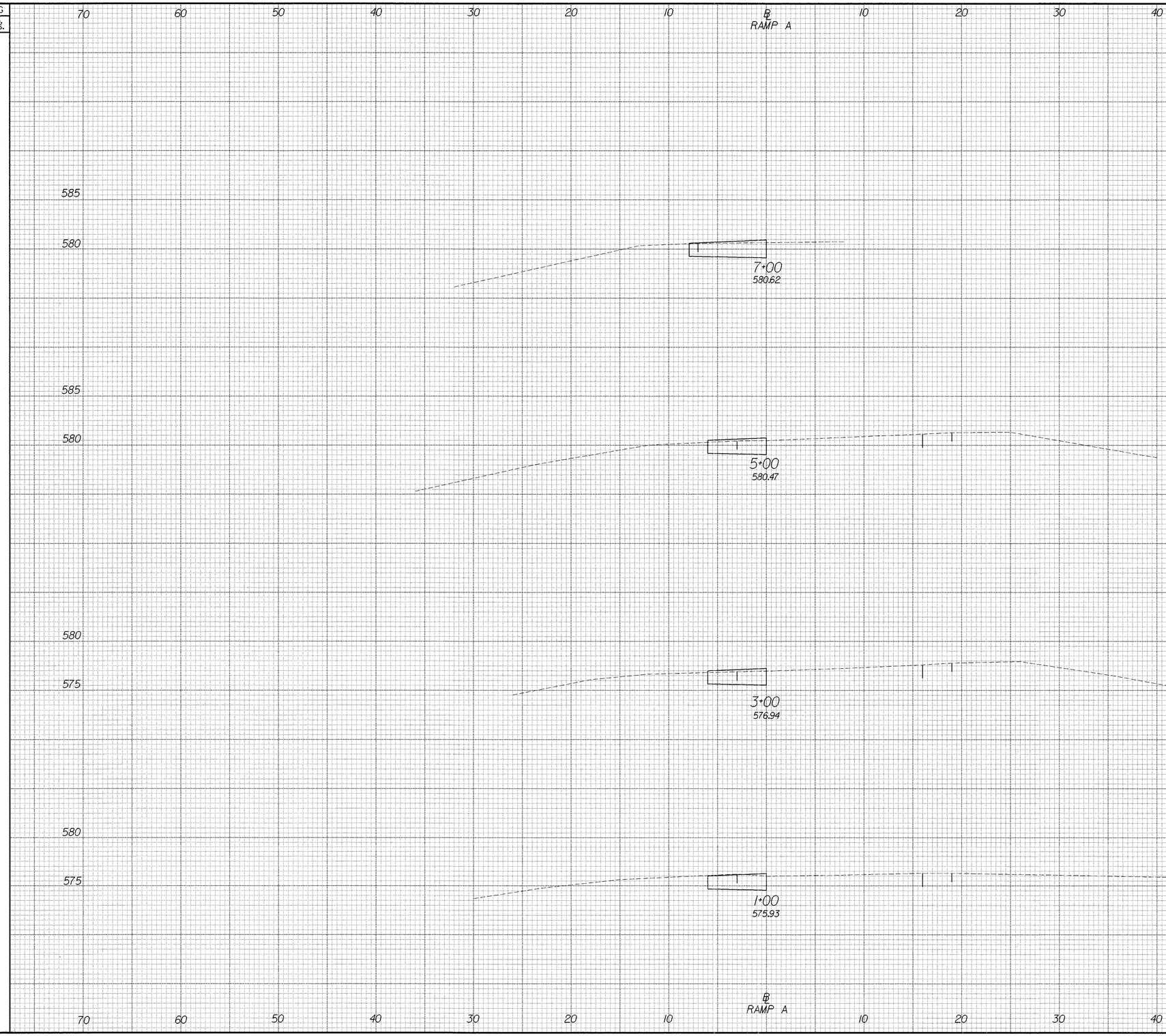


QUANTITIES
CALC BY SKL DATE 2-23-95
CKD BY TWB DATE 8-17-95

| FHWA REGION | STATE | PROJECT | |
|---|---|---|---|
| 5 | OHIO | | |

182/367

OTT-2-16.60

| END AREA | | VOLUME | |
|---|---|---|---|
| CUT | FILL | CUT | FILL |
| 11 | 0 | | |
| | | 70 | 0 |
| 8 | 0 | | |
| | | 59 | 0 |
| 8 | 0 | | |
| | | 63 | 0 |
| 9 | 0 | | |
| Sheet Totals | | 192 | 0 |

/1/pd/ottawa/ott2/163rmpxs.dgn

SR 163 RAMP "A" CROSS SECTIONS

| SEEDING | |
|---|---|
| END WIDTH | SQ. YDS. |

QUANTITIES
CALC BY SKL DATE 2-23-95
CKD BY TWB DATE 6-17-95

| FHWA REGION | STATE | PROJECT | |
|---|---|---|---|
| 5 | OHIO | | |

OTT-2-16.60

183
367

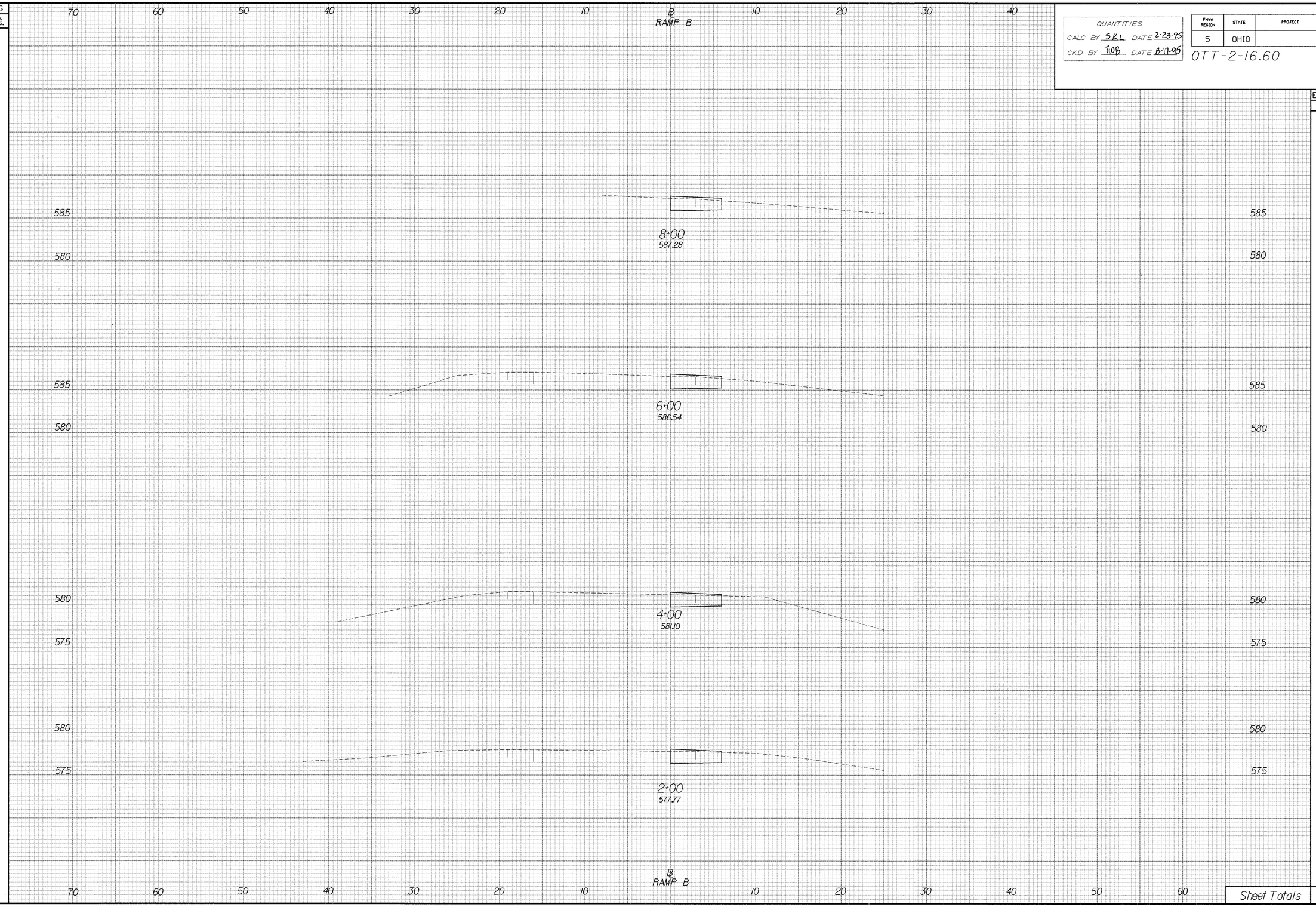


| END AREA | | VOLUME | |
|---|---|---|---|
| CUT | FILL | CUT | FILL |
| 8 | 0 | | |
| | | 60 | 0 |
| 8 | 0 | | |
| | | 60 | 0 |
| 8 | 0 | | |
| | | 60 | 0 |
| 8 | 0 | | |
| Sheet Totals | | 180 | 0 |

/i/pd/ottawa/ott2/163rmpxs.dgn

SR 163 RAMP "B" CROSS SECTIONS

| SEEDING | |
|---|---|
| END WIDTH | SQ. YDS. |




QUANTITIES
CALC BY SKL DATE 2-23-95
CKD BY TWB DATE 8-19-96

| FHWA REGION | STATE | PROJECT | |
|---|---|---|---|
| 5 | OHIO | | |

OTT-2-16.60

184
367

| END AREA | | VOLUME | |
|---|---|---|---|
| CUT | FILL | CUT | FILL |
| | | | |
| 11 | 0 | | |
| | | 82 | 0 |
| 11 | 0 | | |
| | | 70 | 0 |
| 8 | 0 | | |
| Sheet Totals | | 152 | 0 |

/i/pd/ottawa/ott2/163rmpxs.dgn

SR 163 RAMP "B" CROSS SECTIONS

| SEEDING | |
|---|---|
| END WIDTH | SQ. YDS. |

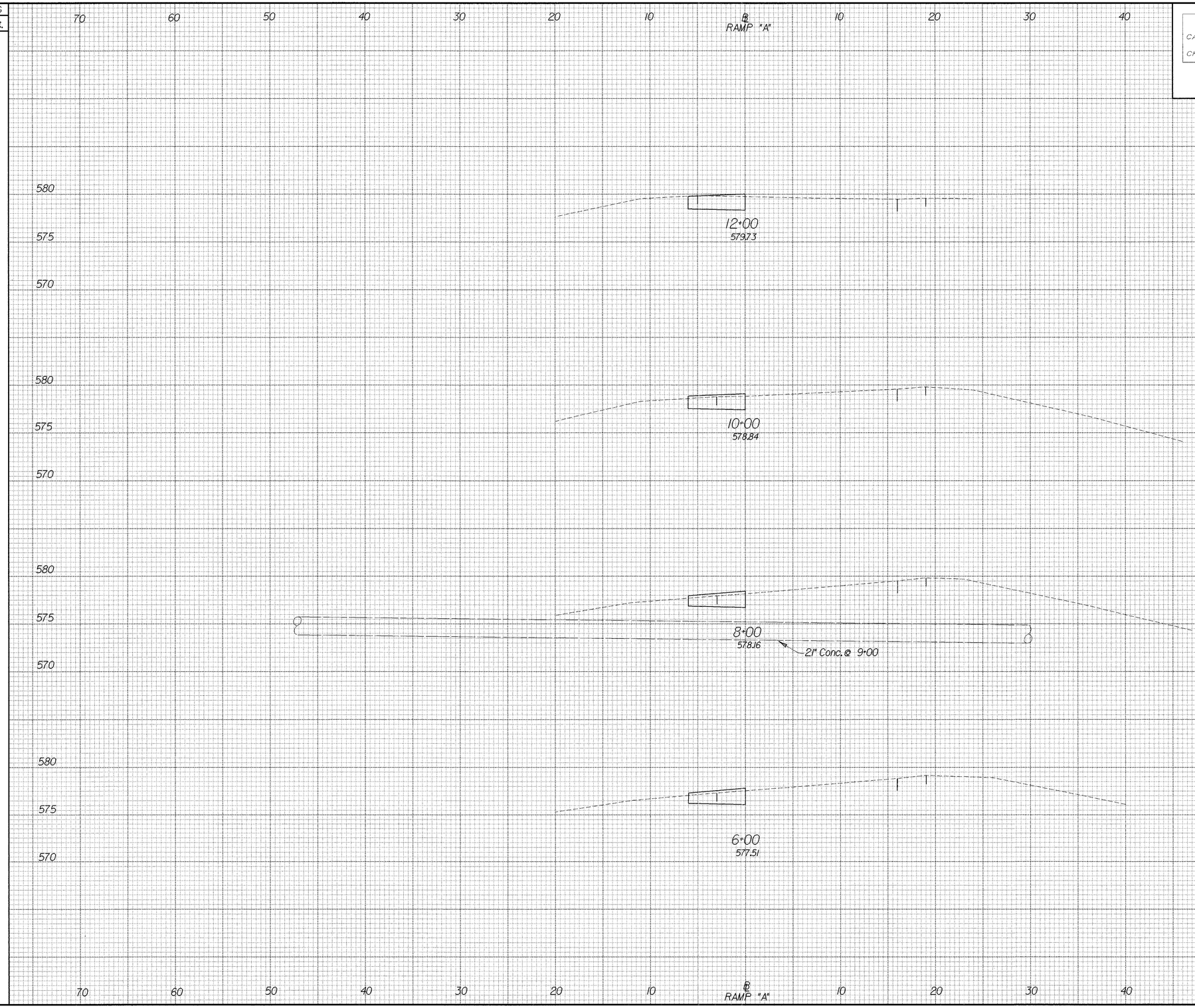


QUANTITIES
CALC BY SKL DATE 2-23-95
CKD BY TWB DATE 8-17-95

| FHWA REGION | STATE | PROJECT | |
|---|---|---|---|
| 5 | OHIO | | |

185/367

OTT-2-16.60

| END AREA | | VOLUME | |
|---|---|---|---|
| CUT | FILL | CUT | FILL |
| 9 | 0 | | |
| | | 63 | 0 |
| 8 | 0 | | |
| | | 56 | 0 |
| 7 | 0 | | |
| | | 52 | 0 |
| 7 | 0 | | |
| Sheet Totals | | 171 | 0 |

USR2/OTTAWA/OTT2/OTT2X1.DGN

SR 53 RAMP "A" CROSS SECTIONS

| SEEDING | |
|---|---|
| END WIDTH | SQ. YDS. |

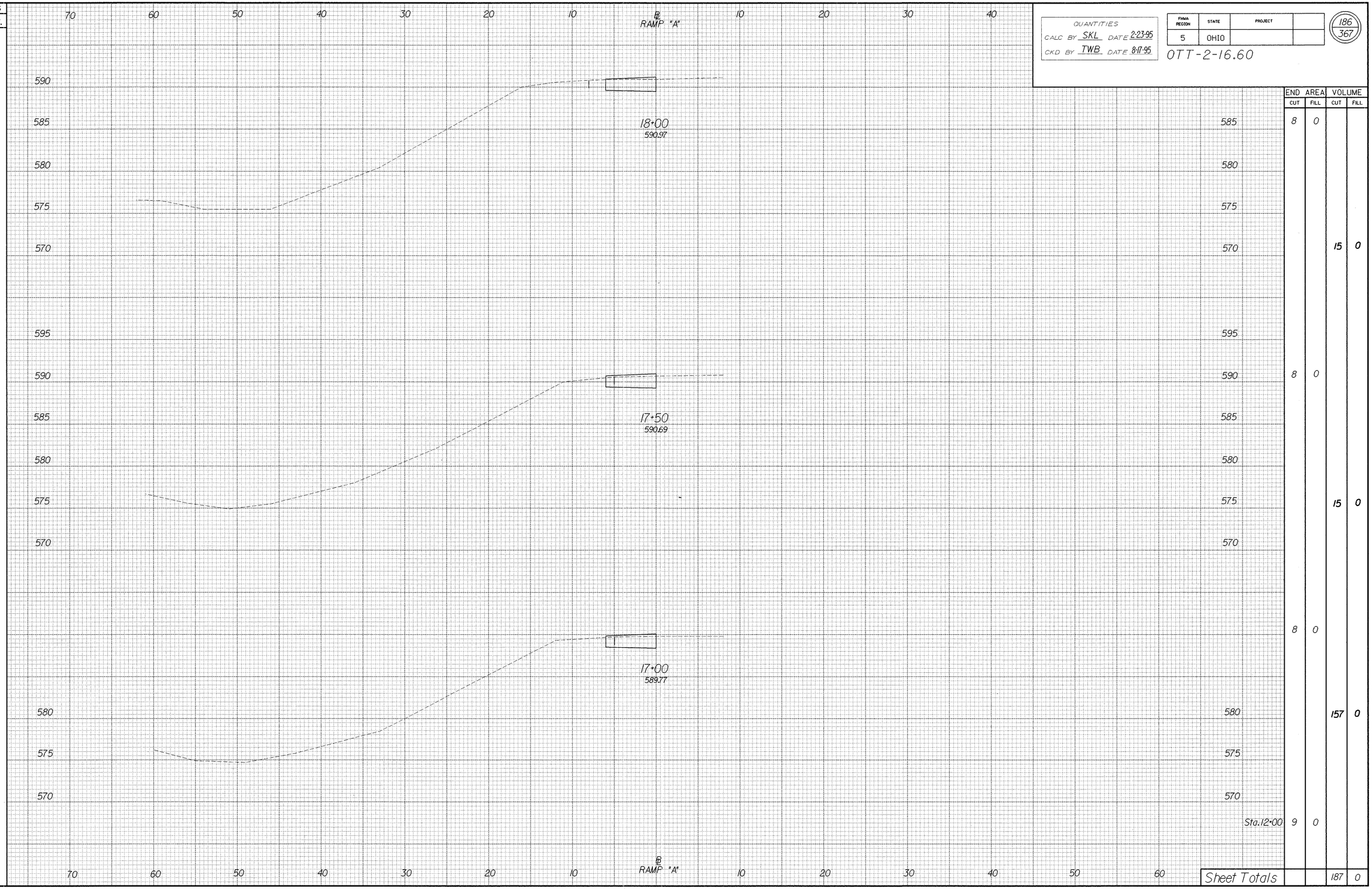


QUANTITIES
CALC BY SKL DATE 2-23-95
CKD BY TWB DATE 8-17-95

| FHWA REGION | STATE | PROJECT | |
|---|---|---|---|
| 5 | OHIO | | |

OTT-2-16.60

186
367

| | END AREA | | VOLUME | |
|---|---|---|---|---|
| | CUT | FILL | CUT | FILL |
| | 8 | 0 | | |
| | | | 15 | 0 |
| | 8 | 0 | | |
| | | | 15 | 0 |
| | 8 | 0 | | |
| | | | 157 | 0 |
| Sta. 12+00 | 9 | 0 | | |
| Sheet Totals | | | 187 | 0 |

USR2/OTTAWA/OTT2/OTT2X1.DGN

SR 53 RAMP "A" CROSS SECTIONS

| SEEDING | |
|---|---|
| END WIDTH | SQ. YDS. |

QUANTITIES
CALC BY SKL DATE 2-23-95
CKD BY TWB DATE 8-17-95

| FHWA REGION | STATE | PROJECT | |
|---|---|---|---|
| 5 | OHIO | | |

187/367

OTT-2-16.60

B
L
RAMP "A & B"

Refer To Slope Repair
Cross Sections
Sht. No. 217

15+00
584.15

14+50
582.65

14+00
581.50 - Existing ℄ Median Elevation

585
580
575
570

10 20 30 40 50 60 70 80 90 100

| END AREA | | VOLUME | |
|---|---|---|---|
| CUT | FILL | CUT | FILL |
| 17 | 0 | | |
| 17 | 0 | | |
| 16 | 0 | | |
| Sheet Totals | | 62 | 0 |

i:/pd/ottawa/ott2/ott2x1.dgn

S.R. 53 RAMP "A" & "B" CROSS SECTIONS

| SEEDING | |
|---|---|
| END WIDTH | SQ. YDS. |

℄ RAMP "A & B"

30 20 10 10 20 30 40 50 60 70 80

590 585 580 575 570

16+50
588.73

Refer To Slope Repair
Cross Sections
Sht. No. 218

590 585 580 575

16+00
587.17

Refer To Slope Repair
Cross Sections
Sht. No. 218

590 585 580 575

15+50
585.58

Refer To Slope Repair
Cross Sections
Sht. No. 217

585 580 575 570

℄ RAMP "A & B"

30 20 10 10 20 30 40 50 60 70 80 90 100

QUANTITIES
CALC BY SKL DATE 2-23-95
CKD BY TWB DATE 8-17-95

| FHWA REGION | STATE | PROJECT | |
|---|---|---|---|
| 5 | OHIO | | |

OTT-2-16.60

188
367

| END AREA | | VOLUME | |
|---|---|---|---|
| CUT | FILL | CUT | FILL |
| 17 | 0 | | |
| 17 | 0 | | |
| | | 31 | 0 |
| 17 | 0 | | |
| 17 | 0 | | |
| | | 31 | 0 |
| 17 | 0 | | |
| Sta. 15+00 Ramps A & B | | | |
| Sheet Totals | | 93 | 0 |

i:/pd/ottawa/ott2/ott2xl.dgn

S.R. 53 RAMP "A" & "B" CROSS SECTIONS

| SEEDING | |
|---|---|
| END WIDTH | SQ. YDS. |

QUANTITIES
CALC BY SKL DATE 2-23-95
CKD BY TWB DATE 8-17-95

| FHWA REGION | STATE | PROJECT | |
|---|---|---|---|
| 5 | OHIO | | |

189
367

OTT-2-16.60

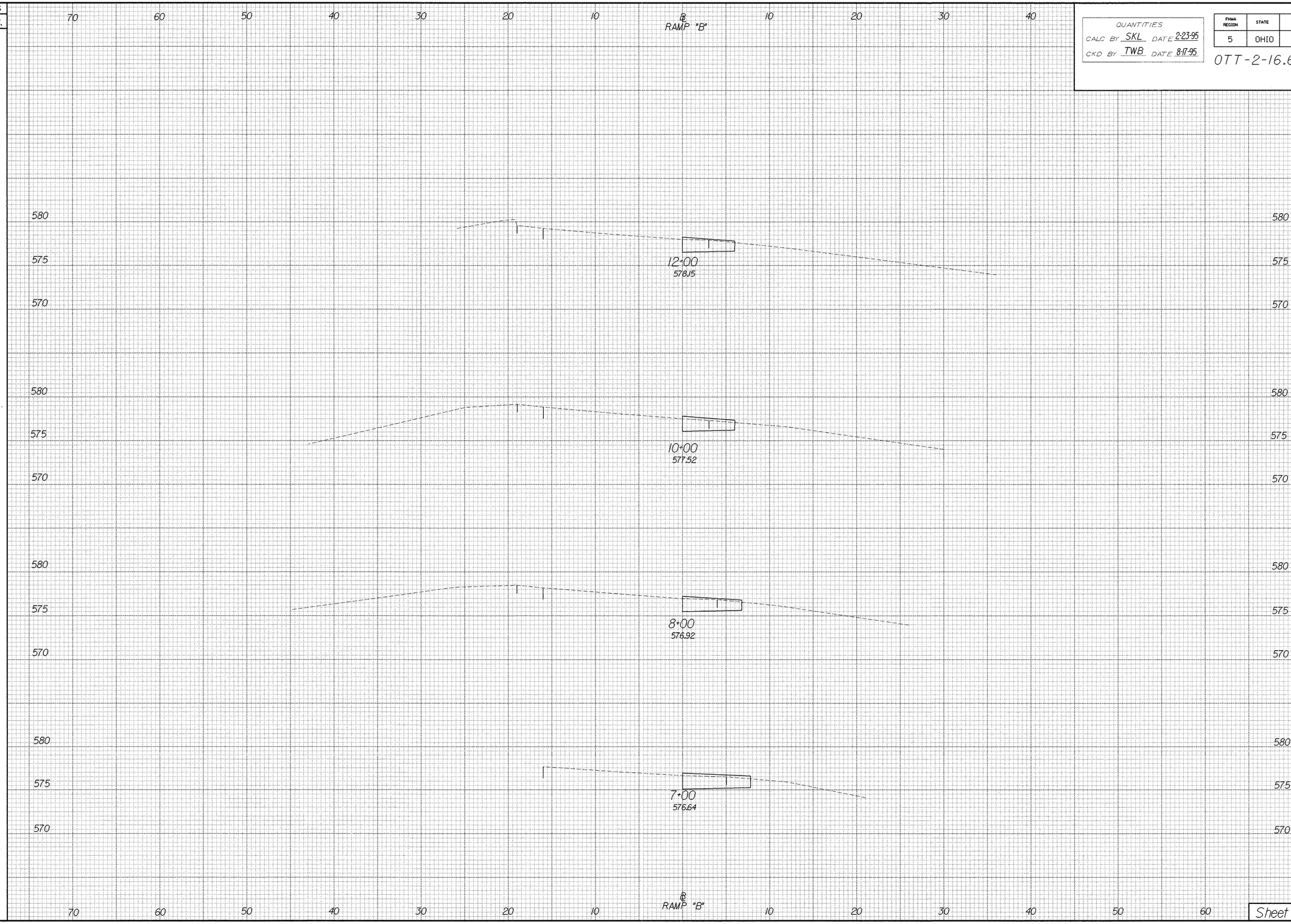


| | END AREA | | VOLUME | |
|---|---|---|---|---|
| | CUT | FILL | CUT | FILL |
| 12+00 | 8 | 0 | | |
| | | | 56 | 0 |
| 10+00 | 7 | 0 | | |
| | | | 59 | 0 |
| 8+00 | 9 | 0 | | |
| | | | 35 | 0 |
| 7+00 | 10 | 0 | | |
| Sheet Totals | | | 150 | 0 |

/i/pd/ottawa/ott2/ott2x1.dgn

SR 53 RAMP "B" CROSS SECTIONS

| SEEDING | |
|---|---|
| END WIDTH | SQ. YDS. |

QUANTITIES
CALC BY SKL DATE 2-23-95
CKD BY TWB DATE 8-17-95

| FHWA REGION | STATE | PROJECT | |
|---|---|---|---|
| 5 | OHIO | | |

190
367

OTT-2-16.60

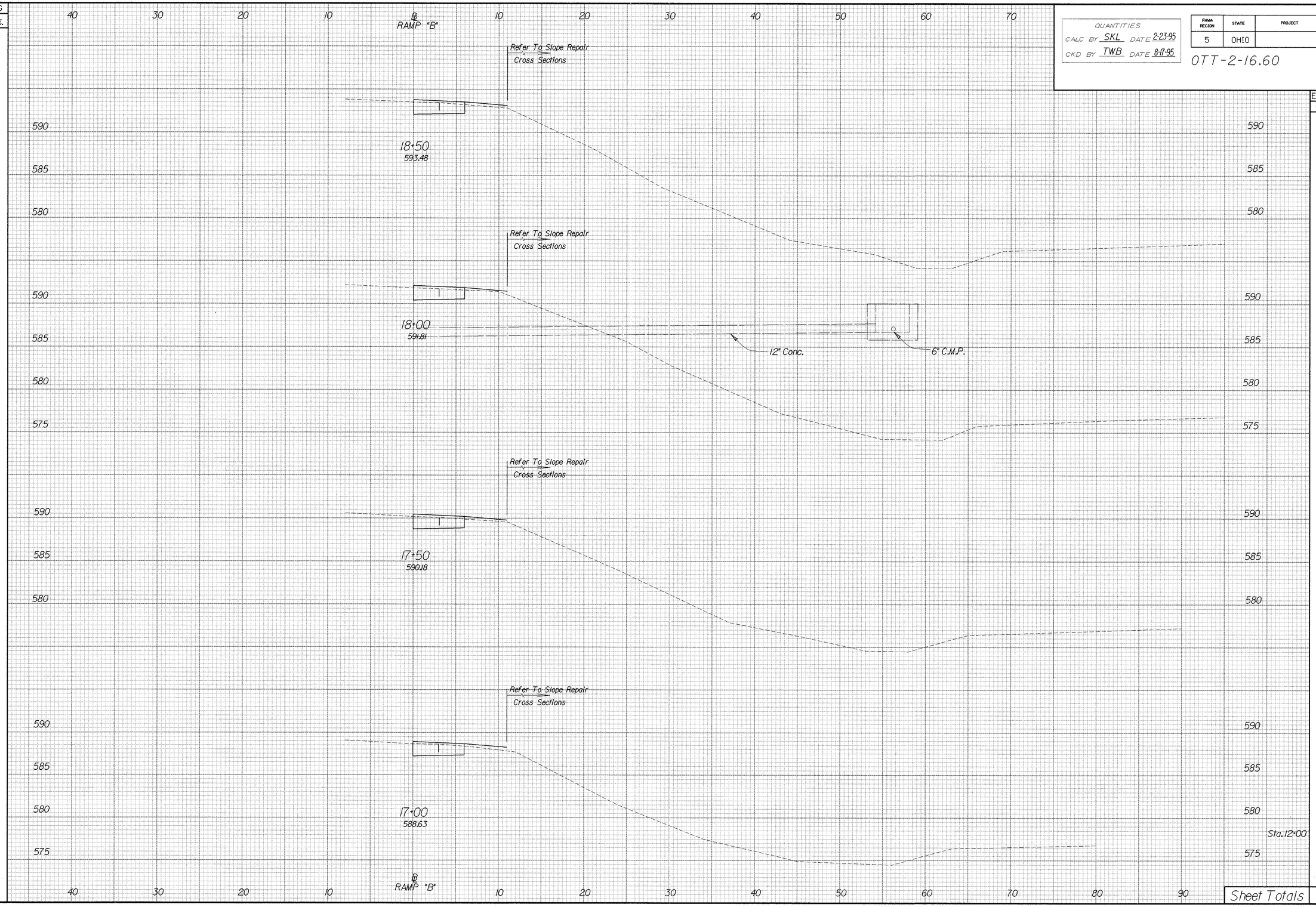


| Station | END AREA CUT | END AREA FILL | VOLUME CUT | VOLUME FILL |
|---|---|---|---|---|
| | 8 | 0 | | |
| | | | 15 | 0 |
| | 8 | 0 | | |
| | | | 14 | 0 |
| | 7 | 0 | | |
| | | | 14 | 0 |
| | 8 | 0 | | |
| | | | 148 | 0 |
| Sta. 12+00 | 8 | 0 | | |
| Sheet Totals | | | 191 | 0 |

SR 53 RAMP "B" CROSS SECTIONS

i:/pd/ottawa/ott2/ott2x1.dgn

| QUANTITIES | |
|---|---|
| CALC BY SKL | DATE 2-23-95 |
| CKD BY TWB | DATE 8-17-95 |

| FHWA REGION | STATE | PROJECT | |
|---|---|---|---|
| 5 | OHIO | | |

191/367

OTT-2-16.60

| SEEDING | |
|---|---|
| END WIDTH | SQ. YDS. |
| | |

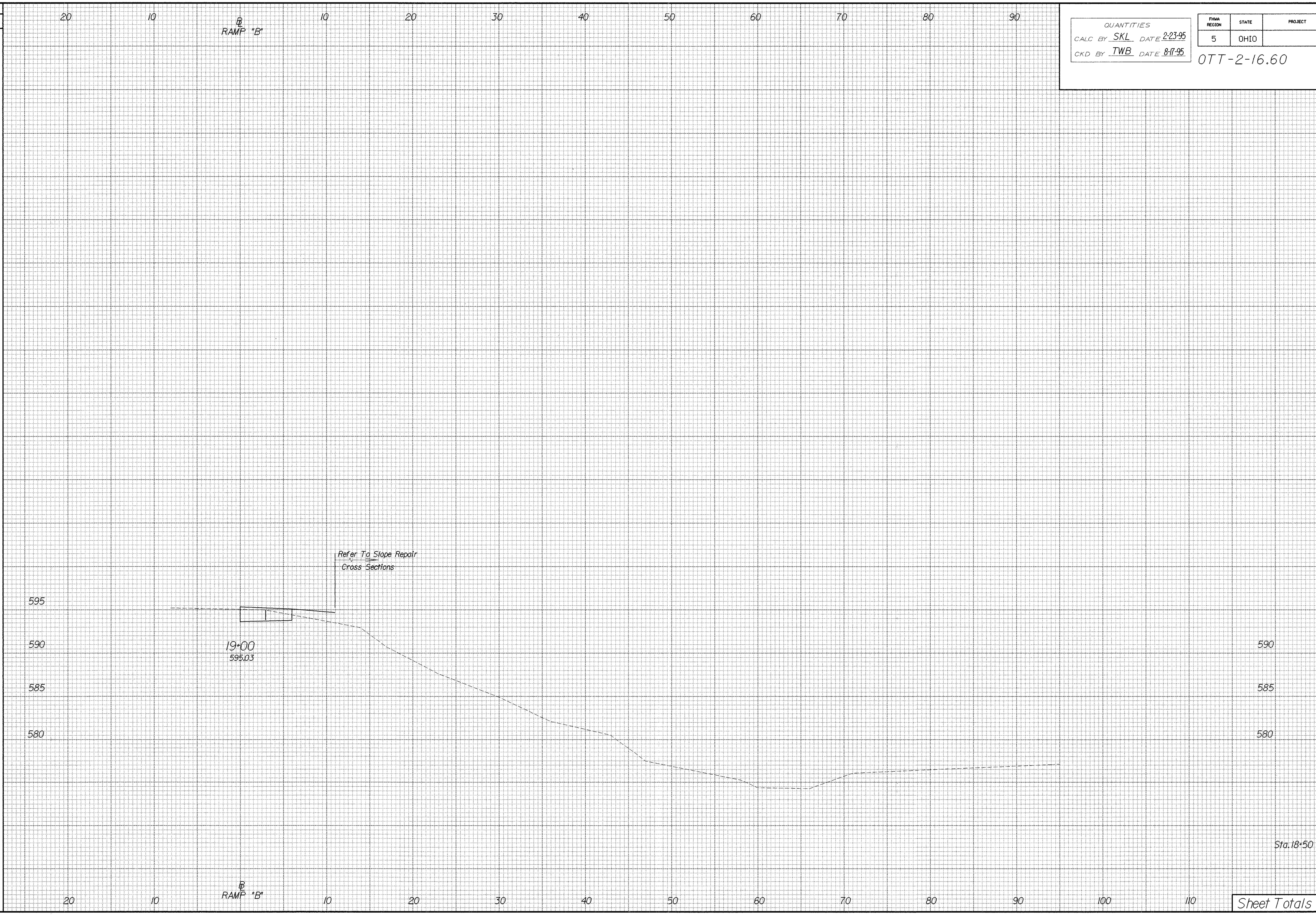


| END AREA | | VOLUME | |
|---|---|---|---|
| CUT | FILL | CUT | FILL |
| 7 | 0 | | |
| 8 | 0 | | |
| | | 14 | 0 |

Sheet Totals

SR 53 RAMP "B" CROSS SECTIONS

i:/pd/ottawa/ott2/ott2xl.dgn

| SEEDING | |
|---|---|
| END WIDTH | SQ. YDS. |

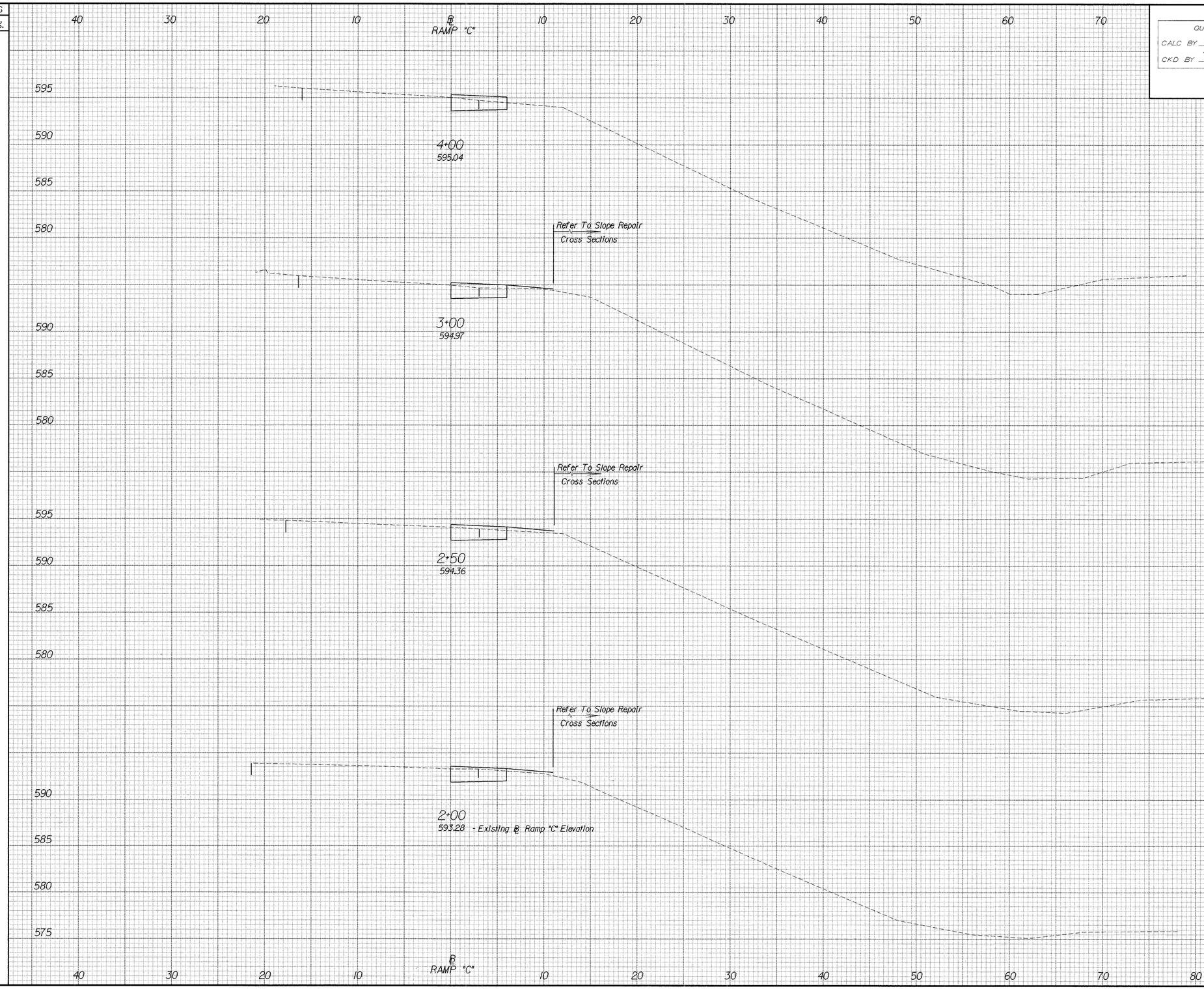


QUANTITIES
CALC BY SKL DATE 2-23-95
CKD BY TWB DATE 8-17-95

| FHWA REGION | STATE | PROJECT | |
|---|---|---|---|
| 5 | OHIO | | |

192
367

OTT-2-16.60

| END AREA | | VOLUME | |
|---|---|---|---|
| CUT | FILL | CUT | FILL |
| 6 | 0 | | |
| | | 24 | 0 |
| 7 | 0 | | |
| | | 13 | 0 |
| 7 | 0 | | |
| | | 14 | 0 |
| 8 | 0 | | |
| Sheet Totals | | 51 | 0 |

S.R. 53 RAMP "C" CROSS SECTIONS

/1/pd/ottawa/ott2/0TT2XL.DGN

| SEEDING | |
|---|---|
| END WIDTH | SQ. YDS. |

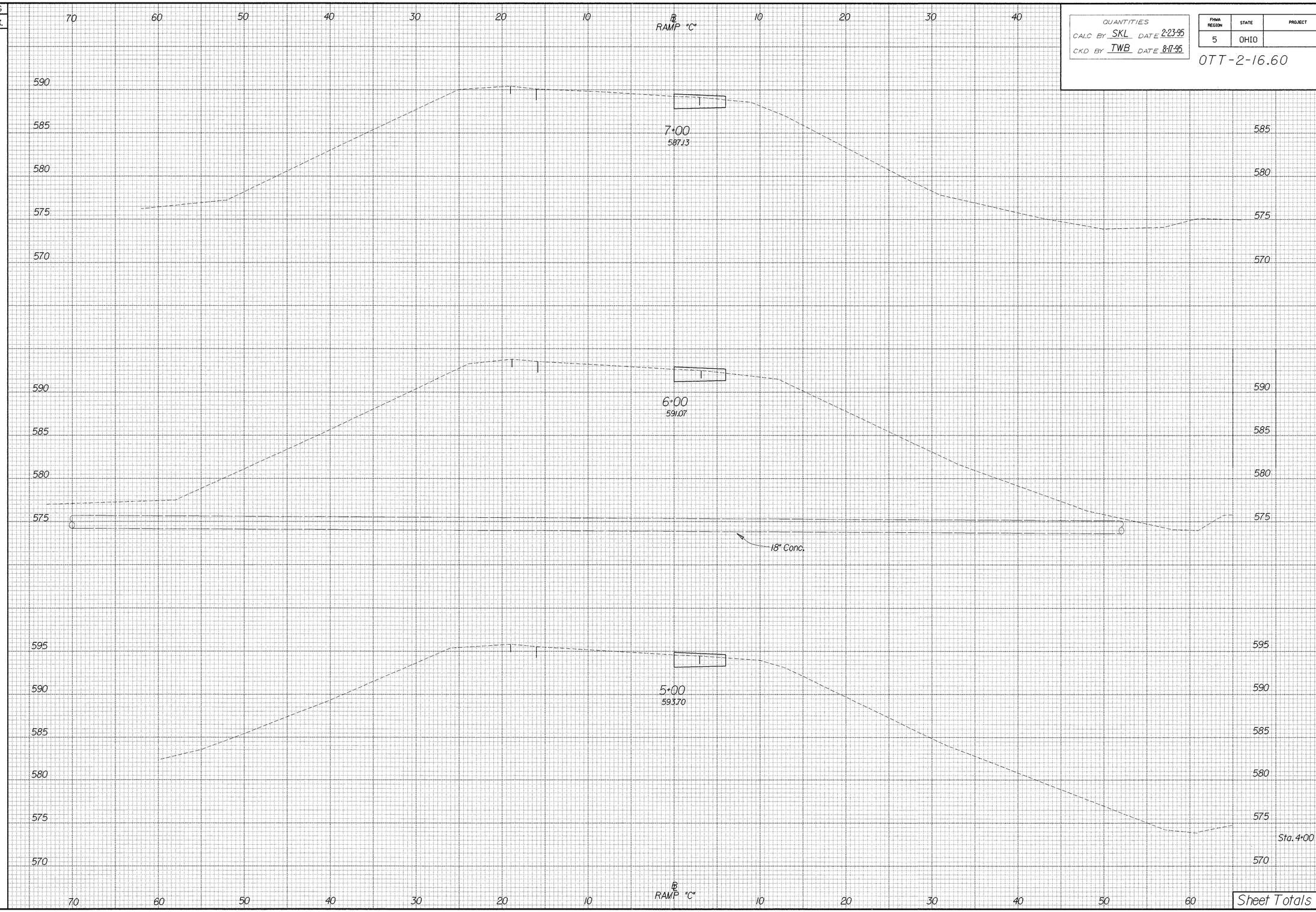


QUANTITIES
CALC BY SKL DATE 2-23-95
CKD BY TWB DATE 8-17-95

| FHWA REGION | STATE | PROJECT | |
|---|---|---|---|
| 5 | OHIO | | |

193
367

OTT-2-16.60

| | END AREA | | VOLUME | |
|---|---|---|---|---|
| | CUT | FILL | CUT | FILL |
| | 7 | 0 | | |
| | | | 26 | 0 |
| | 7 | 0 | | |
| | | | 24 | 0 |
| Sta. 4+00 | 6 | 0 | | |
| Sheet Totals | | | 76 | 0 |

SR 53 RAMP "C" CROSS SECTIONS

i/pd/ottawa/ott2/ott2x1.dgn

| QUANTITIES | | | | | |
|---|---|---|---|---|---|
| CALC BY SKL | DATE 2-23-95 | FHWA REGION | STATE | PROJECT | |
| CKD BY TWB | DATE 8-17-95 | 5 | OHIO | | |

194
367

OTT-2-16.60

SEEDING

| END WIDTH | SQ. YDS. |
|---|---|
| | |

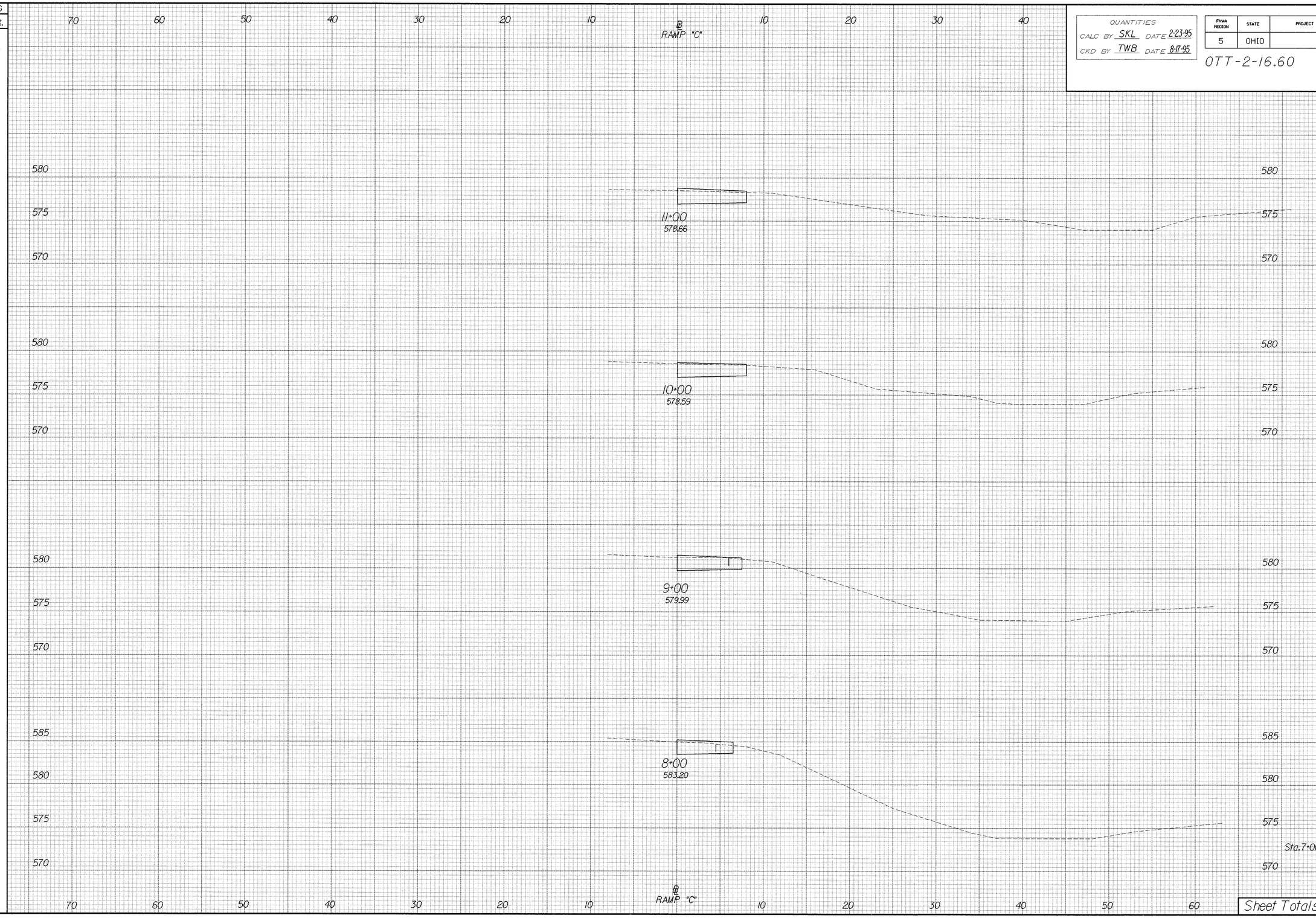


| END AREA | | VOLUME | |
|---|---|---|---|
| CUT | FILL | CUT | FILL |
| 10 | 0 | | |
| | | 39 | 0 |
| 12 | 0 | | |
| | | 43 | 0 |
| 11 | 0 | | |
| | | 35 | 0 |
| 8 | 0 | | |
| | | 28 | 0 |
| 7 | 0 | | |
| Sheet Totals | | 145 | 0 |

/1/pd/ottawa/ott2/OTT2X1.DGN

SR 53 RAMP "C" CROSS SECTIONS

| SEEDING | |
|---|---|
| END WIDTH | SQ. YDS. |

QUANTITIES
CALC BY SKL DATE 2-23-95
CKD BY TWB DATE 8-17-95

| FHWA REGION | STATE | PROJECT | |
|---|---|---|---|
| 5 | OHIO | | |

195
367

OTT-2-16.60

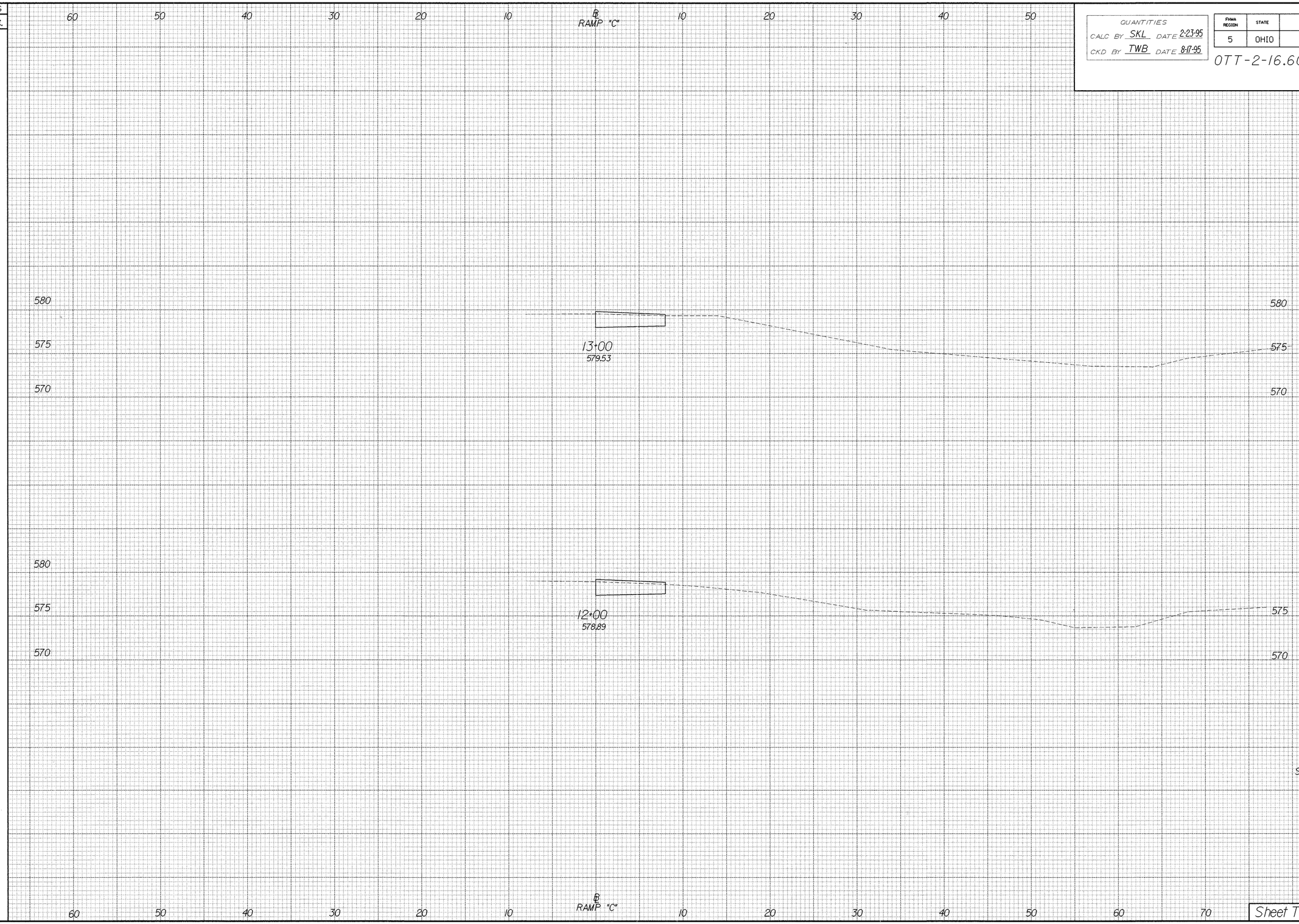


| END AREA | | VOLUME | |
|---|---|---|---|
| CUT | FILL | CUT | FILL |
| 11 | 0 | | |
| | | 41 | 0 |
| 11 | 0 | | |
| | | 39 | 0 |
| 10 | 0 | | |
| Sheet Totals | | 80 | 0 |

/1/pd/ottawa/ott2/OTT2X1.DGN

SR 53 RAMP "C" CROSS SECTIONS

| SEEDING | |
|---|---|
| END WIDTH | SQ. YDS. |

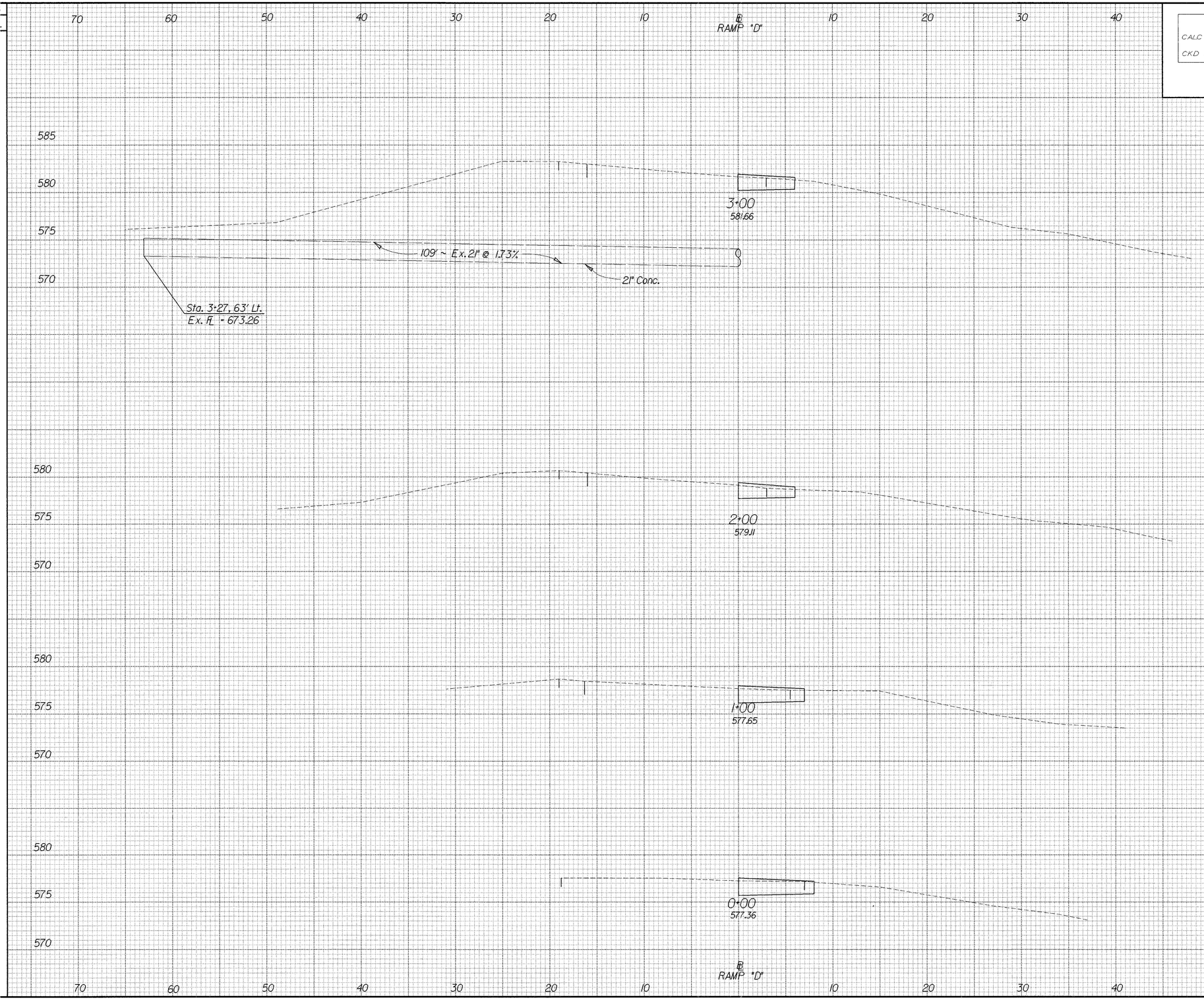


QUANTITIES
CALC BY SKL DATE 2-23-95
CKD BY TWB DATE 8-17-95

| FHWA REGION | STATE | PROJECT | |
|---|---|---|---|
| 5 | OHIO | | |

196/367

OTT-2-16.60

| | END AREA | | VOLUME | |
|---|---|---|---|---|
| | CUT | FILL | CUT | FILL |
| | | | | |
| | 7 | 0 | | |
| | | | | |
| | | | | |
| | | | 26 | 0 |
| | | | | |
| | 7 | 0 | | |
| | | | | |
| | | | 30 | 0 |
| | | | | |
| | 9 | 0 | | |
| | | | | |
| | | | 37 | 0 |
| | | | | |
| | 11 | 0 | | |
| | | | | |
| Sheet Totals | | | 93 | 0 |

i:/pd/OTTAWA/OTT2/OTT2XL.DGN

SR 53 RAMP "D" CROSS SECTIONS

| SEEDING | |
|---|---|
| END WIDTH | SQ. YDS. |
| | |

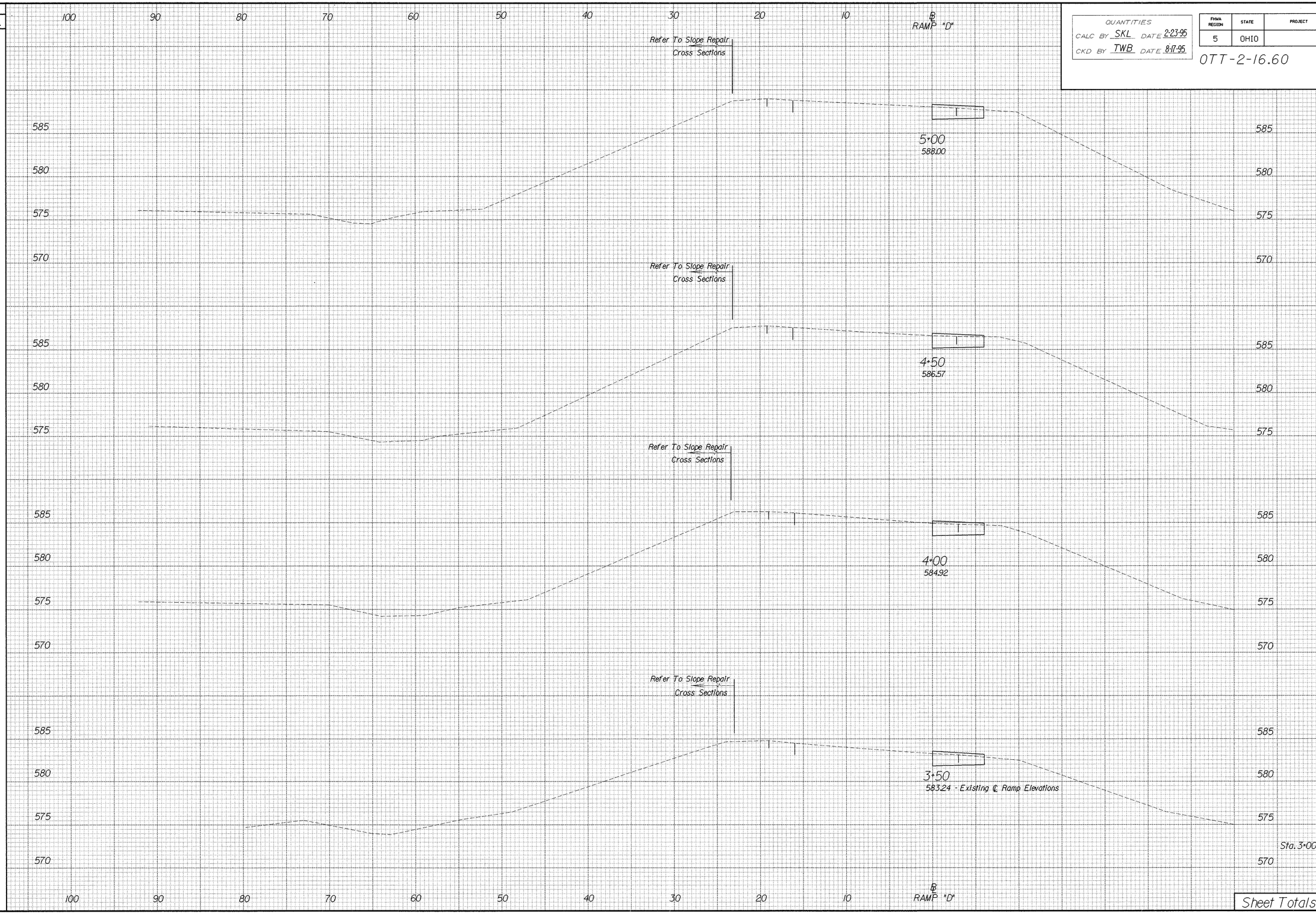


QUANTITIES
CALC BY SKL DATE 2-23-95
CKD BY TWB DATE 8-17-95

| FHWA REGION | STATE | PROJECT | |
|---|---|---|---|
| 5 | OHIO | | |

197
367

OTT-2-16.60

| END AREA | | VOLUME | |
|---|---|---|---|
| CUT | FILL | CUT | FILL |
| 7 | 0 | | |
| | | 14 | 0 |
| 8 | 0 | | |
| | | 15 | 0 |
| 8 | 0 | | |
| | | 14 | 0 |
| 7 | 0 | | |
| | | 13 | 0 |
| Sta. 3+00 7 | 0 | | |
| Sheet Totals | | 56 | 0 |

i/pd/OTTAWA/OTT2/OTT2XL.DGN

S.R. 53 RAMP "D" CROSS SECTIONS

| SEEDING | |
|---|---|
| END WIDTH | SQ. YDS. |

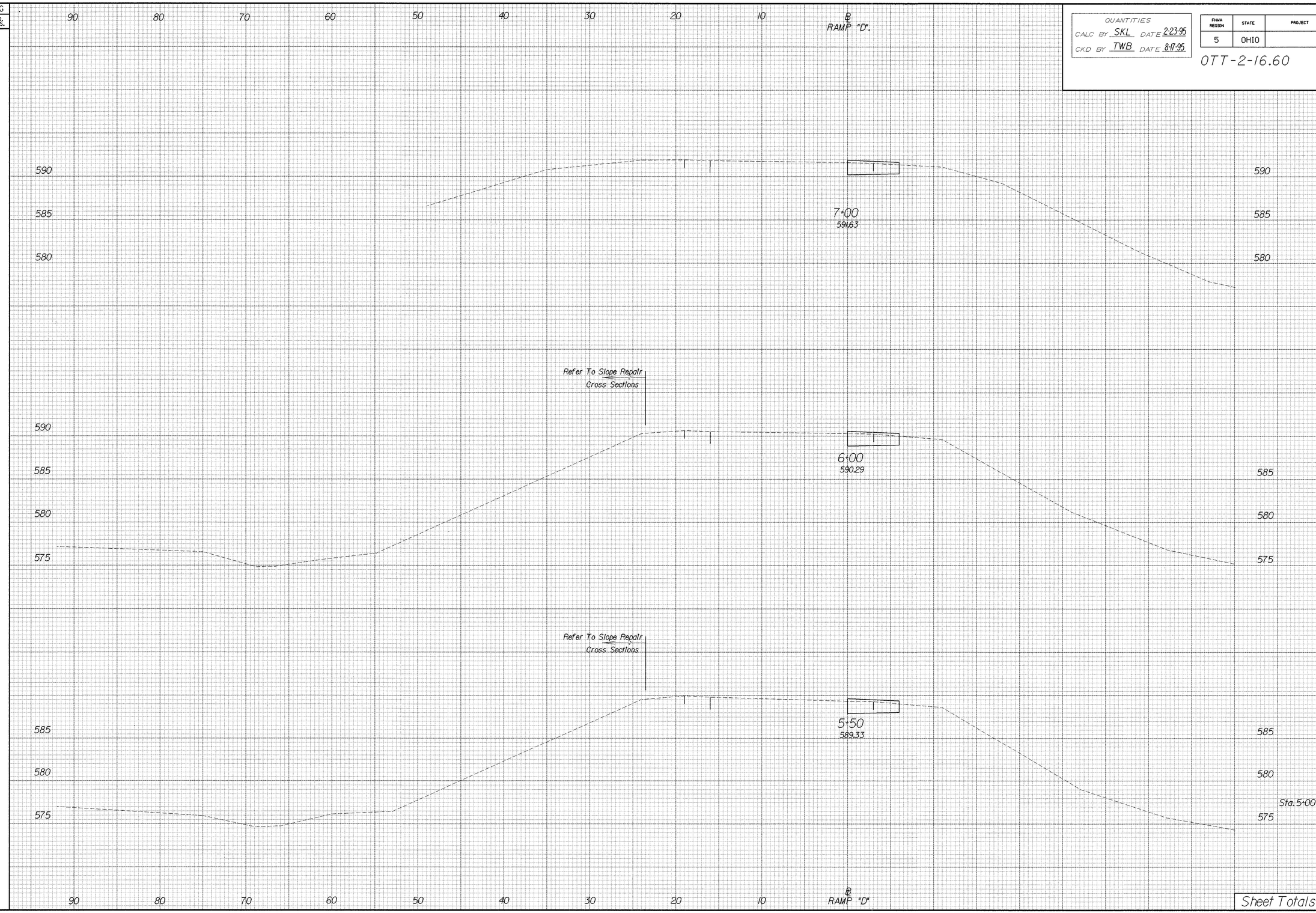


QUANTITIES
CALC BY SKL DATE 2-23-95
CKD BY TWB DATE 8-17-95

| FHWA REGION | STATE | PROJECT | |
|---|---|---|---|
| 5 | OHIO | | |

198
367

OTT-2-16.60

| END AREA | | VOLUME | |
|---|---|---|---|
| CUT | FILL | CUT | FILL |
| 7 | 0 | | |
| | | 28 | 0 |
| 8 | 0 | | |
| | | 15 | 0 |
| 8 | 0 | | |
| | | 14 | 0 |
| 7 | 0 | | |
| Sheet Totals | | 57 | 0 |

I:/PD/OTTAWA/OTT2/OTT2XL.DGN

S.R. 53 RAMP "D" CROSS SECTIONS

| FHWA REGION | STATE | PROJECT | |
|---|---|---|---|
| 5 | OHIO | | |

199/367

OTT-2-16.60

# SLOPE REPAIR ~ SCHEMATIC PLAN

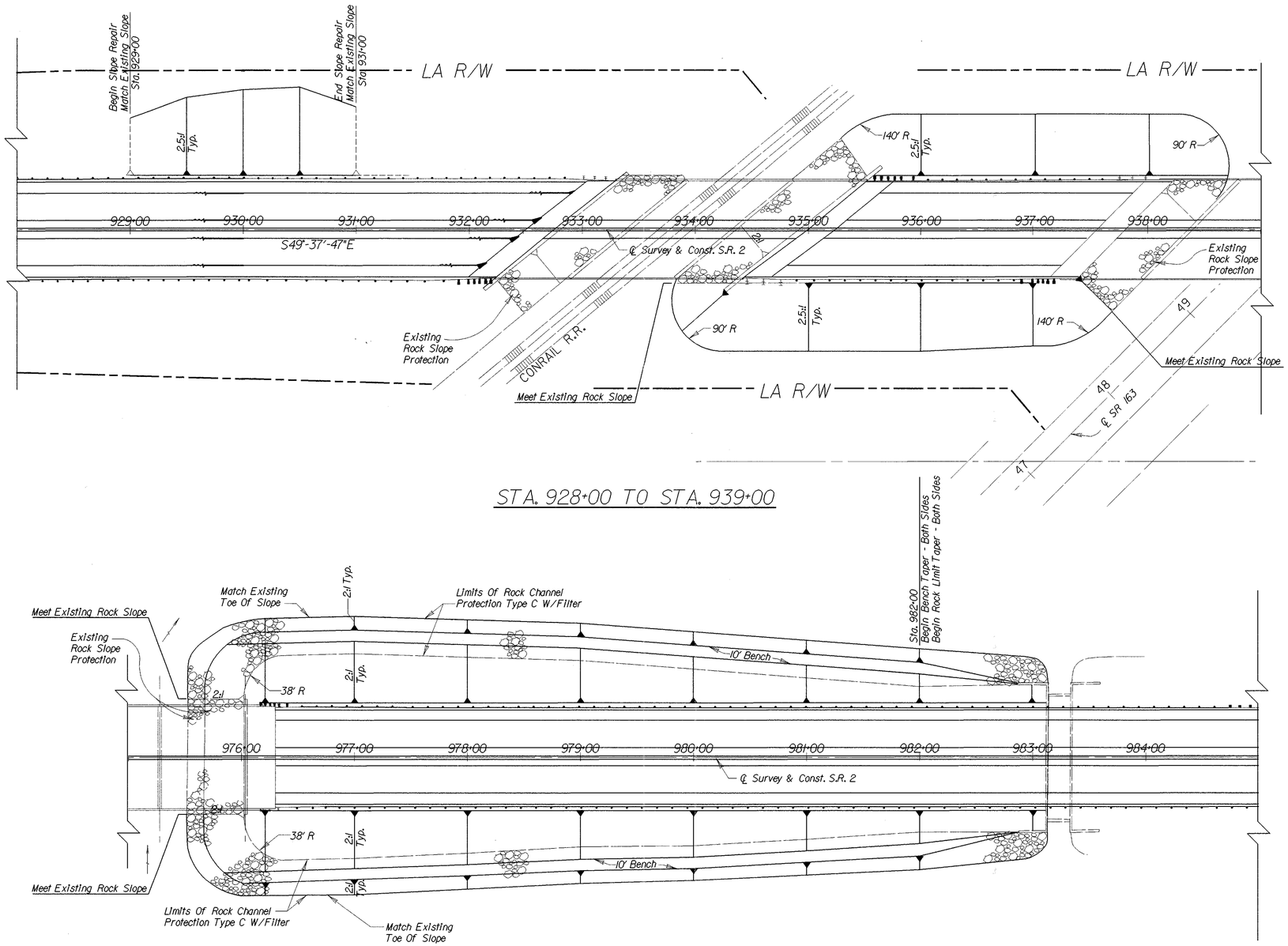


NOTE
For Actual Stepping And Slope Limits Refer To Cross Sections.

i/pd/ottawa/ott2/2slrpsch.dgn

| FHWA REGION | STATE | PROJECT | |
|---|---|---|---|
| 5 | OHIO | | |

200
367

OTT-2-16.60

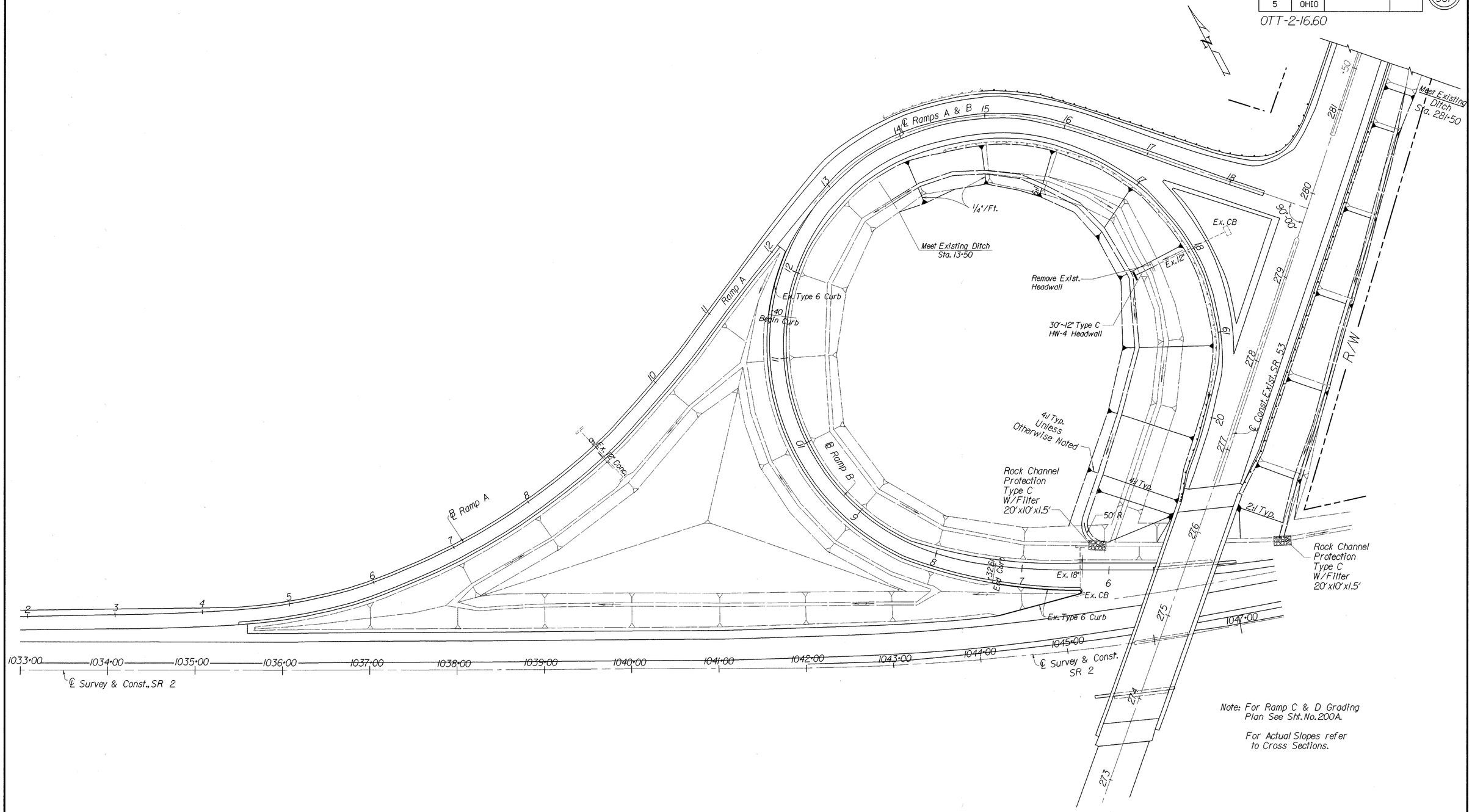


/svrl/pd/OTTAWA/OTT2/SR53RMPLDGN

SLOPE REPAIR - SR 53 & SR 2 Ramps A & B

| FHWA REGION | STATE | PROJECT | |
|---|---|---|---|
| 5 | OHIO | | |

200A
367

OTT-2-16.60

NOTE: For Ramp A & B Grading Plan
See Sheet 200.
For Actual Slopes Refer To
Cross Sections.

Rock Channel Protection, Type C W/Filter 10'x10'x1.5'

Ex. Curb

Ex. CB

Ex. 12"

Ex. 18"

Ex. 24"

℄ Ramp D

℄ Ramp C

℄ Survey & Const. SR 2

℄ Survey & Const. SR 53

LA R/W

R/W

Meet Existing Ditch Sta. 27+00

Meet Existing Ditch Sta. 7+00± Rt.

Meet Existing Ditch Sta. 3+00± Rt.

Rock Channel Protection Type C W/Filter 5'x10'x1.5'

50' R

110' R

100' R

Ex. 12" CMP

MATCH LINE - 268+00

Rock Channel Protection, Type C W/Filter 10'x10'x1.5'

Ex. 72" Conc.

Meet Existing Ditch

Field Drive

12" CMP

Rock Channel Protection Type C W/Filter 15'x25'x1.5' Avg. Depth

Frontage Road

ASPHALT

Remove CB 37

4-12" Type C

10-12" Type C

18" CONC.

Sta. 26+35.27 Rt.
No. 22B

I:/pd/OTTAWA/OTT2/SR53RMP2.DGN

SLOPE REPAIR - SR 53 & SR 2 Ramps C & D

| FHWA REGION | STATE | PROJECT | |
|---|---|---|---|
| 5 | OHIO | | |

201/367

OTT-2-16.60

QUANTITIES
CALC BY SKL DATE 8-10-95
CKD BY TWB DATE 8-10-95

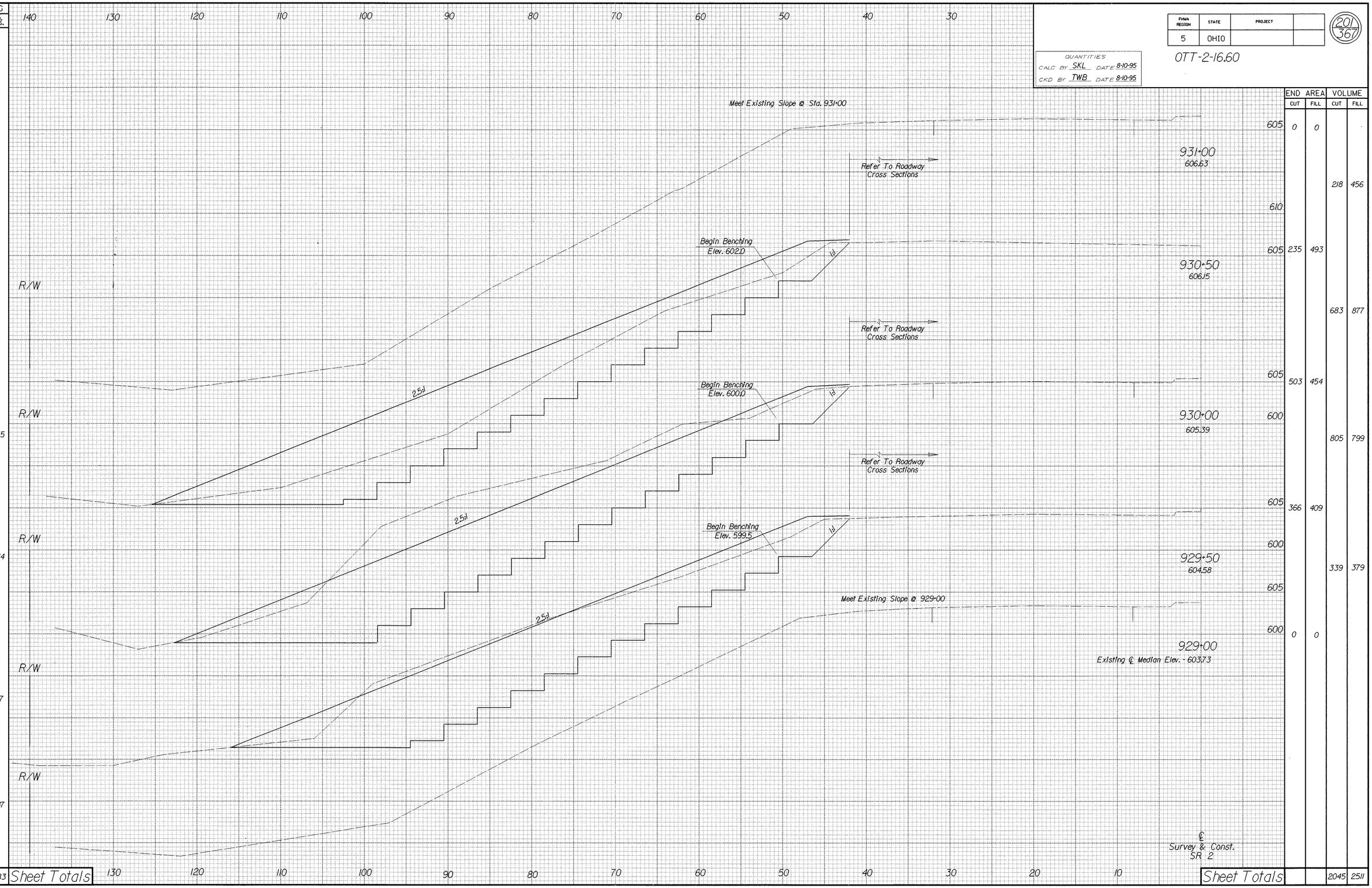


| SEEDING END WIDTH | SEEDING SQ. YDS. | END AREA CUT | END AREA FILL | VOLUME CUT | VOLUME FILL |
|---|---|---|---|---|---|
| | | 605 0 | 0 | | |
| | | | | 218 | 456 |
| | | 610 | | | |
| | | 605 235 | 493 | | |
| | | | | 683 | 877 |
| 0 | | 605 503 | 454 | | |
| | 275 | | | 805 | 799 |
| 99 | | 605 366 | 409 | | |
| | 544 | 600 | | 339 | 379 |
| 97 | | 605 | | | |
| | | 600 0 | 0 | | |
| | 517 | | | | |
| 89 | | | | | |
| | 247 | | | | |
| 0 | | | | | |
| | 1583 Sheet Totals | Sheet Totals | | 2045 | 2511 |

SLOPE REPAIR ~ CROSS SECTIONS STA. 929+00 TO STA. 931+00 LT.

I:/pd/ottawa/ott2/at2slrp4.dgn

| FHWA REGION | STATE | PROJECT | |
|---|---|---|---|
| 5 | OHIO | | |

202 / 367

OTT-2-16.60

QUANTITIES
CALC BY SKL DATE 8-10-95
CKD BY TWB DATE 8-10-95

| SEEDING END WIDTH | SEEDING SQ. YDS. | | END AREA CUT | END AREA FILL | VOLUME CUT | VOLUME FILL |
|---|---|---|---|---|---|---|
| | | Add Eng.Est. | | | ·620 | ·887 |
| 99 | 533 | 937+00 606.58 | | | | |
| 93 | 567 | 936+50 606.58 | | | | |
| 111 | 622 | 936+00 607.56 | 334 | 478 | 531 | 832 |
| 113 | 622 | 935+50 607.30 | 240 | 421 | 453 | 828 |
| 111 | 600 | 935+00 608.09 - Existing ℄ Const. Elev. | 249 | 473 | 438 | 906 |
| | 595 | | 224 | 505 | 406 | 906 |
| | ·462 | Add Eng.Est. | 215 | 473 | ·319 | ·701 |
| | 3356 | SHEET TOTALS | | | 2767 | 5060 |

℄ SURVEY & CONST. SR 2

℄ Eastbound Lanes
608.40 - Proposed ℄ Elevation

Refer To Roadway Cross Sections

606.86 — Begin Benching Elevation 598.0

606.05 — Begin Benching Elevation 598.0

607.166 — Begin Benching Elev.598.5

607.41 — Begin Benching Elev.599.0

608.41 — Begin Benching Elev.599.5

1H, 2.5H, 2H

4' Typ.

2' Typ.

Item 203, Embankment

R/W

Add Eng.Est.

SHEET TOTALS

S.R. 2 SLOPE REPAIR ~ CROSS SECTIONS STA.935+00 TO STA.937+00 RT.

i:/pd/ottaw/att2/at2slrpl.dgn

| FHWA REGION | STATE | PROJECT | |
|---|---|---|---|
| 5 | OHIO | | |

203/367

QUANTITIES
CALC BY SKL DATE 8-10-95
CKD BY TWB DATE 8-10-95

OTT-2-16.60

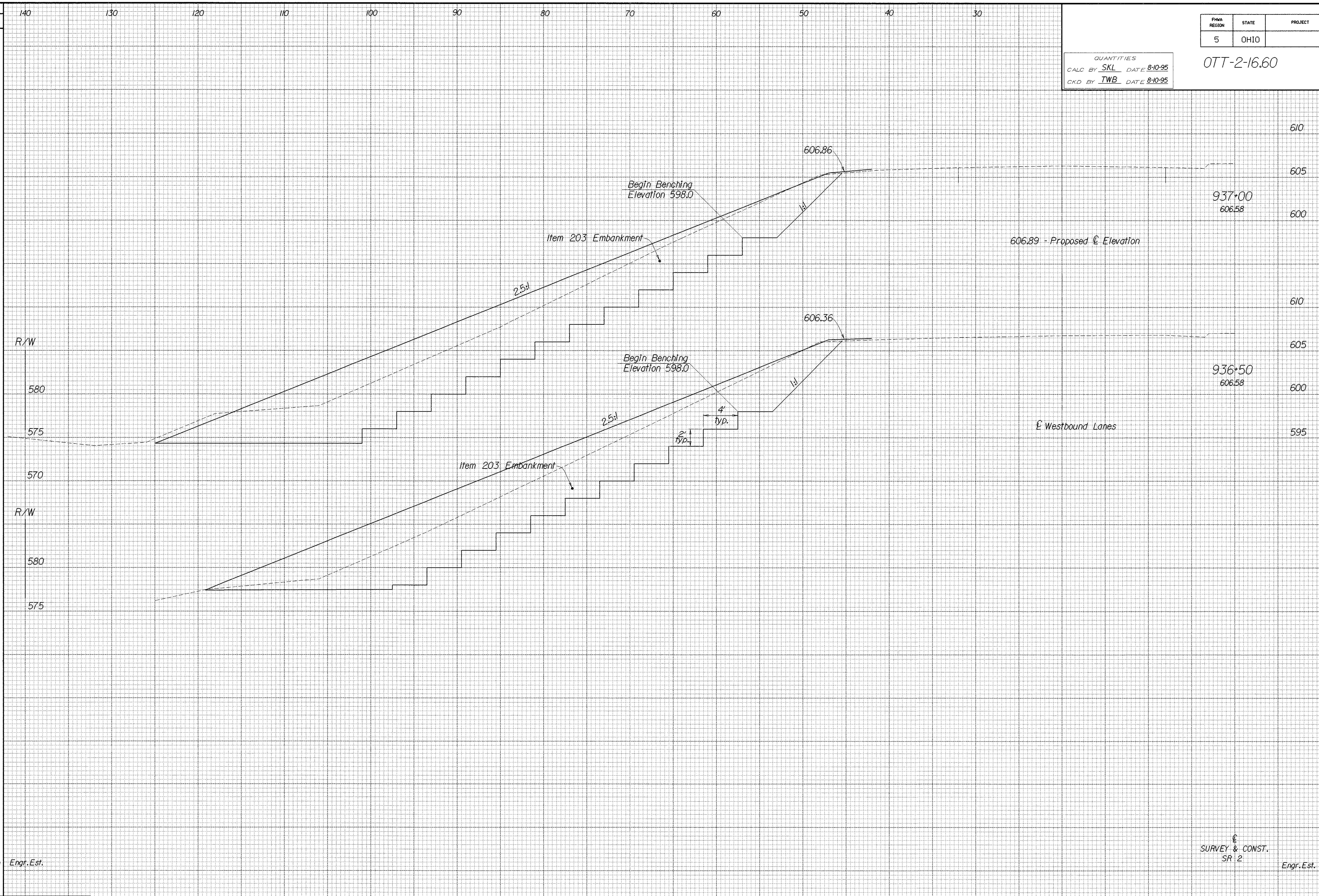


| SEEDING END WIDTH | SEEDING SQ. YDS. |
|---|---|
| 99 | |
| | 533 |
| 93 | |
| | +540 Engr. Est. |
| | 1073 Sheet Totals |

| END AREA CUT | END AREA FILL | VOLUME CUT | VOLUME FILL |
|---|---|---|---|
| 336 | 447 | | |
| | | 558 | 804 |
| 267 | 421 | | |
| | | +1028 | +1622 |
| Sheet Totals | | 1586 | 2426 |

i/pd/ottawa/ott2/ot2slrp5.dgn

S.R. 2 SLOPE REPAIR - CROSS SECTIONS STA. 936+50 TO STA. 937+00 LT.

| FHWA REGION | STATE | PROJECT | |
|---|---|---|---|
| 5 | OHIO | | |

204 / 367

OTT-2-16.60

QUANTITIES
CALC BY SKL DATE 8-10-95
CKD BY TWB DATE 8-10-95

| SEEDING END WIDTH | SEEDING SQ. YDS. |
|---|---|
| 43 | 506 |
| 48 | 544 |
| 50 | 462 |
| 54 | •450 Engr. Est. |
| | 1962 Sheet Totals |

℄ SURVEY & CONST. SR 2

10 20 30 40 50 60 70 80 90

979+00
598.53
598.07
Refer To Roadway Cross Sections
597.75
Begin Benching Elev. 592.0
1:1
2:1

978+00
600.44
599.90
Refer To Roadway Cross Sections
599.58
Begin Benching Elev. 593.5
1:1
2:1

977+00
601.72
℄ Eastbound Lane
601.80 - Existing ℄ Profile Elevation
Refer To Roadway Cross Sections
601.28
Begin Benching Elev. 594.5
1:1
2:1

976+20
602.49
Begin Benching Elev. 597.0
1:1
4' Typ.
2' Typ.
2:1

976+00
603.03 - Existing ℄ Median Elev.

A Quantity of 894 Cu.Yds. of Rock Channel Protection has been carried to Sht.No.79

A Quantity of 443 Cu.Yds. of Granular Embankment has been carried to Sht.No.79

Elev. 580.0
2' Rock Channel Protection Type C W/Filter
10'
2:1
1.5:1
Item 203, Embankment Using Granular Material, As Per Plan

Elev. 580.0
2' Rock Channel Protection Type C W/Filter
10'
2:1
1.5:1
Item 203, Embankment Using Granular Material, As Per Plan

Elev. 580.0
2' Rock Channel Protection Type C W/Filter
10'
2:1
1.5:1
Item 203, Embankment Using Granular Material, As Per Plan

Elev. 580.0
2' Rock Channel Protection Type C W/Filter
10'
2:1
1.5:1
Item 203, Embankment Using Granular Material, As Per Plan

| END AREA CUT | END AREA FILL | VOLUME CUT | VOLUME FILL | |
|---|---|---|---|---|
| | | | | 575 |
| 139 | 144 | | | 570 |
| | | 657 | 569 | |
| | | | | 575 |
| 216 | 163 | | | 570 |
| | | 731 | 641 | |
| | | | | 575 |
| 179 | 183 | | | 570 |
| | | 480 | 558 | |
| | | | | 575 |
| 145 | 194 | | | 570 |
| | | •402 | •539 | Engr. Est. |
| | | 2270 | 2307 | Sheet Totals |

℄ SURVEY & CONST. SR 2

10 20 30 40 50 60 70 80 90 100 110

S.R. 2 SLOPE REPAIR ~ CROSS SECTIONS STA. 976+00 TO STA. 979+00 RT

i:/pd/ottawa/ott2/of2slrp3.dgn

| FHWA REGION | STATE | PROJECT | |
|---|---|---|---|
| 5 | OHIO | | |

205
367

OTT-2-16.60

QUANTITIES
CALC BY SKL DATE 8-10-95
CKD BY TWB DATE 8-10-95

| SEEDING END WIDTH | SEEDING SQ. YDS. |
|---|---|
| 44 | 506 |
| 47 | 544 |
| 51 | 462 |
| 53 | 442 |
| Engr.Est. | |
| 1954 | Sheet Totals |

A Quantity of 894 Cu.Yds. of Rock Channel Protection has been carried to Sheet No. 79

A Quantity of 474 Cu.Yds. of Granular Embankment has been carried to Sheet No. 79

120 110 100 90 80 70 60 50 40 30 20 10

Refer To Roadway Cross Sections

597.75

Begin Benching 592.5

1:1

2:1

Elev. 580.0

10'

2:1

1.5:1

575

570

Item 203, Embankment Using Granular Material, As Per Plan

979+00
598.53

598.07

Refer To Roadway Cross Sections

599.61

Begin Benching Elev. 594.0

1:1

2:1

Elev. 580.0

10'

2:1

1.5:1

575

570

978+00
600.44

599.93

Refer To Roadway Cross Sections

601.17

Begin Benching Elev. 595.6

1:1

2:1

Elev. 580.0

10'

2:1

1.5:1

575

570

977+00
601.72

601.49

Refer To Roadway Cross Sections

Item 203, Embankment Using Granular Material, As Per Plan

Begin Benching Elev. 596.0

1:1

2:1

Elev. 580.0

10'

2:1

1.5:1

575

570

4' Typ.

2' Typ.

976+20
602.36 - Existing ℄ Median Elev.

Item 203, Embankment Using Granular Material, As Per Plan

2' Rock Channel Protection Type C

Elev. 580.0

10'

2:1

1.5:1

575

570

Item 203, Embankment Using Granular Material, As Per Plan

℄ SURVEY & CONST. SR 2

| END AREA CUT | END AREA FILL | VOLUME CUT | VOLUME FILL |
|---|---|---|---|
| 193 | 136 | | |
| | | 737 | 530 |
| 205 | 150 | | |
| | | 724 | 573 |
| 186 | 160 | | |
| | | 519 | 499 |
| 164 | 177 | | |
| Engr.Est. | | 456 | 492 |
| Sheet Totals | | 2436 | 2094 |

S.R. 2 SLOPE REPAIR ~ CROSS SECTIONS STA. 976+00 TO STA. 979+00 LT.

I:/pd/ottawa/ott2/ot2slrp2.dgn

| FHWA REGION | STATE | PROJECT | |
|---|---|---|---|
| 5 | OHIO | | |

206 / 367

OTT-2-16.60

QUANTITIES
CALC BY SKL DATE 8-10-95
CKD BY TWB DATE 8-10-95

A Quantity of 1045 Cu.Yds. of Rock Channel Protection has been carried to Sht. No. 79

A Quantity of 532 Cu.Yds. of Granular Embankment has been carried to Sht. No. 79

| SEEDING END WIDTH | SEEDING SQ. YDS. | | END AREA CUT | END AREA FILL | VOLUME CUT | VOLUME FILL |
|---|---|---|---|---|---|---|
| | | ℄ SURVEY & CONST. SR 2 | | | | |
| | | 590 | | | | |
| | | 585 | | | | |
| | +45 | Add Engr.Est. | | | | |
| | | 983+00 | | | | |
| | | 587.69 | | | | |
| | | 587.69 | | | | |
| | | 595 | | | | |
| 27 | | 590 | | | | |
| | | 982+00 | | | | |
| | | 590.71 | | | | |
| | 333 | 590.71 | | | | |
| | | 595 | | | | |
| | | 590 | | | | |
| 33 | | 981+00 | | | | |
| | | 593.71 | | | | |
| | | 593.29 | | | | |
| | 400 | | | | | |
| | | 600 | | | | |
| 39 | | 595 | | | | |
| | | 980+00 | | | | |
| | | 596.39 - Existing ℄ Const. Elev. | | | | |
| | 456 | ℄ Eastbound Lnaes 595.90 - Existing ℄ Profile Elevation | | | | |
| 43 | | Sta. 979+00 | | | | |
| 1234 | Sheet Totals | ℄ SURVEY & CONST. SR 2 | | | | |

Engr.Est. +75 +50

Existing Concrete Wingwall - Do Not Disturb

Refer To Roadway Cross Sections

590.39

Begin Benching Elev. 584.5

1:1

2:1

Elev. 580.0

10'

2' Rock Channel Protection Type C W/Filter

Refer To Roadway Cross Sections

592.97

Begin Benching Elev. 587.0

1:1

2:1

575

2:1

1.5:1

Item 203, Embankment Using Granular Material, As Per Plan

135 90

570

443 374

Elev. 580.0

2' Rock Channel Protection Type C W/Filter

10'

575

Refer To Roadway Cross Sections

595.58

Begin Benching Elev. 590.0

1:1

2:1

4' Typ.

2' Typ.

2:1

1.5:1

Item 203, Embankment Using Granular Material, As Per Plan

104 112

570

396 456

Elev. 580.0

2' Rock Channel Protection Type C W/Filter

10'

575

2:1

1.5:1

Item 203, Embankment Using Granular Material, As Per Plan

110 134

461 515

Sta. 979+00 570

139 144

Sheet Totals 1375 1395

S.R. 2 SLOPE REPAIR ~ CROSS SECTIONS STA. 980+00 TO STA. 983+00 RT.

I:/pd/ottawa/ott2/of2/sr2slrp3.dgn

| FHWA REGION | STATE | PROJECT | |
|---|---|---|---|
| 5 | OHIO | | |

207/367

OTT-2-16.60

QUANTITIES
CALC BY SKL DATE 8-10-95
CKD BY TWB DATE 8-10-95

| SEEDING END WIDTH | SEEDING SQ. YDS. |
|---|---|
| | 28 |
| 17 | |
| | 250 |
| 27 | |
| | 344 |
| 39 | |
| | 406 |
| 39 | |
| 44 | 461 |
| | 1489 |

Engr.Est.

A Quantity of 1045 Cu.Yds. of Rock Channel Protection has been carried to Sht.No.79

A Quantity of 512 Cu.Yds. of Granular Embankment has been carried to Sht.No.79

Refer To Roadway Cross Sections

Existing Concrete Wingwall - Do Not Disturb

Begin Benching Elev = 584.5.

Elev. 580.0

Elev. 575.0

2' Rock Channel Protection Type C W/Filter

Begin Benching Elev.= 587.0

Begin Benching Elev.= 590.0

Item 203 Embankment Using Granular Material, As Per Plan

2:1 1:1 1.5:1 10' 4' Typ. 2' Typ.

983+00 587.69 587.59

982+00 590.71 590.45

981+00 593.71 593.34

980+00 596.39 - Ex. ℄ Const. Elev. 595.98 Existing ℄ Profile Elevation

℄ WestBound Lane

℄ SURVEY & CONST. SR 2

Sta.979+00

Sta.979+00

| END AREA CUT | END AREA FILL | VOLUME CUT | VOLUME FILL |
|---|---|---|---|
| | | 0 | 5 |
| 0 | 9 | | |
| | | 174 | 194 |
| 94 | 96 | | |
| | | 398 | 400 |
| 121 | 120 | | |
| | | 541 | 478 |
| 171 | 138 | | |
| | | 674 | 507 |
| 193 | 136 | | |
| Sheet Totals | | 1787 | 1584 |

i:/pd/ottawa/ott2/ot2slrp5.dgn

S.R. 2 SLOPE REPAIR - CROSS SECTIONS STA. 980+00 TO STA. 983+00 LT.

| FHWA REGION | STATE | PROJECT | |
|---|---|---|---|
| 5 | OHIO | | |

208 / 367

OTT-2-16.60

QUANTITIES
CALC BY SKL DATE 8-15-95
CKD BY TWB DATE 8-16-95

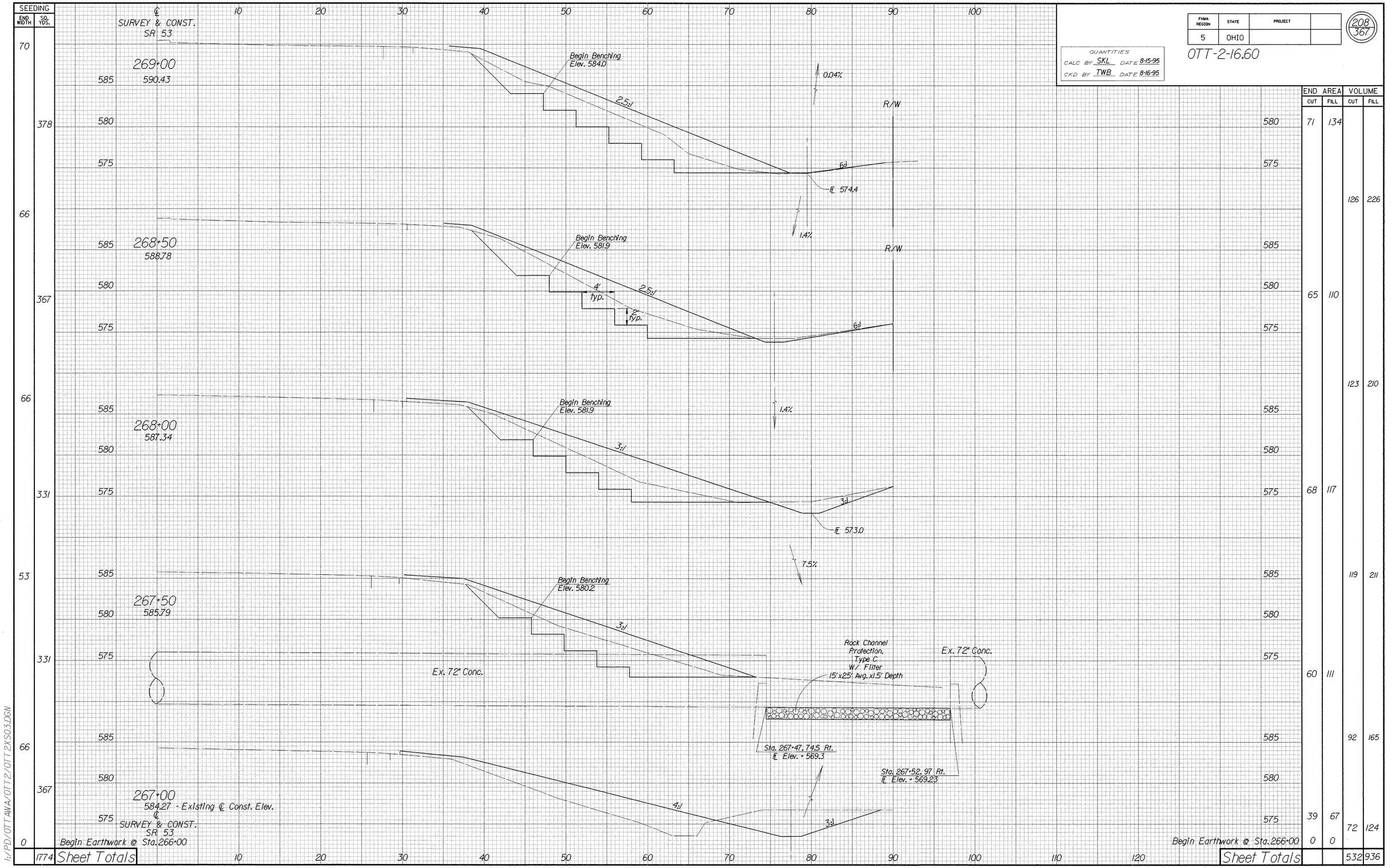


| SEEDING END WIDTH | SEEDING SQ. YDS. | END AREA CUT | END AREA FILL | VOLUME CUT | VOLUME FILL |
|---|---|---|---|---|---|
| 70 | 378 | 71 | 134 | 126 | 226 |
| 66 | 367 | 65 | 110 | 123 | 210 |
| 66 | 331 | 68 | 117 | 119 | 211 |
| 53 | 331 | 60 | 111 | 92 | 165 |
| 66 | 367 | 39 | 67 | 72 | 124 |
| 0 | 1774 Sheet Totals | 0 | 0 | 532 | 936 |

Sheet Totals

I:/PD/OTT/AWA/OTT2/OTT2XS03.DGN

S.R. 53 SLOPE REPAIR ~ CROSS SECTIONS STA.267+00 to STA. 269+00 RT.

| FHWA REGION | STATE | PROJECT | |
|---|---|---|---|
| 5 | OHIO | | |

209/367

OTT-2-16.60

QUANTITIES
CALC BY SKL DATE 8-15-95
CKD BY TWB DATE 8-16-95

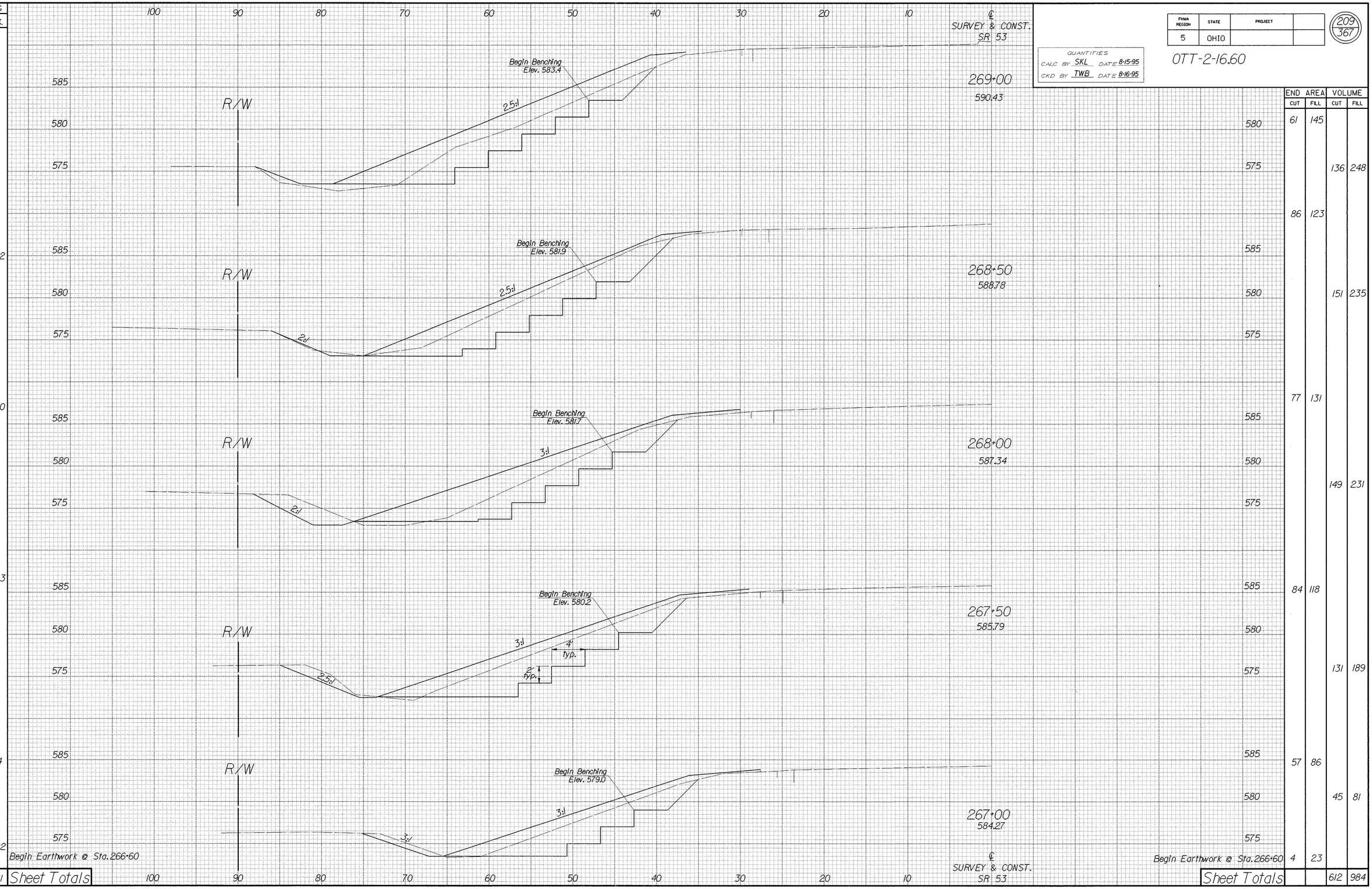


| SEEDING END WIDTH | SEEDING SQ. YDS. | END AREA CUT | END AREA FILL | VOLUME CUT | VOLUME FILL |
|---|---|---|---|---|---|
| | | 61 | 145 | | |
| 62 | | | | 136 | 248 |
| | | 86 | 123 | | |
| | 342 | | | | |
| 61 | | | | 151 | 235 |
| | | 77 | 131 | | |
| | 350 | | | | |
| 65 | | | | 149 | 231 |
| | 353 | | | | |
| | | 84 | 118 | | |
| 62 | | | | 131 | 189 |
| | 314 | | | | |
| | | 57 | 86 | | |
| 51 | | | | 45 | 81 |
| 40 | 202 | 4 | 23 | | |
| | 1561 Sheet Totals | | | 612 | 984 |

I:/PD/OTTAWA/OTT2/OTT2XS03.DGN

S.R. 53 SLOPE REPAIR ~ CROSS SECTIONS STA. 267+00 to STA. 269+00 LT.

| FHWA REGION | STATE | PROJECT | |
|---|---|---|---|
| 5 | OHIO | | |

210/367

OTT-2-16.60

QUANTITIES
CALC BY SKL DATE 8-10-95
CKD BY TWB DATE 8-10-95

| SEEDING END WIDTH | SEEDING SQ. YDS. | | END AREA CUT | END AREA FILL | VOLUME CUT | VOLUME FILL |
|---|---|---|---|---|---|---|
| 57 | 319 | ℄ SURVEY & CONST. SR 53 | 92 | 131 | | |
| 58 | 356 | 269+50 591.95 - Existing ℄ Median Elev. | 95 | 150 | 173 | 260 |
| 70 | 675 | Sta. 269+00 Rt. ℄ SURVEY & CONST. SR 53 | 71 | 134 | 154 | 263 |
| | Sheet Totals | | | Sheet Totals | 327 | 523 |

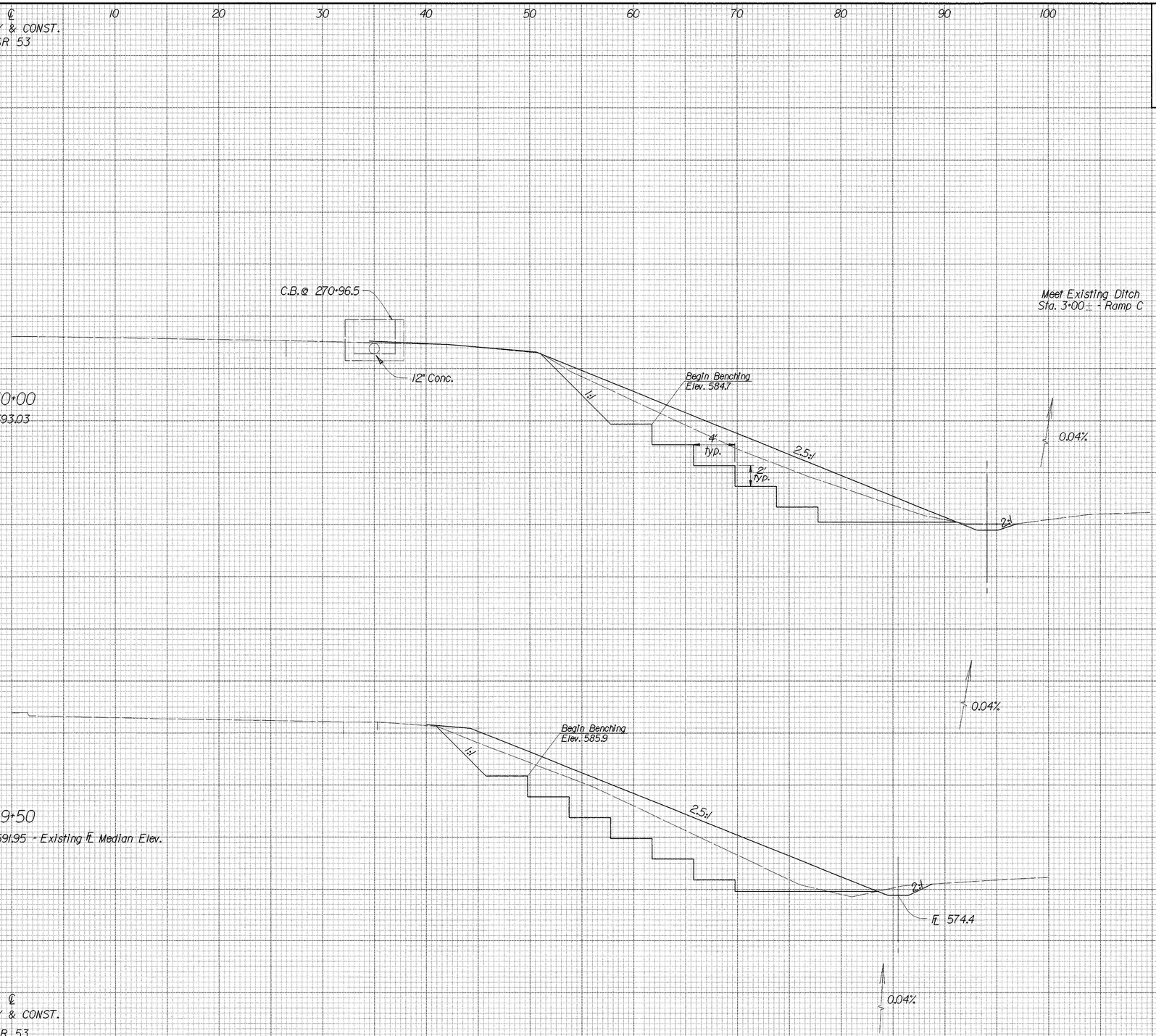


I:\PD\OTTAWA\OTT2\OTT2XS04.DGN

S.R. 53 SLOPE REPAIR ~ CROSS SECTIONS STA. 269+50 TO STA. 270+00 RT.

| FHWA REGION | STATE | PROJECT | |
|---|---|---|---|
| 5 | OHIO | | |

211
367

QUANTITIES
CALC BY SKL DATE 8-10-95
CKD BY TWB DATE 8-10-95

OTT-2-16.60

| SEEDING | |
|---|---|
| END WIDTH | SQ. YDS. |
| 110 | |
| 107 | |
| 603 | |
| 603 | Sheet Totals |

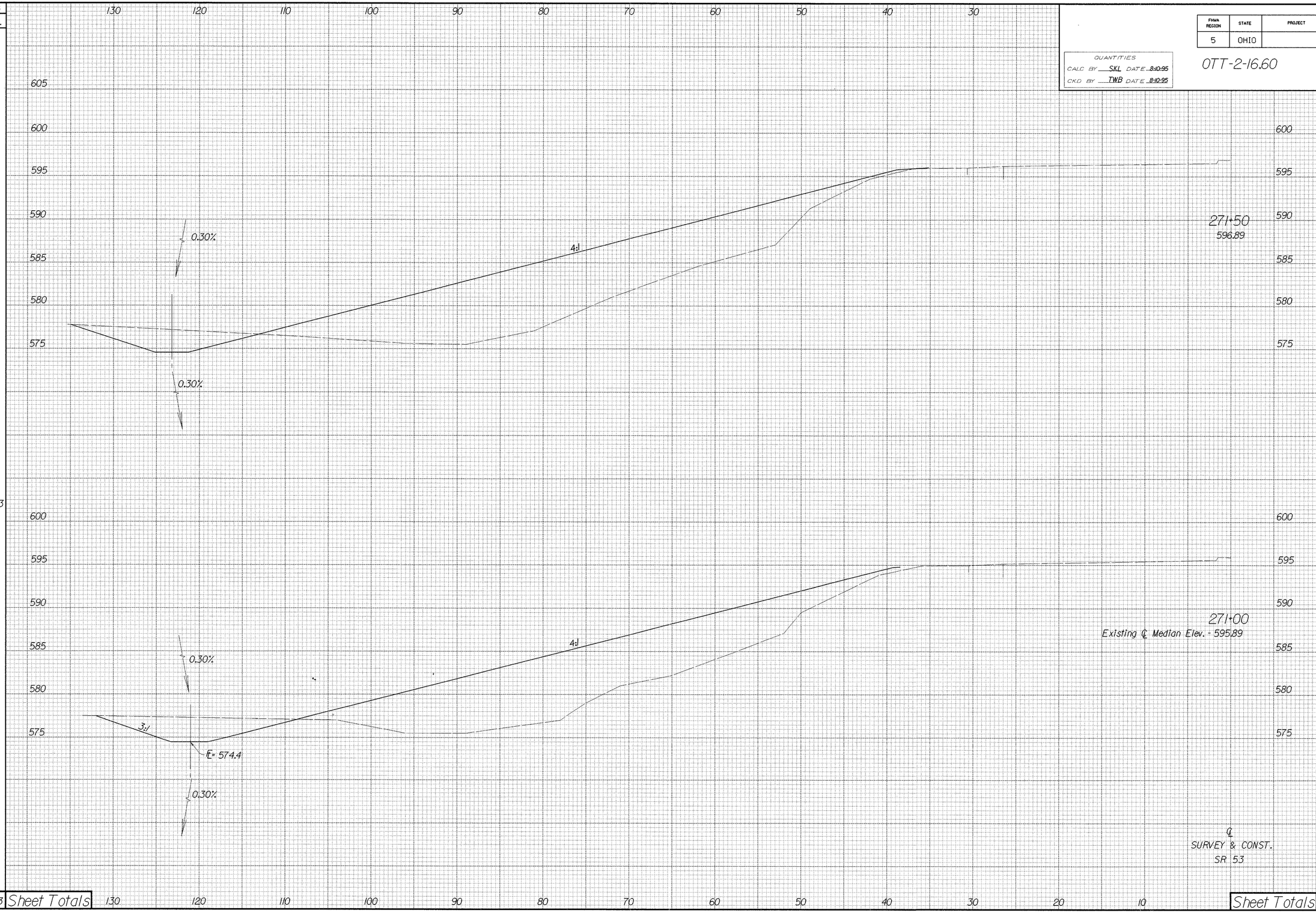


| END AREA | | VOLUME | |
|---|---|---|---|
| CUT | FILL | CUT | FILL |
| 34 | 343 | | |
| 39 | 318 | | |
| | | 68 | 612 |
| Sheet Totals | | 68 | 612 |

I:\PD\OTT\AWA\OTT2\OTT2XS04.DGN

S.R. 53 SLOPE REPAIR ~ CROSS SECTIONS STA. 271+00 TO STA. 271+50 (LEFT)

| FHWA REGION | STATE | PROJECT | |
|---|---|---|---|
| 5 | OHIO | | |

212/367

OTT-2-16.60

QUANTITIES
CALC BY SKL DATE 8-10-95
CKD BY TWB DATE 8-10-95

| SEEDING END WIDTH | SEEDING SQ. YDS. |
|---|---|
| 0 | |
| | 178 |
| 64 | |
| | 333 |
| 56 | |
| | 156 |
| 0 | |
| | 667 |

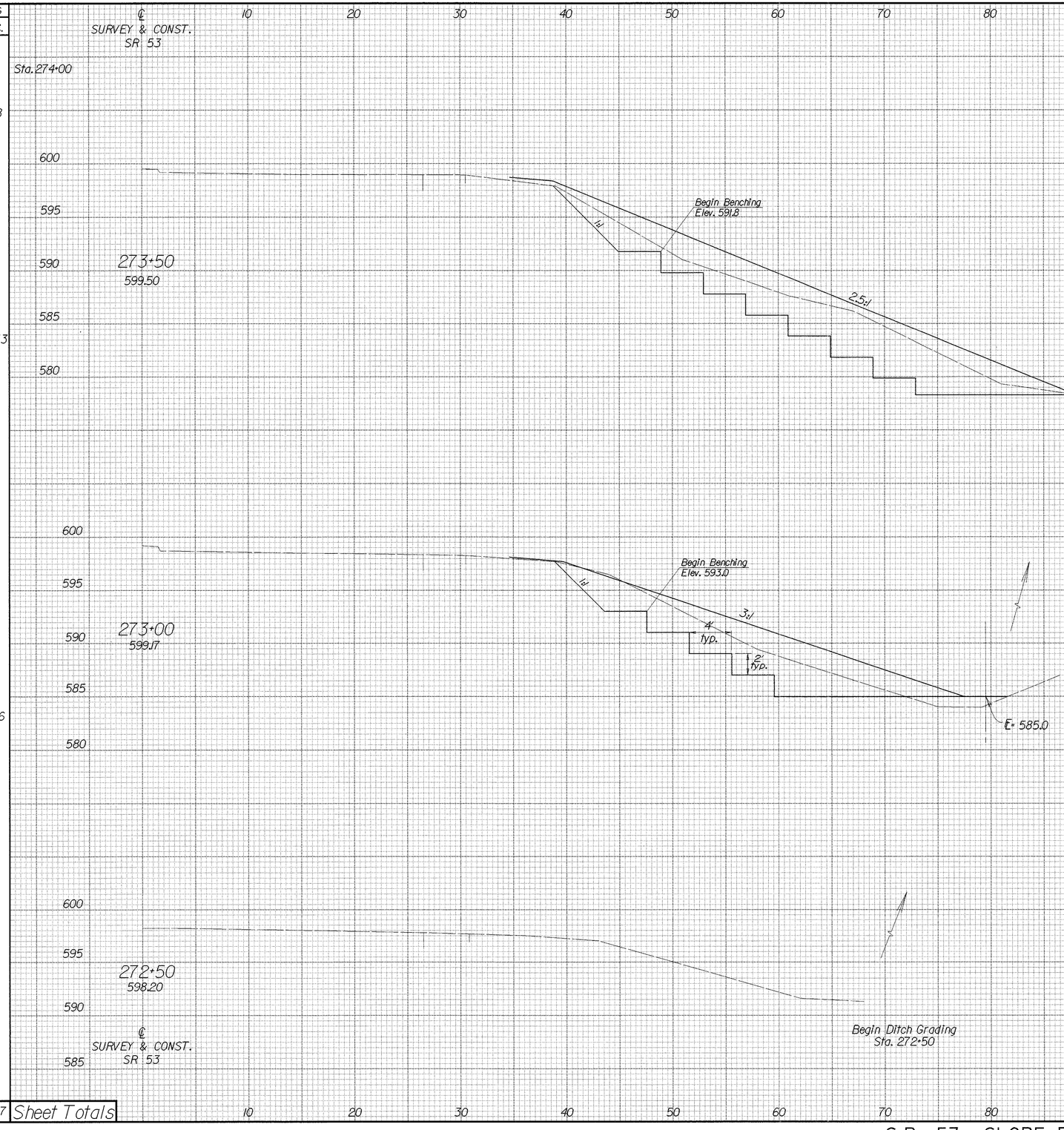


| | END AREA CUT | END AREA FILL | VOLUME CUT | VOLUME FILL |
|---|---|---|---|---|
| Sta. 274+00 | 0 | 0 | | |
| 595 | | | 105 | 169 |
| 590 | | | | |
| 585 | 113 | 183 | | |
| 580 | | | | |
| | | | 174 | 289 |
| 600 | | | | |
| 595 | | | | |
| 590 | 75 | 129 | | |
| 585 | | | | |
| 580 | | | | |
| | | | 69 | 119 |
| 600 | | | | |
| 595 | | | | |
| 590 | 0 | 0 | | |
| 585 | | | | |
| Sheet Totals | | | 348 | 577 |

I:/PD/OTTAWA/OTT2/OTT2XS05.DGN

S.R. 53 SLOPE REPAIR ~ CROSS SECTIONS STA. 272+50 TO STA. 273+50 (RIGHT)

| FHWA REGION | STATE | PROJECT | |
|---|---|---|---|
| 5 | OHIO | | |

213/367

OTT-2-16.60

QUANTITIES
CALC BY SKL DATE 8-10-95
CKD BY TWB DATE 8-10-95

| SEEDING | | END AREA | | VOLUME | |
|---|---|---|---|---|---|
| END WIDTH | SQ. YDS. | CUT | FILL | CUT | FILL |
| 88 | | 181 | 308 | | |
| | | | | 189 | 600 |
| | 550 | 23 | 340 | | |
| 110 | | | | 48 | 629 |
| | | 29 | 339 | | |
| 109 | | | | 58 | 631 |
| | 608 | 34 | 343 | | |
| 110 | | | | | |
| | 1766 | | | 295 | 1860 |

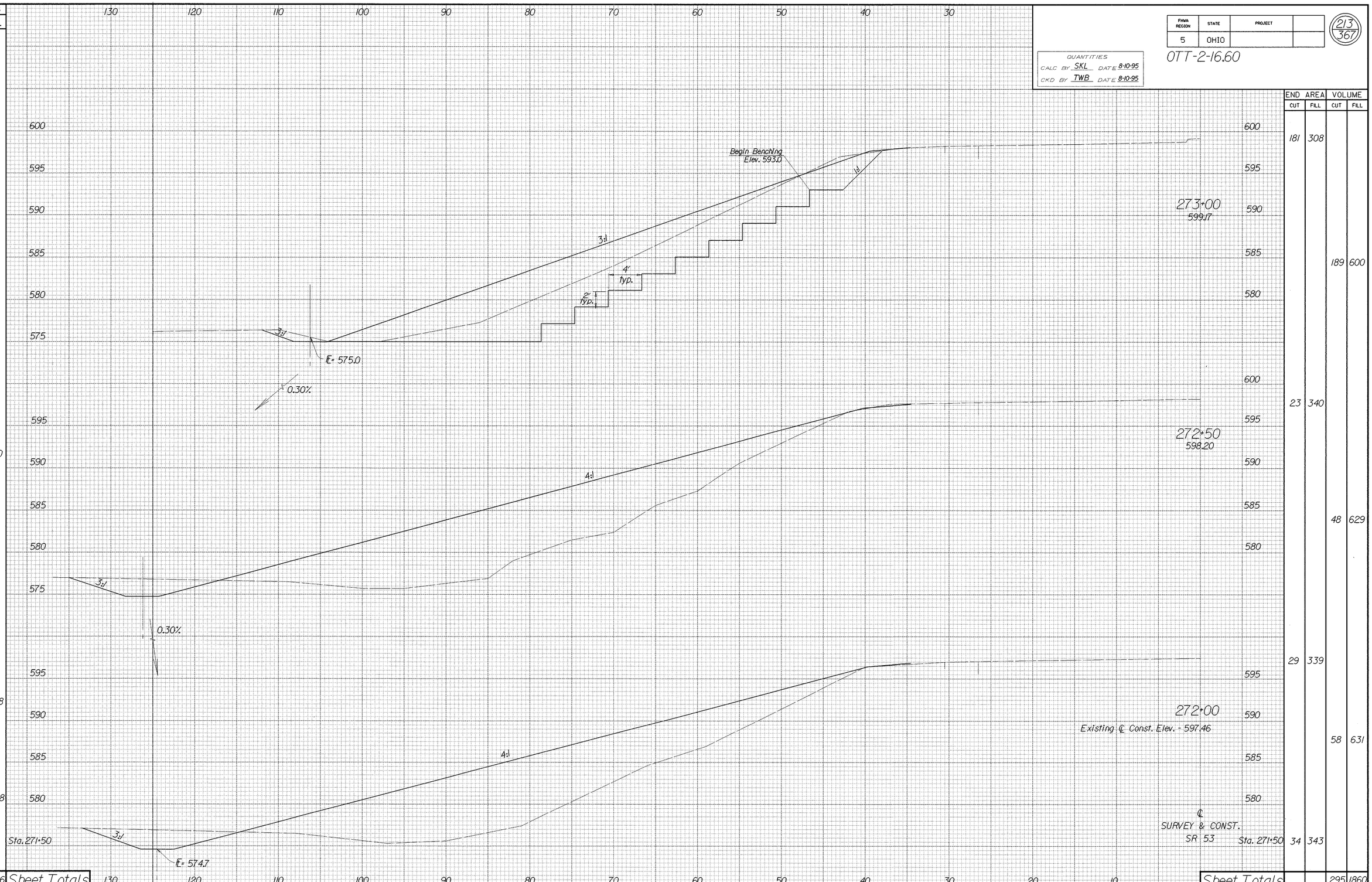


Sheet Totals

Sheet Totals

I:/PD/OTT/AWA/OTT2/OTT2XS05.DGN

S.R. 53 SLOPE REPAIR ~ CROSS SECTIONS STA. 272+00 TO STA. 273+00 (LEFT)

| FHWA REGION | STATE | PROJECT | |
|---|---|---|---|
| 5 | OHIO | | |

214/367

OTT-2-16.60

QUANTITIES
CALC BY SKL DATE 8-10-95
CKD BY TWB DATE 8-10-95

| SEEDING | | | END AREA | | VOLUME | |
|---|---|---|---|---|---|---|
| END WIDTH | SQ. YDS. | | CUT | FILL | CUT | FILL |
| 69 | 386 | 279+00<br>594.56 | 93 | 163 | 172 | 315 |
| 70 | 397 | 278+50<br>595.75 | 93 | 177 | 182 | 330 |
| 73 | 406 | 278+00<br>596.80 | 104 | 179 | 183 | 326 |
| 73 | 408 | 277+50<br>597.75 | 94 | 173 | 191 | 338 |
| 74 | | 277+00<br>598.43 - Existing ℄ Median Elev. | 112 | 192 | | |
| | 1597 | Sheet Totals | | | 728 | 1309 |

℄ SURVEY & CONST. SR 53

Begin Benching Elev. 586.75

Begin Benching Elev. 588.0

Begin Benching Elev. 588.4

Begin Benching Elev. 589.9

Begin Benching Elev. 589.8

0.10%

1H

2.5H

2H

4' typ.

2' typ.

R/W Fence - Typical

595

590

0 10 20 30 40 50 60 70 80 90 100 110 120

I:/PD/OTTAWA/OTT2/OTT2XS06.DGN

S.R. 53 SLOPE REPAIR - CROSS SECTIONS STA. 277+00 TO STA. 279+00 (RIGHT)

| FHWA REGION | STATE | PROJECT | |
|---|---|---|---|
| 5 | OHIO | | |

215/367

OTT-2-16.60

QUANTITIES
CALC BY SKL DATE 8-10-95
CKD BY TWB DATE 8-10-95

| SEEDING | | END AREA | | VOLUME | |
|---|---|---|---|---|---|
| END WIDTH | SQ. YDS. | CUT | FILL | CUT | FILL |
| | | | | | |
| 113 | | | 41 | 393 | |
| | | | 28 | 414 | |
| 115 | | | | | |
| | 633 | | | 64 | 747 |
| | 633 | Sheet Totals | | 64 | 747 |

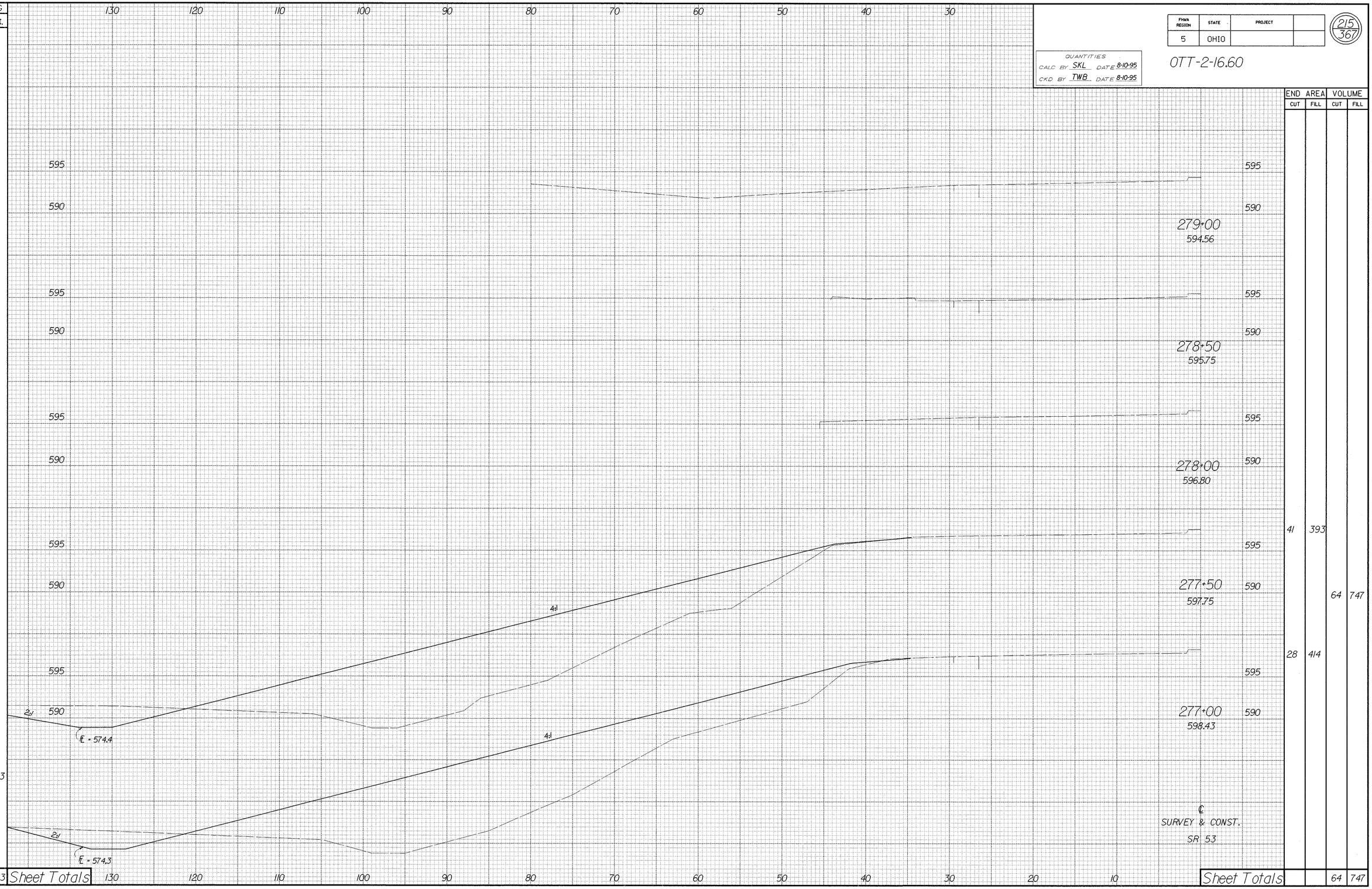


I:\PD\OTTAWA\OTT2\OTT2XS06.DGN

S.R. 53 SLOPE REPAIR - CROSS SECTIONS STA. 277+00 TO STA. 279+00 (LEFT)

| FHWA REGION | STATE | PROJECT | |
|---|---|---|---|
| 5 | OHIO | | |

216 / 367

OTT-2-16.60

QUANTITIES
CALC BY SKL DATE 8-16-95
CKD BY TWB DATE 8-16-95

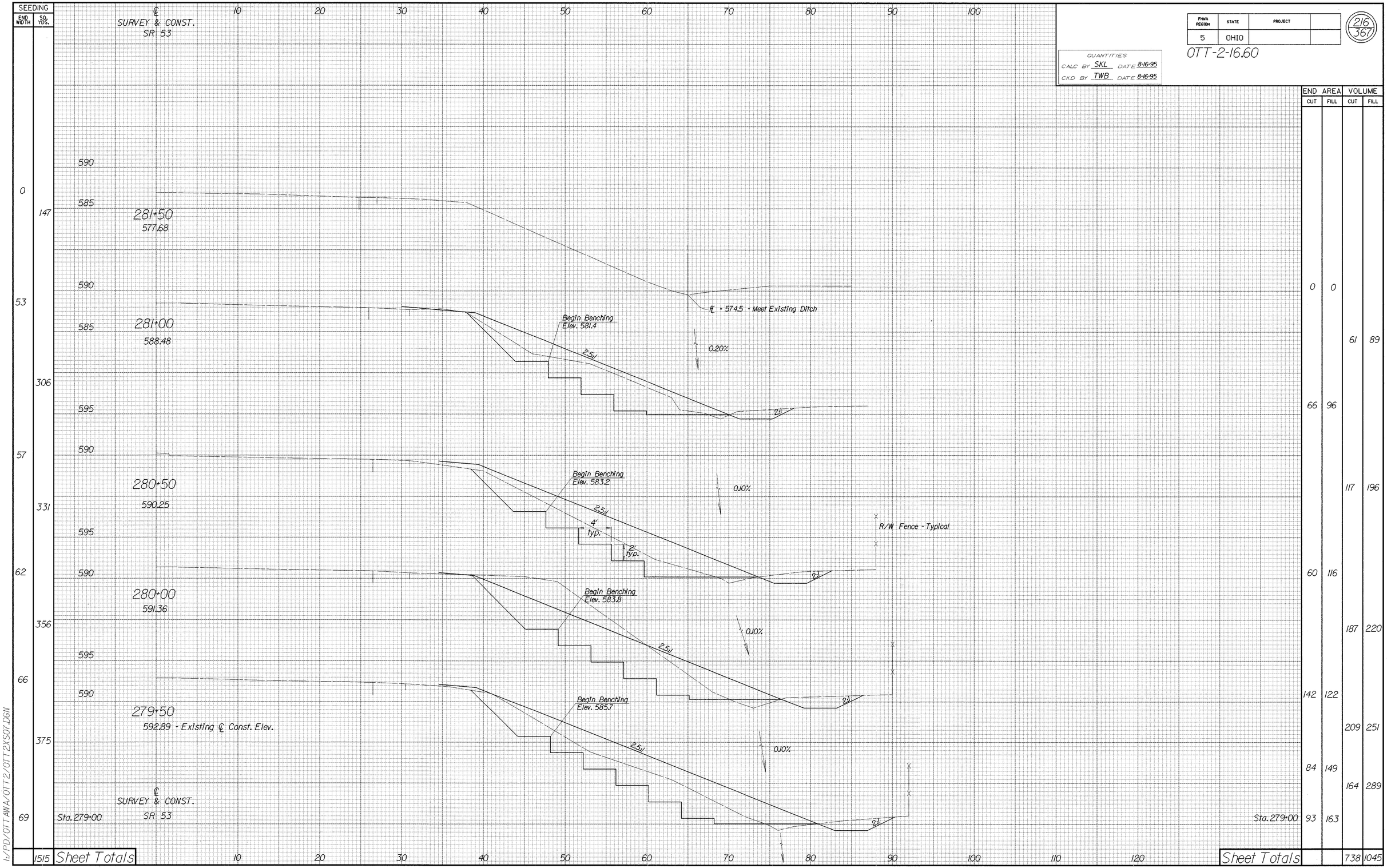


S.R. 53 SLOPE REPAIR - CROSS SECTIONS STA. 279+50 TO STA. 281+50 (RIGHT)

| FHWA REGION | STATE | PROJECT | |
|---|---|---|---|
| 5 | OHIO | | |

217/367

OTT-2-16.60

QUANTITIES
CALC BY SKL DATE 8-10-95
CKD BY TWB DATE 8-10-95

| SEEDING END WIDTH | SEEDING SQ. YDS. |
|---|---|
| 65 | |
| | 344 |
| 59 | |
| | 314 |
| 54 | |
| | 336 |
| 67 | |
| | 994 |

## RAMP "A & B"

### 15+50
585.58

Refer To Roadway Cross Sections

0.10%

4:1

1/2"/Ft.

### 15+00
584.15

Refer To Roadway Cross Sections

0.10%

4:1

1/4"/Ft.

℄ = 574.8

### 14+50
582.65

Refer To Roadway Cross Sections

0.10%

5:1

1/4"/Ft.

### 14+00
581.50 - Existing ℄ Median Elevation

Refer To Roadway Cross Sections

0.10%

6:1

1/4"/Ft.

℄ = 574.9

Begin Ditch Grading Sta. 13+50

## RAMP "A & B"

| | END AREA | | VOLUME | |
|---|---|---|---|---|
| | CUT | FILL | CUT | FILL |
| | 0 | 28 | | |
| | | | 0 | 47 |
| | 0 | 23 | | |
| | | | 0 | 39 |
| | 0 | 19 | | |
| | | | 0 | 34 |
| | 0 | 18 | | |
| SHEET TOTALS | | | 0 | 120 |

S.R. 53 SLOPE REPAIR RAMP "A" & "B" CROSS SECTIONS

i:/pd/ottawa/ott2/53rmpslp.dgn

| FHWA REGION | STATE | PROJECT | |
|---|---|---|---|
| 5 | OHIO | | |

218/367

OTT-2-16.60

QUANTITIES
CALC BY SKL DATE 8-10-95
CKD BY TWB DATE 8-10-95

| SEEDING | | | END AREA | | VOLUME | |
|---|---|---|---|---|---|---|
| END WIDTH | SQ. YDS. | | CUT | FILL | CUT | FILL |
| 72 | | B/L RAMP "A & B" 10 20 30 40 50 60 70 80 | | | | |
| | | Refer To Roadway Cross Sections | | | | |
| | | 16+50 588.73 | | | | |
| | | 590 585 580 575 570 | | | | |
| | | 0.10% 4:1 4:1 | | | | |
| | 367 | | 11 | 91 | | |
| 60 | | Refer To Roadway Cross Sections | | | 10 | 131 |
| | | 16+00 587.17 | | | | |
| | | 590 585 580 575 570 | | | | |
| | | 0.10% 4:1 6:1 ℄ = 574.7 | | | | |
| | 347 | | 0 | 50 | 0 | 72 |
| 65 | | STA. 15+50 | 0 | 28 | | |
| | | B/L RAMP "A & B" 10 20 30 40 50 60 70 80 90 100 | | | | |
| | 714 | SHEET TOTALS | | | 10 | 203 |
| | | | SHEET TOTALS | | | |

i/pd/ottawa/ott2/53rmpslp.dgn

S.R. 53 SLOPE REPAIR RAMP "A" & "B" CROSS SECTIONS

| FHWA REGION | STATE | PROJECT | |
|---|---|---|---|
| 5 | OHIO | | |

219/367

OTT-2-16.60

QUANTITIES
CALC BY SKL DATE 8-10-95
CKD BY TWB DATE 8-10-95

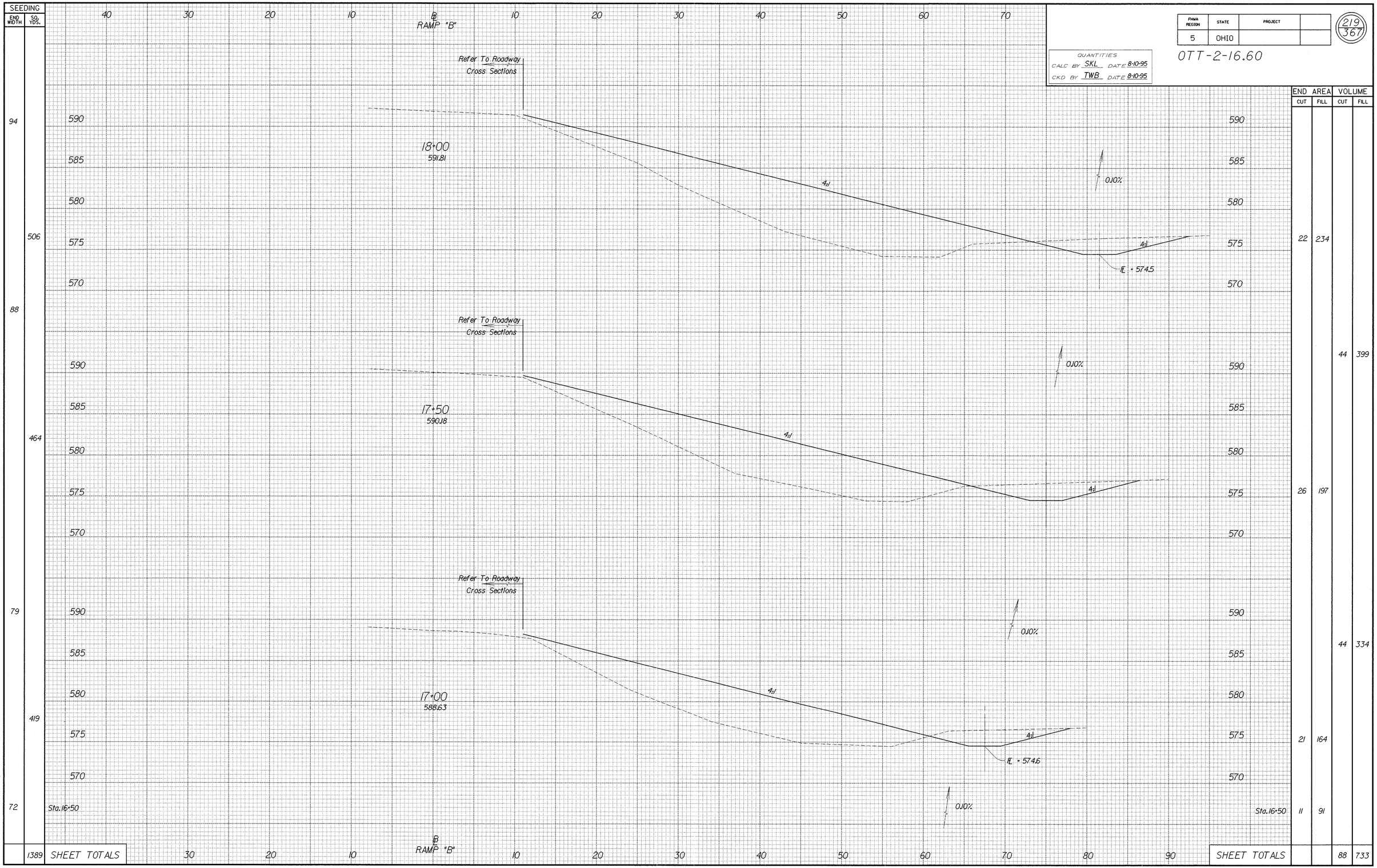


| SEEDING END WIDTH | SEEDING SQ. YDS. | | END AREA CUT | END AREA FILL | VOLUME CUT | VOLUME FILL |
|---|---|---|---|---|---|---|
| 94 | | | | | | |
| | 506 | | 22 | 234 | | |
| 88 | | | | | | |
| | 464 | | 26 | 197 | | |
| 79 | | | | | 44 | 334 |
| | 419 | | 21 | 164 | | |
| 72 | | Sta. 16+50 | 11 | 91 | | |
| | 1389 | SHEET TOTALS | | | 88 | 733 |

S.R. 53 SLOPE REPAIR - RAMP "B" CROSS SECTIONS

I:\pd\ottawa\ott2\53rmpslp.dgn

| FHWA REGION | STATE | PROJECT | |
|---|---|---|---|
| 5 | OHIO | | |

220/367

OTT-2-16.60

QUANTITIES
CALC BY SKL DATE 8-10-95
CKD BY TWB DATE 8-10-95

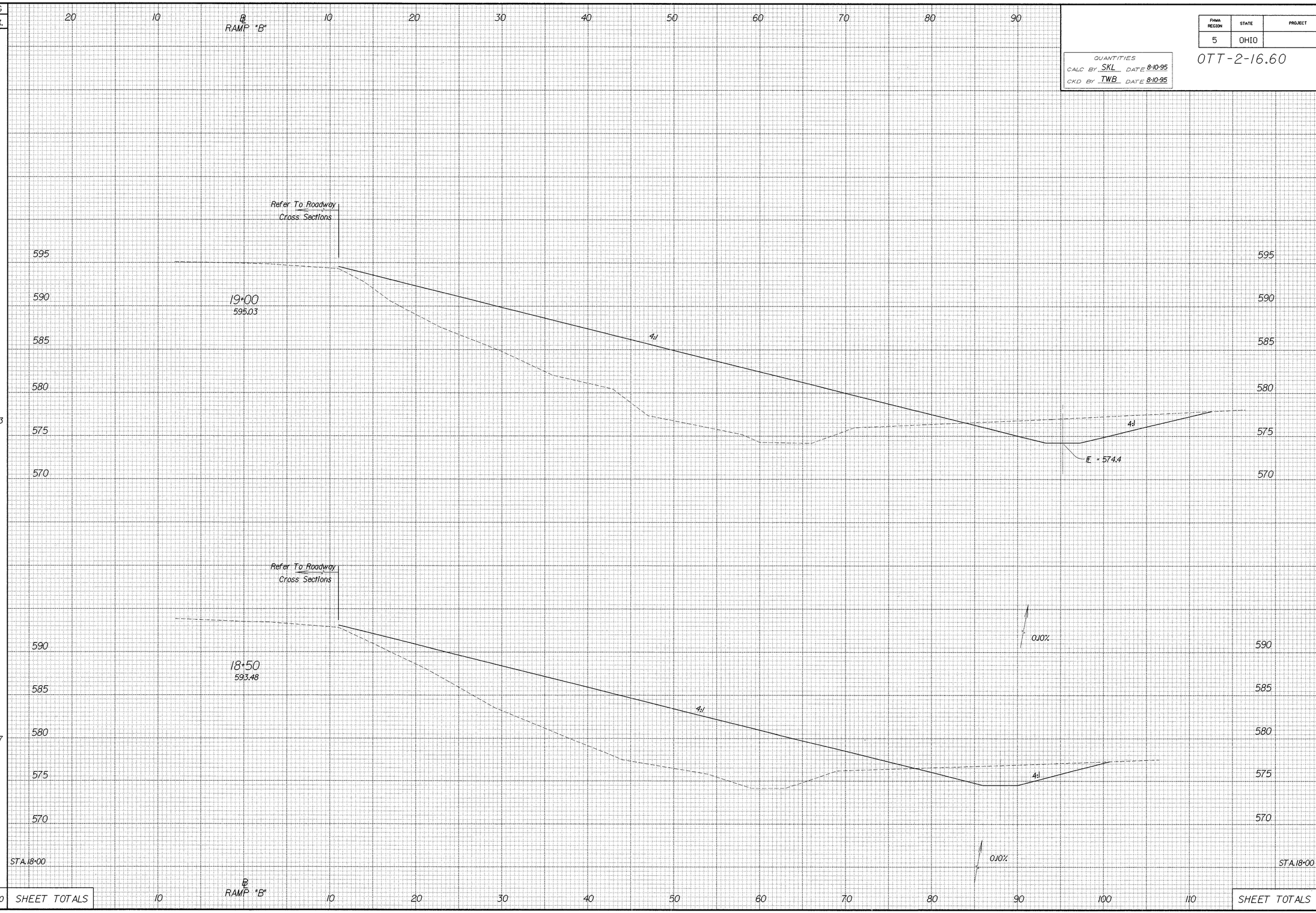


| SEEDING END WIDTH | SEEDING SQ. YDS. | | END AREA CUT | END AREA FILL | VOLUME CUT | VOLUME FILL |
|---|---|---|---|---|---|---|
| 114 | | | | | | |
| | 603 | | 47 | 366 | | |
| 103 | | | | | 72 | 623 |
| | 547 | | 31 | 307 | | |
| | | | | | 49 | 501 |
| 94 | | STA 18+00 | 22 | 234 | | |
| | 1150 | SHEET TOTALS | | | 121 | 1124 |

S.R. 53 SLOPE REPAIR - RAMP "B" CROSS SECTIONS

I:/pd/ottawa/ott2/53rmpslp.dgn

| FHWA REGION | STATE | PROJECT | |
|---|---|---|---|
| 5 | OHIO | | |

221
367

OTT-2-16.60

QUANTITIES
CALC BY SKL DATE 8-10-95
CKD BY TWB DATE 8-10-95

| SEEDING END WIDTH | SEEDING SQ. YDS. |
|---|---|
| 76 | |
| | 400 |
| 68 | |
| | 367 |
| 64 | |
| 767 | SHEET TOTALS |

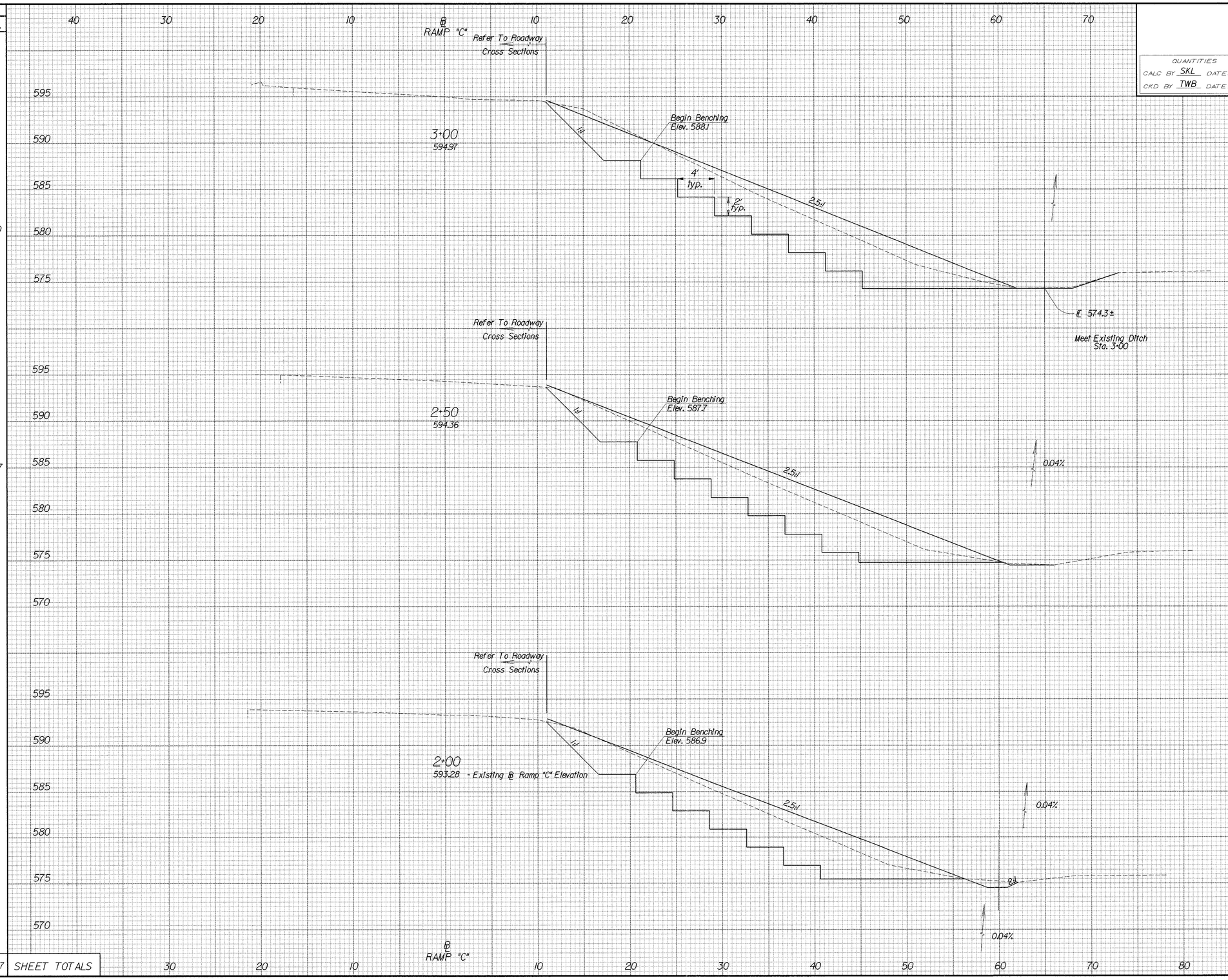


| END AREA CUT | END AREA FILL | VOLUME CUT | VOLUME FILL |
|---|---|---|---|
| 155 | 192 | | |
| | | 269 | 347 |
| 135 | 183 | | |
| | | 244 | 318 |
| 128 | 160 | | |
| SHEET TOTALS | | 513 | 665 |

/I/PD/OTTAWA/OTT2/53RMPSLP.DGN

# S.R. 53 SLOPE REPAIR - RAMP "C" CROSS SECTIONS

| FHWA REGION | STATE | PROJECT | |
|---|---|---|---|
| 5 | OHIO | | |

222/367

OTT-2-16.60

QUANTITIES
CALC BY SKL DATE 8-10-95
CKD BY TWB DATE 8-10-95

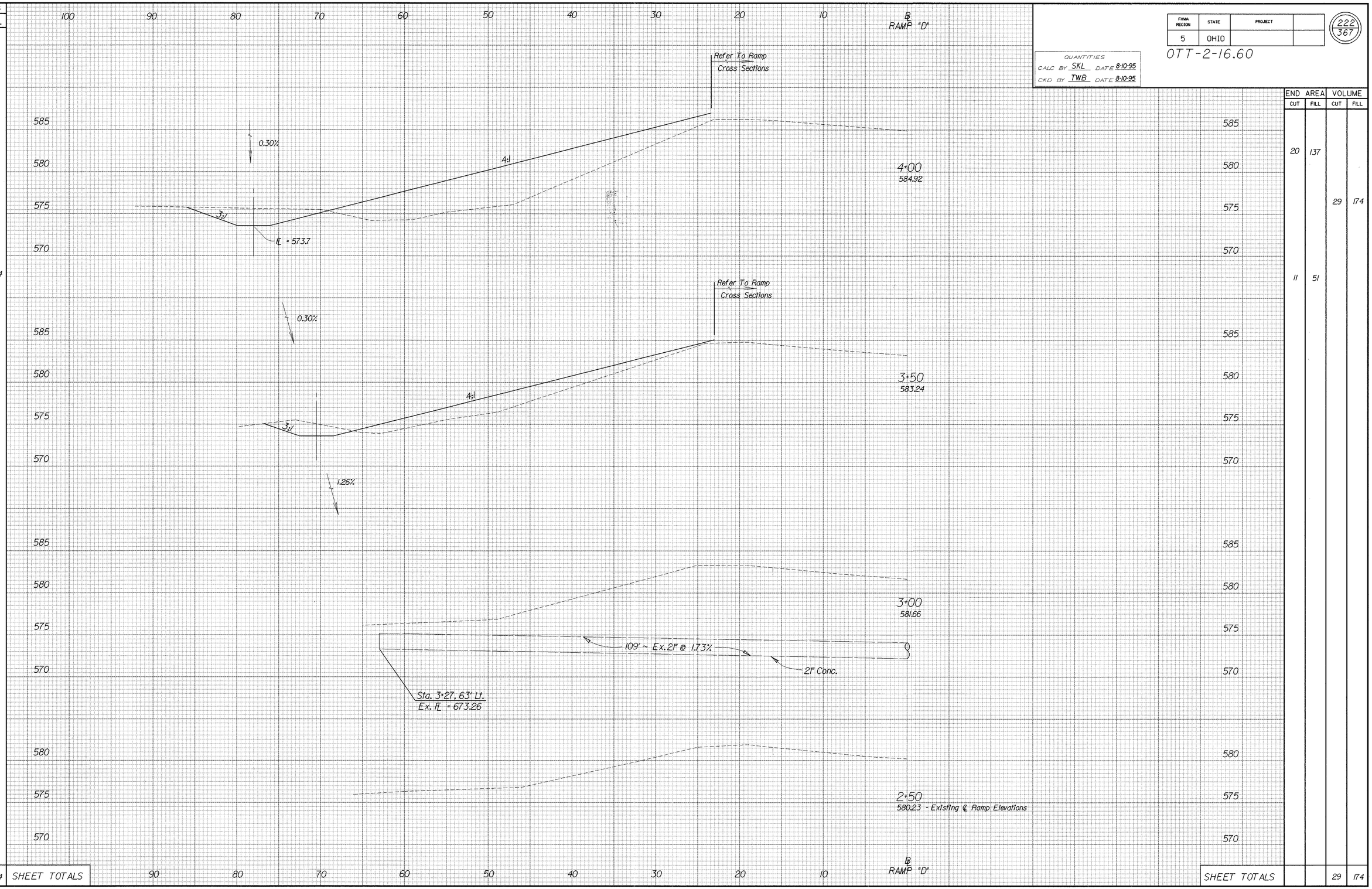


| SEEDING END WIDTH | SEEDING SQ. YDS. |
|---|---|
| 75 | 394 |
| 67 | |
| | 394 |

| END AREA CUT | END AREA FILL | VOLUME CUT | VOLUME FILL |
|---|---|---|---|
| 20 | 137 | | |
| | | 29 | 174 |
| 11 | 51 | | |
| SHEET TOTALS | | 29 | 174 |

S.R. 53 SLOPE REPAIR - RAMP "D" CROSS SECTIONS

i/pd/ottawa/ott2/53rmpslp.dgn

| FHWA REGION | STATE | PROJECT | |
|---|---|---|---|
| 5 | OHIO | | |

223
367

OTT-2-16.60

QUANTITIES
CALC BY SKL DATE 8-10-95
CKD BY TWB DATE 8-10-95

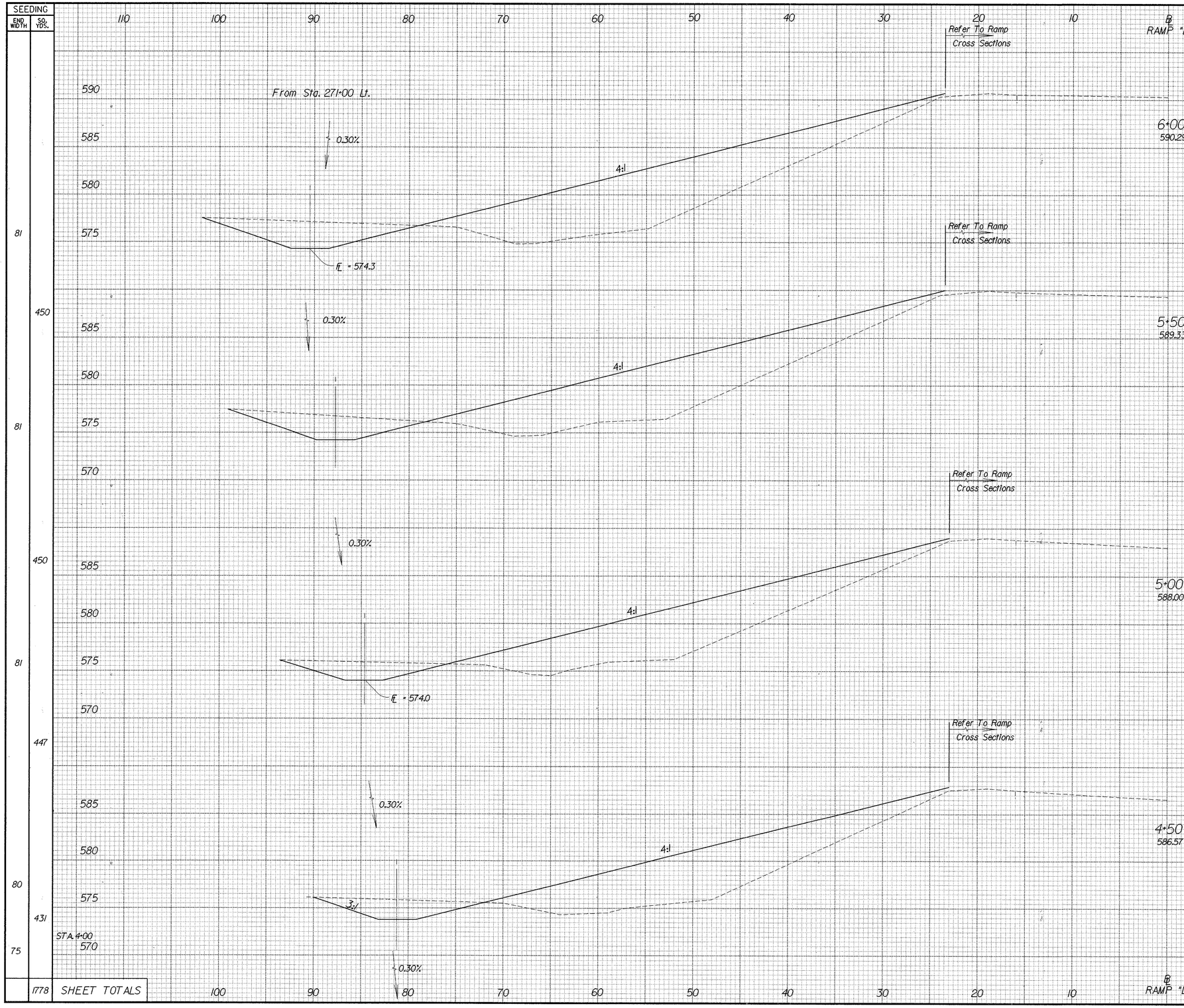


| END AREA CUT | END AREA FILL | VOLUME CUT | VOLUME FILL |
|---|---|---|---|
| 24 | 199 | | |
| | | 45 | 359 |
| 25 | 189 | | |
| | | 42 | 326 |
| 20 | 163 | | |
| | | 40 | 301 |
| 23 | 162 | | |
| | | 40 | 277 |
| STA. 4+00 20 | 137 | | |
| SHEET TOTALS | | 167 | 1263 |

1/pd/ottawa/ott2/53rmpslp.dgn

S.R. 53 SLOPE REPAIR - RAMP "D" CROSS SECTIONS

# MEDIAN U-TURN OPENING DETAIL

| FHWA REGION | STATE | PROJECT | |
|---|---|---|---|
| 5 | OHIO | | |

224/367

OTT-2-16.60

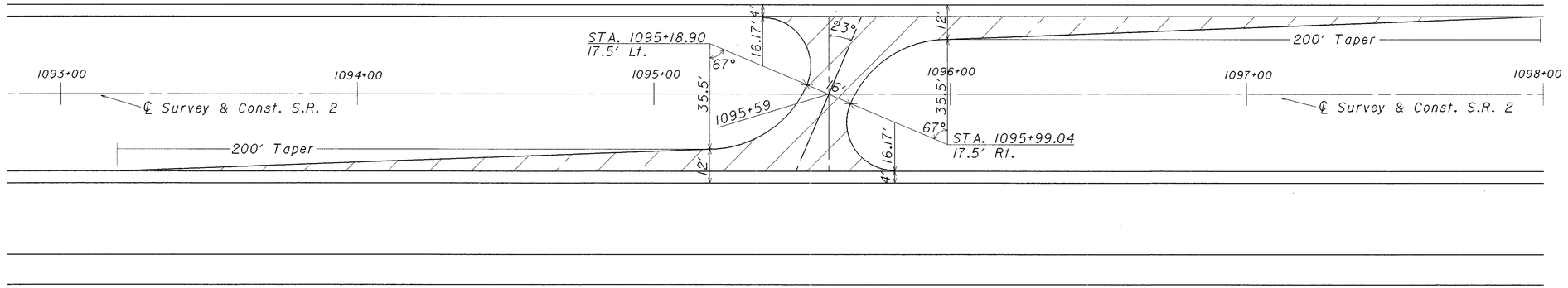


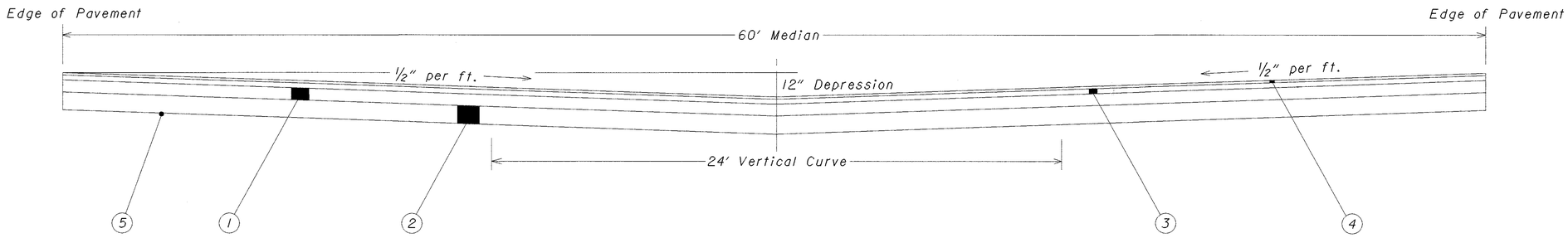


## PROPOSED U-TURN MATERIALS

1. Item 301, 9" Bituminous Aggregate Base, AC-20
2. Item 304, 6" Aggregate Base
3. Item 446, 2¼" Asphalt Concrete Intermediate Course, Type 2, AC-20
4. Item 446, 1¼" Asphalt Concrete Surface Course, Type 1, AC-20
5. Item 203, Subgrade Compaction

NOTE: See sht. no. 74 for pavement quantities.

## LEGEND

Median U-turn Pavement

Note: The following estimated quantities have been carried to sht. no. 78.

| | |
|---|---|
| Item 203 Excavation not including embankment | 300 Cu. Yds. |
| Item 659 Seeding and Mulching | 150 Sq. Yds. |

I:/pd/ottawa/oh12/ot2xodet.dgn

# MEDIAN U-TURN OPENING DETAIL

| FHWA REGION | STATE | PROJECT | |
|---|---|---|---|
| 5 | OHIO | | |

224-A 367

OTT-2-16.60

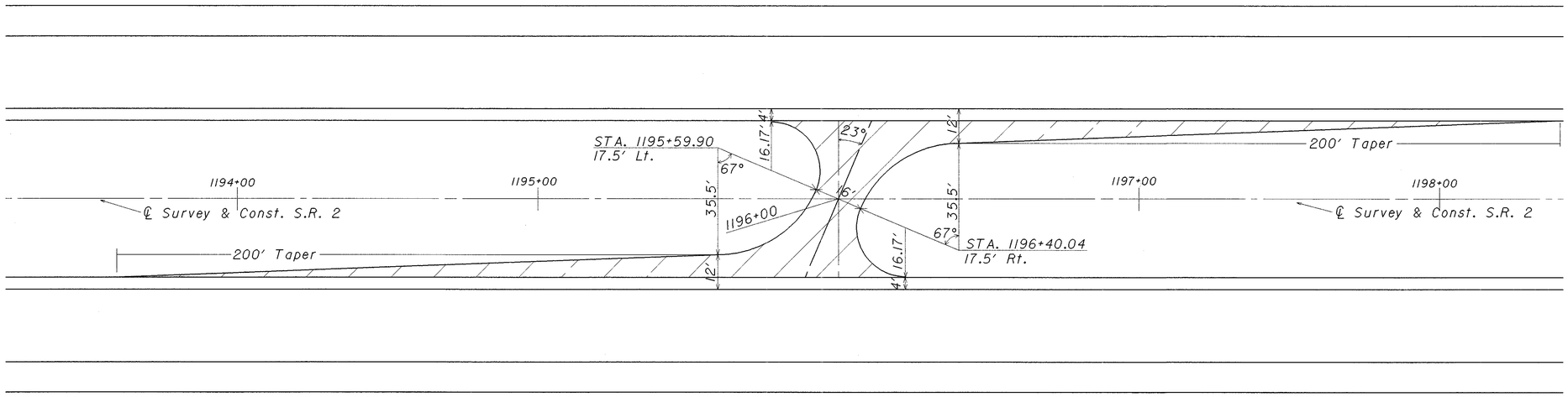


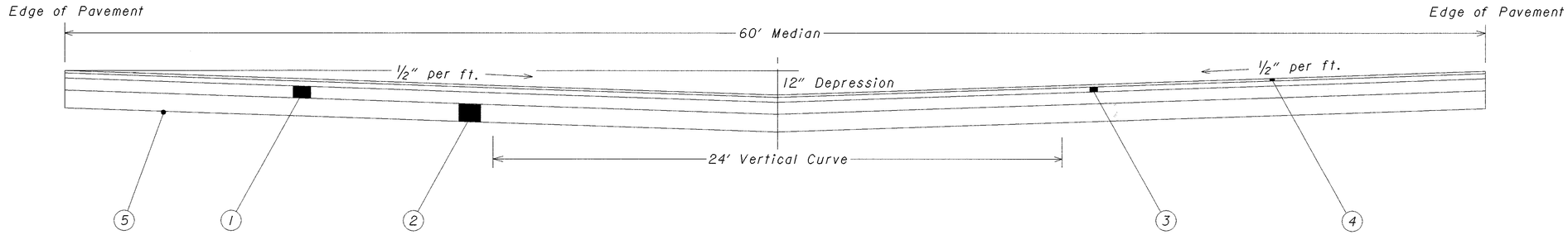


## PROPOSED U-TURN MATERIALS

(1) Item 301, 9" Bituminous Aggregate Base, AC-20

(2) Item 304, 6" Aggregate Base

(3) Item 446, 2¼" Asphalt Concrete Intermediate Course, Type 2, AC-20

(4) Item 446, 1¼" Asphalt Concrete Surface Course, Type 1, AC-20

(5) Item 203, Subgrade Compaction

NOTE: See sht. no. 74 for pavement quantities.

## LEGEND

Median U-turn Pavement

Note: The following estimated quantities have been carried to sht. no. 78.

| | |
|---|---|
| Item 203 Excavation not including embankment | 300 Cu. Yds. |
| Item 659 Seeding and Mulching | 150 Sq. Yds. |

I:\pd\ottawa\ott2_at2\xodet.dgn

MEDIAN U-TURN OPENING DETAIL

| FHWA REGION | STATE | PROJECT 10 | |
|---|---|---|---|
| 5 | OHIO | | |

225/367

OTT-2-16.60

| SEEDING | |
|---|---|
| END WIDTH | SQ. YDS. |

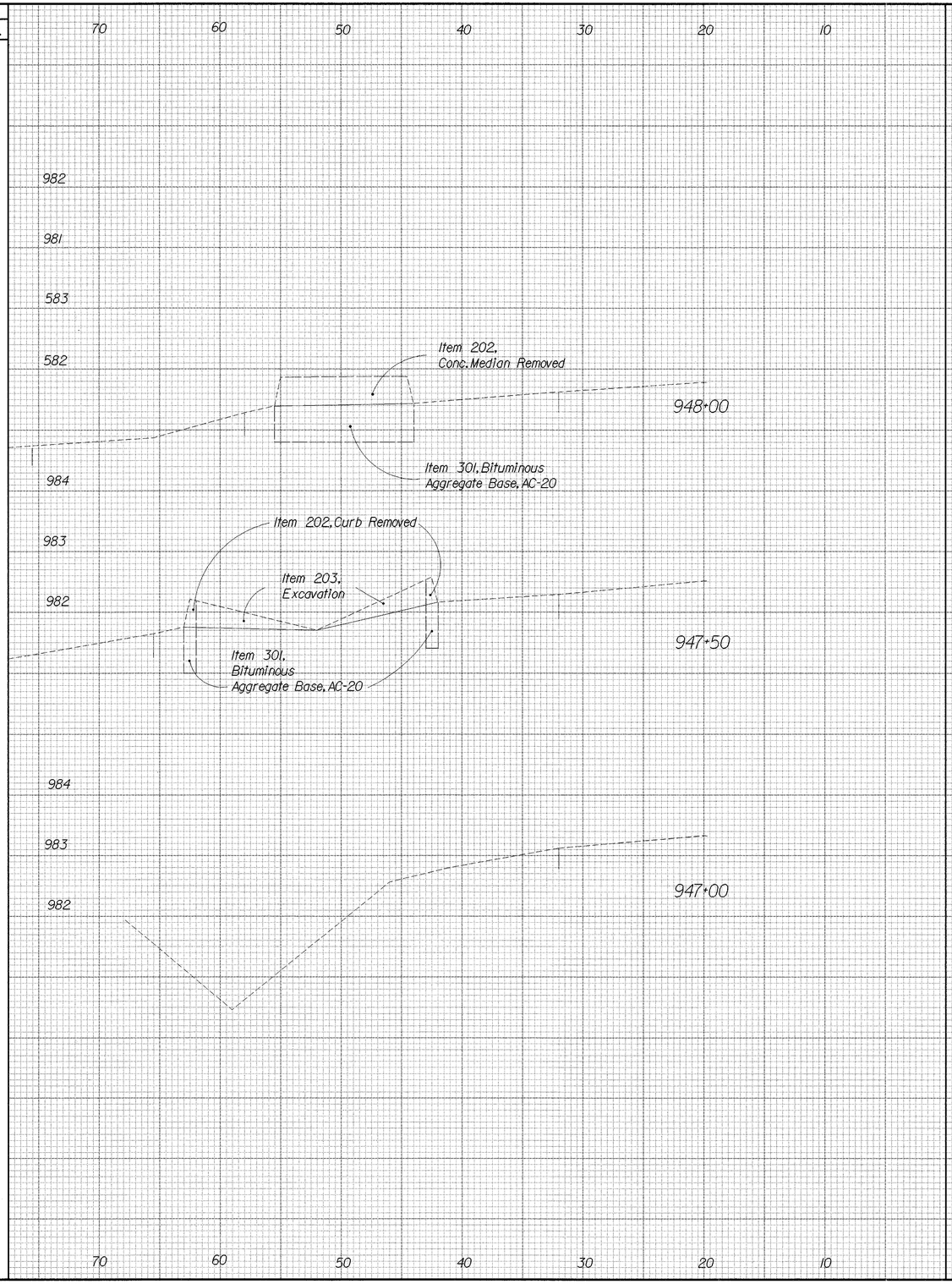


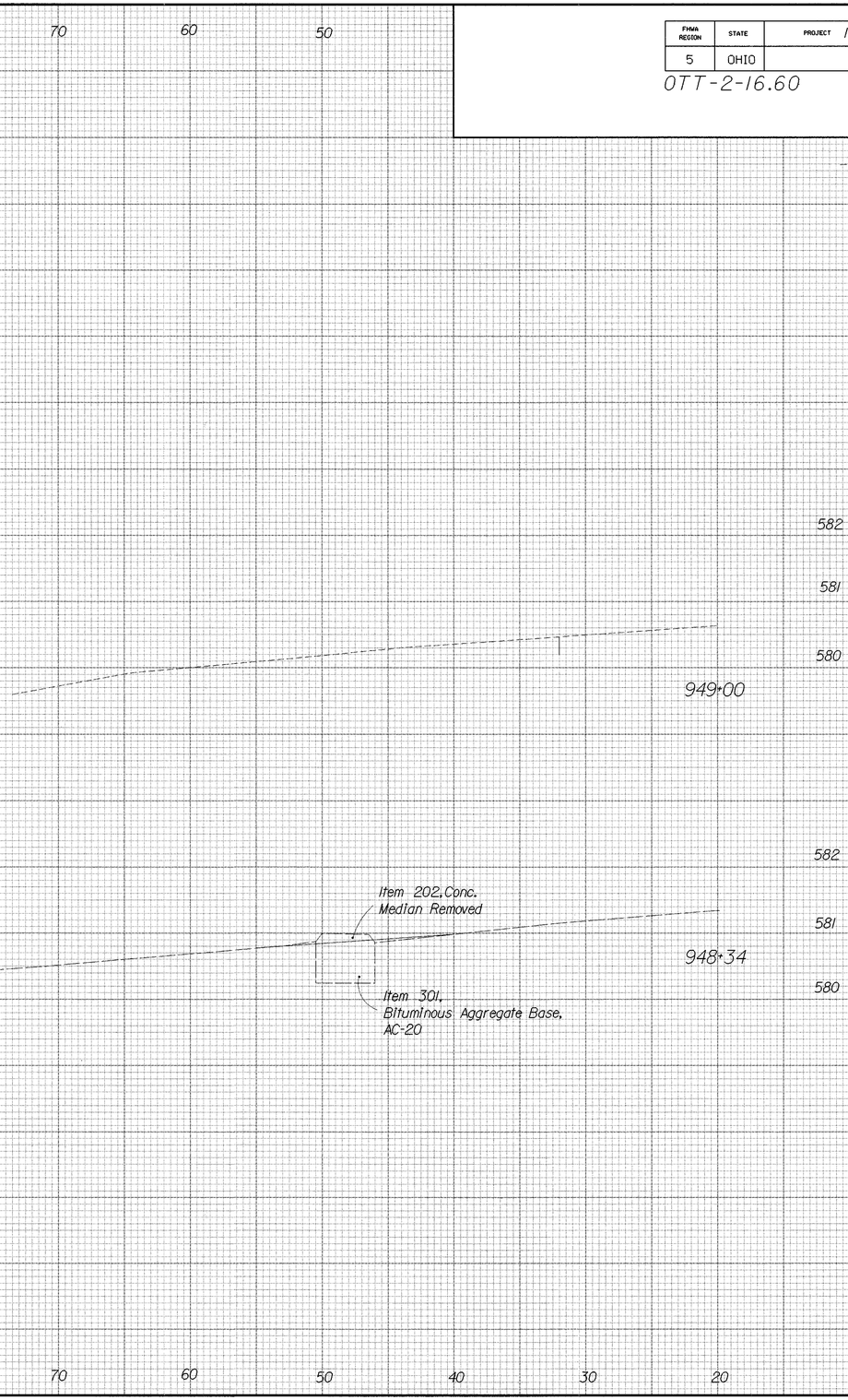


CURB REMOVAL DETAILS ~ SR 163 RAMP A

i:/pd/ottawa/ot12/ot2cbxs6.dgn

| SEEDING | |
|---|---|
| END WIDTH | SQ. YDS. |

| FHWA REGION | STATE | PROJECT | |
|---|---|---|---|
| 5 | OHIO | | |

226
367

OTT-2-16.60

| END AREA | | VOLUME | |
|---|---|---|---|
| CUT | FILL | CUT | FILL |

℄ SURVEY & CONST. SR 2

0 10 20 30 40 50 60 70

585
584
946+50
Item 202, Curb Removed
Item 301, Bituminous Aggregate Base, Ac-20
586
585
946+00
Item 202, Curb Removed
Item 301, Bituminous Aggregate Base, AC-20
584
587
586
945+50
Item 202, Curb Removed
Item 301, Bituminous Aggregate Base AC-20
585
589
588
945+00
Item 202, Curb Removed
Item 202, Wearing Course Removed
Item 301, Bituminous Aggregate Base, AC-20
587
590
589
944+50
Item 202, Wearing Course Removed
Item 202 Curb Removed
Item 301, Bituminous Aggregate Base, AC-20
588

℄ SURVEY & CONST. SR 2

0 10 20 30 40 50 60 70

10 20 30 40

582
581
949+00
Item 202, Curb Removed
Item 301, Bituminous Aggregate Base, AC-20
580
582
581
948+50
Item 202, Wearing Course Removed
Item 202, Curb Removed
Item 301, Bituminous Aggregate Removed
582
581
948+00
Item 202, Curb Removed
Item 301, Bituminous Aggregate Base, AC-20
583
582
947+50
Item 202, Curb Removed
Item 301, Bituminous Aggregate Base, AC-20
584
583
947+00
Item 202, Curb Removed
Item 301, Bituminous Aggregate Base, AC-20
582

10 20 30 40 50 60 70

/i/pd/ottawa/ott2/ot2cbxs6.dgn

CURB REMOVAL DETAILS ~ SR 163 RAMP B

| SEEDING | |
|---|---|
| END WIDTH | SQ. YDS. |

| FHWA REGION | STATE | PROJECT | |
|---|---|---|---|
| 5 | OHIO | | |

227/367

OTT-2-16.60

| END AREA | | VOLUME | |
|---|---|---|---|
| CUT | FILL | CUT | FILL |
| | | | |

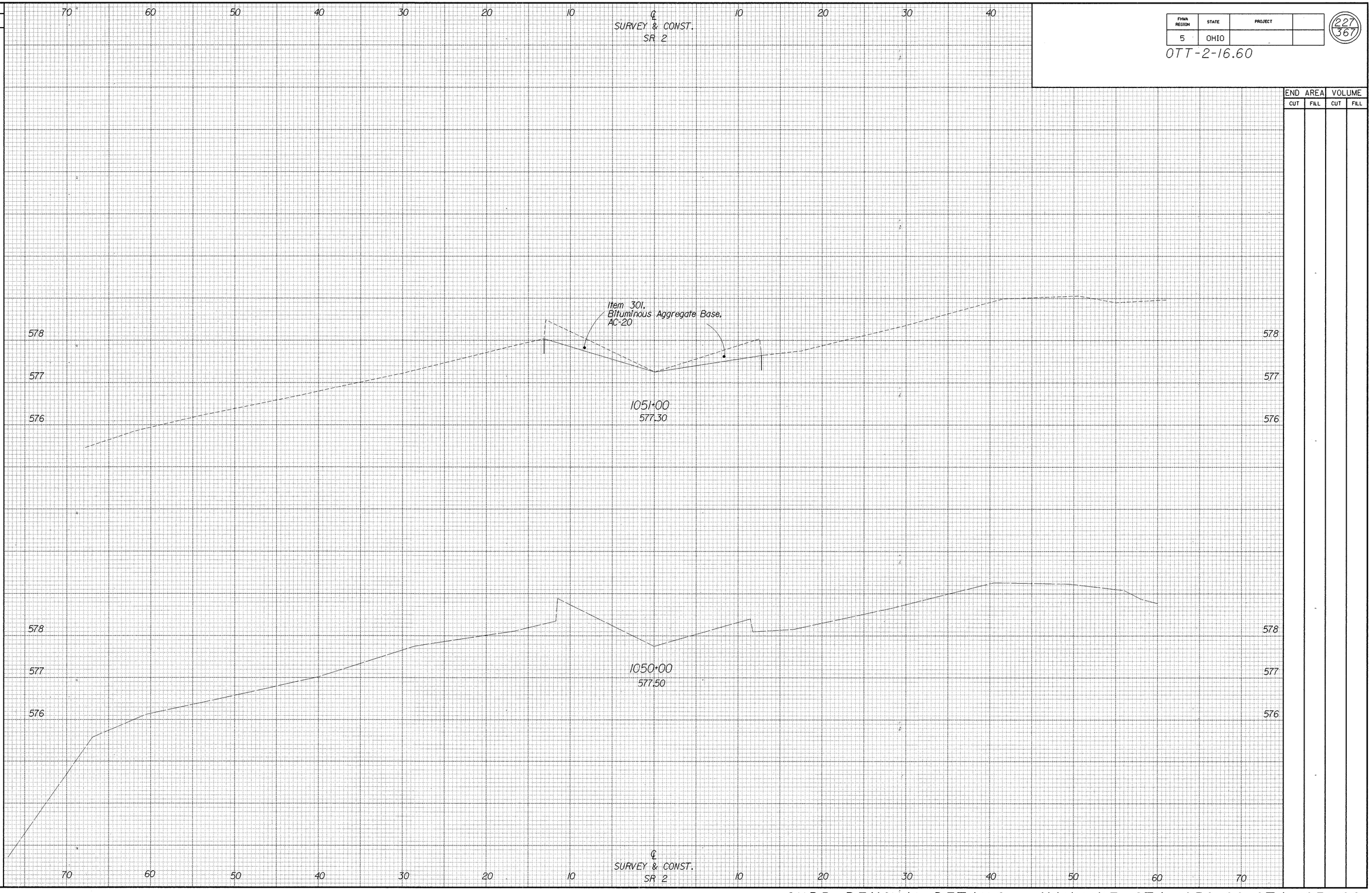


/I/PD/OTTAWA/OTT2/OT2CBXS4.DGN

CURB REMOVAL DETAILS ~ MAINLINE STA. 1050+00-STA. 1051+00

| SEEDING | |
|---|---|
| END WIDTH | SQ. YDS. |

| FHWA REGION | STATE | PROJECT | |
|---|---|---|---|
| 5 | OHIO | | |

228
367

OTT-2-16.60

| END AREA | | VOLUME | |
|---|---|---|---|
| CUT | FILL | CUT | FILL |

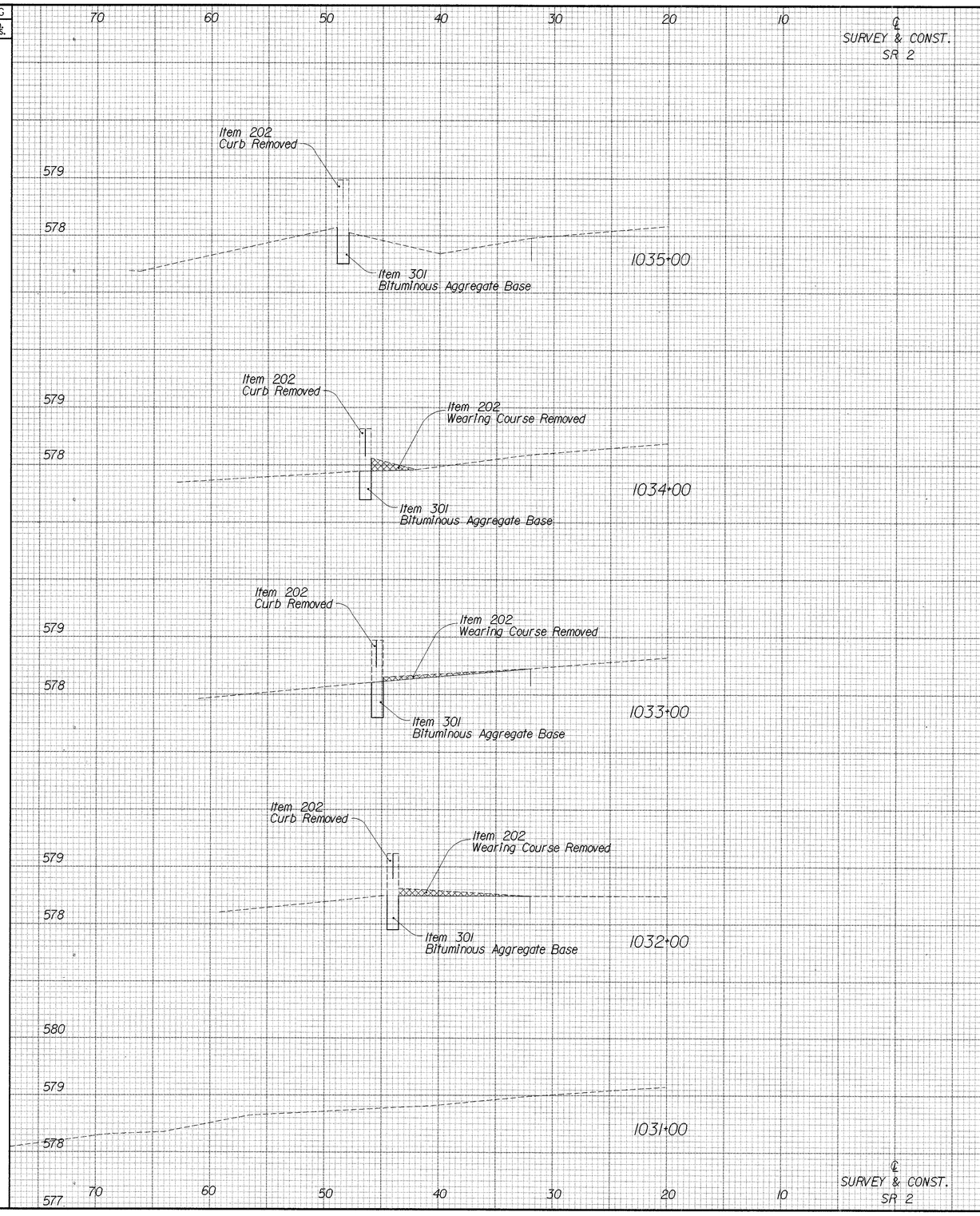


i:/pd/ottawa/ott2/ot2cbxs2.dgn

CURB REMOVAL DETAILS ~ SR 53 RAMP A

| SEEDING | |
|---|---|
| END WIDTH | SQ. YDS. |

| FHWA REGION | STATE | PROJECT | |
|---|---|---|---|
| 5 | OHIO | | |

229/367

OTT-2-16.60

| END AREA | | VOLUME | |
|---|---|---|---|
| CUT | FILL | CUT | FILL |

70 60 50 40 30 20 10 ℄ SURVEY & CONST. SR 2

580
579
578

1046+00

580
579
578

Item 202 Curb Removed

Item 301 Bituminous Aggregate Base, AC-20

1045+00

580
579
578

Item 202 Curb Removed

Item 203 Excavation

Item 202 Curb Removed

Item 301 Bituminous Aggregate Base, AC-20

1044+50

580
579
578

1044+00

70 60 50 40 30 20 10 ℄ SURVEY & CONST. SR 2

/i/pd/ottawa/ott2/of2cbxs3.dgn

CURB DETAILS ~ SR 53 RAMP B

| SEEDING | |
|---|---|
| END WIDTH | SQ. YDS. |

| FHWA REGION | STATE | PROJECT | |
|---|---|---|---|
| 5 | OHIO | | |

OTT-2-16.60

230
367

| END AREA | | VOLUME | |
|---|---|---|---|
| CUT | FILL | CUT | FILL |

0 10 20 30 40 50 60 70

℄
SURVEY & CONST.
SR 2

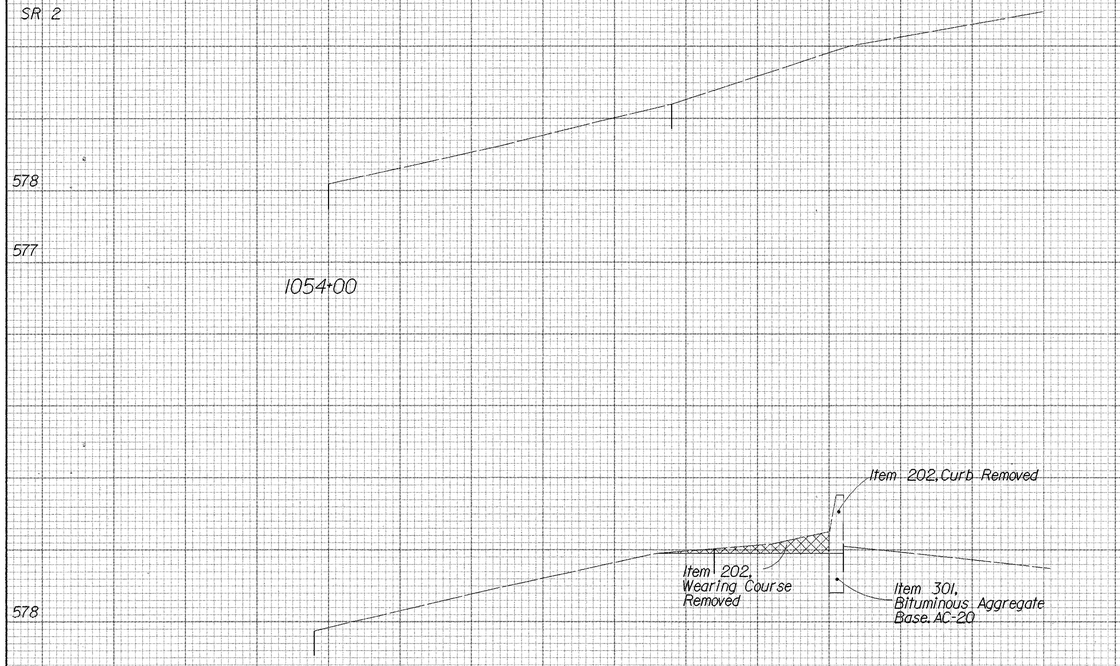


℄
SURVEY & CONST.
SR 2

0 10 20 30 40 50 60 70

/i/pd/ottawa/ott2/ot2cbxs4.dgn

CURB REMOVAL DETAILS ~ SR 53 RAMP C

| SEEDING | |
|---|---|
| END WIDTH | SQ. YDS. |

| FHWA REGION | STATE | PROJECT | |
|---|---|---|---|
| 5 | OHIO | | |

231
367

OTT-2-16.60

| END AREA | | VOLUME | |
|---|---|---|---|
| CUT | FILL | CUT | FILL |

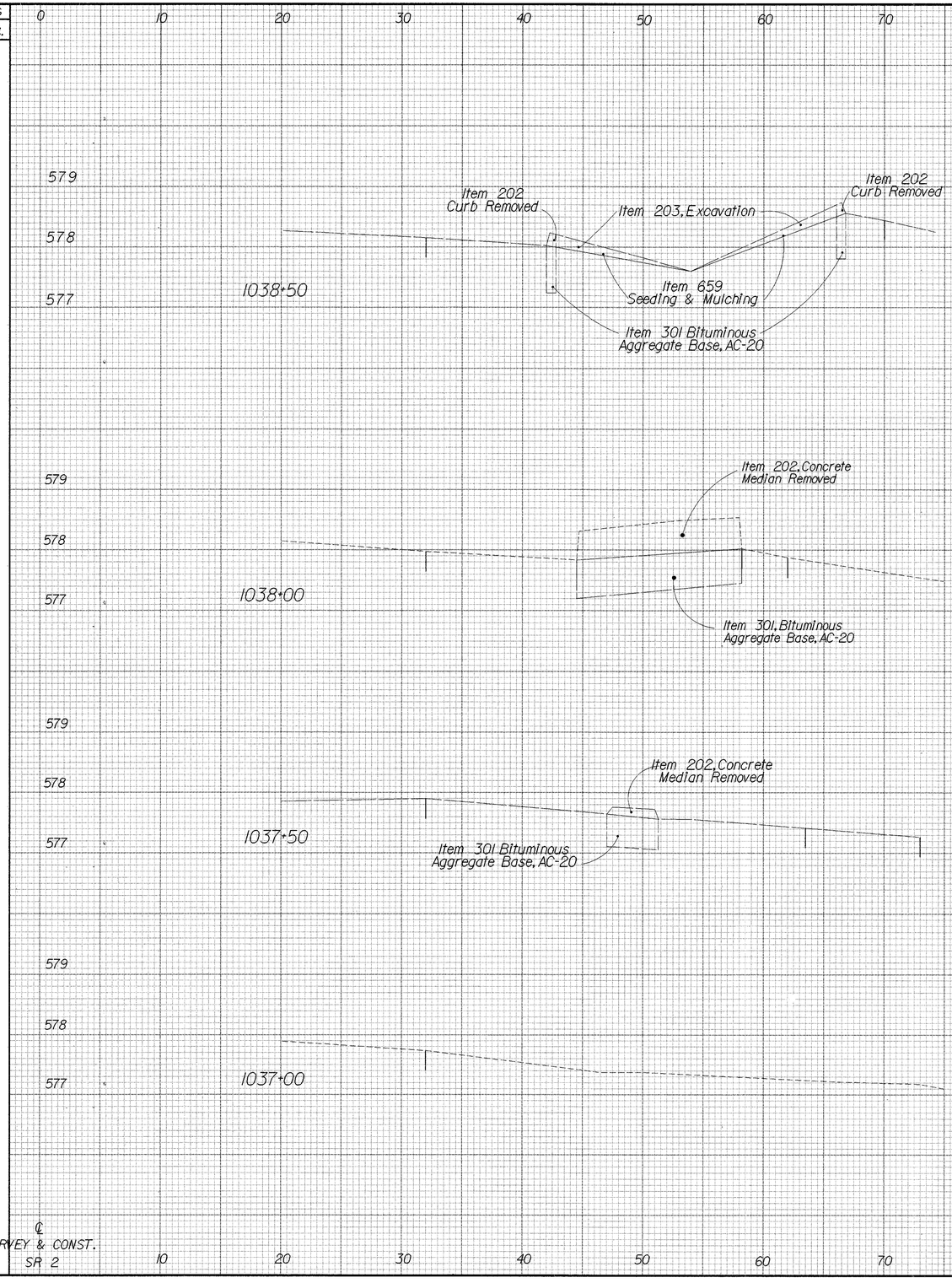


//pd/ottawa/ott2/ot2cbxsl.dgn

CURB REMOVAL DETAILS ~ RAMP D SR 53

| FHWA REGION | STATE | PROJECT | |
|---|---|---|---|
| 5 | OHIO | | |

233
367

OTT-2-16.60

# ITEM SPECIAL - PRECAST REINFORCED CONCRETE OUTLET

The Concrete outlet shall meet the requirements of Item 604 in the Construction & Materials Specifications. Payment shall be made on an Each basis. Payment shall include the cost of the Sod & Wire Cloth.

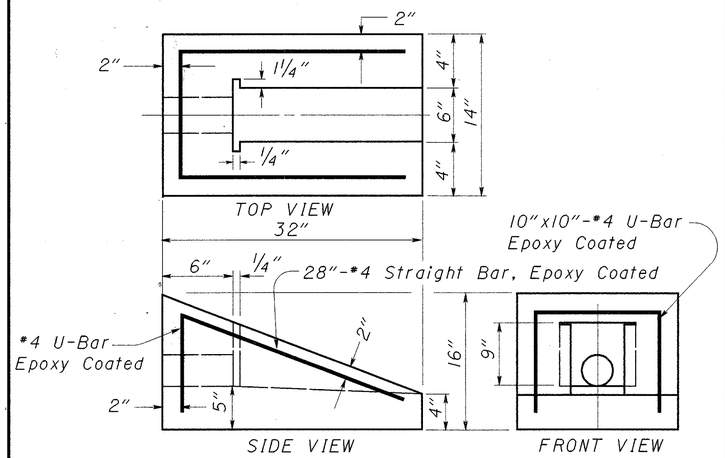


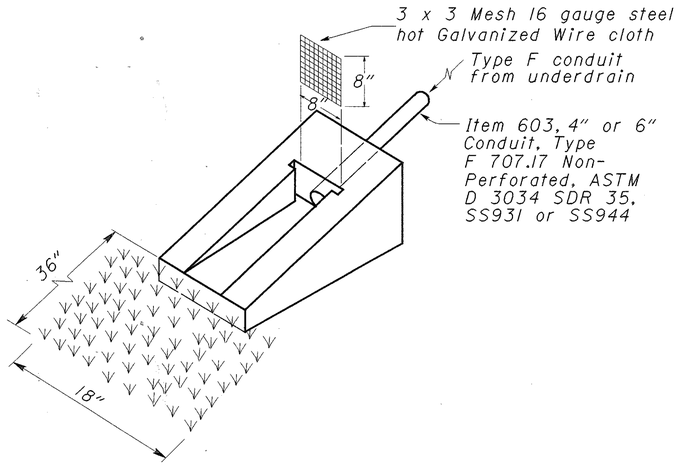


NOTE: The Sod shall be in accordance with Item 660 and staked at each corner approximately 3 inches in from the edge.

# OUTLET DETAILS

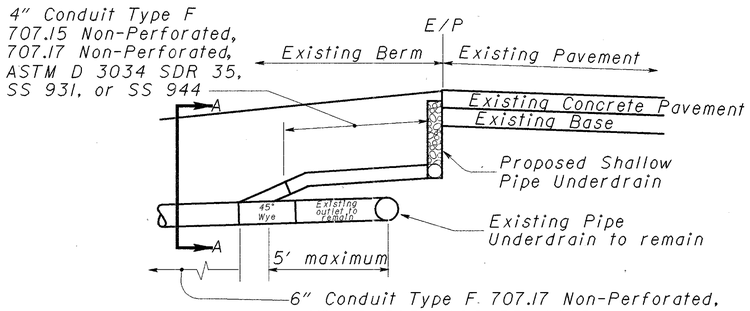


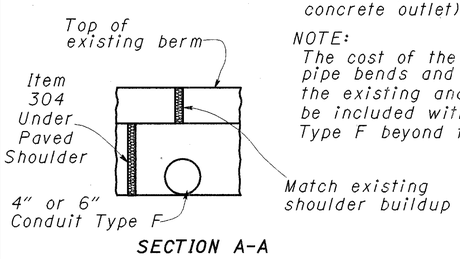


SECTION A-A

NOTE:
The cost of the 4" conduit Type F and necessary pipe bends and branches needed to connect the existing and proposed underdrains shall be included with the cost of the 6" conduit Type F beyond the existing underdrain.

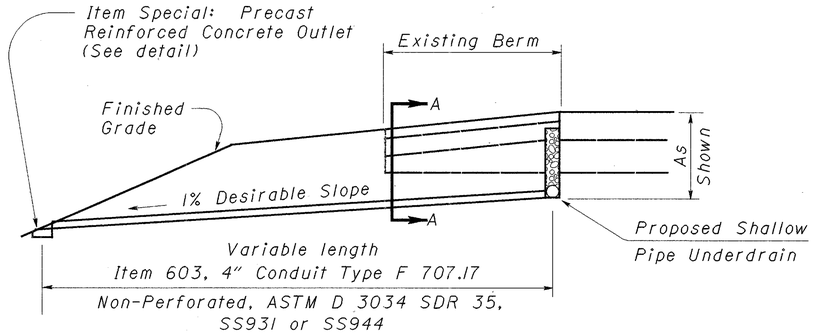


NOTE: For underdrain outlets into catch basins the above Type F Conduit shall be used between the underdrain & catch basin.

# PIPE UNDERDRAIN DETAIL

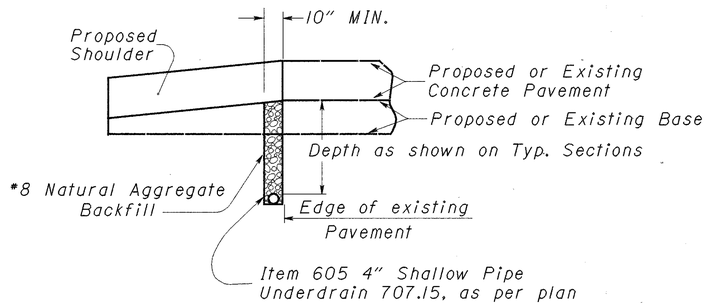


DESCRIPTION: This item shall consist of furnishing and installing a pipe underdrain system in accordance with the specifications, details as shown on the plans, and as directed by the Engineer.

MATERIALS: The underdrain shall be a pipe underdrain system per Item 605

The outlets for the underdrain system shall be constructed as soon as possible after placement of the underdrain to drain the subbase & subgrade. All pipe bends & branches needed to connect the proposed underdrain to the proposed outlet or to an existing underdrain shall be manufactured fittings.

METHOD OF MEASUREMENT: Completed and accepted underdrains will be measured by the linear foot in place.

BASIS OF PAYMENT: Work completed and accepted under this item and measured will be paid for at the contract unit price bid per linear foot for Item 605 4" Shallow Pipe Underdrain 707.15, as per plan.

The price shall be full compensation for excavation and backfill; for furnishing materials, including material for outlet fittings, for all labor, tools, equipment, and incidentals necessary to complete the work.

# ITEM 605 4" SHALLOW PIPE UNDERDRAIN 707.15, AS PER PLAN

DATE 2-5-93

i:/PD/OTTAWA/OTT2/605ITEM.DGN

| FHWA REGION | STATE | PROJECT | | 234 / 367 |
|---|---|---|---|---|
| 5 | OHIO | - | | |

OTT-2-16.60

# ITEM SPECIAL - PRECAST REINFORCED CONCRETE OUTLET

The Concrete outlet shall meet the requirements of CMS 604. Payment shall be made on an Each basis. Payment shall include the cost of the Sod & Wire Cloth.

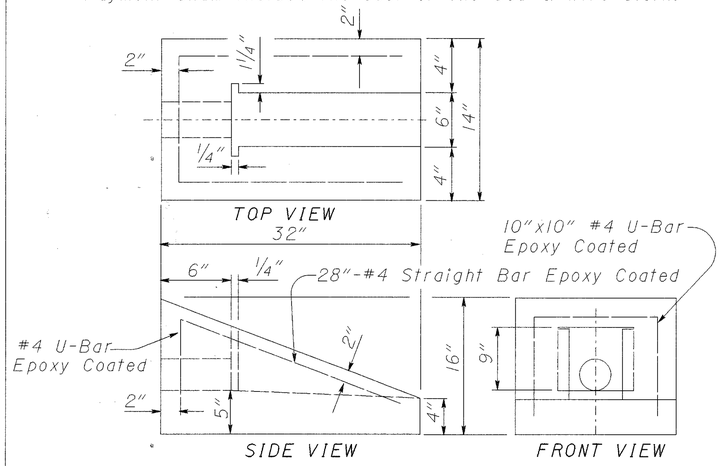


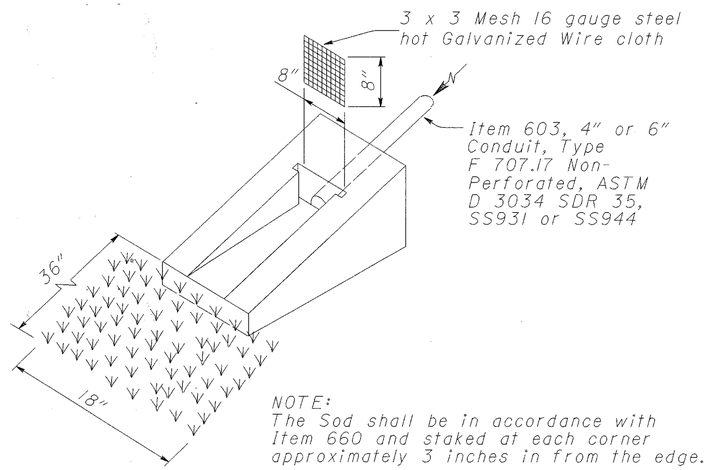


NOTE:
The Sod shall be in accordance with Item 660 and staked at each corner approximately 3 inches in from the edge.

# OUTLET DETAILS

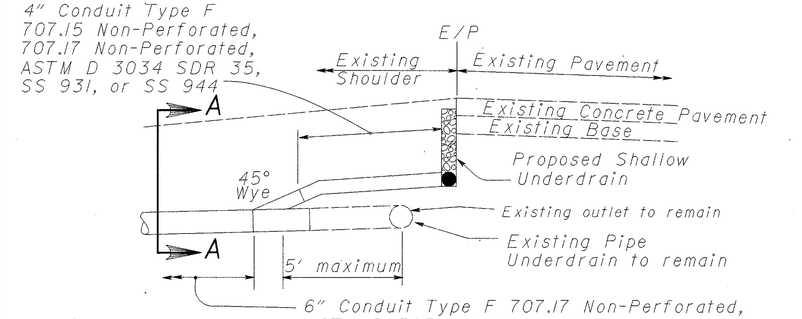


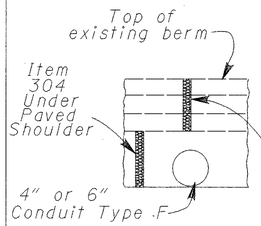


SECTION A-A

NOTE:
The cost of the 4" conduit Type F and necessary pipe bends and branches needed to connect the existing and proposed underdrains shall be included with the cost of the 6" conduit Type F beyond the existing underdrain.

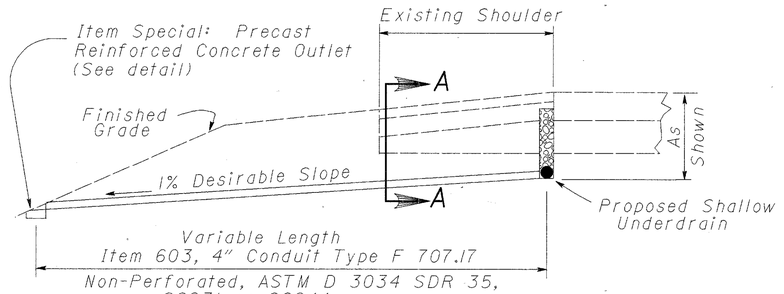


NOTE: For underdrain outlets into catch basins the above Type F Conduit shall be used entirely between the underdrain & catch basin.

# PIPE UNDERDRAIN SYSTEM
## (Alternate to Prefabricated Edge Drain System)

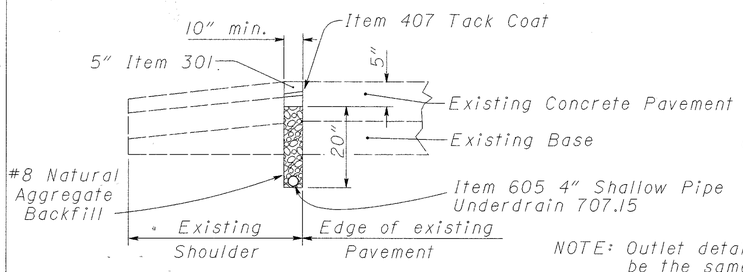


NOTE: Outlet details to be the same as shown above.

# PREFABRICATED EDGE DRAIN SYSTEM

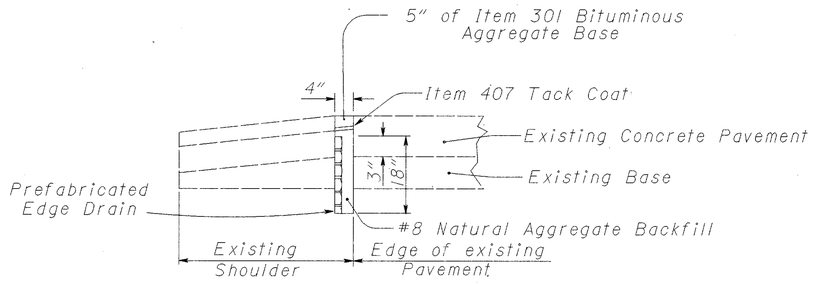


**DESCRIPTION:** This item shall consist of furnishing and installing either a pipe underdrain system or a prefabricated edge drain system in accordance with the specifications and with the details, as shown on the plans, and as directed by the Engineer.

**MATERIALS:** The underdrain shall either be a pipe underdrain system per Item 605 or a prefabricated edge drain system meeting the following requirements. The prefabricated edge drain shall consist of a polymeric core with a minimum thickness of one inch wrapped in fabric meeting CMS 712.09 Type A. The drain shall be flexible, rectangular in shape and of hollow construction. The core material shall be resistant to petroleum based chemicals, naturally occuring soil chemicals, and road de-icing agents.

The core material shall have sufficient flexiblity to withstand installation bending and handling without damage. Side walls of the core shall provide at least 5% open area to permit unobstructed flow through the filter and wall to the core.

The core shall have a minimum open area (in the plane of flow) of 10.5 square inches.

The prefabricated edge drain manufacturer's certified test results shall be furnished in accordance with CMS 101.061.

**CONSTRUCTION:** The prefabricated edge drain shall be installed against the outside wall of the trench as shown and backfilled adjacent to the pavement with No. 8 natural aggregate. The No. 8 aggregate shall be placed in one (1) or more lifts with a vibratory compactor run over the final lift to consolidate the aggregate prior to placing the asphalt plug. The first layer of the backfill material shall be placed simultaneously with the trenching operation to hold the edge drain flush against the trench wall.

The prefabricated edge drain shall be spliced as required prior to placement in the trench, using material furnished by the manufacturer and in accordance with the manufacturer's directions. All material required for the splices will be supplied by the manufacturer, but any equipment required shall be furnished by the Contractor. Splices shall prevent separation of adjoining sections of the prefabricated edge drain panels.

The underdrain outlets shall be placed in accordance with Item 603 using outlet fittings. The manufacturer shall supply outlet fittings which will make the transition between the prefabricated edge drain and the outlet pipe.

The outlets for both underdrain systems shall be constructed as soon as possible after placement of the underdrain. The underdrain and outlets on crack & seat projects shall be in place and functional prior to cracking and seating the existing pavement.

**METHOD OF MEASUREMENT:** Completed and accepted underdrains will be measured by the linear foot in place.

**BASIS OF PAYMENT FOR PIPE UNDERDRAIN SYSTEM:** Work completed, accepted and measured under this item shall be paid for at the contract unit price bid for **Item 605 - 4" Shallow Pipe Underdrain 707.15, As Per Plan.** The price shall be full compensation for excavation and backfill; for furnishing materials, including materials for outlet fittings; and for all labor, tools, equipment and incidentals necessary to complete the work.

**BASIS OF PAYMENT FOR PREFABRICATED EDGE DRAIN SYSTEM:** Work completed, accepted and measured under this item shall be paid for at the contract unit price bid for **Item 605 - Shallow Underdrain, As Per Plan.** The price shall be full compensation for excavation and backfill; for removing and disposing of all surplus excavation in accordance with CMS 203; for furnishing materials, including materials for splices, outlet fittings, and Item 301; and for all labor, tools, equipment and incidentals necessary to complete the work. The price shall also include all costs associated with pipe underdrains, as specified above, which are installed as alternates to the prefabricated edge drain system.

# ITEM 605-SHALLOW UNDERDRAIN, AS PER PLAN

DATE 3-10-95

I:/902std/dgn/underdrn.dgn

| FHWA REGION | STATE | PROJECT | |
|---|---|---|---|
| 5 | OHIO | | |

235
367

OTT-2-16.60

# CATCH BASIN NO.4 & 8, AS PER PLAN

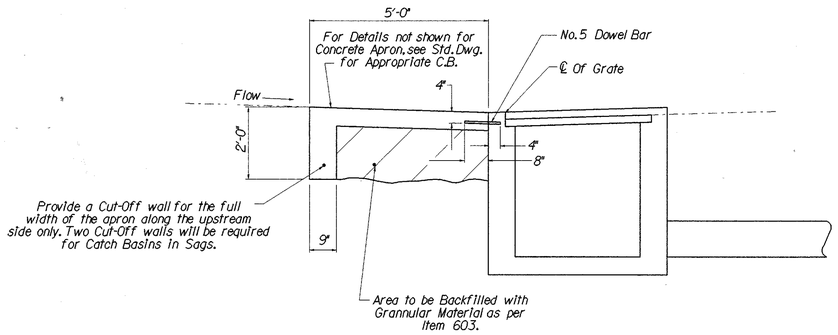


NOTE: This Detail shall be used for No.4 and No.8 Catch Basins, as per plan. For details not shown see Std.Dwg. CB-4 and CB-8.

The Requirements of Item 604 Shall Govern the replacement of the existing Catch Basin. The work shall include the removal and disposal of the existing Catch Basin and its subsequent replacement. The concrete apron shall be replaced and backfilled as shown here and in the pertinent Standard Drawing.

Payment for the above work shall be included in the unit bid price for Item 604 Catch Basin, No.4 or No.8, as per plan, and shall constitute full compensation for furnishing all meterial, labor, tools and equipment incidental to complete this Item of work.

## BAR LOCATION DETAIL

CATCH BASIN NO.4 & 8, AS PER PLAN

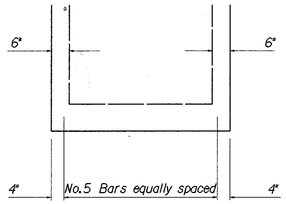


The number of bars needed along each side of a No.4 Catch Basin with a Concrete Apron is 7. For a No.8 Catch Baisn the number of bars needed along each side with a Concrete Apron is 4.

| CATCH BASIN NO. | TOTAL # OF BARS | |
|---|---|---|
| | STD. APRON | SAG APRON |
| 4 | 7 | 14 |
| 8 | 12 | 16 |

The furnishing and placing of steel for the 5/8" x 12" dowel bars shall be per 509 reinforcing steel. The dowel bars shall be epoxy coated per 509.10. The dowel bars shall be installed per 510 or cast into the basin. Bolt or Inserts may be used. The catch basin shall be precast or cast-in-place concrete. Brick or concrete block will not be permitted. The 6" concrete apron shall be reinforced per 601.04(3).

/1/pd/OTTAWA/OTT2/012cbdt1.DGN

CATCH BASIN DETAIL

| SEEDING | |
|---|---|
| END WIDTH | SQ. YDS. |

| QUANTITIES | |
|---|---|
| CALC BY MTG | DATE 3-8-95 |
| CKD BY TWB | DATE 9-17-95 |

| FHWA REGION | STATE | PROJECT | |
|---|---|---|---|
| 5 | OHIO | | |

236
367

OTT-2-16.60

| END AREA | | VOLUME | |
|---|---|---|---|
| CUT | FILL | CUT | FILL |
| | | | |

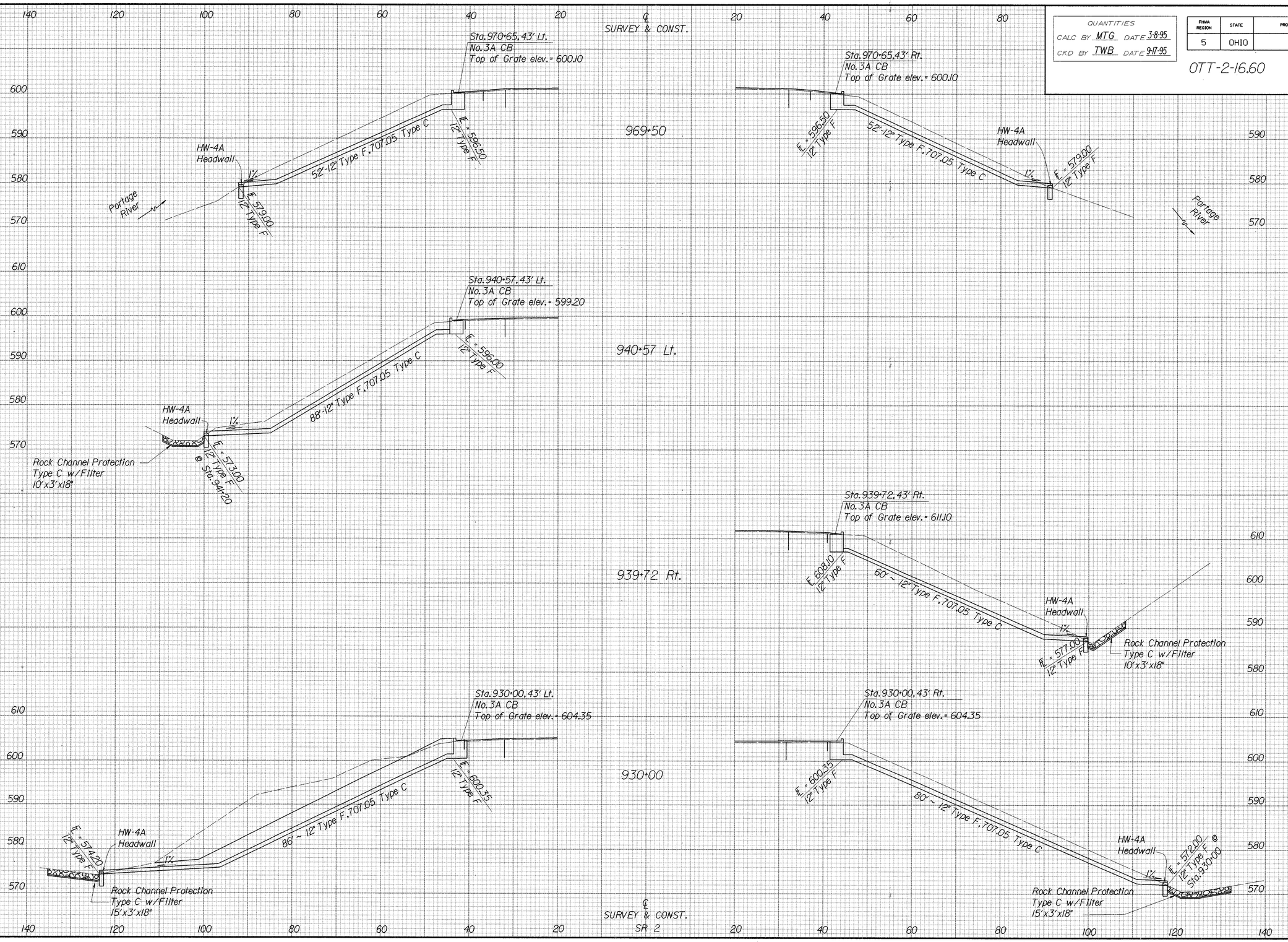


I:/PD/OTT AWA/OTT 2/OTT 2BAEX.DGN

DRAINAGE DETAILS STA. 930+00 TO STA. 969+50

| SEEDING | |
|---|---|
| END WIDTH | SQ. YDS. |

| QUANTITIES | | | |
|---|---|---|---|
| CALC BY | MTG | DATE | 3-8-95 |
| CKD BY | TWB | DATE | 9-11-95 |

| FHWA REGION | STATE | PROJECT | |
|---|---|---|---|
| 5 | OHIO | | |

237/367

OTT-2-16.60

| END AREA | | VOLUME | |
|---|---|---|---|
| CUT | FILL | CUT | FILL |
| | | | |

140 120 100 80 60 40 20 0 SURVEY & CONST. 20 40 60 80

1227+25 Rt.

Sta.1227+19.43' Rt.
No.3A CB
Top of Grade elev.= 603.78

E = 600.00
12" Type F

85'~12" Type F.707.05 Type C

HW-4A
Headwall

1%

590

580

E = 582.00
12" Type F
@Sta.1227+60

Rock Channel Protection
Type C w/Filter
17'x3'x18"

Sta.1226+23.66' Lt.
No.3A CB
Top of Grade elev.= 605.70

610

600

E = 602.60
12" Type F

78'~12" Type F.707.05 Type C

1226+25 Lt.

Rock Channel Protection
Type C w/Filter
10'x3'x18"

E = 579.20
12" Type F

HW-4A
Headwall

1%

Sta.1218+50.65' Lt.
No.3A CB
Top of Grade elev.= 606.15

600

590

580

570

E = 602.15
12" Type F

90'~12" Type F.707.05 Type C

1218+50

HW-4A
Headwall

1%

E = 576.00
12" Type F

Rock Channel Protection
Type C w/Filter
10'x3'x18"

Sta 1218+50.65' Rt.
No.3A CB
Top of Grade elev.= 606.15

E = 602.15
12" Type F

77'~12" Type F.707.05 Type C

HW-4A
Headwall

1%

E = 577.60
12" Type F

Rock Channel Protection
Type C w/Filter
15'x3'x18"

Sta.977+50.43' Lt.
No.3A CB
Top of Grade elev.= 600.00

600

590

580

570

E = 596.00
12" Type F

52'~12" Type F.707.05 Type C

977+50

HW-4A
Headwall

1%

E = 579.00
12" Type F

Portage River

Sta.977+50.43' Rt.
No.3A CB
Top of Grade elev.= 600.00

E = 596.00
12" Type F

55'~12" Type F.707.05 Type C

HW-4A
Headwall

1%

E = 579.00
12" Type F

Portage River

℄ SURVEY & CONST. SR 2

140 120 100 80 60 40 20 20 40 60 80 100 120 140

I:\PD\OTT4WA\OTT2\OTT2BAEX.DGN

DRAINAGE DETAILS STA. 977+50 TO STA. 1227+19 Rt.

| SEEDING | |
|---|---|
| END WIDTH | SQ. YDS. |
| | |

| QUANTITIES | |
|---|---|
| CALC BY MTG | DATE 3-8-95 |
| CKD BY TWB | DATE 9-17-95 |

| FHWA REGION | STATE | PROJECT | |
|---|---|---|---|
| 5 | OHIO | | |

238
367

OTT-2-16.60

| END AREA | | VOLUME | |
|---|---|---|---|
| CUT | FILL | CUT | FILL |
| | | | |

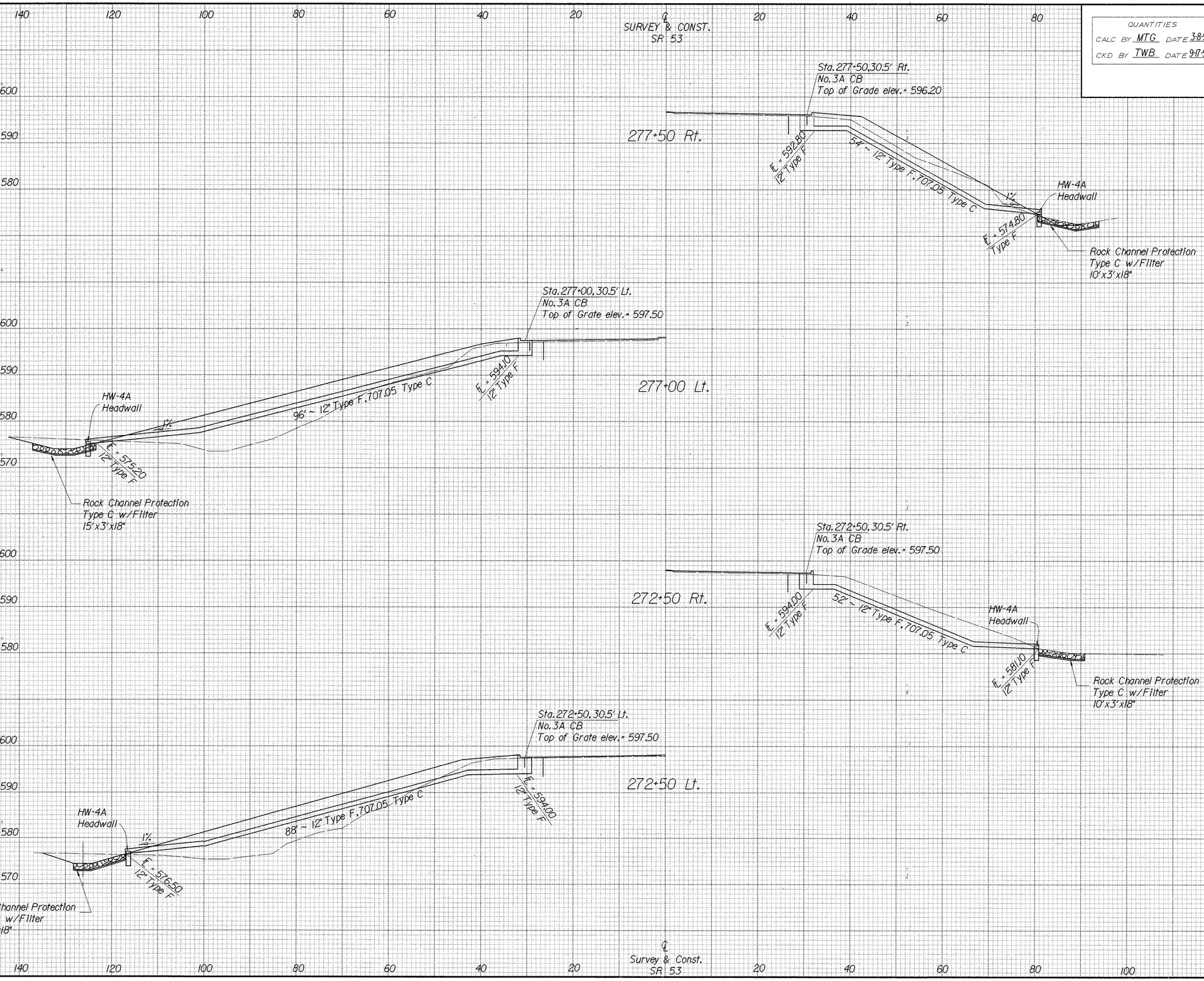


I:/PD/OTT.AWA/OTT2/OTT2base.DGN

SR 53 DRAINAGE DETAILS STA. 272+50 Lt. TO STA. 277+50 Rt.

# TRAFFIC CONTROL GENERAL NOTES

CALC BY AJS DATE 3-7-94
CHKD BY DAB DATE 12-23-94

OHIO | FHWA REGION 5 | 239 / 367

OTT-2-16.60

ITEM SPECIAL, AIR SPEED ZONE MARKING

THE AIR SPEED ZONE MARKINGS WILL BE IN ACCORDANCE WITH THE OHIO MANUAL OF UNIFORM TRAFFIC CONTROL DEVICES, SEC. 3B-35 (PAGE 3-11) AND DETAIL P-25 (PAGE 3-40). MARKINGS SHALL BE AT THE CONTRACT UNIT PRICE PER SQUARE FOOT OF AIR SPEED ZONE MARKING.

THE CONTRACTOR SHALL NOT PLACE AIR SPEED ZONE MARKINGS UNTIL THE LOCATIONS HAVE BEEN DESIGNATED BY THE ODOT SURVEY DEPARTMENT. THE DISTRICT SURVEY DEPARTMENT SHALL BE NOTIFIED NO LESS THAN SEVEN (7) DAYS PRIOR TO THE DATE THAT THE CONTRACTOR EXPECTS THE LOCATIONS TO BE MARKED.

TRAFFIC CONTROL STANDARD CONSTRUCTION DRAWINGS

REFERENCES TO SUPPLEMENTAL SPECIFICATIONS 857, 858, 861, 957, 958, AND 961, ON THE TRAFFIC CONTROL STANDARD CONSTRUCTION DRAWINGS IN THESE PLANS SHALL BE CONSIDERED TO READ AS RESPECTIVE REFERENCES TO ITEMS 630, 631, 633, 730, 731, AND 733.

ADVERSE SIGNING CONDITIONS

IF, DURING CONSTRUCTION OF THIS PROJECT, THE CONTRACTOR SHOULD ENCOUNTER UNFORESEEN ADVERSE SIGNING CONDITIONS SUCH AS EXISTING SIGNS NOT SHOWN ON THE PLAN OR CONFLICTING SIGNING SITUATIONS, HE SHALL NOTIFY THE ENGINEER IMMEDIATELY UPON DISCOVERY.

EXISTING SIGNS NOT SHOWN ON THE PLANS WHICH ARE NON-CONFLICTING SHALL BE LEFT UNDISTURBED FOR TREATMENT BY STATE FORCES. THE ENGINEER SHALL NOTIFY THE DISTRICT TRAFFIC ENGINEER OF SUCH A CONDITION.

IN ANY CONDITION WHERE PROPOSED SIGNS SHALL CREATE A CONFLICTING SITUATION, THE CONTRACTOR SHALL NOT ERECT THE SUBJECT SIGNS UNTIL FURTHER NOTICE. UPON BEING NOTIFIED OF SUCH A CONDITION, THE ENGINEER SHALL CONSULT THE DISTRICT TRAFFIC ENGINEER PRIOR TO ADVISING THE CONTRACTOR IN PROCEEDING WITH SAID SIGN ERECTION.

ANY SIGN ERECTION OR REMOVAL NOT COVERED IN THIS CONTRACT SHALL BE HANDLED BY STATE FORCES.

ITEM 620, DELINEATOR, TYPE C OR D, DESIGN 6, POST MOUNTED

THE DELINEATOR POSTS SHALL CONSIST OF A FLEXIBLE MATERIAL WITH A CIRCULAR CROSS SECTION (FLATTENED TOP PORTION FOR REFLECTOR AREA) WHICH IS CAPABLE OF BEING INSTALLED IN A CIRCULAR METAL SLEEVE DRILLED OR DRIVEN IN THE GROUND.

REFLECTORS SHALL BE 3" IN WIDTH BY 6" IN HEIGHT AND SHALL BE APPLIED TO THE POST IN EITHER SILVER-WHITE OR YELLOW TYPE G SHEETING. ALL REFLECTIVE SHEETING SHALL MEET THE REQUIREMENTS OF ITEM 730J9 OF THE ODOT CONSTRUCTION AND MATERIALS SPECIFICATIONS AND ADDITIONAL SPECIFICATIONS CONTAINED HEREIN.

THE BRAND OF SHEETING USED FOR REFLECTORS IS ACCEPTABLE IF IT HAS BEEN PREQUALIFIED AND IS LISTED UNDER TYPE G SHEETINGS ON THE PREQUALIFIED LIST ATTACHED.

THE TOP OF THE REFLECTOR SHALL BE MOUNTED SO THAT IT IS NOT LESS THAN 2" NOR MORE THAN 2½" FROM THE TOP OF THE POST WITH THE REFLECTOR FACING IN THE DIRECTION OF ONCOMING TRAFFIC. THE REFLECTOR SHALL BE MOUNTED WITH AN AGGRESSIVE, HIGH TACK TYPE ADHESIVE WHICH HAS ADEQUATE STRENGTH TO PREVENT LOSS OF THE REFLECTOR DURING THE LIFE OF THE POST.

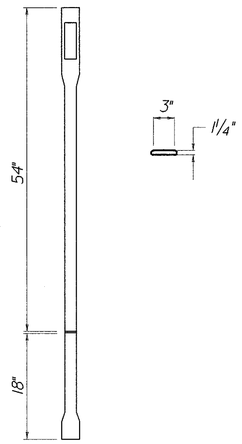


THE DELINATORS ARE PRODUCED BY THE SAFE-HIT CORPORATION, BLDG.# 11, 1930 WEST WINTON AVE., HAYWORD, CALIFORNIA 94545.

ITEM 630, SIGN, FLAT SHEET, AS PER PLAN ONE WAY SUPPORT NO. 4, AS PER PLAN

ONE WAY SIGNS SHALL BE ADDED TO THE EXISTING STOP AND DO NOT ENTER SIGNS AT THE LOCATIONS AS SHOWN ON THE PLANS. THE ONE WAY SIGNS SHALL BE ATTACHED IN ACCORDANCE WITH STANDARD DRAWING TC-41.50. PAYMENT FOR ALL LABOR AND MATERIALS TO ACCOMPLISH THE ABOVE SHALL BE INCLUDED WITH ITEM 630 SIGN, FLAT SHEET, AS PER PLAN.

I:/pd/OTT.AWA/OTT2/OTT2TCGN.DGN

QUANTITIES
CALC BY ALS DATE 3-14-94
CKD BY DAB DATE 12-23-94

| FHWA REGION | STATE | PROJECT | |
|---|---|---|---|
| 5 | OHIO | | |

240/367

OTT-2-16.60

# PAVEMENT MARKING SUBSUMMARY

| FROM SHEET NO. | ROUTE | STATION FROM | STATION TO | SPECIAL EDGE LINE, 4 INCH, EPOXY, AS PER PLAN WHITE | SPECIAL EDGE LINE, 4 INCH, EPOXY, AS PER PLAN YELLOW | SPECIAL LANE LINE, 4 INCH, EPOXY, AS PER PLAN | SPECIAL CENTER LINE, 4 INCH, EPOXY, AS PER PLAN SOLID DASHED | SPECIAL CENTER LINE, 4 INCH, EPOXY, AS PER PLAN SOLID DOUBLE | 644 8" WHITE CHANNELIZING LINE | 644 24" TRANSVERSE LINE WHITE | 644 LANE ARROWS | 644 WORD ON PAVEMENT 96 IN. (ONLY) | SPECIAL AIR SPEED ZONE MARKING | | | | | |
|---|---|---|---|---|---|---|---|---|---|---|---|---|---|---|---|---|---|---|
| | | | | LIN.FT. | | LIN.FT. | LIN.FT. | LIN.FT. | LIN.FT. | LIN.FT. | EACH | EACH | SQ.FT. | | | | | |
| 245 | SR 2 | 876+25 | 902+00 | 5030 | 1320 | 5030 | 2710 | 560 | 290 | | 8 | 1 | | | | | | |
| 246 | SR 2 | 902+00 | 930+00 | 5600 | 5600 | 5600 | | | | | | | | | | | | |
| 247 | SR 2 | 930+00 | 958+00 | 6420 | 6210 | 6030 | | | 905 | 421 | | | | | | | | |
| 247,259 | SR 163 | 0+60/RAMP A | 7+00/RAMP A | 740 | 600 | | | | | | | | | | | | | |
| 247,259 | SR 163 | 0+50/RAMP B | 8+00/RAMP B | 1000 | 800 | | | | | | | | | | | | | |
| 248 | SR 2 | 958+00 | 986+00 | 5600 | 5600 | 5600 | | | | | | | | | | | | |
| 249 | SR 2 | 986+00 | 1014+00 | 5600 | 5600 | 5600 | | | | | | | | | | | | |
| 250 | SR 2 | 1014+00 | 1042+00 | 5930 | 5690 | 6110 | | | 910 | 562 | | | | | | | | |
| 250,260 | SR 53 | 1+00/RAMP A | 18+45/RAMP A | 1745 | 1745 | | | | | | | | | | | | | |
| 251,260 | SR 53 | 7+00/RAMP B | 20+00/RAMP B | 1345 | 1440 | | | | | | | | | | | | | |
| 251,261 | SR 53 | 1+00/RAMP C | 10+00/RAMP C | 900 | 850 | | | | | | | | | | | | | |
| 250,261 | SR 53 | 1+00/RAMP D | 7+30/RAMP D | 640 | 640 | | | | | | | | | | | | | |
| 251 | SR 2 | 1042+00 | 1070+00 | 5995 | 5830 | 6135 | | | 860 | 396 | | | | | | | | |
| 252 | SR 2 | 1070+00 | 1094+86.19 | 4972.5 | 4972.5 | 4972.5 | | | | | | | 32 | | | | | |
| 252-253 | SR 2 | 1094+86.19 | 1104+99.33 | 2026 | 2026 | 2026 | | | | | | | | | | | | |
| 253-254 | SR 2 | 1104+99.33 | 1126+00 | 4201 | 4201 | 4201 | | | | | | | 32 | | | | | |
| 254 | SR 2 | 1126+00 | 1147+96.70 | 4393.5 | 4393.5 | 4393.5 | | | | | | | 16 | | | | | |
| 254-255 | SR 2 | 1147+96.70 | 1154+96.84 | 1400 | 1400 | 1400 | | | | | | | | | | | | |
| 255 | SR 2 | 1154+96.84 | 1182+00 | 5406.5 | 5406.5 | 5406.5 | | | | | | | | | | | | |
| 256 | SR 2 | 1182+00 | 1210+00 | 5600 | 5600 | 5600 | | | | | | | | | | | | |
| 257 | SR 2 | 1210+00 | 1222+84.36 | 2569 | 2569 | 2569 | | | | | | | | | | | | |
| 257 | SR 2 | 1222+84.36 | 1230+80.99 | 1593 | 1593 | 1593 | | | | | | | | | | | | |
| 257 | SR 2 | 1230+80.99 | 1236+47 | 1280 | 1132.5 | 1372.5 | | | 147 | | | | | | | | | |
| 258 | SR 53 | 262+50 | 287+50 | 4511 | | 1862 | | 2096 | | | | | | | | | | |
| TOTALS | | | | 84497.5 | 75219.0 | 75501.0 | 2710 | 2656 | 3112 | 1379 | 8 | 1 | 80 | | | | | |
| TOTALS CARRIED TO TRAFFIC CONTROL GENERAL SUMMARY | | | | 16.00 | 14.25 | 14.30 | .51 | .50 | 3112 | 1379 | 8 | 1 | 80 | | | | | |

i/pd/OTTAWA/OTT2/OTT2PMSS.DGN

# SIGNING SUB-SUMMARY

NOTE: NO SIGN REF.NO.22

| QUANTITIES | | | | | |
|---|---|---|---|---|---|
| CALC BY ALS DATE 3-9-94 | | | | | |
| CKD BY DAB DATE 12-23-94 | | | | | |

| FHWA REGION | STATE | PROJECT | |
|---|---|---|---|
| 5 | OHIO | | |

241/367

OTT-2-16.60

| SIGN REFERENCE NUMBER | FROM SHEET NUMBER | ROUTE | STATION | SIDE | SIGN CODE NUMBER | SIGN IN INCHES | 630 SIGNS FLAT SHEET TYPE G SQ.FT. | 630 SIGNS EXTRU SHEET SQ.FT. | 630 SIGNS FLAT SHEET TYPE G, AS PER PLAN SQ.FT. | 630 GROUND MOUNTED SUPPORTS NO.3 POST LIN.FT. | 630 GROUND MOUNTED SUPPORTS NO.4 POST LIN.FT. | 630 GROUND MOUNTED SUPPORTS S4 x 7.7 BEAM LIN.FT. | 630 GROUND MOUNTED SUPPORTS W6 x 9 BEAM LIN.FT. | 630 GROUND MOUNTED SUPPORTS BREAK-AWAY BEAM CONNECTORS EACH | 630 REMOVAL OF GROUND MOUNTED SIGN AND DISPOSAL EACH | 630 REMOVAL OF GROUND MOUNTED POST SUPPORT AND DISPOSAL EACH | 630 CONCRETE FOR EMBEDDED FOUNDATION CU.YD. |
|---|---|---|---|---|---|---|---|---|---|---|---|---|---|---|---|---|---|
| 1 | 245 | SR 2 | 837+50 | RT | RA-12 | 30x36 | 7.5 | | | 13.5 | | | | | | | |
| 2 | 245 | SR 2 | 837+50 | MED | RA-12 | 30x36 | 7.5 | | | 13.5 | | | | | | | |
| 3 | 245 | SR 2 | 876+50 | RT | R-48-36 | 36x48 | 12.0 | | | 29 | | | | | | | |
| 4 | 245 | SR 2 | 878+00 | RT | GQ | 60x42 | | 17.5 | | | | 32.8 | | 2 | | | .54 |
| | 245 | SR 2 | 878+11 | RT | | | | | | | | | | | 1 | 2 | |
| 5 | 245 | SR 2 | 879+20 | LT | GQ | 60x42 | | 17.5 | | | | 30.5 | | 2 | | | .54 |
| 6 | 245 | SR 2 | 880+00 | RT | RA-4 | 72x66 | | 33.0 | | | | | 42.3 | 2 | | | .66 |
| | 245 | SR 2 | 880+00 | RT | N-20-24 | 24x24 | 4.0 | | | | | | | | | | |
| | 245 | SR 2 | 880+00 | RT | N-61-24 | 24x24 | 4.0 | | | | | | | | | | |
| 7 | 245 | SR 2 | 880+50 | RT | | | | | | | | | | | 1 | 2 | |
| 8 | 245 | SR 2 | 880+52 | MED | | | | | | | | | | | 1 | 1 | |
| 9 | 245 | SR 2 | 881+00 | LT | RA-4 | 72x66 | | 33.0 | | | | | 36.25 | 2 | | | .66 |
| | 245 | SR 2 | 881+00 | LT | N-20-24 | 24x24 | 4.0 | | | | | | | | | | |
| | 245 | SR 2 | 881+00 | LT | N-61-24 | 24x24 | 4.0 | | | | | | | | | | |
| 10 | 245 | SR 2 | 881+50 | LT | | | | | | | | | | | 1 | 2 | |
| 11 | 245 | SR 2 | 882+59 | MED | | | | | | | | | | | 1 | 1 | |
| 12 | 245 | SR 2 | 883+91 | MED | | | | | | | | | | | 1 | 1 | |
| 13 | 245 | SR 2 | 884+16 | MED | | | | | | | | | | | 1 | 1 | |
| 14 | 245 | SR 2 | 885+06 | MED | | | | | | | | | | | 1 | 1 | |
| 15 | 245 | SR 2 | 885+61 | MED | | | | | | | | | | | 1 | 1 | |
| 16 | 245 | SR 2 | 886+61 | MED | | | | | | | | | | | 1 | 1 | |
| 17 | 245 | SR 2 | 888+37 | MED | | | | | | | | | | | 1 | 1 | |
| 18 | 245 | SR 2 | 889+36 | MED | | | | | | | | | | | 1 | 1 | |
| 19 | 245 | SR 2 | 890+00 | RT | R-31FF-48 | 48x30 | 10.0 | | | 26 | | | | | | | |
| 20 | 245 | SR 2 | 891+50 | RT | | | | | | | | | | | 1 | 1 | |
| 21 | 245 | SR 2 | 892+00 | LT | R-48-36 | 36x48 | 12.0 | | | 28 | | | | | | | |
| 23 | 245 | SR 2 | 900+00 | RT | W-85-48 | 48x48 | 16.0 | | | | 30 | | | | | | |
| 24 | 245 | SR 2 | 902+00 | RT | R-70-48 | 48x36 | 12.0 | | | 31 | | | | | | | |
| 25 | 258 | SR 53 | 268+50 | MED | | | | | | | | | | | 1 | 1 | |
| 26 | 258 | SR 53 | 276+30 | LT | | | | | | | | | | | 1 | 2 | |
| 27 | 258 | SR 53 | 280+50 | MED | | | | | | | | | | | 1 | 1 | |
| 28 | 258 | SR 53 | 280+90 | MED | | | | | | | | | | | 1 | 1 | |
| SHEET TOTALS | | | | | | | 93.0 | 101.0 | -- | 137.0 | 30.0 | 63.3 | 78.55 | 8 | 17 | 21 | 2.4 |

i/pd/OTTAWA/OTT2/02SIGNSS.DGN

# SIGNING SUB-SUMMARY

| QUANTITIES | | | | | |
|---|---|---|---|---|---|
| CALC BY ALS | DATE 3-94 | FHWA REGION | STATE | PROJECT | |
| CKD BY DAB | DATE 12-23-94 | 5 | OHIO | | |

242
367

OTT-2-16.60

NOTE: Sign Reference No.38 has been omitted.

| SIGN REFERENCE NUMBER | FROM SHEET NUMBER | ROUTE | STATION | SIDE | SIGN CODE NUMBER | SIGN IN INCHES | 630 SIGNS | | | 630 GROUND MOUNTED SUPPORTS | | | | | REMOVAL OF GROUND MOUNTED SIGN AND DISPOSAL | REMOVAL OF GROUND MOUNTED POST SUPPORT AND DISPOSAL | CONCRETE FOR EMBEDDED FOUNDATION |
|---|---|---|---|---|---|---|---|---|---|---|---|---|---|---|---|---|---|
| | | | | | | | FLAT SHEET TYPE G | EXTRU SHEET | FLAT SHEET TYPE G, AS PER PLAN | NO.3 POST | NO.4 POST | S4 x 7.7 BEAM | W6 x 9 BEAM | BREAK-AWAY BEAM CONNECTORS | | | |
| | | | | | | | SQ.FT. | | | LIN.FT. | LIN.FT. | LIN.FT. | LIN.FT. | EACH | EACH | EACH | CU.YD. |
| 29 | 246 | SR 2 | 915+49 | MED | | | | | | | | | | | 1 | 2 | |
| 30 | 247 | SR 2 | 946+30 | MED | | | | | | | | | | | 1 | 2 | |
| 31 | 248 | SR 2 | 970+96 | RT | | | | | | | | | | | 1 | 1 | |
| 32 | 248 | SR 2 | 976+06 | LT | | | | | | | | | | | 1 | 1 | |
| 33 | 248 | SR 2 | 984+54 | LT | | | | | | | | | | | 1 | 1 | |
| 34 | 257 | SR 2 | 1221+15 | MED | | | | | | | | | | | 1 | 1 | |
| 35 | 257 | SR 2 | 1221+35 | RT | | | | | | | | | | | 1 | 1 | |
| 36 | 257 | SR 2 | 1226+13 | LT | | | | | | | | | | | 1 | 1 | |
| 37 | 257 | SR 2 | 1226+35 | MED | | | | | | | | | | | 1 | 1 | |
| 39 | 259 | SR 163/RAMP A | 0+45 | LT | R-43R-48 | 36x12 | | | 3.0 | | | | | | | | |
| 40 | 259 | SR 163/RAMP A | 0+45 | LT | R-43L-48 | 36x12 | | | 3.0 | | | | | | | | |
| 41 | 259 | SR 163/RAMP A | 3+00 | RT | R-41A-36 | 36x24 | 6.0 | | | 12.5 | | | | | | | |
| 42 | 259 | SR 163/RAMP A | 3+00 | LT | R-41A-36 | 36x24 | 6.0 | | | 11.5 | | | | | | | |
| 43 | 261 | SR 53/RAMP D | 7+10 | LT | R-43R-48 | 36x12 | | | 3.0 | | | | | | | | |
| 44 | 261 | SR 53/RAMP D | 7+10 | LT | R-43L-48 | 36x12 | | | 3.0 | | | | | | | | |
| 45 | 261 | SR 53/RAMP D | 4+50 | RT | R-41A-36 | 36x24 | 6.0 | | | 13.5 | | | | | | | |
| 46 | 261 | SR 53/RAMP D | 4+50 | LT | R-41A-36 | 36x24 | 6.0 | | | 11.8 | | | | | | | |
| SHEET TOTALS | | | | | | | 24.0 | -- | 12.0 | 49.3 | -- | -- | -- | -- | 9 | 11 | -- |
| TOTALS FROM SHEET NO. 241 | | | | | | | 93.0 | 101.0 | -- | 137.0 | 30.0 | 63.3 | 78.55 | 8 | 17 | 21 | 2.4 |
| TOTALS CARRIED TO GENERAL SUMMARY | | | | | | | 117.0 | 101.0 | 12.0 | 186.3 | 30.0 | 63.3 | 78.55 | 8 | 26 | 32 | 2.4 |

I:/pd/OTTAWA/OTT2/02SIGNSS.DGN

# RAISED PAVEMENT MARKER AND DELINEATOR TABLE

QUANTITIES
CALC BY ALS DATE 3-14-94
CKD BY DAB DATE 12-23-95

| FHWA REGION | STATE | PROJECT | |
|---|---|---|---|
| 5 | OHIO | | |

243/367

OTT-2-16.60

| FROM SHEET NUMBER | LOCATION | SIDE | STATION FROM | STATION TO | 620 DELINEATORS: DELINEATOR TYPE C, DESIGN 6 POST MOUNTED (COLORLESS) EACH | 620 DELINEATORS: DELINEATOR TYPE D, DESIGN 6 POST MOUNTED (YELLOW) EACH | 620 DELINEATORS: DELINEATOR TYPE C, BRACKET MOUNTED (COLORLESS) EACH | 620 DELINEATORS: DELINEATOR REMOVED FOR DISPOSAL EACH | 621 RAISED PAVEMENT MARKERS: 1-WAY WHITE EACH | 621 RAISED PAVEMENT MARKERS: 1-WAY YELLOW EACH | 621 RAISED PAVEMENT MARKERS: 2-WAY WHITE-RED EACH | 621 RAISED PAVEMENT MARKERS: 2-WAY YELLOW-YELLOW EACH | 202 RAISED PAVEMENT MARKER REMOVED FOR STORAGE EACH |
|---|---|---|---|---|---|---|---|---|---|---|---|---|---|
| 245 | SR 2 | EB | 876+25 | 902+00 | 6 | | | | 53 | | 22 | 34 | |
| 245 | SR 2 | WB | 878+00 | 902+00 | 5 | | | | 22 | | 30 | 51 | |
| 246 | SR 2 | EB | 902+00 | 930+00 | 7 | | | | 35 | | 3 | | |
| 246 | SR 2 | WB | 902+00 | 930+00 | 7 | | | | 22 | | 22 | | |
| 247 | SR 2 | EB | 930+00 | 958+00 | 10 | | | | 51 | 4 | | | |
| 247 | SR 2 | WB | 930+00 | 958+00 | 9 | | 1 | | 55 | 2 | 13 | | |
| 259 | RAMP A | | | | | 3 | | | | | | | |
| 259 | RAMP B | | | | 2 | 3 | | | | | | | |
| 248 | SR 2 | EB | 958+00 | 986+00 | 7 | | 1 | | 35 | | | | |
| 248 | SR 2 | WB | 958+00 | 986+00 | 7 | | 1 | | 26 | | 9 | | |
| 249 | SR 2 | EB | 986+00 | 1014+00 | 7 | | | | 35 | | | | |
| 249 | SR 2 | WB | 986+00 | 1014+00 | 7 | | | | 35 | | | | |
| 250 | SR 2 | EB | 1014+00 | 1042+00 | 9 | | | | 47 | 2 | 20 | | |
| 250 | SR 2 | WB | 1014+00 | 1042+00 | 10 | | | | 53 | 13 | | | |
| 260 | RAMP A | SR 53 | 1+00 | | 10 | 9 | | | | | | | |
| 260 | RAMP B | SR 53 | 7+00 | | | 14 | | | | | | | |
| 261 | RAMP C | SR 53 | | 10+00 | | 4 | | | | | | | |
| 261 | RAMP D | SR 53 | 1+00 | | | 5 | | | | | | | |
| 251 | SR 2 | EB | 1042+00 | 1070+00 | 11 | | | | 51 | 8 | | | |
| 251 | SR 2 | WB | 1042+00 | 1070+00 | 11 | | | | 44 | 2 | 20 | | |
| 252 | SR 2 | EB | 1070+00 | 1094+86.19 | 6 | | | | 31 | | | | |
| 252 | SR 2 | WB | 1070+00 | 1094+86.19 | 6 | | | | 31 | | | | |
| 252,253 | SR 2 | EB | 1094+86.19 | 1104+99.33 | 2 | | | | 13 | | | | |
| 252,253 | SR 2 | WB | 1094+86.19 | 1104+99.33 | 2 | | | | 13 | | | | |
| 253 | SR 2 | EB | 1104+99.33 | 1126+00 | 5 | | | | 26 | | | | |
| 253 | SR 2 | WB | 1104+99.33 | 1126+00 | 5 | | | | 26 | | | | |
| 254 | SR 2 | EB | 1126+00 | 1147+96.70 | 5 | | | | 28 | | | | |
| 254 | SR 2 | WB | 1126+00 | 1147+96.70 | 5 | | | | 28 | | | | |
| 254,255 | SR 2 | EB | 1147+96.70 | 1154+96.84 | 2 | | | | 8 | | | | |
| 254,255 | SR 2 | WB | 1147+96.70 | 1154+96.84 | 2 | | | | 8 | | | | |
| 255 | SR 2 | EB | 1154+96.84 | 1182+00 | 7 | | | | 34 | | | | |
| 255 | SR 2 | WB | 1154+96.84 | 1182+00 | 7 | | | | 34 | | | | |
| 256 | SR 2 | EB | 1182+00 | 1210+00 | 7 | | | | 35 | | | | |
| 256 | SR 2 | WB | 1182+00 | 1210+00 | 7 | | | | 35 | | | | |
| 257 | SR 2 | EB | 1210+00 | 1222+84.36 | 2 | | 1 | | 16 | | | | |
| 257 | SR 2 | WB | 1210+00 | 1222+84.36 | 2 | | 1 | | 16 | | | | |
| 257 | SR 2 | EB | 1222+84.36 | 1230+80.99 | 1 | | 1 | | 10 | | | | |
| 257 | SR 2 | WB | 1222+84.36 | 1230+80.99 | 1 | | 1 | | 10 | | | | |
| 257 | SR 2 | EB | 1230+80.99 | 1236+47 | 1 | | | | | | | | |
| 257 | SR 2 | WB | 1230+80.99 | 1236+47 | 1 | | | | 7 | | | | |
| 258 | SR 53 | SB | 262+50 | 287+50 | | | | | 54 | | 12 | | |
| 258 | SR 53 | NB | 262+50 | 287+50 | | | | | 77 | | 12 | | |
| 258 | SR 53 | MED | 262+50 | 287+50 | | | | | | | | 17 | |
| TOTAL DELINEATORS REMOVED | | | | | | | | 131 | | | | | |
| TOTAL RAISED PAVEMENT MARKERS REMOVED | | | | | | | | | | | | | 1071 |
| TOTALS CARRIED TO GENERAL SUMMARY | | | | | 201 | 38 | 7 | 131 | 1310 | 31 | 163 | 102 | 1071 |

I:/pd/OTTAWA/OTT2/02RPMTBL.DGN

RAISED PAVEMENT MARKER TABLE

# TRAFFIC CONTROL SUMMARY

QUANTITIES
CALC BY ALS DATE 3-9-94
CKD BY DAB DATE 12-23-94

| FHWA REGION | STATE | PROJECT | |
|---|---|---|---|
| 5 | OHIO | | |

244
367

OTT-2-16.60

| ITEM | SHEET NUMBER 240 | 242 | 243 | | | | | | ITEM | ITEM EXT. | QUANTITIES | UNIT | DESCRIPTION |
|---|---|---|---|---|---|---|---|---|---|---|---|---|---|
| 202 | | | 1071 | | | | | | 202 | 54100 | 1071 | EACH | RAISED PAVEMENT MARKER REMOVED FOR STORAGE |
| 620 | | | 201 | | | | | | 620 | 10720 | 201 | EACH | DELINEATOR,TYPE C,DESIGN 6,POST MOUNTED |
| 620 | | | 7 | | | | | | 620 | 11000 | 7 | EACH | DELINEATOR,TYPE C,BRACKET MOUNTED |
| 620 | | | 38 | | | | | | 620 | 15720 | 38 | EACH | DELINEATOR,TYPE D,DESIGN 6,POST MOUNTED |
| 620 | | | 131 | | | | | | 620 | 31200 | 131 | EACH | DELINEATOR REMOVED FOR DISPOSAL |
| 621 | | | 1606 | | | | | | 621 | 00100 | 1606 | EACH | RAISED PAVEMENT MARKER |
| 630 | | 2.40 | | | | | | | 630 | 00100 | 2.40 | CU.YD. | CONCRETE FOR EMBEDDED FOUNDATION |
| 630 | | 186.3 | | | | | | | 630 | 03100 | 187 | LIN.FT. | GROUND MOUNTED SUPPORT,NO.3 POST |
| 630 | | 30 | | | | | | | 630 | 04100 | 30 | LIN.FT. | GROUND MOUNTED SUPPORT,NO.4 POST |
| 630 | | 63.3 | | | | | | | 630 | 06400 | 64 | LIN.FT. | GROUND MOUNTED SUPPORT,S4 x 7.7 BEAM |
| 630 | | 78.55 | | | | | | | 630 | 06500 | 79 | LIN.FT. | GROUND MOUNTED SUPPORT,W6 x 9 BEAM |
| 630 | | 8 | | | | | | | 630 | 09000 | 8 | EACH | BREAKAWAY BEAM CONNECTION |
| 630 | | 117 | | | | | | | 630 | 80102 | 117 | SQ.FT. | SIGN,FLAT SHEET,TYPE G |
| 630 | | 12 | | | | | | | 630 | 80103 | 12 | SQ.FT. | SIGN,FLAT SHEET,TYPE G,AS PER PLAN |
| 630 | | 101 | | | | | | | 630 | 80200 | 101 | SQ.FT. | SIGN,EXTRUSHEET |
| 630 | | 26 | | | | | | | 630 | 84900 | 26 | EACH | REMOVAL OF GROUND MOUNTED SIGN AND DISPOSAL |
| 630 | | 32 | | | | | | | 630 | 86002 | 32 | EACH | REMOVAL OF GROUND MOUNTED POST SUPPORT AND DISPOSAL |
| 644 | 3112 | | | | | | | | 644 | 00400 | 3112 | LIN.FT. | CHANNELIZING LINE |
| 644 | 1379 | | | | | | | | 644 | 00700 | 1379 | LIN.FT. | TRANSVERSE LINE |
| 644 | 8 | | | | | | | | 644 | 01300 | 8 | EACH | LANE ARROW |
| 644 | 1 | | | | | | | | 644 | 01410 | 1 | EACH | WORD ON PAVEMENT,96" |
| SPECIAL | 80 | | | | | | | | SPECIAL | 64440010 | 80 | SQ.FT. | AIR SPEED ZONE MARKING (SEE SHEET NO. 239 ) |
| SPECIAL | 30.25 | | | | | | | | SPECIAL | 69080000 | 30.25 | MILE | PAVEMENT MARKING,MISC.: EDGE LINE,EPOXY,(SEE PROPOSAL NOTE) |
| SPECIAL | 14.30 | | | | | | | | SPECIAL | 69080000 | 14.30 | MILE | PAVEMENT MARKING,MISC.: LANE LINE,EPOXY,(SEE PROPOSAL NOTE) |
| SPECIAL | 1.01 | | | | | | | | SPECIAL | 69080000 | 1.01 | MILE | PAVEMENT MARKING,MISC.: CENTER LINE,EPOXY,(SEE PROPOSAL NOTE) |

I:/pd/OTTAWA/OTT2/OT2TCSUM.DGN

| FHWA REGION | STATE | PROJECT | |
|---|---|---|---|
| 5 | OHIO | | |

245
367

OTT-2-16.60

**SIGN LEGEND**

- Existing to remain in place
- Existing to be removed
- New

**RPM LEGEND**

- ONE WAY - White
- ONE WAY - Yellow
- TWO WAY - White - Red
- TWO WAY - Yellow - Yellow

**DELINEATOR LEGEND**

- Colorless Delineator
- Yellow Delineator
- Bridge Mounted Colorless Delineator
- Bridge Mounted Yellow Delineator

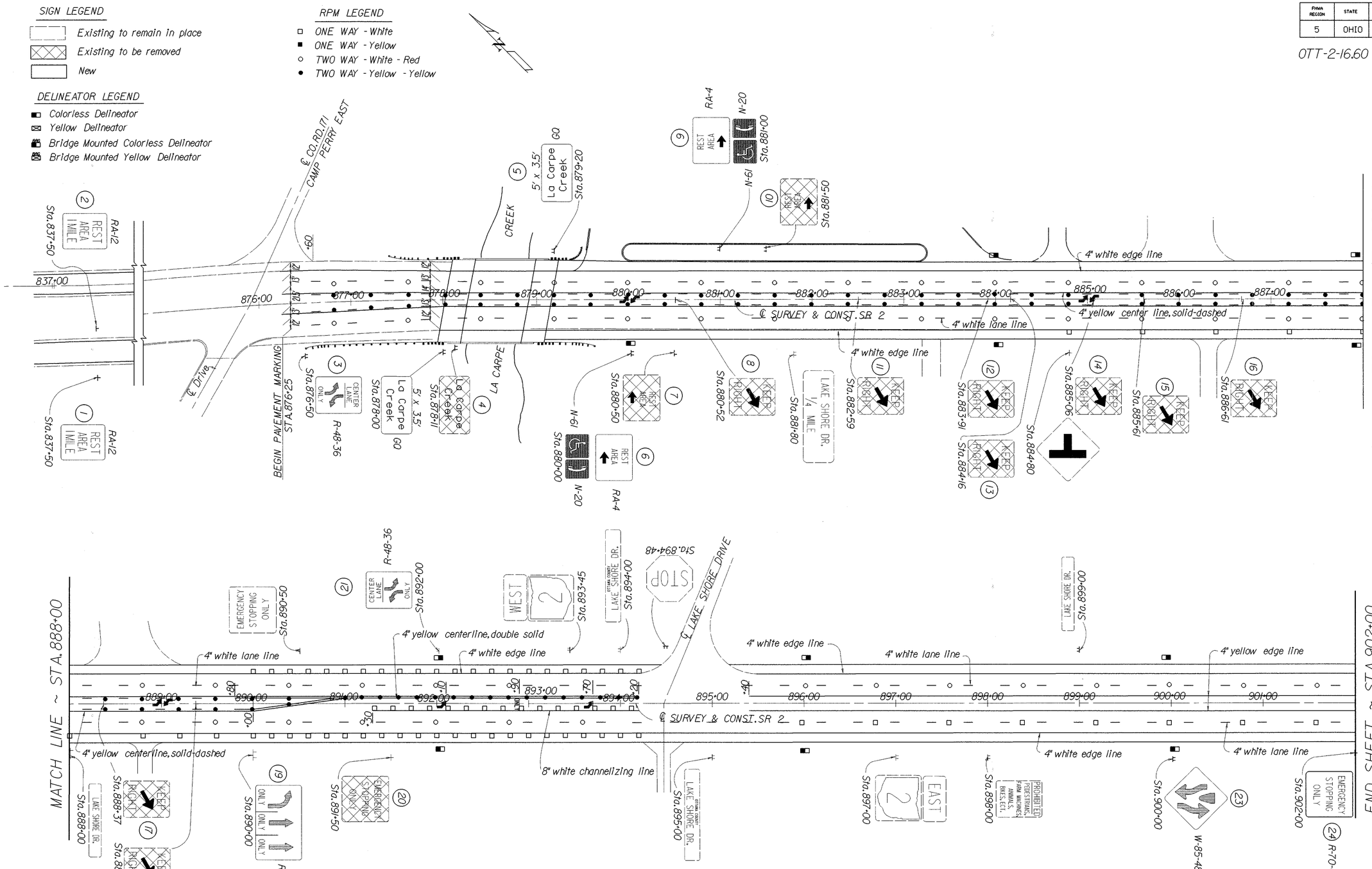


TRAFFIC CONTROL ~ STA.837+50 TO STA.902+00

I:/pd/ottawa/ott2/ott2pmlgn

NOTE: See sht.no.245 for Traffic Control Legends.

| FHWA REGION | STATE | PROJECT | |
|---|---|---|---|
| 5 | OHIO | | |

246/367

OTT-2-16.60

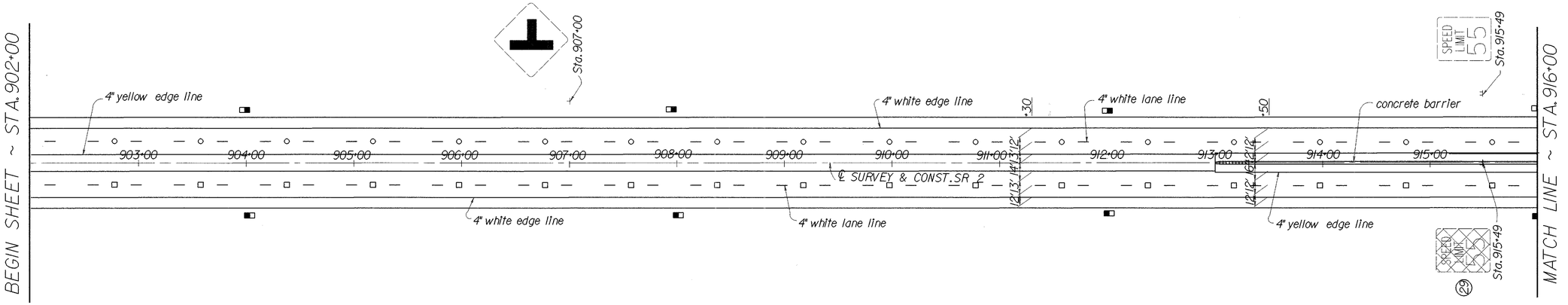


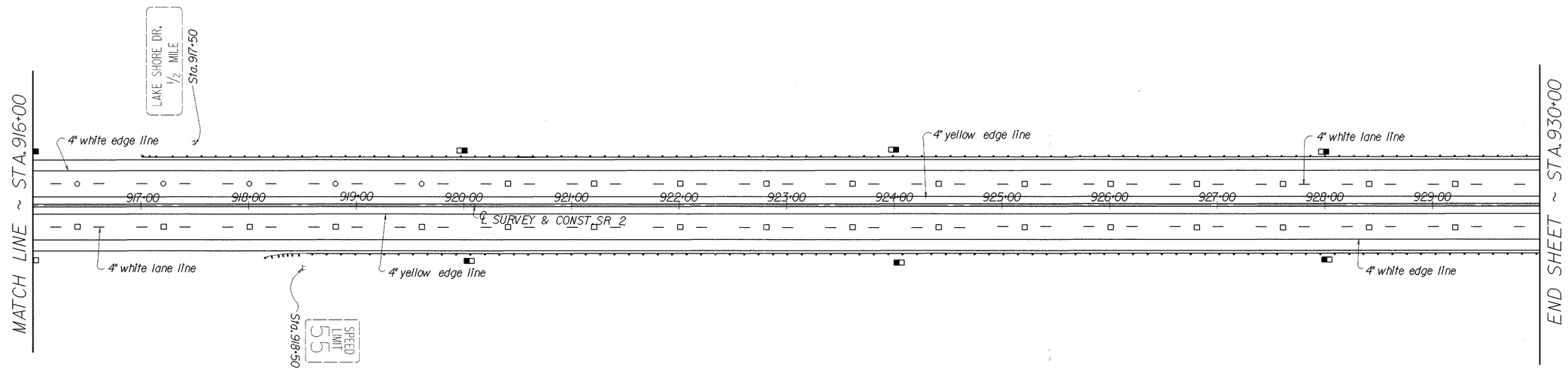


I:/pd/ottawa/ott2/ott2pm2.dgn

TRAFFIC CONTROL ~ STA. 902+00 TO STA. 930+00

NOTE: See sht.no.245 for Traffic Control Legends.
See sht.no.259 for Ramp A Delineators
See sht.no.259 for Ramp B Delineators

| FHWA REGION | STATE | PROJECT | |
|---|---|---|---|
| 5 | OHIO | | |

247/367

OTT-2-16.60

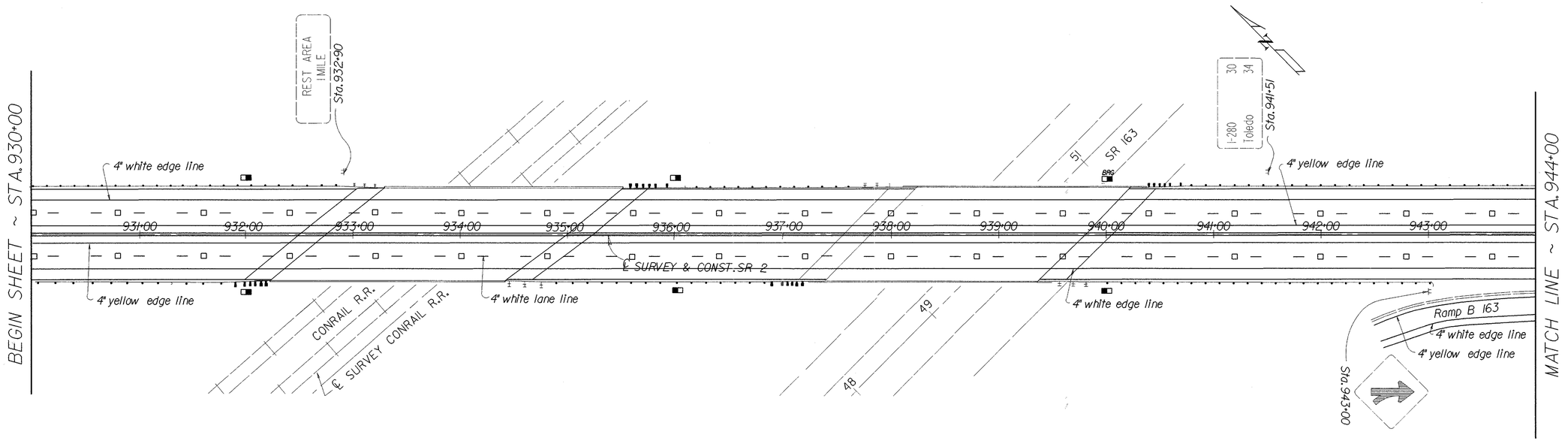


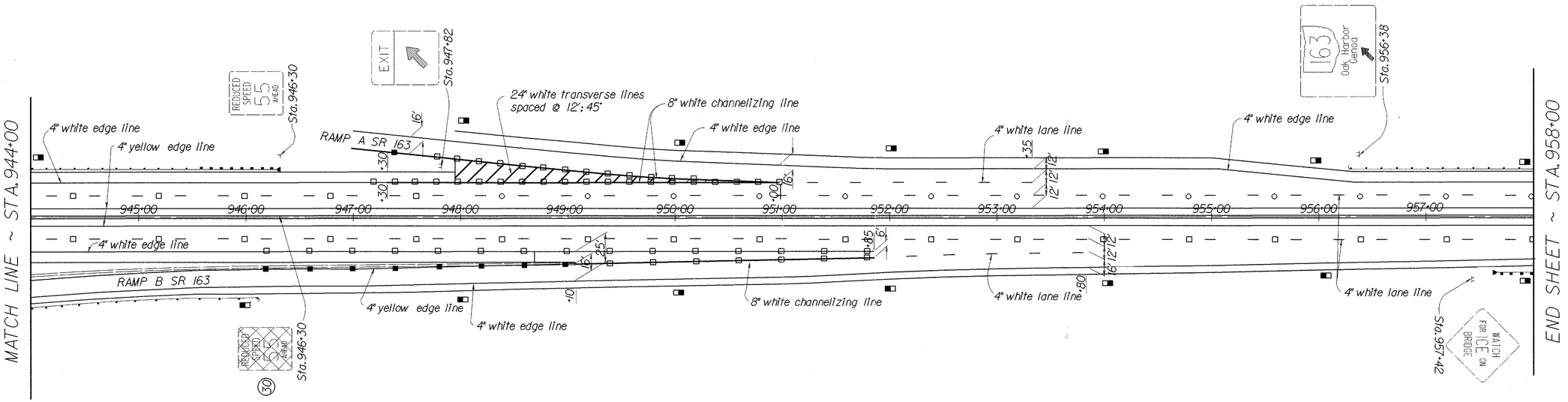


I:/pd/ottawa/ott2/ott2pm3.dgn

TRAFFIC CONTROL ~ STA. 930+00 TO STA. 958+00

NOTE: See sht.no.245 for Traffic control legends.

| FHWA REGION | STATE | PROJECT | |
|---|---|---|---|
| 5 | OHIO | | |

248/367

OTT-2-16.60

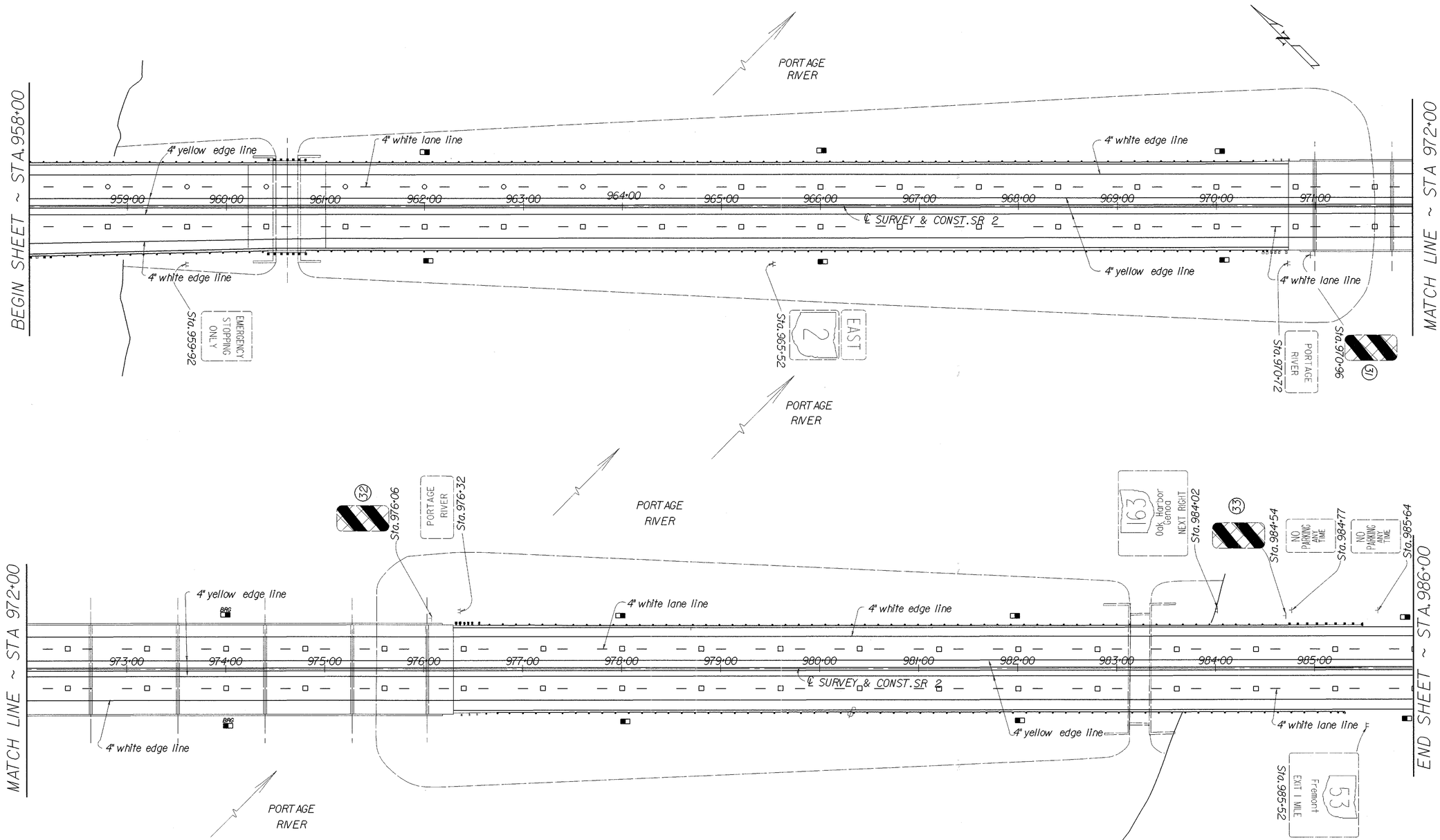


I/pd/ottawa/ott2/ott2pm4.dgn

TRAFFIC CONTROL ~ STA.958+00 TO STA.986+00

NOTE: See sht.no.245 for Traffic Control Legend.

| FHWA REGION | STATE | PROJECT | |
|---|---|---|---|
| 5 | OHIO | | |

249 / 367

OTT-2-16.60

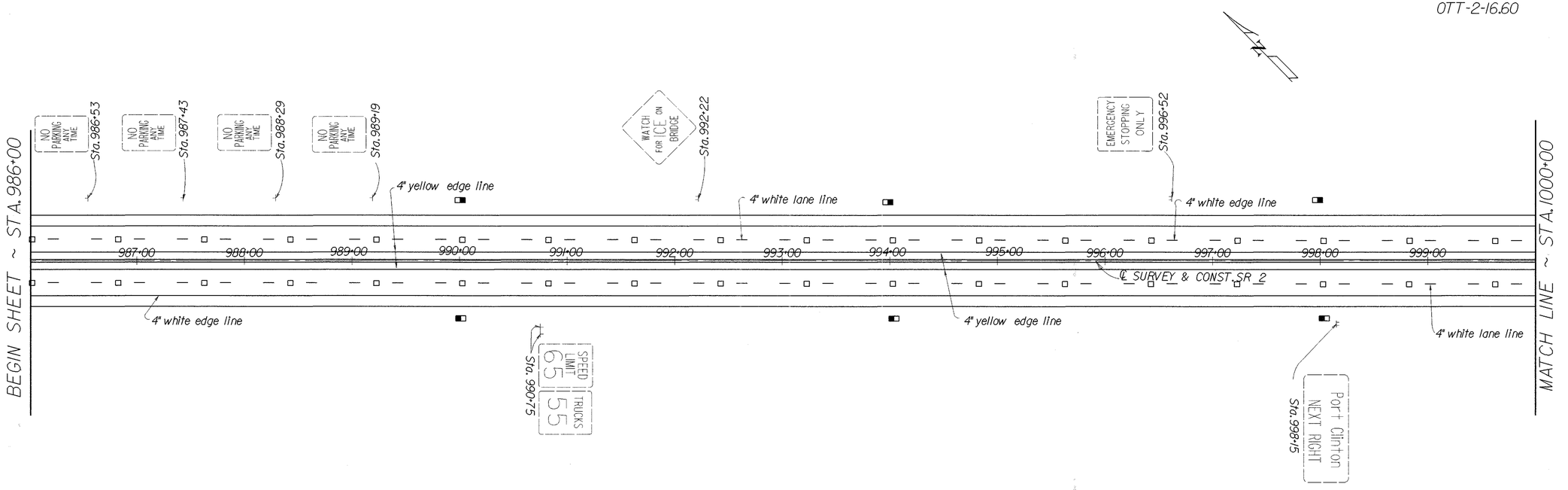


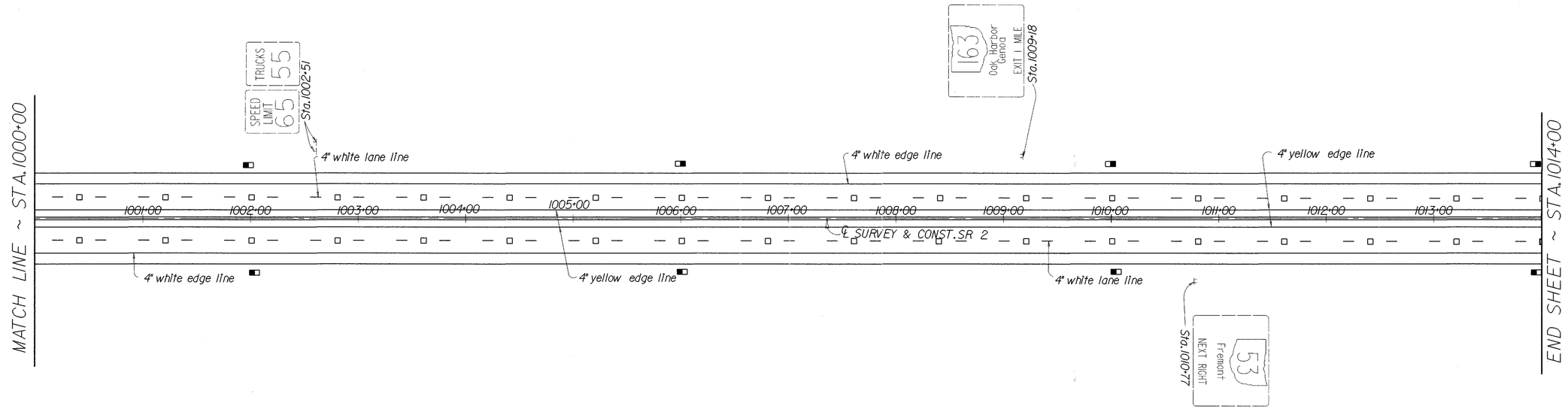


I:/pd/ottawa/ott2/ott2pm5.dgn

NOTE: See sht.no.245 for Traffic control legends.

See sht.no.260 for Ramp A Delineators
See sht.no.261 for Ramp D Delineators

| FHWA REGION | STATE | PROJECT | |
|---|---|---|---|
| 5 | OHIO | | |

250/367

OTT-2-16.60

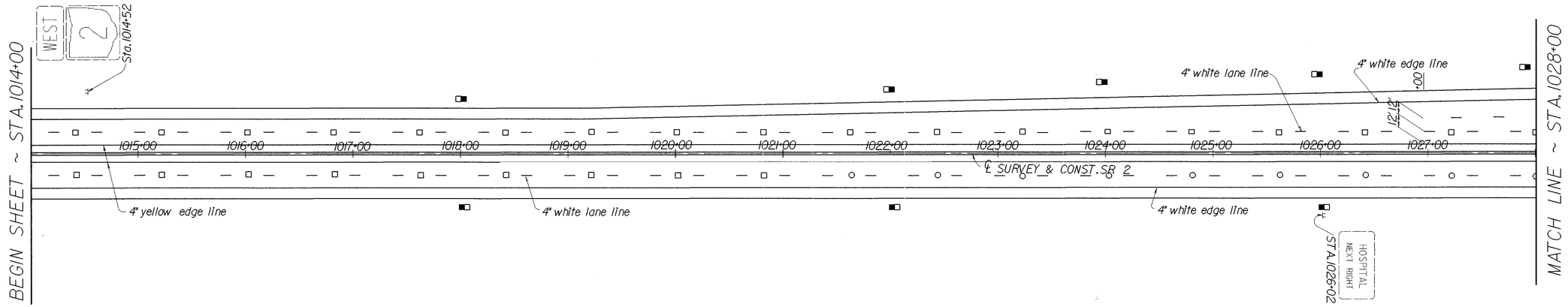


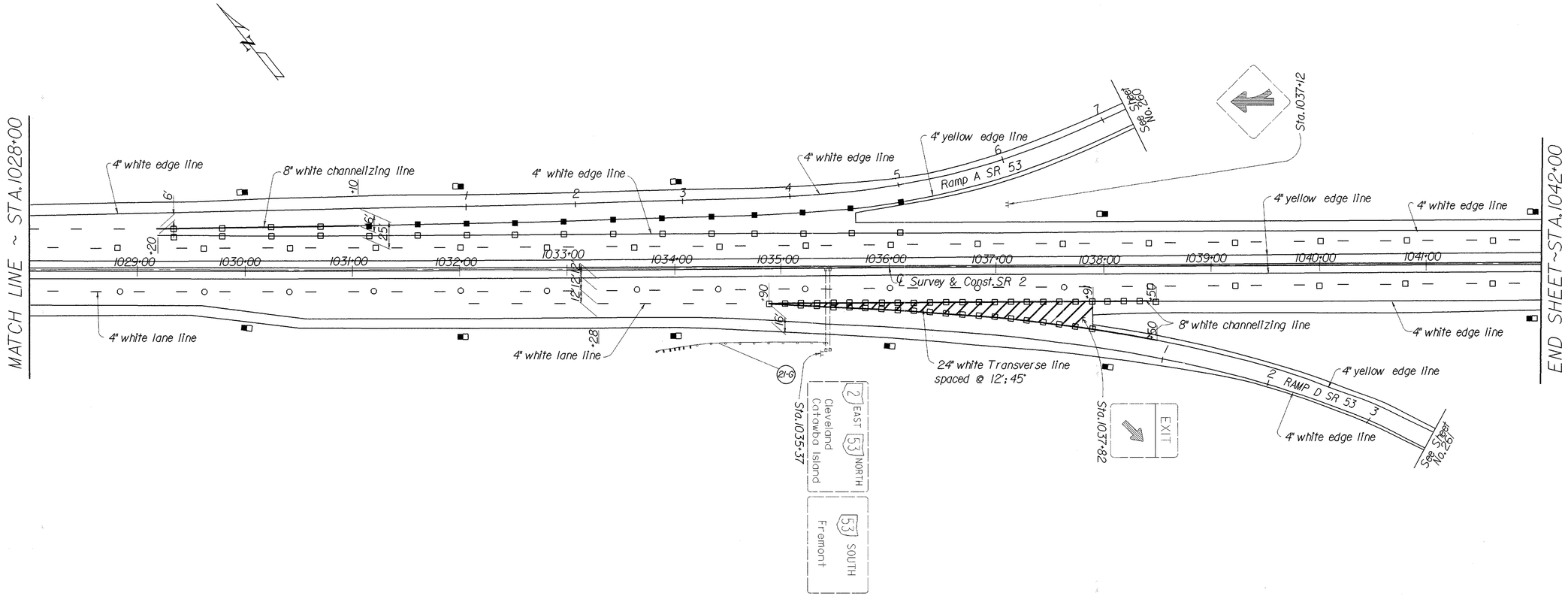


I:/pd/ottawa/ott2/ott2pm6a.dgn

TRAFFIC CONTROL ~ STA.1014+00 TO STA.1042+00

NOTES: See sht.no.245 for Traffic Control legends.

See sht.no.260 for Ramp B Delineators
See sht.no.261 for Ramp C Delineators

| FHWA REGION | STATE | PROJECT | |
|---|---|---|---|
| 5 | OHIO | | |

OTT-2-16.60

251/367

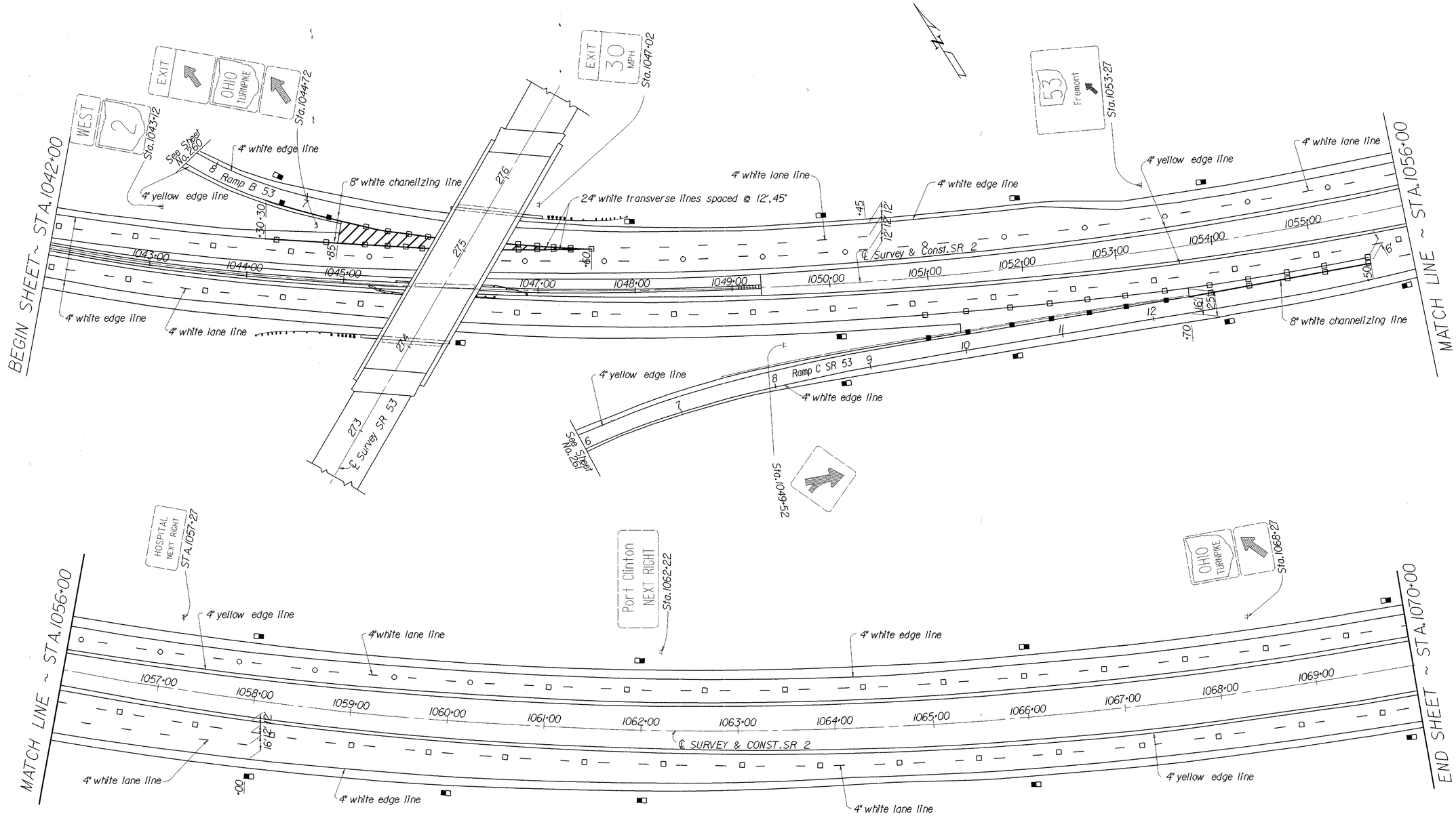


TRAFFIC CONTROL ~ STA.1042+00 TO STA.1070+00

I:/pd/OTTAWA/OTT2/OTT2PM6B.DGN

| FHWA REGION | STATE | PROJECT | |
|---|---|---|---|
| 5 | OHIO | | |

252
367

OTT-2-16.60

NOTE: See sht.no.245 for Traffic Control legend.

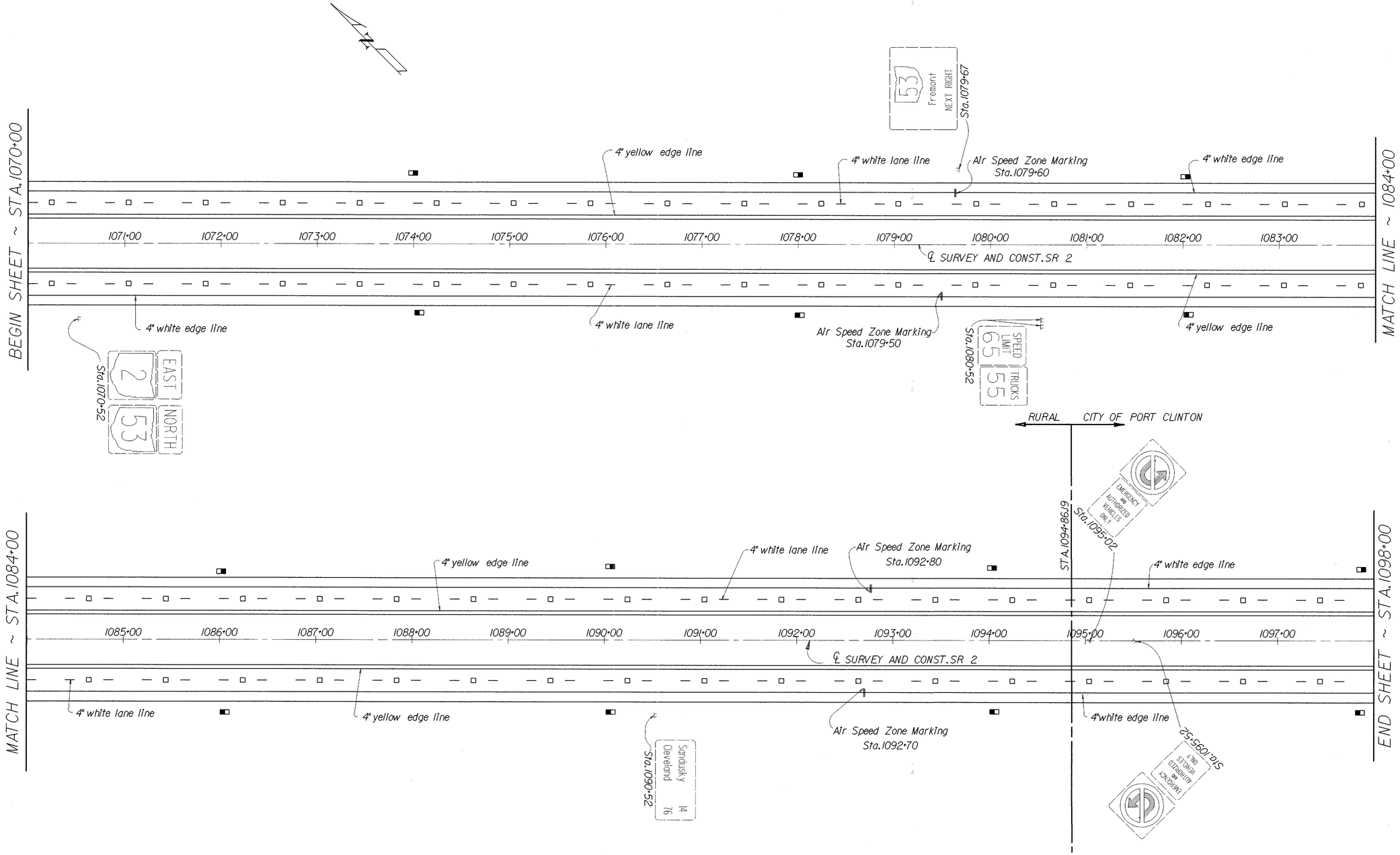


TRAFFIC CONTROL ~ STA. 1070+00 TO STA. 1098+00

1/pd/OTTAWA/OTT2/OTT2PM6.DGN

NOTE: See sht.no.245 for Traffic Control legend.

| FHWA REGION | STATE | PROJECT | |
|---|---|---|---|
| 5 | OHIO | | |

253/367

OTT-2-16.60

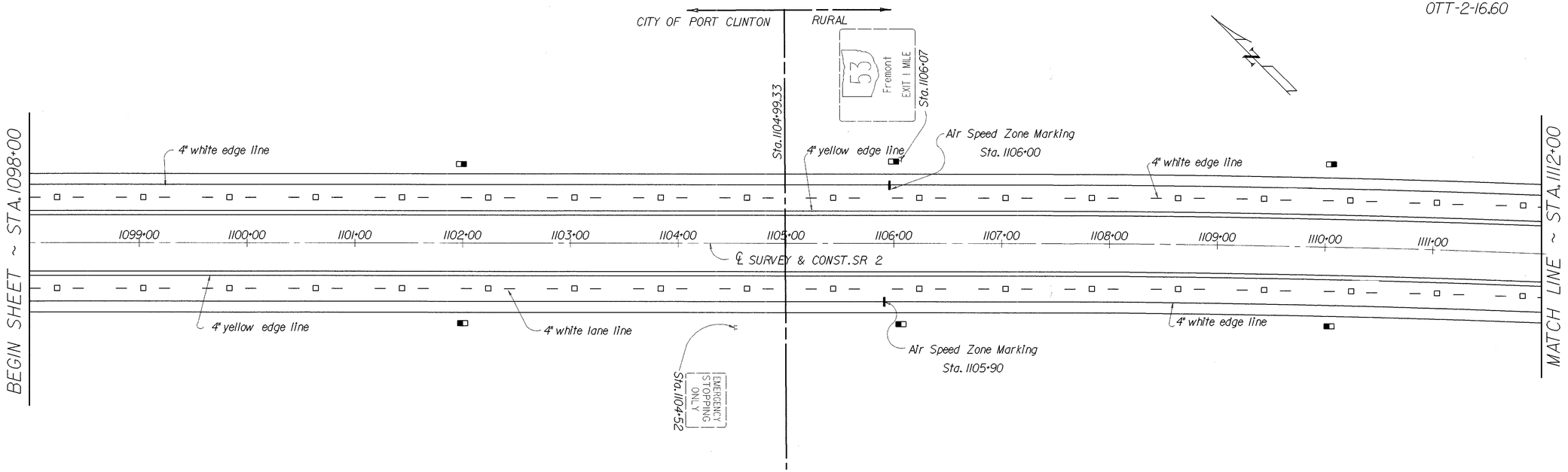


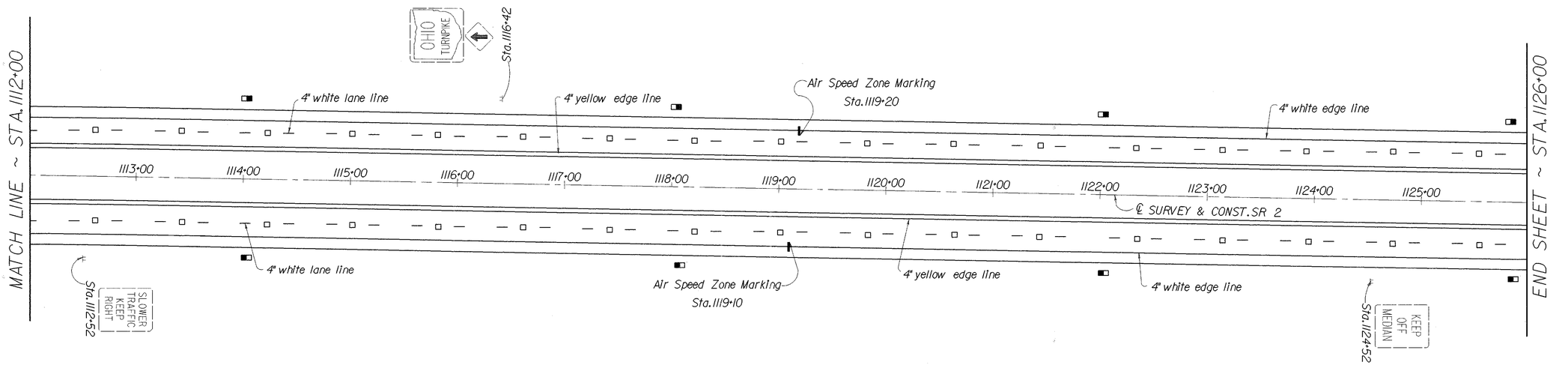


I:/pd/OTTAWA/OTT2/OTT2PMT.DGN

NOTE: See sht.no.245 for Traffic Control legend.

| FHWA REGION | STATE | PROJECT | |
|---|---|---|---|
| 5 | OHIO | | |

254/367

OTT-2-16.60

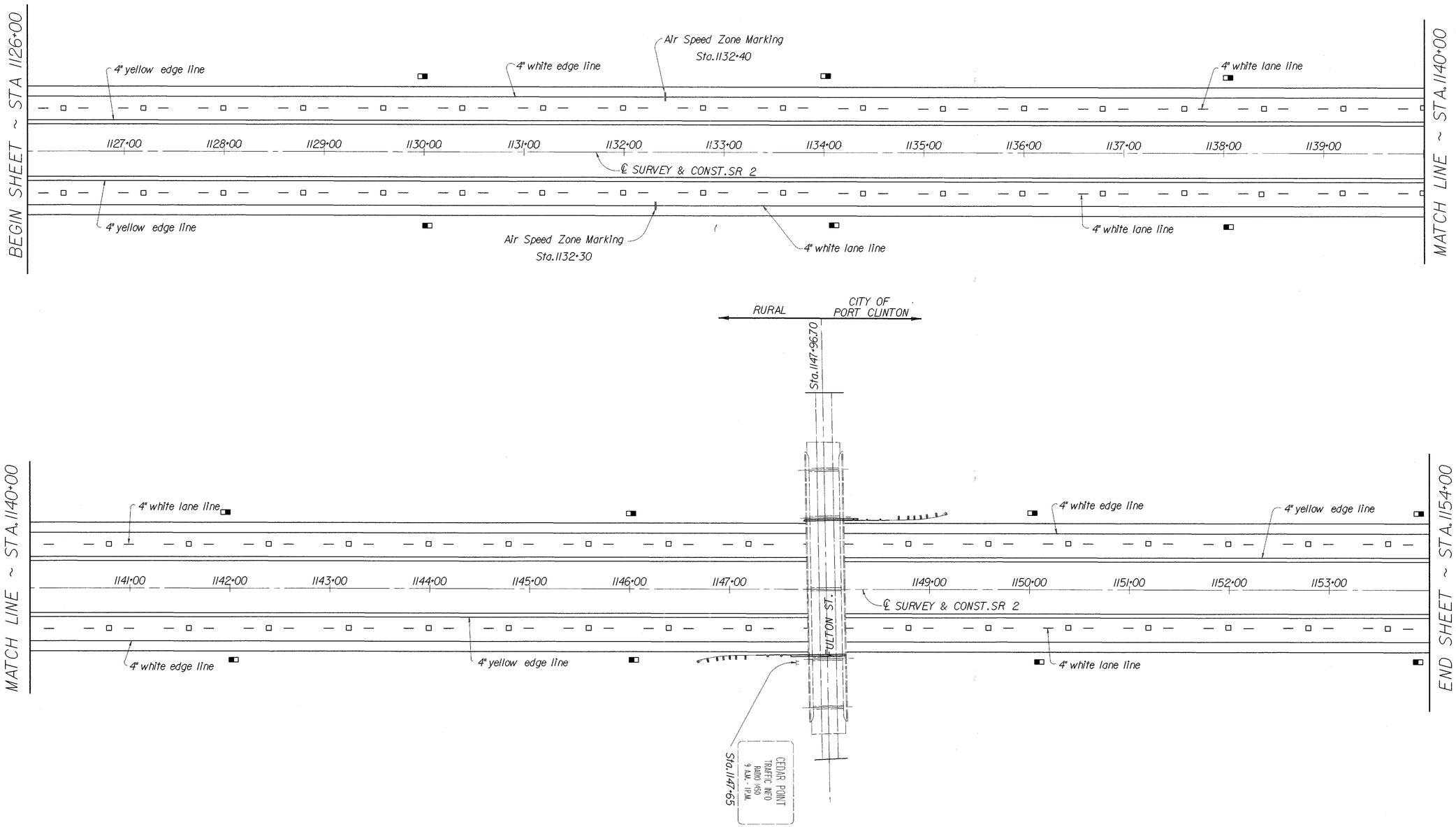


i:/pd/OTTAWA/OTT2/OTT2PM8.DGN

TRAFFIC CONTROL ~ STA. 1126+00 TO STA. 1154+00

| FHWA REGION | STATE | PROJECT | |
|---|---|---|---|
| 5 | OHIO | | |

255/367

OTT-2-16.60

NOTE: See sht.no.245 for Traffic Control legends.

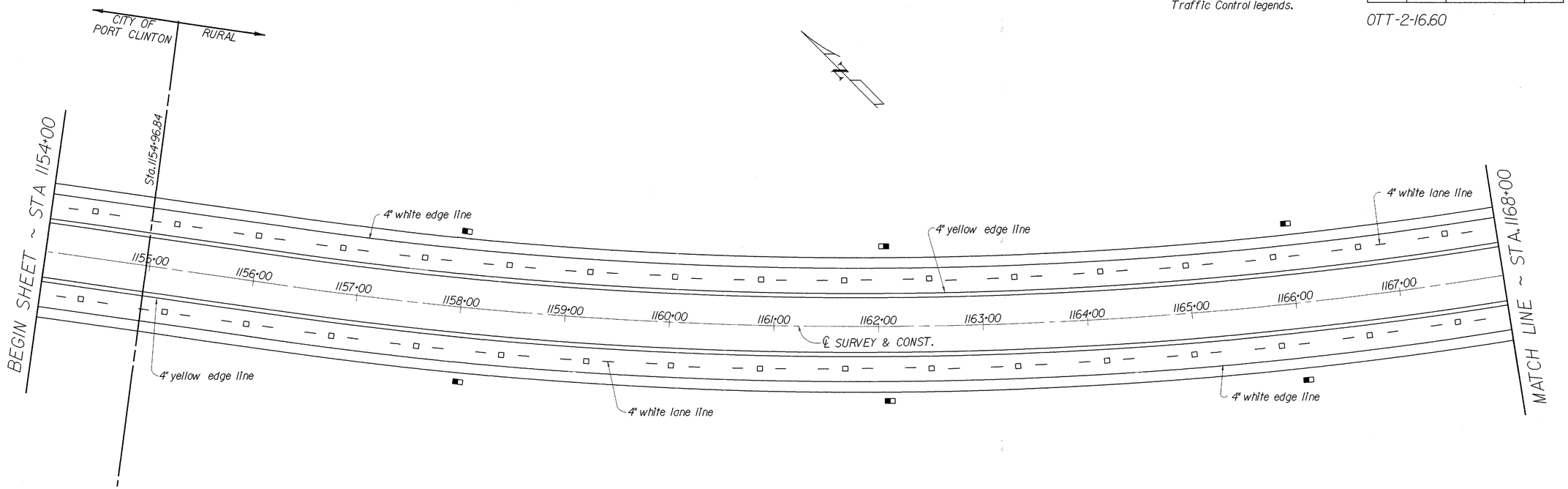


I:/pd/OTTAWA/OTT2/OTT2PM9.DGN

TRAFFIC CONTROL ~ STA.1154+00 TO STA.1182+00

NOTE: See sht.no.245 for Traffic Control legends.

| FHWA REGION | STATE | PROJECT | |
|---|---|---|---|
| 5 | OHIO | | |

OTT-2-16.60

256/367

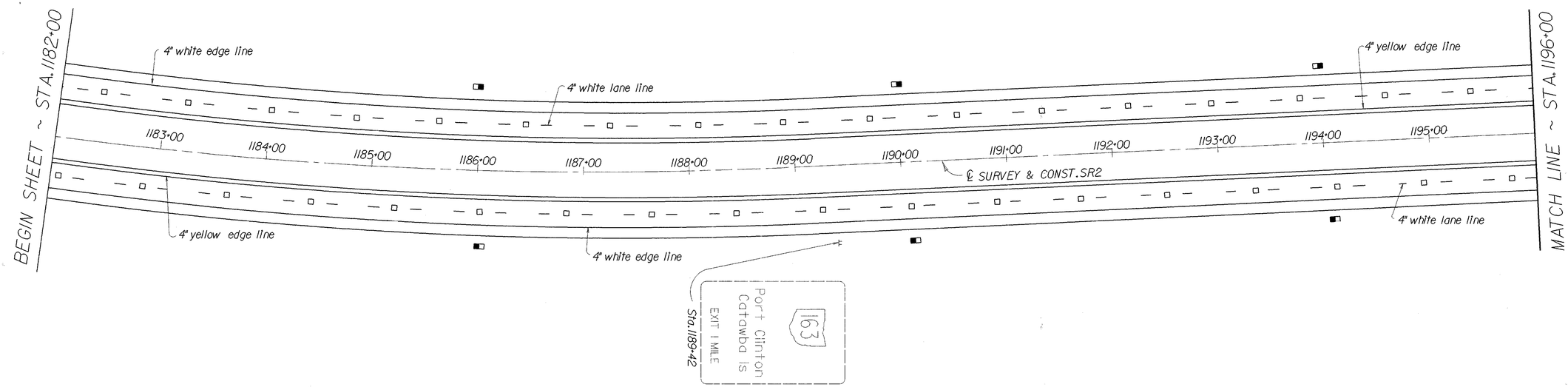


I:/pd/OTTAWA/OTT2/OTT2PM10.DGN

TRAFFIC CONTROL ~ STA.1182+00 TO STA.1210+00

| FHWA REGION | STATE | PROJECT | |
|---|---|---|---|
| 5 | OHIO | | |

257
367

OTT-2-16.60

NOTE: See sht. no. 245 for Traffic Control legends.

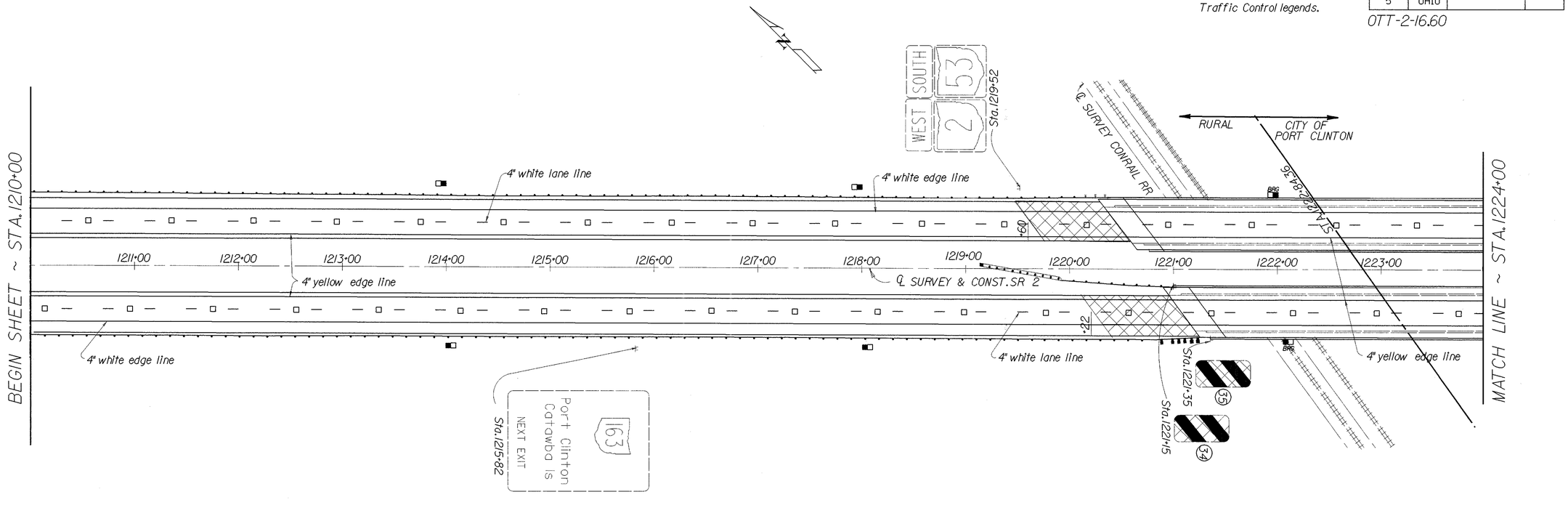


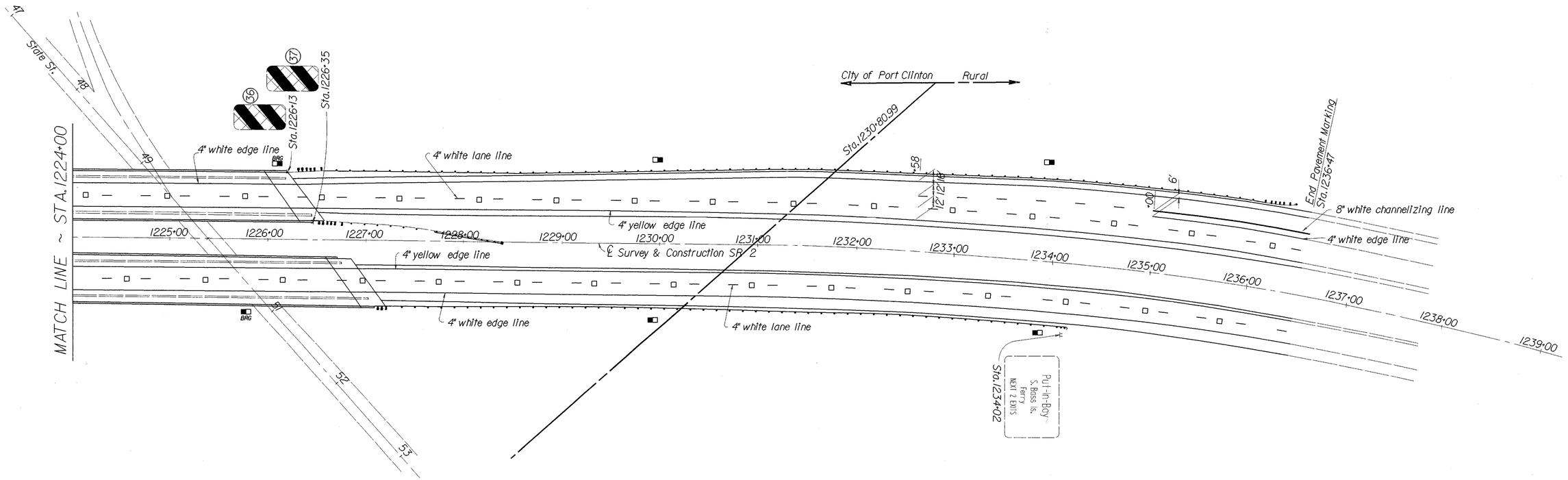


I:/pd/OTTAWA/OTT2/OTT2PWILDGN

TRAFFIC CONTROL ~ STA. 1210+00 TO STA. 1236+47

| FHWA REGION | STATE | PROJECT | |
|---|---|---|---|
| 5 | OHIO | | |

258/367

OTT-2-16.60

NOTE: See sht. no. 245 for Traffic Control Legends.

Begin Work Sta. 262+50

SPEED LIMIT 55 Sta. 263+85

4" Yellow Centerline, Double Solid

4" White Edge Line

SOUTH 53 Sta. 267+95

Fremont 12 Sta. 268+00

4" White Edge Line

4" Yellow Centerline, Double Solid

℄ SURVEY & CONST. SR 53

4" Yellow Edge Line

4" White Edge Line

Business District 2 Port Clinton Sta. 267+00

TO Cedar Point Sta. 267+05

Sta. 268+50

Sta. 269+70

4" White Edge Line

4" Yellow Edge Line

Ramp C4

Sta. 271+35 EAST 2 Cedar Point

Sta. 271+25 WEST 2 Toledo LEFT LANE

ONE WAY Sta. 271+80

Sta. 3+45 YIELD

Sta. 4+00 PROHIBITED PEDESTRIANS FARM MACHINERY ANIMALS BICYCLES OR MOTORCYCLES

STOP Sta. 7+30 DO NOT ENTER

STOP Sta. 7+10 DO NOT ENTER

Ramp D

EAST 2 Cleveland Sta. 271+90

4" White Edge Line

Sta. 273+10

Sta. 273+40

4" Yellow Edge Line

Sta. 273+70

Sta. 273+60 WEST 2

4" White Lane Line

Ramp B

Sta. 276+30

Sta. 276+20

Sta. 276+50

Sta. 276+90

℄ Survey SR 2

END SHEET ~ STA. 277+00

BEGIN SHEET ~ STA. 277+00

Sta. 18+50 STOP DO NOT ENTER

EAST 2 Sta. 277+00

Sta. 19+20 YIELD

4" White Edge Line

Ramp B

Ramp A

Sta. 18+00 PROHIBITED PEDESTRIANS FARM MACHINERY ANIMALS BICYCLES OR MOTORCYCLES

Sta. 18+24 KEEP RIGHT

WEST 2 EAST LEFT LANE Sta. 280+85

4" Yellow Edge Line

4" White Edge Line

Cleveland 77 Toledo 36

Sta. 284+00 ℄ Wonnell Rd.

End Work Sta. 287+50

WEST 2

SOUTH 53

NORTH 53

EAST 2 Sta. 287+97

℄ Survey & Const. Fremont Rd.

4" White Edge Line

4" Yellow Centerline, Double Solid

4" White Edge Line

4" White Lane Line

Sta. 279+68

Sta. 279+90 Toledo WEST 2

Sta. 280+50

Sta. 280+90

Adopt a Road Next 2 Miles Kiwanis Club

Sta. 281+75

Sta. 283+05

Business District Jet Express Parking

HOSPITAL

Sta. 288+30 SPEED LIMIT 45

Sta. 289+15 OTTAWA CO. 52 COUNTY BRIDGE 2 MARGO WEIGHT LIMIT 24 TONS

REDUCED SPEED AHEAD

Ottawa County Highway Maintenance

Fremont

TRAFFIC CONTROL ~ SR 53

I:/pd/OTTAWA/OTT2/2SR53PMLDGN

| FHWA REGION | STATE | PROJECT | |
|---|---|---|---|
| 5 | OHIO | | |

259
367

OTT-2-16.60

NOTE: See sht.no.245 for Traffic Control legend.

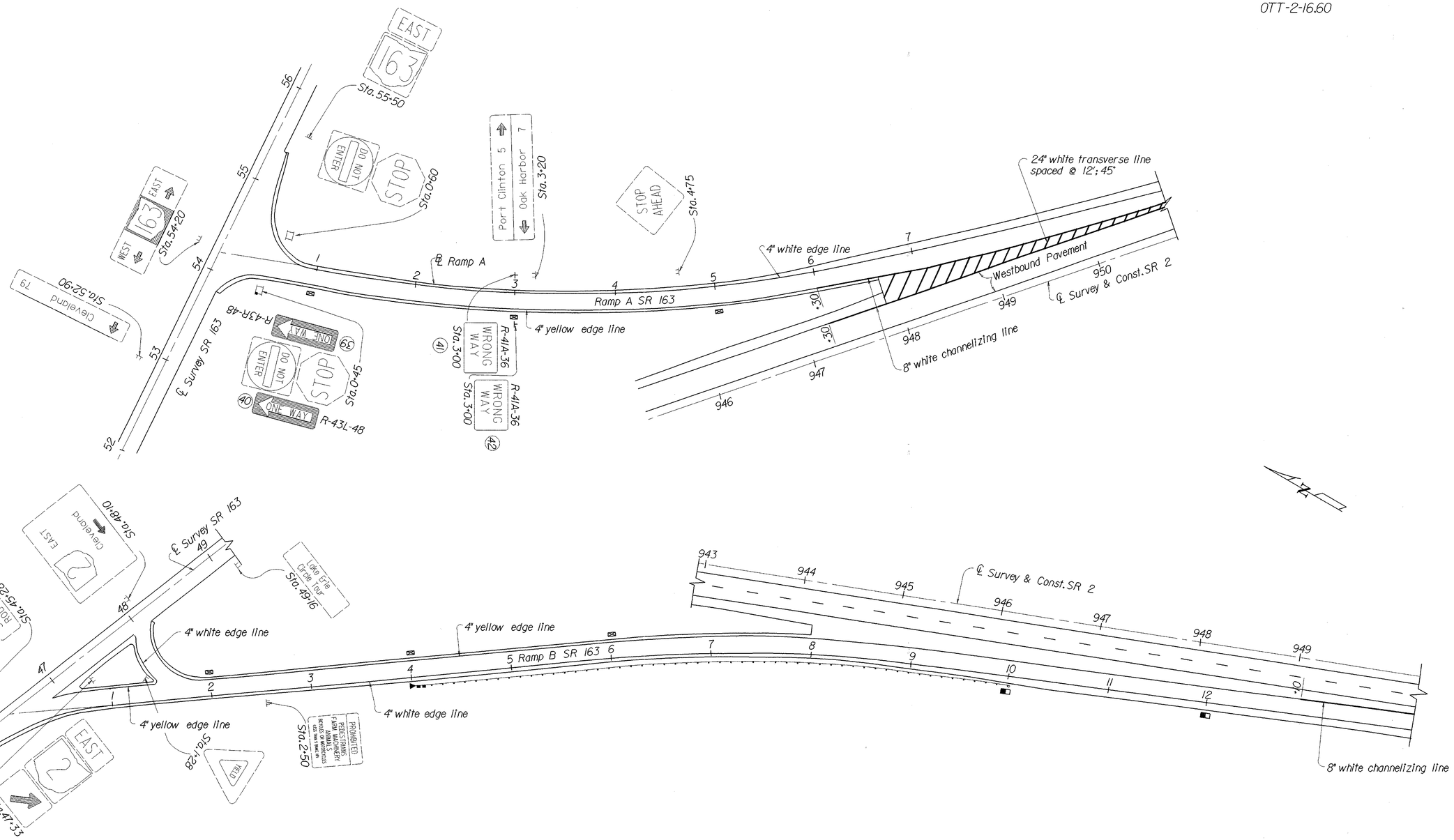


1/pd/OTTAWA/OTT2/SR163PM.DGN

TRAFFIC CONTROL ~ SR 163 RAMPS A & B

| FHWA REGION | STATE | PROJECT | |
|---|---|---|---|
| 5 | OHIO | | |

260
367

OTT-2-16.60

NOTE: See sht. no. 245 for Traffic control legend.

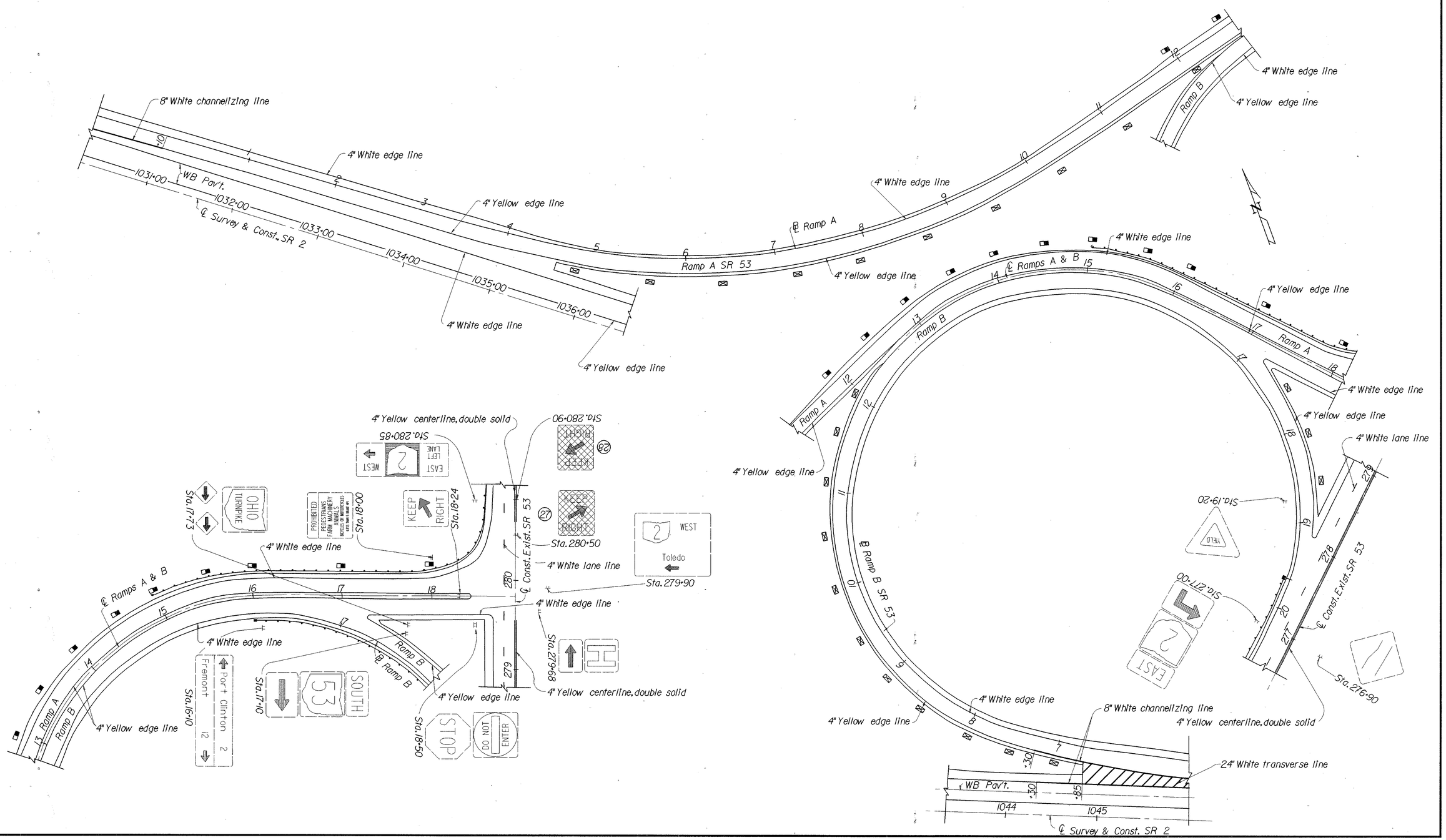


Traffic Control ~ SR 53 & SR 2 Ramps A & B

1/pd/OTTAWA/OTT2/SR53RMPM.DGN

| FHWA REGION | STATE | PROJECT | |
|---|---|---|---|
| 5 | OHIO | | |

261/367

OTT-2-16.60

NOTE: See sht. no. 245 for the Traffic Control legend.

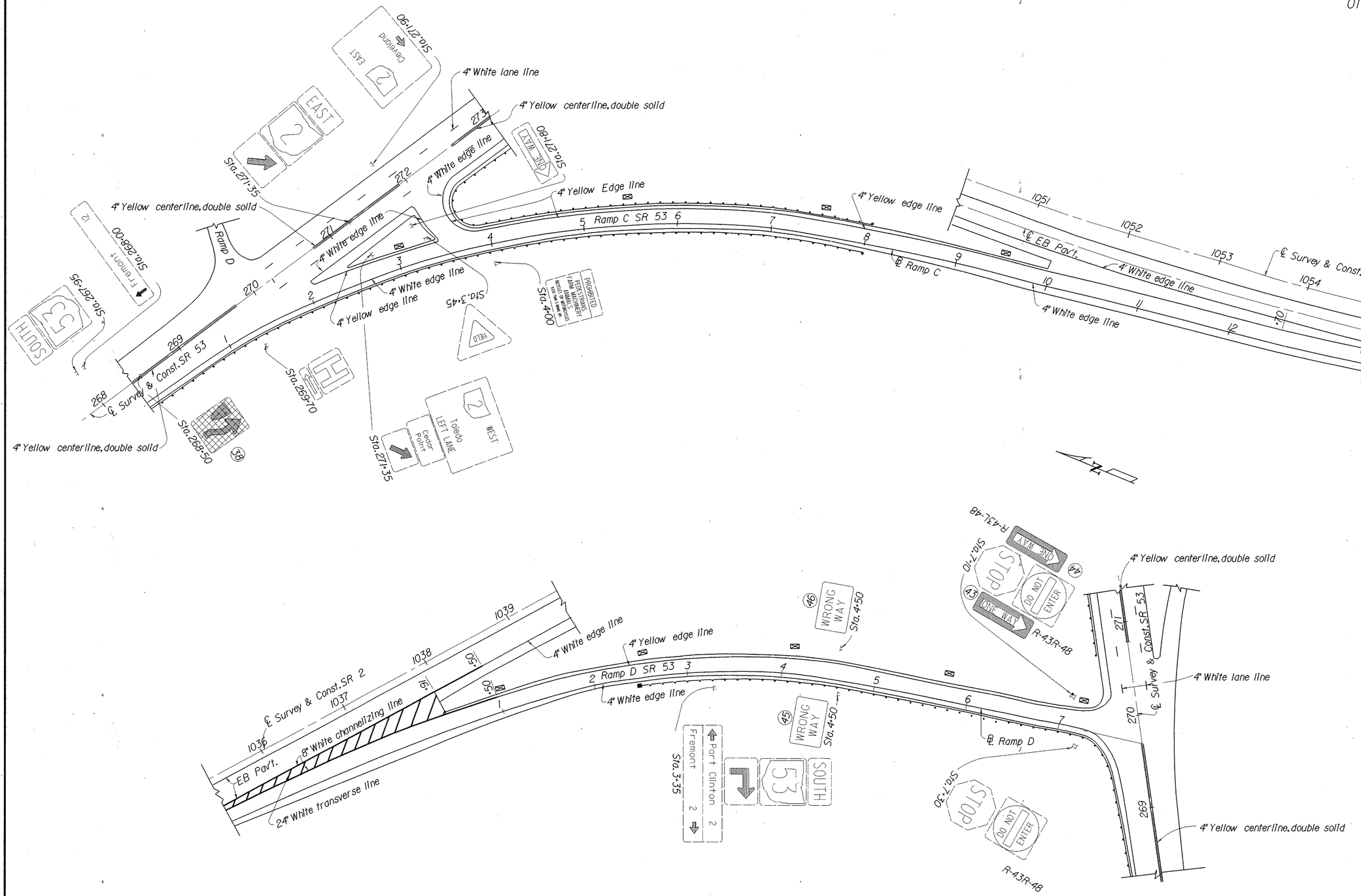




Traffic Control SR 53 Ramps C & D

| FHWA REGION | STATE | PROJECT | |
|---|---|---|---|
| 5 | OHIO | | |



OTT-2-16.60

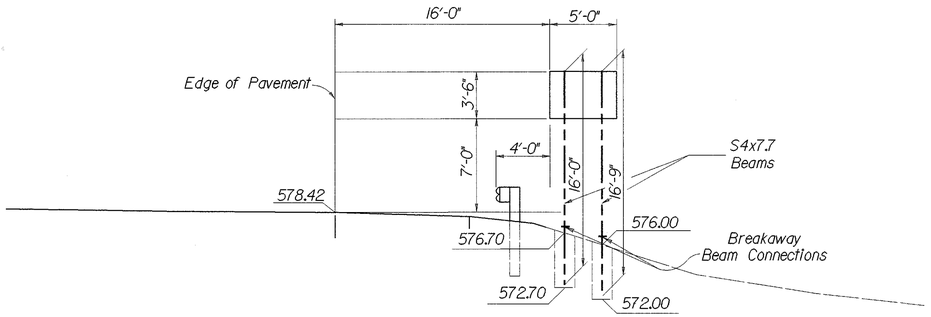


SIGN REF.NO.4
SR 2 EB STA.878+00 RT.

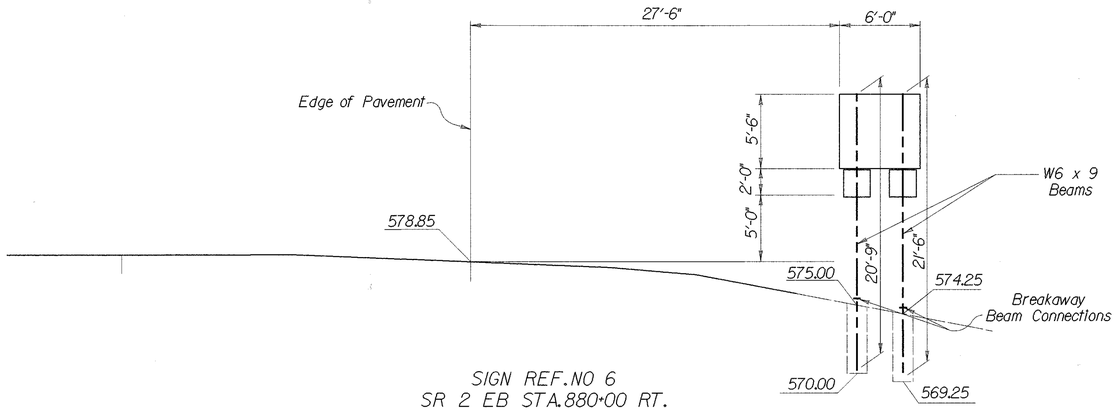


SIGN REF.NO 6
SR 2 EB STA.880+00 RT.

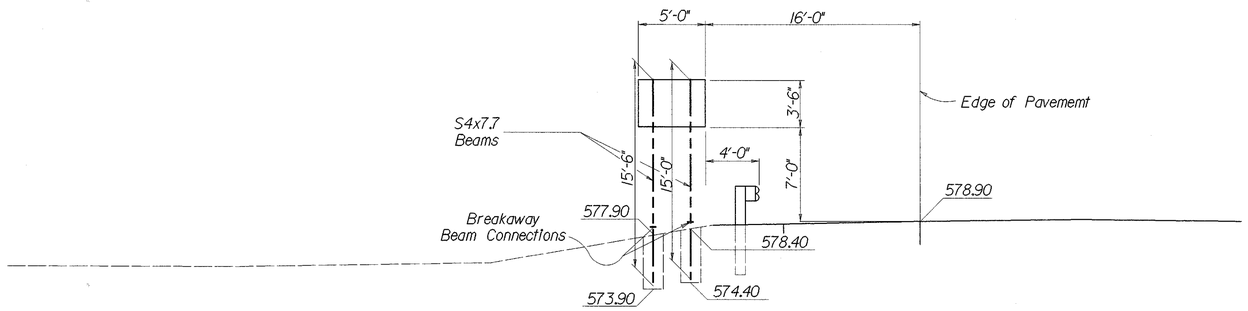


SIGN REF.NO 5
SR 2 WB STA.879+20 LT.

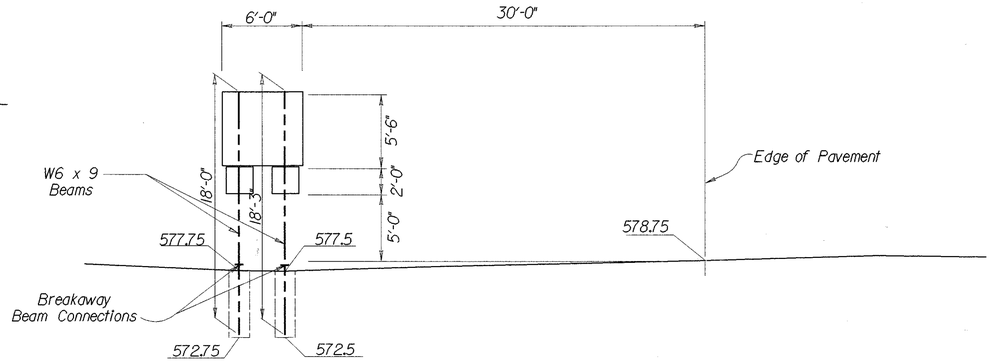


SIGN REF.NO 9
SR 2 WB STA.881+00 LT.

I:/pd/OTTAWA/OTT2/OT12TCDET.DGN

| FHWA REGION | STATE | PROJECT | |
|---|---|---|---|
| 5 | OHIO | | |

263
367

OTT-2-16.60

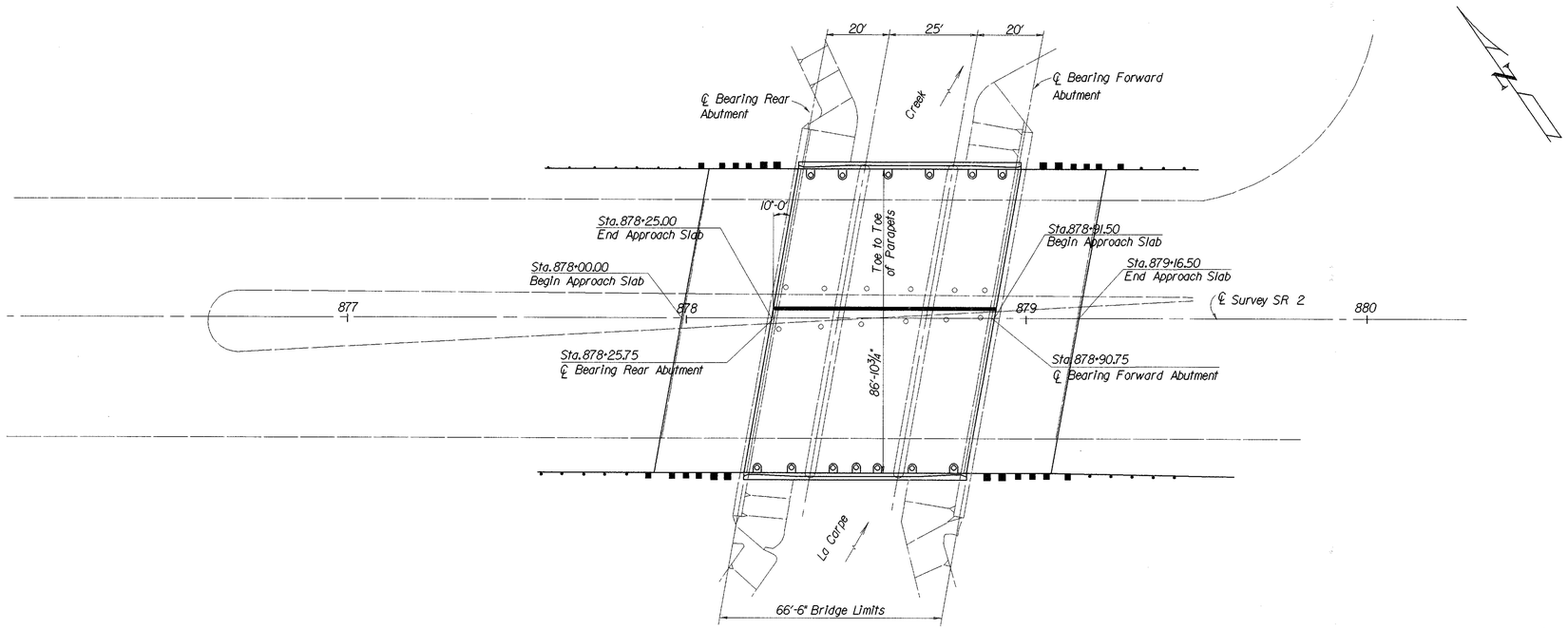


GENERAL PLAN

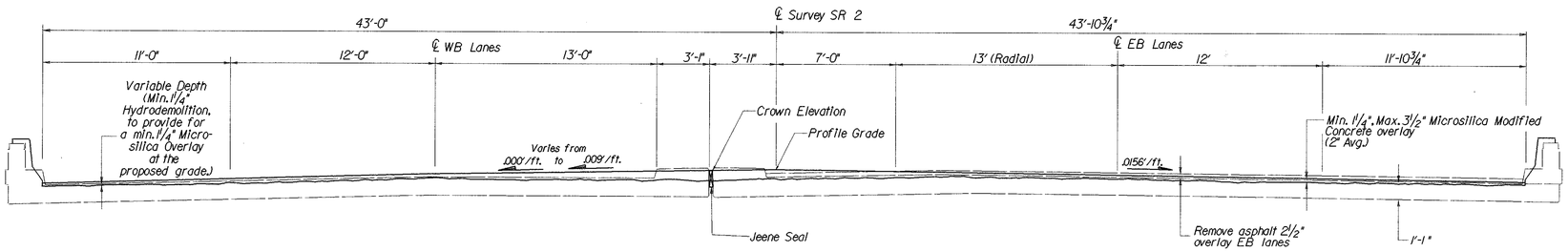


TRANSVERSE SECTION

## PROPOSED WORK

1.) Remove asphalt overlay from EB Lanes
2.) Remove deck on EB and WB Lanes using Hydrodemolition
3.) Remove existing bridge curbs and railings
4.) Reface existing parapets to create safety shape parapets
5.) Repair unsound concrete with variable depth Microsilica
6.) Overlay deck with min. 1¼" Microsilica Modified concrete
7.) Close median joint with Jeene Seal
8.) Seal abutments and parapets with epoxy/urethane
9.) Seal existing steel H-pile piers with an epoxy coating
10.) Replace existing approach slabs

## EXISTING STRUCTURE DATA

Type: Continuous Reinforced Concrete Slab supported by Capped Pile Abutments and Piers
Spans : 20'-0", 25'-0", 20'-0" c/c Brgs
Roadways: 88'-10¾" f/f Parapets with variable raised median
Loading: HS-20
Skew: 10°-00' Left Foward
Wearing Surface : 2½" Asphalt Conc./1" Monolithic Concrete
Approach Slabs: AS-1-54 (25'-0")
Alignment: Tangent
SFN: 6200214
Original Construction: 1967

## PROPOSED STRUCTURE DATA

Type: Continuous Reinforced Concrete Slab supported by capped Pile Abutments and Piers
Spans : 20'-0", 25'-0", 20'-0" c/c Brgs
Roadways: 86'-10¾" toe to toe of Parapets
Loading: HS 20-44 and Alternate Military
Skew: 10°-00' Left Foward
Wearing Surface : 1¼" Microsilica Modified Concrete
Approach Slabs: AS-1-81 (25'-0")
Alignment: Tangent
SFN: 6200214

STATE OF OHIO
DEPARTMENT OF TRANSPORTATION
DISTRICT 2 DESIGN & PLANNING OFFICE

1 / 9

# GENERAL PLAN AND TRANSVERSE SECTION BRIDGE NO. OTT-2-1663 OVER LaCarpe Creek

| DESIGNED | DRAWN | TRACED | CHECKED | REVIEWED DATE | REVISED |
|---|---|---|---|---|---|
| MTG | ALS | | LLL | LCL 1/4/95 | |

I:/PD/OTT.AWA/OTT2/OT2LCSP.DGN

| FHWA REGION | STATE | PROJECT | |
|---|---|---|---|
| 5 | OHIO | | |

264
367

OTT-2-16.60

# BRIDGE NOTES

REFERENCE SHALL BE MADE TO STANDARD DRAWINGS:

AS-1-81 DATED 9-15-94

AND TO SUPPLEMENTAL SPECIFICATIONS:

[redacted]

EXISTING STRUCTURE VERIFICATION

DETAILS AND DIMENSIONS SHOWN ON THESE PLANS PERTAINING TO THE EXISTING STUCTURES HAVE BEEN OBTAINED FROM THE PLANS OF THE EXISTING STRUCTURES AND/OR FROM FIELD OBSERVATIONS AND MEASUREMENTS. CONSEQUENTLY, THEY ARE INDICATIVE OF THE EXISTING STRUCTURES AND THE PROPOSED WORK BUT THEY SHALL BE CONSIDERED TENTATIVE AND APPROXIMATE. THE CONTRACTOR IS REFERRED TO CMS SECTIONS 102.05, 105.02, AND 513.02.

ITEM 516, STRUCTURAL JOINT OR JOINT SEALER, MISC:
HYDROZOL/JEENE MODEL NO.3W

THE JOINT SEAL SHALL BE A 3W SEAL AS MANUFACTURED BY HYDROZO/JEENE, INCORPORATED. A MANUFACTURERS REPRESENTATIVE SHALL BE PRESENT TO ASSIST AND ADVISE IN THE INITIAL INSTALLATION OF THIS SEAL ON THE PROJECT AND AS NEEDED OTHERWISE. THE HYDROZO/JEENE REPRESENTATIVE CAN BE CONTACTED AT (313)-632-5544, 252 S.ORTONVLLE RD., ORTONVILLE, MICH. 48462.

THE CONTRACTOR IS TO TAKE NOTE THAT THE PROPOSED OVERLAY IS TO BE PLACED BEFORE THE NOTCH IS CUT FOR THE PROPOSED JOINT. THIS IS TO INSURE A SMOOTH, STRAIGHT SURFACE FOR THE JOINT TO ADHERE AGAINST.

PAYMENT FOR ALL LABOR, EQUIPMENT AND MATERIALS NEEDED TO PERFORM THIS WORK (INCLUDING SAW-CUTTING THE NOTCH) SHALL BE INCLUDED IN THE LINEAR FOOT UNIT PRICE BID FOR ITEM 516, STRUCTURAL JOINT OR JOINT SEALER, MISC., AS PER PLAN.

ITEM 202, PORTIONS OF STRUCTURE REMOVED, AS PER PLAN

THIS WORK SHALL CONSIST OF THE REMOVAL OF EXISTING CONCRETE MEDIANS. CONCRETE MAY BE REMOVED BY MEANS OF HAND OPERATED PNEUMATIC HAMMERS EMPLOYING PAINTED OR BLUNTED CHISEL TYPE TOOLS.

ALL WORK WILL BE PAID FOR AT THE CONTRACT LUMP SUM PRICE BID, WHICH PRICE AND PAYMENT SHALL BE FULL COMPENSATION FOR ALL LABOR, EQUIPMENT, MATERIALS, AND INCIDENTALS NECESSARY TO COMPLETE THE WORK IN CONFORMANCE WITH THESE REQUIREMENTS, WITH PERTINENT PROVISIONS OF 202, AND TO THE SATISFACTION OF THE ENGINEER

ITEM 517, RAILING FACED, AS PER PLAN

DESCRIPTION: THIS ITEM OF WORK SHALL CONSIST OF FACING CURB STYLE PARAPETS, USING CAST IN PLACE CONCRETE, TO OBTAIN THE DEFLECTOR SHAPE AS SHOWN IN THE PLANS.

REMOVAL: THE CONTRACTOR SHALL CAREFULLY REMOVE THE EXISTING ALUMINUM RAILING, POST, CURB PLATES, AND EXISTING CONCRETE CURB. LEGS OF EXISTING BULB ANGLES SHALL BE BURNED OFF TO ACCOMMODATE PROPOSED OVERLAY. ALL LOOSE OR UNSOUND CONCRETE SHALL BE REMOVED. ALSO TO BE REMOVED SHALL BE ANY SOUND CONCRETE NECESSARY TO OBTAIN A MINIMUM 4" THICKNESS OF NEW CONCRETE.

DOWEL HOLES AND REINFORCING STEEL: DOWEL HOLES SHALL BE DRILLED WHERE SHOWN IN THE PLANS. REINFORCING STEEL SHALL BE INSTALLED USING EPOXY GROUT PER 510 (CMS 705.20). ALL EXISTING REINFORCING STEEL BARS IN THE AREA OF THE DOWEL HOLE SHALL BE LOCATED WITH THE AID OF A REINFORCING STEEL BAR LOCATOR (PACHOMETER) PRIOR TO DRILLING THE HOLES. IF AN EXISTING BAR IS ENCOUNTERED AT THE SAME LOCATION AS A PROPOSED DOWEL HOLE, THE DOWEL HOLE SHALL BE MOVED TO EITHER SIDE OF THE EXISTING BAR. ALL REINFORCING STEEL, DOWEL HOLES AND GROUTING SHALL BE INCLUDED WITH THIS ITEM 517 FOR PAYMENT.

SURFACE PREPARATION: THE PARAPET NEXT TO THE REFACING SHALL BE THOROUGHLY CLEANED BY ABRASIVE BLASTING FOLLOWED BY AN AIR BLAST. USE OF HAND TOOLS MAY BE NECESSARY TO REMOVE SCALE FROM ANY EXPOSED REINFORCING STEEL. THE SURFACE SHALL BE MADE FREE FROM SPALLS, LAITENCE , AND ALL TRACES OF FOREIGN MATERIAL. DETERGENT CLEANING SHALL PRECEDE BLAST CLEANING AS NECESSARY TO ENSURE REMOVAL OF CONTAMINANTS THAT ARE DETRIMENTAL TO ACHIEVING AN ADEQUATE BOND.

MATERIALS: REINFORCING STEEL - 509, GRADE 60, EPOXY COATED;
CONCRETE: 511 CLASS S

SHRINKAGE CRACK CONTROL JOINTS: SHRINKAGE CONTROL JOINTS SHALL BE PLACED IN THE NEW CONCRETE AT THE SAME LOCATION AS THE EXISTING DEFLEECTION JOINTS AND SHALL BE MADE AT RIGHT ANGLE TO THE DECK BY SAWING TO MATCH ALIGNMENT OF EXISTING DEFLECTION JOINTS. THE SAW CUT SHALL BE MADE ALONG THE COMPLETE CIRCUMFERENCE IN THE NEW CONCRETE ON THE PARAPET. STARTING AT THE BACK AND ENDING AT THE ELEVATION OF THE CONCRETE DECK. WHEN SLIPFORMING IS USED, TEMPORARY DEFLECTION FOLLOWING THE SLIPFORMING OPERATION. THE DEPTH OF A JOINT SHALL BE MAX. 1/2 INCH WITHIN 48 HOURS AFTER PLACEMNET OF CONCRETE PARAPET. SAW CUT 1 INCH DEEP JOINTS INTO THE PARAPET. THE USE OF AN EDGE GUIDE, FENCE OR JIG IS REQUIRED TO ENSURE THAT THE CUT IS STRAIGHT, TRUE AND ALIGNED ON ALL FACES OF THE PARAPET. THE JOINT WIDTH SHALL BE THE WIDTH OF THE SAW BLADE, NOT TO EXCEED ONE QUARTER OF AN INCH.
THE SAW CUT SHALL BE FILLED WITH A CAULKING MATERIAL CONFORMING TO FEDERAL SPECIFICATION TT-S-00227E. THE BOTTOM ONE HALF INCH OF BOTH THE INSIDE AND OUTSIDE FACES OF THE PARAPET SHOULD BE LEFT UNSEALED TO ALLOW ANY WATER WHICH MAY ENTER THE JOINT TO ESCAPE.

METHOD OF MEASUREMENT: THE QUANTITY SHALL BE THE ACTUAL LENGTH OF RAILING FACED AS MEASURED FROM END OF WINGWALL TO END OF WINGWALL. THIS ITEM SHALL INCLUDE THE FURNISHING OF ALL LABOR, EQUIPMENT AND MATERIALS NECESSARY TO COMPLETE THIS WORK. ALL COSTS OF REMOVAL, DOWEL HOLES, REINFORCING STEEL, CONCRETE AND SHRINKAGE CONTROL JOINTS COMPLETE AND IN PLACE SHALL BE INCLUDED IN THE UNIT PRICE BID FOR:

| ITEM | UNIT | DESCRIPTION |
|---|---|---|
| 517 | LIN.FT. | RAILING FACED AS PER PLAN |

ITEM 611 REINFORCED CONCRETE APPROACH SLAB (T=15"), AS PER PLAN:

THE REINFORCING STEEL FOR THE APPROACH SLABS OF THIS STRUCTURE SHALL BE EPOXY COATED IN CONFORMANCE WITH 509.

MATERIALS , LABOR AND INSTALLATION SHALL BE INCLUDED FOR PAYMENT IN THIS ITEM 611 REINFORCED CONCRETE APPROACH SLAB (T=15"), AS PER PLAN.

ITEM SPECIAL, PIER PROTECTION SYSTEM

THE PIER PROTECTION SYSTEM SHALL CONSIST OF AN EPOXY COATING TO BE APPLIED TO THE PIERS OF STRUCTURE NO. OTT-2-1663. THE PRODUCT TO BE USED TO COAT THE STEEL PIERS IS A-788 SPLASH ZONE COMPOUND WHICH IS PRODUCED BY KOP-COAT, INC., PITTSBURGH, PENNSYLVANIA 15219. THE A-788 SHALL BE APPLIED FROM THE FLOWLINE OF THE CREEK TO THE TOP OF THE STEEL. THE CORRODED STEEL SHALL BE SANDBLASTED TO THE BARE METAL. THE WASTE SHALL BE CONTAINED AND DISPOSED OF AS PER SYSTEM OZEU (55815) [redacted]. PAYMENT FOR ALL WORK LISTED ABOVE SHALL BE INCLUDED IN ITEM SPECIAL, PIER PROTECTION SYSTEM.
A THICK RING OF THE A-788 PRODUCT SHALL BE APPLIED TO THE PIERS. THE A-788 SHALL THEN BE SMEARED UP AND DOWN THE COLUMN. FINALLY, THE EDGES SHALL BE FEATHERED AND THE LUMPS SMOOTHED OUT. A REPRESENTATIVE FROM KOP-COAT INC. SHALL BE PRESENT AT TIME OF APPLICATION. THE FINISHED PROTECTED COATING SHALL BE ONE-HALF INCH (1/2") MINIMUM THICKNESS.

GENERAL PROVISIONS

THE CONTRACTORS ATTENTION IS CALLED TO ALL OF SECTION 100 OF THE 1991 CONSTRUCTION AND MATERIAL SPECIFICATIONS OF OHIO DEPARTMENT OF TRANSPORTATION, AND SPECIFICALLY TO THE ITEMS LISTED BELOW AS PROVIDED FOR IN THIS SECTION.

COOPERATION OF CONTRACTOR:

THE CONTRACTOR SHALL NOT PERFORM WORK ON SUNDAYS OR LEGAL HOLIDAYS WITHOUT THE APPROVAL OF THE ENGINEER.

PRIOR INSPECTION OF WORK

PROSPECTIVE BIDDERS ARE REQUIRED TO MAKE AN INSPECTION OF THE BRIDGES IN THE FIELD AND TO REVIEW THE PLANS AND SPECIFICATIONS BEFORE SUBMITTING BIDS. SEE SEC.102.05 OF THE CONSTRUCTION AND MATERIALS SPECIFICATIONS, JANUARY 1, 1995

PROTECTION OF PERSONS AND PROPERTY

THE CONTRACTOR SHALL COLLECT, REMOVE AND DISPOSE OF ALL BUCKETS, RAGS OR OTHER DISCARDED MATERIALS AND HE SHALL LEAVE THE JOB SITE IN A CLEAN MANNER AND CONDITION.

STATE OF OHIO
DEPARTMENT OF TRANSPORTATION
DISTRICT 2 DESIGN & PLANNING OFFICE

2 / 9

BRIDGE NOTES
BRIDGE NO. OTT-2-1663
OVER La Carpe CREEK

| DESIGNED | DRAWN | TRACED | CHECKED | REVIEWED DATE | REVISED |
|---|---|---|---|---|---|
| MTG | ALS | | LLL | LCL 1/4/95 | |

I:/pd/ottawa/ott2/ot2logni.dgn

| FHWA REGION | STATE | PROJECT | |
|---|---|---|---|
| 5 | OHIO | | |

265/367

OTT-2-16.60

# ESTIMATED QUANTITIES

| ITEM | EXTENSION | TOTAL | UNIT | DESCRIPTION |
|---|---|---|---|---|
| 202 | 11201 | LUMP | LUMP | PORTIONS OF STRUCTURE REMOVED, AS PER PLAN (SEE SHT. NO. 2) |
| 202 | 23501 | 327 | SQ.YD. | WEARING COURSE REMOVED, AS PER PLAN (SEE SHT. NO. 1) |
| 509 | 15840 | 1791 | LB. | EPOXY COATED REINFORCING STEEL, GRADE 60 |
| 510 | 10000 | 145 | EA. | DOWEL HOLES WITH NONSHRINK, NONMETALLIC GROUT |
| SPECIAL | 51267510 | 163 | SQ.YD. | SEALING OF CONCRETE SURFACES (EPOXY/URETHANE) (SEE PROPOSAL NOTE) |
| SPECIAL | 51614600 | 67 | LIN.FT. | STRUCTURAL JOINT OR JOINT SEALER, MISC: HYDROZOL/JEENE MODEL NO. 3W |
| 517 | 76201 | 133 | LIN.FT. | RAILING FACED, AS PER PLAN (SEE SHT. NO. 2) |
| 518 | 12801 | 13 | EACH | SCUPPER MODIFICATION, AS PER PLAN (SEE SHT. NO. 7) |
| SPECIAL | 51922020 | 640 | SQ.YD. | MICRO-SILICA MODIFIED CONCRETE OVERLAY, USING HYDRODEMOLITION (2" AVG. THICKNESS) (SEE PROPOSAL NOTE) |
| SPECIAL | 51922100 | 29 | CU.YD. | MICRO-SILICA MODIFIED CONCRETE OVERLAY (VARIABLE THICKNESS) (SEE PROPOSAL NOTE) |
| SPECIAL | 51922300 | LUMP | LUMP | TEST SLAB |
| SPECIAL | 53000600 | 2111 | SQ.FT. | ⊛ : PIER PROTECTION SYSTEM (SEE SHT. NO 2) |
| 601 | 20500 | 8 | CU.YD. | CRUSHED AGGREGATE SLOPE PROTECTION |

⊛ STRUCTURE, MISC.

I:/PD/OTT AWA/OTT 2/OT 2LCBSS.DGN

STATE OF OHIO
DEPARTMENT OF TRANSPORTATION
DISTRICT 2 DESIGN & PLANNING OFFICE

3 / 9

ESTIMATED QUANTITIES
BRIDGE NO. OTT-2-1663
OVER La Carpe CREEK

| DESIGNED | DRAWN | TRACED | CHECKED | REVIEWED DATE | REVISED |
|---|---|---|---|---|---|
| MTG | ALS | | LLL | LCL 1/4/95 | |

| FHWA REGION | STATE | PROJECT | |
|---|---|---|---|
| 5 | OHIO | | |



OTT-2-16.60

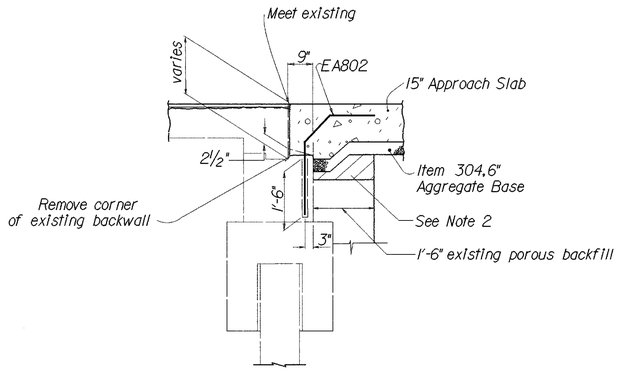


SECTION G-G
APPROACH SLAB DETAIL BEYOND EXISTING APPROACH SLAB SEAT

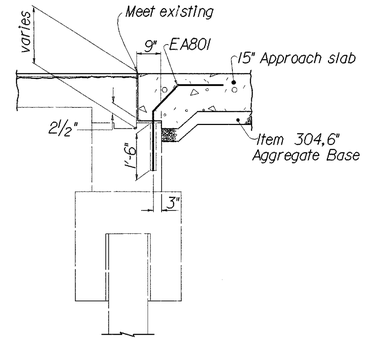


SECTION F-F
APPROACH SLAB DETAIL AT EXISTING APPROACH SLAB SEAT

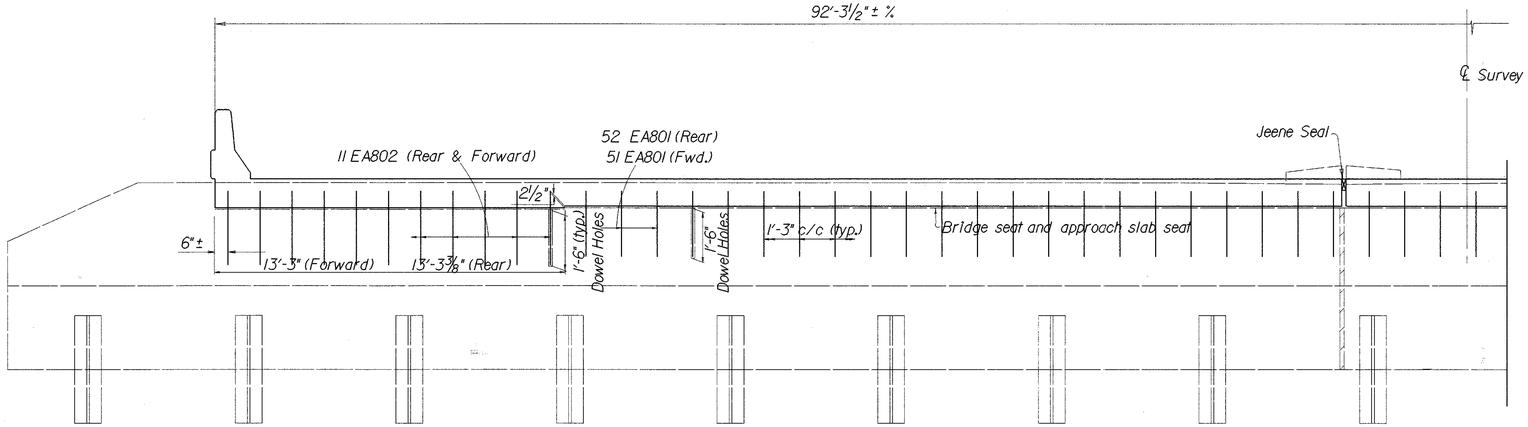


ELEVATION VIEW

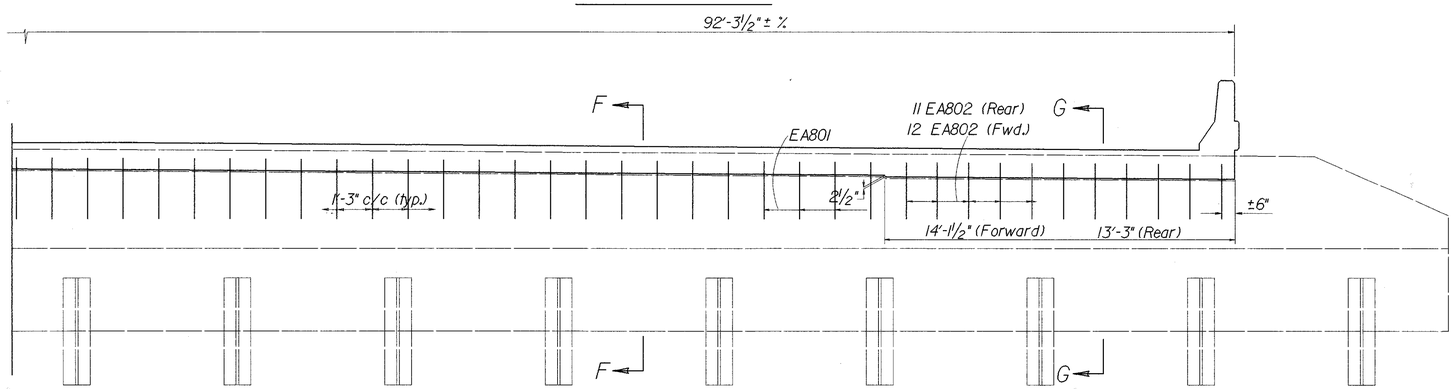


ELEVATION VIEW

~ NOTES ~

(1) In Order to maintain one lane traffic through construction zones described in the "Maintenance of Traffic Notes" on sheet no. ,the proposed approach slabs shall be constructed in separate slabs. This will necessitate a construction joint in the approach slab along the centerline of pavement. The Contractors attention is directed to Standard Construction Drawing As-1-81 to the note which provides that where a longitudinal joint is required, the B501 bars shall be lapped a minimum of 1'-11" and a key provided. The Contractor shall consider this requirement when ordering reinforcing steel for the approach slabs.

(2) Before placing new approach slabs or backfill for abutment repair, any contaminated porous backfill shall be replaced with new porous backfill. Also, at those locations in the berm where approach slabs are to be placed beyond the limits of the existing porous backfill, a quantity of Item 304, Subbase, 6" thick and extending 12" beyond the edge of the proposed approach slab. The cost of these items, except for Item 304, shall be included in the price bid for Item 611, Reinforced Concrete Approach Slab, as per plan.
(See Roadway General Summary sht. no. 66/367.)

(3) Anchor bars EA801 and EA802 shall be used in lieu of D801 or D802 as specified by Standard Drawing AS-1-81.

STATE OF OHIO
DEPARTMENT OF TRANSPORTATION
DISTRICT 2 DESIGN & PLANNING OFFICE

4 / 9

ABUTMENT DETAILS
BRIDGE NO. OTT-2-1663
OVER LA CARPE CREEK

| DESIGNED | DRAWN | TRACED | CHECKED | REVIEWED DATE | REVISED |
|---|---|---|---|---|---|
| MTG | ALS | | LLL | LCL 1/4/95 | |

I:/PD/OTTAWA/OTT2/OT2LCSD.DGN

| FHWA REGION | STATE | PROJECT | |
|---|---|---|---|
| 5 | OHIO | | |

267
367

OTT-2-16.60

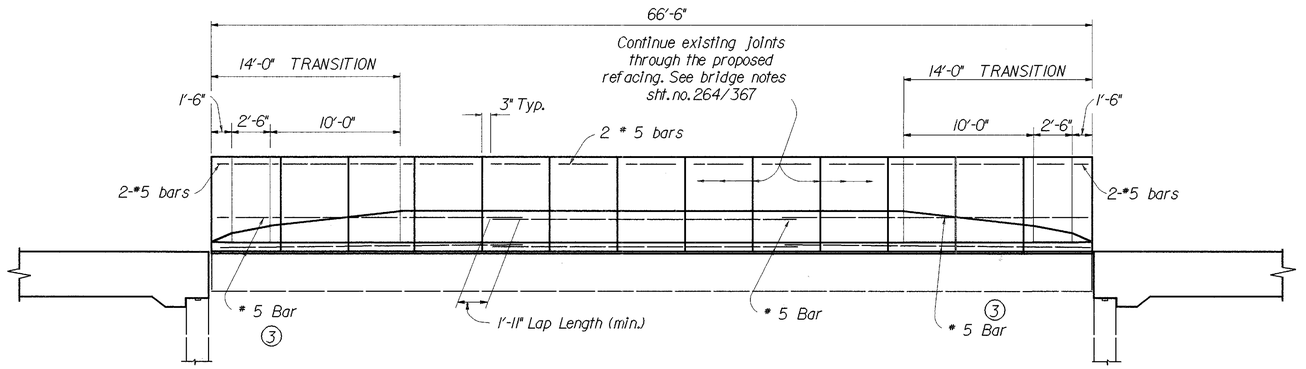


ELEVATION

HORIZONTAL REINFORCEMENT IN DEFLECTOR PARAPET

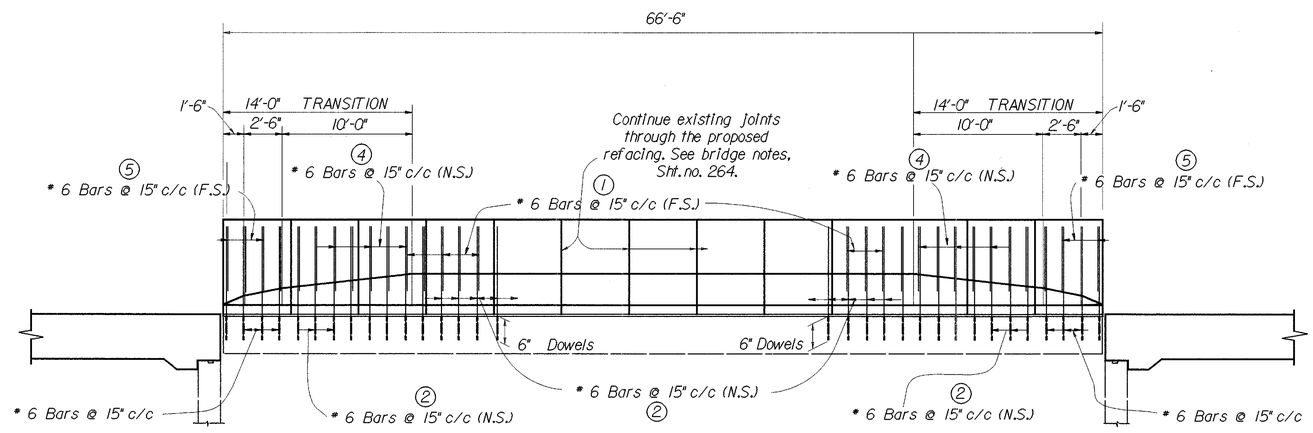


ELEVATION

VERTICAL REINFORCEMENT IN DEFLECTOR PARAPET

LEGEND

N.S. NEAR SIDE
F.S. FAR SIDE

See Sht. 9 for Bending Diagram (for information only)

STATE OF OHIO
DEPARTMENT OF TRANSPORTATION
DISTRICT 2 DESIGN & PLANNING OFFICE

5 / 9

# PARAPET DETAILS
# BRIDGE NO. OTT-2-1663
# OVER LACARPE CREEK

| DESIGNED | DRAWN | TRACED | CHECKED | REVIEWED DATE | REVISED |
|---|---|---|---|---|---|
| MTG | ALS | | LLL | LCL 1/4/95 | |

I/PD/OTTAWA/OTT2/OT2LCSD2.DGN

| FHWA REGION | STATE | PROJECT | |
|---|---|---|---|
| 5 | OHIO | | |

268/367

OTT-2-16.60

LEGEND

- Removal Limits
- Sealing of Concrete Surfaces (epoxy/urethane)
- Proposed Concrete

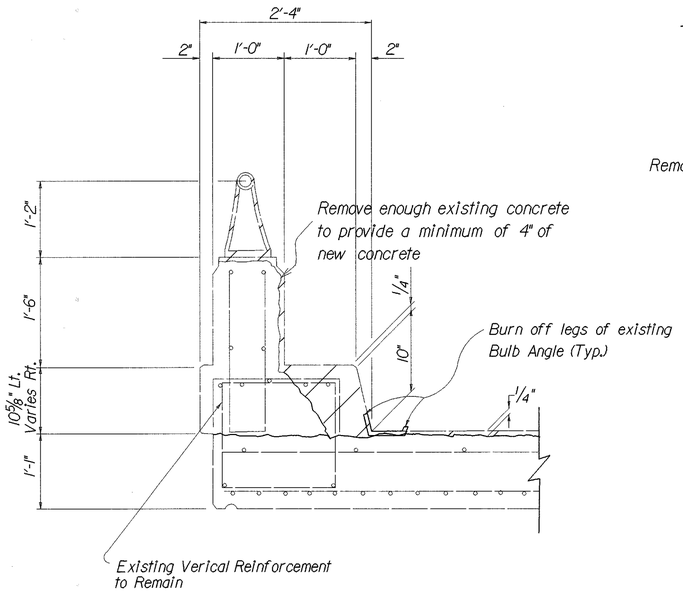


EXISTING PARAPET ON STRUCTURE

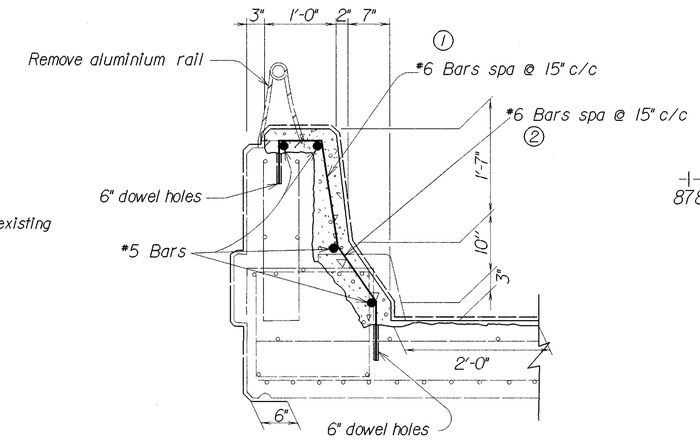


SECTION A-A

RAILING, FACED AS PER PLAN

(SEE BRIDGE NOTES)

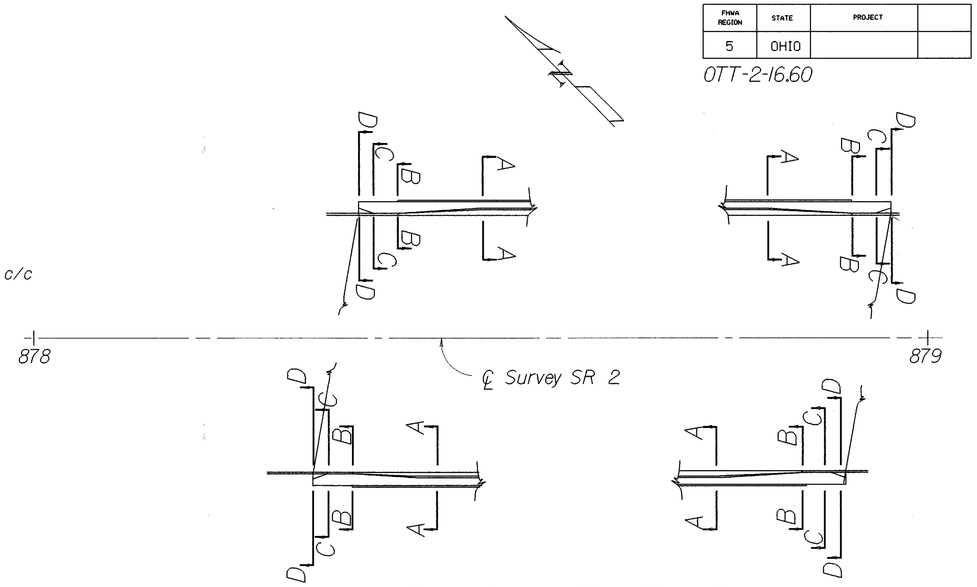


Parapet Transition Plan View

Note: See Sht. 8/9 for typical locations of sections.

Bending Diagrams for Parapets are for Information only

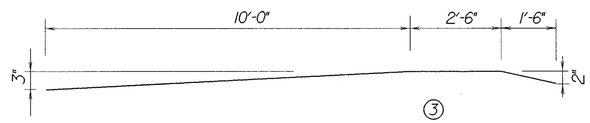


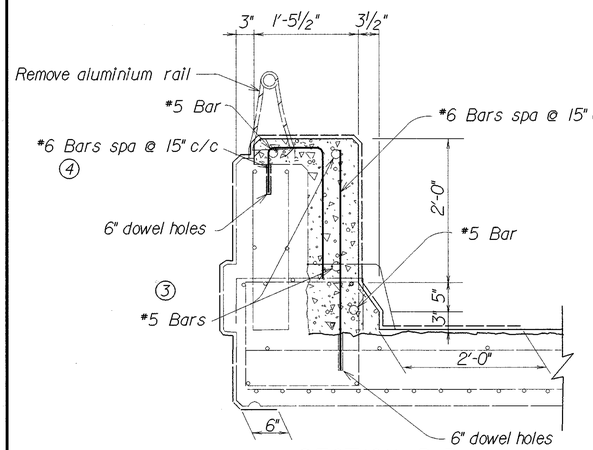


SECTION B-B

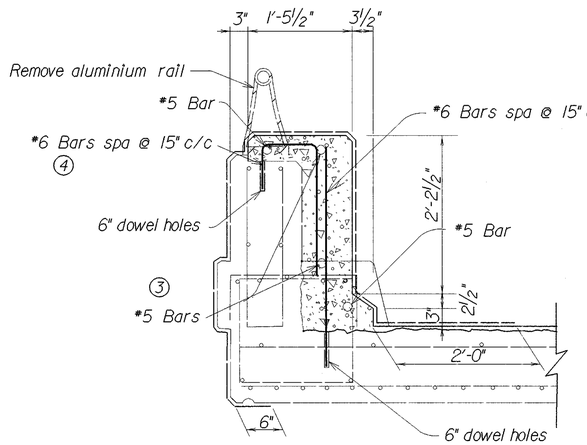


SECTION C-C

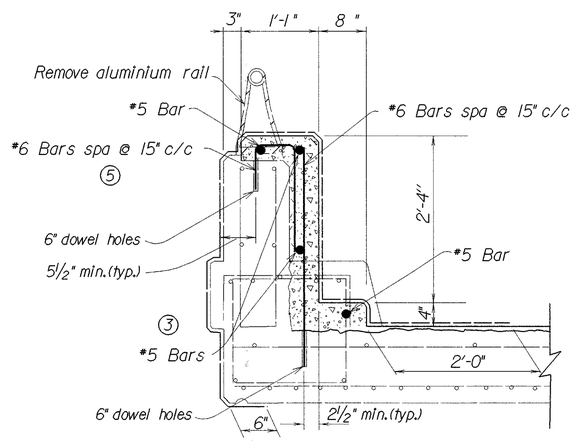


SECTION D-D

STATE OF OHIO
DEPARTMENT OF TRANSPORTATION
DISTRICT 2
DESIGN & PLANNING OFFICE

6 / 9

PARAPET DETAILS
BRIDGE NO. OTT-2-1663
OVER LA CARPE CREEK

| DESIGNED | DRAWN | TRACED | CHECKED | REVIEWED DATE | REVISED |
|---|---|---|---|---|---|
| MTG | ALS | | LLL | LCL 1/4/95 | |

I:/PD/OTT AWA/OTT 2/OT 2LCSD3.DGN

| FHWA REGION | STATE | PROJECT | |
|---|---|---|---|
| 5 | OHIO | | |

269
367

OTT-2-16.60

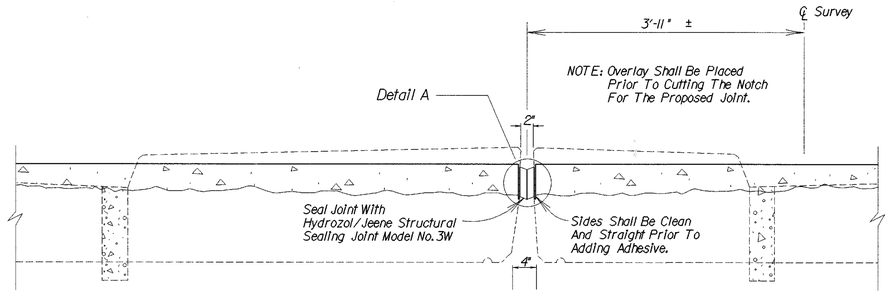


**LONGITUDINAL JOINT DETAIL**

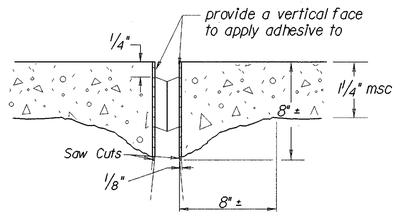


DETAIL A

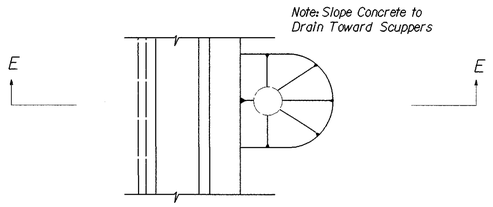


PLAN VIEW

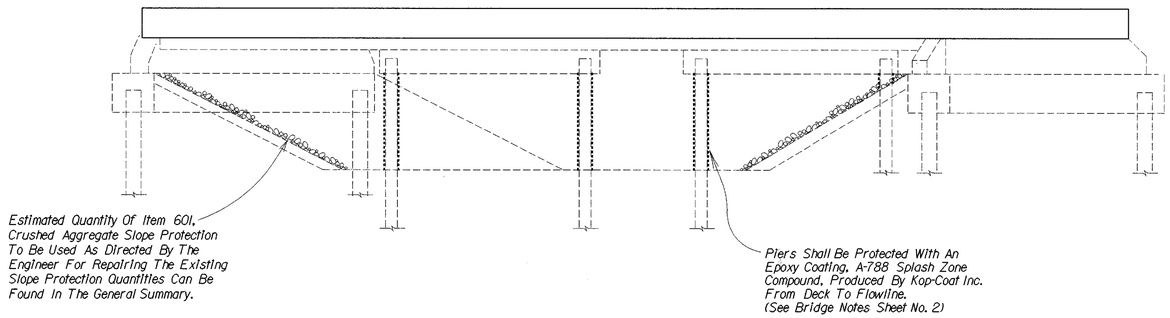


**PIER PROTECTION DETAIL**

Elevation View Looking North-East

**LEGEND**

..... Epoxy Coating

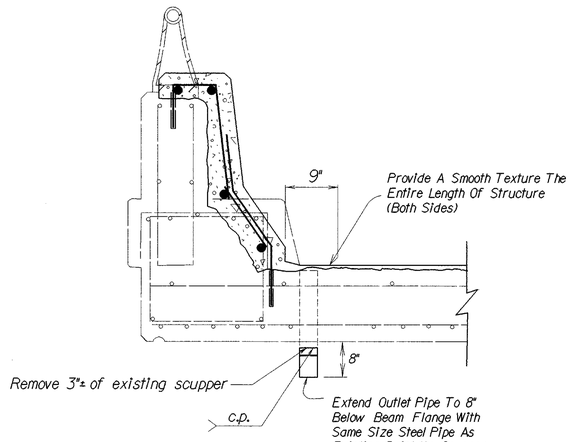


SECTION E-E

**SCUPPER DETAILS**

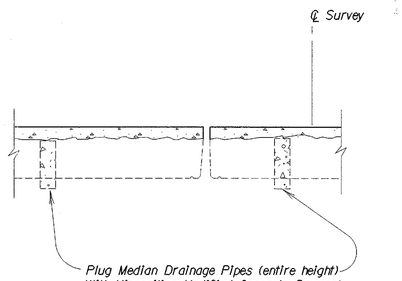


STATE OF OHIO
DEPARTMENT OF TRANSPORTATION
DISTRICT 2 DESIGN & PLANNING OFFICE

7 / 9

# MISCELLANEOUS DETAILS
# BRIDGE NO. OTT-2-1663
# OVER LA CARPE CREEK

| DESIGNED | DRAWN | TRACED | CHECKED | REVIEWED DATE | REVISED |
|---|---|---|---|---|---|
| MTG | ALS | | LLL | LCL 1/4/95 | |

I:/PD/OTTAWA/OTT2/OT2LCSD4.DGN

| FHWA REGION | STATE | PROJECT | |
|---|---|---|---|
| 5 | OHIO | | |

270 / 367

OTT-2-16.60

## BRIDGE ELEVATION TABLE

| STATION | ELEVATION 43.0' LT | SUPER ELEVATION | CROWN ELEVATION | ℄ PROFILE GRADE | CROWN OFFSET LT. FROM ℄ PROFILE | SUPER ELEVATION | ELEVATION 43.9' RT. |
|---|---|---|---|---|---|---|---|
| 878+19.55 | 579.04 | .000 | 579.04 | 579.04 | 0'-0" | .0156 ⟋ | 578.37 |
| 878+25 | 579.09 | .001 ⟋ | 579.13 | 579.07 | 3'-11" | .0156 ⟋ | 578.39 |
| 878+50 | 579.06 | .005 ⟋ | 579.26 | 579.20 | 3'-11" | .0156 ⟋ | 578.52 |
| 878+75 | 579.06 | .008 ⟋ | 579.37 | 579.31 | 3'-11" | .0156 ⟋ | 578.63 |
| 878+91.50 | 579.00 | .011 ⟋ | 579.43 | 579.37 | 3'-11" | .0156 ⟋ | 578.69 |
| 879+00 | 578.88 | .012 ⟋ | 579.40 | 579.40 | 0'-0" | .0156 ⟋ | 578.72 |
| 879+16.50 | 578.82 | .014 ⟋ | 579.44 | 579.44 | 0'-0" | .0156 ⟋ | 578.76 |
| 879+24.55 | 578.76 | .0156 ⟋ | 579.47 | 579.47 | 0'-0" | .0156 ⟋ | 578.79 |
| | | | | | | | |

NOTE: See Sht. No. 6/9 For Sections "A-A", "B-B", "C-C" and "D-D".

Dimensions shown for deflector parapet sections are typical for all locations.

N

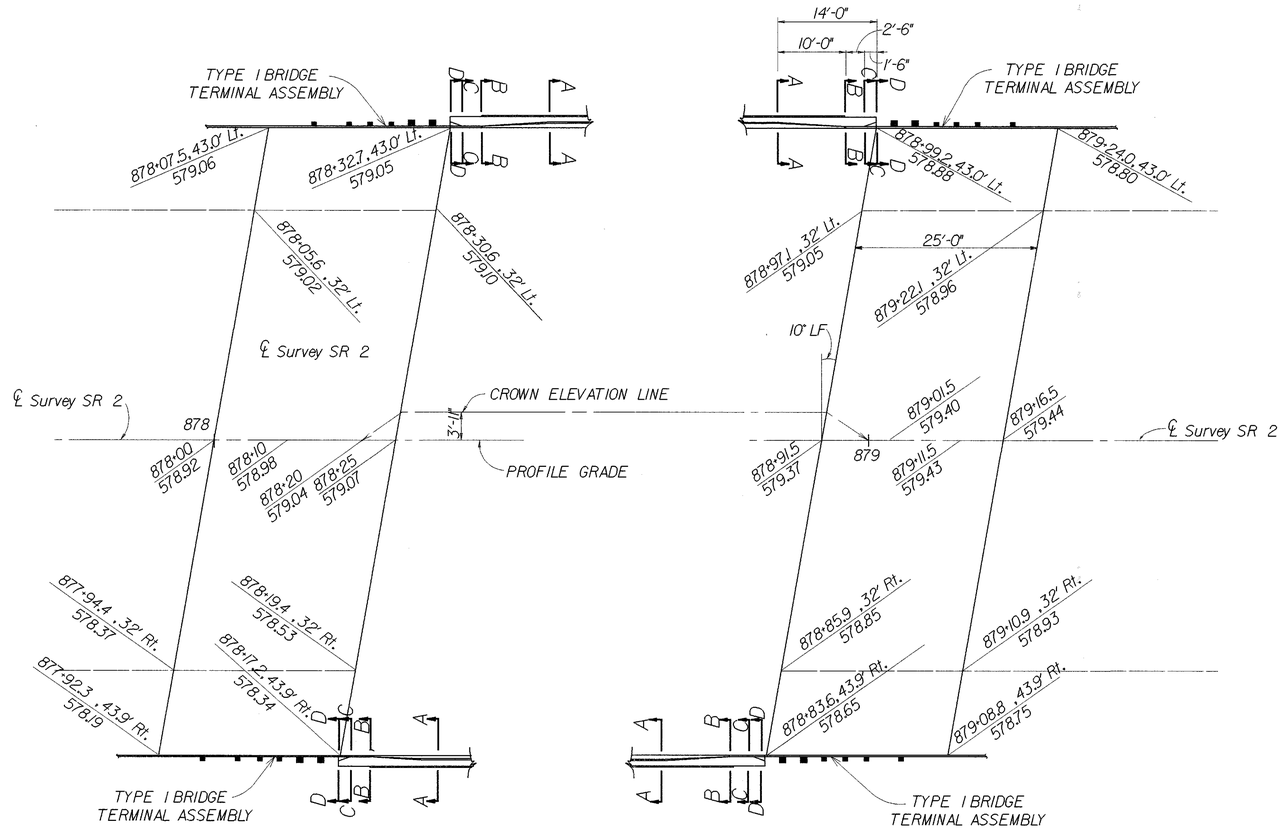


| STATE OF OHIO DEPARTMENT OF TRANSPORTATION DISTRICT 2 DESIGN & PLANNING OFFICE | 8 / 9 |
|---|---|

# BRIDGE ELEVATIONS AND APPROACH SLAB DETAILS
# BRIDGE NO. OTT-2-1663
# OVER La Carpe CREEK

| DESIGNED | DRAWN | TRACED | CHECKED | REVIEWED DATE | REVISED |
|---|---|---|---|---|---|
| MTG | ALS | | LLL | LCL 1/4/95 | |

I:/PD/OTTAWA/OTT2/OT2LCAS.DGN

# DECK OVERLAY DETAILS

| FHWA REGION | STATE | PROJECT | |
|---|---|---|---|
| 5 | OHIO | | |

270A / 367

OTT-2-16.60

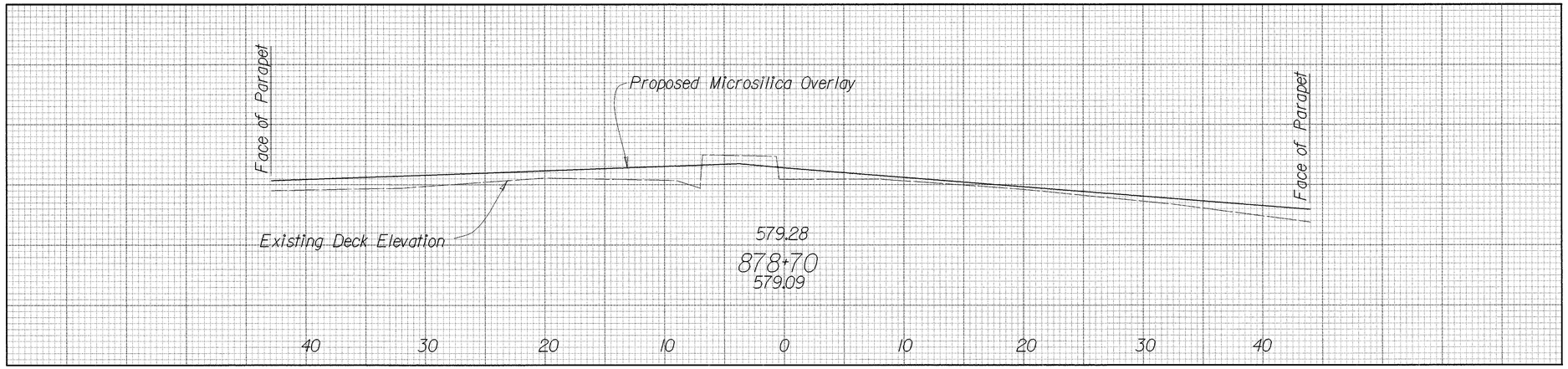


NOTE: A 2" average thickness was used for calculation purposes. The 2" average was determined by estimating total volume of microsilica and then converting to a average thickness over the entire deck. Actual overlay thicknesses vary from 1 1/4" min. to approximately 3 1/2" max.

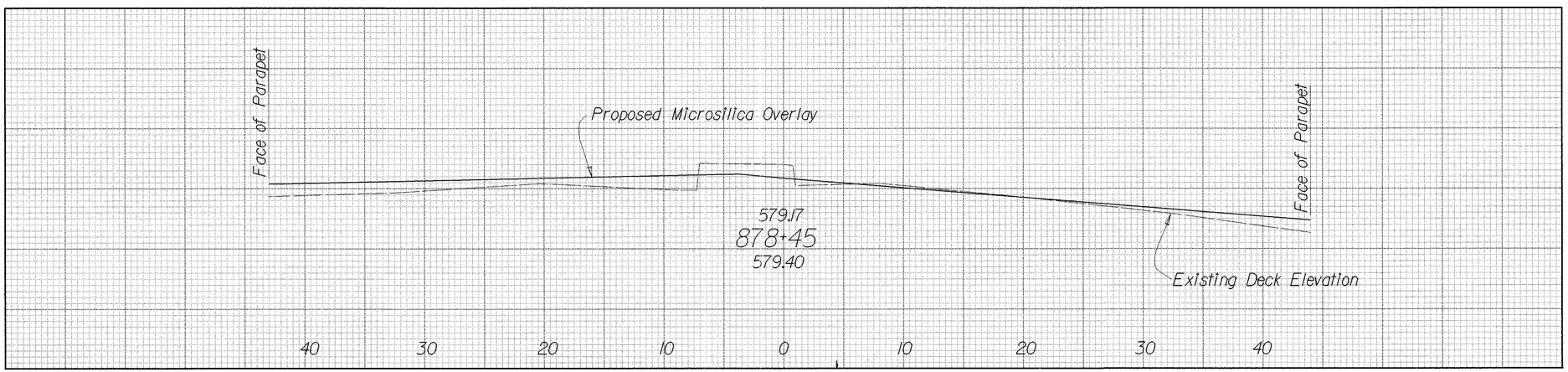


STATE OF OHIO
DEPARTMENT OF TRANSPORTATION
DISTRICT 2 DESIGN & PLANNING OFFICE

8A / 9

DECK OVERLAY DETAILS
BRIDGE NO. OTT-2-1663
OVER La Carpe Creek

| DESIGNED | DRAWN | TRACED | CHECKED | REVIEWED | DATE | REVISED |
|---|---|---|---|---|---|---|
| MTG | ALS | | LLL | LCL | 1-10-95 | |

DECK OVERLAY DETAILS

I:/pd/ottawa/ott2/ot2lcsd5.dgn

| FHWA REGION | STATE | PROJECT | |
|---|---|---|---|
| 5 | OHIO | | |

271
367

OTT-2-16.60

# REINFORCING STEEL LIST

| MARK | NO. IN ABUTMENT Rear | Forward | TOTAL | LENGTH | WEIGHT (LBS.) | SHAPE | LAP LENGTH | DOWEL HOLES (EA.) |
|---|---|---|---|---|---|---|---|---|
| Abutments | | | | | | | | |
| EA801 | 52 | 51 | 103 | 4'-6" | 1238 | BT ① | | 103 |
| EA802 | 22 | 23 | 45 | 4'-8 1/2" | 553 | BT ② | | 45 |
| Totals for Abutments | | | | | 1791 | | | 148 |

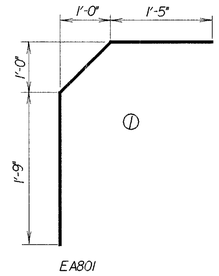

EA801

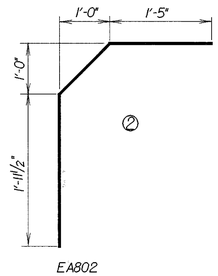

EA802

STATE OF OHIO
DEPARTMENT OF TRANSPORTATION
DISTRICT 2 DESIGN & PLANNING OFFICE

9 / 9

REINFORCING STEEL LIST
AND DETAILS
BRIDGE OTT-2-1663
OVER LA CARPE CREEK

| DESIGNED | DRAWN | TRACED | CHECKED | REVIEWED DATE | REVISED |
|---|---|---|---|---|---|
| MTG | ALS | | LLL | LCL 1/4/95 | |

I:/PD/OTTAWA/OTT2/OT2LCSS1.DGN

| FHWA REGION | STATE | PROJECT | |
|---|---|---|---|
| 5 | OHIO | | |

272/367

OTT-2-16.60

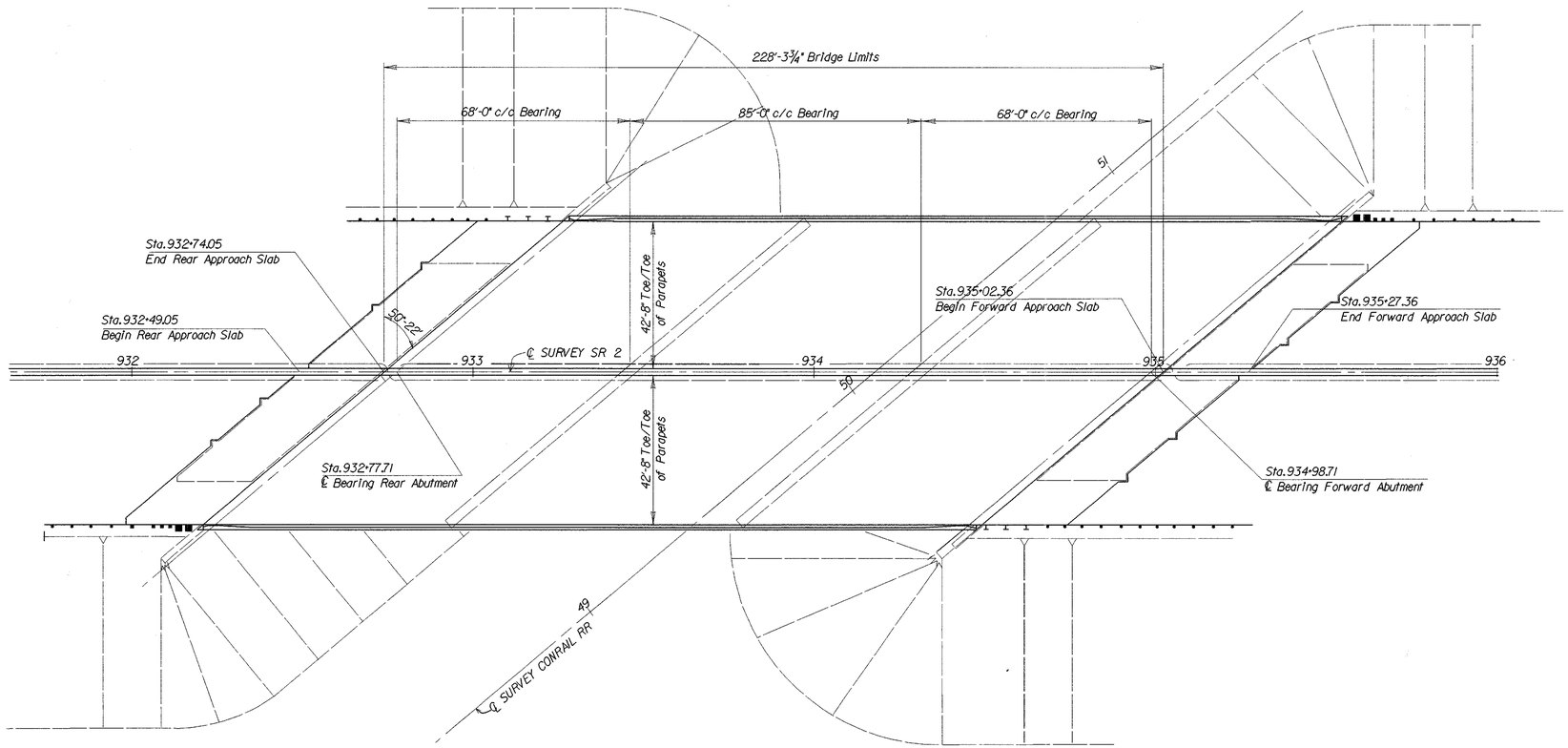


GENERAL PLAN

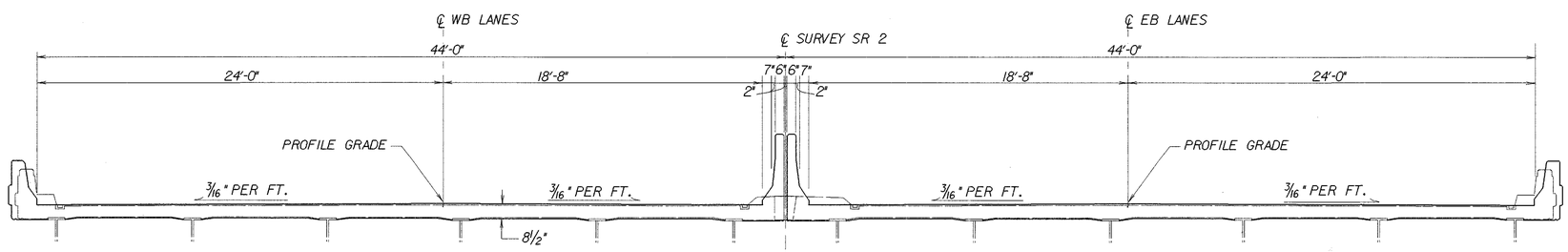


TRANSVERSE SECTION

### PROPOSED WORK

1.) Remove existing bridge deck and approach slabs
2.) Replace existing expansion joints with semi-integral abutments
3.) Build bridge deck and approach slabs
4.) Construct safety shape parapets
5.) Seal abutments, parapets, wingwalls with epoxy/urethane
6.) Paint the structural steel with system OZEU
7.) Repair erosion
8.) Remove graffiti from piers

### EXISTING STRUCTURE DATA

Type: Continuous steel beam with reinforced concrete deck
Reinforced concrete substructure
Stub abutments and "T" type piers
Spans: 68'-0", 85'-0", 68'-0" c/c bearings
Roadway: 88' f/f of parapets with 6'-0" raised median
Loading: HS-20
Skew: 50°-22' left forward
Wearing surface: 1" monolithic concrete
Approach Slabs: AS-1-54 (25'-0")
Alignment: Tangent
SFN: 6200249
Original Construction: 1968

### PROPOSED STRUCTURE DATA

Type: Continuous steel beam with reinforced concrete deck
Reinforced concrete substructure
Stub abutments and "T" type piers
Spans: 68'-0", 85'-0", 68'-0" c/c bearings
Roadway: 42'-8" Toe to Toe of parapets
Loading: HS 20-44 case II and alternate military
Skew: 50°-22' left forward
Wearing Surface: 1" monolithic wearing surface
Approach Slabs: AS-1-81 (25'-0")
Alignment: Tangent
SFN: 6200249

STATE OF OHIO
DEPARTMENT OF TRANSPORTATION
DISTRICT 2 DESIGN & PLANNING OFFICE

1 / 17

# GENERAL PLAN AND TRANSVERSE SECTION BRIDGE NO. OTT-2-1766 OVER CONRAIL RAILROAD

| DESIGNED | DRAWN | TRACED | CHECKED | REVIEWED DATE | REVISED |
|---|---|---|---|---|---|
| MTG | ALS | | LLL | LCL 1/5/95 | |

I:/pd/ottawa/ott2/ot2crspdgn

| FHWA REGION | STATE | PROJECT | |
|---|---|---|---|
| 5 | OHIO | | |

273 / 367

OTT-2-16.60

# BRIDGE NOTES

REFERENCE SHALL BE MADE TO STANDARD DRAWINGS:

| | |
|---|---|
| AS-1-81 | DATED 11-27-81 |
| BR-1 | DATED 5-29-79 |
| RB-1-55 | DATED 3-1-55 |
| RB-1-82 | DATED 5-10-82 |
| ICD-1-82 | DATED 8-1-84 |

AND SUPPLEMENTAL SPECIFICATION:

| | |
|---|---|
| SS815 | DATED 7-17-95 |

EXISTING STRUCTURE VERIFICATION

DETAILS AND DIMENSIONS SHOWN ON THESE PLANS PERTAINING TO THE EXISTING STUCTURES HAVE BEEN OBTAINED FROM THE PLANS OF THE EXISTING STRUCTURES AND/OR FROM FIELD OBSERVATIONS AND MEASUREMENTS. CONSEQUENTLY, THEY ARE INDICATIVE OF THE EXISTING STRUCTURES AND THE PROPOSED WORK BUT THEY SHALL BE CONSIDERED TENTATIVE AND APPROXIMATE. THE CONTRACTOR IS REFERRED TO CMS SECTIONS 102.05, 105.02, AND 513.02.

ITEM 202, PORTIONS OF STRUCTURES REMOVED, AS PER PLAN

WHEN NO LONGER NEEDED TO MAINTAIN TRAFFIC, THE DESIGNATED PORTIONS OF THE BRIDGE DECK SHALL BE REMOVED.

THIS ITEM SHALL ALSO INCLUDE THE REMOVAL AND DISPOSAL OF ABUTMENT BACKWALLS, BRIDGE PARAPETS, RAISED CONCRETE MEDIANS ON BRIDGE DECKS AND ABUTMENTS, BRIDGE DECKS, AND EXISTING DECK SCUPPERS.

ANY LOOSE OR DETERIORATED CONCRETE ADJACENT TO THE PROPOSED REMOVAL LIMITS SHALL BE REMOVED. THE LIMITS OF THIS ADDITIONAL REMOVAL SHALL BE DIRECTED BY THE ENGINEER. CARE SHALL BE EXERCISED DURING REMOVAL TO AVOID DAMAGE TO ADJACENT PORTIONS OF THE BRIDGE ABUTMENTS WHICH ARE NOT TO BE REPAIRED UNDER THIS CONTRACT.

COST OF REMOVAL, AND/OR DISPOSAL AS NOTED ABOVE SHALL BE INCLUDED IN THE CONTRACT PRICE BID FOR "ITEM 202, PORTIONS OF STRUCTURES REMOVED, AS PER PLAN."

PROTECTION OF TRAFFIC: PRIOR TO DEMOLITION OF ANY PORTIONS OF THE EXISTING SUPERSTRUCTURE, THE CONTRACTOR SHALL SUBMIT HIS PLANS FOR THE PROTECTION OF TRAFFIC (VEHICULAR, PEDESTRIAN, BOAT, ETC.) ADJACENT TO AND/OR UNDER THE STRUCTURE TO THE DIRECTOR FOR APPROVAL. THESE PLANS SHALL INCLUDE PROVISIONS FOR ANY DEVICES AND STRUCTURES THAT MAY BE NECESSARY TO ENSURE SUCH PROTECTION. TEMPORARY VERTICAL CLEARANCES SPECIFIED IN THE PROPOSAL SHALL BE MAINTAINED AT ALL TIMES EXCEPT AS OTHERWISE APPROVED BY THE DIRECTOR.

DECK REMOVALS:

DUE TO THE POSSIBLE PRESENCE OF WELDED ATTACHMENTS TO EXISTING STRUCTURAL STEEL (FINISHING MACHINE, SCUPPER AND FORM SUPPORTS, ETC.), CARE SHOULD BE TAKEN DURING DECK REMOVAL TO AVOID DAMAGING STRINGERS WHICH ARE TO REMAIN. STRINGERS DAMAGED BY THE CONTRACTOR'S REMOVAL OPERATIONS SHALL, AT NO COST TO THE PROJECT, BE REPLACED OR REPAIRED. PROPOSED REPAIRS, DEVELOPED BY A REGISTERED PROFESSIONAL ENGINEER, SHALL BE SUBMITTED IN WRITING FOR REVIEW AND APPROVAL BY THE DIRECTOR.

REMOVAL METHODS:

CONCRETE MAY BE REMOVED BY CUTTING AND BY MEANS OF HAND OPERATED PNEUMATIC HAMMERS EMPLOYING POINTED OR BLUNTED CHISEL TYPE TOOLS. FOR REMOVALS ABOVE STEEL MEMBERS, A HAMMER HEAVIER THAN 35 POUNDS BUT NOT TO EXCEED 90 POUNDS, MAY BE USED AT THE APPROVAL OF THE ENGINEER, TO ENSURE ADEQUATE DEPTH CONTROL AND TO PREVENT NICKING OR GOUGING THE PRIMARY STEEL MEMBERS.

LOADING LIMITATIONS:

NO PART OF THE STRUCTURE WILL BE SUBJECTED TO UNIT STRESSES THAT EXCEED 136.5% OF THE ALLOWABLE UNIT STRESSES GIVEN IN THE AASHTO STANDARD SPECIFICATIONS FOR HIGHWAY BRIDGES DUE EITHER TO DEMOLITION, ERECTION OR CONSTRUCTION METHODS, OR TO THE USE OR MOVEMENT OF DEMOLITION OR ERECTION EQUIPMENT ON OR ACROSS THE STRUCTURE. STRUCTURAL ANALYSIS COMPUTATIONS, BY A REGISTERED PROFESSIONAL ENGINEER, SHOWING THE ALLOWABLE STRESSES AND THE MAXIMUM STRESSES PRODUCED BY THE CONTRACTOR'S METHODS OR EQUIPMENT SHALL BE SUBMITTED TO THE DIRECTOR FOR REVIEW AND APPROVAL AT LEAST TWO WEEKS PRIOR TO THE START OF THE WORK.

EXTRANEOUS MEMBERS:

EXISTING EXTRANEOUS MEMBERS (i.e., FINISHING MACHINE AND FORM SUPPORTS, ETC. AND THE SUPPORT FOR SCUPPERS AND BULB ANGLES WHICH ARE TO BE REMOVED) ATTACHED BY WELDED CONNECTIONS TO PORTIONS OF THE TOP FLANGES DESIGNATED "TENSION" SHALL BE REMOVED AND THE FLANGE SURFACES GROUND SMOOTH. GRINDING SHALL BE CAREFULLY DONE AND PARALLEL TO THE FLANGES.

PROTECTION OF STEEL SUPPORT SYSTEMS:

BEFORE DECK SLAB CUTTING IS PERMITTED, THE OUTLINE OF PRIMARY STEEL MEMBERS IN CONTACT WITH THE BOTTOM OF THE DECK SHALL BE DRAWN ON THE SURFACE OF THE DECK. SMALL DIAMETER PILOT HOLES SHALL BE DRILLED 2 INCHES OUTSIDE THESE LINES TO CONFIRM THE LOCATION OF FLANGE EDGES. DECK CUTS OVER OR WITHIN 2 INCHES OF FLANGE EDGES SHALL NOT EXTEND LOWER THAN THE BOTTOM LAYER OF DECK SLAB REINFORCING STEEL. CUTS MADE OUTSIDE 2 INCHES OF FLANGE EDGES MAY EXTEND THE DEPTH OF THE DECK. DURING CUTTING OF THE DECK SLAB, CARE SHALL BE TAKEN NOT TO DAMAGE STEEL MEMBERS THAT ARE TO BE INCORPORATED INTO THE PROPOSED STRUCTURE.

SEMI-INTEGRAL ABUTMENTS

WHEN CONSTRUCTING SEMI-INTEGRAL ABUTMENTS, THE END CROSSFRAMES MAY BE REMOVED SO THAT THE REINFORCEMENT MAY BE PLACED. PRIOR TO REMOVING THE END CROSSFRAMES THE BEAMS SHALL BE TEMPORARILY BRACED TO PREVENT ANY LATERAL MOVEMENT OR TWISTING BEFORE ENCASING IN CONCRETE.

CONCRETE PARAPETS:

WHEN A SLIPFORMING MACHINE IS USED FOR PARAPETS, TEMPORARY DEFLECTION JOINTS SHALL BE CONSTRUCTED BY THE USE OF A GROOVING TOOL. IMMEDIATELY FOLLOWING THE SLIPFORMING OPERATION, THE DEPTH OF THE JOINT SHALL BE MAX. ½".

WITHIN 48 HOURS AFTER PLACEMENT OF PARAPET CONCRETE SAWCUT 1 INCH DEEP JOINTS INTO THE CONCRETE PARAPET AT LOCATIONS AS DETAILED IN THE PLANS. THE SAWCUT SHALL BE MADE IN THE COMPLETE CIRCUMFERENCE OF THE PARAPET, STARTING AND ENDING AT THE ELEVATION OF THE CONCRETE DECK, AND THE COMPLETED SAWCUT SHALL BE FILLED WITH A CAULKING MATERIAL CONFORMING TO FEDERAL SPECIFICATION TT-S-00227E. THE BOTTOM HALF INCH OF THE ONE INCH DEEP SAWED JOINT IN BOTH THE INSIDE AND OUTSIDE FACES OF THE PARAPET SHOULD BE LEFT UNSEALED TO ALLOW ANY WATER WHICH MAY ENTER THE JOINT TO ESCAPE.

IF THE CONTRACTOR CHOOSES THE CAST-PLACE-OPTION THE HORIZONTAL REINFORCING STEEL BARS (S503 AND S504) SHALL BE CUT TO CLEAR THE VERTICAL DEFLECTION JOINTS BY 3 INCHES ON EACH SIDE OF THE JOINT.

REPLACEMENT OF EXISTING REINFORCING STEEL

ANY EXISTING REINFORCING BARS WHICH ARE TO BE INCORPORATED INTO THE NEW WORK AND WHICH ARE MADE UNUSABLE BY THE CONTRACTORS CONCRETE REMOVAL OPERATIONS SHALL BE REPLACED WITH NEW STEEL AT THE CONTRACTOR'S COST. ANY EXISTING REINFORCING BARS DEEMED BY THE ENGINEER TO BE UNUSABLE BECAUSE OF CORROSION SHALL BE REPLACED, AN ALLOWANCE OF 50 POUNDS IS INCLUDED UNDER ITEM 509 IN THE BRIDGE SUMMARY FOR THIS PURPOSE.

ITEM 503, UNCLASSIFIED EXCAVATION, AS PER PLAN

UNCLASSIFIED EXCAVATION SHALL BE IN ACCORDANCE WITH 503 EXCEPT THAT THE BACKFILL MATERIAL BEHIND THE ABUTMENTS SHALL BE 203 GRANULAR MATERIAL PLACED IN LIFTS NOT TO EXCEED A THICKNESS OF SIX (6) INCHES.

GENERAL PROVISIONS

THE CONTRACTORS ATTENTION IS CALLED TO ALL OF SECTION 100 OF THE 1995 CONSTRUCTION AND MATERIAL SPECIFICATIONS OF OHIO DEPARTMENT OF TRANSPORTATION, AND SPECIFICALLY TO THE ITEMS LISTED BELOW AS PROVIDED FOR IN THIS SECTION.

COOPERATION OF CONTRACTOR:

THE CONTRACTOR SHALL NOT PERFORM WORK ON SUNDAYS OR LEGAL HOLIDAYS WITHOUT THE APPROVAL OF THE ENGINEER.

PRIOR INSPECTION OF WORK

PROSPECTIVE BIDDERS ARE REQUIRED TO MAKE AN INSPECTION OF THE BRIDGES IN THE FIELD AND TO REVIEW THE PLANS AND SPECIFICATIONS BEFORE SUBMITTING BIDS. SEE SEC.102.05 OF THE CONSTRUCTION AND MATERIALS SPECIFICATIONS, JANUARY 1, 1995.

PROTECTION OF PERSONS AND PROPERTY

THE CONTRACTOR SHALL COLLECT, REMOVE AND DISPOSE OF ALL BUCKETS, RAGS OR OTHER DISCARDED MATERIALS, AND HE SHALL LEAVE THE JOB SITE IN A CLEAN MANNER AND CONDITION.

ITEM SPECIAL - STRUCTURE MISC.: GRAFFITI REMOVAL

ALL GRAFFITI AREAS ON THE SURFACE OF ABUTMENTS, PIERS AND ANY ADDITIONAL AREAS ORDERED BY THE ENGINEER, SHALL BE PREPARED AND SEALED WITH AN EPOXY SEALER MEETING THE PROPOSAL NOTE FOR SEALING CONCRETE SURFACES (EPOXY). SEE PROPOSAL FOR SURFACE PREPARATION REQUIREMENTS, APPLICATION RATES MATERIAL REQUIREMENTS AND APPLICATION PROCEDURES. AN ESTIMATED QUANTITY OF 50 SQ. YD. HAS BEEN SET UP IN THE GENERAL SUMMARY TO BE USED FOR THIS PURPOSE. THE ACTUAL QUANTITY SHALL BE OBTAINED FROM FIELD MEASUREMENT AND BE APPROVED BY THE ENGINEER. THE ACTUAL QUANTITY SHALL THEN BE SUBTRACTED FROM THE TOTAL QUANTITY FOR ITEM SPECIAL, SEALING OF CONCRETE SURFACES (EPOXY).

COLOR OF EPOXY SEALER TO MATCH EXISTING COLOR OF CONCRETE BY MIXING APPROVED GRAY PAINT.

PAYMENT FOR ALL OF THE ABOVE SHALL BE AT THE LUMP SUM PRICE BID FOR ITEM SPECIAL - STRUCTURE MISC.: GRAFFITI REMOVAL, WHICH SHALL INCLUDE ALL LABOR, EQUIPMENT, MATERIAL AND INCIDENTALS NECESSARY TO COMPLETE THE WORK.

STATE OF OHIO
DEPARTMENT OF TRANSPORTATION
DISTRICT 2 — DESIGN & PLANNING OFFICE

2 / 17

BRIDGE NOTES
BRIDGE NO. OTT-2-1766
OVER CONRAIL RR

| DESIGNED | DRAWN | TRACED | CHECKED | REVIEWED DATE | REVISED |
|---|---|---|---|---|---|
| MTG | ALS | | LLL | LCL 1/5/95 | |

I:/pd/ottawa/ott2/ot2crgnl.dgn

# BRIDGE NOTES

| FHWA REGION | STATE | PROJECT | |
|---|---|---|---|
| 5 | OHIO | | |

274/367

OTT-2-16.60

FINAL ELEVATIONS:

UPON REMOVAL OF THE EXISTING BRIDGE DECK, THE ELEVATIONS OF THE TOP OF ALL BEAMS SHALL BE TAKEN AT A MAXIMUM OF 25' INTERVALS TO VERIFY THE PROPOSED FINAL ELEVATIONS. IF ANY PROBLEMS ARE ENCOUNTERED DURING SET UP OF THE FINAL ELEVATIONS, THE CONCRETE HAUNCH THICKNESS CAN BE VARIED FROM 0" TO 2" FOR ADJUSTMENTS.

ITEM 516, 2" POLYSTYRENE JOINT FILLER, AS PER PLAN

MATERIAL SHALL MEET THE REQUIREMENTS OF ASTM C578-92, TYPE VI.

COOPERATION WITH RAILROADS

THE CONTRACTOR SHALL COOPERATE AT ALL TIMES WITH THE LOCAL OFFICIALS OF THE RAILROAD COMPANY. HE SHALL USE ALL REASONABLE CARE AND DILIGENCE IN THE WORK IN ORDER TO AVOID ACCIDENTS, DAMAGE OR INTERFERENCE WITH THE TRAINS OR OTHER PROPERTY OF THE RAILROAD. THE CONTRACTOR SHALL NOTIFY THE LOCAL OFFICIALS OF THE RAILROAD PRIOR TO STARTING WORK THAT HIS WORK MAY EFFECT RAILROAD PROPERTY AND FACILITIES, AND ODOT SHALL PAY THE RAILROAD COMPANY THE COST OF FLAGGERS FURNISHED BY THE RAILROAD COMPANY AND MADE NECESSARY BECAUSE OF ANY OF HIS OPERATIONS OVER OR ADJACENT TO THE TRACKS, FROM THE PROJECT COST.

A DEMOLITION PLAN FOR THE PORTIONS OF STRUCTURES REMOVED, OVER ALL RAILROADS, SHALL BE PREPARED BY AND CARRY THE SEAL OR REGISTRATION NUMBER OF A REGISTERED PROFESSIONAL ENGINEER. THE CONTRACTOR SHALL ALSO SUBMIT DETAILS OF THE PROTECTION SHIELD FOR THE RAILROAD TRACKS AND COMMUNICATION LINES AND A PLAN FOR HOW THE OTT-2-1766 STRUCTURE OVER THE CONRAIL RR IS TO BE WIDENED. THESE PLANS SHALL BE SUBMITTED TO THE RAILROAD A MINIMUM OF 30 DAYS PRIOR TO PERFORMING THE ABOVE WORK AND APPROVED BY THE RAILROAD BEFORE BEGINNING CONSTRUCTION.

ITEM 516, REFURBISH BEARING DEVICE, AS PER PLAN

THIS ITEM SHALL INCLUDE ALL WORK NECESSARY TO PROPERLY ALIGN BRIDGE BEARINGS AS WELL AS THEIR CLEANING AND PAINTING. INCLUDED SHALL BE THE DISASSEMBLY OF THE BEARINGS, HAND TOOL CLEANING (GRINDING IF NECESSARY), PAINTING AS REQUIRED BY SYSTEM OZEU, REPLACEMENT OF SHEET LEAD (7.11.9), INSTALLATION OF ANY NECESSARY STEEL SHIMS OF THE SAME SIZE AS THE BEARINGS TO PROVIDE A SNUG FIT, REALIGNMENT OF THE UPPER BEARING PLATE BY REMOVING EXISTING WELDS AND REWELDING SO THAT THE BEARINGS ARE VERTICALLY ALIGNED AT 60 DEGREES F, LUBRICATING SLIDING SURFACES, AND REASSEMBLY OF THE BEARINGS. THE CONTRACTOR SHALL BE SURE THAT ALL BEARINGS ARE SHIMMED ADEQUATELY AND THAT NO BEAMS AND/OR BEARING DEVICES ARE "FLOATING". AT THE OPTION OF THE CONTRACTOR AND AT NO ADDITIONAL COST TO THE STATE, NEW BEARINGS OF THE SAME TYPE AS THE EXISTING MAY BE INSTALLED IN LIEU OF REFURBISHING THE BEARINGS. ALL WORK SHALL BE TO SATISFACTION OF THE ENGINEER. PAYMENT FOR ALL THE ABOVE DESCRIBED LABOR AND MATERIALS WILL BE MADE AT THE CONTRACT PRICE BID FOR ITEM 516-REFURBISH BEARING DEVICE, AS PER PLAN.

ALL REMOVALS SHALL BE PERFORMED WITH SUFFICIENT CARE SO AS TO LEAVE UNDAMAGED REMAINING PORTIONS OF THE BRIDGES AND THOSE COMPONENTS WHICH ARE TO BE REVISED. ANY DAMAGE RESULTING FROM REMOVAL OPERATIONS, STORAGE OR HANDLING SHALL BE REMEDIED BY THE CONTRACTOR AT HIS EXPENSE AND TO THE SATISFACTION OF THE ENGINEER. THE LEAD PLATES LOCATED UNDER THE BEARING DEVICES SHALL NOT BE REUSED AND SHALL BE DISPOSED OF.

ITEM 513, WELDED STUD SHEAR CONNECTOR, AS PER PLAN

PRIOR TO THE INSTALLATION OF SHEAR CONNECTORS, THE TOP FLANGES OF THE EXISTING STRUCTURAL STEEL SHALL BE SANDBLASTED. ALL SANDBLASTING SHALL BE DONE IN ACCORDANCE WITH SSPC-SP10 (NEAR-WHITE BLAST CLEANING) AND AS SHOWN ON SSPC-VIS 1-89 (PICTORIAL SURFACE PREPARATION STANDARDS FOR PAINTING STEEL SURFACES). THE WASTE SHALL BE CONTAINED AND DISPOSED OF AS PER SYSTEM OZEU SS 815. . PAYMENT FOR THE ABOVE WORK SHALL BE INCLUDED IN ITEM 513, WELDED STUD SHEAR CONNECTOR, AS PER PLAN.

WELDED ATTACHMENTS: WELDED ATTACHMENTS OF SUPPORTS FOR CONCRETE DECK FINISHING MACHINE MAY BE MADE TO AREAS OF THE FASCIA STRINGER FLANGES DESIGNATED "COMPRESSION". ATTACHMENTS SHALL NOT BE MADE TO AREAS DESIGNATED "TENSION". FILLET WELDS TO COMPRESSION FLANGES SHALL BE NOT CLOSER THAN 1 INCH FROM EDGE OF FLANGE, BE NOT MORE THAN 2 INCHES LONG, AND BE NOT SMALLER THAN THE MINIMUM SIZE REQUIRED BY AASHTO.

ITEM 516, JACKING AND TEMPORARY SUPPORT OF SUPERSTRUCTURE

THIS ITEM SHALL INCLUDE ALL WORK NECESSARY TO JACK AND ADEQUATELY SUPPORT THE EXISTING SUPERSTRUCTURE.

THE CONTRACTOR SHALL BE RESPONSIBLE FOR THE DESIGN, INSTALLATION AND OPERATION OF AN ADEQUATE JACKING SYSTEM, INCUDING ANY TEMPORARY OR PERMANENT SUPPORTS, TO PERFORM THE WORK DESCRIBED IN THE PROJECT PLANS. THREE (3) SETS OF JACKING AND SUPPORT PLANS, PROCEDURES AND LOADING CALCULATIONS, PERFORMED AND STAMPED BY A REGISTERED PROFESSIONAL ENGINEER, SHALL BE SUBMITTED TO THE DIRECTOR FOR APPROVAL AT LEAST THIRTY (30) DAYS BEFORE ACTUAL WORK IS TO BEGIN. SUBMITTALS SHALL INCLUDE AT LEAST THE FOLLOWING:

PHYSICAL DIMENSIONS AND CAPACITY OF THE JACKING SYSTEMS ALONG WITH THE ACTUAL POSITIONS, INCLUDING DIMENSIONS, DEFINING WHERE THE JACKING SYSTEMS WILL BE PHYSICALLY LOCATED ON THE STRUCTURE TO PERFORM THE REQUIRED LIFTS.

PHYSICAL DIMENSIONS, MATERIALS, FABRICATION DETAILS AND DESIGN CALCULATIONS FOR ANY TEMPORARY OR PERMANENT SUPPORTS ALONG WITH ACTUAL DETAILS OF THEIR INSTALLED LOCATIONS ON THE STRUCTURE. HORIZONTAL MOVEMENT RESTRAINTS SHALL BE DESIGNED AND DETAILED. LATERAL AND LONGITUDINAL DESIGN LOADS AND SUPPORTING DESIGN CALCULATIONS SHALL BE INCLUDED.

A JACKING PLAN SHEET LAYOUT, WITH ADEQUATE DETAILS TO SHOW ALL JACKING POINTS, CALCULATED LOADINGS AT THOSE POINTS, LOCATIONS OF JACKING EQUIPMENT AND TEMPORARY OR PERMANENT SUPPORTS SHALL BE INCLUDED IN THE SUBMITTAL. ANY PHASED CONSTRUCTION, SPECIAL TRAFFIC REQUIREMENTS, CLEARANCE REQUIREMENTS, RAILROAD DETAILS OR SPECIAL CONSTRUCTION DETAILS THAT AFFECT THE JACKING OPERATION AND ANY OTHER DETAILS THE CONTRACTOR DEEMS NECESSARY TO ADEQUATELY VISUALLY DESCRIBE THE JACKING OPERATION SHALL ALSO BE INCLUDED IN THE JACKING PLAN SHEET.

THE PLAN SHEET SHALL INCLUDE A STEP BY STEP JACKING PROCEDURE DETAILING ALL STEPS IN THE OPERATION INCLUDING THE REQUIRED WORK DESCRIBED IN THE PROJECT PLANS.

JACKING OPERATIONS ARE LIMITED TO A MAXIMUM DIFFERENTIAL JACKING HEIGHT BETWEEN ADJACENT BEARINGS OF 1/4 INCH.

AT A MINIMUM, A JACKING OPERATION SHALL LIFT ALL BEARINGS AT ANY ONE ABUTMENT OR PIER SIMULTANEOUSLY. MAXIMUM DIFFERENTIAL JACKING HEIGHT BETWEEN ANY ADJACENT ABUTMENTS OR PIERS SHALL BE LIMITED BY STRESSES INDUCED IN THE AFFECTED STRUCTURAL MEMBERS. CALCULATIONS DETAILING ALL STRESSES INDUCED IN THE AFFECTED MEMBERS AND LIMITED BY ALLOWABLE STRESSES OF 136.5% OF NORMAL DESIGN STRESSES, SHALL BE INCLUDED IN THE JACKING PROCEDURE SUBMITTAL. THE ONLY EXCEPTION TO THE SIMULTANEOUS JACKING REQUIREMENT IS WHEN ACTUAL PROJECT WORK REQUIRES INDIVIDUAL BEARINGS TO BE REPLACED OR REHABILITATED, NO PERMANENT SHIMMING IS REQUIRED AND THE HEIGHT OF THE TOTAL LIFT DOES NOT EXCEED 1/4 INCH.

ALL LABOR, TOOLS, EQUIPMENT, MATERIALS AND INCIDENTALS NECESSARY TO COMPLETE THIS WORK ARE INCLUDED UNDER ITEM 516, JACKING AND TEMPORARY SUPPORT OF SUPERSTRUCTURE, AS PER PLAN.

ITEM 611 REINFORCED CONCRETE APPROACH SLAB (T=15"), AS PER PLAN:

THE REINFORCING STEEL FOR THE APPROACH SLABS OF THIS STRUCTURE SHALL BE EPOXY COATED IN CONFORMANCE WITH 509.

TWO SEPARATE THICKNESSES OF CLEAR OR OPAQUE POLYETHYLENE FILM, 705.06, SHALL BE PLACED ON THE PREPARED SUBBASE AND WHERE THE APPROACH SLAB IS TO BE CONSTRUCTED. THE POLYETHYLENE FILMS SHALL COMPLETELY COVER THE FULL LENGTH AND WIDTH OF THE SUBBASE BETWEEN THE SIDEWALL FORMS FOR THE APPROACH SLAB.

PAINTING OF EXISTING STRUCTURAL STEEL

IN ADDITION TO THE SURFACE AREA OF THE STEEL STRINGERS TO BE PAINTED, AN ADDITIONAL TWENTY-FIVE PERCENT OF THIS AMOUNT HAS BEEN ADDED TO THE SQUARE FOOT TOTALS TO ACCOUNT FOR INCIDENTALS SUCH AS CROSSFRAMING, BEARINGS AND EXPANSION SYSTEMS. CAULKING AS PER SS 815 IS REQUIRED IN THE OPEN AREA BETWEEN ABUTTING WEBS AND BOTTOM BEAM FLANGES AT EACH SPLICE LOCATION. AN ESTIMATED QUANTITY OF 150 LIN. FT. CAULKING HAS BEEN CARRIED TO THE BRIDGE QUANTITIES SHEET.

PAINT: THE COLOR OF THE FINISH COAT SHALL BE BLUE.

GRINDING FLANGE EDGES

STEEL OVER PAVEMENT TO HAVE FLANGE EDGES GROUND.

SOLVENT CLEANING

STEEL OVER PAVEMENT AND RAILROAD SHALL BE SOLVENT CLEANED.

I:/PD/OTTAWA/OTT2/OT2CRGN.DGN

STATE OF OHIO
DEPARTMENT OF TRANSPORTATION
DISTRICT 2 DESIGN & PLANNING OFFICE

3 / 17

BRIDGE NOTES
BRIDGE NO. OTT-2-1766
OVER CONRAIL RR

| DESIGNED | DRAWN | TRACED | CHECKED | REVIEWED DATE | REVISED |
|---|---|---|---|---|---|
| MTG | ALS | | LLL | LCL 1/5/95 | |

| FHWA REGION | STATE | PROJECT | |
|---|---|---|---|
| 5 | OHIO | | |

275/367

OTT-2-16.60

# ESTIMATED QUANTITIES

| ITEM | EXTENSION | TOTAL | UNIT | DESCRIPTION |
|---|---|---|---|---|
| 202 | 11201 | LUMP | LUMP | PORTIONS OF STRUCTURE REMOVED, AS PER PLAN (SEE SHT. NO. 5) |
| 503 | 21100 | 424 | CU.YD. | UNCLASSIFIED EXCAVATION |
| 509 | 15840 | 167848 | LB. | EPOXY COATED REINFORCING STEEL, GRADE 60 |
| 510 | 10000 | 618 | EACH | DOWEL HOLES WITH NONSHRINK, NONMETALLIC GROUT |
| 511 | 33400 | 898 | CU.YD. | CLASS S CONCRETE, SUPERSTRUCTURE |
| SPECIAL | 51267020 | 127 | SQ.YD. | MEMBRANE WATERPROOFING (SHEET TYPE 2) (SEE SHT. NO. 8) |
| SPECIAL | 51267510 | 1137 | SQ.YD. | SEALING OF CONCRETE SURFACES (EPOXY/URETHANE) (SEE PROPOSAL NOTE) |
| 513 | 20001 | 7992 | EACH | WELDED STUD SHEAR CONNECTOR, AS PER PLAN |
| 516 | 13200 | 75 | SQ.FT. | 1/2" PREFORMED EXPANSION JOINT FILLER |
| 516 | 13600 | 52 | SQ.FT. | 1" PREFORMED EXPANSION JOINT FILLER |
| 516 | 13900 | 70 | SQ.FT. | 2" PREFORMED EXPANSION JOINT FILLER |
| 516 | 14500 | 1066 | SQ.FT. | STRUCTURAL JOINT OR JOINT SEALER, MISC: 2" POLYSTYRENE JOINT FILLER, AS PER PLAN (SEE SHT. NO. 8) |
| 516 | 14500 | 1013 | SQ.FT. | STRUCTURAL JOINT OR JOINT SEALER, MISC: 3" POLYSTYRENE JOINT FILLER, AS PER PLAN (SEE SHT. NO. 8) |
| 516 | 43201 | 24 | EACH | ELASTOMERIC BEARING WITH INTERNAL LAMINATES ONLY (NEOPRENE), AS PER PLAN (9"x14"x2") (SEE SHT. NO. 8) |
| 516 | 45305 | 12 | EACH | REFURBISH BEARING DEVICE, AS PER PLAN (SEE SHT. NO. 3) |
| 516 | 47001 | LUMP | LUMP | JACKING AND TEMPORARY SUPPORT OF SUPERSTRUCTURE, AS PER PLAN (SEE SHT. NO. 3) |
| 518 | 21200 | 136 | CU.YD. | POROUS BACKFILL WITH FILTER FABRIC |
| 518 | 42400 | 290 | LIN.FT. | 6" PERFORATED PIPE, INCLUDING SPECIALS, 707.17 |
| 518 | 42450 | 60 | LIN.FT. | 6" NON-PERFORATED PIPE, INCLUDING SPECIALS, 707.17 |
| SPECIAL | 53000800 | 50 | SQ.YD. | STRUCTURE MISC.: GRAFFITI REMOVAL |
| 601 | 20500 | 55 | CU.YD. | CRUSHED AGGREGATE SLOPE PROTECTION |
| 601 | 32200 | 5 | CU.YD. | ROCK CHANNEL PROTECTION, TYPE C WITH FILTER |
| 815 | 00050 | 33482 | SQ.FT. | SURFACE PREPARATION OF EXISTING STEEL, SYSTEM OZEU |
| 815 | 00056 | 33482 | SQ.FT. | FIELD PAINTING OF EXISTING STEEL, PRIME COAT, SYSTEM OZEU |
| 815 | 00060 | 33482 | SQ.FT. | FIELD PAINTING OF EXISTING STEEL, INTERMEDIATE COAT, SYSTEM OZEU |
| 815 | 00066 | 33482 | SQ.FT. | FIELD PAINTING OF EXISTING STEEL, FINISH COAT, SYSTEM OZEU |
| 815 | 00500 | 150 | LIN.FT. | CAULKING |
| 815 | 00504 | 106 | MAN HOUR | GRINDING FINS, TEARS, SLIVERS |

STATE OF OHIO
DEPARTMENT OF TRANSPORTATION
DISTRICT 2 DESIGN & PLANNING OFFICE

4 / 17

ESTIMATED QUANTITIES
BRIDGE NO. OTT-2-1766
OVER CONRAIL RR

| DESIGNED | DRAWN | TRACED | CHECKED | REVIEWED DATE | REVISED |
|---|---|---|---|---|---|
| MTG | ALS | | LLL | LCL 1/5/95 | |

I:/PD/OTTAWA/OTT2/OT2CRBSS.DGN

| FHWA REGION | STATE | PROJECT | |
|---|---|---|---|
| 5 | OHIO | | |

276
367

OTT-2-16.60

N for Rear Abutment

N for Forward Abutment

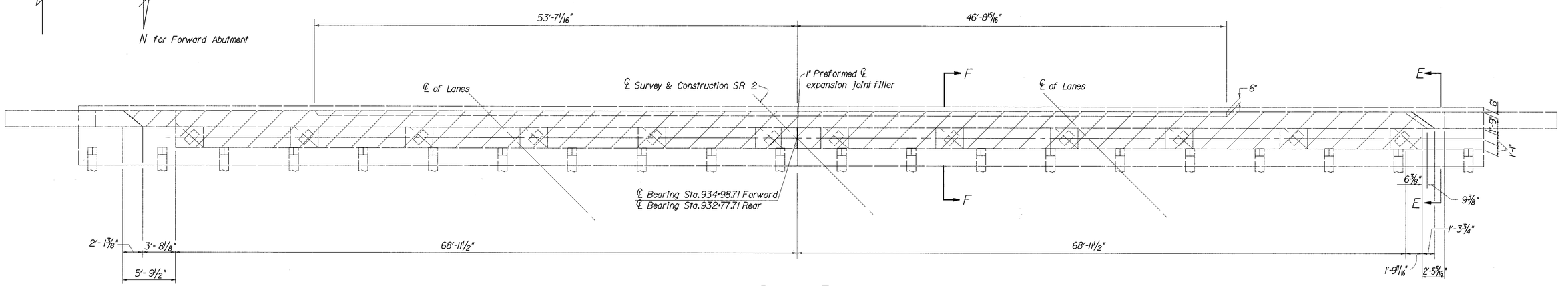


PLAN VIEW

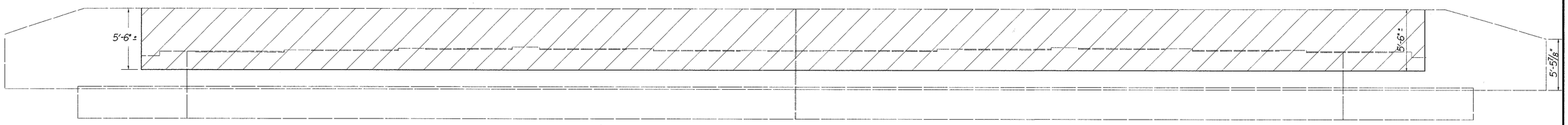


ELEVATION VIEW

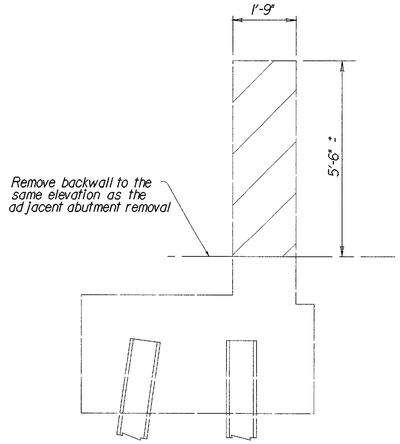


SECT. E-E

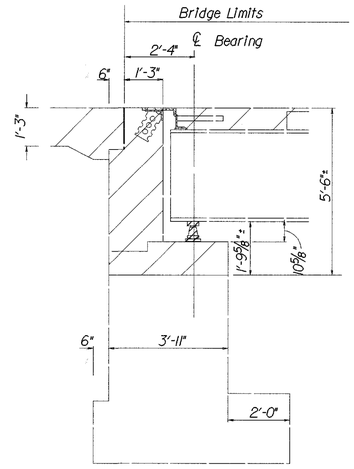


SECT. F-F

LEGEND

Removal Limits

STATE OF OHIO
DEPARTMENT OF TRANSPORTATION
DISTRICT 2 DESIGN & PLANNING OFFICE

5 / 17

# EXISTING ABUTMENT REMOVAL
# BRIDGE NO. OTT-2-1766
# OVER CONRAIL RR

| DESIGNED | DRAWN | TRACED | CHECKED | REVIEWED DATE | REVISED |
|---|---|---|---|---|---|
| MTG | ALS | | LLL | LCL 1/5/95 | |

I:/PD/OTTAWA/OTT2/0T2CRSD8.DGN

| FHWA REGION | STATE | PROJECT | |
|---|---|---|---|
| 5 | OHIO | | |

277/367

OTT-2-16.60

NOTE: See Sht. No. 8/17 for Sections "G-G", and "H-H".

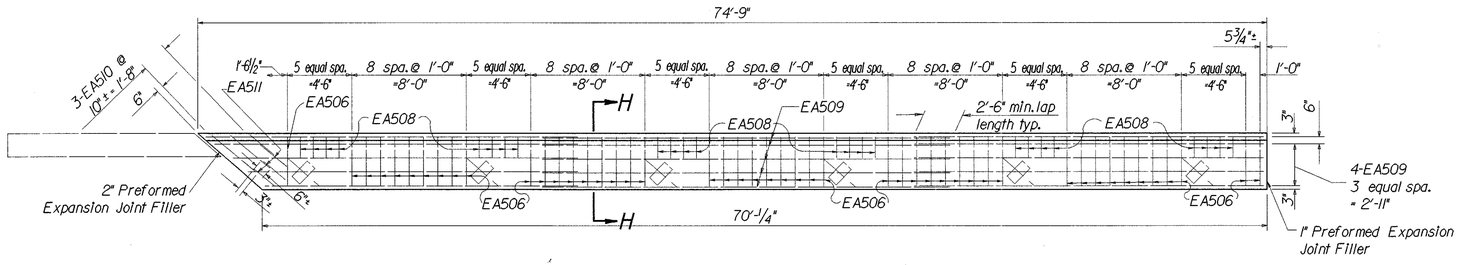


PLAN VIEW

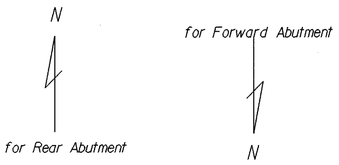


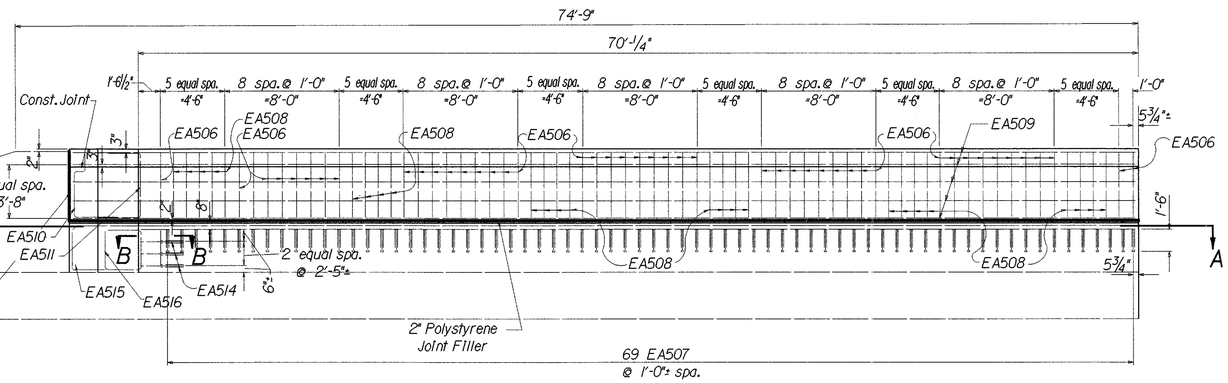


ELEVATION VIEW

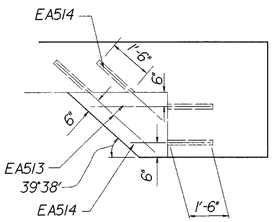


SECTION B-B

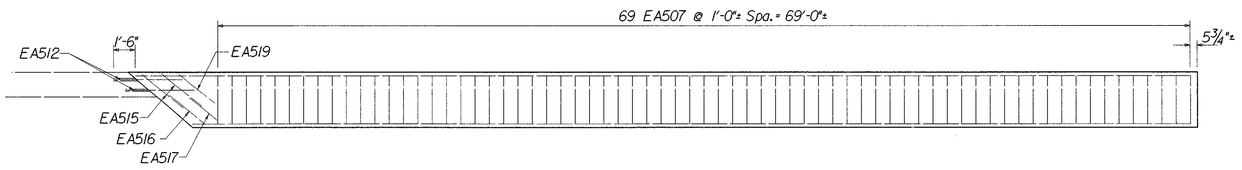


SECTION A-A

STATE OF OHIO
DEPARTMENT OF TRANSPORTATION
DISTRICT 2 — DESIGN & PLANNING OFFICE

6 / 17

# ABUTMENT DETAILS
# BRIDGE NO. OTT-2-1766
# OVER CONRAIL RR

| DESIGNED | DRAWN | TRACED | CHECKED | REVIEWED DATE | REVISED |
|---|---|---|---|---|---|
| MTG | ALS | | LLL | LCL 1/5/95 | |

I:/PD/OTTAWA/OTT2/0T2CRSD9.DGN

| FHWA REGION | STATE | PROJECT | |
|---|---|---|---|
| 5 | OHIO | | |

278
367

OTT-2-16.60

NOTE: See Sht. No. 6/17 for Sections "G-G", and "H-H".

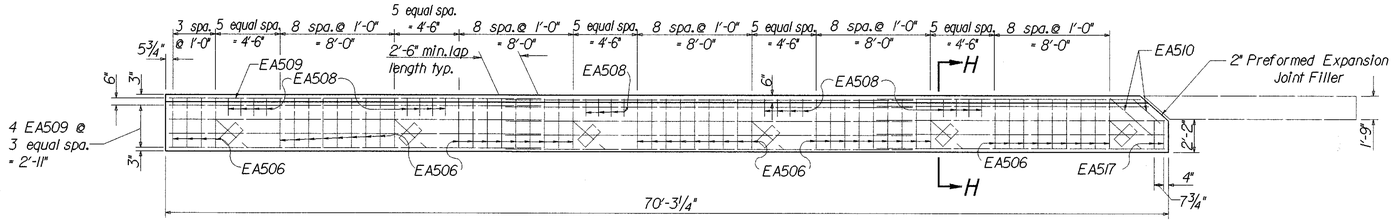


PLAN VIEW

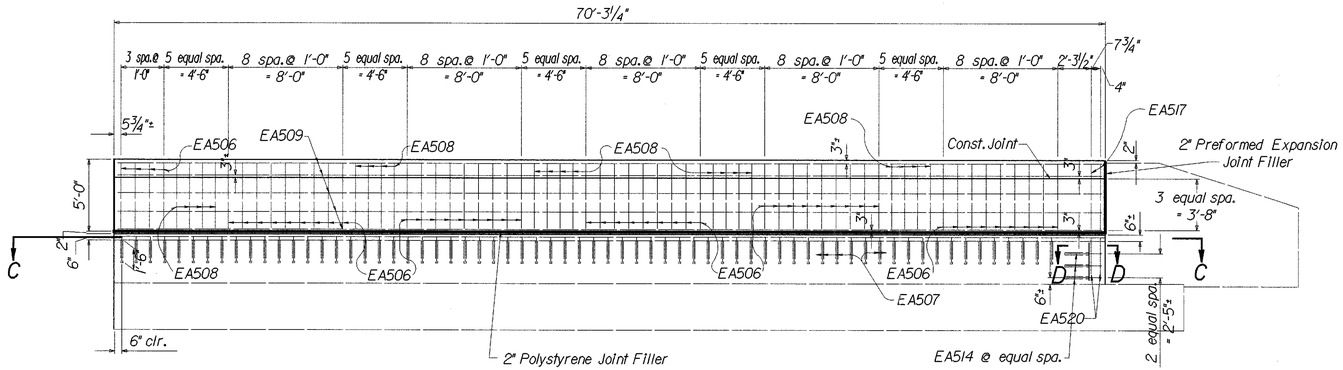


ELEVATION VIEW

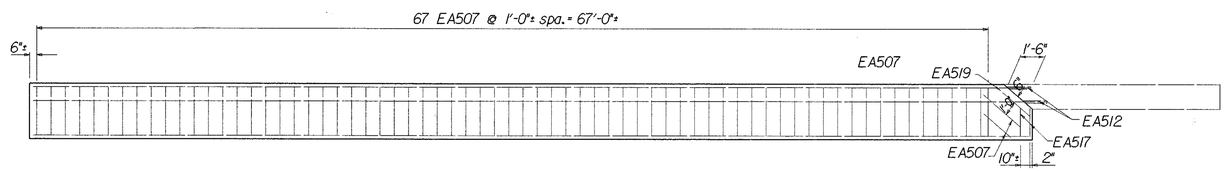


SECTION C-C

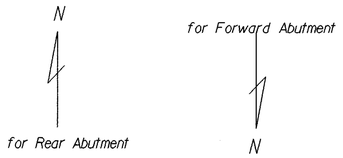


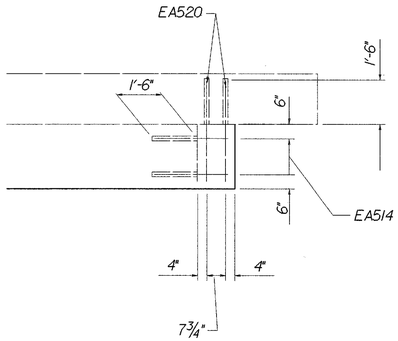


SECTION D-D

STATE OF OHIO
DEPARTMENT OF TRANSPORTATION
DISTRICT 2 — DESIGN & PLANNING OFFICE

7 / 17

# ABUTMENT DETAILS
# BRIDGE NO. OTT-2-1766
# OVER CONRAIL RR

| DESIGNED | DRAWN | TRACED | CHECKED | REVIEWED DATE | REVISED |
|---|---|---|---|---|---|
| MTG | ALS | | LLL | LCL 1/5/95 | |

I:/PD/OTTAWA/OTT2/OT2CRSD9.DGN

| FHWA REGION | STATE | PROJECT | |
|---|---|---|---|
| 5 | OHIO | | |

279 / 367

OTT-2-16.60

LEGEND

Proposed Concrete

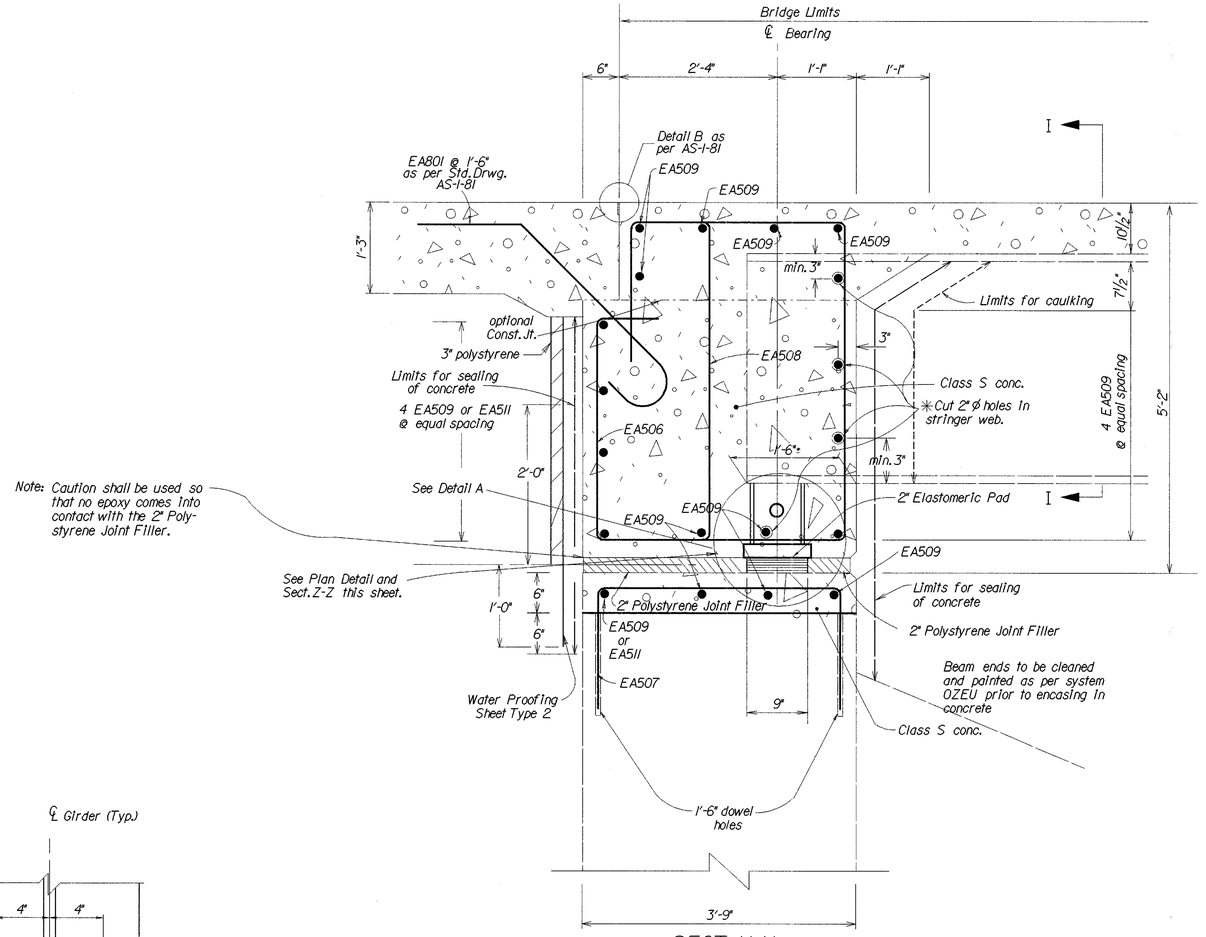


SECT. H-H

(see sht. no. 6 & 7/17)




SECT. Z-Z

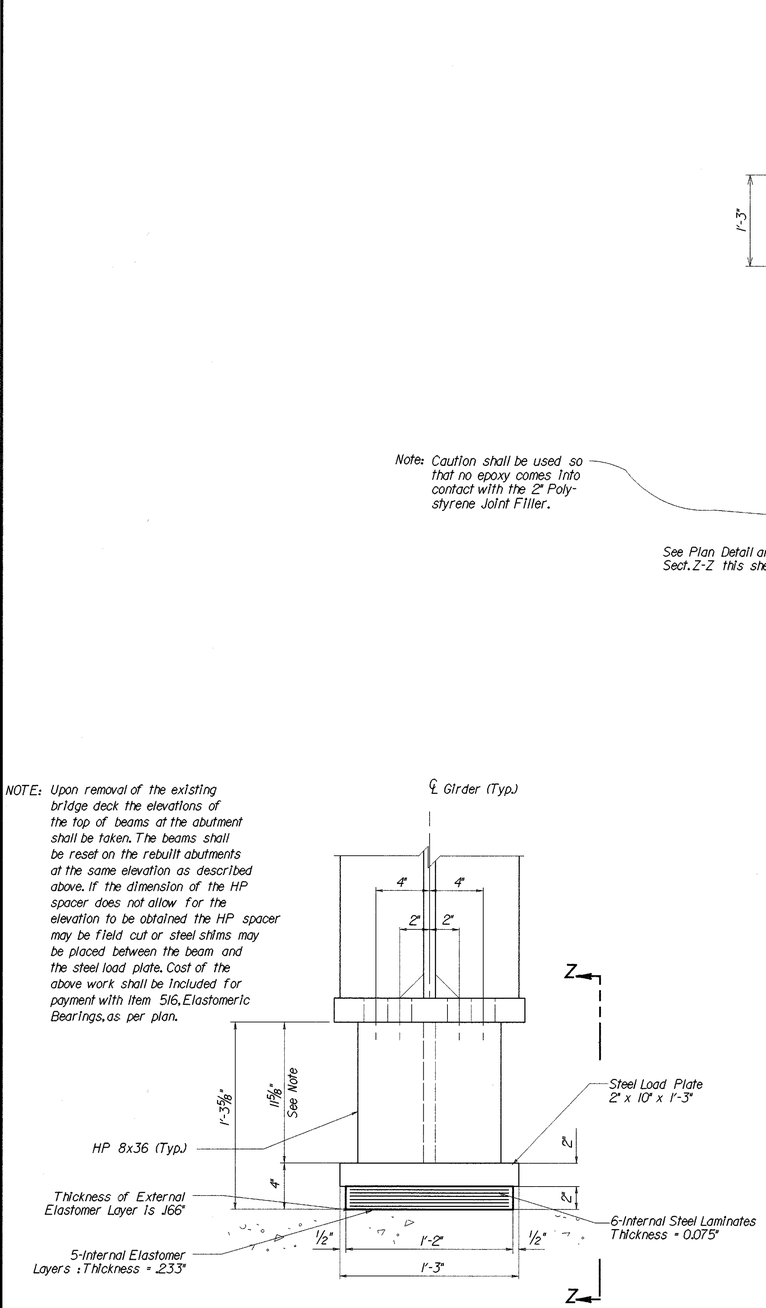


SECT. Y-Y

Rear & Fwd. Abut. (expansion)
Laminated Elastomeric Bearing Details

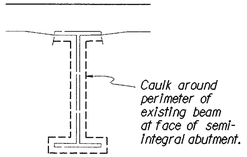


SECT. I-I

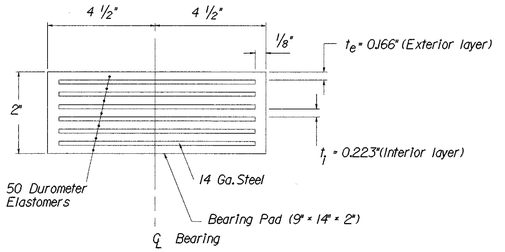


Detail A

Laminated Elastomeric Bearings:
The Elastomer shall be 50 durometer hardness. The steel plates between laminates shall be A36 steel.

Design Loads:
The laminated Elastomeric bearings are designed for the following loads:

Dead Load Reaction = 64 KIPS
Live Load Reaction = 43 KIPS
Max. Design Load = 107 KIPS

✳ 2" ϕ holes may be burned. Cost to be included in Item 509.

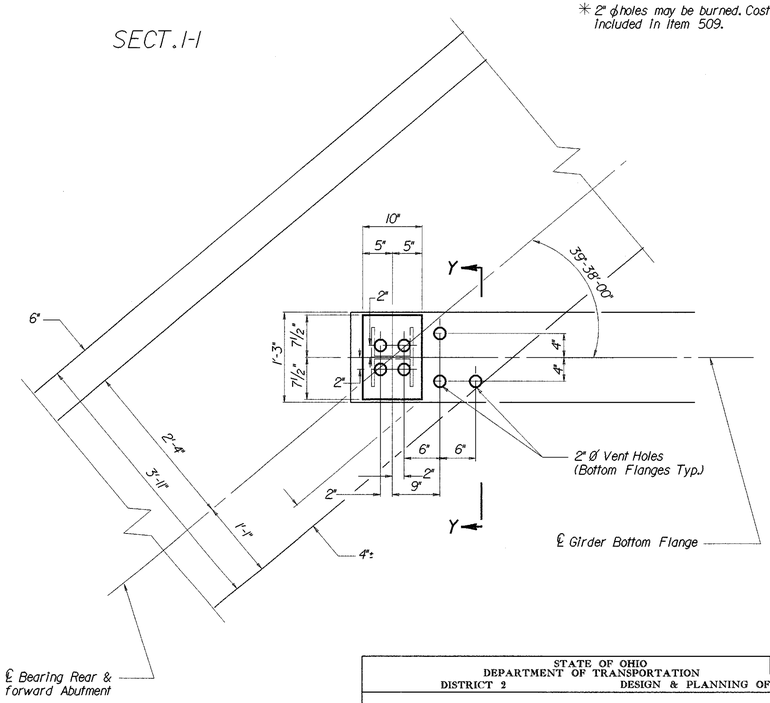


PLAN

STATE OF OHIO
DEPARTMENT OF TRANSPORTATION
DISTRICT 2 DESIGN & PLANNING OFFICE

8 / 17

# TYPICAL SEMI-INTEGRAL ABUTMENT DETAILS BRIDGE NO. OTT-2-1766 OVER CONRAIL RR

| DESIGNED | DRAWN | TRACED | CHECKED | REVIEWED DATE | REVISED |
|---|---|---|---|---|---|
| MTG | ALS | | LLL | LCL 1/5/95 | |

I/PD/OTT AWA/OTT2/OT2CRSDI.DGN

| FHWA REGION | STATE | PROJECT | |
|---|---|---|---|
| 5 | OHIO | | |

280/367

OTT-2-16.60

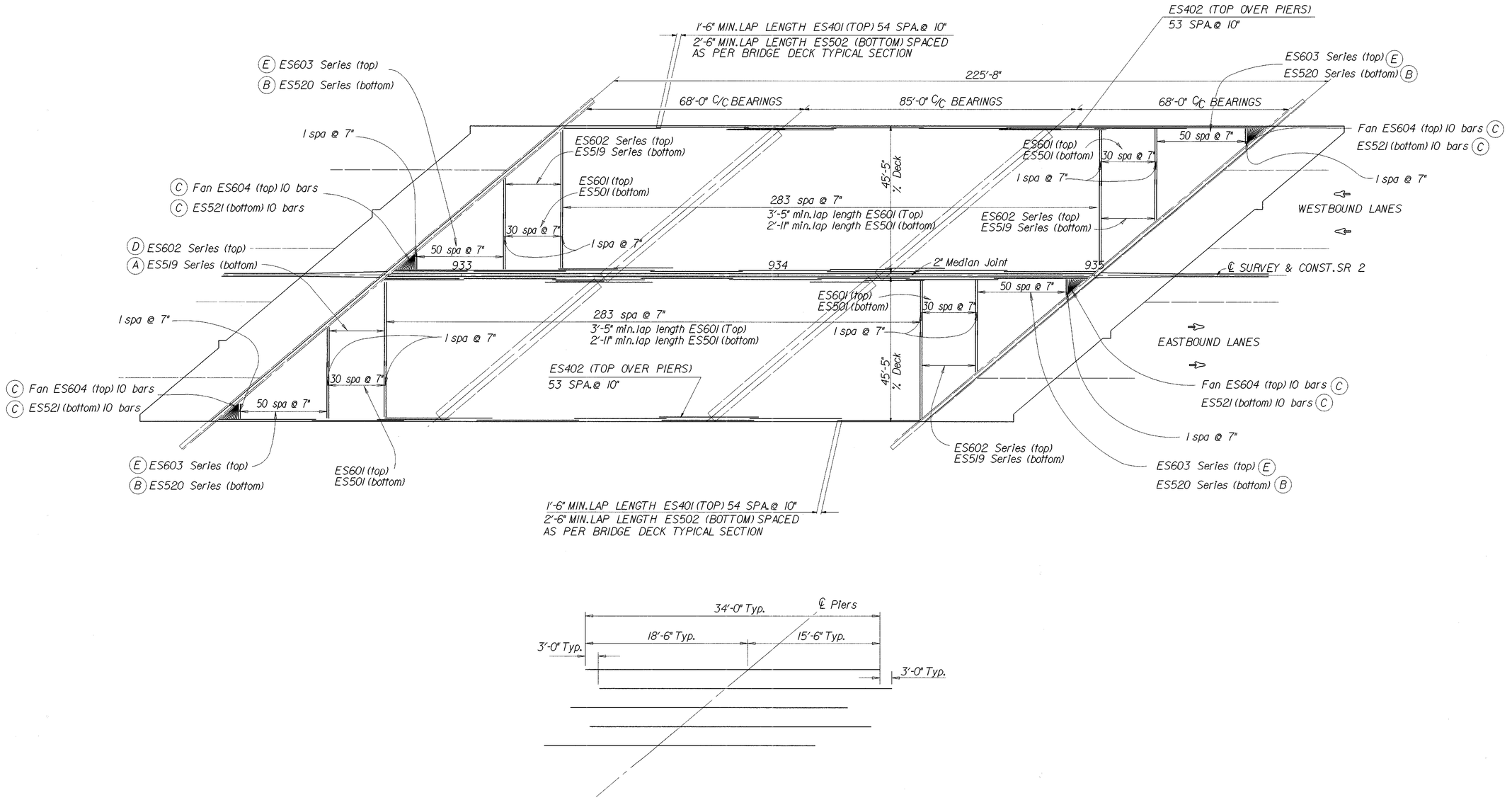





DETAIL SHOWING ES402 BARS OVER PIERS

STATE OF OHIO
DEPARTMENT OF TRANSPORTATION
DISTRICT 2 DESIGN & PLANNING OFFICE

9 / 17

# DECK REINFORCING DETAILS AND STRUCTURE ELEVATIONS BRIDGE NO. OTT-2-1766 OVER CONRAIL RR

| DESIGNED | DRAWN | TRACED | CHECKED | REVIEWED DATE | REVISED |
|---|---|---|---|---|---|
| MTG | ALS | | LLL | LCL 1/5/95 | |

I:/PD/OTTAWA/OTT2/OT2CRSD3.DGN

| FHWA REGION | STATE | PROJECT | |
|---|---|---|---|
| 5 | OHIO | | |

281/367

OTT-2-16.60

LEGEND

- Class S Concrete
- Sealing of concrete surfaces
- C = Compression
- T = Tension

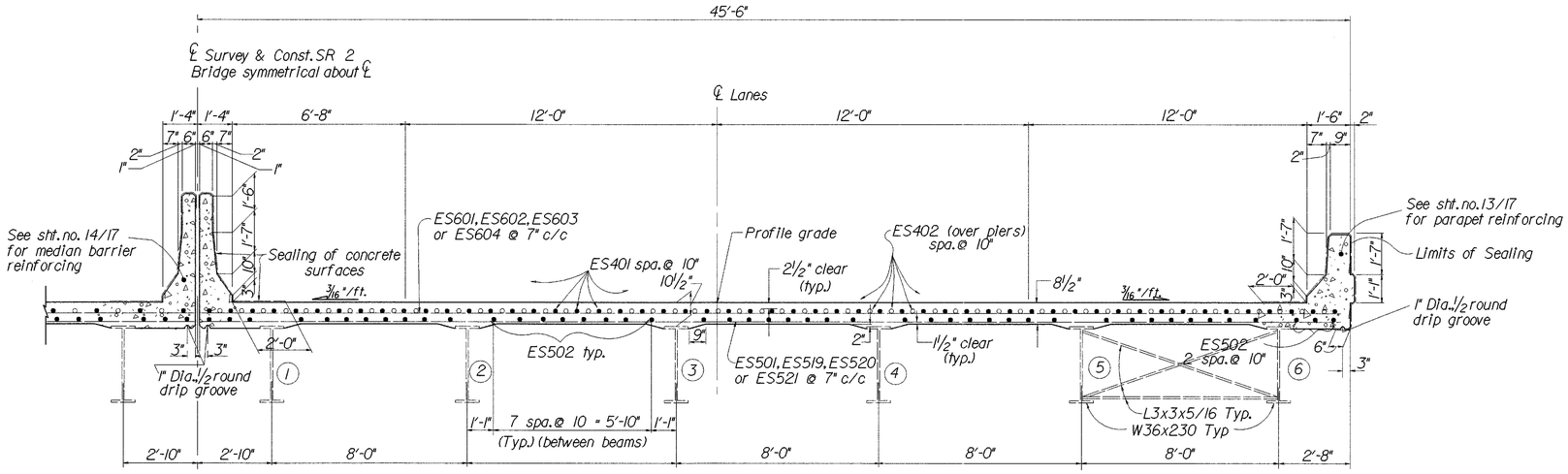


BRIDGE DECK
TYPICAL SECTION

Incidental Percentage for Painting = 25%

DECK SLAB DEPTH: The distance shown from top of deck slab to top of steel beam is the theoretical design dimension. The quanity of deck concrete to be paid for shall be based on this dimension, even though deviation from it may be necessary because the top flange of the beam may not have the exact camber or conformation required to place it parallel to the finished grade.

A HAUNCH WIDTH: of 9 inches shall be used for computing quantity of concrete. However, the haunch width may vary between 6 and 12 inches.

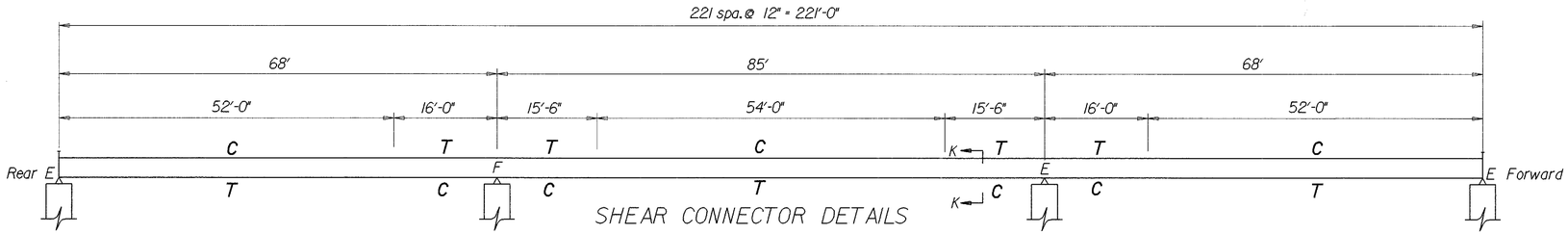


SHEAR CONNECTOR DETAILS

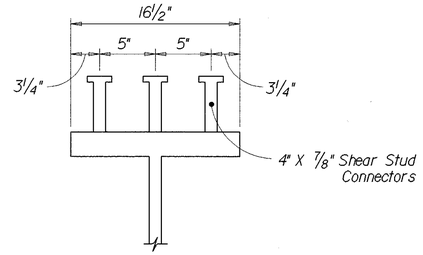


~ SECT. K-K ~

STATE OF OHIO
DEPARTMENT OF TRANSPORTATION
DISTRICT 2 DESIGN & PLANNING OFFICE

10 / 17

BRIDGE DECK DETAILS
BRIDGE NO. OTT-2-1766
OVER CONRAIL RR

| DESIGNED | DRAWN | TRACED | CHECKED | REVIEWED DATE | REVISED |
|---|---|---|---|---|---|
| MTG | ALS | | LLL | LCL 1/5/95 | |

i:/pd/ottawa/ott2/ot2scred.dgn

| FHWA REGION | STATE | PROJECT | |
|---|---|---|---|
| 5 | OHIO | | |

282/367

OTT-2-16.60

# FINAL ELEVATIONS
## OTT-2-1766

| Station | | Elev.@ Face of Med.Bar. | Beam ① | Beam ② | Beam ③ | Profile Grade | Beam ④ | Beam ⑤ | Beam ⑥ | Face of Parapet |
|---|---|---|---|---|---|---|---|---|---|---|
| 932+24.55 | | | | | | | | | | 607.35 |
| 932+31.35 | | | | | | | | | 607.41 | 607.39 |
| 932+38.15 | | | | | | | | 607.58 | 607.46 | 607.44 |
| 932+44.95 | | | | | | | | 607.62 | 607.50 | 607.48 |
| 932+51.75 | | | | | | | 607.80 | 607.67 | 607.55 | 607.53 |
| 932+58.55 | | | | | 607.91 | 607.93 | 607.83 | 607.70 | 607.58 | 607.56 |
| 932+65.35 | | | | 607.82 | 607.94 | 607.96 | 607.86 | 607.73 | 607.61 | 607.59 |
| 932+72.15 | | | 607.73 | 607.85 | 607.97 | 607.99 | 607.89 | 607.76 | 607.64 | 607.62 |
| 932+77.7 | | 607.71 | *607.73 | 607.86 | 607.98 | 608.00 | 607.89 | 608.77 | 607.65 | 607.63 |
| 932+84.5 | | 607.74 | 607.76 | 607.89 | 608.01 | 608.03 | 607.93 | 608.80 | 607.68 | 607.66 |
| 932+91.3 | | 607.76 | 607.78 | 607.91 | 608.03 | 608.05 | 607.95 | 608.82 | 607.70 | 607.68 |
| 932+98.1 | | 607.78 | 607.81 | 607.94 | 608.07 | 608.08 | 607.97 | 608.85 | 607.72 | 607.70 |
| 933+04.9 | | 607.81 | 607.83 | 607.96 | 608.08 | 608.10 | 607.99 | 608.87 | 607.75 | 607.73 |
| 933+11.7 | | 607.83 | 607.85 | 607.97 | 608.10 | 608.12 | 608.01 | 608.89 | 607.76 | 607.74 |
| 933+18.5 | | 607.85 | 607.87 | 608.00 | 608.12 | 608.14 | 608.04 | 608.91 | 607.79 | 607.77 |
| 933+25.3 | | 607.86 | 607.88 | 608.01 | 608.13 | 608.15 | 608.04 | 607.92 | 607.79 | 607.77 |
| 933+32.1 | | 607.88 | 607.91 | 608.03 | 608.16 | 608.18 | 608.07 | 607.94 | 607.82 | 607.80 |
| 933+38.9 | | 607.90 | 607.92 | 608.05 | 608.17 | 608.19 | 608.08 | 607.96 | 607.83 | 607.81 |
| 933+45.7 | | 607.91 | 607.93 | 608.06 | 608.18 | 608.20 | 608.10 | 607.97 | 607.85 | 607.83 |
| 933+54.2 | | 607.92 | 607.95 | 608.07 | 608.20 | 608.22 | 608.11 | 607.98 | 607.86 | 607.84 |
| 933+62.7 | | 607.93 | 607.96 | 608.08 | 608.21 | 608.23 | 608.12 | 607.99 | 607.87 | 607.85 |
| 933+71.2 | | 607.94 | 607.97 | 608.09 | 608.22 | 608.23 | 608.13 | 608.00 | 607.88 | 607.86 |
| 933+79.7 | | 607.95 | 607.97 | 608.10 | 608.22 | 608.24 | 608.13 | 608.01 | 607.88 | 607.86 |
| 933+88.2 | | 607.95 | 607.97 | 608.10 | 608.22 | 608.24 | 608.13 | 608.01 | 607.89 | 607.87 |
| 933+96.7 | | 607.95 | 607.97 | 608.10 | 608.22 | 608.24 | 608.13 | 608.01 | 607.89 | 607.87 |
| 934+05.2 | | 607.95 | 607.97 | 608.10 | 608.22 | 608.24 | 608.13 | 608.01 | 607.88 | 607.86 |
| 934+13.7 | | 607.94 | 607.97 | 608.09 | 608.21 | 608.23 | 608.13 | 608.00 | 607.88 | 607.86 |
| 934+22.2 | | 607.93 | 607.96 | 608.08 | 608.21 | 608.22 | 608.12 | 607.99 | 607.87 | 607.85 |
| 934+30.7 | | 607.92 | 607.95 | 608.07 | 608.19 | 608.21 | 608.11 | 607.98 | 607.86 | 607.84 |
| 934+37.5 | | 607.91 | 607.93 | 608.06 | 608.18 | 608.20 | 608.10 | 607.97 | 607.85 | 607.83 |
| 934+44.3 | | 607.90 | 607.92 | 608.05 | 608.17 | 608.19 | 608.08 | 607.96 | 607.83 | 607.81 |
| 934+51.1 | | 607.88 | 607.91 | 608.03 | 608.16 | 608.18 | 608.07 | 607.94 | 607.82 | 607.80 |
| 934+57.9 | | 607.87 | 607.89 | 608.02 | 608.14 | 608.16 | 608.05 | 607.93 | 607.80 | 607.78 |
| 934+64.7 | | 607.85 | 607.87 | 608.00 | 608.12 | 608.14 | 608.04 | 607.91 | 607.79 | 607.77 |
| 934+71.5 | | 607.83 | 607.85 | 607.98 | 608.10 | 608.12 | 608.01 | 607.89 | 607.77 | 607.75 |
| 934+78.3 | | 607.81 | 607.83 | 607.96 | 608.08 | 608.10 | 607.99 | 607.87 | 607.74 | 607.72 |
| 934+85.1 | | 607.79 | 607.81 | 607.93 | 608.06 | 608.08 | 607.97 | 607.85 | 607.72 | 607.70 |
| 934+91.9 | | 607.76 | 607.78 | 607.91 | 608.03 | 608.05 | 607.95 | 607.82 | 607.70 | 607.68 |
| 934+98.7 | | 607.73 | **607.76 | 607.88 | 608.01 | 608.03 | 607.92 | 607.79 | 607.67 | 607.65 |
| 935+04.22 | | | 607.76 | 607.88 | 608.00 | 608.02 | 607.92 | 607.79 | 607.67 | 607.65 |
| 935+11.02 | | | 607.73 | 607.85 | 607.97 | 607.99 | 607.89 | 607.76 | 607.64 | 607.61 |
| 935+17.82 | | | | 607.82 | 607.94 | 607.96 | 607.86 | 607.73 | 607.61 | 607.59 |
| 935+24.62 | | | | | | 607.93 | 607.83 | 607.70 | 607.58 | 607.56 |
| 935+31.42 | | | | | | | 607.79 | 607.66 | 607.54 | 607.52 |
| 935+38.22 | | | | | | | 607.75 | 607.62 | 607.50 | 607.48 |
| 935+45.02 | | | | | | | | | 607.47 | 607.45 |
| 935+51.82 | | | | | | | | | | 607.42 |

NOTE: * ELEVATIONS ABOVE BAR ARE FOR RIGHT SIDE OF STRUCTURE ONLY

** ELEVATIONS BELOW BAR ARE FOR LEFT SIDE OF STRUCTURE ONLY

| Location (Ft.) | Dead Load Delection (ft) along ℄ Beam |
|---|---|
| | Rear Abut. .00 |
| 6.8 | .01 |
| 13.6 | .02 |
| 20.4 | .03 |
| 27.2 | .03 |
| 34 | .03 |
| 40.8 | .02 |
| 47.6 | .02 |
| 54.4 | .01 |
| 61.2 | .00 |
| 68 | Pier 1 .00 |
| 8.5 | .01 |
| 17 | .02 |
| 25.5 | .03 |
| 34 | .04 |
| 42.5 | .04 |
| 51 | .04 |
| 59.5 | .03 |
| 68 | .02 |
| 76.5 | .01 |
| 85 | Pier 2 .00 |
| 6.8 | .00 |
| 13.6 | .01 |
| 20.4 | .02 |
| 27.2 | .02 |
| 34 | .03 |
| 40.8 | .03 |
| 47.6 | .03 |
| 54.4 | .02 |
| 61.2 | .01 |
| 68 | Fwd. Abut. .00 |

| PROFILE GRADE ELEVATIONS | |
|---|---|
| STA 932+80 | 608.01 |
| STA 933+00 | 608.08 |
| STA 933+20 | 608.14 |
| STA 933+40 | 608.19 |
| STA 933+60 | 608.22 |
| STA 933+80 | 608.24 |
| STA 934+00 | 608.24 |
| STA 934+20 | 608.23 |
| STA 934+40 | 608.21 |
| STA 934+60 | 608.15 |
| STA 934+80 | 608.09 |
| STA 935+00 | 608.02 |

STATE OF OHIO
DEPARTMENT OF TRANSPORTATION
DISTRICT 2 DESIGN & PLANNING OFFICE

11 / 17

FINAL ELEVATIONS
BRIDGE NO.OTT-2-1766
OVER CONRAIL RR

| DESIGNED | DRAWN | TRACED | CHECKED | REVIEWED DATE | REVISED |
|---|---|---|---|---|---|
| MTG | ALS | | LLL | LCL 1/5/95 | |

I:/pd/ottawa/ott2/ot2scree.dgn

| FHWA REGION | STATE | PROJECT |
|---|---|---|
| 5 | OHIO | |

283
367

OTT-2-16.60

LEGEND

(F.S.) Far Side
(N.S.) Near Side

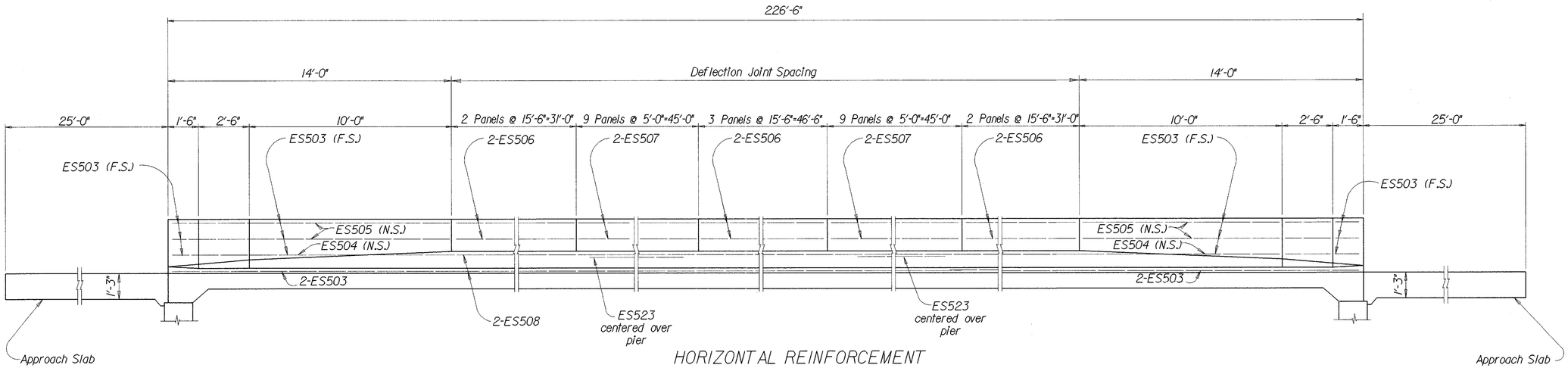


HORIZONTAL REINFORCEMENT IN PARAPET

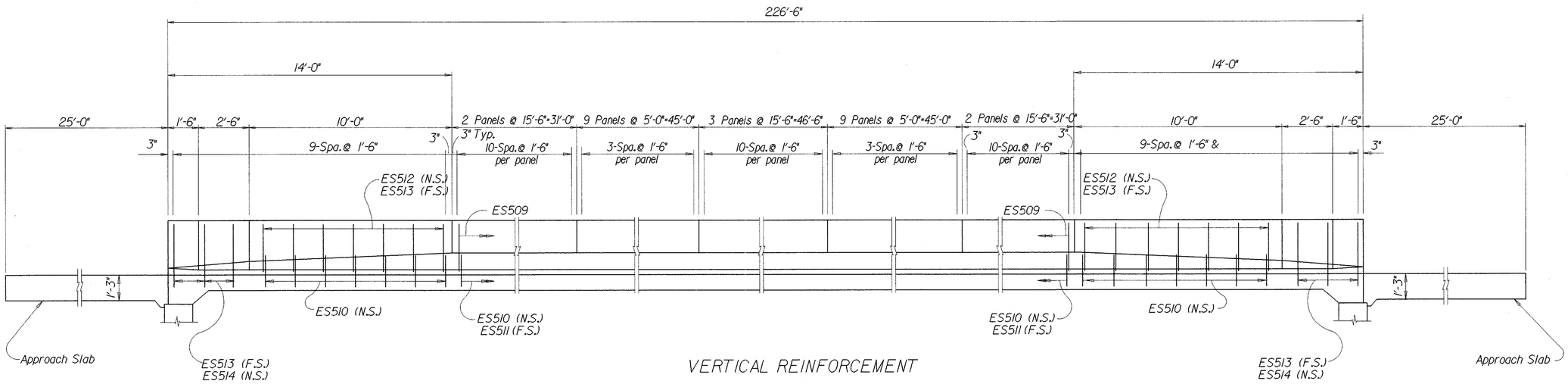


VERTICAL REINFORCEMENT IN PARAPET

STATE OF OHIO
DEPARTMENT OF TRANSPORTATION
DISTRICT 2
DESIGN & PLANNING DEPT.

12 / 17

# PARAPET DETAILS
# BRIDGE NO.OTT-2-1766
# OVER CONRAIL RR

| DESIGNED | DRAWN | TRACED | CHECKED | REVIEWED DATE | REVISED |
|---|---|---|---|---|---|
| MTG | ALS | | LLL | LCL 1/5/95 | |

I:/pd/OTTAWA/OTT2/OT2CRSD4.DGN

| FHWA REGION | STATE | PROJECT | |
|---|---|---|---|
| 5 | OHIO | | |

284/367

OTT-2-16.60

LEGEND

Class S Concrete, Superstructure

Sealing of Concrete Surfaces

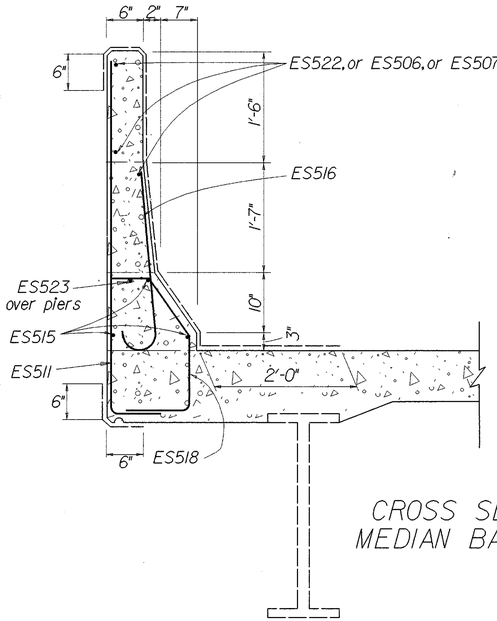


CROSS SECTION OF PROPOSED MEDIAN BARRIER ON STRUCTURE

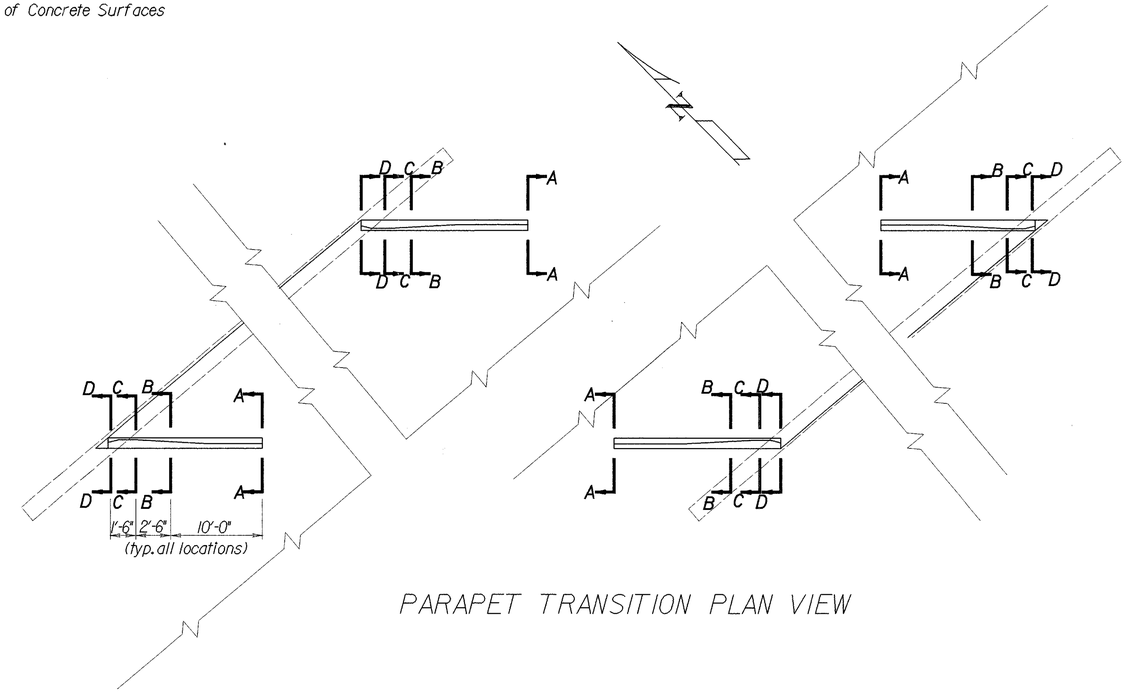


PARAPET TRANSITION PLAN VIEW

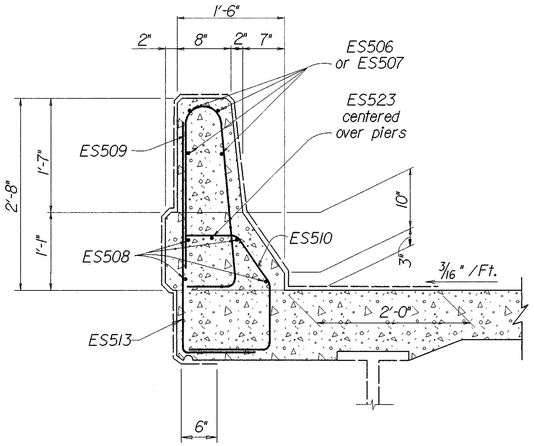


SECTION A-A

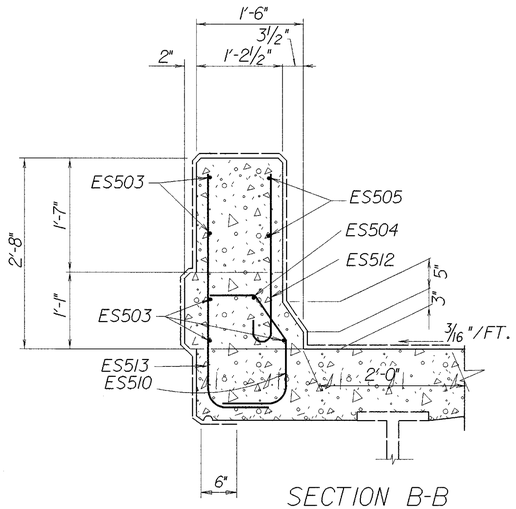


SECTION B-B

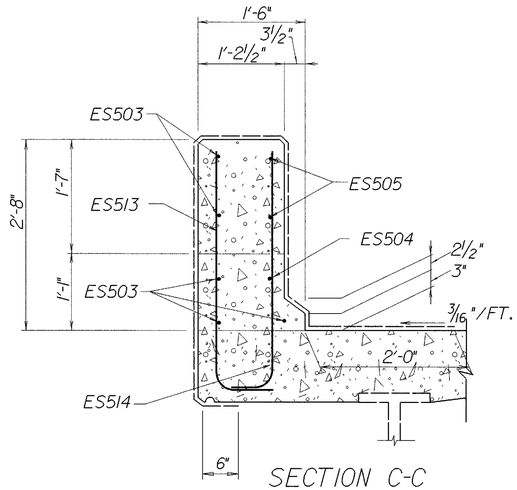


SECTION C-C

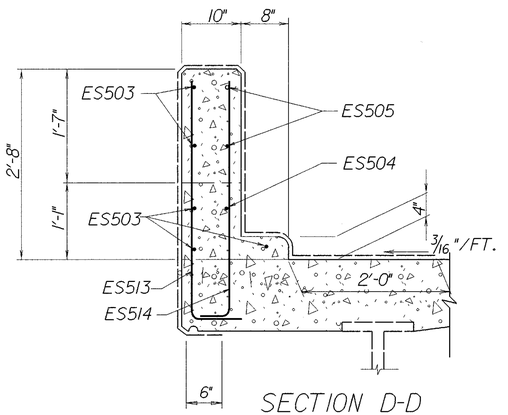


SECTION D-D

STATE OF OHIO
DEPARTMENT OF TRANSPORTATION
DISTRICT 2 DESIGN & PLANNING OFFICE

13 / 17

PARAPET DETAILS
BRIDGE NO. OTT-2-1766
OVER CONRAIL R.R.

| DESIGNED | DRAWN | TRACED | CHECKED | REVIEWED DATE | REVISED |
|---|---|---|---|---|---|
| MTG | ALS | | LLL | LCL 1/5/95 | |

I:/OTTAWA/OTT2/OT2CRSD5.DGN

| FHWA REGION | STATE | PROJECT | |
|---|---|---|---|
| 5 | OHIO | | |

285/367

OTT-2-16.60

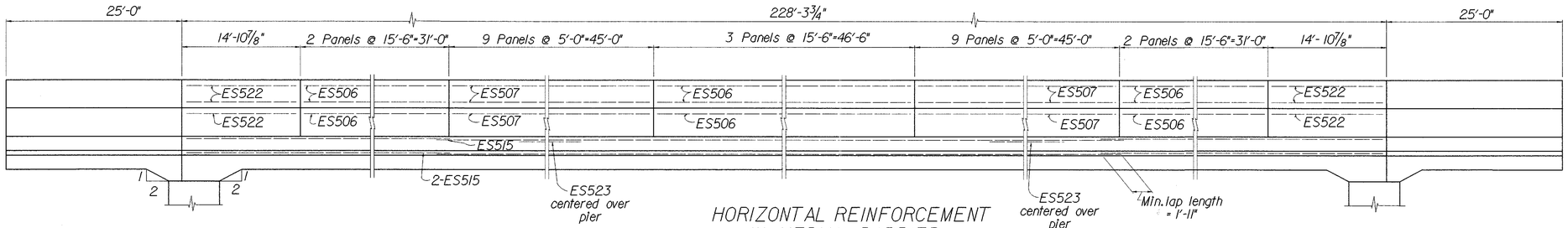


HORIZONTAL REINFORCEMENT IN MEDIAN BARRIER

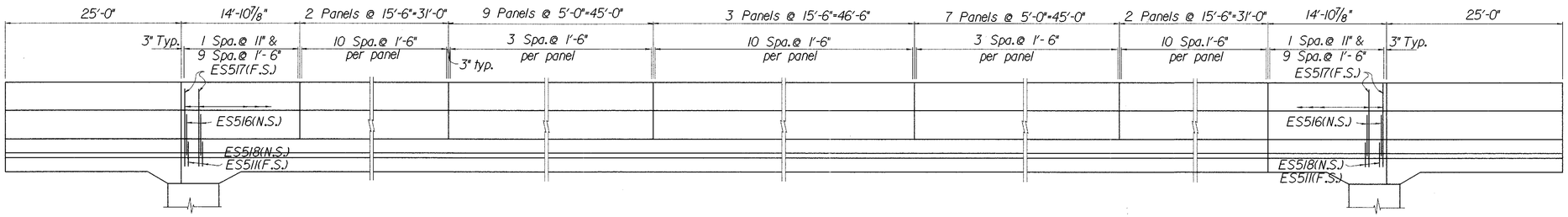


VERTICAL REINFORCEMENT IN MEDIAN BARRIER

STATE OF OHIO
DEPARTMENT OF TRANSPORTATION
DISTRICT 2 DESIGN & PLANNING OFFICE

14 / 17

MEDIAN BARRIER DETAILS
BRIDGE NO. OTT-2-1766
OVER CONRAIL RR

| DESIGNED | DRAWN | TRACED | CHECKED | REVIEWED DATE | REVISED |
|---|---|---|---|---|---|
| MTG | ALS | | LLL | LCL 1/5/95 | |

I:/PD/OTTAWA/OTT2/OT2CRSD2.DGN

| FHWA REGION | STATE | PROJECT | |
|---|---|---|---|
| 5 | OHIO | | |

286/367

OTT-2-16.60

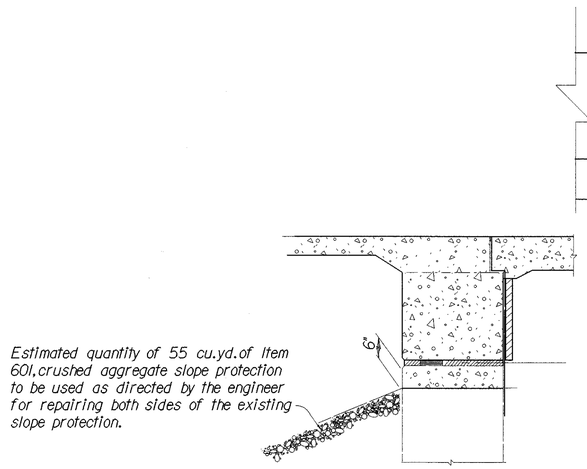


Estimated quantity of 55 cu.yd.of Item 601, crushed aggregate slope protection to be used as directed by the engineer for repairing both sides of the existing slope protection.

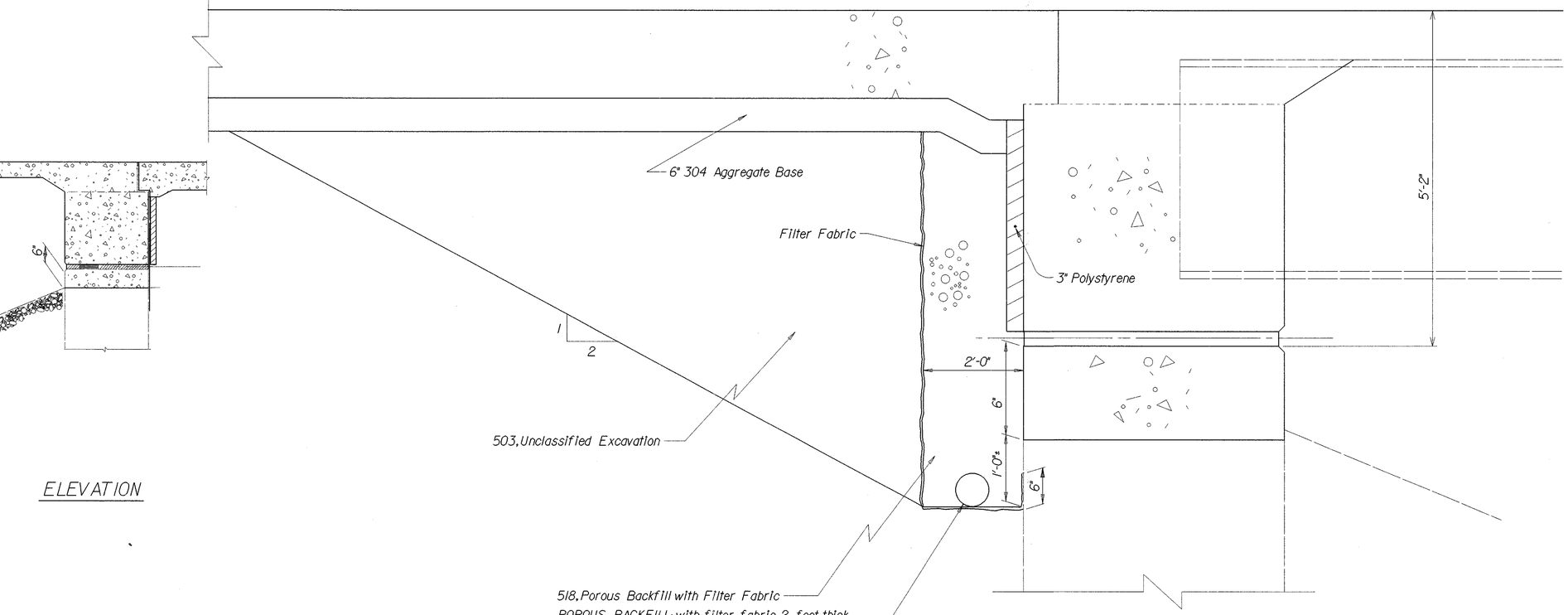


ELEVATION

POROUS BACKFILL: with filter fabric, 2 feet thick shall extend up to the plane of the subgrade, to one foot below the embankment surface, and laterally to the ends of the wingwalls. Geotextile fabric shall conform with 712.09, Type A. The bottom of the porous backfill shall be sloped (1 inch per foot minimum) laterally to drain. Geotextile fabric is included with porous backfill for payment.

Section X-X

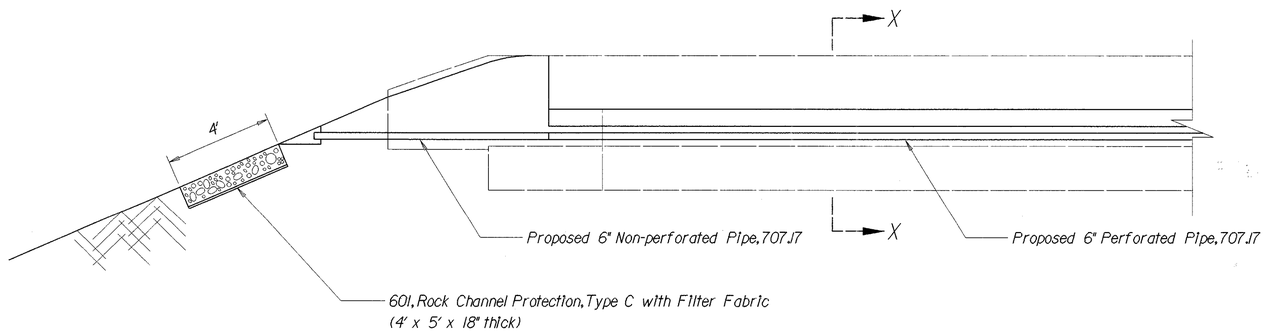


NOTE: Section Typical for both sides of the Rear and Forward Abutments.

STATE OF OHIO
DEPARTMENT OF TRANSPORTATION
DISTRICT 2 DESIGN & PLANNING OFFICE

15 / 17

# MISCELLANEOUS DETAILS
# BRIDGE NO. OTT-2-1766
# OVER CONRAIL RR

| DESIGNED | DRAWN | TRACED | CHECKED | REVIEWED DATE | REVISED |
|---|---|---|---|---|---|
| MTG | ALS | | LLL | LCL 1/5/95 | |

I/PD/OTTAWA/OTT2/OT2CRSD6.DGN

| FHWA REGION | STATE | PROJECT | |
|---|---|---|---|
| 5 | OHIO | | |

287/367

OTT-2-16.60

See Standard Drwgs. BP-2.3 and BP-2.4 for details of Pressure Relief Joints

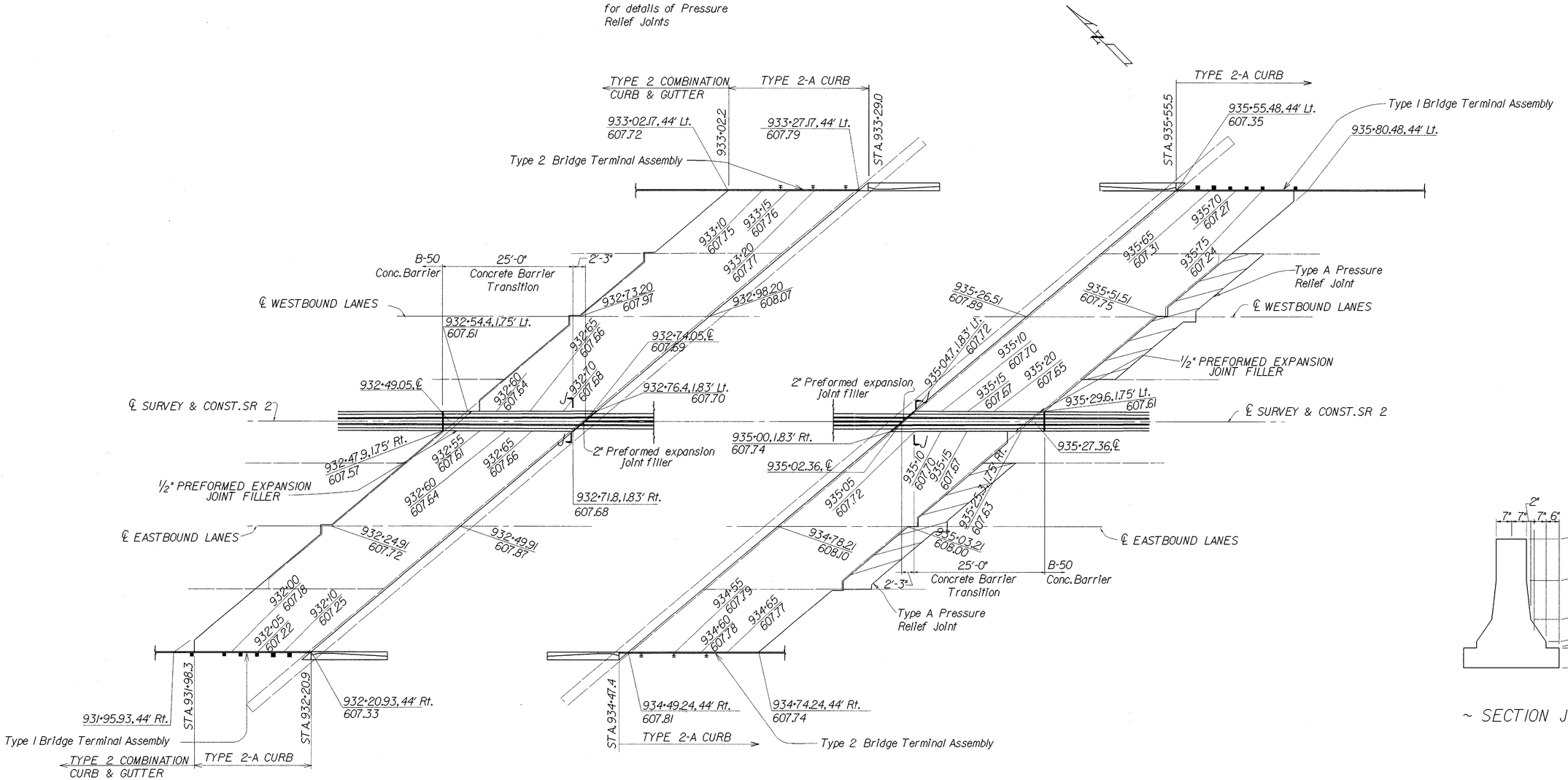


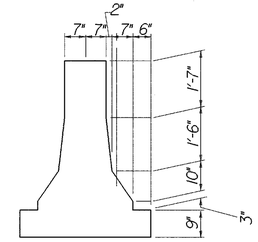


~ SECTION J-J ~

I:\PD\OTTAWA\OTT2\OT2CRAS.DGN

STATE OF OHIO
DEPARTMENT OF TRANSPORTATION
DISTRICT 2 DESIGN & PLANNING OFFICE

16 / 17

# APPROACH SLAB AND MEDIAN BARRIER DETAILS BRIDGE NO. OTT-2-1766 OVER CONRAIL RR

| DESIGNED | DRAWN | TRACED | CHECKED | REVIEWED DATE | REVISED |
|---|---|---|---|---|---|
| MTG | ALS | | LLL | LCL 1/5/95 | |

# REINFORCING STEEL LIST

| MARK | NO. IN STRUCTURE LT. | RT. | TOTAL | LENGTH | WEIGHT (LBS.) | SHAPE | | LAP LENGTH | DOWEL HOLES (EACH) |
|---|---|---|---|---|---|---|---|---|---|
| Superstructure | | | | | | | | | |
| ES401 | 440 | 440 | 880 | 28'-9" | 16900 | ST | | 1'-6" | |
| ES402 | 108 | 108 | 216 | 34'-0" | 4906 | ST | | | |
| ES501 | 630 | 630 | 1260 | 24' | 31540 | ST | | 2'-11" | |
| ES502 | 368 | 368 | 736 | 29'-7" | 22710 | ST | | 2'-6" | |
| ES503 | 10 | 10 | 20 | 13'-6" | 282 | ST | | | |
| ES504 | 2 | 2 | 4 | 13'-6" | 56 | BT | ① | | |
| ES505 | 4 | 4 | 8 | 13'-6" | 113 | BT | ② | | |
| ES506 | 49 | 49 | 98 | 15'-0" | 1533 | ST | | | |
| ES507 | 72 | 72 | 144 | 4'-6" | 676 | ST | | | |
| ES508 | 28 | 28 | 56 | 30'-8" | 1791 | ST | | 1'-11" | |
| ES509 | 149 | 149 | 298 | 5'-3" | 1632 | BT | ③ | | |
| ES510 | 163 | 163 | 326 | 3'-1" | 1048 | BT | ④ | | |
| ES511 | 171 | 171 | 342 | 5'-4" | 1902 | BT | ⑤ | | |
| ES512 | 14 | 14 | 28 | 2'-11" | 85 | BT | ⑥ | | |
| ES513 | 169 | 169 | 338 | 3'-10½" | 1366 | BT | ⑨ | | |
| ES514 | 6 | 6 | 12 | 3'-3½" | 41 | BT | ⑦ | | |
| ES515 | 24 | 24 | 48 | 30'-2" | 1510 | ST | | 1'-11" | |
| ES516 | 171 | 171 | 342 | 3'-1" | 1100 | BT | ⑧ | | |
| ES518 | 171 | 171 | 342 | 2'-11" | 1040 | BT | ④ | | |
| ES519 | 62 | 62 | 124 | Ⓐ | 2096 | ST | | 2'-11" | |
| ES520 | 102 | 102 | 204 | Ⓑ | 3705 | ST | | | |
| ES521 | 20 | 20 | 40 | Ⓒ | 209 | ST | | | |
| ES522 | 6 | 6 | 12 | 14'-5" | 180 | ST | | | |
| ES523 | 4 | 4 | 8 | 34'-0" | 284 | ST | | | |
| ES601 | 630 | 630 | 1260 | 24'-2" | 45736 | ST | | 3'-5" | |
| ES602 | 62 | 62 | 124 | Ⓓ | 3065 | ST | | 3'-5" | |
| ES603 | 102 | 102 | 204 | Ⓔ | 5336 | ST | | | |
| ES604 | 20 | 20 | 40 | Ⓒ | 300 | ST | | | |
| Totals for Superstructure | | | | | 151,142 | | | | |

| MARK | NO. IN ABUTMENT LT. | RT. | TOTAL | LENGTH | WEIGHT (LBS.) | SHAPE | LAP LENGTH | DOWEL HOLES (EACH) |
|---|---|---|---|---|---|---|---|---|
| Abutments | | | | | | | | |
| EA506 | 194 | | 194 | 16'-11" | 3423 | BT. ⑩ | | |
| EA507 | 276 | | 276 | 6'-8" | 1919 | BT. ⑪ | | 552 |
| EA508 | 88 | | 88 | 12'-1" | 1109 | BT. ⑫ | | |
| EA509 | 228 | | 228 | 26'-0" | 6183 | ST. | min. 2'-6" | |
| EA510 | 10 | | 10 | 10'-0" | 104 | BT. ⑬ | | |
| EA511 | 6 | | 6 | 9'-6" | 59 | BT. ⑭ | | |
| EA512 | 8 | | 8 | 4'-6" | 38 | ST. | | 8 |
| EA513 | 12 | | 12 | 4'-0" | 50 | ST. | | 12 |
| EA514 | 24 | | 24 | 2'-6" | 63 | ST. | | 24 |
| EA515 | 4 | | 4 | 5'-3" | 22 | BT. ⑮ | | 4 |
| EA516 | 2 | | 2 | 11'-1" | 23 | BT. ⑯ | | |
| EA517 | 6 | | 6 | 9'-1" | 57 | BT. ⑯ | | |
| EA518 | 2 | | 2 | 6'-9" | 14 | BT. ⑰ | | 2 |
| EA519 | 4 | | 4 | 4'-9" | 20 | BT. ⑱ | | 4 |
| EA520 | 12 | | 12 | 3'-6" | 44 | ST. | | 12 |
| EA801 | 268 | | 268 | 5'-0" | 3578 | BT. ⑲ | | |
| Totals for Abutments | | | | | 16,706 | | | 618 |

Ⓐ 2-Series of 30 spa from 8'-9" to 23'-3" @ increments of 6" ±
Ⓑ 2-Series of 50 spa from 5'-4" to 29'-6" @ increments of 6" ±
Ⓒ Fan 10 bars Length = 5'-0"
Ⓓ 2-Series of 30 spaces from 9'-5" to 23'-8" @ increments of 6" ±
Ⓔ 2-Series of 50 spaces from 5'-4" to 29'-6" @ increments of 6" ±

BENDING DIAGRAMS

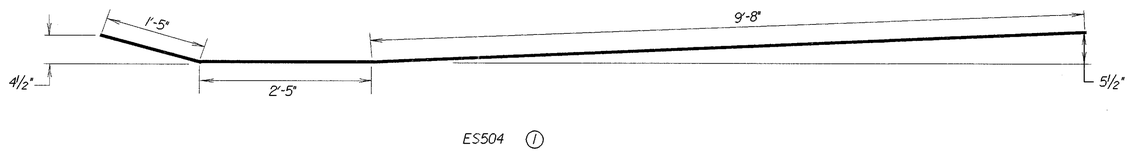

ES504 ①

ES505 ②

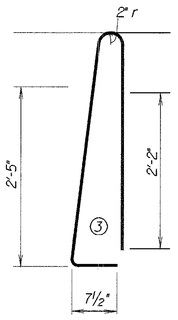

ES509

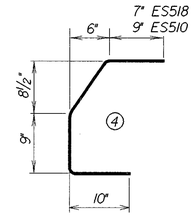

ES510
ES518

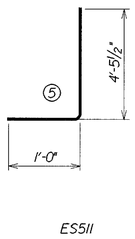

ES511

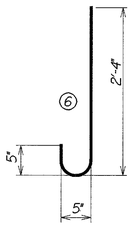

ES512

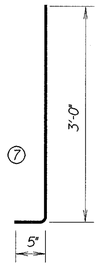

ES514

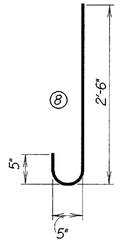

ES516

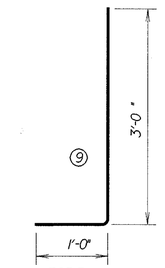

ES513

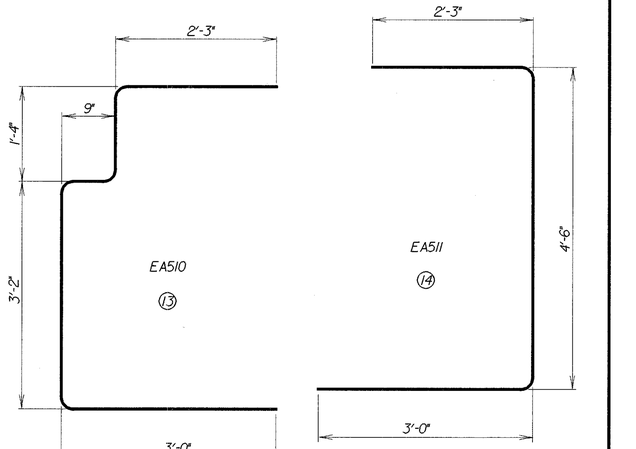

EA510



EA511

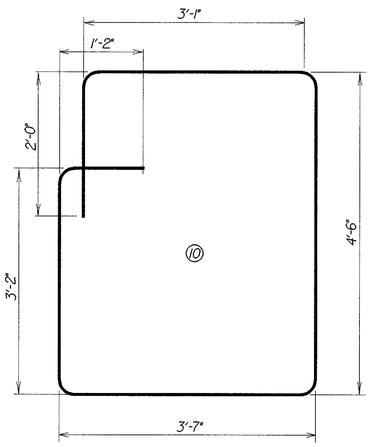

EA506

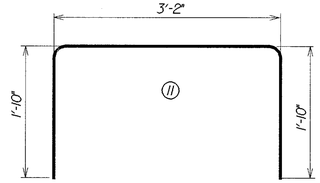

EA507

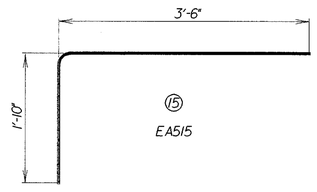

EA515

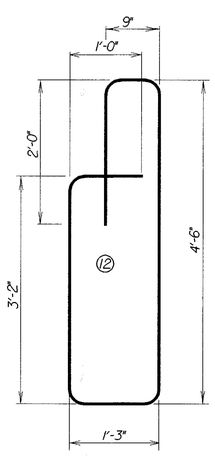

EA508

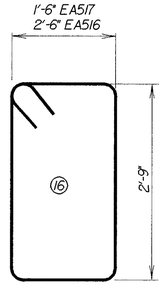

EA516
EA517

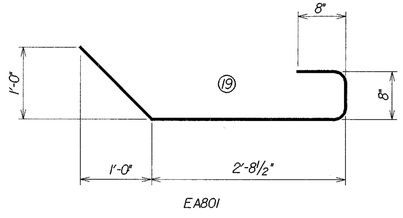

EA801

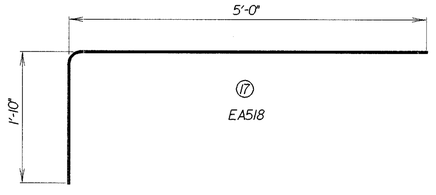

EA518

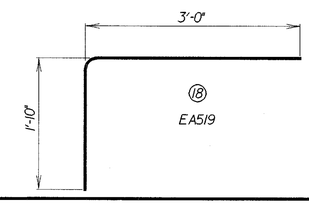

EA519

"E" in prefix designates epoxy coated

| FHWA REGION | STATE | PROJECT | |
|---|---|---|---|
| 5 | OHIO | | |

288 / 367

OTT-2-16.60

STATE OF OHIO
DEPARTMENT OF TRANSPORTATION
DISTRICT 2 DESIGN & PLANNING OFFICE

17 / 17

REINFORCING STEEL LIST
AND DETAILS
BRIDGE NO. OTT-2-1766
OVER CONRAIL RR

| DESIGNED | DRAWN | TRACED | CHECKED | REVIEWED DATE | REVISED |
|---|---|---|---|---|---|
| MTG | ALS | | LLL | LCL 1/5/95 | |

I:/PD/OTT/AWA/OTT2/OT12CRSSLDGN

| FHWA REGION | STATE | PROJECT | |
|---|---|---|---|
| 5 | OHIO | | |

289 / 367

OTT-2-16.60

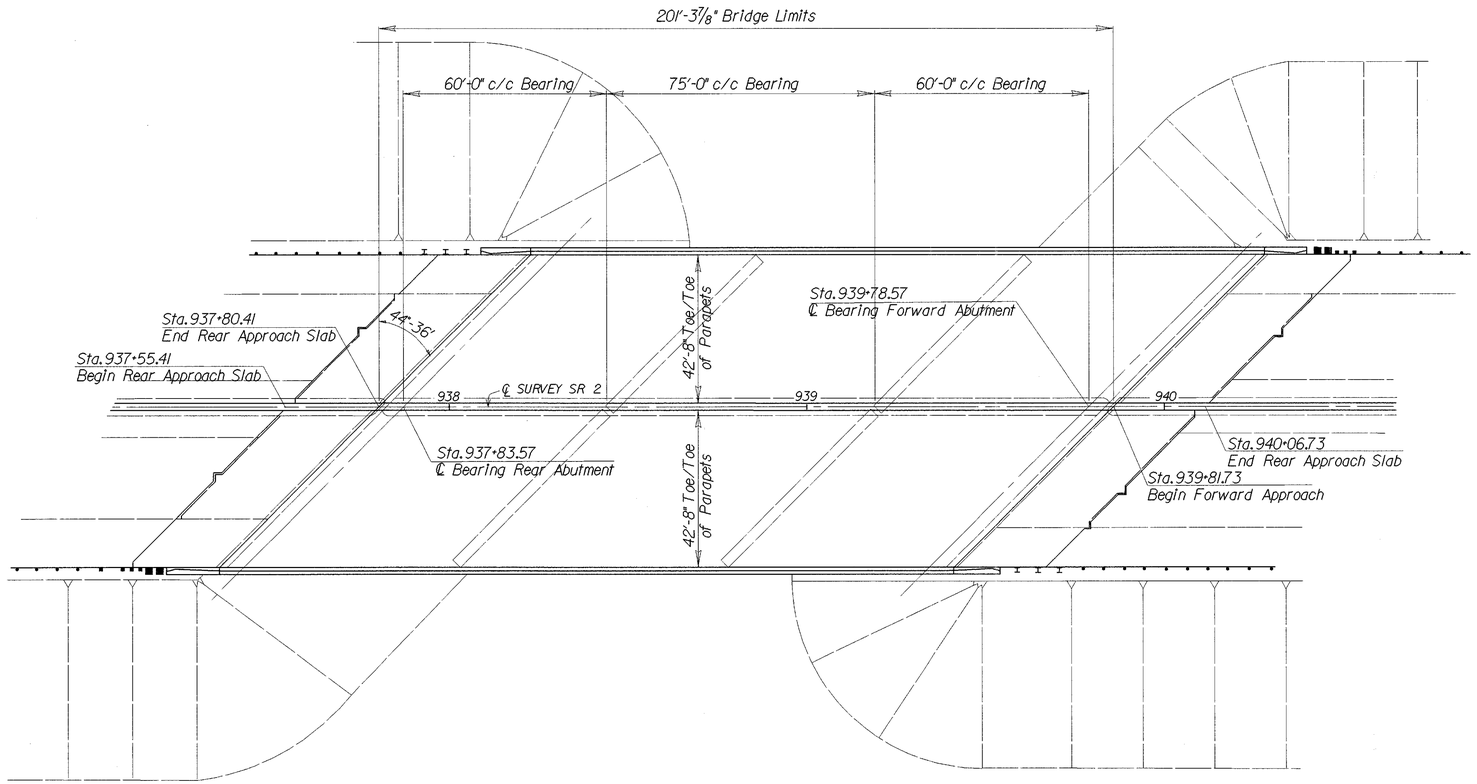


**PLAN**

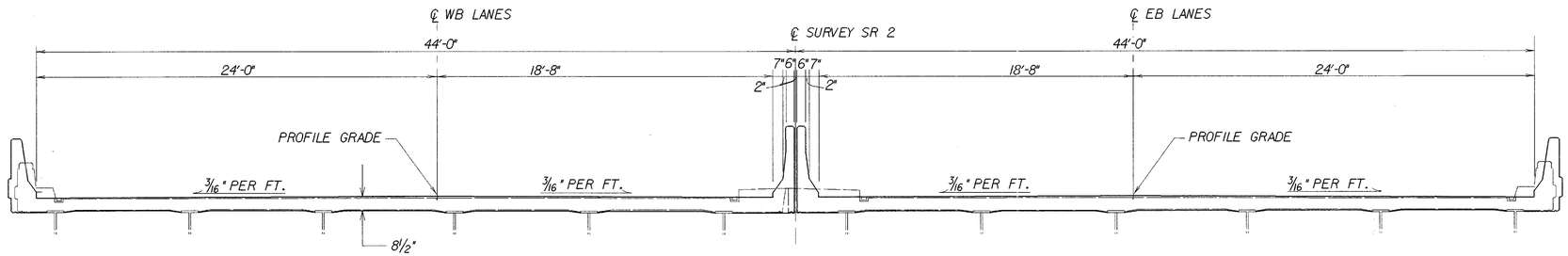


**TRANSVERSE SECTION**

## PROPOSED WORK

1.) Remove existing bridge deck and approach slab
2.) Replace existing expansion joints with semi-integral abutments
3.) Build bridge deck and approach slabs
4.) Construct safety shape parapets
5.) Seal abutments, parapets, wingwalls with epoxy/urethane
6.) Paint the structural steel with system OZEU
7.) Repair erosion
8.) Remove graffiti from piers

## EXISTING STRUCTURE DATA

Type: Continuous steel beam with reinforced concrete deck
Reinforced concrete pier bents and stub abutments
Spans: 60'-0", 75'-0", 60'-0" c/c bearings
Roadway: 88' f/f of parapets with 6'-0" raised median
Loading: HS-20
Skew: 44°-36' left forward
Wearing surface: 1" monolithic concrete
Approach Slabs: AS-1-54 (25'-0")
Alignment: Tangent
SFN: 6200273
Original Construction: 1968

## PROPOSED STRUCTURE DATA

Type: Continuous steel beam with reinforced concrete deck
Reinforced concrete pier bents and stub abutments
Span: 60'-0", 75'-0", 60'-0" c/c bearings
Roadway: 42'-8" toe to toe of parapets
Loading: HS 20-44 case II and alternate military
Approach Slabs: AS-1-81 (25'-0")
Skew: 44°-36' left forward
Wearing Surface: 1" monolithic wearing surface
Alignment: Tangent
SFN: 6200273

STATE OF OHIO
DEPARTMENT OF TRANSPORTATION
DISTRICT 2 DESIGN & PLANNING OFFICE

1 / 17

# GENERAL PLAN AND TRANSVERSE SECTION BRIDGE NO. OTT-2-1776 OVER SR 163

| DESIGNED | DRAWN | TRACED | CHECKED | REVIEWED DATE | REVISED |
|---|---|---|---|---|---|
| MTG | ALS | | LLL | LCL 1/9/95 | |

I:/pd/ottawa/ott2/OT2163SP.dgn

| FHWA REGION | STATE | PROJECT | |
|---|---|---|---|
| 5 | OHIO | | |

290 / 367

OTT-2-16.60

# BRIDGE NOTES

REFERENCE SHALL BE MADE TO STANDARD DRAWINGS:

| | |
|---|---|
| AS-1-81 | DATED 11-27-81 |
| BR-1 | DATED 5-29-79 |
| RB-1-55 | DATED 3-1-55 |
| FB-1-82 | DATED 5-10-82 |
| ICD-1-82 | DATED 8-1-84 |

AND SUPPLEMENTAL SPECIFICATION:

| | |
|---|---|
| SS815 | DATED 7-17-95 |
| ~~SS80E~~ | ~~DATED 7-15-83~~ |

EXISTING STRUCTURE VERIFICATION

DETAILS AND DIMENSIONS SHOWN ON THESE PLANS PERTAINING TO THE EXISTING STUCTURES HAVE BEEN OBTAINED FROM THE PLANS OF THE EXISTING STRUCTURES AND/OR FROM FIELD OBSERVATIONS AND MEASUREMENTS. CONSEQUENTLY, THEY ARE INDICATIVE OF THE EXISTING STRUCTURES AND THE PROPOSED WORK BUT THEY SHALL BE CONSIDERED TENTATIVE AND APPROXIMATE. THE CONTRACTOR IS REFERRED TO CMS SECTIONS 102.05, 105.02, AND 513.02.

ITEM 202, PORTIONS OF STRUCTURES REMOVED, AS PER PLAN

WHEN NO LONGER NEEDED TO MAINTAIN TRAFFIC, THE DESIGNATED PORTIONS OF THE BRIDGE DECK SHALL BE REMOVED.

THIS ITEM SHALL ALSO INCLUDE THE REMOVAL AND DISPOSAL OF ABUTMENT BACKWALLS, BRIDGE PARAPETS, RAISED CONCRETE MEDIANS ON BRIDGE DECKS AND ABUTMENTS, BRIDGE DECKS, AND EXISTING DECK SCUPPERS.

ANY LOOSE OR DETERIORATED CONCRETE ADJACENT TO THE PROPOSED REMOVAL LIMITS SHALL BE REMOVED. THE LIMITS OF THIS ADDITIONAL REMOVAL SHALL BE DIRECTED BY THE ENGINEER. CARE SHALL BE EXERCISED DURING REMOVAL TO AVOID DAMAGE TO ADJACENT PORTIONS OF THE BRIDGE ABUTMENTS WHICH ARE NOT TO BE REPAIRED UNDER THIS CONTRACT.

COST OF REMOVAL, AND/OR DISPOSAL AS NOTED ABOVE SHALL BE INCLUDED IN THE CONTRACT PRICE BID FOR "ITEM 202, PORTIONS OF STRUCTURES REMOVED, AS PER PLAN."

PROTECTION OF TRAFFIC: PRIOR TO DEMOLITION OF ANY PORTIONS OF THE EXISTING SUPERSTRUCTURE, THE CONTRACTOR SHALL SUBMIT HIS PLANS FOR THE PROTECTION OF TRAFFIC (VEHICULAR, PEDESTRIAN, BOAT, ETC.) ADJACENT TO AND/OR UNDER THE STRUCTURE TO THE DIRECTOR FOR APPROVAL. THESE PLANS SHALL INCLUDE PROVISIONS FOR ANY DEVICES AND STRUCTURES THAT MAY BE NECESSARY TO ENSURE SUCH PROTECTION. TEMPORARY VERTICAL CLEARANCES SPECIFIED IN THE PROPOSAL SHALL BE MAINTAINED AT ALL TIMES EXCEPT AS OTHERWISE APPROVED BY THE DIRECTOR.

DECK REMOVALS:

DUE TO THE POSSIBLE PRESENCE OF WELDED ATTACHMENTS TO EXISTING STRUCTURAL STEEL (FINISHING MACHINE, SCUPPER AND FORM SUPPORTS, ETC.), CARE SHOULD BE TAKEN DURING DECK REMOVAL TO AVOID DAMAGING STRINGERS WHICH ARE TO REMAIN. STRINGERS DAMAGED BY THE CONTRACTOR'S REMOVAL OPERATIONS SHALL, AT NO COST TO THE PROJECT, BE REPLACED OR REPAIRED. PROPOSED REPAIRS, DEVELOPED BY A REGISTERED PROFESSIONAL ENGINEER, SHALL BE SUBMITTED IN WRITING FOR REVIEW AND APPROVAL BY THE DIRECTOR.

REMOVAL METHODS:

CONCRETE MAY BE REMOVED BY CUTTING AND BY MEANS OF HAND OPERATED PNEUMATIC HAMMERS EMPLOYING POINTED OR BLUNTED CHISEL TYPE TOOLS. FOR REMOVALS ABOVE STEEL MEMBERS, A HAMMER HEAVIER THAN 35 POUNDS BUT NOT TO EXCEED 90 POUNDS, MAY BE USED AT THE APPROVAL OF THE ENGINEER, TO ENSURE ADEQUATE DEPTH CONTROL AND TO PREVENT NICKING OR GOUGING THE PRIMARY STEEL MEMBERS.

LOADING LIMITATIONS:

NO PART OF THE STRUCTURE WILL BE SUBJECTED TO UNIT STRESSES THAT EXCEED 136.5% OF THE ALLOWABLE UNIT STRESSES GIVEN IN THE AASHTO STANDARD SPECIFICATIONS FOR HIGHWAY BRIDGES DUE EITHER TO DEMOLITION, ERECTION OR CONSTRUCTION METHODS, OR TO THE USE OR MOVEMENT OF DEMOLITION OR ERECTION EQUIPMENT ON OR ACROSS THE STRUCTURE. STRUCTURAL ANALYSIS COMPUTATIONS, BY A REGISTERED PROFESSIONAL ENGINEER, SHOWING THE ALLOWABLE STRESSES AND THE MAXIMUM STRESSES PRODUCED BY THE CONTRACTOR'S METHODS OR EQUIPMENT SHALL BE SUBMITTED TO THE DIRECTOR FOR REVIEW AND APPROVAL AT LEAST TWO WEEKS PRIOR TO THE START OF THE WORK.

EXTRANEOUS MEMBERS:

EXISTING EXTRANEOUS MEMBERS (i.e., FINISHING MACHINE AND FORM SUPPORTS, ETC. AND THE SUPPORT FOR SCUPPERS AND BULB ANGLES WHICH ARE TO BE REMOVED) ATTACHED BY WELDED CONNECTIONS TO PORTIONS OF THE TOP FLANGES DESIGNATED "TENSION" SHALL BE REMOVED AND THE FLANGE SURFACES GROUND SMOOTH. GRINDING SHALL BE CAREFULLY DONE AND PARALLEL TO THE FLANGES.

PROTECTION OF STEEL SUPPORT SYSTEMS:

BEFORE DECK SLAB CUTTING IS PERMITTED, THE OUTLINE OF PRIMARY STEEL MEMBERS IN CONTACT WITH THE BOTTOM OF THE DECK SHALL BE DRAWN ON THE SURFACE OF THE DECK. SMALL DIAMETER PILOT HOLES SHALL BE DRILLED 2 INCHES OUTSIDE THESE LINES TO CONFIRM THE LOCATION OF FLANGE EDGES. DECK CUTS OVER OR WITHIN 2 INCHES OF FLANGE EDGES SHALL NOT EXTEND LOWER THAN THE BOTTOM LAYER OF DECK SLAB REINFORCING STEEL. CUTS MADE OUTSIDE 2 INCHES OF FLANGE EDGES MAY EXTEND THE DEPTH OF THE DECK. DURING CUTTING OF THE DECK SLAB, CARE SHALL BE TAKEN NOT TO DAMAGE STEEL MEMBERS THAT ARE TO BE INCORPORATED INTO THE PROPOSED STRUCTURE.

SEMI-INTEGRAL ABUTMENTS

WHEN CONSTRUCTING SEMI-INTEGRAL ABUTMENTS, THE END CROSSFRAMES MAY BE REMOVED SO THAT THE REINFORCEMENT MAY BE PLACED. PRIOR TO REMOVING THE END CROSSFRAMES THE BEAMS SHALL BE TEMPORARILY BRACED TO PREVENT ANY LATERAL MOVEMENT OR TWISTING BEFORE ENCASING IN CONCRETE.

CONCRETE PARAPETS:

WHEN A SLIPFORMING MACHINE IS USED FOR PARAPETS, TEMPORARY DEFLECTION JOINTS SHALL BE CONSTRUCTED BY THE USE OF A GROOVING TOOL, IMMEDIATELY FOLLOWING THE SLIPFORMING OPERATION, THE DEPTH OF THE JOINT SHALL BE MAX. ½".

WITHIN 48 HOURS AFTER PLACEMENT OF PARAPET CONCRETE SAWCUT 1 INCH DEEP JOINTS INTO THE CONCRETE PARAPET AT LOCATIONS AS DETAILED IN THE PLANS. THE SAWCUT SHALL BE MADE IN THE COMPLETE CIRCUMFERENCE OF THE PARAPET, STARTING AND ENDING AT THE ELEVATION OF THE CONCRETE DECK, AND THE COMPLETED SAWCUT SHALL BE FILLED WITH A CAULKING MATERIAL CONFORMING TO FEDERAL SPECIFICATION TT-S-00227E. THE BOTTOM HALF INCH OF THE ONE INCH DEEP SAWED JOINT IN BOTH THE INSIDE AND OUTSIDE FACES OF THE PARAPET SHOULD BE LEFT UNSEALED TO ALLOW ANY WATER WHICH MAY ENTER THE JOINT TO ESCAPE.

IF THE CONTRACTOR CHOOSES THE CAST-PLACE-OPTION THE HORIZONTAL REINFORCING STEEL BARS (S503 AND S504) SHALL BE CUT TO CLEAR THE VERTICAL DEFLECTION JOINTS BY 3 INCHES ON EACH SIDE OF THE JOINT.

REPLACEMENT OF EXISTING REINFORCING STEEL

ANY EXISTING REINFORCING BARS WHICH ARE TO BE INCORPORATED INTO THE NEW WORK AND WHICH ARE MADE UNUSABLE BY THE CONTRACTORS CONCRETE REMOVAL OPERATIONS SHALL BE REPLACED WITH NEW STEEL AT THE CONTRACTOR'S COST. ANY EXISTING REINFORCING BARS DEEMED BY THE ENGINEER TO BE UNUSABLE BECAUSE OF CORROSION SHALL BE REPLACED. AN ALLOWANCE OF 50 POUNDS IS INCLUDED UNDER ITEM 509 IN THE BRIDGE SUMMARY FOR THIS PURPOSE.

ITEM 503, UNCLASSIFIED EXCAVATION, AS PER PLAN

UNCLASSIFIED EXCAVATION SHALL BE IN ACCORDANCE WITH 503 EXCEPT THAT THE BACKFILL MATERIAL BEHIND THE ABUTMENTS SHALL BE 203 GRANULAR MATERIAL PLACED IN LIFTS NOT TO EXCEED A THICKNESS OF SIX (6) INCHES.

GENERAL PROVISIONS

THE CONTRACTORS ATTENTION IS CALLED TO ALL OF SECTION 100 OF THE 1995 CONSTRUCTION AND MATERIAL SPECIFICATIONS OF OHIO DEPARTMENT OF TRANSPORTATION, AND SPECIFICALLY TO THE ITEMS LISTED BELOW AS PROVIDED FOR IN THIS SECTION.

COOPERATION OF CONTRACTOR:

THE CONTRACTOR SHALL NOT PERFORM WORK ON SUNDAYS OR LEGAL HOLIDAYS WITHOUT THE APPROVAL OF THE ENGINEER.

PRIOR INSPECTION OF WORK

PROSPECTIVE BIDDERS ARE REQUIRED TO MAKE AN INSPECTION OF THE BRIDGES IN THE FIELD AND TO REVIEW THE PLANS AND SPECIFICATIONS BEFORE SUBMITTING BIDS. SEE SEC. 102.05 OF THE CONSTRUCTION AND MATERIALS SPECIFICATIONS, JANUARY 1, 1995.

PROTECTION OF PERSONS AND PROPERTY

THE CONTRACTOR SHALL COLLECT, REMOVE AND DISPOSE OF ALL BUCKETS, RAGS OR OTHER DISCARDED MATERIALS, AND HE SHALL LEAVE THE JOB SITE IN A CLEAN MANNER AND CONDITION.

PAINTING OF EXISTING STRUCTURAL STEEL

IN ADDITION TO THE SURFACE AREA OF THE STEEL STRINGERS TO BE PAINTED, AN ADDITIONAL TWENTY-FIVE PERCENT OF THIS AMOUNT HAS BEEN ADDED TO THE SQUARE FOOT TOTALS TO ACCOUNT FOR INCIDENTALS SUCH AS CROSSFRAMING, BEARINGS AND EXPANSION SYSTEMS. CAULKING AS PER SS 815 IS REQUIRED IN THE OPEN AREA BETWEEN ABUTTING WEBS AND BOTTOM BEAM FLANGES AT EACH SPLICE LOCATION. AN ESTIMATED QUANTITY OF 150 LIN. FT. CAULKING HAS BEEN CARRIED TO THE BRIDGE QUANTITIES SHEET.

PAINT: THE COLOR OF THE FINISH COAT SHALL BE BLUE.

STATE OF OHIO
DEPARTMENT OF TRANSPORTATION
DISTRICT 2 DESIGN & PLANNING OFFICE

2 / 17

BRIDGE NOTES
BRIDGE NO. OTT-2-1776
OVER SR 163

| DESIGNED | DRAWN | TRACED | CHECKED | REVIEWED DATE | REVISED |
|---|---|---|---|---|---|
| MTG | ALS | | LLL | LCL 1/9/95 | |

I:/pd/ottawa/ott2/ot2163bn.dgn

| FHWA REGION | STATE | PROJECT | |
|---|---|---|---|
| 5 | OHIO | | |

291
367

OTT-2-16.60

# BRIDGE NOTES

FINAL ELEVATIONS:

UPON REMOVAL OF THE EXISTING BRIDGE DECK, THE ELEVATIONS OF THE TOP OF ALL BEAMS SHALL BE TAKEN AT A MAXIMUM OF 25' INTERVALS TO VERIFY THE PROPOSED FINAL ELEVATIONS. IF ANY PROBLEMS ARE ENCOUNTERED DURING SET UP OF THE FINAL ELEVATIONS, THE CONCRETE HAUNCH THICKNESS CAN BE VARIED FROM 0" TO 2" FOR ADJUSTMENTS.

ITEM 516, 2" POLYSTYRENE JOINT FILLER, AS PER PLAN

MATERIAL SHALL MEET THE REQUIREMENTS OF ASTM C578-92, TYPE VI.

ITEM 516, REFURBISH BEARING DEVICE, AS PER PLAN

THIS ITEM SHALL INCLUDE ALL WORK NECESSARY TO PROPERLY ALIGN BRIDGE BEARINGS AS WELL AS THEIR CLEANING AND PAINTING. INCLUDED SHALL BE THE DISASSEMBLY OF THE BEARINGS, HAND TOOL CLEANING (GRINDING IF NECESSARY), PAINTING AS REQUIRED BY SYSTEM OZEU, REPLACEMENT OF SHEET LEAD (711J9), INSTALLATION OF ANY NECESSARY STEEL SHIMS OF THE SAME SIZE AS THE BEARINGS TO PROVIDE A SNUG FIT. REALIGNMENT OF THE UPPER BEARING PLATE BY REMOVING EXISTING WELDS AND REWELDING SO THAT THE BEARINGS ARE VERTICALLY ALIGNED AT 60 DEGREES F. LUBRICATING SLIDING SURFACES, AND REASSEMBLY OF THE BEARINGS. THE CONTRACTOR SHALL BE SURE THAT ALL BEARINGS ARE SHIMMED ADEQUATELY AND THAT NO BEAMS AND/OR BEARING DEVICES ARE "FLOATING". AT THE OPTION OF THE CONTRACTOR AND AT NO ADDITIONAL COST TO THE STATE, NEW BEARINGS OF THE SAME TYPE AS THE EXISTING MAY BE INSTALLED IN LIEU OF REFURBISHING THE BEARINGS. ALL WORK SHALL BE TO SATISFACTION OF THE ENGINEER. PAYMENT FOR ALL THE ABOVE DESCRIBED LABOR AND MATERIALS WILL BE MADE AT THE CONTRACT PRICE BID FOR ITEM 516-REFURBISH BEARING DEVICE, AS PER PLAN.

ALL REMOVALS SHALL BE PERFORMED WITH SUFFICIENT CARE SO AS TO LEAVE UNDAMAGED REMAINING PORTIONS OF THE BRIDGES AND THOSE COMPONENTS WHICH ARE TO BE REVISED. ANY DAMAGE RESULTING FROM REMOVAL OPERATIONS, STORAGE OR HANDLING SHALL BE REMEDIED BY THE CONTRACTOR AT HIS EXPENSE AND TO THE SATISFACTION OF THE ENGINEER. THE LEAD PLATES LOCATED UNDER THE BEARING DEVICES SHALL NOT BE REUSED AND SHALL BE DISPOSED OF.

BACKWALL DRAINAGE

THE EXISTING 4" BACKWALL DRAIN HOLES SHALL BE REPLACED BY CORE DRILLING 4½" IN DIAMETER TO ALLOW A 4" PLASTIC PIPE TO BE INSERTED AND ATTACHED TO THE BACKWALL USING AN EPOXY MORTAR.

AN ESTIMATED QUANTITY OF 158 LINEAR FEET OF ITEM 603, 4" CONDUIT, TYPE E (707.19), AS PER PLAN IS TO BE USED FOR THE STRUCTURE. THE COST OF ALL LABOR, EQUIPMENT AND MATERIAL NECESSARY TO COMPLETE THIS WORK SHALL BE INCLUDED IN THE UNIT PRICE BID.

ITEM 513, WELDED STUD SHEAR CONNECTOR, AS PER PLAN

PRIOR TO THE INSTALLATION OF SHEAR CONNECTORS, THE TOP FLANGES OF THE EXISTING STRUCTURAL STEEL SHALL BE SANDBLASTED. ALL SANDBLASTING SHALL BE DONE IN ACCORDANCE WITH SSPC-SP10 (NEAR-WHITE BLAST CLEANING) AND AS SHOWN ON SSPC-VIS 1-89 (PICTORIAL SURFACE PREPARATION STANDARDS FOR PAINTING STEEL SURFACES). THE WASTE SHALL BE CONTAINED AND DISPOSED OF AS PER SYSTEM OZEU SS 815. PAYMENT FOR THE ABOVE WORK SHALL BE INCLUDED IN ITEM 513, WELDED STUD SHEAR CONNECTOR, AS PER PLAN.

WELDED ATTACHMENTS: WELDED ATTACHMENTS OF SUPPORTS FOR CONCRETE DECK FINISHING MACHINE MAY BE MADE TO AREAS OF THE FASCIA STRINGER FLANGES DESIGNATED "COMPRESSION". ATTACHMENTS SHALL NOT BE MADE TO AREAS DESIGNATED "TENSION". FILLET WELDS TO COMPRESSION FLANGES SHALL BE NOT CLOSER THAN 1 INCH FROM EDGE OF FLANGE, BE NOT MORE THAN 2 INCHES LONG, AND BE NOT SMALLER THAN THE MINIMUM SIZE REQUIRED BY AASHTO.

ITEM 516, JACKING AND TEMPORARY SUPPORT OF SUPERSTRUCTURE

THIS ITEM SHALL INCLUDE ALL WORK NECESSARY TO JACK AND ADEQUATELY SUPPORT THE EXISTING SUPERSTRUCTURE.

THE CONTRACTOR SHALL BE RESPONSIBLE FOR THE DESIGN, INSTALLATION AND OPERATION OF AN ADEQUATE JACKING SYSTEM, INCUDING ANY TEMPORARY OR PERMANENT SUPPORTS, TO PERFORM THE WORK DESCRIBED IN THE PROJECT PLANS. THREE (3) SETS OF JACKING AND SUPPORT PLANS, PROCEDURES AND LOADING CALCULATIONS, PERFORMED AND STAMPED BY A REGISTERED PROFESSIONAL ENGINEER, SHALL BE SUBMITTED TO THE DIRECTOR FOR APPROVAL AT LEAST THIRTY (30) DAYS BEFORE ACTUAL WORK IS TO BEGIN. SUBMITTALS SHALL INCLUDE AT LEAST THE FOLLOWING:

PHYSICAL DIMENSIONS AND CAPACITY OF THE JACKING SYSTEMS ALONG WITH THE ACTUAL POSITIONS, INCLUDING DIMENSIONS, DEFINING WHERE THE JACKING SYSTEMS WILL BE PHYSICALLY LOCATED ON THE STRUCTURE TO PERFORM THE REQUIRED LIFTS.

PHYSICAL DIMENSIONS, MATERIALS, FABRICATION DETAILS AND DESIGN CALCULATIONS FOR ANY TEMPORARY OR PERMANENT SUPPORTS ALONG WITH ACTUAL DETAILS OF THEIR INSTALLED LOCATIONS ON THE STRUCTURE. HORIZONTAL MOVEMENT RESTRAINTS SHALL BE DESIGNED AND DETAILED. LATERAL AND LONGITUDINAL DESIGN LOADS AND SUPPORTING DESIGN CALCULATIONS SHALL BE INCLUDED.

A JACKING PLAN SHEET LAYOUT, WITH ADEQUATE DETAILS TO SHOW ALL JACKING POINTS, CALCULATED LOADINGS AT THOSE POINTS, LOCATIONS OF JACKING EQUIPMENT AND TEMPORARY OR PERMANENT SUPPORTS SHALL BE INCLUDED IN THE SUBMITTAL. ANY PHASED CONSTRUCTION, SPECIAL TRAFFIC REQUIREMENTS, CLEARANCE REQUIREMENTS, RAILROAD DETAILS OR SPECIAL CONSTRUCTION DETAILS THAT AFFECT THE JACKING OPERATION AND ANY OTHER DETAILS THE CONTRACTOR DEEMS NECESSARY TO ADEQUATELY VISUALLY DESCRIBE THE JACKING OPERATION SHALL ALSO BE INCLUDED IN THE JACKING PLAN SHEET.

THE PLAN SHEET SHALL INCLUDE A STEP BY STEP JACKING PROCEDURE DETAILING ALL STEPS IN THE OPERATION INCLUDING THE REQUIRED WORK DESCRIBED IN THE PROJECT PLANS.

JACKING OPERATIONS ARE LIMITED TO A MAXIMUM DIFFERENTIAL JACKING HEIGHT BETWEEN ADJACENT BEARINGS OF 1/4 INCH.

AT A MINIMUM, A JACKING OPERATION SHALL LIFT ALL BEARINGS AT ANY ONE ABUTMENT OR PIER SIMULTANEOUSLY. MAXIMUM DIFFERENTIAL JACKING HEIGHT BETWEEN ANY ADJACENT ABUTMENTS OR PIERS SHALL BE LIMITED BY STRESSES INDUCED IN THE AFFECTED STRUCTURAL MEMBERS. CALCULATIONS DETAILING ALL STRESSES INDUCED IN THE AFFECTED MEMBERS AND LIMITED BY ALLOWABLE STRESSES OF 136.5% OF NORMAL DESIGN STRESSES, SHALL BE INCLUDED IN THE JACKING PROCEDURE SUBMITTAL. THE ONLY EXCEPTION TO THE SIMULTANEOUS JACKING REQUIREMENT IS WHEN ACTUAL PROJECT WORK REQUIRES INDIVIDUAL BEARINGS TO BE REPLACED OR REHABILITATED, NO PERMANENT SHIMMING IS REQUIRED AND THE HEIGHT OF THE TOTAL LIFT DOES NOT EXCEED 1/4 INCH.

ALL LABOR, TOOLS, EQUIPMENT, MATERIALS AND INCIDENTALS NECESSARY TO COMPLETE THIS WORK ARE INCLUDED UNDER ITEM 516, JACKING AND TEMPORARY SUPPORT OF SUPERSTRUCTURE, AS PER PLAN.

ITEM 611 REINFORCED CONCRETE APPROACH SLAB (T-15"), AS PER PLAN:

THE REINFORCING STEEL FOR THE APPROACH SLABS OF THIS STRUCTURE SHALL BE EPOXY COATED IN CONFORMANCE WITH 509.

TWO SEPARATE THICKNESSES OF CLEAR OR OPAQUE POLYETHYLENE FILM, 705.06, SHALL BE PLACED ON THE PREPARED SUBBASE AND WHERE THE APPROACH SLAB IS TO BE CONSTRUCTED. THE POLYETHYLENE FILMS SHALL COMPLETELY COVER THE FULL LENGTH AND WIDTH OF THE SUBBASE BETWEEN THE SIDEWALL FORMS FOR THE APPROACH SLAB.

GRINDING FLANGE EDGES

STEEL OVER PAVEMENT TO HAVE FLANGE EDGES GROUND.

SOLVENT CLEANING

STEEL OVER PAVEMENT SHALL BE SOLVENT CLEANED.

ITEM SPECIAL - STRUCTURE MISC.: GRAFFITI REMOVAL

ALL GRAFFITI AREAS ON THE SURFACE OF ABUTMENTS, PIERS AND ANY ADDITIONAL AREAS ORDERED BY THE ENGINEER, SHALL BE PREPARED AND SEALED WITH AN EPOXY SEALER MEETING THE PROPOSAL NOTE FOR SEALING CONCRETE SURFACES (EPOXY/URETHANE). SEE PROPOSAL FOR SURFACE PREPARATION REQUIREMENTS, APPLICATION RATES. MATERIAL REQUIREMENTS AND APPLICATION PROCEDURES. AN ESTIMATED QUANTITY OF 50 SQ. YD. HAS BEEN SET UP IN THE GENERAL SUMMARY TO BE USED FOR THIS PURPOSE. THE ACTUAL QUANTITY SHALL BE OBTAINED FROM FIELD MEASUREMENT AND BE APPROVED BY THE ENGINEER. THE ACTUAL QUANTITY SHALL THEN BE SUBTRACTED FROM THE TOTAL QUANTITY FOR ITEM SPECIAL, SEALING OF CONCRETE SURFACES (EPOXY/URETHANE).

COLOR OF EPOXY SEALER TO MATCH EXISTING COLOR OF CONCRETE BY MIXING APPROVED GRAY PAINT.

PAYMENT FOR ALL OF THE ABOVE SHALL BE AT THE LUMP SUM PRICE BID FOR ITEM SPECIAL - STRUCTURE MISC.: GRAFFITI REMOVAL, WHICH SHALL INCLUDE ALL LABOR, EQUIPMENT, MATERIAL AND INCIDENTALS NECESSARY TO COMPLETE THE WORK.

STATE OF OHIO
DEPARTMENT OF TRANSPORTATION
DISTRICT 2 DESIGN & PLANNING OFFICE

3 / 17

BRIDGE NOTES
BRIDGE NO. OTT-2-1776
OVER SR 163

| DESIGNED | DRAWN | TRACED | CHECKED | REVIEWED DATE | REVISED |
|---|---|---|---|---|---|
| MTG | ALS | | LLL | LCL 1/9/95 | |

I:/pd/ottawa/ott2/ot2163bridgn.dgn

| FHWA REGION | STATE | PROJECT | |
|---|---|---|---|
| 5 | OHIO | | |

292/367

OTT-2-16.60

# ESTIMATED QUANTITIES

| ITEM | EXTENSION | TOTAL | UNIT | DESCRIPTION |
|---|---|---|---|---|
| 202 | 11201 | LUMP | LUMP | PORTIONS OF STRUCTURE REMOVED, AS PER PLAN (SEE SHT. NO. 5) |
| 503 | 21100 | 652 | CU.YD. | UNCLASSIFIED EXCAVATION |
| 509 | 15840 | 149108 | LB. | EPOXY COATED REINFORCING STEEL, GRADE 60 |
| 510 | 10000 | 600 | EACH | DOWEL HOLES WITH NONSHRINK, NONMETALLIC GROUT |
| 511 | 33400 | 768 | CU.YD. | CLASS S CONCRETE, SUPERSTRUCTURE |
| SPECIAL | 51267020 | 83 | SQ.YD. | MEMBRANE WATERPROOFING (SHEET TYPE 2) (SEE SHT. NO. 7) |
| SPECIAL | 51267510 | 1820 | SQ.YD. | SEALING OF CONCRETE SURFACES (EPOXY/URETHANE) (SEE PROPOSAL NOTE) |
| 513 | 20001 | 7056 | EACH | WELDED STUD SHEAR CONNECTOR, AS PER PLAN (SEE SHT. NO. 10) |
| 516 | 13200 | 161 | SQ.FT. | 1/2" PREFORMED EXPANSION JOINT FILLER |
| 516 | 13600 | 50 | SQ.FT. | 1" PREFORMED EXPANSION JOINT FILLER |
| 516 | 13900 | 123 | SQ.FT. | 2" PREFORMED EXPANSION JOINT FILLER |
| 516 | 14500 | 963 | SQ.FT. | STRUCTURAL JOINT OR JOINT SEALER, MISC.: 2" POLYSTYRENE JOINT FILLER, AS PER PLAN (SEE SHT. NO. 7) |
| 516 | 14500 | 892 | SQ.FT. | STRUCTURAL JOINT OR JOINT SEALER, MISC.: 3" POLYSTYRENE JOINT FILLER, AS PER PLAN (SEE SHT. NO. 7) |
| 516 | 43201 | 24 | EACH | ELASTOMERIC BEARING WITH INTERNAL LAMINATES ONLY (NEOPRENE) AS PER PLAN (9"x14"x2") (SEE SHT. NO. 7) |
| 516 | 45305 | 12 | EACH | REFURBISH BEARING DEVICE, AS PER PLAN (SEE SHT. NO. 3) |
| 516 | 47001 | LUMP | LUMP | JACKING AND TEMPORARY SUPPORT OF SUPERSTRUCTURE, AS PER PLAN (SEE SHT. NO. 3) |
| 518 | 21200 | 91 | CU.YD. | POROUS BACKFILL WITH FILTER FABRIC |
| 519 | 11100 | 11 | SQ.FT. | PATCHING CONCRETE STRUCTURE |
| SPECIAL | 53000800 | 50 | SQ.YD. | STRUCTURE MISC.: GRAFFITI REMOVAL |
| 601 | 20500 | 55 | CU.YD. | CRUSHED AGGREGATE SLOPE PROTECTION |
| 601 | 32200 | 5 | CU.YD. | ROCK CHANNEL PROTECTION, TYPE C WITH FILTER |
| 603 | 00401 | 158 | LIN.FT. | 4" CONDUIT, TYPE E, AS PER PLAN 707.19 (SEE SHT. NO. 15) |
| 815 | 00050 | 26647 | SQ.FT. | SURFACE PREPARATION OF EXISTING STEEL, SYSTEM OZEU |
| 815 | 00056 | 26647 | SQ.FT. | FIELD PAINTING OF EXISTING STEEL, PRIME COAT, SYSTEM OZEU |
| 815 | 00060 | 26647 | SQ.FT. | FIELD PAINTING OF EXISTING STEEL, INTERMEDIATE COAT, SYSTEM OZEU |
| 815 | 00066 | 26647 | SQ.FT. | FIELD PAINTING OF EXISTING STEEL, FINISH COAT, SYSTEM OZEU |
| 815 | 00500 | 150 | LIN.FT. | CAULKING |
| 815 | 00504 | 94 | MAN HOUR | GRINDING FINS, TEARS, SLIVERS |
| 815 | 00508 | 3360 | LIN.FT. | GRINDING FLANGE EDGES |

I:/PD/OTT AWA/OTT 2/OT 2163BS.DGN

STATE OF OHIO
DEPARTMENT OF TRANSPORTATION
DISTRICT 2 DESIGN & PLANNING OFFICE

4 / 17

ESTIMATED QUANTITIES
BRIDGE NO. OTT-2-1776
OVER SR 163

| DESIGNED | DRAWN | TRACED | CHECKED | REVIEWED DATE | REVISED |
|---|---|---|---|---|---|
| MTG | ALS | | LLL | LCL 1/9/95 | |

| FHWA REGION | STATE | PROJECT | |
|---|---|---|---|
| 5 | OHIO | | |

293/367

OTT-2-16.60

N for Rear Abutment

N for Forward Abutment

LEGEND

Concrete Removal Limits

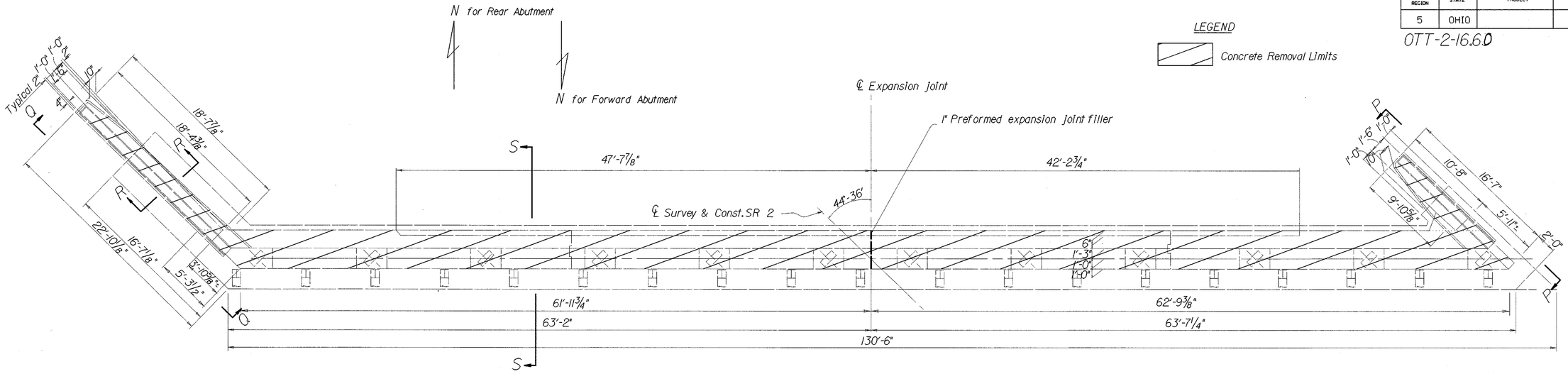


PLAN VIEW

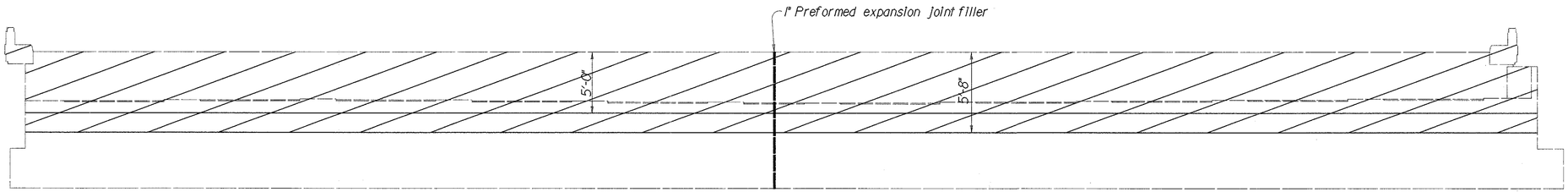


ELEVATION VIEW

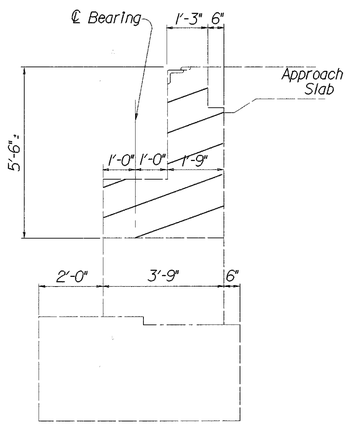


SECTION S-S

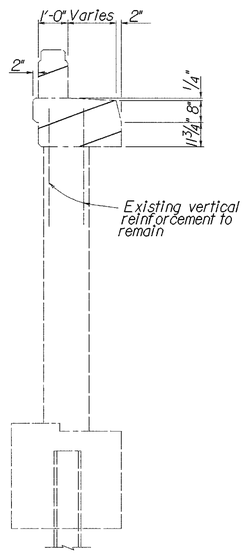


SECTION R-R

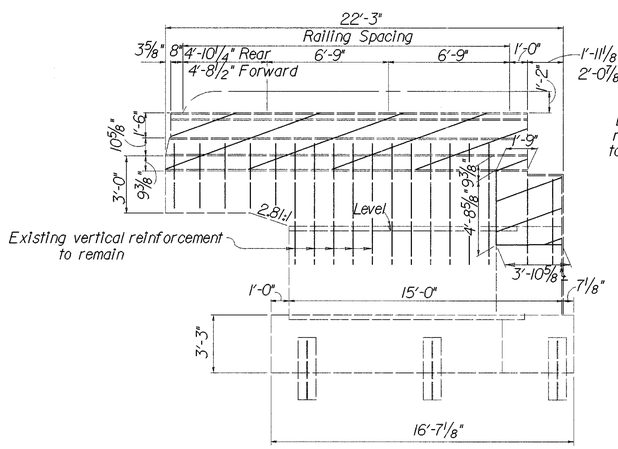


SECTION Q-Q

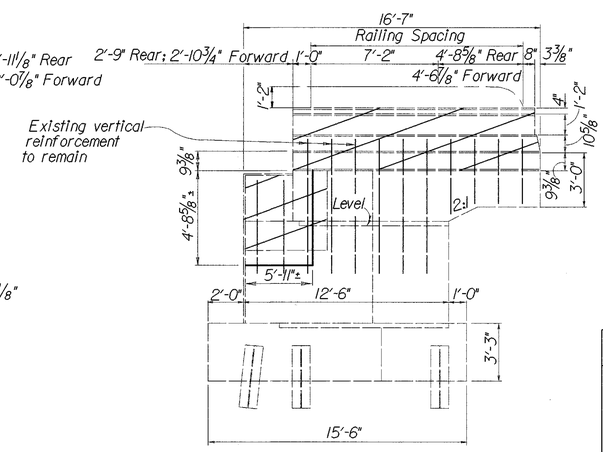


SECTION P-P

STATE OF OHIO
DEPARTMENT OF TRANSPORTATION
DISTRICT 2 DESIGN & PLANNING OFFICE

5 / 17

# EXISTING ABUTMENT REMOVAL DETAILS
# BRIDGE NO. OTT-2-1776
# OVER SR 163

| DESIGNED | DRAWN | TRACED | CHECKED | REVIEWED DATE | REVISED |
|---|---|---|---|---|---|
| MTG | ALS | | LLL | LCL 1/9/95 | |

I:/pd/OTT AWA/OTT 2/02163SD1.DGN

| FHWA REGION | STATE | PROJECT | |
|---|---|---|---|
| 5 | OHIO | | |

294 / 367

OTT-2-16.60

LEGEND

Wingwall extension

See Sht. No. 7/17 For Section "N-N"
See Sht. No. 13/17 For Sections "A-A", "B-B" and "C-C"
See Sht. No. 12/17 For Sections "D-D", "E-E" and "F-F"

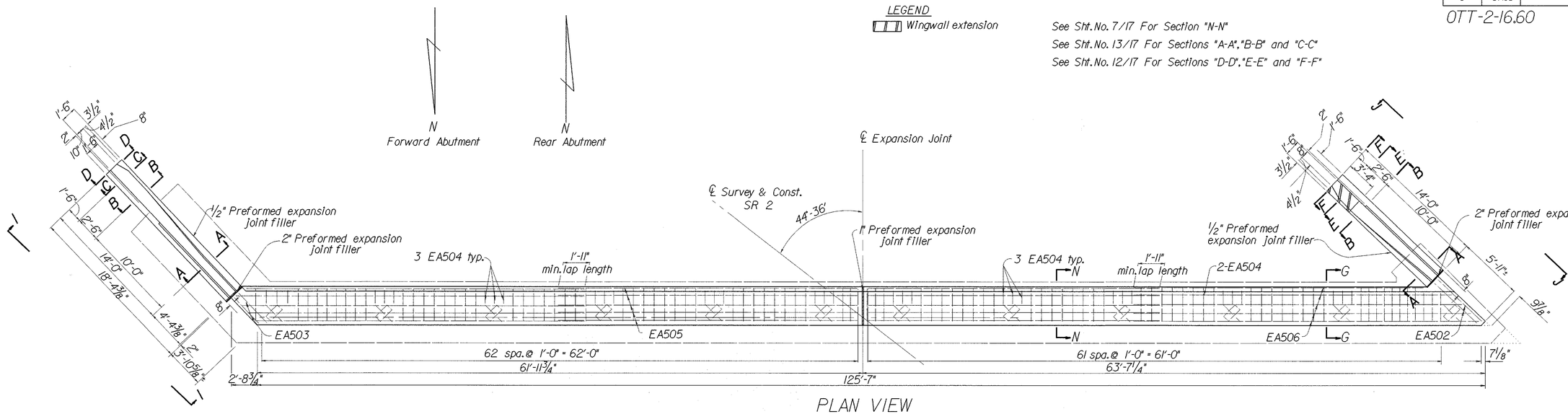


PLAN VIEW
FORWARD ABUTMENT

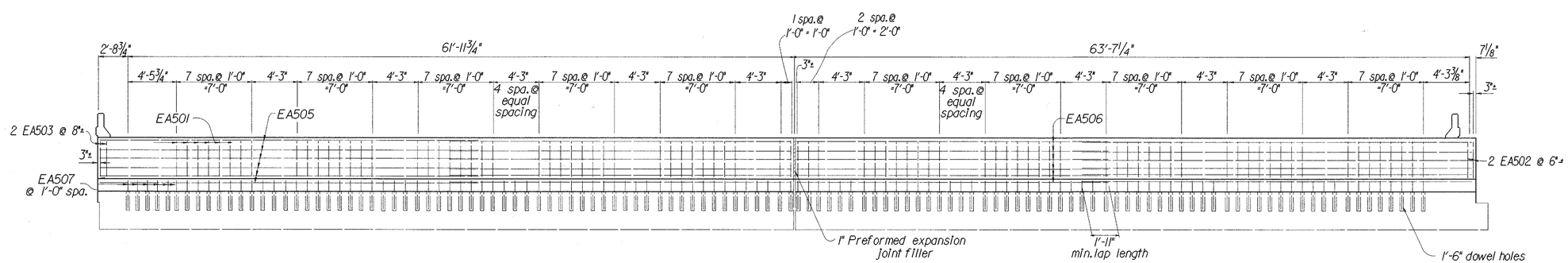


ELEVATION VIEW

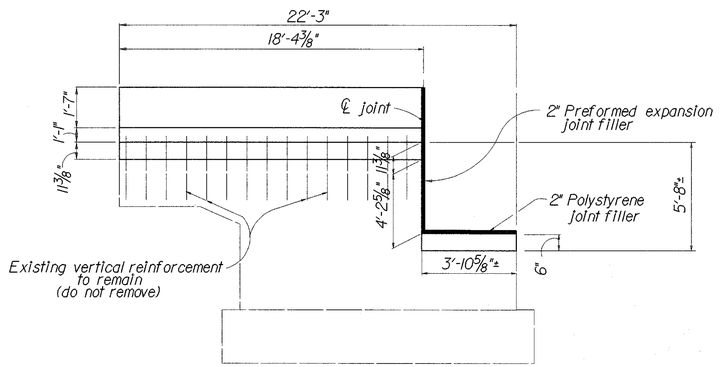


VIEW I-I

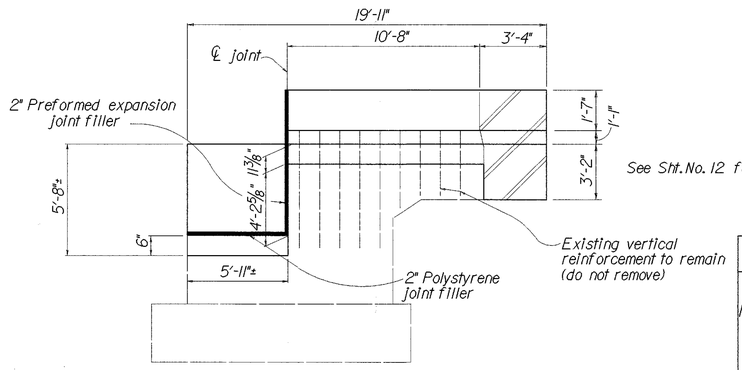


VIEW J-J

See Sht. No. 12 for reinforcing steel details

STATE OF OHIO
DEPARTMENT OF TRANSPORTATION
DISTRICT 2 — DESIGN & PLANNING OFFICE

6 / 17

# FORWARD AND REAR ABUTMENT DETAILS
# BRIDGE NO. OTT-2-1776
# OVER SR 163

| DESIGNED | DRAWN | TRACED | CHECKED | REVIEWED DATE | REVISED |
|---|---|---|---|---|---|
| MTG | ALS | | LLL | LCL 1/9/95 | |

I:/pd/OTTAWA/OTT2/02163SD9.DGN

| FHWA REGION | STATE | PROJECT | |
|---|---|---|---|
| 5 | OHIO | | |

295
367

OTT-2-16.60

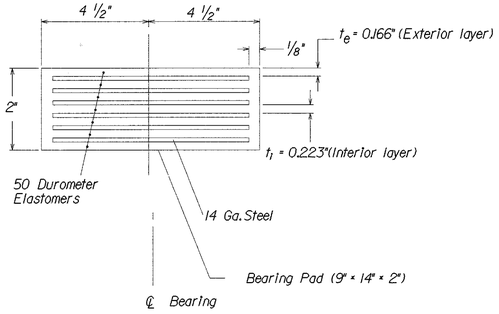


Detail A

LAMINATED ELASTOMERIC BEARINGS:
THE ELASTOMER SHALL BE 50 DUROMETER HARDNESS. THE STEEL PLATES BETWEEN LAMINATES SHALL BE A36 STEEL.

DESIGN LOADS:
THE LAMINATED ELASTOMERIC BEARINGS ARE DESIGNED FOR THE FOLLOWING LOADS:
DEAD LOAD REACTION = 55 KIPS
LIVE LOAD REACTION = 43 KIPS
MAX. DESIGN LOAD = 98 KIPS

* 2" ∅ holes may be burned. Cost to be included in Item 509

NOTE:
Upon removal of the existing bridge deck the elevations of the top of beams at the abutment shall be taken The beams shall be reset on the rebuilt abutments at the same elevation as described above. If the dimension of the HP spacer does not allow for the elevation to be obtained the HP spacer may be field cut or steel shims may be placed between the beam and the steel load plate. Cost of the above work shall be included for payment with Item 516, Elastomeric Bearings, as per plan.

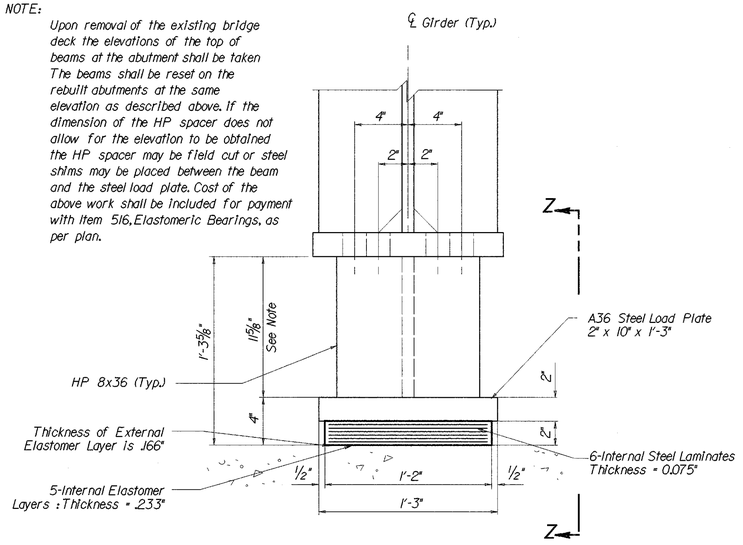


SECT. Y-Y

## Rear & Fwd. Abut. (expansion) Laminated Elastomeric Bearing Details

LEGEND
Proposed Concrete

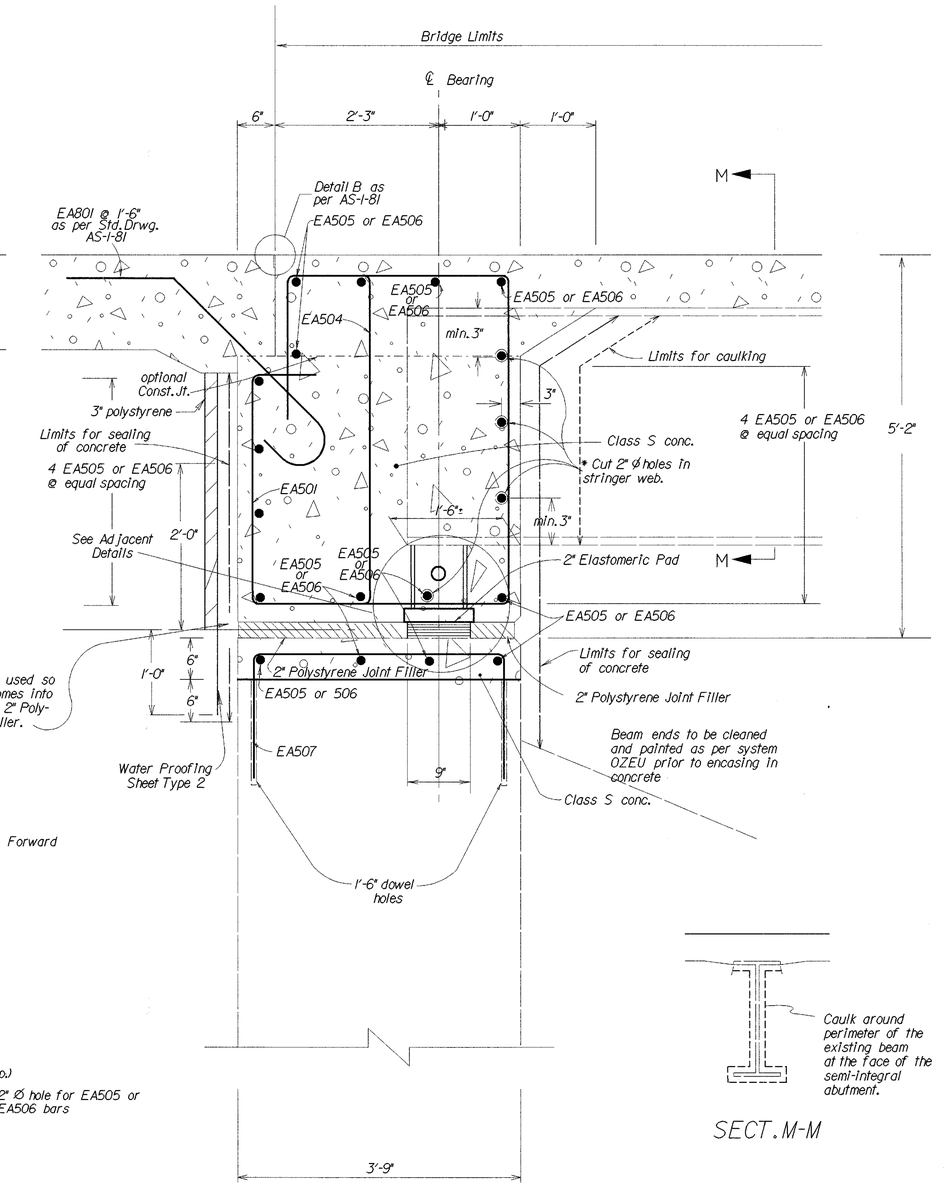


Note: Caution shall be used so that no epoxy comes into contact with the 2" Polystyrene Joint Filler.

SECT. N-N
(see sht. no. 6)

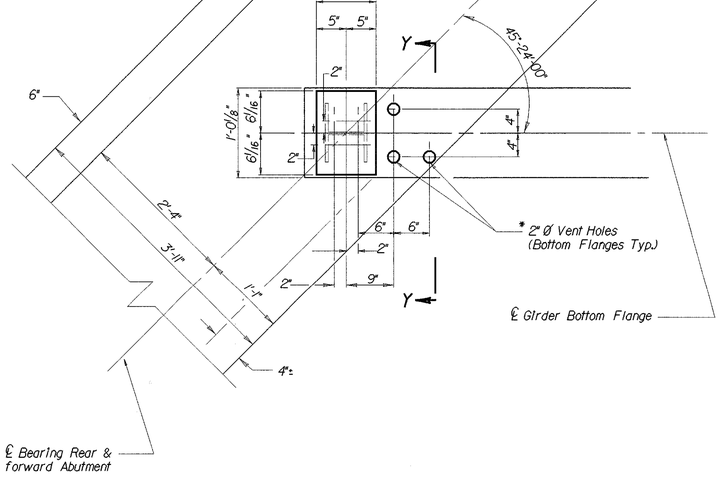


PLAN

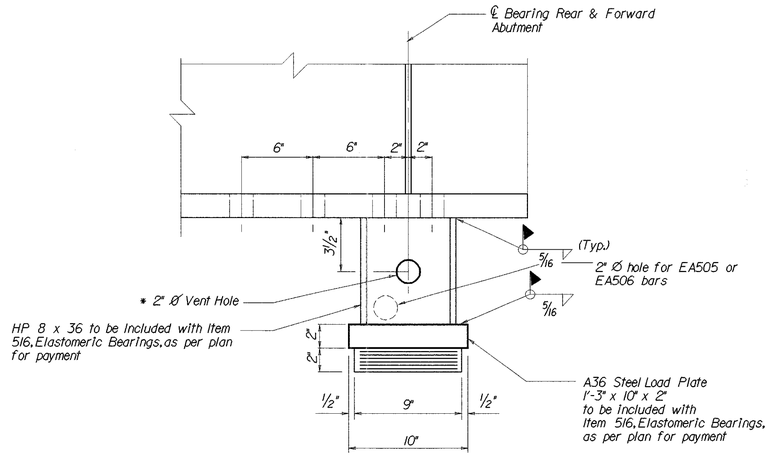


SECT. Z-Z




SECT. M-M

STATE OF OHIO
DEPARTMENT OF TRANSPORTATION
DISTRICT 2 — DESIGN & PLANNING OFFICE

7 / 17

# TYPICAL SEMI-INTEGRAL ABUTMENT DETAILS BRIDGE NO. OTT-2-1776 OVER SR 163

| DESIGNED | DRAWN | TRACED | CHECKED | REVIEWED DATE | REVISED |
|---|---|---|---|---|---|
| MTG | ALS | | LLL | LCL 1/9/95 | . |

i:/pd/OTTAWA/OTT2/02163SD2.DGN

| FHWA REGION | STATE | PROJECT | |
|---|---|---|---|
| 5 | OHIO | | |

296/367

OTT-2-16.60

LEGEND

(N.S.) Near Side
(F.S.) Far Side

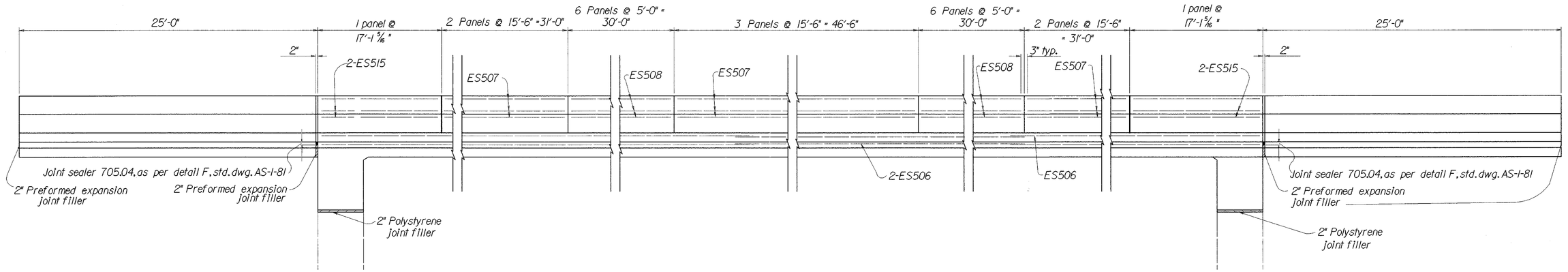


ELEVATION
HORIZONTAL REINFORCEMENT IN MEDIAN BARRIER

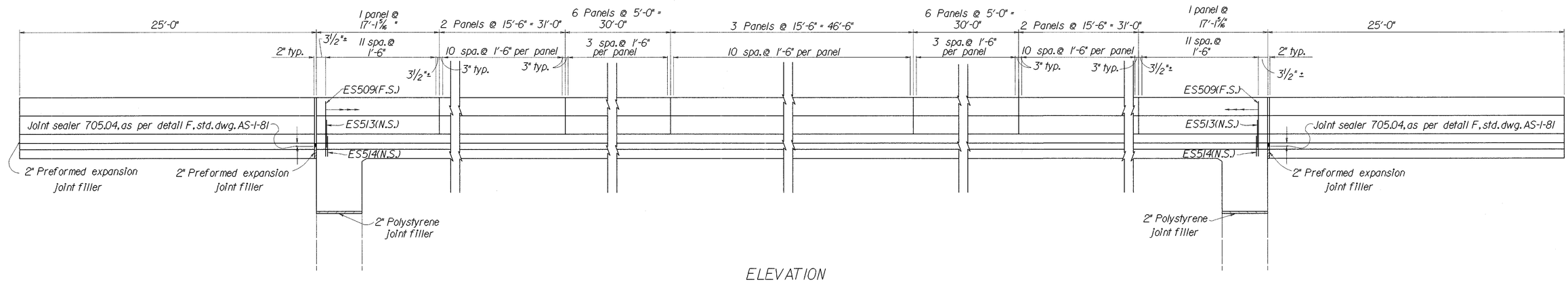


ELEVATION
VERTICAL REINFORCEMENT IN MEDIAN BARRIER

STATE OF OHIO
DEPARTMENT OF TRANSPORTATION
DISTRICT 2 DESIGN & PLANNING OFFICE

8 / 17

# MEDIAN BARRIER DETAILS
# BRIDGE NO. OTT-2-1776
# OVER SR 163

| DESIGNED | DRAWN | TRACED | CHECKED | REVIEWED DATE | REVISED |
|---|---|---|---|---|---|
| MTG | ALS | | LLL | LCL 1/9/95 | |

i:/pd/OTTAWA/OTT2/02163SD6.DGN

| FHWA REGION | STATE | PROJECT | |
|---|---|---|---|
| 5 | OHIO | | |

297/367

OTT-2-16.60

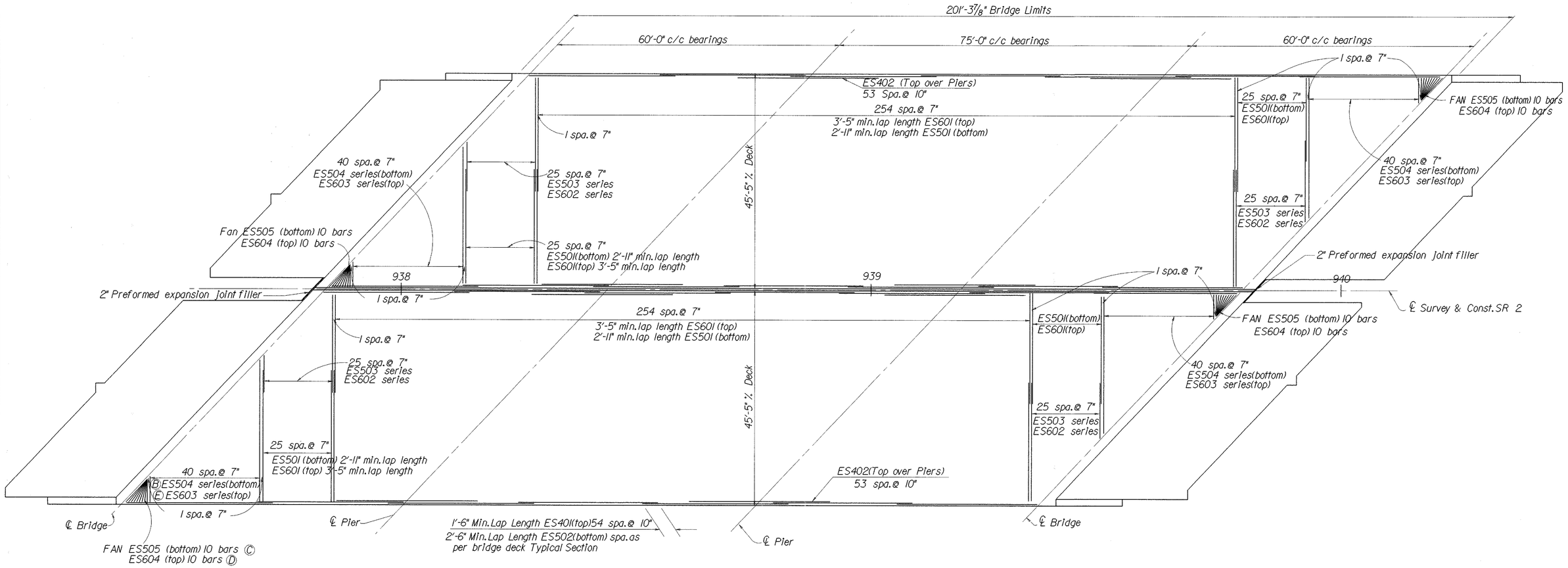


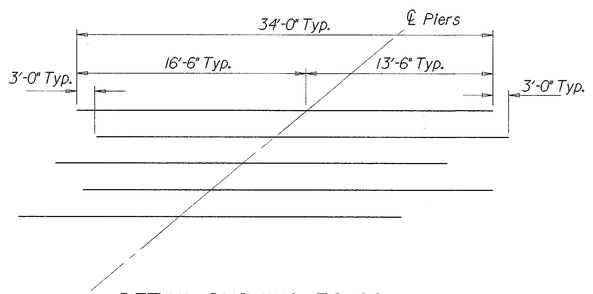


DETAIL SHOWING ES402 BARS OVER PIERS

STATE OF OHIO
DEPARTMENT OF TRANSPORTATION
DISTRICT 2 DESIGN & PLANNING OFFICE

9 / 17

# DECK REINFORCING DETAILS AND ELEVATIONS BRIDGE NO. OTT-2-1776 OVER SR 163

| DESIGNED | DRAWN | TRACED | CHECKED | REVIEWED DATE | REVISED |
|---|---|---|---|---|---|
| MTG | ALS | | LLL | LCL 1/9/95 | |

I:/pd/OTTAWA/OTT2/2163SDII.DGN

| FHWA REGION | STATE | PROJECT | |
|---|---|---|---|
| 5 | OHIO | | |

298/367

OTT-2-16.60

LEGEND

- Class S Concrete
- ——— Sealing of concrete surfaces
- C = Compression
- T = Tension

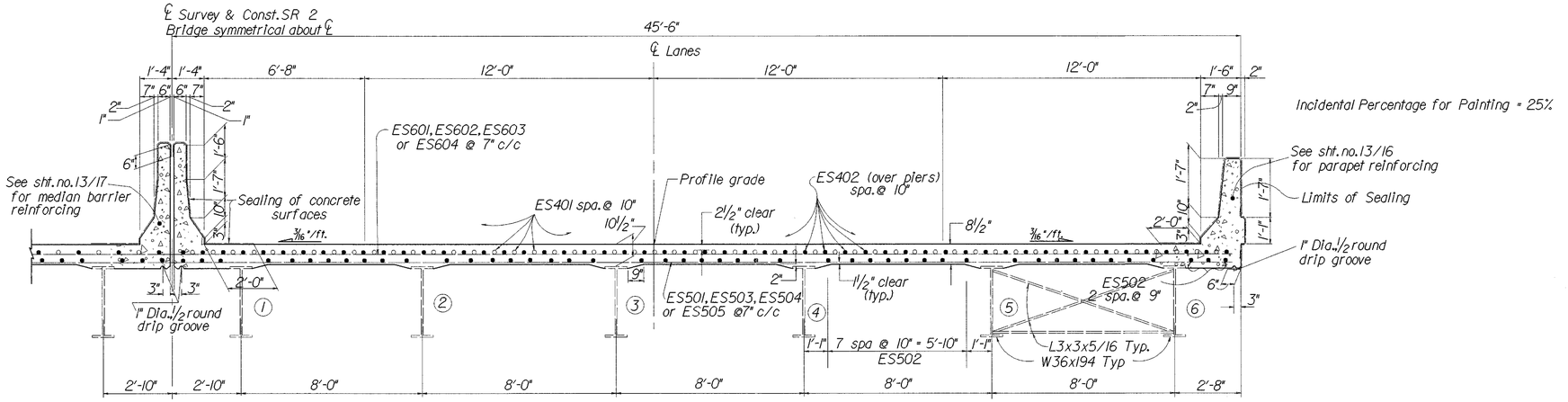


BRIDGE DECK
TYPICAL SECTION

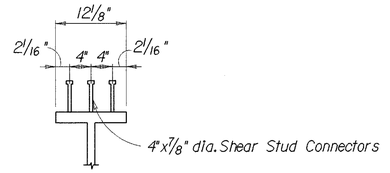


SECTION H-H

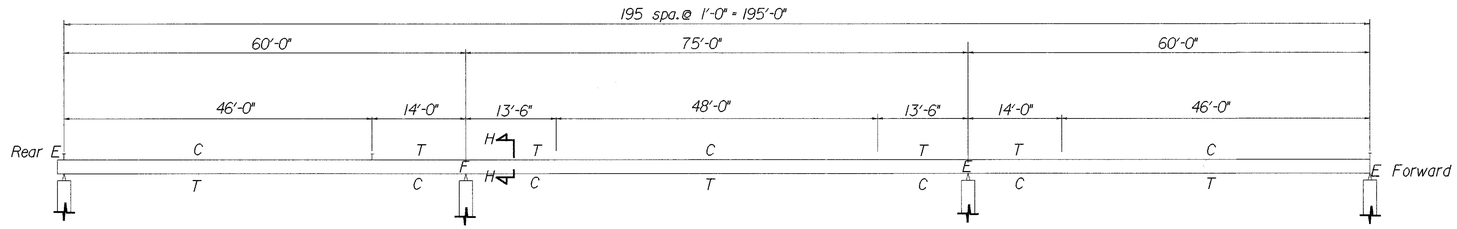


i:\pd\OTTAWA\OTT2\02163SD3.DGN

STATE OF OHIO
DEPARTMENT OF TRANSPORTATION
DISTRICT 2 DESIGN & PLANNING OFFICE

10 / 17

BRIDGE DECK TYPICAL DETAILS
BRIDGE NO. OTT-2-1776
OVER SR 163

| DESIGNED | DRAWN | TRACED | CHECKED | REVIEWED DATE | REVISED |
|---|---|---|---|---|---|
| MTG | ALS | | LLL | LCL 1/9/95 | |

| FHWA REGION | STATE | PROJECT | |
|---|---|---|---|
| 5 | OHIO | | |

299/367

OTT-2-16.60

## FINAL ELEVATIONS
## OTT-2-1776

| Station | | Elev.@ Toe of Med.Bar. | Beam ① | Beam ② | Beam ③ | Profile Grade | Beam ④ | Beam ⑤ | Beam ⑥ | Toe of Parapet |
|---|---|---|---|---|---|---|---|---|---|---|
| 937+39.75 | | | | | | | | | | 605.61 |
| 937+45.75 | | | | | | | | | 605.55 | 605.53 |
| 937+51.75 | | | | | | | | 605.60 | 605.48 | 605.46 |
| 937+57.75 | | | | | | | | 605.51 | 605.39 | 605.37 |
| 937+63.75 | | | | | | | 605.57 | 605.44 | 605.32 | 605.30 |
| 937+69.75 | | | | | 605.55 | 605.57 | 605.47 | 605.34 | 605.22 | 605.20 |
| 937+75.75 | | | | 607.33 | 605.45 | 605.47 | 605.37 | 605.24 | 605.12 | 605.10 |
| 937+81.75 | | | 607.11 | 607.23 | 605.35 | 605.37 | 605.27 | 605.14 | 605.02 | 605.00 |
| 937+83.3 | | 605.07 | * 605.10 | 605.22 | 605.34 | 605.36 | 605.26 | 605.13 | 605.01 | 604.99 |
| 937+89.3 | | 604.98 | 605.01 | 605.13 | 605.26 | 605.27 | 605.17 | 605.04 | 604.92 | 604.90 |
| 937+95.3 | | 604.89 | 604.92 | 605.04 | 605.17 | 605.18 | 605.08 | 604.95 | 604.83 | 604.81 |
| 938+01.3 | | 604.80 | 604.82 | 604.95 | 605.07 | 605.09 | 604.99 | 604.86 | 604.74 | 604.72 |
| 938+07.3 | | 604.71 | 604.73 | 604.86 | 604.98 | 605.00 | 604.89 | 604.77 | 604.64 | 604.62 |
| 938+13.3 | | 604.61 | 604.64 | 604.77 | 604.89 | 604.91 | 604.80 | 604.67 | 604.55 | 604.53 |
| 938+19.3 | | 604.52 | 604.54 | 604.67 | 604.79 | 604.81 | 604.70 | 604.58 | 604.45 | 604.44 |
| 938+25.3 | | 604.42 | 604.45 | 604.57 | 604.69 | 604.71 | 604.61 | 604.48 | 604.36 | 604.34 |
| 938+31.3 | | 604.32 | 604.35 | 604.47 | 604.60 | 604.61 | 604.51 | 604.38 | 604.26 | 604.24 |
| 938+37.3 | | 604.22 | 604.25 | 604.37 | 604.50 | 604.51 | 604.41 | 604.28 | 604.16 | 604.14 |
| 938+43.3 | | 604.12 | 604.15 | 604.27 | 604.40 | 604.41 | 604.31 | 604.18 | 604.06 | 604.04 |
| 938+50.8 | | 603.99 | 604.02 | 604.14 | 604.27 | 604.29 | 604.18 | 604.06 | 603.93 | 603.91 |
| 938+58.3 | | 603.86 | 603.89 | 604.01 | 604.14 | 604.16 | 604.05 | 603.92 | 603.80 | 603.78 |
| 938+65.8 | | 603.73 | 603.76 | 603.88 | 604.00 | 604.02 | 603.92 | 603.79 | 603.67 | 603.65 |
| 938+73.3 | | 603.60 | 603.62 | 603.75 | 603.87 | 603.89 | 603.78 | 603.66 | 603.53 | 603.51 |
| 938+80.8 | | 603.46 | 603.48 | 603.61 | 603.73 | 603.75 | 603.65 | 603.52 | 603.40 | 603.38 |
| 938+88.3 | | 603.32 | 603.35 | 603.47 | 603.59 | 603.61 | 603.51 | 603.38 | 603.26 | 603.24 |
| 938+95.8 | | 603.18 | 603.21 | 603.33 | 603.45 | 603.47 | 603.37 | 603.24 | 603.11 | 603.10 |
| 939+03.3 | | 603.04 | 603.06 | 603.19 | 603.31 | 603.33 | 603.22 | 603.10 | 602.97 | 602.96 |
| 939+10.8 | | 602.89 | 602.92 | 603.04 | 603.17 | 603.18 | 603.08 | 602.95 | 602.83 | 602.81 |
| 939+18.3 | | 602.75 | 602.77 | 602.89 | 603.02 | 603.04 | 602.93 | 602.81 | 602.68 | 602.66 |
| 939+24.3 | | 602.63 | 602.65 | 602.78 | 602.90 | 602.92 | 602.81 | 602.69 | 602.56 | 602.54 |
| 939+30.3 | | 602.51 | 602.53 | 602.66 | 602.78 | 602.80 | 602.69 | 602.57 | 602.44 | 602.42 |
| 939+36.3 | | 602.38 | 602.41 | 602.53 | 602.66 | 602.68 | 602.57 | 602.44 | 602.32 | 602.30 |
| 939+42.3 | | 602.26 | 602.29 | 602.41 | 602.53 | 602.55 | 602.45 | 602.32 | 602.20 | 602.18 |
| 939+48.3 | | 602.14 | 602.16 | 602.28 | 602.41 | 602.43 | 602.32 | 602.20 | 602.07 | 602.05 |
| 939+54.3 | | 602.01 | 602.03 | 602.16 | 602.28 | 602.30 | 602.20 | 602.07 | 601.95 | 601.93 |
| 939+60.3 | | 601.88 | 601.92 | 602.03 | 602.16 | 602.17 | 602.07 | 601.94 | 601.82 | 601.80 |
| 939+66.3 | | 601.75 | 601.78 | 601.90 | 602.03 | 602.05 | 601.94 | 601.81 | 601.69 | 601.67 |
| 939+72.3 | | 601.62 | 601.65 | 601.77 | 601.90 | 601.92 | 601.81 | 601.68 | 601.56 | 601.54 |
| 939+78.3 | | 601.50 | ** 601.53 | 601.65 | 601.78 | 601.79 | 601.69 | 601.56 | 601.44 | 601.42 |
| 939+79.85 | | | 601.51 | 601.63 | 601.75 | 601.77 | 601.67 | 601.54 | 601.42 | 601.40 |
| 939+85.85 | | | 601.39 | 601.51 | 601.63 | 601.65 | 601.55 | 601.42 | 601.30 | 601.28 |
| 939+91.85 | | | | 601.37 | 601.49 | 601.51 | 601.41 | 601.28 | 601.16 | 601.14 |
| 939+97.85 | | | | | | 601.37 | 601.27 | 601.14 | 601.02 | 601.00 |
| 939+03.85 | | | | | | | 601.13 | 601.00 | 600.88 | 600.86 |
| 939+09.85 | | | | | | | | 600.86 | 600.74 | 600.72 |
| 939+15.85 | | | | | | | | 600.72 | 600.60 | 600.58 |
| 939+21.85 | | | | | | | | | | 600.44 |

NOTE: * ELEVATIONS ABOVE BAR ARE FOR RIGHT SIDE OF STRUCTURE ONLY

** ELEVATIONS BELOW BAR ARE FOR LEFT SIDE OF STRUCTURE ONLY

| Location (Ft.) | Dead Load Delection (ft) along ℄ Beam |
|---|---|
| | Rear Abut. .00 |
| 6 | .01 |
| 12 | .02 |
| 18 | .02 |
| 24 | .02 |
| 30 | .02 |
| 36 | .02 |
| 42 | .01 |
| 48 | .01 |
| 54 | .00 |
| 60 | Pier 1 .00 |
| 7.5 | .00 |
| 15 | .01 |
| 22.5 | .02 |
| 30 | .03 |
| 37.5 | .03 |
| 45 | .03 |
| 52.5 | .02 |
| 60 | .01 |
| 67.5 | .00 |
| 75 | Pier 2 .00 |
| 6 | .00 |
| 12 | .01 |
| 18 | .01 |
| 24 | .02 |
| 30 | .02 |
| 36 | .02 |
| 42 | .02 |
| 48 | .02 |
| 54 | .01 |
| 60 | Fwd. Abut. .00 |

## PROFILE GRADE ELEVATIONS

| | |
|---|---|
| STA 937+80 | 605.41 |
| STA 938+00 | 605.11 |
| STA 938+20 | 604.80 |
| STA 938+40 | 604.47 |
| STA 938+60 | 604.13 |
| STA 938+80 | 603.77 |
| STA 939+00 | 603.40 |
| STA 939+20 | 603.00 |
| STA 939+40 | 602.60 |
| STA 939+60 | 602.19 |

STATE OF OHIO
DEPARTMENT OF TRANSPORTATION
DISTRICT 2 DESIGN & PLANNING OFFICE

11 / 17

# FINAL ELEVATIONS
# BRIDGE NO.OTT-2-1776
# OVER SR 163

| DESIGNED | DRAWN | TRACED | CHECKED | REVIEWED DATE | REVISED |
|---|---|---|---|---|---|
| MTG | ALS | | LLL | LCL 1/9/95 | |

l/pd/ottawa/ott2/o2613s3d.dgn

| FHWA REGION | STATE | PROJECT | |
|---|---|---|---|
| 5 | OHIO | | |

300/367

OTT-2-16.60

LEGEND
(N.S.) Near Side
(F.S.) Far Side

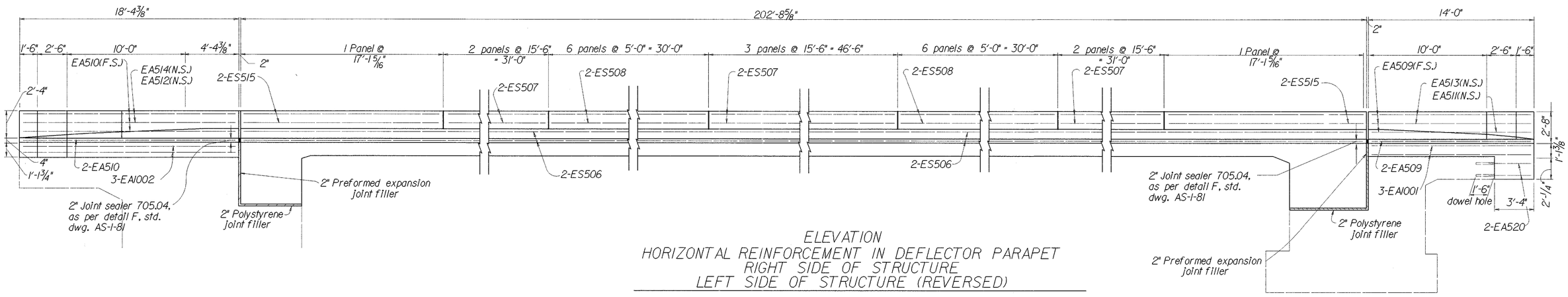


ELEVATION
HORIZONTAL REINFORCEMENT IN DEFLECTOR PARAPET
RIGHT SIDE OF STRUCTURE
LEFT SIDE OF STRUCTURE (REVERSED)

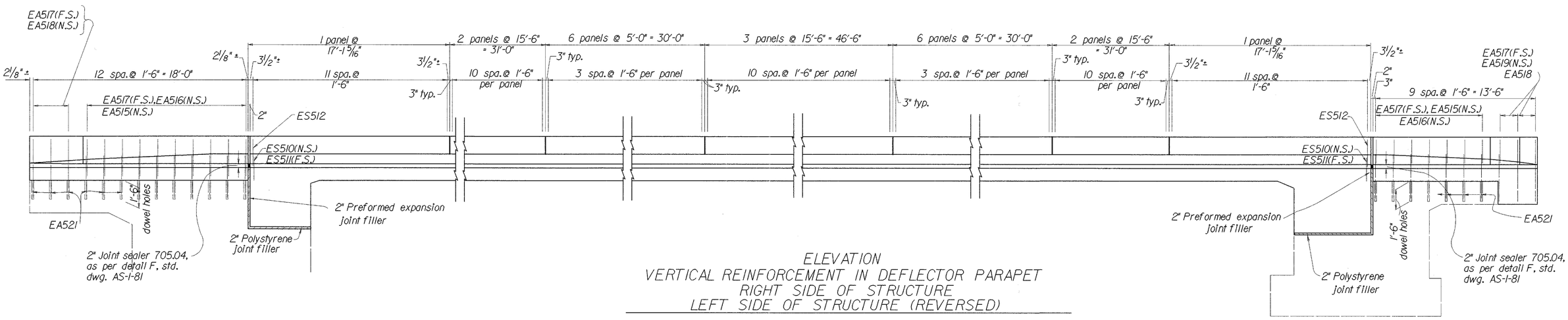


ELEVATION
VERTICAL REINFORCEMENT IN DEFLECTOR PARAPET
RIGHT SIDE OF STRUCTURE
LEFT SIDE OF STRUCTURE (REVERSED)

STATE OF OHIO
DEPARTMENT OF TRANSPORTATION
DISTRICT 2 DESIGN & PLANNING OFFICE

12 / 17

# PARAPET DETAILS
# BRIDGE NO. OTT-2-1776
# OVER SR 163

| DESIGNED | DRAWN | TRACED | CHECKED | REVIEWED DATE | REVISED |
|---|---|---|---|---|---|
| MTG | ALS | | LLL | LCL 1/9/95 | |

I:/pd/OTTAWA/OTT2/02163SDT.DGN

| FHWA REGION | STATE | PROJECT | |
|---|---|---|---|
| 5 | OHIO | | |

301/367

OTT-2-16.60

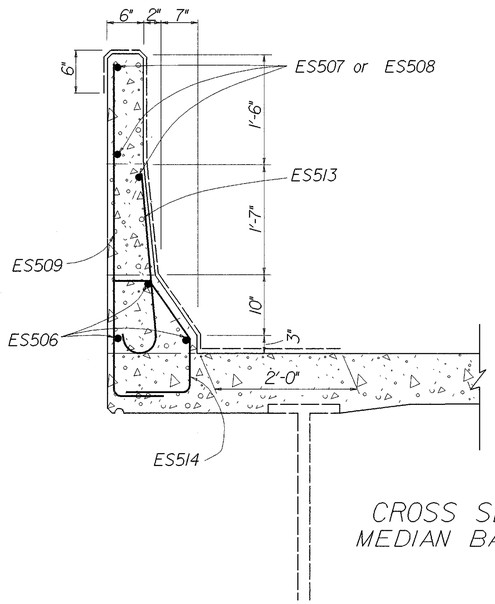


CROSS SECTION OF PROPOSED MEDIAN BARRIER ON STRUCTURE

LEGEND

Class S Concrete, Superstructure

Sealing of Concrete Surfaces

* If the existing parapets on the wingwalls are to be removed by saw cutting, EA521 bars are included to dowel the proposed parapet into the existing wingwall. If the existing vertical reinforcing steel can be salvaged to tie the proposed parapet into the existing wingwall then the EA521 bars and dowel holes shall be non-performed.

Sections "A-A", "B-B", and "C-C" refer to sht. no. 6/17.

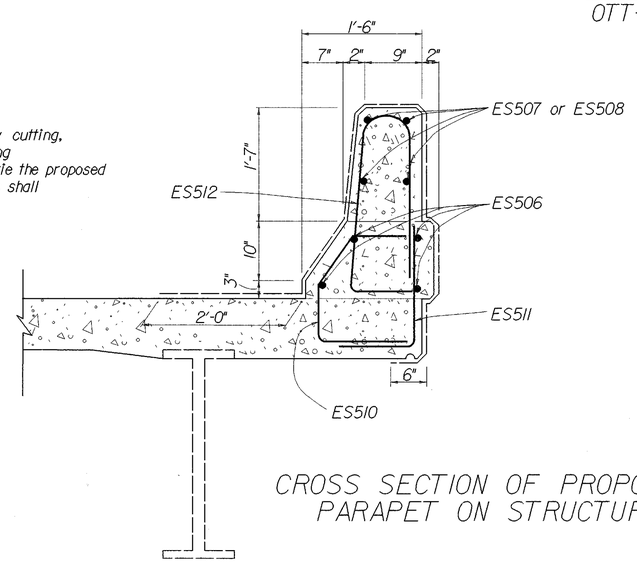


CROSS SECTION OF PROPOSED PARAPET ON STRUCTURE

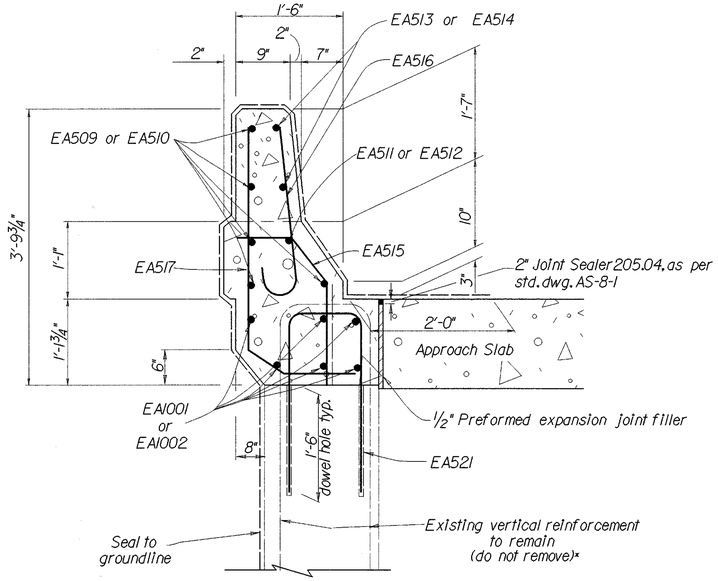


~ SECTION A-A ~

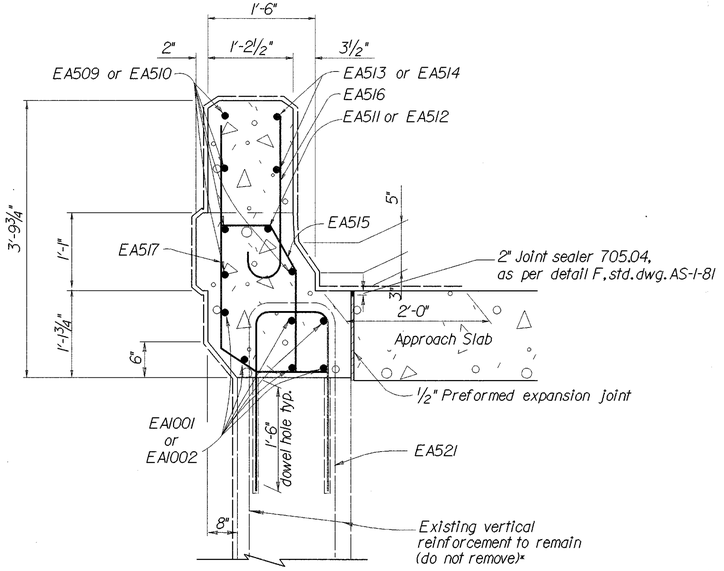


~ SECTION B-B ~

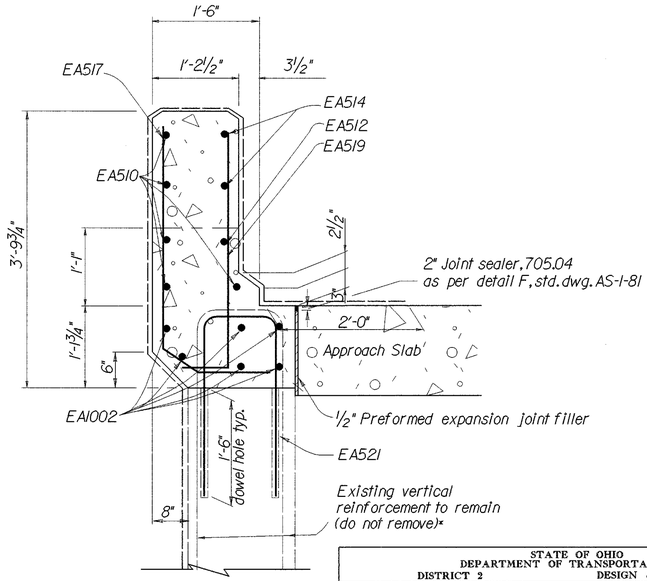


~ SECTION C-C ~

STATE OF OHIO
DEPARTMENT OF TRANSPORTATION
DISTRICT 2
DESIGN & PLANNING OFFICE

13 / 17

# PARAPET DETAILS
# BRIDGE NO. OTT-2-1776
# OVER SR 163

| DESIGNED | DRAWN | TRACED | CHECKED | REVIEWED DATE | REVISED |
|---|---|---|---|---|---|
| MTG | ALS | | LLL | LCL 1/9/95 | |

I:/pd/OTTAWA/OTT2/02163SD04.DGN

| FHWA REGION | STATE | PROJECT | |
|---|---|---|---|
| 5 | OHIO | | |

302/367

OTT-2-16.60

LEGEND

Class S Concrete, Superstructure

Sealing of Concrete Surfaces

Sections "D-D", "E-E", and "F-F" refer to sheet no. 6/17.

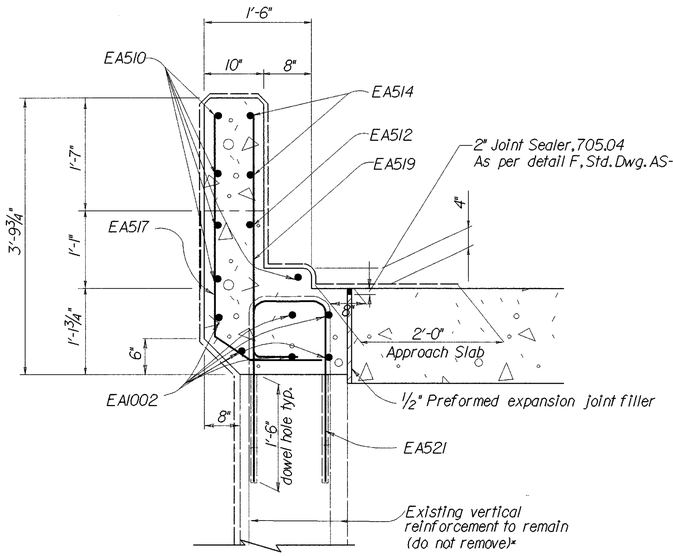


~ SECTION D-D ~

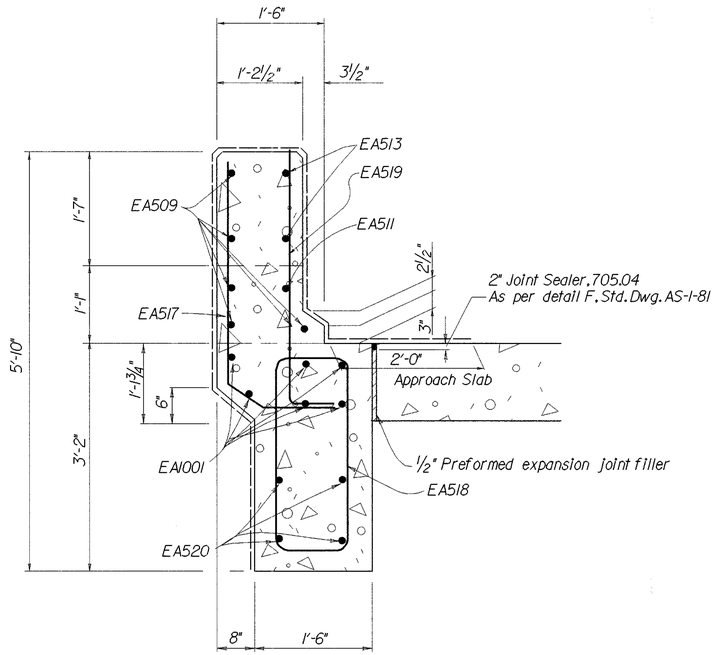


~ SECTION E-E ~

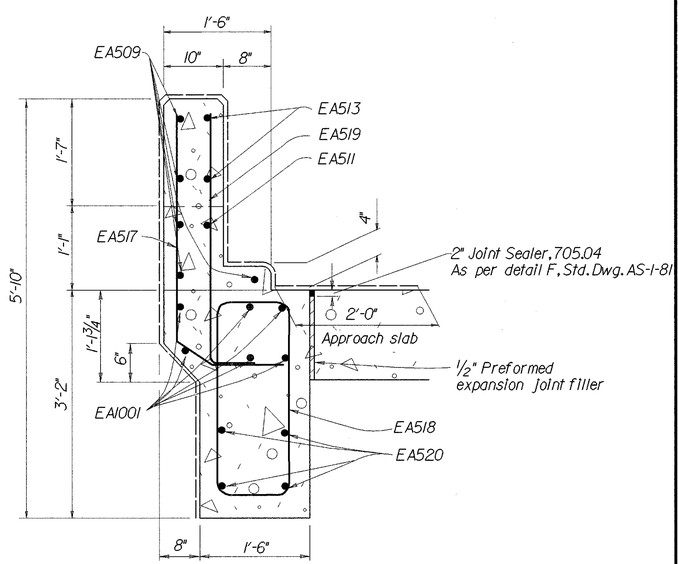


~ SECTION F-F ~

I/pd/OTTAWA/OTT2/02163S05.DGN

STATE OF OHIO
DEPARTMENT OF TRANSPORTATION
DISTRICT 2 DESIGN & PLANNING OFFICE

14 / 17

# PARAPET DETAILS
# BRIDGE NO. OTT-2-1776
# OVER SR 163

| DESIGNED | DRAWN | TRACED | CHECKED | REVIEWED DATE | REVISED |
|---|---|---|---|---|---|
| MTG | ALS | | LLL | LCL 1/9/95 | |

| FHWA REGION | STATE | PROJECT | |
|---|---|---|---|
| 5 | OHIO | | |

303/367

OTT-2-16.60

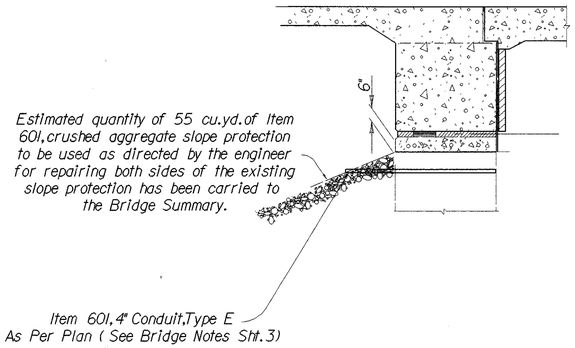


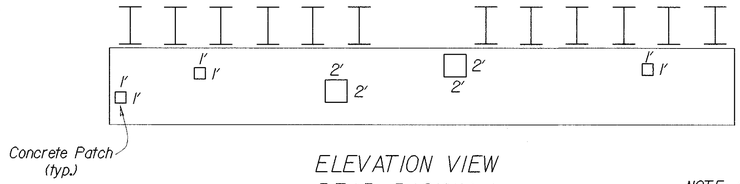


ELEVATION VIEW
REAR BACKWALL

NOTE: An estimated quantity of 11 Sq.Ft. of Concrete for patching the backwall is included in the Bridge Summary with Item 519, Patching Concrete Structure.

DETAILS FOR PATCHING OF BACKWALL

ELEVATION

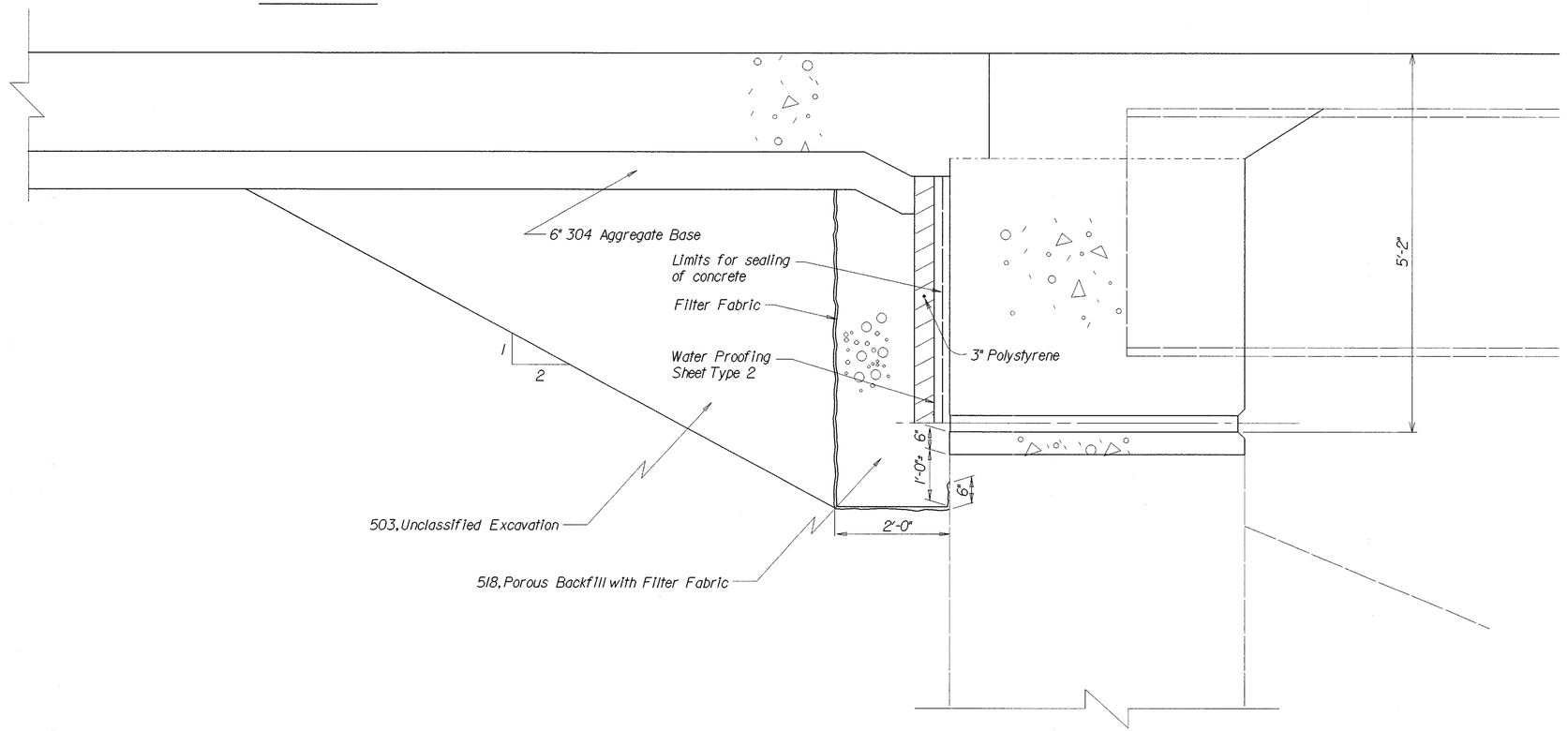


Porous Backfill Detail

1/pd/OTTAWA/OTT2/2163SD13.DGN

STATE OF OHIO
DEPARTMENT OF TRANSPORTATION
DISTRICT 2 DESIGN & PLANNING OFFICE

15 / 17

MISCELLANEOUS DETAILS
BRIDGE NO. OTT-2-1776
SR 2 OVER SR 163

| DESIGNED | DRAWN | TRACED | CHECKED | REVIEWED DATE | REVISED |
|---|---|---|---|---|---|
| MTG | ALS | | LLL | LCL 1/9/95 | |

| FHWA REGION | STATE | PROJECT | |
|---|---|---|---|
| 5 | OHIO | | |

304 / 367

OTT-2-16.60

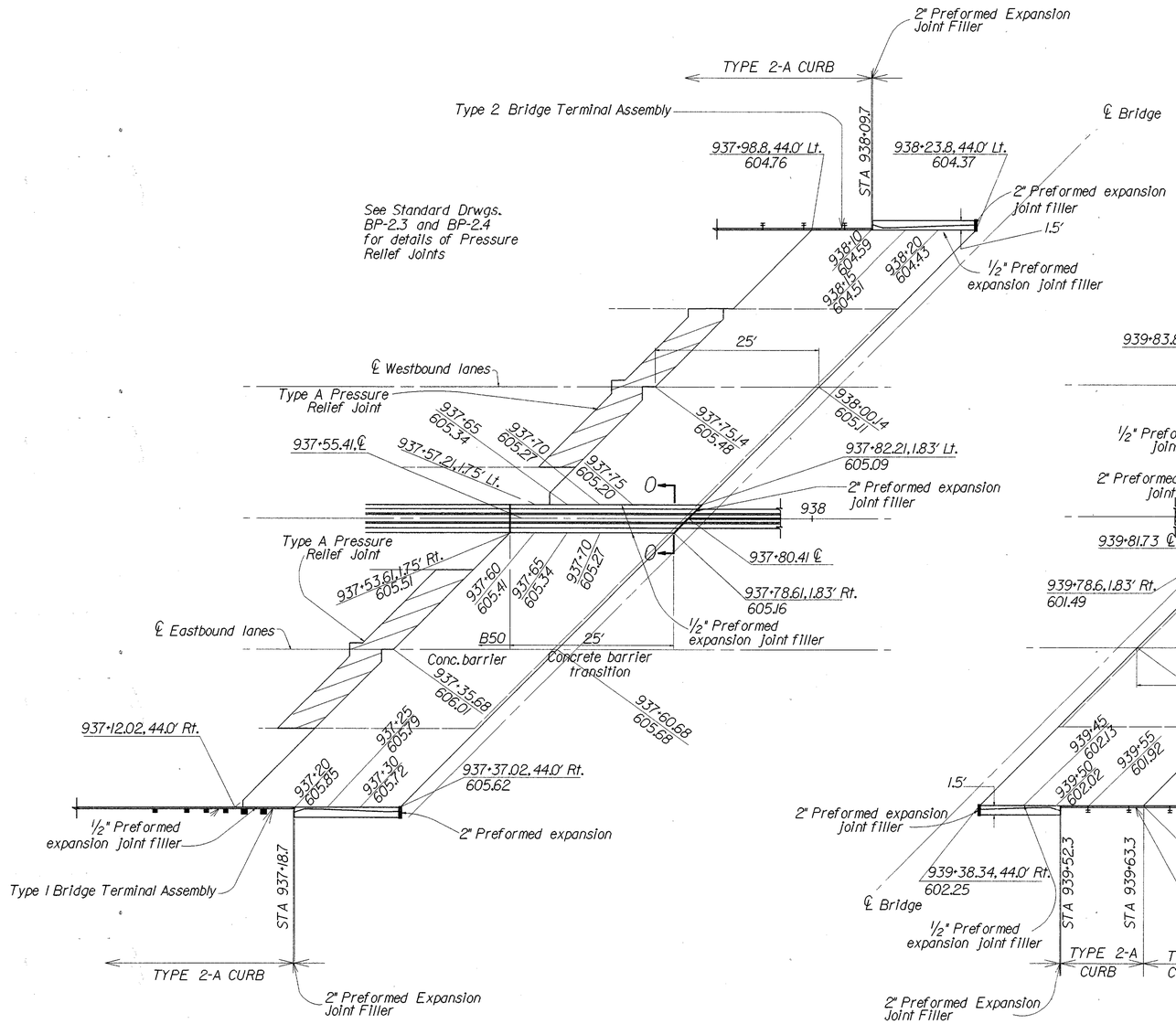


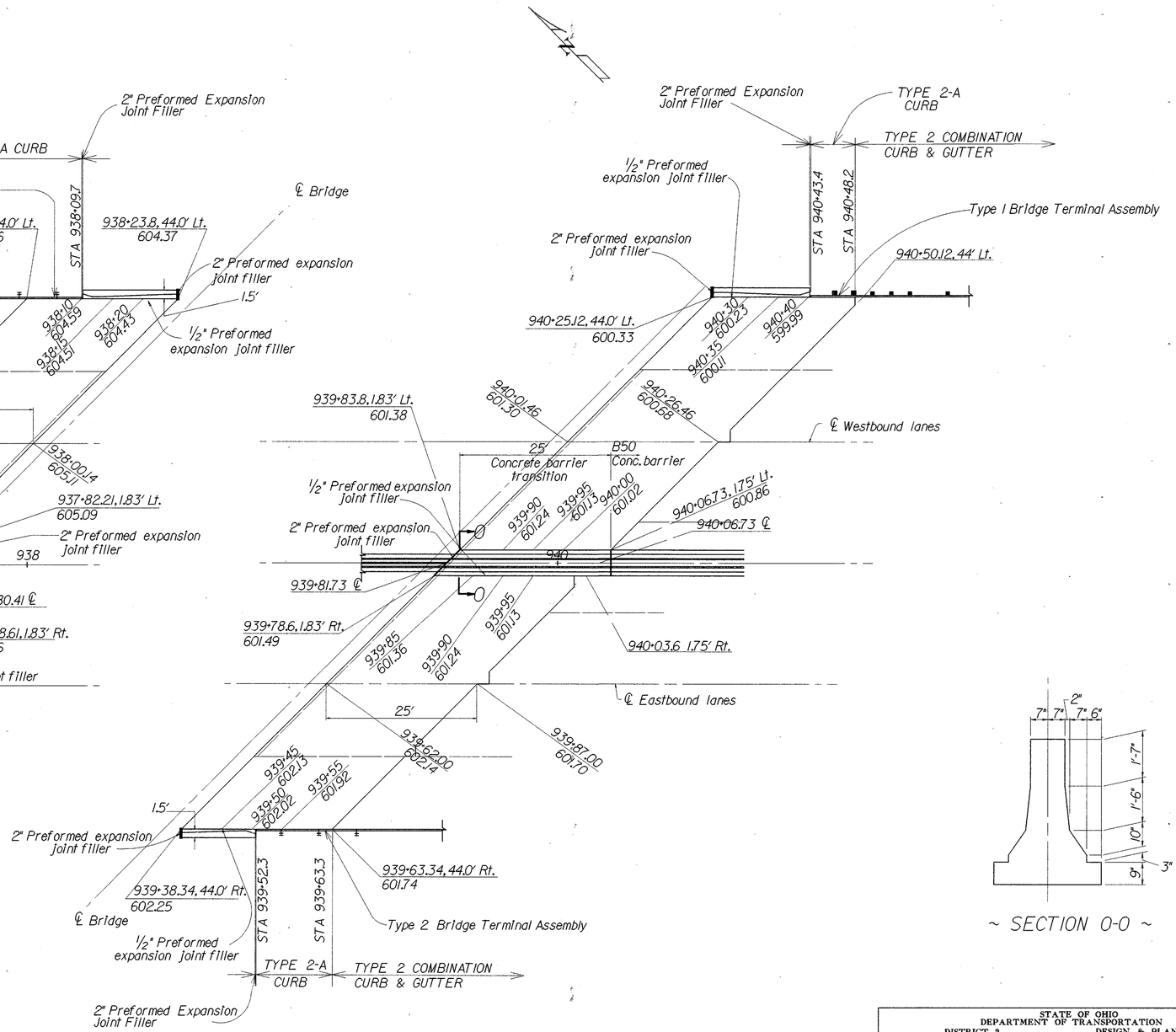





~ SECTION O-O ~

STATE OF OHIO
DEPARTMENT OF TRANSPORTATION
DISTRICT 2 DESIGN & PLANNING OFFICE

16 / 17

# APPROACH SLAB AND MEDIAN BARRIER DETAILS BRIDGE NO. OTT-2-1776 OVER SR 163

| DESIGNED | DRAWN | TRACED | CHECKED | REVIEWED DATE | REVISED |
|---|---|---|---|---|---|
| MTG | ALS | | LLL | LCL 1/9/95 | |

\\1_pd\ottawa\ott2\o2l63asl.dgn

# REINFORCING STEEL LIST

| FHWA REGION | STATE | PROJECT | |
|---|---|---|---|
| 5 | OHIO | | |

305 / 367

OTT-2-16.60

| MARK | NO. IN STRUCTURE LT. | RT. | TOTAL | LENGTH | WEIGHT (LBS.) | SHAPE | LAP LENGTH | DOWEL HOLES (EACH) |
|---|---|---|---|---|---|---|---|---|
| Superstructure | | | | | | | | |
| ES401 | 385 | 385 | 770 | 29'-0" | 14916 | ST | 1'-6" | |
| ES402 | 106 | 106 | 212 | 30'-0" | 4248 | ST | | |
| | | | | | | | | |
| ES501 | 562 | 562 | 1124 | 24'-3" | 27843 | ST | 2'-11" | |
| ES502 | 322 | 322 | 644 | 29'-10" | 20039 | ST | 2'-6" | |
| ES503 | 52 | 52 | 104 | Ⓐ | 1758 | ST | 2'-11" | |
| ES504 | 82 | 82 | 164 | Ⓑ | 2957 | ST | | |
| ES505 | 20 | 20 | 40 | Ⓒ | 209 | ST | | |
| ES506 | 49 | 49 | 98 | 30'-4" | 3100 | ST | 1'-11" | |
| ES507 | 49 | 49 | 98 | 15'-0" | 1533 | ST | | |
| ES508 | 84 | 84 | 168 | 4'-6" | 789 | ST | | |
| ES509 | 149 | 149 | 298 | 5'-5½" | 1697 | BT ① | | |
| ES510 | 149 | 149 | 298 | 3'-1" | 958 | BT ② | | |
| ES511 | 149 | 149 | 298 | 2'-4½" | 738 | BT ③ | | |
| ES512 | 149 | 149 | 298 | 5'-3" | 1632 | BT ④ | | |
| ES513 | 149 | 149 | 298 | 3'-1" | 958 | BT ⑤ | | |
| ES514 | 149 | 149 | 298 | 2'-8" | 829 | BT ② | | |
| ES515 | 14 | 14 | 28 | 15'-11" | 465 | ST | | |
| ES601 | 562 | 562 | 1124 | 24'-2" | 40800 | ST | 3'-5" | |
| ES602 | 52 | 52 | 104 | Ⓓ | 2532 | ST | 3'-5" | |
| ES603 | 82 | 82 | 164 | Ⓔ | 4311 | ST | | |
| ES604 | 20 | 20 | 40 | Ⓒ | 300 | ST | | |
| | | | | | | | | |
| Totals for Superstructure | | | | | 132,612 | | | |

| MARK | NO. IN ABUTMENT LT. | RT. | TOTAL | LENGTH | WEIGHT (LBS.) | SHAPE | LAP LENGTH | DOWEL HOLES (EACH) |
|---|---|---|---|---|---|---|---|---|
| Abutments | | | | | | | | |
| | | | | | | | | |
| EA501 | 86 | 86 | 172 | 16'-7" | 2975 | BT. ⑥ | | |
| EA502 | 2 | 2 | 4 | 20'-3" | 84 | BT. ⑱ | | |
| EA503 | 2 | 2 | 4 | 17'-0" | 71 | BT. ⑱ | | |
| EA504 | 33 | 33 | 66 | 12'-3" | 843 | BT. ⑫ | | |
| EA505 | 38 | 38 | 76 | 32'-11" | 2609 | ST. | min. 1'-11" | |
| EA506 | 38 | 38 | 76 | 32'-5" | 2570 | ST. | min. 1'-11" | |
| EA507 | 126 | 126 | 252 | 6'-4" | 1665 | BT. ⑲ | | 504 |
| EA508 | 4 | 4 | 8 | 4'-11" | 41 | BT. ⑧ | | 8 |
| | | | | | | | | |
| EA509 | 5 | 5 | 10 | 13'-6" | 141 | ST. | | |
| EA510 | 5 | 5 | 10 | 17'-10" | 186 | ST. | | |
| EA511 | 1 | 1 | 2 | 13'-6" | 28 | BT. ⑪ | | |
| EA512 | 1 | 1 | 2 | 17'-10" | 37 | BT. ⑪ | | |
| EA513 | 2 | 2 | 4 | 13'-6" | 56 | BT. ⑬ | | |
| EA514 | 2 | 2 | 4 | 17'-10" | 74 | BT. ⑬ | | |
| EA515 | 17 | 17 | 34 | 2'-10" | 100 | BT. ⑭ | | |
| EA516 | 17 | 17 | 34 | 2'-11" | 103 | BT. ⑮ | | |
| EA517 | 23 | 23 | 46 | 4'-11" | 236 | BT. ⑦ | | |
| EA518 | 3 | 3 | 6 | 7'-11" | 50 | BT. ⑯ | | |
| EA519 | 3 | 3 | 6 | 3'-9" | 23 | BT. ⑰ | | |
| EA520 | 4 | 4 | 8 | 4'-7" | 38 | ST. | | 8 |
| EA521 | 20 | 20 | 40 | 5'-5" | 226 | BT. ⑨ | | 80 |
| EA801 | 128 | 128 | 256 | 5'-0" | 3418 | BT. ⑩ | | |
| EA1001 | 6 | 6 | 12 | 13'-6" | 697 | ST. | | |
| EA1002 | 6 | 6 | 12 | 18'-0" | 225 | ST. | | |
| | | | | | | | | |
| | | | | | | | | |
| | | | | | | | | |
| | | | | | | | | |
| Totals for Abutments | | | | | 16496 | | | 600 |

Ⓐ 2-Series of 25 spa. from 8'-10" to 23'-7" @ increments of 7" ±
Ⓑ 2-Series of 40 spa. from 5'-7" to 29'-0" @ increments of 7" ±
Ⓒ Fan 10 bars length = 5'-0" each side
Ⓓ 2-Series of 25 spa. from 8'-10" to 23'-7" @ increments of 7" ±
Ⓔ 2-Series of 40 spa. from 5'-7" to 29'-5" @ increments of 7" ±

"E" in prefix designates epoxy coated

## BENDING DIAGRAMS

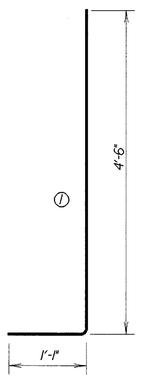

ES509

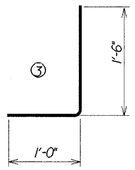

ES511

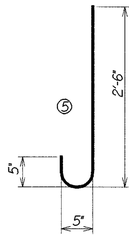

ES513

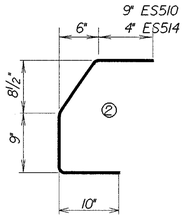

ES514
ES510

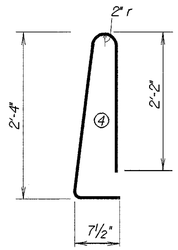

ES512

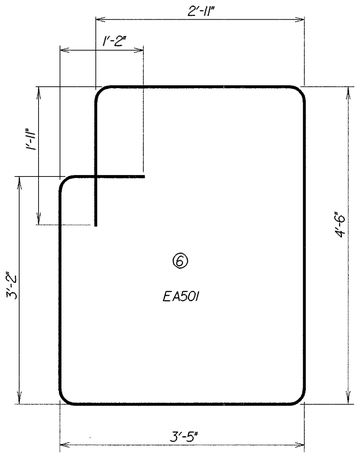

EA501

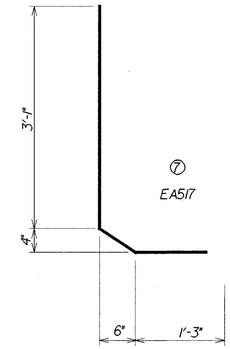

EA517

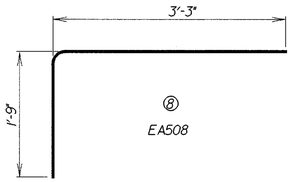

EA508

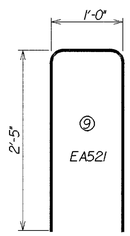

EA521

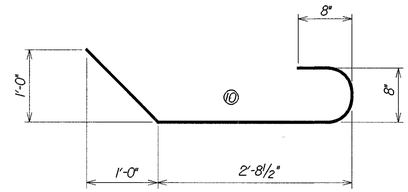

EA801

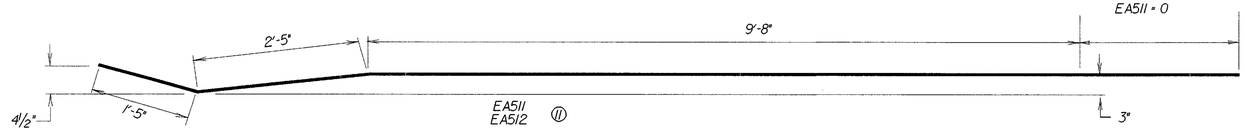

EA511
EA512 ⑪

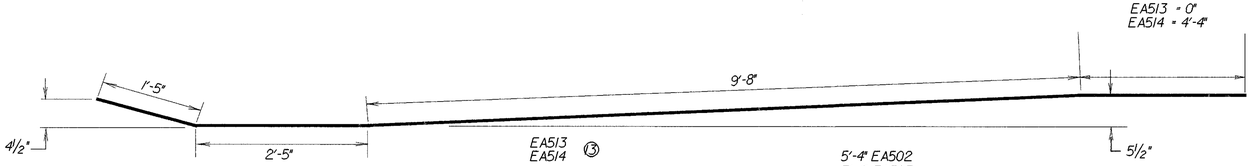

EA513
EA514 ⑬

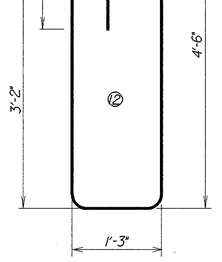

EA504

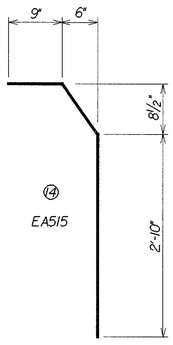

EA515

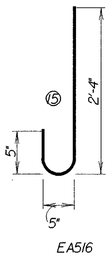

EA516

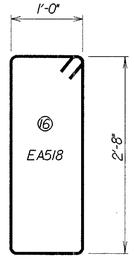

EA518

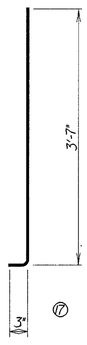

EA519

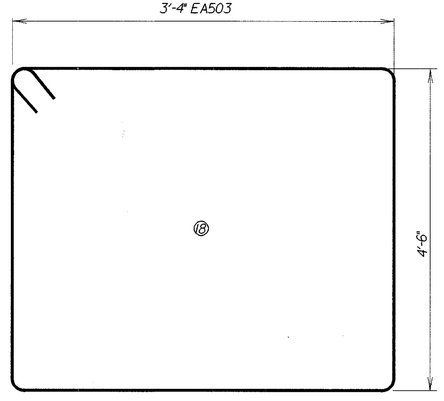

EA502
EA503

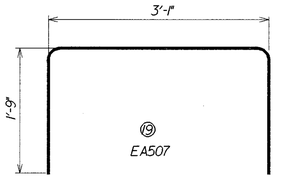

EA507

STATE OF OHIO
DEPARTMENT OF TRANSPORTATION
DISTRICT 2 DESIGN & PLANNING OFFICE

17 / 17

## REINFORCING STEEL LIST AND DETAILS BRIDGE NO. OTT-2-1776 OVER SR 163

| DESIGNED | DRAWN | TRACED | CHECKED | REVIEWED DATE | REVISED |
|---|---|---|---|---|---|
| MTG | ALS | | LLL | LCL 1/9/95 | |

I:/pd/OTTAWA/OTT2/02163SSLDGN

| FHWA REGION | STATE | PROJECT | |
|---|---|---|---|
| 5 | OHIO | | |

306
367

OTT-2-16.60

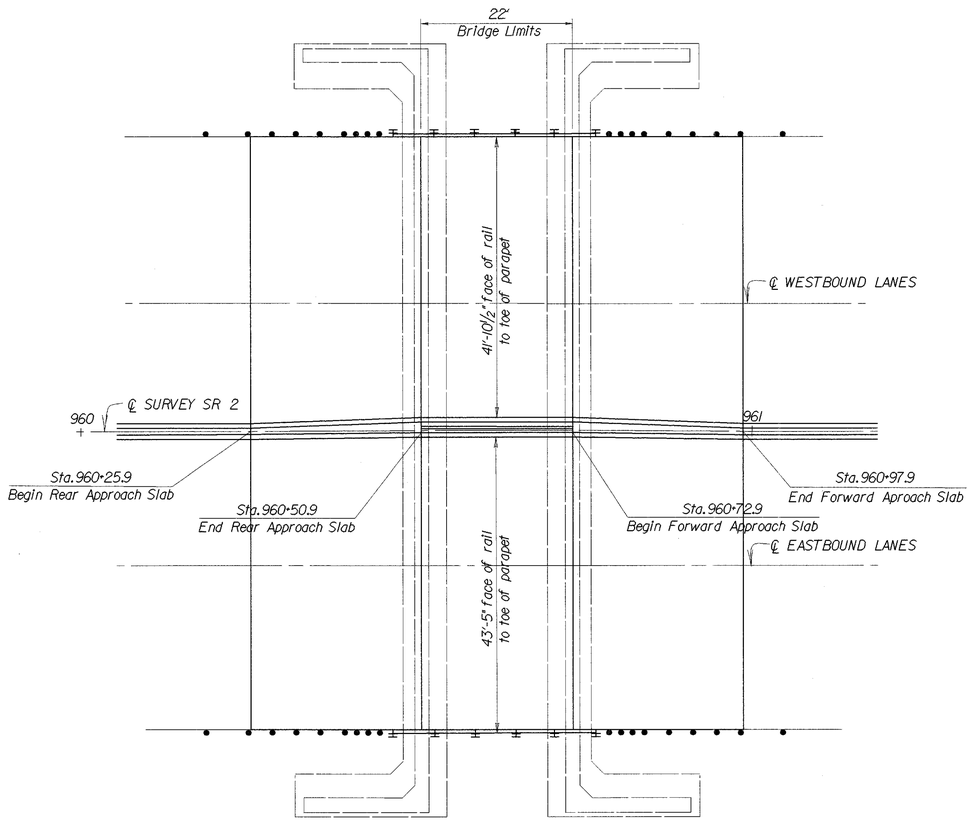


GENERAL PLAN

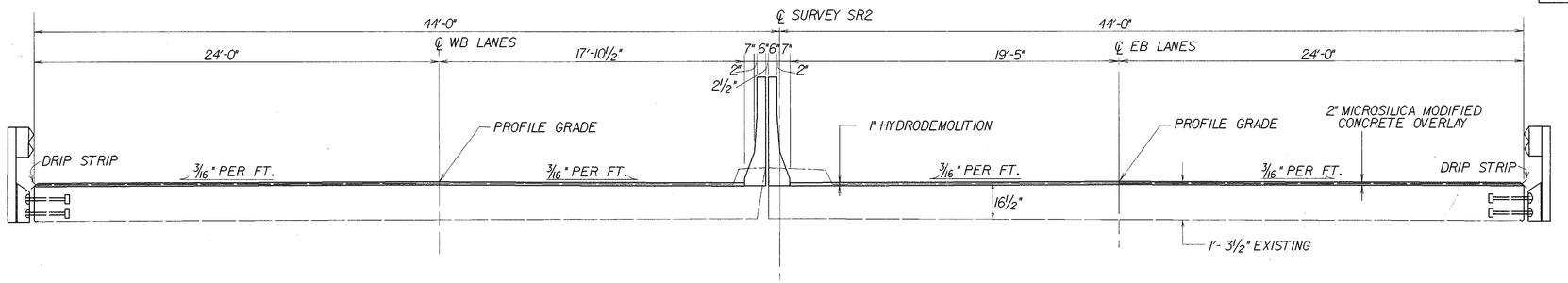


TRANSVERSE SECTION

## PROPOSED WORK

1.) Remove existing median curb and guardrail
2.) Remove 1" of deck wearing surface using hydrodemolition
3.) Construct median safety shape parapet
4.) Repair unsound concrete with variable depth Microsilica
5.) Overlay with 2" Microsilica Modified Concrete
6.) Replace existing bridge rail with standard deep beam bridge railing.
7.) Replace approach slabs
8.) Seal abutments and wingwalls

## EXISTING STRUCTURE DATA

Type: Reinforced Concrete Slab
Reinforced Concrete Abutments
Spans: 20'-0" clear
Roadway: 88'-0" Slab, also face to face of guardrail including 6' Concrete Median
Loading: HS-20
Skew: 0°
Wearing Surface: 1" Monolithic Concrete
Approach Slabs: AS-1-54 (25'-0")
Alignment: Tangent
SFN: 6200303
Original Construction: 1968

## PROPOSED STRUCTURE DATA

Type: Reinforced Concrete Slab
Reinforced Concrete Abutments
Spans: 20'-0" clear
Roadway: 41'-11" Lt., 43'-5" Rt. Toe of parapet to face of rail
Loading: HS-20-44 and Alternate Military
Skew: 0°
Wearing Surface: 2" Microsilica Modified Concrete
Approach Slabs: AS-1-81 (25'-0")
SFN: 6200303

STATE OF OHIO
DEPARTMENT OF TRANSPORTATION
DISTRICT 2 DESIGN & PLANNING OFFICE

1 / 7

# GENERAL PLAN AND TRANSVERSE SECTION BRIDGE NO. OTT-2-1819 OVER PORTAGE RIVER

| DESIGNED | DRAWN | TRACED | CHECKED | REVIEWED DATE | REVISED |
|---|---|---|---|---|---|
| MTG | ALS | | LLL | LCL 1/10/95 | |

I:/PD/OTTAWA/OTT2/OT2PRSP.DGN

| FHWA REGION | STATE | PROJECT | |
|---|---|---|---|
| 5 | OHIO | | |

307/367

OTT-2-16.60

# BRIDGE NOTES

REFERENCE SHALL BE MADE TO STANDARD DRAWINGS

AS-1-81 DATED 11-27-81
DBR-2-73 DATED 4-10-73

AND SUPPLEMENTAL SPECIFICATION:

SS815 DATED 7-17-95
~~SS856~~ ~~DATED 1-20-95~~

EXISTING STRUCTURE VERIFICATION

DETAILS AND DIMENSIONS SHOWN ON THESE PLANS PERTAINING TO THE EXISTING STUCTURES HAVE BEEN OBTAINED FROM THE PLANS OF THE EXISTING STRUCTURES AND/OR FROM FIELD OBSERVATIONS AND MEASUREMENTS. CONSEQUENTLY, THEY ARE INDICATIVE OF THE EXISTING STRUCTURES AND THE PROPOSED WORK BUT THEY SHALL BE CONSIDERED TENTATIVE AND APPROXIMATE. THE CONTRACTOR IS REFERRED TO CMS SECTIONS 102.05, 105.02, AND 513.02.

STATE SAFETY REQUIREMENTS

THE CONTRACTOR IS REQUIRED TO MEET THE APPLICABLE SAFETY REQUIREMENTS OF THE OHIO INDUSTRIAL COMMISSION. THE CONTRACTOR SHALL ALSO BE REQUIRED TO PROVIDE A POWER BOAT IN THE WATER WITH A PERSON ADEPT IN LIFESAVING PROCEDURES ON BOARD ANYTIME WORKERS ARE POSITIONED OVER THE WATER WHILE WORKING ON THE OTT-2-1819 STRUCTURE (OVER PORTAGE RIVER). REQUIREMENTS SHALL BE A SUPPLEMENT OR ADDITION TO ALL APPLICABLE O.S.H.A. REQUIREMENTS.

ITEM 611 REINFORCED CONCRETE APPROACH SLAB (T=15"), AS PER PLAN:

THE REINFORCING STEEL FOR THE APPROACH SLABS OF THIS STRUCTURE SHALL BE EPOXY COATED IN CONFORMANCE WITH 509.

MATERIALS, LABOR AND INSTALLATION SHALL BE INCLUDED FOR PAYMENT IN THIS ITEM 611 REINFORCED CONCRETE APPROACH SLAB (T=15"), AS PER PLAN.

GENERAL PROVISIONS

THE CONTRACTORS ATTENTION IS CALLED TO ALL OF SECTION 100 OF THE 1995 CONSTRUCTION AND MATERIAL SPECIFICATIONS OF OHIO DEPARTMENT OF TRANSPORTATION, AND SPECIFICALLY TO THE ITEMS LISTED BELOW AS PROVIDED FOR IN THIS SECTION.

COOPERATION OF CONTRACTOR:

THE CONTRACTOR SHALL NOT PERFORM WORK ON SUNDAYS OR LEGAL HOLIDAYS WITHOUT THE APPROVAL OF THE ENGINEER.

PRIOR INSPECTION OF WORK

PROSPECTIVE BIDDERS ARE REQUIRED TO MAKE AN INSPECTION OF THE BRIDGES IN THE FIELD AND TO REVIEW THE PLANS AND SPECIFICATIONS BEFORE SUBMITTING BIDS. SEE SEC.102.05 OF THE CONSTRUCTION AND MATERIALS SPECIFICATIONS, JANUARY 1, 1995.

PROTECTION OF PERSONS AND PROPERTY

THE CONTRACTOR SHALL COLLECT, REMOVE AND DISPOSE OF ALL BUCKETS, RAGS OR OTHER DISCARDED MATERIALS, AND HE SHALL LEAVE THE JOB SITE IN A CLEAN MANNER AND CONDITION.

I:/pd/ottawa/ott2/ot2prbnl.dgn

STATE OF OHIO
DEPARTMENT OF TRANSPORTATION
DISTRICT 2 DESIGN & PLANNING OFFICE

2 / 7

BRIDGE NOTES
BRIDGE NO. OTT-2-1819
OVER PORTAGE RIVER

| DESIGNED | DRAWN | TRACED | CHECKED | REVIEWED | DATE | REVISED |
|---|---|---|---|---|---|---|
| MTG | ALS | | LLL | LCL | 1/10/95 | |

| FHWA REGION | STATE | PROJECT | |
|---|---|---|---|
| 5 | OHIO | | |

308
367

OTT-2-16.60

# ESTIMATED QUANTITIES

| ITEM | EXTENSION | TOTAL | UNIT | DESCRIPTION |
|---|---|---|---|---|
| 202 | 11201 | LUMP | LUMP | PORTIONS OF STRUCTURE REMOVED, AS PER PLAN (SEE SHT. NO. 4 ) |
| 509 | 15840 | 2046 | LB. | EPOXY COATED REINFORCING STEEL, GRADE 60 |
| 510 | 10000 | 186 | EACH | DOWEL HOLES, WITH NONSHRINK, NONMETALLIC GROUT |
| 511 | 33400 | 5 | CU.YD. | CLASS S CONCRETE, SUPERSTRUCTURE |
| [redacted] | [redacted] | [redacted] | [redacted] | [redacted] |
| SPECIAL | 51267510 | 288 | SQ.YD. | SEALING OF CONCRETE SURFACES (EPOXY/URETHANE)(SEE PROPOSAL NOTE) |
| 516 | 13200 | 75 | SQ.FT. | 1/2" PREFORMED EXPANSION JOINT FILLER |
| 517 | 72306 | 88 | LIN.FT. | RAILING (DEEP BEAM RAIL WITH STEEL TUBULAR BACKUP AND TYPE 2 STEEL POSTS) |
| SPECIAL | 51822300 | 44 | LIN.FT. | STEEL DRIP STRIP |
| SPECIAL | 51922020 | 208 | SQ.YD. | MICRO-SILICA MODIFIED CONCRETE OVERLAY, USING HYDRODEMOLITION (2" THICK) |
| SPECIAL | 51922100 | 7 | CU.YD. | MICRO-SILICA MODIFIED CONCRETE OVERLAY (VARIABLE THICKNESS) |
| SPECIAL | 51922300 | LUMP | LUMP | TEST SLAB |

STATE OF OHIO
DEPARTMENT OF TRANSPORTATION
DISTRICT 2 DESIGN & PLANNING OFFICE

3 / 7

ESTIMATED QUANTITIES
BRIDGE NO. OTT-2-1819
OVER PORTAGE RIVER

| DESIGNED | DRAWN | TRACED | CHECKED | REVIEWED DATE | REVISED |
|---|---|---|---|---|---|
| MTG | ALS | | LLL | LCL 1/10/95 | |

I:/PD/OTTAWA/OTT2/OT2PRBSS.DGN

| FHWA REGION | STATE | PROJECT | |
|---|---|---|---|
| 5 | OHIO | | |

309/367

OTT-2-16.60

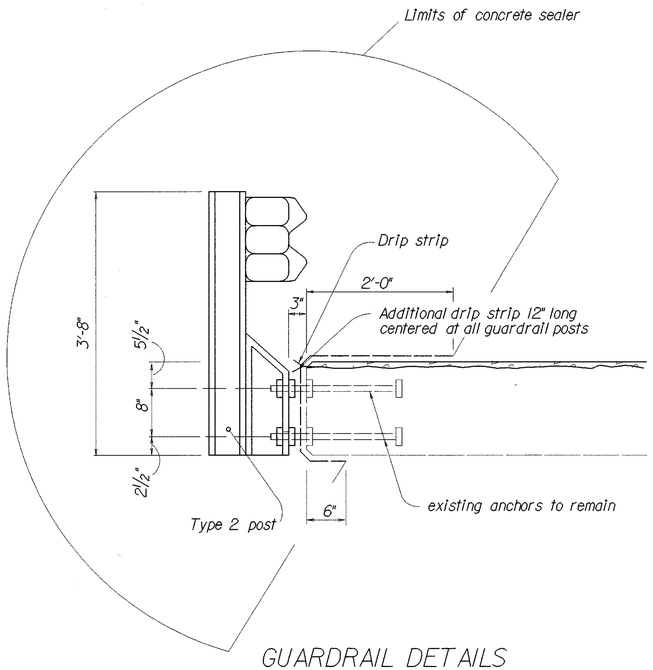


GUARDRAIL DETAILS

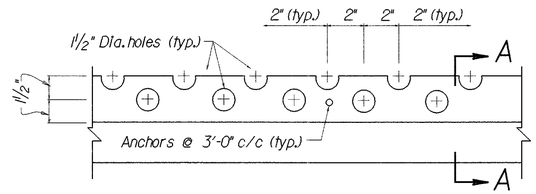


PLAN

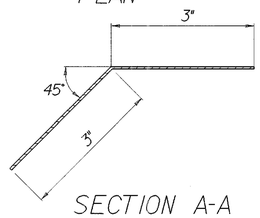


SECTION A-A

DRIP STRIP DETAIL FOR
BRIDGE DECKS WITH CONCRETE OVERLAYS

After Hydrodemolition and before the concrete overlay is placed, a steel drip strip, as detailed, shall be installed along the full length of each side of the bridge. The strips shall be fastened at 3'-0" c/c maximum with power driven pins or No.10 galvanized screws and expansion anchors. Where splices are required the individual pieces shall be butted tightly together, not lapped. Steel for galvanized strips shall be 0.105" thick and shall meet the requirements of ASTM A568 with galvanizing in accordance with 711.02. Stainless steel shall be 20 guage ASTM A167, type 304, mill finish.

Payment shall be at the contract price bid for item special, Lin. Ft., steel drip strip, and shall include all materials, labor, tools, and incidentals nessecary to complete the item.

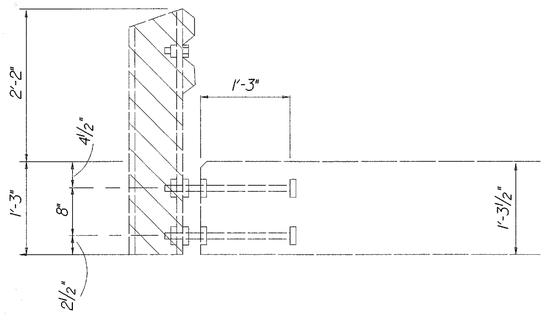


EXISTING GUARDRAIL

LEGEND

- Sealing of Concrete Surfaces
- Removal limits
- 2" Microsilica modified Concrete
- Class S Concrete

NOTE: The Contractor shall locate the existing deck reinforcing prior to drilling the dowel holes. Should the existing reinforcement be struck during the drilling process, relocate the remaining dowel hole locations to avoid damaging the bars.

If Contractor drilled through existing deck, the Contractor shall be responsible for patching all holes at no cost to the state.

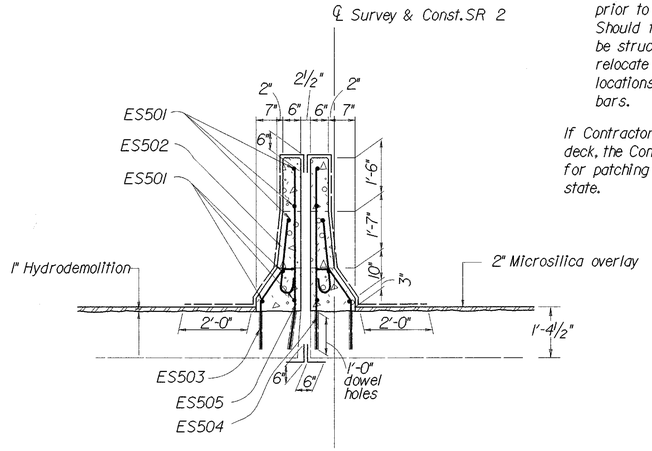


MEDIAN BARRIER
DETAILS

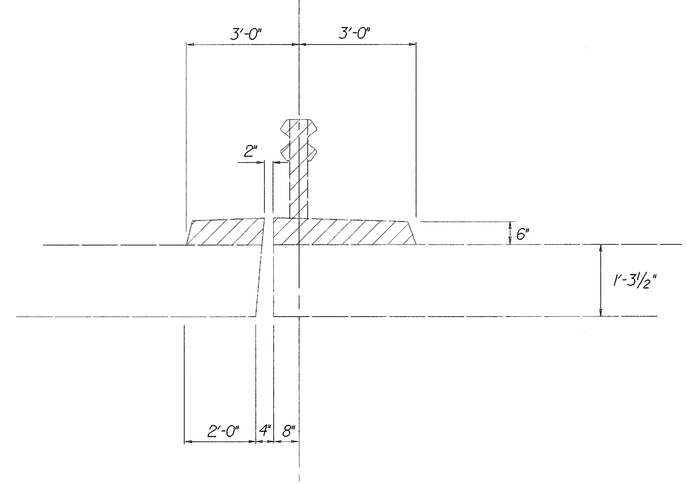


MEDIAN CURB
REMOVAL LIMITS

STATE OF OHIO
DEPARTMENT OF TRANSPORTATION
DISTRICT 2 DESIGN & PLANNING OFFICE

4 / 7

MEDIAN BARRIER & GUARDRAIL DETAILS
BRIDGE NO. OTT-2-1819
OVER PORTAGE RIVER

| DESIGNED | DRAWN | TRACED | CHECKED | REVIEWED DATE | REVISED |
|---|---|---|---|---|---|
| MTG | ALS | | LLL | LCL 1/10/95 | |

I:/pd//ottawa/ott2/OT2PTSD2.DGN

| FHWA REGION | STATE | PROJECT | |
|---|---|---|---|
| 5 | OHIO | | |

310/367

OTT-2-16.60

LEGEND
(N.S.) Near Side
(F.S.) Far Side

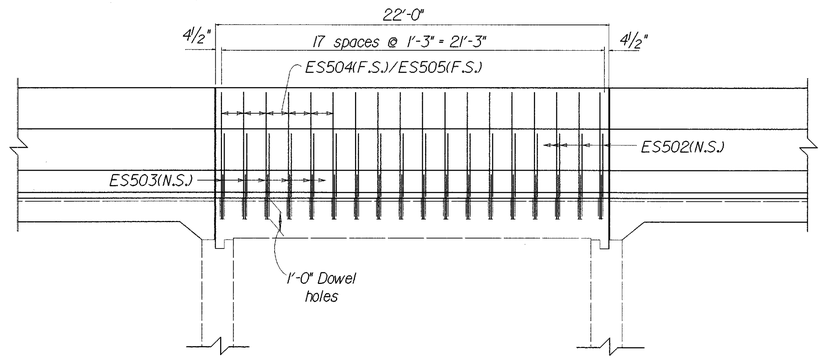


VERTICAL REINFORCEMENT
IN MEDIAN BARRIER

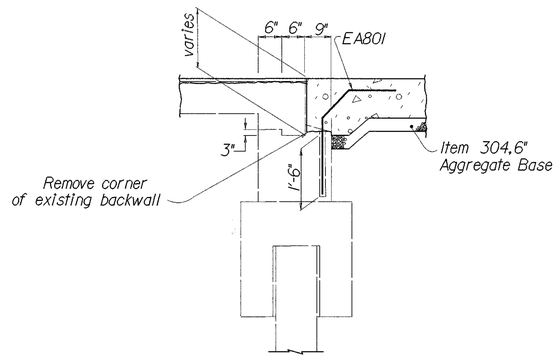


APPROACH SLAB DETAIL BEYOND
THE EXISTING APPROACH SLAB SEAT

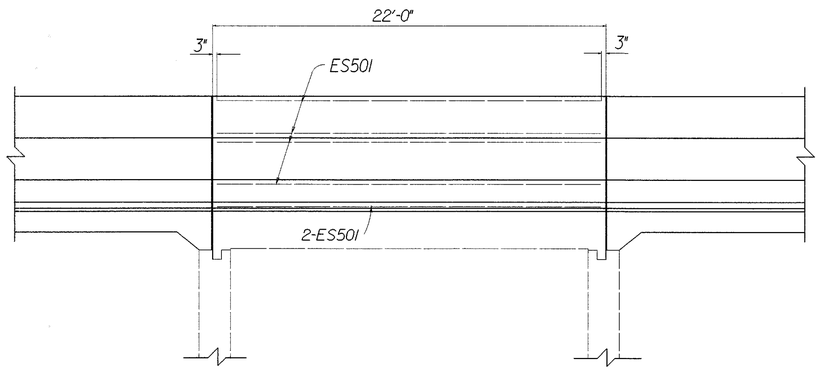


HORIZONTAL REINFORCEMENT
IN MEDIAN BARRIER

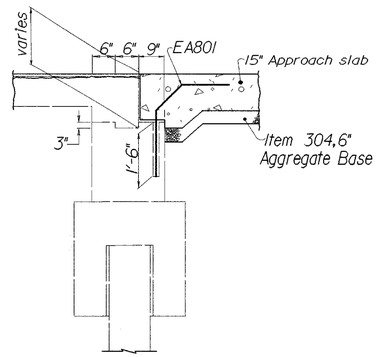


APPROACH SLAB DETAIL AT
EXISTING APPROACH SLAB SEAT

STATE OF OHIO
DEPARTMENT OF TRANSPORTATION
DISTRICT 2 DESIGN & PLANNING OFFICE

5 / 7

MEDIAN BARRIER DETAILS
BRIDGE NO.OTT-2-1819
OVER PORTAGE RIVER

| DESIGNED | DRAWN | TRACED | CHECKED | REVIEWED DATE | REVISED |
|---|---|---|---|---|---|
| MTG | ALS | | LLL | LCL 1/10/95 | |

I:\pd\ottawa\ott2\OT2PTSD3.DGN

| FHWA REGION | STATE | PROJECT | |
|---|---|---|---|
| 5 | OHIO | | |

311 / 367

OTT-2-16.60

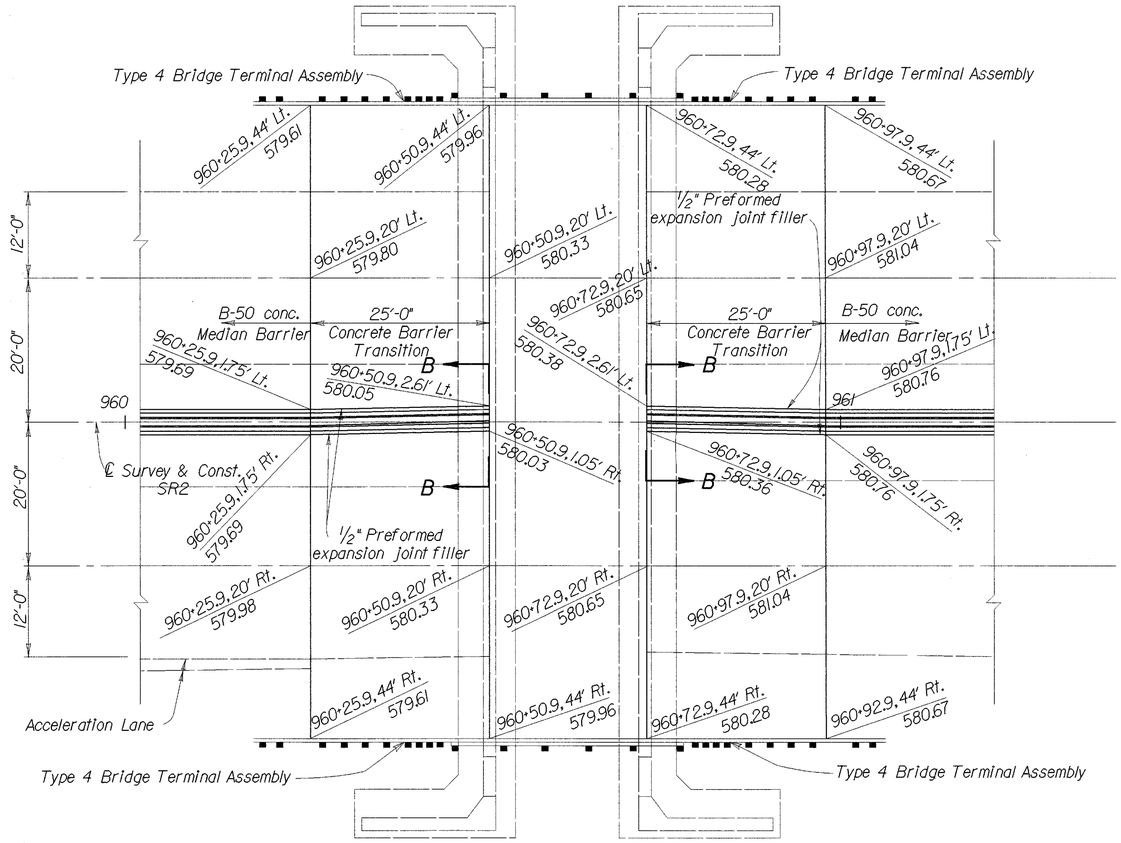


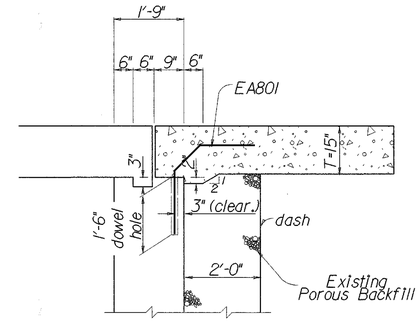


APPROACH SLAB DETAIL

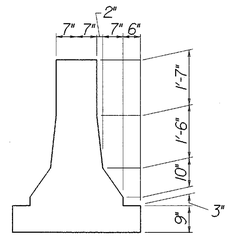


~SECTION B-B~

STATE OF OHIO
DEPARTMENT OF TRANSPORTATION
DISTRICT 2 DESIGN & PLANNING OFFICE

6 / 7

# APPROACH SLAB AND MISCELLANEOUS DETAILS BRIDGE NO. OTT-2-1819 OVER PORTAGE RIVER

| DESIGNED | DRAWN | TRACED | CHECKED | REVIEWED DATE | REVISED |
|---|---|---|---|---|---|
| MTG | ALS | | LLL | LCL 1/10/95 | |

I:/pd/ottawa/ott2/of2ptsdl.dgn

| FHWA REGION | STATE | PROJECT | |
|---|---|---|---|
| 5 | OHIO | | |

312/367

OTT-2-16.60

# REINFORCING STEEL LIST

| MARK | NO. IN STRUCTURE LT. | RT. | TOTAL | LENGTH | WEIGHT (LBS.) | SHAPE | LAP LENGTH | DOWEL HOLES EACH |
|---|---|---|---|---|---|---|---|---|
| Superstructure | | | | | | | | |
| ES501 | 6 | 6 | 12 | 21'-6" | 269 | ST | | |
| ES502 | 18 | 18 | 36 | 3'-0" | 113 | BT ① | | |
| ES503 | 18 | 18 | 36 | 2'-10" | 106 | BT ② | | 36 @ 1'-0" |
| ES504 | 0 | 18 | 18 | 5'-0" | 94 | ST | | 18 @ 1'-0" |
| ES505 | 18 | 0 | 18 | 5'-0" | 94 | BT ④ | | 18 @ 1'-0" |
| Totals for Superstructure | | | | | 676 | | | 72 @ 1'-0" |

| MARK | NO. IN ABUTMENT LT. | RT. | TOTAL | LENGTH | WEIGHT (LBS.) | SHAPE | LAP LENGTH | DOWEL HOLES EACH |
|---|---|---|---|---|---|---|---|---|
| Abutments | | | | | | | | |
| EA801 | 56 | 58 | 114 | 4'-6" | 1370 | BT ③ | | 114 @ 1'-6" |
| Totals for Abutments | | | | | 1370 | | | 116 @ 1'-6" |

BENDING DIAGRAMS

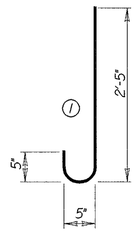

ES502

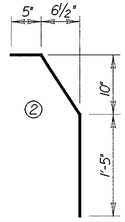

ES503

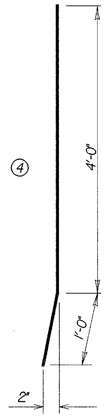

ES505

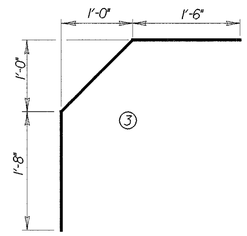

EA801

*"E" in prefix designates epoxy coated

| STATE OF OHIO DEPARTMENT OF TRANSPORTATION DISTRICT 2 DESIGN & PLANNING OFFICE | 7/7 |
|---|---|

REINFORCING STEEL LIST
BRIDGE NO. OTT-2-1819
OVER PORTAGE RIVER

| DESIGNED | DRAWN | TRACED | CHECKED | REVIEWED DATE | REVISED |
|---|---|---|---|---|---|
| MTG | ALS | | LLL | LCL 1/10/95 | |

I:/pd/OTTAWA/OTT2/OT2PRSSLDGN

| FED. RD. DIVISION | STATE | PROJECT | TYPE FUNDS |
|---|---|---|---|
| 5 | OHIO | | |

313 / 367

OTT-2-16.60

### BENCHMARKS

1. AT STA. 960+78.50, 46' RIGHT OF CENTERLINE OF SURVEY, CUT "□" IN TOP OF SOUTHEAST WINGWALL, ELEVATION 580.20.
2. AT STA. 971+01.00, 36.5' RIGHT OF CENTERLINE OF SURVEY, CUT "□" SOUTHEAST CORNER AT TOP OF CURB ON BRIDGE, ELEVATION 603.44.
3. AT STA. 983+31.50, 55' RIGHT OF CENTERLINE OF SURVEY, CUT "□" TOP OF BOX CULVERT, SOUTHEAST CORNER, ELEVATION 583.26.

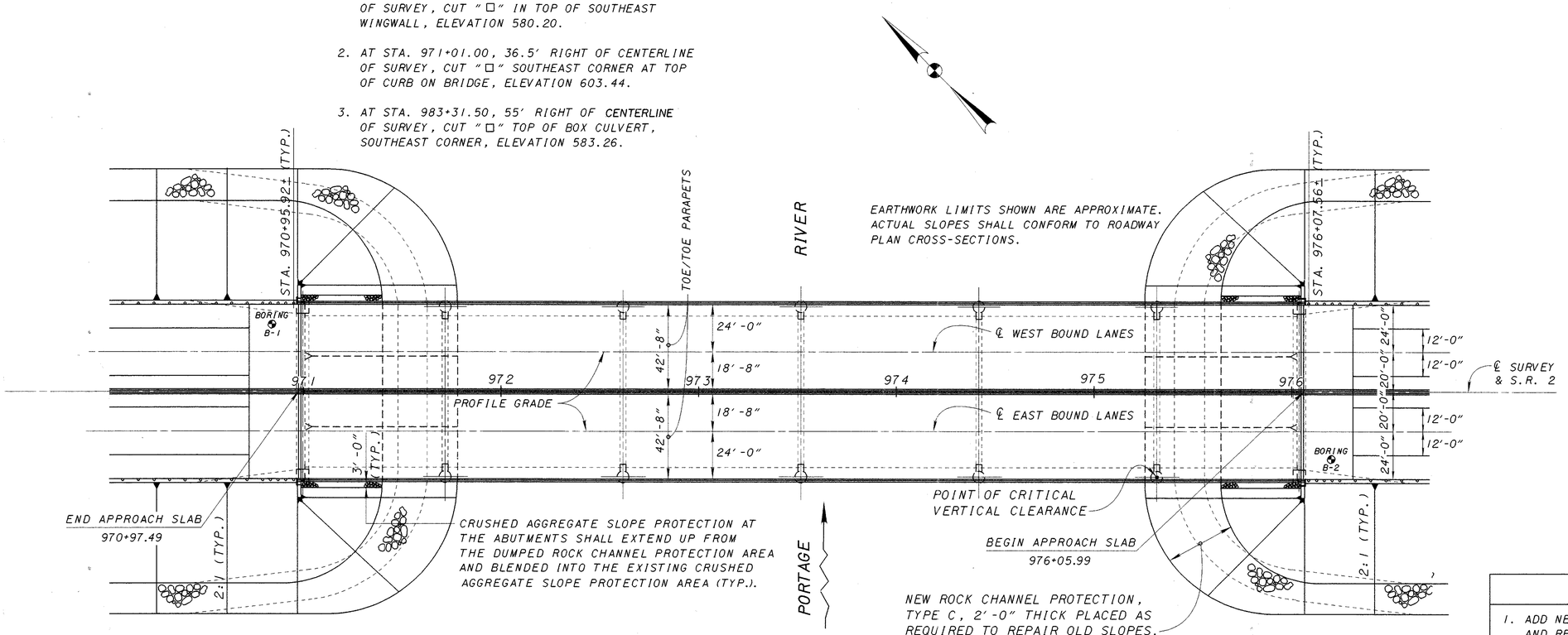


PLAN

**VERTICAL CURVE DATA**

P.V.I. STATION = 973+51.74
P.V.I. ELEVATION = 616.20
V.C. LENGTH = 1600'
G1 = +3.0%
G2 = -3.0%

**DESIGN TRAFFIC:**
2016 ADT= 21,100
2016 ADTT= 4431

12 INCH DIAMETER CAST-IN-PLACE CONCRETE PILES ESTIMATED PAY LENGTH:
REAR ABUTMENT - 35 FEET
FORWARD ABUTMENT - 40 FEET

✡ REQUIRED MINIMUM VERTICAL CLEARANCE = 30.00'
ACTUAL MINIMUM VERTICAL CLEARANCE = 30.08'

SEE ROADWAY PLANS FOR APPROACH PAVING TRANSITIONS TO APPROACH SLABS AND FOR DECK DRAINAGE INTERCEPT DETAILS OFF OF THE STRUCTURE (TYP.).

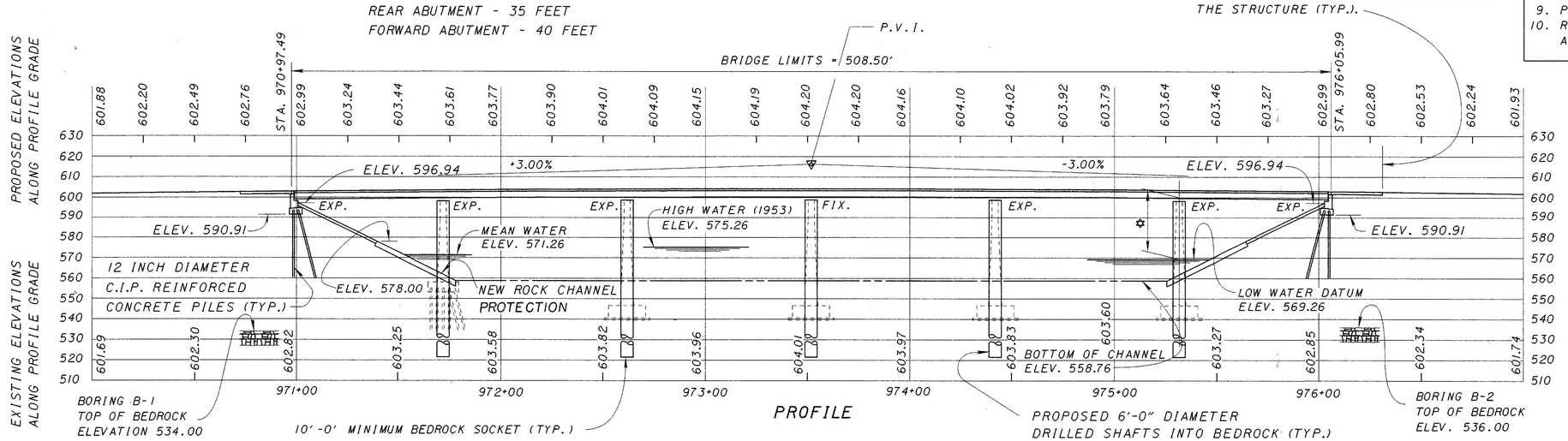


PROFILE

NOTE:
6'-6" DRILLED SHAFTS ABOVE BEDROCK (TYP.)
TOP OF DRILLED SHAFT ELEVATION 570.00 (TYP.)

### EXISTING STRUCTURE

TYPE: CONTINUOUS STEEL BEAM REINFORCED CONCRETE DECK AND SUBSTRUCTURE
SPANS: ±72'-0", ±90'-0", ±90'-0", ±90'-0", ±90'-0", ±72'-0" C/C OF BEARING
ROADWAY: 32'-0" F/F 2'-3" SAFETY CURBS EACH STRUCTURE
LOADING: CF400
SKEW: NONE
WEARING SURFACE: MONOLITHIC CONCRETE
APPROACH SLABS: AS-1-54 (25'-0" LONG)
ALIGNMENT: TANGENT
DATE BUILT: 1968
SFN: 6200338

### PROPOSED STRUCTURE

TYPE: CONTINUOUS EXISTING AND NEW (A572) PAINTED STEEL BEAMS WITH NEW WIDENED COMPOSITE REINFORCED CONCRETE DECK AND WIDENED SUBSTRUCTURE
SPANS: ±72'-0", ±90'-0", ±90'-0", ±90'-0", ±72'-0" C/C OF BEARING
ROADWAY: 42'-8" TOE TO TOE OF PARAPETS FOR EACH STRUCTURE
LOADING: HS20-44 CASE II AND THE ALTERNATE MILITARY LOADING
SKEW: NONE
WEARING SURFACE: MONOLITHIC CONCRETE
APPROACH SLABS: AS-1-81 (25'-0" LONG)
CROWN: 0.016

### PROPOSED WORK

1. ADD NEW BEAMS, WIDEN PIERS, DECKS AND ABUTMENTS, AND REPLACE BACKWALLS.
2. REMOVE AND REPLACE EXISTING BRIDGE DECKS.
3. REPLACE EXISTING EXPANSION JOINTS WITH STRIP SEALS.
4. STRENGTHEN BRIDGE BY WELDING SHEAR CONNECTORS TO THE BEAMS.
5. JACK AND RESET CERTAIN BEARINGS.
6. CONSTRUCT SAFETY SHAPE PARAPETS.
7. REPLACE APPROACH SLABS.
8. SEAL ABUTMENTS, PARAPETS AND DECK FASCIA.
9. PAINT ALL STRUCTUAL STEEL.
10. REPAIR DESIGNATED AREAS OF SPILL-THRU SLOPES WITH AGGREGATES.

STATE OF OHIO
DEPARTMENT OF TRANSPORTATION
BUREAU OF BRIDGES AND STRUCTURAL DESIGN

1 / 25

# SITE PLAN

BRIDGE NO. OTT-2-1839
OVER PORTAGE RIVER

OTTAWA COUNTY
SFN 6200338

STA. 970+97.49
976+05.99

| DESIGNED | DRAWN | TRACED | CHECKED | REVIEWED | DATE | REVISED |
|---|---|---|---|---|---|---|
| AJM | AJM | | JS | BWR | 7281-95 | |

| FED. RD. DIVISION | STATE | PROJECT | TYPE FUNDS |
|---|---|---|---|
| 5 | OHIO | | |

314 / 367

OTT-2-16.60

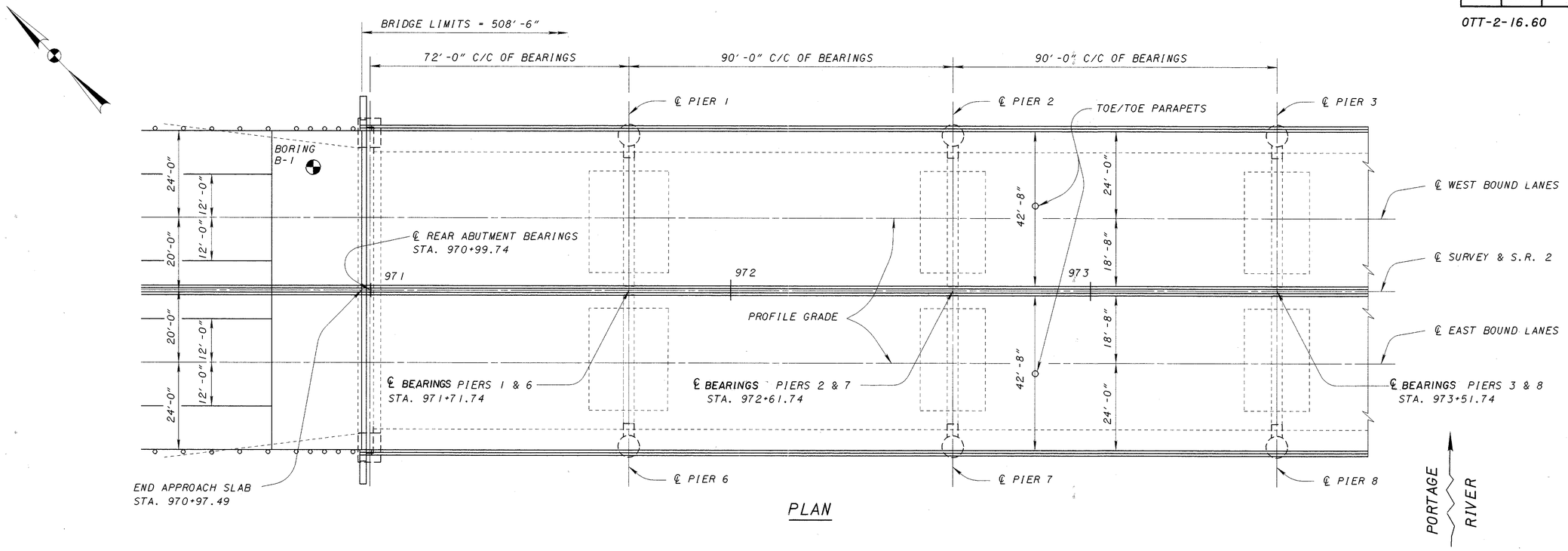


PLAN

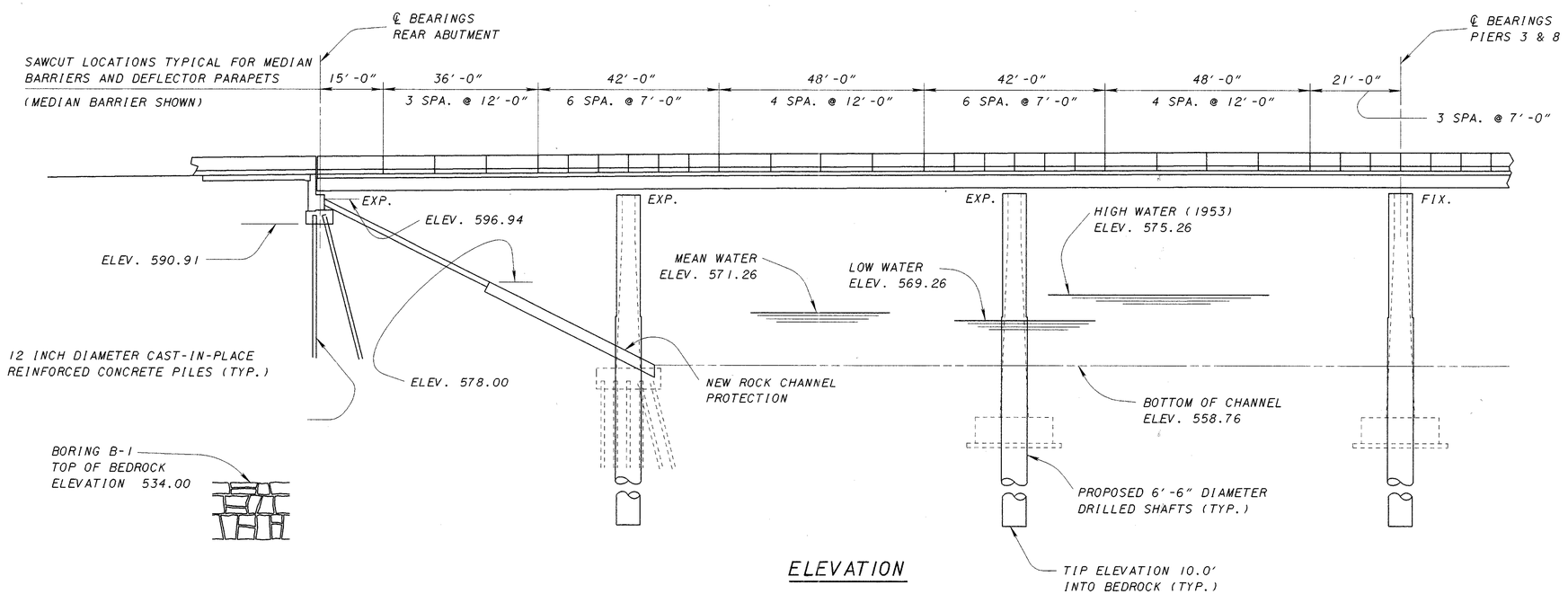


ELEVATION

NOTE:
FOR EMBANKMENT SLOPE PROTECTION
DETAILS SEE SHEET 1 / 25 .

STATE OF OHIO
DEPARTMENT OF TRANSPORTATION
BUREAU OF BRIDGES AND STRUCTURAL DESIGN

2 / 25

# GENERAL PLAN & ELEVATION

BRIDGE NO. OTT-2-1839
OVER PORTAGE RIVER

SFN 6200338

| DESIGNED | DRAWN | TRACED | CHECKED | REVIEWED | DATE | REVISED |
|---|---|---|---|---|---|---|
| JS | JS | | REZA | LMW | 7-8-94 | |

| FED. RD. DIVISION | STATE | PROJECT | TYPE FUNDS |
|---|---|---|---|
| 5 | OHIO | | |

315
367

OTT-2-16.60

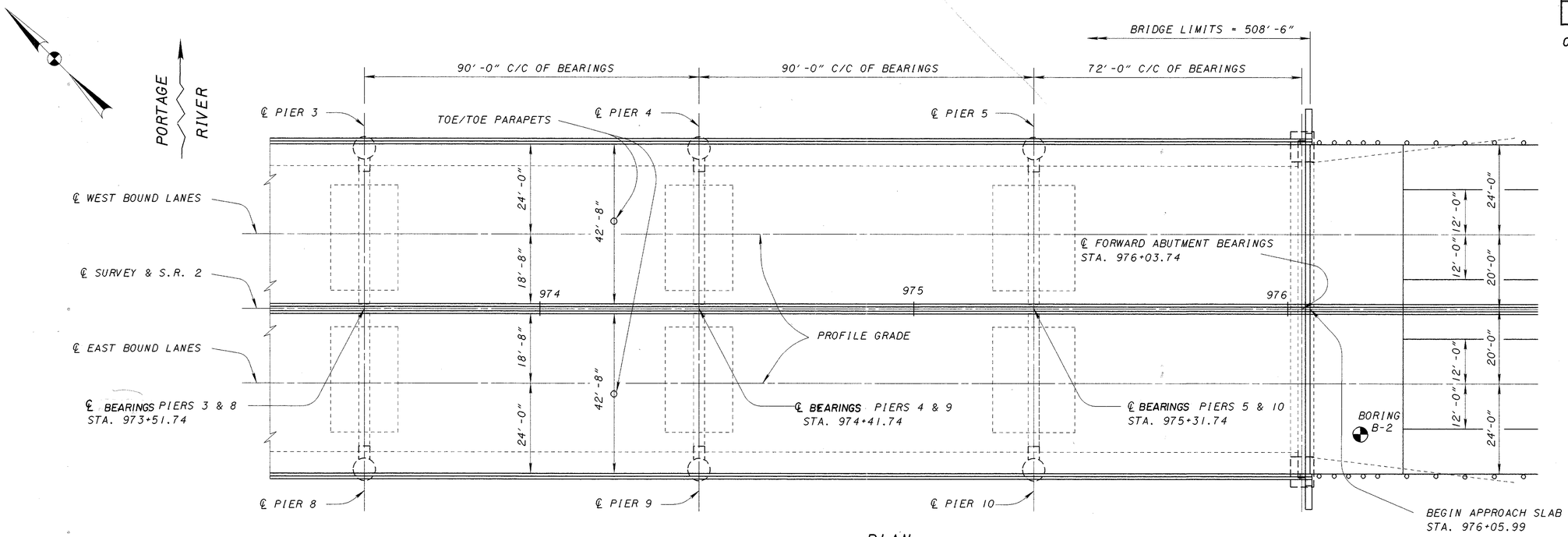


PLAN

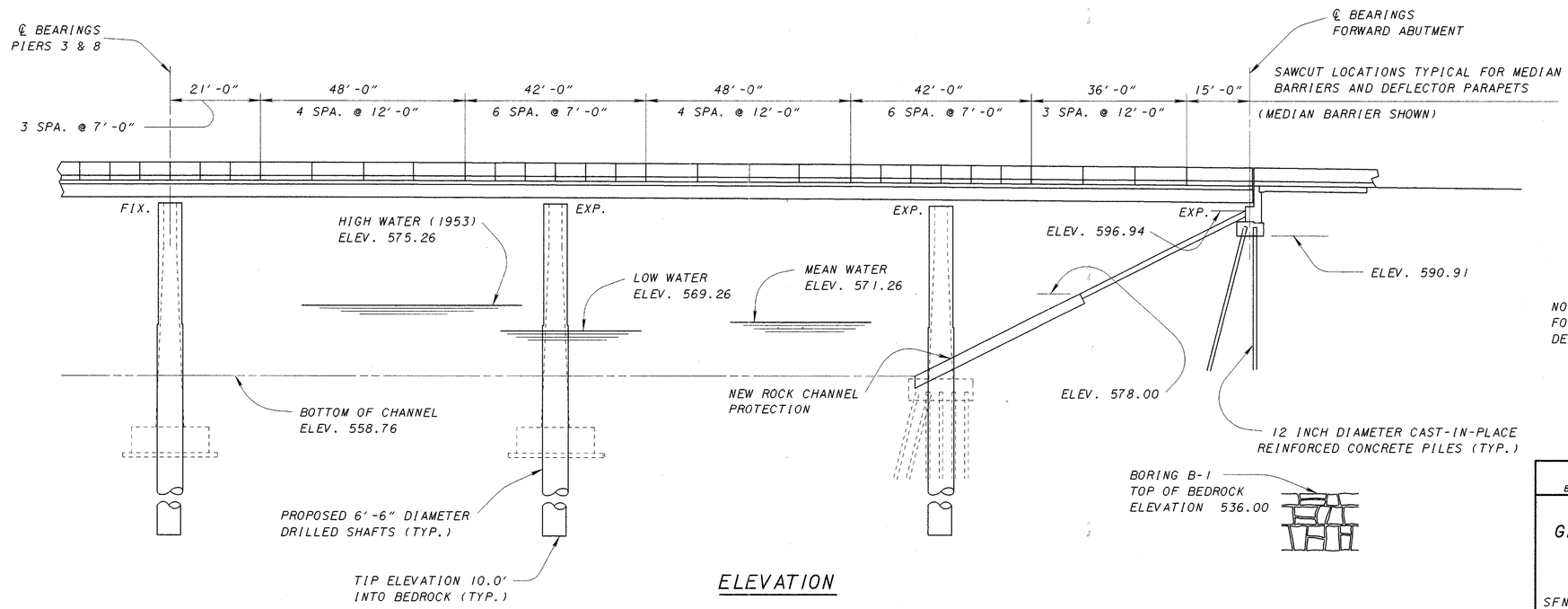


ELEVATION

NOTE:
FOR EMBANKMENT SLOPE PROTECTION DETAILS SEE SHEET 1/25 .

STATE OF OHIO
DEPARTMENT OF TRANSPORTATION
BUREAU OF BRIDGES AND STRUCTURAL DESIGN

3/25

# GENERAL PLAN & ELEVATION

BRIDGE NO. OTT-2-1839
OVER PORTAGE RIVER

SFN 6200338

| DESIGNED | DRAWN | TRACED | CHECKED | REVIEWED | DATE | REVISED |
|---|---|---|---|---|---|---|
| JS | JS | | REZA | LMW | 7-8-94 | |

| FED.RD. DIVISION | STATE | PROJECT | TYPE FUNDS |
|---|---|---|---|
| 5 | OHIO | | |

316
367

OTT-2-16.60

**STANDARD DRAWING AND SUPPLEMENTAL SPECIFICATIONS:**
REFERENCE SHALL BE MADE TO STANDARD DRAWING(S):

AS-1-81 DATED 11-27-81

RB-1-55 DATED (REVISED)2-2-59

SD-1-69 DATED 5-6-91

EXJ-4-87 DATED (REVISED)11-12-93

AND TO SUPPLEMENTAL SPECIFICATIONS(S):

~~832~~ ~~DATED 7-20-95~~
910 DATED 7-17-95
~~815~~ DATED 7-17-95

**DESIGN SPECIFICATIONS:**
THIS STRUCTURE CONFORMS TO "STANDARD SPECIFICATIONS FOR HIGHWAY BRIDGES" ADOPTED BY THE AMERICAN ASSOCIATION OF STATE HIGHWAY AND TRANSPORTATION OFFICIALS,1992, INCLUDING THE 1993 INTERIM SPECIFICATIONS AND THE ODOT BRIDGE DESIGN MANUAL.

**DESIGN LOADING:**
HS20-44, CASE II AND THE ALTERNATE MILITARY LOADING.

**DESIGN DATA:**
CONCRETE CLASS S - COMPRESSIVE STRENGTH 4500 P.S.I. (SUPERSTRUCTURE)

CONCRETE CLASS C - COMPRESSIVE STRENGTH 4000 P.S.I. (SUBSTRUCTURE)

REINFORCING STEEL - ASTM A615, A616 OR A617 - GRADE 60 MINIMUM YIELD STRENGTH 60,000 P.S.I.
SPIRAL REINFORCEMENT MAY BE PLAIN BARS, ASTM A82 OR A615.

STRUCTURAL STEEL
ASTM A572 - YIELD STRENGTH 50,000 P.S.I.

**DECK PROTECTION METHOD:**

EPOXY COATED REINFORCING STEEL.

2-1/2" CONCRETE COVER.

MONOLITHIC WEARING SURFACE:
MONOLITHIC WEARING SURFACE IS ASSUMED, FOR DESIGN PURPOSES, TO BE 1" THICK.

**ITEM 503, UNCLASSIFIED EXCAVATION**
UNCLASSIFIED EXCAVATION SHALL BE IN ACCORDANCE WITH 503 EXCEPT THAT BACKFILL MATERIAL BEHIND THE ABUTMENTS SHALL BE 203 GRANULAR MATERIAL PLACED IN LIFTS NOT TO EXCEED A THICKNESS OF SIX (6) INCHES.

**PILE DESIGN LOADS (SAFE BEARING CAPACITY):**
THE DESIGN LOAD FOR THE ABUTMENT PILES IS 25 TONS PER PILE.

**ITEM 202, PORTIONS OF STRUCTURE REMOVED, AS PER PLAN**

DESCRIPTION:
THIS WORK SHALL CONSIST OF THE REMOVAL OF CONCRETE DECKS INCLUDING SIDEWALKS, PARAPETS, RAILINGS, DECK JOINTS AND OTHER APPURTENANCES FROM STEEL SUPPORTING SYSTEMS (BEAMS, GIRDERS, CROSS FRAMES, ETC.). CARE SHALL BE TAKEN DURING DECK REMOVALS TO PROTECT PORTIONS OF SUCH SYSTEMS THAT ARE TO BE SALVAGED AND INCORPORATED INTO THE PROPOSED STRUCTURE. IN THIS RESPECT, THE USE OF EXPLOSIVES, HEADACHE BALLS AND/OR HOE RAM TYPE OF EQUIPMENT IS PROHIBITED.

REMOVAL METHODS:
CONCRETE MAY BE REMOVED BY CUTTING AND BY MEANS OF HAND OPERATED PNEUMATIC HAMMERS EMPLOYING POINTED OR BLUNTED CHISEL TYPE TOOLS. FOR REMOVALS ABOVE STEEL MEMBERS, A HAMMER HEAVIER THAN 35 POUNDS BUT NOT TO EXCEED 90 POUNDS MAY BE USED AT THE APPROVAL OF THE ENGINEER, TO ENSURE ADEQUATE DEPTH CONTROL AND TO PREVENT NICKING OR GOUGING THE PRIMARY STEEL MEMBERS.

PROTECTION OF TRAFFIC:
PRIOR TO DEMOLITION OF ANY PORTIONS OF THE EXISTING SUPERSTRUCTURE, THE CONTRACTOR SHALL SUBMIT HIS PLANS FOR THE PROTECTION OF TRAFFIC (VEHICULAR, PEDESTRIAN, BOAT, ETC.) ADJACENT TO AND/OR UNDER THE STRUCTURE TO THE DIRECTOR FOR APPROVAL. THESE PLANS SHALL INCLUDE PROVISIONS FOR ANY DEVICES AND STRUCTURES THAT MAY BE NECESSARY TO ENSURE SUCH PROTECTION. TEMPORARY VERTICAL CLEARANCES SPECIFIED ON THE PLANS OR IN THE PROPOSAL SHALL BE MAINTAINED AT ALL TIMES EXCEPT AS OTHERWISE APPROVED BY THE DIRECTOR.

PROTECTION OF STEEL SUPPORT SYSTEMS:
BEFORE DECK SLAB CUTTING IS PERMITTED, THE OUTLINE OF PRIMARY STEEL MEMBERS IN CONTACT WITH THE BOTTOM OF THE DECK SHALL BE DRAWN ON THE SURFACE OF DECK. SMALL DIAMETER PILOT HOLES SHALL BE DRILLED 2 INCHES OUTSIDE THESE LINES TO CONFIRM THE LOCATION OF FLANGE EDGES. DECK CUTS OVER OR WITHIN 2 INCHES OF FLANGE EDGES SHALL NOT EXTEND LOWER THAN THE BOTTOM LAYER OF DECK SLAB REINFORCING STEEL. CUTS MADE OUTSIDE 2 INCHES OF FLANGE EDGES MAY EXTEND THE FULL DEPTH OF THE DECK. DURING CUTTING OF THE DECK SLAB, CARE SHALL BE TAKEN NOT TO DAMAGE STEEL MEMBERS THAT ARE TO BE INCORPORATED INTO THE PROPOSED STRUCTURE.

DECK REMOVALS:
DUE TO THE POSSIBLE PRESENCE OF WELDED ATTACHMENTS TO EXISTING STRUCTURAL STEEL (FINISHING MACHINE, SCUPPER AND FORM SUPPORTS, ETC.), CARE SHALL BE TAKEN DURING DECK REMOVAL TO AVOID DAMAGING STRINGERS WHICH ARE TO REMAIN. STRINGERS DAMAGED BY THE CONTRACTOR'S REMOVAL OPERATIONS SHALL, AT NO COST TO THE PROJECT, BE REPLACED OR REPAIRED. PROPOSED REPAIRS, DEVELOPED BY A REGISTERED PROFESSIONAL ENGINEER, SHALL BE SUBMITTED IN WRITING FOR REVIEW AND APPROVAL BY THE DIRECTOR.

EXTRANEOUS MEMBERS:
EXISTING EXTRANEOUS MEMBERS (I.E., FINISHING MACHINE AND FORM SUPPORTS, ETC., AND THE SUPPORT FOR SCUPPERS AND BULB ANGLES WHICH ARE TO **BE REMOVED**) ATTACHED BY WELDED CONNECTIONS TO PORTIONS OF THE TOP FLANGES DESIGNATED "TENSION" SHALL BE REMOVED AND THE FLANGE SURFACES GROUND SMOOTH. GRINDING SHALL BE CAREFULLY DONE AND PARALLEL TO THE FLANGES.

LOADING LIMITATIONS:
NO PART OF THE STRUCTURE SHALL BE SUBJECTED TO UNIT STRESSES THAT EXCEED 136.5% OF THE ALLOWABLE UNIT STRESSES GIVEN IN THE AASHTO STANDARD SPECIFICATIONS FOR HIGHWAY BRIDGES DUE EITHER TO DEMOLITION, ERECTION OR CONSTRUCTION METHODS, OR TO THE USE OR MOVEMENT OF DEMOLITION OR ERECTION EQUIPMENT ON OR ACROSS THE STRUCTURE. STRUCTURAL ANALYSIS COMPUTATIONS, BY A REGISTERED PROFESSIONAL ENGINEER, SHOWING THE ALLOWABLE STRESSES AND THE MAXIMUM STRESSES PRODUCED BY THE CONTRACTOR'S METHODS OR EQUIPMENT SHALL BE SUBMITTED TO THE DIRECTOR FOR REVIEW AND APPROVAL AT LEAST TWO WEEKS PRIOR TO THE START OF THE WORK.

CUT LINE CONSTRUCTION JOINT PREPARATION:
SAW CUT BOUNDARIES OF PROPOSED CONCRETE REMOVALS 1" DEEP. REMOVE CONCRETE TO A ROUGH SURFACE. WHERE PRACTICABLE, THE EXISTING REINFORCING STEEL WHERE REQUIRED IN THE PLANS SHALL BE LEFT IN PLACE. INSTALL DOWEL BARS IF SPECIFIED. PRIOR TO CONCRETE PLACEMENT ABRASIVELY CLEAN JOINT SURFACE AND EXPOSED REINFORCEMENT TO REMOVE LOOSE AND DISINTEGRATED CONCRETE AND LOOSE RUST. THEN, THE JOINT SURFACE AND EXPOSED REINFORCEMENT SHALL BE THOROUGHLY CLEANED OF ALL DIRT, DUST, OR OTHER FOREIGN MATERIAL BY THE USE OF WATER, AIR UNDER PRESSURE, OR OTHER METHODS THAT PRODUCE SATISFACTORY RESULTS. CONCRETE BONDING SURFACES SHALL BE WET WITHOUT FREE WATER AS CONCRETE IS PLACED.

SUBSTRUCTURE CONCRETE REMOVAL:
SUBSTRUCTURE CONCRETE REMOVAL SHALL BE BY MEANS OF APPROVED PNEUMATIC HAMMERS EMPLOYING POINTED AND BLUNT CHISEL TOOLS. HYDRAULIC HOE-RAM TYPE HAMMERS WILL NOT BE PERMITTED. THE WEIGHT OF THE HAMMER SHALL NOT BE MORE THAN 35 POUNDS FOR REMOVAL WITHIN 18-INCHES OF PORTIONS TO BE PRESERVED. OUTSIDE THE 18-INCH LIMIT, A HAMMER HEAVIER THAN 35 POUNDS, BUT NOT TO EXCEED 90 POUNDS, MAY BE USED AT THE APPROVAL OF THE ENGINEER. PNEUMATIC HAMMERS SHALL NOT BE PLACED IN DIRECT CONTACT WITH REINFORCING STEEL THAT IS TO BE RETAINED IN THE REBUILT STRUCTURE.

PAYMENT:
THIS WORK WILL BE PAID FOR AT THE CONTRACT LUMP SUM PRICE BID, WHICH PRICE AND PAYMENT SHALL BE FULL COMPENSATION FOR ALL LABOR, EQUIPMENT, MATERIALS AND INCIDENTALS NECESSARY TO COMPLETE THE WORK IN CONFORMANCE WITH THESE REQUIREMENTS, WITH PERTINENT PROVISIONS OF 202, AND TO THE SATISFACTION OF THE ENGINEER.

**EXISTING STRUCTURE VERIFICATION:**
DETAILS AND DIMENSIONS SHOWN ON THESE PLANS PERTAINING TO THE EXISTING STRUCTURE HAVE BEEN OBTAINED FROM PLANS OF THE EXISTING STRUCTURE AND FROM FIELD OBSERVATIONS AND MEASUREMENTS. CONSEQUENTLY, THEY ARE INDICATIVE OF THE EXISTING STRUCTURE AND THE PROPOSED WORK BUT THEY SHALL BE CONSIDERED TENTATIVE AND APPROXIMATE. THE CONTRACTOR IS REFERRED TO CMS SECTIONS 102.05, 105.02 AND 513.02. ~~(DELETE THE REFERENCE TO 513.02 IF STRUCTURAL STEEL IS NOT INVOLVED.)~~

CONTRACT BID PRICES SHALL BE BASED UPON A RECOGNITION OF THE UNCERTAINTIES DESCRIBED ABOVE AND UPON A PREBID EXAMINATION OF THE EXISTING STRUCTURE BY THE CONTRACTOR. HOWEVER, ALL PROJECT WORK SHALL BE BASED UPON ACTUAL DETAILS AND DIMENSIONS WHICH HAVE BEEN VERIFIED BY THE CONTRACTOR IN THE FIELD.

EXISTING BRIDGE PLANS MAY BE INSPECTED IN THE BUREAU OF BRIDGES AND STRUCTURAL DESIGN IN COLUMBUS, OHIO OR AT THE ODOT DISTRICT OFFICE IN BOWLING GREEN, OHIO.

**REPLACEMENT OF EXISTING REINFORCING STEEL:**
ANY EXISTING REINFORCING BARS WHICH ARE TO BE INCORPORATED INTO THE NEW WORK AND WHICH ARE MADE UNUSABLE BY THE CONTRACTOR'S CONCRETE REMOVAL OPERATIONS SHALL BE REPLACED WITH NEW STEEL AT THIS COST. ANY EXISTING REINFORCING BARS DEEMED BY THE ENGINEER TO BE UNUSABLE BECAUSE OF CORROSION SHALL BE REPLACED WITH NEW STEEL. AN ALLOWANCE OF 100 POUNDS IS INCLUDED IN ITEM 509 FOR THIS PURPOSE, LISTED IN THE "GENERAL" COLUMN OF THE ESTIMATED QUANTITIES TABLE.

**INSPECTION OF STRUCTURAL STEEL:**
THE ENGINEER SHALL VISUALLY INSPECT ALL EXISTING BUTT-WELDED SPLICES AND/OR TOP FLANGE COVER PLATE FILLET WELDS TO ENSURE THAT THEY ARE FREE OF DEFECTS. THE DECK SLAB HAUNCH FORMS IMMEDIATELY ADJACENT TO SUCH WELDS SHALL NOT BE ERECTED UNTIL AFTER THE ENGINEER HAS COMPLETED THIS INSPECTION. THIS INSPECTION SHALL NOT TAKE PLACE UNTIL AFTER THE TOP FLANGES ARE CLEANED AS SPECIFIED IN 511.08, BUT IT SHALL BE DONE BEFORE THE DECK SLAB REINFORCEMENT IS INSTALLED. THE COST ASSOCIATED WITH THIS INSPECTION SHALL BE INCLUDED WITH ITEM 511, SUPERSTRUCTURE CONCRETE FOR PAYMENT.

**ITEM 510 - DOWEL HOLES WITH NONSHRINK, NONMETALLIC GROUT:**
THIS ITEM SHALL INCLUDE THE DRILLING OF HOLES INTO CONCRETE OR MASONRY AND THE FURNISHING AND PLACING OF GROUT INTO HOLES. NON SHRINKING EPOXY GROUT SHALL BE USED IN ACCORDANCE WITH SPECIFICATION 510 AND CMS 705.20. ANCHORING SHALL CONFORM TO [redacted] SPECIFICATION 510 AND CMS 705.20. PAYMENT SHALL BE INCLUDED WITH ITEM 510.

**REINFORCED CONCRETE APPROACH SLABS:**
SEE THE ROADWAY PLAN NOTES FOR EPOXY COATED REINFORCING STEEL REQUIREMENTS.

**TRAFFIC MAINTENANCE AND PHASING:**
SEE ROADWAY PLAN NOTES AND TRAFFIC CONTROL SHEETS.

**ITEM 611 REINFORCED CONCRETE APPROACH SLAB(T= 15"), AS PER PLAN:**
THE REINFORCING STEEL FOR THE APPROACH SLABS OF THIS STRUCTURE SHALL BE EPOXY COATED IN CONFORMANCE WITH 509.

MATERIALS, LABOR AND INSTALLATION SHALL BE INCLUDED FOR PAYMENT IN THIS ITEM 611 REINFORCED CONCRETE APPROACH SLAB (T= 15"), AS PER PLAN.

**POROUS BACKFILL:**
POROUS BACKFILL WITH FILTER FABRIC, 2 FEET THICK, SHALL EXTEND UP TO THE PLANE OF THE SUBGRADE, TO ONE FOOT BELOW THE EMBANKMENT SURFACE, AND LATERALLY TO THE ENDS OF THE WINGWALLS. GEOTEXTILE FABRIC SHALL CONFORM WITH 712.09, TYPE A. THE BOTTOM OF THE POROUS BACKFILL SHALL BE SLOPED (1 INCH PER FOOT MINIMUM) LATERALLY TO DRAIN. GEOTEXTILE FABRIC IS INCLUDED WITH POROUS BACKFILL FOR PAYMENT.

~~**ITEM SPECIAL, SEALING OF CONCRETE SURFACES.**~~
~~A CONCRETE SEALER SHALL BE APPLIED TO THE CONCRETE SURFACES AS SHOWN ON THESE PLANS. SEE PROPOSAL FOR SURFACE PREPARATION REQUIREMENTS, APPLICATION RATES, MATERIAL REQUIREMENTS AND APPLICATION PROCEDURES.~~

**ITEM SPECIAL, SEALING OF CONCRETE SURFACES (EPOXY/URETHANE):**
A CONCRETE SEALER SHALL BE APPLIED TO THE CONCRETE SURFACES AS SHOWN ON THESE PLANS. SEE PROPOSAL FOR SURFACE PREPARATION REQUIREMENTS, APPLICATION RATES, MATERIAL REQUIREMENTS AND APPLICATION PROCEDURES.

ITEM 611 REINFORCED CONCRETE APPROACH SLAB(T=15"), AS PER PLAN:
THE REINFORCING STEEL FOR THE APPROACH SLABS OF THIS STRUCTURE SHALL BE EPOXY COATED IN CONFORMANCE WITH 509.

MATERIALS, LABOR AND INSTALLATION SHALL BE INCLUDED FOR PAYMENT IN THIS ITEM 611 REINFORCED CONCRETE APPROACH SLAB (T=15"), AS PER PLAN.

ITEM SPECIAL, WEATHER MONITORING SENSORS:

THE EXISTING WEATHER MONITORING SENSORS AT STRUCTURE NO. OTT-2-1839 SHOULD BE DISCONNECTED PRIOR TO CONSTRUCTION. UPON COMPLETION OF THE STRUCTURE AND APPROACH WORK, NEW WEATHER MONITORING SENSORS SHALL BE INSTALLED BY:

SSI SURFACE SYSTEMS
11612 LILBURN PARK RD.
ST. LOUIS, MISSOURI 63146

PAYMENT FOR THE ABOVE MENTIONED LABOR AND MATERIALS SHALL BE INCLUDED IN THE PRICE BID FOR

ITEM SPECIAL, WEATHER MONITORING SENSORS LUMP SUM

STATE OF OHIO
DEPARTMENT OF TRANSPORTATION
BUREAU OF BRIDGES AND STRUCTURAL DESIGN

4 / 25

# GENERAL NOTES

BRIDGE NO. OTT-2-1839
OVER PORTAGE RIVER

SFN 6200338

| DESIGNED | DRAWN | TRACED | CHECKED | REVIEWED | DATE | REVISED |
|---|---|---|---|---|---|---|
| JS | JS | | REZA | LMW | 7-8-94 | |

| FHWA REGION | STATE | PROJECT | |
|---|---|---|---|
| 5 | OHIO | | |

317 / 367

OTT-2-16.60

## ESTIMATED QUANTITIES

| ITEM | EXTENSION | TOTAL | UNIT | DESCRIPTION | ABUT. | PIERS | SUPER. | GEN. |
|---|---|---|---|---|---|---|---|---|
| 202 | 11201 | LUMP | SUM | PORTIONS OF STRUCTURE REMOVED, AS PER PLAN | LUMP | | LUMP | |
| 503 | 21300 | LUMP | SUM | UNCLASSIFIED EXCAVATION | LUMP | | | |
| 505 | 11100 | LUMP | SUM | PILE DRIVING EQUIPMENT MOBILIZATION | | | | LUMP |
| 507 | 22200 | 600 | LF | 12" CAST-IN-PLACE REINFORCED CONCRETE PILES | 600 | | | |
| SPECIAL | 50794950 | 100 | LF | DRILLED SHAFTS, 72" DIAMETER, INTO BEDROCK | | 100 | | |
| SPECIAL | 50795000 | 350 | LF | DRILLED SHAFTS, 78" DIAMETER, INTO BEDROCK | | 350 | | |
| | | | | MISC.: | | | | |
| 509 | 15840 | 453298 | LB | EPOXY COATED REINFORCING STEEL, GRADE 60 | 6163 | 97953 | 349082 | 100 |
| 510 | 10000 | 216 | EACH | DOWEL HOLES WITH NONSHRINK, NONMETALLIC GROUT | 96 | 120 | | |
| 511 | 41500 | 306 | CY | CLASS C CONCRETE, PIER ABOVE FOOTINGS | | 306 | | |
| 511 | 45701 | 75 | CY | CLASS C CONCRETE, ABUTMENT, AS PER PLAN | 75 | | | |
| SPECIAL | 51148000 | 1337 | CY | HIGH PERFORMANCE CONCRETE, SUPERSTRUCTURE (DECK) (SEE PROPOSAL NOTE) | | | 1337 | |
| SPECIAL | 51148020 | 212 | CY | HIGH PERFORMANCE CONCRETE, SUPERSTRUCTURE (PARAPET) (SEE PROPOSAL NOTE) | | | 212 | |
| SPECIAL | 51149000 | LUMP | SUM | HIGH PERFORMANCE CONCRETE, TRIAL MIX (SEE PROPOSAL NOTE) | | | LUMP | |
| SPECIAL | 51149010 | LUMP | SUM | HIGH PERFORMANCE CONCRETE TESTING (SEE PROPOSAL NOTE) | | | LUMP | |
| SPECIAL | 51181100 | 450 | LF | CONCRETE, MISC. : CONCRETE PUMPING | | 450 | | |
| SPECIAL | 51267510 | 2353 | SY | SEALING OF CONCRETE SURFACES (EPOXY/URETHANE) (SEE PROPOSAL NOTE) | 184 | 627 | 1542 | |
| 513 | 11400 | 271500 | LB | STRUCTURAL STEEL, A572-50 AISC CATEGORY I (SEE PROPOSAL NOTE) | | | 271500 | |
| 513 | 20000 | 11556 | EACH | WELDED STUD SHEAR CONNECTOR | | | 11556 | |
| 516 | 11211 | 181 | LF | STRUCTURAL EXPANSION JOINT INCLUDING ELASTOMERIC STRIP SEAL, AS PER PLAN (3") (SEE PROPOSAL NOTE) | | | 181 | |
| 516 | 46000 | 2 | EACH | BEARING DEVICE, BOLSTER | | | | 2 |
| 516 | 46200 | 12 | EACH | BEARING DEVICE, ROCKER | | | | 12 |
| 516 | 46701 | 20 | EACH | RESET BEARING, AS PER PLAN | | | | 20 |
| 518 | 21200 | 45 | CY | POROUS BACKFILL WITH FILTER FABRIC | 45 | | | |
| 601 | 20500 | 60 | CY | CRUSHED AGGREGATE SLOPE PROTECTION | 60 | | | |
| SPECIAL | 69098400 | LUMP | SUM | ROADWAY, MISC.: WEATHER MONITORING SENSORS | | | | LUMP |
| 815 | 00100 | LUMP | SUM | SURFACE PREPARATION OF EXISTING STEEL, SYSTEM OZEU | | | | LUMP |
| 815 | 00200 | LUMP | SUM | FIELD PAINTING OF EXISTING STEEL, PRIME COAT, SYSTEM OZEU | | | | LUMP |
| 815 | 00300 | LUMP | SUM | FIELD PAINTING OF EXISTING STEEL, INTERMEDIATE COAT, SYSTEM OZEU | | | | LUMP |
| 815 | 00400 | LUMP | SUM | FIELD PAINTING OF EXISTING STEEL, FINISH COAT, SYSTEM OZEU | | | | LUMP |
| 815 | 00500 | 52 | LF | CAULKING | | | | 52 |
| 815 | 00504 | 150 | MNHR | GRINDING FINS, TEARS, SLIVERS | | | | 150 |
| 514 | 00610 | 271500 | LB | FIELD PAINTING OF NEW STEEL, SYSTEM IZEU (SEE PROPOSAL NOTE) | | | | 271500 |

**DEFLECTION JOINTS FOR CONCRETE PARAPETS:**
THE JOINTS SHALL BE CONSTRUCTED BY SAWING 1 INCH DEEP ALONG THE PERIMETER OF THE PARAPET AS SOON AS THE SAW CAN BE OPERATED WITHOUT DAMAGING THE CONCRETE.

THE USE OF AN EDGE GUIDE, FENCE, OR JIG IS REQUIRED TO INSURE THAT THE CUT JOINT IS STRAIGHT, TRUE, AND ALIGNED ON ALL FACES OF THE PARAPET. THE JOINT WIDTH SHALL BE THE WIDTH OF THE SAW BLADE, A NOMINAL WIDTH OF 1/4 INCH.

THE PERIMETER OF THE DEFLECTION CONTROL JOINT SHALL BE SEALED WITH A CAULKING MATERIAL TO A MINIMUM DEPTH OF 1 INCH CONFORMING TO FEDERAL SPECIFICATIONS TT-S-00227E. THE BOTTOM ONE HALF INCH OF BOTH THE INSIDE AND OUTSIDE FACES OF THE PARAPET SHOULD BE LEFT UNSEALED TO ALLOW ANY WATER WHICH MAY ENTER THE JOINT TO ESCAPE.

QUANTITIES OF CONCRETE, REINFORCING STEEL, DEFLECTION JOINT SAWCUTS, AND CAULKING MATERIAL FOR PARAPETS ARE INCLUDED WITH ITEM SPECIAL, HIGH PERFORMANCE CONCRETE, SUPERSTRUCTURE, (PARAPET).

**STATION EQUATION:**
STA. 969+00.00 THIS PLAN EQUALS STA. 119+48.26 ORIGINAL BRIDGE PLANS.

**VERTICAL EQUATION:**
ELEVATION 600.00 THIS PLAN EQUALS ELEVATION 601.24 ORIGINAL BRIDGE PLANS.

**ITEM 516, RESET BEARING, AS PER PLAN:**
AFTER THE DECK HAS BEEN REMOVED UNDER ITEM 202, CERTAIN EXPANSION BEARING ROCKERS SHALL BE VERTICALLY REALIGNED IN ACCORDANCE WITH 516.05 AND AS MAY BE DIRECTED BY THE ENGINEER. THE ENGINEER MAY DEEM IT NECESSARY TO HAVE OTHER BEARINGS REALIGNED IN ADDITION TO THOSE INDICATED ON THE PLANS. THE APPROXIMATE STEEL BEAM DEAD LOAD LIFTS ARE 5.0 TONS AT THE ABUTMENTS AND 15.0 TONS AT THE PIERS. THE INDIVIDUAL BEAM JACKING LIFT SHALL NOT EXCEED 1/4 INCH AT EACH BEARING.

PAYMENT WILL BE MADE AT THE UNIT PRICE BID FOR EACH, ITEM 516, RESET BEARING, AS PER PLAN WHICH SHALL INCLUDE ANY MATERIALS, LABOR, EQUIPMENT AND INCIDENTALS NECESSARY TO COMPLETE THE WORK.

FOR LIGHTING SUMMARY SEE SHEET 23/25.

**ITEM SPECIAL, HIGH PERFORMANCE CONCRETE:**
MIX DESIGN 4 SHALL BE USED FOR SUPERSTRUCTURE (DECK) AND SUPERSTRUCTURE (PARAPET) QUANTITIES. MIX DESIGN 2 SHALL BE USED FOR ABUTMENT AND PIER QUANTITIES.

STATE OF OHIO
DEPARTMENT OF TRANSPORTATION
DIVISION OF DESIGN AND CONSTRUCTION
BUREAU OF BRIDGES

5 / 25

ESTIMATED QUANTITIES & BRIDGE NOTES

BRIDGE NO.OTT-2-1839

OVER PORTAGE RIVER

| DESIGNED | DRAWN | TRACED | CHECKED | REVIEWED | DATE | REVISED |
|---|---|---|---|---|---|---|
| JS | JS | | REZA | LMW | 7-8-94 | |

//I/PD/OTTAWA/OTT2/OT2PTEQ.DGN

| FED. RD. DIVISION | STATE | PROJECT | TYPE FUNDS |
|---|---|---|---|
| 5 | OHIO | | |

318
367

OTT-2-16.60

## DESCRIPTION

THIS ITEM SHALL CONSIST OF FURNISHING AND INSTALLING DRILLED SHAFTS OF THE TYPE AND SIZE SPECIFIED IN THE PLANS. THE CONTRACTOR SHALL FURNISH ALL LABOR, MATERIAL AND APPURTENANCES REQUIRED TO COMPLETE THE WORK AS SPECIFIED. THE LENGTH(S) OF THE DRILLED SHAFTS SHOWN IN THESE PLANS HAS BEEN ESTIMATED FROM AVAILABLE SUBSURFACE INFORMATION. THE CONTRACTOR IS EXPECTED TO FURNISH THE PROPOSED DRILLED SHAFTS AS PER THESE PLAN REQUIREMENTS, WITH THE UNDERSTANDING THAT THE ACTUAL LENGTH REQUIRED BASED ON CONDITIONS ENCOUNTERED DURING CONSTRUCTION MAY DIFFER FROM THE ESTIMATED LENGTH SHOWN IN THE PLANS.

THE LIMITS OF EACH DRILLED SHAFT SHALL BE DEFINED AT THE TOP BY THE PLAN ELEVATION AND AT THE BOTTOM BY THE ELEVATION OF THE BOTTOM OF THE BEDROCK SOCKET AS APPROVED BY THE ENGINEER.

A CASING WILL BE NECESSARY FOR THE CONSTRUCTION OF EACH PIER DRILLED SHAFT AND THE CASINGS SHALL BE LEFT IN PLACE.

## CONTRACTOR QUALIFICATION

THE CONTRACTOR SHALL SUBMIT INFORMATION TO THE ENGINEER TO DOCUMENT THAT HIS PERSONNEL IS EXPERIENCED IN THE CONSTRUCTION OF DRILLED SHAFTS OF THE TYPE AND SIZE SPECIFIED ON THE PLANS. THIS INFORMATION SHALL BE SUBMITTED AT THE PRECONSTRUCTION CONFERENCE. THE PROJECT ENGINEER IS REQUESTED TO INFORM BUREAU OF BRIDGES, ATTENTION: FOUNDATION ENGINEER (TEL.614-466-2399) OF THE DATES WHEN THE CONTRACTOR WILL BE CONSTRUCTING THE DRILLED SHAFTS.

## APPROVAL BEFORE DRILLED SHAFT CONSTRUCTION

THE CONTRACTOR SHALL SUBMIT TO THE ENGINEER FOR APPROVAL A WRITTEN PLAN OF STEPS AND PROCEDURES HE PROPOSES TO FOLLOW WHEN DRIVING THE CASING, EXCAVATING INSIDE THE CASING, PLACING THE CONCRETE AND MONITORING THE CONCRETE PLACEMENT. A COPY OF THE PROCEDURE SHALL BE FAXED DIRECTLY TO THE BUREAU OF BRIDGES AND STRUCTURAL DESIGN (ATTN: FOUNDATION ENGINEER, FAX-614-752-4824).

## CASING

THE CASING SHALL BE MADE OF STEEL, SHALL BE WATER TIGHT AND SHALL BE OF AMPLE STRENGTH TO WITHSTAND HANDLING STRESSES AND EXTERNAL SUBSURFACE PRESSURES. THE CASING SHALL BE SEATED INTO THE BEDROCK, THUS ATTEMPTING TO SEAL OUT INCOMING WATER. THE CASING LENGTH SHALL BE AS NECESSARY TO CONSTRUCT EACH DRILLED SHAFT. THE DIAMETER OF THE CASING SHALL BE NO LESS THAN THE DIAMETER OF THE DRILLED SHAFT BEING CONSTRUCTED.

THE DIAMETER OF THE FURNISHED CASING(S) SHALL BE LARGE ENOUGH TO ALLOW THE CONSTRUCTION OF A BEDROCK SOCKET WITH DIAMETER EQUAL TO OR GREATER THAN THE PLAN DIAMETER.

## EXCAVATION

WHEN OBJECTS SUCH AS LARGE BOULDERS ARE ENCOUNTERED, THEY SHALL BE REMOVED. BLASTING METHODS MAY BE USED AND WHEN USED, SHALL BE CONDUCTED SO AS TO AVOID DISTURBANCE TO THE BEDROCK FORMATION BELOW AND OUTSIDE THE LIMITS OF THE PROPOSED DRILLED SHAFT EXCAVATION. THE DRILLED SHAFTS SHALL PENETRATE INTO BEDROCK TO A DEPTH THAT PROVIDES A BEDROCK SOCKET LENGTH THAT IS NOT LESS THAN THE BEDROCK SOCKET SHOWN IN THE PLANS. WHEN A CASING WHICH EXTENDS DOWN TO BEDROCK IS USED, THE BEDROCK SOCKET SHALL BE MEASURED FROM THE BOTTOM OF THE CASING TO THE BOTTOM OF THE DRILLED BEDROCK EXCAVATION. WHEN THE ENGINEER IS ASSURED THAT A PORTION OF THE METAL CASING IS EMBEDDED IN BEDROCK, UPON THE ENGINEER'S CONCURRENCE, THE EMBEDDED DISTANCE MAY BE INCLUDED AS PART OF THE BEDROCK SOCKET.

## DEWATERING

THE CONTRACTOR SHALL BE RESPONSIBLE FOR CONTROLLING ANY INCOMING WATER TO THE EXTENT THAT THE SHAFT EXCAVATION IS MAINTAINED DRY ENOUGH FOR PERFORMANCE OF THE REQUIRED INSPECTION OPERATION. THE PREFERRED METHOD OF CONSTRUCTION IS TO PLACE THE CONCRETE IN A CLEAN, DRY EXCAVATION. THE CONTRACTOR IS EXPECTED TO MAKE A REASONABLE ATTEMPT TO SEAL WATER OUT OF THE DRILLED SHAFT EXCAVATION.

## BOTTOM CLEAN OUT

THE BOTTOM OF THE DRILLED SHAFT EXCAVATION SHALL BE AS CLEAN AS PRACTICABLE (NO MORE THAN ONE INCH OF LOOSE MATERIAL ON THE BOTTOM). PRIOR TO CONCRETE PLACEMENT, DRILLING SPOILS THAT ADHERE TO THE VERTICAL SIDES OF THE BEDROCK SOCKETS ARE TO BE REMOVED.

## APPROVAL BEFORE CONCRETE PLACEMENT

THE CONTRACTOR SHALL SUBMIT TO THE PROJECT ENGINEER FOR APPROVAL A WRITTEN PLAN OF STEPS AND PROCEDURES HE PROPOSES TO FOLLOW WHEN PLACING THE CONCRETE AND MONITORING THE CONCRETE PLACEMENT. CONCRETE SHALL NOT BE PLACED IN ANY DRILLED SHAFT EXCAVATION WITHOUT PRIOR APPROVAL FROM THE ENGINEER. THE DRILLED SHAFT EXCAVATION SHALL BE INSPECTED IMMEDIATELY BEFORE THE CONCRETE IS PLACED. A LIGHT POWERFUL ENOUGH TO THOROUGHLY INSPECT THE SIDES, BOTTOM AND REINFORCING STEEL CAGE OF THE DRILLED SHAFT IS REQUIRED.

## CONCRETE PLACEMENT

THE CONCRETE FOR THE DRILLED SHAFT SHALL BE PLACED AS PER ITEM 511 EXCEPT AS MODIFIED BY THE PLANS. IF THE DRILLED SHAFT HAS A BEDROCK SOCKET, THE CONCRETE FOR THE BEDROCK SOCKET SHALL BE PLACED AGAINST THE IN-SITU BEDROCK. THE CONCRETE FOR THE DRILLED SHAFT SHALL BE PLACED PROMPTLY AFTER THE FINAL INSPECTION OF THE SHAFT. IF PRACTICABLE, THE CONCRETE SHALL BE PLACED IN A CLEAN DRY EXCAVATION, HOWEVER, NO MORE THAN 2 INCHES OF STANDING WATER WILL BE PERMITTED. THE DRY CONSTRUCTION METHOD CAN ONLY BE USED WHEN LESS THAN 12 INCHES OF WATER ACCUMULATES ABOVE THE BASE OF THE HOLE DURING A ONE HOUR PERIOD WHEN NO PUMPING IS PERMITTED. CARE SHALL BE TAKEN TO ENSURE THAT CONCRETE IS NOT BEING PLACED IN MOVING WATER. THE CONCRETE MAY BE PLACED IN A DRY DRILLED SHAFT EXCAVATION BY THE FREE FALL METHOD PROVIDED THE CONCRETE FALLS TO ITS FINAL POSITION THROUGH AIR WITHOUT STRIKING THE SIDES OF THE HOLE, THE REINFORCING STEEL CAGE OR ANY OTHER OBSTRUCTION. THE FREE FALL METHOD ALLOWS THE CONCRETE TO BE DROPPED FROM THE TOP THROUGH A CENTERING CHUTE TO THE CONCRETE'S FINAL POSITION. USE FREE FALL PLACEMENT WITH A 25 FOOT MAXIMUM HEIGHT OF FREE FALL. SUPPORT THE DROP CHUTE SO THAT THE MAXIMUM HEIGHT OF FREE FALL OF THE CONCRETE MEASURED FROM THE BOTTOM OF THE CHUTE IS 25 FEET.

IF THE ENGINEER DETERMINES THAT DEWATERING IS NOT PRACTICABLE THE ENGINEER SHALL REQUIRE THAT THE CONCRETE BE PLACED UNDER WATER BY MEANS OF A CONCRETE PUMP. PAYMENT FOR PUMPING THE CONCRETE WILL BE MADE UNDER ITEM SPECIAL "CONCRETE, MISC: CONCRETE PUMPING".

## TOLERANCES

THE CONTRACTOR SHALL LOCATE AND CONSTRUCT THE TOP CENTER OF THE PIER DRILLED SHAFTS WITHIN A TWO-INCH RADIUS OF THE POSITION INDICATED BY THE PLANS. THE SHAFTS ARE TO BE INSTALLED VERTICALLY AND MUST BE WITHIN 1.0 PERCENT OF PLUMB FOR THE TOTAL LENGTH OF THE DRILLED SHAFT.

## REINFORCING STEEL

ALL REINFORCING STEEL SHALL BE EPOXY COATED AND SHALL MEET THE REQUIREMENTS OF ITEM 509. THE REINFORCING STEEL SHALL BE GRADE 60. THE SPIRAL REINFORCING STEEL MAY BE PLAIN BARS ASTM A82 OR A615. THE REINFORCING STEEL CAGE SHALL BE COMPLETELY ASSEMBLED PRIOR TO PLACEMENT AND THE LENGTH SHALL BE AS NECESSARY TO CONSTRUCT EACH DRILLED SHAFT. SEE PLAN SHEETS FOR DETAILS OF REINFORCING STEEL. NOTE THAT THE LENGTHS PROVIDED IN THE REINFORCING STEEL LIST ARE ESTIMATED LENGTHS. THE REINFORCING STEEL SHALL BE PLACED AT PLAN LOCATION.

## CONCRETE

CONCRETE FOR ALL DRILLED SHAFTS SHALL BE CLASS S CONCRETE AND SHALL BE IN ACCORDANCE WITH ITEM 511 EXCEPT AS MODIFIED AND SUPPLEMENTED HEREIN. THE REQUIRED SLUMP IS SIX (6) INCHES, PLUS OR MINUS ONE (1) INCH. THE MAXIMUM WATER TO CEMENT RATIO SHALL BE 0.50. IF CONCRETE IS PLACED UNDER WATER, THE REQUIREMENTS OF ADDING 10 PERCENT MORE CEMENT TO THE CONCRETE MIX SHALL BE WAIVED. THE MAXIMUM COARSE AGGREGATE SIZE SHALL BE NO. 8. THE TOP 3 TO 5 FEET OF CONCRETE IN THE DRILLED SHAFTS ARE REQUIRED TO BE VIBRATED. ONLY A MINIMAL VIBRATORY EFFORT IS NECESSARY. SPECIAL CARE SHALL BE TAKEN NOT TO OVER-VIBRATE THE DRILLED SHAFT CONCRETE. NOTE: IF THE CASING IS REMOVED USING A VIBRATORY HAMMER, NO OTHER VIBRATORY EFFORT IS NEEDED.

## SPACERS

CONCRETE SPACERS OR OTHER APPROVED NONCORROSIVE SPACING DEVICES SHALL BE USED AT SUFFICIENT INTERVALS (NEAR THE BOTTOM AND AT INTERVALS NOT EXCEEDING 10 FEET) TO INSURE CONCENTRIC SPACING FOR THE ENTIRE CAGE LENGTH. SPACERS SHALL BE CONSTRUCTED OF APPROVED MATERIAL EQUAL IN QUALITY AND DURABILITY TO THE CONCRETE SPECIFIED FOR THE SHAFT. THE SPACERS SHALL HAVE ADEQUATE DIMENSIONS TO INSURE A MINIMUM 3 INCH ANNULAR SPACE BETWEEN THE OUTSIDE OF THE REINFORCING CAGE AND THE SIDE OF THE EXCAVATED HOLE. CYLINDRICAL CONCRETE FEET (BOTTOM SUPPORTS) SHALL BE PROVIDED TO INSURE THAT THE BOTTOM OF THE CAGE IS MAINTAINED THE PROPER DISTANCE ABOVE THE BASE.

## INSPECTION

AN INSPECTION RECORD CHART HAS BEEN INCLUDED WITH THE PLANS ON SHEET 7 OF 25 AND SHOULD BE COMPLETED BY THE ENGINEER. MEASUREMENTS SHOULD BE OBTAINED PRIOR TO PLACING CONCRETE. THE CONTRACTOR SHOULD PROVIDE ALL NECESSARY EQUIPMENT NEEDED TO OBTAIN MEASUREMENTS FOR COMPLETING THE CHART. THE CONTRACTOR SHALL ASSIST THE ENGINEER IN OBTAINING THESE MEASUREMENTS. WHEN THE INSPECTION RECORD CHART IS COMPLETED, THE PROJECT ENGINEER SHOULD SUBMIT A COPY TO THE BUREAU OF BRIDGES AND STRUCTURAL DESIGN: ATTENTION: FOUNDATION ENGINEER.

## METHOD OF MEASUREMENT

THE TOTAL PAY LENGTH OF EACH DRILLED SHAFT SHALL BE THE COMPLETED AND ACCEPTED LENGTH MEASURED ALONG THE AXIS OF THE DRILLED SHAFT FROM THE BOTTOM OF THE BEDROCK SOCKET TO THE PROPOSED TOP ELEVATION, AS PER PLAN. THE REINFORCING STEEL THAT PROJECTS FROM THE DRILLED SHAFT INTO THE PIER COLUMN OR THE ABUTMENT FOOTING AS SPECIFIED BY THE PLANS IS INCLUDED WITH THE DRILLED SHAFT FOR PAYMENT BUT SHALL NOT BE INCLUDED IN THE MEASURED LENGTH OF THE DRILLED SHAFT.

THE TOTAL LENGTH OF EACH DRILLED SHAFT SHALL BE DIVIDED INTO TWO SEGMENTS. THE LENGTH OF THE LOWER SEGMENT IS THE LENGTH OF THE BEDROCK SOCKET AND THE LENGTH OF THE UPPER SEGMENT IS THE LENGTH OF THE DRILLED SHAFT ABOVE THE BEDROCK SOCKET.

## BASIS OF PAYMENT

PAYMENT FOR FURNISHING AND INSTALLING DRILLED SHAFTS WILL BE MADE AT THE CONTRACT UNIT PRICE PER LINEAR FOOT OF ACCEPTED SHAFT LENGTH AS PER ITEM SPECIAL - "DRILLED SHAFTS, 6'-6" DIAMETER, ABOVE BEDROCK" AND ITEM SPECIAL - "DRILLED SHAFTS, 6'-0" DIAMETER, INTO BEDROCK", WHICH SHALL INCLUDE ALL MATERIALS, LABOR AND EQUIPMENT NECESSARY TO COMPLETE THE ITEMS AS SPECIFIED.

## DESIGN PARAMETERS

THE DESIGN LOAD TO BE SUPPORTED BY EACH DRILLED SHAFT IS ~~TONS AT THE ABUTMENT(S) AND~~ 365 TONS AT THE PIER(S), WHICH IS ASSUMED TO BE RESISTED BY SHAFT ADHESION WITHIN A PORTION OF THE BEDROCK SOCKET AND ALSO BY SHAFT END BEARING PRESSURE. THE ALLOWABLE BEDROCK SOCKET ADHESION IS 0.5 TON(S) PER SQUARE FOOT WHICH IS ASSUMED TO ACT ALONG THE ~~BOTTOM FEET OF THE BEDROCK SOCKET AT THE ABUTMENT AND~~ BOTTOM 4 FEET OF THE BEDROCK SOCKET AT THE PIERS. THE ALLOWABLE END BEARING PRESSURE IS 12 TONS PER SQUARE FOOT.

## ITEM SPECIAL - CONCRETE, MISC: CONCRETE PUMPING

## DESCRIPTION

THE DRILLED SHAFT EXCAVATION SHALL BE FILLED WITH WATER TO SUCH A DEPTH THAT ALL WATER MOTION HAS CEASED. THE CONCRETE SHALL THEN BE PLACED BY MEANS OF A CONCRETE PUMP. THE CONCRETE PUMP PIPE SHALL HAVE A DIAMETER THAT IS NOT LESS THAN 4 INCHES. THE CONCRETE PUMP EQUIPMENT SHALL BE SO ARRANGED THAT NO VIBRATIONS RESULT WHICH MIGHT DAMAGE FRESH CONCRETE. PIPES CARRYING CONCRETE FROM THE PUMP TO THE SHAFT SHOULD BE ARRANGED WITH A MINIMUM NUMBER OF BENDS. THE PIPE USED TO CONVEY THE CONCRETE TO THE BOTTOM OF THE DRILLED SHAFT EXCAVATION SHALL BE ANCHORED TO THE STEEL CASING TO PREVENT THE PIPE FROM UNDULATING DURING THE INITIAL PLACEMENT OF THE CONCRETE.

THE PUMPING EQUIPMENT SHALL BE SUITABLE IN KIND AND ADEQUATE IN CAPACITY FOR THE WORK REQUIRED. THE USE OF ALUMINUM PIPE AS A CONVEYANCE FOR THE CONCRETE WILL NOT BE PERMITTED. AN ADEQUATE QUANTITY OF GROUT, MORTAR OR CONCRETE WITH COARSE AGGREGATE OMITTED SHALL BE PUMPED THROUGH THE EQUIPMENT AHEAD OF THE SPECIFICATION CONCRETE TO PROVIDE LUBRICATION TO THE PUMPING SYSTEM. THE CONCRETE USED FOR LUBRICATION SHALL NOT BE PLACED IN THE SHAFT. THE LUBRICATION PROCESS WILL NOT BE REPEATED AS LONG AS THE PUMPING OPERATIONS ARE CONTINUOUS. THE OPERATION OF THE PUMP SHALL BE SUCH THAT A CONTINUOUS STREAM OF CONCRETE WITHOUT AIR POCKETS IS PRODUCED. IN ORDER TO PREVENT THE CONTAMINATION OF THE CONCRETE PLACED INITIALLY AT THE BOTTOM OF THE SHAFT, THE OUTLET END OF THE PUMPING PIPE SHALL BE SEALED WITH A DIAPHRAGM OR PLUG THAT IS FLUSHED OUT WHEN THE HYDROSTATIC PRESSURE FROM THE COLUMN OF CONCRETE EXCEEDS THAT OF THE WATER IN THE SHAFT. THE INITIAL RATE OF CONCRETE PLACEMENT MUST BE CAREFULLY CONTROLLED SO AS NOT TO LIFT OR DISPLACE THE CAGE OF REINFORCING STEEL. THE CONVEYING SYSTEM SHALL BE WATER TIGHT AND THE OUTLET END SHALL ALWAYS REMAIN WELL BELOW THE TOP OF THE FRESHLY PLACED CONCRETE. THE PREFERRED CONCRETE PLACEMENT PROCEDURE IS TO MAINTAIN THE OUTLET END OF THE PUMPING SYSTEM AT APPROXIMATELY 10 FEET BELOW THE TOP OF THE FRESH CONCRETE. WHEN THE CONCRETE REACHES THE TOP OF THE DRILLED SHAFT COLUMN ALL LAITANCE SHALL BE REMOVED.

## BASIS OF PAYMENT

PAYMENT FOR PUMPING CONCRETE WILL BE MADE AT CONTRACT UNIT PRICE PER LINEAR FOOT OF ACCEPTED SHAFT LENGTH PUMPED AS PER ITEM SPECIAL - "CONCRETE, MISC: CONCRETE PUMPING".

STATE OF OHIO
DEPARTMENT OF TRANSPORTATION
BUREAU OF BRIDGES AND STRUCTURAL DESIGN

6 / 25

# DRILLED SHAFT NOTES

BRIDGE NO. OTT-2-1839
OVER PORTAGE RIVER

SFN 6200338

| DESIGNED | DRAWN | TRACED | CHECKED | REVIEWED | DATE | REVISED |
|---|---|---|---|---|---|---|
| JS | JS | | REZA | LMW | 7-8-94 | |

| FED. RD. DIVISION | STATE | PROJECT | TYPE FUNDS |
|---|---|---|---|
| 5 | OHIO | | |

319
367

OTT-2-16.60

# INSPECTION RECORD FOR DRILLED SHAFTS

PROJECT NO. _____

GENERAL CONTRACTOR _____

DRILLING CONTRACTOR _____

PROJECT ENGINEER _____

TYPE & MODEL OF DRILLING MACHINERY _____

MAX. CONTINUOUS TORQUE _____ FT.-LB.

CROWD (MAX. CONTINUOUS DOWNWARD FORCE) _____ LBS.

TYPE OF CONCRETE PUMP _____

HOSE DIAMETER _____ INCHES

CAPACITY _____ CU. FT./MIN.

COST PER LINEAL FOOT _____

ABOVE THE BEDROCK SOCKET _____

IN BEDROCK SOCKET _____

TYPE OF ROCK _____

| SUBSTRUCTURE UNIT | | DATE AND TIME OF DRILLING | | APPROX. ELEVATION OF TOP OF OVER BURDEN | LENGTH OF DRILLED SHAFTS ABOVE THE BEDROCK SOCKET | | | | OBSTRUCTIONS ENCOUNTERED | | | LENGTH OF DRILLED SHAFTS IN BEDROCK SOCKET | | | STEEL CASING | | | REINFORCING STEEL | | | | CONCRETE | | | | | TOLERANCES | | | PLAN SHAFT DIAMETER (INCH) | CONSTRUCTED SHAFT DIAMETER (INCH) |
|---|---|---|---|---|---|---|---|---|---|---|---|---|---|---|---|---|---|---|---|---|---|---|---|---|---|---|---|---|---|---|
| | | | | | | | | | | | | | | | | | | VERTICAL | | SPIRAL | | | | | | | DEVIATION FROM PLUMB | | | | |
| PIER OR ABUT | SHAFT NO. | STARTED DATE / TIME | FINISHED DATE / TIME | | THROUGH AIR (FEET) | THROUGH WATER (FEET) | THROUGH OVER BURDEN (FEET) | PAY LENGTH (FEET) | NUMBER | SIZE (INCH) | ELAPSED TIME FOR REMOVAL (HR.) | APPROX. ELEVATION OF TOP OF BEDROCK | ELEV. OF BOTT. OF BEDROCK SOCKET | LENGTH OF BEDROCK SOCKET (FEET) | LENGTH (FEET) | CASING GAUGE | WAS CASING LEFT IN PLACE ? | BAR SIZE NO. | NO. OF REBARS | BAR SIZE NO. | PITCH (INCH) | SLUMP TEST RESULT (INCH) | CYLINDER STRENGTH f'c (P.S.I.) | AIR TEMP. (F) | TIME NEEDED TO PLACE CONCRETE (HR.) | QUANTITY (CU.YD.) | N-S (INCH) | E-W (INCH) | DEVIATION OF COLUMN TOP CENTER FROM PLAN LOCATION HORIZONTALLY (INCH) | | |
| | | | | | | | | | | | | | | | | | | | | | | | | | | | | | | | |
| | | | | | | | | | | | | | | | | | | | | | | | | | | | | | | | |
| | | | | | | | | | | | | | | | | | | | | | | | | | | | | | | | |
| | | | | | | | | | | | | | | | | | | | | | | | | | | | | | | | |
| | | | | | | | | | | | | | | | | | | | | | | | | | | | | | | | |
| | | | | | | | | | | | | | | | | | | | | | | | | | | | | | | | |
| | | | | | | | | | | | | | | | | | | | | | | | | | | | | | | | |
| | | | | | | | | | | | | | | | | | | | | | | | | | | | | | | | |
| | | | | | | | | | | | | | | | | | | | | | | | | | | | | | | | |

## PROJECT ENGINEER COMMENTS

1. LOCATION AND EXTENT OF CAVITIES

2. PROCEDURES FOR CONTROLING WATER

3. WERE UNEXPECTED SUBSURFACE CONDITIONS ENCOUNTERED

4. ANY SUGGESTIONS FOR IMPROVING THE PLANS

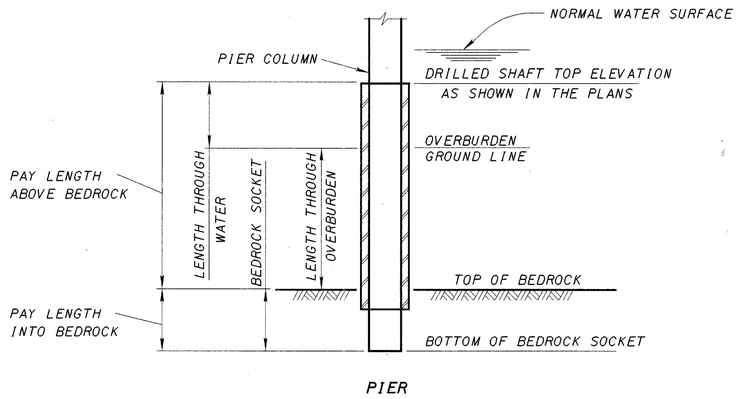


PIER

SUBMIT A COPY TO BUREAU OF BRIDGES
ATTN: FOUNDATION ENGINEER

THIS SHEET IS TO BE USED ONLY FOR RECORDING "AS-BUILT" INFORMATION

STATE OF OHIO
DEPARTMENT OF TRANSPORTATION
BUREAU OF BRIDGES AND STRUCTURAL DESIGN

7 / 25

## DRILLED SHAFTS INSPECTION RECORD

BRIDGE NO. OTT-2-1839
OVER PORTAGE RIVER

SFN 6200338

| DESIGNED | DRAWN | TRACED | CHECKED | REVIEWED | DATE | REVISED |
|---|---|---|---|---|---|---|
| JS | JS | | REZA | LMW | 7-8-94 | |

| FED. RD. DIVISION | STATE | PROJECT | TYPE FUNDS |
|---|---|---|---|
| 5 | OHIO | | |

320
367

OTT-2-16.60

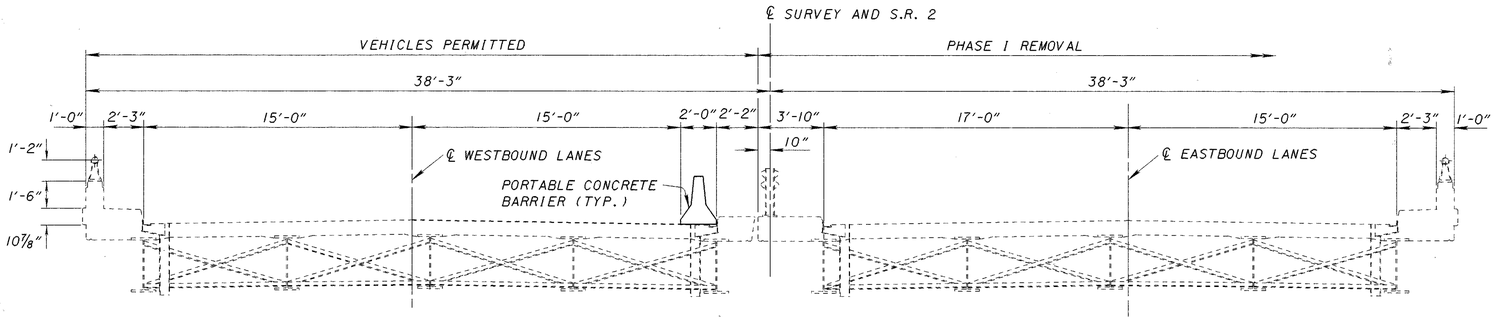


TYPICAL EXISTING CROSS SECTION

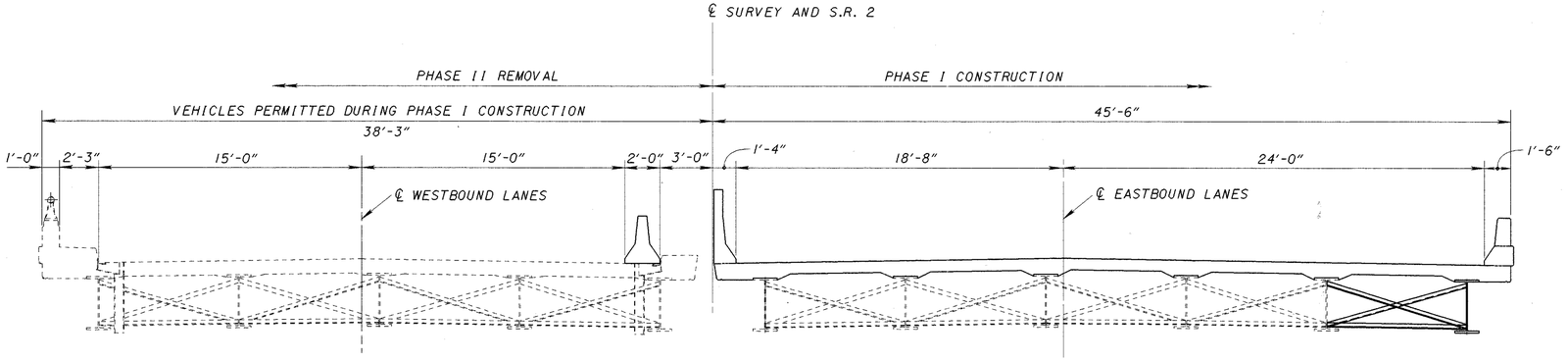


PHASE I CONSTRUCTION CROSS SECTION

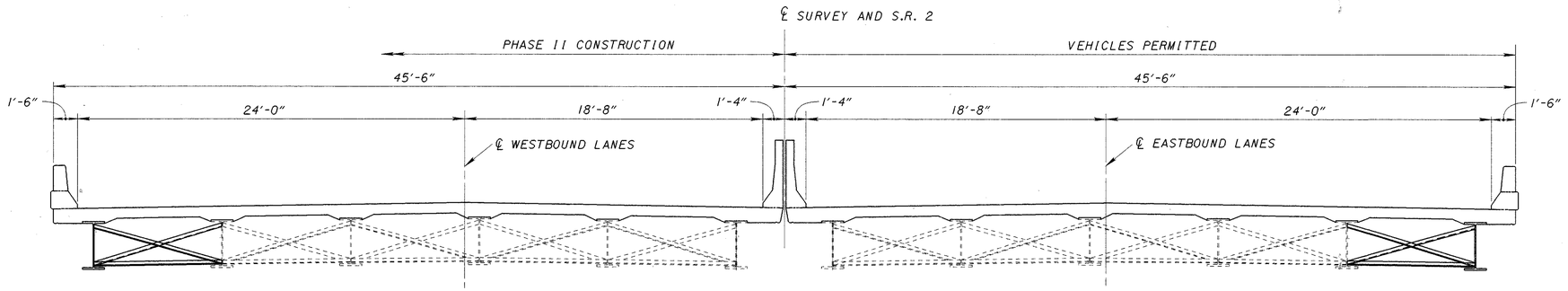


PHASE 2 CONSTRUCTION CROSS SECTION

STATE OF OHIO
DEPARTMENT OF TRANSPORTATION
BUREAU OF BRIDGES AND STRUCTURAL DESIGN

8 / 25

# PHASE CONSTRUCTION DETAILS

BRIDGE NO. OTT-2-1839
OVER PORTAGE RIVER

SFN 6200338

| DESIGNED | DRAWN | TRACED | CHECKED | REVIEWED | DATE | REVISED |
|---|---|---|---|---|---|---|
| AJM JS | AJM JS | | REZA | LMW | 7-8-94 | |

| FED. RD. DIVISION | STATE | PROJECT | TYPE FUNDS |
|---|---|---|---|
| 5 | OHIO | | |

321
367

OTT-2-16.60

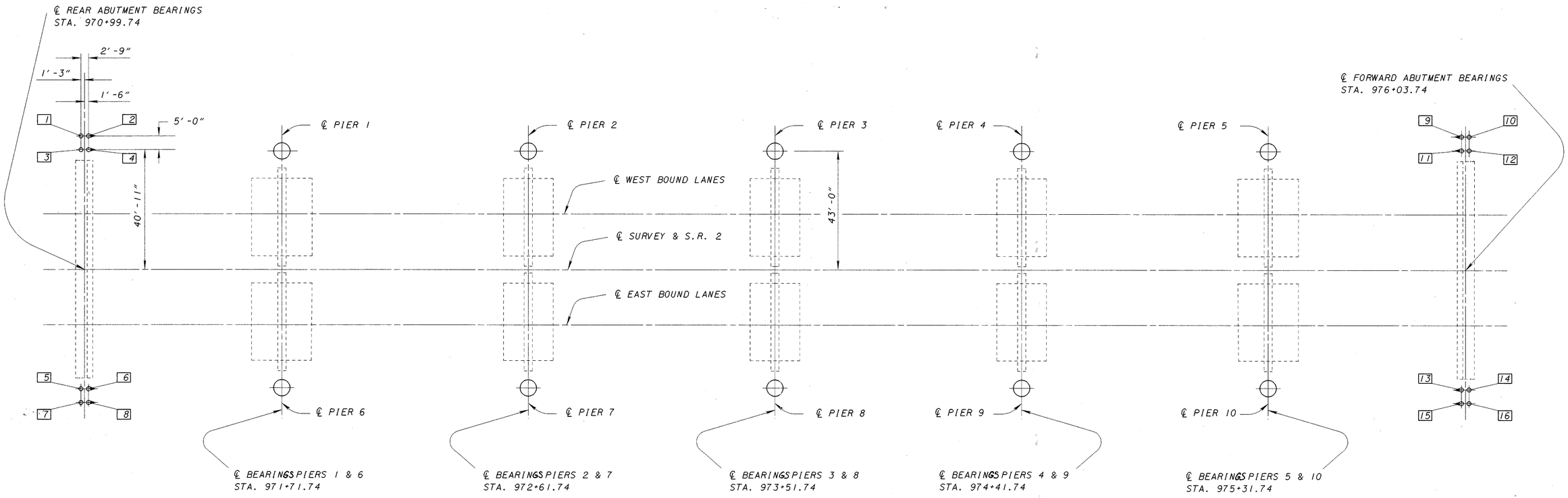


## PLAN

(DIMENSIONS ARE TYPICAL FOR ALL ABUTMENTS AND PIERS)

### LEGEND

- ○ - INDICATES PILES TO BE DRIVEN VERTICALLY
- ➝ - INDICATES PILES TO BE DRIVEN ON 1 TO 4 BATTER IN THE DIRECTION OF ARROW
- ◯ - INDICATES LOCATION OF 6'-6" DIAMETER DRILLED SHAFTS
- □ - INDICATES PILE NUMBER AT REAR AND FORWARD ABUTMENTS

STATE OF OHIO
DEPARTMENT OF TRANSPORTATION
BUREAU OF BRIDGES AND STRUCTURAL DESIGN

9 / 25

# DRILLED SHAFTS AND PILES LAYOUT PLAN

BRIDGE NO. OTT-2-1839
OVER PORTAGE RIVER

SFN 6200338

| DESIGNED | DRAWN | TRACED | CHECKED | REVIEWED | DATE | REVISED |
|---|---|---|---|---|---|---|
| AJM JS | AJM JS | | REZA | LMW | 7-8-94 | |

| FED. RD. DIVISION | STATE | PROJECT | TYPE FUNDS |
|---|---|---|---|
| 5 | OHIO | | |

322
367

OTT-2-16.60

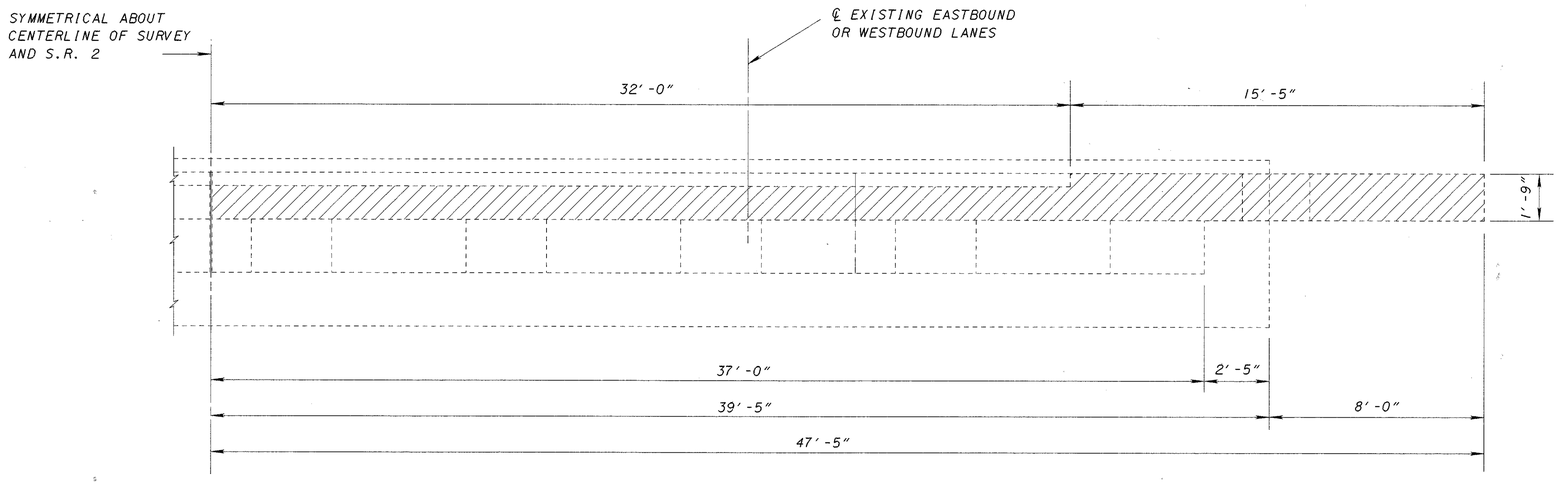


PLAN

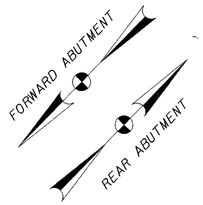


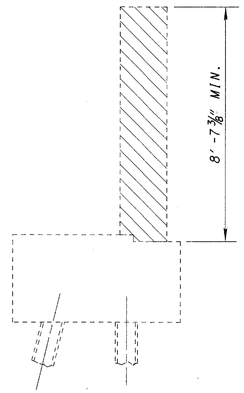


SECTION A-A

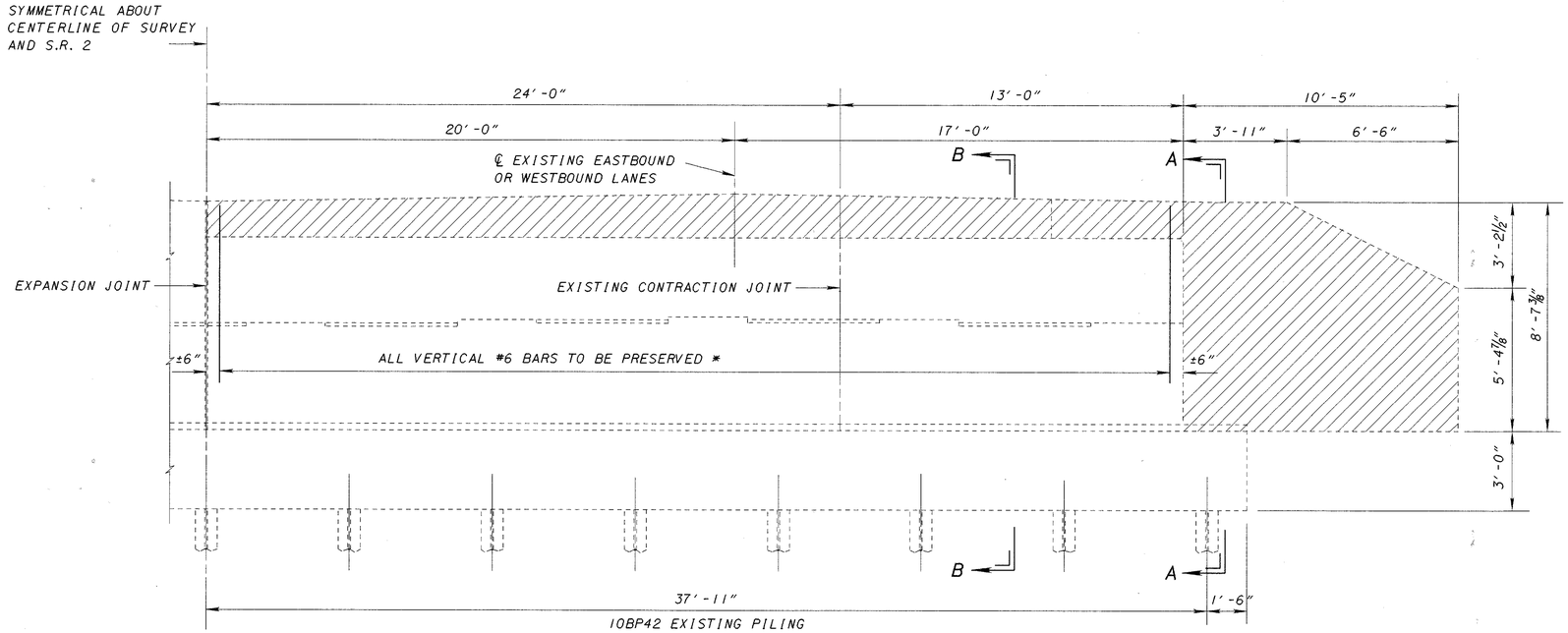


ELEVATION

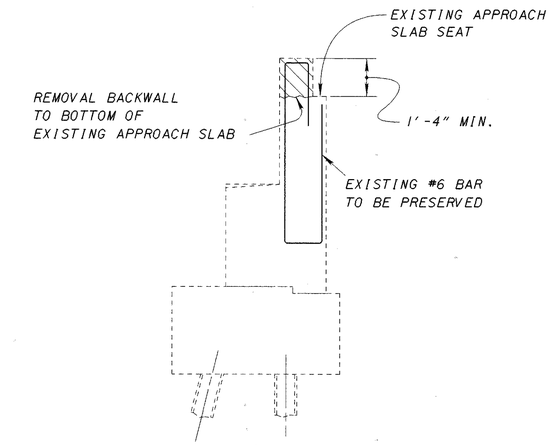


SECTION B-B

REMOVAL LIMITS

**NOTES:** THE SURFACE OF THE CONCRETE AT REMOVAL LINE SHALL BE CLEAN AND FREE OF LAITANCE AND SHALL BE TO A FULL AMPLITUDE OF ¼″.

* INDICATES EXISTING VERTICAL REINFORCING STEEL THAT SHALL BE PRESERVED AND CLEANED. REINFORCING STEEL SHALL BE THROUGHLY CLEANED BY SANDBLASTING FOLLOWED BY AN AIR BLAST (WHERE NECESSARY USE HAND TOOLS TO REMOVE SCALE).

STATE OF OHIO
DEPARTMENT OF TRANSPORTATION
BUREAU OF BRIDGES AND STRUCTURAL DESIGN

10/25

# EXISTING ABUTMENT REMOVAL

BRIDGE NO. OTT-2-1839
OVER PORTAGE RIVER

SFN 6200338

| DESIGNED | DRAWN | TRACED | CHECKED | REVIEWED | DATE | REVISED |
|---|---|---|---|---|---|---|
| AJM REZA | AJM REZA | | JS | LMW | 7-8-94 | |

| FED.RD. DIVISION | STATE | PROJECT | TYPE FUNDS |
|---|---|---|---|
| 5 | OHIO | | |

323
367

OTT-2-16.60

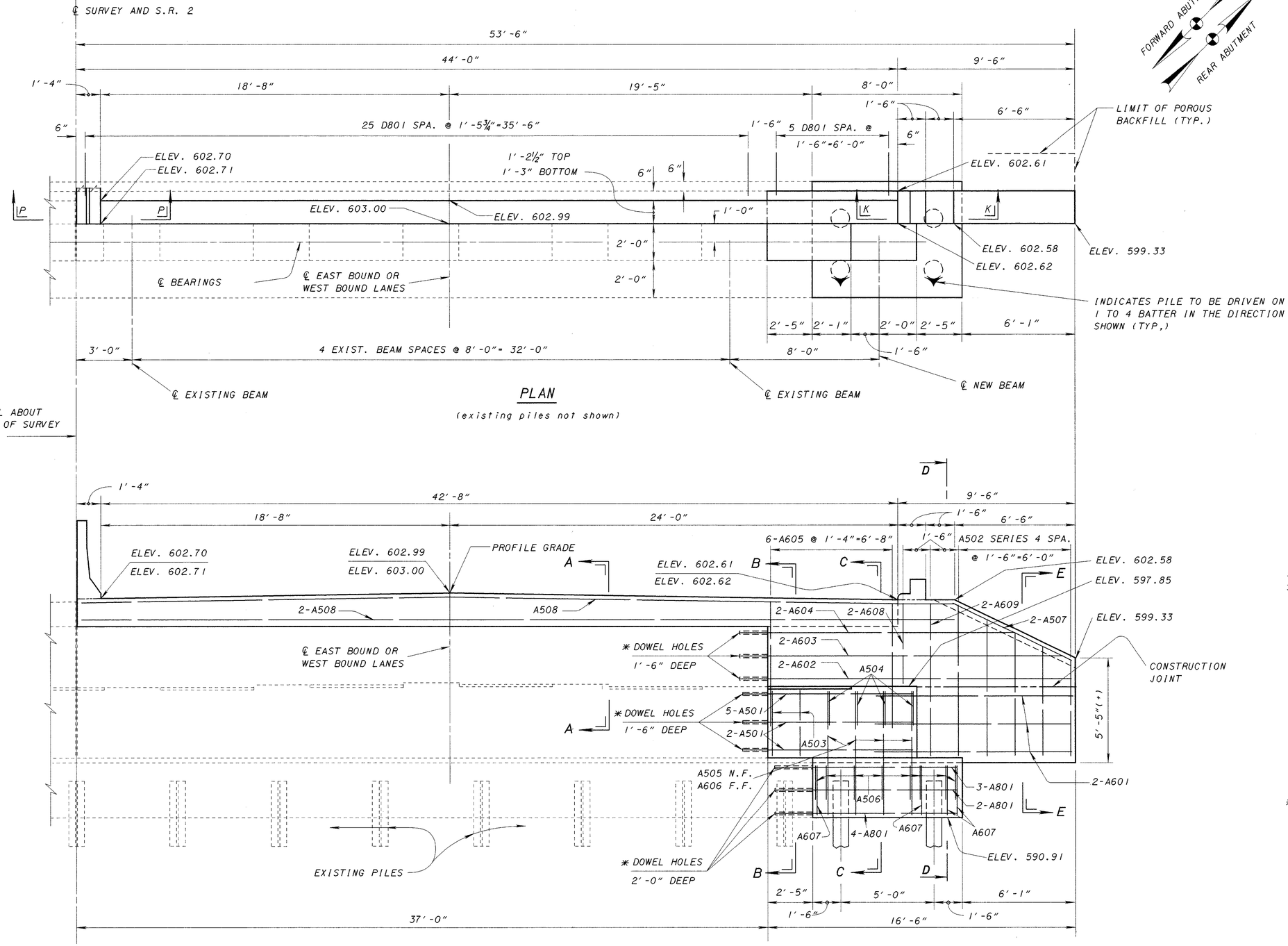


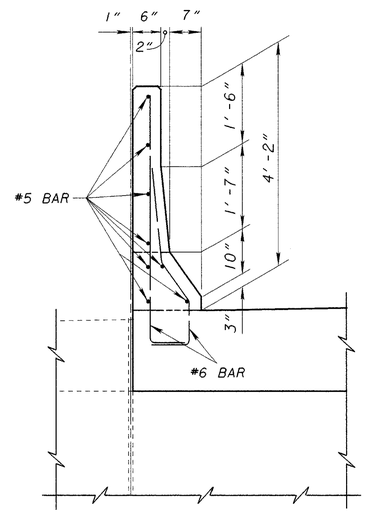


SECTION P-P

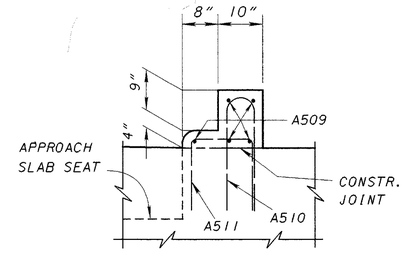


SECTION K-K

FOR SECTIONS A-A, B-B, C-C, AND D-D SEE SHEET 11/25

* ALL DOWEL HOLES SHALL BE GROUTED AS PER ITEM 510 - DOWEL HOLES WITH NONSHRINK, NONMETALLIC GROUT

STATE OF OHIO
DEPARTMENT OF TRANSPORTATION
BUREAU OF BRIDGES AND STRUCTURAL DESIGN

11/25

# PROPOSED ABUTMENT DETAILS

BRIDGE NO. OTT-2-1839
OVER PORTAGE RIVER

SFN 6200338

| DESIGNED | DRAWN | TRACED | CHECKED | REVIEWED | DATE | REVISED |
|---|---|---|---|---|---|---|
| AJM REZA | AJM REZA | | JS | LMW | 7-8-94 | |

| FED. RD. DIVISION | STATE | PROJECT | TYPE FUNDS |
|---|---|---|---|
| 5 | OHIO | | |

324
367

OTT-2-16.60

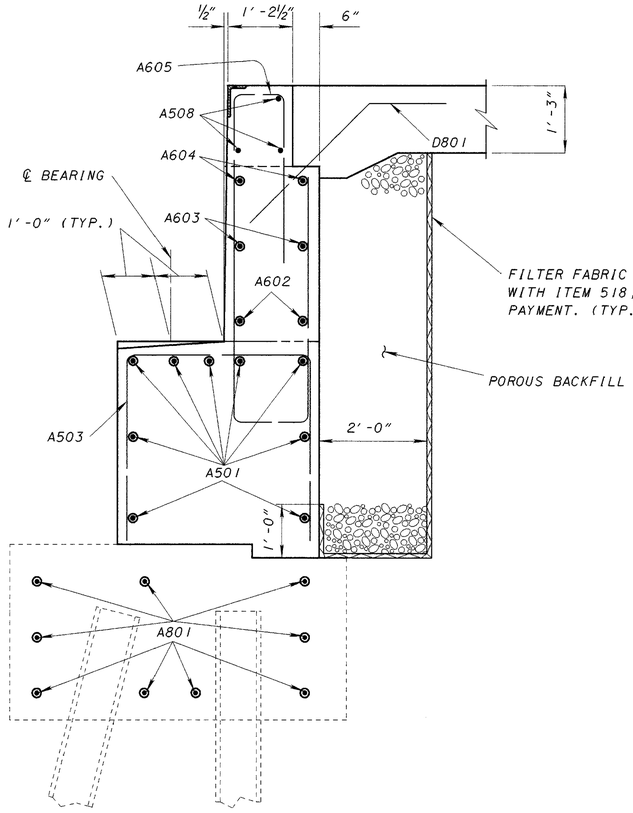


SECTION B-B

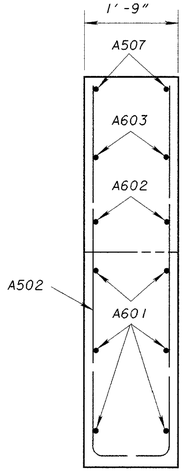


SECTION E-E

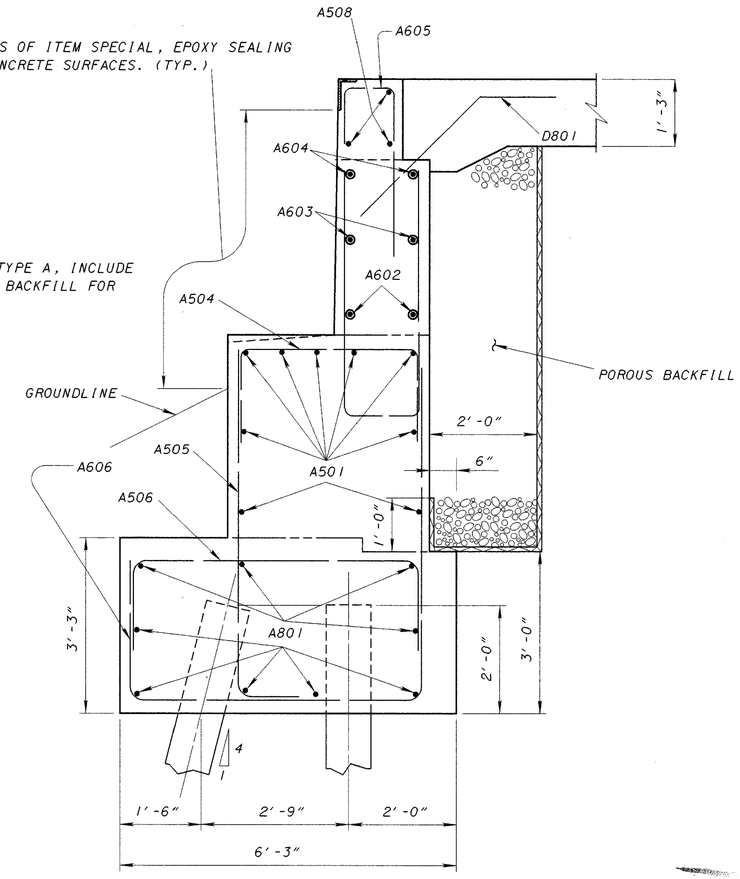


SECTION C-C

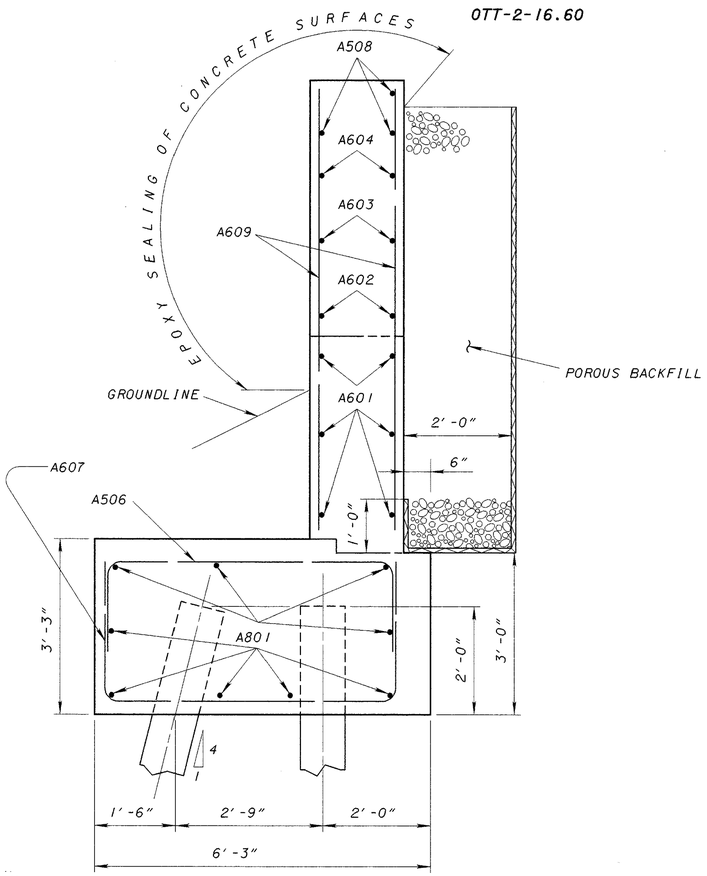


SECTION D-D

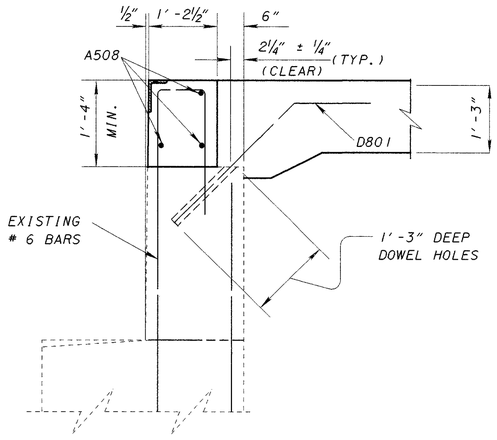


SECTION A-A

STATE OF OHIO
DEPARTMENT OF TRANSPORTATION
BUREAU OF BRIDGES AND STRUCTURAL DESIGN

12/25

# PROPOSED ABUTMENT DETAILS

BRIDGE NO. OTT-2-1839
OVER PORTAGE RIVER

SFN 6200338

| DESIGNED | DRAWN | TRACED | CHECKED | REVIEWED | DATE | REVISED |
|---|---|---|---|---|---|---|
| AJM REZA | AJM REZA | | JS | LMW | 7-8-94 | |

| FED. RD. DIVISION | STATE | PROJECT | TYPE FUNDS |
|---|---|---|---|
| 5 | OHIO | | |

325
367

OTT-2-16.60

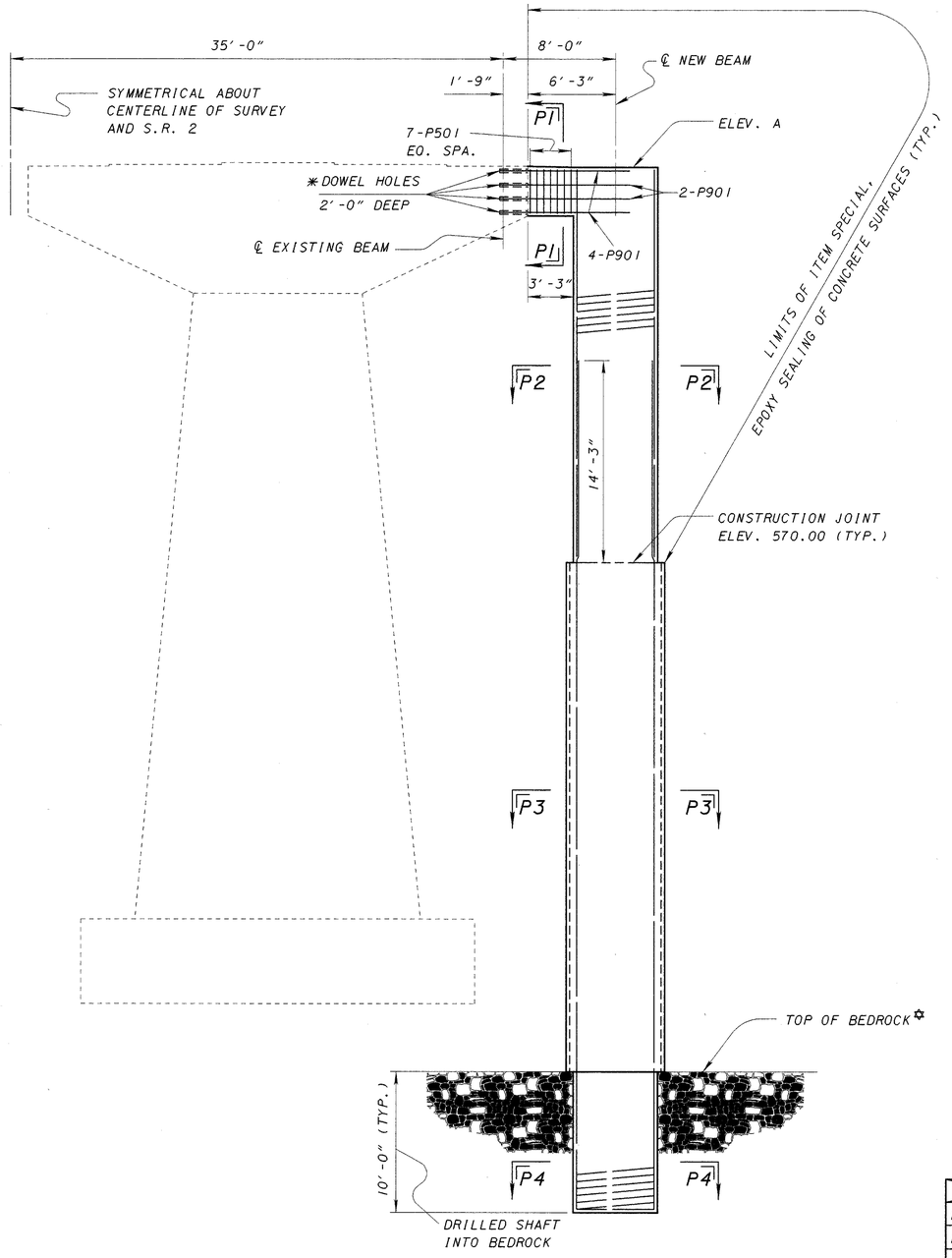


PIER ELEVATION

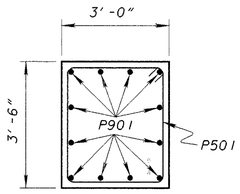


SECTION P1-P1

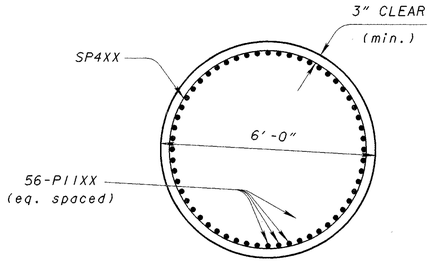


SECTION P2-P2

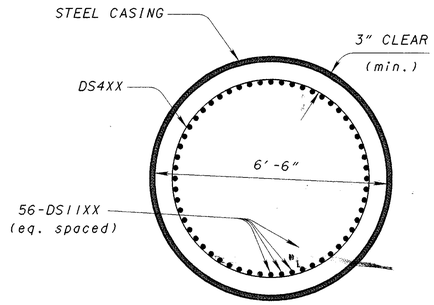


SECTION P3-P3

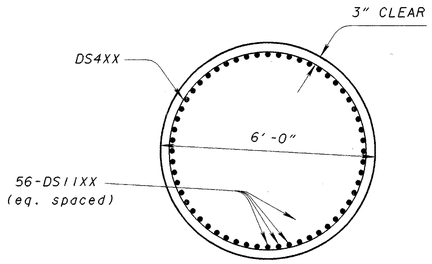


SECTION P4-P4

| | ELEV. A | SP4XX | P11XX |
|---|---|---|---|
| PIER 1 & 6 | 597.91 | SP401 | P1101 |
| PIER 2 & 7 | 598.37 | SP402 | P1102 |
| PIER 3 & 8 | 598.52 | SP403 | P1103 |
| PIER 4 & 9 | 598.37 | SP402 | P1102 |
| PIER 5 & 10 | 597.91 | SP401 | P1101 |

✳ ALL DOWEL HOLES SHALL BE GROUTED AS PER ITEM 510 - DOWEL HOLES **WITH NONSHRINK, NONMETALLIC GROUT**

✡ TOP OF BEDROCK ELEVATIONS AT BORING B-1 IS 534.00 AND AT BORING B-2 IS 536.00.

STATE OF OHIO
DEPARTMENT OF TRANSPORTATION
BUREAU OF BRIDGES AND STRUCTURAL DESIGN

13 / 25

# PIER DETAILS

BRIDGE NO. OTT-2-1839
OVER PORTAGE RIVER

SFN 6200338

| DESIGNED | DRAWN | TRACED | CHECKED | REVIEWED | DATE | REVISED |
|---|---|---|---|---|---|---|
| JS | REZA | | REZA | LMW | 7-8-94 | |

| FED. RD. DIVISION | STATE | PROJECT | TYPE FUNDS |
|---|---|---|---|
| 5 | OHIO | | |

326
367

OTT-2-16.60

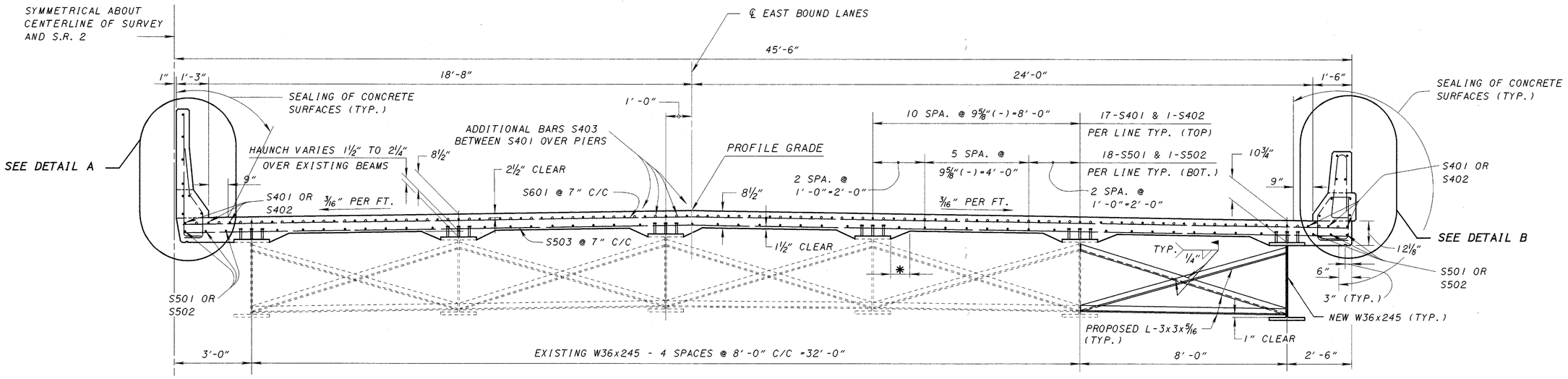


TYPICAL HALF CROSS SECTION

## SCREED ELEVATIONS

| SPAN | POINT | STATION | LEFT BRIDGE | | | RIGHT BRIDGE | | |
|---|---|---|---|---|---|---|---|---|
| | | | LEFT CURB | PROFILE GRADE | RIGHT CURB | LEFT CURB | PROFILE GRADE | RIGHT CURB |
| | | | ELEV | ELEV | ELEV | ELEV | ELEV | ELEV |
| | R.A. | 970+99.74 | 602.63 | 603.01 | 602.72 | 602.72 | 603.01 | 602.63 |
| 1 | ¼ | 971+17.74 | 602.83 | 603.21 | 602.91 | 602.91 | 603.21 | 602.83 |
| 1 | ½ | 971+35.74 | 602.99 | 603.36 | 603.07 | 603.07 | 603.36 | 602.99 |
| 1 | ¾ | 971+53.74 | 603.11 | 603.48 | 603.19 | 603.19 | 603.48 | 603.11 |
| | PIER 1 | 971+71.74 | 603.22 | 603.59 | 603.30 | 603.30 | 603.59 | 603.22 |
| 2 | ¼ | 971+94.24 | 603.39 | 603.76 | 603.47 | 603.47 | 603.76 | 603.39 |
| 2 | ½ | 972+16.74 | 603.53 | 603.91 | 603.62 | 603.62 | 603.91 | 603.53 |
| 2 | ¾ | 972+39.24 | 603.62 | 603.99 | 603.70 | 603.70 | 603.99 | 603.62 |
| | PIER 2 | 972+61.74 | 603.67 | 604.05 | 603.76 | 603.76 | 604.05 | 603.67 |
| 3 | ¼ | 972+84.24 | 603.77 | 604.14 | 603.85 | 603.85 | 604.14 | 603.77 |
| 3 | ½ | 973+06.74 | 603.83 | 604.21 | 603.92 | 603.92 | 604.21 | 603.83 |
| 3 | ¾ | 973+29.24 | 603.84 | 604.22 | 603.93 | 603.93 | 604.22 | 603.84 |
| | PIER 3 | 973+51.74 | 603.83 | 604.20 | 603.91 | 603.91 | 604.20 | 603.83 |
| 4 | ¼ | 973+74.24 | 603.84 | 604.22 | 603.93 | 603.93 | 604.22 | 603.84 |
| 4 | ½ | 973+96.74 | 603.83 | 604.21 | 603.92 | 603.92 | 604.21 | 603.83 |
| 4 | ¾ | 974+19.24 | 603.77 | 604.14 | 603.85 | 603.85 | 604.14 | 603.77 |
| | PIER 4 | 974+41.74 | 603.67 | 604.05 | 603.76 | 603.76 | 604.05 | 603.67 |
| 5 | ¼ | 974+64.24 | 603.62 | 603.99 | 603.70 | 603.70 | 603.99 | 603.62 |
| 5 | ½ | 674+86.74 | 603.53 | 603.91 | 603.62 | 603.62 | 603.91 | 603.53 |
| 5 | ¾ | 975+09.24 | 603.39 | 603.76 | 603.47 | 603.47 | 603.76 | 603.39 |
| | PIER 5 | 975+31.74 | 603.22 | 603.59 | 603.30 | 603.30 | 603.59 | 603.22 |
| 6 | ¼ | 975+49.74 | 603.11 | 603.48 | 603.19 | 603.19 | 603.48 | 603.11 |
| 6 | ½ | 975+67.74 | 602.99 | 603.36 | 603.07 | 603.07 | 603.36 | 602.99 |
| 6 | ¾ | 975+85.74 | 602.83 | 603.21 | 602.91 | 602.91 | 603.21 | 602.83 |
| | F.A. | 976+03.74 | 602.63 | 603.01 | 602.72 | 602.72 | 603.01 | 602.63 |

NOTE: ALL SCREED ELEVATIONS GIVEN AT THE ℄ OF BEARING OF EACH SUBSTRUCTURE AND AT THE ¼ POINTS OF EACH SPAN.

R.A. = REAR ABUTMENT
F.A. = FORWARD ABUTMENT

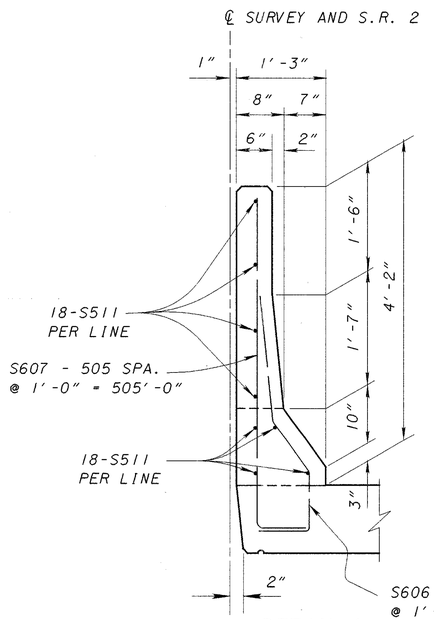


DETAIL A

(see sheet 18/25 for additional details)

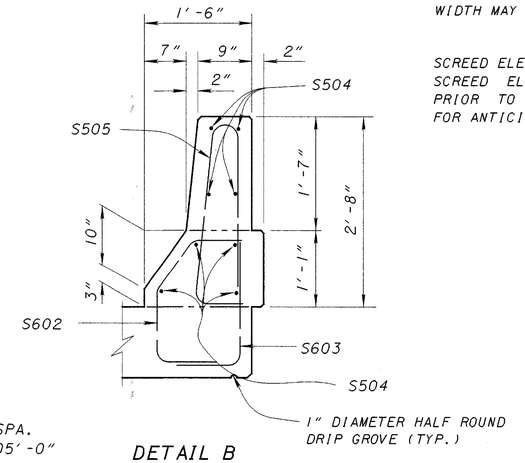


DETAIL B

(see sheet 17/25 for additional details)

**DECK SLAB DEPTH:**
THE DISTANCE SHOWN FROM TOP OF DECK SLAB TO TOP OF STEEL BEAM IS THE THEORETICAL DESIGN DIMENSION. THE QUANTITY OF DECK CONCRETE TO BE PAID FOR SHALL BE BASED ON THIS DIMENSION, EVEN THOUGH DEVIATION FROM IT MAY BE NECESSARY BECAUSE THE TOP FLANGE OF THE BEAM MAY NOT HAVE THE EXACT CAMBER OR CONFORMATION REQUIRED TO PLACE IT PARALLEL TO THE FINISHED GRADE.

* A HAUNCH WIDTH OF 9 INCHES SHALL BE USED FOR COMPUTING QUANTITY OF CONCRETE. HOWEVER, THE HAUNCH WIDTH MAY VARY BETWEEN 6 AND 12 INCHES.

SCREED ELEVATIONS:
SCREED ELEVATIONS SHOWN ARE FOR THE DECK SLAB SURFACE PRIOR TO CONCRETE PLACEMENT. ALLOWANCE HAS BEEN MADE FOR ANTICIPATED DEAD LOAD DEFLECTION.

STATE OF OHIO
DEPARTMENT OF TRANSPORTATION
BUREAU OF BRIDGES AND STRUCTURAL DESIGN

14/25

# SUPERSTRUCTURE DETAILS

BRIDGE NO. OTT-2-1839
OVER PORTAGE RIVER

SFN 6200338

| DESIGNED | DRAWN | TRACED | CHECKED | REVIEWED | DATE | REVISED |
|---|---|---|---|---|---|---|
| AJM JS | AJM JS | | REZA | LMW | 7-8-94 | |

| FED. RD. DIVISION | STATE | PROJECT | TYPE FUNDS |
|---|---|---|---|
| 5 | OHIO | | |

327
367

OTT-2-16.60

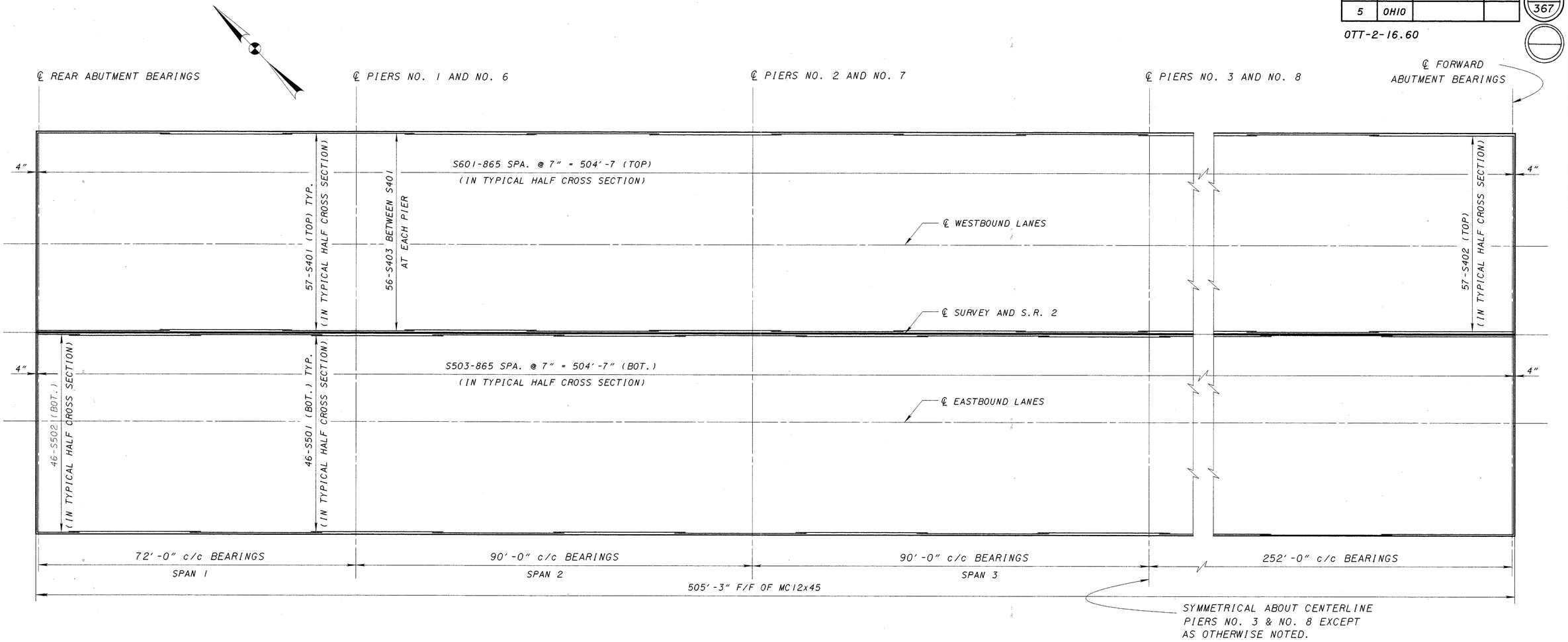


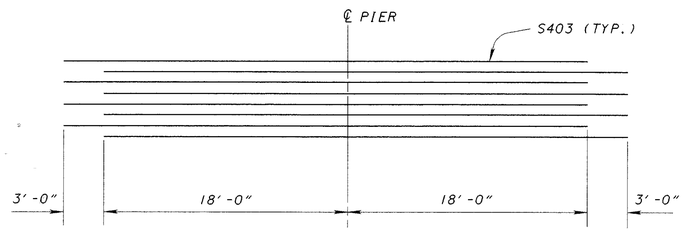


DIAGRAM SHOWING STAGGER OF ADDITIONAL BARS OVER PIERS

BAR LAPS REQUIRED:

NO. 4 (TOP) = 2'-3" MINIMUM
NO. 5 (BOT.) = 2'-6" MINIMUM
NO. 6 (TOP) = 3'-5" MINIMUM

STATE OF OHIO
DEPARTMENT OF TRANSPORTATION
BUREAU OF BRIDGES AND STRUCTURAL DESIGN

15 / 25

# SUPERSTRUCTURE DETAILS

BRIDGE NO. OTT-2-1839
OVER PORTAGE RIVER

SFN 6200338

| DESIGNED | DRAWN | TRACED | CHECKED | REVIEWED | DATE | REVISED |
|---|---|---|---|---|---|---|
| AJM JS | AJM JS | | REZA | LMW | 7-8-94 | |

| FED. RD. DIVISION | STATE | PROJECT | TYPE FUNDS |
|---|---|---|---|
| 5 | OHIO | | |

328
367

OTT-2-16.60

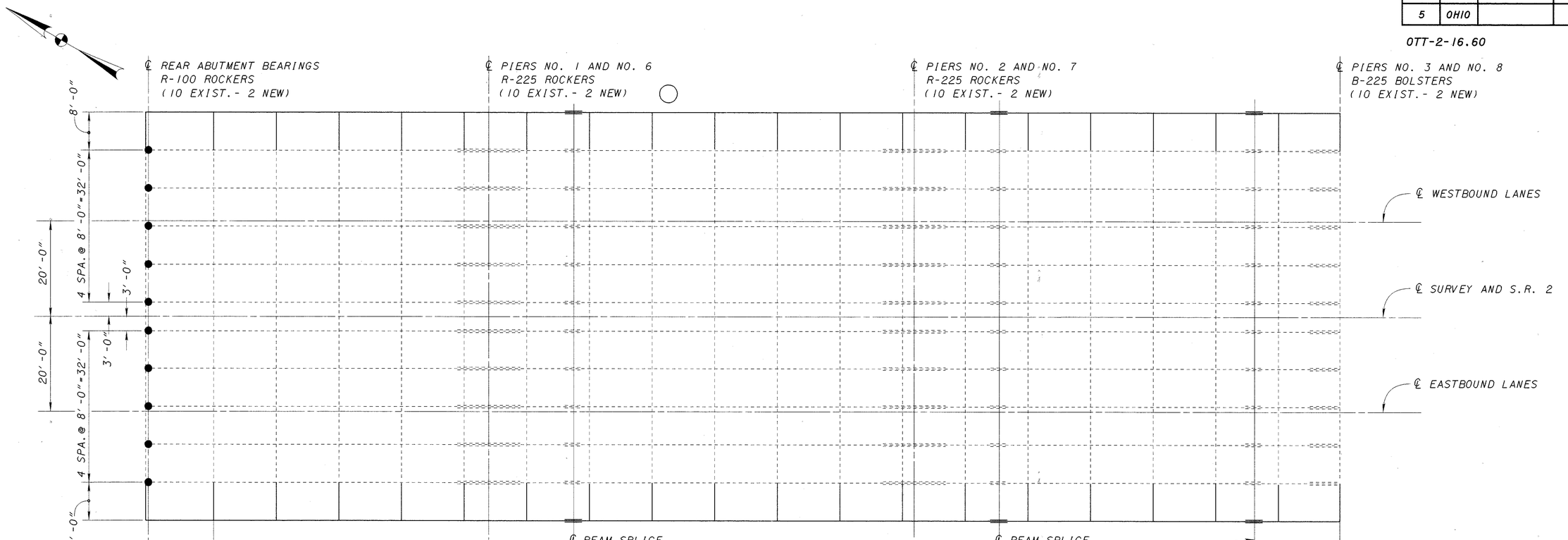


## HALF STEEL FRAMING PLAN

SYMMETRICAL ABOUT CENTERLINE PIERS NO. 3 & NO. 8 EXCEPT AS OTHERWISE NOTED.

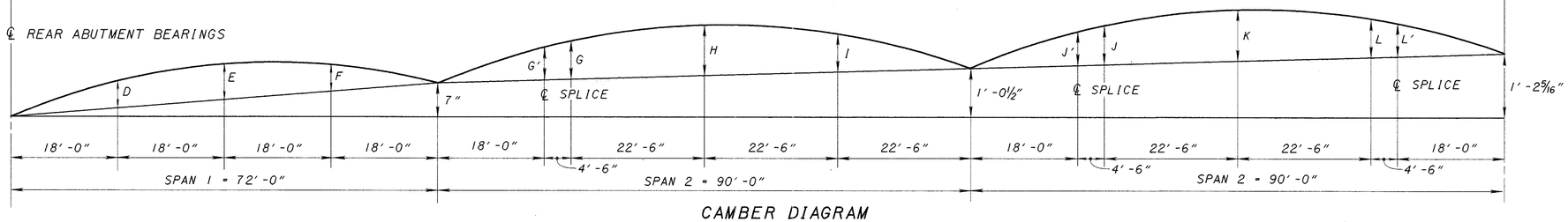


## CAMBER DIAGRAM

### DEFLECTION AND CAMBER (INCHES)

| | SPAN 1 | | | SPAN 2 | | | | SPAN 3 | | | | |
|---|---|---|---|---|---|---|---|---|---|---|---|---|
| | D | E | F | G' | G | H | I | J' | J | K | L | L' |
| DEFLECTION DUE TO WEIGHT OF STEEL | +1/8 | +3/16 | +1/16 | +1/8 | +1/8 | +3/16 | +1/8 | +1/8 | +1/8 | +3/16 | +1/8 | +1/8 |
| DEFLECTION DUE TO REMAINING DEAD LOAD | +9/16 | +5/8 | +5/16 | +3/8 | +1/2 | +13/16 | +7/16 | +5/16 | +7/16 | +13/16 | +7/16 | +5/16 |
| ADJUSTMENT REQUIRED FOR VERTICAL CURVE | +1/8 | +1/4 | +1/8 | +9/16 | +5/16 | +1/2 | +5/16 | +3/8 | +1/4 | +7/16 | +5/16 | +1/4 |
| REQUIRED SHOP SHOP CAMBER | +13/16 | +1 1/16 | +1/2 | +1 1/16 | +15/16 | +1 1/2 | +7/8 | +13/16 | +13/16 | +1 7/16 | +7/8 | +11/16 |

NOTE: WHERE A SHAPE OR PLATE IS DESIGNATED (CVN) THE MATERIAL SHALL MEET SPECIFIED MINIMUM NOTCH TOUGHNESS REQUIREMENTS AS SPECIFIED IN 711.01.

STATE OF OHIO
DEPARTMENT OF TRANSPORTATION
BUREAU OF BRIDGES AND STRUCTURAL DESIGN

16 / 25

# SUPERSTRUCTURE DETAILS

BRIDGE NO. OTT-2-1839
OVER PORTAGE RIVER

SFN 6200338

| DESIGNED | DRAWN | TRACED | CHECKED | REVIEWED | DATE | REVISED |
|---|---|---|---|---|---|---|
| AJM JS | AJM JS | | REZA | LMW | 7-8-94 | |

| FED. RD. DIVISION | STATE | PROJECT | TYPE FUNDS |
|---|---|---|---|
| 5 | OHIO | | |

329
367

OTT-2-16.60

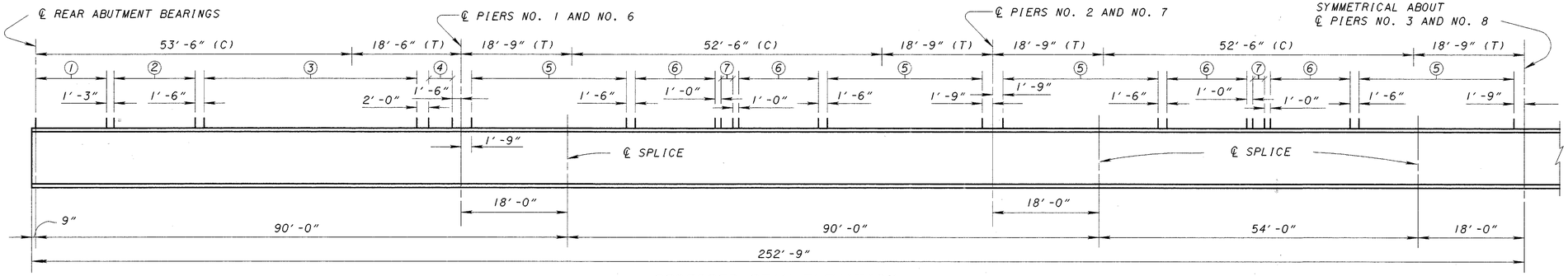


## PROPOSED BEAM ELEVATION

(VERTICAL SCALE IS EXAGGERATED)
978 SHEAR CONNECTORS REQUIRED PER LINE

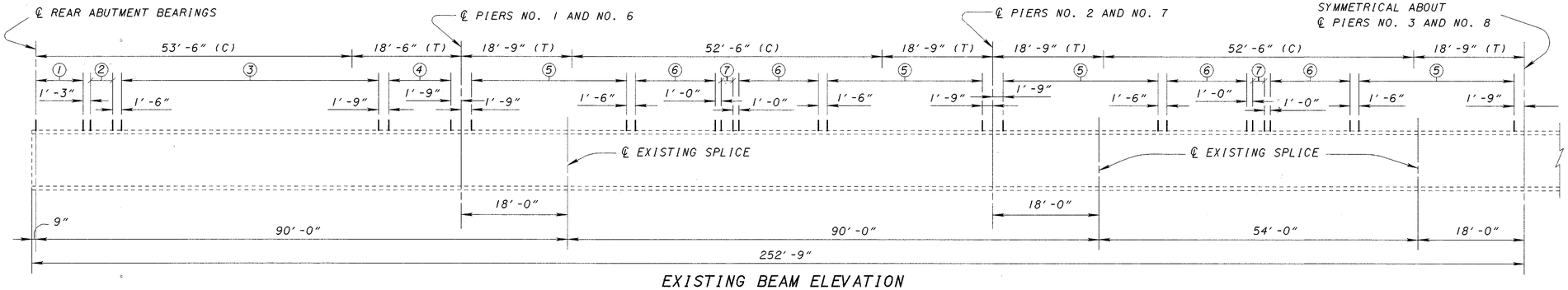


## EXISTING BEAM ELEVATION

(VERTICAL SCALE IS EXAGGERATED)
960 SHEAR CONNECTORS REQUIRED PER LINE

NOTE: CONNECTORS MAY BE MOVED SLIGHTLY AT THE SPLICES TO AVOID INTERFERENCE WITH THE FLANGE BOLTS.

NOTE: T = TENSION ZONE
C = COMPRESSION ZONE

### SHEAR CONNECTOR SPACING (PROPOSED BEAMS)

| | |
|---|---|
| ① | 12 SPACES @ 1′-0″ = 12′-0″ |
| ② | 11 SPACES @ 1′-3″ = 13′-9″ |
| ③ | 24 SPACES @ 1′-6″ = 36′-0″ |
| ④ | 2 SPACES @ 2′-0″ = 4′-0″ |
| ⑤ | 15 SPACES @ 1′-9″ = 26′-3″ |
| ⑥ | 9 SPACES @ 1′-6″ = 13′-6″ |
| ⑦ | 2 SPACES @ 1′-0″ = 2′-0″ |

### SHEAR CONNECTOR SPACING (EXISTING BEAMS)

| | |
|---|---|
| ① | 8 SPACES @ 1′-0″ = 8′-0″ |
| ② | 3 SPACES @ 1′-3″ = 3′-9″ |
| ③ | 29 SPACES @ 1′-6″ = 43′-6″ |
| ④ | 6 SPACES @ 1′-9″ = 10′-6″ |
| ⑤ | 15 SPACES @ 1′-9″ = 26′-3″ |
| ⑥ | 9 SPACES @ 1′-6″ = 13′-6″ |
| ⑦ | 2 SPACES @ 1′-0″ = 2′-0″ |

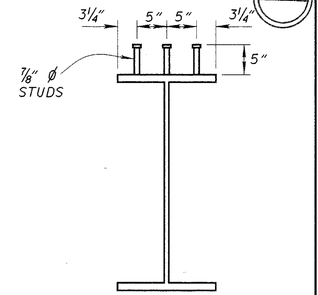


SHEAR CONNECTORS (PROPOSED BEAMS)

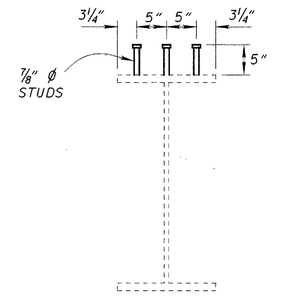


SHEAR CONNECTORS (EXISTING BEAMS)

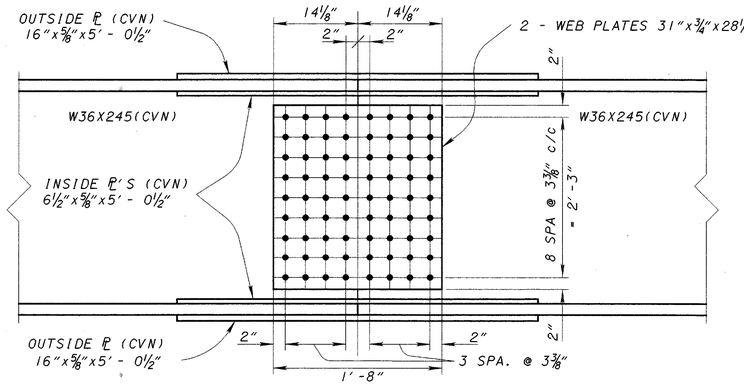


## PROPOSED SPLICE ELEVATION

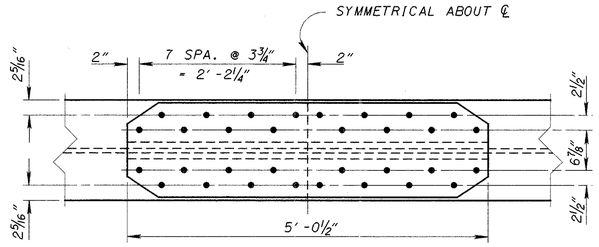


## PROPOSED SPLICE PLAN VIEW

NOTE:
WELDED ATTACHMENT OF SUPPORTS FOR CONCRETE DECK FINISHING MACHINE MAY BE MADE TO AREAS OF THE FASCIA STRINGER FLANGES DESIGNATED "COMPRESSION". ATTACHMENTS SHALL NOT BE MADE TO AREAS DESIGNATED "TENSION". FILLET WELDS TO COMPRESSION FLANGES SHALL NOT BE CLOSER THAN 1" FROM EDGE OF FLANGE, BE NOT MORE THAN 2" LONG, AND BE NOT SMALLER THAN THE MINIMUM SIZE REQUIRED BY AASHTO.

NOTE: ALL BOLTED CONNECTIONS SHALL BE MADE WITH HIGH STRENGTH 1⅛" DIAMETER BOLTS.

NOTE: WHERE A SHAPE OR PLATE IS DESIGNATED (CVN), THE MATERIAL SHALL MEET SPECIFIED MINIMUM NOTCH TOUGHNESS REQUIREMENTS AS SPECIFIED IN 711.01 OF CMS.

STATE OF OHIO
DEPARTMENT OF TRANSPORTATION
BUREAU OF BRIDGES AND STRUCTURAL DESIGN

17 / 25

# SUPERSTRUCTURE DETAILS

BRIDGE NO. OTT-2-1839
OVER PORTAGE RIVER

SFN 6200338

| DESIGNED | DRAWN | TRACED | CHECKED | REVIEWED | DATE | REVISED |
|---|---|---|---|---|---|---|
| AJM JS | AJM JS | | REZA | BWW | 7281-98 | |

| FED. RD. DIVISION | STATE | PROJECT | TYPE FUNDS |
|---|---|---|---|
| 5 | OHIO | | |

330
367

OTT-2-16.60

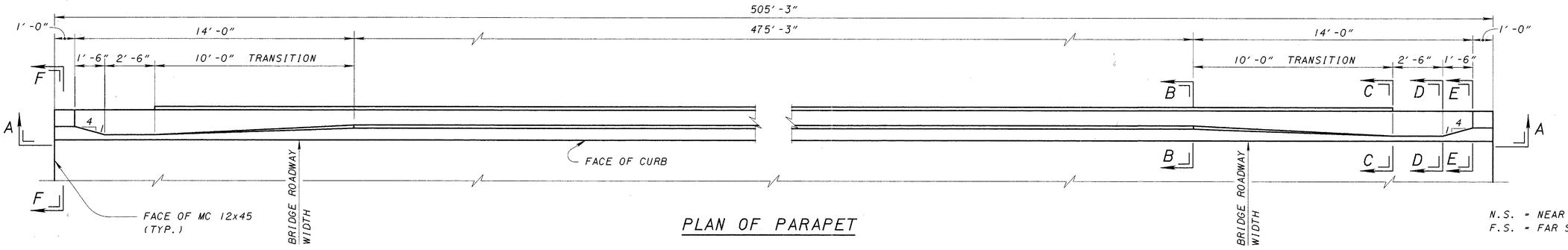


## PLAN OF PARAPET

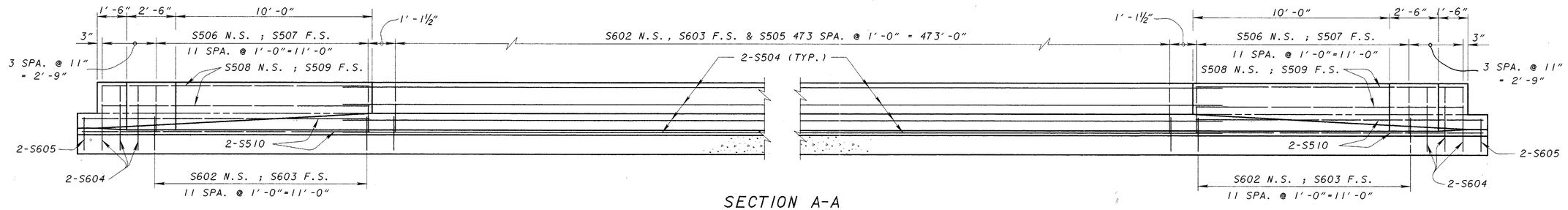


## SECTION A-A

BAR LAPS REQUIRED:
NO. 5 = 1'-6" MINIMUM

BRIDGE TERMINAL ASSEMBLY, TYPE I SHALL BE USED AT EACH CORNER OF DEFLECTOR PARAPET. FOR DETAILS NOT SHOWN ON THIS SHEET SEE STANDARD CONSTRUCTION DRAWING GR-3.1.

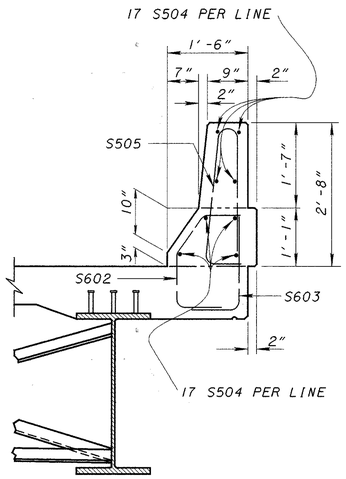


## SECTION B-B

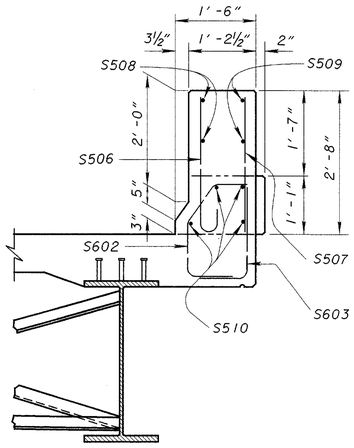


## SECTION C-C

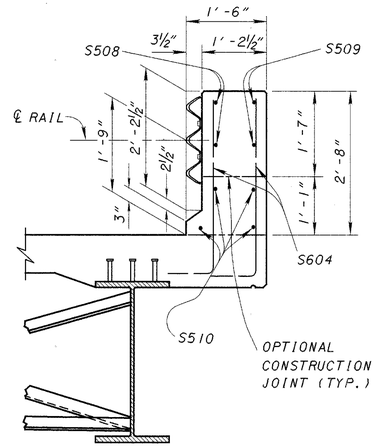


## SECTION D-D

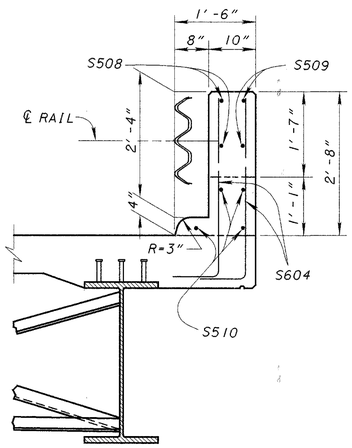


## SECTION E-E

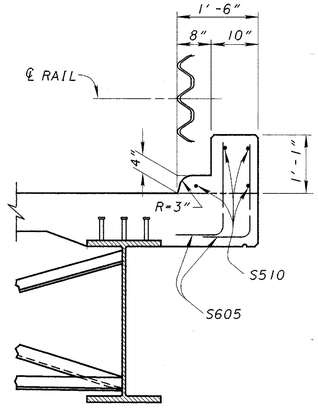


## SECTION F-F

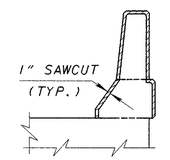


## SECTION THRU SAWCUT

SEE SHEET 2/25 AND 3/25 FOR ADDITIONAL DETAILS

STATE OF OHIO
DEPARTMENT OF TRANSPORTATION
BUREAU OF BRIDGES AND STRUCTURAL DESIGN

18/25

# DEFLECTOR PARAPET DETAILS

BRIDGE NO. OTT-2-1839
OVER PORTAGE RIVER

SFN 6200338

| DESIGNED | DRAWN | TRACED | CHECKED | REVIEWED | DATE | REVISED |
|---|---|---|---|---|---|---|
| AJM JS | AJM JS | REZA | | LMW | 7-8-94 | |

| FED. RD. DIVISION | STATE | PROJECT | TYPE FUNDS |
|---|---|---|---|
| 5 | OHIO | | |

331
367

OTT-2-16.60

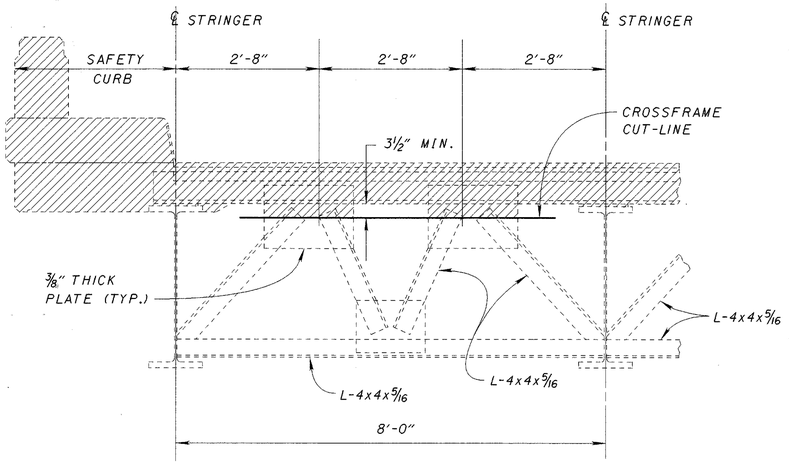


EXISTING END CROSSFRAME DETAIL

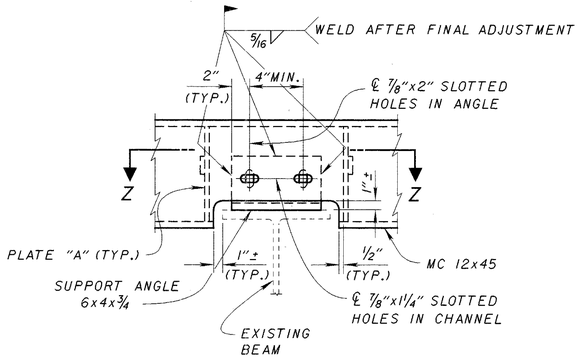


DETAIL A

(similar for proposed beam)

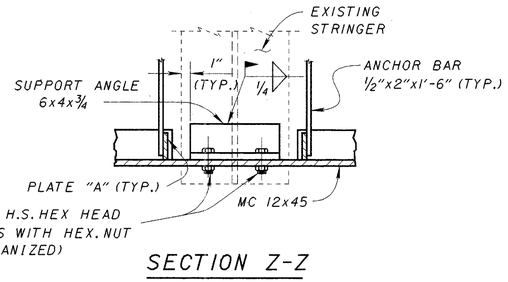


SECTION Z-Z

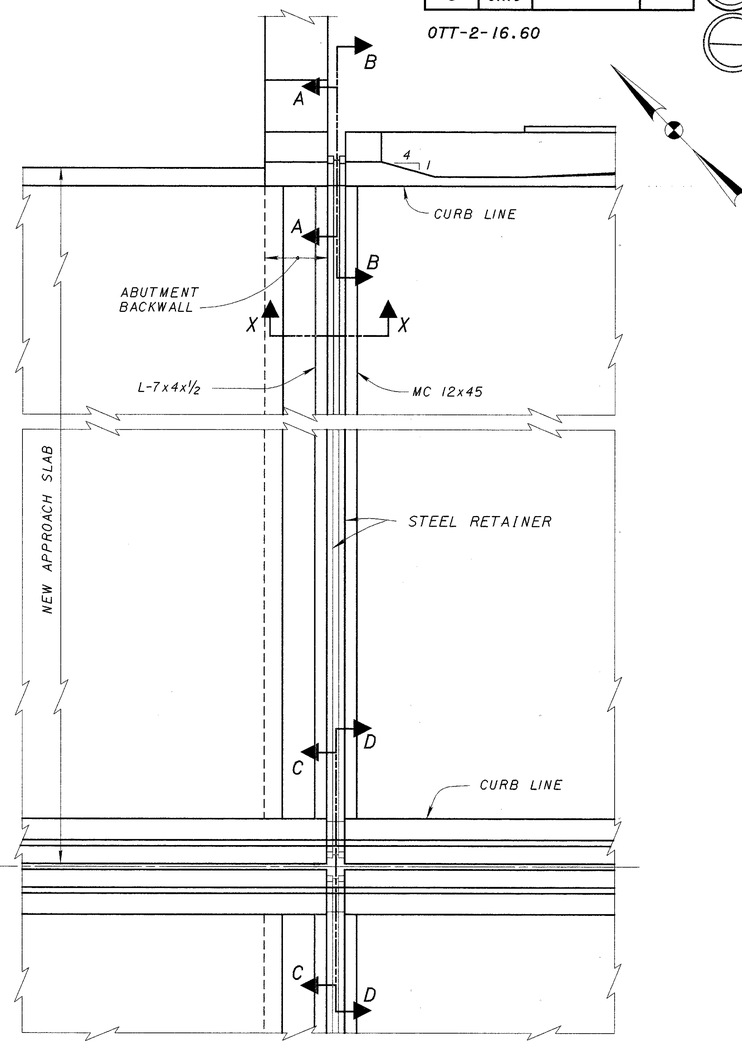


PART PLAN AT ABUTMENT

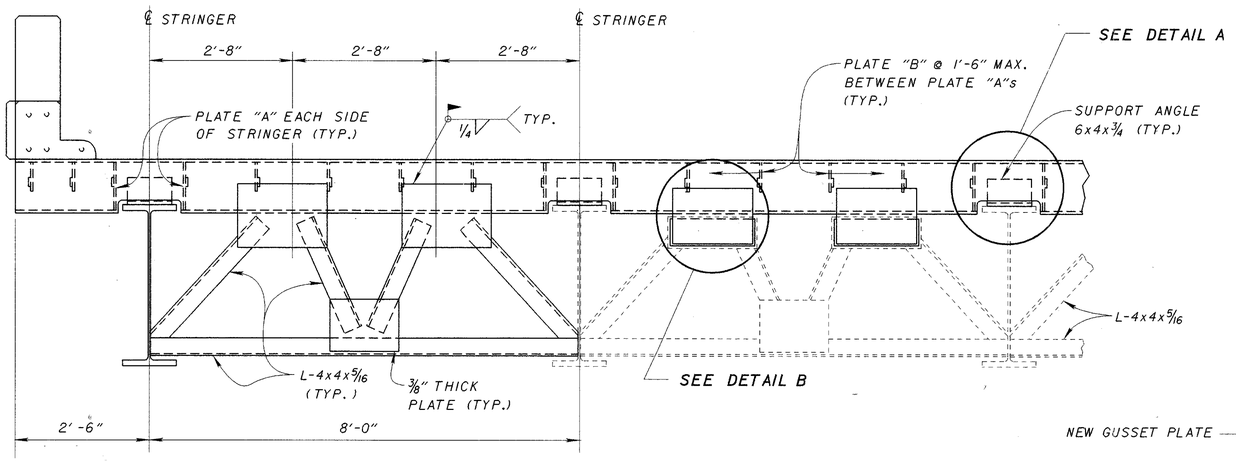


PROPOSED END CROSSFRAME DETAIL

(for welding details see standard drawing EXJ-4-93)

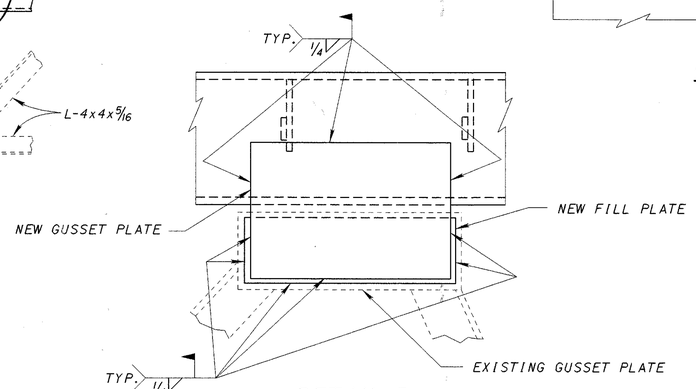


DETAIL B

SEE SHEET 20/25 FOR SECTIONS A-A, B-B, C-C, D-D AND X-X

STATE OF OHIO
DEPARTMENT OF TRANSPORTATION
BUREAU OF BRIDGES AND STRUCTURAL DESIGN

19/25

# STRIP SEAL JOINT DETAILS

BRIDGE NO. OTT-2-1839
OVER PORTAGE RIVER

SFN 6200338

| DESIGNED | DRAWN | TRACED | CHECKED | REVIEWED | DATE | REVISED |
|---|---|---|---|---|---|---|
| AJM JS | AJM JS | | REZA | LMW | 7-8-94 | |

| FED. RD. DIVISION | STATE | PROJECT | TYPE FUNDS |
|---|---|---|---|
| 5 | OHIO | | |

332
367

OTT-2-16.60

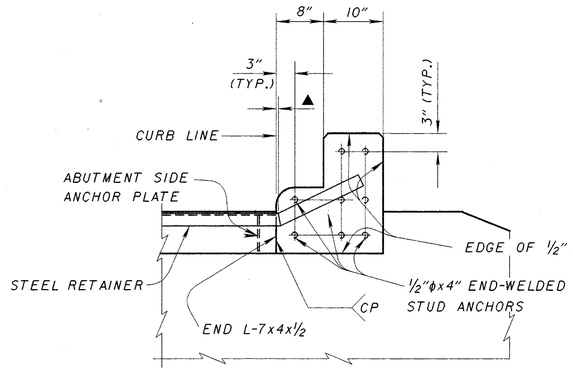


SECTION A-A

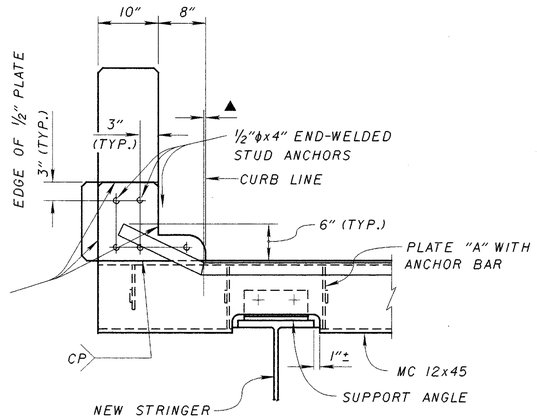


SECTION B-B

| AMBIENT TEMP. °F | DIMENSION "A" 3" SEAL |
|---|---|
| 30 | 2 1/16" |
| 40 | 1 1/8" |
| 50 | 1 1/16" |
| 60 | 1" |
| 70 | 15/16" |
| 80 | 13/16" |
| 90 | 7/8" |

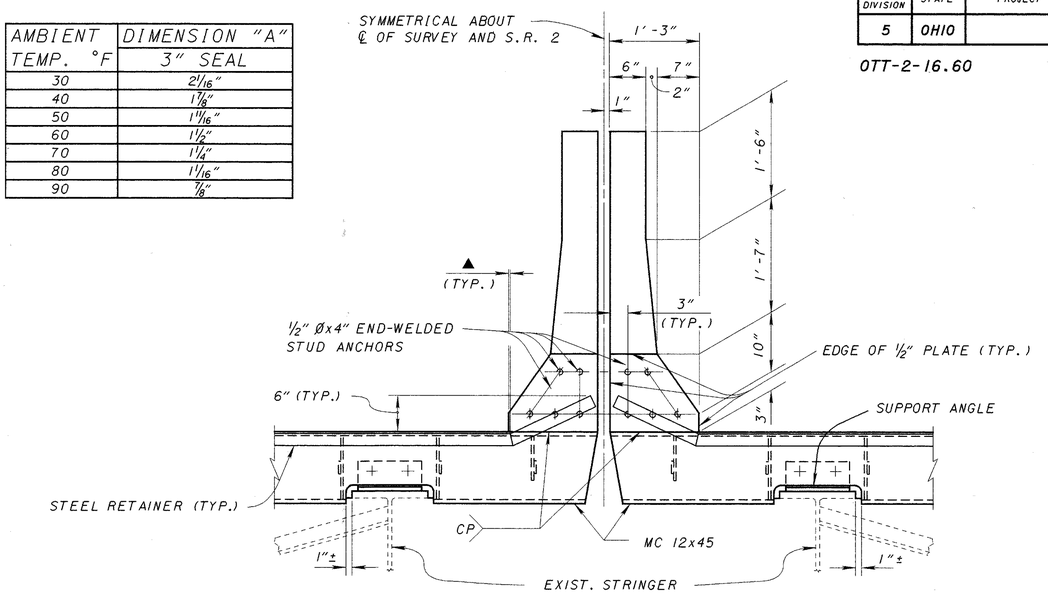


NOTE:
▲ - 0" MIN. TO ½" MAX. TO THE BREAKPOINT IN RETAINER

SECTION D-D

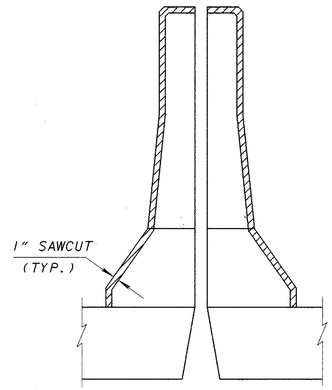


SECTION THRU SAWCUT

SEE SHEET 2/25 AND 3/25 FOR ADDITIONAL DETAILS

SECTIONS A-A, B-B, C-C, D-D and X-X REFER TO SHEET 19/25.

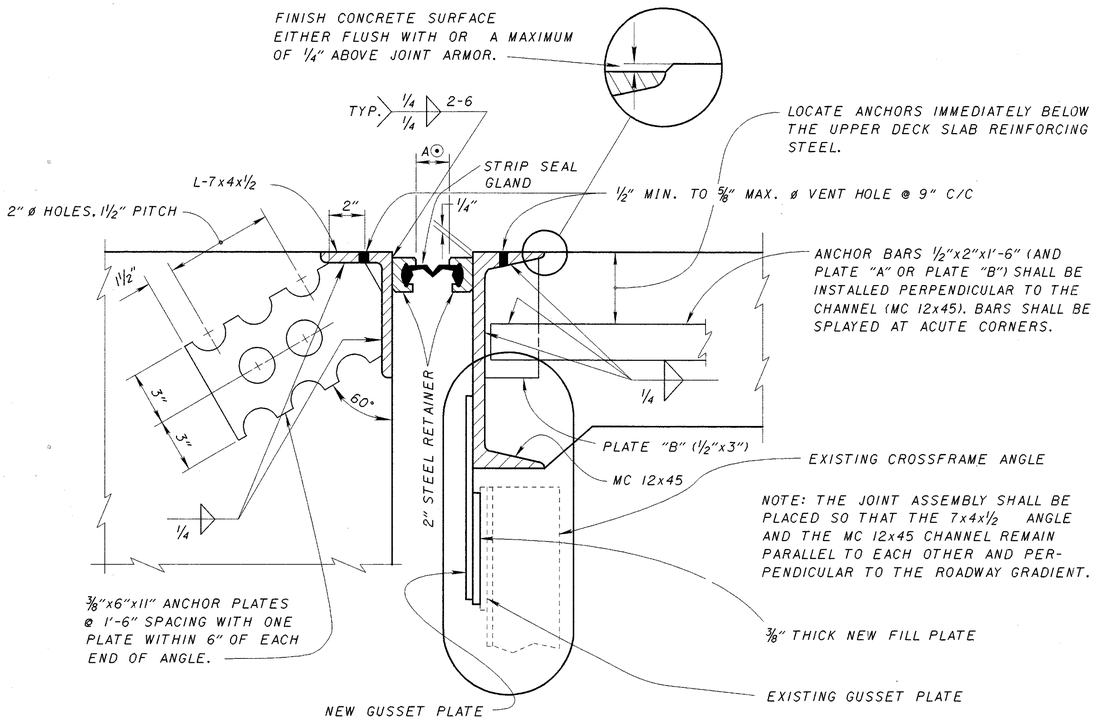


SECTION X-X

⊙ - DIMENSION "A"

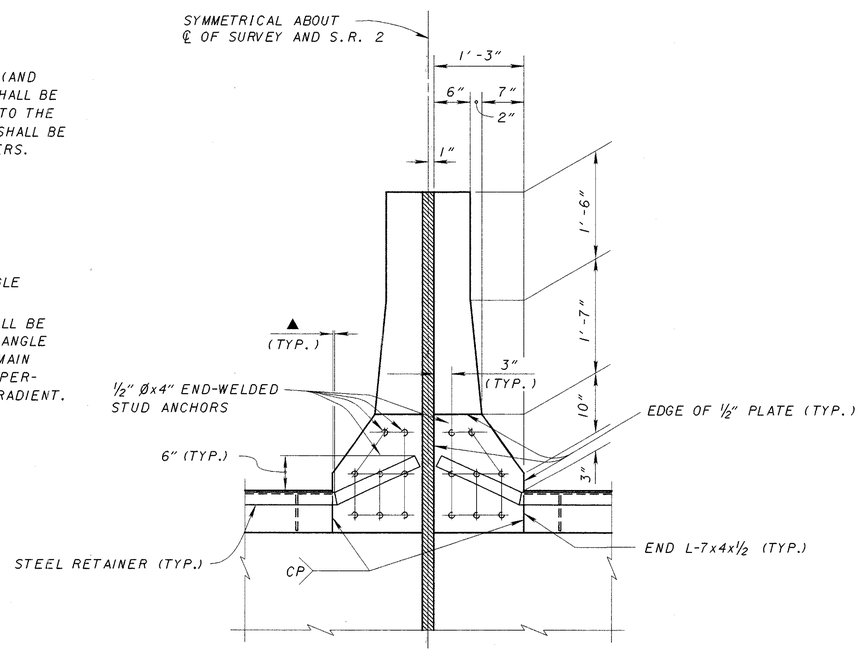


SECTION C-C

STATE OF OHIO
DEPARTMENT OF TRANSPORTATION
BUREAU OF BRIDGES AND STRUCTURAL DESIGN

20/25

# STRIP SEAL JOINT DETAILS

BRIDGE NO. OTT-2-1839
OVER PORTAGE RIVER

SFN 6200338

| DESIGNED | DRAWN | TRACED | CHECKED | REVIEWED | DATE | REVISED |
|---|---|---|---|---|---|---|
| AJM JS | AJM JS | | REZA | LMW | 7-8-94 | |

| FED. RD. DIVISION | STATE | PROJECT | TYPE FUNDS |
|---|---|---|---|
| 5 | OHIO | | |

333
367

OTT-2-16.60

| MARK | NUMBER REAR | NUMBER FWD | NUMBER TOTAL | LENGTH | WEIGHT | TYPE | DIMENSIONS A | B | C | D | E | R | INC. |
|---|---|---|---|---|---|---|---|---|---|---|---|---|---|
| **ABUTMENTS** | | | | | | | | | | | | | |
| A501 | 18 | 18 | 36 | 9'-4" | 350 | STR. | | | | | | | |
| | 2 | 2 | 4 | 5'-0" | | | | | | | | | |
| A502 | SER. OF | SER. OF | SER. OF | TO | 136 | STR. | | | | | | | 9" |
| | 5 | 5 | 5 | 8'-0" | | | | | | | | | |
| A503 | 4 | 4 | 8 | 9'-10" | 82 | 1 | 3'-4" | 3'-5" | 3'-4" | | | | |
| A504 | 8 | 8 | 16 | 6'-10" | 114 | 1 | 1'-10" | 3'-5" | 3'-4" | | | | |
| A505 | 8 | 8 | 16 | 7'-0" | 117 | 2 | 6'-6" | 7½" | | | | | |
| A506 | 16 | 16 | 32 | 8'-10" | 295 | 1 | 1'-10" | 5'-5" | 1'-10" | | | | |
| A507 | 4 | 4 | 8 | 6'-11" | 58 | STR. | | | | | | | |
| A508 | 6 | 6 | 12 | 46'-7" | 583 | STR. | | | | | | | |
| A509 | 10 | 10 | 20 | 1'-5" | 31 | STR. | | | | | | | |
| A510 | 4 | 4 | 8 | 5'-10" | 49 | 3 | 2'-9" | | | | | 3" | |
| A511 | 4 | 4 | 8 | 4'-7" | 38 | 1 | 1'-10" | 1'-2" | 1'-10" | | | | |
| A601 | 12 | 12 | 24 | 9'-9" | 351 | STR. | | | | | | | |
| A602 | 4 | 4 | 8 | 17'-10" | 215 | STR. | | | | | | | |
| A603 | 4 | 4 | 8 | 17'-4" | 209 | STR. | | | | | | | |
| A604 | 4 | 4 | 8 | 14'-8" | 176 | STR. | | | | | | | |
| A605 | 12 | 12 | 24 | 15'-11" | 573 | 4 | 5'-4" | 1'-4½" | 6'-8" | 10½" | 2'-4" | | |
| A606 | 8 | 8 | 16 | 14'-3" | 343 | 1 | 2'-10" | 5'-5" | 6'-4" | | | | |
| A607 | 8 | 8 | 16 | 10'-9" | 258 | 1 | 2'-10" | 5'-5" | 2'-10" | | | | |
| A608 | 4 | 4 | 8 | 4'-5" | 53 | STR. | | | | | | | |
| A609 | 4 | 4 | 8 | 8'-1" | 97 | STR. | | | | | | | |
| A801 | 18 | 18 | 36 | 9'-10" | 945 | STR. | | | | | | | |
| D801 | 50 | 50 | 100 | 4'-1" | 1090 | 5 | 1'-0" | 2'-8" | | | | | |
| **PIERS** | | | | | | | | | | | | | |
| SP401 | | | 4 | 24'-5" | 4017 | 12 | 5'-6" | 3½" | | | | | |
| SP402 | | | 4 | 24'-10" | 4063 | 12 | 5'-6" | 3½" | | | | | |
| SP403 | | | 2 | 25'-0" | 2055 | 12 | 5'-6" | 3½" | | | | | |
| P501 | | | 70 | 12'-1" | 882 | 6 | 2'-8" | 3'-2" | | | | | |
| P901 | | | 120 | 9'-3" | 3774 | STR. | | | | | | | |
| P1101 | | | 224 | 27'-8" | 32930 | STR. | | | | | | | |
| P1102 | | | 224 | 28'-1" | 33422 | STR. | | | | | | | |
| P1103 | | | 112 | 28'-3" | 16810 | STR. | | | | | | | |

| MARK | NUMBER REAR | NUMBER FWD | NUMBER TOTAL | LENGTH | WEIGHT | TYPE | DIMENSIONS A | B | C | D | E | R | INC. |
|---|---|---|---|---|---|---|---|---|---|---|---|---|---|
| **SUPERSTRUCTURE** | | | | | | | | | | | | | |
| S401 | | | 1938 | 30'-0" | 38838 | STR. | | | | | | | |
| S402 | | | 114 | 32'-10" | 2500 | STR. | | | | | | | |
| S403 | | | 360 | 39'-0" | 9379 | STR. | | | | | | | |
| S501 | | | 1656 | 30'-0" | 51816 | STR. | | | | | | | |
| S502 | | | 92 | 9'-7" | 920 | STR. | | | | | | | |
| S503 | | | 1732 | 45'-1" | 81442 | STR. | | | | | | | |
| S504 | | | 272 | 30'-0" | 8511 | STR. | | | | | | | |
| S505 | | | 948 | 5'-4" | 5270 | 7 | 8" | 2'-5" | 2'-2" | | | 2" | |
| S506 | | | 48 | 3'-0" | 150 | 8 | 2'-5" | | | | | | |
| S507 | | | 48 | 2'-5" | 121 | STR. | | | | | | | |
| S508 | | | 8 | 13'-10" | 115 | 9 | 10'-0" | 2'-5" | 1'-5" | | | | |
| S509 | | | 8 | 13'-10" | 115 | STR. | | | | | | | |
| S510 | | | 16 | 14'-10" | 248 | STR. | | | | | | | |
| S511 | | | 288 | 29'-9" | 8936 | STR. | | | | | | | |
| S601 | | | 1732 | 45'-2" | 117499 | STR. | | | | | | | |
| S602 | | | 996 | 3'-1" | 4613 | 10 | 10½" | 10" | 8½" | 6" | 9" | | |
| S603 | | | 996 | 2'-7" | 3865 | 2 | 1'-10" | 10½" | | | | | |
| S604 | | | 24 | 4'-1" | 147 | 2 | 3'-4" | 10½" | | | | | |
| S605 | | | 8 | 2'-6" | 30 | 2 | 1'-9" | 10½" | | | | | |
| S606 | | | 1012 | 3'-10" | 5827 | 11 | 1'-9" | 8½" | 6" | 9¾" | 8½" | | |
| S607 | | | 1012 | 5'-9" | 8740 | 2 | 5'-0" | 10½" | | | | | |
| **DRILLED SHAFTS** | | | | | | | | | | | | | |
| DS401 ◔ | | | 10 | 45'-0" | | 12 | 5'-6" | 3½" | | | | | |
| DS1001 ◔ | | | 560 | 59'-3" | | STR. | | | | | | | |

◔ FOR ESTIMATING PURPOSES ONLY. DRILLED SHAFTS REINFORCING STEEL SHALL BE INCLUDED FOR PAYMENT WITH ITEM SPECIAL - DRILLED SHAFTS

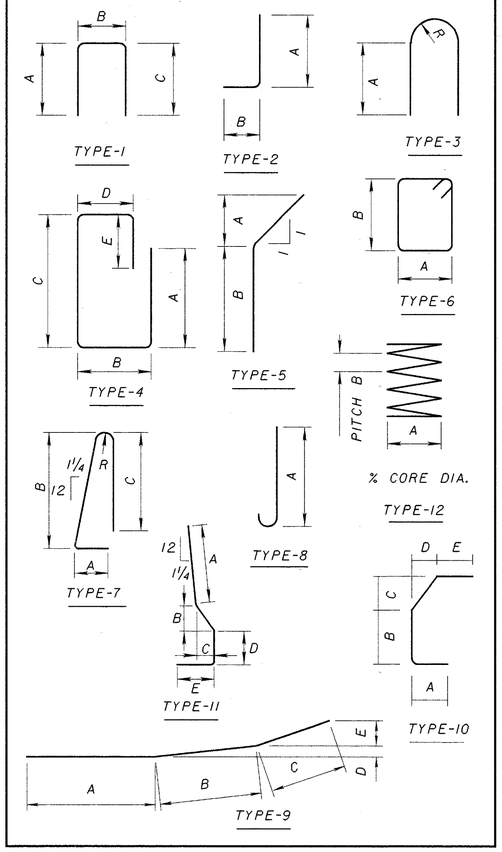


**BAR MARKS:**
BAR SIZE IS INDICATED IN THE BAR MARK. THE FIRST DIGIT WHERE THREE DIGITS ARE USED, AND THE FIRST TWO DIGITS WHERE FOUR ARE USED, INDICATE THE BAR SIZE NUMBER. FOR EXAMPLE, A700 IS A NO. 7 AND A1014 IS A NO. 10 SIZE. BAR DIMENSIONS SHOWN ARE OUT TO OUT UNLESS OTHERWISE INDICATED. R INDICATES INSIDE RADIUS, UNLESS OTHERWISE NOTED. "STD." WRITTEN IN PLACE OF A DIMENSION INDICATES A STANDARD BEND AT THE END OF THE BAR.

ALL REINFORCING STEEL TO BE EPOXY COATED.

STATE OF OHIO
DEPARTMENT OF TRANSPORTATION
BUREAU OF BRIDGES AND STRUCTURAL DESIGN

21/25

# REINFORCING STEEL LIST

BRIDGE NO. OTT-2-1839
OVER PORTAGE RIVER

SFN 6200338

| DESIGNED | DRAWN | TRACED | CHECKED | REVIEWED | DATE | REVISED |
|---|---|---|---|---|---|---|
| JS | JS | | REZA | LMW | 7-8-94 | |

| FHWA REGION | STATE | PROJECT | |
|---|---|---|---|
| 5 | OHIO | | |

334
367

OTT-2-16.60

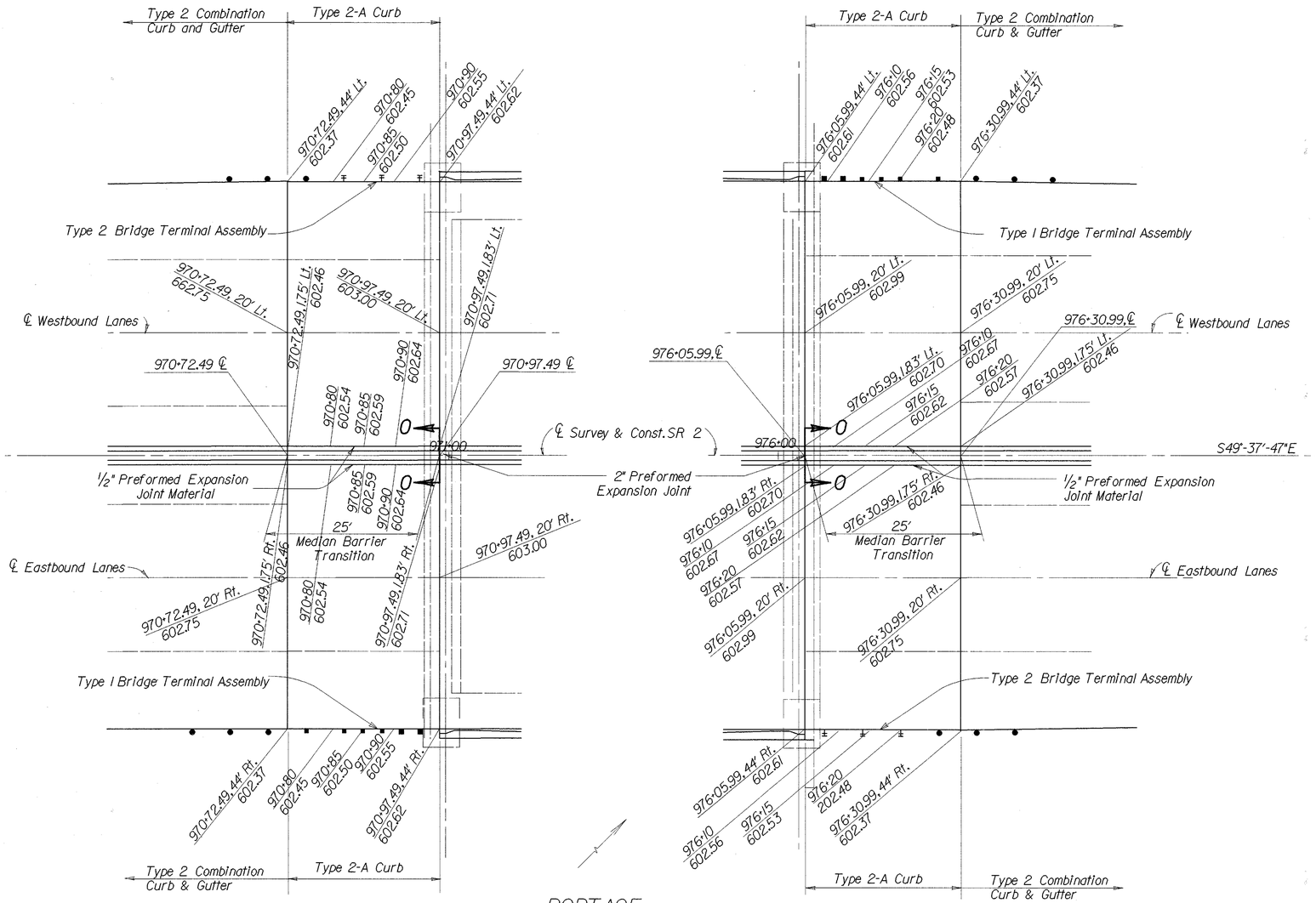


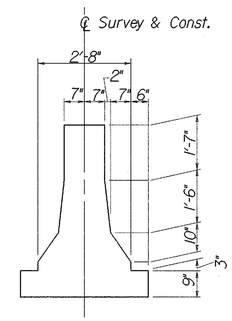


~ SECTION O-O ~

STATE OF OHIO
DEPARTMENT OF TRANSPORTATION
DISTRICT 2 DESIGN & PLANNING OFFICE

22 / 25

# APPROACH SLAB AND MEDIAN BARRIER DETAILS BRIDGE NO. OTT-2-1839 OVER PORTAGE RIVER

| DESIGNED | DRAWN | TRACED | CHECKED | REVIEWED DATE | REVISED |
|---|---|---|---|---|---|
| MTG | ALS | | LLL | LCL 1/10/95 | |

I:/pd/ottawa/ott2/ot2prasl.dgn

# LIGHTING SUMMARY

| FHWA REGION | STATE | PROJECT | |
|---|---|---|---|
| 5 | OHIO | | |

OTT-2-16.60

335 / 367

| SHEET NUMBER | ITEM | ITEM EXT. | GRAND TOTAL | UNIT | DESCRIPTION | SEE SHT NO. |
|---|---|---|---|---|---|---|
| 24 | | | | | | |
| 250 | 202 | 35101 | 250 | LIN. FT. | PIPE REMOVED, 24" AND UNDER, AS PER PLAN | 24 |
| 18 | 202 | 62000 | 18 | EACH | JUNCTION BOX REMOVED | |
| 7 | 202 | 98100 | 7 | EACH | REMOVAL, MISC.: WOOD POLE REMOVED, AS PER PLAN | 24 |
| 18 | 202 | 98100 | 18 | EACH | REMOVAL, MISC.: NAVIGATION LIGHT REMOVED FOR STORAGE, AS PER PLAN | 24 |
| 1020 | 202 | 98200 | 1020 | LIN. FT. | REMOVAL, MISC.: OVERHEAD LINE REMOVED | |
| 60 | 603 | 00400 | 60 | LIN. FT. | 4" CONDUIT, TYPE E | |
| 186 | 625 | 01500 | 186 | EACH | CABLE SPLICING KIT | |
| 700 | 625 | 23200 | 700 | LIN FT | NO. 4 AWG 5000 VOLT DISTRIBUTION CABLE | |
| 5696 | 625 | 23302 | 5696 | LIN FT | NO. 6 AWG 5000 VOLT DISTRIBUTION CABLE | |
| 2090 | 625 | 23306 | 2090 | LIN FT | NO. 10 AWG 600 VOLT DISTRIBUTION CABLE | |
| 2600 | 625 | 24320 | 2600 | LIN. FT. | 1-1/2" DUCT CABLE WITH THREE NO. 4 AWG 5000 VOLT CABLES | |
| 337 | 625 | 25000 | 337 | LIN. FT. | CONDUIT, 3/4", 713.04 | |
| 908 | 625 | 25400 | 908 | LIN. FT. | CONDUIT, 2", 713.04 | |
| 98 | 625 | 25500 | 98 | LIN. FT. | CONDUIT, 3", 713.04 | |
| 92 | 625 | 25900 | 92 | LIN. FT. | CONDUIT, JACKED OR DRILLED UNDER PAVEMENT, 3", 713.04 | |
| 2730 | 625 | 29002 | 2730 | LIN. FT. | TRENCH, 24" DEEP | |
| 38 | 625 | 29900 | 38 | EACH | JUNCTION BOX | |
| 4 | 625 | 30700 | 4 | EACH | PULL BOX, 713.08, 18" | |
| 1 | 625 | 30706 | 1 | EACH | PULL BOX, 713.08, 24" | 24 |
| | | | | | | 24 |
| | | | | | | 24 |
| 1 | 625 | 32000 | 1 | EACH | GROUND ROD | |
| 1 | 625 | 33000 | 1 | EACH | STRUCTURE GROUNDING SYSTEM | |
| 1 | 625 | 98000 | 1 | EACH | LIGHTING, MISC.: REFURBISH EXISTING POWER SERVICE, AS PER PLAN | |
| 8 | 625 | 98000 | 8 | EACH | LIGHTING, MISC.: 360 DEGREE GREEN NAVIGATION LIGHT, AS PER PLAN | |
| 10 | 625 | 98000 | 10 | EACH | LIGHTING, MISC.: 180 DEGREE RED NAVIGATION LIGHT, AS PER PLAN | |
| 30 | 625 | 98100 | 30 | LIN. FT. | LIGHTING, MISC.: 3/4" LIQUID-TIGHT CONDUIT | |
| | SPECIAL | 62540000 | LUMP | LUMP | MAINTAIN EXISTING LIGHTING | 24 |

STATE OF OHIO
DEPARTMENT OF TRANSPORTATION
DISTRICT 2 DESIGN & PLANNING OFFICE

23 / 25

LIGHTING SUMMARY
BRIDGE NO. OTT-2-1839
OVER PORTAGE RIVER

| DESIGNED | DRAWN | TRACED | CHECKED | REVIEWED DATE | REVISED |
|---|---|---|---|---|---|
| ADB | ALS | | LLL | LCL 1/10/95 | |

I/PD/OTTAWA/OTT2/OT2BLIT.DGN

| Station From | Station To | 202 Pipe Removed As Per Plan | 202 Junction Box Removed | 202 Wood Pole Removed As Per Plan | 202 Overhead Line Removed | 202 Navigation Light Removed For Storage As Per Plan | 625 Cable Splicing Kit | 625 #4 AWG 5000 V Distribution Cable | 625 #6 AWG 5000 V Distribution Cable | 625 #10 AWG 600 Volt Distribution Cable | 625 1½" Duct Cable With 3 - #4 AWG 5000 Volt Cables | 625 ¾" Conduit 713.04 | 625 ¾" Liquid -Tight Conduit | 625 2" Conduit 713.04 | 625 3" Conduit 713.04 | 625 3" Conduit, 713.04 Jacked or Drilled | 625 Trench 24" Deep | 625 Junction Box | 625 Pull Box 18" 713.08 | 625 Pull Box 24" 713.08 | 625 Ground Rod | 625 Structure Grounding System | 625 Refurbish Ex. Power Service As Per plan | 625 360° Green Nav. Light As Per Plan | 625 180° Red Nav. Light As Per Plan |
|---|---|---|---|---|---|---|---|---|---|---|---|---|---|---|---|---|---|---|---|---|---|---|---|---|---|
| | | Lin. Ft. | Each | Each | Lin. Ft. | Each | Each | Lin. Ft. | Lin. Ft. | Lin. Ft. | Lin. Ft. | Lin. Ft. | Lin. Ft. | Lin. Ft. | Lin. Ft. | Lin. Ft. | Lin. Ft. | Each | Each | Each | Each | Each | Each | Each | Each |
| 971+72 | 972+17 | | 2 | | | 2 | 24 | | 390 | 370 | | 65 | 6 | 90 | | | | 6 | | | | | | | 2 |
| 972+17 | 972+61 | | 2 | | | 2 | 12 | | 390 | 60 | | 3 | | 90 | | | | 2 | | | | | | 2 | |
| 972+61 | 973+06 | | 2 | | | 2 | 24 | | 390 | 370 | | 65 | 6 | 90 | | | | 6 | | | | | | | 2 |
| 973+06 | 973+51 | | 2 | | | 2 | 12 | | 390 | 60 | | 3 | | 90 | | | | 2 | | | | | | 2 | |
| 973+51 | 973+96 | | 2 | | | 2 | 24 | | 390 | 370 | | 65 | 6 | 90 | | | | 6 | | | | | | | 2 |
| 973+96 | 974+42 | | 2 | | | 2 | 12 | | 390 | 60 | | 3 | | 90 | | | | 2 | | | | | | 2 | |
| 974+42 | 974+87 | | 2 | | | 2 | 24 | | 390 | 370 | | 65 | 6 | 90 | | | | 6 | | | | | | | 2 |
| 974+87 | 975+31 | | 2 | | | 2 | 12 | | 390 | 60 | | 3 | | 90 | | | | 2 | | | | | | 2 | |
| 975+31 | 976+25 | 19 | 2 | | | 2 | 24 | | 684 | 370 | | 65 | 6 | 188 | | | 32 | 6 | | | | | | | 2 |
| 976+25 | 987+52 | 231 | | 7 | 1020 | | 18 | 400 | | | 2600 | | | | 98 | 92 | 2698 | | 4 | 1 | 1 | 1 | 1 | | |
| Spare Conductor | | | | | | | | 300 | 1892 | | | | | | | | | | | | | | | | |
| Totals Carried To Lighting Summary | | 250 | 18 | 7 | 1020 | 18 | 186 | 700 | 5696 | 2090 | 2600 | 337 | 30 | 908 | 98 | 92 | 2730 | 38 | 4 | 1 | 1 | 1 | 1 | 8 | 10 |

| FHWA REGION | STATE | PROJECT | |
|---|---|---|---|
| 5 | OHIO | | |

336 / 367

OTT-2-16.60

## MAINTAINING NAVIGATIONAL LIGHTING

BEFORE ANY WORK IS STARTED IN THE VICINITY OF THE NAVIGATIONAL LIGHTING CIRCUITS, REPRESENTATIVES OF THE STATE AND THE CONTRACTOR SHALL MAKE A VISUAL INSPECTION OF THE NAVIGATIONAL LIGHTING SYSTEMS. RECORDS OF THIS INSPECTION AS TO THE LIGHT AND CIRCUIT OUTAGES SHALL BE KEPT, IN WRITING, BY THE STATE. ANY OUTAGES WILL BE REPAIRED BY STATE FORCES. AFTER REPAIR, IT SHALL THEN BECOME THE RESPONSIBILITY OF THE CONTRACTOR TO CONTINUOUSLY MAINTAIN NAVIGATIONAL LIGHTING.

THIS LIGHTING SHALL BE MAINTAINED AT ALL TIMES AND IN NO FORM OBSTRUCT NAVIGATIONAL FLOW AS REQUIRED BY THE COAST GUARD RULES. WHILE REPLACING THE NAVIGATIONAL LIGHTS AND CIRCUIT COMPONENTS, THE CONTRACTOR SHALL ARRANGE HIS WORK IN SUCH A MANNER THAT NO NAVIGATIONAL AID IS OUT OF SERVICE. PAYMENT WILL BE AT THE LUMP SUM BID PRICE FOR ITEM SPECIAL "MAINTAIN EXISTING LIGHTING" AND SHALL BE FULL COMPENSATION INCLUDING ALL LABOR, MATERIALS, AND INCIDENTALS REQUIRED.

## ITEM 202 - PIPE REMOVED, AS PER PLAN

THIS ITEM SHALL CONSIST OF REMOVING AN EXISTING UNDERGROUND 2" CONCRETE-ENCASED CONDUIT. ALL RESULTANT OPENINGS SHALL BE BACKFILLED TO GRADE WITH SUITABLE COMPACTED SOIL AND SHALL BE RESTORED TO MATCH THE SURROUNDING AREA. ALL MATERIALS REMOVED SHALL BECOME THE PROPERTY OF THE CONTRACTOR AND SHALL BE REMOVED FROM THE PROJECT SITE.

PAYMENT WILL BE MADE AT THE UNIT BID PRICE FOR EACH LIN. FT. OF ITEM 202 "PIPE REMOVED, AS PER PLAN".

## PADLOCKS AND KEYS

PADLOCKS FURNISHED SHALL BE EITHER BRASS OR BRONZE, EQUAL TO MASTER NO. 4BKA OR WILSON BOHANNAN 660A, OR EQUAL AS AND SHALL BE KEYED IN ACCORDANCE WITH SPECIFICATION 631.08, PARAGRAPH 3. PAYMENT SHALL BE INCLUDED IN THE BID FOR THE ITEM(S) BEING LOCKED.

## CONDUIT ON STRUCTURE - BRIDGE NO. OTT-2-1839

EXPANSION FITTINGS FOR CONDUIT ON STRUCTURES SHALL BE OZ TYPE AX-4, CROUSE-HINDS TYPE XJ-4, APPLETON TYPE XJ-4, OR EQUAL APPROVED BY THE ENGINEER.

EACH EXPANSION FITTING SHALL HAVE A COPPER EXTERNAL BONDING JUMPER.

## REPLACEMENT OF EXISTING NAVIGATIONAL LIGHTS

REFERENCE IS MADE TO THE PLAN SHEETS FOR DETAILS OF THE REPLACEMENT OF NAVIGATION LIGHTING. WORK SHALL CONSIST OF REMOVING AND REPLACING ALL EXISTING CONDUIT, CABLE, FLEXIBLE CONDUIT AND NAVIGATION LIGHTS. EXISTING NAVIGATIONAL LIGHTS SHALL BE REMOVED AS NOT TO DAMAGE THEM. IT SHALL BE THE RESPONSIBILITY OF THE CONTRACTOR TO CONTINUOUSLY MAINTAIN THE NAVIGATIONAL LIGHTING. THIS LIGHTING SHALL BE MAINTAINED AT ALL TIMES AND IN NO FORM OBSTRUCT NAVIGATIONAL FLOW AS REQUIRED BY THE COAST GUARD RULES.

THE NEW 360° GREEN NAVIGATION LIGHTS SHALL BE AUTOMATIC POWER, B&B OR EQUAL APPROVED BY THE ENGINEER. EACH LIGHT SHALL BE A DUPLEX SWIVEL MOUNTED BRIDGE LIGHT IN A BRONZE HOUSING COMPLETE WITH AN AUTOMATIC SHOCK MOUNTED LAMPCHANGER HAVING A MINIMUM OF 6-12V LAMPS, DISCONNECT SWITCH, 200mm 360° GREEN FRESNEL LENS, AND A TRANSFORMER OF 120V/60 CY/13V-6 AMPS. THE COST OF MOUNTING THE LIGHT, AS STATED IN THE PLAN, SHALL BE INCLUDED AS PART OF THE COST FOR EACH LIGHT.

THE NEW 180° RED NAVIGATION LIGHTS SHALL BE AUTOMATIC POWER, B&B OR EQUAL APPROVED BY THE ENGINEER. EACH FENDER LIGHT SHALL BE PEDESTAL MOUNTED IN A BRONZE HOUSING COMPLETE WITH AN AUTOMATIC SHOCK MOUNTED LAMPCHANGER HAVING A MINIMUM OF 6-12V LAMPS, DISCONNECT SWITCH, 200mm 180° RED FRESNEL LENS, AND A TRANSFORMER OF 120V/60 CY/13V-6 AMPS. THE COST OF MOUNTING THE LIGHT, AS STATED IN THE PLAN, SHALL BE INCLUDED AS PART OF THE COST FOR EACH LIGHT. THE COST OF THE LADDERS SHALL ALSO BE INCLUDED AS PART OF THIS COST.

PAYMENT FOR THE ABOVE STATED NAVIGATION LIGHTS SHALL BE MADE AT THE UNIT BID PRICE FOR EACH ITEM 625 "360° GREEN NAVIGATION LIGHT, AS PER PLAN" AND EACH ITEM 625 "180° RED NAVIGATION LIGHT, AS PER PLAN", RESPECTIVLY.

ALL THE FOLLOWING ITEMS SHALL BE INCLUDED IN THE LUMP SUM BID PRICE FOR ITEM 202 "PORTIONS OF STRUCTURE REMOVED"; ALL EXISTING CONDUIT ON PIERS, STRUCTURE AND IN ABUTMENT, LADDERS AND MOUNTING BRACKETS ON THE EXISTING PIERS, JUNCTION BOXES AND ANY MISCELLANEOUS HARDWARE USED TO ATTACH ABOVE STATED TO STRUCTURE.

THE REMOVED NAVIGATION LIGHTS SHALL BE STORED ON THE PROJECT SITE FOR REMOVAL BY STATE FORCES. ALL OTHER MATERIALS REMOVED SHALL BECOME PROPERTY OF THE CONTRACTOR AND SHALL BE REMOVED FROM THE PROJECT SITE. AN ESTIMATED QUANTITY OF THE TABULATED ITEMS IS INCLUDED IN THE BRIDGE SUMMARY FOR THE COMPLETION OF THIS WORK.

TO FACILITATE THE DESIGN PROCESS, AUTOMATIC POWER'S FA-231, FA-230 AND FA-229 BRIDGE LIGHT PRODUCTS WERE USED AS A BASIS FOR THE ABOVE STATED NAVIGATIONAL LIGHTING SYSTEM.

REFERENCE TO A PARTICULAR MANUFACTURER'S NAME, PRODUCT OR CATALOG NUMBER FOR AN ARTICLE OF EQUIPMENT OR MATERIAL IS NOT MEANT TO BE RESTRICTIVE, BUT IS INTENDED TO BE DESCRIPTIVE OF EQUIPMENT OR MATERIAL THAT WILL BE ACCEPTABLE. THE CONTRACTOR MAY SUBMIT A DIFFERENT PLAN USING AN APPROVED EQUAL.

## UNDERDRAINS FOR PULL BOXES

REFERENCE IS MADE TO STANDARD DRAWING HL-30.11 FOR DETAILS OF DRAINING PULL BOXES. UNDERDRAINS FOR PULL BOXES SHALL BE USED AS DIRECTED BY THE ENGINEER AND SHALL BE PROVIDED WHERE THE LENGTH REQUIRED FOR A SATISFACTORY OUTLET DOES NOT EXCEED APPROXIMATELY 20 FEET. AN ESTIMATED QUANTITY OF "60 LINEAR FEET OF ITEM 603, 4" CONDUIT TYPE E" IS INCLUDED IN THE LIGHTING SUMMARY FOR THIS PURPOSE.

## ITEM 625 - REFURBISH EXISTING POWER SERVICE, AS PER PLAN

POWER SERVICE EQUIPMENT SHALL BE INSTALLED AS SPECIFIED IN THE ODOT CONSTRUCTION AND MATERIAL SPECIFICATIONS AND ON STANDARD CONSTRUCTION DRAWINGS HL-40.10 AND HL-60.31 EXCEPT THAT THE EQUIPMENT WILL BE MOUNTED ON AN EXISTING SERVICE POLE RATHER THAN A SEPARATE SERVICE POLE, AND THE SERVICE WILL BE METERED. ANY UNSALVAGEABLE COMPONENTS NEEDED IN THE NEW POWER SERVICE SHALL BE REPLACED AND ANY COMPONENTS NOT RE-USED IN THE NEW POWER SERVICE SHALL BECOME THE PROPERTY OF THE CONTRACTOR AND SHALL BE REMOVED FROM THE PROJECT SITE.

PAYMENT WILL BE MADE AT THE UNIT BID PRICE FOR EACH ITEM 625 "REFURBISH EXISTING POWER SERVICE, AS PER PLAN" SO INSTALLED AND SHALL INCLUDE ALL LABOR, MATERIALS, AND EQUIPMENT NEEDED TO COMPLETE WORK.

## ITEM 625 - STRUCTURE GROUNDING SYSTEM

THE NO. 1/0 COPPER GROUNDING CABLE SHALL BE CONNECTED TO THE STRUCTURAL STEEL, PIER ENCASEMENT, JUNCTION BOXES AND NAVIGATIONAL LIGHT MOUNTINGS BY MEANS OF EXOTHERMIC WELDING. TWO COATS OF INSULATING VARNISH SHALL BE APPLIED OVER THE EXOTHERMIC WELD AND EXPOSED CABLE.

STRUCTURE GROUNDING SYSTEM SHALL BE CONNECTED TO STRUCTURE CONDUIT SYSTEM BY THE USE OF CONDIUT GROUNDING BUSHINGS AS SHOWN ON HL-20.14 AND HL-50.21. REFERENCE SHOULD ALSO BE MADE TO SHEETS 24A/25 AND 25/25 FOR TYPICAL WIRE PLACEMENT .

PAYMENT SHALL BE MADE AT THE UNIT BID PRICE FOR EACH ITEM 625 "STRUCTURE GROUNDING SYSTEM".

## ITEM 202 - WOOD POLE REMOVED, AS PER PLAN

THIS ITEM OF WORK SHALL CONSIST OF REMOVING AN EXISTING WOOD POLE. REMOVAL SHALL INCLUDE ALL MATERIAL AND HARDWARE NORMALLY COMPRISING A WOOD POLE. THE RESULTANT OPENING SHALL BE BACKFILLED TO GRADE WITH SUITABLE COMPACTED SOIL AND RESTORED TO MATCH THE SURROUNDING AREA. ALL MATERIALS REMOVED SHALL BECOME THE PROPERTY OF THE CONTRACTOR AND SHALL BE REMOVED FROM THE PROJECT SITE.

PAYMENT SHALL BE MADE AT THE UNIT BID PRICE FOR EACH ITEM 202 "WOOD POLE REMOVED, AS PER PLAN".

## ITEM 202 - OVERHEAD LINE REMOVED

THIS ITEM OF WORK SHALL CONSIST OF REMOVING AN EXISTING OVERHEAD LINE. REMOVAL SHALL INCLUDE ALL MATERIAL AND HARDWARE NORMALLY COMPRISING AN OVERHEAD LINE. ALL MATERIALS REMOVED SHALL BECOME THE PROPERTY OF THE CONTRACTOR AND SHALL BE REMOVED FROM THE PROJECT SITE.

PAYMENT WILL BE MADE AT THE UNIT BID PRICE FOR EACH LIN. FT. OF ITEM 202 "OVERHEAD LINE REMOVED".

I:/PD/OTTAWA/OTT2/OT2PRNAV.DGN

STATE OF OHIO
DEPARTMENT OF TRANSPORTATION
DISTRICT 2 DESIGN & PLANNING OFFICE

24 / 25

# NAVIGATION LIGHT DETAILS
# BRIDGE NO.OTT-2-1839
# OVER PORTAGE RIVER

| DESIGNED | DRAWN | TRACED | CHECKED | REVIEWED DATE | REVISED |
|---|---|---|---|---|---|
| ADB | ALS | | LLL | LCL 1/10/95 | |

| FHWA REGION | STATE | PROJECT | |
|---|---|---|---|
| 5 | OHIO | | |

336A
367A

OTT-2-16.60

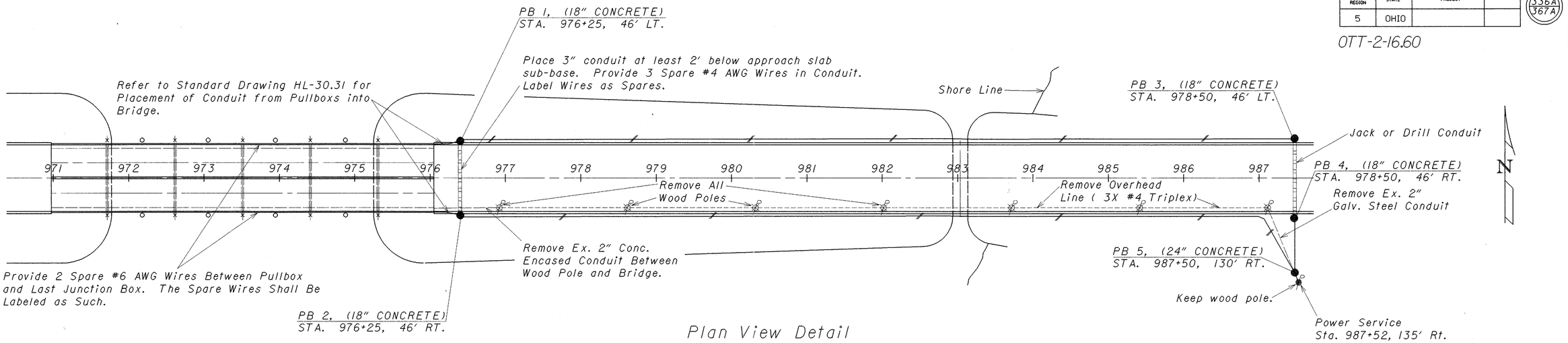


Plan View Detail

Legend

- Green Lights- 8 Required
- Red Lights - 10 Required
- Ex. Pullbox - To Be Removed
- Ex. Wood Pole - To Be Removed
- Refurbish Existing Power Service
- New 18" Conc. Pullbox
- Duct Cable Directly Buried
- 3" Conduit, 713.04

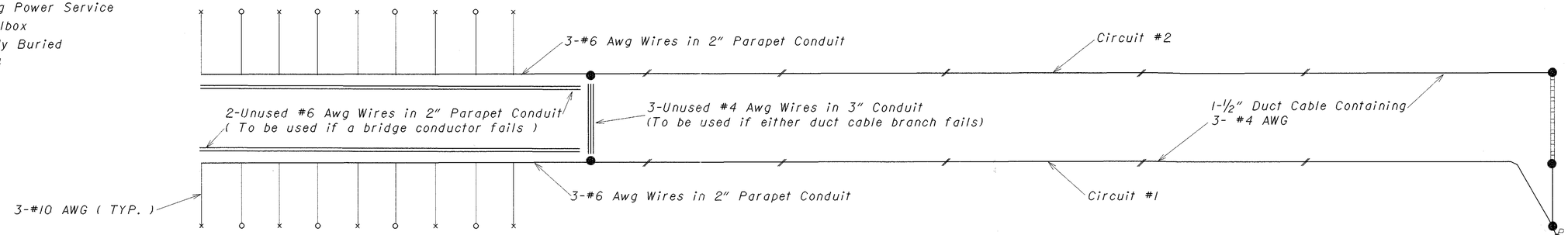


Circuit Map

I/PD/OTTAWA/OTT2/OT2PRNAV.DGN

STATE OF OHIO
DEPARTMENT OF TRANSPORTATION
DISTRICT 2 DESIGN & PLANNING OFFICE

24A / 25

# NAVIGATION LIGHT DETAILS
# BRIDGE NO.OTT-2-1839
# OVER PORTAGE RIVER

| DESIGNED | DRAWN | TRACED | CHECKED | REVIEWED DATE | REVISED |
|---|---|---|---|---|---|
| ADB | ALS | | LLL | LCL 1/10/95 | |

| FHWA REGION | STATE | PROJECT | |
|---|---|---|---|
| 5 | OHIO | | |

337 / 367

OTT-2-16.60

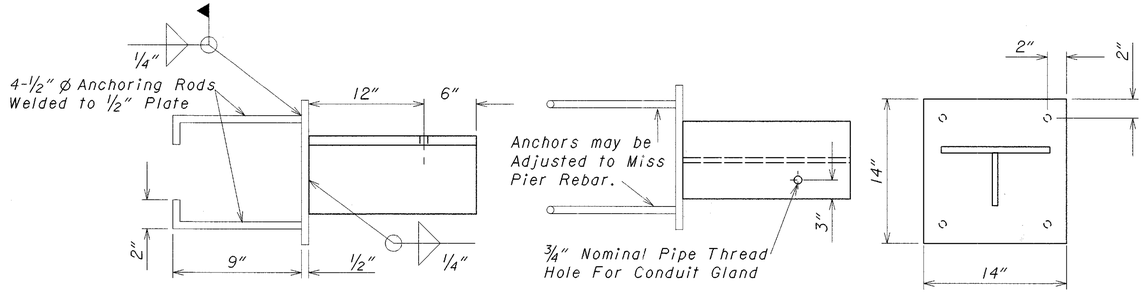


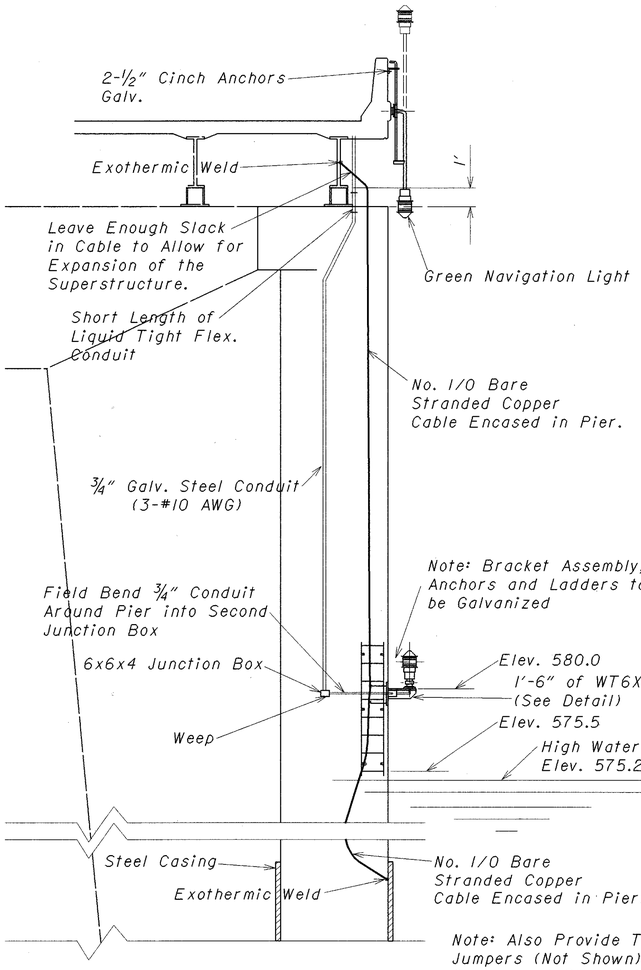


Typical For Each Pier

Note: Also Provide Two Short Copper Jumpers (Not Shown) Between The Steel Casing and Pier Rebar Spaced 180° Apart.

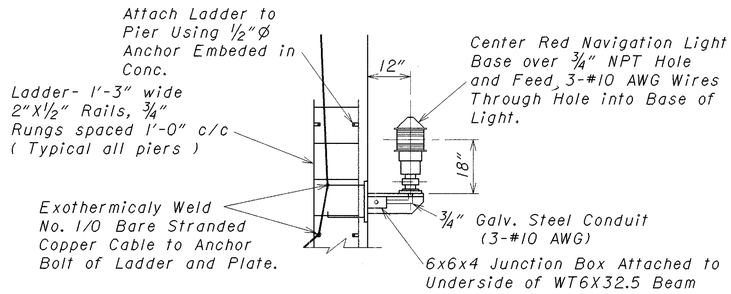


Mounting Details For Red Pier Lights

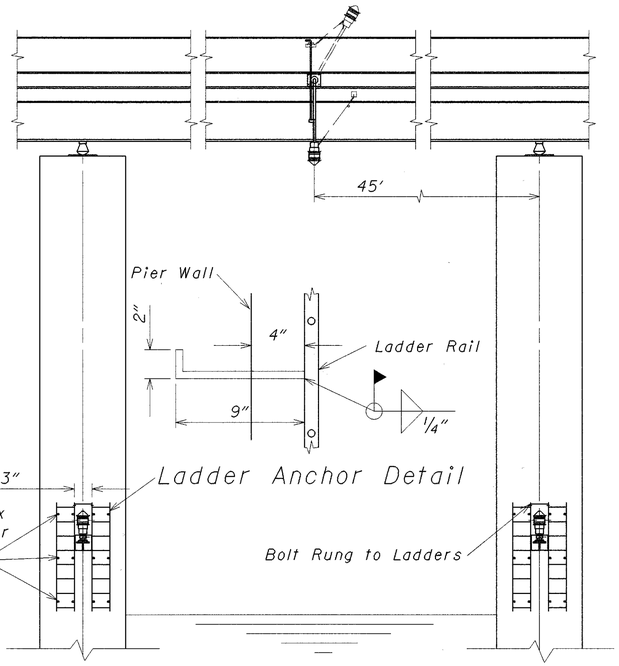


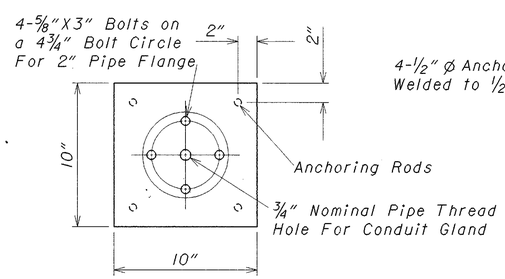


Mounting Plate Detail For Mid-Span Green Lights

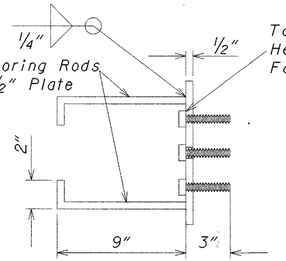


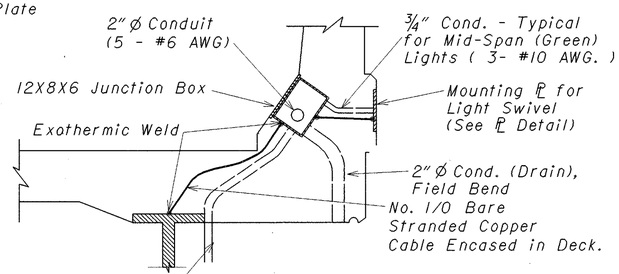


Typical For Each Junction Box

STATE OF OHIO
DEPARTMENT OF TRANSPORTATION
DISTRICT 2
DESIGN & PLANNING OFFICE

25 / 25

# NAVIGATION LIGHT DETAILS
# BRIDGE NO.OTT-2-1839
# OVER PORTAGE RIVER

| DESIGNED | DRAWN | TRACED | CHECKED | REVIEWED DATE | REVISED |
|---|---|---|---|---|---|
| ADB | ALS | | LLL | LCL 1/10/95 | |

I:/PD/OTTAWA/OTT2/OT2PRNAV.DGN

| FHWA REGION | STATE | PROJECT | |
|---|---|---|---|
| 5 | OHIO | | |

338
367

OTT-2-16.60

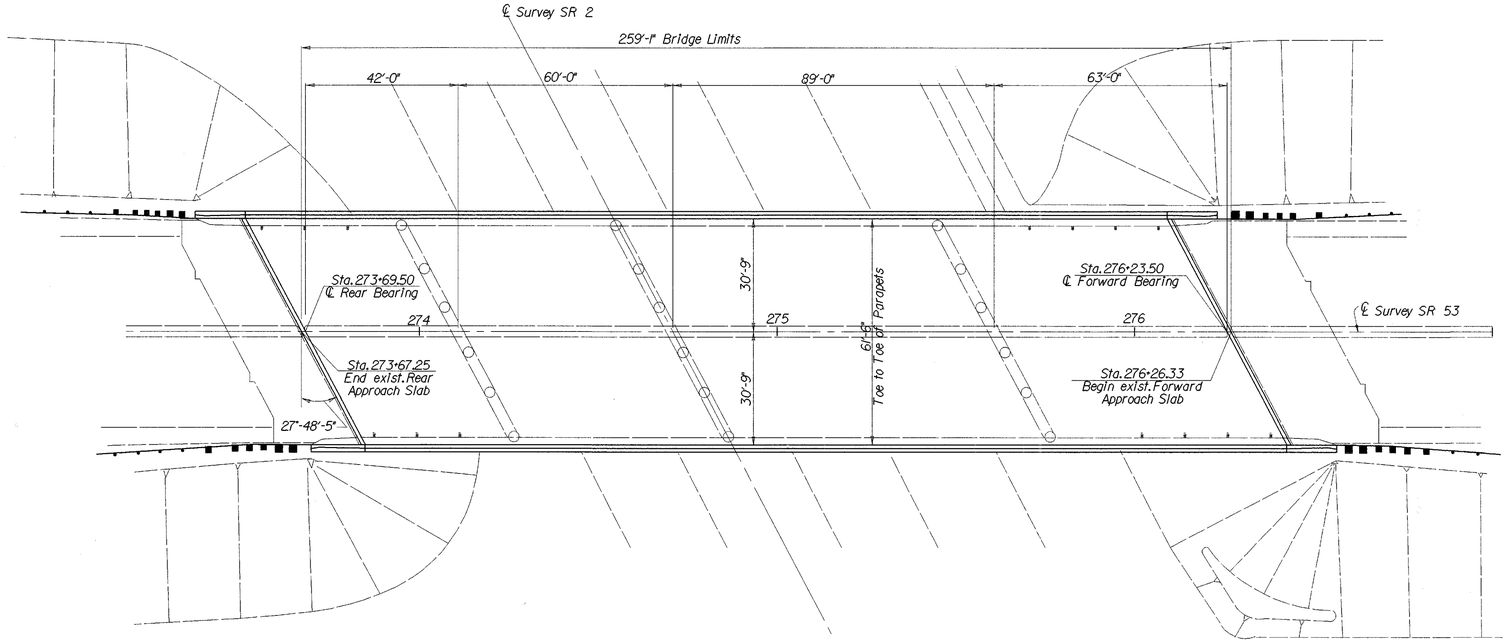


GENERAL PLAN

## PROPOSED WORK

1.) Remove existing 2½" asphalt from deck
2.) Reset the indicated rockers at the abutment and piers
3.) Remove existing bridge median curb
4.) Reface existing safety curbs into safety shape parapets
5.) Vertical Extension of the structural steel expansion joints
6.) Remove min. 1" of existing deck using hydrodemolition
7.) Repair unsound concrete with variable depth Microsilica
8.) Overlay deck with 2" Microsilica Modified Concrete, on asphalt
9.) Close median joint with Jeene Seal
10.) Seal expansion joints, abutments, parapets, wingwalls, and piers
11.) Repair erosion
12.) Paint the structural steel with system OZEU

## EXISTING STRUCTURE DATA

Type: Continuous steel beam with reinforced concrete deck. Reinforced concrete pier bents and stub abutments.
Spans: 42'-0", 60'-0", 89'-0", 63'-0", c/c Brgs.
Roadway: 59' f/f of 2'-3" safety curbs including 3'-0" raised concrete median
Loading: HS-20
Skew: 27°-48'-05" Right Forward
Wearing Surface: 2½" Asphalt Wearing Surface
Approach Slabs: AS-1-54 (25'-0") Special
Alignment: Tangent
SFN: 6201296
Original Construction: 1968

## PROPOSED STRUCTURE DATA

Type: Continuous steel beam with reinforced concrete deck. Reinforced concrete pier bents and stub abutments.
Spans: 42'-0", 60'-0", 89'-0", 63'-0", c/c Brgs.
Roadway: 61'-6" Toe to Toe of parapets
Loading: HS 20-44 and Alternate Military
Skew: 27°-48'-5" Right Forward
Wearing Surface: 2" Microsilica Modified Concrete
Approach Slabs: AS-1-81 (25'-0")
Alignment: Tangent
SFN: 6201296

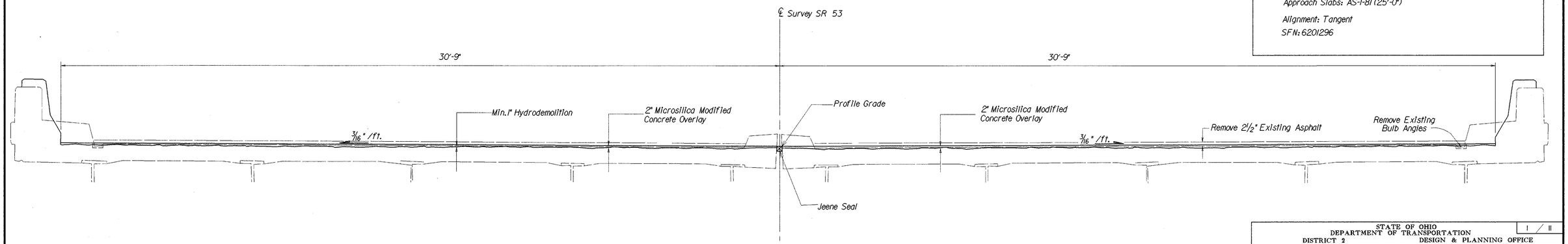


TRANSVERSE SECTION

STATE OF OHIO
DEPARTMENT OF TRANSPORTATION
DISTRICT 2 DESIGN & PLANNING OFFICE

I / II

# GENERAL PLAN AND TRANSVERSE SECTION BRIDGE NO. OTT-2-1980 (also known as Br. No. OTT-53-0519L) SR 2 UNDER SR 53

| DESIGNED | DRAWN | TRACED | CHECKED | REVIEWED DATE | REVISED |
|---|---|---|---|---|---|
| MTG | ALS | | LLL | LCL 1/10/95 | |

I:/pd/OTTAWA/OTT2/02SR53SP.DGN

| FHWA REGION | STATE | PROJECT | |
|---|---|---|---|
| 5 | OHIO | | |

339
367

OTT-2-16.60

# BRIDGE NOTES

REFERENCE SHALL BE MADE TO SUPPLEMENTAL SPECIFICATIONS:

SS815 DATED 7-17-95
[redacted]

ITEM SPECIAL - STRUCTURE MISC.: GRAFFITI REMOVAL

ALL GRAFFITI AREAS ON THE SURFACE OF ABUTMENTS, PIERS AND ANY ADDITIONAL AREAS ORDERED BY THE ENGINEER, SHALL BE PREPARED AND SEALED WITH AN EPOXY SEALER MEETING THE PROPOSAL NOTE FOR SEALING CONCRETE SURFACES (EPOXY). SEE PROPOSAL FOR SURFACE PREPARATION REQUIREMENTS, APPLICATION RATES MATERIAL REQUIREMENTS AND APPLICATION PROCEDURES. AN ESTIMATED QUANTITY OF 50 SQ.YDS. HAS BEEN SET UP IN THE GENERAL SUMMARY TO BE USED FOR THIS PURPOSE. THE ACTUAL QUANTITY SHALL BE OBTAINED FROM FIELD MEASUREMENT AND BE APPROVED BY THE ENGINEER. THE ACTUAL QUANTITY SHALL THEN BE SUBTRACTED FROM THE TOTAL QUANTITY FOR ITEM SPECIAL, SEALING OF CONCRETE SURFACES (EPOXY).

COLOR OF EPOXY SEALER TO MATCH EXISTING COLOR OF CONCRETE BY MIXING APPROVED GRAY PAINT.

PAYMENT FOR ALL OF THE ABOVE SHALL BE AT THE UNIT PRICE BID PER SQUARE YARD FOR ITEM SPECIAL - STRUCTURE MISC.: GRAFFITI REMOVAL, WHICH SHALL INCLUDE ALL LABOR, EQUIPMENT, MATERIAL, AND INCIDENTALS NECESSARY TO COMPLETE THE WORK.

EXISTING STRUCTURE VERIFICATION

DETAILS AND DIMENSIONS SHOWN ON THESE PLANS PERTAINING TO THE EXISTING STUCTURES HAVE BEEN OBTAINED FROM THE PLANS OF THE EXISTING STRUCTURES AND/OR FROM FIELD OBSERVATIONS AND MEASUREMENTS. CONSEQUENTLY, THEY ARE INDICATIVE OF THE EXISTING STRUCTURES AND THE PROPOSED WORK BUT THEY SHALL BE CONSIDERED TENTATIVE AND APPROXIMATE. THE CONTRACTOR IS REFERRED TO CMS SECTIONS 102.05, 105.02, AND 513.02.

ITEM 516, STRUCTURAL JOINT OR JOINT SEALER, MISC.: HYDROZOL/JEENE MODEL NO. 4W

THE JOINT SEAL SHALL BE A 4W SEAL AS MANUFACTURED BY HYDROZO/JEENE, INCORPORATED. A MANUFACTURERS REPRESENTATIVE SHALL BE PRESENT TO ASSIST AND ADVISE IN THE INITIAL INSTALLATION OF THIS SEAL ON THE PROJECT AND AS NEEDED OTHERWISE. THE HYDROZO/JEENE REPRESENTATIVE CAN BE CONTACTED AT (313)-632-5544, 252 S.ORTONVLLE RD., ORTONVILLE, MICH. 48462.

THE CONTRACTOR IS TO TAKE NOTE THAT THE PROPOSED OVERLAY IS TO BE PLACED BEFORE THE NOTCH IS CUT FOR THE PROPOSED JOINT. THIS IS TO INSURE A SMOOTH, STRAIGHT SURFACE FOR THE JOINT TO ADHERE AGAINST.

PAYMENT FOR ALL LABOR, EQUIPMENT AND MATERIALS NEEDED TO PERFORM THIS WORK (INCLUDING SAW-CUTTING THE NOTCH) SHALL BE INCLUDED IN THE LINEAR FOOT UNIT PRICE BID FOR ITEM 516, STRUCTURAL JOINT OR JOINT SEALER, MISC.: HYDROZOL/JEENE MODEL NO. 4W.

ITEM 517, RAILING FACED AS PER PLAN

DESCRIPTION: THIS ITEM OF WORK SHALL CONSIST OF FACING CURB STYLE PARAPETS, USING CAST IN PLACE CONCRETE, TO OBTAIN THE DEFLECTOR SHAPE AS SHOWN IN THE PLANS.

REMOVAL: THE CONTRACTOR SHALL CAREFULLY REMOVE THE EXISTING ALUMINUM RAILING, POST, CURB PLATES, EXISITING CONCRETE CURB AND BULB ANGLE GUTTER. ALL LOOSE OR UNSOUND CONCRETE SHALL BE REMOVED. ALSO TO BE REMOVED SHALL BE ANY SOUND CONCRETE NECESSARY TO OBTAIN A MINIMUM 4" THICKNESS OF NEW CONCRETE.

DOWEL HOLES AND REINFORCING STEEL: DOWEL HOLES SHALL BE DRILLED WHERE SHOWN IN THE PLANS. REINFORCING STEEL SHALL BE INSTALLED USING EPOXY GROUT PER 510 (CMS 705.20). ALL EXISTING REINFORCING STEEL BARS IN THE AREA OF THE DOWEL HOLE SHALL BE LOCATED WITH THE AID OF A REINFORCING STEEL BAR LOCATOR (PACHOMETER) PRIOR TO DRILLING THE HOLES. IF AN EXISTING BAR IS ENCOUNTERED AT THE SAME LOCATION AS A PROPOSED DOWEL HOLE, THE DOWEL HOLE SHALL BE MOVED TO EITHER SIDE OF THE EXISTING BAR. ALL REINFORCING STEEL, DOWEL HOLES AND GROUTING SHALL BE INCLUDED WITH THIS ITEM 517 FOR PAYMENT.

SURFACE PREPARATION: THE PARAPET NEXT TO THE REFACING SHALL BE THOROUGHLY CLEANED BY ABRASIVE BLASTING FOLLOWED BY AN AIR BLAST. USE OF HAND TOOLS MAY BE NECESSARY TO REMOVE SCALE FROM ANY EXPOSED REINFORCING STEEL. THE SURFACE SHALL BE MADE FREE FROM SPALLS, LAITENCE , AND ALL TRACES OF FOREIGN MATERIAL. DETERGENT CLEANING SHALL PRECEDE BLAST CLEANING AS NECESSARY TO ENSURE REMOVAL OF CONTAMINANTS THAT ARE DETRIMENTAL TO ACHIEVING AN ADEQUATE BOND.

MATERIALS: REINFORCING STEEL - 509, GRADE 60, EPOXY COATED; CONCRETE: 511 CLASS S

SHRINKAGE CRACK CONTROL JOINTS: SHRINKAGE CONTROL JOINTS SHALL BE PLACED IN THE NEW CONCRETE AT THE SAME LOCATION AS THE EXISTING DEFLECTION JOINTS AND SHALL BE MADE AT RIGHT ANGLE TO THE DECK BY SAWING TO MATCH ALIGNMENT OF EXISTING DEFLECTION JOINTS. THE SAW CUT SHALL BE MADE IN THE COMPLETE CIRCUMFERENCE OF THE PARAPET, STARTING AND ENDING AT THE ELEVATION OF THE CONCRETE DECK. THE DEPTH OF THE SAWCUT SHALL BE ONE INCH. THE SAWING SHALL BE DONE NO MORE THAN 48 HOURS AFTER THE CONCRETE PLACEMENT. THE USE OF AN EDGE GUIDE, FENCE OR JIG IS REQUIRED TO ENSURE THAT THE CUT IS STRAIGHT, TRUE AND ALIGNED ON ALL FACES OF THE PARAPET. THE JOINT WIDTH SHALL BE THE WIDTH OF THE SAW BLADE, NOT TO EXCEED ONE QUARTER OF AN INCH. THE SAW CUT SHALL BE FILLED WITH A CAULKING MATERIAL CONFORMING TO FEDERAL SPECIFICATION TT-S-00227E. THE BOTTOM ONE HALF INCH OF BOTH THE INSIDE AND OUTSIDE FACES OF THE PARAPET SHOULD BE LEFT UNSEALED TO ALLOW ANY WATER WHICH MAY ENTER THE JOINT TO ESCAPE

METHOD OF MEASUREMENT: THE QUANTITY SHALL BE THE ACTUAL LENGTH OF RAILING FACED AS MEASURED FROM END OF WINGWALL TO END OF WINGWALL. THIS ITEM SHALL INCLUDE THE FURNISHING OF ALL LABOR, EQUIPMENT AND MATERIALS NECESSARY TO COMPLETE THIS WORK. ALL COSTS OF REMOVAL, DOWEL HOLES, REINFORCING STEEL, CONCRETE AND SHRINKAGE CONTROL JOINTS COMPLETE AND IN PLACE SHALL BE INCLUDED IN THE UNIT PRICE BID FOR:

| ITEM | UNIT | DESCRIPTION |
|---|---|---|
| 517 | LIN.FT. | RAILING FACED AS PER PLAN |

GRINDING FLANGE EDGES:

STEEL OVER PAVEMENT TO HAVE FLANGE EDGES GROUND.

SOLVENT CLEANING:

STEEL OVER PAVEMENT SHALL BE SOLVENT CLEANED.

GENERAL PROVISIONS

THE CONTRACTORS ATTENTION IS CALLED TO ALL OF SECTION 100 OF THE 1995 CONSTRUCTION AND MATERIAL SPECIFICATIONS OF OHIO DEPARTMENT OF TRANSPORTATION, AND SPECIFICALLY TO THE ITEMS LISTED BELOW AS PROVIDED FOR IN THIS SECTION.

COOPERATION OF CONTRACTOR:

THE CONTRACTOR SHALL NOT PERFORM WORK ON SUNDAYS OR LEGAL HOLIDAYS WITHOUT THE APPROVAL OF THE ENGINEER.

PRIOR INSPECTION OF WORK

PROSPECTIVE BIDDERS ARE REQUIRED TO MAKE AN INSPECTION OF THE BRIDGES IN THE FIELD AND TO REVIEW THE PLANS AND SPECIFICATIONS BEFORE SUBMITTING BIDS. SEE SEC.102.05 OF THE CONSTRUCTION AND MATERIALS SPECIFICATIONS, JANUARY 1, 1995.

PROTECTION OF PERSONS AND PROPERTY

THE CONTRACTOR SHALL COLLECT, REMOVE AND DISPOSE OF ALL BUCKETS, RAGS OR OTHER DISCARDED MATERIALS AND HE SHALL LEAVE THE JOB SITE IN A CLEAN MANNER AND CONDITION.

PAINTING OF EXISTING STRUCTURAL STEEL

IN ADDITION OT THE SURFACE AREA OF THE STEEL STRINGERS TO BE PAINTED, AN ADDITIONAL TWENTY-FIVE PERCENT OF THIS AMOUNT HAS BEEN ADDED TO THE SQUARE FOOT TOTALS TO ACCOUNT FOR INCIDENTALS SUCH AS CROSSFRAMING. BEARINGS AND EXPANSION SYSTEMS, CAULKING AS PER SS 815 IS REQUIRED IN THE OPEN AREA BETWEEN ABUTTING WEBS AND BOTTOM BEAM FLANGES AT EACH SPLICE LOCATION, AN ESTIMATED QUANTITIY OF 150 LIN.FT. CAULKING HAS BEEN CARRIED TO THE BRIDGE QUANTITIES SHEET.

PAINT: THE COLOR OF THE FINISH COAT SHALL BE BLUE.

ITEM SPECIAL, CAULKING:

CAULK USED SHALL CONSIST OF A TWO COMPONENT, 100% SOLIDS EPOXY MASTIC AS MANUFACTURED BY ONE OF THE FOLLOWING MANUFACTURERS:

MARK 24.4
POLY-CARB
SOLON, OHIO 44139
216-248-1223

A-788 SPLASH ZONE COMPOND
KOPPERS COMPANY INC.
MIDWESTERN DISTRICT
SALES OFFICE
188 INDUSTRIAL DRIVE
ELMHURST, IL 60126
312-530-6300

SIKADUR INJECTION GEL
SIKA CHEMICAL CORP.
LYDHURST, N.J. 07071
201-933-8801

STATE OF OHIO
DEPARTMENT OF TRANSPORTATION
DISTRICT 2 DESIGN & PLANNING OFFICE

2 / 11

BRIDGE NOTES
BRIDGE NO. OTT-2-1980
OVER SR 53

| DESIGNED | DRAWN | TRACED | CHECKED | REVIEWED DATE | REVISED |
|---|---|---|---|---|---|
| MTG | ALS | | LLL | LCL 1/10/95 | |

I:/pd/ottawa/ott2/ot253bnl.dng

| FHWA REGION | STATE | PROJECT | |
|---|---|---|---|
| 5 | OHIO | | |

340/367

OTT-2-16.60

# ESTIMATED QUANTITIES

| ITEM | EXTENSION | TOTAL | UNIT | DESCRIPTION |
|---|---|---|---|---|
| 202 | 11201 | LUMP | LUMP | PORTIONS OF STRUCTURE REMOVED, AS PER PLAN (SEE SHT.NO.4) |
| 202 | 23501 | 1594 | SQ.YD. | WEARING COURSE REMOVED, AS PER PLAN (SEE SHT.NO.1) |
| 509 | 15840 | 791 | LB. | EPOXY COATED REINFORCING STEEL,GRADE 60 |
| 510 | 10000 | 80 | EACH | DOWEL HOLES WITH NONSHRINK, NONMETALLIC GROUT |
| 511 | 45700 | 11 | CU.YD. | CLASS C CONCRETE, ABUTMENT |
| SPECIAL | 51267510 | 1263 | SQ.YD. | SEALING OF CONCRETE SURFACES (EPOXY/URETHANE)(SEE PROPOSAL NOTE) |
| SPECIAL | 51614600 | 255 | LIN.FT. | STRUCTURAL JOINT OR JOINT SEALER,MISC.: HYDROZOL/JEENE MODEL NO.4W |
| SPECIAL | 51631300 | 139 | LIN.FT. | POLYMER MODIFIED ASPHALT EXPANSION JOINT SYSTEM |
| 516 | 46801 | 21 | EACH | REFURBISH AND RESET BEARING, AS PER PLAN (SEE SHT.NO.6) |
| 516 | 47000 | LUMP | LUMP | JACKING AND TEMPORARY SUPPORT OF SUPERSTRUCTURE |
| 517 | 76201 | 516 | LIN.FT. | RAILING FACED, AS PER PLAN (SEE SHT.NO.7) |
| 518 | 12801 | 14 | EACH | SCUPPER MODIFICATION, AS PER PLAN (SEE SHT.NO.9) |
| SPECIAL | 51922020 | 1742 | SQ.YD. | MICRO-SILICA MODIFIED CONCRETE OVERLAY, USING HYDRODEMOLITION (2" THICK) |
| SPECIAL | 51922100 | 260 | CU.YD. | MICRO-SILICA MODIFIED CONCRETE OVERLAY (VARIABLE THICKNESS) |
| SPECIAL | 51922300 | LUMP | LUMP | TEST SLAB |
| SPECIAL | 53000800 | 50 | SQ.YD. | STRUCTURE,MISC.: GRAFFITI REMOVAL |
| 601 | 20500 | 50 | CU.YD. | CRUSHED AGGREGATE SLOPE PROTECTION |
| 601 | 21100 | 39 | SQ.YD. | SLOPE PROTECTION,MISC.: SLOPE PROTECTION GROUT, AS PER PLAN (SEE SHT.NO.8) |
| 815 | 00050 | 28265 | SQ.FT. | SURFACE PREPARATION OF EXISTING STEEL,SYSTEM OZEU |
| 815 | 00056 | 28265 | SQ.FT. | FIELD PAINTING OF EXISTING STEEL, PRIME COAT, SYSTEM OZEU |
| 815 | 00060 | 28265 | SQ.FT. | FIELD PAINTING OF EXISTING STEEL, INTERMEDIATE COAT, SYSTEM OZEU |
| 815 | 00066 | 28265 | SQ.FT. | FIELD PAINTING OF EXISTING STEEL, FINISH COAT, SYSTEM OZEU |
| 815 | 00500 | 150 | LIN.FT. | CAULKING |
| 815 | 00504 | 102 | MAN HOUR | GRINDING FINS, TEARS, SLIVERS |
| 815 | 00508 | 6000 | LIN.FT. | GRINDING FLANGE EDGES |

I/PD/OTTAWA/OTT2/OT253BGS.DGN

STATE OF OHIO
DEPARTMENT OF TRANSPORTATION
DISTRICT 2 DESIGN & PLANNING OFFICE

3/11

ESTIMATED QUANTITIES
BRIDGE NO.OTT-2-1980
UNDER SR 53

| DESIGNED | DRAWN | TRACED | CHECKED | REVIEWED DATE | REVISED |
|---|---|---|---|---|---|
| MTG | ALS | | LLL | LCL 1/10/95 | |

| FHWA REGION | STATE | PROJECT | |
|---|---|---|---|
| 5 | OHIO | | |

341/367

OTT-2-16.60

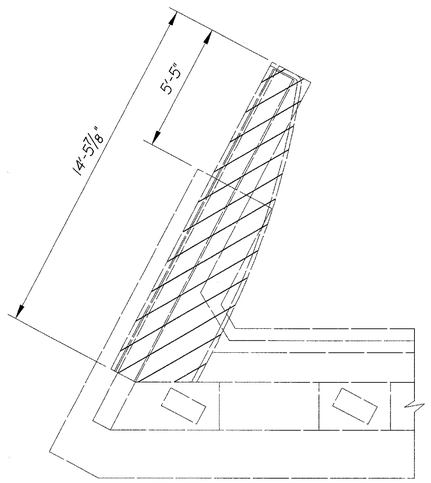


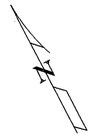

(FORWARD ABUTMENT)

(REAR ABUTMENT)

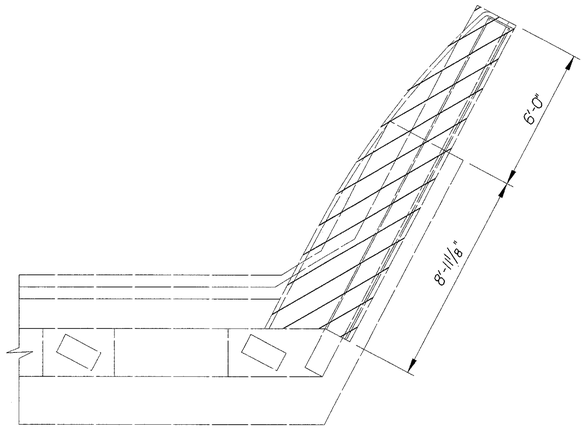


LEGEND

REMOVAL LIMITS

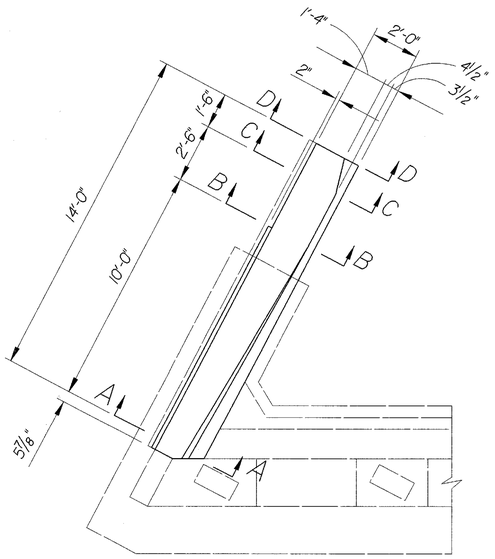


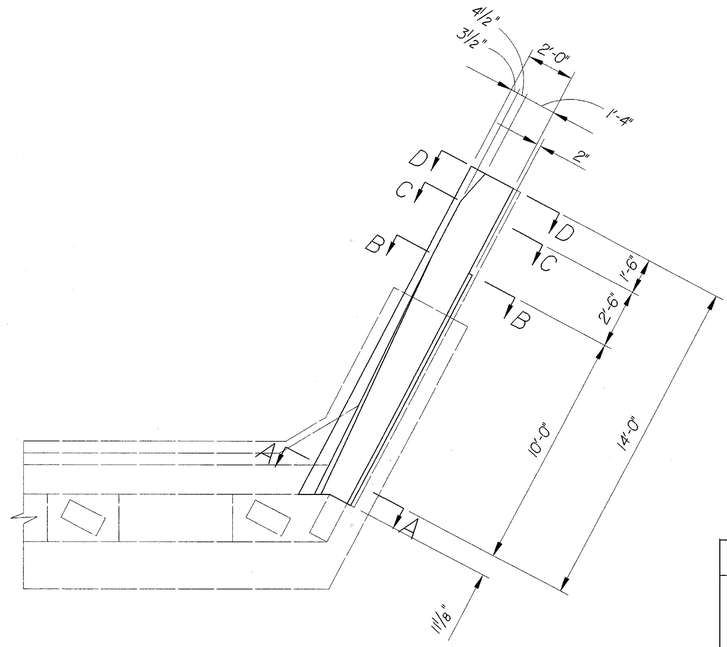


STATE OF OHIO
DEPARTMENT OF TRANSPORTATION
DISTRICT 2 DESIGN & PLANNING DEPT.

4 / 11

# WINGWALL DETAILS
# BRIDGE NO. OTT-2-1980
# SR 2 UNDER SR 53

| DESIGNED | DRAWN | TRACED | CHECKED | REVIEWED DATE | REVISED |
|---|---|---|---|---|---|
| MTG | ALS | | LLL | LCL 1/10/95 | |

I/PD/OTT/AWA/OTT2/OT2533D6.DGN

| FHWA REGION | STATE | PROJECT | |
|---|---|---|---|
| 5 | OHIO | | |

342/367

OTT-2-16.60

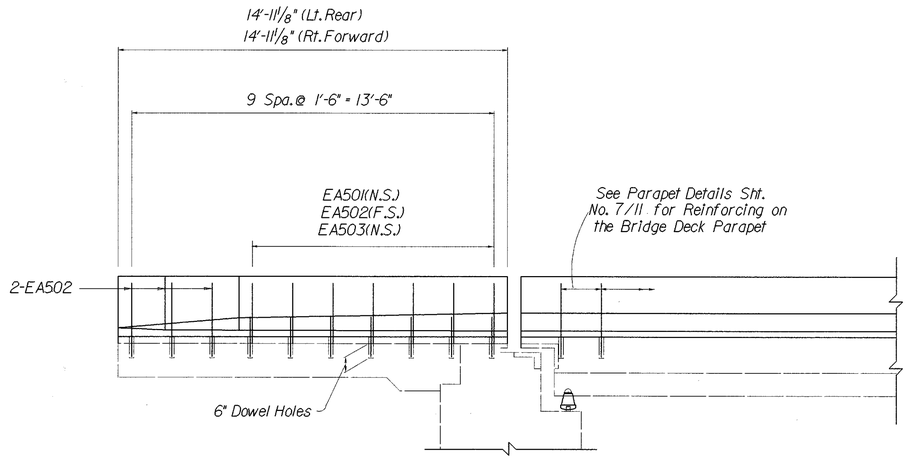


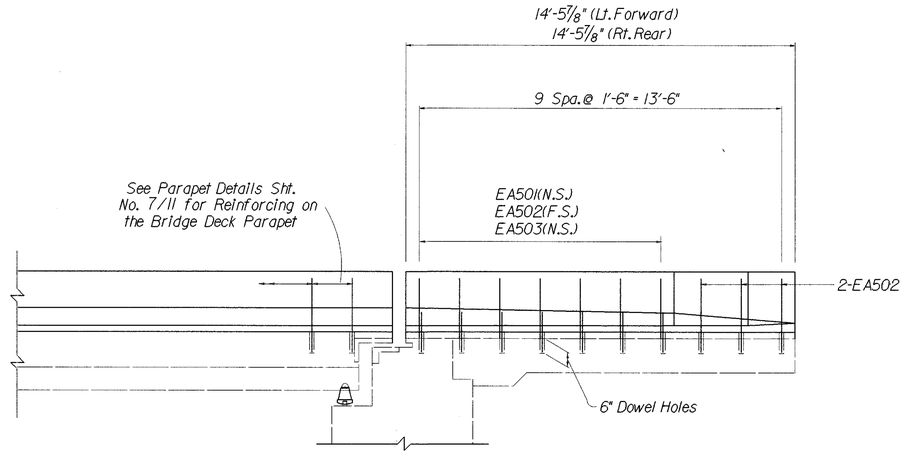


VERTICAL REINFORCEMENT IN WINGWALL

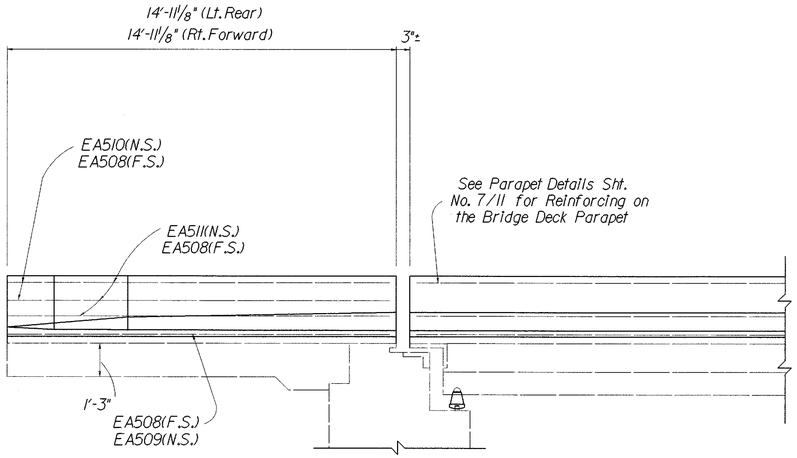


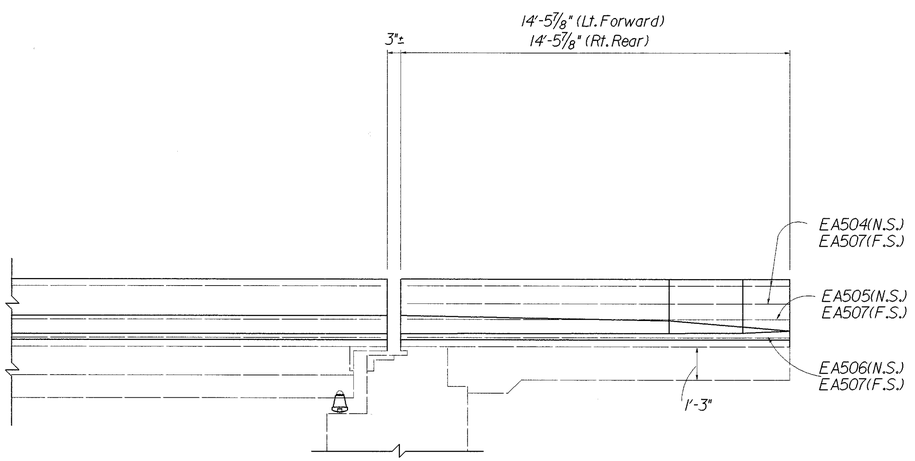


HORIZONTAL REINFORCEMENT IN WINGWALL

STATE OF OHIO
DEPARTMENT OF TRANSPORTATION
DISTRICT 2 DESIGN & PLANNING OFFICE

5 / 11

# WINGWALL REINFORCEMENT
# BRIDGE NO. OTT-2-1980
# SR 53 OVER SR 2

| DESIGNED | DRAWN | TRACED | CHECKED | REVIEWED DATE | REVISED |
|---|---|---|---|---|---|
| MTG | ALS | | LLL | LCL 1/10/95 | |

I/PD/OTTAWA/OTT2/OT2535D4.DGN

| FHWA REGION | STATE | PROJECT | |
|---|---|---|---|
| 5 | OHIO | | |

343/367

OTT-2-16.60

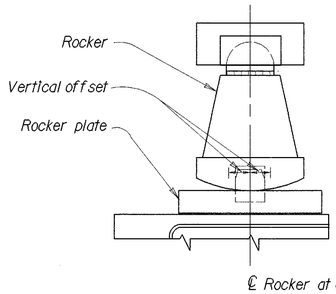


℄ Rocker at 60° F

NOTE:

1.) Sandblast and paint all rockers and rocker plates

2.) Reset rockers as per rocker table

LEGEND

○ INDICATES ROCKER OR BOLSTER TO BE CLEANED AND PAINTED

⊗ INDICATES ROCKER TO BE CLEANED, PAINTED, AND RESET.

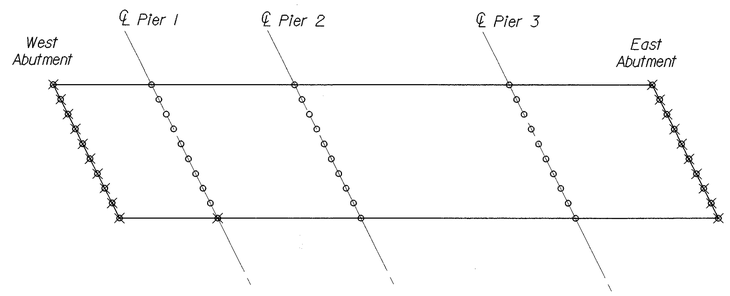


PLAN VIEW FOR ROCKERS

## ROCKER TABLE FOR WEST ABUTMENT

| TEMPERATURE (°F) | VERTICAL OFFSET (IN.) |
|---|---|
| 30 | (−) 0.24 |
| 40 | (−) 0.16 |
| 50 | (−)0.08 |
| 60 | 0 |
| 70 | (+) 0.08 |
| 80 | (+) 0.16 |
| 90 | (+) 0.24 |
| | |

When reseting the rockers looking north

(-) = right from bottom center of rocker

(+) = left from bottom center of rocker

## ROCKER TABLE FOR PIER 1

| TEMPERATURE (°F) | VERTICAL OFFSET (IN.) |
|---|---|
| 30 | (−) 0.14 |
| 40 | (−) 0.09 |
| 50 | (−)0.05 |
| 60 | 0 |
| 70 | (+) 0.05 |
| 80 | (+) 0.09 |
| 90 | (+) 0.14 |
| | |

When reseting the rockers looking north

(-) = right from bottom center of rocker

(+) = left from bottom center of rocker

## ROCKER TABLE FOR EAST ABUTMENT

| TEMPERATURE (°F) | VERTICAL OFFSET (IN.) |
|---|---|
| 30 | (−) 0.36 |
| 40 | (−) 0.24 |
| 50 | (−)0.12 |
| 60 | 0 |
| 70 | (+) 0.12 |
| 80 | (+) 0.24 |
| 90 | (+) 0.36 |
| | |

When reseting the rockers looking north

(-) = left from bottom center of rocker

(+) = right from bottom center of rocker

STATE OF OHIO
DEPARTMENT OF TRANSPORTATION
DISTRICT 2 DESIGN & PLANNING OFFICE

6 / 11

# JACKING AND RESETTING OF ROCKERS
# BRIDGE NO.OTT-2-1980
# SR 2 UNDER SR 53

| DESIGNED | DRAWN | TRACED | CHECKED | REVIEWED DATE | REVISED |
|---|---|---|---|---|---|
| MTG | ALS | | LLL | LCL 1/10/95 | |

I:/pd/ottawa/ott2/OT253SD1.DGN

| FHWA REGION | STATE | PROJECT | |
|---|---|---|---|
| 5 | OHIO | | |

344/367

OTT-2-16.60

## LEGEND

- REMOVAL LIMITS
- PROPOSED CONCRETE
- LIMITS OF CONCRETE SEALING

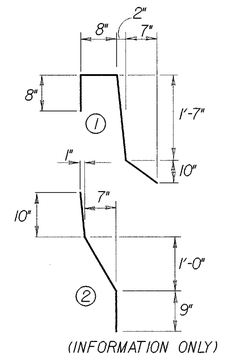


(INFORMATION ONLY)

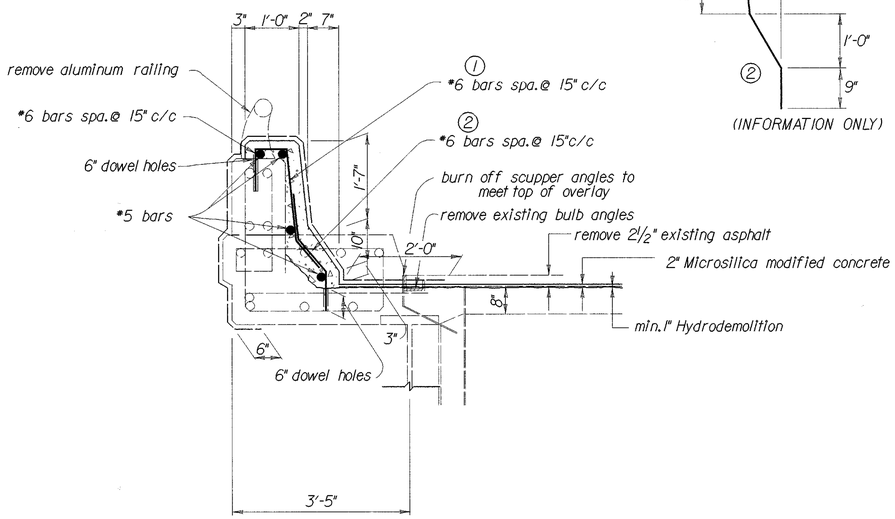


RAILING, FACED AS PER PLAN
(SEE BRIDGE NOTES)

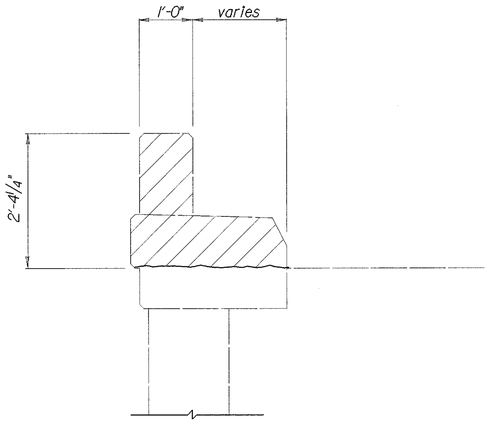


EXISTING WINGWALL PARAPET
REMOVAL LIMITS

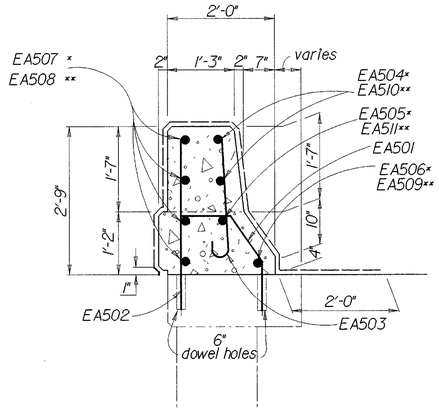


SECTION A-A

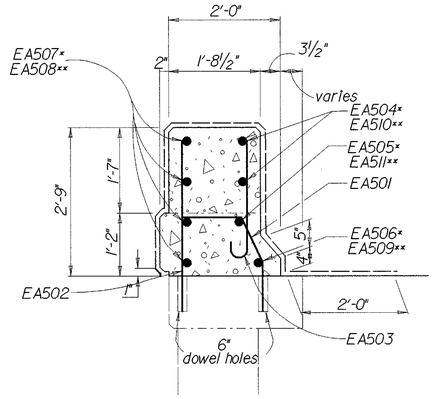


SECTION B-B

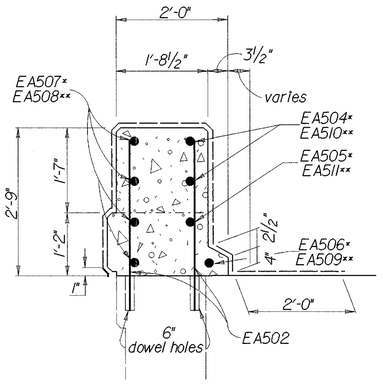


SECTION C-C

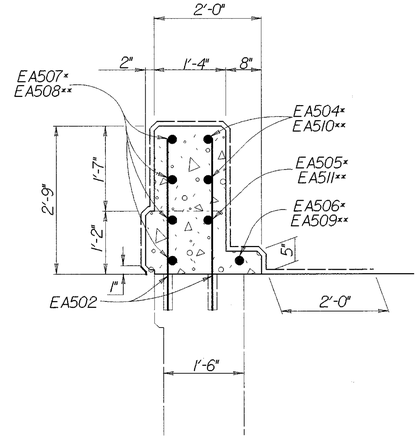


SECTION D-D

* Left Forward & Right Rear
** Right Forward & Left Rear

STATE OF OHIO
DEPARTMENT OF TRANSPORTATION
DISTRICT 2 DESIGN & PLANNING OFFICE

7 / 11

# PARAPET DETAILS
# BRIDGE NO.OTT-2-1980
# SR 2 UNDER SR 53

| DESIGNED | DRAWN | TRACED | CHECKED | REVIEWED DATE | REVISED |
|---|---|---|---|---|---|
| MTG | ALS | | LLL | LCL 1/10/95 | |

I:/pd/ottawa/ott2/ot2533sd5.dgn

| FHWA REGION | STATE | PROJECT | |
|---|---|---|---|
| 5 | OHIO | | |

345/367

OTT-2-16.60

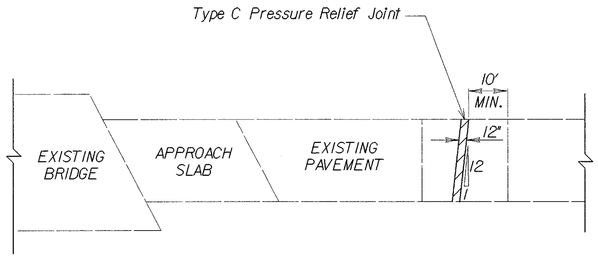


EXISTING JOINT

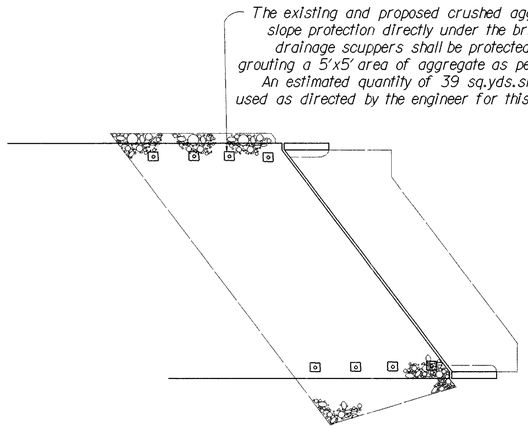


PLAN

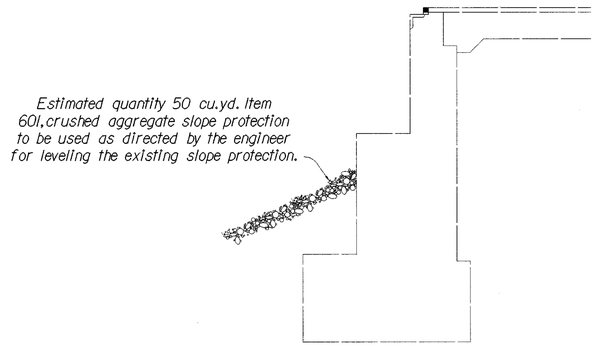


ELEVATION

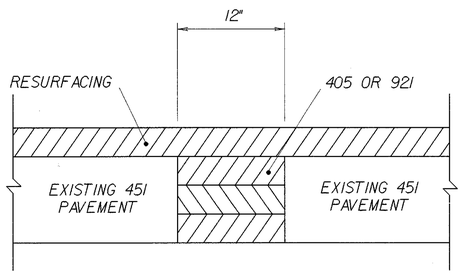


TYPE C PRESSURE RELIEF JOINT WITH RESURFACING

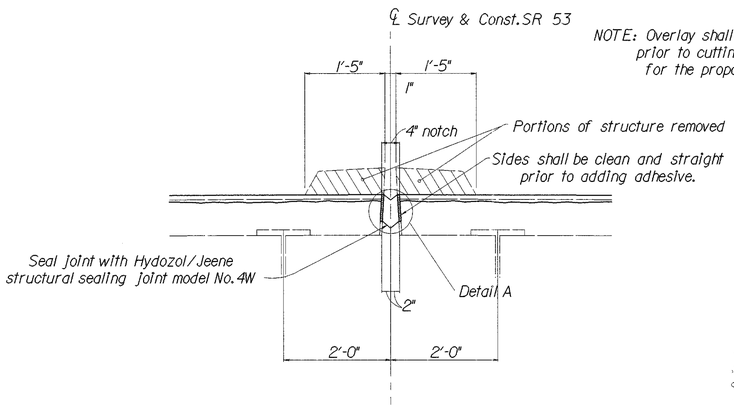


NOTE: Overlay shall be placed prior to cutting the notch for the proposed joint

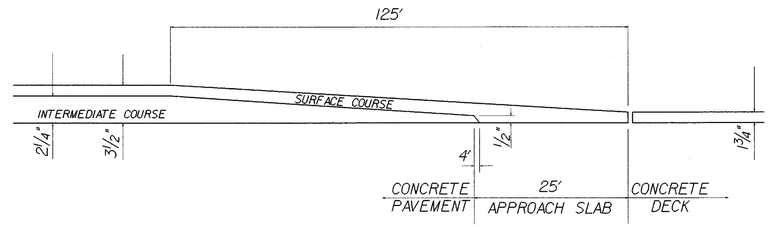


ASPHALT TAPER ACROSS APPROACH SLABS

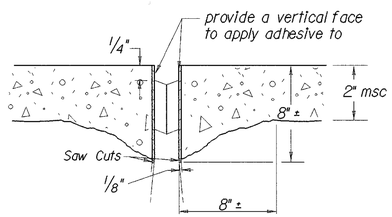


DETAIL A

STATE OF OHIO
DEPARTMENT OF TRANSPORTATION
DISTRICT 2 DESIGN & PLANNING OFFICE

8 / 11

# MISCELLANEOUS DETAILS
# BRIDGE NO. OTT-2-1980
# SR 53 OVER SR 2

| DESIGNED | DRAWN | TRACED | CHECKED | REVIEWED DATE | REVISED |
|---|---|---|---|---|---|
| MTG | ALS | | LLL | LCL 1/10/95 | |

I:/PD/OTTAWA/OTT2/OT253SD02.DGN

| FHWA REGION | STATE | PROJECT | |
|---|---|---|---|
| 5 | OHIO | | |

346/367

OTT-2-16.60

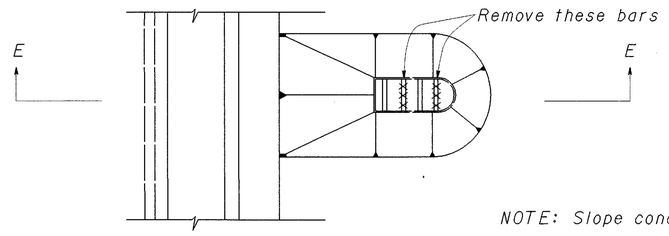


NOTE: Slope concrete to drain toward scuppers

PLAN VIEW

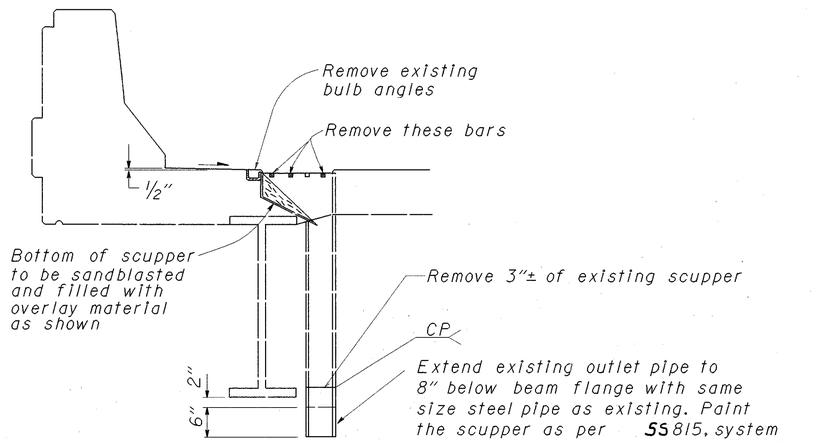


SECTION E-E

I:/PD/OTTAWA/OTT2/OT253SD3.DGN

STATE OF OHIO
DEPARTMENT OF TRANSPORTATION
DISTRICT 2 DESIGN & PLANNING OFFICE

9 / 11

# MISCELLANEOUS DETAILS
# BRIDGE NO.OTT-2-1980
# SR 2 UNDER SR 53

| DESIGNED | DRAWN | TRACED | CHECKED | REVIEWED DATE | REVISED |
|---|---|---|---|---|---|
| MTG | ALS | | LLL | LCL 1/10/95 | |

# GENERAL NOTES AND DETAILS FOR POLYMER MODIFIED ASPHALT EXPANSION JOINT SYSTEM

| FHWA REGION | STATE | PROJECT | |
|---|---|---|---|
| 5 | OHIO | | |

347 / 367

OTT-2-16.60

## ITEM SPECIAL - POLYMER-MODIFIED ASPHALT EXPANSION JOINT SYSTEM

THIS ITEM SHALL BE USED TO SEAL THE EXPANSION/CONTRACTION JOINTS AS PER THESE DETAILS AND THE MANUFACTURER'S REQUIREMENTS USING A POLYMER-MODIFIED ASPHALT SYSTEM. THE PRIME CONTRACTOR SHALL OBTAIN THE SERVICES OF ONE OF THE FOLLOWING LICENSED APPLICATORS WHO SHALL FURNISH AND INSTALL THE NEW BRIDGE EXPANSION JOINT SYSTEM AFTER ALL PAVING ON THE AFFECTED BRIDGE(S) HAS BEEN COMPLETED.

PAVETECH ENGINEERED SYSTEMS INC.
2575 US. RT. 22 & 3, OFFICE 1
MAINEVILLE, OH 45039
TEL: 1-800-258-0162

LINEAR DYNAMICS, INC.
400 LAWIDEX PLAZA
PARSIPPANY, NJ 07054
TEL: (201) 884-0300

## MATERIALS:

### BRIDGING PLATE:

MILD STEEL OR ALUMINUM 1/8" OR 1/4" THICK PLATE, 8" WIDE

### BINDER:

| | |
|---|---|
| TYPE: | POLYMER MODIFIED ASPHALT |
| SOFTENING POINT: | 180 DEGREES F. MIN. |
| FLOW: | 3 MM. MAX. AT 140 DEGREES F. |
| PENETRATION: | 9 MM. MAX. AT 77 DEGREES F.<br>1 MM. MAX AT 0 DEGREES F.<br>ASTM D 3407 |
| DUCTILITY: | 40 CM. MIN. ASTM D 113 |
| RESILIENCE: | 60% MIN. AT 77 DEGREES F. |
| TENSILE ADHESION: | 700% MIN. |
| SPECIFIC GRAVITY: | 1.10 • 0.05 |
| POURING TEMP: | 350 - 390 DEGREES F. |

### AGGREGATE:

| | |
|---|---|
| TYPE: | CRUSHED, DOUBLE WASHED, AND DRIED GRANITE OR BASALT |
| GRADATION | THE GRADATION OF THE AGGREGATE VARIES BY MANUFACTURER AND SHALL BE AS PER THE MANUFACTURER'S RECOMMENDATIONS FOR THE SYSTEM BEING USED ON THIS PROJECT. |

### BACKER ROD:

| PROPERTY | NOMINAL VALUE | TEST METHOD |
|---|---|---|
| DENSITY | 2.0 LBS/CU FT | ASTM D 1622 |
| TENSILE STRENGTH | 25 PSI | ASTM D 1623 |
| WATER ABSORPTION BY VOLUME | 0.5% | ASTM C 509 |
| COMPRESSION DEFLECTION AT 8 PSI | 25% | ASTM D 1621 |
| TEMPERATURE RESISTANCE | -45 TO +450 DEGREES F | |

## INSTALLATION PROCEDURES:

### SAWING AND SURFACE PREPARATION:

AFTER ALL PAVING OPERATIONS ARE COMPLETED, THE OVERLAY IS TO BE TRANSVERSELY SAW CUT FULL DEPTH (20" CENTERED OVER JOINT OPENING, UNLESS OTHERWISE NOTED). ALL MATERIAL, INCLUDING WATERPROOFING MATERIAL, BETWEEN THE SAW CUTS SHALL BE REMOVED. THE EXPOSED CONCRETE, STEEL SURFACES, AND CUT SURFACES SHALL BE THOROUGHLY CLEANED AND DRIED USING A HOT COMPRESSED AIR (HCA) LANCE. THE LANCE SHALL PRODUCE A FLAME RETARDED AIR STREAM TEMPERATURE OF 3,000 DEGREES F. AT A VELOCITY OF 3,000 FEET PER SECOND WITH 15 PSIG CHAMBER PRESSURE. IF THERE IS AN INTERRUPTION DUE TO WEATHER OR OTHER CAUSES, THE OPERATION WILL BE REPEATED WITH THE HCA LANCE IMMEDIATELY BEFORE THE TANKING OPERATION. ALSO, 6 INCHES OF THE ROAD SURFACE ON EITHER SIDE OF THE JOINT WILL BE DRIED SO THAT A SUITABLE SURFACE FOR BITUMEN ADHESION IS OBTAINED.

### SEALING OF EXPANSION JOINT:

THE EXPANSION JOINT GAP IS TO BE SEALED AND A BRIDGING PLATE CENTERED ALONG IT. A VERY NARROW GAP SHALL BE SEALED BY POURING HOT BINDER INTO THE GAP. GAPS OF 1/8" OR MORE SHALL FIRST BE FILLED WITH AN APPROPRIATE SIZED BACKER ROD. THE BACKER ROD SHALL BE INSTALLED SO THAT IT IS BETWEEN 1/8" AND 1-1/8" BELOW THE TOP OF THE EXISTING GAP. THE GAP SHALL THEN BE FILLED WITH BINDER. ADDITIONAL BINDER SHALL BE SPREAD OVER THE SURFACE AREA WHERE THE METAL PLATE WILL BE PLACED.

### BOND BREAKER:

THE BRIDGING PLATE SHALL THEN BE CENTERED OVER THE EXISTING JOINT AND BEDDED INTO THE HOT BINDER. THE BRIDGING PLATES SHALL BE BUTT JOINTED TO ACCOMODATE THE ENTIRE JOINT LENGTH. SPIKE HOLES SHALL BE DRILLED AT 1 FOOT INTERVALS ALONG THE LONGITUDINAL CENTERLINE OF THE PLATES. SECURE PLATE TO BACKER ROD WITH NAILS OR SPIKES. BUTT JOINTS SHALL BE SEALED WITH HOT BINDER AND ALLOWED TO COOL BEFORE THE JOINT IS TANKED.

### TANKING:

ALL PREPARED, EXPOSED SURFACES OF THE JOINT SHALL BE SEALED WITH BINDER. THE HOT BINDER SHALL BE POURED OVER THE FLOOR AREA OF THE JOINT AND SPREAD TO COAT ALL EXPOSED SURFACES. THE BINDER SHALL BE A MINIMUM OF 1/32" THICK ON THE BOTTOM OF THE JOINT CAVITY, WITH POOLS OF GREATER THICKNESS WHERE THERE ARE SURFACE IRREGULARITIES. THE BINDER APPLICATION TEMPERATURE SHALL BE BETWEEN 350 AND 390 DEGREES F. THE BINDER SHALL NOT BE HEATED ABOVE 410 DEGREES F. NOR ALLOWED TO EXCEED 390 DEGREES F. FOR MORE THAN 1 HOUR.

### BUILD-UP OF JOINT LAYERS:

AGGREGATE PREPARATION:

AGGREGATE SHALL BE HEATED TO A TEMPERATURE OF 275 TO 325 DEGREES F. IN A SUITABLE ROTATING DRUM WITH A HEAT SOURCE ATTACHED OR USING A HOT COMPRESSED AIR LANCE TO REMOVE ALL DUST AND MOISTURE.

AGGREGATE PROPORTION AND LAYER THICKNESS:

THE AGGREGATE SHALL BE MIXED WITH THE BINDER SUCH THAT THE MINIMUM AGGREGATE CONTENT BY WEIGHT SHALL BE 68%. THE HEATED AGGREGATE AND BINDER SHALL BE COMBINED IN LAYERS NOT LESS THAN 3/4 OF AN INCH NOR EXCEEDING 2 INCHES. THE THICKNESS OF EACH LAYER CAN BE VARIED, WITHIN THESE LIMITS, TO ACHIEVE THE REQUIRED JOINT THICKNESS. THE OBJECTIVE IS TO COAT EACH STONE AND TO FILL THE VOIDS BETWEEN WHILE AVOIDING AN EXCESS OF BINDER. THE AIM IS TO ACHIEVE THE MAXIMUM CONTENT OF STONE CONSISTENT WITH ALL STONES BEING COATED WITH BINDER AND A MAXIMUM VOID CONTENT OF 2%. TO ACHIEVE THIS, THE AGGREGATE AND THE BINDER SHALL BE RAKED TO MIX AND LEVEL. EACH LAYER SHALL BE ALLOWED TO COOL BEFORE PLACEMENT OF SUBSEQUENT LAYERS.

AGGREGATE PREPARATION:

THE TOP LAYER SHALL NOT BE LESS THAN 1/2 INCH AND NOT EXCEED 1 INCH. IN PREPARING THE TOP LAYER, THE RATIO OF AGGREGATE TO BINDER SHALL BE APPROXIMATELY 6:1 BY WEIGHT. THIS RATIO IS NOT ABSOLUTELY VITAL SINCE ADDITIONAL BINDER WILL INFILTRATE THE TOP LAYER FROM BOTH BELOW AND ABOVE. THE TOP LAYER SHALL BE OVERFILLED AND COMPACTED TO THE LEVEL OF THE ADJACENT SURFACES USING A ROLLER OR VIBRATORY PLATE COMPACTOR. IMMEDIATELY AFTER COMPLETION OF THE COMPACTION, SUFFICIENT BINDER SHALL BE SPREAD OVER THE JOINT TO FILL THE SURFACE VOIDS AND COAT THE SURFACE STONE. THE FINISHED JOINT SHALL THEN BE DUSTED WITH A FINE, DRY AGGREGATE TO PREVENT TACKINESS. THE COMPLETED JOINT SHALL BE ALLOWED TO COOL TO THE SURFACE TEMPERATURE OF THE DECK BEFORE IT IS EXPOSED TO TRAFFIC.

### MAINTENANCE OF TRAFFIC:

IF NECESSARY TO FACILITATE TRAFFIC MAINTENANCE, THE JOINT SHALL BE INSTALLED IN TWO (2) HALF-WIDTH PHASES. DURING PHASE 1 APPROXIMATELY HALF OF THE TOTAL JOINT SHALL BE INSTALLED. DURING PHASE 2, A MINIMUM OF TWO (2) INCHES OF THE PHASE 1 JOINT SHALL BE REMOVED, AT OR NEAR THE CENTERLINE, WITH THE REMAINDER OF THE JOINT INSTALLED. IN ALL CASES, OPERATIONS SHALL BE SCHEDULED SO THAT ALL LANES CAN BE OPEN TO TRAFFIC DURING ALL NON-WORKING HOURS.

### PAYMENT:

PAYMENT FOR ALL THE ABOVE SHALL BE AT THE UNIT PRICE BID PER LINEAR FOOT OF SEALED JOINT IN PLACE FOR ITEM SPECIAL, POLYMER MODIFIED ASPHALT EXPANSION JOINT SYSTEM. THIS SHALL INCLUDE ALL LABOR, EQUIPMENT, MATERIALS, AND INCIDENTALS NECESSARY TO COMPLETE THE ABOVE WORK.

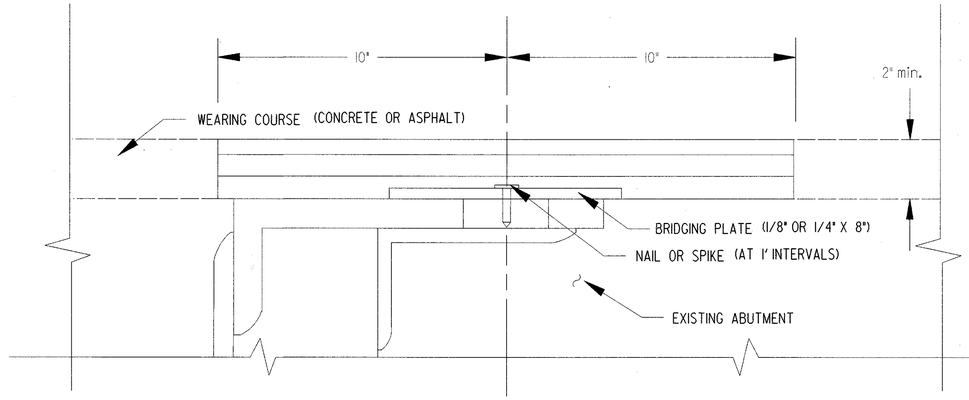


TYPICAL STEEL BEAM EXPANSION JOINT

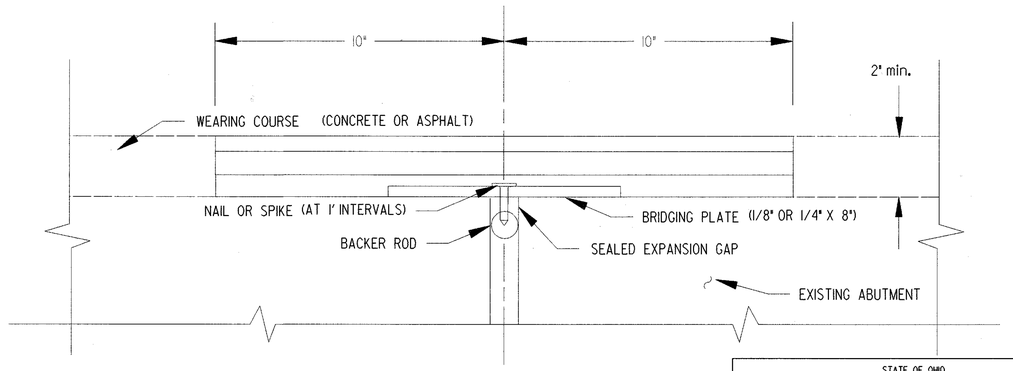


TYPICAL PRESTRESSED BOX BEAM
OR
CONCRETE SLAB JOINT

STATE OF OHIO
DEPARTMENT OF TRANSPORTATION
BUREAU OF MAINTENANCE BRIDGE SECTION

10 / 11

STANDARD

POLYMER MODIFIED ASPHALT EXPANSION JOINT SYSTEM

REVISED 10-27-92

| DESIGNED | DRAWN | TRACED | CHECKED | REVIEWED |
|---|---|---|---|---|
| MAM | MAM | | | |

I:/pd/ottawa/ott2/pmaedgn

| FHWA REGION | STATE | PROJECT | |
|---|---|---|---|
| 5 | OHIO | | |

348/367

OTT-2-16.60

# REINFORCING STEEL LIST

| MARK | NO. IN ABUTMENT LT. | RT. | TOTAL | LENGTH | WEIGHT (LBS.) | SHAPE | | LAP LENGTH | DOWEL HOLES (EACH) |
|---|---|---|---|---|---|---|---|---|---|
| Abutments | | | | | | | | | |
| EA501 | 14 | 14 | 28 | 2'-6" | 73 | BT | ① | | 28 |
| EA502 | 26 | 26 | 52 | 3'-0" | 163 | ST | | | 52 |
| EA503 | 14 | 14 | 28 | 2'-10" | 83 | BT | ② | | |
| EA504 | 2 | 2 | 4 | 13'-8" | 57 | BT | ③ | | |
| EA505 | 1 | 1 | 2 | 13'-8" | 29 | BT | ④ | | |
| EA506 | 1 | 1 | 2 | 13'-6" | 28 | ST | | | |
| EA507 | 4 | 4 | 8 | 14'-0" | 117 | ST | | | |
| EA508 | 4 | 4 | 8 | 14'-6" | 121 | ST | | | |
| EA509 | 1 | 1 | 2 | 14'-9" | 31 | ST | | | |
| EA510 | 2 | 2 | 4 | 14'-2" | 59 | BT | ③ | | |
| EA511 | 1 | 1 | 2 | 14'-2" | 30 | BT | ④ | | |
| Totals for Abutments | | | | | 791 | | | | 80 |

"E" in prefix designates epoxy coated

BENDING DIAGRAMS

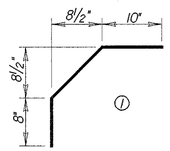


ES501

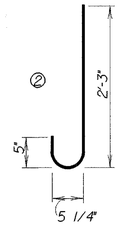


EA503

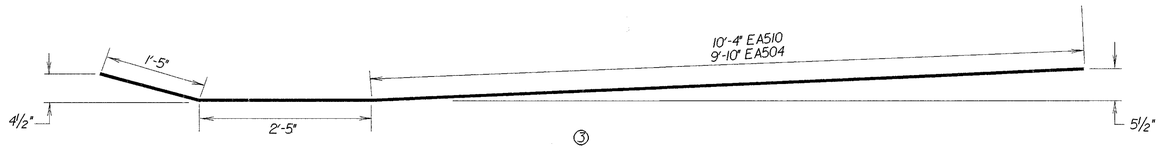


EA504
EA510

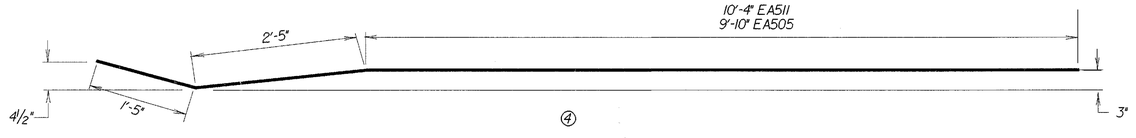


EA505
EA511

| STATE OF OHIO DEPARTMENT OF TRANSPORTATION DISTRICT 2 DESIGN & PLANNING OFFICE | | | | | II / II |
|---|---|---|---|---|---|
| REINFORCING STEEL LIST AND DETAILS OTT-2-1980 SR 2 UNDER SR 53 | | | | | |
| DESIGNED MTG | DRAWN ALS | TRACED | CHECKED LLL | REVIEWED DATE LCL 1/10/95 | REVISED |

I:/PD/OTT4WA/OTT2/OT2533SSLDGN

| FHWA REGION | STATE | PROJECT | |
|---|---|---|---|
| 5 | OHIO | | |

349
367

OTT-2-16.60

⊗ – Indicates Type 1, Bridge Terminal Assembly required
△ – Indicates Type 2, Bridge Terminal Assembly required

**BENCHMARKS**

1. Sta. 1220+15.41 centerline survey
   Top of concrete monument
   Elev. = 607.26
2. Sta. 1227+12.85 centerline survey
   Top of concrete monument
   Elev. = 602.99

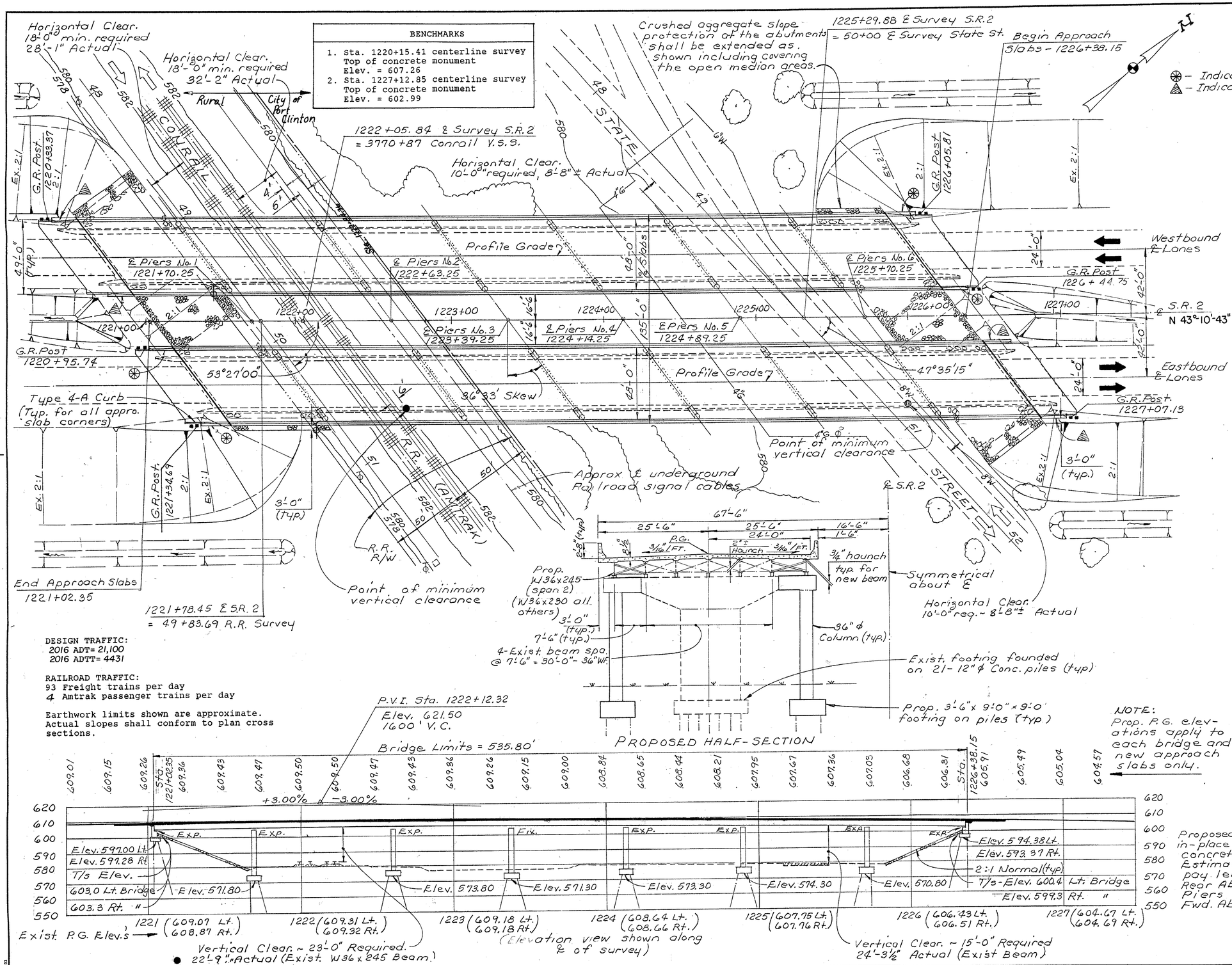


**EXISTING STRUCTURE**

Type: Continuous steel beam with reinforced concrete deck and substructures.
Spans: 65'-0",93'-0",76'-0",75'-0",75'-0", 81'-0",65'-0" c-c bearings. (Left and Right Structures).
Roadway: 30'-0" f-f 2'-3" Safety curbs
Loading: CF400
Skew: 36 Degrees 33 Minutes Right Forward
Wearing Surface: Monolithic Concrete
Approach Slabs: AS-1-54 (25'-0")
Alignment: Tangent
Tracks: Two
Date Built: 1968
SFN: 6200427 Left, 6200451 Right

**PROPOSED STRUCTURE**

Type: Continuous steel beam with new widened composite reinforced concrete deck and widened substructures.
Spans: 65'-0",93'-0",76'-0",75'-0",75'-0", 81'-1'0",65'-0" c-c bearings (Left and Right Structures.
Roadway: 48'-0" toe to toe of parapets for each structure.
Loading: HS20-44 Case II and the alternate military loading.
Skew: 36 Degrees 33 Minutes, Right Forward
Wearing Surface: Monolithic Concrete
Approach Slabs: AS-1-81 (25'-0" Long)
Alignment: Tangent
Superelevation: None

**PROPOSED WORK**

1. Widen piers, beam seats, decks and abutments
2. Remove and replace existing bridge deck
3. Replace existing expansion joints with strip seals
4. Strengthen bridge by welding shear connectors to the beams
5. Jack and reset certain bearings
6. Construct safety shape parapets
7. Replace approach slabs
8. Seal abutments, parapets, pier columns along state St., and wingwalls with epoxy
9. Paint all structural steel
10. Repair designated areas of spill-thru slopes with aggregate

DESIGN TRAFFIC:
2016 ADT= 21,100
2016 ADTT= 4431

RAILROAD TRAFFIC:
93 Freight trains per day
4 Amtrak passenger trains per day

Earthwork limits shown are approximate. Actual slopes shall conform to plan cross sections.

NOTE:
Prop. P.G. elevations apply to each bridge and new approach slabs only.

STATION EQUATION:
Sta. 1221+00.00 this plan equals Sta. 371+87.68 original bridge plans.

VERTICAL EQUATION:
Elevation 600.00 this plan equals Elevation 601.19 original bridge plans.

See roadway plans for approach paving transitions to approach slabs and for deck drainage intercept details off of the bridges.

Proposed 12" ϕ Cast-in-place reinforced concrete piles. Estimated average pay lengths:
Rear Abuts. = 20'
Piers = 35'
Fwd. Abuts. = 25'

STATE OF OHIO
DEPARTMENT OF TRANSPORTATION
BUREAU OF BRIDGES AND STRUCTURAL DESIGN

1 | 15

# SITE PLAN
## BRIDGE No. OTT-2-2313 Lt & Rt. OVER CONRAIL R.R. AND STATE ST.

OTTAWA COUNTY - STA. 1221+02.35 to STA. 1226+38.15

| DESIGNED | DRAWN | TRACED | CHECKED | REVIEWED | DATE | REVISED |
|---|---|---|---|---|---|---|
| FO | FO | | WTK/RJS | RLE | 9-24-93 | |

| FED. RD. DIVISION | STATE | PROJECT | TYPE FUNDS |
|---|---|---|---|
| 5 | OHIO | | |

350
367

OTT-2-16.60

# GENERAL NOTES

**REFERENCE** SHALL BE MADE TO STANDARD DRAWING(S):

| | | |
|---|---|---|
| AS-1-81 | DATED | 11-27-81 |
| EXJ-4-87 | DATED | 11-12-93 |
| RB-1-55 | REVISED | 2-2-59 |
| SD-1-69 | DATED | 6-12-69 |

AND TO SUPPLEMENTAL SPECIFICATIONS:

| | | |
|---|---|---|
| [redacted] | [redacted] | [redacted] |
| 910 | DATED | 7-17-95 |
| 815 | DATED | 7-17-95 |

**DESIGN SPECIFICATIONS:**
THIS STRUCTURE CONFORMS TO "STANDARD SPECIFICATIONS FOR HIGHWAY BRIDGES" ADOPTED BY THE AMERICAN ASSOCIATION OF STATE HIGHWAY AND TRANSPORTATION OFFICIALS, 1992. INCLUDING THE 1993 INTERIM SPECIFICATIONS AND THE ODOT BRIDGE DESIGN MANUAL.

**DESIGN LOADING:**
HS20-44, CASE II AND THE ALTERNATE MILITARY LOADING.

**DESIGN DATA:**
CONCRETE CLASS S - COMPRESSIVE STRENGTH 4500 P.S.I. (SUPERSTRUCTURE)

CONCRETE CLASS C - COMPRESSIVE STRENGTH 4000 P.S.I. (SUBSTRUCTURE)

REINFORCING STEEL - ASTM A615, A616 OR A617
GRADE 60 MINIMUM YIELD STRENGTH 60,000 P.S.I.
SPIRAL REINFORCEMENT MAY BE PLAIN BARS, ASTM A82 OR A615.

STRUCTURAL STEEL
ASTM A36 - YIELD STRENGTH 36,000 P.S.I.

**DECK PROTECTION METHOD:**

EPOXY COATED REINFORCING STEEL.

2-1/2" CONCRETE COVER.

**MONOLITHIC WEARING SURFACE** IS ASSUMED, FOR DESIGN PURPOSES, TO BE 1" THICK.

**ITEM SPECIAL, SEALING OF CONCRETE SURFACES:**
A CONCRETE SEALER SHALL BE APPLIED TO THE CONCRETE SURFACES SHOWN ON SHEET 8/15. SEE PROPOSAL FOR SURFACE PREPARATION REQUIREMENTS, APPLICATION RATES, MATERIAL REQUIREMENTS AND APPLICATION PROCEDURES.

**PORTIONS OF STRUCTURE REMOVED, AS PER PLAN**

DESCRIPTION:
THIS WORK SHALL CONSIST OF THE REMOVAL OF CONCRETE DECKS INCLUDING SIDEWALKS, PARAPETS, RAILINGS, DECK JOINTS AND OTHER APPURTENANCES FROM STEEL SUPPORTING SYSTEMS (BEAMS, GIRDERS, CROSS FRAMES, ETC.). CARE SHALL BE TAKEN DURING DECK REMOVALS TO PROTECT PORTIONS OF SUCH SYSTEMS THAT ARE TO BE SALVAGED AND INCORPORATED INTO THE PROPOSED STRUCTURE. IN THIS RESPECT, THE USE OF EXPLOSIVES, HEADACHE BALLS AND/OR HOE RAM TYPE OF EQUIPMENT IS PROHIBITED.

PROTECTION OF TRAFFIC:
PRIOR TO DEMOLITION OF ANY PORTIONS OF THE EXISTING SUPERSTRUCTURE, THE CONTRACTOR SHALL SUBMIT HIS PLANS FOR THE PROTECTION OF TRAFFIC (VEHICULAR, PEDESTRIAN, BOAT, ETC.) ADJACENT TO AND/OR UNDER THE STRUCTURE TO THE DIRECTOR FOR APPROVAL. THESE PLANS SHALL INCLUDE PROVISIONS FOR ANY DEVICES AND STRUCTURES THAT MAY BE NECESSARY TO ENSURE SUCH PROTECTION. TEMPORARY VERTICAL CLEARANCES SPECIFIED ON THE PLANS OR IN THE PROPOSAL SHALL BE MAINTAINED AT ALL TIMES EXCEPT AS OTHERWISE APPROVED BY THE DIRECTOR.

PROTECTION OF STEEL SUPPORT SYSTEMS:
BEFORE DECK SLAB CUTTING IS PERMITTED, THE OUTLINE OF PRIMARY STEEL MEMBERS IN CONTACT WITH THE BOTTOM OF THE DECK SHALL BE DRAWN ON THE SURFACE OF DECK. SMALL DIAMETER PILOT HOLES SHALL BE DRILLED 2 INCHES OUTSIDE THESE LINES TO CONFIRM THE LOCATION OF FLANGE EDGES. DECK CUTS OVER OR WITHIN 2 INCHES OF FLANGE EDGES SHALL NOT EXTEND LOWER THAN THE BOTTOM LAYER OF DECK SLAB REINFORCING STEEL. CUTS MADE OUTSIDE 2 INCHES OF FLANGE EDGES MAY EXTEND THE FULL DEPTH OF THE DECK. DURING CUTTING OF THE DECK SLAB, CARE SHALL BE TAKEN NOT TO DAMAGE STEEL MEMBERS THAT ARE TO BE INCORPORATED INTO THE PROPOSED STRUCTURE.

REMOVAL METHODS:
CONCRETE MAY BE REMOVED BY CUTTING AND BY MEANS OF HAND OPERATED PNEUMATIC HAMMERS EMPLOYING POINTED OR BLUNTED CHISEL TYPE TOOLS. FOR REMOVALS ABOVE STEEL MEMBERS, A HAMMER HEAVIER THAN 35 POUNDS BUT NOT TO EXCEED 90 POUNDS MAY BE USED AT THE APPROVAL OF THE ENGINEER, TO ENSURE ADEQUATE DEPTH CONTROL AND TO PREVENT NICKING OR GOUGING THE PRIMARY STEEL MEMBERS.

**PORTIONS OF STRUCTURE REMOVED, AS PER PLAN (CONTINUED)**

DECK REMOVALS:
DUE TO THE POSSIBLE PRESENCE OF WELDED ATTACHMENTS TO EXISTING STRUCTURAL STEEL (FINISHING MACHINE, SCUPPER AND FORM SUPPORTS, ETC.), CARE SHALL BE TAKEN DURING DECK REMOVAL TO AVOID DAMAGING STRINGERS WHICH ARE TO REMAIN. STRINGERS DAMAGED BY THE CONTRACTOR'S REMOVAL OPERATIONS SHALL, AT NO COST TO THE PROJECT, BE REPLACED OR REPAIRED. PROPOSED REPAIRS, DEVELOPED BY A REGISTERED PROFESSIONAL ENGINEER, SHALL BE SUBMITTED IN WRITING FOR REVIEW AND APPROVAL BY THE DIRECTOR.

EXTRANEOUS MEMBERS:
EXISTING EXTRANEOUS MEMBERS (I.E., FINISHING MACHINE AND FORM SUPPORTS, ETC., AND THE SUPPORT FOR SCUPPERS AND BULB ANGLES WHICH ARE TO BE REMOVED) ATTACHED BY WELDED CONNECTIONS TO PORTIONS OF THE TOP FLANGES DESIGNATED "TENSION" SHALL BE REMOVED AND THE FLANGE SURFACES GROUND SMOOTH. GRINDING SHALL BE CAREFULLY DONE AND PARALLEL TO THE FLANGES.

LOADING LIMITATIONS:
NO PART OF THE STRUCTURE SHALL BE SUBJECTED TO UNIT STRESSES THAT EXCEED 136.5% OF THE ALLOWABLE UNIT STRESSES GIVEN IN THE AASHTO STANDARD SPECIFICATIONS FOR HIGHWAY BRIDGES DUE EITHER TO DEMOLITION, ERECTION OR CONSTRUCTION METHODS, OR TO THE USE OR MOVEMENT OF DEMOLITION OR ERECTION EQUIPMENT ON OR ACROSS THE STRUCTURE. STRUCTURAL ANALYSIS COMPUTATIONS, BY A REGISTERED PROFESSIONAL ENGINEER, SHOWING THE ALLOWABLE STRESSES AND THE MAXIMUM STRESSES PRODUCED BY THE CONTRACTOR'S METHODS OR EQUIPMENT SHALL BE SUBMITTED TO THE DIRECTOR FOR REVIEW AND APPROVAL AT LEAST TWO WEEKS PRIOR TO THE START OF THE WORK.

PAYMENT:
THIS WORK WILL BE PAID FOR AT THE CONTRACT LUMP SUM PRICE BID, WHICH PRICE AND PAYMENT SHALL BE FULL COMPENSATION FOR ALL LABOR, EQUIPMENT, MATERIALS AND INCIDENTALS NECESSARY TO COMPLETE THE WORK IN CONFORMANCE WITH THESE REQUIREMENTS, WITH PERTINENT PROVISIONS OF 202, AND TO THE SATISFACTION OF THE ENGINEER.

SUBSTRUCTURE CONCRETE REMOVAL: SHALL BE BY MEANS OF APPROVED PNEUMATIC HAMMERS EMPLOYING POINTED AND BLUNT CHISEL TOOLS. HYDRAULIC HOE-RAM TYPE HAMMERS WILL NOT BE PERMITTED. THE WEIGHT OF THE HAMMER SHALL NOT BE MORE THAN 35 POUNDS FOR REMOVAL WITHIN 18-INCHES OF PORTIONS TO BE PRESERVED. OUTSIDE THE 18-INCH LIMIT, A HAMMER HEAVIER THAN 35 POUNDS, BUT NOT TO EXCEED 90 POUNDS, MAY BE USED AT THE APPROVAL OF THE ENGINEER. PNEUMATIC HAMMERS SHALL NOT BE PLACED IN DIRECT CONTACT WITH REINFORCING STEEL THAT IS TO BE RETAINED IN THE REBUILT STRUCTURE.

CUT LINE CONSTRUCTION JOINT PREPARATION: SAW CUT BOUNDARIES OF PROPOSED CONCRETE REMOVALS 1" DEEP, REMOVE CONCRETE TO A ROUGH SURFACE. THE EXISTING REINFORCING STEEL WHERE REQUIRED IN THE PLANS SHALL BE LEFT IN PLACE. INSTALL DOWEL BARS IF SPECIFIED. PRIOR TO CONCRETE PLACEMENT, ABRASIVELY CLEAN JOINT SURFACE AND EXPOSED REINFORCING STEEL TO REMOVE LOOSE AND DISINTEGRATED CONCRETE AND RUST FROM STEEL. ALL DIRT, DUST OR OTHER FOREIGN MATERIAL SHALL THEN BE REMOVED BY WATER PRESSURE OR AIR BLAST. CONCRETE BONDING SURFACES SHALL BE WET WITHOUT FREE WATER AS CONCRETE IS PLACED.

**EXISTING STRUCTURE VERIFICATION:**
DETAILS AND DIMENSIONS SHOWN ON THESE PLANS PERTAINING TO THE EXISTING STRUCTURE HAVE BEEN OBTAINED FROM PLANS OF THE EXISTING STRUCTURE AND FROM FIELD OBSERVATIONS AND MEASUREMENTS. CONSEQUENTLY, THEY ARE INDICATIVE OF THE EXISTING STRUCTURE AND THE PROPOSED WORK BUT THEY SHALL BE CONSIDERED TENTATIVE AND APPROXIMATE. THE CONTRACTOR IS REFERRED TO CMS SECTIONS 102.05, 105.02 AND 513.02.

CONTRACT BID PRICES SHALL BE BASED UPON A RECOGNITION OF THE UNCERTAINTIES DESCRIBED ABOVE AND UPON A PREBID EXAMINATION OF THE EXISTING STRUCTURE BY THE CONTRACTOR. HOWEVER, ALL PROJECT WORK SHALL BE BASED UPON ACTUAL DETAILS AND DIMENSIONS WHICH HAVE BEEN VERIFIED BY THE CONTRACTOR IN THE FIELD.

**EXISTING BRIDGE PLANS** MAY BE INSPECTED IN THE BUREAU OF BRIDGES AND STRUCTURAL DESIGN IN COLUMBUS, OHIO OR AT THE ODOT DISTRICT OFFICE IN BOWLING GREEN, OHIO.

**REPLACEMENT OF EXISTING REINFORCING STEEL:**
ANY EXISTING REINFORCING BARS WHICH ARE TO BE INCORPORATED INTO THE NEW WORK AND WHICH ARE MADE UNUSABLE BY THE CONTRACTOR'S CONCRETE REMOVAL OPERATIONS SHALL BE REPLACED WITH NEW STEEL AT THE CONTRACTORS COST. ANY EXISTING REINFORCING BARS DEEMED BY THE ENGINEER TO BE UNUSABLE BECAUSE OF CORROSION SHALL BE REPLACED WITH NEW STEEL. AN ALLOWANCE OF 100 POUNDS IS INCLUDED IN ITEM 509 FOR THIS PURPOSE, LISTED IN THE "GENERAL" COLUMN OF THE ESTIMATED QUANTITIES TABLE.

**INSPECTION OF STRUCTURAL STEEL:**
THE ENGINEER SHALL VISUALLY INSPECT ALL EXISTING BUTT-WELDED SPLICES AND/OR TOP FLANGE COVER PLATE FILLET WELDS TO ENSURE THAT THEY ARE FREE OF DEFECTS. THE DECK SLAB HAUNCH FORMS IMMEDIATELY ADJACENT TO SUCH WELDS SHALL NOT BE ERECTED UNTIL AFTER THE ENGINEER HAS COMPLETED THIS INSPECTION. THIS INSPECTION SHALL NOT TAKE PLACE UNTIL AFTER THE TOP FLANGES ARE CLEANED AS SPECIFIED IN 511.08, BUT IT SHALL BE DONE BEFORE THE DECK SLAB REINFORCEMENT IS INSTALLED. THE COST ASSOCIATED WITH THIS INSPECTION SHALL BE INCLUDED WITH ITEM 511, SUPERSTRUCTURE CONCRETE FOR PAYMENT.

**CONSTRUCTION CLEARANCE OF 12'-0"** HORIZONTALLY FROM THE CENTER OF TRACKS AND **22'-0"** VERTICALLY FROM A POINT LEVEL WITH THE TOP OF THE HIGHER RAIL, AND 6 FEET FROM THE CENTER OF TRACKS, SHALL BE MAINTAINED AT ALL TIMES.

**RAILROAD AERIAL LINES:** WILL BE RELOCATED BY THE RAILROAD. THE CONTRACTOR SHALL USE ALL PRECAUTIONS NECESSARY TO SEE THAT THE LINES ARE NOT DISTURBED DURING THE CONSTRUCTION STAGE AND SHALL COOPERATE WITH THE RAILROAD IN THE RELOCATION OF THESE LINES. THE COST OF THE RELOCATION SHALL BE INCLUDED IN THE RAILROAD FORCE ACCOUNT WORK.

**DEMOLITION AND CONSTRUCTION OVER RAILROAD:**

THE CONTRACTOR SHALL EXERCISE CARE WHILE WORKING OVER AND ADJACENT TO THE TWO RAILROAD TRACKS. HE SHALL SUBMIT FOR APPROVAL TO THE ENGINEER, A PROCEDURE FOR PROTECTING RAILROAD TRAFFIC AT ALL TIMES FROM FALLING DEBRIS. ANY DAMAGE DONE TO RAILROAD PROPERTY DURING DEMOLITION AND CONSTRUCTION SHALL BE REPAIRED AT THE CONTRACTOR'S EXPENSE AND TO THE SATISFACTION OF THE ENGINEER. SUBMITTALS OF A WRITTEN PROCEDURE AND/OR PLANS SHOWING PROTECTIVE SHIELDING OF THE RAILROAD SHALL BE IN ACCORDANCE WITH 501.06. PLANS SHALL BE SUBMITTED AT LEAST 60 DAYS BEFORE CONSTRUCTION BEGINS.

**EXISTING 8" WATER LINE** ON THE NORTH SIDE OF STATE STREET, FROM FIELD SURVEY DATA AND CALCULATIONS, IT WAS DETERMINED THAT THE PROPOSED FOOTING CORNER AND OUTERMOST PILE AT PIER NO. 6 OF THE RIGHT BRIDGE WILL HAVE A LATERAL CLEARANCE OF 1.5 FT± TO 2.5 FT± RESPECTIVELY TO THE WATERLINE. THE PROPOSED BOTTOM OF FOOTING AND THE PIPE ARE APPROXIMATELY AT THE SAME ELEVATION. THE CONTRACTOR'S CONSTRUCTION AND PILE DRIVING OPERATIONS SHOULD REFLECT ON THIS CLEARANCE RESTRICTION SO THAT WATER SERVICE TO THE COMMUNITY IS NOT INTERRUPTED.

**ITEM 503, UNCLASSIFIED EXCAVATION, AS PER PLAN:**
UNCLASSIFIED EXCAVATION SHALL BE IN ACCORDANCE WITH 503 EXCEPT THAT THE BACKFILL MATERIAL BEHIND THE ABUTMENTS SHALL BE 203 GRANULAR MATERIAL PLACED IN LIFTS NOT TO EXCEED A THICKNESS OF SIX (6) INCHES.

**PILE DESIGN LOADS (SAFE BEARING CAPACITY):**
THE DESIGN LOAD FOR THE ABUTMENT PILES IS 25 TONS PER PILE AND THE DESIGN LOAD FOR THE PIER PILES IS 40 TONS PER PILE.

**ITEM 516, RESET BEARING, AS PER PLAN:**

AFTER THE DECK HAS BEEN REMOVED UNDER ITEM 202; CERTAIN EXPANSION BEARING ROCKERS SHALL BE VERTICALLY REALIGNED IN ACCORDANCE WITH 516.05 AND AS MAY BE DIRECTED BY THE ENGINEER. THE ENGINEER MAY DEEM IT NECESSARY TO HAVE OTHER BEARINGS REALIGNED IN ADDITION TO THOSE INDICATED ON THE PLAN. THE APPROXIMATE STEEL BEAM DEADLOAD LIFTS ARE 2.5 TONS AT THE ABUTMENTS AND 10 TONS AT THE PIERS. THE INDIVIDUAL BEAM JACKING LIFT SHALL NOT EXCEED 1/4 INCH AT EACH BEARING.
PAYMENT WILL BE MADE AT THE UNIT PRICE BID FOR EACH, ITEM 516, RESET BEARING, AS PER PLAN WHICH SHALL INCLUDE ANY MATERIALS, LABOR, EQUIPMENT AND INCIDENTALS NECESSARY TO COMPLETE THE WORK.

**ITEM 510 - DOWEL HOLES WITH NONSHRINK, NONMETALLIC GROUT:**
THIS ITEM SHALL INCLUDE THE DRILLING OF HOLES INTO CONCRETE OR MASONRY AND THE FURNISHING AND PLACING OF GROUT INTO HOLES. NON SHRINKING EPOXY GROUT SHALL BE USED IN ACCORDANCE WITH [redacted] SPECIFICATION 510 AND CMS 705.20. ANCHORING SHALL CONFORM TO [redacted] SPECIFICATION 510 AND CMS 705.20. PAYMENT SHALL BE INCLUDED WITH ITEM 510.

**TRAFFIC MAINTENANCE AND PHASING:**
SEE ROADWAY PLAN NOTES AND TRAFFIC CONTROL SHEETS.

**PAINTING OF EXISTING STRUCTURAL STEEL:**
IN ADDITION TO THE SURFACE AREA OF THE STEEL STRINGERS TO BE PAINTED, AN ADDITIONAL THIRTY PERCENT OF THIS AMOUNT HAS BEEN ADDED TO THE SQUARE FOOT TOTALS TO ACCOUNT FOR INCIDENTALS SUCH AS CROSSFRAMING, BEARINGS AND EXPANSION SYSTEMS. CAULKING AS PER SS 815 IS REQUIRED IN THE OPEN AREA BETWEEN ABUTTING WEBS AND BOTTOM BEAM FLANGES AT EACH SPLICE LOCATION. *

PAINT: THE COLOR OF THE FINISH COAT SHALL MATCH THE COLOR OF THE EXISTING BEAMS.

**REINFORCED CONCRETE APPROACH SLABS:**
SEE THE ROADWAY PLAN NOTES FOR EPOXY COATED REINFORCING STEEL REQUIREMENTS.

**REINFORCING STEEL LIST:** (SHEET 14/15 )
BAR SIZE IS INDICATED IN THE BAR MARK. THE FIRST DIGIT WHERE THREE DIGITS ARE USED, AND THE FIRST TWO DIGITS WHERE FOUR ARE USED, INDICATE THE BAR SIZE NUMBER. FOR EXAMPLE, A709 IS A NO. 7 AND A1014 IS A NO. 10 SIZE. BAR DIMENSIONS SHOWN ARE OUT TO OUT UNLESS OTHERWISE INDICATED. R INDICATES INSIDE RADIUS. UNLESS OTHERWISE NOTED, "STD." WRITTEN IN PLACE OF A DIMENSION INDICATES A STANDARD BEND AT THE END OF THE BAR.

**CONCRETE PARAPETS, SLIPFORM OPTION: (SEE PROPOSAL NOTE)**
WITHIN 48 HOURS AFTER PLACEMENT OF PARAPET CONCRETE, SAWCUT 1 INCH DEEP JOINTS INTO THE CONCRETE PARAPET AT LOCATIONS AS DETAILED IN THE PLANS. THE SAWCUT SHALL BE MADE IN THE COMPLETE CIRCUMFERENCE OF THE PARAPET, STARTING AND ENDING AT THE ELEVATION OF THE CONCRETE DECK, AND THE COMPLETED SAWCUT SHALL BE FILLED WITH A CAULKING MATERIAL CONFORMING TO FEDERAL SPECIFICATION TT-S-00227E. THE BOTTOM HALF INCH OF THE ONE INCH DEEP SAWED JOINT IN BOTH THE INSIDE AND OUTSIDE FACES OF THE PARAPET SHOULD BE LEFT UNSEALED TO ALLOW ANY WATER WHICH MAY ENTER THE JOINT TO ESCAPE.

IF THE CONTRACTOR CHOOSES THE CAST-PLACE-OPTION, THE HORIZONTAL REINFORCING STEEL BARS (S503 AND S504) SHALL BE CUT TO CLEAR THE VERTICAL DEFLECTION JOINTS BY 3 INCHES ON EACH SIDE OF THE JOINT.

**PROPOSED WORK NOTES,** SEE SHEET 3/15 .

ITEM 611 REINFORCED CONCRETE APPROACH SLAB(T=15"), AS PER PLAN:

THE REINFORCING STEEL FOR THE APPROACH SLABS OF THIS STRUCTURE SHALL BE EPOXY COATED IN CONFORMANCE WITH 509.

MATERIALS, LABOR AND INSTALLATION SHALL BE INCLUDED FOR PAYMENT IN THIS ITEM 611 REINFORCED CONCRETE APPROACH SLAB (T=15"), AS PER PLAN.

SOLVENT CLEANING:
STEEL OVER PAVEMENT AND RAILROAD SHALL BE SOLVENT CLEANED.

GRINDING FLANGE EDGES:
ALL STEEL OVER PAVEMENT SHOULD HAVE FLANGE EDGES GROUND.

*AN ESTIMATED QUANTITY OF 200 LIN. FT. CAULKING HAS BEEN CARRIED TO THE BRIDGE QUANTITIES SHEET.

STATE OF OHIO
DEPARTMENT OF TRANSPORTATION
BUREAU OF BRIDGES AND STRUCTURAL DESIGN

2/15

GENERAL NOTES
BRIDGE NO. OTT-2-2313 L&R
OVER CONRAIL R.R.
AND STATE ST.

| DESIGNED | DRAWN | TRACED | CHECKED | REVIEWED | DATE | REVISED |
|---|---|---|---|---|---|---|
| FO | SAM | | JS | LMW | 3-23-94 | |

| FHWA REGION | STATE | PROJECT | |
|---|---|---|---|
| 5 | OHIO | | |

351/367

OTT-2-16.60

# ESTIMATED QUANTITIES

| ITEM | EXTENSION | TOTAL | UNIT | DESCRIPTION | ABUT. | PIERS | SUPER. | GEN. |
|---|---|---|---|---|---|---|---|---|
| 202 | 11201 | LUMP | SUM | PORTIONS OF STRUCTURE REMOVED, AS PER PLAN | LUMP | | LUMP | |
| 503 | 21301 | LUMP | SUM | UNCLASSIFIED EXCAVATION, AS PER PLAN | LUMP | LUMP | | |
| 505 | 11100 | LUMP | SUM | PILE DRIVING EQUIPMENT MOBILIZATION | | | | LUMP |
| 507 | 22200 | 5850 | LF | 12" CAST-IN-PLACE REINFORCED CONCRETE PILES | 810 | 5040 | | |
| 509 | 15840 | 465556 | LB | EPOXY COATED REINFORCING STEEL, GRADE 60 | 17919 | 64522 | 383015 | 100 |
| 510 | 10000 | 524 | EACH | DOWEL HOLES WITH NONSHRINK, NONMETALLIC GROUT | 308 | 216 | | |
| 511 | 32202 | 1784 | CY | CLASS S CONCRETE, SUPERSTRUCTURE | 15 | | 1769 | |
| 511 | 41000 | 234 | CY | CLASS C CONCRETE, PIER ABOVE FOOTINGS | | 234 | | |
| 511 | 44100 | 95 | CY | CLASS C CONCRETE, ABUTMENT NOT INCLUDING FOOTING | 95 | | | |
| 511 | 46500 | 333 | CY | CLASS C CONCRETE, FOOTING | 81 | 252 | | |
| SPECIAL | 51267500 | 2059 | SY | SEALING OF CONCRETE SURFACES (SEE PROPOSAL NOTE) | | | 2059 | |
| SPECIAL | 51267510 | 341 | SY | SEALING OF CONCRETE SURFACES (EPOXY/URETHANE) | 341 | | | |
| 513 | 11400 | 568900 | LB | STRUCTURAL STEEL, A572-50 AISC CATEGORY I | | | 568900 | |
| 513 | 20000 | 14396 | EACH | WELDED STUD SHEAR CONNECTOR | | | 14396 | |
| 516 | 11211 | 126 | LF | STRUCTURAL EXPANSION JOINT INCLUDING ELASTOMERIC STRIP SEAL, AS PER PLAN (4") (SEE PROPOSAL NOTE) | | | 126 | |
| 516 | 11211 | 126 | LF | STRUCTURAL EXPANSION JOINT INCLUDING ELASTOMERIC STRIP SEAL, AS PER PLAN (5") (SEE PROPOSAL NOTE) | | | 126 | |
| 516 | 46701 | 7 | EACH | RESET BEARING, AS PER PLAN | | | 7 | |
| 518 | 21200 | 49 | CY | POROUS BACKFILL WITH FILTER FABRIC | 49 | | | |
| 518 | 41100 | 56 | LF | 6" PERFORATED HELICAL CORRUGATED STEEL PIPE, 707.01 | 56 | | | |
| 518 | 41200 | 160 | LF | 6" NON-PERFORATED HELICAL CORRUGATED STEEL PIPE, INCLUDING SPECIALS, 707.01 | 160 | | | |
| 601 | 20500 | 300 | CY | CRUSHED AGGREGATE SLOPE PROTECTION | 300 | | | |
| 815 | 00050 | 62300 | SF | SURFACE PREPARATION OF EXISTING STEEL, SYSTEM OZEU | | | 62300 | |
| 815 | 00056 | 62300 | SF | FIELD PAINTING OF EXISTING STEEL, PRIME COAT, SYSTEM OZEU | | | 62300 | |
| 815 | 00060 | 62300 | SF | FIELD PAINTING OF EXISTING STEEL, INTERMEDIATE COAT, SYSTEM OZEU | | | 62300 | |
| 815 | 00066 | 62300 | SF | FIELD PAINTING OF EXISTING STEEL, FINISH COAT, SYSTEM OZEU | | | 62300 | |
| 815 | 00500 | 200 | LF | CAULKING | | | 200 | |
| 815 | 00504 | 150 | MNHR | GRINDING FINS, TEARS, SLIVERS | | | 150 | |
| 815 | 00508 | 2240 | LF | GRINDING FLANGE EDGES | | | 2240 | |
| 514 | 00610 | 568900 | LB | FIELD PAINTING OF NEW STEEL, SYSTEM IZEU | | | 568900 | |

## PROPOSED WORK NOTES

1.) IN ADDITION TO THE ITEMS LISTED FOR REMOVAL UNDER ITEM 202 (SEE SHEET. NO. 2/15 FOR NOTE). THE FOLLOWING SHALL BE INCLUDED:

(A) REMOVAL OF ALL END CROSSFRAME ANGLES AND ALL SCUPPERS, INCLUDING SUPPORTS.

(B) DESIGNATED PORTIONS OF ABUTMENT BACKWALLS AND WINGWALLS.

2.) EXTEND ALL SUBSTRUCTURE UNITS.
3.) RESET DESIGNATED BEARINGS.
4.) SET BEARINGS FOR NEW BEAM LINES, INTERMEDIATE AND END CROSSFRAMES, AND NEW EXPANSION ARMOR.
5.) PLACE SHEAR CONNECTORS ON ALL BEAM LINES.
6.) CONSTRUCT NEW DECK, ABUTMENT BACKWALLS, WINGWALLS, PARAPETS AND APPROACH SLABS.
7.) SEAL DESIGNATED CONCRETE SURFACES.
8.) PAINT ALL STRUCTURAL STEEL.
9.) COMPLETE REMAINING CONTRACT ITEMS. (IT IS NOT INTENDED THAT THE ABOVE WORK OCCUR IN SEQUENTIAL ORDER AS LISTED.)

STATE OF OHIO
DEPARTMENT OF TRANSPORTATION
BUREAU OF BRIDGES AND
STRUCTURAL DESIGN

3 / 15

ESTIMATED QUANTITIES &
PROPOSED WORK NOTES
BRIDGE NO.OTT-2-2313 L&R
OVER CONRAIL R.R.
AND STATE ST.

| DESIGNED | DRAWN | TRACED | CHECKED | REVIEWED | DATE | REVISED |
|---|---|---|---|---|---|---|
| FO SAM | SAM | | JS 2-17-94 | LMW | 3-23-94 | |

I:/PD/OTTAWA/OTT2/OT2STEQ.DGN

| FED. RD. DIVISION | STATE | PROJECT | TYPE FUNDS |
|---|---|---|---|
| 5 | OHIO | | |

352
367

OTT-2-16.60

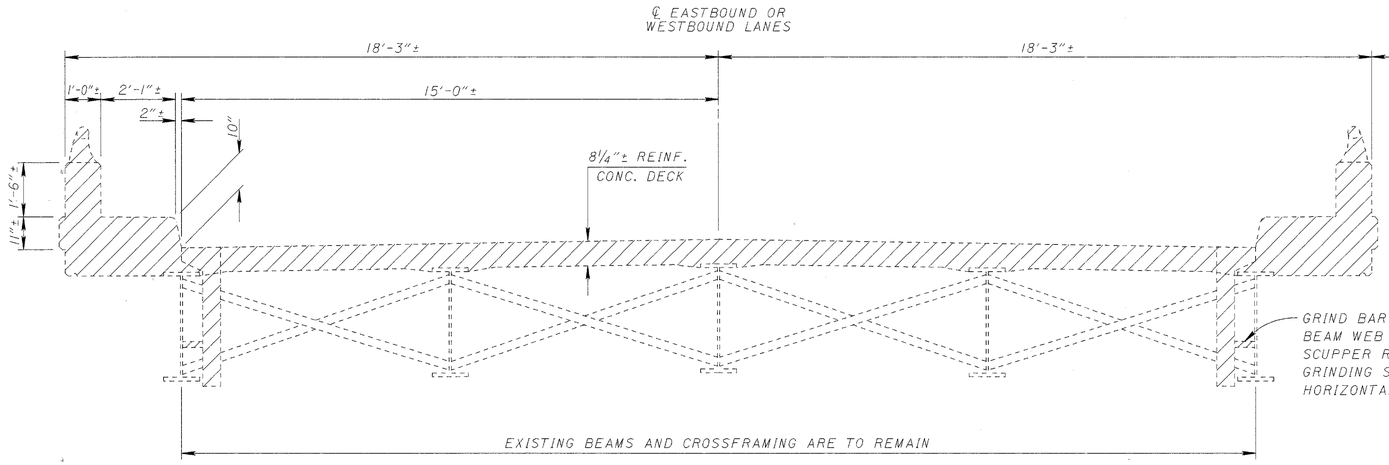


## EXISTING SECTION

(CARE SHALL BE USED IN SAW CUTTING OF THE DECK SO THAT CONTACT IS NOT MADE WITH THE BEAM FLANGES OR WITH THE MOMENT PLATES OVER THE PIERS.)

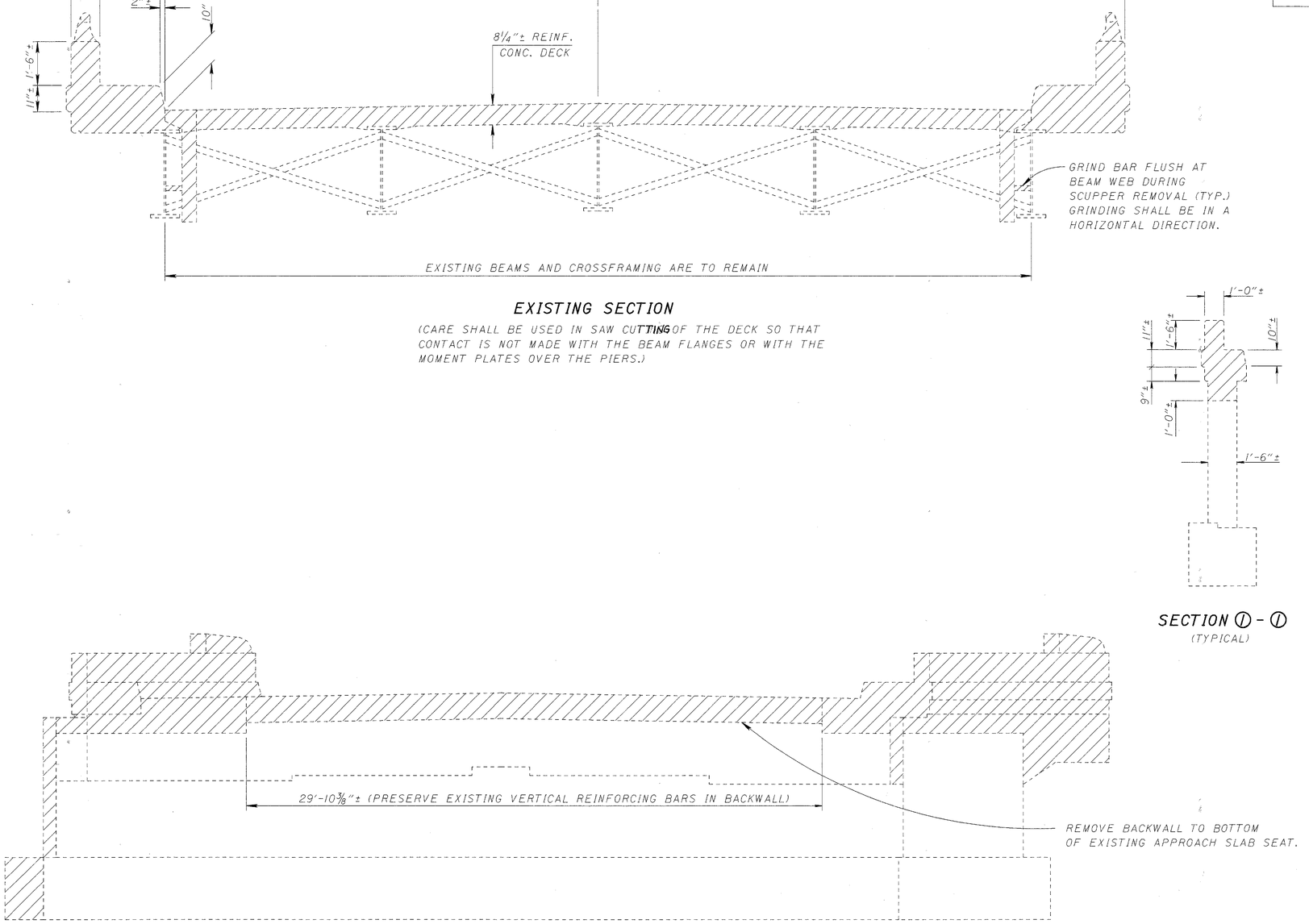


## EXISTING ABUTMENT ELEVATION

(TYPICAL)




## SECTION Ⓘ - Ⓘ

(TYPICAL)

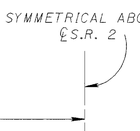


▨ INDICATES PORTIONS OF STRUCTURE THAT ARE TO BE REMOVED.

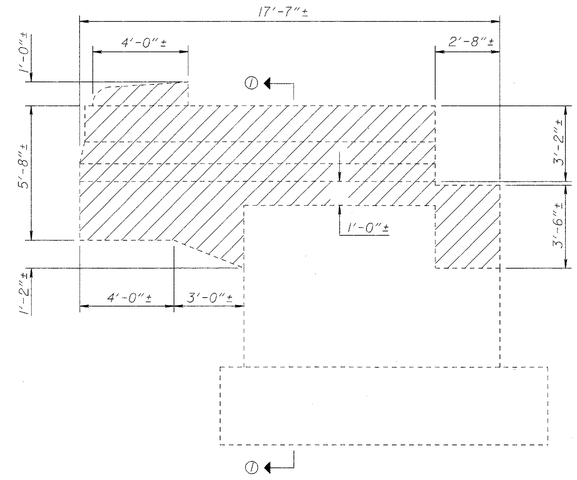


## RIGHT REAR & LEFT FORWARD WINGWALL

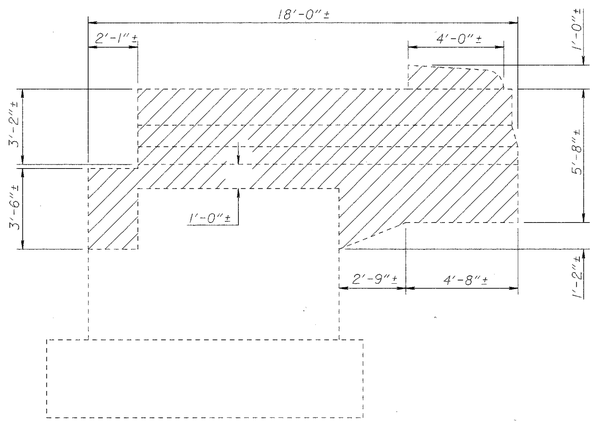


## LEFT REAR & RIGHT FORWARD WINGWALL

STATE OF OHIO
DEPARTMENT OF TRANSPORTATION
BUREAU OF BRIDGES AND STRUCTURAL DESIGN

4 / 15

# REMOVAL DETAILS BRIDGE NO. OTT-2-2313 L&R OVER CONRAIL R.R. AND STATE ST.

| DESIGNED | DRAWN | TRACED | CHECKED | REVIEWED | DATE | REVISED |
|---|---|---|---|---|---|---|
| FO | SAM | | JS | LMW | 3-23-94 | |

| FED. RD. DIVISION | STATE | PROJECT | TYPE FUNDS |
|---|---|---|---|
| 5 | OHIO | | |

353
367

OTT-2-16.60

**LEGEND**

- ○ - INDICATES PILE TO BE DRIVEN VERTICALLY
- ⚲ - INDICATES PILE TO BE DRIVEN ON 1 TO 4 BATTER IN DIRECTION OF ARROW
- [96] - INDICATES PILE NUMBER AT REAR AND FORWARD ABUTMENTS
- ★ - THIS DIMENSION IS FROM THE REMOVED FOOTING CORNER
- ⊕ - LEFT FORWARD ABUTMENT, LEFT BRIDGE AND RIGHT REAR ABUTMENT, RIGHT BRIDGE
- ▲ - LEFT FORWARD. ABUTMENT, RIGHT BRIDGE AND RIGHT REAR ABUTMENT LEFT BRIDGE

**NOTE:** PIER PILES ARE NUMBERED CONSECUTIVELY FROM LEFT TO RIGHT FOR EACH BRIDGE ON EACH SIDE OF THE PIER.

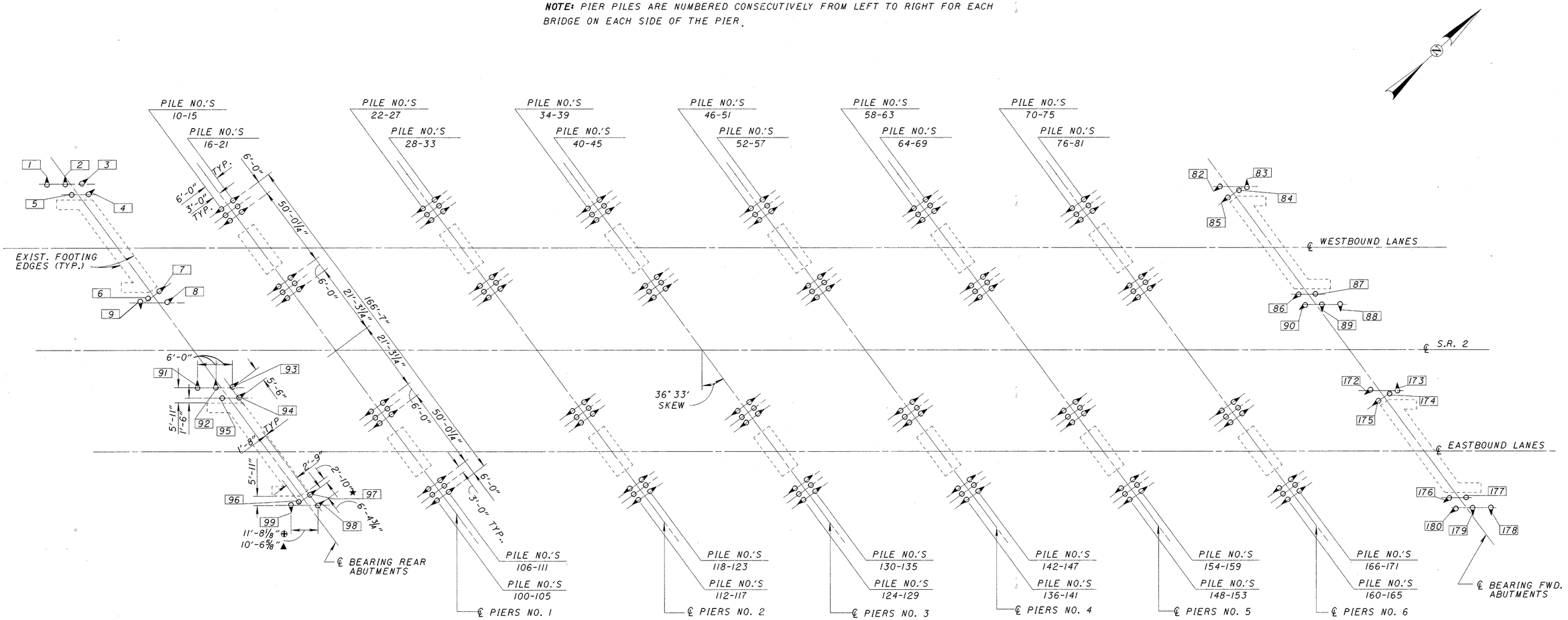


**NOTE:** THE ABUTMENT PILE LOCATIONS HAVE BEEN REFERENCED TO THE EXISTING FOOTINGS AND SHALL BE LOCATED FOR DRIVING AFTER THE FOOTINGS ARE EXPOSED. ALSO SEE FOOTING PLANS ON SHEET [7/15].

## PLAN

(DIMENSIONS ARE TYPICAL FOR ALL ABUTMENTS AND PIERS EXCEPT AS NOTED)

STATE OF OHIO
DEPARTMENT OF TRANSPORTATION
BUREAU OF BRIDGES AND STRUCTURAL DESIGN

5 / 15

# PILE LAYOUT AND NUMBERING PLAN
# BRIDGE NO. OTT-2-2313 L&R OVER CONRAIL R.R. AND STATE ST.

| DESIGNED | DRAWN | TRACED | CHECKED | REVIEWED DATE | REVISED |
|---|---|---|---|---|---|
| FO | FO | | JS | LMW 3-23-94 | |

| FED. RD. DIVISION | STATE | PROJECT | TYPE FUNDS |
|---|---|---|---|
| 5 | OHIO | | |

354
367

OTT-2-16.60

LEGEND

▲ - LEFT FORWARD ABUTMENT, LEFT BRIDGE AND RIGHT REAR ABUTMENT, RIGHT BRIDGE

⊕ - LEFT FORWARD ABUTMENT, RIGHT BRIDGE AND RIGHT REAR ABUTMENT, LEFT BRIDGE

▨ - INDICATES PORTION OF STRUCTURE TO BE REMOVED

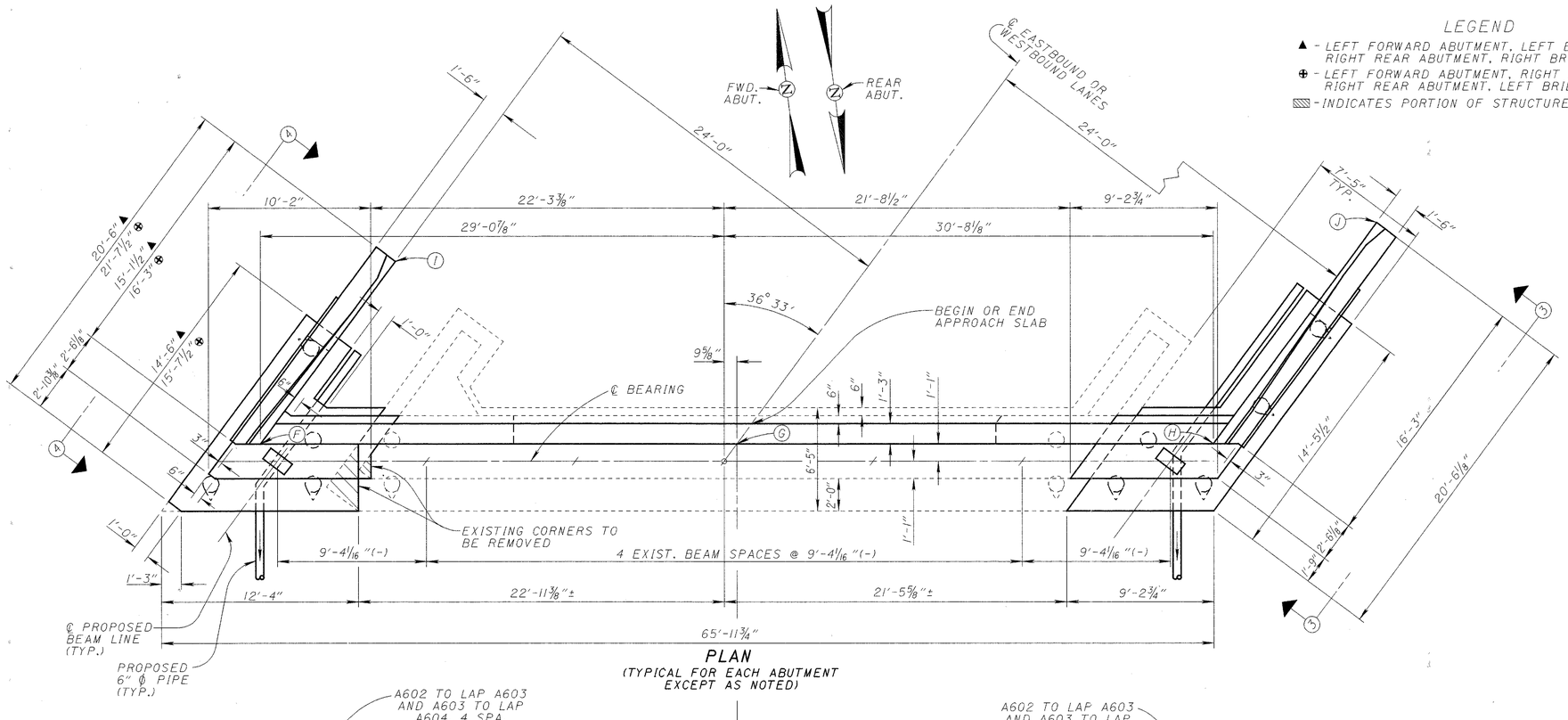


PLAN
(TYPICAL FOR EACH ABUTMENT EXCEPT AS NOTED)

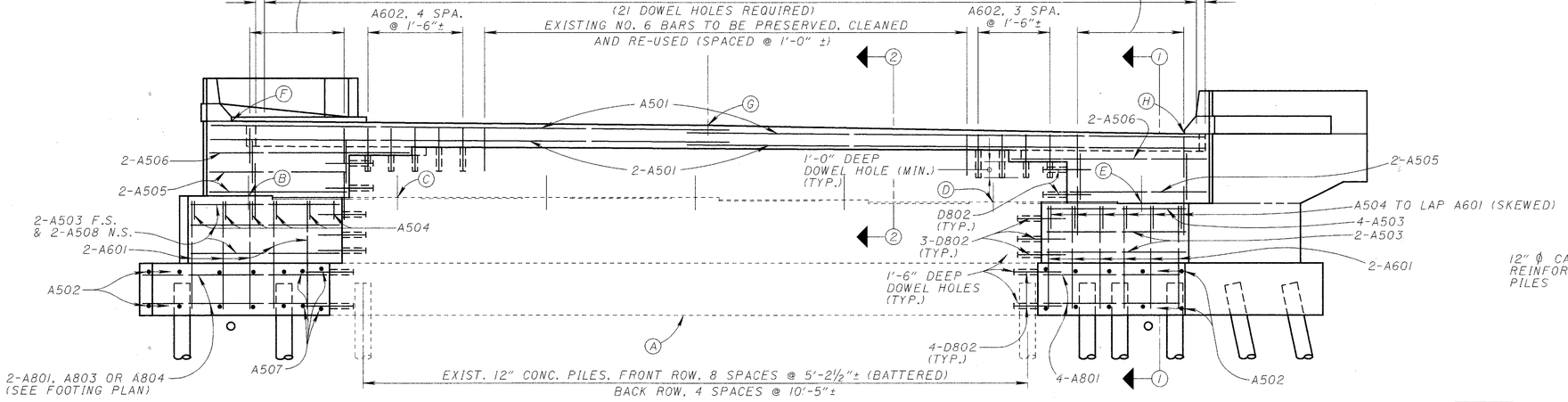


ELEVATION

| LOCATION | | ELEVATIONS | | | | | | | | | |
|---|---|---|---|---|---|---|---|---|---|---|---|
| | | (A) | (B) | (C) | (D) | (E) | (F) | (G) | (H) | (I) | (J) |
| LEFT BRIDGE | REAR ABUTMENT | 597.00± | 604.20 | 604.15± | 604.03± | 604.03 | 608.85 | 609.14 | 608.66 | 608.78 | 608.55 |
| | FORWARD ABUTMENT | 594.38± | 601.84 | 601.74± | 601.41± | 601.35 | 606.49 | 606.60 | 605.96 | 606.28 | 605.69 |
| RIGHT BRIDGE | REAR ABUTMENT | 597.28± | 604.41 | 604.37± | 604.31± | 604.32 | 609.06 | 609.39 | 608.96 | 609.03 | 608.89 |
| | FORWARD ABUTMENT | 593.37± | 600.89 | 600.77± | 600.40± | 600.33 | 605.54 | 605.61 | 604.93 | 605.28 | 604.61 |

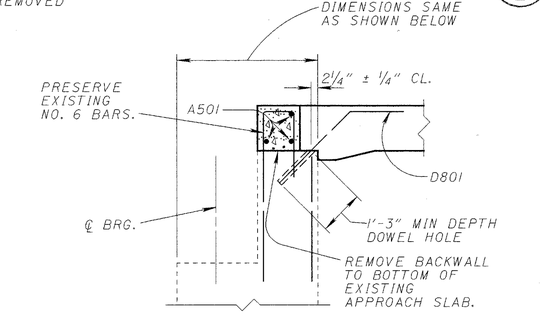


SECTION ②-②

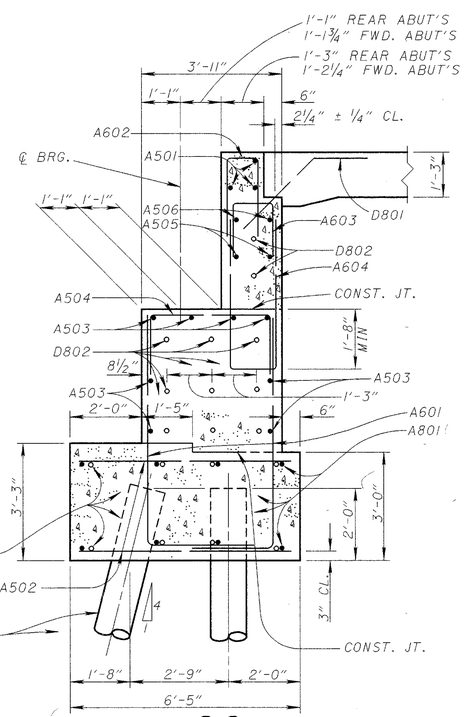


SECTION ①-①

SEE SHEET 7 / 15 FOR FOOTING LAYOUT, VIEWS, RELATED DETAILS AND NOTES.

SEE SHEET 5 / 15 FOR PILE NUMBERS AND PILE LAYOUT PLAN.

STATE OF OHIO
DEPARTMENT OF TRANSPORTATION
BUREAU OF BRIDGES AND STRUCTURAL DESIGN

6 / 15

# ABUTMENT DETAILS
# BRIDGE NO. OTT-2-2313 L&R
# OVER CONRAIL R.R. AND STATE ST.

| DESIGNED | DRAWN | TRACED | CHECKED | REVIEWED | DATE | REVISED |
|---|---|---|---|---|---|---|
| FO | SAM | | JS | LMW | 3-23-94 | |

| FED. RD. DIVISION | STATE | PROJECT | TYPE FUNDS |
|---|---|---|---|
| 5 | OHIO | | |

355
367

OTT-2-16.60

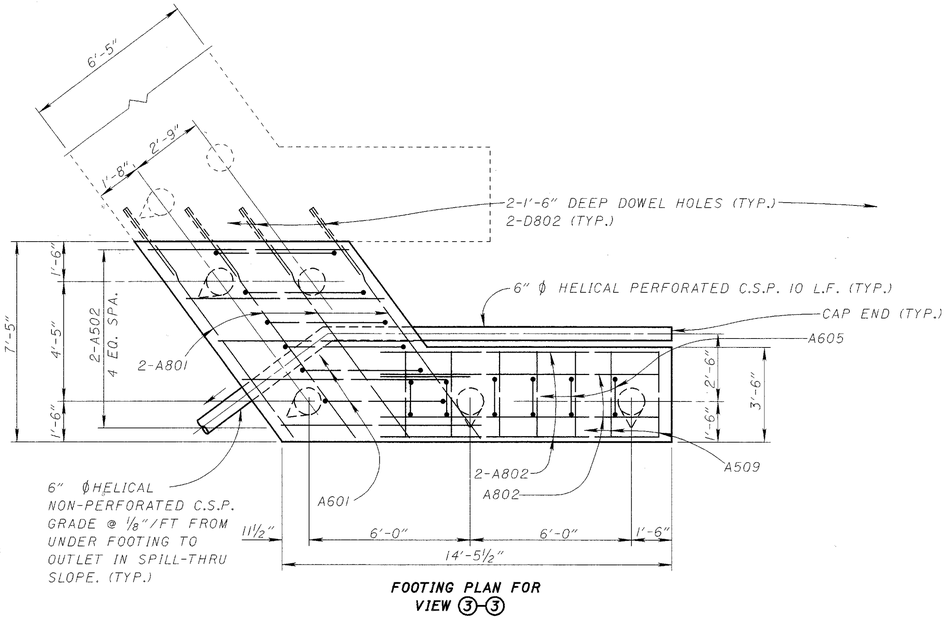


FOOTING PLAN FOR VIEW ③-③

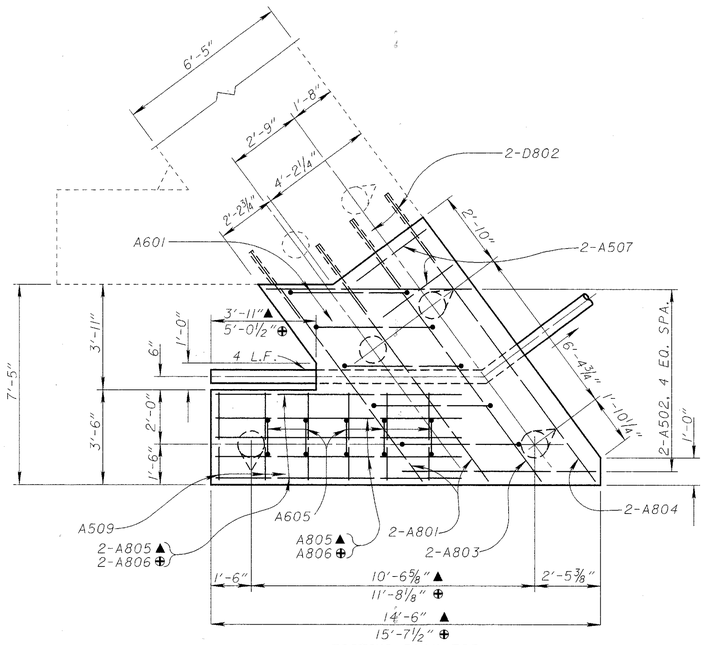


FOOTING PLAN FOR VIEW ④-④

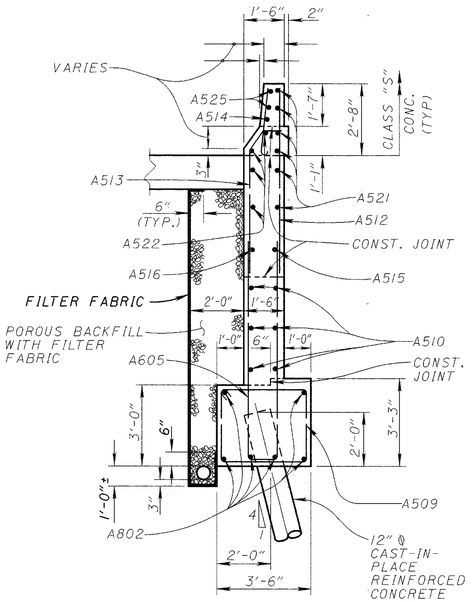


SECTION ⑤-⑤
(SIMILAR FOR VIEW 4-4)

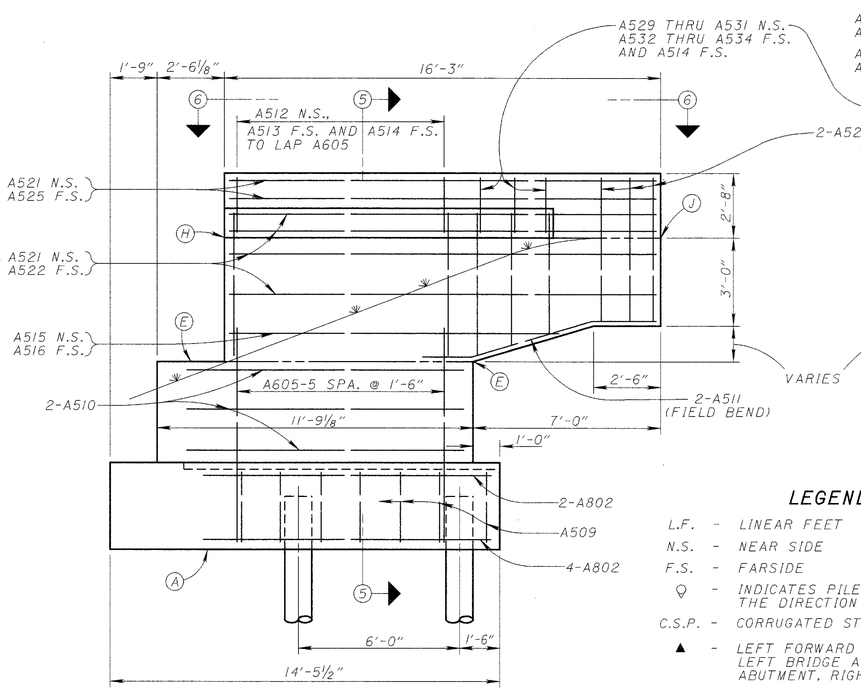


VIEW ③-③
(NOT ALL PILES SHOWN)

## LEGEND

| | | |
|---|---|---|
| L.F. | - | LINEAR FEET |
| N.S. | - | NEAR SIDE |
| F.S. | - | FARSIDE |
| ♀ | - | INDICATES PILE TO BE BATTERED IN THE DIRECTION SHOWN. |
| C.S.P. | - | CORRUGATED STEEL PIPE |
| ▲ | - | LEFT FORWARD ABUTMENT, LEFT BRIDGE AND RIGHT REAR ABUTMENT, RIGHT BRIDGE. |
| ⊕ | - | LEFT FORWARD ABUTMENT, RIGHT BRIDGE AND RIGHT REAR ABUTMENT, LEFT BRIDGE. |

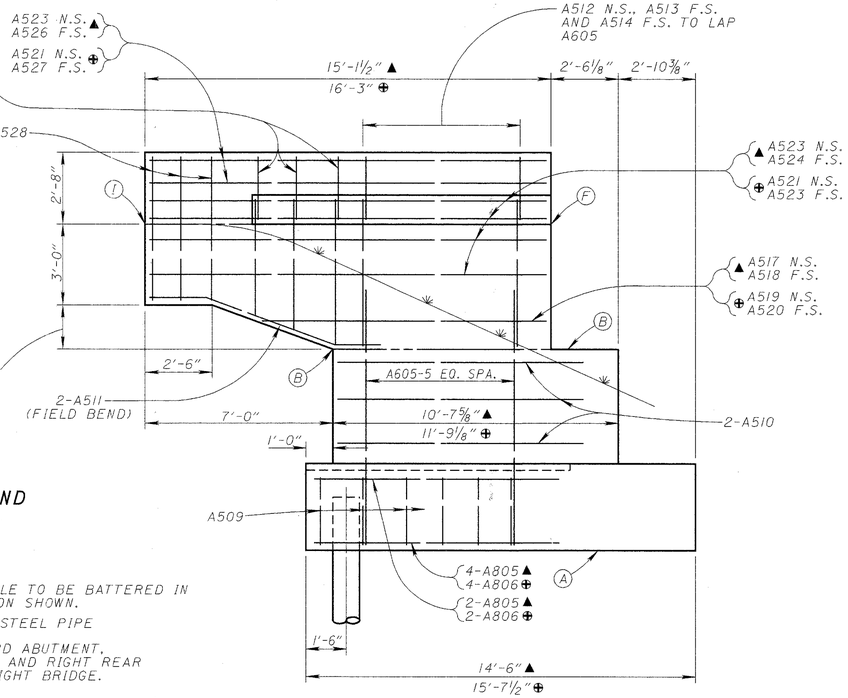


VIEW ④-④
(NOT ALL PILES SHOWN)

SEE SHEET 8 / 15 FOR VIEW ⑥-⑥ AND ITS RELATED SECTIONS.

SEE SHEET 8 / 15 FOR C.S.P. OUTLET DETAILS.

SEE SHEET 8 / 15 FOR CONCRETE SEALING DETAILS.

SEE SHEET 5 / 15 FOR PILE NUMBERS AND PILE LAYOUT PLAN.

SEE SHEET 6 / 15 FOR ELEVATIONS.

NOTE: ALL WINGWALL PARAPETS ABOVE THE CONST. JOINT AT THE APPROACH SLAB SURFACE SHALL BE CLASS "S" CONCRETE.

STATE OF OHIO
DEPARTMENT OF TRANSPORTATION
BUREAU OF BRIDGES AND STRUCTURAL DESIGN

7 / 15

# ABUTMENT DETAILS
## BRIDGE NO. OTT-2-2313 L&R OVER CONRAIL R.R. AND STATE ST.

| DESIGNED | DRAWN | TRACED | CHECKED | REVIEWED | DATE | REVISED |
|---|---|---|---|---|---|---|
| FO | SAM | | JS | LMW | 3-23-94 | |

| FED. RD. DIVISION | STATE | PROJECT | TYPE FUNDS |
|---|---|---|---|
| 5 | OHIO | | |

356
367

OTT-2-16.60

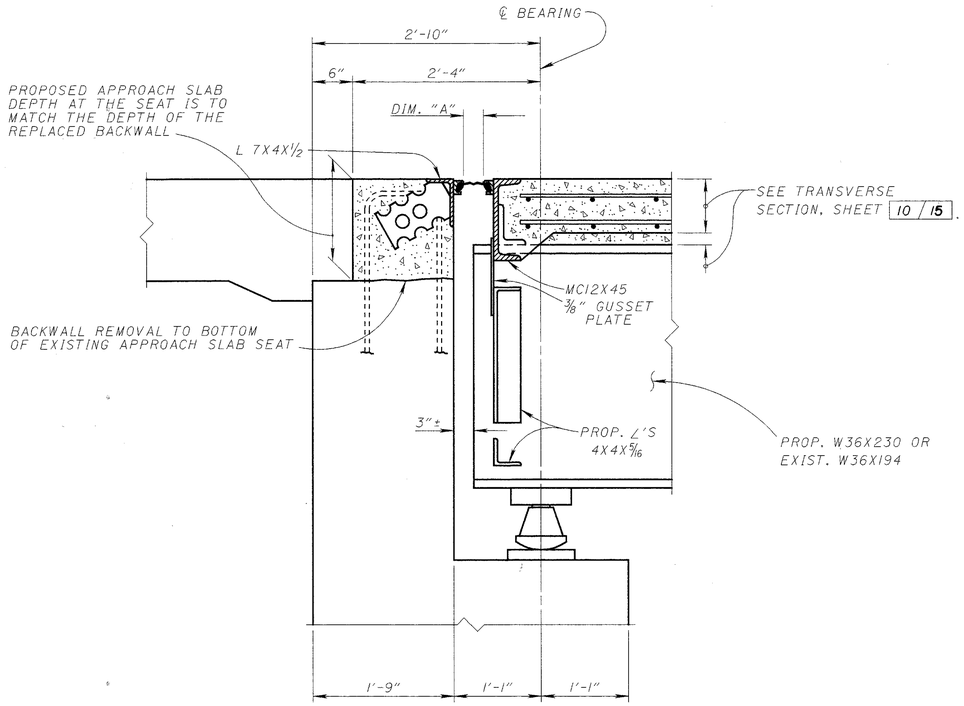


**SECTION (1)-(1)**

FOR ADDITIONAL EXPANSION JOINT DETAILS, SEE STD. DRWG. EXJ-4-87

| AMBIENT TEMP (°F) | DIMENSION "A" R.A. (4" SEAL) | F.A. (5" SEAL) |
|---|---|---|
| | | |
| 30° | 2 1/2" | 3" |
| 40° | 2 5/16" | 2 13/16" |
| 50° | 2 3/16" | 2 11/16" |
| 60° | 2" | 2 1/2" |
| 70° | 1 7/8" | 2 1/4" |
| 80° | 1 3/4" | 2 1/8" |
| 90° | 1 9/16" | 1 7/8" |
| | | |

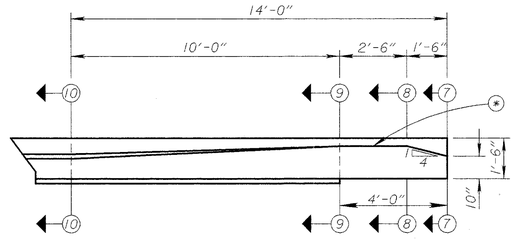


**VIEW (6)-(6)**

(SIMILAR FOR ALL WINGWALLS)

(*)-FOR BRIDGE TERMINAL ASSEMBLYS, TYPE 1 & 2 DETAILS, SEE STD. CONST. DRWG. GR-3.1 & GR-3.2.

SEE SITE PLAN FOR LOCATION OF EACH TYPE.

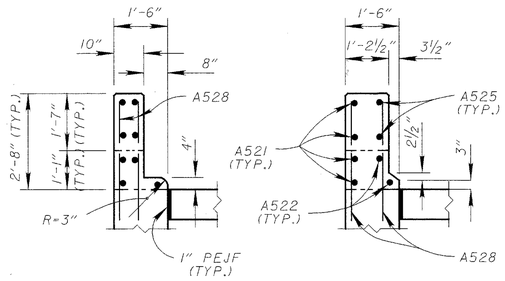


**SECTION (7)-(7)** **SECTION (8)-(8)** **SECTION (9)-(9)** **SECTION (10)-(10)**

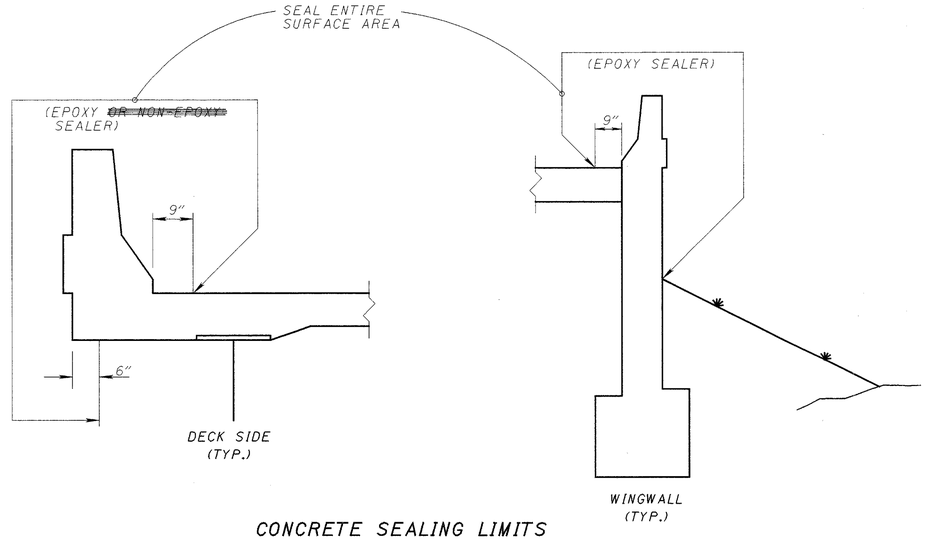


CONCRETE SEALING LIMITS

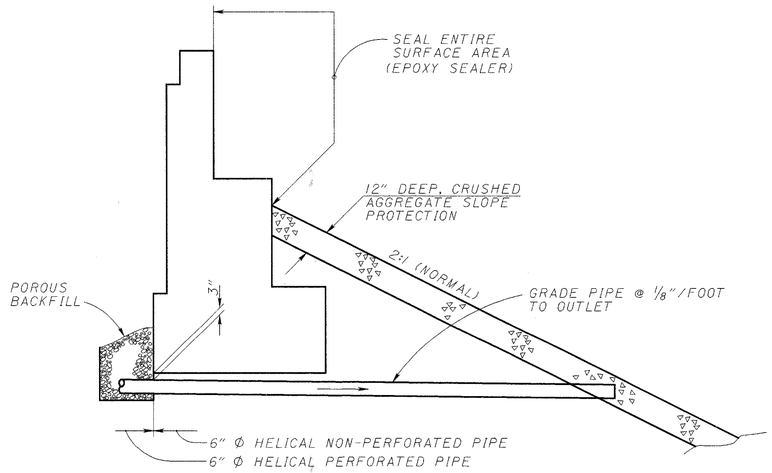


CORRUGATED STEEL PIPE OUTLET DETAIL

(TYPICAL AT EACH ABUTMENT CORNER)

## LEGEND

PEJF = PREFORMED EXPANSION JOINT FILLER
R.A. = REAR ABUTMENT
F.A. = FORWARD ABUTMENT

STATE OF OHIO
DEPARTMENT OF TRANSPORTATION
BUREAU OF BRIDGES AND STRUCTURAL DESIGN

8 / 15

# MISCELLANEOUS DETAILS
# BRIDGE NO. OTT-2-2313 L&R OVER CONRAIL R.R. AND STATE ST.

| DESIGNED | DRAWN | TRACED | CHECKED | REVIEWED | DATE | REVISED |
|---|---|---|---|---|---|---|
| FO | SAM | | JS | LMW | 3-23-94 | |

| FED. RD. DIVISION | STATE | PROJECT | TYPE FUNDS |
|---|---|---|---|
| 5 | OHIO | | |

357
367

OTT-2-16.60

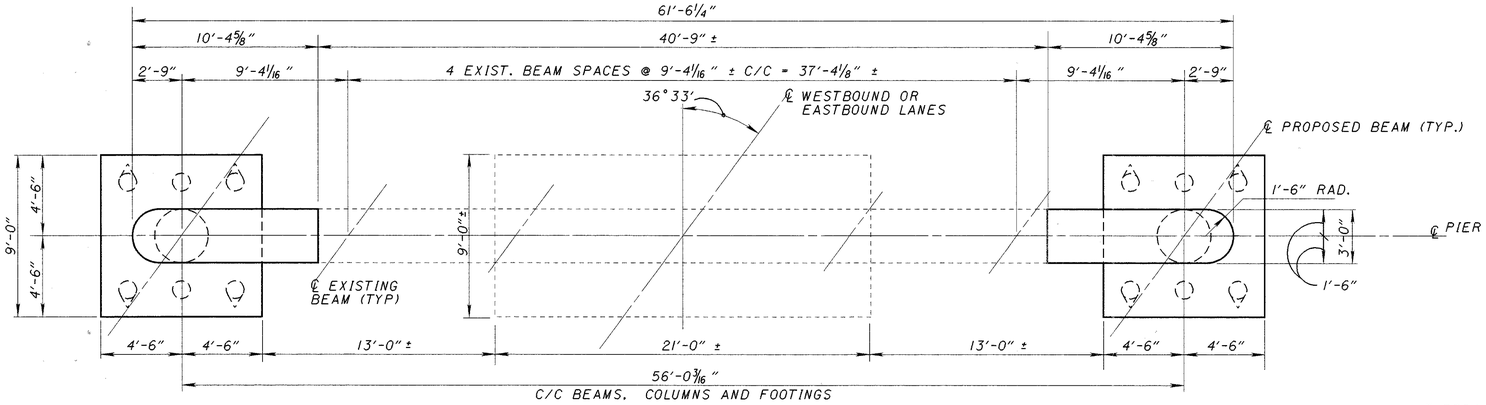


PLAN

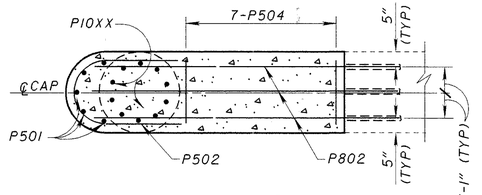


SECTION 3-3

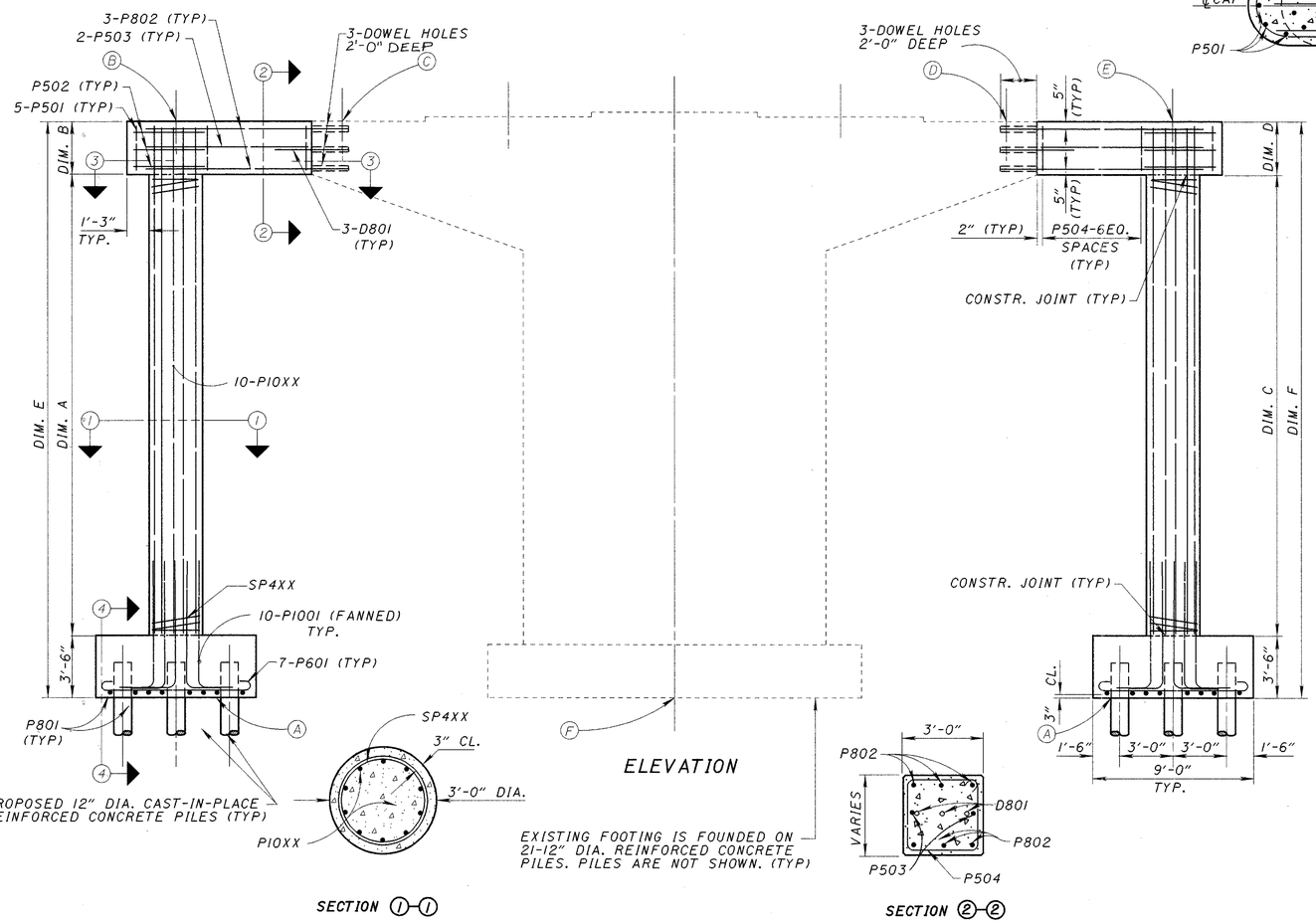


ELEVATION

SECTION 1-1




SECTION 2-2

FOR PILE LAYOUT PLAN AND PILE NUMBERING, SEE SHEET 5 / 15

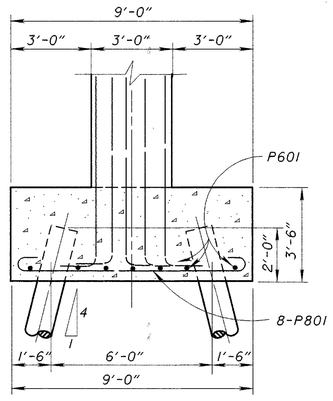


SECTION 4-4

BRIDGE SEAT REINFORCING AT PIER NO. 3 (LT. & RT. BRIDGES) : REINFORCING STEEL IN THE VICINITY OF THE BRIDGE SEAT SHALL BE ACCURATELY PLACED TO AVOID INTERFERENCE WITH THE DRILLING OF BEARING ANCHOR HOLES OR THE PRE-SETTING OF BEARING ANCHORS.

**RE-STEEL BAR NUMBERS**

| LOCATION | | SP4XX LT. & RT. COL. | P10XX LT. COL. | P10XX RT. COL. |
|---|---|---|---|---|
| LEFT BRIDGE | PIER 1 | SP401 | P1002 | P1002 |
| | PIER 2 | SP402 | P1003 | P1003 |
| | PIER 3 | SP403 | P1004 | P1004 |
| | PIER 4 | SP404 | P1005 | P1006 |
| | PIER 5 | SP405 | P1007 | P1008 |
| | PIER 6 | SP406 | P1009 | P1010 |
| RIGHT BRIDGE | PIER 1 | SP407 | P1011 | P1011 |
| | PIER 2 | SP408 | P1012 | P1012 |
| | PIER 3 | SP409 | P1013 | P1014 |
| | PIER 4 | SP410 | P1015 | P1016 |
| | PIER 5 | SP411 | P1017 | P1018 |
| | PIER 6 | SP412 | P1019 | P1020 |

**ELEVATIONS**

| LOCATION | | A | B | C | D | E | F |
|---|---|---|---|---|---|---|---|
| LEFT BRIDGE | PIER 1 | 571.80 | 603.80 | 603.79 | 603.85 | 603.89 | 571.8± |
| | PIER 2 | 573.80 | 603.95 | 603.92 | 603.90 | 603.92 | 573.8± |
| | PIER 3 | 571.30 | 603.88 | 603.80 | 603.72 | 603.76 | 571.3± |
| | PIER 4 | 573.30 | 603.56 | 603.45 | 603.31 | 603.34 | 573.3± |
| | PIER 5 | 574.30 | 603.02 | 602.90 | 602.69 | 602.71 | 574.3± |
| | PIER 6 | 570.80 | 602.15 | 602.06 | 601.79 | 601.74 | 570.8± |
| RIGHT BRIDGE | PIER 1 | 571.80 | 603.93 | 603.91 | 603.92 | 603.95 | 571.8± |
| | PIER 2 | 573.80 | 603.87 | 603.83 | 603.76 | 603.77 | 573.8± |
| | PIER 3 | 571.30 | 603.63 | 603.53 | 603.39 | 603.43 | 571.3± |
| | PIER 4 | 573.30 | 603.12 | 603.01 | 602.81 | 602.83 | 573.3± |
| | PIER 5 | 574.30 | 602.41 | 602.28 | 602.02 | 602.02 | 574.3± |
| | PIER 6 | 570.80 | 601.35 | 601.25 | 600.93 | 600.86 | 570.8± |

**DIMENSIONS**

| LOCATION | | A | B | C | D | E | F |
|---|---|---|---|---|---|---|---|
| LEFT BRIDGE | PIER 1 | 25'-5 3/4" | 3'-0 1/4" | 25'-5 3/4" | 3'-1 3/8" | 32'-0" | 32'-1 1/8" |
| | PIER 2 | 23'-7 1/8" | 3'-0 3/4" | 23'-7 1/8" | 3'-0 3/8" | 30'-1 3/4" | 30'-1 3/8" |
| | PIER 3 | 25'-10 7/8" | 3'-2" | 25'-10 7/8" | 3'-0 1/2" | 32'-7" | 32'-5 1/2" |
| | PIER 4 | 23'-6" | 3'-3 1/8" | 23'-6" | 3'-0 1/2" | 30'-3 1/8" | 30'-0 1/2" |
| | PIER 5 | 21'-10 5/8" | 3'-4" | 21'-10 7/8" | 3'-0 1/4" | 28'-8 7/8" | 28'-4 7/8" |
| | PIER 6 | 24'-5 3/4" | 3'-4 1/2" | 24'-5 3/4" | 3'-0" | 31'-4 1/4" | 30'-11 1/4" |
| RIGHT BRIDGE | PIER 1 | 25'-7 1/4" | 3'-0 3/8" | 25'-7 1/4" | 3'-0 5/8" | 32'-1 1/2" | 32'-1 3/4" |
| | PIER 2 | 23'-5 3/8" | 3'-1 1/2" | 23'-5 3/8" | 3'-0 1/4" | 30'-0 7/8" | 29'-11 5/8" |
| | PIER 3 | 25'-7" | 3'-3" | 25'-7" | 3'-0 5/8" | 32'-4" | 32'-1 1/2" |
| | PIER 4 | 23'-0" | 3'-3 7/8" | 23'-0" | 3'-0 3/8" | 29'-9 7/8" | 29'-6 3/8" |
| | PIER 5 | 21'-2 1/2" | 3'-4 3/4" | 21'-2 1/2" | 3'-0" | 28'-1 3/8" | 27'-8 5/8" |
| | PIER 6 | 23'-7 1/2" | 3'-5" | 23'-7 1/2" | 3'-0" | 30'-6 7/8" | 30'-0 3/4" |

STATE OF OHIO
DEPARTMENT OF TRANSPORTATION
BUREAU OF BRIDGES AND STRUCTURAL DESIGN

9 / 15

# PIER DETAILS BRIDGE NO. OTT-2-2313 L&R OVER CONRAIL R.R. AND STATE ST.

| DESIGNED | DRAWN | TRACED | CHECKED | REVIEWED | DATE | REVISED |
|---|---|---|---|---|---|---|
| FO | FO | | JS | LMW | 3-23-94 | |

| FED. RD. DIVISION | STATE | PROJECT | TYPE FUNDS |
|---|---|---|---|
| 5 | OHIO | | |

358
367

OTT-2-16.60

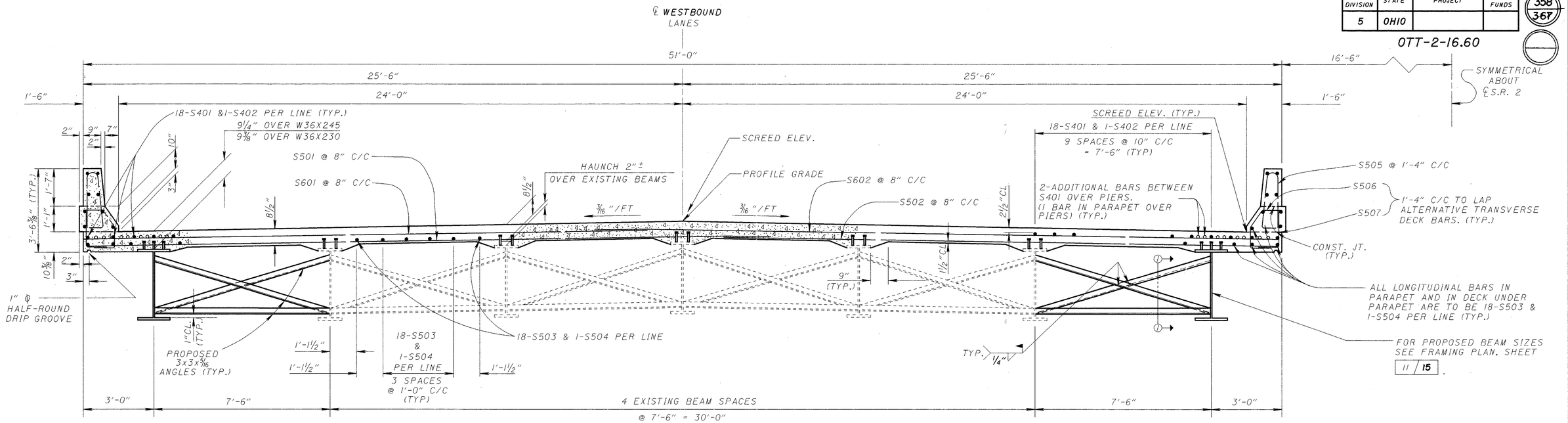


## HALF-TRANSVERSE SECTION

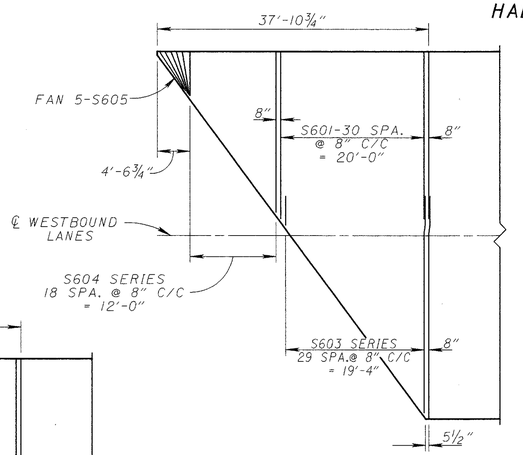


## TYPICAL TOP REINFORCEMENT AT DECK ENDS

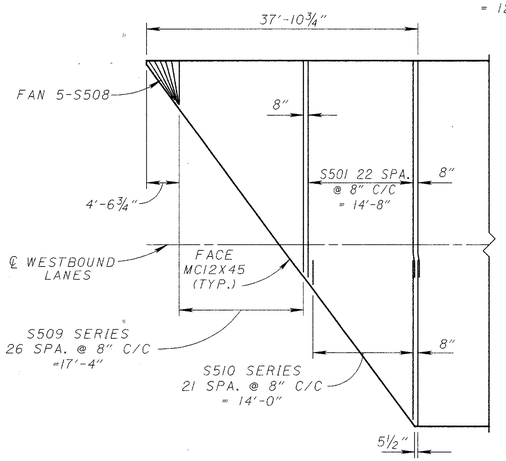


## TYPICAL BOTTOM REINFORCEMENT AT DECK ENDS

BAR LAPS REQ'D
NO. 4 (TOP) = 2'-3" MIN.
NO. 5 (BOTT.) = 2'-0" MIN.
NO. 6 (TOP) = 3'-5" MIN.

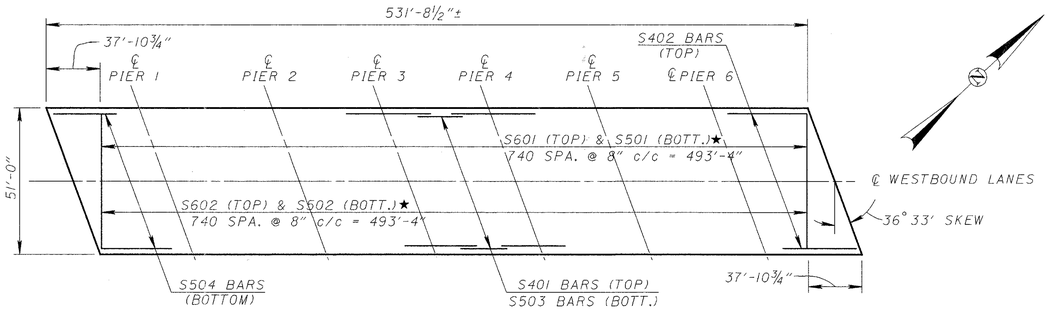


## DECK REINFORCING PLAN

**(LT. BRIDGE IS SHOWN, RT. BRIDGE IS IDENTICAL)**

★ - FOR LAP DETAILS SEE TRANSVERSE SECTION.

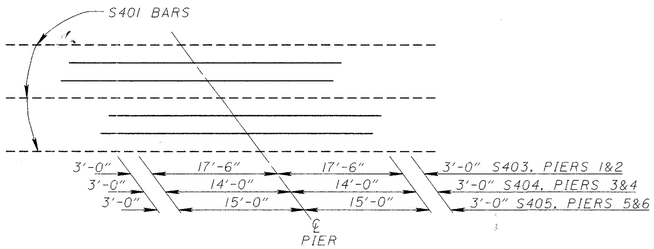


## DIAGRAM SHOWING STAGGER OF ADDITIONAL BARS OVER PIERS

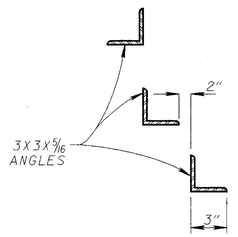


**SECTION ⓘ - ⓘ**

WELD BOTH SIDES OF VERTICAL LEG AND TOP SIDE OF HORIZONTAL LEG TO BEAM WITH ¼" CONTINUOUS FILLET WELD. (TYP)

DECK SLAB DEPTH: THE DISTANCE SHOWN FROM TOP OF DECK SLAB TO TOP OF HAUNCH IS THE DESIGN DIMENSION. THE QUANTITY OF DECK CONCRETE TO BE PAID FOR SHALL BE BASED ON THIS DIMENSION PLUS THE HAUNCH DEPTHS.

SEE SHEET 8/15 FOR CONCRETE PARAPET SEALING LIMITS.

SEE SHEET 12/15 FOR PARAPET DEFLECTION JOINT SPACING.

SEE SHEET 13/15 FOR SCREED ELEVATIONS.

STATE OF OHIO
DEPARTMENT OF TRANSPORTATION
BUREAU OF BRIDGES AND STRUCTURAL DESIGN

10/15

# SUPERSTRUCTURE DETAILS
# BRIDGE NO. OTT-2-2313 L&R OVER CONRAIL R.R. AND STATE ST.

| DESIGNED | DRAWN | TRACED | CHECKED | REVIEWED | DATE | REVISED |
|---|---|---|---|---|---|---|
| FO | SAM | | JS | LMW | 3-23-94 | |

| FED. RD. DIVISION | STATE | PROJECT | TYPE FUNDS |
|---|---|---|---|
| 5 | OHIO | | |

359
367

OTT-2-16.60

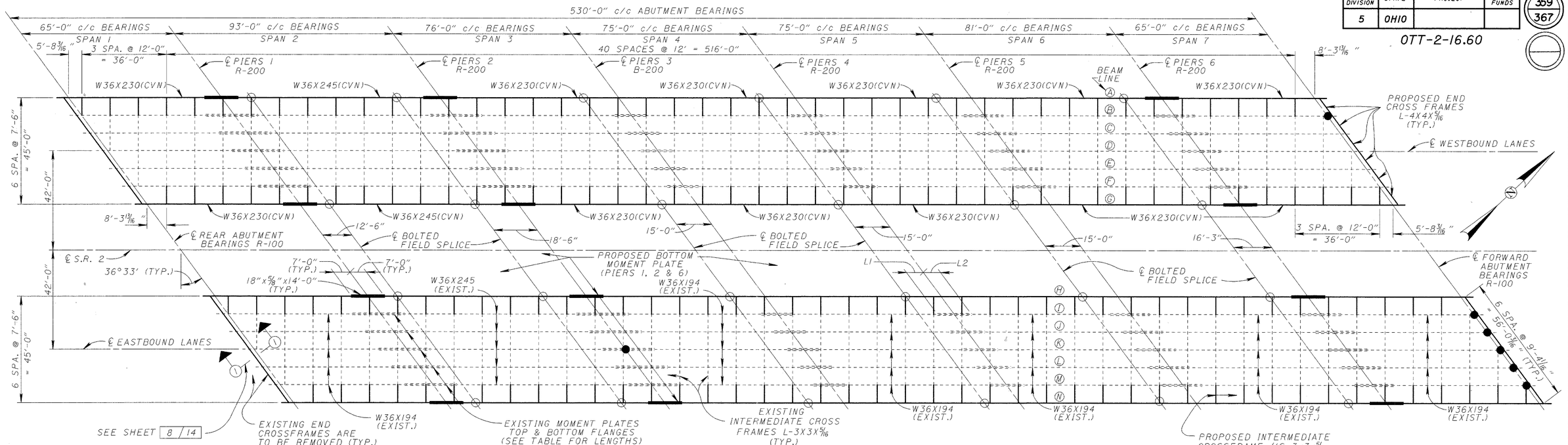


## FRAMING PLAN
(LT. & RT. BRIDGES ARE IDENTICAL)

**EXISTING MOMENT PLATE LENGTHS**

| PIERS NO. | L1 | L2 | T |
|---|---|---|---|
| 1 | 12'-2" | 9'-10" | 5/8" |
| 2 | 9'-9" | 12'-3" | 5/8" |
| 3 | 7'-2" | 6'-10" | 1/2" |
| 4 | 7'-3" | 7'-3" | 1/2" |
| 5 | 8'-9" | 8'-0" | 1/2" |
| 6 | 8'-0" | 8'-6" | 1/2" |

T = THICKNESS
(ALL PLATES ARE 13 1/2" WIDE)

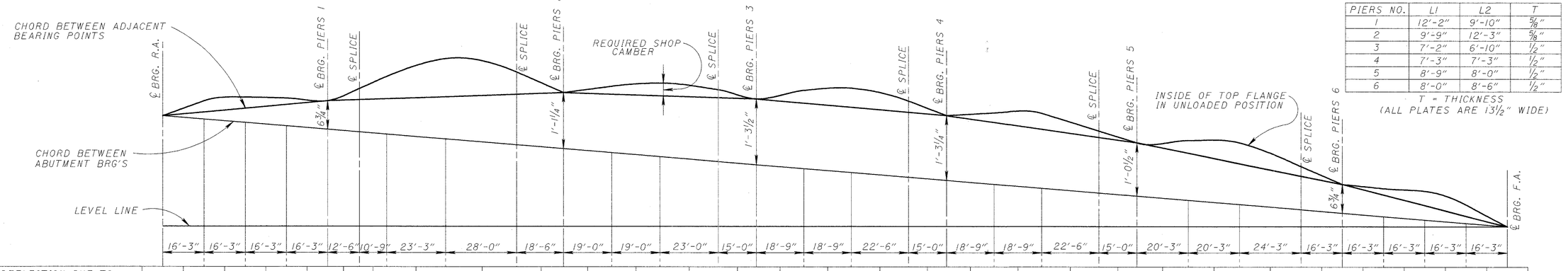


| | | | | | | | | | | | | | | | | | | | | | | | | | | | | | |
|---|---|---|---|---|---|---|---|---|---|---|---|---|---|---|---|---|---|---|---|---|---|---|---|---|---|---|---|---|---|
| DEFLECTION DUE TO WEIGHT OF STEEL | 0 | 1/16 | 1/16 | 0 | 0 | 1/16 | 1/8 | 3/16 | 1/8 | 0 | 0 | 1/16 | 0 | 0 | 1/16 | 1/16 | 1/16 | 0 | 0 | 1/16 | 0 | 0 | 1/16 | 1/8 | 1/16 | 0 | 0 | 1/16 | 1/16 | 0 |
| DEFLECTION DUE TO REMAINING DEAD LOAD | 0 | 3/16 | 3/16 | 1/16 | 0 | 3/16 | 7/16 | 3/4 | 3/8 | 0 | 0 | 1/8 | 1/16 | 0 | 3/16 | 5/16 | 1/8 | 0 | 1/8 | 1/4 | 1/16 | 0 | 1/4 | 3/8 | 1/8 | 0 | 1/8 | 5/16 | 1/4 | 0 |
| ADJUSTMENT FOR VERTICAL CURVE | 0 | 3/16 | 3/16 | 3/16 | 0 | 3/16 | 5/16 | 9/16 | 3/8 | 0 | 5/16 | 5/16 | 1/4 | 0 | 1/4 | 3/8 | 1/4 | 0 | 1/4 | 5/16 | 3/16 | 0 | 3/16 | 5/16 | 3/16 | 0 | 1/8 | 3/16 | 1/8 | 0 |
| REQUIRED SHOP CAMBER | 0 | +7/16" | +7/16" | +1/4" | 0 | +7/16" | +7/8" | +1 1/2" | +7/8" | 0 | +5/16" | +1/2" | +5/16" | 0 | +1/2" | +3/4" | +7/16" | 0 | +3/8" | +5/8" | +1/4" | 0 | +1/2" | +13/16" | +3/8" | 0 | +1/4" | +9/16" | +7/16" | 0 |

## CAMBER DIAGRAM
(FOR PROPOSED BEAM LINES A, G, H & N)

NOTE: WHERE A SHAPE OR PLATE IS DESIGNATED (CVN) THE MATERIAL SHALL MEET SPECIFIED MINIMUM NOTCH TOUGHNESS REQUIREMENTS AS SPECIFIED IN 711.01.

SEE SHEET 13 / 15 FOR ADDITIONAL MOMENT PLATE DETAILS

SEE STANDARD DRAWING RB-1-55, SD-1-69 AND EXJ-4-87 FOR ADDITIONAL DETAILS.

LEGEND

- ● - INDICATES EXISTING BEARING TO BE RESET, AS PER PLAN. (SEE GENERAL NOTES).
- ○ - INDICATES PROPOSED FIELD BOLTED SPLICE. SEE SHEET 13 / 15 FOR DETAILS.

STATE OF OHIO
DEPARTMENT OF TRANSPORTATION
BUREAU OF BRIDGES AND STRUCTURAL DESIGN

11 / 15

# SUPERSTRUCTURE DETAILS
# BRIDGE NO. OTT-2-2313 L&R OVER CONRAIL R.R. AND STATE ST.

| DESIGNED | DRAWN | TRACED | CHECKED | REVIEWED | DATE | REVISED |
|---|---|---|---|---|---|---|
| FO | SAM | | JS | LMW | 3-23-94 | |

| FED. RD. DIVISION | STATE | PROJECT | TYPE FUNDS |
|---|---|---|---|
| 5 | OHIO | | |

360
367

OTT-2-16.60

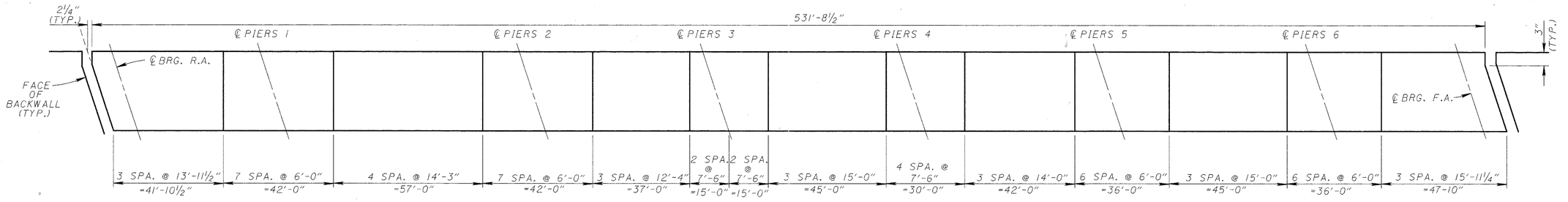


PLAN VIEW

## PARAPET DEFLECTION JOINT SPACING

(FOR SAW CUT JOINTS ONLY)

SEE GENERAL NOTE SHEET 2/15 FOR CONCRETE PARAPET NOTE.

NOTE: T = TENSION ZONE
C = COMPRESSION ZONE
TOP FLANGE IS SHOWN
BOTTOM IS OPPOSITE

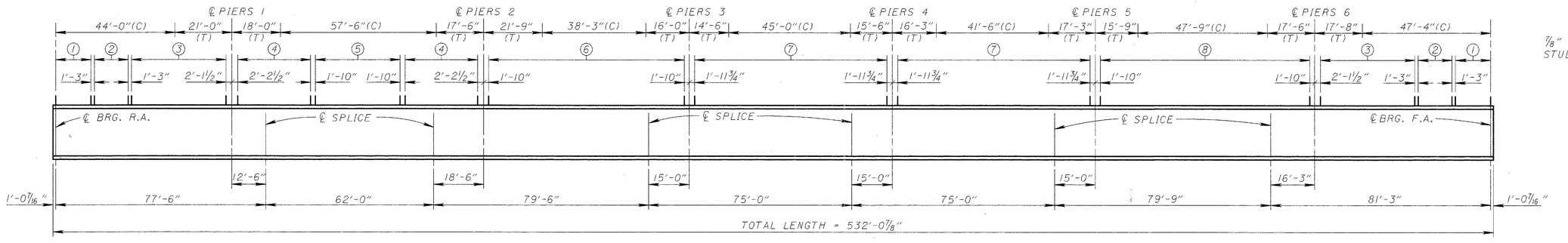


## PROPOSED BEAM ELEVATION

(VERTICAL SCALE IS EXAGGERATED)
1164 SHEAR CONNECTORS REQUIRED PER LINE

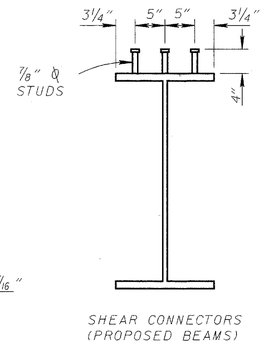


SHEAR CONNECTORS (PROPOSED BEAMS)

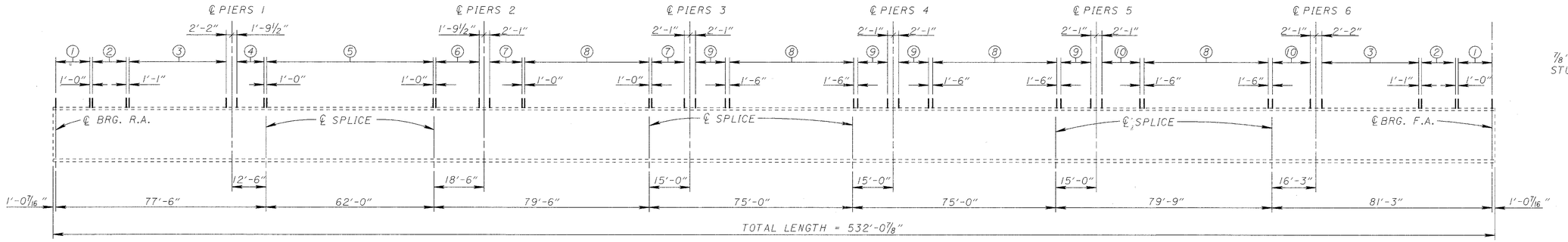


## EXISTING BEAM ELEVATION

(VERTICAL SCALE IS EXAGGERATED)
974 SHEAR CONNECTORS REQUIRED PER LINE

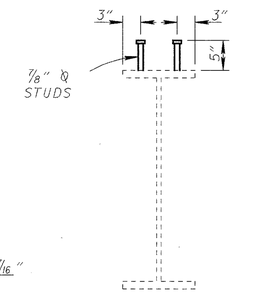


SHEAR CONNECTORS (EXISTING BEAMS)

SHEAR CONNECTOR SPACING (PROPOSED BEAMS)

① 12 SPACES @ 1'-1" = 13'-0"
② 10 SPACES @ 1'-3" = 12'-6"
③ 27 SPACES @ 1'-3½" = 34'-10½"
④ 14 SPACES @ 1'-11" = 26'-10"
⑤ 25 SPACES @ 1'-3" = 31'-3"
⑥ 56 SPACES @ 1'-3½" = 72'-4"
⑦ 55 SPACES @ 1'-3½" = 71'-0½"
⑧ 58 SPACES @ 1'-4" = 77'-4"

SHEAR CONNECTOR SPACING (EXISTING BEAMS)

① 15 SPACES @ 10" = 12'-6"
② 10 SPACES @ 1'-3" = 12'-6"
③ 33 SPACES @ 1'-1" = 35'-9"
④ 5 SPACES @ 2'-0" = 10'-0"
⑤ 67 SPACES @ 11" = 61'-5"
⑥ 8 SPACES @ 2'-0" = 16'-0"
⑦ 6 SPACES @ 2'-0" = 12'-0"
⑧ 55 SPACES @ 10" = 45'-10"
⑨ 6 SPACES @ 1'-10" = 11'-0"
⑩ 7 SPACES @ 2'-0" = 14'-0"

NOTE: COMPRESSION AND TENSION ZONES ARE SIMILAR AS SHOWN ON PROPOSED BEAMS.

NOTE: WELDED ATTACHMENT OF SUPPORTS FOR CONCRETE DECK FINISHING MACHINE MAY BE MADE TO AREAS OF THE FASCIA STRINGER FLANGES DESIGNATED "COMPRESSION". ATTACHMENTS SHALL NOT BE MADE TO AREAS DESIGNATED "TENSION". FILLET WELDS TO COMPRESSION FLANGES SHALL BE NOT CLOSER THAN 1" FROM EDGE OF FLANGE, BE NOT MORE THAN 2" LONG, AND BE NOT SMALLER THAN THE MINIMUM SIZE REQUIRED BY AASHTO.

NOTE: CONNECTORS MAY BE MOVED SLIGHTLY AT THE SPLICES TO AVOID INTERFERENCE WITH THE FLANGE BOLTS.

STATE OF OHIO
DEPARTMENT OF TRANSPORTATION
BUREAU OF BRIDGES AND STRUCTURAL DESIGN

12/15

# SUPERSTRUCTURE DETAILS
# BRIDGE NO. OTT-2-2313 L&R OVER CONRAIL R.R. AND STATE ST.

| DESIGNED | DRAWN | TRACED | CHECKED | REVIEWED | DATE | REVISED |
|---|---|---|---|---|---|---|
| FO | SAM | | JS | LMW | 3-23-94 | |

| FED. RD. DIVISION | STATE | PROJECT | TYPE FUNDS |
|---|---|---|---|
| 5 | OHIO | | |

361
367

OTT-2-16.60

# SCREED ELEVATIONS

| SPAN | POINT | LT. BRIDGE LT. CURB | | LT. BRIDGE BEAM "D" | | LT. BRIDGE RT. CURB | | RT. BRIDGE LT. CURB | | RT. BRIDGE BEAM "K" | | RT. BRIDGE RT. CURB | |
|---|---|---|---|---|---|---|---|---|---|---|---|---|---|
| | | STA | ELEV | STA | ELEV | STA | ELEV | STA | ELEV | STA | ELEV | STA | ELEV |
| | R.A. | 1220+56.32 | 608.67 | 1220+74.12 | 609.14 | 1220+91.91 | 608.85 | 1221+18.59 | 608.96 | 1221+36.38 | 609.39 | 1221+54.18 | 609.06 |
| 1 | 1/4 | 1220+72.57 | 608.77 | 1220+90.37 | 609.24 | 1221+08.16 | 608.94 | 1221+34.84 | 609.03 | 1221+52.63 | 609.45 | 1221+70.43 | 609.11 |
| 1 | 1/2 | 1220+88.82 | 608.86 | 1221+06.62 | 609.31 | 1221+24.41 | 609.00 | 1221+51.09 | 609.07 | 1221+68.88 | 609.48 | 1221+86.68 | 609.13 |
| 1 | 3/4 | 1221+05.07 | 608.91 | 1221+22.87 | 609.35 | 1221+40.66 | 609.03 | 1221+67.34 | 609.09 | 1221+85.13 | 609.49 | 1222+02.93 | 609.13 |
| | PIER 1 | 1221+21.32 | 608.97 | 1221+39.12 | 609.40 | 1221+56.91 | 609.07 | 1221+83.59 | 609.11 | 1222+01.38 | 609.50 | 1222+19.18 | 609.13 |
| 2 | 1/4 | 1221+44.57 | 609.08 | 1221+62.37 | 609.49 | 1221+80.16 | 609.14 | 1222+06.84 | 609.16 | 1222+24.63 | 609.54 | 1222+42.43 | 609.15 |
| 2 | 1/2 | 1221+67.82 | 609.15 | 1221+85.62 | 609.55 | 1222+03.41 | 609.19 | 1222+30.09 | 609.18 | 1222+47.88 | 609.54 | 1222+65.68 | 609.14 |
| 2 | 3/4 | 1221+91.07 | 609.16 | 1222+08.87 | 609.54 | 1222+26.66 | 609.16 | 1222+53.34 | 609.13 | 1222+71.13 | 609.47 | 1222+88.93 | 609.05 |
| | PIER 2 | 1222+14.32 | 609.13 | 1222+32.12 | 609.49 | 1222+49.91 | 609.10 | 1222+76.59 | 609.05 | 1222+94.38 | 609.37 | 1223+12.18 | 608.94 |
| 3 | 1/4 | 1222+33.32 | 609.12 | 1222+51.12 | 609.47 | 1222+68.91 | 609.07 | 1222+95.59 | 609.00 | 1223+13.38 | 609.31 | 1223+31.18 | 608.86 |
| 3 | 1/2 | 1222+52.32 | 609.11 | 1222+70.12 | 609.45 | 1222+87.91 | 609.03 | 1223+14.59 | 608.94 | 1223+32.38 | 609.24 | 1223+50.18 | 608.78 |
| 3 | 3/4 | 1222+71.32 | 609.07 | 1222+89.12 | 609.40 | 1223+06.91 | 608.97 | 1223+33.59 | 608.86 | 1223+51.38 | 609.14 | 1223+69.18 | 608.67 |
| | PIER 3 | 1222+90.32 | 609.01 | 1223+08.12 | 609.33 | 1223+25.91 | 608.88 | 1223+52.59 | 608.76 | 1223+70.38 | 609.03 | 1223+88.18 | 608.55 |
| 4 | 1/4 | 1223+09.07 | 608.97 | 1223+26.87 | 609.27 | 1223+44.66 | 608.81 | 1223+71.34 | 608.67 | 1223+89.13 | 608.93 | 1224+06.93 | 608.43 |
| 4 | 1/2 | 1223+27.82 | 608.90 | 1223+45.62 | 609.19 | 1223+63.41 | 608.72 | 1223+90.09 | 608.56 | 1224+07.88 | 608.81 | 1224+25.68 | 608.30 |
| 4 | 3/4 | 1223+46.57 | 608.80 | 1223+64.37 | 609.08 | 1223+82.16 | 608.60 | 1224+08.84 | 608.42 | 1224+26.63 | 608.65 | 1224+44.43 | 608.13 |
| | PIER 4 | 1223+65.32 | 608.69 | 1223+83.12 | 608.95 | 1224+00.91 | 608.46 | 1224+27.59 | 608.26 | 1224+45.38 | 608.48 | 1224+63.18 | 607.95 |
| 5 | 1/4 | 1223+84.07 | 608.58 | 1224+01.87 | 608.84 | 1224+19.66 | 608.33 | 1224+46.34 | 608.11 | 1224+64.13 | 608.32 | 1224+81.93 | 607.77 |
| 5 | 1/2 | 1224+02.82 | 608.46 | 1224+20.62 | 608.71 | 1224+38.41 | 608.19 | 1224+65.09 | 607.95 | 1224+82.88 | 608.15 | 1225+00.68 | 607.59 |
| 5 | 3/4 | 1224+21.57 | 608.31 | 1224+39.37 | 608.54 | 1224+57.16 | 608.01 | 1224+83.84 | 607.75 | 1225+01.63 | 607.94 | 1225+19.43 | 607.37 |
| | PIER 5 | 1224+40.32 | 608.15 | 1224+58.12 | 608.37 | 1224+75.91 | 607.82 | 1225+02.59 | 607.55 | 1225+20.38 | 607.72 | 1225+38.18 | 607.14 |
| 6 | 1/4 | 1224+60.57 | 607.99 | 1224+78.37 | 608.19 | 1224+96.16 | 607.63 | 1225+22.84 | 607.34 | 1225+40.63 | 607.50 | 1225+58.43 | 606.90 |
| 6 | 1/2 | 1224+80.82 | 607.81 | 1224+98.62 | 608.00 | 1225+16.41 | 607.43 | 1225+43.09 | 607.11 | 1225+60.88 | 607.26 | 1225+78.68 | 606.64 |
| 6 | 3/4 | 1225+01.07 | 607.58 | 1225+18.87 | 607.76 | 1225+36.66 | 607.17 | 1225+63.34 | 606.83 | 1225+81.13 | 606.97 | 1225+98.93 | 606.34 |
| | PIER 6 | 1225+21.32 | 607.34 | 1225+39.12 | 607.50 | 1225+56.91 | 606.90 | 1225+83.59 | 606.54 | 1226+01.38 | 606.66 | 1226+19.18 | 606.02 |
| 7 | 1/4 | 1225+37.57 | 607.15 | 1225+55.37 | 607.31 | 1225+73.16 | 606.69 | 1225+99.84 | 606.32 | 1226+17.63 | 606.43 | 1226+35.43 | 605.78 |
| 7 | 1/2 | 1225+53.82 | 606.96 | 1225+71.62 | 607.11 | 1225+89.41 | 606.48 | 1226+16.09 | 606.09 | 1226+33.88 | 606.20 | 1226+51.68 | 605.53 |
| 7 | 3/4 | 1225+70.07 | 606.75 | 1225+87.87 | 606.88 | 1226+05.66 | 606.25 | 1226+32.34 | 605.84 | 1226+50.13 | 605.93 | 1226+67.93 | 605.25 |
| | F.A. | 1225+86.32 | 606.50 | 1226+04.12 | 606.62 | 1226+21.91 | 605.98 | 1226+48.59 | 605.56 | 1226+66.38 | 605.63 | 1226+84.18 | 604.95 |

NOTE: ALL SCREED ELEVATIONS GIVEN AT THE ℄ OF BEARING OF EACH SUB-STRUCTURE AND AT THE 1/4 POINTS OF EACH SPAN.

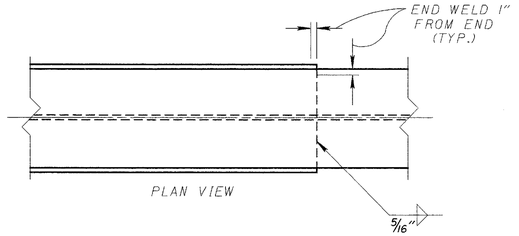


BOTTOM MOMENT PLATES

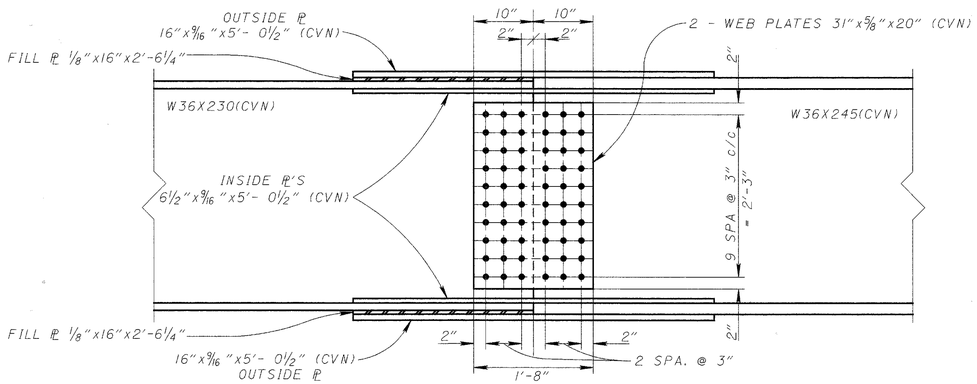


ELEVATION

NOTE: SPLICE SHOWN IS BETWEEN W36X245 & W36X230. SPLICES BETWEEN 2-W36X230 ARE IDENTICAL EXCEPT FILL PLATES SHALL BE EXCLUDED.

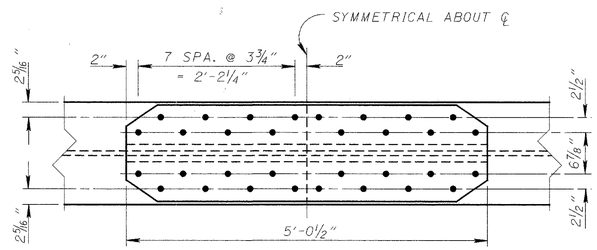


PLAN VIEW

NOTE: ALL BOLTED CONNECTIONS SHALL BE MADE WITH HIGH STRENGTH 1" DIAMETER BOLTS.

NOTE: WHERE A SHAPE OR PLATE IS DESIGNATED (CVN), THE MATERIAL SHALL MEET SPECIFIED MINIMUM NOTCH TOUGHNESS REQUIREMENTS AS SPECIFIED IN 711.01 OF CMS.

PROPOSED SPLICE DETAILS

STATE OF OHIO
DEPARTMENT OF TRANSPORTATION
BUREAU OF BRIDGES AND STRUCTURAL DESIGN

13 / 15

SUPERSTRUCTURE DETAILS
BRIDGE NO. OTT-2-2313 L&R
OVER CONRAIL R.R.
AND STATE ST.

| DESIGNED | DRAWN | TRACED | CHECKED | REVIEWED | DATE | REVISED |
|---|---|---|---|---|---|---|
| FO | SAM | | JS | LMW | 3-23-94 | |

| MARK | NUMBER REAR | NUMBER FWD | NUMBER TOTAL | LENGTH | WEIGHT | TYPE | DIMENSIONS A | B | C | D | E | R | INC. |
|---|---|---|---|---|---|---|---|---|---|---|---|---|---|
| ABUTMENTS | | | | | | | | | | | | | |
| A501 | 12 | 12 | 24 | 33'-1" | 828 | ST | | | | | | | |
| A502 | 40 | 40 | 80 | 7'-6" | 626 | ST | | | | | | | |
| A503 | 28 | 28 | 56 | 8'-11" | 521 | ST | | | | | | | |
| A504 | 24 | 24 | 48 | 9'-5" | 471 | 2 | 4'-6" | 2'-7" | 2'-7" | | | | |
| A505 | 12 | 12 | 24 | 8'-11" | 223 | ST | | | | | | | |
| A506 | 8 | 8 | 16 | 11'-8" | 195 | ST | | | | | | | |
| A507 | 8 | 8 | 16 | 3'-10" | 64 | ST | | | | | | | |
| A508 | 12 | 12 | 24 | 9'-10" | 246 | ST | | | | | | | |
| A509 | 26 | 26 | 52 | 11'-7" | 628 | 6 | 3'-0" | 2'-6" | | | | | |
| A510 | 24 | 24 | 48 | 10'-0" | 501 | ST | | | | | | | |
| A511 | 8 | 8 | 16 | 9'-2" | 153 | ST | | | | | | | |
| A512 | 24 | 24 | 48 | 6'-7" | 330 | ST | | | | | | | |
| A513 | 24 | 24 | 48 | 5'-10" | 292 | 8 | 4'-3" | 8½" | 9" | 6" | | | |
| A514 | 36 | 36 | 72 | 3'-0" | 225 | 5 | 2'-5" | | | | | | |
| A515 | 2 | 2 | 4 | 11'-2" | 47 | ST | | | | | | | |
| A516 | 2 | 2 | 4 | 11'-11" | 50 | ST | | | | | | | |
| A517 | 1 | 1 | 2 | 10'-0" | 21 | ST | | | | | | | |
| A518 | 1 | 1 | 2 | 9'-3" | 19 | ST | | | | | | | |
| A519 | 1 | 1 | 2 | 11'-2" | 23 | ST | | | | | | | |
| A520 | 1 | 1 | 2 | 10'-5" | 22 | ST | | | | | | | |
| A521 | 18 | 18 | 36 | 15'-11" | 598 | ST | | | | | | | |
| A522 | 8 | 8 | 16 | 16'-8" | 278 | ST | | | | | | | |
| A523 | 10 | 10 | 20 | 14'-9" | 308 | ST | | | | | | | |
| A524 | 4 | 4 | 8 | 14'-0" | 117 | ST | | | | | | | |
| A525 | 4 | 4 | 8 | 16'-2" | 135 | 12 | 12'-5" | 2'-4" | 1'-5" | 1½" | 6½" | | |
| A526 | 2 | 2 | 4 | 14'-4" | 60 | 12 | 10'-7" | 2'-4" | 1'-5" | 1½" | 6½" | | |
| A527 | 2 | 2 | 4 | 15'-5" | 64 | 12 | 11'-8" | 2'-4" | 1'-5" | 1½" | 6½" | | |
| A528 | 24 | 24 | 48 | 5'-4" | 267 | ST | | | | | | | |
| A529 | 4 | 4 | 8 | 5'-9" | 48 | ST | | | | | | | |
| A530 | 4 | 4 | 8 | 6'-2" | 51 | ST | | | | | | | |
| A531 | 4 | 4 | 8 | 6'-7" | 55 | ST | | | | | | | |
| A532 | 4 | 4 | 8 | 5'-0" | 42 | 8 | 3'-5" | 8½" | 9" | 6" | | | |
| A533 | 4 | 4 | 8 | 5'-5" | 45 | 8 | 3'-10" | 8½" | 9" | 6" | | | |
| A534 | 4 | 4 | 8 | 5'-10" | 49 | 8 | 4'-3" | 8½" | 9" | 6" | | | |
| A601 | 44 | 44 | 88 | 9'-10" | 1300 | 1 | 6'-7" | 3'-1" | | | | | |
| A602 | 40 | 40 | 80 | 7'-9" | 931 | 2 | 10" | 3'-7" | 3'-7" | | | | |
| A603 | 22 | 22 | 44 | 5'-9" | 380 | 2 | 1'-4" | 2'-4" | 2'-4" | | | | |
| A604 | 22 | 22 | 44 | 10'-11" | 721 | 2 | 1'-4" | 4'-11" | 4'-11" | | | | |
| A605 | 24 | 24 | 48 | 21'-5" | 1544 | 2 | 1'-0" | 10'-4" | 10'-4" | | | | |
| A801 | 24 | 24 | 48 | 8'-11" | 1143 | ST | | | | | | | |
| A802 | 12 | 12 | 24 | 8'-8" | 555 | ST | | | | | | | |
| A803 | 4 | 4 | 8 | 11'-1" | 237 | ST | | | | | | | |
| A804 | 4 | 4 | 8 | 12'-0" | 256 | ST | | | | | | | |
| A805 | 6 | 6 | 12 | 8'-8" | 278 | ST | | | | | | | |
| A806 | 6 | 6 | 12 | 9'-10" | 315 | ST | | | | | | | |
| D801 | 66 | 66 | 132 | 4'-1" | 1439 | 3 | 1'-5" | 2'-8" | 12 | | | | |
| D802 | 76 | 76 | 152 | 3'-0" | 1218 | ST | | | | | | | |

| MARK | NUMBER TOTAL | LENGTH | WEIGHT | TYPE | DIMENSIONS A | B | C | D | E | R | INC. |
|---|---|---|---|---|---|---|---|---|---|---|---|
| PIERS | | | | | | | | | | | |
| P501 | 120 | 2'-8" | 334 | ST | | | | | | | |
| P502 | 72 | 8'-4" | 626 | 11 | 2'-9" | 2'-8" | | | | 1'-4" | |
| P503 | 48 | 9'-1" | 455 | ST | | | | | | | |
| P504 | 168 | 11'-3" | 1971 | 6 | 2'-8" | 2'-8" | | | | | |
| P601 | 168 | 9'-6" | 2397 | 4 | 8'-6" | | | | | | |
| P801 | 192 | 9'-10" | 5039 | 4 | 8'-6" | | | | | | |
| P802 | 144 | 11'-3" | 4325 | ST | | | | | | | |
| D801 | 72 | 4'-0" | 769 | ST | | | | | | | |

NOTE: ALL REINFORCING STEEL IS TO BE EPOXY COATED.
NOTE: TOTALS ARE FOR BOTH LT. & RT. BRIDGES.

| MARK | NUMBER TOTAL | LENGTH | WEIGHT | TYPE | DIMENSIONS A | B | C | D | E | R | INC. |
|---|---|---|---|---|---|---|---|---|---|---|---|
| PIERS (CONT'D) | | | | | | | | | | | |
| P1001 | 240 | 11'-0" | 11360 | 1 | 9'-6" | 1'-10" | | | | | |
| P1002 | 20 | 28'-3" | 2431 | ST | | | | | | | |
| P1003 | 20 | 26'-4" | 2266 | ST | | | | | | | |
| P1004 | 20 | 28'-9" | 2474 | ST | | | | | | | |
| P1005 | 10 | 26'-6" | 1140 | ST | | | | | | | |
| P1006 | 10 | 26'-4" | 1133 | ST | | | | | | | |
| P1007 | 10 | 25'-0" | 1076 | ST | | | | | | | |
| P1008 | 10 | 24'-8" | 1061 | ST | | | | | | | |
| P1009 | 10 | 27'-7" | 1187 | ST | | | | | | | |
| P1010 | 10 | 27'-3" | 1173 | ST | | | | | | | |
| P1011 | 20 | 28'-5" | 2446 | ST | | | | | | | |
| P1012 | 20 | 26'-3" | 2259 | ST | | | | | | | |
| P1013 | 10 | 28'-7" | 1230 | ST | | | | | | | |
| P1014 | 10 | 28'-5" | 1223 | ST | | | | | | | |
| P1015 | 10 | 26'-1" | 1122 | ST | | | | | | | |
| P1016 | 10 | 25'-9" | 1108 | ST | | | | | | | |
| P1017 | 10 | 24'-4" | 1047 | ST | | | | | | | |
| P1018 | 10 | 24'-0" | 1033 | ST | | | | | | | |
| P1019 | 10 | 26'-10" | 1155 | ST | | | | | | | |
| P1020 | 10 | 26'-4" | 1133 | ST | | | | | | | |
| SP401 | 2 | 25'-2" | 845 | 7 | 2'-6" | 4½" | | | | | |
| SP402 | 2 | 23'-4" | 786 | 7 | 2'-6" | 4½" | | | | | |
| SP403 | 2 | 25'-7" | 858 | 7 | 2'-6" | 4½" | | | | | |
| SP404 | 2 | 23'-2" | 780 | 7 | 2'-6" | 4½" | | | | | |
| SP405 | 2 | 21'-7" | 729 | 7 | 2'-6" | 4½" | | | | | |
| SP406 | 2 | 24'-2" | 813 | 7 | 2'-6" | 4½" | | | | | |
| SP407 | 2 | 25'-4" | 850 | 7 | 2'-6" | 4½" | | | | | |
| SP408 | 2 | 23'-2" | 780 | 7 | 2'-6" | 4½" | | | | | |
| SP409 | 2 | 25'-4" | 850 | 7 | 2'-6" | 4½" | | | | | |
| SP410 | 2 | 22'-8" | 764 | 7 | 2'-6" | 4½" | | | | | |
| SP411 | 2 | 20'-11" | 708 | 7 | 2'-6" | 4½" | | | | | |
| SP412 | 2 | 23'-4" | 786 | 7 | 2'-6" | 4½" | | | | | |

| MARK | NUMBER TOTAL | LENGTH | WEIGHT | TYPE | DIMENSIONS A | B | C | D | E | R | INC. |
|---|---|---|---|---|---|---|---|---|---|---|---|
| SUPERSTRUCTURE | | | | | | | | | | | |
| S401 | 2196 | 30'-0" | 44008 | ST | | | | | | | |
| S402 | 122 | 31'-8" | 2581 | ST | | | | | | | |
| S403 | 480 | 38'-0" | 12184 | ST | | | | | | | |
| S404 | 480 | 31'-0" | 9940 | ST | | | | | | | |
| S405 | 480 | 33'-0" | 10581 | ST | | | | | | | |
| S501 | 1574 | 30'-0" | 49250 | ST | | | | | | | |
| S502 | 1482 | 22'-8" | 35042 | ST | | | | | | | |
| S503 | 2088 | 30'-0" | 65334 | ST | | | | | | | |
| S504 | 116 | 27'-4" | 3307 | ST | | | | | | | |
| S505 | 1596 | 5'-3" | 8739 | 10 | 2'-2" | 2'-5" | 1¼ | 7½" | | 2⅛" | |
| S506 | 1596 | 3'-1" | 5133 | 9 | 10" | 8½" | 9" | 6" | 10½" | | |
| S507 | 1596 | 2'-4" | 3879 | 1 | 1'-7" | 10½" | | | | | |
| S508 | 20 | 6'-0" | 125 | ST | | | | | | | |
| | 4 | 6'-0" | | | | | | | | | |
| S509 | SERIES OF | TO | 1976 | ST | | | | | | | 10¾" |
| | 27 | 29'-1" | | | | | | | | | |
| | 4 | 3'-1¾" | | | | | | | | | |
| S510 | SERIES OF | TO | 1152 | ST | | | | | | | 10¾" |
| | 22 | 21'-11½" | | | | | | | | | |
| S601 | 1606 | 24'-1" | 58093 | ST | | | | | | | |
| S602 | 1482 | 30'-0" | 66779 | ST | | | | | | | |
| | 4 | 4'-4" | | | | | | | | | |
| S603 | SERIES OF | TO | 3124 | ST | | | | | | | 10¾" |
| | 30 | 30'-4" | | | | | | | | | |
| | 4 | 6'-0" | | | | | | | | | |
| S604 | SERIES OF | TO | 1608 | ST | | | | | | | 10¾" |
| | 19 | 22'-2" | | | | | | | | | |
| S605 | 20 | 6'-0" | 180 | ST | | | | | | | |

SEE GENERAL NOTES, SHEET 2/15 FOR REINFORCING STEEL NOTE.

| FED. RD. DIVISION | STATE | PROJECT | TYPE FUNDS |
|---|---|---|---|
| 5 | OHIO | | |

362
367

OTT-2-16.60

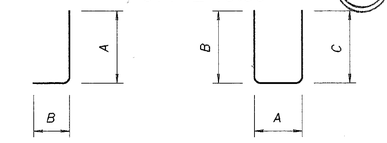


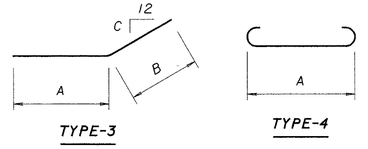


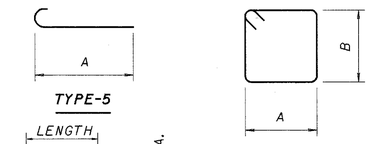


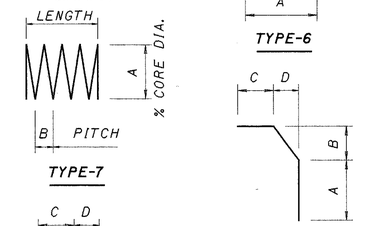


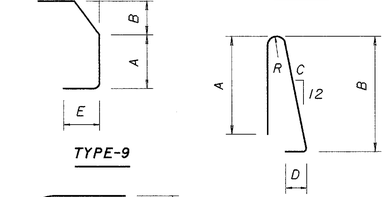


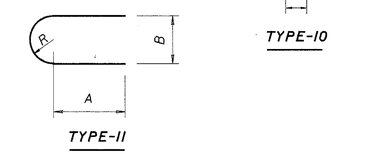


STATE OF OHIO
DEPARTMENT OF TRANSPORTATION
BUREAU OF BRIDGES AND STRUCTURAL DESIGN

14/15

# REINFORCING STEEL LIST
# BRIDGE NO. OTT-2-2313 L&R
# OVER CONRAIL R.R.
# AND STATE ST.

| DESIGNED | DRAWN | TRACED | CHECKED | REVIEWED | DATE | REVISED |
|---|---|---|---|---|---|---|
| SAM | SAM | | JS | LMW | 3-23-94 | |

| FHWA REGION | STATE | PROJECT | |
|---|---|---|---|
| 5 | OHIO | | |

363/367

OTT-2-16.60

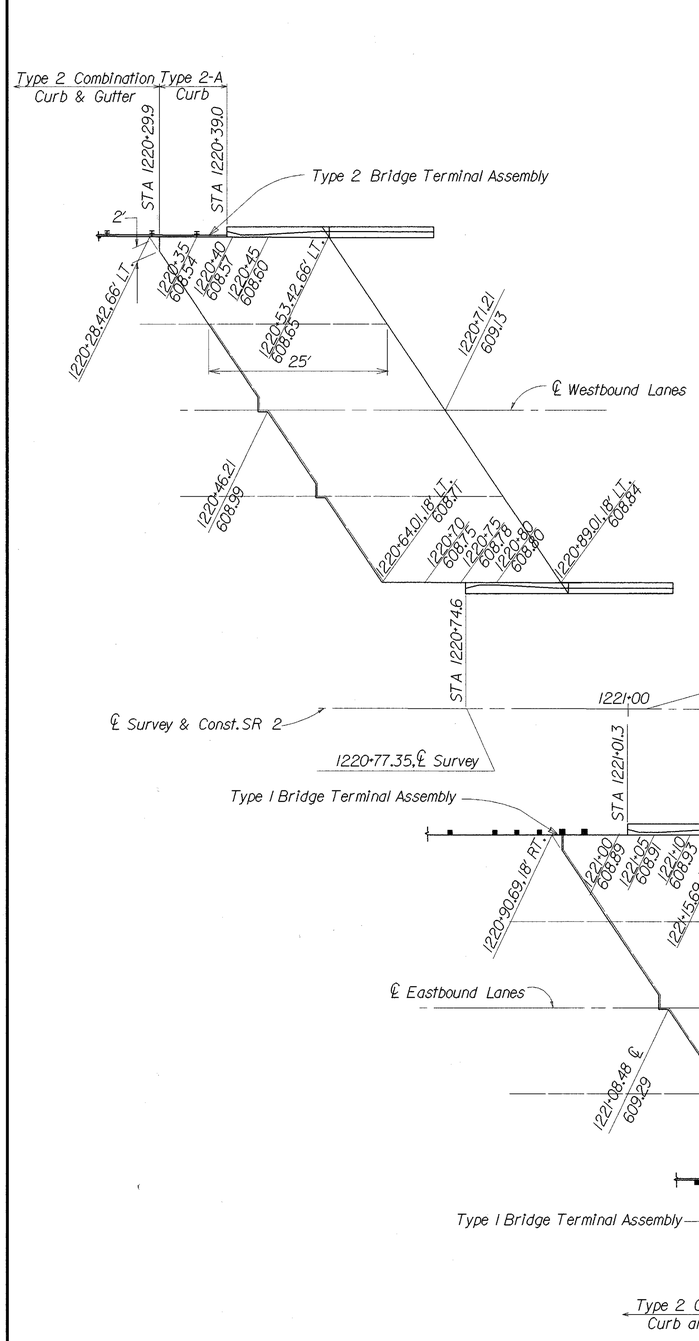


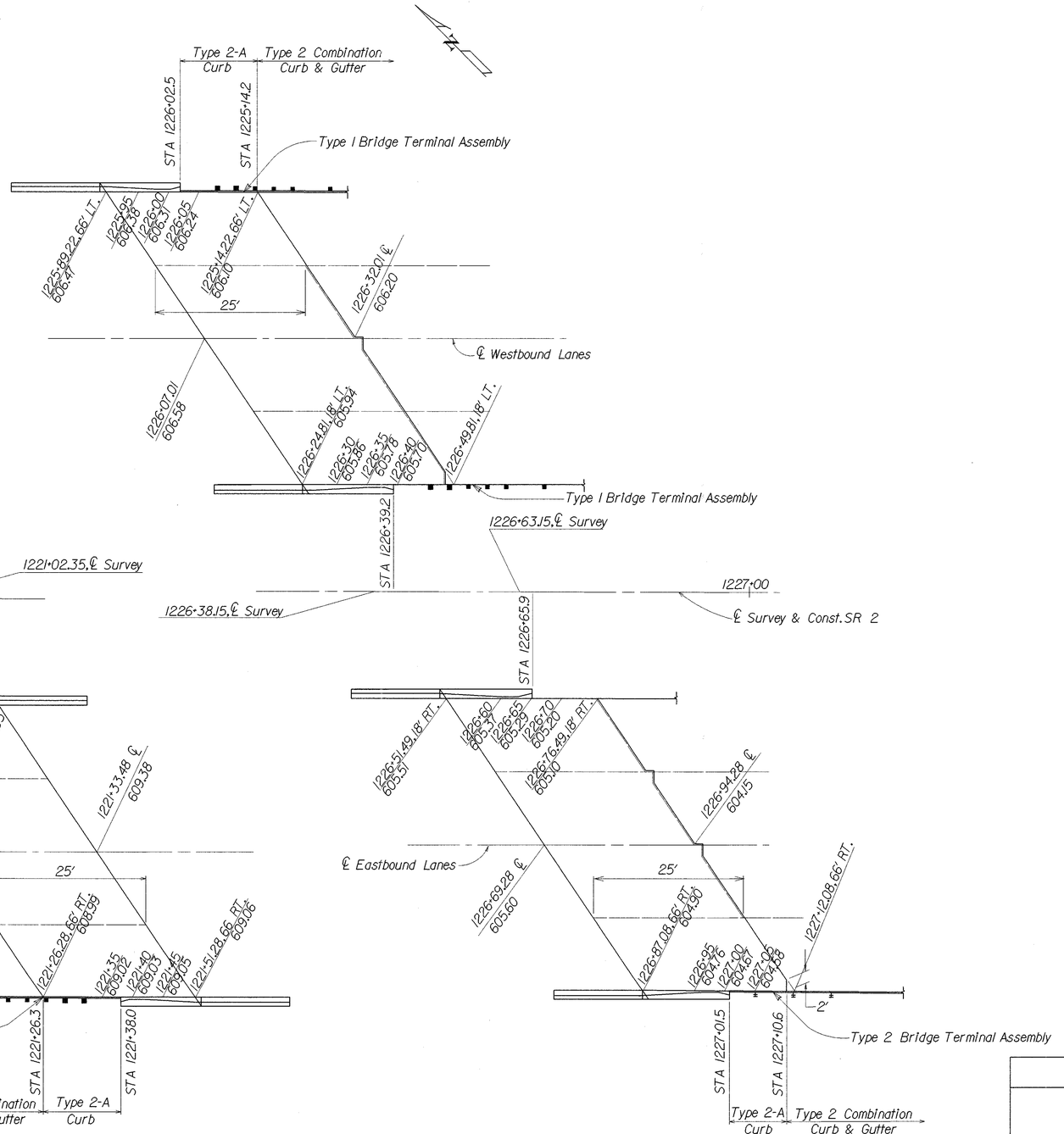


STATE OF OHIO
DEPARTMENT OF TRANSPORTATION
DISTRICT 2 DESIGN & PLANNING OFFICE

15 / 15

# APPROACH SLAB
# BRIDGE NO. OTT-2-2313 L & R
# OVER CONRAIL RR AND
# STATE STREET

| DESIGNED | DRAWN | TRACED | CHECKED | REVIEWED DATE | REVISED |
|---|---|---|---|---|---|
| MTG | ALS | | LLL | LCL 1/9/95 | |

I:/pd/ottawa/ott2/ott2stas.dgn

| | | | |
|---|---|---|---|
| CALC BY ____ DATE ____ | | | OHIO |
| CHKD BY ____ DATE ____ | | | FHWA REGION 5 |
| FEDERAL PROJECT | | STATE PROJECT | |

364 / 367

1 / 4

| RIGHT-OF-WAY | OTT-2-16.60 |
|---|---|
| PID 3586 | SJN 022960 |

# CENTERLINE SURVEY PLAT
# OTT-2-16.60

PORAGE TOWNSHIP
OTTAWA COUNTY
SECTION 4 T-6-N R-17-E

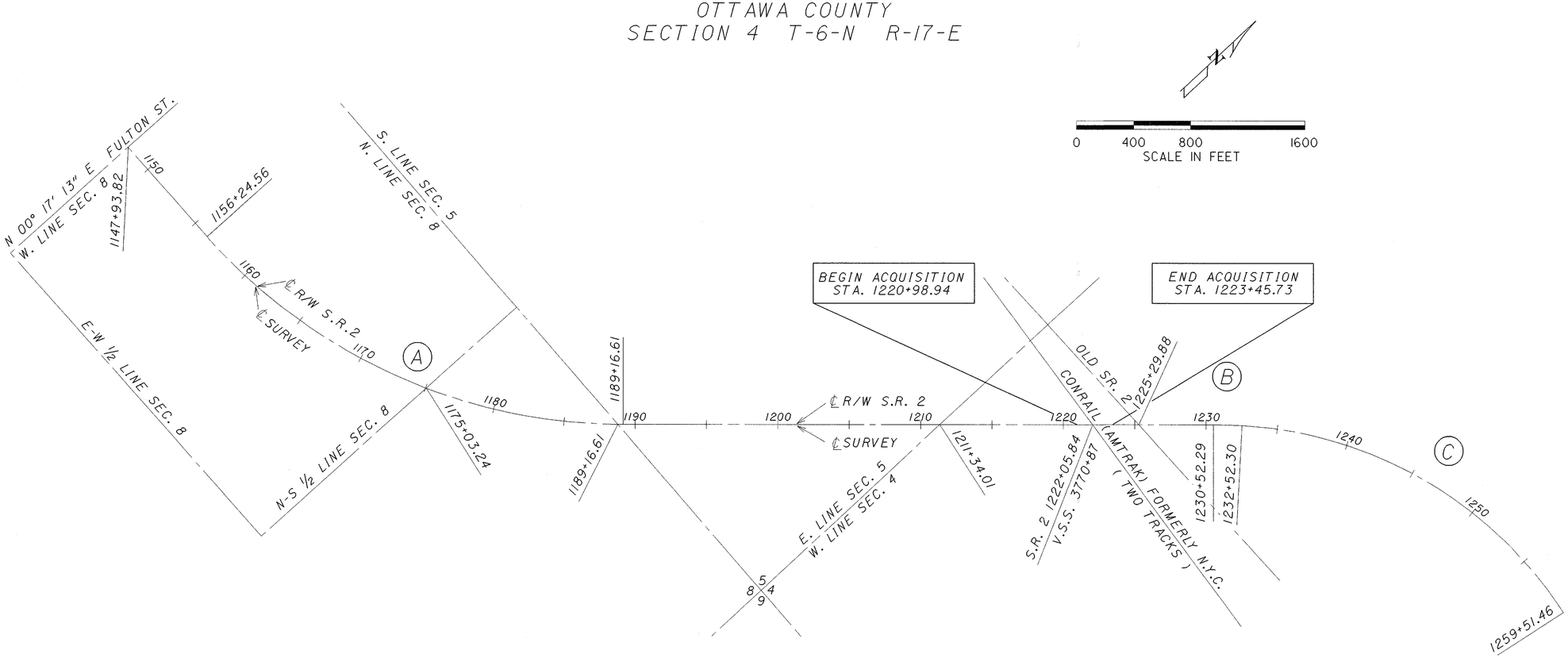


| (A) | | (B) | | (C) | |
|---|---|---|---|---|---|
| P.I.= | 1173+75.45 | P.C.= | 1230+52.29 | P.C.C.= | 1232+52.29 |
| △ = | 48° 17' 00" | △ = | 3° 00' 00" | △ = | 53° 59' 00" |
| R. = | 3906.53' | R. = | 3819.99' | R. = | 2864.79' |
| T. = | 1750.89' | T. = | 100.03' | T. = | 1459.16' |
| L. = | 3292.05' | L. = | 200.01' | L. = | 2699.17' |

I HEREBY CERTIFY THAT THIS PLAT IS A TRUE DELINEATION OF A SURVEY MADE BY THE OHIO DEPARTMENT OF TRANPORTATION IN _____
_____ DATE _____
REGISTERED SURVEYOR NO._____

/i/pd/pc6/dgn/ottawa/ott2sum.dgn

| FHWA REGION | STATE | PROJECT | |
|---|---|---|---|
| 5 | OHIO | | |

365
367

RIGHT-OF-WAY | OTT-2-16.60
PID 3586 | SJN 022960

2
4

# PROPERTY MAP
# OTT-2-16.60

## PORTAGE TOWNSHIP
## OTTAWA COUNTY
## SECTION 4 T-6-N R-17-E

STRUCTURES KEY:

- ☐ - RESIDENTIAL BUILDING
- ■ - COMMERCIAL BUILDING

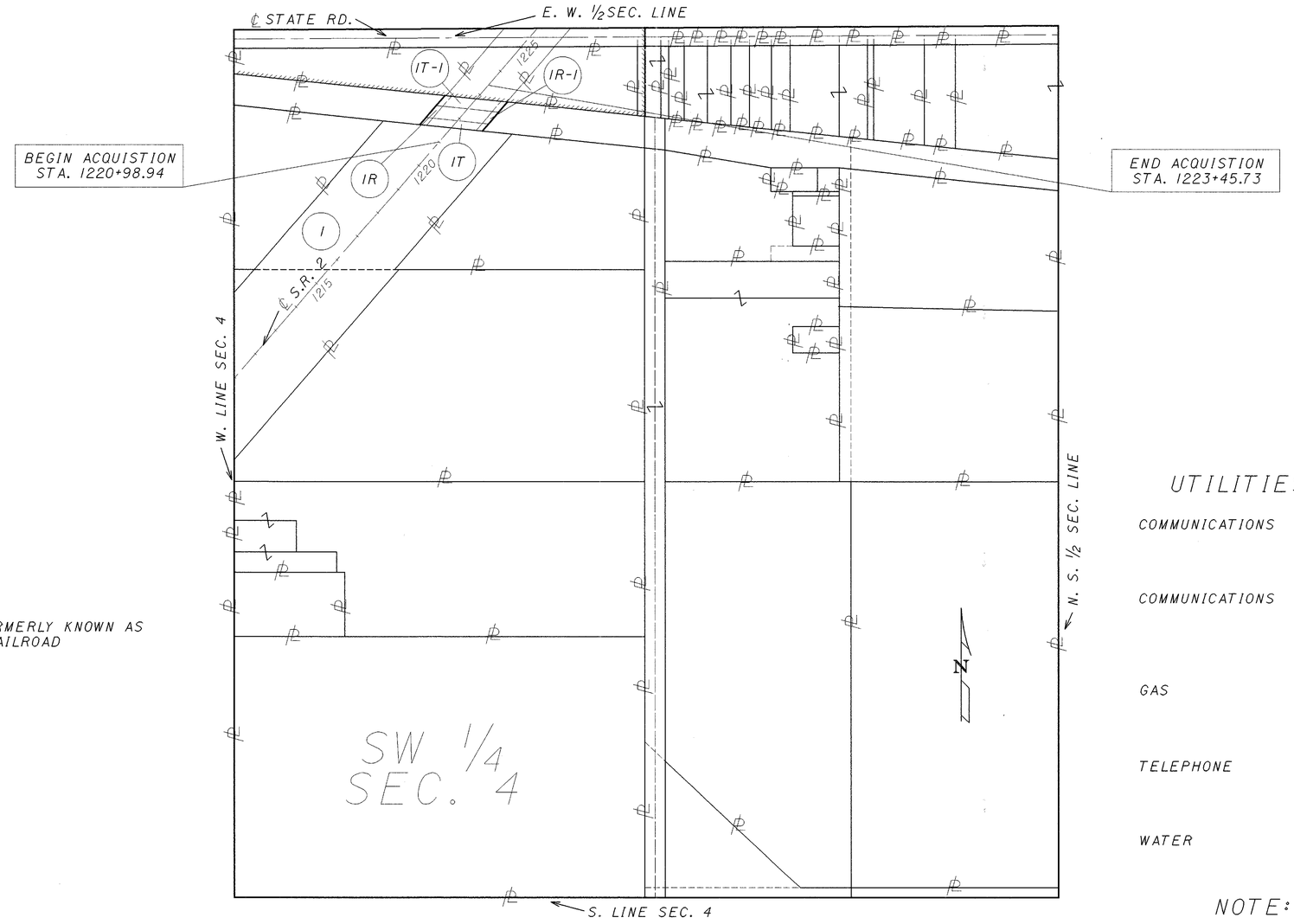


(I) CONRAIL (AMTRAK) FORMERLY KNOWN AS NEW YORK CENTRAL RAILROAD

0 100 200 300 500
SCALE IN FEET

## UTILITIES OWNERS

| | |
|---|---|
| COMMUNICATIONS | AT&T COMMUNICATIONS<br>3833 WEYMOUTH RD.<br>MEDINA, OHIO 44256<br>(216) 723-9100 |
| COMMUNICATIONS | WILTEL INC.<br>1468 W. 9TH ST.<br>SUITE 100<br>CLEVELAND, OHIO 44113<br>(216) 579-1010 |
| GAS | COLUMBIA GAS CO.<br>2110 CALDWELL ST.<br>SANDUSKY, OHIO 44870<br>(419) 625-4532 |
| TELEPHONE | GENERAL TELEPHONE COMPANY OF OHIO<br>300 WEST GYPSY LANE RD.<br>BOWLING GREEN, OHIO 43402<br>(419) 354-3521 |
| WATER | OTTAWA CO. SANITARY ENGINEERS & WATER<br>COURT HOUSE BLDG. ROOM 307<br>PORT CLINTON, OHIO 43452<br>(419) 734-4431 |

NOTE: LOCATION OF UNDERGROUND UTILITIES SHOWN ON THE PLAN ARE AS OBTAINED FROM OWNERS OF THE UTILITIES AS REQUIRED BY SECTION 153.64 OF THE OHIO REVISED CODE.

PLAN COMPLETION DATE

| REV. | DATE | DESCRIPTION |
|---|---|---|
| | | |
| | | |
| | | |
| | | |
| | | |

ott216pp.dgn M6

NOTE: SEE SHEET NO. 4
FOR CALL POINTS FOR EACH PARCEL TIES TO
BOTH RAILROAD AND HIGHWAY CENTERLINES

| FHWA REGION | STATE | PROJECT | |
|---|---|---|---|
| 5 | OHIO | | |

366
367

RIGHT-OF-WAY | OTT-2-16.60
PID 3586 | SJN 022960

3
4

# OTTAWA COUNTY, OHIO

PORTAGE TOWNSHIP
SECTION 4 T-6-N R-17-E

0 20 40 80
SCALE IN FEET

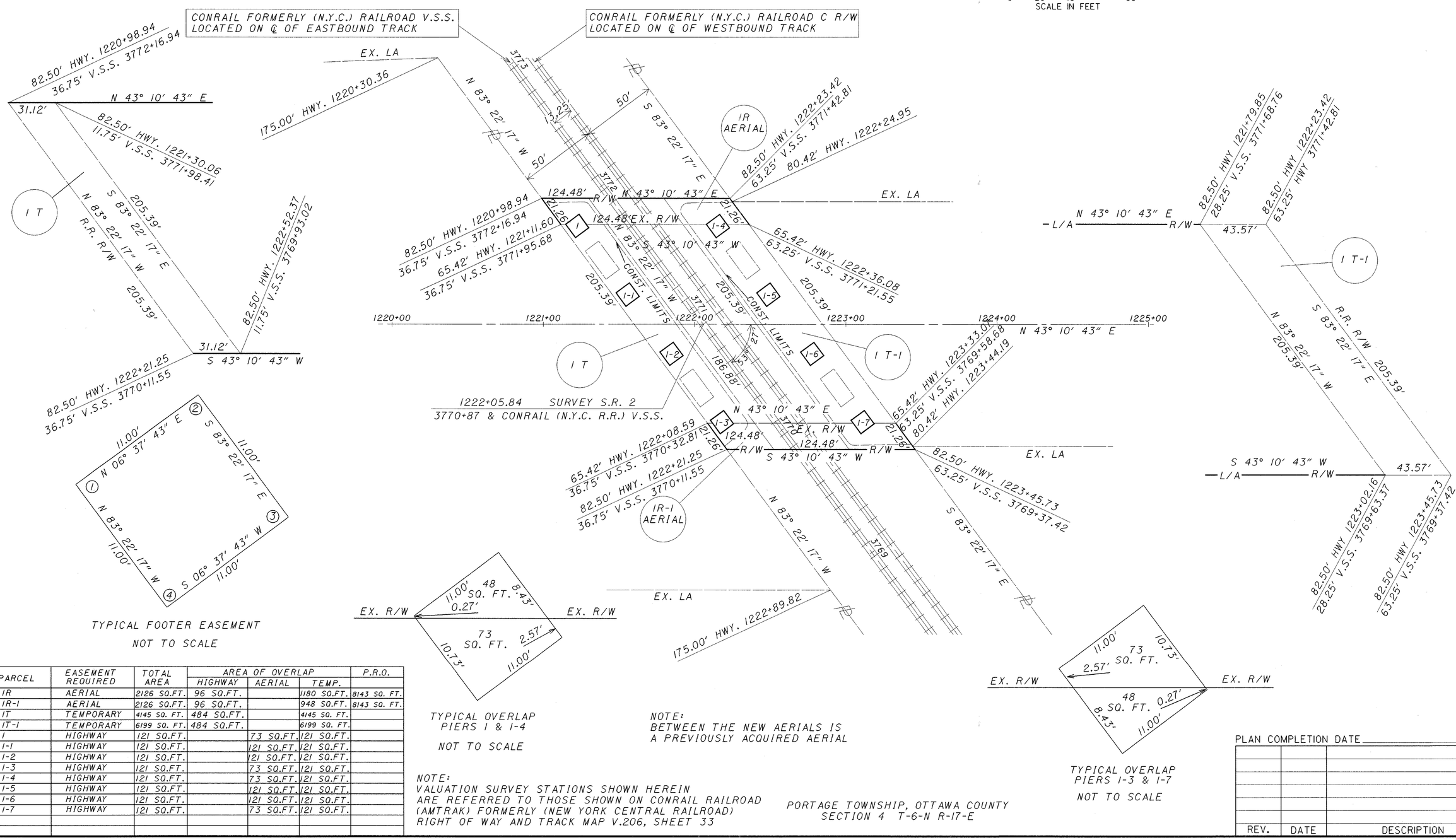


| PARCEL | EASEMENT REQUIRED | TOTAL AREA | AREA OF OVERLAP | | | P.R.O. |
|---|---|---|---|---|---|---|
| | | | HIGHWAY | AERIAL | TEMP. | |
| IR | AERIAL | 2126 SQ.FT. | 96 SQ.FT. | | 1180 SQ.FT. | 8143 SQ. FT. |
| IR-1 | AERIAL | 2126 SQ.FT. | 96 SQ.FT. | | 948 SQ.FT. | 8143 SQ. FT. |
| IT | TEMPORARY | 4145 SQ. FT. | 484 SQ.FT. | | 4145 SQ. FT. | |
| IT-1 | TEMPORARY | 6199 SQ. FT. | 484 SQ.FT. | | 6199 SQ. FT. | |
| I | HIGHWAY | 121 SQ.FT. | | 73 SQ.FT. | 121 SQ.FT. | |
| I-1 | HIGHWAY | 121 SQ.FT. | | 121 SQ.FT. | 121 SQ.FT. | |
| I-2 | HIGHWAY | 121 SQ.FT. | | 121 SQ.FT. | 121 SQ.FT. | |
| I-3 | HIGHWAY | 121 SQ.FT. | | 73 SQ.FT. | 121 SQ.FT. | |
| I-4 | HIGHWAY | 121 SQ.FT. | | 73 SQ.FT. | 121 SQ.FT. | |
| I-5 | HIGHWAY | 121 SQ.FT. | | 121 SQ.FT. | 121 SQ.FT. | |
| I-6 | HIGHWAY | 121 SQ.FT. | | 121 SQ.FT. | 121 SQ.FT. | |
| I-7 | HIGHWAY | 121 SQ.FT. | | 73 SQ.FT. | 121 SQ.FT. | |
| | | | | | | |
| | | | | | | |

NOTE:
VALUATION SURVEY STATIONS SHOWN HEREIN
ARE REFERRED TO THOSE SHOWN ON CONRAIL RAILROAD
(AMTRAK) FORMERLY (NEW YORK CENTRAL RAILROAD)
RIGHT OF WAY AND TRACK MAP V.206, SHEET 33

PORTAGE TOWNSHIP, OTTAWA COUNTY
SECTION 4 T-6-N R-17-E

PLAN COMPLETION DATE

| REV. | DATE | DESCRIPTION |
|---|---|---|
| | | |
| | | |
| | | |
| | | |
| | | |
| | | |

ott2161.dgn M6

| FHWA REGION | STATE | PROJECT | |
|---|---|---|---|
| 5 | OHIO | | |

367
367

RIGHT-OF-WAY | OTT-2-16.60 | 4/4
PID 3586 | SJN 022960

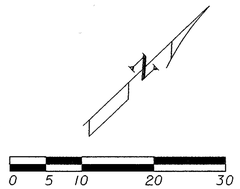


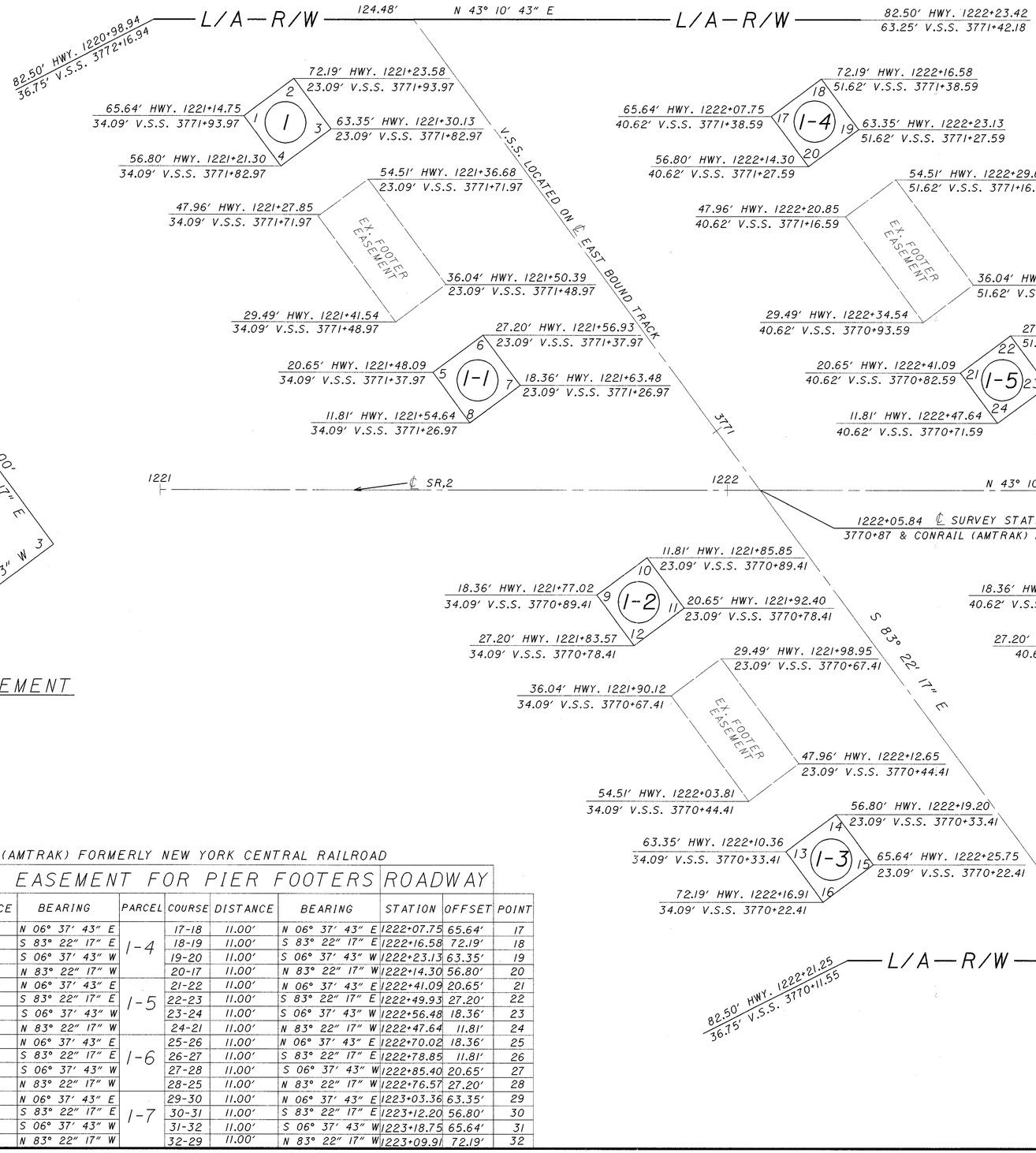


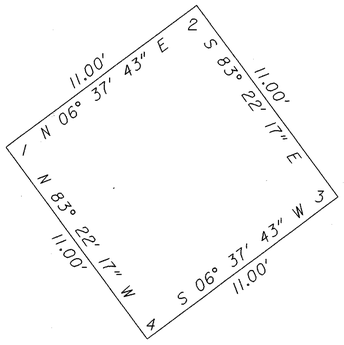


TYPICAL FOOTER EASEMENT
NOT TO SCALE

CONRAIL RAILROAD (AMTRAK) FORMERLY NEW YORK CENTRAL RAILROAD

| | ROADWAY | | PERMANENT EASEMENT FOR PIER FOOTERS | | | | | | | | ROADWAY | | |
|---|---|---|---|---|---|---|---|---|---|---|---|---|---|
| POINT | STATION | OFFSET | PARCEL | COURSE | DISTANCE | BEARING | PARCEL | COURSE | DISTANCE | BEARING | STATION | OFFSET | POINT |
| 1 | 1221+14.75 | 65.42' | 1 | 1-2 | 11.00' | N 06° 37' 43" E | 1-4 | 17-18 | 11.00' | N 06° 37' 43" E | 1222+07.75 | 65.64' | 17 |
| 2 | 1221+23.58 | 72.19' | | 2-3 | 11.00' | S 83° 22' 17" E | | 18-19 | 11.00' | S 83° 22' 17" E | 1222+16.58 | 72.19' | 18 |
| 3 | 1221+30.13 | 63.35' | | 3-4 | 11.00' | S 06° 37' 43" W | | 19-20 | 11.00' | S 06° 37' 43" W | 1222+23.13 | 63.35' | 19 |
| 4 | 1221+21.30 | 56.80' | | 4-1 | 11.00' | N 83° 22' 17" W | | 20-17 | 11.00' | N 83° 22' 17" W | 1222+14.30 | 56.80' | 20 |
| 5 | 1221+48.09 | 20.65' | 1-1 | 5-6 | 11.00' | N 06° 37' 43" E | 1-5 | 21-22 | 11.00' | N 06° 37' 43" E | 1222+41.09 | 20.65' | 21 |
| 6 | 1221+56.93 | 27.20' | | 6-7 | 11.00' | S 83° 22' 17" E | | 22-23 | 11.00' | S 83° 22' 17" E | 1222+49.93 | 27.20' | 22 |
| 7 | 1221+63.48 | 18.36' | | 7-8 | 11.00' | S 06° 37' 43" W | | 23-24 | 11.00' | S 06° 37' 43" W | 1222+56.48 | 18.36' | 23 |
| 8 | 1221+54.64 | 11.81' | | 8-5 | 11.00' | N 83° 22' 17" W | | 24-21 | 11.00' | N 83° 22' 17" W | 1222+47.64 | 11.81' | 24 |
| 9 | 1221+77.02 | 18.36' | 1-2 | 9-10 | 11.00' | N 06° 37' 43" E | 1-6 | 25-26 | 11.00' | N 06° 37' 43" E | 1222+70.02 | 18.36' | 25 |
| 10 | 1221+85.85 | 11.81' | | 10-11 | 11.00' | S 83° 22' 17" E | | 26-27 | 11.00' | S 83° 22' 17" E | 1222+78.85 | 11.81' | 26 |
| 11 | 1221+92.40 | 20.65' | | 11-12 | 11.00' | S 06° 37' 43" W | | 27-28 | 11.00' | S 06° 37' 43" W | 1222+85.40 | 20.65' | 27 |
| 12 | 1221+83.57 | 27.20' | | 12-9 | 11.00' | N 83° 22' 17" W | | 28-25 | 11.00' | N 83° 22' 17" W | 1222+76.57 | 27.20' | 28 |
| 13 | 1222+10.36 | 63.35' | 1-3 | 13-14 | 11.00' | N 06° 37' 43" E | 1-7 | 29-30 | 11.00' | N 06° 37' 43" E | 1223+03.36 | 63.35' | 29 |
| 14 | 1222+19.20 | 56.80' | | 14-15 | 11.00' | S 83° 22' 17" E | | 30-31 | 11.00' | S 83° 22' 17" E | 1223+12.20 | 56.80' | 30 |
| 15 | 1222+25.75 | 65.64' | | 15-16 | 11.00' | S 06° 37' 43" W | | 31-32 | 11.00' | S 06° 37' 43" W | 1223+18.75 | 65.64' | 31 |
| 16 | 1222+16.91 | 72.19' | | 16-13 | 11.00' | N 83° 22' 17" W | | 32-29 | 11.00' | N 83° 22' 17" W | 1223+09.91 | 72.19' | 32 |

PLAN COMPLETION DATE

| REV. | DATE | DESCRIPTION |
|---|---|---|
| | | |

ott2det.dgn M6

## GEOLOGY OF THE SITE

THE STRUCTURE SITE IS LOCATED IN THE RELATIVELY FLAT GLACIATED PORTION OF THE LAKE PLAIN REGION, ON THE BROAD FLOODPLAIN OF AND OVER THE PORTAGE RIVER, IN AN AREA WHERE EXTREMELY DEEP GLACIAL-DERIVED MATERIAL AND ALLUVIAL DEPOSITS OVERLIE LIMESTONE OF THE MONROE FORMATION.

## EXPLORATION

THE EXPLORATION CONSISTED OF TWO CORE BORINGS MADE BY MEANS OF A MECHANICALLYPOWERED HOLLOW STEM ROTARY AUGER MOUNTED ON A MOBILE PLATFORM, PERFORMED ON AUGUST 11 TO 17, 1993.

## INVESTIGATIONAL FINDINGS AND OBSERVATIONS

THE TEST BORINGS DISCLOSED THAT EXTREMELY DEEP GLACIAL-DERIVED MATERIAL AND ALLUVIAL DEPOSITS OVERLIE GENTLY SLOPING BEDROCK SURFACE. TEST BORING B-1 (MADE IN THE GENERAL VICINITY OF THE REAR ABUTMENT) ENCOUNTERED BEDROCK SURFACE AT 69.5 FOOT DEPTH, ELEVATION 533.0 FEET AND CONTINUED TO ADVANCE TO A TOTAL DEPTH OF 90.0 FEET, ELEVATION 512.5 FEET AFTER HAVE PENETRATED 20.5 FEET BELOW BEDROCK SURFACE. TEST BORING B-2 (MADE IN THE GENERAL VICINITY OF THE FORWARD ABUTMENT) ENCOUNTERED BEDROCK SURFACE AT 67.5 FOOT DEPTH, ELEVATION 535.0 FEET AND CONTINUED TO ADVANCE TO A TOTAL DEPTH OF 85.0 FEET, ELEVATION 517.5 FEET AFTER HAVING PENETRATED 17.5 FEET BELOW BEDROCK SURFACE.

NO FREE WATER OBSERVATIONS WERE MADE IN EITHER OF THE TEST BORINGS PERFORMED DURING, OR AT THE CONCLUSION OF DRILLING OPERATIONS.

## LEGEND

- Auger Boring Location - Plan View
- Press and/or Drive Sample and/or Core Boring Location - Plan View
- TR — Top Of Rock
- W — Indicates Free Water Elevation
- ▼ — Indicates Static Water Elevation
- Horizontal Bar on Boring Log Indicates the Depth the Sample Was Taken.
- X/Y/Z — Figures Beside the Boring Log In Profile Indicate the Number of Blows for Standard Penetration Test
  - X = Number of Blows for First 6 Inches
  - Y = Number of Blows for Second 6 Inches
  - Z = Number of Blows for Third 6 Inches

## SYMBOLS OF ROCK TYPES

- Coal
- Weathered Mudstone
- Mudstone
- Claystone
- Weathered Shale
- Shale
- Weathered Siltstone
- Siltstone
- Fire Clay or Underclay
- Weathered Sandstone
- Sandstone
- Leached Dolomite
- Dolomite
- Leached Limestone
- Limestone
- Boulders or Cobbles

## GENERAL INFORMATION

### DRIVE SAMPLE BORINGS - DRIVE-PRESS SAMPLE BORINGS

Drive sample borings are made by means of a rotary-type drill rig, employing a 2" O.D., 1-3/8" I.D. sampler, at 2-1/2 and/or 5-foot depth intervals, driven by means of a 140 pound hammer with a free fall of 30 inches. The number of blows required to drive the sampler 18 inches is considered the standard penetration test.

Drive-press sample borings are made by means of a rotary-type drill rig, employing a 2" O.D., 1-3/8" I.D. drive sampler, and 3" O.D. thin-wall press sampler. The press sampler is advanced by continuous uniform pressure, applied by the drill rig.

The boring log sheets show a graphic plot of the information obtained, including depth and elevation of the sample, number of blows for the standard penetration tests in three 6-inch increments, depth of press samples, field sample number sample description - based on laboratory tests and the Casagrande AC classification system - and gradation, plasticity, and moisture content determinations. Results of stregth and consolidation testing, if performed, appear an separate enclosures.

At depths where materials are bouldery or gravelly to the extent that a sampler cannot be driven, a wash sample is produced for visual classification, in order to determine the general character of the material. These samples are not considered sufficiently representative to warrant laboratory testing.

### Particle Size Definitions

| Boulders | Cobbles | Gravel | Coarse Sand | Fine Sand | Silt | Clay |
|---|---|---|---|---|---|---|
| 12" | 3" | 2.0 mm (No. 10 sieve) | 0.42 mm (No. 40 sieve) | 0.074 mm (No. 300 sieve) | | 0.005 mm |

NOTE: ALL AVAILABLE SOIL AND BEDROCK INFORMATION WHICH MAY BE CONVENIENTLY SHOWN ON THE STRUCTURE FOUNDATION INVESTIGATION SHEETS HAS BEEN SO REPORTED. ADDITIONAL SUBSURFACE INVESTIGATIONS MAY HAVE BEEN MADE TO STUDY SOME SPECIAL ASPECT OF THE PROJECT. COPIES OF THIS DATA, IF ANY MAY BE INSPECTED IN THE DISTRICT DEPUTY DIRECTOR'S OFFICE, THE BUREAU OF TESTS AT 1600 WEST BROAD STREET, THE PAVEMENT AND SOILS SECTION OF THE BUREAU OF LOCATION AND DESIGN OR IN THE BRIDGE BUREAU AT 25 SOUTH FRONT STREET.

*REVISED 7/13/94*

Note: Information shown by this subsurface investigation was obtained solely for the use in establishing design controls for the project. The State of Ohio does not guarantee the accuracy of this data and it is not to be construed as a part of the plans governing construction of the project.

**OHIO DEPARTMENT OF TRANSPORTATION**
**DIVISION OF HIGHWAYS-TESTING LABORATORY**
1600 WEST BROAD STREET, COLUMBUS, OHIO 43223

**STRUCTURE FOUNDATION INVESTIGATION**

**BRIDGE NO. OTT-2-1844**
**OVER PORTAGE RIVER**
**SEC. OTT-2-16,60**

| CHECKED BY | REVIEWED BY | DATE |
|---|---|---|
| A.F. | M.R.S. | 11/9/93 |

OTTAWA COUNTY
OTT-2-16.60
2/3

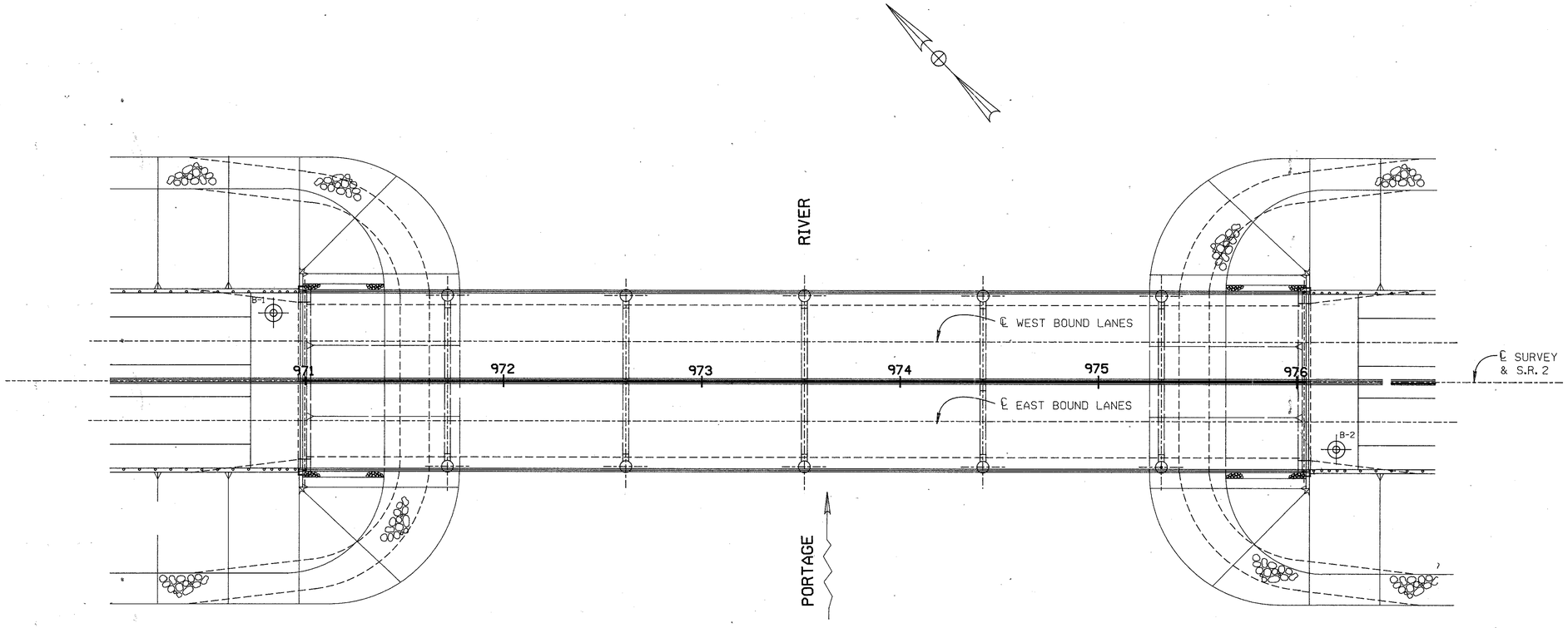


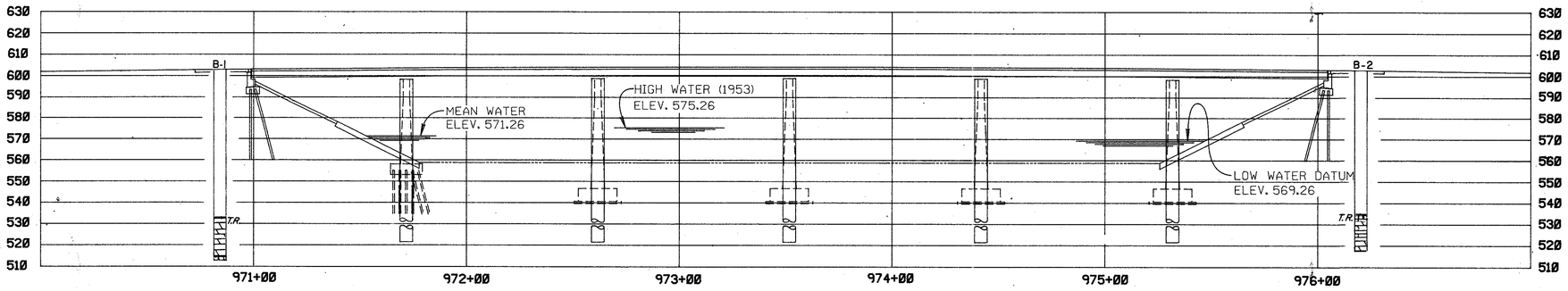


PROPOSED STRUCTURE

REVISED 7/13/94

OHIO DEPARTMENT OF TRANSPORTATION
DIVISION OF HIGHWAYS-TESTING LABORATORY
1600 WEST BROAD STREET COLUMBUS, OHIO 43223

STRUCTURE FOUNDATION INVESTIGATION
BRIDGE NO. OTT-2-1844
OVER PORTAGE RIVER
SEC. OTT-2-16.60

PLAN AND PROFILE - COMPUTER GENERATED

| DRAWN BY | CHECKED BY | REVIEWED BY | DATE |
|---|---|---|---|
| T.K.B. | A.F. | M.R.S. | 11/19/93 |

TE - 182
400 - 12 - 78

OTT-2-16.60 (3/3)

## LOG OF BORING

Date Started 8/11/93 Sampler: Type SS Dia. 1 3/8" Water Elev. —
Date Completed 8/16/93
Boring No. B-1 Station & Offset 970+84, 34' LT. (REAR ABUT.) Surface Elev. 602.5'

| Elev. | Depth | Std. Pen. (in.) | Rec. (ft.) | Loss (ft.) | Description | Sample No. | % Agg | % C.S. | % F.S. | % Silt | % Clay | L.L. | P.I. | W.C. | SHTL Class |
|---|---|---|---|---|---|---|---|---|---|---|---|---|---|---|---|
| 602.5 | 0 | | | | OVERBURDEN | | | | | | | | | | |
| 533.0 | 70 | | | | DK.GRAY BROKEN,& JOINTED DOLOMITE W/WHITE GYPSUM,NODULES,& LENSES(DRILLER'S DESCRIPTION) | | | | | | | | | | |
| | | | 5.0 | 0.0 | DOLOMITE, DARK GRAY,FIRM W/LARGE MICA FLAKES, W/CARBONACEOUS STRINGERS, W/SCATTERED THIN SANDY CLAY SEAMS, THIN-BEDDED, HIGHLY BROKEN AND JOINTED, INTERBEDDED W/NUMEROUS WHITE, FIRM, BROKEN AND JOINTED NODULES AND LENSES UP TO 0.2' THICK OF GYPSUM. NO CORE LOSS. | | | | | | | | | | |
| | | | 5.0 | 0.0 | | | | | | | | | | | |
| | | | 5.0 | 0.0 | | | | | | | | | | | |
| 514.8 | 88 | | 5.0 | 0.0 | LIMESTONE, GRAY, FIRM W/LARGE MICA FLAKES W/CARBONACEOUS STRINGERS, SLIGHTLY CROSS-BEDDED, THIN-BEDDED, W/SCATTERED THIN CLAY SEAMS, HIGHLY BROKEN & JOINTED IN UPPER PORTION, INTER-BEDDED W/NUMEROUS WHITE & GRAY, FIRM NODULES & LENSES UP TO 0.4' THICK OF GYPSUM. NO CORE LOSS. | | | | | | | | | | |
| 512.5 | 90 | | | | BOTTOM OF BORING | | | | | | | | | | |

TOP OF ROCK

## LOG OF BORING

Date Started 8/16/93 Sampler: Type SS Dia. 1 3/8" Water Elev. —
Date Completed 8/17/93
Boring No. B-2 Station & Offset 976+20, 34' RT. (FWD. ABUT.) Surface Elev. 602.5'

| Elev. | Depth | Std. Pen. (in.) | Rec. (ft.) | Loss (ft.) | Description | Sample No. | % Agg | % C.S. | % F.S. | % Silt | % Clay | L.L. | P.I. | W.C. | SHTL Class |
|---|---|---|---|---|---|---|---|---|---|---|---|---|---|---|---|
| 602.5 | 0 | | | | AUGERED ASPHALT | - | - | - | - | - | - | - | - | - | VISUAL |
| | | | | | OVERBURDEN | | | | | | | | | | |
| 535.0 | 68 | | | | GREENISH GRAY LIMESTONE W/NUMEROUS GRAYISH WHITE GYPSUM NODULES & LENSES (DRILLER'S DESCRIPTION) | | | | | | | | | | |
| 534.5 | 70 | | 2.0 | 0.0 | LIMESTONE, GREENISH GRAY, DARK GRAY, FIRM W/LARGE MICA FLAKES W/CARBONACEOUS STRINGERS, W/FEW SCATTERED THIN CLAY SEAMS, THIN-BEDDED, HIGHLY BROKEN & JOINTED IN LOWER PORTION, W/NUMEROUS GRAYISH WHITE, FIRM NODULES & LENSES UP TO 0.2' THICK OF GYPSUM. NO CORE LOSS. | | | | | | | | | | |
| 531.6 | 72 | | 5.0 | 0.0 | DOLOMITIC LIMESTONE, DARK GRAY, FIRM WITH LARGE MICA FLAKES, W/SCATTERED THIN CLAY SEAMS, W/CARBONACEOUS STRINGERS, THIN-BEDDED, HIGHLY BROKEN AND JOINTED, W/FEW WHITE GYPSUM NODULES IN UPPER PORTION. NO CORE LOSS. | | | | | | | | | | |
| 528.2 | 74 | | | | | | | | | | | | | | |
| | 76 | | 5.0 | 0.0 | LIMESTONE, GREENISH GRAY, DARK GRAY, FIRM, W/LARGE MICA FLAKES, W/CARBONACEOUS STRINGERS AND THIN SEAMS, W/SCATTERED THIN SANDY CLAY SEAMS, THIN-BEDDED, HIGHLY BROKEN & JOINTED, INTERBEDDED W/WHITE, FIRM, BROKEN AND JOINTED NODULES & LENSES UP TO 0.2' THICK OF GYPSUM. NO CORE LOSS. | | | | | | | | | | |
| 522.9 | 78 | | | | | | | | | | | | | | |
| | 80 | | | | | | | | | | | | | | |
| | 82 | | 5.0 | 0.0 | DOLOMITIC LIMESTONE, DARK GRAY, FIRM, W/LARGE MICA FLAKES, W/FEW SCATTERED THIN SANDY CLAY SEAMS, THIN-BEDDED, BROKEN AND JOINTED, INTERBEDDED W/GRAYISH, WHITE, FIRM NODULES & LENSES UP TO 0.1' THICK OF GYPSUM IN UPPER 3.2' OF INTERVAL. NO CORE LOSS. | | | | | | | | | | |
| 517.5 | 84 | | | | | | | | | | | | | | |
| | 86 | | | | BOTTOM OF BORING | | | | | | | | | | |

TOP OF ROCK

REVISED 7/13/94

OHIO DEPARTMENT OF TRANSPORTATION
DIVISION OF HIGHWAYS - TESTING LABORATORY
1600 WEST BROAD STREET COLUMBUS, OHIO 43223

STRUCTURE FOUNDATION INVESTIGATION
BRIDGE NO. OTT-2-1844
OVER PORTAGE RIVER
SEC. OTT-2-16.60

BORING DATA

| TYPED BY | CHECKED BY | REVIEWED BY | DATE |
|---|---|---|---|
| L.A.O. | A.F. | M.R.S. | 11/19/93 |

TE - 118

OTTAWA COUNTY
OTT-2-16.60
1
4

## GEOLOGY OF THE SITE

THE STRUCTURE SITE IS LOCATED IN THE DISSECTED GLACIATED PORTION OF THE LAKE PLAIN REGION, IN AN AREA WHERE EXTREMELY DEEP GLACIAL LACUSTRINE DEPOSITS AND FILL DEPOSITS OVERLIE LIMESTONE AND GYPSUM BEDROCK OF THE MONROE FORMATION.

## EXPLORATION

THE EXPLORATION CONSISTED OF FOUR DRIVE SAMPLE-CORE BORINGS MADE BY MEANS OF A MECHANICALLY-POWERED HOLLOW STEM ROTARY AUGER MOUNTED ON A MOBILE PLATFORM, PERFORMED ON AUGUST 3-10, 1993.

## INVESTIGATIONAL FINDINGS AND OBSERVATIONS

THE TEST BORINGS DISCLOSED THAT INTERVALS OF LOOSE TO EXTREMELY DENSE UNSTRATIFIED BASIC SILT AND CLAY MODIFIED WITH SAND, GRAVEL, ROOTS, WOOD FRAGMENTS, STONE FRAGMENTS AND VARYING AMOUNTS OF EACH OTHER THAT ERRATICALLY INCREASE IN DENSITY WITH INCREASE IN DEPTH OVERLIE GENTLY SLOPING BEDROCK SURFACE. TEST BORING B-1 (MADE IN THE VICINITY OF THE REAR ABUTMENT) ENCOUNTERED BEDROCK SURFACE AT 86.5 FOOT DEPTH, ELEVATION 522.0 FEET AND CONTINUED TO ADVANCE TO A TOTAL DEPTH OF 90.0 FEET, ELEVATION 618.5 FEET WHERE THE BORING WAS TERMINATED AFTER HAVING PENETRATED 3.5 FEET BELOW BEDROCK SURFACE. BOULDERS WERE ENCOUNTERED IN BORING B-1 AT 80.5 FOOT DEPTH, ELEVATION 528.0 FEET. TEST BORING B-2 (MADE IN THE VICINITY OF THE SECOND PIER) ENCOUNTERED BEDROCK SURFACE AT 57.4 FOOT DEPTH, ELEVATION 522.2 FEET AND CONTINUED TO ADVANCE TO A TOTAL DEPTH OF 63.0 FEET, ELEVATION 516.6 FEET WHERE THE BORING WAS TERMINATED AFTER HAVING PENETRATED 5.6 FEET BELOW BEDROCK SURFACE. A LIMESTONE SLAB WAS ENCOUNTERED IN BORING B-2 AT 51.0 FOOT DEPTH, ELEVATION 528.6 FEET. TEST BORING B-3 (MADE IN THE VICINITY OF THE SIXTH PIER) ENCOUNTERED BEDROCK SURFACE AT 57.0 FOOT DEPTH, ELEVATION 522.1 FEET, AND CONTINUED TO ADVANCE TO A TOTAL DEPTH OF 62.0 FEET, ELEVATION 517.1 FEET WHERE THE BORING WAS TERMINATED AFTER HAVING PENETRATED 5.0 FEET BELOW BEDROCK SURFACE. TEST BORING B-4 (MADE IN THE VICINITY OF THE FORWARD ABUTMENT) ENCOUNTERED BEDROCK SURFACE AT 79.0 FOOT DEPTH, ELEVATION 526.6 FEET AND CONTINUED TO ADVANCE TO A TOTAL DEPTH OF 82.0 FEET, ELEVATION 523.6 FEET WHERE THE BORING WAS TERMINATED AFTER HAVING PENETRATED 3.0 FEET BELOW BEDROCK SURFACE. A LIMESTONE SLAB WAS ENCOUNTERED IN BORING B-4 AT 77.0 FOOT DEPTH, ELEVATION 528.6 FEET.

NO FREE WATER OBSERVATIONS WERE MADE IN ANY OF THE TEST BORINGS PERFORMED EITHER DURING, OR AT THE CONCLUSION OF DRILLING OPERATIONS. HOWEVER, NON-PLASTIC MATERIAL WITH A HIGH WATER CONTENT WAS ENCOUNTERED IN BORING B-2 AT 2.5 FOOT DEPTH, ELEVATION 577.1 FEET.

FIELD RECONNAISSANCE OF THE SITE INDICATES THAT A LOW WET AREA WITH CATTAILS IS LOCATED BETWEEN THE THIRD AND FOURTH EBL PIERS AND A CATTAIL AREA IS LOCATED TO THE EAST OF THE SIXTH SET OF PIERS.

## LEGEND

- Auger Boring Location - Plan View
- Press and/or Drive Sample and/or Core Boring Location - Plan View
- TR — Top Of Rock
- W — Indicates Free Water Elevation
- Indicates Static Water Elevation
- Horizontal Bar on Boring Log Indicates the Depth the Sample Was Taken
- X/Y/Z — Figures Beside the Boring Log In Profile Indicate the Number of Blows for Standard Penetration Test
  - X = Number of Blows for First 6 Inches
  - Y = Number of Blows for Second 6 Inches
  - Z = Number of Blows for Third 6 Inches

## SYMBOLS OF ROCK TYPES

- Coal
- Weathered Mudstone
- Mudstone
- Claystone
- Weathered Shale
- Shale
- Weathered Siltstone
- Siltstone
- Fire Clay or Underclay
- Weathered Sandstone
- Sandstone
- Leached Dolomite
- Dolomite
- Leached Limestone
- Limestone
- Boulders or Cobbles

## GENERAL INFORMATION

DRIVE SAMPLE BORINGS - DRIVE-PRESS SAMPLE BORINGS

Drive sample borings are made by means of a rotary-type drill rig, employing a 2" O.D., 1-3/8" I.D. sampler, at 2-1/2 and/or 5-foot depth intervals, driven by means of a 140 pound hammer with a free fall of 30 inches. The number of blows required to drive the sampler 18 inches is considered the standard penetration test.

Drive-press sample borings are made by means of a rotary-type drill rig, employing a 2" O.D., 1-3/8" I.D. drive sampler, and 3" O.D. thin-wall press sampler. The press sampler is advanced by continuous uniform pressure, applied by the drill rig.

The boring log sheets show a graphic plot of the information obtained, including depth and elevation of the sample, number of blows for the standard penetration tests in three 6-inch increments, depth of press samples, field sample number sample description - based on laboratory tests and the Casagrande AC classification system - and gradation, plasticity, and moisture content determinations. Results of stregth and consolidation testing, if performed, appear on separate enclosures.

At depths where materials are bouldery or gravelly to the extent that a sampler cannot be driven, a wash sample is produced for visual classification, in order to determine the general character of the material. These samples are not considered sufficiently representative to warrant laboratory testing.

### Particle Size Definitions

| Boulders | Cobbles | Gravel | Coarse Sand | Fine Sand | Silt | Clay |
|---|---|---|---|---|---|---|
| 12" | 3" | 2.0 mm (No. 10 sieve) | 0.42 mm (No. 40 sieve) | 0.074 mm (No. 300 sieve) | | 0.005 mm |

NOTE: ALL AVAILABLE SOIL AND BEDROCK INFORMATION WHICH MAY BE CONVENIENTLY SHOWN ON THE STRUCTURE FOUNDATION INVESTIGATION SHEETS HAS BEEN SO REPORTED. ADDITIONAL SUBSURFACE INVESTIGATIONS MAY HAVE BEEN MADE TO STUDY SOME SPECIAL ASPECT OF THE PROJECT. COPIES OF THIS DATA, IF ANY MAY BE INSPECTED IN THE DISTRICT DEPUTY DIRECTOR'S OFFICE, THE BUREAU OF TESTS AT 1600 WEST BROAD STREET, THE PAVEMENT AND SOILS SECTION OF THE BUREAU OF LOCATION AND DESIGN OR IN THE BRIDGE BUREAU AT 25 SOUTH FRONT STREET.

*REVISED 8/24/94*

Note: Information shown by this subsurface investigation was obtained solely for the use in establishing design controls for the project. The State of Ohio does not guarantee the accuracy of this data and it is not to be construed as a part of the plans governing construction of the project.

OHIO DEPARTMENT OF TRANSPORTATION
DIVISION OF HIGHWAYS-TESTING LABORATORY
1600 WEST BROAD STREET, COLUMBUS, OHIO 43223

STRUCTURE FOUNDATION INVESTIGATION

BRIDGE NO. OTT-2-2313 L/R
OVER CONRAIL R.R. & STATE ST.
SEC. OTT-2-16.60

| CHECKED BY | REVIEWED BY | DATE |
|---|---|---|
| A.F. | M.R.S. | 11/23/93 |

| FHWA REGION | STATE | PROJECT | |
|---|---|---|---|
| 5 | OHIO | | |

OTT-2-16.60

2/4

⊗ – Indicates Type 1, Bridge Terminal Assembly required.
△ – Indicates Type 2, Bridge Terminal Assembly required.

**BENCHMARKS**

1. Sta. 1220+15.41 centerline survey
   Top of concrete monument
   Elev. = 607.26
2. Sta. 1227+12.85 centerline survey
   Top of concrete monument
   Elev. = 602.99

Horizontal Clear. 18'-0" min. required 28'-1" Actual

Horizontal Clear. 18'-0" min. required 32'-2" Actual

1222+05.84 ℄ Survey S.R.2 = 3770+87 Conrail V.S.S.

Horizontal Clear. 10'-0" required, 8'-8"± Actual

Crushed aggregate slope protection at the abutments shall be extended as shown including covering the open median areas.

1225+29.88 ℄ Survey S.R.2 = 50+00 ℄ Survey State St.

Begin Approach Slabs - 1226+38.15

CONRAIL

STATE

S.R. 2

STREET

R.R. (AMTRAK)

G.R. Post 1220+33.37

G.R. Post 1220+95.74

G.R. Post 1221+34.69

G.R. Post 1226+05.81

G.R. Post 1226+44.75

G.R. Post 1227+07.13

℄ Piers No. 1 1221+70.25

℄ Piers No. 2 1222+63.25

℄ Piers No. 3 1223+39.25

℄ Piers No. 4 1224+14.25

℄ Piers No. 5 1224+89.25

℄ Piers No. 6 1225+70.25

Profile Grade

Westbound ℄ Lanes

Eastbound ℄ Lanes

S.R. 2 ℄ N 43°12'51" E

53°27'00"

36°33' Skew

47°35'15"

Type 4-A Curb (Typ. for all appro. slab corners)

NOTE: LIMIT OF LOW WET AREA WITH CAT TAILS (TYPICAL)

Point of minimum vertical clearance

Approx. ℄ underground Railroad signal cable

Point of minimum vertical clearance

End Approach Slabs 1221+02.35

1221+78.45 ℄ S.R. 2 = 49+83.69 R.R. Survey

Prop. W36x245 (span 2) (W36x230 all others)

4-Exist. beam spc. @ 7'-6" = 30'-0" = 36" WF.

3'-6" haunch typ. for new beam

Symmetrical about ℄

36" ϕ Column (typ.)

Exist. footing founded on 21-12" ϕ Conc. piles (typ.)

Prop. 3'-6" x 9'-0" x 9'-0" footing on piles (typ.)

PROPOSED HALF-SECTION

P.V.I. Sta. 1222+12.32
Elev. 621.50
1600' V.C.

Bridge Limits = 535.80'

+3.00% −3.00%

Sta. 1221+02.35

Sta. 1226+38.15

609.01 609.15 609.26 609.36 609.43 609.47 609.50 609.50 609.47 609.43 609.36 609.26 609.15 609.00 608.84 608.65 608.44 608.21 607.95 607.67 607.36 607.03 606.68 606.31 605.91 605.49 605.04 604.57

Elev. 597.00 Lt.
Elev. 597.28 Rt.
T/s Elev. 603.0 Lt. Bridge
603.3 Rt. "
Elev. -571.80

Elev. 571.30

Elev. 593.30

Elev. 570.80

Elev. 594.38 Lt.
Elev. 593.37 Rt.
2:1 Normal (typ)
T/s - Elev. 600.4
Elev. 599.3

B-1: 6/8/8 6/7/7 8/11/13 8/12/16 12/16/8 9/4/16 5/9/13 20/27/32 6/9/10 4/7/9 3/5/8 2/4/7 3/6/8 32/13/23 60/50 60(0.3')

B-2: 3/5/4 4/6/8 10/10/15 3/5/9 2/4/5 5/8/11 4/7/10 4/5/8 23/39/45 42/80 34/90(0.3')

B-3: 3/6/16 2/4/8 8/13/27 4/6/15 5/10/12 5/9/24 3/5/7 3/7/9 6/17/50 25/51/75 58/75 48/70

B-4: 3/2/2 3/5/6 7/10/25 9/12/14 3/7/9 7/12/20 7/12/14 20/36/50(0.3') 6/7/10 4/16/19 4/5/9 5/8/8 3/4/7 4/7/17 50(0.4') 50(0.4')

Exp. Fix. T.R.

620 610 600 590 580 570 560 550 540 530 520

1221 1222 1223 1224 1225 1226 1227

Proposed 12" ϕ Cast-in-place reinforced concrete piles. Estimated average pay lengths: Rear Abuts. = 20', Piers = 35', Fwd. Abuts. = 25'

SCALE 1"=30'

**DESIGN TRAFFIC:**
2014 ADT= 12,450
2014 ADTT= 3486

**RAILROAD TRAFFIC:**
93 Freight trains per day
2 Amtrak passenger trains per day

Earthwork limits shown are approximate. Actual slopes shall conform to plan cross sections.

**EXISTING STRUCTURE**

Type: Continuous steel beam with reinforced concrete deck and substructures.
Spans: 65'-0",93'-0",76'-0",75'-0",75'-0", 81'-0",65'-0" c-c bearings. (Left and Right Structures).
Roadway: 30'-0" f-f 2'-3" Safety curbs
Loading: CF400
Skew: 36 Degrees 33 Minutes Right Forward
Wearing Surface: Monolithic Concrete
Approach Slabs: AS-1-54 (25'-0")
Alignment: Tangent
Tracks: Two
Date Built: 1968
SFN: 6200427 Left, 6200451 Right

**PROPOSED STRUCTURE**

Type: Continuous steel beam with new widened composite reinforced concrete deck and widened substructures.
Spans: 65'-0",93'-0",76'-0",75'-0",75'-0", 81-'0",65'-0" c-c bearings (Left and Right Structures.
Roadway: 48'-0" toe to toe of parapets for each structure.
Loading: HS20-44 Case II and the alternate military loading.
Skew: 36 Degrees 33 Minutes, Right Forward
Wearing Surface: Monolithic Concrete
Approach Slabs: AS-1-81 (25'-0" Long)
Alignment: Tangent
Superelevation: None

**PROPOSED WORK**

1. Widen piers, beam seats, decks and abutments
2. Remove and replace existing bridge deck
3. Replace existing expansion joints with strip seals
4. Strengthen bridge by welding shear connectors to the beams
5. Jack and reset certain bearings
6. Construct safety shape parapets
7. Replace approach slabs
8. Seal abutments, parapets, pier columns along State St., and wingwalls with epoxy
9. Paint all structural steel
10. Repair designated areas of spill-thru slopes with aggregate

STATION EQUATION:
Sta. 1221+00.00 this plan equals Sta. 371+87.68 original bridge plans.

VERTICAL EQUATION:
Elevation 600.00 this plan equals Elevation 601.19 original bridge plans.

See roadway plans for approach paving transitions to approach slabs and for deck drainage intercept details off of the bridges.

NOTE: Prop. P.G. elevations apply to each bridge and new approach slabs only.

REVISED 8/24/94

OHIO DEPARTMENT OF TRANSPORTATION
DIVISION OF HIGHWAYS-TESTING LABORATORY
1600 WEST BROAD STREET COLUMBUS, OHIO 43223

STRUCTURE FOUNDATION INVESTIGATION
BRIDGE NO. OTT-2-2313 L/R
OVER CONRAIL R.R. & STATE ST.
SEC. OTT-2-16.60

PLAN AND PROFILE

| DRAWN BY | CHECKED BY | REVIEWED BY | DATE |
|---|---|---|---|
| J.B.H. | T.K.B. | M.R.S. | 11/23/93 |

B84233

TE-123
4OO-12-78

OTT-2-16.60 (3/4)

## LOG OF BORING

Date Started 8/9/93 Sampler: Type SS Dia. 1 3/8" Water Elev. –
Date Completed 8/9/93
Boring No. B-1 Station & Offset 1220+39, 55' LT. (REAR ABUT.) APPROX. Surface Elev. 608.5

| Depth | Std. (N) Pen. | Rec. ft. | Loss ft. | Description | Sample No. | Physical Characteristics % Agg | % C.S. | % F.S. | % Silt | % Clay | L.L. | P.I. | W.C. | SHTL Class |
|---|---|---|---|---|---|---|---|---|---|---|---|---|---|---|
| 608.5 0 | | | | AUGERED | | | | | | | | | | |
| 608.2 | | | | ASPHALT | | | | | | | | | | |
| 606.0 2 | | | | | | | | | | | | | | |
| 4 | 8/8/8 | | | GRAY AND BROWN SANDY CLAY | 1 | 0 | 6 | 14 | 33 | 47 | 31 | 13 | 11 | A-6A |
| 603.5 6 | 6/8/8 | | | BROWN AND GRAY SANDY CLAY | 2 | 0 | 7 | 15 | 32 | 46 | 28 | 11 | 14 | A-6A |
| 8 | | | | | | | | | | | | | | |
| 598.5 10 | 6/7/7 | | | GRAY SILT AND CLAY | 3 | 0 | 6 | 13 | 33 | 48 | 29 | 11 | 12 | A-6A |
| 12 | | | | | | | | | | | | | | |
| 14 | | | | | | | | | | | | | | |
| 593.5 16 | 8/11/13 | | | BROWN AND GRAY SANDY CLAY | 4 | 0 | 6 | 14 | 30 | 50 | 28 | 11 | 13 | A-6A |
| 18 | | | | | | | | | | | | | | |
| 588.5 20 | 8/12/16 | | | GRAY SANDY SILT | 5 | 0 | 7 | 15 | 29 | 49 | 28 | 10 | 11 | A-4A |
| 22 | | | | | | | | | | | | | | |
| 24 | | | | | | | | | | | | | | |
| 583.5 26 | 12/16/18 | | | BROWN SILT AND CLAY | 6 | 0 | 5 | 13 | 30 | 52 | 31 | 13 | 14 | A-6A |
| 28 | | | | | | | | | | | | | | |
| 578.5 30 | 9/14/16 | | | BROWN SILT AND CLAY | 7 | 0 | 6 | 11 | 33 | 50 | 31 | 13 | 14 | A-6A |
| 32 | | | | | | | | | | | | | | |
| 34 | | | | | | | | | | | | | | |
| 573.5 36 | 5/9/13 | | | BROWN SILT AND CLAY W/ROOTS | 8 | 0 | 6 | 12 | 32 | 50 | 34 | 14 | 21 | A-6A |
| 38 | | | | | | | | | | | | | | |
| 568.5 40 | | | | | | | | | | | | | | |
| 42 | 20/27/32 | | | BROWN SANDY CLAY | 9 | 0 | 5 | 15 | 33 | 47 | 32 | 12 | 15 | A-6A |
| 44 | | | | | | | | | | | | | | |
| 563.5 46 | 6/9/10 | | | GRAY SANDY SILT | 10 | 0 | 7 | 14 | 32 | 47 | 25 | 9 | 15 | A-4A |
| 48 | | | | | | | | | | | | | | |
| 558.5 50 | 4/7/9 | | | GRAY SANDY SILT | 11 | 0 | 8 | 16 | 30 | 46 | 25 | 8 | 17 | A-4A |
| 52 | | | | | | | | | | | | | | |
| 54 | | | | | | | | | | | | | | |
| 553.5 56 | 3/5/8 | | | GRAY SANDY SILT | 12 | 0 | 9 | 14 | 31 | 46 | 25 | 8 | 16 | A-4A |
| 58 | | | | | | | | | | | | | | |
| 548.5 60 | | | | | | | | | | | | | | |
| 62 | 2/4/7 | | | GRAY SANDY SILT | 13 | 0 | 8 | 14 | 32 | 46 | 25 | 8 | 15 | A-4A |
| 64 | | | | | | | | | | | | | | |
| 543.5 66 | 3/6/8 | | | GRAY SANDY SILT | 14 | 0 | 7 | 14 | 33 | 46 | 27 | 10 | 11 | A-4A |
| 68 | | | | | | | | | | | | | | |
| 538.5 70 | | | | | | | | | | | | | | |
| 72 | 32/13/23 | | | GRAY SANDY CLAY | 15 | 0 | 10 | 16 | 36 | 38 | 27 | 11 | 17 | A-6A |
| 74 | | | | | | | | | | | | | | |
| 533.5 76 | 60/50 | | | GRAY SANDY CLAY | 16 | 0 | 10 | 18 | 40 | 32 | 27 | 12 | 9 | A-6A |
| 78 | | | | | | | | | | | | | | |
| 528.5 80 | 60(0.3') | | | GRAY TILL W/LIMESTONE FRAGMENTS | 17 | – | – | – | – | – | – | – | – | VISUAL |
| 528.0 | | | | GRANITE BOULDERS. NO CORE LOSS | | | | | | | | | | |
| 527.2 82 | | 4.3 | 0.2 | GRAY TILL. CORE LOSS 3%. | | | | | | | | | | |
| | | | | TOP OF ROCK | | | | | | | | | | |
| 84 | | | | | | | | | | | | | | |
| 523.5 | | | | BROWN VARVED CLAY. CORE LOSS 27%. | | | | | | | | | | |
| 522.0 86 | | 4.6 | 0.4 | LIMESTONE, LIGHT GRAY, FIRM W/CARBONACEOUS STRINGERS, W/NUMEROUS CELESTITE CRYSTALS, SLIGHTLY CROSS-BEDDED, THIN TO MEDIUM-BEDDED. NO CORE LOSS. | | | | | | | | | | |
| 88 | | | | | | | | | | | | | | |
| 518.5 90 | | | | BOTTOM OF BORING | | | | | | | | | | |
| 92 | | | | | | | | | | | | | | |

* GRANITE BOULDERS AT 80.5'

## LOG OF BORING

Date Started 8/5/93 Sampler: Type SS Dia. 1 3/8" Water Elev. –
Date Completed 8/10/93
Boring No. B-2 Station & Offset 1223+14, 72' RT. (PIER 2) APPROX. Surface Elev. 579.6

| Depth | Std. (N) Pen. | Rec. ft. | Loss ft. | Description | Sample No. | Physical Characteristics % Agg | % C.S. | % F.S. | % Silt | % Clay | L.L. | P.I. | W.C. | SHTL Class |
|---|---|---|---|---|---|---|---|---|---|---|---|---|---|---|
| 579.6 0 | | | | | | | | | | | | | | |
| 2 | AUGERED | | | BROWN CLAY W/GRAVEL (DRILLER'S DESCRIPTION) | – | – | – | – | – | – | – | – | – | VISUAL |
| 577.1 | | | | | | | | | | | | | | |
| 4 | 3/5/4 | | | DARK GRAY SILTY SAND | 1 | 0 | 28 | 41 | 22 | 9 | NP | NP | 31 | A-3A |
| 574.6 6 | 4/6/8 | | | BROWN SILTY CLAY | 2 | 0 | 3 | 5 | 31 | 61 | 44 | 20 | 23 | A-7-6 |
| 8 | | | | | | | | | | | | | | |
| 569.6 10 | | | | | | | | | | | | | | |
| 12 | 10/10/15 | | | GRAY AND BROWN SANDY SILT | 3 | 0 | 8 | 19 | 36 | 37 | 22 | 8 | 10 | A-4A |
| 14 | | | | | | | | | | | | | | |
| 564.6 16 | 3/5/9 | | | GRAY SANDY SILT | 4 | 0 | 7 | 17 | 35 | 41 | 23 | 8 | 13 | A-4A |
| 18 | | | | | | | | | | | | | | |
| 559.6 20 | | | | | | | | | | | | | | |
| 22 | 2/4/5 | | | GRAY SANDY SILT | 5 | 0 | 7 | 15 | 33 | 45 | 23 | 8 | 14 | A-4A |
| 24 | | | | | | | | | | | | | | |
| 554.6 26 | 5/8/11 | | | GRAY SANDY SILT | 6 | 0 | 8 | 15 | 27 | 50 | 23 | 7 | 16 | A-4A |
| 28 | | | | | | | | | | | | | | |
| 549.6 30 | | | | | | | | | | | | | | |
| 32 | 4/7/10 | | | GRAY SANDY SILT | 7 | 0 | 7 | 15 | 30 | 48 | 23 | 6 | 16 | A-4A |
| 34 | | | | | | | | | | | | | | |
| 544.6 36 | 4/5/8 | | | GRAY GRAVELLY SILT | 8 | 49 | 4 | 7 | 16 | 24 | 23 | 7 | 16 | A-4A |
| 38 | | | | | | | | | | | | | | |
| 539.6 40 | | | | | | | | | | | | | | |
| 42 | 23/39/45 | | | GRAY SANDY GRAVELLY SILT | 9 | 42 | 6 | 11 | 22 | 19 | 23 | 9 | 9 | A-4A |
| 44 | | | | | | | | | | | | | | |
| 534.6 46 | 42/80 | | | GRAY SANDY SILT | 10 | 0 | 10 | 17 | 36 | 37 | 23 | 7 | 8 | A-4A |
| 48 | | | | | | | | | | | | | | |
| 529.6 50 | | | | | | | | | | | | | | |
| 528.6 | 34/90(0.3') | | | GRAY SANDY SILT | 11 | 0 | 13 | 19 | 35 | 33 | 23 | 9 | 8 | A-4A |
| 528.3 52 | | | | LIGHT GRAY LIMESTONE SLAB. NO CORE LOSS. | | | | | | | | | | |
| 54 | | 2.0 | 2.0 | GRAY TILL W/WOOD FRAGMENTS IN LOWER PORTION. CORE LOSS 61%. HIGH CORE LOSS DUE TO NATURE OF MATERIAL. | | | | | | | | | | |
| 56 | | | | | | | | | | | | | | |
| 522.2 | | | | TOP OF ROCK | | | | | | | | | | |
| 520.9 58 | | 3.3 | 1.7 | GYPSUM, LIGHT GRAY, WHITE, FIRM W/CALCAREOUS STRINGERS, W/LIMESTONE FRAGMENTS, HIGHLY BROKEN AND JOINTED. NO CORE LOSS. | | | | | | | | | | |
| 60 | | | | LIMESTONE, LIGHT GRAY, FIRM, SLIGHTLY MICACEOUS, W/CARBONACEOUS STRINGERS, W/FEW CELESTITE CRYSTALS, W/FEW SCATTERED THIN SANDY CLAY SEAMS, SLIGHTLY VUGGY, | | | | | | | | | | |
| 62 | | 3.0 | 0.0 | SLIGHTLY CROSS-BEDDED IN UPPER PORTION, THIN TO MEDIUM-BEDDED, BROKEN AND JOINTED. NO CORE LOSS. | | | | | | | | | | |
| 516.6 64 | | | | BOTTOM OF BORING | | | | | | | | | | |
| 66 | | | | | | | | | | | | | | |

REVISED 8/24/94

OHIO DEPARTMENT OF TRANSPORTATION
DIVISION OF HIGHWAYS - TESTING LABORATORY
1600 WEST BROAD STREET COLUMBUS, OHIO 43223

STRUCTURE FOUNDATION INVESTIGATION
BRIDGE NO. OTT-2-2313 L/R
OVER CONRAIL R.R. & STATE ST.
SEC. OTT-2-16.60
BORING DATA

| TYPED BY | CHECKED BY | REVIEWED BY | DATE |
|---|---|---|---|
| L.A.O. | A.F. | M.R.S. | 11/23/93 |

TE - 182
400 - 12 - 78

OTT-2-1660 (4/4)

## LOG OF BORING

Date Started 8/3/93 Sampler: Type SS Dia. 1 3/8" Water Elev. -
Date Completed 8/3/93
Boring No. B-3 Station & Offset 1225+20, 70' LT. (PIER 6) APPROX. Surface Elev. 579.1'

| Elev. | Depth | Std. (N) / Pen. | Rec. Ft. | Loss Ft. | Description | Sample No. | % Agg | % C.S. | % F.S. | % Silt | % Clay | L.L. | P.I. | W.C. | SHTL Class |
|---|---|---|---|---|---|---|---|---|---|---|---|---|---|---|---|
| 579.1 | 0 | | | | | | | | | | | | | | |
| | 2 | AUGERED | | | BROWN CLAY W/STONE FRAGMENTS | - | - | - | - | - | - | - | - | - | VISUAL |
| 576.6 | 4 | 3/6/16 | | | GRAY SILTY CLAY | 1 | 0 | 4 | 10 | 31 | 55 | 41 | 18 | 33 | A-7-6 |
| 574.1 | 6 | 2/4/8 | | | BROWN SANDY CLAY | 2 | 0 | 7 | 14 | 31 | 48 | 32 | 14 | 15 | A-6A |
| | 8 | | | | | | | | | | | | | | |
| 569.1 | 10 | 8/13/27 | | | GRAY SANDY SILT | 3 | 0 | 8 | 15 | 32 | 45 | 26 | 10 | 15 | A-4A |
| | 12 | | | | | | | | | | | | | | |
| 564.1 | 14 | | | | | | | | | | | | | | |
| | 16 | 4/6/15 | | | GRAY SANDY CLAY | 4 | 0 | 8 | 16 | 41 | 35 | 26 | 13 | 14 | A-6A |
| 559.1 | 18 | | | | | | | | | | | | | | |
| | 20 | | | | | | | | | | | | | | |
| | 22 | 5/10/12 | | | GRAY SILT AND CLAY | 5 | 0 | 7 | 11 | 34 | 48 | 28 | 11 | 17 | A-6A |
| 554.1 | 24 | | | | | | | | | | | | | | |
| | 26 | 5/9/24 | | | GRAY SANDY SILT | 6 | 0 | 7 | 14 | 29 | 50 | 27 | 10 | 17 | A-4A |
| 549.1 | 28 | | | | | | | | | | | | | | |
| | 30 | | | | | | | | | | | | | | |
| | 32 | 3/5/7 | | | GRAY SANDY SILT | 7 | 0 | 8 | 12 | 33 | 47 | 27 | 10 | 18 | A-4A |
| 544.1 | 34 | | | | | | | | | | | | | | |
| | 36 | 3/7/9 | | | GRAY SANDY SILT | 8 | 0 | 7 | 15 | 29 | 49 | 27 | 10 | 18 | A-4A |
| | 38 | | | | | | | | | | | | | | |
| 539.1 | 40 | | | | | | | | | | | | | | |
| | 42 | 6/17/50 | | | GRAY SANDY SILT | 9 | 0 | 9 | 17 | 36 | 38 | 23 | 8 | 11 | A-4A |
| | 44 | | | | | | | | | | | | | | |
| 534.1 | 46 | 25/51/75 | | | GRAY SANDY SILT | 10 | 0 | 9 | 16 | 38 | 37 | 23 | 8 | 7 | A-4A |
| | 48 | | | | | | | | | | | | | | |
| 529.1 | 50 | 58/75 | | | GRAY SANDY SILT | 11 | 0 | 10 | 19 | 42 | 29 | 23 | 9 | 7 | A-4A |
| | 52 | | | | | | | | | | | | | | |
| | 54 | | | | TOP OF ROCK | | | | | | | | | | |
| 524.1 | 56 | 48/70 | | | GRAY SILT | 12 | 0 | 5 | 9 | 54 | 32 | 23 | 6 | 16 | A-4B |
| 522.1 | 58 | | 4.5 | 0.5 | LIMESTONE, LIGHT GRAY, FIRM, W/FEW CARBONACEOUS STRINGERS, W/NUMEROUS CELESTITE CRYSTALS, SLIGHTLY VUGGY, W/FEW SCATTERED THIN CLAY SEAMS, SLIGHTLY CROSS-BEDDED, THIN-BEDDED. CORE LOSS 10%. | | | | | | | | | | |
| | 60 | | | | | | | | | | | | | | |
| 517.1 | 62 | | | | | | | | | | | | | | |
| | 64 | | | | BOTTOM OF BORING | | | | | | | | | | |

## LOG OF BORING

Date Started 8/3/93 Sampler: Type SS Dia. 1 3/8" Water Elev. -
Date Completed 8/3/93
Boring No. B-4 Station & Offset 1227+08, 32' RT. (FWD. ABUT.) APPROX. Surface Elev. 605.6'

| Elev. | Depth | Std. (N) / Pen. | Rec. Ft. | Loss Ft. | Description | Sample No. | % Agg | % C.S. | % F.S. | % Silt | % Clay | L.L. | P.I. | W.C. | SHTL Class |
|---|---|---|---|---|---|---|---|---|---|---|---|---|---|---|---|
| 605.6 | 0 | | | | ASPHALT | | | | | | | | | | |
| 605.3 | 2 | AUGERED | | | | | | | | | | | | | VISUAL |
| 603.1 | 4 | 3/2/2 | | | LIGHT GRAY SILTY SANDY GRAVEL | 1 | 40 | 19 | 12 | 13 | 16 | NP | NP | 14 | A-2-4 |
| 600.6 | 6 | 3/5/6 | | | GRAY SILT AND CLAY | 2 | 0 | 8 | 10 | 28 | 54 | 33 | 13 | 13 | A-6A |
| | 8 | | | | | | | | | | | | | | |
| 595.6 | 10 | 7/10/25 | | | GRAY SILTY CLAY | 3 | 0 | 7 | 13 | 29 | 51 | 34 | 17 | 11 | A-6B |
| | 12 | | | | | | | | | | | | | | |
| | 14 | | | | | | | | | | | | | | |
| 590.6 | 16 | 9/12/14 | | | GRAY SILT AND CLAY | 4 | 0 | 3 | 8 | 30 | 59 | 33 | 14 | 10 | A-6A |
| | 18 | | | | | | | | | | | | | | |
| 585.6 | 20 | | | | | | | | | | | | | | |
| | 22 | 3/7/9 | | | BROWN SILTY CLAY | 5 | 0 | 1 | 3 | 36 | 60 | 39 | 18 | 22 | A-6B |
| | 24 | | | | | | | | | | | | | | |
| 580.6 | 26 | 7/12/20 | | | BROWN AND GRAY SILTY CLAY | 6 | 0 | 3 | 4 | 35 | 58 | 39 | 16 | 24 | A-6B |
| | 28 | | | | | | | | | | | | | | |
| 575.6 | 30 | | | | | | | | | | | | | | |
| | 32 | 7/12/14 | | | BROWN AND GRAY SILTY CLAY | 7 | 0 | 2 | 3 | 36 | 59 | 42 | 19 | 22 | A-7-6 |
| | 34 | | | | | | | | | | | | | | |
| 570.6 | 36 | 20/36/50 (0.3') | | | BROWN SANDY SILT | 8 | 0 | 7 | 21 | 37 | 35 | 23 | 8 | 16 | A-4A |
| | 38 | | | | | | | | | | | | | | |
| 565.6 | 40 | | | | | | | | | | | | | | |
| | 42 | 6/7/10 | | | BROWN AND GRAY SANDY SILT | 9 | 0 | 8 | 18 | 34 | 40 | 23 | 8 | 14 | A-4A |
| | 44 | | | | | | | | | | | | | | |
| 560.6 | 46 | 4/16/19 | | | GRAY SANDY SILT | 10 | 0 | 7 | 16 | 37 | 40 | 21 | 7 | 12 | A-4A |
| | 48 | | | | | | | | | | | | | | |
| 555.6 | 50 | | | | | | | | | | | | | | |
| | 52 | 4/5/9 | | | GRAY SANDY CLAY | 11 | 0 | 8 | 13 | 31 | 48 | 27 | 11 | 16 | A-6A |
| | 54 | | | | | | | | | | | | | | |
| 550.6 | 56 | 5/8/6 | | | GRAY SANDY CLAY | 12 | 0 | 7 | 14 | 30 | 49 | 28 | 11 | 16 | A-6A |
| | 58 | | | | | | | | | | | | | | |
| 545.6 | 60 | | | | | | | | | | | | | | |
| | 62 | 3/4/7 | | | GRAY SANDY SILT | 13 | 0 | 8 | 15 | 29 | 48 | 27 | 10 | 18 | A-4A |
| | 64 | | | | | | | | | | | | | | |
| 540.6 | 66 | 4/7/17 | | | GRAY SANDY CLAY | 14 | 0 | 8 | 17 | 34 | 41 | 27 | 12 | 12 | A-6A |
| | 68 | | | | | | | | | | | | | | |
| 535.6 | 70 | 50(0.4') | | | GRAY SANDY CLAY | 15 | 0 | 10 | 18 | 35 | 37 | 27 | 12 | 7 | A-6A |
| | 72 | | | | TOP OF ROCK | | | | | | | | | | |
| | 74 | | | | | | | | | | | | | | |
| 530.6 | 76 | 50(0.4') | | | GRAY SANDY CLAY | 16 | 0 | 10 | 17 | 34 | 39 | 28 | 13 | 8 | A-6A |
| 528.6 | 78 | | | | GRAY LIMESTONE SLAB (DRILLER'S DESCRIPTION) | - | - | - | - | - | - | - | - | - | VISUAL |
| 526.2 | 80 | | 3.3 | 1.7 | A. | | | | | | | | | | |
| 526.6 | | | | | B. | | | | | | | | | | |
| 523.6 | 82 | | | | BOTTOM OF BORING | | | | | | | | | | |
| | 84 | | | | | | | | | | | | | | |
| | 86 | | | | | | | | | | | | | | |
| | 88 | | | | A. GRAY TILL. CORE LOSS 94%. * | | | | | | | | | | |
| | 90 | | | | B. LIMESTONE, LIGHT GRAY, FIRM, W/CARBONACEOUS STRINGERS, W/NUMEROUS CELESTITE CRYSTALS, MICACEOUS, W/FEW SCATTERED THIN CLAY SEAMS, SLIGHTLY CROSS-BEDDED, THIN-BEDDED, HIGHLY BROKEN AND JOINTED IN UPPER PORTION BEING PREDOMINATELY COMPRISED OF INTERBEDDED LIGHT GRAY, WHITE, FIRM, HIGHLY BROKEN AND JOINTED GYPSUM. NO CORE LOSS. | | | | | | | | | | |
| | 92 | | | | | | | | | | | | | | |
| | 94 | | | | * HIGH CORE LOSS DUE TO NATURE OF MATERIAL. | | | | | | | | | | |

REVISED 8/24/94

OHIO DEPARTMENT OF TRANSPORTATION
DIVISION OF HIGHWAYS - TESTING LABORATORY
1600 WEST BROAD STREET COLUMBUS, OHIO 43223

STRUCTURE FOUNDATION INVESTIGATION
BRIDGE NO. OTT-2-2313 L/R
OVER CONRAIL R.R. & STATE ST.
SEC. OTT-2-16.60

BORING DATA

| TYPED BY | CHECKED BY | REVIEWED BY | DATE |
|---|---|---|---|
| L.A.O. | A.F. | M.R.S. | 11/23/93 |

# LEGEND FOR PROJECT AVERAGE RESULTS OF TESTS - 32 SAMPLES TESTED

| DESRCIPTION | H.R.B. CLASS | OHIO CLASS | % AGG. | % C. SAND | % F. SAND | % SILT | % CLAY | LIQUID LIMIT | PLASTICITY INDEX | WATER CONTENT | SAMPLES TESTED |
|---|---|---|---|---|---|---|---|---|---|---|---|
| GRAVEL & STONE FRAGS. | A-1-A(0) | A-1-A | 57 | 18 | 10 | 12 | 3 | NP | NP | 16 | 1 |
| GRAVEL & STONE FRAGS. WITH SAND | A-1-B(0) | A-1-B | 45 | 16 | 14 | 24 | 1 | NP | NP | 18 | 1 |
| GRAVEL & STONE FRAGS. WITH SAND AND SILT. | A-2-4(0) | A-2-4 | 40 | 20 | 13 | 21 | 6 | 33 | 4 | 22 | 4 |
| STONE FRAGS. WITH SAND, SILT & CLAY | A-2-7(0) | A-2-7 | 46 | 18 | 16 | 15 | 5 | 63 | 35 | 11 | 1 |
| SANDY SILT | A-4(5) | A-4A | 18 | 9 | 12 | 36 | 25 | 24 | 6 | 13 | 6 |
| SILT | A-4(6) | A-4B | 0 | 3 | 30 | 55 | 12 | 18 | 1 | 9 | 3 |
| SILT AND CLAY | A-6(8) | A-6A | 9 | 9 | 13 | 34 | 35 | 29 | 13 | 17 | 10 |
| SILTY CLAY | A-6(11) | A-6B | 7 | 5 | 10 | 35 | 43 | 36 | 17 | 19 | 5 |
| LIMESTONE | | | | VISUAL CLASSIFICATION | | | | | | | 1 |
| VARIOUS OTHER MATERIALS | | | | VISUAL CLASSIFICATION | | | | | | | --- |

ASPHALT & SUBBASE =X= APPROXIMATE DEPTH

DRIVE SAMPLE CORE BORING-PLAN VIEW

DRIVE SAMPLE CORE BORING PLOTTED TO VERTICAL SCALE ONLY

NOTE: Figure beside borings indicate water content in percent. e.g.

INDICATES A NON-PLASTIC MATERIAL WITH A HIGH WATER CONTENT

INDICATES FREE WATER ELEVATION

NUMBER OF BLOWS FOR "STANDARD PENETRATION" TEST
X= NUMBER OF BLOWS FOR FIRST 6 INCHES
Y= NUMBER OF BLOWS FOR SECOND 6 INCHES
Z= NUMBER OF BLOWS FOR THIRD 6 INCHES

# EMB. FAILURE INV.
# OTTAWA COUNTY
# OTT-2-17.42

**OHIO DEPARTMENT OF TRANSPORTATION**
**DIVISION OF HIGHWAYS-TESTING LABORATORY**
1600 WEST BROAD STREET COLUMBUS, OHIO 43223

1/2

## NOTES

1. INFORMATION SHOWN BY THIS SUBGRADE PROFILE WAS OBTAINED SOLELY FOR USE IN ESTABLISHING DESIGN CONTROLS FOR THE PROJECT. THE STATE OF OHIO DOES NOT GUARANTEE THE ACCURACY OF THIS DATA AND IT IS NOT TO BE CONSTRUED AS A PART OF THE PLANS GOVERNING CONSTRUCTION OF THE PROJECT.

2. ALL AVAILABLE SOIL AND BEDROCK INFORMATION WHICH CAN BE CONVENIENTLY SHOWN ON THE SOIL PROFILE FOUNDATION INVESTIGATION SHEETS HAS BEEN SO REPORTED. ADDITIONAL SUBSERFACE INVESTIGATION, SOIL TESTS AND BEDROCK BORINGS MAY HAVE BEEN MADE TO STUDY SOME SPECIAL ASPECT OF THE PROJECT, COPIES OF THIS DATA, IF ANY, MAY BE INSPECTED IN THE DISTRICT DEPUTY DIRECTOR'S OFFICE, THE BUREAU OF TESTS AT 1600 WEST BROAD STREET, THE PAVEMENT AND SOILS SECTION OF THE BUREAU OF LOCATION AND DESIGN OR IN THE BRIDGE BUREAU AT 25 SOUTH FRONT SREET.

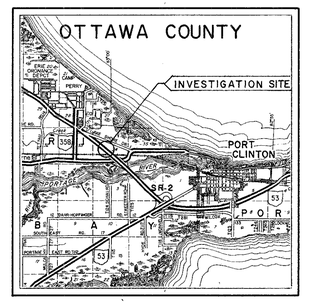


LOCATION MAP

*Recon.- M.R.S.,9/92*
*Drilling - T.C.V.,9/24 to 28/92*
*Drafting - M.R.S.,9/27/94*

## SUMMARY OF SOIL TEST DATA

NOTE - NP SHOWN IN LIQUID LIMIT AND PLASTICITY COLUMNS INDICATES A NON-PLASTIC MATERIAL

| STATION & OFFSET | DEPTH FROM | TO | AGG | CS | FS | SILT | CLAY | LL | PI | WC | COMP CLASS |
|---|---|---|---|---|---|---|---|---|---|---|---|
| 919+56,040 R | 02.5 | 04.0 | 9 | 5 | 11 | 33 | 42 | 36 | 16 | 24 | A-6B |
| | 04.0 | 05.5 | 0 | 7 | 13 | 35 | 45 | NP | NP | 17 | A-4A |
| | 05.5 | 07.0 | - | - | - | - | - | - | - | 0 | |
| | | | GR SAND & ST FRGS | | | | | | | | VISUAL |
| | 07.0 | 08.5 | 57 | 18 | 10 | 12 | 3 | NP | NP | 16 | A-1-A |
| | 08.5 | 10.0 | 58 | 15 | 9 | 15 | 3 | 31 | 8 | 20 | A-2-4 |
| | 10.0 | 11.5 | 39 | 20 | 13 | 21 | 7 | 34 | 6 | 19 | A-2-4 |
| | 11.5 | 13.0 | 46 | 18 | 16 | 15 | 5 | 63 | 35 | 11 | A-2-7 |
| | 13.0 | 14.5 | 12 | 8 | 12 | 31 | 37 | 29 | 8 | 15 | A-4A |
| | 14.5 | 16.0 | 9 | 6 | 14 | 34 | 37 | 29 | 13 | 14 | A-6A |
| | 16.0 | 17.5 | 27 | 6 | 11 | 27 | 29 | 30 | 12 | 15 | A-6A |
| | 17.5 | 19.0 | 17 | 17 | 14 | 23 | 29 | 29 | 13 | 18 | A-6A |
| | 19.0 | 20.5 | 0 | 7 | 10 | 44 | 39 | 30 | 13 | 18 | A-6A |
| | 25.0 | 25.8 | 0 | 2 | 38 | 53 | 7 | NP | NP | 16 | A-4B |
| | 30.0 | 30.4 | 0 | 4 | 25 | 54 | 17 | 18 | 4 | 7 | A-4B |
| | 35.0 | 35.5 | 0 | 8 | 19 | 48 | 25 | 22 | 8 | 9 | A-4A |
| | 40.0 | 41.0 | 22 | 15 | 13 | 32 | 18 | 22 | 8 | 8 | A-4A |
| 920+58,038 L | 02.5 | 04.0 | 0 | 4 | 8 | 40 | 48 | 39 | 18 | 15 | A-6B |
| | 04.0 | 05.5 | 0 | 7 | 14 | 34 | 45 | 30 | 16 | 14 | A-6B |
| | 05.5 | 07.0 | 0 | 5 | 12 | 38 | 45 | 35 | 17 | 27 | A-6B |
| | 07.0 | 08.5 | 27 | 3 | 7 | 27 | 36 | 40 | 19 | 17 | A-6B |
| | 08.5 | 10.0 | 44 | 10 | 9 | 36 | 1 | NP | NP | 20 | A-4A |
| | 10.0 | 11.5 | 45 | 16 | 14 | 24 | 1 | NP | NP | 18 | A-1-B |
| | 11.5 | 13.0 | 40 | 16 | 17 | 26 | 1 | NP | NP | 21 | A-2-4 |
| | 13.0 | 14.5 | 23 | 28 | 14 | 21 | 14 | NP | NP | 26 | A-2-4 |
| | 14.5 | 16.0 | 23 | 6 | 10 | 28 | 33 | 30 | 13 | 17 | A-6A |
| | 16.0 | 17.5 | 0 | 8 | 15 | 36 | 41 | 30 | 13 | 20 | A-6A |
| | 17.5 | 19.0 | 17 | 6 | 12 | 30 | 35 | 28 | 12 | 18 | A-6A |
| | 19.0 | 20.5 | 0 | 9 | 14 | 37 | 40 | 28 | 12 | 18 | A-6A |
| | 25.0 | 26.5 | 0 | 8 | 14 | 35 | 43 | 28 | 11 | 17 | A-6A |
| | 30.0 | 30.5 | 0 | 3 | 27 | 57 | 13 | NP | NP | 5 | A-4B |
| | 35.0 | 35.8 | 0 | 9 | 20 | 45 | 26 | 27 | 13 | 17 | A-6A |
| | 40.0 | 40.4 | 28 | 7 | 9 | 33 | 23 | 24 | 9 | 7 | A-4A |
| | 45.0 | 45.1 | - | - | - | - | - | - | - | 7 | |
| | | | GR DOLOMITIC LIMEST | | | | | | | | VISUAL |

# EMB. FAILURE INV.
OTTAWA COUNTY
OTT-2-17.42.

OHIO DEPARTMENT OF TRANSPORTATION
DIVISION OF HIGHWAYS-TESTING LABORATORY
1600 WEST BROAD STREET COLUMBUS, OHIO 43223

2/2

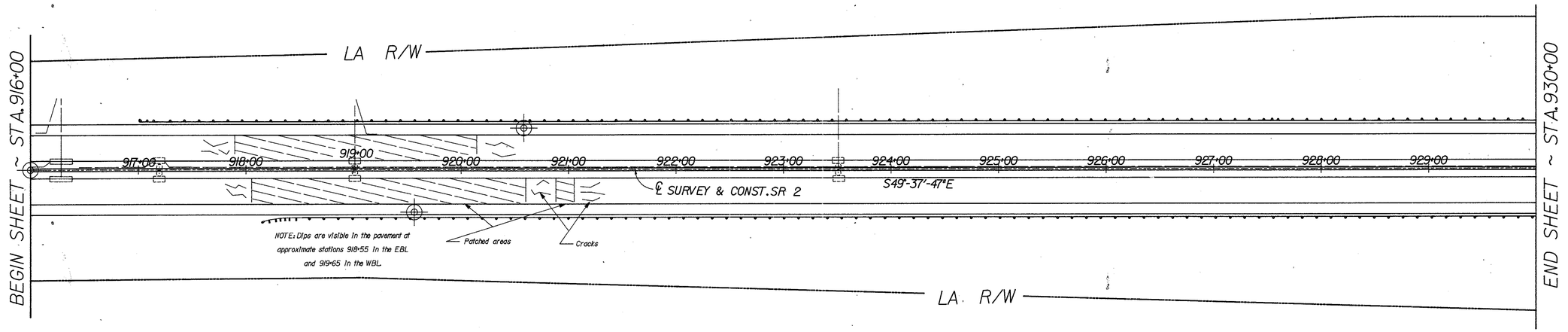


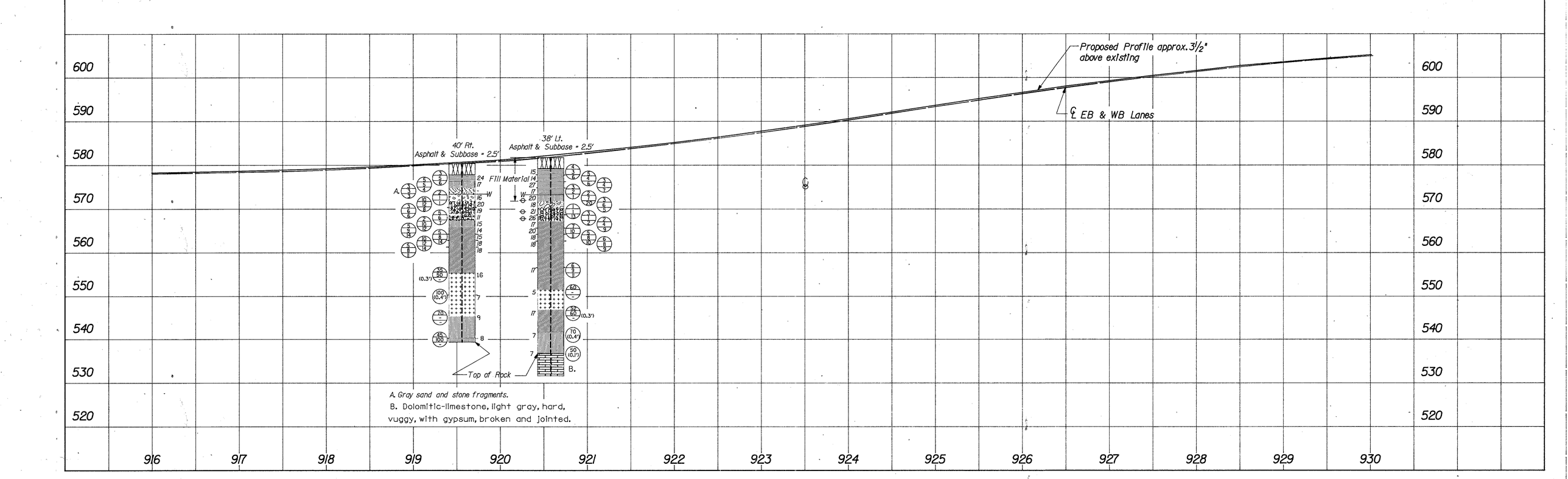

# LEGEND FOR PROJECT AVERAGE RESULTS OF TESTS - 46 SAMPLES TESTED

| DESRCIPTION | H.R.B. CLASS | OHIO CLASS | % AGG. | % C. SAND | % F. SAND | % SILT | % CLAY | LIQUID LIMIT | PLASTICITY INDEX | WATER CONTENT | SAMPLES TESTED |
|---|---|---|---|---|---|---|---|---|---|---|---|
| STONE FRAGMENTS | A-1-A(0) | A-1-A | 62 | 14 | 9 | 12 | 3 | NP | NP | 7 | 1 |
| STONE FRAGS. WITH SAND. | A-1-B(0) | A-1-B | 40 | 12 | 30 | 16 | 2 | NP | NP | 19 | 1 |
| STONE FRAGS. WITH SAND AND SILT. | A-2-4-(0) | A-2-4- | 44 | 18 | 13 | 17 | 8 | 30 | 8 | 9 | 1 |
| STONE FRAGS. WITH SAND, SILT AND CLAY. | A-2-7(0) | A-2-7 | 52 | 17 | 10 | 18 | 3 | 73 | 47 | 11 | 4 |
| SANDY SILT | A-4(5) | A-4A | 12 | 8 | 20 | 33 | 27 | 26 | 7 | 17 | 7 |
| SILT AND CLAY | A-6(9) | A-6A | 4 | 6 | 10 | 41 | 39 | 31 | 13 | 16 | 26 |
| SILTY CLAY | A-6(11) | A-6B | 0 | 4 | 7 | 39 | 50 | 37 | 17 | 20 | 3 |
| CLAY | A-7-6(13) | A-7-6 | 0 | 1 | 4 | 42 | 53 | 42 | 21 | 23 | 1 |
| LIMESTONE | | | | VISUAL CLASSIFICATION | | | | | | | 1 |
| BOULDERY ZONE | | | | VISUAL CLASSIFICATION | | | | | | | --- |
| VARIOUS OTHER MATERIALS | | | | VISUAL CLASSIFICATION | | | | | | | 1 |

ASPHALT =X= APPROXIMATE DEPTH

DRIVE SAMPLE OR CORE BORING LOCATION - PLAN VIEW

DRIVE SAMPLE & CORE BORING PLOTTED TO VERTICAL SCALE ONLY

WATER CONTENT NEARLY EQUAL TO OR GREATER THAN LIQUID LIMIT

NOTE: FIGURES BESIDE BORINGS INDICATE WATER CONTENT IN PERCENT e.g. 15

INDICATES A NON-PLASTIC MATERIAL WITH A HIGH WATER CONTENT

INDICATES STATIC WATER ELEVATION

NUMBER OF BLOWS FOR "STANDARD PENETRATION" TEST
X= NUMBER OF BLOWS FOR FIRST 6 INCHES
Y= NUMBER OF BLOWS FOR SECOND 6 INCHES
Z= NUMBER OF BLOWS FOR THIRD 6 INCHES

# EMB. FAILURE INV.
# OTTAWA COUNTY
# OTT-2-18.51

OHIO DEPARTMENT OF TRANSPORTATION
DIVISION OF HIGHWAYS-TESTING LABORATORY
1600 WEST BROAD STREET COLUMBUS, OHIO 43223

1/3

## NOTES

1. INFORMATION SHOWN BY THIS SUBGRADE PROFILE WAS OBTAINED SOLELY FOR USE IN ESTABLISHING DESIGN CONTROLS FOR THE PROJECT. THE STATE OF OHIO DOES NOT GUARANTEE THE ACCURACY OF THIS DATA AND IT IS NOT TO BE CONSTRUED AS A PART OF THE PLANS GOVERNING CONSTRUCTION OF THE PROJECT.

2. ALL AVAILABLE SOIL AND BEDROCK INFORMATION WHICH CAN BE CONVENIENTLY SHOWN ON THE SOIL PROFILE FOUNDATION INVESTIGATION SHEETS HAS BEEN SO REPORTED. ADDITIONAL SUBSERFACE INVESTIGATION, SOIL TESTS AND BEDROCK BORINGS MAY HAVE BEEN MADE TO STUDY SOME SPECIAL ASPECT OF THE PROJECT, COPIES OF THIS DATA, IF ANY, MAY BE INSPECTED IN THE DISTRICT DEPUTY DIRECTOR'S OFFICE, THE BUREAU OF TESTS AT 1600 WEST BROAD STREET, THE PAVEMENT AND SOILS SECTION OF THE BUREAU OF LOCATION AND DESIGN OR IN THE BRIDGE BUREAU AT 25 SOUTH FRONT SREET.

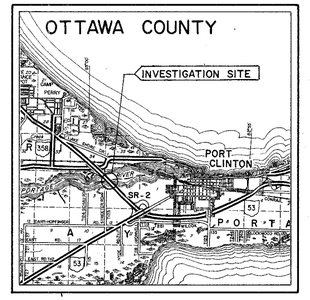


LOCATION MAP

*Recon.-* M.R.S., 9/92
*Drilling -* T.C.V., 9/29 TO 10/5/92
*Drafting -* M.R.S., 9/27/94

## SUMMARY OF SOIL TEST DATA

NOTE - NP SHOWN IN LIQUID LIMIT AND PLASTICITY COLUMNS INDICATES A NON-PLASTIC MATERIAL

| STATION & OFFSET | DEPTH FROM | TO | AGG | PERCENTAGES CS | FS | SILT | CLAY | LL | PI | WC | COMP CLASS |
|---|---|---|---|---|---|---|---|---|---|---|---|
| 977+00,039 Rt. | 02.5-04.0 | | 0 | 4 | 9 | 43 | 44 | 34 | 13 | 25 | A-6A |
| | 05.0-06.5 | | 0 | 4 | 10 | 42 | 44 | 35 | 15 | 21 | A-6A |
| | 07.5-09.0 | | 0 | 4 | 11 | 41 | 44 | 33 | 15 | 19 | A-6A |
| | 10.0-11.5 | | 0 | 6 | 12 | 43 | 39 | 30 | 12 | 17 | A-6A |
| | 12.5-14.0 | | 0 | 4 | 9 | 47 | 40 | 30 | 12 | 15 | A-6A |
| | 15.8-16.3 | | 6 | 3 | 6 | 65 | 20 | 30 | 15 | 16 | A-6A |
| | 17.5-19.0 | | 0 | 3 | 7 | 37 | 53 | 30 | 10 | 17 | A-4A |
| | 20.0-21.5 | | 0 | 4 | 9 | 46 | 41 | 30 | 12 | 15 | A-6A |
| | 22.5-24.0 | | 0 | 5 | 11 | 39 | 45 | 32 | 14 | 20 | A-6A |
| | 25.0-26.5 | | 0 | 3 | 8 | 35 | 54 | 37 | 17 | 17 | A-6B |
| | 27.5-29.0 | | 0 | 1 | 4 | 49 | 46 | 34 | 15 | 22 | A-6A |
| | 30.0-31.5 | | 45 | 19 | 11 | 25 | 0 | 73 | 47 | 11 | A-2-7 |
| | 32.5-34.0 | | 53 | 18 | 10 | 15 | 4 | 73 | 50 | 9 | A-2-7 |
| | 35.0-36.5 | | 65 | 12 | 7 | 14 | 2 | 73 | 47 | 10 | A-2-7 |
| | 37.5-39.0 | | 46 | 19 | 12 | 18 | 5 | 73 | 43 | 12 | A-2-7 |
| | 40.0-41.5 | | - | - | - | - | - | - | - | 29 | |
| | | | GR S'M'C W/ST FRAGS | | | | | | | | VISUAL |
| | 42.5-44.5 | | 5 | 13 | 33 | 39 | 10 | NP | NP | 25 | A-4A |
| | 45.0-46.5 | | 10 | 13 | 17 | 30 | 30 | 29 | 12 | 16 | A-6A |
| | 47.5-49.0 | | 13 | 6 | 13 | 33 | 35 | 22 | 4 | 15 | A-4A |
| | 50.0-51.5 | | 9 | 7 | 11 | 34 | 39 | 30 | 13 | 14 | A-6A |
| | 55.0-56.5 | | 11 | 6 | 12 | 34 | 37 | 30 | 13 | 16 | A-6A |
| | 60.0-61.5 | | 39 | 10 | 10 | 24 | 17 | 26 | 11 | 11 | A-6A |
| | 65.0-66.0 | | 25 | 15 | 13 | 32 | 15 | 25 | 9 | 12 | A-4A |

| STATION & OFFSET | DEPTH FROM | TO | AGG | PERCENTAGES CS | FS | SILT | CLAY | LL | PI | WC | COMP CLASS |
|---|---|---|---|---|---|---|---|---|---|---|---|
| 979+25,038 Rt. | 02.5-04.0 | | 0 | 3 | 6 | 43 | 48 | 40 | 19 | 24 | A-6B |
| | 05.0-06.5 | | 0 | 3 | 9 | 44 | 44 | 33 | 14 | 15 | A-6A |
| | 07.5-09.0 | | 0 | 7 | 15 | 37 | 41 | 30 | 14 | 13 | A-6A |
| | 10.0-10.5 | | 0 | 6 | 11 | 42 | 41 | 30 | 14 | 14 | A-6A |
| | 12.5-14.0 | | 0 | 1 | 3 | 57 | 39 | 32 | 13 | 19 | A-6A |
| | 16.5-17.0 | | 0 | 2 | 5 | 53 | 40 | 30 | 15 | 16 | A-6A |
| | 17.5-19.0 | | 0 | 6 | 12 | 40 | 42 | 30 | 12 | 14 | A-6A |
| | 20.0-21.5 | | 0 | 5 | 9 | 38 | 48 | 35 | 16 | 18 | A-6B |
| | 22.5-24.0 | | 0 | 2 | 6 | 48 | 44 | 35 | 13 | 19 | A-6A |
| | 25.0-26.5 | | 44 | 18 | 13 | 17 | 8 | 30 | 8 | 9 | A-2-4 |
| | 27.5-29.0 | | 62 | 14 | 9 | 12 | 3 | NP | NP | 7 | A-1-A |
| | 30.0-31.5 | | 40 | 12 | 30 | 16 | 2 | NP | NP | 19 | A-1-B |
| | 32.5-34.0 | | 0 | 1 | 44 | 32 | 23 | 27 | 9 | 26 | A-4A |
| | 35.0-36.5 | | 0 | 1 | 4 | 42 | 53 | 42 | 21 | 23 | A-7-6 |
| | 37.5-39.0 | | 0 | 3 | 6 | 54 | 37 | 31 | 11 | 21 | A-6A |
| | 40.0-41.5 | | 20 | 10 | 13 | 27 | 30 | 27 | 11 | 10 | A-6A |
| | 42.5-44.0 | | 19 | 8 | 15 | 29 | 29 | 27 | 11 | 10 | A-6A |
| | 45.0-46.5 | | 0 | 7 | 18 | 38 | 37 | 26 | 11 | 11 | A-6A |
| | 47.5-49.0 | | 0 | 7 | 14 | 36 | 43 | 29 | 11 | 16 | A-6A |
| | 50.5-51.5 | | 0 | 7 | 14 | 33 | 46 | 31 | 12 | 15 | A-6A |
| | 55.0-56.5 | | 0 | 9 | 18 | 39 | 34 | 26 | 8 | 14 | A-4A |
| | 60.0-61.3 | | 42 | 7 | 11 | 21 | 19 | 26 | 10 | 9 | A-4A |
| | 63.0-63.1 | | - | - | - | - | - | - | - | 11 | |
| | | | GR DOLOMITIC LIMEST | | | | | | | | VISUAL |

EMB. FAILURE INV.
OTTAWA COUNTY
OTT-2-18.51

OHIO DEPARTMENT OF TRANSPORTATION
DIVISION OF HIGHWAYS-TESTING LABORATORY
1600 WEST BROAD STREET COLUMBUS, OHIO 43223

2/3

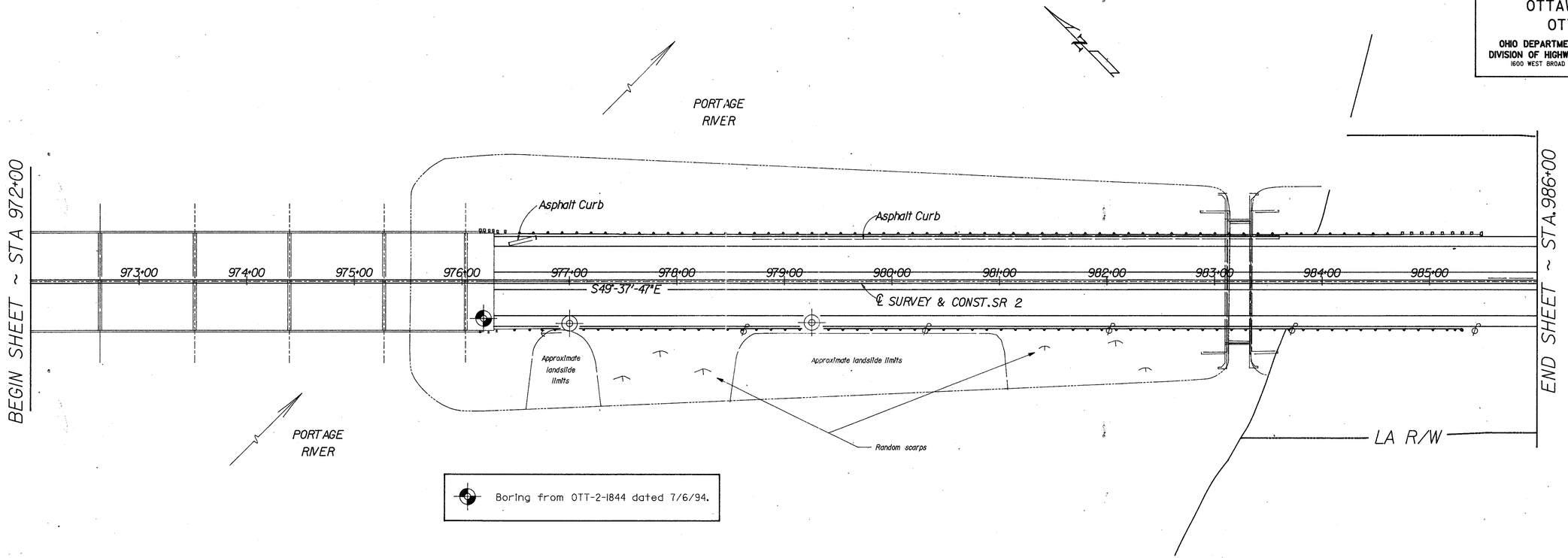


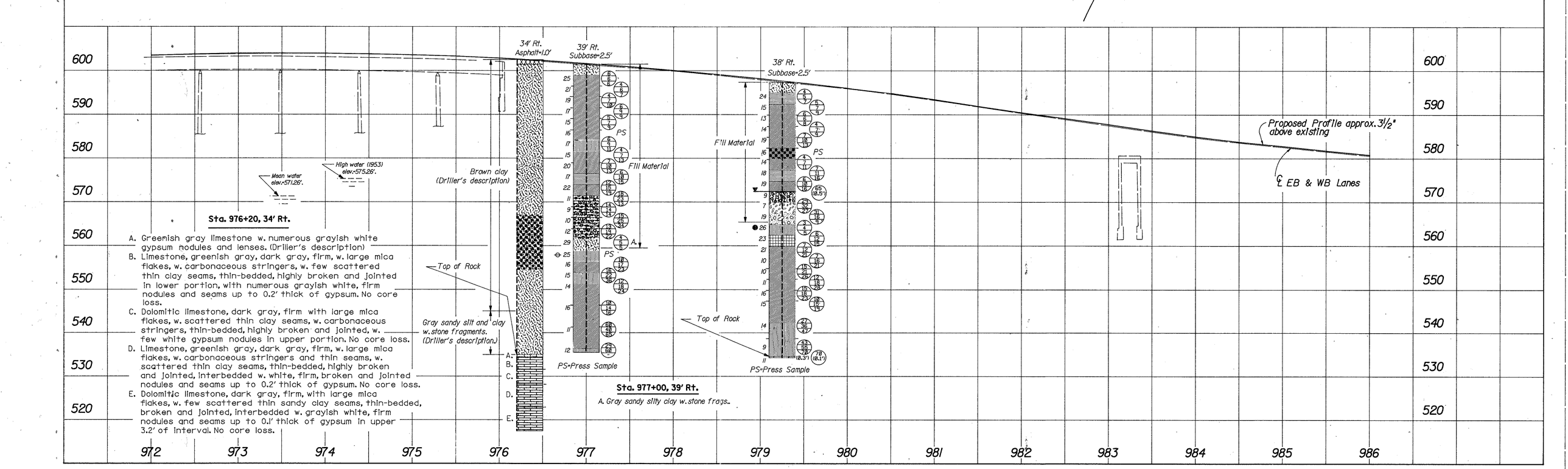


**Sta. 976+20, 34' Rt.**

A. Greenish gray limestone w. numerous grayish white gypsum nodules and lenses. (Driller's description)
B. Limestone, greenish gray, dark gray, firm, w. large mica flakes, w. carbonaceous stringers, w. few scattered thin clay seams, thin-bedded, highly broken and jointed in lower portion, with numerous grayish white, firm nodules and seams up to 0.2' thick of gypsum. No core loss.
C. Dolomitic limestone, dark gray, firm with large mica flakes, w. scattered thin clay seams, w. carbonaceous stringers, thin-bedded, highly broken and jointed, w. few white gypsum nodules in upper portion. No core loss.
D. Limestone, greenish gray, dark gray, firm, w. large mica flakes, w. carbonaceous stringers and thin seams, w. scattered thin clay seams, thin-bedded, highly broken and jointed, interbedded w. white, firm, broken and jointed nodules and seams up to 0.2' thick of gypsum. No core loss.
E. Dolomitic limestone, dark gray, firm, with large mica flakes, w. few scattered thin sandy clay seams, thin-bedded, broken and jointed, interbedded w. grayish white, firm nodules and seams up to 0.1' thick of gypsum in upper 3.2' of interval. No core loss.

**Sta. 977+00, 39' Rt.**

A. Gray sandy silty clay w. stone frags..

EMB. FAILURE INV.
OTTAWA COUNTY
OTT-2-18.51

**OHIO DEPARTMENT OF TRANSPORTATION**
**DIVISION OF HIGHWAYS-TESTING LABORATORY**
1600 WEST BROAD STREET. COLUMBUS, OHIO 43223

3/3

State of Ohio
Department of Transportation
Division of Highways
Testing Laboratory

UNCONFINED COMPRESSION TEST

Boring No. B-1 Station & Offset 979+25, 38' RT.
Field No. 6 Lab No.So 73498
Depth 16.5' - 17.0'

Project Identification OTTAWA
OTT-2-18.51
SUBSURFACE INVESTIGATION

Specimen Data
Diameter 2.85 IN. Wet Density 133.36 LB/CU.FT.
Length 6.00 IN. Dry Density 114.42 LB/CU.FT.
Specific Gravity

| Physical Characteristics | | | | | | | |
|---|---|---|---|---|---|---|---|
| % Agg | % C.S. | % F.S. | % Silt | % Clay | L.L. | P.I. | W.C. |
| 0 | 2 | 5 | 53 | 40 | 30 | 15 | 16 |

Visual Description BROWN SILT AND CLAY

Diagram of Failure



Diagram of Failure



Penetrometer 4.50 TSF Torvane 1.0 TSF
Remarks: ASTM D-2166
qu=2.2696 TSF BREAKING STRAIN 10.50%

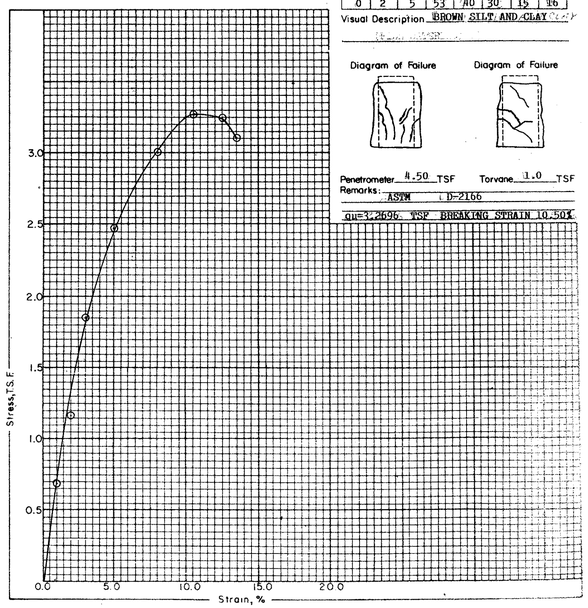


State of Ohio
Department of Transportation
Division of Highways
Testing Laboratory

UNCONFINED COMPRESSION TEST

Boring No. B-2 Station & Offset 977+00, 39' RT.
Field No. 6 Lab No.So 73499
Depth 15.8' - 16.3'

Project Identification OTTAWA
OTT-2-18.51
SUBSURFACE INVESTIGATION

Specimen Data
Diameter 2.85 IN. Wet Density 134.61 LB/CU.FT.
Length 6.00 IN. Dry Density 115.72 LB/CU.FT.
Specific Gravity

| Physical Characteristics | | | | | | | |
|---|---|---|---|---|---|---|---|
| % Agg | % C.S. | % F.S. | % Silt | % Clay | L.L. | P.I. | W.C. |
| 6 | 3 | 6 | 65 | 20 | 30 | 15 | 16 |

Visual Description BROWN SILT AND CLAY

Diagram of Failure



Diagram of Failure


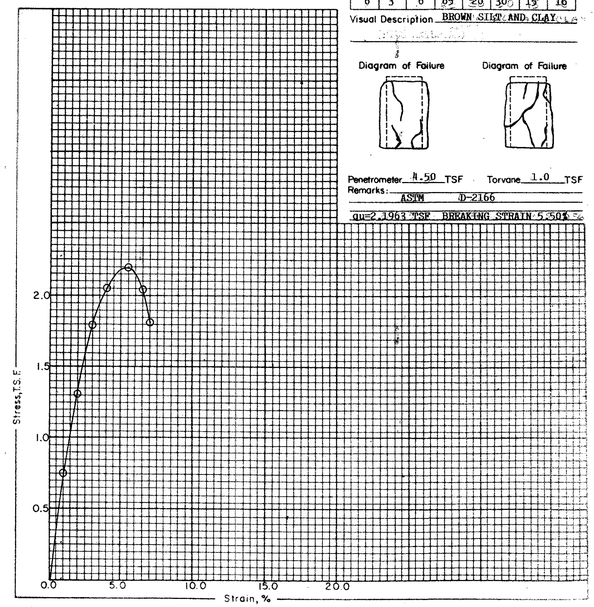
Penetrometer 4.50 TSF Torvane 1.0 TSF
Remarks: ASTM D-2166
qu=2.1963 TSF BREAKING STRAIN 5.50%