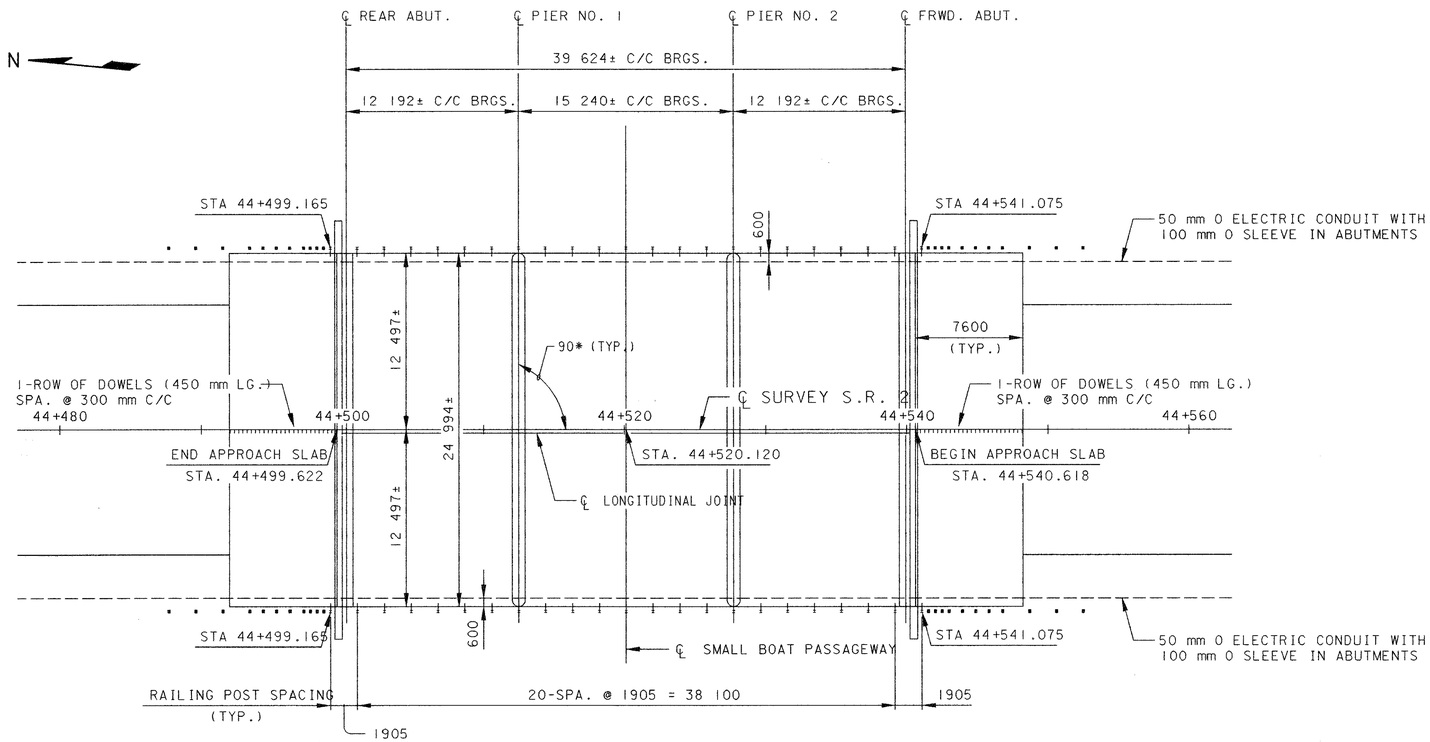

PLAN

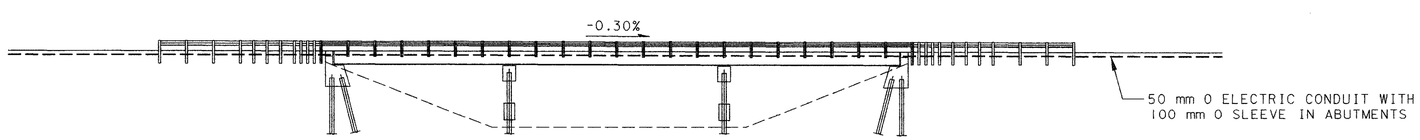

ELEVATION

PROPOSED WORK

1. REMOVE EXISTING ASPHALT CONCRETE OVERLAY, MEDIAN, AND OUTSIDE RAILINGS.
2. REMOVE 25 mm OF EXISTING DECK SLAB USING HYDRODEMOLITION.
3. REMOVE EXISTING APPROACH SLAB.
4. REMOVE EXISTING BACKWALL AND PORTIONS OF DECK SLAB.
5. REMOVE EXISTING POROUS BACKFILL AT ABUTMENTS.
6. REMOVE EXISTING BEARING PLATES AT ABUTMENTS.
7. REMOVE EXISTING END CROSS FRAMES AND EXISTING BUMPER ANGLES ATTACHED TO BEAMS AT EACH ABUTMENT.
8. INSTALL NEW ELASTOMERIC BEARING PADS AT ABUTMENTS
9. INSTALL SEMI-INTEGRAL ABUTMENTS.
10. INSTALL NEW ABUTMENT DRAINAGE SYSTEM.
11. REPLACE STEEL DRIP STRIPS.
12. REMOVE ORIGINAL DECK FORM MATERIAL ALONG LONGITUDINAL CENTER JOINT.
13. INSTALL NEW MEDIAN AND OUTSIDE RAILINGS.
14. PROVIDE NEW APPROACH SLABS.
15. INSTALL PRESSURE RELIEF JOINTS.
16. REPAIR EXISTING DECK SLAB.
17. PROVIDE 32 mm MICRO-SILICA MODIFIED CONCRETE OVERLAY.
18. SEAL DECK SLAB WITH NON-EPOXY AND SEAL ABUTMENTS AND EXPOSED SURFACES OF WINGWALLS WITH EPOXY.
19. REPAIR PAINT SYSTEM OF EXISTING STEEL RESULTING FROM CONSTRUCTION DAMAGE USING SYSTEM OZEU.
20. ALL DIMENSIONS ARE IN MILLIMETERS AND ALL ELEVATIONS ARE IN METERS, UNLESS NOTED OTHERWISE.

AS-BUILT DRAWING 03/99

metric units

DESIGN AGENCY
M&E CIVIL ENGINEERING
Civil Engineering, Inc.
35 Brooksedge Blvd.
Westerville, Ohio 43081

DESIGNED	DRAWN	REVIEWED	DATE
A.D.	A.D.	MM	06-12-98
CHECKED	REVISED	STRUCTURE FILE NUMBER	
PLC	.	6200753	

STRUCTURAL GENERAL NOTES
BRIDGE NO. OTT-2-45383
S.R. 2 OVER SANDUSKY BAY (SMALL BOAT PASSAGEWAY)

OTT/ERI-2-44.103-0.000

1/10

28/41

Ananda Dharma u:\98\98307\SE27SR2.dgn DATE:MARCH 10,1999 TIME:2:45 PM

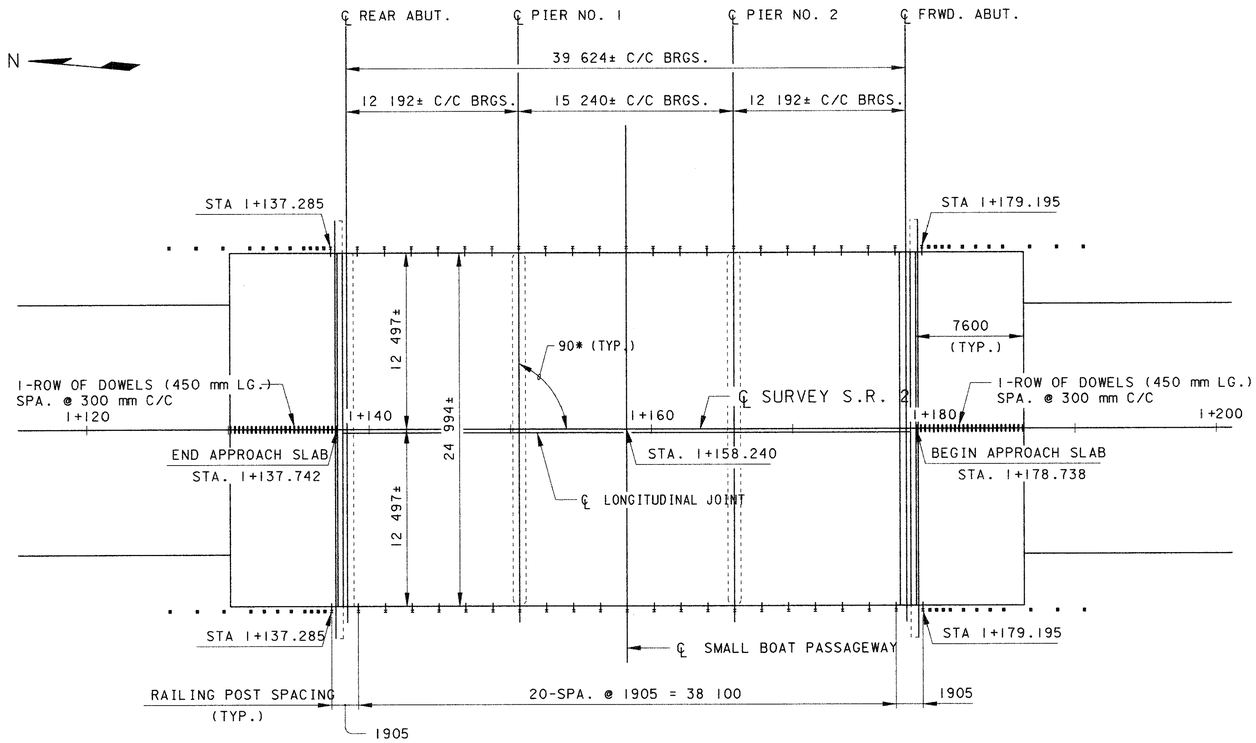

PLAN

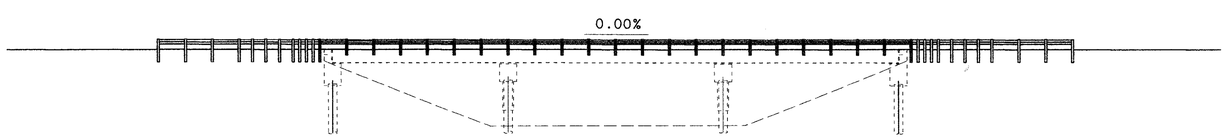

ELEVATION

PROPOSED WORK

1. REMOVE EXISTING ASPHALT CONCRETE OVERLAY, MEDIAN, AND OUTSIDE RAILINGS.
2. REMOVE 25 mm OF EXISTING DECK SLAB USING HYDRODEMOLITION.
3. REMOVE EXISTING APPROACH SLAB.
4. REMOVE EXISTING BACKWALL AND PORTIONS OF DECK SLAB.
5. REMOVE EXISTING POROUS BACKFILL AT ABUTMENTS.
6. REMOVE EXISTING BEARING PLATES AT ABUTMENTS.
7. REMOVE EXISTING END CROSS FRAMES AND EXISTING BUMPER ANGLES ATTACHED TO BEAMS AT EACH ABUTMENT.
8. INSTALL NEW ELASTOMERIC BEARING PADS AT ABUTMENTS
9. INSTALL SEMI-INTEGRAL ABUTMENTS.
10. INSTALL NEW ABUTMENT DRAINAGE SYSTEM.
11. REPLACE STEEL DRIP STRIPS.
12. REMOVE ORIGINAL DECK FORM MATERIAL ALONG LONGITUDINAL CENTER JOINT.
13. INSTALL NEW MEDIAN AND OUTSIDE RAILINGS.
14. PROVIDE NEW APPROACH SLABS.
15. INSTALL PRESSURE RELIEF JOINTS.
16. REPAIR EXISTING DECK SLAB.
17. PROVIDE 32 mm MICRO-SILICA MODIFIED CONCRETE OVERLAY.
18. SEAL DECK SLAB WITH NON-EPOXY AND SEAL ABUTMENTS AND EXPOSED SURFACES OF WINGWALLS WITH EPOXY.
19. PAINT EXISTING STEEL USING SYSTEM OZEU.
20. ALL DIMENSIONS ARE IN MILLIMETERS AND ALL ELEVATIONS ARE IN METERS, UNLESS NOTED OTHERWISE.

AS-BUILT DRAWING 03/99

metric units

DESIGN AGENCY
M+E Civil Engineering, Inc.
635 Brookside Blvd.
Westerville, Ohio 43081

DESIGNED	DRAWN	REVIEWED	DATE
A.D.	A.D.	MM	06-12-98
CHECKED	REVISED	STRUCTURE FILE NUMBER	
PLC	.	2200031	

STRUCTURAL GENERAL NOTES
BRIDGE NO. ERI-2-00952
S.R. 2 OVER SANDUSKY BAY (SMALL BOAT PASSAGEWAY)

OTT/ERI-2-44.103-0.000

2/10

29/41

Ananda Dharma J:\98\983071\BSE128SR2.dgn DATE: MARCH 10, 1999 TIME: 2:30 PM

metric units

REFERENCE

REFERENCE SHALL BE MADE TO STANDARD DRAWINGS:

STANDARD BRIDGE DRAWING NO. AS-1-81M DATED 10-25-94
STANDARD BRIDGE DRAWING NO. DBR-2-73M REVISED 08-18-95
STANDARD BRIDGE DRAWING NO. DS-1-94M DATED 12-15-94
STANDARD CONSTRUCTION DRAWING NO. DM-1.1M DATED 10-21-97
NEW YORK DOT STANDARD DRAWING NO. M606-4R1 REVISED 05-21-79

AND TO SUPPLEMENTAL SPECIFICATIONS:

815 DATED 05-30-96
910 DATED 04-21-97
911 DATED 07-10-97
1081 DATED 07-10-97

DESIGN SPECIFICATIONS

THE PROPOSED REHABILITATION WORK FOR THESE STRUCTURES CONFORMS TO "STANDARD SPECIFICATIONS FOR HIGHWAY BRIDGES" ADOPTED BY THE AMERICAN ASSOCIATION OF STATE HIGHWAY AND TRANSPORTATION OFFICIALS, 1996, INCLUDING THE 1997 INTERIM SPECIFICATIONS AND THE ODOT BRIDGE DESIGN MANUAL.

DESIGN DATA

DESIGN LOADING: MS18 (CASE II) AND THE ALTERNATE MILITARY LOADING.

CONCRETE CLASS S: COMPRESSIVE STRENGTH 31.0 MPa

REINFORCING STEEL: ASTM A615M, A616M OR A617M - GRADE 420, MINIMUM YIELD STRENGTH 420 MPa

STRUCTURAL STEEL: A36M - YIELD STRENGTH 250 MPa.

DECK PROTECTION METHODS: EPOXY COATED REINFORCING STEEL, MICRO-SILICA MODIFIED CONCRETE OVERLAY, STEEL DRIP STRIP, AND SEALING OF CONCRETE SURFACES.

EXISTING STRUCTURE VERIFICATION

DETAILS AND DIMENSIONS SHOWN ON THESE PLANS PERTAINING TO THE EXISTING STRUCTURES HAVE BEEN OBTAINED FROM PLANS OF THE EXISTING STRUCTURES AND FROM FIELD OBSERVATIONS AND MEASUREMENTS. CONSEQUENTLY, THEY ARE INDICATIVE OF THE EXISTING STRUCTURES AND THE PROPOSED WORK BUT THEY SHALL BE CONSIDERED TENTATIVE AND APPROXIMATE. THE CONTRACTOR IS REFERRED TO CMS SECTIONS 102.05, 105.02, AND 513.02.

CONTRACT BID PRICES ARE BASED UPON A RECOGNITION OF THE UNCERTAINTIES DESCRIBED ABOVE AND UPON A PREBID EXAMINATION OF THE EXISTING STRUCTURES BY THE CONTRACTOR. ALL PROJECT WORK IS BASED UPON ACTUAL DETAILS AND DIMENSIONS WHICH WAS VERIFIED BY THE CONTRACTOR IN THE FIELD.

EXISTING STRUCTURE PLANS

THE EXISTING STRUCTURE PLANS ARE ON FILE AND MAY BE REVIEWED AT THE DISTRICT TWO OFFICE OF THE OHIO DEPARTMENT OF TRANSPORTATION, 317 E. POE RD., BOWLING GREEN, OH 43402.

PROTECTION OF TRAFFIC

PRIOR TO DEMOLITION OF ANY PORTIONS OF THE EXISTING SUPERSTRUCTURE, THE CONTRACTOR SHALL SUBMIT HIS PLANS FOR THE PROTECTION OF TRAFFIC (VEHICULAR, PEDESTRIAN, BOAT, ETC.) ADJACENT TO AND/OR UNDER THE STRUCTURE TO THE DIRECTOR FOR APPROVAL. THESE PLANS SHALL INCLUDE PROVISIONS FOR ANY DEVICES AND STRUCTURES THAT MAY BE NECESSARY TO ENSURE SUCH PROTECTION. TEMPORARY VERTICAL CLEARANCES SPECIFIED ON THE PLANS OR IN THE PROPOSAL SHALL BE MAINTAINED AT ALL TIMES EXCEPT AS OTHERWISE APPROVED BY THE DIRECTOR.

EXISTING UTILITIES

CARE SHALL BE TAKEN DURING REMOVAL OF PORTIONS OF EXISTING DECK AND ABUTMENT SO AS NOT TO DISRUPT OR DAMAGE THE EXISTING CONDUIT EMBEDDED IN THE SUPERSTRUCTURE AND ABUTMENT.

REINFORCING STEEL

ALL REINFORCING STEEL SHALL BE EPOXY COATED.

REPLACEMENT OF EXISTING REINFORCING STEEL

ANY EXISTING REINFORCING BARS WHICH ARE TO BE INCORPORATED INTO THE NEW WORK AND WHICH ARE MADE UNUSABLE BY THE CONTRACTOR'S CONCRETE REMOVAL OPERATIONS SHALL BE REPLACED WITH NEW STEEL AT HIS COST.

ANY EXISTING REINFORCING BARS DEEMED BY THE ENGINEER TO BE UNUSABLE BECAUSE OF CORROSION SHALL BE REPLACED WITH NEW STEEL.

DUST CONTROL

WHEN CONDUCTING ABRASIVE BLASTING OR PAVEMENT GRINDING OPERATIONS AND/OR CLEANING BRIDGE DECKS PRIOR TO THE PLACEMENT OF THE OVERLAY, THE CONTRACTOR SHALL SUPPLY AND OPERATE ADDITIONAL EQUIPMENT OR ERECT TEMPORARY SCREENINGS TO PROTECT ADJACENT TRAFFIC AND PROPERTY FROM THE DUST ORIGINATING FROM THESE OPERATIONS.

THE CONTRACTOR SHALL SUBMIT HIS METHOD OF CONTROLLING DUST FOR APPROVAL TO THE ENGINEER AT LEAST ONE (1) WEEK PRIOR TO THE BEGINNING OF WORK. THESE PROVISIONS SHALL BE FURNISHED AT NO ADDITIONAL COST TO THE PROJECT. THIS REQUIREMENT IS IN ADDITION TO THE PROVISIONS OF SECTION 107.12 OF THE SPECIFICATIONS AND SHALL NOT RELIEVE THE CONTRACTOR FROM HIS OBLIGATION TO PROTECT AND RESTORE PROPERTY FROM HIS OTHER OPERATIONS.

STRUCTURE REMOVAL

THIS ITEM SHALL INCLUDE THE ELEMENTS INDICATED IN THE PLANS AND GENERAL NOTES. ITEMS TO BE REMOVED INCLUDE ALL EXISTING MATERIALS BEING REPLACED BY NEW CONSTRUCTION AND MISCELLANEOUS ITEMS THAT ARE NOT SHOWN TO BE INCORPORATED INTO THE FINAL CONSTRUCTION AND ARE DIRECTED TO BE REMOVED BY THE ENGINEER. THE USE OF EXPLOSIVES, HEADACHE BALLS AND/OR HOE-RAMS WILL NOT BE PERMITTED. THE METHOD OF REMOVAL AND THE WEIGHT OF HAMMER SHALL BE APPROVED BY THE ENGINEER. APPROVAL BY THE ENGINEER DOES NOT RELIEVE THE CONTRACTOR OF HIS LIABILITY IF HE DAMAGES THE REMAINING STRUCTURES. ALL WORK SHALL BE DONE IN A MANNER THAT WILL NOT CUT, ELONGATE OR DAMAGE THE EXISTING REINFORCING STEEL TO BE PRESERVED. CHIPPING HAMMERS SHALL NOT BE HEAVIER THAN THE NOMINAL 41 KILOGRAM CLASS. PNEUMATIC HAMMERS SHALL NOT BE PLACED IN DIRECT CONTACT WITH REINFORCING STEEL THAT IS TO BE RETAINED IN THE REBUILT STRUCTURE.

CUT LINE CONSTRUCTION JOINT PREPARATION. SAW CUT BOUNDARIES OF PROPOSED CONCRETE REMOVALS 25 mm DEEP. REMOVE CONCRETE TO A ROUGH SURFACE. WHERE PRACTICABLE, THE EXISTING REINFORCING STEEL WHERE REQUIRED IN THE PLANS SHALL BE LEFT IN PLACE. INSTALL DOWEL BARS IF SPECIFIED. PRIOR TO CONCRETE PLACEMENT, ABRASIVELY CLEAN JOINT SURFACE AND EXPOSED REINFORCEMENT TO REMOVE LOOSE AND DISINTEGRATED CONCRETE AND LOOSE RUST. THEN, THE JOINT SURFACE AND EXPOSED REINFORCEMENT SHALL BE THOROUGHLY CLEANED OF ALL DIRT, DUST, OR OTHER FOREIGN MATERIAL BY THE USE OF WATER, AIR UNDER PRESSURE, OR OTHER METHOD THAT PRODUCE SATISFACTORY RESULTS. CONCRETE BONDING SURFACES SHALL BE WET WITHOUT FREE WATER AS CONCRETE IS PLACED.

SUBSTRUCTURE CONCRETE REMOVAL SHALL BE BY MEANS OF APPROVED PNEUMATIC HAMMERS EMPLOYING POINTED AND BLUNT CHISEL TOOLS. HYDRAULIC HOE-RAM TYPE HAMMERS WILL NOT BE PERMITTED. THE WEIGHT OF THE HAMMER SHALL NOT BE MORE THAN 16 KILOGRAMS FOR REMOVAL WITHIN 450 mm OF PORTIONS TO BE PRESERVED. OUTSIDE THE 450 mm LIMIT, A HAMMER HEAVIER THAN 16 KILOGRAMS, BUT NOT TO EXCEED 41 KILOGRAMS, MAY BE USED AT THE APPROVAL OF THE ENGINEER.

SEMI-INTEGRAL ABUTMENT JOINT WATERPROOFING

INSTALL A 900 mm WIDE STRIP, 2.5 mm THICK, GENERAL PURPOSE, HEAVY DUTY NEOPRENE SHEET WITH NYLON FABRIC REINFORCEMENT AT LOCATIONS SHOWN IN THE PLANS. SECURE 900 mm WIDE NEOPRENE SHEETING TO THE CONCRETE WITH 32 mm X 3 mm (LENGTH X SHANK DIAMETER) GALVANIZED BUTTON HEAD SPIKES THROUGH A 25 mm OUTSIDE DIAMETER, 3 mm GALVANIZED WASHER. MAXIMUM FASTENER SPACING IS 225 mm. OTHER SIMILAR GALVANIZED DEVICES WHICH WILL NOT DAMAGE EITHER THE NEOPRENE OR THE CONCRETE MAY BE USED SUBJECT TO THE APPROVAL OF THE ENGINEER.

CENTER THE NEOPRENE STRIPS ON ALL JOINTS. FOR HORIZONTAL JOINTS, SECURE THE HORIZONTAL NEOPRENE STRIP BY USING A SINGLE LINE OF FASTENERS, STARTING AT 150 mm (+/-) FROM THE TOP OF THE NEOPRENE STRIP. FOR THE VERTICAL JOINTS, SECURE THE VERTICAL NEOPRENE STRIP BY USING A SINGLE VERTICAL LINE OF FASTENERS, STARTING AT 150 mm (+/-) FROM THE VERTICAL EDGE OF THE NEOPRENE STRIP NEAREST TO THE CENTERLINE OF ROADWAY. FOR VERTICAL JOINTS, INSTALL 2 ADDITIONAL FASTENERS AT 150 mm CENTER TO CENTER ACROSS THE TOP OF THE NEOPRENE STRIP ON THE SAME SIDE OF THE VERTICAL JOINT AS THE SINGLE VERTICAL ROW OF FASTENERS IS LOCATED.

THE VERTICAL NEOPRENE STRIPS SHOULD COMPLETELY OVERLAP THE HORIZONTAL STRIPS. LAPS IN THE LENGTH OF THE HORIPONTAL STRIPS DUE TO MATERIAL MANUFACTURING SHALL BE AT LEAST 300 mm IN LENGTH, IF NOT VULCANIZED OR ADHESIVE BONDED, OR 150 mm IN LENGTH IF THE LAP IS VULCANIZED OR ADHESIVE BONDED. NO LAPS ARE ACCEPTABLE IN VERTICALLY INSTALLED NEOPRENE STRIPS.

THE NEOPRENE SHEETING SHALL BE 2.5 mm THICK GENERAL PURPOSE, HEAVY DUTY NEOPRENE SHEET WITH NYLON FABRIC REINFORCEMENT. THE SHEETING SHALL BE "FAIRPRENE NUMBER NN-0003", BY E. I. DUPONT DE NEMOURS AND COMPANY, INC., "WINGPRENE" BY THE GOODYEAR TIRE AND RUBBER COMPANY, OR AN APPROVED ALTERNATE. THE NEOPRENE SHEETING SHALL CONFORM TO THE FOLLOWING:

DESCRIPTION OF TEST	ASTM METHOD	REQUIREMENT
THICKNESS, mm	D 751	2.5 * 0.25
BREAKING STRENGTH, GRAB WXF, N, MINIMUM	D 751	3130 X 3130
ADHESIVE 25 mm STRIP, 50 mm MINIMUM, N MINIMUM	D 751	27
BURST STRENGTH (MULLEN) MPa, MINIMUM	D 751	9.65
HEAT AGING 70 HOURS T 100*C, 180* BEND WITHOUT CRACKING	D 2136	NO CRACKING OF COATING
LOW TEMPERATURE BRITTLENESS 1 HOUR AT -40*C, BEND AROUND 6 mm MANDREL	D 2136	NO CRACKING OF COATING

150 mm PERFORATED CORRUGATED PLASTIC PIPE

CORRUGATED PIPE USED IN ABUTMENT DRAINAGE SHALL BE 150 mm DIAMETER, PLASTIC CORRUGATED AS PER CMS 707.33, AASHTO M294, TYPE SP.

150 mm NON-PERFORATED CORRUGATED PLASTIC PIPE

CORRUGATED PIPE USED IN ABUTMENT DRAINAGE SHALL BE 150 mm DIAMETER PLASTIC CORRUGATED AS PER CMS 707.33, AASHTO M294, TYPE S. THIS ITEM SHALL INCLUDE ALL ELBOWS, TEES, AND END CAPS REQUIRED TO COMPLETE THE ABUTMENT DRAINAGE SYSTEM.

DECK REPAIR

THIS WORK SHALL CONSIST OF MAKING PARTIAL AND FULL DEPTH REPAIRS AS PER CMS 519 TO THE DETERIORATED CONCRETE DECK SLAB USING MICROSILICA MODIFIED CONCRETE AS DIRECTED BY THE ENGINEER.

ALL SURFACES TO BE PATCHED AND THE EXPOSED REINFORCING STEEL WITHIN SHALL BE THOROUGHLY CLEANED BY ABRASIVE BLASTING PRIOR TO THE CLEANING SPECIFIED BY CMS 519.04 AND 520.05. CLEANING SHALL PRECEDE APPLICATION OF THE PATCHING MATERIAL OR ERECTION OF THE FORMS BY NOT MORE THAN 24 HOURS.

REVISED 06/29/98

AS-BUILT DRAWING 03/99

DESIGN AGENCY
M-E Civil Engineering, Inc.
635 Brooksedge Blvd.
Westerville, Ohio 43081

DESIGNED	DRAWN	REVIEWED	DATE
DESIGNED	DRAWN	NM	06-12-98
CHECKED	REVISED	STRUCTURE FILE NUMBER	
PLC	.	6200753/2200031	

STRUCTURAL GENERAL NOTES
BRIDGE NO. OTT/ERI-2-45383/00952
S.R. 2 OVER SANDUSKY BAY (SMALL BOAT PASSAGEWAY)

OTT/ERI-2-44.103-0.000

Anando Dharma J:\898\983071\SN129SR2.dgn DATE: MARCH 10, 1999 TIME: 2:45 PM

JACKING AND TEMPORARY SUPPORT OF SUPERSTRUCTURE

THIS WORK SHALL CONSIST OF FURNISHING ALL NECESSARY LABOR, MATERIALS, AND EQUIPMENT TO RAISE OR REPOSITION ANY EXISTING STRUCTURES TO THE DIMENSIONS AND REQUIREMENTS DEFINED IN THE PROJECT PLANS.

THE CONTRACTOR SHALL BE RESPONSIBLE FOR THE DESIGN, INSTALLATION, AND OPERATION OF AN ADEQUATE JACKING SYSTEM, INCLUDING ANY TEMPORARY OR PERMANENT SUPPORTS NECESSARY TO PERFORM THE WORK DESCRIBED IN THE PROJECT PLANS. THREE (3) SETS OF JACKING PLANS, WHICH INCLUDE THE INFORMATION DESCRIBED IN THIS NOTE, SHALL BE SUBMITTED TO THE DIRECTOR FOR APPROVAL AT LEAST THIRTY (30) DAYS BEFORE ACTUAL WORK IS TO BEGIN. THE PLANS SHALL BE PREPARED AND STAMPED BY A REGISTERED PROFESSIONAL ENGINEER IN THE STATE OF OHIO.

JACKING SUBMITTALS SHALL INCLUDE AT LEAST THE FOLLOWING:

1. THE SIGNATURE AND NUMBER, OR PROFESSIONAL SEAL, OF THE REGISTERED PROFESSIONAL ENGINEER WHO PREPARED THE SUBMITTAL.

2. CALCULATIONS AND ANALYSIS OF THE STRUCTURE TO DETERMINE AND DEFINE THE ACTUAL LOADING APPLIED AT THE CONTRACTOR'S SELECTED JACKING POINTS.

3. A DRAWING SHOWING THE PHYSICAL AND DIMENSIONAL POSITION OF THE JACKS WITH RESPECT TO THE STRUCTURE INCLUDING CLEARANCES AND CENTER OF LIFT.

4. A SCHEMATIC LAYOUT OF JACKS, CHECK VALVES, PUMPS WITH 3 WAY RETRACTOR VALVE, PRESSURE GAGES, FLOW CONTROL VALVES, ETC. IN ACCORDANCE WITH MANUFACTURER'S RECOMMENDATIONS. ALL JACKS FOR EACH ABUTMENT SHALL BE CONNECTED TOGETHER. ALL JACKS AT EACH ABUTMENT SHALL BE THE SAME SIZE.

5. ANALYSIS AND CALCULATIONS OF THE STRESSES INDUCED OR CREATED IN THE STRUCTURE AND ANY TEMPORARY OR PERMANENT SUPPORTS. DESIGN CALCULATIONS FOR ANY TEMPORARY OR PERMANENT SUPPORTS.

6. PHYSICAL DIMENSIONS, MATERIALS, AND FABRICATION DETAILS OF ANY TEMPORARY OR PERMANENT SUPPORTS. HORIZONTAL AND VERTICAL MOVEMENT RESTRAINT SHALL BE PROVIDED.

7. A STEP BY STEP PROCEDURE DETAILING ALL STEPS IN THE JACKING OPERATION.

8. METHOD OF ATTACHMENT TO STRUCTURAL MEMBERS. WELDING TO TENSION AREAS WILL NOT BE PERMITTED.

THE ENTIRE SYSTEM INCLUDING JACKS SHALL HAVE 20% MORE CAPACITY THAN REQUIRED BASED ON CALCULATED LOADS.

FOR LIFTS GRATER THAN 25 mm, JACKS SHALL HAVE LOCKING NUTS TO POSITIVELY LOCK AND SUPPORT THE STRUCTURE DURING THE LIFT.

JACKS SHALL HAVE A SWIVEL LOAD CAP, A DOMED PISTON HEAD OR SOME OTHER DEVICE TO PROTECT AGAINST THE EFFECTS OF SIDE LOAD ON THE JACK.

JACKS ALONE SHALL NOT BE USED TO SUPPORT LOADS EXCEPT DURING THE ACTUAL JACKING OPERATION. TEMPORARY SUPPORTS, BLOCKING OR OTHER METHODS APPROVED BY THE ENGINEER SHALL BE USED.

SINGLE ACTING RAMS WITH NO OVER-TRAVEL PROTECTION SYSTEM SHALL NOT BE USED.

SPARE EQUIPMENT SHALL BE AVAILABLE ON SITE FOR THE REQUIRED STRUCTURE RAISING TO PROCEED IN THE EVENT OF BREAKDOWN. A LIST OF SPARE EQUIPMENT SHALL BE PROVIDED TO THE ENGINEER.

AT A MINIMUM, A JACKING OPERATION SHALL LIFT ALL BEAMS AT ANY ONE ABUTMENT SIMULTANEOUSLY. THE ONLY EXCEPTION IS THE SITUATION WHERE THE WORK INVOLVES REPLACING OR REHABILITATING INDIVIDUAL BEARINGS; NO PERMANENT SHIMMING IS REQUIRED AND THE HEIGHT OF THE LIFT SHALL NOT EXCEED 6 mm.

MAXIMUM DIFFERENTIAL JACKING HEIGHT BETWEEN ANY ADJACENT ABUTMENTS OR PIERS SHALL BE 25 mm OR LESS.

IF, DURING THE JACKING OPERATIONS, CRACKING OF THE CONCRETE SUPERSTRUCTURE, SEPARATION OF THE CONCRETE DECK FROM THE STEEL STRINGERS, OR OTHER DAMAGE TO THE STRUCTURE IS VISUALLY OBSERVED, THE JACKING OPERATION SHALL IMMEDIATELY CEASE AND APPROVED SUPPORTS SHALL BE INSTALLED. THE CONTRACTOR SHALL THEN ANALYZE THE DAMAGE AND SUBMIT A METHOD OF CORRECTION TO THE ENGINEER FOR APPROVAL. ANY BEAMS THAT SEPARATE FROM THE DECK SHALL BE EPOXY INJECTED FOR THE DISTANCE OF THE SEPARATION IN ACCORDANCE WITH THE PROPOSAL NOTE "CONCRETE REPAIR BY EPOXY INJECTION". COST OF THIS EPOXY INJECTION OR OTHER REQUIRED REPAIRS SHALL BE BORNE BY BY THE CONTRACTOR.

THE CONTRACTOR SHALL DEMONSTRATE TO THE ENGINEER THAT THE BRIDGE BEARINGS ARE FULLY SEATED BETWEEN ALL CONTACT AREAS. IF FULL SEATING IS NOT ATTAINED, SUITABLE MEANS OF REPAIR, SUBJECT TO THE APPROVAL OF THE ENGINEER, WILL BE REQUIRED AT THE CONTRACTOR'S EXPENSE.

THE JACKING OPERATION SHALL BE DIRECTED BY A PROFESSIONAL ENGINEER EMPLOYED BY THE CONTRACTOR. FAILURE TO HAVE A PROFESSIONAL ENGINEER PRESENT SHALL BE CAUSE FOR CEASING JACKING OPERATIONS.

AS-BUILT DRAWING 03/99

Amanda Dharma J:\98\983071\SN30582.dgn DATE:MARCH 10,1999 TIME:3:00 PM

DESIGN AGENCY
M+E CivilEngineering, Inc.
35 Brooksedge Blvd.
Westerville, Ohio 43081

DESIGNED	DRAWN	REVIEWED	DATE
A.D.	A.D.	MM	06-12-98
CHECKED	REVISED	STRUCTURE FILE NUMBER	
PLC	.	6200753/2200031	

STRUCTURAL GENERAL NOTES
BRIDGE NO. OTT/ERI-2-45383/00952
S.R. 2 OVER SANDUSKY BAY (SMALL BOAT PASSAGEWAY)

OTT/ERI-2-44.103-0.000

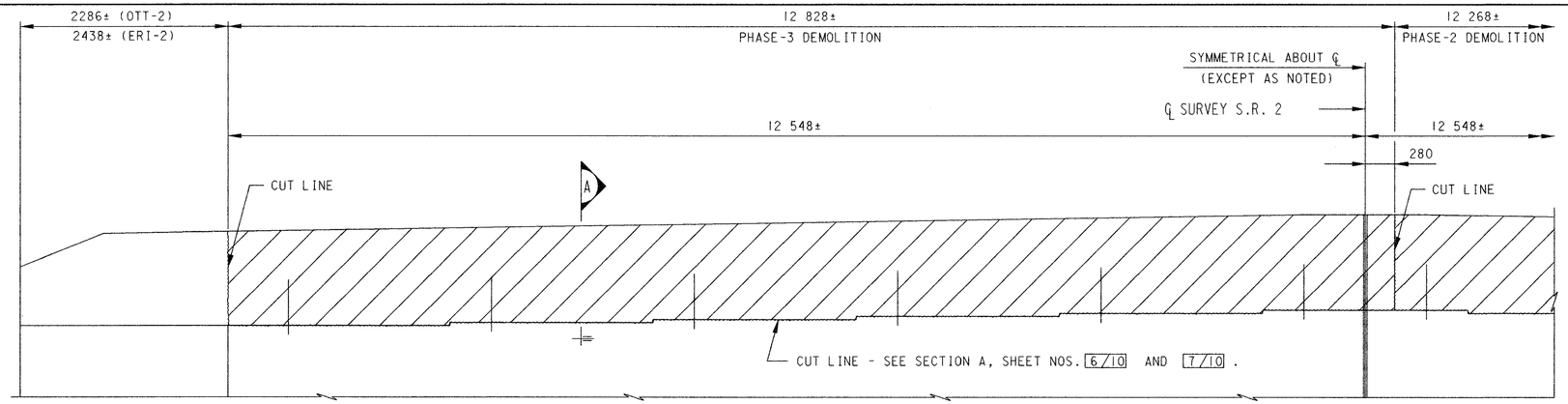

LEGEND

INDICATES REMOVAL LIMITS

ELEVATION - REMOVAL LIMITS AT EXIST. ABUTMENT (TYP.)

FORWARD ABUTMENT SHOWN, REAR ABUTMENT SIMILAR BUT OPPOSITE HAND

		ELEVATIONS								
		H	J	K	L	M	N	P	Q	R
BRIDGE NO. OTT-2-45383	REAR ABUT.	178.821*	179.007*	177.356	177.231	177.281	177.108	178.627	178.627	178.441
	FRWD. ABUT.	178.702*	178.888*	177.238	177.113	177.163	176.989	178.508	178.508	178.322
BRIDGE NO. ERI-2-00952	REAR ABUT.	178.129*	178.315*	176.665	176.540	176.590	176.416	177.935	177.935	177.749
	FRWD. ABUT.	178.129*	178.315*	176.665	176.540	176.590	176.416	177.935	177.935	177.749

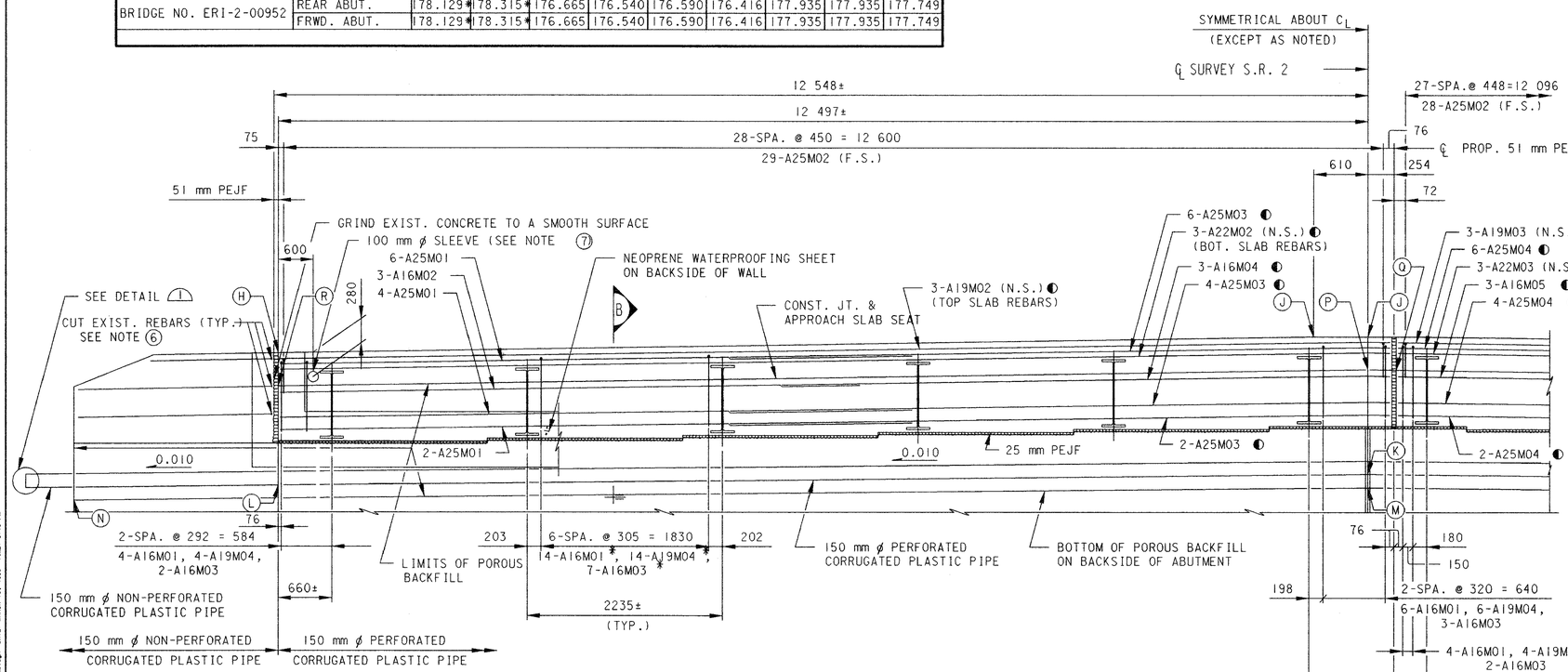

* TYP. REINFORCEMENT BETWEEN EXIST. BEAMS

ELEVATION - PROP. ABUTMENT (TYP.)

FORWARD ABUTMENT SHOWN, REAR ABUTMENT SIMILAR BUT OPPOSITE HAND

NOTES:

1. ABBREVIATIONS:

BOT.	=	BOTTOM
BRG.	=	BEARING
CONST.	=	CONSTRUCTION
EXIST.	=	EXISTING
F.F.	=	FRONT FACE
F.S.	=	FAR SIDE
JT.	=	JOINT
MID.	=	MIDDLE
N.S.	=	NEAR SIDE
PEJF	=	PREFORMED EXPANSION JOINT FILLER
PROP.	=	PROPOSED
TYP.	=	TYPICAL

2. FOR SECTIONS A AND B, SEE SHEET NO. 6/10 (BRIDGE NO. OTT-2-45383), OR SHEET NO. 7/10 (BRIDGE NO. ERI-2-00952).

3. SPLICE LENGTHS FOR:

A16M01	=	590 mm
A25M01	=	1200 mm

4. REINFORCING STEEL SHOWN ARE SYMMETRICAL ABOUT CENTERLINE OF SURVEY S.R. 2, EXCEPT THOSE DENOTED BY " ◐ ".

5. FOR ADDITIONAL DETAILS ON PRECAST REINFORCED CONCRETE OUTLET, REFER TO STANDARD CONSTRUCTION DRAWING NO. DM-1.1M DATED 10-21-97.

6. REMOVE EXISTING REBARS TO A MINIMUM OF 51 mm BELOW THE EXISTING CONCRETE SURFACE AND FILL WITH NON-SHRINK GROUT. NO EXPOSED REBARS WILL BE PERMITTED.

7. RELOCATE CONDUIT BELOW THE APPROACH SLAB SEAT (BRIDGE NO. OTT-2-45383 ONLY)

8. ALL REINFORCING STEEL SHALL BE EPOXY COATED.

9. FOR ADDITIONAL NOTES ON CONSTRUCTION PHASING, SEE MAINTENANCE OF TRAFFIC SHEET NO. 6/41 .

10. MINIMUM CLEARANCE TO REBARS SHALL BE 50 mm, UNLESS NOTED OTHERWISE.

11. ALL DIMENSIONS ARE IN MILLIMETERS, UNLESS NOTED OTHERWISE.

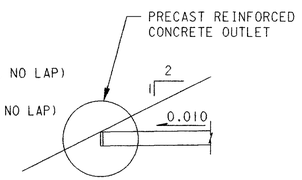

DETAIL 1
SEE NOTE 5

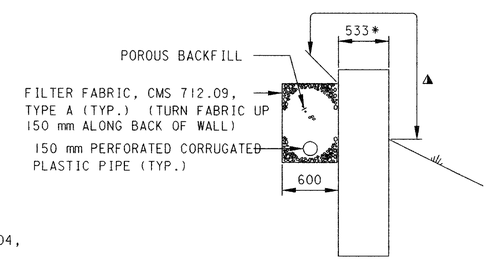

TYP. WINGWALL SECTION

AS-BUILT DRAWING 03/99

DESIGN AGENCY
M+E Civil Engineering, Inc.
635 Brooksedge Blvd.
Westerville, Ohio 43081

DESIGNED	DRAWN	REVIEWED	DATE
A.D.	A.D.	MM	06-12-98
CHECKED	REVISED	STRUCTURE FILE NUMBER	
PLC	.	6200753/2200031	

TYPICAL ABUTMENT DETAILS
BRIDGE NO. OTT/ERI-2-45383/00952
S.R. 2 OVER SANDUSKY BAY (SMALL BOAT PASSAGEWAY)

OTT/ERI-2-44.103-0.000

5/10

32/41

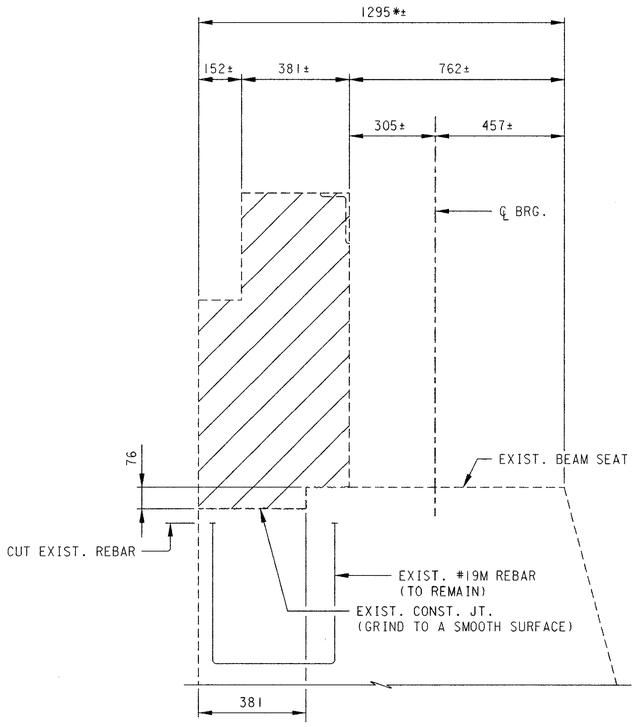

SECTION A

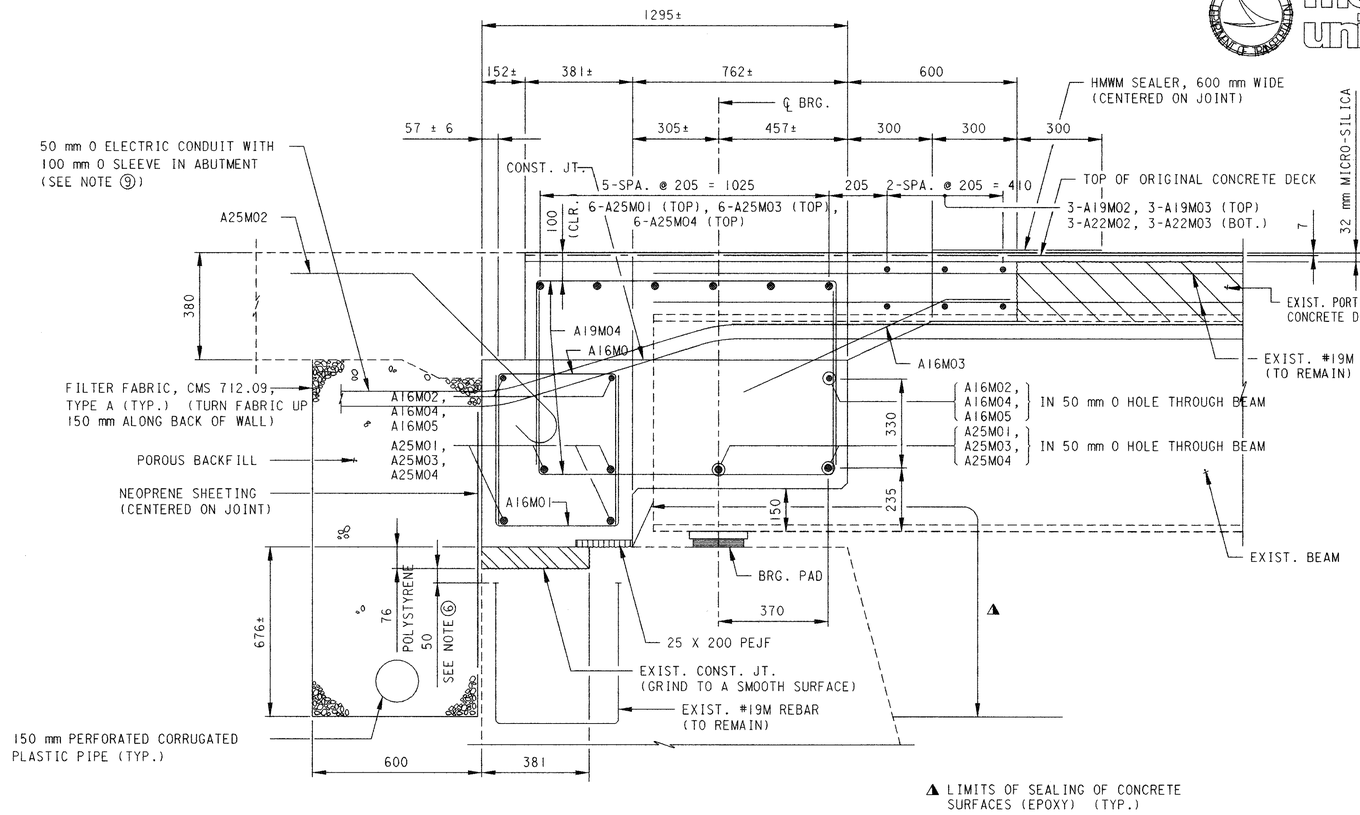

SECTION B
SEE NOTE 7

▲ LIMITS OF SEALING OF CONCRETE SURFACES (EPOXY) (TYP.)

LEGEND

INDICATES REMOVAL LIMITS

NOTES:

1. FOR LOCATIONS OF SECTIONS A AND B, SEE SHEET NO. 5/10 .
2. POROUS BACKFILL WITH FILTER FABRIC, 600 mm THICK SHALL EXTEND UP TO THE PLANE OF THE SUBGRADE, TO 300 mm BELOW THE EMBANKMENT SURFACE, AND LATERALLY TO THE ENDS OF THE WINGWALLS.
3. FOR ADDITIONAL NOTES AND LIST OF ABBREVIATIONS, SEE SHEET NO. 5/10
4. FOR LAMINATED ELASTOMERIC BEARING PAD TABLE, SEE SHEET NO. 8/10 .
5. CARE SHALL BE EXERCISED IN REMOVING PORTIONS OF THE EXISTING ABUTMENT AND EXISTING DECK SLAB SO THAT NO DAMAGE IS DONE TO THE EXISTING DECK SLAB REBARS WHICH ARE TO PROJECT INTO THE PROPOSED CONSTRUCTION. WHERE EXISTING REBARS ARE DAMAGED, NEW EQUIVALENT SIZE DOWEL BARS, 900 mm LONG, SHALL BE PROVIDED. SUCH DOWELS SHALL BE EMBEDDED 450 mm INTO EXISTING CONCRETE BY DRILLING 38 mm DIAMETER HOLES AND FILLING WITH NON-SHRINK MORTAR PER CMS 705.20.
6. CUT EXISTING #19M REBARS APPROXIMATELY 50 mm BELOW THE SURFACE OF EXISTING BEAM SEAT AND FILL IN THE OPENINGS WITH NON-SHRINK MORTAR PER CMS 705.20. NO EXPOSED REBARS SHALL BE PERMITTED.
7. PRIOR TO CONCRETE ENCASEMENT, THE EXISTING BEAM ENDS WHICH WILL BE ENCASED IN CONCRETE SHALL BE TREATED WITH PRIME COAT AS PER CMS 708.17 AND THE BOTTOM SURFACES OF THE BOTTOM FLANGES SHALL BE PAINTED WITH THE OZEU PAINT SYSTEM (SEE PROPOSAL NOTE).
8. DIAPHRAGM CONCRETE ENCASING THE STRUCTURAL MEMBER SECTIONS SUPPORTED IN SEMI-INTEGRAL TYPE ABUTMENT SHALL BE PLACED AT LEAST 48 HOURS BEFORE THE ACTUAL DECK CONCRETE IS PLACED.
9. USE EXPANSION JOINT MATERIAL TO WRAP THE EXISTING 50 mm O ELECTRIC CONDUIT AND RELOCATE THE CONDUIT UNDER THE APPROACH SLAB.
10. ALL DIMENSIONS ARE IN MILLIMETERS, UNLESS NOTED OTHERWISE.

REVISED 06/29/98

AS-BUILT DRAWING 03/99

metric units

DESIGN AGENCY
M-E Civil Engineering, Inc.
635 Brooksedge Blvd.
Westerville, Ohio 43081

DESIGNED	DRAWN	REVIEWED	DATE
A.D.	A.D.	MM	06-12-98
CHECKED	REVISED	STRUCTURE FILE NUMBER	
PLC	.	6200753/2200031	

ABUTMENT DETAILS
BRIDGE NO. OTT/ERI-2-45383/00952
S.R. 2 OVER SANDUSKY BAY (SMALL BOAT PASSAGEWAY)

OTT/ERI-2-44.103-0.000

6/10

33/41

Amanda Dharma JA\98\98307I\SA1325R2.dgn DATE:MARCH 10,1999 TIME:3:20 PM

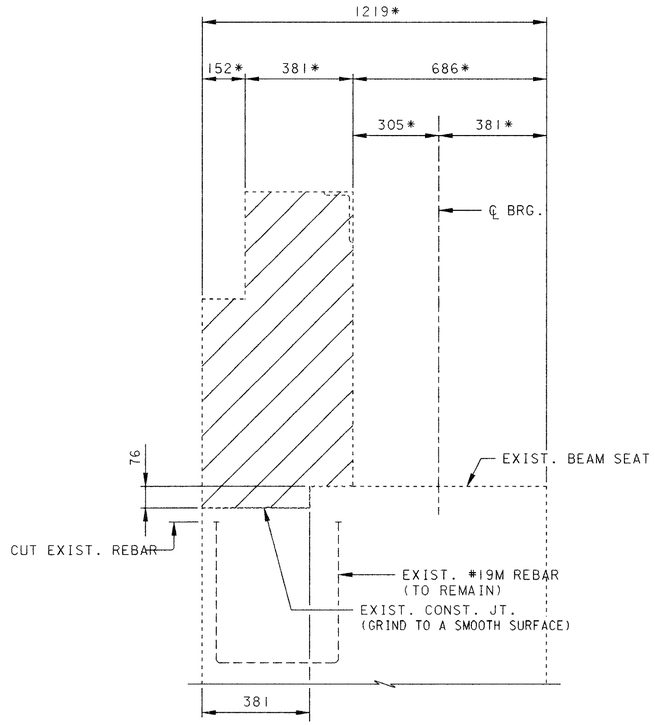

SECTION (A)

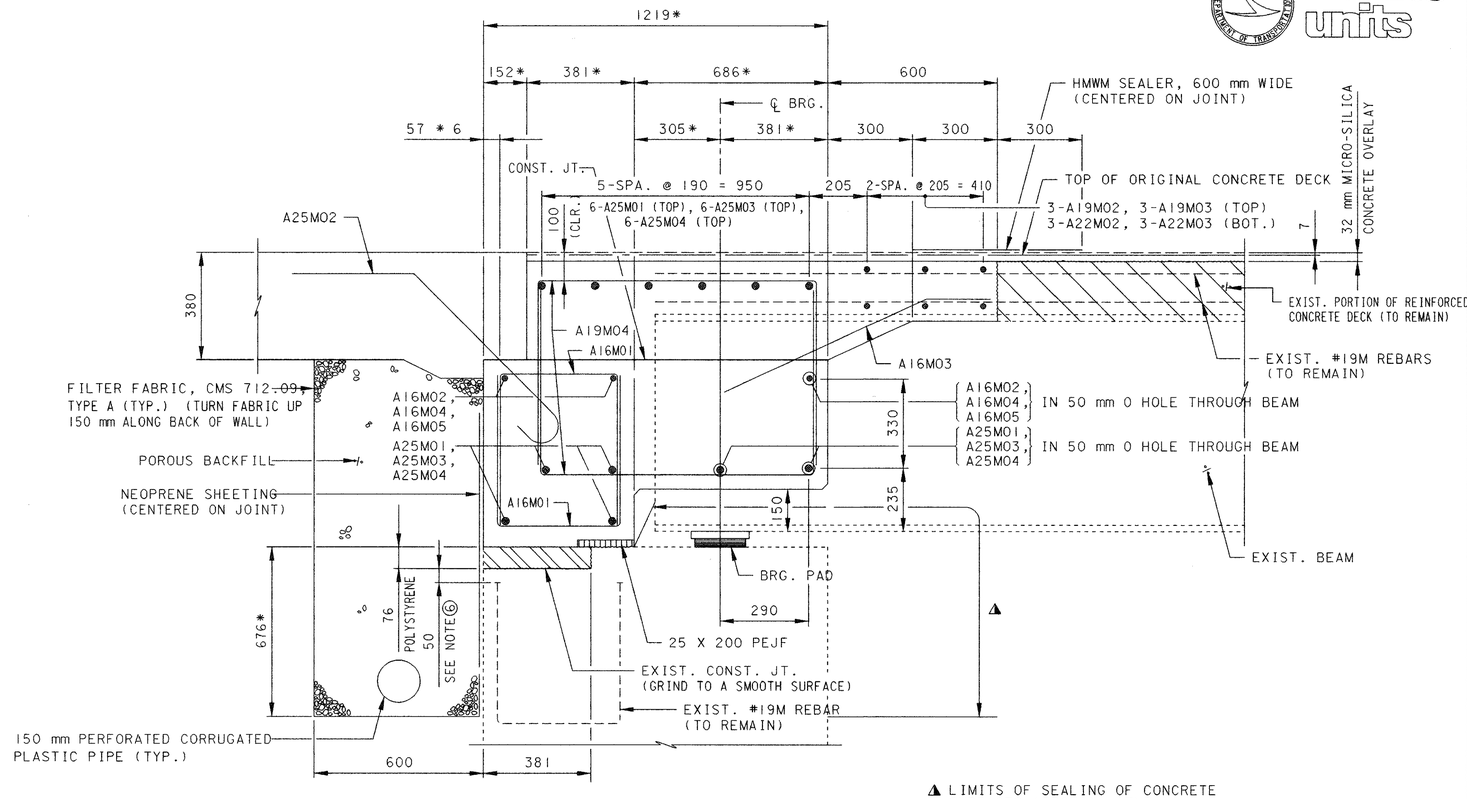

SECTION (B)
SEE NOTE 7

▲ LIMITS OF SEALING OF CONCRETE SURFACES (EPOXY) (TYP.)

LEGEND

INDICATES REMOVAL LIMITS

NOTES:

1. FOR LOCATIONS OF SECTIONS A AND B, SEE SHEET NO. 5/10 .
2. POROUS BACKFILL WITH FILTER FABRIC, 600 mm THICK SHALL EXTEND UP TO THE PLANE OF THE SUBGRADE, TO 300 mm BELOW THE EMBANKMENT SURFACE, AND LATERALLY TO THE ENDS OF THE WINGWALLS.
3. FOR ADDITIONAL NOTES AND LIST OF ABBREVIATIONS, SEE SHEET NO. 5/10 .
4. FOR LAMINATED ELASTOMERIC BEARING PAD TABLE, SEE SHEET NO. 8/10 .
5. CARE SHALL BE EXERCISED IN REMOVING PORTIONS OF THE EXISTING ABUTMENT AND EXISTING DECK SLAB SO THAT NO DAMAGE IS DONE TO THE EXISTING DECK SLAB REBARS WHICH ARE TO PROJECT INTO THE PROPOSED CONSTRUCTION. WHERE EXISTING REBARS ARE DAMAGED, NEW EQUIVALENT SIZE DOWEL BARS, 900 mm LONG, SHALL BE PROVIDED. SUCH DOWELS SHALL BE EMBEDDED 450 mm INTO EXISTING CONCRETE BY DRILLING 38 mm DIAMETER HOLES AND FILLING WITH NON-SHRINK MORTAR PER CMS 705.20.
6. CUT EXISTING #19M REBARS APPROXIMATELY 50 mm BELOW THE SURFACE OF EXISTING BEAM SEAT AND FILL IN THE OPENINGS WITH NON-SHRINK MORTAR PER CMS 705.20. NO EXPOSED REBARS SHALL BE PERMITTED.
7. PRIOR TO CONCRETE ENCASEMENT, THE EXISTING BEAM ENDS WHICH WILL BE ENCASED IN CONCRETE SHALL BE TREATED WITH PRIME COAT AS PER CMS 708.17 AND THE BOTTOM SURFACES OF THE BOTTOM FLANGES SHALL BE PAINTED WITH THE OPEU PAINT SYSTEM (SEE PROPOSAL NOTE).
8. DIAPHRAGM CONCRETE ENCASING THE STRUCTURAL MEMBER SECTIONS SUPPORTED IN SEMI-INTEGRAL TYPE ABUTMENT SHALL BE PLACED AT LEAST 48 HOURS BEFORE THE ACTUAL DECK CONCRETE IS PLACED.
9. ALL DIMENSIONS ARE IN MILLIMETERS, UNLESS NOTED OTHERWISE.

AS-BUILT DRAWING 03/99

metric units

DESIGN AGENCY
M+E CIVIL ENGINEERING
W+E Civil Engineering, Inc.
635 Brookside Blvd.
Westerville, Ohio 43081

DATE	REVIEWED	DRAWN	DESIGNED
06-12-98	MM	A.D.	A.D.
STRUCTURE FILE NUMBER		REVISED	CHECKED
2200031			PLC

DETAILS

ABUTMENT DETAILS
BRIDGE NO. ERI-2-00952
S.R. OVER SANDUSKY BAY (SMALL BOAT PASSAGEWAY)

OTT-ERI-2-44.103-0.000

7/10

34/41

Ananda Dharma J:\398\398307\ISA1335R2.dgn DATE: MARCH 10, 1999 TIME: 3:45 PM

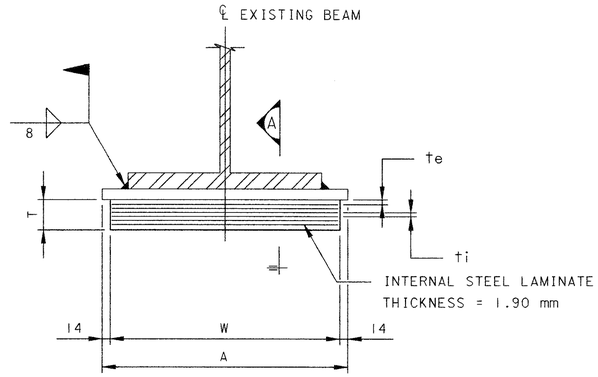

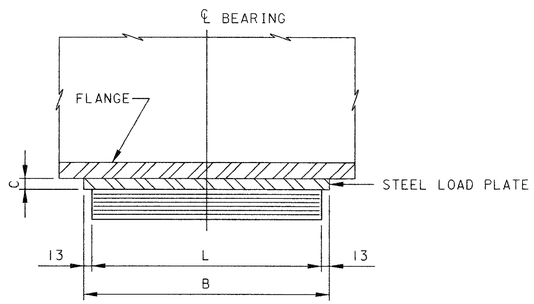

SECTION A

LAMINATED ELASTOMERIC
EXPANSION BEARING AT ABUTMENTS
(48 REQUIRED)

SUBSTRUCTURE	ELASTOMERIC PAD							STEEL LOAD PLATE			TYPE	DEAD LOAD (kN)	MAX. LIVE LOAD (NO IMPACT) (kN)	MAX. DESIGN LOAD (kN)
	W (mm)	L (mm)	T (mm)	NO. OF INTERNAL LAYERS	ti (mm)	te (mm)	NO. OF STEEL LAMINATES	A (mm)	B (mm)	C (mm)				
REAR & FRWD. ABUTMENTS	265	205	42.4	5	4.8	3.5	6	293	231	15	EXP.	189	177	366

NOTES:

1. ELASTOMERIC BEARINGS SHALL BE 50 DUROMETER ELASTOMER.
2. STEEL LOAD PLATE SHALL BE BONDED BY VULCANIPATION TO THE ELASTOMER DURING THE MOLDING PROCESS. THE STEEL LOAD PLATE SHALL BE ASTM A36M STEEL PAINTED IN ACCORDANCE WITH SYSTEM OPEU.
3. WELDING OF THE LOAD PLATE TO THE EXISTING BEAM SHALL BE CONTROLLED SO THAT THE PLATE TEMPERATURE AT THE ELASTOMER BONDED SURFACE SHALL NOT EXCEED 150°C AS DETERMINED BY THE USE OF PYROMETRIC STICKS OR OTHER TEMPERATURE MONITORING DEVICES.
4. EXISTING ANCHOR DOWELS OF THE EXISTING BEARINGS SHALL BE CUT OFF A MINIMUM OF 3 mm BELOW THE BEARING SEAT. THE HOLE SHALL BE FILLED AND LEVELED WITH NON-SHRINK GROUT. PAYMENT SHALL BE INCLUDED WITH THE PRICE BID FOR THE BEARINGS.
5. FOR GENERAL NOTES, SEE SHEET NOS. AND . 3/10 4/10
6. FOR ABUTMENT DETAILS, SEE SHEET NOS. AND . 6/10 7/10
7. ALL DIMENSIONS ARE IN MILLIMETERS, UNLESS NOTED OTHERWISE.

AS-BUILT DRAWING 03/99

metric units

DESIGN AGENCY
M+E CIVIL ENGINEERING
M+E Civil Engineering, Inc.
635 Brookside Blvd.
Westerville, Ohio 43081

REVIEWED	DATE
MM	06-12-98
STRUCTURE FILE NUMBER	
6200753/2200031	

DESIGNED	DRAWN	REVIEWED
A.D.	A.D.	MM
CHECKED	REVISED	STRUCTURE FILE NUMBER
PLC	.	6200753/2200031

LAMINATED ELASTOMERIC BEARING DETAILS
BRIDGE NO. OTT/ERI-2-45383/00952
S.R. 2 OVER SANDUSKY BAY (SMALL BOAT PASSAGEWAY)

OTT/ERI-2-44.103-0.000

8/10

35/41

Ananda Dharma J:\898\98307\SW134SR2.dgn DATE: MARCH 10, 1999 TIME: 4:00 PM

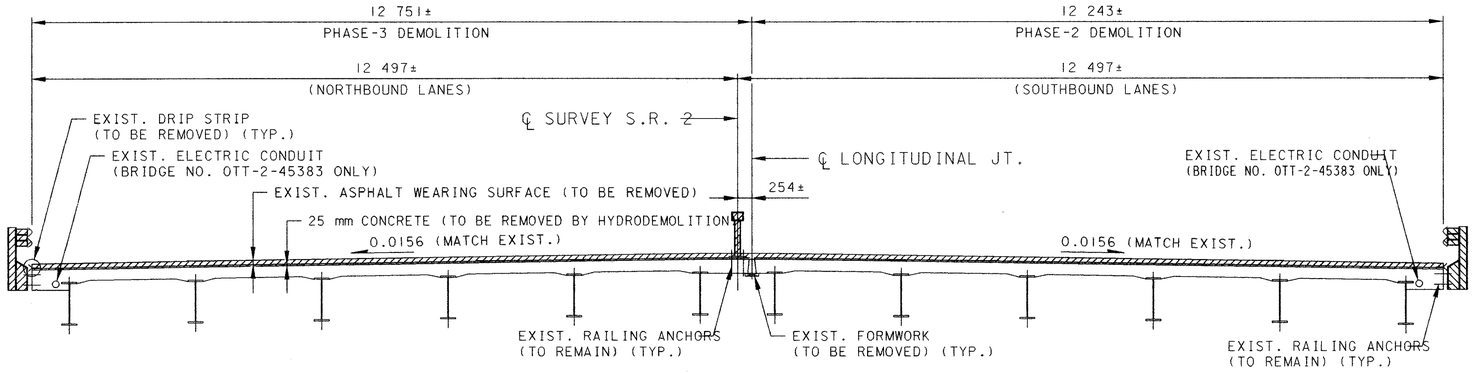

LEGEND

INDICATES REMOVAL LIMITS

DECK REMOVAL LIMITS

BRIDGE NOS. OTT/ERI-2-45383/00952

NOTES:

1. FOR OUTSIDE RAILING DETAILS, REFER TO STANDARD BRIDGE DRAWING NO. DBR-2-73M.
2. FOR MEDIAN RAILING DETAILS, REFER TO NEW YORK DEPARTMENT OF TRANSPORTATION STANDARD DRAWING NO. M606-4R1.
3. FOR DRIP STRIP DETAILS, REFER TO STANDARD BRIDGE DRAWING NO. DS-1-94M.
4. FOR ADDITIONAL NOTES ON CONSTRUCTION PHASING, SEE MAINTENANCE OF TRAFFIC SHEET NO. . (6/41)
5. ALL DIMENSIONS ARE IN MILLIMETERS, UNLESS NOTED OTHERWISE.

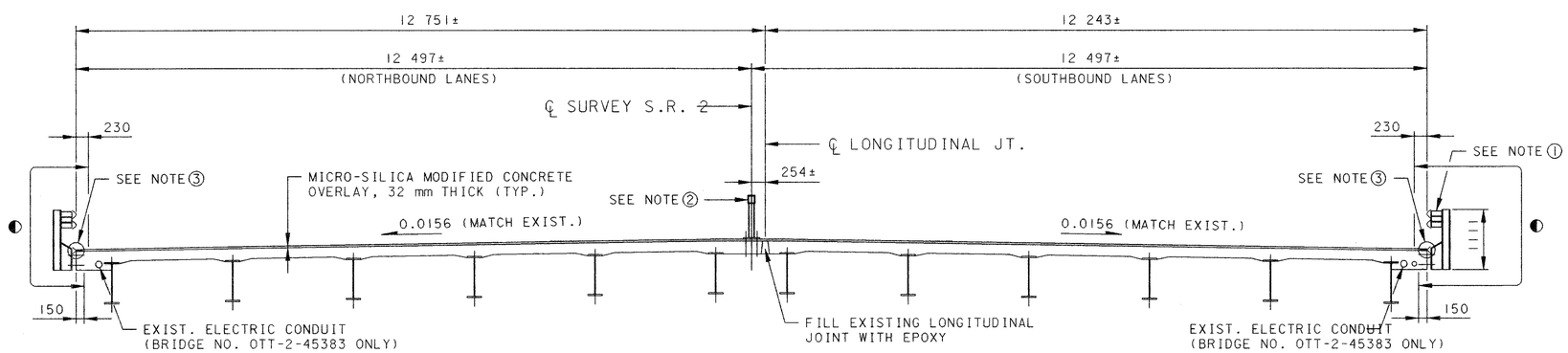

◐ LIMITS OF SEALING OF CONCRETE SURFACES (TYP.)

PROPOSED TRANSVERSE SECTION

BRIDGE NOS. OTT/ERI-2-45383/00952

AS-BUILT DRAWING 03/99

metric units

DESIGN AGENCY
M-E Civil Engineering, Inc.
635 Brooksedge Blvd.
Westerville, Ohio 43081

DESIGNED	DRAWN	REVIEWED	DATE
A.D.	A.D.	MM	06-12-98
CHECKED	REVISED	STRUCTURE FILE NUMBER	
PLC	.	6200753/2200031	

SUPERSTRUCTURE DETAILS
BRIDGE NO. OTT/ERI-2-45383/00952
S.R. 2 OVER SANDUSKY BAY (SMALL BOAT PASSAGEWAY)

OTT/ERI-2-44.103-0.000

9/10

36/41

Anando Dharma J:\BS\BS307\BSC135SR2.dgn DATE: MARCH 10, 1999 TIME: 4:00 PM

metric units

BRIDGE NO. OTT-2-45383

ABUTMENT

MARK	NUMBER REAR	NUMBER FRWD.	NUMBER TOTAL	LENGTH (mm)	TYPE	DIMENSIONS (mm) A	DIMENSIONS (mm) B	DIMENSIONS (mm) C	INC.
A16M01	158	158	316	1430	103	430	540		
A16M02	6	6	12	5895	STR.				
A16M03	79	79	158	1105	105	325	780	325	
A16M04	3	3	6	7290	STR.				
A16M05	3	3	6	6785	STR.				
A19M02	3	3	6	12 650	STR.				
A19M03	3	3	6	12 140	STR.				
A19M04	158	158	316	2240	103	1040	650		
A22M02	3	3	6	12 650	STR.				
A22M03	3	3	6	12 140	STR.				
A25M01	24	24	48	6500	STR.				
A25M02	57	57	114	1490	116	790	305		
A25M03	12	12	24	7300	STR.				
A25M04	12	12	24	6800	STR.				

BRIDGE NO. ERI-2-00952

ABUTMENT

MARK	NUMBER REAR	NUMBER FRWD.	NUMBER TOTAL	LENGTH (mm)	TYPE	DIMENSIONS (mm) A	DIMENSIONS (mm) B	DIMENSIONS (mm) C	INC.
A16M01	158	158	316	1430	103	430	540		
A16M02	6	6	12	5895	STR.				
A16M03	79	79	158	1105	105	325	780	325	
A16M04	3	3	6	7290	STR.				
A16M05	3	3	6	6785	STR.				
A19M02	3	3	6	12 650	STR.				
A19M03	3	3	6	12 140	STR.				
A19M04	158	158	316	2160	103	960	650		
A22M02	3	3	6	12 650	STR.				
A22M03	3	3	6	12 140	STR.				
A25M01	24	24	48	6500	STR.				
A25M02	57	57	114	1490	116	790	305		
A25M03	12	12	24	7300	STR.				
A25M04	12	12	24	6800	STR.				

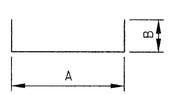

103

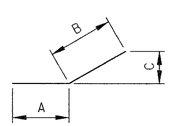

105

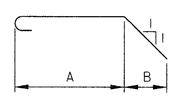

116

REINFORCING SCHEDULE

BAR SIZE LOCATION IS INDICATED IN THE BAR MARK. THE FIRST ALPHABETICAL LETTER INDICATES LOCATION. THE FIRST TWO DIGITS INDICATE THE BAR SIZE NUMBER.

EXAMPLE:

A16M01
- NO. 16M SIZE BAR
- ABUTMENT

ALL REINFORCING STEEL TO BE EPOXY COATED.

ALL BAR DIMENSIONS ARE GIVEN OUT TO OUT.

ABBREVIATION:

INC. = INCREMENT

AS-BUILT DRAWING 03/99

DESIGN AGENCY
M+E Civil Engineering, Inc.
635 Brooksedge Blvd.
Westerville, Ohio 43081

DESIGNED	DRAWN	REVIEWED	DATE
A.D.	A.D.	MM	06-12-98
CHECKED	REVISED	STRUCTURE FILE NUMBER	
PLC	.	6200753/2200031	

REINFORCING SCHEDULE
BRIDGE NO. OTT/ERI-2-45383/00952
S.R. 2 OVER SANDUSKY BAY (SMALL BOAT PASSAGEWAY)

OTT/ERI-2-44.103-0.000

10/10

37/41

Ananda Dharma J:\E98\E98307\BSM1365R2.dgn DATE: MARCH 10, 1999 TIME: 4:30 PM