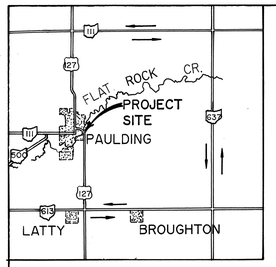

DETOUR MAP

0 1 2 3 4
SCALE OF MILES

DETOUR

MICROFILMED
NOV 18 1994

PAULDING COUNTY PAU-127-10.19	OHIO FHWA REGION 5	1/39
BRF - 92-4(28)	FEDERAL PROJECT	

STATE OF OHIO
DEPARTMENT OF TRANSPORTATION
PAU-127-10.19
VILLAGE OF PAULDING
PAULDING COUNTY

BRF-92-4(28)

CONVENTIONAL SIGNS

County Line
Township Line
Section Line
Corporation Line or
Fence Line (existing) (proposed)
Center Line 352 353
Trees Stumps (to be removed)
Utility Poles: Telephone Power Light

Limited Access (only) LA
Right of Way (only) RW
Limited Access & Right of Way LA & RW
Existing Right of Way
Property Line (in existing fence)
Railroad or
Guardrail (exis ting) (proposed)

INDEX OF SHEETS

Title Sheet	1
Schematic Plan & Design Designation	2
Typical Section	3
General Notes	4
Superelevation Tables	5
Pavement Calculations	6
General Summary	7-7A
Plan and Profile	8-9
Cross Sections	10-12
Channel Cross Sections	13-15
Structure Over 20' Span	16-34
Bridge Lighting	35
Right-of-Way Plans	36-39

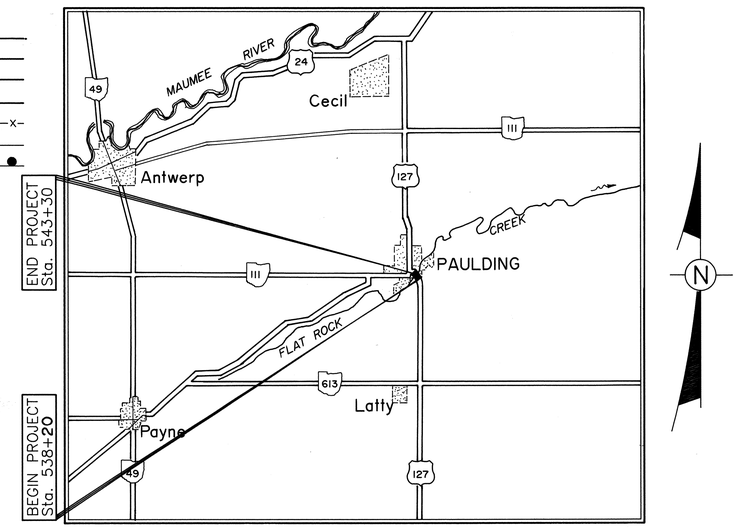

LOCATION MAP

SCALE IN MILES
0 1 2 3 4 5 6 7 8

Portion to be improved
State & Federal Routes
Other Roads
Detour

SCALES

Plan 0 20 40
Profile: Horizontal 0 20 40, Vertical 0 5 10
Cross Section: Horizontal 0 5 10, Vertical 0 5 10

LINE DATA

Begin Work Sta. 537+85
End Work Sta. 543+70
TOTAL LENGTH OF WORK = 585 L.F. or 0.111 Mile

Begin Project Sta. 538+20
End Project Sta. 543+30
TOTAL LENGTH OF PROJECT = 510 L.F. or 0.097 Mile

UNDERGROUND UTILITIES

TWO WORKING DAYS
BEFORE YOU DIG
Call...800-362-2764 (Toll free)
OHIO UTILITIES PROTECTION SERVICE
NON-MEMBERS
MUST BE CALLED DIRECTLY

STRUCTURE PLANS REVIEWED BY:
Burgess & Niple, Limited
Engineers and Architects

Plan Prepared By:
Kohli and Kaliher Assoc., Inc.
311 East Market Street
Lima, Ohio

Project: PAU-127-10.19
Date of Letting _____ 19____, Contract No. _____

SEAL

SUPPLEMENTAL PRINTS OF STANDARD CONSTRUCTION DRAWINGS

A-1-69	6-12-69	BP-4.1	2-21-92	MH-3	12-18-84			HL-60.31	5-01-87
AS-1-81	11-27-81	BP-5.1	2-21-92	MC-4	7-26-76	HL-20.14	5-01-87	GR. 1.1	5-6-91
BR-2-82	11-01-82	MC-1	6-13-69	MC-11	8-01-78	HL-20.15	5-01-87	GR 1.2	10-30-92
EXJ-2-81	4-02-84	CB-2-2A&B	5-1-79	MT-99.10	11-14-86	HL-30.31	5-01-87	GR 2.1	5-6-91
SD-1-69	6-12-69	CB-3A	5-1-79	HL-10.11	5-01-87	HL-40.10	5-01-87	GR 3.1	5-6-91
		CB-7	12-18-84	HL-10.12	5-01-87	HL-50.21	5-01-87	GR 4.1	5-6-91
		HW-4B	4-1-80	HL-10.13	5-01-87	HL-60.11	5-01-87		

SUPPLEMENTAL SPECIFICATIONS

820	3-18-92	940	6-10-87
802	4-13-90	942	3-18-92
		944	3-18-92
849	12-24-85	949	9-26-86
		931	3-18-92

1993 SPECIFICATIONS

The standard specifications of the State of Ohio, Department of Transportation, including changes and supplemental specifications listed in the proposal shall govern this improvement.

I hereby approve these plans and declare that the making of this improvement will require the closing to traffic of the highway and that detours will be provided as indicated on the plans. (This Sheet)

STRUCTURE REVIEWED BY BURGESS & NIPLE, LIMITED

DISTRICT CERTIFIED PLAN

Approved _____
Date 6/3/93 District Deputy Director of Transportation

Approved B.D. Hanhlammi / HEH
Date 6-16-93 Engineer, Bureau of Bridges and Structural Design

Approved Christopher L. Rumpke
Date 7-16-93 Deputy Director, Design

Approved Jerry Wray
Date 7-16-93 Director, Department of Transportation

DEPARTMENT OF TRANSPORTATION
FEDERAL HIGHWAY ADMINISTRATION

APPROVED:

DIVISION ADMINISTRATOR DATE

SCHEMATIC PLAN

100 50 0 100 200
SCALE IN FEET

PAULDING COUNTY
Village of Paulding
Sec. 12, T-2-N, R-2-E

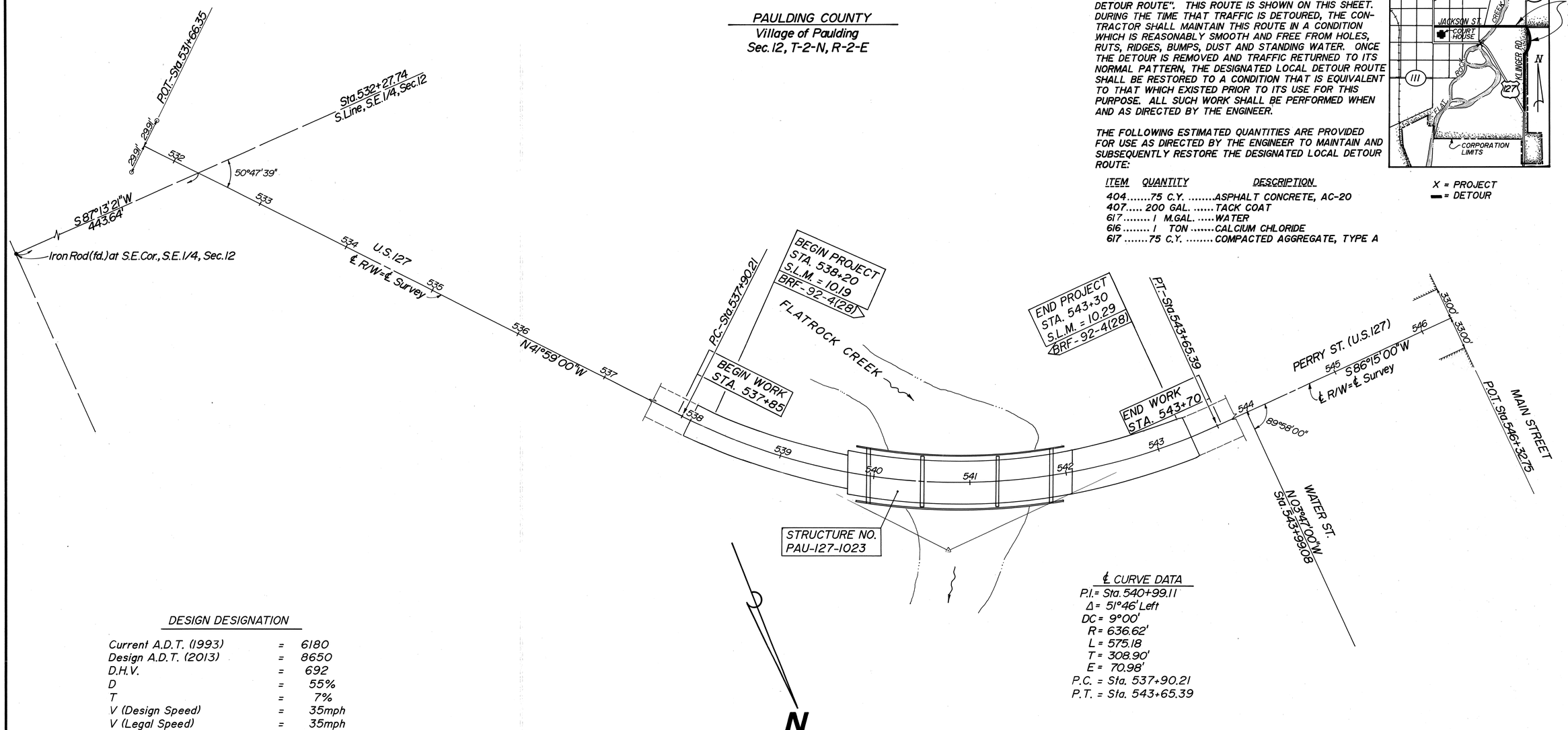

DESIGNATED LOCAL DETOUR ROUTE

IN ADDITION TO THE OFFICIAL, SIGNED DETOUR ROUTE, A LOCAL ROUTE HAS BEEN DETERMINED TO BE THE SECONDARY, UNSIGNED DETOUR ROUTE OR "DESIGNATED LOCAL DETOUR ROUTE". THIS ROUTE IS SHOWN ON THIS SHEET. DURING THE TIME THAT TRAFFIC IS DETOURED, THE CONTRACTOR SHALL MAINTAIN THIS ROUTE IN A CONDITION WHICH IS REASONABLY SMOOTH AND FREE FROM HOLES, RUTS, RIDGES, BUMPS, DUST AND STANDING WATER. ONCE THE DETOUR IS REMOVED AND TRAFFIC RETURNED TO ITS NORMAL PATTERN, THE DESIGNATED LOCAL DETOUR ROUTE SHALL BE RESTORED TO A CONDITION THAT IS EQUIVALENT TO THAT WHICH EXISTED PRIOR TO ITS USE FOR THIS PURPOSE. ALL SUCH WORK SHALL BE PERFORMED WHEN AND AS DIRECTED BY THE ENGINEER.

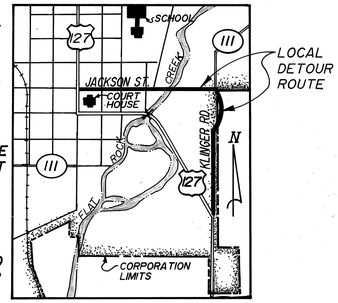

X = PROJECT
▬ = DETOUR

THE FOLLOWING ESTIMATED QUANTITIES ARE PROVIDED FOR USE AS DIRECTED BY THE ENGINEER TO MAINTAIN AND SUBSEQUENTLY RESTORE THE DESIGNATED LOCAL DETOUR ROUTE:

ITEM	QUANTITY	DESCRIPTION
404	75 C.Y.	ASPHALT CONCRETE, AC-20
407	200 GAL.	TACK COAT
617	1 M.GAL.	WATER
616	1 TON	CALCIUM CHLORIDE
617	75 C.Y.	COMPACTED AGGREGATE, TYPE A

DESIGN DESIGNATION

Current A.D.T. (1993)	=	6180
Design A.D.T. (2013)	=	8650
D.H.V.	=	692
D	=	55%
T	=	7%
V (Design Speed)	=	35mph
V (Legal Speed)	=	35mph
Functional Classfication	=	Minor Arterial, Urban
Design Exceptions	=	None

℄ CURVE DATA

P.I. = Sta. 540+99.11
Δ = 51°46' Left
DC = 9°00'
R = 636.62'
L = 575.18
T = 308.90'
E = 70.98'
P.C. = Sta. 537+90.21
P.T. = Sta. 543+65.39

Computations By
Initials R. L. M. Date 3/30/93
Computations Checked By
Initials T. H. H. Date 4/15/93

TYPICAL SECTION
TYPE 404 ON 301

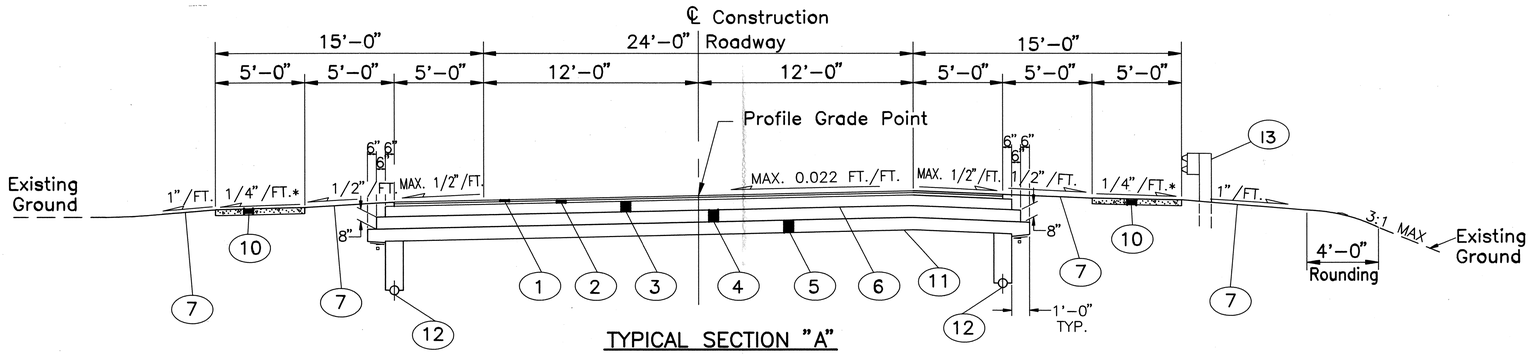

TYPICAL SECTION "A"

Superelevated Typical Section "A" applies from Sta. 538 + 20 to Sta. 539 + 73.22 = 153.22 L.F.

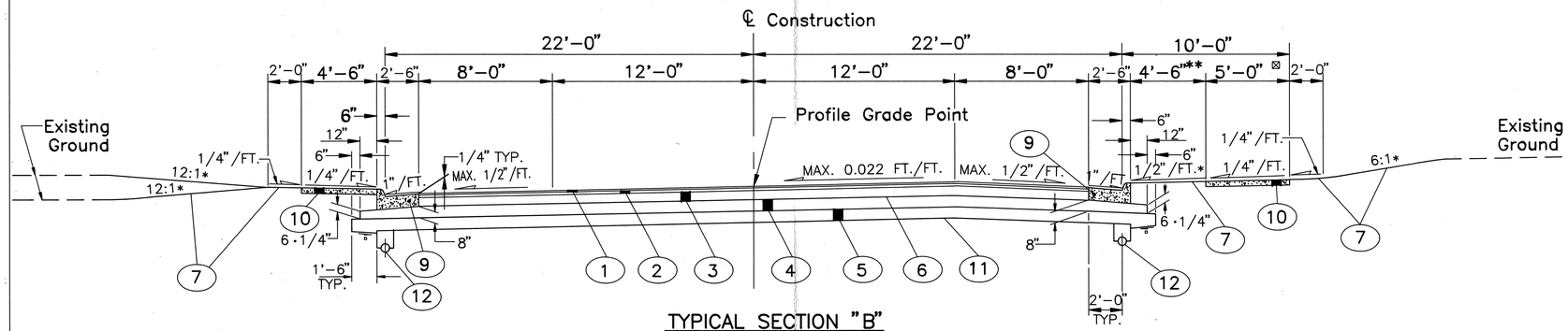

TYPICAL SECTION "B"

Superelevated Typical Section "B" applies from Sta. 542 + 05.46 to Sta. 543 + 30 = 124.54 L.F.

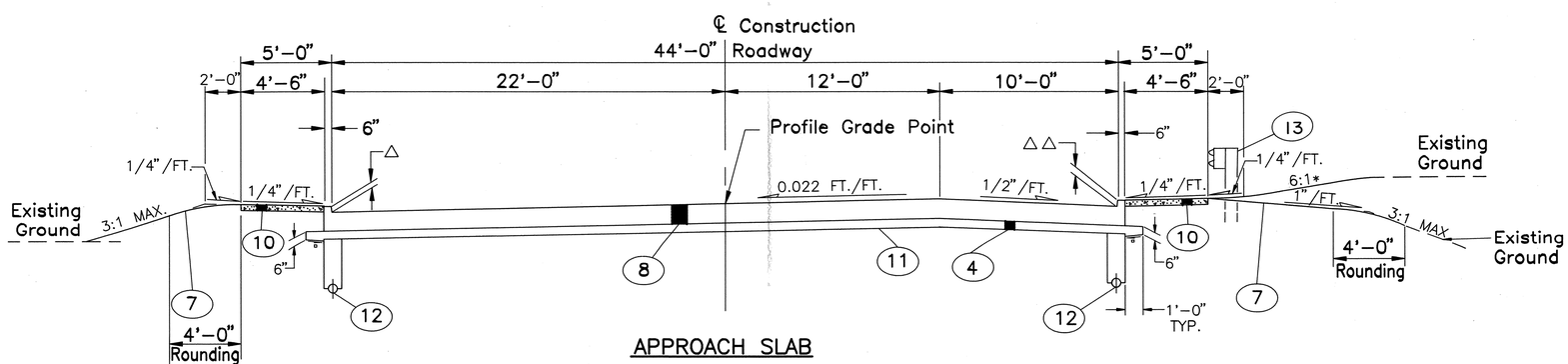

APPROACH SLAB

Superelevated Bridge Approach Slab applies from Sta. 539 + 73.22 to Sta. 542 + 05.46 = 232.24
Deduct for Structure PAU-127-1023 , Sta. 539 + 93.22 to Sta. 541 + 85.46 = 192.24
40.00 L.F.

△ VARIES FROM 10" AT BRIDGE TO 6" AT END OF REAR APPROACH SLAB
VARIES FROM 10" AT BRIDGE TO 6" AT END OF FORWARD APPROACH SLAB

△△ VARIES FROM 10" AT BRIDGE TO 6" AT END OF REAR APPROACH SLAB
VARIES FROM 10" AT BRIDGE TO 6" WITHIN 6' AT FORWARD APPROACH SLAB

NOTE: FOR TRANSVERSE PAVEMENT SLOPES SEE SHEET 5, SUPERELEVATIONS TABLE.

FOR GRADING DETAILS BEYOND THESE STATIONS SEE CROSS SECTIONS, SHEETS 10-12

* UNLESS OTHERWISE SHOWN ON CROSS SECTIONS

□ SLOPE 1"/FT.

⊠ VARIES FROM STA. 542+01 TO 542+24 (SEE SHEET 6)

** VARIES FROM 0' AT STA. 542 + 01 TO 4.5' AT STA. 542 + 50 (SEE SHEET 6)

1	Item 404	1·1/4" Asphalt Concrete, AC-20
2	Item 402	1·3/4" Asphalt Concrete, AC-20
3	Item 301	7" Bituminous Aggregate Base, AC-20
4	Item 304	Aggregate Base, Thickness As Shown, (See Proposal Note)
5	Item 310	8" Subbase, Type 1, Grading A (See Proposal Note)
6	Item 408	Bituminous Prime Coat, applied at 0.40 gal. per sq. yd.
7	Item 659	Seeding and Mulching (See General Note)
8	Item 611	Reinforced Concrete Approach Slab (T=13")
9	Item 609	Combination Curb and Gutter, Type 2 (T=9·3/4")
10	Item 608	4" Concrete Walk ***
11	Item 203	Subgrade Compaction
12	Item 605	6"ø Unclassified Pipe Underdrains
13	Item 606	Guardrail, Type 5

*** EXPANSION JOINT FILLER 1/2 INCH THICK SHALL BE INSTALLED BETWEEN THE WALK AND ANY FIXED STRUCTURE, EXTENDING THE FULL DEPTH OF THE WALK. INCLUDED IN ITEM 608 FOR PAYMENT.

GENERAL NOTES

DETOUR LIMITATIONS: TWO-WAY TRAFFIC SHALL BE MAINTAINED AT ALL TIMES, EXCEPT FOR A PERIOD NOT TO EXCEED 120 CONSECUTIVE CALENDAR DAYS, WHEN THROUGH TRAFFIC MAY BE DETOURED AS SHOWN ON SHEET 1. THE DETOUR SHALL BE ESTABLISHED, MAINTAINED AND SUBSEQUENTLY REMOVED BY OTHERS. ACCESS TO ADJACENT PROPERTIES AFFECTED BY ANY OF THE CONSTRUCTION OPERATIONS SHALL BE MAINTAINED AT ALL TIMES UNLESS PERMISSION TO CLOSE THE FACILITY IS OBTAINED FROM OWNERS AND THE ENGINEER. LIQUIDATED DAMAGES SHALL BE ASSESSED IN ACCORDANCE WITH SECTION 108.07 OF THE CONSTRUCTION AND MATERIAL SPECIFICATIONS FOR EACH CALENDAR DAY THAT THE ROADWAY REMAINS CLOSED BEYOND THE SPECIFIED LIMIT. TEMPORARY OR PERMANENT PAVEMENT MARKINGS MUST BE IN PLACE PRIOR TO OPENING THE ROAD TO TRAFFIC.

ROUNDING OF CORNERS SHOWN ON CROSS SECTIONS: THE ROUNDED CORNERS SHOWN ON THE TYPICAL SECTIONS APPLY TO ALL CROSS SECTIONS EVEN THOUGH OTHERWISE SHOWN ON THESE PLANS.

ELEVATION DATUM: ALL ELEVATIONS ARE BASED ON U.S.G.S. DATUM.

CONTINGENCY QUANTITIES: THE CONTRACTOR SHALL NOT ORDER MATERIALS OR PERFORM WORK LISTED IN THE GENERAL SUMMARY FOR ITEMS DESIGNATED BY PLAN NOTE TO BE USED "AS DIRECTED BY THE ENGINEER" UNLESS AUTHORIZED BY THE ENGINEER. THE ACTUAL WORK LOCATIONS AND QUANTITIES USED AT THE ENGINEER'S DISCRETION SHALL BE MADE A MATTER OF RECORD BY INCORPORATION INTO THE FINAL CHANGE ORDER GOVERNING THE COMPLETION OF THIS PROJECT.

UNDERGROUND UTILITIES: THE LOCATIONS OF THE UNDERGROUND UTILITIES SHOWN ON THE PLANS ARE AS OBTAINED FROM THE OWNERS OF THE UTILITY AS REQUIRED BY SECTION 153.64 O.R.C.

ITEM 207 – FILTER FABRIC FENCE: FILTER FABRIC FENCE SHALL MEET THE REQUIREMENTS OF ITEM 207.02.

THE BOTTOM OF THE FENCE SHALL BE BURIED 6" BELOW THE GROUND. THE FENCE SHALL BE HIGH ENOUGH TO RETAIN SEDIMENT LADEN WATER AND ADEQUATELY SUPPORTED TO PREVENT COLLAPSE OR BURSTING. THE GROUND ELEVATION OF THE FENCE SHALL BE HELD CONSTANT WITH THE EXCEPTION OF THE END ELEVATIONS WHICH SHALL BE RAISED TO PREVENT FLOW AROUND THE END OF THE FENCE.

THE FILTER FABRIC FENCE SHALL BE MAINTAINED TO BE FUNCTIONAL. THIS SHALL INCLUDE REMOVAL OF TRAPPED SEDIMENT AND REQUIRED CLEANING, REPAIR, AND/OR REPLACEMENT OF THE FILTER FABRIC.

THE COST OF ALL MATERIALS, CONSTRUCTION, MAINTENANCE AND REMOVAL REQUIRED SHALL BE PAID FOR UNDER ITEM 207 LIN. FT. FILTER FABRIC FENCE.

TEMPORARY SOIL EROSION AND SEDIMENT CONTROL: THE FOLLOWING ESTIMATED QUANTITIES ARE TO BE USED "AS DIRECTED BY THE ENGINEER" FOR EROSION AND SILTATION CONTROL MEASURES.

207	TEMPORARY SEEDING AND MULCHING	262 S.Y.
207	FILTER FABRIC FENCE	500 L.F.
207	STRAW OR HAY BALES	60 EACH
659	COMMERCIAL FERTILIZER	0.01 TON
659	WATER	1 M. GAL.

SEEDING: QUANTITIES FOR SEEDING ARE CALCULATED FOR THE SOIL AREA BETWEEN TEN FEET OUTSIDE THE WORK LIMITS, AS SHOWN ON THE CROSS SECTIONS, OR TO THE RIGHT-OF-WAY LINES, IF SUCH LINES ARE LESS THAN TEN FEET FROM THE WORK LIMITS.

JOINT SEALERS: ALL REFERENCES TO 705.01 OR 705.2, APPEARING ON STANDARD DRAWINGS OR ON THE PLANS, SHALL BE CONSIDERED TO READ 705.04.

CONNECTION TO EXISTING PIPE: WHERE THE PLANS PROVIDE FOR PROPOSED CONDUIT TO BE CONNECTED TO, OR TO CROSS EITHER OVER OR UNDER AN EXISTING SEWER, IT SHALL BE THE RESPONSIBILITY OF THE CONTRACTOR TO LOCATE THE EXISTING PIPE BOTH AS TO LINE AND GRADE BEFORE HE STARTS TO LAY THE PROPOSED CONDUIT. PAYMENT FOR ALL OPERATIONS DESCRIBED ABOVE SHALL BE INCLUDED IN THE UNIT PRICE BID FOR THE PERTINENT 603 CONDUIT ITEMS.

FARM DRAINS: ALL FARM DRAINS, WHICH ARE ENCOUNTERED DURING CONSTRUCTION, SHALL BE PROVIDED WITH UNOBSTRUCTED OUTLETS UNDER THE DIRECTION OF THE ENGINEER. EXISTING COLLECTORS WHICH ARE LOCATED BELOW THE ROADWAY DITCH ELEVATIONS, AND WHICH CROSS THE ROADWAY, SHALL BE REPLACED WITHIN THE CONSTRUCTION LIMITS BY ITEM 603 CONDUIT, TYPE B, ONE COMMERCIAL SIZE LARGER THAN THE EXISTING CONDUIT.

EXISTING COLLECTORS AND ISOLATED FARM DRAINS, WHICH ARE ENCOUNTERED ABOVE THE ELEVATION OF THE ROADWAY DITCHES, SHALL OUTLET INTO THE ROADWAY DITCH BY 603 TYPE F CONDUIT. THE OPTIMUM OUTLET ELEVATION SHALL BE, IF POSSIBLE, ONE FOOT ABOVE THE FLOWLINE ELEVATION OF THE DITCH. LATERAL TILE FIELDS WHICH CROSS THE ROADWAY SHALL BE INTERCEPTED BY 603, TYPE E CONDUIT AND CARRIED IN A LONGITUDINAL DIRECTION TO AN ADEQUATE OUTLET OR ROADWAY CROSSING.

THE LOCATION, TYPE, SIZE AND GRADE OF REQUIRED REPLACEMENTS SHALL BE DETERMINED BY THE ENGINEER DURING CONSTRUCTION, AND PAYMENT SHALL BE MADE ON FINAL MEASUREMENTS.

THE FOLLOWING ESTIMATED QUANTITIES HAVE BEEN INCLUDED IN THE GENERAL SUMMARY FOR THE WORK NOTED ABOVE.

ITEM 603	12" CONDUIT, TYPE B	25 L.F.
ITEM 603	6" CONDUIT, TYPE E	25 L.F.
ITEM 603	8" CONDUIT, TYPE E	25 L.F.
ITEM 603	12" CONDUIT, TYPE E	25 L.F.
ITEM 603	6" CONDUIT, TYPE F, 707.17 NON-PERFORATED ASTM 3034 SDR-35 OR SS931 OR 944	25 L.F.
ITEM 603	8" CONDUIT, TYPE F, 707.17 NON-PERFORATED ASTM 3034 SDR-35 OR SS931 OR 944	25 L.F.

NECESSARY BENDS AND BRANCHES SHALL BE INCLUDED FOR PAYMENT IN THE PERTINENT CONDUIT ITEM, NONE OF THE ABOVE MATERIALS SHALL BE ORDERED BY THE CONTRACTOR UNTIL AUTHORIZED BY THE ENGINEER.

WATERING PERMANENT SEEDED AREAS: THE FOLLOWING ESTIMATED QUANTITY IS TO BE USED AS DIRECTED BY THE ENGINEER TO PROMOTE GROWTH AND TO CARE FOR THE PERMANENT SEEDED AREAS, AS PER 659.09.

659	WATER	3 M. GAL.

MONUMENTS: MONUMENTS SHALL BE CONSTRUCTED IN ACCORDANCE WITH DETAILS SHOWN ON STANDARD CONSTRUCTION DRAWING MC-1. FOR LOCATIONS, SEE SHEET NO. 8 AND 9.

EROSION CONTROL: ITEM 601 IS PROVIDED IN THE PLANS FOR EROSION CONTROL. ROCK OF STABLE NATURE WILL NOT BE REMOVED IN ORDER TO PLACE ITEM 601. THE ENGINEER SHALL CHECK AND NON-PERFORM QUANTITIES OR ADJUST LOCATIONS AND QUANTITIES FOR THE ITEM WHERE INDICATED BY FIELD CONDITIONS DURING CONSTRUCTION.

UTILITY OWNERSHIP: THE FOLLOWING UTILITIES AND OWNERS ARE LOCATED WITHIN THE WORK LIMITS OF THIS PROJECT:

OHIO POWER COMPANY
301 CLEVELAND AVENUE S.W.
P.O. BOX 24400
CANTON, OHIO 44701-4400
ATTENTION: JOHN SCHRADE, JR.
(216) 456-8173

OHIO GAS
701 E. WILSON
BRYAN, OHIO 43506
ATTENTION: DALE BRENNER
(800) 331-7396

VILLAGE OF PAULDING
VILLAGE UTILITY OFFICE
208 N. WILLIAMS
PAULDING, OHIO 45879
ATTENTION: HARRY WIEBE, VILLAGE ADMINISTRATOR
(419) 399-4011

CLEARING AND GRUBBING: ALTHOUGH THERE ARE NO TREES AND/OR STUMPS SPECIFICALLY MARKED FOR REMOVAL WITHIN THE LIMITS OF THIS PROJECT, A LUMP SUM QUANTITY HAS BEEN INCLUDED IN THE GENERAL SUMMARY FOR ITEM 201, CLEARING AND GRUBBING. ALL PROVISIONS AS SET FORTH IN THE SPECIFICATIONS UNDER THIS ITEM SHALL BE INCLUDED IN THE LUMP SUM PRICE BID FOR ITEM 201, CLEARING AND GRUBBING.

EROSION CONTROL PADS AND ANIMAL GUARDS: EROSION CONTROL PADS AND ANIMAL GUARDS SHALL BE PROVIDED AT THE OUTLET END OF ALL FARM DRAINS, AS PER STANDARD CONSTRUCTION DRAWING MC-4, EXCEPT WHEN THEY OUTLET INTO A DRAINAGE STRUCTURE.

PAYMENT FOR THE EROSION CONTROL PADS AND THE ANIMAL GUARDS SHALL BE INCLUDED IN THE PRICE BID FOR ITEM 603.

MAINTENANCE OF TRAFFIC: THE CONTRACTOR SHALL MAINTAIN TRAFFIC AT ALL TIMES IN ACCORDANCE WITH THE REQUIREMENTS OF ITEM 614, "MAINTAINING TRAFFIC" AND THE FOLLOWING:

THE CONTRACTOR SHALL ALSO PROVIDE, ERECT AND MAINTAIN 48" X 30", R-75 "ROAD CLOSED" SIGNS ON TYPE III BARRICADES WITH FLASHING BARRICADE WARNING LIGHTS AT EVERY LOCATION WHERE THE ROAD IS TO BE PHYSICALLY CLOSED TO ALL TRAFFIC AND 36" X 36", OW-120, "ROAD CLOSED AHEAD" SIGNS 500 FEET IN ADVANCE OF THE "ROAD CLOSED" SIGNS.

THE SIGN SUPPORTS, BARRICADES AND LIGHTS FOR THE ABOVE SIGNS SHALL BE AS DETAILED IN THE OHIO MANUAL OF UNIFORM TRAFFIC CONTROL DEVICES. PAYMENT FOR PROVIDING, ERECTING, MAINTAINING AND REMOVING LIGHTS, SIGNS, SIGN SUPPORTS AND BARRICADES SHALL BE INCLUDED IN THE LUMP SUM PRICE BID FOR ITEM 614, "MAINTAINING TRAFFIC".

PAYMENT FOR ANY ADDITIONAL SIGNS AND/OR BARRICADES REQUIRED TO PROVIDE CLARITY TO THE TRAFFIC CONTROL SCHEMES SET FORTH IN THE PLANS OR THE OHIO MANUAL OF UNIFORM TRAFFIC CONTROL DEVICES OR PAYMENT FOR ANY SIGNS AND/OR BARRICADES WHICH REQUIRE RE-LOCATION TO PROVIDE CLARITY AS DIRECTED BY THE ENGINEER SHALL BE INCLUDED IN THE LUMP SUM PRICE BID FOR ITEM 614, "MAINTAINING TRAFFIC"

THE FOLLOWING ESTIMATED QUANTITIES HAVE BEEN INCLUDED IN THE GENERAL SUMMARY TO BE USED AS DIRECTED BY THE ENGINEER FOR MAINTENANCE OF TRAFFIC.

ITEM 616	CALCIUM CHLORIDE	1 TON
ITEM 616	WATER	1 M. GAL.

Computations By	Initials: D.G.B.	Date: 2/2/93
Computations By	Initials: M.A.D.	Date: 2/8/93

PAULDING COUNTY
PAU-127-10.19

OHIO
FHWA REGION 5
FEDERAL PROJECT

SUPERELEVATION TABLE

STATION	LEFT ELEVATION 20'	LEFT SLOPE	LEFT ELEVATION 12'	LEFT SLOPE	℄ ELEVATION	RIGHT SLOPE	RIGHT ELEVATION 12'	RIGHT SLOPE	RIGHT ELEVATION 20'
543+50	721.84*	−0.037*	722.14*	−0.017*	722.34*	−0.007*	722.26*	−0.025*	722.06*
543+35	721.74**	−0.035**	722.02**	−0.019**	722.25**	−0.004**	722.20**	−0.016**	722.07**
543+30	721.72	−0.036	722.01	−0.019	722.24	−0.003	722.20	−0.017	722.07
543+25	721.70	−0.039	722.01	−0.019	722.24	−0.002	722.22	−0.018	722.07
543+00	721.63	−0.042	721.97	−0.020	722.21	0.004	722.26	−0.024	722.07
542+75	721.59	−0.042	721.93	−0.021	722.18	0.010	722.30	−0.030	722.06
542+50	721.56	−0.042	721.90	−0.021	722.16	0.016	722.35	−0.036	722.06
542+25	721.61	−0.031	721.86	−0.022	722.13	0.022	722.39	−0.042	722.05
542+05.46	721.67	−0.022	721.84	−0.022	722.11	0.022	722.37	−0.042	722.03
542+00	721.66	−0.022	721.84	−0.022	722.10	0.022	722.36	−0.042	722.03
541+75	721.63	−0.022	721.81	−0.022	722.07	0.022	722.34	−0.042	722.00
541+50	721.60	−0.022	721.78	−0.022	722.04	0.022	722.31	−0.042	721.97
541+25	721.58	−0.022	721.75	−0.022	722.02	0.022	722.28	−0.042	721.94
541+00	721.55	−0.022	721.72	−0.022	721.99	0.022	722.25	−0.042	721.92
540+75	721.52	−0.022	721.70	−0.022	721.96	0.022	722.22	−0.042	721.89
540+50	721.49	−0.022	721.67	−0.022	721.93	0.022	722.20	−0.042	721.86
540+25	721.47	−0.022	721.64	−0.022	721.91	0.022	722.17	−0.042	721.83
540+00	721.44	−0.022	721.61	−0.022	721.88	0.022	722.14	−0.042	721.81
539+75	721.41	−0.022	721.59	−0.022	721.85	0.022	722.11	−0.042	721.78
539+73.22	721.41	−0.022	721.58	−0.022	721.85	0.022	722.11	−0.042	721.78
539+50			721.56	−0.022	721.82	0.022	722.09		
539+25			721.53	−0.022	721.79	0.022	722.06		
539+00			721.50	−0.022	721.77	0.022	722.03		
538+75			721.44	−0.025	721.74	0.019	721.97		
538+53			721.39	−0.027	721.71	0.017	721.92		
538+50			721.37	−0.028	721.71	0.017	721.91		
538+25			721.20	−0.033	721.60	0.014	721.76		
538+00			720.94**	−0.033**	721.34**	0.011**	721.47**		
537+50			720.42*	−0.022*	720.69*	−0.002*	720.66*		

*—Existing **—Existing & Proposed — Slope Rate (ft. per ft.)

Slope Legend
(−) ℄ (+)

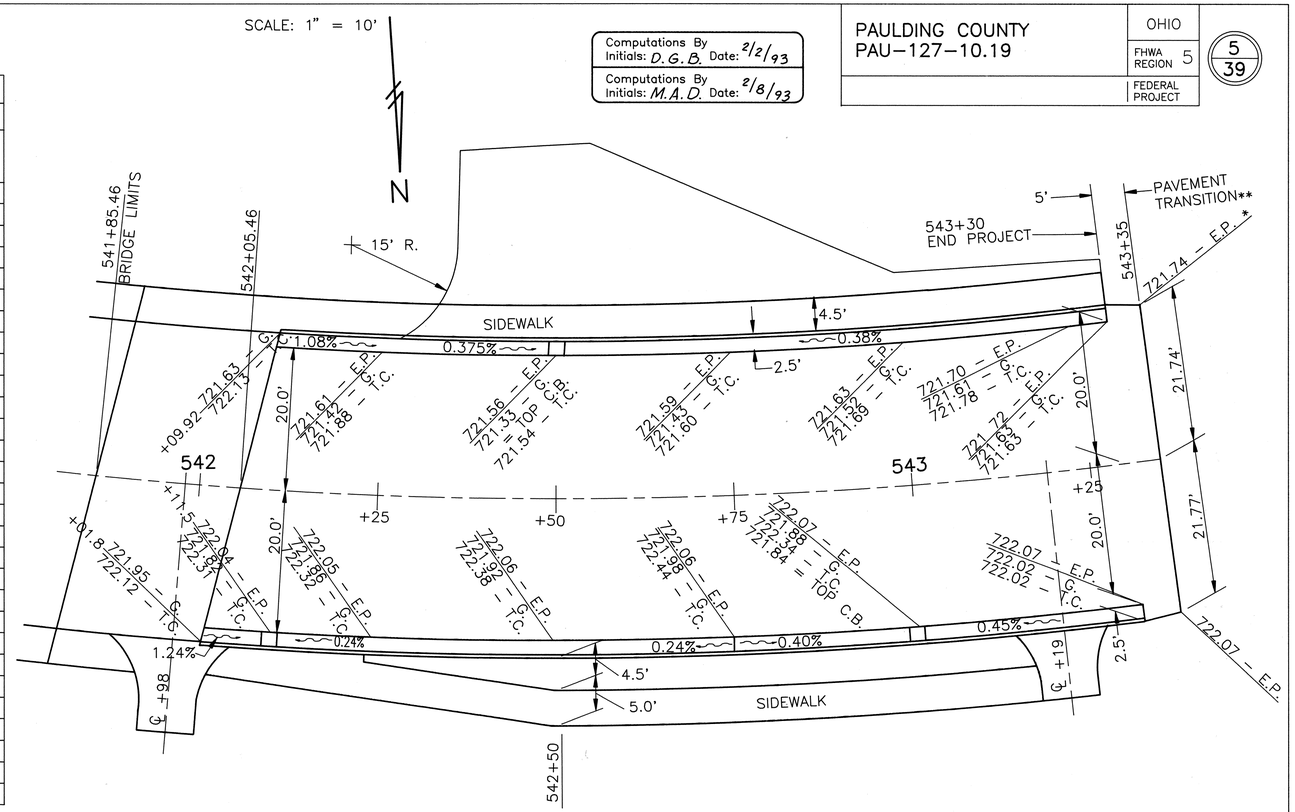

GRADING DETAIL
EDGE OF PAVEMENT/GUTTER/TOP CURB

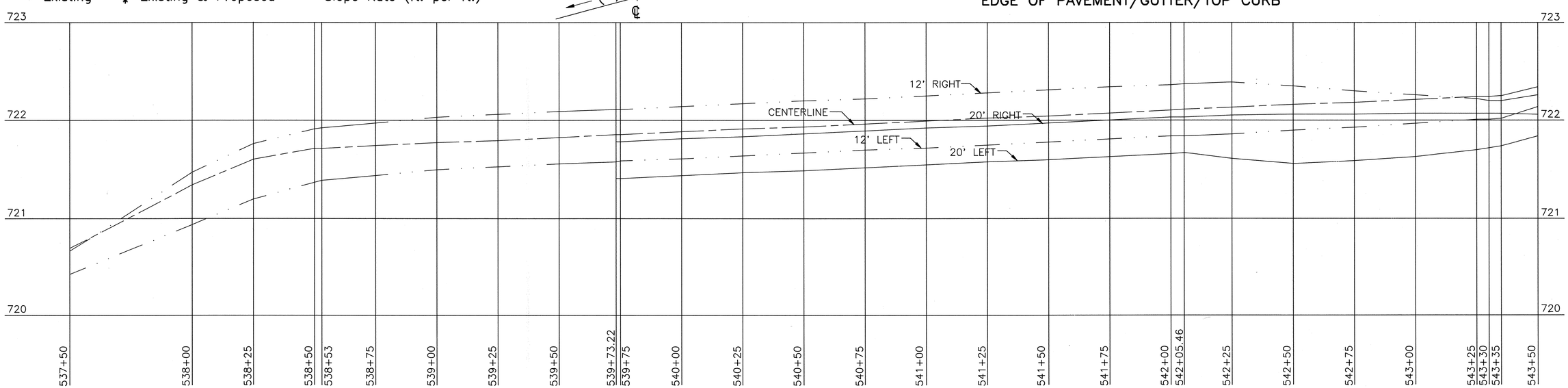

PAVEMENT PROFILES

PAVEMENT CALCULATIONS

ROADWAY ℄ CONST. STA.	ITEM 404 – 1·1/4" ASPHALT CONC.	ITEM 402 – 1·3/4" ASPHALT CONC.	ITEM 301 – 7" BIT. AGGR. BASE	ITEM 304 – AGGREGATE BASE, THICKNESS AS SHOWN	ITEM 310 – 8" SUBBASE,	ITEM 408 – BIT. PRIME COAT
STA. 538+00 TO 538+20	$\frac{34.89'+34.00'}{2} * \frac{1\cdot1/4"}{12} * 20.00' \div 27 = 2.66$ C.Y.	$\frac{34.89'+34.00'}{2} * \frac{1\cdot3/4"}{12} * 20.00' \div 27 = 3.72$ C.Y.	$\frac{35.89'+35.00'}{2} * \frac{7"}{12} * 20.00' \div 27 = 15.32$ C.Y.	$\frac{36.89'+36.00'}{2} * \frac{8"}{12} * 20.00' \div 27 = 18.00$ C.Y.	$\frac{37.89'+37.00'}{2} * \frac{8"}{12} * 20.00' \div 27 = 18.49$ C.Y.	$\frac{35.89'+35.00'}{2} * 20.00' \div 9 * 0.40 = 31.51$ GAL.
STA. 538+20 TO 539+73.22	$34.00' * \frac{1\cdot1/4"}{12} * 153.22' \div 27 = 20.10$ C.Y.	$34.00' * \frac{1\cdot3/4"}{12} * 153.22' \div 27 = 28.14$ C.Y.	$35.00' * \frac{7"}{12} * 153.22' \div 27 = 115.86$ C.Y.	$36.00' * \frac{8"}{12} * 153.22' \div 27 = 136.20$ C.Y.	$37.00' * \frac{8"}{12} * 153.22' \div 27 = 139.98$ C.Y.	$35.00' * 153.22' \div 9 * 0.40 = 238.34$ GAL.
STA.542+05.46 TO 543+30	$40.00' * \frac{1\cdot1/4"}{12} * 124.54' \div 27 = 19.22$ C.Y.	$40.00' * \frac{1\cdot3/4"}{12} * 124.54' \div 27 = 26.91$ C.Y.	$40.00' * \frac{7"}{12} * 124.54' \div 27 = 107.63$ C.Y.	$40.00' * \frac{8"}{12} * 124.54' \div 27 = 123.00$ C.Y. $7.00' * \frac{8"+6\cdot1/4"}{2 * 12} * 124.54' \div 27 = 19.17$ C.Y.	$48.00' * \frac{8"}{12} * 124.54' \div 27 = 147.60$ C.Y.	$40.00' * 124.54' \div 9 * 0.40 = 221.40$ GAL.
STA.543+30 TO 543+35	$\frac{45.00'+43.51'}{2} * \frac{1\cdot1/4"}{12} * 5.00' \div 27 = 0.85$ C.Y.	$\frac{45.00'+43.51'}{2} * \frac{1\cdot3/4"}{12} * 5.00' \div 27 = 1.20$ C.Y.	$\frac{46.00'+44.51'}{2} * \frac{7"}{12} * 5.00' \div 27 = 4.89$ C.Y.	$\frac{47.00'+45.51'}{2} * \frac{8"}{12} * 5.00' \div 27 = 5.71$ C.Y.	$\frac{48.00'+46.51'}{2} * \frac{8"}{12} * 5.00' \div 27 = 5.83$ C.Y.	$\frac{46.00'+44.51'}{2} * 5.00' \div 9 * 0.40 = 10.06$ GAL.
SUB TOTAL	42.83 C.Y.	59.97 C.Y.	243.70 C.Y.	302.08 C.Y.	311.90 C.Y.	501.31 GAL.

ROADWAY ℄ CONST. STA.	ITEM 203 – SUBGRADE COMPACTION
STA. 538+00 TO 538+20	$\frac{34.89'+34.00'}{2} * 20.00' \div 9 = 76.54$ S.Y.
STA. 538+20 TO 539+73.22	$34.00' * 153.22' \div 9 = 578.83$ S.Y.
STA.542+05.46 TO 543+30	$45.00' * 124.54' \div 9 = 622.70$ S.Y.
STA.543+30 TO 543+35	$\frac{45.00'+43.51'}{2} * 5.00' \div 9 = 24.59$ S.Y.
SUB TOTAL	1302.66 S.Y.

ITEM 614 – TEMPORARY CENTER LINE, CLASS II	
STATION	L.F.
538+00 TO 543+35	535 L.F. (0.10 MILE)

ITEM 642 – CENTER LINE, DOUBLE SOLID YELLOW	
STATION	L.F.
538+00 TO 543+35	535 L.F. (0.10 MILE)

ITEM 642 – 4" EDGE LINES – WHITE	
STATION	L.F.
538+00 TO 543+35	1070 L.F. (0.20 MILE)

ITEM 604 – MONUMENT ASSEMBLY		
POINT REFERENCED	STATION	TYPE, LOCATION
P.C.	537+90.21	MONUMENT BOX ON ℄
P.T.	543+65.39	MONUMENT BOX ON ℄

APPROACH SLAB ℄ CONST. STA.	ITEM 304 – AGGR. BASE, THICKNESS AS SHOWN	ITEM 203 – SUBGRADE COMPACTION	ITEM 611 – REIN. CONC. APPROACH SLAB
STA.539+73.22 TO 539+93.22	$47.00' * \frac{6"}{12} * 20.00' \div 27 = 17.41$ C.Y.	$45.00' * 20.00' \div 9 * = 100.00$ S.Y.	$45.00' * 20.00' \div 9 = 100.0$ S.Y.
STA.541+85.46 TO 542+05.46	$47.00' * \frac{6"}{12} * 20.00' \div 27 = 17.41$ C.Y.	$45.00' * 20.00' \div 9 * = 100.00$ S.Y.	$45.00' * 20.00' \div 9 = 100.0$ S.Y.
SUB TOTAL	34.82 C.Y.	200.00 S.Y.	200.00 S.Y.

ITEM 659 – COMMERCIAL FERTILIZER

$1312 \text{ S.Y.} * \frac{9 \text{ S.F.}}{\text{S.Y.}} * \frac{20 \text{ LB.}}{1000 \text{ S.F.}} * \frac{1 \text{ TON}}{2000 \text{ LB.}} = 0.12$ TON

ITEM 659 – WATER

$1312 \text{ S.Y.} * \frac{9 \text{ S.F.}}{\text{S.Y.}} * \frac{120 \text{ GAL.}}{1000 \text{ S.F.}} * \frac{1 \text{ M. GAL.}}{1000 \text{ GAL.}} * 2 \text{ APPLICATIONS} = 3.0 \text{ M. GAL.}$

(QUANTITY CARRIED TO SHEET 4)

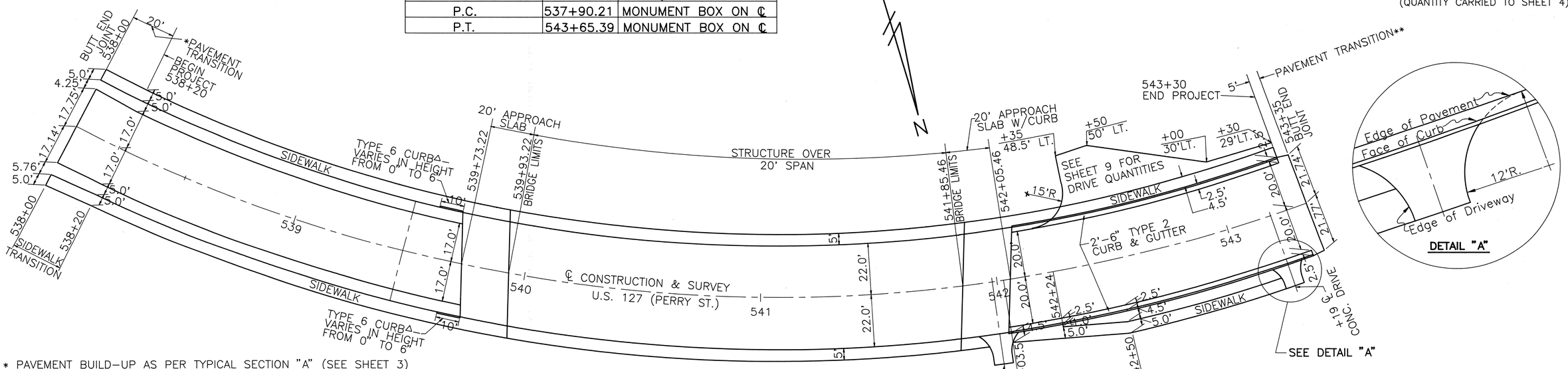

* PAVEMENT BUILD–UP AS PER TYPICAL SECTION "A" (SEE SHEET 3)

** PAVEMENT BUILD–UP AS PER TYPICAL SECTION "B" (SEE SHEET 3)

△ SIDEWALK SLOPE VARIES FROM 1/4"/FT. TOWARD PAVEMENT AT BRIDGE APPROACH SLAB TO 1/4"/FT. AWAY FROM PAVEMENT AT END OF TYPE 6 CURB.

Computations By Initials: R.L.M. Date: 3/22/93
Computations Checked By Initials: C.A.T. Date: 4/6/93

GENERAL SUMMARY

Computations By Initials: R.L.M. Date: 3/30/93
Computations By Initials: T.H.H. Date: 4/15/93

PAULDING COUNTY
PAU-127-10.19

OHIO
FHWA REGION 5
FEDERAL PROJECT

ITEM	SHEET NUMBERS 2	4	6	8	9	ITEM	ITEM EXTENSION	GRAND TOTAL	UNIT	DESCRIPTION
										ROADWAY
201		LUMP				201	11000	LUMP		Clearing and Grubbing
202				99	115	202	22900	214	S.Y.	Approach Slab Removed
202				696	703	202	23000	1399	S.Y.	Pavement Removed
202				890	560	202	30000	1450	S.F.	Walk Removed
202				1	1	202	58100	2	EACH	Catch Basin Removed
203				398	380	203	12000	778	C.Y.	Excavation, Not including Embankment Construction
203				29	44	203	20000	73	C.Y.	Embankment
203			1503			203	50000	1503	S.Y.	Subgrade Compaction
604			2			604	38500	2	EACH	Monument Assembly
606				75		606	13000	75	L.F.	Guardrail, Type 5
606				1		606	25000	1	EACH	Anchor Assembly, Type A
606				1		606	35000	1	EACH	Bridge Terminal Assembly, Type 1
608				2000	839	608	10000	2839	S.F.	4" Concrete Walk
608					428	608	13000	428	S.F.	6" Concrete Walk
609					249	609	12000	249	L.F.	Combination Curb and Gutter, Type 2
609				20		609	26000	20	L.F.	Curb, Type 6
802				3		802	00100	3	EACH	Barrier Reflector, Type A
										EROSION CONTROL
207		262				207	10000	262	S.Y.	Temporary Seeding and Mulching
207		500				207	30000	500	L.F.	Filter Fabric Fence
207		60				207	70000	60	EACH	Straw or Hay Bales
601				56	224	601	32200	280	C.Y.	Rock Channel Protection, Type C w/ Filter
659				1023	120	659	10000	1143	S.Y.	Seeding and Mulching
659		0.01	0.12			659	20000	0.13	TON	Commercial Fertilizer
659		4				659	35000	4	M.GAL	Water
660					169	660	30000	169	S.Y.	Sodding
										DRAINAGE
602				0.20	0.20	602	20000	0.40	C.Y.	Concrete Masonry
603		25				603	01400	25	L.F.	6" Conduit, Type E
603		25		40	40	603	01500	105	L.F.	6" Conduit, Type F, 707.17 Non-Perforated ASTM 3034 SDR-35 or SS931 or 944
603		25				603	02500	25	L.F.	8" Conduit, Type E
603		25				603	02600	25	L.F.	8" Conduit, Type F, 707.17 Non-Perforated ASTM 3034 SDR-35 or SS931 or 944
603		25		41	59	603	04400	125	L.F.	12" Conduit, Type B
603				39	149	603	04600	188	L.F.	12" Conduit, Type C
603		25				603	05100	25	L.F.	12" Conduit, Type E
604					3	604	00800	3	EACH	Catch Basin, No. 3A
604					1	604	02400	1	EACH	Catch Basin, No. 7
604				2		604	04500	2	EACH	Catch Basin, No. 2-2B
604				1	1	604	31500	2	EACH	Manhole, No. 3
604					1	604	34500	1	EACH	Manhole Adjusted to Grade
605				343	254	605	13300	597	L.F.	6" Unclassified Pipe Underdrain
										PAVEMENT
301			244			301	10002	244	C.Y.	Bituminous Aggregate Base, AC-20
304			337		26	304	20000	363	C.Y.	Aggregate Base (See Proposal Note)
310			312			310	12000	312	C.Y.	Subbase, Type 1 Grading A (See Proposal Note)
402			60		6	402	20000	66	C.Y.	Asphalt Concrete, AC-20
404			43		4	404	20000	47	C.Y.	Asphalt Concrete, AC-20
408			501		46	408	10000	547	GAL.	Bituminous Prime Coat
452					22	452	10000	22	S.Y.	6" Plain Concrete Pavement
611			200			611	15000	200	S.Y.	Reinforced Concrete Approach Slab (T=13")

GENERAL SUMMARY

Computations By Initials: R.L.M. Date: 3/30/93
Computations By Initials: T.H.H. Date: 4/15/93

PAULDING COUNTY
PAU-127-10.19

OHIO
FHWA REGION 5
FEDERAL PROJECT

7A
39

SHEET NUMBERS ITEM	2	4	6	8	9	ITEM	ITEM EXTENSION	GRAND TOTAL	UNIT	DESCRIPTION
										MAINTENANCE OF TRAFFIC
404	75					404	20000	75	C.Y.	Asphalt Concrete, AC-20
407	200					407	10000	200	GAL.	Tack Coat
614			0.10			614	21400	0.10	MILE	Temporary Centerline, Class II
616		1				616	10000	1	M.GAL	Water
616	1	1				616	20000	2	TON	Calcium Chloride
617	75					617	10100	75	C.Y.	Compacted Aggregate, Type A
617	1					617	25000	1	M.GAL	Water
										TRAFFIC CONTROL
642			0.20			642	00090	0.20	MILE	Edge Line
642			0.10			642	00290	0.10	MILE	Centerline
										STRUCTURES OVER 20' SPAN
										For Quantities of Bridge No. PAU-127-1023, See Sheet No. 18
										LIGHTING
										For Lighting Quantities, See Sheet No. 35
614		LUMP				614	11000	LUMP		Maintaining Traffic
619						619	15010	LUMP		Field Office, Type B
623						623	10000	LUMP		Construction Layout Stakes
624						624	10000	LUMP		Mobilization

Computations By Initials R.L.M. Date 3/30/93
Computations Checked By Initials T.H.H. Date 4/15/93

CURVE DATA

Δ	= 51°46'
D	= 9°0'
T	= 308.91'
R	= 636.62'
L	= 575.18'
E	= 70.98'
P.C.	= STA. 537+90.21
P.I.	= STA. 540+99.11
P.T.	= STA. 543+65.39

BEGIN PROJECT
STA. 538+20
S.L.M. = 10.19
BRF-92-4(28)

Rock Channel Protection Calculation
336 S.F. ÷ 2' Thick ÷ 27 = 25 C.Y.
421 S.F. ÷ 2' Thick ÷ 27 = 31 C.Y.

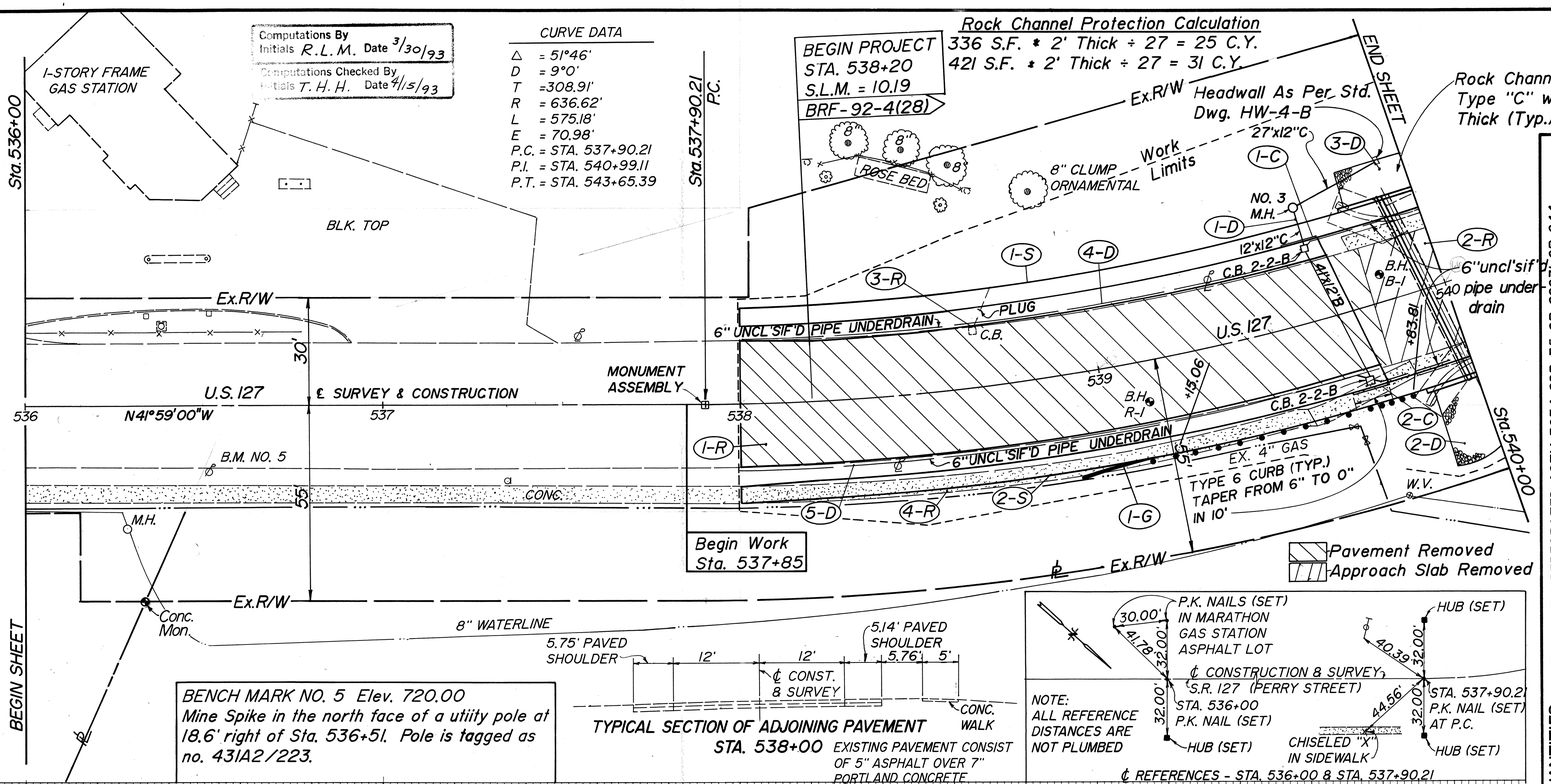

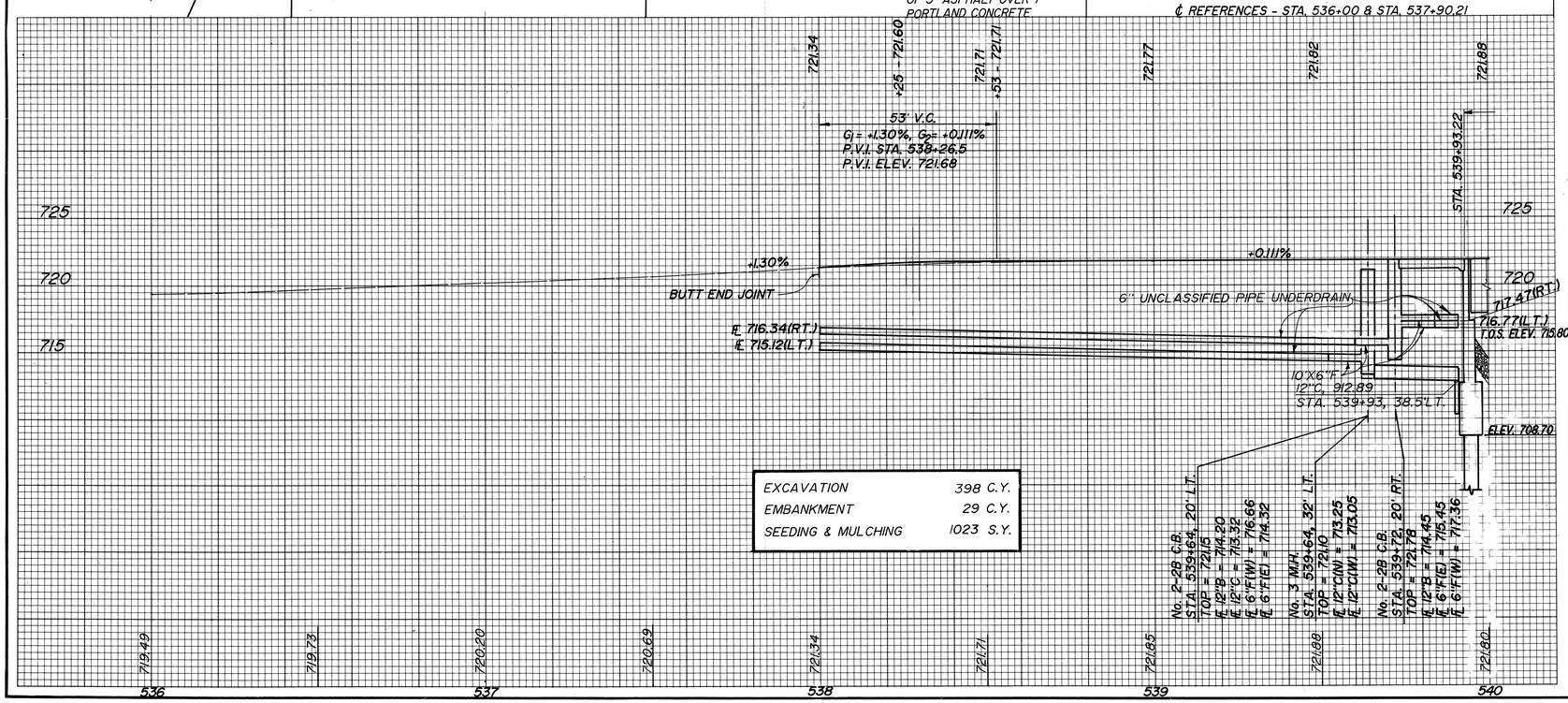

EXCAVATION	398 C.Y.
EMBANKMENT	29 C.Y.
SEEDING & MULCHING	1023 S.Y.

ESTIMATED QUANTITIES * 707.17, NON-PERFORATED ASTM 3034 SDR-35 OR SS931 OR 944

REF. NO.	STATION TO STATION	SIDE	202 PAVEMENT REMOVED	202 APPROACH SLAB REMOVED	202 C.B. REMOVED	202 WALK REMOVED	601 R.C.P. TYPE "C" W/ FLT. 24" THICK	602 CONC. MASONRY	603 CONDUIT 12"B	603 CONDUIT 12"C	603 CONDUIT 6"F*	604 ANCH. ASSY TYPE 1	604 GUARD RAIL TYPE 1	604 BRIDGE ASSY TYPE 1	604 No. 2-28 C.B.	604 No. 3 M.H.	605 6" UNCL. SIF'D PIPE TYP.	608 4" CONC. WALK	609 CURB TYPE 6	802 BARRIER REFL'CTR TYPE A
			S.Y.	S.Y.	EACH	S.F.	C.Y.	C.Y.	L.F.	L.F.	L.F.	EACH	L.F.	EACH	EACH	EACH	L.F.	S.F.	L.F.	EACH
1-R	538+00 TO 539+79	LT/RT	696																	
2-R	539+79 TO 540+00	LT/RT		99																
3-R	538+65	LT.			1															
4-R	538+00 TO 540+00	RT.				890														
1-G	538+87.16 TO 539+90.06	RT.										1	75	1						3
1-S	538+00 TO 540+00	LT.																1000		
2-S	538+00 TO 540+00	RT.																1000		
1-C	539+58.22 TO 539+68.56	LT.																	10	
2-C	539+67.04 TO 539+76.68	RT.																	10	
1-D	539+64 TO 539+93	LT/RT						0.2	41	39	40				2	1	170			
2-D	539+88 TO 540+00	RT.															173			
3-D	539+78 TO 540+00	LT.					31													
4-D	538+00 TO 540+00	LT.					25													
5-D	538+00 TO 540+00	RT.																		
TOTALS			696	99	1	890	56	0.2	41	39	40	1	75	1	2	1	343	2000	20	3

PLAN AND PROFILE STA. 536+00 TO STA. 540+00

44-232 75507

Computations By Initials R.L.M. Date 3/30/93
Computations Checked By Initials T.H.H. Date 4/15/93

= Approach Slab Removed
= Pave. Removed

Structure No. PAU-127-1023

ROCK CHANNEL PROTECTION CALCULATIONS
957 S.F. * 2' THICK ÷ 27 = 71 C.Y. (6-D)
1163 S.F. * 2' THICK ÷ 27 = 86 C.Y. (7-D)
903 S.F. * 2' THICK ÷ 27 = 67 C.Y. (5-D)

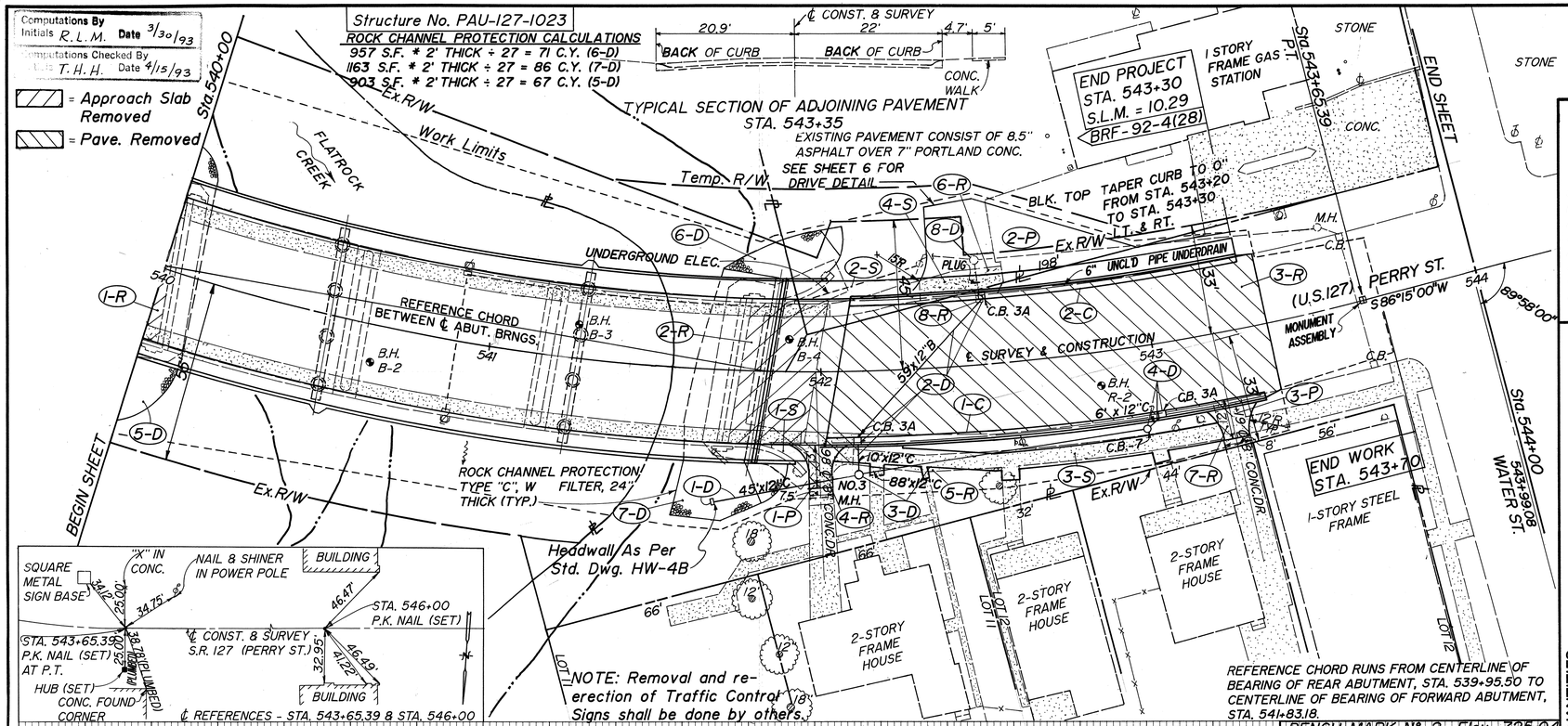

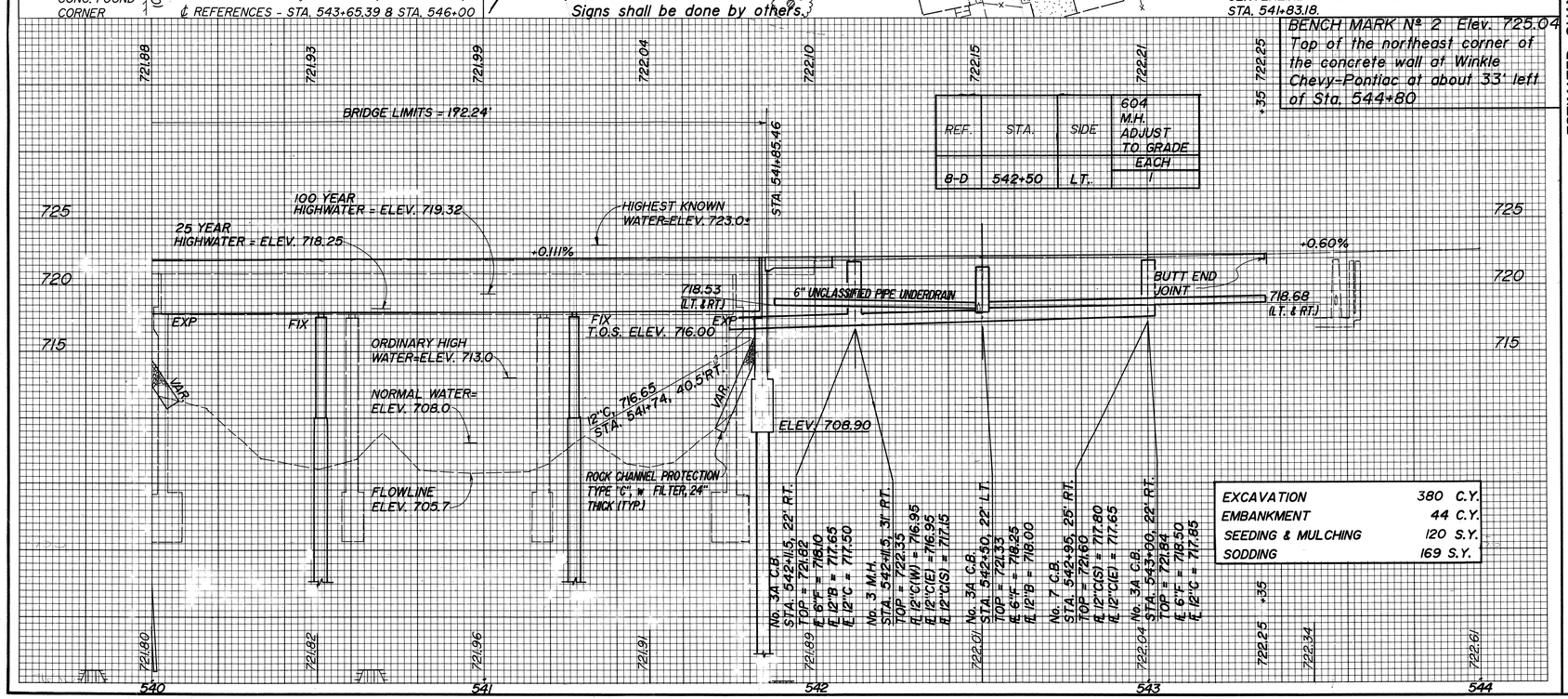

REF.	STA.	SIDE	604 M.H. ADJUST TO GRADE EACH
8-D	542+50	LT.	1

EXCAVATION	380 C.Y.
EMBANKMENT	44 C.Y.
SEEDING & MULCHING	120 S.Y.
SODDING	169 S.Y.

PAULDING COUNTY
PAU-127-10.19

OHIO
FHWA REGION 5
FEDERAL PROJECT

9
39

EXISTING STRUCTURE

TYPE: SIMPLE SPAN, STEEL BEAM W/ CONCRETE DECK
SPAN: 3 AT 57'± C/C BEARINGS
ROADWAY: 34' PLUS TWO 4.5' SIDEWALKS
APPROACH SLABS: 25' LONG
SKEW: NONE
ALIGNMENT: 9°-0' CURVE TO LEFT
SUPERELEVATION: 0.0294 FT/FT
CONDITION: POOR
STRUCTURE FILE NUMBER: 6301266

PROPOSED STRUCTURE

TYPE: CONTINUOUS STEEL BEAM BRIDGE W/ REINFORCED CONCRETE DECK AND SUBSTRUCTURE, (A572 GALVANIZED BEAMS)
SPANS: 56'-75'-56', ALONG REFERENCE CHORD
ROADWAY: 44'-0" CURB TO CURB W/5'-0" SIDEWALK EACH SIDE
APPROACH SLABS: AS-1-81 (20' LONG)
SKEW: NONE
LOADING: HS 20-44 & ALT. MIL. LOADING
ALIGNMENT: 9°-0' CURVE TO LEFT
SUPERELEVATION: 0.022 FT/FT
WEARING SURFACE: CONCRETE

ESTIMATED QUANTITIES

REF. NO.	STATION TO STATION	SIDE	202 APPROACH SLAB REMOVED S.Y.	202 PAVEMENT REMOVED S.Y.	202 WALK REMOVED S.F.	202 C.B. REMOVED EACH	608 6" CONC. WALK S.F.	601 R.C.P. TYPE "C" W FILTER 24" THICK C.Y.	602 CONC. MASONRY C.Y.	603 CONDUIT 6"F* L.F.	603 CONDUIT 12"B L.F.	603 CONDUIT 12"C L.F.	604 M.H. ADJUST TO GRADE EACH	604 No. 3A C.B. EACH	604 No. 3 M.H. EACH	452 6" PLN. PORT. CEMENT CONC. S.Y.	408 PRIME COAT 0.4 GAL/S.Y. GAL	404 1¼" ASP. CONC. C.Y.	402 1¾" ASP. CONC. C.Y.	304 8" AGG. BASE C.Y.	609 COMBINED CURB & GUTTER L.F.	608 4" CONC. WALK S.F.	605 6" UNCL'D PIPE U.D. L.F.	604 No. 7 C.B. EACH	604 No. 3A C.B. EACH	604 No. 3 M.H. EACH	452 6" PLN. PORT. CEMENT CONC. S.Y.	408 PRIME COAT 0.4 GAL/S.Y. GAL	404 1¼" ASP. CONC. C.Y.	402 1¾" ASP. CONC. C.Y.	304 8" AGG. BASE C.Y.
1-R	540+00 TO 540+01.8	L.T.&R.T.	8																												
2-R	541+76 TO 541+99	L.T.&R.T.	107																												
3-R	541+99 TO 543+35	L.T.&R.T.		651																											
4-R	541+95.5 TO 542+09.5	RT.		21	560																										
5-R	542+09.5 TO 543+15	RT.					21																								
6-R	542+31 TO 542+57	LT.					10																								
7-R	543+15 TO 543+23	RT.																													
8-R	542+50	LT.				1																									
1-D	541+74 TO 542+10	RT.							0.2		45																				
2-D	541+88 TO 543+35	L.T.&R.T.								40	10																				
3-D	542+10 TO 542+94	RT.									59																				
4-D	542+94 TO 543+35	RT.									88																				
5-D	540+00 TO 540+11	L.T.&R.T.									6																				
6-D	541+62 TO 542+08	LT.						67																							
7-D	541+62 TO 541+90	RT.						71																							
								86																							
1-C	542+05.5 TO 543+30	RT.																													
2-C	542+05.5 TO 543+30	LT.																													
1-P	541+98	RT.											26																		
2-P	542+35 TO 543+30	LT.																													
3-P	543+19	RT.																													
1-S	541+85.46 TO 541+92	RT.																													
2-S	541+85.46 TO 542+06.46	LT.																													
3-S	542+03.3 TO 543+14.5	RT.																													
4-S	542+05.46 TO 543+30	LT.						428																							
TOTALS			115	703	560	1	428	224	0.2	40	59	49	26	1	3	1	22	46	4	6	249	839	254	1	1	1	22	46	4	6	26

* 707.17, NON-PERFORATED ASTM 3034 SDR-35 OR SS931 OR 944

PLAN AND PROFILE STA. 540+00 TO STA. 544+00

44-232 75507

PAULDING COUNTY PAU-127-10.19	OHIO FHWA REGION 5 FEDERAL PROJECT	10 39

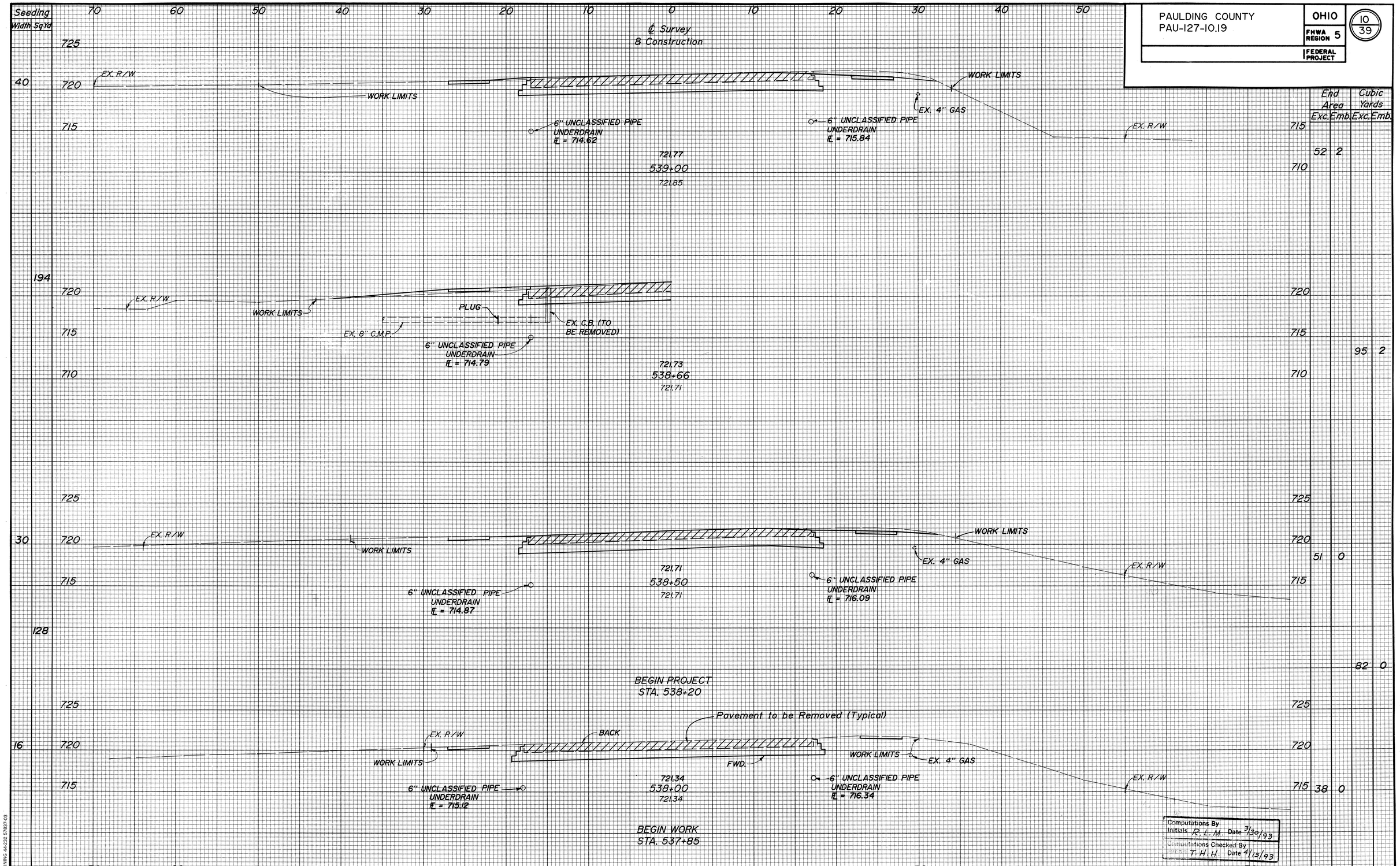

CROSS SECTIONS STA. 538+00 TO STA. 539+00

BRUNING 44-232-57837-03

PAULDING COUNTY PAU-127-10.19	OHIO FHWA REGION 5 FEDERAL PROJECT	11 39

		End Area Exc.	End Area Emb.	Cubic Yards Exc.	Cubic Yards Emb.
+90.47	Fwd.	51	30		
	Back			33	19
+73.22	Fwd.	51	30		
	Back	51	3		
				44	3
		51	3		
				95	5
+00		52	2		

CROSS SECTIONS STA. 539+50 TO STA. 541+50

BRUNING 44-232-5783T-03

PAULDING COUNTY PAU-127-10.19	OHIO FHWA REGION 5 FEDERAL PROJECT	12 39

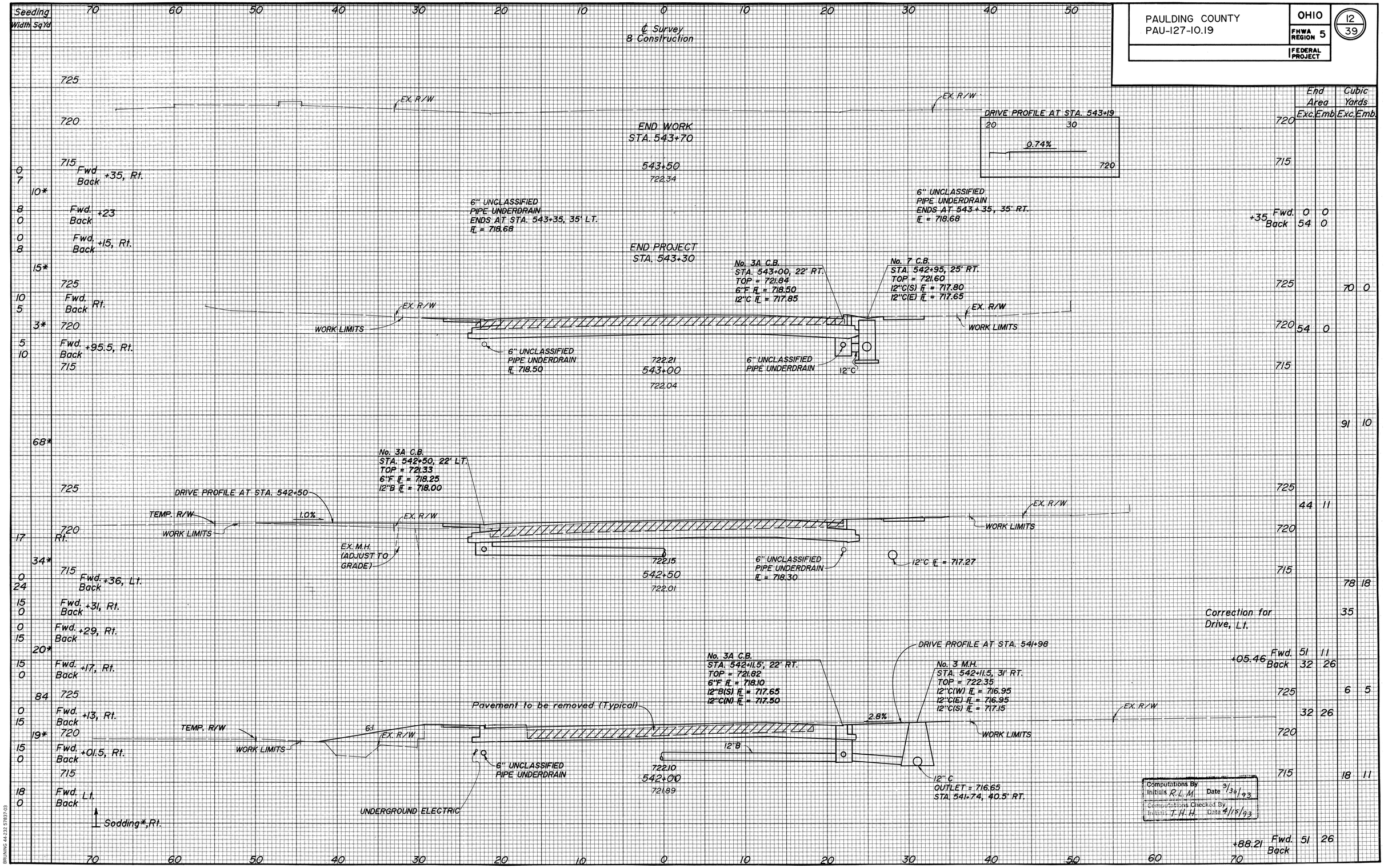

CROSS SECTIONS STA. 542+00 TO STA. 543+50

BRUNING 44.232 5783703

PAULDING COUNTY PAU-127-10.19	OHIO	13 39
	FHWA REGION 5	
	FEDERAL PROJECT	

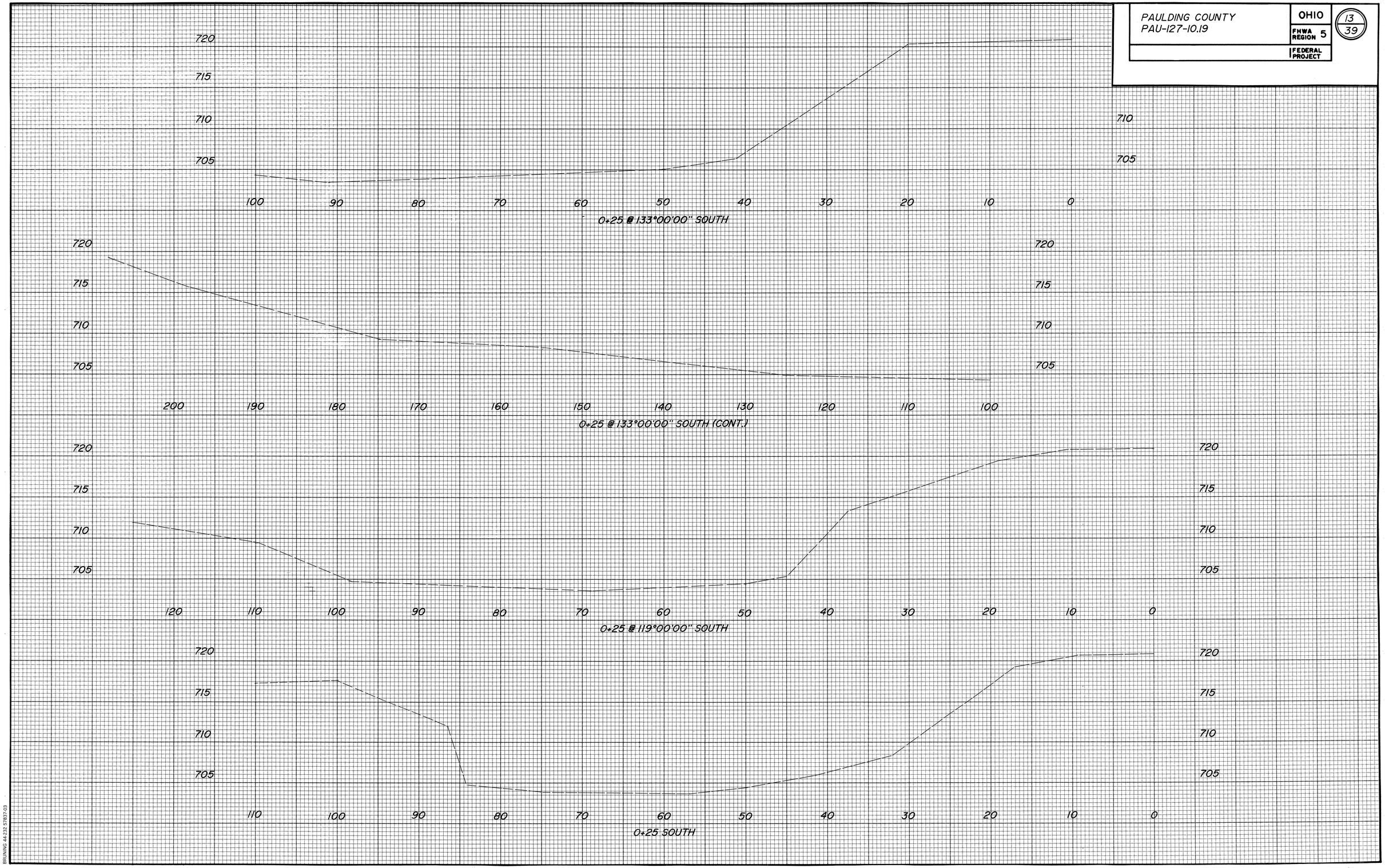

CHANNEL CROSS SECTIONS 0+25 SOUTH TO 0+25 @ 133°00'00" SOUTH

BRUNING 44-232 57837-03

PAULDING COUNTY PAU-127-10.19	OHIO FHWA REGION 5 FEDERAL PROJECT	14 39

Seeding	
Width	Sq.Yd.

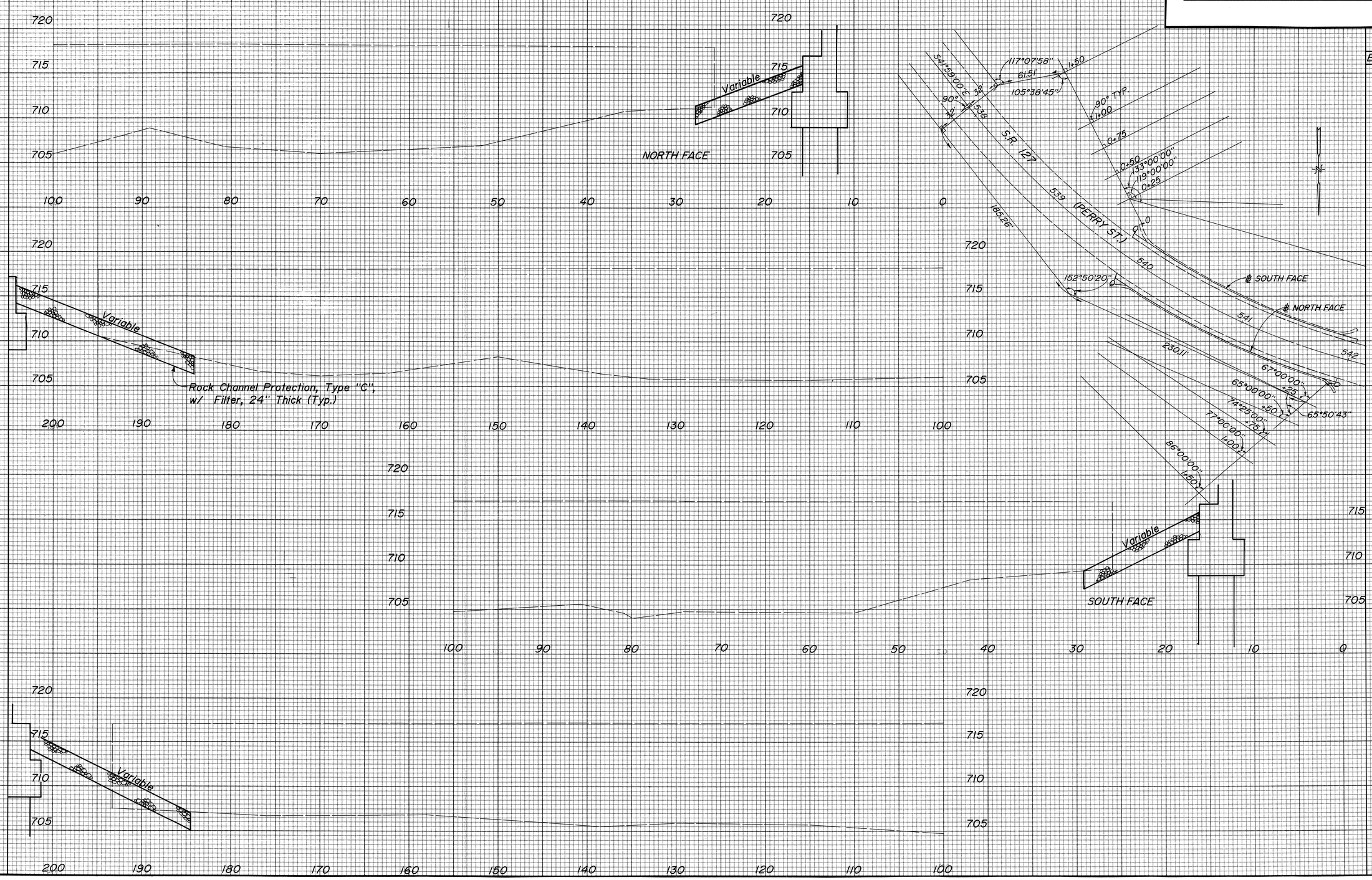

End Area		Cubic Yards	
Exc.	Emb.	Exc.	Emb.

Quantities on this sheet are included in Roadway Cross Sections

CHANNEL CROSS SECTIONS SOUTH FACE TO NORTH FACE

BRUNING 44-232 57837-03

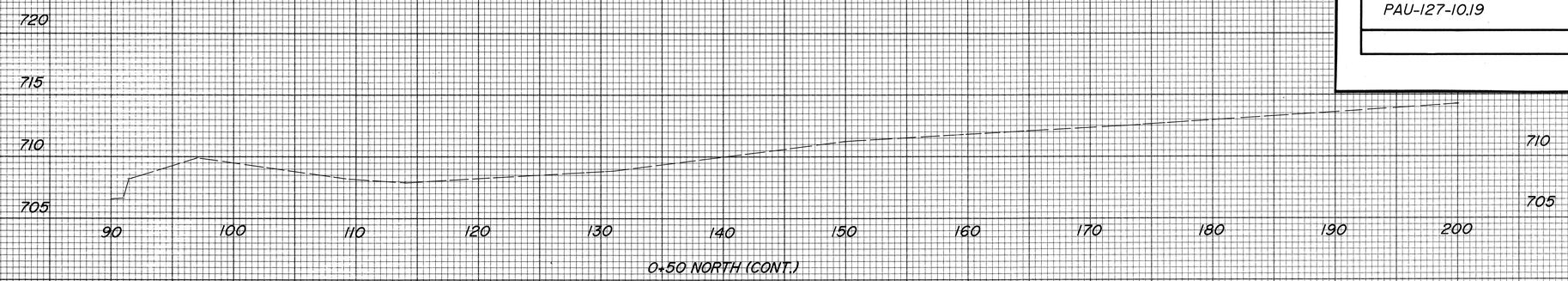

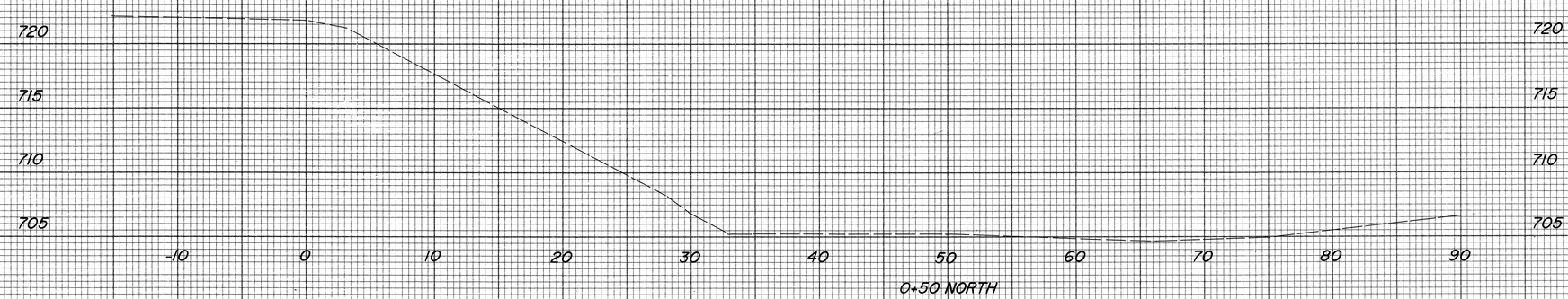

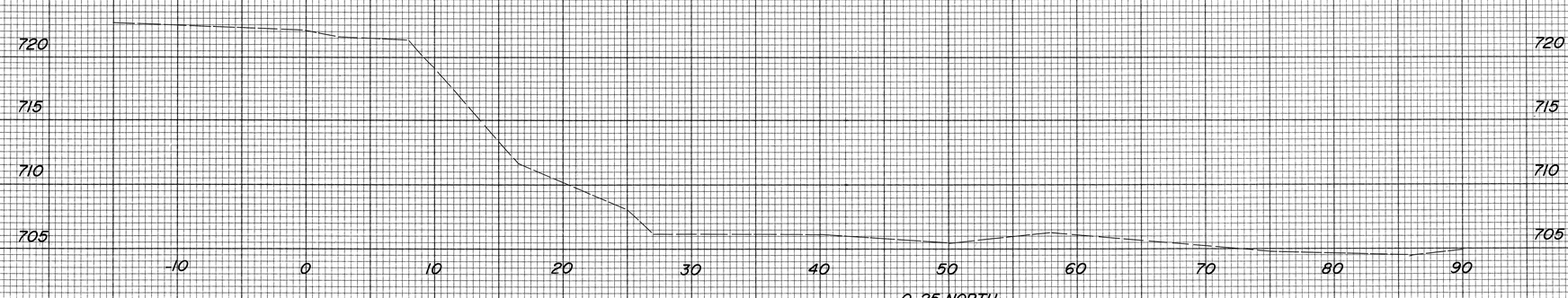

Quantities on this sheet are included in Roadway Cross Sections

BRUNING 44-232 57837-03

CHANNEL CROSS SECTIONS 0+25 NORTH TO 0+50 NORTH

PAULDING COUNTY
PAU-127-10.19

OHIO
FHWA REGION 5
FEDERAL PROJECT

16/39

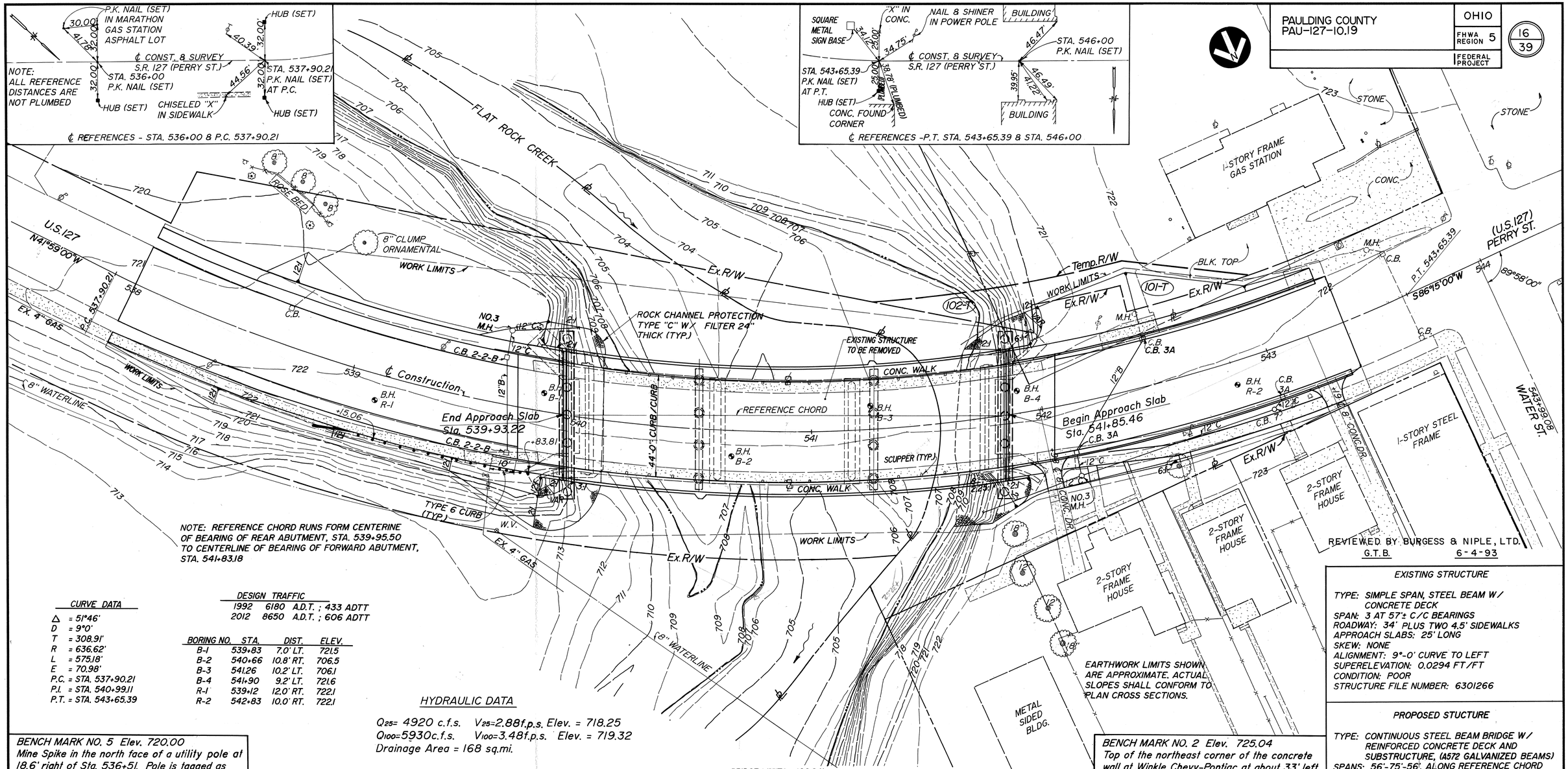

NOTE: REFERENCE CHORD RUNS FORM CENTERINE OF BEARING OF REAR ABUTMENT, STA. 539+95.50 TO CENTERLINE OF BEARING OF FORWARD ABUTMENT, STA. 541+83.18

REVIEWED BY BURGESS & NIPLE, LTD.
G.T.B. 6-4-93

CURVE DATA	
Δ	= 51°46'
D	= 9°0'
T	= 308.91'
R	= 636.62'
L	= 575.18'
E	= 70.98'
P.C.	= STA. 537+90.21
P.I.	= STA. 540+99.11
P.T.	= STA. 543+65.39

DESIGN TRAFFIC

1992	6180	A.D.T. ; 433 ADTT
2012	8650	A.D.T. ; 606 ADTT

BORING NO.	STA.	DIST.	ELEV.
B-1	539+83	7.0' LT.	721.5
B-2	540+66	10.8' RT.	706.5
B-3	541.26	10.2' LT.	706.1
B-4	541+90	9.2' LT.	721.6
R-1	539+12	12.0' RT.	722.1
R-2	542+83	10.0' RT.	722.1

HYDRAULIC DATA

Q_{25}= 4920 c.f.s. V_{25}=2.88f.p.s. Elev. = 718.25
Q_{100}=5930c.f.s. V_{100}=3.48f.p.s. Elev. = 719.32
Drainage Area = 168 sq.mi.

BENCH MARK NO. 5 Elev. 720.00
Mine Spike in the north face of a utility pole at 18.6' right of Sta. 536+51. Pole is tagged as no. 431A2/223.

BENCH MARK NO. 2 Elev. 725.04
Top of the northeast corner of the concrete wall at Winkle Chevy-Pontiac at about 33' left of Sta. 544+80.

EXISTING STRUCTURE

TYPE: SIMPLE SPAN, STEEL BEAM W/ CONCRETE DECK
SPAN: 3 AT 57'± C/C BEARINGS
ROADWAY: 34' PLUS TWO 4.5' SIDEWALKS
APPROACH SLABS: 25' LONG
SKEW: NONE
ALIGNMENT: 9°-0' CURVE TO LEFT
SUPERELEVATION: 0.0294 FT/FT
CONDITION: POOR
STRUCTURE FILE NUMBER: 6301266

PROPOSED STUCTURE

TYPE: CONTINUOUS STEEL BEAM BRIDGE W/ REINFORCED CONCRETE DECK AND SUBSTRUCTURE, (A572 GALVANIZED BEAMS)
SPANS: 56'-75'-56', ALONG REFERENCE CHORD
ROADWAY: 44'-0" CURB TO CURB W/ 5'-0" SIDEWALK EACH SIDE
APPROACH SLABS: AS-1-81 (20' LONG)
SKEW: NONE
LOADING: HS 20-44 & ALT. MIL. LOADING
ALIGNMENT: 9°-0' CURVE TO LEFT
SUPERELEVATION: 0.022 FT/FT
WEARING SURFACE: CONCRETE

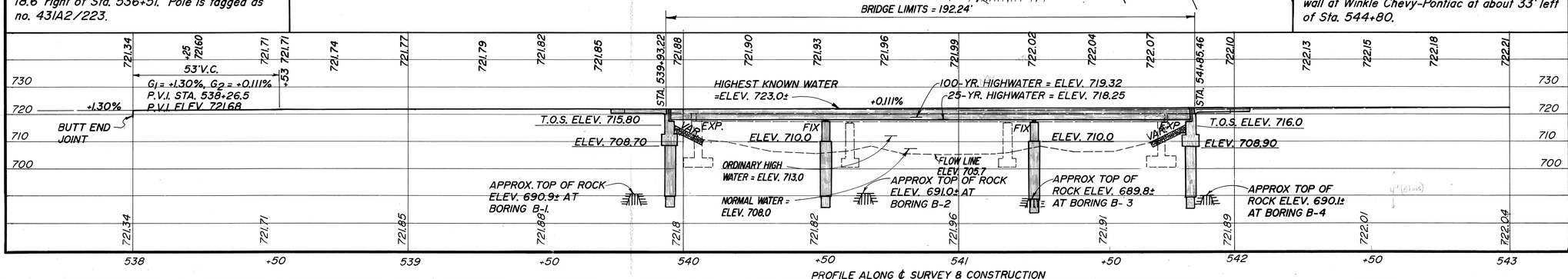

KOHLI & KALIHER ASSOCIATES, INC.
CONSULTING ENGINEERS AND SURVEYORS
LIMA, OHIO

1/19

SITE PLAN
BRIDGE NO. PAU-127-1023
OVER FLATROCK CREEK
PAULDING COUNTY STA. 539+93.22
STA. 541+85.46

DESIGNED	DRAWN	TRACED	CHECKED	REVIEWED	DATE	REVISED
D.G.B.	T.L.M.		M.A.D.	T.H.H.	3-5-93	

PAULDING COUNTY PAU-127-10.19	OHIO
	FHWA REGION 5
	FEDERAL PROJECT

17/39

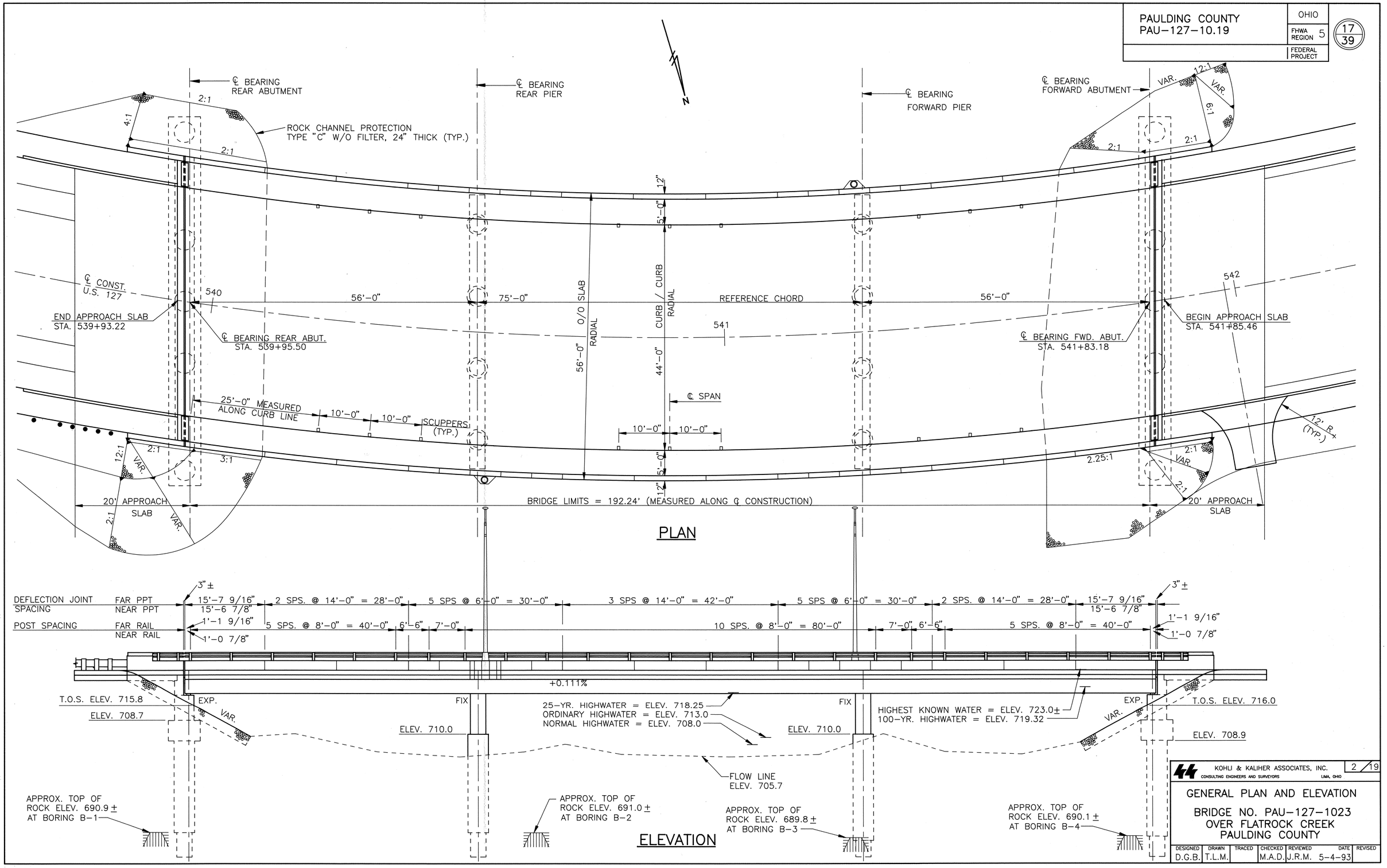

KOHLI & KALIHER ASSOCIATES, INC.
CONSULTING ENGINEERS AND SURVEYORS
LIMA, OHIO

2/19

GENERAL PLAN AND ELEVATION

BRIDGE NO. PAU-127-1023
OVER FLATROCK CREEK
PAULDING COUNTY

DESIGNED	DRAWN	TRACED	CHECKED	REVIEWED	DATE	REVISED
D.G.B.	T.L.M.		M.A.D.	J.R.M.	5-4-93	

ESTIMATED QUANTITIES

QUANTITIES CALCULATED BY MAD DATE 4-22-93
QUANTITIES CHECKED BY SAP DATE 4-23-93

ITEM	ITEM EXT.	TOTAL	UNIT	DESCRIPTION	SUPER.	ABUT'S.	PIERS	GEN'L.
202	11002	Lump		Structure Removed, Over 20 Foot Span				Lump
503	11100	Lump		Cofferdams, Cribs and Sheeting				Lump
503	21100	398	Cu Yd	Unclassified Excavation		398		
SPECIAL	50794704	72	Lin Ft	Drilled Shafts, 36" Diameter, Into Bedrock		40	32	
SPECIAL	50794902	340	Lin Ft	Drilled Shafts, 48" Diameter, Above Bedrock		183	157	
509	15800	115232	Pound	Epoxy Coated Reinforcing Steel, Grade 60	89002	17004	9226	
511	31504	378	Cu Yd	Class S Concrete, Superstructure	378			
511*	33404	378	Cu Yd	Class S Concrete, Superstructure (Using Shrinkage Compensating Cement)**	378			
511*	33410	Lump		Class S Concrete, Using Shrinkage Compensating Cement, For Pre-Placement Testing**	Lump			
511	41000	34	Cu Yd	Class C Concrete, Pier Above Footings			34	
511	43500	258	Cu Yd	Class C Concrete, Abutment Including Footing		258		
SPECIAL	51267500	644	Sq Yd	Sealing of Concrete Surfaces (See Proposal Note)	591	53		
SPECIAL	51267502	94	Sq Yd	Sealing of Concrete Surfaces (Epoxy) (See Proposal Note)		94		
513	15801	301100	Pound	Structural Steel, Galvanized, As Per Plan (See Proposal Note)	301100			
516	10500	114	Lin Ft	Structural Expansion Joint Including Elastomeric Compression Seal **		114		
516	43100	14	Each	Elastomeric Bearing with Internal Laminates Only (Neoprene) (1 3/4" X 9" X 13")**		14		
516	43100	14	Each	Elastomeric Bearing with Internal Laminates Only (Neoprene) (1 1/2" X 12" X 18")**			14	
517	71501	424	Lin Ft	Railing (Concrete Parapet with Double Pipe Rail), As Per Plan **	424			
517 ⊤	71510	424	Lin Ft	Railing (Concrete Parapet with Double Pipe Rail, Using Shrinkage Compensating Cement) (See Proposal Note)	424			
518	12200	18	Each	Scupper, Including Supports (See Proposal Note)	18			
518	21200	43	Cu Yd	Porous Backfill with Filter Fabric		43		
518	41100	100	Lin Ft	6" Perforated Helical Corrugated Steel Pipe, 707.01		100		
518	41200	49	Lin Ft	6" Non-Perforated Helical Corrugated Steel Pipe, including specials, 707.01		49		

* ALTERNATE BID ITEM: THESE TWO ITEMS SHALL CONSTITUTE ONE ALTERNATE BID TO CLASS S CONCRETE, SUPERSTRUCTURE.

** SEE PROPOSAL NOTE

⊤ ALTERNATE BID ITEM

GENERAL NOTES

REFERENCE SHALL BE MADE TO STANDARD DRAWINGS:

AS-1-81	DATED 11-27-81
BR-2-82	DATED 11-1-82
EXJ-2-81	DATED 9-1-81
SD-1-69	DATED 6-12-69

AND TO SUPPLEMENTAL SPECIFICATIONS

849	DATED 12-24-85
949	DATED 9-26-86

DESIGN SPECIFICATIONS: THIS STRUCTURE CONFORMS TO "STANDARD SPECIFICATIONS FOR HIGHWAY BRIDGES" ADOPTED BY THE AMERICAN ASSOCIATION OF STATE HIGHWAY AND TRANSPORTATION OFFICIALS 1992, AND TO THE OHIO "SUPPLEMENT" TO THESE SPECIFICATIONS.

DESIGN DATA:

DESIGN LOADING: HS 20-44, CASE II AND ALTERNATE MILITARY LOADING
CONCRETE CLASS C: COMPRESSIVE STRENGTH 4000 P.S.I.
CONCRETE CLASS S: COMPRESSIVE STRENGTH 4500 P.S.I.
REINFORCING STEEL: ASTM A615, A616, A617 - GRADE 60 MINIMUM YIELD STRENGTH 60,000 P.S.I.
STRUCTURAL STEEL: ASTM A572 YIELD STRENGTH 50,000 P.S.I.-GALVANIZED
SPIRAL REINFORCEMENT MAY BE PLAIN, ASTM A82 OR A615.

STRUCTURAL STEEL: ALL OF THE STRUCTURAL STEEL OF THE STRUCTURE SHALL BE ASTM A572 GALVANIZED. THE PARTS DESIGNED AS (CVN) SHOWN ON SHEETS 16/19 AND 17/19 SHALL MEET THE 711.01 NOTCH TOUGHNESS REQUIREMENTS OF CMS.

GALVANIZED STEEL: AFTER FABRICATION, ALL STRUCTURAL STEEL EXCEPT HARDWARE SHALL BE GALVANIZED IN ACCORDANCE WITH ASTM A123. BOLTS, NUTS AND WASHERS SHALL BE GALVANIZED IN ACCORDANCE WITH ASTM 153 OR MAY BE ELECTROGALVANIZED IN ACCORDANCE WITH ASTM B695 CLASS 65. THE CONTRACTOR SHALL TAKE CARE SO AS NOT TO DAMAGE THE GALVANIZED FINISH. IF THE FINISH IS DAMAGED, IT SHALL BE REPAIRED IN ACCORDANCE WITH ASTM A780. THE NUTS SHALL BE TAPPED AFTER GALVANIZING.

COMPATABILITY OF THE NUTS AND BOLTS AFTER GALVANIZING IS ESSENTIAL. THEREFORE, THE CONTRACTOR SHALL ORDER NUTS, BOLTS AND WASHERS AS A-325 GALVANIZED (ASTM 153 OR B695) FROM A DISTRIBUTOR AND SHALL NOT ORDER THEM BLACK AND THEN MAKE SEPARATE ARRANGEMENTS FOR GALVANIZING. THE THREADS OF THE NUTS SHALL BE LUBRICATED WITH MELTED BEESWAX OR MELTED COMMERCIAL WAX, PRIOR TO SHIPMENT TO THE JOB SITE. SEE SHEET 17/19 BOLTED BEAM SPLICE NOTE FOR ADDITIONAL INFORMATION REGARDING STRUCTURAL STEEL HARDWARE REQUIREMENTS. INCLUDE ALL COSTS OF GALVANIZING WITH ITEM 513 "STRUCTURAL STEEL, GALVANIZED, AS PER PLAN" FOR PAYMENT.

REMOVAL OF EXISTING STRUCTURE: WHEN NO LONGER NEEDED TO MAINTAIN TRAFFIC, THE EXISTING STRUCTURE SHALL BE REMOVED AS PER 202.03. SUITABLE WASTE MASONARY MAY BE PLACED AS BANK PROTECTION AS DIRECTED BY THE ENGINEER.

REMOVAL OVER WATER: REASONABLE CARE SHALL BE USED BY THE CONTRACTOR TO PREVENT REMOVED MATERIALS FROM FALLING INTO THE WATER. ANY DROPPED MATERIALS SHALL BE IMMEDIATELY RECOVERED AND DISPOSED OF AWAY FROM THE SITE EXCEPT FOR APPROVED MASONRY MATERIAL WHICH MAY BE USED AS BANK PROTECTION AS DIRECTED BY THE ENGINEER. THIS WORK WILL BE PAID FOR UNDER ITEM 202 "STRUCTURE REMOVED, OVER 20 FOOT SPAN." REFER TO 104.06 OF THE O.D.O.T. C.M.S. FOR ADDITIONAL REQUIREMENTS.

EMBANKMENT CONSTRUCTION: THE EMBANKMENT SHALL BE CONSTRUCTED TO THE LEVEL OF THE SUBGRADE. EXCAVATION MAY THEN BE MADE FOR THE ABUTMENTS AND DRILLED SHAFTS.

MONOLITHIC WEARING SURFACE: IS ASSUMED, FOR DESIGN PURPOSES, TO BE 1 INCH THICK.

UTILITY LINES: ALL EXPENSE INVOLVED IN RELOCATING THE AFFECTED UTILITY LINES SHALL BE BORNE BY THE OWNERS. THE CONTRACTOR AND OWNERS ARE REQUESTED TO COOPERATE BY ARRANGING THEIR WORK IN SUCH A MANNER THAT INCONVENIENCE TO EITHER WILL BE HELD TO A MINIMUM.

DECK PROTECTION METHOD: EPOXY COATED REINFORCING STEEL, TOP AND BOTTOM MAT, AND SEALING OF CONCRETE SURFACES.

ITEM SPECIAL - SEALING OF CONCRETE SURFACES: A CONCRETE SEALER SHALL BE APPLIED TO THE SURFACES SHOWN ON SHEETS 9/19 AND 13/19. SEE THE PROPOSAL NOTE FOR SURFACE PREPARATION REQUIREMENTS, APPLICATION PROCEDURES AND RATES AND MATERIAL REQUIREMENTS.

RAILING (CONCRETE PARAPET WITH DOUBLE PIPE RAIL), AS PER PLAN: RAILING CONCRETE SHALL BE CURED PER SECTION 511.14 USING METHOD (A), WATER CURING.

RAILING (CONCRETE PARAPET WITH DOUBLE PIPE RAIL, USING SHRINKAGE COMPENSATING CEMENT): SHALL CONFORM TO THE PERTINENT SECTIONS OF THE PROPOSAL NOTE FOR SHRINKAGE COMPENSATING CEMENT AND TO 517 OF THE CMS. PAYMENT FOR RAILING SHALL CONFORM WITH 517.07 OF THE CMS.

WELDED ATTACHMENT OF SUPPORTS FOR CONCRETE DECK FINISHING MACHINE OR FORMS MAY NOT BE MADE TO ANY AREAS OF THE GALVANIZED BEAMS.

STRUCTURAL EXPANSION JOINTS INCLUDING ELASTOMERIC COMPRESSION SEALS: REFER TO STANDARD DRAWING EXJ-2-81 FOR NOTES AND DETAILS WITH THE FOLLOWING EXCEPTIONS:

MATERIALS: STEEL PORTIONS OF THE JOINTS SHALL BE GALVANIZED ASTM A36 OR ASTM A572. THE ELASTOMERIC COMPRESSION SEAL SHALL BE AS MANUFACTURED BY THE D.S. BROWN COMPANY OF NORTH BALTIMORE, OHIO: THE WATSON BOWMAN AND ACME CORPORATION OF AMHERST, NEW YORK: STRUCTURAL ACCESSORIES OF LENOIR, NORTH CAROLINA, OR AN APPROVED ALTERNATE.

GALVANIZING: THE EXPANSION JOINTS SHALL BE GALVANIZED IN ACCORDANCE WITH ASTM A123.

COMPRESSION SEALS FOR BRIDGE DECK JOINTS SHALL BE INSTALLED IN ONE CONTINUOUS PIECE.

ABUTMENT RAILING PARAPET CONCRETE SHALL CONFORM TO THE REQUIREMENTS FOR CLASS S CONCRETE AND SHALL BE INCLUDED WITH ITEM 517 - RAILING (CONCRETE PARAPET WITH DOUBLE PIPE RAIL) FOR PAYMENT.

ITEM SPECIAL – DRILLED SHAFTS

DESCRIPTION

THIS ITEM SHALL CONSIST OF FURNISHING AND INSTALLING DRILLED SHAFTS OF THE TYPE AND SIZE SPECIFIED IN THE PLANS. THE CONTRACTOR SHALL FURNISH ALL LABOR, MATERIAL, AND APPURTENANCES REQUIRED TO COMPLETE THE WORK AS SPECIFIED. THE LENGTH(S) OF THE DRILLED SHAFTS SHOWN IN THESE PLANS HAS BEEN ESTIMATED FROM AVAILABLE SUBSURFACE INFORMATION. THE CONTRACTOR IS EXPECTED TO FURNISH THE PROPOSED DRILLED SHAFTS AS PER THESE PLAN REQUIREMENTS, WITH THE UNDERSTANDING THAT THE ACTUAL LENGTH REQUIRED BASED ON CONDITIONS ENCOUNTERED DURING CONSTRUCTION, MAY DIFFER FROM THE ESTIMATED LENGTH SHOWN IN THE PLANS.

THE LIMITS OF EACH DRILLED SHAFT SHALL BE DEFINED AT THE TOP BY THE PLAN ELEVATION AND AT THE BOTTOM BY THE ELEVATION OF THE BOTTOM OF THE BEDROCK SOCKET AS APPROVED BY THE ENGINEER.

A CASING WILL BE NECESSARY FOR THE CONSTRUCTION OF EACH PIER DRILLED SHAFT AND THE CASING SHALL BE LEFT IN PLACE. A CASING MAY BE NECESSARY FOR THE CONSTRUCTION OF EACH ABUTMENT DRILLED SHAFT. ABUTMENT DRILLED SHAFT CASINGS MAY BE REMOVED PROVIDED ALL PLAN REQUIREMENTS ARE SATISIFIED.

CONTRACTOR QUALIFICATION

THE CONTRACTOR SHALL SUBMIT INFORMATION TO THE ENGINEER TO DOCUMENT THAT HIS PERSONNEL ARE EXPERIENCED IN THE CONSTRUCTION OF DRILLED SHAFTS OF THE TYPE AND SIZE SPECIFIED ON THE PLANS. THIS INFORMATION SHALL BE SUBMITTED AT THE PRECONSTRUCTION CONFERENCE. THE PROJECT ENGINEER IS REQUESTED TO INFORM BUREAU OF BRIDGES. ATTENTION: FOUNDATION ENGINEER (TEL. 614-466-2399) OF THE DATES WHEN THE CONTRACTOR WILL BE CONSTRUCTING THE DRILLED SHAFTS.

CASING

THE CASINGS SHALL BE MADE OF STEEL, SHALL BE WATER TIGHT AND SHALL BE OF AMPLE STRENGTH TO WITHSTAND HANDLING STRESSES AND EXTERNAL SUBSURFACE PRESSURES. THE CASINGS SHALL BE SEATED INTO THE BEDROCK, THUS ATTEMPTING TO SEAL OUT INCOMING WATER. THE CASING LENGTH SHALL BE AS NECESSARY TO CONSTRUCT EACH DRILLED SHAFT.

THE DIAMETER OF THE FURNISHED CASING(S) SHALL BE LARGE ENOUGH TO ALLOW THE CONSTRUCTION OF A BEDROCK SOCKET WITH A DIAMETER EQUAL TO OR GREATER THAN THE PLAN DIAMETER.

EXCAVATION

WHEN OBJECTS SUCH AS LARGE BOULDERS ARE ENCOUNTERED, THEY SHALL BE REMOVED. BLASTING METHODS MAY BE USED, AND WHEN USED, SHALL BE CONDUCTED SO AS TO AVOID DISTURBANCE TO THE BEDROCK FORMATION BELOW AND OUTSIDE THE LIMITS OF THE PROPOSED DRILLED SHAFT EXCAVATIONS. THE DRILLED SHAFTS SHALL PENETRATE INTO SOLID BEDROCK TO A DEPTH THAT PROVIDES A BEDROCK SOCKET LENGTH THAT IS NOT LESS THAN THE BEDROCK SOCKET SHOWN IN THE PLANS. WHEN A CASING WHICH EXTENDS DOWN TO BEDROCK IS USED, THE BEDROCK SOCKET SHALL BE MEASURED FROM THE BOTTOM OF THE CASING TO THE BOTTOM OF THE DRILLED BEDROCK EXCAVATION. WHEN THE ENGINEER IS ASSURED THAT A PORTION OF THE METAL CASING IS EMBEDDED IN SOLID BEDROCK, UPON THE ENGINEER'S CONCURRENCE, THE EMBEDDED DISTANCE MAY BE INCLUDED AS PART OF THE BEDROCK SOCKET.

DEWATERING

THE CONTRACTOR SHALL BE RESPONSIBLE FOR CONTROLLING ANY INCOMING WATER TO THE EXTENT THAT THE SHAFT EXCAVATION IS MAINTAINED DRY ENOUGH FOR PERFORMANCE OF THE REQUIRED INSPECTION OPERATION. THE PREFERRED METHOD OF CONSTRUCTION IS TO PLACE THE CONCRETE IN A CLEAN, DRY EXCAVATION. THE CONTRACTOR IS EXPECTED TO MAKE A RESONABLE ATTEMPT TO SEAL WATER OUT OF THE DRILLED SHAFT EXCAVATION.

BOTTOM CLEANOUT

THE BOTTOM OF THE DRILLED SHAFT EXCAVATION SHALL BE AS CLEAN AS IS PRACTICABLE (NO MORE THAN ONE INCH OF LOOSE MATERIAL ON THE BOTTOM) PRIOR TO CONCRETE PLACEMENT. DRILLING SPOILS THAT ADHERE TO THE VERTICAL SIDES OF THE BEDROCK SOCKETS ARE TO BE REMOVED.

APPROVAL BEFORE CONCRETE PLACEMENT

THE CONTRACTOR SHALL SUBMIT TO THE PROJECT ENGINEER FOR APPROVAL A WRITTEN PLAN OF STEPS AND PROCEDURES HE PROPOSES TO FOLLOW WHEN PLACING AND MONITORING THE CONCRETE PLACEMENT. CONCRETE SHALL NOT BE PLACED IN ANY DRILLED SHAFT EXCAVATION WITHOUT PRIOR APPROVAL FROM THE ENGINEER. THE DRILLED SHAFT EXCAVATION SHALL BE INSPECTED IMMEDIATELY BEFORE THE CONCRETE IS PLACED. A LIGHT POWERFUL ENOUGH TO THOROUGHLY INSPECT THE SIDES, BOTTOM AND REINFORCING STEEL CAGE OF THE DRILLED SHAFT IS REQUIRED. CONCRETE SHALL NOT BE PLACED DURING INCLEMENT WEATHER CONDITIONS WHICH PREVENT A THOROUGH INSPECTION.

CONCRETE PLACEMENT

THE CONCRETE FOR THE DRILLED SHAFTS SHALL BE PLACED AS PER 511 EXCEPT AS MODIFIED BY THE PLANS. THE CONCRETE PLACEMENT OPERATION SHALL BE CONTINUOUS FROM START TO FINISH. IF THE DRILLED SHAFT HAS A BEDROCK SOCKET, THE CONCRETE FOR THE BEDROCK SOCKET SHALL PLACED AGAINST THE IN-SITU BEDROCK. THE CONCRETE FOR THE DRILLED SHAFT SHALL BE PLACED PROMPTLY AFTER THE FINAL INSPECTION OF THE SHAFT. IF PRACTICABLE, THE CONCRETE SHALL BE PLACED IN A CLEAN DRY EXCAVATION. CARE SHALL BE TAKEN TO ENSURE THAT CONCRETE IS NOT BEING PLACED IN MOVING WATER. THE CONCRETE CAN BE PLACED IN A DRY DRILLED SHAFT EXCAVATION BY THE FREE FALL METHOD PROVIDED THE CONCRETE FALLS TO ITS FINAL POSITION THROUGH AIR WITHOUT STRIKING THE SIDES OF THE HOLE, THE REINFORCING STEEL CAGE, OR ANY OTHER OBSTRUCTION. THE FREE FALL METHOD ALLOWS THE CONCRETE TO BE DROPPED FROM THE TOP THROUGH A CENTERING CHUTE TO THE CONCRETE'S FINAL POSITION.

IF THE ENGINEER DETERMINES THAT DEWATERING IS NOT PRACTICABLE, THE CONTRACTOR WILL BE GIVEN PERMISSION TO PLACE THE CONCRETE UNDER WATER. THE DRILLED SHAFT EXCAVATION SHALL BE FILLED WITH WATER TO SUCH A DEPTH THAT ALL WATER MOTION HAS CEASED. THE CONCRETE SHALL THEN BE PLACED BY MEANS OF A CONCRETE PUMP. THE CONCRETE PUMP PIPE SHALL HAVE A DIAMETER THAT IS NOT LESS THAN 4 INCHES. THE CONCRETE PUMP EQUIPMENT SHALL BE SO ARRANGED THAT NO VIBRATIONS RESULT WHICH MIGHT DAMAGE FRESH CONCRETE. PIPES CARRYING CONCRETE FROM THE PUMP TO THE SHAFT SHOULD BE ARRANGED WITH A MINIMUM NUMBER OF BENDS. THE PIPE USED TO CONVEY THE CONCRETE TO THE BOTTOM OF THE DRILLED SHAFT EXCAVATION SHALL BE ANCHORED TO THE STEEL CASING TO PREVENT THE PIPE FROM UNDULATING DURING THE INITIAL PLACEMENT OF THE CONCRETE.

THE PUMPING EQUIPMENT SHALL BE SUITABLE IN KIND AND ADEQUATE IN CAPACITY FOR THE WORK REQUIRED. THE USE OF ALUMINUM PIPE AS A CONVEYANCE FOR THE CONCRETE WILL NOT BE PERMITTED. AN ADEQUATE QUANTITY OF GROUT, MORTAR OR CONCRETE WITH COARSE AGGREGATE OMITTED SHALL BE PUMPED THROUGH THE EQUIPMENT AHEAD OF THE SPECIFICATION CONCRETE TO PROVIDE LUBRICATION TO THE PUMPING SYSTEM. THE CONCRETE USED FOR LUBRICATION SHALL NOT BE PLACED IN THE SHAFT. THE LUBRICATION PROCESS WILL NOT BE REPEATED AS LONG AS THE PUMPING OPERATIONS ARE CONTINUOUS. THE OPERATION OF THE PUMP SHALL BE SUCH THAT A CONTINUOUS STREAM OF CONCRETE WITHOUT AIR POCKETS IS PRODUCED. IN ORDER TO PREVENT THE CONTAMINATION OF THE CONCRETE PLACED INITIALLY AT THE BOTTOM OF SHAFT, THE OUTLET END OF THE PUMPING PIPE SHALL BE SEALED WITH A DIAPHRAGM OR PLUG THAT IS FLUSHED OUT WHEN THE HYDROSTATIC PRESSURE FROM THE COLUMN OF CONCRETE EXCEEDS THAT OF THE WATER IN THE SHAFT. THE INITIAL RATE OF CONRETE PLACEMENT MUST BE CAREFULLY CONTROLLED SO AS NOT TO LIFT OR DISPLACE THE CAGE OF REINFORCING STEEL. THE CONVEYING SYSTEM SHALL BE WATER TIGHT AND THE OUTLET END SHALL ALWAYS REMAIN WELL BELOW THE TOP OF THE FRESHLY PLACED CONCRETE. THE PREFERRED CONCRETE PLACEMENT PROCEDURE IS TO MAINTAIN THE OUTLET END OF THE PUMPING SYSTEM AT APPROXIMATELY 10 FEET BELOW THE TOP OF THE FRESH CONCRETE. WHEN THE CONCRETE REACHES THE TOP OF THE DRILLED SHAFT COLUMN ALL LAITANCE SHALL BE REMOVED.

TOLERANCES

THE CONTRACTOR SHALL LOCATE AND CONSTRUCT THE TOP CENTER OF THE PIER DRILLED SHAFTS WITHIN A TWO-INCH RADIUS OF THE POSITION INDICATED BY THE PLANS. THE SHAFTS ARE TO BE INSTALLED VERTICALLY AND MUST BE WITHIN 1.0 PERCENT OF PLUMB FOR THE TOTAL LENGTH OF THE DRILLED SHAFT.

THE TOP CENTER OF THE ABUTMENT DRILLED SHAFTS SHALL BE LOCATED WITHIN A 3 INCH RADIUS OF THE POSITION INDICATED BY THE PLANS. THE ABUTMENT VERTICAL DRILLED SHAFTS ARE TO BE INSTALLED WITHIN 2.0 PERCENT OF PLUMB FOR THE TOTAL LENGTH OF THE DRILLED SHAFT.

CONCRETE

CONCRETE FOR ALL DRILLED SHAFTS SHALL BE CLASS S CONCRETE AND SHALL BE IN ACCORDANCE WITH ITEM 511, EXCEPT AS MODIFIED AND SUPPLEMENTED HEREIN. THE REQUIRED SLUMP IS SIX (6) INCHES, PLUS OR MINUS ONE-HALF (1/2) INCH. THE MAXIMUM WATER TO CEMENT RATIO SHALL BE 0.50 FOR CONCRETE PLACED UNDER WATER, THE REQUIREMENTS OF ADDING 10 PERCENT MORE CEMENT TO THE CONCRETE MIX SHALL BE WAIVED. THE MAXIMUM COARSE AGGREGATE SIZE SHALL BE LIMITED TO 3/8 INCH. THE TOP 2 TO 3 FEET OF CONCRETE IN THE DRILLED SHAFTS ARE REQUIRED TO BE VIBRATED. ONLY A MINIMAL VIBRATORY EFFORT IS NECESSARY. SPECIAL CARE SHALL BE TAKEN NOT TO OVER-VIBRATE THE DRILLED SHAFT CONCRETE.

NOTE: IF THE CASING IS REMOVED USING A VIBRATORY HAMMER NO OTHER VIBRATORY EFFORT IS NEEDED.

IF THE CASINGS FOR THE DRILLED SHAFTS ARE TO BE WITHDRAWN, THE CONCRETE SHALL NOT BE VIBRATED UNTIL THE CASING IS COMPLETELY REMOVED AND THE SHAFT TOP IS FORMED TO THE PLAN CROSS-SECTION. CARE SHALL BE TAKEN WHEN REMOVING THE CASING SO THAT THE REINFORCING STEEL CAGE IS NOT DEFORMED BY THE FORCE OF THE DOWNWARD FLOWING CONCRETE. THE CONTRACTOR SHALL FURNISH A PRECONSTRUCTED TOP FORM FOR USE IN ACCURATELY CONFINING THE CONCRETE AT THE TOP OF THE DRILLED SHAFT WHEN THE CASING IS REMOVED. THE TOP FORM SHALL BE NOT LESS THAN THREE FEET LONG.

REINFORCING STEEL

REINFORCING STEEL SHALL MEET THE REQUIREMENTS OF 509. THE REINFORCING STEEL SHALL BE GRADE 60. THE SPIRAL REINFORCING STEEL MAY BE PLAIN BARS ASTM A82 OR A615. THE REINFORCING STEEL CAGE SHALL BE COMPLETELY ASSEMBLED PRIOR TO PLACEMENT AND THE LENGTH SHALL BE AS NECESSARY TO CONSTRUCT EACH DRILLED SHAFT. SEE PLAN SHEETS FOR DETAILS OF REINFORCING STEEL. NOTE THAT THE LENGTHS PROVIDED IN THE REINFORCING STEEL LIST ARE ESTIMATED LENGTHS. THE REINFORCING STEEL SHOULD BE PLACED AT PLAN LOCATION. ALL REINFORCING STEEL SHALL BE EPOXY COATED.

SPACERS

CONCRETE SPACERS OR OTHER APPROVED NONCORROSIVE SPACING DEVICES SHALL BE USED AT SUFFICIENT INTERVALS (NEAR THE BOTTOM AND AT INTERVALS NOT EXCEEDING 10 FEET) TO INSURE CONCENTRIC SPACING FOR THE ENTIRE CAGE LENGTH. SPACERS SHALL BE CONSTRUCTED OF APPROVED MATERIAL EQUAL IN QUALITY AND DURABILITY TO THE CONCRETE SPECIFIED FOR THE SHAFT. THE SPACERS SHALL HAVE ADEQUATE DIMENSIONS TO INSURE A MINIMUM 3 INCH CLEAR SPACE BETWEEN THE OUTSIDE OF THE REINFORCING CAGE AND THE SIDE OF THE EXCAVATED HOLE. CYLINDRICAL CONCRETE FEET (BOTTOM SUPPORTS) SHALL BE PROVIDED TO INSURE THAT THE BOTTOM OF THE CAGE IS MAINTAINED THE PROPER DISTANCE ABOVE THE BASE.

INSPECTION

THE CONTRACTOR SHALL PROVIDE AND MAINTAIN SUITABLE MEANS FOR ACCESS AND SAFE DESCENT INTO ALL DRILLED SHAFT EXCAVATIONS THAT ARE PROTECTED BY A CASING AND HAVE A DIAMETER THAT IS LARGE ENOUGH TO ALLOW A PERSON TO SAFELY ENTER AND PERFORM THE REQUIRED INSPECTION. ACCESS MAY BE PROVIDED BY A POSITIVE FORWARD AND REVERSE HYDRAULIC WINCH OR POWER-UP AND POWER-DOWN HOIST ON A CRANE. THE METHOD CHOSEN FOR ENTERING OR LEAVING THE SHAFT SHALL BE CONVINIENT, SAFE AND NOT UNCOMFORTABLE FOR THE USER. THE CONTRACTOR SHALL ALSO PROVIDE PROTECTIVE CLOTHING FOR THOSE MAKING AN INSPECTION OF THE SHAFT.

SMALL DIAMETER AND/OR UNCASED DRILLED SHAFT EXCAVATIONS SHALL BE INSPECTED AS THOROUGHLY AS PRACTICABLE.

AN INSPECTION RECORD CHART HAS BEEN INCLUDED WITH THE PLANS ON SHEET 6 OF 19 AND SHOULD BE COMPLETED BY THE ENGINEER. MEASUREMENTS SHOULD BE OBTAINED PRIOR TO PLACING CONCRETE. THE CONTACTOR SHOULD PROVIDE ALL NECESSARY EQUIPMENT NEEDED TO OBTAIN MEASUREMENTS FOR COMPLETING THE CHART. THE CONTRACTOR SHALL ASSIST THE ENGINEER IN OBTAINING THESE MEASUREMENTS. WHEN THE INSPECTION RECORD CHART IS COMPLETED, THE PROJECT ENGINEER SHOULD SUBMIT A COPY TO THE BUREAU OF BRIDGES: **ATTENTION: FOUNDATION ENGINEER.**

SAFETY PROVISIONS

THE CONTRACTOR SHALL HAVE AT THE JOB SITE ALL EQUIPMENT AND MATERIALS NEEDED TO PROVIDE SAFE CONSTRUCTION AND INSPECTION OF THE DRILLED SHAFTS AS REQUIRED BY CITY, STATE AND FEDERAL SAFETY REQUIREMENTS.

SAFETY PROVISIONS SHALL INCLUDE, BUT NOT BE LIMITED TO THE REQUIREMENTS SPECIFIED BY THE PLANS, SPECIAL PROVISIONS, AND PROPOSAL.

THE CONTRACTOR SHALL PROVIDE CONTINUOUS SURVEILLANCE OF ALL PERSONS IN THE DRILLED SHAFT EXCAVATIONS. AT ALL TIMES WHEN A PERSON IS IN THE DRILLED SHAFT EXCAVATION, PROVISIONS SHALL BE MADE FOR PUMPING FRESH AIR TO SAID PERSON. ALL LIGHTING SHALL BE WITH ELECTRICAL LIGHTS. MECHANICAL EQUIPMENT USED INSIDE THE SHAFTS SHALL BE OPERATED BY AIR OR ELECTRICITY. THE USE OF GASOLINE ENGINES OR OTHER TYPES OF EQUIPMENT PRODUCING FUMES THAT MAY ENTER THE EXCAVATION WILL NOT BE PERMITTED. THE CONTRACTOR SHALL PROVIDE GAS DETECTION AND OXYGEN ANALYZERS, AND SHALL TEST THE DRILLED SHAFT EXCAVATION ATMOSPHERE QUALITATIVELY THROUGHOUT THE COLUMN'S ENTIRE LENGTH AND ASSURE THAT THE QUANTITIES OF GASES AND OXYGEN PRESENT ARE IN SAFE AMOUNT AND SAFE PROPORTION PRIOR TO PERMITTING ANY PERSON TO ENTER THE SHAFT.

METHOD OF MEASUREMENT

THE TOTAL PAY LENGTH OF EACH DRILLED SHAFT SHALL BE THE COMPLETED AND ACCEPTED LENGTH, MEASURED ALONG THE AXIS OF THE DRILLED SHAFT FROM THE BOTTOM OF THE BEDROCK SOCKET TO THE PROPOSED TOP ELEVATION, AS PER PLAN.

THE TOTAL LENGTH OF EACH DRILLED SHAFT SHALL BE DIVIDED INTO TWO SEGMENTS. THE LENGTH OF THE LOWER SEGMENT IS THE LENGTH OF THE BEDROCK SOCKET AND THE LENGTH OF THE UPPER SEGMENT IS THE LENGTH OF THE DRILLED SHAFT ABOVE THE BEDROCK SOCKET. THE REINFORCING STEEL THAT PROJECTS FROM THE DRILLED SHAFT INTO THE PIER COLUMNS OR THE ABUTMENT FOOTING, AS SPECIFIED BY THE PLANS, SHALL BE INCLUDED WITH THE DRILLED SHAFT, ABOVE BEDROCK SOCKET, FOR PAYMENT BUT SHALL NOT BE INCLUDED IN THE MEASURED LENGTH OF THE DRILLED SHAFT.

BASIS OF PAYMENT

PAYMENT FOR FURNISHING AND INSTALLING DRILLED SHAFTS WILL BE MADE AT THE CONTRACT UNIT PRICE PER LINEAR FOOT OF ACCEPTED SHAFT LENGTH AS PER ITEM SPECIAL – "48" DIAMETER DRILLED SHAFTS ABOVE THE BEDROCK SOCKET" AND ITEM SPECIAL – "36" DIAMETER DRILLED SHAFTS IN BEDROCK" WHICH SHALL INCLUDE ALL LABOR, MATERIALS, AND EQUIPMENT NECESSARY TO COMPLETE THE ITEMS AS SPECIFIED.

DESIGN PARAMETERS

THE DESIGN LOAD TO BE SUPPORTED BY THE DRILLED SHAFTS ARE 157 TONS AT THE ABUTMENT AND 222 TONS AT THE PIER, WHICH ARE ASSUMED TO BE RESISTED BY SHAFT ADHESION WITHIN A PORTION OF THE BEDROCK SOCKET AND ALSO BY SHAFT END BEARING PRESSURE. THE ALLOWABLE BEDROCK SOCKET ADHESION IS ONE TON PER SQUARE FOOT WHICH IS ASSUMED TO ACT ALONG THE BOTTOM 2 FEET OF THE BEDROCK SOCKET, AT THE ABUTMENT AND THE BOTTOM 2 FEET OF THE BEDROCK SOCKFT AT THE PIER. THE ALLOWABLE DESIGN END BEARING PRESSURE IS 30 TONS PER SQUARE FOOT.

INSPECTION RECORD FOR DRILLED SHAFTS

PAULDING COUNTY PAU-127-10.19	OHIO	21/39
	FHWA REGION 5	
	FEDERAL PROJECT	

PROJECT NO. _ _ _ _ _

GENERAL CONTRACTOR _ _ _ _ _ _ _ _ _ _

DRILLED CONTRACTOR _ _ _ _ _ _ _ _ _ _

PROJECT ENGINEER _ _ _ _ _ _ _ _ _ _

TYPE AND MODEL OF DRILLING MACHINERY _ _ _ _ _ _ _ _

MAX. CONTINUOUS TORQUE _ _ _ _ _ _ _ _ _ _ _ FT.-LB.

CROWD (MAX. CONTINUOUS DOWNWARD FORCE) _ _ _ _ LBS.

TYPE OF CONCRETE PUMP _ _ _ _ _ _ _ _

HOSE DIAMETER _ _ _ _ _ _ _ _ INCHES

CAPACITY _ _ _ _ _ _ _ _ _ CU. FT./MIN.

COST PER LINEAL FOOT _ _ _ _ _ _ _ _

ABOVE THE BEDROCK SOCKET _ _ _ _ _ _

IN BEDROCK SOCKET _ _ _ _ _ _ _ _ _ _

TYPE OF ROCK _ _ _ _ _ _ _ _ _ _ _ _

SUBSTRUCTURE UNIT		DATE AND TIME OF DRILLING		APPROX. ELEVATION OF TOP OF OVER BURDEN	LENGTH OF DRILLED SHAFTS ABOVE THE BEDROCK SOCKET				OBSTRUCTIONS ENCOUNTERED			LENGTH OF DRILLED SHAFTS IN BEDROCK SOCKET			STEEL CASING			REINFORCING STEEL				CONCRETE					TOLERANCES				PLAN SHAFT DIAMETER (INCH)	CONSTRUCTED SHAFT DIAMETER (INCH)
																		VERTICAL		SPIRAL							DEVIATION FROM PLUMB		DEVIATION OF COLUMN TOP CENTER FROM PLAN LOCATION HORIZONTALLY (INCH)			
PIER OR ABUT	SHAFT NO.	STARTED DATE / TIME	FINISHED DATE / TIME		THROUGH AIR (FEET)	THROUGH WATER (FEET)	THROUGH OVER BURDEN (FEET)	PAY LENGTH (FEET)	NUMBER	SIZE (INCH)	ELAPSED TIME FOR REMOVAL (HR)	APPROX. ELEV. OF TOP OF BEDROCK	ELEV. OF BOTTOM OF BEDROCK SOCKET	LENGTH OF BEDROCK SOCKET (FEET)	LENGTH (FEET)	CASING GAUGE	WAS CASING LEFT IN PLACE?	BAR SIZE NO.	NO. OF REBARS	BAR SIZE NO.	PITCH (INCH)	SLUMP TEST RESULT (INCH)	CYLINDER STRENGTH f'c (P.S.I.)	AIR TEMP (F)	TIME NEEDED TO PLACE CONCRETE (HR.)	QUANTITY (CU.YD.)	N-S (INCH)	E-W (INCH)				

PAULDING COUNTY PAU-127-10.19	OHIO	22/39
	FHWA REGION 5	
	FEDERAL PROJECT	

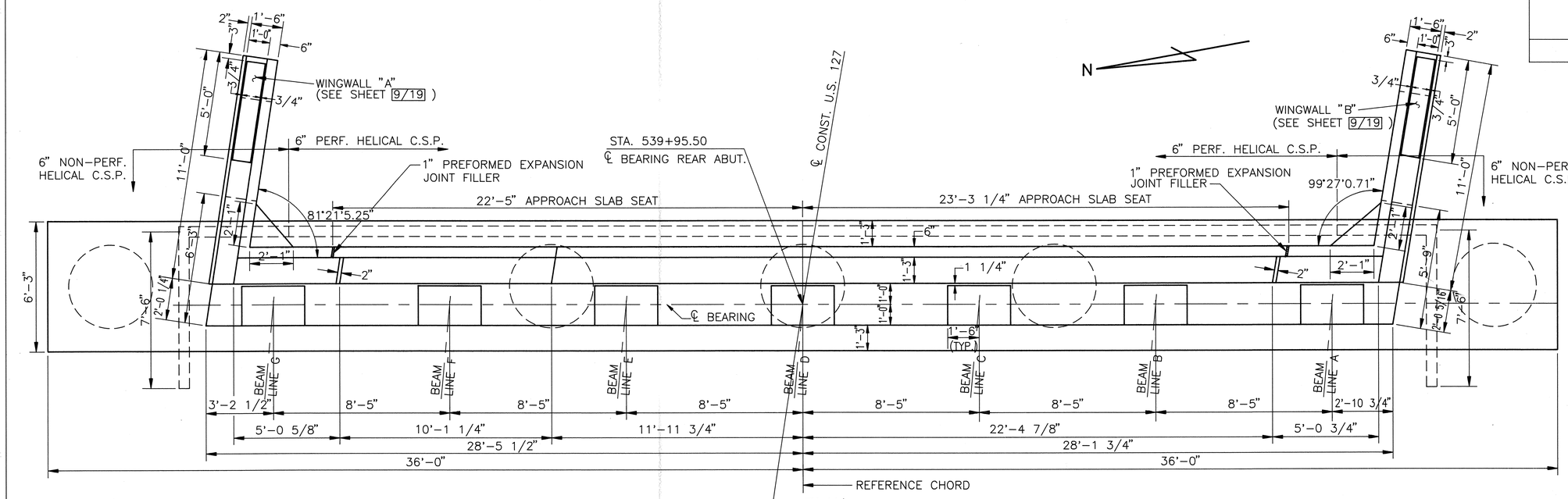

PLAN

APPROACH SLAB AND SIDEWALKS NOT SHOWN

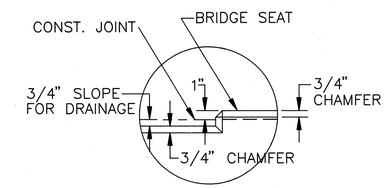

DETAIL X

NOTES:

BACKWALL CONCRETE: IN ADDITION TO THE PROVISIONS OF 511.08, BACKWALL CONCRETE ABOVE THE OPTIONAL CONSTUCTION JOINT AT THE APPROACH SLAB SEAT SHALL NOT BE PLACED UNTIL AFTER THE DECK CONCRETE IN SPAN ADJACENT TO THE ABUTMENT HAS BEEN PLACED.

REINFORCING STEEL ABBREVIATIONS

N.F. – NEAR FACE
F.F. – FAR FACE
SPS – SPACES
C.S.P. – CORRUGATED STEEL PIPE

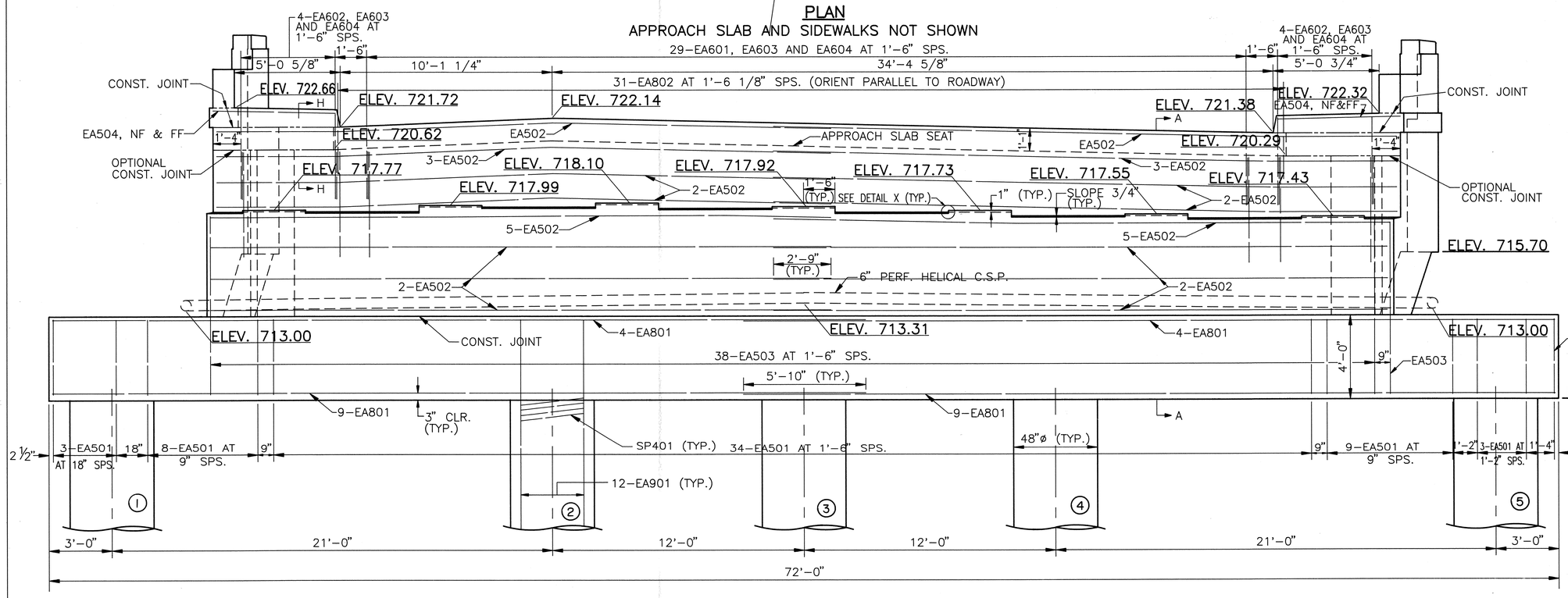

ELEVATION – REAR ABUTMENT

FOR SECTION A-A AND SECTION H-H, SEE SHEET 9/19

KOHLI AND KALIHER ASSOCIATES, INC. CONSULTING ENGINEERS AND SURVEYORS LIMA, OHIO

7/19

REAR ABUTMENT DETAILS

BRIDGE NO. PAU-127-1023
OVER FLATROCK CREEK
PAULDING COUNTY

DESIGNED	DRAWN	TRACED	CHECKED	REVIEWED	DATE	REVISED
D.G.B.	M.D.W.		M.A.D.	J.R.M.	5-4-93	

PAU–127–10.19 PAULDING COUNTY	OHIO	23/39
	FHWA REGION 5	
	FEDERAL PROJECT	

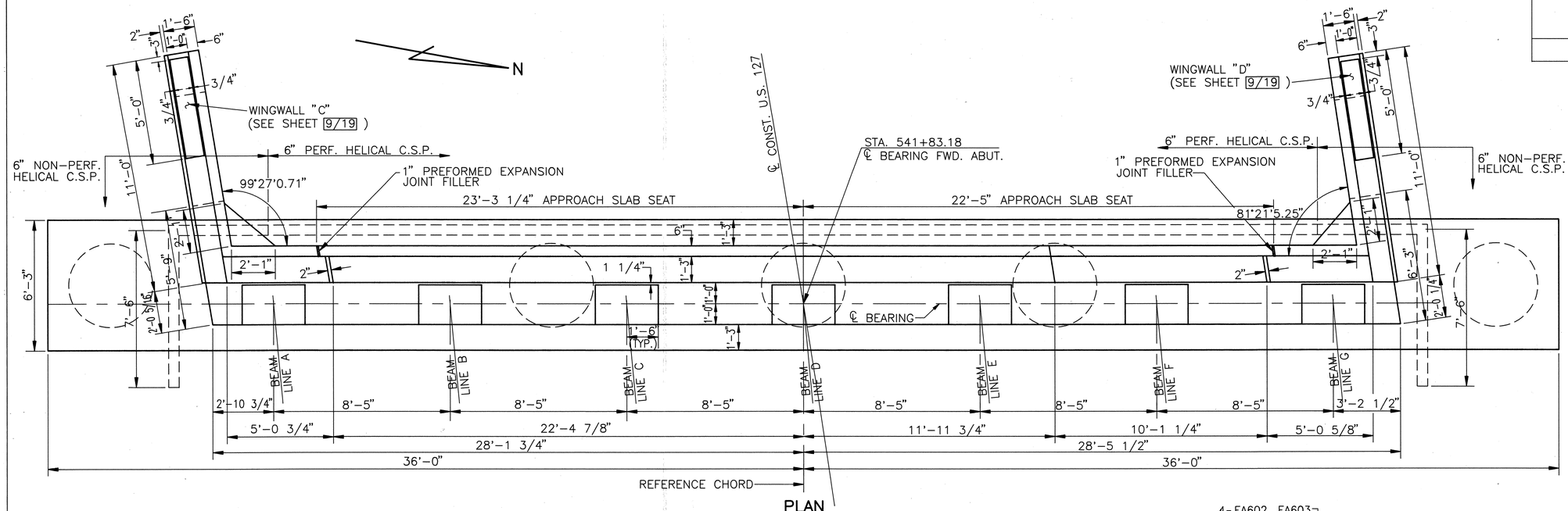

PLAN

APPROACH SLAB AND SIDEWALKS NOT SHOWN

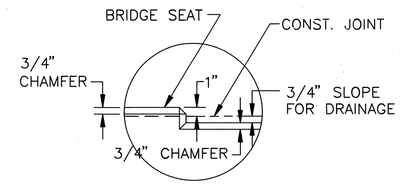

DETAIL X

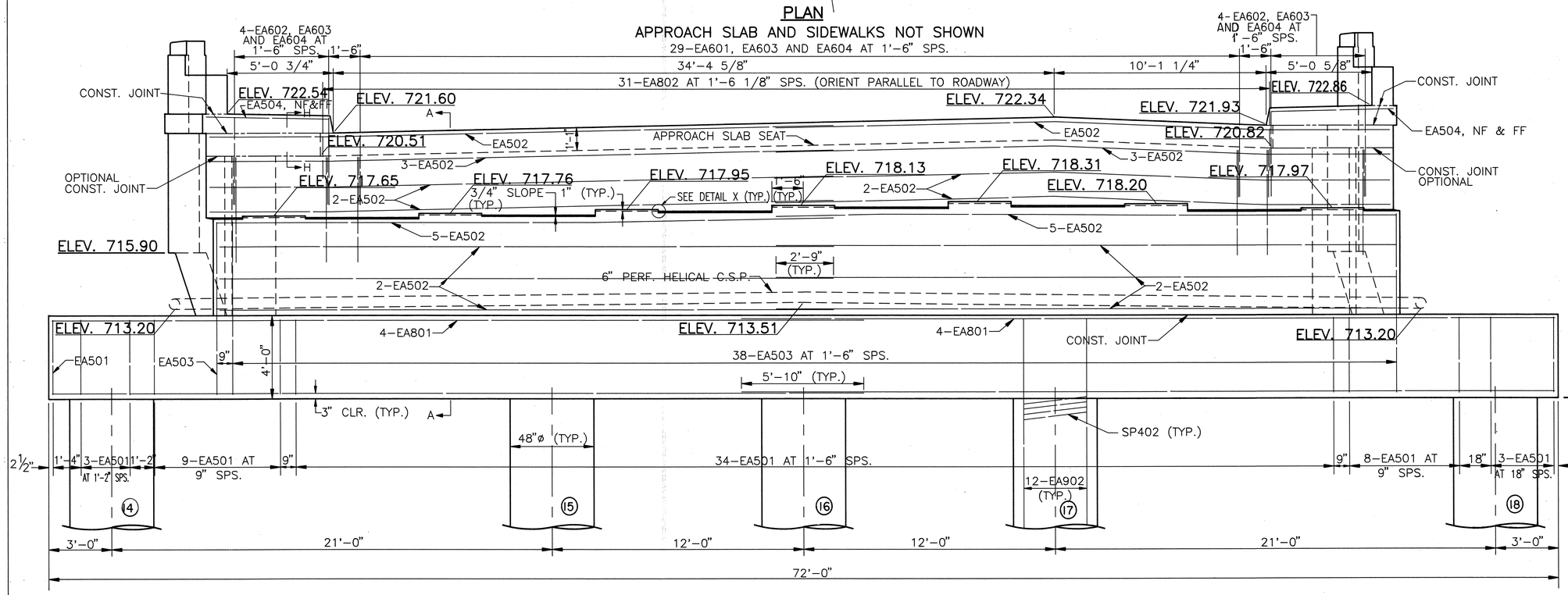

ELEVATION – FORWARD ABUTMENT

NOTES:

BACKWALL CONCRETE: IN ADDITION TO THE PROVISIONS OF 511.08, BACKWALL CONCRETE ABOVE THE OPTIONAL CONSTUCTION JOINT AT THE APPROACH SLAB SEAT SHALL NOT BE PLACED UNTIL AFTER THE DECK CONCRETE IN SPAN ADJACENT TO THE ABUTMENT HAS BEEN PLACED.

REINFORCING STEEL ABBREVIATIONS

N.F. – NEAR FACE
F.F. – FAR FACE
SPS – SPACES
C.S.P. – CORRUGATED STEEL PIPE

ITEM SPECIAL–DRILLED SHAFTS SEE SECTION A–A, SHEET 9/19

KOHLI AND KALIHER ASSOCIATES, INC. CONSULTING ENGINEERS AND SURVEYORS LIMA, OHIO

8/19

FORWARD ABUTMENT DETAILS

BRIDGE NO. PAU–127–1023 OVER FLATROCK CREEK PAULDING COUNTY

DESIGNED	DRAWN	TRACED	CHECKED	REVIEWED	DATE	REVISED
D.G.B.	M.D.W.		M.A.D.	J.R.M.	5–4–93	

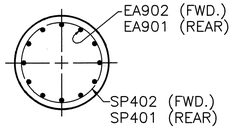

SECTION L-L

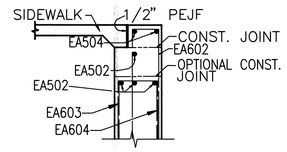

SECTION H-H

(SHEETS 7/19 AND 8/19)

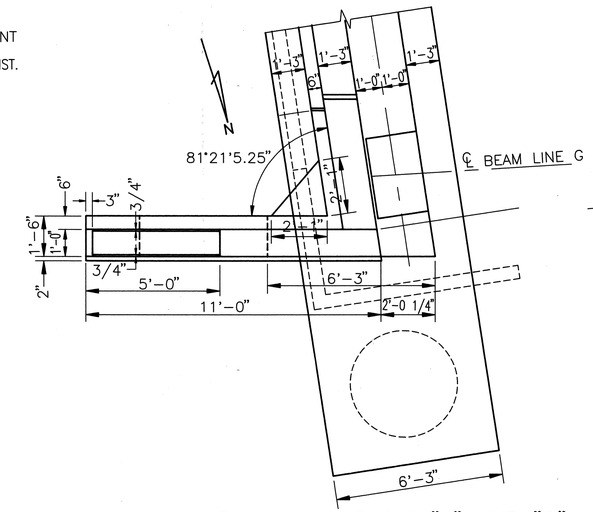

PLAN – WINGWALL "A" AND "D"

WINGWALL "A" IS SHOWN
WINGWALL "D" IS SYMMETRIC

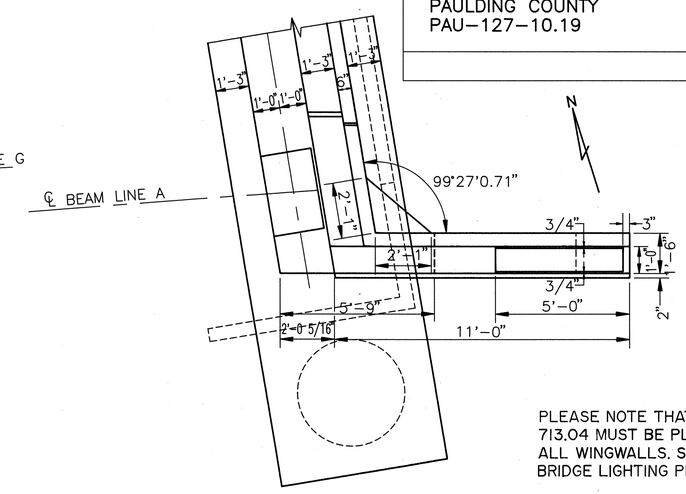

PLEASE NOTE THAT A 2" Ø CONDUIT 713.04 MUST BE PLACED THROUGH ALL WINGWALLS. SEE SHEET 35/39 BRIDGE LIGHTING PLAN.

PLAN – WINGWALL "B" AND "C"

WINGWALL "B" IS SHOWN
WINGWALL "C" IS SYMMETRIC

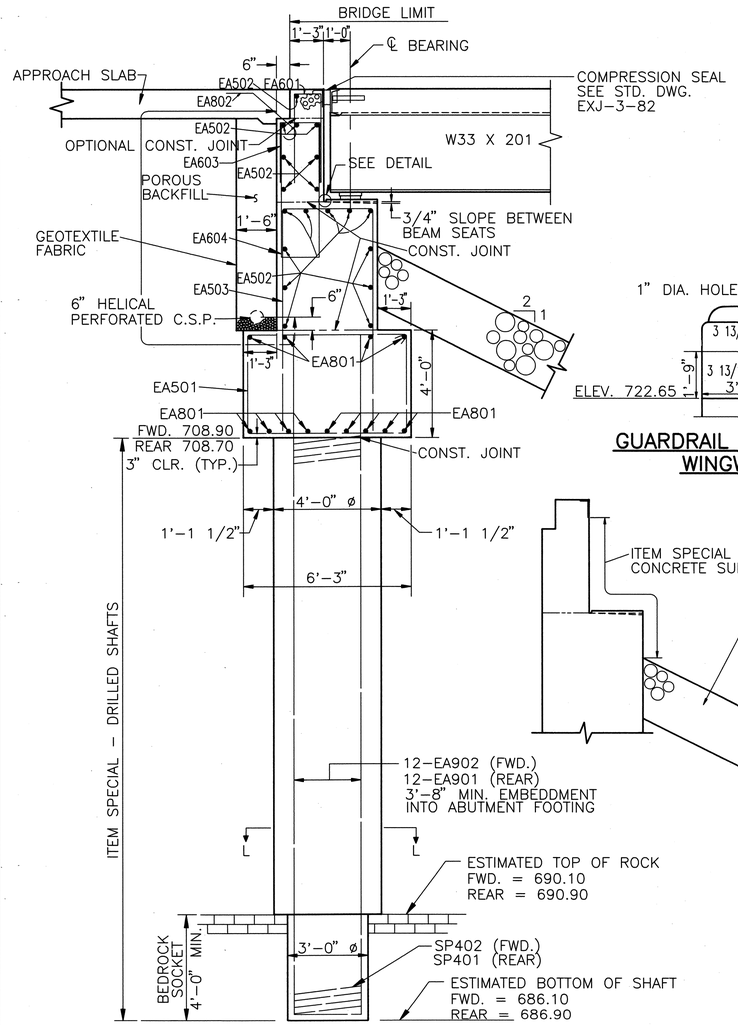

SECTION A-A

(SHEETS 7/19 AND 8/19)

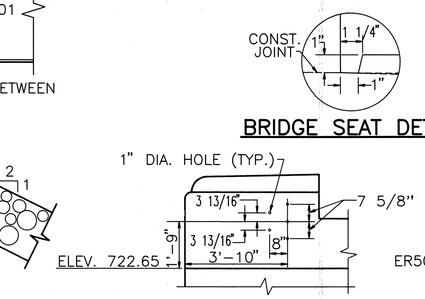

BRIDGE SEAT DETAIL

GUARDRAIL BOLT HOLE PATTERN WINGWALL "A" ONLY

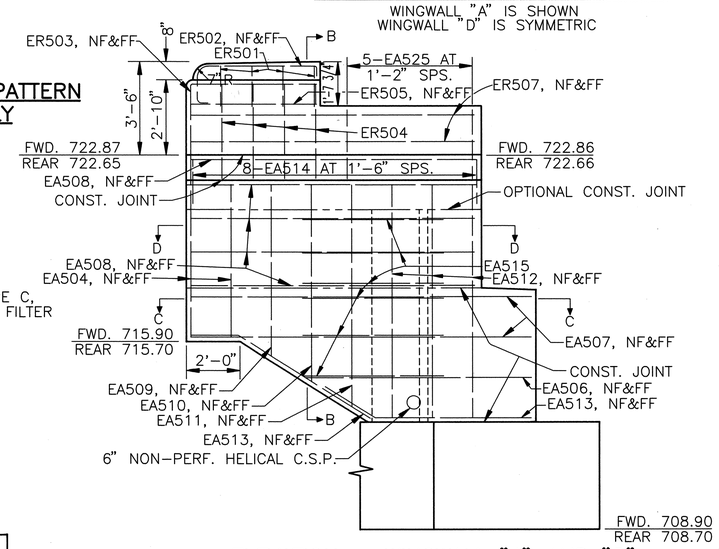

ELEVATION – WINGWALL "A" AND "D"

(FOR SECTION B-B, SECTION C-C, AND SECTION D-D, SEE SHEET 10/19 .)

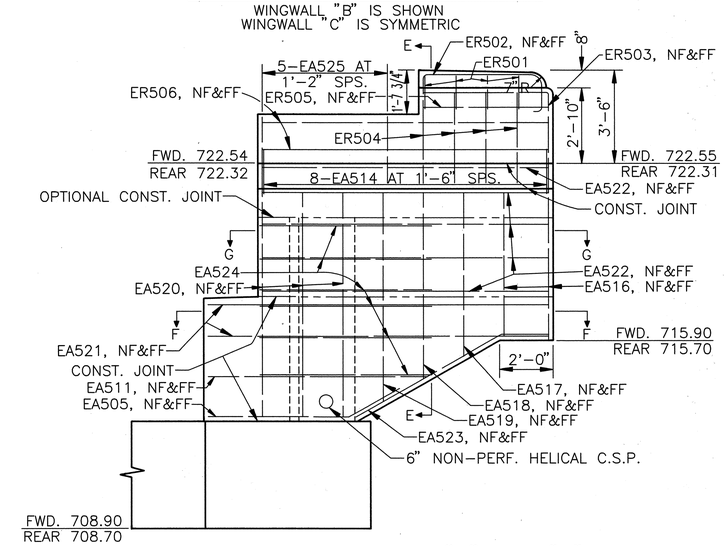

ELEVATION – WINGWALL "B" AND "C"

(FOR SECTION E-E, SECTION F-F, AND SECTION G-G, SEE SHEET 10/19 .)

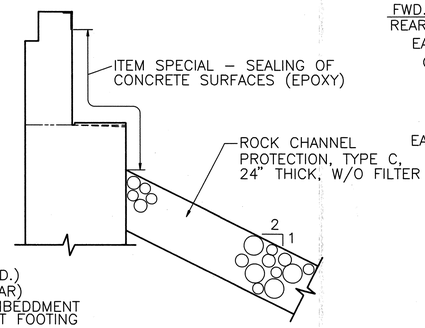

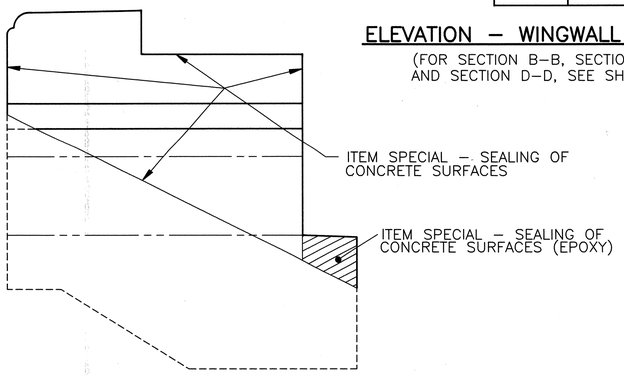

SEALING LIMITS

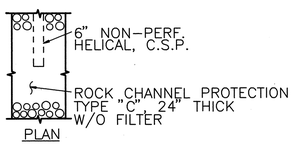

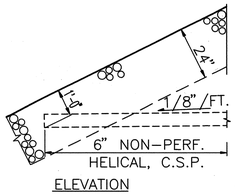

TERMINATION OF C.S.P. AT FRONT SLOPE

NOTES:

ABBREVIATIONS
N.F. – NEAR FACE
F.F. – FAR FACE
SPS. – SPACES
C.S.P.– CORRUGATED STEEL PIPE

BACKWALL CONCRETE: IN ADDITION TO THE PROVISIIONS OF 511.08, BACKWALL CONCRETE ABOVE THE OPTIONAL CONSTRUCTION JOINT AT THE APPROACH SLAB SEAT SHALL NOT BE PLACED UNTIL AFTER THE DECK CONCRETE IN THE SPAN ADJACENT TO THE ABUTMENT HAS BEEN PLACED.

KOHLI AND KALIHER ASSOCIATES, INC.
CONSULTING ENGINEERS AND SURVEYORS
LIMA, OHIO

9/19

REAR AND FORWARD ABUTMENT DETAILS
BRIDGE NO. PAU-127-1023
OVER FLAT ROCK CREEK
PAULDING COUNTY

DESIGNED	DRAWN	TRACED	CHECKED	REVIEWED	DATE	REVISED
D.G.B.	M.D.W.		M.A.D.	J.R.M.	5-4-93	

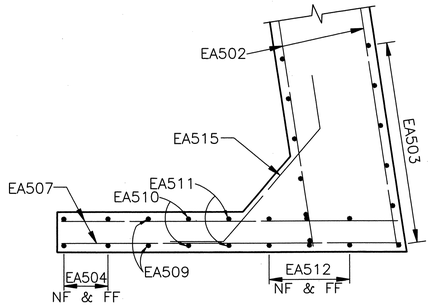

SECTION C-C
(SHEET 9/19)

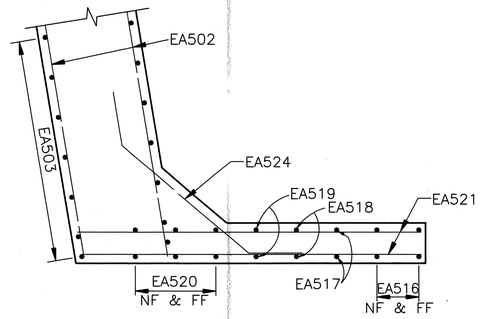

SECTION F-F
(SHEET 9/19)

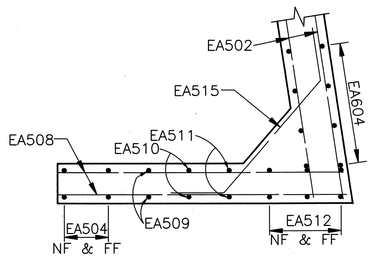

SECTION D-D
(SHEET 9/19)

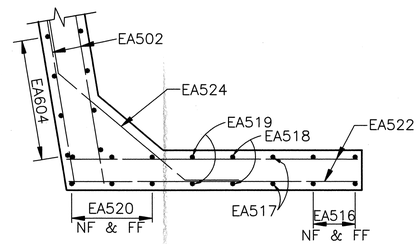

SECTION G-G
(SHEET 9/19)

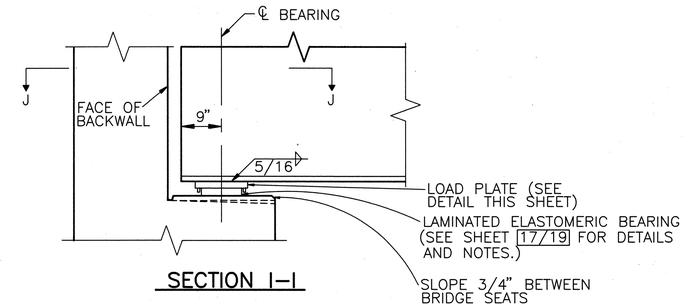

SECTION I-I

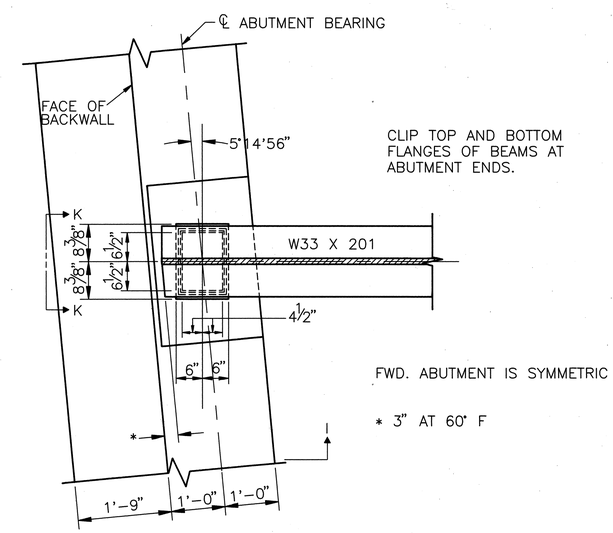

SECTION J-J
(SEE SECTION I-I)

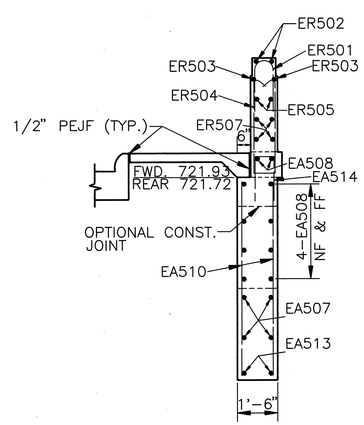

SECTION B-B
(SHEET 9/19)

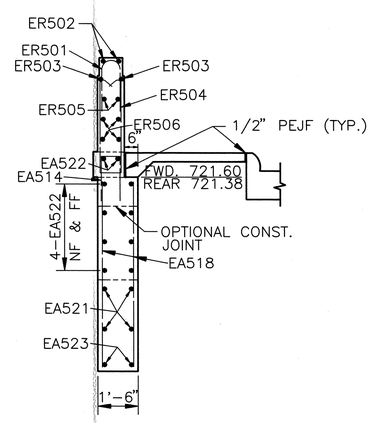

SECTION E-E
(SHEET 9/19)

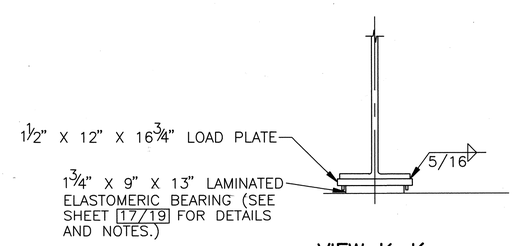

VIEW K-K

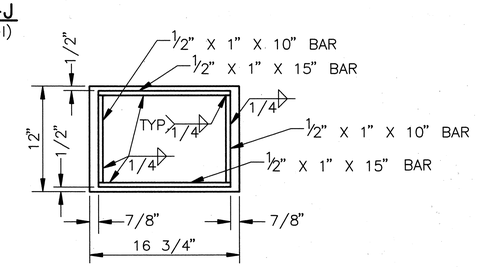

BOTTOM VIEW OF LOAD PLATE

REAR AND FORWARD ABUTMENT BEARING DETAILS

NOTES:

ABBREVIATIONS
N.F. – NEAR FACE
F.F. – FAR FACE
SPS. – SPACES

KOHLI AND KALIHER ASSOCIATES, INC.
CONSULTING ENGINEERS AND SURVEYORS
LIMA, OHIO

10/19

REAR AND FORWARD ABUTMENT DETAILS
BRIDGE NO. PAU-127-1023
OVER FLAT ROCK CREEK
PAULDING COUNTY

DESIGNED	DRAWN	TRACED	CHECKED	REVIEWED	DATE	REVISED
D.G.B.	M.D.W.		M.A.D.	J.R.M.	5-4-93	

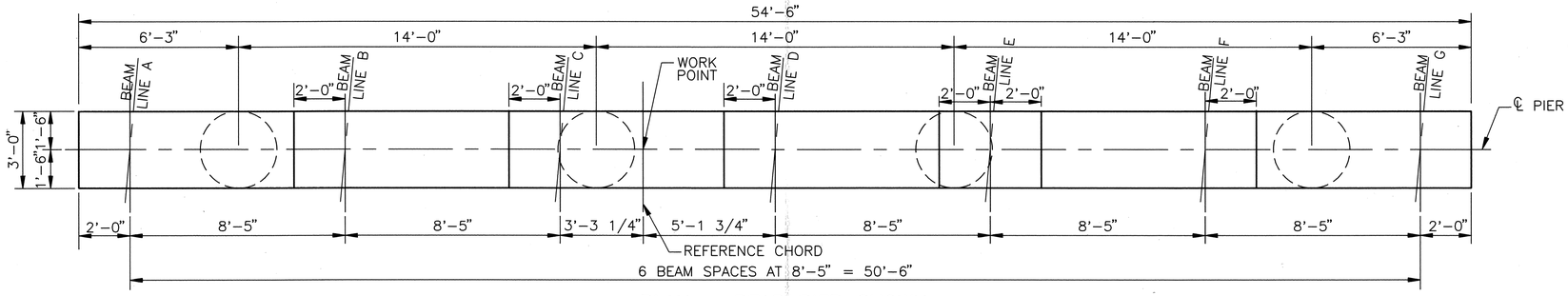

PLAN – REAR PIER SHOWN
FORWARD PIER SIMILAR

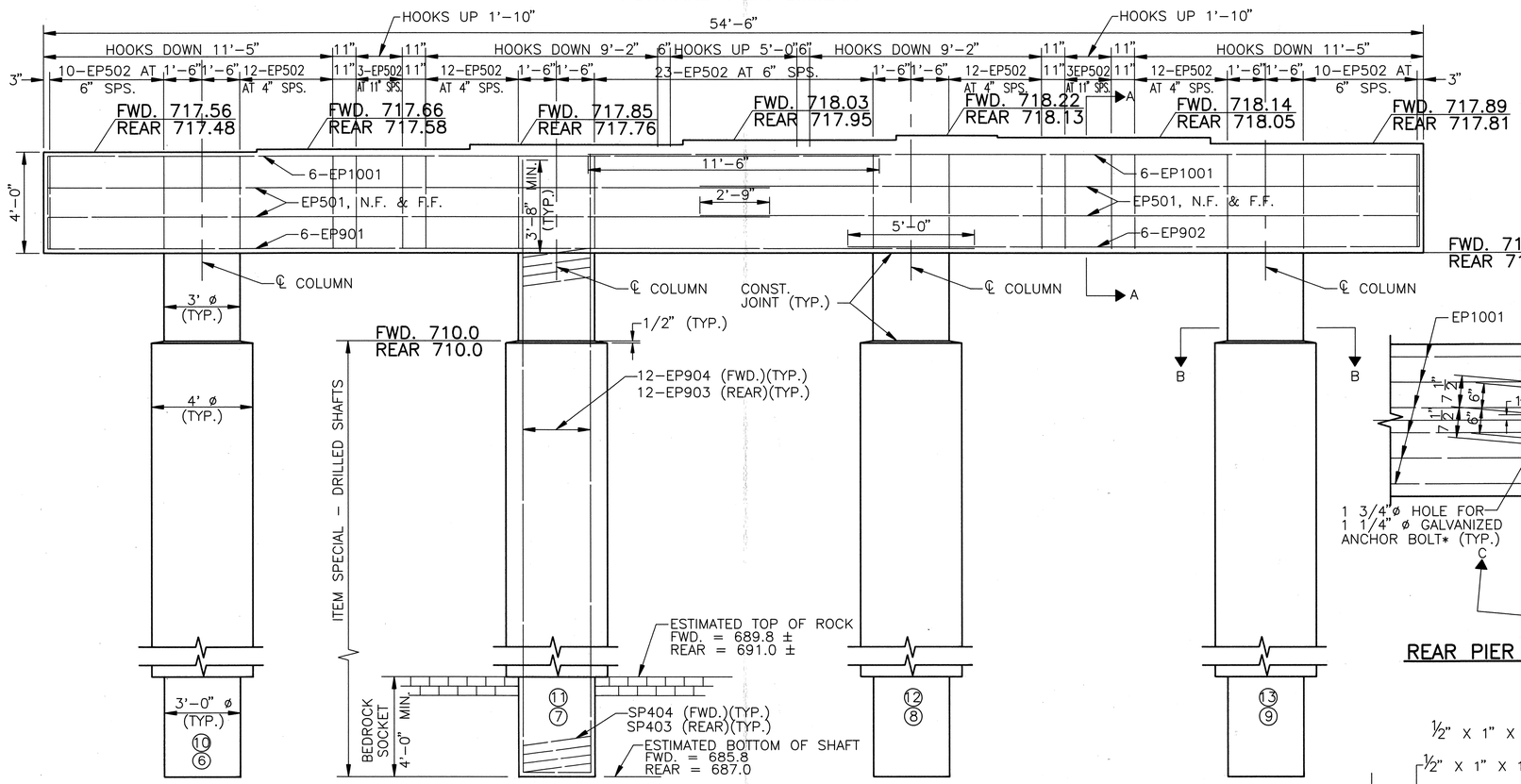

ELEVATION
DRILLED SHAFT NO. 10 THRU DRILLED SHAFT NO. 13 = FWD. PIER
DRILLED SHAFT NO. 6 THRU DRILLED SHAFT NO. 9 = REAR PIER

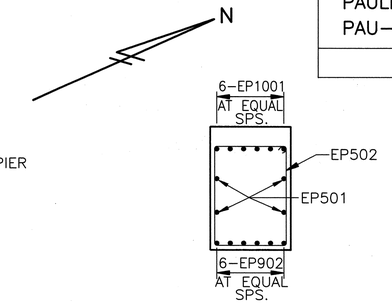

SECTION A–A

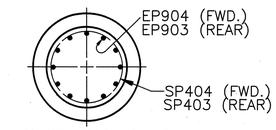

SECTION B–B

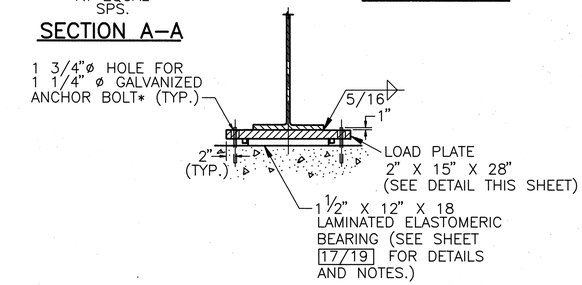

SECTION C–C

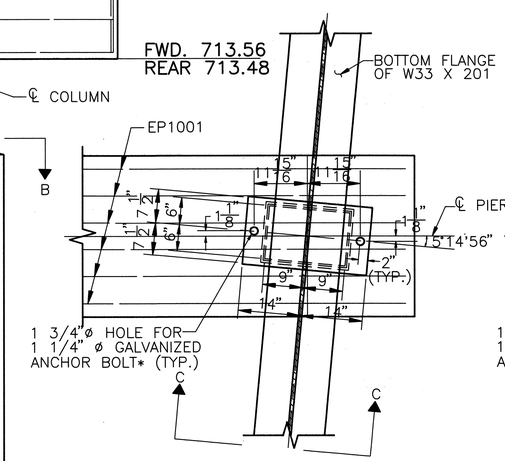

REAR PIER BEARING DETAILS

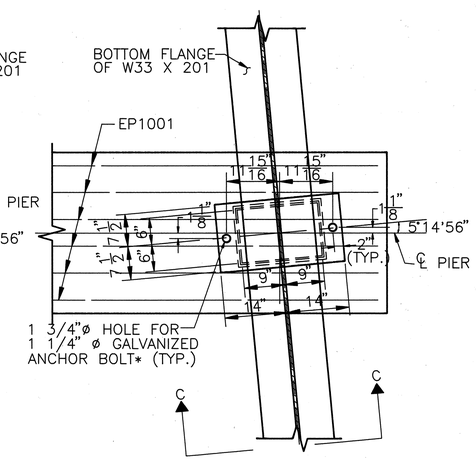

FORWARD PIER BEARING DETAILS

* – BEARING ANCHOR BOLTS SHALL BE 1 1/4"ø X 20" SWEDGE ANCHOR ROD, GALVANIZED ACCORDING TO 711.02, SET 1'-3" INTO CONCRETE. THE BEARING ANCHOR BOLTS SHALL BE INSTALLED PER 510. INCLUDE DOWEL HOLES AND ANCHOR RODS WITH ITEM 516 ELASTOMERIC BEARING FOR PAYMENT.

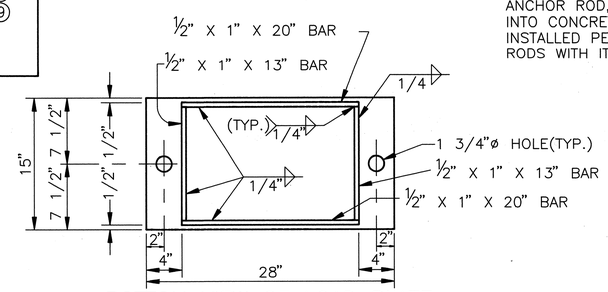

BOTTOM VIEW OF LOAD PLATE

NOTES:

BRIDGE SEAT REINFORCING
REINFORCING STEEL IN THE VICINITY OF THE BRIDGE SEAT SHALL BE ACCURATELY PLACED TO AVOID INTERFERENCE WITH THE DRILLING OF THE ANCHOR BAR HOLES.

REINFORCING STEEL ABBREVIATIONS
N.F. – NEAR FACE
F.F. – FAR FACE
SPS – SPACES

KOHLI AND KALIHER ASSOCIATES, INC.
CONSULTING ENGINEERS AND SURVEYORS
LIMA, OHIO
11/19

PIER DETAILS

BRIDGE NO. PAU-127-1023
OVER FLAT ROCK CREEK
PAULDING COUNTY

DESIGNED	DRAWN	TRACED	CHECKED	REVIEWED	DATE	REVISED
D.G.B.	M.D.W.		M.A.D.	J.R.M.	5-4-93	

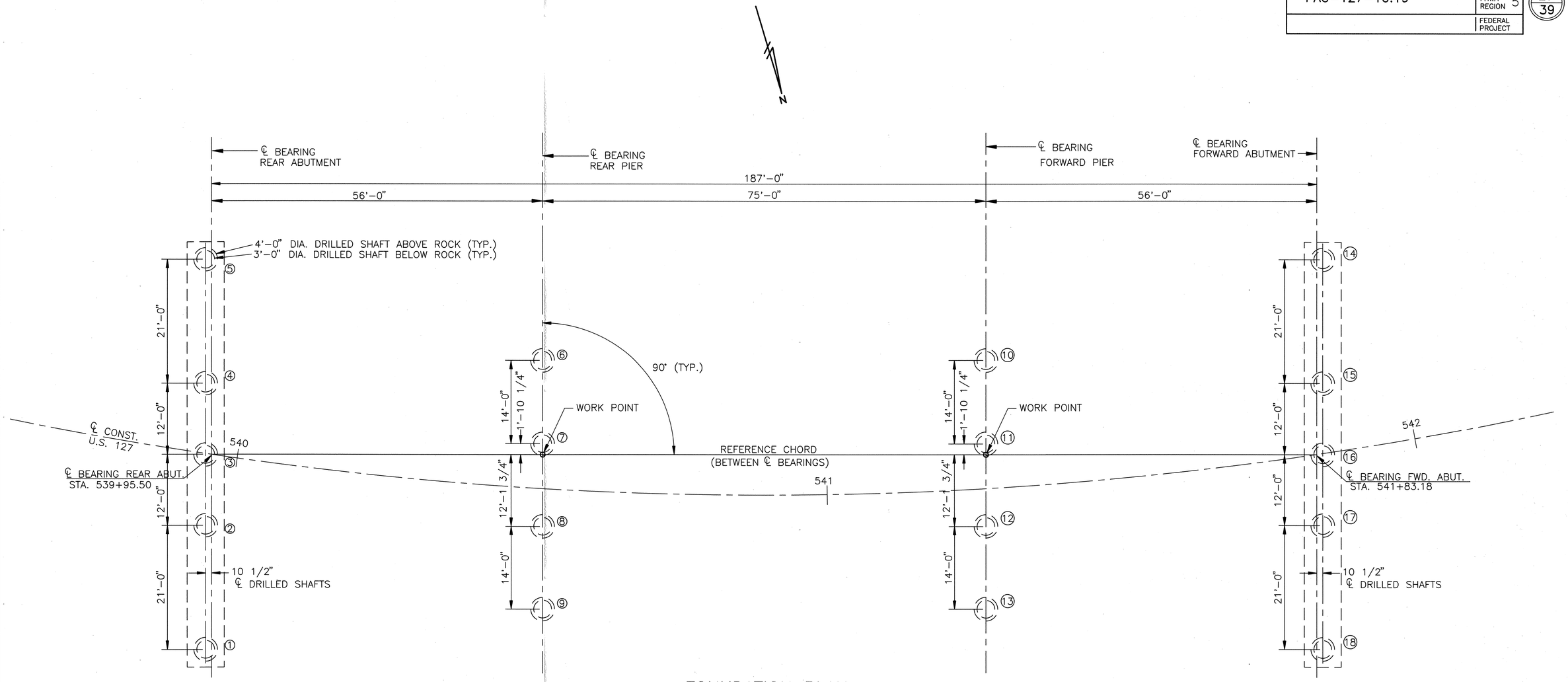

FOUNDATION PLAN

KOHLI & KALIHER ASSOCIATES, INC.
CONSULTING ENGINEERS AND SURVEYORS
LIMA, OHIO

12/19

FOUNDATION PLAN

BRIDGE NO. PAU-127-1023
OVER FLATROCK CREEK
PAULDING COUNTY

DESIGNED	DRAWN	TRACED	CHECKED	REVIEWED	DATE	REVISED
D.G.B.	M.D.W.		M.A.D.	J.R.M.	5-4-93	

PAULDING COUNTY	OHIO
PAU-127-10.19	FHWA REGION 5
	FEDERAL PROJECT

28/39

*NOTE: ALL CONSTRUCTION JOINTS ARE LEVEL TRANSVERSE TO ℄ OF ROADWAY.

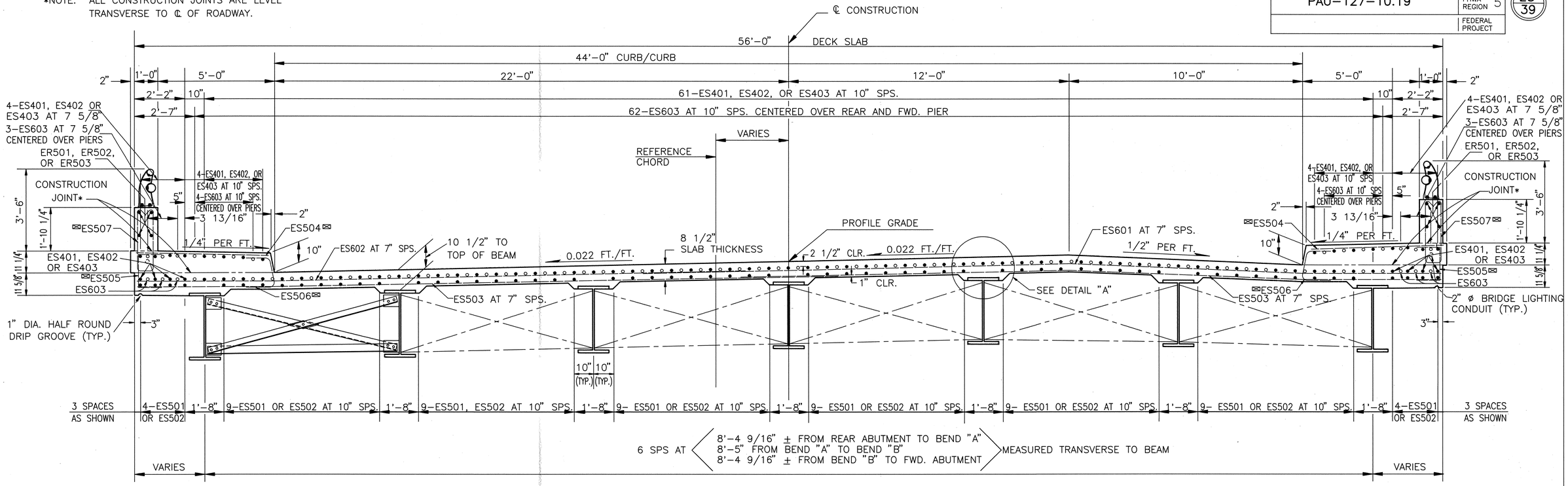

TYPICAL TRANSVERSE SECTION

ALL MEASUREMENTS ARE RADIAL UNLESS OTHERWISE NOTED.

⊠ SEE SHEET 15/19 FOR SPACING AND LOCATION OF REINFORCING STEEL.

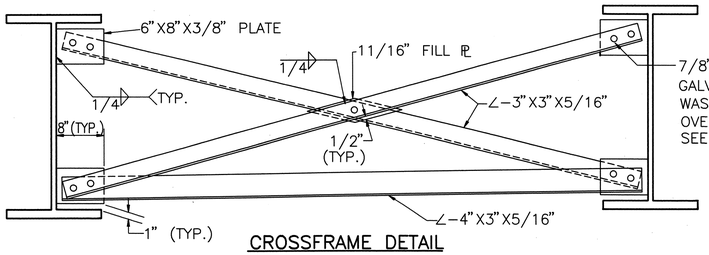

CROSSFRAME DETAIL

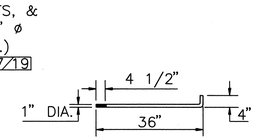

ANCHOR BOLT FOR SUPERSTRUCTURE

NOTE: FOR PARAPET DETAILS, SEE SHEETS 2/19 AND 5/19.
ANCHOR BOLTS INCLUDED WITH LIGHTING QUANTITIES, ROADWAY PLANS, FOR PAYMENT.

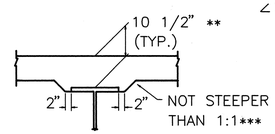

DETAIL "A"

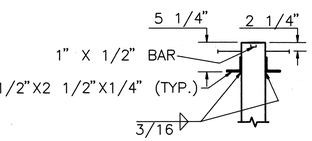

VIEW A-A

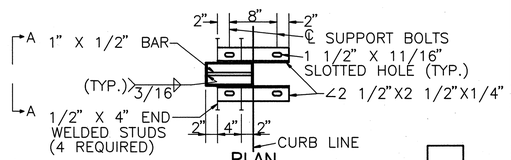

PLAN

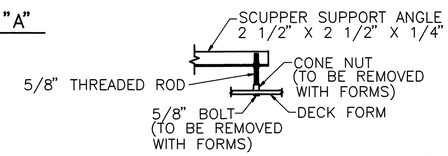

DETAIL C

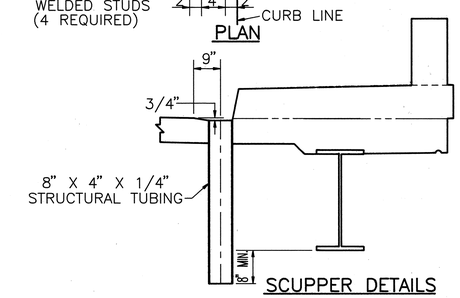

SCUPPER DETAILS

NOTE: SCUPPER SHALL BE GALVANIZED IN ACCORDANCE WITH CMS 711.02.

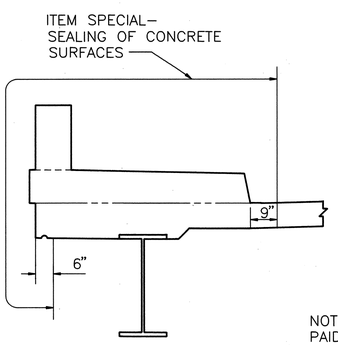

SEALING LIMITS (TYP.)

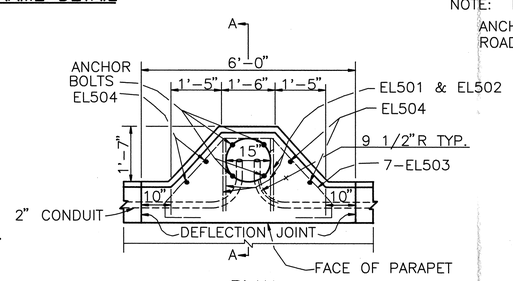

PLAN

PARAPET REINFORCEMENT NOT SHOWN

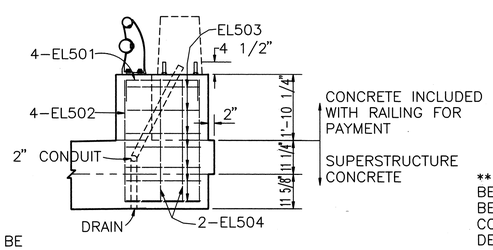

SECTION A-A

NOTE: ALL REINFORCING STEEL FOR THE LIGHT POLE BASES SHALL BE PAID FOR UNDER ITEM 509, EPOXY COATED REINFORCING STEEL.

THE CONTRACTOR WILL SUPPLY ALL CONDUIT WIRE, CONNECTORS, ETC. NECESSARY TO COMPLETE THE LIGHTING PORTION OF THIS PROJECT.

ALL CONDUITS INSTALLED SHALL BE STEEL AS PER 713.04.

REINFORCING STEEL ABBREVIATIONS
N.F. - NEAR FACE
F.F. - FAR FACE
SPS - SPACES

** - THIS IS THE DESIGN DIMENSION. THE QUANTITY OF DECK CONCRETE SHALL BE BASED ON THIS DIMENSION EVEN THOUGH DEVIATION FROM IT MAY BE NECESSARY BECAUSE THE TOP FLANGE OF THE BEAM MAY NOT HAVE THE EXACT CAMBER OR CONFORMATION REQUIRED TO PLACE IT PARALLEL TO THE FINISHED GRADE. NO DEDUCTION WILL BE MADE FOR THE VOLUME OF THE REINFORCING STEEL, CONDUITS OR STRUCTURAL STEEL OTHER THAN BEAM FLANGES EMBEDDED IN DECK SLABS.

*** - A HAUNCH WIDTH BASED ON A SLOPE OF 1:1 SHALL BE USED FOR COMPUTING QUANTITY OF CONCRETE. THE SLOPE OF THE HAUNCH MAY BE LESS AT THE CONTRACTOR'S OPTION.

KOHLI AND KALIHER ASSOCIATES, INC. CONSULTING ENGINEERS AND SURVEYORS LIMA, OHIO

13/19

SUPERSTRUCTURE DETAILS

BRIDGE NO. PAU-127-1023
OVER FLAT ROCK CREEK
PAULDING COUNTY

DESIGNED	DRAWN	TRACED	CHECKED	REVIEWED	DATE	REVISED
D.G.B.	T.L.M.		M.A.D.	J.R.M.	5-4-93	

PAULDING COUNTY PAU-127-10.19	OHIO FHWA REGION 5 FEDERAL PROJECT	29/39

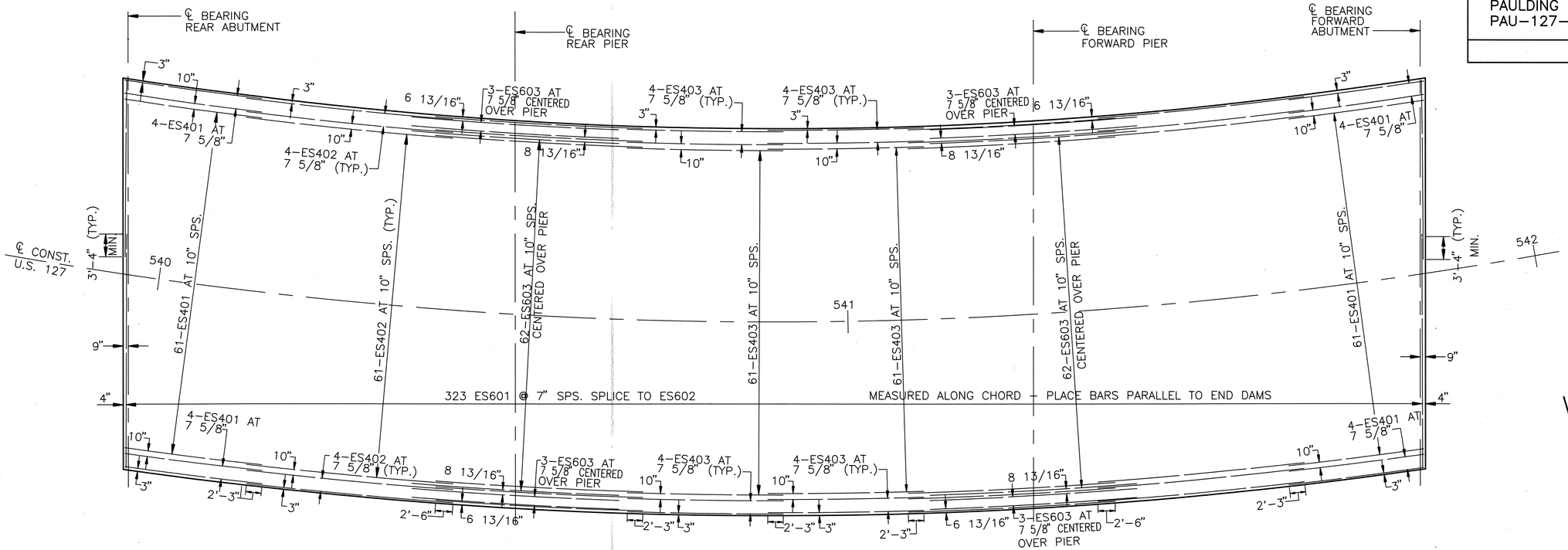

DECK REINFORCEMENT (TOP)

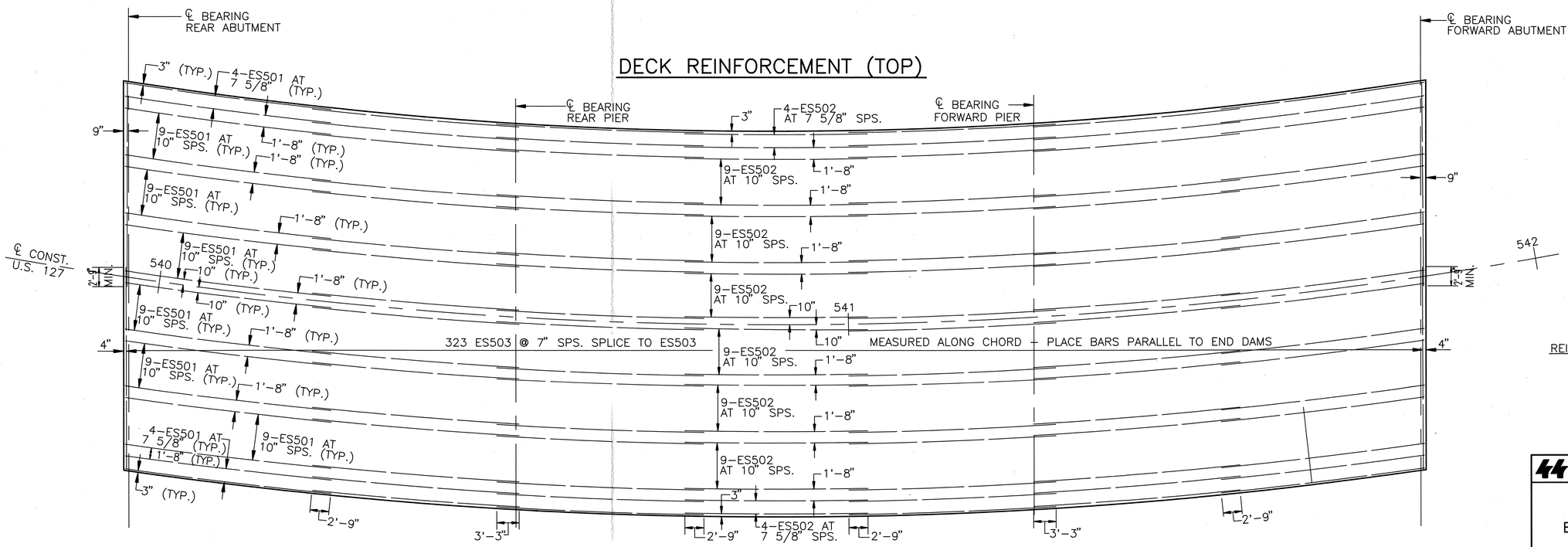

DECK REINFORCEMENT (BOTTOM)

REINFORCING STEEL ABBREVIATIONS
N.F. – NEAR FACE
F.F. – FAR FACE
SPS. – SPACES

KOHLI & KALIHER ASSOCIATES, INC.
CONSULTING ENGINEERS AND SURVEYORS
LIMA, OHIO

14/19

SUPERSTRUCTURE DETAILS

BRIDGE NO. PAU-127-1023
OVER FLATROCK CREEK
PAULDING COUNTY

DESIGNED	DRAWN	TRACED	CHECKED	REVIEWED	DATE	REVISED
D.G.B.	M.D.W.		M.A.D.	J.R.M.	5-4-93	

PAULDING COUNTY PAU-127-10.19	OHIO FHWA REGION 5 FEDERAL PROJECT	30/39

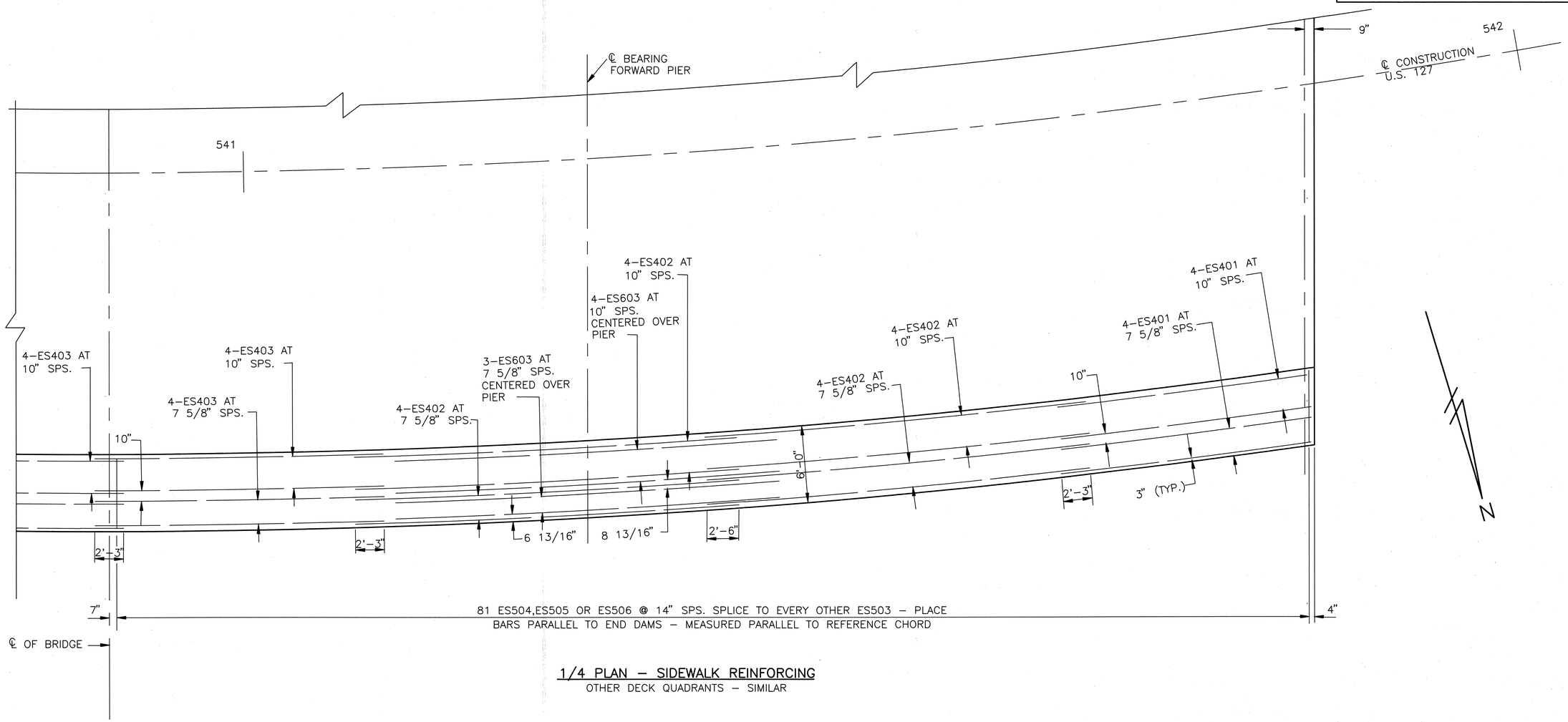

1/4 PLAN - SIDEWALK REINFORCING

OTHER DECK QUADRANTS - SIMILAR

REINFORCING STEEL ABBREVIATIONS
N.F. - NEAR FACE
F.F. - FAR FACE
SPS. - SPACES

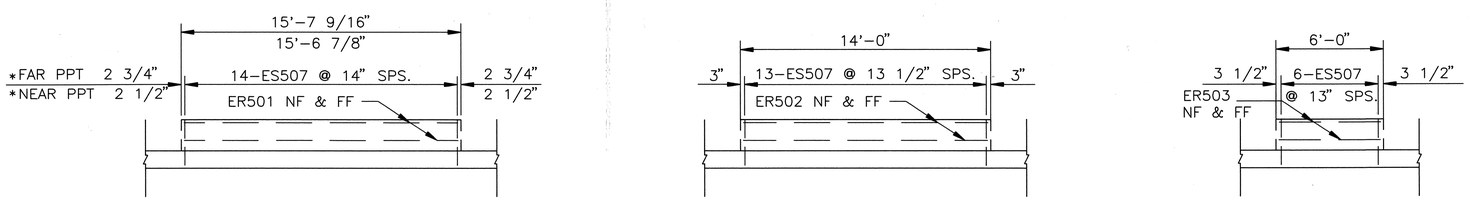

* SEE SHEET 2/19 FOR NEAR/FAR PARAPET LOCATION IDENTIFICATION

PARAPET REINFORCING

KOHLI & KALIHER ASSOCIATES, INC.
CONSULTING ENGINEERS AND SURVEYORS
LIMA, OHIO

15/19

SUPERSTRUCTURE DETAILS

BRIDGE NO. PAU-127-1023
OVER FLATROCK CREEK
PAULDING COUNTY

DESIGNED	DRAWN	TRACED	CHECKED	REVIEWED	DATE	REVISED
D.G.B.	T.L.M.		M.A.D.	J.R.M.	5-4-93	

PAULDING COUNTY PAU-127-10.19	OHIO	31/39
	FHWA REGION 5	
	FEDERAL PROJECT	

⊛ – DENOTES INTERMEDIATE CROSSFRAME (ADJACENT TO BEND-FIELD SPLICE), WITH AN ADDITIONAL HORIZONAL ANGLE NEAR TOP FLANGE OF GIRDER.

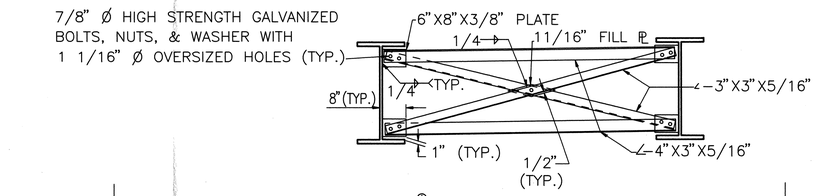

⊛ CROSSFRAME DETAIL

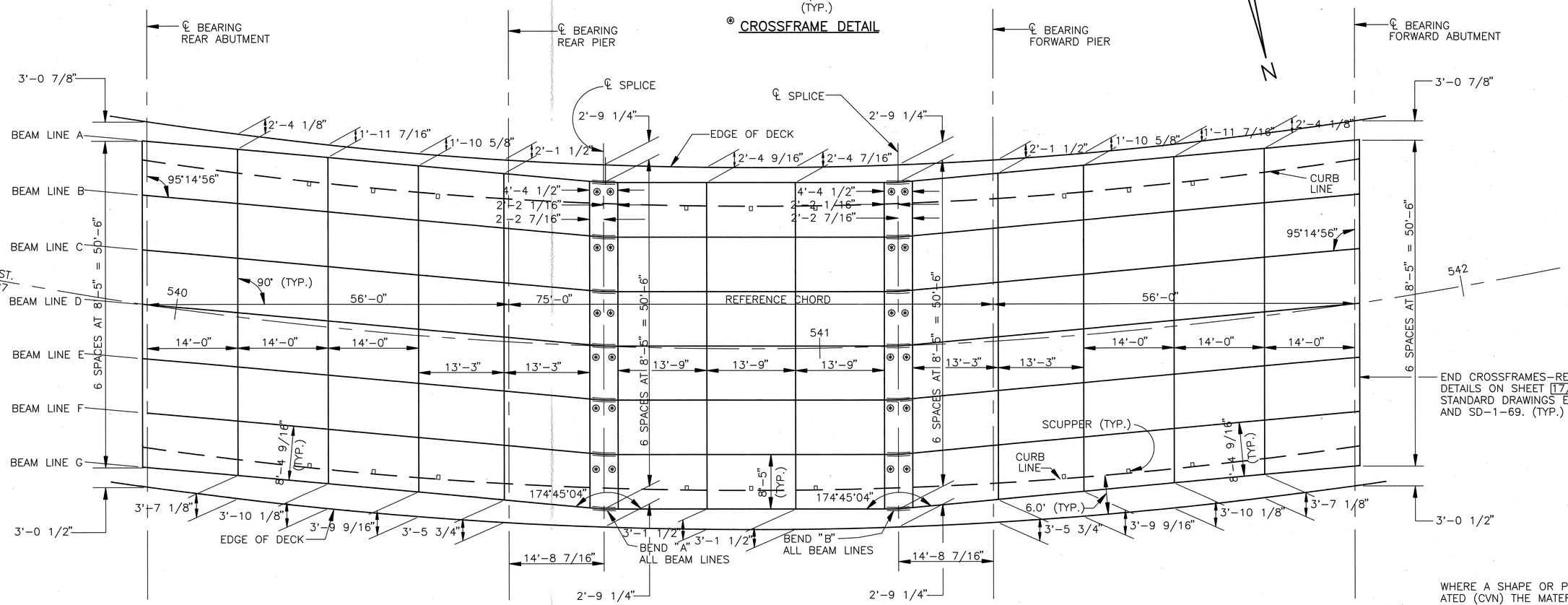

FRAMING PLAN

WHERE A SHAPE OR PLATE IS DESIGNATED (CVN) THE MATERIAL SHALL MEET SPECIFIED MINIMUM NOTCH TOUGHNESS REQUIREMENTS AS SPECIFIED IN 711.01 OF THE STATE OF OHIO CONSTRUCTION AND MATERIAL SPECIFICATIONS.

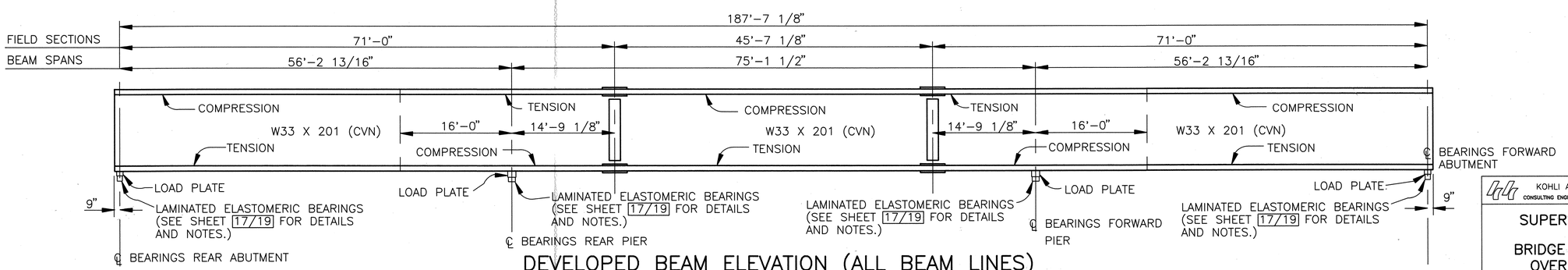

DEVELOPED BEAM ELEVATION (ALL BEAM LINES)

KOHLI AND KALIHER ASSOCIATES, INC. CONSULTING ENGINEERS AND SURVEYORS LIMA, OHIO — 16/19

SUPERSTRUCTURE DETAILS

BRIDGE NO. PAU-127-1023
OVER FLATROCK CREEK
PAULDING COUNTY

DESIGNED	DRAWN	TRACED	CHECKED	REVIEWED	DATE	REVISED
D.G.B.	M.D.W.		M.A.D.	J.R.M.	5-4-93	

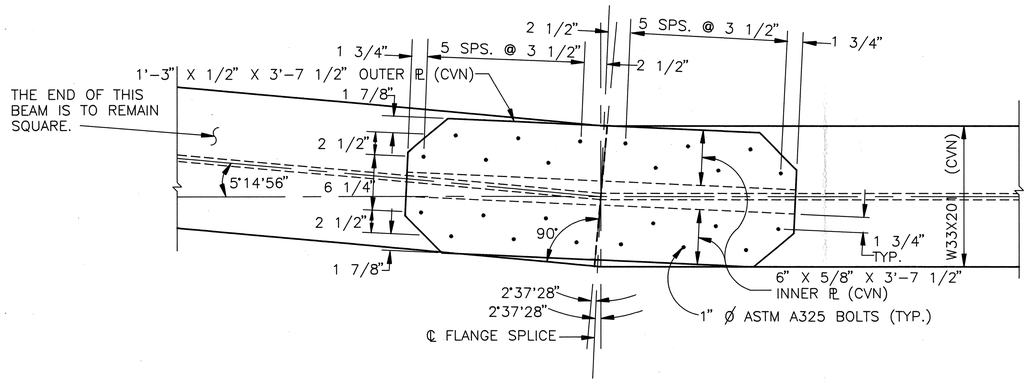

BOLTED FIELD SPLICE –BEND "A"

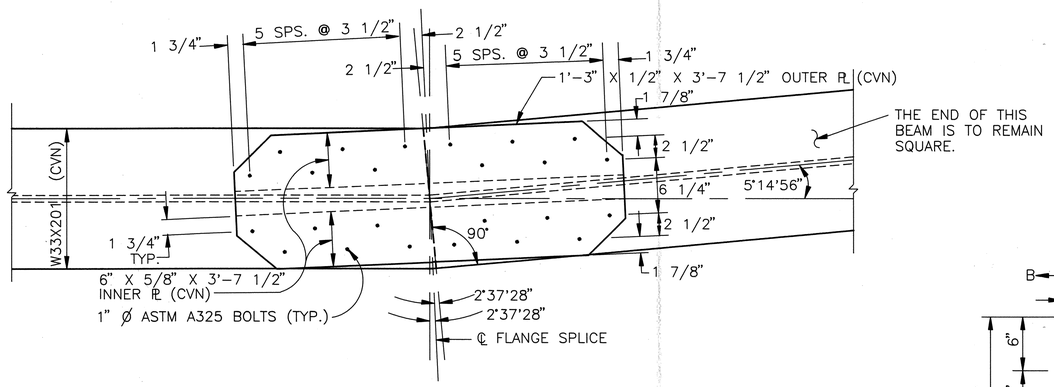

BOLTED FIELD SPLICE –BEND "B"

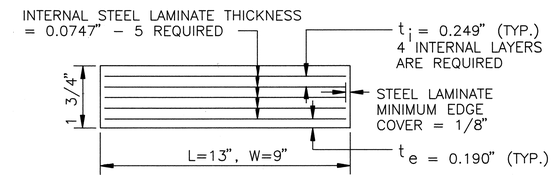

LAMINATED ELASTOMERIC EXPANSION BEARING
50 DUROMETER

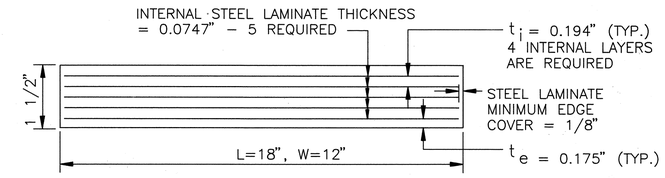

LAMINATED ELASTOMERIC FIXED BEARING
50 DUROMETER

REAR AND FORWARD ABUTMENT

DEAD LOAD REACTION	=	35.1 K
LIVE LOAD REACTION W/O IMPACT	=	71.7 K
MAXIMUM DESIGN LOAD	=	106.8 K

REAR AND FORWARD PIER

DEAD LOAD REACTION	=	128.0 K
LIVE LOAD REACTION W/O IMPACT	=	85.5 K
MAXIMUM DESIGN LOAD	=	213.5 K

ELASTOMERIC BEARINGS SHALL COMPLY WITH 516 AND ARTICLES 18.2.5 THROUGH 18.2.8 OF SECTION 18, BEARINGS DEVICES, DIVISION II, CONSTRUCTION, OF THE AASHTO STANDARD SPECIFICATIONS FOR HIGHWAY BRIDGES. BEARINGS SHALL BE GRADE 3, 50–DUROMETER ELASTOMER, AND SHALL BE SUBJECTED TO THE LOAD TESTING REQUIREMENTS CORRESPONDING TO DESIGN METHOD A. TESTING SHALL BE INCLUDED IN THE PRICE BID FOR THE BEARINGS.

BASIS OF PAYMENT: THE UNIT PRICE BID SHALL INCLUDE ALL MATERIALS, LABOR, AND INCIDENTALS NECESSARY TO FURNISH AND INSTALL LAMINATED ELASTOMERIC BEARINGS EITHER FIXED OR EXPANSION. PAYMENT WILL BE MADE AT THE CONTRACT PRICE FOR ITEM 516, EACH, LAMINATED ELASTOMERIC BEARINGS (12" X 18" X 1 1/2") OR (9" X 13" X 1 3/4").

BEARING POSITIONING: IF DECK CONCRETE IS PLACED AT AN AMBIENT TEMPERATURE HIGHER THAN 80°F OR LOWER THAN 40°F AND THE BEARING SHEAR DEFLECTION EXCEEDS ONE–SIXTH OF THE BEARING HEIGHT AT 60°F±, THE BEAMS SHALL BE RAISED TO ALLOW THE BEARINGS TO RETURN TO THEIR UNDEFORMED SHAPE AT 60°F± 10°.

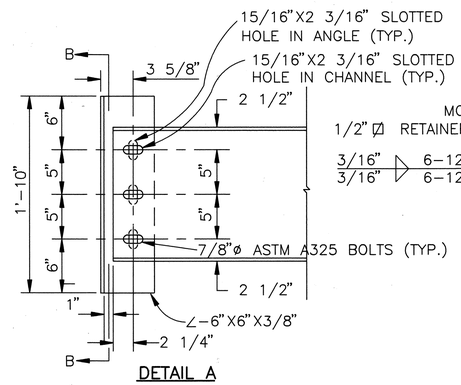

DETAIL A

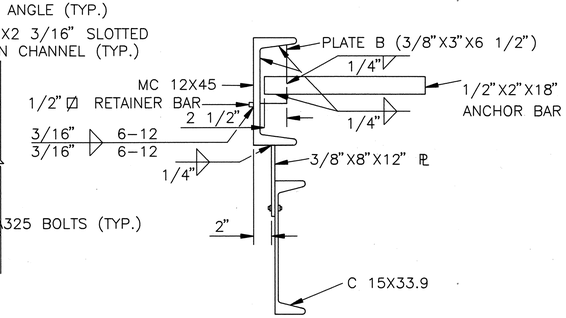

SECTION A–A

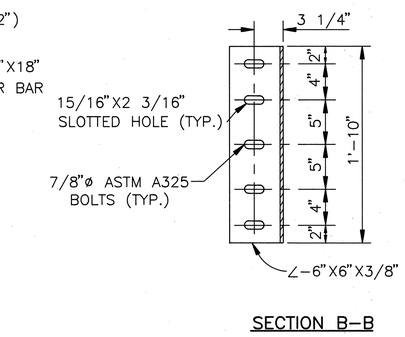

SECTION B–B

NOTE:
BOLTED BEAM SPLICES AND BOLTED CROSSFRAME CONNECTIONS SHALL COMPLY WITH STANDARD DRAWING SD–1–69, SHEET 4, WITH THE FOLLOWING EXCEPTIONS:
GRADE DH NUTS (ASTM A563) SHALL BE USED. PRIOR TO INSTALLATION THE THREADS OF THE NUTS SHALL BE LUBRICATED WITH MELTED BEESWAX OR MELTED COMMERCIAL WAX. ALL CONTACTING SURFACES OF BEAMS AND PLATES SHALL BE LIGHTLY SAND BLASTED OR WIRE BRUSHED PRIOR TO ASSEMBLY. THIS TREATMENT SHALL BE SUFFICIENT TO DULL THE NORMAL SHINY APPEARANCE OF THE GALVANIZING COATING, WITHOUT DOING DAMAGE TO THE CONTINUITY OF THE COATING. THE BOLTS SHALL BE TIGHTENED BY THE TURN–OF–NUT METHOD.

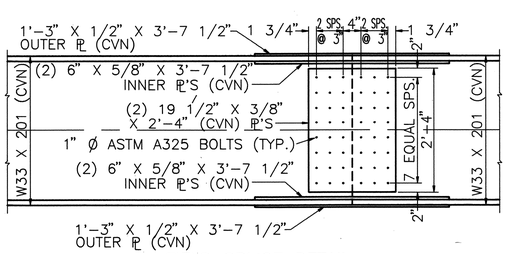

FIELD SPLICE DETAIL

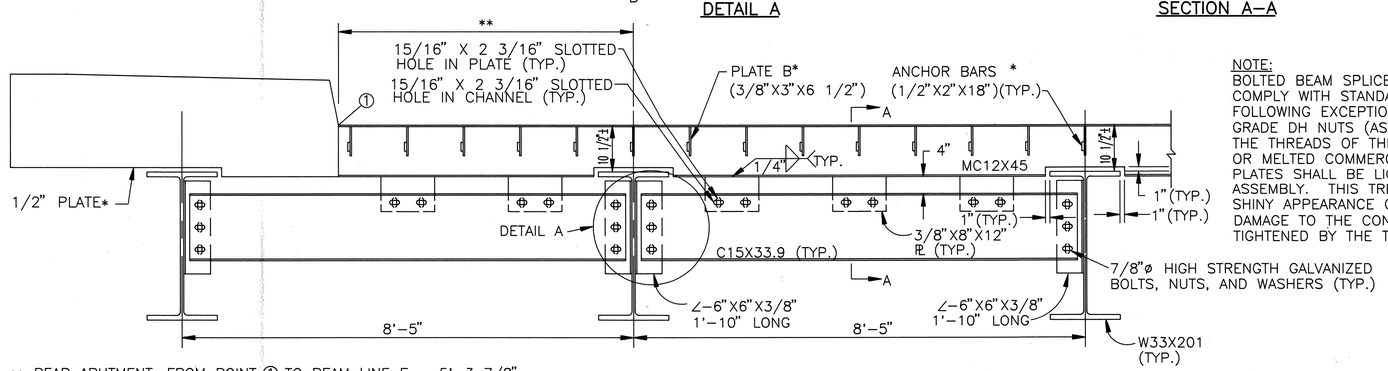

** REAR ABUTMENT: FROM POINT ① TO BEAM LINE F = 5'-3 7/8"
FROM BEAM LINE B TO POINT ① = 5'-6"

** FWD. ABUTMENT: FROM POINT ① TO BEAM LINE B = 5'-6"
FROM BEAM LINE F TO POINT ① = 5'-3 7/8"

END CROSSFRAME DETAIL

* SEE STANDARD DRAWINGS EXJ–2–81 AND SD–1–69 FOR PLACEMENT OF THESE PLATES AND OTHER EXPANSION JOINT DETAILS.

KOHLI & KALIHER ASSOCIATES, INC.
CONSULTING ENGINEERS AND SURVEYORS — LIMA, OHIO

17/19

SUPERSTRUCTURE DETAILS

BRIDGE NO. PAU–127–1023
OVER FLATROCK CREEK
PAULDING COUNTY

DESIGNED	DRAWN	TRACED	CHECKED	REVIEWED	DATE	REVISED
D.G.B.	T.L.M.		M.A.D.	J.R.M.	5–4–93	

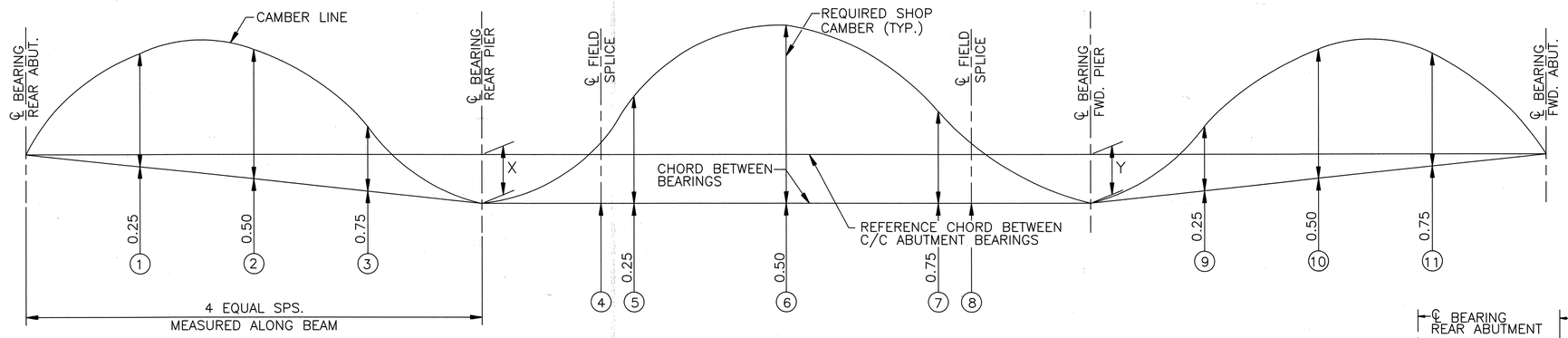

CAMBER DIAGRAM

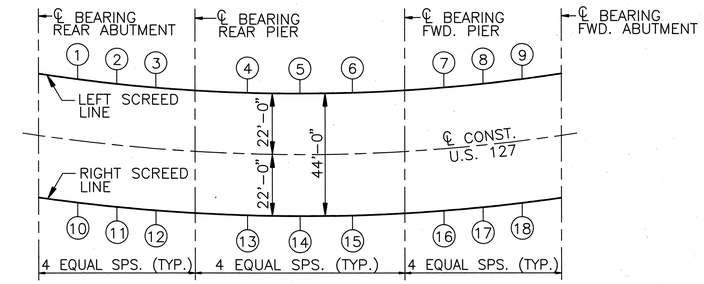

PLAN

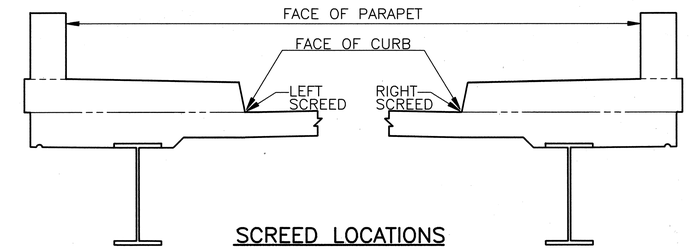

SCREED LOCATIONS

* TOP OF CONCRETE SLAB AT FACE OF CURB, PRIOR TO PLACING CONCRETE DECK. ALLOWANCE HAS BEEN MADE FOR ANTICIPATED DEAD LOAD DEFLECTIONS OF BEAMS DUE TO WEIGHT OF CONCRETE DECK.

DEFLECTION AND CAMBER (INCHES)											
DESCRIPTION	BEAM LINE A AND G										
	1	2	3	4	5	6	7	8	9	10	11
DEFLECTION DUE TO WEIGHT OF STEEL	1/16	1/16	0	1/16	1/16	1/8	1/16	1/16	0	1/16	1/16
DEFLECTION DUE TO REMAINING DEAD LOAD	1/4	1/4	1/8	5/16	3/8	5/8	3/8	5/16	1/8	1/4	1/4
CURVATURE ADJUSTMENT	0	0	0	0	0	0	0	0	0	0	0
REQUIRED SHOP CAMBER	5/16	5/16	1/8	3/8	7/16	3/4	7/16	3/8	1/8	5/16	5/16
DESCRIPTION	BEAM LINES B THROUGH E										
	1	2	3	4	5	6	7	8	9	10	11
DEFLECTION DUE TO WEIGHT OF STEEL	1/16	1/16	0	1/16	1/16	1/8	1/16	1/16	0	1/16	1/16
DEFLECTION DUE TO REMAINING DEAD LOAD	1/4	1/4	1/8	5/16	3/8	5/8	3/8	5/16	1/8	1/4	1/4
CURVATURE ADJUSTMENT	1/8	3/16	1/8	-3/16	-1/8	-1/16	-1/8	-3/16	1/8	3/16	1/8
REQUIRED SHOP CAMBER	7/16	1/2	1/4	3/16	5/16	11/16	5/16	3/16	1/4	1/2	7/16
DESCRIPTION	BEAM LINE F										
	1	2	3	4	5	6	7	8	9	10	11
DEFLECTION DUE TO WEIGHT OF STEEL	1/16	1/16	0	1/16	1/16	1/8	1/16	1/16	0	1/16	1/16
DEFLECTION DUE TO REMAINING DEAD LOAD	1/4	1/4	1/8	5/16	3/8	5/8	3/8	5/16	1/8	1/4	1/4
CURVATURE ADJUSTMENT	-1/4	-5/16	-1/4	5/16	1/4	1/8	1/4	5/16	-1/4	-5/16	-1/4
REQUIRED SHOP CAMBER	1/16	0	-1/8	11/16	11/16	7/8	11/16	11/16	-1/8	0	1/16

BEAM LINE	DIMENSION (INCHES) X	Y
A	0"	0"
B	-3/16"	-3/16"
C	-3/16"	-3/16"
D	-3/16"	-3/16"
E	-1/8"	-1/8"
F	1/4"	1/4"
G	0"	0"

BLOCKING TABLE

FOR BEAM LINE LOCATIONS SEE SHEET 16/19

SCREED ELEVATIONS*					
LEFT SCREED ELEVATIONS			RIGHT SCREED ELEVATIONS		
POINT	STATION	FINAL SCREED ELEV.	POINT	STATION	FINAL SCREED ELEV.
R.A.	539+92.12	721.38	R.A.	539+98.66	721.72
1	540+06.70	721.42	10	540+12.26	721.76
2	540+21.29	721.44	11	540+25.86	721.78
3	540+35.88	721.44	12	540+39.47	721.78
R.P.	540+50.47	721.45	R.P.	540+53.07	721.78
4	540+69.91	721.50	13	540+71.21	721.84
5	540+89.34	721.55	14	540+89.34	721.88
6	541+08.77	721.55	15	541+07.47	721.88
F.P.	541+28.21	721.54	F.P.	541+25.61	721.86
7	541+42.80	721.56	16	541+39.21	721.89
8	541+57.38	721.59	17	541+52.81	721.92
9	541+71.97	721.61	18	541+66.42	721.93
F.A.	541+86.56	721.60	F.A.	541+80.02	721.93

ABBREVIATIONS

R.A. – REAR ABUTMENT
R.P. – REAR PIER
F.P. – FORWARD PIER
F.A. – FORWARD ABUTMENT

KOHLI AND KALIHER ASSOCIATES, INC.
CONSULTING ENGINEERS AND SURVEYORS
LIMA, OHIO

18/19

SUPERSTRUCTURE DETAILS
BRIDGE NO. PAU-127-1023
OVER FLATROCK CREEK
PAULDING COUNTY

DESIGNED	DRAWN	TRACED	CHECKED	REVIEWED	DATE	REVISED
D.G.B.	M.D.W.		S.A.P.	J.R.M.	5-4-93	

REINFORCING STEEL LIST

PAULDING COUNTY PAU-127-10.19	OHIO	FHWA REGION 5	FEDERAL PROJECT	34/39

EPOXY COATED — REAR ABUTMENT

MARK	NO.	LENGTH	WEIGHT	SHP.	A	B	C
EA501	58	19'-7"	1185	B4	5'-11"	3'-7"	
EA502	38	29'-6"	1169	S			
EA503	39	19'-8"	800	B1	3'-5"	8'-3"	
EA504	8	5'-8"	47	S			
EA505	2	7'-7"	16	B8	5'-7"	2'-0"	
EA506	2	8'-0"	17	S			
EA507	4	12'-5"	52	S			
EA508	10	10'-6"	110	S			
EA509	2	6'-4"	13	S			
EA510	2	7'-4"	15	S			
EA511	4	8'-3"	34	S			
EA512	6	8'-8"	54	S			
EA513	4	8'-0"	33	B8	6'-0"	2'-0"	
EA514	16	3'-9"	63	B1	0'-8"	1'-8"	
EA515	6	9'-5"	59	B9	5'-6"	2'-0"	81°
EA516	4	5'-4"	22	S			
EA517	2	6'-0"	13	S			
EA518	2	6'-10"	14	S			
EA519	2	7'-8"	16	S			
EA520	6	8'-4"	52	S			
EA521	4	12'-8"	53	S			
EA522	10	10'-8"	111	S			
EA523	2	8'-0"	17	B8	6'-3"	1'-9"	
EA524	6	10'-5"	65	B9	6'-6"	2'-0"	99°
EA525	10	6'-8"	70	B3	0'-8"	2'-8"	
EA601	29	7'-2"	312	B1	0'-10"	3'-4"	
EA602	8	8'-10"	106	B1	0'-10"	4'-2"	
EA603	37	6'-1"	338	B1	1'-5"	2'-6"	
EA604	37	11'-1"	616	B1	1'-5"	5'-0"	
EA801	26	38'-9"	2690	S			
EA802	31	4'-8"	386	B10	2'-4"	1'-0"	
EA901	60	25'-4"	**	S			
ER501	8	3'-3"	*	B5	6 1/2"	1'-6"	
ER502	4	6'-7"	*	B6	4'-5"	1'-6"	
ER503	4	8'-11"	*	B7	4'-8"	3'-6"	
ER504	8	8'-3"	*	B3	0'-8"	3'-6"	
ER505	4	4'-8"	*	S			
ER506	4	10'-8"	*	S			
ER507	4	10'-6"	*	S			
TOTAL			8548				

SPIRAL REINFORCEMENT

MARK	NO.	LENGTH	WEIGHT	CORE	PITCH	TURNS	SPACERS
SP401	5	21'-10"	**	30"	4 1/2"	62	4

EPOXY COATED — REAR PIER

MARK	NO.	LENGTH	WEIGHT	SHP.	A	B	C
EP501	8	28'-6"	238	S			
EP502	97	13'-3"	1341	B4	2'-8"	3'-8"	
EP901	6	36'-7"	746	S			
EP902	6	22'-7"	461	S			
EP903	48	30'-2"	**	S			
EP1001	12	36'-2"	1868	B11	32'-10"	3'-8"	
TOTAL			4654				

SPIRAL REINFORCEMENT

MARK	NO.	LENGTH	WEIGHT	CORE	PITCH	TURNS	SPACERS
SP403	4	26'-6"	**	30"	4 1/2"	74	4

EPOXY COATED — FORWARD ABUTMENT

MARK	NO.	LENGTH	WEIGHT	SHP.	A	B	C
EA501	58	19'-7"	1185	B4	5'-11"	3'-7"	
EA502	38	29'-6"	1169	S			
EA503	39	19'-8"	800	B1	3'-5"	8'-3"	
EA504	8	5'-8"	47	S			
EA505	2	7'-7"	16	B8	5'-7"	2'-0"	
EA506	2	8'-0"	17	S			
EA507	4	12'-5"	52	S			
EA508	10	10'-6"	110	S			
EA509	2	6'-4"	13	S			
EA510	2	7'-4"	15	S			
EA511	4	8'-3"	34	S			
EA512	6	8'-8"	54	S			
EA513	4	8'-0"	33	B8	6'-0"	2'-0"	
EA514	16	3'-9"	63	B1	0'-8"	1'-8"	
EA515	6	9'-5"	59	B9	5'-6"	2'-0"	81°
EA516	4	5'-4"	22	S			
EA517	2	6'-0"	13	S			
EA518	2	6'-10"	14	S			
EA519	2	7'-8"	16	S			
EA520	6	8'-4"	52	S			
EA521	4	12'-8"	53	S			
EA522	10	10'-8"	111	S			
EA523	2	8'-0"	17	B8	6'-3"	1'-9"	
EA524	6	10'-5"	65	B9	6'-6"	2'-0"	99°
EA525	10	6'-8"	70	B3	0'-8"	2'-8"	
EA601	29	7'-2"	312	B1	0'-10"	3'-4"	
EA602	8	8'-10"	106	B1	0'-10"	4'-2"	
EA603	37	6'-1"	338	B1	1'-5"	2'-6"	
EA604	37	11'-1"	616	B1	1'-5"	5'-0"	
EA801	26	38'-9"	2690	S			
EA802	31	4'-8"	386	B10	2'-4"	1'-0"	
EA902	60	26'-4"	**	S			
ER501	8	3'-3"	*	B5	6 1/2"	1'-6"	
ER502	4	6'-7"	*	B6	4'-5"	1'-6"	
ER503	4	8'-11"	*	B7	4'-8"	3'-6"	
ER504	8	8'-3"	*	B3	0'-8"	3'-6"	
ER505	4	4'-8"	*	S			
ER506	4	10'-8"	*	S			
ER507	4	10'-6"	*	S			
TOTAL			8548				

SPIRAL REINFORCEMENT

MARK	NO.	LENGTH	WEIGHT	CORE	PITCH	TURNS	SPACERS
SP402	5	22'-10"	**	30"	4 1/2"	64	4

EPOXY COATED — FOWARD PIER

MARK	NO.	LENGTH	WEIGHT	SHP.	A	B	C
EP501	8	28'-6"	238	S			
EP502	97	13'-3"	1341	B4	2'-8"	3'-8"	
EP901	6	36'-7"	746	S			
EP902	6	22'-7"	461	S			
EP904	48	31'-5"	**	S			
EP1001	12	36'-2"	1868	B11	32'-10"	3'-8"	
TOTAL			4654				

SPIRAL REINFORCEMENT

MARK	NO.	LENGTH	WEIGHT	CORE	PITCH	TURNS	SPACERS
SP404	4	27'-9"	**	30"	4 1/2"	77	4

EPOXY COATED — SUPERSTRUCTURE (DECK)

MARK	NO.	LENGTH	WEIGHT	SHP.	A	B	C
ES401	138	20'-0"	1844	S			
ES402	276	30'-0"	5531	S			
ES403	138	22'-7"	2082	S			
ES501	372	30'-0"	11640	S			
ES502	62	26'-6"	1714	S			
ES503	646	30'-0"	20213	S			
ES601	323	34'-0"	16495	S			
ES602	323	26'-0"	12614	S			
ES603	136	30'-0"	6128	S			
TOTAL			78261				

SUPERSTRUCTURE (SIDEWALK)

MARK	NO.	LENGTH	WEIGHT	SHP.	A	B	C
ES401	32	20'-0"	428	S			
ES402	64	30'-0"	1283	S			
ES403	32	22'-7"	483	S			
ES504	324	5'-8"	1915	S			
ES505	324	4'-1"	1380	B1	1'-4"	1'-6"	
ES506	324	4'-2"	1408	B2	1'-6"	1'-9"	1'-2"
ES507	358	6'-3"	2334	B3	0'-8"	2'-6"	
ES603	28	30'-0"	1262	S			
TOTAL			10493				

SUPERSTRUCTURE (RAILING)

MARK	NO.	LENGTH	WEIGHT	SHP.	A	B	C
ER501	16	15'-2"	*	S			
ER502	28	13'-8"	*	S			
ER503	80	5'-8"	*	S			

SUPERSTRUCTURE (PILASTERS)

MARK	NO.	LENGTH	WEIGHT	SHP.	A	B	C
EL501	8	3'-0"	25	B1	2'-1"	0'-7"	
EL502	8	8'-8"	72	B1	2'-1"	3'-5"	
EL503	14	8'-4"	122	B12	1'-4"	1'-8"	0'-5"
EL504	8	3'-5"	29	S			
TOTAL			248				

NOTES:
1. ALL DIMENSIONS ARE OUT TO OUT.
2. AN "E" PREFIX IN THE "MARK" COLUMN INDICATES EPOXY COATED BARS.
3. AN "S" IN THE "SHP" COLUMN INDICATES STRAIGHT BARS.
4. REFER TO CMS SECTION 509.05 FOR STANDARD BEND DIMENSIONS.

REINFORCING BAR SPLICE
REINFORCING BAR SPLICE LENGTHS SHALL CONFORM TO THE MINIMUM LENGTHS SPECIFIED BY 509.08 OF THE CONSTRUCTION AND MATERIAL SPECIFICATIONS UNLESS OTHERWISE NOTED ON THE PLANS.

SPIRAL REINFORCING BARS: THE "LENGTH" SHOWN IN THE STEEL LIST FOR THE SPIRAL BARS IS THE LENGTH OF THE SPIRAL ALONG THE AXIS OF THE SPIRAL. FOUR STEEL CHANNEL, TEE OR ANGLE SPACERS, WEIGHING APPROXIMATELY 0.80 LB. PER LINEAR FEET OF SPACER, SHALL BE PROVIDED FOR EACH SPIRAL UNIT. THEY SHALL BE EQUALLY SPACED ALONG THE PERIPHERY OF THE COILS. THE NUMBER OF POUNDS OF THESE SPACERS, BASED ON 3.20 PER LINEAR FOOT WILL BE PAID FOR AS REINFORCING STEEL AND IS INCLUDED IN THE TABULATED QUANTITIES OF SPIRAL BARS.

BENDING DIAGRAM

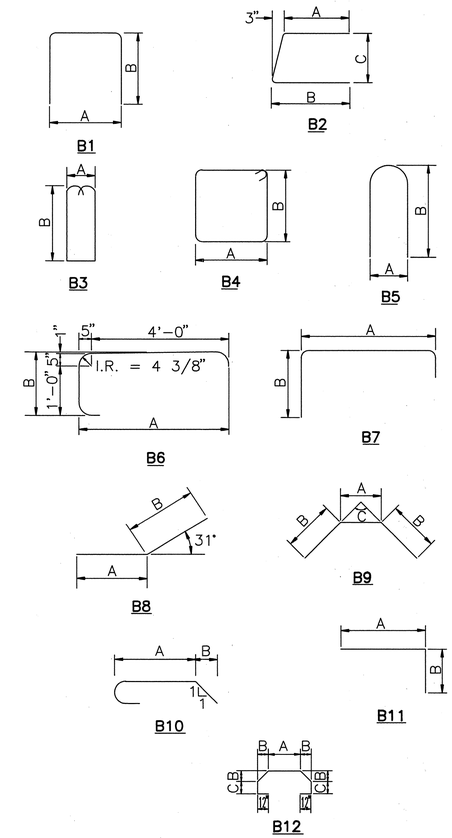

* INCLUDED WITH BRIDGE SIDEWALK RAILING FOR PAYMENT.

** INCLUDED IN UNIT PRICE FOR ITEM SPECIAL – DRILLED SHAFTS, 48" DIAMETER, ABOVE BEDROCK.

KOHLI AND KALIHER ASSOCIATES, INC. CONSULTING ENGINEERS AND SURVEYORS LIMA, OHIO — 19/19

REINFORCING STEEL LIST AND BENDING DIAGRAM
BRIDGE NO. PAU-127-1023
OVER FLAT ROCK CREEK
PAULDING COUNTY

DESIGNED	DRAWN	TRACED	CHECKED	REVIEWED	DATE	REVISED
D.G.B.	M.D.W.		M.A.D.	J.R.M.	5-4-93	

PAULDING COUNTY PAU-127-10.19	OHIO	35/39
	FHWA REGION 5	
BRF - 092 (4)	FEDERAL PROJECT	

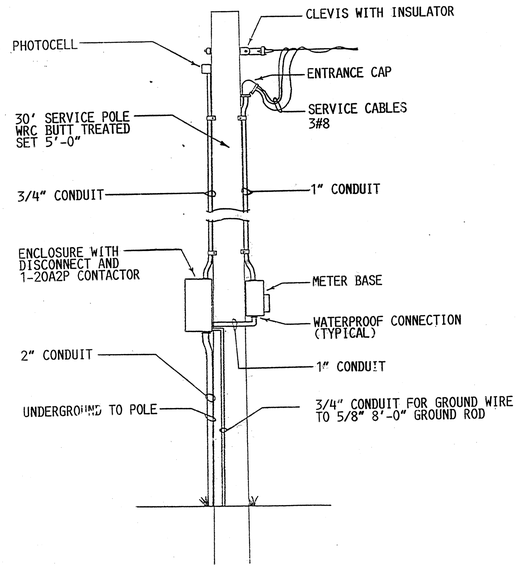

SERVICE POLE DETAIL
N. T. S.

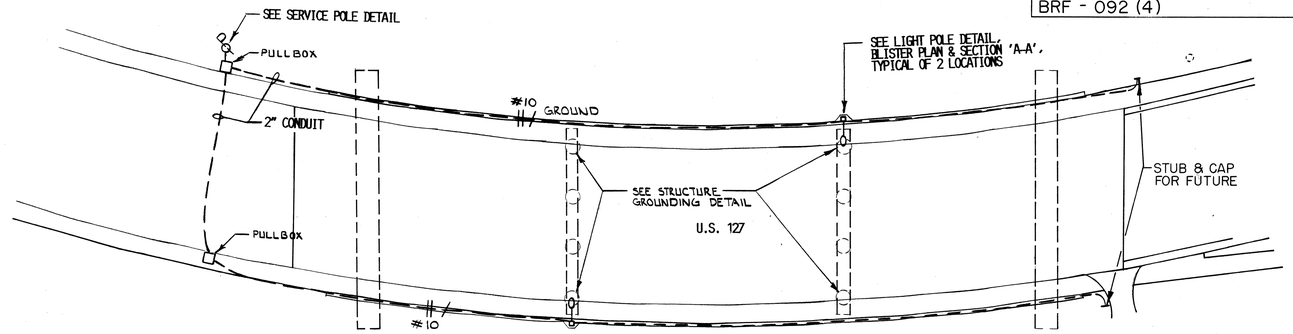

BRIDGE PLAN
SCALE: 1"=20'-0"

JNL

POWER SERVICE

THE POWER SUPPLYING AGENCY OF THIS PROJECT IS OHIO POWER Co. PAULDING, OHIO. CONTROL CENTER DATA SHALL BE:
SERVICE - 120/240 VOLT-1 PHASE-THREE WIRE-GROUNDED NEUTRAL, CONNECTED LOAD - 0.7 KVA, SERVICE ENTRANCE CABLE - #4, ENCLOSURE RATING - 60 AMP, CIRCUIT FUSES - 15 AMP, AND TO BE MAINTAINED BY CITY OF PAULDING, OHIO.

CONDUIT ON STRUCTURE

EXPANSION FITTINGS FOR CONDUIT ON STRUCTURE SHALL BE OZ TYPE AX, CROUSE-HINDS TYPE XJ-4 OR EQUAL APPROVED BY THE ENGINEER. EACH EXPANSION FITTING SHALL HAVE A COPPER EXTERNAL BONDING JUMPER.

HIGH VOLTAGE DIRECT CURRENT TEST

A HIGH VOLTAGE DIRECT CURRENT TEST AS DIRECTED IN CMS 625, SHALL BE PERFORMED ON THE SYSTEM TO BE INSTALLED ON THE PROJECT. PAYMENT FOR THIS TEST IS INCLUDED IN THE GENERAL SUMMARY.

LUMINAIRES

LUMINAIRES SHALL BY STYLE B WITH 250 WATT HPS LAMPS AND INTEGRAL REGULATOR BALLASTS WIRED TO OPERATE ON 240 VOLTS FROM A 120/240 VOLT 3 WIRE SINGLE PHASE SERVICE. LUMINAIRES SHALL BE GENERAL ELECTRIC M400, COOPER OVM, AMERICAN 25/26, OR EQUAL.

LAMPS

HIGH PRESSURE SODIUM LAMPS SHALL BE GENERAL ELECTRIC 'LUCALOX', WESTINGHOUSE 'CERAMALUX', SYLVANIA 'LUMALUX', OR EQUAL.

GENERAL SUMMARY

ITEM	ITEM EXT.	TOTAL	UNIT	DESCRIPTION
625	10500	2	EACH	LIGHT POLE, DESIGN AT6B31.7
625	10600	8	EACH	LIGHT POLE ANCHOR L-BOLTS 1" x 40"
625	23306	380'	LIN. FT	No. 10 AWG 600 DISTRIBUTION CABLE
625	23400	74'	LIN. FT	No.10AWG POLE AND BRACKET CABLE
625	25400	560'	LIN. FT	CONDUIT 2", 713.04
625	26490	2	EACH	LUMINAIRE STYLE 'B', TYPE III, 250W, 240V, HIGH PRESSURE SODIUM, 713.11
625	29002	140'	LIN. FT	TRENCH, 24" DEEP
625	30500	2	EACH	PULLBOX 713.08, 18" CONCRETE
625	32000	1	EACH	GROUND ROD
625	33000	1	EACH	STRUCTURAL GROUNDING SYSTEM
625	34000	1	EACH	POWER SERVICE
625	38000	LUMP		HIGH VOLTAGE TEST

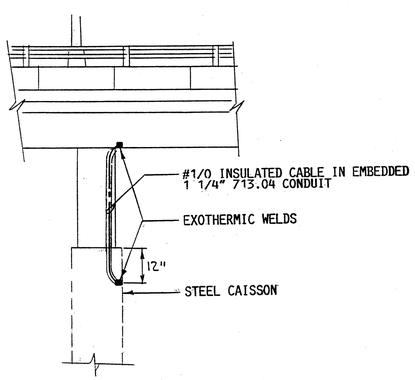

STRUCTURE GROUNDING DETAIL
N.T.S.
(TYPICAL OF FOUR)

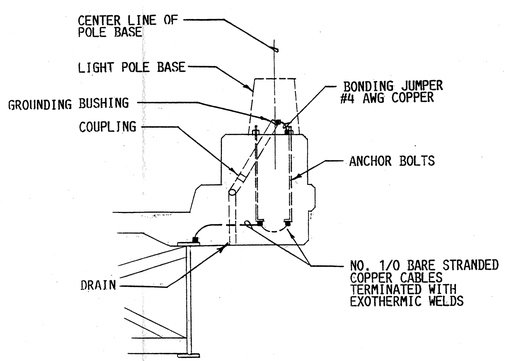

SECTION-'A-A'
N.T.S.

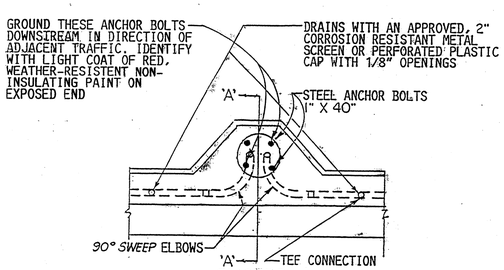

BLISTER PLAN
N. T. S.

KOHLI AND KALIHER ASSOCIATES, INC.
CONSULTING ENGINEERS AND SURVEYORS LIMA, OHIO

STATE OF OHIO NELSON S. GIBSON 23749 REGISTERED PROFESSIONAL ENGINEER

BRIDGE LIGHTING
PLAN & DETAILS
BRIDGE NO. PAU-127-1023
OVER FLATROCK CREEK
PAULDING COUNTY

DESIGNED	DRAWN	TRACED	CHECKED	REVIEWED	DATE	REVISED
N.S.G.	GR		N.S.G.	J.R.M.	5-4-93	

PAULDING COUNTY PAU-127-10.19	OHIO FHWA REGION 5
BRF-092(4)	FEDERAL PROJECT
017940	STATE PROJECT

36/39

1/4

R/W ONLY

CENTERLINE SURVEY PLAT

100 50 0 100 200
SCALE IN FEET

PAULDING COUNTY
Village of Paulding
Sec. 12, T-2-N, R-2-E

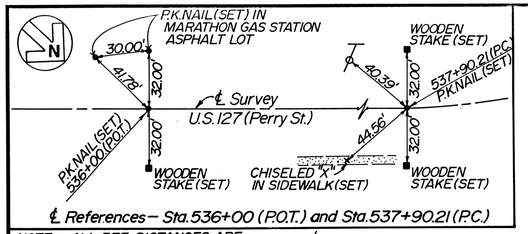

NOTE—ALL REF. DISTANCES ARE SLOPE DISTANCES

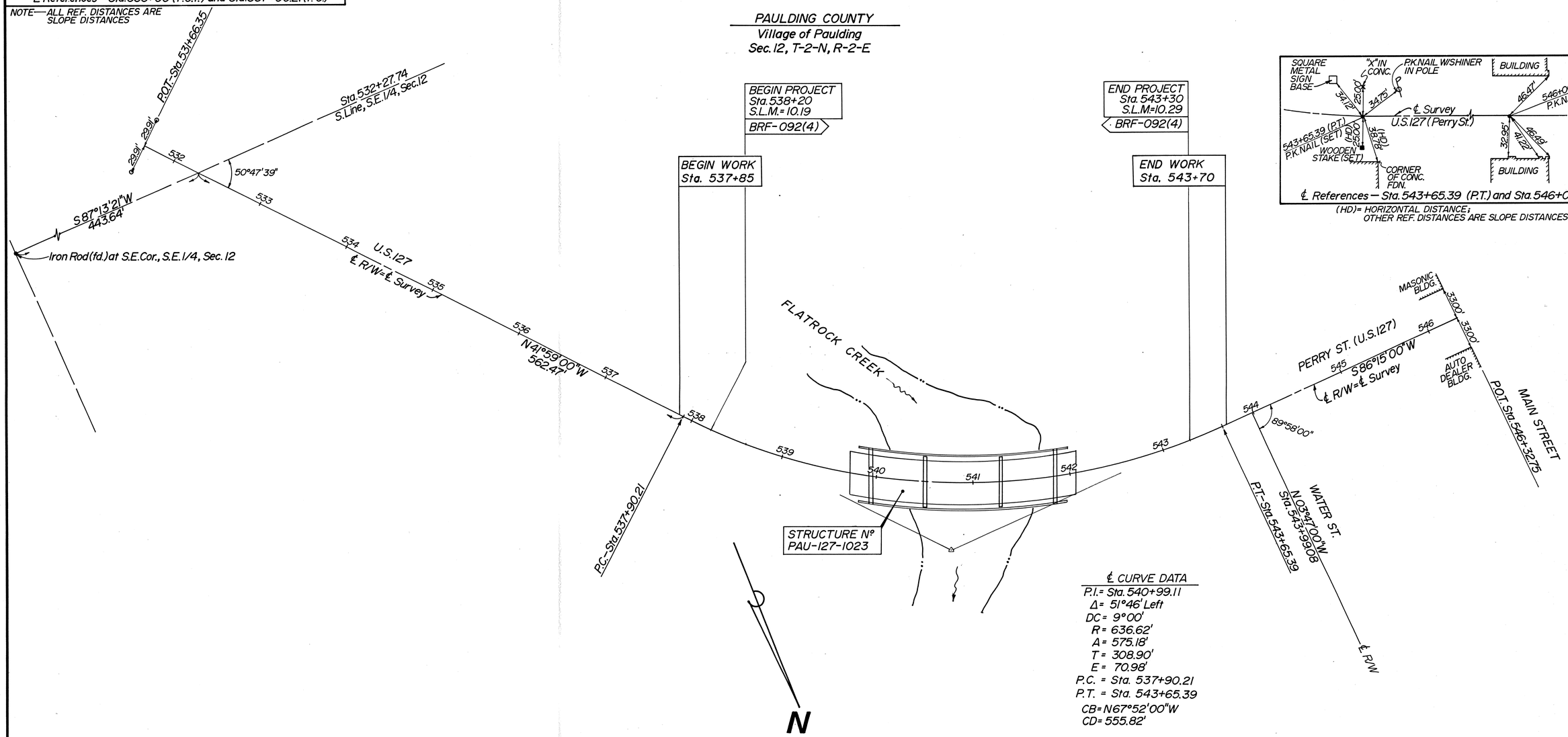

℄ CURVE DATA

P.I. = Sta. 540+99.11
Δ = 51°46' Left
DC = 9°00'
R = 636.62'
A = 575.18'
T = 308.90'
E = 70.98'
P.C. = Sta. 537+90.21
P.T. = Sta. 543+65.39
CB = N 67°52'00" W
CD = 555.82'

Received _____, 19____
Recorded _____, 19____
Book _____, Page _____

County Recorder

I hereby certify that this plat is a true delineation of a survey by Kohli & Kaliher Associates, Inc., Lima, Ohio.

By Michael G. Guettner
Reg. Surveyor No. 6881
Date May 3, 1993

Seal

CENTERLINE SURVEY PLAT

PAULDING COUNTY PAU-127-10.19	OHIO FHWA REGION 5
BRF-092(4)	FEDERAL PROJECT
017940	STATE PROJECT

37/39

2/4

R/W ONLY

PROPERTY MAP

0 50 100 150 200 250
SCALE IN FEET

PAULDING COUNTY
Village of Paulding
Sec. 12, T-2-N, R-2-E

N

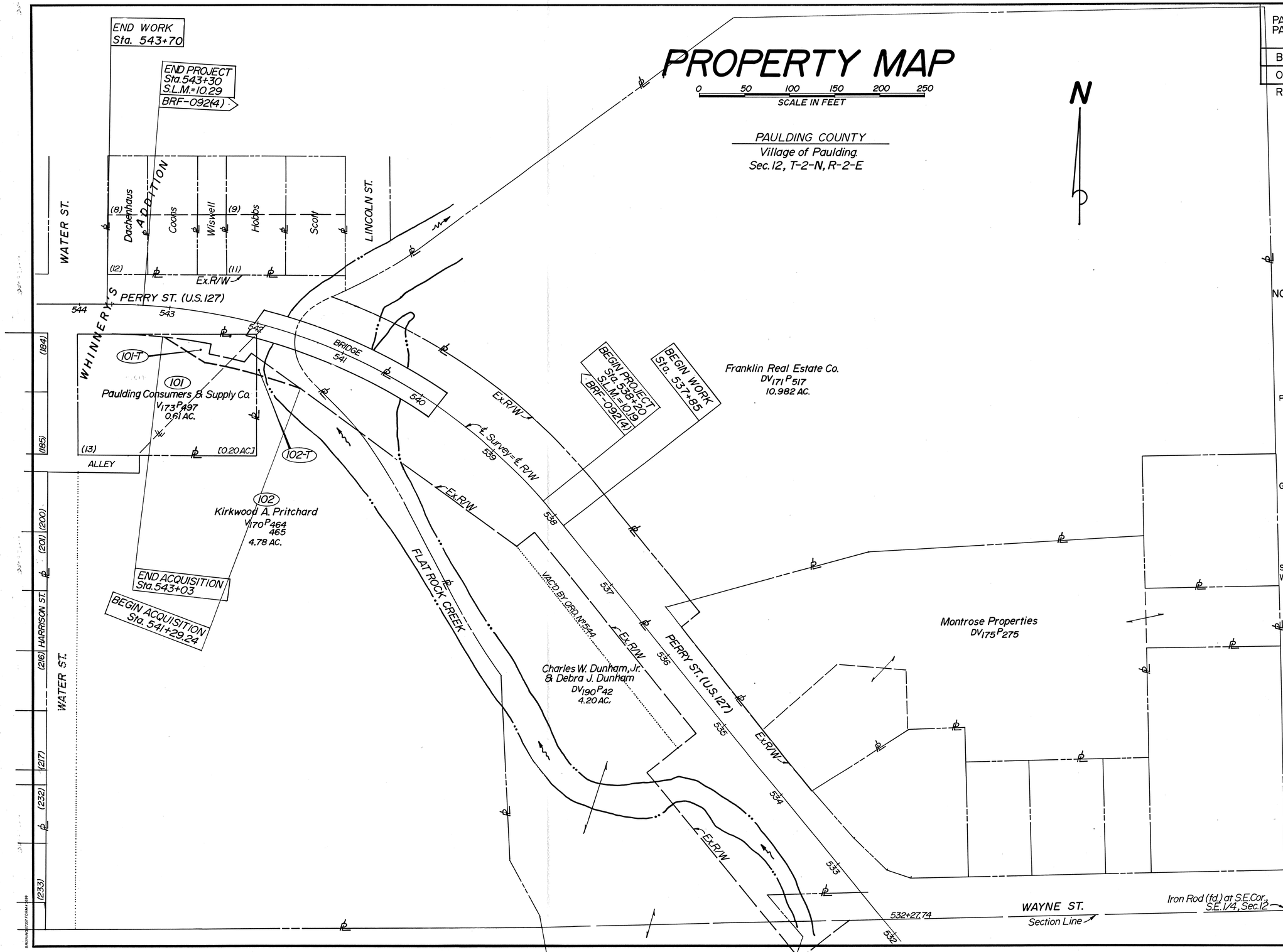

NOTE: The location of the underground utilities shown in the plans are as obtained from the owners of the utility as required by Section 153.64 of the Ohio Revised Code.

POWER- OHIO POWER COMPANY
301 CLEVELAND AVENUE S.W.
P.O. BOX 24400
CANTON, OHIO 44701-4400
ATTENTION: JOHN SCHRADE, JR.
(216) 456-8173

GAS- OHIO GAS
701 E. WILSON
BRYAN, OHIO 43506
ATTENTION: DALE BRENNER
(800) 331-7396

SANITARY-WATER VILLAGE OF PAULDING
VILLAGE UTILITY OFFICE
208 N. WILLIAMS
PAULDING, OHIO 45879
ATTENTION: HARRY WIEBE,
VILLAGE ADMINISTRATOR
(419) 339-4011

Rev.	Date	Description

Date Completed _____

PROPERTY MAP

TOTAL NUMBER OF ___
2 OWNERSHIPS
0 TOTAL TAKES
0 OWNERSHIPS WITH STRUCTURES INVOLVED
0 OWNERSHIPS WITH "P" ITEMS

SUMMARY OF ADDITIONAL RIGHT OF WAY

CALC. BY MGB DATE 3-1-93
CHKD. BY SAP DATE 3-1-93
FEDERAL PROJECT BRF-092(4) R/W ONLY
PAULDING COUNTY PAU-127-10.19
OHIO
FHWA REGION 5
STATE PROJECT 017940
38/39
3/4

PARCEL	SHEET NO.	OWNER	AUDITOR'S PARCEL NO.	OWNERS RECORD BOOK	OWNERS RECORD PAGE	RECORD AREA	TOTAL P.R.O.	GROSS TAKE	P.R.O. IN TAKE	NET TAKE	STRUCTURE	NET RESIDUE LEFT	NET RESIDUE RIGHT	TYPE FUND	REMARKS AND PERSONALTY	AS ACQUIRED BOOK	AS ACQUIRED PAGE
101-T	4	PAULDING CONSUMERS & SUPPLY CO.	30-29-016-00	173	497	0.61	0.042	0.031		0.031				State	Temporary Easement for Grading Purposes		
102-T	4	KIRKWOOD A. PRITCHARD	30-43-004-00	170	464-465	4.78	0.068	0.009		0.009				↓	"		

REV.	DATE	DESCRIPTION

R/W SUMMARY SHEET

PAULDING COUNTY PAU-127-10.19	OHIO	
	FHWA REGION 5	39 / 39
BRF-092(4)	FEDERAL PROJECT	
017940	STATE PROJECT	4 / 4
R/W ONLY		

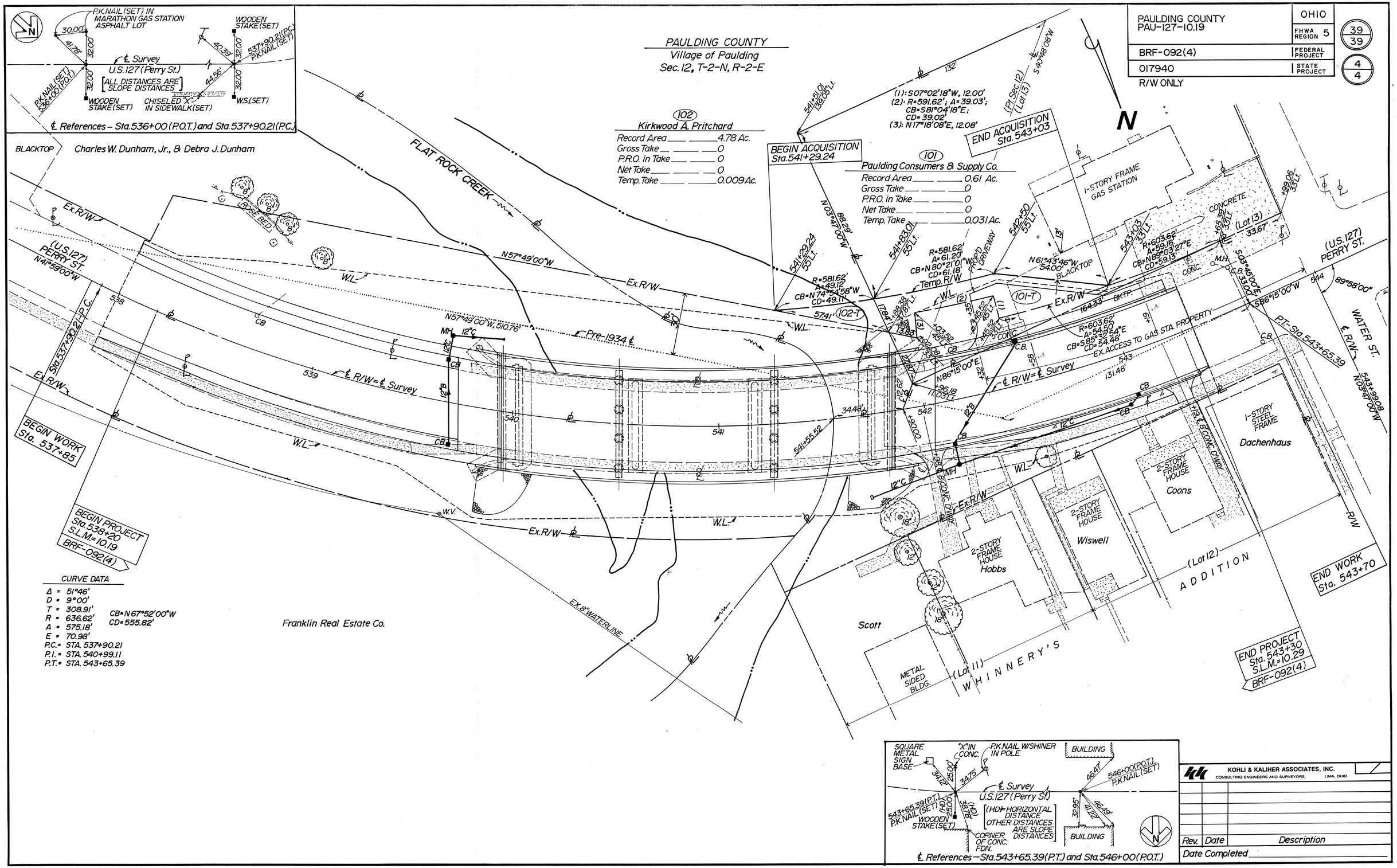

KOHLI & KALIHER ASSOCIATES, INC.
CONSULTING ENGINEERS AND SURVEYORS LIMA, OHIO

Rev.	Date	Description

Date Completed

RIGHT-OF-WAY PLANS

GEOLOGY OF THE SITE

GENERALIZED GEOLOGICAL REFERENCES REPORT THAT THE SITE WAS COVERED BY BOTH THE ILLINOIAN AND WISCONSIN GLACIERS. SOILS AT THE SITE ARE BELIEVED TO BE RECENT ALLUVIAL DEPOSITS OVER GLACIAL TILL. THE UNDERLYING BEDROCK AT THE SITE IS REPORTED TO BE LIMESTONE AND DOLOMITE OF THE MONROE FORMATION PRESENT AT DEPTHS VARYING BETWEEN 25 AND 45 FEET BELOW THE GROUND SURFACE.

EXPLORATION

THE EXPLORATION CONSISTED OF DRILLING SIX BORINGS. THE BORINGS WERE DRILLED BETWEEN SEPTEMBER 22 AND 28, 1992, USING A TRUCK MOUNTED DRILL RIG. BORINGS B-1 AND B-4 WERE LOCATED NEAR THE EXISTING ABUTMENTS AND WERE DRILLED TO DEPTHS OF 36.3 AND 40.3 FEET, RESPECTIVELY. BORINGS B-2 AND B-3 WERE DRILLED THROUGH THE EXISTING BRIDGE DECK NEAR THE PIERS AND WERE DRILLED TO DEPTHS OF 20.7 AND 26.3 FEET, RESPECTIVELY. BORINGS R-1 AND R-2 WERE DRILLED THROUGH THE ROADWAY AT LOCATIONS APPROXIMATELY 100 FEET FROM THE REAR AND FORWARD ABUTMENTS, RESPECTIVELY. BORINGS R-1 AND R-2 WERE BOTH DRILLED TO A DEPTH OF 10.0 FEET.

INVESTIGATIONAL FINDINGS AND OBSERVATIONS

1. SOILS

BORINGS B-1 AND B-4 ENCOUNTERED FILL AND POSSIBLE FILL BENEATH THE PAVEMENT AND BASE TO DEPTHS OF 10.5 FEET. THE FILL AND POSSIBLE FILL GENERALLY CONSISTED OF COHESIVE SOILS RANGING IN CONSISTENCY FROM MEDIUM STIFF TO VERY STIFF. BENEATH THE FILL, BORINGS B-1 AND B-4 ENCOUNTERED VERY SOFT TO MEDIUM STIFF SILTY CLAYS AND LOOSE TO MEDIUM DENSE SANDS AND GRAVELS TO DEPTHS OF 18.0 AND 15.5 FEET, RESPECTIVELY. UNDERLYING THESE MATERIALS, BORINGS B-1 AND B-4 ENCOUNTERED HARD CLAYEY GLACIAL TILL. THE HARD TILL WAS PRESENT IN BORING B-1 TO THE TOP OF BEDROCK; HOWEVER, BORING B-4 ENCOUNTERED VERY DENSE SILT FROM 27.0 FEET DEPTH TO THE TOP OF BEDROCK.

BORINGS B-2 AND B-3 WERE DRILLED THROUGH THE BRIDGE DECK NEAR THE EXISTING PIERS. BORING B-2 ENCOUNTERED SOFT TO VERY SOFT SILTY CLAY TO A DEPTH OF 5.5 FEET. BENEATH THE SOFT SOIL, BORING B-2 ENCOUNTERED HARD CLAYEY TILL TO A DEPTH OF 10.5 FEET. BENEATH THE HARD TILL, VERY DENSE SAND AND GRAVEL WAS ENCOUNTERED TO THE TOP OF BEDROCK. BORING B-3 ENCOUNTERED MEDIUM DENSE SAND AND GRAVEL TO A DEPTH OF 3.0 FEET. UNDERLYING THE SAND AND GRAVEL, BORING B-3 ENCOUNTERED HARD CLAYEY TILL TO THE TOP OF BEDROCK.

COBBLES AND/OR BOULDERS WERE ENCOUNTERED AT VARIOUS DEPTHS WITHIN THE GLACIAL TILL IN BORINGS B-1, B-2, B-3 AND B-4.

BORINGS R-1 AND R-2 WERE DRILLED THROUGH THE ROADWAY APPROXIMATELY 100 FEET EITHER SIDE OF THE EXISTING ABUTMENTS. BENEATH THE PAVEMENT, BORINGS R-1 AND R-2 ENCOUNTERED STIFF TO HARD COHESIVE SOILS TO THEIR COMPLETION DEPTHS.

2. BEDROCK

BORINGS B-1, B-2, B-3 AND B-4 ENCOUNTERED BEDROCK AT DEPTHS OF 30.6, 15.5, 16.3, AND 31.5 FEET, RESPECTIVELY. THE BEDROCK GENERALLY CONSISTED OF VERY HARD LIMESTONE, SOMEWHAT BROKEN AND FRACTURED IN UPPER 2 TO 5 FEET. RQD VALUES RANGED FROM 0 TO 100 PERCENT.

3. GROUNDWATER

WATER SEEPAGE WAS FIRST ENCOUNTERED IN BORINGS B-1 AND B-4 AT DEPTHS OF 14.0 AND 11.0 FEET, RESPECTIVELY. THE WATER LEVELS UPON COMPLETION IN BORINGS B-1 AND B-4 WERE AT DEPTHS OF 8.5 AND 10.5 FEET, RESPECTIVELY. BORINGS B-2 AND B-3 WERE DRILLED THROUGH THE STREAM AND CONSEQUENTLY, THE WATER LEVELS UPON COMPLETION WERE EQUAL TO THE STREAM LEVEL. DRILLING WATER WAS USED IN THE BORINGS AND, CONSEQUENTLY, THE COMPLETION MEASUREMENTS IN BORINGS B-1 AND B-4 MAY NOT REFLECT ACTUAL GROUNDWATER CONDITIONS. IT IS BELIEVED THAT THE GROUNDWATER LEVEL AT THE SITE IS INTERCONNECTED WITH THE STREAM.

NO SEEPAGE WAS ENCOUNTERED IN BORINGS R-1 AND R-2 DURING DRILLING AND THERE WAS NO FREE WATER PRESENT AT THE COMPLETION OF DRILLING.

LEGEND

DRIVE SAMPLE AND/OR CORE BORING - PLAN VIEW

DRIVE SAMPLE AND/OR CORE BORING - PROFILE VIEW

W — FREE WATER OR WATER SEEPAGE

DRILLING WATER AT COMPLETION OF BORING (MEASURED WITH HOLLOW STEM AUGERS OR FLUSH JOINT CASING REMOVED)

TR — TOP OF ROCK

X — NUMBER OF BLOWS FOR "STANDARD PENETRATION" TEST
X = NUMBER OF BLOWS FOR SEATING IN CASES WHERE THE SAMPLER ENCOUNTERED RESISTANCE TO PENETRATION OF 6 INCHES OR LESS FROM 50 BLOWS OF THE DROP HAMMER.

Y/Z — NUMBER OF BLOWS FOR "STANDARD PENETRATION" TEST.
Y=NUMBER OF BLOWS FOR SECOND 6 INCHES
Z=NUMBER OF BLOWS FOR THIRD 6 INCHES

50(n) - INDICATES NUMBER OF BLOWS (50) TO DRIVE A SPLIT-BARREL SAMPLER A CERTAIN NUMBER OF INCHES (n) OTHER THAN THE NORMAL 6-INCH INCREMENT.

SYMBOLS OF ROCK TYPES

LIMESTONE

GENERAL INFORMATION

DRIVE SAMPLE/PRESS SAMPLE/CORE BORINGS

DRIVE SAMPLE BORINGS ARE MADE BY MEANS OF A MECHANICALLY-POWERED ROTARY-TYPE DRILLING MACHINE, EMPLOYING A 2" O.D., 1-3/8" I.D. SPLIT SPOON SAMPLING DEVICE, AT 2-1/2 AND/OR 5-FOOT DEPTH INTERVALS, DRIVEN BY MEANS OF A 140-POUND DROP-HAMMER WITH A FREE FALL OF 30 INCHES. THE NUMBER OF BLOWS REQUIRED TO DRIVE THE SAMPLING DEVICE THE LAST 12 INCHES OF THE 18 INCH SAMPLING INTERVAL IS CONSIDERED THE STANDARD PENETRATION VALUE.

DRIVE/PRESS SAMPLE BORINGS ARE MADE BY MEANS OF A MECHANICALLY-POWERED ROTARY-TYPE DRILLING MACHINE, EMPLOYING A 2" O.D., 1-3/8" I.D. SPLIT SPOON SAMPLING DEVICE, AND 3" O.D. THIN WALL PRESS SAMPLING DEVICE. THE PRESS SAMPLER IS ADVANCED BY CONTINUOUS UNIFORM PRESSURE, APPLIED BY THE DRILLING MACHINE.

CORE BORINGS ARE MADE BY MEANS OF A MECHANICALLY-POWERED ROTARY-TYPE DRILLING MACHINE, EMPLOYING A NXM CORE BARREL WITH INDUSTRIAL DIAMOND CUTTING HEAD.

THE BORING LOG SHEETS DISPLAY A GRAPHIC PLOT OF THE INFORMATION OBTAINED, INCLUDING DEPTH AND ELEVATION OF THE SAMPLE, TYPE OF SAMPLE, THE STANDARD PENETRATION TEST READINGS IN THE THREE 6-INCH INCREMENTS, FIELD NUMBER ASSIGNED TO SAMPLE, SAMPLE DESCRIPTION - BASED ON LABORATORY TESTS UTILIZING THE CASAGRANDE A C CLASSIFICATION SYSTEM AND GRADATION, PLASTICITY AND MOISTURE CONTENT DETERMINATIONS. RESULTS OF STRENGTH AND CONSOLIDATION TESTING, IF PERFORMED ON UNDISTURBED SAMPLES, WILL APPEAR GRAPHICALLY ON SEPARATE ENCLOSURES. ROCK SAMPLES ARE DISPLAYED ON THE LOG SHEETS INCLUDING DEPTH AND ELEVATION OF THE SAMPLE, AMOUNT OF RECOVERY AND A VISUAL CLASSIFICATION BASED ON TYPE, COLOR, DEGREE OF HARDNESS, GRAIN SIZE, DETERIORATION, BEDDING, ACID REACTION AND OTHER QUALIFYING FACTORS.

AT DEPTHS WHERE MATERIALS ARE BOULDERY OR GRAVELLY TO THE EXTENT THAT THE SAMPLER CAN NOT BE UTILIZED, A WASH SAMPLE IS PROCURED AND VISUALLY CLASSIFIED, IN ORDER TO DETERMINE THE GENERAL CHARACTERISTICS OF THE MATERIAL. THESE SAMPLES ARE NOT CONSIDERED SUFFICIENTLY REPRESENTATIVE TO WARRANT LABORATORY TESTING.

PARTICLE SIZE DEFINITIONS

BOULDERS	12" – 3"	COBBLES	3" – 2.0mm	GRAVEL	2.0mm – 0.42mm (No. 10 sieve)	COARSE SAND	0.42mm – 0.074mm (No. 40 sieve)	FINE SAND	0.074mm – 0.005mm (No. 200 sieve)	SILT	CLAY

NOTE: ALL AVAILABLE SOIL AND BEDROCK INFORMATION WHICH CAN BE CONVENIENTLY SHOWN ON THE STRUCTURE FOUNDATION INVESTIGATON SHEETS HAS BEEN SO REPORTED. ADDITIONAL SUBSURFACE INVESTIGATIONS MAY HAVE BEEN MADE TO STUDY SOME SPECIAL ASPECT OF THE PROJECT. COPIES OF THIS DATA, IF ANY, MAY BE INSPECTED IN THE DISTRICT DEPUTY DIRECTOR'S OFFICE, THE BUREAU OF TESTS AT 1600 WEST BROAD STREET, THE PAVEMENT AND SOILS SECTION OF THE BUREAU OF LOCATION AND DESIGN OR IN THE BRIDGE BUREAU AT 25 SOUTH FRONT STREET.

NOTE: INFORMATION SHOWN BY THIS SUBSURFACE INVESTIGATION WAS OBTAINED SOLELY FOR USE IN ESTABLISHING DESIGN CONTROLS FOR THE PROJECT. THE STATE OF OHIO DOES NOT GUARANTEE THE ACCURACY OF THIS DATA AND IT IS NOT TO BE CONSTRUED AS A PART OF THE PLAN GOVERNING CONSTRUCTION OF THIS PROJECT.

MASON - deVERTEUIL GEOTECHNICAL SERVICES
6121 HUNTLEY ROAD
COLUMBUS, OHIO 43229

STRUCTURE FOUNDATION INVESTIGATION

BRIDGE NO. PAU-127-1023 OVER FLATROCK CREEK
PAULDING COUNTY, OHIO

SEC.

TITLE SHEET

DRAWN BY	CHECKED BY	REVIEWED BY	DATE
P.J.H.	B.E.W.	P.d.V.	2/17/93

PAULDING COUNTY
PAU-127-10.19

2/4

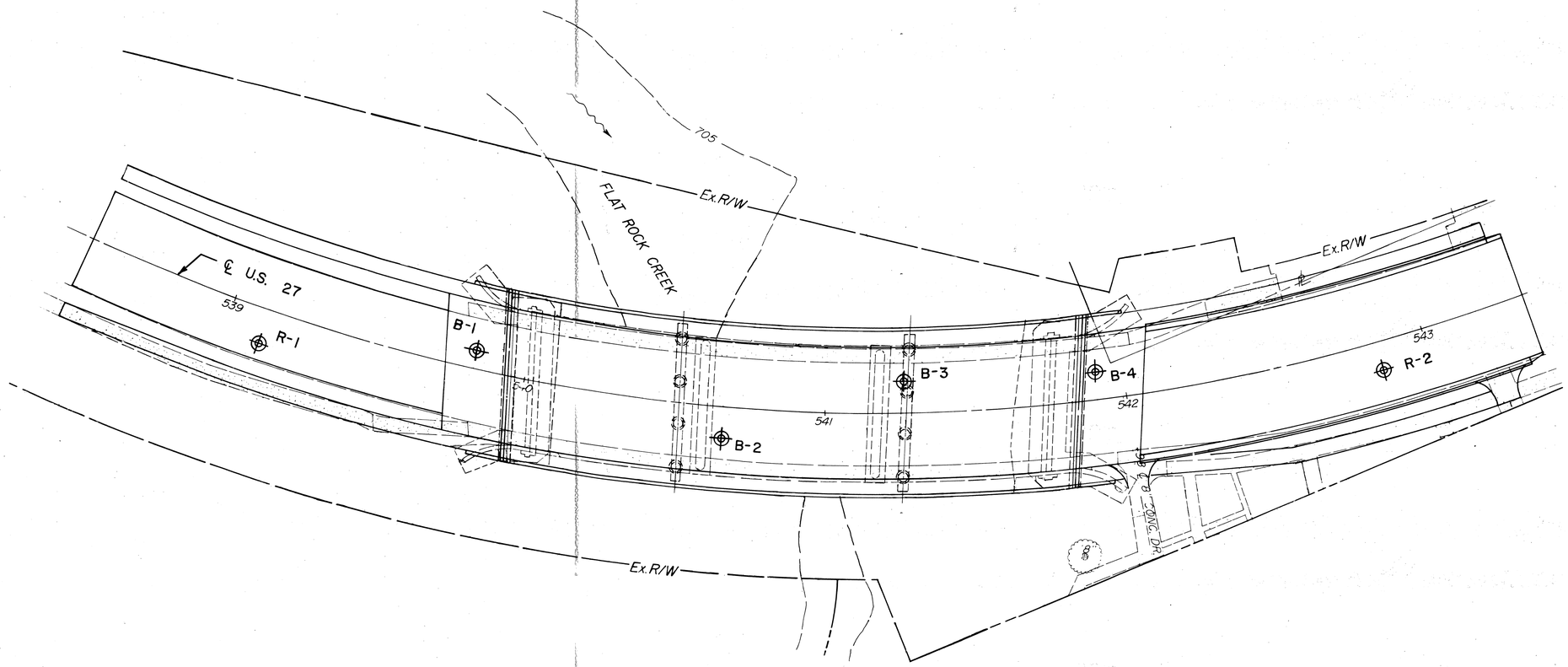

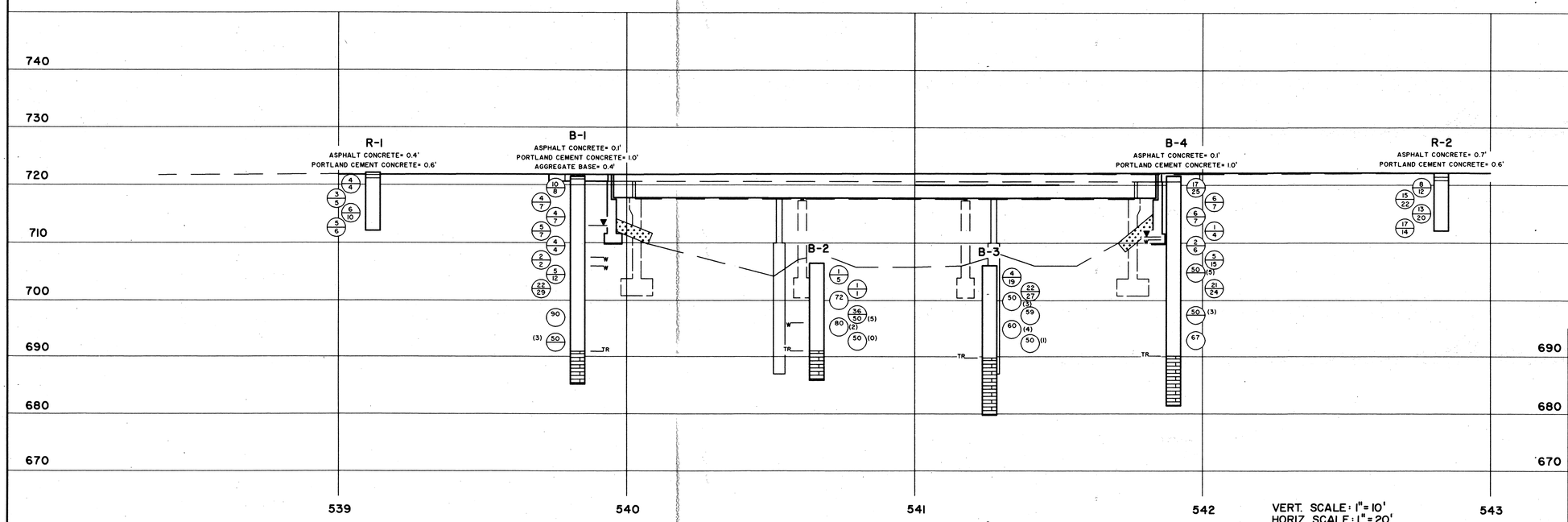

VERT. SCALE: 1" = 10'
HORIZ. SCALE: 1" = 20'

MASON - deVERTEUIL GEOTECHNICAL SERVICES
6121 HUNTLEY ROAD
COLUMBUS, OHIO 43229

STRUCTURE FOUNDATION INVESTIGATION

BRIDGE NO. PAU-127-1023 OVER FLATROCK CREEK
PAULDING COUNTY, OHIO

SEC.

PLAN AND PROFILE

DRAWN BY	CHECKED BY	REVIEWED BY	DATE
P.J.H.	B.E.W.	P.d.V.	2/17/93

PAULDING COUNTY
PAU-127-10.19

3/4

MASON-deVERTEUIL GEOTECHNICAL SERVICES, 6035 HUNTLEY ROAD, COLUMBUS, OHIO 43229, 614/888-0576

Client: Kohli & Kaliher Associates, Inc. | Project: Bridge Replacement, PAU-127-1023 | M-V Job No. 92218

LOG OF Boring B-1

Location: Sta 539+83, 7' left of ℄ | Date Drilled: 9/23 & 24/92

WATER OBSERVATIONS: Water seepage at: 14.0', 15.5'; Water level at completion: 8.5' (includes drilling water)

Depth in feet	Elevation in feet	Penetration Blows/6"	Recovery in inches	Sample No.	Drive	Press	Hand Penetrometer (tsf)	Description	% Agg.	% C.S.	% M.S.	% F.S.	% Silt	% Clay	Moisture Content (PL / Natural / LL)	Standard Penetration (N) Blows per foot
0	721.5															
1.5	720.0	14 10 8	11	1				Asphalt concrete - 1"; Portland cement concrete - 12"; Aggregate base - 5"								
								FILL: Stiff to very stiff SILTY CLAY (A-6b), some fine to coarse sand, little gravel; moist	17	6	–	18	26	33		
5		3 4 7	12	2			2.0									
		3 4 7	16	3			2.0									
		4 5 7	16	4			2.75									
10 / 10.5	711.0															
		3 4 4	15	5			0.5	Very soft to soft brown and gray SILTY CLAY (A-6b), some to "and" fine to coarse sand, trace gravel; moist								
		1 2 2	18	6			0.0	@ 14.0', wet sand seam								
15 / 15.5	706.0															
		6 5 12	9	7				Medium dense brown coarse and fine SAND (A-3a), little silty clay, little gravel; wet								
18.0	703.5															
		18 22 29	16	8			4.5+	Hard gray SANDY SILT (A-4a), little clay, trace gravel; damp; @ 20.0' - 28.0', cobbles and boulders								51
20																
25		90	6	9			4.5+		8	8	–	21	46	17		90+
		22 50(3)	9	10			4.0	@ 28.5', some clay; moist	4	3	–	20	34	39		50+
30 / 30.6	690.9	CORE 14"	REC 12"	RQD 0%				Very hard gray LIMESTONE, massive; @ 31.0', high angle fracture								
		CORE 54"	REC 54"	RQD 100%				@ 35.9', high angle fracture								
35																
36.3	685.2							Bottom of Boring - 36.3'								

Note: Used 3¼" dia. hollow stem augers from 0.0' - 30.6'

MASON-deVERTEUIL GEOTECHNICAL SERVICES, 6035 HUNTLEY ROAD, COLUMBUS, OHIO 43229, 614/888-0576

Client: Kohli & Kaliher Associates, Inc. | Project: Bridge Replacement, PAU-127-1023 | M-V Job No. 92218

LOG OF Boring B-2

Location: Sta 540+66, 10.8' right of ℄ | Date Drilled: 9-22-92

WATER OBSERVATIONS: Water seepage at: 10.5'; Water level at completion: Stream level

Depth in feet	Elevation in feet	Penetration Blows/6"	Recovery in inches	Sample No.	Drive	Press	Hand Penetrometer (tsf)	Description	% Agg.	% C.S.	% M.S.	% F.S.	% Silt	% Clay	Moisture Content (PL / Natural / LL)	Standard Penetration (N) Blows per foot
0	706.5															
		2 1 5	6	1			0.25	Soft to very soft brown and gray SILTY CLAY (A-6b), some fine to coarse sand, trace gravel, contains organic material; moist								
		1 1 1	5	2			0.25									
5 / 5.5	701.0															
		72	6	3			4.5+	Hard gray SANDY SILT (A-4a), some clay, trace gravel; damp	9	8	–	22	36	25		72+
7.5	699.0															
		22 36 50(5)	16	4			4.5+	Hard gray SILTY CLAY (A-6b), trace fine to coarse sand, trace gravel; damp to moist	4	2	–	5	34	55		86+
10 / 10.5	696.0															
		80/2	2	5				Very dense gray GRAVEL with SAND and SILT (A-2-4), trace clay; wet								80+
		50(0)	NS					@ 13.0' possible cobbles & boulders								50+
15 / 15.5	691.0															
		CORE 36"	REC 22"	RQD 14%				Very hard gray LIMESTONE, broken								
		CORE 26"	REC 18"	RQD 0%												
20 / 20.5	686.0															
								Bottom of Boring - 20.6'								

Notes: Boring was drilled through bridge deck. (15.7' from bridge deck to ground surface) Used 3¼" dia. hollow stem augers from 0.0' to 15.5'

MASON-deVERTEUIL GEOTECHNICAL SERVICES, 6035 HUNTLEY ROAD, COLUMBUS, OHIO 43229, 614/888-0576

Client: Kohli & Kaliher Associates, Inc. | Project: Bridge Replacement, PAU-127-1023 | M-V Job No. 92218

LOG OF Boring B-3

Location: Sta 541+26, 10.2' left of ℄ | Date Drilled: 9-28-92

WATER OBSERVATIONS: Water seepage at: -; Water level at completion: Stream level

Depth in feet	Elevation in feet	Penetration Blows/6"	Recovery in inches	Sample No.	Drive	Press	Hand Penetrometer (tsf)	Description	% Agg.	% C.S.	% M.S.	% F.S.	% Silt	% Clay	Moisture Content (PL / Natural / LL)	Standard Penetration (N) Blows per foot
0	706.1															
		2 4 19	1	1				Medium dense gray gravel with SAND and SILT (A-2-4), trace clay; wet								
3.0	703.1															
		14 22 27	15	2			4.5+	Hard gray, SILT and CLAY (A-6a), little to some fine to coarse sand, trace gravel; damp	8	7	–	14	33	38		
5		50(3)		3			4.5+	@ 6.0', drove on boulder	5	6	–	12	34	43		50+
7.5	698.6															
		59	6	4			4.5+	Hard gray SANDY SILT (A-4a), some clay, trace gravel; damp; @ 7.5' - 16.3', cobbles and boulders	3	7	–	12	49	29		59+
10		50(4)	4	5			4.5+		9	8	–	11	50	22		60+
		50(1)	NS													50+
15																
16.3	689.8															
		CORE 120"	REC 103"	RQD 71%				Very hard gray LIMESTONE, massive; @ 16.3' - 17.1', very broken; @ 17.7' - 18.3', broken								
20																
25																
26.3	679.8															
								Bottom of Boring - 26.3'								

Notes: Boring was drilled through bridge deck. (15.5' from bridge deck to ground surface) Used 3¼" dia. hollow stem augers from 0.0' - 16.3'

MASON - deVERTEUIL GEOTECHNICAL SERVICES
6121 HUNTLEY ROAD
COLUMBUS, OHIO 43229

STRUCTURE FOUNDATION INVESTIGATION

BRIDGE NO. PAU-127-1023 OVER FLATROCK CREEK
PAULDING COUNTY, OHIO

SEC.

LOGS OF BORINGS

DRAWN BY	CHECKED BY	REVIEWED BY	DATE
P.J.H.	B.E.W.	P.d.V.	2/17/93

MASON-deVERTEUIL GEOTECHNICAL SERVICES, 6035 HUNTLEY ROAD, COLUMBUS, OHIO 43229, 614/888-0576

Client: Kohli & Kaliher Associates, Inc. | Project: Bridge Replacement, PAU-127-1023 | M-V Job No. 92218

LOG OF Boring B-4

Location: Sta 541+90, 9.2' left of ℄ | Date Drilled: 9-23-92

WATER OBSERVATIONS: Water seepage at: 11.0'; Water level at completion: 10.5' (includes drilling water)

Depth in feet	Elevation in feet	Penetration Blows/6"	Recovery in inches	Sample No.	Drive	Press	Hand Penetrometer (tsf)	Description	% Agg.	% C.S.	% M.S.	% F.S.	% Silt	% Clay	Moisture Content - % (Natural, PL, LL)	Standard Penetration (N) Blows per foot
0	721.6							Asphalt concrete - 1.5" Portland cement concrete -12"								
1.1	720.5	8 17 25	12		1			FILL: Dense brown coarse and fine SAND (A-3a), little clayey silt, little gravel; damp								
3.0	718.6	9 6 7	13		2		1.25	FILL: Medium dense brown GRAVEL with SAND and SILT (A-2-4), little clay; damp to moist	6	10	-	55	12	17		
5		4 6 7	13		3		1.0									
8.0	713.6	3 1 4	14		4		1.0	POSSIBLE FILL: Medium stiff to stiff gray SANDY SILT (A-4a), little clay, trace gravel; moist								
10 / 10.5	711.1	20 2 6	3		5			Loose gray GRAVEL with SAND and SILT (A-2-4), trace clay; wet								
13.0	708.6	3 5 15	18		6		0.5	Medium stiff gray SILT and CLAY (A-6a), trace fine to coarse sand, contains organic material; moist								
15 / 15.5	706.1	22 50(5)	11		7		4.5+	Hard gray and brown SILT and CLAY (A-6a), little to some fine to coarse sand, trace gravel; damp @ 16.5', drove on boulder	8	7	-	14	36	35		50+
20		18 21 24	18		8		4.5+		7	7	-	13	34	39		
22.0	699.6	49 50(3)	10		9		4.5+	Hard gray SILTY CLAY (A-6b), trace fine to coarse sand, trace gravel; damp	1	2	-	5	40	52		50+
25		67	5		10			Very dense gray SILT (A-4b), little clay, trace fine to coarse sand; moist								67+
27.0	694.6															
30																
31.5	690.1	CORE 47"	REC 43"	RQD 26%				Very hard gray LIMESTONE, massive @ 32.5' - 35.6', very broken								
35		CORE 59"	REC 55"	RQD 90%												
40 / 40.2	681.4							Bottom of Boring - 40.2'								

Notes: Used 3¼" dia. hollow stem augers from 1.1' to 31.5'

MASON-deVERTEUIL GEOTECHNICAL SERVICES, 6035 HUNTLEY ROAD, COLUMBUS, OHIO 43229, 614/888-0576

Client: Kohli & Kaliher Associates, Inc. | Project: Bridge Replacement, PAU-127-1023 | M-V Job No. 92218

LOG OF Boring R-1

Location: Sta 539+12, 12' right of ℄ | Date Drilled: 9-22-92

WATER OBSERVATIONS: Water seepage at: none; Water level at completion: none

Depth in feet	Elevation in feet	Penetration Blows/6"	Recovery in inches	Sample No.	Drive	Press	Hand Penetrometer (tsf)	Description	% Agg.	% C.S.	% M.S.	% F.S.	% Silt	% Clay	Moisture Content - % (Natural, PL, LL)	Standard Penetration (N) Blows per foot
0	722.1															
1.0	721.1	1 4 4	11		1		2.5	Asphalt concrete - 5" Portland cement concrete - 7"								
3.0	719.1							Very stiff brown and gray CLAY (A-7-6), "and" silt, trace fine to coarse sand, trace gravel; moist	1	1	-	3	41	54		
5		2 3 5	12		2		—	Stiff to very stiff brown and gray SILTY CLAY (A-6b), little fine to coarse sand, trace gravel; moist								
7.0	715.1	2 6 10	12		3A 3B		1.75 4.5+	Very stiff to hard gray SILT and CLAY (A-6a), some fine to coarse sand, trace gravel; damp to moist								
10	712.1	3 5 6	12		4		2.75									

Bottom of Boring - 10.0'

Note: Used 3¼" dia. hollow stem augers from 1.0' - 8.5'

MASON-deVERTEUIL GEOTECHNICAL SERVICES, 6035 HUNTLEY ROAD, COLUMBUS, OHIO 43229, 614/888-0576

Client: Kohli & Kaliher Associates, Inc. | Project: Bridge Replacement, PAU-127-1023 | M-V Job No. 92218

LOG OF Boring R-2

Location: Sta 542+83, 10.0' right of ℄ | Date Drilled: 9-25-92

WATER OBSERVATIONS: Water seepage at: none; Water level at completion: none

Depth in feet	Elevation in feet	Penetration Blows/6"	Recovery in inches	Sample No.	Drive	Press	Hand Penetrometer (tsf)	Description	% Agg.	% C.S.	% M.S.	% F.S.	% Silt	% Clay	Moisture Content - % (Natural, PL, LL)	Standard Penetration (N) Blows per foot
0	722.1															
1.3	720.8	10 8 12	11		1		3.0	Asphalt concrete - 8.5" Portland cement concrete - 7.0"								
5		9 15 22	18		2		4.5+	Very stiff to hard light brown and gray SANDY SILT (A-4a), "and" clay, trace gravel; damp to moist	3	3	-	10	47	37		
		13 13 20	17		3		4.5+									
10	712.1	11 17 14	14		4		4.5+									

Bottom of Boring - 10.0'

Note: Used 3¼" dia. hollow stem augers from 1.3' - 8.5'

MASON - deVERTEUIL GEOTECHNICAL SERVICES
6121 HUNTLEY ROAD
COLUMBUS, OHIO 43229

STRUCTURE FOUNDATION INVESTIGATION

BRIDGE NO. PAU-127-1023 OVER FLATROCK CREEK
PAULDING COUNTY, OHIO

SEC.

LOGS OF BORINGS

DRAWN BY	CHECKED BY	REVIEWED BY	DATE
P.J.H.	B.E.W.	P.d.V.	2/17/93