LANCASTER PIKE IMPROVEMENTS

CITY OF CIRCLEVILLE

CIRCLEVILLE TOWNSHIP

PICKAWAY COUNTY

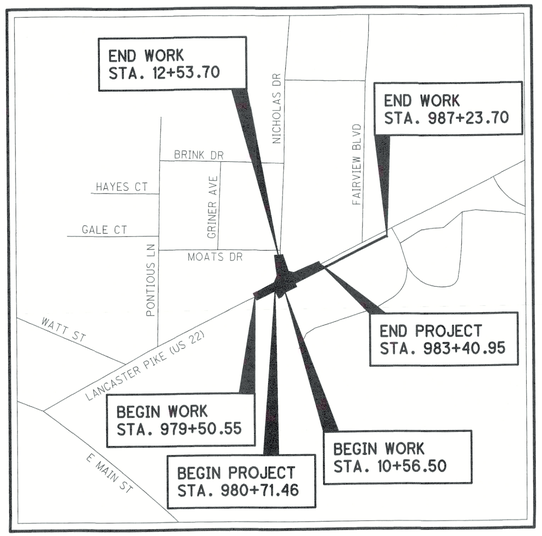

LOCATION MAP

LATITUDE: 39°36'01" LONGITUDE: 82°55'44"

SCALE IN FEET

0 400 800

N

PORTION TO BE IMPROVED
INTERSTATE HIGHWAY
FEDERAL ROUTES
STATE ROUTES
COUNTY & TOWNSHIP ROADS
OTHER ROADS

DESIGN DESIGNATION

CURRENT ADT (2022)	11,333
DESIGN YEAR ADT (2042)	13,829
DESIGN HOURLY VOLUME (2022)	1,978
DIRECTIONAL DISTRIBUTION	0.53
TRUCKS (24 HOUR B&C)	750
DESIGN SPEED	35 MPH
LEGAL SPEED	35 MPH

DESIGN FUNCTIONAL CLASSIFICATION:
D6 MINOR COLLECTOR (URBAN)

NHS PROJECT ..... NO

DESIGN EXCEPTIONS

NONE

INDEX OF SHEETS:

TITLE SHEET	1
SCHEMATIC PLAN	2
GENERAL NOTES	3
TYPICAL SECTIONS	4
MAINTENANCE OF TRAFFIC	5 - 7
GENERAL SUMMARY	8 - 9
ROADWAY SUBSUMMARY	10
PLAN	11
CROSS SECTIONS	12 - 19
INTERSECTION DETAIL	20
STORM SEWER PROFILE	21
SIGNAL PLANS	22 - 27, 22A
TRAFFIC CONTROL	28 - 29

PROJECT DESCRIPTION

THE PROJECT CONSISTS OF A NEW ENTRANCE TO THE PICKAWAY COUNTY FAIRGROUNDS ON LANCASTER PIKE, ACROSS FROM NICHOLAS DRIVE, INCLUDING A WESTBOUND LEFT TURN LANE ON LANCASTER PIKE. OTHER IMPROVEMENTS INCLUDE DRAINAGE, SIDEWALK AND CURB RAMPS, CURB AND GUTTER, SIGNING, AND PAVEMENT MARKINGS.

PROJECT EARTH DISTURBED AREA: 0.78 ACRES
ESTIMATED CONTRACTOR EARTH DISTURBED AREA: 0 ACRES
NOTICE OF INTENT EARTH DISTURBED AREA: 0.78 ACRES

2019 SPECIFICATIONS

THE STANDARD SPECIFICATIONS OF THE STATE OF OHIO, DEPARTMENT OF TRANSPORTATION, INCLUDING SUPPLEMENTAL SPECIFICATIONS LISTED IN THE PLANS AND CHANGES LISTED IN THE PROPOSAL SHALL GOVERN THIS IMPROVEMENT.

UNDERGROUND UTILITIES

CONTACT BOTH SERVICES
CALL TWO WORKING DAYS
BEFORE YOU DIG

CALL
1-800-362-2764
(TOLL FREE)

OHIO UTILITIES PROTECTION SERVICE
NON-MEMBERS
MUST BE CALLED DIRECTLY

OIL & GAS PRODUCERS UNDERGROUND PROTECTION SERVICE CALL: **1-800-925-0988**

PLAN PREPARED BY:
ms consultants, inc.
engineers • architects • planners
2221 SCHROCK ROAD
COLUMBUS, OHIO 43229-1547
Phone (614) 898-7100 Fax (614) 898-7570
www.msconsultants.com

ENGINEERS SEAL:

STATE OF OHIO
DIANA L. TOUT
E-69276
REGISTERED PROFESSIONAL ENGINEER

SIGNED:
DATE: 10/11/2022

STANDARD CONSTRUCTION DRAWINGS							SUPPLEMENTAL SPECIFICATIONS		SPECIAL PROVISIONS
BP-3.1	1/21/22	MT-97.10					809	7/15/22	
BP-3.2	1/18/19	MT-97.11	1/20/17						
BP-5.1	7/15/22	MT-101.90	7/17/20						
BP-7.1	1/21/22	MT-105.10	1/17/20						
BP-8.2	1/18/19	MT-110.10	7/19/13						
CB-3A	7/16/21	TC-41.20	10/18/13						
		TC-41.41	7/19/19						
DM-1.1	7/17/20	TC-42.20	10/18/13						
DM-1.2	7/16/21	TC-52.20	1/15/21						
DM-4.4	1/15/16	TC-71.10	7/15/22						
		TC-74.10	1/21/22						
HW-2.1	7/20/18	TC-85.10	4/17/20						
HW-2.2	7/20/18	TC-85.22	1/19/18						
MH-3	7/16/21								

APPROVED
DATE 1/9/23 DIRECTOR OF PUBLIC SERVICES, JAMES A. STANLEY

APPROVED
DATE 1/9/23 UTILITIES OPERATION MANAGER, BRIAN FROST

FEDERAL PROJECT NO. -
PID NO.
CONSTRUCTION PROJECT NO. -
RAILROAD INVOLVEMENT NONE

LANCASTER PIKE IMPROVEMENTS

N:\03\67\26620-00\Transportation\Roadway\Sheets\26620_GT001.dwg 05-Oct-22 8:08 AM

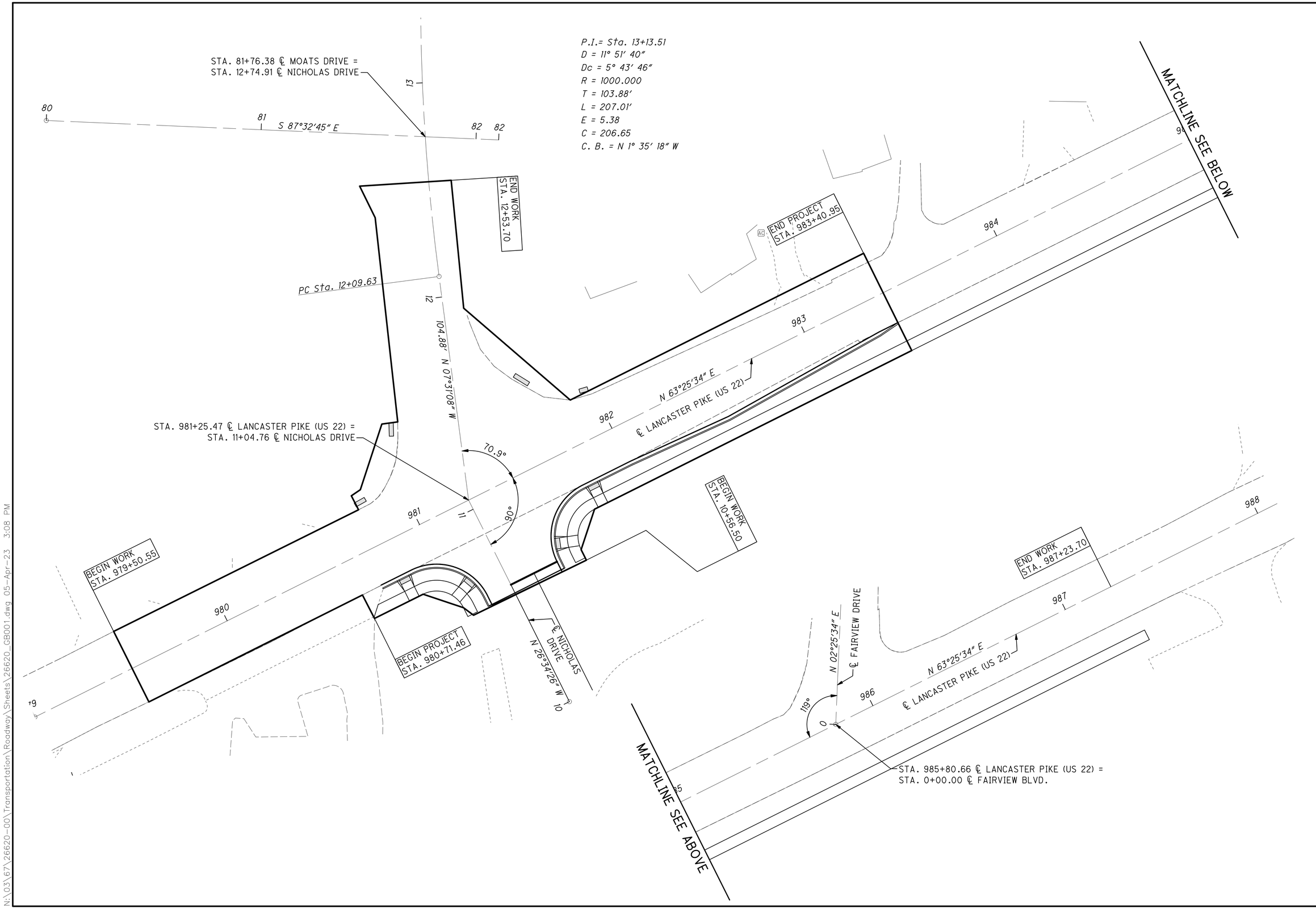
P.I.= Sta. 13+13.51
D = 11° 51′ 40″
Dc = 5° 43′ 46″
R = 1000.000
T = 103.88′
L = 207.01′
E = 5.38
C = 206.65
C. B. = N 1° 35′ 18″ W
STA. 81+76.38 ℄ MOATS DRIVE =
STA. 12+74.91 ℄ NICHOLAS DRIVE
S 87°32′45″ E
PC Sta. 12+09.63
104.88′ N 07°31′08″ W
END WORK
STA. 12+53.70
END PROJECT
STA. 983+40.95
MATCHLINE SEE BELOW
N 63°25′34″ E
℄ LANCASTER PIKE (US 22)
STA. 981+25.47 ℄ LANCASTER PIKE (US 22) =
STA. 11+04.76 ℄ NICHOLAS DRIVE
70.9°
60°
BEGIN WORK
STA. 10+56.50
BEGIN WORK
STA. 979+50.55
BEGIN PROJECT
STA. 980+71.46
℄ NICHOLAS DRIVE
N 26°34′26″ W
END WORK
STA. 987+23.70
N 02°25′34″ E
℄ FAIRVIEW DRIVE
119°
STA. 985+80.66 ℄ LANCASTER PIKE (US 22) =
STA. 0+00.00 ℄ FAIRVIEW BLVD.
MATCHLINE SEE ABOVE
80
81
82
82
13
12
11
10
9
98
984
983
982
981
980
979
988
987
986
985
0
N
HORIZONTAL SCALE IN FEET
0
10
20
40
CALCULATED GAN
CHECKED DLT
SCHEMATIC PLAN
LANCASTER PIKE IMPROVEMENTS
2
29
N:\03\67\26620-00\Transportation\Roadway\Sheets\26620_GB001.dwg 05-Apr-23 3:08 PM

UTILITIES

LISTED BELOW ARE ALL UTILITIES LOCATED WITHIN THE PROJECT CONSTRUCTION LIMITS TOGETHER WITH THEIR RESPECTIVE OWNERS.

COLUMBIA GAS OF OHIO - CHOLLICOTHE
ATTN: MICHAEL PAULUS
843 PIATT AVE.
CHILLICOTHE, OH 45601
OFFICE: 740.774.8239
mpaulus@nisource.com

AEP - COLUMBUS SOUTHERN POWER
ATTN: BRENT GATES
850 TECH CENTER DR.
GAHANNA, OH 43230
OFFICE: 614.883.6802
bmgates@aep.com

SOUTH CENTRAL POWER
ATTN: ZAC REED
720 MILL PARK DR.
LANCASTER, OH 43130
OFFICE: 800.282.5064
CELL: 740.415.4274
zreed@SouthCentralPower.com

FRONTIER COMMUNICATION POWER (FKA VERIZON)
757 COMMERCE CT.
LEWIS CENTER, OH 43035
CELL: 614.593.6685 (MAURICE JONES)
CELL: 614.816.0361 (BOB DILLOW)
vz.net.columbus@verizon.com
John.cornell@verizonwireless.com
michael.hennon@verizonwireless.com
michael.bondy@verizonwireless.com
sven.christianson@verizonwireless.com

PICKAWAY COUNTY ENGINEER'S OFFICE
121 W FRANKLIN ST.
CIRCLEVILLE, OH 43113
OFFICE: 740.474.3360

CHARTER COMMUNICATIONS/SPECTRUM (AKA TIME WARNER COMMUNICATIONS)
3760 INTERCHANGE RD.
COLUMBUS, OH 43204
OFFICE: 641.481.5374
DL-MOH-CONSTRUCTION-FRELO-TEAM@charter.com
joshua.hite@charter.com

THE LOCATION OF THE UNDERGROUND UTILITIES SHOWN ON THE PLANS ARE AS OBTAINED FROM THE OWNERS AS REQUIRED BY SECTION 153.64 O.R.C.

CONSTRUCTION NOISE

ACTIVITIES AND LAND USE ADJACENT TO THIS PROJECT MAY BE AFFECTED BY CONSTRUCTION NOISE. IN ORDER TO MINIMIZE ANY ADVERSE CONSTRUCTION NOISE IMPACTS, DO NOT OPERATE POWER-OPERATED CONSTRUCTION-TYPE DEVICES BETWEEN THE HOURS OF 7PM AND 7AM. IN ADDITION, DO NOT OPERATE AT ANY TIME ANY DEVICE IN SUCH A MANNER THAT THE NOISE CREATED SUBSTANTIALLY EXCEEDS THE NOISE CUSTOMARILY AND NECESSARILY ATTENDANT TO THE REASONABLE AND EFFICIENT PERFORMANCE OF SUCH EQUIPMENT.

SURVEYING PARAMETERS

PRIMARY PROJECT CONTROL MONUMENTS GOVERN ALL POSITIONING.

USE THE FOLLOWING PROJECT CONTROL, VERTICAL POSITIONING, AND HORIZONTAL POSITIONING PARAMETERS FOR ALL SURVEYING:

PROJECT CONTROL

POSITIONING METHOD: ODOT VRS SURVEY COLLECTION PER 502.2.E. OF SURVEY MANUAL
MONUMENT TYPE: PROJECT CONTROL MONUMENT TYPE B

VERTICAL POSITIONING

ORTHOMETRIC HEIGHT DATUM: NAVD88
GEOID:GEOID12A

HORIZONTAL POSITIONING

REFERENCE FRAME: NAD83 (2011)
ELLIPSOID: GRS80
MAP PROJECTION: LAMBERT CONFORMAL CONIC
COORDINATE SYSTEM: OHIO STATE PLANE, SOUTH ZONE (3402)
COMBINED SCALE FACTOR: 1.0000000000
ORIGIN OF SCALE (X,Y):

EASTING (X): 0
NORTHING (Y): 0

USE THE POSITIONING METHODS AND MONUMENT TYPE USED IN THE ORIGINAL SURVEY TO RESTORE ALL MONUMENTS RELATED TO PRIMARY PROJECT CONTROL THAT ARE DAMAGED OR DESTROYED BY CONSTRUCTION ACTIVITIES. RESTORE THE DAMAGED OR DESTROYED MONUMENTS IN ACCORDANCE WITH CMS 623.

UNITS ARE IN U.S. SURVEY FEET.

WORK LIMITS

THE WORK LIMITS SHOWN ON THESE PLANS ARE FOR PHYSICAL CONSTRUCTION ONLY. PROVIDE THE INSTALLATION AND OPERATION OF ALL WORK ZONE TRAFFIC CONTROL AND WORK ZONE TRAFFIC CONTROL DEVICES REQUIRED BY THESE PLANS WHETHER INSIDE OR OUTSIDE THESE WORK LIMITS.

CLEARING AND GRUBBING

ALTHOUGH THERE ARE NO TREES OR STUMPS SPECIFICALLY MARKED FOR REMOVAL WITHIN THE LIMITS OF THE PROJECT, A LUMP SUM QUANTITY IS INCLUDED IN THE GENERAL SUMMARY FOR ITEM 201, CLEARING AND GRUBBING. ALL PROVISIONS AS SET FORTH IN THE SPECIFICATIONS UNDER THIS ITEM ARE INCLUDED IN THE LUMP SUM PRICE BID FOR ITEM 201, CLEARING AND GRUBBING.

ITEM 204 - PROOF ROLLING

THE FOLLOWING QUANTITY IS PROVIDED IN THE GENERAL SUMMARY TO ADDRESS LOCATIONS REQUIRING PROOF ROLLING. SEE PLAN SHEET NO 11 FOR ADDITIONAL INFORMATION.

ITEM 204 PROOF ROLLING 1 HOUR.

CROSSINGS AND CONNECTIONS TO EXISTING PIPES AND UTILITIES

WHERE PLANS PROVIDE FOR A PROPOSED CONDUIT TO BE CONNECTED TO, OR CROSS OVER OR UNDER AN EXISTING SEWER OR UNDERGROUND UTILITY, LOCATE THE EXISTING PIPES OR UTILITIES BOTH AS TO LINE AND GRADE BEFORE STARTING TO LAY THE PROPOSED CONDUIT.

IF IT IS DETERMINED THAT THE ELEVATION OF THE EXISTING CONDUIT, OR EXISTING APPURTENANCE TO BE CONNECTED, DIFFERS FROM THE PLAN ELEVATION OR RESULTS IN A CHANGE IN THE PLAN CONDUIT SLOPE, NOTIFY THE CITY OF CIRCLEVILLE BEFORE STARTING CONSTRUCTION OF ANY PORTION OF THE PROPOSED CONDUIT WHICH WILL BE AFFECTED BY THE VARIANCE IN THE EXISTING ELEVATIONS.

IF IT IS DETERMINED THAT THE PROPOSED CONDUIT WILL INTERSECT AN EXISTING SEWER OR UNDERGROUND UTILITY IF CONSTRUCTED AS SHOWN ON THE PLAN, NOTIFY THE CITY OF CIRCLEVILLE BEFORE STARTING CONSTRUCTION OF ANY PORTION OF THE PROPOSED CONDUIT WHICH WOULD BE AFFECTED BY THE INTERFERENCE WITH AN EXISTING FACILITY.

PAYMENT FOR ALL THE OPERATIONS DESCRIBED ABOVE IS INCLUDED IN THE CONTRACT PRICE FOR THE PERTINENT 611 CONDUIT ITEM.

REVIEW OF DRAINAGE FACILITIES

PRIOR TO THE START OF WORK AND AGAIN BEFORE FINAL ACCEPTANCE, PERFORM AN INSPECTION WITH REPRESENTATIVES OF THE CITY OF CIRCLEVILLE, CONTRACTOR AND LOCALS OF ALL EXISTING DRAINAGE FACILITIES THAT ARE TO REMAIN IN SERVICE WHICH MAY BE AFFECTED BY THE WORK. THE CONDITION OF THE EXISTING CONDUITS AND THEIR APPURTENANCES IS DETERMINED FROM FIELD OBSERVATIONS. RECORDS OF THE INSPECTION ARE MAINTAINED BY THE CITY OF CIRCLEVILLE.

CONFIRM ALL EXISTING SEWERS INSPECTED INITIALLY BY THE ABOVE-MENTIONED PARTIES ARE MAINTAINED AND LEFT IN A CONDITION COMPARABLE TO THAT DETERMINED BY THE ORIGINAL INSPECTION. THE CONTRACTOR IS RESPONSIBLE TO CORRECT ANY CHANGE IN THE CONDITION RESULTING FROM THEIR OPERATIONS AS DIRECTED AND APPROVED BY THE CITY OF CIRCLEVILLE.

PAYMENT FOR ALL OPERATIONS DESCRIBED ABOVE IS INCLUDED IN THE CONTRACT PRICE FOR THE PERTINENT 611 CONDUIT ITEMS.

SEEDING AND MULCHING

THE FOLLOWING QUANTITIES ARE PROVIDED TO PROMOTE GROWTH AND CARE OF PERMANENT SEEDED AREAS:

ITEM 659, SOIL ANALYSIS TEST	1 EACH
ITEM 659, TOPSOIL	26 CU. YD.
ITEM 659, SEEDING AND MULCHING	232 SQ. YD.
ITEM 659, REPAIR SEEDING AND MULCHING	104 SQ. YD.
ITEM 659, INTER-SEEDING	104 SQ. YD.
ITEM 659, COMMERCIAL FERTILIZER	0.29 TON
ITEM 659, LIME	0.43 ACRES
ITEM 659, WATER	12 M. GAL.
ITEM 659, MOWING	5 M. SQ. SF.

APPLY SEEDING AND MULCHING S TO ALL AREAS OF EXPOSED SOIL BETWEEN THE RIGHT-OF-WAY LINES AND WITHIN THE CONSTRUCTION LIMITS FOR AREAS OUTSIDE THE RIGHT-OF-WAY LINES COVERED BY WORK AGREEMENT OR SLOPE EASEMENT. QUANTITY CALCULATIONS FOR SEEDING AND MULCHING ARE BASED ON THESE LIMITS.

CALCULATED GAN
CHECKED DLT

GENERAL NOTES

LANCASTER PIKE IMPROVEMENTS

N:\03\67\26620-00\Transportation\Roadway\Sheets\26620_GN001.dwg 05-Apr-23 3:08 PM

LEGEND

PROPOSED

1. ITEM 301 - 6" ASPHALT CONCRETE BASE, PG64-22 (449)
2. ITEM 304 - 6" AGGREGATE BASE
3. ITEM 441 - 1-1/2" ASPHALT CONCRETE SURFACE COURSE, TYPE 1, (449), PG64-22
4. ITEM 441 - 1-1/2" ASPHALT CONCRETE INTERMEDIATE COURSE, TYPE 1, (449)
5. ITEM 408 - BITUMINOUS PRIME COAT (@ 0.40 GAL/SY)
6. ITEM 204 - SUBGRADE COMPACTION
7. ITEM 659 - SEEDING AND MULCHING
8. ITEM 254 - 1-1/2" PAVEMENT PLANING, ASPHALT CONCRETE
9. ITEM 653 - 3" TOPSOIL FURNISHED AND PLACED
10. ITEM 605 - 4" BASE PIPE UNDERDRAIN
11. ITEM 407 - NON-TRACKING TACK (@ 0.15 GAL/SY)
12. ITEM 608 - 4" CONCRETE WALK
13. ITEM 609 - COMBINATION CURB AND GUTTER, TYPE 2

EXISTING

- (A) EXISTING PAVEMENT
- (B) EXISTING CURB AND GUTTER
- (C) EXISTING WALK
- (D) EXISTING UNDERDRAIN

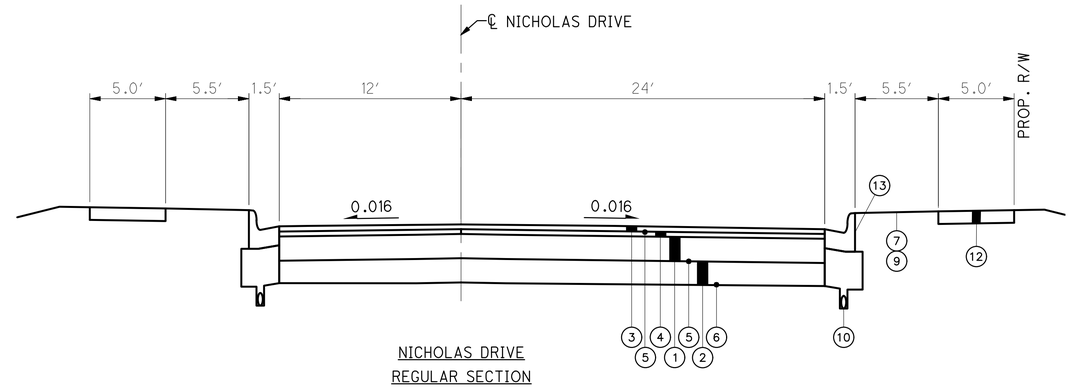

NICHOLAS DRIVE
REGULAR SECTION
STA. 10+56.50 TO STA. 10+87.45

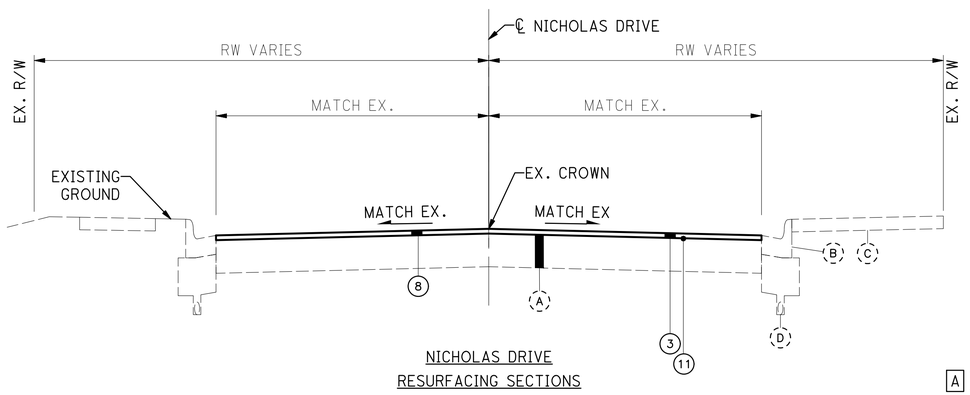

NICHOLAS DRIVE
RESURFACING SECTIONS
(NOT TO SCALE)
STA. 11+24.61 TO STA 12+53.94

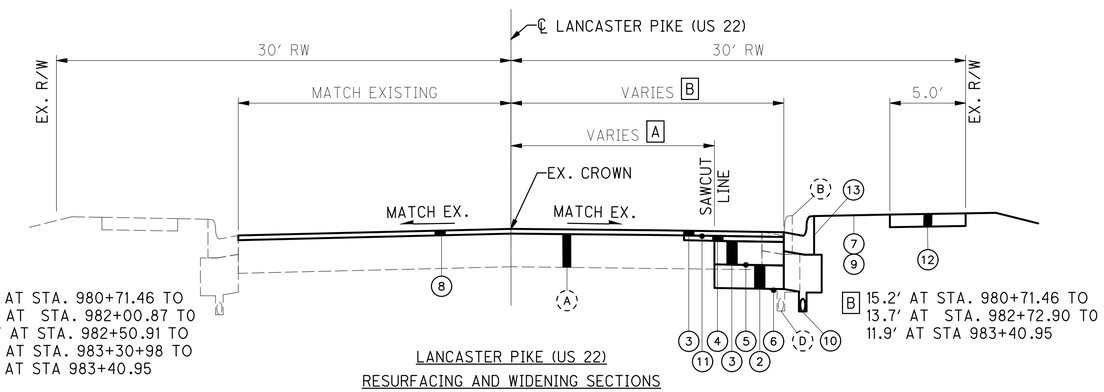

A 18.7' AT STA. 980+71.46 TO
19.0' AT STA. 982+00.87 TO
20.8' AT STA. 982+50.91 TO
17.0' AT STA. 983+30+98 TO
15.5' AT STA 983+40.95

B 15.2' AT STA. 980+71.46 TO
13.7' AT STA. 982+72.90 TO
11.9' AT STA 983+40.95

LANCASTER PIKE (US 22)
RESURFACING AND WIDENING SECTIONS
(NOT TO SCALE)
STA. 980+71.46 TO STA 983+40.95

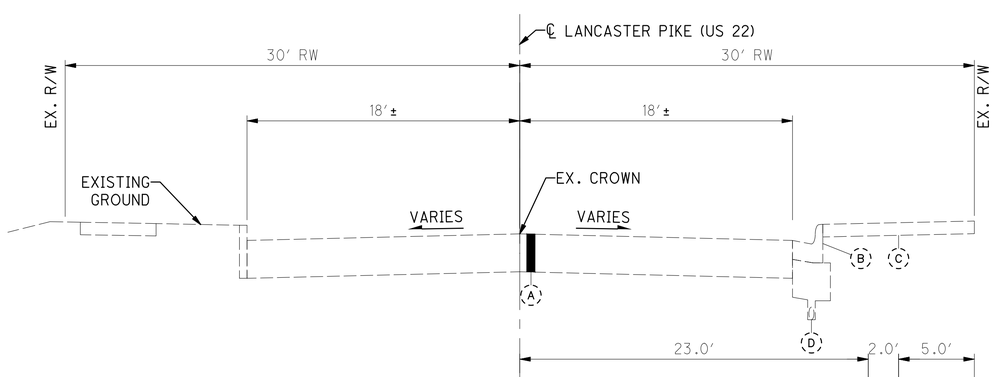

LANCASTER PIKE (US 22)
END ADJOINING SECTIONS
(NOT TO SCALE)
STA. 979+50.55
STA 983+40.95

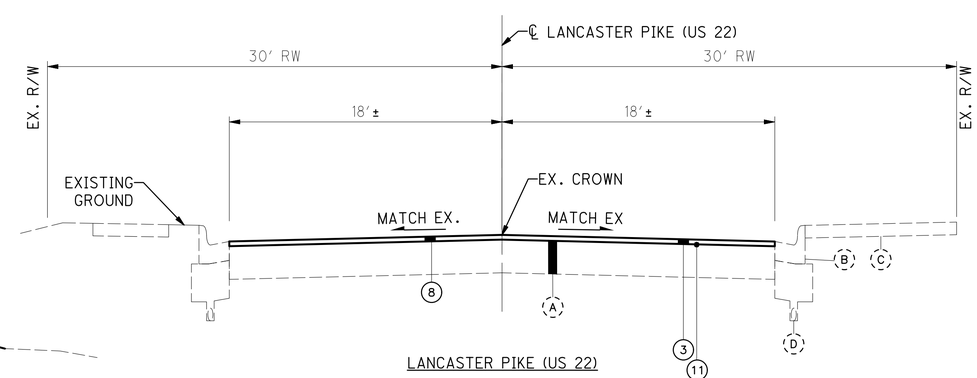

LANCASTER PIKE (US 22)
RESURFACING SECTIONS
(NOT TO SCALE)
STA. 979+50.55 TO STA 980+71.46

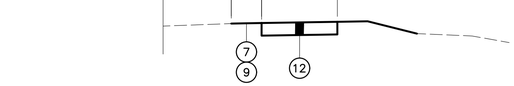

WALK SECTION
STA. 983+40.95 TO STA 987+23.70

CALCULATED GAN
CHECKED DLT

TYPICAL SECTIONS

LANCASTER PIKE IMPROVEMENTS

N:\03\67\26620-00\Transportation\Roadway\Sheets\26620_GY001.dwg 05-Apr-23 3:08 PM

ITEM 614, MAINTAINING TRAFFIC

THIS ITEM SHALL CONSIST OF MAINTENANCE OF TRAFFIC ON EXISTING ROADWAYS IN ACCORDANCE WITH THE OHIO MANUAL OF UNIFORM TRAFFIC CONTROL DEVICES FOR STREETS AND HIGHWAYS (OMUTCD), CURRENT EDITION, LATEST REVISION.

ALL TRAFFIC CONTROL DEVICES REQUIRED INSIDE THE WORK LIMITS SHALL BE FURNISHED, ERECTED, MAINTAINED AND SUBSEQUENTLY REMOVED BY THE CONTRACTOR.

THE CONTRACTOR SHALL MAINTAIN TRAFFIC AT ALL TIMES IN ACCORDANCE WITH THE REQUIREMENTS OF ITEM 614. TWO WAY TRAFFIC SHALL BE MAINTAINED AT ALL TIMES UNLESS DIRECTED BY THE CITY OF CIRCLEVILLE.

PROCEDURES FOR MAINTAINING TRAFFIC SHALL BE IN ACCORDANCE WITH THE OHIO MANUAL OF UNIFORM TRAFFIC CONTROL DEVICES AND ALL STANDARD CONSTRUCTION DRAWINGS SHOWN ON THE TITLE SHEET. WORK ON OR BEYOND THE SHOULDER SHALL BE IN ACCORDANCE WITH PLATES TA-1, TA-3, AND TA-6 OF THE OMUTCD. MINIMUM LANE WIDTHS DURING MAINTENANCE OF TRAFFIC SHALL BE 10 FEET. ALL WORK WITHIN THE ROADWAY SHALL BE COMPLETED FROM 9AM TO 4PM.

ALL ADVANCE WARNING SIGNS FOR ANY CONDITION WHICH RESTRICTS TRAFFIC SHALL BE ERECTED BEFORE ANY SUCH RESTRICTION IS PUT INTO EFFECT. ALL SUCH SIGNS SHALL BE COVERED OR REMOVED FROM VIEW OF TRAFFIC WHEN THEY ARE NOT APPLICABLE, AS DETERMINED BY THE CITY OF CIRCLEVILLE.

IF THE CONTRACTOR FAILS TO COMPLY WITH THE PROVISIONS FOR TRAFFIC CONTROL AS SET FORTH IN THESE PLANS OR WITH PROVISIONS OF THE OMUTCD, AND SUCH FAILURE RESULTS IN A CONDITION AT THE WORK SITE WHICH IS UNSAFE FOR TRAFFIC, THE CITY OF CIRCLEVILLE SHALL SUSPEND WORK UNTIL THE CONTRACTOR COMPLIES WITH THE NECESSARY REQUIREMENTS.

THE CONTRACTOR MAY CLOSE APPROACHES AT THE INTERSECTION FOR A PERIOD NOT TO EXCEED 10 MINUTES FOR THE PURPOSE OF INSTALLING SIGNAL EQUIPMENT OVER THE ROADWAY BY THE USE OF FLAGGERS OR OFF DUTY POLICE OFFICER(S) WITH PATROL CAR(S). CLOSURE SHALL BE ONLY PERMITTED BETWEEN THE HOURS OF 10:00 AM AND 3:00 PM MONDAY THRU FRIDAY.

NO STOPPAGE OF TRAFFIC SHALL OCCUR FOR THE ERECTION OF OVERHEAD SUPPORTS, CUTTING AND INSTALLING LOOP DETECTOR WIRE OR HANGING SPAN WIRE AND SIGNAL HEADS WITHOUT A LAW ENFORCEMENT OFFICER WITH PATROL CAR AT THE SITE FOR ASSISTANCE IN CONTROLLING TRAFFIC. IT SHALL BE THE CONTRACTOR'S RESPONSIBILITY TO PROVIDE THE SERVICES AND SCHEDULING OF SAID LAW ENFORCEMENT OFFICERS WITH PATROL CAR. THE DEPARTMENT SHALL BE CONTRACTED IN WRITING A MINIMUM OF TWO (2) WEEKS BEFORE PERFORMING WORK.

LANES OPEN DURING HOLIDAYS OR SPECIAL EVENTS

NO WORK SHALL BE PERFORMED AND ALL EXISTING LANES SHALL BE OPEN TO TRAFFIC DURING THE FOLLOWING DESIGNATED HOLIDAYS OR EVENTS:

CHRISTMAS	FOURTH OF JULY
NEW YEAR'S	LABOR DAY
MEMORIAL DAY	THANKSGIVING

THE PERIOD OF TIME THAT THE LANES ARE TO BE OPEN DEPENDS ON THE DAY OF THE WEEK ON WHICH THE HOLIDAY OR EVENT FALLS. THE FOLLOWING SCHEDULE SHALL BE USED TO DETERMINE THIS PERIOD:

DAY OF HOLIDAY OR EVENT	TIME ALL LANES MUST BE OPEN TO TRAFFIC
SUNDAY	12:00N FRIDAY THROUGH 6:00 AM MONDAY
MONDAY	12:00N FRIDAY THROUGH 6:00 AM TUESDAY
TUESDAY	12:00N MONDAY THROUGH 6:00 AM WEDNESDAY
WEDNESDAY	12:00N TUESDAY THROUGH 6:00 AM THURSDAY
THURSDAY	12:00N WEDNESDAY THROUGH 6:00 AM FRIDAY
THURSDAY (THANKSGIVING ONLY)	6:00 AM WEDNESDAY THROUGH 6:00 AM MONDAY
FRIDAY	12:00N THURSDAY THROUGH 6:00 AM MONDAY
SATURDAY	12:00N FRIDAY THROUGH 6:00 AM MONDAY

SHOULD THE CONTRACTOR FAIL TO MEET ANY OF THESE REQUIREMENTS, THE CITY OF CIRCLEVILE MAY REVOKE ANY AND ALL ROADWAY OCCUPANCY PERMITS.

LANE CLOSURE/REDUCTION REQUIRED)

LENGTH AND DURATION OF LANE CLOSURES AND RESTRICTIONS SHALL BE AT THE APPROVAL OF THE CITY OF CIRCLEVILLE. IT IS THE INTENT TO MINIMIZE THE IMPACT TO THE TRAVELING PUBLIC. LANE CLOSURES OR RESTRICTIONS OVER SEGMENTS OF THE PROJECT IN WHICH NO WORK IS ANTICIPATED WITHIN A REASONABLE TIME FRAME, AS DETERMINED BY THE CITY OF CIRCLEVILLE, SHALL NOT BE PERMITTED. THE LEVEL OF UTILIZATION OF MAINTENANCE OF TRAFFIC DEVICES SHALL BE COMMENSURATE WITH THE WORK IN PROGRESS.

ALL WORK AND TRAFFIC CONTROL DEVICES SHALL BE IN ACCORDANCE WITH C&MS 614 AND OTHER APPLICABLE PORTIONS OF THE SPECIFICATIONS, AS WELL AS THE OHIO MANUAL OF UNIFORM TRAFFIC CONTROL DEVICES. PAYMENT FOR ALL LABOR, EQUIPMENT AND MATERIALS SHALL BE INCLUDED IN THE LUMP SUM CONTRACT PRICE FOR ITEM 614, MAINTAINING TRAFFIC, UNLESS SEPARATELY ITEMIZED IN THE PLAN.

TRENCH FOR WIDENING

TRENCH EXCAVATION FOR BASE WIDENING SHALL BE ONLY ON ONE SIDE OF THE PAVEMENT AT A TIME. THE OPEN TRENCH SHALL BE ADEQUATELY MAINTAINED AND PROTECTED WITH DRUMS OR BARRICADES AT ALL TIMES. PLACEMENT OF PROPOSED SUBBASE AND BASE MATERIAL SHALL FOLLOW AS CLOSELY AS POSSIBLE BEHIND EXCAVATION OPERATIONS. THE LENGTH OF WIDENING TRENCH WHICH IS OPEN AT ANY ONE TIME SHALL BE HELD TO A MINIMUM AND SHALL AT ALL TIMES BE SUBJECT TO APPROVAL OF THE CITY OF CIRCLEVILLE.

OVERNIGHT TRENCH CLOSING

THE BASE WIDENING SHALL BE COMPLETED TO A DEPTH OF NO MORE THAN 5 INCHES BELOW THE EXISTING PAVEMENT BY THE END OF EACH WORK DAY. NO TRENCH SHALL BE LEFT OPEN OVERNIGHT EXCEPT FOR A SHORT LENGTH (25 FEET OR LESS) OF A WORK SECTION AT THE END OF THE TRENCH. IN CASE WORK MUST BE SUSPENDED BECAUSE OF INCLEMENT WEATHER OR OTHER REASONS, THE TRENCH FOR THE UNCOMPLETED BASE WIDENING SHALL BE BACKFILLED AT THE DIRECTION OF THE CITY OF CIRCLEVILLE.

DUST CONTROL

THE CONTRACTOR SHALL FURNISH AND APPLY WATER FOR DUST CONTROL AS DIRECTED BY THE CITY OF CIRCLEVILLE. THE FOLLOWING ESTIMATED QUANTITIES HAVE BEEN INCLUDED FOR DUST CONTROL PURPOSES:

ITEM 616, WATER 1 M. GAL.

MAINTENANCE OF TRAFFIC SIGNAL/FLASHER INSTALLATION

THE CONTRACTOR SHALL BE RESPONSIBLE FOR MAINTAINING TRAFFIC SIGNAL/FLASHER INSTALLATIONS WITHIN THE PROJECT UNDER THE FOLLOWING CONDITIONS:

1. EXISTING SIGNAL/FLASHER INSTALLATIONS WHICH THE PLANS REQUIRE THE CONTRACTOR TO ADJUST, MODIFY, ADD ONTO OR REMOVE, OR WHICH THE CONTRACTOR ACTUALLY ADJUSTS, MODIFIES OR OTHERWISE DISTURBS. THE CONTRACTOR SHALL BE RESPONSIBLE FOR THE ENTIRE INSTALLATION (AT AN INTERSECTION) FROM THE TIME HIS OPERATIONS FIRST DISTURB THE INSTALLATION UNTIL THE INSTALLATION HAS BEEN SUBSEQUENTLY REMOVED OR MODIFIED AND THE WORK IS ACCEPTED.

2. NEW OR REUSED SIGNAL/FLASHER INSTALLATIONS OR DEVICES, INSTALLED BY THE CONTRACTOR. THE CONTRACTOR SHALL BE RESPONSIBLE FOR MAINTENANCE OF THESE FROM THE TIME OF INSTALLATION UNTIL THE WORK IS ACCEPTED.

THE CONTRACTOR SHALL CORRECT AS QUICKLY AS POSSIBLE ALL OUTAGES OR MALFUNCTIONS. HE SHALL PROVIDE THE MAINTAINING AGENCY AND THE CITY OF CIRCLEVILLE SUCH ADDRESSES AND PHONE NUMBERS WHERE HIS MAINTENANCE FORCES CAN BE CONTACTED. THE CONTRACTOR SHALL PROVIDE ONE OR MORE PERSONS TO RECEIVE ALL CALLS AND DISPATCH THE NECESSARY MAINTENANCE FORCES TO CORRECT OUTAGES. SUCH A PERSON OR PERSONS MAY BE USED TO PERFORM OTHER DUTIES AS LONG AS PROMPT ATTENTION IS GIVEN TO THESE CALLS AND A PERSON IS READILY AVAILABLE CONTINUOUSLY 24 HOURS A DAY, 7 DAYS A WEEK. ALL LAMP OUTAGES, CABLE OUTAGES, ELECTRICAL FAILURES, EQUIPMENT MALFUNCTIONS AND MISALIGNED SIGNAL HEADS SHALL BE CORRECTED TO THE SATISFACTION OF THE CITY OF CIRCLEVILLE WITH THE SIGNAL BACK TO SERVICE WITHIN FOUR HOURS AFTER THE CONTRACTOR HAS BEEN NOTIFIED OF THE OUTAGE.

IN THE EVENT NEW SIGNALS ARE DAMAGED PRIOR TO ACCEPTANCE, ALL DAMAGED EQUIPMENT EXCEPT POLES AND CONTROL EQUIPMENT SHALL BE REPLACED BY THE CONTRACTOR TO THE SATISFACTION OF THE CITY OF CIRCLRVILLE WITH THE SIGNAL BACK IN SERVICE WITHIN 8 HOURS AFTER THE CONTRACTOR'S NOTIFICATION OF THE OUTAGE. THE CONTRACTOR SHALL ARRANGE FOR FULL TRAFFIC CONTROL UNTIL THE SIGNAL IS BACK IN OPERATION. IF POLES AND/OR CONTROL EQUIPMENT ARE DAMAGED AND MUST BE REPLACED, THE CONTRACTOR SHALL MAKE TEMPORARY REPAIRS AS NECESSARY TO BRING THE SIGNAL BACK INTO FULL OPERATION WITHIN THE ALLOWED 8-HOUR PERIOD, AND SHALL MAKE PERMANENT REPAIRS OR REPLACEMENT AS SOON THEREAFTER AS POSSIBLE.

NONE OF THE ABOVE SHALL BE CONSTRUED AS COLLECTIVE OR CONSECUTIVE OUTAGE TIME PERIODS AT ANY ONE LOCATION. THAT IS, WHERE MORE THAN ONE OUTAGE OCCURS AT ANY ONE LOCATION THEN THE ALLOTTED TIME LIMIT SHALL BE FOR THE WORST SINGLE OUTAGE.

WHERE OUTAGES ARE THE DIRECT RESULT OF A VEHICLE ACCIDENT THE RESPONSE OF THE CONTRACTOR SHALL BE AS OUTLINED ABOVE. THE CONTRACTOR SHALL BE RESPONSIBLE FOR COLLECTION OF ANY COMPENSATION FOR THIS WORK FROM THOSE PARTIES RESPONSIBLE FOR THE DAMAGE.

WHERE THE CONTRACTOR HAS FAILED TO, OR CANNOT RESPOND TO, AN OUTAGE OR SIGNAL EQUIPMENT MALFUNCTION, AT THESE LOCATIONS WITHIN HIS RESPONSIBILITY, WITHIN PERIODS AS SPECIFIED ABOVE, THE CITY OF CIRCLEVILLE MAY INVOKE THE PROVISIONS OF SECTION 105.15 AND ANY SUBSEQUENT BILLINGS TO THE STATE OR THE CITY OF CIRCLEVILE FOR POLICE SERVICES AND MAINTENANCE SERVICES BY CITY FORCES SHALL BE DEDUCTED FROM MONIES DUE OR TO BECOME DUE THE CONTRACTOR IN ACCORDANCE WITH PROVISIONS OF SECTION 105.15.

CALCULATED MSS CHECKED JML

MAINTANENCE OF TRAFFIC GENERAL NOTES

LANCASTER PIKE IMPROVEMENTS

N:\03\67\26620-00\Transportation\MOT\Sheets\26620_MN001.dwg 05-Apr-23 3:08 PM

THE CONTRACTOR SHALL PROVIDE THE MAINTENANCE SERVICE ENTIRELY WITH HIS FORCES OR HE MAY CHOOSE TO ENTER INTO A COOPERATIVE UNDERSTANDING WITH THE LOCAL MAINTAINING AGENCY TO PROVIDE THE MAINTENANCE. THE CONTRACTOR SHALL INFORM THE CITY OF CIRCLEVILLE, IN WRITING, OF THE MAINTENANCE METHOD SELECTED.

THE CONTRACTOR SHALL BE RESPONSIBLE FOR ANY DAMAGE TO ANY TRAFFIC SIGNAL COMPONENTS REQUIRED TO BE HANDLED DURING THE RELOCATION OF POLES AND REVISIONS TO THE SIGNAL SYSTEM. WHEN A TRAFFIC SIGNAL MUST BE TAKEN OUT OF SERVICE BY THE CONTRACTOR, DUE TO CONSTRUCTION PROCEDURES, THIS OUTAGE SHALL NOT EXCEED SIX HOURS AND SHALL NOT INCLUDE THE HOURS OF 6 AM TO 9 AM AND 4 PM TO 7 PM MONDAY THROUGH FRIDAY. ANY SIGNALIZED INTERSECTION, WHERE THE SIGNAL IS OUT OF SERVICE DUE TO CONSTRUCTION PROCEDURES, OR DUE TO AN OUTAGE OR MALFUNCTION OF EQUIPMENT AS DESCRIBED ABOVE, SHALL BE PROTECTED, BY THE CONTRACTOR, BY OFF-DUTY CITY OF CIRCLEVILE POLICE, HIRED BY THE CONTRACTOR.

ANY VEHICULAR TRAFFIC SIGNAL HEAD, EITHER NEW OR EXISTING WHICH WILL BE OUT OF OPERATION SHALL BE COVERED IN THE MANNER DESCRIBED IN 632.25.

THE CONTRACTOR SHALL MAINTAIN COMPLETE RECORDS OF MALFUNCTIONS INCLUDING:

1. TIME OF NOTIFICATION OF MALFUNCTION;
2. TIME OF WORK CREWS ARRIVAL TO CORRECT THE MALFUNCTION;
3. ACTIONS TAKEN TO CORRECT THE MALFUNCTION, INCLUDING A LIST OF PARTS REPAIRED OR REPLACED;
4. A DIAGNOSIS OF REASON FOR THE MALFUNCTION AND PROBABILITY OF REOCCURRENCE;
5. TIME OF COMPLETION OF THE REPAIR AND SYSTEM RESTORED TO FULL SERVICE.

A COPY OF THESE RECORDS SHALL BE PROVIDED TO THE CITY OF CIRCLEVILLE WITHIN THREE (3) WORKING DAYS FOLLOWING COMPLETION OF EACH REPAIR.

ALL COSTS RESULTING FROM THE ABOVE REQUIREMENTS SHALL BE CONSIDERED TO BE INCLUDED IN THE LUMP SUM PRICE BID FOR ITEM 614, MAINTAINING TRAFFIC.

ITEM 614, LAW ENFORCEMENT OFFICER (WITH PATROL CAR) FOR ASSISTANCE DURING CONSTRUCTION OPERATIONS

USE OF LAW ENFORCEMENT OFFICERS (LEOS) BY CONTRACTORS OTHER THAN THE USES SPECIFIED BELOW WILL NOT BE PERMITTED AT PROJECT COST. LEOS SHOULD NOT BE USED WHERE THE OMUTCD INTENDS THAT FLAGGERS BE USED.

IN ADDITION TO THE REQUIREMENTS OF C&MS 614 AND THE OMUTCD, A UNIFORMED LEO WITH AN OFFICIAL PATROL CAR (CAR WITH TOP-MOUNTED EMERGENCY FLASHING LIGHTS AND COMPLETE MARKINGS OF THE APPROPRIATE LAW ENFORCEMENT AGENCY) SHALL BE PROVIDED FOR THE FOLLOWING TRAFFIC CONTROL TASKS:

- DURING THE ENTIRE ADVANCE PREPARATION AND CLOSURE SEQUENCE WHERE COMPLETE BLOCKAGE OF TRAFFIC IS REQUIRED.
- DURING A TRAFFIC SIGNAL INSTALLATION WHEN IMPACTING THE NORMAL FUNCTION OF THE SIGNAL OR THE FLOW OF TRAFFIC, OR WHEN TRAFFIC NEEDS TO BE DIRECTED THROUGH AN ENERGIZED TRAFFIC SIGNAL CONTRARY TO THE SIGNAL DISPLAY (E.G., DIRECTING MOTORISTS THROUGH A RED LIGHT).

IN GENERAL, LEOS SHOULD BE POSITIONED IN ADVANCE OF AND ON THE SAME SIDE AS THE LANE RESTRICTION (OR AT THE POINT OF ROAD CLOSURE), AND TO MANUALLY CONTROL TRAFFIC MOVEMENTS THROUGH SIGNALIZED INTERSECTIONS IN WORK ZONES.

LEOS SHOULD NOT FORGO THEIR TRAFFIC CONTROL RESPONSIBILITIES TO APPREHEND MOTORISTS FOR ROUTINE TRAFFIC VIOLATIONS. HOWEVER, IF A MOTORIST'S ACTIONS ARE CONSIDERED TO BE RECKLESS, THEN PURSUIT OF THE MOTORIST IS APPROPRIATE.

THE LEOS WORK AT THE DIRECTION OF THE CONTRACTOR. THE CONTRACTOR IS RESPONSIBLE FOR SECURING THE SERVICES OF THE LEOS WITH THE APPROPRIATE AGENCIES AND COMMUNICATING THE INTENTIONS OF THE PLANS WITH RESPECT TO DUTIES OF THE LEOS. THE CITY OF CIRCLEVILLE SHALL HAVE FINAL CONTROL OVER THE LEOS' DUTIES AND PLACEMENT, AND WILL RESOLVE ANY ISSUES THAT MAY ARISE BETWEEN THE TWO PARTIES.

ENSURE PROVIDED LEOS HAVE BEEN TRAINED APPROPRIATE TO THE JOB DECISIONS THEY ARE REQUIRED TO MAKE WHILE ON THE PROJECT, IN ACCORDANCE WITH C&MS 614.03.

THE LEO SHALL REPORT IN TO THE CONTRACTOR PRIOR TO THE START OF THE SHIFT, IN ORDER TO RECEIVE INSTRUCTIONS REGARDING SPECIFIC WORK ASSIGNMENTS DURING HIS/HER SHIFT. THE LEO IS EXPECTED TO STAY AT THE PROJECT SITE FOR THE ENTIRE DURATION OF HIS/HER SHIFT. THE LEO SHALL REPORT TO THE CONTRACTOR AT THE END OF HIS/HER SHIFT. SHOULD IT BE NECESSARY TO LEAVE THE PROJECT SITE, THE LEO SHALL NOTIFY THE ENGINEER. THE CONTRACTOR SHALL PROVIDE THE LEO WITH A TWO-WAY COMMUNICATION DEVICE THAT SHALL BE RETURNED TO THE CONTRACTOR AT THE END OF HIS/HER SHIFT.

LEOS (WITH PATROL CAR) REQUIRED BY THE TRAFFIC MAINTENANCE TASKS ABOVE SHALL BE PAID FOR ON A UNIT PRICE (HOURLY) BASIS UNDER ITEM 614, LAW ENFORCEMENT OFFICER (WITH PATROL CAR) FOR ASSISTANCE. THE FOLLOWING ESTIMATED QUANTITIES HAVE BEEN CARRIED TO THE GENERAL SUMMARY.

ITEM 614, LAW ENFORCEMENT OFFICER WITH PATROL CAR FOR ASSISTANCE 80 HOURS

THE HOURS PAID SHALL INCLUDE ANY MINIMUM SHOW-UP TIME REQUIRED BY THE LAW ENFORCEMENT AGENCY INVOLVED.

ANY ADDITIONAL COSTS (ADMINISTRATIVE OR OTHERWISE) INCURRED BY THE CONTRACTOR TO OBTAIN THE SERVICES OF AN LEO ARE INCLUDED WITH THE BID UNIT PRICE FOR ITEM 614, LAW ENFORCEMENT OFFICER WITH PATROL CAR FOR ASSISTANCE.

NOTIFICATION OF TRAFFIC RESTRICTIONS

THROUGHOUT THE DURATION OF THE PROJECT, THE CONTRACTOR SHALL NOTIFY THE CITY OF CIRCLEVILE IN WRITING OF ALL TRAFFIC RESTRICTIONS AND UPCOMING MAINTENANCE OF TRAFFIC CHANGES. THE CONTRACTOR SHALL ENSURE THE WRITTEN NOTIFICATION IS SUBMITTED IN A TIMELY MANNER TO ALLOW THE CITY OF CIRCLEVILE TO MEET THE REQUIRED TIME FRAMES SET FORTH IN THE TABLE BELOW TO INFORM THE SPECIAL HAULING PERMITS SECTION (HAULING.PERMITS@DOT.OHIO.GOV) AND THE DISTRICT PUBLIC INFORMATION OFFICE (PIO). THIS NOTIFICATION SHALL BE RECEIVED BY THE CITY OF CIRCLEVILE PRIOR TO THE PHYSICAL SETUP OF ANY APPLICABLE SIGNS OR MESSAGE BOARDS.

INFORMATION SHOULD INCLUDE, BUT IS NOT LIMITED TO, ALL CONSTRUCTION ACTIVITIES THAT IMPACT OR INTERFERE WITH TRAFFIC AND SHALL LIST THE SPECIFIC LOCATION, TYPE OF WORK, ROAD STATUS, DATE AND TIME OF RESTRICTION, DURATION OF RESTRICTION, NUMBER OF LANES MAINTAINED, NUMBER OF LANES CLOSED, MINIMUM VERTICAL CLEARANCE, MINIMUM WIDTH OF DRIVABLE PAVEMENT, DETOUR ROUTES, IF APPLICABLE, AND ANY OTHER INFORMATION REQUESTED BY THE CITY OF CIRCLEVILLE.

NOTIFICATION OF TRAFFIC RESTRICTIONS TIME TABLE

ITEM	DURATION OF CLOSURE	NOTICE DUE TO PERMITS & PIO
RAMP & CLOSURE	≥ 2 WEEKS	21 CALENDAR DAYS PRIOR TO CLOSURE
	> 12 HOURS & < 2 WEEKS	14 CALENDAR DAYS PRIOR TO CLOSURE
	≤ 12 HOURS	4 BUSINESS DAYS PRIOR TO CLOSURE
LANE CLOSURE & RESTRICTION	≥ 2 WEEKS	4 CALENDAR DAYS PRIOR TO CLOSURE
	< 2 WEEKS	5 BUSINESS DAYS PRIOR TO CLOSURE
START OF CONSTRUCTION & TRAFFIC PATTERN CHANGES	N/A	14 CALENDAR DAYS PRIOR TO IMPLEMENTATION

ANY UNFORESEEN CONDITIONS NOT SPECIFIED IN THE PLANS REQUIRING TRAFFIC RESTRICTIONS SHALL ALSO BE REPORTED TO THE CITY OF CIRCLEVILLE USING THE NOTIFICATION TIME TABLE.

CALCULATED MSS
CHECKED JML

MAINTANENCE OF TRAFFIC GENERAL NOTES

LANCASTER PIKE IMPROVEMENTS

N:\03\67\26620-00\Transportation\MOT\Sheets\26620_MN001.dwg 05-Apr-23 3:08 PM

SEQUENCE OF CONSTRUCTION

LANCASTER PIKE (US 22) WIDENING, DRAINAGE, DRIVEWAY TIE-IN, & SIDEWALK CONSTRUCTION.

DURING WORKING HOURS CLOSE THE EASTBOUND LANE OF U.S. 22 WITHIN THE LIMITS OF THAT DAY'S WORK. UTILIZE FLAGGING OPERATIONS IN ACCORDANCE WITH MT-97.10 TO MAINTAIN BI-DIRECTIONAL TRAFFIC IN THE WESTBOUND LANE. WHEN WORKING WITHIN THE INTERSECTION OF U.S. 22 AND NICHOLAS DRIVE, OR WHEN VEHICULAR TRAFFIC WILL BE REQUIRED TO PROCEED THROUGH THE SIGNALIZED INTERSECTION AGAINST THE SIGNAL INDICATION, PROVIDE A LEO TO DIRECT TRAFFIC THROUGH THE INTERSECTION. UPON COMPLETION OF THE DAY'S WORK, BACKFILL ANY BASE WIDENING TO WITHIN FIVE INCHES OF THE ROADWAY SURFACE. PROVIDE DRUMS WITH TYPE "C" WARNING LIGHTS ALONG THE BACKFILLED AREA AND REOPEN THE CLOSED LANE.

SIGNAL MODIFICATIONS

WHEN ACTIVELY WORKING WITHIN THE TRAVEL LANES OF U.S. 22 IN ORDER TO MODIFY THE EXISTING OVERHEAD SIGNAL AT NICHOLAS DRIVE, CLOSE ONE LANE OF TRAFFIC ON U.S. 22 AND MAINTAIN BI-DIRECTIONAL TRAFFIC UTILIZING FLAGGING OPERATIONS IN ACCORDANCE WITH MT-97.10 IN THE OPEN LANE. PROVIDE A LEO TO DIRECT TRAFFIC THROUGH THE SIGNALIZED INTERSECTION.

RESURFACING AND FINAL PAVEMENT MARKING APPLICATION

UTILIZE FLAGGING OPERATIONS IN ACCORDANCE WITH MT 97.11 TO CLOSE ONE LANE OF U.S. 22 OR NICHOLAS DRIVE AT A TIME TO PERFORM RESURFACING OF THE INTERSECTION AND APPROACHES. PROVIDE A LEO TO DIRECT TRAFFIC THROUGH THE SIGNALIZED INTERSECTION OF U.S. 22 AND NICHOLAS DRIVE.

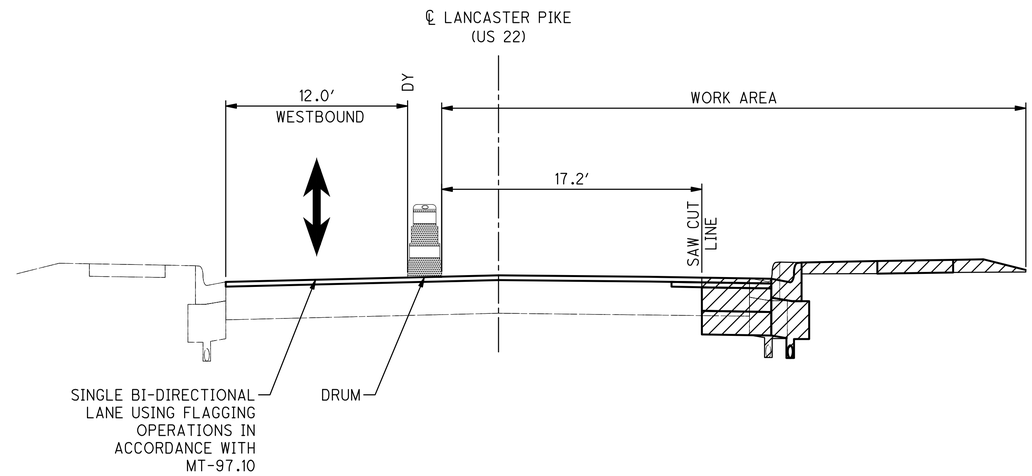

TYPICAL SECTION - LANCASTER PIKE (US 22)
BASE WIDENING
(WORKING HOURS)

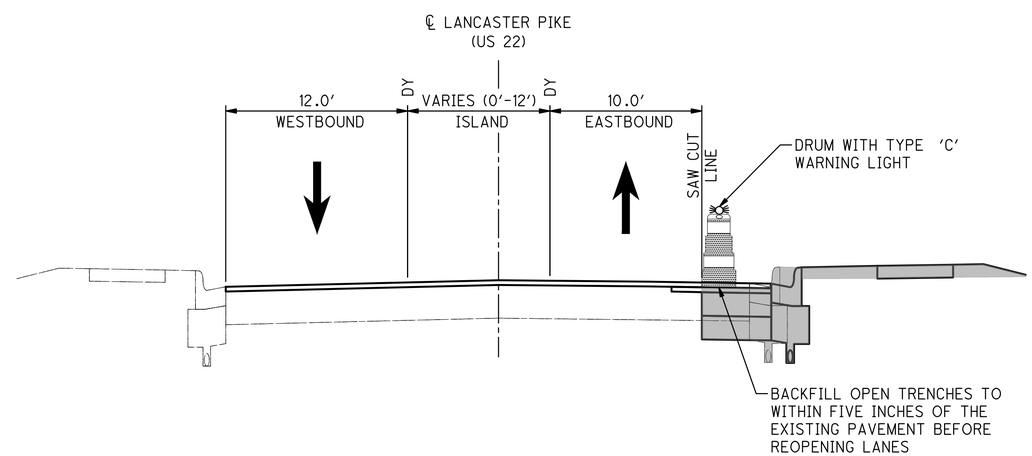

TYPICAL SECTION - LANCASTER PIKE (US 22)
BASE WIDENING
(NON-WORKING HOURS)

N

HORIZONTAL SCALE IN FEET 0 10 20 40

CALCULATED CLB
CHECKED JML

MAINTANENCE OF TRAFFIC
SEQUENCE OF CONSTRUCTION AND TYPICAL SECTION

LANCASTER PIKE IMPROVEMENTS

N:\03\67\26620-00\Transportation\MOT\Sheets\26620_MT001.dwg 05-Apr-23 3:08 PM

SHEET NUM.													PART.	ITEM	ITEM	GRAND	UNIT	DESCRIPTION	SEE SHEET NO.
OFFICE CALCS	3	10											01		EXT	TOTAL			
																		ROADWAY	
													LS	201	11000	LS		CLEARING AND GRUBBING	
64													64	202	23000	64	SY	PAVEMENT REMOVED	
		1,345											1,345	202	30000	1,345	SF	WALK REMOVED	
		269											269	202	32500	269	FT	CURB AND GUTTER REMOVED	
		115											115	202	35100	115	FT	PIPE REMOVED, 24" AND UNDER	
		2											2	202	58200	2	EACH	INLET REMOVED	
44													44	203	10000	44	CY	EXCAVATION	
288													288	203	20000	288	CY	EMBANKMENT	
204													204	204	10000	204	SY	SUBGRADE COMPACTION	
1													1	204	45000	1	HOUR	PROOF ROLLING	
		2,816											2,816	608	10000	2,816	SF	4" CONCRETE WALK	
		246											246	608	52000	246	SF	CURB RAMP	
		86											86	608	53020	86	SF	DETECTABLE WARNING	
		275											275	609	12000	275	FT	COMBINATION CURB AND GUTTER, TYPE 2	
																		EROSION CONTROL	
		8											8	601	32200	8	CY	ROCK CHANNEL PROTECTION, TYPE C WITH FILTER	
	1												1	659	00100	1	EACH	SOIL ANALYSIS TEST	3
	26												26	659	00300	26	CY	TOPSOIL	3
	232												232	659	10000	232	SY	SEEDING AND MULCHING	3
	104												104	659	14000	104	SY	REPAIR SEEDING AND MULCHING	3
	104												104	659	15000	104	SY	INTER-SEEDING	3
	0.29												0.29	659	20000	0.29	TON	COMMERCIAL FERTILIZER	3
	0.43												0.43	659	31000	0.43	ACRE	LIME	3
	12												12	659	35000	12	MGAL	WATER	3
	5												5	659	40000	5	MSF	MOWING	3
													LS	832	15000	LS		STORM WATER POLLUTION PREVENTION PLAN	
													4,000	832	30000	4,000	EACH	EROSION CONTROL	
																		DRAINAGE	
		1											1	602	20000	1	CY	CONCRETE MASONRY	
		275											275	605	06000	275	FT	4" BASE PIPE UNDERDRAINS	
		27											27	611	10200	27	FT	24" CONDUIT, TYPE A	
		39											39	611	11900	39	FT	27" CONDUIT, TYPE B	
		56											56	611	12100	56	FT	27" CONDUIT, TYPE C	
		2											2	611	98180	2	EACH	CATCH BASIN, NO. 3A	
		1											1	611	99574	1	EACH	MANHOLE, NO. 3	
		3											3	611	99654	3	EACH	MANHOLE ADJUSTED TO GRADE	
																		PAVEMENT	
285													285	252	01500	285	FT	FULL DEPTH PAVEMENT SAWING	
2,126													2,126	254	01000	2,126	SY	PAVEMENT PLANING, ASPHALT CONCRETE, 1.5"	
41													41	301	56000	41	CY	ASPHALT CONCRETE BASE, PG64-22, (449)	
41													41	304	20000	41	CY	AGGREGATE BASE	
319													319	407	20000	319	GAL	NON-TRACKING TACK COAT	
99													99	408	10000	99	GAL	PRIME COAT	
99													99	441	70000	99	CY	ASPHALT CONCRETE SURFACE COURSE, TYPE 1, (449), PG64-22	
10													10	441	70200	10	CY	ASPHALT CONCRETE INTERMEDIATE COURSE, TYPE 1, (449)	
																		WATER WORK	
		5											5	638	10800	5	EACH	VALVE BOX ADJUSTED TO GRADE	

CALCULATED MSS
CHECKED DLT

GENERAL SUMMARY

LANCASTER PIKE IMPROVEMENTS

N:\03\67\26620-00\Transportation\Roadway\Sheets\26620_GG001.dwg 05-Apr-23 3:08 PM

SHEET NUM. 5	6	22A	23	28									PART. 01	ITEM	ITEM EXT	GRAND TOTAL	UNIT	DESCRIPTION	SEE SHEET NO.
																		TRAFFIC CONTROL	
				24.8									24.8	630	02100	24.8	FT	GROUND MOUNTED SUPPORT, NO. 2 POST	
				13									13	630	03100	13	FT	GROUND MOUNTED SUPPORT, NO. 3 POST	
			2										2	630	79000	2	EACH	SIGN HANGER ASSEMBLY, SPAN WIRE	
			15	15.2									30.2	630	80100	30.2	SF	SIGN, FLAT SHEET	
				4									4	630	84900	4	EACH	REMOVAL OF GROUND MOUNTED SIGN AND DISPOSAL	
				3									3	630	86002	3	EACH	REMOVAL OF GROUND MOUNTED POST SUPPORT AND DISPOSAL	
				0.09									0.09	644	00300	0.09	MILE	CENTER LINE	
				314									314	644	00400	314	FT	CHANNELIZING LINE, 8"	
				72									72	644	00500	72	FT	STOP LINE	
				230									230	644	00620	230	FT	CROSSWALK LINE, 12"	
				8									8	644	01300	8	EACH	LANE ARROW	
				1									1	644	01400	1	EACH	WORD ON PAVEMENT, 72"	
																		TRAFFIC SIGNALS	
			1										1	632	05006	1	EACH	VEHICULAR SIGNAL HEAD, (LED), 3-SECTION, 12" LENS, 1-WAY, POLYCARBONATE	
			2										2	632	05086	2	EACH	VEHICULAR SIGNAL HEAD, (LED), 5-SECTION, 12" LENS, 1-WAY, POLYCARBONATE	
			2										2	632	20731	2	EACH	PEDESTRIAN SIGNAL HEAD (LED), TYPE D2, COUNTDOWN, AS PER PLAN	22
			3										3	632	25000	3	EACH	COVERING OF VEHICULAR SIGNAL HEAD	
			2										2	632	25010	2	EACH	COVERING OF PEDESTRIAN SIGNAL HEAD	
			296										296	632	40500	296	FT	SIGNAL CABLE, 5 CONDUCTOR, NO. 14 AWG	
			244										244	632	40700	244	FT	SIGNAL CABLE, 7 CONDUCTOR, NO. 14 AWG	
			1										1	632	90101	1	EACH	REMOVAL OF TRAFFIC SIGNAL INSTALLATION, AS PER PLAN	22
			204										204	632	90500	204	FT	SIGNALIZATION, MISC.: UNLASH AND RELASH MESSENGER WIRE	22
		1											1	633	65511	1	EACH	CABINET, TYPE TS-2, AS PER PLAN	22A
			4										4	809	69101	4	EACH	STOP LINE RADAR DETECTION, AS PER PLAN	22
		1											1	809	69123	1	EACH	ATC CONTROLLER, AS PER PLAN	22A
																		MAINTENANCE OF TRAFFIC	
	80												80	614	11110	80	HOUR	LAW ENFORCEMENT OFFICER WITH PATROL CAR FOR ASSISTANCE	6
1													1	616	10000	1	MGAL	WATER	5
																		INCIDENTALS	
													LS	614	11000	LS		MAINTAINING TRAFFIC	
													LS	623	10000	LS		CONSTRUCTION LAYOUT STAKES AND SURVEYING	
													LS	624	10000	LS		MOBILIZATION	

CALCULATED MSS
CHECKED DLT

GENERAL SUMMARY

LANCASTER PIKE IMPROVEMENTS

N:\03\67\26620-00\Transportation\Roadway\Sheets\26620_GG002.dwg 05-Apr-23 3:09 PM

REF NO.	SHEET NO.	STATION TO STATION					202 WALK REMOVED SF	202 CURB AND GUTTER REMOVED FT	202 PIPE REMOVED, 24" AND UNDER FT	202 INLET REMOVED EA	601 ROCK CHANNEL PROTECTION, TYPE C WITH FILTER CY	602 CONCRETE MASONRY CY	605 4" BASE PIPE UNDERDRAINS FT	608 4" CONCRETE WALK SF	608 CURB RAMP SF	608 DETECTABLE WARNING SF	609 COMBINATION CURB AND GUTTER, TYPE 2 FT	611 CATCH BASIN, NO. 3A EA	611 MANHOLE, NO. 3 EA	611 24" CONDUIT, TYPE C FT	611 27" CONDUIT, TYPE B FT	611 27" CONDUIT, TYPE C FT	611 MANHOLE ADJUSTED TO GRADE EA	638 VALVE BOX ADJUSTED TO GRADE EA
R1	11	980+71.44	RT	TO	983+40.95	RT		269																
R2	11	980+75.29	RT	TO	980+97.61	RT			41															
R3	11	980+97.61	RT	TO	981+71.28	RT			74															
R4	11	980+97.61	RT							1														
R5	11	981+71.28	RT							1														
				TO																				
R6	11	980+66.12	RT	TO	983+21.13	RT	1345																	
M1	11	980+53.67	RT																				1	
M2	11	980+99.39	LT																				1	
WL1	11	980+72.97	LT																					1
WL2	11	980+82.15	RT																					1
WL3	11	980+86.55	RT																					1
WL4	11	981+21.78	LT																					1
WL5	11	982+52.21	RT																					1
D8	11	981+72.15	LT																				1	
D9	11	981+71.28	RT	TO	981+70.63	RT														27				
D10	11	981+70.63	RT	TO	981+50.97	RT													1			20		
D11	11	981+50.97	RT	TO	981+12.01	RT												1			39			
D12	11	981+12.01	RT	TO	980+77.21	RT												1				36		
D13	11	980+77.21	RT								8	0.53												
W1	11	980+79.94	RT	TO	981+05.97	RT								223	123	20								
W2	11	980+79.98	LT													10								
W3	11	981+07.99	LT													12								
W4	11	981+56.97	RT	TO	987+28.70	RT								2593	123	20								
W5	11	981+72.50	LT													14								
W6	11	981+96.17	LT													10								
U1	11	980+71.46	RT	TO	981+12.01	RT							216											
U2	11	981+50.97	RT	TO	983+40.95	RT							59											
C1	11	980+79.97	RT	TO	981+05.97	RT											216							
C2	11	981+56.97	RT	TO	987+28.70	RT											59							
				TO																				
				TO																				
				TO																				
				TO																				
				TO																				
				TO																				
				TO																				
				TO																				
				TO																				
				TO																				
TOTALS CARRIED TO GENERAL SUMMARY							1345	269	115	2	8	1	275	2816	246	86	275	2	1	27	39	56	3	5

CALCULATED MSS
CHECKED DLT

ROADWAY SUBSUMMARY

LANCASTER PIKE IMPROVEMENTS

N:\03\67\26620-00\Transportation\Roadway\Sheets\26620_GS001.dwg 05-Apr-23 3:09 PM

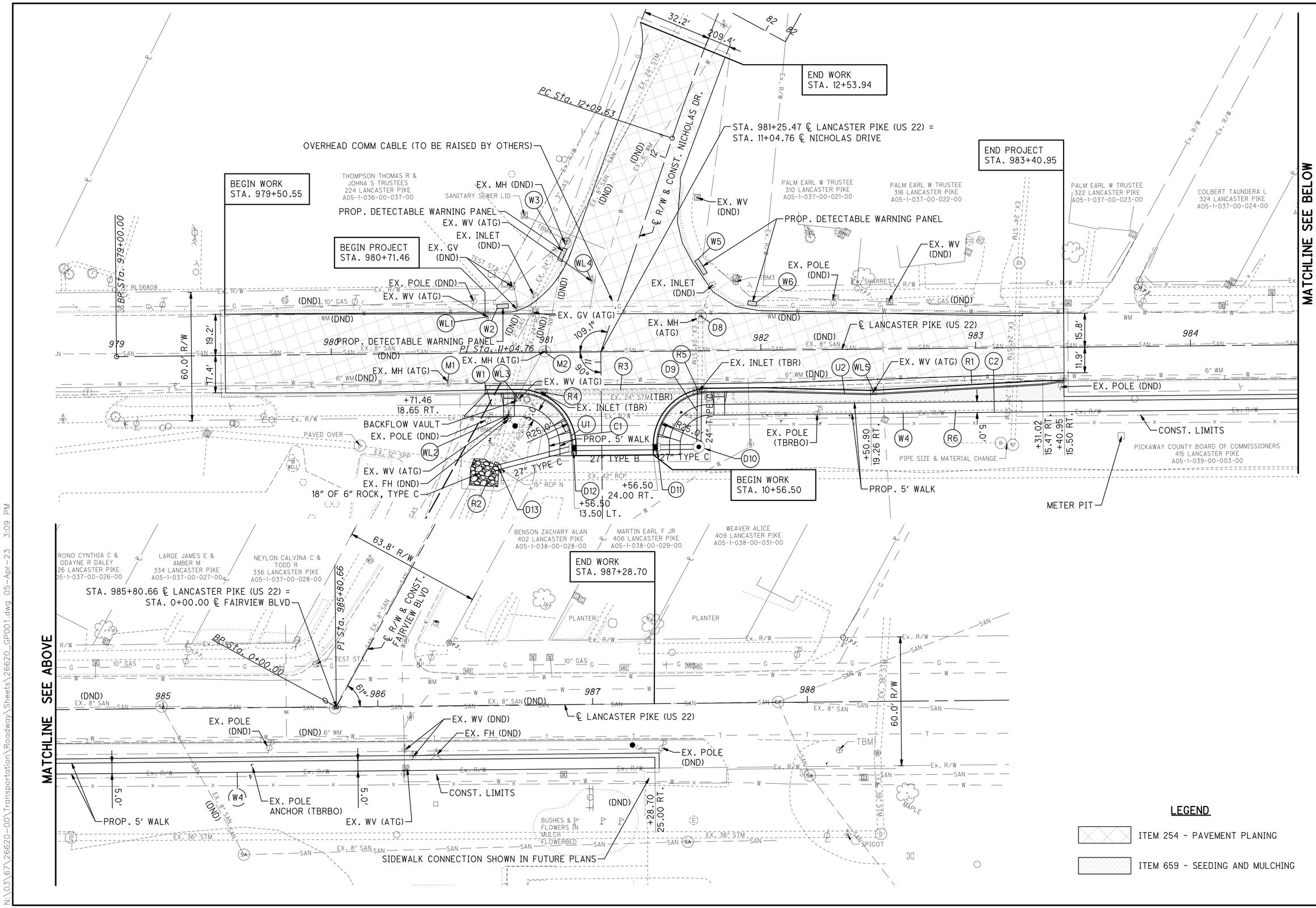

LEGEND

ITEM 254 - PAVEMENT PLANING

ITEM 659 - SEEDING AND MULCHING

HORIZONTAL SCALE IN FEET 0 10 20 40

CALCULATED GAN
CHECKED DLT

PLAN
STA. 979+00 TO STA. 988+00

LANCASTER PIKE IMPROVEMENTS

N:\03\67\26620-00\Transportation\Roadway\Sheets\26620_GP001.dwg 05-Apr-23 3:09 PM

SEEDING	
END WIDTH	SQ. YDS.

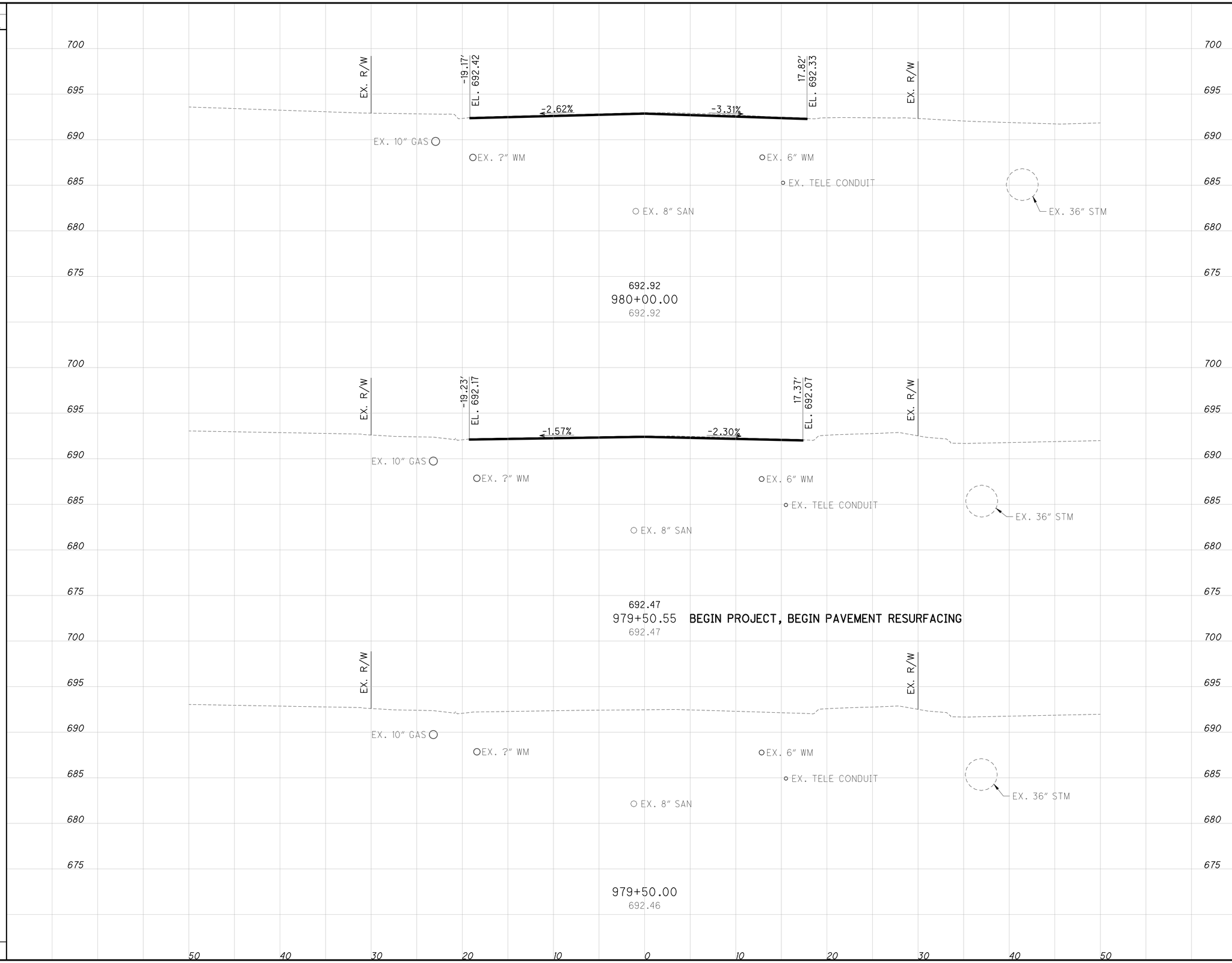

END AREA		VOLUME	
CUT	FILL	CUT	FILL
7	0	12	0
6	0	0	0
0	0	0	0

CALCULATED GAN
CHECKED DLT

CROSS SECTIONS - LANCASTER PIKE (US 22)
STA. 979+50.00 TO STA. 980+00.00

LANCASTER PIKE IMPROVEMENTS

N:\03\67\26620-00\Transportation\Roadway\Basemaps\26620_Lancaster Pike Corridor.dwg 05-Apr-23 3:09 PM

SEEDING	
END WIDTH	SQ. YDS.

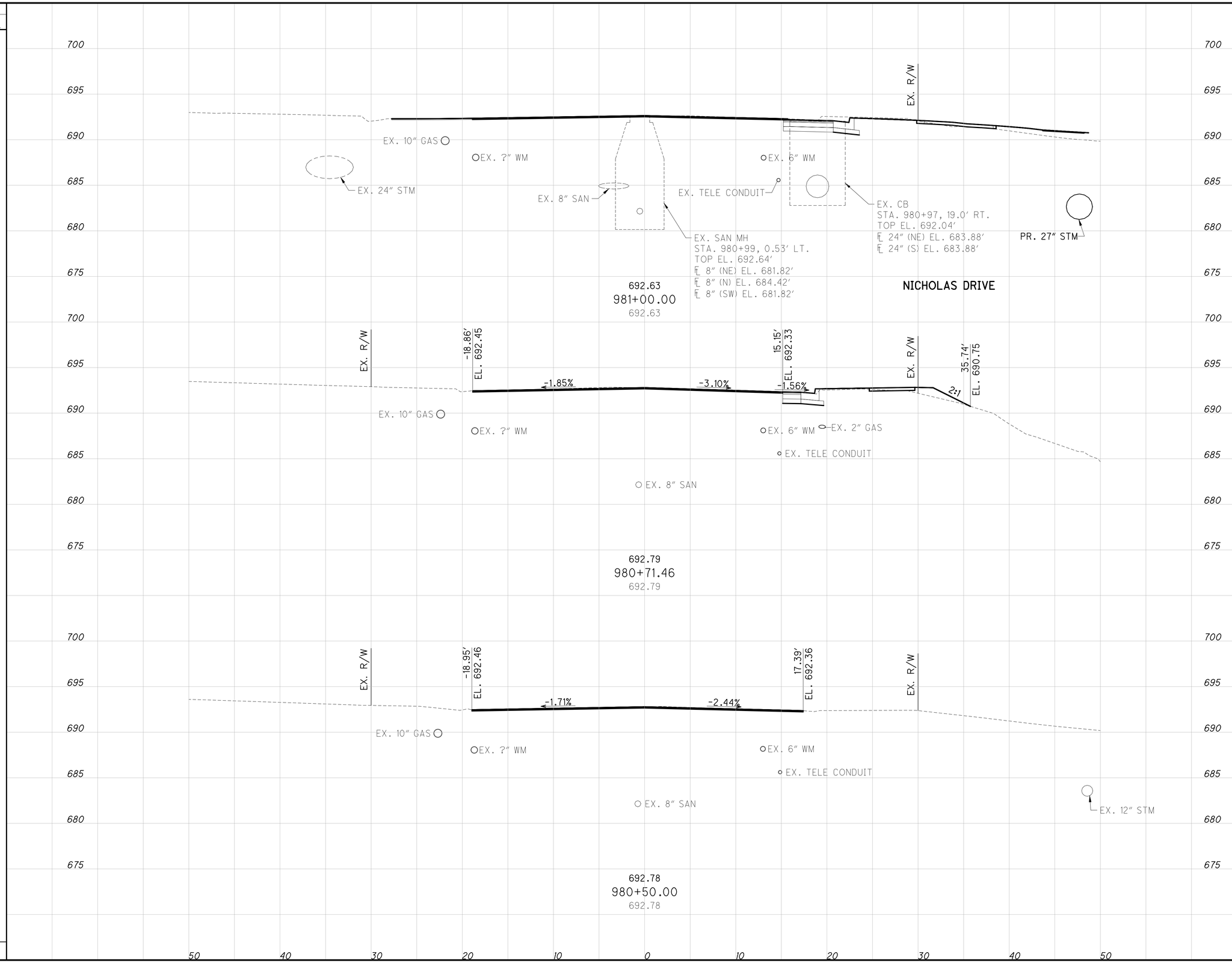

END AREA		VOLUME	
CUT	FILL	CUT	FILL
20	7	16	6
10	4	6	2
5	0	11	0

CALCULATED GAN
CHECKED DLT

CROSS SECTIONS - LANCASTER PIKE (US 22)
STA. 980+50.00 TO STA. 981+00.00

LANCASTER PIKE IMPROVEMENTS

13
29

N:\03\67\26620-00\Transportation\Roadway\Basemaps\26620_Lancaster Pike Corridor.dwg 05-Apr-23 3:10 PM

SEEDING		END AREA		VOLUME	
END WIDTH	SQ. YDS.	CUT	FILL	CUT	FILL
		13	1	20	6
		13	7	26	11
		15	5	25	7

CALCULATED GAN
CHECKED DLT

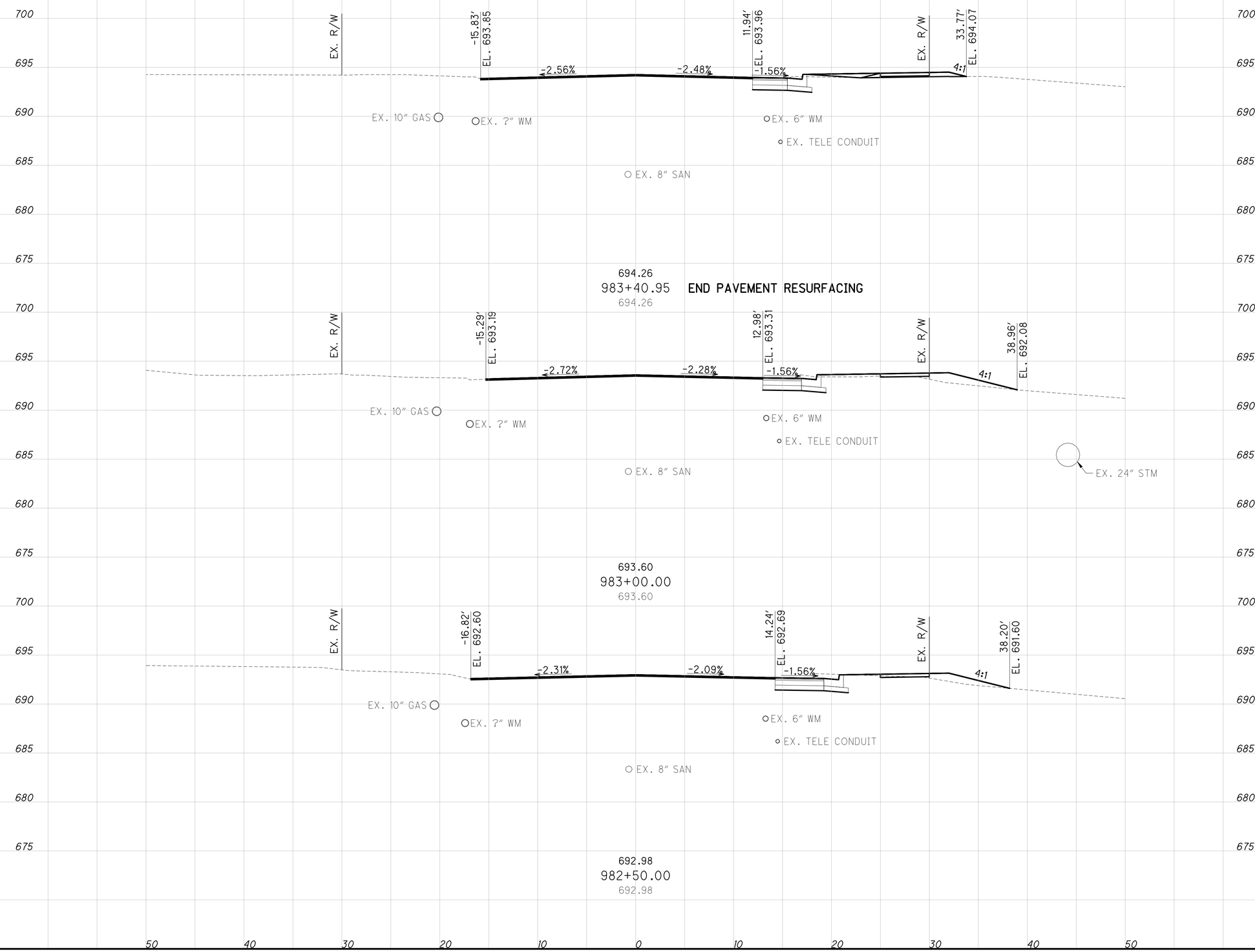

CROSS SECTIONS - LANCASTER PIKE (US 22)
STA. 982+50.00 TO STA. 983+40.95

LANCASTER PIKE IMPROVEMENTS

N:\03\67\26620-00\Transportation\Roadway\Basemaps\26620_Lancaster Pike Corridor.dwg 05-Apr-23 3:10 PM

SEEDING		END AREA		VOLUME	
END WIDTH	SQ. YDS.	CUT	FILL	CUT	FILL

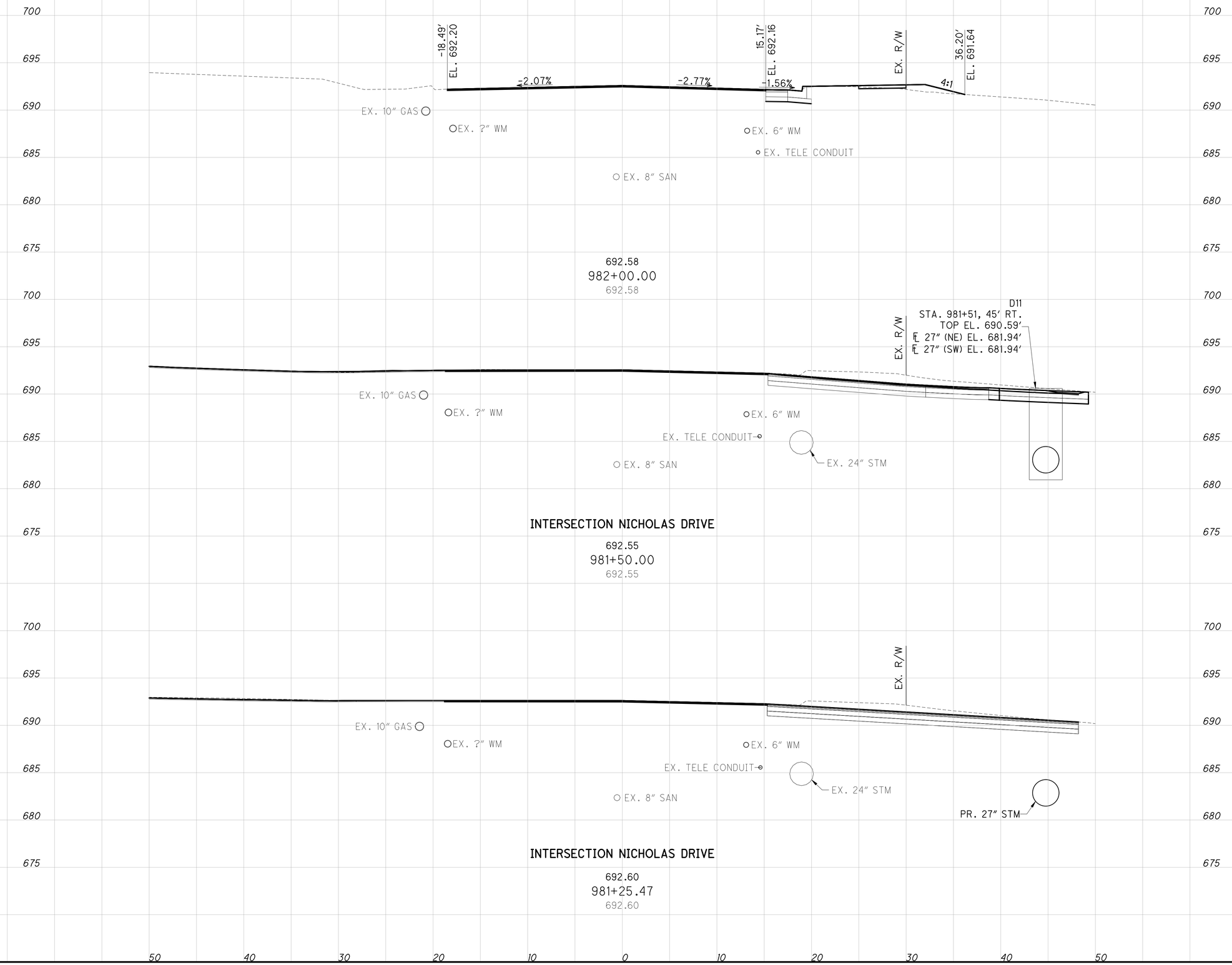

END AREA CUT	END AREA FILL	VOLUME CUT	VOLUME FILL
11	3	73	3
68	0	64	0
73	0	44	3

CALCULATED GAN
CHECKED DLT

CROSS SECTIONS - LANCASTER PIKE (US 22)
STA. 981+25.47 TO STA. 982+00.00

LANCASTER PIKE IMPROVEMENTS

15
29

N:\03\67\26620-00\Transportation\Roadway\Basemaps\26620_Lancaster Pike Corridor.dwg 05-Apr-23 3:10 PM

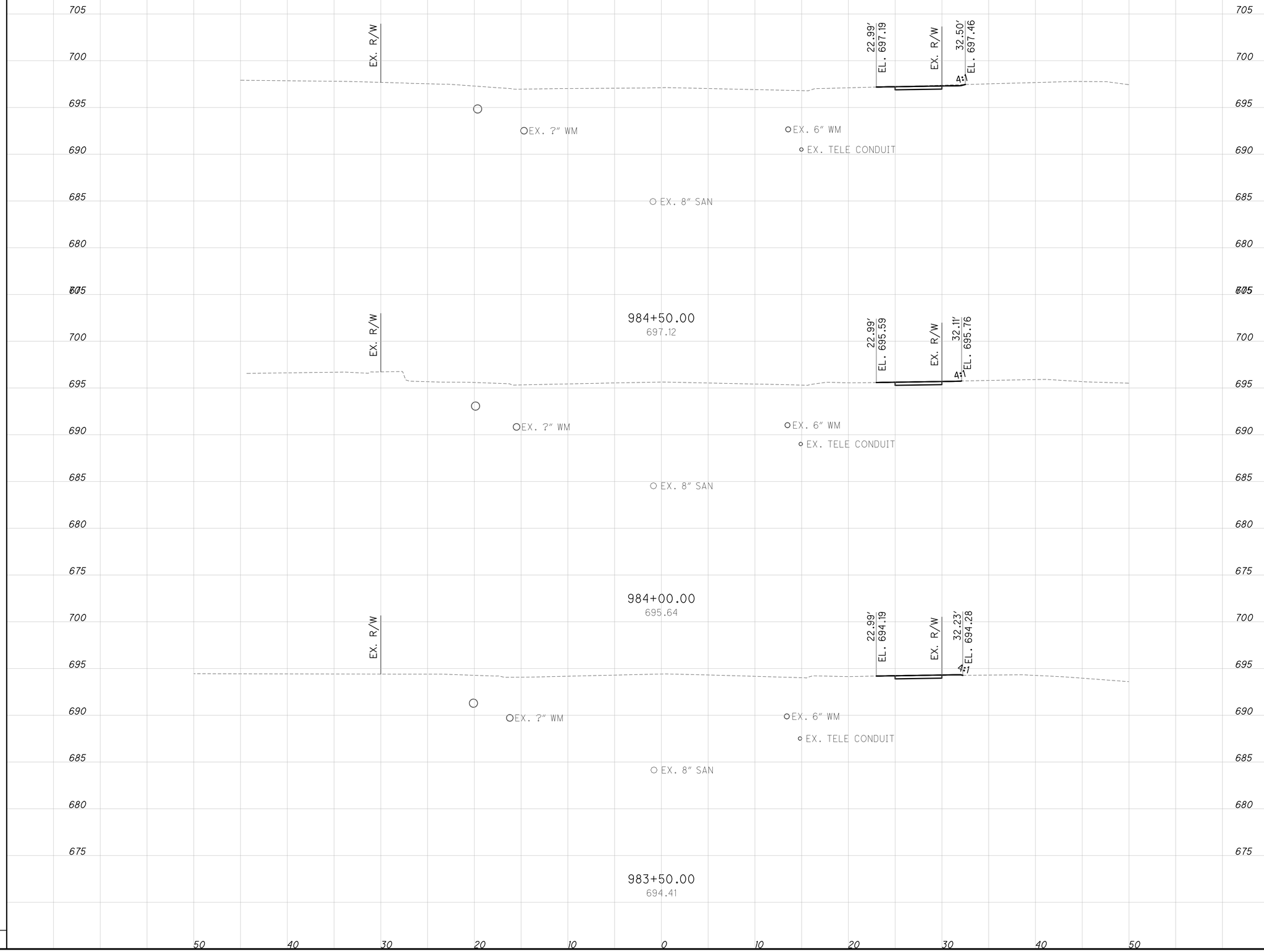

SEEDING		END AREA		VOLUME	
END WIDTH	SQ. YDS.	CUT	FILL	CUT	FILL
		2	0		
				4	0
		2	0		
				3	0
		2	0		
				2	0

CALCULATED GAN
CHECKED DLT

CROSS SECTIONS - LANCASTER PIKE (US 22)
STA. 983+50.00 TO STA. 984+50.00

LANCASTER PIKE IMPROVEMENTS

16
29

N:\03\67\26620-00\Transportation\Roadway\Basemaps\26620_Lancaster Pike Corridor.dwg 05-Apr-23 3:10 PM

SEEDING		END AREA		VOLUME	
END WIDTH	SQ. YDS.	CUT	FILL	CUT	FILL
		2	0	3	0
		1	0	3	0
		2	0	4	0

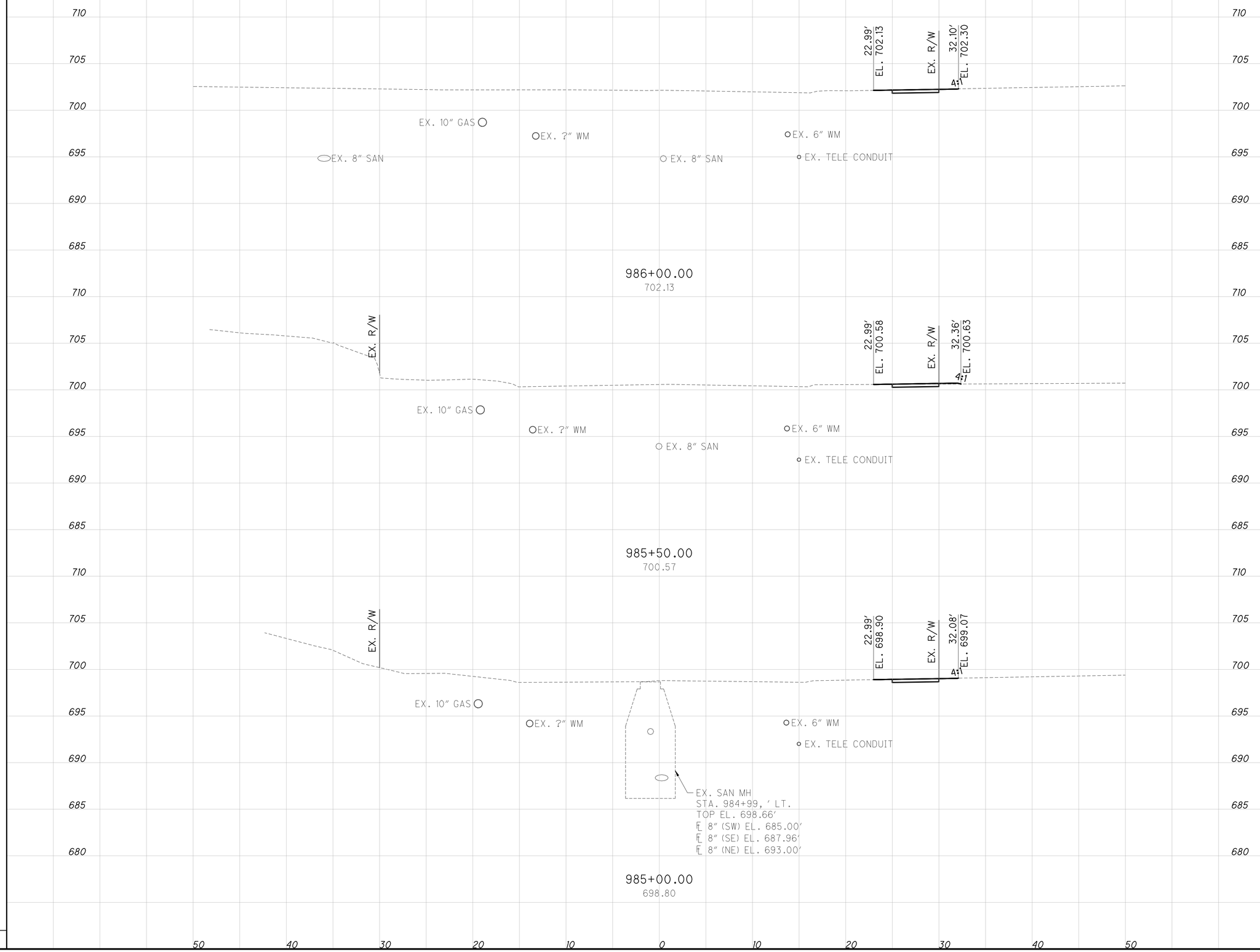

CALCULATED GAN
CHECKED DLT

CROSS SECTIONS - LANCASTER PIKE (US 22)
STA. 985+00.00 TO STA. 986+00.00

LANCASTER PIKE IMPROVEMENTS

N:\03\67\26620-00\Transportation\Roadway\Basemaps\26620_Lancaster Pike Corridor.dwg 05-Apr-23 3:10 PM

SEEDING	
END WIDTH	SQ. YDS.

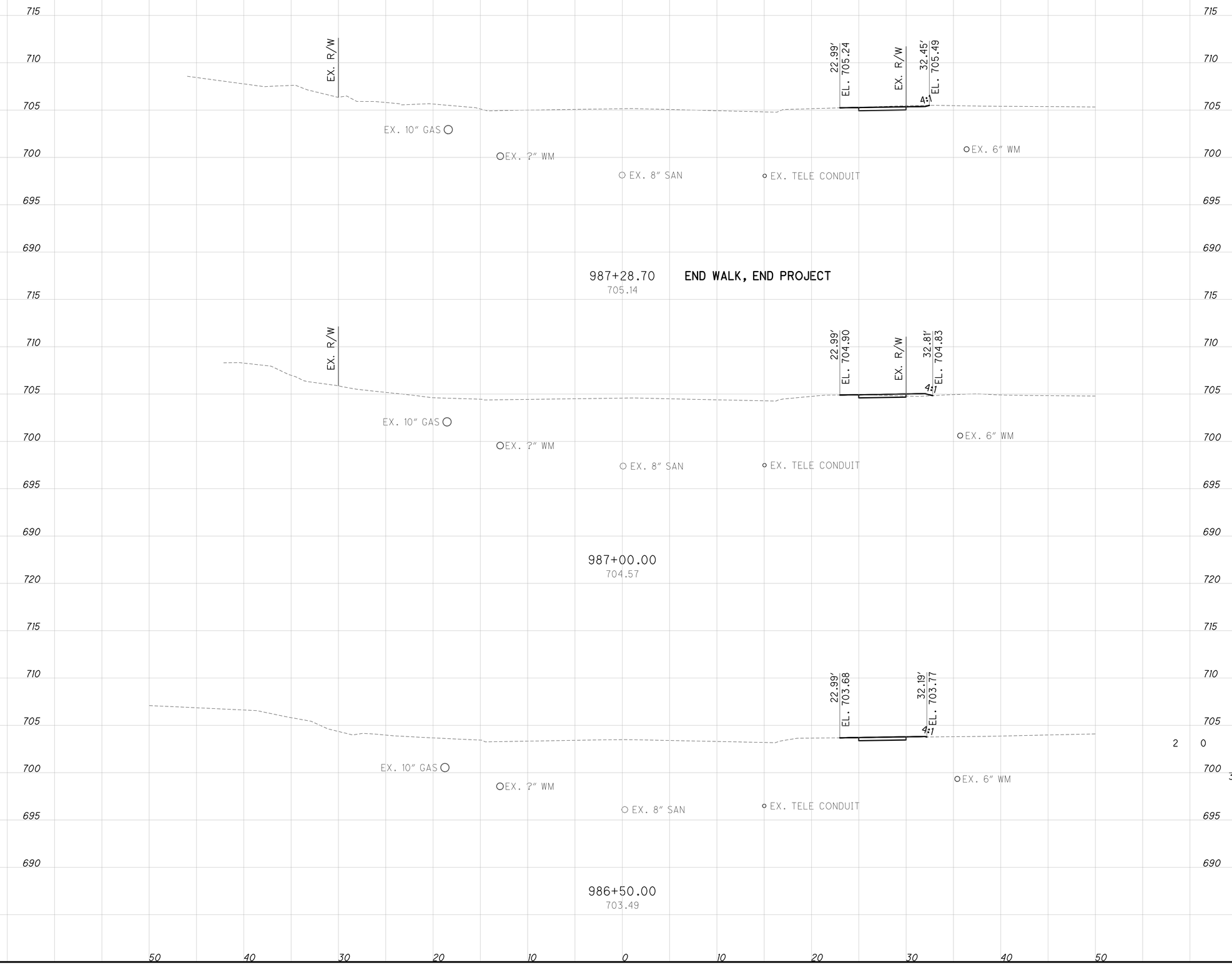

END AREA		VOLUME	
CUT	FILL	CUT	FILL
2	0		
		2	0
1	1		
		2	1
2	0		
3	0		

CALCULATED GAN
CHECKED DLT

CROSS SECTIONS - LANCASTER PIKE (US 22)
STA. 986+50.00 TO STA. 987+28.70

LANCASTER PIKE IMPROVEMENTS

18
29

N:\03\67\26620-00\Transportation\Roadway\Basemaps\26620_Lancaster Pike Corridor.dwg 05-Apr-23 3:10 PM

SEEDING	
END WIDTH	SQ. YDS.

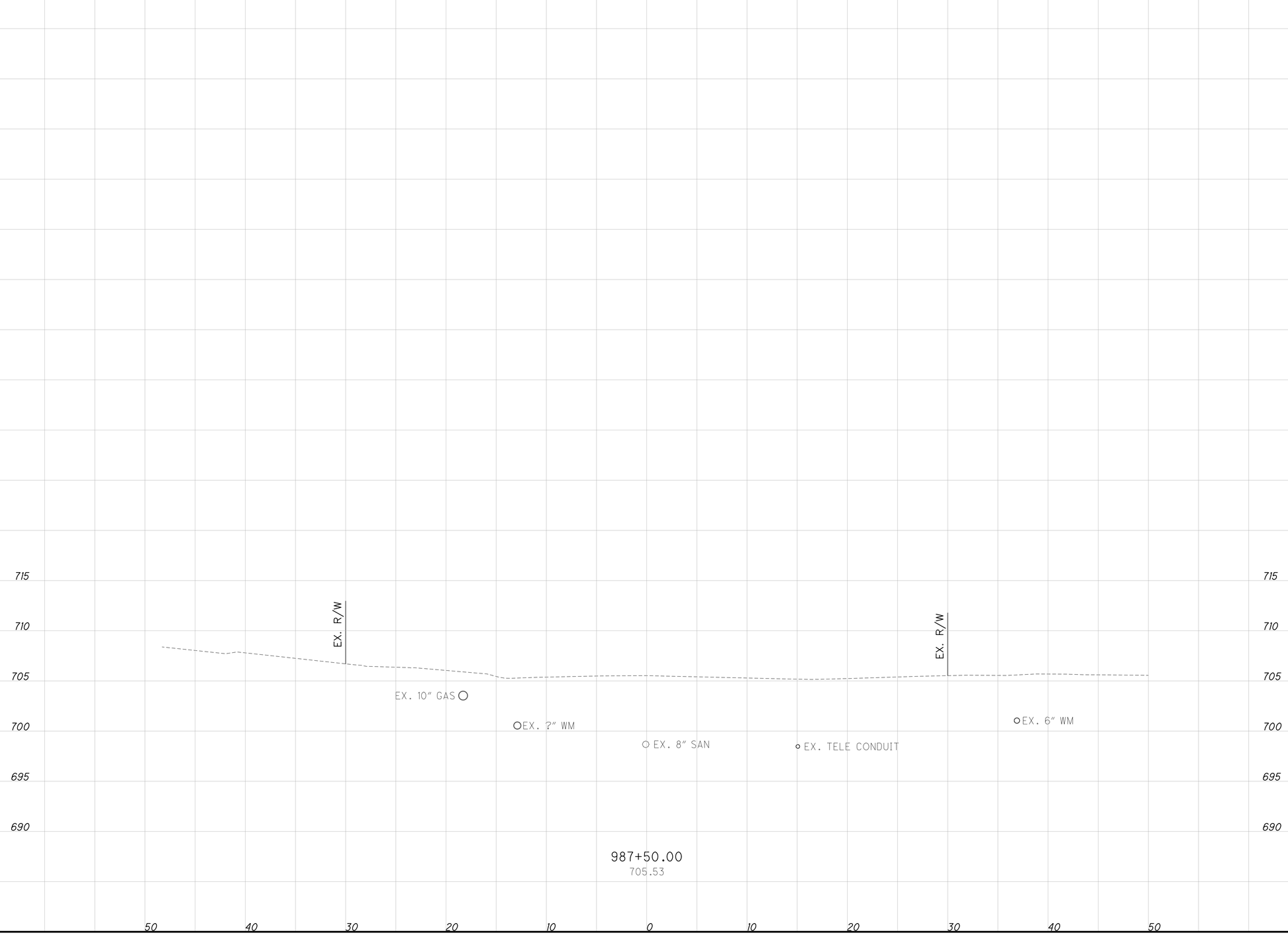

END AREA		VOLUME	
CUT	FILL	CUT	FILL
0	0	1	0

CALCULATED GAN
CHECKED DLT

CROSS SECTIONS - LANCASTER PIKE (US 22)

STA. 987+50.00

LANCASTER PIKE IMPROVEMENTS

N:\03\67\26620-00\Transportation\Roadway\Basemaps\26620_Lancaster Pike Corridor.dwg 05-Apr-23 3:10 PM

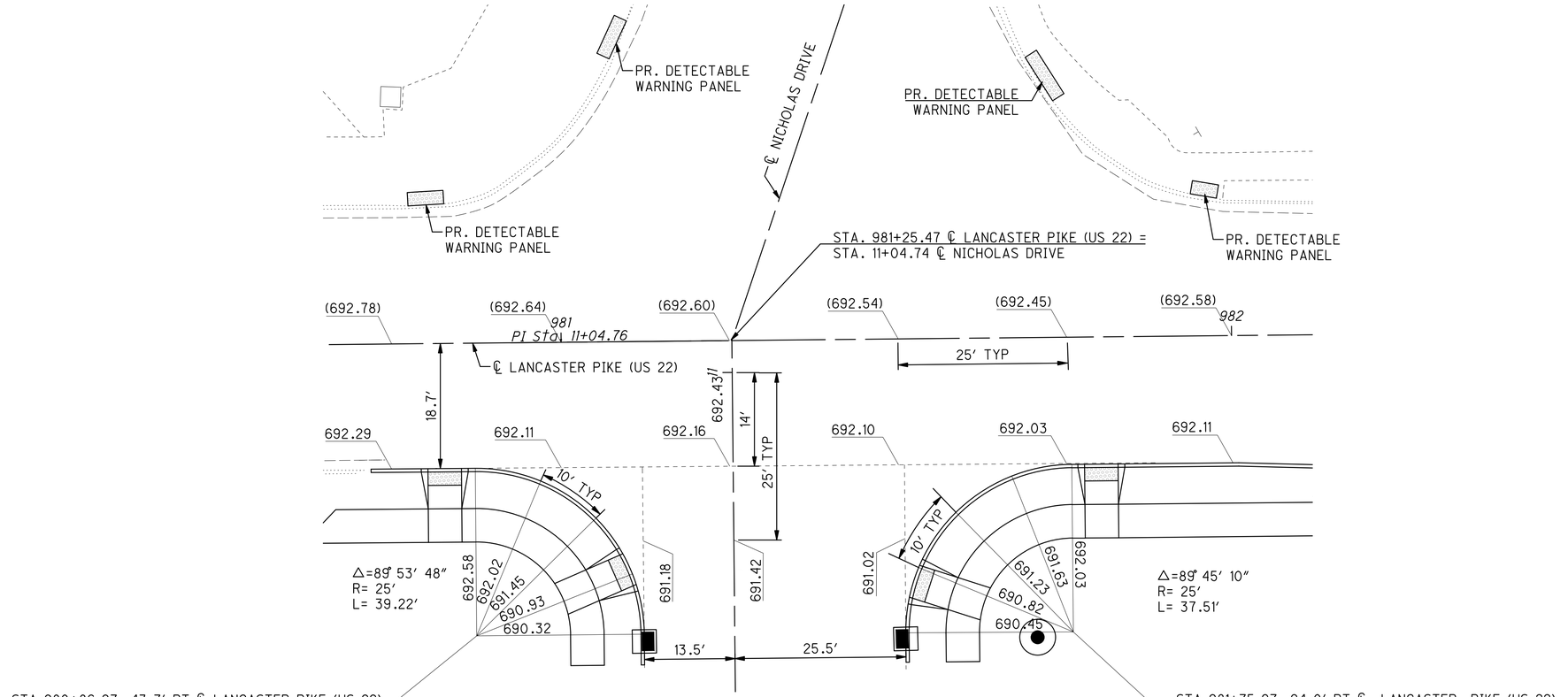

INTERSECTION DETAIL

SCALE 10:1

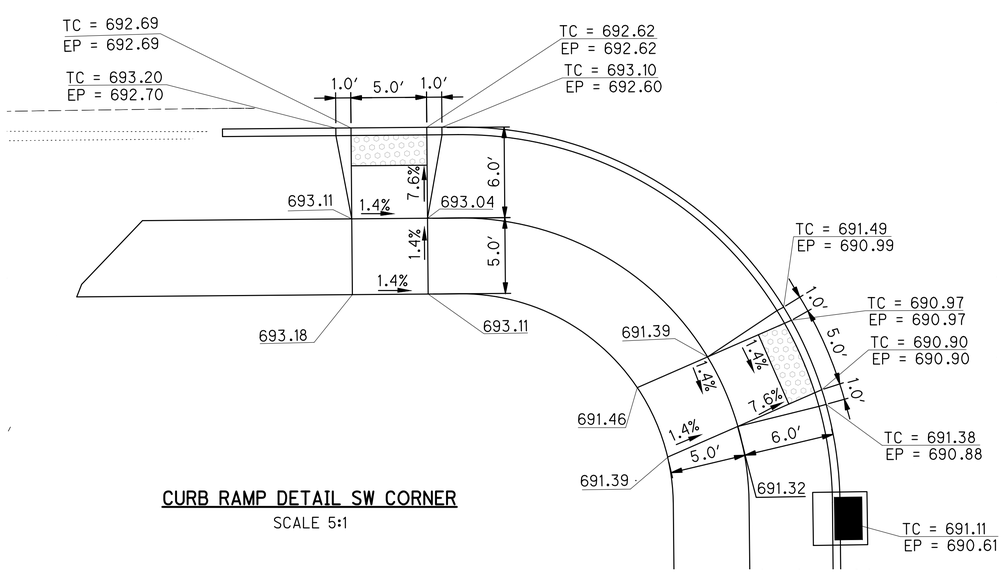

CURB RAMP DETAIL SW CORNER

SCALE 5:1

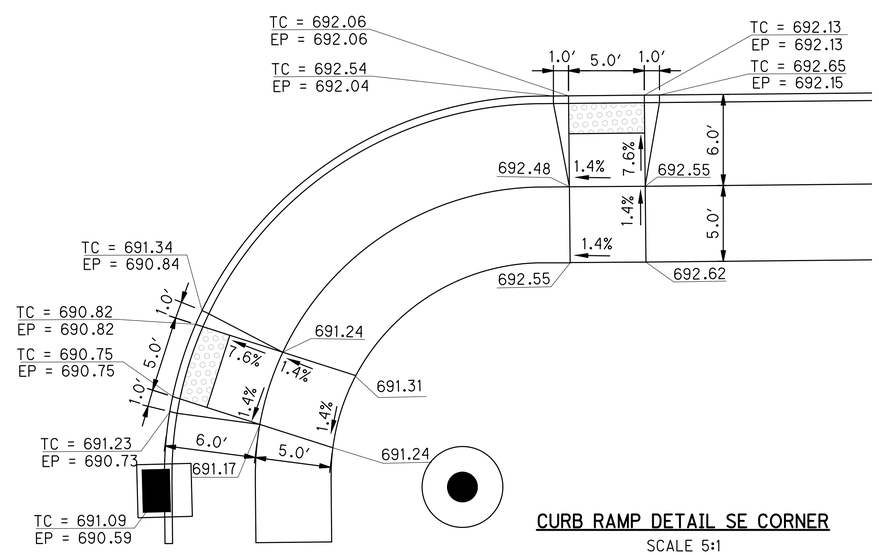

CURB RAMP DETAIL SE CORNER

SCALE 5:1

N:\03\67\26620-00\Transportation\Roadway\Sheets\26620_GI001.dwg 05-Apr-23 3:10 PM

N

HORIZONTAL SCALE IN FEET 0 5 10 20

CALCULATED MSS
CHECKED GAN

INTERSECTION DETAIL

LANCASTER PIKE IMPROVEMENTS

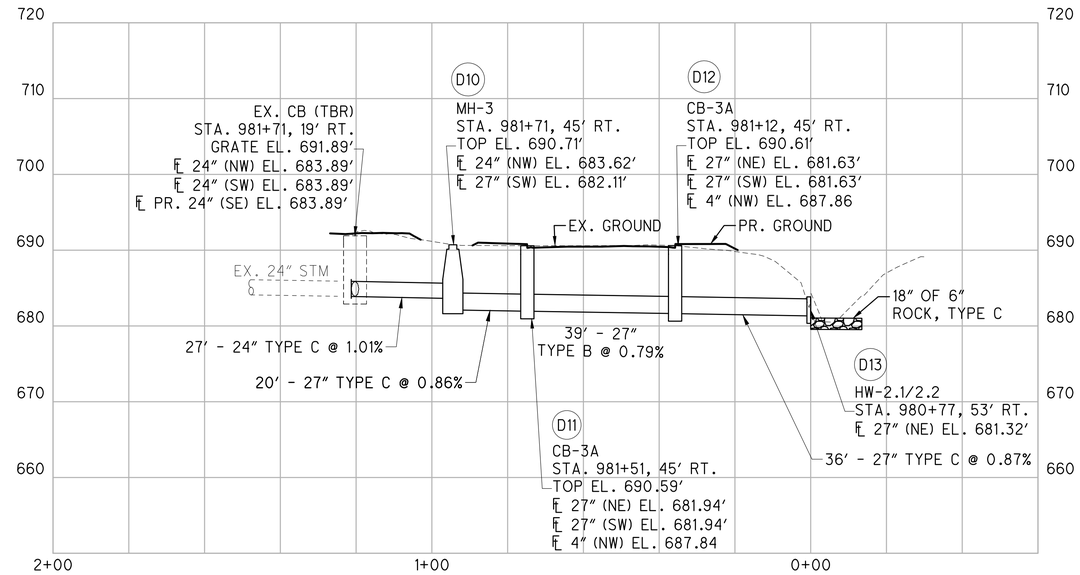

VERTICAL SCALE IN FEET
0 5 10 20

HORIZONTAL SCALE IN FEET
0 10 20 40

CALCULATED GAN
CHECKED DLT

STORM SEWER PROFILE

LANCASTER PIKE IMPROVEMENTS

N:\03\67\26620-00\Transportation\Drainage\Sheets\26620_DF001.dwg 05-Apr-23 3:11 PM

WORK INSPECTION

THE CONTRACTOR SHALL PROVIDE CITY OF CIRCLEVILLE THE WITH 72-HOUR NOTICE OF ANY SIGNAL WORK TO BE PERFORMED AT THE INTERSECTION SITE SO THAT INSPECTION SERVICES CAN BE SUPPLIED.

632 PEDESTRIAN SIGNAL HEAD (LED), (COUNTDOWN), TYPE D2, AS PER PLAN

IN ADDITION TO THE REQUIREMENTS OF C&MS 632 AND 732 THE FOLLOWING SHALL APPLY:

1. SIGNAL HEADS AND VISORS SHALL BE CONSTRUCTED OF BLACK POLYCARBONATE PLASTIC AND MEET ITE SPECIFICATIONS.

2. PROPER EXTERIOR COLORS SHALL BE OBTAINED BY USE OF COLORED PLASTIC MATERIAL RATHER THAN PAINTING.

3. PIPE, SPACERS AND FITTINGS CONSTRUCTED OF POLYCARBONATE PLASTIC MAY BE USED IN LIEU OF GALVANIZED STEEL OR ALUMINUM.

4. THE PEDESTRIAN SIGNAL HEAD SHALL BE OF THE LED COUNTDOWN TYPE.

5. NEW ATTACHMENT HARDWARE AND FITTINGS SHALL BE USED.

6. THE LIGHT EMITTING DIODE (LED) MODULES SHALL MEET THE REQUIREMENTS OF C&MS 732.04. THE CONTRACTOR SHALL PROVIDE THE CITY OF CIRCLEVILLE, IN WRITING, WITH THE LED MANUFACTURER NAME, SERIAL NUMBER, PART NUMBER, DESCRIPTION OF LAMP, AND DATE OF MANUFACTURE FOR ALL LED UNITS THAT ARE TO BE USED IN THE SIGNAL HEAD PRIOR TO INSTALLATION, FOR ACCEPTANCE AND WARRANTY PURPOSES.

PAYMENT FOR ITEM 632 PEDESTRIAN SIGNAL HEAD (LED), (COUNTDOWN), TYPE D2, AS PER PLAN SHALL BE MADE FOR THE NUMBER OF COMPLETE SIGNAL HEAD FURNISHED AND INSTALLED, INCLUDING ALL LABOR, EQUIPMENT, MATERIALS AND NEW ATTACHMENT HARDWARE.

GROUNDING AND BONDING

THE REQUIREMENTS OF THE CONSTRUCTION AND MATERIAL SPECIFICATIONS (C&MS) AND THE TC SERIES OF STANDARD CONSTRUCTION DRAWINGS ARE MODIFIED AS FOLLOWS:

A. ALL METALLIC PARTS CONTAINING ELECTRICAL CONDUCTORS SHALL BE PERMANENTLY JOINED TO FORM AN EFFECTIVE GROUND FAULT CURRENT PATH BACK TO THE GROUNDED CONDUCTOR IN THE POWER SERVICE DISCONNECT SWITCH. PROVIDE AN EQUIPMENT GROUNDING CONDUCTOR IN METALLIC CONDUITS (725.04) IN ADDITION TO THE CONDUCTORS SPECIFIED AND BOND THE CONDUIT TO THIS GROUNDING CONDUCTOR.

B. WHEN AN EQUIPMENT GROUNDING CONDUCTOR IS REQUIRED IN PLASTIC CONDUIT (725.05), THE INSTALLATION SHALL INCLUDE A SEPARATE EQUIPMENT GROUNDING CONDUCTOR IN ADDITION TO THE CONDUCTORS SPECIFIED.

C. METALLIC CONDUIT CARRYING THE LOOP WIRES FROM IN THE PAVEMENT TO THE PULL BOX SPLICE LOCATION WILL ONLY BE BONDED AT THE PULL BOX END, AND WILL NOT CONTAIN AN EQUIPMENT GROUNDING CONDUCTOR.

D. IF MULTIPLE CONDUIT RUNS BEGIN AND END AT THE SAME POINTS, ONLY ONE EQUIPMENT GROUNDING CONDUCTOR IS REQUIRED.

E. IF AN EQUIPMENT GROUNDING CONDUCTOR IS NEEDED IN CONDUIT BETWEEN SIGNALIZED INTERSECTIONS FOR UNDERGROUND INTERCONNECT CABLE, THE GROUNDING SYSTEM FOR EACH SIGNALIZED INTERSECTION WILL BE SEPARATED ABOUT MIDWAY BETWEEN THE INTERSECTIONS.

F. THE MESSENGER WIRE AT SIGNALIZED INTERSECTIONS WILL BE USED AS THE CONDUCTIVE PATH FROM CORNER TO CORNER IF CONDUIT IS NOT PROVIDED UNDER THE ROADWAY. WHEN CONDUIT CONNECTS THE CORNERS OF AN INTERSECTION, AN EQUIPMENT GROUNDING CONDUCTOR SHALL BE USED IN THE CONDUIT.

GROUNDING AND BONDING (CONT.)

2. CONDUITS

A. THE 725.04 CONDUIT SHALL HAVE GROUNDING BUSHINGS INSTALLED AT ALL TERMINATION POINTS. THE BUSHING MATERIAL SHALL BE COMPATIBLE WITH GALVANIZED STEEL CONDUIT AND THE GROUNDING LUG MATERIAL SHALL BE COMPATIBLE FOR USE WITH COPPER WIRE. THREADED OR COMPRESSION TYPE BUSHINGS MAY BE USED.

B. THE 725.05 CONDUIT SHALL HAVE THE INSIDE AND OUTSIDE DIAMETERS OF THE CONDUIT DEBURRED AT ALL TERMINATION POINTS.

C. BOTH ENDS OF METALLIC CONDUIT SHALL BE BONDED TO THE EQUIPMENT GROUNDING CONDUCTOR.

D. METALLIC CONDUIT MAY BE BONDED TO METALLIC BOXES THROUGH THE USE OF CONDUIT FITTINGS UL APPROVED FOR THIS TYPE OF CONNECTION, WITH THE BOX BONDED TO THE EQUIPMENT GROUNDING CONDUCTOR.

3. WIRE FOR GROUNDING AND BONDING

A. USE INSULATED, COPPER WIRE FOR THE EQUIPMENT GROUNDING CONDUCTOR. BONDING JUMPERS IN BOXES AND ENCLOSURES MAY BE BARE OR INSULATED COPPER WIRE. WIRE SIZE SHALL BE AS FOLLOWS:

I. USE 4 AWG BETWEEN THE POWER SERVICE AND SUPPORTS, POLES, PEDESTALS, CONTROLLER OR FLASHER CABINETS.

II. USE A MINIMUM 8 AWG BETWEEN LOOP DETECTOR PULL BOXES AND THE FIRST CONDUIT THAT REQUIRES A LARGER SIZE AS SPECIFIED IN 3.A.I ABOVE.

III. USE A MINIMUM 8 AWG BETWEEN THE-PREPARE TO STOP WHEN FLASHING INSTALLATION (INCLUDING SUPPORT) AND THE FIRST CONDUIT THAT REQUIRES A LARGER SIZE AS SPECIFIED IN 3.A.I ABOVE.

IV. THE INSULATION SHALL BE GREEN OR GREEN WITH YELLOW STRIPE(S). FOR 4 AWG OR LARGER, INSULATION MAY ALSO BE BLACK WITH GREEN TAPE/LABELS INSTALLED AT ALL ACCESS POINTS.

B. IN A HIGHWAY LIGHTING SYSTEM, THE EQUIPMENT GROUNDING CONDUCTOR SHALL BE THE SAME WIRE SIZE AS THE DUCT CABLE OR DISTRIBUTION CABLE CIRCUIT CONDUCTORS, WITH THE MINIMUM CONDUCTOR SIZE OF 4 AWG. BONDING JUMPERS WILL BE MINIMUM SIZE 4 AWG.

4. GROUND ROD

A. A 3/4-INCH SCHEDULE 40 PVC CONDUIT WILL BE USED IN FOUNDATIONS AND CONCRETE WALLS FOR THE GROUNDING CONDUCTOR (GROUND WIRE) RACEWAY TO THE GROUND ROD. SHOULD METALLIC CONDUIT BE USED, BOTH ENDS OF THE CONDUIT SHALL BE BONDED TO THE GROUNDING CONDUCTOR.

B. THE TYPICAL GROUNDING CONDUCTOR (GROUND WIRE) SHALL BE 4 AWG INSULATED, COPPER.

GROUNDING AND BONDING (CONT.)

5. THE GREEN CONDUCTOR IN SIGNAL CABLES (CONDUCTOR #4) SHALL NOT BE USED TO SUPPLY POWER TO A SIGNAL INDICATION. IT WILL BE CONNECTED TO THE SIGNAL BODY AS AN EQUIPMENT GROUND IN ALUMINUM HEADS AND IT WILL BE UNUSED IN PLASTIC HEADS. UNUSED CONDUCTORS SHALL BE GROUNDED IN THE CABINET. TYPICAL USE OF CONDUCTORS IS AS FOLLOWS:

COND.NO.	COLOR	VEHICLE SIGNAL	PEDESTRIAN SIGNAL
1	BLACK	GREEN BALL	#1 WALK
2	WHITE	AC NEUTRAL	AC NEUTRAL
3	RED	RED BALL	#1 DW/FDW
4	GREEN	EQUIPT. GROUND	EQUIPT. GROUND
5	ORANGE	YELLOW BALL	#2 DW/FDW
6	BLUE	GREEN ARROW	#2 WALK
7	WHITE/ BLACK STRIPE	YELLOW ARROW	NOT USED

6. POWER SERVICE AND DISCONNECT SWITCH

A. AT THE POWER SERVICE LOCATION, THE GROUNDING CONDUCTOR (GROUND WIRE) FROM THE DISCONNECT SWITCH NEUTRAL (AC-) BAR TO THE GROUND ROD SHALL BE A CONTINUOUS, UNSPLICED CONDUCTOR. IF SPLICED, IT SHALL BE AN EXOTHERMIC WELD BUTT SPLICE.

B. THE SERVICE NEUTRAL (AC-) SHALL ONLY BE CONNECTED TO GROUND AT THE PRIMARY POWER SERVICE DISCONNECT SWITCH.

I. NEMA CONTROLLER CABINETS: IF A POWER SERVICE DISCONNECT SWITCH IS LOCATED BEFORE THE CONTROLLER CABINET, THE NEUTRAL (AC-) AND THE GROUNDING BARS IN THE CONTROLLER CABINET SHALL NOT BE CONNECTED TOGETHER AS SHOWN IN NEMA TS-2, FIGURE 5-4.

II. IF SECONDARY DISCONNECT SWITCHES ARE CONNECTED AFTER THE PRIMARY DISCONNECT SWITCH, THE NEUTRAL (AC-) SHALL ONLY BE GROUNDED AT THE PRIMARY SWITCH. EQUIPMENT GROUNDING CONDUCTORS SHALL BE BROUGHT TO THE PRIMARY SWITCH, BUT SHALL BE GROUNDED AT BOTH SECONDARY AND PRIMARY SWITCHES.

7. PAYMENT-ALL MATERIALS AND WORK REQUIRED TO COMPLETE THE EFFECTIVE GROUND FAULT CURRENT PATH SYSTEM ARE INCIDENTAL TO THE CONDUCTORS INSTALLED BY CONTRACT.

632 SIGNALIZATION, MISC.: UNLASH AND RELASH MESSENGER WIRE

THE CONTRACTOR SHALL REMOVE EXISTING MESSENGER WIRE LASHING RODS AND REINSTALL THEM AS NECESSARY FOR THE INSTALLATION OF ANY NEW CABLES ON THE EXISTING INTERSECTION SIGNAL SPANS. THE CABLES SHALL ENTER THE EXISTING STRAIN POLE THROUGH THE POLE CABLE ENTRANCE FITTING. THE NEW CABLES SHALL BE SUPPORTED BY A NEW CABLE SUPPORT ASSEMBLY AT THE TOP OF THE STRAIN POLE.

THE NEW SIGNAL CABLES SHALL BE BID BY SEPARATE BID ITEMS.

PAYMENT FOR ITEM 632 "SIGNALIZATION MISC.: UNLASH AND RELASH MESSENGER WIRE" SHALL BE MADE AT THE CONTRACT UNIT PRICE PER FOOT AND SHALL INCLUDE ALL LABOR, MATERIALS, CABLE SUPPORT ASSEMBLIES AND EQUIPMENT TO INSTALL NEW CABLES ON EXISTING SIGNAL SPAN WIRE INSTALLATIONS.

809 - STOP LINE RADAR DETECTION, AS PER PLAN

THIS ITEM OF WORK SHALL CONSIST OF FURNISHING AND INSTALLING A WAVETRONIX SMARTSENSOR MATRIX DETECTION UNIT.THE DETECTION UNIT SHALL INCLUDE THE FOLLOWING:

1. POWER SHALL BE PROVIDED FROM THE TRAFFIC CABINET.

2. ALL REQUIRED INPUTS CARDS SHALL BE INCLUDED IN THE TRAFFIC CABINET AND SHALL BE COMPATIBLE WITH CALTRANS, NEMA TS1 AND NEMA TS2 DETECTOR RACKS. THE CARDS SHALL PROVIDE TRUE PRESENCE DETECTOR CALLS OR CONTACT CLOSURE TO THE TRAFFIC CONTROLLER.

3. THE UNIT SHALL BE MOUNTED DIRECTLY TO A POLE OR MAST ARM, AS RECOMMENDED BY THE MANUFACTURER. CABLE(S) SHALL BE PROVIDED AS REQUIRED AND RECOMMENDED BY THE MANUFACTURER.

4. SURGE PROTECTION DEVICES, AS RECOMMENDED BY THE MANUFACTURER SHALL BE INCLUDED BOTH AT THE POLE WHERE THE UNIT IS LOCATED TO PROTECT THE UNIT AND IN THE TRAFFIC CABINET TO PROTECT THE CABINET ELECTRONICS.

5. THE MANUFACTURER'S REPRESENTATIVE SHALL BE ON SITE DURING INSTALLATION AND TESTING AND SHALL PROVIDE ONSITE TRAINING ON THE SETUP, OPERATION AND MAINTENANCE OF THE UNIT.

6. A SERIAL TO ETHERNET COMMUNICATIONS MODULE AND ETHERNET CABLE (MINIMUM 7 FEET).

7. THE POWER SUPPLY AND COMMUNICATION MODULES SHALL BE SECURED TO A SINGLE PANEL THAT CAN BE MOUNTED INTERIOR TO THE TRAFFIC CABINET. THE PANEL SHALL INCLUDE

MODULAR-PLUG STYLE CONNECTIONS FOR UP TO FOUR (4) SENSOR CABLES. ADDITIONAL SENSORS MAY BE HARD-WIRED TO THE COMMUNICATION MODULES, AS NECESSARY.

8. THE CONTRACTOR SHALL INSTALL THE RADAR DETECTION PRIOR TO MILLING/DISABLING EXISTING LOOPS.

9. THE INSTALLATION SHALL INCLUDE ALL CONTROLLER PROGRAMMING FOR COMPLETE INSTALLATION, WHICH INCLUDES MODIFICATIONS FOR REMOVAL OF EXISTING DETECTION.

PAYMENT FOR ITEM 809 STOP-LINE RADAR DETECTION, AS PER PLAN SHALL BE MADE AT THE CONTRACT UNIT PRICE FOR EACH UNIT, COMPLETE AND IN PLACE INCLUDING ALL REQUIRED CABINET HARDWARE, MOUNTING BRACKETS, CABLES, CONDUIT AND CONNECTIONS TESTED AND ACCEPTED.

ITEM 632 - REMOVAL OF TRAFFIC SIGNAL INSTALLATION, AS PER PLAN

TRAFFIC SIGNAL INSTALLATIONS, INCLUDING SIGNAL HEADS, CABLE, MESSENGER WIRE, STRAIN POLES, CABINET, CONTROLLER ETC., SHALL BE REMOVED IN ACCORDANCE WITH C&MS 632.26 AS INDICATED ON THE PLANS. REMOVED ITEMS SHALL BE PROPERLY DISPOSED OF. ITEMS TO BE REMOVED AND DISPOSED OF INCLUDE THE FOLLOWING:

(1) SIGNAL CABINET WITH CONTROLLER

(1) 3 SECTION, 1 WAY VEHICULAR SIGNAL HEADS, INCLUDING MOUNTING HARDWARE

(1) SPAN MOUNTED SIGN

SIGNAL CABLE (NO LONGER BEING USED)

CALCULATED MSS CHECKED KWR

TRAFFIC SIGNAL GENERAL NOTES

LANCASTER PIKE IMPROVEMENTS

N:\03\67\26620-00\Transportation\Signals\Sheets\26620_CN001.dwg 05-Apr-23 3:11 PM

809 ATC CONTROLLER, AS PER PLAN

THE CONTROLLER UNIT SHALL BE FURNISHED AND INSTALLED PER SS 809 AND BE LISTED ON THE ODOT TRAFFIC AUTHORIZED PRODUCTS (TAP) LIST.

THE CONTROLLER SHALL BE COMPATIBLE WITH THE CABINET TYPE BEING INSTALLED. SUBMIT CONTROLLER MATERIAL DATA SHEETS TO THE CITY OF CIRCLEVILLE FOR APPROVAL PRIOR TO ORDERING.

633 CABINET, TYPE TS-2, AS PER PLAN

THE CABINET SHALL BE FURNISHED AND INSTALLED ACCORDING TO CMS 633 AND 733 AND BE LISTED ON THE ODOT TRAFFIC AUTHORIZED PRODUCTS LIST (TAP).

THE POLE-MOUNTED CABINET SHALL BE A NEMA TS-2, TYPE 1, CABINET SIZE M36 STRETCH WITH 16 LOAD SWITCH BAYS, LED UNDER-SHELF LIGHTING, POWER HARNESSES FOR BOTH TS2 TYPE 1 AND TYPE 2 CONTROLLERS AND SHALL HAVE A MINIMUM OF THREE SHELVES.

EACH CABINET SHALL COME EQUIPPED WITH TWO 16-CHANNEL CABINET DETECTOR RACKS (CDR) INCLUDING BUS INTERFACE UNITS (BUI). THE LOOP DETECTOR TERMINATION PANEL FOR THE SECOND DETECTOR RACK SHALL BE OMITTED.

THE CABINET SHALL BE FURNISHED WITH AN EDI MMU.

SUBMIT SIGNAL CABINET MATERIAL DATA SHEETS TO THE CITY OF CIRCLEVILLE FOR APPROVAL PRIOR TO ORDERING.

PAYMENT FOR ITEM 633 CABINET, TYPE TS-2, AS PER PLAN WILL BE AT THE CONTRACT BID PRICE PER EACH COMPLETE AND IN PLACE INCLUDING ALL CONNECTIONS TESTED AND ACCEPTED. PAYMENT SHALL INCLUDE ALL LABOR, MATERIALS AND APPURTENANCES NECESSARY TO CONNECT THE EXISTING POWER SERVICE, SIGNAL CABLES, PUSHBUTTON CABLES, WIRELESS INTERCONNECT, AND ANY OTHER EXISTING SIGNAL EQUIPMENT REQUIRED TO MAKE THE SIGNAL FULLY OPERATIONAL.

CALCULATED KJF
CHECKED JML

TRAFFIC SIGNAL GENERAL NOTES

LANCASTER PIKE IMPROVEMENTS

TRAFFIC SIGNAL SUBSUMMARY

ITEM	EXTENSION	QUANTITY	UNIT	ITEM DESCRIPTION	REFERENCE
630	79000	2	EACH	SIGN HANGER ASSEMBLY, SPAN WIRE	
630	80100	15.0	SF	SIGN, FLAT SHEET	
632	05006	1	EACH	VEHICULAR SIGNAL HEAD, (LED), 3-SECTION, 12" LENS, 1-WAY, POLYCARBONATE	
632	05086	2	EACH	VEHICULAR SIGNAL HEAD, (LED), 5-SECTION, 12" LENS, 1-WAY, POLYCARBONATE	
632	20731	2	EACH	PEDESTRIAN SIGNAL HEAD (LED), TYPE D2, COUNTDOWN, AS PER PLAN	22
632	25000	3	EACH	COVERING OF VEHICULAR SIGNAL HEAD	
632	25010	2	EACH	COVERING OF PEDESTRIAN SIGNAL HEAD	
632	40500	296	FT	SIGNAL CABLE, 5 CONDUCTOR, NO. 14 AWG	
632	40700	244	FT	SIGNAL CABLE, 7 CONDUCTOR, NO. 14 AWG	
632	90101	1	EACH	REMOVAL OF TRAFFIC SIGNAL INSTALLATION, AS PER PLAN	22
632	90500	204	FT	SIGNALIZATION, MISC.: UNLASH AND RELASH MESSENGER WIRE	22
633	65511	1	EACH	CABINET, TYPE TS-2, AS PER PLAN	22A
809	69101	4	EACH	STOP LINE RADAR DETECTION, AS PER PLAN	22
809	69123	1	EACH	ATC CONTROLLER, AS PER PLAN	22A

CALCULATED MSS
CHECKED KWR

TRAFFIC SIGNAL SUBSUMMARY

LANCASTER PIKE IMPROVEMENTS

N:\03\67\26620-00\Transportation\Signals\Sheets\26620_CS001.dwg 05-Apr-23 3:11 PM

NOTES:

1. ABANDON EXISTING LOOPS IN PLACE AND DISCONNECT EXISTING LEAD-IN LOOP DETECTOR CABLES WITHIN THE CONTROLLER CABINET. INSTALL RADAR DETECTION POWER AND COMMUNICATION EQUIPMENT.

2. REMOVE AND DISPOSE OF THE EXISTING TRAFFIC SIGNAL CONTROLLER AND CABINET. REESTABLISH THE EXISTING TRAFFIC SIGNAL POWER TO THE NEW CONTROLLER AND CABINET. REWIRE ALL EXISTING SIGNAL INFRASTRUCTURE TO THE PROPOSED CABINET.

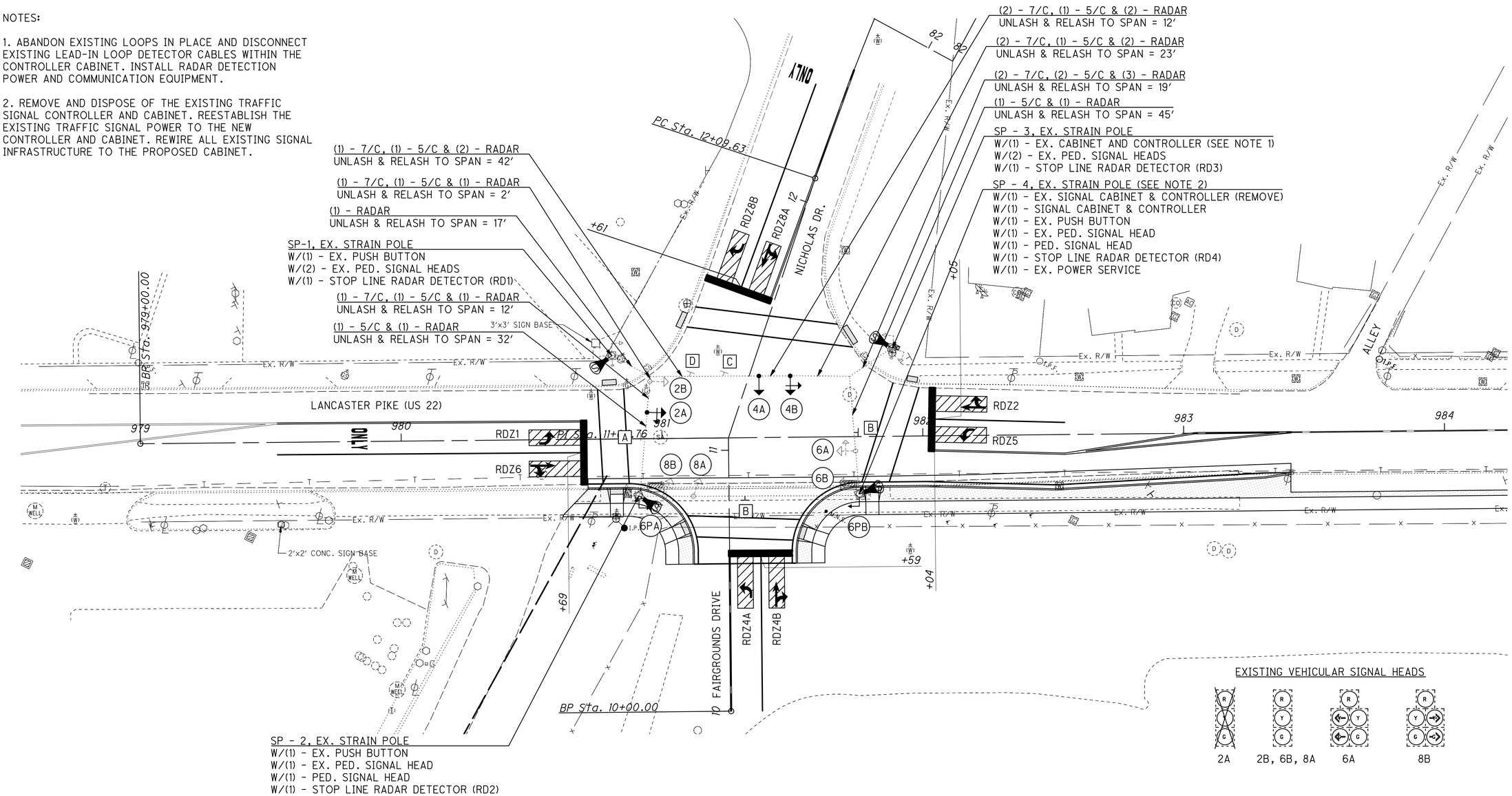

SPAN MOUNTED SIGNS

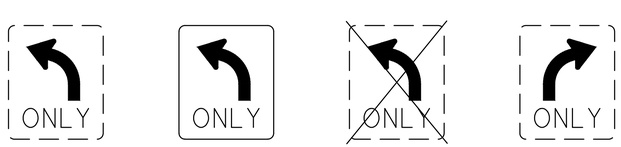

R3-5L-30 A | R3-5L-30 B | R3-5L-30 C | R3-5R-30 D

EXISTING VEHICULAR SIGNAL HEADS

2A | 2B, 6B, 8A | 6A | 8B

PROPOSED VEHICULAR SIGNAL HEADS
(12" LED LENS, YELLOW POLYCARBONATE, CUTAWAY, WITH BACKPLATES)

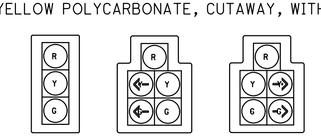

4A | 2A | 4B

PROPOSED PEDESTRIAN SIGNAL HEADS
(LED, COUNTDOWN, TYPE D2)

6PA, 6PB

HORIZONTAL SCALE IN FEET 0 10 20 40

CALCULATED CLB
CHECKED JML

TRAFFIC SIGNAL PLAN
LANCASTER PIKE (US 22) & NICHOLAS DRIVE

LANCASTER PIKE IMPROVEMENTS

24/29

N:\03\67\26620-00\Transportation\Signals\Sheets\26620_CP001.dwg 05-Apr-23 3:11 PM

SIGNAL TIMING CHART

INTERSECTION: U.S. 22 & NICHOLAS DRIVE
MAINTAINING AGENCY: CITY OF CIRCLEVILLE

START UP

START IN: ALL–RED FLASH
TIME FOR: FLASH, ALL RED (SEC.): 9, 6
FIRST PHASE(S): 2+6
COLOR DISPLAYED: GREEN

DUAL ENTRY: YES | PHASES: 1&5, 4&8
REST IN RED: RING 1 NO | RING 2 NO

OVERLAP	A	B	C	D
PHASES	1	5	–	–

INTERVAL OR FEATURE	CONTROLLER MOVEMENT NO.							
INTERSECTION MOVEMENT (PHASE)	1	2	3	4	5	6	7	8
DIRECTION	EBLT	WB	–	NB	WBLT	EB	–	SB
MINIMUM GREEN (INITIAL) (SEC.)	7	20	–	10	7	20	–	20
ADDED INITIAL *(SEC./ACTUATION)	–	–	–	–	–	–	–	–
MAXIMUM INITIAL *(SEC.)	–	–	–	–	–	–	–	–
PASSAGE TIME (PRESET GAP) (SEC.)	3	3	–	3	3	3	–	3
TIME BEFORE REDUCTION *(SEC.)	–	–	–	–	–	–	–	–
MINIMUM GAP *(SEC.)	–	–	–	–	–	–	–	–
TIME TO REDUCE *(SEC.)	–	–	–	–	–	–	–	–
MAXIMUM GREEN I (SEC.)	12	51	–	22	12	51	–	22
MAXIMUM GREEN II (SEC.)	17	52	–	25	12	57	–	25
YELLOW CHANGE (SEC.)	3.2	4.1	–	3.7	3.2	4.1	–	3.7
ALL RED CLEARANCE (SEC.)	1.9	1.0	–	1.0	1.9	1.0	–	1.0
DELAYED GREEN (LPI) # (SEC.)	–	–	–	–	–	–	–	–
FLASHING YELLOW ARROW DELAY^ (SEC.)	–	–	–	–	–	–	–	–
WALK (SEC.)	–	7	–	7	–	7	–	7
PEDESTRIAN CLEARANCE (SEC.)	–	15	–	8	–	9	–	7
RECALL – MAXIMUM (ON/OFF)	OFF	OFF	–	OFF	OFF	OFF	–	OFF
RECALL – MINIMUM (ON/OFF)	OFF	ON	–	OFF	OFF	ON	–	OFF
RECALL – PEDESTRIAN (ON/OFF)	–	ON	–	OFF	–	ON	–	OFF
MEMORY (ON/OFF)	OFF	ON	–	OFF	–	ON	–	OFF

*VOLUME DENSITY CONTROLS

NOTES:

- ALL MOVEMENTS SHALL BE ACTUATED. THE PRIMARY THRU MOVEMENT SHOULD HAVE MIN RECALL ACTIVE TO REST IN GREEN.
- FOR PROTECTED/PERMISSIVE PHASES, IMPLEMENT CALL OMITS TO AVOID YELLOW BALL TRAP.
- ENABLE ϕ1 ϕ5 DETECTOR SWITCHING TO ALLOW ϕ1 & ϕ5 TO EXTEND ϕ2 & ϕ6 WHEN ALLOCATED GREEN TIME FOR LEFT TURN PHASES ARE EXHAUSTED.
- COUNTDOWN PEDESTRIAN SIGNALS SHALL GO TO ZERO ON YELLOW PER OMUTCD FIGURE 4E–2.
- RADAR SHALL HAVE QUEUE DETECTION CONFIGURED AND A ZONE PLACED AT 100–200 FEET FROM STOP BAR FOR SLOW MOVING VEHICLE EXTENSIONS. SPEED TRIGGER SHALL BE SET AT 1–35 MPH.
- ALL DETECTOR DELAYS SHALL BE PLACED IN THE CONTROLLER.
- FOR ANY ENTRY TO FLASHING OPERATION, PROGRAMMING SHALL RUN MINOR STREET GREEN (ϕ4 & ϕ8), ALL–RED CLEARANCE, AND THEN FLASHING OPERATION.

PHASING DIAGRAM

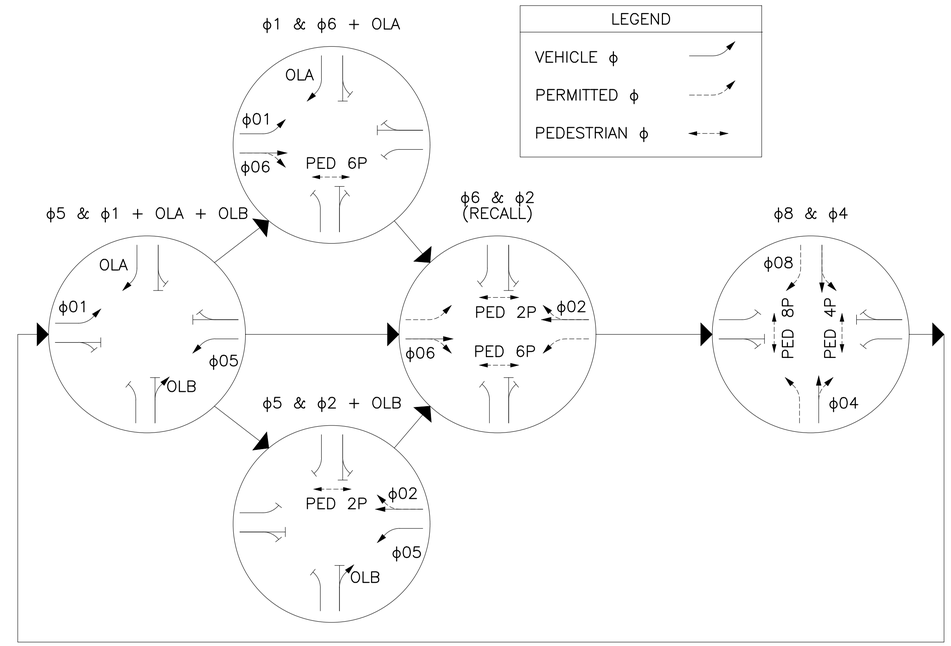

RADAR DETECTION CHART

DETECTION ZONE	MOVEMENT	PULSE OR PRESENCE	ASSOCIATED PHASE	DELAY PROGRAMMED IN CONTROLLER (SEC.)	EXTENSION PROGRAMMED IN CONTROLLER (SEC.)	DETECTOR NO.	PURPOSE	DETECTION ZONE LENGTH (FT)
RDZ1	EBLT	PRESENCE	1	3	0	RD1	STOP LINE	20
RDZ6	EB	PRESENCE	6	8	0	RD1	STOP LINE	20
RDZ4A	NBLT	PRESENCE	4	3	0	RD2	STOP LINE	20
RDZ4B	NB	PRESENCE	4	8	0	RD2	STOP LINE	20
RDZ5	WBLT	PRESENCE	5	3	0	RD4	STOP LINE	20
RDZ2	WB	PRESENCE	2	8	0	RD4	STOP LINE	20
RDZ8A	SB	PRESENCE	8	3	0	RD3	STOP LINE	20
RDZ8B	SBRT	PRESENCE	8	10	0	RD3	STOP LINE	20

Note: Advance/Dilemma Zone Speed Threshold: 30 MPH

Purpose: Stop–Line or Advance Detection

CALCULATED CLB
CHECKED JML

TRAFFIC SIGNAL PLAN DETAILS
LANCASTER PIKE (US 22) & NICHOLAS DRIVE

LANCASTER PIKE IMPROVEMENTS

N:\03\67\26620–00\Transportation\Signals\Sheets\26620_CD001.dwg 05–Apr–23 3:11 PM

NOTES:

1. ALL SIGNAL POLES ARE EXISTING TO REMAIN. POLE HEIGHTS AND DESIGN NUMBERS HAVE BEEN COMPARED BETWEEN THE EXISTING AND PROPOSED CONDITION USING ODOT SWISS. THE INDICATED SIGNAL MODIFICATIONS DO NOT CHANGE THE POLE HEIGHTS OR DESIGN NUMBERS OF THE POLES.

2. FOR THE PROPOSED PEDESTRIAN SIGNAL HEADS, FIELD DRILL THE EXISTING POLES, REPAIR GALVANIZED SURFACES AS SPECIFIED BY ASTM A 780 EXCEPT THAT AEROSOL SPRAY APPLICATIONS OF PAINTS CONTAINING ZINC DUST IS NOT ALLOWED.

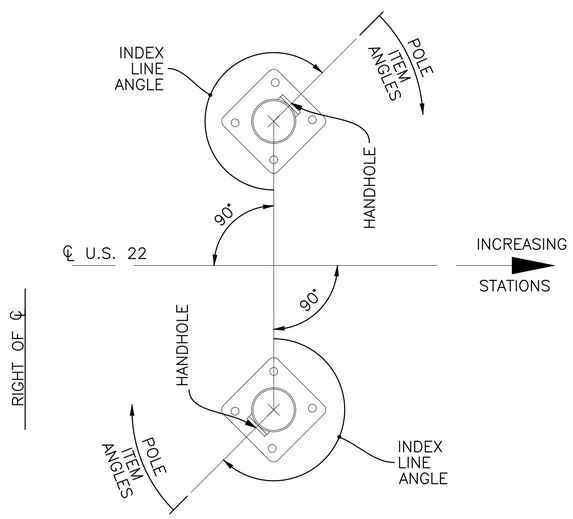

NOTES:

– ALL ANGLES ARE MEASURED CLOCKWISE.

– THE INDEX LINE GOES THROUGH THE CENTER OF THE HANDHOLE.

POLE DIAGRAM

PLAN VIEW FOR TYPICAL SPANWIRE (BOX) DETAIL

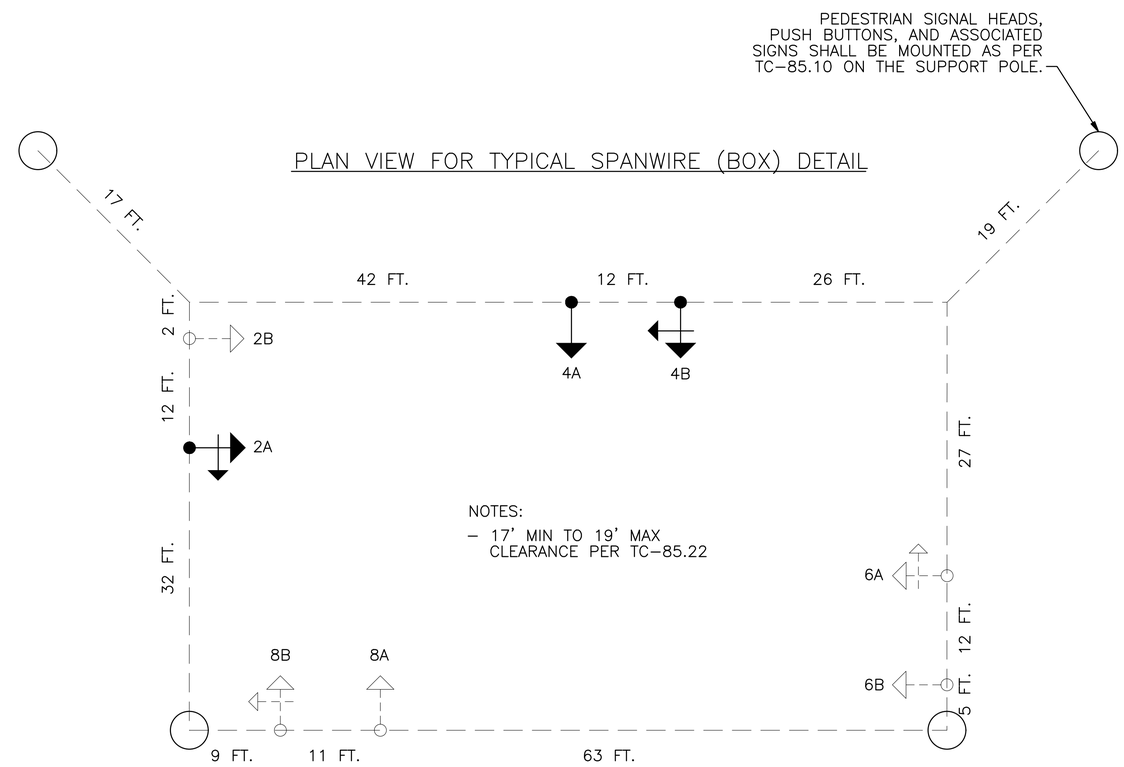

CALCULATED CLB
CHECKED JML

TRAFFIC SIGNAL PLAN DETAILS
LANCASTER PIKE (US 22) & NICHOLAS DRIVE

LANCASTER PIKE IMPROVEMENTS

N:\03\67\26620-00\Transportation\Signals\Sheets\26620_CD001.dwg 05-Apr-23 3:11 PM

WIRING DIAGRAM

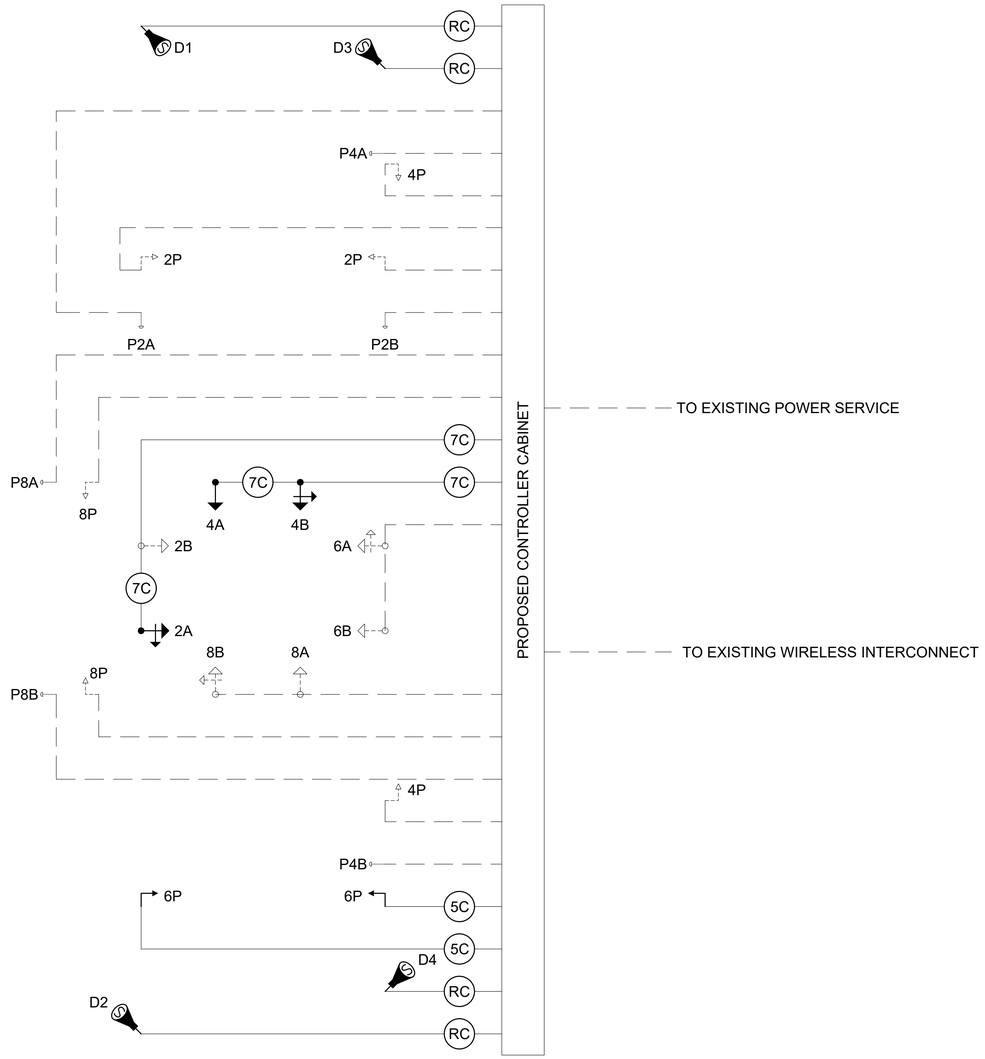

FIELD WIRING HOOK-UP CHART

SIGNAL HEAD	INDICATION	FIELD TERMINAL	FLASH
2A (WB LT)	R	ϕ2 R	R
	Y	ϕ2 Y	
	G	ϕ2 G	
	<--Y---	ϕ5 Y	
	<--G---	ϕ5 G	
2B (WB)	R	ϕ2 R	R
	Y	ϕ2 Y	
	G	ϕ2 G	
4A (NB)	R	ϕ4 R	R
	Y	ϕ4 Y	
	G	ϕ4 G	
4B (NB RT)	R	ϕ4 R	R
	Y	ϕ4 Y	
	G	ϕ4 G	
	---Y-->	ϕ5 Y/ LS 13 Y	
	---G-->	ϕ5 G/ LS 13 G	
6A (EB LT)	R	ϕ6 R	R
	Y	ϕ6 Y	
	G	ϕ6 G	
	<--Y---	ϕ1 Y	
	<--G---	ϕ1 G	
6B (EB)	R	ϕ6 R	R
	Y	ϕ6 Y	
	G	ϕ6 G	
LS = LOAD SWITCH			

SIGNAL HEAD	INDICATION	FIELD TERMINAL	FLASH
8A (SB)	R	ϕ8 R	R
	Y	ϕ8 Y	
	G	ϕ8 G	
8B (SB RT)	R	ϕ8 R	R
	Y	ϕ8 Y	
	G	ϕ8 G	
	---Y-->	ϕ1 Y/ LS 14 Y	
	---G-->	ϕ1 G/ LS 14 G	
PEDESTRIAN MOVEMENTS			
P2	W	ϕ2 G/ LS 9 G	OUT
NORTH	DW	ϕ2 G/ LS 9 R	
P4	W	ϕ4 G/ LS 10 G	OUT
EAST	DW	ϕ4 G/ LS 10 R	
P6	W	ϕ6 G/ LS 11 G	OUT
SOUTH	DW	ϕ6 G/ LS 11 R	
P8	W	ϕ8 G/ LS 12 G	OUT
WEST	DW	ϕ8 G/ LS 12 R	
OVERLAPS			
OLA	---Y-->	ϕ1 Y/ LS 14 Y	OUT
	---G-->	ϕ1 G/ LS 14 G	
OLB	---Y-->	ϕ5 Y/ LS 13 Y	OUT
	---G-->	ϕ5 G/ LS 13 G	

NOTES:

- ALL CABLES ARE EXISTING TO REMAIN UNLESS OTHERWISE INDICATED.
- OVERLAPS SHALL BE WIRED TO THE APPROPRIATE LOAD SWITCHES AS PER THE FIELD HOOKUP CHART AND CONFIGURED IN THE CONTROLLER SOFTWARE PER THE SIGNAL TIMING CHART.

LEGEND

TRAFFIC SIGNAL, 5 UNIT HEAD, 12"	EXISTING TRAFFIC SIGNAL, 5 UNIT HEAD, 12"	SIGNAL CABLE, 5 CONDUCTOR, NO. 14 AWG
TRAFFIC SIGNAL, 3 UNIT, HEAD 12"	EXISTING TRAFFIC SIGNAL, 3 UNIT, HEAD 12"	SIGNAL CABLE, 7 CONDUCTOR, NO. 14 AWG
PEDESTRIAN SIGNAL	EXISTING PEDESTRIAN SIGNAL	RADAR DETECTION CABLE
STOP LINE RADAR DETECTION UNIT	EXISTNG PEDESTRIAN PUSH BUTTON	EXISTING CABLE, TO REMAIN (REWIRE TO PROPOSED CABINET)

CALCULATED CLB
CHECKED JML

TRAFFIC SIGNAL PLAN DETAILS
LANCASTER PIKE (US 22) & NICHOLAS DRIVE

LANCASTER PIKE IMPROVEMENTS

N:\03\67\26620-00\Transportation\Signals\Sheets\26620_CD001.dwg 05-Apr-23 3:11 PM

PAVEMENT MARKINGS SUBSUMMARY

SHEET NO.	LOCATION	STATION TO STATION					644 CENTER LINE	644 CHANNELIZING LINE, 8"	644 STOP LINE	644 CROSSWALK LINE, 12"	644 LANE ARROW	644 WORD ON PAVEMENT, 72"
							FT/MI	FT	FT	FT	EACH	EACH
29	LANCASTER PIKE (US 22)	979+53	LT		980+71	LT	118					
29	LANCASTER PIKE (US 22)	979+53	LT		980+71	RT		118				
29	LANCASTER PIKE (US 22)	979+87	LT									1
29	LANCASTER PIKE (US 22)	980+59	L/R								2	
29	LANCASTER PIKE (US 22)	980+71	L/R						24			
29	LANCASTER PIKE (US 22)	980+76	L/R							36		
29	LANCASTER PIKE (US 22)	980+86	L/R							36		
29												
29	LANCASTER PIKE (US 22)	981+82	L/R							40		
29	LANCASTER PIKE (US 22)	981+93	L/R							38		
29	LANCASTER PIKE (US 22)	982+02	L/R						24			
29	LANCASTER PIKE (US 22)	982+02	LT		982+54	LT		52				
29	LANCASTER PIKE (US 22)	982+14	LT								1	
29	LANCASTER PIKE (US 22)	982+15	LT								1	
29	LANCASTER PIKE (US 22)	982+02	RT		983+41	CL	139					
29	LANCASTER PIKE (US 22)	982+54	RT		983+41	CL	87					
29												
29	NICHOLAS DR.	11+46	L/R									
29	NICHOLAS DR.	11+54	L/R									
29	NICHOLAS DR.	11+59	L/R									
29	NICHOLAS DR.	11+59	LT		12+44	LT		85				
29	NICHOLAS DR.	11+59	LT		12+54	CL	95					
29	NICHOLAS DR.	11+71	LT								2	
29												
29	FAIRGROUNDS DR.	10+00	CL		10+59	CL	59					
29	FAIRGROUNDS DR.	10+00	RT		10+59	RT		59				
29	FAIRGROUNDS DR.	10+49	RT								2	
29	FAIRGROUNDS DR.	10+59	RT						24			
29	FAIRGROUNDS DR.	10+66	L/R							37		
29	FAIRGROUNDS DR.	10+74	L/R							43		
TOTAL FEET							498	314	72	230		
TOTAL MILES							0.09					
TOTALS CARRIED TO GENERAL SUMMARY							0.09	314	72	230	8	1

SIGNING SUBSUMMARY

REF NO.	SHEET NO.	LOCATION	STATION	SIDE	CODE	SIZE (INCHES)	630 GROUND MOUNTED SUPPORT, NO. 2 POST	630 GROUND MOUNTED SUPPORT, NO. 3 POST	630 SIGN, FLAT SHEET	630 REMOVAL OF GROUND MOUNTED SIGN AND DISPOSAL	630 REMOVAL OF GROUND MOUNTED POST SUPPORT AND DISPOSAL
							FT	FT	SF	EACH	EACH
S1		LANCASTER PIKE (US 22)	973+53	RT	R3-H8BH	36"X30"		13	7.5		
R1		LANCASTER PIKE (US 22)	979+53	RT						1	1
S2		LANCASTER PIKE (US 22)	980+99	RT	M1-4	24"X24"	12.75		4		
					M6-4	21"X15"			2.19		
R2		LANCASTER PIKE (US 22)	981+01	RT						2	1
S3		LANCASTER PIKE (US 22)	982+87	RT	R7-1	12"X18"	12		1.5		
R3		LANCASTER PIKE (US 22)	982+87	RT						1	1
TOTALS CARRIED TO GENERAL SUMMARY							24.8	13.0	15.2	4	3

CALCULATED MSS
CHECKED KWR

TRAFFIC CONTROL SUBSUMMARY

LANCASTER PIKE IMPROVEMENTS

N:\03\67\26620-00\Transportation\Traffic\Sheets\26620_TP001.dwg 05-Apr-23 3:12 PM

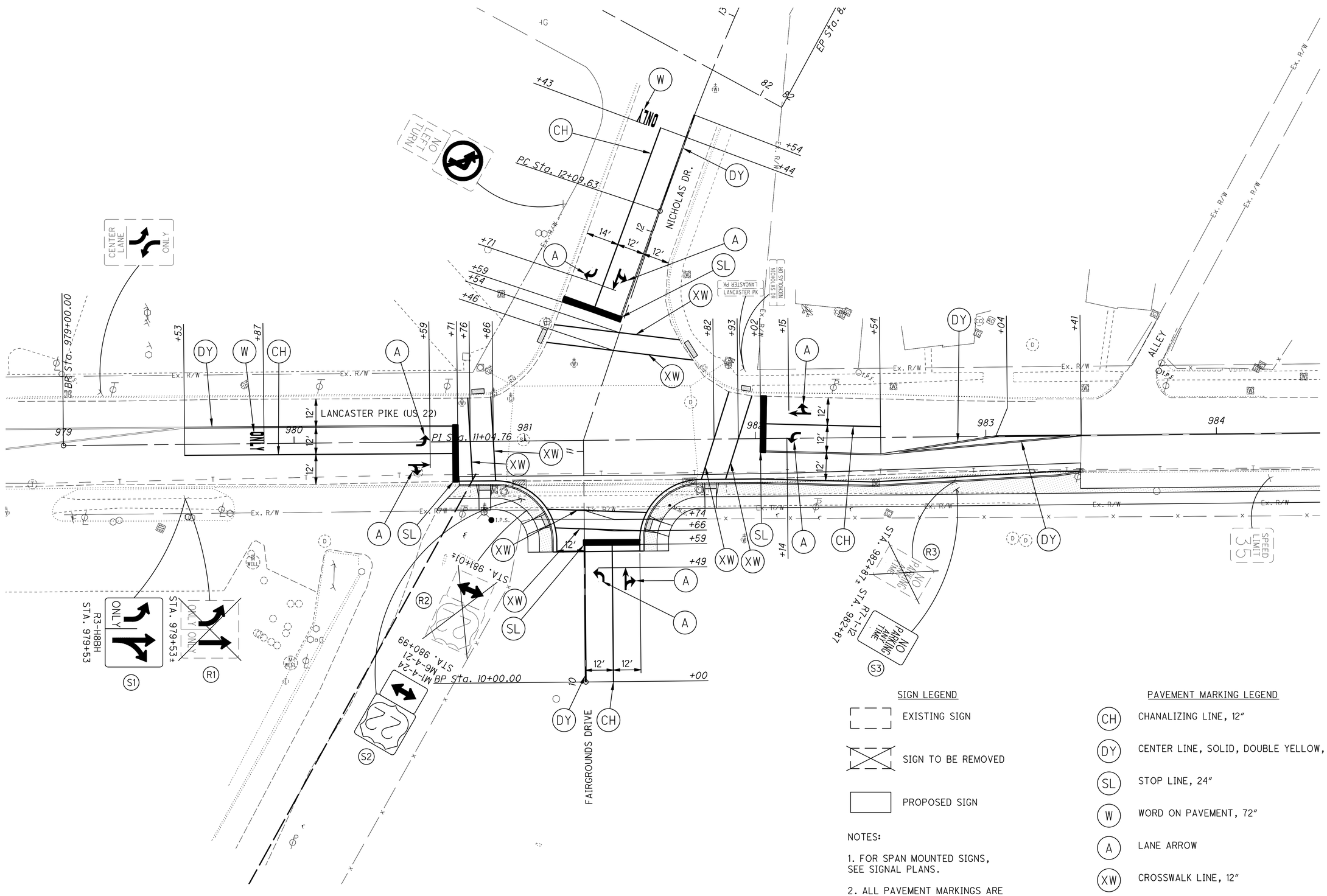

SIGN LEGEND

- EXISTING SIGN
- SIGN TO BE REMOVED
- PROPOSED SIGN

NOTES:

1. FOR SPAN MOUNTED SIGNS, SEE SIGNAL PLANS.

2. ALL PAVEMENT MARKINGS ARE EXISTING TO REMAIN UNLESS OTHERWISE INDICATED.

PAVEMENT MARKING LEGEND

- CH — CHANALIZING LINE, 12"
- DY — CENTER LINE, SOLID, DOUBLE YELLOW, 4"
- SL — STOP LINE, 24"
- W — WORD ON PAVEMENT, 72"
- A — LANE ARROW
- XW — CROSSWALK LINE, 12"

HORIZONTAL SCALE IN FEET 0 10 20 40

CALCULATED CLB
CHECKED JML

TRAFFIC CONTROL PLAN - LANCASTER PIKE (US 22)
STA. 979+00 TO STA. 984+32

LANCASTER PIKE IMPROVEMENTS

29/29

N:\03\67\26620-00\Transportation\Traffic\Sheets\26620_TP001.dwg 05-Apr-23 3:12 PM