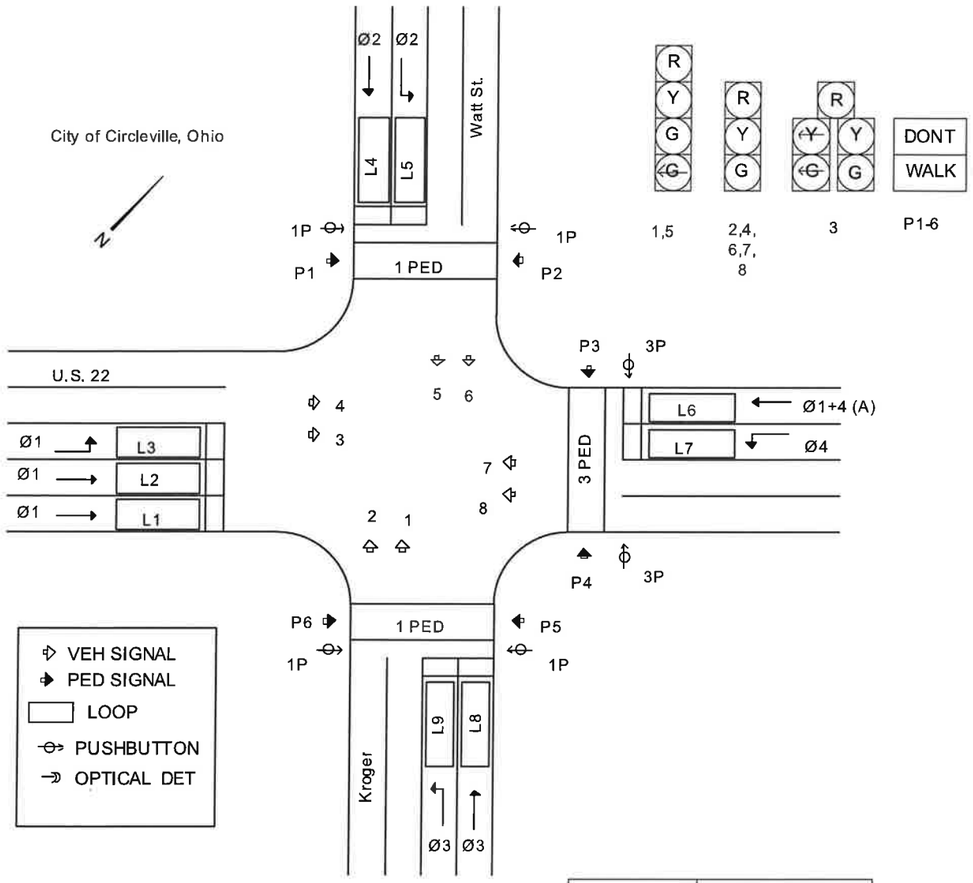

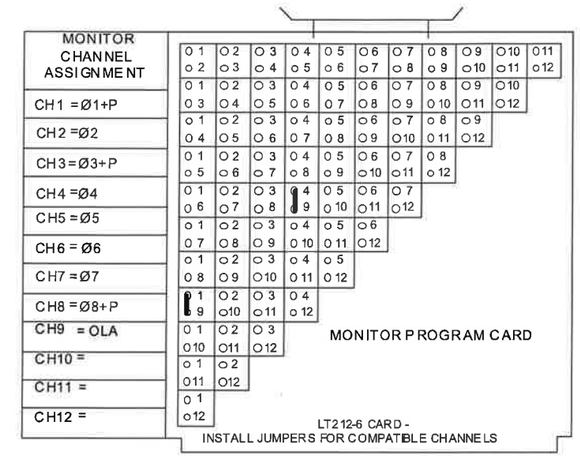

WIRE GAUGE SIZE

= 22
V = 16
X = 14
Z = 12
= 10
8 = 8

WIRE COLOR

B = BLACK
GN = GREEN
P = PURPLE
R = RED
W = WHITE
Y - YELLOW
NO CODE = BLUE

COMPONENT

RC1 = PBN-2002 RC NETWORK (100 OHM-0.1 MFD)
= PGR-72 DIODE (1200 PIV 1 AMP)
= PGR-193 MOV (150 VRMS-20 JOULES)

ABBREVIATIONS

BR = BUS RELAY
CB = COMMON BUS
CL = CABINET LIGHT
CP = CIRCUIT PROTECTOR
CR = CONTROL RELAY
DB = DIODE BOARD
DR = DUPLEX RECEPTACLE
FL = FLASHER
FP = FLASH PROGRAM
FR = FLASH RELAY
LS = LOAD SWITCH
LC = LOGIC COMMON
LF = LINE FILTER
IB = INTERCONNECT BLOCK
P = PLUG
PB = POWER BUS
S = SOCKET
SG = SAFETY GROUND
SP = SURGE PROTECTOR
SW = SWITCH
TB = TERMINAL BLOCK
TS = TERMINAL STRIP

OVERLAP PROGRAM

PHASES INCLUDED IN OVERLAP	
A	Ø1 + 4
B	
C	
D	

FIELD CONNECTION CHART

SIGNAL	G	Y	R	~~G~~	~~Y~~	~~G~~	~~Y~~	W	D
1	2G	2Y	2R	2G					
2	2G	2Y	2R						
3	9G	9Y	9R	4G	4Y				
4	9G	9Y	9R						
5	3G	3Y	3R	3G					
6	3G	3Y	3R						
7,8	1G	1Y	1R						
P1,P2,P5,P6								10G	10R
P3,P4								11G	11R

DETECTOR	TERMINAL	
L1	A416	A418
L4	A419	A421
L8	A422	A424
L7	A425	A427
L5	B416	B418
L9	B419	B421
	B422	B424
	B425	B427
L2	C416	C418
L3	C419	C421
L6	C422	C424
	C425	C427
1P	SB5	SB9,10
3P	SB6	SB9,10
	SB7	SB9,10
	SB8	SB9,10

SEE SHEET 2 FOR INTERCONNECT CONNECTIONS
(if used)

SERVICE CONNECTION
120VAC 60 CYCLE

	TERMINAL
AC+ HOT	AC+
AC- NEUT	AC-
GROUND	SG

EAGLE TRAFFIC CONTROL SYSTEMS

DESIGN ENGR RJS 3/93	ORIGINAL ETCS DWG No	
CHECKED BY	TF4008T28B-2	REV 1
DRAWN BY RJS 4/93		

BALDWIN & SOURS

DRAWN BY DKS	PROJECT	City of Circleville, Ohio
CHECKED BY TEK	LOCATION	U.S. 22 & Kroger / Watt St.
DATE 5-12-98	FINAL DWG No	BT BS - 2066
SHT 1 OF 5		

CABINET LEFT WALL

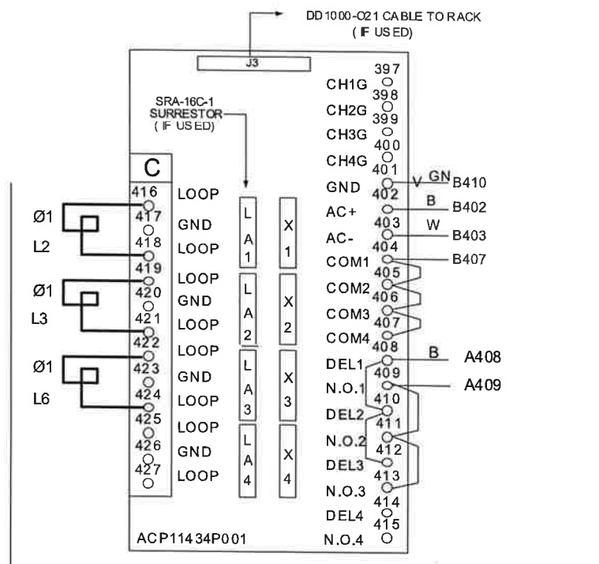

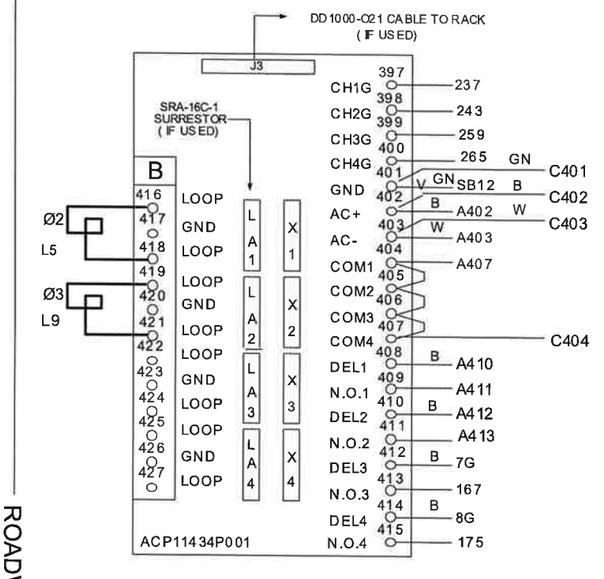

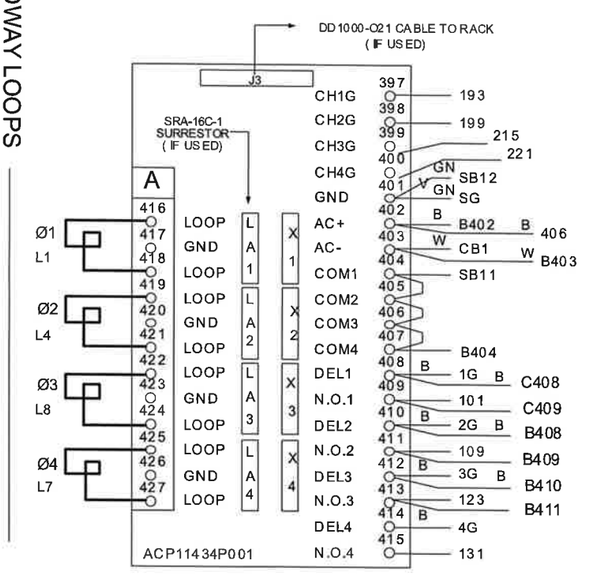

ROADWAY LOOPS

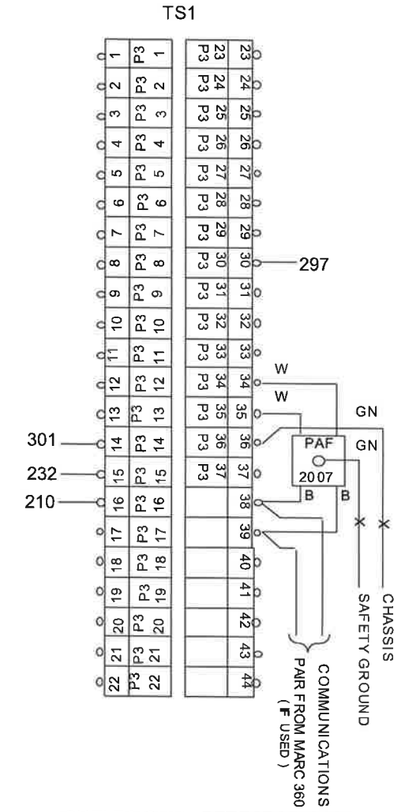

SHELF MOUNT DETECTOR CABLE
(IF USED)

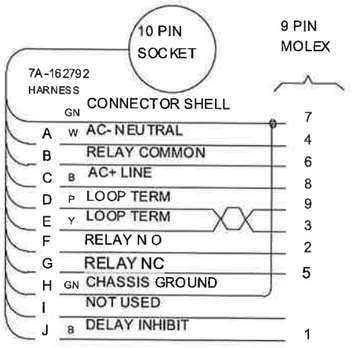

CONNECTOR D

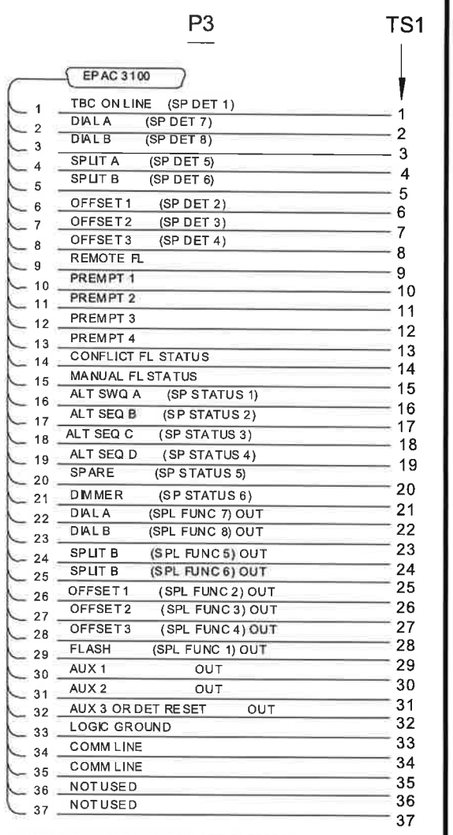

FUNCTIONS IN PARENTHESIS ARE IN EFFECT
WHEN THE UNIT ADDRESS IS OTHER THAN "000".
" D " INPUT MODE = 0 & OUTPUT MODE = O
SEE EPAC MANUAL FOR ALTERNATE FUNCTIONS AVAILABLE.

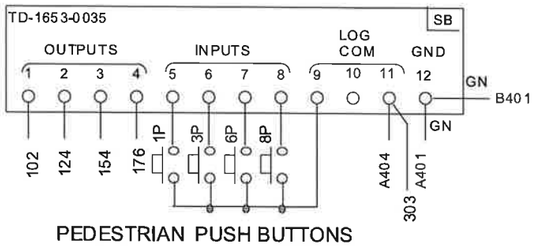

PEDESTRIAN PUSH BUTTONS
(if used)

EAGLE TRAFFIC CONTROL SYSTEMS

DESIGN ENGR R.JS 3/93
CHECKED BY
DRAWN BY R.JS 4/93
ORIGINAL ETC'S DWG No TF4008T28B-2
REV 1

BALDWIN & SOURS

DRAWN BY DKS
CHECKED BY TEK
DATE 5-12-98
PROJECT City of Circleville, Ohio
LOCATION U.S. 22 & Kroger / Watt St.
FINAL DWG No BT BS - 2066
SHT 2 OF 5

LOAD BAY (BOTTOM)

LOAD BAY WIRING IS TF4008-2

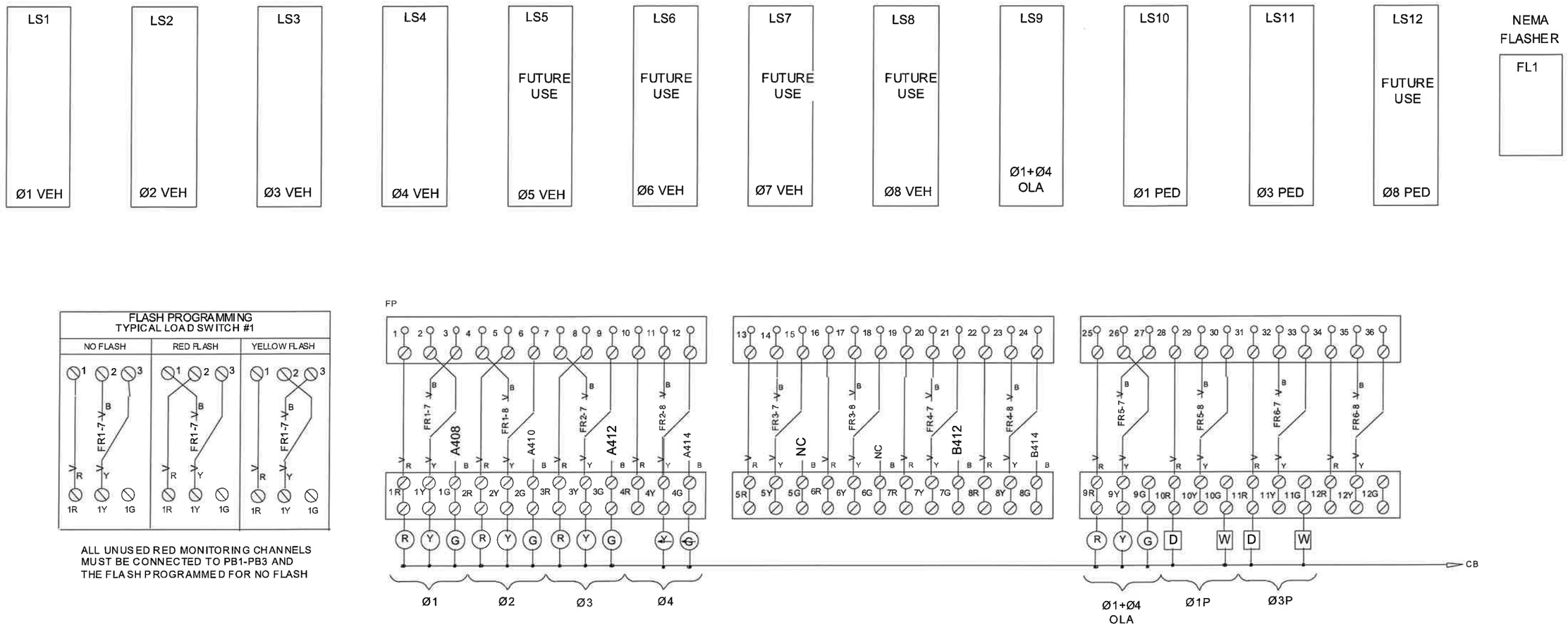

EAGLE TRAFFIC CONTROL SYSTEMS			
DESIGN ENGR	RJS 3/93	ORIGINAL ETCS DWG No	
CHECKED BY		TF4008T28B-2	REV 1
DRAWN BY	RJS 4/93		

BALDWIN & SOURS			
DRAWN BY	DKS	PROJECT	City of Circleville, Ohio
CHECKED BY	TEK	LOCATION	U.S. 22 & Kroger / Watt St.
DATE	5-12-98	FINAL DWG No	
SHT 3	OF 5		BT BS - 2066

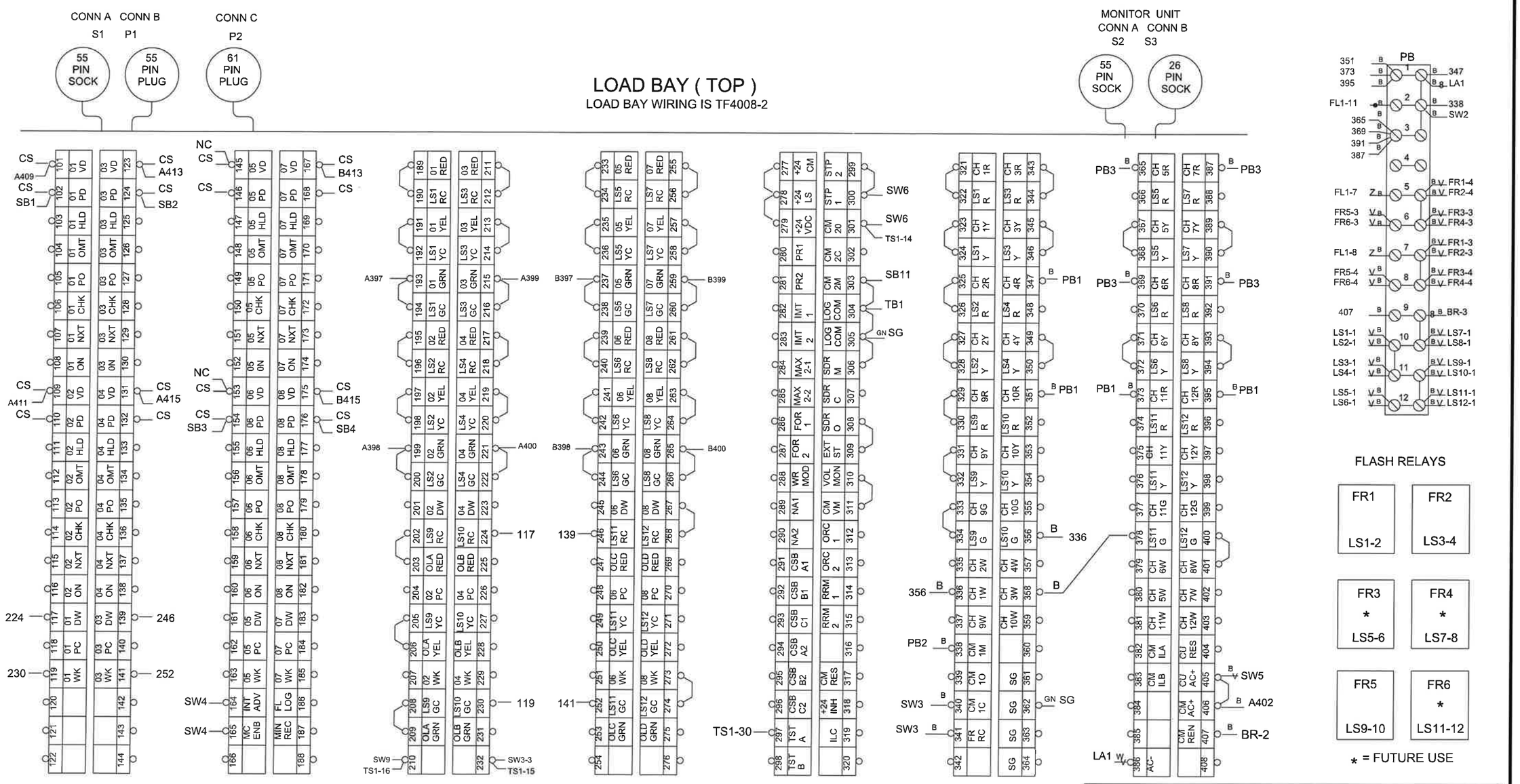

EAGLE TRAFFIC CONTROL SYSTEMS		
DESIGN ENGR RJS 3/93	ORIGINAL ETCS DWG No	
CHECKED BY	TF4008T28B-2	REV 1
DRAWN BY RJS 4/93		

BALDWIN & SOURS		
DRAWN BY DKS	PROJECT	City of Circleville, Ohio
CHECKED BY TEK	LOCATION	U.S. 22 & Kroger / Watt St.
DATE 5-12-98	FINAL DWG No	BT BS - 2066
SHT 4 OF 5		

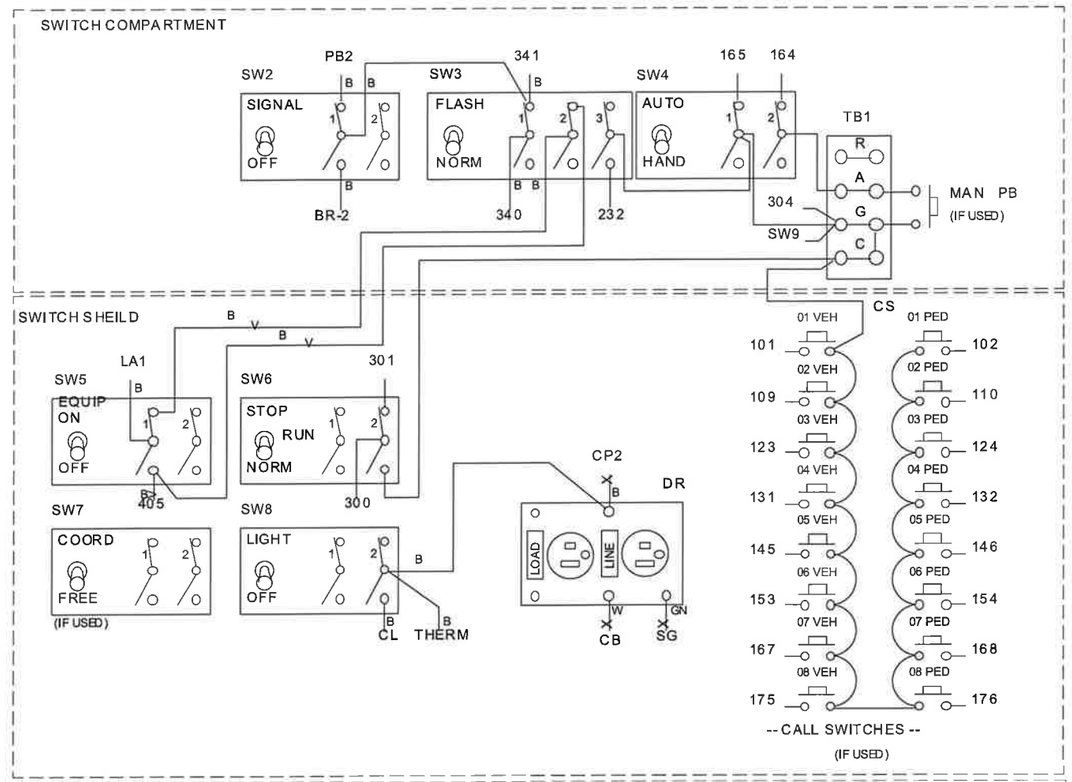

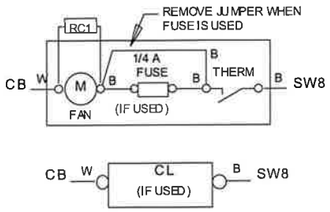

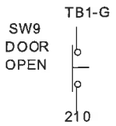

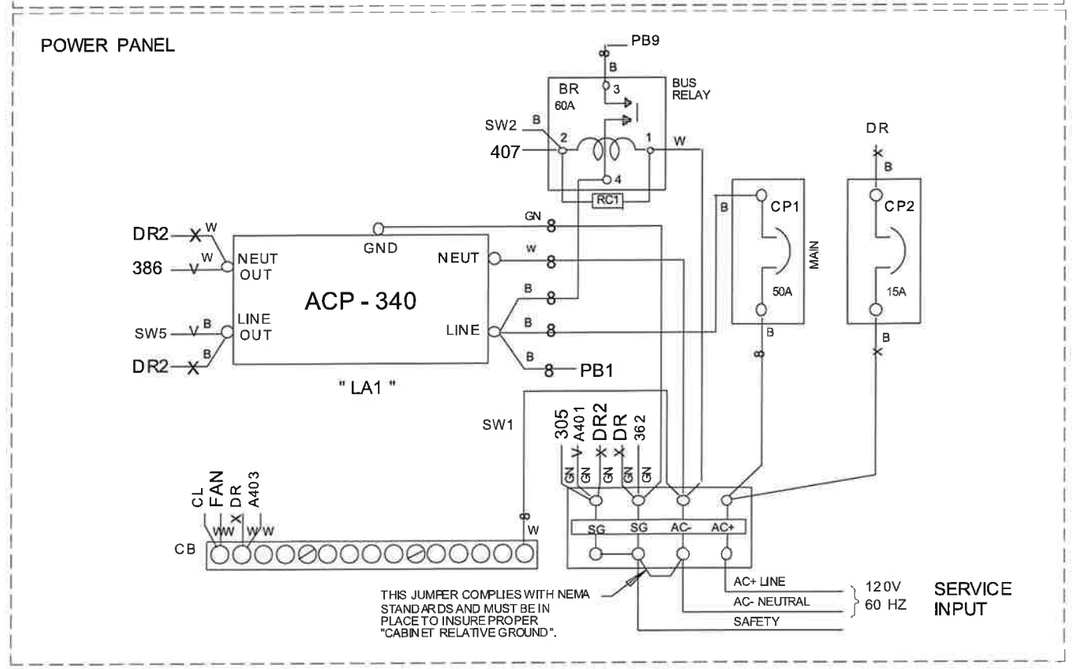

EAGLE TRAFFIC CONTROL SYSTEMS			
DESIGN ENGR	RJS 3/93	ORIGINAL ETCS DWG No	
CHECKED BY		TF4008T28B-2	REV 1
DRAWN BY	RJS 4/93		

BALDWIN & SOURS			
DRAWN BY	DKS	PROJECT	City of Circleville, Ohio
CHECKED BY	TEK	LOCATION	U.S. 22 & Kroger / Watt St.
DATE	5-12-98	FINAL DWG No	
SHT 5	OF 5		BT BS - 2066