STATE OF OHIO
DEPARTMENT OF TRANSPORTATION

PIC-22-18.41

CITY OF CIRCLEVILLE
PICKAWAY COUNTY

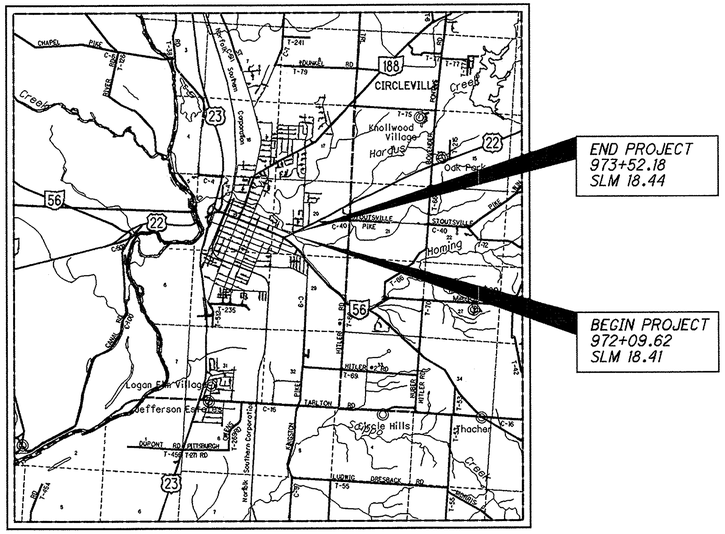

LOCATION MAP

LATITUDE: 39°35'57" LONGITUDE: 82°55'55"

SCALE IN MILES

0 1 2 3 4

N

PORTION TO BE IMPROVED
INTERSTATE HIGHWAY
FEDERAL ROUTES
STATE ROUTES
COUNTY & TOWNSHIP ROADS
OTHER ROADS

DESIGN DESIGNATION

CURRENT ADT (2013)	11000
DESIGN YEAR ADT (2025)	12000
DESIGN HOURLY VOLUME (2025)	1100
DIRECTIONAL DISTRIBUTION	.53
TRUCKS (24 HOUR B&C)	.06
DESIGN SPEED	35
LEGAL SPEED	30
DESIGN FUNCTIONAL CLASSIFICATION: URBAN PRINCIPAL ARTERIAL	
NHS PROJECT	NO

DESIGN EXCEPTIONS

NONE

INDEX OF SHEETS

TITLE	1
SCHEMATIC PLANS	2
TYPICAL SECTIONS	3
GENERAL NOTES	4
MAINTENANCE OF TRAFFIC NOTES	5 - 6
MAINTENANCE OF TRAFFIC PLANS	7 - 9
GENERAL SUMMARY	10
SUB-SUMMARY	11
TRAFFIC CONTROL	12
STRUCTURES (OVER 20')	13 - 14

PROJECT DESCRIPTION

REPLACEMENT OF EXISTING BRIDGE OVERLAY WITH SUPERPLASTICIZED DENSE CONCRETE OVERLAY

PROJECT EARTH DISTURBED AREA:
N/A (MAINTENANCE PROJECT)
ESTIMATED CONTRACTOR EARTH DISTURBED AREA:
N/A (MAINTENANCE PROJECT)
NOTICE OF INTENT EARTH DISTURBED AREA:
N/A (MAINTENANCE PROJECT)

2010 SPECIFICATIONS

THE STANDARD SPECIFICATIONS OF THE STATE OF OHIO, DEPARTMENT OF TRANSPORTATION, INCLUDING CHANGES AND SUPPLEMENTAL SPECIFICATIONS LISTED IN THE PROPOSAL SHALL GOVERN THIS IMPROVEMENT.

I HEREBY APPROVE THESE PLANS AND DECLARE THAT THE MAKING OF THIS IMPROVEMENT WILL REQUIRE THE CLOSING TO TRAFFIC OF THE HIGHWAY AND THAT DETOURS WILL BE PROVIDED AS INDICATED ON SHEETS 7 & 8.

UNDERGROUND UTILITIES

CONTACT BOTH SERVICES
CALL TWO WORKING DAYS
BEFORE YOU DIG

CALL
1-800-362-2764
(TOLL FREE)
OHIO UTILITIES PROTECTION SERVICE
NON-MEMBERS
MUST BE CALLED DIRECTLY

OIL & GAS PRODUCERS UNDERGROUND PROTECTION SERVICE CALL: **1-800-925-0988**

PLAN PREPARED BY:
OHIO DEPARTMENT OF TRANSPORTATION
DISTRICT SIX

ENGINEERS SEAL:

STATE OF OHIO
KEVIN R. FIANT
E-64877
REGISTERED
PROFESSIONAL ENGINEER

SIGNED: Kevin Fiant
DATE: 2-7-13

STANDARD CONSTRUCTION DRAWINGS

BP-3.1	04/20/12	TC-71.10	10/19/12	MT-95.61	07/20/12	
		TC-73.10	04/20/12	MT-99.20	07/20/12	
				MT-101.60	07/20/12	
				MT-110.10	07/20/12	

SUPPLEMENTAL SPECIFICATIONS

800	01/18/13
832	05/05/09
848	10/21/11

SPECIAL PROVISIONS

PLANS CERTIFIED BY:
NAME: Holly G. Bazer DATE: 1/22/13
DISTRICT 6
OHIO DEPT. OF TRANSPORTATION

APPROVED [signature]
DATE 2-7-13 DISTRICT DEPUTY DIRECTOR

APPROVED [signature]
DATE 2-22-13 DIRECTOR, DEPARTMENT OF TRANSPORTATION

FEDERAL PROJECT NO. E120688
PID NO. 91527
CONSTRUCTION PROJECT NO.
RAILROAD INVOLVEMENT NONE
PIC-22-18.37

PIC - US-22-18.41
130301 PID - 91527
Dist 6 5/9/2013
11-FEB-2013 9:51AM hboyer
I:\Projects\pic\022\1837.013\91527\production\roadway\sheets\TITLE SH
Contract Proposal Available @ www.contracts.dot.state.oh.us/home

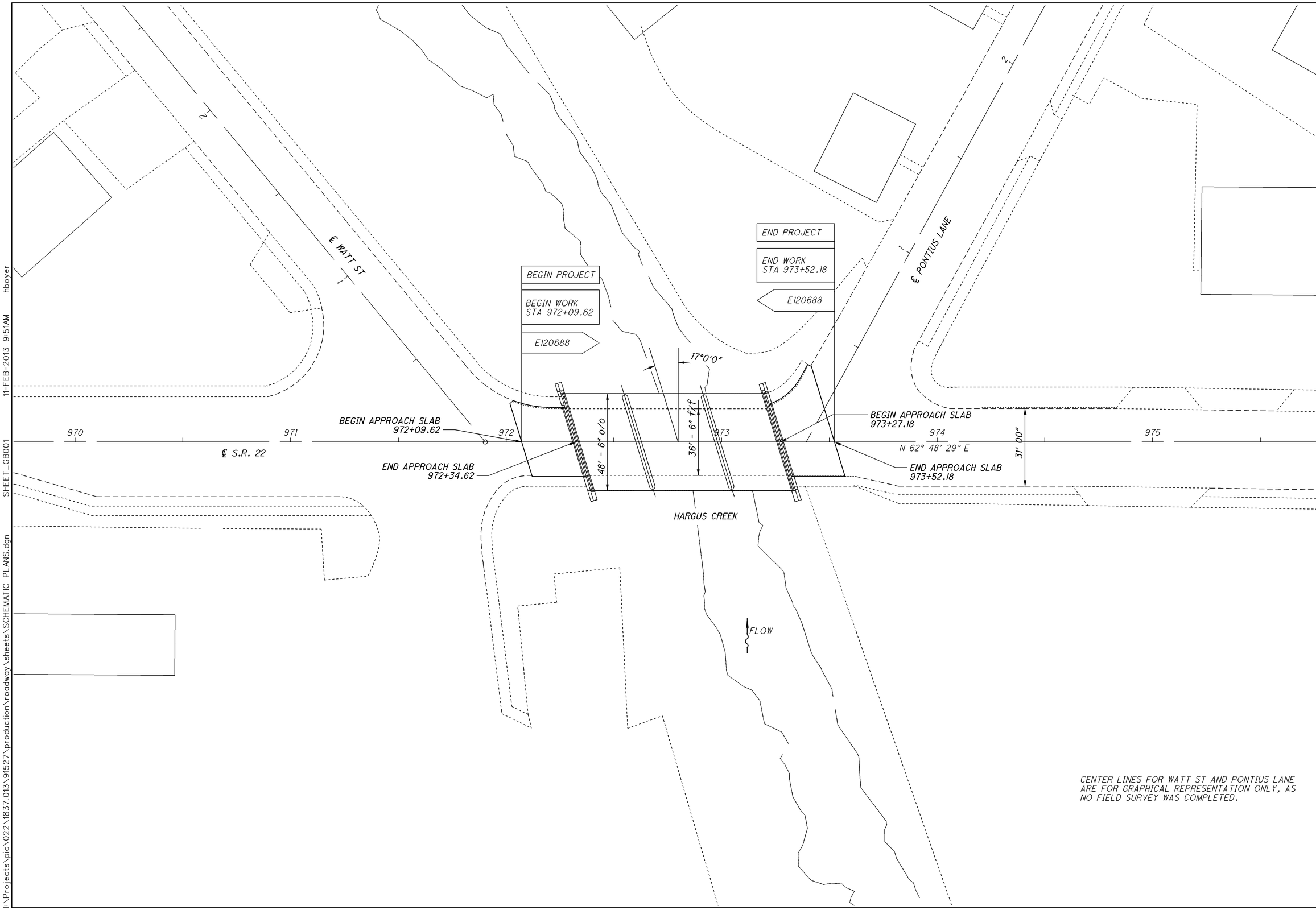

HORIZONTAL SCALE IN FEET
0 10 20 40

CALCULATED HAB
CHECKED ACT

SCHEMATIC

PIC-22-18.37

2
14

I:\Projects\pic\022\1837.013\91527\production\roadway\sheets\SCHEMATIC PLANS.dgn SHEET_GB001 11-FEB-2013 9:51AM hboyer

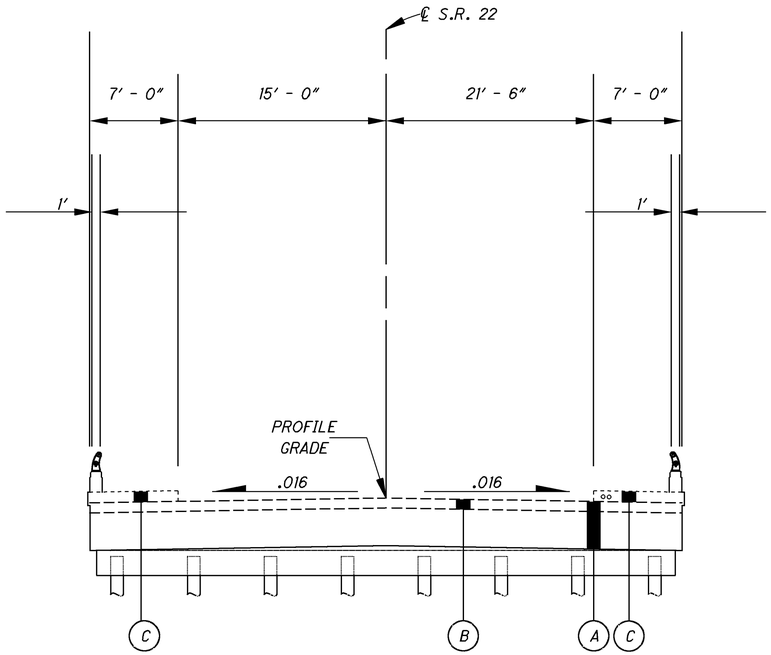

EXISTING STRUCTURE
TYPICAL SECTION
972+34.62 TO 973+27.18

LEGEND

A	1′ - 4″ BRIDGE DECK
B	2″ LMC OVERLAY
C	10″ WALK
D	1 ½″ ASPHALTIC CONCRETE SURFACE COURSE
E	CONCRETE APPROACH SLAB PER AS-1-54
**	DISTANCE VARIES FROM 15′ - 6″ TO 32′ - 0″
***	SLOPE TO MATCH EXISTING

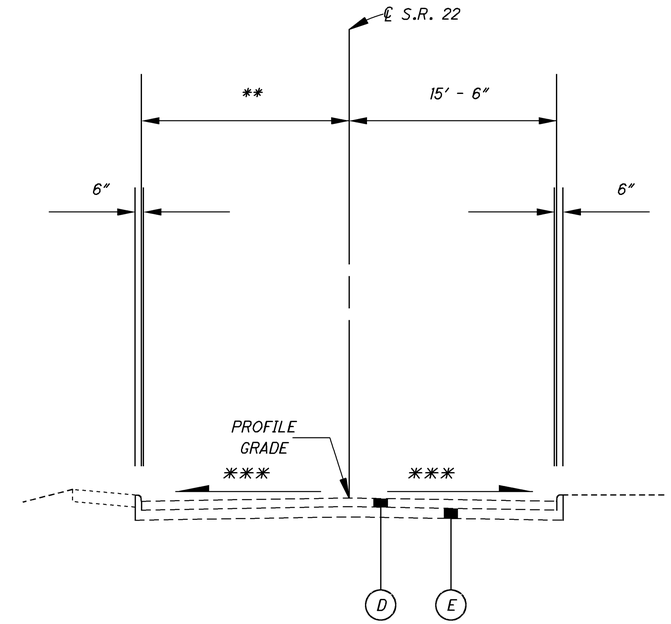

EXISTING APPROACH
TYPICAL SECTION
972+09.62 TO 972+34.62
973+27.18 TO 973+52.18

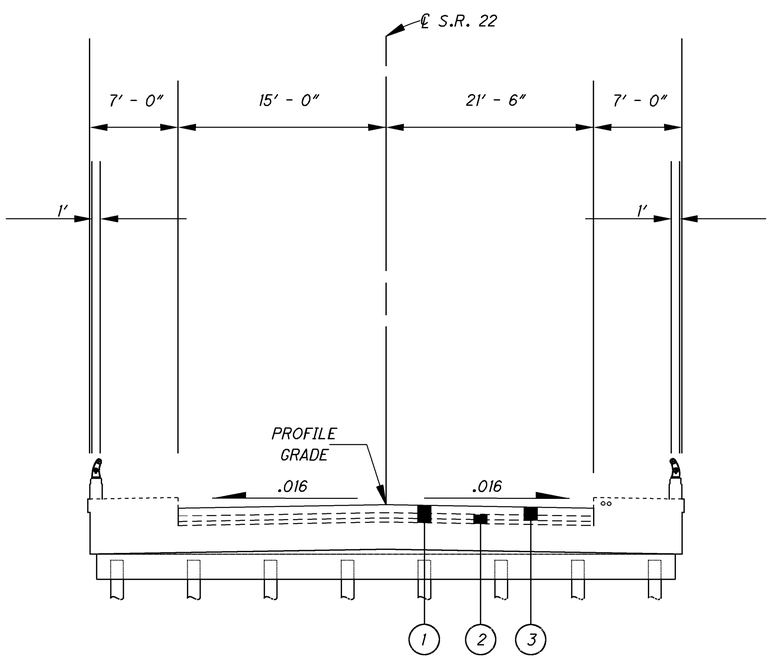

PROPOSED STRUCTURE
TYPICAL SECTION

972+34.62 TO 973+27.18

LEGEND

1	ITEM 848, SUPERPLASTICIZED DENSE CONCRETE OVERLAY USING HYDRODEMOLITION (2 ¼″)
2	ITEM 848, SURFACE PREPERATION USING HYDRODEMOLITION (1″ MIN)
3	ITEM 848, EXISTING CONCRETE OVERLAY REMOVED 2″ NOMINAL THICKNESS
4	ITEM 254, PAVEMENT PLANING, ASHPALT CONCRETE (1 ½″)
5	ITEM 407, TACK COAT, 702.13
6	ITEM 442, ASPHALT CONCRETE SURFACE COURSE, 12.5MM, TYPE A(448) 1 ½″
**	DISTANCE VARIES FROM 15′ - 6″ TO 32′ - 0″
***	SLOPE TO MATCH EXISTING

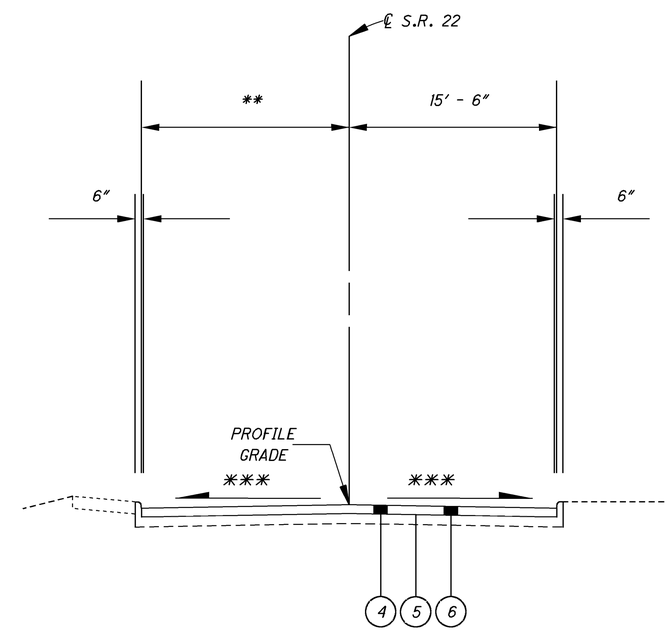

PROPOSED APPROACH
TYPICAL SECTION

972+09.62 TO 972+34.62
973+27.18 TO 973+52.18

CALCULATED HAB
CHECKED ACT

TYPICAL SECTIONS

PIC-22-18.37

I:\Projects\pic\022\18837.013\91527\production\roadway\sheets\TYPICAL SECTIONS.dgn SHEET_GY001 11-FEB-2013 9:51AM hboyer

GENERAL
THE CONTRACTOR SHALL SUBMIT IN WRITING A SCHEDULE OF OPERATIONS TO THE ENGINEER (SEE 108.02) AND RECEIVE APPROVAL IN WRITING BEFORE WORK IS STARTED ON THIS PROJECT. ALL TRAFFIC CONTROL DEVICES SHALL BE FURNISHED, ERECTED, MAINTAINED, AND REMOVED BY THE CONTRACTOR IN ACCORDANCE WITH THE OHIO MANUAL OF UNIFORM TRAFFIC CONTROL DEVICES.

CONTRACTORS EQUIPMENT - OPERATION AND STORAGE
THE CONTRACTOR'S EQUIPMENT SHALL BE OPERATED IN THE DIRECTION OF TRAFFIC WHERE PRACTICAL. EQUIPMENT SHALL HAVE AT LEAST ONE AMBER FLASHING LIGHT. WHEN PARKED ALONG THE HIGHWAY, THE EQUIPMENT SHALL BE LOCATED EITHER A MINIMUM OF THIRTY FEET FROM THE EDGE OF PAVEMENT OR SIX FEET BEHIND GUARDRAIL WITH A MINIMUM OF 125 FEET OF GUARDRAIL PRECEDING THE EQUIPMENT. ALL OTHER EQUIPMENT, INCLUDING PRIVATE VEHICLES, SHALL BE STORED AT AN APPROVED CONTRACTOR'S STORAGE AREA.

CONTINGENCY QUANTITIES
THE CONTRACTOR SHALL NOT ORDER MATERIALS OR PERFORM WORK FOR ITEMS DESIGNATED BY PLAN NOTE TO BE USED "AS DIRECTED BY THE ENGINEER" UNLESS AUTHORIZED BY THE ENGINEER. THE ACTUAL WORK LOCATIONS AND QUANTITIES USED FOR SUCH ITEMS SHALL BE INCORPORATED INTO THE FINAL CHANGE ORDER GOVERNING COMPLETION OF THIS PROJECT.

REMOVAL ITEMS
GUARDRAIL, POSTS, ASPHALT AND MISCELLANEOUS HARDWARE DESIGNATED FOR REMOVAL BECOME PROPERTY OF THE CONTRACTOR AND SHALL BE DISPOSED OF, WITH EXCEPTION OF THE BRIDGE RAILING THAT IS TO BE REUSED. PAYMENT FOR THE ABOVE SHALL BE INCLUDED IN THE UNIT PRICE BID FOR THE REMOVED ITEM.

FIRE HYDRANTS
THE CONTRACTOR SHALL BE RESPONSIBLE FOR OBTAINING ANY PERMITS AND FEES THAT ARE REQUIRED FOR THE USE OF ANY FIRE HYDRANTS. A SIAMESE VALVE IS TO BE USED ON THE HYDRANT OUTLET IF A HOSE IS TO BE LEFT CONNECTED AND UNATTENDED.

UTILITIES
THERE ARE NO KNOWN UNDERGROUND UTILITIES SHOWN ON THIS PLAN. THE NATURE OF THE WORK REQUIRED BY THIS PROJECT WILL NOT AFFECT ANY KNOWN UNDERGROUND UTILITIES THAT EXIST UNDER OR ADJACENT TO THE WORK AREA.

DRAIN PIPES
AT ALL DRAIN PIPES LOCATED IN EXISTING CURB AND THAT DRAIN INTO THE GUTTER, SPECIAL CARE SHALL BE TAKEN BY THE CONTRACTOR SO THAT THESE DRAINS WILL NOT BE CLOSED OR OTHERWISE RENDERED INOPERATIVE. ANY DAMAGE DONE TO THE DRAIN PIPE WILL BE REPLACED AT THE CONTRACTOR'S EXPENSE.

STANDARD DRAWINGS AND SUPPLEMENTAL SPECIFICATIONS
REFER TO THE FOLLOWING SUPPLEMENTAL SPECIFICATION(S):
848 DATED 12/31/2012

DESIGN SPECIFICATIONS
THIS STRUCTURE CONFORMS TO "STANDARD SPECIFICATIONS FOR HIGHWAY BRIDGES" ADOPTED BY THE AMERICAN ASSOCIATION OF STATE HIGHWAY AND TRANSPORTATION OFFICIALS, 2002, AND THE ODOT BRIDGE DESIGN MANUAL.

DESIGN DATA
CONCRETE CLASS S - 4500 PSI (BACKWALL, ABUTMENT, PARAPET REPAIRS)

REINFORCING STEEL - ASTM A615 OR A996 GRADE 60 MINIMUM YIELD STRENGTH 60,000 PSI

DECK PROTECTION METHOD
SUPERPLASTICIZED DENSE CONCRETE OVERLAY

PROPOSED STRUCTURE WORK
BELOW IS A SUMMARY OF THE STRUCTURE WORK REQUIRED ON THIS PROJECT. NOTE: THIS IS NOT INTENDED TO SERVE AS AN ALL-INCLUSIVE LIST OF WORK BUT RATHER A GENERAL GUIDELINE OF PRIMARY WORK ITEMS:

- REPAIR OF PARAPETS
- HYDRO-DEMOLITION AND PLACEMENT OF SDC OVERLAY
- PLANING AND REPAVING OF APPROACHES AT EACH END OF STRUCTURE AND FINAL PAVEMENT MARKINGS

EXISTING STRUCTURE VERIFICATION
DETAILS AND DIMENSIONS SHOWN ON THESE PLANS PERTAINING TO THE EXISTING STRUCTURE HAVE BEEN OBTAINED FROM PLANS OF THE EXISTING STRUCTURE AND FROM FIELD OBSERVATIONS AND MEASUREMENTS. CONSEQUENTLY, THEY ARE INDICATIVE OF THE EXISTING STRUCTURE AND THE PROPOSED WORK, BUT THEY SHALL BE CONSIDERED TENTATIVE AND APPROXIMATE. THE CONTRACTOR IS REFERRED TO CMS SECTIONS 102.05, AND 105.02.

BASE CONTRACT BID PRICES UPON RECOGNITION OF THE UNCERTAINTIES DESCRIBED ABOVE AND UPON A PREBID EXAMINATION OF THE EXISTING STRUCTURE. HOWEVER, THE DEPARTMENT WILL PAY FOR ALL PROJECT WORK BASED UPON ACTUAL DETAILS AND DIMENSIONS THAT HAVE BEEN VERIFIED IN THE FIELD.

ALIGNMENT AND PROFILE
THE ALIGNMENT OF THE EXISTING STRUCTURE WILL NOT BE CHANGED. THE PROPOSED PROFILE GRADE ELEVATIONS SHALL BE THE SAME AS THE EXISTING.

ITEM 202, PORTIONS OF STRUCTURE REMOVED, AS PER PLAN
THIS ITEM SHALL INCLUDE THE PARAPET INDICATED IN THE PLANS AND STRUCTURE NOTES AND THAT ARE NOT SEPARATELY LISTED FOR PAYMENT, EXCEPT FOR WEARING COURSE REMOVAL. ITEMS TO BE REMOVED INCLUDE ALL EXISTING MATERIALS BEING REPLACED BY NEW CONSTRUCTION AND MISCELLANEOUS ITEMS THAT ARE NOT SHOWN TO BE INCORPORATED INTO THE FINAL CONSTRUCTION AND ARE DIRECTED TO BE REMOVED BY THE ENGINEER. THE USE OF EXPLOSIVES, HEADACHE BALLS AND/OR HOE-RAMS WILL NOT BE PERMITTED. THE METHOD OF REMOVAL AND THE WEIGHT OF HAMMER SHALL BE APPROVED BY THE ENGINEER. PERFORM ALL WORK IN A MANNER THAT WILL NOT CUT, ELONGATE OR DAMAGE THE EXISTING REINFORCING STEEL TO BE PRESERVED. CHIPPING HAMMERS SHALL NOT BE HEAVIER THAN THE NOMINAL 35-POUND CLASS WITHIN 18 INCHES OF PORTIONS OF STRUCTURE TO BE RETAINED. OUTSIDE THE 18 INCH [450 MM] LIMIT, THE CONTRACTOR MAY USE HAMMERS NOT EXCEEDING 90 POUNDS UPON THE APPROVAL OF THE ENGINEER. PNEUMATIC HAMMERS SHALL NOT BE PLACED IN DIRECT CONTACT WITH REINFORCING STEEL THAT IS TO BE RETAINED IN THE REBUILT STRUCTURE.

ITEM 202, BRIDGE RAILING REMOVED FOR REUSE, AS PER PLAN
REMOVE THE PORTION OF THE BRIDGE RAILING ABOVE THE SECTIONS OF PARAPET DETAILED FOR REMOVAL. STORE THE RAILING FOR REUSE. AFTER REPAIRING THE PARAPET SECTIONS, REUSE THE RAILING. THIS ITEM INCLUDES PAYMENT FOR REINSTALLING THE RAILING AND HARDWARE. REPLACE ANY BROKEN HARDWARE. BRACKETS CAN BE PROVIDED BY THE DEPARTMENT, UPON REQUEST.

THIS ITEM INCLUDES THE COST TO REPLACE ALL ANCHOR BOLTS AND ANY OTHER NECESSARY HARDWARE.

ITEM 254 - PAVEMENT PLANING, ASPHALT CONCRETE
THIS ITEM IS TO BE PERFORMED ON BOTH APPROACH SLABS OF THE STRUCTURE PIC-022-1837.

THE CONTRACTOR SHALL BE TOTALLY RESPONSIBLE FOR ANY AND ALL DAMAGE TO THE CONTRACTORS EQUIPMENT THAT MAY RESULT FROM THE PLANING OPERATION, INCLUDING DAMAGE CAUSED BY CASTINGS AND LOOP DETECTORS. THE DEPTH OF PLANING CLOSE TO THE CASTINGS SHALL BE AS DIRECTED; TO ACHIEVE A SMOOTH RIDING FINISHED PAVEMENT. GREAT CARE SHALL BE TAKEN TO PREVENT THE REMOVAL OF THE EXISTING PAVEMENT CROSS-SLOPE (CROWN) DURING THE PLANING OPERATIONS.

PAVEMENT SHALL BE PLANED TO THE DEPTH NECESSARY TO REMOVE ALL ASPHALT FROM THE CONCRETE APPROACH SLABS (APPROXIMATELY 1.5"), AND SHALL BE REPLACED BEFORE RE-OPENING STRUCTURE TO TRAFFIC.

ITEM 407 - TACK COAT, 702.13
THE RATE OF APPLICATION OF ITEM 407 - TACK COAT, 702.13 SHALL BE SUBJECT TO ADJUSTMENT, AS DIRECTED BY THE ENGINEER. FOR ESTIMATING PURPOSES ONLY, THE PLAN INDICATES AN AVERAGE APPLICATION RATE OF TACK COAT AT 0.075 GALLONS PER SQUARE YARD THIS ITEM IS FOR USE WITH ITEM 442 AS DEPICTED IN THE TYPICAL SECTIONS ON SHEET 3. A COVER AGGREGATE SHALL BE USED IF HEAVY TRACKING OF THE TACK COAT ONTO THE EXISTING PAVEMENT SHOULD OCCUR DURING THE PAVING OPERATIONS. THE COST OF THE COVER AGGREGATE SHALL BE INCLUDED IN THE COST OF THIS ITEM.

ITEM 509 REINFORCING STEEL, REPLACEMENT OF EXISTING REINFORCING STEEL, AS PER PLAN
REPLACE ALL EXISTING REINFORCING BARS DEEMED BY THE ENGINEER TO BE UNUSABLE BECAUSE OF CORROSION. THE DEPARTMENT WILL MEASURE THE REPLACEMENT REINFORCING STEEL BY THE NUMBER OF POUNDS ACCEPTED IN PLACE.

REPLACE ALL EXISTING REINFORCING STEEL BARS WHICH ARE TO BE INCORPORATED INTO THE NEW WORK AND ARE DEEMED BY THE ENGINEER TO BE MADE UNUSABLE BY CONCRETE REMOVAL OPERATIONS WITH NEW EPOXY COATED REINFORCING STEEL OF THE SAME SIZE AT NO COST TO THE DEPARTMENT.

IN ADDITION TO THE PROVISIONS OF ITEM 509, FIELD BEND AND/OR FIELD CUT THE REINFORCING STEEL DESIGNATED IN THE PLANS, AS NECESSARY, IN ORDER TO MAINTAIN THE REQUIRED CLEARANCES AND BAR SPACINGS. REPAIR ALL DAMAGE TO THE EPOXY COATING, AS A RESULT OF THIS WORK, ACCORDING TO 709.00.

THIS ITEM WILL INCLUDE PAYMENT FOR THE PARAPET STEEL ON SHEET 14, AS WELL AS, A CONTINGENCY QUANTITY OF 100LBS FOR THE DECK.

ITEM 511, TREATING OF CONCRETE BRIDGE DECK WITH SRS, AS PER PLAN
SEAL THE JOINT BETWEEN THE LEFT PARAPET AND THE SIDEWALK 6" IN EACH DIRECTION WITH SRS. SEE DETAIL ON SHEET 14.

ITEM 511, CLASS S SUPERSTRUCTURE, AS PER PLAN
DOWEL INTO THE SIDEWALK A MINIMUM OF 1' AND PLACE EPOXY COATED RE-STEEL AS SHOWN ON SHEET 14. USE NONSHRINK, NONMETALLIC GROUT TO FILL THE DOWEL HOLES. AFTER PLACING ALL RE-STEEL, FORM AND POUR PARAPET TO MATCH EXISTING. SLIP FORMING OF PARAPET IS PROHIBITED. THE CONTRACTOR IS REQUIRED TO INSTALL THREADED INSERTS ON ACTUAL ANCHORS FOR BRIDGE RAIL PRIOR TO POURING. DRILLING INTO PARAPET AFTER POUR IS PROHIBITED.

ITEM 512, SEALING OF CONCRETE SURFACES (NON-EPOXY), AS PER PLAN
SEAL THE NEW LEFT PARAPET TO THE LIMITS SHOWN ON SHEET 14. USE CLEAR NON-EPOXY SEALER.

NOTIFICATION OF CONSTRUCTION INITIATION
AT LEAST FOURTEEN DAYS PRIOR TO STARTING INITIAL CONSTRUCTION ACTIVITIES, THE CONTRACTOR SHALL ADVISE THE DISTRICT OFFICE OF COMMUNICATIONS VIA EMAIL AT d06.pio@dot.state.oh.us, THE DISTRICT WORK ZONE TRAFFIC MANAGER VIA EMAIL AT d06.mot@dot.state.oh.us AND THE CENTRAL OFFICE SPECIAL HAUL PERMITS SECTION BY FAX AT (614)728-4099 OF THE ANTICIPATED START DATE OF ANY CONSTRUCTION ACTIVITIES INCLUDING BUT NOT LIMITED TO THE PLACING OF WORK ZONE SIGNS. THE NOTIFICATION SHALL ALSO INCLUDE THE PROJECT NUMBER, PID, NAME AND PHONE NUMBER OF THE CONTRACTOR, A POINT OF CONTACT AND THE ANTICIPATED IMPACT ON TRAFFIC. THE CONTRACTOR WILL IMMEDIATELY INFORM THE DISTRICT OFFICE OF COMMUNICATIONS AND THE DISTRICT WORK ZONE TRAFFIC MANAGER OF ANY AND ALL DELAYS AND/OR CHANGES REGARDING THE CONSTRUCTION INITIATION DATE.

PUBLIC OUTREACH AND NOTIFICATION
THE CONTRACTOR SHALL BE RESPONSIBLE FOR CONTACTING THE DISTRICT 6 PUBLIC INFORMATION OFFICE AT (740) 833-8063 TO COORDINATE EFFORTS TO NOTIFY ALL LOCAL COUNTY, STATE AND FEDERAL EMERGENCY SERVICES, SCHOOL DISTRICTS AND ADJACENT RESIDENTS AND BUSINESSES OF THE UPCOMING CLOSURE. ADVANCE NOTIFICATION SHALL OCCUR NO LATER THAN FOURTEEN (14) DAYS PRIOR TO CLOSING THE ROAD. IF, SUBSEQUENT TO THE ADVANCE NOTIFICATION, THE START DATE IS CHANGED, THEN A NEW SEVEN (7) DAY NOTIFICATION WILL BE REQUIRED. THE ROAD CANNOT BE CLOSED UNLESS PRIOR NOTIFICATION HAS BEEN ACCOMPLISHED. THE SAME PARTIES SHALL BE NOTIFIED WHEN THE CLOSURE HAS CONCLUDED AND THE ROAD IS BACK OPEN TO TRAFFIC.

NOTIFICATION OF TRAFFIC RESTRICTIONS
THROUGHOUT THE DURATION OF THE PROJECT, THE CONTRACTOR SHALL NOTIFY THE PROJECT ENGINEER IN WRITING OF ALL TRAFFIC RESTRICTIONS AND UPCOMING MAINTENANCE OF TRAFFIC CHANGES. THE CONTRACTOR SHALL ENSURE THE WRITTEN NOTIFICATION IS SUBMITTED IN A TIMELY MANNER TO ALLOW THE PROJECT ENGINEER TO MEET THE REQUIRED TIME FRAMES SET FORTH IN THE TABLE BELOW. THIS NOTIFICATION SHALL BE RECEIVED BY THE PROJECT ENGINEER PRIOR TO THE PHYSICAL SETUP OF ANY APPLICABLE SIGNS OR MESSAGE BOARDS.

INFORMATION SHOULD INCLUDE, BUT IS NOT LIMITED TO ALL CONSTRUCTION ACTIVITIES THAT IMPACT OR INTERFERE WITH TRAFFIC AND SHOULD LIST THE SPECIFIC LOCATION, TYPE OF WORK, ROAD STATUS, DATE AND TIME OF RESTRICTION, DURATION OF RESTRICTION, NUMBER OF LANES MAINTAINED, DETOUR ROUTES IF APPLICABLE, AND ANY OTHER INFORMATION REQUESTED BY THE PROJECT ENGINEER.

Notification Time Frame Table

Item	Duration of Closure	Notification due to District 6 Communications Office
Ramp & Road Closures	>= 2 weeks	14 calendar days prior to closure
	> 12 hours & < 2 weeks	7 calendar days prior to closure
	< 12 hours	2 business days prior to closure
Lane Closures & Restrictions	>= 2 weeks	7 calendar days prior to closure
	< 2 weeks	2 business days prior to closure

ANY UNFORESEEN CONDITIONS NOT SPECIFIED IN THE PLANS REQUIRING TRAFFIC RESTRICTIONS SHALL ALSO BE REPORTED TO THE PROJECT ENGINEER USING THE NOTIFICATION TIME FRAME TABLE.

CONSTRUCTION SEQUENCE:
PRIOR TO BEGINNING WORK THE CONTRACTOR SHALL INSTALL ALL DETOUR SIGNING, BARRIERS, AND ENVIRONMENTAL BMP'S.

THE BRIDGE SCUPPERS SHALL BE TEMPORARILY PLUGGED TO PREVENT WATER FROM HYDRODEMOLITION FROM ENTERING THE STREAM BELOW. FOLLOWING SUPPLEMENTAL SPECIFICATION 848, 2 ¼" OF CONCRETE WEARING SURFACE SHALL BE REMOVED. A MINIMUM OF 1" SHALL BE REMOVED USING HYDRODEMOLITION. THE ENGINEER SHALL SOUND THE DECK TO ENSURE THAT ALL UNSOUND MATERIAL HAS BEEN REMOVED. ANY CONCRETE FOUND TO BE UNSOUND OR ANY REMAINING DELAMINATED LMC OVERLAY SHALL BE REMOVED BY JACK HAMMERING. A NEW SDC CONCRETE OVERLAY 2 ¼" SHALL BE PLACED.

ON THE APPROACH SLABS, THE WEARING COURSE (1.5" OF ASPHALT BY PRIOR PLAN DIMENSIONS) WILL BE REMOVED AND REPLACED AS DETAILED IN THE TYPICAL SECTIONS ON SHEET 3.

ITEM 614, MAINTAINING TRAFFIC: LANES OPEN DURING HOLIDAYS OR SPECIAL EVENTS:
NO WORK SHALL BE STARTED OR PERFORMED DURING THESE PERIODS AND WORK SHALL BE STAGED SUCH THAT IT WILL NOT BE ACTIVE DURING THE FOLLOWING DESIGNATED HOLIDAYS AND EVENTS:

HOLIDAYS

CHRISTMAS	FOURTH OF JULY
NEW YEAR'S EVE	LABOR DAY
MEMORIAL DAY	THANKSGIVING

THE PERIOD OF TIME THAT THE LANES ARE TO BE OPEN DEPENDS ON THE DAY OF THE WEEK ON WHICH THE HOLIDAY FALLS. THE FOLLOWING SCHEDULE SHALL BE USED TO DETERMINE THIS PERIOD:

DAY OF HOLIDAY	TIME ALL LANES MUST BE OPEN TO TRAFFIC
SUNDAY	12:00 NOON FRIDAY THROUGH 6:00 AM MONDAY
MONDAY	12:00 NOON FRIDAY THROUGH 6:00 AM TUESDAY
TUESDAY	12:00 NOON MONDAY THROUGH 6:00 AM WEDNESDAY
WEDNESDAY	12:00 NOON TUESDAY THROUGH 6:00 AM THURSDAY
THURSDAY	12:00 NOON WEDNESDAY THROUGH 6:00 AM FRIDAY
THANKSGIVING	5:00 AM WEDNESDAY THROUGH 6:00 AM MONDAY
FRIDAY	12:00 NOON THURSDAY THROUGH 6:00 AM MONDAY
SATURDAY	12:00 NOON FRIDAY THROUGH 6:00 AM MONDAY

SPECIAL EVENTS
THE PUMPKIN SHOW
PICKAWAY COUNTY FAIR

NO EXTENSIONS OF TIME SHALL BE GRANTED FOR DELAYS IN MATERIAL DELIVERIES, UNLESS SUCH DELAYS ARE INDUSTRY WIDE, OR FOR LABOR STRIKES.

SHOULD THE CONTRACTOR FAIL TO MEET ANY OF THESE REQUIREMENTS, THE CONTRACTOR SHALL BE ASSESSED A DISINCENTIVE IN THE AMOUNT OF $50 FOR EACH MINUTE THE ABOVE DESCRIBED LANE CLOSURE RESTRICTIONS ARE VIOLATED.

ALL WORK AND TRAFFIC CONTROL DEVICES SHALL BE IN ACCORDANCE WITH CMS 614 AND OTHER APPLICABLE PORTIONS OF THE SPECIFICATIONS, AS WELL AS THE OHIO MANUAL OF UNIFORM TRAFFIC CONTROL DEVICES. PAYMENT FOR ALL LABOR, EQUIPMENT AND MATERIALS SHALL BE INCLUDED IN THE LUMP SUM CONTRACT PRICE FOR ITEM 614, MAINTAINING TRAFFIC, UNLESS SEPARATELY ITEMIZED IN THE PLAN.

ITEM 614, MAINTAINING TRAFFIC (TIME LIMITIATION ON A DETOUR)
A MINIMUM OF ONE LANE OF TRAFFIC IN EACH DIRECTION SHALL BE MAINTAINED AT ALL TIMES, EXCEPT FOR A PERIOD NOT TO EXCEED 7 CONSECUTIVE CALENDAR DAYS, WHEN THROUGH TRAFFIC MAY BE DETOURED AS SHOWN ON SHEETS 7-9. A DISINCENTIVE SHALL BE ASSESSED IN THE AMOUNT OF $1000 PER DAY FOR EACH CALENDAR DAY THE ROADWAY REMAINS CLOSED TO TRAFFIC BEYOND THE SPECIFIED LIMIT. IT IS PLAN INTENT THAT THE PARAPET REPAIRS BE COMPLETED DURING THE FULL CLOSURE, HOWEVER IF INCLEMENT WEATHER CAUSES THE NEED FOR PRIORITIZATION, THE PARAPET CAN BE REPAIRED AFTER THE DECK FOLLOWING MT-95.61, AND DURING NON-PEAK TRAFFIC. PEAK TRAFFIC IS CONSIDERED BETWEEN THE HOURS OF 6A-9A AND 3P-6P. BARRICADES AND ALL DETOUR SIGNING SHALL BE PAID IN THE ITEM 614, DETOUR SIGNING LUMP SUM. DETAILS ON SIGNS CAN BE FOUND ON SHEETS 7-9.

PEDESTRIAN TRAFFIC IS TO BE MAINTAINED AT ALL TIMES FOLLOWING THE OHIO MANUAL OF UNIFORM TRAFFIC CONTROL DEVICES 2012, TYPICAL APPLICATIONS 28 AND 29. ANY SIGNING REQUIRED SHALL BE INCLUDED IN DETOUR SIGNING LUMP SUM.

ITEM 614 PORTABLE CHANGEABLE MESSAGE SIGN, A.P.P.:
THE CONTRACTOR SHALL FURNISH, INSTALL, MAINTAIN, AND REMOVE WHEN NO LONGER NEEDED, CHANGEABLE MESSAGE SIGNS, ON SITE, TO BE USED AS DIRECTED.

THE SIGN SHALL BE OF A TYPE SHOWN ON A LIST OF APPROVED PCMS UNITS MAINTAINED BY THE DIRECTOR. ONLY CLASS I OR II SIGNS WILL BE PERMITTED. EACH SIGN SHALL BE TRAILER MOUNTED AND EQUIPPED WITH A FUNCTIONAL DIMMING MECHANISM TO DIM THE SIGN DURING DARKNESS AND A TEMPER AND VANDAL PROOF ENCLOSURE. EACH SIGN SHALL BE PROVIDED WITH APPROPRIATE TRAINING AND OPERATION INSTRUCTIONS TO ENABLE ON-SITE PERSONNEL TO OPERATE AND TROUBLE SHOOT THE UNIT. THE SIGN SHALL ALSO BE CAPABLE OF BEING POWERED BY AN ELECTRICAL SERVICE DROP FROM A LOCAL UTILITY COMPANY. PLACEMENT OF THE PCMS'S SHALL BE, AS DIRECTED BY THE ENGINEER.

SIGN ACTIVATION SHALL BE 7 DAYS PRIOR TO CONSTRUCTION INITIATION, OR AS DIRECTED BY THE ENGINEER. OPERATION AND MAINTENANCE OF THE SIGNS BY THE CONTRACTOR SHALL BE AS DIRECTED BY THE ENGINEER. THE PCMS SHALL BE LOCATED IN A HIGHLY VISIBLE POSITION YET PROTECTED FROM TRAFFIC. THE CONTRACTOR SHALL, AT THE DIRETCTION OF THE ENGINEER, RELOCATE THE PCMS TO IMPROVE VISIBILITY OR ACCOMMODATE CHANGED CONDITIONS. WHEN NOT IN USE, THE PCMS WILL BE OFF, FACING AWAY FROM ALL TRAFFIC, AND SHALL DISPLAY ONE OR MORE HIGH INTENSITY YELLOW REFLECTIVE SHEETING SURFACES OF 9 INCHES BY 15 INCHES MINIMUM, FACING TRAFFIC.

THE ENGINEER SHALL BE PROVIDED ACCESS TO EACH SIGN UNIT AND SHALL BE PROVIDED WITH APPROPRIATE TRAINING AND OPERATION INSTRUCTIONS TO ENABLE ODOT PERSONNEL TO OPERATE AND TROUBLE SHOOT THE UNIT AND TO REVISE SIGN MESSAGES, IF NEEDED. THE SIGN SHALL HAVE THE CAPABILITY TO STORE UP TO 99 MESSAGES. MESSAGE MEMORY OR PRE-PROGRAMMED DISPLAYS SHALL NOT BE LOST AS A RESULT OF POWER FAILURES TO THE ON BOARD COMPUTER. THE THREE-LINE PRESENTATION FORMATS WITH UP TO SIX MESSAGE PHASES SHOULD BE SUPPORTED, BUT NORMALLY NOT MORE THAN TWO MESSAGE PHASES SHOULD BE EMPLOYED, ALTHOUGH THREE PHASES MAY BE USED IN UNUSAL CONDITIONS. PCMS FORMAT SHALL PERMIT THE COMPLETE MESSAGE FOR EACH PHASE TO BE READ AT LEAST ONCE.

THE PCMS SHALL CONTAIN AN ACCURATE CLOCK AND PROGRAMMING LOGIC WHICH WILL ALLOW THE SIGN TO BE ACTIVATED, DEACTIVATED, OR MESSAGES CHANGED AUTOMATICALLY AT DIFFERENT TIMES FOR DIFFERENT DAYS OF THE WEEK.

CALCULATED HAB
CHECKED ACT

MAINTENANCE OF TRAFFIC
GENERAL NOTES

PIC-22-18.37

I:\Projects\pic\022\1837.013\91527\production\roadway\sheets\GENERAL NOTES.dgn SHEET_MN101 11-FEB-2013 9:51AM hboyer

ITEM 614 PORTABLE CHANGEABLE MESSAGE SIGN, A.P.P. (CONTINUED):
THE PCMS UNIT SHALL BE MAINTAINED IN GOOD WORKING ORDER BY THE CONTRACTOR IN ACCORDANCE WITH THE PROVISIONS OF 614.03. THE CONTRACTOR SHALL, PRIOR TO ACTIVATING THE UNIT, MAKE ARRANGEMENTS WITH AN AUTHORIZED SERVICE AGENT FOR THE PCMS TO ASSURE PROMPT SERVICE IN THE EVENT OF A FAILURE. ANY FAILURE SHALL NOT RESULT IN THE SIGN BEING OUT OF SERVICE FOR MORE THAN 12 HOURS, INCLUDING WEEKENDS. FAILURE TO COMPLY MAY RESULT IN AN ORDER TO STOP WORK AND OPEN ALL TRAFFIC LANES AND/OR IN THE DEPARTMENT TAKING APPROPRIATE ACTION TO SAFELY CONTROL TRAFFIC AND THE ENTIRE COST TO CONTROL TRAFFIC ACCRUED BY THE DEPARTMENT WILL BE DEDCTED FROM MONEYS DUE, OR TO BECOME DUE THE CONTRACTOR ON THE CONTRACT. THE CONTRACTOR SHALL BE RESPONSIBLE FOR 24 HOURS PER DAY OPERATIONS AND MAINTENANCE OF THESE SIGNS ON THE PROJECT FOR THE DURATION OF THE PHASES WHEN THE PLAN REQUIRES THEIR USE.

THE REQUIREMENT TO FURNISH, INSTALL, MAINTAIN, MOVE, AND REMOVE A PCMS UNIT ON THIS PROJECT SHALL NOT IN ANY WAY RELIEVE THE CONTRACTOR OF ITS RESPONSIBILITIES AS OUTLINED IN 104.04. PAYMENT FOR THE ABOVE DESCRIBED ITEM SHALL BE AT THE CONTRACT BID PRICE PER DAY FOR EACH ITEM 614 - PORTABLE CHANGEABLE MESSAGE SIGN, AS PER PLAN AND SHALL INCLUDE ALL LABOR, MATERIALS, EQUIPMENT, FUELS, LUBRICATING OILS, SOFTWARE, HARDWARE, AND INCINDENTALS TO PERFORM THE ABOVE DESCRIBED WORK.

THE SIGNS SHALL BE USED TO ALERT THE COMMUNITY OF THE UPCOMING ROAD CLOSURE, AND TO DIRECT THROUGH TRAFFIC TO USE THE ALTERNATE DETOUR. THEY SHALL BE PROGRAMMED AND PLACED AS DIRECTED BY THE ENGINEER.

POSSIBLE MESSAGE: THROUGH TRAFFIC USE ALT / CONTINUE ON S.R.188

THE FOLLOWING QUANTITY HAS BEEN CALCULATED AT 2 SIGNS FOR 14 DAYS:

LOCATION	# OF PCMS	DAYS	TOTAL	UNIT
PIC-22	2	14	28	DAYS

ITEM 614 - PORTABLE CHANGEABLE MESSAGE SIGN, AS PER PLAN = 28 DAYS

ITEM 614, LAW ENFORCEMENT OFFICER WITH PATROL CAR FOR ASSISTANCE DURING CONSTRUCTION OPERATIONS:
USE OF LEOS BY CONTRACTORS OTHER THAN THE USES SPECIFIED BELOW WILL NOT BE PERMITTED AT PROJECT COST UNLESS PRIOR APPROVAL HAS BEEN OBTAINED FROM THE PROJECT ENGINEER. LAW ENFORCEMENT OFFICERS (LEOS) SHOULD NOT BE USED WHERE THE OMUTCD INTENDS THAT FLAGGERS BE USED, IN ADDITION TO THE REQUIREMENTS OF CMS 614 AND THE OHIO MANUAL OF UNIFORM TRAFFIC CONTROL DEVICES (OMUTCD), A UNIFORMED LAW ENFORCEMENT OFFICER WITH AN OFFICIAL PATROL CAR (CAR WITH TOP-MOUNTED EMERGENCY FLASHING LIGHTS AND COMPLETE MARKINGS OF THE APPROPRIATE LAW ENFORCEMENT AGENCY) SHOULD BE PROVIDED FOR THE FOLLOWING TRAFFIC CONTROL TASKS:

- DURING A TRAFFIC SIGNAL INSTALLATION WHEN IMPACTING THE NORMAL FUNCTION OF THE SIGNAL OR THE FLOW OF TRAFFIC OR WHEN TRAFFIC NEEDS TO BE DIRECTED THROUGH AN ENERGIZED TRAFFIC SIGNAL CONTRARY TO THE SIGNAL DISPLAY (E.G., DIRECTING MOTORISTS THROUGH A RED LIGHT).

IN ADDITION TO THE REQUIREMENT OF CMS 614 AND THE OMUTCD, A UNIFORMED LEO WITH AN OFFICIAL PATROL CAR (CAR WITH TOP-MOUNTED EMERGENCY FLASHING LIGHTS AND COMPLETE MARKINGS OF THE APPROPRIATE LAW ENFORCEMENT AGENCY) SHOULD BE PROVIDED FOR THE FOLLOWING TRAFFIC TASKS:

ITEM 614, LAW ENFORCEMENT OFFICER WITH PATROL CAR FOR ASSISTANCE DURING CONSTRUCTION OPERATIONS (CONTINUED):

- FOR LANE CLOSURES: DURING INITIAL SET-UP PERIODS, TEAR DOWN PERIODS, SUBSTANTIAL SHIFTS OF CLOSURE POINT OR WHEN NEW LANE CLOSURE ARRANGEMENTS ARE INITATED FOR LONG-TERM LANE CLOSURE/SHIFTS (FOR THE FIRST AND LAST DAY OF MAJOR CHANGES IN TRAFFIC CONTROL SETUP). IN GENERAL, LEOS SHOULD BE POSITIONED AT THE POINT OF LANE RESTRCTION OR ROAD CLOSURE AND TO MANUALLY CONTROL TRAFFIC MOVEMENTS THROUGH INTERSECTIONS IN WORK ZONES.

LEOS SHOULD NOT FORGO THEIR TRAFFIC CONTROL RESPONSIBILITES TO APPREHEND MOTORISTS FOR ROUTINE TRAFFIC VIOLATIONS. HOWEVER, IF A MOTORIST'S ACTIONS ARE CONSIDERED TO BE RECKLESS, THEN PURSUIT OF THE MOTORIST IS APPROPRIATE.

THE LEOS WORK AT THE DIRECTION OF THE CONTRACTOR. THE CONTRACTOR IS RESPONSIBLE FOR SECURING THE SERVICES OF THE LEO'S AND COMMUNICATING THE INTENTIONS OF THE PLANS WITH RESPECT TO DUTIES OF THE LEO. THE ENGINEER SHALL HAVE FINAL CONTROL OVER THEIR RESPECTIVE DUTIES, PLACEMENT, AND WILL RESOLVE ANY ISSUES BETWEEN THE TWO PARTIES THAT MAY ARISE. THE CONTRACTOR SHALL MAKE ARRANGEMENTS FOR THE SERVICES WITH:

PICKAWAY COUNTY SHERIFF'S OFFICE: 1-740-477-6000
THE OHIO HIGHWAY PATROL: 1-614-466-2660

THE LEO SHOULD REPORT INTO THE CONTRACTOR PRIOR TO THE START OF THE SHIFT, IN ORDER TO RECEIVE INTSTRUCTIONS REGARDING SPECIFIC WORK ASSIGNMENTS DURING THE SHIFT. THE CONTRACTOR SHALL PROVIDE THE LEO WITH A TWO-WAY COMMUNICATION DEVICE, WHICH SHALL BE RETURNED TO THE CONTRACTOR AT THE END OF THE SHIFT.

LAW ENFORCEMENT OFFICERS (WITH PATROL CAR) REQUIRED BY THE TRAFFIC MAINTENANCE TASKS ABOVE SHALL BE PAID FOR ON A UNIT PRICE (HOURLY) BASIS UNDER ITEM 614, LAW ENFORCEMENT OFFICER WITH PATROL CAR. THE FOLLOWING ESTIMATED QUANTITIES HAVE BEEN CARREIED TO THE GENERAL SUMMARY.

ANY ADDITIONAL COSTS (ADMINISTRATIVE OR OTHERWISE) INCURRED BY THE CONTRACTOR TO OBTAIN THE SERVICES OF A LEO ARE INCLUDED WITHIN THE BID UNIT PRICE FOR ITEM-614 LAW ENFORCEMENT OFFICER WITH PATROL CAR. THE HOURS PAID SHALL INCLUDE ANY MINIMUM SHOW-UP TIME REQUIRED BY THE LAW ENFORCEMENT AGENCY INVOLVED.
THE FOLLOWING ESTIMATED QUANTITIES HAVE BEEN PROVIDED:
ITEM 614 - LAW ENFORCEMENT OFFICER WITH PATROL CAR FOR ASSISTANCE = 56 HOURS

FLOODLIGHTING:
FLOODLIGHTING OF THE WORK SITE FOR OPERATIONS CONDUCTED DURING NIGHTTIME PERIODS SHALL BE ACCOMPLISHED, SO THAT THE LIGHTS DO NOT CAUSE GLARE TO THE DRIVERS ON THE ROADWAY. TO ENSURE THE ADEQUACY OF THE FLOODLIGHT PLACEMENT, THE CONTRACTOR AND THE ENGINEER SHALL DRIVE THROUGH THE WORK SITE EACH NIGHT WHEN THE LIGHTING IS IN PLACE AND OPERATIVE PRIOR TO COMMENCING ANY WORK. IF GLARE IS DETECTED, THE LIGHT PLACEMENT AND SHIELDING SHALL BE ADJUSTED TO THE SATISFACTION OF THE ENGINEER BEFORE WORK PROCEEDS.

PAYMENT FOR ALL LABOR, EQUIPMENT AND MATERIALS SHALL BE INCLUDED IN THE LUMP SUM CONTRACT PRICE FOR ITEM 614, MAINTAINING TRAFFIC.

WORK LIMITS:
THE WORK LIMITS SHOWN ON THESE PLANS ARE FOR PHYSICAL CONSTRUCTION ONLY. THE INSTALLATION AND OPERATION OF ALL TEMPORARY TRAFFIC CONTROL AND TEMPORARY TRAFFIC CONTROL DEVICES REQUIRED BY THESE PLANS SHALL BE PROVIDED BY THE CONTRACTOR WHETHER INSIDE OR OUTSIDE THESE WORK LIMITS.

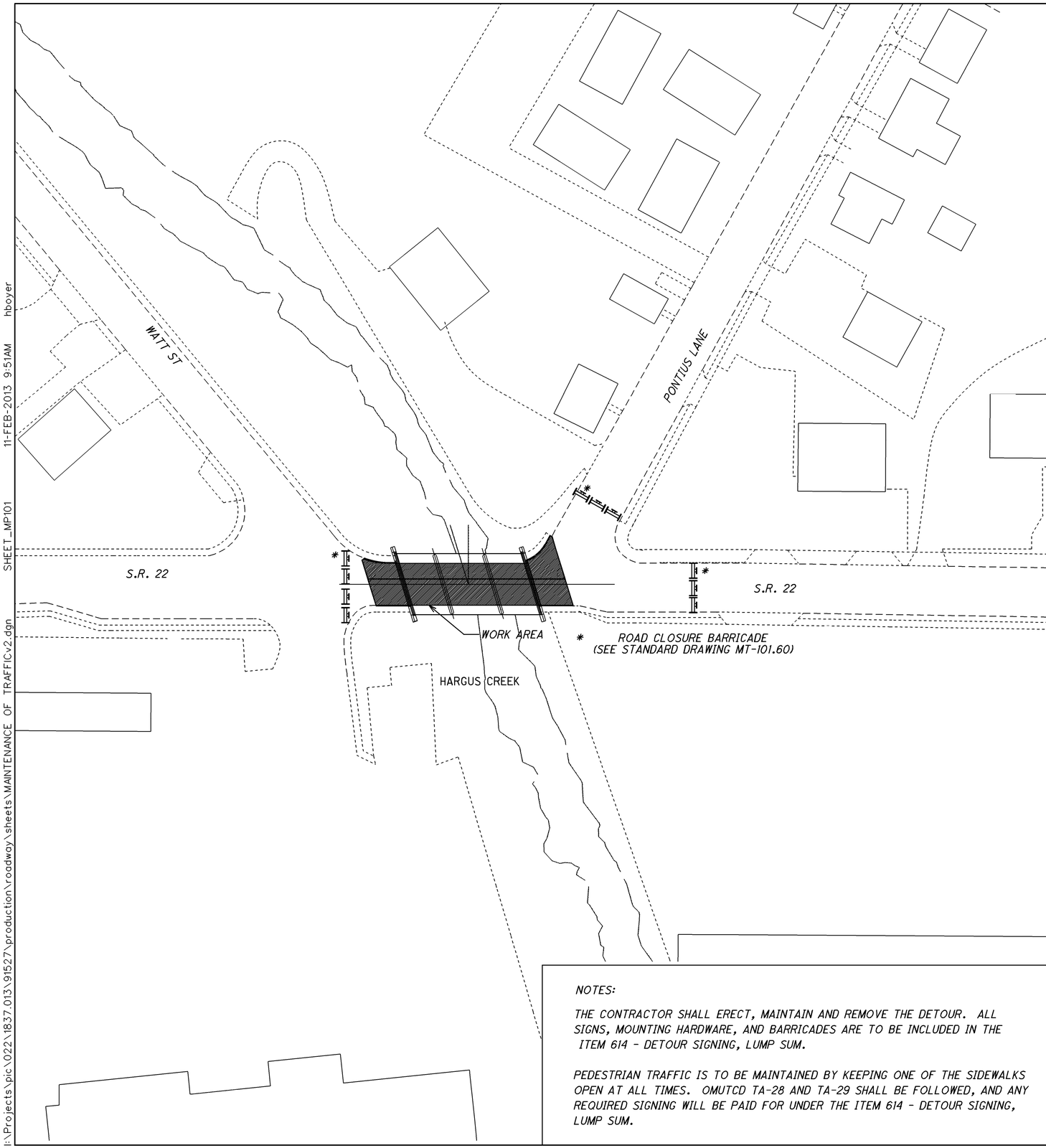

NOTES:

THE CONTRACTOR SHALL ERECT, MAINTAIN AND REMOVE THE DETOUR. ALL SIGNS, MOUNTING HARDWARE, AND BARRICADES ARE TO BE INCLUDED IN THE ITEM 614 - DETOUR SIGNING, LUMP SUM.

PEDESTRIAN TRAFFIC IS TO BE MAINTAINED BY KEEPING ONE OF THE SIDEWALKS OPEN AT ALL TIMES. OMUTCD TA-28 AND TA-29 SHALL BE FOLLOWED, AND ANY REQUIRED SIGNING WILL BE PAID FOR UNDER THE ITEM 614 - DETOUR SIGNING, LUMP SUM.

DETOUR SIGNING LEGEND

1	EAST / 22	M3-2 (24 X 12); M1-4 (24 X 24)
2	WEST / 22	M3-4 (24 X 12); M1-4 (24 X 24)
3	DETOUR ⇦	M4-H9bL (30 X 24)
4	DETOUR ⇦	M4-9L (30 X 24)
5	DETOUR ⇨	M4-HbR (30 X 24)
6	DETOUR ⇨	M4-9R (30 X 24)
7	DETOUR ⇧	M4-9 (30 X 24)
13	DETOUR ⇨	M4-10R (48 X 18)
8	ROAD CLOSED AHEAD	W20-1 (36 X 36)
9	DETOUR AHEAD	W20-2 (36 X 36)
10	END DETOUR	M4-8a (24 X 18)
11	TYPE A WARNING LIGHTS; US-22 CLOSED EAST OF SR-56 FOLLOW DETOUR	SPECIAL (60 X 48)
12	TYPE B FLASHING (YELLOW) WARNING LIGHTS; R11-3B; BRIDGE OUT __ MILES AHEAD LOCAL TRAFFIC ONLY; Front; Type III Barricade (72" Portable); SEE NOTE BELOW	

*NOTE: SEE 6F.63 OF THE OMUTCD
SEE SHEETS 8 & 9 FOR DISTANCES

HORIZONTAL SCALE IN FEET 0 20 40 80

CALCULATED HAB
CHECKED ACT

MAINTENANCE OF TRAFFIC WORK ZONE

PIC-22-18.37

I:\Projects\pic\022\1837.013\91527\production\roadway\sheets\MAINTENANCE OF TRAFFICv2.dgn SHEET_MP101 11-FEB-2013 9:51AM hboyer

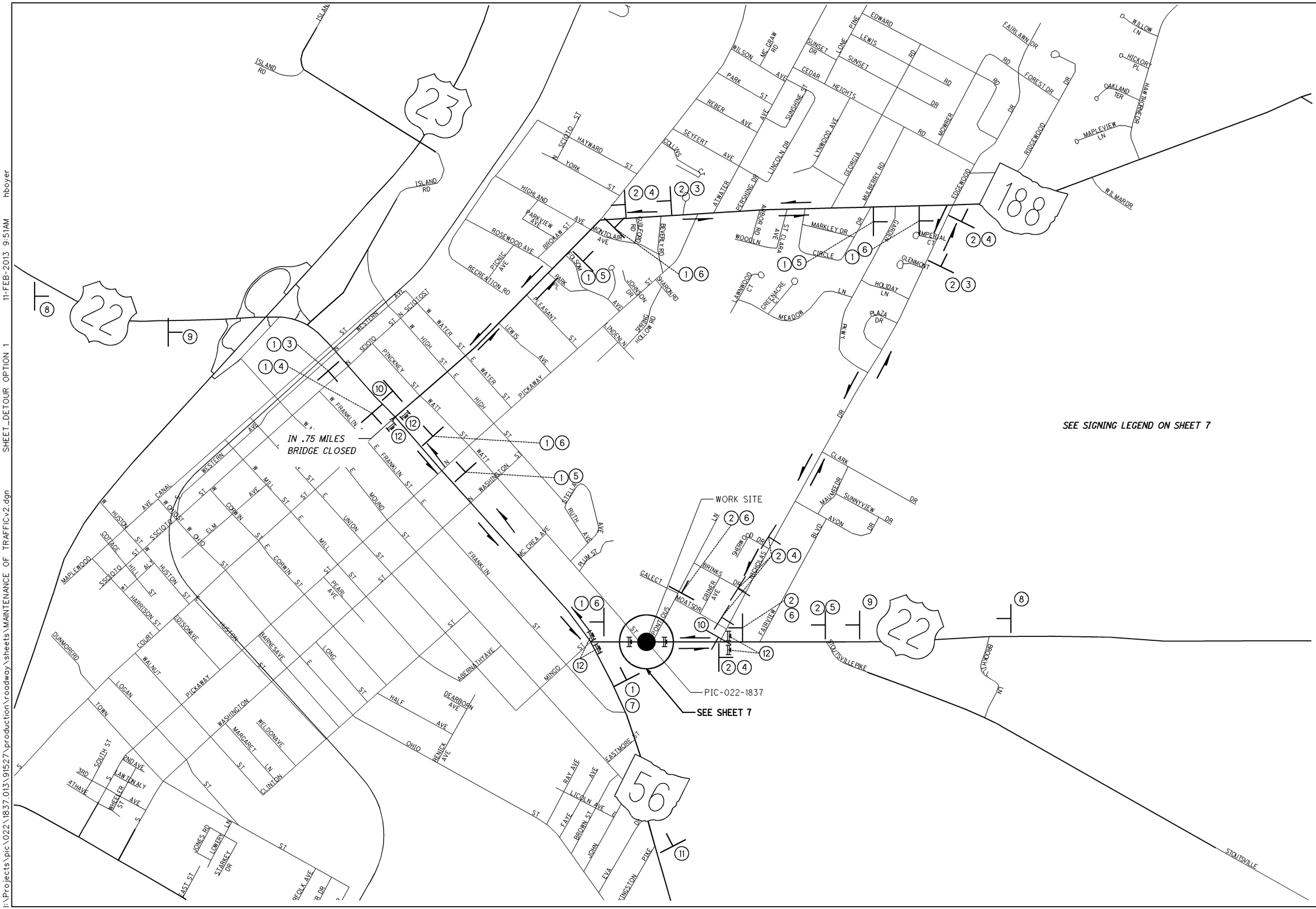

I:\Projects\pic\022\1837.013\91527\production\roadway\sheets\MAINTENANCE OF TRAFFICv2.dgn SHEET_DETOUR OPTION 1 11-FEB-2013 9:51AM hboyer

HORIZONTAL SCALE IN FEET
0 250 500 1000

CALCULATED HAB
CHECKED ACT

MAINTENANCE OF TRAFFIC DETOUR PLAN

PIC-22-18.37

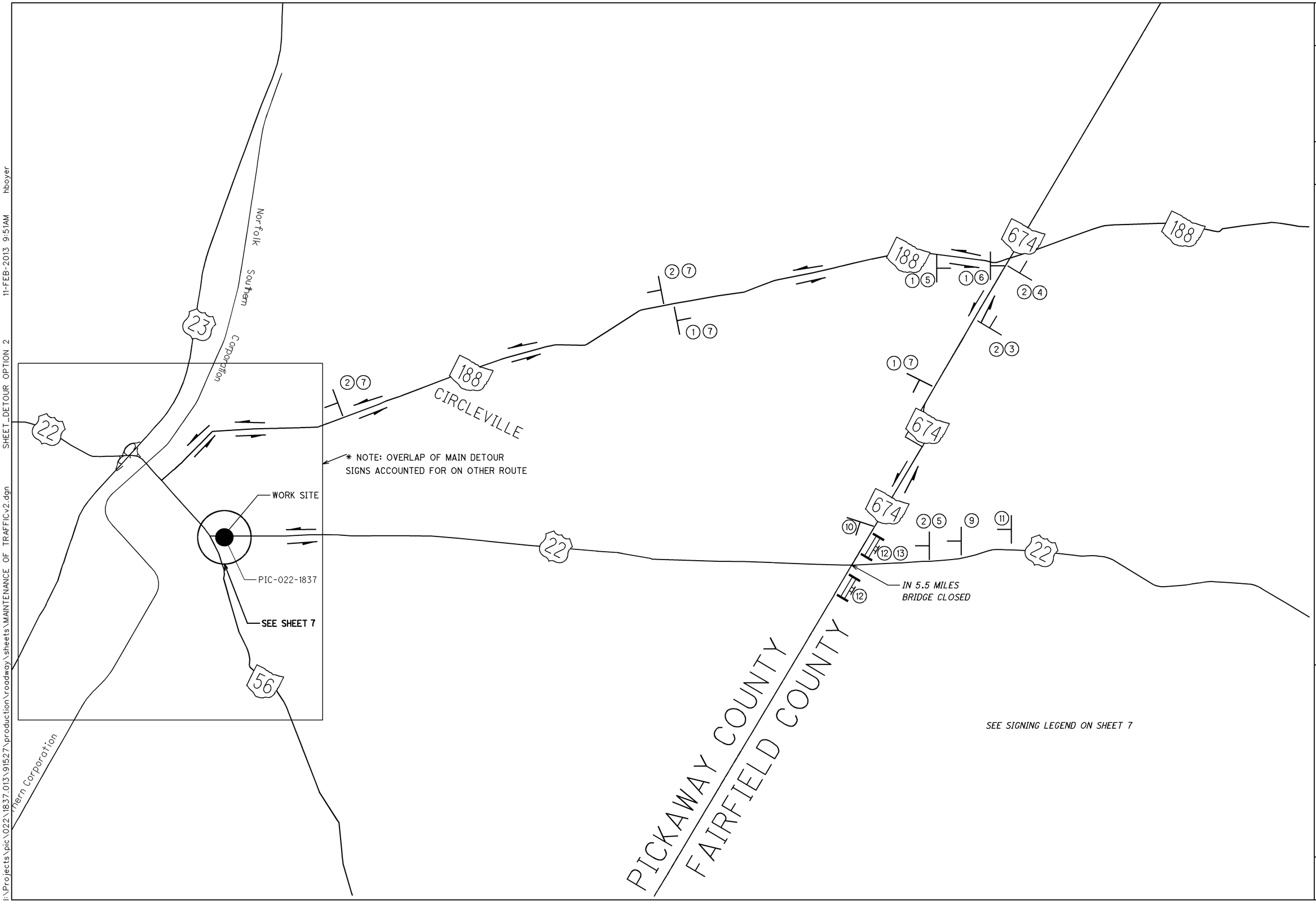

CALCULATED HAB
CHECKED ACT

MAINTENANCE OF TRAFFIC DETOUR PLAN ALTERNATE ROUTE

PIC-22-18.37

I:\Projects\pic\022\1837.013\91527\production\roadway\sheets\MAINTENANCE OF TRAFFIC v2.dgn SHEET_DETOUR OPTION 2 11-FEB-2013 9:51AM hboyer

SHEET NUMBER 4	11	12	13	14							PARTICIPATION 01/BRO/BR			ITEM	ITEM EXT	GRAND TOTAL	UNIT	DESCRIPTION	SEE SHEET NO.
																		EROSION CONTROL	
											1,000			832	30000	1,000	EACH	EROSION CONTROL	
																		PAVEMENT	
	197										197			254	01000	197	SQ YD	PAVEMENT PLANING, ASPHALT CONCRETE 1 1/2"	
	15										15			407	13900	15	GALLON	TACK COAT, 702.13	
	9										9			442	20000	9	CU YD	ASPHALT CONCRETE SURFACE COURSE, 12.5MM, TYPE A (448)	
																		TRAFFIC CONTROL	
		0.04									0.04			646	10200	0.04	MILE	CENTER LINE	
		178									178			646	10300	178	FT	CHANNELIZING LINE, 8"	
		22									22			646	10400	22	FT	STOP LINE	
		1									1			646	20300	1	EACH	LANE ARROW	
																		STRUCTURES	
	7										7			202	11301	7	CU YD	PORTIONS OF STRUCTURE REMOVED, AS PER PLAN	4
	218										218			202	38603	218	FT	BRIDGE RAILING REMOVED FOR REUSE, AS PER PLAN	4
100				963							1,063			509	20001	1,063	POUND	REINFORCING STEEL, REPLACEMENT OF EXISTING REINFORCING STEEL, AS PER PLAN	4
	128										128			510	10000	128	EACH	DOWEL HOLES WITH NONSHRINK, NONMETALLIC GROUT	
	7										7			511	32205	7	CU YD	CLASS S CONCRETE, SUPERSTRUCTURE, AS PER PLAN	4
	86										86			512	10051	86	SQ YD	SEALING OF CONCRETE SURFACES (NON-EPOXY), AS PER PLAN	4
	10										10			512	10401	10	SQ YD	TREATING OF CONCRETE BRIDGE DECK WITH SRS, AS PER PLAN	4
			7								7			518	12700	7	EACH	SCUPPER, VERTICAL EXTENSION	
			100								100			601	32200	100	CU YD	ROCK CHANNEL PROTECTION, TYPE C WITH FILTER	
	375										375			848	10200	375	SQ YD	SUPERPLASTICIZED DENSE CONCRETE OVERLAY USING HYDRODEMOLITION, 2 1/4"	
	375										375			848	20000	375	SQ YD	SURFACE PREPERATION USING HYDRODEMOLITION	
	5										5			848	30200	5	CU YD	SUPERPLASTICIZED DENSE CONCRETE OVERLAY (VARIABLE THICKNESS) MATERIAL ONLY	
	75										75			848	50000	75	SQ YD	HAND CHIPPING	
	LUMP										LUMP			848	50100	LUMP		TEST SLAB	
	375										375			848	50320	375	SQ YD	EXISTING CONCRETE OVERLAY REMOVED 2" NOMINAL THICKNESS	
	75										75			848	50340	75	SQ YD	REMOVAL OF DEBONDED EXISTING VARIABLE THICKNESS CONCRETE OVERLAY	
																		MAINTENANCE OF TRAFFIC	
											56			614	11110	56	HOUR	LAW ENFORCEMENT OFFICER WITH PATROL CAR FOR ASSISTANCE	6
											LUMP			614	12420	LUMP		DETOUR SIGNING	5
											28			614	18401	28	DAY	PORTABLE CHANGEABLE MESSAGE SIGN, AS PER PLAN	5-6
											LUMP			614	11000	LUMP		MAINTAINING TRAFFIC	5
											LUMP			624	10000	LUMP		MOBILIZATION	
											LUMP			823	10000	LUMP		CONSTRUCTION LAYOUT STAKES	

CALCULATED HAB
CHECKED ACT

GENERAL SUMMARY

PIC-22-18.37

I:\Projects\pic\022\1837.013\91527\production\roadway\sheets\SUMMARY.dgn SHEET_GG101 25-FEB-2013 2:05PM hboyer

SUBSUMMARY

SHEET NO.	REFERENCE NO.	STATION FROM	STATION TO	SIDE	LENGTH FT	PAVEMENT 254 PAVEMENT PLANING, ASPHALT CONCRETE 1 1/2" SQ YD	PAVEMENT 407 TACK COAT, 702.13 GAL	PAVEMENT 442 ASPHALT CONCRETE SURFACE COURSE, 12.5MM, TYPE A(448) 1 1/2" CU YD	STRUCTURE 202 PORTIONS OF STRUCTURE REMOVED, AS PER PLAN CU YD	STRUCTURE 202 BRIDGE RAILING REMOVED FOR REUSE, AS PER PLAN FT	STRUCTURE 510 DOWEL HOLES WITH NONSHRINK, NONMETALLIC GROUT EACH	STRUCTURE 511 CLASS S CONCRETE, SUPERSTRUCTURE, AS PER PLAN CU YD	STRUCTURE 512 SEALING OF CONCRETE SURFACES (NON-EPOXY), AS PER PLAN SQ YD	STRUCTURE 512 TREATING OF CONCRETE BRIDGE DECK WITH SRS, AS PER PLAN SQ YD	STRUCTURE 848 SUPERPLASTICIZED DENSE CONCRETE OVERLAY USING HYDRODEMOLITION SQ YD	STRUCTURE 848 SURFACE PREPERATION USING HYDRODEMOLITION SQ YD	STRUCTURE 848 SUPERPLASTICIZED DENSE CONCRETE OVERLAY (VARIABLE THICKNESS) MATERIAL ONLY CU YD	STRUCTURE 848 HAND CHIPPING SQ YD	STRUCTURE 848 TEST SLAB LUMP	STRUCTURE 848 EXISTING CONCRETE OVERLAY REMOVED 2" NOMINAL THICKNESS SQ YD	STRUCTURE 848 REMOVAL OF DEBONDED EXISTING VARIABLE THICKNESS CONCRETE OVERLAY SQ YD	REMARKS
13		972+09.62	972+34.62		25	87	7	4														REAR APPROACH
13		973+27.18	973+52.18		25	110	8	5														FORWARD APPROACH
13		972+34.62	973+27.18		93										375	375	5	75	1	375	75	DECK
14		972+34.62	973+27.18	LT	93				7	185	128	7	86	10								LEFT PARAPET
14		973+06.92	973+23.42	RT	17					33												RIGHT PARAPET
					SUBTOTAL	197	15	9	7	218	128	7	86	10	375	375	5	75	LUMP	375	75	
TOTALS CARRIED TO GENERAL SUMMARY						197	15	9	7	218	128	7	86	10	375	375	5	75	LUMP	375	75	01/BRO/BR

CALCULATED HAB
CHECKED ACT

SUBSUMMARY

PIC-22-18.37

I:\Projects\pic\022\1837.013\91527\production\roadway\sheets\SUMMARY.dgn SHEET_GS101 11-FEB-2013 9:51AM hboyer

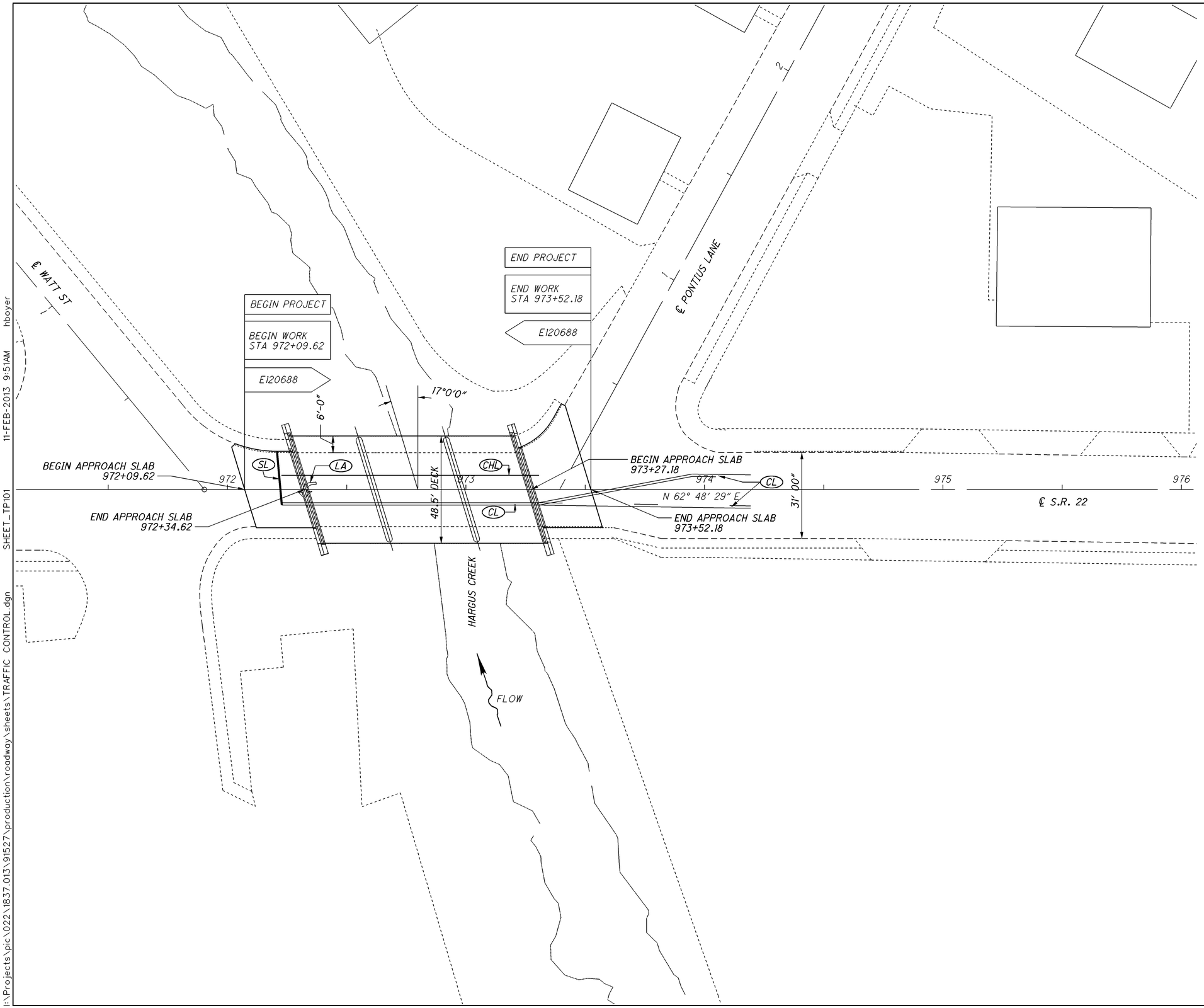

REF NO.	STATION FROM	STATION TO	SIDE	LENGTH	646 CENTER LINE (MILE)	646 CHANNELIZING LINE, 8" (FT)	646 STOP LINE (FT)	646 LANE ARROW (EA)	REMARKS
CL	972+22.24	974+19.45	RT	197	0.04				
CHL	972+22.24	974+00.00	LT	178		178			
SL	972+22.24		CL				22		
LA	972+32.91		CL					1	
TOTALS CARRIED TO GENERAL SUMMARY					0.04	178	22	1	

HORIZONTAL SCALE IN FEET 0 10 20 40

CALCULATED HAB
CHECKED ACT

TRAFFIC CONTROL

PIC-22-18.37

12
14

I:\Projects\pic\022\1837.013\91527\production\roadway\sheets\TRAFFIC CONTROL.dgn SHEET_TP101 11-FEB-2013 9:51AM hboyer

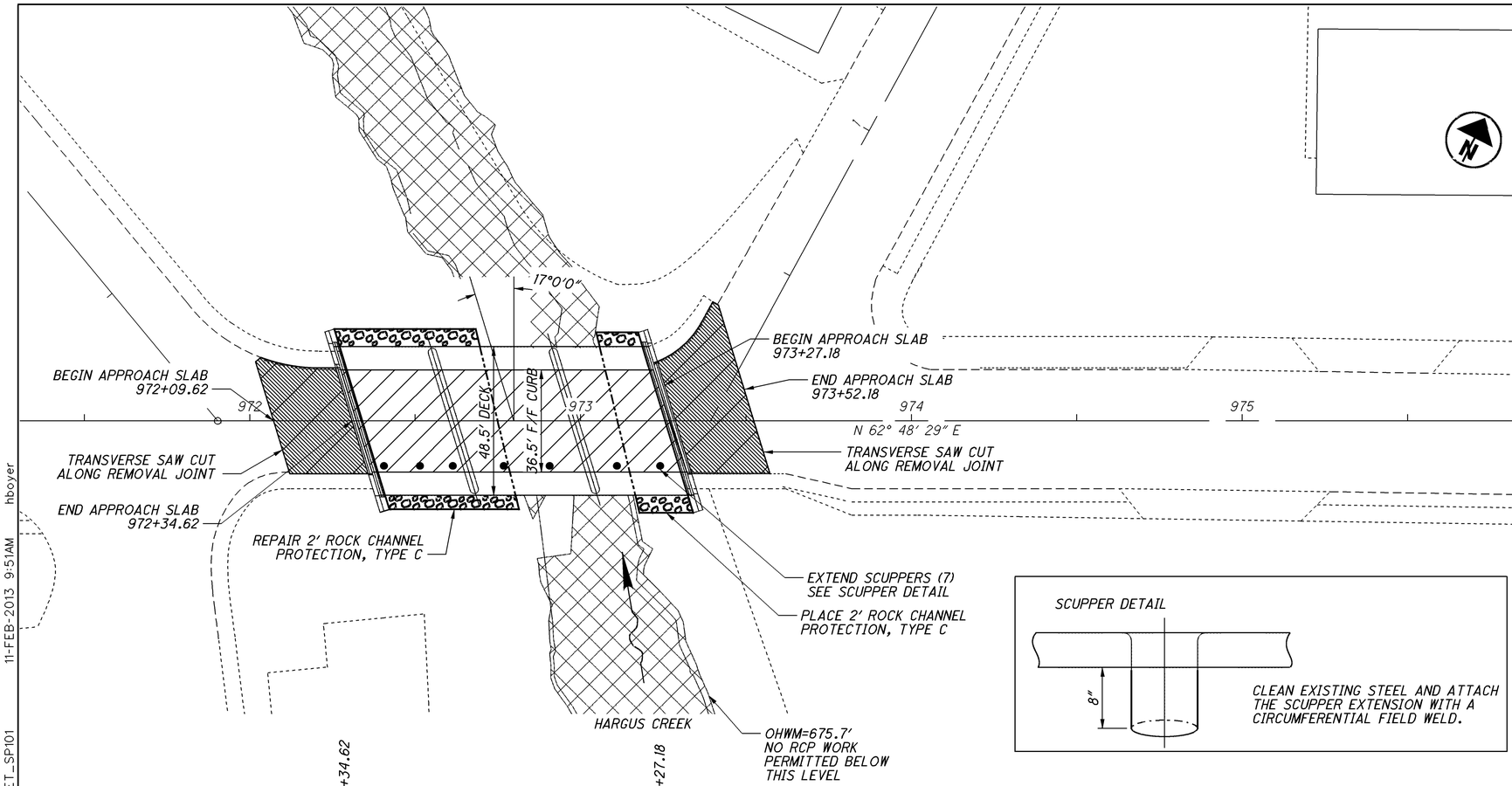

PROPOSED WORK:

1. REMOVE EXISTING LMC OVERLAY AND REPLACE WITH SDC OVERLAY USING HYDRODEMOLITION.

2. PLANE OFF EXISTING ASPHALT ON APPROACH SLABS, AND REPLACE ACCORDING TO TYPICAL SECTION DETAILS SHEET 3. PROVIDE BUTT JOINT AT BRIDGE AND ROADWAY.

3. SAW CUT AND REMOVE LEFT PARAPET, DOWEL 1' MIN INTO SIDEWALK AND RECONSTRUCT PARAPET ACCORDING TO DETAILS ON SHEET 14.

4. EXTEND ALL SCUPPERS ON RIGHT SIDE OF BRIDGE

5. PLACE 2' OF ROCK CHANNEL PROTECTION TYPE C UNDER FORWARD ABUTMENT, AND REPAIR ROCK CHANNEL PROTECTION TYPE C UNDER REAR ABUTMENT. (FOR CALCULATION PURPOSES 25% REPAIR AREA WAS ASSUMED).

LEGEND

LIMITS OF SDC OVERLAY

LIMITS OF ASPHALT REMOVAL AND REPLACEMENT

SCUPPER DETAIL

DESIGN TRAFFIC:
2013 ADT = 11000
2025 ADT = 12000
DIRECTIONAL DISTRIBUTION = .53

EXISTING STRUCTURE

TYPE: 3 SPAN CONTINUOUS CONCRETE SLAB ON CAPPED PILE SUBSTRUCTURE WITH 2" LMC OVERLAY

SPANS: 28' - 35' - 28' C/C BEARING
ROADWAY: 36.5' F/F CURB PLUS 2 - 6' SIDEWALKS
LOADING: CF 2000 (57)
SKEW: 17° R.F.
APPROACH SLABS: 25' (AS-1-54)
ALIGNMENT: TANGENT
CROWN: ± 3/16"/FT
STRUCTURAL FILE NUMBER: 6500390
DATE BUILT: 7/1/1966; 2" LMC OVERLAY 1983
DISPOSITION: REMOVAL OF LMC OVERLAY, OVERLAY WITH SDC

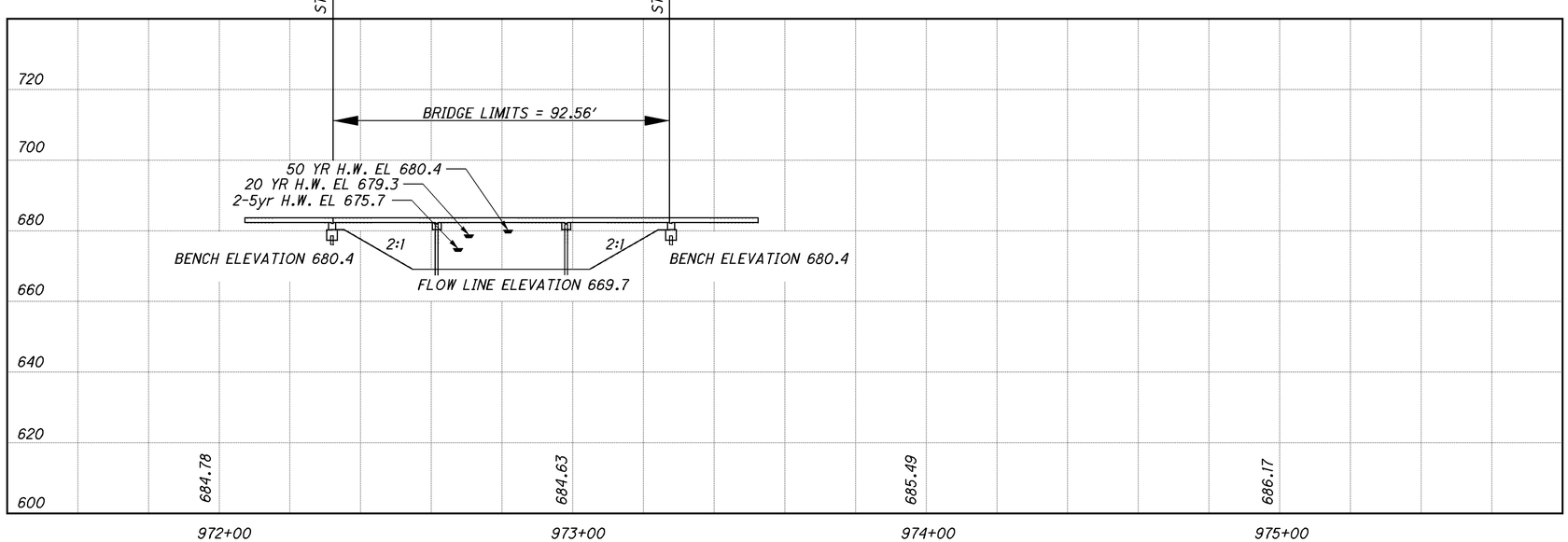

PROPOSED STRUCTURE

TYPE: 3 SPAN CONTINUOUS CONCRETE SLAB ON CAPPED PILE SUBSTRUCTURE WITH 2 1/4" SDC OVERLAY

SPANS: 28' - 35' - 28' C/C BEARING
ROADWAY: 36.5' F/F CURB PLUS 2 - 6' SIDEWALKS
LOADING: SAME
SKEW: 17° R.F.
APPROACH SLABS: SAME
ALIGNMENT: TANGENT
CROWN: MATCH EXISTING
COORDINATES: LATITUDE 39°35'56.52"
LONGITUDE 82°55'54.80"

DESIGN AGENCY
OHIO DEPARTMENT OF TRANSPORTATION
DISTRICT SIX IN HOUSE DESIGN

PIC-22-18.37
STA. 972+09.62
STA. 973+52.18

SITE PLAN
BRIDGE NO. PIC-22-18.37
OVER HARGUS CREEK

PIC-22-18.37
PID No. 91527

I:\Projects\pic\022\1837.013\91527\production\roadway\sheets\SITE PLAN.dgn SHEET_SP101 11-FEB-2013 9:51AM hboyer

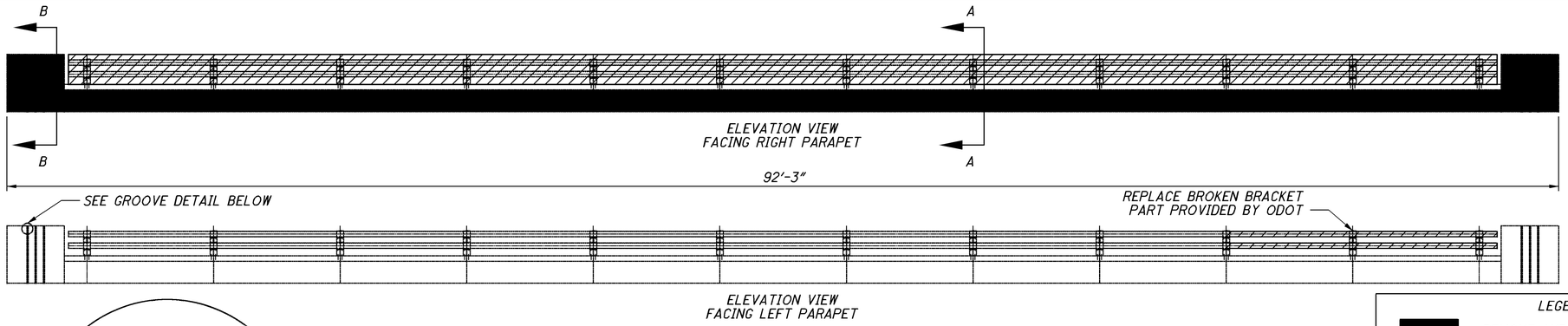

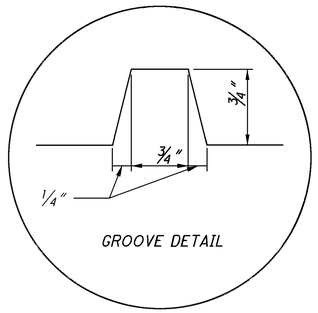

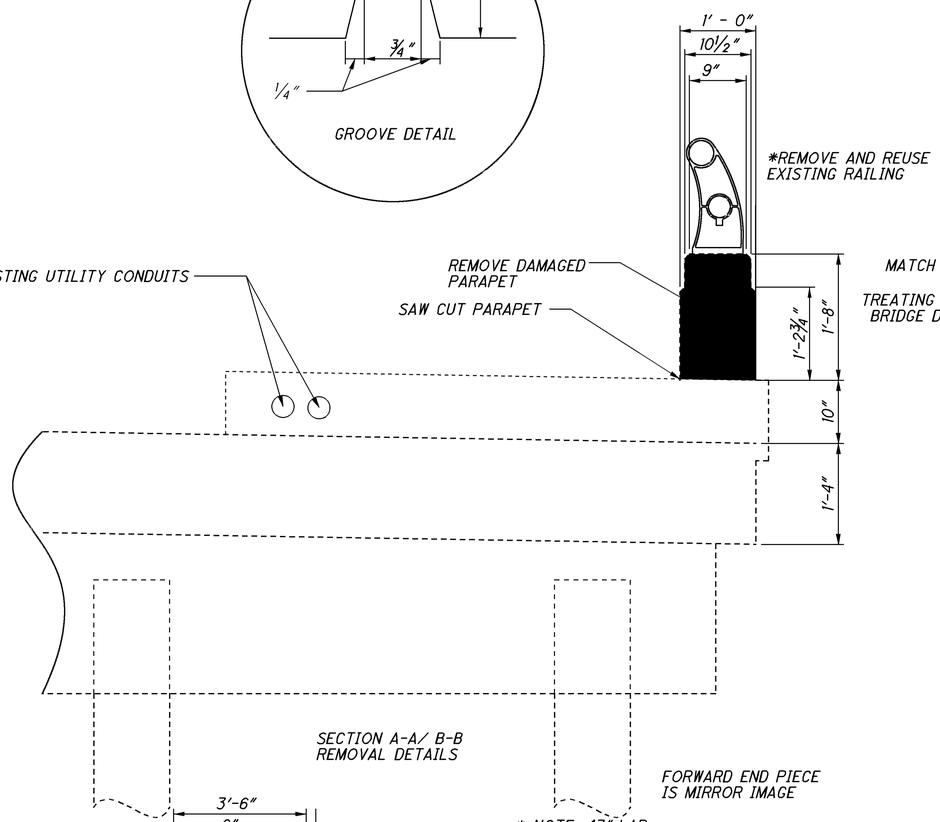

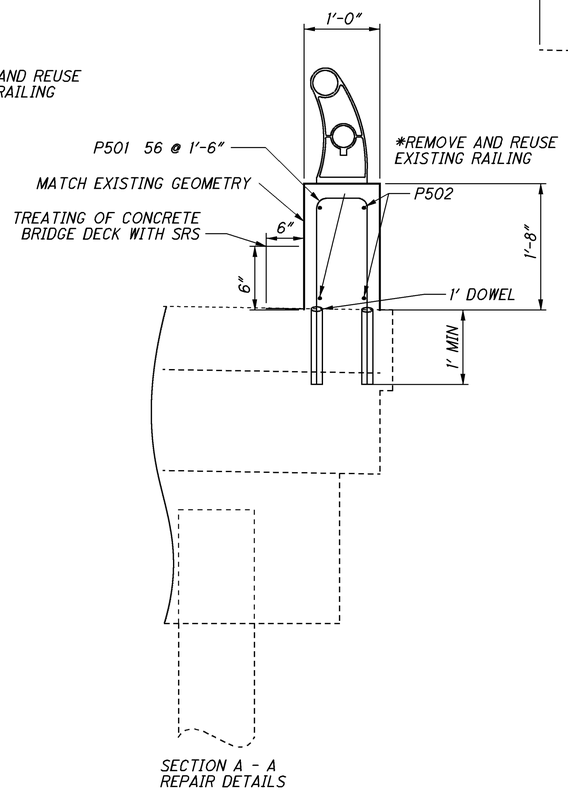

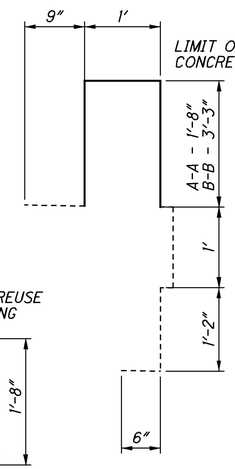

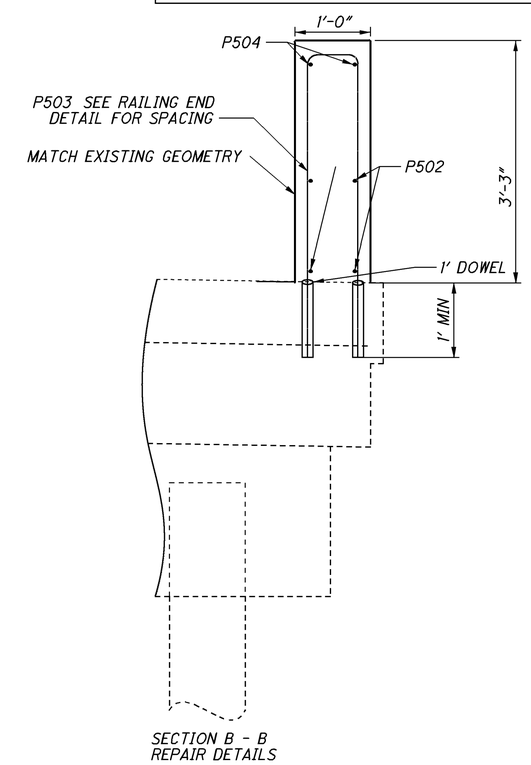

LEGEND

- REMOVE AND REPLACE
- REMOVE AND RE-INSTALL

NOTE: SAW CUT PARAPET LONGITUDINALLY AND HORIZONTALLY AT ALL REMOVAL LOCATIONS

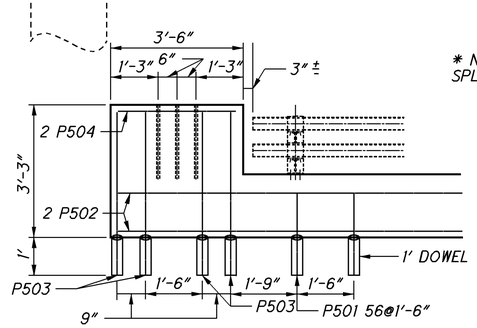

RAILING END DETAIL

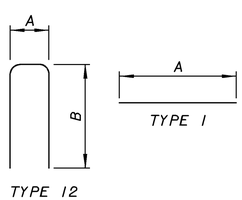

MARK	NUMBER REQ'D		TOTAL	LENGTH	WEIGHT	TYPE	DIMENSIONS A	B	C	D	E	F	G	R	INC.
						PARAPETS									
	LEFT	RIGHT													
P501	56		56	5' - 5"	316	12	8"	2' - 6"							
P502	16		16	30' - 0"	501	1	30' - 0"								
P503	8		8	15' - 11"	133	12	8' - 0"	4' - 1"							
P504	4		4	3' - 2"	13	1	3' - 2"								
TOTAL CARRIED TO GENERAL SUMMARY					963										

DESIGN AGENCY
ODOT DISTRICT 6
IN HOUSE DESIGN TEAM

DESIGNED	DRAWN	REVIEWED	DATE
HAB	12/3/12		
CHECKED	REVISED	STRUCTURE FILE NUMBER	
ACT		6500390	

PIC-22-1837
STA. 972+34.62
STA. 973+27.18

PARAPET DETAILS

PIC-22-18.37
PID No. 91527

2 / 2

14
14

I:\Projects\pic\022\1837.013\91527\production\roadway\sheets\SITE PLAN.dgn 11-FEB-2013 9:51AM hboyer SHEET_SP102