STATE OF OHIO
DEPARTMENT OF TRANSPORTATION

POR-14/VAR-1.74/VAR
PART 1

CITY OF STREETSBORO
SUGAR BUSH KNOLL VILLAGE
PORTAGE COUNTY

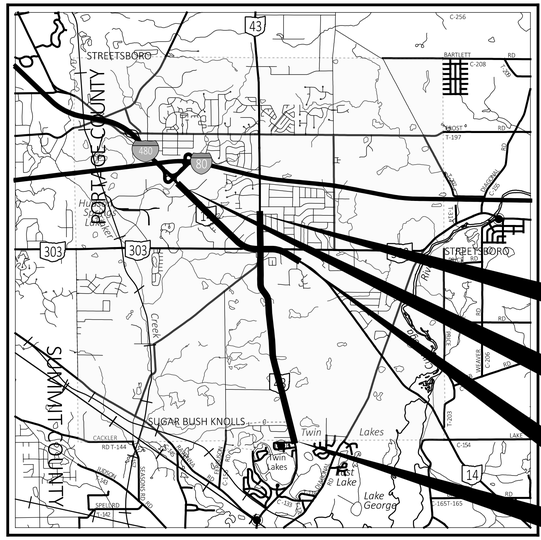

RESUME PROJECT
POR SR 43 SLM: 18.20
END PROJECT
POR SR 43 SLM: 18.64

BEGIN PROJECT
POR SR 14 SLM: 1.74
SUSPEND PROJECT
POR SR 14 SLM: 3.08

RESUME PROJECT
POR SR 14 SLM: 3.19
END PROJECT
POR SR 14 SLM: 3.65

BEGIN PROJECT
POR SR 43 SLM: 15.59
SUSPEND PROJECT
POR SR 43 SLM: 18.16

LOCATION MAP

LATITUDE: N 41°14'20" LONGITUDE: W 81°20'45"

N

PORTION TO BE IMPROVED
INTERSTATE HIGHWAY
FEDERAL ROUTES
STATE ROUTES
COUNTY & TOWNSHIP ROADS
OTHER ROADS

DESIGN DESIGNATION

SEE PART 2 SHEET P.2 FOR DESIGN DESIGNATIONS

DESIGN EXCEPTIONS

NONE REQUIRED

ADA DESIGN WAIVERS

REQUIRED

UNDERGROUND UTILITIES
Contact Two Working Days Before You Dig
OHIO811.org Before You Dig
OHIO811, 8-1-1, or 1-800-362-2764
(Non members must be called directly)

PLAN PREPARED BY:
ODOT DISTRICT 4, CAPITAL PLANNING
2088 S. ARLINGTON ROAD
AKRON, OH 44306

INDEX OF SHEETS:

TITLE SHEET	P.1
TYPICAL SECTIONS	P.2-3
GENERAL NOTES	P.4-5
MAINTENANCE OF TRAFFIC	P.6-7
GENERAL SUMMARY	P.8-9
PAVEMENT CALCULATIONS	P.10-11
CURB RAMPS	P.12-14
DRAINAGE DETAILS	P.15
PAVEMENT MARKINGS	P.16

STANDARD CONSTRUCTION DRAWINGS

BP-1.1	7/28/00	RM-1.1	1/20/23	MT-105.10	1/17/20	TC-85.10	1/19/24		800-2023	7/18/25	
BP-2.1	1/21/22			MT-110.10	7/19/13	TC-85.20	4/21/23		809	7/18/25	
BP-2.2	1/15/21	HL-10.11	7/21/23	MT-120.00	7/19/24				813	7/21/23	
BP-3.1	1/19/24	HL-10.12	7/21/23						816	10/18/19	
BP-3.2	1/18/19	HL-30.11	7/21/23	TC-16.22	7/18/25				821	4/20/12	
BP-4.1	7/19/13	HL-30.22	1/17/25	TC-21.21	7/18/25				825	7/19/24	
BP-5.1	7/18/25	HL-60.11	7/21/17	TC-41.20	10/18/13				832	7/18/25	
BP-7.1	7/18/25			TC-41.40	10/18/13				907	10/18/19	
		MT-95.31	7/18/25	TC-42.20	10/18/13				909	7/18/25	
CB-3	7/19/24	MT-95.32	7/18/25	TC-52.10	10/18/13				913	4/16/21	
		MT-97.10	7/18/25	TC-52.20	1/15/21				916	7/19/24	
DM-1.1	1/17/25	MT-97.12	1/20/17	TC-71.10	7/18/25				921	7/19/24	
DM-1.2	1/17/25	MT-99.20	4/19/19	TC-74.10	7/21/23						
DM-4.3	1/15/16	MT-101.60	1/17/25	TC-81.22	1/17/25						
DM-4.4	1/15/16	MT-101.90	7/17/20	TC-82.10	1/17/25						
		MT-102.20	4/19/19	TC-83.20	7/18/25						

SUPPLEMENTAL SPECIFICATIONS

SPECIAL PROVISIONS

FEDERAL PROJECT NUMBER

E250(143)

RAILROAD INVOLVEMENT

NONE

PROJECT DESCRIPTION

RESURFACING OF 1.80 MILES OF POR SR 14
AND 3.01 MILES OF SR 43 IN THE CITY OF STREETSBORO,
INCLUDES MINOR WORK TO ONE STRUCTURE ON SR 14 AT SLM 2.1.

EARTH DISTURBED AREAS

PROJECT EARTH DISTURBED AREA:	1.39 ACRES
ESTIMATED CONTRACTOR EARTH DISTURBED AREA:	0.25 ACRES
NOTICE OF INTENT EARTH DISTURBED AREA:	N/A (NOI NOT REQUIRED)*

* ROUTINE MAINTENANCE PROJECT

2023 SPECIFICATIONS

THE STANDARD SPECIFICATIONS OF THE STATE OF OHIO, DEPARTMENT OF TRANSPORTATION, INCLUDING SUPPLEMENTAL SPECIFICATIONS LISTED IN THE PLANS, CHANGES LISTED IN THE PROPOSAL, AND THE SUPPLEMENTAL SPECIFICATION 800 VERSION INDICATED ON THE PROPOSAL SHALL GOVERN THIS IMPROVEMENT.

I HEREBY APPROVE THESE PLANS AND DECLARE THAT THE MAKING OF THIS IMPROVEMENT WILL NOT REQUIRE THE CLOSING TO TRAFFIC OF THE HIGHWAY AND THAT PROVISIONS FOR THE MAINTENANCE AND SAFETY OF TRAFFIC WILL BE AS SET FORTH ON THE PLANS AND ESTIMATES.

Arthur G. Noiroit Jr., P.E.
District 04 Deputy Director

Pamela Boratyn
Director, Department of Transportation

ENGINEER'S SEAL

STATE OF OHIO
BLAINE M CARTER
E-88009
REGISTERED
PROFESSIONAL ENGINEER

2026.01.16
14:10:13-05'00'

TITLE SHEET

DESIGN AGENCY

DESIGNER
CLG

REVIEWER
BC 10-24-24

PROJECT ID
105213

SHEET P.1 TOTAL 16

POR-14/43-1.74/VAR

MODEL: Sheet PAPERSIZE: 34x22 (in.) DATE: 1/15/2026 TIME: 1:19:55 PM PLTDRV: OHDOT_PDF.pltcfg PENTBL: OHDOT_Pen.tbl USER: Sean.Hayes@dot.ohio.gov WORKSPACE: OHDOTCEv02 WORKSET: 105213 PRODUCT: OpenRoadsDesigner 24.00.00.205
pw:\\ohiodot-pw.bentley.com:ohiodot-pw-02\Documents\01 Active Projects\District 04\Portage\105213\400-Engineering\Roadway\Sheets\105213_GT001.dgn

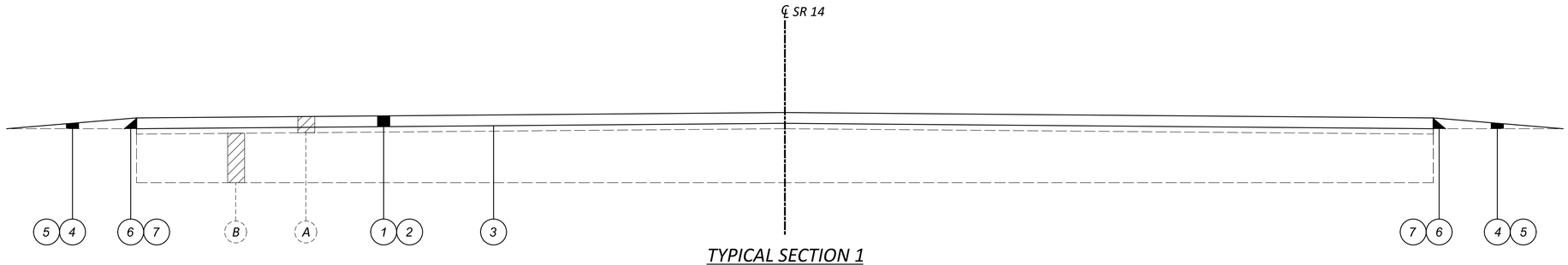

TYPICAL SECTION 1

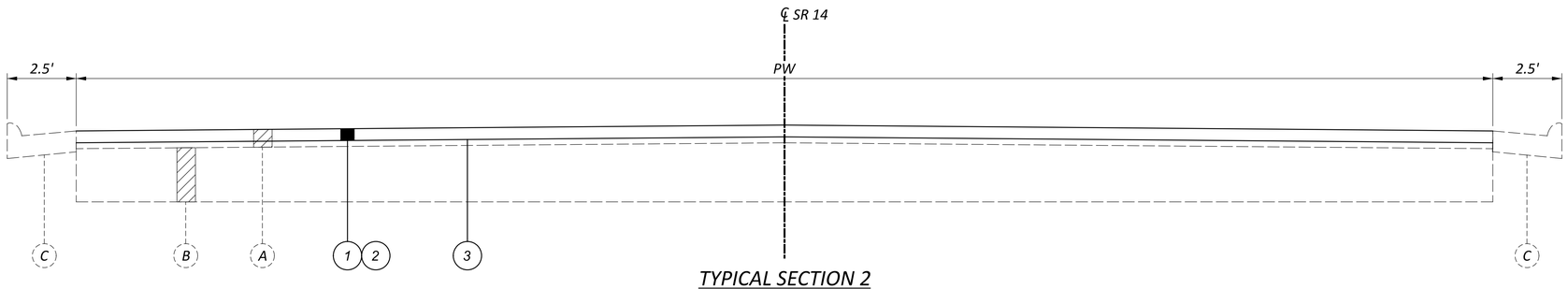

TYPICAL SECTION 2

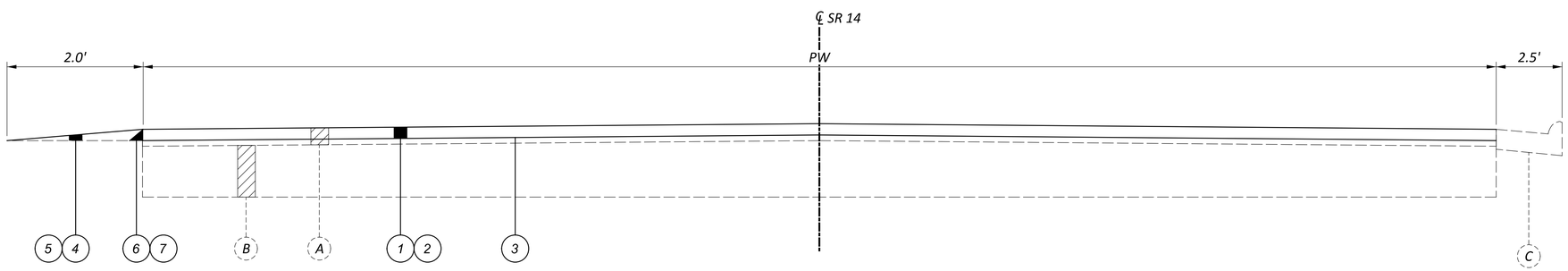

TYPICAL SECTION 3

LEGEND

- (1) ITEM 254, PAVEMENT PLANING, ASPHALT CONCRETE (T = 2")
- (1A) ITEM 254, PAVEMENT PLANING, ASPHALT CONCRETE (T = 1.5")
- (2) ITEM 442, ASPHALT CONCRETE SURFACE COURSE, 12.5MM, TYPE A, (446) (T = 2")
- (2A) ITEM 442, ASPHALT CONCRETE SURFACE COURSE, 12.5MM, TYPE A, (446) (T = 1.5")
- (3) ITEM 407, NON-TRACKING TACK COAT @ 0.09 GAL/SY
- (4) ITEM 617, COMPACTED AGGREGATE, AS PER PLAN (T =2")
- (5) ITEM 408, PRIME COAT AS PER PLAN @ 0.40 GAL/SY
- (6) ITEM 209, PREPARING SUBGRADE FOR SHOULDER PAVING
- (7) SAFETY EDGE, AS PER BP-3.1
- PW "PAVEMENT WIDTH"
- SW "SHOULDER WIDTH"

- (A) EXISTING ASPHALT CONCRETE (T = 4" TO 6")*
- (A1) EXISTING ASPHALT CONCRETE (T = 9"±)
- (B) EXISTING MACADAM BASE OR REINFORCED CONCRETE BASE (T = 11"±)
- (C) EXISTING COMBINATION CURB AND GUTTER, TYPE 2
- (D) EXISTING SHOULDERS

*4" TO 6" (MONDIAL PKWY TO SLM 2.23 ±)
4" TO 2" (SLM 2.23 ± TO SHADY LAKE DR)
2" TO 3" (SHADY LAKE DR TO END)

SR 14				
SLM		LENGTH (MILES)	AVG. PW (FT)	TYPICAL SECTION
FROM	TO			
1.74	1.78	0.04	80.00	1
1.78	1.83	0.05	82.00	2
1.83	1.97	0.14	68.00	2
1.97	2.13	0.16	78.00	3
2.13	2.18	0.05	80.00	2
2.18	2.40	0.22	83.00	3
2.40	2.55	0.15	80.00	2
2.55	2.58	0.03	66.00	2
2.58	2.63	0.05	80.00	2
2.63	2.70	0.07	70.00	2
2.70	2.99	0.29	62.00	2
2.99	3.03	0.04	72.00	2
3.03	3.08	0.05	84.00	2
3.19	3.21	0.02	74.00	2
3.21	3.29	0.08	74.00	2
3.29	3.34	0.05	81.50	2
3.34	3.48	0.14	62.00	2
3.48	3.65	0.17	52.00	2

TYPICAL SECTIONS

DESIGN AGENCY

DESIGNER CLG

REVIEWER BC 10-24-24

PROJECT ID 105213

SHEET P.2 TOTAL 16

POR-14/43-1.74/VAR

MODEL: Sheet 1 PAPERSIZE: 34x22 (in.) DATE: 1/15/2026 TIME: 1:20:06 PM PLTDRV: OHDOT_PDF.pltcfg PENTBL: OHDOT_Pen.tbl USER: Sean.Hayes@dot.ohio.gov WORKSPACE: OHDOTCEv02 WORKSET: 105213 PRODUCT: OpenRoadsDesigner 24.00.00.205
pw:\\ohiodot-pw.bentley.com:ohiodot-pw-02\Documents\01 Active Projects\District 04\Portage\105213\400-Engineering\Roadway\Sheets\105213_GY001.dgn

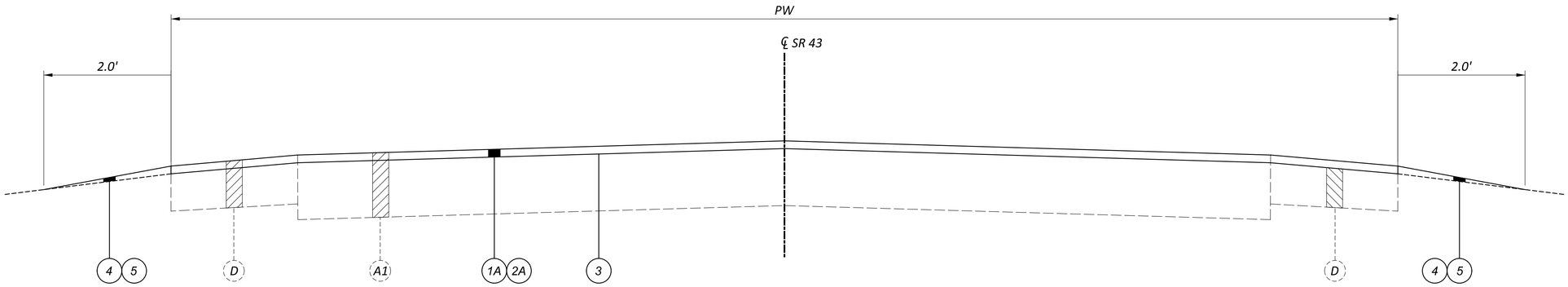

TYPICAL SECTION 4

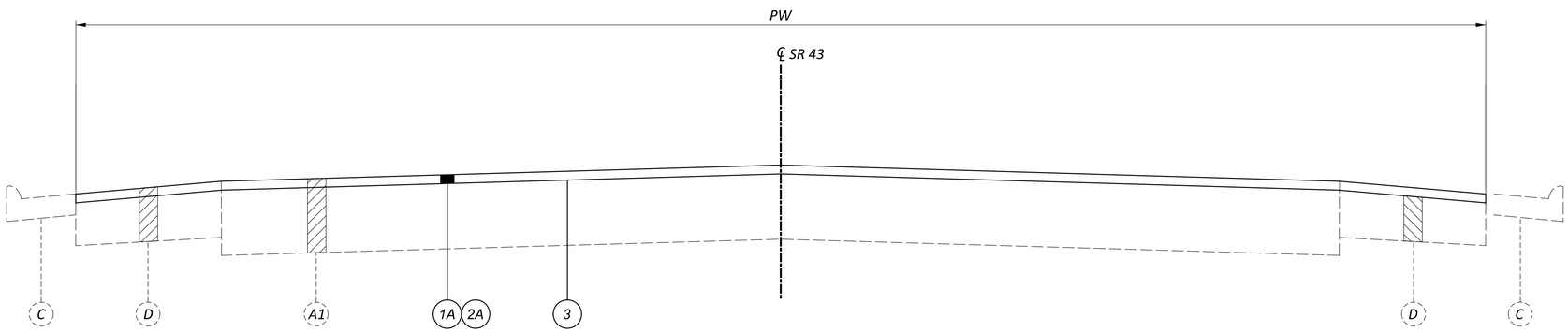

TYPICAL SECTION 5

NOTE: FOR LEGEND, SEE PREVIOUS SHEET.

SR 43				
SLM		LENGTH (MILES)	AVG. PW (FT)	TYPICAL SECTION
FROM	TO			
15.59	15.84	0.25	30.00	4
15.84	17.53	1.69	30.00	4
17.53	17.65	0.12	46.00	4
17.65	17.88	0.23	31.00	4
17.88	17.94	0.06	33.00	5
17.94	18.03	0.09	36.00	5
18.03	18.09	0.06	65.00	5
18.09	18.16	0.07	72.00	5
18.20	18.21	0.01	63.00	5
18.21	18.64	0.43	61.00	5

TYPICAL SECTIONS

DESIGN AGENCY

DESIGNER CLG

REVIEWER BC 10-24-24

PROJECT ID 105213

SHEET P.3 TOTAL 16

POR-14/43-1.74/VAR

MODEL: Sheet 2 PAPERSIZE: 34x22 (in.) DATE: 1/15/2026 TIME: 1:20:14 PM PLTDRV: OHDOT_PDF.pltcfg PENTBL: OHDOT_Pen.tbl USER: Sean.Hayes@dot.ohio.gov WORKSPACE: OHDOTCEv02 WORKSET: 105213 PRODUCT: OpenRoadsDesigner 24.00.00.205
pw:\\ohiodot-pw.bentley.com:ohiodot-pw-02\Documents\01 Active Projects\District 04\Portage\105213\400-Engineering\Roadway\Sheets\105213_GY001.dgn

UTILITIES

THE CONTRACTOR SHALL USE THE FOLLOWING PROCEDURE AT EACH LOCATION WHERE WORK IS PERFORMED, IN ACCORDANCE WITH SECTIONS 105.07 AND 107.16 IN THE CONSTRUCTION AND MATERIALS SPECIFICATIONS.

THE CONTRACTOR SHALL NOTIFY THE PROJECT ENGINEER, OHIO811, THE OHIO DEPARTMENT OF TRANSPORTATION DISTRICT 4 HEADQUARTERS (MICHELLE CHANEY AT 330-786-2267) AND ALL NON REGISTERED UTILITY OWNERS AT LEAST TWO (2) WORKING DAYS PRIOR TO COMMENCING CONSTRUCTION OPERATIONS IN ALL AREAS.

THE LOCATION OF EXISTING UNDERGROUND UTILITIES ARE NOT SHOWN ON THE PLANS, BUT CAN BE OBTAINED FROM THE OWNERS OF THE UTILITIES. THE CONTRACTOR IS RESPONSIBLE FOR ANY DAMAGE TO UTILITIES.

WORK LIMITS

THE WORK LIMITS SHOWN ON THESE PLANS ARE FOR PHYSICAL CONSTRUCTION ONLY. PROVIDE THE INSTALLATION AND OPERATION OF ALL WORK ZONE TRAFFIC CONTROL AND WORK ZONE TRAFFIC CONTROL DEVICES REQUIRED BY THESE PLANS WETHER INSIDE OR OUTSIDE THESE WORK LIMITS.

PROFILE AND ALIGNMENT

PLACE THE PROPOSED PAVEMENT TO FOLLOW THE ALIGNMENT AND PROFILE OF THE EXISTING PAVEMENT. PLACE THE PROPOSED ASPHALT CONCRETE OVERLAY AS SHOWN ON THE TYPICAL SECTIONS.

PAVEMENT MARKING DETAILS

THE PAVEMENT MARKING DETAIL SHEETS HAVE BEEN SUPPLIED AS REFERENCE DOCUMENTS FOR THIS PROJECT AND ARE AVAILABLE ON THE ODOT FTP SITE AT https://ftp.dot.state.oh.us/pub/contracts/Attach/ FOR THIS PROJECT. FOR ANY LOCATIONS THAT PAVEMENT MARKING DETAILS HAVE NOT BEEN MADE AVAILABLE TO THE CONTRACTOR, IT WILL BE THE CONTRACTORS RESPONSIBILITY TO PUT BACK NEW PAVEMENT MARKINGS IN THE ORIGINAL LOCATIONS.

PAVEMENT MARKING LANE WIDTHS

THE NORMAL LANE WIDTH FOR THE PAVEMENT MARKINGS ON THIS PROJECT SHALL BE AS FOLLOWS:

ROUTE	S.L.M.	TO S.L.M.	LANE WIDTH
SR 14	1.74	3.08	12'
SR 14	3.19	3.65	12'
SR 43	15.59	18.16	11.5'
SR 43	18.20	18.64	12'

INTERSECTIONS

INTERSECTIONS WILL BE RESURFACED 10 FT. BEYOND THE EDGE LINE, UNLESS OTHERWISE DIRECTED BY THE ENGINEER OR INDICATED IN THE PLAN. INTERSECTIONS SHALL BE PAVED AFTER COMPLETION OF THE SURFACE COURSE. A BUTT JOINT, AS PER STANDARD CONSTRUCTION DRAWING BP-3.1, SHALL BE USED TO PROVIDE A SMOOTH TRANSITION TO THE EXISTING PAVEMENT. USE THE SAME ASPHALT CONCRETE AS THE MAINLINE PAVEMENT UNLESS SHOWN OTHERWISE ON THE ASPHALT CONCRETE CALCULATIONS SHEET. ANY GRADING OR PRIME NECESSARY TO ACCOMPLISH THIS WORK SHALL BE INCLUDED IN THE COST OF THE PERTINENT BID ITEM.

ITEM 251 - PARTIAL DEPTH PAVEMENT REPAIR (441)

A QUANTITY OF THIS ITEM SHALL BE PROVIDED FOR USE AS DIRECTED BY THE ENGINEER. THE ITEM SHALL CONSIST OF REPAIRING EXISTING LOCATIONS EXHIBITING SURFACE DETERIORATION AND PLACING ITEM 441 ASPHALT CONCRETE, TYPE 2. IT IS NOT THE INTENT TO REPAIR EVERY DETERIORATED AREA WITHIN THE PROJECT. PAVEMENT REPAIRS WILL BE MARKED IN THE FIELD BY THE PROJECT ENGINEER ACCORDING TO CMS 251.02. MINIMUM WIDTH IS 2'. UNLESS OTHERWISE DIRECTED BY THE ENGINEER, THIS ITEM SHALL BE PERFORMED AFTER THE COMPLETION OF MAINLINE PAVEMENT PLANING AND PRIOR TO THE PLACEMENT OF ASPHALT ON THE MILLED SURFACE. PAYMENT SHALL BE BASED ON THE ACTUAL NUMBER OF SQUARE YARDS OF PAVEMENT REPAIR.

THE FOLLOWING ESTIMATED QUANTITY HAS BEEN CARRIED TO THE GENERAL SUMMARY:
251, PARTIAL DEPTH REPAIR, 1200 SQ. YD. (LONGITUDINAL)
251, PARTIAL DEPTH REPAIR, 200 SQ. YD. (TRANSVERSE)

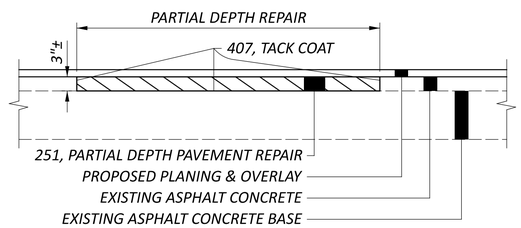

ITEM 253 - PAVEMENT REPAIR

A QUANTITY OF THIS ITEM SHALL BE PROVIDED FOR USE AS DIRECTED BY THE ENGINEER. THIS ITEM SHALL CONSIST OF CUTTING AND REMOVING DETERIORATED PAVEMENT FULL DEPTH AND PLACING 12" OF 301 ASPHALT CONCRETE BASE, PG64-22. THE MAXIMUM COMPACTED DEPTH OF ANY ONE LAYER SHALL BE 6 INCHES. UNLESS OTHERWISE DIRECTED BY THE ENGINEER, THIS ITEM SHALL BE PERFORMED AFTER THE COMPLETION OF MAINLINE PAVEMENT PLANING AND PRIOR TO THE PLACEMENT OF ASPHALT ON THE MILLED SURFACE.

IT IS NOT THE INTENT TO REPAIR EVERY DETERIORATED AREA WITHIN THE PROJECT. THE ENGINEER SHALL DETERMINE WHICH AREAS ARE TO BE REPAIRED. PAYMENT SHALL BE BASED ON THE ACTUAL NUMBER OF SQUARE YARDS OF PAVEMENT REMOVED AND REPLACED TO THE LIMITS DESIGNATED BY THE ENGINEER.

THE FOLLOWING ESTIMATED QUANTITY HAS BEEN CARRIED TO THE GENERAL SUMMARY:
253, PAVEMENT REPAIR, 200 SQ YD

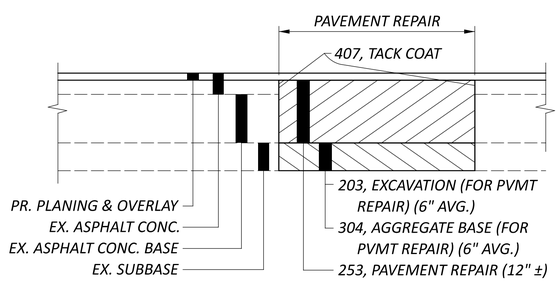

ITEM 203 - EXCAVATION (FOR PAVEMENT REPAIR)

THIS ITEM OF WORK SHALL CONSIST OF REMOVING AND DISPOSING OF ALL UNSUITABLE MATERIAL BY EXCAVATING THE EXISTING SUBGRADE AND SUBBASE TO AN AVERAGE DEPTH OF 6 INCHES OR AS DIRECTED BY THE ENGINEER. EXACT LIMITS OF REMOVAL SHALL BE DETERMINED BY THE ENGINEER. ALL EQUIPMENT, LABOR, TOOLS, AND INCIDENTALS NECESSARY TO COMPLETE THIS ITEM SHALL BE INCLUDED IN THE UNIT PRICE BID FOR ITEM 203 EXCAVATION (FOR PAVEMENT REPAIR). THE FOLLOWING ESTIMATED QUANTITY HAS BEEN CARRIED TO THE GENERAL SUMMARY:
203, EXCAVATION (FOR PAVEMENT REPAIR), 17 CU YD

ITEM 304 - AGGREGATE BASE (FOR PAVEMENT REPAIR)

THE FOLLOWING ESTIMATED QUANTITY HAS BEEN PROVIDED AND SHALL BE USED AS DIRECTED BY THE ENGINEER TO BACKFILL AREAS WHICH WERE EXCAVATED UNDER ITEM 203 EXCAVATION (FOR PAVEMENT REPAIR). THE FOLLOWING ESTIMATEDQUANTITY HAS BEEN CARRIED TO THE GENERAL SUMMARY:
304, AGGREGATE BASE (FOR PAVEMENT REPAIR), 17 CU YD

ITEM 408 - PRIME COAT, AS PER PLAN

APPLY "MC-70" AT A RATE OF 0.4 GALLONS PER SQUARE YARD, OR AS DETERMINED BY THE ENGINEER, TO THE COMPLETED COMPACTED AGGREGATE SHOULDER.

FIELD DRIVEWAYS

THIS ITEM WILL CONSIST OF PLACING ITEM 411, STABILIZED CRUSHED AGGREGATE. THE CONTRACTOR WILL NOT BE PERMITTED TO LEAVE A DIFFERENCE IN ELEVATION BETWEEN THE MAINLINE ASPHALT SURFACE COURSE AND THE EXISTING FIELD DRIVE-WAYS. FIELD DRIVES WILL BE PLACED AFTER THE COMPLETION OF THE SURFACE COURSE AND SHALL HAVE AN AVERAGE 2 INCH THICKNESS. ALL GRADING TOOLS, EQUIPMENT, MATERIALS, AND INCIDENTALS REQUIRED TO LAYOUT AND CONSTRUCT THE FIELD DRIVES WILL BE INCLUDED IN THE UNIT PRICE BID FOR ITEM 411, STABILIZED CRUSHED AGGREGATE. AN ESTIMATED QUANTITY OF 3 CU. YD. HAS BEEN CARRIED TO THE GENERAL SUMMARY.

ITEM 617 - COMPACTED AGGREGATE, AS PER PLAN

IN LOW SHOULDER AREAS EXCEEDING 1", AND ADJACENT TO THE SAFETY EDGE, OR AS DIRECTED BY THE ENGINEER, RECYCLED ASPHALT PAVEMENT (RAP) SHALL BE USED IN AREAS ADJACENT TO THE PAVED BERM. THE RAP SHALL HAVE A MINIMUM PG CONTENT OF 4.5% AND MEET THE FOLLOWING GRADATION. ONCE THE STOCKPILE MEETS THE GRADATION, THE PG CONTENT OF THE RAP SHALL BE DETERMINED PER 441.03. THE RAP ANALYSIS MUST BE SUBMITTED TO THE ENGINEER FOR APPROVAL 2 WEEKS PRIOR TO USE. METHOD OF MEASUREMENT SHALL BE AS PER 617.06. PLACEMENT AND COMPACTION SHALL MEET THE REQUIREMENTS OF ITEM 617. ALL MATERIALS, LABOR, EQUIPMENT, TOOLS AND INCIDENTALS NECESSARY TO COMPLETE THE WORK SHALL BE INCLUDED IN THE UNIT PRICE BID FOR ITEM 617 COMPACTED AGGREGATE, AS PER PLAN.

MODIFIED GRADATION SHALL APPLY:

SIEVE	TOTAL PERCENT PASSING
1- 1/2"	100
3/4"	50-100
NO. 4	35-70
NO. 30	9-33
NO. 200	0-13

LINEAR GRADING

AREAS WHERE THE SHOULDER IS HIGHER THAN THE EDGE OF PAVEMENT WILL BE GRADED TO PROVIDE POSITIVE DRAINAGE. THIS WORK WILL ONLY BE PERFORMED IN AREAS NECESSARY AND WILL NOT BE PERFORMED ON THE ENTIRE PROJECT. AREAS FOR THE WORK WILL BE MARKED BY THE PROJECT ENGINEER. UNDER NO CIRCUMSTANCES WILL THIS WORK BE PERFORMED CONCURRENTLY WITH ANY OTHER OPERATION.

GRADING WILL BE ACCOMPLISHED BY THE REMOVAL OF MATERIAL TO PROVIDE A 0.08 POSITIVE SLOPE. THE GRADED AREAS WILL BE COMPACTED TO A SUFFICIENT DENSITY TO PREVENT EROSION UNTIL SEEDING AND MULCHING IS PERFORMED. ALL EXCESS MATERIAL WILL BE REMOVED FROM THE BERMS AND WILL BE DISPOSED OF OFF THE PROJECT BY THE CONTRACTOR.

THE CONTRACTOR IS REQUIRED TO PLACE ITEM 617 WITHIN A PERIOD NOT TO EXCEED 7 DAYS. REFER TO THE AS PER PLAN NOTE FOR REQUIREMENTS.

EXPOSED EARTH OUTSIDE OF THE LIMITS OF ITEM 617 ARE REQUIRED TO BE SEEDED AND MULCHED WITHIN 7 DAYS OF PLACEMENT OF ITEM 617. PAYMENT FOR THIS WORK SHALL BE MADE UNDER ITEM 832.

THE QUANTITY OF ITEM 209 IS NOT PERMITED TO BE INCREASED. REDUCTIONS IN QUANTITIES ARE PERMITTED AS DETERMINED BY THE PROJECT ENGINEER.

ALL MATERIALS, LABOR, EQUIPMENT, TOOLS, AND INCIDENTALS NECESSARY TO COMPLETE THIS WORK WILL BE INCLUDED IN THE UNIT PRICE FOR THE PERTINENT BID ITEM. THE FOLLOWING QUANTITIES HAVE BEEN CARRIED TO THE GENERAL SUMMARY:
209, LINEAR GRADING, 242 STA.

ITEM 609 - CURB, TYPE 7, AS PER PLAN

ALL REQUIREMENTS OF SECTION 609 OF THE CONSTRUCTION AND MATERIAL SPECIFICATIONS AND SCD BP-5.1 WITH THE EXCEPTION OF THE VARYING CURB HEIGHT TO MEET EXISTING GRADE.

GENERAL NOTES

DESIGN AGENCY

DESIGNER CLG
REVIEWER BC 10-24-24
PROJECT ID 105213
SHEET P.4 TOTAL 16

MODEL: Sheet 1 PAPERSIZE: 34x22 (in.) DATE: 1/15/2026 TIME: 1:20:19 PM PLTDRV: OHDOT_PDF.pltcfg PENTBL: OHDOT_Pen.tbl USER: Sean.Hayes@dot.ohio.gov WORKSPACE: OHDOTCEv02 WORKSET: 105213 PRODUCT: OpenRoadsDesigner 24.00.00.205
pw:\\ohiodot-pw.bentley.com:ohiodot-pw-02\Documents\01 Active Projects\District 04\Portage\105213400-Engineering\Roadway\Sheets\105213_GN001.dgn

ITEM 611 – MANHOLE ADJUSTED TO GRADE, AS PER PLAN
ITEM 623 – MONUMENT ASSEMBLY ADJUSTED TO GRADE, AS PER PLAN

IN ADDITION TO THE REQUIREMENTS OF CMS 611.10.D FOR MANHOLES, OR 623.05 FOR MONUMENT ASSEMBLY, THE CONTRACTOR WILL MAKE A CLEAN CIRCULAR CUT AROUND THE CASTING (48" DIAMETER FOR STORM AND SANITARY MANHOLE CASTINGS, 24"-28" FOR MONUMENT ASSEMBLIES, AND 2' IN DIAMETER LARGER THAN THE CASTING DIAMETER FOR ANY CASTINGS THAT ARE LARGER THAN STANDARD MANHOLES) AND REMOVE AND DISCARD THE EXISTING CASTING. INSTALL A NEW CASTING TO GRADE (ACCORDING TO TOLERANCES AS SHOWN ON STANDARD CONSTRUCTION DRAWING BP-3.1) AFTER THE PAVEMENT SURFACE COURSE HAS BEEN REPLACED.

CMS 499 CLASS QCMS CONCRETE (DYE THE CONCRETE SUCH THAT ITS COLOR CLOSELY MATCHES THE COLOR OF THE SURROUNDING PAVEMENT) WILL BE USED FOR BACKFILLING THE FULL PAVEMENT SECTION AND THE JOINT BETWEEN THE ASPHALT AND CONCRETE WILL BE SEALED WITH CMS 702.01 PG BINDER. EPOXY COATED REBAR SHALL BE PLACED IN THE CONCRETE AT 6" MAXIMUM ON CENTER AND A MINIMUM OF 3.5" CLEARANCE FROM THE TOP, BOTTOM AND SIDES. THE CONCRETE WILL BE VIBRATED SUFFICIENTLY TO ELIMINATE AIR POCKETS UNDER THE FRAME.

PAYMENT WILL INCLUDE REMOVAL OF THE EXISTING MATERIAL, INSTALLATION AND FURNISHING OF A NEW CASTING, AND ALL LABOR AND MATERIALS REQUIRED TO COMPLETE THIS ITEM OF WORK AS DESCRIBED.

THE FOLLOWING QUANTITIES HAVE BEEN CARRIED TO THE GENERAL SUMMARY:

611 - MANHOLE ADJUSTED TO GRADE, AS PER PLAN
SR 14, 14 EACH SR 43, 17 EACH

623 - MONUMENT ASSEMBLY ADJUSTED TO GRADE, AS PER PLAN
SR 14, 3 EACH SR 43, 2 EACH

CATCH BASIN ADJUSTED TO GRADE

AN ESTIMATED QUANTITY HAS BEEN CARRIED TO THE GENERAL SUMMARY FOR ADJUSTING CATCH BASINS TO GRADE.

EXISTING CASTINGS MAY PROVE TO BE UNSUITABLE FOR REUSE, AS DETERMINED BY THE ENGINEER. IT IS THE CONTRACTOR'S RESPONSIBILITY TO PROVIDE THE CASTINGS OF REQUIRED TYPE, SIZE AND STRENGTH. ENSURE ALL MATERIAL MEETS CMS ITEM 611 AND HAS PRIOR APPROVAL OF THE ENGINEER.

ITEM 611 – CATCH BASIN ADJUSTED TO GRADE, 2 EACH
ITEM SPECIAL – MISCELLANEOUS METAL, 400 LB

CATCH BASIN RECONSTRUCTED TO GRADE

AN ESTIMATED QUANTITY HAS BEEN CARRIED TO THE GENERAL SUMMARY FOR RECONSTRUCTING CATCH BASINS TO GRADE.

EXISTING CASTINGS MAY PROVE TO BE UNSUITABLE FOR REUSE, AS DETERMINED BY THE ENGINEER. IT IS THE CONTRACTOR'S RESPONSIBILITY TO PROVIDE THE CASTINGS OF REQUIRED TYPE, SIZE AND STRENGTH. ENSURE ALL MATERIAL MEETS CMS ITEM 611 AND HAS PRIOR APPROVAL OF THE ENGINEER.

ITEM 611 – CATCH BASIN RECONSTRUCTED TO GRADE, 1 EACH
ITEM SPECIAL – MISCELLANEOUS METAL, 400 LB

REVIEW OF CURB RAMPS

PRIOR TO THE START OF WORK, PERFORM AN INSPECTION WITH REPRESENTATIVES OF THE DEPARTMENT AND CONTRACTOR OF ALL CURB RAMPS INCLUDED IN THE PROJECT LIMITS. PRIOR TO THE INSPECTION, THE CONTRACTOR SHALL MARK THE WORK LIMITS OF ALL CURB RAMPS AND ASSOCIATED WORK TO IDENTIFY ANY CONDITIONS THE CONTRACTOR CANNOT BRING INTO ADA COMPLIANCE PER BP-7.1. THE DEPARTMENT SHALL HAVE TEN (10) BUSINESS DAYS TO RESOLVE ANY SUCH ANTICIPATED NON-COMPLIANCE WITH AN ADA WAIVER, QUANTITY CHANGE OR DESIGN REVISION PRIOR TO THE START OF WORK.

IMMEDIATELY FOLLOWING INSTALLATION OF FORMWORK FOR CURB RAMP CONCRETE PLACEMENT AND PRIOR TO PLACEMENT OF CONCRETE, THE CONTRACTOR SHALL VERIFY ADA COMPLIANCE BASED UPON MEASUREMENT OF THE FORMS. THE ENGINEER SHALL BE IMMEDIATELY NOTIFIED OF ANY NON-COMPLIANT ADA CONDITIONS MEASURED BY THE CONTRACTOR WITHIN THE WORK LIMITS. THE ENGINEER SHALL HAVE THREE (3) BUSINESS DAYS TO RESOLVE ANY SUCH NON-COMPLIANCE WITH A CORRECTIVE FORM LAYOUT, ADA WAIVER, QUANTITY CHANGE OR DESIGN CHANGE PRIOR TO THE PLACEMENT OF CONCRETE.

THE CONTRACTOR IS RESPONSIBLE TO CORRECT ANY ADA NON-COMPLIANCE FOR ALL ISSUES NOT REPORTED TO THE ENGINEER IN THE INITIAL INSPECTION AND/OR THE FORM INSTALLATION MEASUREMENT. MODIFICATION OF FORMS INTO A COMPLIANT CONFIGURATION AND/OR REMOVAL AND RECONSTRUCTION OF FINISHED WORK SHALL BE AT THE EXPENSE OF THE CONTRACTOR.

PAYMENT FOR ALL OPERATIONS DESCRIBED ABOVE IS INCLUDED IN THE CONTRACT PRICE FOR THE PERTINENT 608 CURB RAMP ITEMS.

ITEM 608 - CURB RAMP, AS PER PLAN

UNLESS OTHERWISE DIRECTED BY THE ENGINEER, INSTALLATION OF THE CURB RAMPS / DETECTABLE WARNINGS WILL BE PERFORMED PRIOR TO MAINLINE RESURFACING.

IN ADDITION TO THE CMS REQUIREMENTS OF ITEM 608 CURB RAMP, THIS ITEM SHALL INCLUDE THE RESTORATION OF THE ADJACENT AREAS DISTURBED FOR THE INSTALLATION OF CURB RAMPS AND IMMEDIATELY ADJACENT CONCRETE WALK. RESTORATION SHALL INCLUDE PLACEMENT OF ITEM 659 TOPSOIL, ITEM 659 COMMERCIAL FERTILIZER, ITEM 659 SEEDING AND MULCHING, AND ITEM 659 WATER, ALL PER CMS.

PAYMENT FOR ALL LABOR, EQUIPMENT, AND MATERIALS NECESSARY TO PERFORM THE WORK DESCRIBED ABOVE SHALL BE INCLUDED IN THE UNIT PID PRICE FOR ITEM 608 - CURB RAMP, AS PER PLAN.

ADA DESIGN WAIVER

AN APPROVED ADA DESIGN WAIVER IS REQUIRED ON THIS PROJECT. THE FOLLOWING CURB RAMPS LISTED BELOW HAVE WAIVERS APPROVED.

RAMP ID	APPROVAL DATE	LOCATION/DESCRIPTION	SHEET
RMP0030446	10/17/2025	STAPLES DR / RL	12
RMP0030486	10/17/2025	MARKET SQUARE / FR1	12
RMP0030485	10/17/2025	MARKET SQUARE / RL2	12
RMP0030487	10/17/2025	SHADY LAKE / FL	12
RMP0030488	10/20/2025	SINGLETARY / FL	12

ITEM SPECIAL - AS-BUILT CONSTRUCTION PLANS

PRIOR TO FINAL ACCEPTANCE OF THE WORK, THE CONTRACTOR SHALL FURNISH THE DEPARTMENT FORMAL AS-BUILT CONSTRUCTION PLANS. THE FORMAL AS-BUILT CONSTRUCTION PLANS SHALL INCLUDE ALL RED-LINED CHANGES. RED-LINE CHANGE SHALL BE DENOTED UTILIZING CLOUDING IN MICROSTATION (OR OTHER CAD SOFTWARE) OR CLOUDING IN PDF EDITING SOFTWARE. THE AS-BUILT CONSTRUCTION PLANS SHALL HAVE A SIGNED VERIFICATION ON THE TITLE SHEET FROM THE CONTRACTOR INDICATING THAT ALL RED-LINED AND FIELD CHANGES HAVE BEEN INCORPORATED INTO AS-BUILT CONSTRUCTION PLANS.

THE CONTRACTORS VERIFICATION STATEMENT INDICATES ALL KNOWN FIELD MODIFICATIONS MADE HAVE BEEN INCLUDED IN THE FORMAL AS-BUILT CONSTRUCTION PLANS. THE CONTRACTORS VERIFICATION STATEMENT SHALL BE SIGNED BY THE CONTRACTORS PROJECT MANAGER (OR ACCEPTABLE REPRESENTATIVE).

IN ADDITION TO THE INFORMATION SHOWN ON THE CONSTRUCTION PLANS, THE AS-BUILT CONSTRUCTION PLANS SHALL SHOW THE FOLLOWING:

1. ALL DEVIATIONS FROM THE ORIGINAL APPROVED CONSTRUCTION PLANS WHICH RESULT IN A CHANGE OF LOCATION, MATERIAL, TYPE OR SIZE OF WORK.
2. ANY UTILITIES, PIPES, WELLHEADS, ABANDONED PAVEMENTS, FOUNDATIONS OR OTHER MAJOR OBSTRUCTIONS DISCOVERED AND REMAINING IN PLACE WHICH ARE NOT SHOWN, OR DO NOT CONFORM TO LOCATIONS OR DEPTHS SHOWN IN THE PLANS. UNDERGROUND FEATURES SHALL BE SHOWN AND LABELED ON THE AS-BUILT CONSTRUCTION PLANS IN TERMS OF STATION, OFFSET AND ELEVATION.
3. THE FINAL OPTION AND SPECIFICATION NUMBER SELECTED FOR THOSE ITEMS WHICH ALLOW SEVERAL MATERIAL OPTIONS UNDER THE SPECIFICATION (E.G., CONDUIT).
4. CHANGES TO THE PAY ITEMS AND FINAL QUANTITIES AS PAID SHALL BE SHOWN ON THE GENERAL SUMMARY AND SUBSUMMARIES.
5. ADDITIONAL PLAN SHEETS MAY BE NEEDED IF NECESSARY TO SHOW WORK NOT INCLUDED IN THE CONSTRUCTION PLANS. IF ADDITIONAL PLAN SHEETS ARE NEEDED, THEY ARE REQUIRED TO BE PREPARED IN CONFORMANCE WITH THE LOCATION AND DESIGN MANUAL, VOLUME 3, SECTION 1200 - PLAN PREPARATION.

NOTATION SHALL ALSO BE MADE OF LOCATIONS AND THE EXTENT OF USE OF MATERIALS, OTHER THAN SOIL, FOR EMBANKMENT CONSTRUCTION (ROCK, BROKEN CONCRETE WITHOUT REINFORCING STEEL, ETC.).

THE PLAN INDEX SHALL SHOW THE PLAN SHEETS WHICH HAVE CHANGES APPEARING ON THEM.

TWO COPIES OF THE AS-BUILT CONSTRUCTION PLANS SHALL BE DELIVERED TO THE PROJECT ENGINEER FOR APPROVAL UPON COMPLETION OF THE PHYSICAL WORK BUT PRIOR TO THE REQUEST FOR FINAL PAYMENT. AFTER THE DEPARTMENT HAS APPROVED THE AS-BUILT CONSTRUCTION PLANS, THE ASSOCIATED ELECTRONIC FILES SHALL BE DELIVERED TO THE DISTRICT CAPITAL PROGRAMS ADMINISTRATOR. ACCEPTANCE OF THESE PLANS AND DELIVERY OF THE ASSOCIATED ELECTRONIC FILES IS REQUIRED PRIOR TO THE WORK BEING ACCEPTED AND THE FINAL ESTIMATE APPROVED.

PAYMENT FOR ALL THE ABOVE SHALL BE LUMP SUM UPON PROPER EXECUTION OF ALL WORK OF THIS ITEM AS DETERMINED BY THE PROJECT ENGINEER.

ITEM 638 – VALVE BOX ADJUSTED TO GRADE

THE FOLLOWING QUANTITY HAS BEEN CARRIED TO THE GENERAL SUMMARY:
ITEM 638 - VALVE BOX ADJUSTED TO GRADE, 17 EACH

ITEM SPECIAL - PIPE CLEANOUT

THIS WORK CONSISTS OF REMOVING SEDIMENT AND DEBRIS FROM THE EXISTING DRAINAGE CONDUITS AND ATTACHED CATCH BASINS SPECIFIED IN THE PLANS. DISPOSE OF ALL MATERIAL PER 105.16 AND 105.17. CLEAN OUT TO THE APPROVAL OF THE ENGINEER.

CLEANOUT OF THE PIPE IS PAID FOR AT THE UNIT PRICE BID FOR ITEM SPECIAL, PIPE CLEANOUT. THIS PRICE INCLUDES THE COST FOR MATERIAL, EQUIPMENT, LABOR, AND ALL INCIDENTALS REQUIRED TO COMPLETE THE CLEANOUT.

THE FOLLOWING ESTIMATED QUANTITIES HAVE BEEN INCLUDED IN THE GENERAL SUMMARY FOR THE WORK NOTED ABOVE:

SR 14, SLM 1.54 (SEE S-21, SHEET P.15 FOR REFERENCE)
ITEM SPECIAL, PIPE CLEANOUT, 24" AND UNDER 75 FT

SR 14, SLM 1.62 (SEE S-22, SHEET P.15 FOR REFERENCE)
ITEM SPECIAL, PIPE CLEANOUT, 24" AND UNDER 75 FT

GENERAL NOTES

DESIGN AGENCY

DESIGNER CLG
REVIEWER BC 10-24-24
PROJECT ID 105213
SHEET P.5 TOTAL 16

POR-14/43-1.74/VAR

MODEL: Sheet 2 PAPERSIZE: 34x22 (in.) DATE: 1/15/2026 TIME: 1:20:19 PM PLTDRV: OHDOT_PDF.pltcfg PENTBL: OHDOT_Pen.tbl USER: Sean.Hayes@dot.ohio.gov WORKSPACE: OHDOTCEv02 WORKSET: 105213 PRODUCT: OpenRoadsDesigner 24.00.00.205
pw:\\ohiodot-pw.bentley.com:ohiodot-pw-02\Documents\01 Active Projects\District 04\Portage\105213\400-Engineering\Roadway\Sheets\105213_GN001.dgn

MAINTENANCE OF TRAFFIC COORDINATION AND SEQUENCE RESTRICTIONS

THIS PROJECT PACKAGE IS COMPOSED OF MULTIPLE PARTS. REFER TO THE INDIVIDUAL PLAN PARTS FOR SPECIFIC DETAILS REGARDING WORK LIMITS, PROJECT DETAILS, AND THE MOT PHASING REGARDING EACH PART OF THE PROJECT PACKAGE. A SUMMARY OF THE INDIVIDUAL PROJECT PARTS AND RESTICTIONS ARE LISTED BELOW:

•PART 1 WILL PERFORM CURB RAMP IMPROVEMENTS AND RESURFACE PORTIONS OF SR 14 AND SR 43. PART 1 WILL ALSO INCLUDE MINOR WORK AT THE POR-14-2.10 STRUCTURE. PLEASE NOTE THAT WORK AT THE POR-14-2.10 STRUCTURE MAY BE PERFORMED INDEPENDENTLY OF WORK AT PART 2 AND PART 3 LOCATIONS.

•PART 2 WILL RECONSTRUCT THE SR 14/SR 43 INTERSECTION TO REPLACE THE EXISTING ASPHALT PAVEMENT WITH CONCRETE PAVEMENT.

•PART 3 WILL REMOVE THE SLIP LANE AT THE SR 303/SR 14 INTERSECTION AND MODIFY THE SR 303/SR 14/RANCH ROAD INTERSECTION. THE SR 303/SR 14 INTERSECTION SHALL BE CLOSED AT THE BEGINNING OF PART 2 WORK AND SHALL REMAIN CLOSED UNTIL THE COMPLETION OF PART 2 AND PART 3.

•PART 1 RESURFACING OF SR 14 BETWEEN MARKET SQUARE DRIVE AND THE EAST END OF THE PROJECT SHALL BE PERFORMED AFTER PART 2 COMPLETION.

•PART 1 RESURFACING OF SR 43 BETWEEN MARKET SQUARE DRIVE AND SEASONS ROAD SHALL BE PERFORMED AFTER PART 2 COMPLETION.

MAINTENANCE OF TRAFFIC

THIS ITEM SHALL CONSIST OF MAINTENANCE OF TRAFFIC ON EXISTING ROADWAYS AND RAMPS IN ACCORDANCE WITH THE OHIO MANUAL OF UNIFORM TRAFFIC CONTROL DEVICES FOR STREETS AND HIGHWAYS, CURRENT EDITION, LATEST REVISION, THE SPECIFICATIONS AND THE FOLLOWING:

1. A MINIMUM OF ONE TEN FOOT BI-DIRECTIONAL LANE SHALL BE MAINTAINED ON THE EXISTING PAVEMENT OR COMPLETED PAVEMENT DURING CONSTRUCTION OF THE WORK.

2. THE CONTRACTOR SHALL INFORM THE DISTRICT OFFICE (330) 786-2208, EIGHTEEN (18) DAYS PRIOR TO THE BEGINNING OF WORK.

3. LANE RESTRICTIONS OR LANE REDUCTIONS SHALL NOT BE PERMITTED AFTER NORMAL WORKING HOURS. NORMAL WORKING HOURS SHALL BE THOSE HOURS DURING WHICH THE CONTRACTOR HAS A FULL COMPLEMENT OF EMPLOYEES AND EQUIPMENT ACTIVELY REMOVING AND/OR PLACING PAVEMENT MATERIALS.

4. ALL FULL DEPTH PAVEMENT REMOVAL AND REPLACEMENT OPERATIONS SHALL BE COMPLETED THE SAME DAY THE EXCAVATION IS MADE. IF THE CONTRACTOR CANNOT COMPLETE THE WORK, THE EXCAVATION SHALL BE BACKFILLED OR PROTECTED AS PER STANDARD CONSTRUCTION DRAWING MT-101.90.

5. TRUCK MOUNTED ATTENUATORS [TMA'S] SHALL BE USED AS SHOWN IN THE STANDARD CONSTRUCTION DRAWINGS.

6. UNDER NO CIRCUMSTANCES SHALL THE CONTRACTOR BE PERMITTED TO HAVE SUCCESSIVE WORK ZONES UNLESS THE DISTANCE BETWEEN THE DRUMS, BARRICADES OR CONES EXCEEDS TWO (2) MILES RURAL OR ONE [1] MILE URBAN.

MAINTENANCE OF TRAFFIC (CONT.)

7. IN ADDITION TO THE REQUIREMENTS OF 614.11 WORK ZONE PAVEMENT MARKINGS, AT THE END OF EACH DAY OF WORK, THE CONTRACTOR SHALL REPLACE (WITH WORK ZONE MARKINGS) ALL LANE, CENTER, STOP OR CHANNELIZING LINES THAT WERE REMOVED OR COVERED DURING THE PAVEMENT REMOVAL OR PLACEMENT OPERATIONS. QUANTITIES FOR SUCH PLACEMENT ARE CARRIED AS PART OF THE ITEMS LISTED UNDER 614 WORK ZONE PAVEMENT MARKINGS.

8. A QUANTITY OF 10 CU. YDS. OF ITEM 614 ASPHALT CONCRETE FOR MAINTAINING TRAFFIC SHALL BE PROVIDED FOR USE IN MAINTAINING PAVEMENT, SHOULDERS AND OTHER LOCATIONS AS DIRECTED BY THE ENGINEER.

9. PRIOR TO OPENING TO TRAFFIC EACH LANE SHALL BE IN A SAFE, PASSABLE CONDITION. ALL TRANSVERSE JOINTS SHALL EXTEND ACROSS THE FULL LANE AND SHOULDER WIDTH AND EACH LANE SHALL BE FREE FROM UNEVEN LONGITUDINAL JOINTS. THE CONTRACTOR SHALL PROVIDE ASPHALT WEDGES FOR TRANSVERSE JOINTS WHEREVER THERE ARE PAVEMENT ELEVATION DIFFERENCES.

10. THE CONTRACTOR SHALL INSTALL, MAINTAIN AND SUBSEQUENLT REMOVE WORK ZONE MARKING SIGNS AND THEIR SUPPORTS WITHIN THE WORK LIMITES. THESE SIGNS INCLUDE "NO EDGE LINES", "DO NOT PASS" AND "PASS WITH CARE". ALL OTHER SIGNS WILL BE INCIDENTAL TO THE LUMP SUM PAY ITEM 614 MAINTAINING TRAFFIC UNLESS SEPARATELY ITEMIZED IN THE PLANS. A QUANTITY OF ITEM 614 WORK ZONE MARKING SIGNS HAS BEEN INCLUDED IN THE PLANS AS PER CMS 614.04.

11. THE CONTRACTOR SHALL SET A WORK ZONE AT THE REQUEST OF THE ENGINEER TO ALLOW THE LAYOUT OF THE PARTIAL/FULL DEPTH PAVEMENT REPAIR AREAS. THIS WORK IS INCIDENTAL TO ITEM 614 MAINTAINING TRAFFIC.

12. ALL WORK FOR PART 1 SHALL BE COMPLETED AT NIGHT FROM 7PM TO 5AM UNLESS OTHERWISE APPROVED BY THE ENGINEER. A DISINCENTIVE PER THE LANE VALUE CHART ON PAGE P.7 WILL BE ASSESSED FOR FAILURE TO ADHERE TO THIS NOTE.

THE FOLLOWING QUANTITIES SHALL BE USED FOR THE MAINTENANCE OF TRAFFIC ON THIS PROJECT:

PHASE I: MILLED SURFACE
- 614, WORK ZONE CENTER LINE, CLASS I, 5.95 MILE
- 614, WORK ZONE LANE LINE, CLASS I, 6" 5.41 MILE
- 614, WORK ZONE STOP LINE, CLASS I, 817 FT
- 614, WORK ZONE CHANNELIZING LINE, CLASS I, 8" 79 FT
- 614, WORK ZONE CHANNELIZING LINE, CLASS I, 12" 7460 FT
- 614, WORK ZONE MARKING SIGN, (ALL PHASES) 6 EACH

PHASE II: SURFACE COURSE
- 614, WORK ZONE CENTER LINE, CLASS III, 642 PAINT 5.95 MILE
- 614, WORK ZONE LANE LINE, CLASS III, 6", 642 PAINT 5.41 MILE
- 614, WORK ZONE STOP LINE, CLASS III, 642 PAINT 817 FT
- 614, WORK ZONE CHANNELIZING LINE, CLASS III, 8", 642 PAINT 79 FT
- 614, WORK ZONE CHANNELIZING LINE, CLASS III, 12", 642 PAINT 7460 FT

TO BE USED AS DIRECTED BY THE ENGINEER
- 614, WORK ZONE EDGE LINE, CLASS III, 6", 642 PAINT 5.03 MILE

ALL WORK AND TRAFFIC CONTROL DEVICES SHALL BE IN ACCORDANCE WITH C&MS 614 AND OTHER APPLICABLE PORTIONS OF THE SPECIFICATIONS, AS WELL AS THE OHIO MANUAL OF UNIFORM TRAFFIC CONTROL DEVICES. PAYMENT FOR ALL LABOR, EQUIPMENT, AND MATERIALS SHALL BE INCLUDED IN THE LUMP SUM CONTRACT PRICE FOR ITEM 614, MAINTAINING TRAFFIC, UNLESS SEPARATELY ITEMIZED IN THE PLAN.

ADVANCED NOTICE TO PAVE

THE CONTRACTOR SHALL SUBMIT FOR APPROVAL TO THE DISTRICT CONSTRUCTION ENGINEER A DETAILED SCHEDULE 15 DAYS PRIOR TO THE PLACEMENT OF THE OVERLAY COURSES, ON HOW THEY PROPOSE TO PROSECUTE THE PAVING OPERATIONS. THE DETAILS SHALL SHOW THE ORDER OF PERFORMANCE OF EACH STAGE (START TO FINISH) OF THE WORK INCLUDING THE MAINTENANCE OF TRAFFIC THAT WILL BE USED.

TRAFFIC CONTROL INSPECTOR

THE CONTRACTOR SHALL DESIGNATE AN INDIVIDUAL OTHER THAN THE SUPERINTENDENT AND SUBJECT TO THE APPROVAL OF THE ENGINEER, TO CONTINUOUSLY INSPECT ALL TRAFFIC CONTROL DEVICES WHENEVER CONSTRUCTION WORK IS BEING PERFORMED WITHIN THE WORK LIMITS OF THE PROJECT. THE DESIGNATED INDIVIDUAL SHALL ALSO INSPECT ALL TRAFFIC DEVICES AT THE BEGINNING AND AT THE END OF EACH WORK DAY. THE DESIGNATED INDIVIDUAL OR A QUALIFIED REPRESENTATIVE SHALL ALSO BE AVAILABLE ON AN AROUND THE CLOCK BASIS TO REPAIR AND/OR REPLACE DAMAGED OR MISSING TRAFFIC CONTROL DEVICES. THESE INDIVIDUALS SHALL BE EQUIPPED WITH CELLULAR PHONES AND THEIR NAMES AND PHONE NUMBERS SHALL BE GIVEN TO THE PROJECT ENGINEER AT THE PRE-CONSTRUCTION MEETING. THE DESIGNATED INDIVIDUAL MAY HAVE OTHER CONSTRUCTION RELATED DUTIES AS LONG AS IMMEDIATE ATTENTION IS GIVEN TO TRAFFIC CONTROL. PAYMENT FOR THE SERVICES OF THE TRAFFIC CONTROL INSPECTOR SHALL BE INCLUDED IN THE LUMP SUM PRICE BID FOR ITEM 614 MAINTAINING TRAFFIC.

TIME LIMITATION, CURB RAMP

THE MAXIMUM ALLOWABLE TIME FOR THE CONTRACTOR TO HAVE AN INDIVIDUAL CURB RAMP AND ASSOCIATED SIDEWALK LEADING INTO THE CURB RAMP OUT OF SERVICE FOR THE REMOVAL AND REPLACEMENT SHALL BE 14 CONSECUTIVE CALENDAR DAYS (THE TIME PERIOD INCLUDES ALL WORK LISTED IN THE BASIS OF PAYMENT PER CMS 608.09, INCLUDING ALL REMOVAL, REPLACEMENT, AND BACKFILL ASSOCIATED WITH THE CURB RAMPS, AND CURING TIME PERIOD).

AT THE CONCLUSION OF CONSTRUCTING OF THE CURB RAMP AND PRIOR TO OPENING TO PEDESTRIAN TRAFFIC THE CONTRACTOR SHALL ENSURE THAT THE REQUIREMENTS OF STANDARD CONSTRUCTION DRAWING BP-7.1 ARE MET. THE CONTRACTOR SHALL USE ASPHALT AS A WEDGE, OR SUBMIT ANOTHER METHOD APPROVED BY THE ENGINEER, TO ENSURE THE TRANSITION FROM THE CURB RAMP TO THE ROADWAY ARE PER STANDARD CONSTRUCTION DRAWING BP-7.1. ALL COSTS TO PERFORM THIS WORK SHALL BE INCIDENTAL TO THE ASSOCIATED PAY ITEMS FOR THE INSTALLATION OF THE CURB RAMP.

SHOULD THE CONTRACTOR FAIL TO MEET THIS REQUIREMENT, THE CONTRACTOR SHALL BE ASSESSED A DISINCENTIVE IN THE AMOUNT OF $1000 PER DAY PER AFFECTED RAMP THAT THE AFFECTED CURB RAMP REMAINS OUT OF SERVICE BEYOND 14 CONSECUTIVE CALENDAR DAYS.

TIME LIMITATION, TRAFFIC ON A MILLED SURFACE

THE MAXIMUM ALLOWABLE TIME FOR TRAFFIC TO BE PLACED ON A MILLED SURFACE SHALL BE 7 CONSECUTIVE CALENDAR DAYS. SHOULD THE CONTRACTOR FAIL TO MEET THIS REQUIREMENT, THE CONTRACTOR SHALL BE ASSESSED A DISINCENTIVE IN THE AMOUNT OF $5000 PER DAY THAT THE TRAFFIC IS PLACED ON A MILLED SURFACE BEYOND THE SPECIFIED LIMIT.

NOTIFICATION OF TRAFFIC RESTRICTIONS

THROUGHOUT THE DURATION OF THE PROJECT, THE CONTRACTOR SHALL NOTIFY THE PROJECT ENGINEER IN WRITING OF ALL TRAFFIC RESTRICTIONS AND UPCOMING MAINTENANCE OF TRAFFIC CHANGES. THE CONTRACTOR SHALL ENSURE THE WRITTEN NOTIFICATION IS SUBMITTED IN A TIMELY MANNER TO ALLOW THE PROJECT ENGINEER TO MEET THE REQUIRED TIME FRAMES SET FORTH IN THE TABLE BELOW TO INFORM THE SPECIAL HAULING PERMITS SECTION (HAULING.PERMITS@DOT.OHIO.GOV) AND THE DISTRICT PUBLIC INFORMATION OFFICE (PIO). THIS NOTIFICATION SHALL BE RECEIVED BY THE PROJECT ENGINEER PRIOR TO THE PHYSICAL SETUP OF ANY APPLICABLE SIGNS OR MESSAGE BOARDS.

INFORMATION SHOULD INCLUDE, BUT IS NOT LIMITED TO, ALL CONSTRUCTION ACTIVITIES THAT IMPACT OR INTERFERE WITH TRAFFIC AND SHALL LIST THE SPECIFIC LOCATION, TYPE OF WORK, ROAD STATUS, DATE AND TIME OF RESTRICTION, DURATION OF RESTRICTION, NUMBER OF LANES MAINTAINED, NUMBER OF LANES CLOSED, MINIMUM VERTICAL CLEARANCE, MINIMUM WIDTH OF DRIVABLE PAVEMENT, DETOUR ROUTES, IF APPLICABLE, AND ANY OTHER INFORMATION REQUESTED BY THE PROJECT ENGINEER.

NOTIFICATION TIME TABLE

ITEM	DURATION OF CLOSURE	NOTICE DUE TO PERMITS & PIO
ROAD & RAMP CLOSURES	>= 2WEEKS	21 CALENDAR DAYS PRIOR TO CLOSURE
	> 12 HOURS & < 2 WEEKS	14 CALENDAR DAYS PRIOR TO CLOSURE
	<12 HOURS	4 BUSINESS DAYS PRIOR TO CLOSURE
LANE CLOSURES & RESTRICTIONS	>=2 WEEKS	14 CALENDAR DAYS PRIOR TO CLOSURE
	< 2 WEEKS	5 BUSINESS DAYS PRIOR TO CLOSURE
START OF CONSTRUCTION & TRAFFIC PATTERNS CHANGES	N/A	14 CALENDAR DAYS PRIOR TO IMPLEMENTATION

ANY UNFORESEEN CONDITIONS NOT SPECIFIED IN THE PLANS REQUIRING TRAFFIC RESTRICTIONS SHALL ALSO BE REPORTED TO THE PROJECT ENGINEER USING THE NOTIFICATION TIME TABLE.

ASPHALT PAVING LIMITATION

THE CONTRACTOR SHALL NOT ANTICIPATE OR SCHEDULE PLACING ASPHALT (ASPHALT SURFACE COURSE, ASPHALT INTERMEDIATE COURSE, ASPHALT CONCRETE BASE, ETC.) BETWEEN NOVEMBER 1 AND APRIL 1 WHEN SUBMITTING THEIR INITIAL BAR CHART PROGRESS SCHEDULE TO THE DISTRICT CONSTRUCTION ENGINEER (DCE) AS SPECIFIED IN CMS SECTION 108.02A. THIS LIMITATION SHALL ALSO INCLUDE INITIAL BASE LINE SCHEDULES AND ALL UPDATES IF A CPM SCHEDULE IS REQUIRED.

PLACEMENT OF ASPHALT CONCRETE

TWO-WAY TRAFFIC SHALL BE MAINTAINED AT ALL TIMES EXCEPT THAT ONE-WAY TRAFFIC WILL BE PERMITTED FOR MINIMUM PERIODS OF TIME CONSISTENT WITH THE REQUIREMENTS OF THE SPECIFICATIONS FOR PROTECTION OF COMPLETE ASPHALT CONCRETE COURSES.

MAINTENANCE OF TRAFFIC NOTES

DESIGN AGENCY

DESIGNER CLG

REVIEWER BC 10-24-24

PROJECT ID 105213

SHEET P.6 TOTAL 16

MODEL: Sheet 1 PAPERSIZE: 34x22 (in.) DATE: 1/15/2026 TIME: 1:20:25 PM PLTDRV: OHDOT_PDF.pltcfg PENTBL: OHDOT_Pen.tbl USER: Sean.Hayes@dot.ohio.gov WORKSPACE: OHDOTCEv02 WORKSET: 105213 PRODUCT: OpenRoadsDesigner 24.00.00.205
pw:\\ohiodot-pw.bentley.com:ohiodot-pw-02\Documents\01 Active Projects\District 04\Portage\105213400-Engineering\MOT\Sheets\105213_MN001.dgn

ITEM 614 - PORTABLE CHANGABLE MESSAGE SIGN, AS PER PLAN

THE CONTRACTOR SHALL FURNISH, INSTALL, MAINTAIN AND REMOVE, WHEN NO LONGER NEEDED, A CHANGEABLE MESSAGE SIGN. THE SIGN SHALL BE A TYPE SHOWN ON A LIST OF APPROVED PCMS UNITS AVAILABLE ON THE OFFICE OF METERIALS MANAGEMENT WEB PAGE. THE LIST CONTAINS CLASS A AND B UNITS WITH MINIMUM LEGIBILITY DISTANCES OF 800 FEET AND 650 FEET, RESPECTIVELY.

EACH SIGN SHALL BE TRAILER-MOUNTED AND EQUIPPED WITH A FUNCTIONAL DIMMING MECHANISM, TO DIM THE SIGN DURING DARKNESS, AND A TAMPER AND VANDAL PROOF ENCLOSURE. EACH SIGN SHALL BE PROVIDED WITH APPROPRIATE TRAINING AND OPPERATION INSTRUCTIONS TO ENABLE ON-SITE PERSONNEL TO OPERATE AND TROUBLESHOOT THE UNIT. THE SIGN SHALL ALSO BE CAPABLE OF BEING POWERED BY AN ELECTRICAL SERVICE DROP FROM A LOCAL UTILITY COMPANY. THE PCMS SHALL BE DELINEATED IN ACCORDANCE WITH C&MS 614.03.

THE PROBABLE PCMS LOCATIONS AND WORK LIMITS, PLACEMENT, OPERATION, MAINTENANCE AND ALL ACTIVATION OF THE SIGNS BY THE CONTRACTOR SHALL BE AS DIRECTED BY THE ENGINEER. THE PCMS SHALL BE LOCATED IN A HIGHLY VISIBLE POSITION YET PROTECTED FROM TRAFFIC. THE CONTRACTOR SHALL, AT THE DIRECTION OF THE ENGINEER, RELOCATE THE PCMS TO IMPROVE VISIBILITY OR ACCOMMODATE CHANGED CONDITIONS. WHEN NOT IN USE, THE PCMS SHALL BE TURNED OFF. ADDITIONALLY, WHEN NOT IN USE FOR EXTENDED PERIODS OF TIME, THE PCMS SHALL BE TURNED AWAY FROM ALL TRAFFIC.

THE ENGINEER SHALL BE PROVIDED ACCESS TO EACH SIGN UNIT AND SHALL BE PROVIDED WITH APPROPRIATE TRAINING AND OPERATION INSTRUCTIONS TO ENABLE ODOT PERSONNEL TO OPERATE AND TROUBLESHOOT THE UNIT, AND TO REVISE SIGN MESSAGES, IF NECESSARY.

ALL MESSAGES TO BE DISPLAYED ON THE SIGN WILL BE PROVIDED BY THE ENGINEER. A LIST OF ALL REQUIRED PRE-PROGRAMMED MESSAGES WILL BE GIVEN TO THE CONTRACTOR AT THE PROJECT PRECONSTRUCTION CONFERENCE. THE SIGN SHALL HAVE THE CAPABILITY TO STORE UP TO 99 MESSAGES. MESSAGE MEMORY OR PRE-PROGRAMMED DISPLAYS SHALL NOT BE LOST AS A RESULT OF POWER FAILURES TO THE ON-BOARD COMPUTER. THE SIGNS LEGEND SHALL BE CAPABLE OF BEING CHANGED IN THE FIELD. THREE-LINE PRESENTATION FORMATS WITH UP TO SIX MESSAGE PHASES SHALL BE SUPPORTED. PCMS FORMAT SHALL PERMIT THE COMPLETE MESSAGE FOR EACH PHASE TO BE READ AT LEAST TWICE.

THE PCMS SHALL CONTAIN AN ACCURATE CLOCK AND PROGRAMMING LOGIC WHICH WILL ALLOW THE SIGNS TO BE ACTIVATED, DEACTIVATED OR MESSAGES CHANGED AUTOMATICALLY AT DIFFERENT TIMES OF THE DAY FOR DIFFERENT DAYS OF THE WEEK.

(THE PCMS SHALL CONTAIN A CELLULAR TELEPHONE DATA LINK WHICH WILL (IN ACTIVE CELLULAR PHONE AREAS) ALLOW REMOTE SIGN ACTIVATION, MESSAGE CHANGES, MESSAGE ADDITIONS AND REVISIONS TO TIME OF DAY PROGRAMS. THE SYSTEM SHALL ALSO PERMIT VERIFICATION OF CURRENT AND PROGRAMMED MESSAGES. ONE REMOTE DATA INPUT DEVICE (LAPTOP COMPUTER PLUS MODEM OR EQUIVALENT) SHALL BE FURNISHED FOR USE BY THE DISTRICT TRAFFIC ENGINEER, OR EQUIVALENT, AND SHALL BE INSURED AGAINST LEFT.) THE PCMS UNIT SHALL BE MAINTAINED IN GOOD WORKING ORDER BY THE CONTRACTOR IN ACCORDANCE WITH THE PROVISIONS OF C&MS 614.07. THE CONTRACTOR SHALL, PRIOR TO ACTIVATING THE UNIT, MAKE ARRANGEMENTS, WITH AN AUTHORIZED SERVICE AGAENT FOR THE PCMS, TO ASSURE PROMPT SERVICE IN THE EVENT OF FAILURE. ANY FAILURE SHALL NOT RESULT IN THE SIGN BEING OUT OF SERVICE FOR MORE THAN 12 HOURS, INCLUDING WEEKENDS. FAILURE TO COMPLY MAY RESULT IN AN ORDER TO STOP WORK AND OPEN ALL TRAFFIC LANES AND/OR IN THE DEPARTMENT TAKING APPROPRIATE ACTION TO SAFELY CONTROL TRAFFIC. THE ENTIRE COST TO CONTROL TRAFFIC, ACCURED BY THE DEPARTMENT DUE TO THE CONTRACTOR'S NONCOMPLIANCE, WILL BE DEDUCTED FROM MONEYS DUE, OR TO BECOME DUE THE CONTRACTOR ON HIS CONTRACT.

THE CONTRACTOR SHALL BE RESPONSIBLE FOR 24-HOUR-PER-DAY OPERATION AND MAINTENANCE OF THESE SIGNS ON THE PROJECT FOR THE DURATION OF THE PHASES WHEN THE PLAN REQUIRES THEIR USE.

PAYMENT FOR THE ABOVE DESCRIBED ITEM SHALL BE AT THE CONTRACT UNIT PRICE. PAYMENT SHALL INCULDE ALL LABOR, MATERIALS, EQUIPMENT, FUELS, LUBRICATING OILS, SOFTWARE, HARDWARE AND INCIDENTALS TO PERFORM THE ABOVE DESCRIBED WORK.

614 PORTABLE CHANGEABLE MESSAGE SIGN,
AS PER PLAN, 8 SIGN MONTH
ASSUMING 2 SIGNS FOR 4 MONTHS

ITEM 614, LAW ENFORCEMENT OFFICER (WITH PATROL CAR) FOR ASSISTANCE DURING CONSTRUCTION OPERATIONS

USE OF LAW ENFORCEMENT OFFICERS (LEOS) BY CONTRACTORS OTHER THAN THE USES SPECIFIED BELOW SHALL NOT BE PERMITTED AT PROJECT COST NOR TIME COMPENSATION. LEOS SHOULD NOT BE USED WHERE THE OMUTCD INTENDS THAT FLAGGERS BE USED.

IN ADDITION TO THE REQUIREMENTS OF C&MS 614 AND THE OMUTCD, A UNIFORMED LEO WITH AN OFFICIAL PATROL CAR (CAR WITH TOP-MOUNTED EMERGENCY FLASHING LIGHTS AND COMPLETE MARKINGS OF THE APPROPRIATE LAW ENFORCEMENT AGENCY) SHALL BE PROVIDED FOR THE FOLLOWING TRAFFIC CONTROL TASKS:

DURING THE ENTIRE ADVANCE PREPARATION AND CLOSURE SEQUENCE WHERE COMPLETE BLOCKAGE OF TRAFFIC IS REQUIRED.

DURING A TRAFFIC SIGNAL INSTALLATION WHEN IMPACTING THE NORMAL FUNCTION OF THE SIGNAL OR THE FLOW OF TRAFFIC, OR WHEN TRAFFIC NEEDS TO BE DIRECTED THROUGH AN ENERGIZED TRAFFIC SIGNAL CONTRARY TO THE SIGNAL DISPLAY (E.G., DIRECTING MOTORISTS THROUGH A RED LIGHT).

DURING PERIODS WHERE TRAFFIC NEEDS TO BE DIRECTED CONTRARY TO A TRAFFIC CONTROL DEVICE (FLAGGER, SIGN [E.G. STOP SIGN, STREET OR HIGHWAY SIGNS, ETC], SIGNAL OR OTHER DEVICE USED TO REGULATE, WARN OR GUIDE TRAFFIC). TRAFFIC IN THIS INSTANCE INCLUDES VEHICULAR, PEDESTRIAN AND/OR SHARED USE PATH USERS.

IN ADDITION TO THE REQUIREMENT OF C&MS 614 AND THE OMUTCD, A UNIFORMED LEO WITH AN OFFICIAL PATROL CAR (CAR WITH TOP-MOUNTED EMERGENCY FLASHING LIGHTS AND COMPLETE MARKINGS OF THE APPROPRIATE LAW ENFORCEMENT AGENCY) SHOULD BE PROVIDED FOR THE FOLLOWING TRAFFIC CONTROL TASKS AS APPROVED BY THE ENGINEER:

FOR LANE CLOSURES THAT MEET ALL OF THE CRITERIA LISTED BELOW: DURING INITIAL SET-UP PERIODS, TEAR DOWN PERIODS, SUBSTANTIAL SHIFTS OF A CLOSURE POINT OR WHEN NEW LANE CLOSURE ARRANGEMENTS ARE INITIATED FOR LONG-TERM LANE CLOSURES/SHIFTS (FOR THE FIRST AND LAST DAY OF MAJOR CHANGES IN TRAFFIC CONTROL SETUP).

CRITERIA

. ON A MULTI-LANE DIVIDED INTERSTATE, OTHER FREEWAY OR EXPRESSWAY; AND
. AN AUTHORIZED SPEED LIMIT OF 45 MPH OR GREATER THAT IS IN EFFECT AT THE TIME OF THE OPERATION; AND,
. AADT OF 50,000 (OR AADT OF 30,000 WITH 25% OR HIGHER PERCENT TRUCKS)

IN GENERAL, LEOS SHOULD BE POSITIONED IN ADVANCE OF AND ON THE SAME SIDE AS THE LANE RESTRICTION (OR AT THE POINT OF ROAD CLOSURE), AND TO MANUALLY CONTROL TRAFFIC MOVEMENTS THROUGH SIGNALIZED INTERSECTIONS AND/OR IN CONTRARY TO OTHER TRAFFIC CONTROL DEVICE IN WORK ZONES.

LEOS SHOULD NOT FORGO THEIR TRAFFIC CONTROL RESPONSIBILITIES TO APPREHEND MOTORISTS FOR ROUTINE TRAFFIC VIOLATIONS. HOWEVER, IF A MOTORIST'S ACTIONS ARE CONSIDERED TO BE RECKLESS, THEN PURSUIT OF THE MOTORIST IS APPROPRIATE.

THE LEOS WORK AT THE DIRECTION OF THE CONTRACTOR. THE CONTRACTOR IS RESPONSIBLE FOR SECURING THE SERVICES OF THE LEOS WITH THE APPROPRIATE AGENCIES AND COMMUNICATING THE INTENTIONS OF THE PLANS WITH RESPECT TO DUTIES OF THE LEOS. THE ENGINEER SHALL HAVE FINAL CONTROL OVER THE LEOS' DUTIES AND PLACEMENT, AND WILL RESOLVE ANY ISSUES THAT MAY ARISE BETWEEN THE TWO PARTIES.

ENSURE PROVIDED LEOS HAVE BEEN TRAINED APPROPRIATE TO THE JOB DECISIONS THEY ARE REQUIRED TO MAKE WHILE ON THE PROJECT, IN ACCORDANCE WITH C&MS 614.03.

THE LEO SHALL REPORT IN TO THE CONTRACTOR PRIOR TO THE START OF THE SHIFT, IN ORDER TO RECEIVE INSTRUCTIONS REGARDING SPECIFIC WORK ASSIGNMENTS DURING HIS/HER SHIFT. THE SHIFT DURATION SHALL NOT BE LESS THAN THE LEO'S MINIMUM SHOW-UP TIME REQUIRED BY THEIR LAW ENFORCEMENT AGENCY.THE LEO IS EXPECTED TO STAY AT THE PROJECT SITE FOR THE ENTIRE DURATION OF HIS/HER SHIFT. THE LEO SHALL REPORT TO THE CONTRACTOR AT THE END OF HIS/HER SHIFT.SHOULD IT BE NECESSARY TO LEAVE THE PROJECT SITE, THE LEO SHALL NOTIFY THE ENGINEER. THE CONTRACTOR SHALL PROVIDE THE LEO WITH A TWO-WAY COMMUNICATION DEVICE THAT SHALL BE RETURNED TO THE CONTRACTOR AT THE END OF HIS/HER SHIFT.

LEOS (WITH PATROL CAR) REQUIRED BY THE TRAFFIC MAINTENANCE TASKS ABOVE SHALL BE PAID FOR ON A UNIT PRICE (HOURLY) BASIS UNDER ITEM 614, LAW ENFORCEMENT OFFICER (WITH PATROL CAR) FOR ASSISTANCE. THE FOLLOWING ESTIMATED QUANTITIES HAVE BEEN CARRIED TO THE GENERAL SUMMARY.

ITEM 614, LAW ENFORCEMENT OFFICER WITH PATROL CAR
FOR ASSISTANCE 350 HOURS

THE HOURS PAID SHALL INCLUDE ANY MINIMUM SHOW-UP TIME REQUIRED BY THE LAW ENFORCEMENT AGENCY INVOLVED.

ANY ADDITIONAL COSTS (ADMINISTRATIVE OR OTHERWISE) INCURRED BY THE CONTRACTOR TO OBTAIN THE SERVICES OF A LEO ARE INCLUDED WITH THE BID UNIT PRICE FOR ITEM 614, LAW ENFORCEMENT OFFICER WITH PATROL CAR FOR ASSISTANCE.

ITEM 614 - MAINTAINING TRAFFIC (LANES OPEN DURING HOLIDAYS OR SPECIAL EVENTS)

NO WORK SHALL BE PERFORMED AND ALL EXISTING LANES SHALL BE OPEN TO TRAFFIC DURING THE FOLLOWING DESIGNATED HOLIDAYS OR SPECIAL EVENTS:

NEW YEAR'S (OBSERVED)
MEMORIAL DAY
FOURTH OF JULY (OBSERVED)
LABOR DAY
GENERAL/REGULAR ELECTION DAY (NOV)
THANKSGIVING
CHRISTMAS (OBSERVED)

THE PERIOD OF TIME THAT THE LANES ARE TO BE OPEN DEPENDS ON THE DAY OF THE WEEK ON WHICH THE HOLIDAY OR SPECIAL EVENT FALLS. THE FOLLOWING SCHEDULE SHALL BE USED TO DETERMINE THIS PERIOD:

DAY OF HOLIDAY OR SPECIAL EVENT — TIME ALL LANES MUST BE OPEN TO TRAFFIC

SUNDAY 12:00N FRIDAY THROUGH 6:00 AM MONDAY
MONDAY 12:00N FRIDAY THROUGH 6:00 AM TUESDAY
TUESDAY 12:00N MONDAY THROUGH 6:00 AM WEDNESDAY
TUESDAY (GEN./REG. ELECTION)
5:00 AM TUESDAY THROUGH 12:00 AM WEDNESDAY
WEDNESDAY 12:00N TUESDAY THROUGH 6:00 AM THURSDAY
THURSDAY 12:00N WEDNESDAY THROUGH 6:00 AM FRIDAY
THURSDAY (THANKSGIVING ONLY)
6:00 AM WEDNESDAY THROUGH 6:00 AM MONDAY
FRIDAY 12:00N THURSDAY THROUGH 6:00 AM MONDAY
SATURDAY 12:00N THROUGH 6:00 AM MONDAY

DURING THE SAME PERIODS, MAINTAIN PEDESTRIAN ACCESS IF PEDESTRIAN ACCESS WAS PRESENT PRIOR TO CONSTRUCTION.

[NEWLY CONSTRUCTED LANE ADDITIONS, ONCE COMPLETED AND INITIALLY OPENED TO TRAFFIC, SHALL BE OPEN TO TRAFFIC DURING ALL SUBSEQUENT DESIGNATED HOLIDAYS AND SPECIAL EVENTS, AND RELATED PERIODS OF TIME, SPECIFIED ABOVE.]

SHOULD THE CONTRACTOR FAIL TO MEET ANY OF THESE REQUIREMENTS, THE CONTRACTOR SHALL BE ASSESSED A DISINCENTIVE PER THE LANE VALUE CONTRACT (PN 127).

LANE VALUE CONTRACT

DESCRIPTION OF CRITICAL LANE TO BE MAINTAINED	RESTRICTED TIME PERIOD	TIME UNIT	DISINCENTIVE $ PER TIME PERIOD
SR-14	AS PER NOTE ABOVE	PER LANE/ PER MINUTE	$50
SR-43	AS PER NOTE ABOVE	PER LANE/ PER MINUTE	$50

MAINTENANCE OF TRAFFIC NOTES

DESIGN AGENCY

DESIGNER CLG
REVIEWER BC 10-24-24
PROJECT ID 105213
SHEET P.7 TOTAL 16

MODEL: Sheet 2 PAPERSIZE: 34x22 (in.) DATE: 1/15/2026 TIME: 1:20:26 PM PLTDRV: OHDOT_PDF.pltcfg PENTBL: OHDOT_Pen.tbl USER: Sean.Hayes@dot.ohio.gov WORKSPACE: OHDOTCEv02 WORKSET: 105213 PRODUCT: OpenRoadsDesigner 24.00.00.205
pw:\\ohiodot-pw.bentley.com:ohiodot-pw-02\Documents\01 Active Projects\District 04\Portage\105213\400-Engineering\MOT\Sheets\105213_MN001.dgn

SHEET NUM.													PART.		ITEM	ITEM EXT	GRAND TOTAL	UNIT	DESCRIPTION	SEE SHEET NO.
					P.4	P.5	P.6	P.7	P.10	P.11	P.12	P.16	01/NHS/STRE	02/NHS/STRE						
																			ROADWAY	
										16			16		202	23500	16	SY	WEARING COURSE REMOVED	
											1,368			1,368	202	30000	1,368	SF	WALK REMOVED	
											141			141	202	32000	141	FT	CURB REMOVED	
					17									17	203	10000	17	CY	EXCAVATION (FOR PAVEMENT REPAIR)	
					242								242		209	60200	242	STA	LINEAR GRADING	
									23				23		209	72000	23	STA	PREPARING SUBGRADE FOR SHOULDER PAVING	
											120			120	608	10000	120	SF	4" CONCRETE WALK	
											1,185			1,185	608	52001	1,185	SF	CURB RAMP, AS PER PLAN	P.5
						5							5		623	39501	5	EACH	MONUMENT ASSEMBLY ADJUSTED TO GRADE, AS PER PLAN	P.5
						LS							LS		SPECIAL	69091000	LS		AS-BUILT CONSTRUCTION PLANS	P.5
																			EROSION CONTROL	
													3,000		832	30000	3,000	EACH	EROSION CONTROL	
																			DRAINAGE	
						150								150	SPECIAL	20270110	150	FT	PIPE CLEANOUT, 24" AND UNDER	P.5
						2							2		611	98630	2	EACH	CATCH BASIN ADJUSTED TO GRADE	
						1								1	611	98634	1	EACH	CATCH BASIN RECONSTRUCTED TO GRADE	
						31							31		611	99655	31	EACH	MANHOLE ADJUSTED TO GRADE, AS PER PLAN	P.5
						800							800		SPECIAL	61199820	800	LB	MISCELLANEOUS METAL	P.5
																			PAVEMENT	
					1,200									1,200	251	01000	1,200	SY	PARTIAL DEPTH PAVEMENT REPAIR (441) (LONGITUDINAL)	
					200									200	251	01000	200	SY	PARTIAL DEPTH PAVEMENT REPAIR (441) (TRANSVERSE)	
					200									200	253	01000	200	SY	PAVEMENT REPAIR	
										66,567			66,567		254	01000	66,567	SY	PAVEMENT PLANING, ASPHALT CONCRETE (T=1.5")	
									75,384	1,697			77,081		254	01000	77,081	SY	PAVEMENT PLANING, ASPHALT CONCRETE (T=2")	
					17									17	304	20000	17	CY	AGGREGATE BASE (FOR PAVEMENT REPAIR)	
									6,834	6,146			12,980		407	20000	12,980	GAL	NON-TRACKING TACK COAT	
									216	1,822			2,038		408	10001	2,038	GAL	PRIME COAT, AS PER PLAN	P.4
					3								3		411	10000	3	CY	STABILIZED CRUSHED AGGREGATE	
										8			8		441	70500	8	CY	ASPHALT CONCRETE SURFACE COURSE, TYPE 1, (449), (DRIVEWAYS)	
									4,221	2,869			7,090		442	10000	7,090	CY	ASPHALT CONCRETE SURFACE COURSE, 12.5 MM, TYPE A (446)	
											63			63	609	26000	63	FT	CURB, TYPE 6	
									15	127			142		617	10101	142	CY	COMPACTED AGGREGATE, AS PER PLAN	P.4
																			WATER WORK	
						17							17		638	10800	17	EACH	VALVE BOX ADJUSTED TO GRADE	
																			TRAFFIC CONTROL	
												5.03	5.03		646	10010	5.03	MILE	EDGE LINE, 6"	
												5.41	5.41		646	10110	5.41	MILE	LANE LINE, 6"	
												5.95	5.95		646	10200	5.95	MILE	CENTER LINE	
												79	79		646	10300	79	FT	CHANNELIZING LINE, 8"	
												7,460	7,460		646	10310	7,460	FT	CHANNELIZING LINE, 12"	
												817	817		646	10400	817	FT	STOP LINE	
												604	604		646	10520	604	FT	CROSSWALK LINE, 24"	
												947	947		646	10600	947	FT	TRANSVERSE/DIAGONAL LINE	
												194	194		646	10800	194	SF	ISLAND MARKING	
												137	137		646	20300	137	EACH	LANE ARROW	
												14	14		646	20400	14	EACH	WORD ON PAVEMENT, 72"	
												443	443		646	20504	443	FT	DOTTED LINE, 6"	

GENERAL SUMMARY

DESIGN AGENCY

DESIGNER
CLG

REVIEWER
MC 10-24-24

PROJECT ID
105213

SHEET P.8 TOTAL 16

POR-14/43-1.74/VAR

MODEL: Sheet PAPERSIZE: 34x22 (in.) DATE: 1/15/2026 TIME: 1:20:32 PM PLTDRV: OHDOT_PDF.pltcfg PENTBL: OHDOT_Pen.tbl USER: Sean.Hayes@dot.ohio.gov WORKSPACE: OHDOTCEv02 WORKSET: 105213 PRODUCT: OpenRoadsDesigner 24.00.00.205
pw:\\ohiodot-pw.bentley.com:ohiodot-pw-02\Documents\01 Active Projects\District 04\Portage\105213\400-Engineering\Roadway\Sheets\105213_GG001.dgn

SHEET NUM.												PART.		ITEM	ITEM EXT	GRAND TOTAL	UNIT	DESCRIPTION	SEE SHEET NO.
				P.4	P.5	P.6	P.7	P.10	P.11	P.12	P.16	01/NHS/STRE	02/NHS/STRE						
																		MAINTENANCE OF TRAFFIC	
							350					350		614	11110	350	HOUR	LAW ENFORCEMENT OFFICER WITH PATROL CAR FOR ASSISTANCE	
						6						6		614	12460	6	EACH	WORK ZONE MARKING SIGN	
						10						10		614	13000	10	CY	ASPHALT CONCRETE FOR MAINTAINING TRAFFIC	
							8					8		614	18601	8	SNMT	PORTABLE CHANGEABLE MESSAGE SIGN, AS PER PLAN	P.7
						5.41						5.41		614	20010	5.41	MILE	WORK ZONE LANE LINE, CLASS I, 6"	
						5.41						5.41		614	20560	5.41	MILE	WORK ZONE LANE LINE, CLASS III, 6", 642 PAINT	
						5.95						5.95		614	21000	5.95	MILE	WORK ZONE CENTER LINE, CLASS I	
						5.95						5.95		614	21550	5.95	MILE	WORK ZONE CENTER LINE, CLASS III, 642 PAINT	
						5.03						5.03		614	22360	5.03	MILE	WORK ZONE EDGE LINE, CLASS III, 6", 642 PAINT	
						79						79		614	23000	79	FT	WORK ZONE CHANNELIZING LINE, CLASS I, 8"	
						7,460						7,460		614	23010	7,460	FT	WORK ZONE CHANNELIZING LINE, CLASS I, 12"	
						79						79		614	23680	79	FT	WORK ZONE CHANNELIZING LINE, CLASS III, 8", 642 PAINT	
						7,460						7,460		614	23690	7,460	FT	WORK ZONE CHANNELIZING LINE, CLASS III, 12", 642 PAINT	
						817						817		614	26000	817	FT	WORK ZONE STOP LINE, CLASS I	
						817						817		614	26610	817	FT	WORK ZONE STOP LINE, CLASS III, 642 PAINT	
																		INCIDENTALS	
												LS		614	11000	LS		MAINTAINING TRAFFIC	
												12		619	16010	12	MNTH	FIELD OFFICE, TYPE B	
												LS		623	10000	LS		CONSTRUCTION LAYOUT STAKES AND SURVEYING	
												LS		624	10000	LS		MOBILIZATION	

GENERAL SUMMARY

DESIGN AGENCY

DESIGNER
CLG

REVIEWER
MC 10-24-24

PROJECT ID
105213

SHEET P.9 TOTAL 16

POR-14/43-1.74/VAR

MODEL: Sheet 2 PAPERSIZE: 34x22 (in.) DATE: 1/15/2026 TIME: 1:20:32 PM PLTDRV: OHDOT_PDF.pltcfg PENTBL: OHDOT_Pen.tbl USER: Sean.Hayes@dot.ohio.gov WORKSPACE: OHDOTCEv02 WORKSET: 105213 PRODUCT: OpenRoadsDesigner 24.00.00.205
pw:\\ohiodot-pw.bentley.com:ohiodot-pw-02\Documents\01 Active Projects\District 04\Portage\105213\400-Engineering\Roadway\Sheets\105213_GG001.dgn

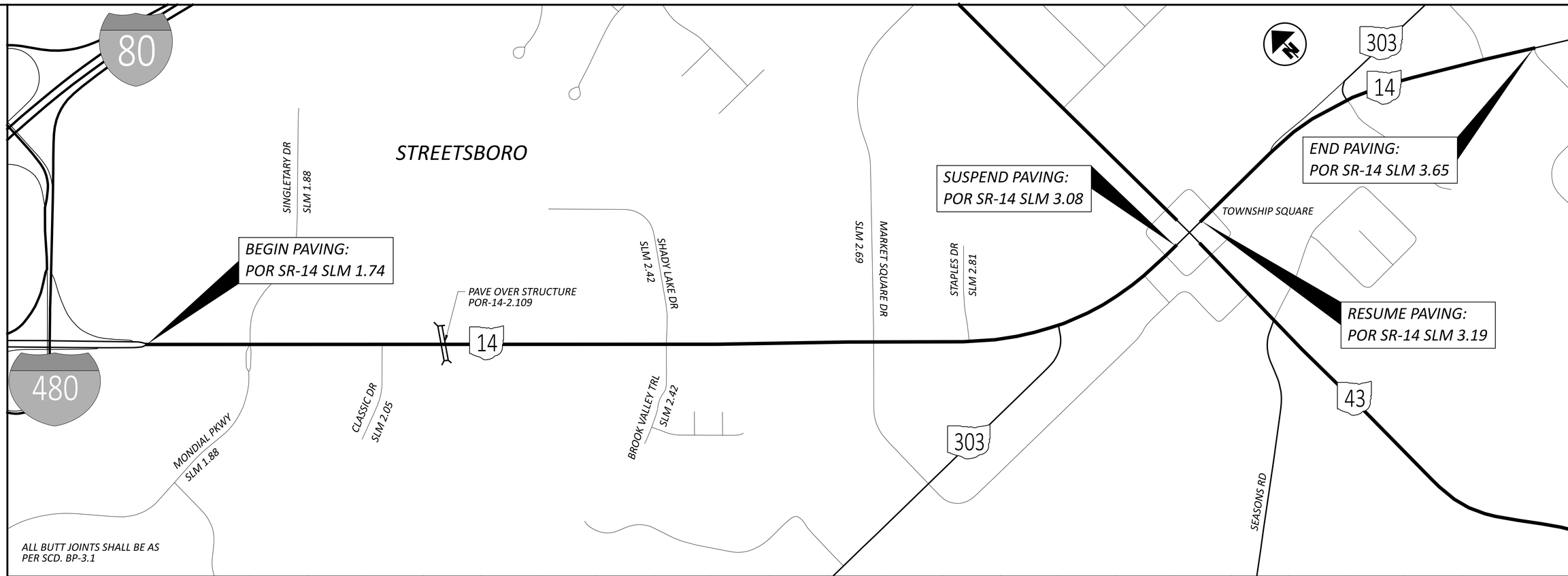

SLM RANGE			TYPICAL SECTION	SIDE	DISTANCE (D)	AVERAGE WIDTH (W)	SURFACE AREA (A) A=DxW/9	CADD GENERATED AREA	PAVEMENT PLANING, ASPHALT CONCRETE (T=2")	PAVEMENT PLANING, ASPHALT CONCRETE (T=1.5")	NON-TRACKING TACK COAT @ 0.09 GAL/SY	ASPHALT CONCRETE SURFACE COURSE, 12.5 MM, TYPE A (446) (T=2")	ASPHALT CONCRETE SURFACE COURSE, 12.5 MM, TYPE A (446) (T=1.5")	PRIME COAT, AS PER PLAN @ 0.40 GAL/SY	COMPACTED AGGREGATE, AS PER PLAN (T = 1" AVG.)	PREPARING SUBGRADE FOR SHOULDER PAVING	NON-TRACKING TACK COAT @ 0.09 GAL/SY (SAFETY EDGE)	ASPHALT CONCRETE SURFACE COURSE, 12.5 MM, TYPE A (446) (SAFETY EDGE)
									254	254	407	442	442	408	617	209	407	442
					FT	FT	SY	SY	SY	SY	GAL	CY	CY	GAL	CY	STA	GAL	CY
SR 14																		
1.74	TO	1.78	1	LT/RT	211.20	80.00	1877.33		1877.33		168.96	104.30		37.55	2.61	2.11	8.45	5.63
1.78	TO	1.83	2	LT/RT	264.00	82.00	2405.33		2405.33		216.48	133.63						
1.83	TO	1.97	2	LT/RT	739.20	68.00	5585.07		5585.07		502.66	310.28						
1.97	TO	2.13	3	LT/RT	844.80	78.00	7321.60		7321.60		658.94	406.76		75.09	5.21	8.45	16.90	11.26
2.13	TO	2.18	2	LT/RT	264.00	80.00	2346.67		2346.67		211.20	130.37						
2.18	TO	2.40	3	LT/RT	1161.60	83.00	10712.53		10712.53		964.13	595.14		103.25	7.17	11.62	23.23	15.49
2.40	TO	2.55	2	LT/RT	792.00	80.00	7040.00		7040.00		633.60	391.11						
2.55	TO	2.58	2	LT/RT	158.40	66.00	1161.60		1161.60		104.54	64.53						
2.58	TO	2.63	2	LT/RT	264.00	80.00	2346.67		2346.67		211.20	130.37						
2.63	TO	2.70	2	LT/RT	369.60	70.00	2874.67		2874.67		258.72	159.70						
2.70	TO	2.99	2	LT/RT	1531.20	62.00	10548.27		10548.27		949.34	586.01						
2.99	TO	3.03	2	LT/RT	211.20	72.00	1689.60		1689.60		152.06	93.87						
3.03	TO	3.08	2	LT/RT	264.00	84.00	2464.00		2464.00		221.76	136.89						
3.19	TO	3.21	2	LT/RT	105.60	74.00	868.27		868.27		78.14	48.24						
3.21	TO	3.29	2	LT/RT	422.40	74.00	3473.07		3473.07		312.58	192.95						
3.29	TO	3.34	2	LT/RT	264.00	81.50	2390.67		2390.67		215.16	132.81						
3.34	TO	3.48	2	LT/RT	739.20	62.00	5092.27		5092.27		458.30	282.90						
3.48	TO	3.65	2	LT/RT	897.6	52.00	5186.13		5186.13		466.75	288.12						
								SUBTOTALS	75383.73	0.00	6784.54	4187.99		215.89	14.99	22.18	48.58	32.38
								TOTALS CARRIED TO GENERAL SUMMARY	75384	0	6785	4188		216	15	23	49	33

PAVEMENT CALCULATIONS

DESIGN AGENCY

DESIGNER
CLG

REVIEWER
BC 10-24-24

PROJECT ID
105213

SHEET P.10 TOTAL 16

POR-14/43-1.74/VAR

MODEL: Sheet 1 PAPERSIZE: 34x22 (in.) DATE: 1/15/2026 TIME: 1:20:37 PM PLTDRV: OHDOT_PDF.pltcfg PENTBL: OHDOT_Pen.tbl USER: Sean.Hayes@dot.ohio.gov WORKSPACE: OHDOTCEv02 WORKSET: 105213 PRODUCT: OpenRoadsDesigner 24.00.00.205
pw:\\ohiodot-pw.bentley.com:ohiodot-pw-02\Documents\01 Active Projects\District 04\Portage\105213\400-Engineering\Roadway\Sheets\105213_GC001.dgn

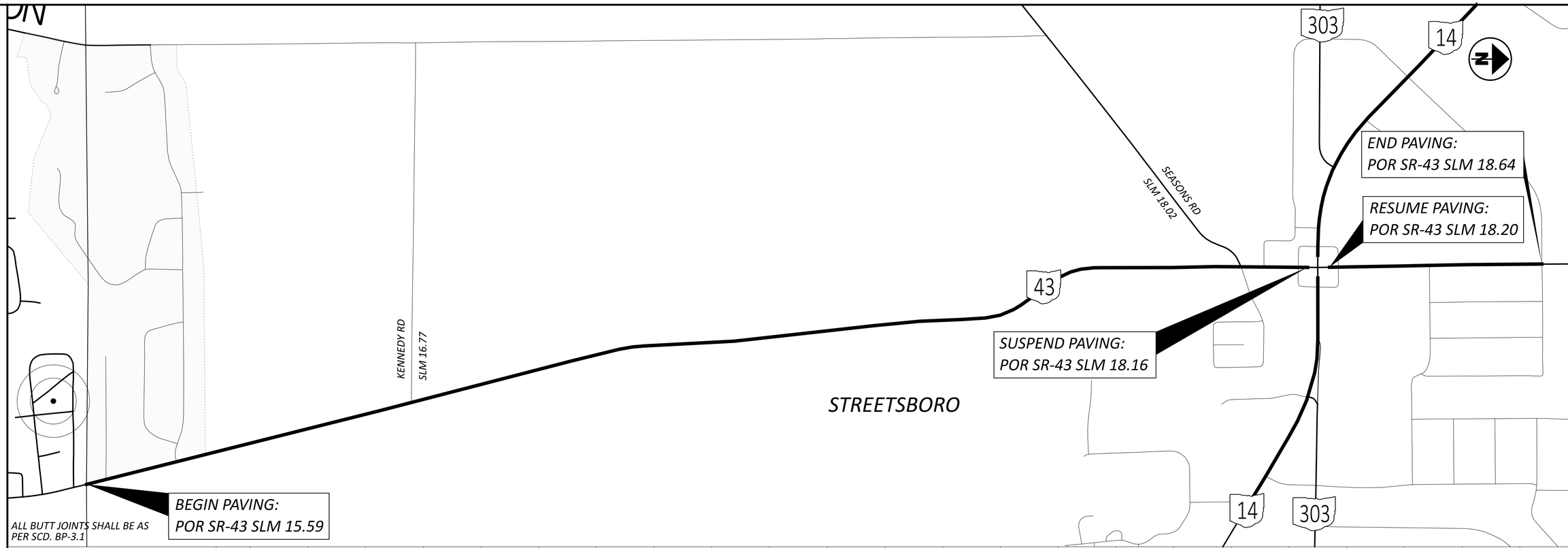

PAVEMENT CALCULATIONS

SLM RANGE			TYPICAL SECTION	SIDE	DISTANCE (D)	AVERAGE WIDTH (W)	SURFACE AREA (A) A=DxW/9	CADD GENERATED AREA	254 PAVEMENT PLANING, ASPHALT CONCRETE (T=2")	254 PAVEMENT PLANING, ASPHALT CONCRETE (T=1.5")	407 NON-TRACKING TACK COAT @ 0.09 GAL/SY	442 ASPHALT CONCRETE SURFACE COURSE, 12.5 MM, TYPE A (446) (T=2")	442 ASPHALT CONCRETE SURFACE COURSE, 12.5 MM, TYPE A (446) (T=1.5")	408 PRIME COAT, AS PER PLAN @ 0.40 GAL/SY	617 COMPACTED AGGREGATE, AS PER PLAN (T = 1" AVG.)	202 WEARING COURSE REMOVED	441 ASPHALT CONCRETE SURFACE COURSE, TYPE 1, (449), (DRIVEWAYS) (T=2")	441 ASPHALT CONCRETE SURFACE COURSE, TYPE 1, (449), (DRIVEWAYS) (T=1.5")
					FT	FT	SY	SY	SY	SY	GAL	CY	CY	GAL	CY	SY	CY	CY
SR 43																		
15.59	TO	15.84	4	LT/RT	1320.00	30.00	4400.00			4400.00	396.00		183.33	234.67	16.30			
15.84	TO	17.53	4	LT/RT	8923.20	30.00	29744.00			29744.00	2676.96		1239.33	1586.35	110.16			
17.53	TO	17.65	5	LT/RT	633.60	46.00	3238.40			3238.40	291.46		134.93					
17.65	TO	17.88	5	LT/RT	1214.40	31.00	4182.93			4182.93	376.46		174.29					
17.88	TO	17.94	5	LT/RT	316.80	33.00	1161.60			1161.60	104.54		48.40					
17.94	TO	18.03	5	LT/RT	475.20	36.00	1900.80			1900.80	171.07		79.20					
18.03	TO	18.09	5	LT/RT	316.80	65.00	2288.00			2288.00	205.92		95.33					
18.09	TO	18.16	5	LT/RT	369.60	72.00	2956.80			2956.80	266.11		123.20					
18.20	TO	18.21	5	LT/RT	52.80	63.00	369.60			369.60	33.26		15.40					
18.21	TO	18.64	5	LT/RT	2270.40	61.00	15388.27			15388.27	1384.94		641.18					
INTERSECTIONS																		
SR 14 INTERSECTIONS					VARIES	10.00		1697.00	1697.00		152.73	94.28						
SR 43 INTERSECTIONS					VARIES	10.00		936.00		936.00	84.24		39.00					
DRIVEWAYS																		
SR 14 INTERSECTIONS					VARIES	2.00					0.18					2.00		1.00
SR 43 INTERSECTIONS					VARIES	2.00					1.22					13.60	6.80	
								SUBTOTALS	1697.00	66566.40	6145.11	94.28	2773.60	1821.01	126.46	15.60	6.80	1.00
								TOTALS CARRIED TO GENERAL SUMMARY	1697	66567	6146	95	2774	1822	127	16	7	1

DESIGN AGENCY

DESIGNER
CLG

REVIEWER
MC 10-24-24

PROJECT ID
105213

SHEET P.11 TOTAL 16

POR-14/43-1.74/VAR

MODEL: Sheet 2 PAPERSIZE: 34x22 (in.) DATE: 1/15/2026 TIME: 1:20:38 PM PLTDRV: OHDOT_PDF.pltcfg PENTBL: OHDOT_Pen.tbl USER: Sean.Hayes@dot.ohio.gov WORKSPACE: OHDOTCEv02 WORKSET: 105213 PRODUCT: OpenRoadsDesigner 24.00.00.205
pw:\\ohiodot-pw.bentley.com:ohiodot-pw-02\Documents\01 Active Projects\District 04\Portage\105213\400-Engineering\Roadway\Sheets\105213_GC001.dgn

CURB RAMP SUB-SUMMARY

MAIN ROUTE	INTERSECTING ROUTE	DESIGN SHEET	QUADRANT RL=REAR LT, RR=REAR RT FL=FWD LT, FR=FWD RT (LOOKING UPSTATION)	SUGGESTED CURB RAMP TYPE (SCD BP-7.1, SHEET 2/3)	202 WALK REMOVED SF	202 CURB REMOVED FT	203 EXCAVATION (FOR WALK OR CURB RAMP INSTALLATION) CY	608 4" CONCRETE WALK SF	608 CURB RAMP, AS PER PLAN SF		609 CURB, TYPE 6 FT	611 MANHOLE ADJUSTED TO GRADE EACH	625 PULL BOX, MISC.: ADJUSTED TO GRADE EACH	638 VALVE BOX ADJUSTED TO GRADE EACH	609 CURB, TYPE 7, AS PER PLAN FT			COMMENTS
S.R. 14	Mondial Pkwy		FR	A2/C2	92.00				92.00									Only need to fix landing
S.R. 14	Singletary Dr		RL	A2/C2	112.00	5.00			112.00		5.00							
S.R. 14	Shady Lake		RL	A2/C2	84.00	5.00			84.00		5.00							
S.R 14	Staples Dr		RL	A2-1	85.00	5.00			85.00		5.00							Waiver for Ramp Cross Slope
			FL	A2-1	48.00	5.00			48.00		5.00							
S.R. 14	S.R. 43		RR															Included in Part 2
			FR															Included in Part 2
S.R 14	Ranch Rd		RR															Included in Part 3
			FR															Included in Part 3
S.R. 14	Superior Ave		RL	A1/C1	196.00	20.00			196.00		10.00							Both ramps together
			FL	B2	190.00	21.00			190.00		10.00							
			RR2	A2-1	26.00	13.00			16.00									Need detectable warning full width
S.R. 14	Portage Pointe Dr		FR	A2-1	40.00			20.00	20.00									Landing and Walk to fix tie-in
S.R. 43	Colony Dr		FR	A2-1	65.00	8.00			65.00		5.00							
S.R. 43	Russel Dr		RR	A2-1	187.00	14.00		50.00	144.00		10.00							
			FR	A2-1	183.00	15.00		50.00	73.00		8.00							
			RL	A2-1	35.00	17.00			35.00									Need detectable warning full width
S.R. 43	Market Square Dr		FR	A2-1	25.00	13.00			25.00									Need detectable warning full width
				SUBTOTALS	1368.00	141.00	0.00	120.00	1185.00	0.00	63.00	0.00	0.00	0.00	0.00	0.00	0.00	
				TOTALS CARRIED TO GENERAL SUMMARY	1368	141	0	120	1185	0	63	0	0	0	0	0	0	

POR-14/43-1.74/VAR

MODEL: Curb Ramp SubSummary PAPERSIZE: 34x22 (in.) DATE: 1/15/2026 TIME: 1:20:43 PM PLTDRV: OHDOT_PDF.pltcfg PENTBL: OHDOT_Pen.tbl USER: Sean.Hayes@dot.ohio.gov WORKSPACE: OHDOTCEv02 WORKSET: 105213 PRODUCT: OpenRoadsDesigner 24.00.00.205
pw:\\ohiodot-pw.bentley.com:ohiodot-pw-02\Documents\01 Active Projects\District 04\Portage\105213\400-Engineering\Roadway\Sheets\105213_GS002.dgn

DESIGN AGENCY

DESIGNER
SPH

REVIEWER
CG 03-14-25

PROJECT ID
105213

SHEET P.12 TOTAL 16

MAIN ROUTE	INTERSECTION ROUTE	DESIGN SHEET	QUADRANT	SUGGESTED CURB RAMP TYPE	DIMENSIONS (FEET)						
					A	B	C	D	E	F	G
S.R. 14	Mondial Pkwy		FR	A2/C2	8	4		4	5	4	
S.R. 14	Singletary		RL	A2/C2	5	7		2	6	6	
S.R. 14	Shady Lake		RL	A2/C2	14				6		
S.R. 14	Staples Dr		RL	A2-1	12		4				
			FL	A2-1	17		5				
S.R. 14	S.R. 43		RR		SEE PART 2						
			FR		SEE PART 2						
S.R. 14	Ranch Rd		RR		SEE PART 3						
			FR		SEE PART 3						
S.R. 14	Superior Ave		RL	A1/C1	9		7		20		
			FL	B2	6		22				
			RR2	A2-1			13				
S.R. 14	Portage Pointe Dr		FR	A2-1	9	4	4				
S.R. 43	Colony Dr		FR	A2-1	13	0	5				
S.R. 14	Russel Dr		RR	A2/C2	8	5		7	5	7	
			FR	A2/C2	8	5		7	5	7	
			RL	A2/C2	8	5		7	5	7	
S.R. 43	Market Square Dr		FR	A2/C2					13		

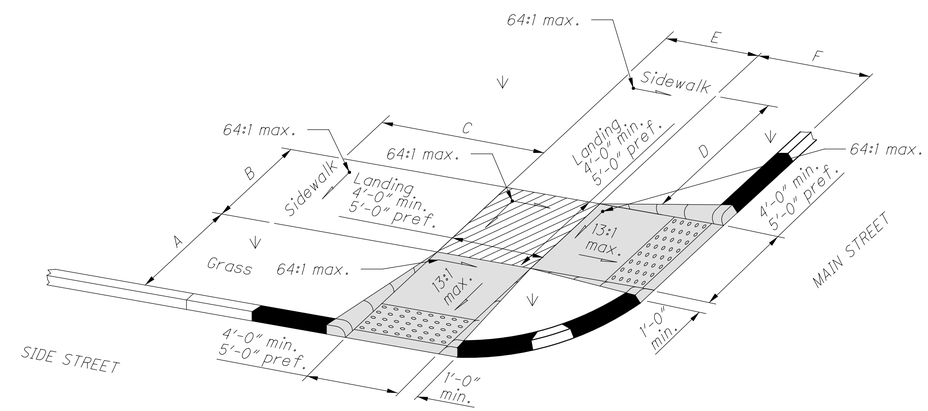

Type A2 - 5

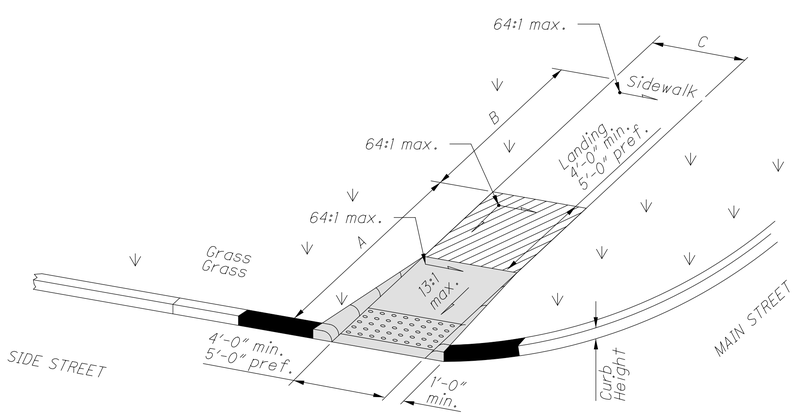

Type A2 - 1

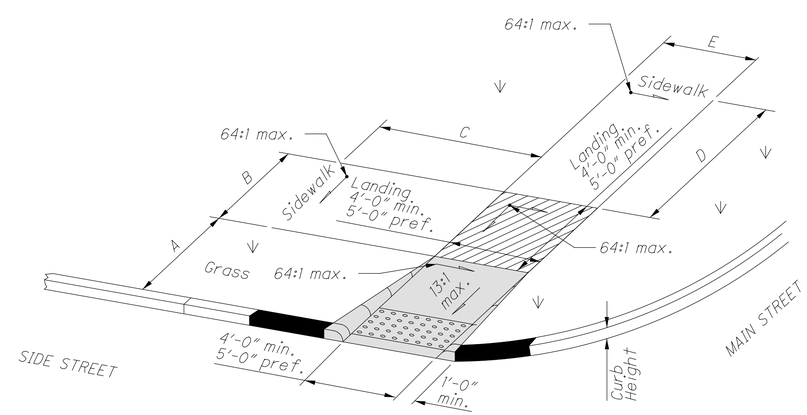

Type A2 - 3

CURB RAMP DIMENSIONS

DESIGN AGENCY

DESIGNER
SPH

REVIEWER
BC 03-14-25

PROJECT ID
105213

SHEET P.13 TOTAL 16

POR-14/43-1.74/VAR

MODEL: Details 1 PAPERSIZE: 34x22 (in.) DATE: 1/15/2026 TIME: 1:20:43 PM PLTDRV: OHDOT_PDF.pltcfg PENTBL: OHDOT_Pen.tbl USER: Sean.Hayes@dot.ohio.gov WORKSPACE: OHDOTCEv02 WORKSET: 105213 PRODUCT: OpenRoadsDesigner 24.00.00.205
pw:\\ohiodot-pw.bentley.com:ohiodot-pw-02\Documents\01 Active Projects\District 04\Portage\105213\400-Engineering\Roadway\Sheets\105213_GS002.dgn

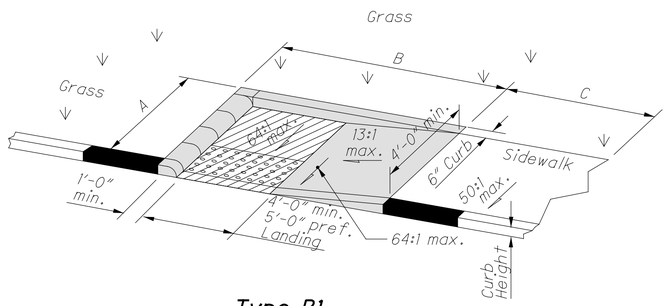

Type B1

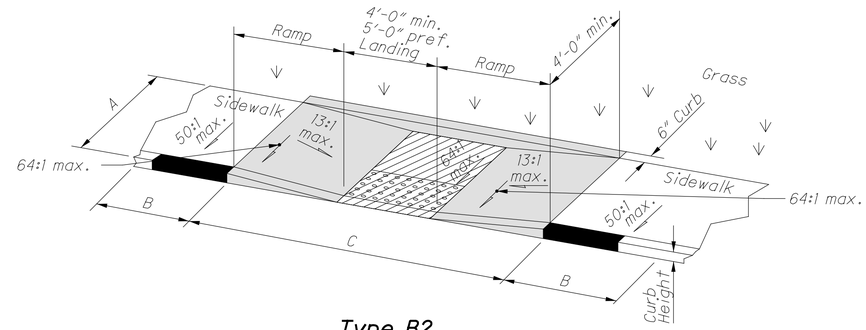

Type B2

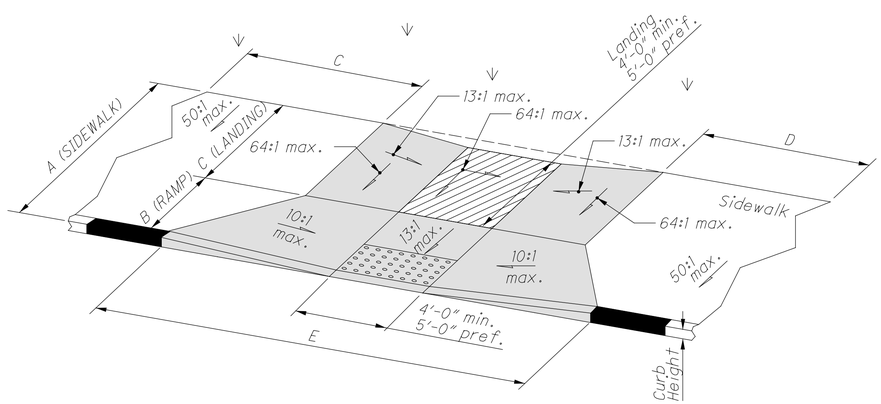

Type A1/C1

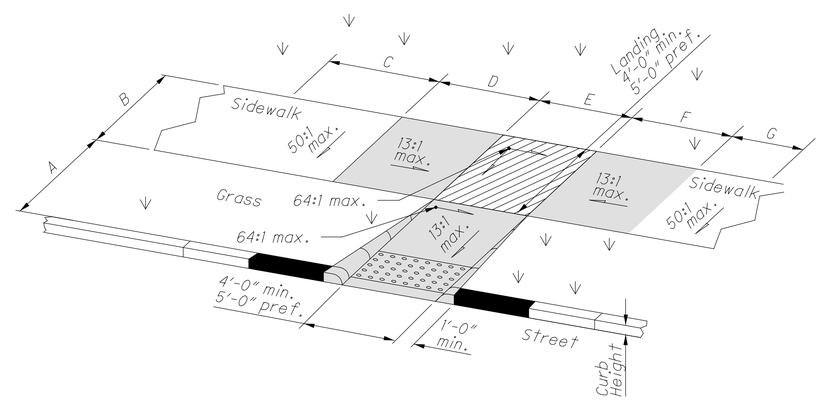

Type A2/C2

CURB RAMP DIMENSIONS

DESIGN AGENCY

DESIGNER
SPH

REVIEWER
BC 03-14-25

PROJECT ID
105213

SHEET P.14 TOTAL 16

POR-14/43-1.74/VAR

MODEL: Details 2 PAPERSIZE: 34x22 (in.) DATE: 1/15/2026 TIME: 1:20:43 PM PLTDRV: OHDOT_PDF.pltcfg PENTBL: OHDOT_Pen.tbl USER: Sean.Hayes@dot.ohio.gov WORKSPACE: OHDOTCEv02 WORKSET: 105213 PRODUCT: OpenRoadsDesigner 24.00.00.205
pw:\\ohiodot-pw.bentley.com:ohiodot-pw-02\Documents\01 Active Projects\District 04\Portage\105213\400-Engineering\Roadway\Sheets\105213_GS002.dgn

FOR REFERENCE ONLY

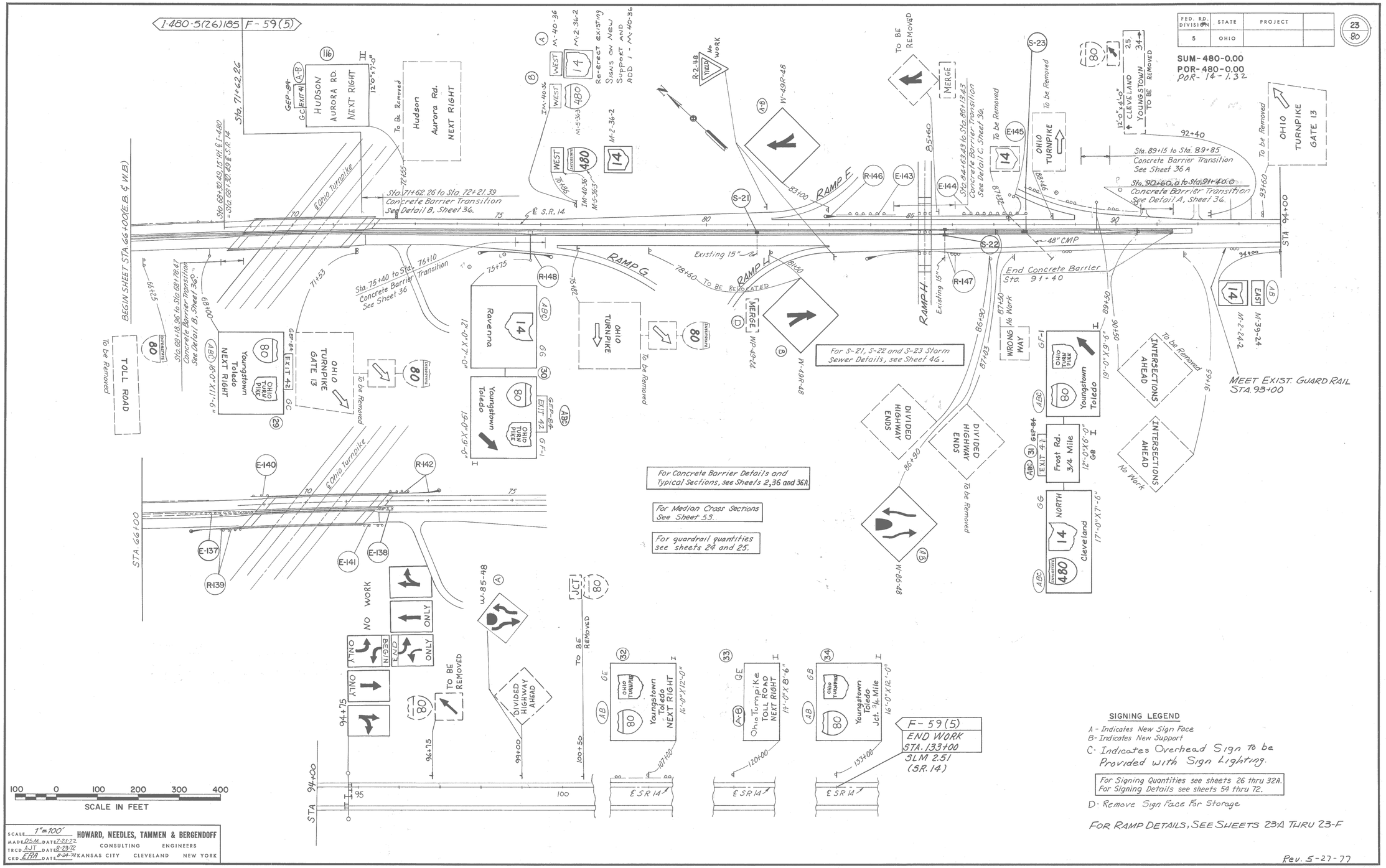

EXISTING PLAN
(SR 14, SLM 1.60)

IR 480 TO SR. 14 STA. 67+00 TO STA. 133+00 (E.B. & W.B.)

DRAINAGE DETAILS

DESIGN AGENCY

DESIGNER SPH

REVIEWER BC 03-14-25

PROJECT ID 105213

SHEET P.15 TOTAL 16

POR-14/43-1.74/VAR

MODEL: Sheet 2 PAPERSIZE: 34x22 (in.) DATE: 1/15/2026 TIME: 1:20:48 PM PLTDRV: OHDOT_PDF.pltcfg PENTBL: OHDOT_Pen.tbl USER: Sean.Hayes@dot.ohio.gov WORKSPACE: OHDOTCEv02 WORKSET: 105213 PRODUCT: OpenRoadsDesigner 24.00.00.205

pw:\\ohiodot-pw.bentley.com:ohiodot-pw-02\Documents\01 Active Projects\District 04\Portage\105213\400-Engineering\Drainage\Sheets\105213_DD001.dgn

PAVEMENT MARKINGS SUBSUMMARY

GENERAL SPEC:	640
MATERIAL TYPE:	646

EDGE LINE

CTY	ROUTE	TRUE LOG	FROM	TRUE LOG	TO	WHITE EDGE LINE, 6" TOTAL	WHITE HIGHWAY	WHITE RAMP	YELLOW EDGE LINE, 6" TOTAL	YELLOW HIGHWAY	YELLOW RAMP	COMMENTS
POR	SR 14	1.74	START OF CONCRETE MEDIAN BARRIER	1.75	WALMART ENTRANCE	0.02	0.02					NO CURB AND GUTTER
POR	SR 14	1.75	WALMART ENTRANCE	1.78	WALMART ENTRANCE	0.03	0.03					CURB AND GUTTER ON LEFT SIDE
POR	SR 14	1.96	RUBY TUESDAY DRIVE	2.12	GREAT LAKES HYUNDAI DRIVE	0.16	0.16					CURB AND GUTTER ON RIGHT SIDE
POR	SR 14	2.18	HOME DEPOT DRIVE	2.42	SR 14/SHADY LAKE DR. INTERSECTION	0.24	0.24					CURB AND GUTTER ON RIGHT SIDE
POR	SR 43	15.59	CITY OF STREETSBORO LIMITS	17.88	START OF 2 LANE TAPER TO 3 LANES	4.58	4.58					NO CURB AND GUTTER
TOTAL						5.03	5.03		0			

LANE LINE

CTY	ROUTE	TRUE LOG	FROM	TRUE LOG	TO	TOTAL MILES	6" LANE LINE DASHED	6" LANE LINE SOLID	COMMENTS
POR	SR 14	1.74	START OF CONCRETE MEDIAN BARRIER	1.78	WALMART ENTRANCE	0.08	0.08		2 LANE LINES
POR	SR 14	1.78	WALMART ENTRANCE	2.62	MCCDONALDS ENTRANCE	2.52	2.52		3 LANE LINES
POR	SR 14	2.62	MCCDONALDS ENTRANCE	3.08	PAVEMENT JOINT WEST OF SR 14/43 INT.	0.92	0.92		2 LANE LINES
POR	SR 14	3.19	PAVEMENT JOINT EAST OF SR 14/43 INT.	3.65	SR 14/PORTAGE POINT DRIVE INTERSECTION	0.92	0.92		2 LANE LINES
POR	SR 43	18.03	SR 43/SEASONS ROAD INTERSECTION	18.09	START OF 6 LANES	0.06	0.06		1 LANE LINE
POR	SR 43	18.13	LIMITS OF OLD TOWN SQUARE	18.16	PAVEMENT JOINT SOUTH OF SR 14/43 INT.	0.03	0.03		1 LANE LINE
POR	SR 43	18.20	PAVEMENT JOINT NORTH OF SR 14/43 INT.	18.64	SR 43/MARKET SQUARE DRIVE INT.	0.88	0.88		2 LANE LINES
TOTAL						5.41	5.41		

CENTER LINE

CTY	ROUTE	TRUE LOG	FROM	TRUE LOG	TO	TOTAL MILES	EQUIVALENT SOLID LINE	COMMENTS
POR	SR 14	1.74	START OF CONCRETE MEDIAN BARRIER	3.08	PAVEMENT JOINT WEST OF SR 14/43 INT.	2.03	3.15	
POR	SR 14	3.19	PAVEMENT JOINT EAST OF SR 14/43 INT.	3.65	SR 14/PORTAGE POINT DRIVE INTERSECTION	0.53	1.22	
POR	SR 43	15.59	CITY OF STREETSBORO LIMITS	18.16	PAVEMENT JOINT SOUTH OF SR 14/43 INT.	2.76	5.24	
POR	SR 43	18.20	PAVEMENT JOINT NORTH OF SR 14/43 INT.	18.64	SR 43/MARKET SQUARE DRIVE INT.	0.63	1.03	
TOTAL						5.95	10.64	

AUXILIARY

*24" HIGH VISIBILITY

** INCLUDES 2 WAY LEFT TURN ARROWS

CTY	ROUTE LOCATION	TRUE LOG	CHANNEL LINE, 8"	CHANNEL LINE, 12"	STOP LINE	*CROSS WALK LINES	TRANSVERSE DIAGONAL LINES WHITE	TRANSVERSE DIAGONAL LINES YELLOW	ISLAND MARKING	SYMBOL MARKINGS RxR	SYMBOL MARKINGS SCHOOL 72"	SYMBOL MARKINGS SCHOOL 96"	LANE ARROWS **TURN LEFT	LANE ARROWS TURN RIGHT	LANE ARROWS THRU	LANE ARROWS COMB.	REDUCT. ARROW	WORD ON PVMT ONLY 72"	WORD ON PVMT ONLY 96"	DOTTED LINES, 6"	COMMENTS
			FT	FT	FT	FT	FT	FT	SF	EACH	EACH	EACH	EACH	EACH	EACH	EACH	EACH	EACH	EACH	FT	
POR	SR 14/WALMART ENTRANCE	1.769		369			56	144						3						310	
POR	SR 14/MONDIAL PARKWAY	1.875		1029	111	99							12	5						133	
POR	SR 14/CLASSIC DRIVE	2.047			85								8								
POR	SR 14/HOME DEPOT DRIVE	2.228			81								9								
POR	SR 14/SHADY LAKE DRIVE	2.418		429	95			43					10	3							
POR	SR 14/ARBYS ENTRANCE	2.494		232			66						3	2							
POR	SR 14/HONEY BAKED HAM INT.	2.590		95									3	1							
POR	SR 14/MARKET SQUARE DR.	2.683		543	81	148							5	4							
POR	SR 14/STAPLES DR.	2.808		106	58			69	32				6								
POR	SR 14/SR 303	2.923		294	74								5								
POR	SR 14/SR 43	3.134		687									4	1							WEST OF CONCRETE PVMT. JOINT
POR	SR 14/SR 43	3.134		576				47	32				9					2			EAST OF CONCRETE PVMT. JOINT
POR	SR 14/STREETSBORO RD.	3.403		292				64	32				9								
POR	SR 14/SUPERIOR AVE.	3.584		276	71	66							6								
POR	SR 14/PORTAGE POINTE DR.	3.653		186					32					2							WEST SIDE OF INTERSECTION
POR	SR 43/CRESCENT DR.	17.586	79					135	34				1								
POR	SR 43/SEASONS RD.	18.022		437	63	62		216					6	2				3			INCLUDES TAPER WIDENING
POR	SR 43/GIANT EAGLE ENTRANCE	18.070		252										4							
POR	SR 43/SR 14	18.180		1026									4	1				6			SOUTH OF CONCRETE PVMT. JOINT
POR	SR 43/SR 14	18.180		319									3					2			NORTH OF CONCRETE PVMT. JOINT
POR	SR 43/FIRE DEPT. ENTRANCE	18.285		102	58			70	32												
POR	SR 43/RUSSELL DRIVE	18.410				84							2								
POR	SR 43/CECIL DRIVE	18.642		210	40	145		37					4					1			NORTH END OF INTERSECTION
TOTAL			79	7460	817	604	122	825	194				109	28				14		443	

DESIGN AGENCY

DESIGNER CLG

REVIEWER BC 10-24-24

PROJECT ID 105213

SHEET P.16 TOTAL 16

POR-14/43-1.74/VAR

MODEL: Sheet PAPERSIZE: 34x22 (in.) DATE: 1/15/2026 TIME: 1:21:19 PM PLTDRV: OHDOT_PDF.pltcfg PENTBL: OHDOT_Pen.tbl USER: Sean.Hayes@dot.ohio.gov WORKSPACE: OHDOTCEv02 WORKSET: 105213 PRODUCT: OpenRoadsDesigner 24.00.00.205
pw:\\ohiodot-pw.bentley.com:ohiodot-pw-02\Documents\01 Active Projects\District 04\Portage\105213400-Engineering\Roadway\Sheets\105213_GS001.dgn