MICROFILMED
JAN 27 1995

OHIO	1 / 28
FHWA REGION 5	
IM-76-2(55)46	FEDERAL PROJECT

POR-76-20.13 (PART II)

STATE OF OHIO
DEPARTMENT OF TRANSPORTATION

POR-76-20.13 (PART II)

For Part I,
See POR-76-20.13 (PART I)

PALMYRA TOWNSHIP
PORTAGE COUNTY

DESIGN DESIGNATION

CURRENT A.D.T. (1991)	=	21150
DESIGN YEAR A.D.T. (2011)	=	31730
D.H.V.	=	2856
D	=	56%
T	=	21%
DESIGN SPEED	=	65 MPH.
LEGAL SPEED	=	65 MPH.
FUNCTION CLASSIFICATION	=	RURAL INTERSTATE
DESIGN EXCEPTIONS	:	NONE

CONVENTIONAL SIGNS

County Line
Township Line
Section Line
Corporation Line or
Fence Line(existing) (proposed)
Center Line 352 353
Trees, Stumps, (to be removed)
Utility Poles: Telephone, Power, Light
Limited Access (only) LA
Right of Way (only) RW
Limited Access & Right of Way LA & RW
Existing Right of Way
Property Line (in existing fence)
Railroad or
Guardrail (existing) (proposed)

INDEX OF SHEETS

TITLE SHEET	1
SCHEMATIC PLAN	2
TYPICAL SECTIONS	3
GENERAL NOTES	4
CALCULATIONS	5
GENERAL SUMMARY	6-7
PLAN AND PROFILE	8
CROSS SECTIONS	9-13
MAINTENANCE OF TRAFFIC	14-28

END WORK
STA. 1076+85

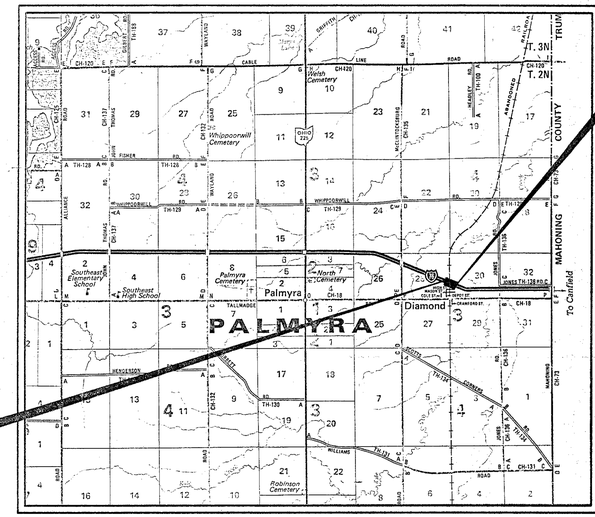

BEGIN WORK
STA. 1052+40

LOCATION MAP

SCALE IN MILES
0 1/2 1 2 3

LIMITED ACCESS

This improvement has been declared a limited access highway or freeway by action of the Director of Highways in accordance with the provisions of Section 5511.02, Revised Code of Ohio, and is especially designed for through traffic.

1991 SPECIFICATIONS

The standard specification of the State of Ohio, Department of Transportation, including changes and supplemental specifications listed in the proposal shall govern this improvement.

I hereby approve these plans and declare that the making of this improvement will not require the closing to traffic of the highway and that provisions for the maintenance and safety of traffic will be as set forth on the plans and estimates.

Approved David R Dreyer
Date 6-5-91 District Deputy Director of Transportation

Approved
Date Engineer, Bureau of Bridges and Structural Design

Approved George L. Butzer
Date 2/27/92 Deputy Director, Planning and Design

Approved George Wiley
Date 2-27-92 Director, Department of Transportation

UNDERGROUND UTILITIES
TWO WORKING DAYS
BEFORE YOU DIG
Call...800-362-2764 (Toll free)
OHIO UTILITIES PROTECTION SERVICE
NON-MEMBERS
MUST BE CALLED DIRECTLY

Portion to be improved
State & Federal Routes
Other Roads

SCALES

Plan 0 50 100
Profile : Horizontal 0 50 100, Vertical 0 2 4 5 10
Cross Section : Horizontal 0 1 2 3 4 5 10, Vertical 0 1 2 3 4 5 10

SUPPLEMENTAL SPECIFICATIONS	
SEE PART I, POR-76-20.13	

LINE DATA

PROJECT LENGTH = 0.00 LIN. FT. or 0.000 MILES

BEGIN WORK: STA. 1052+40
END WORK: STA. 1076+85
LENGTH OF WORK = 2445.00 LIN. FT. or 0.463 MILES

SUPPLEMENTAL PRINTS OF STANDARD CONSTRUCTION DRAWINGS				
SEE PART I, POR-76-20.13				

Plan Prepared By :

OHIO Department of Transportation
District 4

Project : POR-76-20.13 PART II
Date of Letting _____, 19__ Contract No. _____

DEPARTMENT OF TRANSPORTATION
FEDERAL HIGHWAY ADMINISTRATION

APPROVED:

DIVISION ADMINISTRATOR DATE

F.H.W.A. REGION	STATE	PROJECT NO.	FUNDS
5	OHIO		

2
28

POR-76-20.13 (PART II)

SCHEMATIC PLAN

0 100 300 500
SCALE IN FEET

PROJECT DESCRIPTION

PART II COVERS REPAIRING OF THE SLOPE FAILURE AREA BETWEEN STA. 1070+00 LT. AND STA. 1073+00 LT.

THIS PART ALSO INCLUDES THE MAINTENANCE OF TRAFFIC FOR BOTH THE SLIDE REPAIR AND THE BRIDGE REPAIR IN PART I.

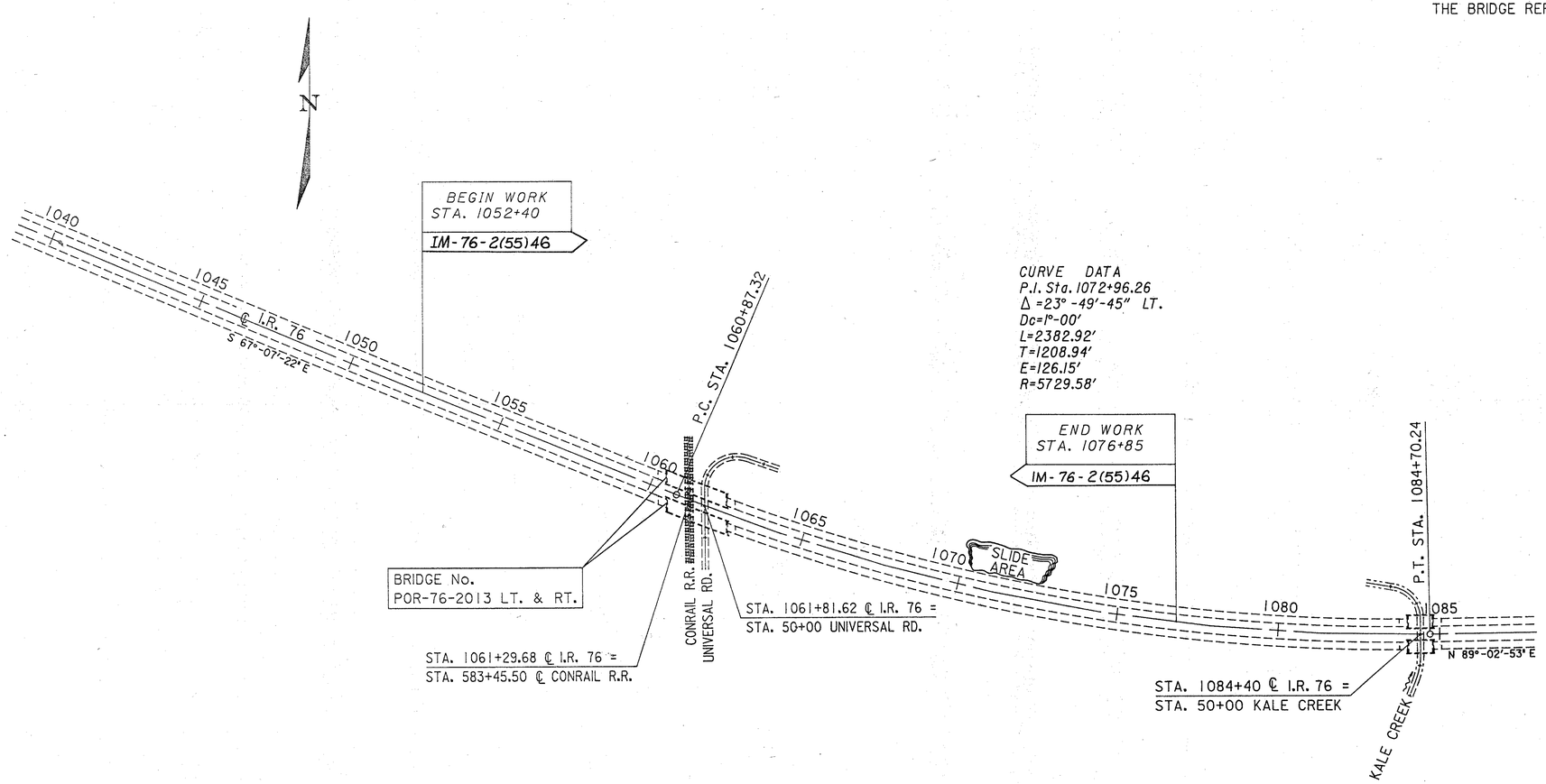

TYPICAL SECTIONS

F.H.W.A. REGION	STATE	PROJECT NO.	FUNDS
5	OHIO		

3/28

POR - 76 - 20.13
(PART II)

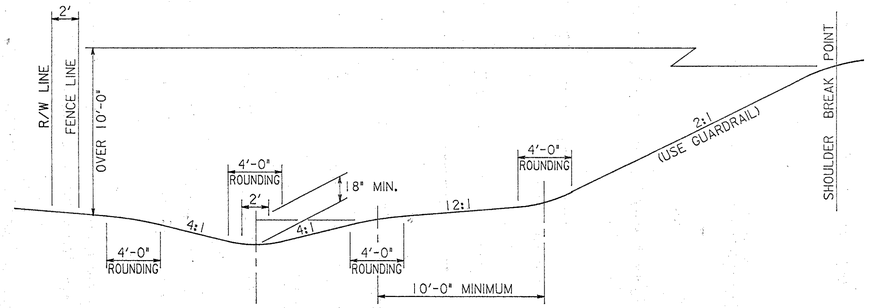

SLOPE AND DITCHES IN FILL SECTIONS

SLOPE FAILURE REPAIR
(PART II)

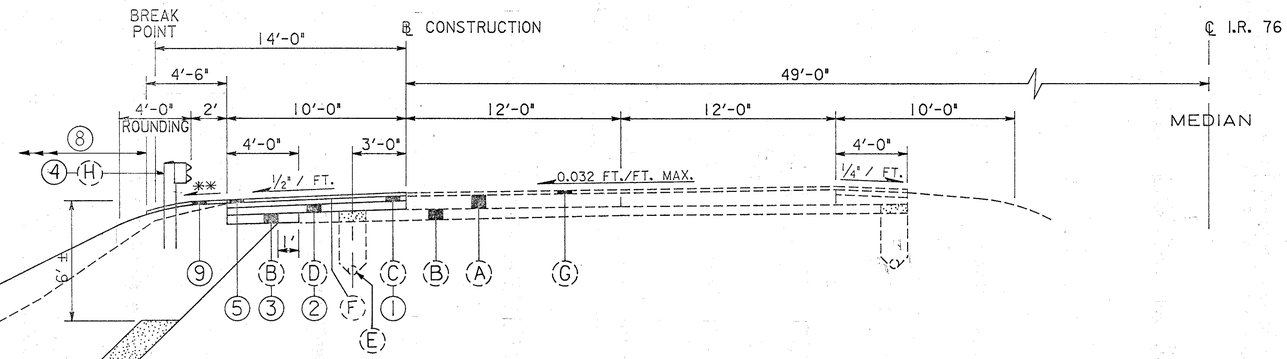

LIMITING STATIONS
STA. 1070+15 TO STA. 1072+70 = 255 L.F.

** 1"/FT.

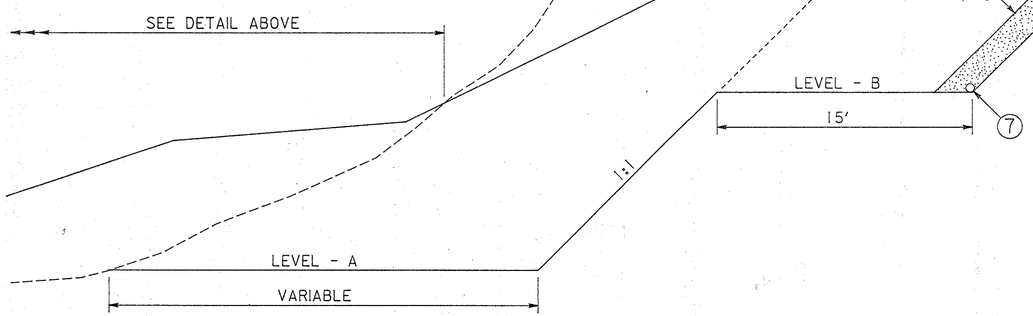

NOTE:

1 - SEE CROSS SECTIONS FOR VARIATIONS TO TYPICAL TREATMENT.

2 - DUE TO THE ACTIVE NATURE OF THE SLIDE, IT MAY BE NECESSARY TO REPLACE ADDITIONAL PAVED BERM AREAS. ESTIMATED QUANTITIES OF ITEM 301 BITUMINOUS AGGREGATE BASE, ITEM 304 AGGREGATE BASE, ITEM 404 ASPHALT CONCRETE AND ITEM 310 SUBBASE HAVE BEEN PROVIDED FOR USE AS DIRECTED BY THE ENGINEER.

3 - DUE TO THE UNSTABLE SLIDE CONDITION IT MAY BE NECESSARY TO ADJUST THE ELEVATIONS AND WIDTHS OF THE BENCHES SHOWN ON THE CROSS SECTIONS AS DIRECTED BY THE ENGINEER.

4 - THE EXCAVATED MATERIAL MAY BE USED FOR EMBANKMENT CONSTRUCTION PROVIDED IT HAS THE PROPERTIES IN ACCORDANCE WITH 203.08.

SEQUENCE OF CONSTRUCTION:

1 - EXCAVATION FOR LEVEL - A SHALL BEGIN FIRST. SLOPE SHALL BE KEPT TO A 1:1 MAXIMUM AT ALL TIMES.

2 - EMBANKMENT SHALL BE CONSTRUCTED UP TO LEVEL - B. EXTRA CARE SHALL BE TAKEN IN THE AREA OF THE CULVERT IN ORDER TO PREVENT ANY DAMAGE TO THE PIPE OR HEADWALL. EXCAVATION AND EMBANKMENT AROUND CULVERT SHALL BE AS PER 603.03 AND 603.08.

3 - EXCAVATION AND EMBANKMENT FROM LEVEL - B UP TO THE TOP OF SLOPE SHALL BE PERFORMED WHEN THERE IS NO WEST BOUND TRAFFFIC IN THE AREA. THIS OPERATION SHALL BE SCHEDULED TO COINCIDE WITH THE WEST BOUND BRIDGE REPAIR* AND TRAFFIC HAS BEEN MOVED TO EAST BOUND LANES. PLACEMENT OF THE 6" PIPE UNDERDRAIN AND DRAINAGE CONNECTION SHALL BE DONE SIMULTANEOUSLY WITH THE EMBANKMENT.

4 - ALL OPERATIONS MENTIONED ABOVE SHALL BE FINISHED IN ONE CONSTRUCTION SEASON.

* PART I

PROPOSED PAVEMENT LEGEND

1	ITEM 301	- 3" BITUMINOUS AGGREGATE BASE, AC-20
2	ITEM 304	- 5" AGGREGATE BASE, AS PER PLAN
3	ITEM 310	- 6" SUBBASE, TYPE II, AS PER PLAN
4	ITEM 606	- GUARDRAIL, TYPE 5
5	ITEM 404	- 3" ASPHALT CONCRETE, AC-20
6	ITEM SPECIAL	- DRAINAGE CONNECTION USING No. 8 AGGREGATE
7	ITEM 603	- 6" CONDUIT, TYPE E, AS PER PLAN
8	ITEM 659	- SEEDING AND MULCHING
9	ITEM 404	- 2" ASPHALT CONCRETE, AC-20, UNDER GUARDRAIL

EXISTING PAVEMENT LEGEND

A	9" REINFORCED PORTLAND CEMENT CONCRETE PAVEMENT
B	6" SUBBASE
C	3" WATERPROOFED AGGREGATE BASE COURSE
D	AGGREGATE BASE COURSE (VAR. THICKNESS)
E	6" PIPE UNDERDRAIN
F	BITUMINOUS SURFACE TREATMENT
G	ASPHALT CONCRETE OVERLAY
H	GUARDRAIL

GENERAL NOTES

ORIGINAL CONSTRUCTION PLANS

THIS PROJECT INCLUDES CONSTRUCTION PROJECTS AS LISTED BELOW, WITH COPIES ON FILE IN THE DISTRICT 4 OFFICE, 705 OAKWOOD STREET, RAVENNA, OHIO 44266.

POR/MAH - 18 - 19.34/0.00

CONTINGENCY QUANTITIES

THE CONTRACTOR SHALL NOT ORDER MATERIALS OR PERFORM WORK LISTED IN THE GENERAL SUMMARY FOR ITEMS DESIGNATED BY PLAN NOTE TO BE USED "AS DIRECTED BY THE ENGINEER" UNLESS AUTHORIZED BY THE ENGINEER. THE ACTUAL WORK LOCATIONS AND QUANTITIES USED AT THE ENGINEER'S DISCRETION SHALL BE MADE A MATTER OF RECORD BY INCORPORATION INTO THE FINAL CHANGE ORDER GOVERNING COMPLETION OF THIS PROJECT.

ROUNDING OF CORNERS SHOWN ON CROSS SECTIONS

THE ROUNDED CORNERS SHOWN ON THE TYPICAL SECTIONS, APPLY TO ALL CROSS SECTIONS EVEN THOUGH OTHERWISE SHOWN ON THESE PLANS.

UNDERGROUND UTILITIES

THERE ARE NO UNDERGROUND UTILITIES SHOWN ON THIS PLAN. THE NATURE OF THE WORK REQUIED BY THIS PROJECT WILL NOT AFFECT ANY UNDERGROUND UTILITIES THAT MAY EXISTUNDER OR ADJACENT TO THE WORK AREA. IN THE EVENT OF UNFORSEEN CIRCUMSTANCES OR UNUSUAL CONDITIONS, THE FOLLOWING LIST OF ALL UTILITY OWNERS IS PROVIDED TO THE CONTRACTOR AND PROJECT ENGINEER FOR NOTIFICATION OF UTILITY OWNERS.

UTILITY OWNERSHIP

THE FOLLOWING UTILITIES AND OWNERS ARE LOCATED WITHIN THE WORK LIMITS OF THIS PROJECT:

OHIO EDISON
730 SOUTH AVENUE
YOUNGSTOWN, OHIO 44502
(216) 393-1531

UNITED TELEPHONE
220 SOUTH PARK AVENUE
WARREN, OHIO 44482
(216) 841-1214

EAST OHIO GAS
1165 WEST RAYEN AVENUE
YOUNGSTOWN, OHIO 44502
(216) 742-8140

UTILITIES NOTIFICATION

AT LEAST TWO WORKING DAYS PRIOR TO COMMENCING CONSTRUCTION OPERATIONS IN AN AREA WHICH MAY INVOLVE UNDERGROUND UTILITY FACILITIES, THE CONTRACTOR SHALL NOTIFY THE PROJECT ENGINEER, THE REGISTERED UTILITY PROTECTION SERVICE AND THE OWNERS OF EACH UNDERGROUND UTILITY FACILITY SHOWN IN THE PLANS.

CLEARING AND GRUBBING

ALTHOUGH THERE ARE NO TREES AND/OR STUMPS SPECIFICALLY MARKED FOR REMOVAL WITHIN THE LIMITS OF THIS PROJECT, A LUMP SUM QUANTITY HAS BEEN INCLUDED IN THE GENERAL SUMMARY FOR ITEM 201, CLEARING AND GRUBBING. ALL PROVISIONS AS SET FORTH IN THE SPECIFICATIONS UNDER THIS ITEM SHALL BE INCLUDED IN THE LUMP SUM PRICE BID FOR ITEM 201, CLEARING AND GRUBBING.

CONNECTIONS BETWEEN EXISTING AND PROPOSED GUARDRAIL

WHEN IT IS NECESSARY TO SPLICE PROPOSED GUARDRAIL TO EXISTING GUARDRAIL, ONLY THE EXISTING GUARDRAIL SHALL BE CUT, DRILLED OR PUNCHED. THE CONNECTION SHALL BE MADE USING A "BEAM RAIL SPLICE" AS SHOWN ON STANDARD DRAWING GR-1.1 PAYMENT SHALL BE INCLUDED IN THE UNIT PRICE BID FOR THE RESPECTIVE GUARDRAIL RUNS.

TEMPORARY SOIL EROSION AND SEDIMENT CONTROL

THE FOLLOWING ESTIMATED QUANTITIES ARE TO BE USED AS DIRECTED BY THE ENGINEER, FOR TEMPORARY EROSION AND SEDIMENT CONTROL MEASURES:

207	TEMPORARY SEEDING AND MULCHING	543	SQ. YD.
207	STRAW OR HAY BALES	100	EACH
659	COMMERCIAL FERTILIZER	0.05	TON
659	REPAIR SEEDING AND MULCHING	136	SQ. YD.
659	WATER	1.2	M. GAL.

ITEM 605 - 6" SHALLOW PIPE UNDERDRAIN

A QUANTITY OF 300 LIN. FT. OF ITEM 605 - 6" SHALLOW PIPE UNDERDRAIN HAS BEEN PROVIDED AND CARRIED TO THE GENERAL SUMMARY, TO BE USED AS DIRECTED BY THE ENGINEER, IN CASE THE EXISTING PIPE UNDERDRAIN IS DAMAGED DURING CONSTRUCTION.

ITEM 603 - 6" CONDUIT, TYPE E, AS PER PLAN

THE MATERIAL FOR THIS ITEM SHALL BE IN ACCORDANCE WITH 707.17; ASTM D-3034 SDR 35 PERFORATED PER 707.17; OR SUPPLEMENTAL SPECIFICATION 931 PERFORATED PER 707.15.

ITEM 603 - 6" CONDUIT, TYPE F, AS PER PLAN

THIS ITEM IS TO BE USED FOR UNDERDRAIN OUTLET, THE PIPE SHALL BE NON-PERFORATED 6" CONDUIT 707.17, ASTM 3034 SDR 35 OR, AS AN OPTION, SUPPLEMENTAL SPECIFICATION 931.

ITEM 202 - WEARING COURSE REMOVED, AS PER PLAN

THIS ITEM IS PROVIDED FOR REMOVING THE EXISTING BROKEN SHOULDER AREA BETWEEN STA. 1070+00 TO 1073+00, WHICH INCLUDES THE ASPHALT CONCRETE SURFACE COURSES AND AGGREGATE BASE COURSE AS SHOWN ON TYPICAL SECTION SHEET No. 3 . A SAW CUT ALONG THE EDGE OF PAVEMENT SHALL BE MADE BEFORE REMOVAL. THE ESTIMATED QUANTITY IS BASED ON AN AREA 6 FT. WIDE AND 300 FT. LONG. ACTUAL AREA SHALL BE ADJUSTED IN THE FIELD, AS DIRECTED BY THE ENGINEER.

MAINTENANCE OF TRAFFIC

SEE SHEET No. 14 , 15 .

SEEDING

QUANTITIES FOR SEEDING ARE CALCULATED FOR THE SOIL AREAS BETWEEN THE RIGHT-OF-WAY LINES IN UNFENCED AREAS, AND WITHIN THE WORK LIMITS FOR AREAS OUTSIDE THE RIGHT-OF-WAY LINES COVERED BY WORK AGREEMENT OR SLOPE EASEMENT.

ITEM 304 - AGGREGATE BASE, AS PER PLAN

MATERIALS FURNISHED FOR THIS ITEM SHALL EXCLUDE ALL SLAG EXCEPT GRANULATED SLAG OR CRUSHED AIR-COOLED BLAST FURNACE SLAG.
AT THE CONTRACTOR'S OPTION, CRUSHED CONCRETE OBTAINED FROM CONCRETE PAVEMENT ON THIS PROJECT OR PROJECTS CONSTRUCTED UNDER ODOT SPECIFICATIONS MAY BE USED FOR ITEM 304 AGGREGATE BASE. ALL CRUSHED CONCRETE PASSING THE No. 4 SIEVE SHALL BE REPLACED BY MATERIAL OBTAINED FROM APPROVED SOURCES. THE RECYCLED CONCRETE PAVEMENT SHALL NOT CONTAIN MORE THAN 1.0% RECYCLED ASPHALT PAVEMENT. ALL OTHER REQUIREMENTS OF 304 AND 703.04 SHALL APPLY.

ITEM 310 - SUBBASE, TYPE II, AS PER PLAN

MATERIALS FURNISHED FOR THIS ITEM SHALL EXCLUDE ALL SLAG EXCEPT GRANULATED SLAG OR CRUSHED AIR-COOLED BLAST FURNACE SLAG AND SHALL EXCLUDE THAT PART OF BROKEN SALVAGED PORTLAND CEMENT PAVEMENT PASSING THE No. 4 SIEVE. BROKEN SALVAGED PORTLAND CEMENT CONCRETE PAVEMENT SHALL BE OBTAINED ON THIS PROJECT OR OTHER PROJECTS CONSTRUCTED UNDER ODOT SPECIFICATIONS. ALL OTHER REQUIREMENTS OF 310 AND 703.04 SHALL APPLY.

CHANNEL CLEANOUT

THE CONTRACTOR SHALL CLEAR SMALL TREES AND BUSHES IN THE OUTLET AREA UP TO THE L/A LINE, AND REMOVE DIRT AND MUD DOWN TO THE ORIGINAL ROCK CHANNEL PROTECTION, RESTORE CHANNEL TO THE ORIGINAL SHAPE AS SHOWN ON THE ORIGINAL CONSTRUCTION PLAN POR/MAH-18-19.34/0.00. THE FENCE SHALL NOT BE DISTURBED. COST OF CLEARING SHALL BE INCLUDED IN THE LUMP SUM PRICE BID FOR ITEM 201 - CLEARING AND GRUBBING.
A QUANTITY OF 30 C.Y. OF ITEM 203 - EXCAVATION NOT INCLUDING EMBANKMENT CONSTRUCTION HAS BEEN PROVIDED AND CARRIED TO THE GENERAL SUMMARY FOR USE IN REMOVING AND RESHAPING THE CHANNEL.

ITEM SPECIAL - DRAINAGE CONNECTION USING No. 8 AGGREGATE

THE EARTHWORK SHALL INCLUDE A BACKSLOPE DRAIN CONSISTING OF AN 18" THICK BLANKET OF No. 8 AGGREGATE TO THE LIMITS SHOWN IN THE TYPICAL SECTION AND CROSS SECTIONS SHOWN IN THE PLAN. DUE TO THE ACTIVE NATURE OF THE SLIDE CONDITION IT MAY BE NECESSARY FOR THE LOCATION OF THE DRAINAGE BLANKET TO BE ALTERED AS DIRECTED BY THE ENGINEER. THE No. 8 AGGREGATE MATERIAL SHALL CONSIST OF DURABLE NATURAL AGGREGATE.

ITEM SPECIAL - PIPE CLEANOUT

THE EXISTING 54" CMP CULVERT WHICH IS TO REMAIN IN PLACE SHALL BE CLEANED OUT AS DIRECTED BY THE ENGINEER. THIS WORK SHALL CONSIST OF THE REMOVAL OF ALL MATERIAL FROM THE INSIDE OF THE EXISTING PIPE. THE MATERIAL SHALL BE DISPOSED OF IN ACCORDANCE WITH THE REQIUREMENTS OF SEC. 203.05. THE LOCATION, TYPE, DEPTH AND SIZE OF THE EXISTING PIPE IS SHOWN AS NEARLY EXACT AS THE AVAILABLE INFORMATION WILL PERMIT. THE STATE OF OHIO WILL NOT BE RESPONSIBLE FOR ANY VARIATION IN SIZES ENCOUNTERED DURING CONSTRUCTION. PAYMENT FOR ANY WORK REQUIRED TO DETERMINE EXACT SIZE AND LOCATION SHALL BE INCLUDED IN THE BID PRICE PER LINEAR FEET FOR "ITEM SPECIAL, PIPE CLEANOUT". THE FOOTAGE TO BE PAID SHALL BE THE ACTUAL NUMBER OF LINEAR FEET OF EXISTING PIPE CLEANED OUT AS DIRECTED BY THE ENGINEER. PAYMENT SHALL CONSTITUTE FULL COMPENSATION FOR REMOVAL AND DISPOSAL OF MATERIAL FOUND AND FURNISHINGS OF ALL LABOR, EQUIPMENT, TOOLS AND INCIDENTALS NECESSARY TO COMPLETE THIS ITEM. NONE OF THE ABOVE DESCRIBED WORK SHALL BE PERFORMED UNTIL AUTHORIZED IN WRITING BY THE ENGINEER. SEE SHEET No. 8 FOR QUANTITIES CARRIED TO THE GENERAL SUMMARY FOR THIS ITEM.

ITEM SPECIAL - ASPHALT INVERT REPAIR

A QUANTITY HAS BEEN PROVIDED FOR ASPHALT INVERT REPAIR. THIS WORK IS TO REPAIR THE PAVED INVERT IN VARIOUS AREAS WITHIN THE EXISTING PIPE. REPAIR SHALL BE MADE USING ASPHALT MATERIAL MEETING THE REQUIREMENTS OF AASHTO M243 SUITABLE FOR TROWEL APPLICATION SUCH AS 5X ASPHALT MASTIC MANUFACTURED BY GRUNDY INDUSTRIES, 1301 HERKIMER STREET, JOLIET ILL. 60432 OR THIO-DECK MEMBRANE SP MANUFACTURED BY CARBOLINE COMPANY, TORCH BUILDING PRODUCTS DIVISION, 350 HANLEY INDUSTRIAL COURT, ST. LOUIS, MO. 63144. THE AREAS WHERE THE ASPHALT MATERIAL IS TO BE APPLIED SHALL BE DRY AND FREE OF LOOSE DEBRIS PRIOR TO APPLICATION. THE FINISH SURFACE OF THE REPAIRED SECTION SHOULD BE BROUGHT UP TO MATCH THE EXISTING SURFACE. THIS WORK SHALL BE PAID FOR AS ITEM SPECIAL - ASPHALT INVERT REPAIR.

CALCULATIONS

AREA FOR 404, 301 & 304

L = 300', W = 10' AREA = 300 x 10 = 3000 S.F.

ITEM 404 - 3" ASPHALT CONCRETE

0.25 x 3000 ÷ 27 = 27.78 C.Y. *

ITEM 301 - 3" BITUMINOUS AGGREGATE BASE

0.25 x 3000 ÷ 27 = 27.78 C.Y. *

ITEM 304 - 4 7/8" AGGREGATE BASE

0.4063 x 3000 ÷ 27 = 45.14 C.Y. *

ITEM 310 - 6" SUBBASE

AREA = 4 x 300 = 1200 S.F.
VOL. = 0.5 x 1200 ÷ 27 = 22.22 C.Y. *

ITEM 202 - WEARING COURSE REMOVED, AS PER PLAN

AREA = 6 x 300 ÷ 9 = 200 S.Y. *

ITEM 404 - ASPHALT CONCRETE, UNDER GUARDRAIL (2")

AREA = 300 x 4.5 = 1350 S.F.
VOL. = 0.1667 x 1350 ÷ 27 = 8.33 C.Y. *

ITEM SPECIAL - DRAINAGE CONNECTION, USING No. 8 AGGREGATE

AVG. L = 27.875', W = 1.5' DISTANCE = 250 L.F.
VOL. = 1.5 x 27.875 x 250 ÷ 27 = 387.15 C.Y. *

ITEM 659 - REPAIR SEEDING AND MULCHING

5% OF PERMANENT SEEDING AREA
0.05 x 2713 = 136 S.Y.

ITEM 659 - COMMERCIAL FERTILIZER

10 lbs./1000 S.F. OF TEMPORARY SEEDING AREA + 20 lbs./1000 S.F. OF PERMANENT SEEDING
(0.000045 x 543) + (0.00009 x 2713) = 0.27 TONS

ITEM 659 - WATER

120 GAL./1000 S.F. OF TEMPORARY & PERMANENT SEEDING AREA
2 x 120 x (543 + 2713) x 9 ÷ 1000 ÷ 1000 = 7.0 M-GAL.

ITEM 659 - AGRICULTURAL LIMING

100 lbs./1000 S.F. OF PERMANENT SEEDING AREA
0.00045 x 2713 = 1.22 TONS

* Quantity Carried to Sht. 8

TEMPORARY EROSION CONTROL

DRAINAGE AREA FROM CONSTRUCTION: L = 300', W = 113 + 24 = 137 L.F.
AREA = 300 x 137 ÷ 43560 = 0.94 ACRES

USE STRAW OR HAY BALES FOR DITCH CHECKS & FILTER DIKE

DITCH CHECK: No. = 2 CHECKS, 7 BALES / CHECK
No. OF BALES = 14 EACH

FILTER DIKE: LENGTH OF BENCH = 255'
No. OF BALES = 255 / 3.5 = 73 EACH

ITEM 207 - STRAW OR HAY BALES

14 + 73 = 87 EACH
USE 100 EACH

ITEM 207 - TEMPORARY SEEDING AND MULCHING

20% OF PERMANENT SEEDING (2713 S.Y.)
0.2 x 2713 = 543 S.Y.

GENERAL SUMMARY

COMPLETED BY KS DATE 4-91
CHECKED BY ST DATE 9-91

F.H.W.A. REGION	STATE	PROJECT NO.	FUNDS
5	OHIO		

POR - 76 - 20.13 PART II

SHEET NUMBER 4	5	8	14	ITEM	ITEM EXT.	GRAND TOTAL	UNIT	DESCRIPTION	
								ROADWAY	
LUMP				201	11000	LUMP		CLEARING AND GRUBBING	
		200		202	23501	200	SQ. YD.	WEARING COURSE REMOVED, AS PER PLAN	(SEE SHEET No. 4)
		300		202	38100	300	LIN. FT.	GUARDRAIL REMOVED FOR STORAGE	(SEE SHEET NO. 4)
		100		SPECIAL	20270100	100	LIN. FT.	PIPE CLEANOUT	
30		6364		203	12000	6394	CU. YD.	EXCAVATION NOT INCLUDING EMBANKMENT CONSTRUCTION	
		6232		203	20000	6232	CU. YD.	EMBANKMENT	
		300		606	13000	300	LIN. FT.	GUARDRAIL, TYPE 5	
	543							EROSION CONTROL	
	100			207	10000	543	SQ. YD.	TEMPORARY SEEDING AND MULCHING	
				207	70000	100	EACH	STRAW OR HAY BALES	
		2713		659	10000	2713	SQ. YD.	SEEDING AND MULCHING	
	136			659	14000	136	SQ. YD.	REPAIR SEEDING AND MULCHING	
	0.27			659	20000	0.27	TON	COMMERCIAL FERTILIZER	
	1.22			659	30000	1.22	TON	AGRICULTURAL LIMING	
	7			659	35000	7	M. GAL.	WATER	
		225						DRAINAGE	
		50		603	01401	225	LIN. FT.	6" CONDUIT, TYPE E, AS PER PLAN	(SEE SHEET No. 4)
		18		603	01501	50	LIN. FT.	6" CONDUIT, TYPE F, AS PER PLAN	(SEE SHEET No. 4)
				SPECIAL	60398400	18	SQ. YD.	ASPHALT INVERT REPAIR	(SEE SHEET NO. 4)
300				605	11100	300	LIN. FT.	6" SHALLOW PIPE UNDERDRAIN	
		387		SPECIAL	60532504	387	CU. YD.	DRAINAGE CONNECTION USING No. 8 AGGREGATE	(SEE SHEET NO. 4)
								PAVEMENT	
		28		301	10002	28	CU. YD.	BITUMINOUS AGGREGATE BASE, AC-20	
		45		304	20001	45	CU. YD.	AGGREGATE BASE, AS PER PLAN	(SEE SHEET No. 4)
		22		310	20001	22	CU. YD.	SUBBASE, TYPE II, AS PER PLAN	(SEE SHEET No. 4)
		28		404	20000	28	CU. YD.	ASPHALT CONCRETE, AC-20	
		8		404	30000	8	CU. YD.	ASPHALT CONCRETE, AC-20, UNDER GUARDRAIL	

GENERAL SUMMARY

COMPLETED BY KS DATE 4-91
CHECKED BY ST DATE 9-91

F.H.W.A. REGION	STATE	PROJECT NO.	FUNDS
5	OHIO		

POR - 76 - 20.13 PART II

SHEET NUMBER 14	SHEET NUMBER 15	ITEM	ITEM EXT.	GRAND TOTAL	UNIT	DESCRIPTION
						MAINTENANCE OF TRAFFIC
	40	SPECIAL	61411100	40	HOURS	LAW ENFORCEMENT OFFICER WITH PATROL CAR
1		614	12756	1	EACH	TEMPORARY CROSSOVER LIGHTING SYSTEM
774		614	12900	774	EACH	TEMPORARY RAISED PAVEMENT MARKERS, TYPE A
380	30	614	13300	410	EACH	BARRIER REFLECTOR, TYPE B (SEE SHEET No. 15)
4.04		614	22000	4.04	MILE	TEMPORARY EDGE LINE, CLASS I
4150		622	40031	4150	LIN. FT.	PORTABLE CONCRETE BARRIER, 50", AS PER PLAN (SEE SHEET No. 15)
380		622	40046	380	LIN. FT.	PORTABLE CONCRETE BARRIER, 50", BRIDGE MOUNTED
50		404	35000	50	CU. YD.	BITUMINOUS CONCRETE FOR MAINTAINING TRAFFIC
LUMP		615	10000	LUMP		TEMPORARY ROAD
4200		615	20000	4200	SQ. YD.	TEMPORARY PAVEMENT, CLASS A
20		616	10000	20	M. GAL	WATER
4		616	20000	4	TON	CALCIUM CHLORIDE
LUMP		614	11000	LUMP		MAINTAINING TRAFFIC
		619	15010	LUMP		FIELD OFFICE, TYPE B
		623	10000	LUMP		CONSTRUCTION LAYOUT STAKES
		624	10000	LUMP		MOBILIZATION

ZFA2:[20.7] P0762006.DGN

BEGIN WORK
STA. 1052+40
(SEE SHEET Nos. 14-28)

CALC. BY KS DATE 3-91
CK'D. BY ST DATE 9-91

FED. RD. DIVISION	STATE	PROJECT	
5	OHIO		

POR-76-20.13
(PART II)

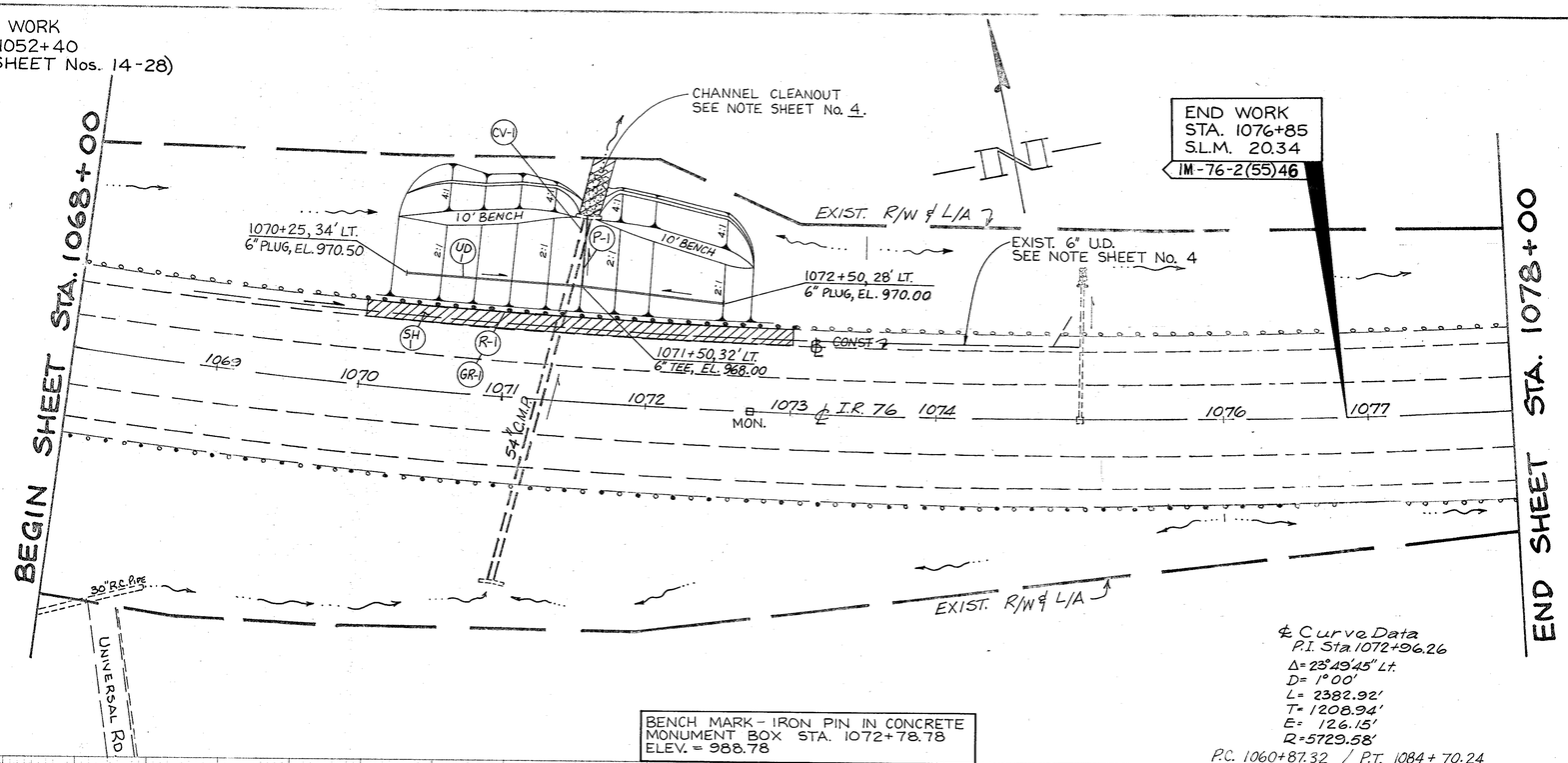

BENCH MARK - IRON PIN IN CONCRETE
MONUMENT BOX STA. 1072+78.78
ELEV. = 988.78

℄ Curve Data
P.I. Sta. 1072+96.26
Δ = 23°49'45" Lt.
D = 1°00'
L = 2382.92'
T = 1208.94'
E = 126.15'
R = 5729.58'
P.C. 1060+87.32 / P.T. 1084+70.24

ESTIMATED QUANTITIES										
MARK	STATION FROM	STATION TO	SIDE	202 GUARDRAIL REMOVED FOR STORAGE LIN. FT.	606 GUARDRAIL, TYPE 5 LIN. FT.	603 6" CONDUIT, TYPE F, AS PER PLAN LIN. FT.	SPECIAL DRAINAGE CONNECTION, USING No. 8 AGGREGATE CU. YD.	603 6" CONDUIT, TYPE E, AS PER PLAN LIN. FT.	SPECIAL PIPE CLEANOUT LIN. FT.	SPECIAL ASPHALT INVERT REPAIR SQ. YD.
R-1	1070+00	1073+00	L	300						
GR-1	1070+00	1073+00	L		300					
P-1	1071+50	-	L			50				
UD-1	1070+25	1072+50	L				387	225		
CV-1	1071+25		L/R						100	18
TOTALS				300	300	50	387	225	100	18

SH-1:

ITEM 202	- WEARING COURSE REMOVED, AS PER PLAN	200	S.Y.
ITEM 301	- BITUMINOUS AGGREGATE BASE	28	C.Y.
ITEM 304	- AGGREGATE BASE	45	C.Y.
ITEM 310	- SUBBASE	22	C.Y.
ITEM 404	- ASPHALT CONCRETE, AC-20	28	C.Y.
ITEM 404	- ASPHALT CONCRETE, AC-20, UNDER GUARDRAIL	8	C.Y.

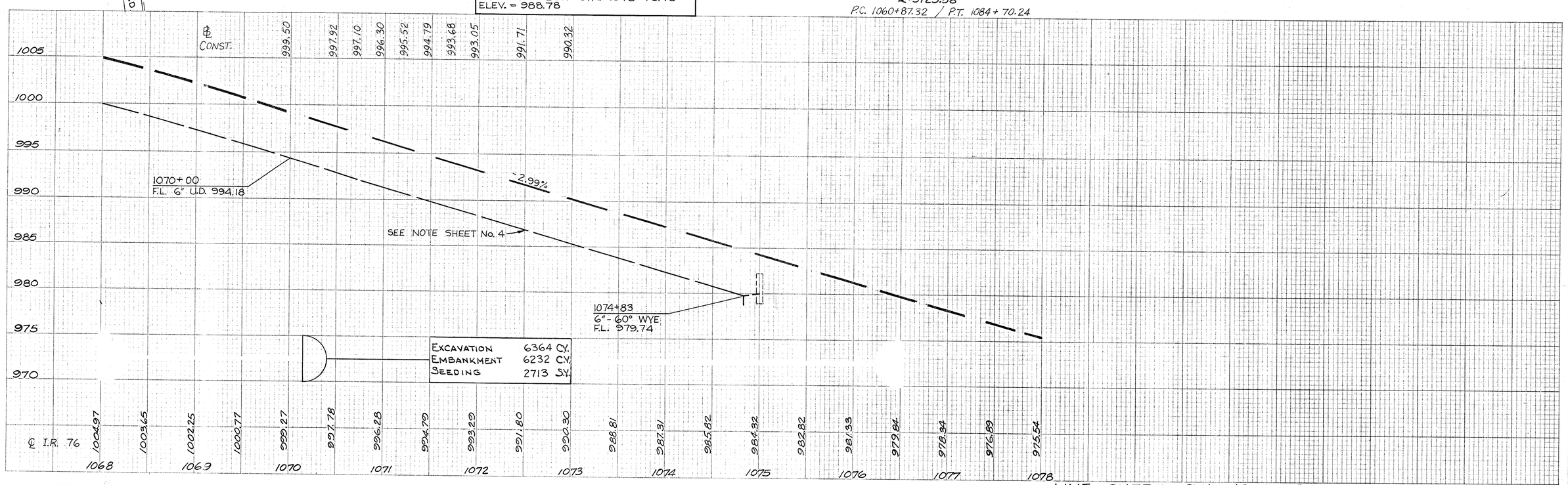

LINE SHEET STA. 1068+00 TO STA. 1078+00

FINAL SURVEY
NOTE BOOK NO.
SURVEYED
PLOTTED
TRAVERSE
AREAS
AREAS CHECKED
BY
DATE

POR - 76 - 20.13 (PART II)

CALC. BY: RB DATE: 3-91
CHKD. BY: KS DATE: 3-91

FED. RD. DIVISION	STATE	PROJECT	
5	OHIO		

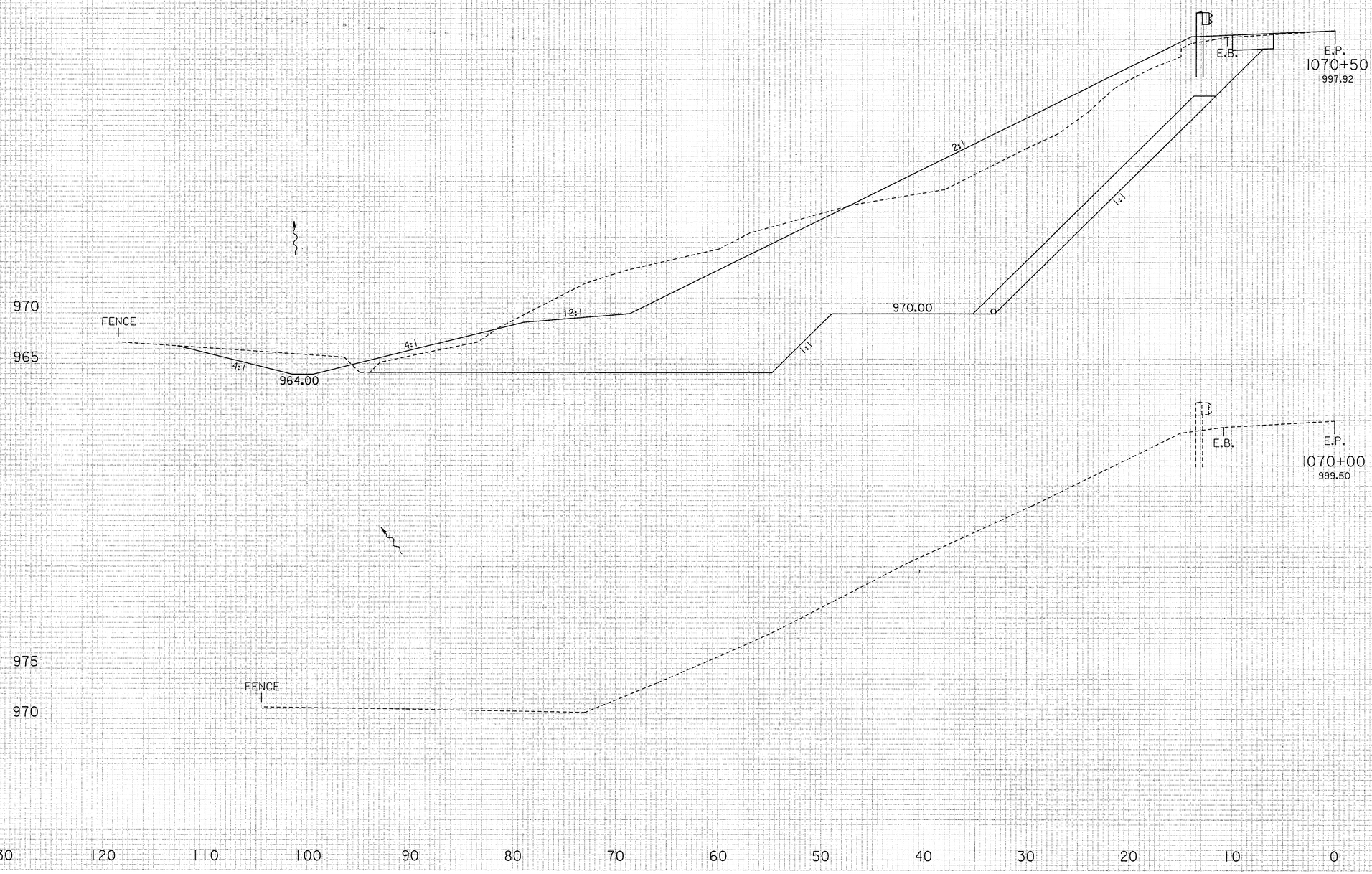

	SEEDING		END AREA		CU. YDS.	
	L.F.	S.Y.	CUT	FILL	EXC.	EMB.
1070+15	0		0	0		
	116		814	749		
		226			528	485

STA. 1070+00 TO STA. 1070+50

PLATE 3-FULL CROSS SECTION-FILL LINE

POR - 76 - 20.13 (PART II)

CALC. BY: RB DATE: 3-91
CHKD. BY: KS DATE: 3-91

FED. RD. DIVISION 5 | STATE OHIO | PROJECT

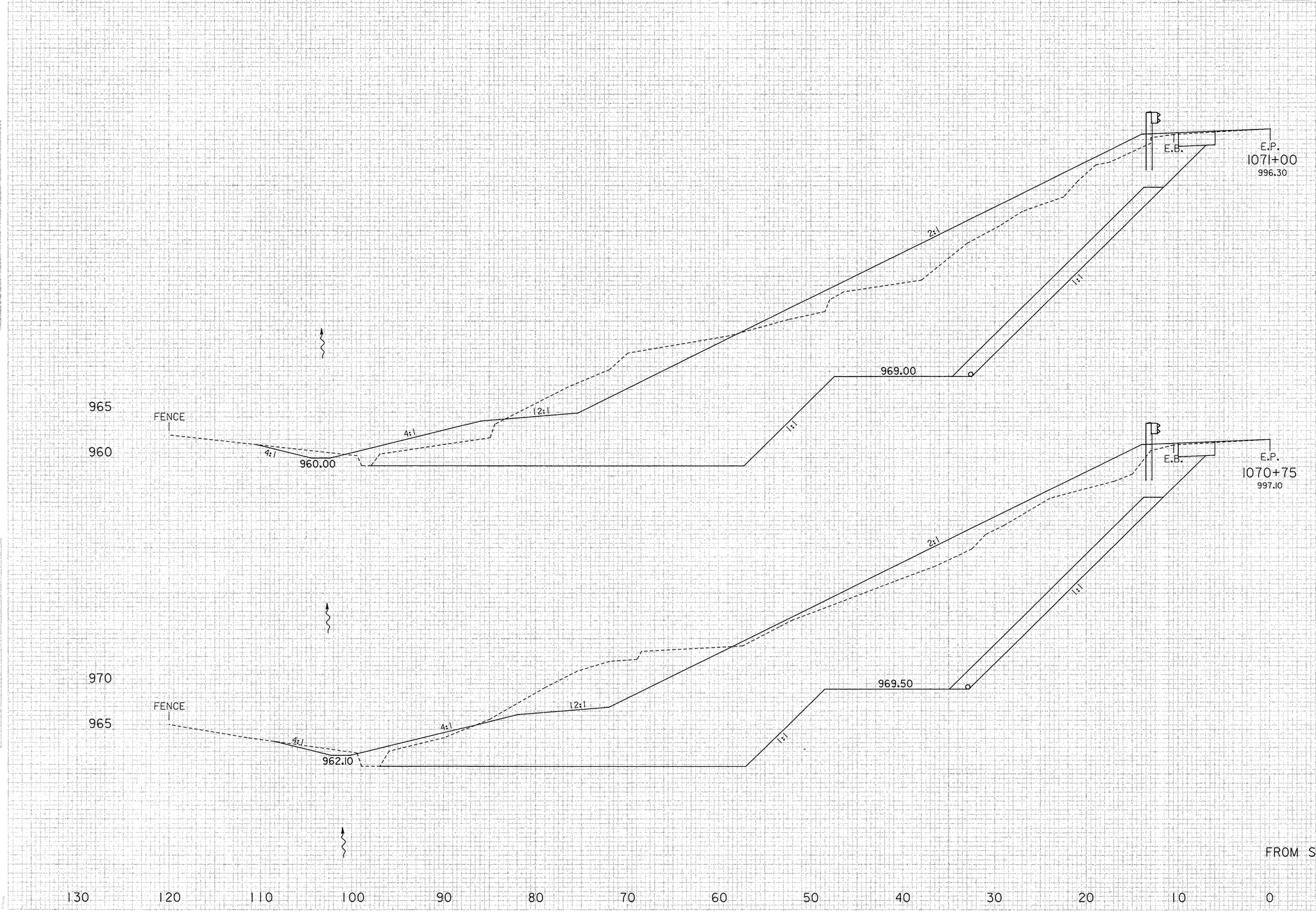

	SEEDING		END AREA		CU. YDS.	
	L.F.	S.Y.	CUT	FILL	EXC.	EMB.
	118		834	839		
		325			792	770
	116		876	824		
		322			782	728
FROM STA. 1070+50	116		814	749		

PLATE 3-FULL CROSS SECTION-FULL LINE

STA. 1070+75 TO STA. 1071+00

POR - 76 - 20.13 (PART II)

CALC. BY: RB DATE: 3-91
CHKD. BY: KS DATE: 3-91

F.H.W.A. REGION	STATE	PROJECT NO.	FUNDS
5	OHIO		

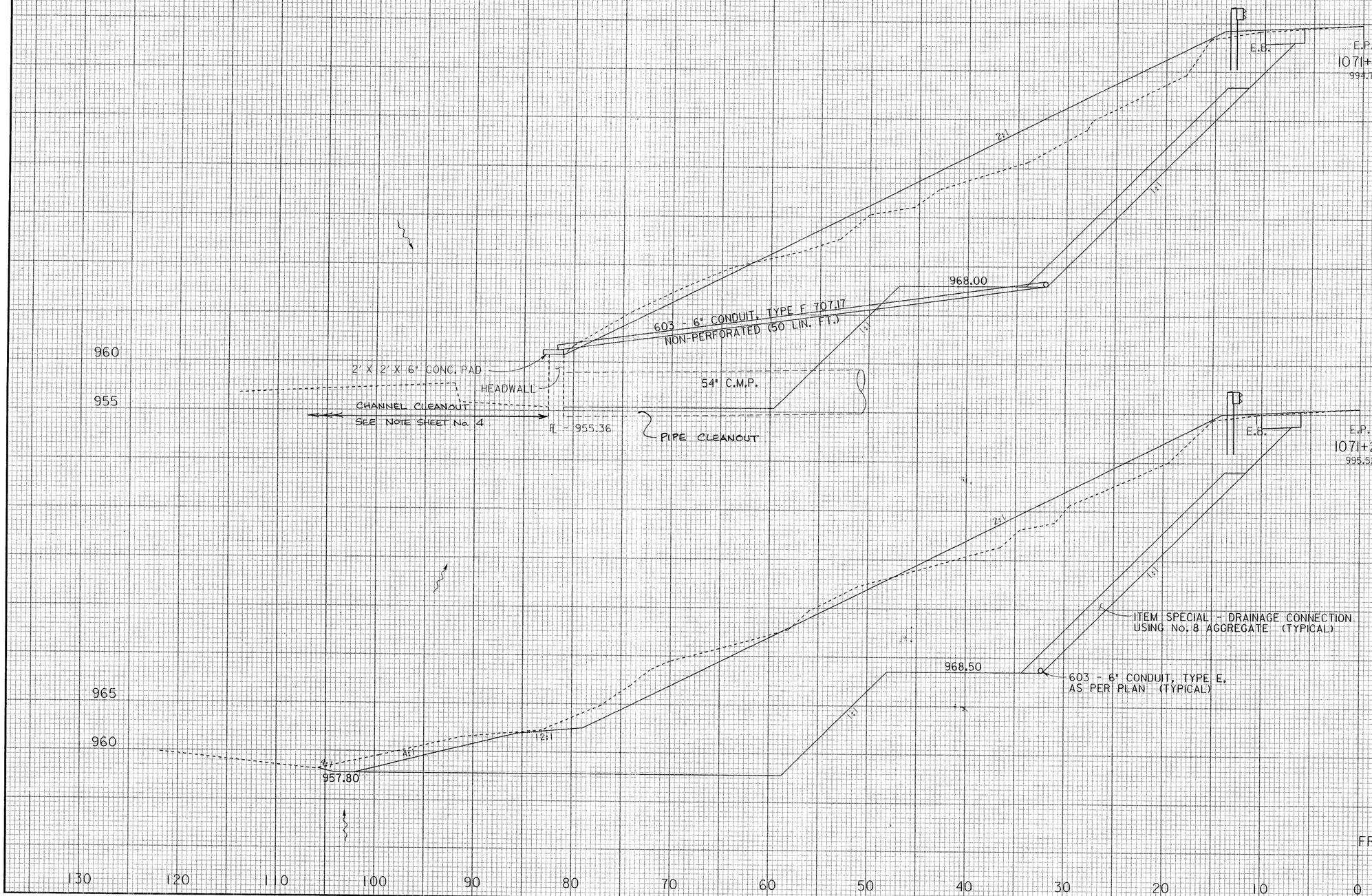

	SEEDING		END AREA		CU. YDS.	
	L.F.	S.Y.	CUT	FILL	EXC.	EMB.
	79		767	808		
		268			759	753
	114		873	819		
		322			790	768
FROM STA. 1071+00	118		834	839		

STA. 1071+25 TO STA. 1071+50

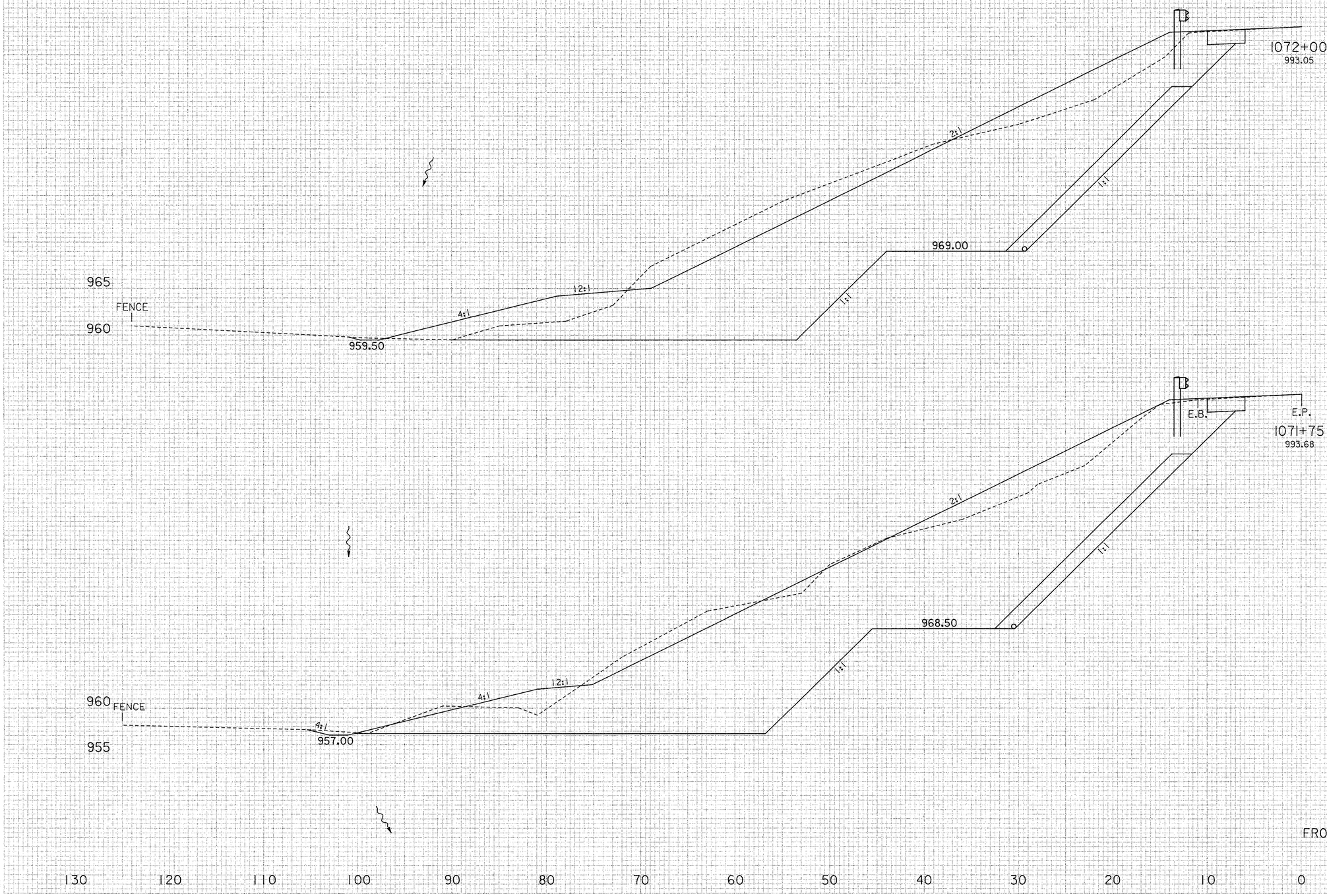

	SEEDING		END AREA		CU. YDS.	
	L.F.	S.Y.	CUT	FILL	EXC.	EMB.
	108		705	697		
		307			687	681
	113		778	773		
		267			715	732
FROM STA. 1071+50	79		767	808		

PLATE 3-FULL CROSS SECTION-FULL LINE

STA. 1071+75 TO STA. 1072+00

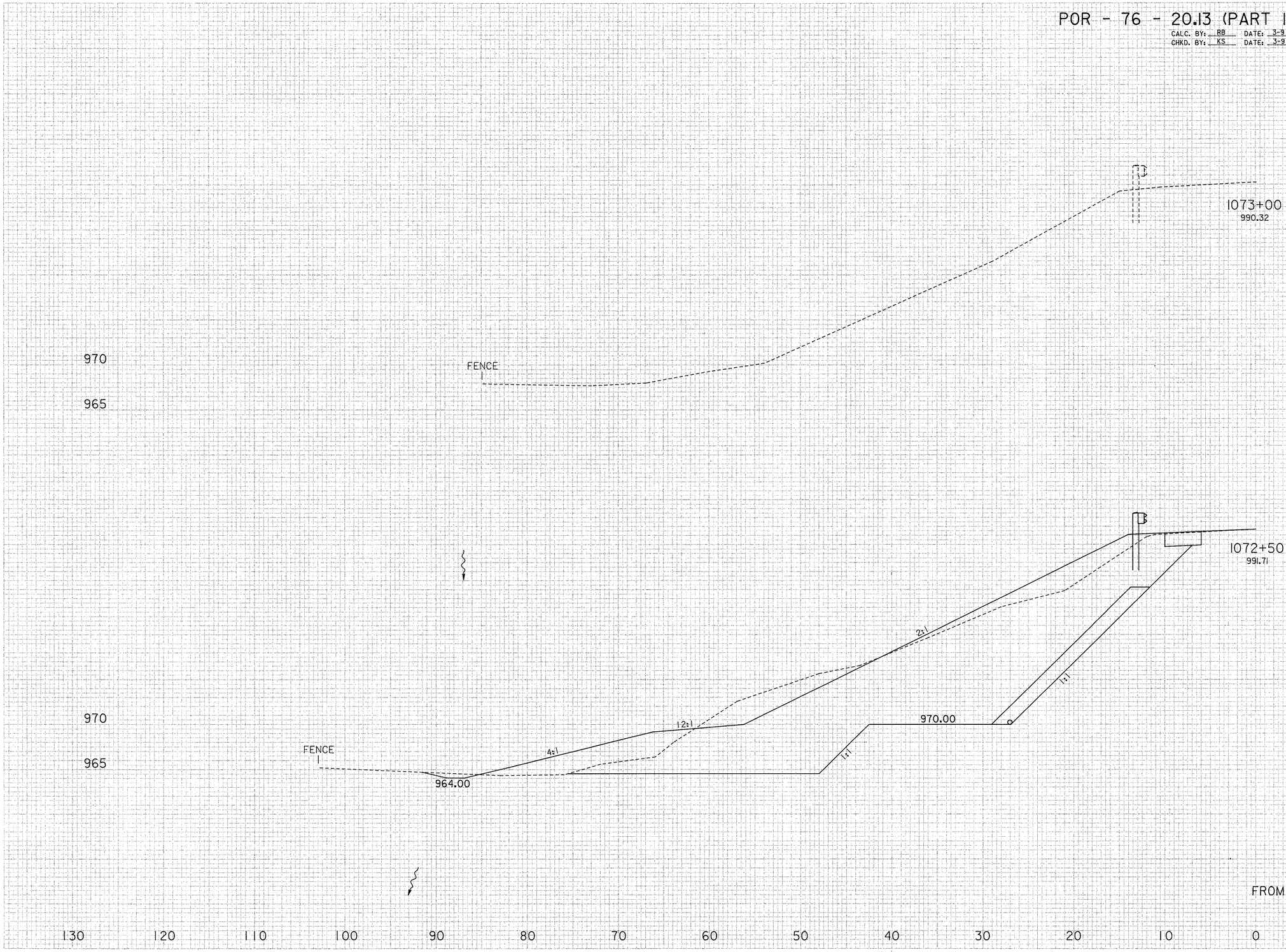

	SEEDING		END AREA		CU. YDS.	
	L.F.	S.Y.	CUT	FILL	EXC.	EMB.
1072+70	0		0	0		
		107			188	191
1072+50	97		508	517		
		569			1123	1124
FROM STA. 1072+00	108		705	697		

PLATE 3-FULL CROSS SECTION-FULL LINE

STA. 1072+50 TO STA. 1073+00

MAINTENANCE OF TRAFFIC GENERAL NOTES

CONTRACTOR'S EQUIPMENT-OPERATION AND STORAGE

THE CONTRACTOR'S EQUIPMENT SHALL BE OPERATED IN THE DIRECTION OF TRAFFIC, WHERE PRACTICAL. A QUALIFIED FLAGGER SHALL BE EMPLOYED WHERE THE CONTRACTOR'S EQUIPMENT MUST MERGE WITH THE TRAFFIC STREAM. THE CONTRACTOR'S EQUIPMENT SHALL BE EQUIPPED WITH AT LEAST ONE AMBER FLASHING LIGHT. PAVERS, ROLLERS AND OTHER EQUIPMENT MAY BE PARKED IN AREAS ALONG THE HIGHWAY WHEN PAVING OPERATIONS ARE SCHEDULED TO CONTINUE WITHIN THE NEXT WORKDAY: OTHERWISE THE EQUIPMENT SHALL BE STORED AT A STORAGE AREA, THE LOCATION OF WHICH SHALL HAVE PRIOR APPROVAL OF THE ENGINEER. WHEN PARKING ALONG THE HIGHWAY THE EQUIPMENT SHALL BE PARKED EITHER FIFTY (50) FEET FROM THE EDGE OF PAVEMENT OR SIX (6) FEET BEHIND GUARDRAIL WITH A MINIMUM OF 125 FEET OF GUARDRAIL PRECEDING THE EQUIPMENT. NO EQUIPMENT SHALL BE PARKED IN THE MEDIAN OF THE HIGHWAY.
ADEQUATE BARRICADES AND LIGHTS SHALL BE PLACED ON THE PAVEMENT SIDE OF THE EQUIPMENT TO IDENTIFY THE LIMITS OF THE EQUIPMENT. ALL OTHER EQUIPMENT, INCLUDING PRIVATE VEHICLES, SHALL BE STORED AT THE APPROVED CONTRACTOR'S STORAGE AREA.

MAINTENANCE OF TRAFFIC

THIS ITEM SHALL CONSIST OF MAINTENANCE OF TRAFFIC ON EXISTING ROADWAYS AND RAMPS IN ACCORDANCE WITH THE OHIO MANUAL OF UNIFORM TRAFFIC CONTROL DEVICES FOR STREETS AND HIGHWAYS, CURRENT EDITION LATEST REVISION, THE SPECIFICATIONS AND THE FOLLOWING:

1. ONE LANE DIRECTIONAL TRAFFIC SHALL BE MAINTAINED ON THE EXISTING PAVEMENT AT ALL TIMES WITHOUT INTERUPTION DURING CONSTRUCTION OF THE WORK.

2. ALL EXISTING LANES SHALL BE OPENED TO THE TRAFFIC BETWEEN NOV. 1, 1992 AND MARCH 1, 1993. OCT. 31, 1992 SHALL BE CONSIDERED TO CONSTITUTE AN INTERM COMPLETION DATE AND LIQUIDATED DAMAGES IN THE AMOUNT OF $500.00 PER DAY SHALL BE ASSESSED FOR EACH CALENDAR DAY THAT THE ROADWAY REMAINS CLOSED TO TRAFFIC BEYOND THE SPECIFIED LIMIT. NO POSTPONEMENT OF THE COMPLETION DATE DUE TO WEATHER OR SEASONAL CONDITIONS WILL BE PERMITTED.

3. ON THIS PROJECT THE TEMPORARY CLASS A PAVEMENT SHALL NOT BE LESS THAN 22 FEET OUT TO OUT OF SHOULDERS. THE ALIGNMENT AND PAVEMENT TYPICAL SHALL BE AS DETAILED ON SHEETS 16 & 17.

THE FOLLOWING ESTIMATED QUANTITIES HAVE BEEN INCLUDED IN THE GENERAL SUMMARY TO BE USED IN CONSTRUCTING THE TEMPORARY CLASS A PAVEMENT.

ITEM 615	TEMPORARY ROADS	LUMP SUM
ITEM 615	TEMPORARY PAVEMENT, CLASS A	4200 SQ. YDS.
ITEM 616	CALCIUM CHLORIDE	4 TONS
ITEM 616	WATER	20 M-GAL.

UPON COMPLETION OF THE PROJECT, THE CONTRACTOR SHALL REMOVE THE TEMPORARY PAVEMENT. THE AFFECTED EXISTING EARTH MEDIAN AND PAVED SHOULDERS SHALL BE RESTORED TO THEIR ORGINAL CONDITION AS DIRECTED BY THE ENGINEER AND AS PER 615.08.

TEMPORARY PAVEMENTS SHALL NOT BE OPENED TO TRAFFIC UNTIL ALL TEMPORARY TRAFFIC CONTROL DEVICES, SIGNS, PAVEMENT MARKINGS AND PORTABLE CONCRETE BARRIERS HAVE BEEN ERECTED AND APPROVED BY THE ENGINEER.

ALTHOUGH ESTIMATES FOR TEMPORARY EXCAVATION, EMBANKMENT AND SEEDING HAVE BEEN SHOWN ON THE PLAN DETAILS, THESE ITEMS SHALL BE CONSIDERED INCIDENTAL TO, AND INCLUDED WITH PAYMENT FOR ITEM 615 TEMPORARY ROADS.

4. THE CONTRACTOR SHALL DESIGNATE AN INDIVIDUAL, OTHER THAN THE SUPERINTENDENT AND SUBJECT TO THE APPROVAL OF THE ENGINEER, TO CONTINOUSLY INSPECT ALL TRAFFIC CONTROL DEVICES WHENEVER CONSTRUCTION WORK IS BEING PERFORMED WITHIN THE WORK LIMITS OF THE PROJECT. THE DESIGNATED INDIVIDUAL SHALL ALSO INSPECT ALL TRAFFIC CONTROL DEVICES AT THE BEGINING AND AT THE END OF EACH WORK DAY. THE DESIGNATED INDIVIDUAL SHALL ALSO BE AVAILABLE ON AN AROUND THE CLOCK BASIS TO REPAIR AND/OR REPLACE DAMAGED OR MISSING TRAFFIC CONTROL DEVICES. PAYMENT FOR THE SERVICES OF THE TRAFFIC INSPECTOR SHALL BE INCLUDED IN THE LUMP SUM PRICE BID FOR EACH ITEM 614 MAINTAINING TRAFFIC.

5. IN AREAS OF LANE CLOSURES THE CONTRACTOR SHALL BE RESPONSIBLE FOR GRADING THE EXISTING SHOULDER NEXT TO THE TRAVELED LANE, TO AN ELEVATION NOT MORE THAN ONE (1) INCH BELOW EXISTING PAVEMENT ELEVATION AND MAINTAINING THE SHOULDERS IN A SAFE CONDITION FOR THE DURATION OF THE PROJECT.

6. CONES SHALL NOT BE ACCEPTABLE TRAFFIC CONTROL DEVICES FOR LANE RESTRICTIONS OR LANE REDUCTIONS THAT ARE IN OPERATION ONE-HALF HOUR AFTER SUNSET OR ONE-HALF HOUR BEFORE SUNRISE. ALL NIGHTTIME LANE RESTRICTIONS OR LANE REDUCTIONS SHALL REQUIRE DRUMS OR BARRICADES AT A MAXIMUM SPACING OF FIFTY (50) FEET. TYPE C STEADY BURNING WARNING LIGHTS SHALL BE MOUNTED ON EACH AND EVERY DRUM BARRICADE USED FOR THE TAPER, TYPE C BARRICADE WARNING LIGHTS SHALL ALSO BE INSTALLED AT 100 FT. INTERVALS FOR THE REMAINDER OF THE PROJECT.

7. A FLASHING ARROW BARRICADE (TC 35.10) SHALL BE USED FOR TRAFFIC CONTROL WHENEVER THERE IS A LANE RESTRICTION, LANE REDUCTION AND LANE SHIFT.

8. ALL TRAFFIC CONTROL DEVICES REQUIRED, EXCEPT REGULATORY SIGNS SHALL BE FURNISHED, ERECTED, MAINTAINED, AND SUBSEQUENTLY REMOVED BY THE CONTRACTOR.

9. THE CONTRACTOR SHALL FURNISH AND MAINTAIN ALL FLAGS, FLAGGERS, WATCHMAN, BARRICADES, SIGNS, SIGN SUPPORTS AND INCIDENTALS RELATED THERETO. THE ABOVE ITEMS SHALL BE UTILIZED IN CONFORMANCE WITH THE OHIO MANUAL OF UNIFORM TRAFFIC CONTROL DEVICES, CURRENT EDITION, LATEST REVISION.

10. A QUANTITY OF 50 CU. YDS. OF 404 BITUMINOUS CONCRETE FOR MAINTAINING TRAFFIC SHALL BE PROVIDED FOR USE IN MAINTAINING PAVEMENT AND SHOULDERS AS DIRECTED BY THE ENGINEER.

11. THIS WORK SHALL CONSIST OF FURNISHING, ERECTING, OPERATING, MAINTAINING AND REMOVING A TEMPORARY LIGHTING SYSTEM FOR A SINGLE CROSSOVER OR OVERLAPPING A PAIR OF CROSSOVERS ON A TWO-WAY, TWO LANE OPERATION. THE SYSTEM SHALL BE AS SHOWN ON STANDARD CONSTRUCTION DRAWING MT-100.00. THE CONTRACTOR SHALL ARRANGE FOR AND PAY FOR POWER. ALL MATERIALS AND CONSTRUCTION SHALL COMPLY WITH APPLICABLE PORTIONS OF 625 AND 713 EXCEPT: THE PERFORMANCE TEST OF 625.22E, AND WORKING DRAWING REQUIREMENT OF 625.04 ARE WAIVED AND USED MATERIALS IN GOOD CONDITION ARE ACCEPTABLE.
LUMINAIRES SHALL BE 120/240V RATED.
POLES SHALL BE LOCATED NO LESS THAN 30' FROM EDGE OF PAVEMENT OR 6.5' BEHIND THE FACE OF GUARDRAIL. ADDITIONAL POLES, CABLES AND APPURTENANCES NECESSARY TO FURNISH POWER SERVICE THE LIGHTING SYSTEM SHALL BE INCLUDED IN THIS ITEM. SERVICE POLES SHALL BE POSITIONED WITH THE SAME CONSTRAINTS AS LIGHTING POLES AS A MINIMUM.

PAYMENT WILL BE MADE AT THE *UNIT* PRICE BID *PER EACH* TEMPORARY CROSSOVER LIGHTING SYSTEM THROUGHOUT ALL PHASES OF WORK WHEN THE CROSSOVER ROADWAYS ARE USED.

ITEM 614 TEMPORARY CROSSOVER LIGHTING SYSTEM, 1 EACH

12. ESTIMATED QUANTITIES OF 4150 LIN. FT. OF ITEM 622 PORTABLE CONCRETE BARRIER AND 380 LIN. FT. OF ITEM 622 PORTABLE CONCRETE BARRIER, BRIDGE MOUNTED, SHALL BE FURNISHED, INSTALLED MAINTAINED AND SUBSEQUENTLY REMOVED BY THE CONTRACTOR. THE PORTABLE CONCRETE BARRIER SHALL BE USED TO SEPARATE OPPOSING DIRECTIONS OF TRAFFIC FOR THE DURATION OF EACH PHASE OF THE TWO LANE, TWO WAY TRAFFIC OPERATION. SEE SHEET 25-28 FOR ADDITIONAL DETAILS.

13. A SAFETY NET OR PLATFORM SHALL BE REQUIRED TO PROTECT THE ROADWAY, RAILROAD OR STREAM DURING THE REMOVAL OF THE EXISTING CONCRETE PARAPET AND DECK. THE CONTRACTOR SHALL PROVIDE A SAFETY NET OR PLATFORM OF SUITABLE STRENGTH ON THE UNDERSIDE OF THE DECK. THE DESIGN OF THE NET OR PLATFORM SHALL CONFORM WITH OSHA REQUIREMENTS AND THE APPROVAL OF THE ENGINEER AND SHALL REMAIN IN PLACE UNTIL THE WORK HAS BEEN COMPLETED AND ACCEPTED OR AS DIRECTED BY THE ENGINEER.

14. FOR ADDITIONAL MAINTENANCE OF TRAFFIC NOTES, DETAILS AND SKETCHES, SEE SHEET NOS. 25-28 IN REFERENCE TO THESE SHEETS,

15. UNDER NO CIRCUMSTANCES SHALL THE CONTRACTOR BE PERMITTED TO HAVE WORK ZONES THAT ALTERNATELY CLOSE BOTH THE PASSING LANE AND THE DRIVING LANE UNLESS THE DISTANCE BETWEEN THE DRUMS, BARRICADES OR CONES EXCEEDS TWO (2) MILES.

THE FOLLOWING QUANTITIES SHALL BE USED FOR THE MAINTENANCE OF TRAFFIC ON THIS PROJECT:

ITEM 622	PORTABLE CONCRETE BARRIER, 50", AS PER PLAN	4150 LIN. FT.
ITEM 614	TEMPORARY RAISED PAVEMENT MARKERS, TYPE A	774 EACH
ITEM 614	MAINTAINING TRAFFIC	LUMP SUM
ITEM 404	BITUMINOUS CONCRETE FOR MAINTAINING TRAFFIC	50 CU. YD.
ITEM 614	TEMPORARY EDGE LINE, CLASS I	4.04 MI.
ITEM 614	BARRIER REFLECTORS TYPE B	380 EACH
ITEM 622	PORTABLE CONCRETE BARRIER, 50", BRIDGE MOUNTED	380 LIN. FT.

TRAFFIC CONTROL STANDARD CONSTRUCTION DRAWINGS

REFERENCES TO SUPPLEMENTAL SPECIFICATIONS 857,858,861,847,957,958 961,947, AND ITEM 621 ON THE TRAFFIC CONTROL STANDARD CONSTRUCTION DRAWINGS IN THESE PLANS SHALL BE CONSIDERED TO READ AS RESPECTIVE REFERENCES TO ITEMS 630,631,633. ,645,730,731,733,740 AND 642.

614 BARRIER REFLECTORS

THESE REFLECTORS AND THEIR MOUNTING SHALL CONFORM TO SUPPLEMENTAL SPECIFICATION 802 EXCEPT THAT THE SPACING SHALL BE 10'. AN ESTIMATED QUANTITY OF 380 EACH OF ITEM 614 BARRIER REFLECTOR, TYPE B HAS BEEN PROVIDED AND CARRIED TO THE GENERAL SUMMARY

TEMPORARY PAVEMENT MARKINGS

TEMPORARY LINE PAVEMENT MARKINGS SHALL BE 6" IN WIDTH AND SHALL BE INSTALLED BY THE CONTRACTOR AS PER MT-99.10. ALL TEMPORARY PAVEMENT MARKINGS SHALL BE INSTALLED PRIOR TO SETTING THE TEMPORARY CONCRETE BARRIER.

TRAFFIC CONTROL DEVICES

ALL TRAFFIC CONTROL DEVICES SHALL BE FURNISHED BY THE CONTRACTOR AND SHALL BE ERECTED AND MAINTAINED IN COMPLIANCE WITH THE STATE OF OHIO MANUAL OF UNIFORM TRAFIC CONTROL DEVICES CURRENT EDITION, LATEST REVISION. THE CONTRACTOR SHALL BE RESPONSIBLE AT ALL TIMES FOR PROVIDING AND MAINTAINING LIGHTS, SIGNS, AND BARRICADES FOR THE MAINTENANCE OF TRAFFIC AND SAFETY OF THE WORK AT THE LOCATIONS SHOWN ON THESE PLANS OR AS DIRECTED BY THE ENGINEER. ANY REPAIRS TO TRAFFIC CONTROL DEVICES SHALL BE PERFORMED WITHIN 24 HOURS OF NOTIFICATION.

SUSPENSION OF WORK

IF THE CONTRACTOR FAILS TO COMPLY WITH THE PROVISIONS FOR TRAFFIC CONTROL AS SET FORTH IN THESE PLANS OR WITH PROVISIONS OF THE MANUAL THE ENGINEER SHALL SUSPEND WORK UNTIL THE CONTRACTOR COMPLIES WITH THE NECESSARY REQUIREMENTS.

MAINTENANCE OF TRAFFIC GENERAL NOTES

PRIOR NOTICE

EIGHTEEN (18) DAYS PRIOR TO IMPLEMENTATION OF ANY MAINTENANCE OF TRAFFIC MEASURE, THE CONTRACTOR SHALL PROVIDE WRITTEN NOTIFICATION TO THE PROJECT ENGINEER AND THE DISTRICT TRAFFIC ENGINEER, OF THE TYPE WORK TO BE DONE, THE MAINLINE LANE CLOSURES AND ANY PERTINENT MAINTENANCE OF TRAFFIC INFORMATION

PRIVATE VEHICLES

NO PRIVATE VEHICLES (BELONGING TO THE CONTRACTOR'S EMPLOYEES OR TO ODOT PERSONNEL ASSIGNED TO THE PROJECT) SHALL BE PARKED WITHIN THE ROADWAY TRAVEL PORTION (PAVEMENT AND SHOULDER) OF THE HIGHWAY PROJECT LIMITS.

ALTERNATE MAINTENANCE OF TRAFFIC PLANS

IF THE CONTRACTOR SO ELECTS HE/SHE MAY SUBMIT ALTERNATE METHODS FOR THE MAINTENANCE OF TRAFFIC, PROVIDED THE INTENT OF THE ABOVE PROVISIONS ARE FOLLOWED AND NO ADDITIONAL INCONVIENCE TO THE TRAVELING PUBLIC RESULTS THEREFROM. NO ALTERNATE PLAN SHALL BE PLACED INTO EFFECT UNTIL APPROVAL HAS BEEN GRANTED IN WRITING BY THE ODOT DISTRICT DEPUTY DIRECTOR.

ITEM 622-PORTABLE CONCRETE BARRIER, 50" AS PER PLAN

THIS WORK SHALL CONSIST OF THE FURNISHING, INSTALLATION, MAINTENANCE, AND SUBSEQUENT REMOVAL OF A 50" PORTABLE CONCRETE BARRIER AT THE LOCATIONS SHOWN ON THE PLANS. THE INDIVIDUAL SECTIONS SHALL NOT BE LESS THAN 10' IN LENGTH.

PORTABLE CONCRETE BARRIER, TYPE A32 WITH AN 18" MINIMUM HEIGHT GLARE SCREEN MAY BE USED AT THE OPTION OF THE CONTRACTOR. THE PORTABLE CONCRETE BARRIER, TYPE A32, SHALL BE CONSTRUCTED USING ONE (1) OF THE FOLLOWING SYSTEMS OR EQUAL APPROVED BY THE ENGINEER.

SYRO GLAREFOIL
SYRO STEEL COMPANY
1170 NORTH STATE ST.
GIRARD, OHIO 44420
(216) 545-4373

CARSONITE MODULAR GLARE SCREEN
CARSONITE INTERNATIONAL
2900 LOCKHEED WAY
CARSON CITY, NEVADA 89701
(702) 883-5104 (800) 648-7974

FORWARD GLARE SCREEN
PROVEN PRODUCTS INC.
7560 S.W. LAVIEW DRIVE
PORTLAND, OREGON 97219
(503) 244-9185

PADDLE OR INTERMITTEN-TYPE GLARE SCREEN SHALL BE DESIGNED USING A 20 DEGREE CUT-OFF ANGLE BASED ON TANGENT ALIGNMENT. THAT SPACING SHALL BE USED THROUGHOUT THE BARRIER LENGTH WITHOUT REGARD TO THE BARRIER CURVATURE. THE GLARE SCREEN SYSTEM ATTACHED TO THE 32" PORTABLE CONCRETE BARRIER SHALL BE SECURELY FASTENED USING THE HARDWARE AND PROCEDURES SPECIFIED BY THE MANUFACTURER.

PORTABLE CONCRETE BARRIER WHICH HAS BECOME DAMAGED BEYOND REPAIR BY TRAFFIC SHALL BE REPLACED BY THE CONTRACTOR WITHIN TWENTY-FOUR (24) HOURS OF NOTIFICATION OF THE INCIDENT WHICH CAUSED THE DAMAGE. REPLACEMENT BARRIER SHALL BE AS PER SECTION 622.04 OF THE SPECIFICATIONS.

PAYMENT SHALL INCLUDE FURNISHING, INSTALLATION, MAINTENANCE AND SUBSEQUENT REMOVAL OF PORTABLE CONCRETE BARRIER INCLUDING ALL LABOR, MATERIAL, AND EQUIPMENT NECESSARY TO PERFORM THE WORK. THIS ITEM SHALL BE PAID FOR BY THE ACTUAL LINEAL FEET OF ITEM 622 PORTABLE CONCRETE BARRIER, TYPE A50, AS PER PLAN, INSTALLED AT A PARTICULAR LOCATION REGARDLESS OF WHETHER THE SAME SECTION OF BARRIER COULD BE RE-USED AGAIN ON THE PROJECT.

ITEM 622-PORTABLE CONCRETE BARRIER, 50" BRIDGE MOUNTED

ALL PORTABLE CONCRETE BARRIER ON BRIDGES SHALL BE BRACED AS SHOWN ON SHEET 25, 26 ALL PROVISIONS OF ITEM 622-PORTABLE CONCRETE BARRIER, 50" AS PER PLAN SHALL APPLY TO BRIDGE MOUNTED BARRIER.

THE UNIT BID PRICE FOR ITEM 622-PORTABLE CONCRETE BARRIER, 50" BRIDGE MOUNTED SHALL BE FULL COMPENSATION FOR FURNISHING, INSTALLATION, MAINTENANCE, AND SUBSEQUENT REMOVAL OF TEMPORARY CONCRETE BARIER ON BRIDGES, AND ALL MATERIALS INCLUDING BRACING AND MISCELLANEOUS HARDWARE, AND LABOR REQUIRED TO MAKE THIS ITEM COMPLETE. THIS ITEM SHALL BE PAID FOR BY THE ACTUAL LINEAL FEET OF ITEM 622-PORTABLE CONCRETE BARRIER, 50", BRIDGE MOUNTED INSTALLED AT A PARTICULAR LOCATION REGARDLESS OF WHETHER THE SAME SECTION OF BARRIER COULD BE RE-USED AGAIN ON THE PROJECT.

LAW ENFORCEMENT OFFICER

THE CONTRACTOR SHALL PROVIDE THE SERVICE OF LAW ENFORCEMENT OFFICER (L.E.O.) WITH A PATROL CAR. AT THE ENGINER'S REQUEST, FOR THE PURPOSE OF CONTROLLING THROUGH TRAFFIC. THE L.E.O. WITH A PATROL CAR SHALL BE UTILIZED DURING INSTALLATON AND REMOVAL OF TRAFFIC CONTROL DEVICES FOR LANE CLOSURES AND AS AUTHORIZED BY THE ENGINEER.

INFORMATION REGARDING ARRANGEMENTS AND PAYMENTS BY THE CONTRACTOR FOR THE L.E.O. MAY BE OBTAINED BY CONTACTING OHIO HIGHWAY PATROL 660 EAST MAIN ST., COLUMBUS, OHIO. TELEPHONE: (614) 466-2300.

IF AFTER CONTACTING THE OHIO HIGHWAY PATROL IT IS DETERMINED THAT THEY CANNOT SUPPLY THE L.E.O., THEN AN AUTHORIZED MUNICIPAL OR COUNTY POLICE OFFICER EQUIPPED WITH A MARKED AND FLASHER-LIGHT EQUIPPED OFFICAL POLICE OR PATROL CAR SHALL BE PROVIDED.

THIS REQUIREMENT DOES NOT PRECLUDE THE CONTRACTORS USE OF AN L.E.O. FOR OTHER PURPOSES OF CONTROLLING TRAFFIC AS APPROVED BY THE ENGINEER.
THE L.E.O. SHALL BE CONSIDERED AN EMPLOYEE OF THE CONTRACTOR AND THE CONTRACTOR SHALL BE RESPONSIBLE FOR HIS/HER ACTIONS. ALTHOUGH EMPLOYED BY THE CONTRACTOR, THE PROJECT ENGINEER SHALL HAVE CONTROL OVER THE L.E.O. PLACEMENT AND HIS/HER ACTIVITIES.
PAYMENT SHALL BE AT THE UNIT BID PRICE FOR THE ACTUAL NUMBER OF HOURS FOR EACH ITEM SPECIAL-LAW ENFORCEMENT OFFICER WITH PATROL CAR.

ITEM SPECIAL-LAW ENFORCEMENT OFFICER WITH PATROL CAR 40 HOURS

ITEM 614-REPLACEMENT BARRIER REFLECTORS, TYPE B

REPLACEMENT BARRIER REFLECTORS AND THEIR MOUNTING SHALL CONFORM TO SUPPLEMENTAL SPECIFICATION 802 EXCEPT THAT SPACING SHALL BE AT 10' INCREMENTS, ONE REFLECTOR PER EACH UNIT OF PORTABLE CONCRETE BARRIER.

THE FOLLOWING QUANTITY HAS BEEN INCLUDED IN THE MAINTENANCE OF TRAFFIC SUMMARY FOR USE AS DIRECTED BY THE ENGINEER FOR REPLACEMENT OF BARRIER REFLECTORS:

ITEM 614-	BARRIER REFLECTORS, TYPE B (FOR REPLACEMENT)	30 EACH

NIGHT WORK

UNLESS OTHERWISE REQUIRED BY SPECIFIC NOTE, NO WORK SHALL BE DONE AT NIGHT UNLESS WRITTEN APPROVAL BY THE PROJECT ENGINEER HAS BEEN RECEIVED. THE CONTRACTOR'S REQUEST FOR USE OF NIGHT WORK SHALL INCLUDE THE TYPE OF WORK TO BE DONE. THE DURATION OF THE WORK LOCATION OF THE INTENDED WORK, AND THE CONTRACTOR'S TEMPORARY LIGHTING PLAN. ALL TEMPORARY LIGHTING REQUIRED FOR THE NIGHT WORK SHALL BE AT THE CONTRACTOR'S EXPENSE.

SEQUENCE OF CONSTRUCTION

GENERAL: WHEN THE BRIDGE IS BEING DEMOLISHED, THE AFFECTED LANE ON UNIVERSAL RD. WILL BE CLOSED AS PER MT-97.10. NO DEMOLITION SHALL TAKE PLACE OVER TRAFFIC.

PHASE 1:
BUILD CROSSOVERS AS SHOWN ON SHEETS 16,17. WHEN ANY WORK IS BEING PERFORMED OR EQUIPMENT IS WITHIN 12' OF A TRAVELED LANE, THAT LANE SHALL BE CLOSED AS PER STANDARD CONSTRUCTION DRAWING MT-95.30.

PHASE 2:
ERECT ALL TRAFFIC CONTROL DEVICES NEEDED TO CROSS WESTBOUND TRAFFIC OVER TO THE EASTBOUND INSIDE LANE AS PER STANDARD CONSTRUCTION DRAWING MT-95.70. CROSS TRAFFIC OVER TO EASTBOUND LANE. REPAIR THE SLIDE AREA AS PER THE SEQUENCE OF CONSTRUCTION ON SHEET 3 AND PERFORM ALL WORK ON NORTH STRUCTURE AND ROADWAY.

PHASE 3:
ERECT ALL TRAFFIC CONTROL DEVICES NEEDED TO CROSS EASTBOUND TRAFFIC OVER TO THE WESTBOUND INSIDE LANE AS PER STANDARD CONSTRUCTION DRAWING MT-95.70. CROSS WESTBOUND TRAFFIC OVER TO EASTBOUND LANE. PERFORM ALL WORK ON THE SOUTH STRUCTURE AND ROADWAY.

PHASE 4:
MOVE TRAFFIC TO ORGINAL LANES. REMOVE ALL CROSSOVER PAVEMENT AND RESEED THE AREA.

INSTALLATION AND RESETTING CONSTRUCTION PHASES

ONLY DURING OFF-PEAK TRAFFIC PERIODS (ie. ANY PERIOD OTHER THAN 7-9 A.M. AND 4-5 P.M.) SHALL THE CONTRACTOR INSTALL AND SUBSEQUENTLY RESET ALL TRAFFIC CONTROL DEVICES NECESSARY FOR MAINTAINING TRAFFIC FOR EACH CONSTRUCTION PHASE.

625.03 GENERAL

THE POWER SUPPLYING AGENCY FOR THIS PROJECT IS: OHIO EDISON COMPANY
76 S. MAIN ST.
AKRON, OHIO 44308
(216) 384-4702
ATTN: PAUL SEVERYN
DIV. ENG.

POWER SERVICE: 120/240 VOLT, 2 WIRE, SINGLE PHASE, GROUNDED NEUTRAL.

METHOD OF PAYMENT

PAYMENT FOR THE MAINTENANCE OF TRAFFIC ITEMS, UNLESS SPECIFIED SEPARATELY, SHALL BE AT THE LUMP SUM PRICE BID FOR ITEM-614 MAINTAINING TRAFFIC, WHICH SHALL INCLUDE ALL LABOR, EQUIPMENT, MATERIALS AND INCIDENTALS TO COMPLETE THE WORK AS DETAILED IN THE PLANS.

TEMPORARY SIGN SUPPORT REQUIREMENTS

A. PLACEMENT OF SIGNS WHICH WILL REMAIN MORE THAN ONE DAY:

1) LATERAL PLACEMENT TO NEAREST EDGE OF SIGNS SHALL BE AS FOLLOWS:

a) ON THE RIGHT SIDE OF THE ROAD FOR APPROACHING TRAFFIC (EXCEPT FOR DUAL MOUNTED SIGNS AND SIGNS DESIGNATED IN THE PLANS FOR LEFT SIDE MOUNTING).

b) CURBED ROADWAY - PREFERABLY 2 FT. (MINIMUM 1 FT.) BEHIND FACE OF CURB.

c) UNCURBED ROADWAY-12 FT. FROM EDGE OF TRAFFIC LANE OR 6 FT. FROM EDGE OF PAVED OR USEABLE SHOULDER, WHICHEVER IS GREATER.

d) BEHIND GUARDRAIL OR BARRIER - PREFERABLY 2 FT. BEHIND FACE OF GUARDRAIL (MINIMUM 1 FT.) FOR SIGNS ON CLASS A SUPPORTS: 4 FT. FOR CLASS B OR C SUPPORTS 1 FT. BEHIND FACE OF CONCRETE BARRIER UNLESS BARRIER TOP MOUNTING IS REQUIRED BY THE PLAN.

2) VERTICAL CLEARANCE OF SIGNS, MEASURED ABOVE ROADWAY ELEVATION; SHALL BE AS FOLLOWS:

a) RURAL - 5 FT. WHEN PARKED CARS, CONSTRUCTION EQUIPMENT, ETC WILL NOT OBSCURE SIGN VISIBILITY.

b) RURAL AREAS WITH PARKED CARS OR CONSTRUCTION EQUIPMENT - 7 FT.

c) URBAN - 7 FT.

d) CARE SHALL BE TAKEN TO ASSURE THAT SIGNS WILL NOT BE OBSCURED BY CONSTRUCTION EQUIPMENT, TREES, WEEDS OR OTHER OBSTACLES. BRUSH, WEEDS OR GRASS WITHIN THE RIGHT OF WAY SHALL BE TRIMMED AS NECESSARY. SIGNS SHALL NORMALLY BE VISIBLE TO TRAFFIC 400 TO 600 FT. IN ADVANCE OF THE SIGN.

3) SUPPORTS FOR SIGNS WHICH WILL REMAIN IN PLACE MORE THAN ONE DAY SHALL BE FIXED RATHER THAN PORTABLE EXCEPT IN SITUATIONS WHERE THE SIGN MUST REST ON PERMANENT PAVEMENT OR OTHER SURFACE WHICH WOULD BE DAMAGED BY INSERTION OF POST TYPE SUPPORTS.

B. PLACEMENT OF SIGNS WHICH WILL REMAIN FOR ONE DAY OR LESS:

1) SAME AS A-1 ABOVE EXECPT THAT SIGNS MAY BE PLACED ON THE ROADWAY ONLY IF THEY DO NOT INTRUDE INTO A TRAFFIC LANE IN USE.

2) MINIMUM OF 1 FT. ABOVE ROADWAY

C. CLASSES OF SUPPORTS:

ALL TEMPORARY SIGN SUPPORTS SHALL BE OF THE FOLLOWING TYPES:

1) CLASS A:

SUPPORTS SHALL BE USED FOR EXPOSED LOCATIONS ON HIGHWAYS WHERE TRAFFIC APPROACH SPEEDS OF 40 MPH AND HIGHER ARE ENCOUNTERED. THEY ARE ALSO SUITABLE FOR USE IN ALL OTHER LOCATIONS.

2) CLASS B:

SUPPORTS SHALL BE USED FOR EXPOSED LOCATIONS ON HIGHWAYS WHERE TRAFFIC APPROACH SPEEDS OF LESS THAN 40 MPH ARE ENCOUNTERED. THEY ARE ALSO SUITABLE FOR USE IN ALL APPLICATIONS DEFINED FOR CLASS C SUPPORTS.

3) CLASS C:

SUPPORTS MAY ONLY BE USED WHERE FULLY PROTECTED BY GUARDRAIL, CONCRETE BARRIER AND IN LOCATIONS POSITIVELY PROTECTED FROM TRAFFIC SUCH AS ON RETAINING WALLS OR WHERE TRAFFIC APPROACH SPEEDS ARE LESS THAN 25 MPH.

D. TRAFFIC APPROACH SPEEDS:

TRAFFIC APPROACH SPEEDS SHALL BE THE LOCALLY POSTED SPEED (NOT ADVISORY SPEED SIGNS) OR THE MEASURED ACTUAL (85TH PERCENTILE) SPEED (IF AVAILABLE) OF APPROACHING TRAFFIC, WHICHEVER IS HIGHER, ADJACENT TO THE SIGN LOCATION.

TABLE

APPROACH SPEED (MPH)	COMPLETELY PROTECTED BY GUARDRAIL OR BARRIER	PARTLY PROTECTED BY GUARDRAIL OR BARRIER ✳	GREATER THAN 30' FROM EDGE OF PAVEMENT	WITHIN 30' FROM EDGE OF PAVEMENT
40 AND HIGHER	A, B OR C	A OR B	A OR B ✳✳	A ONLY
26 TO 39	A, B OR C	A OR B	A OR B	A OR B
0 TO 25	A, B OR C	A, B OR C	A, B OR C	A, B OR C

✳ IF SUPPORTS ARE BEHIND GUARDRAIL BUT NOT FULLY 5.5' BEHIND FACE OF RAIL OR IF SIGN IS NOT 1' BEHIND FACE OF CONCRETE BARRIER.

✳✳ 30' CRITERION IS BASED UPON STRAIGHT ROADWAY AND A SLOPE OF 6:1 OR FLATTER. SUPPORTS ON THE OUTSIDE OF CURVES OR LOCATED DOWN A SLOPE (STEEPER THAN 6:1) WILL REQUIRE USE OF CLASS A SUPPORTS.

E. BALLASTING

BALLASTING OF PORTABLE SUPPORTS SHALL BE WITH SANDBAGS PLACED WITHIN 1 FT. OF THE GROUND. IN NO CASE SHALL HARD OBJECTS BE USED FOR BALLAST.

F. STRENGTH OF SIGN SUPPORTS

THE CONTRACTOR SHALL CHOOSE SIGN SUPPORTS OF ADEQUATE STRENGTH AND WITH ADEQUATE FOUNDATIONS AND ANCHORAGE TO SUPPORT THE SIGN SIZES ERECTED. PROPRIETARY DEVICES SHALL NOT BE LOADED BEYOND THE LIMITS RECOMMENDED BY THE MANUFACTURER. SLIP BASE TYPE BREAKAWAY BEAM CONNECTIONS SHALL BE AT LEAST PARTIALLY EMBEDDED IN CONCRETE CONSISTING OF A 1 FT. DEEP BY 12" DIAMETER COLLAR. SIGN SUPPORTS WHICH FAIL UNDER TYPICAL WIND LOAD CONDITIONS SHALL BE IMMEDIATELY MODIFIED OR REPLACED WITH A SUPPORT OF ADEQUATE STRENGTH.

G. PROHIBITED SUPPORTS

THE FOLLOWING SUPPORT TYPES SHALL NOT BE PERMITTED ON PROJECTS:

1) SUPPORTS FABRICATED FROM AUTOMOTIVE AXLE DIFFERENTIAL ASSEMBLIES AND SIMILARLY HEAVY ASSEMBLIES WHICH CANNOT BE CONSIDERED BREAKAWAY TYPE.

2) SUPPORTS CONSISTING OF VERTICAL POSTS WITH ANGLED BRACES MADE FROM DRIVEPOST OR OTHER RIGID ELEMENTS.

CLASS A SUPPORTS

FIXED SUPPORTS

1) ALL #2, #3, AND #4 POST WHEN INSTALLED SINGLY OR IN PAIRS ACCORDING TO THE DETAILS OF TC-41.20. THE NUMBER OF SUPPORTS SHALL BE AS SHOWN ON TC-52.10 AND TC-52.20.

2) THE FOLLOWING POST TYPES, WHEN INSTALLED SINGLY, BY IMBEDMENT OR DRIVING INTO EARTH TO A DEPTH OF ABOUT 42 INCHES:

a) - UP TO 4" X 4" WOOD

b) - UP TO 2 INCH DIAMETER SCHEDULE 40 STEEL PIPE

c) - UP TO 3 INCH DIAMETER SCHEDULE 40 ALUMINUM PIPE

d) - UP TO 2¼INCH SQUARE, 12 GAUGE WALL, PUNCHED STEEL POST

e) - UP TO 6" X 8" WOOD WITH BREAKAWAY HOLES SHOWN BELOW

3) THE FOLLOWING POST TYPES WHEN INSTALLED IN PAIRS WITH LESS THAN 7 FT. BETWEEN POSTS, BY IMBEDMENT OR DRIVING INTO EARTH TO A DEPTH OF ABOUT 42 INCHES:

a) - UP TO 4" X 4" WOOD

b) - UP TO 2 INCH DIAMETER SCHEDULE 40 STEEL PIPE

c) - UP TO 3 INCH DIAMETER SCHEDULE 40 ALUMINUM PIPE

d) - UP TO 2 INCH SQUARE, 14 GAUGE WALL, PUNCHED STEEL POST

4) FIXED TYPE III BARRICADES:

5) ALL BREAKAWAY CONNECTION BEAM SUPPORTS, WHEN INSTALLED ACCORDING TO THE PROPER DETAILS SHOWN ON TC-41.10 WITH A MINIMUM CLEAR DISTANCE BETWEEN SUPPORTS OF 7 FT. FOR SUPPORTS LARGER THAN W6 X 9.

6) ANY BREAKAWAY POST OR POST AND CONNECTION WHICH HAS BEEN CRASH TESTED AND APPROVED BY THE FHWA AS SATISFYING THE BREAKAWAY CRITERIA DESCRIBED IN 630.06.

(CONTINUED ON 15B)

ALL WORK AND TRAFFIC CONTROL DEVICES SHALL BE IN ACCORDANCE WITH 614 AND OTHER APPLICABLE PORTIONS OF THE C & M SPECIFICATIONS AS WELL AS IN ACCORDANCE WITH PART 7 OF THE OMUTCD. PAYMENT FOR ALL LABOR, EQUIPMENT AND MATERIALS TO PROVIDE THIS METHOD OF TRAFFIC CONTROL SHALL BE INCLUDED IN THE LUMP SUM BID FOR 614 MAINTAINING TRAFFIC, UNLESS SEPARATELY ITEMIZED IN THE PLAN.

REVISED BY:	DATE:	
210510		DATE 05/07/90
TEMPORARY SIGN SUPPORT		
PLAN INSERT SHEET		

WCC

CALC BY ____ DATE ____	POR-76-20.13	OHIO	158
CHKD BY ____ DATE ____		FHWA REGION 5	28

CLASS A SUPPORTS

FIXED

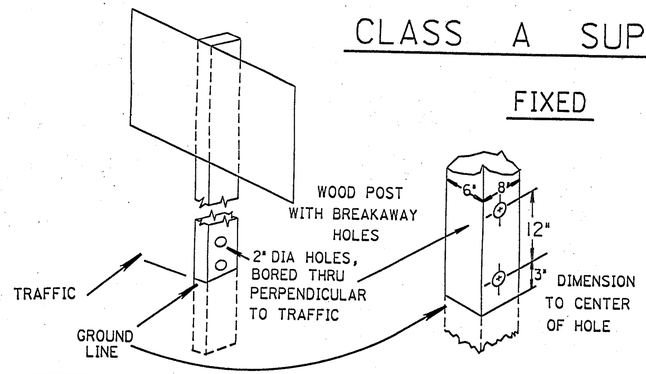

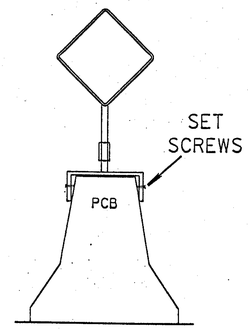

PORTABLE

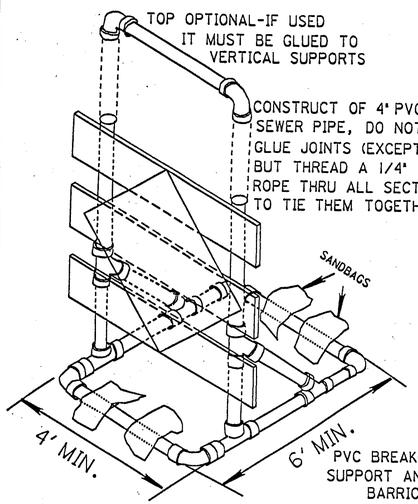

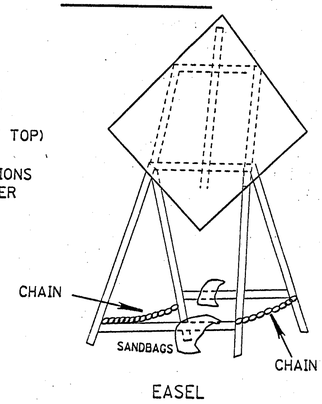

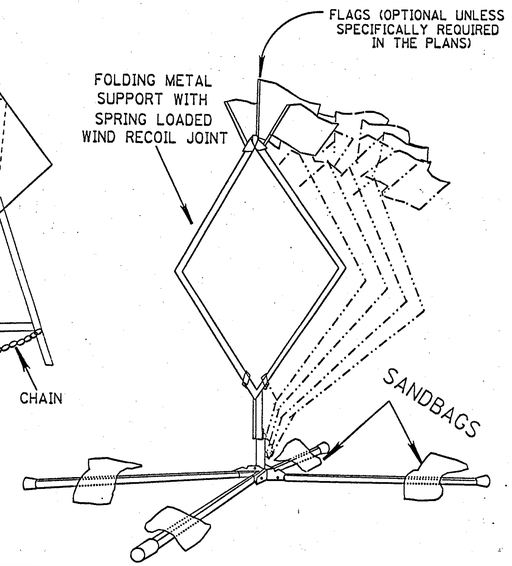

STUBBING STANDARD

DIRECTION OF TRAFFIC

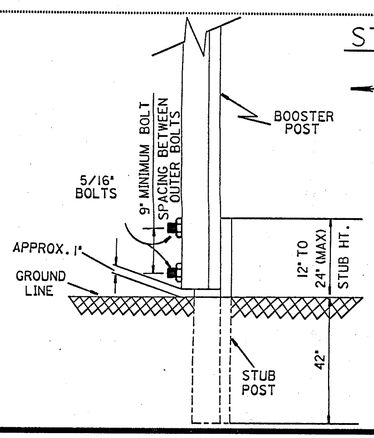

NOTES

1. FOR USE WITH #3 POST OR SMALLER ONLY
2. BOLTS SHALL BE STEEL OR ALUMINUM
3. A MINIMUM OF TWO FASTENERS SHALL BE USED PER ASSEMBLY
4. BOOSTER POST SHALL BE MOUNTED BEHIND STUB POST
5. BOOSTER POST SHALL BE THE SAME OR 1 LB./FT. LESS THAN STUB POST

CLASS B SUPPORTS

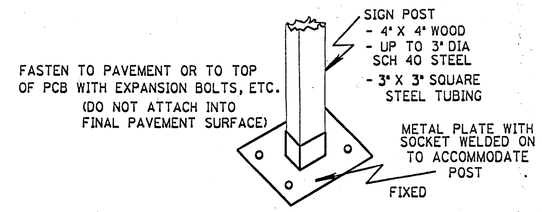

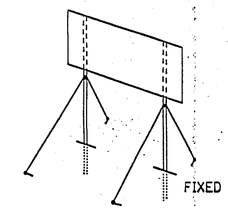

ANY CLASS A SIGN POST WITH GUY WIRES ADDED TO INCREASE SIGN CARRYING ABILITY. (GUY WIRES SHALL NOT BE HEAVIER THAN 1/8" DIA. BRAIDED CABLE. GUY ANCHORS SHALL NOT EXTEND MORE THAN 6" ABOVE GROUND SURFACE).

CLASS C SUPPORTS

1. ALL BEAM TYPE SUPPORTS WITHOUT BREAKAWAY CONNECTIONS.
2. SUPPORTS SIMILAR TO BUT LARGER THAN PERMITTED FOR CLASS A OR B.
3. THE STEEL DRUM(S) SHOWN BELOW MAY BE USED ONLY WHEN LOCATED BEHIND GUARDRAIL OR BARRIER.

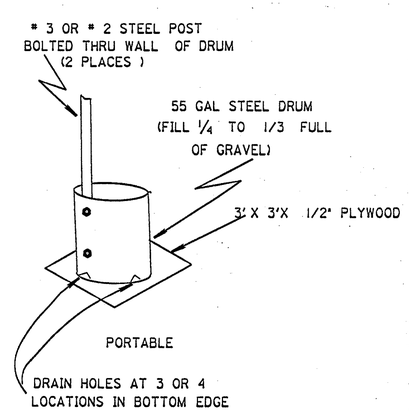

ALL WORK AND TRAFFIC CONTROL DEVICES SHALL BE IN ACCORDANCE WITH 614 AND OTHER APPLICABLE PORTIONS OF THE C & M SPECIFICATIONS AS WELL AS IN ACCORDANCE WITH PART 7 OF THE OMUTCD. PAYMENT FOR ALL LABOR, EQUIPMENT AND MATERIALS TO PROVIDE THIS METHOD OF TRAFFIC CONTROL SHALL BE INCLUDED IN THE LUMP SUM BID FOR 614 MAINTAINING TRAFFIC, UNLESS SEPARATELY ITEMIZED IN THE PLAN.

REVISED BY:	DATE:	
210511		DATE 05/07/90
TEMPORARY SIGN SUPPORT		
PLAN INSERT SHEET		

WCC

POR-76-20.13 PART II

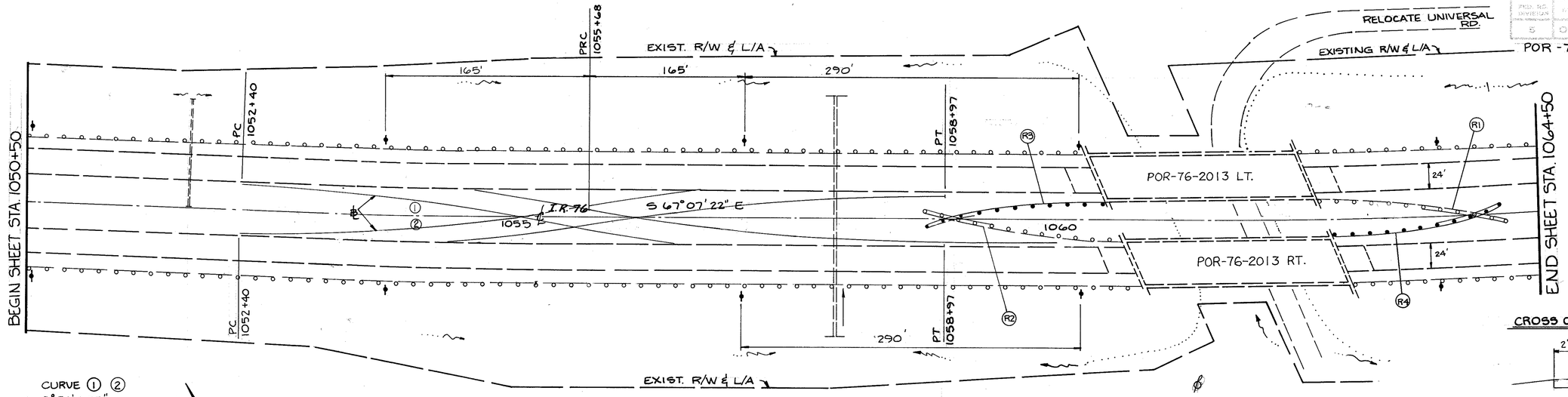

CURVE ① ②
Δ = 9°54'4.55"
D = 3°0'0"
L = 330.04'
T = 165.44'
E = 7.15'
R = 1910'

NOTES:

1.) SIGNING, STRIPING AND PLACEMENT OF PORTABLE CONCRETE BARRIER SHALL COMPLY WITH STANDARD CONSTRUCTION DRAWING MT-95.70

2.) ALL LANES TO HAVE A MINIMUM OF 11' WIDTH IN THE CONSTRUCTION ZONE.

* SEE PART I FOR QUANTITIES.

** THESE QUANTITIES SHALL BE INCLUDED AND PAID FOR UNDER ITEM 615 - TEMPORARY ROADS

ESTIMATED QUANTITIES **

MARK	STATION FROM	STATION TO	SIDE		614 TEMPORARY GUARDRAIL TYPE B LIN. FT.	614 TEMPORARY BRIDGE TERMINAL ASS'Y EACH	614 TEMPORARY TYPE A ANCHOR ASS'Y EACH
R-1	1062+40	1064+20	MED	*			
R-2	1058+80	1060+60	MED	*			
R-3	1058+80	1060+50	MED		170	1	1
R-4	1062+50	1064+20	MED		170	1	1
TOTALS					340	2	2

CROSS OVER TYPICAL SECTION

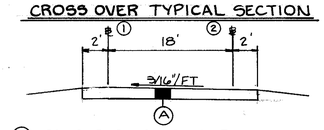

Ⓐ TEMPORARY PAVEMENT, CLASS A

LEGEND

- INDIVIDUAL LIGHT POLES IN TEMPORARY CROSSOVER LIGHTING SYSTEM
- EXISTING GUARDRAIL
- PROPOSED TEMPORARY GUARDRAIL

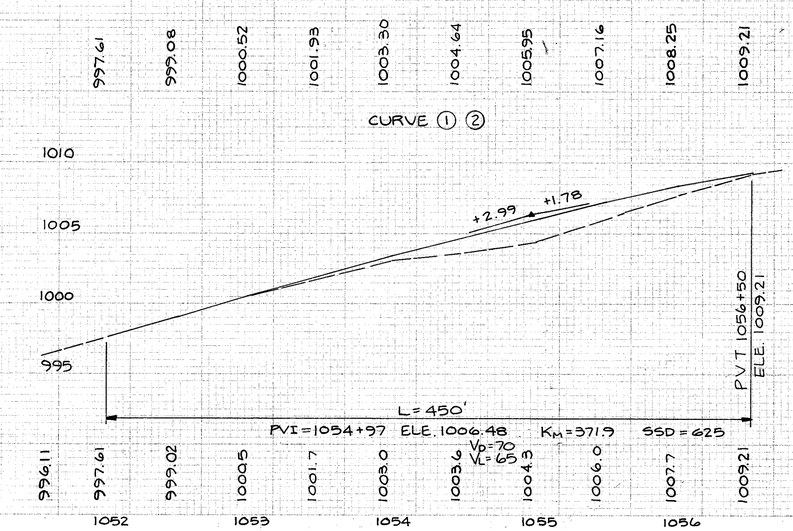

CROSS OVER STA 1050+50 TO STA 1064+50

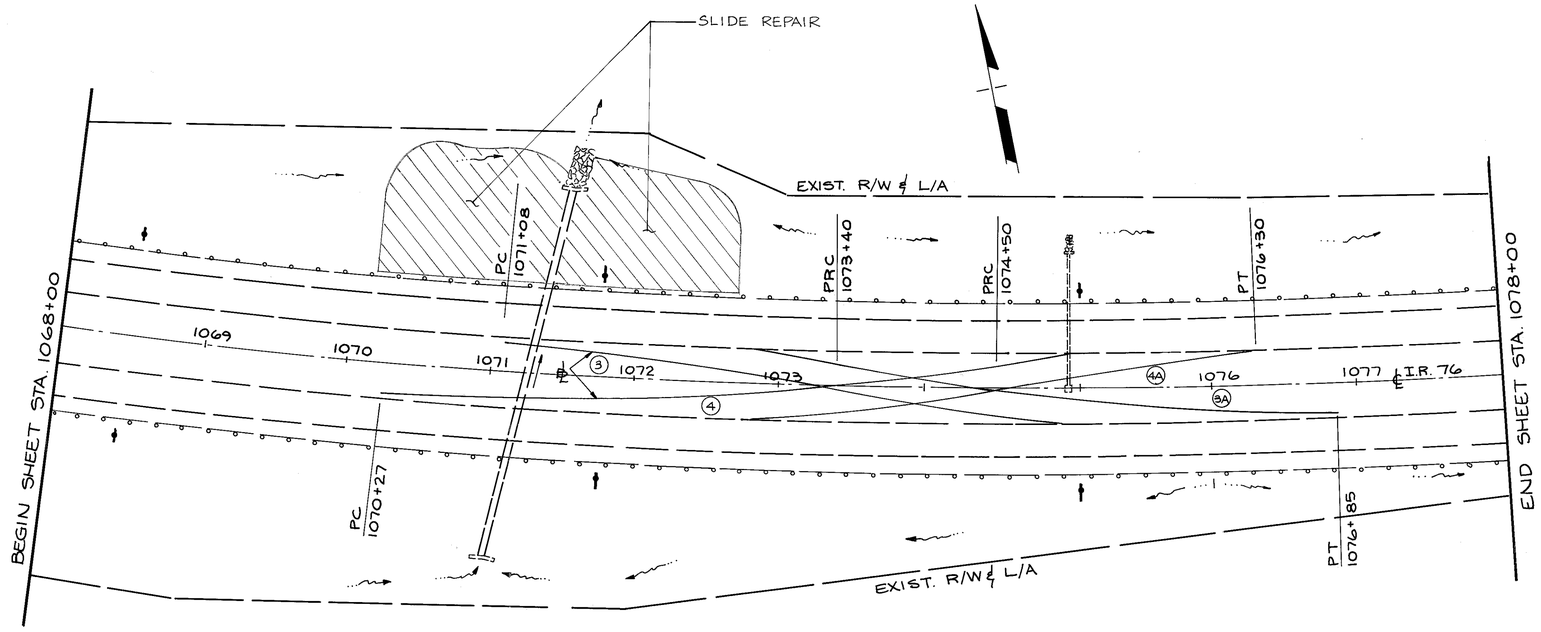

CROSS OVER TYPICAL SECTION

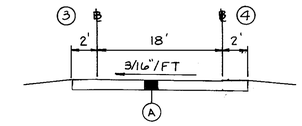

(A) TEMPORARY PAVEMENT, CLASS A

SEE SHEET 14 FOR NOTES

CURVES

(3)	(3A)	(4)	(4A)
Δ = 7°0'35.3"	Δ = 10°24'38.84"	Δ = 12°45'40.67"	Δ = 5°27'12.57"
D = 3°0'0"	D = 3°0'0"	D = 3°0'0"	D = 3°0'0"
L = 233.57'	L = 347.03'	L = 425.38'	L = 181.78'
T = 116.84'	T = 174.00'	T = 213.59'	T = 90.97'
E = 3.157'	E = 7.91'	E = 11.90'	E = 2.16'
R = 1910'	R = 1910'	R = 1910'	R = 1910'

LEGEND

INDIVIDUAL LIGHT POLES IN TEMPORARY CROSS OVER LIGHTING SYSTEM.

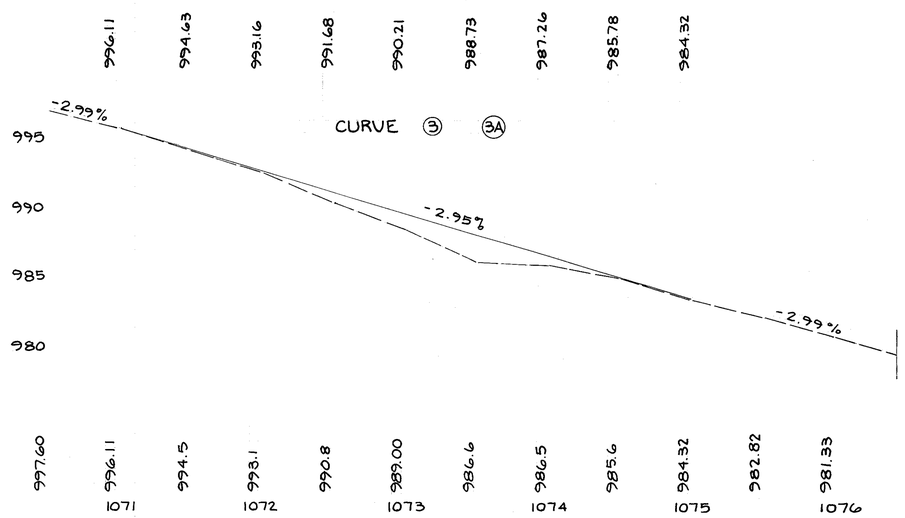

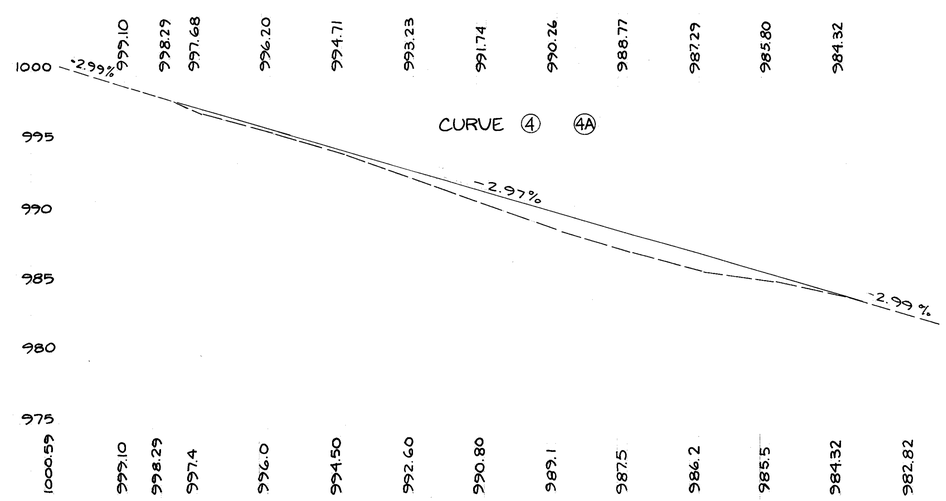

GENERAL

THIS ITEM OF WORK SHALL CONSIST OF FURNISHING, INSTALLING, MAINTAINING, AND SUBSEQUENTLY REMOVING TEMPORARY RAISED PAVEMENT MARKERS (TRPM'S). THE MARKERS SHALL BE YELLOW OR WHITE, AS DESCRIBED IN THE PLAN.

MATERIAL

ALL MARKERS SHALL BE OF SUFFICIENT STRENGTH AND PROPERLY SHAPED SO AS NOT TO BE DISLODGED OR BROKEN, OR THE REFLECTOR DISLODGED OR BROKEN, OR THE REFLECTOR DISLODGED OR DAMAGED BY IMPACTS FROM VEHICLES TIRES, INCLUDING THOSE OF HIGH PRESSURE TRUCK TIRES LOADED TO 4500 POUNDS.

RETROREFLECTORS SHALL BE PROVIDED IN ONE OR TWO DIRECTIONS ON EACH MARKER AS REQUIRED BY THE USAGE AND SHALL RETURN WHITE OR YELLOW LIGHT AS IS APPROPRIATE FOR THE APPLICATION.

THE REFLECTOR SHALL HAVE AN EFFECTIVE AREA OF 0.35 SQUARE INCHES FOR TYPE A OR 3.0 SQUARE INCHES FOR TYPE B. ITS BRIGHTNESS OR SPECIFIC INTENSITY (WHEN TESTED AT 0.2 DEGREE ANGLE OF OBSERVATION AND THE FOLLOWING ANGLES OF INCIDENCE) SHALL MEET OR EXCEED THE FOLLOWING:

SPECIFIC INTENSITY

INCIDENCE ANGLE (DEGREES)	TYPE A WHITE	TYPE A YELLOW
0	1.0	0.6
20	0.4	0.24
45	—	—

INCIDENCE ANGLE (DEGREES)	TYPE B WHITE	TYPE B YELLOW
0	3.0	1.8
20	1.2	0.72
45	0.3	0.2

ANGLE OF INCIDENCE FORMED BY A RAY FROM LIGHT SOURCE TO THE MARKER AND THE NORMAL TO THE LEADING EDGE OF THE MARKER FACE (ALSO HORIZONTAL ENTRANCE ANGLE).

ANGLE OF OBSERVATION FORMED BY A RAY FROM LIGHT SOURCE TO THE MARKER AND THE RETURNED RAY FROM THE MARKER TO THE MEASURING RECEPTOR.

SPECIFIC INTENSITY IS THE MEAN CANDLEPOWER OF THE REFLECTED LIGHT (AT GIVEN INCIDENCE AND DIVERGENCE ANGLES) FOR EACH FOOT-CANDLE AT THE REFLECTOR (ON A PLANE PERPENDICULAR TO THE INCIDENT LIGHT).

TYPE A MARKERS ARE INTENDED TO PROVIDE HIGH VISIBILITY BOTH DAY AND NIGHT. THEIR DAY TIME VISIVILITY SHALL BE ASSURED BY SIZE, SHAPE AND COLOR AS FOLLOWS:

1) THE MARKERS SHALL BE A HIGH VISIBILITY YELLOW OR WHITE COLOR WHICH WILL NOT DEGRADE SUBSTANTIALLY DUE TO TRAFFIC WEAR AND WHICH WILL MATCH THE COLOR OF THE REFLECTOR.

2) WHEN VIEWED FROM ABOVE, THE MARKERS SHALL HAVE A VISIBLE AREA OF NOT LESS THAN 14 SQUARE INCHES.

3) WHEN VIEWED FROM THE FRONT, PARALLEL TO THE PAVEMENT, AS FROM APPROACHING TRAFFIC, THE MARKER SHALL HAVE A WIDTH OF APPROXIMATELY 4 INCHES AND A VISIBLE AREA OF NOT LESS THAN 1.5 SQUARE INCHES.

TYPE B MARKERS ARE INTENDED TO PROVIDE HIGH VISIBILITY AT NIGHT BY RETROREFLECTING AUTOMOTIVE HEADLIGHT BACK TO DRIVER.

INSTALLATION

TEMPORARY RAISED PAVEMENT MARKERS SHALL BE ATTACHED TO CLEAN, DRY PAVEMENT BY A BUTYL ADHESIVE PAD, A BITUMINOUS ADHESIVE OR OTHER CONSTRUCTION GRADE ADHESIVES (SUCH AS FRANKLIN PANEL AND METAL ADHESIVE) SUITABLE TO ANCHOR THE MARKER UNDER THE ABOVE CONDITIONS. WHEN IT IS NECESSARY TO ATTACH MARKERS TO NEW CONCRETE PAVEMENT WITH CURING COMPOUND REMAINING, THE CURING COMPOUND MEMBRANE SHALL BE REMOVED BY SANDBLASTING OR OTHER MECHANICAL CLEANING METHOD. MARKERS SHALL BE INSTALLED IN ACCORDANCE WITH THE MANUFACTURER'S RECOMMENDATIONS.

THE CONTRACTOR SHALL IMMEDIATELY REPLACE, AT HIS EXPENSE, ANY MARKERS WHICH FAIL (BROKEN HOUSING, HOUSING WORN TO THE EXTENT THAT DAYTIME VISIBILITY IS SIGNIFICANTLY DIMINISHED OR OF AN UNACCEPTABLE COLOR, DETACHED OR BROKEN REFLECTOR, HOUSING DETACHED FROM ADHESIVE).

MARKERS ARE LIKELY TO BE REMOVED BY SNOW PLOWING OPERATIONS, THUS THEY ARE NOT CONSIDERED SUITABLE FOR USE DURING THE PERIOD FROM OCTOBER 15 UNTIL APRIL 30. THE CONTRACTOR IS ADVISED TO SCHEDULE HIS WORK AND/OR THE USE OF THESE DEVICES TO AVOID THIS PERIOD. SHOULD THE CONTRACTOR CHOOSE TO USE TRPM'S DURING THIS PERIOD AND THEY ARE SUBSEQUENTLY REMOVED OR DESTROYED BY SNOW AND ICE CONTROL ACTIVITIES, THE CONTRACTOR SHALL IMMEDIATELY, AT HIS EXPENSE, PROVIDE A SUBSTITUTE TRAFFIC GUIDANCE SYSTEM EFFECTIVE DURING DAY AND NIGHT AND WHICH IS ACCEPTABLE TO THE ENGINEER.

THE MARKERS SHALL BE PLACED ACCURATELY TO DEPICT STRAIGHT OR UNIFORMLY CURVING LINES. WHEN USED TO SUPPLEMENT TEMPORARY PAVEMENT MARKINGS, THEY SHALL BE PLACED ON OR IMMEDIATELY ADJACENT TO THE PAVEMENT MARKING. LOCATIONS SHALL BE ADJUSTED UP TO ONE FOOT LONGITUDINALLY OR SIX INCHES LATERALLY TO AVOID PLACEMENT ON JOINTS, OR ON CRACKED OR DETERIORATED PAVEMENT. MARKERS SHALL NOT BE PLACED DIRECTLY ON PAVEMENT MARKINGS IF THIS DESTRACTS FROM THEIR ABILITY TO REMAIN ATTACHED TO THE PAVEMENT.

APPLICATION

1) WHEN REQUIRED TO SUPPLEMENT PAVEMENT MARKING, TEMPORARY RAISED PAVEMENT MARKERS SHALL BE PLACED AS FOLLOWS:

LINE	TYPE	SPACING
EDGE LINE	A OR B	20'C/C
LANE LINE	A OR B	40'C/C•
CENTER LINE (SINGLE/BROKEN)	A OR B	40'C/C•
CENTER LINE (DOUBLE/SOLID)	A OR B	2 UNITS SIDE BY SIDE 4 INCHES APART 20'C/C
CHANNELIZING LINE (INCLUDES EXIT GORE NOSE)	A OR B	10'C/C

• CENTERED IN GAP

2) WHEN USED TO SIMULATE (REPLACE) PAVEMENT MARKING, TEMPORARY RAISED PAVEMENT MARKERS SHALL BE PLACED AS FOLLOWS:

LINE	TYPE	SPACING
EDGE LINE	A	5' C/C
LANE LINE	A	403.33'C/C 30'GAP (40'CYCLE)
CENTER LINE (DOUBLE/SOLID)	A	2 UNITS SIDE BY SIDE 5' C/C
CENTER LINE (SINGLE/BROKEN)	A	403.33'C/C 30'GAP (40'CYCLE)
CHANNELIZING LINE (INCLUDES EXIT GORE NOSE)	A	5' C/C
EDGE LINE (TWO-COLOR) (WHITE/YELLOW)	A	BACK TO BACK 5' C/C

YELLOW MARKERS USED TO SEPARATE OPPOSITE FLOWS OF TRAFFIC (CENTER LINES) SHALL INCLUDE REFLECTIONS FOR BOTH DIRECTIONS. ALL OTHER YELLOW AND WHITE MARKERS SHALL PROVIDE RETROREFLECTIVITY FOR ONE DIRECTION ONLY.

REMOVAL

REMOVAL SHALL BE ACCOMPLISHED IN A MANNER THAT LITTLE OR NONE OF THE ADHESIVE REMAINS ON THE PAVEMENT. PERMANENT PAVEMENT SURFACES SHALL NOT BE SCARRED, BROKEN OR ROUGHENED SIGNIFICANTLY.

PAVEMENT

BASIS OF PAYMENT SHALL BE AT THE CONTRACT UNIT PRICE PER EACH MARKER AND SHALL INCLUDE ALL LABOR, EQUIPMENT, HARDWARE AND INCIDENTALS REQUIRED TO PERFORM THE WORK. IT SHALL ALSO INCLUDE REPLACEMENT AT NO ADDITIONAL COST OF ALL TEMPORARY RAISED PAVEMENT MARKERS WHICH, IN THE JUDGEMENT OF THE ENGINEER, FAIL FOR ANY REASON, EXECPT DUE TO FAILURE OF THE PAVEMENT TO WHICH THEY ARE ATTACHED.

ITEM	UNIT	DESCRIPTION
614	EACH	TEMPORARY RAISED PAVEMENT MARKERS.

STATIONING FROM	TO	SIDE	SPACING (FT)	TYPE A W	TYPE A Y	TYPE A Y/Y		TYPE B OR A W	TYPE B OR A Y	TYPE B OR A Y/Y		REMARKS (LINE TYPE)	614 EDGE LINE CLASS I (WHITE) LIN. FT.	614 EDGE LINE CLASS I (YELLOW) LIN. FT.
PHASE II														
1045+17	1074+00	RT	-											2883
1052+40	1103+60	LT/RT/LT	20'C-C		256							EDGE LINE		5120
1054+50	1080+20	LT/RT/LT	20'C-C	128								EDGE LINE	2570	
PHASE III														
1055+50	1084+88	LT												2938
1025+10	1076+85	RT/LT/RT	20'C-C		258							EDGE LINE		5175
1048+50	1075+00	RT/LT/RT	20'C-C	132								EDGE LINE	2650	
TOTALS				260	514								5220	16116
				774									4.04 MI.	

QUANTITIES CARRIED TO SHEET No. 14

PRELIMINARY
PREPARED BY
TECHNICAL SUPPORT SECTION
ALF H. HANSEN P.E.
WALTER C. CHADWICK D.S.

REVISED BY: DATE:

210120

614 TEMPORARY RAISED PAVEMENT MARKERS

PLAN INSERT SHEET

DATE
03/30/88
03/23/90
03/28/90
07/03/90

WCC

POR-76-20.13 PART II

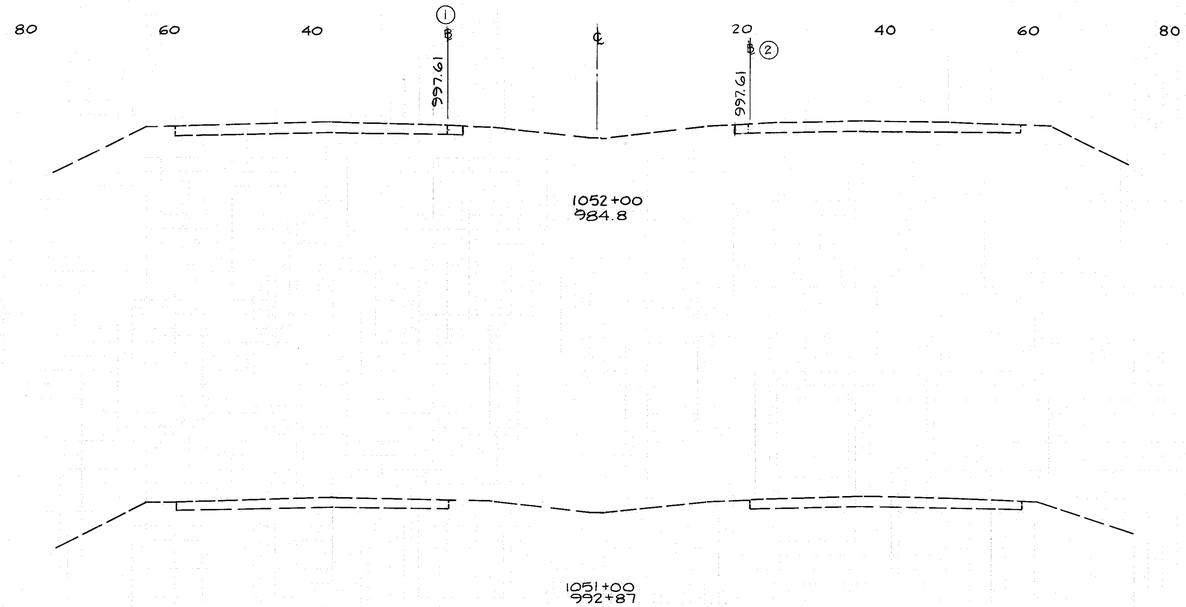

FOR INFORMATION ONLY

SEEDING		END AREA		CU. YDS.	
L.F	SQ.YD.	CUT	FILL	CUT	FILL
4		4	0		
	22			7	0
0		0	0		

STA 1051+00 TO STA 1052+00

POR-76-20.13 PART II

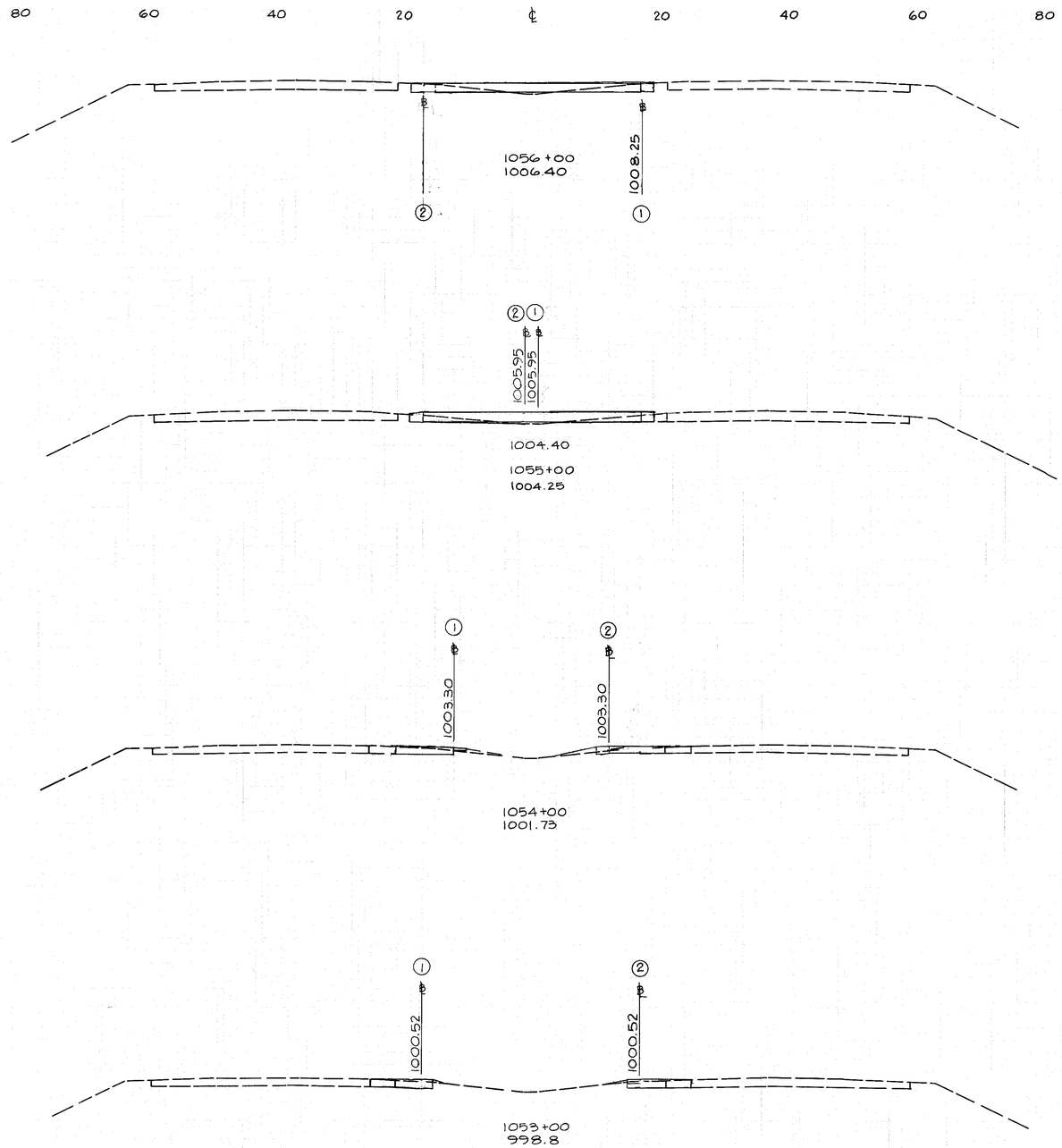

FOR INFORMATION ONLY

SEEDING		END AREA		CU. YDS	
L.F.	SQ.YD.	CUT	FILL	CUT	FILL
38		24	1		
	422			76	2
38		17	0		
	333			80	11
22		26	6		
	189			89	15
12		22	2		
	22			48	4

STA 1053+00 TO STA. 1056+00

POR-76-20.13 PART II

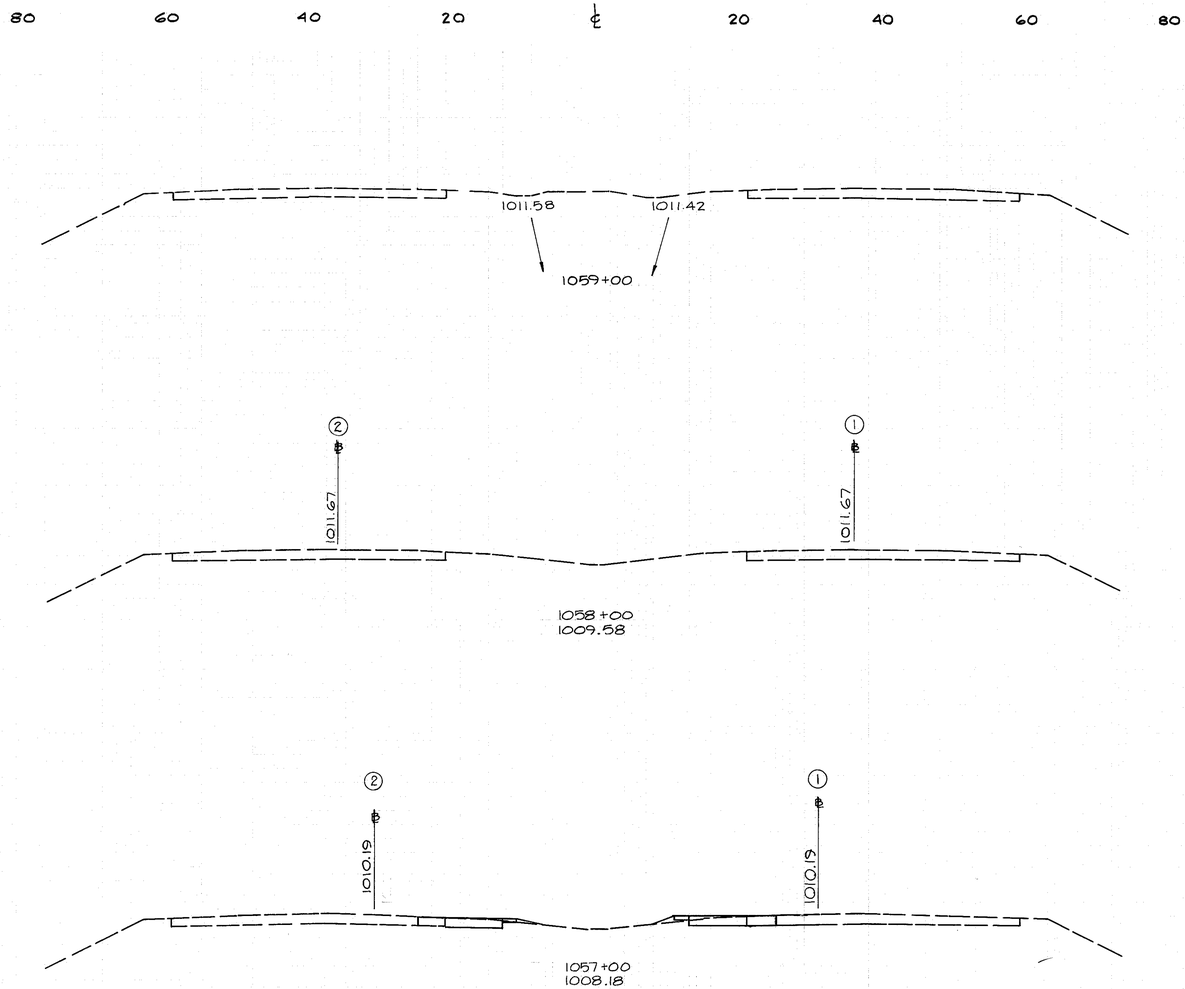

FOR INFORMATION ONLY

SEEDING		END AREA		CU. YDS.	
L.F.	SQ.YD.	CUT	FILL	CUT	FILL
0		0	0		
	111			59	4
20		32	2		
	322			104	6

STA 1057+00 TO STA. 1059+00

POR-76-20.13 PART II

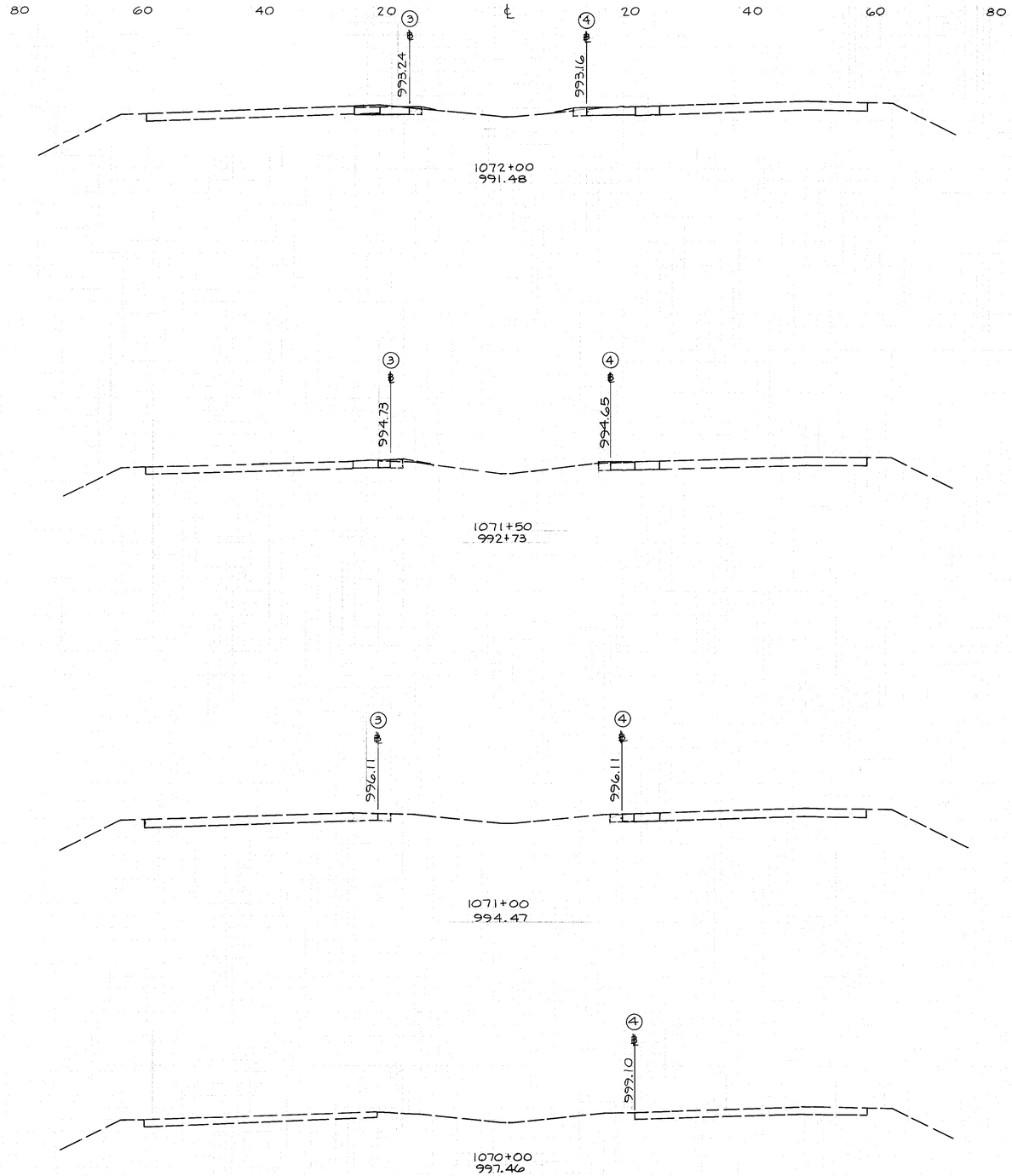

FOR INFORMATION ONLY

SEEDING		END AREA		CU. YDS.	
L.F.	SQ.YD	CUT	FILL	CUT	FILL
17		32	2		
	75			50	4
10		22	2		
	11			31	2
6		11	0		
	33			20	0
0		0	0		

STA 1070+00 TO STA 1072+00

POR-76-20.13 PART II

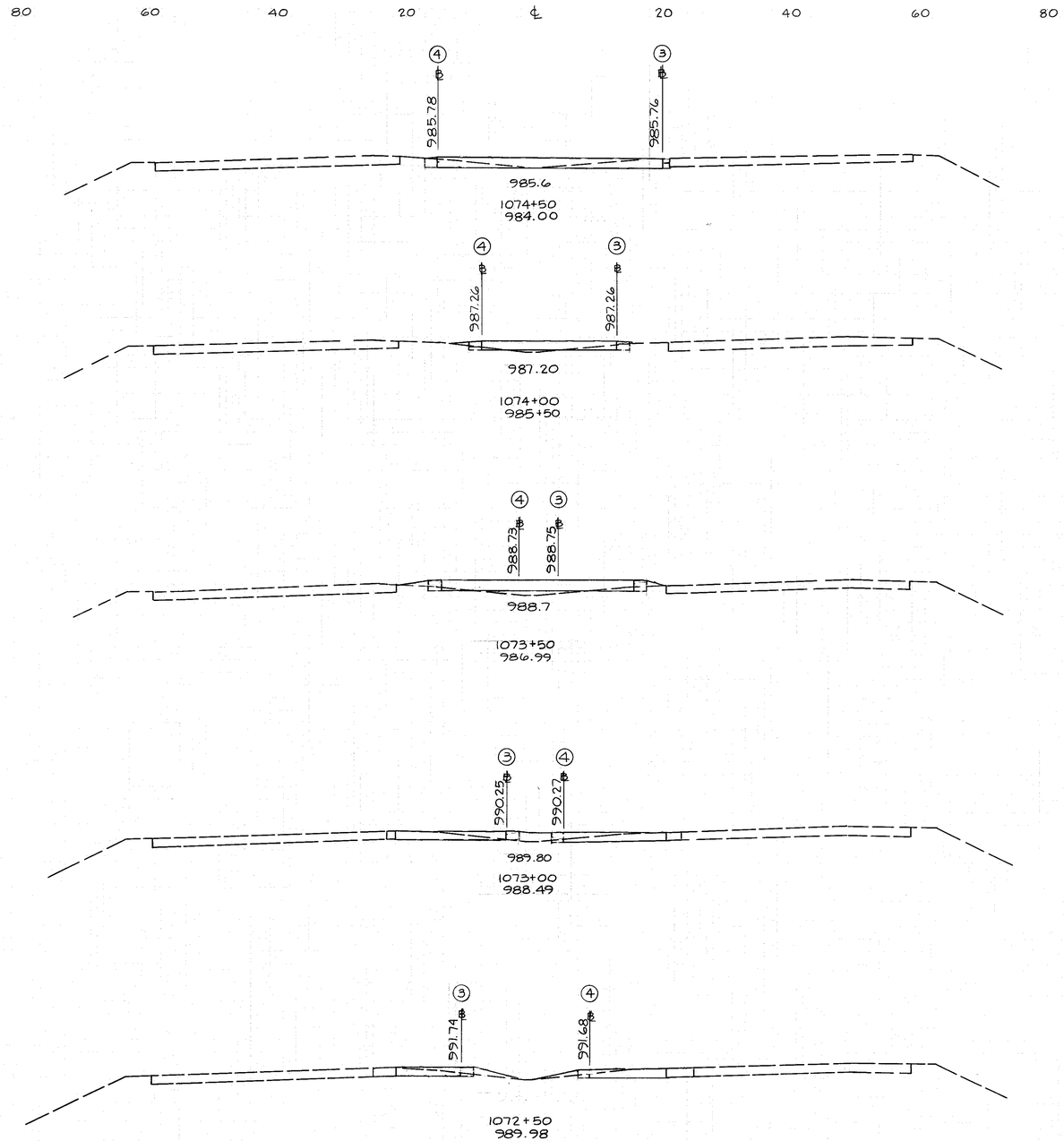

FOR INFORMATION ONLY

SEEDING		END AREA		CU. YDS.	
L.F.	SQ.YD.	CUT	FILL	CUT	FILL
38		31	0		
	175			35	3
25		7	3		
	164			12	14
34		6	12		
	197			42	19
37		40	9		
	175			71	17
26		37	9		
	119			64	10

STA 1072+50 TO STA 1074+50

POR-76-20.13 PART II

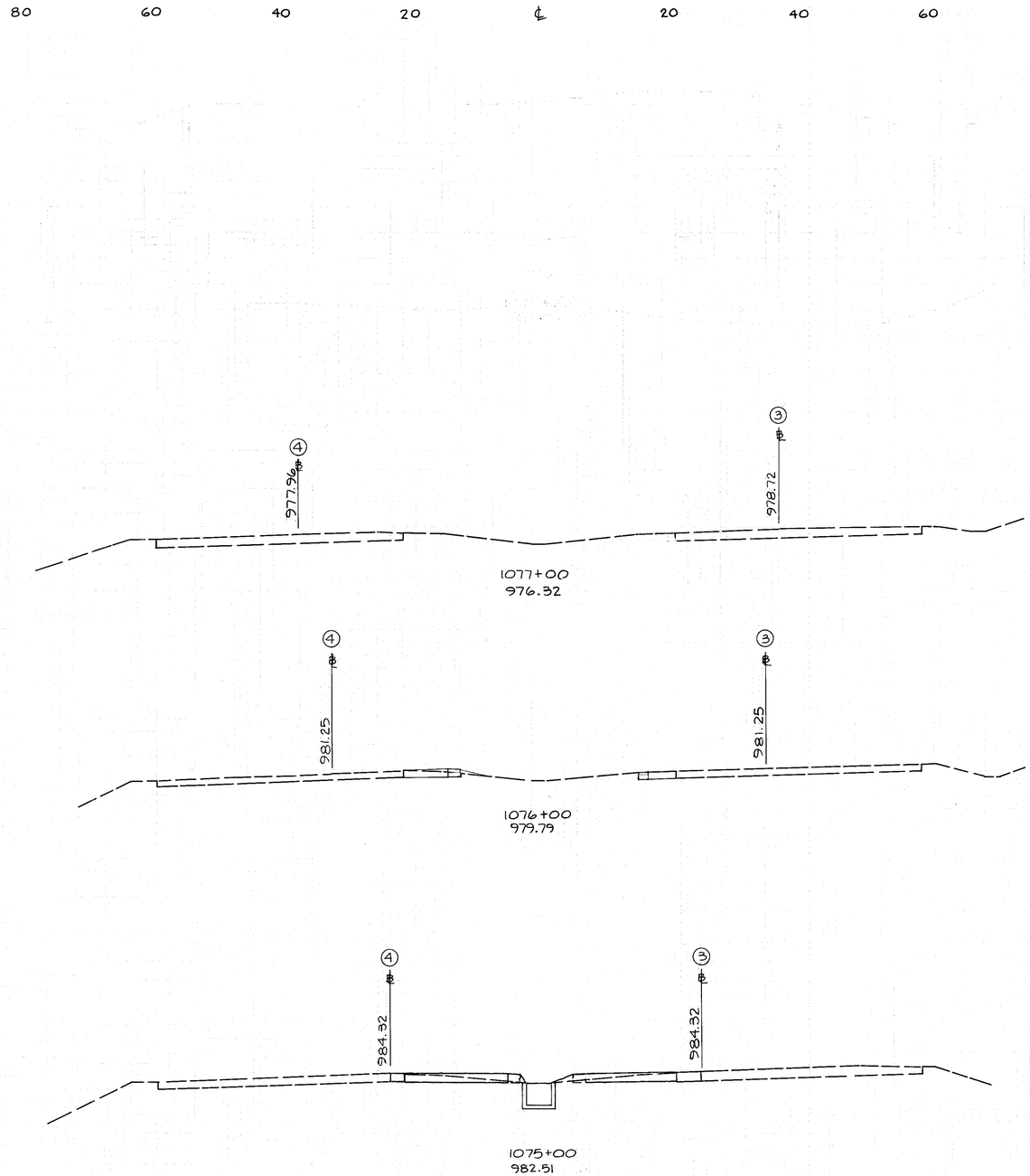

FOR INFORMATION ONLY

SEEDING		END AREA		CU. YDS.	
L.F.	SQ.YD.	CUT	FILL	CUT	FILL
0		0	0		
	83			31	2
15		17	2		
	272			102	13
34		38	5		
	200			64	5

STA 1075+00 TO STA 1078+00

REVISED 9/88

F.H.W.A. REGION	STATE	PROJECT NO.	FUNDS
5	OHIO		

25/28

POR-76-20.13 PART II

PROPOSED BARRIER DETAILS

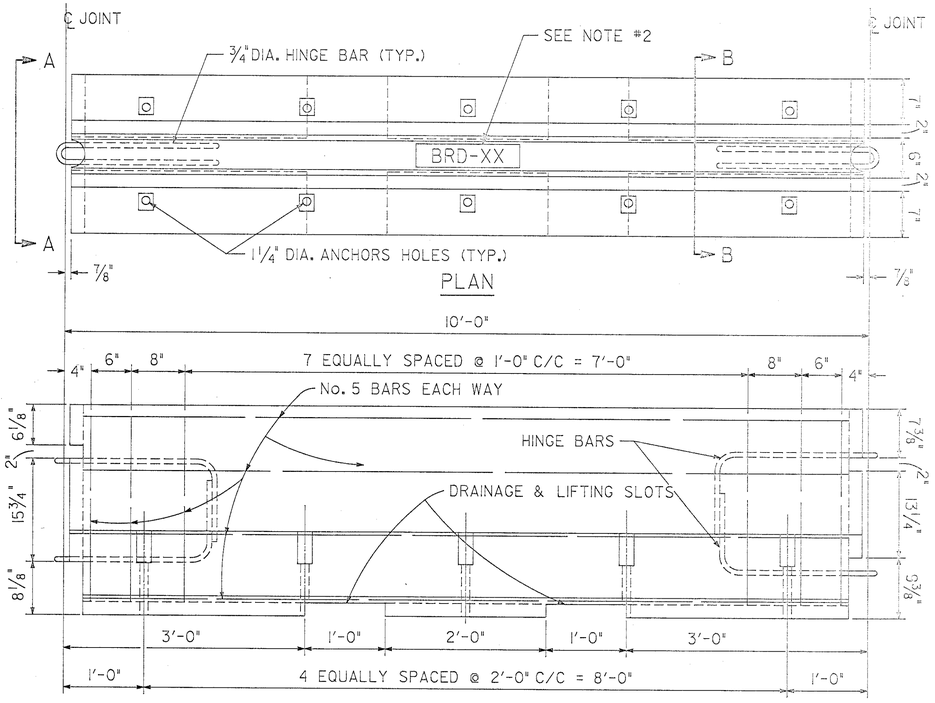

ELEVATION

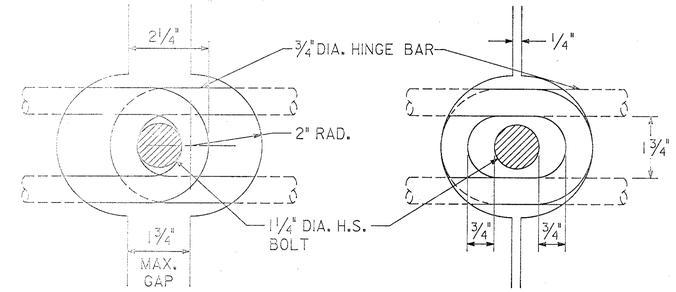

① OPEN JOINT ② CLOSED JOINT

JOINT CONNECTION DETAILS

① BARRIER JOINTS MUST BE FULLY OPEN BEFORE NUT IS TIGHTED ONTO BOLT AND OPENING IS EITHER GROUTED OR SHIMMED.

② BARRIERS SHOULD INITIALLY BE PLACED CLOSER TOGETHER SO THAT BOLTS CAN BE EASILY INSERTED THROUGH HINGE BAR LOOPS.

NOTES:

1. ALL ANCHORS SHALL BE 1" DIA., HIGH STRENGTH, THRU BOLTS OR APPROVED RESIN ANCHORS. WHEN RESIN ANCHORS ARE USED, THEY MUST BE EMBEDDED A MINIMUM OF 6" INTO FIRM CONCRETE. THE NUMBER OF ANCHORS SHALL BE AS SPECIFIED IN THE PLAN.

2. ALL NEW BARRIER SEGMENTS MADE ACCORDINGLY TO THE PROPOSED DESIGN, OR AN APPROVED EQUAL, SHALL BE CLEARLY MARKED, SUCH AS "BRD-XX". (WHERE XX = THE YEAR CAST)

3. PROPOSED BARRIER DESIGN DATA:

   1. THE STEEL ROD CONNECTOR LOOPS AND THE OTHER REINFORCING STEEL, SHALL HAVE A MINIMUM YIELD STRENGTH OF 60,000 psi.

   2. THE CONCRETE SHALL HAVE A MINIMUM COMPRESSIVE STRENGTH OF 4,000 psi.

4. THE DESIGNER MAY USE THIS BARRIER OR ONE OF A SIMILAR DESIGN, AS APPROVED BY THE DIRECTOR. ALL DESIGNS SHALL MEET OR EXCEED THE DESIGN REQUIREMENTS DESCRIBED IN THE REPORT, "DESIGN AND EVALUATION OF TEMPORARY PRECAST CONCRETE BARRIERS FOR USE ON OHIO BRIDGE DECKS"*. DESIGNS, AS SUBMITTED, SHALL BECOME THE PROPERTY OF THE STATE OF OHIO.

* COPIES OF THIS REPORT ARE AVAILABLE FROM THE OHIO DEPARTMENT OF TRANSPORTATION, BUREAU OF BRIDGES AND STRUCTURAL DESIGN.

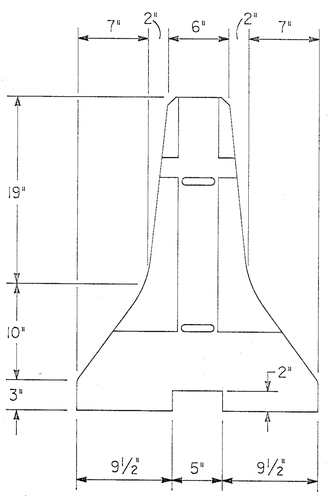

SECTION "A-A"

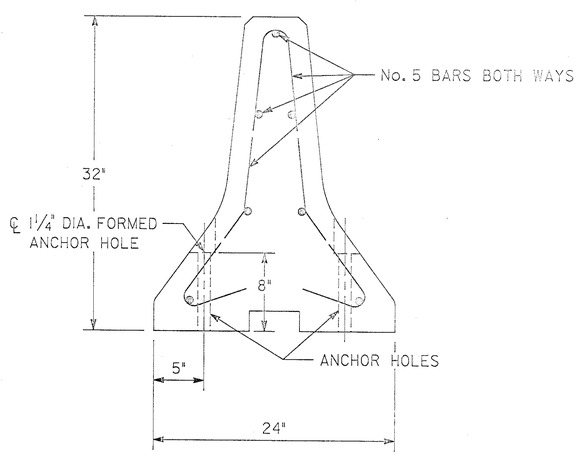

SECTION "B-B"

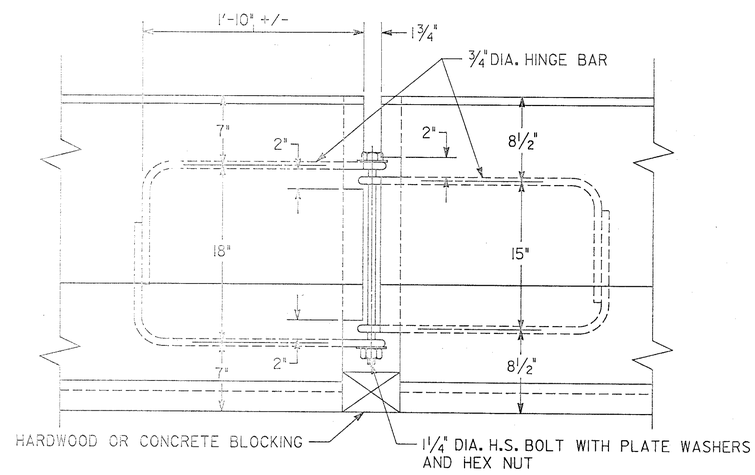

DETAIL AT HINGED CONNECTION

DRAWN 2/88

REVISED 9/88

F.H.W.A. REGION	STATE	PROJECT NO.	FUNDS
	OHIO		

POR-76-20.13 PART II

MODIFIED (EXISTING) BARRIER DETAILS

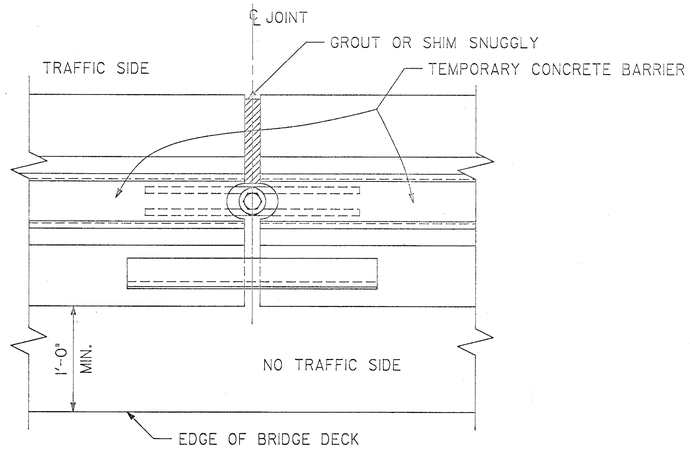

PLAN AT JOINT

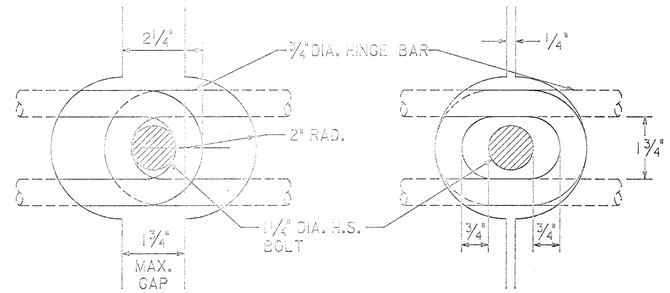

① OPEN JOINT ② CLOSED JOINT

JOINT CONNECTION DETAILS

① BARRIER JOINTS MUST BE FULLY OPEN BEFORE NUT IS TIGHTED ONTO BOLT AND OPENING IS EITHER GROUTED OR SHIMMED.

② BARRIERS SHOULD INITIALLY BE PLACED CLOSER TOGETHER SO THAT BOLTS CAN BE EASILY INSERTED THROUGH HINGE BAR LOOPS.

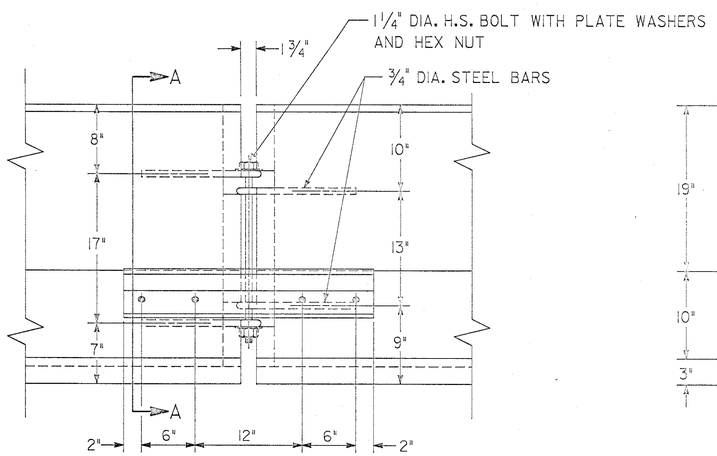

ELEVATION AT JOINT

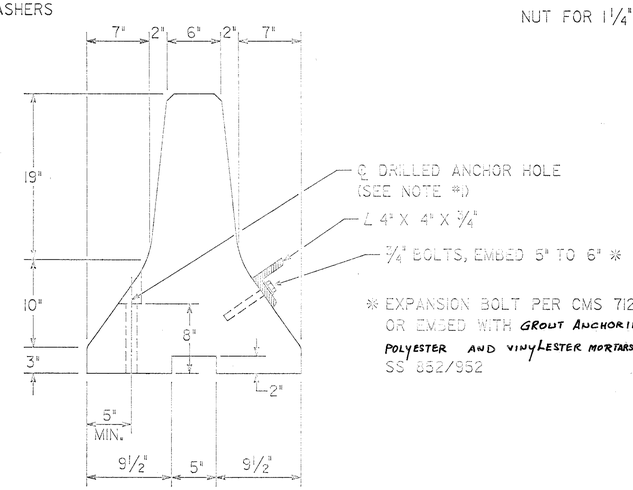

SECTION "A-A"

* EXPANSION BOLT PER CMS 712.01 OR EMBED WITH GROUT ANCHORING WITH POLYESTER AND VINYLESTER MORTARS PER SS 852/952

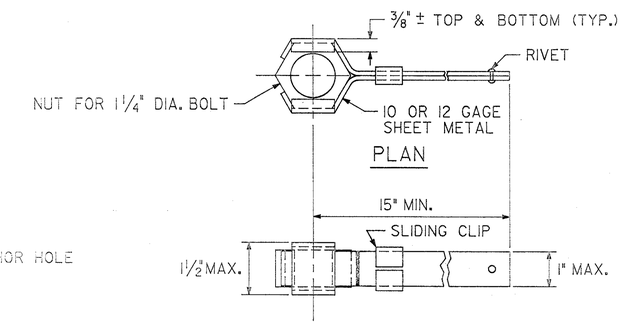

ELEVATION

NUT RETAINER DETAIL

NOTES:

1. IN ORDER TO ANCHOR THE MODIFIED (EXISTING) BARRIER TO THE BRIDGE DECK, WHERE ANCHORING IS REQUIRED, 1-1/4" MIN. DIA. HOLES MUST BE DRILLED THROUGH THE BARRIER TOE AT THE LOCATION SHOWN IN SECTION "A-A". GREAT CARE MUST BE USED IN DRILLING AND INSTALLING THE BARRIER SEGMENTS, AS ANY DAMAGE TO THEM WILL BE CONSIDERED CAUSE FOR THEIR REJECTION.

   ALL ANCHORS SHALL BE 1" DIA., HIGH STRENGTH, THRU BOLTS OR APPROVED RESIN ANCHORS. WHEN RESIN ANCHORS ARE USED, THEY MUST BE EMBEDDED A MINIMUM OF 6" INTO FIRM CONCRETE. THE NUMBER OF ANCHORS SHALL BE AS SPECIFIED IN THE PLAN.

3. USE OF THE EXISTING OHIO BARRIER:

   THE EXISTING OHIO BARRIER (STANDARD CONSTRUCTION DRAWING MC-9A, REVISED 1-11-85, CONNECTING PIN TYPE), EVEN WHEN MODIFIED, CARE MUST BE TAKEN BY THE DESIGNER WHEN SPECIFYING ITS USE IN AREAS OF PROBABLE HIGH IMPACT SEVERITY (OVER 45,000 FT-LBS). THE MODIFICATIONS TO BE MADE TO THE EXISTING BARRIER, PRIOR TO ITS USE ON OHIO BRIDGE DECKS, ARE LISTED BELOW AND DETAILED AT LEFT.

   A. REPLACE CONNECTION PINS WITH 1-1/4 INCH DIA. HIGH STRENGTH BOLTS.

   B. FURTHER STIFFEN THE CONNECTION, WHERE REQUIRED **, BY FASTENING AN ANGLE (4" X 4" X 3/4") TO THE BACK FACE OF JOINT.

   C. LIMIT THE SLACK IN JOINTS BETWEEN SEGMENTS TO A MAXIMUM OF 3 DEGREES BY SHIMMING AND/OR GROUTING THE JOINT.

** WHEN THE EXISTING BARRIER IS USED IN AREAS OF LOW TO MODERATE IMPACT SEVERITY (30,000 FT-LBS OR LESS) THE STEEL ANGLE MAY GENERALLY BE OMITTED.

DRAWN 2/88

MODIFIED (EXISTING) BARRIER

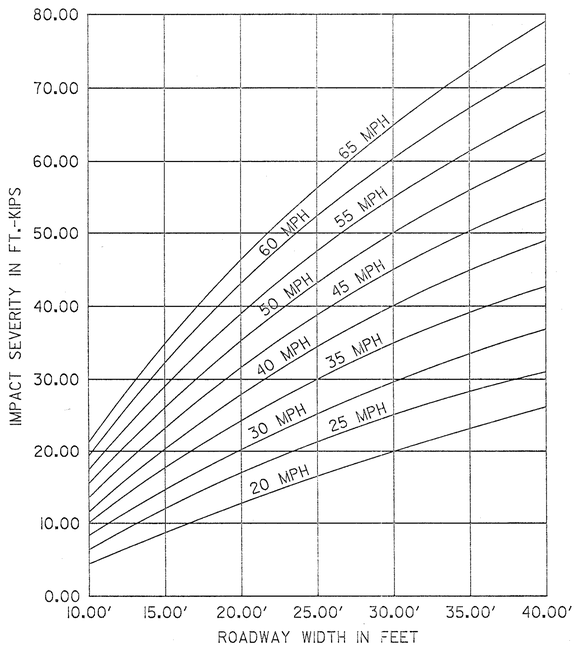

IMPACT SEVERITY VS ROADWAY WIDTH

FIGURE 1

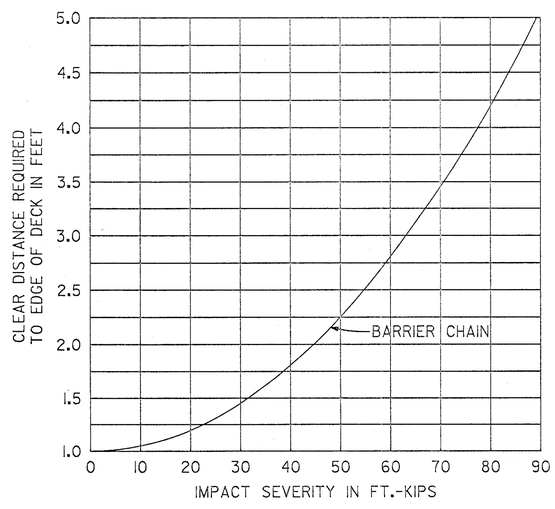

PLACEMENT VS IMPACT SEVERITY OF AN UNANCHORED BARRIER CHAIN COMPOSED OF 10' LONG SEGMENTS

FIGURE 2

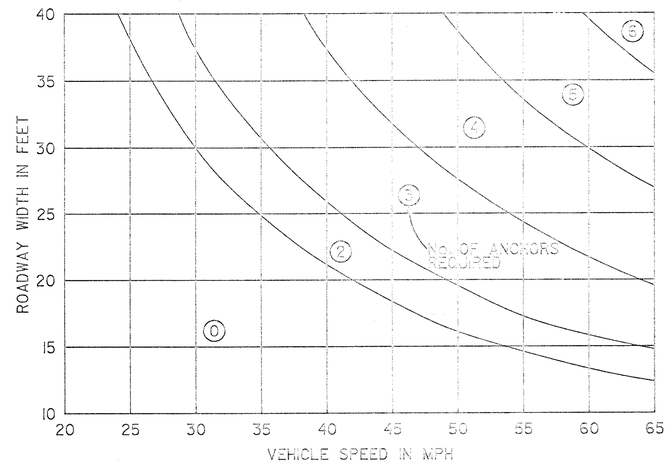

ANCHORS REQUIRED PER 10' BARRIER SEGMENT FOR MODIFIED (EXISTING) BARRIERS

FIGURE 3

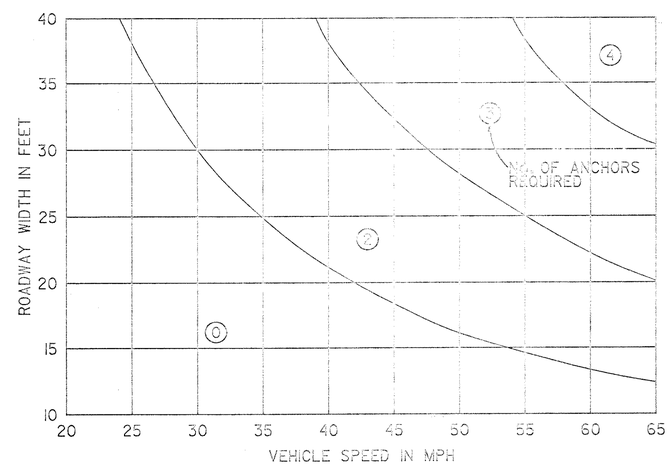

ANCHORS REQUIRED PER 10' BARRIER SEGMENT FOR PROPOSED BARRIERS

FIGURE 4

NOTES:
"ROADWAY WIDTH" SHALL BE DEFINED AS THE CLEAR DISTANCE BETWEEN THE TRAFFIC FACE OF THE PRECAST TEMPORARY CONCRETE BARRIER CHAIN AND THE PERMANENT BRIDGE RAILING OR FACE OF SIDEWALK CURB.

GENERAL NOTES

BRIDGE DECK SURFACE PREPARATION:

THE PROCEDURES WHICH MUST BE FOLLOWED WHEN INSTALLING ALL TEMPORARY PRECAST CONCRETE BARRIERS, ON OHIO BRIDGE DECKS, ARE GIVEN BELOW.

A. THE BRIDGE DECK SURFACE AREA, ON WHICH THE PRECAST CONCRETE BARRIERS WILL REST, SHALL BE CLEARED OF ALL LOOSE SAND, GRAVEL, DIRT AND DEBRIS.

B. ANY IRREGULARITIES IN THE BRIDGE DECK AREA, UNLESS JUDGED BY THE ENGINEER TO BE INCONSEQUENTIAL, SHALL BE LEVELED WITH GROUT AND/OR ASPHALT.

C. ASPHALT ROLL ROOFING SHALL BE PLACED ON THOSE BRIDGE DECK AREAS, AS JUDGED BY THE ENGINEER, TO HAVE A SURFACE ROUGHNESS WHICH WOULD INHIBIT FRICTION CONTACT BETWEEN BARRIER SEGMENTS AND DECK.

BARRIER ANCHORAGE REQUIREMENTS:

THE ANCHORAGE REQUIREMENTS FOR TEMPORARY PRECAST CONCRETE BARRIERS CAN BE DETERMINED BY USING THE FOLLOWING PROCEDURES.

1. ENTER FIGURE 3 WITH THE KNOWN ROADWAY WIDTH AND THE POSTED SPEED LIMIT * AND FIND THE NUMBER OF ANCHORS REQUIRED WHEN THE MODIFIED (EXISTING) BARRIER DESIGN IS USED.

OR

ENTER FIGURE 4 WITH THE KNOWN ROADWAY WIDTH AND THE POSTED SPEED LIMIT * AND FIND THE NUMBER OF ANCHORS REQUIRED WHEN THE PROPOSED BARRIER DESIGN IS USED.

2. IF THE BARRIER INSTALLATION IS TO REMAIN UNANCHORED, EITHER BECAUSE OF LOW IMPACT SEVERITY OR THE AVAILABILITY OF SPACE BETWEEN THE BARRIER AND THE EDGE OF THE BRIDGE DECK, ENTER FIGURE 1 WITH THE KNOWN ROADWAY WIDTH AND THE POSTED SPEED LIMIT * AND FIND THE IMPACT SEVERITY. THEN, WITH THE KNOWN IMPACT SEVERITY, ENTER FIGURE 2 AND FIND THE MINIMUM CLEAR DISTANCE REQUIRED FROM THE EDGE OF THE BRIDGE DECK AT WHICH THE BARRIER (MODIFIED OR PROPOSED) CAN BE LOCATED.

* THE POSTED SPEED LIMIT SHALL BE DEFINED AS THE SPEED THAT IS ACTIVELY ENFORCED EITHER BY LEGAL MEANS OR TRAFFIC CONTROL DEVICES.

ALL BARRIER SEGMENTS SHALL, WHERE REQUIRED, BE FASTENED TO THE BRIDGE DECK USING ONE INCH DIAMETER HIGH STRENGTH THRU BOLTS OR APPROVED RESIN ANCHORS. WHEN RESIN ANCHORS ARE USED THEY MUST BE EMBEDDED A MINIMUM OF 6" INTO FIRM CONCRETE. GENERALLY, ALL ANCHORS SHALL BE PLACED ON THE TRAFFIC SIDE OF THE BARRIER WITH THE ANCHOR PATTERN SYMMETRICAL ABOUT THE CENTER OF EACH TEN FOOT SEGMENT. EVEN THOSE PRECAST CONCRETE BARRIER SEGMENTS, NOT OTHERWISE REQUIRING ANCHORING SHALL, WHEN LOCATED ON BRIDGE DECKS CROSSING OVER ROADWAYS, RAILROADS AND/OR RECREATIONAL AREAS, BE SECURED BY NO LESS THAN TWO (2) ANCHORS **.

** UNLESS BARRIER SEGMENTS ARE TO BE INSTALLED 6' OR MORE (CLEAR DISTANCE) FROM THE EDGE OF DECK, EQUIPMENT AND/OR PROBABLE WORK AREAS.

PORTABLE CONCRETE BARRIER WITH GLARE SCREEN

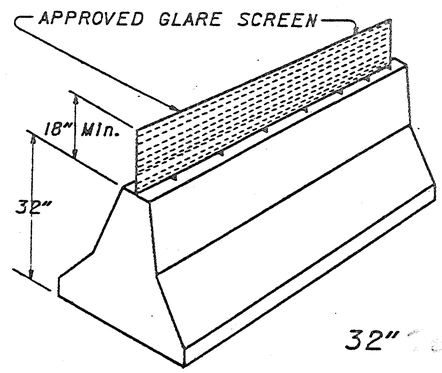

SEE MC-9A
FOR BARRIER DETAILS

32" PORTABLE CONCRETE BARRIER
WITH GLARE SCREEN

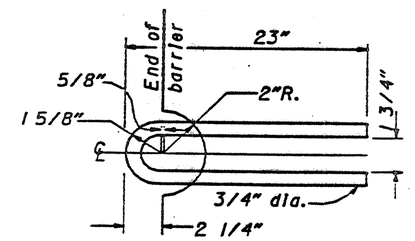

STEEL ROD CONNECTOR

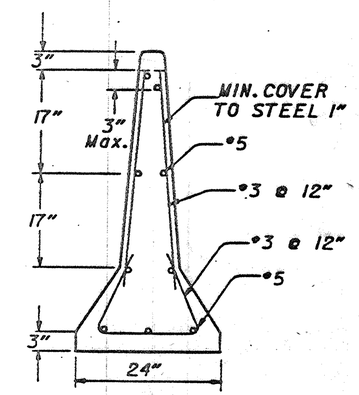

SECTION A-A

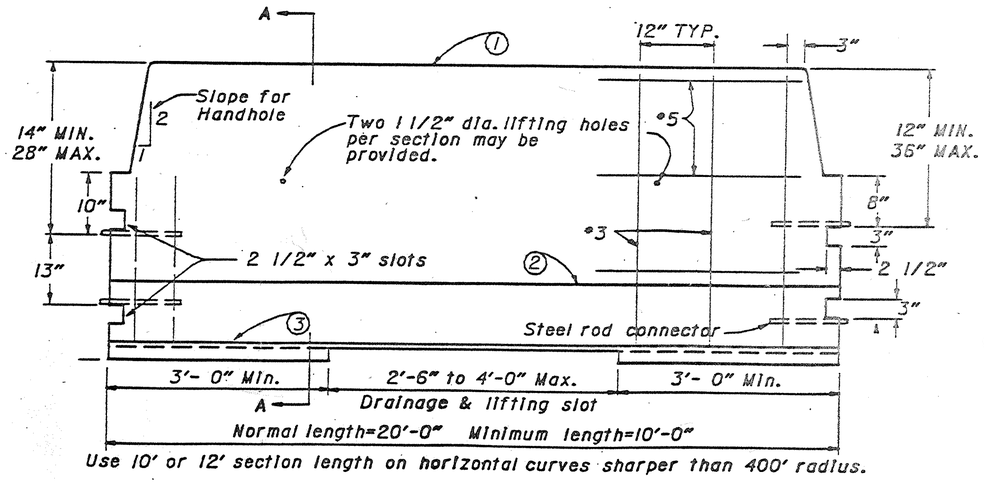

ELEVATION

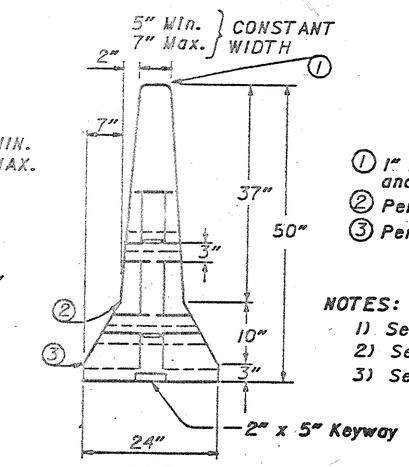

END

LEGEND

1. 1" Radius or 3/4" Chamfer, all top and end corners
2. Permissible 10" radius
3. Permissible 1" radius

NOTES:

1) See MC-9 For PLAN VIEW
2) See MC-9A For CONNECTING PIN DETAIL & BASE RESTRAINT NOTE, & DETAILS NOT SHOWN
3) See Item 622.02 & 622.04 ODOT C & M SPEC.

50" PORTABLE CONCRETE BARRIER