tperez@D04CD0234662 - 24168gj001.m - Friday October 25 2002 12:43:16 PM EDT

POR - SR 5 - 4.33/Various (city of Kent)
030098 PID - 24168
Dist 4 1/22/2003

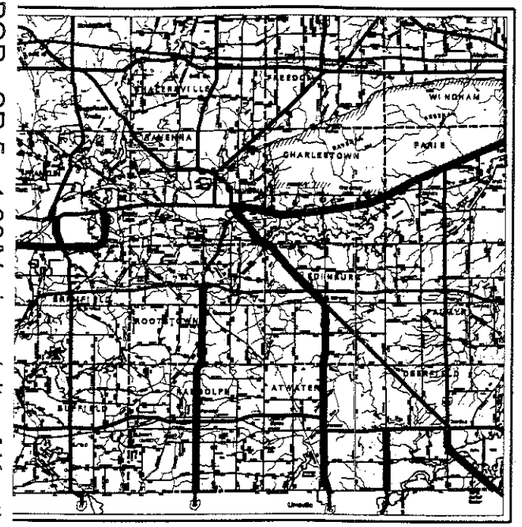

LOCATION MAP

ATITUDE: 041°10'00" LONGITUDE: 081°15'00"

SCALE IN MILES

0 3 6 9 12

N

PORTION TO BE IMPROVED
INTERSTATE & DIVIDED HIGHWAY
UNDIVIDED STATE & FEDERAL ROUTES
OTHER ROADS

STATE OF OHIO

DEPARTMENT OF TRANSPORTATION

POR-5-4.33/VARIOUS

CITY OF KENT, FRANKLIN TOWNSHIP BRIMFIELD TOWNSHIP, RAVENNA TOWNSHIP, ROOTSTOWN TOWNSHIP, RANDOLPH TOWNSHIP, ATWATER TOWNSHIP, EDINBURG TOWNSHIP, DEERFIELD TOWNSHIP, CHARLESTOWN TOWNSHIP, PARIS TOWNSHIP

PORTAGE COUNTY

PROJECT DESCRIPTION

THIS PROJECT UPGRADES GROUND MOUNTED SIGNS IN SOUTHERN PORTAGE COUNTY IN THE STATE OF OHIO.

2002 SPECIFICATIONS

THE STANDARD SPECIFICATIONS OF THE STATE OF OHIO, DEPARTMENT OF TRANSPORTATION, INCLUDING CHANGES AND SUPPLEMENTAL SPECIFICATIONS LISTED IN THE PROPOSAL SHALL GOVERN THIS IMPROVEMENT.

I HEREBY APPROVE THESE PLANS AND DECLARE THAT THE MAKING OF THIS IMPROVEMENT WILL NOT REQUIRE THE CLOSING TO TRAFFIC OF THE HIGHWAY AND THAT PROVISIONS FOR THE MAINTENANCE AND SAFETY OF TRAFFIC WILL BE AS SET FORTH ON THE PLANS AND ESTIMATES.

APPROVED _____
DATE 10-22-02 DISTRICT DEPUTY DIRECTOR

APPROVED Gordon Proctor
DATE 10-31-02 DIRECTOR, DEPARTMENT OF TRANSPORTATION

INDEX OF SHEETS:

TITLE SHEET	1
GENERAL & MAINTENANCE OF TRAFFIC NOTES	2
GENERAL SUMMARY	3
S.R. 5 SIGNING PLAN	4-9
S.R. 5 SIGNING SUBSUMMARY	10-12
S.R. 14 SIGNING PLAN - PART 1	13-15, 15A, 15B
S.R. 14 SIGNING SUBSUMMARY - PART 1	16-20
S.R. 14 SIGNING PLAN - PART 2	21-23
S.R. 14 SIGNING SUBSUMMARY - PART 2	24-26
S.R. 43 SIGNING PLAN	27-28
S.R. 43 SIGNING SUBSUMMARY	29
S.R. 44 SIGNING PLAN	30-33
S.R. 44 SIGNING SUBSUMMARY	34-37
S.R. 59 SIGNING PLAN	38
S.R. 59 SIGNING SUBSUMMARY	39
S.R. 183 SIGNING PLAN	40-43
S.R. 183 SIGNING SUBSUMMARY	44-46, 46A
S.R. 225 SIGNING PLAN	47-48
S.R. 225 SIGNING SUBSUMMARY	49
S.R. 261 SIGNING PLAN	50-53
S.R. 261 SIGNING SUBSUMMARY	54-57

DESIGN EXCEPTIONS

NONE

UNDERGROUND UTILITIES
TWO WORKING DAYS
BEFORE YOU DIG
CALL 1-800-362-2764 (TOLL FREE)
OHIO UTILITIES PROTECTION SERVICE
NON-MEMBERS
MUST BE CALLED DIRECTLY

PLAN PREPARED BY:

ODOT
DISTRICT 4
PRODUCTION

ENGINEERS SEAL:

STATE OF OHIO
LISA A. JAYNES
E-56841
REGISTERED
PROFESSIONAL ENGINEER

SIGNED Lisa A. Jaynes
DATE: 10-25-02

STANDARD CONSTRUCTION DRAWINGS

			MT-35.10	04-20-01	
			MT-95.31	04-19-02	
			MT-95.32	04-19-02	
			MT-95.61	04-19-02	
			MT-97.10	04-19-02	
		TC-41.20 01-19-01	MT-105.10M	04-25-94	
		TC-42.10 01-19-01	MT-105.11M	04-25-94	
		TC-42.20 04-20-01			
		TC-52.10 04-20-01			
		TC-52.20 04-20-01			

SUPPLEMENTAL SPECIFICATIONS

SPECIAL PROVISIONS

FEDERAL PROJECT NO. NONE

PID NO. 24168

CONSTRUCTION PROJECT NO.

RAILROAD INVOLVEMENT NONE

POR-5-4.33

i:\Projects\24168_POR-5-4.33\dgn\24168gt001.dgn 25-OCT-2002 12:43PM tperez

UTILITIES

THE CONTRACTOR SHALL USE THE FOLLOWING PROCEDURE AT EACH LOCATION WHERE WORK IS PERFORMED, IN ACCORDANCE WITH SECTIONS 105.06 AND 107.17 OF THE CONSTRUCTION AND MATERIALS SPECIFICATIONS:

THE CONTRACTOR SHALL NOTIFY THE PROJECT ENGINEER, THE OHIO UTILITIES PROTECTION SERVICE (OUPS), THE OHIO & GAS PROCEDURES UNDERGROUND PROTECTION SERVICE (OGPUPS), THE OHIO DEPARTMENT OF TRANSPORTATION DISTRICT 4 HEADQUARTERS AND ALL NON REGISTERED UTILITY OWNERS AT LEAST TWO (2) WORKING DAYS PRIOR TO COMMENCING CONSTRUCTION OPERATIONS IN ALL AREAS.

OUPS 800-362-2764
(CONTACT LIMITED BASIS PARTICIPANTS DIRECTLY)

OGPUPS 800-925-0988

ODOT 330-297-0801 EXT 305 (KEN GREENE)

THE LOCATION OF EXISTING UNDERGROUND UTILITIES ARE NOT SHOWN ON THE PLANS, BUT CAN BE OBTAINED FROM THE OWNERS OF THE UTILITIES. THE CONTRACTOR IS RESPONSIBLE FOR ANY DAMAGE TO UTILITIES.

WORK LIMITS

THE WORK LIMITS SHOWN ON THESE PLANS ARE FOR PHYSICAL CONSTRUCTION ONLY. THE INSTALLATION AND OPERATION OF ALL TEMPORARY TRAFFIC CONTROL AND TEMPORARY TRAFFIC CONTROL DEVICES REQUIRED BY THESE PLANS SHALL BE PROVIDED BY THE CONTRACTOR WHETHER INSIDE OR OUTSIDE THESE WORK LIMITS.

CONVERSION OF STANDARD CONSTRUCTION DRAWINGS

THE METRIC STANDARD DRAWINGS REFERENCED IN THIS PLAN SHALL BE CONVERTED TO ENGLISH UNITS USING THE SI (METRIC) TO ENGLISH CONVERSION FACTORS PROVIDED IN SECTION 109.02 OF THE 2002 CONSTRUCTION AND MATERIAL SPECIFICATIONS. CONVERSIONS SHALL BE APPROPRIATELY PRECISE AND SHALL REFLECT STANDARD INDUSTRY ENGLISH VALUES WHERE SUITABLE.

HOLIDAY WORK LIMITATIONS

NO WORK SHALL BE PERFORMED AND ALL EXISTING LANES SHALL BE OPEN TO TRAFFIC DURING THE FOLLOWING DESIGNATED HOLIDAYS OR EVENTS:

CHRISTMAS	NEW YEARS
MEMORIAL DAY	FOURTH OF JULY
LABOR DAY	THANKSGIVING

THE PERIOD OF TIME THAT THE LANES ARE TO BE OPEN DEPENDS ON THE DAY OF THE WEEK ON WHICH THE HOLIDAY OR EVENT FALLS. THE FOLLOWING SCHEDULE SHALL BE USED TO DETERMINE THIS PERIOD:

DAY OF THE WEEK	TIME ALL LANES MUST BE OPEN TO TRAFFIC
SUNDAY	12:00N FRIDAY THROUGH 12:00N MONDAY
MONDAY	12:00N FRIDAY THROUGH 12:00N TUESDAY
TUESDAY	12:00N MONDAY THROUGH 12:00N WEDNESDAY
WEDNESDAY	12:00N TUESDAY THROUGH 12:00N THURSDAY
THURSDAY	12:00N WEDNESDAY THROUGH 12:00N MONDAY
FRIDAY	12:00N THURSDAY THROUGH 12:00N MONDAY
SATURDAY	12:00N FRIDAY THROUGH 12:00N MONDAY

NO EXTENSIONS OF TIME SHALL BE GRANTED FOR DELAYS IN MATERIAL DELIVERIES, UNLESS SUCH DELAYS ARE INDUSTRY-WIDE, OR FOR LABOR STRIKES, UNLESS SUCH STRIKES ARE AREA-WIDE.

SHOULD THE CONTRACTOR FAIL TO MEET ANY OF THESE REQUIREMENTS, THE CONTRACTOR SHALL BE ASSESSED LIQUIDATED DAMAGES IN ACCORDANCE WITH 108.07.

SIGN PLACEMENT

THE EXACT LOCATIONS OF SIGNS ARE TO BE STAKED AND CHECKED BY THE ENGINEER PRIOR TO PLACEMENT TO INSURE CLEARANCE OF DRIVES, ROADWAYS AND OTHER OBSTACLES. IF THERE ARE ANY CONFLICTS, THEY ARE TO BE ADJUSTED AS DIRECTED BY THE ENGINEER. PAYMENT FOR THIS IS INCIDENTAL TO ALL 630 ITEMS.

MAINTENANCE OF TRAFFIC

THIS ITEM SHALL CONSIST OF MAINTENANCE OF TRAFFIC ON EXISTING ROADWAYS AND RAMPS IN ACCORDANCE WITH THE OHIO MANUAL OF UNIFORM TRAFFIC CONTROL DEVICES FOR STREETS AND HIGHWAYS, CURRENT EDITION, LATEST REVISION, THE SPECIFICATIONS AND THE FOLLOWING:

1. ON ROADWAYS WITH FOUR OR MORE LANES, A MINIMUM OF ONE ELEVEN FOOT LANE IN EACH DIRECTION SHALL BE MAINTAINED, ON OTHER ROADWAYS, A MINIMUM OF ONE ELEVEN FOOT BIDIRECTIONAL LANE SHALL BE MAINTAINED ON THE EXISTING PAVEMENT DURING CONSTRUCTION OF THE WORK. SHOULDERS SHALL NOT BE USED TO MAINTAIN TRAFFIC.

2. THE CONTRACTOR SHALL INFORM THE DISTRICT OFFICE (330) 297-0801 EXT 209, EIGHTEEN (18) DAYS PRIOR TO THE BEGINNING OF WORK.

3. CONES SHALL NOT BE ACCEPTABLE TRAFFIC CONTROL DEVICES FOR LANE RESTRICTIONS OR LANE REDUCTIONS THAT ARE IN OPERATION ONE-HALF HOUR AFTER SUNSET OR ONE HALF-HOUR BEFORE SUNRISE. ALL NIGHTTIME LANE RESTRICTIONS SHALL REQUIRE DRUMS OR BARRICADES AT A MAXIMUM SPACING OF FIFTY (50) FEET. WEIGHTED CHANNELIZERS MAY BE USED IN ACCORDANCE WITH THE ADDITIONAL NOTE HEREIN.

4. LANE RESTRICTIONS OR LANE REDUCTIONS SHALL NOT BE PERMITTED AFTER NORMAL WORKING HOURS. NORMAL WORKING HOURS SHALL BE THOSE HOURS DURING WHICH THE CONTRACTOR HAS A FULL COMPLEMENT OF EMPLOYEES AND EQUIPMENT ACTIVELY INSTALLING SIGNS.

5. THE CONTRACTOR SHALL FURNISH, ERECT, MAINTAIN AND SUBSEQUENTLY REMOVE ALL FLAGS, BARRICADES, SIGNS, SIGN SUPPORTS AND FURNISH AND MAINTAIN ALL FLAGGERS, WATCHERS AND INCIDENTALS RELATED THERETO.

6. UNDER NO CIRCUMSTANCES SHALL THE CONTRACTOR BE PERMITTED TO HAVE SUCCESSIVE WORK ZONES UNLESS THE DISTANCE BETWEEN THE DRUMS, BARRICADES, WEIGHTED CHANNELIZERS OR CONES EXCEEDS TWO (2) MILES RURAL OR ONE (1) MILE URBAN.

PAYMENT FOR ALL LABOR, EQUIPMENT AND MATERIALS SHALL BE INCLUDED IN THE LUMP SUM CONTRACT PRICE FOR 614, MAINTAINING TRAFFIC, UNLESS SEPARATELY ITEMIZED IN THE PLAN.

CONTRACTOR'S EQUIPMENT - OPERATION AND STORAGE

A QUALIFIED FLAGGER SHALL BE EMPLOYED WHERE THE CONTRACTOR'S EQUIPMENT MUST MERGE WITH THE TRAFFIC STREAM. THE CONTRACTOR'S EQUIPMENT SHALL BE EQUIPPED WITH AT LEAST ONE AMBER FLASHING LIGHT. WHEN NOT IN USE, EQUIPMENT SHALL BE STORED AT A STORAGE AREA OUTSIDE THE R/W, THE LOCATION OF WHICH SHALL HAVE PRIOR APPROVAL OF THE ENGINEER. WHEN PARKING ALONG THE HIGHWAY THE EQUIPMENT SHALL BE PLACED AND DELINEATED AS PER 614.03. ADEQUATE BARRICADES AND LIGHTS SHALL BE PLACED ON THE PAVEMENT SIDE OF THE EQUIPMENT TO IDENTIFY THE LIMITS OF THE EQUIPMENT. ALL OTHER EQUIPMENT, INCLUDING PRIVATE VEHICLES, SHALL BE STORED AT THE APPROVED CONTRACTOR'S STORAGE AREA. NO EQUIPMENT SHALL BE PARKED ON PRIVATE PROPERTY UNLESS PRIOR APPROVAL OF THE OWNER AND THE PROJECT ENGINEER/SUPERVISOR HAS BEEN GRANTED.

WEIGHTED CHANNELIZERS

THE WEIGHTED CHANNELIZER SHALL BE PREDOMINATELY ORANGE IN COLOR AND SHALL BE MADE OF A LIGHTWEIGHT, FLEXIBLE, AND DEFORMABLE MATERIAL. THEY SHALL BE AT LEAST 42 INCHES IN HEIGHT WITH A WEIGHTED BASE. THEY MAY HAVE A "HANDLE" OR LIFTING DEVICE WHICH EXTENDS ABOVE THE 42" MINIMUM HEIGHT.

THE MARKINGS ON THE WEIGHTED CHANNELIZER SHALL BE HORIZONTAL, CIRCUMFERENTIAL, ALTERNATING ORANGE AND WHITE RETROREFLECTIVE STRIPES 6 INCHES WIDE. EACH WEIGHTED CHANNELIZER SHALL HAVE A MINIMUM OF TWO ORANGE AND TWO WHITE STRIPES. ANY NON-RETROREFLECTIVE SPACES BETWEEN THE HORIZONTAL ORANGE AND WHITE STRIPES SHALL NOT EXCEED 2 INCHES WIDE. THE WEIGHTED CHANNELIZER SHALL HAVE A 4-INCH MINIMUM WIDTH, REGARDLESS OF ORIENTATION.

ON FREEWAYS AND MULTILANE HIGHWAYS:
USE OF WEIGHTED CHANNELIZERS ON FREEWAYS AND MULTILANE HIGHWAYS SHALL BE LIMITED TO SHORT-TERM OPERATION, GENERALLY TWELVE HOURS OR LESS, FOR EITHER DAY OR NIGHT. UPON COMPLETION OF WORK WITHIN THE ABOVE NOTED TIME PERIOD, THE WEIGHTED CHANNELIZERS SHALL BE REMOVED. THE WEIGHTED CHANNELIZERS MAY AGAIN BE PLACED ON THE HIGHWAY WHEN THE WORK IS TO RESUME ON THE FOLLOWING DAY OR NIGHT. ANY LANE CLOSURE USING CHANNELIZATION DEVICES, EXPECTED TO REMAIN FOR MORE THAN TWELVE HOURS, SHALL REQUIRE THE USE OF DRUMS OR BARRIERS.

WHEN USED AT NIGHT, WEIGHTED CHANNELIZERS SHALL ONLY BE PLACED IN THE "TANGENT AREA". THE "TANGENT AREA" IS DEFINED AS THE AREA AFTER THE TRANSITION TAPER WHERE THE WORK TAKES PLACE. DRUMS SHALL BE USED IN THE TRANSITION TAPERS FOR NIGHT OPERATIONS.

ON OTHER HIGHWAYS:
THERE ARE NO DURATIONS OF WORK RESTRICTIONS FOR USE OF WEIGHTED CHANNELIZERS ON ALL OTHER TYPES OF HIGHWAYS, DAY OR NIGHT. ON THESE ROADWAYS THE WEIGHTED CHANNELIZER MAY BE USED IN THE TRANSITION TAPERS AS WELL AS IN THE TANGENT AREAS, DAY OR NIGHT.

MAXIMUM SPACING OF THE WEIGHTED CHANNELIZER SHALL BE 40 FEET.

STEPS SHOULD BE TAKEN TO ENSURE THAT THE WEIGHTED CHANNELIZERS WILL NOT BE BLOWN OVER OR DISPLACED BY WIND OR MOVING TRAFFIC. BALLASTS SHOULD NOT PRESENT A HAZARD IF THE WEIGHTED CHANNELIZERS ARE INADVERTENTLY STRUCK, NOR SHOULD THEY AFFECT THE VISIBILITY OF THE WEIGHTED CHANNELIZERS. ALL BALLASTS USED SHOULD BE IN ACCORDANCE WITH THE MANUFACTURER'S SPECIFICATIONS.

TRAFFIC CONTROL INSPECTOR

THE CONTRACTOR SHALL DESIGNATE AN INDIVIDUAL OTHER THAN THE SUPERINTENDENT AND SUBJECT TO THE APPROVAL OF THE ENGINEER, TO CONTINUOUSLY INSPECT ALL TRAFFIC CONTROL DEVICES WHENEVER CONSTRUCTION WORK IS BEING PERFORMED WITHIN THE WORK LIMITS OF THE PROJECT. THE DESIGNATED INDIVIDUAL SHALL ALSO INSPECT ALL TRAFFIC DEVICES AT THE BEGINNING AND AT THE END OF EACH WORK DAY. THE DESIGNATED INDIVIDUAL OR A QUALIFIED REPRESENTATIVE SHALL ALSO BE AVAILABLE ON AN AROUND THE CLOCK BASIS TO REPAIR AND/OR REPLACE DAMAGED OR MISSING TRAFFIC CONTROL DEVICES. THESE INDIVIDUALS SHALL BE EQUIPPED WITH CELLULAR PHONES AND THEIR NAMES AND PHONE NUMBERS SHALL BE GIVEN TO THE PROJECT ENGINEER AT THE PRE-CONSTRUCTION MEETING. THE DESIGNATED INDIVIDUAL MAY HAVE OTHER CONSTRUCTION RELATED DUTIES AS LONG AS IMMEDIATE ATTENTION IS GIVEN TO TRAFFIC CONTROL. PAYMENT FOR THE SERVICES OF THE TRAFFIC CONTROL INSPECTOR SHALL BE INCLUDED IN THE LUMP SUM PRICE BID FOR ITEM 614 MAINTAINING TRAFFIC.

WORK SCHEDULE/NOTIFICATION

ALL WORK SHALL BE COMPLETED ON ONE ROUTE PRIOR TO BEGINNING WORK ON SUBSEQUENT ROUTES.

THE CONTRACTOR SHALL NOTIFY THE DISTRICT TRAFFIC OFFICE (330-297-0801, EXT. 305) A MINIMUM OF 2 DAYS BEFORE BEGINNING WORK ON A ROUTE AND SHALL PROVIDE NOTICE WHEN WORK ON EACH ROUTE IS COMPLETE.

CALCULATED TJP
CHECKED MJH

GENERAL NOTES

POR-5-4.33

lkopnick@D04CD0234117 - 24168gg.m - Monday October 28 2002 10:39:46 AM EST

SHEET NUMBER 12	26	29	37	39	44	45	46	46A	49	57	ITEM	ITEM EXT.	GRAND TOTAL	UNIT	DESCRIPTION	SEE SHEET NO.
															TRAFFIC CONTROL	
	247.0		80.0		29.0		20.0	102.0	20.0	60.0	630	02100	558.0	FT	GROUND MOUNTED SUPPORT, NO. 2 POST	
1325.3	2,521.6	87.0	1824.5	185.7	271.5	309.7	287.0	271.7	223.5	1119.7	630	03100	8427.2	FT	GROUND MOUNTED SUPPORT, NO. 3 POST	
	99.8										630	06400	99.8	FT	GROUND MOUNTED SUPPORT, S4X7.7 BEAM	
	32.0										630	06500	32.0	FT	GROUND MOUNTED SUPPORT, W6X9 BEAM	
	52.0										630	08004	52.0	FT	ONE WAY SUPPORT, NO. 3 POST	
	2										630	09000	2	EACH	BREAKAWAY BEAM CONNECTION	
	2	5		3			2			3	630	79000	15	EACH	SIGN HANGER ASSEMBLY, SPAN WIRE	
				1							630	79100	1	EACH	SIGN HANGER ASSEMBLY, MAST ARM	
										9	630	79500	9	EACH	SIGN SUPPORT ASSEMBLY, POLE MOUNTED	
548.86	1,576.8	58.38	942.58	152.19	142.56	176.46	148.63	135.62	123.38	648.49	630	80102	4653.95	SQ FT	SIGN, FLAT SHEET, TYPE G	
	48.0		79.0								630	80204	127.0	SQ FT	SIGN, EXTRUSHEET, TYPE G	
			1								630	82000	1	EACH	SIGN BACKING ASSEMBLY	
113	273	15	171	19	25	60	53	36	27	96	630	84900	888	EACH	REMOVAL OF GROUND MOUNTED SIGN AND DISPOSAL	
	10		4				4	4		4	630	85000	26	EACH	REMOVAL OF GROUND MOUNTED SIGN AND STORAGE	
	1				1		1			2	630	85100	5	EACH	REMOVAL OF GROUND MOUNTED SIGN AND REERECTION	
109	229	5	151	14	23	27	29	34	19	91	630	86002	731	EACH	REMOVAL OF GROUND MOUNTED POST SUPPORT AND DISPOSAL	
	2			4			2			3	630	87400	11	EACH	REMOVAL OF OVERHEAD MOUNTED SIGN AND DISPOSAL	
		2									630	87500	2	EACH	REMOVAL OF POLE MOUNTED SIGN AND DISPOSAL	
											614	11000	LUMP		MAINTAINING TRAFFIC	
											619	16000	4	MONTH	FIELD OFFICE, TYPE A	
											623	10000	LUMP		CONSTRUCTION LAYOUT STAKES	
											624	10000	LUMP		MOBILIZATION	

CALCULATED TJP
CHECKED MJH

GENERAL SUMMARY

POR-5-4.33

mexley@D04CD0234631 - 241669p001.rm - Monday October 28 2002 09:01:42 AM EST

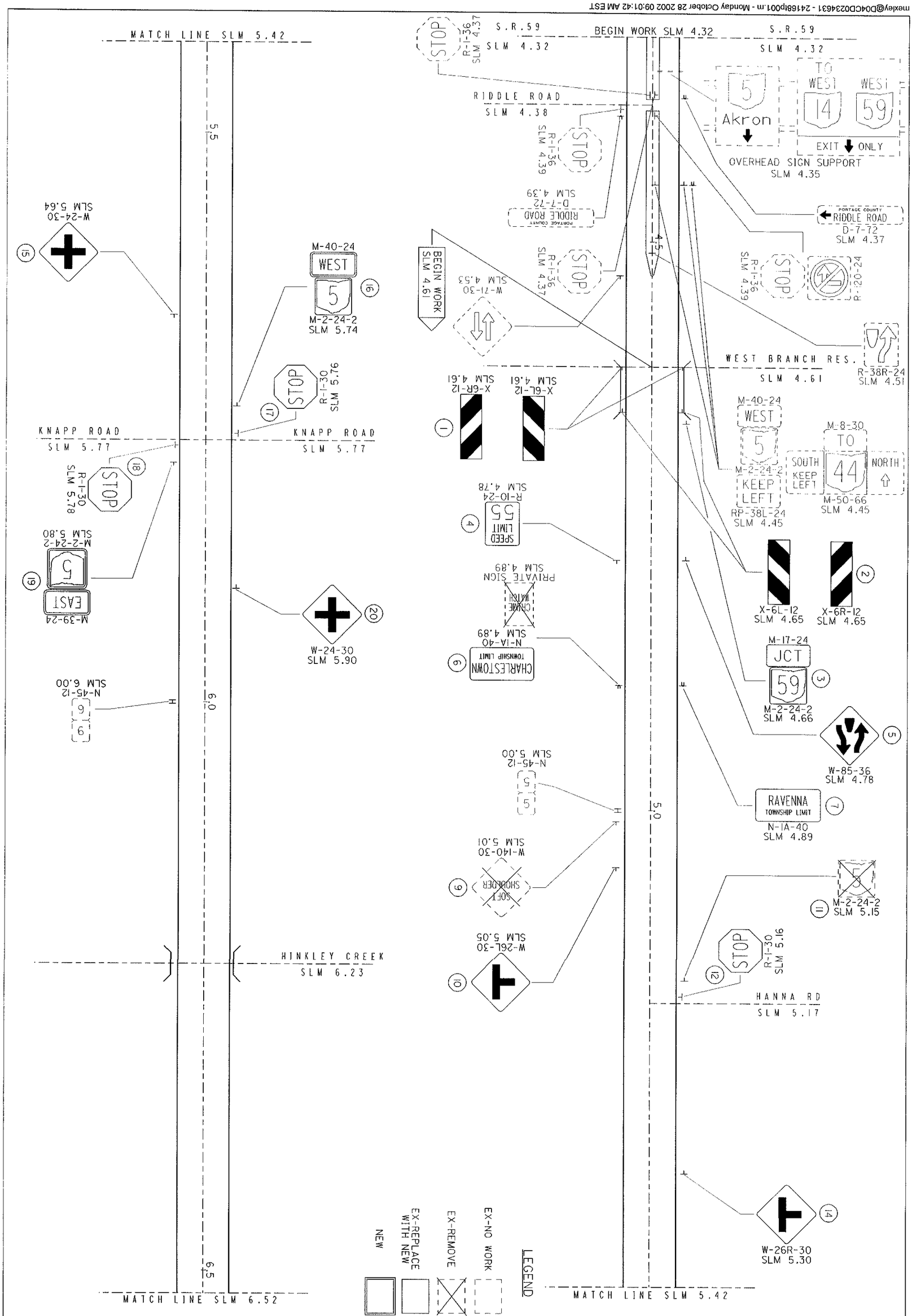

4 / 57	POR-5-4.33	S.R. 5 SIGNING PLAN SLM 4.32 TO SLM 6.52	CALCULATED T.X.I. CHECKED K.G. 0 0.04 0.08 0.02 0.06 HORIZONTAL SCALE IN MILES

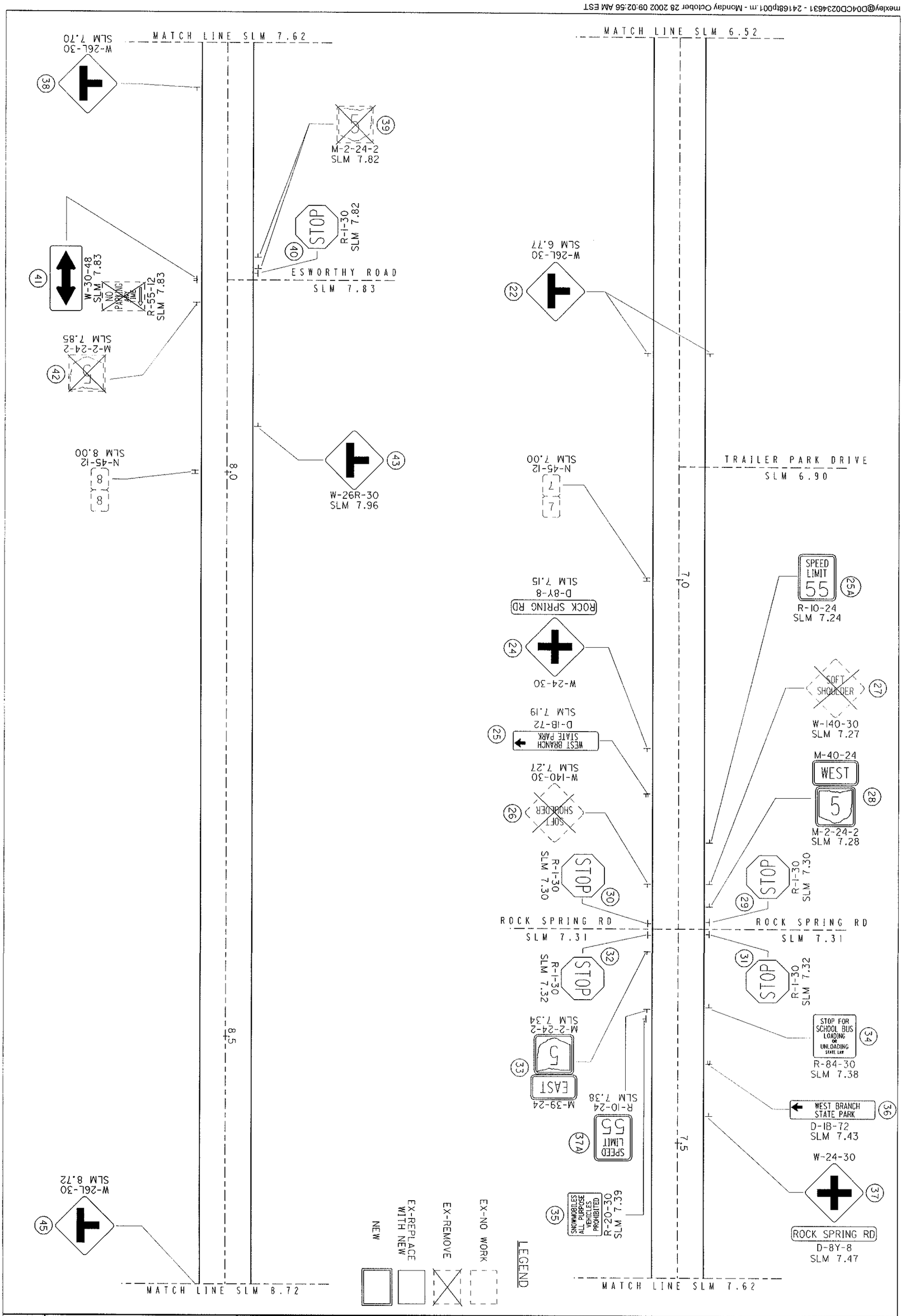

5-57	POR-5-4.33	**S.R. 5 SIGNING PLAN** **SLM 6.52 TO SLM 8.72**	CALCULATED T.K.I. CHECKED K.G. 0 0.04 0.08 0.02 0.06 HORIZONTAL SCALE IN MILES

mexley@D04CDD234631 - 241681p001.m - Monday October 28 2002 09:03:13 AM EST

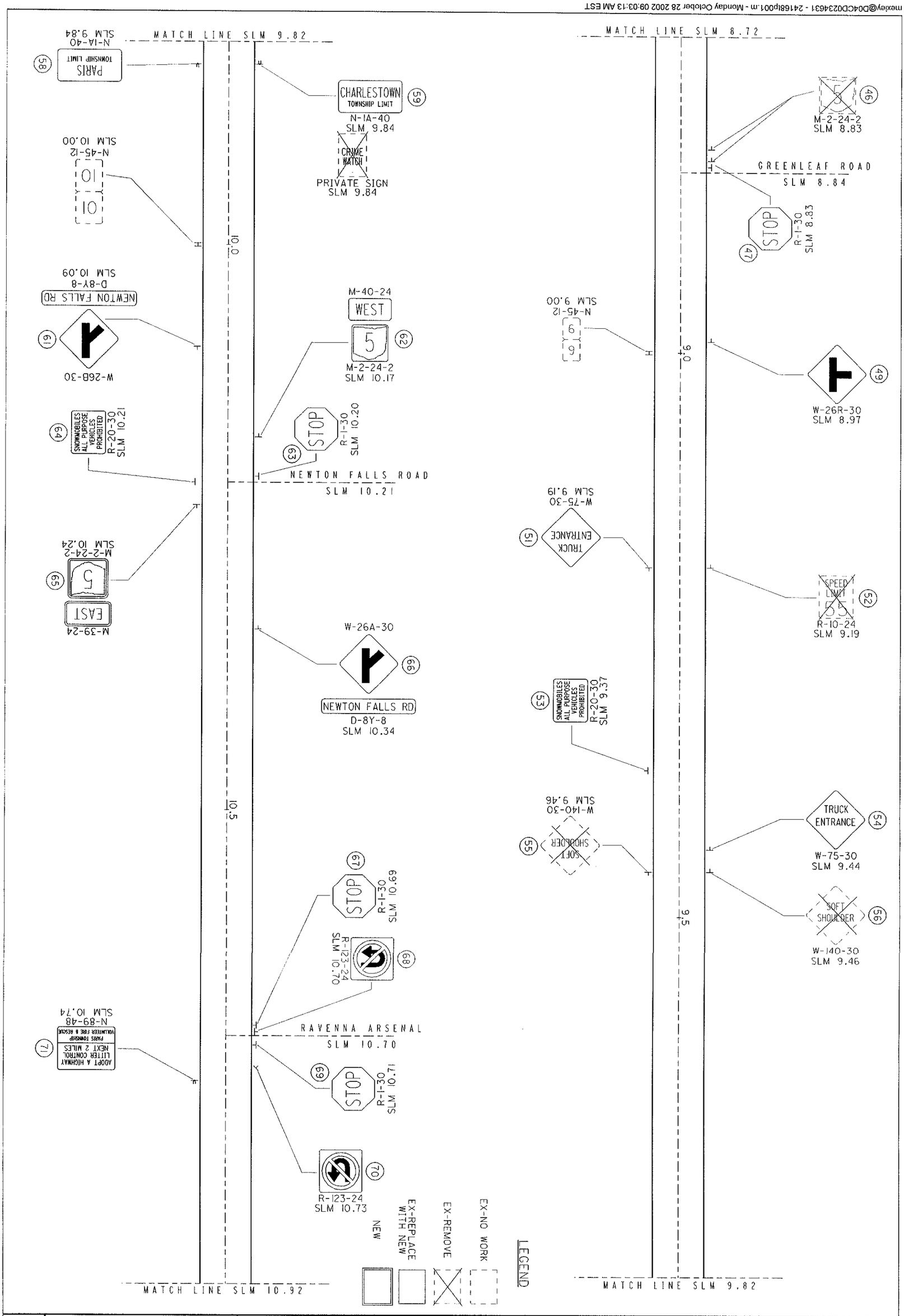

6 / 57	POR-5-4.33	S.R. 5 SIGNING PLAN SLM 8.72 TO SLM 10.92	CALCULATED T.K.L. CHECKED K.G. 0 0.04 0.08 0.02 0.06 HORIZONTAL SCALE IN MILES N

mexley@D04CD0234631 - 241661p001.m - Monday October 28 2002 09:03:29 AM EST

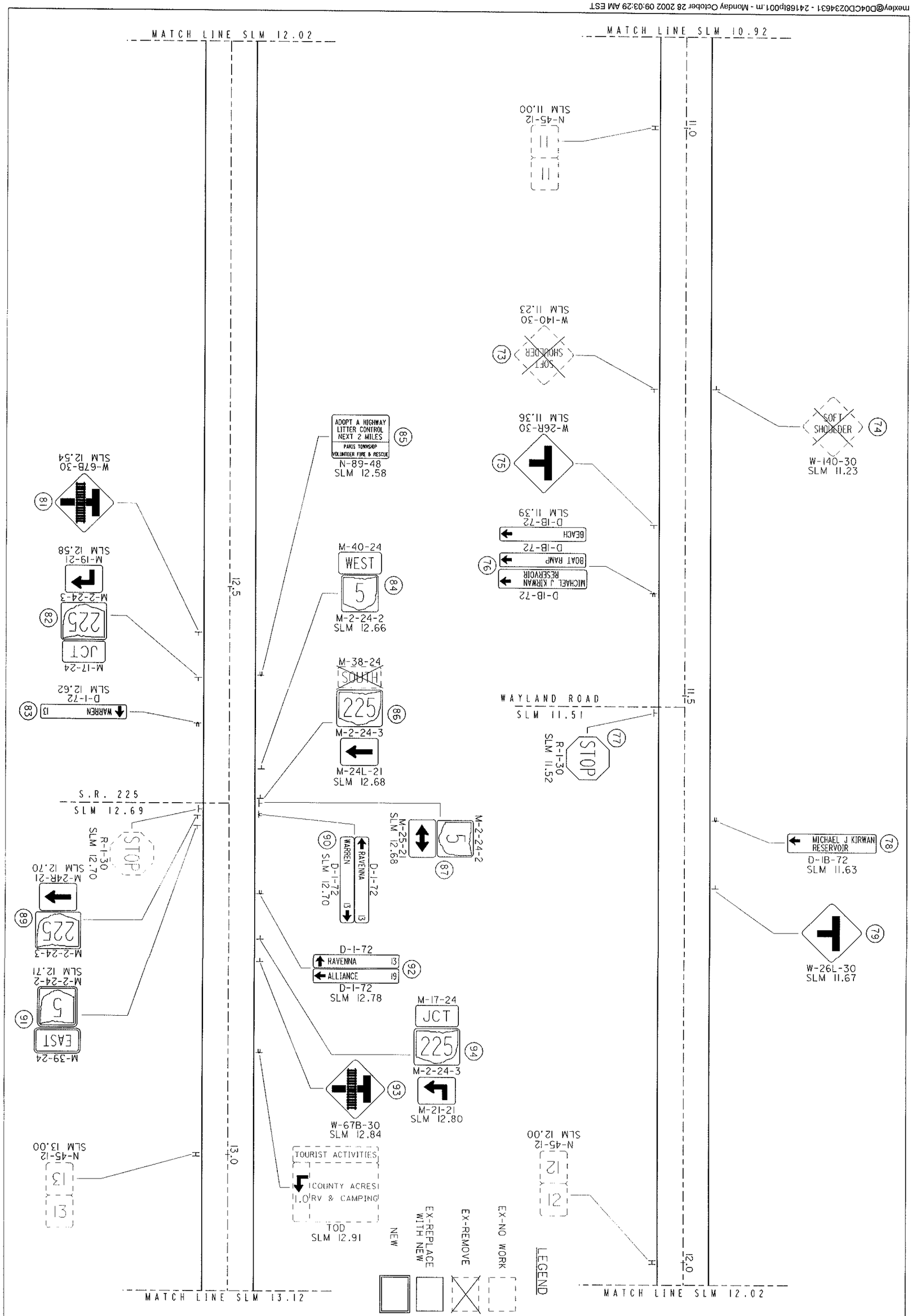

7/57	POR-5-4.33	S.R. 5 SIGNING PLAN SLM 10.92 TO SLM 13.12	CALCULATED T.X.I. CHECKED K.G. 0 0.02 0.04 0.06 HORIZONTAL SCALE IN MILES

mexley@D04CD0234631 - 241681p001.m - Monday October 28 2002 09:03:47 AM EST

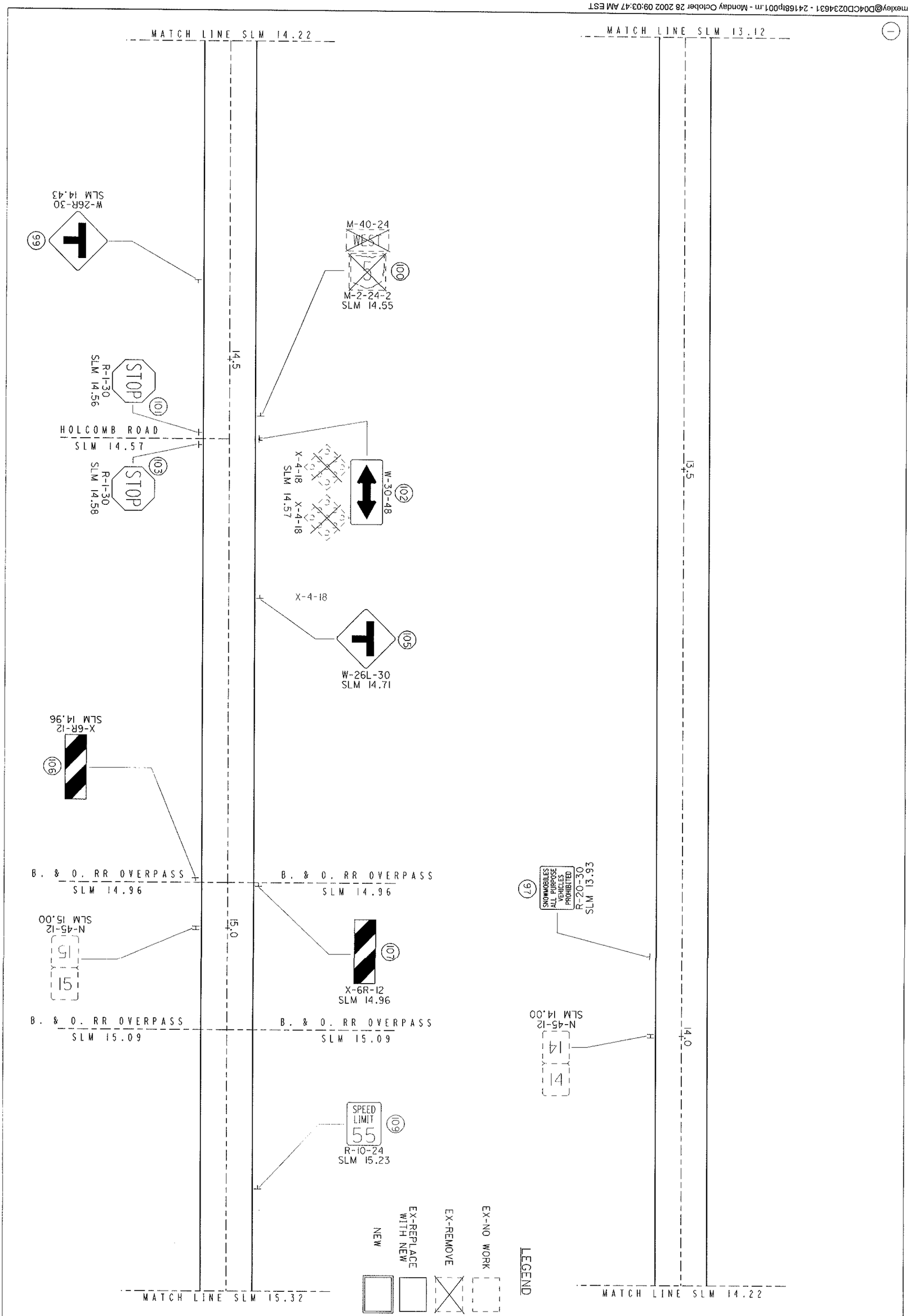

57 / 80	POR-5-4.33	S.R. 5 SIGNING PLAN SLM 13.12 TO SLM 15.32	CALCULATED T.K.I. CHECKED K.C. 0 0.04 0.08 0.02 0.06 HORIZONTAL SCALE IN MILES

mexley@D04CD0234631 - 241681p001.m - Monday October 28 2002 09:04:04 AM EST

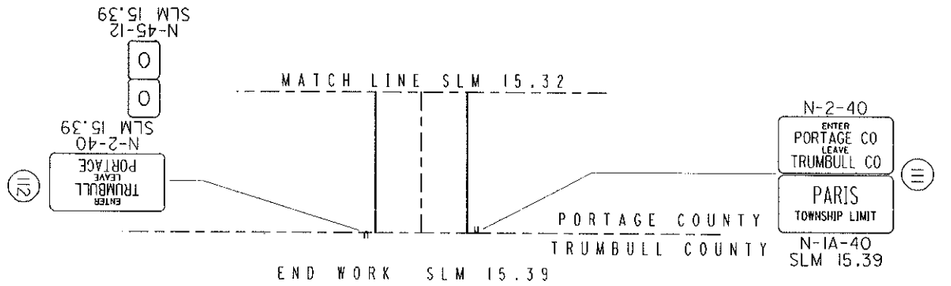

LEGEND

- EX-NO WORK
- EX-REMOVE
- EX-REPLACE WITH NEW
- NEW

57 / 98	POR-5-4.33	S.R. 5 SIGNING PLAN SLM 15.32 TO SLM 15.39	CALCULATED T.K.L. CHECKED K.C. 0 0.04 0.08 0.02 0.06 HORIZONTAL SCALE IN MILES

Δ - SHEETING TO BE YELLOW-GREEN COLOR

* - FABRICATE ON MARINE-GRADE PLYWOOD, 3/4"

** - DOUBLE-SIDED SIGN

REFERENCE NO.	STATION (S.L.M.)	SIDE	CODE	SIZE (INCHES)	630 GROUND MOUNTED SUPPORT, NO.2 POST (FT.)	630 GROUND MOUNTED SUPPORT, NO.3 POST (FT.)	630 SIGN, FLAT SHEET, TYPE G (SQ. FT.)	630 REMOVAL OF GROUND MOUNTED SIGN AND DISPOSAL (EACH)	630 REMOVAL OF GROUND MOUNTED SIGN AND STORAGE (EACH)	630 REMOVAL OF GROUND MOUNTED POST SUPPORT AND DISPOSAL (EACH)
	SHEET 4									
1	4.61	RT.	X-6R-12	12 x 36		10.5	3	1		1
1	4.61	LT.	X-6L-12	12 x 36		10.5	3	1		1
2	4.65	LT.	X-6L-12	12 x 36		10.5	3	1		1
2	4.65	RT.	X-6R-12	12 x 36		10.5	3	1		1
3	4.66	LT.	M-17-24	24 x 12		13.5	2	1		1
3	4.66	LT.	M-2-24-2	24 x 24			4	1		
4	4.78	RT.	R-10-24	24 x 30		13	5	1		1
5	4.78	LT.	W-85-36	36 x 36		14.75	9	1		1
6	4.89	RT.	N-1A-40	40 x 20		12/12	5.56	1		2
6	4.89	RT.	PRIVATE SIGN	-				1		
7	4.89	LT.	N-1A-40	40 x 20		12/12	5.56	1		2
8	5.00 **	RT.	N-45-12	NO WORK						
9	5.01	RT.	W-140-30	30 x 30				1		1
10	5.05	RT.	W-26L-30	30 x 30		14	6.25	1		1
11	5.15	LT.	M-2-24-2	24 x 24		12.5	4	1		1
12	5.16	LT.	R-1-30	30 x 30		13	6.25	1		1
13	NOT USED									
14	5.32	LT.	W-26R-30	30 x 30		14	6.25	1		1
15	5.64	RT.	W-24-30	30 x 30		14	6.25	1		1
16	5.74	LT.	M-2-24-2	24 x 24		12.5	4	1		1
17	5.76	LT.	R-1-30	30 x 30		13	6.25	1		1
18	5.78	RT.	R-1-30	30 x 30		13	6.25	1		1
19	5.80	RT.	M-2-24-2	24 x 24		12.5	4			
20	5.90	LT.	W-24-30	30 x 30		14	6.25	1		1
21	6.00 **	RT.	N-45-12	NO WORK						
	SHEET 5									
22	6.77	RT.	W-26L-30	30 x 30		14	6.25	1		1
22	6.77	LT.	W-26L-30	30 x 30		14	6.25	1		1
23	7.00 **	RT.	N-45-12	NO WORK						
24	7.15	RT.	W-24-30	30 x 30		14	6.25	1		1
25	7.19 *	RT.	D-1B-72	72 x 18		12/12	9	1		2
25A	7.24	LT.	R-10-24	24 x 30		13	5			
26	7.27	RT.	W-140-30	30 x 30				1		1
27	7.27	LT.	W-140-30	30 x 30				1		1
28	7.28	LT.	M-40-24	24 x 12		12.5	2			
28	7.28	LT.	M-2-24-2	24 x 24			4			
29	7.30	LT.	R-1-30	30 x 30		13	6.25	1		1
30	7.30	RT.	R-1-30	30 x 30		13	6.25	1		1
31	7.32	LT.	R-1-30	30 x 30		13	6.25	1		1
32	7.32	RT.	R-1-30	30 x 30		13	6.25	1		1
33	7.34	RT.	M-39-24	24 x 12		12.5	2			
33	7.34	RT.	M-2-24-2	24 x 24			4			
34	7.38	LT.	R-84-30	30 x 30		13	6.25	1		1
35	7.39	RT.	R-20-30	30 x 24		12.5	5	1		1
36	7.43 *	LT.	D-1B-72	72 x 18		12/12	9	1		2
37	7.47	LT.	W-24-30	30 x 30		14	6.25	1		1
37A	7.38	RT.	R-10-24	24 x 30		13	5			
38	7.70	RT.	W-26L-30	30 x 30		14	6.25	1		1
39	7.82	LT.	M-2-24-2	24 x 24				1		1
40	7.82	LT.	R-1-30	30 x 30		13	6.25	1		1
41	7.83	RT.	W-30-48	48 x 24		12.5/12.5	8	1		2
41	7.83	RT.	R-55-12	12 x 18				1		
TOTALS CARRIED TO SHEET 12						548.25	220.62	40		42

CALCULATED TKI
CHECKED KG

S.R. 5 SIGNING SUBSUMMARY

POR-5-4.33

mexley@D04CD0234631 - 24168ts001.m - Monday October 28 2002 09:20:41 AM ES.
mexley 28-OCT-2002 9:15AM I:\Projects\24168_POR-5-4.33\dgn\24168ts001.dgn

REFERENCE NO.	Δ - SHEETING TO BE YELLOW-GREEN COLOR STATION (S.L.M.) * - FABRICATE ON MARINE-GRADE PLYWOOD, 3/4" ** - DOUBLE-SIDED SIGN	SIDE	CODE	SIZE (INCHES)	630 GROUND MOUNTED SUPPORT, NO.2 POST FT.	GROUND MOUNTED SUPPORT, NO.3 POST FT.	SIGN, FLAT SHEET, TYPE G SQ. FT.	REMOVAL OF GROUND MOUNTED SIGN AND DISPOSAL EACH	REMOVAL OF GROUND MOUNTED SIGN AND STORAGE EACH	REMOVAL OF GROUND MOUNTED POST SUPPORT AND DISPOSAL EACH
	SHEET 5									
42	7.85	RT.	M-2-24-2	24 x 24				1		1
43	7.96	LT.	W-26R-30	30 x 30		13	6.25	1		1
44	8.00 **	RT.	N-45-12	NO WORK						
45	8.72	RT.	W-26L-30	30 x 30		13	6.25	1		1
	SHEET 6									
46	8.83	LT.	M-2-24-2	24 x 24				1		1
47	8.83	LT.	R-1-30	30 x 30		13	6.25	1		1
48	NOT USED									
49	8.97	LT.	W-26R-30	30 x 30		14	6.25	1		1
50	9.00 **	RT.	N-45-12	NO WORK						
51	9.19	RT.	W-75-30	30 x 30		14	6.25	1		1
52	9.19	LT.	R-10-24	24 x 30				1		1
53	9.37	RT.	R-20-30	30 x 24		12.5	5	1		1
54	9.44	LT.	W-75-30	30 x 30				1		1
55	9.46	RT.	W-140-30	30 x 30				1		1
56	9.46	LT.	W-140-30	30 x 30		14	6.25	1		1
57	NOT USED									
58	9.84	RT.	N-1A-40	40 x 20		12/12	5.56	1		2
59	9.84	LT.	N-1A-40	40 x 20		12/12	5.56	1		2
59	9.84	LT.	PRIVATE SIGN	-				1		
60	10.00 **	RT.	N-45-12	NO WORK						
61	10.09	RT.	W-26B-30	30 x 30		14	6.25	1		1
62	10.17	LT.	M-40-24	24 x 12				1		
62	10.17	LT.	M-2-24-2	24 x 24		12.5	4	1		1
63	10.20	LT.	R-1-36	36 x 36		9	6.25	1		1
64	10.21	RT.	R-20-30	30 x 24		12.5	5	1		1
65	10.24	RT.	M-2-24-2	24 x 24		12.5	4			
66	10.34	LT.	W-26A-30	30 x 30		14	6.25	1		1
67	10.69	LT.	R-1-30	30 x 30		13	6.25	1		1
68	10.70	LT.	R-123-24	24 x 24		12.5	4	1		1
69	10.71	LT.	R-1-30	30 x 30		13	6.25	1		1
70	10.73	LT.	R-123-24	24 x 24		12.5	4	1		1
71	10.74	RT.	N-89-48	48 x 30		13/13	10	1		2
	SHEET 7									
72	11.00 **	RT.	N-45-12	NO WORK						
73	11.23	RT.	W-140-30	30 x 30				1		1
74	11.23	LT.	W-140-30	30 x 30				1		1
75	11.36	RT.	W-26R-30	30 x 30		14	6.25	1		1
76	11.39 *	RT.	D-1B-72	72 x 18		13.5/13.5	9	1		2
76	11.39 *	RT.	D-1B-72	72 X 12			6	1		
76	11.39 *	RT.	D-1B-72	72 X 12			6	1		
77	11.52	RT.	R-1-30	30 x 30		13	6.25	1		1
78	11.63 *	LT.	D-1B-72	72 x 18		12/12.5	9	1		2
79	11.67	LT.	W-26L-30	30 x 30		14	6.25	1		1
80	12.00 **	RT.	N-45-12	NO WORK						
81	12.54	RT.	W-67B-30	30 x 30		14	6.25	1		1
82	12.58	RT.	M-17-24	24 x 12		15.3	2	1		1
82	12.58	RT.	M-2-24-3	30 x 24			5	1		
82	12.58	RT.	M-19-21	21 x 15			2.2	1		
83	12.62 *	RT.	D-1-72	72 x 12		12/12.5	6	1		2
TOTALS CARRIED TO SHEET 12						452.30	186.07	40		40

CALCULATED TKI
CHECKED KG

S.R. 5 SIGNING SUBSUMMARY

POR-5-4.33

11
57

mexley@DD4CD0234631 - 24168ts001.m - Monday October 28 2002 09:21:25 AM ES.
i:\Projects\24168_POR-5-4.33\dgn\24168ts001.dgn 28-OCT-2002 9:15AM mexley

REFERENCE NO.	Δ - SHEETING TO BE YELLOW-GREEN COLOR STATION (S.L.M.) * - FABRICATE ON MARINE-GRADE PLYWOOD, 3/4" ** - DOUBLE-SIDED SIGN	SIDE	CODE	SIZE (INCHES)	630 GROUND MOUNTED SUPPORT, NO.2 POST FT.	GROUND MOUNTED SUPPORT, NO.3 POST FT.	SIGN, FLAT SHEET, TYPE G SQ. FT.	REMOVAL OF GROUND MOUNTED SIGN AND DISPOSAL EACH	REMOVAL OF GROUND MOUNTED SIGN AND STORAGE EACH	REMOVAL OF GROUND MOUNTED POST SUPPORT AND DISPOSAL EACH
	SHEET 7									
84	12.66	LT.	M-40-24	24 x 12		13.5	2	1		1
84	12.66	LT.	M-2-24-2	24 x 24			4	1		
85	112.58	LT.	N-89-48	48 x 30		13/13	10	1		2
86	12.68	LT.	M-38-24	24 x 12		15.5		1		1
86	12.68	LT.	M-2-24-3	30 x 24			5	1		
86	12.68	LT.	M-24L-21	21 x 15			2.2	1		
87	12.68	LT.	M-2-24-2	24 x 24		13.75	4	1		1
87	12.68	LT.	M-25-21	21 x 15			2.2	1		
88	NOT USED									
89	12.70	RT.	M-2-24-3	30 x 24		13.75	5	1		1
89	12.70	RT.	M-24R-21	21 x 15			2.2	1		
90	12.70 *	LT.	D-1-72	72 x 12		12.5/12.5	6	1		2
90	12.70 *	LT.	D-1-72	72 x 12			6	1		
91	12.71	RT.	M-39-24	24 x 12		13.5	2			
91	12.71	RT.	M-2-24-2	24 x 24			4			
92	12.78 *	LT.	D-1-72	72 x 12		12.5/12.5	6	1		2
92	12.78 *	LT.	D-1-72	72 x 12			6	1		
93	12.84	LT.	W-67B-30	30 x 30		14	6.25	1		1
94	12.80	LT.	M-17-24	24 x 12		15.3	2	1		1
94	12.80	LT.	M-2-24-3	30 x 24			5	1		
94	12.80	LT.	M-21-21	21 x 15			2.2	1		
95	NOT USED									
96	13.00 **	RT.	N-45-12	NO WORK						
	SHEET 8									
97	13.93	RT.	R-20-30	30 x 24		12.5	5	1		1
98	14.00 **	RT.	N-45-12	NO WORK						
99	14.43	RT.	W-26R-30	30 x 30		14	6.25	1		1
100	14.55	LT.	M-40-24	24 x 12				1		
100	14.55	LT.	M-2-24-2	24 x 24				1		1
101	14.56	RT.	R-1-30	30 x 30		13	6.25	1		1
102	14.57	LT.	W-30-48	48 x 24		12.5/12.5	8	1		2
102	14.57	LT.	X-4-18	18 x 18				1		
102	14.57	LT.	X-4-18	18 x 18				1		
103	14.58	RT.	R-1-30	30 x 30		13	6.25	1		1
104	NOT USED									
105	14.71	LT.	W-26L-30	30 x 30		14	6.25	1		1
106	14.96	RT.	X-6R-12	12 x 36		10.5	3	1		1
107	14.96	LT.	X-6R-12	12 x 36		10.5	3	1		1
108	15.00 **	RT.	N-45-12	NO WORK						
109	15.23	LT.	R-10-24	24 x 30		13	5	1		1
	SHEET 9									
110	15.39	LT.	W-140-30	30 x 30				1		1
111	15.39	LT.	N-1A-40	40 x 20		12/12	5.56	1		2
		LT.	N-2-40	40 x 20			5.56	1		
	TOTALS FROM THIS SHEET					324.80	142.17	33		27
	TOTALS FROM SHEET 10					548.25	220.62	40		42
	TOTALS FROM SHEET 11					452.30	186.07	40		40
	TOTALS CARRIED TO GENERAL SUMMARY					1325.35	548.86	113		109

CALCULATED TKI
CHECKED KG

S.R. 5 SIGNING SUBSUMMARY

POR-5-4.33

mexley@D04CD0234631 - 24168ts001.m - Monday October 28 2002 09:22:29 AM ES,
mexley 28-OCT-2002 9:15AM
I:\Projects\24168_POR-5-4.33\dgn\24168ts001.dgn

mexley@D04CDC023463I - 241661p002.m - Monday October 28 2002 09:37:33 AM EST

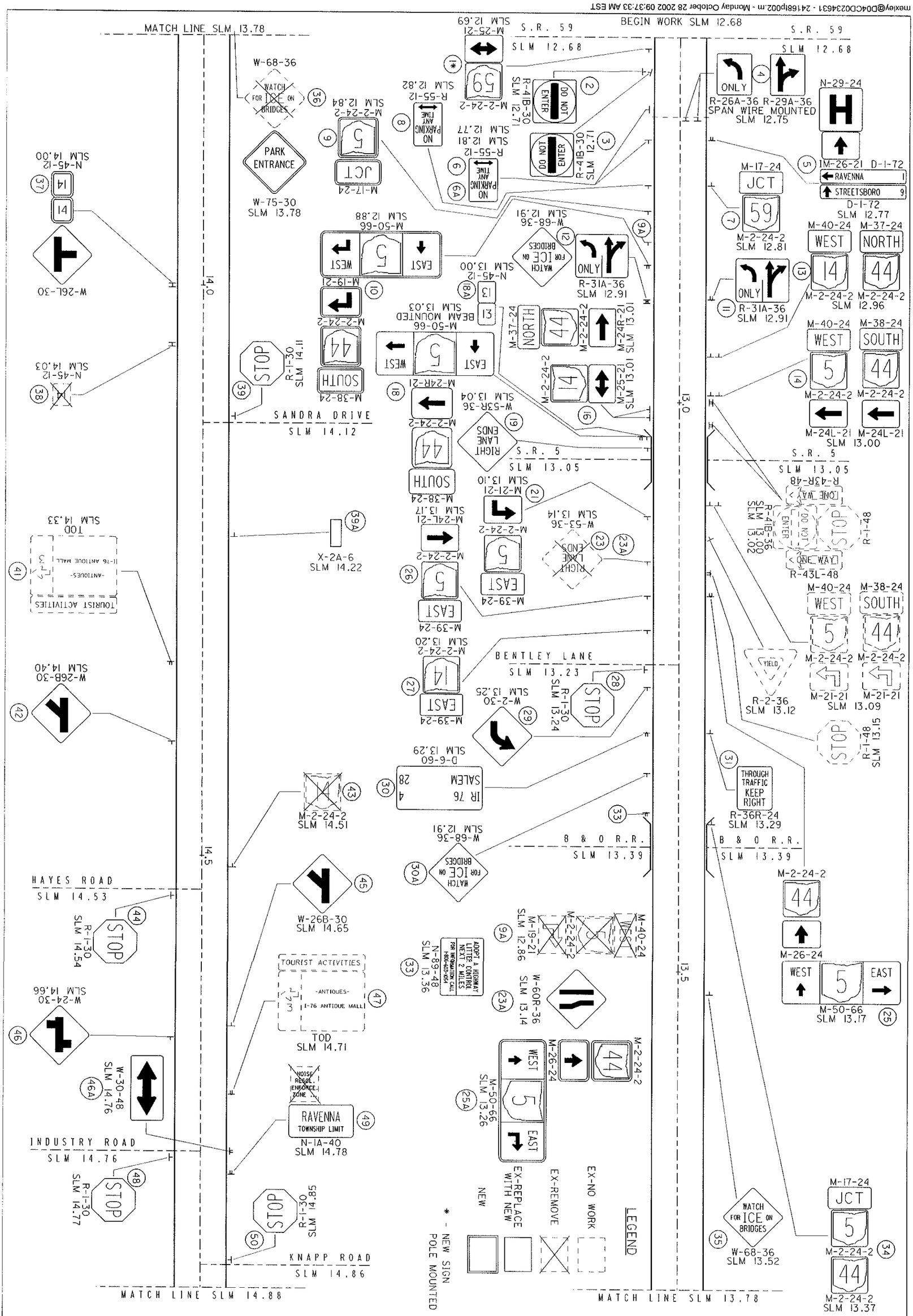

13-57	POR-5-4.33	S.R. 14 SIGNING PLAN - PART 1 SLM 12.68 TO SLM 14.88	CALCULATED T.K.I. CHECKED K.G. 0 0.04 0.08 / 0.02 0.06 HORIZONTAL SCALE IN MILES

mexley@D04CD023463I - 2416Bip002.rm - Monday October 28 2002 09:06:38 AM EST

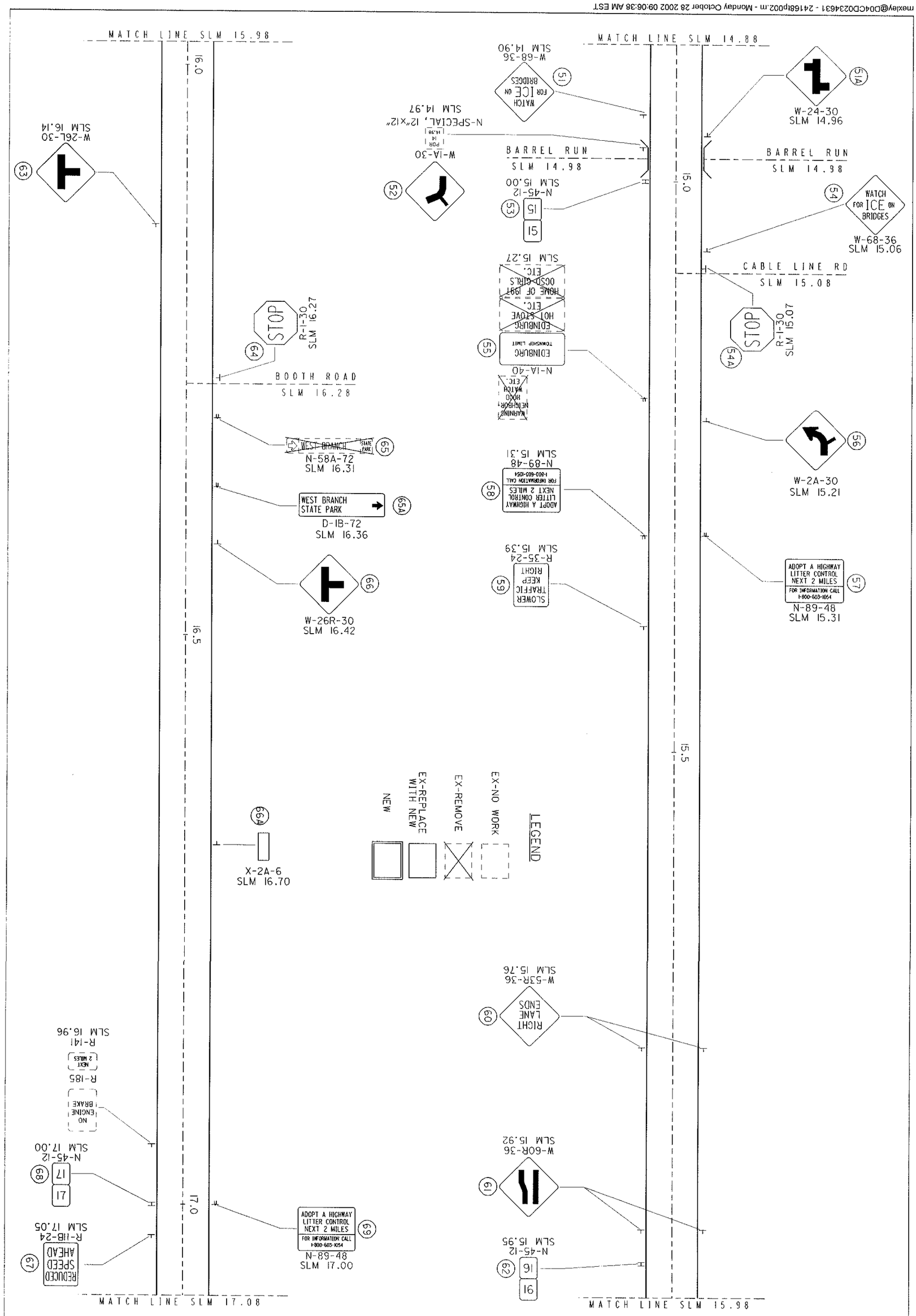

14-57	POR-5-4.33	S.R. 14 SIGNING PLAN - PART 1 SLM 14.88 TO SLM 17.08	CALCULATED T.K.L. CHECKED K.C.	0 0.04 0.08 0.02 0.06 HORIZONTAL SCALE IN MILES

mexley@D04CD023463I - 2416Ip002.m - Monday October 28 2002 09:07:43 AM EST

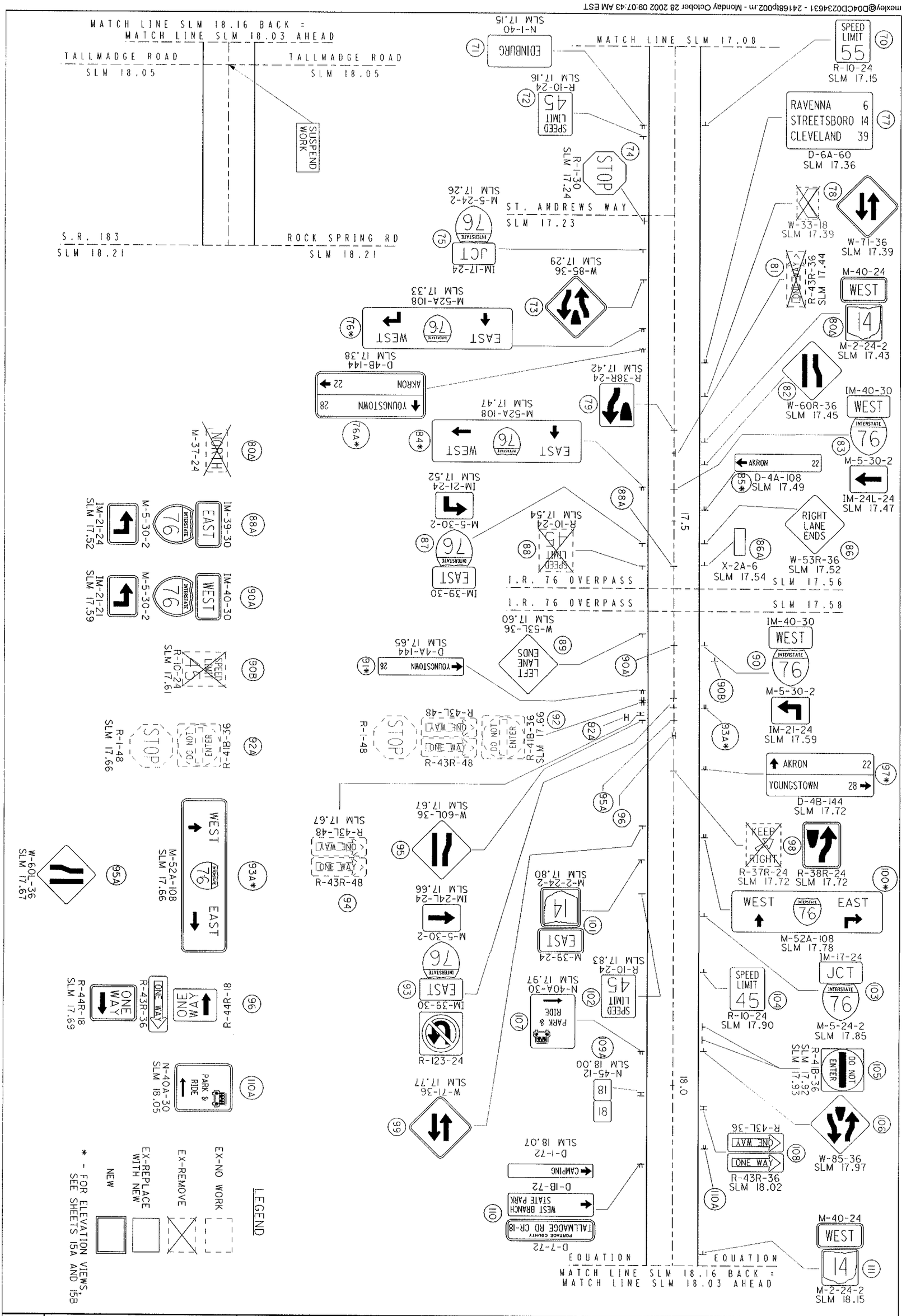

15 / 57	POR-5-4.33	S.R. 14 SIGNING PLAN - PART 1 SLM 17.08 TO SLM 18.05	CALCULATED T.K.L. / CHECKED K.D. / 0 0.02 0.04 0.06 0.08 HORIZONTAL SCALE IN MILES / N

mexley@D04CD0234631 - 24168te.im - Monday October 28 2002 09:06:04 AM EST

SEEDING	
END WIDTH	SQ. YDS.

END AREA		VOLUME	
CUT	FILL	CUT	FILL

CALCULATED

CHECKED

(76) SLM 17.33 RT.
M-52A-108
S4x7.7 BEAMS
RT. BEAM 11.6'
LT. BEAM 12.9'

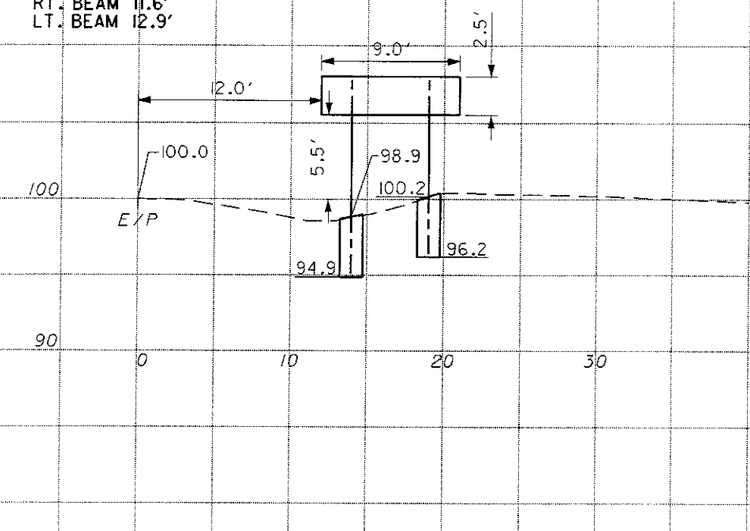

(76a) SLM 17.38 RT.
D-4B-144
S4x7.7 BEAMS
RT. BEAM 12.5'
LT. BEAM 12.9'

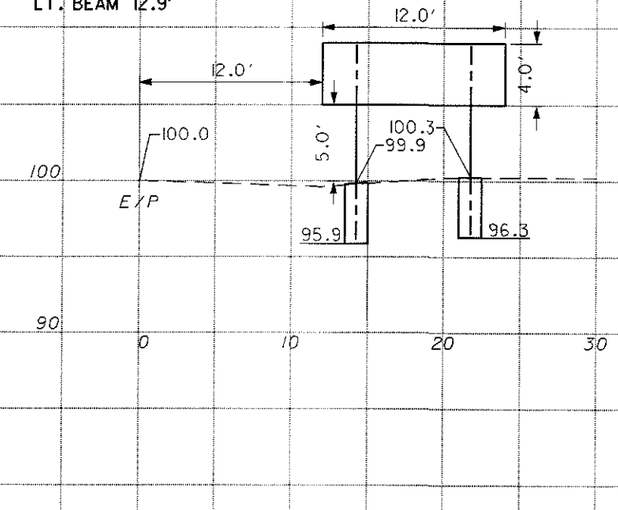

NOTE: ALL BEAMS SHALL HAVE BREAKAWAY CONNECTIONS.

(84) SLM 17.47 RT.
M-52A-108
S4x7.7 BEAMS
RT. BEAM 13.0'
LT. BEAM 12.5'

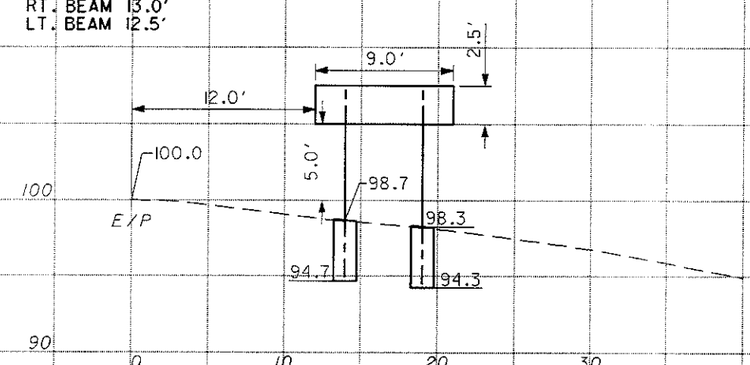

(85) SLM 17.49 LT.
D-4A-108
S4x7.7 BEAMS
RT. BEAM 13.8'
LT. BEAM 12.7'

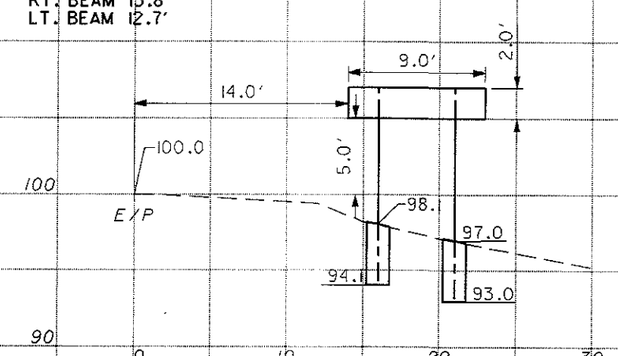

SHEET TOTAL

SHEET TOTAL

CROSS SECTIONS

POR-5-4.33

15g
57

mexley@D04CD0234631 - 241681e.m - Monday October 28 2002 09:04:36 AM EST

SEEDING	
END WIDTH	SQ. YDS.

END AREA		VOLUME	
CUT	FILL	CUT	FILL

CALCULATED

CHECKED

(91)

SLM 17.65 RT.
D-4A-144
S4x7.7 BEAMS
RT. BEAM 13.8'
LT. BEAM 12.7'

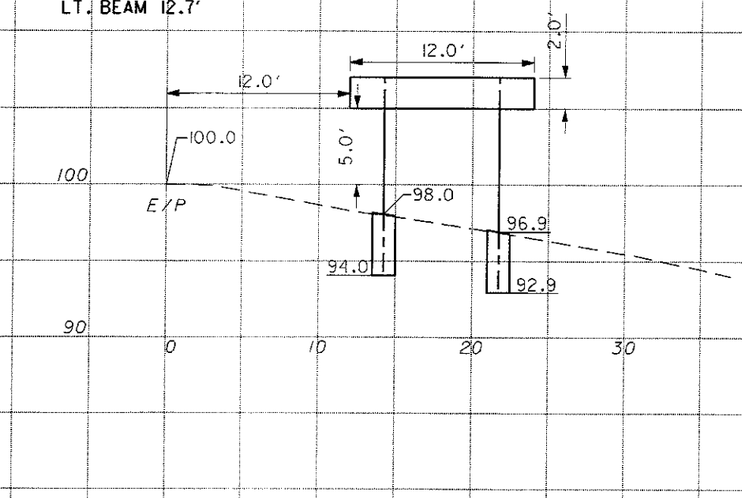

(93a)

SLM 17.66 RT.
M-52A-108
S4x7.7 BEAMS
RT. BEAM 13.5'
LT. BEAM 12.6'

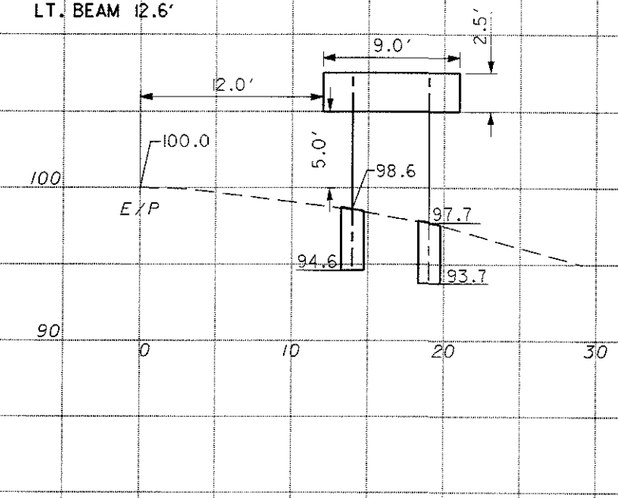

NOTE: ALL BEAMS SHALL HAVE BREAKAWAY CONNECTIONS.

(97)

SLM 17.72 LT.
D-4B-144
W6x9 BEAMS
RT. BEAM 16.4'
LT. BEAM 16.6'

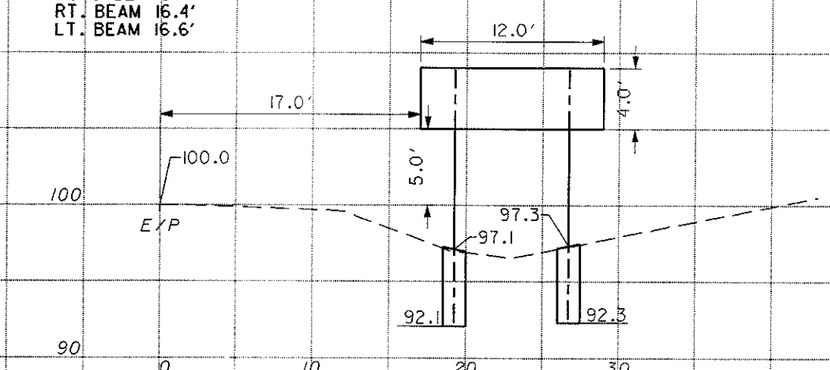

(100)

SLM 17.78 LT.
M-52A-108
S4x7.7 BEAMS
RT. BEAM 12.5'
LT. BEAM 12.3'

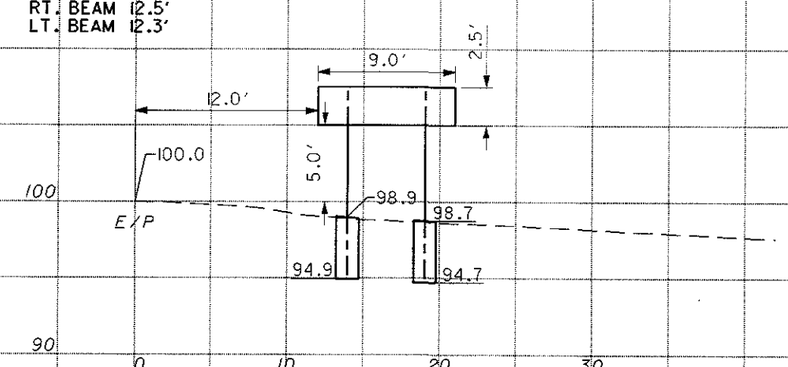

SHEET TOTAL

SHEET TOTAL

CROSS SECTIONS

POR-5-4.33

Δ - SHEETING TO BE YELLOW-GREEN COLOR

* - FABRICATE ON MARINE-GRADE PLYWOOD, 3/4"

** - DOUBLE-SIDED SIGN

REFERENCE NO.	STATION (S.L.M.)	SIDE	CODE	SIZE (INCHES)	GROUND MOUNTED SUPPORT, NO.3 POST (630) FT.	ONE-WAY SUPPORT, NO.3 POST (630) FT.	SIGN HANGER ASSEMBLY, SPAN WIRE (630) EACH	SIGN, FLAT SHEET, TYPE G (630) SQ. FT.	SIGN, EXTRUSHEET, TYPE G (630) SQ. FT.	REMOVAL OF GROUND MOUNTED SIGN AND DISPOSAL (630) EACH	REMOVAL OF OVERHEAD MOUNTED SIGN AND DISPOSAL (630) EACH	REMOVAL OF GROUND MOUNTED POST SUPPORT AND DISPOSAL (630) EACH	GROUND MOUNTED SUPPORT, S4 X 7.7 BEAM FT.	GROUND MOUNTED SUPPORT, W6 x 9 BEAM FT.	BREAKAWAY BEAM CONNECTION EACH	CONCRETE BEAM FOUNDATION EACH
	SHEET 13															
1	12.69	RT.	M-2-24-2	24 x 24	12.25			4		1		1				
1	12.69	RT.	M-25-21	21 x 15				2.19		1						
2	12.71	RT.	R-41B-30	30 x 30	11.5			6.25		1		1				
3	12.71	RT.	R-41B-30	30 x 30	11.5			6.25		1		1				
4	12.75	LT.	R-26A-36	36 x 42			1	10.5			1					
4	12.75	LT.	R-29A-36	36 x 42			1	10.5			1					
5	12.77 *	LT.	D-1-72	72 x 12	14.25/11			6		1		2				
5	12.77 *	LT.	D-1-72	72 x 12				6		1						
5	12.77	LT.	N-29-24	24 x 24				4		1						
5	12.77	LT.	IM-26-21	21 x 15				2.19		1						
6	12.77	RT.	R-55-12	12 x 18	10.5			1.5		1		1				
6A	12.81	RT.	R-55-12	12 x 18	10.5			1.5		1		1				
7	12.81	LT.	M-17-24	24 x 12	12			2		1		1				
7	12.81	LT.	M-2-24-2	24 x 24				4		1						
8	12.82	RT.	R-55-12	12 x 18	10.5			1.5		1		1				
9	12.84	RT.	M-17-24	24 x 12	13			2								
9	12.84	RT.	M-2-24-2	24 x 24				4								
9A	12.86	RT.	M-40-24	24 x 12	12.5/12.5			2		1		2				
9A	12.86	RT.	M-2-24-2	24 x 24				4		1						
9A	12.86	RT.	M-19-21	21 x 15				2.19		1						
10	12.88	RT.	M-50-66	66 x 24	11/15.25			11								
10	12.88	RT.	M-38-24	24 x 12				2								
10	12.88	RT.	M-2-24-2	24 x 24				4								
10	12.88	RT.	M-19-21	21 x 15				2.19								
11	12.91	LT.	R-31A-36	36 x 30	11.5/11.5			7.5		1		2				
12	12.91	RT.	R-31A-36	36 x 30	11.5/11.5			7.5		1		2				
12	12.91	RT.	W-68-36	36 x 36	13.25			9		1						
13	12.96	LT.	M-40-24	24 x 12	12			2		1		1				
13	12.96	LT.	M-2-24-2	24 x 24				4		1						
13	12.96	LT.	M-37-24	24 x 12	12			2		1		1				
13	12.96	LT.	M-2-24-2	24 x 24				4		1						
14	13.00	LT.	M-40-24	24 x 12	12.25			2		1		1				
14	13.00	LT.	M-2-24-2	24 x 24				4		1						
14	13.00	LT.	M-24L-21	21 x 15				2.19		1						
14	13.00	LT.	M-38-24	24 x 12	12.25			2		1		1				
14	13.00	LT.	M-2-24-2	24 x 24				4		1						
14	13.00	LT.	M-24L-21	21 x 15				2.19		1						
15	13.00	LT.	R-1-48	48 x 48		13/13		16		1		2				
15	13.00	LT.	R-41B-36	36 x 36				9		1						
15	13.00	LT.	R-43R-48	48 x 18				6		1						
15	13.00	LT.	R-43L-48	48 x 18				6		1						
16	13.01	RT.	M-2-24-2	24 x 24	12.25			4		1		1				
16	13.01	RT.	M-25-21	21 x 15				2.19		1						
16	13.01	RT.	M-37-24	24 x 12	12.25			2		1		1				
16	13.01	RT.	M-2-24-2	24 x 24				4		1						
16	13.01	RT.	M-24R-21	21 x 15				2.19		1						
17	13.02	LT.	R-1-48	48 x 48		13/13		16		1		2				
17	13.02	LT.	R-41B-36	36 x 36				9		1						
17	13.02	LT.	R-43R-48	48 x 18				6		1						
17	13.02	LT.	R-43L-48	48 x 18				6		1						
TOTALS CARRIED TO SHEET 26					300.5	52.0	2	242.52		42	2	25				

CALCULATED TKI
CHECKED KG

S.R. 14 SIGNING SUBSUMMARY - PART 1

POR-5-4.33

mexley@D04CD0234631 - 24168ts002.m - Monday October 28 2002 09:22:46 AM ES
mexley
28-OCT-2002 9:17AM
i:\Projects\24168_POR-5-4.33\dgn\24168ts002.dgn

Δ - SHEETING TO BE YELLOW-GREEN COLOR

* - FABRICATE ON MARINE-GRADE PLYWOOD, 3/4"

** - DOUBLE-SIDED SIGN

REFERENCE NO.	STATION (S.L.M.)	SIDE	CODE	SIZE (INCHES)	630 GROUND MOUNTED SUPPORT, NO.2 POST (FT.)	630 GROUND MOUNTED SUPPORT, NO.3 POST (FT.)	630 SIGN, FLAT SHEET, TYPE G (SQ. FT.)	630 SIGN, EXTRUSHEET, TYPE G (SQ. FT.)	630 REMOVAL OF GROUND MOUNTED SIGN AND DISPOSAL (EACH)	630 REMOVAL OF GROUND MOUNTED SIGN AND STORAGE (EACH)	REMOVAL OF GROUND MOUNTED POST SUPPORT AND DISPOSAL (EACH)		GROUND MOUNTED SUPPORT, S4 X 7.7 BEAM (FT.)	GROUND MOUNTED SUPPORT, W6 x 9 BEAM (FT.)	BREAKAWAY BEAM CONNECTION (EACH)	CONCRETE BEAM FOUNDATION (EACH)					
	SHEET 13																				
18	13.03	RT.	M-50-66	66 x 24		11/15.25	11		1		2										
18	13.03	RT.	M-38-24	24 x 12			2														
18	13.03	RT.	M-2-24-2	24 x 24			4														
18	13.03	RT.	M-24R-21	21 x 15			2.19														
18A	13.00 **	RT.	N-45-12	12 x 12			1		1												
19	13.04	RT.	W-53-36	36 x 36		13.25	9		1		1										
20	13.09	LT.	M-40-24	24 x 12		12.25	2		1		1										
20	13.09	LT.	M-2-24-2	24 x 24			4		1												
20	13.09	LT.	M-21-21	21 x 15			2.19		1												
20	13.09	LT.	M-38-24	24 x 12		12.25	2		1		1										
20	13.09	LT.	M-2-24-2	24 x 24			4		1												
20	13.09	LT.	M-21-21	21 x 15			2.19		1												
21	13.10	RT.	M-39-24	24 x 12		12.25	2		1		1										
21	13.10	RT.	M-2-24-2	24 x 24			4		1												
21	13.10	RT.	M-21-21	21 x 15			2.19		1												
22	13.12	LT.	R-2-36	36 x 36		12	3.9		1		1										
23	13.14	RT.	W-53-36	36 x 36		13.25	9		1		1										
23A	13.14	RT.	W-53-36	36 x 36		13.25	9		1		1										
24	13.15	LT.	R-1-48	48 x 48		13/13	16		1		2										
25	13.17	LT.	M-50-66	66 x 24		11/11	11		1		2										
25A	13.26	RT.	M-2-24-2	24 x 24		11/11	4														
	13.26	RT.	M-26-24	24 x 12			2														
	13.26	RT.	M-50-66	66 x 24			11														
26	13.17	RT.	M-39-24	24 x 12		12.25	2		1		1										
26	13.17	RT.	M-2-24-2	24 x 24			4		1												
26	13.17	RT.	M-24L-21	21 x 15			2.19		1												
27	13.20	RT.	M-39-24	24 x 12		12	2		1		1										
27	13.20	RT.	M-2-24-2	24 x 24			4		1												
28	13.24	RT.	R-1-30	30 x 30		11.5	6.25		1		1										
29	13.25	RT.	W-2-30	30 x 30		12.5	6.25		1		1										
30	13.29	RT.	D-6-60	60 x 30		11.5/11.5	12.5		1		2										
30A	12.91	RT.	W-68-36	36 x 36		13.25	9														
31	13.29	LT.	R-36R-24	24 x 30		11.5	5		1		1										
32	NOT USED																				
33	13.36	RT.	N-89-48	48 x 30		11.5/11.5	10		1		2										
34	13.37	LT.	M-17-24	24 x 12		13	2		1		1										
34	13.37	LT.	M-2-24-2	24 x 24			4		1												
35	13.52	LT.	W-68-36	36 x 36		13.25	9		1		1										
36	13.78	LT.	W-68-36	36 x 36		13.25	9		1		1										
37	14.00 **	RT.	N-45-12	12 x 12	10		1														
38	14.02	RT.	W-26L-30	30 x 30		12.5	6.25		1		1										
38A	14.03 **	RT.	N-45-12	12 x 12					1		1										
39	14.11	LT.	R-1-30	30 x 30		11.5	6.25		1		1										
39A	14.22	RT.	X-2A-6	6 x 12	9		0.5		1		1										
41	14.33	RT.	GS-SPEC-72	72 x 30		11.5/11.5	15		1		2										
42	14.40	RT.	W-26B-30	30 x 30		12.5	6.25		1		1										
43	14.51	LT.	M-2-24-2	24 x 24		11	4		1		1										
44	14.54	RT.	R-1-30	30 x 30		11.5	6.25		1		1										
45	14.65	LT.	W-26B-30	30 x 30		12.5	6.25		1		1										
46	14.66	RT.	W-24-30	30 x 30		12.5	6.25		1		1										
46A	14.76	LT.	W-30-48	48 x 24	11/11		8		1		2										
47	14.71	LT.	GS-SPEC-72	72 x 30		11.5/11.5	15		1		2										
TOTALS CARRIED TO SHEET 26					41	473.25	287.85		43		40										

CALCULATED TKI
CHECKED KG

S.R. 14 SIGNING SUBSUMMARY - PART 1

POR-5-4.33

mexley@D04CD0234631 - 24168ts002.m - Monday October 28 2002 09:23:25 AM EST
i:\Projects\24168_POR-5-4.33\dgn\24168ts002.dgn 28-OCT-2002 9:18AM mexley

Δ - SHEETING TO BE YELLOW-GREEN COLOR

* - FABRICATE ON MARINE-GRADE PLYWOOD, 3/4"

** - DOUBLE-SIDED SIGN

REFERENCE NO.	STATION (S.L.M.)	SIDE	CODE	SIZE (INCHES)	GROUND MOUNTED SUPPORT, NO.2 POST (630) FT.	GROUND MOUNTED SUPPORT, NO.3 POST (630) FT.	SIGN, FLAT SHEET, TYPE G (630) SQ. FT.	SIGN, EXTRUSHEET, TYPE G (630) SQ. FT.	REMOVAL OF GROUND MOUNTED SIGN AND DISPOSAL (630) EACH	REMOVAL OF GROUND MOUNTED SIGN AND STORAGE (630) EACH	REMOVAL OF GROUND MOUNTED POST SUPPORT AND DISPOSAL EACH	GROUND MOUNTED SUPPORT, S4 X 7.7 BEAM FT.	GROUND MOUNTED SUPPORT, W6 x 9 BEAM FT.	BREAKAWAY BEAM CONNECTION EACH	CONCRETE BEAM FOUNDATION EACH
	SHEET 13														
48	14.77	RT.	R-1-30	30 x 30		11.5	6.25		1		1				
49	14.78	LT.	N-1A-40	40 x 20		10.5/10.5	5.56		1		2				
49	14.78	LT.	PRIVATE SIGN	-						1					
50	14.85	LT.	R-1-30	30 x 30		11.5	6.25		1		1				
	SHEET 14														
51	14.96	LT.	W-24-30	30 x 30		12.5	6.25		1		1				
51A															
52	14.97	RT.	W-1 SPEC-30	30 x 30		12.5	6.25		1		1				
52	14.97	RT.	N-SPECIAL	12 x 12			1								
53	15.00 **	RT.	N-45-12	12 x 12	10		1		1		1				
54	15.06	LT.	W-68-36	36 x 36		13.25	9		1		1				
54A	15.07	LT.	R-1-30	30 x 30		11.5	6.25		1		1				
55	15.27	RT.	N-1A-40	40 x 20		10.5/10.5	5.56		1		2				
55	15.27	RT.	PRIVATE SIGN	-						1					
55	15.27	RT.	PRIVATE SIGN	-						1					
55	15.27	RT.	PRIVATE SIGN	-						1					
56	15.21	LT.	W-2A-30	30 x 30		12.5	6.25		1		1				
57	15.31	LT.	N-89-48	48 x 30		11.5/11.5	10		1		2				
58	15.31	RT.	N-89-48	48 x 30		11.5/11.5	10		1		2				
59	15.39	RT.	R-35-24	24 x 30		11.5	5		1		1				
60	15.76	RT.	W-53-36	36 x 36		13.25	9		1		1				
60	15.76	LT.	W-53-36	36 x 36		13.25	9		1		1				
61	15.92	RT.	W-60R-36	36 x 36		13.25	9		1		1				
61	15.92	LT.	W-60R-36	36 x 36		13.25	9		1		1				
62	15.95 **	RT.	N-45-12	12 x 12	10		1		1		1				
63	16.14	RT.	W-26L-30	30 x 30		12.5	6.25		1		1				
64	16.27	LT.	R-1-30	30 x 30		11.5	6.25		1		1				
65	16.31 *	LT.	N-58A-72	72 x 12		10.5/10.5	6		1		2				
65A	16.36	LT.	D-1B-72	72 x 24		12.5/12.5	12		1		2				
66	16.42	LT.	W-26R-30	30 x 30		12.5	6.25		1		1				
66A	16.70	LT.	X-2A-6	6 x 12	10		0.5		1		1				
67	16.93	RT.	R-11B-24	24 x 30		11.5	5		1		1				
68	17.00 **	RT.	N-45-12	12 x 12	10		1		1		1				
69	17.00	LT.	N-89-48	48 x 30		11.5/11.5	10		1		2				
	SHEET 15														
70	17.15	LT.	R-10-24	24 x 30		11.5	5		1		1				
71	17.15	RT.	N-1-40	40 x 20		10.5/10.5	5.56		1		2				
72	17.16	RT.	R-10-24	24 x 30		11.5	5		1		1				
73	17.29	RT.	W-85-36	36 x 36		13.25	9								
74	17.24	RT.	R-1-30	30 x 30		11.5	6.25		1		1				
75	17.26	RT.	IM-17-24	24 x 12		12	2		1		1				
75	17.26	RT.	M-5-24-2	24 x 24			4		1						
76	17.33	RT.	M-52A-108	108 x 30				22.5	1		2	24.5/24.5		2	2
76A	17.38	RT.	D-4B-144	144 X 48				48	1		2	25.4/25.4		2	2
77	17.36	LT.	D-6A-60	60 x 40		12.5/12.5	16.67		1		2				
78	17.39	LT.	W-71-36	36 x 36		13.25	9								
78	17.39	LT.	W-33-18	18 x 24					1		1				
79	17.42	CL	R-38R-24	24 x 30		11.5	5		1		1				
80	17.43	LT.	M-40-24	24 x 12		12	2								
80	17.43	LT.	M-2-24-2	24 x 24			4		1						
80	17.43	LT.	M-37-24	24 x 12					1		1				
81	17.44	CL	R-43R-36	36 x 12		10				3					
TOTALS CARRIED TO SHEET 26					40	507.25	248.35	70.5	40	7	49	99.8		4	4

CALCULATED TKI
CHECKED KG

S.R. 14 SIGNING SUBSUMMARY - PART 1

POR-5-4.33

tperez@D04CD02346G2 - 241681s002.m - Monday October 28 2002 09:17:52 AM EST
I:\Projects\24168_POR-5-4.33\dgn\24168ts002.dgn 28-OCT-2002 9:12AM tperez

Δ - SHEETING TO BE YELLOW-GREEN COLOR

* - FABRICATE ON MARINE-GRADE PLYWOOD, 3/4"

** - DOUBLE-SIDED SIGN

REFERENCE NO.	STATION (S.L.M.)	SIDE	CODE	SIZE (INCHES)	630 GROUND MOUNTED SUPPORT, NO.2 POST (FT.)	630 GROUND MOUNTED SUPPORT, NO.3 POST (FT.)	630 SIGN, FLAT SHEET, TYPE G (SQ. FT.)	630 SIGN, EXTRUSHEET, TYPE G (SQ. FT.)	630 REMOVAL OF GROUND MOUNTED SIGN AND DISPOSAL (EACH)	630 REMOVAL OF GROUND MOUNTED POST SUPPORT AND DISPOSAL (EACH)	630 GROUND MOUNTED SUPPORT, S4 X 7.7 BEAM (FT.)	630 GROUND MOUNTED SUPPORT, W6 x 9 BEAM (FT.)	630 BREAKAWAY BEAM CONNECTION (EACH)	630 CONCRETE BEAM FOUNDATION (EACH)
	SHEET 15													
82	17.45	LT.	W-60R-36	36 x 36		13.25	9		1	1				
83	17.47	CL	IM-40-24	24 x 12		13.25	2		1					
83	17.47	CL	M-5-24-2	24 x 24			4		1					
83	17.47	CL	IM-24L-21	21 x 15			2.19		1	2				
84	17.47	RT.	M-52A-108	108 x 30				22.5	1	2	11.5/11.5		2	2
85	17.49 *	LT.	D-4A-108	108 x 24				18	1	1	26.5/26.5		2	2
86	17.52	LT.	W-53-36	36 x 36		13.25	9		1	1				
86A	17.54	LT.	X-2A-6	6 x 12	10		0.5		1	1				
87	17.52	RT.	IM-39-24	24 x 12		13.25	2		1					
87	17.52	RT.	M-5-24-2	24 x 24			4		1					
87	17.52	RT.	IM-21-21	21 x 15			2.19		1	1				
88	17.54	RT.	R-10-24	24 x 30		11.5	5		1	1				
88A	17.52	MED	IM-40-24	24 x 12		13.25	2							
	17.52	MED	M-5-24-2	24 x 24			4							
	17.52	MED	IM-21-21	21 x 15			2.19							
89	17.60	RT.	W-52-36	36 x 36		13.25	9		1	1				
90	17.61	LT.	IM-40-24	24 x 12		13.25	2		1					
90	17.61	LT.	M-5-24-2	24 x 24			4		1					
90	17.61	LT.	IM-21-21	21 x 15			2.19		1	1				
90A	17.59	MED	IM-40-24	24 x 12		13.25	2							
	17.59	MED	M-5-24-2	24 x 24			4							
	17.59	MED	IM-21-21	21 x 15			2.19							
90B	17.61	LT.	R-10-24	24 x 30		11.5	5		1	2				
91	17.65 *	RT.	D-4A-144	144 x 24				24	1		26.5/26.5		2	2
92	17.66	RT.	R-41B-36	36 x 36		14/14	9		1	1				
92	17.66	RT.	R-43L-48	48 x 18			6		1					
92	17.66	RT.	R-43R-48	48 x 18			6		1					
92	17.66	RT.	R-1-48	48 x 48			16		1					
92A	17.66	RT.	R-41B-36	36 x 36		12.5/12.5	9		1	1				
92A	17.66	RT.	R-1-48	48 x 48			16		1					
93	17.66	CL	IM-39-24	24 x 12		13.25	2		1	1				
93	17.66	CL	M-5-24-2	24 x 24			4		1					
93	17.66	CL	IM-24L-21	21 x 15			2.19		1					
93	17.66	CL	R-123-24	24 x 24			4		1					
93A	17.66	LT.	M-52A-108	108 x 30				22.5			26.1/26.1		2	2
94	17.67	RT.	R-43L-48	48 x 18		10.5	6		1	1				
94	17.67	RT.	R-43R-48	48 x 18			6		1					
95	17.67	RT.	W-60L-36	36 x 36		13.25	9		1	1				
96	17.69	CL	R-44R-18	18 x 24		10.5	3		1	1				
96	17.69	CL	R-43R-36	36 x 12			3		1					
97	17.72	LT.	D-4B-144	144 x 48				48	1	2		33/33	2	2
98	17.72	CL	R-37R-24	24 x 30					1	1				
98	17.72	CL	R-38R-24	24 x 30		11.5	5							
99	17.77	RT.	W-71-36	36 x 36		13.25	9							
100	17.78	LT.	M-52A-108	108 x 30				22.5	1	2	24.8/24.8			
TOTALS CARRIED TO SHEET 26					10	254.25	193.64	157.50	36	34	230.80	66	10	10

CALCULATED TKI
CHECKED KG

S.R. 14 SIGNING SUBSUMMARY - PART 1

POR-5-4.33

mexley@D04CD0234631 - 24168ts002.m - Monday October 28 2002 09:24:03 AM EST
i:\Projects\24168_POR-5-4.33\dgn\24168ts002.dgn 28-OCT-2002 9:19AM mexley

Δ - SHEETING TO BE YELLOW-GREEN COLOR

* - FABRICATE ON MARINE-GRADE PLYWOOD, 3/4"

** - DOUBLE-SIDED SIGN

REFERENCE NO.	STATION (S.L.M.)	SIDE	CODE	SIZE (INCHES)	GROUND MOUNTED SUPPORT, NO.2 POST (FT.)	GROUND MOUNTED SUPPORT, NO.3 POST (FT.)			SIGN, FLAT SHEET, TYPE G (SQ. FT.)	SIGN, EXTRUSHEET, TYPE G (SQ. FT.)	REMOVAL OF GROUND MOUNTED SIGN AND DISPOSAL (EACH)	REMOVAL OF GROUND MOUNTED POST SUPPORT AND DISPOSAL (EACH)	GROUND MOUNTED SUPPORT, S4 X 7.7 BEAM (FT.)	GROUND MOUNTED SUPPORT, W6 x 9 BEAM (FT.)	BREAKAWAY BEAM CONNECTION (EACH)	CONCRETE BEAM FOUNDATION (EACH)					
	630																				
	SHEET 15																				
101	17.80	RT.	M-39-24	24 x 12	12	2															
101	17.80	RT.	M-2-24-2	24 x 24		4															
102	17.83	RT.	R-10-24	24 x 30	11.5	5			1	1											
103	17.85	LT.	IM-17-24	24 x 12	12	2			1	1											
103	17.85	LT.	M-5-24-2	24 x 24		4			1												
104	17.90	LT.	R-10-24	24 x 30	11.5	5			1	1											
105	17.92	LT.	R-41B-36	36 x 36	12	9			1	1											
105	17.93	LT.	R-41B-36	36 x 36	12	9			1	1											
106	17.97	LT.	W-85-36	36 x 36	13.25	9			1	1											
107	17.97	RT.	N-40A-30	30 x 36	12/12	7.5			1	2											
108	18.02	LT.	R-43L-36	36 x 12	10	3			1	1											
108	18.02	LT.	R-43R-36	36 x 12		3			1												
109A	18.00 **	RT.	N-45-12	12 x 12					1		1										
110	18.07 *	RT.	D-1B-72	72 x 18	13.5/13.5				6		1	2									
110	18.07 *	RT.	D-1B-72	72 x 18					6		1										
111	18.15	LT.	M-40-24	24 x 12	12				2												
111	18.15	LT.	M-2-24-2	24 x 24					4		1	1									
TOTALS CARRIED TO SHEET 26					157.25	62.50			29	9	4	3									

CALCULATED TKI
CHECKED KG

S.R. 14 SIGNING SUBSUMMARY - PART 1

POR-5-4.33

I:\Projects\2416B_POR-5-4.33\dgn\2416B1s002.dgn 28-OCT-2002 9:19AM mexley
mexley@DD4CD0234631 - 2416Bts002.m - Monday October 28 2002 09:24:19 AM EST

mexley@D04CD0234631 - 24168tp002.m - Monday October 28 2002 09:08:49 AM EST

mexley@D04CD0234631 - 241681p002.m - Monday October 28 2002 09:09:07 AM EST

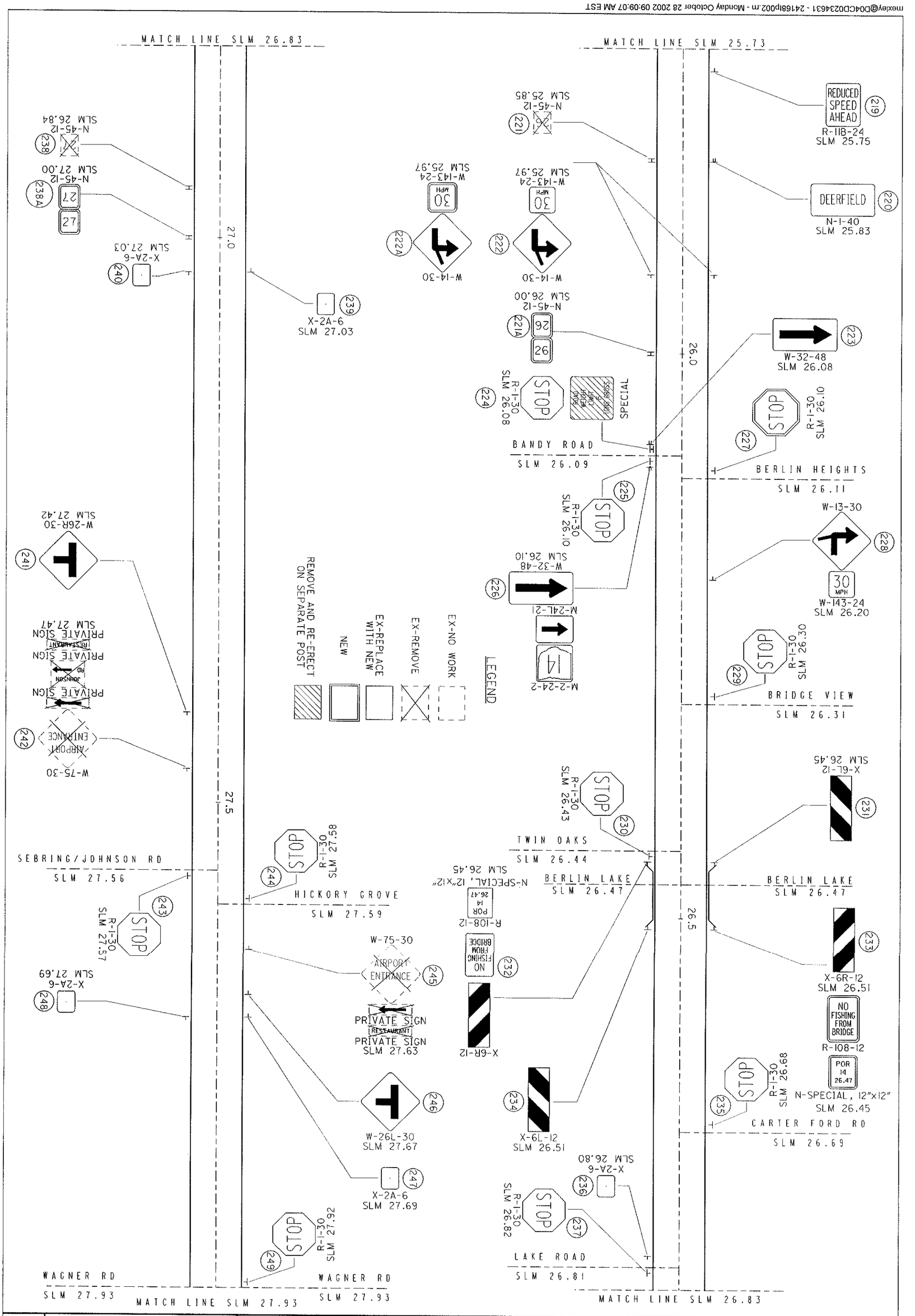

22 / 57	POR-5-4.33	S.R. 14 SIGNING PLAN - PART 2 SLM 25.73 TO SLM 27.93	CALCULATED T.K.L. CHECKED K.O. 0 0.04 0.08 / 0.02 0.06 HORIZONTAL SCALE IN MILES

LEGEND

EX-NO WORK

EX-REMOVE

EX-REPLACE WITH NEW

NEW

HORIZONTAL SCALE IN MILES

0 0.02 0.04 0.06 0.08

CALCULATED T.K.J.

CHECKED K.G.

S.R. 14 SIGNING PLAN - PART 2
SLM 27.93 TO SLM 28.75

POR-5-4.33

23/57

mexley@D04CD0234631 - 241681p002.m - Monday October 28 2002 09:09:23 AM EST

Δ - SHEETING TO BE YELLOW-GREEN COLOR

* - FABRICATE ON MARINE-GRADE PLYWOOD, 3/4"

** - DOUBLE-SIDED SIGN

REFERENCE NO.	STATION (S.L.M.)	SIDE	CODE	SIZE (INCHES)	630 GROUND MOUNTED SUPPORT, NO.2 POST (LIN. FT.)	GROUND MOUNTED SUPPORT, NO.3 POST (LIN. FT.)	SIGN, FLAT SHEET, TYPE G (SQ. FT.)	REMOVAL OF GROUND MOUNTED SIGN AND DISPOSAL (EACH)	REMOVAL OF GROUND MOUNTED POST SUPPORT AND DISPOSAL (EACH)
	SHEET 21								
	121 - 186 NOT USED								
187	25.24	LT.	R-1-30	30 x 30		11.5	6.25	1	1
188	25.24	LT.	W-32-96	96 x 48		13/13	32	1	2
189	25.24	LT.	M-37-24	24 x 12		12	2	1	1
189	25.24	LT.	M-2-30-3	30 x 24			5	1	
190	25.25	RT.	X-2A-6	6 x 12	9		0.5	1	1
190A	25.23	RT.	X-2A-6	6 x 12	9		0.5	1	1
190B	25.24	RT.	X-2A-6	6 x 12	9		0.5	1	1
191	25.26	RT.	X-2A-6	6 x 12	9		0.5	1	1
192	25.27	RT.	X-2A-6	6 x 12	9		0.5	1	1
193	25.28	RT.	M-17-24	24 x 12		13.25	2	1	1
193	25.28	RT.	M-1-30-3	30 x 24			5	1	
193	25.28	RT.	M-24R-21	21 x 15			2.19	1	
194	25.28 *	LT.	D-1-72	72 x 12		12.5/12.5	6	1	2
194	25.28	LT.	M-2-24-2	24 x 24			4	1	
194	25.28	LT.	M-21-21	21 x 15			2.19	1	
194	25.28	LT.	M-2-30-3	30 x 24			5	1	
194	25.28	LT.	M-26-21	21 x 15			2.19	1	
195	25.31	RT.	R-1-30	30 x 30		11.5	6.25	1	1
TOTALS CARRIED TO SHEET 26					45.0	99.2	82.6	18	13
					45		82.57	18	13

CALCULATED TKI
CHECKED KG

S.R. 14 SIGNING SUBSUMMARY - PART 2

POR-5-4.33

24
57

mexley@D04CD0234631 - 24168ts002.m - Monday October 28 2002 09:24:36 AM ES1
I:\Projects\24168_POR-5-4.33\dgn\24168ts002.dgn 28-OCT-2002 9:20AM mexley

Δ - SHEETING TO BE YELLOW-GREEN COLOR

* - FABRICATE ON MARINE-GRADE PLYWOOD, 3/4"

** - DOUBLE-SIDED SIGN

REFERENCE NO.	STATION (S.L.M.)	SIDE	CODE	SIZE (INCHES)	630 GROUND MOUNTED SUPPORT, NO.2 POST LIN. FT.	GROUND MOUNTED SUPPORT, NO.3 POST LIN. FT.	SIGN, FLAT SHEET, TYPE G SQ. FT.	REMOVAL OF GROUND MOUNTED SIGN AND DISPOSAL EACH	REMOVAL OF GROUND MOUNTED SIGN AND STORAGE EACH	REMOVAL OF GROUND MOUNTED POST SUPPORT AND DISPOSAL EACH	REMOVAL OF GROUND MOUNTED SIGN AND REERECTION EACH
	SHEET 21										
	196 - 198 NOT USED										
199	25.35	LT.	PRIVATE	18 x 21				1			
	200 - 204 NOT USED										
205	25.40	RT.	R-55-12	12 x 18		12	1.5	1		1	
	206 NOT USED										
207	25.41	LT.	R-1-30	30 x 30		11.5	6.25	1		1	
208	25.41	RT.	M-39-24	24 x 12		15	2	1		1	
208	25.41	RT.	M-2-24-2	24 x 24			4	1			
208	25.41 Δ	RT.	W-82S-36	36 x 48			12	1			
209	25.42	LT.	M-17-24	24 x 12		13	2	1		1	
209	25.42	LT.	M-1-30-3	30 x 24			5	1			
209	25.42	LT.	M-2-30-3	30 x 24			5	1			
210	25.43	RT.	R-10S-24	24 x 48		13	8	1			
211	25.43	LT.	R-55-12	12 x 18		10.5	1.5	1		1	
212	25.49	RT.	R-84-30	30 x 30		11.5	6.25	1		1	
213	25.48	LT.	R-10S-24	24 x 48		13	8	1		1	
214	25.53	RT.	R-10-24	24 x 30		11.5	5	1		1	
214A	25.67	RT.	R-10-24	24 x 30		11.5	5	1		1	
215	25.50	LT.	W-45A-36	36 x 36		13.25	9	1		1	
216	25.56 Δ	LT.	W-82S-36	36 x 48		13	12	1		1	
217	25.68	RT.	R-10-24	24 x 30		11.5	5	1		1	
218	25.66	LT.	R-10-24	24 x 30		11.5	5	1		1	
	SHEET 22										
219	25.75	LT.	R-11B-24	24 x 30		11.5	5	1		1	
220	25.83	LT.	N-1-40	40 x 20		10.5/10.5	5.56	1		2	
221	25.85 **	RT.	N-45-12	12 x 12				1		1	
221A	26.00 **	RT.	N-45-12	12 x 12	10		1				
222	25.93	LT.	W-14-30	30 x 30		12.5	6.25	1		1	
222	25.93	LT.	W-143-24	24 x 24			4	1			
222A	25.93	RT.	W-14-30	30 x 30		12.5	6.25	1		1	
222A	25.93	RT.	W-143-24	24 x 24			4				
223	26.08	RT.	W-32-48	48 x 24		11/11	8	1		2	
224	26.08	RT.	R-1-30	30 x 30		11.5	6.25	1		1	
224	26.08	RT.	SPECIAL	-		11.5					1
225	26.10	RT.	R-1-30	30 x 30		11.5	6.25	1		1	
226	26.10	RT.	W-32-48	48 x 24		14.25/11	8	1		2	
226	26.10	RT.	M-2-24-2	24 x 24			4	1			
226	26.10	RT.	M-24L-21	21 x 15			2.19	1			
227	26.10	LT.	R-1-30	30 x 30		11.5	6.25	1		1	
228	26.20	LT.	W-13-30	30 x 30		12.5	6.25	1		1	
228	26.20	LT.	W-143-24	24 x 24			4	1			
229	26.30	LT.	R-1-30	30 x 30		11.5	6.25	1		1	
230	26.43	RT.	R-1-30	30 x 30		11.5	6.25	1		1	
231	26.45	LT.	X-6L-12	12 x 36		11	3	1		1	
	TOTALS CARRIED TO SHEET 26				10.0	369	201.25	37		30	1

CALCULATED TKI CHECKED KG

S.R. 14 SIGNING SUBSUMMARY - PART 2

POR-5-4.33

mexley@D04CD0234631 - 24168ts002.m - Monday October 28 2002 09:36:14 AM EST
mexley 28-OCT-2002 9:35AM
I:\Projects\24168_POR-5-4.33\dgn\24168ts002.dgn

Δ - SHEETING TO BE YELLOW-GREEN COLOR

* - FABRICATE ON MARINE-GRADE PLYWOOD, 3/4"

** - DOUBLE-SIDED SIGN

REFERENCE NO.	STATION (S.L.M.)	SIDE	CODE	SIZE (INCHES)	630 GROUND MOUNTED SUPPORT, NO.2 POST (FT.)	GROUND MOUNTED SUPPORT, NO.3 POST (FT.)	GROUND MOUNTED SUPPORT, S4 X 7.7 BEAM (FT.)	GROUND MOUNTED SUPPORT, W6 x 9 BEAM (FT.)	ONE-WAY SUPPORT, NO.3 POST (FT.)	BREAKAWAY BEAM CONNECTION (EACH)	SIGN HANGER ASSEMBLY, SPAN WIRE (EACH)	SIGN, FLAT SHEET, TYPE G (SQ. FT.)	SIGN, EXTRUSHEET, TYPE G (SQ. FT.)	REMOVAL OF GROUND MOUNTED SIGN AND DISPOSAL (EACH)	REMOVAL OF GROUND MOUNTED SIGN AND STORAGE (EACH)	REMOVAL OF GROUND MOUNTED POST SUPPORT AND DISPOSAL (EACH)	REMOVAL OF GROUND MOUNTED SIGN AND REERECTION (EACH)	REMOVAL OF OVERHEAD MOUNTED SIGN AND DISPOSAL (EACH)	BREAKAWAY BEAM CONNECTION (EACH)	CONCRETE BEAM FOUNDATION (EACH)
	SHEET 22																			
232	26.45	RT.	X-6R-12	12 x 36		12						3		1		1				
232	26.45	RT.	R-108-12	12 x 18								1.5		1						
232	26.45	RT.	N-SPECIAL	12 x 12								1		1						
233	26.51	LT.	X-6R-12	12 x 36		11						3		1		1				
234	26.51	RT.	X-6L-12	12 x 36		11						3		1		1				
235	26.68	LT.	R-1-30	30 x 30		11.5						6.25		1		1				
236	26.80	RT.	X-2A-6	6 x 12	9							0.5		1		1				
237	26.82	RT.	R-1-30	30 x 30		11.5						6.25		1		1				
238	26.84 **	RT.	N-45-12	12 x 12										1		1				
238A	27.00 **	RT.	N-45-12	12 x 12	10							1								
239	27.03	LT.	X-2A-6	6 x 12	9							0.5		1		1				
240	27.03	RT.	X-2A-6	6 x 12	9							0.5		1		1				
241	27.42	RT.	W-26R-30	30 x 30		12.5						6.25		1		1				
242	27.47	RT.	W-75-30	30 x 30		12.5						6.25		1		1				
242	27.47	RT.	PRIVATE SIGN	-											1					
242	27.47	RT.	PRIVATE SIGN	-											1					
242	27.47	RT.	PRIVATE SIGN	-											1					
243	27.57	RT.	R-1-30	30 x 30		11.5						6.25		1		1				
244	27.58	LT.	R-1-30	30 x 30		11.5						6.25		1		1				
245	27.63	LT.	W-75-30	30 x 30		12.5						6.25		1		1				
245	27.63	LT.	PRIVATE SIGN	-											1					
245	27.63	LT.	PRIVATE SIGN	-											1					
246	27.67	LT.	W-26L-30	30 x 30		12.5						6.25		1		1				
247	27.69	LT.	X-2A-6	6 x 12	9							0.5		1		1				
248	27.69	RT.	X-2A-6	6 x 12	9							0.5		1		1				
249	27.92	LT.	R-1-30	30 x 30		11.5						6.25		1		1				
	SHEET 23																			
250	27.94	RT.	R-1-30	30 x 30		11.5						6.25		1		1				
251	28.00 **	RT.	N-45-12	12 x 12	10							1								
252	28.15	RT.	N-1-40	40 x 20		10.5/10.5						5.56		1		2				
253	28.18	LT.	R-1-30	30 x 30		11.5						6.25		1		1				
254	28.33	RT.	W-26L-30	30 x 30		12.5						6.25		1		1				
255	28.40	LT.	R-1-30	30 x 30		11.5						6.25		1		1				
256	28.75	LT.	N-2-40	40 x 20		10.5/10.5						5.56		1		2				
	TOTALS FROM THIS SHEET				65.0	230						120.2		27	6	28				
	TOTALS FROM SHEET 16					300.5			52.0		2	246.5		42		25		2		
	TOTALS FROM SHEET 17				41	473.25						196.1		35		28				
	TOTALS FROM SHEET 18				40	507.25	99.80					316.8		45	4	55				
	TOTALS FROM SHEET 19				10	254.25		66		2		329.8	48.0	47		36				
	TOTALS FROM SHEET 20				157.25	62.50						88.6		22		14				
	TOTALS FROM SHEET 24				45	99.25						82.6		18		13				
	TOTALS FROM SHEET 25				10	369						196.2		37		30	1			
	TOTALS CARRIED TO GENERAL SUMMARY				247.0	2,521.6		32.0	52.0	2	2	1,576.8	48.0	273	10	229	1	2		

CALCULATED TKI
CHECKED KG

S.R. 14 SIGNING SUBSUMMARY - PART 2

POR-5-4.33

mexley@D04CD0234631 - 24168ts002.m - Monday October 28 2002 09:35:57 AM ES1
mexley 28-OCT-2002 9:34AM
t:\Projects\24168_POR-5-4.33\dgn\24168ts002.dgn

mexley@D04CD0234631 - 241681p003.m - Monday October 28 2002 09:09:39 AM EST

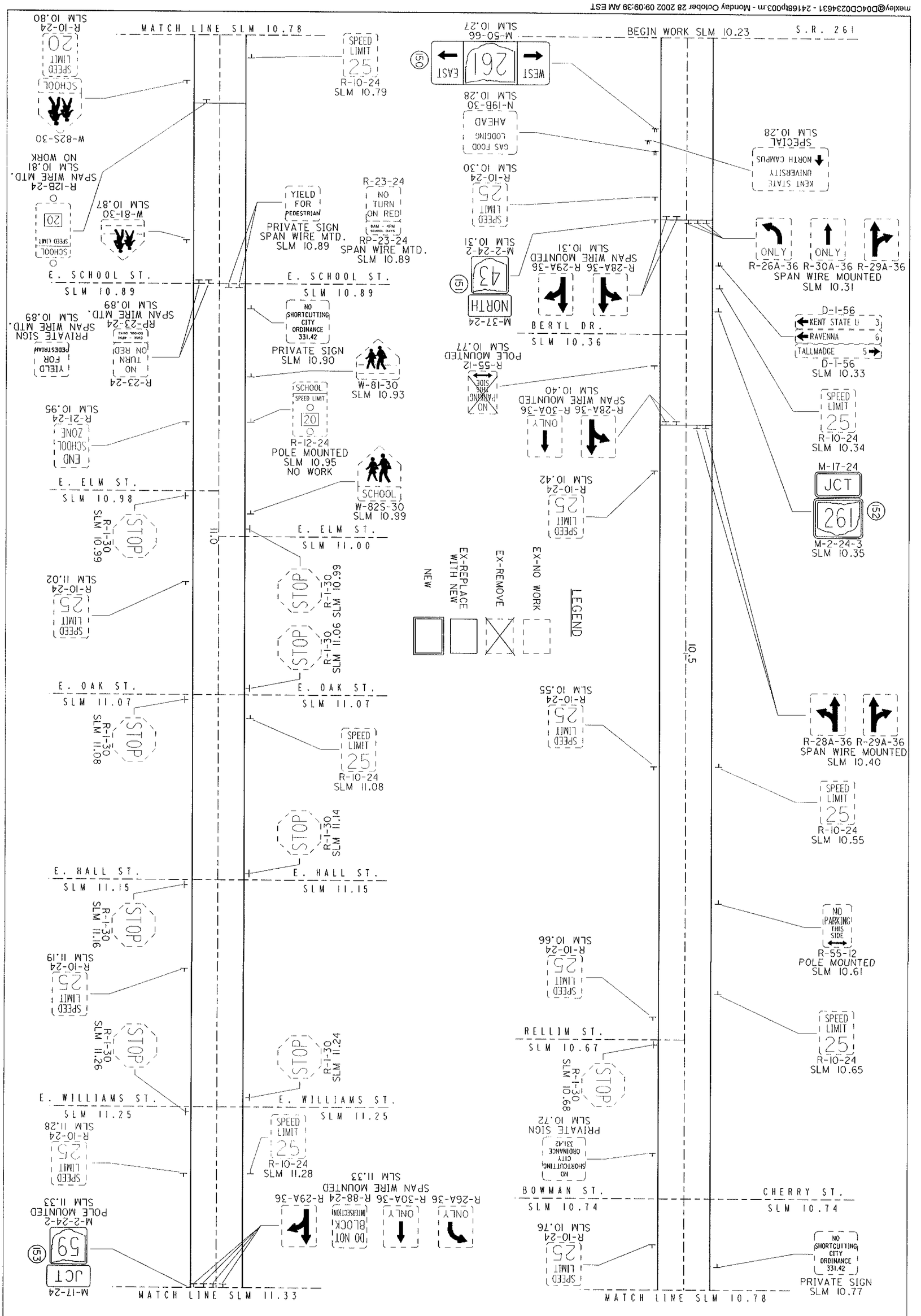

27/57	POR-5-4.33	**S.R. 43 SIGNING PLAN** **SLM 10.23 TO SLM 11.33**	CALCULATED T.R.J. CHECKED K.G. 0 0.02 0.04 0.01 0.03 HORIZONTAL SCALE IN MILES N

LEGEND

EX-NO WORK

EX-REMOVE

EX-REPLACE WITH NEW

NEW

N

0 0.01 0.02 0.03 0.04
HORIZONTAL SCALE IN MILES

CALCULATED T.K.L.

CHECKED K.G.

S.R. 43 SIGNING PLAN
SLM 11.33 TO SLM 11.42

POR-5-4.33

mexley@D04CD0234631 - 24168rp003.m - Monday October 28 2002 09:09:56 AM EST

Δ - SHEETING TO BE YELLOW-GREEN COLOR

* - FABRICATE ON MARINE-GRADE PLYWOOD, 3/4"

** - DOUBLE-SIDED SIGN

REFERENCE NO.	STATION (S.L.M.)	SIDE	CODE	SIZE (INCHES)	630 GROUND MOUNTED SUPPORT, NO.3 POST (FT.)		SIGN, FLAT SHEET, TYPE G (SQ. FT.)	REMOVAL OF GROUND MOUNTED SIGN AND DISPOSAL (EACH)	REMOVAL OF POLE MOUNTED SIGN AND DISPOSAL (EACH)	REMOVAL OF GROUND MOUNTED POST SUPPORT AND DISPOSAL (EACH)
150	10.27	RT.	M-50-66	66 x 24	11/11		11	1		2
151	10.31	RT.	M-37-24	24 x 12	12		2	1		1
151	10.31	RT.	M-2-24-2	24 x 24			4	1		
152	10.35	LT.	M-17-24	24 x 12	12		2			
152	10.35	LT.	M-2-24-3	30 x 24			5			
153	11.33	RT.	M-17-24	24 x 12	12		2		1	
153	11.33	RT.	M-2-24-2	24 x 24			4		1	
154	11.43	RT.	M-2-24-2	24 x 24				1		
154	11.43	RT.	M-24-21	21 x 15				1		
155	11.41	RT.	M-38-24	24 x 12	13.25		2	1		1
155	11.41	RT.	M-2-24-2	24 x 24			4	1		
155	11.41	RT.	M-24R-21	21 x 15			2.19	1		
156	11.43	RT.	M-2-24-2	30 x 24				1		1
156	11.43	RT.	M-24-21	21 x 15				1		
156	11.43	RT.	M-24-21	21 x 15				1		
157	11.43	RT.	M-37-24	24 x 12	15.75		2	1		
157	11.43	RT.	M-2-24-2	30 x 24			5	1		
157	11.43	RT.	M-24L-21	21 x 15			2.19	1		
157	11.43*	RT.	M-50-66	66 x 24			11.0	1		
TOTALS CARRIED TO GENERAL SUMMARY					87.0		58.38	15	2	5

CALCULATED TKI
CHECKED KG

S.R. 43 SIGNING SUBSUMMARY

POR-5-4.33

mexley@D04CD0234631 - 24168ts003.m - Monday October 28 2002 09:35:41 AM EST
i:\Projects\24168_POR-5-4.33\dgn\24168ts003.dgn 28-OCT-2002 9:33AM mexley

mexley@D04CD0234631 - 2416BJ004.m - Monday October 28 2002 09:10:32 AM EST

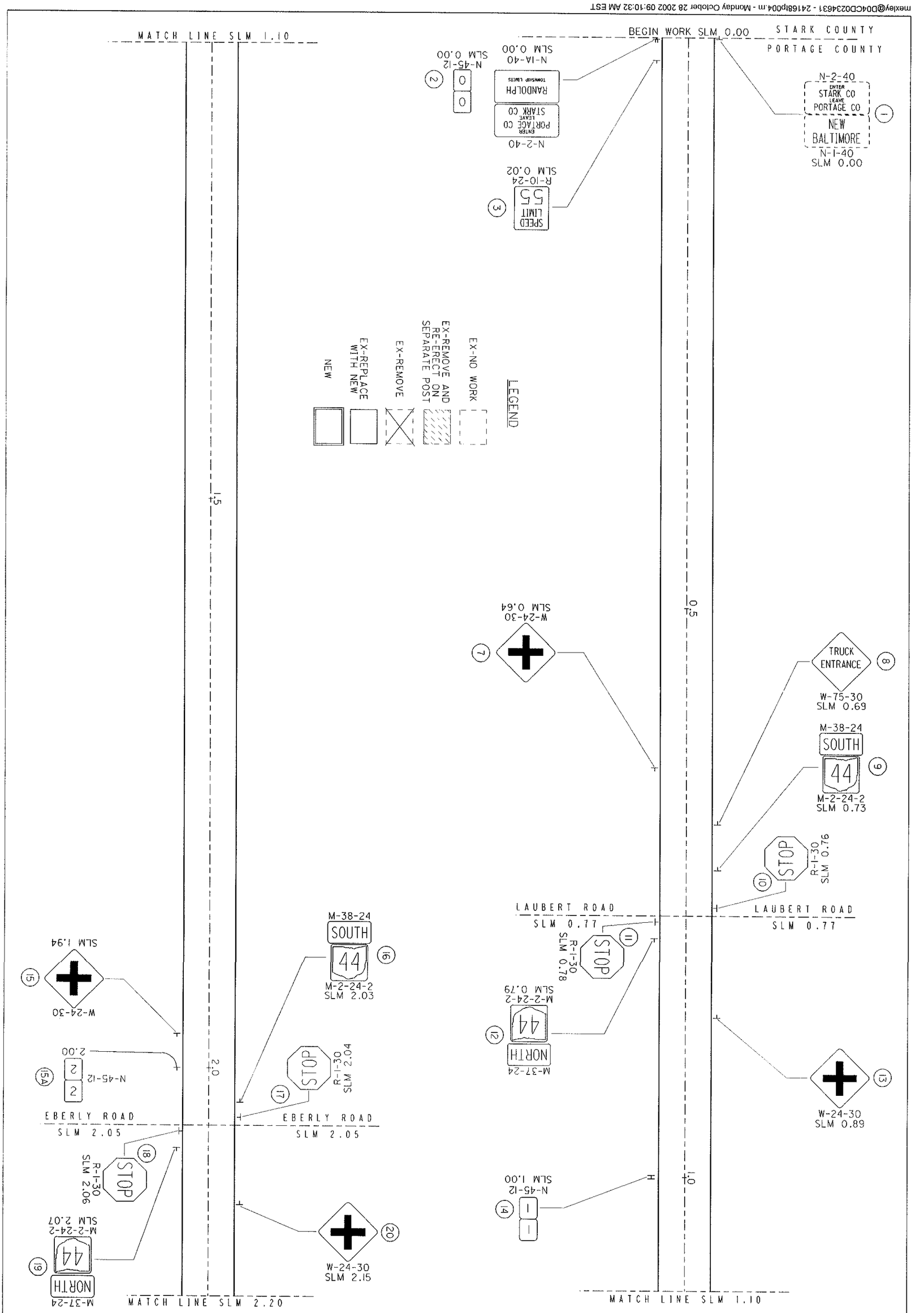

30/57	POR-5-4.33	**S.R. 44 SIGNING PLAN** **SLM 0.00 TO SLM 2.20**	CALCULATED T.K.L. CHECKED K.G. 0 0.04 0.08 0.02 0.06 HORIZONTAL SCALE IN MILES

mexley@D04CD0234631 - 241681p004.m - Monday October 28 2002 09:10:15 AM EST

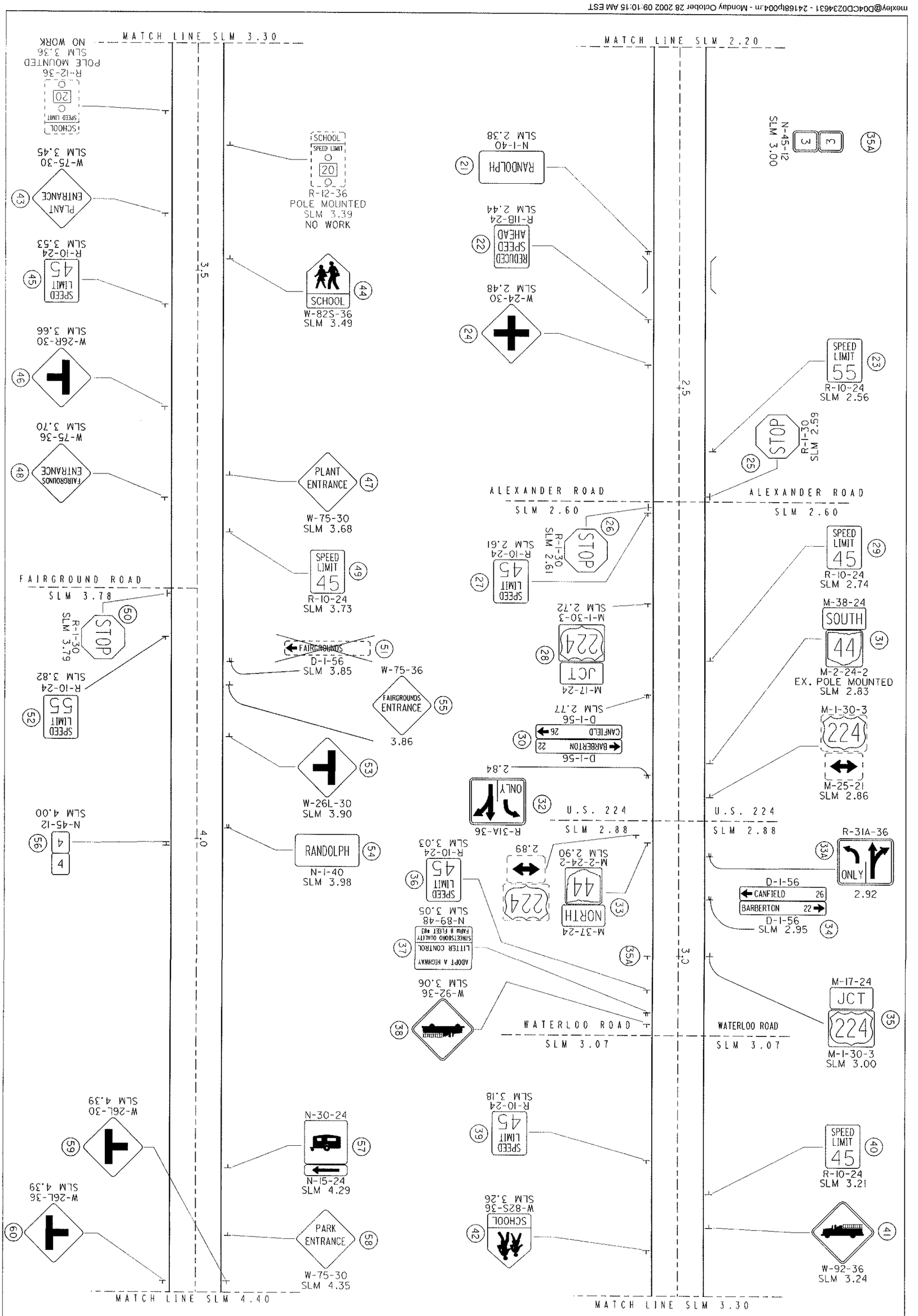

31 / 57	POR-5-4.33	S.R. 44 SIGNING PLAN SLM 2.20 TO SLM 4.40	CALCULATED T.K.I. CHECKED K.G. 0 0.04 0.08 / 0.02 0.06 HORIZONTAL SCALE IN MILES N

mexley@D04CD0234631 - 241681p004.m - Monday October 28 2002 09:11:07 AM EST

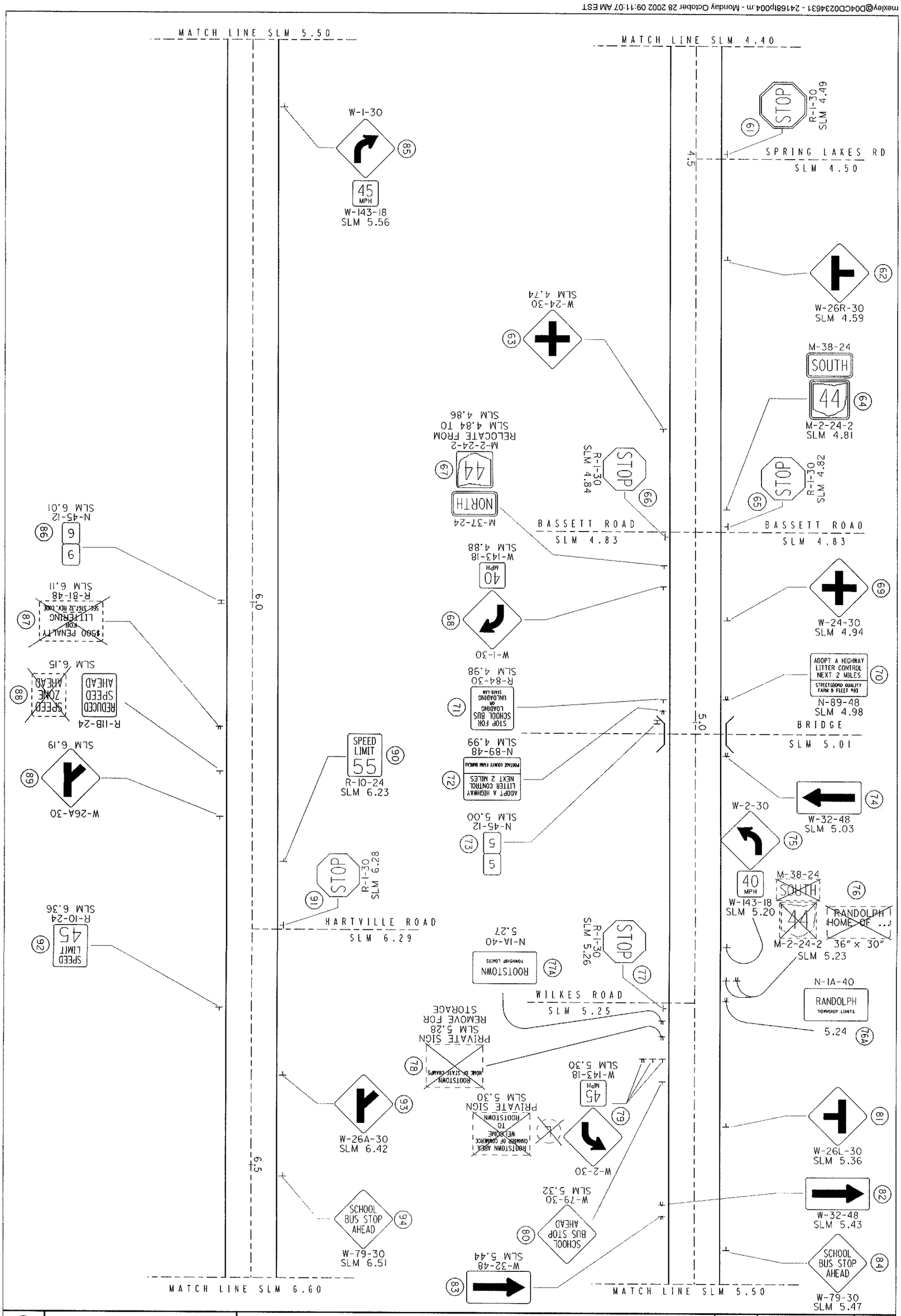

32-57	POR-5-4.33	S. R. 44 SIGNING PLAN SLM 4.40 TO SLM 6.60	CALCULATED T.K.I. CHECKED K.G. 0 0.04 0.08 0.02 0.06 HORIZONTAL SCALE IN MILES N

mexley@D04CD0234631 - 241681p004.m - Monday October 28 2002 09:10:48 AM EST

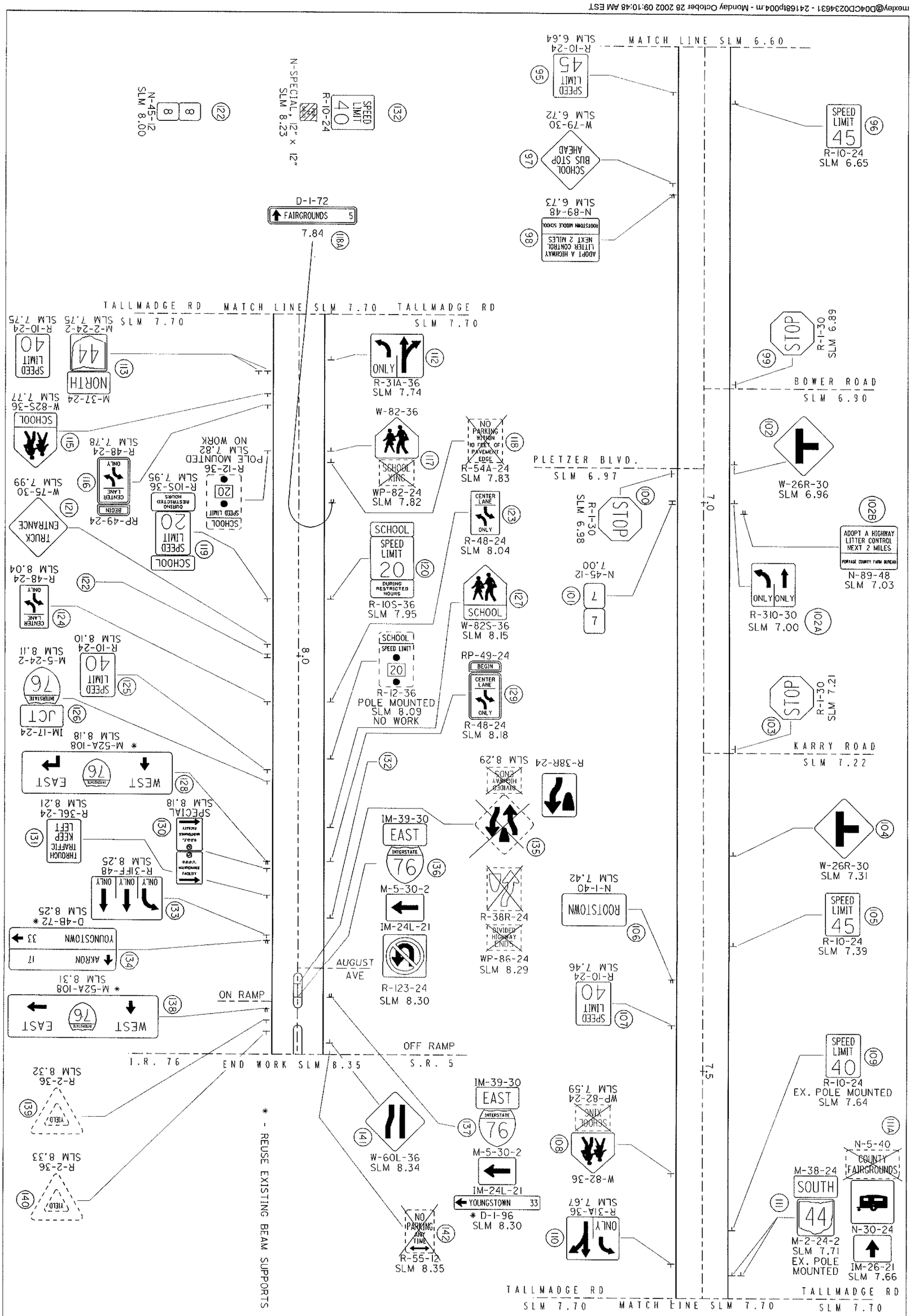

SHEET	**POR-5-4.33**	**S. R. 44 SIGNING PLAN** **SLM 6.60 TO SLM 8.35**	CALCULATED T.K.L. CHECKED K.G. 0 0.02 0.04 0.06 0.08 HORIZONTAL SCALE IN MILES N

△ - SHEETING TO BE YELLOW-GREEN COLOR

* - FABRICATE ON MARINE-GRADE PLYWOOD, 3/4"

** - DOUBLE-SIDED SIGN

REFERENCE NO.	STATION (S.L.M.)	SIDE	CODE	SIZE (INCHES)	630 GROUND MOUNTED SUPPORT, NO.2 POST FT.	GROUND MOUNTED SUPPORT, NO.3 POST FT.	SIGN, FLAT SHEET, TYPE G SQ. FT.	REMOVAL OF GROUND MOUNTED SIGN AND DISPOSAL EACH	REMOVAL OF GROUND MOUNTED SIGN AND STORAGE EACH	REMOVAL OF GROUND MOUNTED POST SUPPORT AND DISPOSAL EACH
	SHEET 30									
1	0.00	LT.	N-2-40	NO WORK			5.56	1		2
1	0.00	LT.	N-1-40	NO WORK			5.56	1		
2	0.00	RT.	N-2-40	40 x 20		10.5/10.5	5.56	1		2
2	0.00	RT.	N-1A-40	40 x 20			5.56	1		
2	0.00 **	RT.	N-45-12	12 x 12	10		1	1		1
3	0.02	RT.	R-10-24	24 x 30		11.5	5	1		1
	4,5,6 NOT USED									
7	0.64	RT.	W-24-30	30 x 30		12.5	6.25	1		1
8	0.69	LT.	W-75-30	30 x 30		12.5	6.25	1		1
9	0.73	LT.	M-38-24	24 x 12		12	2	1		1
9	0.73	LT.	M-2-24-2	24 x 24			4	1		
10	0.76	LT.	R-1-30	30 x 30		11.5	6.25	1		1
11	0.78	RT.	R-1-30	30 x 30		11.5	6.25	1		1
12	0.79	RT.	M-37-24	24 x 12		12	2	1		1
12	0.79	RT.	M-2-24-2	24 x 24			4	1		
13	0.89	LT.	W-24-30	30 x 30		12.5	6.25	1		1
14	1.00 **	RT.	N-45-12	12 x 12	10		1	1		1
15	1.94	RT.	W-24-30	30 x 30		12.5	6.25	1		1
15	2.00 **	RT.	N-45-12	12 x 12			1	1		
16	2.03	LT.	M-38-24	24 x 12		12	2	1		1
16	2.03	LT.	M-2-24-2	24 x 24			4	1		
17	2.04	LT.	R-1-30	30 x 30		11.5	6.25	1		1
18	2.06	RT.	R-1-30	30 x 30		11.5	6.25	1		1
19	2.07	RT.	M-37-24	24 x 12		12	2	1		1
19	2.07	RT.	M-2-24-2	24 x 24			4	1		
20	2.15	LT.	W-24-30	30 x 30		12.5	6.25	1		1
	SHEET 31									
21	2.38	RT.	N-1-40	40 x 20		10.5/10.5	5.56	1		2
22	2.44	RT.	R-11B-24	24 x 30		11.5	5	1		1
23	2.56	LT.	R-10-24	24 x 30		11.5	5	1		1
24	2.48	RT.	W-24-30	30 x 30		12.5	6.25	1		1
25	2.59	LT.	R-1-30	30 x 30		11.5	6.25	1		1
26	2.61	RT.	R-1-30	30 x 30		11.5	6.25	1		1
27	2.61	RT.	R-10-24	24 x 30		11.5	5	1		1
28	2.72	RT.	M-17-24	24 x 12		12	2	1		1
28	2.72	RT.	M-1-30-3	30 x 24			5	1		
29	2.74	LT.	R-10-24	24 x 30		11.5	5	1		1
30	2.77 *	RT.	D-1-56	56 x 8		10.5/10.5	3.11	1		2
30	2.77 *	RT.	D-1-56	56 x 8			3.11	1		
31	2.83	LT.	M-38-24	24 x 12		12	2	1		
31	2.83	LT.	M-2-24-2	24 x 24			4	1		
32	2.84	RT.	R-31A-36	36 x 30		13/13	7.5			
33	2.90	RT.	M-37-24	24 x 12		12	2	1		1
33	2.90	RT.	M-2-24-2	24 x 24			4	1		
33A	2.92	RT.	R-31A-36	36 x 30		13/13	7.5			
34	2.95 *	LT.	D-1-56	56 x 8		10.5/10.5	3.11	1		2
34	2.95 *	LT.	D-1-56	56 x 8			3.11	1		
35	3.00	LT.	M-17-24	24 x 12		12	2	1		1
35	3.00	LT.	M-1-30-3	30 x 24			5	1		
35A	3.00 **	RT.	N-45-12	12 x 12	10		1			
36	3.03	RT.	R-10-24	24 x 30		11.5	5	1		1
37	3.05	RT.	N-89-48	48 x 30		11.5/11.5	10	1		2
38	3.06	RT.	W-92-36	36 x 36		13.25	9			
TOTALS CARRIED TO SHEET 37					30	481.25	233.24	47		39

CALCULATED TKI
CHECKED KG

S.R. 44 SIGNING SUBSUMMARY

POR-5-4.33

mexley@D04CD0234631 - 24168ts004.m - Monday October 28 2002 09:28:16 AM EST
mexley 28-OCT-2002 9:22AM
I:\Projects\24168_POR-5-4.33\dgn\24168ts004.dgn

Δ - SHEETING TO BE YELLOW-GREEN COLOR

* - FABRICATE ON MARINE-GRADE PLYWOOD, 3/4"

** - DOUBLE-SIDED SIGN

REFERENCE NO.	STATION (S.L.M.)	SIDE	CODE	SIZE (INCHES)	630 GROUND MOUNTED SUPPORT, NO.2 POST FT.	GROUND MOUNTED SUPPORT, NO.3 POST FT.	SIGN, FLAT SHEET, TYPE G SQ. FT.	REMOVAL OF GROUND MOUNTED SIGN AND DISPOSAL EACH	REMOVAL OF GROUND MOUNTED SIGN AND STORAGE EACH	REMOVAL OF GROUND MOUNTED POST SUPPORT AND DISPOSAL EACH
	SHEET 31									
39	3.18	RT.	R-10-24	24 x 30		11.5	5	1		1
40	3.21	LT.	R-10-24	24 x 30		11.5	5	1		1
41	3.24	LT.	W-92-36	36 x 36		13.25	9			
42	3.26 Δ	RT.	W-82S-36	36 x 48		13	12	1		1
43	3.45	RT.	W-75-30	30 x 30		12.5	6.25	1		1
44	3.49 Δ	LT.	W-82S-36	36 x 48		13	12	1		1
45	3.53	RT.	R-10-24	24 x 30		11.5	5	1		1
46	3.66	RT.	W-26R-30	30 x 30		12.5	6.25	1		1
47	3.68	LT.	W-75-30	30 x 30		12.5	6.25	1		1
48	3.70	RT.	W-75-36	36 x 36		13.25	9	1		1
49	3.73	LT.	R-10-24	24 x 30		11.5	5	1		1
50	3.79	RT.	R-1-30	30 x 30		11.5	6.25	1		1
51	3.85 *	LT.	D-1-56	56 x 8		10/10	3.11	1		2
52	3.82	RT.	R-10-24	24 x 30		11.5	5	1		1
53	3.90	LT.	W-26L-30	30 x 30		12.5	6.25	1		1
54	3.98	LT.	N-1-40	40 x 20		10.5/10.5	5.56	1		2
55	3.86	LT.	W-75-36	36 x 36		13.25	9	1		1
56	4.00 **	RT.	N-45-12	12 x 12	10		1	1		1
57	4.29	LT.	N-30-24	24 x 24		11.5	4	1		1
57	4.29	LT.	N-15-24	24 x 6			1	1		
58	4.35	LT.	W-75-30	30 x 30		12.5	6.25	1		1
59	4.39	LT.	W-26L-30	30 x 30		12.5	6.25	1		1
60	4.39	RT.	W-26L-36	36 x 36		13.25	9	1		1
	SHEET 32									
61	4.49	LT.	R-1-30	30 x 30		11.5	6.25	1		1
62	4.59	LT.	W-26R-30	30 x 30		12.5	6.25	1		1
63	4.74	RT.	W-24-30	30 x 30		12.5	6.25	1		1
64	4.81	LT.	M-2-24-2	24 x 24		11	4			
65	4.82	LT.	R-1-30	30 x 30		11.5	6.25	1		1
66	4.84	RT.	R-1-30	30 x 30		11.5	6.25	1		1
67	4.86	RT.	M-2-24-2	24 x 24		11	4	1		1
68	4.88	RT.	W-1-30	30 x 30		13	6.25	1		1
68	4.88	RT.	W-143-18	18 x 18			2.25	1		
69	4.94	LT.	W-24-30	30 x 30		12.5	6.25	1		1
70	4.98	LT.	N-89-48	48 x 30		11.5/11.5	10	1		2
71	4.98	RT.	R-84-30	30 x 30		11.5	6.25	1		1
72	4.99	RT.	N-89-48	48 x 30		11.5/11.5	10	1		2
73	5.00 **	RT.	N-45-12	12 x 12	10		1	1		1
74	5.03	LT.	W-32-48	48 x 24		11/11	8	1		2
75	5.20	LT.	W-2-30	30 x 30		13	6.25	1		1
75	5.20	LT.	W-143-18	18 x 18			2.25	1		
76	5.23	LT.	M-38-24	24 x 12				1		1
76	5.23	LT.	M-2-24-2	24 x 24				1		
76	5.23	LT.	PRIVATE SIGN	-					1	2
76A	5.24	LT.	N-1A-40	40 x 20		12/12	5.56			
77	5.26	RT.	R-1-30	30 x 30		11.5	6.25	1		1
77A	5.27	RT.	N-1A-40	40 x 20		12/12	5.56			
78	5.28	RT.	PRIVATE SIGN	-					1	2
79	5.30	RT.	W-2-30	30 x 30		13	6.25	1		1
79	5.30	RT.	W-143-18	18 x 18			2.25	1		
79	5.30	RT.	PRIVATE SIGN	-					1	1
79	5.30	RT.	PRIVATE SIGN	-					1	2
TOTALS CARRIED TO SHEET 37					20	547.50	267.90	43	4	50

CALCULATED TKI
CHECKED KG

S.R. 44 SIGNING SUBSUMMARY

POR-5-4.33

mexley@D04CD0234631 - 24168ts004.m - Monday October 28 2002 09:28:33 AM EST
I:\Projects\24168_POR-5-4.33\dgn\24168ts004.dgn 28-OCT-2002 9:23AM mexley

Δ - SHEETING TO BE YELLOW-GREEN COLOR

* - FABRICATE ON MARINE-GRADE PLYWOOD, 3/4"

** - DOUBLE-SIDED SIGN

REFERENCE NO.	STATION (S.L.M.)	SIDE	CODE	SIZE (INCHES)	630 GROUND MOUNTED SUPPORT, NO.2 POST FT.	630 GROUND MOUNTED SUPPORT, NO.3 POST FT.	630 SIGN, FLAT SHEET, TYPE G SQ. FT.	630 REMOVAL OF GROUND MOUNTED SIGN AND DISPOSAL EACH	630 REMOVAL OF GROUND MOUNTED POST SUPPORT AND DISPOSAL EACH
	SHEET 32								
80	5.32 Δ	RT.	W-79-30	30 x 30		12.5	6.25	1	1
81	5.36	LT.	W-26L-30	30 x 30		12.5	6.25	1	1
82	5.43	RT.	W-32-48	48 x 24		11/11	8	1	2
83	5.44	RT.	W-32-48	48 x 24		11/11	8	1	2
84	5.47 Δ	LT.	W-79-30	30 x 30		12.5	6.25	1	1
85	5.56	LT.	W-1-30	30 x 30		13	6.25	1	1
85	5.56	LT.	W-143-18	18 x 18			2.25	1	
86	6.00 **	RT.	N-45-12	12 x 12	10		1	1	1
87	6.11	RT.	R-81-48	48 x 30		11.5/11.5	10	1	2
88	6.15	RT.	R-11C-24	24 x 30		11.5	5	1	1
89	6.19	RT.	W-26A-30	30 x 30		12.5	6.25	1	1
90	6.23	LT.	R-10-24	24 x 30		11.5	5	1	1
91	6.28	LT.	R-1-30	30 x 30		11.5	6.25	1	1
92	6.36	RT.	R-10-24	24 x 30		11.5	5	1	1
93	6.42	LT.	W-26A-30	30 x 30		12.5	6.25	1	1
94	6.51 Δ	LT.	W-79-30	30 x 30		12.5	6.25	1	1
	SHEET 33								
95	6.64	RT.	R-10-24	24 x 30		11.5	5	1	1
96	6.65	LT.	R-10-24	24 x 30		11.5	5	1	1
97	6.72 Δ	RT.	W-79-30	30 x 30		12.5	6.25	1	1
98	6.73	RT.	N-89-48	48 x 30		11.5/11.5	10	1	2
99	6.89	LT.	R-1-30	30 x 30		11.5	6.25	1	1
100	6.98	RT.	R-1-30	30 x 30		11.5	6.25	1	1
101	7.00 **	RT.	N-45-12	12 x 12	10		1		
102	6.96	LT.	W-26R-30	30 x 30		12.5	6.25	1	1
102A	7.00	LT.	R-31Q-30	30 x 30		11.5	6.25	1	1
102B	7.03	LT.	N-89-48	48 x 30		11.5/11.5	10	1	2
103	7.21	LT.	R-1-30	30 x 30		11.5	6.25	1	1
104	7.31	LT.	W-26R-30	30 x 30		12.5	6.25	1	1
105	7.39	LT.	R-10-24	24 x 30		11.5	5	1	1
106	7.42	RT.	N-1-40	40 x 20		10.5/10.5	5.56	1	2
107	7.46	RT.	R-10-24	24 x 30		11.5	5	1	1
108	7.59 Δ	RT.	W-82-36	36 x 36		12	9	1	1
108	7.59	RT.	WP-82-24	24 x 18				1	
109	7.64	LT.	R-10-24	24 x 30		11.5	5	1	
110	7.67	RT.	R-31A-36	36 x 30		11.5	7.5	1	1
111	7.71	LT.	M-38-24	24 x 12		12	2	1	1
111	7.71	LT.	M-2-24-2	24 x 24			4	1	
111A	7.66	LT.	N-5-40	40 x 20		12/12	5.56	1	1
111A	7.66	LT.	N-30-24	24 x 24			4	1	
111A	7.66	LT.	IM-26-21	21 x 15			2.19	1	
112	7.74	LT.	R-31A-36	36 x 30		11.5	7.5	1	1
113	7.75	RT.	M-37-24	24 x 12		12	2	1	1
113	7.75	RT.	M-2-24-2	24 x 24			4	1	
113	7.75	RT.	R-10-24	24 x 30		11.5	5	1	1
	114 NOT USED								
115	7.77 Δ	RT.	W-82S-36	36 x 48		13	12	1	1
116	7.78	RT.	RP-49-24	24 x 6		12.5	1		
116	7.78	RT.	R-48-24	24 x 36			6		
117	7.82 Δ	LT.	W-82-36	36 x 36		12	9	1	1
117	7.82	LT.	WP-82-24	24 x 18				1	
118	7.83	LT.	R-54A-24	24 x 30		11.5	5	1	1
118A	7.84	LT.	D-1-72	72 X 12		11.5/11.5	6		
TOTALS CARRIED TO SHEET 37					20	575.50	281.31	48	45

CALCULATED TKI
CHECKED KG

S.R. 44 SIGNING SUBSUMMARY

POR-5-4.33

mexley@D04CD0234631 - 24168ts004.m - Monday October 28 2002 09:30:11 AM EST
i:\Projects\24168_POR-5-4.33\dgn\24168ts004.dgn 28-OCT-2002 9:24AM mexley

Δ - SHEETING TO BE YELLOW-GREEN COLOR

* - FABRICATE ON MARINE-GRADE PLYWOOD, 3/4"

** - DOUBLE-SIDED SIGN

REFERENCE NO.	STATION (S.L.M.)	SIDE	CODE	SIZE (INCHES)	GROUND MOUNTED SUPPORT, NO.2 POST (LIN. FT.)	GROUND MOUNTED SUPPORT, NO.3 POST (LIN. FT.)	SIGN BACKING ASSEMBLY (EACH)	SIGN, FLAT SHEET, TYPE G (SQ. FT.)	SIGN, EXTRUSHEET, TYPE G (SQ. FT.)	REMOVAL OF GROUND MOUNTED SIGN AND DISPOSAL (EACH)	REMOVAL OF GROUND MOUNTED SIGN AND STORAGE (EACH)	REMOVAL OF GROUND MOUNTED POST SUPPORT AND DISPOSAL (EACH)
	SHEET 33											
119	7.95	RT.	R-10S-36	36 x 75		14.25		18.75		1		1
120	7.95	LT.	R-10S-36	36 x 75		14.25		18.75		1		1
121	7.99	RT.	W-75-30	30 x 30		12.5		6.25		1		1
122	8.00 **	RT.	N-45-12	12 x 12	10			1		1		1
123	8.04	LT.	R-48-24	24 x 36		12		6		1		1
124	8.04	RT.	R-48-24	24 x 36		12		6		1		1
125	8.10	RT.	R-10-24	24 x 30		11.5		5		1		1
126	8.11	RT.	IM-17-24	24 x 12		12		2		1		1
126	8.11	RT.	M-5-24-2	24 x 24				4		1		
127	8.15 Δ	LT.	W-82S-36	36 x 48		13		12		1		1
128	8.18	RT.	M-52A-108	108 x 30					22.5	1		
129	8.18	LT.	RP-49-24	24 x 6		12.5		1				
129	8.18	LT.	R-48-24	24 x 36				6				
130	8.18	RT.	SPECIAL	30 x 30		11.5		6.25		1		1
130	8.18	RT.	SPECIAL	30 x 30				6.25		1		
131	8.21	RT.	R-36L-24	24 x 30		11.5		5		1		1
132	8.23	LT.	R-10-24	24 x 30		11.5		5		1		1
132	8.23	LT.	N-SPECIAL	12 x 12		10		1		1		
133	8.25	RT.	R-31FF-48	48 x 30		11.5		10		1		1
134	8.25	RT.	D-4B-72	72 x 36					18	1		
135	8.29	CL	W-85-36	36 x 36		13.25		9		1		1
135	8.29	CL	WP-86-24	24 x 18						1		
135	8.29	CL	R-38R-24	24 x 30						1		
135	8.29	CL	WP-86-24	24 x 18						1		
136	8.30	CL	IM-39-24	24 x 12		13.25		2		1		1
136	8.30	CL	M-5-24-2	24 x 24				4		1		
136	8.30	CL	IM-24L-21	21 x 15				2.19		1		
136	8.30	CL	R-123-24	24 x 24				4		1		
137	8.30	LT.	IM-39-24	24 x 12			1	2		1		
137	8.30	LT.	M-5-24-2	24 x 24				4		1		
137	8.30	LT.	IM-24L-21	21 x 15				2.19		1		
137	8.30	LT.	D-1-96	96 x 24					16	1		
138	8.31	RT.	M-52A-108	108 x 30					22.5	1		
139	8.32	RT.	R-2-36	NO WORK								
140	8.33	RT.	R-2-36	NO WORK								
141	8.34	LT.	W-60L-36	36 x 36		13.25		9		1		1
142	8.35	LT.	R-55-12	12 x 18		10.5		1.5		1		1
	TOTALS FROM THIS SHEET				10	220.25	1	160.13	79	33		17
	TOTALS FROM SHEET 34				30.0	481.25		233.24		47		39
	TOTALS FROM SHEET 35				20.0	547.50		267.90		43	4	50
	TOTALS FROM SHEET 36				20.0	575.50		281.31		48		45
	TOTALS CARRIED TO GENERAL SUMMARY				**80.0**	**1824.50**	**1**	**942.58**	**79**	**171**	**4**	**151**

630

CALCULATED FKI CHECKED KG

S.R. 44 SIGNING SUBSUMMARY

POR-5-4.33

mexley@D04CD0234631 - 241681s004.m - Monday October 28 2002 09:30:29 AM ES.
mexley 28-OCT-2002 9:24AM
I:\Projects\24168_POR-5-4.33\dgn\24168tsd004.dgn

S.R. 59 SIGNING PLAN SLM 9.17 TO SLM 9.99

POR-5-4.33

38/57

rmexley@D04CD0234631 - 24168tp005.tm - Monday October 28 2002 09:11:26 AM EST

Δ - SHEETING TO BE YELLOW-GREEN COLOR

* - FABRICATE ON MARINE-GRADE PLYWOOD, 3/4"

** - DOUBLE-SIDED SIGN

REFERENCE NO.	STATION (S.L.M.)	SIDE	CODE	SIZE (INCHES)	630 GROUND MOUNTED SUPPORT, NO.3 POST (FT.)	SIGN HANGER ASSEMBLY, SPAN WIRE (EACH)	SIGN HANGER ASSEMBLY, MAST ARM (EACH)	SIGN, FLAT SHEET, TYPE G (SQ. FT.)	REMOVAL OF GROUND MOUNTED SIGN AND DISPOSAL (EACH)	REMOVAL OF OVERHEAD MOUNTED SIGN AND DISPOSAL (EACH)	REMOVAL OF GROUND MOUNTED POST SUPPORT AND DISPOSAL (EACH)
1	9.18	RT.	M-2-24-2	24 x 24	13.25			4	1		1
1	9.18	RT.	M-2-24-2	24 x 24				4	1		
1	9.18	RT.	M-25-21	21 x 15				2.19	1		
2	9.20	RT.	M-39-24	24 x 12	12			2	1		1
2	9.20	RT.	M-2-24-2	24 x 24				4	1		
3	9.31	LT.	R-26A-36	36 x 42		1		10.5		1	
3	9.31	LT.	R-30A-36	36 x 42		1		10.5		1	
3	9.31	LT.	R-29A-36	36 x 42		1		10.5		1	
4	9.34 *	LT.	D-1-72	72 x 12	11/11			6	1		2
4	9.34 *	LT.	D-1-72	72 x 12				6	1		
5	9.44	LT.	M-17-24	24 x 12	12			2	1		1
5	9.44	LT.	M-2-24-2	24 x 24				4	1		
5	9.44	LT.	M-17-24	24 x 12	12			2	1		1
5	9.44	LT.	M-2-24-2	24 x 24				4	1		
6	9.61	RT.	W-85-36	36 x 36	13.25			9	1		1
6	9.61	RT.	N-45-12	12 x 12					1		
7	9.66	RT.	R-1-30	30 x 30	11.5			6.25	1		1
8	9.69	CL	R-38R-36	36 x 48			1	12		1	
9	9.70	LT.	W-71-30	30 x 30	12.5			6.25			
10	9.75	RT.	M-17-24	24 x 12	12			2	1		1
10	9.75	RT.	M-2-24-2	24 x 24				4	1		
11	9.80	RT.	W-45A-36	36 x 36	13.25			9	1		1
12	9.89	RT.	R-1-48	48 x 48	13/13			16	1		2
12	9.89	RT.	R-1-48	48 x 48	13/13			16	1		2
13	9.92	RT.	R-43R-48	NO WORK							
14	9.95	RT.	R-2-36	NO WORK							
14	9.95 **	RT.	N-45-12	NO WORK							
15	9.98	LT.	M-8-24	NO WORK							
15	9.98	LT.	M-40-24	NO WORK							
15	9.98	LT.	M-2-24-2	NO WORK							
15	9.98	LT.	M-40-24	NO WORK							
15	9.98	LT.	M-2-24-2	NO WORK							
TOTALS CARRIED TO GENERAL SUMMARY					185.75	3	1	152.19	19	4	14

CALCULATED TKI
CHECKED KC

S.R. 59 SIGNING SUBSUMMARY

POR-5-4.33

mhursh@D04CD02525G0 - 24168ts005.m - Monday October 28 2002 10:43:43 AM EST
mhursh 28-OCT-2002 10:44AM
I:\Projects\24168_POR-5-4.33\dgn\24168ts005.dgn

mexley@D04CD0234631 - 241681p006.m - Monday October 28 2002 09:12:20 AM EST

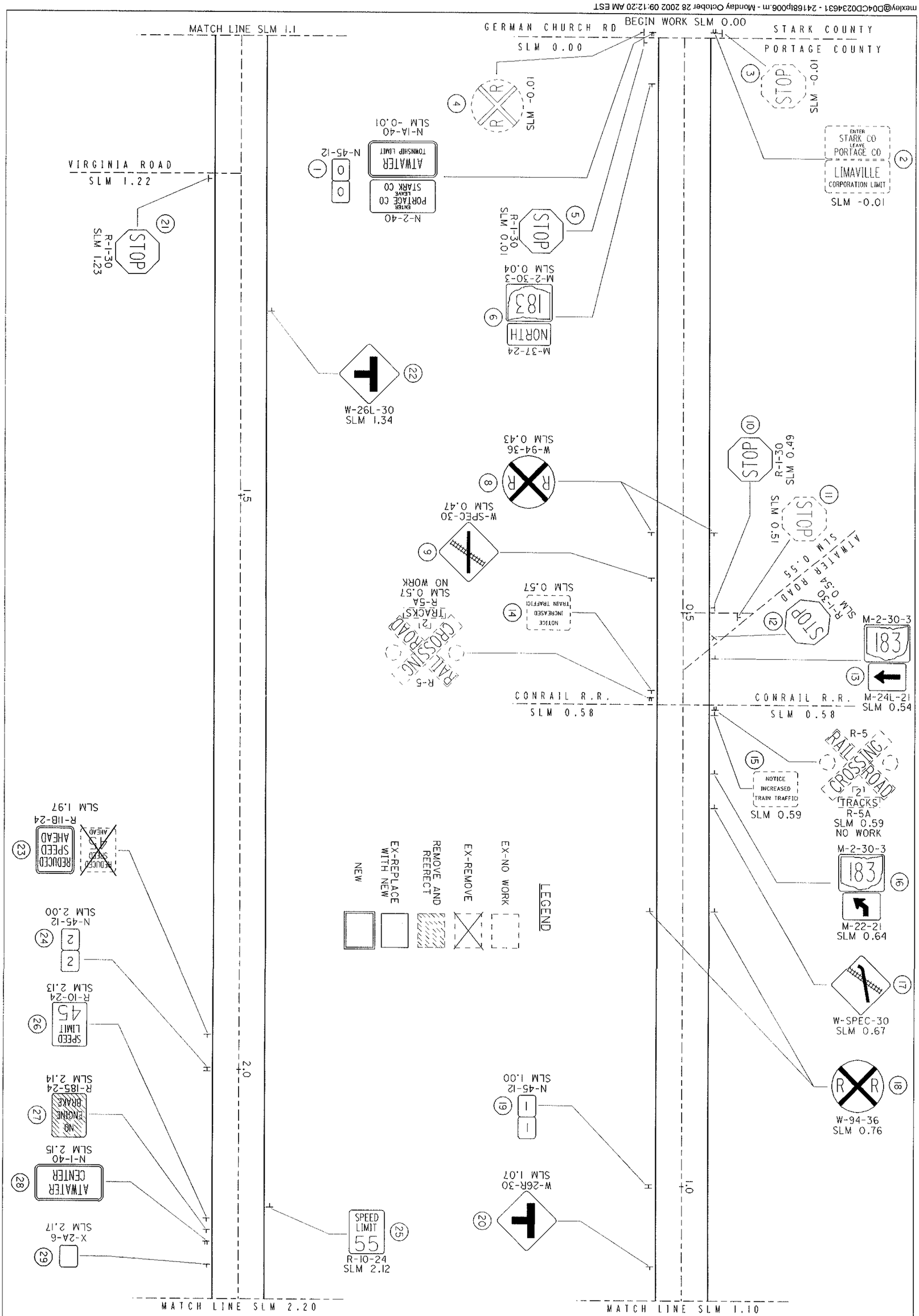

40-57	POR-5-4.33	**S.R. 183 SIGNING PLAN** **SLM 0.00 TO SLM 2.20**	CALCULATED T.X.L. CHECKED K.G.	0 0.02 0.04 0.06 HORIZONTAL SCALE IN MILES

mexley@D04CD023463 1 - 24168jp006.m - Monday October 28 2002 09:13:50 AM EST

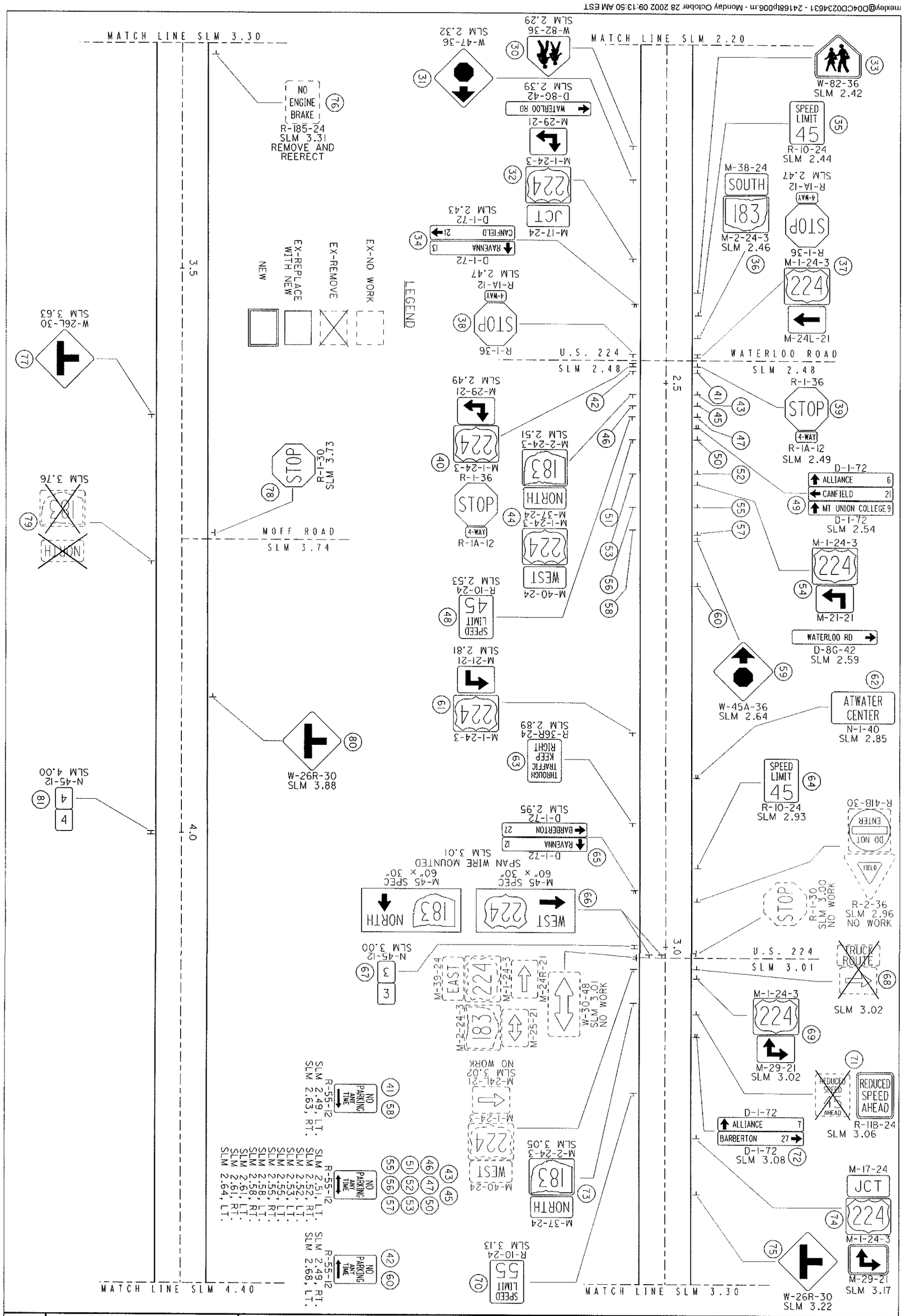

41 / 57	POR-5-4.33	S.R. 183 SIGNING PLAN SLM 2.20 TO SLM 4.40	CALCULATED T.K.I. CHECKED K.G. 0 0.02 0.04 0.06 0.08 HORIZONTAL SCALE IN MILES N

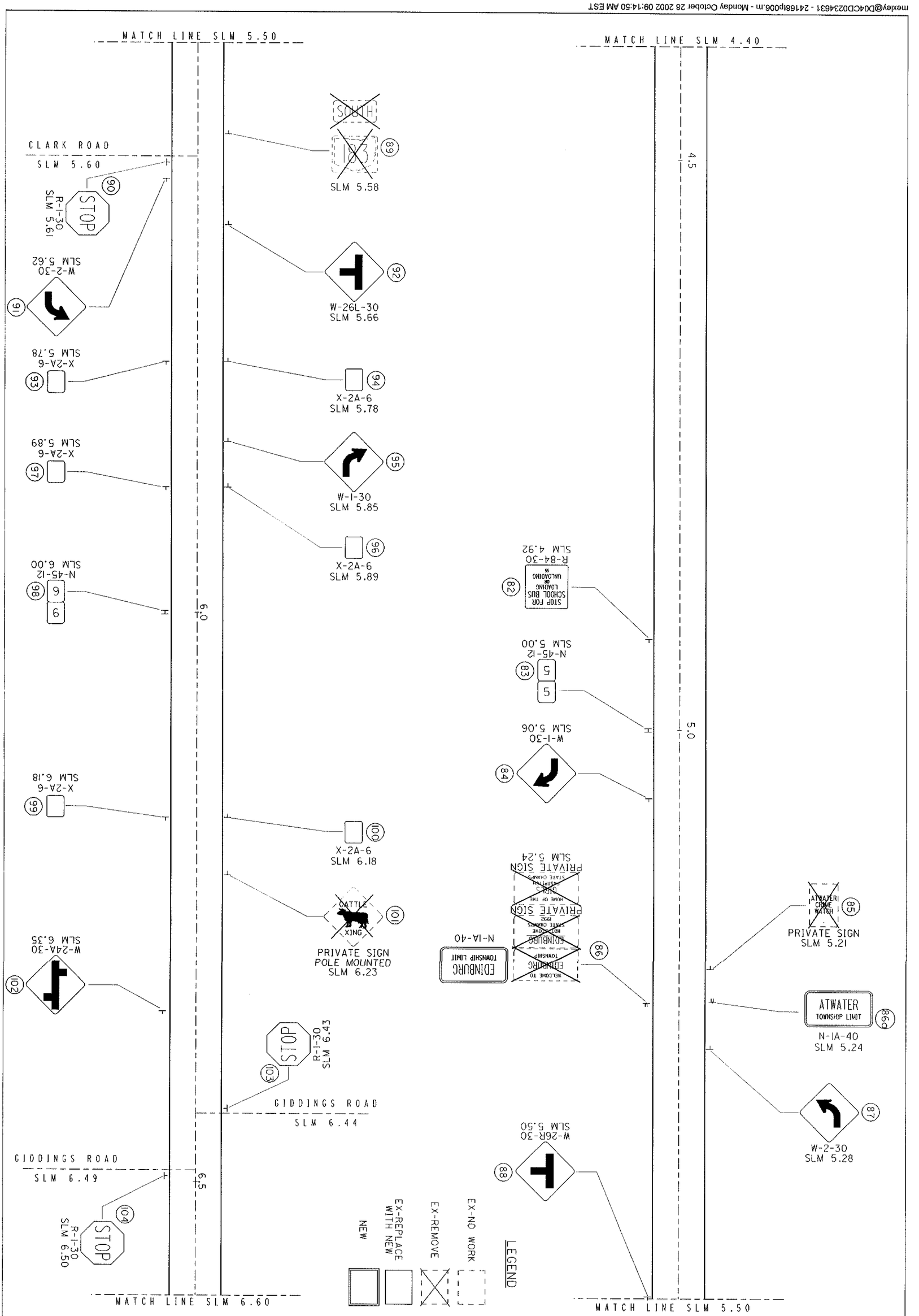

42 / 57	POR-5-4.33	S.R. 183 SIGNING PLAN SLM 4.40 TO SLM 6.60	CALCULATED T.K.I. CHECKED K.G. 0 0.02 0.04 0.06 HORIZONTAL SCALE IN MILES

mexley@D04CD0234631 - 24168lp006.m - Monday October 28 2002 09:15:33 AM EST

CALCULATED T.K.J.

CHECKED K.G.

S.R. 183 SIGNING PLAN
SLM 6.60 TO SLM 7.61

POR-5-4.33

Δ - SHEETING TO BE YELLOW-GREEN COLOR

* - FABRICATE ON MARINE-GRADE PLYWOOD, 3/4"

** - DOUBLE-SIDED SIGN

REFERENCE NO.	STATION (S.L.M.)	SIDE	CODE	SIZE (INCHES)	630 GROUND MOUNTED SUPPORT, NO.2 POST (FT.)	GROUND MOUNTED SUPPORT, NO.3 POST (FT.)	SIGN BACKING ASSEMBLY (EACH)	SIGN HANGER ASSEMBLY, SPAN WIRE (EACH)	SIGN, FLAT SHEET, TYPE G (SQ. FT.)	REMOVAL OF GROUND MOUNTED SIGN AND DISPOSAL (EACH)	REMOVAL OF GROUND MOUNTED SIGN AND REERECTION (EACH)	REMOVAL OF GROUND MOUNTED SIGN AND STORAGE (EACH)	REMOVAL OF OVERHEAD MOUNTED SIGN AND AND DISPOSAL (EACH)	REMOVAL OF GROUND MOUNTED POST SUPPORT AND DISPOSAL (EACH)
1	-0.01	RT.	N-2-40	40 x 20		12/12			5.56	1				2
1	-0.01	RT.	N-1A-40	40 x 20					5.56					
1	-0.01 **	RT.	N-45-12	12 x 12					1	1				
2	NOT USED													
3	NOT USED													
4	NOT USED													
5	0.01	RT.	R-1-30	30 x 30		11.5			6.25	1				1
6	0.04	RT.	M-37-24	24 x 12		12			2	1				1
6	0.04	RT.	M-2-24-3	30 x 24					5	1				
7	NOT USED													
8	0.43	RT.	W-94-36	36 DIA.		12			9	1				1
8	0.43	LT.	W-94-36	36 DIA.		12			9	1				1
9	0.47	RT.	W-SPEC-30	30 x 30		12.5			6.25	1				1
10	0.49	LT.	R-1-30	30 x 30		11.5			6.25	1				1
11	NOT USED													
12	0.54	LT.	R-1-30	30 x 30		11.5			6.25	1				1
13	0.54	LT.	M-2-24-3	30 x 24		12.25			5	1				1
13	0.54	LT.	M-24L-21	21 x 15					2.19	1				
14	NOT USED													
15	NOT USED													
16	0.64	LT.	M-2-24-3	30 x 24		12.25			5	1				1
16	0.64	LT.	M-22-21	21 x 15					2.19	1				
17	0.67	LT.	W-SPEC-30	30 x 30		12.5			6.25	1				1
18	0.76	LT.	W-94-36	36 DIA.		12			9					
18	0.76	RT.	W-94-36	36 DIA.		12			9	1				1
19	1.00 **	RT.	N-45-12	12 x 12	10				1	1				1
20	1.07	RT.	W-26R-30	30 x 30		12.5			6.25	1				1
21	1.23	RT.	R-1-30	30 x 30		11.5			6.25	1				1
22	1.34	LT.	W-26L-30	30 x 30		12.5			6.25	1				1
23	1.97	RT.	R-11A-24	24 x 30						1				1
23	1.97	RT.	R-11B-24	24 x 30		11.5			5					
24	2.00 **	RT.	N-45-12	12 x 12	10				1	1				1
25	2.12	LT.	R-10-24	24 x 30		11.5			5	1				1
26	2.13	RT.	R-10-24	24 x 30		11.5			5	1				1
27	2.14	RT.	R-185-24	24 x 30		11.5					1			1
28	2.15	RT.	N-1-40	40 x 20		10.5/10.5			5.56					
29	2.17	RT.	X-2A-6	6 x 12	9				0.5	1				1
TOTALS CARRIED TO GENERAL SUMMARY					29.0	271.5			142.56	25	1			23

CALCULATED TKI
CHECKED KG

S.R. 183 SIGNING SUBSUMMARY

POR-5-4.33

mexley@D04CD0234631 - 24168ts006.m - Monday October 28 2002 09:31:01 AM EST
i:\Projects\24168_POR-5-4.33\dgn\24168ts006.dgn 28-OCT-2002 9:26AM mexley

Δ - SHEETING TO BE YELLOW-GREEN COLOR

* - FABRICATE ON MARINE-GRADE PLYWOOD, 3/4"

** - DOUBLE-SIDED SIGN

REFERENCE NO.	STATION (S.L.M.)	SIDE	CODE	SIZE (INCHES)	630 GROUND MOUNTED SUPPORT, NO.2 POST (FT.)	GROUND MOUNTED SUPPORT, NO.3 POST (FT.)	SIGN BACKING ASSEMBLY (EACH)	SIGN HANGER ASSEMBLY, SPAN WIRE (EACH)	SIGN, FLAT SHEET, TYPE G (SQ. FT.)	REMOVAL OF GROUND MOUNTED SIGN AND DISPOSAL (EACH)	REMOVAL OF GROUND MOUNTED SIGN AND REERECTION (EACH)	REMOVAL OF GROUND MOUNTED SIGN AND STORAGE (EACH)	REMOVAL OF OVERHEAD MOUNTED SIGN AND AND DISPOSAL (EACH)	REMOVAL OF GROUND MOUNTED POST SUPPORT AND DISPOSAL (EACH)
30	2.29 Δ	RT.	W-82-36	36 x 36		12			9	1				1
31	2.32	RT.	W-45A-36	36 x 36		13.25			9	1				1
32	2.39	RT.	M-17-24	24 x 12		12.25			2	1				1
32	2.39	RT.	M-1-24-3	30 x 24					5	1				
32	2.39	RT.	M-29-21	21 x 15					2.19	1				
32	2.39 *	RT.	D-8G-42	42 x 8					2.35	1				
33	2.42 Δ	LT.	W-82-36	36 x 36		12			9					
34	2.43 *	RT.	D-1-72	72 x 12		11/11			6	1				2
34	2.43 *	RT.	D-1-72	72 x 12					6	1				
35	2.44	LT.	R-10-24	24 x 30		11.5			5	1				1
36	2.46	LT.	M-38-24	24 x 12		12			2	1				1
36	2.46	LT.	M-2-24-3	30 x 24					5	1				
37	2.47	LT.	R-1-36	36 x 36		12			9	1				1
37	2.47	LT.	R-1A-12	12 x 6					0.5	1				
37	2.47	LT.	M-1-24-3	30 x 24					5	1				
37	2.47	LT.	M-24L-21	21 x 15					2.19	1				
38	2.47	RT.	R-1-36	36 x 36		12			9	1				1
38	2.47	RT.	R-1A-12	12 x 6					0.5	1				
39	2.49	LT.	R-1-36	36 x 36		12			9	1				1
39	2.49	LT.	R-1A-12	12 x 6					0.5	1				
40	2.49	RT.	R-1-36	36 x 36		12			9	1				1
40	2.49	RT.	R-1A-12	12 x 6					0.5	1				
40	2.49	RT.	M-1-24-3	30 x 24					5	1				
40	2.49	RT.	M-29-21	21 x 15					2.19	1				
41	2.49	LT.	R-55-12	12 x 18		10.5			1.5	1				1
42	2.49	RT.	R-55-12	12 x 18		10.5			1.5	1				1
43	2.51	LT.	R-55-12	12 x 18		10.5			1.5	1				1
44	2.51	RT.	M-40-24	24 x 12		14			2	1				1
44	2.51	RT.	M-1-24-3	30 x 24					5	1				
44	2.51	RT.	M-37-24	24 x 12					2	1				1
44	2.51	RT.	M-2-24-3	30 x 24					5	1				
45	2.52	LT.	R-55-12	12 x 18		10.5			1.5	1				1
46	2.52	RT.	R-55-12	12 x 18		10.5			1.5	1				1
47	2.53	LT.	R-55-12	12 x 18		10.5			1.5	1				1
48	2.53	RT.	R-10-24	24 x 30		11.5			5	1				1
49	2.54 *	LT.	D-1-72	72 x 12		12/12			6	1				2
49	2.54 *	LT.	D-1-72	72 x 12					6	1				
49	2.54 *	LT.	D-1-72	72 x 12					6	1				
50	2.55	LT.	R-55-12	12 x 18		10.5			1.5	1				1
51	2.55	RT.	R-55-12	12 x 18		10.5			1.5	1				1
52	2.58	LT.	R-55-12	12 x 18		10.5			1.5	1				1
53	2.58	RT.	R-55-12	12 x 18		10.5			1.5	1				1
54	2.59	LT.	M-1-24-3	30 x 24		12.25			5	1				1
54	2.59	LT.	M-21-21	21 x 15					2.19	1				
54	2.59	LT.	D-8G-42	42 x 8					2.35	1				
TOTALS CARRIED TO GENERAL SUMMARY						309.7			176.46	60				27

CALCULATED TKI
CHECKED KG

S.R. 183 SIGNING SUBSUMMARY

POR-5-4.33

mexley@D04CD02234631 - 24168ts006.m - Monday October 28 2002 09:31:17 AM EST
mexley 28-OCT-2002 9:27AM I:\Projects\24168_POR-5-4.33\dgn\24168ts006.dgn

Δ - SHEETING TO BE YELLOW-GREEN COLOR

* - FABRICATE ON MARINE-GRADE PLYWOOD, 3/4"

** - DOUBLE-SIDED SIGN

REFERENCE NO.	STATION (S.L.M.)	SIDE	CODE	SIZE (INCHES)	630 GROUND MOUNTED SUPPORT, NO.2 POST FT.	GROUND MOUNTED SUPPORT, NO.3 POST FT.	SIGN BACKING ASSEMBLY EACH	SIGN HANGER ASSEMBLY, SPAN WIRE EACH	SIGN, FLAT SHEET, TYPE G SQ. FT.	REMOVAL OF GROUND MOUNTED SIGN AND DISPOSAL EACH	REMOVAL OF GROUND MOUNTED SIGN AND REERECTION EACH	REMOVAL OF GROUND MOUNTED SIGN AND STORAGE EACH	REMOVAL OF OVERHEAD MOUNTED SIGN AND AND DISPOSAL EACH	REMOVAL OF GROUND MOUNTED POST SUPPORT AND DISPOSAL EACH
55	2.61	LT.	R-55-12	12 x 18		10.5			1.5	1				1
56	2.61	RT.	R-55-12	12 x 18		10.5			1.5	1				1
57	2.64	LT.	R-55-12	12 x 18		10.5			1.5	1				1
58	2.63	RT.	R-55-12	12 x 18		10.5			1.5	1				1
59	2.64	LT.	W-45A-36	36 x 36		13.25			9	1				1
60	2.68	LT.	R-55-12	12 x 18		10.5			1.5	1				1
61	2.81	RT.	M-1-24-3	30 x 24		12.25			5	1				1
61	2.81	RT.	M-21-21	21 x 15					2.19	1				
62	2.85	LT.	N-1-40	40 x 20		10.5/10.5			5.56	1				2
63	2.89	RT.	R-36R-24	24 x 30		11.5			5	1				1
64	2.93	LT.	R-10-24	24 x 30		11.5			5	1				1
65	2.95 *	RT.	D-1-72	72 x 12		11/11			6	1				2
65	2.95 *	RT.	D-1-72	72 x 12					6	1				
66	3.01	RT.	M-45SPEC-60	60 x 30				1	12.5				1	
66	3.01	RT.	M-45SPEC-60	60 x 30				1	12.5				1	
67	3.00 **	RT.	N-45-12	12 x 12	10				1	1				1
68	3.02	LT.	M-15SPEC-24	24 x 12						1				1
68	3.02	LT.	M-29-21	21 x 15						1				
69	3.02	LT.	M-1-24-3	30 x 24		12.25			5	1				1
69	3.02	LT.	M-29-21	21 x 15					2.19	1				
70	3.13	RT.	R-10-24	24 x 30		11.5			5	1				1
71	3.06	LT.	R-11A-24	24 x 30						1				1
71	3.06	LT.	R-11B-24	24 x 30		11.5			5					
72	3.08 *	LT.	D-1-72	72 x 12		11/11			6	1				2
72	3.08 *	LT.	D-1-72	72 x 12					6	1				
73	3.05	RT.	M-37-24	24 x 12		12			2	1				1
73	3.05	RT.	M-2-24-3	30 x 24					5	1				
74	3.17	LT.	M-17-24	24 x 12		13.25			2	1				1
74	3.17	LT.	M-1-24-3	30 x 24					5	1				
74	3.17	LT.	M-29-21	21 x 15					2.19					
75	3.22	LT.	W-26R-30	30 x 30		12.5			6.25	1				1
76	3.31	LT.	R-185-24	24 x 30		11.5					1			1
77	3.63	RT.	W-26L-30	30 x 30		12.5			6.25	1				1
78	3.73	LT.	R-1-30	30 x 30		11.5			6.25	1				1
79	3.76	RT.	M-37-24	24 x 12						1				1
79	3.76	RT.	M-2-24-3	30 x 24						1				
80	3.88	LT.	W-26R-30	30 x 30		12.5			6.25	1				1
81	4.00 **	RT.	N-45-12	12 x 12	10				1	1				1
TOTALS CARRIED TO GENERAL SUMMARY					20	287.0		2	148.63	53	1		2	29

CALCULATED TKI CHECKED KG

S.R. 183 SIGNING SUBSUMMARY

POR-5-4.33

mexley@D04CD0234631 - 24168ts006.im - Monday October 28 2002 09:31:34 AM EST
mexley 28-OCT-2002 9:27AM
I:\Projects\24168_POR-5-4.33\dgn\24168ts006.dgn

Δ - SHEETING TO BE YELLOW-GREEN COLOR

* - FABRICATE ON MARINE-GRADE PLYWOOD, 3/4"

** - DOUBLE-SIDED SIGN

REFERENCE NO.	STATION (S.L.M.)	SIDE	CODE	SIZE (INCHES)	GROUND MOUNTED SUPPORT, NO.2 POST (FT.)	GROUND MOUNTED SUPPORT, NO.3 POST (FT.)	SIGN BACKING ASSEMBLY (EACH)	SIGN HANGER ASSEMBLY, SPAN WIRE (EACH)	SIGN, FLAT SHEET, TYPE G (SQ. FT.)	REMOVAL OF GROUND MOUNTED SIGN AND DISPOSAL (EACH)	REMOVAL OF GROUND MOUNTED SIGN AND REERECTION (EACH)	REMOVAL OF GROUND MOUNTED SIGN AND STORAGE (EACH)	REMOVAL OF OVERHEAD MOUNTED SIGN AND AND DISPOSAL (EACH)	REMOVAL OF GROUND MOUNTED POST SUPPORT AND DISPOSAL (EACH)
					630									
82	4.92	RT.	R-84-30	30 x 30		11.5			6.25	1				1
83	5.00 **	RT.	N-45-12	12 x 12	10				1	1				1
84	5.06	RT.	W-1-30	30 x 30		12.5			6.25	1				1
85	5.21	LT.	PRIVATE SIGN	-								1		1
86	5.24	RT.	N-2A-40	40 x 20						1				2
86	5.24	RT.	N-1A-40	40 x 20		10.5/10.5			5.56					
86	5.24	RT.	PRIVATE SIGN	-								1		
86	5.24	RT.	PRIVATE SIGN	-								1		
86a	5.24	LT.	N-1A-40	40 x 20		10.5/10.5			5.56					
87	5.28	LT.	W-2-30	30 x 30		12.5			6.25	1				1
88	5.50	RT.	W-26R-30	30 x 30		12.5			6.25	1				1
89	5.58	LT.	M-38-24	24 x 12						1				1
89	5.58	LT.	M-2-24-3	30 x 24						1				
90	5.61	RT.	R-1-30	30 x 30		11.5			6.25	1				1
91	5.62	RT.	W-2-30	30 x 30		12.5			6.25	1				1
92	5.66	LT.	W-26L-30	30 x 30		12.5			6.25	1				1
93	5.78	RT.	X-2A-6	6 x 12	9				0.5	1				1
94	5.78	LT.	X-2A-6	6 x 12	9				0.5	1				1
95	5.85	LT.	W-1-30	30 x 30		12.5			6.25	1				1
96	5.89	LT.	X-2A-6	6 x 12	9				0.5	1				1
97	5.89	RT.	X-2A-6	6 x 12	9				0.5	1				1
98	6.00 **	RT.	N-45-12	12 x 12	10				1	1				1
99	6.18	RT.	X-2A-6	6 x 12	9				0.5	1				1
100	6.18	LT.	X-2A-6	6 x 12	9				0.5	1				1
101	6.23	LT.	PRIVATE SIGN	-								1		
102	6.35	RT.	W-24A-30	30 x 30		12.5			6.25	1				1
103	6.43	LT.	R-1-30	30 x 30		11.5			6.25	1				1
104	6.50	RT.	R-1-30	30 x 30		11.5			6.25	1				1
105	6.62	LT.	W-24A-30	30 x 30		12.5			6.25	1				1
106	7.00 **	RT.	N-45-12	12 x 12	10				1	1				1
107	7.31	RT.	X-2A-6	6 x 12	9				0.5	1				1
108	7.31	LT.	X-2A-6	6 x 12	9				0.5	1				1
109	7.35	RT.	W-75-30	30 x 30		12.5			6.25	1				1
110	7.46	RT.	M-17-24	24 x 12		13.25			2	1				1
110	7.46	RT.	M-2-24-2	24 x 24					4	1				
110	7.46	RT.	M-25-21	21 x 15						1				
111	7.50	LT.	R-10-24	24 x 30		11.5			5					
112	7.52 *	RT.	N-58A-72	72 x 12						1				2
112	7.52 *	RT.	D-1B-72	72 x 12		11/11			6					
112	7.52 *	RT.	D-1-72	72 x 12					6	1				
113	7.54	LT.	W-75-30	30 x 30		12.5			6.25	1				1
114	7.55	LT.	M-38-24	24 x 12		12			2	1				1
114	7.55	LT.	M-2-24-3	30 x 24					5	1				
115	7.60	RT.	R-4L-24	24 x 36						1				1
TOTALS CARRIED TO GENERAL SUMMARY					102	271.7			135.62	36		4		34

CALCULATED TKI
CHECKED KG

S.R. 183 SIGNING SUBSUMMARY

POR-5-4.33

mexley@D04CD0234631 - 24168ts006.m - Monday October 28 2002 09:32:03 AM EST
I:\Projects\24168_POR-5-4.33\dgn\24168ts006.dgn 28-OCT-2002 9:28AM mexley

S.R. 225 SIGNING PLAN
SLM 0.00 TO SLM 2.20

POR-5-4.33

mexley@D04CD0234631 - 241681p007.m - Monday October 28 2002 09:18:24 AM EST

LEGEND

EX-NO WORK

EX-REMOVE

EX-REPLACE WITH NEW

NEW

CALCULATED T.K.J.

CHECKED K.D.

0 0.02 0.04 0.06 0.08
HORIZONTAL SCALE IN MILES

S.R. 225 SIGNING PLAN
SLM 2.20 TO SLM 2.54

POR-5-4.33

mexley@D04CD0234631 - 241681p007.m - Monday October 28 2002 09:19:06 AM EST

Δ - SHEETING TO BE YELLOW-GREEN COLOR

* - FABRICATE ON MARINE-GRADE PLYWOOD, 3/4"

** - DOUBLE-SIDED SIGN

REFERENCE NO.	STATION (S.L.M.)	SIDE	CODE	SIZE (INCHES)	GROUND MOUNTED SUPPORT, NO.2 POST (FT.)	GROUND MOUNTED SUPPORT, NO.3 POST (FT.)	SIGN, FLAT SHEET, TYPE G (SQ. FT.)		REMOVAL OF GROUND MOUNTED SIGN AND DISPOSAL (EACH)	REMOVAL OF GROUND MOUNTED POST SUPPORT AND DISPOSAL (EACH)
					630					
1	0.00	RT.	N-2-40	40 x 20		10.5/10.5	5.56		1	2
1	0.00	RT.	N-45-12	12 x 12			1		1	
2	NOT USED									
3	NOT USED									
4	0.01	RT.	R-1-30	30 x 30		11.5	6.25		1	1
5	0.02	RT.	M-37-24	24 x 12		12	2		1	1
5	0.02	RT.	M-2-24-3	30 x 24			5		1	
6	1.00 **	RT.	N-45-12	12 x 12	10		1		1	1
7	1.04/1.06	RT.	W-24A-30	30 x 30		12.5	6.25		1	1
8	1.16	LT.	M-2-24-3	30 x 24					1	1
9	1.17	LT.	R-1-30	30 x 30		11.5	6.25		1	1
10	1.28	RT.	R-1-30	30 x 30		11.5	6.25		1	1
11	1.29	RT.	M-2-24-3	30 x 24					1	1
12	1.36/1.39	LT.	W-24A-30	30 x 30		12.5	6.25		1	1
13	2.00 **	RT.	N-45-12	12 x 12	10		1			
14	2.36	RT.	W-45A-36	36 x 36		13.25	9		1	1
14	2.36	LT.	W-45A-36	36 x 36		13.25	9		1	1
15	2.40	RT.	M-17-24	24 x 12		13.25	2		1	1
15	2.40	RT.	M-1-24-3	30 x 24			5		1	
15	2.40	RT.	M-25-21	21 x 15					1	
15	2.40	RT.	M-2-24-3	30 x 24		12.25	5		1	1
15	2.40	RT.	M-19-21	21 x 15			2.19		1	
15a	2.48	LT.	R-10-24	24 x 30		14	5			
16	2.52	LT.	M-38-24	24 x 12		12	2		1	1
16	2.52	LT.	M-2-24-3	30 x 24			5		1	
17	2.53	RT.	R-1-36	36 x 36		13.25	9		1	1
17	2.53	LT.	R-1-36	36 x 36		13.25	9		1	1
17a	2.55	RT.	M-1-24-3	30 x 24		13.25	5		1	1
17a	2.55	RT.	M-25-21	21 x 15			2.19		1	
17a	2.55	RT.	M-2-24-3	30 x 24		13.25	5		1	
17a	2.55	RT.	M-24R-21	21 x 15			2.19		1	
TOTALS CARRIED TO GENERAL SUMMARY					20.0	223.5	123.38		27	19

CALCULATED TKI
CHECKED KG

S.R. 225 SIGNING SUBSUMMARY

POR-5-4.33

mexley@D04CD0234631 - 241681s007.m - Monday October 28 2002 09:32:36 AM ES1
I:\Projects\24168_POR-5-4.33\dgn\241681s007.dgn 28-OCT-2002 9:28AM mexley

mexley@D04CDO234631 - 241681p008.m - Monday October 28 2002 10:14:30 AM EST

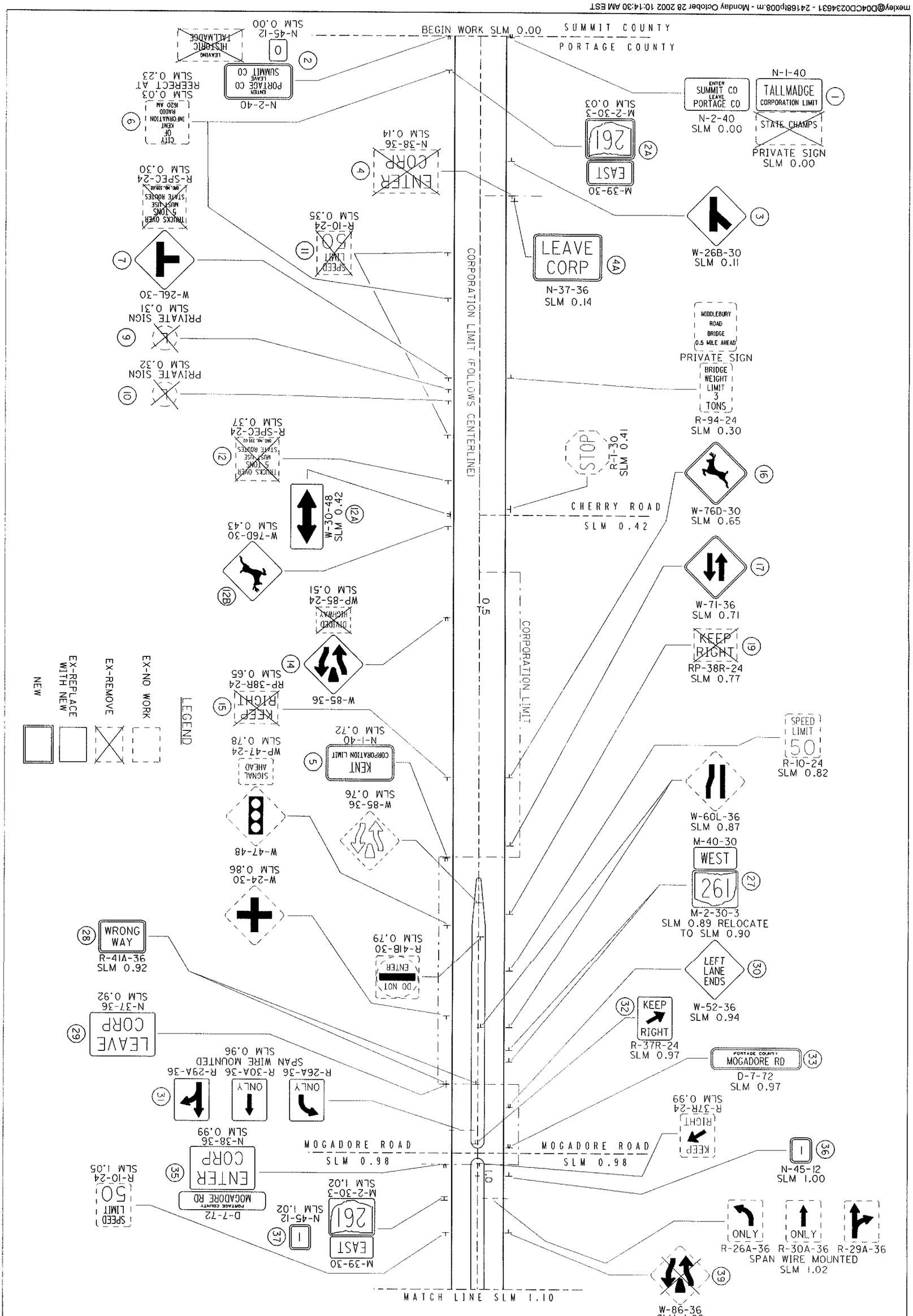

50/57	POR-5-4.33	**S.R. 261 SIGNING PLAN** **SLM 0.00 TO SLM 1.10**	CALCULATED T.K.I. CHECKED K.G. HORIZONTAL SCALE IN MILES (0 – 0.02 – 0.04 – 0.06 – 0.08)

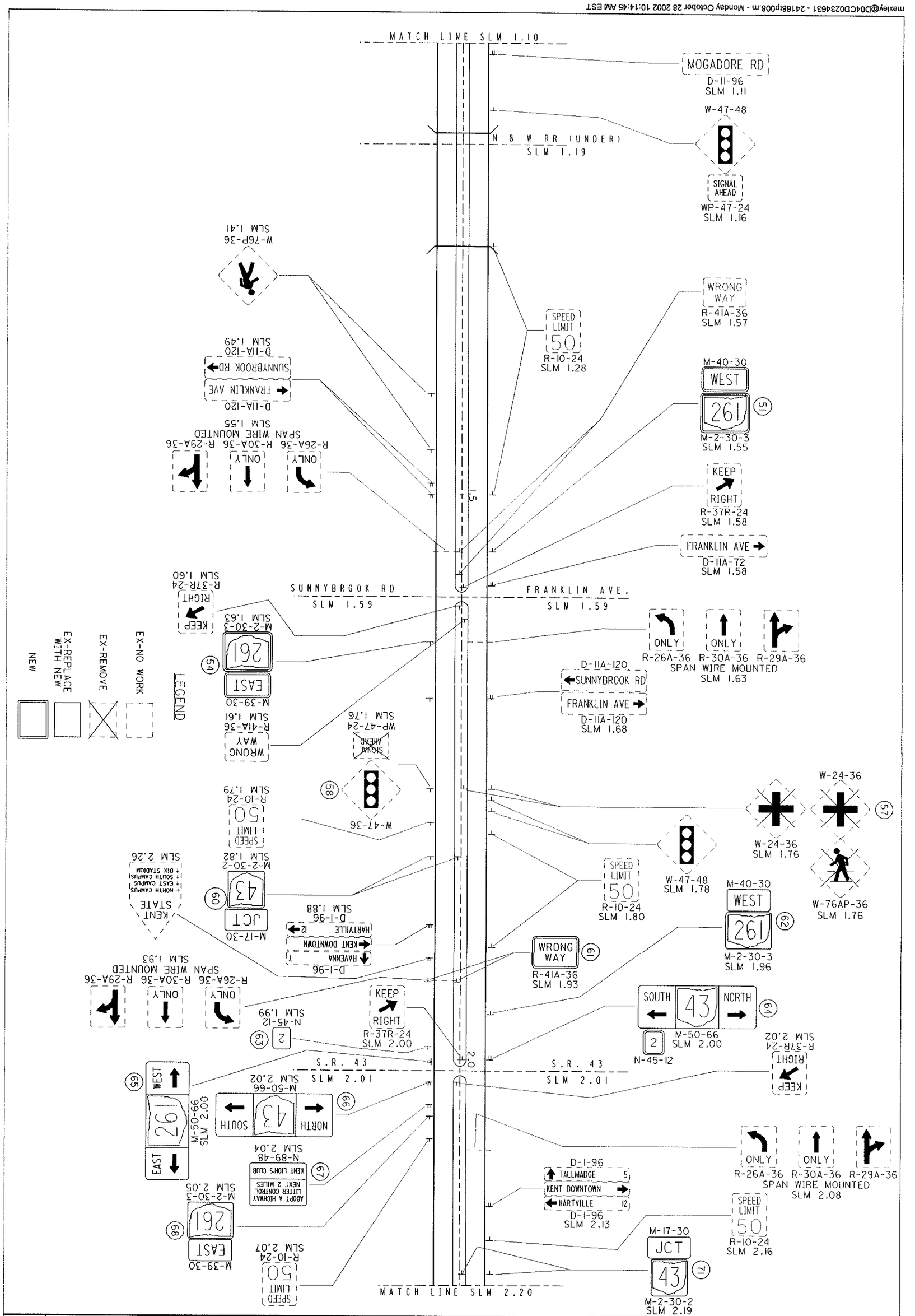

51 / 57	POR-5-4.33	**S.R. 261 SIGNING PLAN** **SLM 1.10 TO SLM 2.20**	CALCULATED T.K.L. CHECKED K.C. 0 0.04 0.06 / 0.02 0.06 HORIZONTAL SCALE IN MILES

mexley@D04CD0234631 - 2416BIP008.m - Monday October 28 2002 10:15:02 AM EST

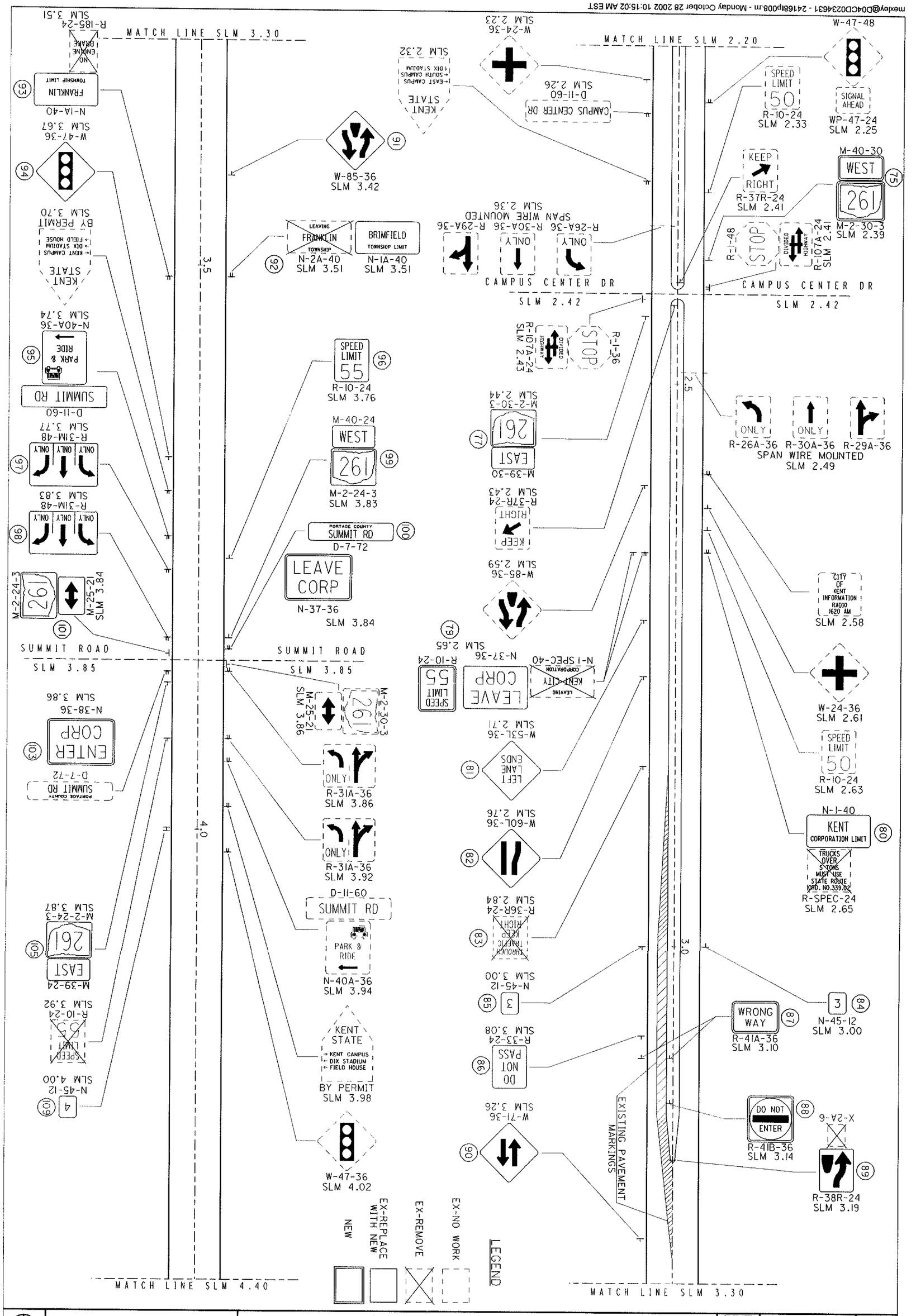

52 / 57	POR-5-4.33	S.R. 261 SIGNING PLAN SLM 2.20 TO SLM 4.40	CALCULATED T.K.L. CHECKED K.G.	0 0.04 0.08 0.02 0.06 HORIZONTAL SCALE IN MILES

mexley@D04CD0234631 - 241681p008.m - Monday October 28 2002 10:15:19 AM EST

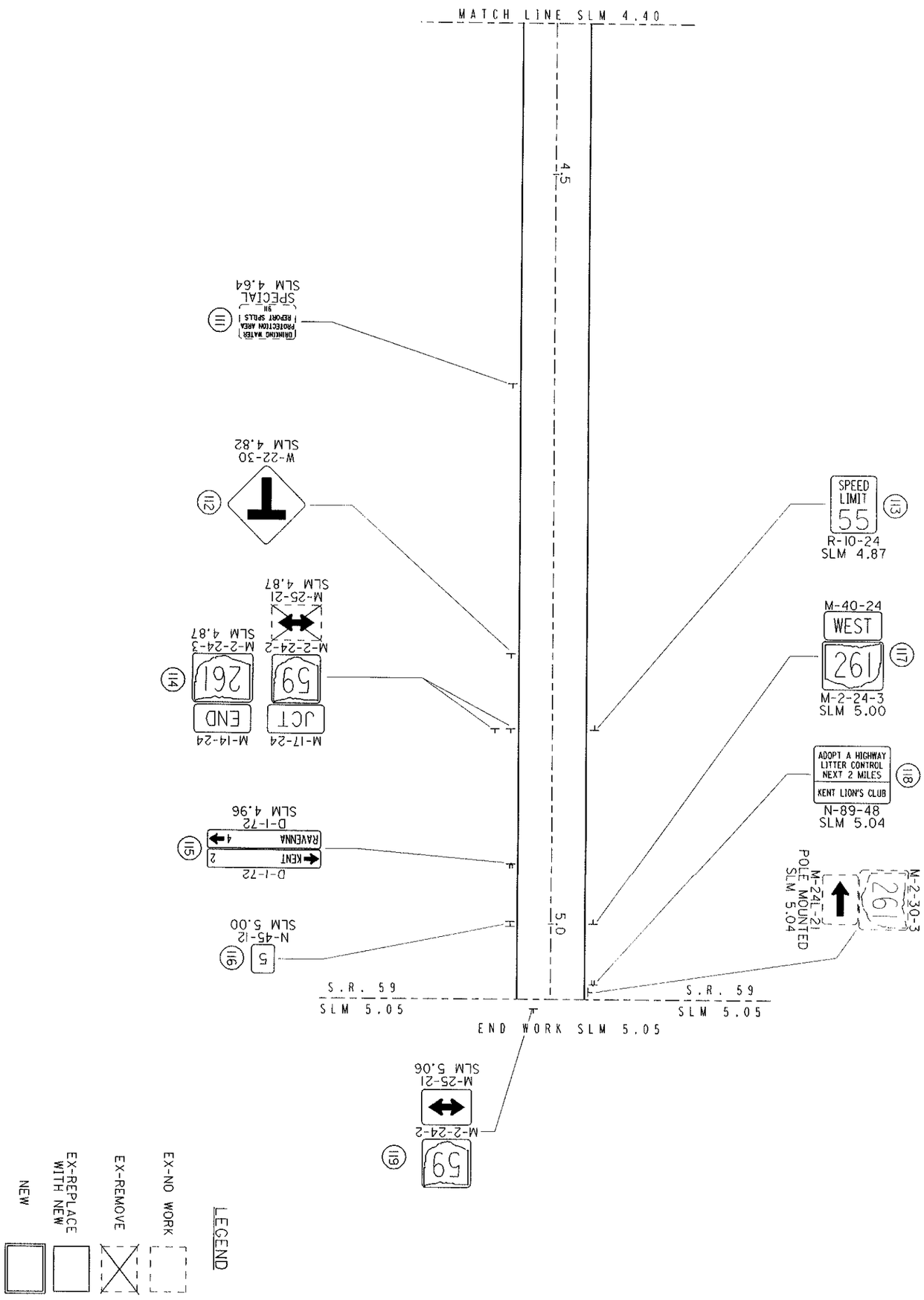

53-57	POR-5-4.33	S. R. 261 SIGNING PLAN SLM 4.40 TO SLM 5.05	CALCULATED T.K.L. CHECKED K.G. 0 0.04 0.08 0.02 0.06 HORIZONTAL SCALE IN MILES

Δ - SHEETING TO BE YELLOW-GREEN COLOR

* - FABRICATE ON MARINE-GRADE PLYWOOD, 3/4"

** - DOUBLE-SIDED SIGN

REFERENCE NO.	STATION (S.L.M.)	SIDE	CODE	SIZE (INCHES)	630 GROUND MOUNTED SUPPORT, NO.2 POST FT.	GROUND MOUNTED SUPPORT, NO.3 POST FT.	SIGN SUPPORT ASSEMBLY, POLE MOUNTED EACH	SIGN HANGER ASSEMBLY, SPAN WIRE EACH	SIGN, FLAT SHEET, TYPE G SQ. FT.	REMOVAL OF GROUND MOUNTED SIGN AND DISPOSAL EACH	REMOVAL OF GROUND MOUNTED SIGN AND STORAGE EACH	REMOVAL OF GROUND MOUNTED SIGN AND REERECTION EACH	REMOVAL OF OVERHEAD MOUNTED SIGN AND DISPOSAL EACH	REMOVAL OF GROUND MOUNTED POST SUPPORT AND DISPOSAL EACH
1	0.00	LT.	N-2-40	40 x 20		10.5/10.5			5.56	1				2
1	0.00	LT.	N-1-40	40 x 20		10.5/10.5			5.56	1				2
1	0.00	LT.	PRIVATE SIGN	-							1			
2	0.00	RT.	N-2-40	40 x 20		10.5/10.5			5.56					
2	0.00 **	RT.	N-45-12	12 x12					1	1				1
2	0.00	RT.	PRIVATE SIGN	-							1			
2A	0.03	RT.	M-39-30	30 x 15		15			3.13					
2A	0.03	RT.	M-2-30-3	37.5 x 30					7.81					
3	0.11	LT.	W-26B-30	30 x 30		12.5			6.25	1				1
4	0.14	LT.	N-38-36	36 x 24						1				1
4A	0.14	LT.	N-37-36	36 x 24		10.5/10.5			6					
5	0.72	RT.	N-1-40	40 x 20		10.5/10.5			5.56					
6	0.23	RT.	PRIVATE SIGN	-		13						1		1
7	0.30	RT.	R-SPEC-24	24 x 24						1				1
7A	0.30	RT.	W-26L-30	30 x 30		11.5			6.25	1				
8	NOT USED													
9	0.31	RT.	PRIVATE SIGN	-							1			1
10	0.32	RT.	PRIVATE SIGN	-							1			1
11	NOT USED													
12	0.37	RT.	R-SPEC-24	24 x 24						1				1
12A	0.42	RT.	W-30-48	48 x 24		11/11			8.00	1				2
12B	0.43	RT.	W-76D-30	30 x 30		11.5			6.25	1				1
13	NOT USED													
14	0.51	RT.	W-85-36	36 x 36		13.25			9	1				2
14	0.51	RT.	WP-85-24	24 x 18						1				
15	0.65	RT.	RP-38R-24	24 x 18						1				1
16	0.65	LT.	W-76D-30	30 x 30		12.5			6.25					
17	0.71	LT.	W-71-36	36 x 36		13.25			9					
18	NOT USED													
19	0.77	LT.	RP-38R-24	24 x 18						1				1
20	NOT USED													
21	NOT USED													
22	NOT USED													
23	NOT USED													
24	NOT USED													
25	NOT USED													
26	NOT USED													
27	0.90	LT.	M-40-30	30 x 15		13			3.13	1				1
27	0.90	LT.	M-2-30-3	37.5 x 30					7.81	1				
28	0.92	RT.	R-41A-36	36 x 24			1		5					
28	0.92	RT.	R-41A-36	36 x 24			1		5					
29	0.92	RT.	N-37-36	36 x 24		12			6	1				1
30	0.94	LT.	W-52-36	36 x 36		13.25			9	1				1
31	0.96	RT.	R-26A-36	36 x 42				1	10.5				1	
31	0.96	RT.	R-30A-36	36 x 42				1	10.5				1	
31	0.96	RT.	R-29A-36	36 x 42				1	10.5				1	
32	0.97	CL	R-37R-24	24 x 30		11.5			5	1				1
33	0.97 *	LT.	D-7-72	72 x 12		10/10			6					
34	0.99	CL	R-37R-24	24 x 30		11.5			5	1				1
35	0.99 *	RT.	D-7-72	72 x 12		10/10			6	1				2
35	0.99	RT.	N-38-36	36 x 24					6	1				
36	1.00	LT.	N-45-12	12 x 12	10				1					
TOTALS CARRIED TO SHEET 57					10.0	330.7	2	3	187.62	22	4	1	3	26

CALCULATED TKI
CHECKED KG

S.R. 261 SIGNING SUBSUMMARY

POR-5-4.33

mexley@DD4CD0234631 - 24168ts008.m - Monday October 28 2002 10:16:06 AM ES,
mexley 28-OCT-2002 10:16AM
I:\Projects\24168_POR-5-4.33\dgn\24168ts008.dgn

REFERENCE NO.	Δ - SHEETING TO BE YELLOW-GREEN COLOR STATION (S.L.M.) * - FABRICATE ON MARINE-GRADE PLYWOOD, 3/4" ** - DOUBLE-SIDED SIGN	SIDE	CODE	SIZE (INCHES)	630 GROUND MOUNTED SUPPORT, NO.2 POST FT.	GROUND MOUNTED SUPPORT, NO.3 POST FT.	SIGN SUPPORT ASSEMBLY, POLE MOUNTED EACH	SIGN, FLAT SHEET, TYPE G SQ. FT.	REMOVAL OF GROUND MOUNTED SIGN AND DISPOSAL EACH	REMOVAL OF GROUND MOUNTED POST SUPPORT AND DISPOSAL EACH
37	1.02	RT.	M-39-30	30 x 15		13		3.13	1	1
37	1.02	RT.	M-2-30-3	37.5 x 30				7.81	1	
37	1.02	RT.	N-45-12	12 x 12				1		
38	NOT USED									
39	NOT USED									
40	NOT USED									
41	NOT USED									
42	NOT USED									
43	NOT USED									
44	NOT USED									
45	NOT USED									
46	NOT USED									
47	NOT USED									
48	NOT USED									
49	NOT USED									
50	1.55	RT.	R-41A-36	36 x 24			1	6		
51	1.55	LT.	M-40-30	30 x 15		13		3.13		
51	1.55	LT.	M-2-30-3	37.5 x 30				7.81		
52	NOT USED									
53	NOT USED									
54	1.63	RT.	M-39-30	30 x 15		13		3.13		
54	1.63	RT.	M-2-30-3	37.5 x 30				7.81		
55	NOT USED									
56	1.72	LT.	W-76P-36	36 x 36		13.25		9		
57	1.76	LT.	W-24-36	36 x 36					1	1
57	1.76	LT.	W-24-36	36 x 36					1	1
57	1.76	LT.	W-76AP-36	36 x 36					1	
58	1.76	RT.	WP-47-24	24 x 18					1	
59	NOT USED									
60	1.82	RT.	M-17-30	30 x 15		13		3.13	1	1
60	1.82	RT.	M-2-30-2	30 x 30				6.25	1	
61	1.93	RT.	R-41A-36	36 x 24			1	6		
61	1.93	RT.	R-41A-36	36 x 24			1	6		
62	1.96	LT.	M-40-30	30 x 15		13		3.13	1	1
62	1.96	LT.	M-2-30-3	37.5 x 30				7.81	1	
63	1.99	RT.	N-45-12	12 x 12	10			1	1	1
64	2.00	LT.	M-50-66	66 x 24		11/11		11	1	2
64	2.00	LT.	N-45-12	12 x 12				1		
65	2.00	RT.	M-50-66	66 x 24		11/11		11	1	2
66	2.02	RT.	M-50-66	66 x 24		11/11		11	1	2
67	2.04	RT.	N-89-48	48 x 30		11.5/11.5		10	1	2
68	2.05	RT.	M-39-30	30 x 15		13		3.13	1	1
68	2.05	RT.	M-2-30-3	37.5 x 30				7.81	1	
69	NOT USED									
70	NOT USED									
TOTALS CARRIED TO SHEET 57					10.0	180.2	3	137.08	17	15

CALCULATED TKI
CHECKED KG

S.R. 261 SIGNING SUBSUMMARY

POR-5-4.33

55
57

mexley@D04CD0234631 - 24168ts008.m - Monday October 28 2002 10:16:20 AM ES,
mexley
28-OCT-2002 10:16AM
I:\Projects\24168_POR-5-4.33\dgn\24168ts008.dgn

Δ - SHEETING TO BE YELLOW-GREEN COLOR

STATION (S.L.M.)

* - FABRICATE ON MARINE-GRADE PLYWOOD, 3/4"

** - DOUBLE-SIDED SIGN

REFERENCE NO.	STATION (S.L.M.)	SIDE	CODE	SIZE (INCHES)	GROUND MOUNTED SUPPORT, NO.2 POST (630) FT.	GROUND MOUNTED SUPPORT, NO.3 POST (630) FT.	SIGN SUPPORT ASSEMBLY, POLE MOUNTED (630) EACH	SIGN, FLAT SHEET, TYPE G (630) SQ. FT.	REMOVAL OF GROUND MOUNTED SIGN AND DISPOSAL (630) EACH	REMOVAL OF GROUND MOUNTED SIGN AND REERECTION (630) EACH	REMOVAL OF GROUND MOUNTED POST SUPPORT AND DISPOSAL (630) EACH
71	2.19	LT.	M-17-30	30 x 15		12		3.13	1		1
71	2.19	LT.	M-2-30-2	30 x 30				6.25	1		
71	2.19	CL	M-17-24	24 x 12		12		2	1		1
71	2.19	CL	M-2-24-2	24 x 24				4	1		
72	NOT USED										
73	NOT USED										
74	NOT USED										
74	NOT USED										
75	2.39	LT.	M-40-30	30 x 15		13		3.13			
75	2.39	LT.	M-2-30-2	37.5 x 30				7.81			
76	NOT USED										
77	2.44	RT.	M-39-30	30 x 15		13		3.13	1		1
77	2.44	RT.	M-2-30-3	37.5 x 30				7.81	1		
78	NOT USED										
79	2.65	RT.	N-SPEC-40	40 x 20					1		1
79	2.65	RT.	N-37-36	36 x 24		12		6			
79	2.65	RT.	R-10-24	24 x 30				5			
80	2.65	LT.	N-1-40	40 x 20		10.5/10.5		5.56	1		2
80	2.65	LT.	R-SPEC-24	24 x 24				4	1		
81	2.71	RT.	W-53L-36	36 x 36		13.25		9	1		1
82	2.76	RT.	W-60L-36	36 x 36		13.25		9	1		1
83	NOT USED										
84	3.00	LT.	N-45-12	12 x 12	10			1	1		1
85	3.00	RT.	N-45-12	12 x 12	10			1	1		1
86	3.08	RT.	R-33-24	24 x 30		11.5		5	1		1
87	3.10	RT.	R-41A-36	36 x 24		11		6			
87	3.10	RT.	R-41A-36	36 x 24		11		6			
88	3.14	RT.	R-41B-36	36 x 36		12		9			
89	3.19	CL	R-38R-24	24 x 30		11.5		5	1		1
89	3.19	CL	X-2A-6	6 x 12					1		
90	3.26	RT.	W-71-36	36 x 36		13.25		9	1		1
91	3.42	LT.	W-85-36	36 x 36		13.25		9	1		1
92	3.51	LT.	N-2A-40	40 x 20					1		2
92	3.51	LT.	N-1A-40	40 x 20		10.5/10.5		5.56			
93	3.51	RT.	N-1A-40	40 x 20		10.5/10.5		5.56	1		2
93	3.51	RT.	R-185-24	24 x 30					1		
94	3.67	RT.	W-47-36	36 x 36		13.25		9	1		1
95	3.74 *	RT.	D-11-60	60 x 18		14.5/14.5		7.5	1		2
95	3.74	RT.	N-40A-36	36 x 48				12	1		
96	3.76	LT.	R-10-24	24 x 30		11.5		5	1		1
97	3.77	RT.	R-31M-48	48 x 30		11.5/11.5		10	1		2
98	3.83	RT.	R-31M-48	48 x 30		11.5/11.5		10	1		2
99	3.83	LT.	M-40-24	24 x 12		12		2	1		1
99	3.83	LT.	M-2-24-3	30 x 24				5	1		
100	3.84 *	LT.	D-7-72	72 x 12		10/10		6	1		2
100	3.84	LT.	N-37-36	36 x 24				6			
101	3.84	RT.	M-2-24-3	30 x 24		12.25		5	1		1
101	3.84	RT.	M-25-21	21 x 15				2.19	1		
102	NOT USED										
103	3.86	RT.	N-38-36	36 x 24				6			
104	NOT USED										
TOTALS CARRIED TO SHEET 57					20.0	379.0		223.6	32		30

CALCULATED TKI
CHECKED KG

S.R. 261 SIGNING SUBSUMMARY

POR-5-4.33

mexley@D04CD0234631 - 24168ts008.m - Monday October 28 2002 10:16:35 AM EST
I:\Projects\24168_POR-5-4.33\dgn\24168ts008.dgn 28-OCT-2002 10:16AM mexley

REFERENCE NO.	Δ - SHEETING TO BE YELLOW-GREEN COLOR STATION (S.L.M.) * - FABRICATE ON MARINE-GRADE PLYWOOD, 3/4" ** - DOUBLE-SIDED SIGN	SIDE	CODE	SIZE (INCHES)	630 GROUND MOUNTED SUPPORT, NO.2 POST LIN. FT.	GROUND MOUNTED SUPPORT, NO.3 POST LIN. FT.	SIGN SUPPORT ASSEMBLY, POLE MOUNTED EACH	SIGN HANGER ASSEMBLY, SPAN WIRE EACH	SIGN, FLAT SHEET, TYPE G SQ. FT.	REMOVAL OF GROUND MOUNTED SIGN AND DISPOSAL EACH	REMOVAL OF GROUND MOUNTED SIGN AND STORAGE EACH	REMOVAL OF GROUND MOUNTED SIGN AND REERECTION EACH	REMOVAL OF OVERHEAD MOUNTED SIGN AND DISPOSAL EACH	REMOVAL OF GROUND MOUNTED POST SUPPORT AND DISPOSAL EACH
105	3.87	RT.	M-39-24	24 x 12		12			2	1				1
105	3.87	RT.	M-2-24-3	30 x 24					5	1				
106	NOT USED													
107	NOT USED													
108	NOT USED													
109	4.00 **	RT.	N-45-12	12 x 12	10				1	1				1
110	NOT USED													
111	4.64	RT.	SPECIAL	30 X 18		13.5			3.75	1				1
112	4.82	RT.	W-22-30	30 x 30		12.5			6.25	1				1
113	4.87	LT.	R-10-24	24 x 30		11.5			5	1				1
114	4.87	RT.	M-17-24	24 x 12		12			2	1				1
114	4.87	RT.	M-2-24-2	24 x 24					4	1				
114	4.87	RT.	M-25-21	21 x 15						1				
114	4.87	RT.	M-14-24	24 x 12		12			2	1				1
114	4.87	RT.	M-2-24-3	30 x 24					5	1				
115	4.96 *	RT.	D-1-72	72 x 12		12/12			6	1				2
115	4.96 *	RT.	D-1-72	72 x 12					6	1				
116	5.00 **	RT.	N-45-12	12 x 12	10				1	1				1
117	5.00	LT.	M-40-24	24 x 12		12			2	1				1
117	5.00	LT.	M-2-24-3	30 x 24					5	1				
118	5.04	LT.	N-89-48	48 x 30		11.5/11.5			10	1				2
119	5.06	RT.	M-2-24-2	24 x 24		12			4	1				
119	5.06	RT.	M-25L-21	21 x 15					2.19	1				
	TOTALS FROM THIS SHEET				20.0	144.5			72.19	19				13
	TOTALS FROM SHEET 54				10.0	330.7	2	3	187.62	22	4	1	3	26
	TOTALS FROM SHEET 55				10.0	180.2	3		137.08	17				15
	TOTALS FROM SHEET 56				20.0	464.3	4		251.6	38		1		37
	TOTALS CARRIED TO GENERAL SUMMARY				60.0	1119.7	9	3	648.49	96	4	2	3	91

CALCULATED TKI
CHECKED KG

S.R. 261 SIGNING SUBSUMMARY

POR-5-4.33

mexley@D04CD0234631 - 24168ts008.m - Monday October 28 2002 10:16:51 AM ES.
I:\Projects\24168_POR-5-4.33\dgn\24168ts008.dgn 28-OCT-2002 10:17AM mexley