STATE OF OHIO
DEPARTMENT OF TRANSPORTATION

D04-CULVERTS-FY2025

PALMYRA TOWNSHIP, SUFFIELD TOWNSHIP, AND RAVENNA TOWNSHIP, PORTAGE COUNTY

MARLBORO TOWNSHIP AND LEXINGTON TOWNSHIP, STARK COUNTY

RICHFIELD TOWNSHIP, SUMMIT COUNTY

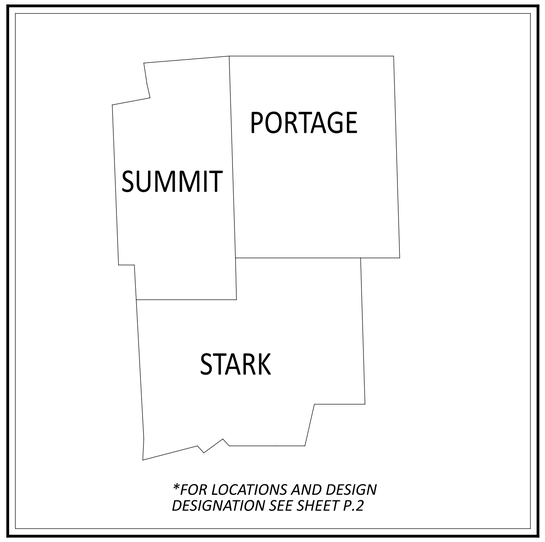

LOCATION MAP

FEDERAL PROJECT NUMBER

NON-FEDERAL

RAILROAD INVOLVEMENT

NONE

PROJECT DESCRIPTION

DISTRICT 4 CULVERT REPLACEMENTS:
POR-5-3.896, POR-43-3.956, POR-225-7.775, STA-44-21.874, AND SUM-303-3.589

BEST MANAGEMENT PRACTICE REVISION:
STA-619-13.170

EARTH DISTURBED AREAS

SEE SHEET P.2 FOR EARTH DISTURBED AREAS.

DESIGN EXCEPTIONS

	APPROVAL DATES	SHEET NUMBERS
POR-43-3.956		
LANE WIDTH	5/2/24	P.23
SHOULDER WIDTH	5/2/24	P.23
POR-225-7.775		
SHOULDER WIDTH	5/2/24	P.32
STA-44-21.874		
SHOULDER WIDTH	5/14/24	P.40

INDEX OF SHEETS:

TITLE SHEET	P.1
LOCATION MAPS	P.2
GENERAL NOTES	P.3
MAINTENANCE OF TRAFFIC NOTES	P.4-P.9
GENERAL SUMMARY	P.10-P.11
CULVERT PLANS	
POR-5-3.896	P.12-P.22
POR-43-3.956	P.23-P.31
POR-225-7.775	P.32-P.39
STA-44-21.874	P.40-P.48
SUM-303-3.589	P.49-P.57
ROADSIDE BMP REVISION	
STA-619-13.170	P.58-P.62
RIGHT-OF-WAY	

2023 SPECIFICATIONS

THE STANDARD SPECIFICATIONS OF THE STATE OF OHIO, DEPARTMENT OF TRANSPORTATION, INCLUDING SUPPLEMENTAL SPECIFICATIONS LISTED IN THE PLANS, CHANGES LISTED IN THE PROPOSAL, AND THE SUPPLEMENTAL SPECIFICATION 800 VERSION INDICATED ON THE PROPOSAL SHALL GOVERN THIS IMPROVEMENT.

I HEREBY APPROVE THESE PLANS AND DECLARE THAT THE MAKING OF THIS IMPROVEMENT WILL REQUIRE THE CLOSING TO TRAFFIC OF THE HIGHWAY AND THAT DETOURS WILL BE PROVIDED AS INDICATED ON SHEETS P.6-P.9.

Arthur G. Noiroit Jr., P.E.
District 04 Deputy Director

Pamela Boratyn
Director, Department of Transportation

ADA DESIGN WAIVERS

NONE

UNDERGROUND UTILITIES
Contact Two Working Days Before You Dig
OHIO811.org Before You Dig
OHIO811, 8-1-1, or 1-800-362-2764
(Non members must be called directly)

PLAN PREPARED BY:
ODOT DISTRICT 4 - CAPITAL PROGRAMS
2088 S. ARLINGTON RD
AKRON, OH 44306

STANDARD CONSTRUCTION DRAWINGS

BP-1.1	7/28/00	MGS-1.1	7/16/21	MT-95.40	7/21/23			800-2023 1/17/25	WPC 1/30/25
BP-3.1	1/19/24	MGS-2.1	1/19/18	MT-95.45	7/21/23			821 4/20/12	
BP-4.1	7/19/13	MGS-2.3	1/20/23	MT-97.10	4/19/19			832 7/19/24	
BP-5.1	7/15/22	MGS-4.2	7/19/13	MT-101.60	4/21/23			921 7/19/24	
		MGS-4.3	1/18/13	MT-101.70	7/19/24				
CB-2-2A, 2B, 2C	7/19/24			MT-101.75	7/21/23				
CB-2-5, 2-6	7/19/24	RM-4.2	7/19/24	MT-101.90	7/17/20				
				MT-105.10	1/17/20				
DM-1.1	7/17/20	MH-3	7/19/24						
DM-2.1	1/18/13			TC-41.20	10/18/13				
DM-4.2	7/20/12	HW-1.1	7/19/24	TC-42.20	10/18/13				
DM-4.3	1/15/16	HW-2.1	7/15/22	TC-52.10	10/18/13				
DM-4.4	1/15/16	HW-2.2	7/20/18	TC-52.20	1/15/21				
				TC-61.30	7/19/24				
F-1.1	7/19/13			TC-65.10	1/17/14				
				TC-65.11	1/19/24				

SUPPLEMENTAL SPECIFICATIONS | ***SPECIAL PROVISIONS***

ENGINEER'S SEAL

STATE OF OHIO
MICHAEL JOHN PALAGANO
E-89701
REGISTERED
PROFESSIONAL ENGINEER

Michael J. Palagano
Digitally signed by mpalagan
Reason: I am approving this document
Date: 2025.02.03 08:00:21-05'00'

TITLE SHEET

DESIGN AGENCY

DESIGNER NKF
REVIEWER MJP 04-24-24
PROJECT ID 109452
SHEET P.1 TOTAL 62

D04-CULVERTS-FY2025

MODEL: Sheet PAPERSIZE: 34x22 (in.) DATE: 1/31/2025 TIME: 9:33:32 AM USER: mpalagan
pw:\\ohiodot-pw.bentley.com:ohiodot-pw-02\Documents\01 Active Projects\District 04_D041109452\400-Engineering\Roadway\Sheets\109452_GT000.dgn

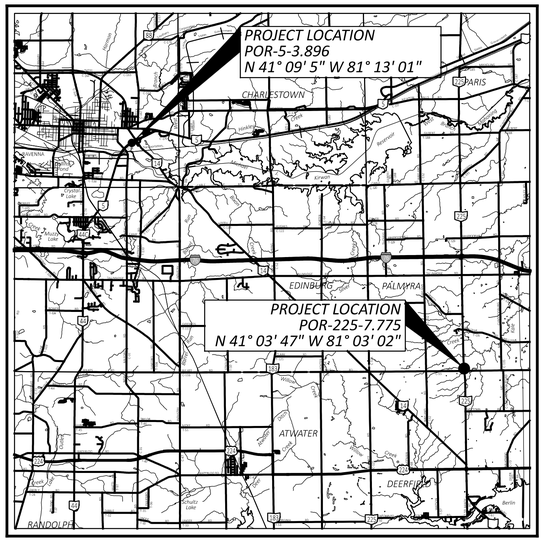

LOCATION MAP

PORTION TO BE IMPROVED	●
INTERSTATE HIGHWAY	
FEDERAL ROUTES	
STATE ROUTES	
COUNTY & TOWNSHIP ROADS	
OTHER ROADS	

DESIGN DESIGNATION*

	POR-5	POR-225
CURRENT ADT (2025)	5,239	4,146
DESIGN YEAR ADT (2045)	5,239	4,146
DESIGN HOURLY VOLUME (2045)	487	372
DIRECTIONAL DISTRIBUTION	51%	56%
TRUCKS (24 HOUR B&C)	9%	16%
DESIGN SPEED	60 MPH	60 MPH
LEGAL SPEED	55 MPH	55 MPH
DESIGN FUNCTIONAL CLASSIFICATION:	OTHER PRINCIPAL ARTERIAL - URBAN	RURAL - MAJOR COLLECTOR
NHS PROJECT	YES	NO

EARTH DISTURBED AREAS

PROJECT EARTH DISTURBED AREA:	0.18 ACRES (POR-5), 0.25 ACRES (POR-225)
ESTIMATED CONTRACTOR EARTH DISTURBED AREA:	0.25 ACRES
NOTICE OF INTENT EARTH DISTURBED AREA:	N/A ACRES

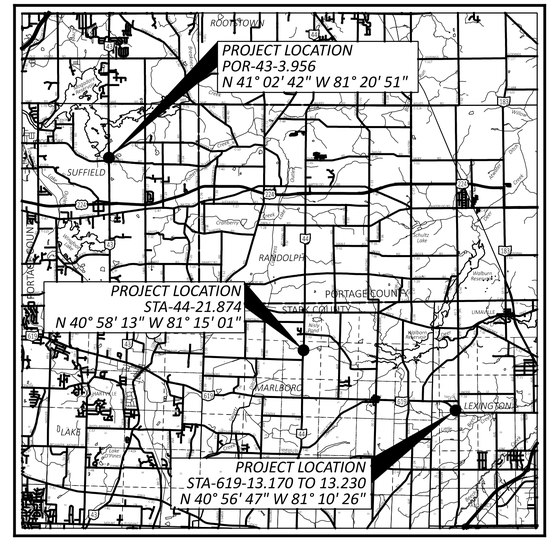

LOCATION MAP

PORTION TO BE IMPROVED	●
INTERSTATE HIGHWAY	
FEDERAL ROUTES	
STATE ROUTES	
COUNTY & TOWNSHIP ROADS	
OTHER ROADS	

DESIGN DESIGNATION*

	POR-43	STA-44	STA-619
CURRENT ADT (2025)	8,984	6,067	3,036
DESIGN YEAR ADT (2045)	8,984	6,067	3,036
DESIGN HOURLY VOLUME (2045)	981	573	306
DIRECTIONAL DISTRIBUTION	59%	58%	56%
TRUCKS (24 HOUR B&C)	3%	12%	3%
DESIGN SPEED	50 MPH	60 MPH	60 MPH
LEGAL SPEED	45 MPH	55 MPH	55 MPH
DESIGN FUNCTIONAL CLASSIFICATION:	OTHER PRINCIPAL ARTERIAL - RURAL	RURAL - MINOR ARTERIAL	RURAL - MINOR ARTERIAL
NHS PROJECT	YES	NO	NO

EARTH DISTURBED AREAS

PROJECT EARTH DISTURBED AREA:	0.20 ACRES (POR-43), 0.27 ACRES (STA-44), 0.23 ACRES (STA-619)
ESTIMATED CONTRACTOR EARTH DISTURBED AREA:	0.25 ACRES
NOTICE OF INTENT EARTH DISTURBED AREA:	N/A ACRES

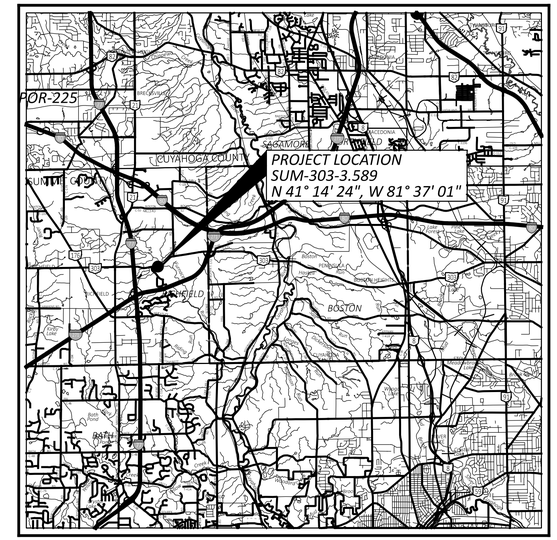

LOCATION MAP

PORTION TO BE IMPROVED	●
INTERSTATE HIGHWAY	
FEDERAL ROUTES	
STATE ROUTES	
COUNTY & TOWNSHIP ROADS	
OTHER ROADS	

DESIGN DESIGNATION*

	SUM-303
CURRENT ADT (2025)	6,726
DESIGN YEAR ADT (2045)	6,726
DESIGN HOURLY VOLUME (2045)	761
DIRECTIONAL DISTRIBUTION	55%
TRUCKS (24 HOUR B&C)	3%
DESIGN SPEED	45 MPH
LEGAL SPEED	45 MPH
DESIGN FUNCTIONAL CLASSIFICATION:	RURAL - MAJOR COLLECTOR
NHS PROJECT	NO

EARTH DISTURBED AREAS

PROJECT EARTH DISTURBED AREA:	0.14 ACRES
ESTIMATED CONTRACTOR EARTH DISTURBED AREA:	0.25 ACRES
NOTICE OF INTENT EARTH DISTURBED AREA:	N/A ACRES

* DISCLAIMER: DESIGN DESIGNATION VALUES ARE REFERENCED FROM THE TRAFFIC MONITORING MANAGMENT SYSTEM (TMMS)

LOCATION MAP

DESIGN AGENCY

DESIGNER NKF

REVIEWER MJP 04-24-24

PROJECT ID 109452

SHEET P.2 TOTAL 62

D04-CULVERTS-FY2025

MODEL: Sheet_SurvFt PAPERSIZE: 34x22 (in.) DATE: 1/31/2025 TIME: 9:33:44 AM USER: mpalagan
pw:\\ohiodot-pw.bentley.com:ohiodot-pw-02\Documents\01 Active Projects\District 04_D041\109452\400-Engineering\Roadway\Sheets\109452_GT001.dgn

WORK LIMITS

THE WORK LIMITS SHOWN ON THESE PLANS ARE FOR PHYSICAL CONSTRUCTION ONLY. PROVIDE THE INSTALLATION AND OPERATION OF ALL WORK ZONE TRAFFIC CONTROL AND WORK ZONE TRAFFIC CONTROL DEVICES REQUIRED BY THESE PLANS WHETHER INSIDE OR OUTSIDE THESE WORK LIMITS.

ITEM SPECIAL - AS-BUILT CONSTRUCTION PLANS

PRIOR TO FINAL ACCEPTANCE OF THE WORK, THE CONTRACTOR SHALL FURNISH THE DEPARTMENT FORMAL AS-BUILT CONSTRUCTION PLANS. THE FORMAL AS-BUILT CONSTRUCTION PLANS SHALL INCLUDE ALL RED-LINED CHANGES. RED-LINE CHANGE SHALL BE DENOTED UTILIZING CLOUDING IN MICROSTATION (OR OTHER CAD SOFTWARE OR CLOUDING IN PDF EDITING SOFTWARE. THE AS-BUILT CONSTRUCTION PLANS SHALL HAVE A SIGNED VERIFICATION ON THE TITLE SHEET FROM THE CONTRACTOR INDICATING THAT ALL RED-LINED AND FIELD CHANGES HAVE BEEN INCORPORATED INTO AS-BUILT CONSTRUCTION PLANS.

THE CONTRACTOR'S VERIFICATION STATEMENT INDICATES ALL KNOWN FIELD MODIFICATIONS MADE HAVE BEEN INCLUDED IN THE FORMAL AS-BUILT CONSTRUCTION PLANS. THE CONTRACTORS VERIFICATION STATMENT SHALL BE SIGNED BY THE CONTRACTOR'S PROJECT MANAGER (OR ACCEPTABLE REPRESENTATIVE).

IN ADDITION TO THE INFORMATION SHOWN ON THE CONSTRUCTION PLANS, THE AS-BUILT CONSTRUCTION PLANS SHALL SHOW THE FOLLOWING:

1. ALL DEVIATIONS FROM THE ORIGINAL APPROVED CONSTRUCTION PLANS WHICH RESULT IN A CHANGE OF LOCATION, MATERIAL, TYPE OR SIZE OF WORK.
2. ANY UTILITIES, PIPES, WELLHEADS, ABANDONED PAVEMENTS, FOUNDATIONS OR OTHER MAJOR OBSTRUCTIONS DISCOVERED AND REMAINING IN PLACE WHICH ARE NOT SHOWN, OR DO NOT CONFORM TO LOCATIONS OR DEPTHS SHOWN IN THE PLANS. UNDERGROUND FEATURES SHALL BE SHOWN AND LABELED ON THE AS-BUILT CONSTRUCTION PLANS IN TERMS OF STATION, OFFSET AND ELEVATION.
3. THE FINAL OPTION AND SPECIFICATION NUMBER SELECTED FOR THOSE ITEMS WHICH ALLOW SEVERAL MATERIAL OPTIONS UNDER THE SPECIFICATION (E.G., CONDUIT).
4. CHANGES TO THE PAY ITEMS AND FINAL QUANTITIES AS PAID SHALL BE SHOWN ON THE GENERAL SUMMARY AND SUBSUMMARIES.
5. ADDITIONAL PLAN SHEETS MAY BE NEEDED IF NECESSARY TO SHOW WORK NOT INCLUDED IN THE CONSTRUCTION PLANS. IF ADDITIONAL PLAN SHEETS ARE NEEDED, THEY ARE REQUIRED TO BE PREPARED IN CONFORMANCE WITH THE LOCATION AND DESIGN MANUAL VOLUME 3, SECTION 1200 - PLAN PREPARATION.

NOTATION SHALL ALSO BE MADE OF LOCATIONS AND THE EXTENT OF USE OF MATERIALS, OTHER THAN SOIL, FOR EMBANKMENT CONSTRUCTION (ROCK, BROKEN CONCRETE WITHOUT REINFORCING STEEL, ETC.).

THE PLAN INDEX SHALL SHOW THE PLAN SHEETS WHICH HAVE CHANGES APPEARING ON THEM.

TWO COPIES OF THE AS-BUILT CONSTRUCTION PLANS SHALL BE DELIVERED TO THE PROJECT ENGINEER FOR APPROVAL UPON COMPLETION OF THE PHYSICAL WORK BUT PRIOR TO THE REQUEST FOR FINAL PAYMENT. AFTER THE DEPARTMENT HAS APPROVED THE AS-BUILT CONSTRUCTION PLANS, THE ASSOCIATED ELECTRONIC FILES SHALL BE DELIVERED TO THE DISTRICT CAPITAL PROGRAMS ADMINISTRATOR. ACCEPTANCE OF THESE PLANS AND DELIVERY OF THE ASSOCIATED ELECTRONIC FILES IS REQUIRED PRIOR TO THE WORK BEING ACCEPTED AND THE FINAL ESTIMATE APPROVED.

PAYMENT FOR ALL THE ABOVE SHALL BE LUMP SUM UPON PROPER EXECUTION OF ALL WORK OF THIS ITEM AS DETERMINED BY THE PROJECT ENGINEER.

REVIEW OF DRAINAGE FACILITIES

PRIOR TO THE START OF WORK AND AGAIN BEFORE FINAL ACCEPTANCE, PERFORM AN INSPECTION WITH REPRESENTATIVES OF THE DEPARTMENT, CONTRACTOR AND LOCALS OF ALL EXISTING DRAINAGE FACILITIES THAT ARE TO REMAIN IN SERVICE WHICH MAY BE AFFECTED BY THE WORK. THE CONDITION OF THE EXISTING CONDUITS AND THEIR APPURTENANCES IS DETERMINED FROM FIELD OBSERVATIONS. RECORDS OF THE INSPECTION ARE MAINTAINED BY THE DEPARTMENT.

CONFIRM ALL EXISTING SEWERS INSPECTED INITIALLY BY THE ABOVE-MENTIONED PARTIES ARE MAINTAINED AND LEFT IN A CONDITION COMPARABLE TO THAT DETERMINED BY THE ORIGINAL INSPECTION. THE CONTRACTOR IS RESPONSIBLE TO CORRECT ANY CHANGE IN CONDITION RESULTING FROM THEIR OPERATIONS AS DIRECTED AND APPROVED BY THE ENGINEER.

PAYMENT FOR ALL OPERATIONS DESCRIBED ABOVE IS INCLUDED IN THE CONTRACT PRICE FOR THE PERTINENT 611 CONDUIT ITEMS.

ITEM 408 - PRIME COAT, AS PER PLAN

APPLY "MC-70" AT A RATE OF 0.4 GALLONS PER SQUARE YARD, OR AS DETERMINED BY THE ENGINEER, TO THE COMPLETED COMPACTED AGGREGATE SHOULDER.

ITEM 606 - ANCHOR ASSEMBLY, MGS TYPE E

THIS ITEM SHALL CONSIST OF FURNISHING AND INSTALLING ANY OF THE GUARDRAIL END TERMINALS FOR TYPE MGS GUARDRAIL AS LISTED ON ROADWAY ENGINEERING'S WEB PAGE UNDER ROADSIDE SAFETY DEVICES FOR APPROVED GUARDRAIL END TREATMENTS. INSTALLATION SHALL BE AT THE LOCATIONS SPECIFIED IN THE PLANS, IN ACCORDANCE WITH THE MANUFACTURER'S SPECIFICATIONS.

THE FACE OF THE TYPE E IMPACT HEAD SHALL BE COVERED WITH A SHEET OF TYPE G REFLECTIVE SHEETING, PER CMS 730.19.

REFER TO THE MANUFACTURER'S INSTRUCTIONS REGARDING THE INSTALLATION OF, AND THE GRADING AROUND THE FOUNDATION TUBES AND GROUND STRUT. THE TOP OF ANY FOUNDATION TUBE SHOULD BE LESS THAN 4 INCHES ABOVE THE GROUND. THE PLACEMENT OF THE FOUNDATION TUBES SHOULD BE AN APPROPRIATE DEPTH BELOW THE LEVEL LINE IN ORDER TO MAINTAIN THE FINISHED GUARDRAIL HEIGHT OF 31 INCHES FROM THE EDGE OF THE SHOULDER.

ON-SITE GRADING IS REQUIRED IF THE TOP OF THE FOUNDATION TUBES OR TOP OF THE GROUND STRUT DOES PROJECT MORE THAN 4 INCHES ABOVE THE GROUND LINE.

PAYMENT FOR THE ABOVE WORK SHALL BE MADE AT THE UNIT PRICE BID FOR ITEM 606, ANCHOR ASSEMBLY, MGS TYPE E, EACH, AND SHALL INCLUDE ALL LABOR, TOOLS, EQUIPMENT AND MATERIALS NECESSARY TO CONSTRUCT A COMPLETE AND FUNCTIONAL ANCHOR ASSEMBLY SYSTEM, INCLUDING ALL RELATED TRANSITIONS, REFLECTIVE SHEETING, HARDWARE, GRADING, EMBANKMENT AND EXCAVATION NOT SEPARATELY SPECIFIED, AS REQUIRED BY THE MANUFACTURER.

CONNECTION BETWEEN EXISTING AND PROPOSED GUARDRAIL

WHEN IT IS NECESSARY TO SPLICE PROPOSED GUARDRAIL TO EXISTING GUARDRAIL, ONLY THE EXISTING GUARDRAIL SHALL BE CUT, DRILLED, OR PUNCHED. THE CONNECTION SHALL BE MADE USING A W-BEAM, BEAM SPLICE AS SHOWN IN AASHTO M 180-12, EXCEPT THE BEAM WASHERS ARE NOT TO BE USED. PAYMENT SHALL BE INCLUDED IN THE CONTRACT PRICE FOR THE RESPECTIVE GUARDRAIL ITEMS.

ITEM 617 - COMPACTED AGGREGATE, AS PER PLAN

IN LOW SHOULDER AREAS EXCEEDING 1", AND ADJACENT TO THE SAFETY EDGE, OR AS DIRECTED BY THE ENGINEER, RECYCLED ASPHALT PAVEMENT (RAP) SHALL BE USED IN AREAS ADJACENT TO THE PAVED BERM. THE RAP SHALL HAVE A MINIMUM PG CONTENT OF 4.5% AND MEET THE FOLLOWING GRADATION. ONCE THE STOCKPILE MEETS THE GRADATION, THE PG CONTENT OF THE RAP SHALL BE DETERMINED PER 441.03. THE RAP ANALYSIS MUST BE SUBMITTED TO THE ENGINEER FOR APPROVAL 2 WEEKS PRIOR TO USE. METHOD OF MEASUREMENT SHALL BE AS PER 617.06. PLACEMENT AND COMPACTION SHALL MEET THE REQUIREMENTS OF ITEM 617. ALL MATERIALS, LABOR, EQUIPMENT, TOOLS AND INCIDENTALS NECESSARY TO COMPLETE THE WORK SHALL BE INCLUDED IN THE UNIT PRICE BID FOR ITEM 617 COMPACTED AGGREGATE, AS PER PLAN.

MODIFIED GRADATION SHALL APPLY:

SIEVE	TOTAL PERCENT PASSING
1- 1/2"	100
3/4"	50-100
NO. 4	35-70
NO. 30	9-33
NO. 200	0-13

ITEM 630 - GROUND MOUNTED SUPPORT, NO. 3 POST, AS PER PLAN

SQUARE POSTS, CMS 730.016, SHALL NOT BE PERMITTED TO BE USED.

ENDANGERED SPECIES HABITAT - INDIANA BAT/NORTHERN LONG-EARED BAT - POR-5-3.896, POR-43-3.956, STA-44-21.874 CULVERT LCOATIONS

THE PROJECT IS LOCATED WITHIN THE KNOWN HABITAT RANGES OF THE FEDERALLY LISTED AND PROTECTED INDIANA BAT AND NORTHERN LONG-EARED BAT AT THE POR-5-3.896, POR-43-3.956, STA-44-21.874 CULVERT LOCATIONS. NO TREES SHALL BE REMOVED AT THE POR-5-3.896, POR-43-3.956, STA-44-21.874 CULVERT LOCATIONS UNDER THIS PROJECT FROM APRIL 1 THROUGH SEPTEMBER 30.

ALL NECESSARY TREE REMOVAL SHALL OCCUR FROM OCTOBER 1 THROUGH MARCH 31. THIS REQUIREMENT IS NECESSARY TO AVOID AND MINIMIZE IMPACTS TO THESE SPECIES AS REQUIRED BY THE ENDANGERED SPECIES ACT. FOR THE PURPOSES OF THIS NOTE, A TREE IS DEFINED AS A LIVE, DYING, OR DEAD WOODY PLANT, WITH A TRUNK THREE INCHES OR GREATER IN DIAMETER AT A HEIGHT OF 4.5 FEET ABOVE THE GROUND SURFACE, AND WITH A MINIMUM HEIGHT OF 13 FEET.

ENDANGERED SPECIES HABITAT - INDIANA BAT/NORTHERN LONG-EARED BAT - SUM-303-3.589 CULVERT LCOATION

THE PROJECT IS LOCATED WITHIN THE KNOWN HABITAT RANGES OF THE FEDERALLY LISTED AND PROTECTED INDIANA BAT AND NORTHERN LONG-EARED BAT AT THE SUM-303-3.589 CULVERT LOCATION. NO TREES SHALL BE REMOVED AT THE SUM-303-3.589 CULVERT LOCATION UNDER THIS PROJECT FROM MARCH 15 THROUGH NOVEMBER 15.

ALL NECESSARY TREE REMOVAL SHALL OCCUR FROM NOVEMBER 16 THROUGH MARCH 14. THIS REQUIREMENT IS NECESSARY TO AVOID AND MINIMIZE IMPACTS TO THESE SPECIES AS REQUIRED BY THE ENDANGERED SPECIES ACT. FOR THE PURPOSES OF THIS NOTE, A TREE IS DEFINED AS A LIVE, DYING, OR DEAD WOODY PLANT, WITH A TRUNK THREE INCHES OR GREATER IN DIAMETER AT A HEIGHT OF 4.5 FEET ABOVE THE GROUND SURFACE, AND WITH A MINIMUM HEIGHT OF 13 FEET.

ITEM 670 - SLOPE EROSION PROTECTION

A QUANTITY OF ITEM 670 - SLOPE EROSION PROTECTION HAS BEEN PROVIDED FOR POR-5-3.896 AND STA-619-13.170 WORK. SLOPE EROSION PROTECTION WILL BE USED AS DIRECTED BY THE PROJECT ENGINEER.

THE FOLLOWING QUANTITY HAS BEEN CARRIED TO THE GENERAL SUMMARY:

ITEM 670 - SLOPE EROSION PROTECTION 500 SY

MAINTENANCE OF TRAFFIC

THIS ITEM SHALL CONSIST OF MAINTENANCE OF TRAFFIC ON EXISTING ROADWAYS AND RAMPS IN ACCORDANCE WITH THE OHIO MANUAL OF UNIFORM TRAFFIC CONTROL DEVICES FOR STREETS AND HIGHWAYS, CURRENT EDITION, LATEST REVISION, THE SPECIFICATIONS AND THE FOLLOWING:

1. A MINIMUM OF ONE TEN FOOT LANE IN EACH DIRECTION SHALL BE MAINTAINED ON THE EXISTING PAVEMENT OR COMPLETED PAVEMENT DURING CONSTRUCTION OF THE WORK.

2. THE CONTRACTOR SHALL INFORM THE DISTRICT OFFICE (330) 786-2208, EIGHTEEN (18) DAYS PRIOR TO THE BEGINNING OF WORK.

3. LANE RESTRICTIONS OR LANE REDUCTIONS SHALL NOT BE PERMITTED AFTER NORMAL WORKING HOURS. NORMAL WORKING HOURS SHALL BE THOSE HOURS DURING WHICH THE CONTRACTOR HAS A FULL COMPLEMENT OF EMPLOYEES AND EQUIPMENT ACTIVELY REMOVING AND/OR PLACING PAVEMENT MATERIALS.

4. TRUCK MOUNTED ATTENUATORS [TMA'S] SHALL BE USED AS SHOWN IN THE STANDARD CONSTRUCTION DRAWINGS.

5. A QUANTITY OF 5 CU. YDS. OF ITEM 614 ASPHALT CONCRETE FOR MAINTAINING TRAFFIC SHALL BE PROVIDED FOR USE IN MAINTAINING PAVEMENT, SHOULDERS AND OTHER LOCATIONS AS DIRECTED BY THE ENGINEER.

6. PRIOR TO OPENING TO TRAFFIC EACH LANE SHALL BE IN A SAFE, PASSABLE CONDITION. ALL TRANSVERSE JOINTS SHALL EXTEND ACROSS THE FULL LANE AND SHOULDER WIDTH AND EACH LANE SHALL BE FREE FROM UNEVEN LONGITUDINAL JOINTS. THE CONTRACTOR SHALL PROVIDE ASPHALT WEDGES FOR TRANSVERSE JOINTS WHEREVER THERE ARE PAVEMENT ELEVATION DIFFERENCES.

WHEN WORKING AT THE SR 619/MCCALLUM AVE LOCATION, LANE CLOSURES BETWEEN THE HOURS OF 6AM-8AM AND 3PM-6PM SHALL NOT BE PERMITTED. WORK ALONG THE WESTBOUND SHOULDER SHALL BE IN ACCORDANCE WITH OMUTCD FIGURE 6H-6 - "TYPICAL APPLICATION 6 SHOULDER WORK WITH MINOR ENCROACHMENT". IF IT IS NECESSARY TO CLOSE A LANE OF TRAFFIC WHEN WORKING AT THIS LOCATION, INCLUDING MATERIAL OR EQUIPMENT DELIVERIES, MAINTAIN ALL ROUNDABOUT APPROACHES VIA FLAGGER CONTROL SIMILAR TO THE REQUIREMENTS OF OMUTCD FIGURE 6H-27 - "TYPICAL APPLICATION 27 CLOSURE AT THE SIDE OF AN INTERSECTION." SR 619 TRAFFIC SHALL NOT BE DIVERTED TO COUNTY ROADS AT ANY TIME.

ALL WORK AND TRAFFIC CONTROL DEVICES SHALL BE IN ACCORDANCE WITH C&MS 614 AND OTHER APPLICABLE PORTIONS OF THE SPECIFICATIONS, AS WELL AS THE OHIO MANUAL OF UNIFORM TRAFFIC CONTROL DEVICES. PAYMENT FOR ALL LABOR, EQUIPMENT AND MATERIALS SHALL BE INCLUDED IN THE LUMP SUM CONTRACT PRICE FOR ITEM 614, MAINTAINING TRAFFIC, UNLESS SEPARATELY ITEMIZED IN THE PLAN.

NOTIFICATION OF TRAFFIC RESTRICTIONS

THROUGHOUT THE DURATION OF THE PROJECT, THE CONTRACTOR SHALL NOTIFY THE PROJECT ENGINEER IN WRITING OF ALL TRAFFIC RESTRICTIONS AND UPCOMING MAINTENANCE OF TRAFFIC CHANGES. THE CONTRACTOR SHALL ENSURE THE WRITTEN NOTIFICATION IS SUBMITTED IN A TIMELY MANNER TO ALLOW THE PROJECT ENGINEER TO MEET THE REQUIRED TIME FRAMES SET FORTH IN THE TABLE BELOW TO INFORM THE SPECIAL HAULING PERMITS SECTION (HAULING.PERMITS@DOT.OHIO.GOV) AND THE DISTRIC PUBLIC INFORMATION OFFICE (PIO). THIS NOTIFICATION SHALL BE RECEIVED BY THE PROJECT ENGINEER PRIOR TO THE PHYSICAL SETUP OF ANY APPLICABLE SIGNS OR MESSAGE BOARDS.

INFORMATION SHOULD INCLUDE, BUT IS NOT LIMITED TO, ALL CONSTRUCTION ACTIVITIES THAT IMPACT OR INTERFERE WITH TRAFFIC AND SHALL LIST THE SPECIFIC LOCATION, TYPE OF WORK, ROAD STATUS, DATE AND TIME OF RESTRICTION, DURATION OF RESTRICTION, NUMBER OF LANES MAINTAINED, NUMBER OF LANES CLOSED, MINIMUM VERTICAL CLEARANCE, MINIMUM WIDTH OF DRIVABLE PAVEMENT, DETOUR ROUTES, IF APPLICABLE, AND ANY OTHER INFORMATION REQUESTED BY THE PROJECT ENGINEER.

NOTIFICATION TIME TABLE		
ITEM	DURATION OF CLOSURE	NOTICE DUE TO PERMITS & PIO
ROAD & RAMP CLOSURES	>= 2WEEKS	21 CALENDAR DAYS PRIOR TO CLOSURE
	> 12 HOURS & < 2 WEEKS	14 CALENDAR DAYS PRIOR TO CLOSURE
	<12 HOURS	4 BUSINESS DAYS PRIOR TO CLOSURE
LANE CLOSURES & RESTRICTIONS	>=2 WEEKS	14 CALENDAR DAYS PRIOR TO CLOSURE
	< 2 WEEKS	5 BUSINESS DAYS PRIOR TO CLOSURE
START OF CONSTRUCTION & TRAFFIC PATTERNS CHANGES	N/A	14 CALENDAR DAYS PRIOR TO IMPLEMENTATION

ANY UNFORESEEN CONDITIONS NOT SPECIFIED IN THE PLANS REQUIRING TRAFFIC RESTRICTIONS SHALL ALSO BE REPORTED TO THE PROJECT ENGINEER USING THE NOTIFICATION TIME TABLE.

TRAFFIC CONTROL INSPECTOR

THE CONTRACTOR SHALL DESIGNATE AN INDIVIDUAL OTHER THAN THE SUPERINTENDENT AND SUBJECT TO THE APPROVAL OF THE ENGINEER, TO CONTINUOUSLY INSPECT ALL TRAFFIC CONTROL DEVICES WHENEVER CONSTRUCTION WORK IS BEING PERFORMED WITHIN THE WORK LIMITS OF THE PROJECT. THE DESIGNATED INDIVIDUAL SHALL ALSO INSPECT ALL TRAFFIC DEVICES AT THE BEGINNING AND AT THE END OF EACH WORK DAY. THE DESIGNATED INDIVIDUAL OR A QUALIFIED REP-RESENTATIVE SHALL ALSO BE AVAILABLE ON AN AROUND THE CLOCK BASIS TO REPAIR AND/OR REPLACE DAMAGED OR MISS-ING TRAFFIC CONTROL DEVICES. THESE INDIVIDUALS SHALL BE EQUIPPED WITH CELLULAR PHONES AND THEIR NAMES AND PHONE NUMBERS SHALL BE GIVEN TO THE PROJECT ENGINEER AT THE PRE-CONSTRUCTION MEETING. THE DESIGNATED INDIVIDUAL MAY HAVE OTHER CONSTRUCTION RELATED DUTIES AS LONG AS IMMEDIATE ATTENTION IS GIVEN TO TRAFFIC CONTROL. PAYMENT FOR THE SERVICES OF THE TRAFFIC CONTROL INSPECTOR SHALL BE INCLUDED IN THE LUMP SUM PRICE BID FOR ITEM 614 MAINTAINING TRAFFIC.

DETOUR NOTIFICATION [ODOT]

THE CONTRACTOR SHALL ADVISE THE ODOT PROJECT ENGINEER EIGHTEEN (18) DAYS IN ADVANCE OF WHEN THE DETOUR ROUTE SHOULD BE IN EFFECT. ALL WORK ZONE DEVICES REQUIRED SHALL BE FURNISHED, ERECTED, MAINTAINED, AND SUBSEQUENTLY REMOVED BY THE CONTRACTOR. PAYMENT FOR ALL WORK ASSOCIATED WITH THE DETOUR SHALL BE INCLUDED UNDER THE LUMP SUM BID FOR ITEM 614, DETOUR SIGNING.

ITEM 614, PORTABLE CHANGEABLE MESSAGE SIGNS, AS PER PLAN

THE CONTRACTOR SHALL FURNISH, INSTALL, MAINTAIN AND REMOVE, WHEN NO LONGER NEEDED, A CHANGEABLE MESSAGE SIGN. THE SIGN SHALL BE OF A TYPE SHOWN ON A LIST OF APPROVED PCMS UNITS AVAILABLE ON THE OFFICE OF MATERIALS MANAGEMENT WEB PAGE. THE LIST CONTAINS CLASS A AND B UNITS WITH MINIMUM LEGIBILITY DISTANCES OF 800 FEET AND 650 FEET, RESPECTIVELY.

EACH SIGN SHALL BE TRAILER-MOUNTED AND EQUIPPED WITH A FUNCTIONAL DIMMING MECHANISM, TO DIM THE SIGN DURING DARKNESS, AND A TAMPER AND VANDAL PROOF ENCLOSURE. EACH SIGN SHALL BE PROVIDED WITH APPROPRIATE TRAINING AND OPERATION INSTRUCTIONS TO ENABLE ON-SITE PERSONNEL TO OPERATE AND TROUBLESHOOT THE UNIT. THE SIGN SHALL ALSO BE CAPABLE OF BEING POWERED BY AN ELECTRICAL SERVICE DROP FROM A LOCAL UTILITY COMPANY. THE PCMS SHALL BE DELINEATED IN ACCORDANCE WITH C&MS 614.03.

PLACEMENT, OPERATION, MAINTENANCE AND ALL ACTIVATION OF THE SIGNS BY THE CONTRACTOR SHALL BE AS DIRECTED BY THE ENGINEER. THE PCMS SHALL BE LOCATED IN A HIGHLY VISIBLE POSITION YET PROTECTED FROM TRAFFIC. THE CONTRACTOR SHALL, AT THE DIRECTION OF THE ENGINEER, RELOCATE THE PCMS TO IMPROVE VISIBILITY OR ACCOMMODATE CHANGED CONDITIONS. WHEN NOT IN USE, THE PCMS SHALL BE TURNED OFF. ADDITIONALLY, WHEN NOT IN USE FOR EXTENDED PERIODS OF TIME, THE PCMS SHALL BE TURNED AWAY FROM ALL TRAFFIC.

THE ENGINEER SHALL BE PROVIDED ACCESS TO EACH SIGN UNIT AND SHALL BE PROVIDED WITH APPROPRIATE TRAINING AND OPERATION INSTRUCTIONS TO ENABLE ODOT PERSONNEL TO OPERATE AND TROUBLESHOOT THE UNIT, AND TO REVISE SIGN MESSAGES, IF NECESSARY.

ALL MESSAGES TO BE DISPLAYED ON THE SIGN WILL BE PROVIDED BY THE ENGINEER. A LIST OF ALL REQUIRED PRE-PROGRAMMED MESSAGES WILL BE GIVEN TO THE CONTRACTOR AT THE PROJECT PRECONSTRUCTION CONFERENCE. THE SIGN SHALL HAVE THE CAPABILITY TO STORE UP TO 99 MESSAGES. MESSAGE MEMORY OR PRE-PROGRAMMED DISPLAYS SHALL NOT BE LOST AS A RESULT OF POWER FAILURES TO THE ON-BOARD COMPUTER. THE SIGN LEGEND SHALL BE CAPABLE OF BEING CHANGED IN THE FIELD. THREE-LINE PRESENTATION FORMATS WITH UP TO SIX MESSAGE PHASES SHALL BE SUPPORTED. PCMS FORMAT SHALL PERMIT THE COMPLETE MESSAGE FOR EACH PHASE TO BE READ AT LEAST TWICE.

THE PCMS SHALL CONTAIN AN ACCURATE CLOCK AND PROGRAMMING LOGIC WHICH WILL ALLOW THE SIGN TO BE ACTIVATED, DEACTIVATED OR MESSAGES CHANGED AUTOMATICALLY AT DIFFERENT TIMES OF THE DAY FOR DIFFERENT DAYS OF THE WEEK.

THE CONTRACTOR SHALL BE RESPONSIBLE FOR 24-HOUR-PER-DAY OPERATION AND MAINTENANCE OF THESE SIGNS ON THE PROJECT FOR THE DURATION OF THE PHASES WHEN THE PLAN REQUIRES THEIR USE.

PAYMENT FOR THE ABOVE DESCRIBED ITEM SHALL BE AT THE CONTRACT UNIT PRICE. PAYMENT SHALL INCLUDE ALL LABOR, MATERIALS, EQUIPMENT, FUELS, LUBRICATING OILS, SOFTWARE, HARDWARE AND INCIDENTALS TO PERFORM THE ABOVE DESCRIBED WORK.

ITEM 614, PORTABLE CHANGEABLE MESSAGE SIGN, AS PER PLAN 8 SIGN MONTH ASSUMING 2 PCMS SIGN(S) FOR 4 MONTH(S)

LANE CLOSURE FOR WORK AT POR-5-3.896

THE CONTRACTOR IS PERMITTED TO CLOSE THE OUTSIDE LANE OF EASTBOUND SR 5 IN ACCORDANCE WITH SCD MT-95.40. THE LANE CLOSURE FOR WORK AT THIS LOCATION SHALL BE LIMITED TO SEVEN DAYS. THE FOLLOWING QUANTITIES HAVE BEEN PROVIDED FOR USE AT THIS LOCATION:

ITEM 606, IMPACT ATTENUATOR, TYPE 1 (UNIDIRECTIONAL)	*1 EACH*
ITEM 614, WORK ZONE EDGE LINE, CLASS III, 6", 642 PAINT	*0.26 MI*
ITEM 614, WORK ZONE DOTTED LINE, CLASS III, 6", 642 PAINT	*700 FT*
ITEM 614, BARRIER REFLECTOR, TYPE 1, ONE WAY	*11 EACH*
ITEM 614, OBJECT MARKER, ONE WAY	*11 EACH*
ITEM 622, PORTABLE BARRIER, UNANCHORED	*520 FT*

ITEM 614, MAINTAINING TRAFFIC (NOTICE OF CLOSURE SIGN)

NOTICE OF CLOSURE SIGNS (W20-H13) SHALL BE ERECTED BY THE CONTRACTOR PRIOR TO THE SCHEDULED ROAD OR RAMP CLOSURE IN ACCORDANCE WITH THE NOTICE OF CLOSURE TIME TABLE BELOW. [AT THE APPROVAL OF THE ENGINEER, PORTABLE CHANGEABLE MESSAGE SIGNS MAY BE USED IN LIEU OF THE STANDARD FLATSHEET SIGN FOR CLOSURE DURATIONS OF LESS THAN 1 WEEK.]

THE SIGNS SHALL BE ERECTED ON THE RIGHT-HAND SIDE OF THE ROAD/RAMP FACING TRAFFIC. THEY SHALL BE PLACED SO AS NOT TO INTERFERE WITH THE VISIBILITY OF ANY OTHER TRAFFIC CONTROL SIGNS. ON ROADWAYS, THEY SHOULD BE ERECTED AT OR NEAR THE POINT OF CLOSURE. THE SIGNS MAY BE ERECTED ANYWHERE ON RAMPS AS LONG AS THEY ARE VISIBLE TO THE MOTORISTS USING THE RAMP. ON ENTRANCE RAMPS, THE SIGN SHALL BE ERECTED WELL IN ADVANCE OF THE MERGE AREA TO AVOID DISTRACTING MOTORISTS.

NOTICE OF CLOSURE SIGN TIME TABLE		
ITEM	DURATION OF CLOSURE	SIGN DISPLAYED TO PUBLIC
ROAD & RAMP CLOSURES	>= 2WEEKS	14 CALENDAR DAYS PRIOR TO CLOSURE
	> 12 HOURS & < 2 WEEKS	7 CALENDAR DAYS PRIOR TO CLOSURE
	<12 HOURS	2 BUSINESS DAYS PRIOR TO CLOSURE

THE SIGN SHALL DISPLAY THE DATE OF THE CLOSURE IN MMM-DD FORMAT AND THE NUMBER OF DAYS OF THE CLOSURE. THE LAST LINE OF THE W20-H13 SIGN LISTS A PHONE NUMBER WHICH A MOTORIST MAY CALL FOR ADDITIONAL INFORMATION. THIS IS TO BE A SPECIFIC OFFICE WITHIN THE DISTRICT RATHER THAN THE GENERAL SWITCHBOARD NUMBER.

MAINTENANCE OF TRAFFIC NOTES

ITEM 614, LAW ENFORCEMENT OFFICER (WITH PATROL CAR) FOR ASSISTANCE DURING CONSTRUCTION OPERATIONS

USE OF LAW ENFORCEMENT OFFICERS (LEOS) BY CONTRACTORS OTHER THAN THE USES SPECIFIED BELOW WILL NOT BE PERMITTED AT PROJECT COST. LEOS SHOULD NOT BE USED WHERE THE OMUTCD INTENDS THAT FLAGGERS BE USED.

IN ADDITION TO THE REQUIREMENTS OF C&MS 614 AND THE OMUTCD, A UNIFORMED LEO WITH AN OFFICIAL PATROL CAR (CAR WITH TOP-MOUNTED EMERGENCY FLASHING LIGHTS AND COMPLETE MARKINGS OF THE APPROPRIATE LAW ENFORCEMENT AGENCY) SHALL BE PROVIDED FOR THE FOLLOWING TRAFFIC CONTROL TASKS:

DURING THE ENTIRE ADVANCE PREPARATION AND CLOSURE SEQUENCE WHERE COMPLETE BLOCKAGE OF TRAFFIC IS REQUIRED.

FOR LANE CLOSURES: DURING INITIAL SET-UP PERIODS, TEAR DOWN PERIODS, SUBSTANTIAL SHIFTS OF A CLOSURE POINT OR WHEN NEW LANE CLOSURE ARRANGEMENTS ARE INITIATED FOR LONG-TERM LANE CLOSURES/SHIFTS (FOR THE FIRST AND LAST DAY OF MAJOR CHANGES IN TRAFFIC CONTROL SETUP).

IN GENERAL, LEOS SHOULD BE POSITIONED IN ADVANCE OF AND ON THE SAME SIDE AS THE LANE RESTRICTION (OR AT THE POINT OF ROAD CLOSURE), AND TO MANUALLY CONTROL TRAFFIC MOVEMENTS THROUGH SIGNALIZED INTERSECTIONS IN WORK ZONES.

LEOS SHOULD NOT FORGO THEIR TRAFFIC CONTROL RESPONSIBILITIES TO APPREHEND MOTORISTS FOR ROUTINE TRAFFIC VIOLATIONS. HOWEVER, IF A MOTORIST'S ACTIONS ARE CONSIDERED TO BE RECKLESS, THEN PURSUIT OF THE MOTORIST IS APPROPRIATE.

THE LEOS WORK AT THE DIRECTION OF THE CONTRACTOR. THE CONTRACTOR IS RESPONSIBLE FOR SECURING THE SERVICES OF THE LEOS WITH THE APPROPRIATE AGENCIES AND COMMUNICATING THE INTENTIONS OF THE PLANS WITH RESPECT TO DUTIES OF THE LEOS. THE ENGINEER SHALL HAVE FINAL CONTROL OVER THE LEOS' DUTIES AND PLACEMENT, AND WILL RESOLVE ANY ISSUES THAT MAY ARISE BETWEEN THE TWO PARTIES.

ENSURE PROVIDED LEOS HAVE BEEN TRAINED APPROPRIATE TO THE JOB DECISIONS THEY ARE REQUIRED TO MAKE WHILE ON THE PROJECT, IN ACCORDANCE WITH C&MS 614.03.

THE LEO SHALL REPORT IN TO THE CONTRACTOR PRIOR TO THE START OF THE SHIFT, IN ORDER TO RECEIVE INSTRUCTIONS REGARDING SPECIFIC WORK ASSIGNMENTS DURING HIS/HER SHIFT. THE LEO IS EXPECTED TO STAY AT THE PROJECT SITE FOR THE ENTIRE DURATION OF HIS/HER SHIFT. THE LEO SHALL REPORT TO THE CONTRACTOR AT THE END OF HIS/HER SHIFT. SHOULD IT BE NECESSARY TO LEAVE THE PROJECT SITE, THE LEO SHALL NOTIFY THE ENGINEER. THE CONTRACTOR SHALL PROVIDE THE LEO WITH A TWO-WAY COMMUNICATION DEVICE THAT SHALL BE RETURNED TO THE CONTRACTOR AT THE END OF HIS/HER SHIFT.

ITEM 614, LAW ENFORCEMENT OFFICER (WITH PATROL CAR) FOR ASSISTANCE DURING CONSTRUCTION OPERATIONS (CONT...)

LEOS (WITH PATROL CAR) REQUIRED BY THE TRAFFIC MAINTENANCE TASKS ABOVE SHALL BE PAID FOR ON A UNIT PRICE (HOURLY) BASIS UNDER ITEM 614, LAW ENFORCEMENT OFFICER (WITH PATROL CAR) FOR ASSISTANCE. THE FOLLOWING ESTIMATED QUANTITIES HAVE BEEN CARRIED TO THE GENERAL SUMMARY.

ITEM 614, LAW ENFORCEMENT OFFICER WITH PATROL CAR
FOR ASSISTANCE 50 HOURS

THE HOURS PAID SHALL INCLUDE ANY MINIMUM SHOW-UP TIME REQUIRED BY THE LAW ENFORCEMENT AGENCY INVOLVED.

ANY ADDITIONAL COSTS (ADMINISTRATIVE OR OTHERWISE) INCURRED BY THE CONTRACTOR TO OBTAIN THE SERVICES OF A LEO ARE INCLUDED WITH THE BID UNIT PRICE FOR ITEM 614, LAW ENFORCEMENT OFFICER WITH PATROL CAR FOR ASSISTANCE.

ITEM 614, MAINTAINING TRAFFIC (TIME LIMITATION ON A DETOUR) POR-43-3.956

A MINIMUM OF ONE LANE OF TRAFFIC IN EACH DIRECTION SHALL BE MAINTAINED AT ALL TIMES, EXCEPT FOR A PERIOD NOT TO EXCEED 14 CONSECUTIVE CALENDAR DAYS, WHEN THROUGH TRAFFIC MAY BE DETOURED AS SHOWN ON SHEET P.6. A DISINCENTIVE SHALL BE ASSESSED IN THE AMOUNT OF $3,000 PER DAY FOR EACH CALENDAR DAY THE ROADWAY REMAINS CLOSED TO TRAFFIC BEYOND THE SPECIFIED LIMIT. THE DETOUR FOR POR-43-3.956 SHALL NOT BE PERFORMED CONCURRENTLY WITH THE STA-44-21.874 DETOUR.

ALL WORK AT THE POR-43 LOCATION SHALL BE COMPLETED DURING THE PERMITTED DETOUR DURATION.

ITEM 614, MAINTAINING TRAFFIC (TIME LIMITATION ON A DETOUR) POR-225-7.775

A MINIMUM OF ONE LANE OF TRAFFIC IN EACH DIRECTION SHALL BE MAINTAINED AT ALL TIMES, EXCEPT FOR A PERIOD NOT TO EXCEED 14 CONSECUTIVE CALENDAR DAYS, WHEN THROUGH TRAFFIC MAY BE DETOURED AS SHOWN ON SHEET P.7. A DISINCENTIVE SHALL BE ASSESSED IN THE AMOUNT OF $3,000 PER DAY FOR EACH CALENDAR DAY THE ROADWAY REMAINS CLOSED TO TRAFFIC BEYOND THE SPECIFIED LIMIT.

ALL WORK AT THE POR-225 LOCATION SHALL BE COMPLETED DURING THE PERMITTED DETOUR DURATION.

ITEM 614, MAINTAINING TRAFFIC (TIME LIMITATION ON A DETOUR) STA-44-21.874

A MINIMUM OF ONE LANE OF TRAFFIC IN EACH DIRECTION SHALL BE MAINTAINED AT ALL TIMES, EXCEPT FOR A PERIOD NOT TO EXCEED 14 CONSECUTIVE CALENDAR DAYS, WHEN THROUGH TRAFFIC MAY BE DETOURED AS SHOWN ON SHEET P.8. A DISINCENTIVE SHALL BE ASSESSED IN THE AMOUNT OF $3,000 PER DAY FOR EACH CALENDAR DAY THE ROADWAY REMAINS CLOSED TO TRAFFIC BEYOND THE SPECIFIED LIMIT. THE DETOUR FOR STA-44-21.874 SHALL NOT BE PERFORMED CONCURRENTLY WITH THE POR-43-3.956 DETOUR.

ALL WORK AT THE STA-44 LOCATION SHALL BE COMPLETED DURING THE PERMITTED DETOUR DURATION.

ITEM 614, MAINTAINING TRAFFIC (TIME LIMITATION ON A DETOUR) SUM-303-3.589

A MINIMUM OF ONE LANE OF TRAFFIC IN EACH DIRECTION SHALL BE MAINTAINED AT ALL TIMES, EXCEPT FOR A PERIOD NOT TO EXCEED 14 CONSECUTIVE CALENDAR DAYS, WHEN THROUGH TRAFFIC MAY BE DETOURED AS SHOWN ON SHEET P.9. A DISINCENTIVE SHALL BE ASSESSED IN THE AMOUNT OF $3,000 PER DAY FOR EACH CALENDAR DAY THE ROADWAY REMAINS CLOSED TO TRAFFIC BEYOND THE SPECIFIED LIMIT.

ALL WORK AT THE SUM-303 LOCATION SHALL BE COMPLETED DURING THE PERMITTED DETOUR DURATION.

ITEM 614, WORK ZONE IMPACT ATTENUATOR FOR 24" WIDE HAZARDS (UNIDIRECTIONAL OR BIDIRECTIONAL)

THIS ITEM SHALL CONSIST OF FURNISHING AND INSTALLING A NON-GATING IMPACT ATTENUATOR. FURNISH AN IMPACT ATTENUATOR FROM THE OFFICE OF ROADWAY ENGINEERING'S APPROVED LIST FOR WORK ZONE IMPACT ATTENUATORS, FROM THE ROADWAY STANDARDS APPROVED PRODUCTS WEB PAGE.

INSTALLATION SHALL BE AT THE LOCATIONS SPECIFIED IN THE PLANS IN ACCORDANCE WITH THE MANUFACTURER'S SPECIFICATIONS.

THE CONTRACTOR SHALL REPAIR OR REPLACE A DAMAGED UNIT WITHIN 24 HOURS OF A DAMAGING IMPACT.

WHEN BIDIRECTIONAL DESIGNS ARE SPECIFIED, THE CONTRACTOR SHALL SUPPLY APPROPRIATE TRANSITIONS.

WHEN GATING IMPACT ATTENUATORS ARE DESIRED, THE CONTRACTOR SHALL SUBMIT DOCUMENTATION TO THE ENGINEER FOR ACCEPTANCE.

THE COST FOR THE ADDITIONAL BARRIER REQUIRED FOR A GATING IMPACT ATTENUATOR SHALL BE INCLUDED IN THE COST OF THE GATING IMPACT ATTENUATOR.

PAYMENT FOR THE ABOVE WORK SHALL BE MADE AT THE UNIT PRICE BID AND SHALL INCLUDE ALL LABOR, TOOLS, EQUIPMENT AND MATERIALS NECESSARY TO CONSTRUCT AND MAINTAIN A COMPLETE AND FUNCTIONAL IMPACT ATTENUATOR SYSTEM, INCLUDING ALL RELATED BACKUPS, TRANSITIONS, LEVELING PADS, HARDWARE AND GRADING, NOT SEPARATELY SPECIFIED, AS REQUIRED BY THE MANUFACTURER.

DRIVEWAY ACCESS (POR-225-7.775)

CONTRACTOR SHALL PROVIDE ACCESS TO THE DRIVES LOCATED ON SR 225 (STA. 137+15 LT) & (STA. 140+25 LT) THROUGHOUT THE ENTIRE DURATION OF THE POR-225-7.775 CULVERT REPLACEMENT.

ALL COSTS ASSOCIATED WITH MAINTAINING THIS DRIVE ACCESS SHALL BE INCLUDED IN THE LUMP SUM PRICE BID FOR ITEM 614, MAINTAINING TRAFFIC.

DRIVEWAY ACCESS (STA-44-21.874)

CONTRACTOR SHALL PROVIDE ACCESS TO THE DRIVES LOCATED ON SR 44 (STA. 449+75 LT) & (STA. 449+00 RT) THROUGHOUT THE ENTIRE DURATION OF THE STA-44-21.874 CULVERT REPLACEMENT.

ALL COSTS ASSOCIATED WITH MAINTAINING THIS DRIVE ACCESS SHALL BE INCLUDED IN THE LUMP SUM PRICE BID FOR ITEM 614, MAINTAINING TRAFFIC.

DRIVEWAY ACCESS (SUM-303-3.589)

CONTRACTOR SHALL PROVIDE ACCESS TO THE DRIVE LOCATED ON SR 303 (STA. 104+00 RT) THROUGHOUT THE ENTIRE DURATION OF THE SUM-303-3.589 CULVERT REPLACEMENT.

ALL COSTS ASSOCIATED WITH MAINTAINING THIS DRIVE ACCESS SHALL BE INCLUDED IN THE LUMP SUM PRICE BID FOR ITEM 614, MAINTAINING TRAFFIC.

MAINTENANCE OF TRAFFIC NOTES

DESIGN AGENCY

DESIGNER NKF

REVIEWER AJN 04-24-24

PROJECT ID 109452

SHEET P.5 TOTAL 62

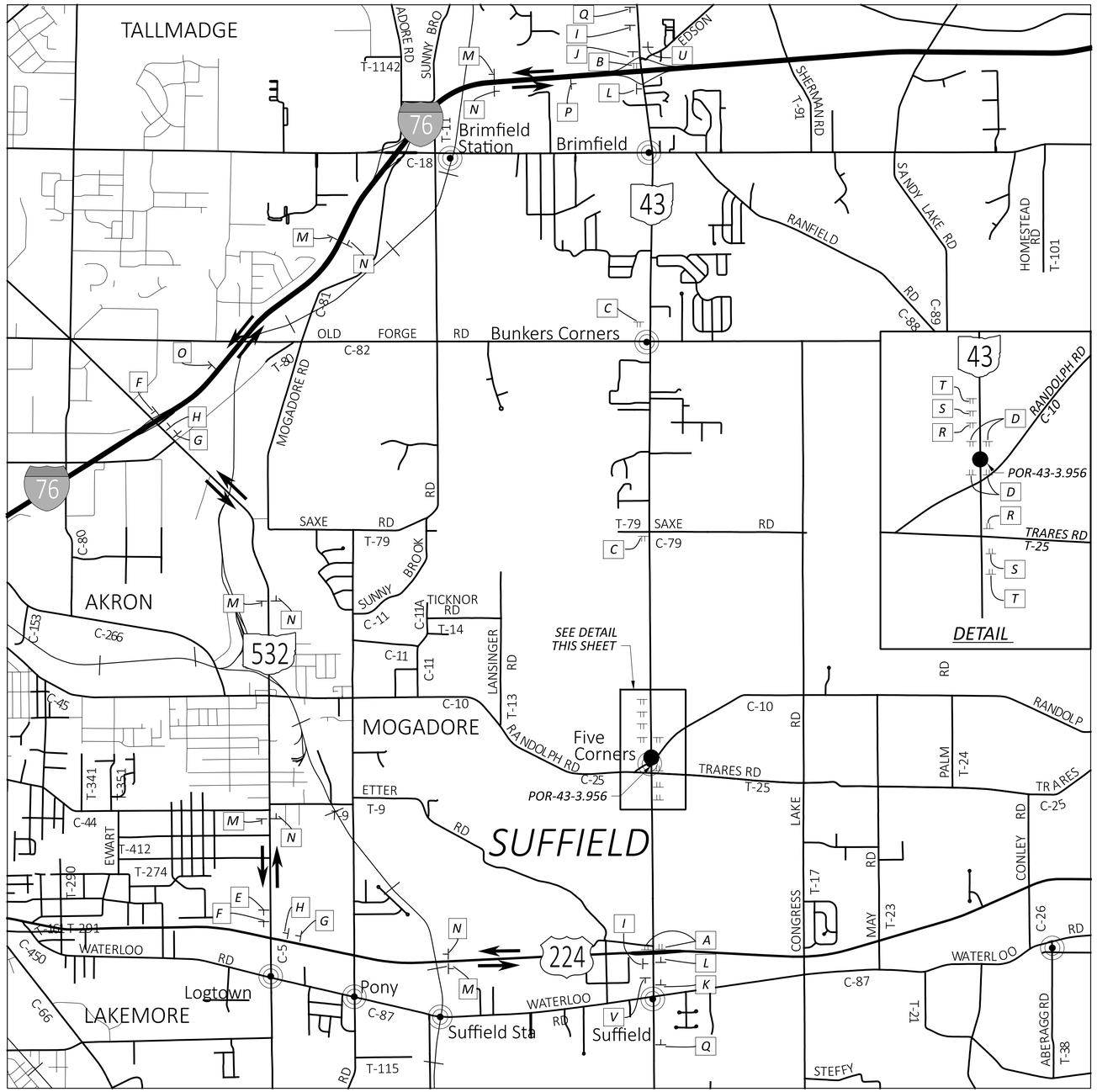

DETOUR ROUTE FOR: POR-43-3.956

DETOUR ROUTE: SR 224 / SR 532 / I 76

CLOSE STRUCTURE POR-43-3.956 PER STANDARD CONSTRUCTION DRAWING MT-101.60

 # ON TYPE III BARRICADE WITH TYPE B FLASHERS MOUNTED PER SCD MT-101.60

TYPE A WARNING LIGHT

REFER TO THE OHIO MANUAL OF UNIFORM TRAFFIC CONTROL DEVICES, FIGURE 6H-8 (TYPICAL APPLICATION 8), FOR SIGN SPACING.

NOT TO SCALE

U — NORTH (M3-1-24) / 43 (M1-5-24-2) / END DETOUR (M4-8a-24)

V — SOUTH (M3-3-24) / 43 (M1-5-24-2) / END DETOUR (M4-8a-24)

A — # / ROAD CLOSED MILES AHEAD LOCAL TRAFFIC ONLY (R11-3a-60) / DETOUR (M4-10L-48)

B — # / ROAD CLOSED MILES AHEAD LOCAL TRAFFIC ONLY (R11-3a-60) / DETOUR (M4-10R-48)

C — # / ROAD CLOSED MILES AHEAD LOCAL TRAFFIC ONLY (R11-3a-60)

D — # / ROAD CLOSED (R11-2-48)

E — DETOUR (M4-8-24) / SOUTH (M3-3-24) / 43 (M1-5-24-2) / (M5-1-21)

F — DETOUR (M4-8-24) / SOUTH (M3-3-24) / 43 (M1-5-24-2) / (M6-1-21)

G — DETOUR (M4-8-24) / NORTH (M3-1-24) / 43 (M1-5-24-2) / (M5-1-21)

H — DETOUR (M4-8-24) / NORTH (M3-1-24) / 43 (M1-5-24-2) / (M6-1-21)

I — DETOUR (M4-8-24) / SOUTH (M3-3-24) / 43 (M1-5-24-2) / (M5-1-21)

J — DETOUR (M4-8-24) / SOUTH (M3-3-24) / 43 (M1-5-24-2) / (M6-1-21)

K — DETOUR (M4-8-24) / NORTH (M3-1-24) / 43 (M1-5-24-2) / (M5-1-21)

L — DETOUR (M4-8-24) / NORTH (M3-1-24) / 43 (M1-5-24-2) / (M6-1-21)

M — DETOUR (M4-8-24) / SOUTH (M3-3-24) / 43 (M1-5-24-2) / (M6-3-21)

N — DETOUR (M4-8-24) / NORTH (M3-1-24) / 43 (M1-5-24-2) / (M6-3-21)

O — DETOUR (M4-8-24) / SOUTH (M3-3-24) / 43 (M1-5-24-2) / (M6-2R-21)

P — DETOUR (M4-8-24) / NORTH (M3-1-24) / 43 (M1-5-24-2) / (M6-2R-21)

Q — DETOUR AHEAD (W20-2-48)

R — ROAD CLOSED AHEAD (W20-3-48) / 500 FEET (W16-2P-30)

S — ROAD CLOSED AHEAD (W20-3-48) / 1000 FEET (W16-2P-30)

T — ROAD WORK AHEAD (W20-1-48)

MAINTENANCE OF TRAFFIC DETOUR PLAN - POR-43-3.956

DESIGN AGENCY

DESIGNER: NKF

REVIEWER: AJN 04-24-24

PROJECT ID: 109452

SHEET P.6 TOTAL 62

D04-CULVERTS-FY2025

MODEL: DETOUR 43 PAPERSIZE: 34x22 (in.) DATE: 1/31/2025 TIME: 9:34:07 AM USER: mpallagan
pw:\\ohiodot-pw.bentley.com:ohiodot-pw-02\Documents\01 Active Projects\District 04_D041\109452\400-Engineering\MOT\Sheets\109452_MD201.dgn

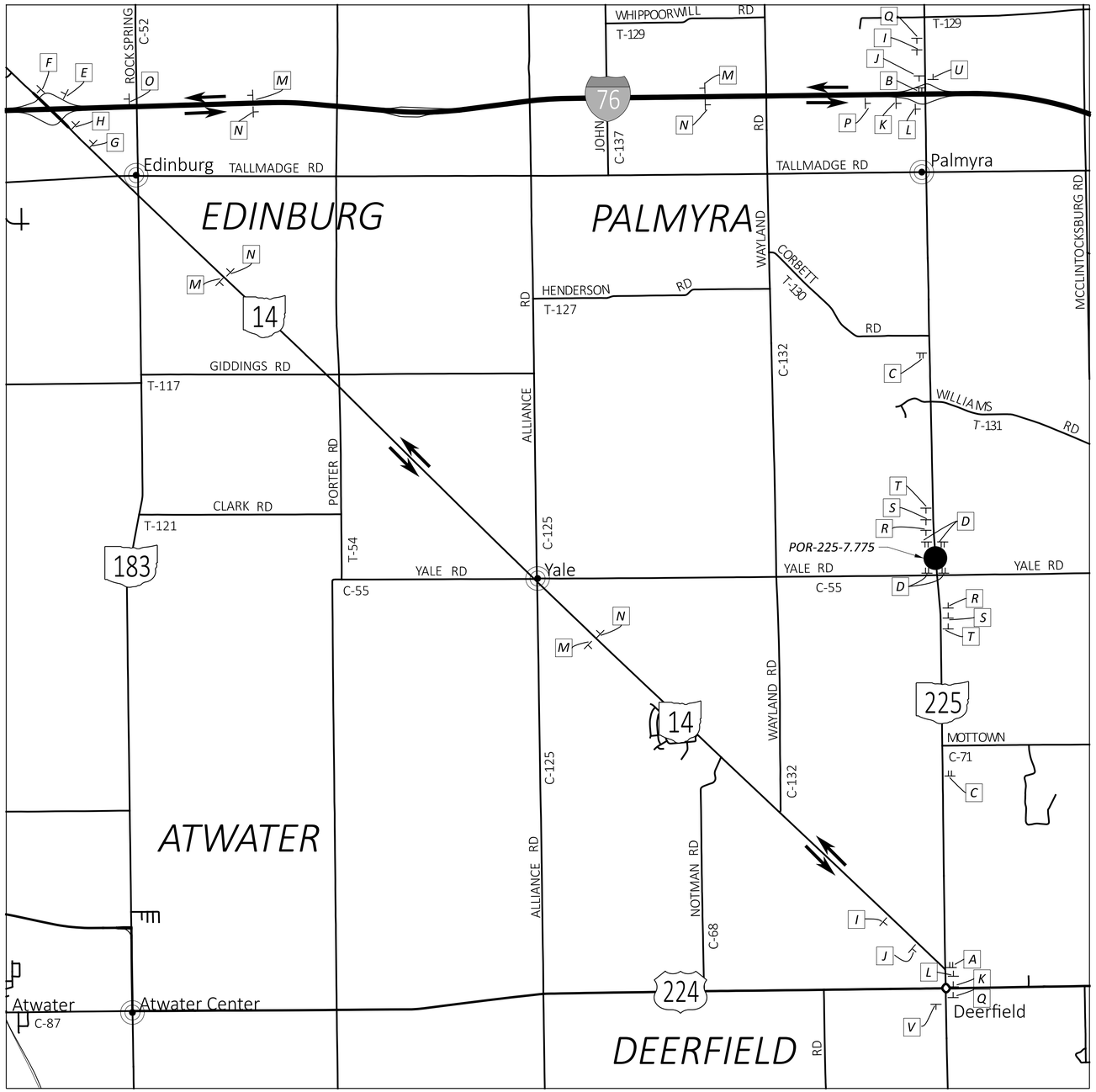

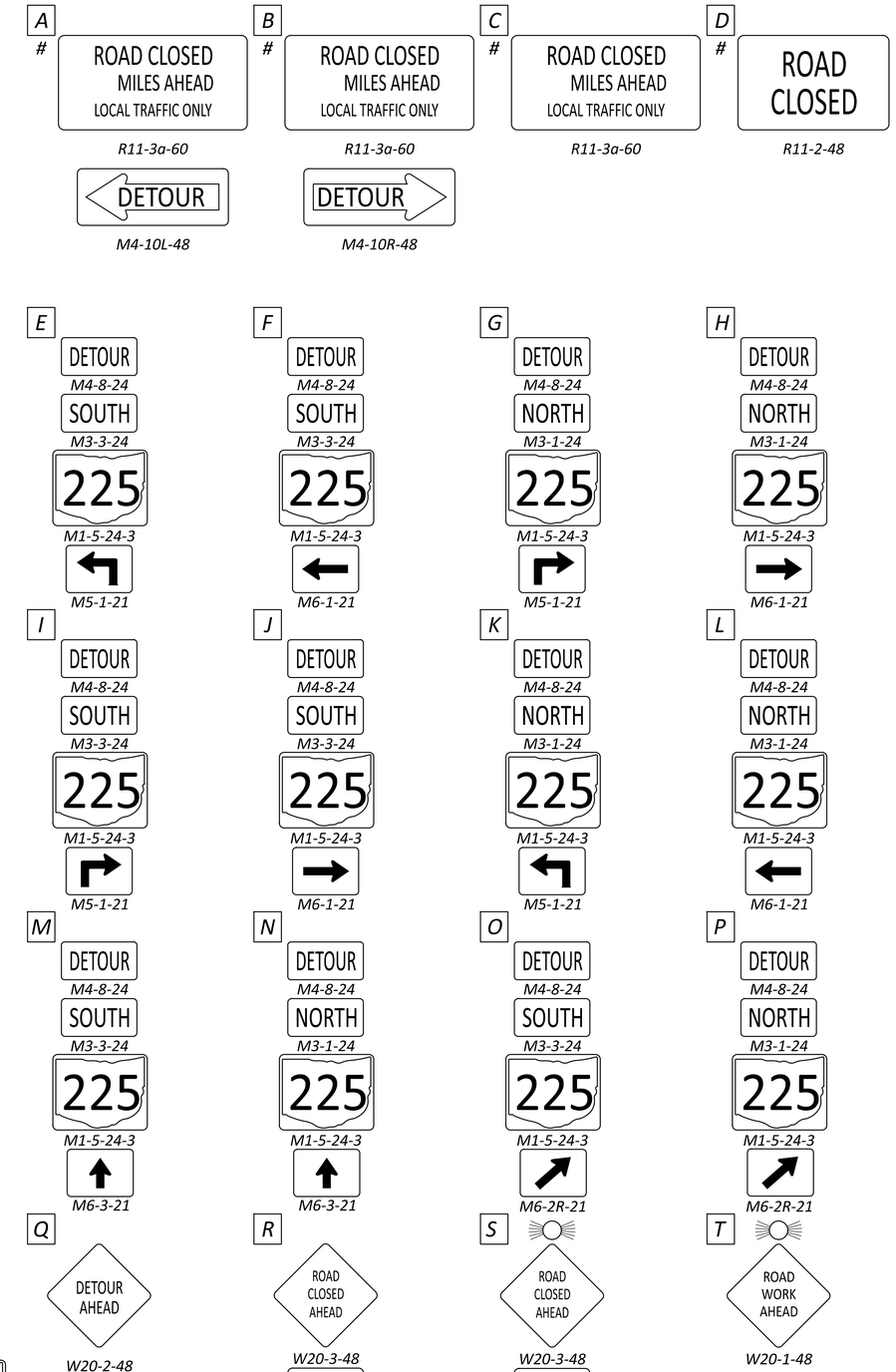

DETOUR ROUTE FOR: POR-225-7.775

- *DETOUR ROUTE: SR 225 / SR 14 / I 76*
- *CLOSE STRUCTURE POR-225-7.775 PER STANDARD CONSTRUCTION DRAWING MT-101.60*
- *# ON TYPE III BARRICADE WITH TYPE B FLASHERS MOUNTED PER SCD MT-101.60*
- *TYPE A WARNING LIGHT*

REFER TO THE OHIO MANUAL OF UNIFORM TRAFFIC CONTROL DEVICES, FIGURE 6H-8 (TYPICAL APPLICATION 8), FOR SIGN SPACING.

NOT TO SCALE

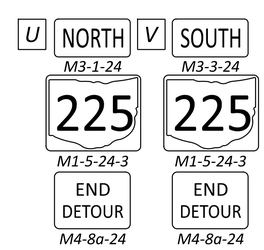

MAINTENANCE OF TRAFFIC DETOUR PLAN - POR-225-7.775

DESIGN AGENCY

DESIGNER NKF

REVIEWER AJN 04-24-24

PROJECT ID 109452

SHEET P.7 TOTAL 62

D04-CULVERTS-FY2025

MODEL: DETOUR 225 PAPERSIZE: 34x22 (in.) DATE: 1/31/2025 TIME: 9:34:14 AM USER: mpalagan
pw:\\ohiodot-pw.bentley.com:ohiodot-pw-02\Documents\01 Active Projects\District 04_D04\109452\400-Engineering\MOT\Sheets\109452_MD301.dgn

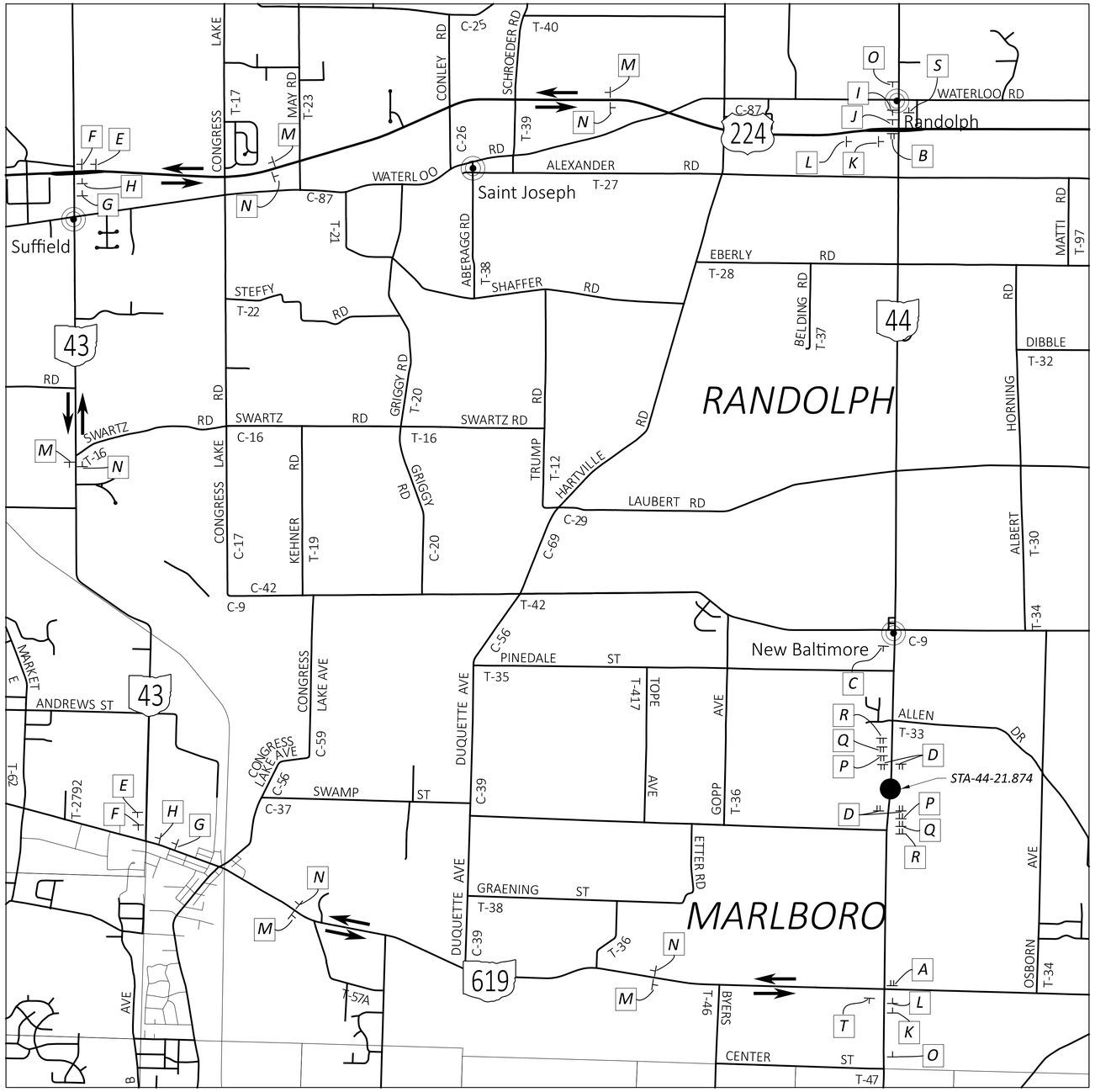

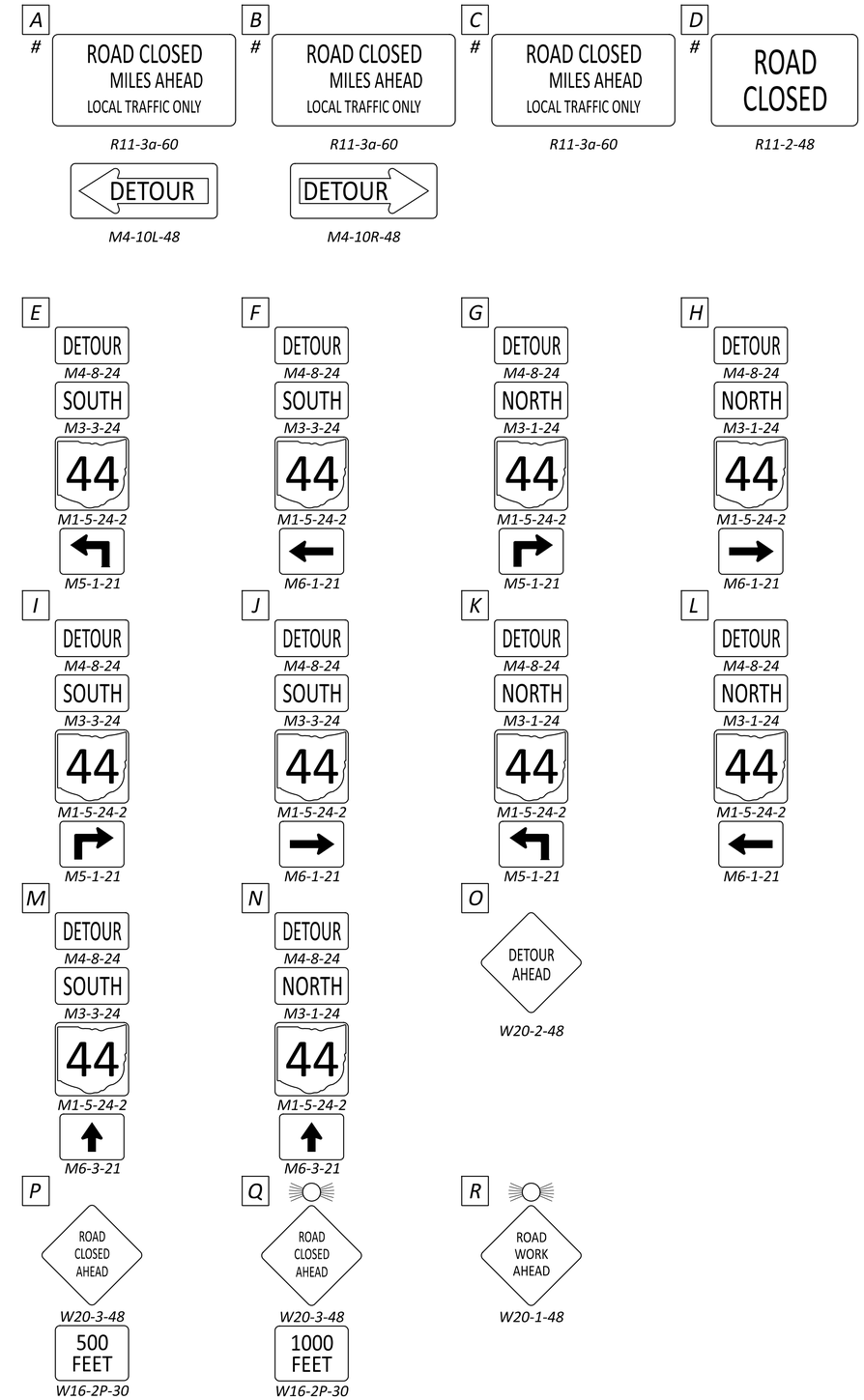

DETOUR ROUTE FOR: STA-44-21.874

DETOUR ROUTE: SR 619 / SR 43 / SR 224

CLOSE STRUCTURE STA-44-21.874 PER STANDARD CONSTRUCTION DRAWING MT-101.60

 # ON TYPE III BARRICADE WITH TYPE B FLASHERS MOUNTED PER SCD MT-101.60

TYPE A WARNING LIGHT

REFER TO THE OHIO MANUAL OF UNIFORM TRAFFIC CONTROL DEVICES, FIGURE 6H-8 (TYPICAL APPLICATION 8), FOR SIGN SPACING.

NOT TO SCALE

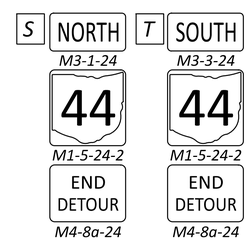

MAINTENANCE OF TRAFFIC DETOUR PLAN - STA-44-21.874

DESIGN AGENCY

DESIGNER NKF

REVIEWER AJN 04-24-24

PROJECT ID 109452

SHEET P.8 TOTAL 62

D04-CULVERTS-FY2025

MODEL: DETOUR 44 PAPERSIZE: 34x22 (in.) DATE: 1/31/2025 TIME: 9:34:21 AM USER: mpallagan
pw:\\ohiodot-pw.bentley.com:ohiodot-pw-02\Documents\01 Active Projects\District 04_D04\109452\400-Engineering\MOT\Sheets\109452_MD401.dgn

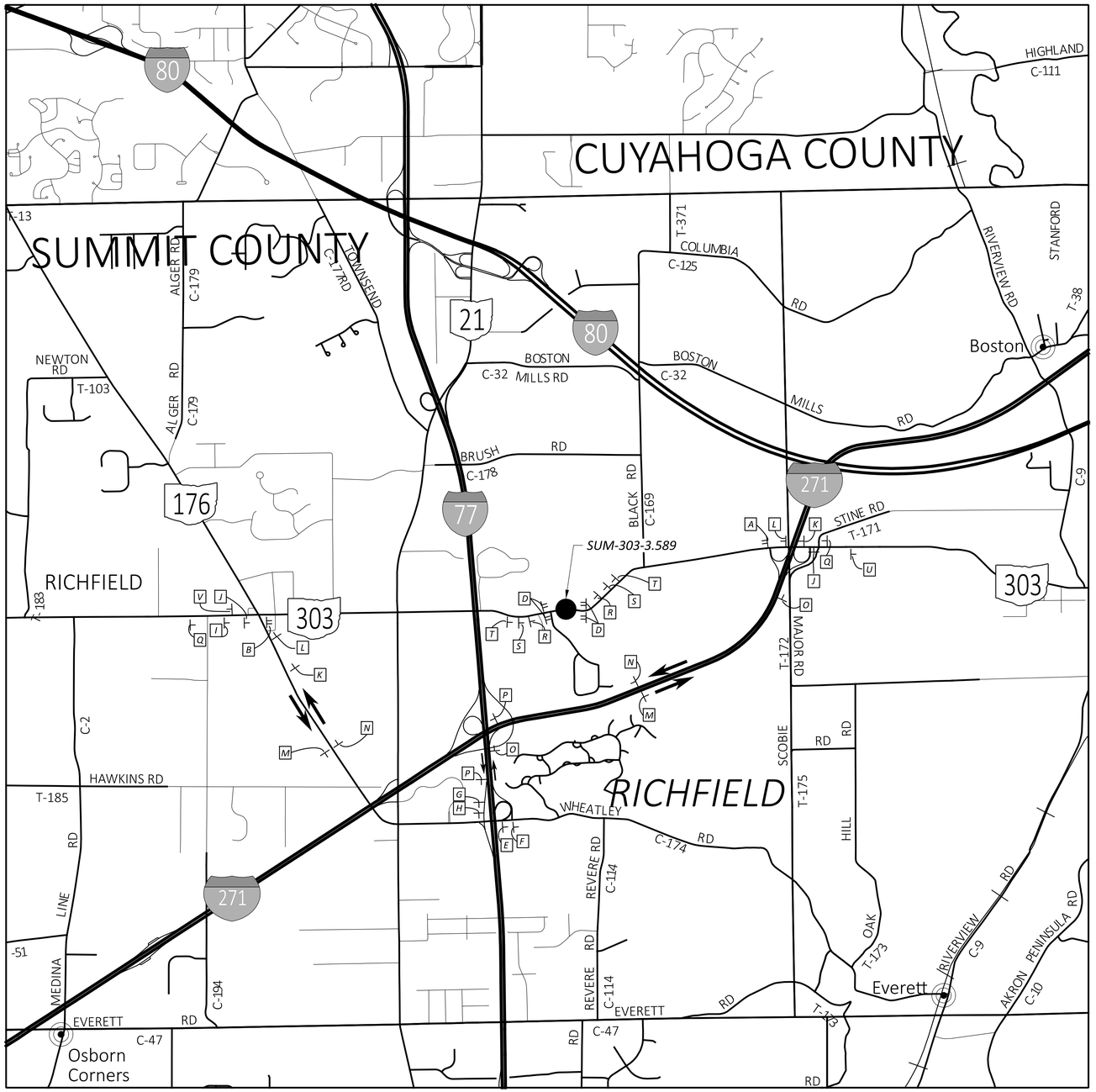

DETOUR ROUTE FOR: SUM-303-3.589

DETOUR ROUTE: SR 176 / I 77 / I 271

CLOSE STRUCTURE SUM-303-3.589 PER STANDARD CONSTRUCTION DRAWING MT-101.60

ON TYPE III BARRICADE WITH TYPE B FLASHERS MOUNTED PER SCD MT-101.60

TYPE A WARNING LIGHT

REFER TO THE OHIO MANUAL OF UNIFORM TRAFFIC CONTROL DEVICES, FIGURE 6H-8 (TYPICAL APPLICATION 8), FOR SIGN SPACING.

NOT TO SCALE

A #
ROAD CLOSED
MILES AHEAD
LOCAL TRAFFIC ONLY
R11-3a-60
DETOUR
M4-10L-48

B #
ROAD CLOSED
MILES AHEAD
LOCAL TRAFFIC ONLY
R11-3a-60
DETOUR
M4-10R-48

C #
ROAD CLOSED
MILES AHEAD
LOCAL TRAFFIC ONLY
R11-3a-60

D #
ROAD
CLOSED
R11-2-48

E
DETOUR
M4-8-24
EAST
M3-2-24
303
M1-5-24-3
M5-1-21

F
DETOUR
M4-8-24
EAST
M3-2-24
303
M1-5-24-3
M6-1-21

G
DETOUR
M4-8-24
WEST
M3-4-24
303
M1-5-24-3
M5-1-21

H
DETOUR
M4-8-24
WEST
M3-4-24
303
M1-5-24-3
M6-1-21

I
DETOUR
M4-8-24
EAST
M3-2-24
303
M1-5-24-3
M5-1-21

J
DETOUR
M4-8-24
EAST
M3-2-24
303
M1-5-24-3
M6-1-21

K
DETOUR
M4-8-24
WEST
M3-4-24
303
M1-5-24-3
M5-1-21

L
DETOUR
M4-8-24
WEST
M3-4-24
303
M1-5-24-3
M6-1-21

M
DETOUR
M4-8-24
EAST
M3-2-24
303
M1-5-24-3
M6-3-21

N
DETOUR
M4-8-24
WEST
M3-4-24
303
M1-5-24-3
M6-3-21

O
DETOUR
M4-8-24
EAST
M3-2-24
303
M1-5-24-3
M6-2R-21

P
DETOUR
M4-8-24
WEST
M3-4-24
303
M1-5-24-3
M6-2R-21

Q
DETOUR
AHEAD
W20-2-48

R
ROAD
CLOSED
AHEAD
W20-3-48
500
FEET
W16-2P-30

S
ROAD
CLOSED
AHEAD
W20-3-48
1000
FEET
W16-2P-30

T
ROAD
WORK
AHEAD
W20-1-48

U
EAST
M3-2-24
303
M1-5-24-3
END
DETOUR
M4-8a-24

V
WEST
M3-4-24
303
M1-5-24-3
END
DETOUR
M4-8a-24

MAINTENANCE OF TRAFFIC DETOUR PLAN - SUM-303-3.589

DESIGN AGENCY

DESIGNER
NKF

REVIEWER
AJN 04-24-24

PROJECT ID
109452

SHEET P.9 TOTAL 62

D04-CULVERTS-FY2025

MODEL: Sheet_SurvFt PAPERSIZE: 34x22 (in.) DATE: 1/31/2025 TIME: 9:34:27 AM USER: mpalagan
pw:\\ohiodot-pw.bentley.com:ohiodot-pw-02\Documents\01 Active Projects\District 04_D04\109452\400-Engineering\MOT\Sheets\109452_MD601.dgn

SHEET NUM.													PART.	ITEM	ITEM EXT	GRAND TOTAL	UNIT	DESCRIPTION	SEE SHEET NO.
P.3	P.4	P.12	P.13	P.24	P.25	P.33	P.34	P.41	P.42	P.50	P.52	P.59	01/NFP/04						
																		ROADWAY	
						LS							LS	201	11001	LS		CLEARING AND GRUBBING, AS PER PLAN, AROUND CULVERTS (POR-225-7.775)	P.33
				LS									LS	201	11001	LS		CLEARING AND GRUBBING, AS PER PLAN, AROUND CULVERTS (POR-43-3.956)	P.24
		LS											LS	201	11001	LS		CLEARING AND GRUBBING, AS PER PLAN, AROUND CULVERTS (POR-5-3.896)	P.12
								LS					LS	201	11001	LS		CLEARING AND GRUBBING, AS PER PLAN, AROUND CULVERTS (STA-44-21.874)	P.41
										LS			LS	201	11001	LS		CLEARING AND GRUBBING, AS PER PLAN, AROUND CULVERTS (SUM-303-3.589)	P.50
					LS								LS	202	11000	LS		STRUCTURE REMOVED, (POR-43-3.956)	
												4	4	202	20010	4	EACH	HEADWALL REMOVED	
							2						2	202	20010	2	EACH	HEADWALL REMOVED, (POR-225-7.775)	
					1								1	202	20010	1	EACH	HEADWALL REMOVED, (POR-43-3.956)	
									2				2	202	20010	2	EACH	HEADWALL REMOVED, (STA-44-21.874)	
											2		2	202	20010	2	EACH	HEADWALL REMOVED, (SUM-303-3.589)	
				167		133		133		159		7	599	202	23000	599	SY	PAVEMENT REMOVED	
											130		130	202	32000	130	FT	CURB REMOVED	
			25		10				14		54	128	231	202	35100	231	FT	PIPE REMOVED, 24" AND UNDER	
					64		60		62		51		237	202	35200	237	FT	PIPE REMOVED, OVER 24"	
					163		532		517				1,212	202	38000	1,212	FT	GUARDRAIL REMOVED	
									4				4	202	42040	4	EACH	ANCHOR ASSEMBLY REMOVED, TYPE T	
					1								1	202	58100	1	EACH	CATCH BASIN REMOVED, (POR-43-3.956)	
		84		63		133		144		53		14	491	203	10000	491	CY	EXCAVATION	
		39		51		118		35		21		217	481	203	20000	481	CY	EMBANKMENT	
				146		155		132		181			614	204	10000	614	SY	SUBGRADE COMPACTION	
					138		565		532				1,235	606	15050	1,235	FT	GUARDRAIL, TYPE MGS	
			38										38	606	16500	38	FT	GUARDRAIL REBUILT, TYPE 5	
					1		2		2				5	606	26150	5	EACH	ANCHOR ASSEMBLY, MGS TYPE E, MASH 2016	
							2		2				4	606	26550	4	EACH	ANCHOR ASSEMBLY, MGS TYPE T	
			1										1	606	27900	1	EACH	ANCHOR ASSEMBLY REBUILT, TYPE T	
			80										80	607	35000	80	FT	FENCE REMOVED AND REBUILT	
LS													LS	SPECIAL	69091000	LS		AS-BUILT CONSTRUCTION PLANS	P.3
						LS							LS	SPECIAL	69098400	LS		SURVEY CONTROL VERIFICATION, (POR-225-7.775)	P.33
				LS									LS	SPECIAL	69098400	LS		SURVEY CONTROL VERIFICATION, (POR-43-3.956)	P.24
		LS											LS	SPECIAL	69098400	LS		SURVEY CONTROL VERIFICATION, (POR-5-3.896)	P.12
								LS					LS	SPECIAL	69098400	LS		SURVEY CONTROL VERIFICATION, (STA-44-21.874)	P.41
										LS			LS	SPECIAL	69098400	LS		SURVEY CONTROL VERIFICATION, (SUM-303-3.589)	P.50
																		EROSION CONTROL	
							5		4				9	601	11000	9	SY	RIPRAP, TYPE D	
			36		8		9		9				62	601	32104	62	CY	ROCK CHANNEL PROTECTION, TYPE B WITH GEOTEXTILE FABRIC	
											20		20	601	32204	20	CY	ROCK CHANNEL PROTECTION, TYPE C WITH GEOTEXTILE FABRIC	
											74		74	601	37500	74	FT	PAVED GUTTER, TYPE 1-2	
		96		106		132		143		74		106	657	659	00300	657	CY	TOPSOIL	
		863		952		1,194		1,289		668		1,115	6,081	659	10000	6,081	SY	SEEDING AND MULCHING	
		0.12		0.13		0.16		0.17		0.09		0.15	0.82	659	20000	0.82	TON	COMMERCIAL FERTILIZER	
		0.18		0.2		0.25		0.27		0.14		0.23	1.27	659	31000	1.27	ACRE	LIME	
		5		5		6		7		4			27	659	35000	27	MGAL	WATER	
500													500	670	00500	500	SY	SLOPE EROSION PROTECTION	
												179	179	670	00700	179	SY	DITCH EROSION PROTECTION	
													5,000	832	30000	5,000	EACH	EROSION CONTROL	
			43										43	836	10030	43	SY	SEEDING AND EROSION CONTROL WITH TURF REINFORCING MAT, TYPE 3	
																		DRAINAGE	
			1		2		3		4		18		28	602	20000	28	CY	CONCRETE MASONRY	
									20				20	611	04600	20	FT	12" CONDUIT, TYPE C	
					8								8	611	05900	8	FT	15" CONDUIT, TYPE B	
			15								56	129	200	611	06100	200	FT	15" CONDUIT, TYPE C	
			20										20	611	06700	20	FT	15" CONDUIT, TYPE F - 707.05 TYPE C, 707.21, OR 707.33	
												216	216	611	07400	216	FT	18" CONDUIT, TYPE B	
					12								12	611	22600	12	FT	54" CONDUIT, TYPE C, 706.02	
					70								70	611	23800	70	FT	60" CONDUIT, TYPE B, 706.02	
									66				66	611	23600	66	FT	60" CONDUIT, TYPE A, 706.02, (707.01, 707.02) ALUMINIZED, 707.33	
											53		53	611	52700	53	FT	29" X 45" CONDUIT, TYPE A, 706.04	

GENERAL SUMMARY

DESIGN AGENCY

DESIGNER
NKF

REVIEWER
MJP 04-24-24

PROJECT ID
109452

SHEET P.10 TOTAL 62

D04-CULVERTS-FY2025

MODEL: SHEET 1 PAPERSIZE: 34x22 (in.) DATE: 1/31/2025 TIME: 9:34:35 AM USER: mpatagan
pw:\\ohiodot-pw.bentley.com:ohiodot-pw-02\Documents\01 Active Projects\District 04_D04\109452\400-Engineering\Roadway\Sheets\109452_GG000.dgn

SHEET NUM.														PART.	ITEM	ITEM EXT	GRAND TOTAL	UNIT	DESCRIPTION	SEE SHEET NO.
P.4	P.5	P.12	P.13	P.24	P.25	P.33	P.34	P.41	P.42	P.50	P.52	P.59		01/NFP/04						
																			DRAINAGE	
							66							66	611	53100	66	FT	43" X 68" CONDUIT, TYPE A, 706.04	
									1			1		2	611	98450	2	EACH	CATCH BASIN, NO. 2-2A	
											1	1		2	611	98470	2	EACH	CATCH BASIN, NO. 2-2B	
					1									1	611	98600	1	EACH	CATCH BASIN, NO. 2-6	
																			PAVEMENT	
						356		353		96				805	254	01000	805	SY	PAVEMENT PLANING, ASPHALT CONCRETE, (T=3")	
				31		38		23		36				128	301	56000	128	CY	ASPHALT CONCRETE BASE, PG64-22, (449)	
				25		26		22		31				104	304	20000	104	CY	AGGREGATE BASE	
				48		93		51		35				227	407	20000	227	GAL	NON-TRACKING TACK COAT	
				41				61						102	408	10000	102	GAL	PRIME COAT	
				32		42								74	441	10000	74	CY	ASPHALT CONCRETE SURFACE COURSE, TYPE 1, (446), PG64-22	
								38		23				61	441	70000	61	CY	ASPHALT CONCRETE SURFACE COURSE, TYPE 1, (449), PG64-22	
												7		7	452	10050	7	SY	6" NON-REINFORCED CONCRETE PAVEMENT, CLASS QC MS	
											130			130	609	26000	130	FT	CURB, TYPE 6	
				3				5						8	617	10100	8	CY	COMPACTED AGGREGATE	
																			TRAFFIC CONTROL	
							6							6	626	00110	6	EACH	BARRIER REFLECTOR, TYPE 2, BIDIRECTIONAL	
		15		15		15		15		15				75	630	02100	75	FT	GROUND MOUNTED SUPPORT, NO. 2 POST	
		2		2		2		2		2				10	630	80100	10	SF	SIGN, FLAT SHEET, 730.20	
		2		2		2		2		2				10	630	84900	10	EACH	REMOVAL OF GROUND MOUNTED SIGN AND DISPOSAL	
		2		2		2		2		2				10	630	86002	10	EACH	REMOVAL OF GROUND MOUNTED POST SUPPORT AND DISPOSAL	
				0.04		0.06		0.06		0.04				0.2	642	00104	0.2	MILE	EDGE LINE, 6", TYPE 1	
				0.02		0.03		0.03		0.02				0.1	642	00300	0.1	MILE	CENTER LINE, TYPE 1	
																			RETAINING WALLS (XXX)	
							LS							LS	503	11100	LS		COFFERDAMS AND EXCAVATION BRACING, (POR-225-7.775)	
					LS									LS	503	11100	LS		COFFERDAMS AND EXCAVATION BRACING, (POR-43-3.956)	
			LS											LS	503	11100	LS		COFFERDAMS AND EXCAVATION BRACING, (POR-5-3.896)	
									LS					LS	503	11100	LS		COFFERDAMS AND EXCAVATION BRACING, (STA-44-21.874)	
											LS			LS	503	11100	LS		COFFERDAMS AND EXCAVATION BRACING, (SUM-303-3.589)	
																			MAINTENANCE OF TRAFFIC	
1														1	606	60002	1	EACH	IMPACT ATTENUATOR, TYPE 1 (UNIDIRECTIONAL)	
	50													50	614	11110	50	HOUR	LAW ENFORCEMENT OFFICER WITH PATROL CAR FOR ASSISTANCE	
	LS													LS	614	12420	LS		DETOUR SIGNING, (POR-225-7.775)	
	LS													LS	614	12420	LS		DETOUR SIGNING, (POR-43-3.956)	
	LS													LS	614	12420	LS		DETOUR SIGNING, (STA-44-21.874)	
	LS													LS	614	12420	LS		DETOUR SIGNING, (SUM-303-3.589	
5														5	614	13000	5	CY	ASPHALT CONCRETE FOR MAINTAINING TRAFFIC	
11														11	614	13310	11	EACH	BARRIER REFLECTOR, TYPE 1, ONE WAY	
					3				7					10	614	13312	10	EACH	BARRIER REFLECTOR, TYPE 2, BIDIRECTIONAL	
11														11	614	13350	11	EACH	OBJECT MARKER, ONE WAY	
8														8	614	18601	8	SNMT	PORTABLE CHANGEABLE MESSAGE SIGN, AS PER PLAN	P.4
0.26														0.26	614	22360	0.26	MILE	WORK ZONE EDGE LINE, CLASS III, 6", 642 PAINT	
700														700	614	24612	700	FT	WORK ZONE DOTTED LINE, CLASS III, 6", 642 PAINT	
520														520	622	41100	520	FT	PORTABLE BARRIER, UNANCHORED	
																			INCIDENTALS	
														LS	614	11000	LS		MAINTAINING TRAFFIC	
														8	619	16010	8	MNTH	FIELD OFFICE, TYPE B	
														LS	623	10000	LS		CONSTRUCTION LAYOUT STAKES AND SURVEYING	
														LS	624	10000	LS		MOBILIZATION	

GENERAL SUMMARY

D04-CULVERTS-FY2025

MODEL: SHEET 2 PAPERSIZE: 34x22 (in.) DATE: 1/31/2025 TIME: 9:34:36 AM USER: mpatagan
pw:\\ohiodot-pw.bentley.com:ohiodot-pw-02\Documents\01 Active Projects\District 04_D04\109452\400-Engineering\Roadway\Sheets\109452_GG000.dgn

DESIGN AGENCY

DESIGNER
NKF

REVIEWER
MJP 04-24-24

PROJECT ID
109452

SHEET P.11 TOTAL 62

SURVEYING PARAMETERS

PRIMARY PROJECT CONTROL MONUMENTS GOVERN ALL POSITIONING ON ODOT PROJECTS. SEE THIS SHEET OF THE PLANS FOR A TABLE CONTAINING PROJECT CONTROL INFORMATION.

USE THE FOLLOWING PROJECT CONTROL, VERTICAL POSITIONING, AND HORIZONTAL POSITIONING PARAMETERS FOR ALL SURVEYING:

PROJECT CONTROL

POSITIONING METHOD: STATIC
MONUMENT TYPE: B

VERTICAL POSITIONING

ORTHOMETRIC HEIGHT DATUM: NAVD 88
GEOID: 2018

HORIZONTAL POSITIONING

REFERENCE FRAME: NAD 83 (2011) (EPOCH: 2010.0000)
ELLIPSOID: GRS80
MAP PROJECTION: TRANSVERSE MERCATOR
COORDINATE SYSTEM: PORTAGE COUNTY LDP
COMBINED SCALE FACTOR: 1.000043
ORIGIN OF COORDINATE SYSTEM: N 39-48-00, E 278-54-00

USE THE POSITIONING METHODS AND MONUMENT TYPE USED IN THE ORIGINAL SURVEY TO RESTORE ALL MONUMENTS RELATED TO PRIMARY PROJECT CONTROL THAT ARE DAMAGED OR DESTROYED BY CONSTRUCTION ACTIVITIES. RESTORE THE DAMAGED OR DESTROYED MONUMENTS IN ACCORDANCE WITH CMS 623.

UNITS ARE IN U.S. SURVEY FEET.
USE THE FOLLOWING CONVERSION FACTOR:
1 METER = 3.2808333333 U.S. SURVEY FEET

UTILITIES

THE CONTRACTOR SHALL USE THE FOLLOWING PROCEDURE AT EACH LOCATION WHERE WORK IS PERFORMED, IN ACCORDANCE WITH SECTIONS 105.07 AND 107.16 IN THE CONSTRUCTION AND MATERIALS SPECIFICATIONS.

THE CONTRACTOR SHALL NOTIFY THE PROJECT ENGINEER, OHIO811, THE OHIO DEPARTMENT OF TRANSPORATION DISTRICT 4 HEADQUARTERS AND ALL NON REGISTERED UTILITY OWNERS AT LEAST TWO (2) WORKING DAYS PRIOR TO COMMENCING CONSTRUCTION OPERATION IN ALL AREAS.

THE LOCATION OF THE UNDERGROUND UTILITIES SHOWN ON THE PLANS ARE AS OBTAINED FROM THE OWNERS AS REQUIRED BY SECTION 153.64 O.R.C.

LISTED BELOW ARE ALL UTILITIES LOCATED WITHIN THE PROJECT CONSTRUCTION LIMITS TOGETHER WITH THEIR RESPECTIVE OWNERS:

AT&T
ATTN: Steven Hylton
50 W. Bowery St., 6th Floor
Akron, OH 44308
330-384-3055
330-631-7485 (cell)
sh1513@att.com

Dominion Energy
ATTN: Kyle J. McCall
Supervisor - Gas Operations
Distribution Design
320 Springside Drive
Akron, OH 44333
330-801-8299 (cell)
Kyle.J.McCall@dominionenergy.com
relocation@dominionenergy.com

UTILITIES (CONT...)

Ohio Edison
ATTN: Phillip Rawson
730 South Avenue
Youngstown, OH 44502
724-255-1332 (cell)
prawson@firstenergycorp.com

Portage County Water Resources
Engineer Manager
ATTN: Jonathan Vence
449 South Meridian Street
P.O. Box 1217
Ravenna, OH 44266
330-297-3677
jvence@portageco.com

ITEM SPECIAL - SURVEY CONTROL VERIFICATION

THE CONTRACTOR SHALL PERFORM THIS WORK TO VERIFY THE PROVIDED SURVEY CONTROL. THE CONTRACTOR WILL PERFORM THE VERIFICATION USING ONE OF THE TWO METHODS BELOW DEPENDENT UPON THE CONTRACTOR'S CHOSEN MEANS OF SURVEY CONTROL TO BE USED ON THE PROJECT. THE WORK SHALL BE PERFORMED UNDER THE DIRECT SUPERVISION OF AN OHIO LICENSED SURVEYOR.

1. IF USING GPS DEVICES TO ESTABLISH AND OR PROVIDE SUPPLEMENTAL HORIZONTAL AND VERTICAL SURVEY CONTROL
a. LOCATE VERTICAL CONTROL POINTS PROVIDED IN THE PLAN AND PERFORM A DIFFERENTIAL LEVEL CIRCUIT.
b. PERFORM A SITE CALIBRATION UTILIZING THE AVAILABLE HORIZONTAL AND VERTICAL CONTROL POINTS PROVIDED IN THE PLAN.
c. PROVIDE A REPORT, SIGNED BY AN OHIO LICENSED SURVEYOR, TO THE PROJECT ENGINEER COMPARING THE OBSERVED DATA TO THE PLAN DATA ALONG WITH A NARRATIVE DETAILING ANY DISCREPANCIES FOUND.
2. IF USING CONVENTIONAL SURVEY INSTRUMENTATION TO ESTABLISH AND OR PROVIDE SUPPLEMENTAL HORIZONTAL AND VERTICAL SURVEY CONTROL
a. LOCATE VERTICAL CONTROL POINTS PROVIDED IN THE PLANS AND PERFORM A DIFFERENTIAL LEVEL CIRCUIT.
b. LOCATE AND OBSERVE ANGLE AND DISTANCE TO ALL AVAILABLE HORIZONTAL CONTROL POINTS PROVIDED IN THE PLAN.
c. PROVIDE A REPORT, SIGNED BY AN OHIO LICENSED SURVEYOR, TO THE PROJECT ENGINEER COMPARING THE OBSERVED DATA TO THE PLAN DATA ALONG WITH A NARRATIVE DETAILING ANY DISCREPANCIES FOUND.

ALL MATERIALS, LABOR, EQUIPMENT, TOOLS, AND INCIDENTIALS NECESSARY TO COMPLETE THIS WORK SHALL BE INCLUDED IN THE LUMP SUM BID ITEM.

CONTROL POINT (U.S. SURVEY FEET GROUND)					
POINT	NORTHING	EASTING	STATION	OFFSET	ELEV.
CP10	491838.644	131060.463	573.+47.87	49.78' RT.	1084.69
CP20	492406.807	131872.721	583+53.22	51.21' RT.	1082.00
CP21	492316.369	131921.905	583+53.59	154.15' RT.	
CP30	492799.844	132861.606	594+17.39	128.80' RT.	1089.60
CENTERLINE ALIGNMENT					
28	489989.749	129801.191	550+71.71		
35	493297.299	133601.960	603+00.00		
37	492908.625	132790.220	594+00.01	0.14' LT.	
103	486540.439	128692.042	514+48.46		
BENCHMARK					
BM1	492439.474	132058.507	585+36.88	106.81' RT.	1080.67

PIPE CONNECTIONS TO CORRUGATED METAL STRUCTURES

PROVIDE CONNECTIONS OF PROPOSED LONGITUDINAL DRAINAGE TO CORRUGATED METAL STRUCTURES BY MEANS OF A SHOP FABRICATED OR FIELD WELDED STUB ON THE STRUCTURE. FURNISH A STUB MEETING THE REQUIREMENTS OF 707 WITH A MINIMUM LENGTH OF 2 FEET AND A MINIMUM WALL THICKNESS OF 0.064 INCHES.

THE LOCATION AND ELEVATION OF THE STUB ARE TO BE CONSIDERED APPROXIMATE AND MAY BE ADJUSTED BY THE ENGINEER TO AVOID CUTTING THROUGH JOINTS IN THE STRUCTURE.

THOROUGHLY CLEAN AND REGALVANIZE OR OTHERWISE SUITABLY REPAIR THE FIELD WELDED JOINT, IF USED. MEET WELDING REQUIREMENTS OF 513.21.

PROVIDE A MASONRY COLLAR PER STANDARD CONSTRUCTION DRAWING DM-1.1, TO CONNECT THE LONGITUDINAL DRAINAGE TO THE STUB, WHEN PIPE OTHER THAN CORRUGATED METAL IS USED FOR THE LONGITUDINAL DRAINAGE.

PAYMENT FOR CUTTING INTO THE STRUCTURE AND PROVIDING THE CONNECTION DESCRIBED, IS INCLUDED IN THE CONTRACT PRICE FOR ITEM 611 OR 522.

SEEDING AND MULCHING

THE FOLLOWING QUANTITIES ARE PROVIDED TO PROMOTE GROWTH AND CARE OF PERMANENT SEEDED AREAS:

659, TOPSOIL 96 CU. YD.
659, SEEDING AND MULCHING 863 SQ. YD.
659, COMMERCIAL FERTILIZER 0.12 TON
659, LIME 0.18 ACRES
659, WATER 5 M. GAL.

SEEDING AND MULCHING SHALL BE APPLIED TO ALL AREAS OF EXPOSED SOIL BETWEEN THE RIGHT-OF-WAY LINES, AND WITHIN THE CONSTRUCTION LIMITS FOR AREAS OUTSIDE THE RIGHT-OF-WAY LINES COVERED BY WORK AGREEMENT OR SLOPE EASEMENT. QUANTITY CALCULATIONS FOR SEEDING AND MULCHING ARE BASED ON THESE LIMITS.

EXCAVATION AND EMBANKMENT

THE FOLLOWING QUANTITIES HAVE BEEN TAKEN FROM THE CROSS SECTION SHEETS AND CARRIED TO THE GENERAL SUMMARY:

ITEM 203 - EXCAVATION 84 CY
ITEM 204 - EMBANKMENT 39 CY

ITEM 201 - CLEARING AND GRUBBING, AS PER PLAN, AROUND CULVERTS (POR-5-3.896)

ALTHOUGH THERE ARE NO TREES OR STUMPS SPECIFICALLY MARKED FOR REMOVAL WITHIN THE PLANS, A LUMP SUM QUANTITY IS INCLUDED IN THE GENERAL SUMMARY FOR ITEM 201, CLEARING AND GRUBBING, AS PER PLAN, AROUND CULVERTS. SCALPING IS NOT REQUIRED FOR THIS ITEM OF WORK. ALL VEGETATION SHALL BE REMOVED WITHIN 15 FEET (OR TO THE R/W LIMITS, WHICHEVER IS CLOSER) OF THE HEADWALLS, ABUTMENTS, AND/OR PIERS.

ALL OTHER PROVISIONS AS SET FORTH IN THE CMS UNDER THIS ITEM ARE INCLUDED IN THE LUMP SUM BID PRICE FOR IS INCLUDED IN THE GENERAL SUMMARY FOR ITEM 201, CLEARING AND GRUBBING, AS PER PLAN, AROUND CULVERTS.

CONDUIT IDENTIFICATION SIGNS

CONDUIT IDENTIFICATION SIGNS (I-H25b) WILL BE PLACED ON EACH APPROACH OFF THE RIGHT SHOULDER, FACING TRAFFIC, AND BEHIND THE GUARDRAIL IF APPLICABLE. A QUANTITY OF ONE SIGN PER APPROACH WILL BE INSTALLED. THE SIGNS WILL HAVE A NON-REFLECTIVE WHITE SHEETING BACKGROUND.

THE SIGNS WILL BE MOUNTED ON NEW NO. 2 POSTS AND WILL BE INSTALLED AS PER STANDARD CONSTRUCTION DRAWING TC-41.20, MOST CURRENT REVISION. EACH POST WILL BE 7.5' IN LENGTH.

INSTALL SIGNS FOR POR-5-3.986

THE FOLLOWING QUANTITIES HAVE BEEN INCLUDED FOR EACH APPROACH:
ITEM 630 - SIGN, FLAT SHEET, 730.20, 1 SQ FT
ITEM 630 - GROUND MOUNTED SUPPORT, NO. 2 POST, 7.5 FT
ITEM 630 - REMOVAL OF GROUND MOUNTED SIGN AND DISPOSAL, 1 EACH
ITEM 630 - REMOVAL OF GROUND MOUNTED POST SUPPORT AND DISPOSAL, 1 EACH

CROSSINGS AND CONNECTIONS TO EXISTING PIPES AND UTILITIES

WHERE PLANS PROVIDE FOR A PROPOSED CONDUIT TO BE CONNECTED TO, OR CROSS OVER OR UNDER AN EXISTING SEWER OR UNDERGROUND UTILITY, LOCATE THE EXISTING PIPES OR UTILITIES BOTH AS TO LINE AND GRADE BEFORE STARTING TO LAY THE PROPOSED CONDUIT.

IF IT IS DETERMINED THAT THE ELEVATION OF THE EXISTING CONDUIT, OR EXISTING APPURTENANCE TO BE CONNECTED, DIFFERS FROM THE PLAN ELEVATION OR RESULTS IN A CHANGE IN THE PLAN CONDUIT SLOPE, NOTIFY THE ENGINEER BEFORE STARTING CONSTRUCTION OF ANY PORTION OF THE PROPOSED CONDUIT WHICH WILL BE AFFECTED BY THE VARIANCE IN THE EXISTING ELEVATIONS.

IF IT IS DETERMINED THAT THE PROPOSED CONDUIT WILL INTERSECT AN EXISTING SEWER OR UNDERGROUND UTILITY IF CONSTRUCTED AS SHOWN ON THE PLAN, NOTIFY THE ENGINEER BEFORE STARTING CONSTRUCTION OF ANY PORTION OF THE PROPOSED CONDUIT WHICH WOULD BE AFFECTED BY THE INTERFERENCE WITH AN EXISTING FACILITY.

PAYMENT FOR ALL THE OPERATIONS DESCRIBED ABOVE IS INCLUDED IN THE CONTRACT PRICE FOR THE PERTINENT 611 CONDUIT ITEM.

REF NO.	SHEET NO.	STATION TO STATION						202 PIPE REMOVED, 24" AND UNDER	503 COFFERDAMS AND EXCAVATION BRACING, (POR-5-3.896)	601 ROCK CHANNEL PROTECTION, TYPE B WITH GEOTEXTILE FABRIC	602 CONCRETE MASONRY	607 FENCE REMOVED AND REBUILT	611 15" CONDUIT, TYPE C	611 15" CONDUIT, TYPE F - 707.05 TYPE C, 707.21, OR 707.33	606 GUARDRAIL REBUILT, TYPE 5	606 ANCHOR ASSEMBLY REBUILT, TYPE T	836 SEEDING AND EROSION CONTROL WITH TURF REINFORCING MAT, TYPE 3
								FT	LS	CY	CY	FT	FT	FT	FT	EACH	SY
				TO													
R-1	P.14	583+53.83	RT		583+53.83	RT		25									
R-2	P.14	583+60.09	RT		584+38.29	RT						80					
D-1	P.14	583+53.83	RT		583+53.83	RT			LS		0.11		15	20			
EC-1	P.14	584+35.63	RT		583+35.30	RT				36							43
GR-1	P.14	583+32.71	RT		583+71.71	RT									37.5	1	
TOTALS CARRIED TO GENERAL SUMMARY								25	LS	36	1	80	15	20	38	1	43

ROADWAY AND DRAINAGE SUBSUMMARY - POR-5-3.896

DESIGN AGENCY

DESIGNER
NKF

REVIEWER
MJP 04-24-24

PROJECT ID
109452

SHEET P.13 TOTAL 62

D04-CULVERTS-FY2025

MODEL: Sheet_SurvFt PAPERSIZE: 34x22 (in.) DATE: 1/31/2025 TIME: 9:34:50 AM USER: mpalagan
pw:\\ohiodot-pw.bentley.com:ohiodot-pw-02\Documents\01 Active Projects\District 04_D04\109452\400-Engineering\Roadway\Sheets\109452_GS100.dgn

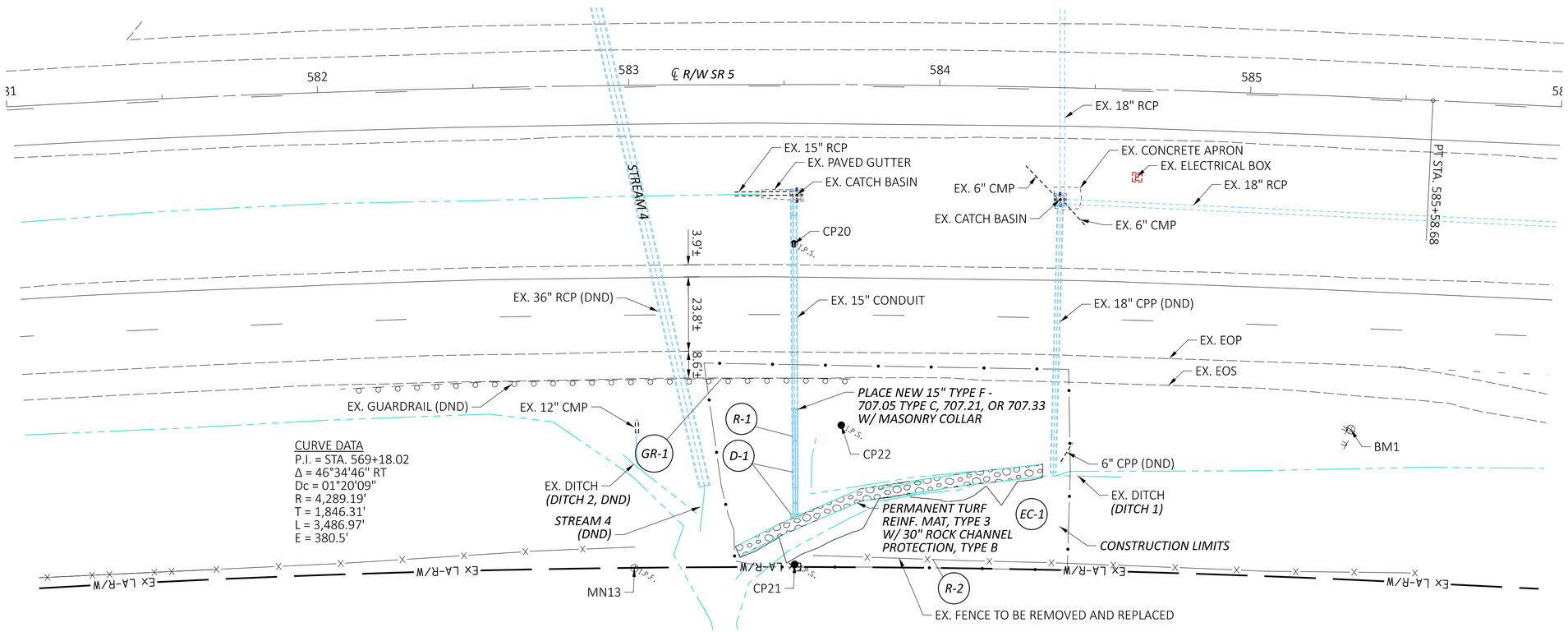

CURVE DATA
P.I. = STA. 569+18.02
Δ = 46°34'46" RT
Dc = 01°20'09"
R = 4,289.19'
T = 1,846.31'
L = 3,486.97'
E = 380.5'

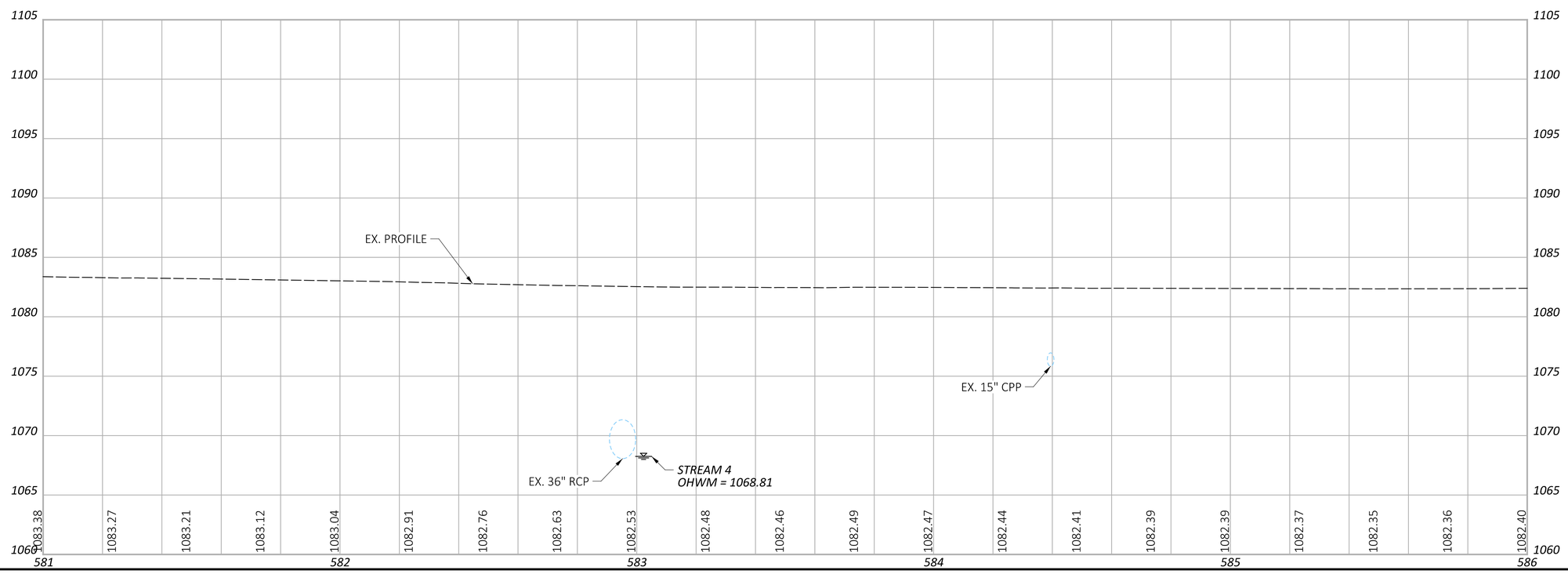

HORIZONTAL SCALE IN FEET
0 10 20 40

PLAN AND PROFILE - POR-5-3.896
STA. 584+00 TO STA. 586+00

DESIGN AGENCY

DESIGNER
NKF

REVIEWER
MJP 04-24-24

PROJECT ID
109452

SHEET P.14 TOTAL 62

D04-CULVERTS-FY2025

MODEL: CLX_3 - Plan 1 [Sheet] PAPERSIZE: 34x22 (in.) DATE: 1/31/2025 TIME: 9:34:59 AM USER: mpalagan
pw:\\ohiodot-pw.bentley.com:ohiodot-pw-02\Documents\01 Active Projects\District 04_D04\109452\400-Engineering\Roadway\Sheets\109452_GP100.dgn

Cut Area (SF): 0	Cut Vol. (CY): 0
Fill Area (SF): 0	Fill Vol. (CY): 0
Seed Width (FT):	Seed Area (SY):

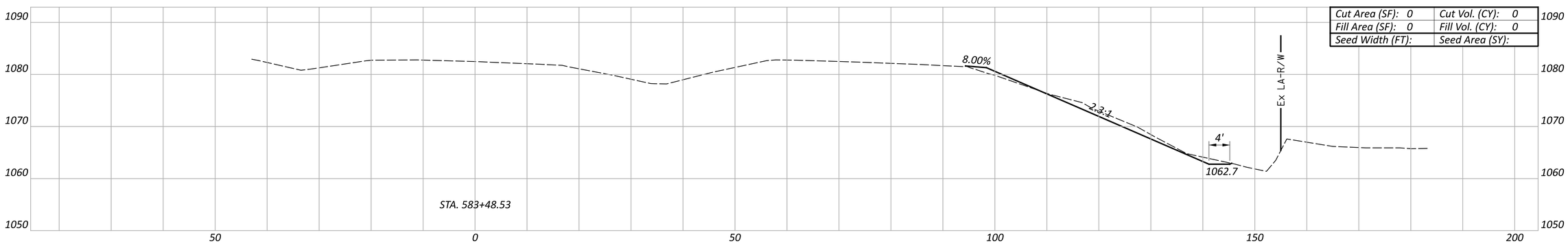

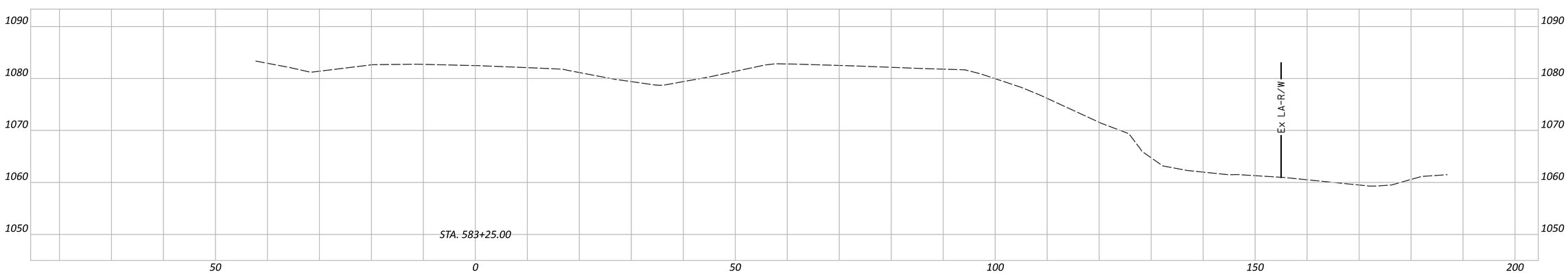

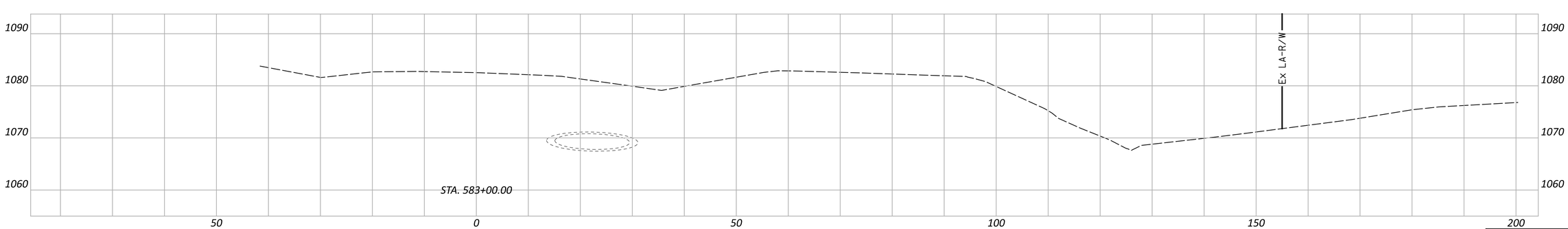

Sheet Totals		
Seeding	Cut	Fill

CROSS SECTIONS - POR-5-3.896
STA. 583+00 TO STA. 583+48.53

DESIGN AGENCY

DESIGNER
NKF

REVIEWER
MJP 04-24-24

PROJECT ID
109452

SHEET P.15 TOTAL 62

D04-CULVERTS-FY2025

MODEL: CLX_3 - 583+00.00 [Sheet] PAPERSIZE: 34x22 (in.) DATE: 1/31/2025 TIME: 9:35:08 AM USER: mpalagan
pw:\\ohiodot-pw.bentley.com:ohiodot-pw-02\Documents\01 Active Projects\District 04_D04\109452\v00-Engineering\Roadway\Sheets\109452_XS101.dgn

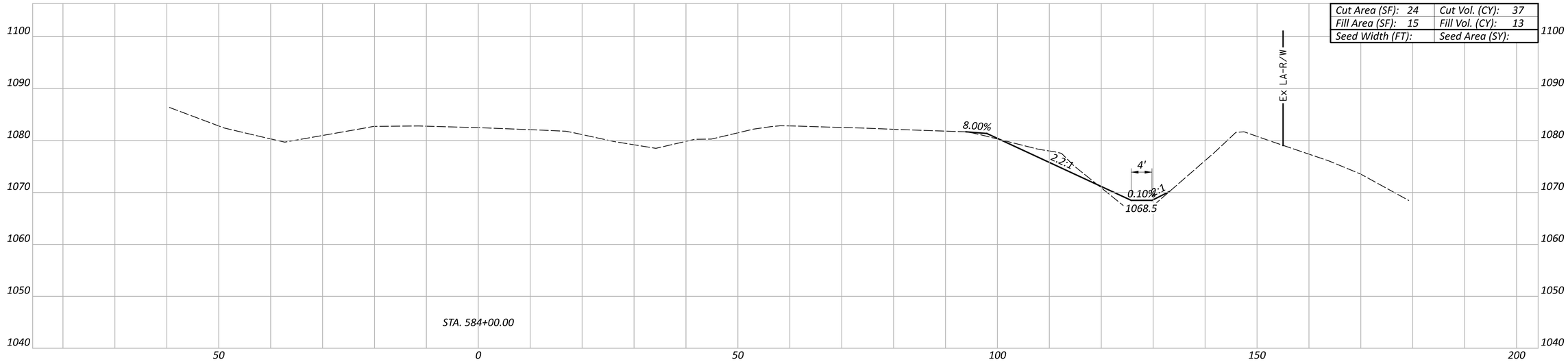

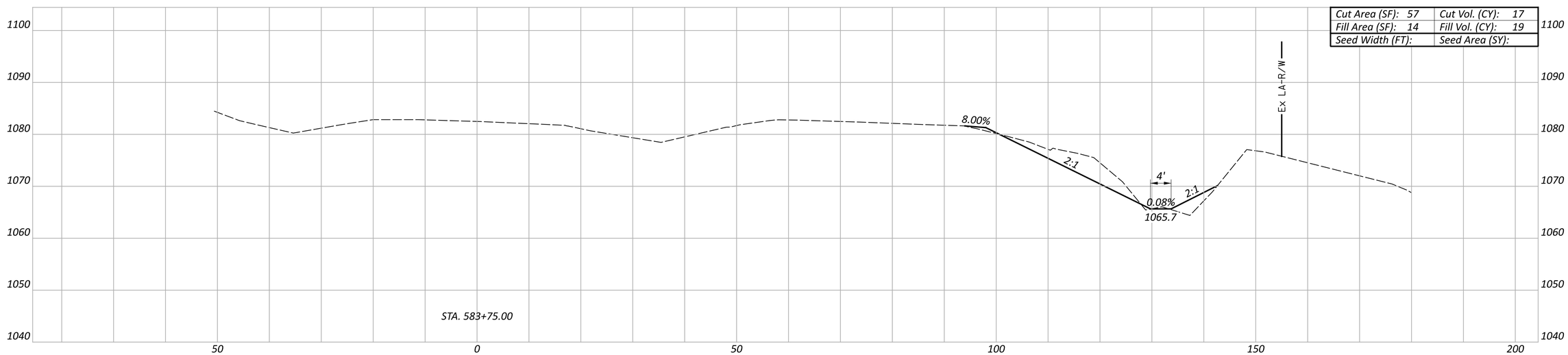

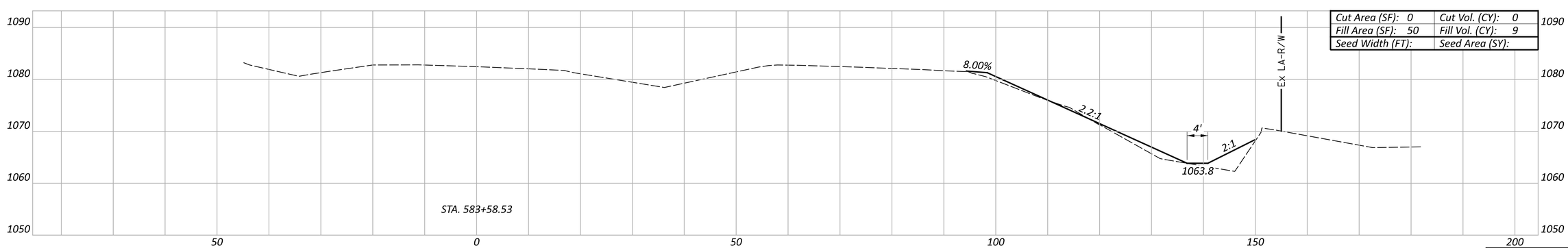

Sheet Totals		
Seeding	Cut	Fill
	54	32

CROSS SECTIONS - POR-5-3.896
STA. 583+58.53 TO STA. 584+00

DESIGN AGENCY

DESIGNER
NKF

REVIEWER
MJP 04-24-24

PROJECT ID
109452

SHEET P.16 TOTAL 62

D04-CULVERTS-FY2025

MODEL: CLX_3 - 583+58.53 [Sheet] PAPERSIZE: 34x22 (in.) DATE: 1/31/2025 TIME: 9:35:10 AM USER: mpalagan
pw:\\ohiodot-pw.bentley.com:ohiodot-pw-02\Documents\01 Active Projects\District 04_D04\109452\v00-Engineering\Roadway\Sheets\109452_XS101.dgn

D04-CULVERTS-FY2025

MODEL: CLX_3 - 584+25.00 [Sheet] PAPERSIZE: 34x22 (in.) DATE: 1/31/2025 TIME: 9:35:11 AM USER: mpalagan
pw:\\ohiodot-pw.bentley.com:ohiodot-pw-02\Documents\01 Active Projects\District 04_D04\109452\400-Engineering\Roadway\Sheets\109452_XS101.dgn

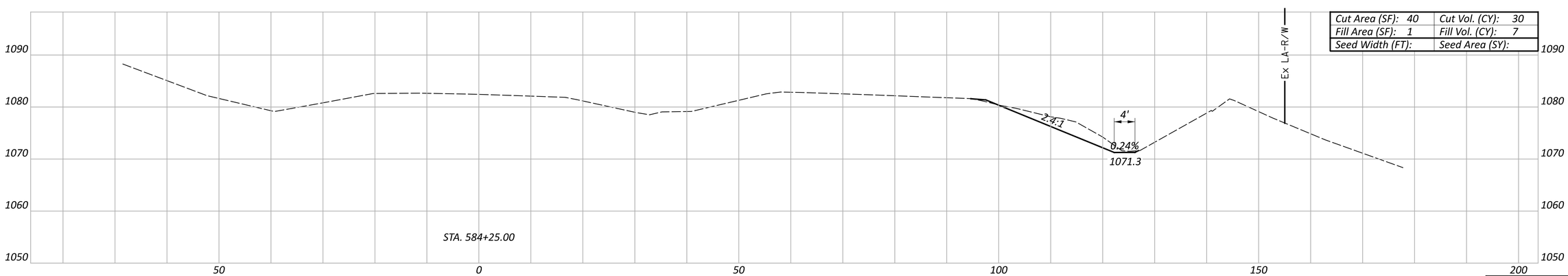

Cut Area (SF): 40	Cut Vol. (CY): 30
Fill Area (SF): 1	Fill Vol. (CY): 7
Seed Width (FT):	Seed Area (SY):

Sheet Totals		
Seeding	Cut	Fill
	30	7

CROSS SECTIONS - POR-5-3.896
STA. 584+25

DESIGN AGENCY

DESIGNER
NKF

REVIEWER
MJP 04-24-24

PROJECT ID
109452

SHEET P.17 TOTAL 62

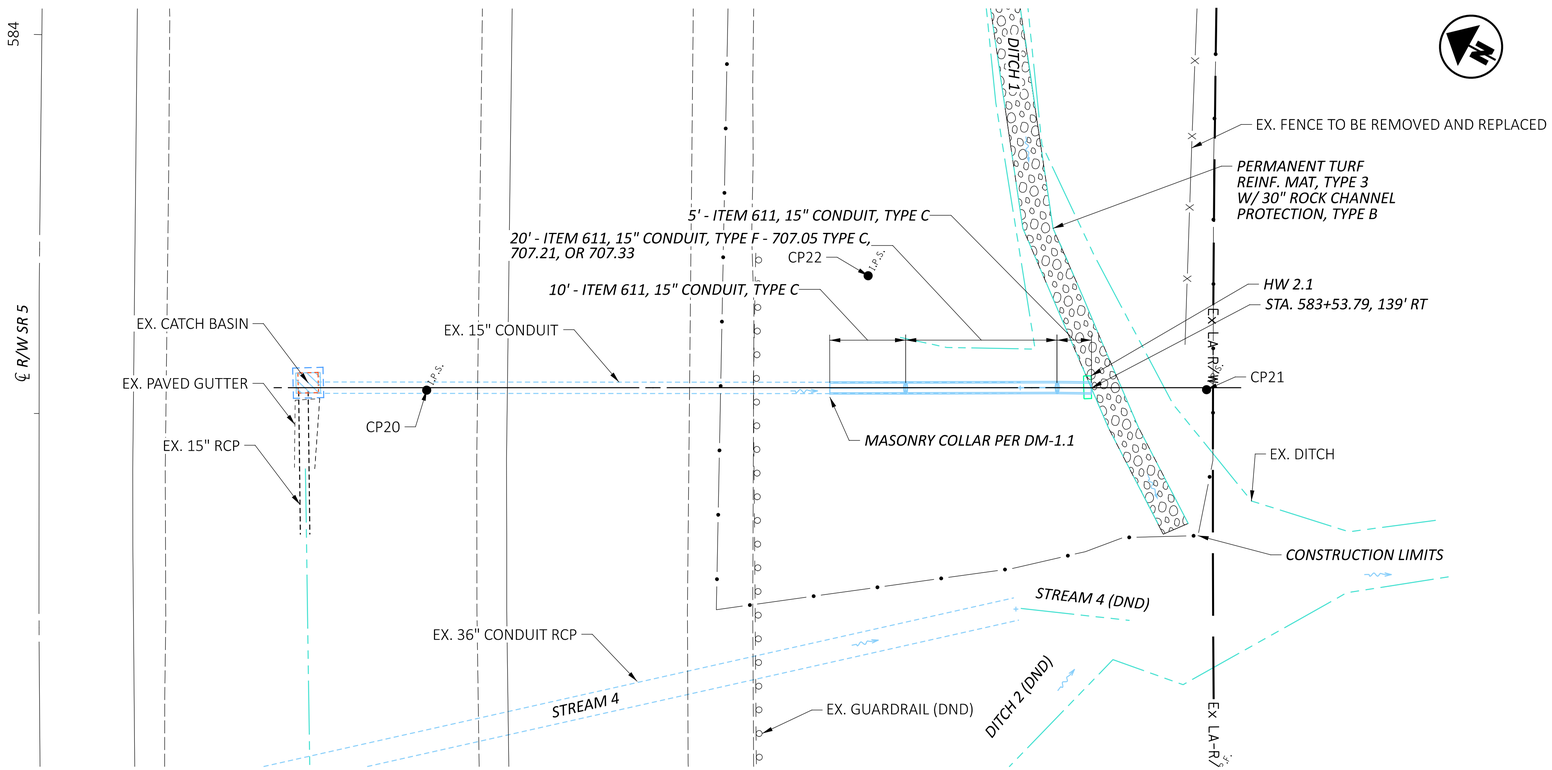

FOR BENCHMARK INFORMATION, SEE SHEET P.12
FOR ESTIMATED QUANTITIES, SEE SHEET P.13

HORIZONTAL SCALE IN FEET 0 5 10 20

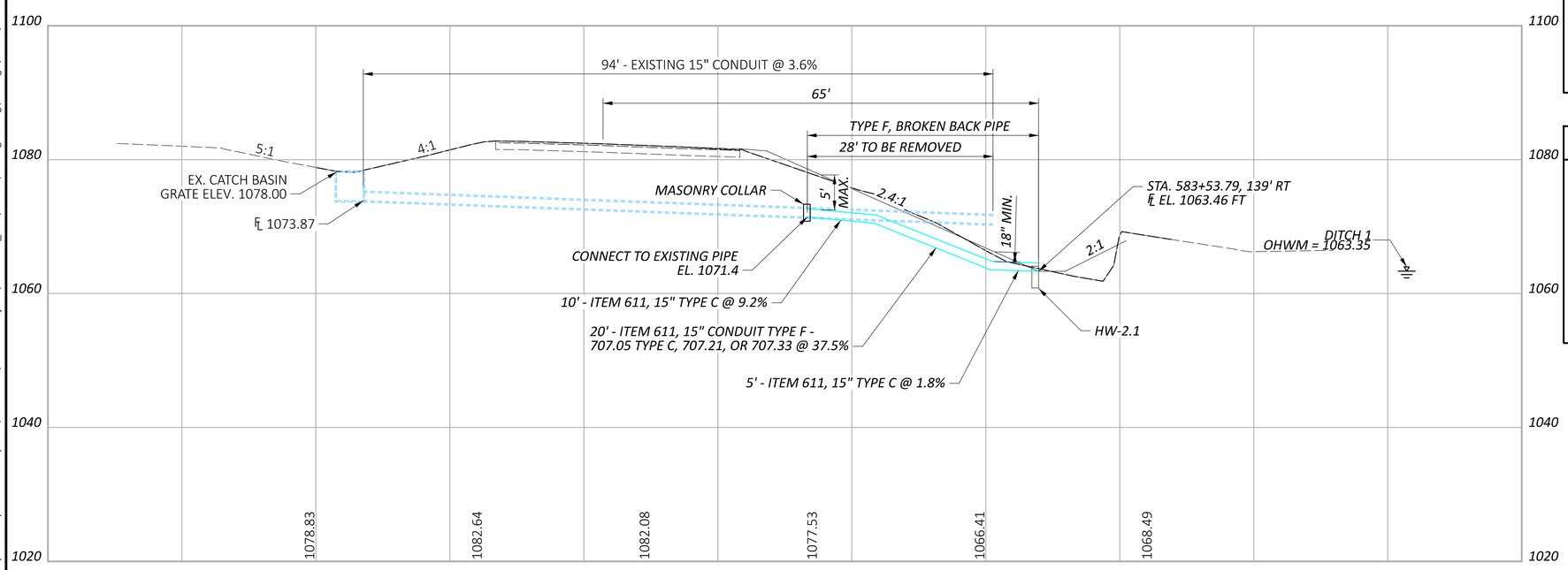

OUTLET HYDRAULIC DATA

DRAINAGE AREA = 2.6 ACRES
Q (10%) = 8.2 CFS V (10%) = 11.3 FT/S
Q (4%) = 9.4 CFS V (4%) = 7.7 FT/S
OHWM = 1063.35
DESIGN SERVICE LIFE: 75 YEARS
ABRASION LEVEL: 2.0
pH: 7.0

EXISTING CONDUIT

TYPE: REINFORCED CONCRETE
SIZE: 15"
SKEW: NONE
ALIGNMENT: TANGENT
DATE BUILT: UNKNOWN
CONDITION: FAILED END SECTION
CFN: 1824173

PROPOSED CONDUIT

TYPE: 15" CONDUIT, TYPE F - 707.05 TYPE C, 707.21, OR 707.33

SKEW: NONE
ALIGNMENT: TANGENT
CFN:
CONDITION: REPLACE FAILED END SECTION

CULVERT DETAILS - POR-5-3.896 STA. 583+50

DESIGN AGENCY

DESIGNER NKF
REVIEWER MJP 04-24-24
PROJECT ID 109452
SUBSET 1 TOTAL 1
SHEET P.18 TOTAL 62

D04-CULVERTS-FY2025

MODEL: CLP_1 - Plan 1 [Sheet] PAPERSIZE: 34x22 (in.) DATE: 1/31/2025 TIME: 9:35:18 AM USER: mpalagan
pw:\\ohiodot-pw.bentley.com:ohiodot-pw-02\Documents\01 Active Projects\District 04_D04\109452\400-Engineering\Drainage\Sheets\109452_DC101.dgn

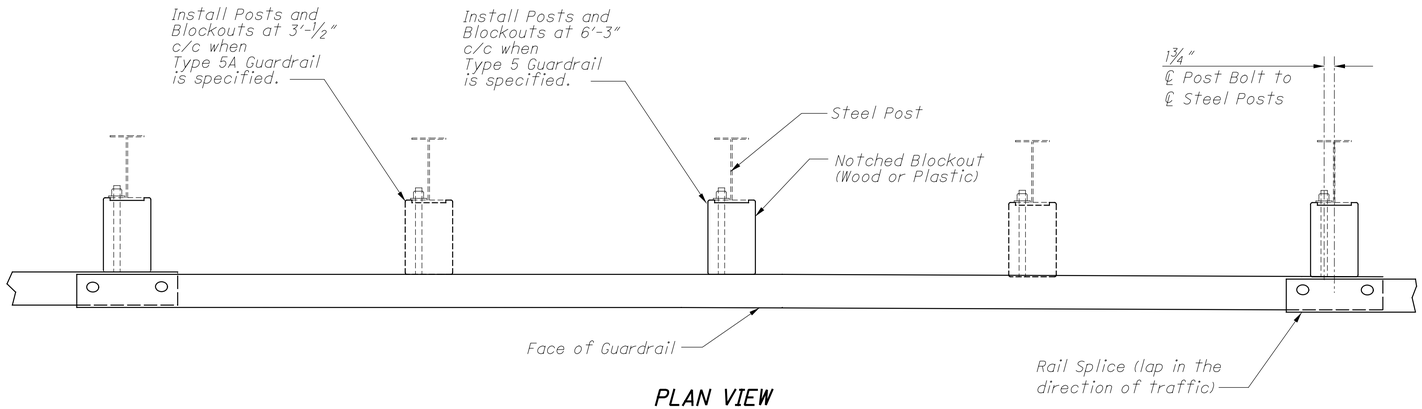

PLAN VIEW

(Steel Posts shown)

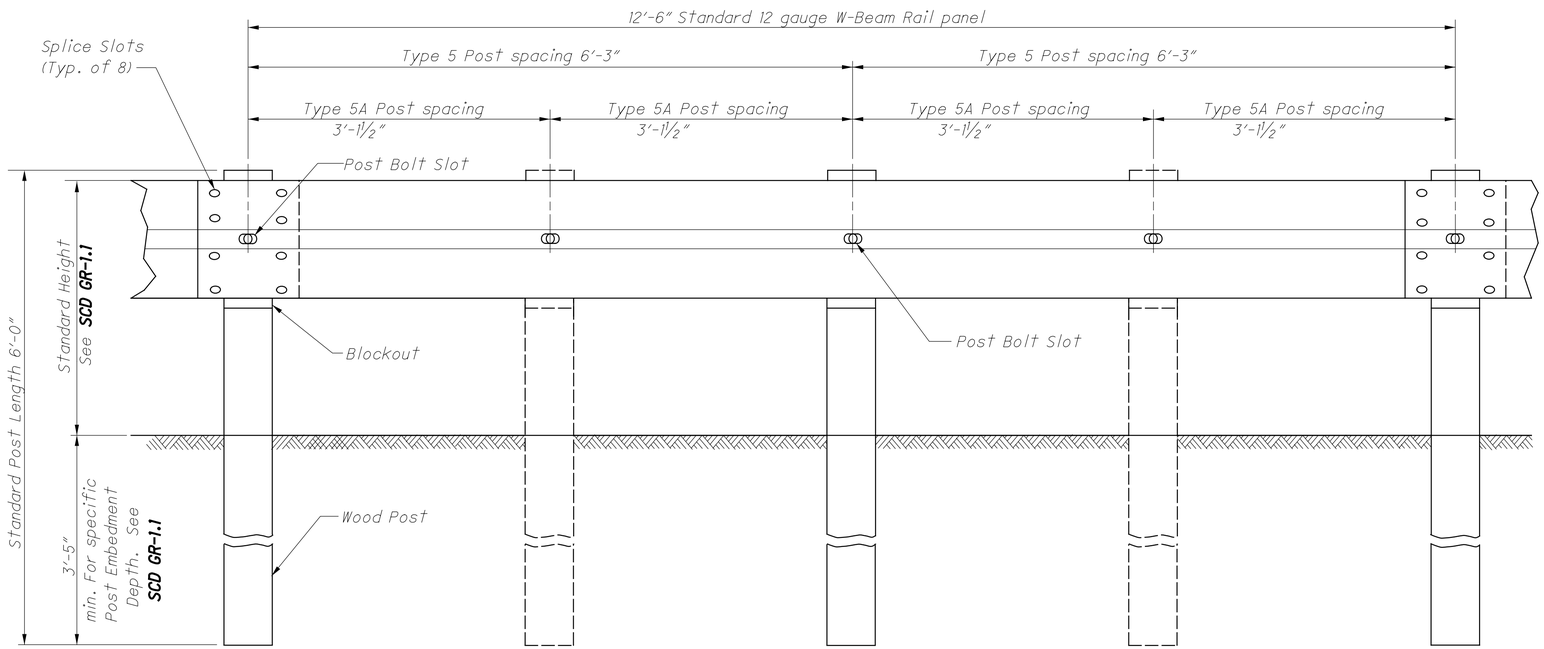

ELEVATION

(Wood Posts shown)

NOTES

RAIL: Use W-Beam rail meeting AASHTO M 180 Type II Class A, as specified in CMS 606.

POSTS: Posts may be constructed of wood or steel. Wood posts may be round or 6"x8" square-sawed.

Use round wood posts on runs of single-sided rail. The round posts shall be 8"±1 in diameter at the top and not more than 3" larger at the butt with a uniform taper.

Fabricated wood posts with square ends. Posts shall be pressure-treated as per CMS 710.14. Bore bolt holes and, if required, trim the tops of posts after the posts are set.

Steel posts are to be W6x9 or W6x8.5 galvanized steel. Use the same type of post throughout the length of the project unless otherwise specified in the plans or permitted by the Engineer.

All posts are 6'-0" long unless specified otherwise in the Contract Document. Posts may be set in drilled holes or may be driven to grade.

WELDED BEAM POSTS: Welded beam guardrail posts may be used for Item 606, Guardrail, provided the web and flange sizes are as shown here. Welding of the web to the flanges must comply with ASTM A 769, Class 1, using Grade 36 steel [250 MPa yield point] with the following exceptions:

Sec. 7.2 Test reports of tensile properties for each lot shall accompany each shipment.

Sec. 12 Beams that have imperfections repaired by welding shall not be accepted for use in Item 606.

Sec. 13 Random samples shall be tested by the Department from materials delivered to the project site, or other locations designated by the Laboratory.

ALTERNATE POSTS: Engineered guardrail posts having met NCHRP 350 criteria, and listed on the **Office of Materials Management's** Approved List are permitted as an equal alternate when installed according to the Manufacturer's instructions and within the limitations shown on the Approved List.

BLOCKOUTS: Blockout dimensions are dependent on post used. Wood Blockouts are to be pressure treated as specified in CMS 710.14. Bore bolt holes. Approved alternate blockouts may be used in lieu of the wood blockouts shown. The approved list is maintained by the **Office of Roadway Engineering.**

WASHERS: Install appropriate sized standard galvanized steel washers on the nut side of bolts installed on wood posts.

DELINEATION: For barrier reflectors, see CMS 626.

MISCELLANEOUS: For other guardrail details, see **SCD GR-1.1.**

STEEL BEAM POSTS (English)				
Size	Beam depth	Flange width	Flange thickness	Web thickness
Rolled W6x8.5	5.8"	3.94"	0.193"	0.170"
Rolled W6x9	5.9"	3.94"	0.215"	0.170"
Welded 6x8.5	6.0"	3.94"	0.193"	0.170"
Welded 6x9	6.0"	3.94"	0.215"	0.170"

OFFICE OF ROADWAY ENGINEERING

DESIGNED XXX REVIEWED XXX

REVISION DATE 1/18/2013 CHECKED CHECKED

PLAN INSERT SHEET

GUARDRAIL TYPE 5 & 5A

PIS GR-2.1

1/2

19/62

pw:\\ohiodot-pw.bentley.com:ohiodot-pw-02\Documents\01 Active Projects\District 04_D04\109452\400-Engineering\Roadway\Sheets\109452_GM001.dgn Sheet_SurvFt 1/31/2025 9:35:25 AM mpalagan

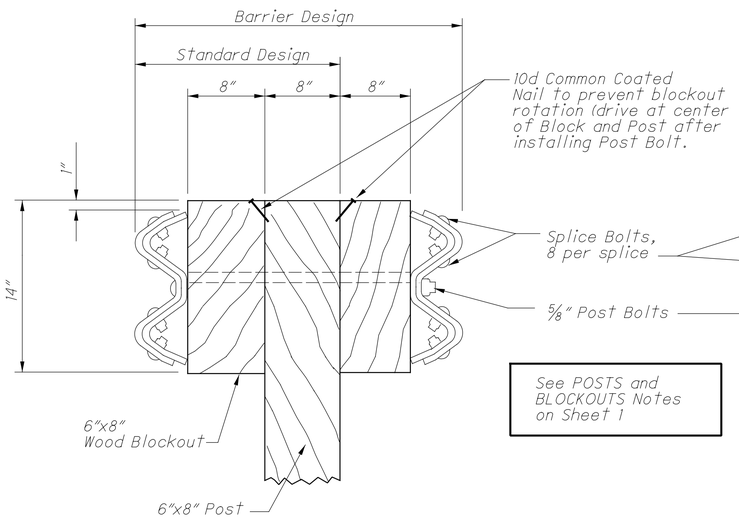

SQUARE WOOD POST

See POSTS and BLOCKOUTS Notes on Sheet 1

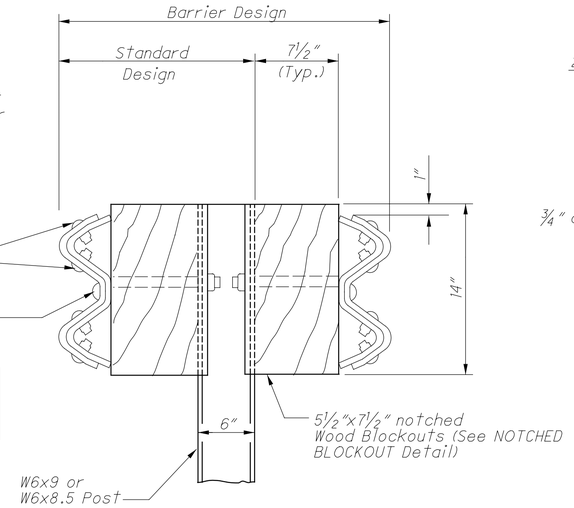

STEEL POST

See POSTS Note, Sheet 1

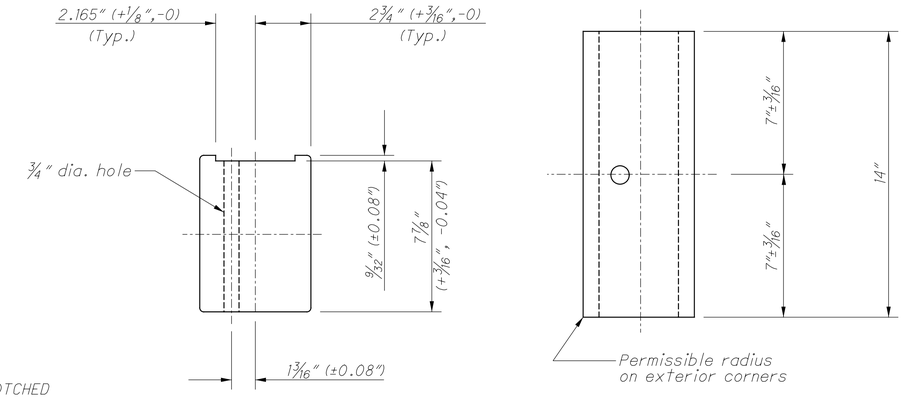

PLAN

ELEVATION

NOTCHED BLOCKOUTS FOR STEEL POSTS

See BLOCKOUTS Note on Sheet 1

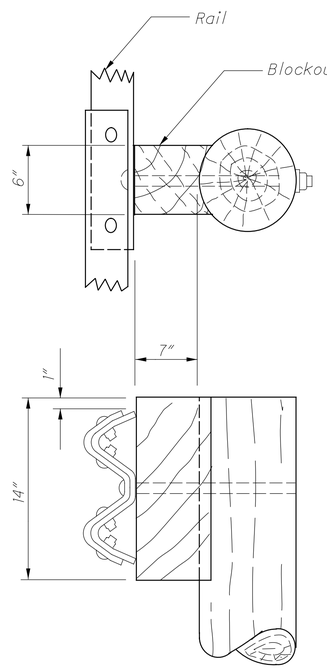

Method 1
Routed Blockout

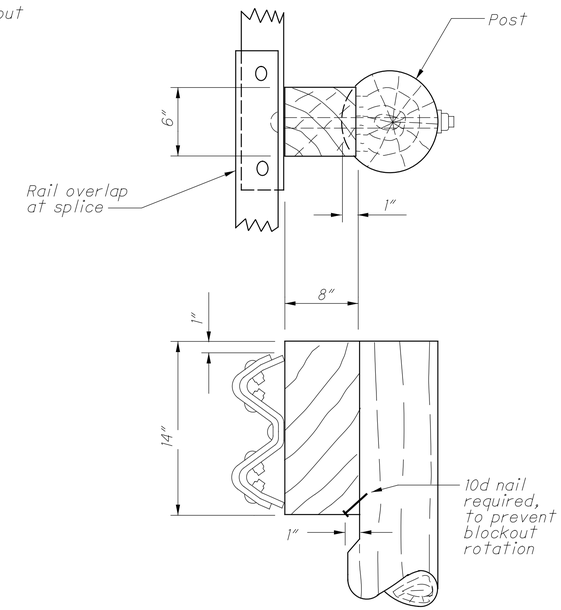

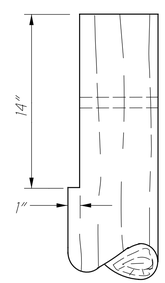

Toenail not required if post is cut as shown

Method 2
Notched Post

Alternate methods of placing the Blockouts on round Posts may be submitted for consideration and approved by the Engineer.

ROUND WOOD POSTS

Single Sided runs only (Standard Design)

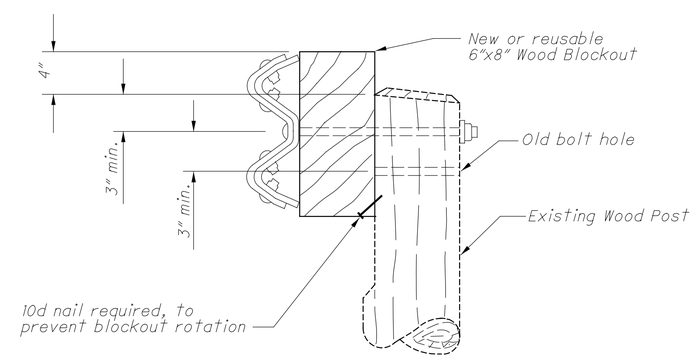

WOOD POSTS WITH WOOD BLOCK RAISING EXISTING GUARDRAIL HEIGHT

OFFICE OF ROADWAY ENGINEERING

DESIGNED XXX REVIEWED XXX

REVISION DATE 1/18/2013 CHECKED CHECKED

PLAN INSERT SHEET

GUARDRAIL TYPE 5 & 5A

PIS GR-2.1

2/2

20/62

pw:\\ohiodot-pw.bentley.com:ohiodot-pw-02\Documents\01 Active Projects\District 04_D04\109452\400-Engineering\Roadway\Sheets\109452_GM001.dgn Sheet_SurvFt 2 1/31/2025 9:35:26 AM mpalagan

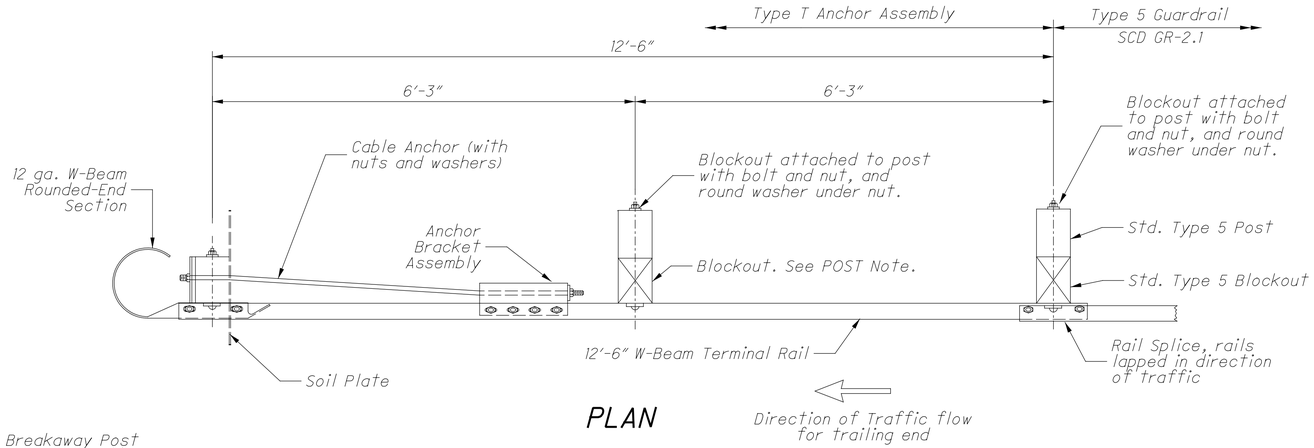

PLAN

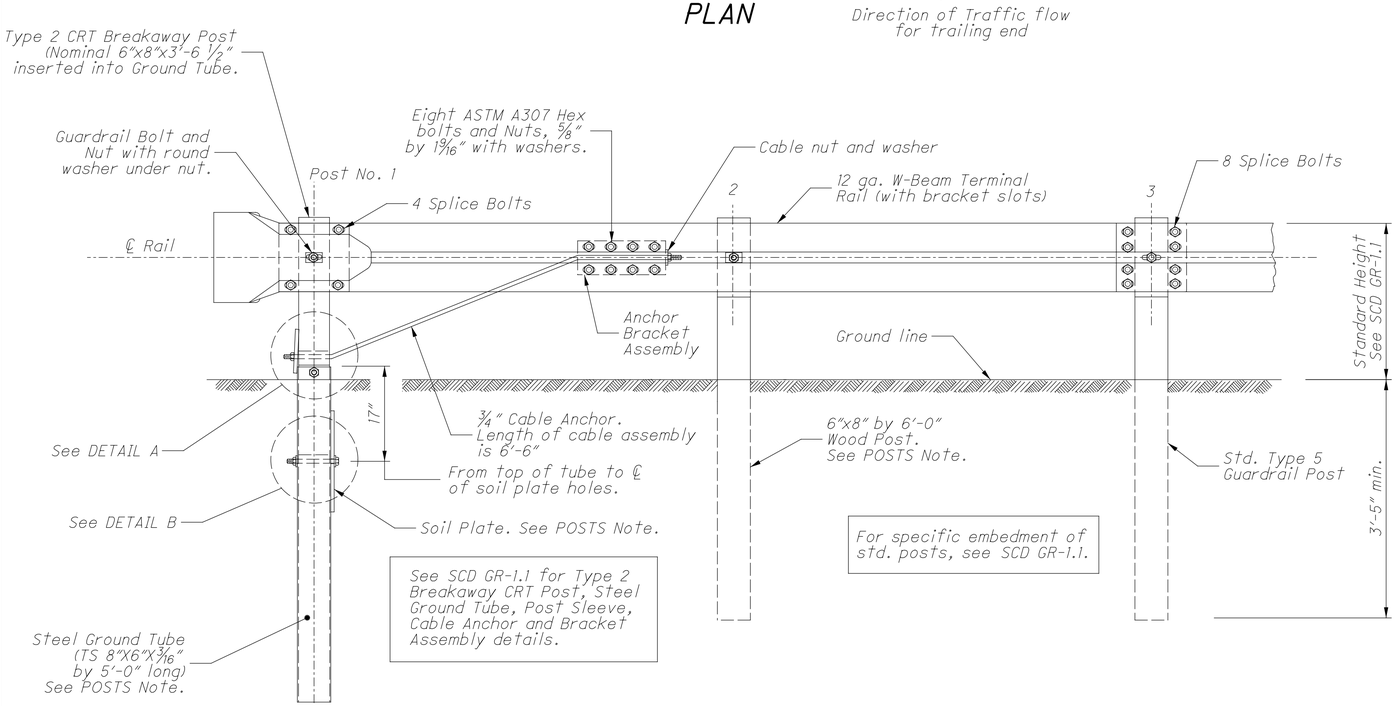

For specific embedment of std. posts, see SCD GR-1.1.

See SCD GR-1.1 for Type 2 Breakaway CRT Post, Steel Ground Tube, Post Sleeve, Cable Anchor and Bracket Assembly details.

ELEVATION - FOUNDATION TUBE

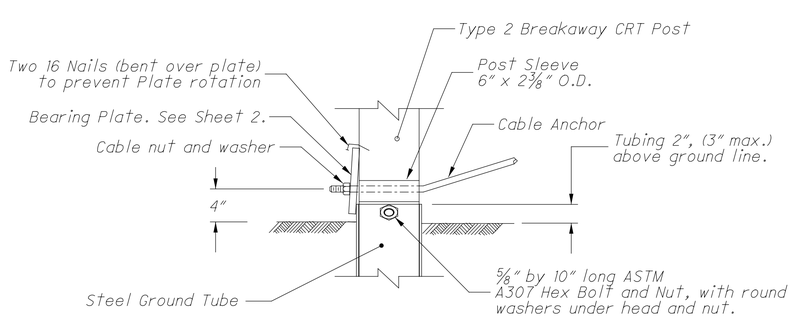

DETAIL A

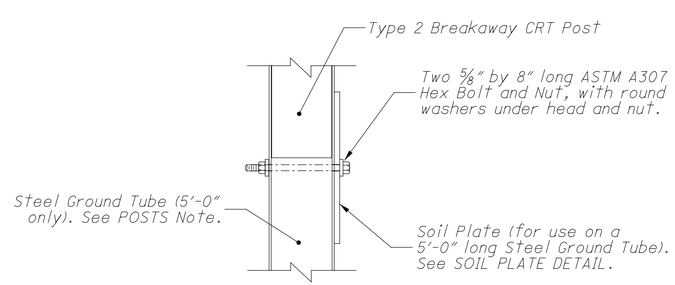

DETAIL B

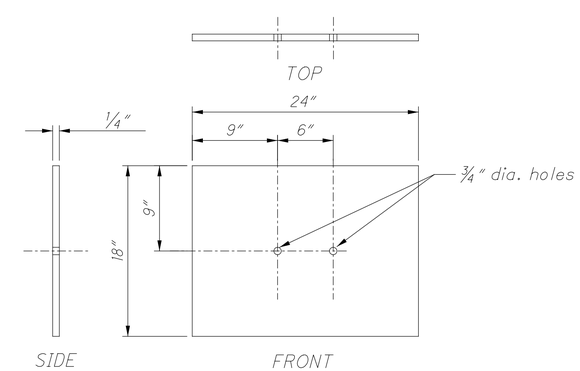

SOIL PLATE DETAIL

NOTES

APPLICATION: Use Type T Anchor Assemblies on the trailing end of guardrail runs, located outside of the clear zone of opposing traffic. The assembly is 12'-6" long, none of which can be considered the Length of Need for the guardrail run.

For termination requirements at driveways, see DRIVEWAY OPENING Detail on Sheet 2. For side road approaches and Terminals at Structures, see Location & Design Manual, Volume 1, Figure 603-3.

ANCHORING OPTIONS: Contractor may choose either the foundation tube (shown on this Sheet) or the concrete footing option (Sheet 2) to construct this anchor assembly.

If the foundation tube option is chosen, the contractor will take proper care to insure that the Soil Plate fasteners are not broken during the driving process.

Concrete footings may be cast-in-place or precast. Compact fill after placing precast unit.

MATERIALS: See **SCD GR-1.1** for parts used on this anchor, including the CRT Breakaway Posts, Steel Ground Tube, Post Sleeve, Cable Anchor and Bracket Assembly.

Bearing Plate and Soil Plate is ASTM A709 Grade 36. Steel Ground Tube shall be ASTM A500, Grade B, and meet CMS 707.10. All angles, channels and plates shall meet CMS 711.01. All structural steel shall be galvanized as specified in CMS 711.02. All bolt washers indicated are standard galvanized steel of the appropriate size.

Concrete shall be class C.

Components on this anchor that are not detailed on SCD GR-1.1 include: 1) 12'-6" W-Beam Terminal Rail (standard part RWM14a), and 2) W-Beam Rounded End Section (RWE03a). For complete details and specifications, see part descriptions in the **AASHTO/AGC/ARTBA Standardized Hardware Guide.**

POSTS: Post No. 1 may be an 8'-0" long Steel Ground Tube without a Soil Plate in lieu of the 5'-0" tube with Soil Plate.

Post No. 2 can be W6x9 (or W6x8.5) with notched wood blockouts or a standard Type 5 post and blockout. Recycled plastic blockouts are permitted.

PAYMENT: All labor and materials, including the W-Beam Rounded End Section and the W-Beam Terminal Rail for the 12'-6" anchor assembly shall be included in the unit price bid for

Item 606 - Anchor Assembly, Type T, Each.

OFFICE OF ROADWAY ENGINEERING

DESIGNED XXX REVIEWED XXX

REVISION DATE 1/18/2013 CHECKED CHECKED

PLAN INSERT SHEET

TYPE T ANCHOR ASSEMBLY (Foundation Tube Option)

PIS GR-4.2

1/2

21/62

pw:\\ohiodot-pw.bentley.com:ohiodot-pw-02\Documents\01 Active Projects\District 04_D04\109452\400-Engineering\Roadway\Sheets\109452_GM001.dgn Sheet_SurvFt 3 1/31/2025 9:35:26 AM mpalagan

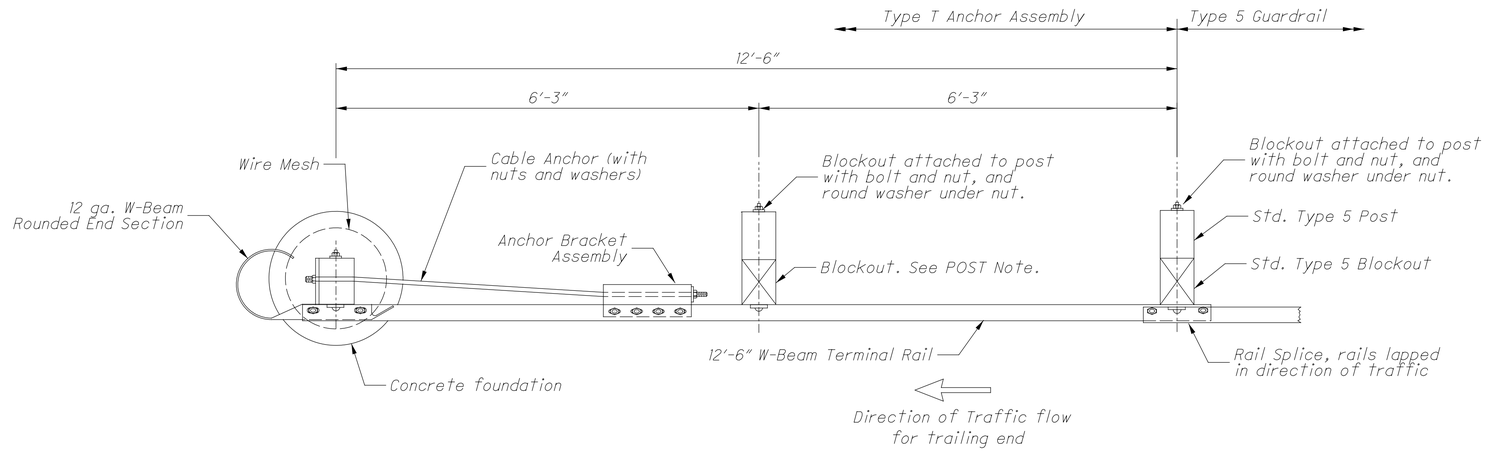

PLAN

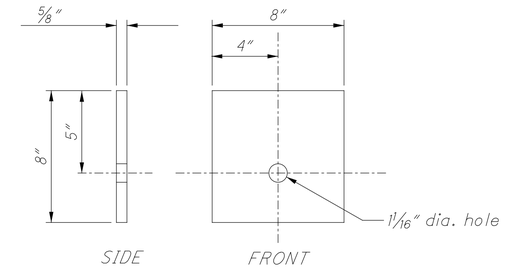

BEARING PLATE DETAIL

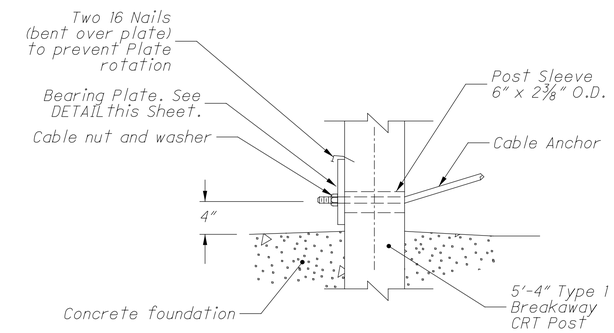

DETAIL C

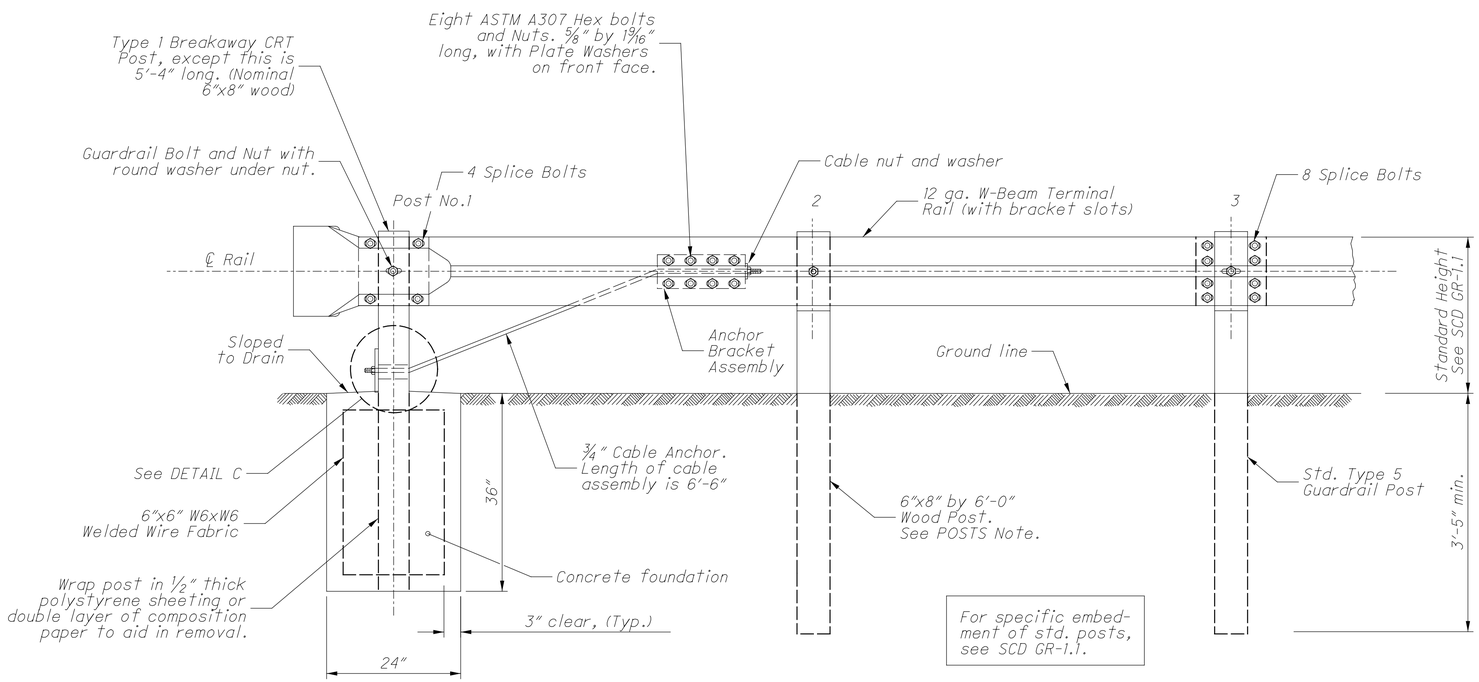

See SCD GR-1.1 for Type 1 Breakaway CRT Post, Steel Ground Tube, Post Sleeve, Cable Anchor and Bracket Assembly details.

ELEVATION - CONCRETE FOOTER

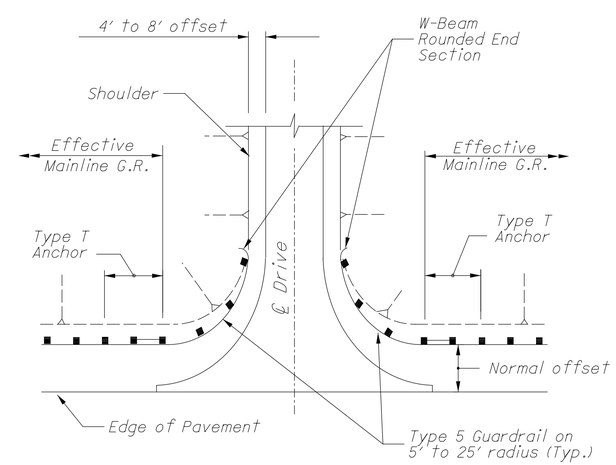

DRIVEWAY OPENING

OFFICE OF ROADWAY ENGINEERING

DESIGNED XXX REVIEWED XXX

REVISION DATE 1/18/2013 CHECKED CHECKED

PLAN INSERT SHEET

TYPE T ANCHOR ASSEMBLY (Foundation Tube Option)

PIS GR-4.2

2/2

22/62

pw:\\ohiodot-pw.bentley.com:ohiodot-pw-02\Documents\01 Active Projects\District 04_D04\109452\400-Engineering\Roadway\Sheets\109452_GM001.dgn Sheet_SurvFt 4 1/31/2025 9:35:26 AM mpalagan

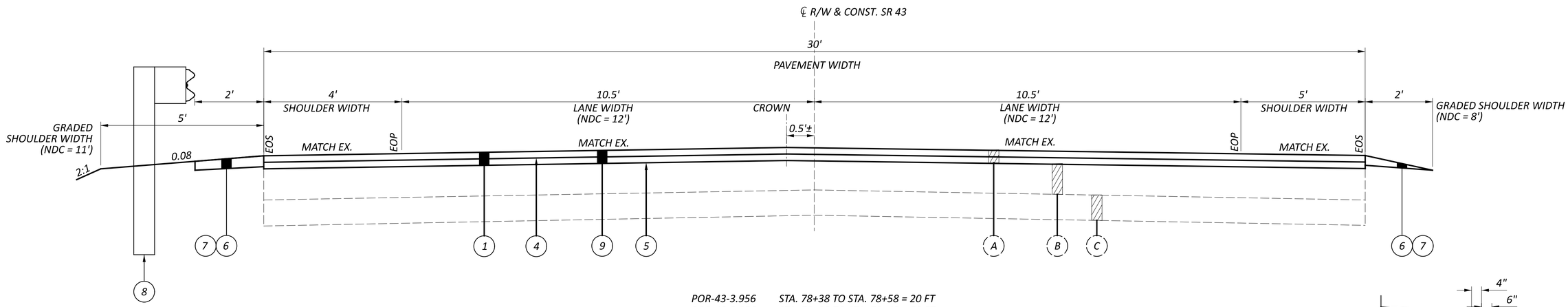

POR-43-3.956 STA. 78+38 TO STA. 78+58 = 20 FT
POR-43-3.956 STA. 78+98 TO STA. 79+48 = 50 FT

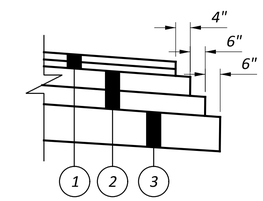

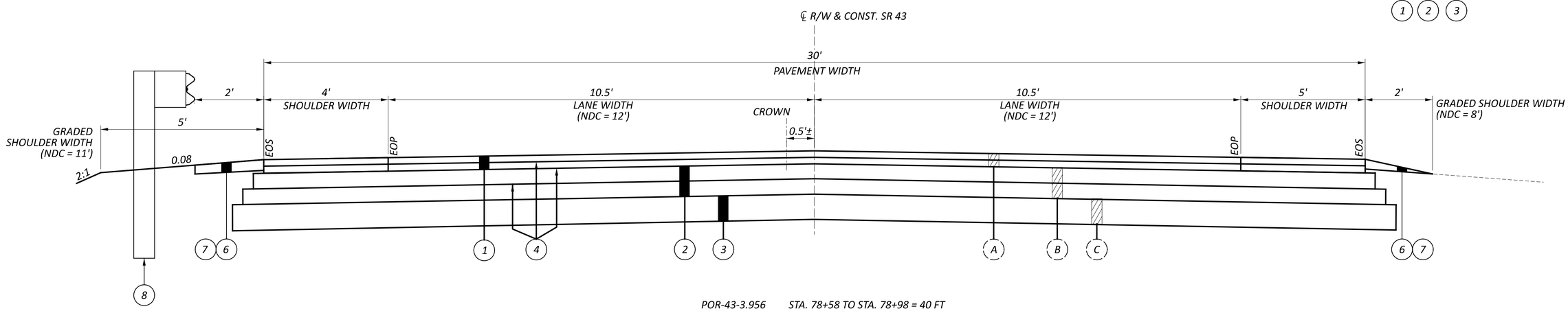

POR-43-3.956 STA. 78+58 TO STA. 78+98 = 40 FT

LEGEND

1. ITEM 441, ASPHALT CONCRETE SURFACE COURSE, TYPE 1, (449), PG64-22 (T=3") - 2 LIFTS
2. ITEM 301, ASPHALT CONCRETE BASE, (449), PG64-22 (T=8") - 2 LIFTS
3. ITEM 304, AGGREGATE BASE (T=6")
4. ITEM 407, NON-TRACKING TACK COAT @ 0.06 GAL/SY
5. ITEM 407, NON-TRACKING TACK COAT @ 0.09 GAL/SY
6. ITEM 617, COMPACTED AGGREGATE, AS PER PLAN (T=1" AVG.)
7. ITEM 408, PRIME COAT, AS PER PLAN @ 0.40 GAL/SY
8. ITEM 606, GUARDRAIL, TYPE MGS
9. ITEM 254, PAVEMENT PLANING, ASPHALT CONCRETE (T=3")

- (A) EXISTING ASPHALT CONCRETE SURFACE (T=3")
- (B) EXISTING ASPHALT CONCRETE BASE (T=8")
- (C) EXISTING ASPHALT BASE (T=6")

NDC - NORMAL DESIGN CRITERIA

TYPICAL SECTIONS-POR-43-3.956

DESIGN AGENCY

DESIGNER
NKF

REVIEWER
MJP 04-24-24

PROJECT ID
109452

SHEET P.23 TOTAL 62

D04-CULVERTS-FY2025

MODEL: SHEET 1 PAPERSIZE: 34x22 (in.) DATE: 1/31/2025 TIME: 9:35:33 AM USER: mpallagan
pw:\\ohiodot-pw.bentley.com:ohiodot-pw-02\Documents\01 Active Projects\District 04_D04\109452\400-Engineering\Roadway\Sheets\109452_GY200.dgn

SURVEYING PARAMETERS

PRIMARY PROJECT CONTROL MONUMENTS GOVERN ALL POSITIONING ON ODOT PROJECTS. SEE THIS SHEET OF THE PLANS FOR A TABLE CONTAINING PROJECT CONTROL INFORMATION.

USE THE FOLLOWING PROJECT CONTROL, VERTICAL POSITIONING, AND HORIZONTAL POSITIONING PARAMETERS FOR ALL SURVEYING:

PROJECT CONTROL

POSITIONING METHOD: STATIC
MONUMENT TYPE: B

VERTICAL POSITIONING

ORTHOMETRIC HEIGHT DATUM: NAVD 88
GEOID: 2018

HORIZONTAL POSITIONING

REFERENCE FRAME: NAD 83 (2011) (EPOCH: 2010.0000)
ELLIPSOID: GRS80
MAP PROJECTION: TRANSVERSE MERCATOR
COORDINATE SYSTEM: PORTAGE COUNTY LDP
COMBINED SCALE FACTOR: 1.000043
ORIGIN OF COORDINATE SYSTEM: N 39-48-00, E 278-54-00

USE THE POSITIONING METHODS AND MONUMENT TYPE USED IN THE ORIGINAL SURVEY TO RESTORE ALL MONUMENTS RELATED TO PRIMARY PROJECT CONTROL THAT ARE DAMAGED OR DESTROYED BY CONSTRUCTION ACTIVITIES. RESTORE THE DAMAGED OR DESTROYED MONUMENTS IN ACCORDANCE WITH CMS 623.

UNITS ARE IN U.S. SURVEY FEET.
USE THE FOLLOWING CONVERSION FACTOR:
1 METER = 3.2808333333 U.S. SURVEY FEET

UTILITIES

THE CONTRACTOR SHALL USE THE FOLLOWING PROCEDURE AT EACH LOCATION WHERE WORK IS PERFORMED, IN ACCORDANCE WITH SECTIONS 105.07 AND 107.16 IN THE CONSTRUCTION AND MATERIALS SPECIFICATIONS.

THE CONTRACTOR SHALL NOTIFY THE PROJECT ENGINEER, OHIO811, THE OHIO DEPARTMENT OF TRANSPORATION DISTRICT 4 HEADQUARTERS AND ALL NON REGISTERED UTILITY OWNERS AT LEAST TWO (2) WORKING DAYS PRIOR TO COMMENCING CONSTRUCTION OPERATION IN ALL AREAS.

THE LOCATION OF THE UNDERGROUND UTILITIES SHOWN ON THE PLANS ARE AS OBTAINED FROM THE OWNERS AS REQUIRED BY SECTION 153.64 O.R.C.

LISTED BELOW ARE ALL UTILITIES LOCATED WITHIN THE PROJECT CONSTRUCTION LIMITS TOGETHER WITH THEIR RESPECTIVE OWNERS:

Akron Water - City of
ATTN: Bob Geiser, P.E.
1460 Triplett Blvd
Akron, OH 44306
330-375-2791
bgeiser@akronohio.gov

AT&T
ATTN: Steven Hylton
50 W. Bowery St., 6th Floor
Akron, OH 44308
330-384-3055
330-631-7485 (cell)
sh1513@att.com

UTILITIES (CONT.)

Dominion Energy
ATTN: Kyle J. McCall
Supervisor - Gas Operations
Distribution Design
320 Springside Drive
Akron, OH 44333
330-801-8299 (cell)
Kyle.J.McCall@dominionenergy.com
relocation@dominionenergy.com

Ohio Edison
ATTN: Phillip Rawson
730 South Avenue
Youngstown, OH 44502
724-255-1332 (cell)
prawson@firstenergycorp.com

ITEM SPECIAL - SURVEY CONTROL VERIFICATION

THE CONTRACTOR SHALL PERFORM THIS WORK TO VERIFY THE PROVIDED SURVEY CONTROL. THE CONTRACTOR WILL PERFORM THE VERIFICATION USING ONE OF THE TWO METHODS BELOW DEPENDENT UPON THE CONTRACTOR'S CHOSEN MEANS OF SURVEY CONTROL TO BE USED ON THE PROJECT. THE WORK SHALL BE PERFORMED UNDER THE DIRECT SUPERVISION OF AN OHIO LICENSED SURVEYOR.

1. IF USING GPS DEVICES TO ESTABLISH AND OR PROVIDE SUPPLEMENTAL HORIZONTAL AND VERTICAL SURVEY CONTROL
a. LOCATE VERTICAL CONTROL POINTS PROVIDED IN THE PLAN AND PERFORM A DIFFERENTIAL LEVEL CIRCUIT.
b. PERFORM A SITE CALIBRATION UTILIZING THE AVAILABLE HORIZONTAL AND VERTICAL CONTROL POINTS PROVIDED IN THE PLAN.
c. PROVIDE A REPORT, SIGNED BY AN OHIO LICENSED SURVEYOR, TO THE PROJECT ENGINEER COMPARING THE OBSERVED DATA TO THE PLAN DATA ALONG WITH A NARRATIVE DETAILING ANY DISCREPANCIES FOUND.
2. IF USING CONVENTIONAL SURVEY INSTRUMENTATION TO ESTABLISH AND OR PROVIDE SUPPLEMENTAL HORIZONTAL AND VERTICAL SURVEY CONTROL
a. LOCATE VERTICAL CONTROL POINTS PROVIDED IN THE PLANS AND PERFORM A DIFFERENTIAL LEVEL CIRCUIT.
b. LOCATE AND OBSERVE ANGLE AND DISTANCE TO ALL AVAILABLE HORIZONTAL CONTROL POINTS PROVIDED IN THE PLAN.
c. PROVIDE A REPORT, SIGNED BY AN OHIO LICENSED SURVEYOR, TO THE PROJECT ENGINEER COMPARING THE OBSERVED DATA TO THE PLAN DATA ALONG WITH A NARRATIVE DETAILING ANY DISCREPANCIES FOUND.

ALL MATERIALS, LABOR, EQUIPMENT, TOOLS, AND INCIDENTIALS NECESSARY TO COMPLETE THIS WORK SHALL BE INCLUDED IN THE LUMP SUM BID ITEM.

CONTROL POINT (U.S. SURVEY FEET GROUND)					
POINT	NORTHING	EASTING	STATION	OFFSET	ELEV.
CP10	453247.692	95798.083	74+72.94	20.28' LT.	1134.19
CP20	454560.961	95852.768	87+86.42	29.32' RT.	1155.05
CP30	455374.522	95846.402			1103.70
CENTERLINE ALIGNMENT					
MN1	453174.661	95818.042	74+00		
MN13	453542.080	95819.665	77+67.42		
MN100	453686.635	95993.769	79+12.62	173.57' RT.	
MN108	452423.468	95774.525			
MN112	454152.815	95791.574	83+78.05	30.06' LT.	
MN141	454051.049	95791.487	82+76.28	30.07' LT.	
MN144	455013.418	95855.200	92+38.88	30.07' RT.	
MN145	455143.349	95855.611	93+68.81	30.00' RT.	
BENCHMARK					
BM1	453655.889	95846.543	1186+51.63	22.76' LT.	1114.83

CONDUIT IDENTIFICATION SIGNS

CONDUIT IDENTIFICATION SIGNS (I-H25b) WILL BE PLACED ON EACH APPROACH OFF THE RIGHT SHOULDER, FACING TRAFFIC, AND BEHIND THE GUARDRAIL IF APPLICABLE. A QUANTITY OF ONE SIGN PER APPROACH WILL BE INSTALLED. THE SIGNS WILL HAVE A NON-REFLECTIVE WHITE SHEETING BACKGROUND.

THE SIGNS WILL BE MOUNTED ON NEW NO. 2 POSTS AND WILL BE INSTALLED AS PER STANDARD CONSTRUCTION DRAWING TC-41.20, MOST CURRENT REVISION. EACH POST WILL BE 7.5' IN LENGTH.

INSTALL SIGNS FOR POR-43-3.956

THE FOLLOWING QUANTITIES HAVE BEEN INCLUDED FOR EACH APPROACH:
ITEM 630 - SIGN, FLAT SHEET, 730.20, 1 SQ FT
ITEM 630 - GROUND MOUNTED SUPPORT, NO. 2 POST, 7.5 FT
ITEM 630 - REMOVAL OF GROUND MOUNTED SIGN AND DISPOSAL, 1 EACH
ITEM 630 - REMOVAL OF GROUND MOUNTED POST SUPPORT AND DISPOSAL, 1 EACH

PAVEMENT MARKINGS

ALL PAVEMENT MARKINGS THAT ARE REMOVED DURING THE CULVERT REPLACEMENT WILL BE REPLACED WITH ITEM 642 - TRAFFIC PAINT. THE FOLLOWING ESTIMATED QUANTITIES HAVE BEEN CARRIED TO THE GENERAL SUMMARY (LANE WIDTH 10.5 FT):

ITEM 642 - EDGE LINE, 6", TYPE 1 0.04 MI
ITEM 642 - CENTER LINE, 6", TYPE 1 0.02 MI

SEEDING AND MULCHING

THE FOLLOWING QUANTITIES ARE PROVIDED TO PROMOTE GROWTH AND CARE OF PERMANENT SEEDED AREAS:

659, TOPSOIL 106 CU. YD.
659, SEEDING AND MULCHING 952 SQ. YD.
659, COMMERCIAL FERTILIZER 0.13 TON
659, LIME 0.20 ACRES
659, WATER 5 M. GAL.

SEEDING AND MULCHING SHALL BE APPLIED TO ALL AREAS OF EXPOSED SOIL BETWEEN THE RIGHT-OF-WAY LINES, AND WITHIN THE CONSTRUCTION LIMITS FOR AREAS OUTSIDE THE RIGHT-OF-WAY LINES COVERED BY WORK AGREEMENT OR SLOPE EASEMENT. QUANTITY CALCULATIONS FOR SEEDING AND MULCHING ARE BASED ON THESE LIMITS.

ITEM 201 - CLEARING AND GRUBBING, AS PER PLAN, AROUND CULVERTS (POR-43-3.956)

ALTHOUGH THERE ARE NO TREES OR STUMPS SPECIFICALLY MARKED FOR REMOVAL WITHIN THE PLANS, A LUMP SUM QUANTITY IS INCLUDED IN THE GENERAL SUMMARY FOR ITEM 201, CLEARING AND GRUBBING, AS PER PLAN, AROUND CULVERTS. SCALPING IS NOT REQUIRED FOR THIS ITEM OF WORK. ALL VEGETATION SHALL BE REMOVED WITHIN 15 FEET (OR TO THE R/W LIMITS, WHICHEVER IS CLOSER) OF THE HEADWALLS, ABUTMENTS, AND/OR PIERS.

ALL OTHER PROVISIONS AS SET FORTH IN THE CMS UNDER THIS ITEM ARE INCLUDED IN THE LUMP SUM BID PRICE FOR IS INCLUDED IN THE GENERAL SUMMARY FOR ITEM 201, CLEARING AND GRUBBING, AS PER PLAN, AROUND CULVERTS.

PAVEMENT RESTORATION AND RESURFACING FOR CONDUITS

THE FOLLOWING QUANTITIES HAVE BEEN TAKEN FROM THE CROSS SECTION SHEETS AND CARRIED TO THE GENERAL SUMMARY:

ITEM 203 - EXCAVATION 63 CY
ITEM 203 - EMBANKMENT 51 CY

PAVEMENT RESTORATION AND RESURFACING FOR CONDUITS

THE FOLLOWING QUANTITY IS PROVIDED FOR PAVEMENT RESTORATION AFTER THE INSTALLATION AND/OR REMOVAL OF CONDUITS

STA. 78+58 TO STA. 78+98
ITEM 202 - PAVEMENT REMOVED, 167 SQ. YDS.
ITEM 204 - SUBGRADE COMPACTION, 146 SQ. YDS.
ITEM 301 - ASPHALT CONCRETE BASE, PG64-22, (449), 31 CU YDS.
ITEM 304 - AGGREGATE BASE, 25 CU YDS.
ITEM 407 - NON-TRACKING TACK COAT, 26 GAL.
ITEM 408 - PRIME COAT, 15 GAL.
ITEM 441 - ASPHALT CONCRETE SURFACE COURSE, TYPE 1 (449), PG64-22 (T=3"), 12 CU. YDS. (PLACED IN 2 LIFTS)
ITEM 617 - COMPACTED AGGREGATE, AS PER PLAN (T=1.0"), 1 CU. YDS.

THE FOLLOWING QUANTITIES HAVE BEEN PROVIDED TO RESURFACE THE ROADWAY AFTER THE INSTALLATION AND/OR REMOVAL OF CONDUITS

STA. 78+38 TO STA. 78+58
STA. 78+98 TO STA. 79+48
ITEM 254 - PAVEMENT PLANING (T=3"), 234 SQ. YDS.
ITEM 407 - NON-TRACKING TACK COAT, 22 GAL.
ITEM 408 - PRIME COAT, 26 GAL.
ITEM 301 - ASPHALT CONCRETE SURFACE COURSE, TYPE 1, (449), PG64-22 (T=3"), 20 CU. YDS.
ITEM 617 - COMPACTED AGGREGATE, AS PER PLAN (T=1.0"), 2 CU. YDS.

CONNECTION BETWEEN EXISTING AND PROPOSED GUARDRAIL

WHEN IT IS NECESSARY TO SPLICE PROPOSED GUARDRAIL TO EXISTING GUARDRAIL, ONLY THE EXISTING GUARDRAIL SHALL BE CUT, DRILLED, OR PUNCHED. THE CONNECTION SHALL BE MADE USING A W-BEAM, BEAM SPLICE AS SHOWN IN AASHTO M 180-12, EXCEPT THE BEAM WASHERS ARE NOT TO BE USED. PAYMENT SHALL BE INCLUDED IN THE CONTRACT PRICE FOR THE RESPECTIVE GUARDRAIL ITEMS.

ROADWAY AND DRAINAGE SUBSUMMARY - POR-43-3.596

REF NO.	SHEET NO.	STATION TO STATION	202 PIPE REMOVED, OVER 24" FT	202 CATCH BASIN REMOVED, (POR-43-3.956) EACH	202 PIPE REMOVED, 24" AND UNDER FT	202 GUARDRAIL REMOVED FT	202 STRUCTURE REMOVED, (POR-43-3.956) LS	202 HEADWALL REMOVED, (POR-43-3.956) EACH	503 COFFERDAMS AND EXCAVATION BRACING, (POR-43-3.956) LS	601 ROCK CHANNEL PROTECTION, TYPE B WITH GEOTEXTILE FABRIC CY	602 CONCRETE MASONRY CY	606 ANCHOR ASSEMBLY, MGS TYPE E, MASH 2016 EACH	606 GUARDRAIL, TYPE MGS FT	611 60" CONDUIT, TYPE B, 706.02 FT	611 54" CONDUIT, TYPE C, 706.02 FT	611 15" CONDUIT, TYPE B FT	611 CATCH BASIN, NO. 2-6 EACH	614 BARRIER REFLECTOR, TYPE 2, BIDIRECTIONAL EACH
R-1	P.26	78+70.50 RT TO 78+79.72 RT			10													
R-2	P.26	78+79.72 RT TO 78+82.87 RT		1														
R-3	P.26	78+82.87 RT TO 78+88.95 RT	6															
R-4	P.26	78+76.44 LT TO 78+81.23 RT	58				LS											
R-5	P.26	78+73.61 LT TO 78+79.04 LT						1										
R-6	P.26	78+17.65 LT TO 81+08.12 LT				163						1						
D-1	P.26	78+77.37 RT TO 78+77.37 LT								8				70				
D-2	P.26	78+73.11 RT TO 78+82.31 RT															1	
D-3	P.26	78+70.50 RT TO 78+77.55 RT														8		
D-4	P.26	78+80.17 RT TO 78+89.01 RT							LS						12			
D-5	P.26	78+72.80 LT TO 78+82.05 LT									1.32							
EC-1	P.26	78+72.80 LT TO 78+82.05 LT																
GR-1	P.26	78+14.94 LT TO 81+12.76 LT											138					3
TOTALS CARRIED TO GENERAL SUMMARY			64	1	10	163	LS	1	LS	8	2	1	138	70	12	8	1	3

D04-CULVERTS-FY2025

MODEL: Sheet_SurvFt PAPERSIZE: 34x22 (in.) DATE: 1/31/2025 TIME: 9:35:48 AM USER: mpalagan
pw:\\ohiodot-pw.bentley.com:ohiodot-pw-02\Documents\01 Active Projects\District 04_D04\109452\400-Engineering\Roadway\Sheets\109452_GS200.dgn

DESIGN AGENCY

DESIGNER NKF

REVIEWER MJP 04-24-24

PROJECT ID 109452

SHEET P.25 TOTAL 62

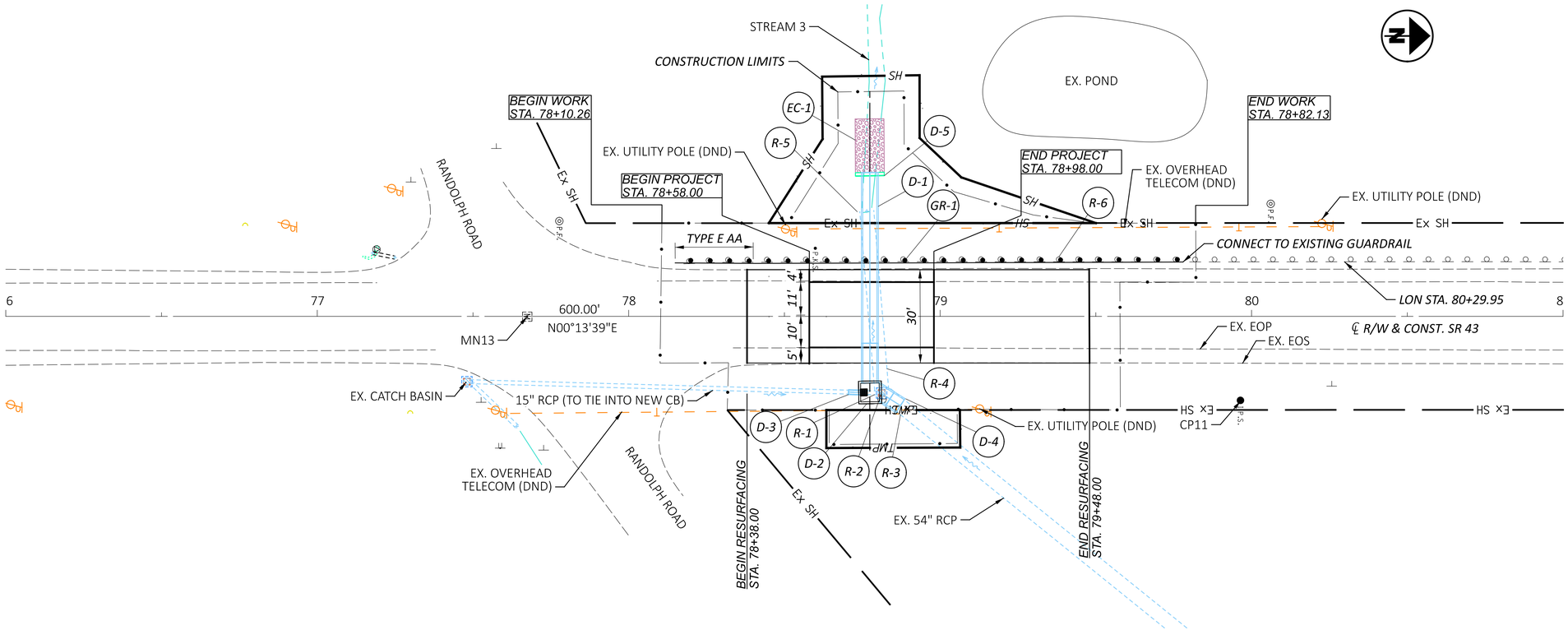

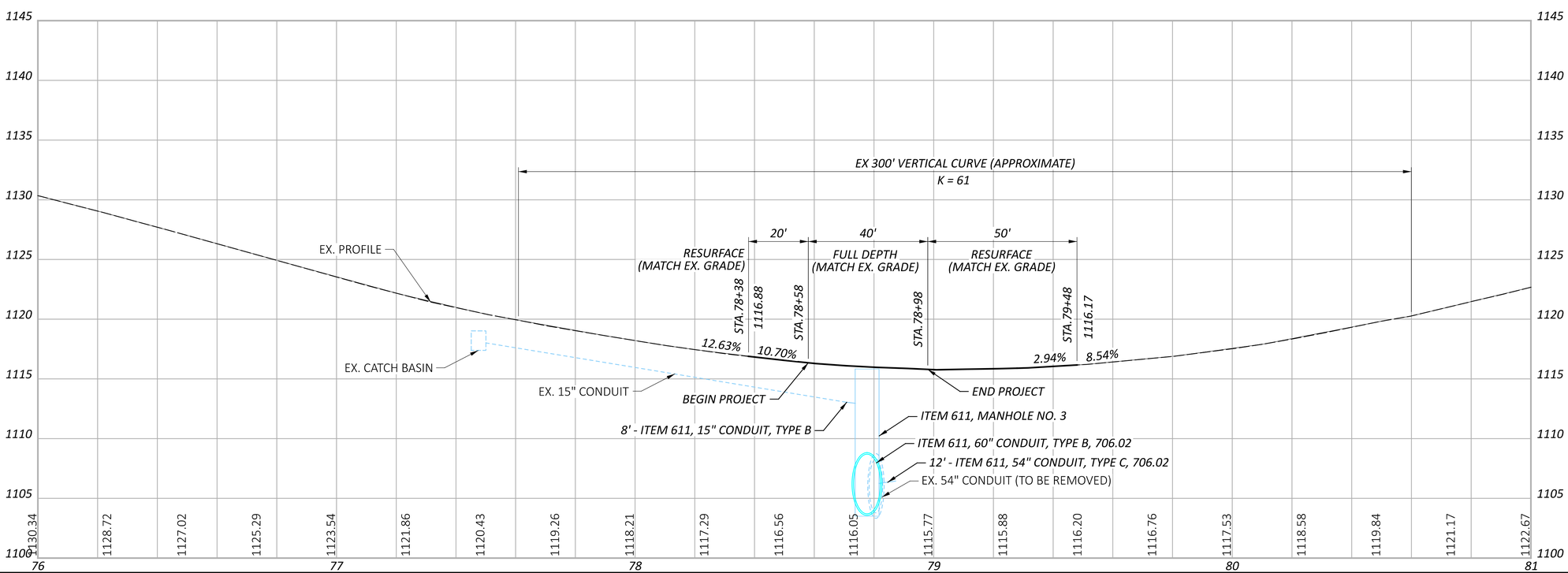

HORIZONTAL SCALE IN FEET
0 10 20 40

PLAN AND PROFILE - POR-43-3.956
STA. 76+00 TO 81+00

DESIGN AGENCY

DESIGNER
NKF

REVIEWER
MJP 04-24-24

PROJECT ID
109452

SHEET P.26 TOTAL 62

D04-CULVERTS-FY2025

MODEL: CLX_43 - Plan 1 [Sheet] PAPERSIZE: 34x22 (in.) DATE: 1/31/2025 TIME: 9:35:55 AM USER: mpalagan
pw:\\ohiodot-pw.bentley.com:ohiodot-pw-02\Documents\01 Active Projects\District 04_D04\109452\400-Engineering\Roadway\Sheets\109452_GP200.dgn

Cut Area (SF): 45	Cut Vol. (CY): 18
Fill Area (SF): 6	Fill Vol. (CY): 2
Seed Width (FT):	Seed Area (SY):

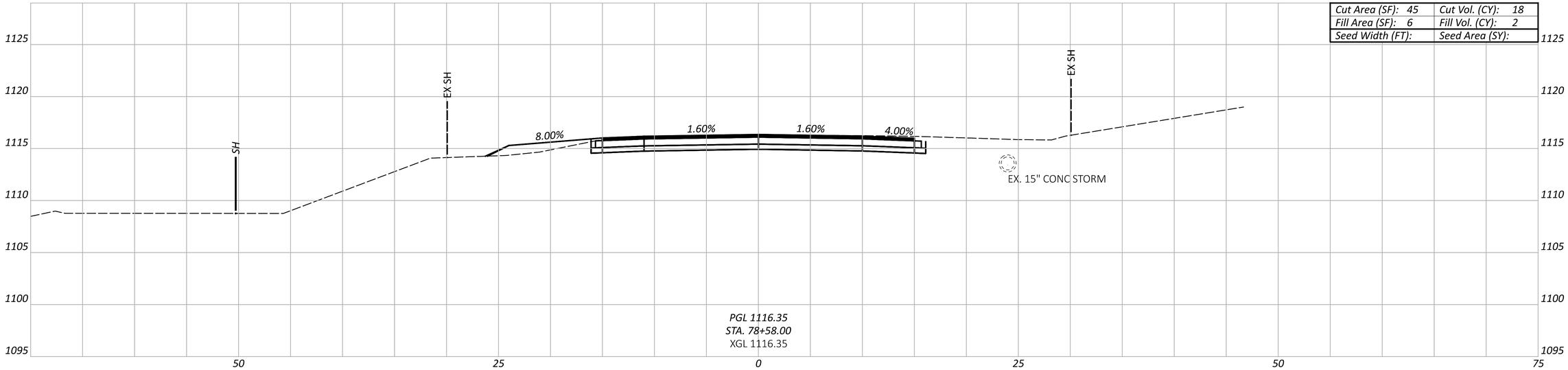

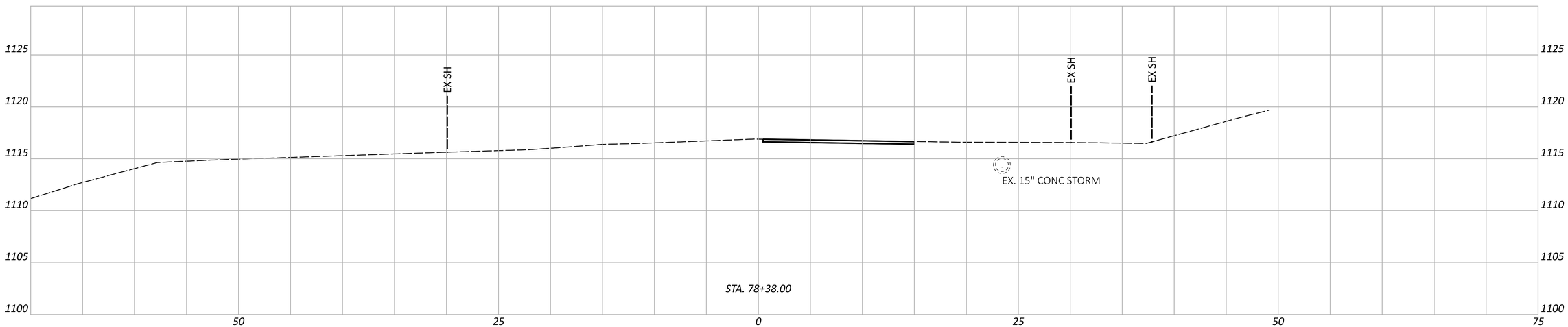

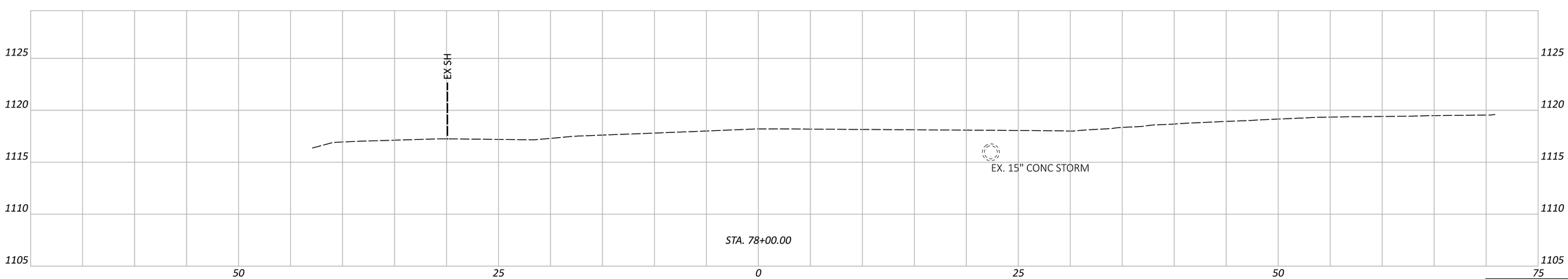

Sheet Totals		
Seeding	Cut	Fill
	18	2

CROSS SECTIONS - POR-43-3.596
STA. 78+00.00 TO STA. 78+58.00

DESIGN AGENCY

DESIGNER
NKF

REVIEWER
MJP 04-24-24

PROJECT ID
109452

SHEET P.27 TOTAL 62

D04-CULVERTS-FY2025

MODEL: CLX_43 - Sheet 001 PAPERSIZE: 34x22 (in.) DATE: 1/31/2025 TIME: 9:36:03 AM USER: mpalagan
pw:\\ohiodot-pw.bentley.com:ohiodot-pw-02\Documents\01 Active Projects\District 04_D04\109452\400-Engineering\Roadway\Sheets\109452_XS201.dgn

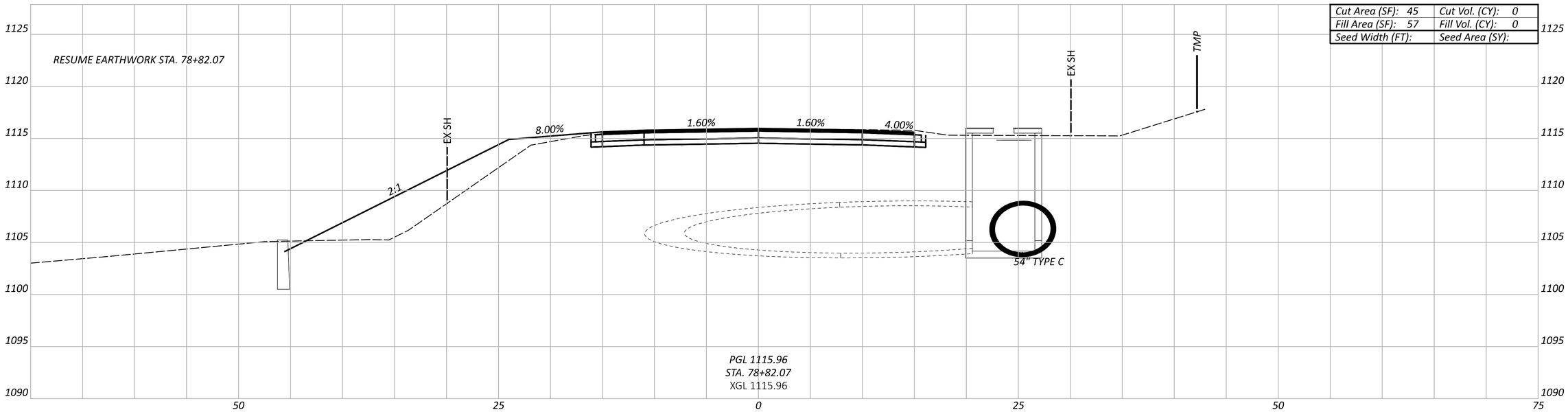

Cut Area (SF): 45	Cut Vol. (CY): 0
Fill Area (SF): 57	Fill Vol. (CY): 0
Seed Width (FT):	Seed Area (SY):

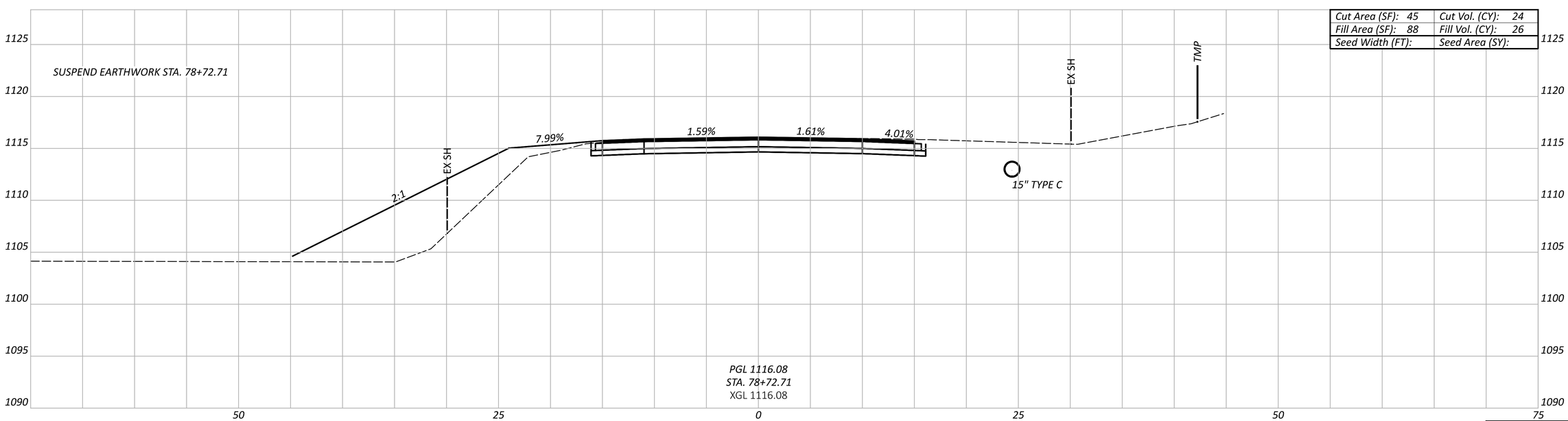

Cut Area (SF): 45	Cut Vol. (CY): 24
Fill Area (SF): 88	Fill Vol. (CY): 26
Seed Width (FT):	Seed Area (SY):

Sheet Totals		
Seeding	Cut	Fill
	24	26

CROSS SECTIONS - POR-43-3.596
STA. 78+72.71 TO STA. 78+82.07

DESIGN AGENCY

DESIGNER
NKF

REVIEWER
MJP 04-24-24

PROJECT ID
109452

SHEET P.28 TOTAL 62

D04-CULVERTS-FY2025

MODEL: CLX_43 - Sheet 002 PAPERSIZE: 34x22 (in.) DATE: 1/31/2025 TIME: 9:36:05 AM USER: mpalagan
pw:\\ohiodot-pw.bentley.com:ohiodot-pw-02\Documents\01 Active Projects\District 04_D04\109452\400-Engineering\Roadway\Sheets\109452_XS201.dgn

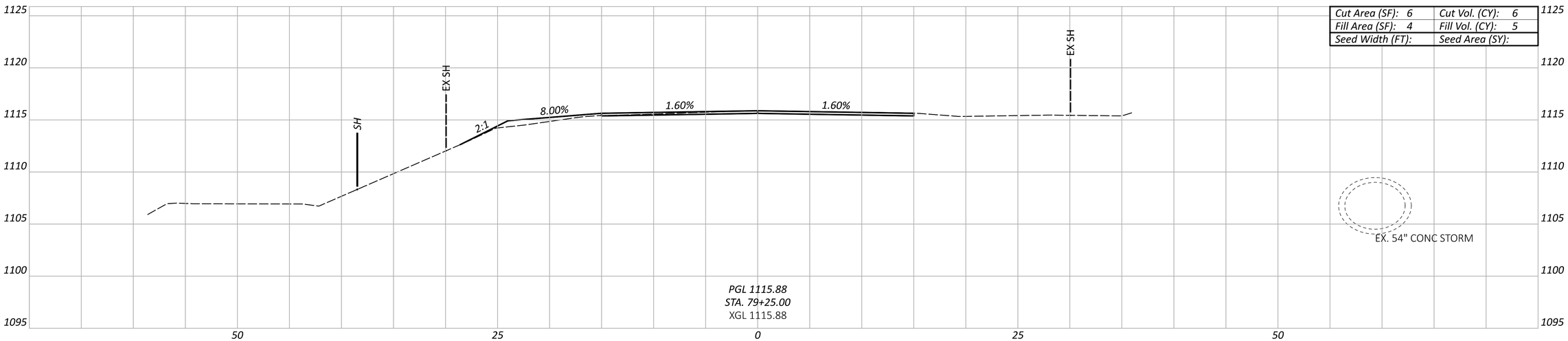

Cut Area (SF): 6	Cut Vol. (CY): 6
Fill Area (SF): 4	Fill Vol. (CY): 5
Seed Width (FT):	Seed Area (SY):

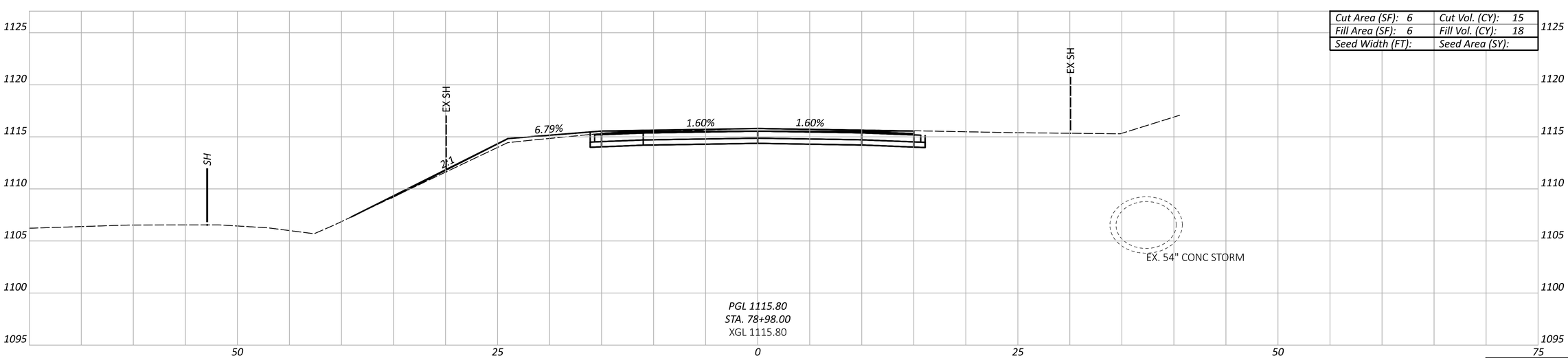

Cut Area (SF): 6	Cut Vol. (CY): 15
Fill Area (SF): 6	Fill Vol. (CY): 18
Seed Width (FT):	Seed Area (SY):

Sheet Totals		
Seeding	Cut	Fill
	21	23

CROSS SECTIONS - POR-43-3.596
STA. 78+98.00 TO STA. 79+25.00

DESIGN AGENCY

DESIGNER
NKF

REVIEWER
MJP 04-24-24

PROJECT ID
109452

SHEET P.29 TOTAL 62

D04-CULVERTS-FY2025

MODEL: CLX_43 - Sheet 003 PAPERSIZE: 34x22 (in.) DATE: 1/31/2025 TIME: 9:36:05 AM USER: mpalagan
pw:\\ohiodot-pw.bentley.com:ohiodot-pw-02\Documents\01 Active Projects\District 04_D04\109452\400-Engineering\Roadway\Sheets\109452_XS201.dgn

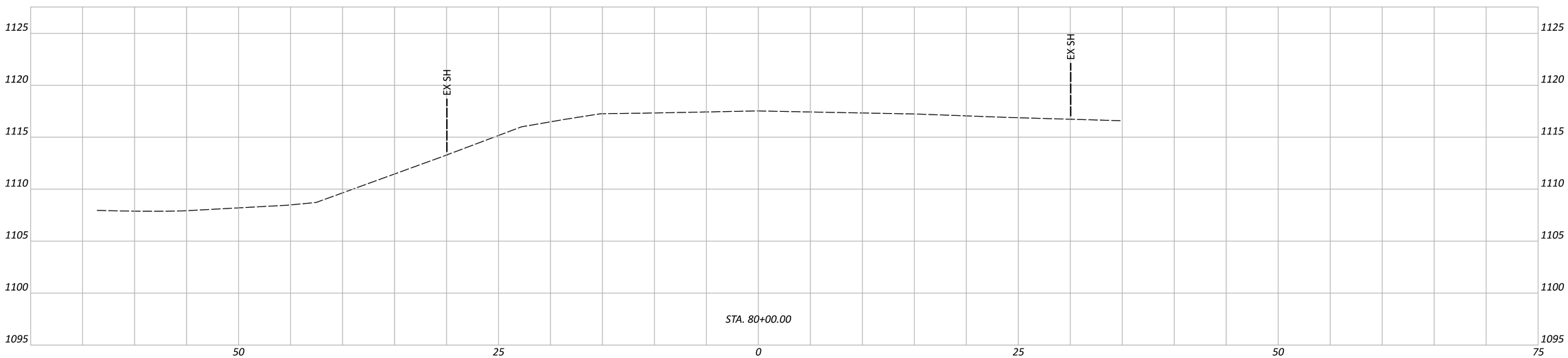

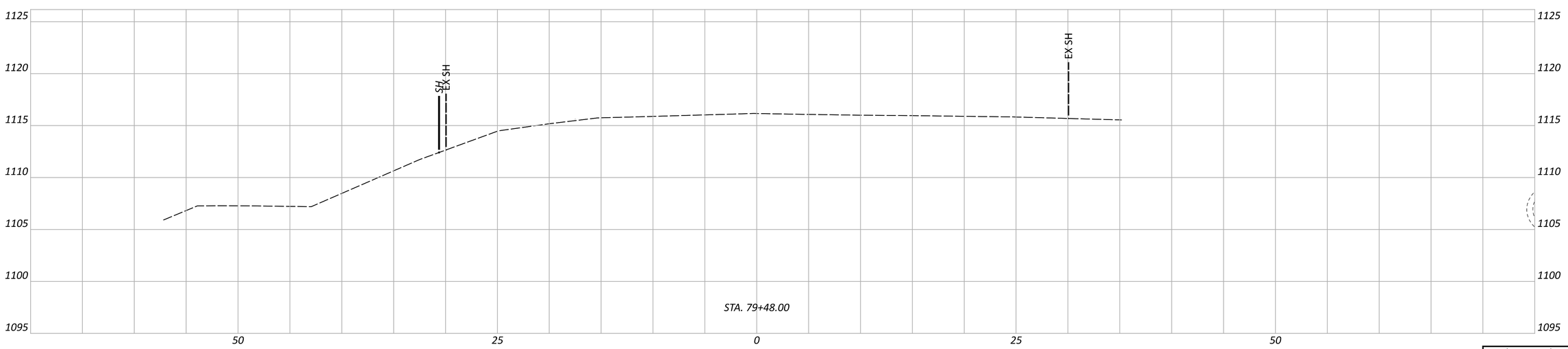

Sheet Totals		
Seeding	Cut	Fill

CROSS SECTIONS - POR-43-3.596
STA. 79+48.00 TO STA. 80+00.00

DESIGN AGENCY

DESIGNER
NKF

REVIEWER
MJP 04-24-24

PROJECT ID
109452

SHEET P.30 TOTAL 62

D04-CULVERTS-FY2025

MODEL: CLX_43 - Sheet 004 PAPERSIZE: 34x22 (in.) DATE: 1/31/2025 TIME: 9:36:06 AM USER: mpalagan
pw:\\ohiodot-pw.bentley.com:ohiodot-pw-02\Documents\01 Active Projects\District 04_D04\109452\400-Engineering\Roadway\Sheets\109452_XS201.dgn

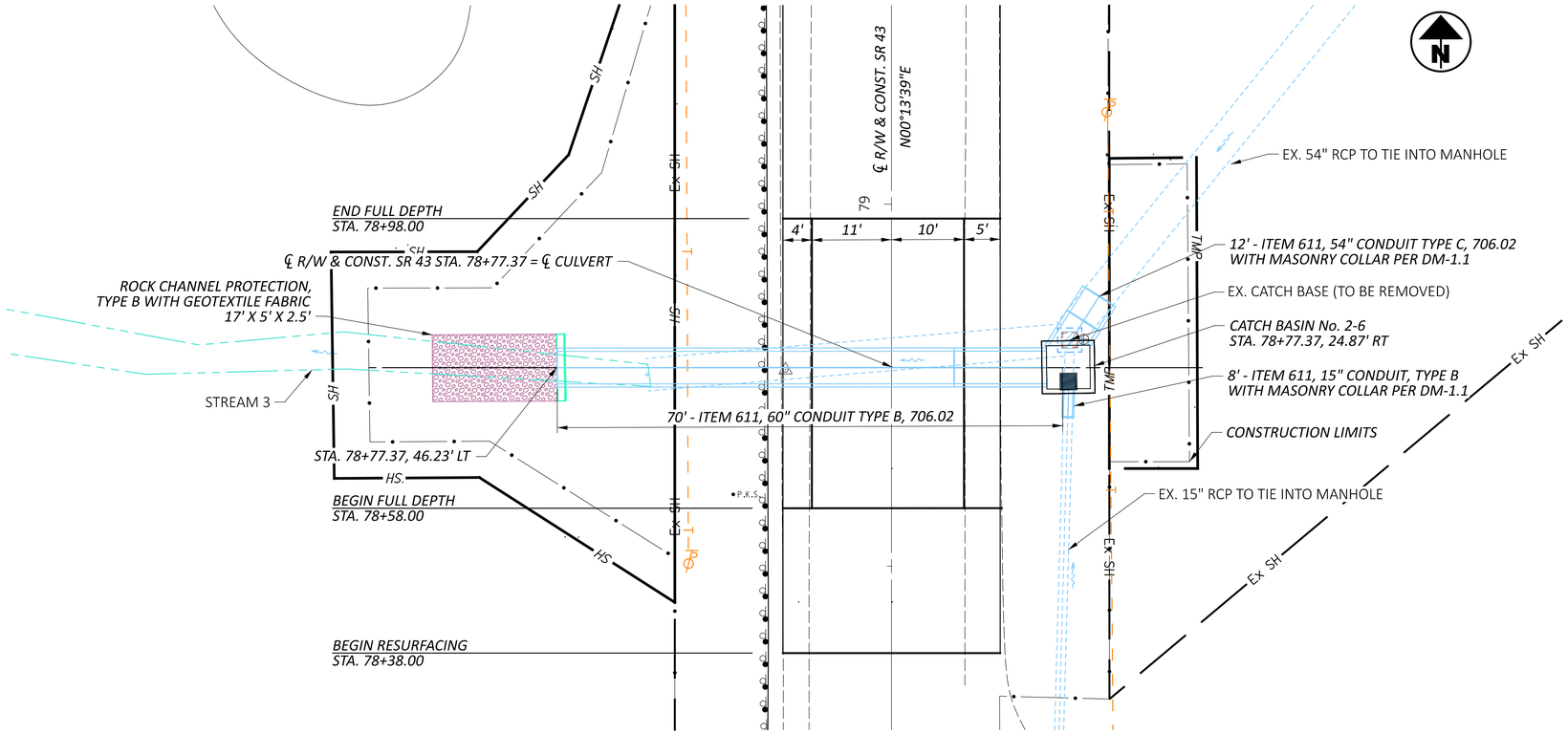

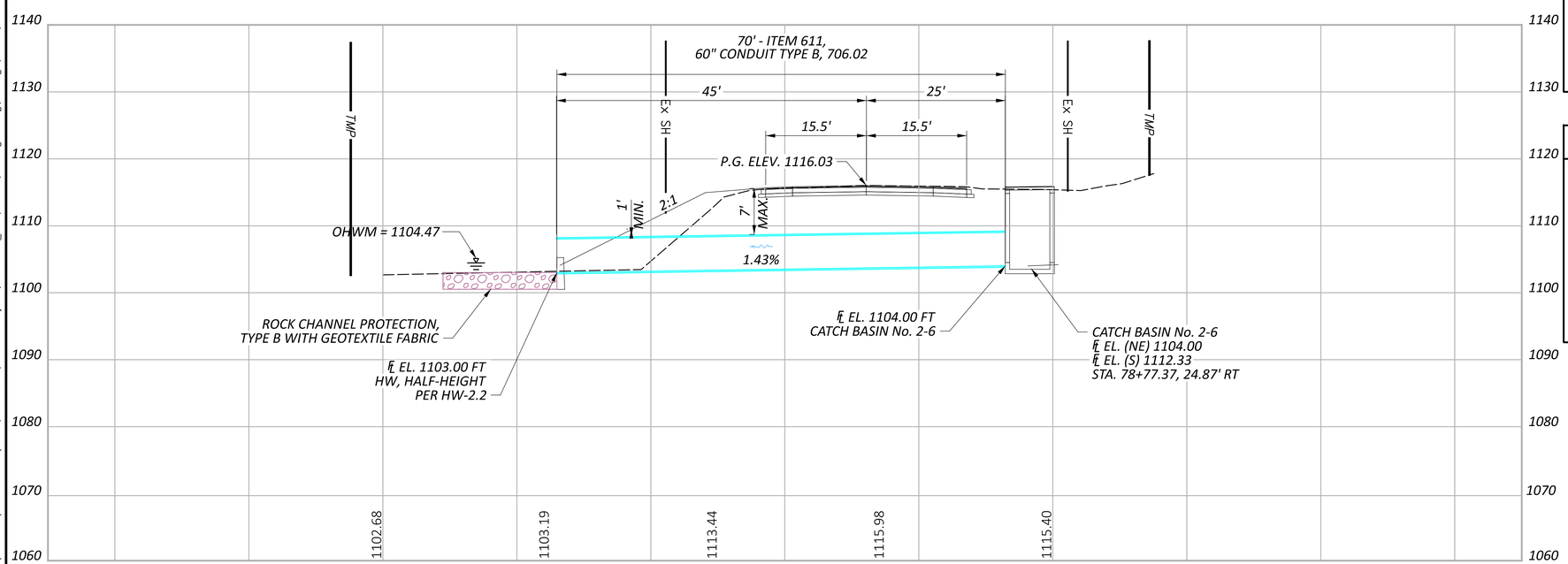

FOR BENCHMARK INFORMATION, SEE SHEET P.24

FOR ESTIMATED QUANTITIES, SEE SHEET P.25

OUTLET HYDRAULIC DATA

DRAINAGE AREA = 1062 ACRES

Q (10%) = 114 CFS *V (10%) = 12.1 FT/S*

Q (4%) = 143 CFS *V (4%) = 13.1 FT/S*

OHWM = 1104.47

DESIGN SERVICE LIFE: 75 YEARS

ABRASION LEVEL: 2.0

pH: 7.0

EXISTING STRUCTURE

TYPE: CONCRETE SLAB TOP CONDUIT STONE WALLS AND ABUTMENTS AND CMP CONDUIT EXTENSIONS

SIZE: 60"

SKEW: 15°

ALIGNMENT: TANGENT

DATE BUILT: UNKNOWN

CONDITION: TO BE REMOVED AND REPLACED

CFN: 1866619

PROPOSED STRUCTURE

TYPE: 60" CONDUIT TYPE B, 706.02

SKEW: NONE

ALIGNMENT: TANGENT

CFN: 1995679

HORIZONTAL SCALE IN FEET 0 5 10 20

CULVERT DETAILS - POR-43-3.956 STA. 78+77.37

DESIGN AGENCY

DESIGNER NKF

REVIEWER MJP 04-24-24

PROJECT ID 109452

SUBSET 1 TOTAL 1

SHEET P.31 TOTAL 62

D04-CULVERTS-FY2025

MODEL: CLP_1 - Plan 1 [Sheet] PAPERSIZE: 34x22 (in.) DATE: 1/31/2025 TIME: 9:36:12 AM USER: mpalagan
pw:\\ohiodot-pw.bentley.com:ohiodot-pw-02\Documents\01 Active Projects\District 04_D04\109452\400-Engineering\Drainage\Sheets\109452_DC201.dgn

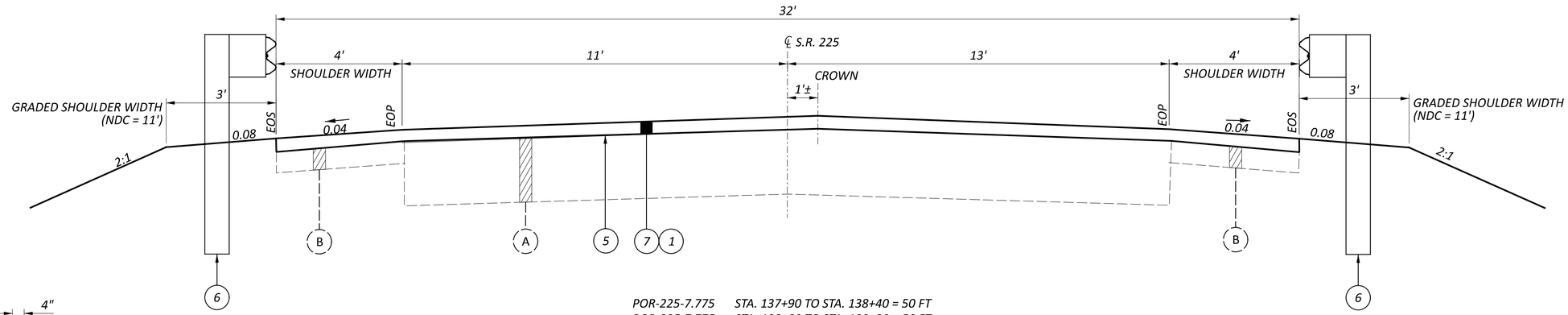

POR-225-7.775 STA. 137+90 TO STA. 138+40 = 50 FT
POR-225-7.775 STA. 138+80 TO STA. 139+30 = 50 FT

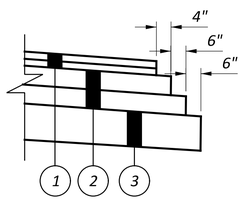

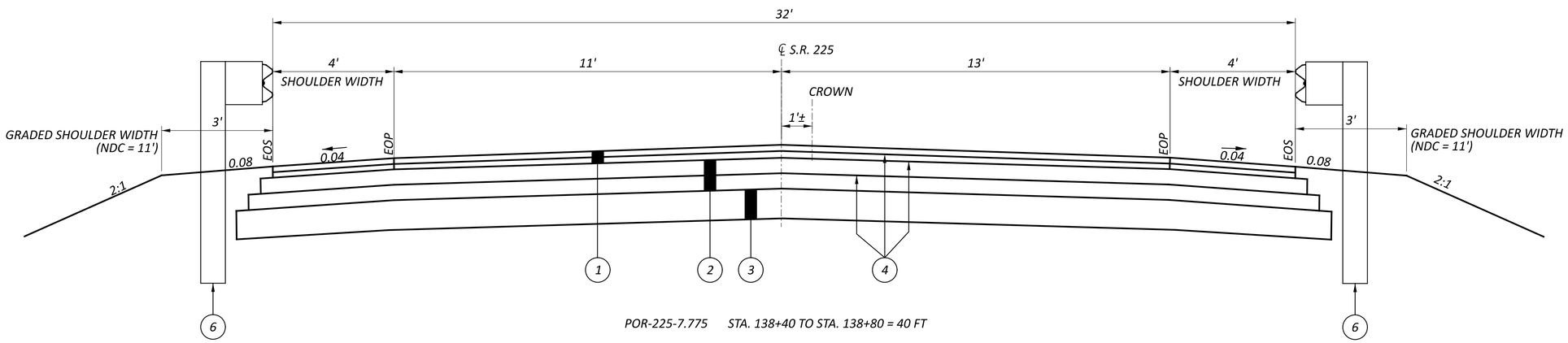

POR-225-7.775 STA. 138+40 TO STA. 138+80 = 40 FT

LEGEND

1. ITEM 441, ASPHALT CONCRETE SURFACE COURSE, TYPE 1, (449), PG64-22 (T=3") - 2 LIFTS
2. ITEM 301, ASPHALT CONCRETE BASE, (449), PG64-22 (T=9") - 2 LIFTS
3. ITEM 304, AGGREGATE BASE (T=6")
4. ITEM 407, NON-TRACKING TACK COAT @ 0.06 GAL/SY
5. ITEM 407, NON-TRACKING TACK COAT @ 0.09 GAL/SY
6. ITEM 606, GUARDRAIL, TYPE MGS
7. ITEM 254, PAVEMENT PLANING, ASPHALT CONCRETE (T=3")

(A) EXISTING PAVEMENT ASPHALT

(B) EXISTING ASPHALT SHOULDER

NDC - NORMAL DESIGN CRITERIA

TYPICAL SECTIONS-POR-225-7.775

DESIGN AGENCY

DESIGNER
NKF

REVIEWER
MJP 04-24-24

PROJECT ID
109452

SHEET P.32 TOTAL 62

D04-CULVERTS-FY2025

MODEL: SHEET 1 PAPERSIZE: 34x22 (in.) DATE: 1/31/2025 TIME: 9:36:20 AM USER: mpatagan
pw:\\ohiodot-pw.bentley.com:ohiodot-pw-02\Documents\01 Active Projects\District 04_D04\109452\400-Engineering\Roadway\Sheets\109452_GY300.dgn

SURVEYING PARAMETERS

PRIMARY PROJECT CONTROL MONUMENTS GOVERN ALL POSITIONING ON ODOT PROJECTS. SEE THIS SHEET OF THE PLANS FOR A TABLE CONTAINING PROJECT CONTROL INFORMATION.

USE THE FOLLOWING PROJECT CONTROL, VERTICAL POSITIONING, AND HORIZONTAL POSITIONING PARAMETERS FOR ALL SURVEYING:

PROJECT CONTROL

POSITIONING METHOD: STATIC
MONUMENT TYPE: B

VERTICAL POSITIONING

ORTHOMETRIC HEIGHT DATUM: NAVD 88
GEOID: 2018

HORIZONTAL POSITIONING

REFERENCE FRAME: NAD 83 (2011) (EPOCH: 2010.0000)
ELLIPSOID: GRS80
MAP PROJECTION: TRANSVERSE MERCATOR
COORDINATE SYSTEM: PORTAGE COUNTY LDP
COMBINED SCALE FACTOR: 1.000043
ORIGIN OF COORDINATE SYSTEM: N 39-48-00, E 278-54-00

USE THE POSITIONING METHODS AND MONUMENT TYPE USED IN THE ORIGINAL SURVEY TO RESTORE ALL MONUMENTS RELATED TO PRIMARY PROJECT CONTROL THAT ARE DAMAGED OR DESTROYED BY CONSTRUCTION ACTIVITIES. RESTORE THE DAMAGED OR DESTROYED MONUMENTS IN ACCORDANCE WITH CMS 623.

UNITS ARE IN U.S. SURVEY FEET.
USE THE FOLLOWING CONVERSION FACTOR:
1 METER = 3.2808333333 U.S. SURVEY FEET

ITEM 201 - CLEARING AND GRUBBING, AS PER PLAN, AROUND CULVERTS (POR-225-7.775)

ALTHOUGH THERE ARE NO TREES OR STUMPS SPECIFICALLY MARKED FOR REMOVAL WITHIN THE PLANS, A LUMP SUM QUANTITY IS INCLUDED IN THE GENERAL SUMMARY FOR ITEM 201, CLEARING AND GRUBBING, AS PER PLAN, AROUND CULVERTS. SCALPING IS NOT REQUIRED FOR THIS ITEM OF WORK. ALL VEGETATION SHALL BE REMOVED WITHIN 15 FEET (OR TO THE R/W LIMITS, WHICHEVER IS CLOSER) OF THE HEADWALLS, ABUTMENTS, AND/OR PIERS.

ALL OTHER PROVISIONS AS SET FORTH IN THE CMS UNDER THIS ITEM ARE INCLUDED IN THE LUMP SUM BID PRICE FOR IS INCLUDED IN THE GENERAL SUMMARY FOR ITEM 201, CLEARING AND GRUBBING, AS PER PLAN, AROUND CULVERTS.

ITEM SPECIAL - SURVEY CONTROL VERIFICATION

THE CONTRACTOR SHALL PERFORM THIS WORK TO VERIFY THE PROVIDED SURVEY CONTROL. THE CONTRACTOR WILL PERFORM THE VERIFICATION USING ONE OF THE TWO METHODS BELOW DEPENDENT UPON THE CONTRACTOR'S CHOSEN MEANS OF SURVEY CONTROL TO BE USED ON THE PROJECT. THE WORK SHALL BE PERFORMED UNDER THE DIRECT SUPERVISION OF AN OHIO LICENSED SURVEYOR.

1. IF USING GPS DEVICES TO ESTABLISH AND OR PROVIDE SUPPLEMENTAL HORIZONTAL AND VERTICAL SURVEY CONTROL
a. LOCATE VERTICAL CONTROL POINTS PROVIDED IN THE PLAN AND PERFORM A DIFFERENTIAL LEVEL CIRCUIT.
b. PERFORM A SITE CALIBRATION UTILIZING THE AVAILABLE HORIZONTAL AND VERTICAL CONTROL POINTS PROVIDED IN THE PLAN.
c. PROVIDE A REPORT, SIGNED BY AN OHIO LICENSED SURVEYOR, TO THE PROJECT ENGINEER COMPARING THE OBSERVED DATA TO THE PLAN DATA ALONG WITH A NARRATIVE DETAILING ANY DISCREPANCIES FOUND.
2. IF USING CONVENTIONAL SURVEY INSTRUMENTATION TO ESTABLISH AND OR PROVIDE SUPPLEMENTAL HORIZONTAL AND VERTICAL SURVEY CONTROL
a. LOCATE VERTICAL CONTROL POINTS PROVIDED IN THE PLANS AND PERFORM A DIFFERENTIAL LEVEL CIRCUIT.
b. LOCATE AND OBSERVE ANGLE AND DISTANCE TO ALL AVAILABLE HORIZONTAL CONTROL POINTS PROVIDED IN THE PLAN.
c. PROVIDE A REPORT, SIGNED BY AN OHIO LICENSED SURVEYOR, TO THE PROJECT ENGINEER COMPARING THE OBSERVED DATA TO THE PLAN DATA ALONG WITH A NARRATIVE DETAILING ANY DISCREPANCIES FOUND.

ALL MATERIALS, LABOR, EQUIPMENT, TOOLS, AND INCIDENTIALS NECESSARY TO COMPLETE THIS WORK SHALL BE INCLUDED IN THE LUMP SUM BID ITEM.

CONTROL POINT (U.S. SURVEY FEET GROUND)					
POINT	NORTHING	EASTING	STATION	OFFSET	ELEV.
CP200	459280.612	177731.941	129+41.41	28.35' RT.	1027.58
CP300	459927.650	177607.329	135+95.43	51.95' LT.	1023.37
CP400	460900.140	177624.273	145+64.52	31.11' RT.	1034.38
CENTERLINE ALIGNMENT					
M1	453174.661	95818.042	135+30.88	1.61' RT.	
SV30	453542.080	95819.665	145+31.27	33.44' LT.	
SV31	453686.635	95993.769	142+96.97	33.03' RT.	
SV32	452423.468	95774.525	141+07.97	31.57' RT.	
SV33	454152.815	95791.574	139+52.90	31.01' RT.	
SV34	454051.049	95791.487	138+05.45	34.11' RT.	
SV35	455013.418	95855.200	138+96.66	32.84' LT.	
SV36	455143.349	95855.611	141+29.59	33.00' LT.	
BENCHMARK					
BM1	460197.506	177614.275	138+64.19	26.67' LT.	1012.60

UTILITIES

THE CONTRACTOR SHALL USE THE FOLLOWING PROCEDURE AT EACH LOCATION WHERE WORK IS PERFORMED, IN ACCORDANCE WITH SECTIONS 105.07 AND 107.16 IN THE CONSTRUCTION AND MATERIALS SPECIFICATIONS.

THE CONTRACTOR SHALL NOTIFY THE PROJECT ENGINEER, OHIO811, THE OHIO DEPARTMENT OF TRANSPORATION DISTRICT 4 HEADQUARTERS AND ALL NON REGISTERED UTILITY OWNERS AT LEAST TWO (2) WORKING DAYS PRIOR TO COMMENCING CONSTRUCTION OPERATION IN ALL AREAS.

THE LOCATION OF THE UNDERGROUND UTILITIES SHOWN ON THE PLANS ARE AS OBTAINED FROM THE OWNERS AS REQUIRED BY SECTION 153.64 O.R.C.

LISTED BELOW ARE ALL UTILITIES LOCATED WITHIN THE PROJECT CONSTRUCTION LIMITS TOGETHER WITH THEIR RESPECTIVE OWNERS:

Charter Communications
ATTN: Ron Ickes
5520 Whipple Ave. NW
North Canton, OH 44720
330-494-9200
216-392-7964 (cell)
Ron.Ickes@charter.com

Diversified Gas & Oil Plc
ATTN: Matt Postlethwait
Pipeline Technician - Ohio
1026A Cookson Ave SE
New Philadelphia, OH 44663
330-417-1397 (cell)
MPostlethwait@dgoc.com

Ohio Edison
ATTN: Phillip Rawson
730 South Avenue
Youngstown, OH 44502
724-255-1332 (cell)
prawson@firstenergycorp.com

CONDUIT IDENTIFICATION SIGNS

CONDUIT IDENTIFICATION SIGNS (I-H25b) WILL BE PLACED ON EACH APPROACH OFF THE RIGHT SHOULDER, FACING TRAFFIC, AND BEHIND THE GUARDRAIL IF APPLICABLE. A QUANTITY OF ONE SIGN PER APPROACH WILL BE INSTALLED. THE SIGNS WILL HAVE A NON-REFLECTIVE WHITE SHEETING BACKGROUND.

THE SIGNS WILL BE MOUNTED ON NEW NO. 2 POSTS AND WILL BE INSTALLED AS PER STANDARD CONSTRUCTION DRAWING TC-41.20, MOST CURRENT REVISION. EACH POST WILL BE 7.5' IN LENGTH.

INSTALL SIGNS FOR POR-225-7.775

THE FOLLOWING QUANTITIES HAVE BEEN INCLUDED FOR EACH APPROACH:
- ITEM 630 - SIGN, FLAT SHEET, 730.20, 1 SQ FT
- ITEM 630 - GROUND MOUNTED SUPPORT, NO. 2 POST, 7.5 FT
- ITEM 630 - REMOVAL OF GROUND MOUNTED SIGN AND DISPOSAL, 1 EACH
- ITEM 630 - REMOVAL OF GROUND MOUNTED POST SUPPORT AND DISPOSAL, 1 EACH

PAVEMENT MARKINGS

ALL PAVEMENT MARKINGS THAT ARE REMOVED DURING THE CULVERT REPLACEMENT WILL BE REPLACED WITH ITEM 642 - TRAFFIC PAINT. THE FOLLOWING ESTIMATED QUANTITIES HAVE BEEN CARRIED TO THE GENERAL SUMMARY:

ITEM 642 - EDGE LINE, 6", TYPE 1 0.06 MI
ITEM 642 - CENTER LINE, 6", TYPE 1 0.03 MI

SEEDING AND MULCHING

THE FOLLOWING QUANTITIES ARE PROVIDED TO PROMOTE GROWTH AND CARE OF PERMANENT SEEDED AREAS:

659, TOPSOIL 132 CU. YD.
659, SEEDING AND MULCHING 1,194 SQ. YD.
659, COMMERCIAL FERTILIZER 0.16 TON
659, LIME 0.25 ACRES
659, WATER 6 M. GAL.

SEEDING AND MULCHING SHALL BE APPLIED TO ALL AREAS OF EXPOSED SOIL BETWEEN THE RIGHT-OF-WAY LINES, AND WITHIN THE CONSTRUCTION LIMITS FOR AREAS OUTSIDE THE RIGHT-OF-WAY LINES COVERED BY WORK AGREEMENT OR SLOPE EASEMENT. QUANTITY CALCULATIONS FOR SEEDING AND MULCHING ARE BASED ON THESE LIMITS.

EXCAVATION AND EMBANKMENT

THE FOLLOWING QUANTITIES HAVE BEEN TAKEN FROM THE CROSS SECTION SHEETS AND CARRIED TO THE GENERAL SUMMARY:

ITEM 203 - EXCAVATION 133 CY
ITEM 203 - EMBANKMENT 118 CY

PAVEMENT RESTORATION AND RESURFACING FOR CONDUITS

THE FOLLOWING QUANTITY IS PROVIDED FOR PAVEMENT RESTORATION AFTER THE INSTALLATION AND/OR REMOVAL OF CONDUITS

STA. 138+40 TO STA.138+80
- ITEM 202 - PAVEMENT REMOVED, 133 SQ. YDS.
- ITEM 204 - SUBGRADE COMPACTION, 155 SQ. YDS.
- ITEM 301 - ASPHALT CONCRETE BASE, PG64-22, (449), 38 CU YDS.
- ITEM 304 - AGGREGATE BASE, 26 CU YDS.
- ITEM 407 - NON-TRACKING TACK COAT, 27 GAL.
- ITEM 441 - ASPHALT CONCRETE SURFACE COURSE, TYPE 1 (449), AS PER PLAN, PG64-22 (T=3"), 12 CU. YDS. (PLACED IN 2 LIFTS)

THE FOLLOWING QUANTITIES HAVE BEEN PROVIDED TO RESURFACE THE ROADWAY AFTER THE INSTALLATION AND/OR REMOVAL OF CONDUITS

STA. 137+90 TO STA. 138+40
STA. 138+80 TO STA. 139+30
- ITEM 254 - PAVEMENT PLANING (T=3"), 356 SQ. YDS.
- ITEM 407 - NON-TRACKING TACK COAT, 33 GAL.
- ITEM 301 - ASPHALT CONCRETE SURFACE COURSE, TYPE 1, (449), AS PER PLAN, PG64-22 (T=3"), 30 CU. YDS.

REF NO.	SHEET NO.	STATION TO STATION						202 HEADWALL REMOVED, (POR-225-7.775) EACH	202 PIPE REMOVED, OVER 24" FT	202 GUARDRAIL REMOVED FT	503 COFFERDAMS AND EXCAVATION BRACING, (POR-225-7.775) LS	601 RIPRAP, TYPE D SY	601 ROCK CHANNEL PROTECTION, TYPE B WITH GEOTEXTILE FABRIC CY	602 CONCRETE MASONRY CY	606 ANCHOR ASSEMBLY, MGS TYPE E, MASH 2016 EACH	606 ANCHOR ASSEMBLY, MGS TYPE T EACH	606 GUARDRAIL, TYPE MGS FT	611 43" X 68" CONDUIT, TYPE A, 706.04 FT	626 BARRIER REFLECTOR, TYPE 2, BIDIRECTIONAL EACH
				TO															
R-1	P.35	138+46.49	LT		138+59.48	LT		1											
R-2	P.35	138+50.19	RT		138+63.17	RT		1											
R-3	P.35	138+56.82	LT		138+56.70	RT			60										
R-4	P.35	137+38.36	LT		140+04.29	LT				266									
R-5	P.35	137+19.67	RT		138+85.63	RT				266									
D-1	P.35	138+52.87	LT		138+56.69	RT					LS							66	
D-2	P.35	138+46.49	LT		138+59.48	LT								1.01					
D-3	P.35	138+50.19	LT		138+63.17	LT								1.01					
EC-1	P.35	138+53.75	RT		138+60.97	RT							9						
EC-2	P.35	138+49.60	LT		138+55.67	RT						5							
GR-1	P.35	137+38.36	LT		140+04.29	LT									2		267		3
GR-2	P.35	137+19.67	RT		138+85.63	RT										2	298		3
TOTALS CARRIED TO GENERAL SUMMARY								2	60	532	LS	5	9	3	2	2	565	66	6

ROADWAY AND DRAINAGE SUBSUMMARY - POR-225-7.775

DESIGN AGENCY

DESIGNER
NKF

REVIEWER
MJP 04-24-24

PROJECT ID
109452

SHEET P.34 TOTAL 62

D04-CULVERTS-FY2025

MODEL: Sheet_SurvFt PAPERSIZE: 34x22 (in.) DATE: 1/31/2025 TIME: 9:36:34 AM USER: mpalagan
pw:\\ohiodot-pw.bentley.com:ohiodot-pw-02\Documents\01 Active Projects\District 04_D04\109452\400-Engineering\Roadway\Sheets\109452_GS300.dgn

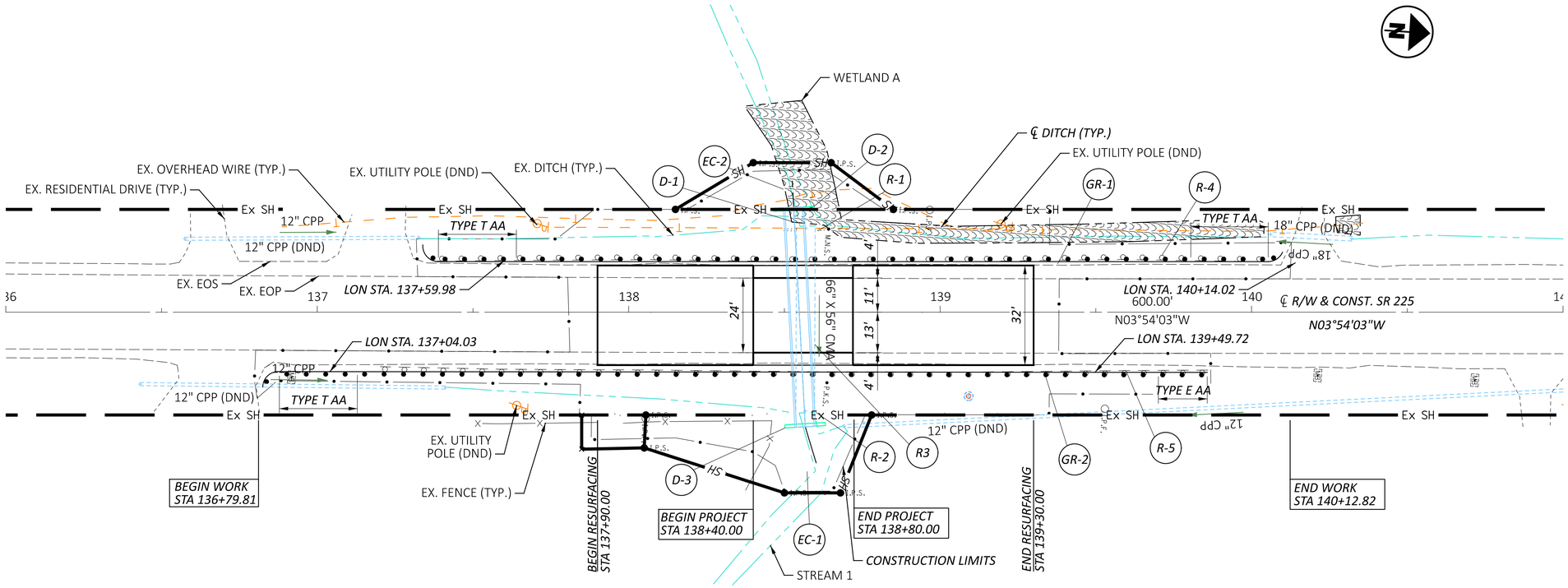

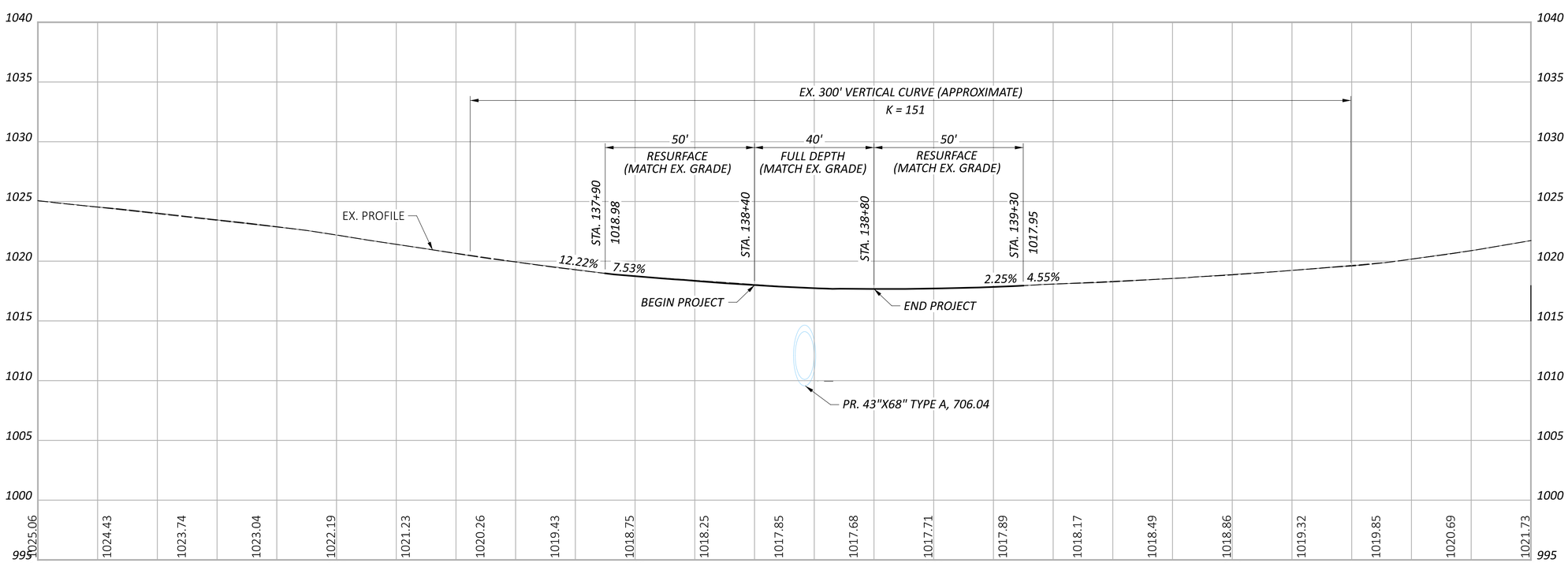

HORIZONTAL SCALE IN FEET
0 10 20 40

PLAN AND PROFILE - POR-225-7.775
STA. 136+00 TO 141+00

DESIGN AGENCY

DESIGNER NKF

REVIEWER MJP 04-24-24

PROJECT ID 109452

SHEET P.35 TOTAL 62

D04-CULVERTS-FY2025

MODEL: CLX_225 - Plan 1 [Sheet] PAPERSIZE: 34x22 (in.) DATE: 1/31/2025 TIME: 9:36:43 AM USER: mpalagan
pw:\\ohiodot-pw.bentley.com:ohiodot-pw-02\Documents\01 Active Projects\District 04_D04\109452\400-Engineering\Roadway\Sheets\109452_GP300.dgn

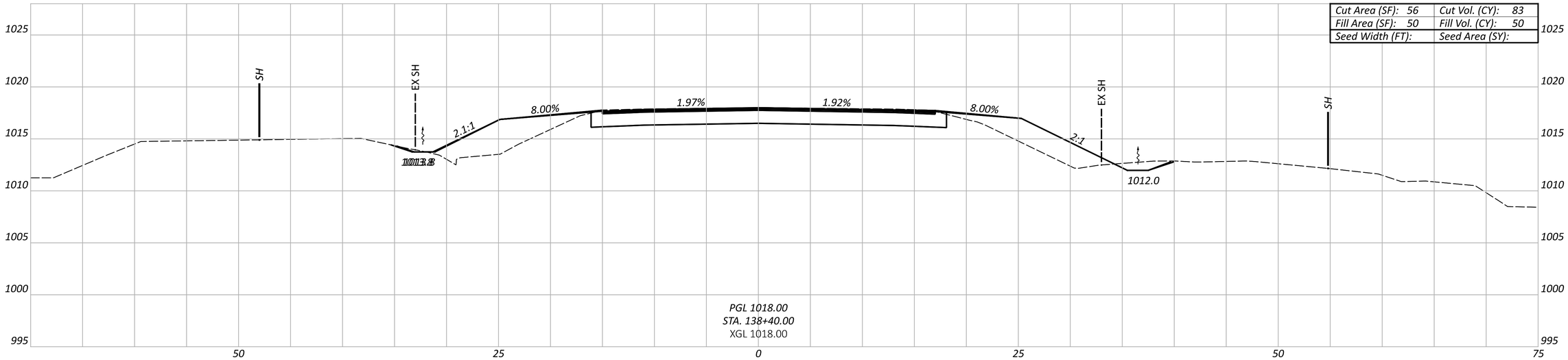

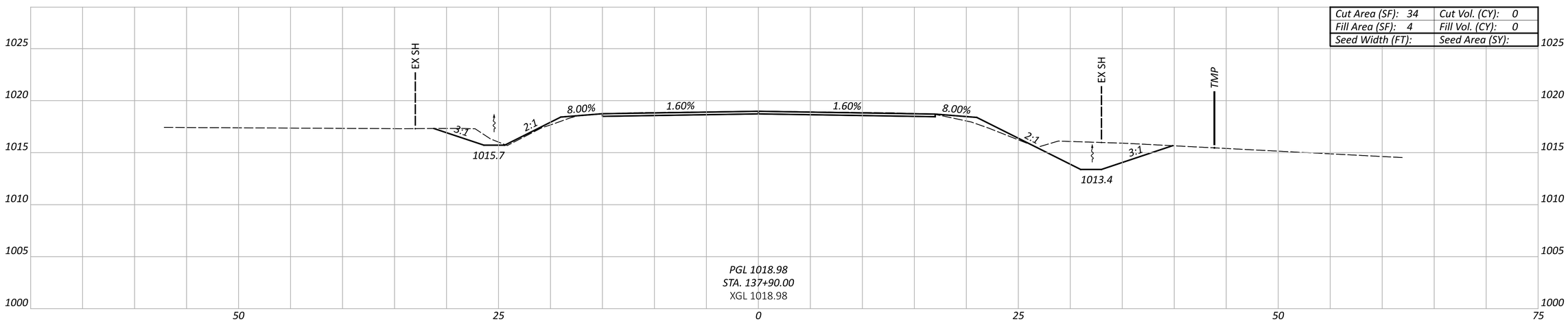

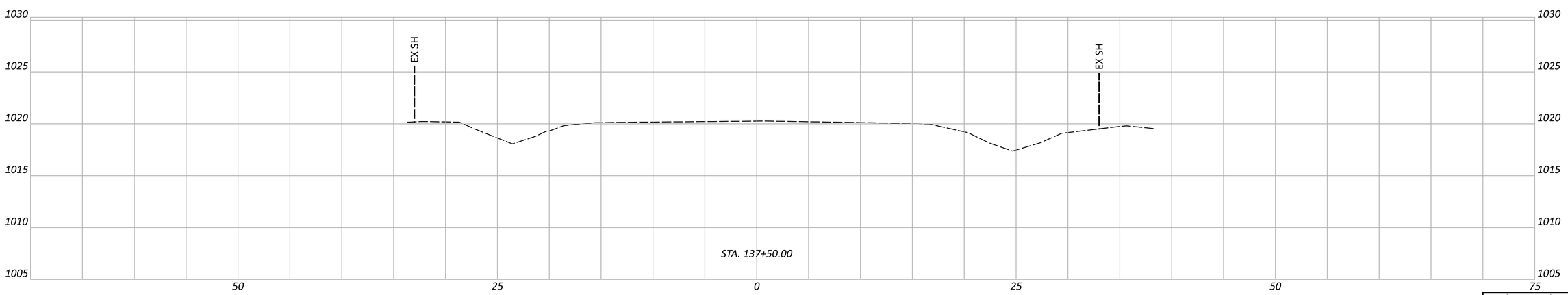

CROSS SECTIONS - POR-225-7.775
STA. 137+50.00 TO STA. 138+40.00

Sheet Totals		
Seeding	Cut	Fill
	83	50

DESIGN AGENCY

DESIGNER
NKF

REVIEWER
MJP 04-24-24

PROJECT ID
109452

SHEET P.36 TOTAL 62

D04-CULVERTS-FY2025

MODEL: CLX_225 - Sheet 001 PAPERSIZE: 34x22 (in.) DATE: 1/31/2025 TIME: 9:36:51 AM USER: mpalagan
pw:\\ohiodot-pw.bentley.com:ohiodot-pw-02\Documents\01 Active Projects\District 04_D04\109452\400-Engineering\Roadway\Sheets\109452_XS301.dgn

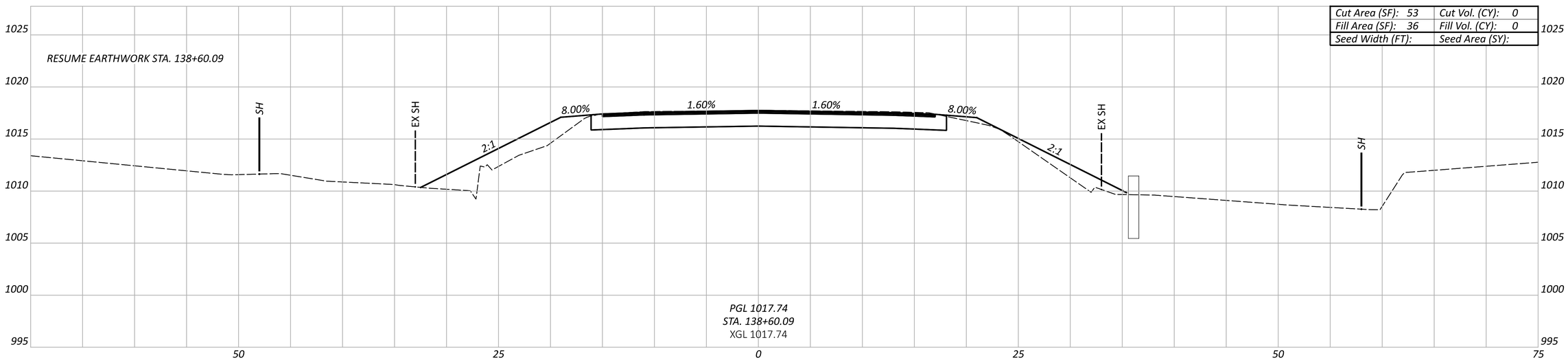

Cut Area (SF): 53	Cut Vol. (CY): 0
Fill Area (SF): 36	Fill Vol. (CY): 0
Seed Width (FT):	Seed Area (SY):

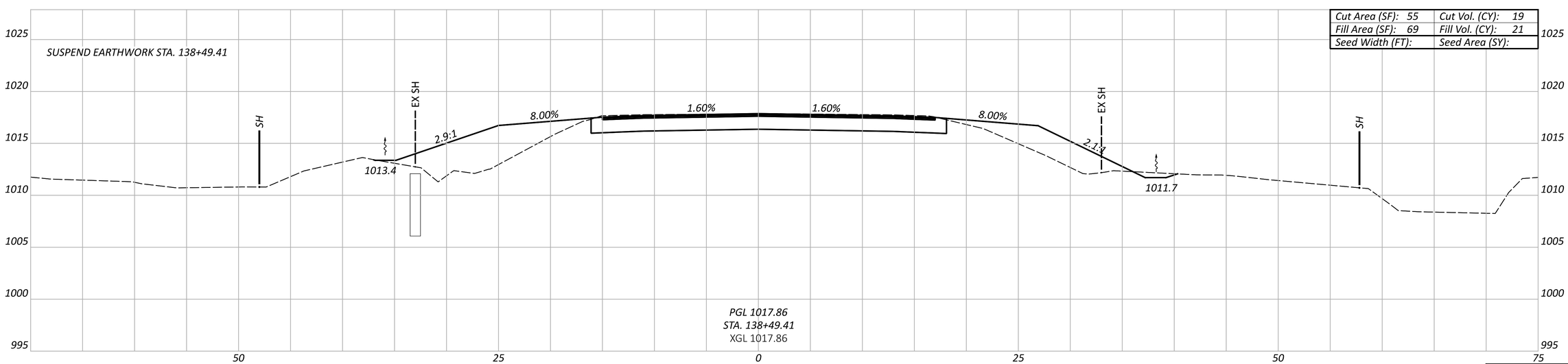

Cut Area (SF): 55	Cut Vol. (CY): 19
Fill Area (SF): 69	Fill Vol. (CY): 21
Seed Width (FT):	Seed Area (SY):

Sheet Totals		
Seeding	Cut	Fill
	19	21

CROSS SECTIONS - POR-225-7.775
STA. 138+49.41 TO STA. 138+60.09

DESIGN AGENCY

DESIGNER
NKF

REVIEWER
MJP 04-24-24

PROJECT ID
109452

SHEET P.37 TOTAL 62

D04-CULVERTS-FY2025

MODEL: CLX_225 - Sheet 002 PAPERSIZE: 34x22 (in.) DATE: 1/31/2025 TIME: 9:36:52 AM USER: mpalagan
pw:\\ohiodot-pw.bentley.com:ohiodot-pw-02\Documents\01 Active Projects\District 04_D04\109452\400-Engineering\Roadway\Sheets\109452_XS301.dgn

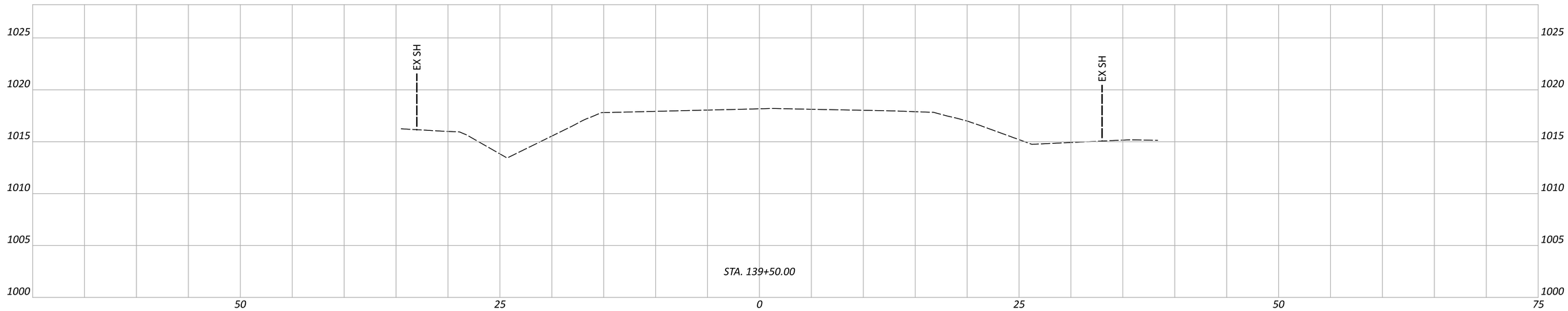

Cut Area (SF): 0	Cut Vol. (CY): 8
Fill Area (SF): 0	Fill Vol. (CY): 24
Seed Width (FT):	Seed Area (SY):

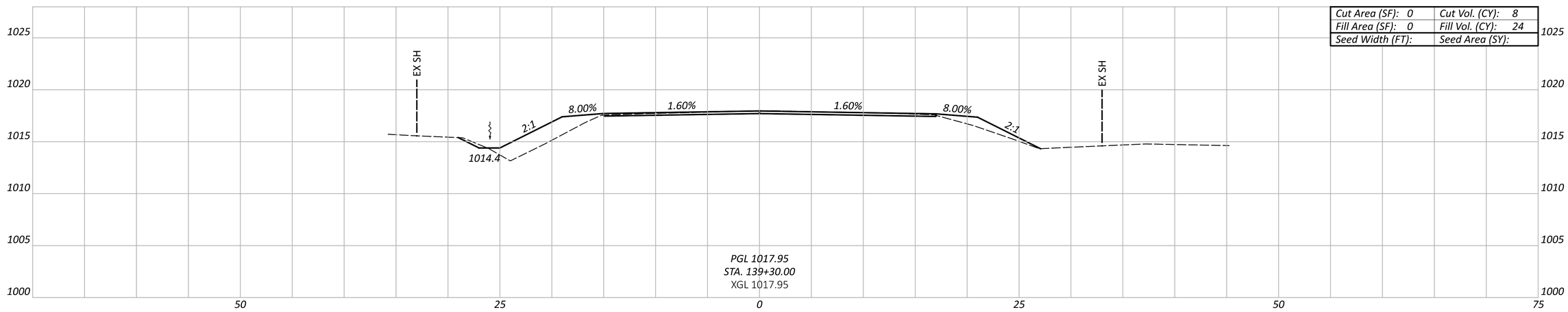

Cut Area (SF): 9	Cut Vol. (CY): 23
Fill Area (SF): 26	Fill Vol. (CY): 23
Seed Width (FT):	Seed Area (SY):

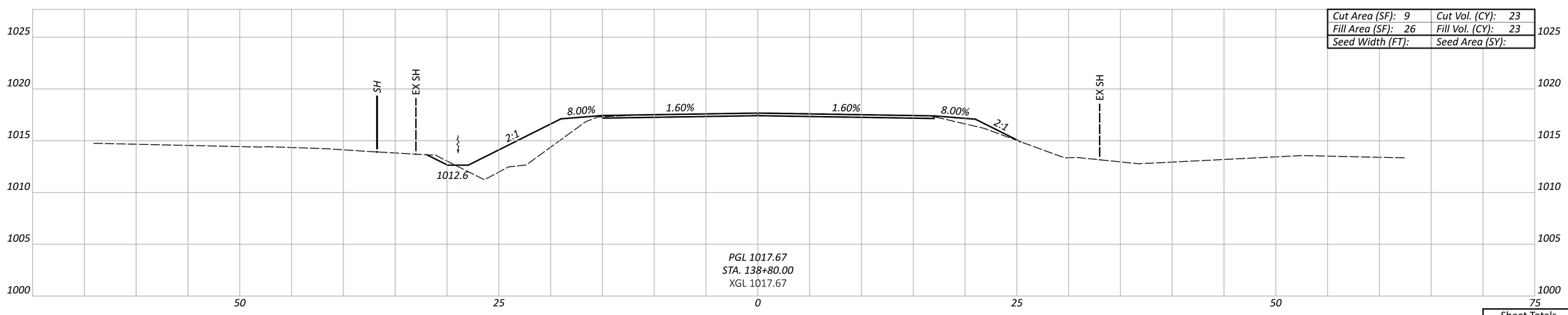

Sheet Totals		
Seeding	Cut	Fill
	31	47

CROSS SECTIONS - POR-225-7.775
STA. 138+80.00 TO STA. 139+50.00

DESIGN AGENCY

DESIGNER
NKF

REVIEWER
MJP 04-24-24

PROJECT ID
109452

SHEET P.38 TOTAL 62

D04-CULVERTS-FY2025

MODEL: CLX_225 - Sheet 003 PAPERSIZE: 34x22 (in.) DATE: 1/31/2025 TIME: 9:36:53 AM USER: mpalagan
pw:\\ohiodot-pw.bentley.com:ohiodot-pw-02\Documents\01 Active Projects\District 04_D04\109452\400-Engineering\Roadway\Sheets\109452_XS301.dgn

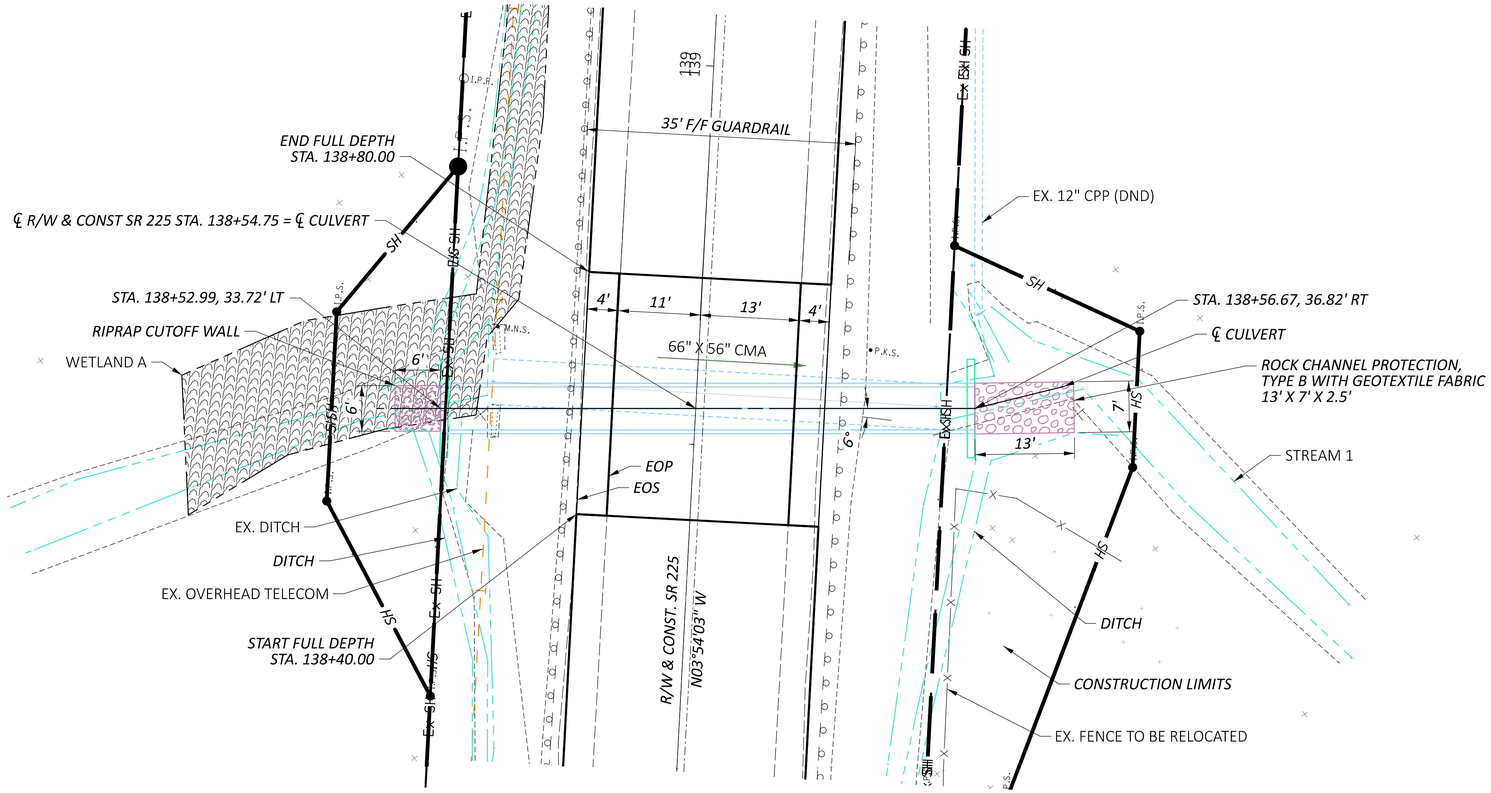

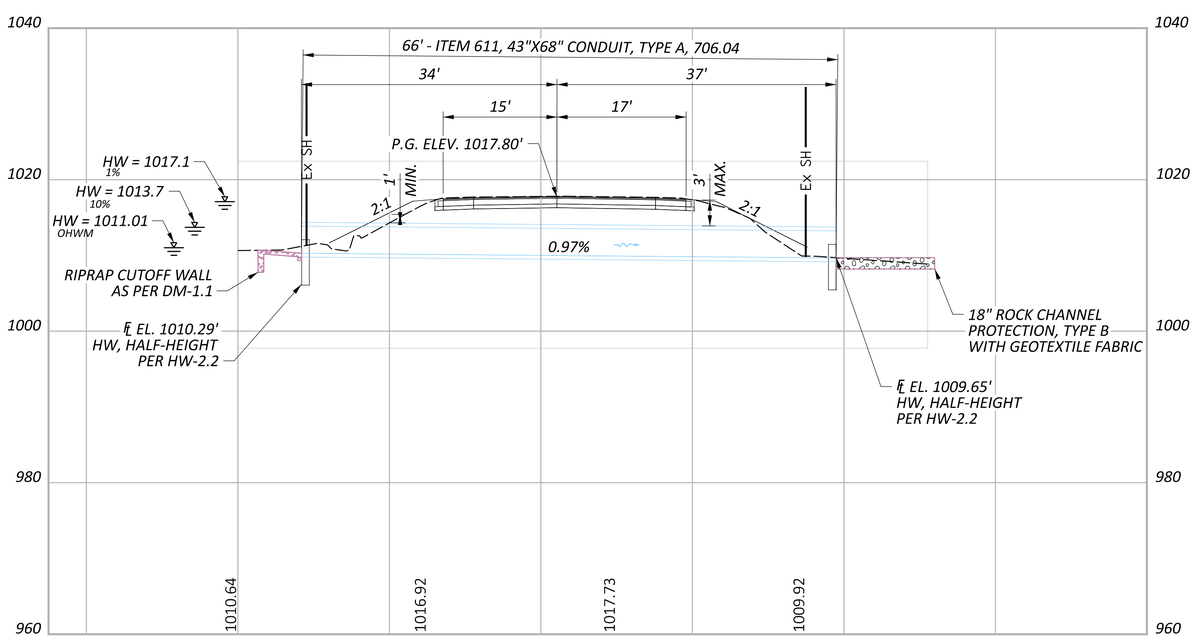

FOR BENCHMARK INFORMATION, SEE SHEET P.33
FOR ESTIMATED QUANTITIES, SEE SHEET P.34

HORIZONTAL SCALE IN FEET
0 5 10 20

HYDRAULIC DATA

DRAINAGE AREA = 160 ACRES

Q (10%) = 83 CFS	V (10%) = 12.1 FT/S	HW (10%) = 1013.5 FT
Q (1%) = 171 CFS	V (1%) = 14.7 FT/S	HW (1%) = 1016.1 FT

ORDINARY HIGH WATER MARK: 1011.01 FT
DESIGN SERVICE LIFE: 75 YEARS
ABRASION LEVEL: 2.0
pH: 7.0

EXISTING CONDUIT

TYPE: CORRUGATED METAL PIPE ARCH
SIZE: 66" X 51"
SKEW: NONE
ALIGNMENT: TANGENT
DATE BUILT: UNKNOWN
CONDITION: TO BE REMOVED AND REPLACED
CFN: 1823982

PROPOSED CONDUIT

TYPE: 706.04, REINFORCED CONCRETE ELLIPTICAL CULVERT
43" X 68"
SKEW: 6° RF
ALIGNMENT: TANGENT
CFN: 1995676

CULVERT DETAILS - POR-225-7.775
STA. 138+54.75

DESIGN AGENCY

DESIGNER NKF
REVIEWER MJP 04-24-24
PROJECT ID 109452
SUBSET 1 TOTAL 1
SHEET P.39 TOTAL 62

D04-CULVERTS-FY2025

MODEL: CLP_225 [Sheet] PAPERSIZE: 34x22 (in.) DATE: 1/31/2025 TIME: 9:37:01 AM USER: mpalagan
pw:\\ohiodot-pw.bentley.com:ohiodot-pw-02\Documents\01 Active Projects\District 04_D04\109452\400-Engineering\Drainage\Sheets\109452_DC301.dgn

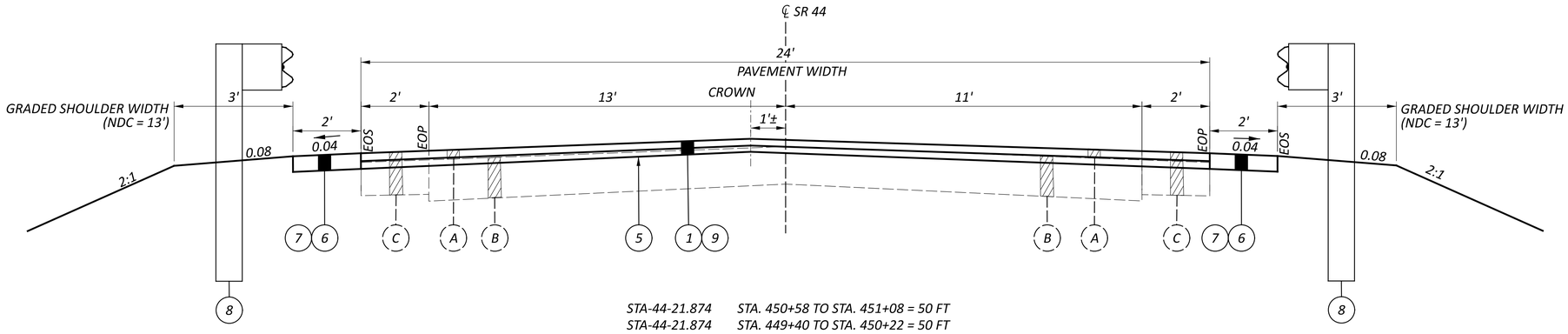

STA-44-21.874 STA. 450+58 TO STA. 451+08 = 50 FT
STA-44-21.874 STA. 449+40 TO STA. 450+22 = 50 FT

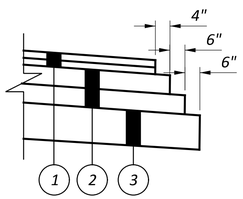

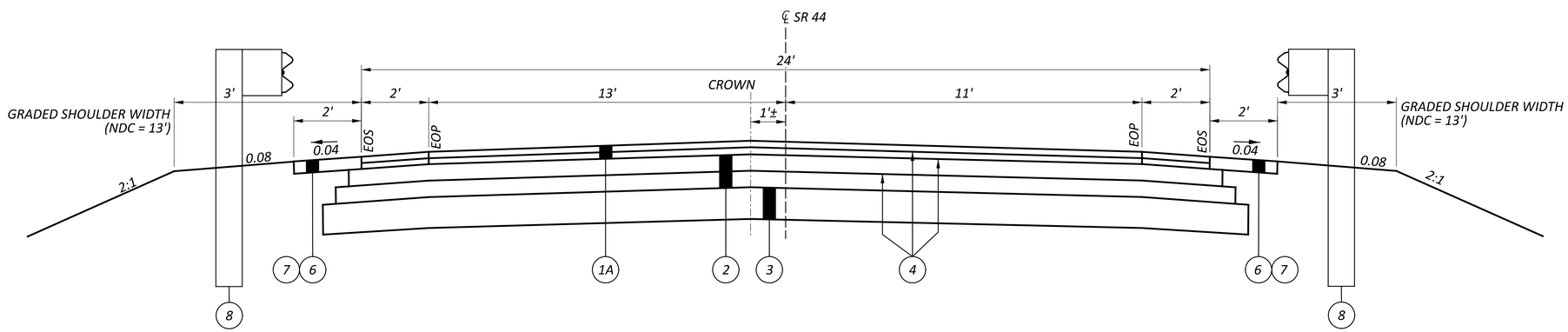

STA-44-21.874 STA. 450+22 TO STA. 450+58 = 36 FT

LEGEND

1. ITEM 441, ASPHALT CONCRETE SURFACE COURSE, TYPE 1, (449), PG64-22 (T=3") - 2 LIFTS
2. ITEM 301, ASPHALT CONCRETE BASE, (449), PG64-22 (T=8") - 2 LIFTS
3. ITEM 304, AGGREGATE BASE (T=6")
4. ITEM 407, NON-TRACKING TACK COAT @ 0.06 GAL/SY
5. ITEM 407, NON-TRACKING TACK COAT @ 0.09 GAL/SY
6. ITEM 617, COMPACTED AGGREGATE, AS PER PLAN (T=1" AVG.)
7. ITEM 408, PRIME COAT, AS PER PLAN @ 0.40 GAL/SY
8. ITEM 606, GUARDRAIL, TYPE MGS
9. ITEM 254, PAVEMENT PLANING, ASPHALT CONCRETE (T=3")

- (A) EXISTING ASPHALT CONCRETE (T=3"±)
- (B) EXISTING ASPHALT CONCRETE BASE (T=8"±)
- (C) EXISTING SHOULDER

NDC - NORMAL DESIGN CRITERIA

TYPICAL SECTIONS-STA-44-21.874

DESIGN AGENCY

DESIGNER NKF

REVIEWER MJP 04-24-24

PROJECT ID 109452

SHEET P.40 TOTAL 62

D04-CULVERTS-FY2025

MODEL: SHEET 1 PAPERSIZE: 34x22 (in.) DATE: 1/31/2025 TIME: 9:37:08 AM USER: mpalagan
pw:\\ohiodot-pw.bentley.com:ohiodot-pw-02\Documents\01 Active Projects\District 04_D04\109452\400-Engineering\Roadway\Sheets\109452_GY400.dgn

SURVEYING PARAMETERS

PRIMARY PROJECT CONTROL MONUMENTS GOVERN ALL POSITIONING ON ODOT PROJECTS. SEE THIS SHEET OF THE PLANS FOR A TABLE CONTAINING PROJECT CONTROL INFORMATION.

USE THE FOLLOWING PROJECT CONTROL, VERTICAL POSITIONING, AND HORIZONTAL POSITIONING PARAMETERS FOR ALL SURVEYING:

PROJECT CONTROL

POSITIONING METHOD: STATIC
MONUMENT TYPE: B

VERTICAL POSITIONING

ORTHOMETRIC HEIGHT DATUM: NAVD88
GEOID: 2018

HORIZONTAL POSITIONING

REFERENCE FRAME: NAD83 (2011)
ELLIPSOID: GRS80
MAP PROJECTION: TRANSVERSE MERCATOR
COORDINATE SYSTEM: STARK COUNTY LDP
COMBINED SCALE FACTOR: 1.000045
ORIGIN OF COORDINATE
SYSTEM: N 39-24-00 E 278-39-00

USE THE POSITIONING METHODS AND MONUMENT TYPE USED IN THE ORIGINAL SURVEY TO RESTORE ALL MONUMENTS RELATED TO PRIMARY PROJECT CONTROL THAT ARE DAMAGED OR DESTROYED BY CONSTRUCTION ACTIVITIES. RESTORE THE DAMAGED OR DESTROYED MONUMENTS IN ACCORDANCE WITH CMS 623.

UNITS ARE IN U.S. SURVEY FEET.
1 METER = 3.28083333333 U.S. SURVEY FEET

UTILITIES

THE CONTRACTOR SHALL USE THE FOLLOWING PROCEDURE AT EACH LOCATION WHERE WORK IS PERFORMED, IN ACCORDANCE WITH SECTIONS 105.07 AND 107.16 IN THE CONSTRUCTION AND MATERIALS SPECIFICATIONS.

THE CONTRACTOR SHALL NOTIFY THE PROJECT ENGINEER, OHIO811, THE OHIO DEPARTMENT OF TRANSPORATION DISTRICT 4 HEADQUARTERS AND ALL NON REGISTERED UTILITY OWNERS AT LEAST TWO (2) WORKING DAYS PRIOR TO COMMENCING CONSTRUCTION OPERATION IN ALL AREAS.

THE LOCATION OF THE UNDERGROUND UTILITIES SHOWN ON THE PLANS ARE AS OBTAINED FROM THE OWNERS AS REQUIRED BY SECTION 153.64 O.R.C.

LISTED BELOW ARE ALL UTILITIES LOCATED WITHIN THE PROJECT CONSTRUCTION LIMITS TOGETHER WITH THEIR RESPECTIVE OWNERS:

AT&T
ATTN: Steven Hylton
50 W. Bowery St., 6th Floor
Akron, OH 44308
330-384-3055
330-631-7485 (cell)
sh1513@att.com

Ohio Edison
ATTN: Phillip Rawson
730 South Avenue
Youngstown, OH 44502
724-255-1332 (cell)
prawson@firstenergycorp.com

ITEM SPECIAL - SURVEY CONTROL VERIFICATION

THE CONTRACTOR SHALL PERFORM THIS WORK TO VERIFY THE PROVIDED SURVEY CONTROL. THE CONTRACTOR WILL PERFORM THE VERIFICATION USING ONE OF THE TWO METHODS BELOW DEPENDENT UPON THE CONTRACTOR'S CHOSEN MEANS OF SURVEY CONTROL TO BE USED ON THE PROJECT. THE WORK SHALL BE PERFORMED UNDER THE DIRECT SUPERVISION OF AN OHIO LICENSED SURVEYOR.

1. IF USING GPS DEVICES TO ESTABLISH AND OR PROVIDE SUPPLEMENTAL HORIZONTAL AND VERTICAL SURVEY CONTROL
a. LOCATE VERTICAL CONTROL POINTS PROVIDED IN THE PLAN AND PERFORM A DIFFERENTIAL LEVEL CIRCUIT.
b. PERFORM A SITE CALIBRATION UTILIZING THE AVAILABLE HORIZONTAL AND VERTICAL CONTROL POINTS PROVIDED IN THE PLAN.
c. PROVIDE A REPORT, SIGNED BY AN OHIO LICENSED SURVEYOR, TO THE PROJECT ENGINEER COMPARING THE OBSERVED DATA TO THE PLAN DATA ALONG WITH A NARRATIVE DETAILING ANY DISCREPANCIES FOUND.
2. IF USING CONVENTIONAL SURVEY INSTRUMENTATION TO ESTABLISH AND OR PROVIDE SUPPLEMENTAL HORIZONTAL AND VERTICAL SURVEY CONTROL
a. LOCATE VERTICAL CONTROL POINTS PROVIDED IN THE PLANS AND PERFORM A DIFFERENTIAL LEVEL CIRCUIT.
b. LOCATE AND OBSERVE ANGLE AND DISTANCE TO ALL AVAILABLE HORIZONTAL CONTROL POINTS PROVIDED IN THE PLAN.
c. PROVIDE A REPORT, SIGNED BY AN OHIO LICENSED SURVEYOR, TO THE PROJECT ENGINEER COMPARING THE OBSERVED DATA TO THE PLAN DATA ALONG WITH A NARRATIVE DETAILING ANY DISCREPANCIES FOUND.

ALL MATERIALS, LABOR, EQUIPMENT, TOOLS, AND INCIDENTIALS NECESSARY TO COMPLETE THIS WORK SHALL BE INCLUDED IN THE LUMP SUM BID ITEM.

CONTROL POINT (U.S. SURVEY FEET GROUND)					
POINT	NORTHING	EASTING	STATION	OFFSET	ELEV.
CP10	570864.465	191452.783	437+82.97	16.27' RT.	1140.88
CP20	571962.345	191566.216	448+86.69	17.58' RT.	1130.75
CP30	572641.459	191625.056	455+67.28	22.63' RT.	1138.49
CENTERLINE ALIGNMENT					
MN436	570731.034	191422.80	436+47.18		
MN453	572408.684	191594.122	453+33.55		
MN462	573361.023	191628.020	462+86.50		
MN20	570736.362	191282.939			
BENCHMARK					
BM1	572124.789	191544.067	450+46.04	20.96' RT.	1129.78

ITEM 201 - CLEARING AND GRUBBING, AS PER PLAN, AROUND CULVERTS (STA-44-21.874)

ALTHOUGH THERE ARE NO TREES OR STUMPS SPECIFICALLY MARKED FOR REMOVAL WITHIN THE PLANS, A LUMP SUM QUANTITY IS INCLUDED IN THE GENERAL SUMMARY FOR
ITEM 201, CLEARING AND GRUBBING, AS PER PLAN, AROUND CULVERTS.
SCALPING IS NOT REQUIRED FOR THIS ITEM OF WORK. ALL VEGETATION SHALL BE REMOVED WITHIN 15 FEET (OR TO THE R/W LIMITS, WHICHEVER IS CLOSER) OF THE HEADWALLS, ABUTMENTS, AND/OR PIERS.

ALL OTHER PROVISIONS AS SET FORTH IN THE CMS UNDER THIS ITEM ARE INCLUDED IN THE LUMP SUM BID PRICE FOR
IS INCLUDED IN THE GENERAL SUMMARY FOR
ITEM 201, CLEARING AND GRUBBING, AS PER PLAN, AROUND CULVERTS.

CONDUIT IDENTIFICATION SIGNS

CONDUIT IDENTIFICATION SIGNS (I-H25b) WILL BE PLACED ON EACH APPROACH OFF THE RIGHT SHOULDER, FACING TRAFFIC, AND BEHIND THE GUARDRAIL IF APPLICABLE. A QUANTITY OF ONE SIGN PER APPROACH WILL BE INSTALLED. THE SIGNS WILL HAVE A NON-REFLECTIVE WHITE SHEETING BACKGROUND.

THE SIGNS WILL BE MOUNTED ON NEW NO. 2 POSTS AND WILL BE INSTALLED AS PER STANDARD CONSTRUCTION DRAWING TC-41.20, MOST CURRENT REVISION. EACH POST WILL BE 7.5' IN LENGTH.

INSTALL SIGNS FOR POR-44-21.874

THE FOLLOWING QUANTITIES HAVE BEEN INCLUDED FOR EACH APPROACH:
ITEM 630 - SIGN, FLAT SHEET, 730.20, 1 SQ FT
ITEM 630 - GROUND MOUNTED SUPPORT, NO. 2 POST, 7.5 FT
ITEM 630 - REMOVAL OF GROUND MOUNTED SIGN AND DISPOSAL, 1 EACH
ITEM 630 - REMOVAL OF GROUND MOUNTED POST SUPPORT AND DISPOSAL, 1 EACH

PAVEMENT MARKINGS

ALL PAVEMENT MARKINGS THAT ARE REMOVED DURING THE CULVERT REPLACEMENT WILL BE REPLACED WITH ITEM 642 - TRAFFIC PAINT. THE FOLLOWING ESTIMATED QUANTITIES HAVE BEEN CARRIED TO THE GENERAL SUMMARY:

ITEM 642 - EDGE LINE, 6", TYPE 1 0.06 MI
ITEM 642 - CENTER LINE, 6", TYPE 1 0.03 MI

SEEDING AND MULCHING

THE FOLLOWING QUANTITIES ARE PROVIDED TO PROMOTE GROWTH AND CARE OF PERMANENT SEEDED AREAS:

659, TOPSOIL 143 CU. YD.
659, SEEDING AND MULCHING 1,289 SQ. YD.
659, COMMERCIAL FERTILIZER 0.17 TON
659, LIME 0.27 ACRES
659, WATER 7 M. GAL.

SEEDING AND MULCHING SHALL BE APPLIED TO ALL AREAS OF EXPOSED SOIL BETWEEN THE RIGHT-OF-WAY LINES, AND WITHIN THE CONSTRUCTION LIMITS FOR AREAS OUTSIDE THE RIGHT-OF-WAY LINES COVERED BY WORK AGREEMENT OR SLOPE EASEMENT. QUANTITY CALCULATIONS FOR SEEDING AND MULCHING ARE BASED ON THESE LIMITS.

EXCAVATION AND EMBANKMENT

THE FOLLOWING QUANTITIES HAVE BEEN TAKEN FROM THE CROSS SECTION SHEETS AND CARRIED TO THE GENERAL SUMMARY:

ITEM 203 - EXCAVATION 144 CY
ITEM 203 - EMBANKMENT 35 CY

PAVEMENT RESTORATION AND RESURFACING FOR CONDUITS

THE FOLLOWING QUANTITY IS PROVIDED FOR PAVEMENT RESTORATION AFTER THE INSTALLATION AND/OR REMOVAL OF CONDUITS

STA. 450+22 TO STA. 450+58
ITEM 202 - PAVEMENT REMOVED, 133 SQ. YDS.
ITEM 204 - SUBGRADE COMPACTION, 132 SQ. YDS.
ITEM 301 - ASPHALT CONCRETE BASE, PG64-22, (449), 23 CU YDS.
ITEM 304 - AGGREGATE BASE, 22 CU YDS.
ITEM 407 - NON-TRACKING TACK COAT, 19 GAL.
ITEM 408 - PRIME COAT, 13 GAL.
ITEM 441 - ASPHALT CONCRETE SURFACE COURSE, TYPE 1 (449), AS PER PLAN, PG64-22 (T=3"), 8 CU. YDS. (PLACED IN 2 LIFTS OF 1.5")
ITEM 617 - COMPACTED AGGREGATE, AS PER PLAN (T=1.0"), 1 CU. YDS.

THE FOLLOWING QUANTITIES HAVE BEEN PROVIDED TO RESURFACE THE ROADWAY AFTER THE INSTALLATION AND/OR REMOVAL OF CONDUITS

STA. 449+40 TO STA. 450+22
STA. 450+58 TO STA. 451+08
ITEM 254 - PAVEMENT PLANING (T=3"), 353 SQ. YDS.
ITEM 407 - NON-TRACKING TACK COAT, 32 GAL.
ITEM 408 - PRIME COAT, 48 GAL.
ITEM 441 - ASPHALT CONCRETE SURFACE COURSE, TYPE 1, (449), AS PER PLAN, PG64-22 (T=3"), 30 CU. YDS.
ITEM 617 - COMPACTED AGGREGATE, AS PER PLAN (T=1.0"), 4 CU. YDS.

DRAINAGE NOTES
STA-44-21.874

DESIGN AGENCY

DESIGNER
NKF
REVIEWER
MJP 04-24-24
PROJECT ID
109452
SHEET P.41 TOTAL 62

D04-CULVERTS-FY2025

MODEL: STA-44 SHEET 1 PAPERSIZE: 34x22 (in.) DATE: 1/31/2025 TIME: 9:37:15 AM USER: mpalagan
pw:\\ohiodot-pw.bentley.com:ohiodot-pw-02\Documents\01 Active Projects\District 04_D04\109452\400-Engineering\Drainage\Sheets\109452_DN400.dgn

ROADWAY AND DRAINAGE SUBSUMMARY - STA-44-21.874

REF NO.	SHEET NO.	STATION TO STATION					202 HEADWALL REMOVED, (STA-44-21.874)	202 PIPE REMOVED, 24" AND UNDER	202 PIPE REMOVED, OVER 24"	202 GUARDRAIL REMOVED	202 ANCHOR ASSEMBLY REMOVED, TYPE T	503 COFFERDAMS AND EXCAVATION BRACING, (STA-44-21.874)	601 ROCK CHANNEL PROTECTION, TYPE B WITH GEOTEXTILE FABRIC	601 RIPRAP, TYPE D	602 CONCRETE MASONRY	606 ANCHOR ASSEMBLY, MGS TYPE E, MASH 2016	606 ANCHOR ASSEMBLY, MGS TYPE T	606 GUARDRAIL, TYPE MGS	611 12" CONDUIT, TYPE C	611 60" CONDUIT, TYPE A, 706.02, (707.01, 707.02) ALUMINIZED, 707.33	611 CATCH BASIN, NO. 2-2A	614 BARRIER REFLECTOR, TYPE 2, BIDIRECTIONAL
				TO			EACH	FT	FT	FT	EACH	LS	CY	SY	CY	EACH	EACH	FT	FT	FT	EACH	EACH
R-1	P.43	450+31.24	LT		450+49.52	LT	1															
R-2	P.43	450+30.74	RT		450+49.04	RT	1															
R-3	P.43	450+39.82	RT		450+39.80	LT			62													
R-4	P.43	450+05.90	RT		450+34.38	RT		9														
R-5	P.43	450+25.90	RT		450+30.52	RT		5														
R-6	P.43	448+83.13	LT		451+97.17	LT				302	2											
R-7	P.43	450+06.10	RT		452+09.83	RT				215	2											
D-1	P.43	450+32.07	RT		450+47.57	RT									1.78							
D-2	P.43	450+32.07	LT		450+47.57	LT									1.78							
D-3	P.43	450+39.82	LT		450+39.82	RT						LS								66		
D-4	P.43	450+06.90	LT		450+36.99	RT									0.21				20			
D-5	P.43	450+03.84	LT		450+07.53	LT															1	
EC-1	P.43	450+36.64	RT		450+42.64	RT							9									
EC-2	P.43	450+36.82	LT		450+42.82	LT								4								
GR-1	P.43	448+77.12	RT		451+97.17	RT										1	1	315				4
GR-2	P.43	450+02.51	LT		452+22.33	LT										1	1	217				3
TOTALS CARRIED TO GENERAL SUMMARY							2	14	62	517	4	LS	9	4	4	2	2	532	20	66	1	7

D04-CULVERTS-FY2025

MODEL: Sheet_SurvFt PAPERSIZE: 34x22 (in.) DATE: 1/31/2025 TIME: 9:37:23 AM USER: mpalagan
pw:\\ohiodot-pw.bentley.com:ohiodot-pw-02\Documents\01 Active Projects\District 04_D04\109452\400-Engineering\Roadway\Sheets\109452_GS400.dgn

DESIGN AGENCY

DESIGNER
NKF

REVIEWER
MJP 04-24-24

PROJECT ID
109452

SHEET P.42 TOTAL 62

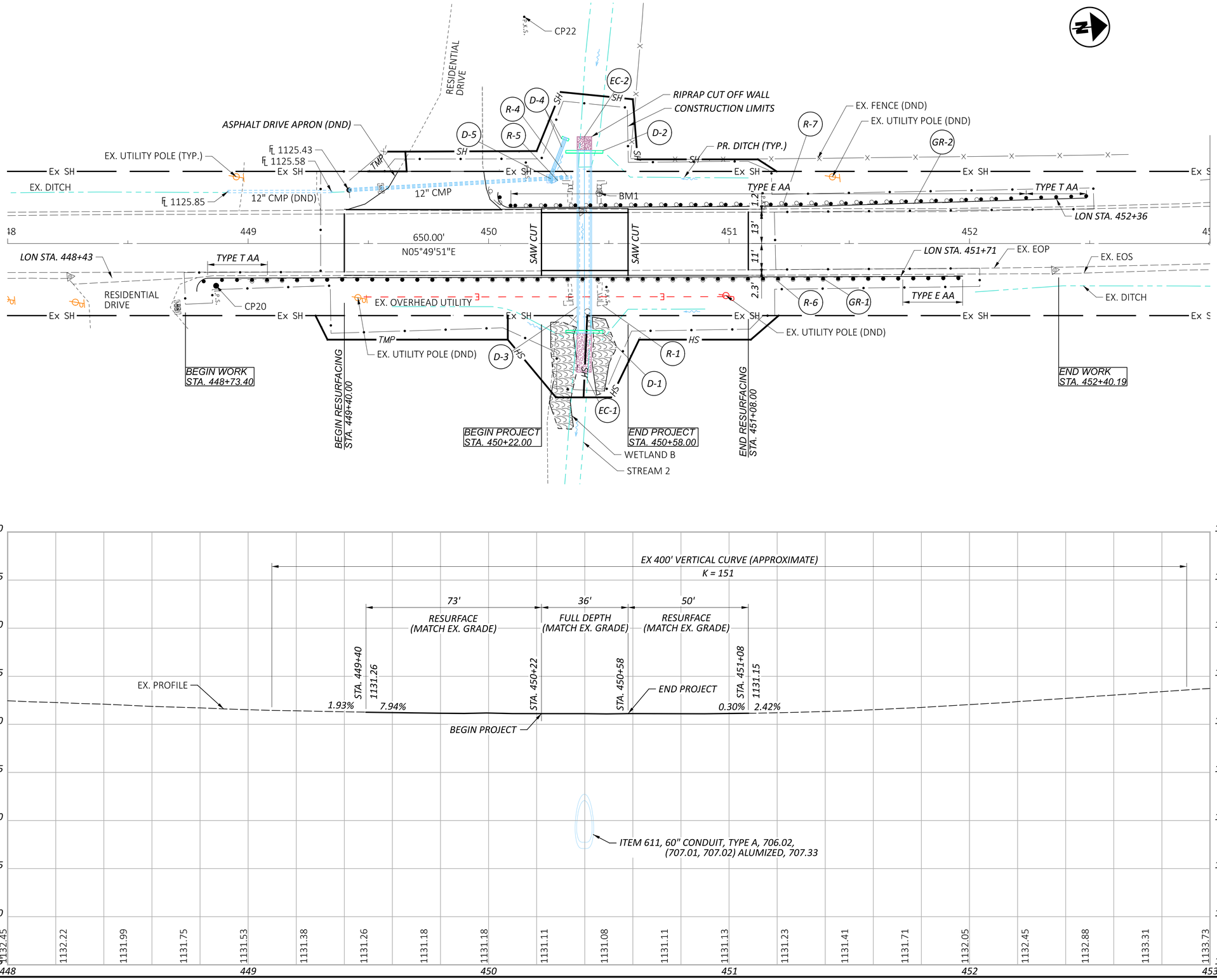

HORIZONTAL SCALE IN FEET
0 10 20 40

PLAN AND PROFILE - STA-44-21.874
STA. 448+00 TO STA. 453+00

DESIGN AGENCY

DESIGNER
NKF

REVIEWER
MJP 04-24-24

PROJECT ID
109452

SHEET P.43 TOTAL 62

D04-CULVERTS-FY2025

MODEL: CLX_44 - Plan 2 [Sheet] PAPERSIZE: 34x22 (in.) DATE: 1/31/2025 TIME: 9:37:30 AM USER: mpalagan
pw:\\ohiodot-pw.bentley.com:ohiodot-pw-02\Documents\01 Active Projects\District 04_D04\109452\400-Engineering\Roadway\Sheets\109452_GP400.dgn

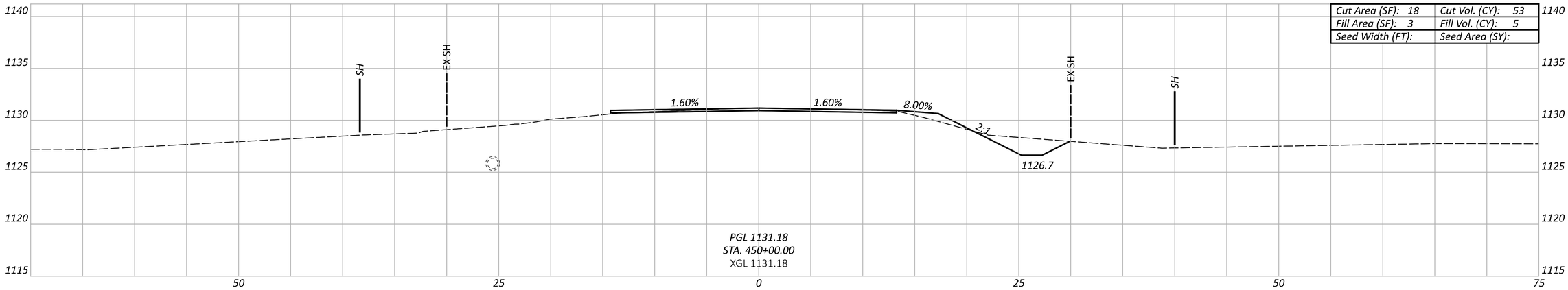

Cut Area (SF): 18	Cut Vol. (CY): 53
Fill Area (SF): 3	Fill Vol. (CY): 5
Seed Width (FT):	Seed Area (SY):

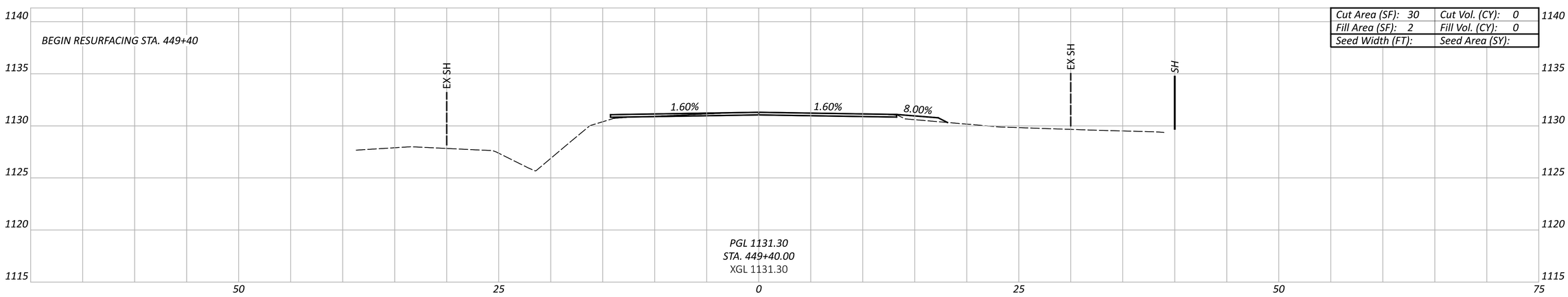

Cut Area (SF): 30	Cut Vol. (CY): 0
Fill Area (SF): 2	Fill Vol. (CY): 0
Seed Width (FT):	Seed Area (SY):

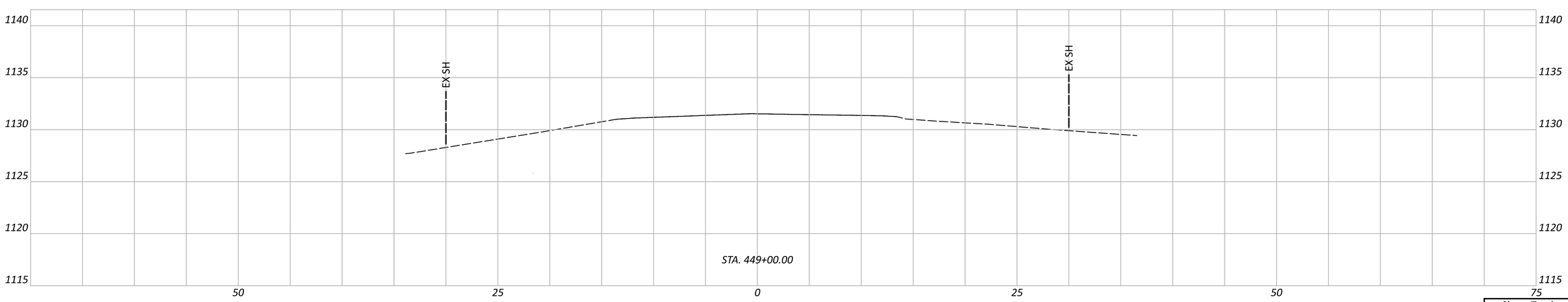

Sheet Totals		
Seeding	Cut	Fill
	53	5

CROSS SECTIONS - STA-44-21.874
STA. 449+00.00 TO STA. 450+00.00

DESIGN AGENCY

DESIGNER
NKF

REVIEWER
MJP 04-24-24

PROJECT ID
109452

SHEET P.44 TOTAL 62

D04-CULVERTS-FY2025

MODEL: CLX_44 - Sheet 001 PAPERSIZE: 34x22 (in.) DATE: 1/31/2025 TIME: 9:37:38 AM USER: mpalagan
pw:\\ohiodot-pw.bentley.com:ohiodot-pw-02\Documents\01 Active Projects\District 04_D04\109452\400-Engineering\Roadway\Sheets\109452_XS401.dgn

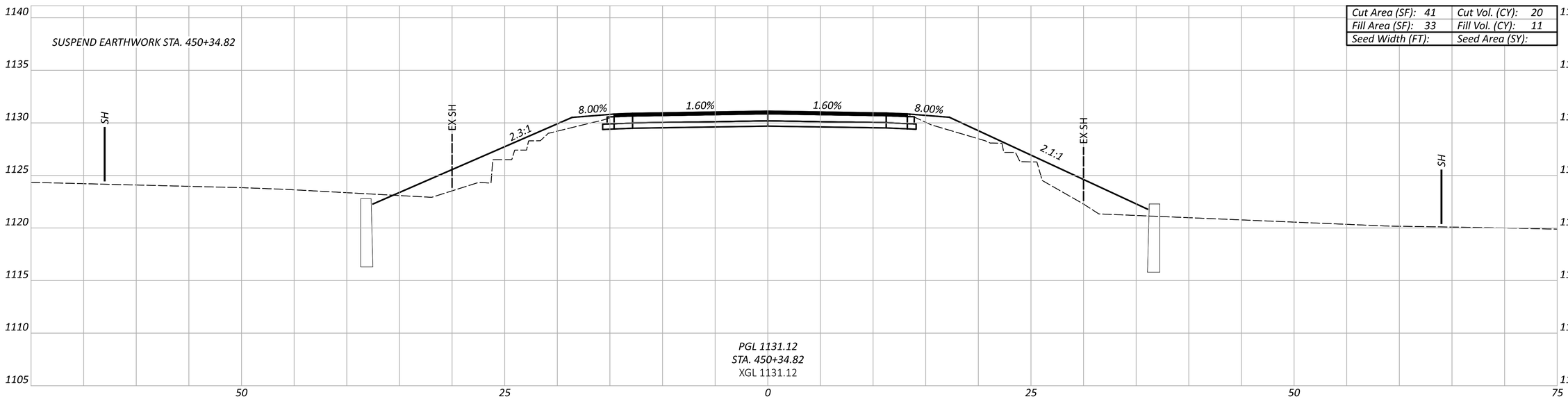

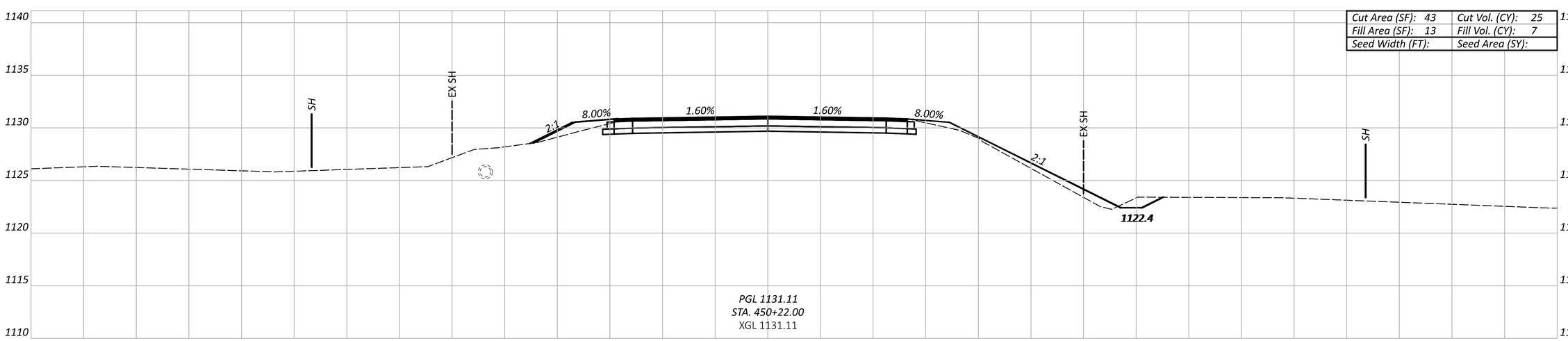

Sheet Totals		
Seeding	Cut	Fill
	45	18

CROSS SECTIONS - STA-44-21.874
STA. 450+22.00 TO STA. 450+34.82

DESIGN AGENCY

DESIGNER
NKF

REVIEWER
MJP 04-24-24

PROJECT ID
109452

SHEET P.45 TOTAL 62

D04-CULVERTS-FY2025

MODEL: CLX_44 - Sheet 002 PAPERSIZE: 34x22 (in.) DATE: 1/31/2025 TIME: 9:37:40 AM USER: mpalagan
pw:\\ohiodot-pw.bentley.com:ohiodot-pw-02\Documents\01 Active Projects\District 04_D04\109452\400-Engineering\Roadway\Sheets\109452_XS401.dgn

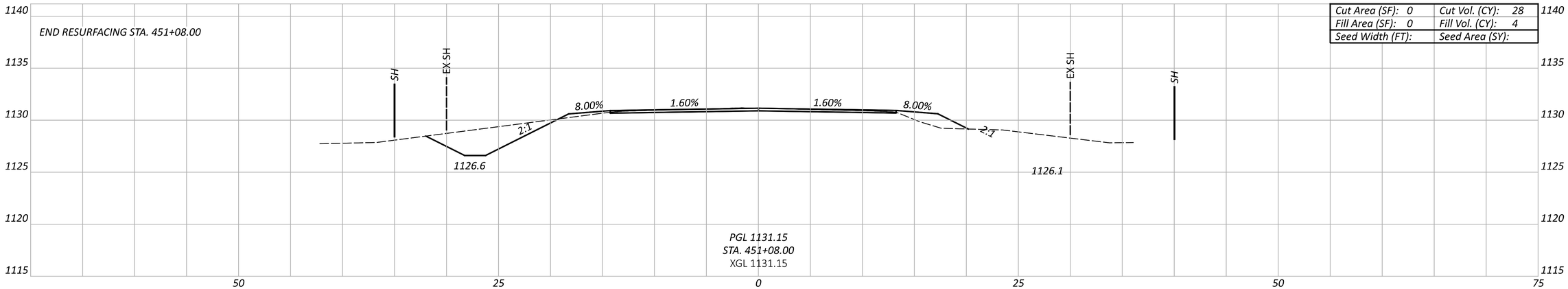

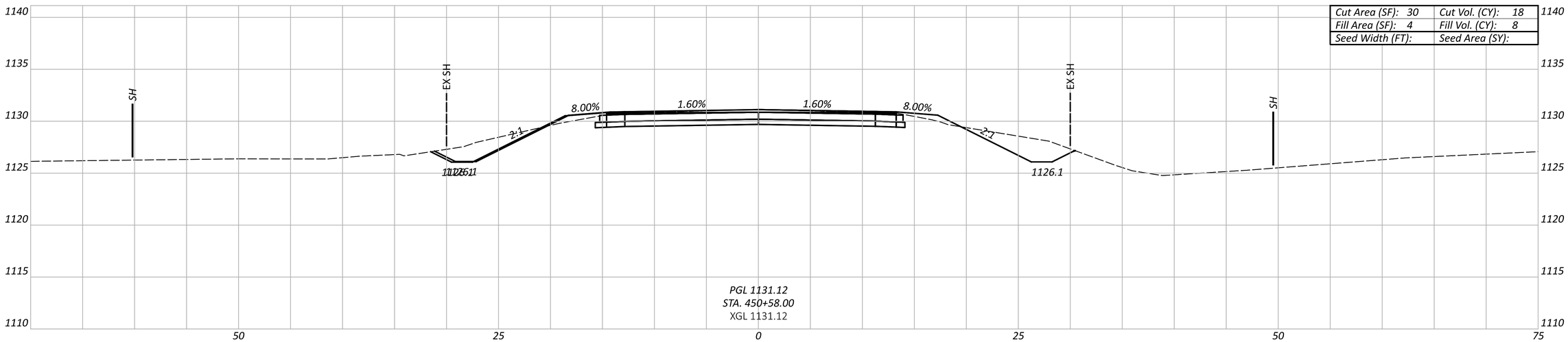

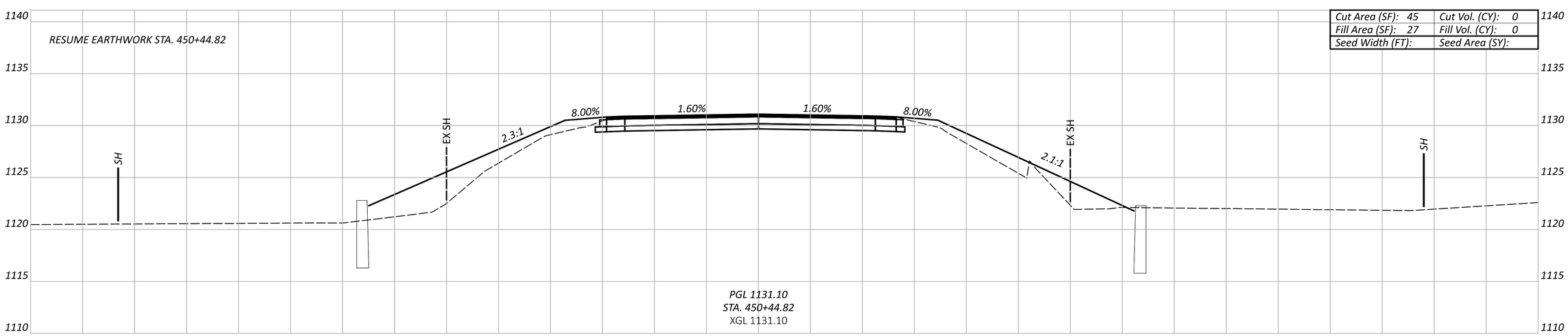

Sheet Totals		
Seeding	Cut	Fill
	46	12

CROSS SECTIONS - STA-44-21.874
STA. 450+44.82 TO STA. 451+08.00

DESIGN AGENCY

DESIGNER
NKF

REVIEWER
MJP 04-24-24

PROJECT ID
109452

SHEET P.46 TOTAL 62

D04-CULVERTS-FY2025

MODEL: CLX_44 - Sheet 003 PAPERSIZE: 34x22 (in.) DATE: 1/31/2025 TIME: 9:37:41 AM USER: mpalagan
pw:\\ohiodot-pw.bentley.com:ohiodot-pw-02\Documents\01 Active Projects\District 04_D04\109452\400-Engineering\Roadway\Sheets\109452_XS401.dgn

D04-CULVERTS-FY2025

MODEL: CLX_44 - Sheet 004 PAPERSIZE: 34x22 (in.) DATE: 1/31/2025 TIME: 9:37:41 AM USER: mpalagan
pw:\\ohiodot-pw.bentley.com:ohiodot-pw-02\Documents\01 Active Projects\District 04_D04\109452\400-Engineering\Roadway\Sheets\109452_XS401.dgn

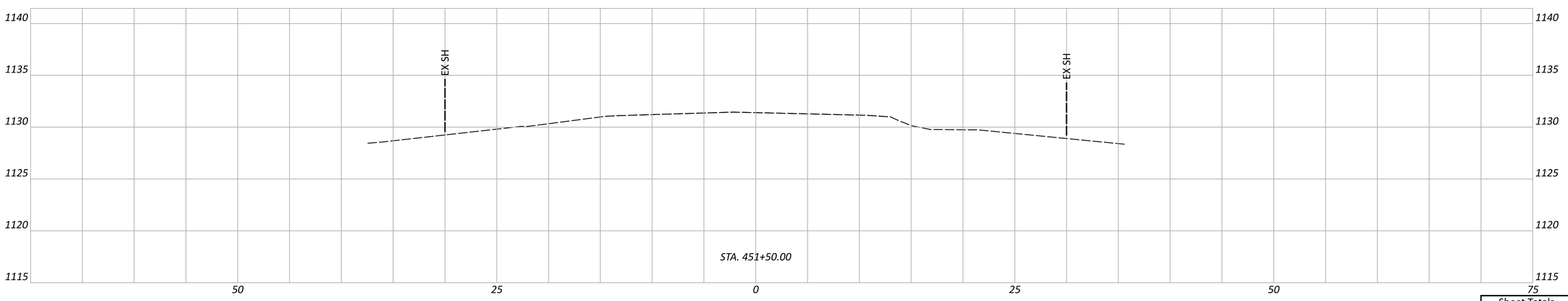

Sheet Totals		
Seeding	Cut	Fill

CROSS SECTIONS - STA-44-21.874
STA. 451+50.00

DESIGN AGENCY

DESIGNER
NKF

REVIEWER
MJP 04-24-24

PROJECT ID
109452

SHEET P.47 TOTAL 62

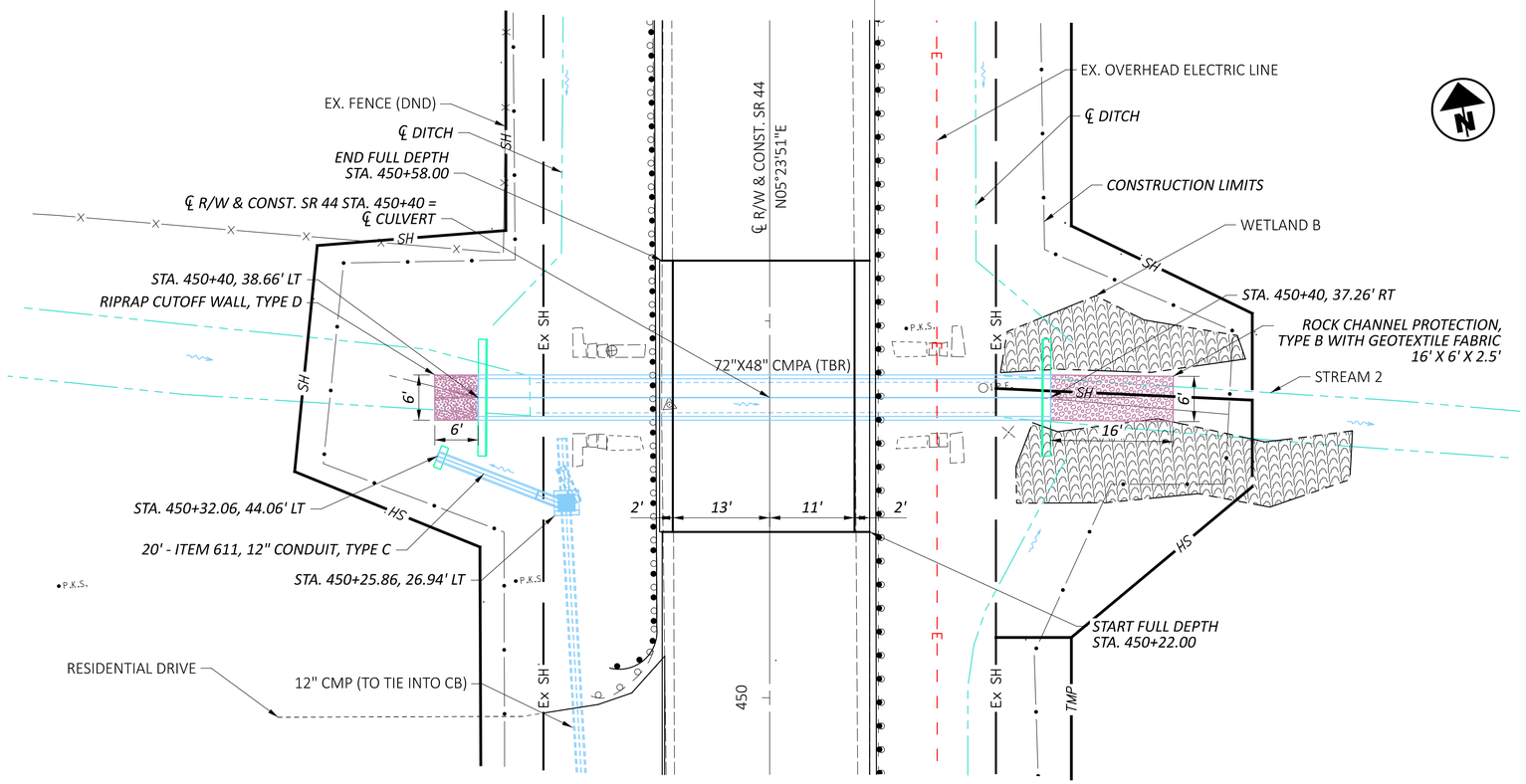

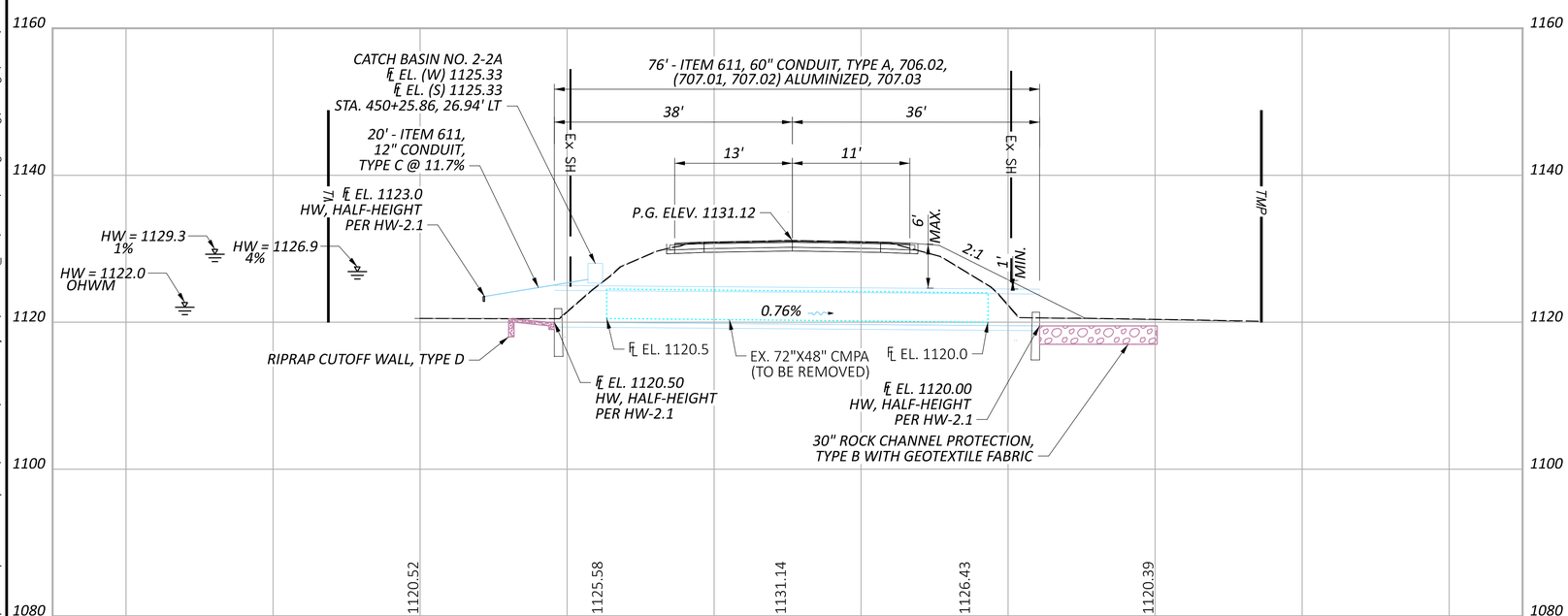

FOR BENCHMARK INFORMATION, SEE SHEET P.41
FOR ESTIMATED QUANTITIES, SEE SHEET P.42

HYDRAULIC DATA

DRAINAGE AREA = 427 ACRES

Q (4%) =	148 CFS	V (4%) =	13.1 FT/S	HW (4%) =	1125.7 FT
Q (1%) =	199 CFS	V (1%) =	13.9 FT/S	HW (1%) =	1127.1 FT

ORDINARY HIGH WATER MARK: 1122.0 FT
DESIGN SERVICE LIFE: 75 YEARS
ABRASION LEVEL: 1.0
pH: 7.6

EXISTING CONDUIT

TYPE: CORRUGATED METAL PIPE ARCH
SIZE: 72" X 48"
SKEW: NONE
ALIGNMENT: TANGENT
DATE BUILT: UNKNOWN
CONDITION: TO BE REMOVED AND REPLACED
CFN: 1847130

PROPOSED CONDUIT

TYPE: CIRCULAR TYPE A, 706.02, (707.01, 707.02) ALUMINIZED, 707.03
SIZE: 60" DIAMETER
SKEW: NONE
ALIGNMENT: TANGENT
CFN: 1995680
HEADWALLS: HALF-HEIGHT, PER HW-2.1 OR HW-2.2

HORIZONTAL SCALE IN FEET 0 5 10 20

CULVERT DETAILS - STA-44-21.874
STA. 450+40

DESIGN AGENCY

DESIGNER NKF
REVIEWER MJP 04-24-24
PROJECT ID 109452
SUBSET 1 TOTAL 1
SHEET P.48 TOTAL 62

D04-CULVERTS-FY2025

MODEL: CLX_44 - Plan 1 [Sheet] PAPERSIZE: 34x22 (in.) DATE: 1/31/2025 TIME: 9:37:48 AM USER: mpalagan
pw:\\ohiodot-pw.bentley.com:ohiodot-pw-02\Documents\01 Active Projects\District 04_D04\109452\400-Engineering\Drainage\Sheets\109452_DC401.dgn

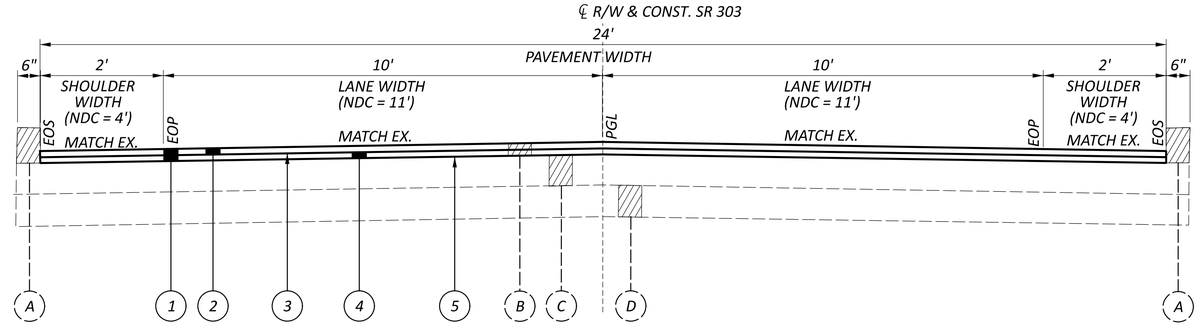

TYPICAL SECTION 1 - RESURFACING

SUM-303-3.589 STA. 104+25 TO STA. 104+40 = 15 FT
SUM-303-3.589 STA. 105+05 TO STA. 105+26 = 26 FT

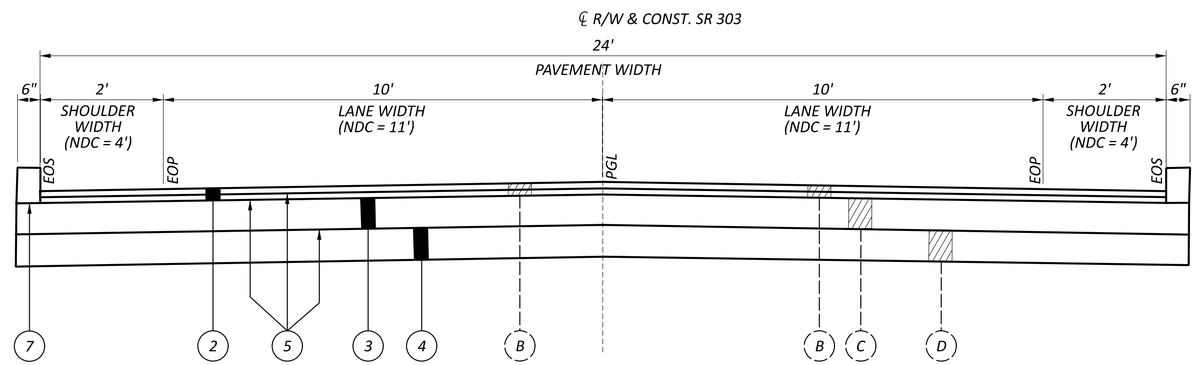

TYPICAL SECTION 1 - FULL DEPTH

SUM-303-3.589 STA. 104+40 TO STA. 105+05 = 55 FT

LEGEND

1. ITEM 254, PAVEMENT PLANING ASPHALT CONCRETE (T=3")
2. ITEM 441, ASPHALT CONCRETE SURFACE COURSE, TYPE 1, (449), PG64-22M (T=3") - 2 LIFTS
3. ITEM 301, ASPHALT CONCRETE BASE, (449), PG64-22 (T=7") - 2 LIFTS
4. ITEM 304, AGGREGATE BASE (T=6")
5. ITEM 407, NON-TRACKING TACK COAT @ 0.06 GAL/SY
6. ITEM 407, NON-TRACKING TACK COAT @ 0.09 GAL/SY
7. ITEM 609, CONCRETE CURB, TYPE 6

- (A) EXISTING CONCRETE CURB
- (B) EXISTING ASPHALT CONCRETE (T=3")
- (C) EXISTING BASE (T=7")
- (D) EXISTING AGGREGATE BASE (T=6")

NDC - NORMAL DESIGN CRITERIA

TYPICAL SECTIONS-SUM-303-3.589

DESIGN AGENCY

DESIGNER NKF

REVIEWER MJP 04-24-24

PROJECT ID 109452

SHEET P.49 TOTAL 62

D04-CULVERTS-FY2025

MODEL: SHEET 1 PAPERSIZE: 34x22 (in.) DATE: 1/31/2025 TIME: 9:37:56 AM USER: mpallagan
pw:\\ohiodot-pw.bentley.com:ohiodot-pw-02\Documents\01 Active Projects\District 04_D04\109452\400-Engineering\Roadway\Sheets\109452_GY600.dgn

SURVEYING PARAMETERS

PRIMARY PROJECT CONTROL MONUMENTS GOVERN ALL POSITIONING ON ODOT PROJECTS. SEE THIS SHEET OF THE PLANS FOR A TABLE CONTAINING PROJECT CONTROL INFORMATION.

USE THE FOLLOWING PROJECT CONTROL, VERTICAL POSITIONING, AND HORIZONTAL POSITIONING PARAMETERS FOR ALL SURVEYING:

PROJECT CONTROL

POSITIONING METHOD: STATIC
MONUMENT TYPE: B

VERTICAL POSITIONING

ORTHOMETRIC HEIGHT DATUM: NAVD 88
GEOID: 2018

HORIZONTAL POSITIONING

REFERENCE FRAME: NAD 83 (2011) (EPOCH: 2010.0000)
ELLIPSOID: GRS80
MAP PROJECTION: TRANSVERSE MERCATOR
COORDINATE SYSTEM: SUMMIT COUNTY LDP
COMBINED SCALE FACTOR: 1.000042
ORIGIN OF COORDINATE SYSTEM: N 39-48-00, E 278-24-00

USE THE POSITIONING METHODS AND MONUMENT TYPE USED IN THE ORIGINAL SURVEY TO RESTORE ALL MONUMENTS RELATED TO PRIMARY PROJECT CONTROL THAT ARE DAMAGED OR DESTROYED BY CONSTRUCTION ACTIVITIES. RESTORE THE DAMAGED OR DESTROYED MONUMENTS IN ACCORDANCE WITH CMS 623.

UNITS ARE IN U.S. SURVEY FEET.
USE THE FOLLOWING CONVERSION FACTOR:
1 METER = 3.2808333333 U.S. SURVEY FEET

ITEM SPECIAL - SURVEY CONTROL VERIFICATION

THE CONTRACTOR SHALL PERFORM THIS WORK TO VERIFY THE PROVIDED SURVEY CONTROL. THE CONTRACTOR WILL PERFORM THE VERIFICATION USING ONE OF THE TWO METHODS BELOW DEPENDENT UPON THE CONTRACTOR'S CHOSEN MEANS OF SURVEY CONTROL TO BE USED ON THE PROJECT. THE WORK SHALL BE PERFORMED UNDER THE DIRECT SUPERVISION OF AN OHIO LICENSED SURVEYOR.

1. IF USING GPS DEVICES TO ESTABLISH AND OR PROVIDE SUPPLEMENTAL HORIZONTAL AND VERTICAL SURVEY CONTROL
a. LOCATE VERTICAL CONTROL POINTS PROVIDED IN THE PLAN AND PERFORM A DIFFERENTIAL LEVEL CIRCUIT.
b. PERFORM A SITE CALIBRATION UTILIZING THE AVAILABLE HORIZONTAL AND VERTICAL CONTROL POINTS PROVIDED IN THE PLAN.
c. PROVIDE A REPORT, SIGNED BY AN OHIO LICENSED SURVEYOR, TO THE PROJECT ENGINEER COMPARING THE OBSERVED DATA TO THE PLAN DATA ALONG WITH A NARRATIVE DETAILING ANY DISCREPANCIES FOUND.
2. IF USING CONVENTIONAL SURVEY INSTRUMENTATION TO ESTABLISH AND OR PROVIDE SUPPLEMENTAL HORIZONTAL AND VERTICAL SURVEY CONTROL
a. LOCATE VERTICAL CONTROL POINTS PROVIDED IN THE PLANS AND PERFORM A DIFFERENTIAL LEVEL CIRCUIT.
b. LOCATE AND OBSERVE ANGLE AND DISTANCE TO ALL AVAILABLE HORIZONTAL CONTROL POINTS PROVIDED IN THE PLAN.
c. PROVIDE A REPORT, SIGNED BY AN OHIO LICENSED SURVEYOR, TO THE PROJECT ENGINEER COMPARING THE OBSERVED DATA TO THE PLAN DATA ALONG WITH A NARRATIVE DETAILING ANY DISCREPANCIES FOUND.

ALL MATERIALS, LABOR, EQUIPMENT, TOOLS, AND INCIDENTIALS NECESSARY TO COMPLETE THIS WORK SHALL BE INCLUDED IN THE LUMP SUM BID ITEM.

CONTROL POINT (U.S. SURVEY FEET GROUND)					
POINT	NORTHING	EASTING	STATION	OFFSET	ELEV.
CP200	524494.869	158645.305	96+70.29	23.61' RT.	1012.63
CP300	524640.038	159242.551	102+78.68	31.33' LT.	986.68
CP400	524551.932	159542.848	105+84.78	20.86' RT.	972.56
CP500	524605.540	160098.287	111+31.91	47.18' RT.	920.54
CENTERLINE ALIGNMENT					
MN3	525960.410	161923.935			
MN42	524519.043	159935.315	109+62.84	53.03' RT.	
MN103	525916.738	161435.659	129+94.43	18.74' LT.	
MN41	524670.549	160135.197	111+97.66	19.73' RT.	
BENCHMARK					
SV100	524613.603	159439.628	104+74.11	26.15' LT.	978.87

ITEM 201 - CLEARING AND GRUBBING, AS PER PLAN, AROUND CULVERTS (SUM-303-3.589)

ALTHOUGH THERE ARE NO TREES OR STUMPS SPECIFICALLY MARKED FOR REMOVAL WITHIN THE PLANS, A LUMP SUM QUANTITY IS INCLUDED IN THE GENERAL SUMMARY FOR ITEM 201, CLEARING AND GRUBBING, AS PER PLAN, AROUND CULVERTS. SCALPING IS NOT REQUIRED FOR THIS ITEM OF WORK. ALL VEGETATION SHALL BE REMOVED WITHIN 15 FEET (OR TO THE R/W LIMITS, WHICHEVER IS CLOSER) OF THE HEADWALLS, ABUTMENTS, AND/OR PIERS.

ALL OTHER PROVISIONS AS SET FORTH IN THE CMS UNDER THIS ITEM ARE INCLUDED IN THE LUMP SUM BID PRICE FOR ITEM 201, CLEARING AND GRUBBING, AS PER PLAN, AROUND CULVERTS.

UTILITIES

THE CONTRACTOR SHALL USE THE FOLLOWING PROCEDURE AT EACH LOCATION WHERE WORK IS PERFORMED, IN ACCORDANCE WITH SECTIONS 105.07 AND 107.16 IN THE CONSTRUCTION AND MATERIALS SPECIFICATIONS.

THE CONTRACTOR SHALL NOTIFY THE PROJECT ENGINEER, OHIO811, THE OHIO DEPARTMENT OF TRANSPORATION DISTRICT 4 HEADQUARTERS AND ALL NON REGISTERED UTILITY OWNERS AT LEAST TWO (2) WORKING DAYS PRIOR TO COMMENCING CONSTRUCTION OPERATION IN ALL AREAS.

THE LOCATION OF THE UNDERGROUND UTILITIES SHOWN ON THE PLANS ARE AS OBTAINED FROM THE OWNERS AS REQUIRED BY SECTION 153.64 O.R.C.

LISTED BELOW ARE ALL UTILITIES LOCATED WITHIN THE PROJECT CONSTRUCTION LIMITS TOGETHER WITH THEIR RESPECTIVE OWNERS:

City of Cleveland
Department of Public Works
ATTN: Fred Roberts
1201 Lakeside Ave. East, 2nd Floor
Cleveland, OH 44114
216-664-2444 ext. 75590
Fred_Roberts@ClevelandWater.com

Village of Richfield
ATTN: Scott Waldemarson
4410 W. Streesboro Road
Richfield, OH 44286
330-659-9201 ext. 500
swaldermarson@richfieldvillageohio.org

Ohio Edison (Summit)
ATTN: David Miller
1910 W. Market Street, Building #1
Akron, OH 44313
330-436-4055, 330-715-4340 (cell)
millerd1@firstenergycorp.com

Dominion Energy
ATTN: Kyle J. McCall, Supervisor - Gas Operations
Distribution Design
320 Springside Drive
Akron, OH 44333
330-801-8299 (cell)
Kyle.J.McCall@dominionenergy.com
relocation@dominionenergy.com

CONDUIT IDENTIFICATION SIGNS

CONDUIT IDENTIFICATION SIGNS (I-H25b) WILL BE PLACED ON EACH APPROACH OFF THE RIGHT SHOULDER, FACING TRAFFIC, AND BEHIND THE GUARDRAIL IF APPLICABLE. A QUANTITY OF ONE SIGN PER APPROACH WILL BE INSTALLED. THE SIGNS WILL HAVE A NON-REFLECTIVE WHITE SHEETING BACKGROUND.

THE SIGNS WILL BE MOUNTED ON NEW NO. 2 POSTS AND WILL BE INSTALLED AS PER STANDARD CONSTRUCTION DRAWING TC-41.20, MOST CURRENT REVISION. EACH POST WILL BE 7.5' IN LENGTH.

INSTALL SIGNS FOR SUM-303-3.589

THE FOLLOWING QUANTITIES HAVE BEEN INCLUDED FOR EACH APPROACH:
- ITEM 630 - SIGN, FLAT SHEET, 730.20, 1 SQ FT
- ITEM 630 - GROUND MOUNTED SUPPORT, NO. 2 POST, 7.5 FT
- ITEM 630 - REMOVAL OF GROUND MOUNTED SIGN AND DISPOSAL, 1 EACH
- ITEM 630 - REMOVAL OF GROUND MOUNTED POST SUPPORT AND DISPOSAL, 1 EACH

PAVEMENT MARKINGS

ALL PAVEMENT MARKINGS THAT ARE REMOVED DURING THE CULVERT REPLACEMENT WILL BE REPLACED WITH ITEM 642 - TRAFFIC PAINT. THE FOLLOWING ESTIMATED QUANTITIES HAVE BEEN CARRIED TO THE GENERAL SUMMARY:

ITEM 642 - EDGE LINE, 6", TYPE 1 0.04 MI
ITEM 642 - CENTER LINE, 6", TYPE 1 0.02 MI

SEEDING AND MULCHING

THE FOLLOWING QUANTITIES ARE PROVIDED TO PROMOTE GROWTH AND CARE OF PERMANENT SEEDED AREAS:

659, TOPSOIL 74 CU. YD.
659, SEEDING AND MULCHING 668 SQ. YD.
659, COMMERCIAL FERTILIZER 0.09 TON
659, LIME 0.14 ACRES
659, WATER 4 M. GAL.

SEEDING AND MULCHING SHALL BE APPLIED TO ALL AREAS OF EXPOSED SOIL BETWEEN THE RIGHT-OF-WAY LINES, AND WITHIN THE CONSTRUCTION LIMITS FOR AREAS OUTSIDE THE RIGHT-OF-WAY LINES COVERED BY WORK AGREEMENT OR SLOPE EASEMENT. QUANTITY CALCULATIONS FOR SEEDING AND MULCHING ARE BASED ON THESE LIMITS.

EXCAVATION AND EMBANKMENT

THE FOLLOWING QUANTITIES HAVE BEEN TAKEN FROM THE CROSS SECTION SHEETS AND CARRIED TO THE GENERAL SUMMARY:

ITEM 203 - EXCAVATION 53 CY
ITEM 203 - EMBANKMENT 21 CY

PAVEMENT RESTORATION AND RESURFACING FOR CONDUITS

THE FOLLOWING QUANTITY IS PROVIDED FOR PAVEMENT RESTORATION AFTER THE INSTALLATION AND/OR REMOVAL OF CONDUITS

STA. 104+40 TO STA. 105+05
- ITEM 202 - PAVEMENT REMOVED, 159 SQ. YDS.
- ITEM 204 - SUBGRADE COMPACTION, 181 SQ. YDS.
- ITEM 301 - ASPHALT CONCRETE BASE, PG64-22, (449), 36 CU YDS.
- ITEM 304 - AGGREGATE BASE, 31 CU YDS.
- ITEM 407 - NON-TRACKING TACK COAT, 22 GAL.
- ITEM 441 - ASPHALT CONCRETE SURFACE COURSE, TYPE 1 (449), AS PER PLAN, PG64-22 (T=3"), 15 CU. YDS. (PLACED IN 2 LIFTS)

THE FOLLOWING QUANTITIES HAVE BEEN PROVIDED TO RESURFACE THE ROADWAY AFTER THE INSTALLATION AND/OR REMOVAL OF CONDUITS

STA. 104+25 TO STA. 104+40
STA. 105+05 TO STA. 105+26
- ITEM 254 - PAVEMENT PLANING (T=1.5"), 96 SQ. YDS.
- ITEM 407 - NON-TRACKING TACK COAT, 9 GAL.
- ITEM 301 - ASPHALT CONCRETE SURFACE COURSE, TYPE 1, (449), AS PER PLAN, PG64-22 (T=3"), 8 CU. YDS.

DRAINAGE NOTES
SUM-303-3.589

DESIGN AGENCY

DESIGNER NKF
REVIEWER MJP 04-24-24
PROJECT ID 109452
SHEET P.50 TOTAL 62

D04-CULVERTS-FY2025

MODEL: SUM-303 SHEET 1 PAPERSIZE: 34x22 (in.) DATE: 1/31/2025 TIME: 9:38:03 AM USER: mpalagan
pw:\\ohiodot-pw.bentley.com:ohiodot-pw-02\Documents\01 Active Projects\District 04_D04\109452\400-Engineering\Drainage\Sheets\109452_DN600.dgn

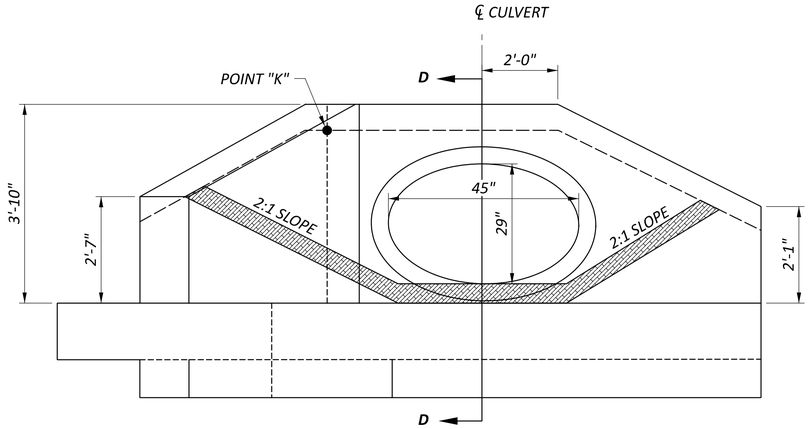

ELEVATION VIEW, TYPE B

INLET HEADWALL
(N.T.S.)

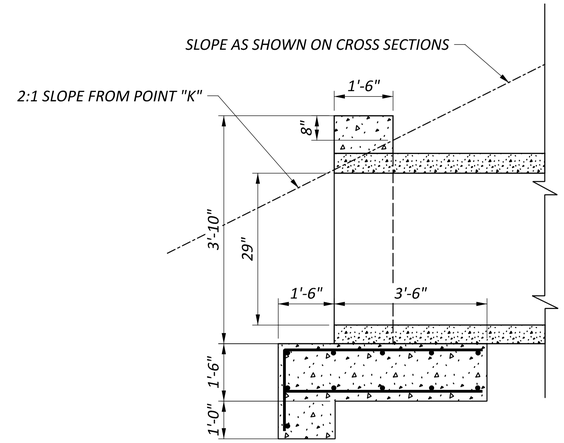

HALF SECTION D-D

(N.T.S.)

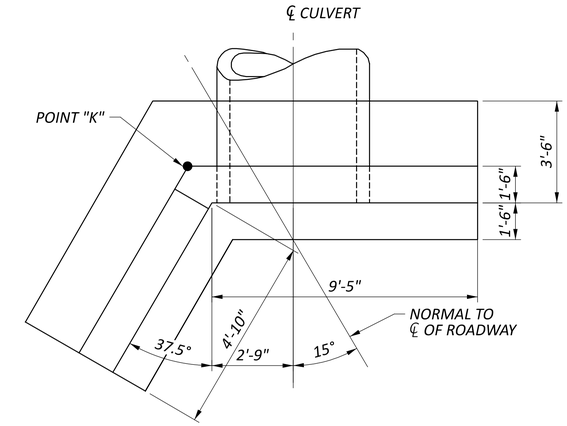

PLAN VIEW, TYPE B

INLET HEADWALL
(N.T.S.)

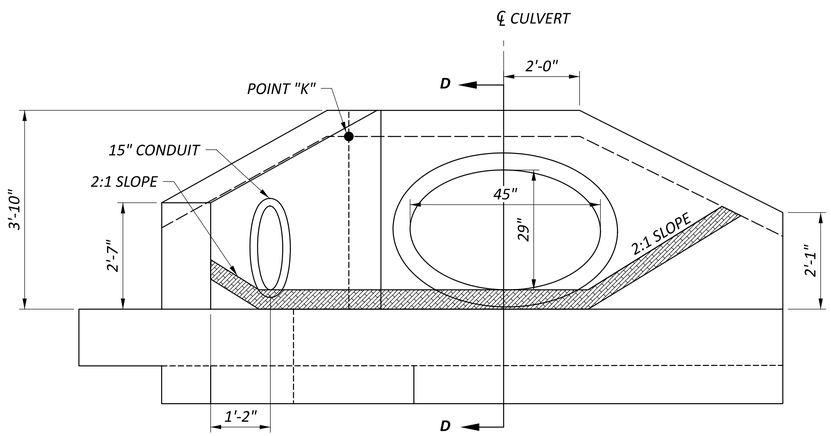

ELEVATION VIEW, TYPE B

OUTLET HEADWALL
(N.T.S.)

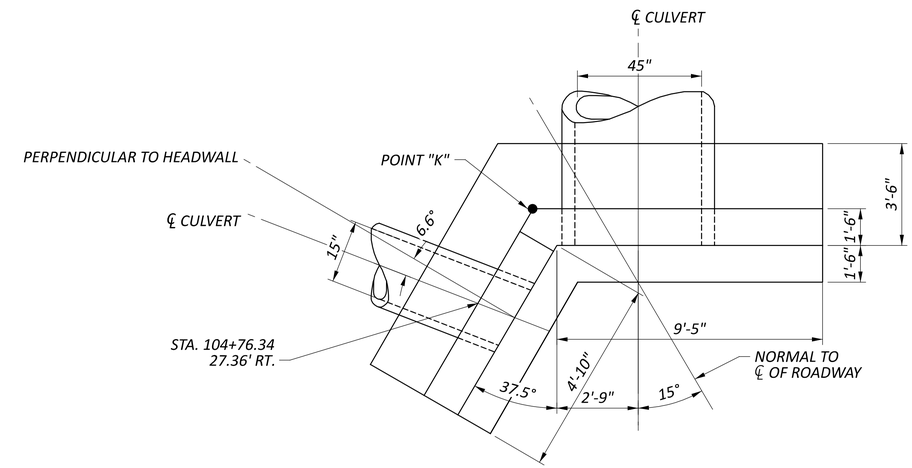

PLAN VIEW, TYPE B

OUTLET HEADWALL
(N.T.S.)

							Θ = 15°						
Elliptical Rise x Span (in.)	H	a	b	c	ts	Bar# d	L1	L2	h1	h2	CONC. CMP (cy)	CONC. RCP (cy)	STEEL (lbs.)
29"x45"	3'-10"	3'-6"	1'-6"	2'-9"	1'-6"	#5	9'-5"	4'-10"	2'-1"	2'-7"	9.3	9.1	806

REFER TO STANDARD CONSTRUCTION DRAWING HW-1.1 FOR MORE DETAILS

HEADWALL DETAILS
SUM-303-3.589

DESIGN AGENCY

DESIGNER
NKF

REVIEWER
MJP 04-24-24

PROJECT ID
109452

SHEET P.51 TOTAL 62

D04-CULVERTS-FY2025

MODEL: SUM-303 SHEET 2 PAPERSIZE: 34x22 (in.) DATE: 1/31/2025 TIME: 9:38:04 AM USER: mpalagan
pw:\\ohiodot-pw.bentley.com:ohiodot-pw-02\Documents\01 Active Projects\District 04_D04\109452\400-Engineering\Drainage\Sheets\109452_DN600.dgn

REF NO.	SHEET NO.	STATION TO STATION						202 HEADWALL REMOVED, (SUM-303-3.589)	202 PIPE REMOVED, 24" AND UNDER	202 PIPE REMOVED, OVER 24"	202 CURB REMOVED	503 COFFERDAMS AND EXCAVATION BRACING, (SUM-303-3.589)	601 ROCK CHANNEL PROTECTION, TYPE C WITH GEOTEXTILE FABRIC	601 PAVED GUTTER, TYPE 1-2	602 CONCRETE MASONRY	609 CURB, TYPE 6	611 29" X 45" CONDUIT, TYPE A, 706.04	611 15" CONDUIT, TYPE C	611 CATCH BASIN, NO. 2-2B
				TO				EACH	FT	FT	FT	LS	CY	FT	CY	FT	FT	FT	EACH
R-1	P.53	104+73.66	LT		104+83.51	LT		1											
R-2	P.53	104+54.97	RT		104+74.06	RT		1											
R-3	P.53	104+22.89	LT		104+75.96	LT			54										
R-4	P.53	104+70.91	RT		104+78.68	LT				51									
R-5	P.53	104+40.00	LT		105+04.98	LT					65								
R-6	P.53	104+40.00	RT		105+04.98	RT					65								
D-1	P.53	104+22.89	LT		104+28.88	LT							4					7	
D-2	P.53	104+28.88	LT		104+30.87	LT													1
D-3	P.53	104+30.87	LT		104+78.55	LT							4					49	
D-4	P.53	104+74.92	LT		104+85.60	LT									9				
D-5	P.53	104+66.66	RT		104+76.97	RT								13					
D-6	P.53	103+96.19	RT		104+56.08	RT								61					
D-7	P.53	104+56.44	RT		104+68.87	RT									9				
D-8	P.53	104+62.58	RT		104+81.38	LT						LS	8				53		
EC-1	P.53	104+79.73	LT		104+89.16	LT							1.67						
EC-2	P.53	104+56.02	RT		104+63.74	RT							1.89						
GR-1	P.53	104+40.00	LT		105+04.98	LT										65			
GR-2	P.53	104+40.00	RT		105+04.98	RT										65			
TOTALS CARRIED TO GENERAL SUMMARY								2	54	51	130	LS	20	74	18	130	53	56	1

D04-CULVERTS-FY2025

MODEL: Sheet_SurvFt PAPERSIZE: 34x22 (in.) DATE: 1/31/2025 TIME: 9:38:11 AM USER: mpalagan
pw:\\ohiodot-pw.bentley.com:ohiodot-pw-02\Documents\01 Active Projects\District 04_D04\109452\400-Engineering\Roadway\Sheets\109452_GS600.dgn

ROADWAY AND DRAINAGE SUBSUMMARY - SUM-303-3.589

DESIGN AGENCY

DESIGNER
NKF

REVIEWER
MJP 04-24-24

PROJECT ID
109452

SHEET P.52 TOTAL 62

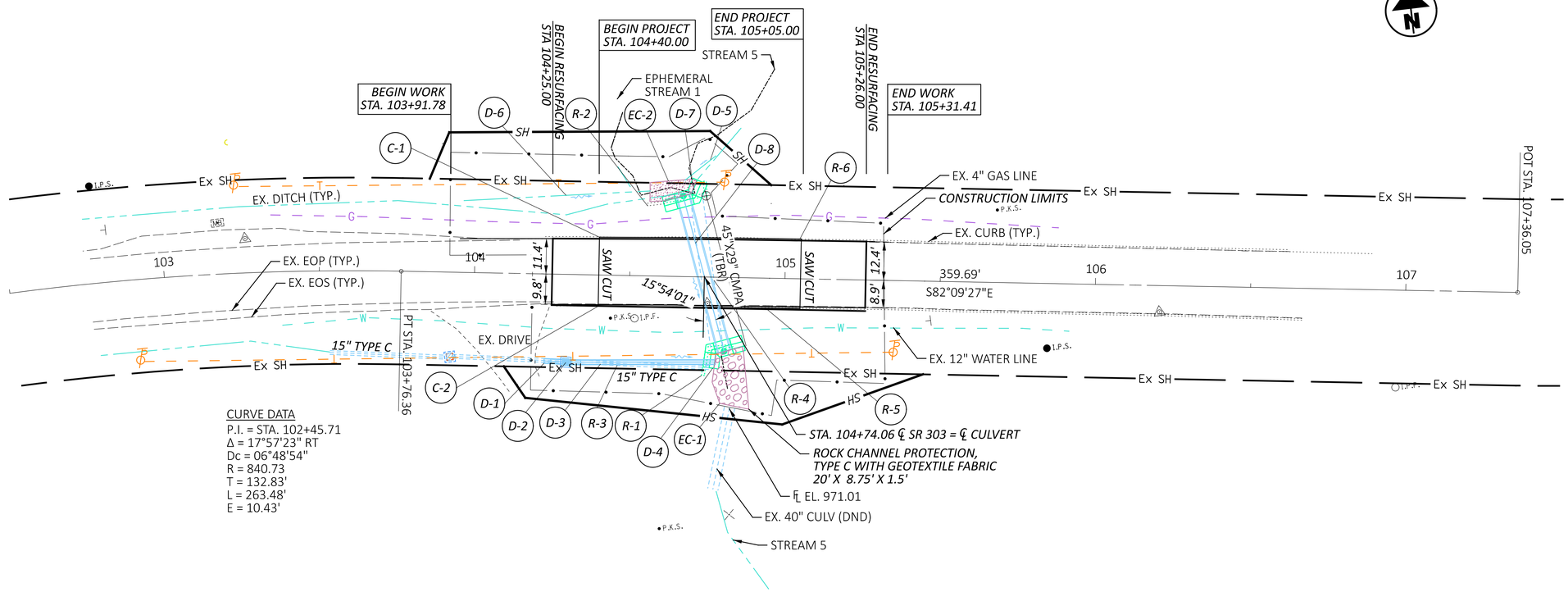

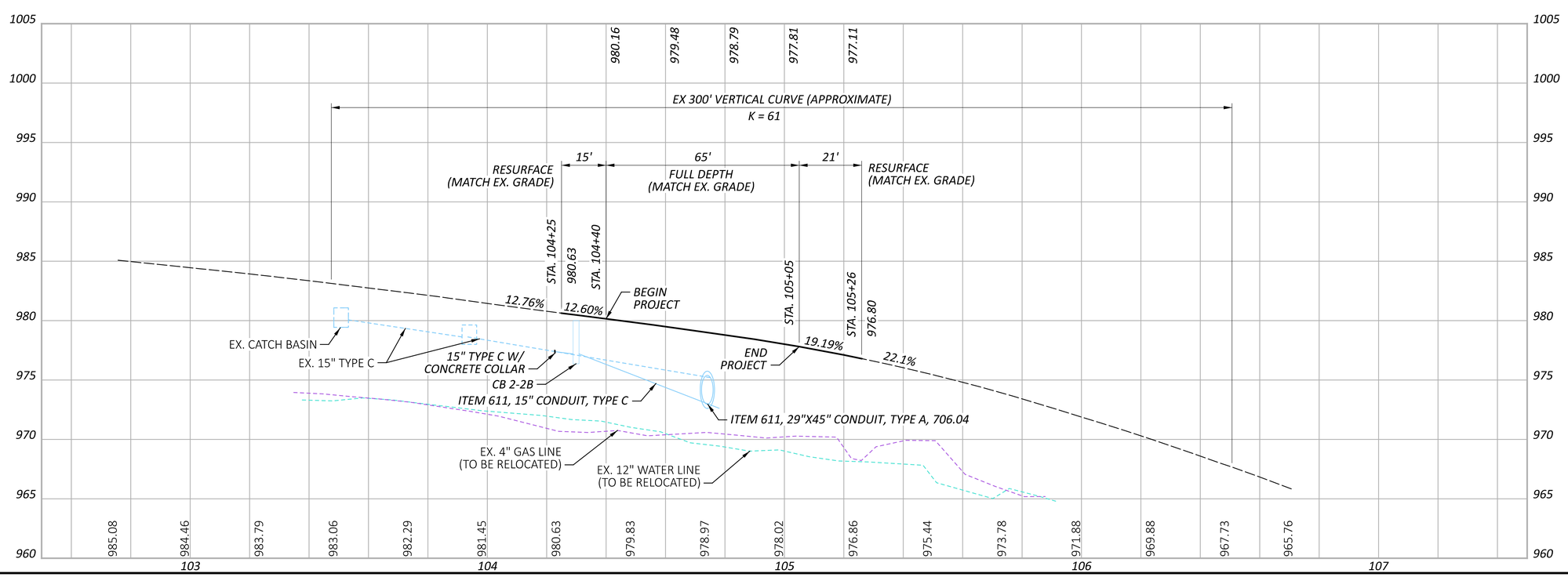

HORIZONTAL SCALE IN FEET
0 10 20 40

PLAN AND PROFILE - SUM-303-3.589
STA. 103+76 TO STA. 107+36

DESIGN AGENCY

DESIGNER
NKF

REVIEWER
MJP 04-24-24

PROJECT ID
109452

SHEET P.53 TOTAL 62

D04-CULVERTS-FY2025

MODEL: CLX303 - Plan 1 [Sheet] PAPERSIZE: 34x22 (in.) DATE: 1/31/2025 TIME: 9:38:19 AM USER: mpalagan
pw:\\ohiodot-pw.bentley.com:ohiodot-pw-02\Documents\01 Active Projects\District 04_D04\109452\400-Engineering\Roadway\Sheets\109452_GP600.dgn

Cut Area (SF): 11	Cut Vol. (CY): 5
Fill Area (SF): 5	Fill Vol. (CY): 4
Seed Width (FT):	Seed Area (SY):

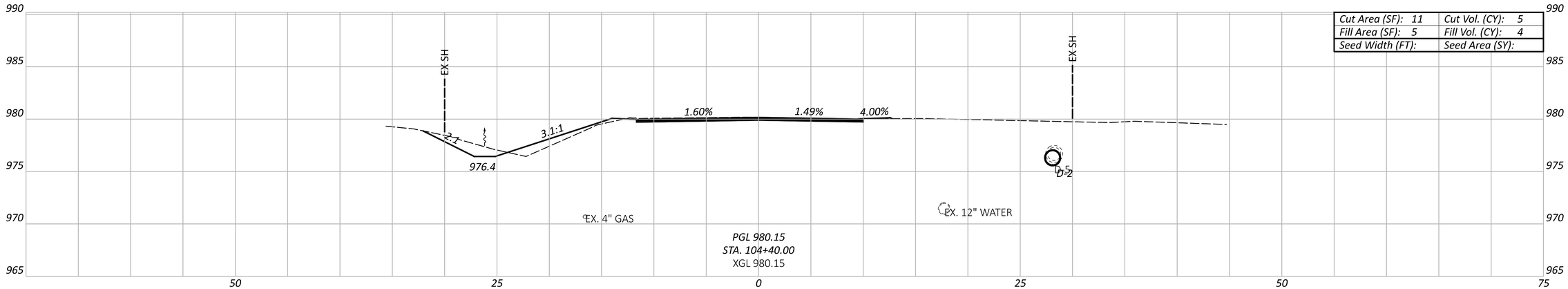

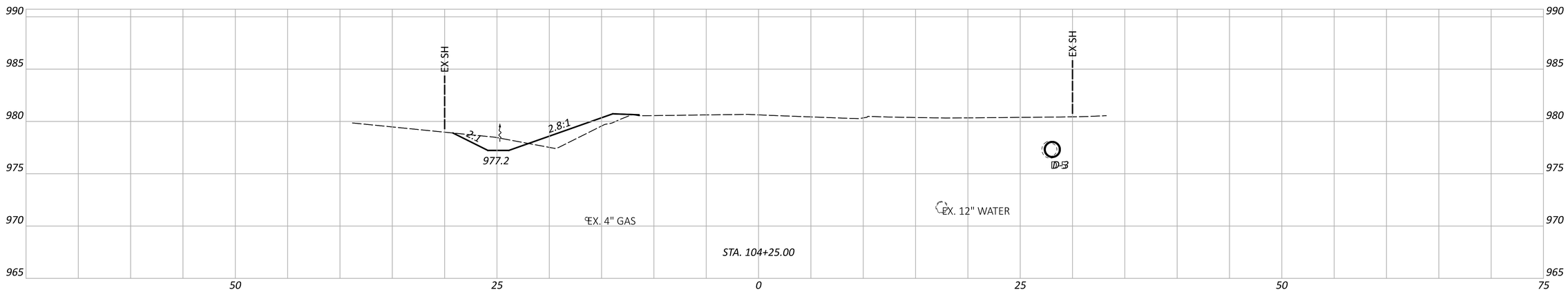

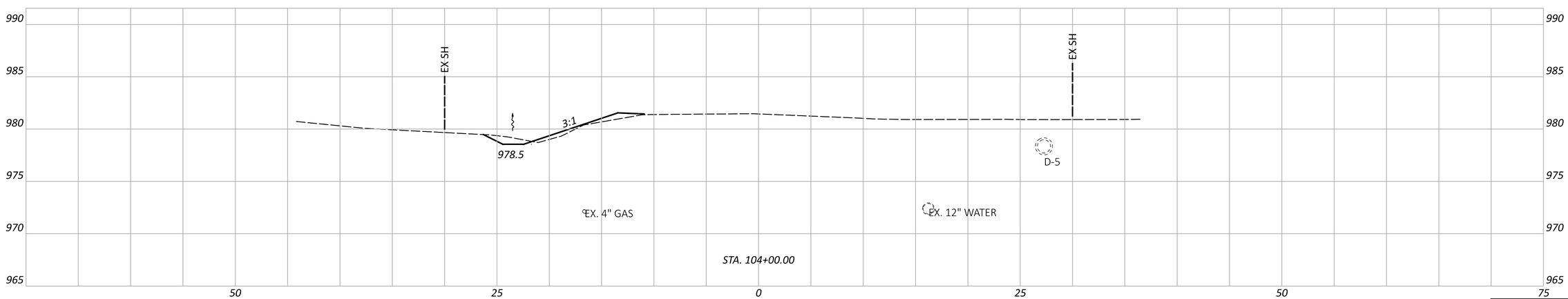

Sheet Totals		
Seeding	Cut	Fill
	5	4

CROSS SECTIONS - SUM-303-3.589
STA. 104+00.00 TO STA. 104+40.00

DESIGN AGENCY

DESIGNER
NKF

REVIEWER
MJP 04-24-24

PROJECT ID
109452

SHEET P.54 TOTAL 62

D04-CULVERTS-FY2025

MODEL: SUM303 - Sheet 001 PAPERSIZE: 34x22 (in.) DATE: 1/31/2025 TIME: 9:38:27 AM USER: mpalagan
pw:\\ohiodot-pw.bentley.com:ohiodot-pw-02\Documents\01 Active Projects\District 04_D04\109452\400-Engineering\Roadway\Sheets\109452_XS601.dgn

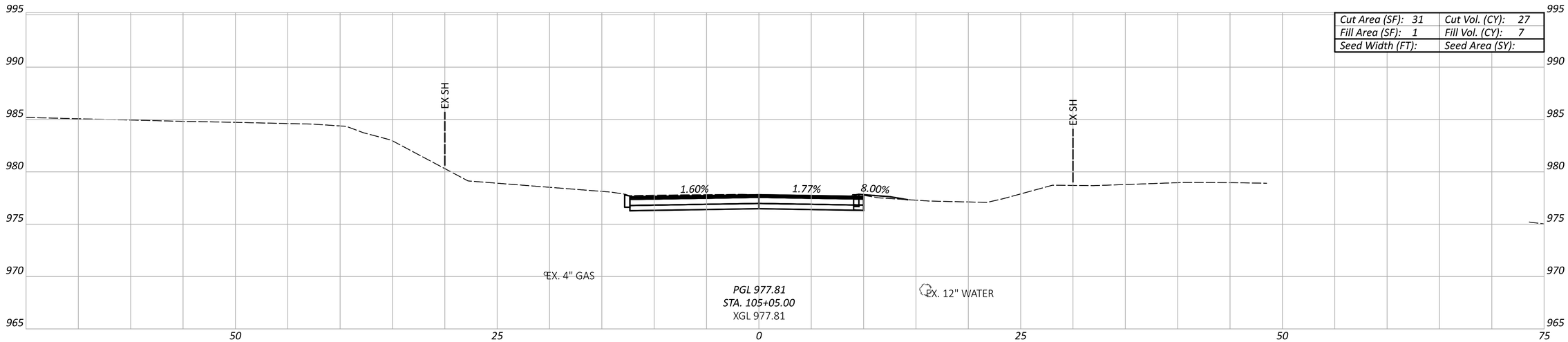

Cut Area (SF): 31	Cut Vol. (CY): 27
Fill Area (SF): 1	Fill Vol. (CY): 7
Seed Width (FT):	Seed Area (SY):

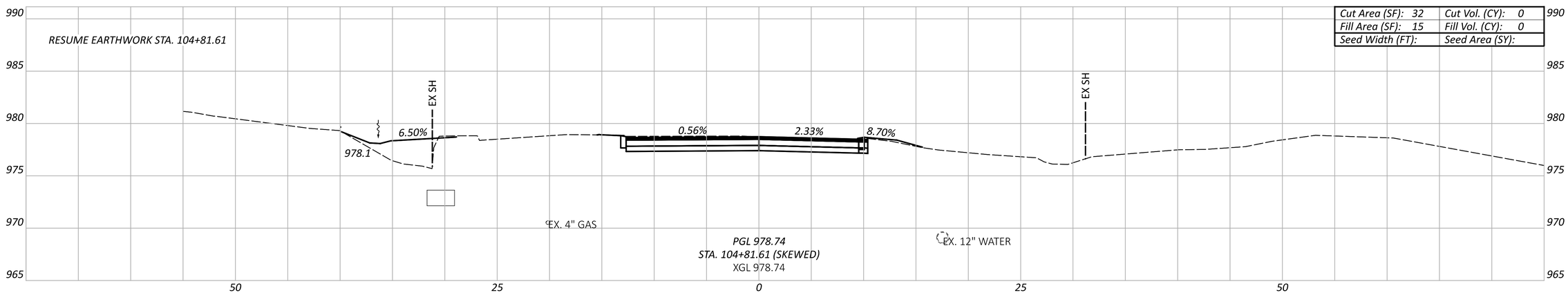

Cut Area (SF): 32	Cut Vol. (CY): 0
Fill Area (SF): 15	Fill Vol. (CY): 0
Seed Width (FT):	Seed Area (SY):

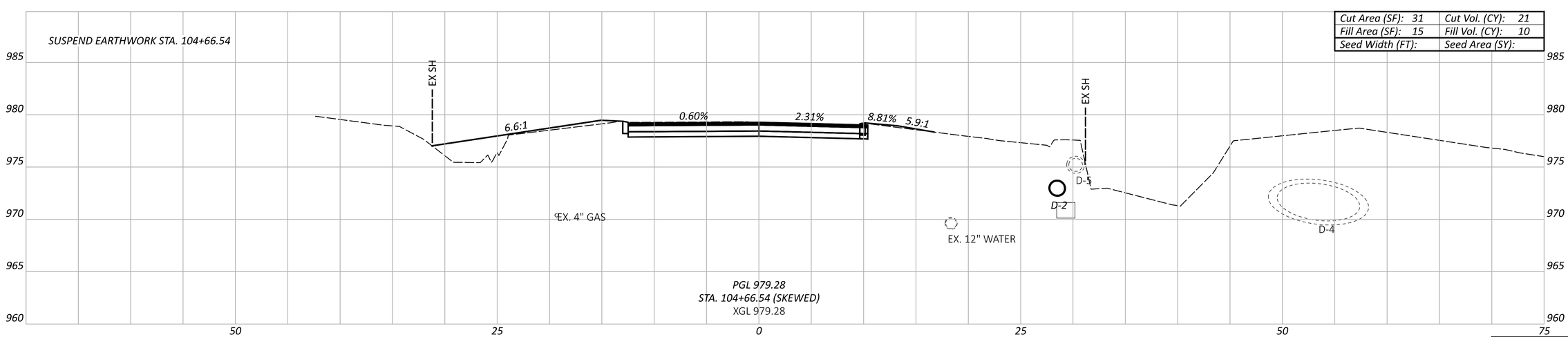

Cut Area (SF): 31	Cut Vol. (CY): 21
Fill Area (SF): 15	Fill Vol. (CY): 10
Seed Width (FT):	Seed Area (SY):

Sheet Totals		
Seeding	Cut	Fill
	48	17

CROSS SECTIONS - SUM-303-3.589
STA. 104+66.54 TO STA. 105+05.00

DESIGN AGENCY

DESIGNER
NKF

REVIEWER
MJP 04-24-24

PROJECT ID
109452

SHEET P.55 TOTAL 62

D04-CULVERTS-FY2025

MODEL: SUM303 - Sheet 002 PAPERSIZE: 34x22 (in.) DATE: 1/31/2025 TIME: 9:38:29 AM USER: mpalagan
pw:\\ohiodot-pw.bentley.com:ohiodot-pw-02\Documents\01 Active Projects\District 04_D04\109452\400-Engineering\Roadway\Sheets\109452_XS601.dgn

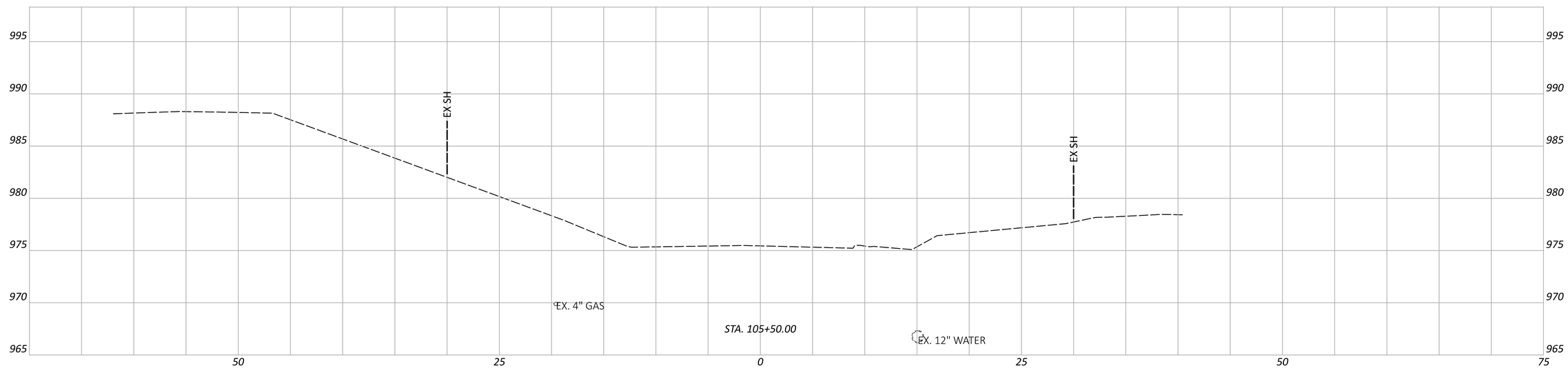

Cut Area (SF): 6	Cut Vol. (CY): 15
Fill Area (SF): 0	Fill Vol. (CY): 0
Seed Width (FT):	Seed Area (SY):

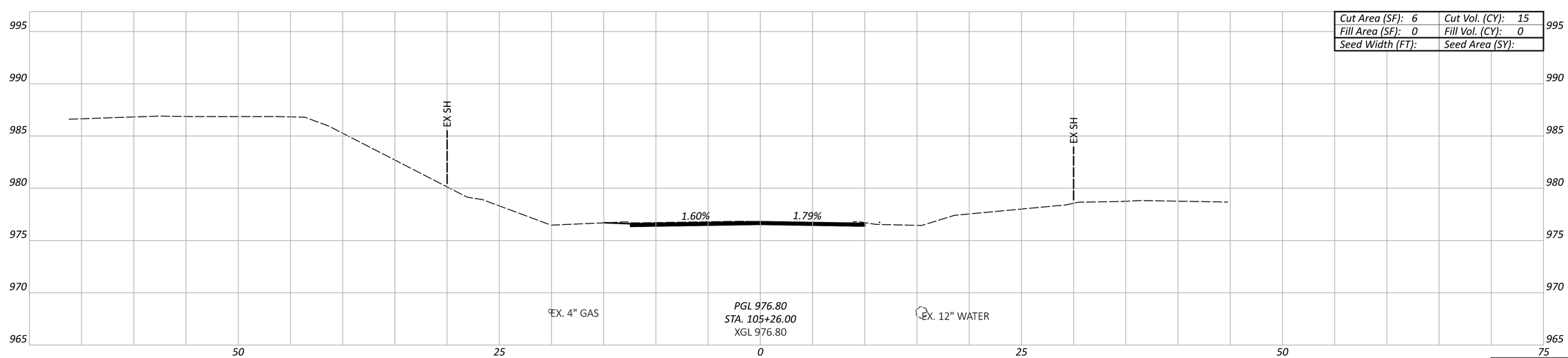

Sheet Totals		
Seeding	Cut	Fill
	15	

CROSS SECTIONS - SUM-303-3.589
STA. 105+26.00 TO STA. 105+50.00

DESIGN AGENCY

DESIGNER
NKF

REVIEWER
MJP 04-24-24

PROJECT ID
109452

SHEET P.56 TOTAL 62

D04-CULVERTS-FY2025

MODEL: SUM303 - Sheet 003 PAPERSIZE: 34x22 (in.) DATE: 1/31/2025 TIME: 9:38:30 AM USER: mpalagan
pw:\\ohiodot-pw.bentley.com:ohiodot-pw-02\Documents\01 Active Projects\District 04_D04\109452\400-Engineering\Roadway\Sheets\109452_XS601.dgn

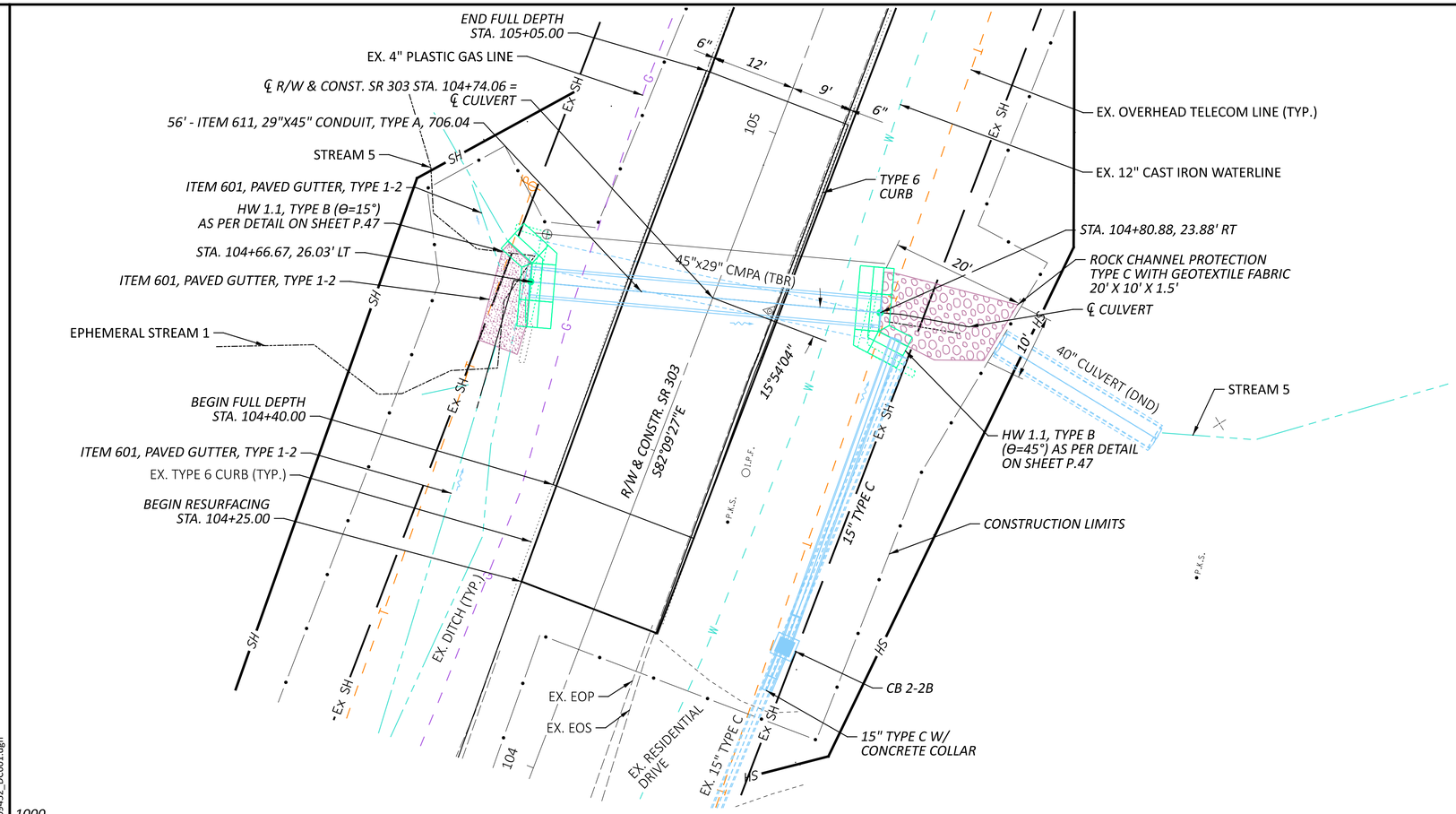

FOR BENCHMARK INFORMATION, SEE SHEET P.50

FOR ESTIMATED QUANTITIES, SEE SHEET P.52

HORIZONTAL SCALE IN FEET 0 5 10 20

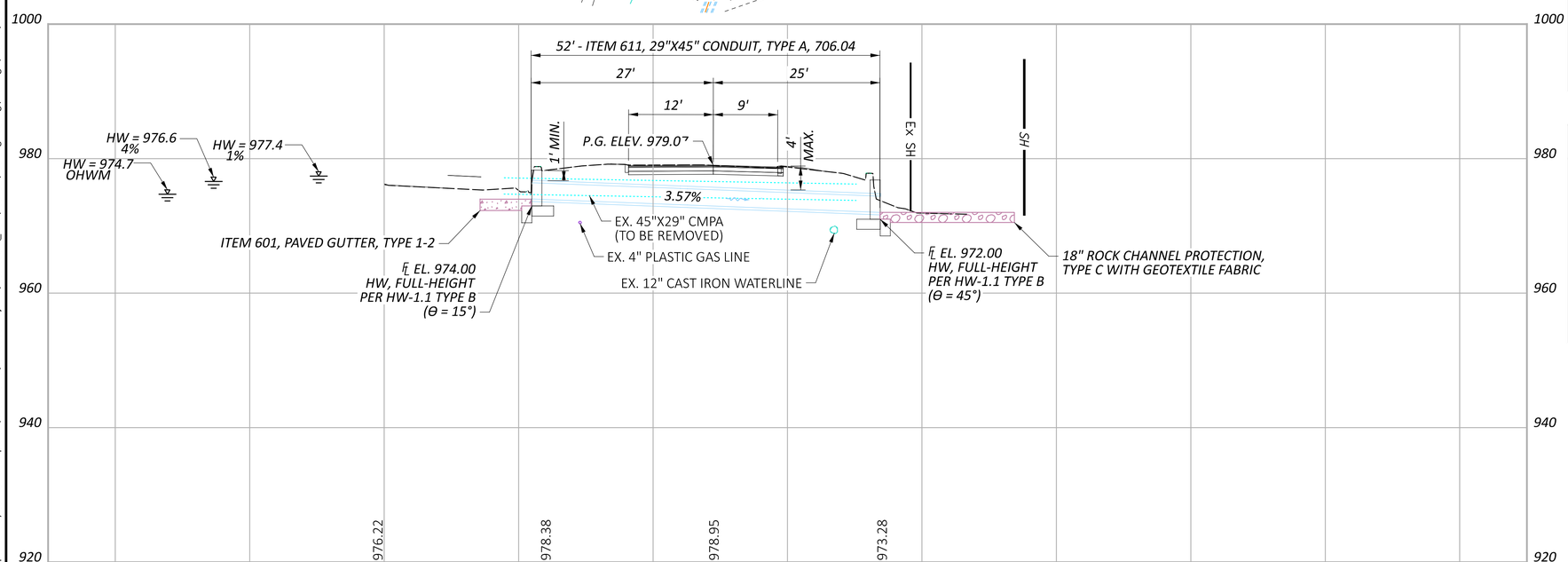

HYDRAULIC DATA

DRAINAGE AREA = 13.4 ACRES

Q (4%) =	28.2 CFS	V (4%) =	15.1 FT/S	HW (4%) =	976.6 FT
Q (1%) =	41.5 CFS	V (1%) =	16.8 FT/S	HW (1%) =	977.4 FT

ORDINARY HIGH WATER MARK: 974.7 FT

DESIGN SERVICE LIFE: 75 YEARS

ABRASION LEVEL: 2.0

pH: 7.0

EXISTING CONDUIT

TYPE: CORRUGATED METAL PIPE ARCH WITH STONE HEADWALLS

SIZE: 45"x29"

SKEW: 82°

ALIGNMENT: TANGENT

DATE BUILT: UNKNOWN

CONDITION: TO BE REMOVED AND REPLACED

CFN: 1822696

PROPOSED CONDUIT

TYPE: 706.04, REINFORCED CONCRETE ELLIPTICAL CULVERT

SIZE: 29"X45"

SKEW: 16° RF

ALIGNMENT: TANGENT

CFN: 1995677

HEADWALLS: FULL-HEIGHT PER HW-1.1 TYPE B
(SEE NOTE ON SHEET P.45)

CULVERT DETAILS - SUM-303-3.589
STA. 104+72.18

DESIGN AGENCY

DESIGNER NKF

REVIEWER MJP 04-24-24

PROJECT ID 109452

SUBSET 1 TOTAL 1

SHEET P.57 TOTAL 62

D04-CULVERTS-FY2025

MODEL: SC303 - Plan 1 [Sheet] PAPERSIZE: 34x22 (in.) DATE: 1/31/2025 TIME: 9:38:37 AM USER: mpalagan
pw:\\ohiodot-pw.bentley.com:ohiodot-pw-02\Documents\01 Active Projects\District 04_D04\109452\400-Engineering\Drainage\Sheets\109452_DC601.dgn

pw:\\ohiodot-pw.bentley.com:ohiodot-pw-02\Documents\01 Active Projects\District 04_D04\109452\400-Engineering\Roadway\Sheets\109452_GB501_donotuse Sheet1 1/31/2025 9:38:45 AM mpalagan

CURVE DATA - SR 619
P.I. Sta. 698+71.52
Δ = 47° 22′ 00″ (LT)
Dc = 2° 45′ 00″
R = 2,083.48′
T = 913.86′
L = 1,722.42′
E = 191.61′
C = 1,673.79′
C.B. = S 66° 22′ 59″ E

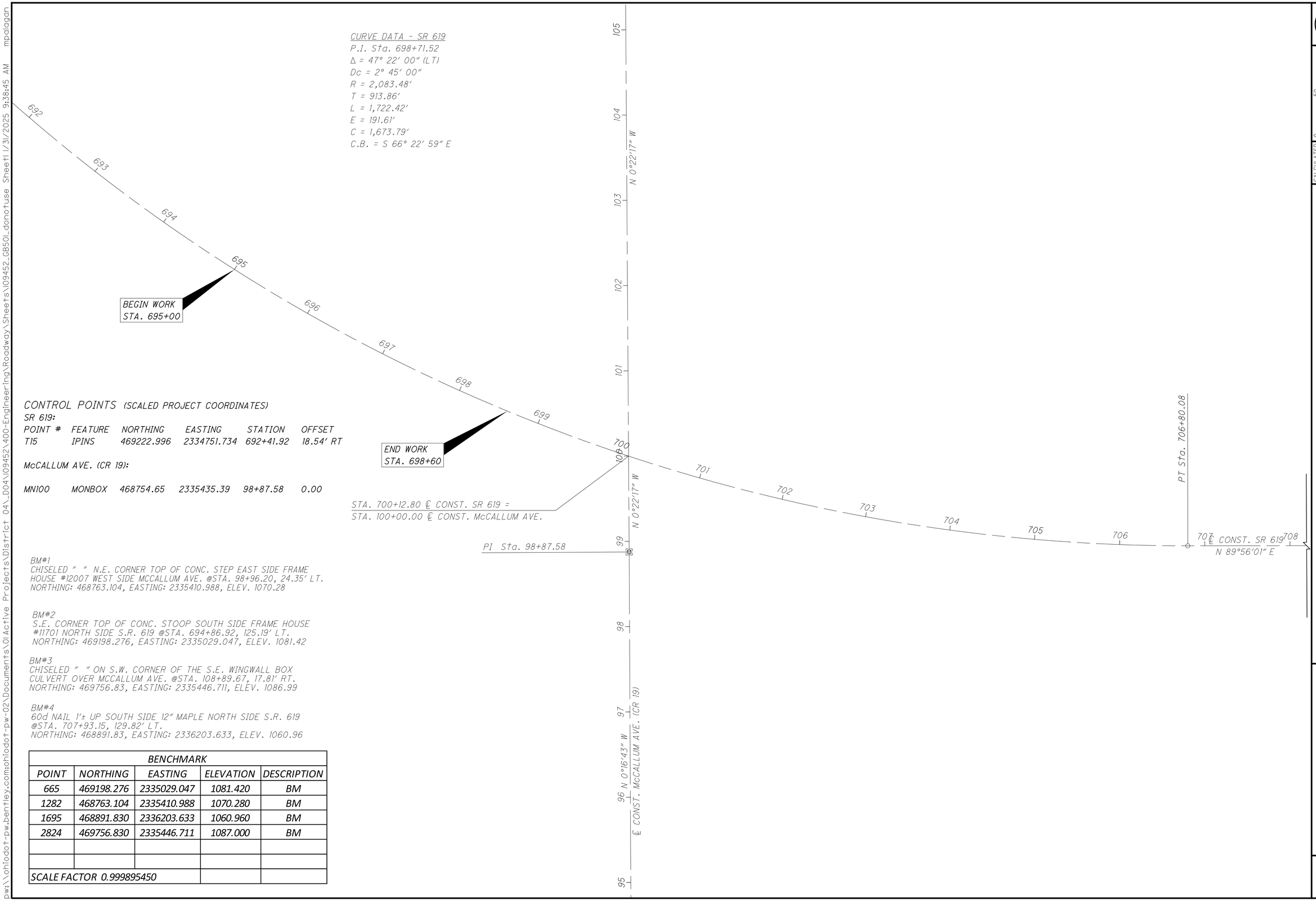

CONTROL POINTS (SCALED PROJECT COORDINATES)

SR 619:

POINT #	FEATURE	NORTHING	EASTING	STATION	OFFSET
T15	IPINS	469222.996	2334751.734	692+41.92	18.54′ RT

McCALLUM AVE. (CR 19):

MN100	MONBOX	468754.65	2335435.39	98+87.58	0.00

BM#1
CHISELED " " N.E. CORNER TOP OF CONC. STEP EAST SIDE FRAME HOUSE #12007 WEST SIDE MCCALLUM AVE. @STA. 98+96.20, 24.35′ LT.
NORTHING: 468763.104, EASTING: 2335410.988, ELEV. 1070.28

BM#2
S.E. CORNER TOP OF CONC. STOOP SOUTH SIDE FRAME HOUSE #11701 NORTH SIDE S.R. 619 @STA. 694+86.92, 125.19′ LT.
NORTHING: 469198.276, EASTING: 2335029.047, ELEV. 1081.42

BM#3
CHISELED " " ON S.W. CORNER OF THE S.E. WINGWALL BOX CULVERT OVER MCCALLUM AVE. @STA. 108+89.67, 17.81′ RT.
NORTHING: 469756.83, EASTING: 2335446.711, ELEV. 1086.99

BM#4
60d NAIL 1′± UP SOUTH SIDE 12″ MAPLE NORTH SIDE S.R. 619 @STA. 707+93.15, 129.82′ LT.
NORTHING: 468891.83, EASTING: 2336203.633, ELEV. 1060.96

BENCHMARK				
POINT	NORTHING	EASTING	ELEVATION	DESCRIPTION
665	469198.276	2335029.047	1081.420	BM
1282	468763.104	2335410.988	1070.280	BM
1695	468891.830	2336203.633	1060.960	BM
2824	469756.830	2335446.711	1087.000	BM
SCALE FACTOR 0.999895450				

HORIZONTAL SCALE IN FEET
0 25 50 100

CALCULATED EMS
CHECKED MJP

SCHEMATIC PLAN

STA-619-13.15

SURVEYING PARAMETERS

PRIMARY PROJECT CONTROL MONUMENTS GOVERN ALL POSITIONING ON ODOT PROJECTS.

USE THE FOLLOWING PROJECT CONTROL, VERTICAL POSITIONING, AND HORIZONTAL POSITIONING PARAMETERS FOR ALL SURVEYING:

PROJECT CONTROL

POSITIONING METHOD: ODOT VRS
MONUMENT TYPE: B

VERTICAL POSITIONING

ORTHOMETRIC HEIGHT DATUM: NAVD88
GEOID: 2012A

HORIZONTAL POSITIONING

REFERENCE FRAME: NAD83 (2011) (EPOCH: 2010.0000)
ELLIPSOID: GRS80
MAP PROJECTION: LAMBERT CONFORMAL CONIC
COORDINATE SYSTEM: OHIO STATE PLANE, SOUTH ZONE
COMBINED SCALE FACTOR: 0.99989545003
ORIGIN OF COORDINATE SYSTEM: (0,0)

USE THE POSITIONING METHODS AND MONUMENT TYPE USED IN THE ORIGINAL SURVEY TO RESTORE ALL MONUMENTS RELATED TO PRIMARY PROJECT CONTROL THAT ARE DAMAGED OR DESTROYED BY CONSTRUCTION ACTIVITIES. RESTORE THE DAMAGED OR DESTROYED MONUMENTS IN ACCORDANCE WITH CMS 623.

UNITS ARE IN U.S. SURVEY FEET.
1 METER = 3.28083333333 U.S. SURVEY FEET

UTILITIES

THE CONTRACTOR SHALL USE THE FOLLOWING PROCEDURE AT EACH LOCATION WHERE WORK IS PERFORMED, IN ACCORDANCE WITH SECTIONS 105.07 AND 107.16 IN THE CONSTRUCTION AND MATERIALS SPECIFICATIONS.

THE CONTRACTOR SHALL NOTIFY THE PROJECT ENGINEER, OHIO811, THE OHIO DEPARTMENT OF TRANSPORATION DISTRICT 4 HEADQUARTERS AND ALL NON REGISTERED UTILITY OWNERS AT LEAST TWO (2) WORKING DAYS PRIOR TO COMMENCING CONSTRUCTION OPERATION IN ALL AREAS.

THE LOCATION OF THE UNDERGROUND UTILITIES SHOWN ON THE PLANS ARE AS OBTAINED FROM THE OWNERS AS REQUIRED BY SECTION 153.64 O.R.C.

LISTED BELOW ARE ALL UTILITIES LOCATED WITHIN THE PROJECT CONSTRUCTION LIMITS TOGETHER WITH THEIR RESPECTIVE OWNERS:

ENBRIDGE GAS OHIO
ATTN: MICAH RISACHER
320 SPRINGSIDE DRIVE
AKRON, OHIO 44333
330.664.2638

ITEM SPECIAL - SURVEY CONTROL VERIFICATION

THE CONTRACTOR SHALL PERFORM THIS WORK TO VERIFY THE PROVIDED SURVEY CONTROL. THE CONTRACTOR WILL PERFORM THE VERIFICATION USING ONE OF THE TWO METHODS BELOW DEPENDENT UPON THE CONTRACTOR'S CHOSEN MEANS OF SURVEY CONTROL TO BE USED ON THE PROJECT. THE WORK SHALL BE PERFORMED UNDER THE DIRECT SUPERVISION OF AN OHIO LICENSED SURVEYOR.

1. IF USING GPS DEVICES TO ESTABLISH AND OR PROVIDE SUPPLEMENTAL HORIZONTAL AND VERTICAL SURVEY CONTROL
a. LOCATE VERTICAL CONTROL POINTS PROVIDED IN THE PLAN AND PERFORM A DIFFERENTIAL LEVEL CIRCUIT.
b. PERFORM A SITE CALIBRATION UTILIZING THE AVAILABLE HORIZONTAL AND VERTICAL CONTROL POINTS PROVIDED IN THE PLAN.
c. PROVIDE A REPORT, SIGNED BY AN OHIO LICENSED SURVEYOR, TO THE PROJECT ENGINEER COMPARING THE OBSERVED DATA TO THE PLAN DATA ALONG WITH A NARRATIVE DETAILING ANY DISCREPANCIES FOUND.
2. IF USING CONVENTIONAL SURVEY INSTRUMENTATION TO ESTABLISH AND OR PROVIDE SUPPLEMENTAL HORIZONTAL AND VERTICAL SURVEY CONTROL
a. LOCATE VERTICAL CONTROL POINTS PROVIDED IN THE PLANS AND PERFORM A DIFFERENTIAL LEVEL CIRCUIT.
b. LOCATE AND OBSERVE ANGLE AND DISTANCE TO ALL AVAILABLE HORIZONTAL CONTROL POINTS PROVIDED IN THE PLAN.
c. PROVIDE A REPORT, SIGNED BY AN OHIO LICENSED SURVEYOR, TO THE PROJECT ENGINEER COMPARING THE OBSERVED DATA TO THE PLAN DATA ALONG WITH A NARRATIVE DETAILING ANY DISCREPANCIES FOUND.

ALL MATERIALS, LABOR, EQUIPMENT, TOOLS, AND INCIDENTIALS NECESSARY TO COMPLETE THIS WORK SHALL BE INCLUDED IN THE LUMP SUM BID ITEM.

SEEDING AND MULCHING

THE FOLLOWING QUANTITIES ARE PROVIDED TO PROMOTE GROWTH AND CARE OF PERMANENT SEEDED AREAS:

659, TOPSOIL	*106 CU. YD.*
659, SEEDING AND MULCHING	*1115 SQ. YD.*
659, COMMERCIAL FERTILIZER	*0.15 TON*
659, LIME	*0.23 ACRE*

SEEDING AND MULCHING SHALL BE APPLIED TO ALL AREAS OF EXPOSED SOIL BETWEEN THE RIGHT-OF-WAY LINES, AND WITHIN THE CONSTRUCTION LIMITS FOR AREAS OUTSIDE THE RIGHT-OF-WAY LINES COVERED BY WORK AGREEMENT OR SLOPE EASEMENT. QUANTITY CALCULATIONS FOR SEEDING AND MULCHING ARE BASED ON THESE LIMITS.

EMBANKMENT

THE FOLLOWING QUANTITIES HAVE BEEN TAKEN FROM THE CROSS SECTION SHEETS AND CARRIED TO THE GENERAL SUMMARY:

ITEM 203, EXCAVATION	*14 CU. YD.*
ITEM 203, EMBANKMENT	*217 CU. YD.*

REF NO.	SHEET NO.	STATION TO STATION					202 HEADWALL REMOVED	202 PAVEMENT REMOVED	202 PIPE REMOVED, 24" AND UNDER	452 6" NON-REINFORCED CONCRETE PAVEMENT, CLASS QC MS	611 15" CONDUIT, TYPE C	611 18" CONDUIT, TYPE B	611 CATCH BASIN, NO. 2-2A	611 CATCH BASIN, NO. 2-2B	670 DITCH EROSION PROTECTION
							EACH	SY	FT	SY	FT	FT	EACH	EACH	SY
				TO											
D-1	P.55	695+12.00	LT		696+36.00	LT					129			1	
D-2	P.55	696+36.00	LT		698+55.00	LT						216	1		
EP-1	P.55	695+12.00	LT		696+36.00	LT									104
EP-2	P.55	696+60.00	LT		697+50.00	LT									75
R-1	P.55	695+12.00	LT		695+12.00	LT	1								
R-2	P.55	696+36.00	LT		696+60.00	LT	2		24						
R-3	P.55	697+50.00	LT		698+55.00	LT	1		104						
DR-1	P.55	696+40	LT		696+55	LT		7		7					
TOTALS CARRIED TO GENERAL SUMMARY							4	7	128	7	129	216	1	1	179

DRAINAGE NOTES
STA-619-13.170

DESIGN AGENCY

DESIGNER NKF
REVIEWER MJP 04-24-24
PROJECT ID 109452
SHEET P.59 TOTAL 62

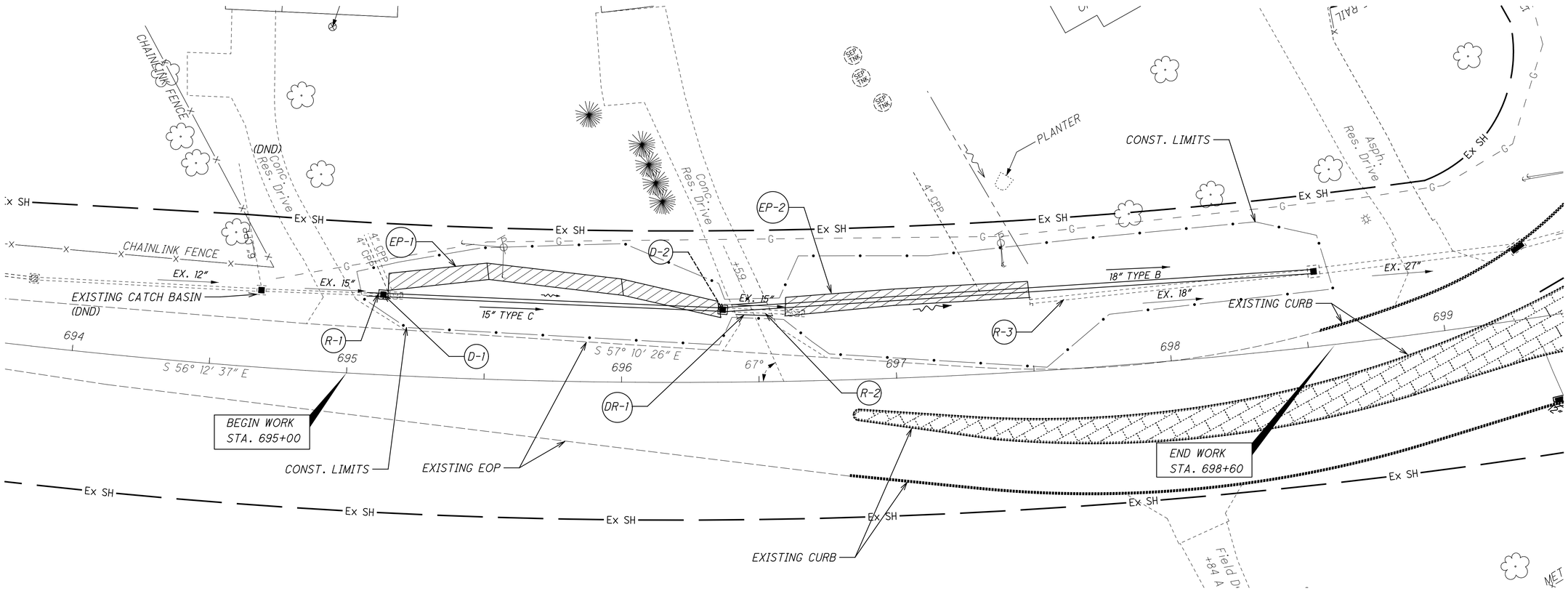

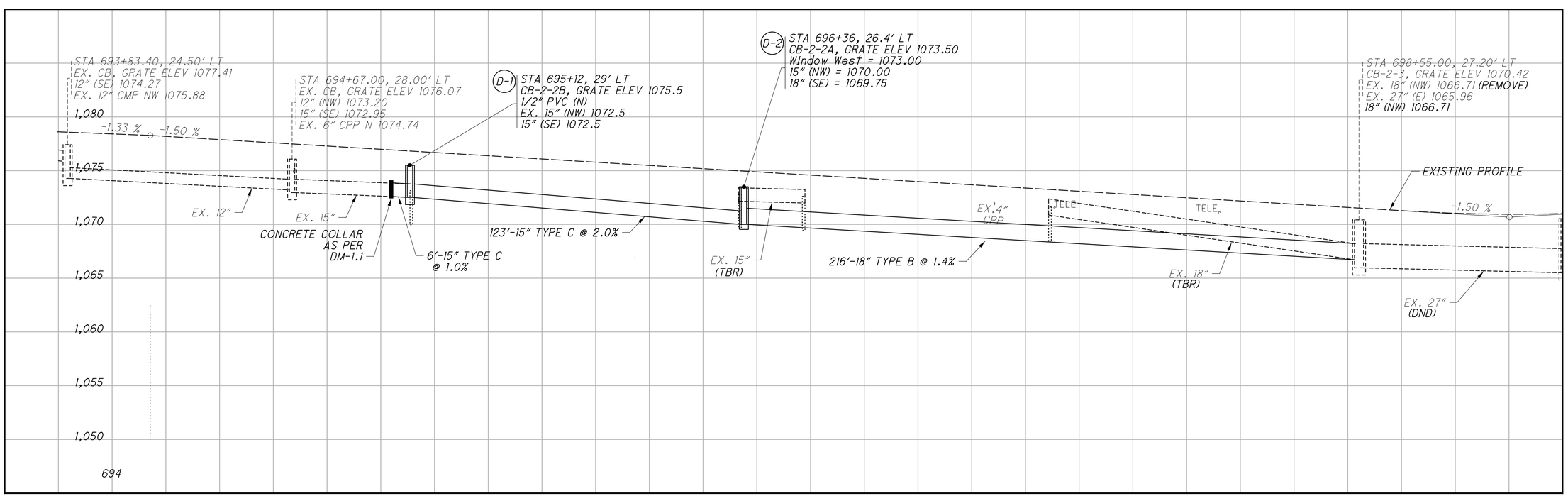

HORIZONTAL SCALE IN FEET
0 10 20 40

PLAN AND PROFILE - STA-619-13.170
BMP REVISION

DESIGN AGENCY

DESIGNER
EMS

REVIEWER
MJP 04-24-24

PROJECT ID
109452

SHEET P.60 TOTAL 62

D04-CULVERTS-FY2025

MODEL: Sheet View PAPERSIZE: 34x22 (in.) DATE: 1/31/2025 TIME: 9:39:01 AM USER: mpalagan
pw:\\ohiodot-pw.bentley.com:ohiodot-pw-02\Documents\01 Active Projects\District 04_D04\109452\400-Engineering\Roadway\Sheets\109452_GP500.dgn

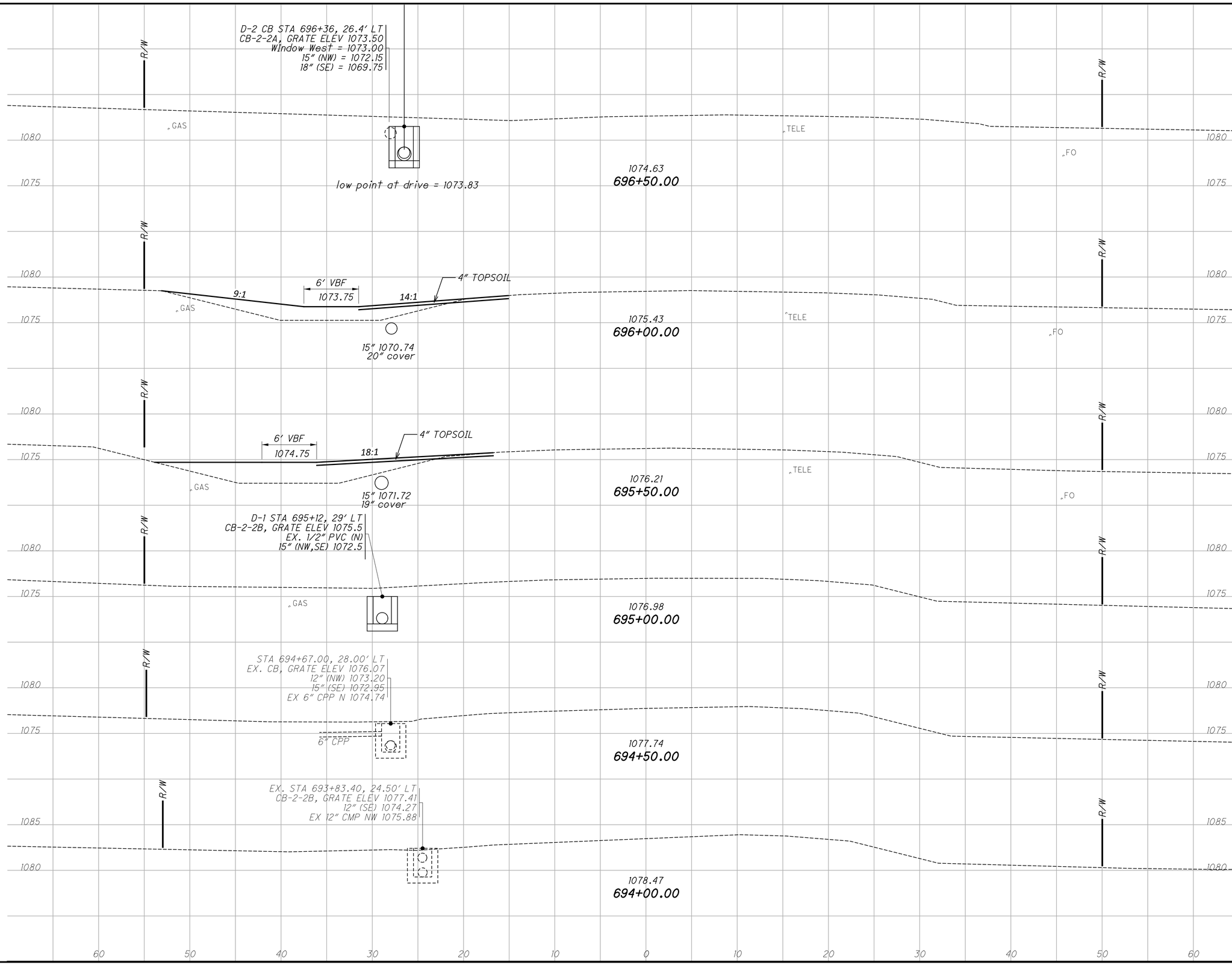

END AREA CUT	END AREA FILL	VOLUME CUT	VOLUME FILL
		6	70
0	0		
		2	31
2	33		
		4	73
2	46		
		2	43
0	0		
		8	147

HORIZONTAL SCALE IN FEET 0 0 0 0

CROSS SECTIONS - STA-619-13.170
STA. 694+00 TO STA. 695+50

DESIGN AGENCY

DESIGNER
EMS

REVIEWER
MJP 04-24-24

PROJECT ID
109452

SHEET P.61 TOTAL 62

D04-CULVERTS-FY2025

MODEL: SHEET 1 PAPERSIZE: 34x22 (in.) DATE: 1/31/2025 TIME: 9:39:08 AM USER: mpalagan
pw:\\ohiodot-pw.bentley.com:ohiodot-pw-02\Documents\01 Active Projects\District 04_D04\109452\400-Engineering\Roadway\Sheets\109452_XS501.dgn

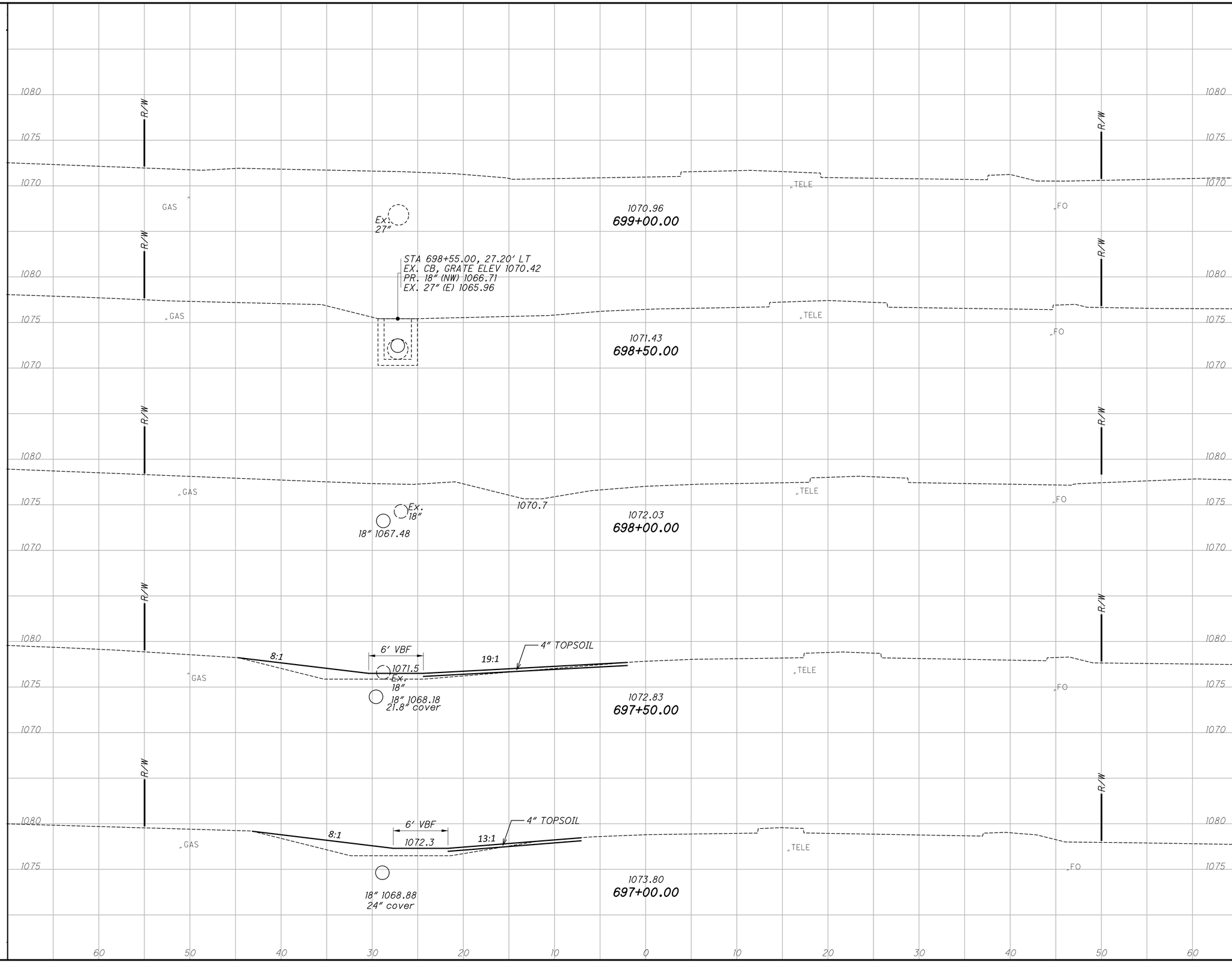

END AREA CUT	END AREA FILL	VOLUME CUT	VOLUME FILL
0	0		
		2	16
2	17		
		2	35
2	20		
		2	19
		6	70

HORIZONTAL SCALE IN FEET 0 0 0 0

CROSS SECTIONS - STA-619-13.170
STA. 697+00 TO STA. 699+00

DESIGN AGENCY

DESIGNER EMS

REVIEWER MJP 04-24-24

PROJECT ID 109452

SHEET P.62 TOTAL 62

D04-CULVERTS-FY2025

MODEL: SHEET 2 PAPERSIZE: 34x22 (in.) DATE: 1/31/2025 TIME: 9:39:09 AM USER: mpalagan
pw:\\ohiodot-pw.bentley.com:ohiodot-pw-02\Documents\01 Active Projects\District 04_D04\109452\400-Engineering\Roadway\Sheets\109452_XS01.dgn