CALC. BY RJH DATE 8-90	ROS-35-25.20	OHIO	1
CHK'D BY geo DATE 1-91		FHWA REGION 5	55

BRF 7(61)

STATE OF OHIO
DEPARTMENT OF TRANSPORTATION
ROS - 35 - 25.20
SCIOTO, SPRINGFIELD TOWNSHIPS
ROSS COUNTY

DESIGN DESIGNATION

CURRENT A.D.T. (1991)	=	13,320
DESIGN YEAR A.D.T. (2011)	=	17,320
D.H.V.	=	1,732
D	=	60 %
T	=	10 %
V (DESIGN SPEED)	=	55 M.P.H.
LEGAL SPEED LIMIT	=	55 M.P.H.
FUNCTIONAL CLASSIFICATION	=	PRINCIPAL ARTERIAL/PRIMARY

DESIGN EXCEPTIONS

BRIDGE WIDTH	APPROVED 8-28-89
SHOULDER WIDTH	APPROVED 8-28-89

MICROFILMED
SEP 22 1995

CONVENTIONAL SIGNS

COUNTY LINE
TOWNSHIP LINE
SECTION LINE
CORPORATION LINE — OR
FENCE LINE (EXISTING) — x — x — PROPOSED
CENTERLINE — 352 — 353
TREES , STUMPS , (TO BE REMOVED)
UTILITY POLE: TELEPHONE , POWER , LIGHT
LIMITED ACCESS (ONLY) — L/A
RIGHT OF WAY (ONLY) — R/W
LIMITED ACCESS & RIGHT OF WAY — L/A & R/W
EXISTING RIGHT OF WAY
PROPERTY LINE — PL — (IN EXISTING FENCE) — x — PL — x
RAILROAD — OR
GUARDRAIL (EXISTING) (PROPOSED)

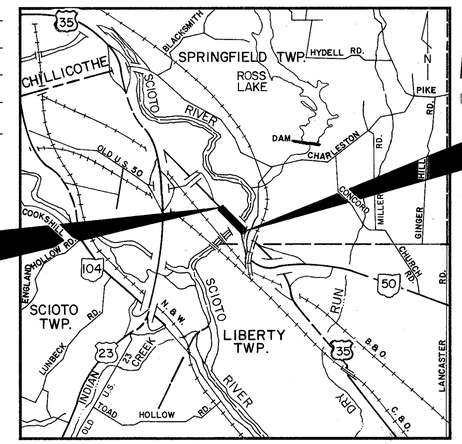

BEGIN PROJECT
ROS-35-25.20
STA. 1331+00
S.L.M. = 25.20

END PROJECT
ROS-35-25.20
STA. 1352+50
S.L.M = 25.61

LOCATION MAP
SCALE IN MILES
1 0 1 2

PORTIONS TO BE IMPROVED
STATE & FEDERAL ROUTES
OTHER ROADS

SCALES

PLAN: 50 0 50 100
PROFILE:
HORIZONTAL 50 0 50 100
VERTICAL 5 0 5 10
CROSS SECTIONS:
HORIZONTAL 5 0 5 10
VERTICAL 5 0 5 10

ALL REFERENCE TO SR35 THROUGH OUT THIS PLAN SHOULD READ US 35

1991 SPECIFICATIONS

THE STANDARD SPECIFICATIONS OF THE STATE OF OHIO, DEPARTMENT OF TRANSPORTATION, INCLUDING CHANGES AND SUPPLEMENTAL SPECIFICATIONS LISTED IN THE PROPOSAL SHALL GOVERN THIS IMPROVEMENT.

I HEREBY APPROVE THESE PLANS AND DECLARE THAT THE MAKING OF THIS IMPROVEMENT WILL NOT REQUIRE THE CLOSING TO TRAFFIC OF THE HIGHWAY AND THAT PROVISIONS FOR THE MAINTENANCE AND SAFETY OF TRAFFIC WILL BE AS SET FORTH ON THE PLANS AND ESTIMATES.

INDEX OF SHEETS

TITLE SHEET..... 1
TYPICAL SECTIONS..... 2
GENERAL NOTES..... 3,4,4A,4B,4C
REFERENCE POINTS..... 5
MAINTENANCE OF TRAFFIC PLAN..... 6
TEMPORARY CROSSOVERS..... 7-8
PAVEMENT & MISC. CALCULATIONS 9-10
GENERAL SUMMARY..... 11-12
PLAN & PROFILE S.R. 35..... 13-15
CROSS SECTIONS S.R. 35..... 16-25
PAVEMENT DETAILS..... 26
MISCELLANEOUS DETAILS..... 27
STRUCTURES 20 FT. SPAN & OVER..... 28-55

APPROVED
DATE 7-23-91 — DISTRICT DEPUTY DIRECTOR OF TRANSPORTATION

B & N REVIEWED

APPROVED
DATE 7/25/91 — ENGINEER, BUREAU OF BRIDGES AND STRUCTURAL DESIGN

APPROVED
DATE 10/2/91 — DEPUTY DIRECTOR, PLANNING AND DESIGN

APPROVED
DATE 10-2-91 — DIRECTOR, DEPARTMENT OF TRANSPORTATION

UNDERGROUND UTILITIES
TWO WORKING DAYS
BEFORE YOU DIG...
CALL 800-362-2764 (TOLL FREE)
OHIO UTILITIES PROTECTION SERVICE
NON-MEMBERS
MUST BE CALLED DIRECTLY

LINE DATA

BEGIN PROJECT	STA. 1331+00
END PROJECT	STA. 1352+50
LENGTH OF PROJECT	2150.00 L.F. OR 0.407 MILES
ADD FOR WORK	
STA. 1330+90 TO STA. 1331+00	10.00 L.F.
STA. 1352+50 TO STA. 1354+60	210.00 L.F.
LENGTH OF WORK	2370.00 L.F. OR 0.449 MILES

DEPARTMENT OF TRANSPORTATION
FEDERAL HIGHWAY ADMINISTRATION

APPROVED

DIVISION ADMINISTRATOR — DATE

REVISED 11-26-91

PREPARED BY:
R.D. ZANDE & ASSOCIATES, LTD.
1237 DUBLIN ROAD
COLUMBUS, OHIO 43215

STRUCTURE PLANS REVIEWED BY:
Burgess & Niple, Limited
Engineers and Architects

PROJECT: ROS - 35 - 25.20

DATE OF LETTING — CONTRACT NO.

SUPPLEMENTAL PRINTS OF STANDARD CONSTRUCTION DRAWINGS

BP-3	12-6-76				
BP-4	10-1-87	TC-65.11	2-1-90	BP-10	1-30-84
BP-1	6-1-65	TC-72.20	2-26-82	BP-7	10-1-87
GR-1.1 & 1.2	5-6-91			BP-2	1-11-85
GR-2.1	5-6-91	MT-95.30	10-10-88		
GR-3.1 & 3.2	5-6-91	MT-99.10	11-14-86		
GR-4.1 & 4.2	5-6-91				
GR-6	2-5-82				
MC-7	10-15-76	CB-8	11-10-83		
MC-4	7-26-76				
MC-9.2	5-6-91	AS-1-81	11-27-81		
MC-11	8-1-78				
TC-35.10	8-29-84	FB-1-82	5-10-82		
TC-41.10	8-29-84				
TC-41.20	3-26-79				
TC-42.10	8-19-77				
TC-42.20	3-26-79				
TC-65.10	2-1-90				
TC-21.10	1-20-84				

SUPPLEMENTAL SPECIFICATIONS

802	4-13-90
862	12-16-88
962	1-23-90
942	11-27-89
931	5-13-91
836	11-12-85

ROS -35-25.20

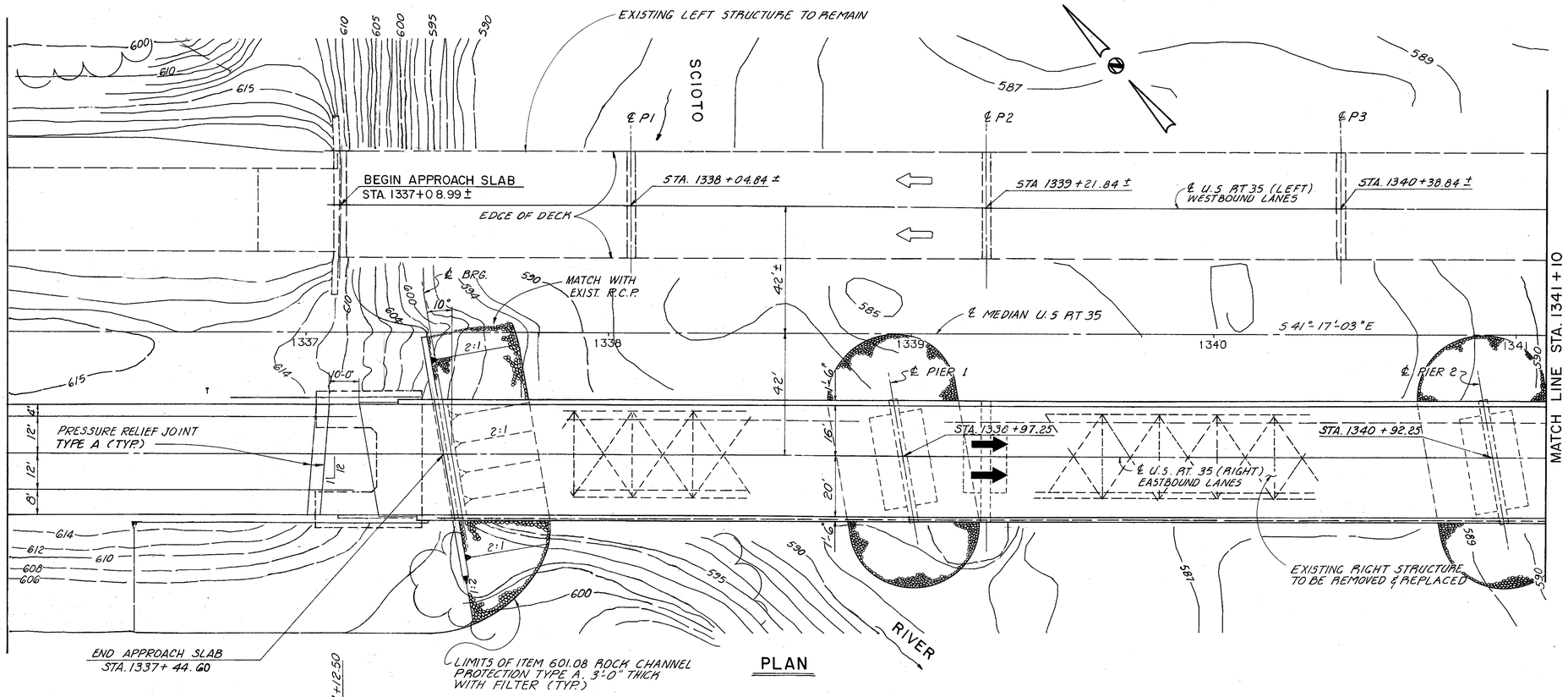

PLAN

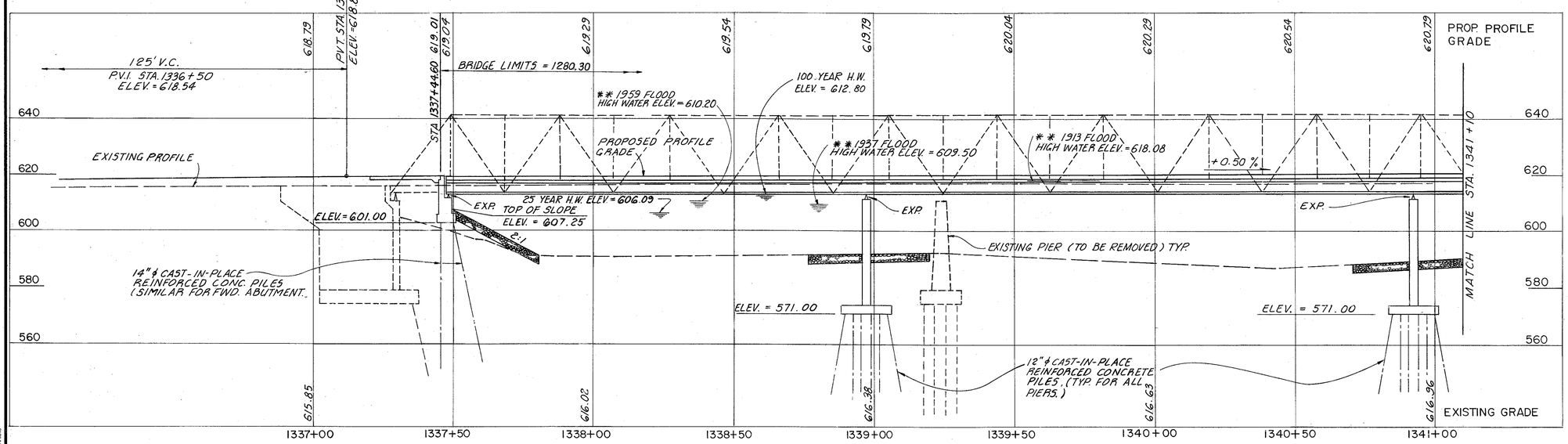

PROFILE ALONG ℄ U.S. RT 35 RIGHT STRUCTURE

REVIEWED BY BURGESS & NIPLE, LTD.
J.L.G. 6-26-91

TRAFFIC COUNT

DESIGN YEAR A.D.T. (2010) = 17,566
CURRENT YEAR A.D.T. (1990) = 13,512
DESIGN A.D.T.T. (2010) = 1,757
CURRENT A.D.T.T. (1990) = 1,351

DRAINAGE DATA

DRAINAGE AREA = 3850 SQ. MI.
Q25 = 30,000 C.F.S.
Q100 = 139,000 C.F.S.
CALCULATED E 25 = 606.09 FT.
V 25 = 4.24 F.P.S.
E100 = 612.80 FT.
V 100 = 4.97 F.P.S.

NOTES

EARTHWORK LIMITS SHOWN ARE APPROXIMATE. ACTUAL SLOPES SHALL CONFORM TO PLAN X-SECTIONS.

** FLOOD ELEVATIONS ARE OBTAINED FROM EXISTING PLANS.

ESTIMATED AVERAGE PAY LENGTH FOR ABUTMENT PILES ARE 50 FEET AND FOR PIER PILES ARE 50 FEET.

EXISTING BRIDGE DATA

TO BE REMOVED
STRUCTURE FILE NO. 7102283
TYPE: CONTINUOUS STEEL TRUSS BRIDGE WITH CONCRETE FLOOR & SUBSTRUCTURE
SPAN: 2 UNITS @ 231'-0" & 4 UNITS @ 192'-0"
ROADWAY: 24' PLUS 4'-3" SIDEWALK ON RIGHT
LOADING: H15
WEARING SURFACE: ASPHALT CONCRETE
SKEW: NONE
APPROACH SLAB: 25' LONG
DATE BUILT: 1939-1940

PROPOSED STRUCTURE

TYPE: 7-SPAN CONTINUOUS COMPOSITE STEEL PLATE GIRDER SUPERSTRUCTURE WITH REINFORCED CONCRETE SUBSTRUCTURE
SPANS: 148.0', 5 at 195.0', 148.0' C/C BRGS.

ROADWAY: 36'-0" TOE/TOE CONCRETE PARAPETS
LOADING: HS-20-44 (CASE II) & ALT. MILITARY LOADING
SKEW: 10° R.F.
WEARING SURFACE: MONOLITHIC CONCRETE
APPROACH SLAB: AS-1-81 (25' LONG)
ALIGNMENT: TANGENT
CROWN: 3/16"/FT.

R. D. ZANDE & ASSOCIATES, LIMITED
CONSULTING ENGINEERS
COLUMBUS, OHIO
1/28

SITE PLAN

BRIDGE NO. ROS-35-2532 R
OVER SCIOTO RIVER
ROSS COUNTY STA. 1337+44.60
STA. 1350+24.90

DESIGNED	DRAWN	TRACED	CHECKED	REVIEWED	DATE	REVISED
T.A.A. O.H.K	R.A.S	R.A.S.	M.T.	OHK	8-17-89	

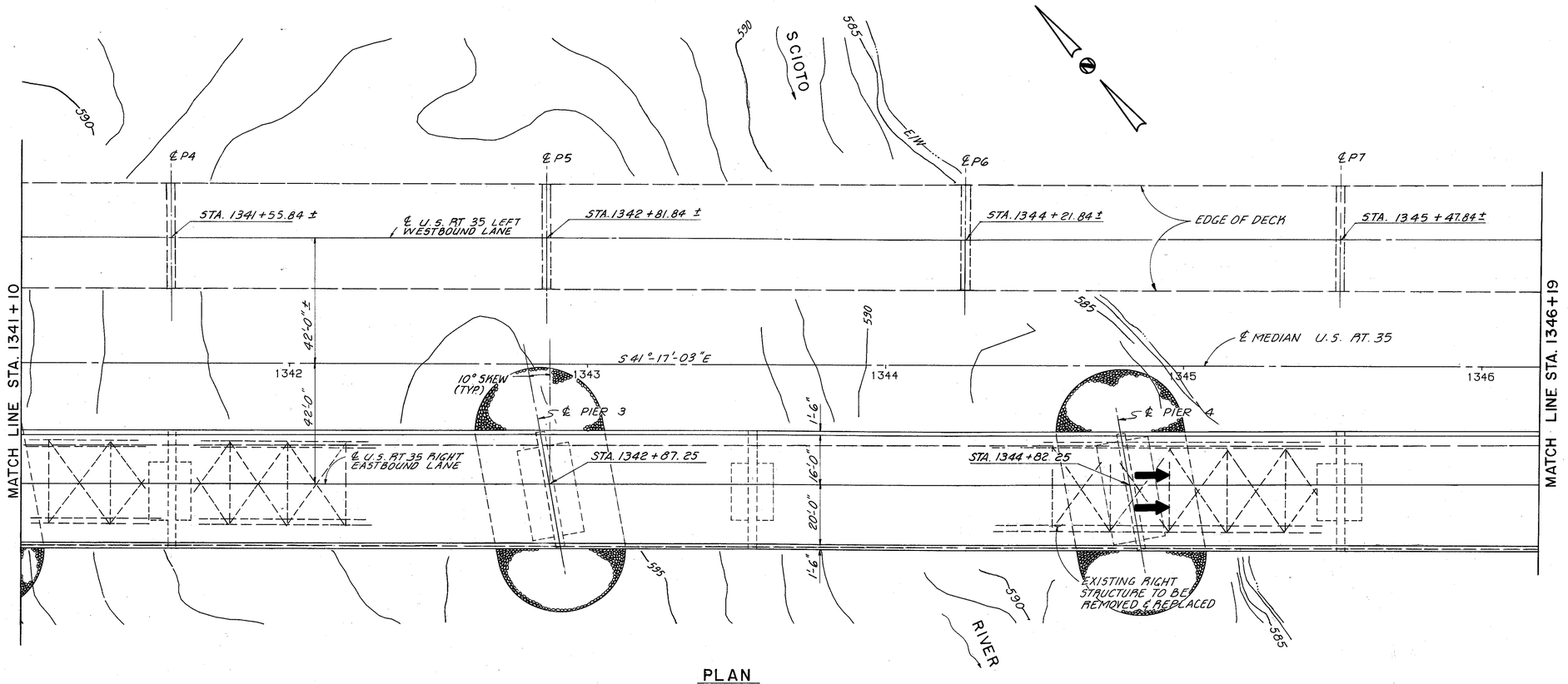

PLAN

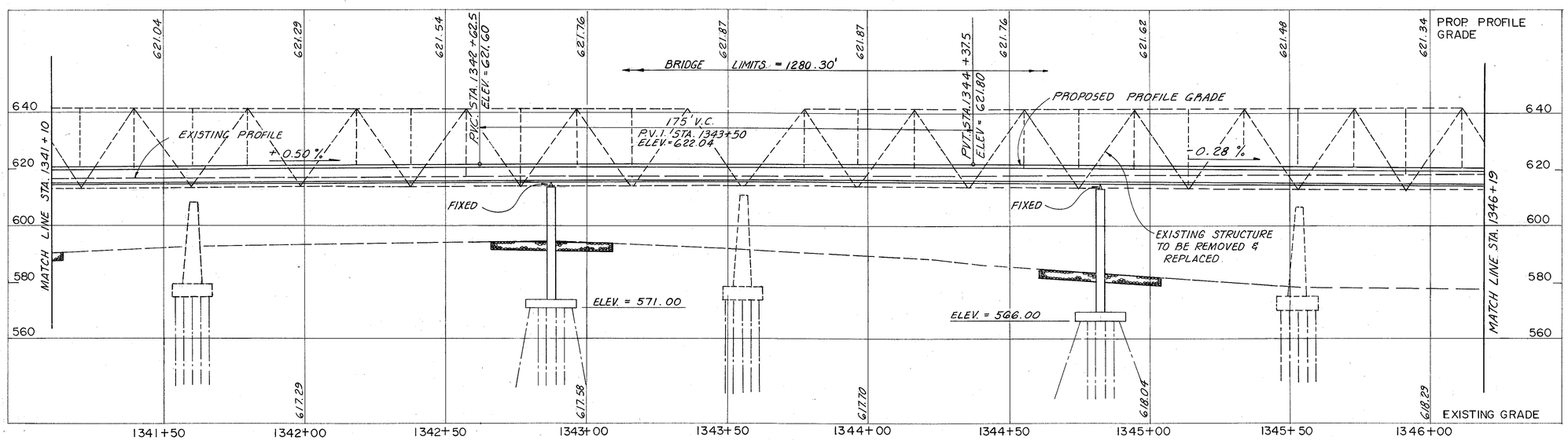

PROFILE ALONG ℄ U.S. RT 35 RIGHT STRUCTURE

NOTES

1. EXISTING RIGHT OF WAY NOT SHOWN. SEE PLAN & PROFILE SHEET FOR LOCATION.

BENCH MARK : U.S.G.S. X-113-RE
1/10 OF MILE SOUTHEAST OF B & O R.R. CROSSING AND U.S. RT. 50, 120 FEET SOUTH OF MAIN TRACK ON NORTHEAST WINGWALL BRIDGE OVER PRIVATE DRIVE.
ELEV. = 608.09

BENCH MARK :
CHISELED SQUARE ON SOUTHEAST WINGWALL AT EAST END OF BRIDGE OF WESTBOUND LANES.
ELEV. = 618.66

R. D. ZANDE & ASSOCIATES, LIMITED
CONSULTING ENGINEERS
COLUMBUS, OHIO

2/28

SITE PLAN

BRIDGE NO. ROS -35-2532R
OVER SCIOTO RIVER
ROSS COUNTY STA. 1337+44.60
STA. 1350+24.90

DESIGNED	DRAWN	TRACED	CHECKED	REVIEWED	DATE	REVISED
T.A.A. O.H.K.	B.A.S	B.A.S	M.T.	O.H.K	8-17-89	

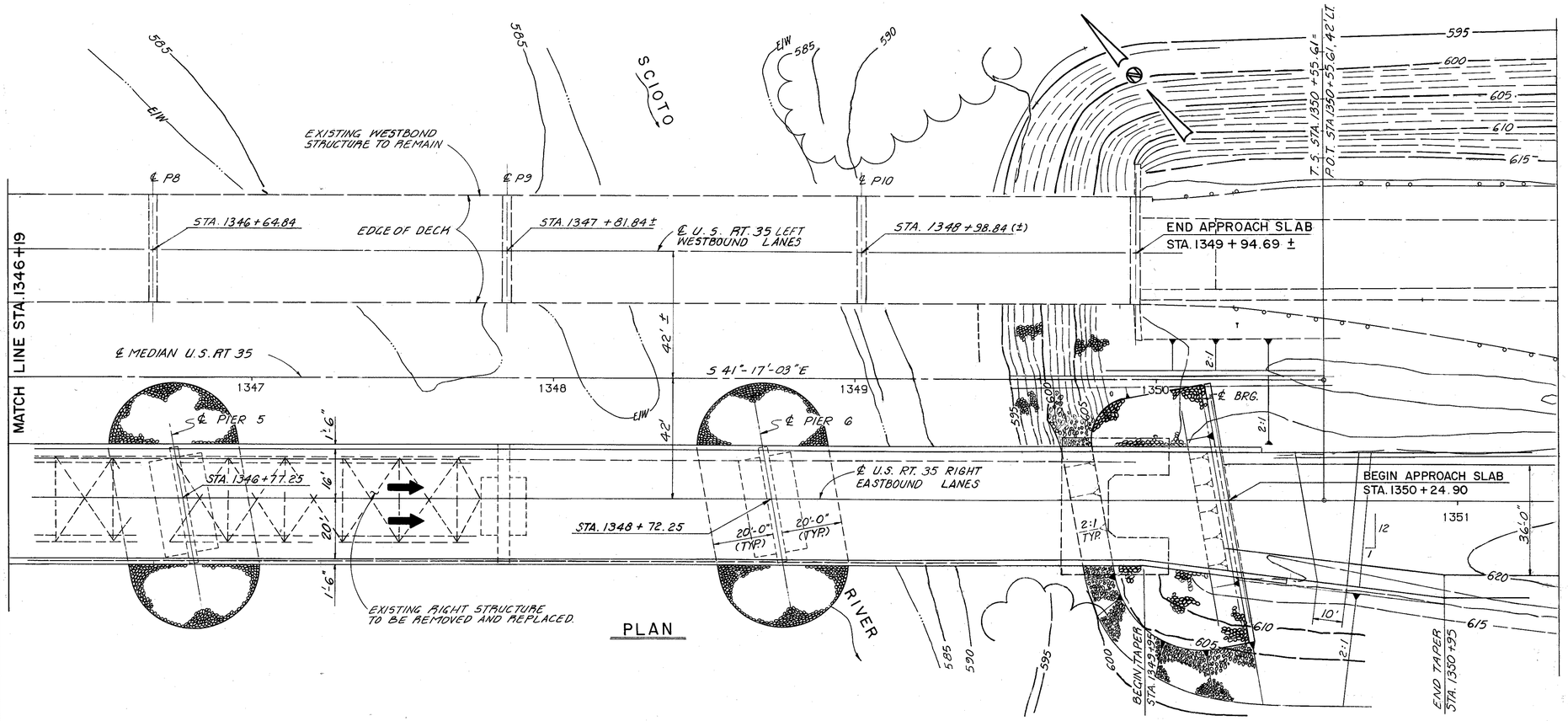

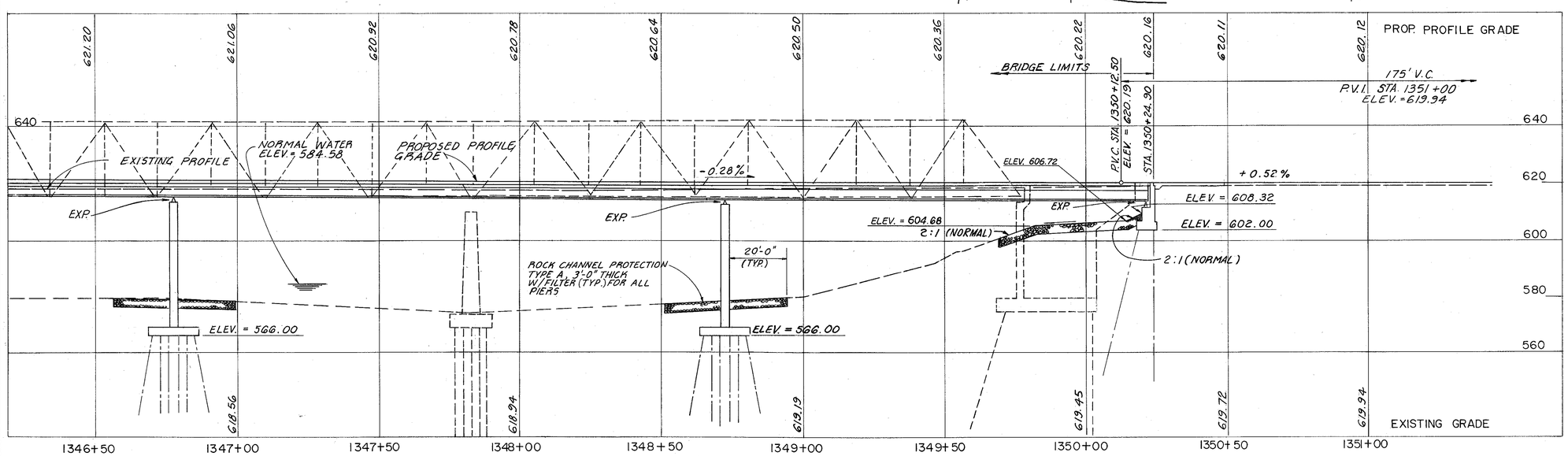

R. D. ZANDE & ASSOCIATES, LIMITED
CONSULTING ENGINEERS
COLUMBUS, OHIO

3/28

SITE PLAN

BRIDGE NO. ROS -35-2532R
OVER SCIOTO RIVER
ROSS COUNTY STA. 1337+44.60
STA. 1350+24.90

DESIGNED	DRAWN	TRACED	CHECKED	REVIEWED	DATE	REVISED
T.A.A. O.H.K.	B.A.S.	B.A.S.	M.T.	O.H.K.	8-17-89	

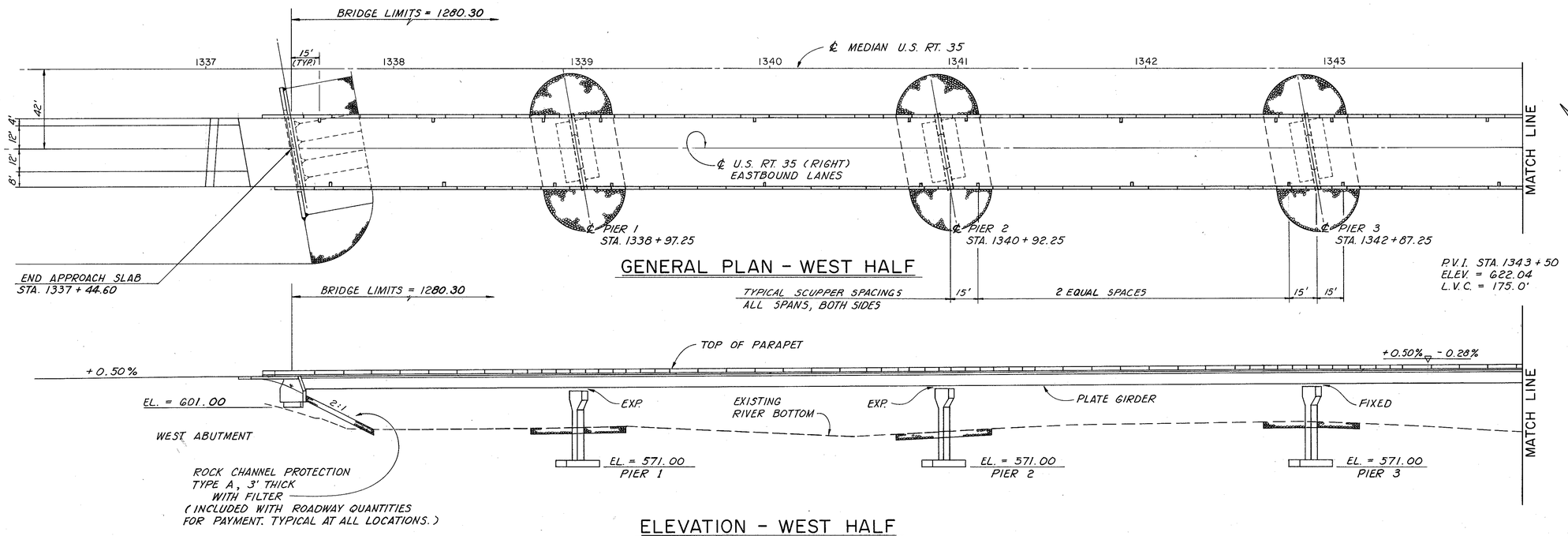

GENERAL PLAN - WEST HALF

SEE SHEET 25/28 FOR PARAPET DETAILS.
SEE SHEET 17/28 FOR SCUPPER DETAILS.

ELEVATION - WEST HALF

PILES ARE NOT SHOWN.

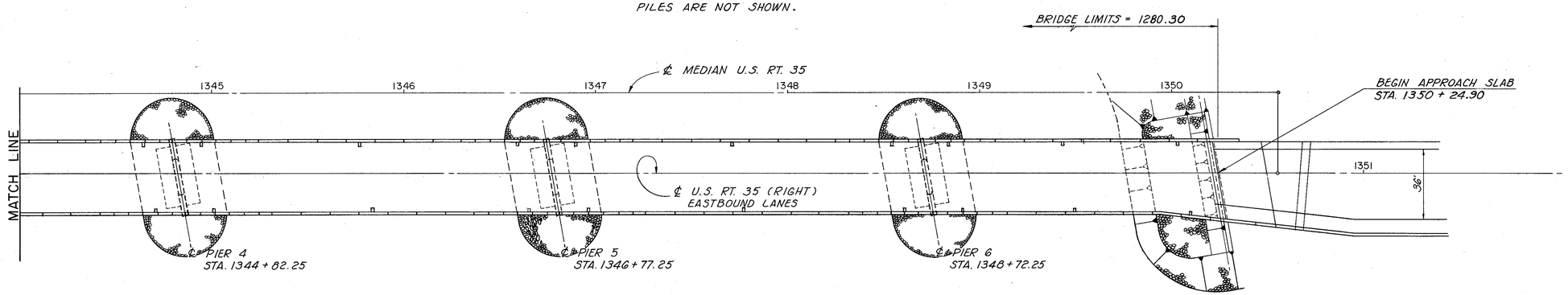

GENERAL PLAN - EAST HALF

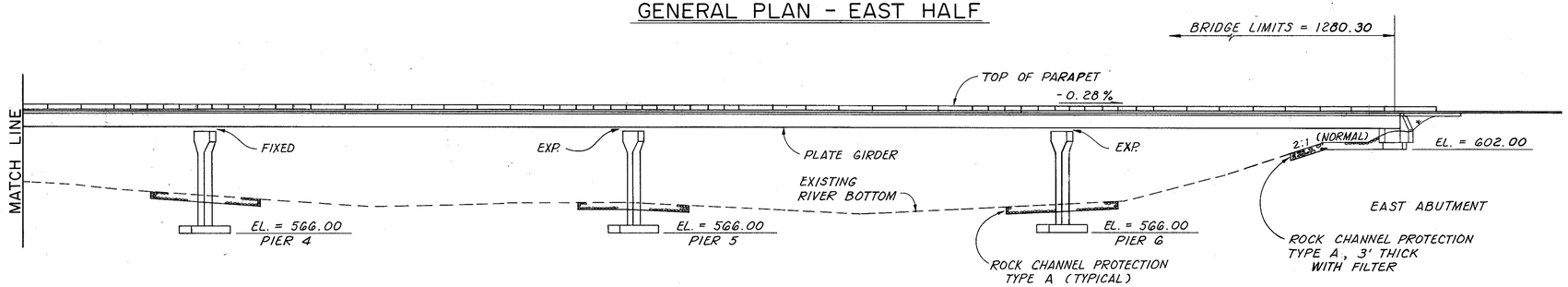

ELEVATION - EAST HALF

PILES ARE NOT SHOWN.

R. D. ZANDE & ASSOCIATES, LIMITED
CONSULTING ENGINEERS
COLUMBUS, OHIO

4/28

GENERAL PLAN & ELEVATION
BRIDGE NO. ROS - 35 - 2532 R
OVER SCIOTO RIVER
ROSS COUNTY STA. 1337 + 44.60
STA. 1350 + 24.90

DESIGNED	DRAWN	TRACED	CHECKED	REVIEWED DATE	REVISED
T.A.A.	P.M.	—	OHK	OHK 2-26-91	

ROS-35-25.20

ESTIMATED QUANTITIES

CALCULATED BY: TAA DATE: 11-19-90
CHECKED BY: CMS DATE: 11-20-90

ITEM	ITEM EXT.	TOTAL	UNIT	DESCRIPTION	ABUT	PIER	SUPER	GEN.		
202	11002	LUMP		STRUCTURE REMOVED, OVER 20 FOOT SPAN				LUMP		
503	11100	LUMP		COFFERDAMS, CRIBS AND SHEETING				LUMP		
503	21100	2485	CU YD	UNCLASSIFIED EXCAVATION	424	2061				
505	11100	LUMP		PILE DRIVING EQUIPMENT MOBILIZATION				LUMP		
506	11101	LUMP		STATIC LOAD TEST, AS PER PLAN				LUMP		
506	12200	1	EACH	SUBSEQUENT STATIC LOAD TEST				1		
507	22201	14400	LIN FT	12" CAST-IN-PLACE REINFORCED CONCRETE PILES,		14400				
				AS PER PLAN (OVER 1000' TOTAL PROJECT)						
507	42201	1500	LIN FT	14" CAST-IN-PLACE REINFORCED CONCRETE PILES,	1500					
				AS PER PLAN (OVER 1000' TOTAL PROJECT)						
509	15800	656068	POUND	EPOXY COATED REINFORCING STEEL, GRADE 60	26166	172047	457855			
511	31502	1853	CU YD	CLASS S CONCRETE, SUPERSTRUCTURE			1853			
				BEAMS OR GIRDERS						
511*	33404	1853	CU YD	CLASS S CONCRETE, SUPERSTRUCTURE (USING			1853			
				SHRINKAGE COMPENSATING CEMENT). (SEE PROPOSAL NOTE)						
511*	33410	LUMP		CLASS S CONCRETE, USING SHRINKAGE COMPENSATING						
				CEMENT, FOR PRE-POUR TESTING (SEE PROPOSAL NOTE)						
511	42000	689	CU YD	CLASS C CONCRETE, PIER ABOVE FOOTINGS (T TYPE)		689				
511	44100	203	CU YD	CLASS C CONCRETE, ABUTMENT NOT INCLUDING	203					
				FOOTING (SPILL-THRU WITH BACKWALL)						
511	46500	510	CU YD	CLASS C CONCRETE, FOOTING	126	384				
SPEC.	51267502	2764	SQ YD	SEALING OF CONCRETE SURFACES, (EPOXY),	222		2542			
				(SEE PROPOSAL NOTE)						
513	12401	2643976	POUND	STRUCTURAL STEEL, A572-50 AISC CATEGORY III,	12976			2631000		
				AS PER PLAN (BUILT UP GIRDER) (SEE PROPOSAL NOTE)						
513	20000	11748	EACH	WELDED STUD SHEAR CONNECTOR			11748			
SPECIAL	51400600	LUMP		PAINTING OF NEW STEEL, SYSTEM IZEU				LUMP		
				(SEE PROPOSAL NOTE)						
516	12201	83	LIN FT	STRUCTURAL STEEL EXPANSION JOINT, AS PER PLAN	83					
518	12301	42	EACH	SCUPPER, INCLUDING SUPPORTS, AS PER PLAN (FOR GIRDER BRIDGES)				42		
518	21200	115	CU YD	POROUS BACKFILL WITH FILTER FABRIC	115					
518	41100	138	LIN FT	6" PERFORATED HELICAL CORRUGATED STEEL PIPE,	138					
				707.01						
518	41200	105	LIN FT	6" NON-PERFORATED HELICAL CORRUGATED STEEL PIPE,	105					
				INCLUDING SPECIALS, 707.01						
523	11100	9	HOUR	DYNAMIC LOAD TEST (12" C.I.P. PILES)				9		
523	11100	3	HOUR	DYNAMIC LOAD TEST (14" C.I.P. PILES)				3		

*ALTERNATE BID ITEM

GENERAL NOTES

REFERENCE SHALL BE MADE TO STANDARD DRAWINGS:

DRAWING NO.	SHEET	DATE
AS-1-81	1,2&3	11-27-81
FB-1-82	1	5-10-82

AND TO SUPPLEMENTAL SPECIFICATIONS

NUMBER	DATE	TITLE
836	11-12-85	CONCRETE CURING MEMBRANE

DESIGN SPECIFICATIONS: THIS STRUCTURE CONFORMS TO "STANDARD SPECIFICATIONS FOR HIGHWAY BRIDGES" ADOPTED BY THE AMERICAN ASSOCIATION OF STATE HIGHWAY AND TRANSPORTATION OFFICIALS, 1989 SPECIFICATIONS, INCLUDING THE 1990 INTERIM, AND THE OHIO "SUPPLEMENT" TO THESE SPECIFICATIONS.

DESIGN DATA

DESIGN LOADING - HS20-44 AND THE ALTERNATE MILITARY LOADING.
CONCRETE CLASS S - COMPRESSIVE STRENGTH = 4500 P.S.I. (SUPERSTRUCTURE)
CONCRETE CLASS C - COMPRESSIVE STRENGTH = 4000 P.S.I. (SUBSTRUCTURE)
REINFORCING STEEL- ASTM A615, A616 OR A617 - GRADE 60 MINIMUM YIELD STRENGTH 60,000 P.S.I.
STRUCTURAL STEEL - ASTM A572: YIELD STRENGTH = 50,000 P.S.I.
FIXED AND EXPANSION BEARING: YIELD STRENGTH = 50,000 P.S.I.

REMOVAL OF EXISTING STRUCTURE: EXISTING STRUCTURE SHALL BE REMOVED. SUITABLE WASTE MASONRY MAY BE PLACED AS BANK PROTECTION AS DIRECTED BY THE ENGINEER. SEE PROPOSAL.

MONOLITHIC WEARING SURFACE IS ASSUMED FOR DESIGN PURPOSES TO BE 1".

PILE DESIGN LOADS: THE DESIGN LOADS FOR THE PILES OF THE REAR AND FORWARD ABUTMENTS ARE 55 TONS PER PILE AND THE DESIGN LOADS FOR THE PILES OF PIER 1 THRU PIER 6 ARE 48 TONS PER PILE.

ITEM 506 STATIC LOAD TEST, AS PER PLAN: THE CONTRACTOR SHALL PERFORM A STATIC LOAD TEST ON ONE OF THE INITIALLY INSTALLED PILES OR ON A PILE INSTALLED WITHIN 50 FEET OF AN ABUTMENT FOOTING LOCATION. THE INSTALLED LENGTH OF THE PILE TO BE LOAD TESTED SHALL NOT BE MORE THAN THE PLAN ESTIMATED PAY LENGTH. THE CONTRACTOR SHALL FURNISH THE DIRECTOR (ATTENTION: BUREAU OF BRIDGES) A COPY OF A TYPED REPORT DESCRIBING THE PROCEDURES AND RESULTS OF THE STATIC LOAD TEST. PAYMENT FOR THIS REPORT IS CONSIDERED INCIDENTAL TO THE COST OF THE STATIC LOAD TEST.

ITEM 507, 12" AND 14" CAST-IN-PLACE REINFORCED CONCRETE PILES, AS PER PLAN:

PILE WALL THICKNESS: THE RESPONSIBILITY OF CHOOSING AND PROVIDING A SATISFACTORY PILE WALL THICKNESS FOR THIS PROJECT SHALL BE BORNE BY THE CONTRACTOR EXCEPT THAT THE PILE WALL THICKNESS SHALL NOT BE LESS THAN 0.205". IF A PILE WALL THICKNESS GREATER THAN 0.205" IS NECESSARY TO RESIST THE PILE INSTALLATION DRIVING STRESS, THE CONTRACTOR SHALL MAKE THIS DETERMINATION AND SHALL FURNISH A PILE WITH AN ACCEPTABLE WALL THICKNESS. IF MONOTUBE PILES ARE USED MONUTUBE PILES SHALL HAVE A MINIMUM WALL THICKNESS OF 0.16".

PILE HAMMER: THE PILE HAMMER USED TO INSTALL THE CAST-IN-PLACE REINFORCED CONCRETE PILES SHALL HAVE A STATE'S ENERGY RATING OF NOT LESS THAN 16,500 FOOT-POUNDS. THIS REQUIREMENT DOES NOT RELIEVE THE CONTRACTOR FROM 108.05 WHICH STATES THAT THE CONTRACTOR IS TO PROVIDE SUFFICIENT EQUIPMENT FOR PROSECUTING THE REQUIRED WORK. REFER TO ODOT'S "MANUAL OF PROCEDURES FOR STRUCTURES" TO OBTAIN THE STATE'S ENERGY RATING.

ITEM 513 STRUCTURAL STEEL, A572-50 AISC CATEGORY III, AS PER PLAN (BUILT UP GIRDER): A36, GRADE 36 STRUCTURAL STEEL MAY BE USED FOR THE CROSSFRAMES AND THE FIXED AND EXPANSION BEARINGS. ALL STRUCTURAL STEEL SHALL BE PAINTED WITH SYSTEM IZEU. SEE PLAN NOTE FOR SYSTEM IZEU.

ITEM 516 STRUCTURAL STEEL EXPANSION JOINT (AS PER PLAN): THE STRUCTURAL STEEL FOR THIS ITEM SHALL BE A572, GRADE 50, PAINTED WITH SYSTEM IZEU. THIS ITEM SHALL INCLUDE ALL MATERIAL, TREATMENTS, AND LABOR REQUIRED TO FABRICATE AND INSTALL THE EXPANSION JOINT AND THE ELASTOMERIC TROUGH AS PER PLAN. SEE PLAN NOTE FOR SYSTEM IZEU.

ITEM 518 SCUPPER, INCLUDING SUPPORTS, AS PER PLAN (FOR GIRDER BRIDGES): THE SCUPPERS SHALL BE FABRICATED USING A36, GRADE 36 STEEL PAINTED WITH SYSTEM IZEU, AS PER THE DETAILS SHOWN ON SHEET 17/28. SEE PLAN NOTE FOR SYSTEM IZEU.

UTILITY LINES: ALL EXPENSE INVOLVED IN RELOCATING THE AFFECTED UTILITY LINES SHALL BE BORNE BY THE OWNERS. THE CONTRACTOR AND OWNERS ARE REQUESTED TO COOPERATE BY ARRANGING THEIR WORK IN SUCH A MANNER THAT INCONVENIENCE TO EITHER WILL BE HELD TO A MINIMUM.

EMBANKMENT CONSTRUCTION: THE EMBANKMENTS SHALL BE CONSTRUCTED TO THE LEVEL OF THE SUBGRADE. EXCAVATION MAY THEN BE MADE FOR THE ABUTMENTS AND PILES DRIVEN.

SEALING OF CONCRETE SURFACES: FOR LIMITS SEE SHEETS 6,8,& 18 OF 28. SEE THE PROPOSAL NOTE FOR SURFACE PREPARATION REQUIREMENTS, APPLICATION RATES, MATERIAL REQUIREMENTS, AND APPLICATION PROCEDURES.

DECK PROTECTION METHOD: EPOXY COATED REINFORCING STEEL BOTH MATS, 2 1/2 INCH CONCRETE COVER AND SEALING OF CONCRETE SURFACES.

ITEM SPECIAL-PAINTING OF NEW STEEL, SYSTEM IZEU: THE FINISH COAT UNDER THIS ITEM SHALL BE BLUE. THE SURFACE PREPARATION AND PRIME PAINT COAT REQUIRED FOR ITEMS 513, 516, AND 518 (SCUPPERS) SHALL BE INCLUDED WITH PAINTING OF NEW STEEL, SYSTEM IZEU, FOR PAYMENT. SURFACE PREPARATION FOR GALVANIZED SCUPPERS SHALL BE AS PER THE PAINTING MANUFACTURER'S RECOMMENDATIONS.

ITEM 511, CLASS S CONCRETE SUPERSTRUCTURE: MEMBRANE CURING PER SUPPLEMENTAL SPECIFICATION 836 WILL NOT BE PERMITTED. CONCRETE SHALL BE CURED BY METHOD (A) WATER CURING.

R. D. ZANDE & ASSOCIATES, LIMITED
CONSULTING ENGINEERS
COLUMBUS, OHIO

5/28

EST. QUANTITIES & GENERAL NOTES
BRIDGE NO. ROS-35-2532R
OVER SCIOTO RIVER

ROSS COUNTY STA. 1337+44.60
STA. 1350+24.90

DESIGNED	DRAWN	TRACED	CHECKED	REVIEWED DATE	REVISED
TAA	VGO	VGO	CMS	O.H.K. 2-26-91	

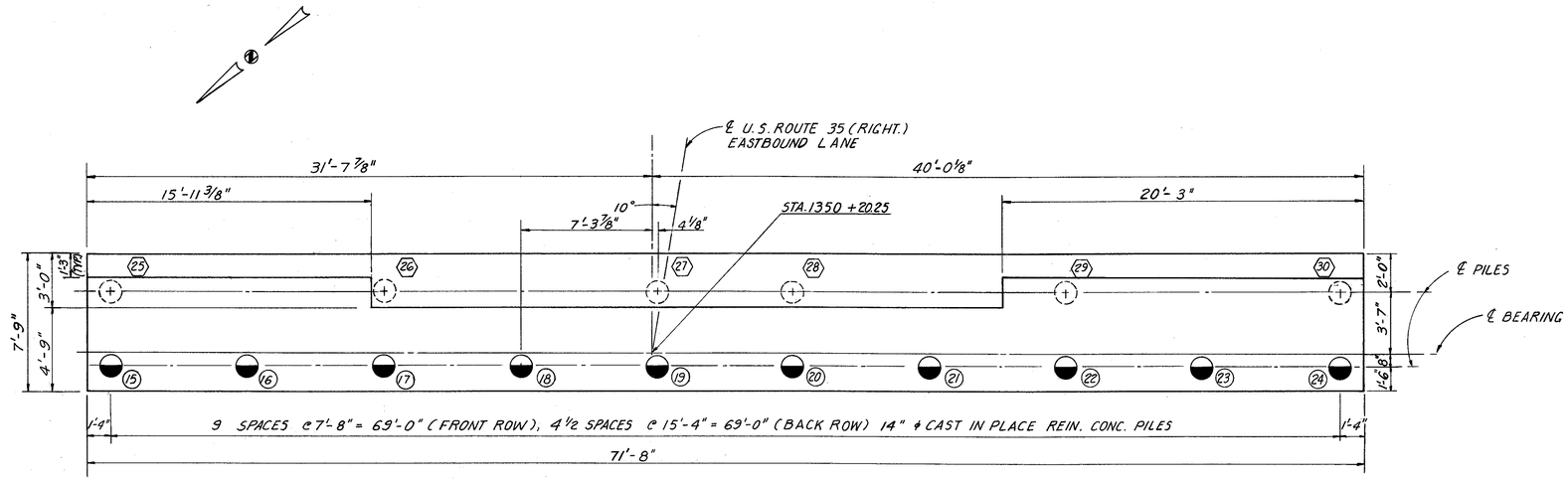

FOOTING PLAN
FORWARD ABUTMENT
BATTERED PILES

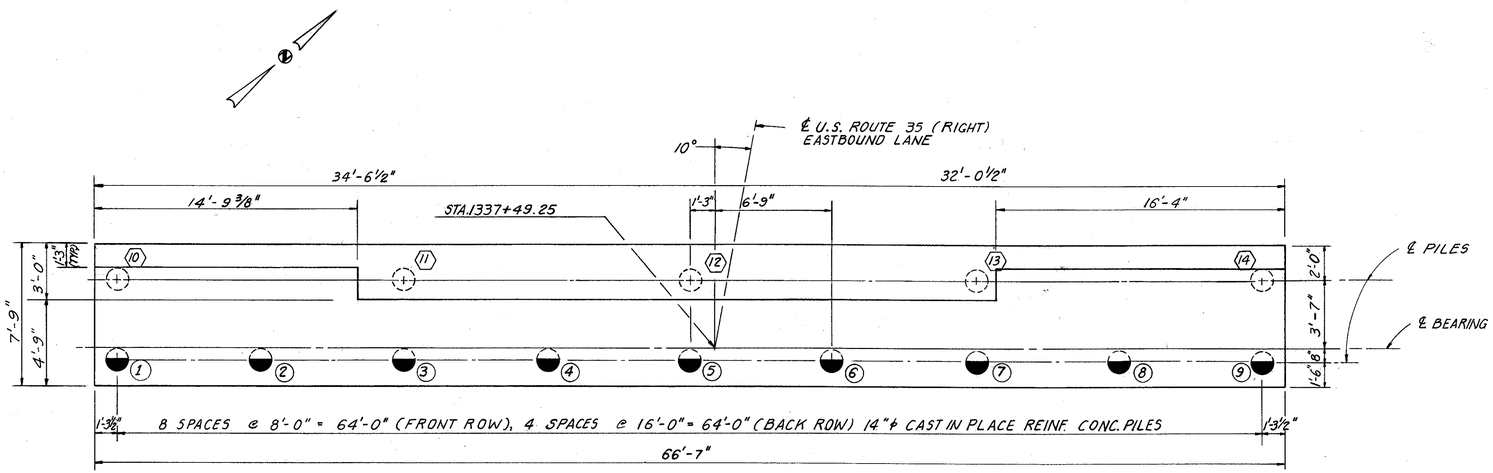

FOOTING PLAN
REAR ABUTMENT

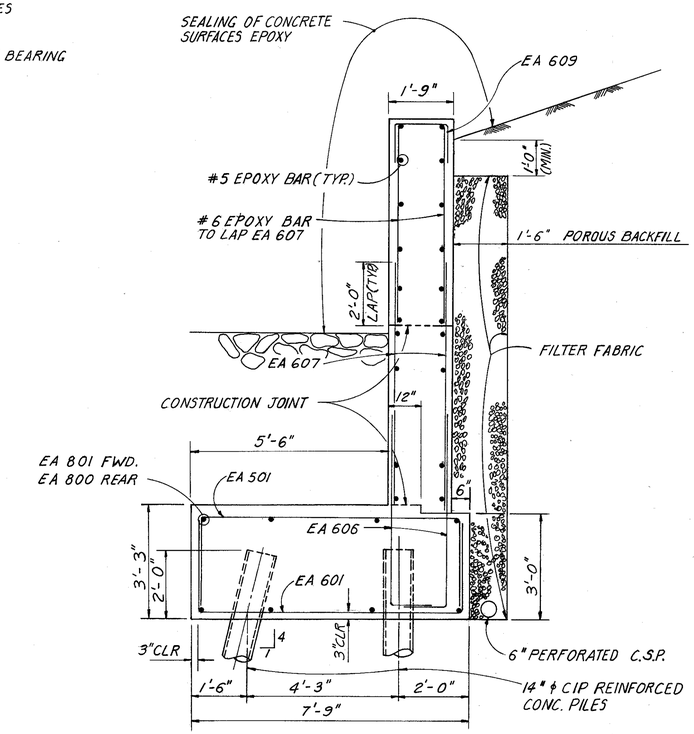

SECTION B-B
FOR SECTION LOCATION SEE SHEET 7/28 & 8/28.

R. D. ZANDE & ASSOCIATES, LIMITED
CONSULTING ENGINEERS
COLUMBUS, OHIO

6/28

FOOTING DETAIL
BRIDGE NO ROS-35-2532 R
OVER SCIOTO RIVER
ROSS COUNTY STA.1337+44.60
STA.1350+24.90

DESIGNED	DRAWN	TRACED	CHECKED	REVIEWED DATE	REVISED
T.A.A.	R.A.S.	R.A.S.	CMS	OHK 2-26-91	

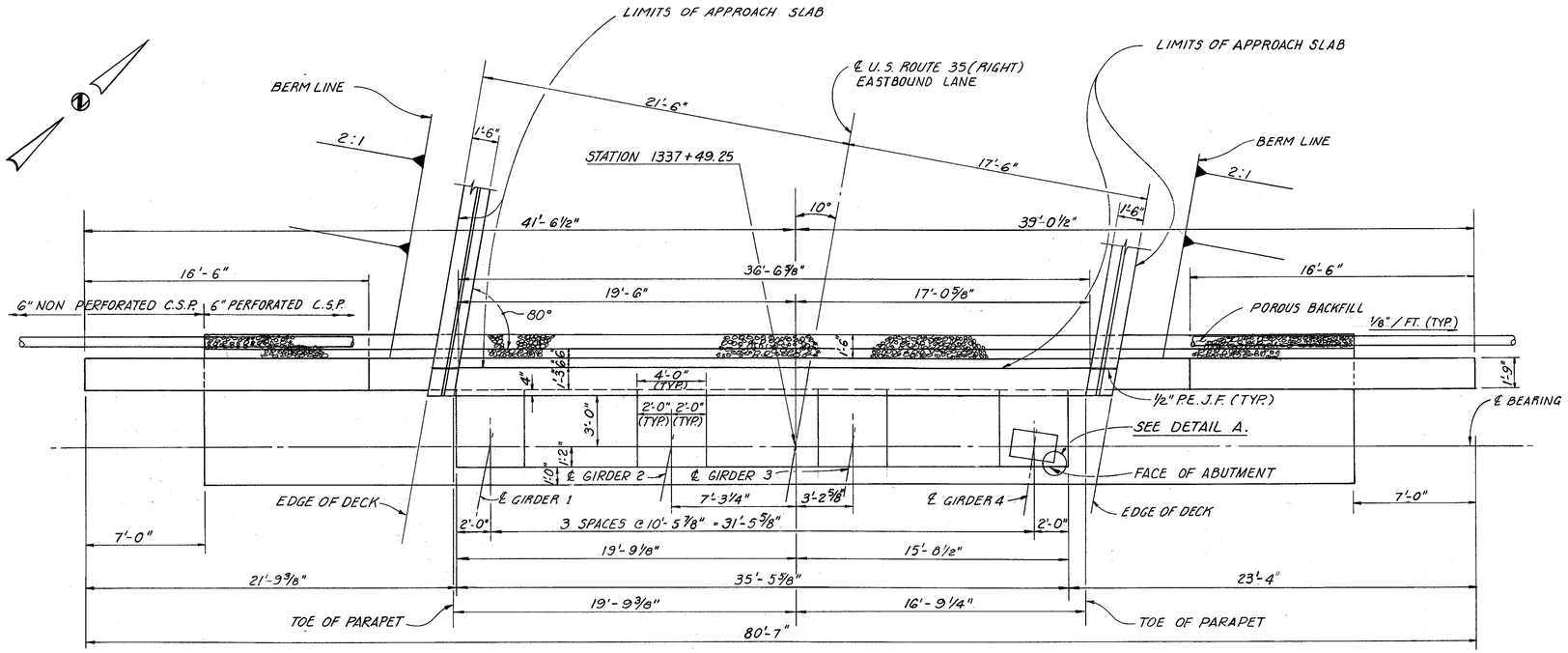

PLAN

PILES ARE NOT SHOWN.

NOTES:

POROUS BACKFILL 1.5 FEET THICK SHALL EXTEND UP TO THE PLANE OF THE SUBGRADE AND TO 1'-0" BELOW EMBANKMENT SURFACE AND HORIZONTALLY AS SHOWN IN PLAN.

FOR SECTION A-A SEE SHEET 8/28.

FOR SECTION B-B SEE SHEET 6/28.

LEGEND

- ○ FRONT ROW
- ⬡ BACK ROW
- N.F. = NEAR FACE
- F.F. = FAR FACE
- S.R = SERIES
- E.F. = EACH FACE
- P.E.J.F. = PERFORMED EXPANSION JOINT FILLER

#8 BAR LAP LENGTH = 4'-9"
#5 BAR LAP LENGTH = 1'-8"

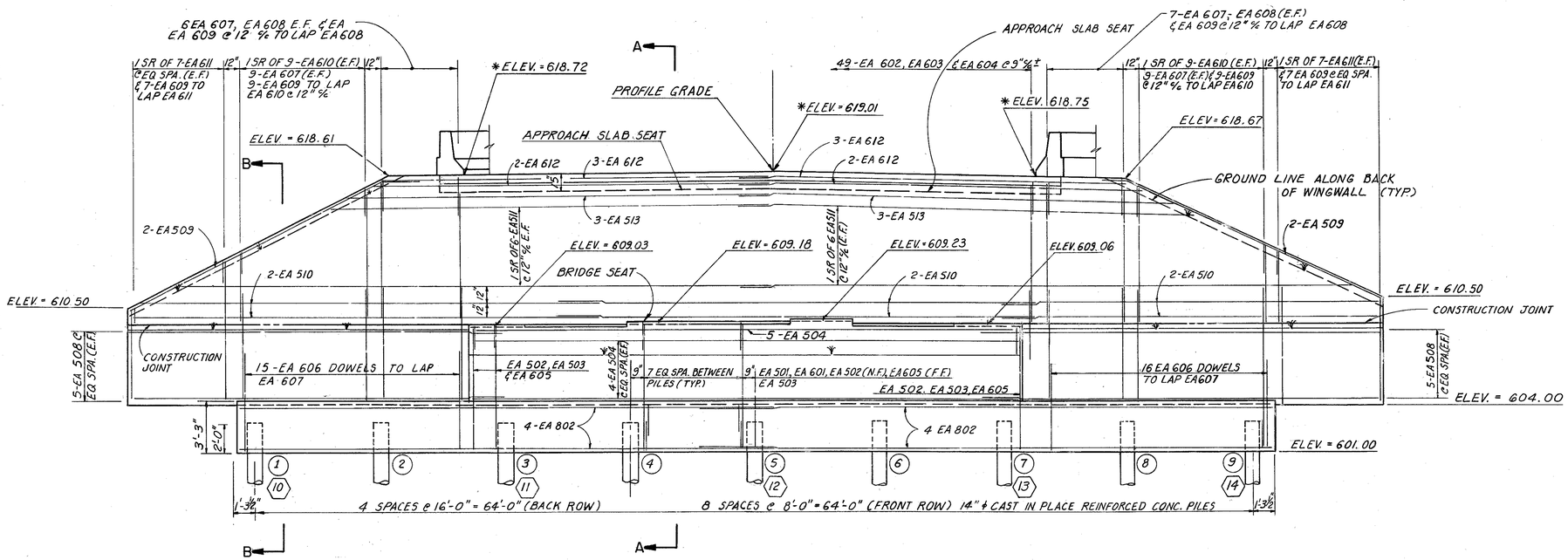

ELEVATION

*NOTE: ELEVATIONS SHOWN ARE MEASURED ALONG THE BRIDGE LIMIT.

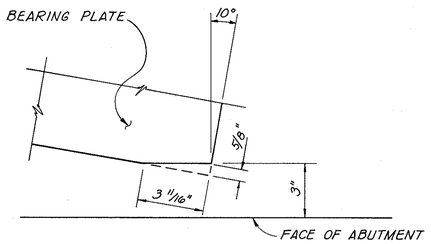

DETAIL A

CLIPPING OF BEARING PLATE (TYP. AT ABUTMENTS)

R. D. ZANDE & ASSOCIATES, LIMITED
CONSULTING ENGINEERS
COLUMBUS, OHIO

7/28

REAR ABUTMENT DETAILS

BRIDGE NO. ROS-35-2532 R
OVER SCIOTO RIVER
ROSS COUNTY STA. 1337+44.60
STA. 1350+24.90

DESIGNED	DRAWN	TRACED	CHECKED	REVIEWED DATE	REVISED
TAA	R.A.S.	R.A.S.	C.M.S.	O.HK 2-26-91	

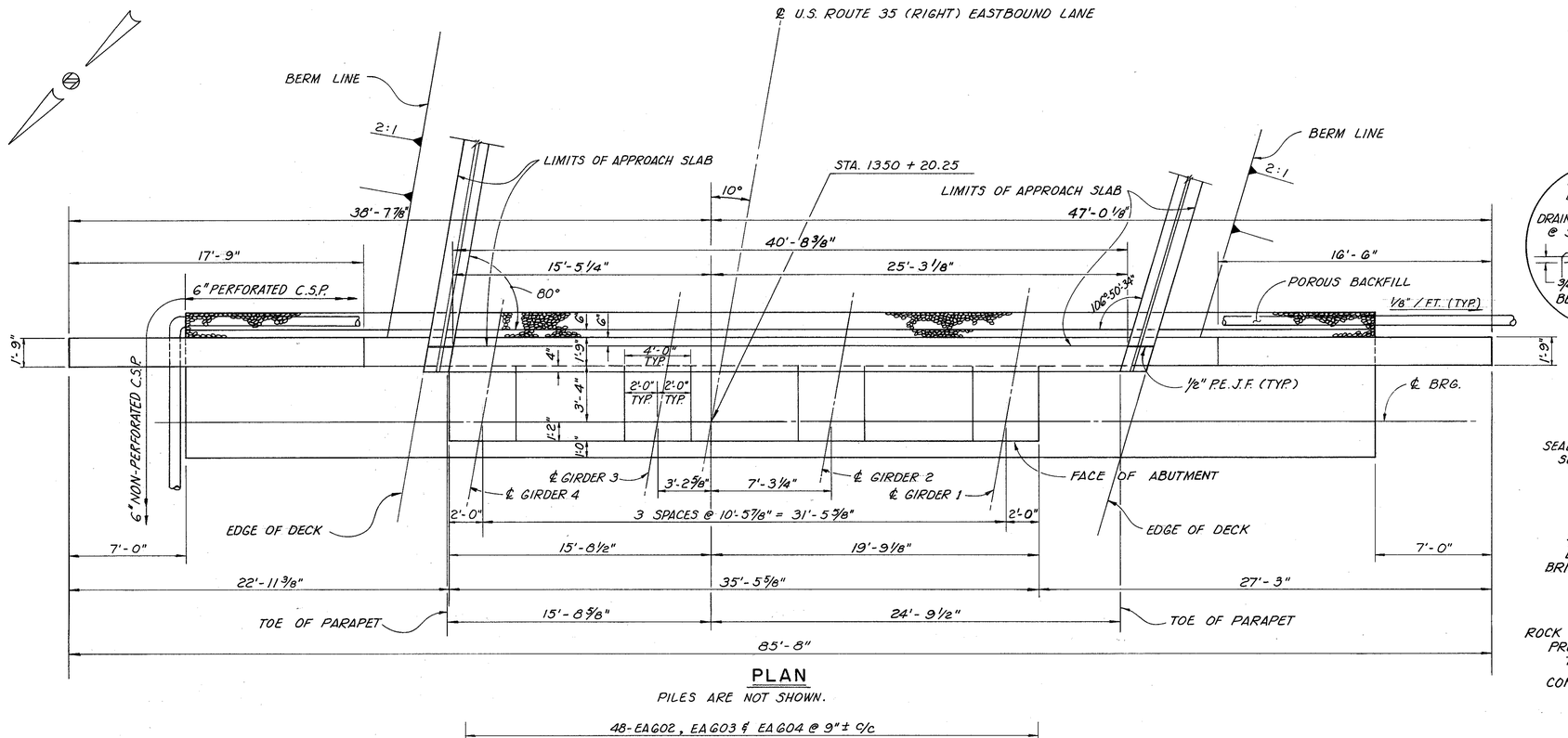

PLAN

PILES ARE NOT SHOWN.

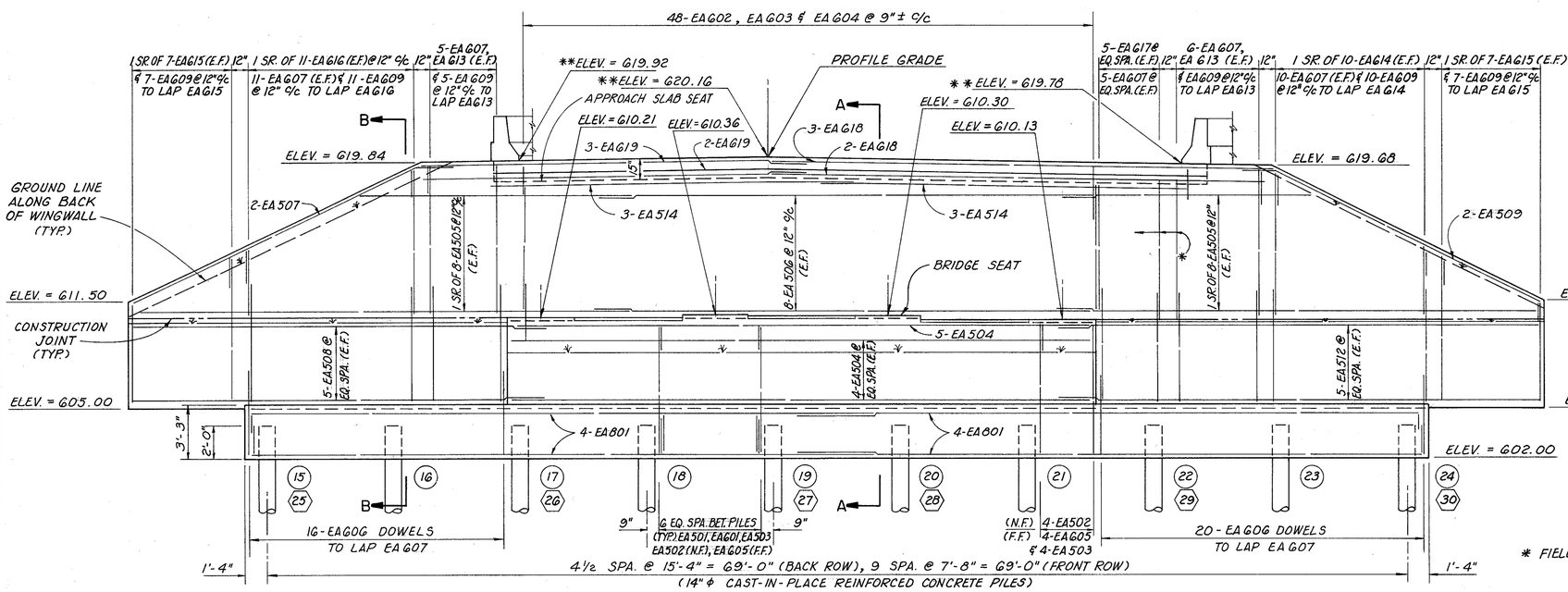

ELEVATION

**NOTE: ELEVATIONS SHOWN ARE MEASURED ALONG THE BRIDGE LIMIT.

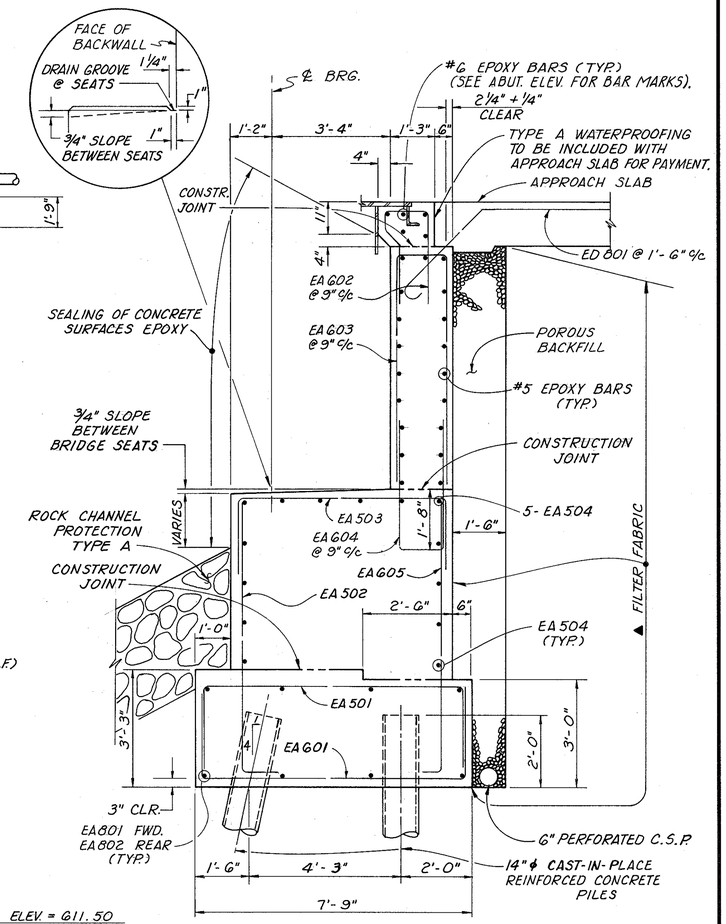

SECTION A-A

▲ FILTER FABRIC SHALL CONFORM TO ITEM 712.09 TYPE A AND SHALL BE INCLUDED WITH POROUS BACKFILL FOR PAYMENT.

FILTER FABRIC TO EXTEND 6" UP THE BACKFACE OF ABUTMENT.

FOR BAR SPLICE LENGTH, SEE SHEET 7/28.

LEGEND

- ○ FRONT ROW
- ⬡ BACK ROW

* FIELD CUT TO SUIT.

R. D. ZANDE & ASSOCIATES, LIMITED
CONSULTING ENGINEERS
COLUMBUS, OHIO

8/28

FORWARD ABUTMENT DETAILS

BRIDGE NO. ROS-35-2532 R
OVER SCIOTO RIVER
ROSS COUNTY STA. 1337+44.60
STA. 1350+24.90

DESIGNED	DRAWN	TRACED	CHECKED	REVIEWED DATE	REVISED
T.A.A.	P.M.	P.M.	C.M.S.	OHK 2-26-91	

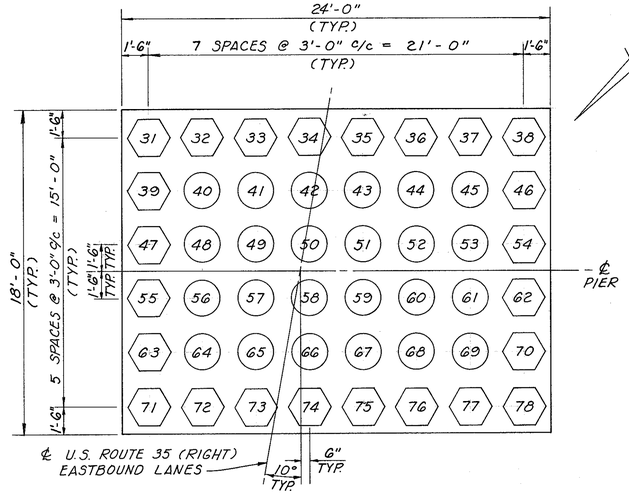

PIER No. 1

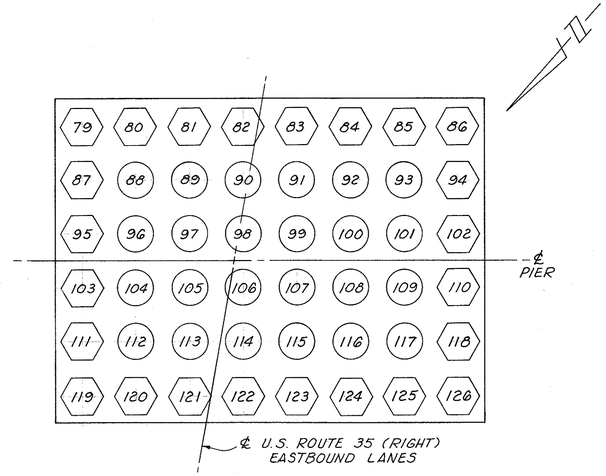

PIER No. 2

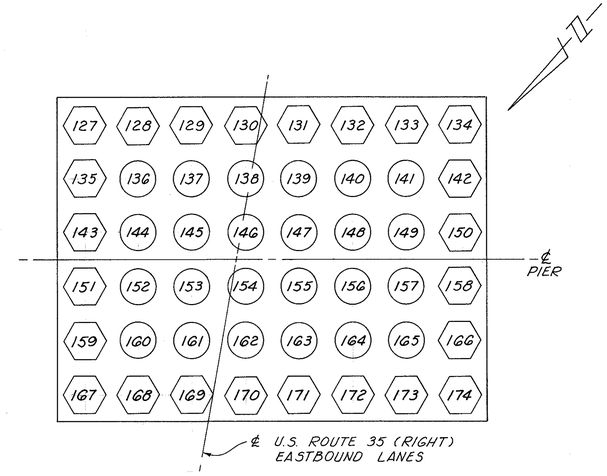

PIER No. 3

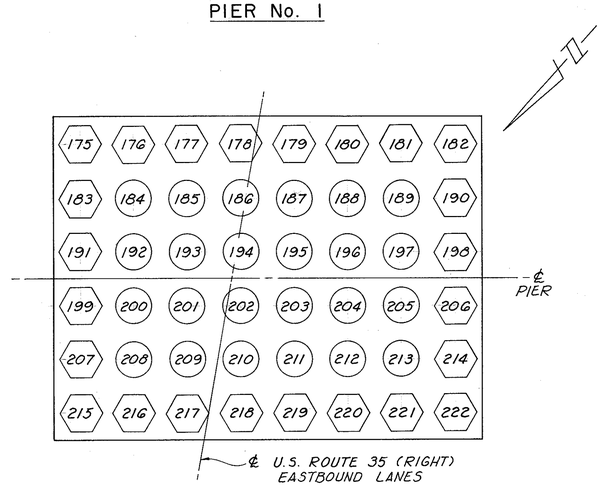

PIER No. 4

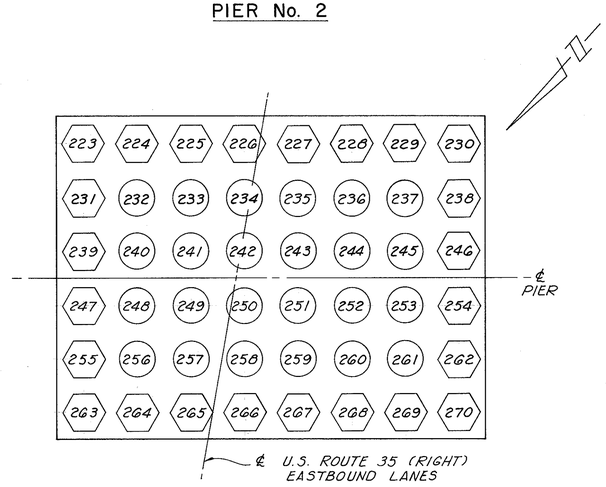

PIER No. 5

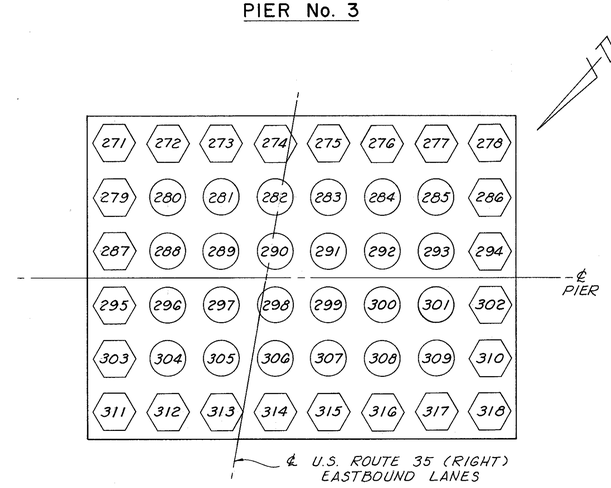

PIER No. 6

PILE LAYOUT

NOTE : ALL PIER PILES ARE 12"Φ C.I.P. REINFORCED CONCRETE.

LEGEND

○ VERTICAL PILES

⬡ BATTERED PILES (1:4)

R. D. ZANDE & ASSOCIATES, LIMITED
CONSULTING ENGINEERS
COLUMBUS, OHIO

9/28

PIER DETAILS

BRIDGE NO. ROS - 35 - 2532 R
OVER SCIOTO RIVER
ROSS COUNTY STA. 1337 + 44.60
STA. 1350 + 24.90

DESIGNED	DRAWN	TRACED	CHECKED	REVIEWED	DATE	REVISED
T.A.A.	P.M.	—	O.H.K.	O.H.K.	5-15-91	

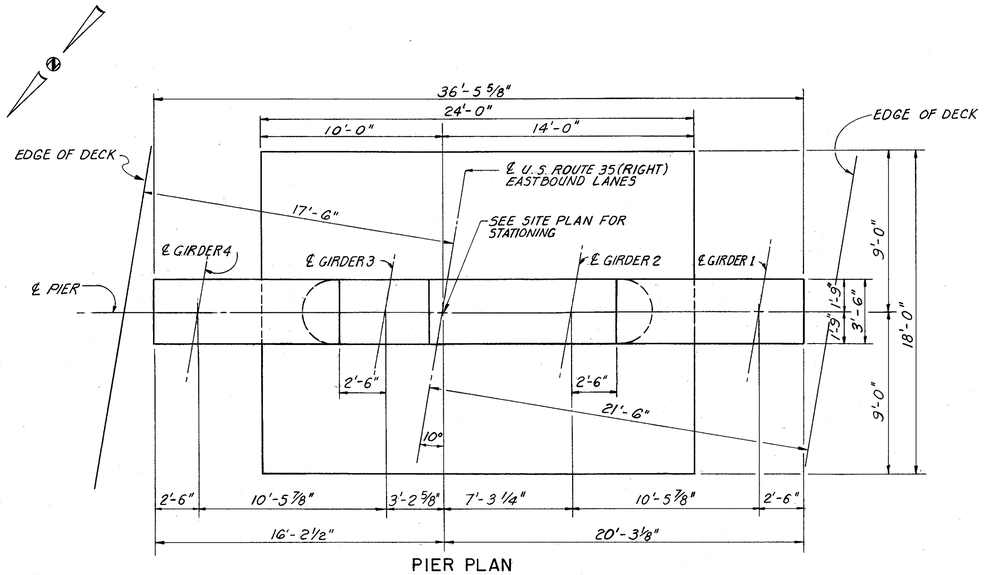

PIER PLAN
(PILES ARE NOT SHOWN FOR CLARITY.)

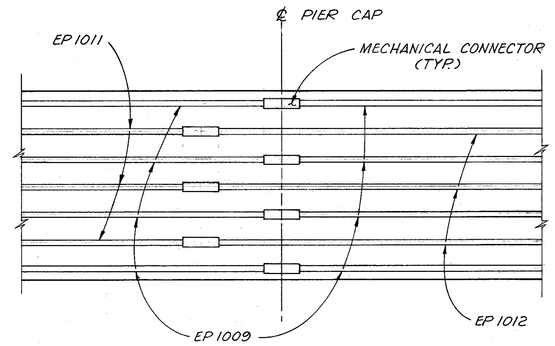

DETAIL 1
PLAN VIEW

NOTES
HOOKS FOR EP512 SHOULD BE PLACED AT THE BOTTOM OF THE CANTILEVER.

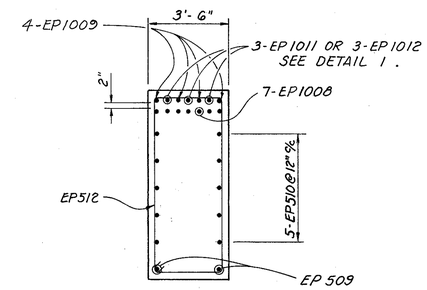

SECTION C-C

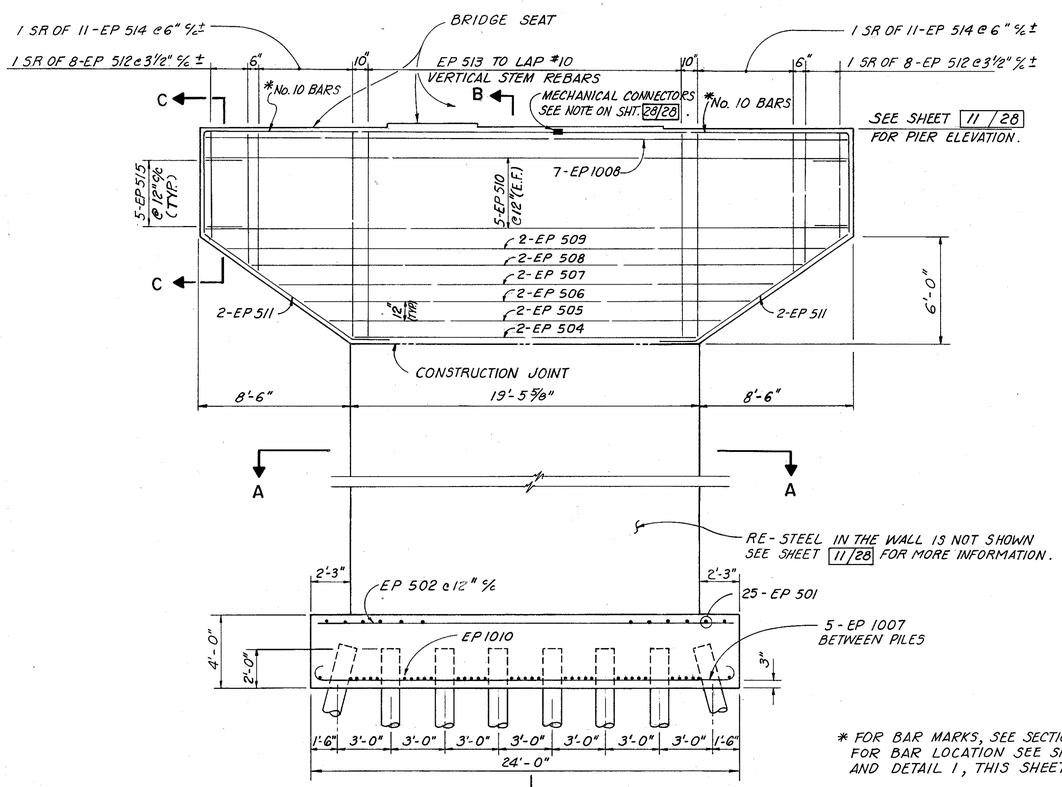

PIER ELEVATION

* FOR BAR MARKS, SEE SECTION C-C, AND FOR BAR LOCATION SEE SHEET 11/28 AND DETAIL 1, THIS SHEET.

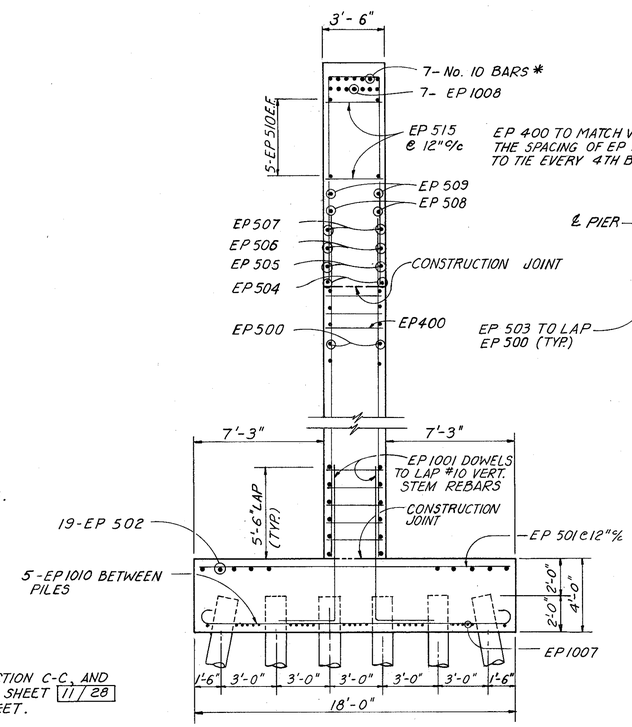

SECTION B-B

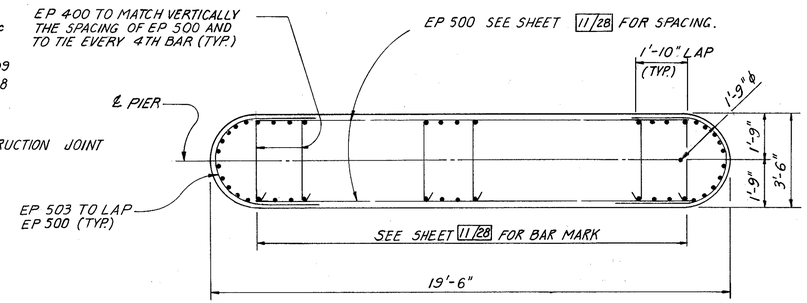

SECTION A-A

R. D. ZANDE & ASSOCIATES, LIMITED
CONSULTING ENGINEERS
COLUMBUS, OHIO

10/28

PIER DETAILS
BRIDGE NO. ROS-35-2532 R
OVER SCIOTO RIVER
ROSS COUNTY STA. 1337+44.60
STA. 1350+24.90

DESIGNED	DRAWN	TRACED	CHECKED	REVIEWED	DATE	REVISED
T.A.A.	R.A.S.	R.A.S.	C.M.S.	OHK	2-26-91	

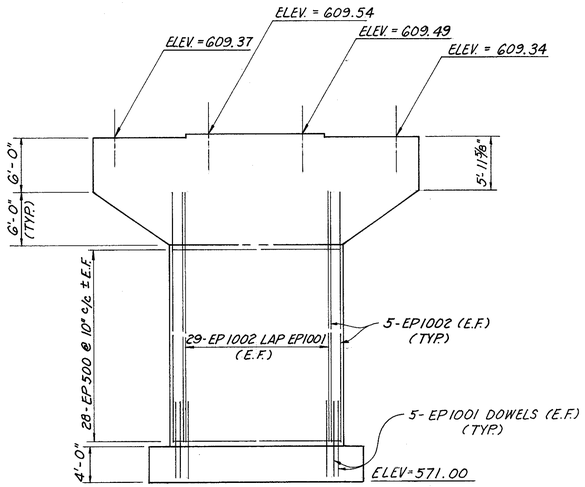

PIER #1
(EXPANSION)

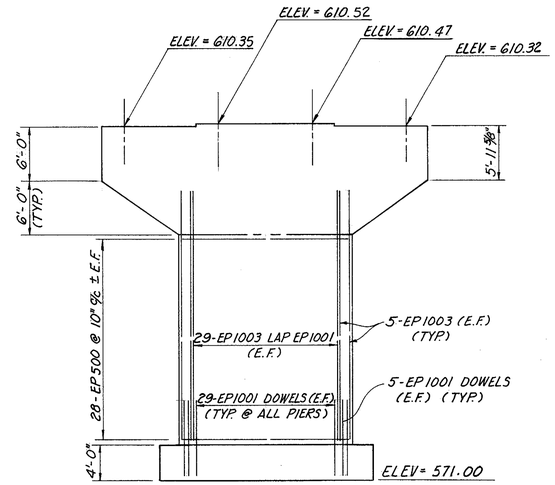

PIER #2
(EXPANSION)

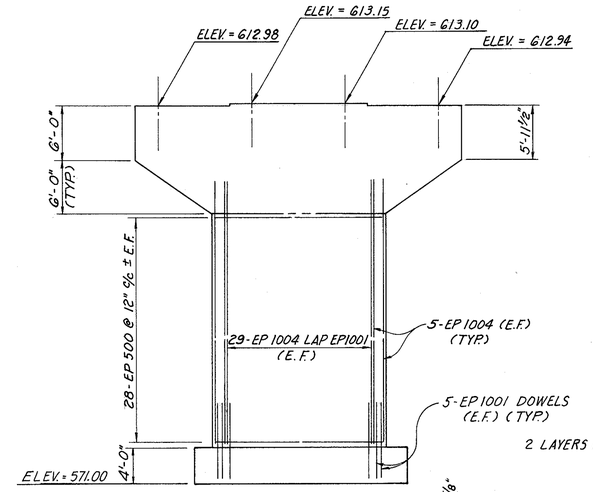

PIER #3
(FIXED)

NOTES

BRIDGE SEAT REINFORCING: REINFORCING STEEL IN THE VICINITY OF THE BRIDGE SEAT SHALL BE ACCURATELY PLACED TO AVOID INTERFERENCE WITH THE DRILLING OF BEARING ANCHOR HOLES OR THE PRESETTING OF BEARING ANCHORS.

BEARING ANCHORS: AT THE OPTION OF THE CONTRACTORS, BEARING ANCHORS, LOCATED AND SUPPORTED BY TEMPLATES, MAY BE CAST IN PLACE.

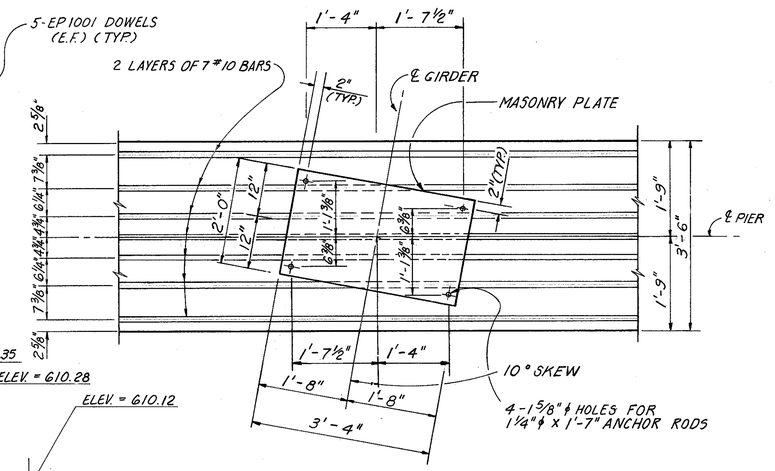

ANCHOR RODS LOCATION

PROVIDE ANCHOR BOLTS FOR PIER 3 & 4 ONLY

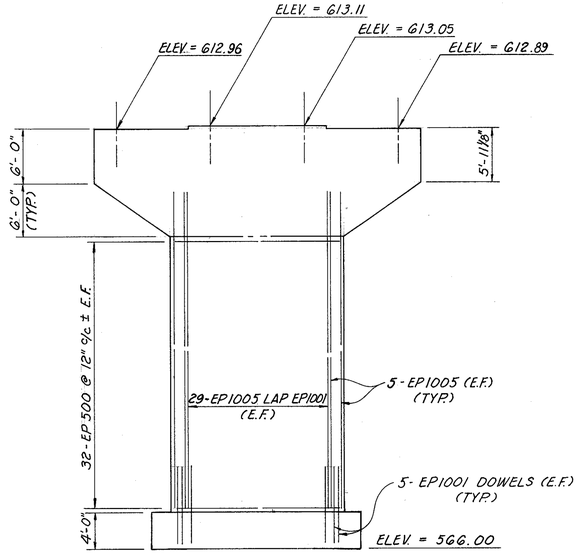

PIER #4
(FIXED)

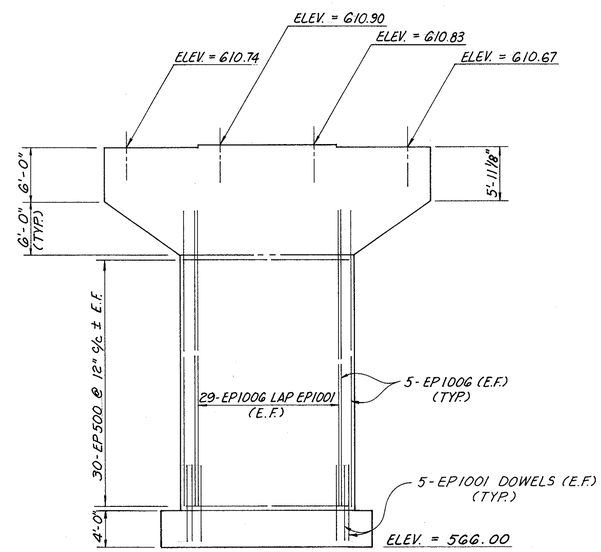

PIER #5
(EXPANSION)
NOTE: PILES ARE NOT SHOW

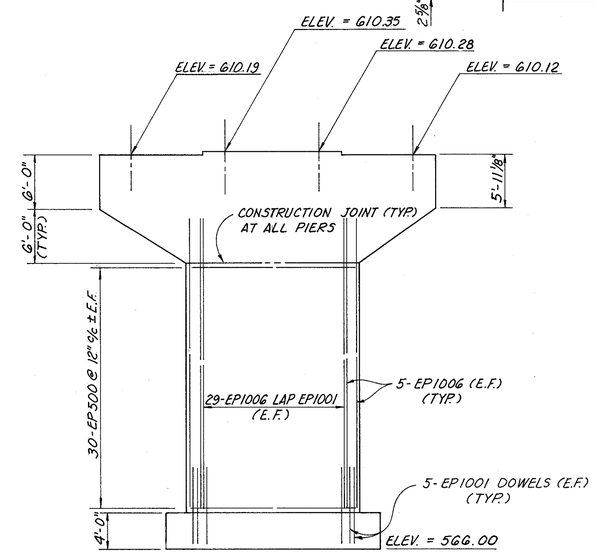

PIER #6
(EXPANSION)

R. D. ZANDE & ASSOCIATES, LIMITED
CONSULTING ENGINEERS
COLUMBUS, OHIO

11/28

PIER DETAILS

BRIDGE NO. ROS - 35 - 2532 R
OVER SCIOTO RIVER
ROSS COUNTY STA. 1337 + 44.60
STA. 1350 + 24.90

DESIGNED	DRAWN	TRACED	CHECKED	REVIEWED DATE	REVISED
T.A.A.	P.M.	—	C.M.S.	OHK 2-26-91	

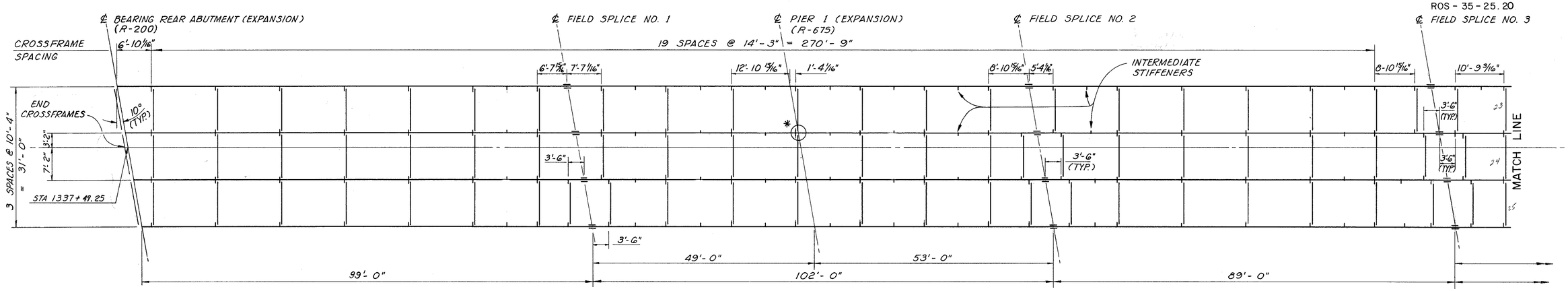

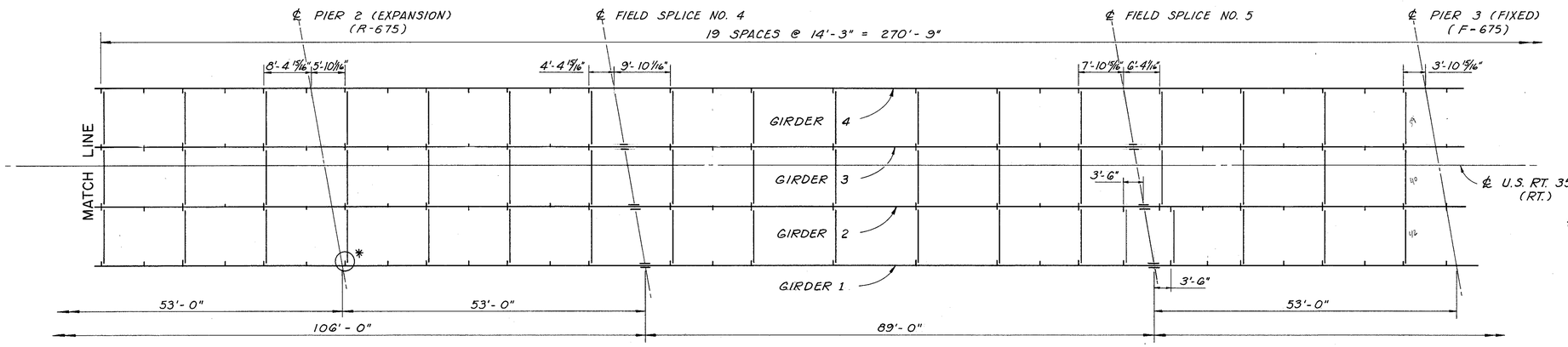

NOTES

INTERMEDIATE STIFFENERS SHALL BE SPACED EVENLY BETWEEN INTERMEDIATE CROSSFRAMES, AS SHOWN ON THE FRAMING PLAN.

FOR GIRDER DETAILS SEE SHEET 13/28.

FOR TRANSVERSE SECTION DETAILS SEE SHEET 18/28.

ALL DIMENSIONS MEASURED ALONG CENTERLINE OF GIRDER.

ALL GIRDER LENGTH DIMENSIONS ARE AT 60°F.

FOR BEARING DETAILS SEE SHEET 14/28

* AT THESE LOCATIONS CROSSFRAMES TO BE WELDED TO BEARING STIFFENERS.

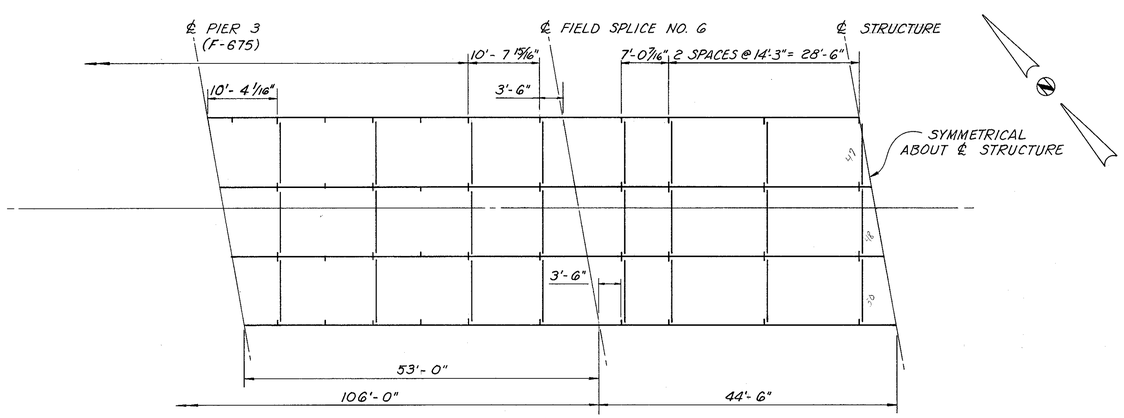

FRAMING PLAN

R. D. ZANDE & ASSOCIATES, LIMITED
CONSULTING ENGINEERS
COLUMBUS, OHIO

12/28

SUPERSTRUCTURE DETAILS

BRIDGE NO. ROS - 35 - 2532 R
OVER SCIOTO RIVER
ROSS COUNTY STA. 1337 + 44.60
STA. 1350 + 24.90

DESIGNED	DRAWN	TRACED	CHECKED	REVIEWED DATE	REVISED
O.H.K.	P.M.	—	CMS	OHK 2-26-91	

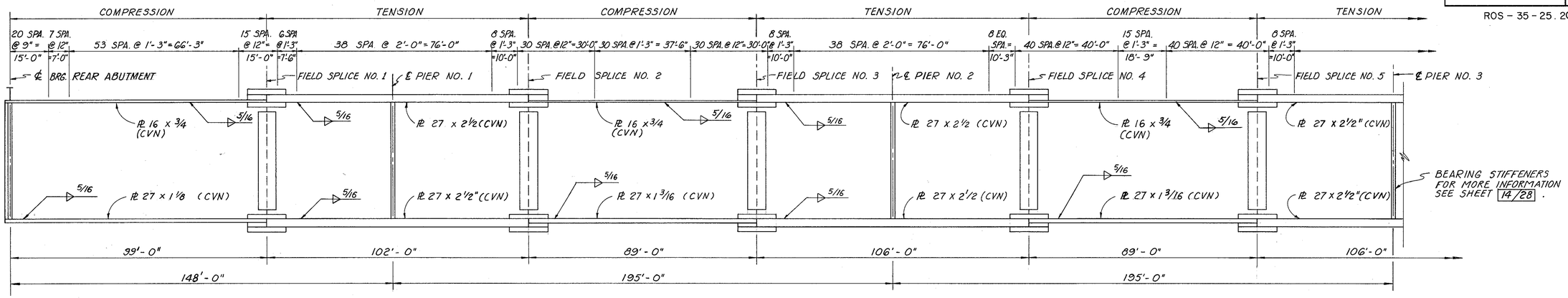

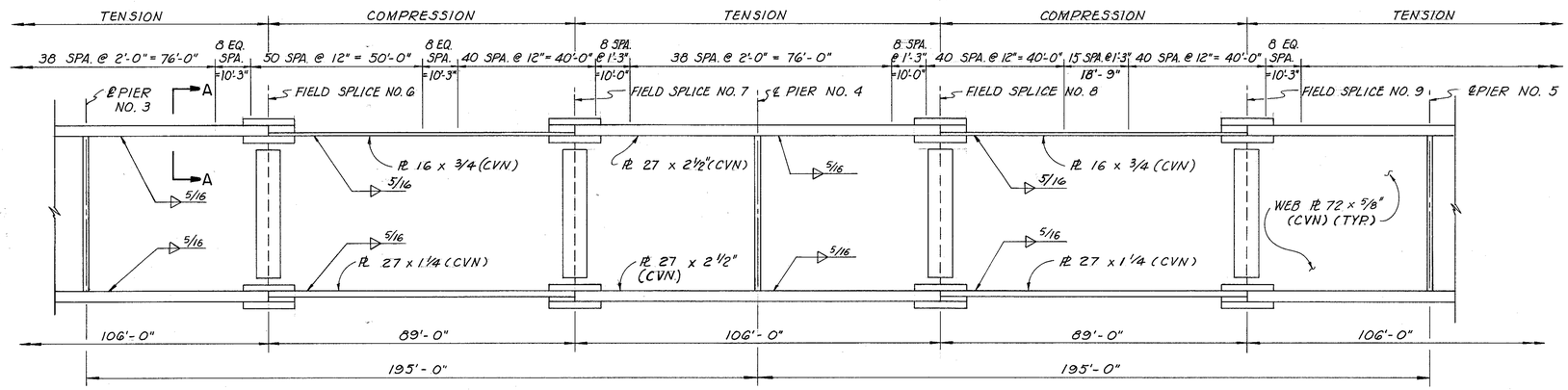

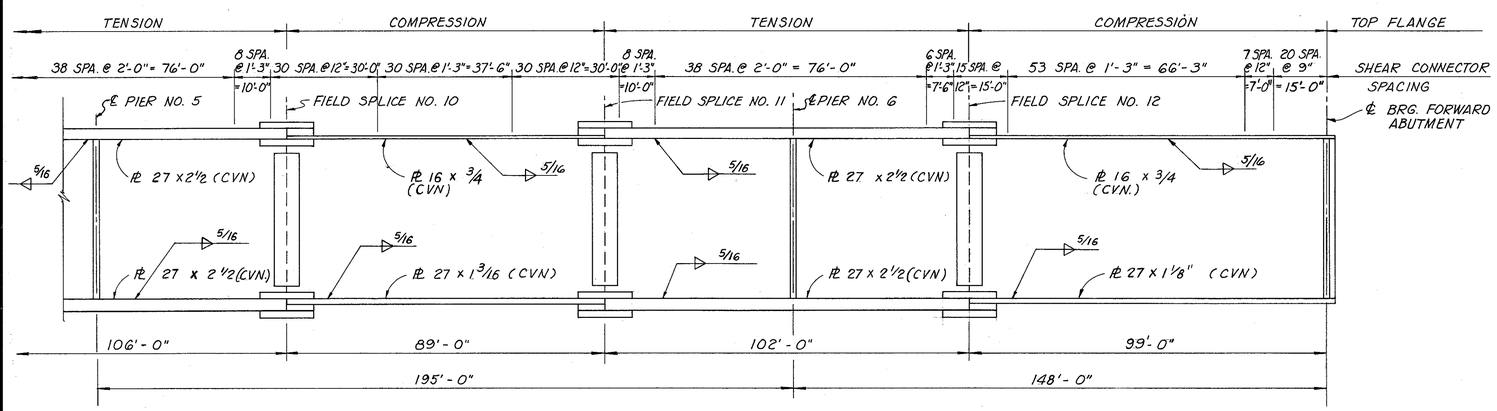

GIRDER ELEVATION
TYPICAL

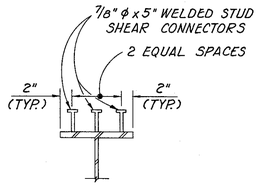

SECTION A-A

LATERAL AND LONGITUDINAL SPACING OF WELDED STUD SHEAR CONNECTORS MAY BE ALTERED AT FIELD SPLICE LOCATIONS TO AVOID INTERFERENCE WITH FLANGE SPLICE BOLTS PROVIDED THAT AT LEAST THE NUMBER OF STUDS SPECIFIED IN THE GIRDER ELEVATION ARE PROVIDED.

R. D. ZANDE & ASSOCIATES, LIMITED
CONSULTING ENGINEERS
COLUMBUS, OHIO

13/28

SUPERSTRUCTURE DETAILS
BRIDGE NO. ROS - 35 - 2532 R
OVER SCIOTO RIVER
ROSS COUNTY STA. 1337 + 44.60
STA. 1350 + 24.90

DESIGNED	DRAWN	TRACED	CHECKED	REVIEWED DATE	REVISED
O.H.K.	P.M.	—	CMS TAA	OHK 2-26-91	

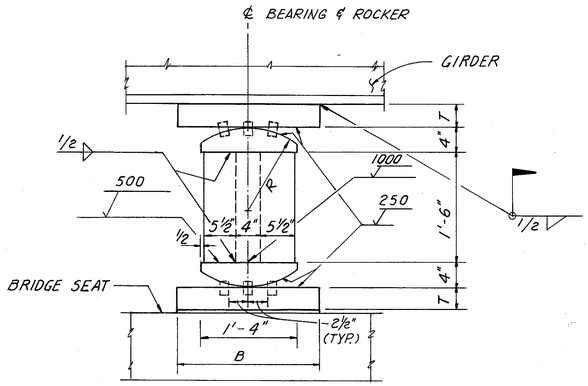

SIDE ELEVATION

FIXED BEARING NO.	FIXED BEARINGS											
	DIMENSIONS (INCHES)										WEIGHT EA. (LBS)	MAXIMUM LOAD (LBS)
	A	B	C	D	E	F	G	H	K	DIA		
F-675	18	24	5	12	4	24	40	4	13 3/8	4	2028	675,000

FIXED BEARING DETAILS

NOTES : FOR DIMENSION LOCATIONS, DETAILS AND NOTES SEE STD. DWG FB-1-82.

ALL FIXED AND EXPANSION BEARING DEVICES SHALL BE PAINTED.

ROCKER NO.	DIMENSIONS INCHES						WEIGHT EA(LBS)	MAXIMUM LOAD (LBS)
	B	L	M	T	R	K		
R-675	24	40	25	4	13	26	2898	675,000
R-200	18	32	21	2¼	13	26	1622	200,000

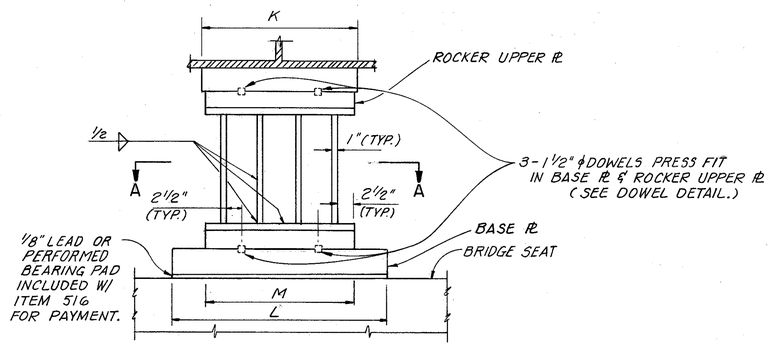

FRONT ELEVATION

ROCKER DETAILS

NOTE : FOR ROCKER DIMENSIONS, SEE TABLE THIS SHEET.

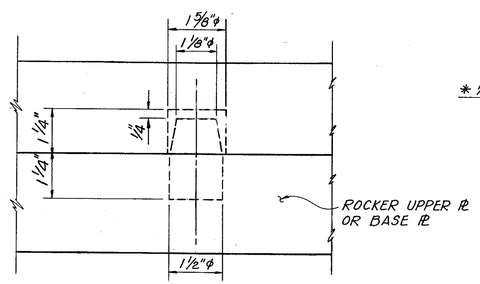

DOWEL DETAIL

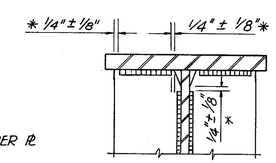

DETAIL "A"

* TYPICAL CLEARANCE WHERE STIFFENER IS WELDED TO GIRDER

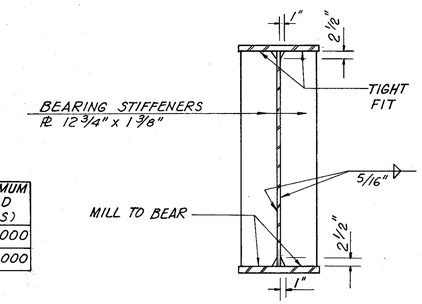

BEARING STIFFENER DETAIL - PIERS

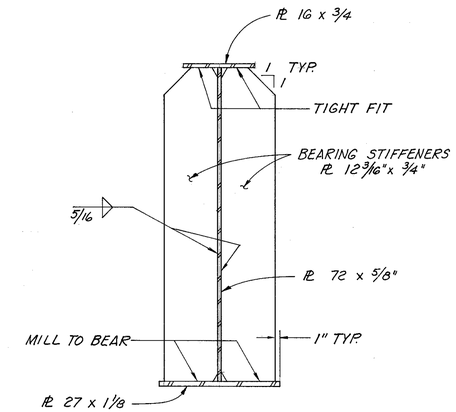

BEARING STIFFENERS - ABUTMENTS

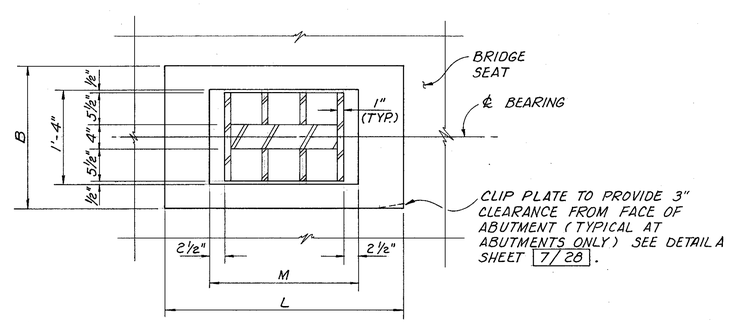

SECTION A-A

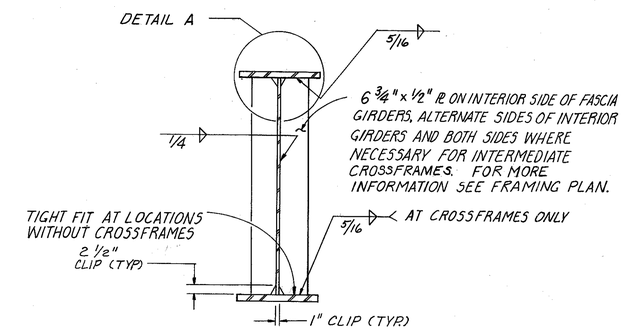

INTERMEDIATE STIFFENERS

R. D. ZANDE & ASSOCIATES, LIMITED
CONSULTING ENGINEERS
COLUMBUS, OHIO

14/28

BEARING DETAILS
BRIDGE NO. ROS-35-2532 R
OVER SCIOTO RIVER
ROSS COUNTY STA. 1337+44.60
STA. 1350+24.90

DESIGNED	DRAWN	TRACED	CHECKED	REVIEWED DATE	REVISED
O.H.K.	RAS.	R.A.S.	TAA.	OHK 2-26-91	

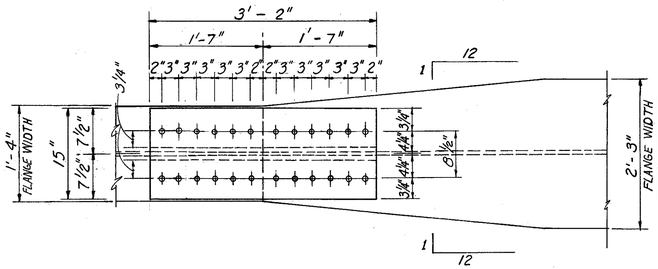

TOP FLANGE

FILLER PLATE \ FIELDSPLICE	FS #1 FS #12	FS #2 FS #11	FS #3 FS #10	FS #4 FS #9	FS #5 FS #8	FS #6 FS #7
FILLER PLATE TOP FLANGE	19x1 3/4x16	19x1 3/4x16	19x1 3/4x16	19x1 3/4x16	19x1 3/4x16	19x1 3/4x16
FILLER PLATE BOTTOM FLANGE	16x1 3/8x26	16x1 5/16x26	16x1 5/16x26	16x1 5/16x26	16x1 5/16x26	16x1 1/4x26

TABLE A

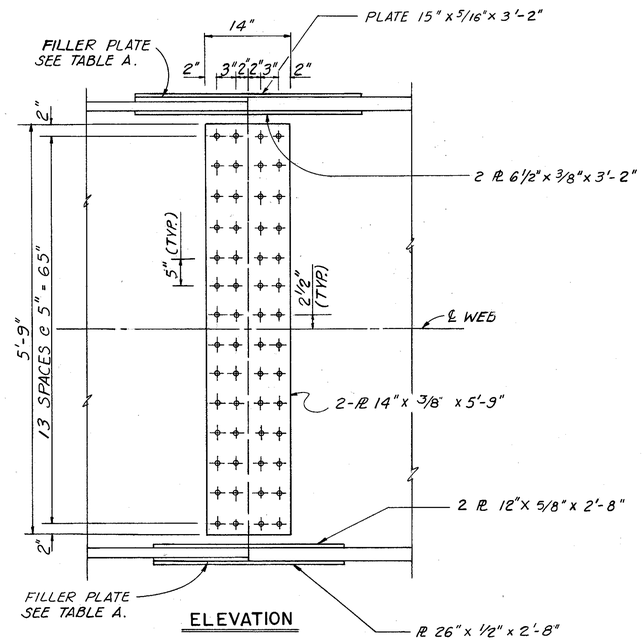

ELEVATION

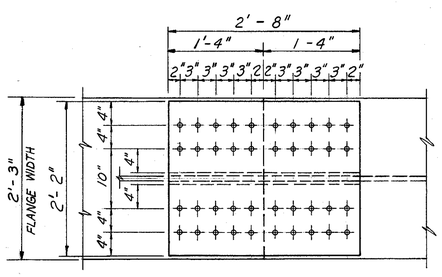

BOTTOM FLANGE

FIELD SPLICE DETAILS

NOTES

WHERE A SHAPE OR PLATE IS DESIGNATED (CVN) THE MATERIAL SHALL MEET SPECIFIED MINIMUM NOTCH TOUGHNESS REQUIREMENTS AS SPECIFIED IN 711.01 OF CMS.

ALL GIRDER LENGTH DIMENSIONS ARE AT 60°F.

ALL DIMENSIONS MEASURED ALONG CENTERLINE OF GIRDER.

ALL STRUCTURAL STEEL TO BE PAINTED.

WELDED ATTACHMENT OF SUPPORTS FOR CONCRETE DECK FINISHING MACHINE MAY BE MADE TO AREAS OF THE FASCIA STRINGER FLANGES DESIGNATED "COMPRESSION". ATTACHMENTS SHALL NOT BE MADE TO AREAS DESIGNATED AS "TENSION". FILLET WELDS TO COMPRESSION FLANGES SHALL NOT BE CLOSER THAN 1" FROM THE EDGE OF THE FLANGE, BE NOT MORE THAN 2" LONG, AND BE NOT SMALLER THAN THE MINIMUM SIZE REQUIRED BY SECTION 2.7 OF AASHTO/AWS D1.5-88 BRIDGE WELDING CODE.

ALL FIELD SPLICE BOLTS SHALL BE 7/8" DIAMETER A325 HIGH-STRENGTH BOLTS.

ALL SPLICE PLATES SHALL BE CVN.

R. D. ZANDE & ASSOCIATES, LIMITED
CONSULTING ENGINEERS
COLUMBUS, OHIO

15/28

SUPERSTRUCTURE DETAILS
BRIDGE NO. ROS-35-2532 R
OVER SCIOTO RIVER
ROSS COUNTY STA. 1337 + 44.60
STA. 1350 + 24.90

DESIGNED	DRAWN	TRACED	CHECKED	REVIEWED DATE	REVISED
CMS	RAS	RAS	TAA	OHK 2-26-91	

TABLE OF CAMBER AND DEFLECTION

		SPAN 1							SPAN 2							SPAN 3						
		.125	.25	.375	.50	F.51	.75	.875	.125	FS2	.375	.50	.625	FS3	.875	.125	FS4	.375	.50	.625	FS5	.875
GIRDER 1	STEEL WEIGHT DEFLECTION	3/16	3/8	7/16	3/8	1/4	1/8	1/16	1/8	7/16	9/16	11/16	9/16	3/8	1/8	1/8	5/16	1/2	9/16	1/2	5/16	1/8
	REMAINING DEAD LOAD DEFLECTION	7/8	1 7/16	1 3/4	1 5/8	1 5/16	5/8	3/16	3/8	1 1/16	1 11/16	1 15/16	1 11/16	1 1/8	5/16	5/16	1 1/8	1 5/8	1 15/16	1 5/8	1 1/8	5/16
	VERTICAL CURVE CORRECTION	0	0	0	0	0	0	0	0	0	0	0	0	0	0	0	1/8	1/8	1/8	1/8	1/4	1/8
	REQUIRED SHOP CAMBER	1 1/16	1 13/16	2 3/16	2	1 3/16	3/4	1/4	1/2	1 1/2	2 1/4	2 5/8	2 1/4	1 1/2	7/16	7/16	1 9/16	2 1/4	2 5/8	2 1/4	1 11/16	9/16
GIRDER 2	STEEL WEIGHT DEFLECTION	3/16	3/8	7/16	3/8	1/4	1/8	1/16	1/8	7/16	9/16	11/16	9/16	3/8	1/8	1/8	5/16	1/2	9/16	1/2	5/16	1/8
	REMAINING DEAD LOAD DEFLECTION	7/8	1 7/16	1 3/4	1 5/8	1 5/16	5/8	3/16	3/8	1 1/16	1 11/16	1 15/16	1 11/16	1 1/8	5/16	5/16	1 1/8	1 5/8	1 15/16	1 5/8	1 1/8	5/16
	VERTICAL CURVE CORRECTION	0	0	0	0	0	0	0	0	0	0	0	0	0	0	1/8	1/8	1/8	1/8	1/8	1/4	1/4
	REQUIRED SHOP CAMBER	1 1/16	1 13/16	2 3/16	2	1 3/16	3/4	1/4	1/2	1 1/2	2 1/4	2 5/8	2 1/4	1 1/2	7/16	9/16	1 9/16	2 1/4	2 5/8	2 1/4	1 11/16	11/16
GIRDER 3	STEEL WEIGHT DEFLECTION	3/16	3/8	7/16	3/8	1/4	1/8	1/16	1/8	7/16	9/16	11/16	9/16	3/8	1/8	1/8	5/16	1/2	9/16	1/2	5/16	1/8
	REMAINING DEAD LOAD DEFLECTION	7/8	1 7/16	1 3/4	1 5/8	1 5/16	5/8	3/16	3/8	1 1/16	1 11/16	1 15/16	1 11/16	1 1/8	5/16	5/16	1 1/8	1 5/8	1 15/16	1 5/8	1 1/8	5/16
	VERTICAL CURVE CORRECTION	0	0	0	0	0	0	0	0	0	0	0	0	0	0	0	0	0	0	1/8	1/8	1/8
	REQUIRED SHOP CAMBER	1 1/16	1 13/16	2 3/16	2	1 3/16	3/4	1/4	1/2	1 1/2	2 1/4	2 5/8	2 1/4	1 1/2	7/16	7/16	1 7/16	2 1/8	2 1/2	2 1/8	1 9/16	9/16
GIRDER 4	STEEL WEIGHT DEFLECTION	3/16	3/8	7/16	3/8	1/4	1/8	1/16	1/8	7/16	9/16	11/16	9/16	3/8	1/8	1/8	5/16	1/2	9/16	1/2	5/16	1/8
	REMAINING DEAD LOAD DEFLECTION	7/8	1 7/16	1 3/4	1 5/8	1 5/16	5/8	3/16	3/8	1 1/16	1 11/16	1 15/16	1 11/16	1 1/8	5/16	5/16	1 1/8	1 5/8	1 15/16	1 5/8	1 1/8	5/16
	VERTICAL CURVE CORRECTION	0	0	0	0	0	0	0	0	0	0	0	0	0	0	0	0	0	0	1/8	1/8	1/8
	REQUIRED SHOP CAMBER	1 1/16	1 13/16	2 3/16	2	1 3/16	3/4	1/4	1/2	1 1/2	2 1/4	2 5/8	2 1/4	1 1/2	7/16	7/16	1 7/16	2 1/8	2 1/2	2 1/4	1 9/16	9/16

		SPAN 4							SPAN 5						
		.125	FS6	.375	.50	.625	FS7	.875	.125	FS8	.375	.50	.625	FS9	.875
GIRDER 1	STEEL WEIGHT DEFLECTION	1/8	3/8	9/16	5/8	9/16	3/8	1/8	1/8	5/16	1/2	9/16	1/2	5/16	1/8
	REMAINING DEAD LOAD DEFLECTION	5/16	1 1/8	1 5/8	1 15/16	1 5/8	1 1/8	5/16	5/16	1 1/8	1 5/8	1 15/16	1 5/8	1 1/8	5/16
	VERTICAL CURVE CORRECTION	1 1/8	1 7/8	2 1/16	2 1/8	2 1/16	1 9/16	3/4	0	0	0	0	0	0	0
	REQUIRED SHOP CAMBER	1 9/16	3 3/8	4 1/4	4 11/16	4 1/4	3 7/16	1 3/16	7/16	1 7/16	2 1/8	2 1/2	2 1/8	1 7/16	7/16
GIRDER 2	STEEL WEIGHT DEFLECTION	1/8	3/8	9/16	5/8	9/16	3/8	1/8	1/8	5/16	1/2	9/16	1/2	5/16	1/8
	REMAINING DEAD LOAD DEFLECTION	5/16	1 1/8	1 5/8	1 15/16	1 5/8	1 1/8	5/16	5/16	1 1/8	1 5/8	1 15/16	1 5/8	1 1/8	5/16
	VERTICAL CURVE CORRECTION	15/16	1 15/16	2 1/16	2 1/4	1 5/16	1 1/2	3/4	0	0	0	0	0	0	0
	REQUIRED SHOP CAMBER	1 3/8	3 7/16	4 1/4	4 13/16	3 1/2	3	1 3/16	7/16	1 7/16	2 1/8	2 1/2	2 1/8	1 7/16	7/16
GIRDER 3	STEEL WEIGHT DEFLECTION	1/8	3/8	9/16	5/8	9/16	3/8	1/8	1/8	5/16	1/2	9/16	1/2	5/16	1/8
	REMAINING DEAD LOAD DEFLECTION	5/16	1 1/8	1 5/8	1 15/16	1 5/8	1 1/8	5/16	5/16	1 1/8	1 5/8	1 15/16	1 5/8	1 1/8	5/16
	VERTICAL CURVE CORRECTION	1/8	1 1/16	1 1/2	1 5/8	1 11/16	1 3/16	3/4	0	0	0	0	0	0	0
	REQUIRED SHOP CAMBER	9/16	2 9/16	3 11/16	4 3/16	3 7/8	2 11/16	1 3/16	7/16	1 7/16	2 1/8	2 1/2	2 1/8	1 7/16	7/16
GIRDER 4	STEEL WEIGHT DEFLECTION	1/8	3/8	9/16	5/8	9/16	3/8	1/8	1/8	5/16	1/2	9/16	1/2	5/16	1/8
	REMAINING DEAD LOAD DEFLECTION	5/16	1 1/8	1 5/8	1 15/16	1 5/8	1 1/8	5/16	5/16	1 1/8	1 5/8	1 15/16	1 5/8	1 1/8	5/16
	VERTICAL CURVE CORRECTION	15/16	1 15/16	2 3/16	2 1/4	2 1/16	1 1/2	7/8	0	0	0	0	0	0	0
	REQUIRED SHOP CAMBER	1 3/8	3 7/16	4 3/8	4 13/16	4 1/4	3	1 5/16	7/16	1 7/16	2 1/8	2 1/2	2 1/8	1 7/16	7/16

		SPAN 6							SPAN 7						
		.125	FS10	.375	.50	.625	FS11	.875	.125	.25	FS12	.50	.625	.75	.875
GIRDER 1	STEEL WEIGHT DEFLECTION	1/8	7/16	9/16	11/16	9/16	3/8	1/8	1/16	1/8	1/4	3/8	7/16	3/8	3/16
	REMAINING DEAD LOAD DEFLECTION	3/8	1 1/16	1 11/16	1 15/16	1 11/16	1 1/8	5/16	3/16	5/8	15/16	1 5/8	1 3/4	1 7/16	7/8
	VERTICAL CURVE CORRECTION	0	0	0	0	0	0	0	0	0	0	0	0	0	0
	REQUIRED SHOP CAMBER	1/2	1 1/2	2 1/4	2 5/8	2 1/4	1 1/2	7/16	1/4	3/4	1 3/16	2	2 3/16	1 13/16	1 1/16
GIRDER 2	STEEL WEIGHT DEFLECTION	1/8	7/16	9/16	11/16	9/16	3/8	1/8	1/16	1/8	1/4	3/8	7/16	3/8	3/16
	REMAINING DEAD LOAD DEFLECTION	3/8	1 1/16	1 11/16	1 15/16	1 11/16	1 1/8	5/16	3/16	5/8	15/16	1 5/8	1 3/4	1 7/16	7/8
	VERTICAL CURVE CORRECTION	0	0	0	0	0	0	0	0	0	0	0	0	0	0
	REQUIRED SHOP CAMBER	1/2	1 1/2	2 1/4	2 5/8	2 1/4	1 1/2	7/16	1/4	3/4	1 3/16	2	2 3/16	1 13/16	1 1/16
GIRDER 3	STEEL WEIGHT DEFLECTION	1/8	7/16	9/16	11/16	9/16	3/8	1/8	1/16	1/8	1/4	3/8	7/16	3/8	3/16
	REMAINING DEAD LOAD DEFLECTION	3/8	1 1/16	1 11/16	1 15/16	1 11/16	1 1/8	5/16	3/16	5/8	15/16	1 5/8	1 3/4	1 7/16	7/8
	VERTICAL CURVE CORRECTION	0	0	0	0	0	0	0	0	0	0	0	0	0	0
	REQUIRED SHOP CAMBER	1/2	1 1/2	2 1/4	2 5/8	2 1/4	1 1/2	7/16	1/4	3/4	1 3/16	2	2 3/16	1 13/16	1 1/16
GIRDER 4	STEEL WEIGHT DEFLECTION	1/8	7/16	9/16	11/16	9/16	3/8	1/8	1/16	1/8	1/4	3/8	7/16	3/8	3/16
	REMAINING DEAD LOAD DEFLECTION	3/8	1 1/16	1 11/16	1 15/16	1 11/16	1 1/8	5/16	3/16	5/8	15/16	1 5/8	1 3/4	1 7/16	7/8
	VERTICAL CURVE CORRECTION	0	0	0	0	0	0	0	0	0	0	0	0	0	0
	REQUIRED SHOP CAMBER	1/2	1 1/2	2 1/4	2 5/8	2 1/4	1 1/2	7/16	1/4	3/4	1 3/16	2	2 3/16	1 13/16	1 1/16

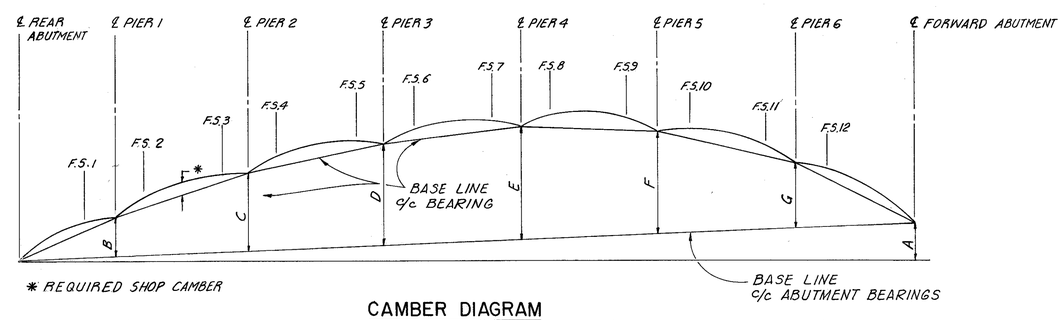

* REQUIRED SHOP CAMBER

CAMBER DIAGRAM

TABLE OF CAMBER DIAGRAM DIMENSIONS

GIRDER \ DIMENSION	A	B	C	D	E	F	G
1	1'-1 7/16"	0'-7 7/16"	1'-5 1/16"	2'-2 1/2"	1'-11 5/8"	1'-3 1/8"	0'-6 1/2"
2	1'-1 1/2"	0'-7 7/16"	1'-4 7/8"	2'-2 3/8"	2'-0"	1'-3 1/4"	0'-6 3/4"
3	1'-1 11/16"	0'-7 5/16"	1'-4 7/8"	2'-2 3/8"	2'-0"	1'-3 1/4"	0'-6 1/2"
4	1'-1 11/16"	0'-7 5/16"	1'-4 7/8"	2'-2 3/16"	2'-0"	1'-3 3/8"	0'-6 3/4"

DIMENSIONS ARE MEASURED ALONG TOP OF WEB.

R. D. ZANDE & ASSOCIATES, LIMITED
CONSULTING ENGINEERS
COLUMBUS, OHIO

16/28

SUPERSTRUCTURE DETAILS

BRIDGE NO. ROS - 35 - 2532 R
OVER SCIOTO RIVER
ROSS COUNTY STA. 1337+44.60
1350+24.90

DESIGNED	DRAWN	TRACED	CHECKED	REVIEWED DATE	REVISED
TAA	VGO	VGO	CMS	OHK 2-26-91	

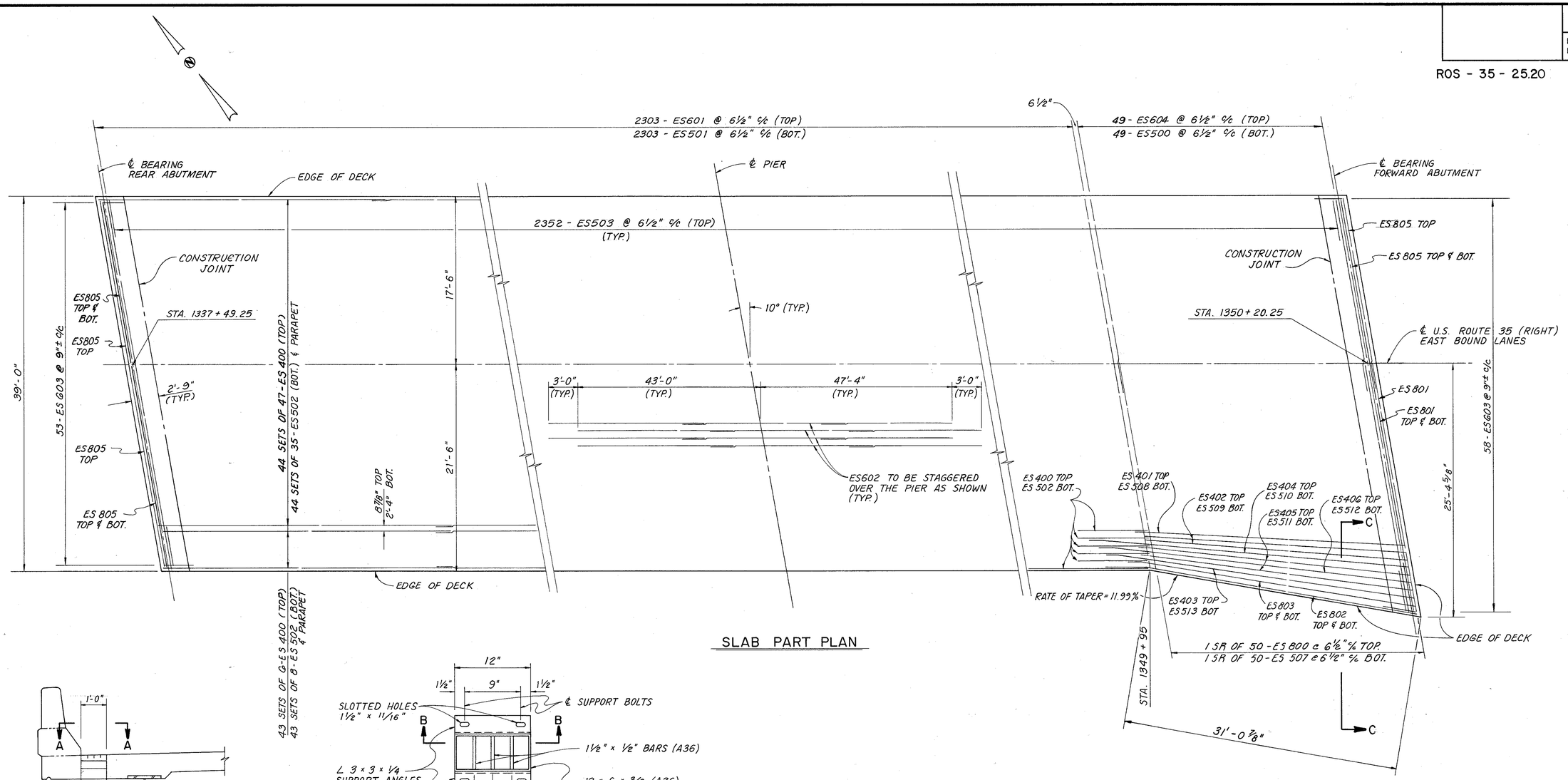

SLAB PART PLAN

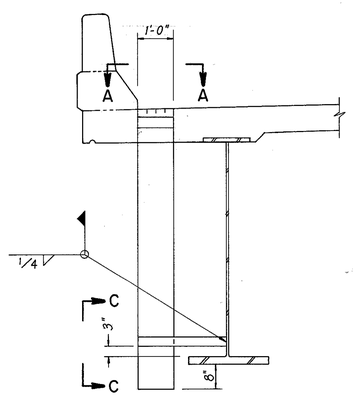

SCUPPER DETAIL

NOTE: REFER TO GENERAL PLAN AND ELEVATION (SHEET 4/28) FOR SCUPPER LOCATIONS.

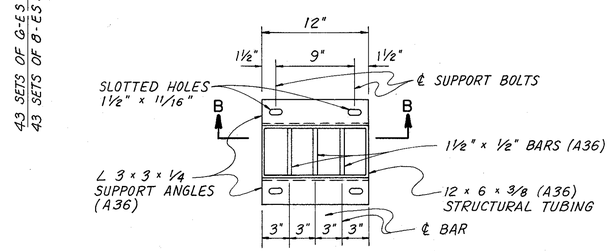

SECTION A-A

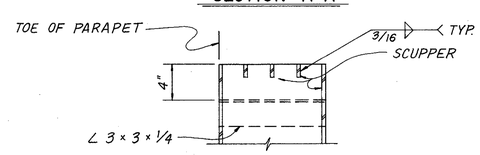

SECTION B-B

NOTES:
1. SUPPORT BOLTS AND SUPPORT ANGLES TO BE INCLUDED WITH SCUPPER FOR PAYMENT.
2. SCUPPER, SUPPORT ANGLES, AND ALL ASSOCIATED HARDWARE SHALL BE GALVANIZED PER 711.02 OF THE O.D.O.T. CMS.

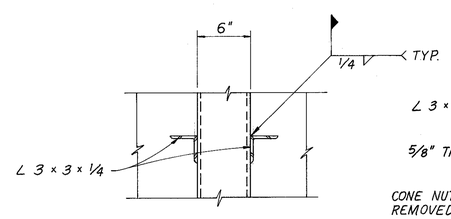

SECTION C-C

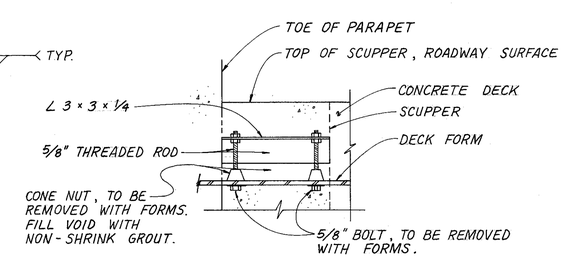

SCUPPER SUPPORT BOLT DETAIL
(FOUR SUPPORT BOLTS PER SCUPPER)

MINIMUM LAP

#4 BARS = 1'-6"
#5 BARS = 1'-8"
#6 BARS = 2'-10"
#8 BARS = 3'-5"

FOR SECTION C-C SEE SHEET 18/27.

R. D. ZANDE & ASSOCIATES, LIMITED 17/28
CONSULTING ENGINEERS
COLUMBUS, OHIO

SUPERSTRUCTURE DETAILS

BRIDGE NO. ROS - 35 - 2532 R
OVER SCIOTO RIVER
ROSS COUNTY STA. 1337 + 44.60
STA. 1350 + 24.90

DESIGNED	DRAWN	TRACED	CHECKED	REVIEWED DATE	REVISED
T.A.A.	L.A.M.	-	CMS OHK	OHK 2-26-91	

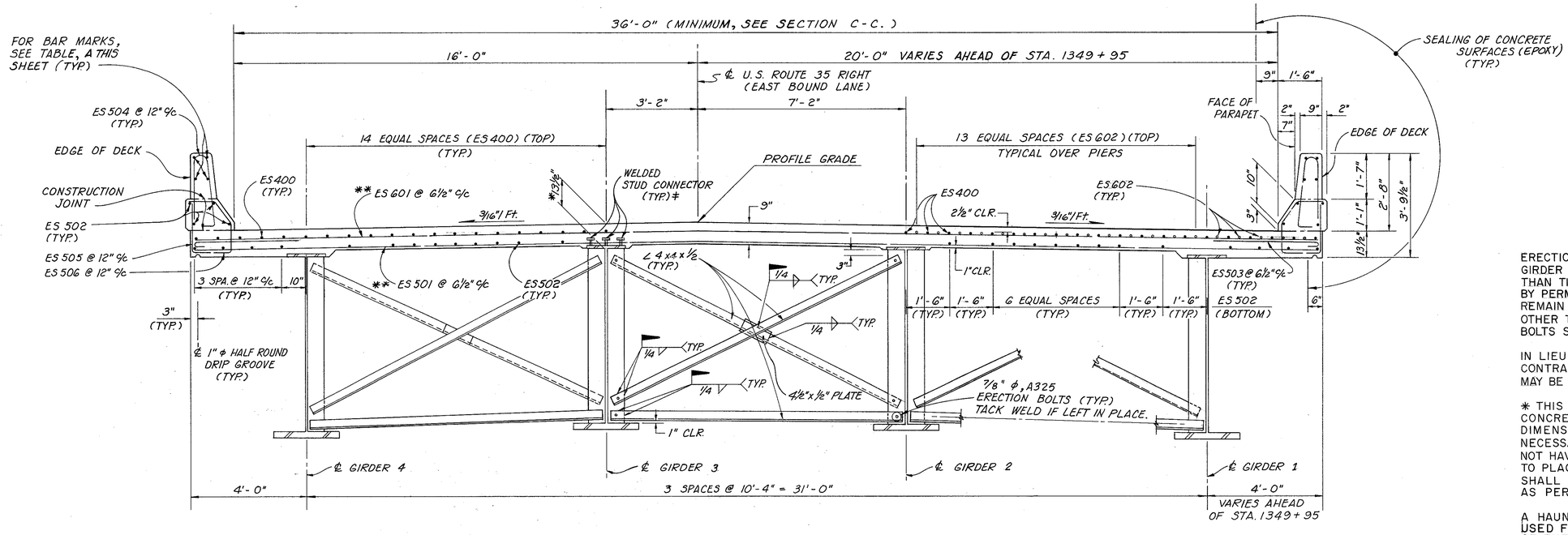

TRANSVERSE SECTION

WELDED STUD CONNECTORS ARE NOT SHOWN AT ALL LOCATIONS. SEE SHEET 13/28 FOR COMPLETE WELDED STUD CONNECTOR DETAILS.

MINIMUM LAP
4 BARS = 1'-4"
5 BARS = 1'-8"
6 BARS = 2'-10"

TABLE A	
PANEL LENGTH	BAR MARK
7'-6"	ES 514
15'-0"	ES 515
9'-0"	ES 516
8'-0⅞"	ES 517

REINFORCING BAR LIST

NOTES

ERECTION BOLTS: HOLE DIAMETER IN THE CROSSFRAMES AND GIRDER STIFFENERS SHALL BE RESPECTIVELY 1/16" AND 1/4" LARGER THAN THE DIAMETER OF THE ERECTION BOLTS. UNLESS REPLACED BY PERMANENT HIGH STRENGTH BOLTS, ERECTION BOLTS SHALL REMAIN IN PLACE. LOCK WASHERS SHALL BE FURNISHED FOR OTHER THAN FULLY TORQUED HIGH STRENGTH ERECTION BOLTS. BOLTS SHALL BE FURNISHED AS PART OF 513.

IN LIEU OF ERECTION BOLTS AND AT THE OPTION OF THE CONTRACTOR, ALTERNATIVE MEANS OF TEMPORARY BRACING MAY BE USED SUBJECT TO THE APROVAL OF THE DIRECTOR (501.06).

* THIS IS THE DESIGN DIMENSION. THE QUANTITY OF DECK CONCRETE TO BE PAID FOR SHALL BE BASED UPON THIS DIMENSION, EVEN THOUGH DEVIATION FROM IT MAY BE NECESSARY BECAUSE THE TOP FLANGE OF THE GIRDER MAY NOT HAVE THE EXACT CAMBER OR CONFORMATION REQUIRED TO PLACE IT PARALLEL TO THE FINISHED GRADE. DEDUCTION SHALL BE MADE FOR VOLUME OF ENCASED STEEL PLATES AS PER 511.18.

A HAUNCH WIDTH BASED ON A SLOPE OF 1:1 SHALL BE USED FOR COMPUTING QUANTITY OF CONCRETE. THE SLOPE OF THE HAUNCH MAY BE FLATTER AT THE CONTRACTOR'S OPTION.

LONGITUDINAL STEEL SHALL BE FIELD CUT AS NECESSARY TO AVOID INTERFERENCE WITH SCUPPERS.

EPOXY COATED BARS THAT ARE FIELD CUT SHALL BE RECOATED AS PER 709.00 OF O.D.O.T. CMS.

** FIELD BEND TRANSVERSE BAR TO FIT THE CROWN. INCLUDED WITH ITEM 509 FOR PAYMENT.

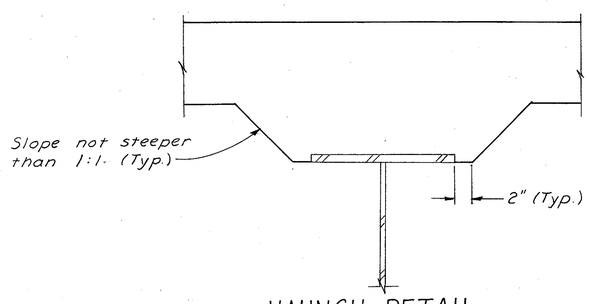

HAUNCH DETAIL

Also refer to detail plan note, this sheet

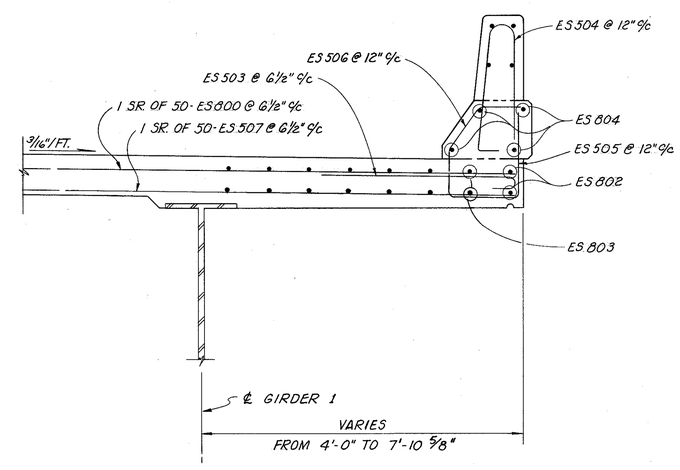

SECTION C-C

FOR LOCATION SEE SHEET 17/28.

R. D. ZANDE & ASSOCIATES, LIMITED
CONSULTING ENGINEERS
COLUMBUS, OHIO

18/28

SUPERSTRUCTURE DETAILS

BRIDGE NO. ROS - 35 - 2532 R
OVER SCIOTO RIVER
ROSS COUNTY STA. 1337 + 44.60
STA. 1350 + 24.90

DESIGNED	DRAWN	TRACED	CHECKED	REVIEWED DATE	REVISED
T.A.A.	P.M.	P.M.	OHK CMS	OHK 2-26-91	

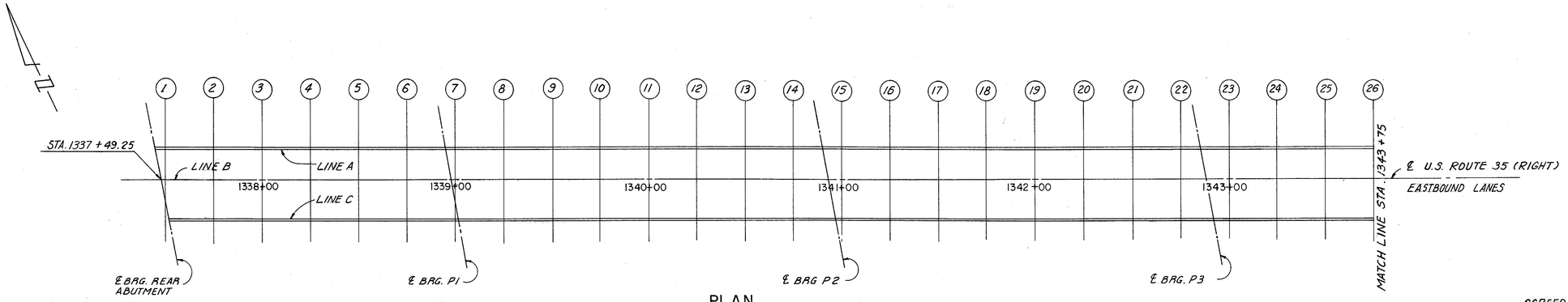

PLAN

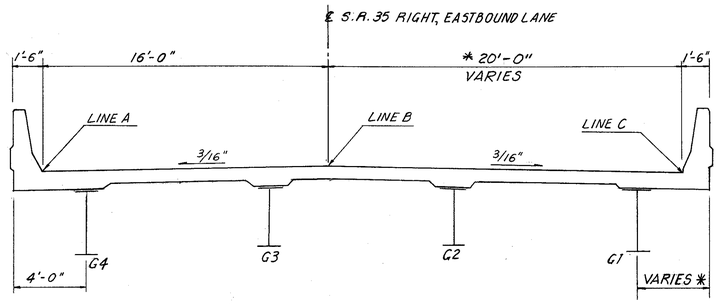

TYPICAL DECK SECTION

* AHEAD OF STA. 1349 + 95

NOTES

SCREED SETTING ELEVATIONS GIVEN ARE TO THE TOP OF THE REINFORCED CONCRETE DECK AND THEY INCLUDE AN ALLOWANCE FOR THE DEAD LOAD DEFLECTION CAUSED BY THE WEIGHT OF THE CONCRETE.

TABLE OF DECK SCREED ELEVATIONS

		1	2	3	4	5	6	7	8	9	10	11	12	13	14	15	16	17	18	19	20
	STATION	1337+50	1337+75	1338+00	1338+25	1338+50	1338+75	1339+00	1339+25	1339+50	1339+75	1340+00	1340+25	1340+50	1340+75	1341+00	1341+25	1341+50	1341+75	1342+00	1342+25
LINE A	TOP OF SLAB ELEV.	618.79	618.92	619.04	619.17	619.29	619.42	619.54	619.67	619.79	619.92	620.04	620.17	620.29	620.42	620.54	620.67	620.79	620.92	621.04	621.17
	DEFLECTION	0.01	0.10	0.13	0.13	0.08	0.02	0.01	0.04	0.10	0.15	0.16	0.12	0.06	0.01	0.01	0.05	0.12	0.19	0.19	0.11
	SCREED SETTING ELEV.	618.80	619.02	619.17	619.30	619.37	619.44	619.55	619.71	619.89	620.07	620.20	620.29	620.35	620.43	620.55	620.72	620.91	621.11	621.23	621.28
LINE B	TOP OF SLAB ELEV.	619.04	619.17	619.29	619.42	619.54	619.67	619.79	619.92	620.04	620.17	620.29	620.42	620.54	620.67	620.79	620.92	621.04	621.17	621.29	621.42
	DEFLECTION	0.01	0.08	0.14	0.13	0.07	0.02	0.00	0.04	0.09	0.15	0.17	0.13	0.07	0.02	0.01	0.05	0.11	0.18	0.19	0.11
	SCREED SETTING ELEV.	619.05	619.25	619.43	619.55	619.61	619.69	619.79	619.96	620.13	620.32	620.46	620.55	620.61	620.69	620.80	620.97	621.15	621.35	621.48	621.53
LINE C	TOP OF SLAB ELEV.	618.73	618.86	618.98	619.11	619.23	619.36	619.48	619.61	619.73	619.86	619.98	620.11	620.23	620.36	620.48	620.61	620.73	620.86	620.98	621.11
	DEFLECTION	–	0.08	0.13	0.14	0.08	0.03	0.00	0.03	0.08	0.14	0.16	0.14	0.08	0.02	0.00	0.04	0.10	0.14	0.15	0.12
	SCREED SETTING ELEV.	618.73	618.94	619.11	619.25	619.31	619.39	619.48	619.64	619.81	620.00	620.14	620.25	620.31	620.38	620.48	620.65	620.83	621.00	621.13	621.23

		21	22	23	24	25	26
	STATION	1342+50	1342+75	1343+00	1343+25	1343+50	1343+75
LINE A	TOP OF SLAB ELEV.	621.29	621.41	621.51	621.58	621.62	621.63
	DEFLECTION	0.05	0.01	0.01	0.07	0.12	0.15
	SCREED SETTING ELEV.	621.34	621.42	621.52	621.65	621.74	621.78
LINE B	TOP OF SLAB ELEV.	621.54	621.66	621.76	621.83	621.87	621.88
	DEFLECTION	0.06	0.01	0.01	0.06	0.11	0.15
	SCREED SETTING ELEV.	621.60	621.67	621.77	621.89	621.98	622.03
LINE C	TOP OF SLAB ELEV.	621.23	621.35	621.45	621.52	621.56	622.04
	DEFLECTION	0.07	0.02	0.01	0.05	0.11	0.15
	SCREED SETTING ELEV.	621.30	621.37	621.46	621.57	621.67	622.19

	LOCATION	REAR ABUT.	P1	P2	P3	P4	P5	P6	FWD ABUT.
LINE A	TOP OF SLAB ELEV.	618.77	619.53	620.50	621.46	621.42	620.87	620.33	619.91
	DEFLECTION	0.00	0.00	0.00	0.00	0.00	0.00	0.00	0.00
	SCREED SETTING ELEV.	618.77	619.53	620.50	621.46	621.42	620.87	620.33	619.91
LINE B	TOP OF SLAB ELEV	619.02	619.78	620.75	621.71	621.67	621.12	620.58	620.16
	DEFLECTION	0.00	0.00	0.00	0.00	0.00	0.00	0.00	0.00
	SCREED SETTING ELEV.	619.02	619.78	620.75	621.71	621.67	621.12	620.58	620.16
LINE C	TOP OF SLAB ELEV	618.71	619.47	620.44	621.40	621.36	620.81	620.27	619.85
	DEFLECTION	0.00	0.00	0.00	0.00	0.00	0.00	0.00	0.00
	SCREED SETTING ELEV.	618.71	619.47	620.44	621.40	621.36	620.81	620.27	619.85

R. D. ZANDE & ASSOCIATES, LIMITED
CONSULTING ENGINEERS
COLUMBUS, OHIO

SUPERSTRUCTURE DETAILS

BRIDGE NO. ROS – 35 – 2532 R
OVER SCIOTO RIVER
ROSS COUNTY STA. 1337+44.60
STA. 1350 + 24.90

DESIGNED	DRAWN	TRACED	CHECKED	REVIEWED DATE	REVISED
T.A.A.	RAS	RAS	CMS	OHK 2-26-91	

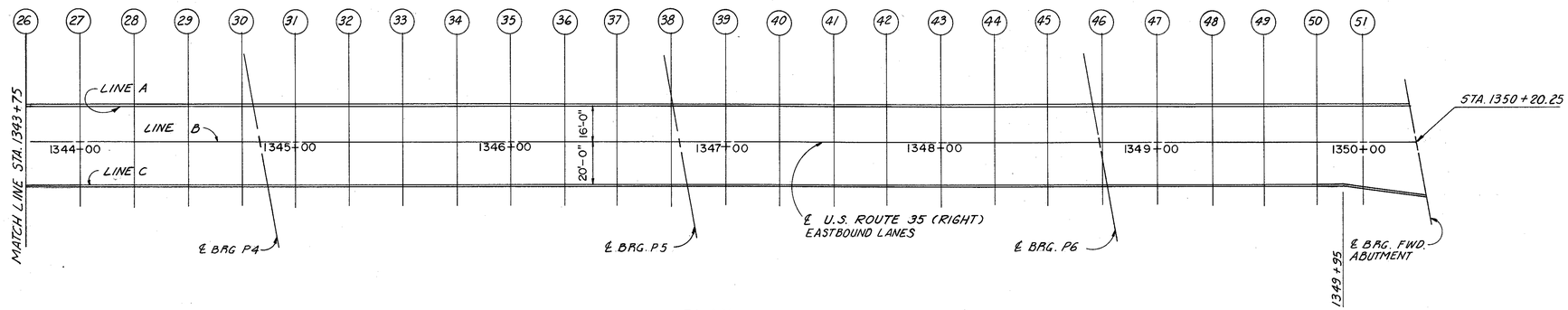

PLAN

TABLE OF DECK SCREED ELEVATIONS

		27	28	29	30	31	32	33	34	35	36	37	38	39	40	41	42	43	44	45	46
	STATION	1344+00	1344+25	1344+50	1344+75	1345+00	1345+25	1345+50	1345+75	1346+00	1346+25	1346+50	1346+75	1347+00	1347+25	1347+50	1347+75	1348+00	1348+25	1348+50	1348+75
LINE A	TOP OF SLAB ELEV.	621.62	621.57	621.51	621.44	621.37	621.30	621.23	621.16	621.09	621.02	620.95	620.88	620.81	620.74	620.67	620.60	620.53	620.46	620.39	620.32
	DEFLECTION	0.14	0.10	0.05	0.00	0.02	0.08	0.13	0.16	0.14	0.09	0.03	0.00	0.03	0.09	0.14	0.16	0.14	0.07	0.02	0.00
	SCREED SETTING ELEV.	621.76	621.67	621.56	621.44	621.39	621.38	621.36	621.32	621.23	621.11	620.98	620.88	620.84	620.83	620.81	620.76	620.67	620.53	620.41	620.32
LINE B	TOP OF SLAB ELEV.	621.87	621.82	621.76	621.69	621.62	621.55	621.48	621.41	621.34	621.27	621.20	621.13	621.06	620.99	620.92	620.85	620.78	620.71	620.64	620.57
	DEFLECTION	0.14	0.10	0.04	0.01	0.02	0.07	0.13	0.16	0.14	0.09	0.03	0.00	0.03	0.08	0.14	0.16	0.14	0.05	0.03	0.00
	SCREED SETTING ELEV.	622.01	621.92	621.80	621.70	621.64	621.62	621.61	621.57	621.48	621.36	621.23	621.13	621.09	621.07	621.06	621.01	620.92	620.76	620.67	620.57
LINE C	TOP OF SLAB ELEV.	621.56	621.51	621.45	621.38	621.31	621.24	621.17	621.10	621.03	620.96	620.89	620.82	620.75	620.68	620.61	620.54	620.47	620.40	620.33	620.26
	DEFLECTION	0.15	0.11	0.05	0.01	0.02	0.06	0.12	0.15	0.14	0.10	0.04	0.01	0.03	0.07	0.13	0.16	0.14	0.09	0.04	0.00
	SCREED SETTING ELEV.	621.71	621.62	621.50	621.39	621.33	621.30	621.29	621.25	621.17	621.06	620.93	620.83	620.78	620.75	620.74	620.70	620.61	620.49	620.37	620.26

		47	48	49	50	51		
	STATION	1349+00	1349+25	1349+50	1349+75	1350+00		
LINE A	TOP OF SLAB ELEV.	620.25	620.18	620.11	620.04	619.97		
	DEFLECTION	0.04	0.06	0.14	0.13	0.07		
	SCREED SETTING ELEV.	620.29	620.24	620.25	620.17	620.04		
LINE B	TOP OF SLAB ELEV.	620.50	620.43	620.36	620.29	620.22		
	DEFLECTION	0.03	0.09	0.14	0.13	0.09		
	SCREED SETTING ELEV.	620.53	620.52	620.50	620.42	620.31		
LINE C	TOP OF SLAB ELEV.	620.19	620.12	620.05	619.98	619.85		
	DEFLECTION	0.03	0.08	0.14	0.14	0.10		
	SCREED SETTING ELEV.	620.22	620.20	620.19	620.12	619.95		

R. D. ZANDE & ASSOCIATES, LIMITED
CONSULTING ENGINEERS
COLUMBUS, OHIO

SUPERSTRUCTURE DETAILS
BRIDGE NO. ROS - 35-2532-R
OVER SCIOTO RIVER
ROSS COUNTY STA. 1337+44.60
STA. 1350+24.90

DESIGNED	DRAWN	TRACED	CHECKED	REVIEWED DATE	REVISED
TAA	RAS	R.A.S	C.M.S	OHK 2-26-91	

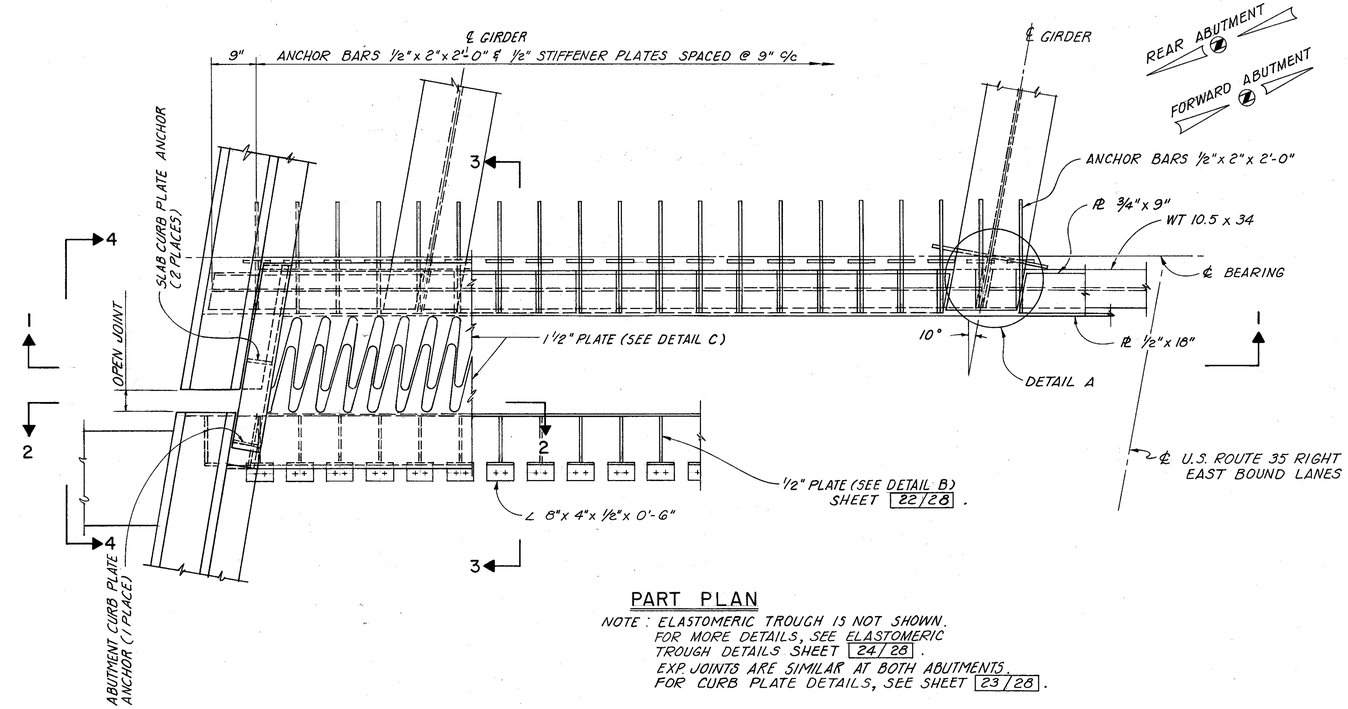

PART PLAN

NOTE: ELASTOMERIC TROUGH IS NOT SHOWN. FOR MORE DETAILS, SEE ELASTOMERIC TROUGH DETAILS SHEET 24/28. EXP. JOINTS ARE SIMILAR AT BOTH ABUTMENTS. FOR CURB PLATE DETAILS, SEE SHEET 23/28.

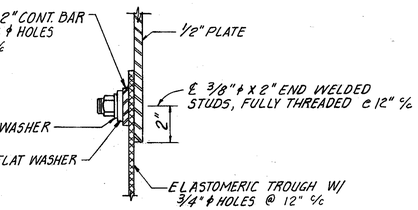

DETAIL E

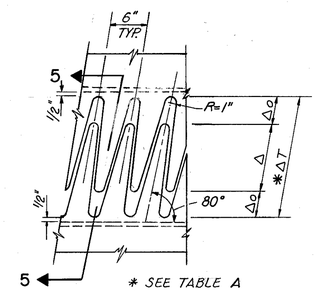

DETAIL C

	TABLE "A"			
	T°	Δ	Δo	ΔT
JOINT OPENING	MIN.	9 1/2	2 1/2	1'-2 1/2"
	MAX.	2"	10"	1'-10"
	30°F	5"	7"	1'-7"
	40°F	5 1/2"	6 1/2"	1'-6 1/2"
	50°F	6"	6"	1'-6"
	60°F	6 1/2"	5 1/2"	1'-5 1/2"
	70°F	7"	5"	1'-5"
	80°F	7 1/2"	4 1/2"	1'-4 1/2"
	90°F	8"	4"	1'-4"
	100°F	8 1/2"	3 1/2"	1'-3 1/2"

TEMPERATURE ADJUSTMENT TABLE

FOR EXP. JOINT OPENING, TYPICAL AT BOTH ABUTMENT

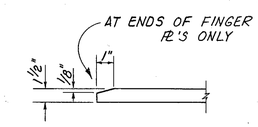

SECTION 5-5

THE SCROLL SHALL BE MADE BY A SINGLE CUT OF MACHINE GUIDED TORCH AND SHARP CORNERS TO BE REMOVED BY GRINDING.

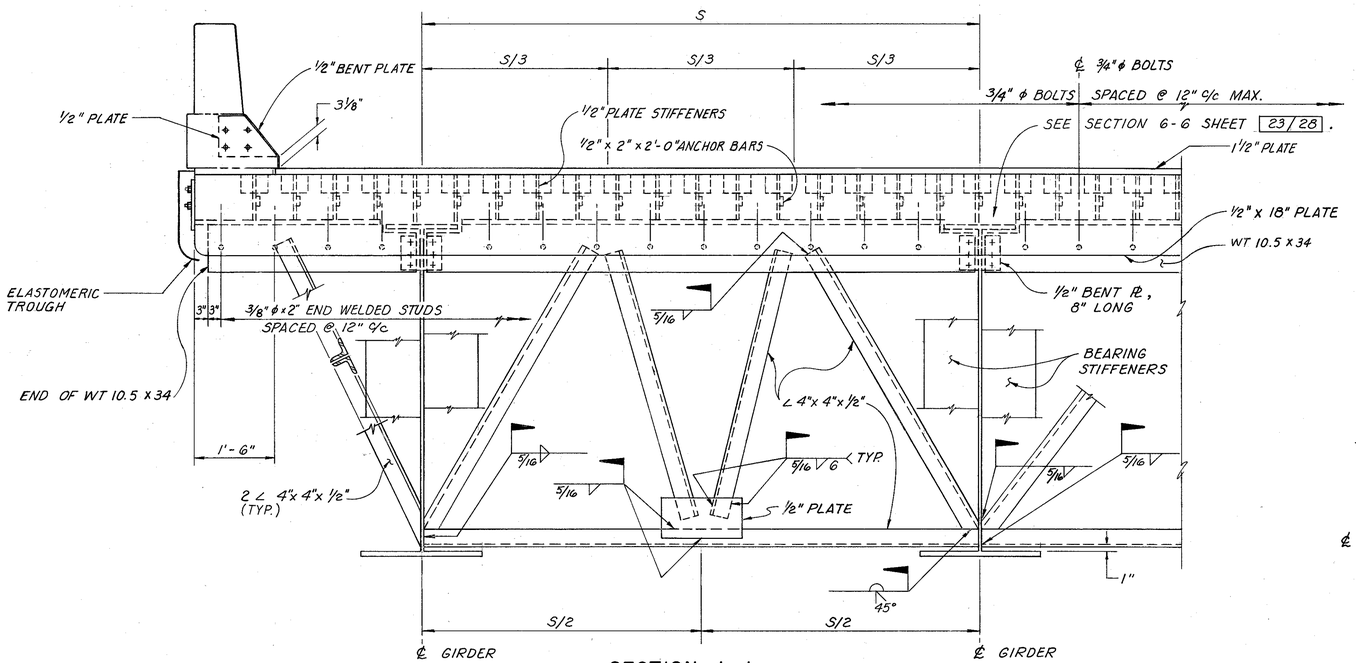

SECTION 1-1
BRIDGE SIDE

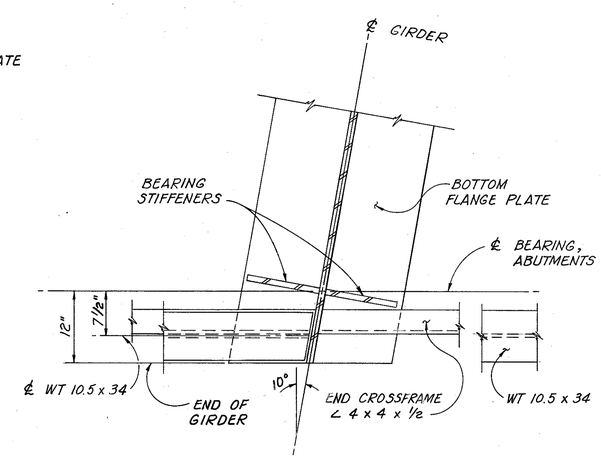

DETAIL A

R. D. ZANDE & ASSOCIATES, LIMITED
CONSULTING ENGINEERS
COLUMBUS, OHIO

21/28

TOOTH EXPANSION JOINT DETAILS
BRIDGE NO. ROS-35-2532 R
OVER SCIOTO RIVER
ROSS COUNTY STA. 1337 + 44.60
STA. 1350 + 24.90

DESIGNED	DRAWN	TRACED	CHECKED	REVIEWED DATE	REVISED
O.H.K.	R.A.S.	R.A.S.	T.A.A.	OHK 2-26-91	

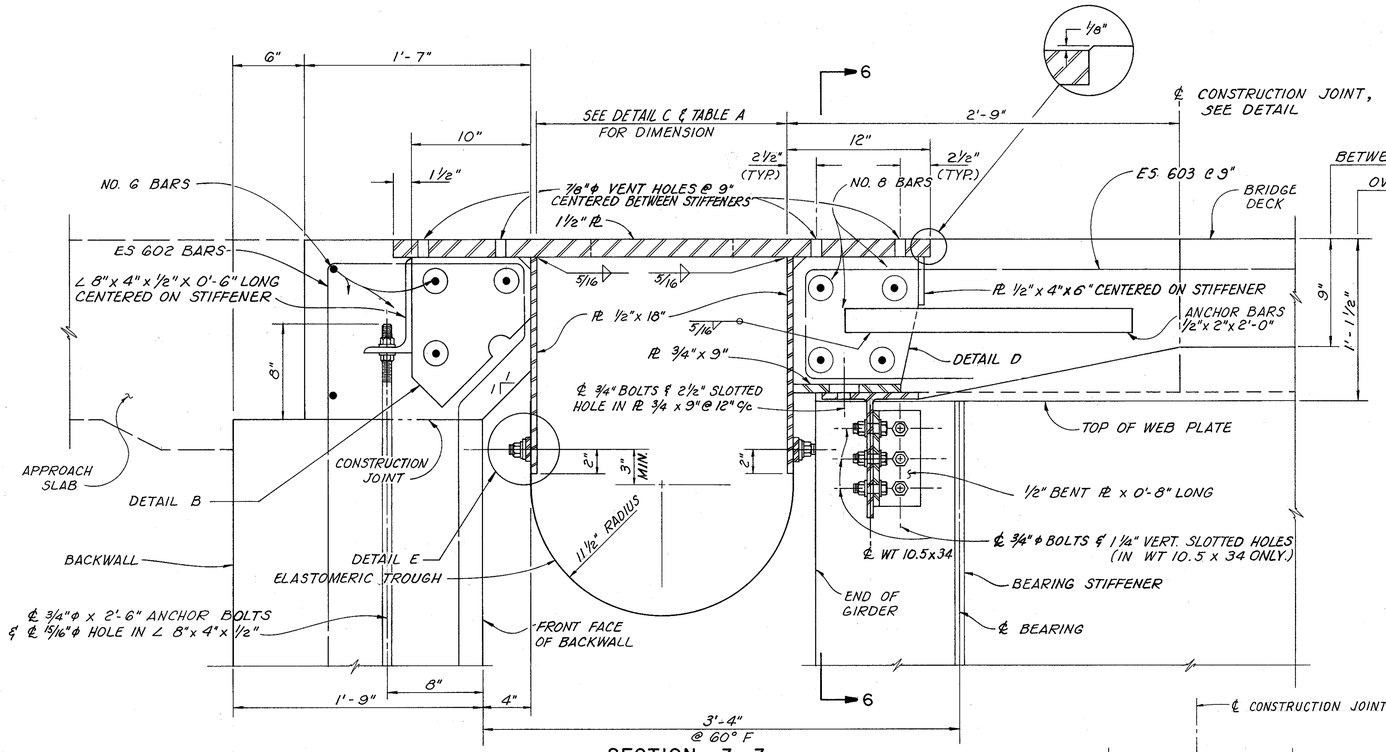

SECTION 3-3

NOTES : FOR REBAR MARKS, SEE ABUTMENT AND SUPERSTRUCTURE DETAILS
FOR ELASTOMERIC TROUGH, SEE ELASTOMERIC TROUGH DETAILS SHEET 24/28.
FOR SECTION 6-6, SEE SHEET 23/28.

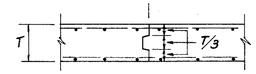

TYPICAL CONSTRUCTION JOINT DETAILS

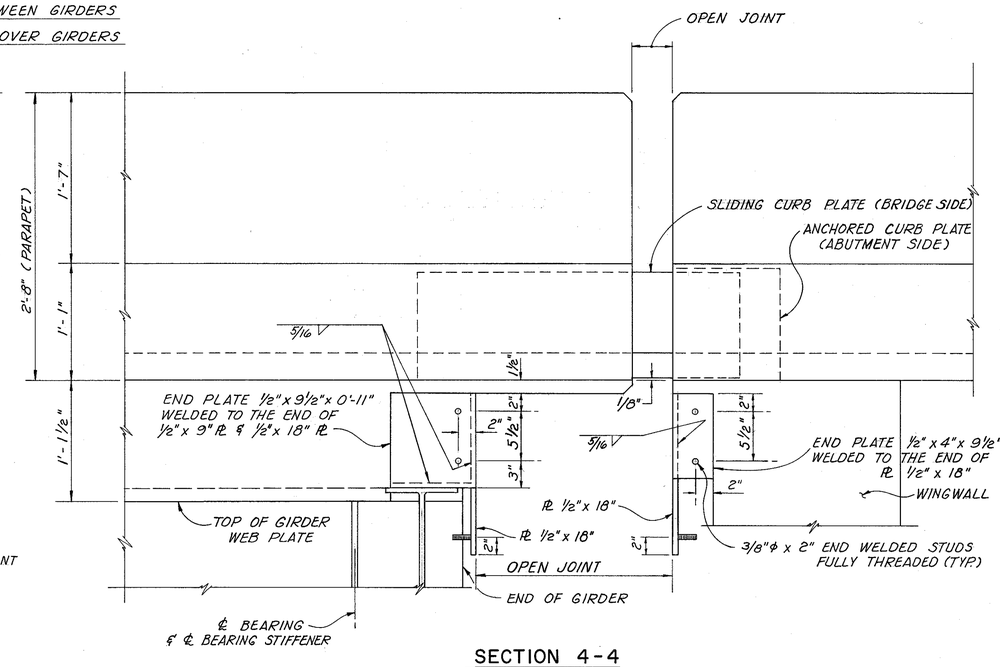

SECTION 4-4

NOTES: ALL MATERIALS AND LABOR INCLUDING END DAM FASTENERS SHALL BE INCLUDED FOR PAYMENT WITH ITEM 516 " STRUCTURAL STEEL EXPANSION JOINT, AS PER PLAN."

ALL BOLTS SHALL BE A 325, HIGH STRENGTH, FRICTION TYPE BOLTS.

ALL STRUCTURAL STEEL FOR THE EXPANSION JOINT SHALL BE A 572.

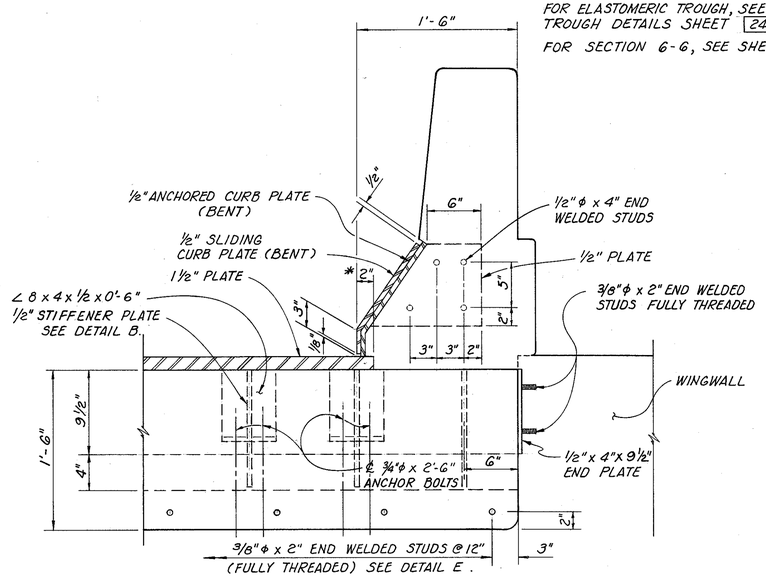

SECTION 2-2 (ABUTMENT SIDE)

* MEASURED NORMAL TO TOE OF PARAPET

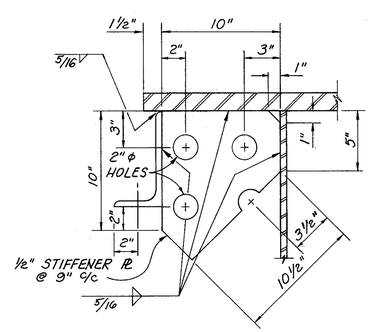

DETAIL B

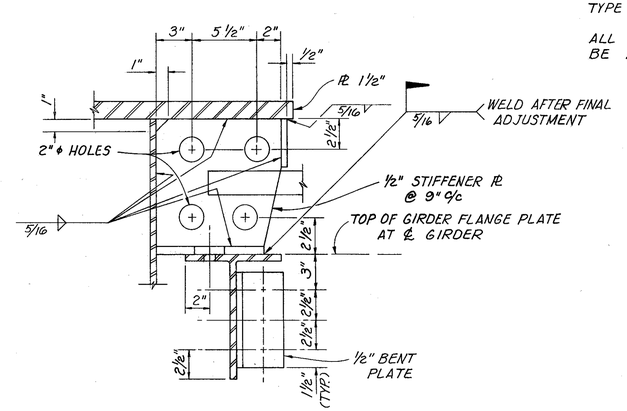

DETAIL D

R. D. ZANDE & ASSOCIATES, LIMITED
CONSULTING ENGINEERS
COLUMBUS, OHIO

22/28

TOOTH EXPANSION JOINT DETAILS

BRIDGE NO. ROS - 35 - 2532 R
OVER SCIOTO RIVER
ROSS COUNTY STA. 1337 + 44.60
STA. 1350 + 24.90

DESIGNED	DRAWN	TRACED	CHECKED	REVIEWED DATE	REVISED
O.H.K.	P.M.	—	T.A.A.	OHK 2-26-91	

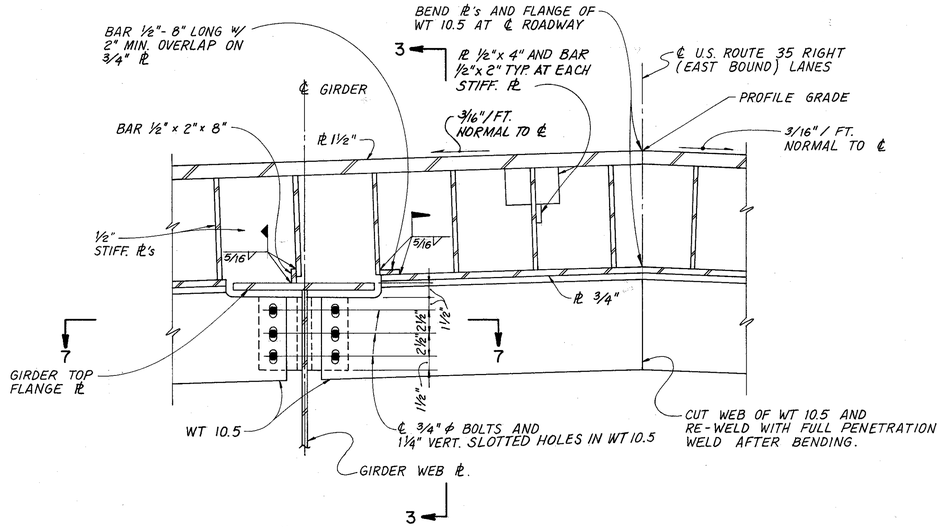

SECTION 6-6

FOR LOCATION, SEE SHEET 22/28.

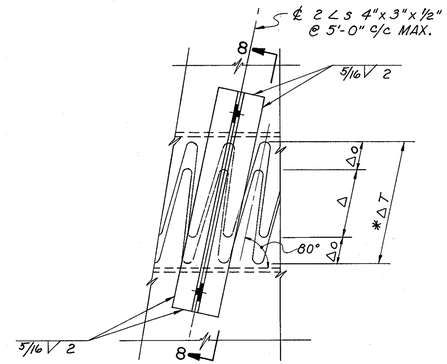

PART PLAN

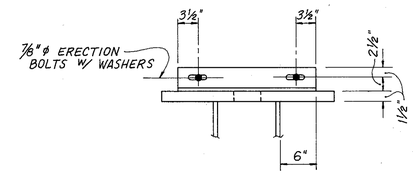

SECTION 8-8

DETAIL OF TEMPORARY ATTACHMENT

FOR SHIPPING AND ERECTION OF EXPANSION JOINT

* FOR DIMENSIONS, SEE SHEET 21/28.

AFTER REMOVING THE TEMPORARY ANGLES, SURFACE OF EXPANSION JOINT SHALL BE GROUND FLUSH PRIOR TO PAINTING.

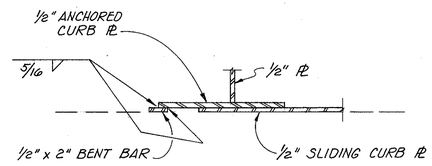

SECTION 9-9

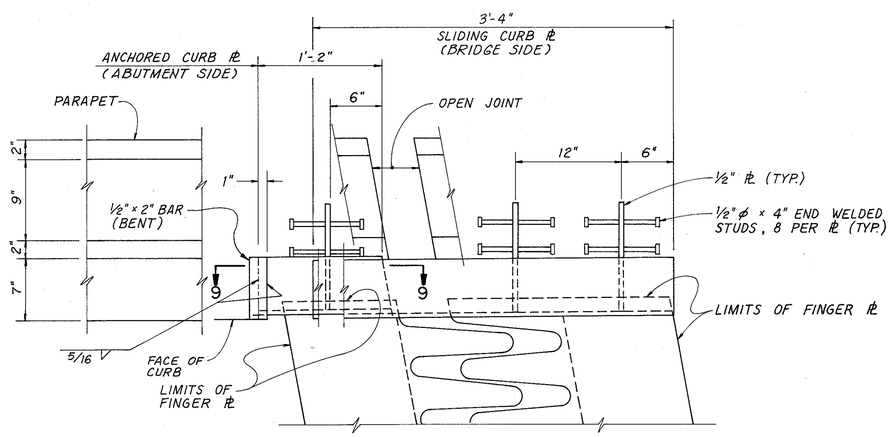

PART PLAN - CURB PLATE DETAIL

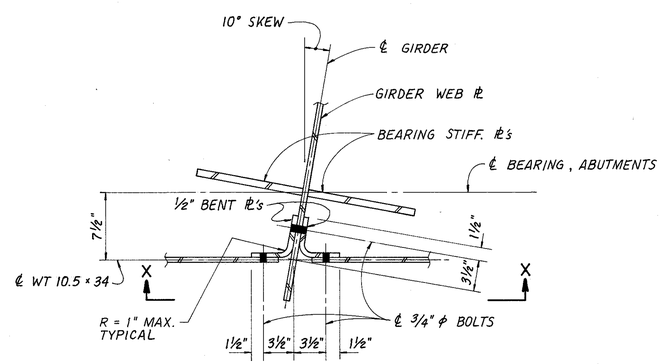

SECTION 7-7

R. D. ZANDE & ASSOCIATES, LIMITED
CONSULTING ENGINEERS
COLUMBUS, OHIO

23/28

EXPANSION JOINT DETAILS

BRIDGE NO. ROS - 35 - 2532 R

OVER SCIOTO RIVER

ROSS COUNTY STA. 1337 + 44.60
STA. 1350 + 24.90

DESIGNED	DRAWN	TRACED	CHECKED	REVIEWED DATE	REVISED
O.H.K.	L.A.M.	L.A.M.	P.M.	OHK 6-5-91	

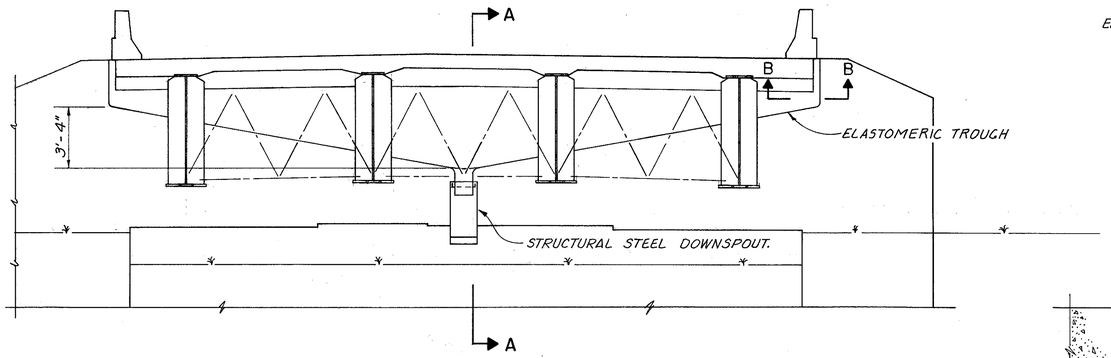

ELEVATION
TYPICAL AT BOTH ABUTMENT

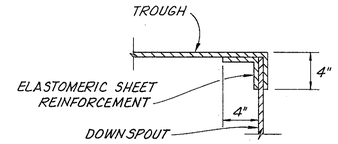

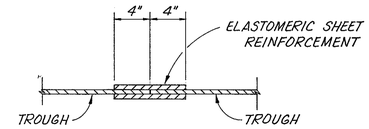

TYPICAL JOINT DETAILS
FOR ELASTOMERIC TROUGH

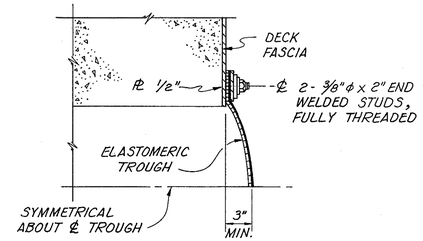

SECTION B-B

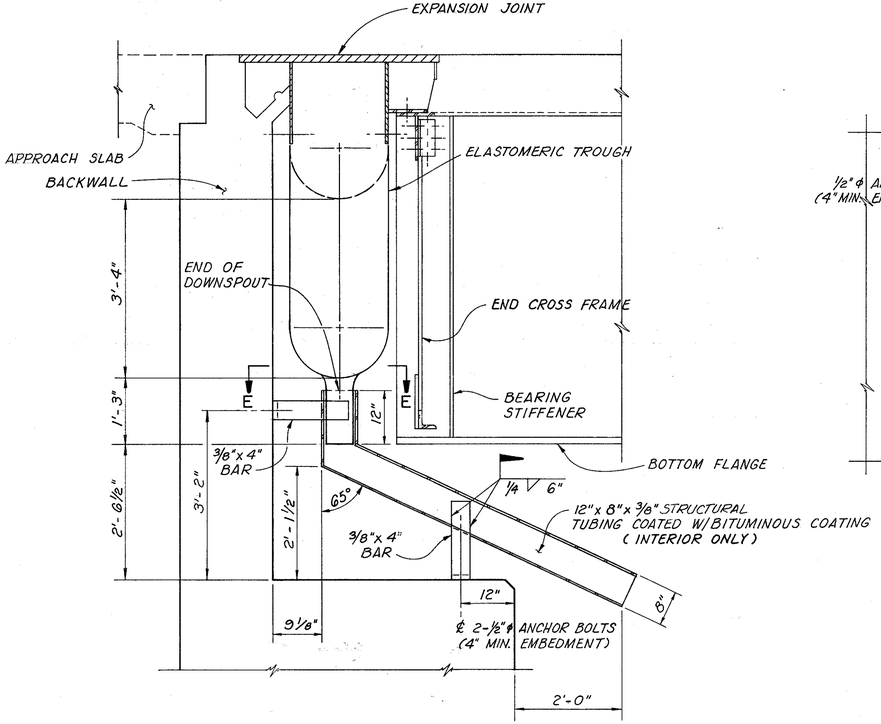

SECTION A-A

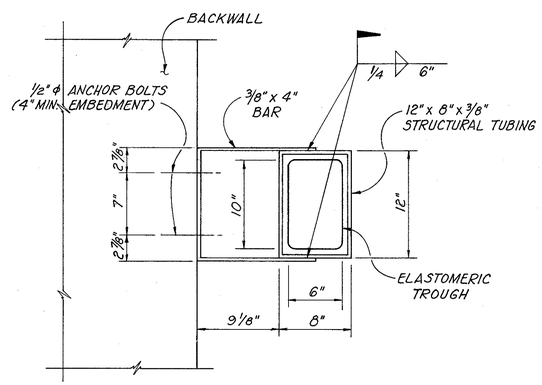

SECTION E-E

NOTES

DESCRIPTION: THIS ITEM SHALL CONSIST OF FURNISHING AND INSTALLING ELASTOMERIC SHEETING UNDER BRIDGE DECK JOINTS IN THE FORM OF TROUGHS OR FLASHING FOR DRAINAGE PROTECTION.

MATERIALS: ELASTOMERIC TROUGHS/FLASHING: SHEETING SHALL BE SHOP FABRICATED AND VULCANIZED BONDED WITH HEAT AND PRESSURE FROM NYLON REINFORCED NEOPRENE SHEET (NRNS). THE SHEET MATERIAL SHALL BE 3/32-INCH THICK GENERAL PURPOSE HEAVY DUTY NEOPRENE SHEET WITH NYLON FABRIC REINFORCEMENT. THE NRNS SHALL BE "FAIRPRENE NUMBER NN-0003" AS MANUFACTURED BY E.I. DUPONT DE NEMOURS AND COMPANY, INC., "WINGPRENE" AS MANUFACTURED BY THE GOODYEAR TIRE AND RUBBER COMPANY, OR AN APPROVED EQUAL. THE SHEET SHALL CONFORM TO THE FOLLOWING:

DESCRIPTION OF TEST	ASTM METHOD	REQUIREMENT
THICKNESS, INCHES	D 751	0.094 + .010"
BREAKING STRENGTH, GRAB WXF., LBS. MIN.	D 751	700 X 700
ADHESIVE, 1" STRIP, 2" MIN., LBS., MIN.	D 751	9
BURST STRENGTH (MULLEN) PSI, MIN.	D 751	1400
HEAT AGING 70 HOURS, T 212°F, 180° BEND WITHOUT CRACKING	D 2136	NO CRACKING OF COATING
LOW TEMPERATURE BRITTLENESS 1 HOUR AT -40°F, BEND AROUND 1/4" MANDREL	D 2136	NO CRACKING OF COATING

CONNECTIONS FOR ELASTOMERIC FLASHING/TROUGHS INCLUDING ALL CLAMP BARS, SUPPORTS, BOLTS, NUTS, AND WASHERS SHALL BE GALVANIZED ACCORDING TO 711.02. ALL HOLES MADE IN THE FIELD SHALL BE DRILLED AND ALL CUTS MADE IN THE FIELD SHALL BE SAWN. ANY GALVANIZED COATING WHICH HAS BEEN CUT OR DAMAGED IN ANY WAY SUCH THAT NEW STEEL IS EXPOSED SHALL BE REPLACED WITH A COLD GALVANIZING COMPOUND SUCH AS THAT MANUFACTURED BY Z.R.C. PRODUCTS CO. OF QUINCY MASS., "GALVICON" BY KENCO DIV. OF SOUTHERN COATING, INC. OF SUMTER S.C., OR AN APPROVED EQUAL, APPLIED IN ACCORDANCE WITH THE MANUFACTURER'S RECOMMENDATIONS.

SHOP DRAWINGS FOR THE ELASTOMERIC TROUGHS/FLASHING SHALL BE PREPARED BY THE ELASTOMERIC FABRICATOR AND SUBMITTED TO THE ENGINEER FOR APPROVAL. FABRICATION SHALL NOT BEGIN BEFORE THE SHOP DRAWINGS ARE APPROVED.

ADHESIVE FOR FIELD BONDING SHALL BE SIKASTIX 323 BY THE SIKA CHEMICAL CORPORATION OF LYNDHURST, NEW JERSEY; FEL-POXY FP-101 BY THE FELT PRODUCTS MANUFACTURING COMPANY OF SKOKIE, ILLINOIS; MARK-184 BY POLY-CARB OF SOLON, OHIO: OR OTHER AS RECOMMENDED BY THE SHEETING MANUFACTURER

SHEETS SHALL BE FURNISHED IN ONE CONTINUOUS PIECE UNLESS A SHOP FABRICATED SPLICE (VULCANIZED WITH HEAT AND PRESSURE), FIELD SPLICE OR FIELD BUTT JOINT IS INDICATED ON THE PLANS OR APPROVED BY THE DIRECTOR.

PREPARATION FOR INSTALLATION: PRIOR TO INSTALLING THE NRNS SHEETING ALL SURFACES WHICH ARE TO BE BONDED TOGETHER SHALL BE THOROUGHLY CLEANED AND KEPT DRY UNTIL THE ADHESIVE HAS BEEN APPLIED. THE PREPARATION OF SURFACES SHALL BE ACCOMPLISHED NOT MORE THAN 24 HOURS PRIOR TO ADHESIVE BONDING. BARE STEEL SURFACES SHALL BE PREPARED TO GRADE SA 3, ASTM D 2200. CONCRETE SURFACES SHALL BE LIGHTLY SANDBLASTED. GALVANIZED STEEL SURFACES SHALL BE LIGHTLY SANDED. IMMEDIATELY AFTER MECHANICAL PREPARATION, THE FRESH SURFACES SHALL BE WIPED WITH METHYLETHYL KETONE, TOLUENE, OR OTHER APPROVED SOLVENTS TO REMOVE CONTAMINANT TRACES.
PRIOR TO USE, ALL EXTERIOR ELASTOMERIC SURFACES SHALL BE CLEANED WITH METHYLETHYL KETONE, TOLUENE, OR OTHER APPROVED SOLVENT USING CLEAN DISPOSABLE CLOTHS. THEN, NOT MORE THAN 7 DAYS PRIOR TO INSTALLATION, A THIN COATING OF APPROVED CYCLIZING PASTE SHALL BE APPLIED TO THE ELASTOMERIC BONDING SURFACES ONLY. AFTER FROM 25 TO 40 MINUTES, THE PASTE SHALL BE WASHED FROM THE SURFACES WITH CLEAN WATER.

INSTALLATION: SUBSTRATE SURFACES SHALL BE CLEAN, DRY AND MAINTAINED ABOVE 45°F DURING INSTALLATION AND ADHESIVE CURING. SUPPLEMENTAL HEATING WILL BE PERMITTED. ADHESIVE SHALL BE APPIED LIBERALLY TO BOTH THE STEEL/CONCRETE AND ELASTOMERIC BONDING SURFACES USING A SERRATED SPATULA IF NECESSARY TO ACHIEVE A COMPLETE AND RELATIVELY UNIFORM COATING.

SAMPLING AND TESTING: EACH LOT OF NRNS SHEETING SHALL BE TESTED BY AN INDEPENDENT LABORATORY TO ENSURE COMPLIANCE WITH THESE PROVISIONS. TWO CERTIFIED COPIES OF THE QUALIFICATION TEST DATA INDICATING THAT THE TESTED MATERIALS COMPLY WITH THESE PROVISIONS SHALL BE SUBMITTED TO THE ODOT TESTING LABORATORY. SAMPLING, WHEN REQUESTED, SHALL BE IN ACCORDANCE WITH 106.3 EXCEPT THAT WHERE NRNS SHEETING IS TO BE FABRICATED ACCORDING TO PLAN REQUIREMENTS, SAMPLES SHALL BE MADE PRIOR TO FABRICATION. THE SAMPLE FROM EACH LOT AND FOR EACH PROJECT SHALL BE ONE PIECE, THREE FEET LONG.
MATERIAL ACCEPTANCE WILL BE BASED UPON ODOT TESTING LABORATORY EVALUATION OF CERTIFIED TEST DATA, LABORATORY TEST OF SAMPLED MATERIAL, OR THE EVALUATION OF BOTH CERTIFIED TEST DATA AND TESTED SAMPLES.

BITUMINOUS COATING SHALL CONFORM TO THE LATEST EDITION OF FEDERAL SPECIFICATION WW-P-405B, COATING F, BRUSH OR TROWEL APPLIED. PRIOR TO ITS APPLICATION, SURFACES SHALL BE WIPED WITH A SUITABLE SOLVENT USING CLEAN DRY CLOTHS TO REMOVE CONTAMINANT TRACES. SURFACES SHALL BE DRY AND WARMER THAN 40°F DURING COATING APPLICATION. COATING THICKNESS SHALL BE NOT LESS THAN 1/16 OF AN INCH. INCLUDED FOR PAYMENT WITH ITEM 516.

R. D. ZANDE & ASSOCIATES, LIMITED
CONSULTING ENGINEERS
COLUMBUS, OHIO
24/28

ELASTOMERIC TROUGH DETAILS
BRIDGE NO ROS-35-2532 R
OVER SCIOTO RIVER
ROSS COUNTY STA. 1337+44.60
STA. 1350+24.90

DESIGNED	DRAWN	TRACED	CHECKED	REVIEWED DATE	REVISED
O.H.K.	P.M.	—	T.A.A.	O.H.K. 2-26-91	

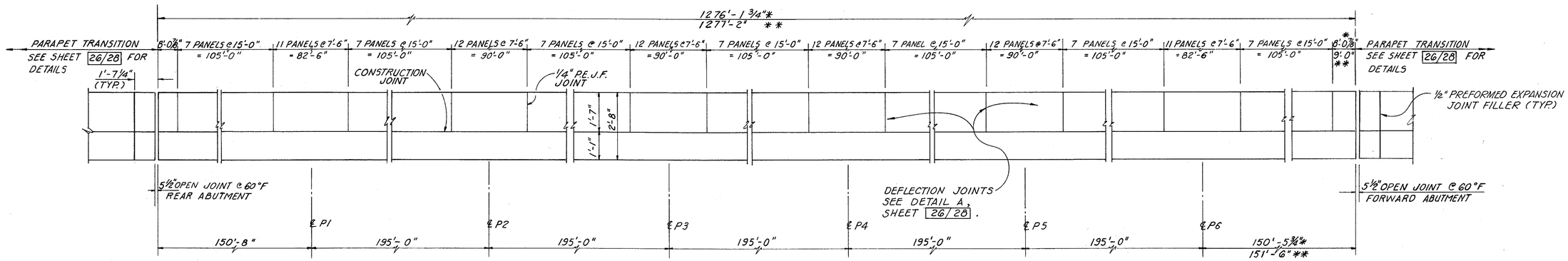

* NORTH PARAPET
** SOUTH PARAPET

NORTH & SOUTH PARAPET ELEVATION

DEFLECTION JOINT SPACINGS

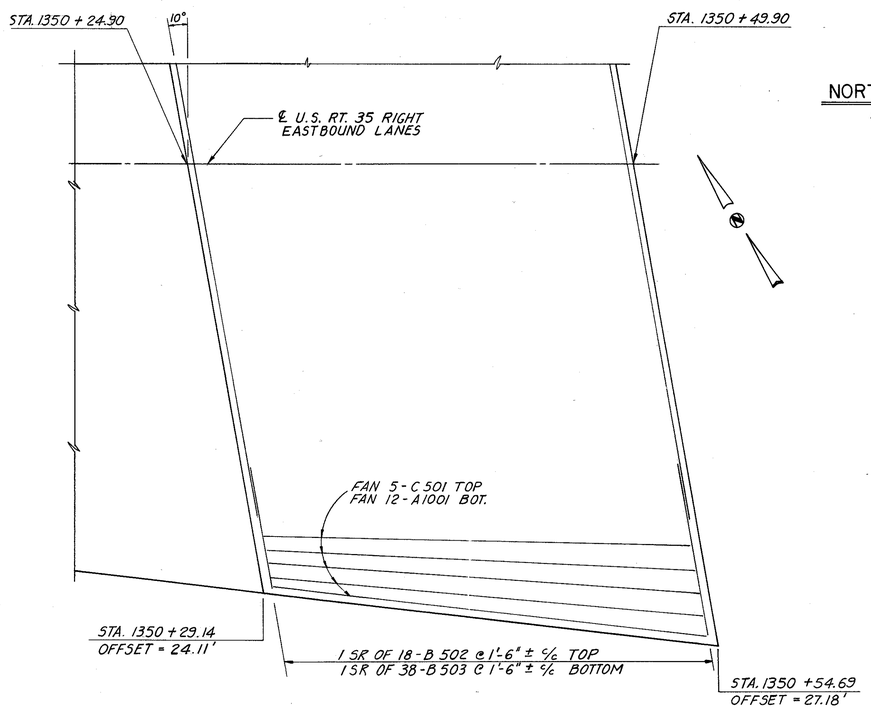

APPROACH SLAB DETAILS AT THE FWD ABUTMENT

SEE NOTES THIS SHEET.

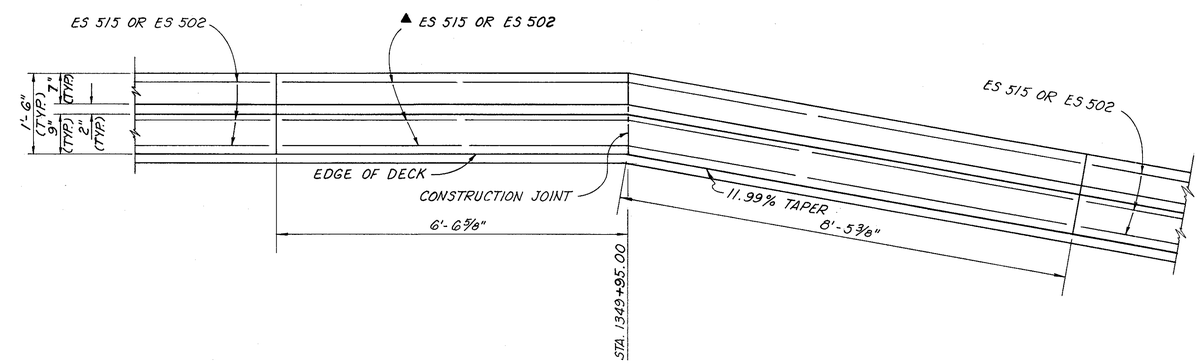

SOUTH PARAPET - PART PLAN

▲ FIELD BEND TO SUIT IN THE FIELD. TO BE INCLUDED WITH ITEM 509 FOR PAYMENT.

NOTES

THE ADDITIONAL STEEL SHOWN FOR THE TAPERED SECTION SHALL BE INCLUDED WITH ITEM 611 "APPROACH SLAB AS PER PLAN" FOR PAYMENT. FOR ADDITIONAL REINFORCING STEEL INFORMATION, SEE STANDARD DRAWINGS AS-1-81.

THE ADDITIONAL CONCRETE QUANTITY FOR THE TAPERED SECTION SHALL BE INCLUDED WITH ITEM 611 APPROACH SLAB AS PER PLAN FOR PAYMENT.

QUANTITIES OF CONCRETE AND REINFORCING STEEL FOR PARAPET ANCHORED TO APPROACH SLAB SHALL BE INCLUDED WITH ITEM 611 APPROACH SLAB AS PER PLAN FOR PAYMENT.

R. D. ZANDE & ASSOCIATES, LIMITED
CONSULTING ENGINEERS
COLUMBUS, OHIO

25/28

PARAPET AND MISC DETAILS

BRIDGE NO. ROS - 35 - 2532 R
OVER SCIOTO RIVER

ROSS COUNTY STA. 1337 + 44.60
STA. 1350 + 24.90

DESIGNED	DRAWN	TRACED	CHECKED	REVIEWED DATE	REVISED
T.A.A	R.A.S.	R.A.S.	C.M.S.	OHK 2-26-91	

FED. RD. DIVISION	STATE	PROJECT	TYPE FUNDS
5	OHIO		

53/55

ROS-35-25.20

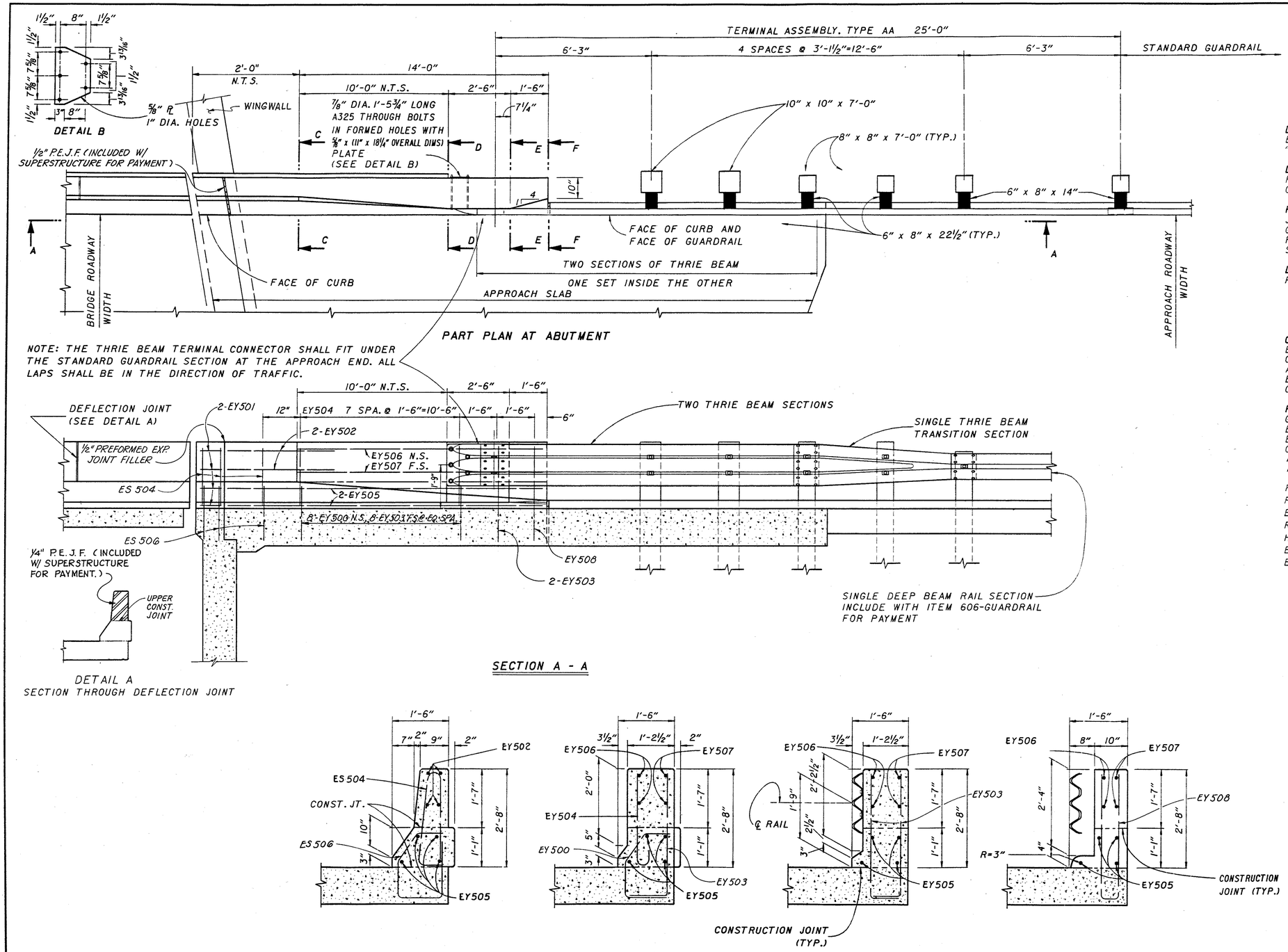

GENERAL NOTES

DESIGN SPECIFICATIONS: "STANDARD SPECIFICATIONS FOR HIGHWAY BRIDGES" ADOPTED BY AASHTO, 1989, INCLUDING THE OHIO "SUPPLEMENT" TO THESE SPECIFICATIONS.

DESIGN DATA: CONCRETE CLASS S fc=4500 P.S.I., fc=1500 P.S.I. REINFORCING STEEL ASTM A615, A616 OR A617 GRADE 60 fs=24,000 P.S.I.

PREFORMED EXPANSION JOINT FILLER IN THE PARAPET DEFLECTION JOINTS MAY BE EITHER 1/4" GRAY SPONGE RUBBER OR 1/4" GRAY CELLULAR POLYVINYL CHLORIDE (PVC) SPONGE. SPONGE RUBBER FILLER SHALL CONFORM TO AASHTO M-153, TYPE I. DENSITY OF PVC SPONGE NOT BE LESS THAN 20 LBS. PER CU. FT.

DEFLECTION JOINTS SHALL BE SPACED AS SHOWN ON SHEET 25/28. REINFORCING BARS SHALL NOT EXTEND THROUGH DEFLECTION JOINTS.

CONCRETE PARAPETS ABOVE UPPER CONSTRUCTION JOINT SHALL BE PLACED IN ALTERNATE SECTIONS BY THE USE OF BULKHEADS. CLOSING SECTIONS SHALL BE PLACED AFTER REMOVAL OF BULKHEADS AND AFTER PLACEMENT OF EXPANSION JOINT FILLER. EXPOSED EDGES OF THE FILLER SHALL BE FLUSH WITH THE SURFACE OF CONCRETE AND SHALL BE FREE OF MORTAR.

PAYMENT: ADDITIONAL GUARDRAIL COST IN EXCESS OF NORMAL GUARDRAIL COST, SUCH AS: TERMINAL CONNECTOR, STEEL PLATE, BOLTS, NUTS, PLATE WASHERS AND OTHER HARDWARE SHALL BE INCLUDED WITH BRIDGE TERMINAL ASSEMBLY FOR PAYMENT. QUANTITIES OF CONCRETE AND REINFORCING STEEL FOR PARAPET ANCHORED TO APPROACH SLAB SHALL BE INCLUDED WITH THE APPROACH SLAB FOR PAYMENT.

POSTS SHALL BE SQUARE-SAWED PRESSURE TREATED WOOD AS PER 710.14. POSTS SHALL BE FABRICATED WITH SQUARE ENDS. BOLT HOLES SHALL BE BORED AND TOPS OF POSTS TRIMMED, IF REQUIRED, AFTER POSTS ARE SET. POSTS MAY BE SET IN DRILLED HOLES OR DRIVEN TO GRADE. STEEL POSTS AND BLOCKOUTS MAY BE FURNISHED AS AN ALTERNATE, PROVIDED THAT THE STRENGTH EQUALS OR EXCEEDS THE STRENGTH OF WOOD POSTS AND BLOCKOUTS.

STATE OF OHIO
DEPARTMENT OF TRANSPORTATION
BUREAU OF BRIDGES AND STRUCTURAL DESIGN

26/28

BRIDGE RAILING

DEFLECTOR PARAPET TYPE

BRIDGE NO ROS-35-2532 R
OVER SCIOTO RIVER
ROSS COUNTY STA. 1337+44.60
STA. 1350+24.90

DESIGNED	DRAWN	TRACED	CHECKED	REVIEWED	DATE	REVISED
FFE	JC		O.H.K. 2-26-91	WTF	10-25-89	1-29-90 4-3-90

REINFORCING STEEL LIST

OHIO	54/55
FHWA REGION 5	

ROS-35-2520

MARK	REAR	FWD.	TOTAL	LENGTH	WEIGHT	TYPE	A	B	C	D	E	INC.
ABUTMENT												
EA501	66	65	131	12-4	1685	3	2-7	7-5	2-7			
EA502	35	32	67	8-4	582	1	7-7	0-11				
EA503	35	32	67	9-0	629	3	1-8	5-11	1-8			
EA504	13	13	26	35-1	951	STR						
		4SR	4SR	16-0								
EA505		0F	0F	T0	768	STR						2-0
		8	8	30-0								
EA506		16	16	30-0	501	STR						
EA507		2	2	21-2	44	7	19-5	1-10	2-2			
EA508	20	10	30	24-9	774	STR						
EA509	4	2	6	20-1	126	7	18-3	1-10	2-0			
EA510	12		12	28-0	350	STR						
	4SR		4SR	28-1								
EA511	0F		0F	T0	841	STR						2-23/8
	6		6	39-1								
EA512		10	10	29-0	302	STR						
EA513	6		6	26-1	163	STR						
EA514		6	6	21-11	137	STR						
EA601	66	65	131	12-3	2410	3	2-7	7-5	2-7			
EA602	49	53	102	7-0	1072	27	3-0	1-3	0-8	0-4	2-0	
EA603	49	48	97	16-9	2440	3	7-10	1-5	7-10			
EA604	49	48	97	8-5	1227	3	3-8	1-5	3-8			
EA605	35	32	67	8-5	847	1	7-7	1-0				
EA606	62	72	134	6-1	1224	1	5-3	1-0				
EA607	62	74	136	7-3	1481	STR						
EA608	26		26	9-1	355	STR						
EA609	45	46	91	5-1	695	3	2-0	1-5	2-0			
	4SR		4SR	5-3								
EA610	0F		0F	T0	383	STR						
	9		9	8-11								
	4SR		4SR	6-1								
EA611	0F		0F	T0	328	STR						
	7		7	9-6								
EA612	10		10	24-10	373	STR						
EA613		22	22	9-4	308	STR						
		2SR	2SR	4-10								
EA614		0F	0F	T0	208	STR						0-51/2
		10	10	9-0								
		4SR	4SR	6-2								
EA615		0F	0F	T0	326	STR						0-63/8
		7	7	9-4								
		2SR	2SR	4-6								
EA616		0F	0F	T0	226	STR						0-55/8
		11	11	9-2								
EA617		10	10	7-11	119	STR						
EA618		5	5	29-6	222	STR						
EA619		5	5	23-0	173	STR						
EA801		16	16	38-0	1623	STR						
EA802	16		16	35-8	1524	STR						
ED801	28	29	57	4-11	749	13	2-7	1-0				
				TOTAL	26166							

MARK			TOTAL	LENGTH	WEIGHT	TYPE	A	B	C	D	E	INC.
PIER												
EP400			1760	4-2	4899	26	3-2					
EP500			352	16-0	5874	STR						
EP501			150	17-8	2763	STR						
EP502			114	23-8	2814	STR						
EP503			352	8-6	3121	4	1-10	1-10	1-6 3/8			
EP504			12	19-2	240	STR						
EP505			12	22-0	275	STR						
EP506			12	24-10	311	STR						
EP507			12	27-8	346	STR						
EP508			12	30-6	382	STR						
EP509			12	33-4	417	STR						
EP510			60	36-2	2263	STR						
EP511			24	12-0	300	7	10-2	1-10	1-5			
			12SR	19-2				6-2				
EP512			0F	T0	2053	2	3-2	T0				0-2 1/4
			8	21-10				7-6				
EP513			174	26-3	4764	3	11-8	3-2	11-8			
			12SR	22-8				7-11				
EP514			0F	T0	3614	2	3-2	T0				0-4 3/8
			11	29-10				11-7				
EP515			60	6-7	412	3	1-10	3-2	1-10			
EP1001			468	10-9	21648	1	9-3	1-10				
EP1002			78	27-0	9062	STR						
EP1003			78	28-0	9398	STR						
EP1004			78	30-8	10293	STR						
EP1005			78	35-8	11971	STR						
EP1006			152	33-5	21859	STR						
EP1007			162	26-5	18415	5	23-8					
EP1008			42	36-2	6537	STR						
EP1009			48	23-4	4819	1	18-1	5-7				
EP1010			222	20-6	19563	5	17-8					
EP1011			18	21-10	1691	1	16-7	5-7				
EP1012			18	24-10	1923	1	19-7	5-7				
				TOTAL	172047							

BENDING DIAGRAM

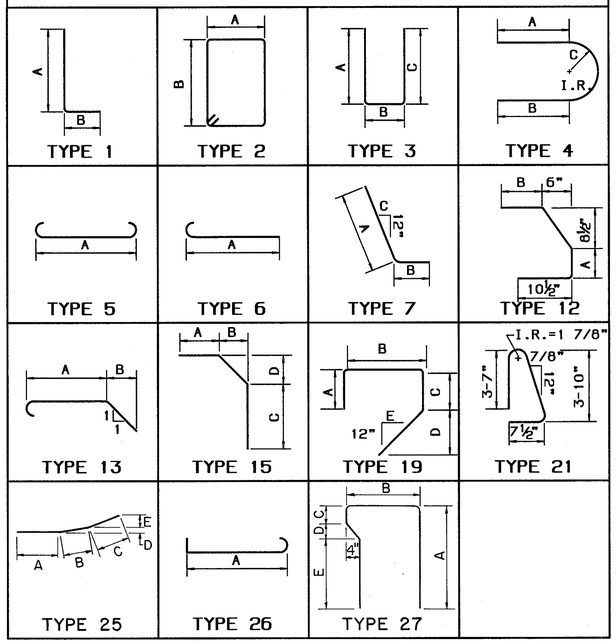

R. D. ZANDE & ASSOCIATES, LIMITED 27/28
CONSULTING ENGINEERS
COLUMBUS, OHIO

REINFORCING STEEL LIST
BRIDGE NO. ROS-35-2532R
OVER SCIOTO RIVER

ROSS COUNTY STA. 1337+44.60
STA. 1350+24.90

DESIGNED	DRAWN	TRACED	CHECKED	REVIEWED	DATE	REVISED
T.A.A.	VGO	VGO	C.M.S.	D.H.K.	2-26-91	

MARK			TOTAL	LENGTH	WEIGHT	TYPE	A	B	C	D	E	INC.
SUPERSTRUCTURE												
ES400			2326	30-6	47390	STR						
ES401			1	32-2	21	STR						
ES402			2	30-8	41	STR						
ES403			1	35-2	23	STR						
ES404			1	36-2	24	STR						
ES405			2	31-2	42	STR						
ES406			1	35-8	24	STR						
ES500			49	19-0	971	STR						
ES501			2303	39-3	94280	STR						
ES502			1884	30-8	60267	STR						
ES503			4704	4-7	22471	6	4-0					
ES504			2724	5-3	14916	21						
ES505			2724	2-6	7103	1	1-8	0-11				
ES506			2724	3-3	9234	12	0-10	0-9				
			1SR	21-11								
ES507			OF	TO	1252	STR						0-1
			50	26-1								
ES508			1	32-4	34	STR						
ES509			2	30-8	64	STR						
ES510			1	36-4	38	STR						
ES511			2	31-2	65	STR						
ES512			1	35-10	37	STR						
ES513			1	35-4	37	STR						
ES514			560	7-2	4188	STR						
ES515			392	14-8	5998	STR						
ES516			4	8-8	36	STR						
ES517			12	7-8	96	STR						
ES601			2303	39-3	135770	STR						
ES602			936	33-0	46394	STR						
ES603			111	5-7	930	3	4-0	0-9	1-2			
ES604			49	20-9	1527	STR						
			1SR	21-11								
ES800			OF	TO	3204	STR						0-1
			50	26-1								
ES801			3	25-3	202	STR						
ES802			2	34-3	129	7	30-10	3-5	8-4			
ES803			2	35-3	188	7	31-10	3-5	8-4			
ES804			4	30-11	330	STR						
ES805			9	22-0	529	STR						
				TOTAL	457855							
EY500			32	3-8	122	12	1-3					
EY501			32	1-1	36	STR						
EY502			16	2-3	38	STR						
EY503			40	4-5	184	1	3-7	0-10				
EY504			32	2-11	97	6	2-4					
EY505			16	14-0	234	STR						
EY506			8	13-8	114	25	9-11	2-4	1-5	0-5	0-1 1/2	
EY507			8	13-8	114	STR						
EY508			4	7-8	32	3	3-7	0-6	3-7			
			*	TOTAL	971							

* RE-STEEL QUANTITY FOR THE PARAPET ANCHORED TO THE APPROACH SLAB SHALL BE INCLUDED WITH APPROACH SLAB FOR PAYMENT.

NOTE

1. THE LETTER "E" BEFORE A BAR MARK DENOTES AN EPOXY COATED REINFORCING BAR. PAYMENT FOR THESE BARS SHALL BE UNDER ITEM 509 "EPOXY COATED REINFORCING STEEL, GRADE 60".
2. "STR." IN THE TYPE COLUMN INDICATES STRAIGHT BARS.
3. REFER TO C.M.S. SECTION 509.05 FOR STANDARD BEND DIMENSION.
4. MECHANICAL CONNECTORS: AN APPROVED TYPE OF MECHANICAL CONNECTOR FOR REINFORCING BARS SHALL BE PROVIDED. INSTALLATION OF CONNECTORS SHALL CONFORM WITH MANUFACTURER'S RECOMMENDED PROCEDURES. CONNECTORS USED WITH EPOXY COATED BARS SHALL BE EPOXY COATED. COATING SHALL CONFORM TO THE SAME SPECIFICATIONS. COATINGS WHICH HAVE BEEN DAMAGED OR WHICH OTHERWISE DO NOT MEET SPECIFICATIONS WITH RESPECT TO COLOR, CONTINUITY, AND UNIFORMITY MAY BE REPAIRED AS DIRECTED BY THE ENGINEER OR THEY SHALL BE REPLACED WITH MATERIAL WHICH MEETS THE SPECIFICATIONS. CONNECTORS SHALL CONFORM WITH ITEM 509 AND SHALL BE INCLUDED IN THE BID PRICE PER POUND FOR ITEM 509. DUE TO SPACE LIMITATIONS, MECHANICAL CONNECTORS THAT UTILIZE BAR SPLICES WILL NOT BE PERMITTED.

R. D. ZANDE & ASSOCIATES, LIMITED
CONSULTING ENGINEERS
COLUMBUS, OHIO

28/28

REINFORCING STEEL LIST
BRIDGE NO. ROS-35-2532R
OVER SCIOTO RIVER

ROSS COUNTY STA. 1337+44.60
STA. 1350+24.90

DESIGNED	DRAWN	TRACED	CHECKED	REVIEWED DATE	REVISED
T.A.A.	V.G.O.	VGO	C.M.S.	O.H.K. 2-26-91	