STATE OF OHIO
DEPARTMENT OF TRANSPORTATION

ROS-23-12.84

GREEN, SCIOTO & SPRINGFIELD TOWNSHIPS
ROSS COUNTY

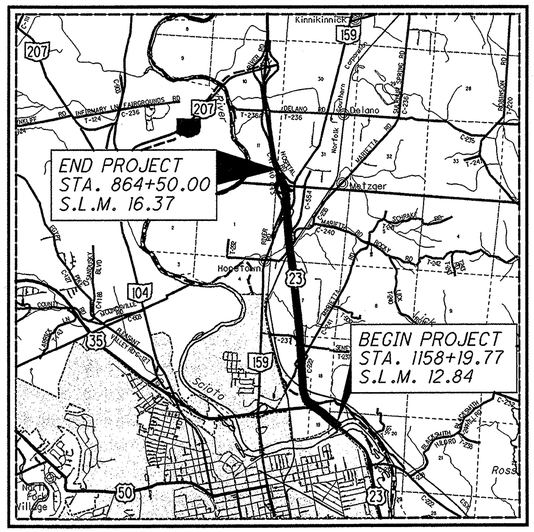

LOCATION MAP

LATITUDE: 39°22'15" N LONGITUDE: 82°58'02" W

SCALE IN MILES

0 1 2 3 4

N

PORTION TO BE IMPROVED
INTERSTATE HIGHWAY
STATE & FEDERAL ROUTES
COUNTY & TOWNSHIP ROADS
OTHER ROADS

DESIGN DESIGNATION

CURRENT ADT (2006) 19,240
TRUCKS (24 HOUR B&C) 19%
DESIGN SPEED ..... 3R PROJECT
LEGAL SPEED ..... 60 MPH
DESIGN FUNCTIONAL CLASSIFICATION:
URBAN FREEWAY & EXPRESSWAY
NHS PROJECT ..... YES

DESIGN EXCEPTIONS

NONE REQUIRED

INDEX OF SHEETS:

TITLE SHEET	1
SCHEMATIC PLAN	2
TYPICAL SECTIONS	3-6
GENERAL NOTES	7-8
MAINTENANCE OF TRAFFIC	9-21
GENERAL SUMMARY	22-24
PAVEMENT CALCULATIONS	25-27
SUBSUMMARIES	28-30
PLAN AND PAVEMENT MARKING	31-40
CROSS SECTIONS	41-44
STRUCTURES (20' AND OVER)	
BRIDGE NO. ROS-23-1533 L	45-77
BRIDGE NO. ROS-23-1533 R	78-82

PROJECT DESCRIPTION

IMPROVEMENT OF 3.53 MILES OF US ROUTE 23 IN ROSS COUNTY BY REMOVING AND REPLACING THE ASPHALT SURFACE COURSE AND ADDING CHIP SEAL MATERIAL TO THE PAVED BERMS. THIS PROJECT WILL UPGRADE THE LEFT STRUCTURE (ROS-23-1533) OVER NORFOLK SOUTHERN RAILROAD, COUNTY ROAD 235 AND DRY RUN.

EARTH DISTURBED AREA

PROJECT EARTH DISTURBED AREA: N/A (MAINTENANCE PROJECT)
ESTIMATED CONTRACTOR EARTH DISTURBED AREA: N/A (MAINTENANCE PROJECT)
NOTICE OF INTENT EARTH DISTURBED AREA: N/A (MAINTENANCE PROJECT)

LIMITED ACCESS

THIS IMPROVEMENT IS ESPECIALLY DESIGNED FOR THROUGH TRAFFIC AND HAS BEEN DECLARED A LIMITED ACCESS HIGHWAY OR FREEWAY BY ACTION OF THE DIRECTOR IN ACCORDANCE WITH THE PROVISIONS OF SECTION 5511.02 OF THE OHIO REVISED CODE.

2008 SPECIFICATIONS

THE STANDARD SPECIFICATIONS OF THE STATE OF OHIO, DEPARTMENT OF TRANSPORTATION, INCLUDING CHANGES AND SUPPLEMENTAL SPECIFICATIONS LISTED IN THE PROPOSAL SHALL GOVERN THIS IMPROVEMENT.

I HEREBY APPROVE THESE PLANS AND DECLARE THAT THE MAKING OF THIS IMPROVEMENT WILL NOT REQUIRE THE CLOSING TO TRAFFIC OF THE HIGHWAY AND THAT PROVISIONS FOR THE MAINTENANCE AND SAFETY OF TRAFFIC WILL BE AS SET FORTH ON THE PLANS AND ESTIMATES.

UNDER AUTHORITY OF SECTION 4511.21, DIVISION (H) OF THE OHIO REVISED CODE, THE REVISED PRIMA FACIE SPEED LIMITS AS INDICATED HEREIN ARE DETERMINED TO BE REASONABLE AND SAFE, AND ARE HEREBY ESTABLISHED FOR THE DURATION OF THIS PROJECT. THE PRIMA FACIE SPEED LIMIT OR LIMITS HEREBY ESTABLISHED SHALL BECOME EFFECTIVE WHEN APPROPRIATE SIGNS GIVING NOTICE THEREOF ARE ERECTED.

APPROVED James A. Brusharb
DATE 11-07-08 DISTRICT DEPUTY DIRECTOR

APPROVED James G. Beasley Jr.
DATE 11-14-08 DIRECTOR, DEPARTMENT OF TRANSPORTATION

UNDERGROUND UTILITIES
CONTACT BOTH SERVICES
CALL TWO WORKING DAYS
BEFORE YOU DIG
CALL
1-800-362-2764
(TOLL FREE)
OHIO UTILITIES PROTECTION SERVICE
NON-MEMBERS
MUST BE CALLED DIRECTLY
OIL & GAS PRODUCERS PROTECTIVE SERVICE CALL: **1-800-925-0988**

PLAN PREPARED BY:
OHIO DEPARTMENT OF TRANSPORTATION
DISTRICT 9 PRODUCTION

ENGINEERS SEAL:
STATE OF OHIO LAWRENCE A. WILLIS E-39867 REGISTERED PROFESSIONAL ENGINEER
SIGNED: Lawrence A. Willis
DATE: 11/6/2008

STANDARD CONSTRUCTION DRAWINGS

BP-2.1	7/18/08	F-2.1	7/28/00	MT-35.10	4/20/01	RM-4.1	10/20/06	AS-1-81	7/19/02	800-2008	10/17/08
BP-2.2	7/18/08	F-3.1	7/28/00	MT-95.30	9/05/06	RM-4.2	10/19/07	EXJ-4-87	7/19/02	802	10/20/08
BP-2.3	7/16/04			MT-95.40	10/20/06			GSD-1-96	7/19/02	832	4/25/06
BP-3.1	10/19/07	GR-1.1	7/16/04	MT-95.50	9/05/06	TC-41.20	1/19/01	RB-1-55	2/02/59	898	4/18/08
BP-5.1	7/28/00	GR-2.1	1/16/04	MT-95.70	1/18/08	TC-42.20	7/16/04	SBR-1-99	7/19/02	902	10/20/08
BP-9.1	4/15/05	GR-3.1	1/19/07	MT-95.82	9/05/06	TC-52.10	1/19/07				
		GR-3.2	1/19/07	MT-99.20m	1/30/95	TC-52.20	1/19/07				
CB-2.2	7/15/05	GR-5.1	4/18/03	MT-100.00	4/19/02	TC-65.10	1/21/05				
CB-3.3	7/15/05	GR-5.2	1/16/04	MT-101.60	9/20/06	TC-65.11	1/21/05				
		GR-5.3	1/16/04	MT-101.70	10/18/02	TC-72.20	1/21/05				
DM-1.1	4/21/06	GR-6.1	4/18/03	MT-102.10	10/20/06	TC-73.10	1/19/01				
DM-1.2	10/21/05			MT-102.20	9/05/06						
DM-1.4	4/21/06	HW-2.1	4/21/06	MT-105.10	10/18/02						
DM-4.1	7/19/02	HW-2.2	4/21/06	MT-105.11	10/18/02						
DM-4.3	7/19/02										
DM-4.4	7/19/02										

SUPPLEMENTAL SPECIFICATIONS

SPECIAL PROVISIONS

SP832	5/20/08

FEDERAL PROJECT NO. E080(592)
PID NO. 79964
CONSTRUCTION PROJECT NO.
RAILROAD INVOLVEMENT NORFOLK SOUTHERN CORPORATION
ROS-23-12.84

ROS - US-23-12.84
090088 PID - 79964
Dist 9 2/4/2009
i:\project\District-wide\2009PM-79964\roadway\sheets\79964GT001.dgn 06-NOV-2008 1:33PM dbeekman

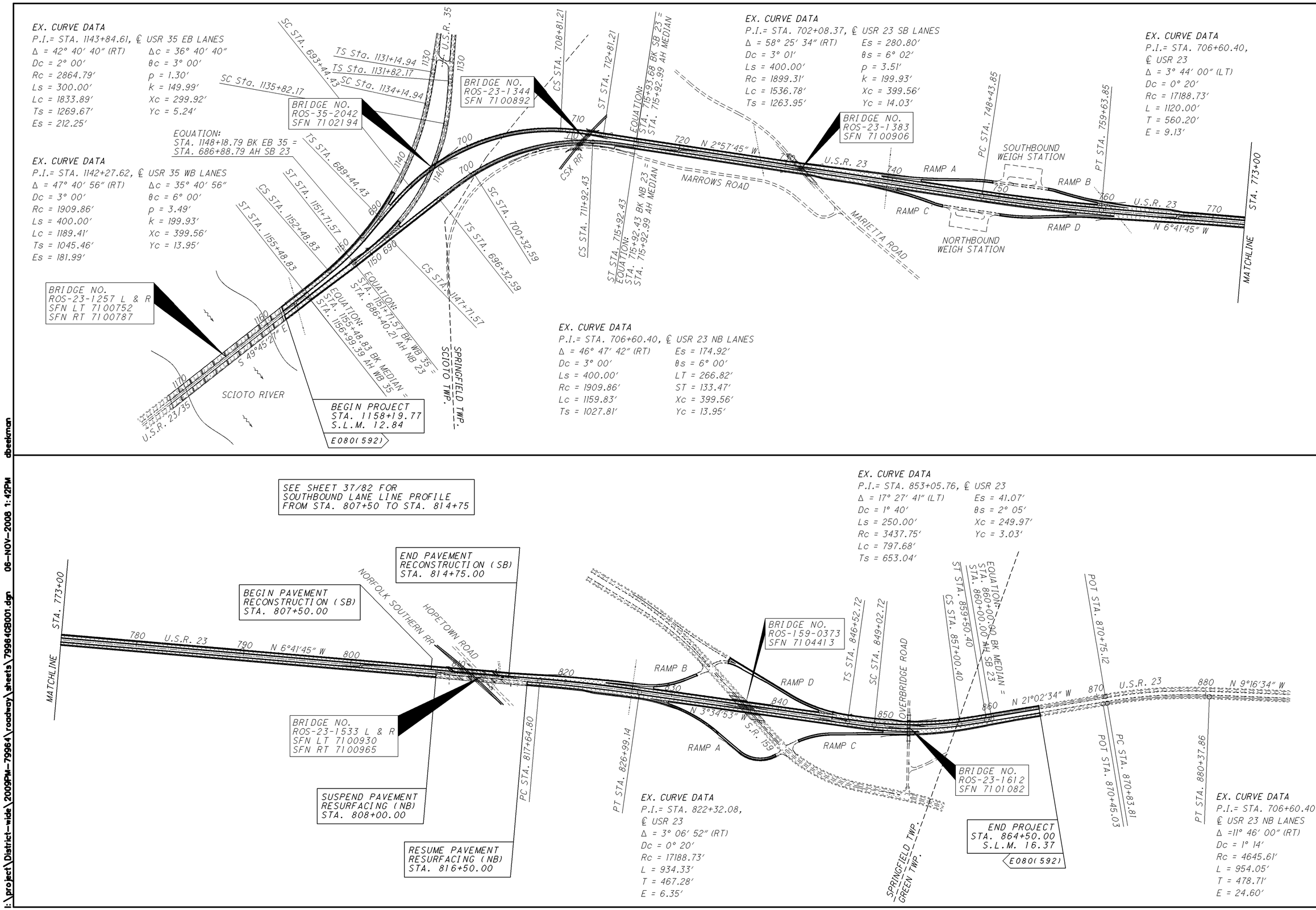

SCHEMATIC PLAN

ROS-23-12.84

i:\project\District-wide\2009PM-799864\roadway\sheets\7996408001.dgn 06-NOV-2008 1:42PM dbeekman

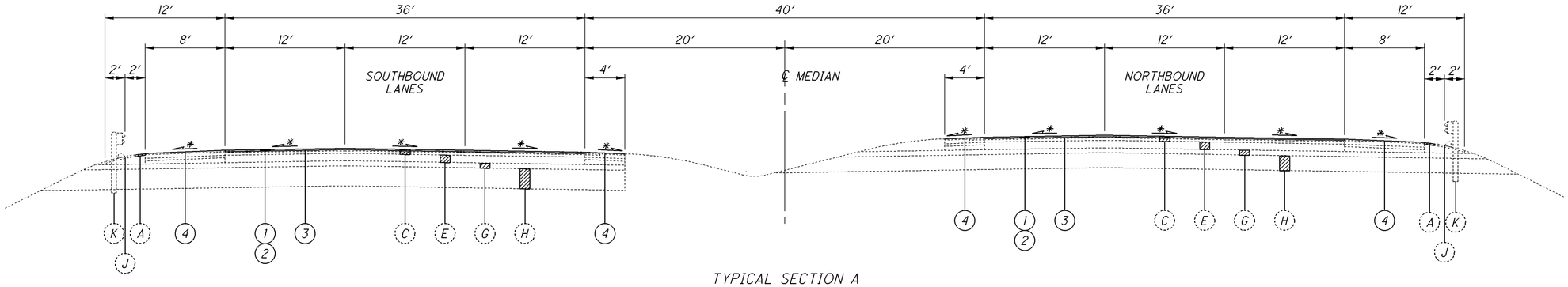

TYPICAL SECTION A

THE ABOVE TYPICAL SECTION APPLIES BETWEEN THE FOLLOWING STATIONS:

STA. 1158+19.77 TO STA. 1155+48.83 = 270.94 FT.
STA. EQN. 1155+48.83 = 1156+99.39 AHEAD N.B.
(W.B. U.S.R. 35 = N.B. U.S.R. 23)
STA. EQN. 1155+48.83 = 1155+48.83 AHEAD S.B.
(E.B. U.S.R. 35 = S.B. U.S.R. 23)

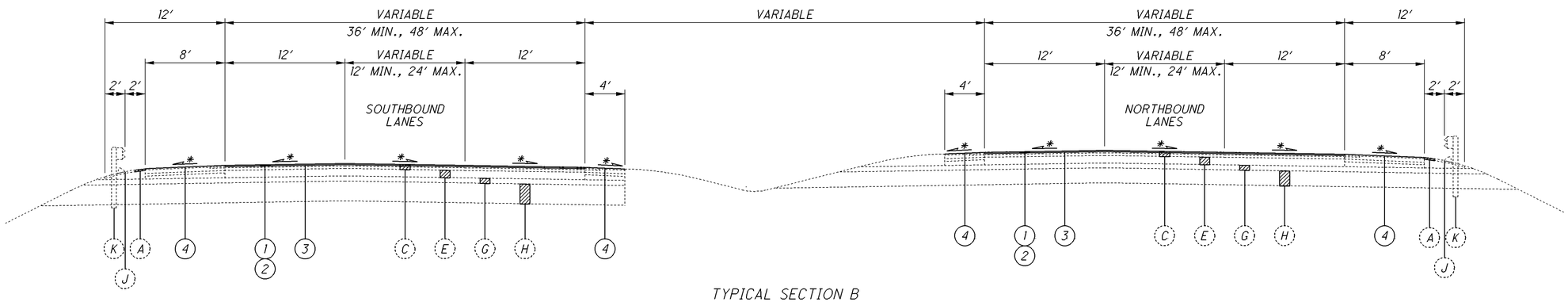

TYPICAL SECTION B

THE ABOVE TYPICAL SECTION APPLIES BETWEEN THE FOLLOWING STATIONS:

NORTHBOUND LANES STA. 1156+99.39 AHEAD N.B. TO STA. 1151+71.57 BACK N.B. STA. EQN. 1151+71.57 BACK N.B. = 686+40.21 AHEAD N.B.	=	527.82 FT.
NORTHBOUND LANES STA. 686+40.21 AHEAD N.B. TO STA. 691+88.03	=	547.82 FT.
SOUTHBOUND LANES STA. 1155+48.83 AHEAD S.B. TO STA. 1148+18.79 BACK S.B. STA. EQN. 1148+18.79 BACK S.B. = 686+88.79 AHEAD S.B.	=	730.04 FT.
SOUTHBOUND LANES STA. 686+88.79 AHEAD S.B. TO STA. 690+97.20	=	408.41 FT.
TOTAL	=	2,214.09 FT.

PROPOSED PAVEMENT LEGEND

1. 442 1 ½″ ASPHALT CONCRETE SURFACE COURSE, 12.5 MM, TYPE A (446)
2. 254 1 ¼″ PAVEMENT PLANING, ASPHALT CONCRETE, AS PER PLAN (SEE GENERAL NOTE)
3. 407 TACK COAT @ 0.075 GAL. PER SQ. YD.
4. 422 SINGLE CHIP SEAL
5. 452 10″ NON-REINFORCED CONCRETE PAVEMENT
6. 304 6″ AGGREGATE BASE
7. 204 SUBGRADE COMPACTION
8. 448 2″ ASPHALT CONCRETE INTERMEDIATE COURSE, TYPE 1, UNDER GUARDRAIL, PG64-22, AS PER PLAN
9. 606 GUARDRAIL REBUILT, TYPE 5
10. 659 SEEDING AND MULCHING

NOTES:

* MATCH EXISTING PAVEMENT SLOPE

EXISTING PAVEMENT LEGEND

- (A) EXISTING 2.0″± ASPHALT CONCRETE PAVEMENT
- (B) EXISTING 4.5″± ASPHALT CONCRETE PAVEMENT
- (C) EXISTING 6.0″± ASPHALT CONCRETE PAVEMENT
- (D) EXISTING 7.5″± ASPHALT CONCRETE PAVEMENT
- (E) EXISTING 9″ REINFORCED CONCRETE
- (F) EXISTING 10″ NON-REINFORCED CONCRETE
- (G) EXISTING SUBBASE
- (H) EXISTING GRANULAR BASE
- (I) EXISTING PIPE UNDERDRAINS
- (J) EXISTING ASPHALT CURB
- (K) EXISTING TYPE 5 GUARDRAIL

TYPICAL SECTIONS

ROS-23-12.84

I:\project\District-wide\2009PM-79964\roadway\sheets\79964GY001.dgn 06-NOV-2008 1:54PM dbeekman

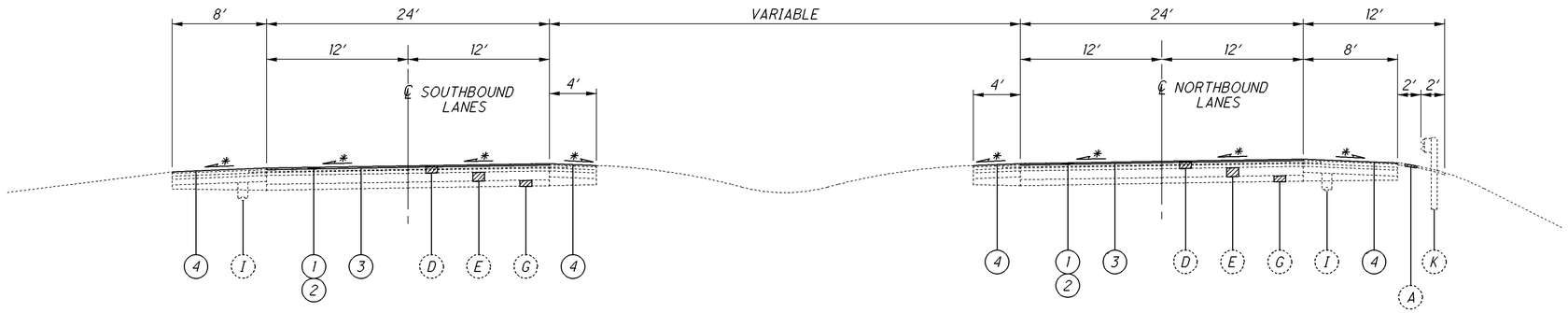

TYPICAL SECTION C

THE ABOVE TYPICAL SECTION APPLIES BETWEEN THE FOLLOWING STATIONS:

NORTHBOUND LANES STA. 691+88.03 TO STA. 715+92.43 BACK N.B. STA. EQN. 715+92.43 BACK N.B. = 715+92.99 AHEAD	=	2,404.40 FT.
SOUTHBOUND LANES STA. 690+97.20 TO STA. 715+93.68 BACK S.B. STA. EQN. 715+93.68 BACK S.B. = 715+92.99 AHEAD	=	2,496.48 FT.
STA. 748+43.85 TO STA. 759+63.85	=	1,120.00 FT.
STA. 817+64.80 TO STA. 826+99.14	=	934.34 FT.
STA. 846+52.72 TO STA. 859+50.40	=	1,297.68 FT.
TOTAL	=	8,252.90 FT.

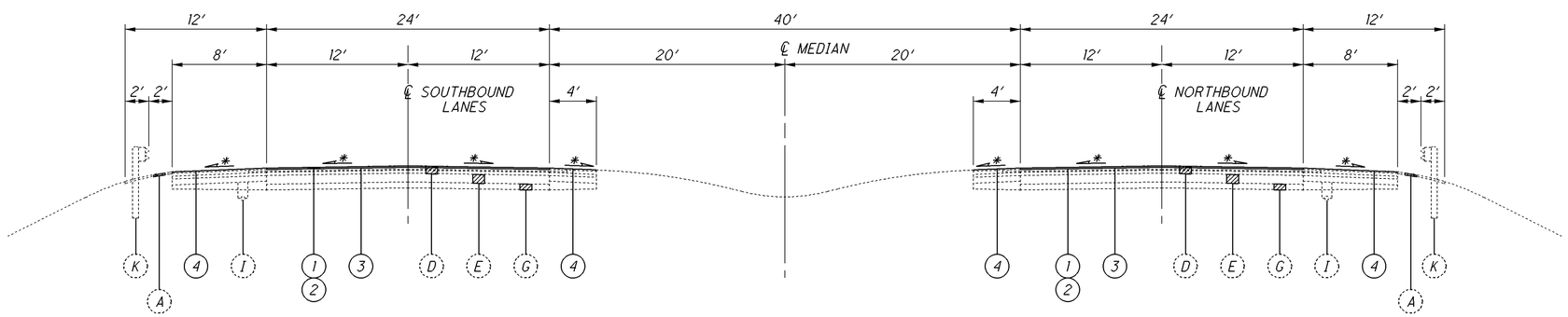

TYPICAL SECTION D

THE ABOVE TYPICAL SECTION APPLIES BETWEEN THE FOLLOWING STATIONS:

STA. 715+92.99 TO 748+43.85	=	3,250.86 FT.
NORTHBOUND LANES STA. 759+63.85 TO STA. 808+00.00	=	4,836.15 FT.
NORTHBOUND LANES STA. 816+50.00 TO STA. 817+64.80	=	114.80 FT.
SOUTHBOUND LANES STA. 759+63.85 TO STA. 807+50.00	=	4,786.15 FT.
SOUTHBOUND LANES STA. 814+75.00 TO STA. 817+64.80	=	289.80 FT.
STA. 826+99.14 TO STA. 846+52.72	=	1,953.58 FT.
STA. 859+50.40 TO STA. 860+00.00 BACK STA. EQN. 860+00.00 BACK = 860+00.00 AHEAD S.B.	=	49.60 FT.
STA. 860+00.00 AHEAD S.B. TO STA. 864+50.00 S.B.	=	450.00 FT.
TOTAL	=	15,730.94 FT.

NOTES:

* MATCH EXISTING PAVEMENT SLOPE

FOR LEGEND, SEE SHEET 3/82

TYPICAL SECTIONS

ROS-23-12.84

I:\project\District-wide\2009PM-79964\roadway\sheets\79964GY002.dgn 06-NOV-2008 1:54PM dbeekman

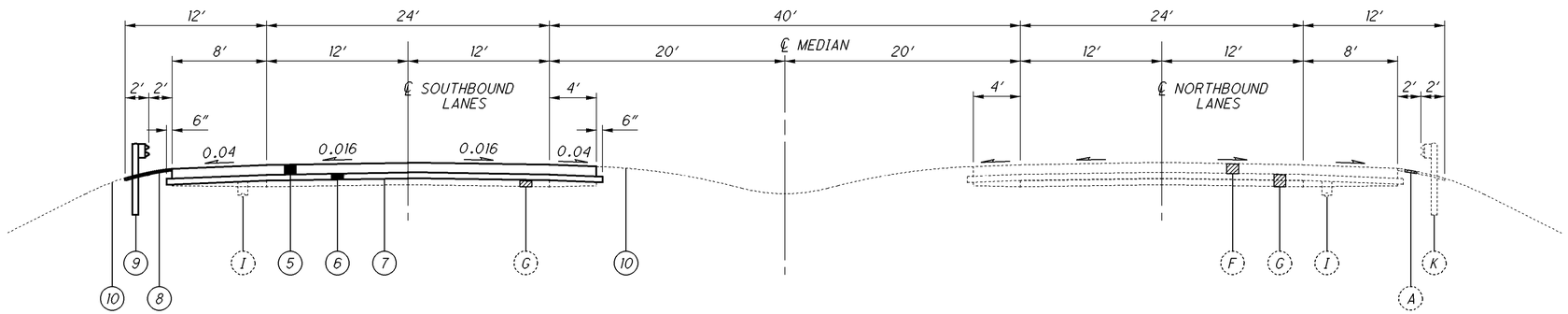

TYPICAL SECTION E

THE ABOVE TYPICAL SECTION APPLIES BETWEEN THE FOLLOWING STATIONS:

NORTHBOUND LANES STA. 808+00.00 TO STA. 810+00.40 SUSPEND	=	200.40 FT.
NORTHBOUND LANES STA. 814+47.00 RESUME TO STA. 816+50.00	=	203.00 FT.
SOUTHBOUND LANES STA. 807+50.00 TO STA. 809+18.00 SUSPEND	=	168.00 FT.
SOUTHBOUND LANES STA. 813+64.60 RESUME TO STA. 814+75.00	=	110.40 FT.
TOTAL	=	681.80 FT.

EXISTING BRIDGES AND APPROACH SLABS

NORTHBOUND LANES STA. 810+00.40 TO STA. 814+47.00	=	446.60 FT.	[ROS-23-1533 R]
SOUTHBOUND LANES STA. 809+18.00 TO STA. 813+64.60	=	446.60 FT.	[ROS-23-1533 L]
TOTAL	=	893.20 FT.	

NOTES:

* MATCH EXISTING PAVEMENT SLOPE

FOR LEGEND, SEE SHEET 3/82

TYPICAL SECTIONS

ROS-23-12.84

I:\project\District-wide\2009PM-79964\roadway\sheets\799640Y003.dgn 06-NOV-2008 1:55PM dbeekman

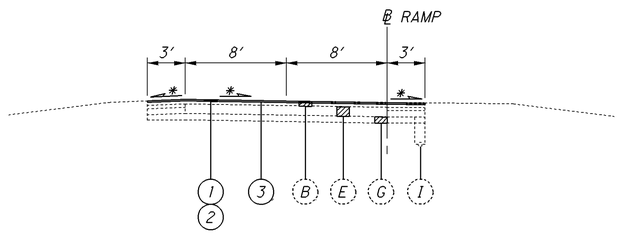

TYPICAL SECTION F (WEIGH STATION RAMPS)

THE ABOVE TYPICAL SECTION APPLIES BETWEEN THE FOLLOWING STATIONS:

SOUTHBOUND WEIGH STATION		
RAMP A STA. 742+66.21 TO STA. 749+30.00	=	663.79 FT.
RAMP B STA. 754+50.00 TO STA. 759+23.87	=	473.87 FT.
NORTHBOUND WEIGH STATION		
RAMP C STA. 740+55.04 TO STA. 745+05.00	=	449.96 FT.
RAMP D STA. 750+25.00 TO STA. 757+32.59	=	707.59 FT.
TOTAL	=	2,295.21 FT.

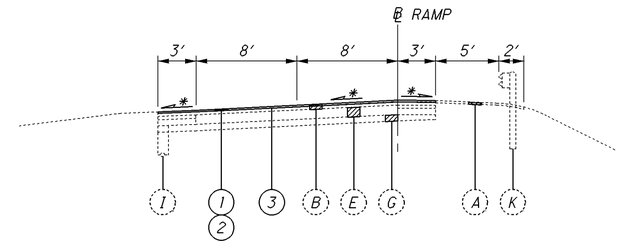

TYPICAL SECTION G (S.R. 159 RAMPS)

THE ABOVE TYPICAL SECTION APPLIES BETWEEN THE FOLLOWING STATIONS:

RAMP A STA. 829+75.92 TO STA. 841+44.55	=	1,168.63 FT.
RAMP B STA. 828+24.95 TO STA. 832+34.50	=	409.55 FT.
RAMP C STA. 841+97.00 TO STA. 849+85.19	=	788.19 FT.
TOTAL	=	2,366.37 FT.

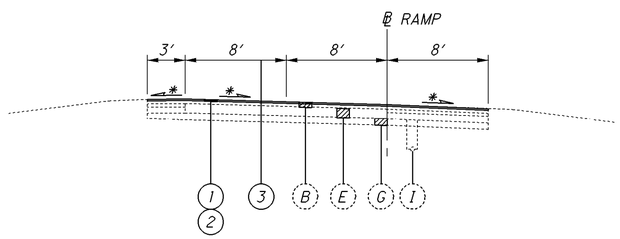

TYPICAL SECTION H (S.R. 159 RAMPS)

THE ABOVE TYPICAL SECTION APPLIES BETWEEN THE FOLLOWING STATIONS:

RAMP D STA. 834+22.00 TO STA. 843+75.73	=	953.73 FT.
TOTAL	=	953.73 FT.

NOTES:

* MATCH EXISTING PAVEMENT SLOPE

FOR LEGEND, SEE SHEET 3/82

TYPICAL SECTIONS

ROS-23-12.84

I:\project\District-wide\2009PM-79964\roadway\sheets\79964GY004.dgn 06-NOV-2008 1:55PM dbeekman

UTILITIES

LISTED BELOW ARE ALL UTILITIES LOCATED WITHIN THE PROJECT CONSTRUCTION LIMITS TOGETHER WITH THEIR RESPECTIVE OWNERS:

ELECTRIC:

AMERICAN ELECTRIC POWER
(DISTRIBUTION)
850 TECH CENTER DRIVE
GAHANNA, OH 43230
614-883-6831

AMERICAN ELECTRIC POWER
(TRANSMISSION)
700 MORRISON ROAD
GAHANNA, OH 43230
614-552-1801

SOUTH CENTRAL POWER COMPANY
P.O. BOX 250
LANCASTER, OH 43130
740-689-6119

ODOT - DISTRICT 9
650 EASTERN AVENUE
P.O. BOX 467
CHILLICOTHE, OH 45601
740-774-9075

GAS:

COLUMBIA GAS OF OHIO
843 PIATT AVENUE
CHILLICOTHE, OH 45601
740-772-9131

TELEPHONE:

HORIZON
P.O. BOX 480
CHILLICOTHE, OH 45601
740-772-8396

SPRINT COMMUNICATIONS, INC.
11815 HIGHWAY DRIVE, SUITE 400
CINCINNATI, OH 45241
513-459-5761

CABLE:

TIME WARNER CABLE
1266 DUBLIN ROAD
COLUMBUS, OH 43215
614-255-6349

SANITARY:

CITY OF CHILLICOTHE
35 SOUTH PAINT STREET
CHILLICOTHE, OH 45601
740-773-8980

WATER:

CITY OF CHILLICOTHE
35 SOUTH PAINT STREET
CHILLICOTHE, OH 45601
740-773-8980

ROSS COUNTY WATER COMPANY
P.O. BOX 1690
CHILLICOTHE, OH 45601
740-774-4117

THE LOCATION OF THE UNDERGROUND UTILITIES SHOWN ON THE PLANS ARE AS OBTAINED FROM THE OWNERS AS REQUIRED BY SECTION 153.64 O.R.C.

EXISTING PLANS

EXISTING PLANS ENTITLED ROS-23-13.12 AND ROS-23-17.052 MAY BE INSPECTED IN THE ODOT DISTRICT 9 OFFICE IN CHILLICOTHE.

ELEVATION DATUM

ALL ELEVATIONS ARE BASED ON U.S.G.S. DATUM.

FENCE LENGTHS

THE LENGTHS OF FENCE SHOWN IN THE PLANS ARE HORIZONTAL DIMENSIONS. MEASUREMENTS OF THE FINAL QUANTITIES WILL BE IN ACCORDANCE WITH ITEM 607.

WORK LIMITS

THE WORK LIMITS SHOWN ON THESE PLANS ARE FOR PHYSICAL CONSTRUCTION ONLY. PROVIDE THE INSTALLATION AND OPERATION OF ALL WORK ZONE TRAFFIC CONTROL AND WORK ZONE TRAFFIC CONTROL DEVICES REQUIRED BY THESE PLANS WHETHER INSIDE OR OUTSIDE THESE WORK LIMITS.

CONVERSION OF STANDARD CONSTRUCTION DRAWINGS

CONVERT THE METRIC STANDARD DRAWING REFERENCED IN THIS PLAN TO ENGLISH UNITS USING THE SI (METRIC) TO ENGLISH CONVERSION FACTORS PROVIDED IN SECTION 109.02 OF THE CONSTRUCTION AND MATERIAL SPECIFICATIONS.

CONVERSIONS WILL BE APPROPRIATELY PRECISE AND REFLECT STANDARD INDUSTRY ENGLISH VALUES WHERE SUITABLE.

CLEARING AND GRUBBING

ALTHOUGH THERE ARE NO TREES OR STUMPS SPECIFICALLY MARKED FOR REMOVAL WITHIN THE LIMITS OF THE PROJECT, A LUMP SUM QUANTITY IS INCLUDED IN THE GENERAL SUMMARY FOR ITEM 201 CLEARING AND GRUBBING. ALL PROVISIONS AS SET FORTH IN THE SPECIFICATIONS UNDER THIS ITEM ARE INCLUDED IN THE LUMP SUM PRICE BID FOR ITEM 201, CLEARING AND GRUBBING.

ITEM 204 - PROOF ROLLING

THE FOLLOWING QUANTITY IS PROVIDED IN THE GENERAL SUMMARY TO ADDRESS LOCATIONS REQUIRING PROOF ROLLING.

ITEM 204 - PROOF ROLLING	1 HOUR

PROFILE AND ALIGNMENT

PLACE THE PROPOSED PAVEMENT TO FOLLOW THE ALIGNMENT AND PROFILE OF THE EXISTING PAVEMENT. PLACE THE PROPOSED ASPHALT CONCRETE OVERLAY AS SHOWN ON THE TYPICAL SECTIONS.

CONCRETE AND/OR EXPANSION JOINTS

ALTHOUGH SPECIFIC LOCATIONS OF CERTAIN CONTRACTION AND EXPANSION JOINTS HAVE BEEN DETAILED ON THIS PLAN, NO WAVIER OF THE SPECIFICATIONS IS INTENDED. IN ALL CASES, THE PROVISION OF EXPANSION JOINTS AT ALL MAJOR STRUCTURES INCLUDING THE MAXIMUM SPACING BETWEEN CONTRACTION JOINTS IS IN ACCORDANCE WITH STANDARD CONSTRUCTION DRAWING BP-2.2 AND THE SPECIFICATIONS.

PART-WIDTH CONSTRUCTION

BECAUSE OF THE NECESSITY TO BUILD THIS PROJECT UNDER TRAFFIC AND TO CONSTRUCT THE FULL PAVEMENT WIDTH IN STAGES, EXERCISE CARE TO PREVENT THE CONSTRUCTION OF A BUTT JOINT IN THE BASE COURSES. LAP LONGITUDINAL JOINTS AS SHOWN ON STANDARD CONSTRUCTION DRAWING BP-3.1.

ITEM 254 - PATCHING PLANED SURFACE

THE FOLLOWING ESTIMATED QUANTITY OF 20% OF THE PLANED SURFACE HAS BEEN CARRIED TO THE GENERAL SUMMARY FOR PATCHING PLANED SURFACE AS DESIGNATED BY THE ENGINEER.

254	PATCHING PLANED SURFACE	26,310 SQ. YD.

CROSSINGS AND CONNECTIONS TO EXISTING PIPES AND UTILITIES

WHERE PLANS PROVIDE FOR A PROPOSED CONDUIT TO BE CONNECTED TO, OR CROSS OVER OR UNDER AN EXISTING SEWER OR UNDERGROUND UTILITY, THE CONTRACTOR SHALL LOCATE THE EXISTING PIPES OR UTILITIES BOTH AS TO LINE AND GRADE BEFORE STARTING TO LAY THE PROPOSED CONDUIT.

IF IT IS DETERMINED THAT THE ELEVATION OF THE EXISTING CONDUIT, OR EXISTING APPURTENANCE TO BE CONNECTED, DIFFERS FROM THE PLAN ELEVATION OR RESULTS IN A CHANGE IN THE PLAN CONDUIT SLOPE, THE ENGINEER SHALL BE NOTIFIED BEFORE STARTING CONSTRUCTION OF ANY PORTION OF THE PROPOSED CONDUIT WHICH WILL BE AFFECTED BY THE VARIANCE IN THE EXISTING ELEVATIONS.

IF IT IS DETERMINED THAT THE PROPOSED CONDUIT WILL INTERSECT AN EXISTING SEWER OR UNDERGROUND UTILITY IF CONSTRUCTED AS SHOWN ON THE PLAN, THE ENGINEER SHALL BE NOTIFIED BEFORE STARTING CONSTRUCTION OF ANY PORTION OF THE PROPOSED CONDUIT WHICH WOULD BE AFFECTED BY THE INTERFERENCE WITH AN EXISTING FACILITY.

PAYMENT FOR ALL THE OPERATIONS DESCRIBED ABOVE SHALL BE INCLUDED IN THE CONTRACT PRICE FOR THE PERTINENT 603 CONDUIT ITEM.

REVIEW OF DRAINAGE FACILITIES

BEFORE ANY WORK IS STARTED ON THE PROJECT AND AGAIN BEFORE FINAL ACCEPTANCE BY THE STATE, REPRESENTATIVES OF THE STATE AND THE CONTRACTOR, ALONG WITH LOCAL REPRESENTATIVES, SHALL MAKE AN INSPECTION OF ALL EXISTING SEWERS WHICH ARE TO REMAIN IN SERVICE AND WHICH MAY BE AFFECTED BY THE WORK. THE CONDITION OF THE EXISTING CONDUITS AND THEIR APPURTENANCE SHALL BE DETERMINED FROM FIELD OBSERVATIONS. RECORDS OF THE INSPECTION SHALL BE KEPT IN WRITING BY THE STATE.

ALL NEW CONDUITS, INLETS, CATCH BASINS, AND MANHOLES CONSTRUCTED AS A PART OF THE PROJECT SHALL BE FREE OF ALL FOREIGN MATTER AND IN A CLEAN CONDITION BEFORE THE PROJECT WILL BE ACCEPTED BY THE STATE.

ALL EXISTING SEWERS INSPECTED INITIALLY BY THE ABOVE MENTIONED PARTIES SHALL BE MAINTAINED AND LEFT IN A CONDITION REASONABLY COMPARABLE TO THAT DETERMINED BY THE ORIGINAL INSPECTION. ANY CHANGE IN THE CONDITION RESULTING FROM THE CONTRACTOR'S OPERATIONS SHALL BE CORRECTED BY THE CONTRACTOR TO THE SATISFACTION OF THE ENGINEER.

PAYMENT FOR ALL OPERATIONS DESCRIBED ABOVE SHALL BE INCLUDED IN THE CONTRACT PRICE FOR THE PERTINENT 603 CONDUIT ITEMS.

CONNECTION BETWEEN EXISTING AND PROPOSED GUARDRAIL

WHEN IT IS NECESSARY TO SPLICE PROPOSED GUARDRAIL TO EXISTING GUARDRAIL, ONLY THE EXISTING GUARDRAIL SHALL BE CUT, DRILLED, OR PUNCHED. THE CONNECTION SHALL BE MADE USING A "W-BEAM RAIL SPLICE" AS SHOWN IN AASHTO M 180. PAYMENT SHALL BE INCLUDED IN THE CONTRACT PRICE FOR THE RESPECTIVE GUARDRAIL ITEMS.

CALCULATED DMB CHECKED LAW

GENERAL NOTES

ROS-23-12.84

I:\project\District-wide\2009PM-79964\roadway\sheets\79964GN001.dgn 06-NOV-2008 1:46PM dbeekman

PAVING UNDER GUARDRAIL

THIS OPERATION SHALL INCLUDE PREPARATION OF THE GRADED SHOULDER USING ITEM 209, LINEAR GRADING, AS PER PLAN AND PAVING UNDER THE GUARDRAIL USING 448 ASPHALT CONCRETE INTERMEDIATE COURSE, TYPE 1, PG64-22, UNDER GUARDRAIL, AS PER PLAN.

ITEM 209, LINEAR GRADING, AS PER PLAN SHALL CONSIST OF EXCAVATING TOPSOIL, PLACING GRANULAR MATERIAL AND APPLYING HERBICIDE AS SPECIFIED IN THE PLANS AND IN ACCORDANCE WITH THE FOLLOWING:

ALL COLLECTED DEBRIS AND TOPSOIL, INCLUDING RHIZOMES, ROOTS AND OTHER VEGETATIVE PLANT MATERIAL SHALL BE REMOVED AND DISPOSED OF AS SPECIFIED IN 105.17.

THE REMOVED MATERIAL SHALL BE REPLACED WITH COMPACTABLE GRANULAR MATERIAL CONFORMING TO 703.16 PLACED TO GRADE AS DETAILED ON THE TYPICAL SECTION OR AS APPROVED BY THE ENGINEER.

HERBICIDE SHALL BE EPA APPROVED FOR PAVING UNDER GUARDRAIL. IT SHALL BE APPLIED TO THE PREPARED AREA AFTER FINAL LEVELING AND GRADING HAS BEEN COMPLETED. THE APPLICATION SHALL BE JUST PRIOR TO PAVING AND SHALL STRICTLY ADHERE TO THE MANUFACTURER'S INSTRUCTIONS.

EACH SUCCESSFUL BIDDER MUST BE LICENSED BY THE OHIO DEPARTMENT OF AGRICULTURE AS A COMMERCIAL APPLICATOR AND ALL PERSONS INVOLVED IN THE ACTUAL SPRAYING SHALL BE LICENSED AS COMMERCIAL OPERATORS IN THE APPROPRIATE SPRAY CATEGORY.

HERBICIDE LABEL, MATERIAL SAFETY DATA SHEET AND COPY OF APPLICATORS LICENSES SHALL BE SUBMITTED TO THE ENGINEER FOR VERIFICATION PRIOR TO COMMENCING WORK.

ALL EQUIPMENT, MATERIALS AND LABOR REQUIRED TO PERFORM THE WORK OUTLINED ABOVE SHALL BE INCLUDED FOR PAYMENT UNDER ITEM 209, LINEAR GRADING, AS PER PLAN. AN ESTIMATED QUANTITY OF 5 STATION HAS BEEN INCLUDED IN THE GENERAL SUMMARY.

PAVING UNDER GUARDRAIL SHALL CONSIST OF PLACING ITEM 448 TO THE DEPTH SPECIFIED USING ONE OF THE FOLLOWING METHODS:

METHOD A:
1) SET GUARDRAIL POSTS
2) PLACE ITEM 448

METHOD B:
1) PLACE ITEM 448
2) BORE ASPHALT AT POST LOCATIONS (MAY BE OMITTED IF STEEL POSTS ARE USED)
3) SET GUARDRAIL POSTS
4) PATCH AROUND POSTS. THE MATERIALS USED FOR PATCHING SHALL BE AN ASPHALT CONCRETE APPROVED BY THE ENGINEER. PATCHED AREAS SHALL BE COMPACTED USING EITHER HAND OR MECHANICAL METHODS. FINISHED SURFACES SHALL BE SMOOTH AND SLOPED TO DRAIN AWAY FROM THE POSTS.

ALL EQUIPMENT, MATERIALS AND LABOR REQUIRED TO PERFORM THE WORK OUTLINED ABOVE, WITH THE EXCEPTION OF SETTING GUARDRAIL POSTS, SHALL BE INCLUDED FOR PAYMENT UNDER ITEM 448, ASPHALT CONCRETE, INTERMEDIATE COURSE, TYPE 1, PG64-22, UNDER GUARDRAIL, AS PER PLAN.

ITEM 254 - PAVEMENT PLANING, ASPHALT CONCRETE, AS PER PLAN

WORK SHALL CONFORM TO SECTION 254 OF THE CONSTRUCTION AND MATERIALS SPECIFICATIONS.

ESTIMATED QUANTITIES HAVE BEEN PROVIDED FOR THE FOLLOWING WORK:

(1.25") - PLANING OF BOTH LANES OF THE MAIN LINE AND RAMPS:

PLAN INTENT IS TO REMOVE 1.25" OF THE EXISTING PAVEMENT AND LEVEL THE SURFACE FOR THE INLAYED PLACEMENT OF A UNIFORM 1.5" COURSE OF ITEM 442, ASPHALT CONCRETE INTERMEDIATE COURSE, 19MM, TYPE A (446).

PLANING SHALL BE THE WIDTH OF THE EXISTING LANES AS SHOWN ON THE TYPICAL SECTIONS.

THE INTENT OF THE PLANING IS TO MILL 1.25" (MAX.) DEPTH AT THE EDGE LINES AND LANE LINES OF THE LANES AND 1/4" (MIN.) DEPTH AT THE BOTTOM OF THE WHEEL RUTS. THE MILLING CROSS SLOPE SHALL BE CONTINUOUS FROM THE LANE LINE TO THE EDGE LINE (EDGE LINE TO EDGE LINE ON THE RAMPS). THE MILLING DEPTH SHALL BE CONTROLLED FROM THE LANE LINE OR EDGE LINE TO LEVEL THE IRREGULARITIES IN THE EXISTING PAVEMENT PROFILE AND CROSS SLOPE.

AN AUTOMATIC MILLING HEAD PROFILE CONTROL HAVING THE EQUIVALENT OF USING A 30 FOOT SKI-ARM SHALL BE USED DURING MILLING OPERATION.

THE ENGINEER MAY DESIGNATE AREAS THAT REQUIRE ADDITIONAL MILLING TO ELIMINATE ADVERSE SURFACE DISTORTION, OR TO PROVIDE A SATISFACTORY GRADE. THESE AREAS INCLUDE AREAS WITH MATERIAL DISPLACED BY RUTTING OR SHOVING ASPHALT CONCRETE, SURFACE PATCHED AREAS, AREAS PATCHED WITH CONCRETE, AREAS WITH TRANSVERSE BUMPS, AND AREAS AROUND CASTINGS FOR MANHOLES, CATCH BASIN, ETC.

INTERIM COMPLETION DATES FOR PAVEMENT PLANING

TRAFFIC SHALL NOT BE PERMITTED TO USE ANY PLANED ROADWAY SURFACE FOR MORE THAN TWENTY-ONE (21) CALENDAR DAYS. THE 21 CALENDAR DAYS SHALL BE CONSIDERED AN INTERIM COMPLETION DATE. SHOULD THE CONTRACTOR FAIL TO MEET ANY INTERIM COMPLETION DATE FOR THIS REQUIREMENT, THE CONTRACTOR SHALL BE ASSESSED LIQUIDATED DAMAGES IN ACCORDANCE WITH CMS 108.07 FOR EACH CALENDAR DAY OR PORTION THEREOF BEYOND THE 21 CALENDAR DAYS.

DISPOSAL OF ASPHALT GRINDINGS

THE GRINDINGS FROM THIS PROJECT WILL BECOME THE PROPERTY OF THE CONTRACTOR.

ITEM 607 - FENCE REMOVED AND REBUILT, AS PER PLAN

THE EXISTING WOVEN WIRE FENCE AT STRUCTURE ROS-23-1533 L SHALL BE REMOVED AND REBUILT AS DIRECTED BY THE ENGINEER TO PROVIDE CONSTRUCTION ACCESS AND CLEARANCE. THE REBUILT FENCE SHALL INCLUDE ALL APPURTANCES AND BE OF NEW MATERIALS AND OF THE SAME TYPE AS THAT BEING REPLACED.

THE AMOUNT OF FENCE REMOVED AND REBUILT TO BE PAID FOR WILL BE THE NUMBER OF FEET REBUILT, COMPLETE IN PLACE AND MEASURED AS PROVIDED FOR IN 607.09.

PAYMENT FOR THE ABOVE WILL BE PAID FOR AT THE CONTRACT PRICE PER FOOT FOR ITEM 607, FENCE REMOVED AND REBUILT, AS PER PLAN AND SHALL INCLUDE ALL LABOR, TOOLS, EQUIPMENT AND MATERIALS NECESSARY TO PERFORM THE ABOVE WORK.

AN ESTIMATED QUANTITY OF 200 FOOT HAS BEEN PROVIDED IN THE GENERAL SUMMARY.

SEEDING AND MULCHING

THE FOLLOWING QUANTITIES ARE PROVIDED TO PROMOTE GROWTH AND CARE OF PERMANENT SEEDED AREAS:

659,	REPAIR SEEDING AND MULCHING	44 SQ. YD.
	(5% OF THE PERMANENT SEEDING AND MULCHING AREA)	
659,	COMMERCIAL FERTILIZER	0.12 TON
	(FIRST APPLICATION @ 20 POUNDS PER 1000 SQ. FT. AND SECOND APPLICATION @ 10 POUNDS PER 1000 SQ. FT.).	
659,	LIME	0.19 ACRE
659,	WATER	5 M. GAL.
	(TWO APPLICATIONS @ 300 GALLONS PER 1000 SQ. FT.).	

SEEDING AND MULCHING SHALL BE APPLIED TO ALL AREAS OF EXPOSED SOIL BETWEEN THE RIGHT-OF-WAY LINES, AND WITHIN THE CONSTRUCTION LIMITS FOR AREAS OUTSIDE THE RIGHT-OF-WAY LINES COVERED BY WORK AGREEMENT OR SLOPE EASEMENT. QUANTITY CALCULATIONS FOR SEEDING AND MULCHING ARE BASED ON THESE LIMITS.

I:\project\District-wide\2009PM-79964\roadway\sheets\79964GN001.dgn 06-NOV-2008 1:46PM dbeekman

ITEM 614, MAINTAINING TRAFFIC

A MINIMUM OF ONE 12 FOOT LANE OF TRAFFIC IN EACH DIRECTION SHALL BE MAINTAINED ON BOTH U.S.R. 23 AND U.S.R. 35 AT ALL TIMES, AS WELL AS, TWO 12 FOOT LANES OF TRAFFIC IN EACH DIRECTION SHALL BE MAINTAINED AT THE U.S.R. 23/U.S.R. 35 OVERLAP AREA AT ALL TIMES BY THE USE OF THE EXISTING PAVEMENT, THE COMPLETED PAVEMENT, AND TEMPORARY SURFACES USING ITEM 614.

TRAFFIC SHALL BE MAINTAINED IN ACCORDANCE WITH THE DETAILS SHOWN ON THESE PLANS AND THE STANDARD CONSTRUCTION DRAWINGS. QUANTITIES ARE TO BE PROVIDED UNDER ITEM 614 UNLESS SEPARATELY ITEMIZED IN THESE PLANS.

THE CONTRACTOR WILL BE WORKING IN CLOSE PROXIMITY TO THE NORFOLK SOUTHERN RAILROAD TRACKS. IT IS THE INTENT OF THIS PLAN THAT THE CONTRACTOR WILL PERFORM THE REQUIRED WORK WITHOUT ENCROACHING INSIDE THE HORIZONTAL AND VERTICAL RAILROAD CLEARANCES SHOWN ON SHEETS 45 AND 78. THE CONTRACTOR SHALL COORDINATE HIS WORK WITH THE RAILROAD AND FOLLOW ALL INSTRUCTIONS GIVEN BY THE RAILROAD FLAGMAN.

LENGTH AND DURATION OF LANE CLOSURES AND RESTRICTIONS SHALL BE AT THE APPROVAL OF THE ENGINEER. IT IS THE INTENT TO MINIMIZE THE IMPACT TO THE TRAVELING PUBLIC. LANE CLOSURES OR RESTRICTIONS OVER SEGMENTS OF THE PROJECT IN WHICH NO WORK IS ANTICIPATED WITHIN A REASONABLE TIME FRAME, AS DETERMINED BY THE ENGINEER, SHALL NOT BE PERMITTED. THE LEVEL OF UTILIZATION OF MAINTENANCE OF TRAFFIC DEVICES SHALL BE COMMENSURATE WITH THE WORK IN PROGRESS.

BEFORE THE WORK BEGINS, THE CONTRACTOR SHALL SUBMIT TO THE ENGINEER THE NAME(S) AND TELEPHONE NUMBER(S) OF A PERSON OR PERSONS WHO CAN BE CONTACTED TWENTY-FOUR (24) HOURS PER DAY BY THE OHIO DEPARTMENT OF TRANSPORTATION AND ALL INTERESTED POLICE AGENCIES. THIS PERSON OR PERSONS SHALL BE RESPONSIBLE FOR PLACING OR REPLACING NECESSARY TRAFFIC CONTROL DEVICES IN ACCORDANCE WITH THE OHIO MANUAL OF UNIFORM TRAFFIC CONTROL DEVICES.

THE CONTRACTOR WILL ADVISE THE DISTRICT PUBLIC INFORMATION OFFICER AT (740) 774-8834, OR FAX (740) 773-2710 SEVEN (7) DAYS PRIOR TO THE START OF CONSTRUCTION ACTIVITIES. THE PROJECT ENGINEER WILL PROVIDE ASSISTANCE/ CLARIFICATION FOR ANY QUESTIONS.

PRIOR TO THE BEGINNING OF CONSTRUCTION, THE CONTRACTOR SHALL INSTALL PORTABLE CHANGEABLE MESSAGE SIGNS FACING NORTHBOUND TRAFFIC PRIOR TO BRIDGE NO. ROS-23-1257 L/R OVER THE SCIOTO RIVER AND FACING SOUTHBOUND TRAFFIC PRIOR TO THE S.R. 207 INTERCHANGE.

THE CONTRACTOR SHALL ARRANGE FOR ALL MAINTENANCE OF TRAFFIC OPERATIONS SUCH THAT THERE WILL BE NO OBSTRUCTIONS TO THE CONTINUOUS FLOW OF TRAFFIC. ALL INTERSECTIONS AND CROSS-OVERS SHALL BE OPEN TO TRAFFIC AT ALL TIMES UNLESS OTHERWISE SHOWN IN THE PLAN.

NO WORK SHALL BE PERFORMED AND ALL EXISTING LANES SHALL BE OPEN TO TRAFFIC (EXCEPT FOR THE LANE CLOSURES FOR THE BRIDGE WORK ZONES) DURING THE FOLLOWING DESIGNATED HOLIDAYS OR EVENTS:

MEMORIAL DAY	FOURTH OF JULY
LABOR DAY	THANKSGIVING
SPECIAL LOCAL EVENTS	

THE PERIOD OF TIME THAT THE LANES ARE TO BE OPEN DEPENDS ON THE DAY OF THE WEEK ON WHICH THE HOLIDAY OR EVENT FALLS. THE FOLLOWING SCHEDULE SHALL BE USED TO DETERMINE THIS PERIOD:

DAY OF THE WEEK	TIME ALL LANES MUST BE OPEN TO TRAFFIC		
SUNDAY	12:00 N FRIDAY	THROUGH	12:00 N MONDAY
MONDAY	12:00 N FRIDAY	THROUGH	12:00 N TUESDAY
TUESDAY	12:00 N MONDAY	THROUGH	12:00 N WEDNESDAY
WEDNESDAY	12:00 N TUESDAY	THROUGH	12:00 N THURSDAY
THURSDAY	12:00 N WEDNESDAY	THROUGH	12:00 N MONDAY
FRIDAY	12:00 N THURSDAY	THROUGH	12:00 N MONDAY
SATURDAY	12:00 N FRIDAY	THROUGH	12:00 N MONDAY

NO EXTENSIONS OF TIME SHALL BE GRANTED FOR DELAYS IN MATERIAL DELIVERIES, UNLESS SUCH DELAYS ARE INDUSTRY-WIDE, OR FOR LABOR STRIKES, UNLESS SUCH STRIKES ARE AREA-WIDE.

SHOULD THE CONTRACTOR FAIL TO MEET ANY OF THESE REQUIREMENTS, DISINCENTIVES SHALL BE ASSESSED IN ACCORDANCE WITH CMS 108.07 FOR EACH CALENDAR DAY OR PORTION THEREOF WHEN THE LANES WERE TO BE OPEN TO TRAFFIC.

THE FOLLOWING ESTIMATED QUANTITIES HAVE BEEN INCLUDED IN THE GENERAL SUMMARY FOR USE AS DIRECTED BY THE ENGINEER FOR THE MAINTENANCE OF TRAFFIC:

ITEM 614, ASPHALT CONCRETE FOR MAINTAINING TRAFFIC 50 CU. YD.

THE FOLLOWING IS A SUGGESTED PHASING SEQUENCE FOR THE MAINTENANCE OF TRAFFIC AND CONSTRUCTION FOR THE STRUCTURES ON THIS PROJECT. SEE SHEETS 19-21 FOR ADDITIONAL DETAILS AND QUANTITIES ASSOCIATED WITH THE FOLLOWING PHASES. FOR DETAILS NOT SHOWN ON THESE PLANS, CONSULT THE APPROPRIATE STANDARD CONSTRUCTION DRAWINGS.

PHASE 1 SET UP TRAFFIC CONTROL TO CLOSE BOTH THE RIGHT (DRIVING) AND LEFT (PASSING) LANES IN THE SOUTHBOUND LANES OF U.S.R. 23 AS SHOWN ON SHEETS 19-20. MAINTAIN A MINIMUM OF ONE 12 FOOT LANE OF TRAFFIC IN EACH DIRECTION BY USE OF THE EXISTING MEDIAN CROSSOVERS AND NORTHBOUND LANES OF U.S.R. 23. PERFORM ALL NECESSARY BRIDGE WORK AT STRUCTURE ROS-23-1533 L, ROADWAY RECONSTRUCTION WORK AND GUARDRAIL REPLACEMENT.

PHASE 2 REMOVE THE PORTABLE CONCRETE BARRIER AND SET UP TRAFFIC CONTROL DEVICES TO CLOSE THE CENTER LANE OF THE NORTHBOUND U.S.R. 23 AND WESTBOUND 35 OVERLAP AND THE LEFT (PASSING) LANE OF NORTHBOUND U.S.R. 23 AND THE RIGHT (DRIVING) LANE OF WESTBOUND U.S.R. 35 AS SHOWN ON SHEETS 16-17 AND IN ACCORDANCE WITH STANDARD CONSTRUCTION DRAWING MT-95.30. ALSO SET UP TRAFFIC CONTROL DEVICES TO CLOSE THE LEFT (PASSING) LANE OF SOUTHBOUND U.S.R. 23 AND THE LEFT LANE OF THE SOUTHBOUND U.S.R. 23 AND EASTBOUND U.S.R. 35 OVERLAP IN ACCORDANCE WITH STANDARD CONSTRUCTION DRAWING MT-95.30. REMOVE THE EXISTING MEDIAN CROSSOVERS AND COMPLETE ALL ROADWAY WORK IN BOTH LEFT (PASSING) LANES OF U.S.R. 23 AND THE RIGHT (DRIVING) LANE OF WESTBOUND U.S.R. 35 AND THE LEFT LANE OF THE SOUTHBOUND U.S.R. 23 AND EASTBOUND U.S.R. 35 OVERLAP AND THE CENTER LANE OF THE NORTHBOUND U.S.R. 23 AND WESTBOUND U.S.R. 35 OVERLAP. TWO LANES OF TRAFFIC IN EACH DIRECTION SHALL BE MAINTAINED AT THE U.S.R. 23/U.S.R. 35 OVERLAP AT ALL TIMES.

PHASE 3 RELOCATE TRAFFIC CONTROL DEVICES TO CLOSE THE RIGHT LANE OF THE NORTHBOUND U.S.R. 23 AND WESTBOUND U.S.R. 35 OVERLAP AND THE RIGHT (DRIVING) LANE OF NORTHBOUND U.S.R. 23 IN ACCORDANCE WITH STANDARD CONSTRUCTION DRAWING MT-95.30. ALSO SET UP TRAFFIC CONTROL DEVICES TO CLOSE THE CENTER LANE OF THE SOUTHBOUND U.S.R. 23 AND EASTBOUND U.S.R. 35 OVERLAP AND THE RIGHT (DRIVING) LANE OF SOUTHBOUND U.S.R. 23 AND THE LEFT (PASSING) LANE OF EASTBOUND U.S.R. 35 AS SHOWN ON SHEETS 16-17 AND IN ACCORDANCE WITH STANDARD CONSTRUCTION DRAWING MT-95.30. COMPLETE ALL ROADWAY WORK IN BOTH RIGHT (DRIVING) LANES OF U.S.R. 23 AND THE LEFT (PASSING) LANE OF EASTBOUND U.S.R. 35 AND THE RIGHT LANE OF THE NORTHBOUND U.S.R. 23 AND WESTBOUND U.S.R. 35 OVERLAP AND THE CENTER LANE OF THE SOUTHBOUND U.S.R. 23 AND EASTBOUND U.S.R. 35 OVERLAP. TWO LANES OF TRAFFIC IN EACH DIRECTION SHALL BE MAINTAINED AT THE U.S.R. 23/U.S.R. 35 OVERLAP AT ALL TIMES.

PHASE 4 RELOCATE TRAFFIC CONTROL DEVICES TO CLOSE THE LEFT LANE OF THE NORTHBOUND U.S.R. 23 AND WESTBOUND U.S.R. 35 OVERLAP AND THE LEFT (PASSING) LANE OF WESTBOUND U.S.R. 35 AND THE RIGHT LANE OF THE SOUTHBOUND U.S.R. 23 AND EASTBOUND U.S.R. 35 OVERLAP AND THE RIGHT (PASSING) LANE OF EASTBOUND U.S.R. 35 IN ACCORDANCE WITH STANDARD CONSTRUCTION DRAWING MT-95.30. COMPLETE ALL ROADWAY WORK IN THE LEFT LANE OF THE NORTHBOUND U.S.R. 23 AND WESTBOUND U.S.R. 35 OVERLAP AND THE LEFT (PASSING) LANE OF WESTBOUND U.S.R. 35 AND THE RIGHT LANE OF THE SOUTHBOUND U.S.R. 23 AND EASTBOUND U.S.R. 35 OVERLAP AND THE RIGHT (PASSING) LANE OF EASTBOUND U.S.R. 35

THE CONTRACTOR SHALL PROVIDE, ERECT AND MAINTAIN SIGNS AND SIGN SUPPORTS, AS DETAILED IN THE OHIO MANUAL OF UNIFORM TRAFFIC CONTROL DEVICES, AND TYPE III BARRICADES OF THE TYPE AND LOCATION AS SHOWN IN THE PLANS.

ALL WORK AND TRAFFIC CONTROL DEVICES SHALL BE IN ACCORDANCE WITH CMS 614 AND OTHER APPLICABLE PORTIONS OF THE SPECIFICATIONS, AS WELL AS THE OHIO MANUAL OF UNIFORM TRAFFIC CONTROL DEVICES. PAYMENT FOR ALL LABOR, EQUIPMENT AND MATERIALS SHALL BE INCLUDED IN THE LUMP SUM CONTRACT PRICE FOR ITEM 614 MAINTAINING TRAFFIC, UNLESS SEPARATELY ITEMIZED IN THE PLAN.

ITEM 614, REPLACEMENT DRUM

DRUMS FURNISHED BY THE CONTRACTOR IN ACCORDANCE WITH THE REQUIREMENTS OF THE PLANS, SPECIFICATIONS AND PROPOSAL WHICH BECOME DAMAGED BY TRAFFIC FOR REASONS BEYOND THE CONTROL OF THE CONTRACTOR SHALL BE REPLACED IN KIND WHEN ORDERED BY THE ENGINEER. REPLACEMENT DRUMS SHALL BE NEW.

PAYMENT FOR THE NEW DRUMS SHALL BE MADE AT THE CONTRACT PRICE PER EACH FOR ITEM 614, REPLACEMENT DRUM, AND SHALL INCLUDE THE COST OF REMOVING AND DISPOSING OF THE DAMAGED DRUM, AND PROVIDING AND MAINTAINING THE REPLACEMENT DRUM IN ACCORDANCE WITH THE CONTRACT REQUIREMENTS FOR THE ORIGINAL DRUM.

AN ESTIMATED QUANTITY OF 100 EACH HAS BEEN PROVIDED IN THE GENERAL SUMMARY.

ITEM 614, REPLACEMENT SIGN

FLATSHEET SIGNS FURNISHED BY THE CONTRACTOR IN ACCORDANCE WITH THE REQUIREMENTS OF THE PLANS, SPECIFICATIONS AND PROPOSAL WHICH BECOME DAMAGED BY TRAFFIC FOR REASONS BEYOND THE CONTROL OF THE CONTRACTOR SHALL BE REPLACED IN KIND WHEN ORDERED BY THE ENGINEER. REPLACEMENT SIGNS SHALL BE NEW. OTHER MATERIALS MAY BE IN USED, BUT GOOD CONDITION SUBJECT TO THE APPROVAL OF THE ENGINEER.

PAYMENT FOR THE NEW SIGNS SHALL BE MADE AT THE CONTRACT PRICE PER EACH FOR ITEM 614, REPLACEMENT SIGN, AND SHALL INCLUDE THE COST OF REMOVING AND DISPOSING OF DAMAGED SIGNS, HARDWARE AND SUPPORTS, AND PROVIDING THE NECESSARY REPLACEMENT HARDWARE, SUPPORTS, ETC.

AN ESTIMATED QUANTITY OF 5 EACH HAS BEEN PROVIDED IN THE GENERAL SUMMARY.

ITEM 614, BARRIER REFLECTORS AND/OR OBJECT MARKERS

BARRIER REFLECTORS AND/OR OBJECT MARKERS SHALL BE INSTALLED ON ALL PORTABLE CONCRETE BARRIER USED FOR TRAFFIC CONTROL. BARRIER REFLECTORS, OBJECT MARKERS AND THEIR INSTALLATION SHALL CONFORM TO CMS 626, EXCEPT THAT THE SPACING SHALL BE 50 FEET. AN ESTIMATED QUANTITY OF 68 EACH OF ITEM 614, BARRIER REFLECTOR, TYPE B AND 68 EACH OF ITEM 614, OBJECT MARKER, ONE-WAY HAVE BEEN PROVIDED AND CARRIED TO THE GENERAL SUMMARY.

DUST CONTROL

THE CONTRACTOR SHALL FURNISH AND APPLY WATER FOR DUST CONTROL AS DIRECTED BY THE ENGINEER. THE FOLLOWING ESTIMATED QUANTITY HAS BEEN INCLUDED FOR DUST CONTROL PURPOSES:

616 WATER 1 M GAL.

I:\project\District-wide\2009PM-79964\roadway\sheets\79964MN001.dgn 06-NOV-2008 1:56PM dbeekman

ITEM 614, LAW ENFORCEMENT OFFICER WITH PATROL CAR FOR ASSISTANCE DURING CONSTRUCTION OPERATIONS

USE OF LAW ENFORCEMENT OFFICERS (LEOS) BY CONTRACTORS OTHER THAN THE USES SPECIFIED IN THIS NOTE WILL NOT GENERALLY BE PERMITTED AT PROJECT COST UNLESS PRIOR APPROVAL HAS BEEN OBTAINED FROM THE ENGINEER. LEOS SHOULD NOT BE USED WHERE THE OHIO MANUAL OF UNIFORMTRAFFIC CONTROL DEVICES (OMUTCD) INTENDS THAT FLAGGERS BE USED.

IN ADDITION TO THE REQUIREMENTS OF CMS 614 AND THE OHIO MANUAL OF UNIFORM TRAFFIC CONTROL DEVICES (OMUTCD), A UNIFORMED LAW ENFORCEMENT OFFICER AND OFFICIAL PATROL CAR WITH WORKING TOP-MOUNTED EMERGENCY FLASHING LIGHTS SHALL BE PROVIDED FOR CONTROLLING TRAFFIC FOR THE FOLLOWING TASKS:

> FOR LANE CLOSURES: DURING INITIAL SET-UP PERIODS, TEAR DOWN PERIODS, SUBSTANTIAL SHIFTS OF A CLOSURE POINT OR WHEN NEW LANE CLOSURE ARRANGEMENTS ARE INITIATED. IN GENERAL, LEOS SHOULD BE POSITIONED AT THE POINT OF LANE RESTRICTION OR ROAD CLOSURE AND TO MANUALLY CONTROL TRAFFIC MOVEMENTS THROUGH INTERSECTIONS IN WORK ZONES.

LEOS SHOULD NOT FORGO THEIR TRAFFIC CONTROL RESPONSIBILITIES TO APPREHEND MOTORISTS FOR ROUTINE TRAFFIC VIOLATIONS. HOWEVER, IF A MOTORIST'S ACTIONS ARE CONSIDERED TO BE RECKLESS, THEN PURSUIT OF THE MOTORIST IS APPROPRIATE.

THE LEOS WORK AT THE DIRECTION OF THE CONTRACTOR. THE CONTRACTOR IS RESPONSIBLE FOR SECURING THE SERVICES OF THE LEOS AND COMMUNICATING THE INTENTIONS OF THE PLANS WITH RESPECT TO DUTIES OF THE LEOS. THE ENGINEER SHALL HAVE FINAL CONTROL OVER THE LEOS' DUTIES AND PLACEMENT, AND WILL RESOLVE ANY ISSUES THAT MAY ARISE BETWEEN THE TWO PARTIES. THE CONTRACTOR SHALL PROVIDE THE ENGINEER WITH A LIST OF THE APPROPRIATE LAW ENFORCEMENT AGENCY(S), INCLUDING ADDRESS AND TELEPHONE NUMBER.

THE LEO SHOULD REPORT IN TO THE CONTRACTOR PRIOR TO THE START OF THE SHIFT TO RECEIVE INSTRUCTIONS REGARDING SPECIFIC WORK ASSIGNMENTS DURING THE SHIFT. THE LEO IS EXPECTED TO STAY AT THE PROJECT SITE FOR THE ENTIRE DURATION OF THE SHIFT. SHOULD IT BE NECESSARY TO LEAVE THE PROJECT SITE, THE LEO SHOULD NOTIFY THE ENGINEER. THE CONTRACTOR SHALL PROVIDE THE LEO WITH A TWO-WAY COMMUNICATION DEVICE WHICH SHALL BE RETURNED TO THE CONTRACTOR AT THE END OF THE SHIFT.

LAW ENFORCEMENT OFFICERS (WITH PATROL CAR) REQUIRED BY THE TRAFFIC MAINTENANCE TASKS ABOVE SHALL BE PAID FOR ON A UNIT PRICE (HOURLY) BASIS UNDER ITEM 614, LAW ENFORCEMENT OFFICER (WITH PATROL CAR). THE FOLLOWING ESTIMATED QUANTITY HAS BEEN CARRIED TO THE GENERAL SUMMARY.

ITEM 614, LAW ENFORCEMENT OFFICER WITH PATROL CAR 75 HOURS

THE HOURS PAID SHALL INCLUDE MINIMUM SHOW-UP TIME REQUIRED BY THE LAW ENFORCEMENT AGENCY INVOLVED.

ANY ADDITIONAL COSTS (ADMINISTRATIVE OR OTHERWISE) INCURRED BY THE CONTRACTOR TO OBTAIN THE SERVICES OF AN LEO ARE INCLUDED WITH THE BID UNIT PRICE FOR ITEM 614, LAW ENFORCEMENT OFFICER WITH PATROL CAR.

ITEM 614, PORTABLE CHANGEABLE MESSAGE SIGNS, AS PER PLAN

THE CONTRACTOR SHALL FURNISH, INSTALL, MAINTAIN AND REMOVE, WHEN NO LONGER NEEDED, A CHANGEABLE MESSAGE SIGN, ON SITE, FOR THE DURATION OF THE PROJECT. THE SIGN SHALL BE OF A TYPE SHOWN ON A LIST OF APPROVED PCMS UNITS MAINTAINED BY THE DIRECTOR (OFFICE OF MATERIALS MANAGEMENT). THE APPROVED LIST OF PORTABLE CHANGEABLE MESSAGE SIGNS CAN BE FOUND ON THE ODOT WEBSITE BY CLICKING ON THE SERVICES MENU, THEN CLICKING ON MATERIALS MANAGEMENT. THE LIST CONTAINS CLASS A AND B UNITS WITH MINIMUM LEGIBILITY DISTANCES OF 650 FT. AND 475 FT. RESPECTIVELY.

EACH SIGN SHALL BE TRAILER-MOUNTED AND EQUIPPED WITH A FUNCTIONAL DIMMING MECHANISM, TO DIM THE SIGN DURING DARKNESS, AND A TAMPER AND VANDAL PROOF ENCLOSURE. EACH SIGN SHALL BE PROVIDED WITH APPROPRIATE TRAINING AND OPERATION INSTRUCTIONS TO ENABLE ON-SITE PERSONNEL TO OPERATE AND TROUBLESHOOT THE UNIT. THE SIGN SHALL ALSO BE CAPABLE OF BEING POWERED BY AN ELECTRICAL SERVICE DROP FROM A LOCAL UTILITY COMPANY. PCMS TRAILERS SHOULD BE DELINEATED ON A PERMANENT BASIS BY AFFIXING RETROREFLECTIVE MATERIAL, IN A CONTINUOUS LINE ON THE FACE OF THE TRAILER AS SEEN BY ONCOMING ROAD USERS.

THE PROBABLE PCMS LOCATIONS AND WORK LIMITS FOR THOSE LOCATIONS ARE FACING NORTHBOUND TRAFFIC PRIOR TO BRIDGE NO. ROS-23-1257 L/R OVER THE SCIOTO RIVER AND FACING SOUTHBOUND TRAFFIC PRIOR TO THE S.R. 207 INTERCHANGE. PLACEMENT, OPERATION, MAINTENANCE AND ALL ACTIVATION OF THE SIGNS BY THE CONTRACTOR SHALL BE AS DIRECTED BY THE ENGINEER. THE PCMS SHALL BE LOCATED IN A HIGHLY VISIBLE POSITION YET PROTECTED FROM TRAFFIC. THE CONTRACTOR SHALL, AT THE DIRECTION OF THE ENGINEER, RELOCATE THE PCMS TO IMPROVE VISIBILITY OR ACCOMMODATE CHANGED CONDITIONS. WHEN NOT IN USE, THE PCMS SHALL BE TURNED OFF. ADDITIONALLY, WHEN NOT IN USE FOR EXTENDED PERIODS OF TIME, THE PCMS SHALL BE TURNED, FACING AWAY FROM ALL TRAFFIC, AND SHALL DISPLAY ONE OR MORE HIGH-INTENSITY YELLOW RETROREFLECTIVE SHEETING SURFACES OF 9-INCH BY 15-INCH MINIMUM SIZE FACING TRAFFIC.

THE ENGINEER SHALL BE PROVIDED ACCESS TO EACH SIGN UNIT AND SHALL BE PROVIDE WITH APPROPRIATE TRAINING AND OPERATION INSTRUCTIONS TO ENABLE ODOT PERSONNEL TO OPERATE AND TROUBLESHOOT THE UNIT, AND TO REVISE SIGN MESSAGES, IF NECESSARY.

THE CONTRACTOR SHALL IMPLEMENT A SYSTEM WHEREBY CHANGEABLE MESSAGES WILL BE IMPLEMENTED WITHIN 4 HOURS FOLLOWING TELEPHONE NOTIFICATION FROM THE PROJECT ENGINEER TO A DESIGNATED PHONE.

ALL MESSAGES TO BE DISPLAYED ON THE SIGN WILL BE PROVIDED BY THE ENGINEER. A LIST OF ALL REQUIRED PRE-PROGRAMMED MESSAGES WILL BE GIVEN TO THE CONTRACTOR AT THE PROJECT PRECONSTRUCTION CONFERENCE. THE SIGN SHALL HAVE THE CAPABILITY TO STORE UP TO 99 MESSAGES. MESSAGE MEMORY OR PRE-PROGRAMMED DISPLAYS SHALL NOT BE LOST AS A RESULT OF POWER FAILURES TO THE ON-BOARD COMPUTER. THE SIGN LEGEND SHALL BE CAPABLE OF BEING CHANGED IN THE FIELD. THREE-LINE PRESENTATION FORMATS WITH UP TO SIX MESSAGE PHASES SHALL BE SUPPORTED. PCMS FORMAT SHALL PERMIT THE COMPLETE MESSAGE FOR EACH PHASE TO BE READ AT LEAST TWICE.

THE PCMS SHALL CONTAIN AN ACCURATE CLOCK AND PROGRAMMING LOGIC WHICH WILL ALLOW THE SIGN TO BE ACTIVATED, DEACTIVATED OR MESSAGES CHANGED AUTOMATICALLY AT DIFFERENT TIMES OF THE DAY FOR DIFFERENT DAYS OF THE WEEK.

THE PCMS UNIT SHALL BE MAINTAINED IN GOOD WORKING ORDER BY THE CONTRACTOR IN ACCORDANCE WITH THE PROVISIONS OF CMS 614.07. THE CONTRACTOR SHALL, PRIOR TO ACTIVATING THE UNIT, MAKE ARRANGEMENTS, WITH AN AUTHORIZED SERVICE AGENT FOR THE PCMS, TO ASSURE PROMPT SERVICE IN THE EVENT OF FAILURE. ANY FAILURE SHALL NOT RESULT IN THE SIGN BEING OUT OF SERVICE FOR MORE THAN 12 HOURS, INCLUDING WEEKENDS. FAILURE TO COMPLY MAY RESULT IN AN ORDER TO STOP WORK AND OPEN ALL TRAFFIC LANES AND/OR IN THE DEPARTMENT TAKING APPROPRIATE ACTION TO SAFELY CONTROL TRAFFIC. THE ENTIRE COST TO CONTROL TRAFFIC, ACCRUED BY THE DEPARTMENT DUE TO THE CONTRACTOR'S NONCOMPLIANCE, WILL BE DEDUCTED FROM MONEYS DUE, OR TO BECOME DUE THE CONTRACTOR ON HIS CONTRACT.

THE CONTRACTOR SHALL BE RESPONSIBLE FOR 24-HOUR-PER-DAY OPERATION AND MAINTENANCE OF THESE SIGNS ON THE PROJECT FOR THE DURATION OF THE PHASES WHEN THE PLAN REQUIRES THEIR USE.

PAYMENT FOR THE ABOVE DESCRIBED ITEM SHALL BE AT THE CONTRACT UNIT PRICE. PAYMENT SHALL INCLUDE ALL LABOR, MATERIALS, EQUIPMENT, FUELS, LUBRICATING OILS, SOFTWARE, HARDWARE AND INCIDENTALS TO PERFORM THE ABOVE DESCRIBED WORK.

ITEM 614, PORTABLE CHANGEABLE MESSAGE SIGN, AS PER PLAN 12 SIGN-MONTH

WORK ZONE INCREASED PENALTIES SIGN

R11-H5a-48 SIGNS SHALL BE FURNISHED, ERECTED, AND MAINTAINED IN GOOD CONDITION AND/OR REPLACED AS NECESSARY AND SUBSEQUENTLY REMOVED BY THE CONTRACTOR. SIGNS SHALL BE MOUNTED AT THE APPROPRIATE OFFSETS AND ELEVATIONS AS PRESCRIBED BY THE OHIO MANUAL OF UNIFORM TRAFFIC CONTROL DEVICES. THEY SHALL BE MAINTAINED ON SUPPORTS MEETING CURRENT SAFETY CRITERIA.

THE SIGNS MAY BE ERECTED OR UNCOVERED NO MORE THAN FOUR HOURS BEFORE THE ACTUAL START OF WORK. THE SIGNS SHALL BE REMOVED OR COVERED NO LATER THAN FOUR HOURS FOLLOWING RESTORATION OF ALL LANES TO TRAFFIC WITH NO RESTRICTIONS, OR SOONER AS DIRECTED BY THE ENGINEER. TEMPORARY SIGN COVERING AND UNCOVERING DUE TO TEMPORARY LANE RESTORATIONS SHALL BE GUIDED BY THE FOUR-HOUR LIMITATIONS STATED ABOVE. SUCH LANE RESTORATIONS SHOULD BE EXPECTED TO REMAIN IN EFFECT FOR 30 OR MORE CONSECUTIVE CALENDAR DAYS, SUCH AS DURING WINTER SHUT-DOWNS.

THE SIGNS ON THE MAINLINE SHALL BE DUAL MOUNTED UNLESS NOT PHYSICALLY POSSIBLE. THE FIRST SIGN SHALL BE PLACED BETWEEN THE ROAD WORK AHEAD (W20-1) SIGN AND THE NEXT SIGN IN THE SEQUENCE. SIGNS SHALL BE ERECTED ON EACH ENTRANCE RAMP AND EVERY 2 MILES THROUGH THE CONSTRUCTION WORK LIMITS. SIGNS ON THE MAINLINE SHALL BE R11-H5a-48. SIGNS USED ON THE RAMPS SHALL BE R11-H5a-24. R11-H5a-24 SIGNS MAY BE USED IN THE MEDIAN IN LIEU OF R11-H5a-48 SIGNS IF IT IS NOT PHYSICALLY POSSIBLE TO PROVIDE R11-H5a-48 SIGNS IN THE MEDIAN.

THE CONTRACTOR MAY USE SIGNS AND SUPPORTS IN USED, BUT GOOD, CONDITION PROVIDED THE SIGNS MEET CURRENT ODOT SPECIFICATIONS. SIGN FACES SHALL BE RETROREFLECTORIZED WITH TYPE G SHEETING COMPLYING WITH THE REQUIREMENTS OF CMS 730.19.

WORK ZONE INCREASED PENALTIES SIGNS AND SUPPORTS WILL BE MEASURED AS THE NUMBER OF SIGN INSTALLATIONS, INCLUDING THE SIGN AND NECESSARY SUPPORTS. IF A SIGN AND SUPPORT COMBINATION IS REMOVED AND RE-ERECTED AT ANOTHER LOCATION AS DIRECTED BY THE ENGINEER, IT SHALL BE CONSIDERED ANOTHER UNIT.

PAYMENT FOR ACCEPTED QUANTITIES, COMPLETE, IN PLACE WILL BE MADE AT THE CONTRACT UNIT PRICE. PAYMENT SHALL BE FULL COMPENSATION FOR ALL MATERIALS, LABOR, INCIDENTALS AND EQUIPMENT FOR FURNISHING, ERECTING, MAINTAINING, COVERING DURING SUSPENSION OF WORK, AND REMOVAL OF THE SIGN AND SUPPORT.

ITEM 614, WORK ZONE INCREASED PENALTIES SIGN 20 EACH

ITEM 614, WORK ZONE CROSSOVER LIGHTING SYSTEM, AS PER PLAN

THIS WORK SHALL CONSIST OF OPERATING, MAINTAINING AND REMOVING THE EXISTING WORK ZONE LIGHTING SYSTEM FOR THE EXISTING CROSSOVERS. THE SYSTEM SHALL BE AS SHOWN ON SCD MT-100.00. THE CONTRACTOR SHALL ARRANGE FOR AND PAY FOR POWER. ALL MATERIALS AND CONSTRUCTION SHALL COMPLY WITH APPLICABLE PORTIONS OF 625 AND 725 EXCEPT: THE PERFORMANCE TEST OF 625.19F, AND CERTIFIED DRAWING REQUIREMENT OF 625.04, ARE WAIVED AND USED MATERIALS IN GOOD CONDITION ARE ACCEPTABLE.

POLES MAY BE LESS THAN 30 FT FROM THE EDGE OF PAVEMENT WHEN BEHIND GUARDRAIL. ADDITIONAL POLE LINES, CABLES AND APPURTENANCES NECESSARY TO FURNISH POWER TO THE LIGHTING SYSTEM SHALL BE INCLUDED IN THIS ITEM. SERVICE POLES SHALL BE POSITIONED WITH THE SAME CONSTRAINTS AS THE LIGHTING POLES AS A MINIMUM.

PAYMENT WILL BE MADE AT THE UNIT PRICE PER EACH FOR ITEM 614, WORK ZONE CROSSOVER LIGHTING SYSTEM, AS PER PLAN THROUGHOUT ALL PHASES OF WORK WHEN THE CROSSOVER ROADWAYS ARE USED.

I:\project\District-wide\2009PM-79964\roadway\sheets\79964MN001.dgn 06-NOV-2008 1:57PM dbeekman

ITEM 614, WORK ZONE SPEED LIMIT SIGN

THE CONTRACTOR SHALL FURNISH, INSTALL, MAINTAIN, COVER DURING SUSPENSION OF WORK, AND SUBSEQUENTLY REMOVE WORK ZONE SPEED LIMIT (R2-1) (50 MPH SPEED LIMIT) SIGNS AND SUPPORTS WITHIN THE WORK LIMITS IN ACCORDANCE WITH THE FOLLOWING REQUIREMENTS:

THE CONTRACTOR SHALL COVER OR REMOVE ANY EXISTING SPEED LIMIT SIGNS WITHIN THE REDUCED SPEED ZONE. THESE SIGNS SHALL BE RESTORED DURING SUSPENSION OR TERMINATION OF THE REDUCED SPEED LIMIT. THE EXPENSE OF COVERING OR REMOVAL AND RESTORATION OF EXISTING SPEED LIMIT OR MINIMUM SPEED LIMIT SIGNS SHALL BE INCLUDED IN THE PAY ITEM FOR THE WORK ZONE SPEED LIMIT SIGNS.

THE WORK ZONE SPEED LIMIT SIGNS MAY BE ERECTED OR UNCOVERED NO MORE THAN FOUR HOURS BEFORE THE ACTUAL START OF WORK. THE SIGNS SHALL BE REMOVED OR COVERED NO LATER THAN FOUR HOURS FOLLOWING RESTORATION OF ALL LANES TO TRAFFIC WITH NO RESTRICTIONS, OR SOONER AS DIRECTED BY THE ENGINEER. TEMPORARY SIGN COVERING AND UNCOVERING DUE TO TEMPORARY LANE RESTORATIONS SHALL BE GUIDED BY THE FOUR-HOUR LIMITATIONS STATED ABOVE. SUCH LANE RESTORATIONS SHOULD BE EXPECTED TO REMAIN IN EFFECT FOR 30 OR MORE DAYS, SUCH AS DURING WINTER SHUT-DOWNS. CLEANUP WORK AND OTHER WORK BEYOND THE SHOULDER SUCH AS SEEDING, TO BE PERFORMED AFTER RESTORATION OF ALL FULL-WIDTH LANES AND SHOULDERS TO TRAFFIC, DOES NOT CONSTITUTE A CONDITION WARRANTING A SPEED REDUCTION. THEREFORE, WHEN ACTIVITY IS LIMITED TO SUCH WORK, THE SPEED LIMIT IN EFFECT SHALL BE THE NORMAL SPEED LIMIT FOR THE SITE.

CONSTRUCTION AND MATERIAL SPECIFICATIONS, ITEM 614, PARAGRAPH 614.02(B) INDICATES THAT THE TWO DIRECTIONS OF A DIVIDED HIGHWAY ARE CONSIDERED SEPARATE HIGHWAY SECTIONS. THEREFORE, IF THE WORK ON A MULTI-LANE DIVIDED HIGHWAY IS LIMITED TO ONLY ONE DIRECTION, SPEED REDUCTION IN THE DIRECTION OF THE WORK DOES NOT AUTOMATICALLY CONSTITUTE SPEED REDUCTION IN THE OPPOSITE DIRECTION. SPEED LIMIT REDUCTION IN THE OPPOSITE DIRECTION, IN SUCH CASE, IS APPROPRIATE ONLY IF CONDITIONS ARE EXPECTED TO HAVE AND IMPACT ON THE DIRECTIONAL TRAFFIC FLOW, AS DIRECTED BY THE ENGINEER.

THE CONTRACTOR SHALL ERECT A WORK ZONE SPEED LIMIT SIGN IN ADVANCE OF ANY LANE RESTRICTION EXPECTED TO LAST AT LEAST 30 CONSECUTIVE CALENDAR DAYS, OR AS DIRECTED BY THE ENGINEER. THE SIGN SHALL BE MOUNTED ON BOTH SIDES OF A DIRECTIONAL ROADWAY OF DIVIDED HIGHWAYS. THE FIRST WORK ZONE SPEED LIMIT SIGN SHALL BE PLACED APPROXIMATELY 500 FEET IN ADVANCE OF THE LANE REDUCTION OR SHIFT TAPER OR OTHER ROADWAY OR SHOULDER RESTRICTION. ON UNDIVIDED HIGHWAYS THE SIGN SHALL BE MOUNTED ON THE RIGHT SIDE, APPROXIMATELY 250 FEET IN ADVANCE OF SUCH RESTRICTIONS. THE SIGN SHALL BE REPEATED, ON THE SIDE NEAREST TRAFFIC, EVERY 1 MILE FOR 55 MPH ZONES AND EVERY ONE-HALF MILE FOR 50 MPH AND 45 MPH ZONES. THESE SIGNS SHALL ALSO BE ERECTED IMMEDIATELY AFTER EACH OPEN ENTRANCE RAMP WITHIN THE ZONE.

ON PROJECTS FOR WHICH THE ACTIVITY OR ROADWAY RESTRICTION IS LIMITED TO ONE SECTION OF THE PROJECT FOR AT LEAST THIRTY DAYS AND THEN IS MOVED TO ANOTHER SECTION OF THE PROJECT UPON COMPLETION OF WORK IN THE FIRST SECTION, THE SPEED LIMIT REDUCTION SHALL BE LIMITED TO ONLY THE ACTIVE PORTION OF THE PROJECT AT THE GIVEN TIME. SIGNING FOR A SPEED LIMIT REDUCTION, AS WELL AS ALL OTHER ADVANCE CONSTRUCTION SIGNING, SHALL BE RELOCATED WHEN THE CONCENTRATION OF ACTIVITY IS RELOCATED.

ON PROJECTS FOR WHICH SPEED REDUCTION IS CALLED FOR ON MORE THAN ONE ROADWAY, THE DISPLAY OF REDUCED SPEED LIMIT SIGNING ON A GIVEN ROADWAY SHALL BE DEPENDANT ON THE SCHEDULING OF WORK ACTIVITY ON THE GIVEN ROADWAY.

SPEED REDUCTION SIGNS (W3-5) SHALL BE ERECTED IN ADVANCE OF THE SPEED REDUCTION, APPROXIMATELY 1250 FEET ON MULTI-LANE HIGHWAYS AND 500 FEET ON 2-LANE HIGHWAYS.

A SIGN(S) TO INDICATE THE RESUMPTION OF THE STATUTORY SPEED LIMIT SHALL BE ERECTED AT THE END OF ANY REDUCED SPEED ZONE, TYPICALLY AT THE POINT WHERE ROADWAY AND SHOULDER WIDTHS RETURN TO NORMAL. ON UNDIVIDED ROADWAYS, THE R2-1 (SPEED LIMIT) SIGN SHALL BE USED. ON DIVIDED HIGHWAYS WHERE THE SPEED LIMIT VARIES BY VEHICLE TYPE, THE R2-1 (SPEED LIMIT) SIGN AND THE R2-H2a (TRUCK SPEED LIMIT) SIGNS SHALL BE MOUNTED SIDE-BY-SIDE ON SEPARATE SUPPORTS. THE CONTRACTOR MAY USE SIGNS AND SUPPORTS IN USED, BUT GOOD CONDITION, PROVIDED THE SIGNS MEET CURRENT ODOT SPECIFICATIONS. SIGN FACES SHALL BE RETROREFLECTORIZED WITH TYPE G SHEETING COMPLYING WITH THE REQUIREMENTS OF CMS 730.19.

WORK ZONE SPEED LIMIT SIGNS SHALL BE MOUNTED ON TWO ITEM 630, GROUND MOUNTED SUPPORTS, NO. 3 POSTS.

WORK ZONE SPEED LIMIT SIGNS AND SUPPORTS WILL BE MEASURED AS THE NUMBER OF SIGN INSTALLATIONS, INCLUDING THE SIGNS AND NECESSARY SUPPORTS. IF A SIGN AND SUPPORT COMBINATION IS REMOVED AND RE-ERECTED AT ANOTHER LOCATION WITHIN THE PROJECT DUE TO CHANGES IN THE SPEED ZONE DIRECTED BY THE ENGINEER, IT SHALL BE CONSIDERED ANOTHER UNIT.

PAYMENT FOR ACCEPTED QUANTITIES, COMPLETE IN PLACE, WILL BE MADE AT THE CONTRACT UNIT PRICE. PAYMENT SHALL BE FULL COMPENSATION FOR ALL MATERIALS, LABOR, INCIDENTALS AND EQUIPMENT FOR FURNISHING, ERECTING, MAINTAINING, COVERING DURING SUSPENSION OF WORK, AND REMOVING THE SIGNS AND SUPPORTS. THE FOLLOWING ESTIMATED QUANTITY HAS BEEN CARRIED TO THE GENERAL SUMMARY.

ITEM 614 - WORK ZONE SPEED LIMIT SIGN 40 EACH

ITEM 614, WORK ZONE IMPACT ATTENUATOR FOR 24" WIDE HAZARDS (UNIDIRECTIONAL)

THIS ITEM SHALL CONSIST OF FURNISHING AND INSTALLING ONE OF THE FOLLOWING IMPACT ATTENUATORS:

1. THE QUADGUARD CZ, 24 INCHES WIDE SIX-BAY WORK ZONE IMPACT ATTENUATOR MANUFACTURED BY ENERGY ABSORPTION SYSTEMS, INC., 35 EAST WACKER DRIVE, CHICAGO, IL 60601 TELEPHONE: 312-467-6750.

   THE LENGTH OF THE SIX-BAY QUADGUARD CZ IS 20'-9". INSTALLATION SHALL BE AT THE LOCATIONS SPECIFIED IN THE PLANS, IN ACCORDANCE WITH THE MANUFACTURER'S SPECIFICATIONS AS DETAILED ON THE FOLLOWING PRE-APPROVED SHOP DRAWINGS.

DRAWING NUMBER	DRAWING NAME	DWG./REV. DATE	ODOT APPROVAL DATE
QSCZCVR-T4	QUADGUARD CZ SYSTEM FOR CONSTRUCTION ZONES	5/13/99 REV. J	8/27/99
35-40-10	QUADGUARD SYSTEM CONCRETE PAD, CZ, QG	11/19/97 REV. D	8/27/99
35-40-16	QUADGUARD SYSTEM BACKUP ASSEMBLY, CZ, QG	7/30/99 REV. F	8/27/99
354051z	QUADGUARD CZ SYSTEM NOSE ASSEMBLY, CZ, QG, 24, 30, 36	5/17/99	8/27/99
35-40-18	TRANSITION ASSEMBLY, 4 OFFSET, QG	6/25/99 REV. F	8/27/99
35400260	QUADGUARD SYSTEM PCMB ANCHOR ASSEMBLY	11/19/97 REV. C	8/27/99

2. THE TRACC (TRINITY ATTENUATING CRASH CUSHION) MANUFACTURED BY TRINITY INDUSTRY, 1170 N. STATE STREET, GIRARD, OHIO 44420 TELEPHONE: 330-545-4373.

   THE TRACC IS 21'-0" LONG AND 2'-7" WIDE. INSTALLATION SHALL BE AT THE LOCATIONS SPECIFIED IN THE PLANS, IN ACCORDANCE WITH THE MANUFACTURER'S SPECIFICATIONS AS DETAILED ON THE FOLLOWING PRE-APPROVED SHOP DRAWINGS.

DRAWING NUMBER	DRAWING NAME	DWG./REV. DATE	ODOT APPROVAL DATE
SS450	CRASH-CUSHION ATTENUATING TERMINAL PLAN, ELEVATION & SECTIONS	3/12/99 REV. 1	8/27/99
SS455	TRACC TRANSITION TO W-BEAM MEDIAN BARRIER PLAN, ELEVATION & SECTIONS	2/18/99	8/27/99
SS461	TRACC TRANSITION TO CONCRETE SAFETY SHAPE BARRIER PLAN, ELEVATION & SECTIONS	6/30/99 REV. 1	8/27/99
SS462	TRACC TRANSITION TO CONCRETE BARRIER SINGLE SLOPE PLAN, ELEVATION & SECTIONS	6/30/99	8/27/99

3. THE BARRIER SYSTEMS, INC. TAU-II IMPACT ATTENUATOR DISTRIBUTED BY ROAD SYSTEMS, INC., SALES SUPPORT, 2183 ELM TRACE, AUSTINTOWN, OH 44515 TELEPHONE: 330-799-9291.

   THE TAU-II FOR THIS NOTE IS A PARALLEL 8-BAY UNIT 24' LONG AND 35" WIDE. INSTALLATION SHALL BE AT THE LOCATIONS SPECIFIED IN THE PLANS, IN ACCORDANCE WITH THE MANUFACTURER'S SPECIFICATIONS AS DETAILED ON THE FOLLOWING PRE-APPROVED SHOP DRAWINGS.

DRAWING NUMBER	DRAWING NAME	DWG./REV. DATE	ODOT APPROVAL DATE
A040416	UNIVERSAL TAU-II PARTS LIST	4/22/04	10/16/04
A040420	UNIVERSAL TAU-II FOUNDATION, FLUSH MOUNT BACKSTOP	4/28/04	10/16/04
A040105	UNIVERSAL TAU-II FOUNDATION, PCB BACKSTOP (REFERENCED ON A04020)	1/07/04	10/16/04
B040239	APPLICATION, FLUSH MOUNT BACKSTOP (TYPICAL FOR PARALLEL 60 MPH UNIT)	4/21/04	10/16/04

THE CONTRACTOR SHALL PROVIDE A REPLACEMENT UNIT WHEN AN IMPACT IS SEVERE ENOUGH TO REQUIRE COMPLETE REPLACEMENT OF THE ATTENUATOR. THE CONTRACTOR SHALL HAVE A SPARE PARTS PACKAGE AVAILABLE ON THE PROJECT SITE AT ALL TIMES WHEN AN ATTENUATOR IS IN PLACE. THE CONTRACTOR SHALL PROVIDE A MINIMUM OF ONE COMPLETE SPARE PARTS PACKAGE FOR EVERY ONE TO SIX UNITS INSTALLED ON THE PROJECT SITE. FOR EXAMPLE, FIVE INSTALLED UNITS REQUIRE ONE SPARE PARTS PACKAGE AND SEVEN INSTALLED UNITS REQUIRE TWO SPARE PARTS PACKAGES.

WHEN BIDIRECTIONAL DESIGNS ARE SPECIFIED, THE CONTRACTOR SHALL SUPPLY APPROPRIATE TRANSITIONS. PAYMENT FOR THE ABOVE WORK SHALL BE MADE AT THE UNIT PRICE BID AND SHALL INCLUDE ALL LABOR, TOOLS, EQUIPMENT AND MATERIALS NECESSARY TO CONSTRUCT, MAINTAIN, REPAIR, REPLACE OR RELOCATE A COMPLETE AND FUNCTIONAL IMPACT ATTENUATOR SYSTEM, INCLUDING ALL RELATED BACKUPS, TRANSITIONS, LEVELING PADS, HARDWARE AND GRADING, NOT SEPARATELY SPECIFIED, AS REQUIRED BY THE MANUFACTURER.

I:\project\District-wide\2009PM-79964\roadway\sheets\79964MN001.dgn 06-NOV-2008 1:57PM dbeekman

ITEM 622, PORTABLE CONCRETE BARRIER, 50", AS PER PLAN

THIS WORK SHALL CONSIST OF FURNISHING, MAINTAINING, AND SUBSEQUENTLY REMOVING A 50-INCH PORTABLE CONCRETE BARRIER (PCB) AT THE LOCATIONS SHOWN ON THE PLANS. FOR DETAILS, SEE SCD RM-4.1 PLEASE NOTE THAT SCD RM-4.1 WAS UPDATED 10-20-06 TO PROVIDE A PCB WHICH IS COMPATIBLE WITH NCHRP 350 CRITERIA.

PORTABLE CONCRETE BARRIER, 32 INCHES HIGH WITH AN 18-INCH MINIMUM HEIGHT GLARE SCREEN MAY BE USED AT THE OPTION OF THE CONTRACTOR. THE GLARE SCREEN SHALL BE CONSTRUCTED USING ONE OF THE SCREENS PROVIDED ON THE APPROVED LIST, AVAILABLE ON THE OFFICE OF MATERIAL MANAGEMENT WEB PAGE AT HTTP://WWW.DOT.STATE.OH.US/TESTLAB/APPLISTS/MISC/GLARESCREEN.HTM.

PADDLE OR INTERMITTENT TYPE GLARE SCREENS SHALL BE DESIGNED USING A 20 DEGREE CUT-OFF ANGLE BASED ON TANGENT ALIGNMENT. THAT SPACING SHALL BE USED THROUGHOUT THE BARRIER LENGTH WITHOUT REGARD TO BARRIER CURVATURE.

THE GLARE SCREEN SYSTEM SHALL BE SECURELY FASTENED TO THE 32-INCH PORTABLE CONCRETE BARRIER USING THE HARDWARE AND PROCEDURES SPECIFIED BY THE MANUFACTURER.

FOR DIRECTIONS ON HOW TO INSTALL THE GLARE SCREEN AND THE BARRIER, SEE THE MANUFACTURER'S INSTRUCTIONS.

PAYMENT SHALL INCLUDE ALL LABOR, MATERIAL, AND EQUIPMENT NECESSARY TO PERFORM THE WORK AND SHALL BE PAID FOR AT THE CONTRACT PRICE PER FOOT FOR ITEM 622, PORTABLE CONCRETE BARRIER, 50 INCH, AS PER PLAN.

ITEM 615, ROADS FOR MAINTAINING TRAFFIC, AS PER PLAN

THIS ITEM INCLUDES ALL LABOR, EQUIPMENT AND MATERIALS TO MAINTAIN AND REMOVE THE MEDIAN CROSSOVERS NOT SEPARATELY ITEMIZED ON THE PLANS. THIS INCLUDES ALL NECESSARY EARTHWORK, DRAINAGE AND SEEDING REQUIRED FOR CROSSOVER REMOVAL. THIS ALSO INCLUDES REMOVAL OF EXISTING RUMBLE STRIPS LOCATED WITHIN THE MEDIAN CROSSOVER ALIGNMENT BY PAVEMENT PLANING AND RESURFACING. UPON REMOVAL OF THE MEDIAN CROSSOVERS, THE PREVIOUSLY REMOVED RUMBLE STRIPS SHALL BE REPLACED PRIOR TO CHIP SEAL APPLICATION.

PAYMENT FOR THIS WORK SHALL BE INCLUDED IN THE LUMP SUM BID PRICE FOR ITEM 615, ROADS FOR MAINTAINING TRAFFIC, AS PER PLAN.

WORK ZONE MARKINGS AND SIGNS

THE FOLLOWING ESTIMATED QUANTITIES HAVE BEEN CARRIED TO THE GENERAL SUMMARY FOR USE AT LOCATIONS IDENTIFIED BY THE ENGINEER FOR WORK ZONE PAVEMENT MARKINGS AND SIGNS PER THE REQUIREMENTS OF CMS 614.04 AND 614.11.

ITEM 614, WORK ZONE LANE LINE, CLASS II	15.98 MILE
ITEM 614, WORK ZONE MARKING SIGN	20 EACH

ADJUSTMENTS FOR TWO-LANE, TWO-WAY OPERATION AT BRIDGES

CONTRACTOR SHALL INSTALL WORK ZONE GUARDRAIL (CONSISTING OF GUARDRAIL, TYPE 5 WITH A BRIDGE TERMINAL ASSEMBLY, TYPE 1) BETWEEN THE WORK ZONE IMPACT ATTENUATOR AND THE TRAILING BRIDGE END TO PROTECT THE REVERSE FLOW TRAFFIC DURING THE TWO WAY CROSSOVER TRAFFIC OPERATION, SEE SCD MT-95.82.

PAYMENT SHALL BE FULL COMPENSATION FOR ALL MATERIAL, LABOR, INCIDENTALS AND EQUIPMENT NECESSARY FOR FURNISHING, INSTALLING, MAINTAINING AND REMOVING ABOVE.

THE FOLLOWING ESTIMATED QUANTITY HAS BEEN INCLUDED IN THE GENERAL SUMMARY:

ITEM SPECIAL, WORK ZONE GUARDRAIL	150 FOOT

FLOODLIGHTING

FLOODLIGHTING OF THE WORK SITE FOR OPERATIONS CONDUCTED DURING NIGHTTIME PERIODS SHALL BE ACCOMPLISHED SO THAT THE LIGHTS DO NOT CAUSE GLARE TO THE DRIVERS ON THE ROADWAY. TO ENSURE THE ADEQUACY OF THE FLOODLIGHT PLACEMENT, THE CONTRACTOR AND THE ENGINEER SHALL DRIVE THROUGH THE WORK SITE EACH NIGHT WHEN THE LIGHTING IS IN PLACE AND OPERATIVE PRIOR TO COMMENCING ANY WORK. IF GLARE IS DETECTED, THE LIGHT PLACEMENT AND SHIELDING SHALL BE ADJUSTED TO THE SATISFACTION OF THE ENGINEER BEFORE WORK PROCEEDS.

PAYMENT FOR ALL LABOR, EQUIPMENT AND MATERIALS SHALL BE INCLUDED IN THE LUMP SUM CONTRACT PRICE FOR ITEM 614, MAINTAINING TRAFFIC.

ADVANCE WORK ZONE INFORMATION

ADVANCE WORK ZONE INFORMATION SIGNS, AS USED IN THIS NOTE, ARE FIXED MESSAGE TYPES. THE SIGNS ARE TO BE LOCATED AT EXTREME DISTANCE FROM THE WORK AREA, AS SHOWN IN THE PLANS.

THE SIGNS SHALL BE BLACK ON ORANGE (INCLUDING A BLACK BORDER). THE LAYOUT SHALL BE IN CONFORMANCE WITH TEM SECTION 211.

WHEN REGULATORY INFORMATION IS PROVIDED, IT SHALL BE DISPLAYED SEPARATELY AS A STANDARD BLACK-ON-WHITE SIGN. MIXING OF BLACK-ON-WHITE REGULATORY INFORMATION ON A BLACK-ON-ORANGE INFORMATION SIGN IS PROHIBITED.

ROUTE SIGN ASSEMBLIES SHALL BE SIZED ACCORDING TO THE TYPE OF ROAD ON WHICH THEY ARE LOCATED IN ACCORDANCE WITH THE OMUTCD.

SUPPORTS FOR SIGN INSTALLATIONS SHALL CONFORM TO ALL EXISTING STANDARDS FOR PERMANENT SIGNS. THESE SIGNS SHOULD NOT BE ATTACHED TO EXISTING SUPPORTS.

WHERE THE PLANS CALL FOR AN OVERLAY TO COVER A PORTION OF AN EXISTING SIGN, THE OVERLAY SHALL BE BLACK-ON-ORANGE. LETTER SIZES SHOULD BE THE SAME AS ON THE EXISTING SIGNS. WHEN LANE ARROWS ARE TO BE COVERED, RATHER THAN USING A BLANK OVERLAY, THE LEGEND "LANE CLOSED" SHALL BE USED.

WHEN A RAMP IS BEING CLOSED, RATHER THAN USING A BLANK OVERLAY TO COVER THE ENTIRE SIGN, THE LEGEND "CLOSED" SHALL BE USED ON A DIAGONAL OVERLAY (LOWER LEFT TO UPPER RIGHT) ON THE SIGN. THE SIZE OF LETTERING ON OVERLAYS AND THE SIZE OF THE OVERLAY ARE INDICATED IN THE PLANS. THE MINIMUM LETTER SIZE FOR "LANE CLOSED" SHALL BE 10" E. THE MINIMUM LETTER SIZE FOR THE DIAGONAL "CLOSED" OVERLAY SHALL BE 12" E.

ALL ADVANCE WORK ZONE INFORMATION SIGN INSTALLATIONS LOCATED OUTSIDE OF THE PROJECT WORK LIMITS SHALL BE PAID FOR UNDER APPROPRIATE 630 ITEMS (SIGNS, SUPPORTS, CONCRETE, BREAKAWAY CONNECTION, OVERLAYS, REMOVALS, ETC.)

EXISTING OVERHEAD AND/OR ROADSIDE SIGNS CONFLICTING WITH CONSTRUCTION LANE CLOSURE(S) GUIDANCE SHALL BE PARTIALLY OR COMPLETELY COVERED AS DIRECTED BY THE ENGINEER.

THE FOLLOWING ESTIMATED QUANTITIES HAVE BEEN PROVIDED IN THE GENERAL SUMMARY FOR USE AT LOCATIONS IDENTIFIED BY THE ENGINEER FOR TEMPORARY INSTALLATIONAL AND REMOVAL OF TEMPORARY SIGN OVERLAYS.

ITEM 630, SIGN, TEMPORARY OVERLAY	100 SQ. FT.
ITEM 630, REMOVAL OF OVERLAY SIGN	6 EACH

ITEM SPECIAL - CONCRETE BARRIER DELINEATION AS PER PLAN

INCREASED DELINEATION, AS SPECIFIED HEREIN, SHALL BE INSTALLED ON ALL CONCRETE BARRIER UNDER EITHER OF THE FOLLOWING CONDITIONS:

ALONG TAPERS AND TRANSITION AREAS.

ALONG CURVES (OUTSIDE ONLY) WITH DEGREE OF CURVATURE GREATER THAN OR EQUAL TO 3 DEGREES.

THE INCREASED DELINEATION SHALL CONSIST OF EITHER LINEAR DELINEATION PANELS OR THE TRIPLE STACKING OF WORK ZONE BARRIER REFLECTORS.

THE LINEAR DELINEATION PANELS SHALL CONSIST OF PANELS OF DELINEATION, APPROXIMATELY 34 INCHES LONG AND 6 INCHES WIDE AND SHALL BE "CRIMPED". PANELS SHALL BE PROVIDED AT THE RATE OF ONE PER SECTION OF PORTABLE CONCRETE BARRIER, OR ONE PANEL EVERY 10 FEET ON PERMANENT BARRIER, SPACED EVENLY ALONG THE LENGTH OF THE RUN. THE PANELS SHALL BE MOUNTED SUCH THAT THE TOPS OF THE PANELS ARE26 INCHES FROM THE BASE OF THE CONCRETE BARRIER.

TRIPLE STACKED BARRIER REFLECTORS SHALL CONSIST OF THREE BARRIER REFLECTORS STACKED VERTICALLY IN THEIR ATTACHMENT TO CONCRETE BARRIER. THERE SHALL BE NO OPEN SPACE BETWEEN THE ADJACENT BARRIER REFLECTORS. THE TOP OF THE MIDDLE BARRIER REFLECTOR SHALL BE LOCATED 26 IN ABOVE THE PAVEMENT.

PAYMENT SHALL BE FULL COMPENSATION FOR ALL MATERIAL, LABOR, INCIDENTALS AND EQUIPMENT NECESSARY FOR FURNISHING, INSTALLING, MAINTAINING AND REMOVING DELINEATION, AS PER PLAN.

THE FOLLOWING ESTIMATED QUANTITY HAS BEEN INCLUDED IN THE PLANS:

ITEM SPECIAL, LINEAR DELINEATION	500 FOOT

ALONG RUNS OF CONCRETE BARRIER WHERE THIS ITEM IS PROVIDED, THE QUANTITY SHALL BE MEASURED AS THE ENTIRE LENGTH OF THE RUN BEING DELINEATED, INCLUDING THE SPACES BETWEEN THE INDIVIDUAL PANELS OR STACKS OF BARRIER REFLECTORS.

CONCRETE BARRIER DELINEATION

OBJECT MARKERS SHALL BE INSTALLED ON ALL PERMANENT CONCRETE BARRIER, LOCATED WITHIN 5 FEET OF THE EDGE OF THE ADJACENT TRAVEL LANE. OBJECT MARKER SPACING SHALL BE 50 FEET.

PAYMENT SHALL BE FULL COMPENSATION FOR ALL MATERIAL, LABOR, INCIDENTALS AND EQUIPMENT NECESSARY FOR FURNISHING, INSTALLING, MAINTAINING AND REMOVING OBJECT MARKERS.

AN ESTIMATED QUANTITY OF 30 EACH OF ITEM 614 OBJECT MARKER, ONE-WAY HAS BEEN PROVIDED AND CARRIED TO THE GENERAL SUMMARY.

GUARDRAIL DELINEATION

OBJECT MARKERS SHALL BE INSTALLED ON ALL GUARDRAIL LOCATED WITHIN 5 FEET OF THE EDGE OF THE ADJACENT TRAVEL LANE. GUARDRAIL-MOUNTING OF OBJECT MARKERS SHALL BE MADE BY INSTALLING THE OBJECT MARKERS ON THE EXTENSION BLOCKS RATHER THAN DIRECTLY ONTO THE GUARDRAIL ITSELF. OBJECT MARKER SPACING SHALL BE APPROXIMATELY 50 FEET.

PAYMENT SHALL BE FULL COMPENSATION FOR ALL MATERIAL, LABOR, INCIDENTALS AND EQUIPMENT NECESSARY FOR FURNISHING, INSTALLING, MAINTAINING AND REMOVING OBJECT MARKERS.

AN ESTIMATED QUANTITY OF 6 EACH OF ITEM 614 OBJECT MARKERS, ONE-WAY HAS BEEN PROVIDED AND CARRIED TO THE GENERAL SUMMARY.

I:\project\District-wide\2009PM-79964\roadway\sheets\79964MN001.dgn 06-NOV-2008 1:58PM dbeekman

ITEM 614 - TRANSITION AREA DELINEATION, AS PER PLAN

TRANSITION AREA DELINEATION, AS PER PLAN SHALL CONSIST OF WORK ZONE RAISED PAVEMENT MARKERS FOR THE WORK ZONE DELINEATION OF EDGE LINES FOR CROSSOVERS AS DETAILED ON SHEET 14, EXCEPT FOR A SINGLE LANE OF TRAFFIC WITHOUT THE CHANNELIZING LINE AND LANE LINE SHOWN FOR TWO LANES OF TRAFFIC.

WORK ZONE RAISED PAVEMENT MARKERS FOR TRANSITION AREA DELINATION AND THEIR INSTALLATION SHALL CONFORM TO CMS 614 OR CMS 621 AS SPECIFIED HEREIN.

RAISED PAVEMENT MARKERS IN USE DURING THE SNOW-PLOWING SEASON SHALL CONFORM TO 621.

RAISED PAVEMENT MARKERS IN USE DURING THE NON-SNOW-PLOW SEASON SHALL CONFORM TO EITHER 614 OR 621.

THE SNOW-PLOWING SEASON SHALL RUN FROM OCTOBER 15 THROUGH APRIL 1.

IF PROJECT DELAYS, NOT THE FAULT OF ODOT, CAUSE THE WORK TO EXTEND INTO THE SNOW-PLOWING SEASON, THE CONTRACTOR SHALL BE RESPONSIBLE FOR REPLACING WORK ZONE RAISED PAVEMENT MARKERS (WZRPMS) CONFORMING TO CMS 614, WITH RAISED PAVEMENT MARKERS CONFORMING TO 621, AS DETERMINED BY THE ENGINEER, AT THE CONTRACTOR'S EXPENSE.

THIS ITEM SHALL INCLUDE PURCHASE, INSTALLATION AND REMOVAL OF WORK ZONE RAISED PAVEMENT MARKERS INCLUDING FILLING OF ANY DEPRESSIONS CREATED IN THE PAVEMENT AS PER CMS 621.08.

RESURFACING OF THE TRANSITION AREAS SHALL BE PERFORMED AT THE TIME THAT THE SURFACE COURSE IS BEING APPLIED TO THE ENTIRE PROJECT. PRIOR TO APPLICATION OF THE SURFACE COURSE ON THE PROJECT, THE SURFACE COURSE OF THE EXISTING PAVEMENT WITHIN THE TRANSITION AREA SHALL BE REMOVED TO A DEPTH EQUIVALENT TO THE DEPTH OF THE PROPOSED SURFACE COURSE, AS DETERMINED BY THE ENGINEER.

PAYMENT FOR RESURFACING WITHIN THE TRANSITION AREA SHALL BE PAID FOR UNDER THE APPROPRIATE BID ITEMS FOR THE WORK REQUIRED, AS PROVIDED FOR IN THE PLANS.

PAYMENT FOR TRANSITION AREA DELINATION, AS PER PLAN SHALL BE MEASURED AS THE ENTIRE LENGTH OF THE CROSSOVER WORK ZONE BEING DELINEATED, INCLUDING TRANSITION AREA AT EACH CROSSOVER AND THE TANGENT AREA BETWEEN THE CROSSOVERS.

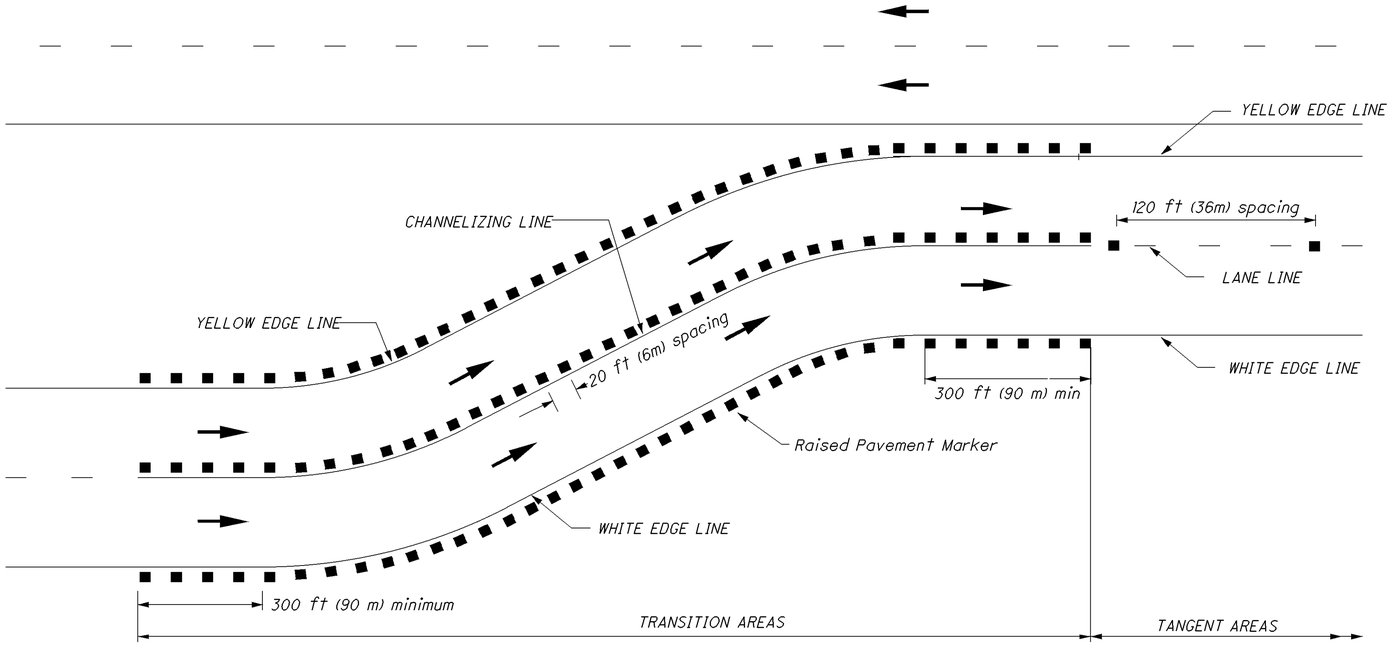

WORK ZONE DELINEATION FOR CROSSOVERS

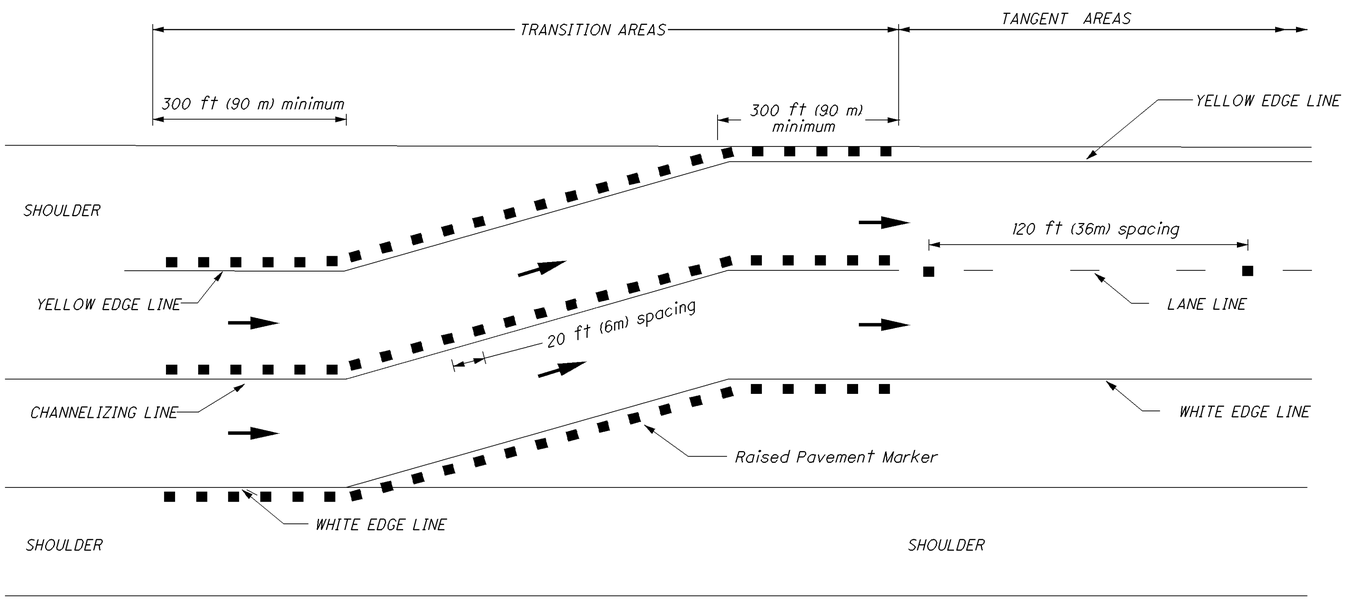

WORK ZONE DELINEATION FOR LANE SHIFTS

LEGEND

- RPM
- DIRECTION OF TRAVEL

NOTES

1. This drawing presents delineation procedures for freeways and expressways on asphalt surfaces. Procedures are provided for transition areas and for tangent areas. The procedures for transition areas apply to crossovers and to lane shifts of 4 feet (1.2 m) or greater. Delineation of transition areas for shifts of less than 4 feet (1.2 m)shall be as per the tangent area delineation.

2. Raised Pavement Markers shall meet the following seasonal specifications:

   a) Raised Pavement Markers in place during the normal construction season may be either 621 Raised Pavement Markers or 614 Work Zone Raised Pavement Markers (WZRPMs). The normal construction season with regard to use of WZRPMs shall be the period from April 1 through October 15.

   b) At locations where it is intended that Raised Pavement Markers will winter over, 621 Raised Pavement Markers shall be provided.

   c) At locations where it is intended that work will continue beyond October 15 but will be completed prior to the beginning of snow-plowing season, 614 WZRPMs may remain in place until such time. Snow-plowing season shall be as specified in the plans. If snow-plowing season is not specified in the plans, it shall be assumed that snow-plowing season runs from October 16 through March 31. If project delays, not the fault of ODOT, cause work to extend into the snow-plowing season, the contractor shall be responsible for replacing WZRPMs with 621 Raised Pavement Markers, as determined by the Engineer, at the contrator's expense.

3. All material furnished shall be listed on the Department's Prequalified Lists.

4. The geometrics of the crossover shall be as shown in the plans. Additional details are provided in Standard Construction Drawing MT-95.70.

5. See Standard Construction Drawings MT-102.10 and MT-102.20 for more details concerning lane shifts.

6. Spacing of raised pavement markers (RPMs) shall be at 20 feet (6 m) center-to-center for all long-line marking within transition areas. Within tangent areas RPMs shall be provided only along the lane lines, spaced at 120 foot (36 m) center-to-center.

7. The RPMs shall be 1-way, facing oncoming traffic, and shall be white or yellow to match the color of the associated line marking.

8. Along the edge lines, the RPMs shall be offset a maximum of 4 inches (100 mm) to the outside of the lines. Along the channelizing lines, the RPMs shall be offset to the left of the lines by no more than 1 inch (25 mm). Along the lane lines the RPMs shall be centered between dashes.

9. The RPMs shall be removed when they are no longer appropriate.

10. Holes resulting from removal of 621 RPMs shall be filled as per 202.10. If removal of the 621 RPMs does not take place immediately after the highlighted alignment becomes invalid, the reflectors within the 621 RPMs shall be removed.

11. Following removal of 621 RPMs resurfacing of the transition shall be performed. The resurfacing shall be performed at the time the surface course is being applied. In preparation for resurfacing, the existing pavement shall be removed to a depth necessary to match the level of the intermediate course of the proposed pavement.

CALCULATED DMB
CHECKED LAW

209930

WORK ZONE DELINEATION ON ASPHALT SURFACES

OFFICE OF TRAFFIC ENGINEERING

ROS-23-12.84

i:\project\District-wide\2009PM-79964\roadway\sheets\79964MN001.dgn 06-NOV-2008 1:59PM dbeekman

GENERAL NOTES

1. It is intended that this drawing be used for treatment of drop-offs that develop during construction operations, and that are not otherwise provided for in the construction plans. The suggested treatments are intended for high volume projects that will last at least seven days and have an active work zone 1 mile or less in length. for guidance on the use of this sheet, see L&D Manual Volume One, Section 500. Where the plans do not provide specific items for labor, equipment, or materials to implement the drop-off treatments specified hereon, they shall be included for payment in the lump sum bid for Item 614 - Maintaining Traffic.

2. While the need for certain advisory signing is noted hereon, it is not intended that this be indicative of all signing that may be required to advise or warn motorists, and all requirements of the Ohio Manual of Uniform Traffic Control Devices (OMUTCD) must be fulfilled.

3. In urban or otherwise heavily developed areas where pedestrians and/or bicyclists may be present in significant numbers, additional signing and protective measures other than those shown hereon may be required.

4. The drop-off treatment selected for use at any given location shall be as appropriate for the prevailing conditions at the site.

5. Where concrete barrier is specified, it shall be in accordance with Standard Construction Drawing RM-4.2 and Item 622.

6. When drums are specified for a drop-off condition, a minimum number of four drums shall be used. Spacing shall be as indicated in the plans or as specified in the OMUTCD.

7. When W8-9 (Low Shoulder) signs or W8-9a (Shoulder Drop-Off) signs or W8-11 (Uneven Lanes) are required, they shall be placed 750 feet in advance of the condition, on all intersecting entrance ramps within the limits of the condition and immediately beyond all intersecting roadways within the limits of the condition. When the drop-off condition extends more than 0.5 mile, additional signs should be erected at intervals of 1.0 mile or less.

8. For locations, such as at ramps, lane shifts, lane closures, etc., where traffic is required to negotiate a difference in elevation between pavements, a 3:1 slope treatment similar to the Optional Wedge Treatment shall be provided.

9. Portable concrete barrier shall be placed on the same level as the traffic surface and shall not encroach on lane width(s) designated as the minimum required for traffic use. Where drums are used, and their presence would reduce traveled lane widths to less than 10 feet, drums may be placed on the opposite level from that of traffic provided the dropoff depth does not exceed 5 inches and approval is granted by the Project Engineer.

10. Pavement Repairs (or similar work):
    a. Lengths greater than 60 feet - utilize appropriate treatment from Condition I.
    b. Lengths of 60 feet or less - repairs shall be effected in accordance with 255.08. Drums may be used as a separator adjacent to the traveled lane.

OPTIONAL WEDGE TREATMENT

(MILLING OR RESURFACING)

1. This treatment may be used when permitted for Condition I only.
2. W8-11 sign required.

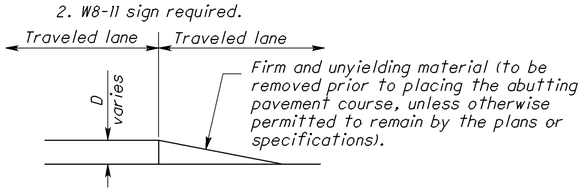

CONDITION I

DROP-OFFS BETWEEN TRAVELED LANES

1. These treatments are to be used for resurfacing, pavement planing, excavation, etc. between or within traveled lanes.

D - Inches	Treatment
≤ 1-1/2	Erect W8-11 sign.
1-1/2 - 3	1) Lane closure utilizing drums* as shown below OR 2) Optional Wedge Treatment
> 3-5	Lane closure utilizing drums as shown below.
> 5	Lane closure utilizing portable concrete barrier as shown below.

* Cones may be used for daytime only conditions.

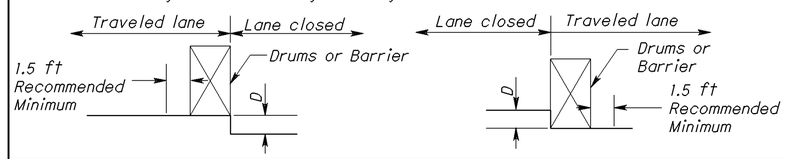

CONDITION II

DROP-OFFS WITHIN GRADED SHOULDER AREA

1. The treatments indicated below are for use in conjunction with resurfacing, planing, or excavations within the graded shoulder area.
2. The graded shoulder area is that flat or gradually sloping area between the edge of a normally traveled lane and the more steeply sloping ditch foreslope or embankment slope. Its surface may be soil or turf, and/or it may be inclusive of a "treated" area (improved with aggregates, asphaltic materials or concrete). For the purposes herein, its maximum width shall be considered to be 12 feet.

D - Inches	Treatment
< 1-1/2	1) Erect W8-9a signs.
> 1-1/2 - 5	1) If minimum lane width* requirements can be met, maintain lanes utilizing drums as shown below OR 2) If minimum lane width* requirements cannot be met, close adjacent lane utilizing drums OR 3) Optional Shoulder Treatment.
> 5-12 Daylight only	If minimum lane width* requirements can be met, maintain lanes utilizing drums as shown below.
> 5-24	1) If minimum lane width* requirements can be met, maintain lanes utilizing portable concrete barrier as shown below OR 2) If minimum lane width* requirements cannot be met, close adjacent lane utilizing drums.
> 24	Lane closure utilizing portable concrete barrier as shown below.

* Minimum lane widths shall be 10 ft unless otherwise specified in the plans.

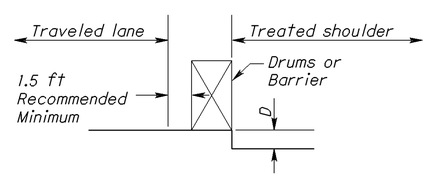

OPTIONAL SHOULDER TREATMENT

1. This treatment may not be used within a bituminous shoulder where a hot longitudinal joint per 401.15 is required.
2. W8-9 signs required.

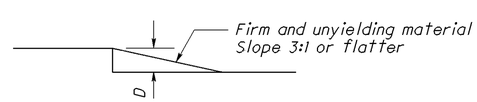

CONDITION III

DROP-OFFS BEYOND GRADED SHOULDER OR BACK OF CURB

1. See Note 2 under Condition II.
2. Use Chart A or B below, as applicable.

CHART A

USE FOR: 1. Uncurbed Facilities.
2. Curbed Facilities, where:
   a. Curbs are less than 6 inch in height.
   b. Curbs are 6 inch or greater in height and the legal speed is greater than 40 mph.

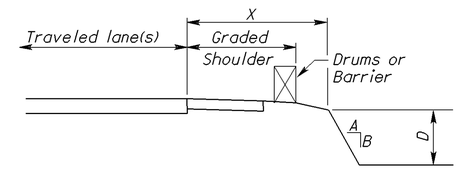

X feet	D inch	A/B	Treatment Required	
			Day	Night
0 - 4	Any	Any	(a)	(a)
4 - 30	Any	3:1 or Flatter	None	None
4 - 12	≤ 3	Steeper than 3:1	None	None
4 - 12	> 3 - < 12	Steeper than 3:1	Drums	Drums
4 - 12	> 12	Steeper than 3:1	Drums	Barrier
> 12 - 20	< 12	Steeper than 3:1	None	None
> 12 - 20	> 12 - 24	Steeper than 3:1	Drums	Drums
> 12 - 20	> 24	Steeper than 3:1	Drums	Barrier
> 20 - 30	< 24	Steeper than 3:1	None	None
> 20 - 30	> 24	Steeper than 3:1	Drums	Barrier
> 30	Any	Any	None	None
(a) Use treatment specified under Condition II.				

CHART B

USE FOR: Curbed facilities, where the curb is 6 inches or greater in height and the legal speed is 40 mph or less.

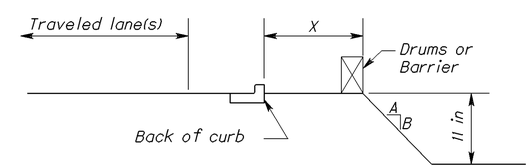

X feet	D inch	A/B	Treatment Required	
			Day	Night
0 - 10	< 12	Any	None	Drums
0 - 10	> 12	Any	Drums	Drums
> 10	Any	Any	None	None

CALCULATED DMB CHECKED LAW

2010190

MAINTENANCE OF TRAFFIC
DROP-OFFS IN WORK ZONES

OFFICE OF TRAFFIC ENGINEERING

ROS-23-12.84

i:\project\District-wide\2009PM-79964\roadway\sheets\79964MN001.dgn 06-NOV-2008 1:59PM dbeekman

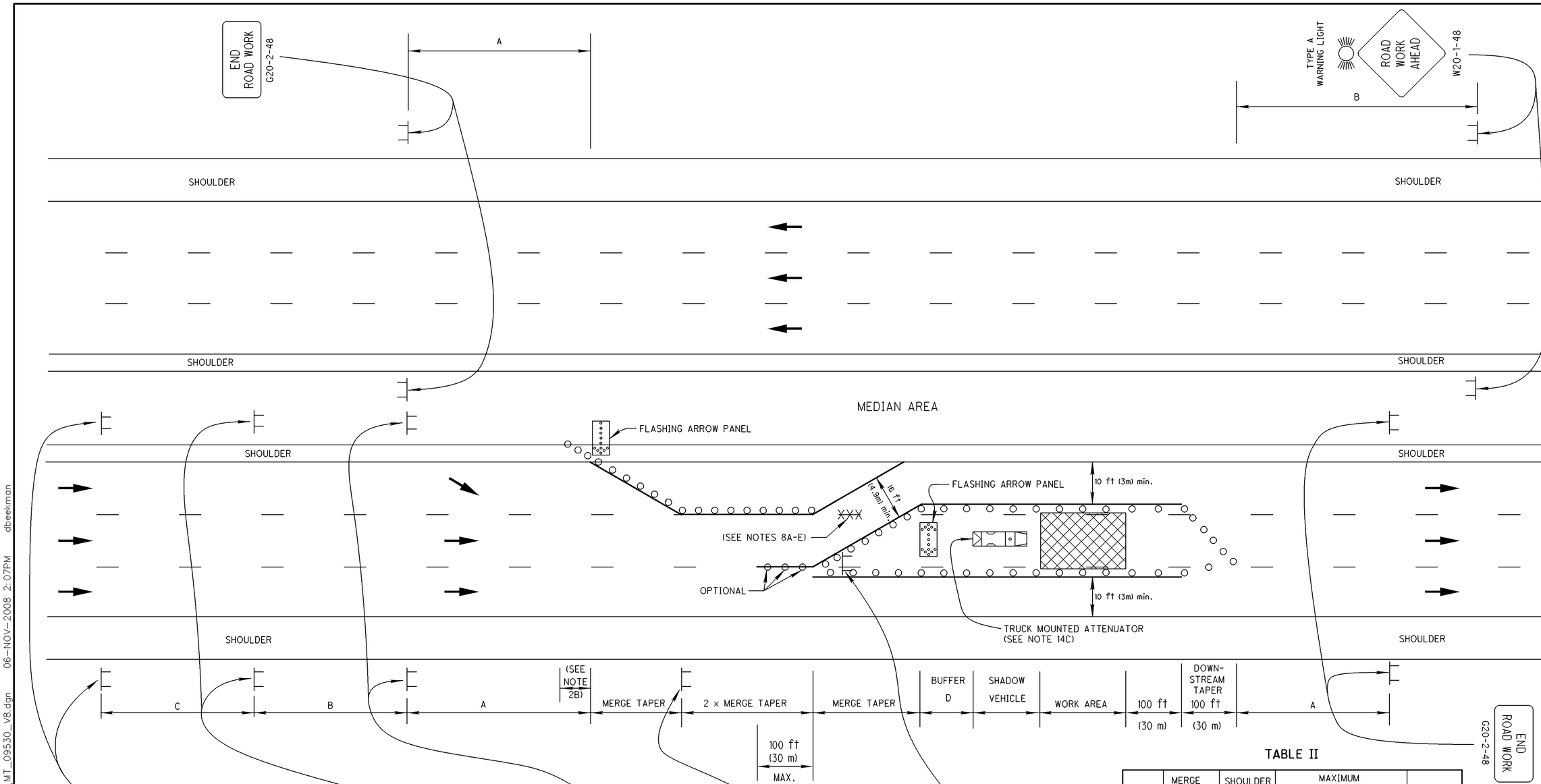

LEGEND

DRUMS	○ ○ ○ ○ ○ ○
REMOVE EXISTING MARKINGS	✕✕✕✕✕✕✕
DIRECTION OF TRAVEL	→

TABLE I (SIGN SPACING)

ROAD TYPE	DISTANCE BETWEEN SIGNS FT(m)		
	A	B	C
MAJOR CONVENTIONAL	500 (150)	500 (150)	500 (150)
FREEWAY & EXPRESSWAY	1000 (300)	1500 (450)	2640 (800)

TABLE II

SPEED LIMIT (MPH)	MERGE TAPER RATE MINIMUM	SHOULDER TAPER RATE MINIMUM	MAXIMUM DRUM SPACING FT (m)		BUFFER (D) FT (m) MINIMUM
			Taper sec.	Tangent sec.	
25	11:1	4:1	25 (7.5)	40 (12)	155 (45)
30	15:1	5:1	30 (9)	40 (12)	200 (60)
35	21:1	7:1	35 (10.5)	40 (12)	250 (75)
40	27:1	9:1	40 (12)	80 (24)	305 (95)
45	45:1	15:1	45 (13.5)	80 (24)	360 (110)
50	50:1	17:1	50 (15)	80 (24)	425 (130)
55	55:1	18:1	55 (16.5)	80 (24)	495 (150)
60	60:1	20:1	60 (18)	120 (36)	570 (175)
65	65:1	22:1	65 (19.5)	120 (36)	645 (200)

CALCULATED DMB
CHECKED LAW

CLOSING INTERIOR LANE OF A MULTI-LANE DIVIDED HIGHWAY WITH DRUMS

ROS-23-12.84

I:\project\District-wide\2009PM-79964\roadway\sheets\MT_09530_V8.dgn 06-NOV-2008 2:07PM dbeekman

GENERAL NOTES:

DESIGN SPEED

1. The design speed used for taper rates should typically be the permanent legal speed. However, on construction projects for which the speed limit is reduced, the reduced speed may be used in determining the taper rate when the taper is not the first active construction area within the project.

TAPERS

2A. The minimum acceptable length for the merge taper shall be determined by multiplying the width of offset by the merge taper rate. The merge taper rate is provided in Table II.

2B. The minimum acceptable length for the shoulder taper shall be determined by multiplying the width of the shoulder by the shoulder taper rate. The shoulder taper rate is provided in Table II.

SIGN SPACING

3A. The minimum spacing between work zone signs, is shown in Table I. Maximum spacing should not be greater than 1.5 times the distances shown in Table I.

3B. Sign spacing should be adjusted to avoid conflict with existing signs. Minimum spacing to existing signs shall be 200 feet (60m) for speeds of 45 mph or less and a minimum of 400 feet (120m) for speeds 50 mph or greater.

ADJUSTMENTS FOR SIGHT DISTANCE

4. The location of the merging taper and the advance warning signs should be adjusted to provide for adequate sight distance for the existing vertical and horizontal roadway alignment.

BASIC SIGNING

5A. ROAD WORK AHEAD (W20-1) signs shall be provided on entrance ramps or roadways entering the work limits.

5B. END ROAD WORK (G20-2) signs are only required for lane closures of more than one day. It is intended that these signs be placed on the mainline, on all exit ramps, and on roadways exiting the work limits.

5C. Overlapping of signing for adjacent projects should be avoided where the messages could be confusing. Any W20-1 or G20-2 sign which falls within the limits of another traffic control zone shall be omitted or covered during the period when both projects are active.

5D. Existing overhead and roadside signs conflicting with construction lane closure(s) shall be partially or completely covered as appropriate as per CMS 630.10.

SIGNING DETAILS

6A. The Advisory Speed plaque W13-1 shall be used when specified in the plan.

6B. 36 inch (900 mm) warning signs may be used when the approach speed limit is 40 mph or less.

6C. The Distance plaque W16-3a (or W16-2a if the distance shown is in feet) shall indicate the distance to the beginning of the merging taper. Distances less than one mile may be expressed in feet. The plaque may be omitted if Extra Advance Sign Groups are not used.

6D. Provide signing on the inactive side of the highway, as shown, when called for in the plans.

6E. Provide the appropriate word or symbol legend necessary on lane reduction signs (W4-2, W20-5) to correctly identify which lane is to be closed.

EXTRA ADVANCE WARNING SIGNING

7. Extra Advance Warning Sign Groups consisting of ROAD WORK AHEAD (W20-1), LANE CLOSED AHEAD (W20-5) and WATCH FOR STOPPED TRAFFIC (W3-H7) signs plus distance plaques may be specified in the plans or may be required to be erected, as determined by the the Engineer (see Standard Construction Drawing MT-95.50).

PAVEMENT MARKING/RPMs

8A. If the construction operation requires a lane closure for more than one day, then the existing conflicting reflectors from the raised pavement markers (RPMs) shall be removed.

8B. Additionally, if a lane closure of greater than 3 days is required, then the following shall be performed:
- a) The appropriate color work zone edge lines shall be applied along the taper.
- b) The existing conflicting pavement markings shall be removed or covered as per CMS 614.11F.
- c) Work Zone Dotted Lines, 3 feet(0.9 m) in length separated by 9 foot (2.7 m) gaps, shall be provided to identify the merge.

8C. Work zone edge lines shall be provided along the tangent section when called for in the plans.

8D. Work zone pavement markings which would conflict with the final traffic lanes shall be removable (CMS 740.06 Type I) tape unless the area will be resurfaced prior to project completion.

8E. After completion of the work, pavement markings other than CMS 740.06, Type I shall be removed in accordance with CMS 641.10. The original markings and raised pavement marker reflectors shall be restored at no additional cost unless separately itemized in the plans.

EQUIPMENT/MATERIALS STORAGE

9A. No equipment or material shall be located within the taper or buffer zone.

9B. When no work is being performed, all material and equipment shall be stored as per CMS 614.03.

FLASHING ARROW PANEL

10. The flashing arrow panel shall be chosen from the ODOT approved list available on the ODOT web site at http://www.dot.state.oh.us/ . Click on the Alphabetical List of choices and select TestLab/Materials Management. Then click on Approved List. Then click on Flashing Arrow Panel located near the bottom of the screen.

FLASHING WARNING LIGHTS

11. Type A flashing warning lights shown on the ROAD WORK AHEAD (W20-1) signs and on the LANE CLOSED AHEAD (W20-5) signs are required whenever a night lane closure is necessary.

INTERSECTION/DRIVEWAY ACCESS

12. Within the length of closure, provision shall be made to control traffic entering from intersecting streets and major drives as necessary to prevent wrong-way movements and to keep vehicles off of new pavement not ready for traffic. The contractor shall:
- a) Place across the closed lane, either 3 drums (cones) or barricades,
  and/or
- b) Provide an additional flagger at every public street intersection and major driveway.

Drums (cones) placed across the closed lane shall be located 25 feet (7.5m) beyond the projected pavement edges of the driveway or cross highway, as shown in Standard Construction Drawing MT-97.11. For barricades, see Standard Construction Drawing MT-101.60.

Existing stop signs shall be relocated as necessary to assure proper location for the traffic conditions.

The method of control shall be subject to the approval of the Engineer.

DRUMS/CONES

13A. The maximum drum spacing along tapers and along tangent sections shall be as shown in Table II. A minimum of 5 drums shall be used to close the upstream shoulder.

13B. Cones may be substituted for drums as follows:
- a) Use of cones is permissible for either daytime operation or for nighttime operation, but shall not be used continuously, day and night. Upon completion of work within the work period, the cones shall be removed. They may again be placed on the highway in order to resume work in the following such work period.
- b) Cones used for daytime traffic control shall have a minimum height of 28 inch (0.7 m).
- c) Cones used for nighttime traffic control shall have a minimum height of 42 inch (1.1 m).
- d) Use of cones at night shall be prohibited along tapers.
- e) Cone spacing at night shall be at a maximum of 40 feet (12 m).

13C. Provisions shall be made to stabilize the cones and drums to prevent them from blowing over.

SHADOW VEHICLE

14A. The shadow vehicle shall be in place and unoccupied whenever workers are in the work area. This vehicle shall be removed from the pavement whenever workers are not in the work area.

14B. The shadow vehicle shall be equipped with a high-intensity yellow rotating, flashing, oscillating, or strobe light(s).

14C. The vehicle shall be equipped with a truck-mounted attenuator (TMA) when called for in the plans.

CALCULATED DMB
CHECKED LAW

CLOSING INTERIOR LANE OF A MULTI-LANE DIVIDED HIGHWAY WITH DRUMS

ROS-23-12.84

I:\project\District-wide\2009PM-79964\roadway\sheets\MT_09530_V8.dgn 06-NOV-2008 2:08PM dbeekman

SHEET NO.	STATION TO STATION (℄ SURVEY & CONSTRUCTION)	SIDE	202 PIPE REMOVED, 24" AND UNDER	202 CATCH BASIN REMOVED		603 15" CONDUIT, TYPE C		604 CATCH BASIN, NO. 8		614 TRANSITION AREA DELINEATION, AS PER PLAN	614 WORK ZONE IMPACT ATTENUATOR (UNIDIRECTIONAL)	614 WORK ZONE CROSSOVER LIGHTING SYSTEM, AS PER PLAN	614 BARRIER REFLECTOR, TYPE A	614 WORK ZONE EDGE LINE, CLASS 1, WHITE	614 WORK ZONE EDGE LINE, CLASS 1, YELLOW		622 PORTABLE CONCRETE BARRIER, 50", AS PER PLAN			
			FT.	EACH		FT.		EACH		FT.	EACH	EACH	EACH	FT.	FT.		FT.			
	PHASE 1																			
19,20	STA. 793+20.00 TO STA. 819+10.00	RT													2,590					
19,20	STA. 799+19.88 TO STA. 820+10.00	RT												2,090						
19,20	STA. 799+61.00 TO STA. 824+61.00	LT/RT								2,500										
19	STA. 800+39.00 TO STA. 810+29.00	LT/RT										1								
19,20	STA. 801+10.08 TO STA. 818+10.00	RT															1,700			
19,20	STA. 813+22.00 TO STA. 823+12.00	LT/RT										1								
19	STA. 814+11.76 TO STA. 815+73.97	RT									1		4							
20	STA. 824+61.00 TO STA. 839+60.21	LT													1,500					
	PHASE 2																			
21	STA. 803+50.00 TO STA. 808+00.00		450																	
21	STA. 808+00.00			1				1												
21	STA. 808+00.00 TO STA. 808+08.00					8														
21	STA. 816+25.00			1																
21	STA. 816+25.00 TO STA. 820+00.00		375																	
	TOTAL		825	2		8		1		2,500	1	2	4	2,090	4,090		1,700			
														6,180						
	CONVERT TO MILE													1.18						
			FT.	EACH		FT.		EACH		FT.	EACH	EACH	EACH	MILE			FT.			
TOTALS CARRIED TO GENERAL SUMMARY			825	2		8		1		2,500	1	2	4	1.18			1,700			

CALCULATED DMB
CHECKED LAW

MAINTENANCE OF TRAFFIC SUBSUMMARY

ROS-23-12.84

I:\project\District-wide\2009PM-79964\roadway\sheets\79964MS001.dgn 06-NOV-2008 2:05PM dbeekman

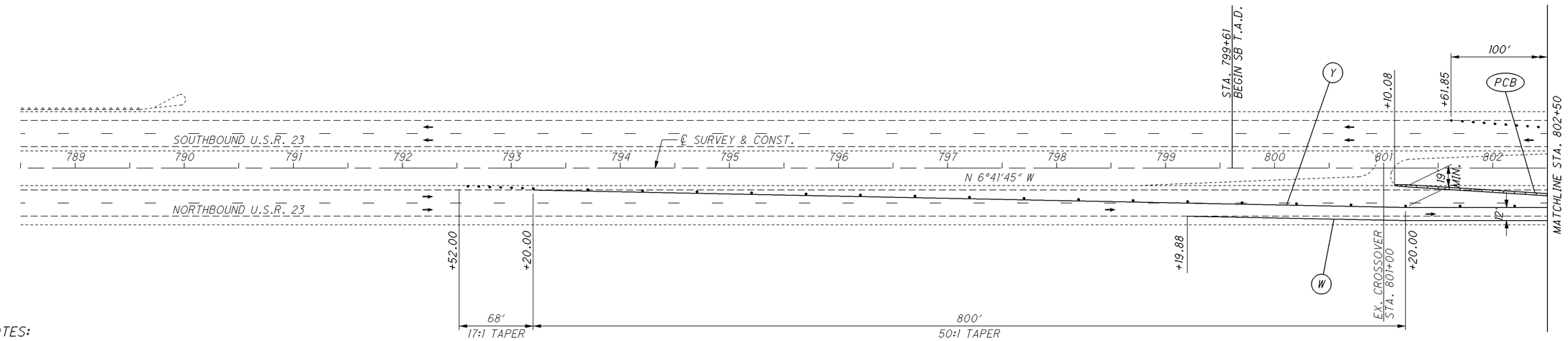

NOTES:

1. ITEM 615, PAVEMENT FOR MAINTAINING TRAFFIC, CLASS A WAS INSTALLED DURING PREVIOUS CONSTRUCTION.
2. FOR ADVANCE SIGN LOCATIONS, NOTES ON PAVEMENT MARKINGS AND LANE CLOSURES, SEE SCD MT-95.30 AND MT-95.40.
3. ALL EXISTING PAVEMENT MARKINGS CONFLICTING WITH THE MAINTENANCE OF TRAFFIC PLAN SHALL BE REMOVED BY GRINDING.
4. FOR CROSSOVER DETAILS, SEE SHEET 21.
5. FOR CROSSOVER LIGHTING REQUIREMENTS, SEE SCD MT-100.00.
6. FOR SEQUENCE OF CONSTRUCTION, SEE SHEET 9.
7. FOR MOT SUB-SUMMARY, SEE SHEET 18.
8. CROSSOVERS AND CROSSOVER LIGHTING SHALL BE REMOVED AT COMPLETION OF CONSTRUCTION.

LEGEND

IA	ITEM 614, WORK ZONE IMPACT ATTENUATOR
PCB	ITEM 622, PORTABLE CONCRETE BARRIER
W	ITEM 614, WORK ZONE EDGE LINE, CLASS I, WHITE
Y	ITEM 614, WORK ZONE EDGE LINE, CLASS I, YELLOW
•	DRUM
T.A.D.	TRANSITION AREA DELINEATION

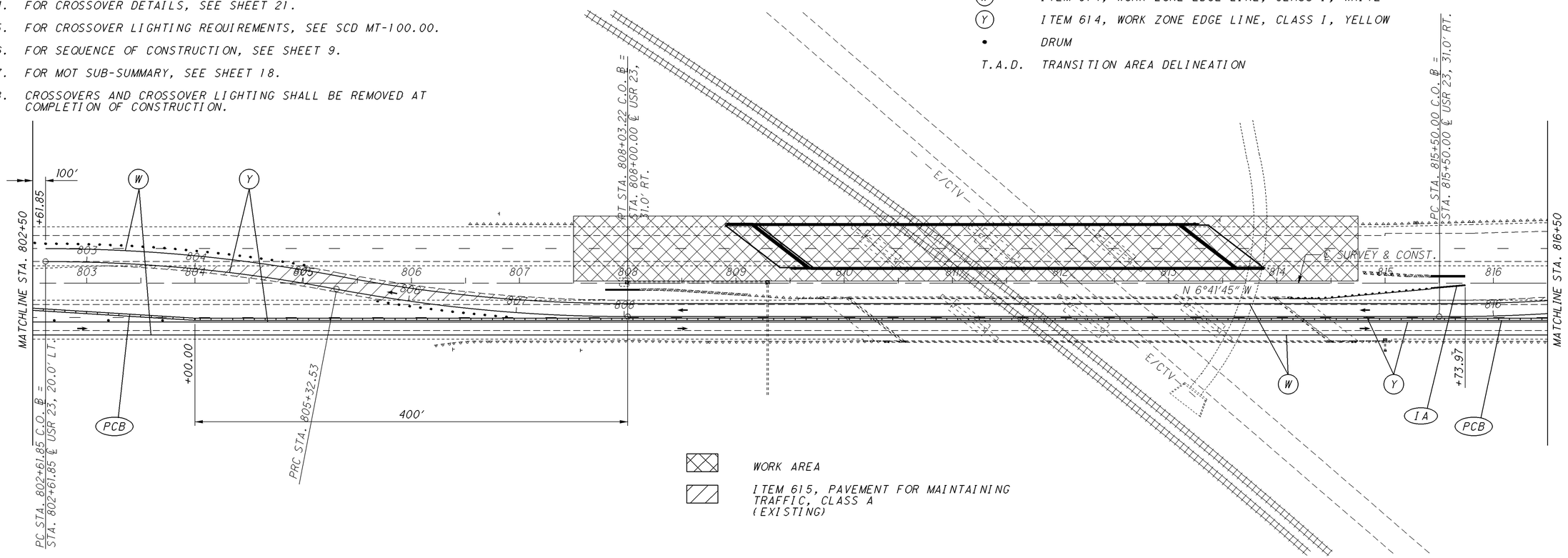

HORIZONTAL SCALE IN FEET
0 25 50 100

CALCULATED DMB
CHECKED LAW

MAINTENANCE OF TRAFFIC - PHASE 1
STA. 788+50 TO STA. 816+50

ROS-23-12.84

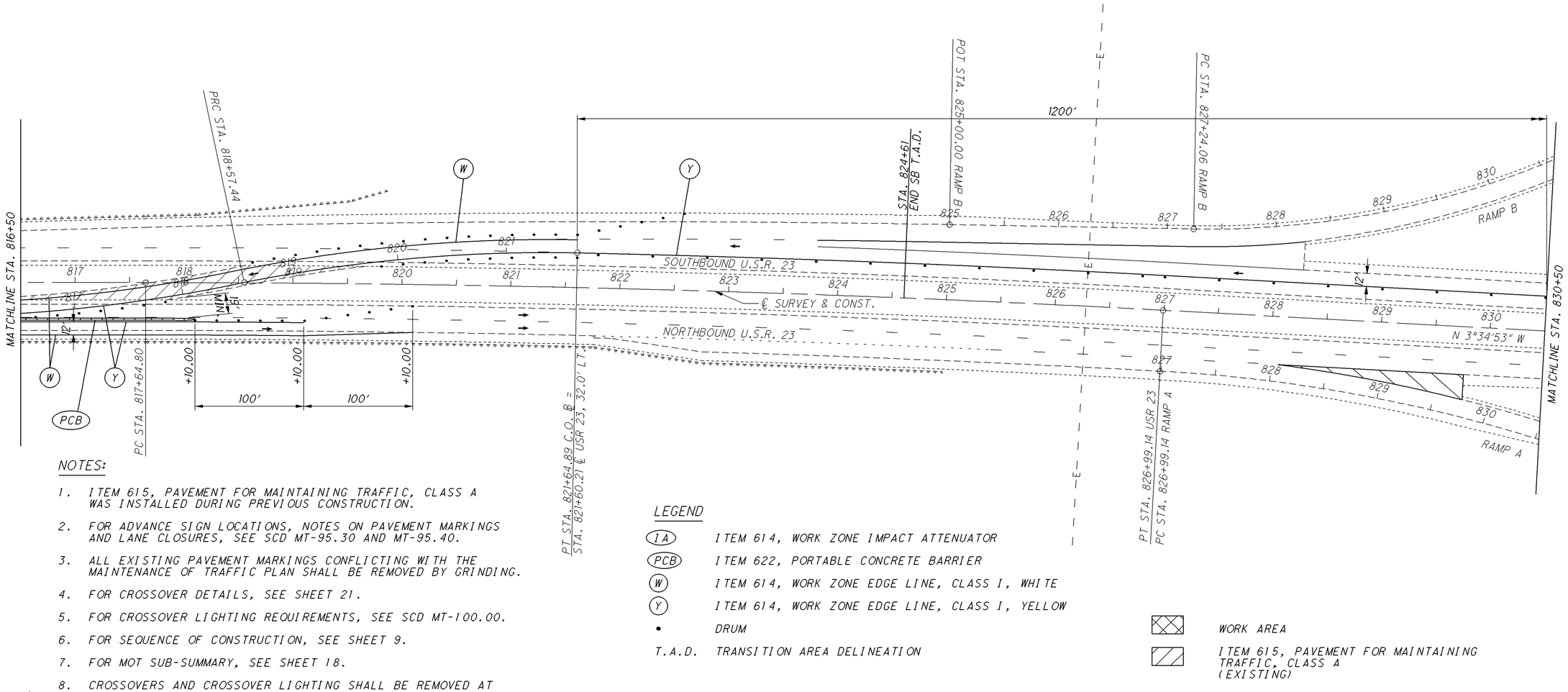

NOTES:

1. ITEM 615, PAVEMENT FOR MAINTAINING TRAFFIC, CLASS A WAS INSTALLED DURING PREVIOUS CONSTRUCTION.
2. FOR ADVANCE SIGN LOCATIONS, NOTES ON PAVEMENT MARKINGS AND LANE CLOSURES, SEE SCD MT-95.30 AND MT-95.40.
3. ALL EXISTING PAVEMENT MARKINGS CONFLICTING WITH THE MAINTENANCE OF TRAFFIC PLAN SHALL BE REMOVED BY GRINDING.
4. FOR CROSSOVER DETAILS, SEE SHEET 21.
5. FOR CROSSOVER LIGHTING REQUIREMENTS, SEE SCD MT-100.00.
6. FOR SEQUENCE OF CONSTRUCTION, SEE SHEET 9.
7. FOR MOT SUB-SUMMARY, SEE SHEET 18.
8. CROSSOVERS AND CROSSOVER LIGHTING SHALL BE REMOVED AT COMPLETION OF CONSTRUCTION.

LEGEND

IA	ITEM 614, WORK ZONE IMPACT ATTENUATOR
PCB	ITEM 622, PORTABLE CONCRETE BARRIER
W	ITEM 614, WORK ZONE EDGE LINE, CLASS I, WHITE
Y	ITEM 614, WORK ZONE EDGE LINE, CLASS I, YELLOW
•	DRUM
T.A.D.	TRANSITION AREA DELINEATION
	WORK AREA
	ITEM 615, PAVEMENT FOR MAINTAINING TRAFFIC, CLASS A (EXISTING)

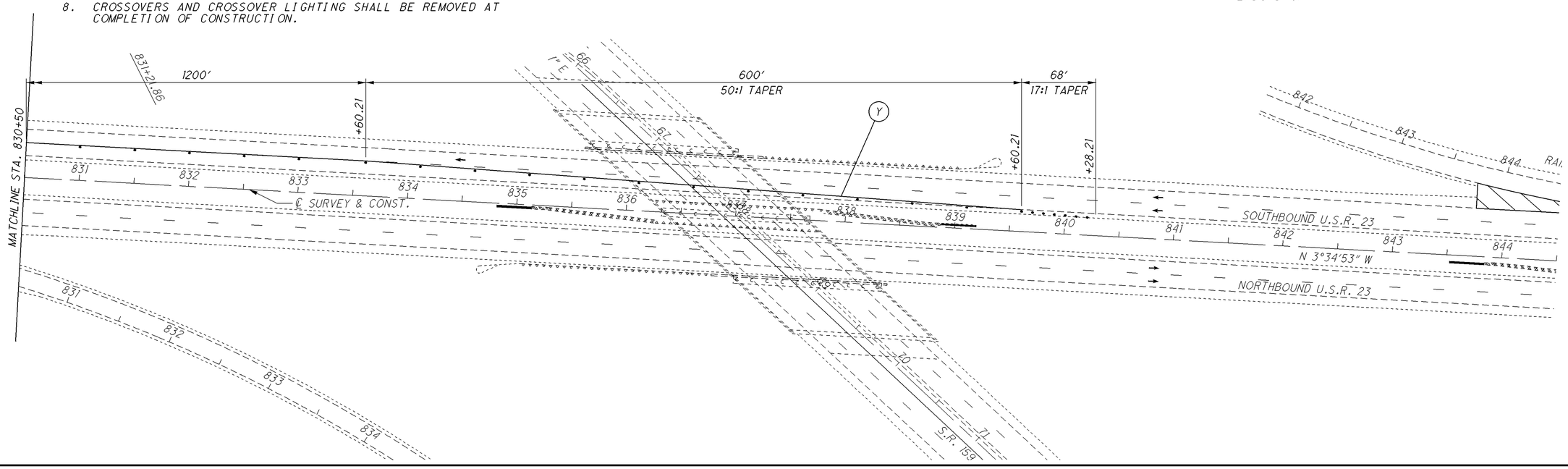

HORIZONTAL SCALE IN FEET
0 25 50 100

CALCULATED DMB
CHECKED LAW

MAINTENANCE OF TRAFFIC - PHASE 1
STA. 816+50 TO STA. 844+50

ROS-23-12.84

NORTHBOUND CROSSOVER CURVE DATA

P.I. STA. 803+53.54
Δ = 12°02'17" (LT)
Dc = 4°00'00"
R = 1,432.40'
T = 151.03'
L = 300.96'
E = 7.94'

P.I. STA. 806+54.50
Δ = 12°02'17" (RT)
Dc = 4°00'00"
R = 1,432.40'
T = 151.03'
L = 300.96'
E = 7.94'

SOUTHBOUND CROSSOVER CURVE DATA

P.I. STA. 803+97.60
Δ = 10°49'38" (RT)
Dc = 4°00'00"
R = 1,432.40'
T = 135.75'
L = 270.69'
E = 6.42'

P.I. STA. 806+68.28
Δ = 10°49'38" (LT)
Dc = 4°00'00"
R = 1,432.40'
T = 135.75'
L = 270.69'
E = 6.42'

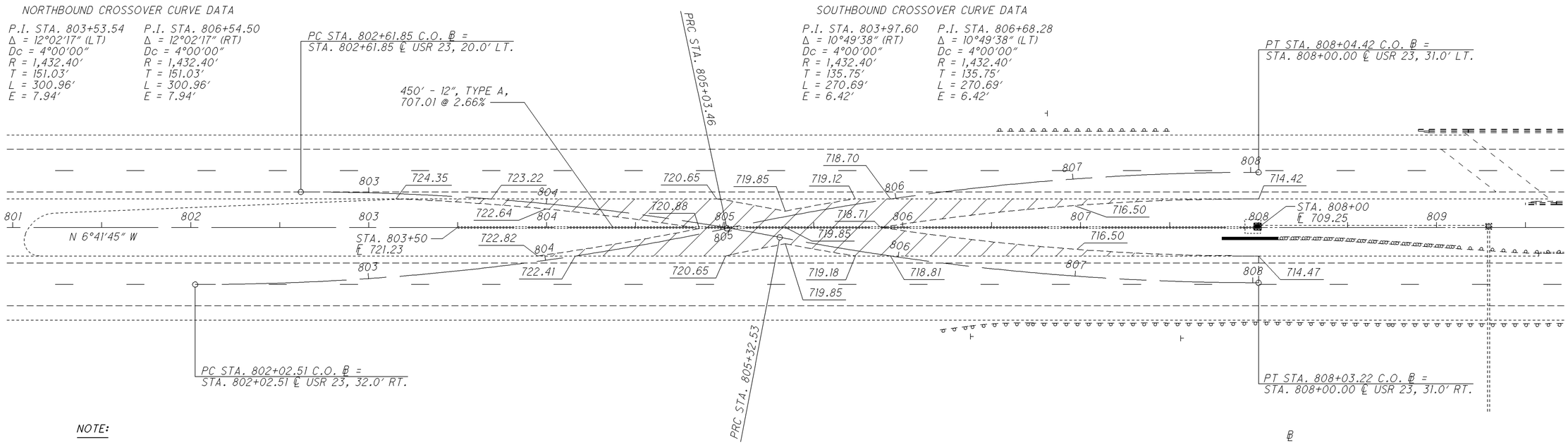

NOTE:

UPON REMOVAL OF THE CROSSOVERS, REPLACE THE EXISTING MEDIAN CATCH BASIN WITH NO. 8 CATCH BASIN AND 8' OF 15" CONDUIT, TYPE C, AT THE FOLLOWING LOCATION:
STA. 808+00.

SOUTH CROSSOVER

THE FOLLOWING ESTIMATED QUANTITIES HAVE BEEN CARRIED TO THE MAINTENANCE OF TRAFFIC SUBSUMMARY ON SHEET 18.

ITEM 202 - PIPE REMOVED, 24" AND UNDER	825 FT.
ITEM 202 - CATCH BASIN REMOVED	2 EA.
ITEM 603 - 15" CONDUIT, TYPE C	8 FT.
ITEM 604 - CATCH BASIN, NO. 8	1 EA.

ITEM 615, PAVEMENT FOR MAINTAINING TRAFFIC, CLASS A (EXISTING)

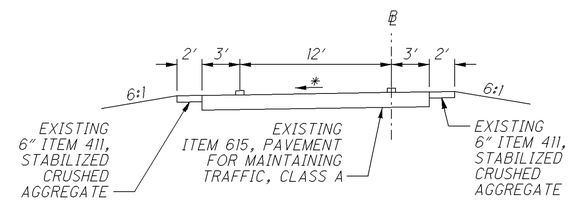

CROSSOVER TYPICAL SECTION

* - VARIES 0.016 MAX. TOWARD INSIDE OF CURVE (FOR INFORMATION ONLY)

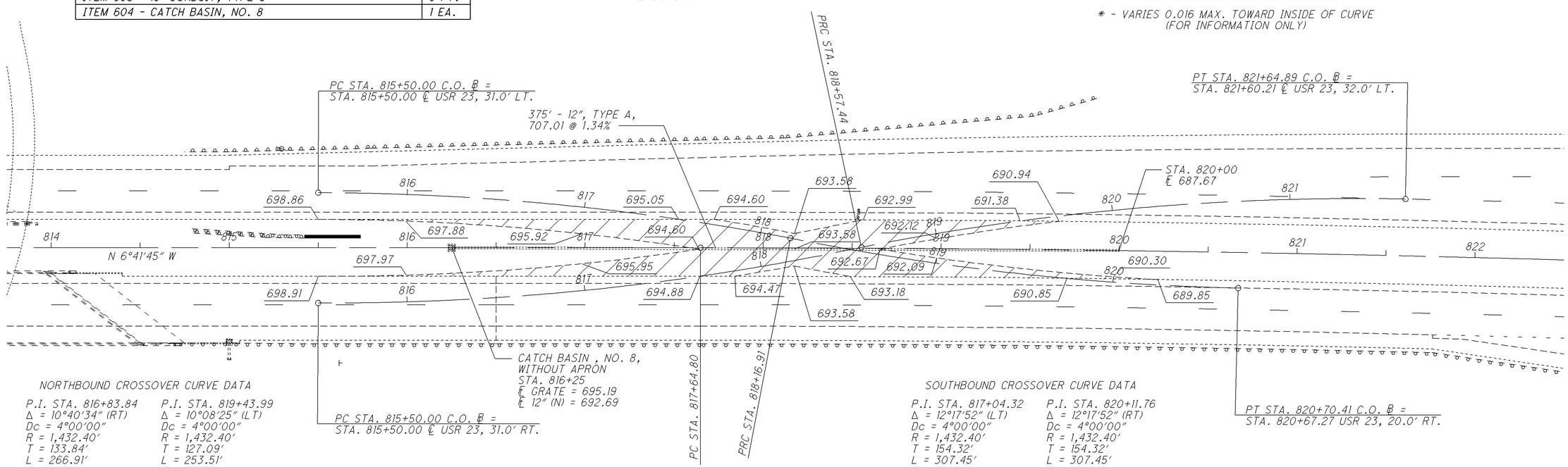

NORTHBOUND CROSSOVER CURVE DATA

P.I. STA. 816+83.84
Δ = 10°40'34" (RT)
Dc = 4°00'00"
R = 1,432.40'
T = 133.84'
L = 266.91'
E = 6.24'

P.I. STA. 819+43.99
Δ = 10°08'25" (LT)
Dc = 4°00'00"
R = 1,432.40'
T = 127.09'
L = 253.51'
E = 5.63'

SOUTHBOUND CROSSOVER CURVE DATA

P.I. STA. 817+04.32
Δ = 12°17'52" (LT)
Dc = 4°00'00"
R = 1,432.40'
T = 154.32'
L = 307.45'
E = 8.29'

P.I. STA. 820+11.76
Δ = 12°17'52" (RT)
Dc = 4°00'00"
R = 1,432.40'
T = 154.32'
L = 307.45'
E = 8.29'

NORTH CROSSOVER

HORIZONTAL SCALE IN FEET 0 15 30 60

CALCULATED DMB
CHECKED LAW

MAINTENANCE OF TRAFFIC DETAILS

ROS-23-12.84

I:\project\District-wide\2009PM-79964\roadway\sheets\79964MP003.dgn 06-NOV-2008 2:04PM dbeekman

SHEET NUMBER														ITEM	ITEM EXT.	GRAND TOTAL	UNIT	DESCRIPTION	SEE SHEET NO.
7	8	9	10	11	12	18	26	27	28	30	41	42	43						
																		ROADWAY	
LUMP														201	11000	LUMP		CLEARING AND GRUBBING	
								1267						202	23000	1267	SQ YD	PAVEMENT REMOVED	
						825								202	35100	825	FT	PIPE REMOVED, 24" AND UNDER	
									400					202	38200	400	FT	GUARDRAIL REMOVED FOR REUSE	
						2								202	58100	2	EACH	CATCH BASIN REMOVED	
											3	26	4	203	20000	33	CU YD	EMBANKMENT	
								1351						204	10000	1351	SQ YD	SUBGRADE COMPACTION	
1														204	45000	1	HOUR	PROOF ROLLING	
	5													209	60201	5	STATION	LINEAR GRADING, AS PER PLAN	8
									375.00					606	16500	375.00	FT	GUARDRAIL REBUILT, TYPE 5	
									25.00					606	16600	25.00	FT	GUARDRAIL REBUILT, BARRIER DESIGN, TYPE 5	
									2					606	35010	2	EACH	BRIDGE TERMINAL ASSEMBLY REBUILT, TYPE 1	
									1					606	35110	1	EACH	BRIDGE TERMINAL ASSEMBLY REBUILT, TYPE 2	
	200													607	35001	200	FT	FENCE REMOVED AND REBUILT, AS PER PLAN	8
																		EROSION CONTROL	
									3					601	32204	3	CU YD	ROCK CHANNEL PROTECTION, TYPE C WITH FABRIC FILTER	
											209	427	244	659	10000	880	SQ YD	SEEDING AND MULCHING	
	44													659	14000	44	SQ YD	REPAIR SEEDING AND MULCHING	
	0.12													659	20000	0.12	TON	COMMERCIAL FERTILIZER	
	0.19													659	31000	0.19	ACRE	LIME	
	5													659	35000	5	M GAL	WATER	
									16					660	20000	16	SQ YD	SODDING REINFORCED	
									20					670	00700	20	SQ YD	DITCH EROSION PROTECTION	
														832	30000	3000	EACH	EROSION CONTROL	
																		DRAINAGE	
									0.3					602	20000	0.3	CU YD	CONCRETE MASONRY	
									20					603	01500	20	FT	6" CONDUIT, TYPE F	
									10					603	04600	10	FT	12" CONDUIT, TYPE C	
						8								603	06100	8	FT	15" CONDUIT, TYPE C	
									1					604	00800	1	EACH	CATCH BASIN, NO. 3A	
						1								604	02800	1	EACH	CATCH BASIN, NO. 8	
									2					604	36600	2	EACH	PRECAST REINFORCED CONCRETE OUTLET	
									128					605	11100	128	FT	6" SHALLOW PIPE UNDERDRAINS	

CALCULATED DMB
CHECKED LAW

GENERAL SUMMARY

ROS-23-12.84

I:\project\District-wide\2009PM-79964\roadway\sheets\79964GG001.dgn 06-NOV-2008 1:45PM dbeekman

SHEET NUMBER														ITEM	ITEM EXT.	GRAND TOTAL	UNIT	DESCRIPTION	SEE SHEET NO.
7	8	9	10	11	12	18	26	27	28	30	41	42	43						
																		PAVEMENT	
							131550							254	01001	131550	SQ YD	PAVEMENT PLANING, ASPHALT CONCRETE, AS PER PLAN (1.25")	8
26310														254	01600	26310	SQ YD	PATCHING PLANED SURFACE	
								191						304	20000	191	CU YD	AGGREGATE BASE	
							9867							407	10000	9867	GALLON	TACK COAT	
							51807							422	10000	51807	SQ YD	SINGLE CHIP SEAL	
							5482							442	10000	5482	CU YD	ASPHALT CONCRETE SURFACE COURSE, 12.5 MM, TYPE A (446)	
								10						448	46061	10	CU YD	ASPHALT CONCRETE INTERMEDIATE COURSE, TYPE 1, UNDER GUARDRAIL, PG64-22, AS PER PLAN	8
									123.92					SPECIAL	45130000	123.92	FT	PRESSURE RELIEF JOINT, TYPE A	
								1114						452	14000	1114	SQ YD	10" NON-REINFORCED CONCRETE PAVEMENT	
									56					609	24000	56	FT	CURB, TYPE 4-A	
								0.26						618	40700	0.26	MILE	RUMBLE STRIPS, (CONCRETE)	
																		TRAFFIC CONTROL	
										775				621	00100	775	EACH	RPM	
										775				621	54000	775	EACH	RAISED PAVEMENT MARKER REMOVED	
									27					626	00100	27	EACH	BARRIER REFLECTOR	
										16.34				644	00100	16.34	MILE	EDGE LINE	
										7.99				644	00200	7.99	MILE	LANE LINE	
										6830				644	00400	6830	FT	CHANNELIZING LINE	
																		STRUCTURES (20' AND OVER)	
																		FOR ESTIMATED QUANTITIES FOR BRIDGE NO. ROS-23-1533 LEFT	48
																		FOR ESTIMATED QUANTITIES FOR BRIDGE NO. ROS-23-1533 RIGHT	80

CALCULATED DMB
CHECKED LAW

GENERAL SUMMARY

ROS-23-12.84

I:\project\District-wide\2009PM-79964\roadway\sheets\79964GG001.dgn 06-NOV-2008 1:45PM dbeekman

SHEET NUMBER														ITEM	ITEM EXT.	GRAND TOTAL	UNIT	DESCRIPTION	SEE SHEET NO.
7	8	9	10	11	12	18	26	27	28	30	41	42	43						
																		MAINTENANCE OF TRAFFIC	
			75											614	11100	75	HOUR	LAW ENFORCEMENT OFFICER WITH PATROL CAR	10
						2500								614	11601	2500	FT	TRANSITION AREA DELINEATION, AS PER PLAN	13
					150									SPECIAL	61412200	150	FT	WORK ZONE GUARDRAIL	12
						1								614	12346	1	EACH	WORK ZONE IMPACT ATTENUATOR (UNIDIRECTIONAL) (FOR 24" WIDE HAZARDS)	11
					20									614	12460	20	EACH	WORK ZONE MARKING SIGN	12
				40										614	12470	40	EACH	WORK ZONE SPEED LIMIT SIGN	11
			20											614	12484	20	EACH	WORK ZONE INCREASED PENALTIES SIGN	10
		5												614	12500	5	EACH	REPLACEMENT SIGN	9
		100												614	12600	100	EACH	REPLACEMENT DRUM	9
						2								614	12757	2	EACH	WORK ZONE CROSSOVER LIGHTING SYSTEM, AS PER PLAN	10
		50												614	13000	50	CU YD	ASPHALT CONCRETE FOR MAINTAINING TRAFFIC	
					500									SPECIAL	61413170	500	FT	LINEAR DELINEATION	12
						4								614	13200	4	EACH	BARRIER REFLECTOR, TYPE A	
		68												614	13300	68	EACH	BARRIER REFLECTOR, TYPE B	
		68			36									614	13350	104	EACH	OBJECT MARKER, ONE WAY	
			12											614	18601	12	SIGN MONTH	PORTABLE CHANGEABLE MESSAGE SIGN, AS PER PLAN	10
					15.98									614	20400	15.98	MILE	WORK ZONE LANE LINE, CLASS II	
						1.18								614	22000	1.18	MILE	WORK ZONE EDGE LINE, CLASS I	
					LUMP									615	10001	LUMP		ROADS FOR MAINTAINING TRAFFIC, AS PER PLAN	12
		1												616	10000	1	M GAL	WATER	
						1700								622	40031	1700	FT	PORTABLE CONCRETE BARRIER, 50", AS PER PLAN	12
					100									630	80300	100	SQ FT	SIGN, TEMPORARY OVERLAY	
					6									630	89900	6	EACH	REMOVAL OF OVERLAY SIGN	
														614	11000	LUMP		MAINTAINING TRAFFIC	
														619	16010	7	MONTH	FIELD OFFICE, TYPE B	
														623	10000	LUMP		CONSTRUCTION LAYOUT STAKES	
														624	10000	LUMP		MOBILIZATION	

CALCULATED DMB
CHECKED LAW

GENERAL SUMMARY

ROS-23-12.84

I:\project\District-wide\2009PM-79964\roadway\sheets\79964GG001.dgn 06-NOV-2008 1:45PM dbeekman

STATION TO STATION	254 PAVEMENT PLANING, ASPHALT CONCRETE, AS PER PLAN 1.25" SQ.YD.	442 ASPHALT CONCRETE SURFACE COURSE, 12.5 MM, TYPE A (446) 1.50" SQ.YD.	407 TACK COAT @ 0.075 GAL./SQ.YD. SQ.YD.			
NORTHBOUND U.S.R. 23/WESTBOUND U.S.R. 35 (MAINLINE PAVEMENT)						
STA. 1158+33.60 TO STA. 1155+48.83 = 284.77′						
284.77′ x 36′ / 9 =	1,139.08	1,139.08	1,139.08			
NORTHBOUND U.S.R. 23 (MAINLINE PAVEMENT)						
STA. 1156+99.39 TO STA. 1151+71.57 = 527.82′						
527.82′ x 24′ / 9 =	1,407.52	1,407.52	1,407.52			
STA. 686+40.21 TO STA. 715+92.43 = 2,952.22′						
2,952.22′ x 24′ / 9 =	7,872.59	7,872.59	7,872.59			
STA. 715+92.99 TO STA. 808+00.00 = 9,207.01′						
9,207.01′ x 24′ / 9 =	24,552.03	24,552.03	24,552.03			
STA. 816+50.00 TO STA. 864+50.00 = 4,800.00′						
4,800.00′ x 24′ / 9 =	12,800.00	12,800.00	12,800.00			
WESTBOUND U.S.R. 35 (MAINLINE PAVEMENT)						
STA. 1156+99.39 TO STA. 1146+00.00 = (CADD MEASURED)						
28,037.54 SQ. FT. / 9 =	3,115.27	3,115.27	3,115.27			
SOUTHBOUND U.S.R. 23/EASTBOUND U.S.R. 35 (MAINLINE PAVEMENT)						
STA. 1158+05.94 TO STA. 1152+48.83 = 557.11′						
557.11′ x 36′ / 9 =	2,228.44	2,228.44	2,228.44			
SOUTHBOUND U.S.R. 23 (MAINLINE PAVEMENT)						
STA. 1152+48.83 TO STA. 1148+18.79 = 430.04′						
430.04′ x 24′ / 9 =	1,146.77	1,146.77	1,146.77			
STA. 686+88.79 TO STA. 715+93.68 = 2,904.89′						
2,904.89′ x 24′ / 9 =	7,746.37	7,746.37	7,746.37			
STA. 715+92.99 TO STA. 807+50.00 = 9,157.01′						
9,157.01′ x 24′ / 9 =	24,418.69	24,418.69	24,418.69			
STA. 814+75.00 TO STA. 864+50.00 = 4,975.00′						
4,975.00′ x 24′ / 9 =	13,266.67	13,266.67	13,266.67			
EASTBOUND U.S.R. 35 (MAINLINE PAVEMENT)						
STA. 1152+48.83 TO STA. 1143+00.00 = (CADD MEASURED)						
23,565.06 SQ. FT. / 9 =	2,618.34	2,618.34	2,618.34			
MAINLINE PAVEMENT: (EXTRA AREAS FOR ACCELERATION AND						
DECELERATION LANES AT INTERCHANGE RAMPS)						
WEIGH STATIONS						
RAMP A						
STA. 730+25.00 TO STA. 742+67.20 = (CADD MEASURED)						
20,051.41 SQ. FT. / 9 =	2,227.93	2,227.93	2,227.93			
RAMP B						
STA. 759+22.76 TO STA. 767+22.76 = (CADD MEASURED)						
13,086.50 SQ. FT. / 9 =	1,454.06	1,454.06	1,454.06			
RAMP C						
STA. 732+55.86 TO STA. 740+55.86 = (CADD MEASURED)						
13,101.69 SQ. FT. / 9 =	1,455.74	1,455.74	1,455.74			
RAMP D						
STA. 757+32.50 TO STA. 769+63.85 = (CADD MEASURED)						
19,618.32 SQ. FT. / 9 =	2,179.81	2,179.81	2,179.81			
SUB-TOTAL THIS COLUMN	109,629.31	109,629.31	109,629.31			

STATION TO STATION	254 PAVEMENT PLANING, ASPHALT CONCRETE, AS PER PLAN 1.25" SQ.YD.	442 ASPHALT CONCRETE SURFACE COURSE, 12.5 MM, TYPE A (446) 1.50" SQ.YD.	407 TACK COAT @ 0.075 GAL./SQ.YD. SQ.YD.			
MAINLINE PAVEMENT: (EXTRA AREAS FOR ACCELERATION AND						
DECELERATION LANES AT INTERCHANGE RAMPS) (CONTINUED)						
STATE ROUTE 159 INTERCHANGE						
RAMP A						
STA. 821+77.30 TO STA. 829+77.48 = (CADD MEASURED)						
11,497.96 SQ. FT. / 9 =	1,277.55	1,277.55	1,277.55			
RAMP B						
STA. 815+00.00 TO STA. 828+26.00 = (CADD MEASURED)						
22,636.39 SQ. FT. / 9 =	2,515.15	2,515.15	2,515.15			
RAMP C						
STA. 849+88.72 TO STA. 862+00.00 = (CADD MEASURED)						
19,082.37 SQ. FT. / 9 =	2,120.26	2,120.26	2,120.26			
RAMP D						
STA. 843+74.37 TO STA. 851+74.37 = (CADD MEASURED)						
11,467.05 SQ. FT. / 9 =	1,274.12	1,274.12	1,274.12			
RAMP PAVEMENT						
WEIGH STATIONS						
RAMP A						
STA. 742+66.21 TO STA. 749+30.00 = 663.79′						
663.79′ x 22′ / 9 =	1,622.60	1,622.60	1,622.60			
RAMP B						
STA. 745+50.00 TO STA. 759+23.87 = 473.87′						
473.87′ x 22′ / 9 =	1,158.35	1,158.35	1,158.35			
RAMP C						
STA. 740+55.04 TO STA. 745+05.00 = 449.96′						
449.96′ x 22′ / 9 =	1,099.90	1,099.90	1,099.90			
RAMP D						
STA. 750+25.00 TO STA. 757+32.59 = 707.59′						
707.59′ x 22′ / 9 =	1,729.66	1,729.66	1,729.66			
STATE ROUTE 159 INTERCHANGE						
RAMP A						
STA. 829+75.92 TO STA. 841+44.55 = 1,168.63′						
1,168.63′ x 22′ / 9 =	2,856.65	2,856.65	2,856.65			
RAMP B						
STA. 828+24.95 TO STA. 832+34.50 = 409.55′						
409.55′ x 22′ / 9 =	1,001.12	1,001.12	1,001.12			
RAMP C						
STA. 841+97.00 TO STA. 849+85.19 = 788.19′						
788.19′ x 22′ / 9 =	1,926.69	1,926.69	1,926.69			
SUB-TOTAL COLUMN	18,582.05	18,582.05	18,582.05			
FROM PREVIOUS COLUMN	109,629.31	109,629.31	109,629.31			
CARRIED TO SHEET 26	128,211.36	128,211.36	128,211.36			

CALCULATED DMB
CHECKED LAW

PAVEMENT CALCULATIONS

ROS-23-12.84

I:\project\District-wide\2009PM-79964\roadway\sheets\79964GC001.dgn 06-NOV-2008 1:42PM dbeekman

STATION TO STATION	254 PAVEMENT PLANING, ASPHALT CONCRETE, AS PER PLAN 1.25" SQ.YD.	442 ASPHALT CONCRETE SURFACE COURSE, 12.5 MM, TYPE A (446) 1.50" SQ.YD.	407 TACK COAT @ 0.075 GAL./SQ.YD. SQ.YD.	422 SINGLE CHIP SEAL SQ.YD.		
RAMP PAVEMENT (CONTINUED)						
STATE ROUTE 159 INTERCHANGE						
RAMP D						
STA. 834+22.00 TO STA. 838+16.70 = (CADD MEASURED)						
14,951.93 SQ. FT. / 9 =	1,661.33	1,661.33	1,661.33			
STA. 838+16.70 TO STA. 843+75.73 = 559.03'						
559.03' x 27' / 9 =	1,677.09	1,677.09	1,677.09			
SINGLE CHIP SEAL						
NORTHBOUND U.S.R. 23/WESTBOUND U.S.R. 35 (MAINLINE PAVEMENT)						
STA. 1158+33.60 TO STA. 1155+48.83 = 284.77'						
(OUTSIDE BERM) 284.77' x 8' / 9 =				253.13		
(INSIDE BERM) 284.77' x 4' / 9 =				126.56		
NORTHBOUND U.S.R. 23 (MAINLINE PAVEMENT)						
STA. 1156+99.39 TO STA. 1151+71.57 = 527.82'						
(OUTSIDE BERM) 527.82' x 8' / 9 =				469.17		
STA. 686+40.21 TO STA. 691+88.03 = 547.82'						
(OUTSIDE BERM) 547.82' x 8' / 9 =				486.95		
STA. 691+88.03 TO STA. 706+83.63 = 1,495.60'						
(OUTSIDE BERM) 1,495.60' x 8' / 9 =				1,329.42		
(INSIDE BERM) 1,495.60' x 4' / 9 =				664.71		
STA. 706+83.63 TO STA. 714+01.69 = 718.06'						
(OUTSIDE BERM - CADD MEASURED) 13,050.28 SQ. FT. / 9 =				1,450.03		
(INSIDE BERM) 718.06' x 4' / 9 =				319.14		
STA. 714+01.69 TO STA. 715+92.43 = 190.74'						
(OUTSIDE BERM) 190.74' x 8' / 9 =				169.55		
(INSIDE BERM) 190.74' x 4' / 9 =				84.77		
STA. 715+92.99 TO STA. 864+50.00 = 14,857.01'						
(OUTSIDE BERM) 14,857.01' x 8' / 9 =				13,206.23		
(INSIDE BERM) 14,857.01' x 4' / 9 =				6,603.12		
WESTBOUND U.S.R. 35 (MAINLINE PAVEMENT)						
STA. 1156+99.39 TO STA. 1146+00.00 = 1,099.39'						
(INSIDE BERM) 1,099.39' x 4' / 9 =				488.62		
STA. 1146+27.19 TO STA. 1146+00.00 = 27.19'						
(OUTSIDE BERM) 27.19' x 8' / 9 =				24.17		
SOUTHBOUND U.S.R. 23/EASTBOUND U.S.R. 35 (MAINLINE PAVEMENT)						
STA. 1158+05.94 TO STA. 1152+48.83 = 557.11'						
(OUTSIDE BERM) 557.11' x 8' / 9 =				495.21		
(INSIDE BERM) 557.11' x 4' / 9 =				247.60		
STA. 1152+48.83 TO STA. 1148+18.79 = 430.04'						
(INSIDE BERM) 430.04' x 4' / 9 =				191.13		
STA. 686+88.79 TO STA. 690+97.20 = 408.41'						
(INSIDE BERM) 408.41' x 4' / 9 =				181.52		
STA. 690+97.20 TO STA. 715+93.68 = 2,496.48'						
(OUTSIDE BERM) 2,496.48' x 8' / 9 =				2,219.09		
(INSIDE BERM) 2,496.48' x 4' / 9 =				1,109.55		
SUB-TOTAL THIS COLUMN	3,338.42	3,338.42	3,338.42	30,119.67		

STATION TO STATION	254 PAVEMENT PLANING, ASPHALT CONCRETE, AS PER PLAN 1.25" SQ.YD.	442 ASPHALT CONCRETE SURFACE COURSE, 12.5 MM, TYPE A (446) 1.50" SQ.YD.	407 TACK COAT @ 0.075 GAL./SQ.YD. SQ.YD.	422 SINGLE CHIP SEAL SQ.YD.		
SOUTHBOUND U.S.R. 23/EASTBOUND U.S.R. 35 (CONTINUED)						
STA. 715+92.99 TO STA. 864.50.00 = 14,857.01'						
(OUTSIDE BERM) 14,857.01' x 8' / 9 =				13,206.23		
(INSIDE BERM) 14,857.01' x 4' / 9 =				6,603.12		
EASTBOUND U.S.R. 35 (MAINLINE PAVEMENT)						
STA. 1152+48.83 TO STA. 1143+00.00 = 948.83'						
(OUTSIDE BERM) 948.83' x 8' / 9 =				843.40		
STA. 1144+14.58 TO STA. 1143+00.00 = 114.58'						
(INSIDE BERM) 114.58' x 4' / 9 =				50.92		
CROSSOVERS						
STA. 1157+10.37 TO STA. 1156+09.87 = (CADD MEASURED)						
1,554.55 SQ. FT / 9 =				172.73		
STA. 717+77.43 TO STA. 722+22.57 = (CADD MEASURED)						
2,432.64 SQ. FT / 9 =				270.29		
STA. 764+52.43 TO STA. 768+97.57 = (CADD MEASURED)						
2,432.64 SQ. FT / 9 =				270.29		
STA. 798+77.43 TO STA. 803+22.57 = (CADD MEASURED)						
2,432.64 SQ. FT / 9 =				270.29		
SUB-TOTAL COLUMN				21,687.27		
FROM PREVIOUS COLUMN	3,338.42	3,338.42	3,338.42	30,119.67		
FROM SHEET 25	128,211.36	128,211.36	128,211.36			
TOTAL	131,549.78	131,549.78	131,549.78	51,806.94		
CONVERT TO CU. YD. / GAL.		5,481.24	9,866.23			
	SQ.YD.	CU.YD.	GAL.	SQ.YD.		
CARRIED TO GENERAL SUMMARY	131,550	5,482	9,867	51,807		

CALCULATED DMB
CHECKED LAW

PAVEMENT CALCULATIONS

ROS-23-12.84

STATION TO STATION	202 PAVEMENT REMOVED		204 SUBGRADE COMPACTION	304 AGGREGATE BASE 6"	448 ASPHALT CONCRETE INTERMEDIATE COURSE, TYPE 1, UNDER GUARDRAIL, PG64-22, AS PER PLAN 2"	452 10" NON-REINFORCED CONCRETE PAVEMENT	618 RUMBLE STRIPS, (CONCRETE)
	SQ. YD.		SQ. YD.	SQ. YD.	SQ. YD.	SQ. YD.	FT.
SOUTHBOUND U.S.R. 23 PAVEMENT RECONSTRUCTION							
STA. 807+50.00 TO STA. 808+92.24 = 142.24′							
142.24′ (4′) / 9 =					63.22		
142.24′ (36′) / 9 =						568.96	
142.24′ (36′ + 0.5′ + 0.5′) / 9 =				584.76			
142.24′ (36′ + 4′) / 9 =	632.18						
142.24′ (36′ + 4′ + 1.5′ + 1.5′) / 9 =			679.59				
142.24′ (2) =							284.48
STA. 808+92.24 TO STA. 809+38.59 = 46.35′							46.35
½ (46.35′) (36′) / 9 =	92.70					92.70	
½ (46.35′) (36′ + 0.5′) / 9 =				93.99			
½ (46.35′) (36′ + 1.5′) / 9 =			96.56				
STA. 813+36.91 TO STA. 813+87.13 = 50.22′							50.22
50.22′ (4′) / 9 =					22.32		
½ (50.22′) (36′) / 9 =						100.44	
½ (50.22′) (36′ + 0.5′) / 9 =				101.84			
½ (50.22′) (36′ + 4′) / 9 =	111.60						
½ (50.22′) (36′ + 4′ + 1.5′) / 9 =			115.79				
STA. 813+87.13 TO STA. 814+75.00 = 87.87′							
87.87′ (4′ + 4′) / 9 =					78.11		
87.87′ (36′) / 9 =						351.48	
87.87′ (36′ + 0.5′ + 0.5′) / 9 =				361.24			
87.87′ (36′ + 4′ + 4′) / 9 =	429.59						
87.87′ (36′ + 4′ + 4′ + 1.5′ + 1.5′) / 9 =			458.88				
87.87′ (2) =							175.74
NORTHBOUND U.S.R. 23 PAVEMENT							
STA. 808+00.00 TO STA. 809+79.80 = 179.80′							
179.80′ x 2 =							359.60
STA. 809+79.80 TO STA. 810+28.09 = 48.29′							48.29
STA. 814+26.41 TO STA. 814+72.77 = 46.36′							46.36
STA. 814+72.77 TO STA. 816+50.00 = 177.23′							
177.23′ x 2 =							354.46
TOTAL	1,266.07		1,350.82	1,141.83	163.65	1,113.58	1,365.50
CONVERT TO CU.YD., MILE				190.31	9.09		0.26
	SQ.YD.		SQ.YD.	CU.YD.	CU.YD.	SQ.YD.	MILE
TOTALS CARRIED TO GENERAL SUMMARY	1,267		1,351	191	10	1,114	0.26

CALCULATED DMB
CHECKED LAW

PAVEMENT CALCULATIONS

ROS-23-12.84

I:\project\District-wide\2009PM-79964\roadway\sheets\79964GC002.dgn 06-NOV-2008 1:43PM dbeekman

REF NO.	SHEET NO.	STATION (℄ SURVEY & CONSTRUCTION) FROM	TO	SIDE	202 GUARDRAIL REMOVED FOR REUSE	606 GUARDRAIL REBUILT, TYPE 5	606 GUARDRAIL REBUILT, BARRIER DESIGN, TYPE 5	606 BRIDGE TERMINAL ASSEMBLY, REBUILT, TYPE 1	606 BRIDGE TERMINAL ASSEMBLY, REBUILT, TYPE 2	609 CURB, TYPE 4-A	626 BARRIER REFLECTOR, TYPE A	626 BARRIER REFLECTOR, TYPE B		602 CONCRETE MASONRY	603 6" CONDUIT, TYPE F	603 12" CONDUIT, TYPE C	604 CATCH BASIN, NO. 3A	604 PRECAST REINFORCED CONCRETE OUTLET	605 6" SHALLOW PIPE UNDERDRAINS	SPECIAL PRESSURE RELIEF JOINT, TYPE A		601 ROCK CHANNEL PROTECTION, TYPE C WITH FABRIC FILTER	660 SODDING REINFORCED	670 DITCH EROSION PROTECTION (6' WIDE) 1 EACH SIDE
					FT.	FT.	FT.	EACH	EACH	FT.	EACH			CU.YD.	FT.	FT.	EACH	EACH	FT.	FT.		CU.YD.	SQ.YD.	SQ.YD.
GR-1	37	807+50.00	808+94.05	LT	150.00	150.00			1		3													
GR-2	37	813+25.35	814+75.00	LT	156.25	156.25		1			3													
GR-3	37	813+85.49	814+79.05	LT	93.75	68.75	25.00	1			3													
PV-1	37	813+27.45	813+57.45	LT						30														
PV-2	37	813+87.59	814+13.59	LT						26														
BR-1	37	808+92.05	813+27.45	LT								9												
BR-2	37	809+51.14	813+87.59	LT								9												
DR-1	37	808+92.24	809+38.59	LT											10			1	60.70	58.70				
DR-2	37	813+36.27	813+87.78	LT											10			1	67.22	65.22				
DR-3	37	813+50.00		LT										0.21		9.5	1					2.22		
EC-1	37	814+18.09		LT																			16	9.3/10.7
			TOTAL		400.00	375.00	25.00	2	1	56	9	18		0.21	20	9.5	1	2	127.92	123.92		2.22	16	20.0
											27													
TOTALS CARRIED TO GENERAL SUMMARY					400	375.00	25.00	2	1	56	27			0.3	20	10	1	2	128	123.92		3	16	20

CALCULATED DMB
CHECKED LAW

ROADWAY AND DRAINAGE SUBSUMMARY

ROS-23-12.84

I:\project\District-wide\2009PM-79964\roadway\sheets\79964GS001.dgn 06-NOV-2008 1:52PM dbeekman

STATION TO STATION	644				621													
	LANE LINE	EDGE LINE		CHANNELIZING LINE	RAISED PAVEMENT MARKER REMOVED	RPM												
		YELLOW	WHITE			TWO-WAY WHITE/RED	TWO-WAY YELLOW/RED	ONE-WAY WHITE										
	FEET	FEET		FEET	EACH	EACH												
NORTHBOUND U.S.R. 23 / WESTBOUND U.S.R. 35																		
STA. 1158+33.60 TO STA. 1155+48.83 = 284.77′		284.77	284.77															
284.77′ x 2 = 569.54′	569.54				8	8												
NORTHBOUND U.S.R. 23																		
STA. 1156+99.39 TO STA. 1151+71.57 = 527.82′	527.82		527.82		7	7												
STA. 686+40.21 TO STA. 691+88.03 = 547.82′	547.82		547.82	547.82	7 + 14	7 + 14												
STA. 691+88.03 TO STA. 715+92.43 = 2,404.40′	2,404.40	2,404.40	2,404.40		30	30												
STA. 715+92.99 TO STA. 864+50.00 = 14,857.01′	14,857.01	14,857.01	14,857.01		186	186												
WESTBOUND U.S.R. 35																		
STA. 1156+99.39 TO STA. 1151+71.57 = 527.82′	527.82	527.82			7	7												
STA. 1151+71.57 TO STA. 1146+27.19 = 544.38′	544.38	544.38		544.38	7 + 14	7 + 14												
STA. 1146+27.19 TO STA. 1146+00.00 = 27.19′	27.19	27.19	27.19															
SOUTHBOUND U.S.R. 23 / EASTBOUND U.S.R. 35																		
STA. 1158+05+94 TO STA. 1152+48.83 = 557.11′		557.11	557.11															
557.11′ x 2 = 1,114.22′	1,114.22				14	14												
SOUTHBOUND U.S.R. 23																		
STA. 1152+48.83 TO STA. 1148+18.79 = 430.04′	430.04	430.04			6	6												
STA. 686+88.79 TO STA. 690+97.20 = 408.41′	408.41	408.41		408.41	6 + 11	6 + 11												
STA. 690+97.20 TO STA. 715+93.68 = 2,496.48′	2,496.48	2,496.48	2,496.48		32	32												
STA. 715+92.99 TO STA. 864+50.00 = 14,857.01′	14,857.01	14,857.01	14,857.01		186	186												
EASTBOUND U.S.R. 35																		
STA. 1152+48.83 TO STA. 1148+18.79 = 430.04′	430.04		430.04		6	6												
STA. 1148+18.79 TO STA. 1144+14.58 = 404.21′	404.21		404.21	404.21	5 + 11	5 + 11												
STA. 1144+14.58 TO STA. 1143+00.00 = 114.58′	114.58	114.58	114.58		2	2												
WEIGH STATION INTERCHANGE																		
RAMP A																		
STA. 736+59.75 TO STA. 738+99.75 = 240.00′	240.00																	
STA. 738+99.75 TO STA. 742+67.20 = 367.45′																		
367.45′ x 2 = 734.90′				734.90	19	19												
RAMP A STA. 742+66.21 TO RAMP A STA. 749+30.00 = 663.79′		663.79	663.79		9		9											
RAMP B																		
RAMP B STA. 754+50.00 TO RAMP B STA. 759+23.87 = 473.87′		473.87	473.87		6		6											
STA. 759+22.85 TO STA. 762+01.73 = 278.88′																		
278.88′ x 2 = 557.76′				557.76	14	14												
STA. 762+01.73 TO STA. 764+12.24 = 210.51′	210.51																	
RAMP C																		
STA. 735+66.27 TO STA. 737+76.67 = 210.40′	210.40																	
STA. 737+76.67 TO STA. 740+55.86 = 279.19′																		
279.19′ x 2 = 558.38′				558.38	14	14												
RAMP C STA. 740+55.04 TO RAMP C STA. 745+05.00 = 449.96′		449.96	449.96		6		6											
RAMP D																		
RAMP D STA. 750+25.00 TO RAMP D STA. 757+32.59 = 707.59′		707.59	707.59		9		9											
STA. 757+32.50 TO STA. 760+83.60 = 351.10′																		
351.10′ x 2 = 702.20′				702.20	18	18												
STA. 760+83.60 TO STA. 763+23.64 = 240.04′	240.04																	
CARRIED TO SHEET 30	41,161.92	39,804.41	39,803.65	4,458.06	654	624	30											

CALCULATED DMB
CHECKED LAW

TRAFFIC CONTROL SUBSUMMARY

ROS-23-12.84

I:\project\District-wide\2009PM-79964\roadway\sheets\79964GS002.dgn 06-NOV-2008 1:53PM dbeekman

STATION TO STATION	644				621			
	LANE LINE	EDGE LINE		CHANNELIZING LINE	RAISED PAVEMENT MARKER REMOVED	RPM		
		YELLOW	WHITE			TWO-WAY WHITE/RED	TWO-WAY YELLOW/RED	ONE-WAY WHITE
	FEET	FEET		FEET	EACH	EACH		
STATE ROUTE 159 INTERCHANGE								
RAMP A								
STA. 825+42.25 TO STA. 828+06.92 = 264.67′	264.67							
STA. 828+06.92 TO STA. 829+77.48 = 170.56′								
170.56′ x 2 = 341.12′				341.12	9	9		
RAMP A STA. 829+75.92 TO RAMP A STA. 841+44.55 = 1,168.63′		1,168.63	1,168.63		15		15	
RAMP A STA. 833+60.00 TO RAMP A STA. 837+60.00 = 400.00′					5			5
RAMP A STA. 837+60.00 TO RAMP A STA. 841+44.55 = 384.55′					10			10
RAMP B								
STA. 821+40.20 TO STA. 823+80.20 = 240.00′	240.00							
STA. 823+80.20 TO STA. 828+26.00 = 445.80′								
445.80′ x 2 = 891.60′				891.60	23	23		
RAMP B STA. 828+24.95 TO RAMP B STA. 832+34.50 = 409.55′		409.55	409.55		6		6	
RAMP C								
RAMP C STA. 841+97.00 TO RAMP C STA. 849+85.19 = 788.19′		788.19	788.19		10		10	
STA. 849+88.72 TO STA. 853+20.15 = 331.43′								
331.43′ x 2 = 662.86′				662.86	17	17		
STA. 853+20.15 TO STA. 855+59.97 = 239.82′	239.82							
RAMP D								
RAMP D STA. 834+22.00 TO RAMP D STA. 834+90.77 = 68.77′		68.77	68.77		2		2	
68.77′ x 2 = 137.54′				137.54	4	4		
RAMP D STA. 834+90.77 TO RAMP D STA. 843+74.37 = 883.60′		883.60	883.60		11		11	
STA. 843+75.73 TO STA. 845+45.08 = 169.35′								
169.35′ x 2 = 338.70′				338.70	9	9		
STA. 845+45.08 TO STA. 848+08.46 = 263.38′	263.38							
FROM THIS SHEET	1,007.87	3,318.74	3,318.74	2,371.82	121	62	44	15
FROM SHEET 29	41,161.92	39,804.41	39,803.65	4,458.06	654	624	30	
TOTAL	42,169.79	43,123.15	43,122.39	6,829.88	775	686	74	15
		86,245.54				775		
CONVERT TO MILE	7.99	16.34						
TOTAL	7.99	16.34		6,829.88	775	775		
	MILE	MILE		FT.	EACH	EACH		
TOTALS CARRIED TO GENERAL SUMMARY	7.99	16.34		6,830	775	775		

CALCULATED DMB
CHECKED LAW

TRAFFIC CONTROL SUBSUMMARY

ROS-23-12.84

I:\project\District-wide\2009PM-79964\roadway\sheets\79964GS002.dgn 06-NOV-2008 1:53PM dbeekman

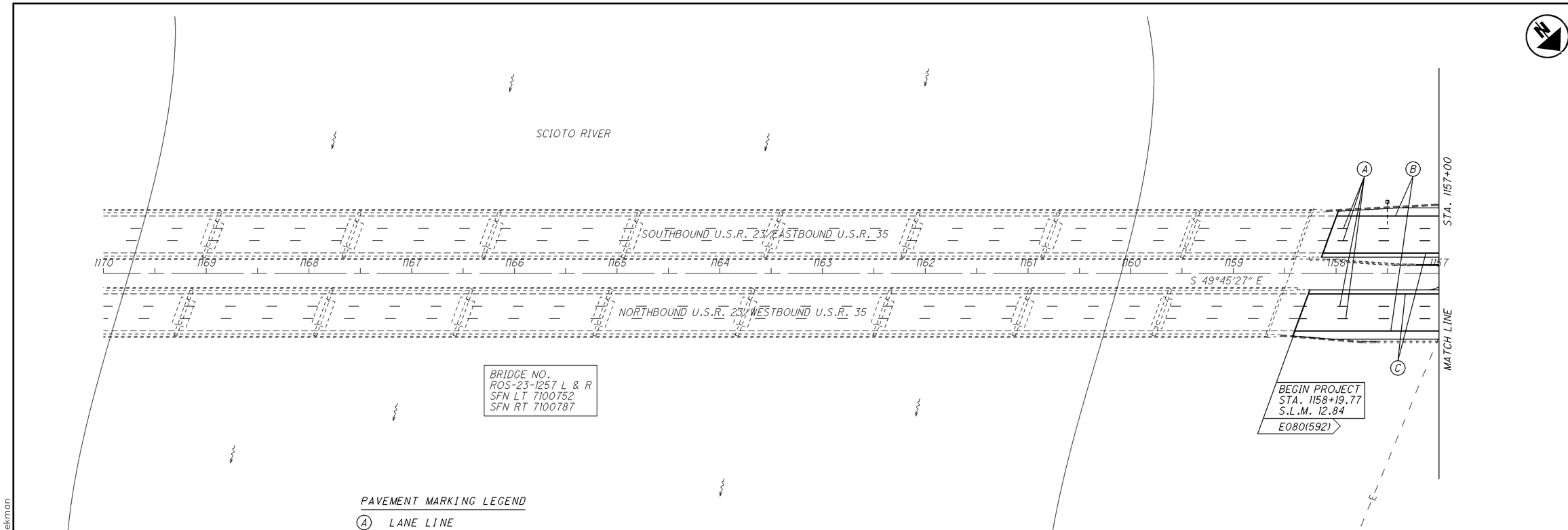

PAVEMENT MARKING LEGEND

(A) LANE LINE

(B) EDGE LINE (WHITE)

(C) EDGE LINE (YELLOW)

(D) CHANNELIZING LINE

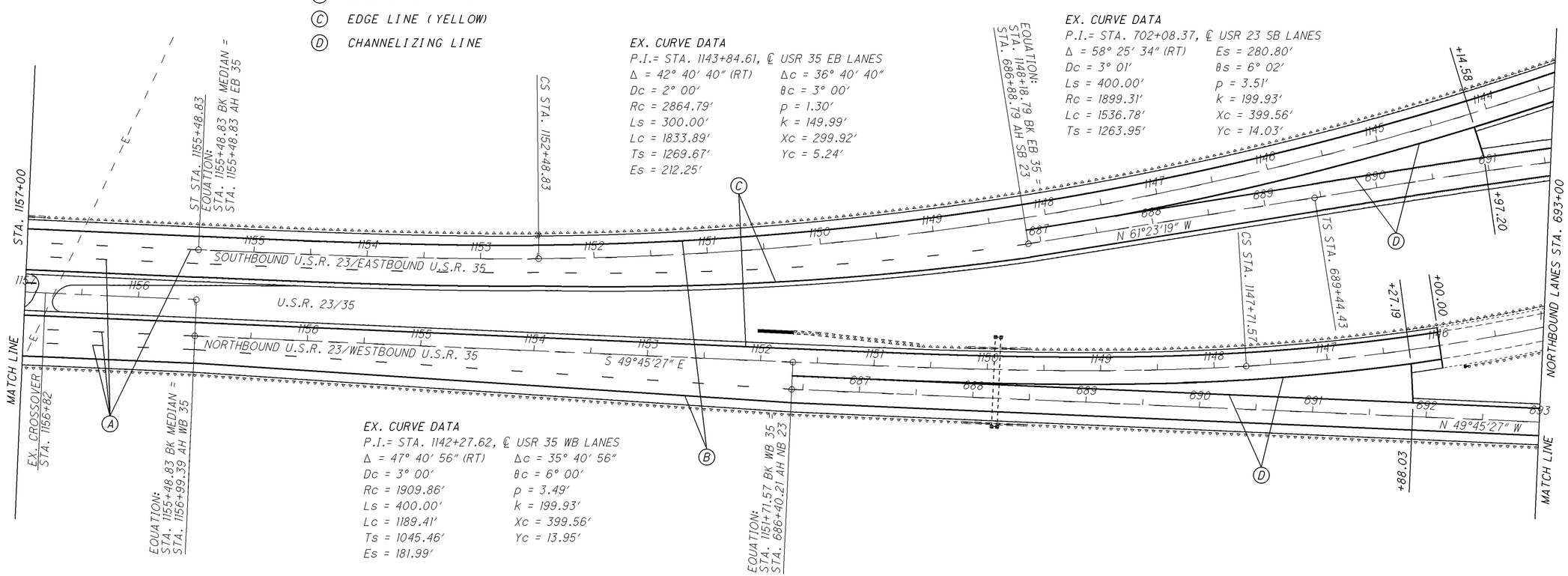

EX. CURVE DATA
P.I.= STA. 1143+84.61, ℄ USR 35 EB LANES

Δ = 42° 40′ 40″ (RT)	Δc = 36° 40′ 40″
Dc = 2° 00′	θc = 3° 00′
Rc = 2864.79′	p = 1.30′
Ls = 300.00′	k = 149.99′
Lc = 1833.89′	Xc = 299.92′
Ts = 1269.67′	Yc = 5.24′
Es = 212.25′	

EX. CURVE DATA
P.I.= STA. 702+08.37, ℄ USR 23 SB LANES

Δ = 58° 25′ 34″ (RT)	Es = 280.80′
Dc = 3° 01′	θs = 6° 02′
Ls = 400.00′	p = 3.51′
Rc = 1899.31′	k = 199.93′
Lc = 1536.78′	Xc = 399.56′
Ts = 1263.95′	Yc = 14.03′

EX. CURVE DATA
P.I.= STA. 1142+27.62, ℄ USR 35 WB LANES

Δ = 47° 40′ 56″ (RT)	Δc = 35° 40′ 56″
Dc = 3° 00′	θc = 6° 00′
Rc = 1909.86′	p = 3.49′
Ls = 400.00′	k = 199.93′
Lc = 1189.41′	Xc = 399.56′
Ts = 1045.46′	Yc = 13.95′
Es = 181.99′	

HORIZONTAL SCALE IN FEET
0 25 50 100

CALCULATED DMB
CHECKED LAW

PLAN AND PAVEMENT MARKING
STA. 1170+00 TO STA. 693+00

ROS-23-12.84

I:\project\District-wide\2009PM-79964\roadway\sheets\79964GP001.dgn 06-NOV-2008 1:47PM dbeekman

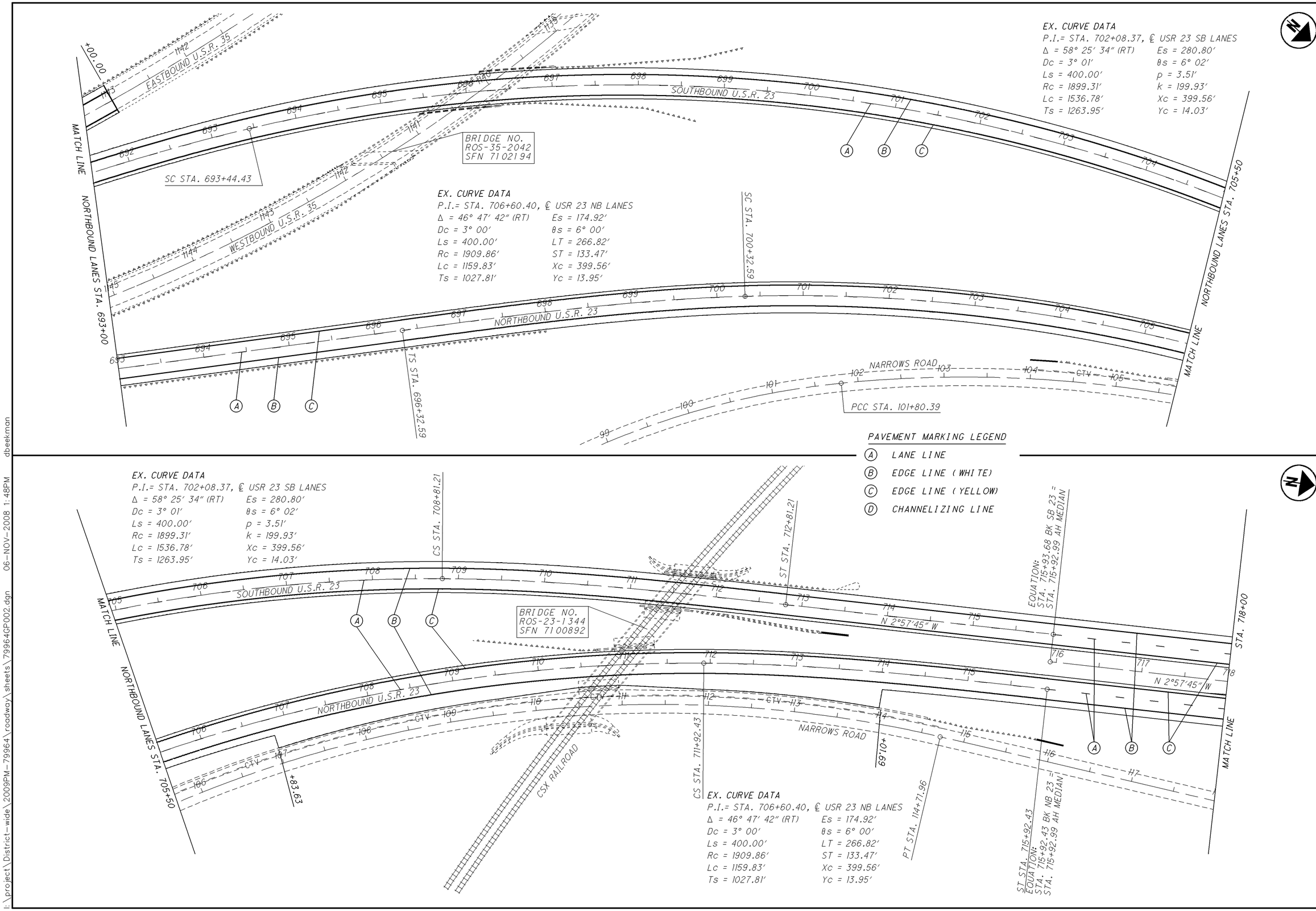

CALCULATED DMB
CHECKED LAW

PLAN AND PAVEMENT MARKING
STA. 693+00 TO STA. 718+00

ROS-23-12.84

i:\project\District-wide\2009PM-79964\roadway\sheets\79964GP002.dgn 06-NOV-2008 1:48PM dbeekman

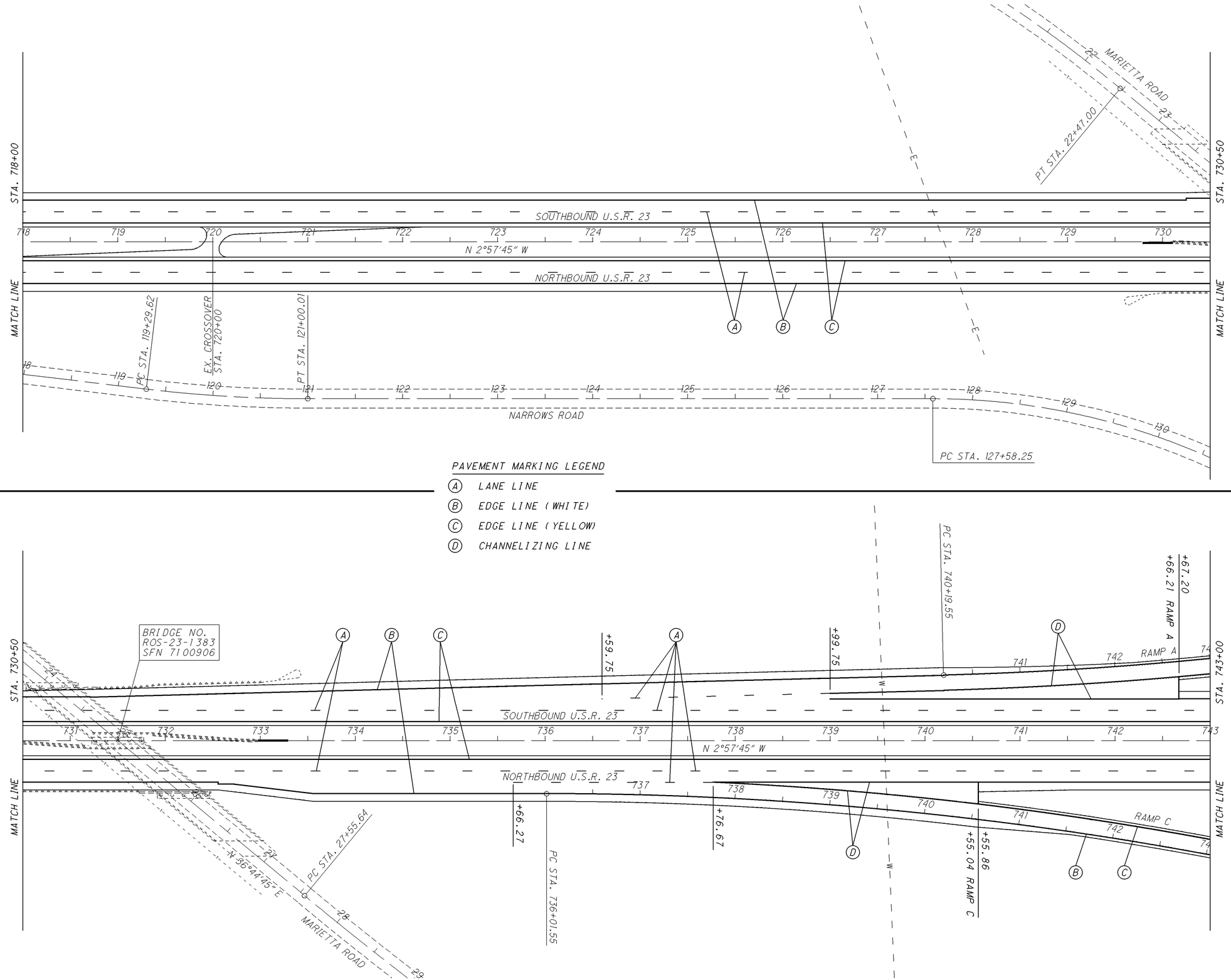

HORIZONTAL SCALE IN FEET 0 25 50 100

CALCULATED DMB
CHECKED LAW

PLAN AND PAVEMENT MARKING
STA. 718+00 TO STA. 743+00

ROS-23-12.84

I:\project\District-wide\2009PM-79964\roadway\sheets\79964GP003.dgn 06-NOV-2008 1:48PM dbeekman

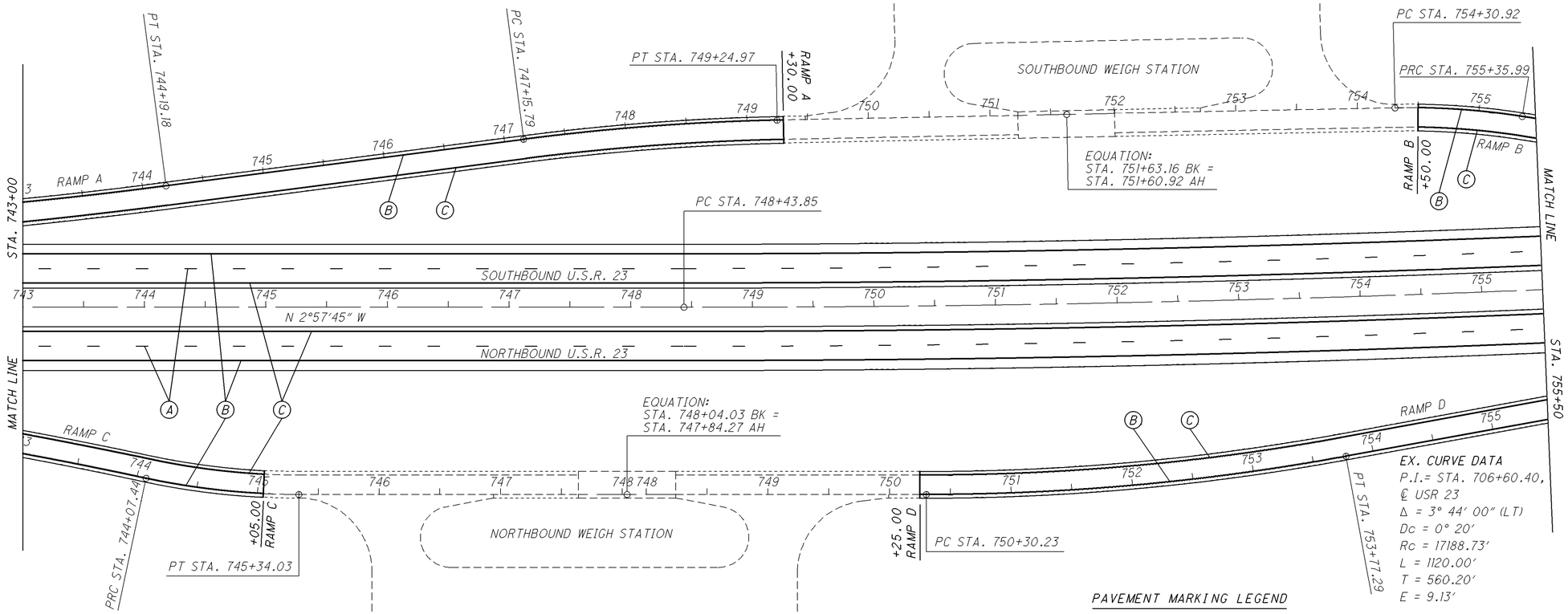

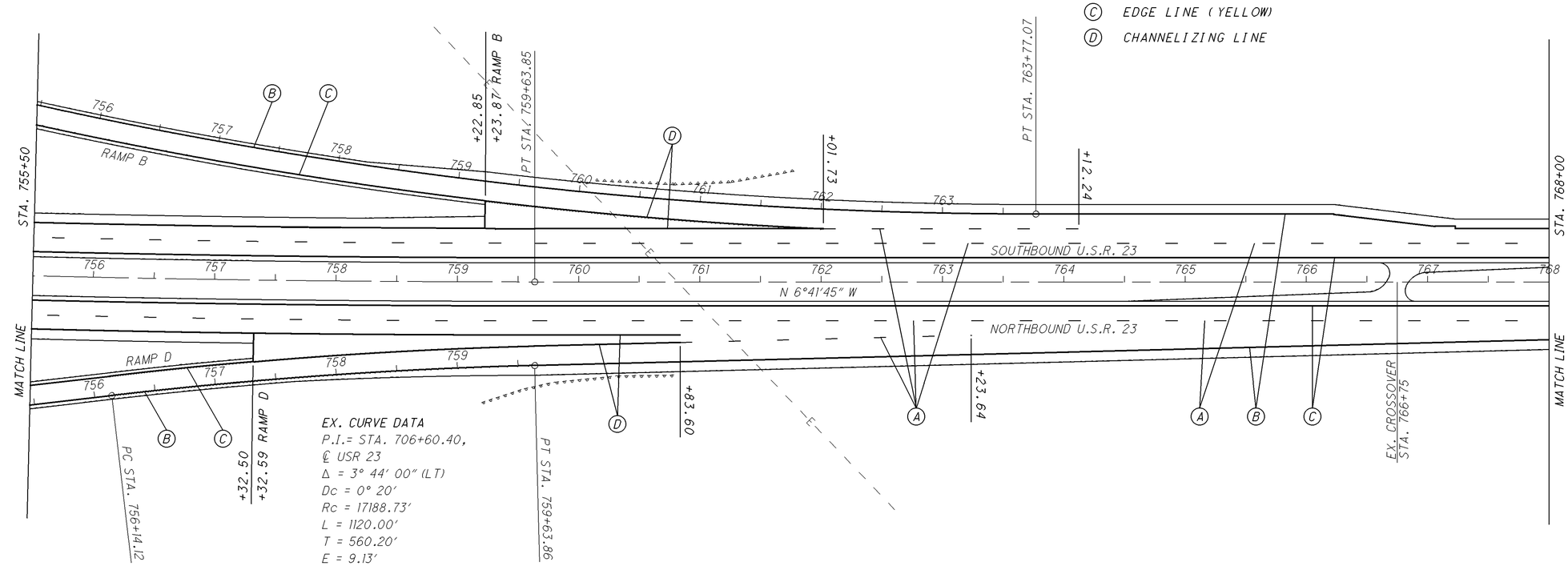

HORIZONTAL SCALE IN FEET 0 25 50 100

CALCULATED DMB
CHECKED LAW

PLAN AND PAVEMENT MARKING STA. 743+00 TO STA. 768+00

ROS-23-12.84

I:\project\District-wide\2009PM-79964\roadway\sheets\799640P004.dgn 06-NOV-2008 1:49PM dbeekman

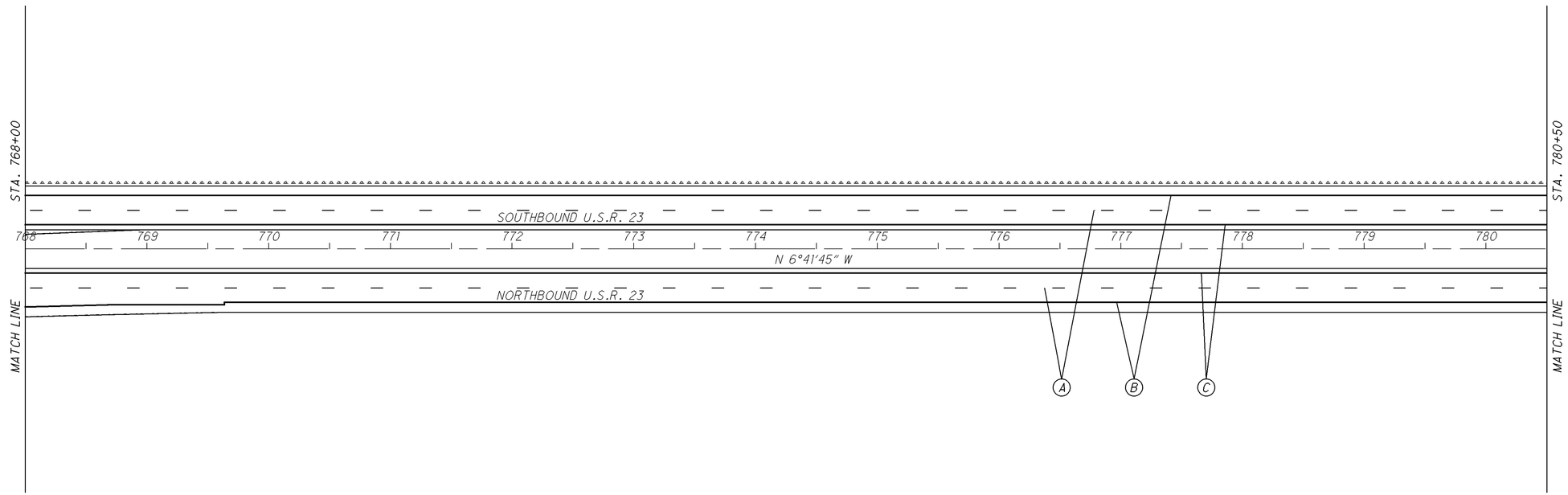

PAVEMENT MARKING LEGEND

(A) LANE LINE

(B) EDGE LINE (WHITE)

(C) EDGE LINE (YELLOW)

(D) CHANNELIZING LINE

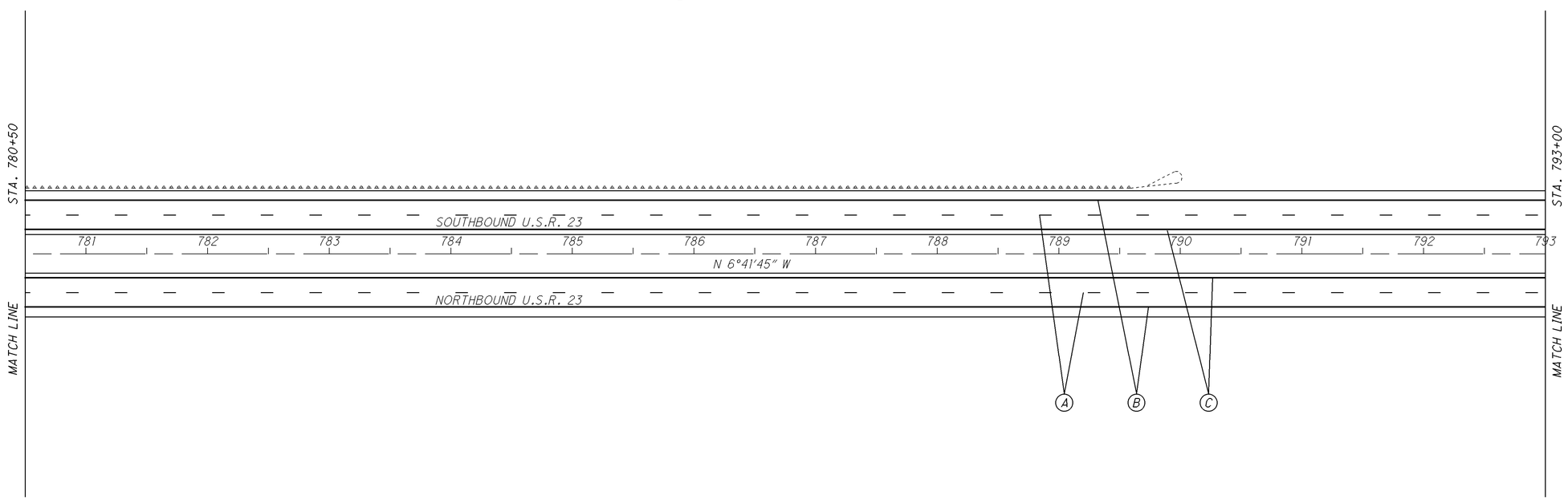

0 25 50 100
HORIZONTAL SCALE IN FEET

CALCULATED DMB
CHECKED LAW

PLAN AND PAVEMENT MARKING STA. 768+00 TO STA. 793+00

ROS-23-12.84

I:\project\District-wide\2009PM-79964\roadway\sheets\79964GP005.dgn 06-NOV-2008 1:49PM dbeekman

PAVEMENT MARKING LEGEND

(A) LANE LINE

(B) EDGE LINE (WHITE)

(C) EDGE LINE (YELLOW)

(D) CHANNELIZING LINE

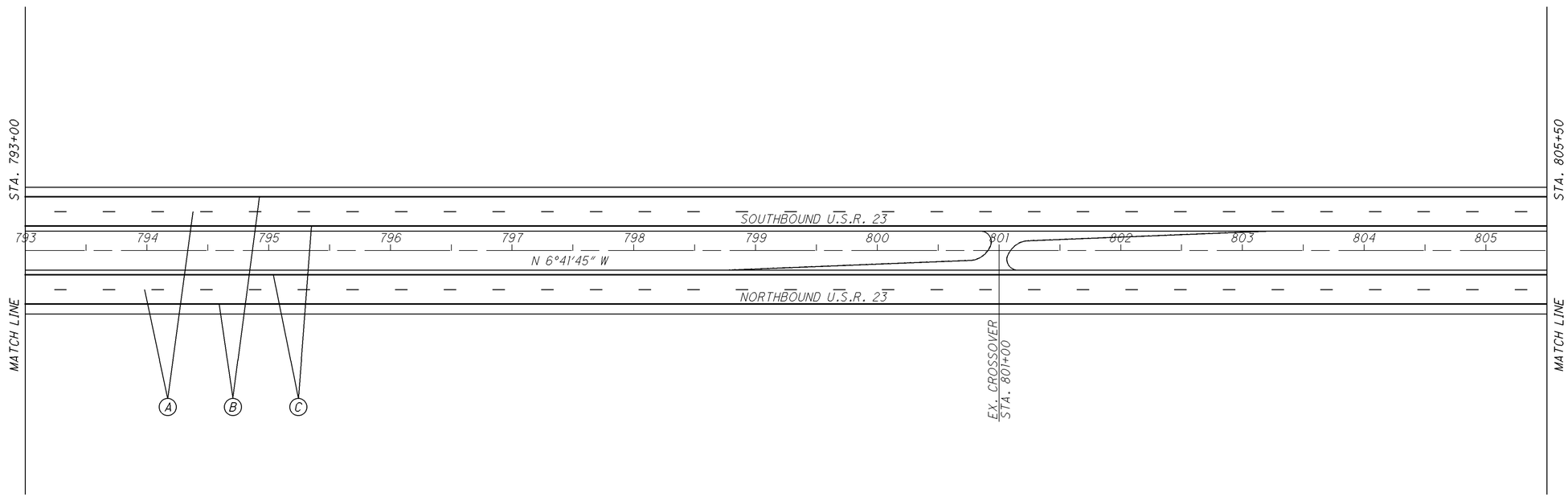

0 25 50 100
HORIZONTAL SCALE IN FEET

CALCULATED DMB
CHECKED LAW

PLAN AND PAVEMENT MARKING STA. 793+00 TO STA. 805+00

ROS-23-12.84

I:\project\District-wide\2009PM-79964\roadway\sheets\79964GP006.dgn 06-NOV-2008 1:50PM dbeekman

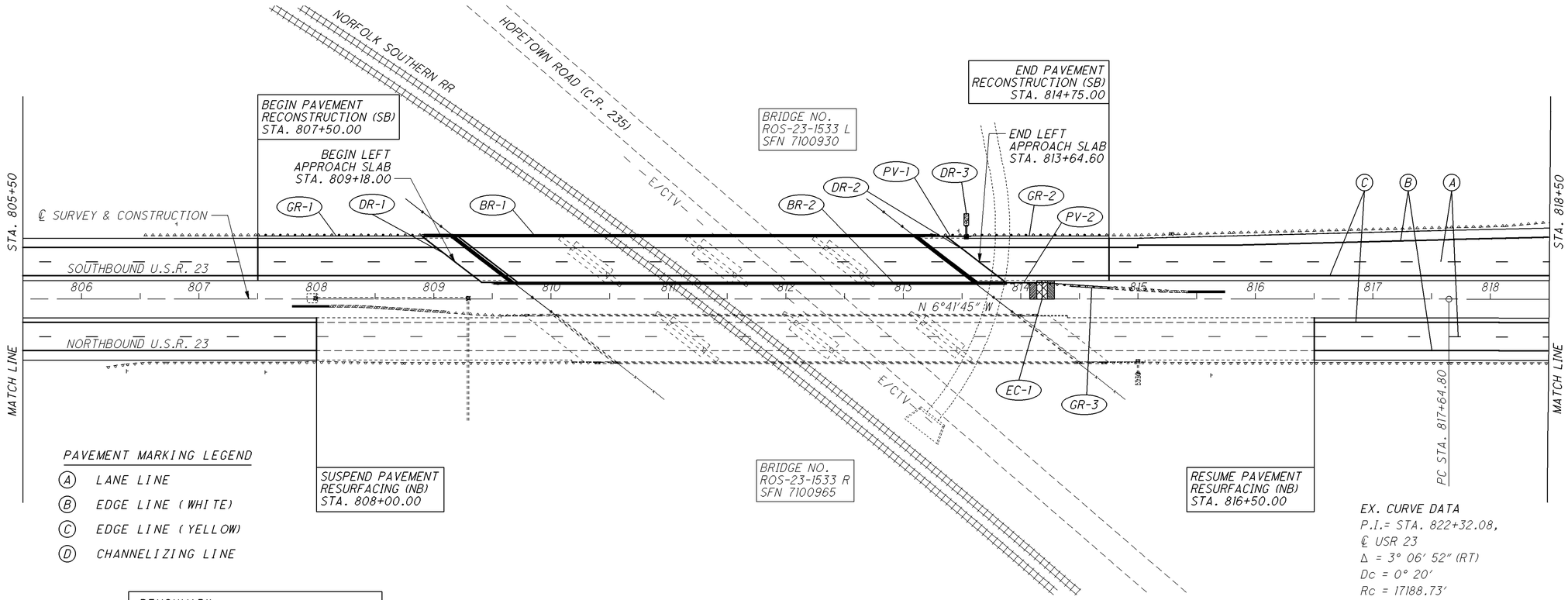

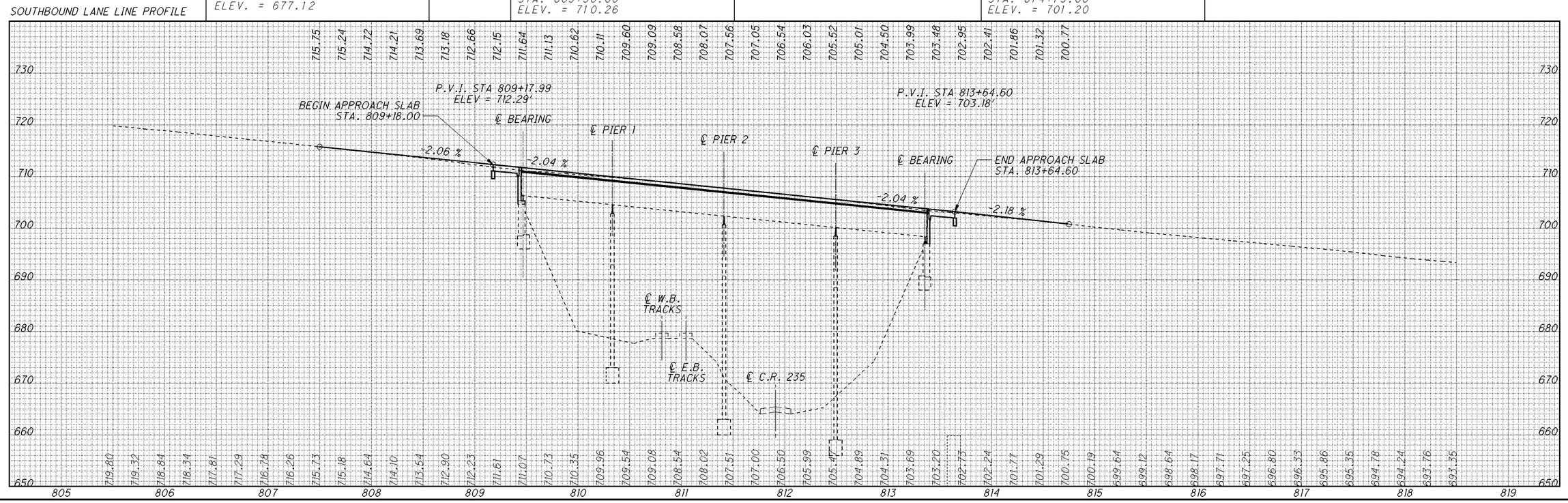

HORIZONTAL SCALE IN FEET 0 25 50 100

CALCULATED DMB
CHECKED LAW

PLAN AND PAVEMENT MARKING STA. 805+50 TO STA. 818+50

ROS-23-12.84

I:\project\District-wide\2009PM-79964\roadway\sheets\79964GF007.dgn 06-NOV-2008 1:44PM dbeekman

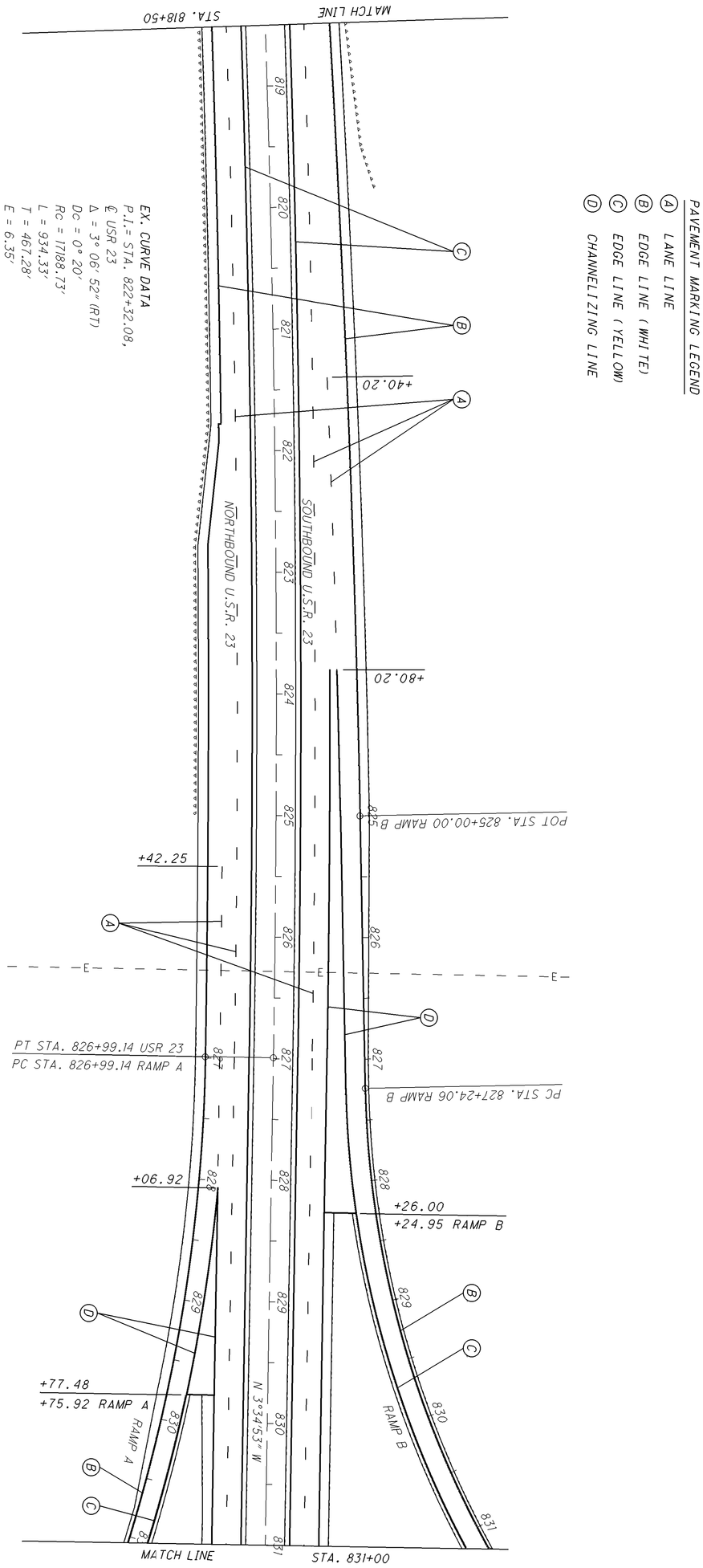

38 / 82	ROS-23-12.84	PLAN AND PAVEMENT MARKING STA. 818+50 TO STA. 831+00	CALCULATED DMB CHECKED LAW 0 25 50 100 HORIZONTAL SCALE IN FEET

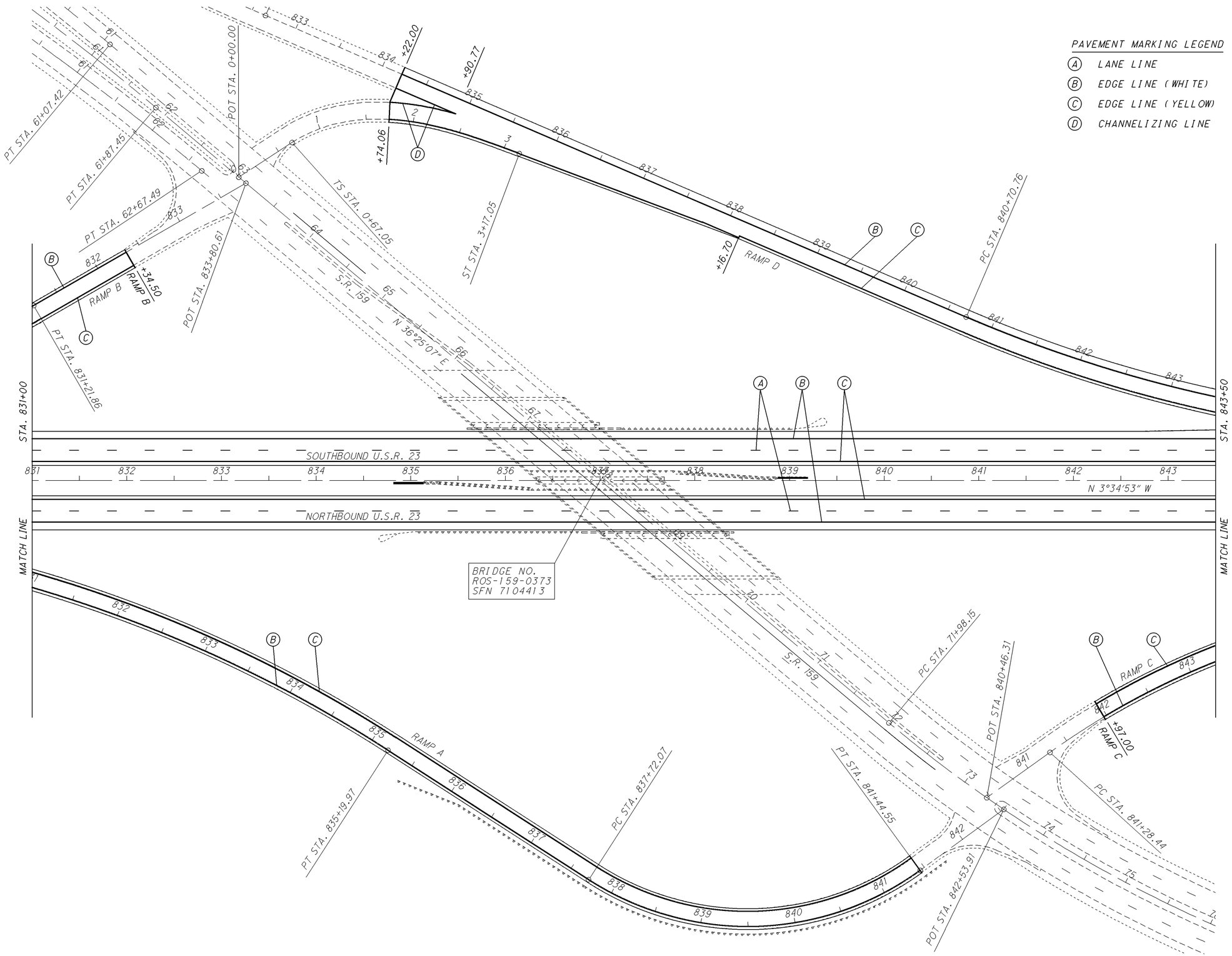

HORIZONTAL SCALE IN FEET
0 25 50 100

CALCULATED DMB
CHECKED LAW

PLAN AND PAVEMENT MARKING STA. 831+00 TO STA. 843+50

ROS-23-12.84

I:\project\District-wide\2009PM-79964\roadway\sheets\79964GP009.dgn 06-NOV-2008 1:51PM dbeekman

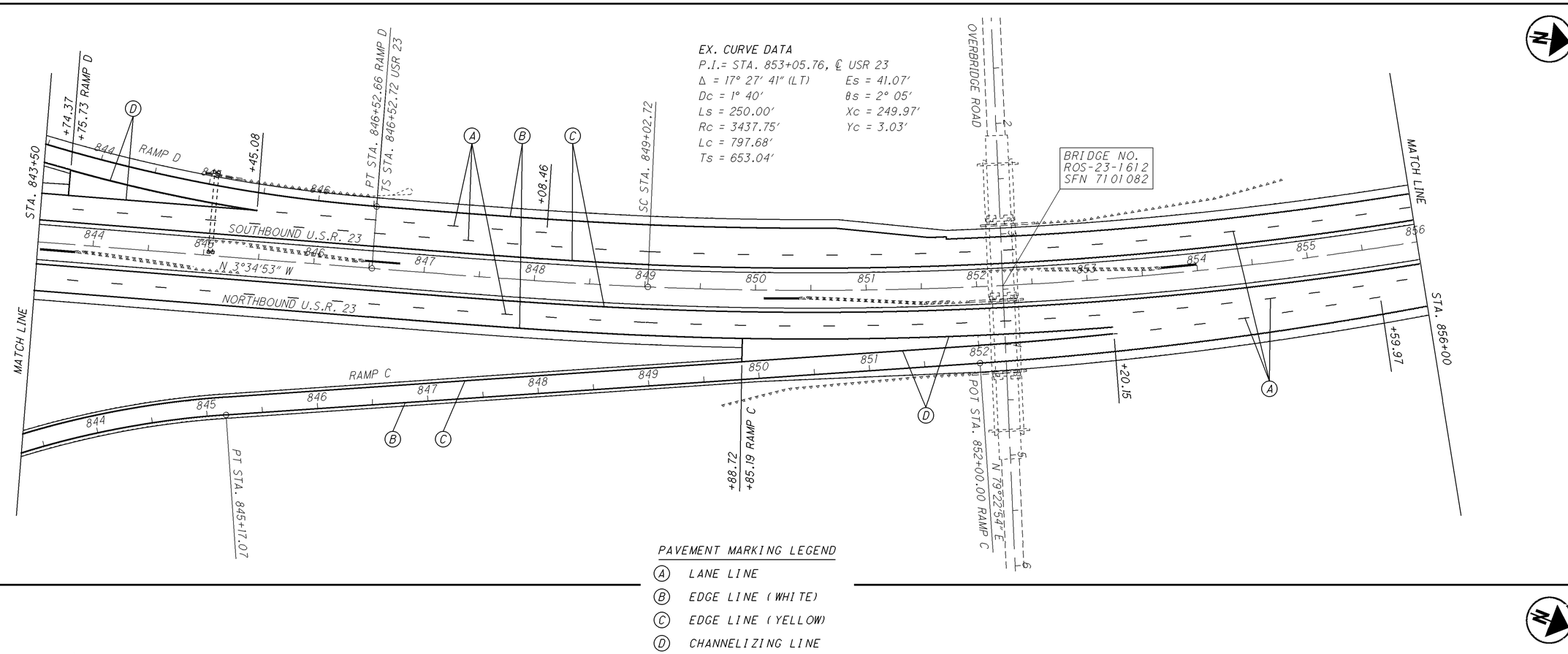

PAVEMENT MARKING LEGEND

- (A) LANE LINE
- (B) EDGE LINE (WHITE)
- (C) EDGE LINE (YELLOW)
- (D) CHANNELIZING LINE

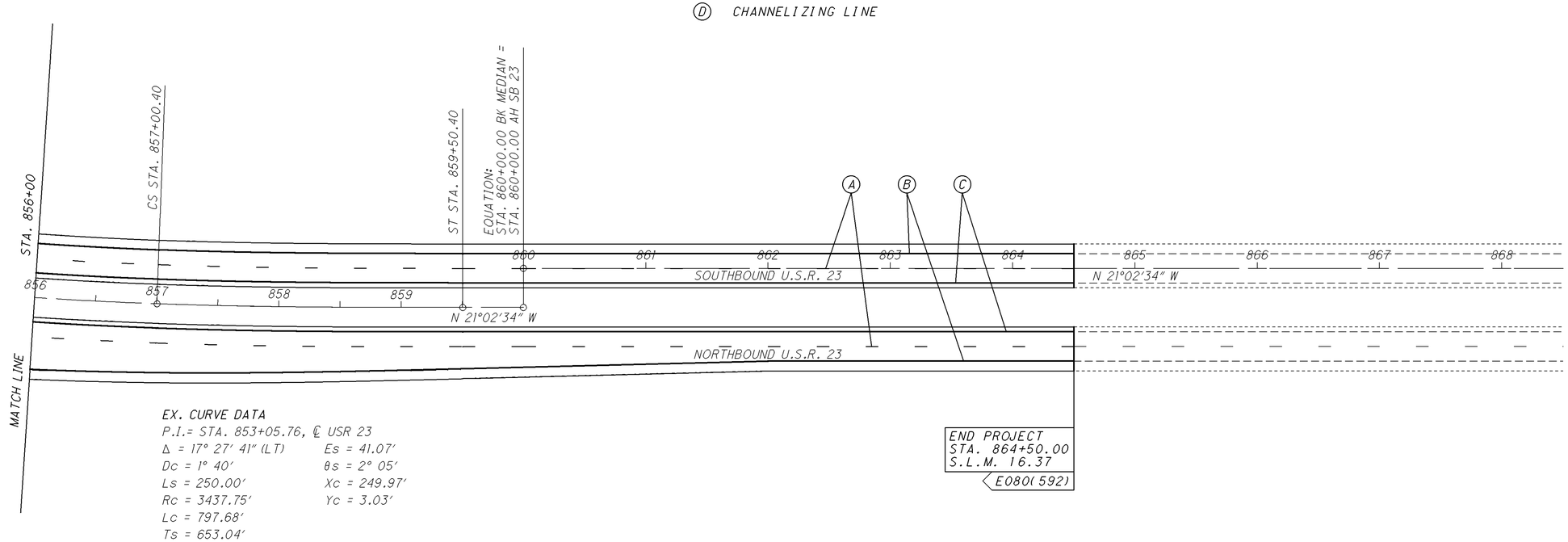

EX. CURVE DATA
P.I.= STA. 853+05.76, ℄ USR 23
Δ = 17° 27′ 41″ (LT)
Dc = 1° 40′
Ls = 250.00′
Rc = 3437.75′
Lc = 797.68′
Ts = 653.04′
Es = 41.07′
θs = 2° 05′
Xc = 249.97′
Yc = 3.03′

HORIZONTAL SCALE IN FEET 0 25 50 100

CALCULATED DMB
CHECKED LAW

PLAN AND PAVEMENT MARKING
STA. 843+50 TO STA. 868+00

ROS-23-12.84

I:\project\District-wide\2009PM-79964\roadway\sheets\79964GP010.dgn 06-NOV-2008 1:52PM dbeekman

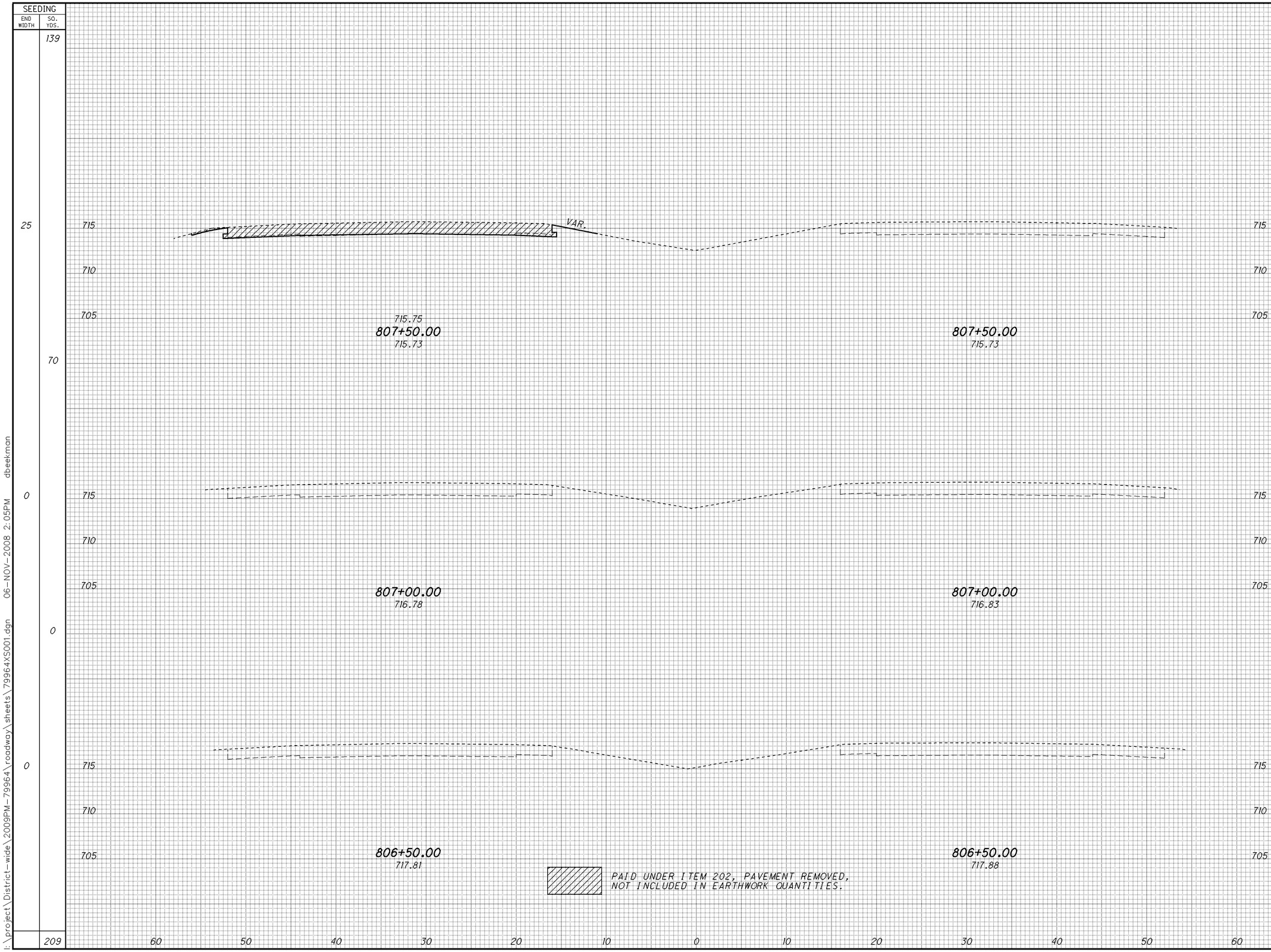

CALCULATED DMB
CHECKED LAW

CROSS SECTIONS
STA. 806+50.00 TO STA. 807+50.00

ROS-23-12.84

41
82

I:\project\District-wide\2009PM-79964\roadway\sheets\79964XS001.dgn 06-NOV-2008 2:05PM dbeekman

SEEDING END WIDTH	SEEDING SQ. YDS.		END AREA CUT	END AREA FILL	VOLUME CUT	VOLUME FILL
	99				0	11
25		AHEAD STA. 813+64.60	0	15		
0		BACK	0	0		
0		AHEAD STA. 809+18.00	0	0		
25		BACK	0	30		
	50				0	11
25			0	1		
	139				0	2
25			0	1		
	139				0	2
25			0	1		
	427				0	26

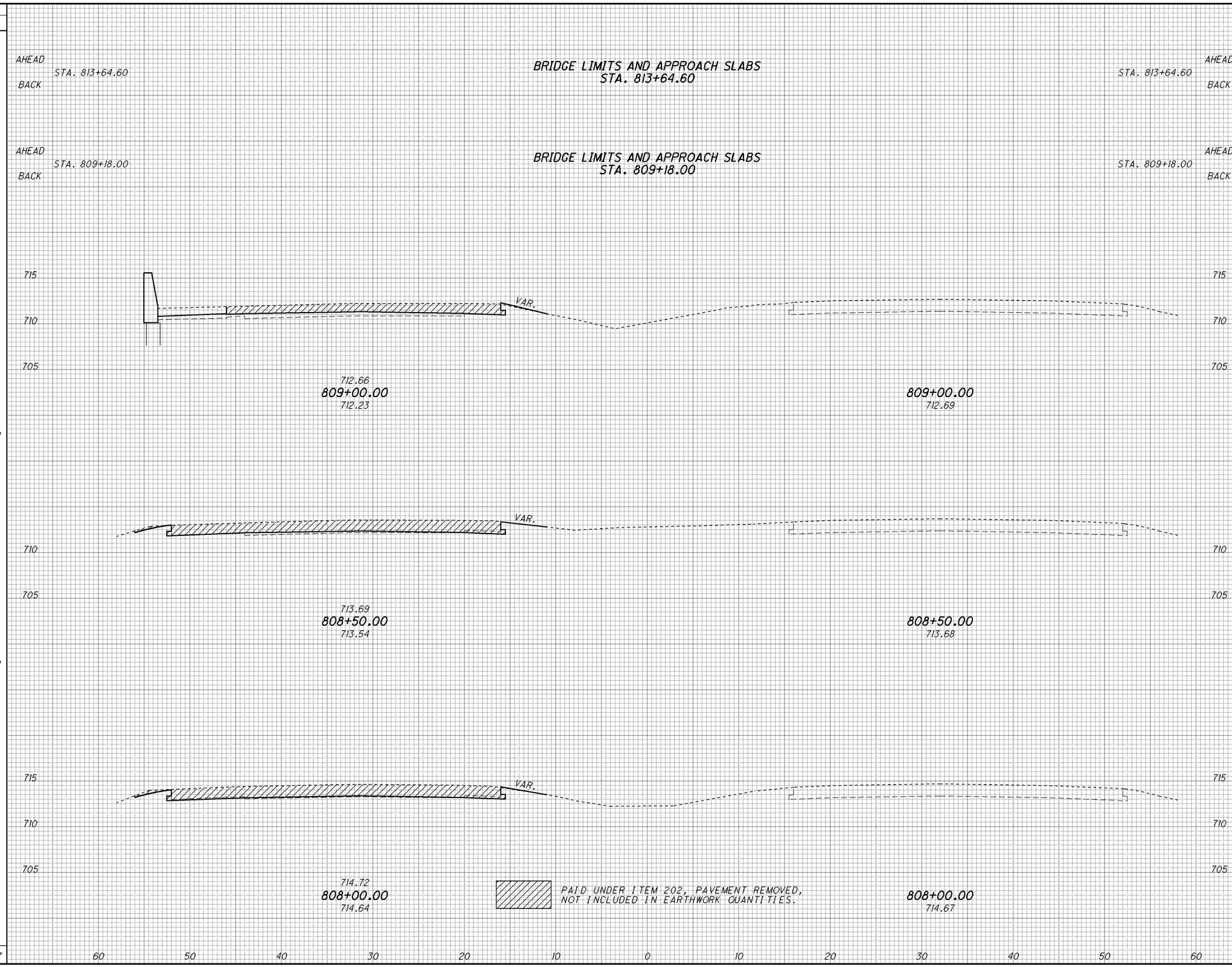

CALCULATED DMB
CHECKED LAW

CROSS SECTIONS
STA. 808+00.00 TO STA. 809+00.00

ROS-23-12.84

I:\project\District-wide\2009PM-79964\roadway\sheets\79964XS001.dgn 06-NOV-2008 2:06PM dbeekman

SEEDING END WIDTH	SEEDING SQ. YDS.	END AREA CUT	END AREA FILL	VOLUME CUT	VOLUME FILL
	35			0	1
25		0	1		
	70			0	1
25		0	1		
	139			0	2
25		0	1		
	244			0	4

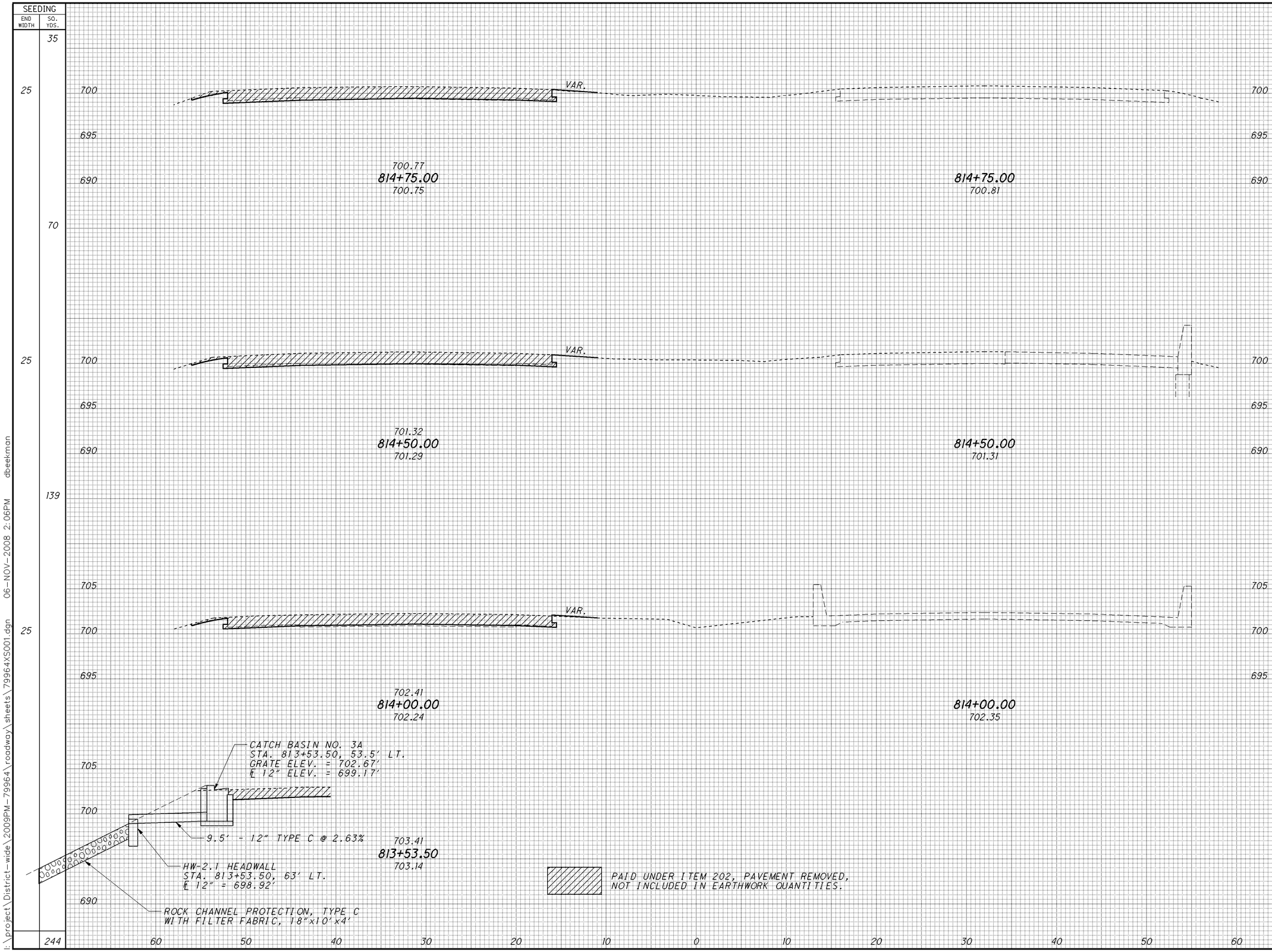

CALCULATED DMB
CHECKED LAW

CROSS SECTIONS
STA. 814+00.00 TO STA. 814+75.00

ROS-23-12.84

I:\project\District-wide\2009PM-79964\roadway\sheets\79964XS001.dgn 06-NOV-2008 2:06PM dbeekman

SEEDING	
END WIDTH	SQ. YDS.
0	0
0	

END AREA		VOLUME	
CUT	FILL	CUT	FILL
0	0		
		0	0
0	0		
		0	0

CALCULATED DMB
CHECKED LAW

CROSS SECTIONS
STA. 815+00.00 TO STA. 815+50.00

ROS-23-12.84

I:\project\District-wide\2009PM-79964\roadway\sheets\79964XS001.dgn 06-NOV-2008 2:07PM dbeekman

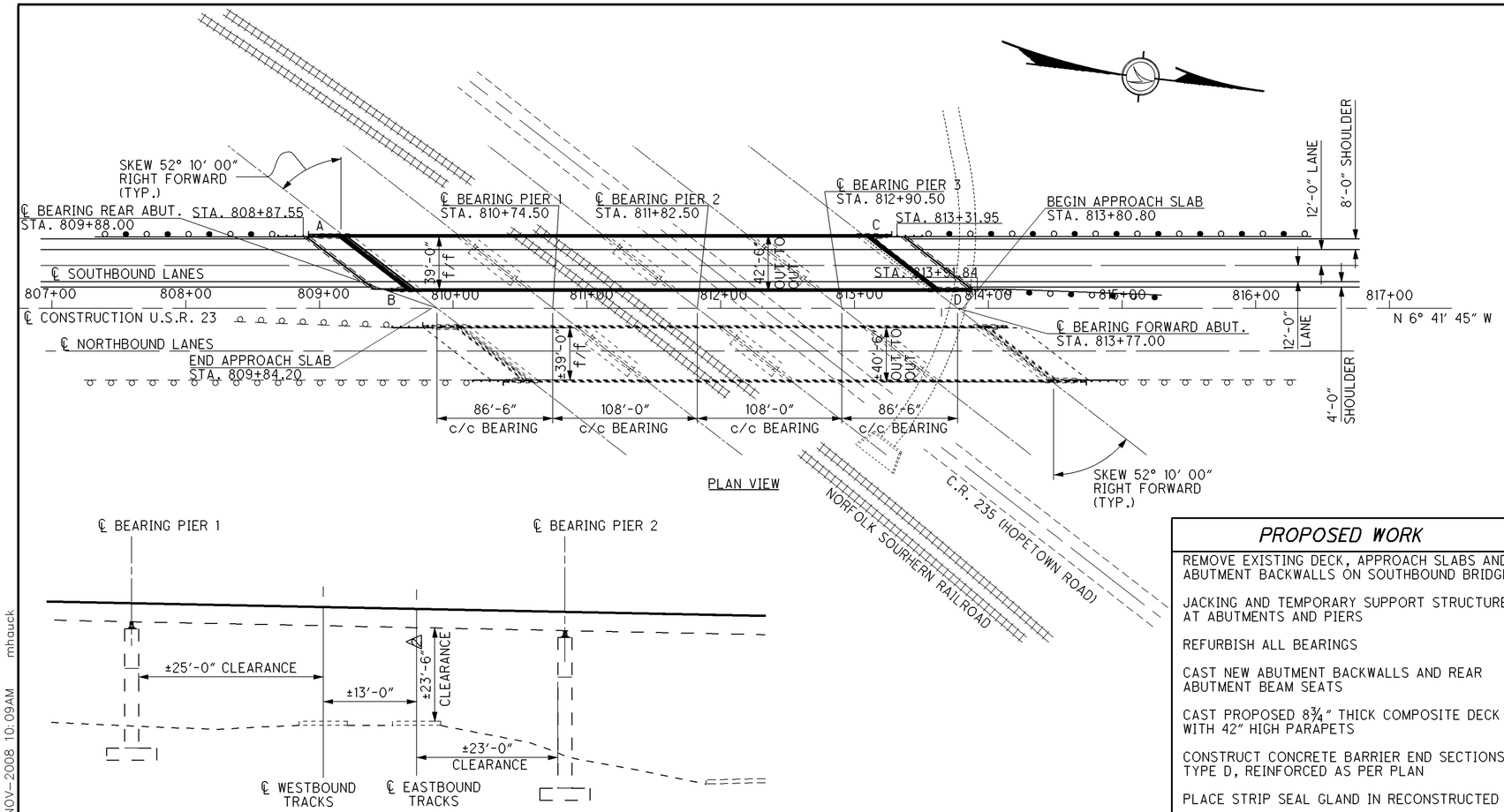

PLAN VIEW

CLEARANCE DIAGRAM

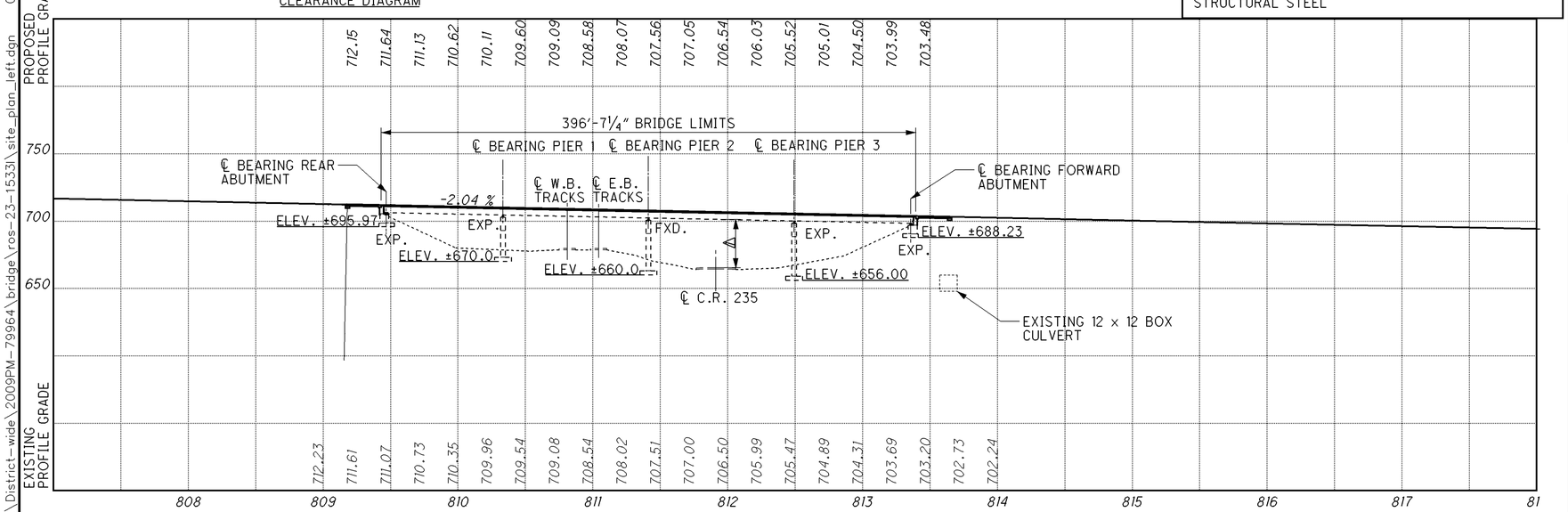

PROFILE ALONG ℄ SOUTHBOUND LANES

BENCHMARK DATA

BM #1 STA. 809+50.00, ELEV.710.26 , @ ℄ CONSTRUCTION U.S.R. 23
BM #2 STA. 814+15.00, ELEV.701.19 , @ ℄ CONSTRUCTION U.S.R. 23

FOR ADDITIONAL BENCHMARK INFORMATION. SEE BRIDGE PLAN SHEET 21/33

NOTES

A, B, C, AND D REFER TO THE CONCRETE BARRIER END SECTIONS AS SHOWN ON SHEETS 22/33 THROUGH 29/33

DESIGN TRAFFIC:
2006 ADT = 19,240 2006 ADTT = 3,580

LEGEND

1 ● 16′-6″ REQUIRED MINIMUM VERTICAL CLEARANCE
±36′-0″ ACTUAL MINIMUM VERTICAL CLEARANCE

2 ● 23′-0″ REQUIRED MINIMUM VERTICAL CLEARANCE FOR RAILROAD
±23′-6″ ACTUAL MINIMUM VERTICAL CLEARANCE FOR RAILROAD

PROPOSED WORK

REMOVE EXISTING DECK, APPROACH SLABS AND ABUTMENT BACKWALLS ON SOUTHBOUND BRIDGE

JACKING AND TEMPORARY SUPPORT STRUCTURE AT ABUTMENTS AND PIERS

REFURBISH ALL BEARINGS

CAST NEW ABUTMENT BACKWALLS AND REAR ABUTMENT BEAM SEATS

CAST PROPOSED 8¾″ THICK COMPOSITE DECK WITH 42″ HIGH PARAPETS

CONSTRUCT CONCRETE BARRIER END SECTIONS, TYPE D, REINFORCED AS PER PLAN

PLACE STRIP SEAL GLAND IN RECONSTRUCTED JOINT

SEALING OF CONCRETE SURFACES AND PAINTING OF STRUCTURAL STEEL

EXISTING STRUCTURE

TYPE: 4 SPAN CONTINUOUS WELDED PLATE GIRDER WITH REINFORCED CONCRETE DECK WITH STUB TYPE REINFORCED CONCRETE ABUTMENTS SUPPORTED BY SPREAD FOOTINGS AND T-TYPE REINFORCED CONCRETE PIERS SUPPORTED BY CONCRETE PILES.

SPANS: 86′-6″, 108′-0″, 108′-0″, 86′-6″ c/c BEARING

ROADWAY: 40′-0″ F/F PARAPET

LOADING: HS20-44

SKEW: 52°10′00″ RIGHT FORWARD

APPROACH SLABS: 25′-0″ LONG (PARTIAL WIDTH)

ALIGNMENT: TANGENT

CROWN: 0.0156 FT./FT.

WEARING SURFACE: 1¾″ SUPERPLASTICIZED DENSE CONCRETE OVERLAY

STRUCTURAL FILE NUMBER: 7100930

DATE BUILT: 1971

PROPOSED STRUCTURE

PROPOSED WORK: NEW COMPSITE REINFORCED CONCRETE DECK ON EXISTING 4 SPAN CONTINOUS WELDED PLATE GIRDERS AND SUBSTRUCTURE.

SPANS: 86′-6″, 108′-0″, 108′-0″, 86′-6″ c/c BEARING

ROADWAY: 39′-0″ TOE/TOE PARAPET

LOADING: HS20-44 CASE II AND ALTERNATE MILITARY AND FWS OF 60 PSF.

SKEW: 52° 10′ 00″ RIGHT FORWARD

APPROACH SLABS: 25′-0″ LONG (AS-1-81)

ALIGNMENT: TANGENT

CROWN: 0.0156 FT/FT

COORDINATES: LATITUDE 39° 22′ 49″ N
LONGITUDE 82° 58′ 8″ W

DESIGN AGENCY
STATE OF OHIO
DEPARTMENT OF TRANSPORTATION
DISTRICT 9 PRODUCTION

DRAWN	REVIEWED	DATE
MRH	LAW	10/07/08
DESIGNED	REVISED	STRUCTURE FILE NUMBER
MRH		7100930
CHECKED		
JTH		

ROSS COUNTY
STA. 809+84.20
STA. 813+80.80

SITE PLAN
BRIDGE NO. ROS-23-1533 L
OVER NORFOLK SOUTHERN RAILROAD AND C.R. 235

ROS-23-12.84
PID No. 79964

i:\project\District-wide\2009PM-79964\bridge\ros-23-1533l\site_plan_left.dgn 07-NOV-2008 10:09AM mhauck

REFER TO THE FOLLOWING STANDARD BRIDGE DRAWINGS

AS-1-81	REVISED 07-19-02
EXJ-4-87	REVISED 07-19-02
GSD-1-96	REVISED 07-19-02
RB-1-55	REVISED 02-02-59
SBR-1-99	REVISED 07-19-02

AND TO THE FOLLOWING SUPPLEMENTAL SPECIFICATIONS

898	DATED 04-18-08

DESIGN SPECIFICATIONS

THIS STRUCTURE CONFORMS TO "STANDARD SPECIFICATIONS FOR HIGHWAY BRIDGES" ADOPTED BY THE AMERICAN ASSOCIATION OF STATE HIGHWAY AND TRANSPORTATION OFFICIALS, 2002 AND THE ODOT BRIDGE DESIGN MANUAL, 2004.

DESIGN LOADING

HS20-44, CASE II AND THE ALTERNATE MILITARY LOADING.
FUTURE WEARING SURFACE (FWS) OF 60 PSF.

DESIGN DATA

QC/QA CONCRETE, CLASS QSC2 - COMPRESSIVE STRENGTH
4500 PSI (SUPERSTRUCTURE)

QC/QA CONCRETE, CLASS QSC1 - COMPRESSIVE STRENGTH
4000 PSI (SUBSTRUCTURE)

REINFORCING STEEL - ASTM A615 OR A996
GRADE 60 MINIMUM YIELD STRENGTH
60,000 PSI

STRUCTURAL STEEL - ASTM A709 GRADE 36 - YIELD
STRESS 36,000 PSI

DECK PROTECTION METHOD

EPOXY COATED REINFORCING STEEL
2½" CONCRETE COVER

MONOLITHIC WEARING SURFACE

MONOLITHIC WEARING SURFACE, FOR DESIGN PURPOSES, IS ASSUMED TO BE 1" THICK

EXISTING BRIDGE PLANS

DETAIL DRAWINGS OF THE EXISTING BRIDGE MAY BE INSPECTED AT THE DISTRICT 9 OFFICE AT 650 EASTERN AVENUE IN CHILLICOTHE, OHIO.

EXISTING STRUCTURE VERIFICATION

DETAILS AND DIMENSIONS SHOWN ON THESE PLANS PERTAINING TO THE EXISTING STRUCTURE HAVE BEEN OBTAINED FROM THE PLANS OF THE EXISTING STRUCTURE AND FROM FIELD OBSERVATIONS AND MEASUREMENTS. CONSEQUENTLY, THEY ARE INDICATIVE OF THE EXISTING STRUCTURE AND THE PROPOSED WORK BUT THEY SHALL BE CONSIDERED TENTATIVE AND APPROXIMATE. THE CONTRACTOR IS REFERRED TO CMS SECTIONS 102.05, 105.02 AND 513.04.

BASE CONTRACT BID PRICE UPON A RECOGNITION OF THE UNCERTAINTIES DESCRIBED ABOVE AND UPON A PREBID EXAMINATION OF THE EXISTING STRUCTURE. HOWEVER, THE DEPARTMENT WILL PAY FOR ALL PROJECT WORK BASED UPON ACTUAL DETAILS AND DIMENSIONS THAT HAVE BEEN VERIFIED IN THE FIELD.

ITEM 202, PORTIONS OF STRUCTURE REMOVED, AS PER PLAN

DESCRIPTION:
THIS WORK CONSIST OF THE REMOVAL OF CONCRETE DECK INCLUDING PARAPETS, DECK JOINTS, SCUPPERS, OTHER APPURTENANCES FORM STEEL SUPPORTING SYSTEMS (BEAMS, GIRDERS, CROSS FRAMES, ECT.), PORTIONS OF THE ABUTMENTS AND THE EXISTING PARAPET TRANSITIONS. THE PROVISIONS OF ITEM 202 APPLY EXCEPT AS SPECIFIED BY THE FOLLOWING NOTES. PERFORM WORK CAREFULLY DURING DECK REMOVALS TO PROTECT PORTIONS OF SUCH SYSTEMS THAT ARE TO BE SALVAGED AND INCORPORATED INTO THE PROPOSED STRUCTURE. THE USE OF EXPLOSIVES, HEADACHE BALLS AND/OR HOE RAM TYPE OF EQUIPMENT IS PROHIBITED. SUBMIT CONSTRUCTION PLANS ACCORDING TO CMS 501.05.

PROTECTION OF STEEL SUPPORT SYSTEM:
BEFORE DECK SLAB CUTTING IS PERMITTED, DRAW THE OUTLINE OF PRIMARY STEEL MEMBERS IN CONTACT WITH THE BOTTOM OF THE DECK ON THE SURFACE OF DECK. DRILL SMALL DIAMETER PILOT HOLES 2-INCHES OUTSIDE THESE LINES TO CONFIRM THE LOCATION OF FLANGE EDGES. DECK CUTS OVER OR WITHIN 2 INCHES OF FLANGE EDGES SHALL NOT EXTEND LOWER THAN THE BOTTOM LAYER OF DECK SLAB REINFORCING STEEL. CUTS MADE OUT- SIDE 2 INCHES OF FLANGE EDGES MAY EXTEND THE FULL DEPTH OF THE DECK. PERFORM WORK CAREFULLY DURING CUTTING OF THE DECK SLAB TO AVOID DAMAGING STEEL MEMBERS THAT ARE TO BE INCORPORATED INTO THE PROPOSED STRUCTURE. REPLACE OR REPAIR STEEL MEMBERS DAMAGED BY THE DECK SLAB CUTTING OPERATIONS AT NO COST TO THE PROJECT. AT LEAST 7 DAYS BEFORE PERFORMING REPAIR WORK, SUBMIT A PROPOSED REPAIR PLAN, DEVELOPED BY AN OHIO REGISTERED PROFESSIONAL ENGINEER TO THE DIRECTOR. OBTAIN THE DIRECTOR'S APPROVAL BEFORE PERFORMING REPAIR.

REMOVAL METHODS:
THE CONTRACTOR MAY REMOVE CONCRETE BY CUTTING AND BY MEANS OF HAND OPERATED PNEUMATIC HAMMERS EMPLOYING POINTED OR BLUNTED CHISEL TYPE TOOLS. FOR REMOVALS OVER STRUCTURAL MEMBERS, THE CONTRACTOR MAY USE A HAMMER HEAVIER THAN 35 POUNDS BUT NOT TO EXCEED 90 POUNDS UNLESS APPROVED BY THE ENGINEER. REMOVAL METHODS OVER STRUCTURAL MEMBERS SHALL ENSURE ADEQUATE DEPTH CONTROL AND PREVENT NICKING OR GOUGING THE PRIMARY STRUCTURAL MEMBERS.

DUE TO THE POSSIBLE PRESENCE OF ATTACHMENTS (E.G., FINISHING MACHINE, SCUPPER AND FORM SUPPORTS, ETC.) TO EXISTING STRUCTURAL MEMBERS, PERFORM WORK CAREFULLY DURING DECK REMOVAL TO AVOID DAMAGING STRUCTURAL MEM- BERS THAT ARE TO REMAIN. REPLACE OR REPAIR STRUCTURAL MEMBERS DAMAGED BY THE REMOVAL OPERATIONS AT NO COST TO THE PROJECT. AT LEAST 7 DAYS BEFORE PERFORMING REPAIR WORK, SUBMIT A PROPOSED REPAIR PLAN, DEVELOPED BY AN OHIO REGISTERED PROFESSIONAL ENGINEER TO THE DIRECTOR. OBTAIN THE DIRECTOR'S APPROVAL BEFORE PERFORMING REPAIR.

EXISTING WELDED ATTACHMENTS:
REMOVE EXISTING WELDED ATTACHMENTS (E.G. FINISHING MACHINE AND FORM SUPPORTS: AND SUPPORTS FOR SCUPPERS AND BULB ANGLES WHICH ARE TO BE REMOVED) LOCATED IN THE DESIGNATED TENSION PORTIONS OF THE TOP FLANGES OF EXISTING STEEL MEMBERS AND GRIND FLANGE SURFACE SMOOTH. CAREFULLY GRIND PARALLEL TO THE FLANGES.

SUBSTRUCTURE CUT LINE CONSTRUCTION JOINT PREPARATION:
SAW CUT BOUNDARIES OF PROPOSED CONCRETE REMOVALS 1 INCH DEEP. REMOVE CONCRETE TO A ROUGH SURFACE. LEAVE THE EXISTING REINFORCING STEEL, IF REQUIRED IN THE PLANS, IN PLACE. INSTALL DOWEL BARS AS SPECIFIED. PRIOR TO CONCRETE PLACEMENT ABRASIVELY CLEAN JOINT SURFACES AND EXISTING EXPOSED REINFORCEMENT TO REMOVE LOOSE AND DISINTEGRATED CONCRETE AND LOOSE RUST. THOROUGHLY CLEAN THE JOINT SURFACE AND EXPOSED REINFORCEMENT OF ALL DIRT, DUST, RUST OR OTHER FOREIGN MATERIAL BY THE USE OF WATER, AIR UNDER PRESSURE, OR OTHER METHODS THAT PRODUCE SATISFACTORY RESULTS. EXISTING REINFORCING STEEL DOES NOT HAVE TO HAVE A BRIGHT STEEL FINISH, BUT REMOVAL ALL PACK AND LOOSE RUST. THOROUGHLY DRENCH EXISTING CONCRETE SURFACES WITH CLEAN WATER AND ALLOW TO DRY TO A DAMP CONDITION BEFORE PLACING CONCRETE.

SUBSTRUCTURE CONCRETE REMOVAL:
REMOVE OF CONCRETE BY MEANS OF APPROVED PNEUMATIC HAMMERS EMPLOYING POINTED AND BLUNT CHISEL TOOLS. HYDRAULIC HOW-RAM TYPE HAMMERS WILL NOT BE PERMITTED. THE WEIGHT OF THE HAMMER SHALL NOT BE MORE THAN 35 POUNDS FOR REMOVAL WITHIN THE 18 INCH LIMIT, THE CONTRACTOR MAY USE HAMMERS NOT EXCEEDING 90 POUNDS UPON THE APPROVAL OF THE ENGINEER. DO NOT PLACE PNEUMATIC HAMMERS IN DIRECT CONTACT WITH REINFORCING STEEL THAT IS TO BE RETAINED IN THE REBUILT STRUCTURE.

MEASUREMENT & PAYMENT:
THE DEPARTMENT WILL MEASURE THE QUANTITY OF REMOVALS ON A LUMP SUM BASIS. THE DEPARTMENT WILL PAY FOR THE ACCEPTED QUANTITIES OF REMOVALS AT THE CONTRACT PRICE FOR ITEM 202, PORTIONS OF STRUCTURE REMOVED, AS PER PLAN.

ITEM 503, UNCLASSIFIED EXCAVATION, AS PER PLAN

THIS ITEM SHALL CONSIST OF REMOVING MATERIALS FROM BEHIND THE EXISTING BACKWALL IN ORDER TO PERFORM ITEM 202, PORTIONS OF STRUCTURE REMOVED, AS PER PLAN. LIMITS OF EXCAVATION SHALL BE LIMITED BETWEEN THE EXISTING ABUTMENT WINGWALLS AND EXTEND TO THE END OF THE EXISTING APPROACH SLAB AS DETAILED ON SHEETS 6/33 AND 8/33.

THE BACKFILL MATERIAL FOR ALL EXCAVATION BEHIND THE ABUTMENTS AND UNDER THE APPROACH SLABS SHALL BE LOW STRENGTH MORTAR BACKFILL. LSM, TYPE 1, SHALL CONFORM TO CMS 613 AND BE PLACED WITHIN THE LIMITS OF THE APPROACH SLABS. THE AREA FOR THE POROUS BACKFILL WITH FILTER FABRIC SHALL BE FORMED UP PRIOR TO THE PLACEMENT OF THE LSM, TYPE 1, BACKFILL AND THE PLACEMENT OF THE FILTER FABRIC AND POROUS BACKFILL SHALL BE PLACED AFTER LSM HAS CURED AND THE FORMS HAVE BEEN REMOVED.

PAYMENT FOR ALL EQUIPMENT, MATERIALS, AND LABOR REQUIRED TO PERFORM THE WORK OUTLINED ABOVE SHALL BE INCLUDED IN THE CUBIC YARD CONTRACT PRICE FOR ITEM 503, UNCLASSIFIED EXCAVATION, AS PER PLAN, UNLESS SEPARATELY ITEMIZED IN THE PLANS.

ITEM 898 - QC/QA CONCRETE, CLASS QSC2, SUPERSTRUCTURE (APPROACH SLAB)(T=15"), AS PER PLAN

FURNISH APPROACH SLABS CONFORMING TO CMS 526 EXCEPT CONCRETE SHALL BE IN ACCORDANCE WITH SUPPLEMENTAL SPECIFICATION 898, QC/QA CONCRETE, CLASS QSC2, THE ACCEPTED QUANTITIES SHALL INCLUDE: CONCRETE, REIN- -FORCING STEEL, JOINT FILLERS, WATERPROOFING, JOINT SEALS AND JOINT SEALERS. THE DEPARTMENT WILL MEASURE APPROACH SLABS BY THE NUMBER OF SQUARE YARDS. THE DEPARTMENT WILL INITIALLY PAY THE FULL BID PRICE TO THE CONTRACTOR UPON COMPLETING THE WORK. THE DEPARTMENT WILL CALCULATE THE FINAL ADJUSTED PAYMENT ACCORDING TO 898.17 AND INCLUDE APPROACH SLAB CONCRETE AND DECK CONCRETE IN THE SAME LOT TO DETERMINE FINAL PAY FACTORS.

ITEM 898 - QC/QA CONCRETE, CLASS QSC2, SUPERSTRUCTURE (DECK), AS PER PLAN

THE DEPARTMENT WILL CALCULATE THE FINAL ADJUSTED PAYMENT ACCORDING TO 898.17 AND INCLUDE APPROACH SLAB CONCRETE AND DECK CONCRETE IN THE SAME LOT TO DETERMINE FINAL PAY FACTORS.

CONSTRUCTION CLEARANCE

MAINTAIN A CONSTRUCTION CLEARANCE OF 13 FEET HORIZONTALLY FROM THE CENTER OF TRACKS AND 22 FEET VERTICALLY FROM A POINT LEVEL WITH THE TOP OF THE HIGHER RAIL, AND 13 FEET FROM THE CENTER OF TRACKS, AT ALL TIMES.

ITEM 516 - JACKING AND TEMPORARY SUPPORT OF SUPERSTRUCTURE, AS PER PLAN

THIS WORK CONSISTS OF RAISING OR RE-POSITIONING EXISTING STRUCTURES TO THE DIMENSIONS AND REQUIREMENTS DEFINED IN THE PROJECT PLANS.

SUBMIT CONSTRUCTION PLANS IN ACCORDANCE WITH CMS 501.05.

THE BRIDGE BEARINGS SHALL BE FULLY SEATED AT ALL CONTACT AREAS. IF FULL SEATING IS NOT ATTAINED, SUBMIT A REPAIR PLAN TO THE ENGINEER. THE DEPARTMENT WILL NOT PAY FOR THE REPAIR COSTS TO ENSURE FULL SEATING ON BEARINGS.

THE DEPARTMENT WILL MEASURE THIS WORK ON A LUMP SUM BASIS.

THE DEPARTMENT WILL PAY FOR THE ACCEPTED QUANTITIES AT THE CONTRACT PRICE FOR ITEM 516, JACKING AND TEMPORARY SUPPORT OF SUPERSTRUCTURE, AS PER PLAN.

ITEM - 516 REFURBISH BEARING DEVICE, AS PER PLAN

THIS ITEM SHALL INCLUDE ALL WORK NECESSARY TO PROPERLY ALIGN THE BRIDGE BEARINGS, AS WELL AS THEIR CLEANING AND PAINTING. INCLUDED SHALL BE THE DISASSEMBLY OF THE BEARING, HAND TOOL CLEANING (GRINDING IF NECESSARY), PAINTING OF NEW STEEL ACCORDING TO 514, IF NECESSARY, REPLACEMENT OF EXISTING SHEET LEAD WITH PREFORMED BEARING PADS (711.211), 1/8" THICK, INSTALLATION OF ANY NECESSARY STEEL SHIMS OF THE SAME SIZE AS THE BEARINGS TO PROVIDE A SNUG FIT, REALIGNMENT OF THE UPPER BEARING PLATE BY REMOVING EXISTING WELDS AND REWELDING, SO SURFACE, AND REASSEMBLY OF THE BEARINGS ARE VERTICALLY ALIGNED AT 60° F, LUBRICATING SLIDING SURFACES, AND REASSEMBLY OF THE BEARINGS. BOLTS SHALL BE INSTALLED OR REINSTALLED IN ACCORDANCE WITH 513.20 OF THE CMS. ASSURE ALL BEARINGS ARE SHIMMED ADEQUATELY AND THAT NO BEAMS AND/OR BEARING DEVICES ARE "FLOATING". AT NO ADDITIONAL COST TO THE STATE, THE CONTRACTOR MAY INSTALL NEW BEARINGS OF THE SAME TYPE AS THE EXISTING IN PLACE OF REFURBISHING THE BEARINGS. ALL WORK SHALL BE TO THE SATISFACTION OF THE ENGINEER.

IN ADDITION, THE EXISTING BASE PLATES WITH TWO PRESS FIT 1½" DIA. DOWELS (SEE STD. BDG. DWG. RB-1-55) AT THE FORWARD ABUTMENT SHALL BE REPLACED WITH NEW BASE PLATES WTIH TWO PRESS FIT 1½" DIA. DOWELS OF THE SAME DIMENSIONS AS THE EXISTING BASE PLATES EXCEPT THAT THE PLATE THICKNESS SHALL BE AS SPECIFIED ON SHEET 14/33 AND THEY SHALL BE IN ACCORDANCE WITH 516.04 OF THE CMS.

PAYMENT FOR ALL OF THE ABOVE DESCRIBED LABOR AND MATERIALS WILL BE MADE AT THE CONTRACT PRICE BID FOR ITEM 516, REFURBISH BEARING DEVICES, AS PER PLAN, UNLESS SEPARATELY ITEMIZED IN THE PLANS.

DECK PLACEMENT DESIGN ASSUMPTIONS

THE FOLLOWING ASSUMPTIONS OF CONSTRUCTION MEANS AND METHODS WERE MADE FOR THE ANALYSIS AND DESIGN OF THE SUPERSTRUCTURE. THE CONTRACTOR IS RESPONSIBLE FOR THE DESIGN OF THE FALSEWORK SUPPORT SYSTEM WITHIN THESE PARAMETERS AND WILL ASSUME RESPONSIBILITY FOR THE SUPERSTRUCTURE ANALYSIS FOR DEVIATION FROM THESE DESIGN ASSUMPTIONS.

AN EIGHT WHEEL FINISHING MACHINE WITH A MAXIMUM WHEEL LOAD OF 1.52 KIPS FOR A TOTAL MACHINE LOAD OF 12.16 KIPS

A MINIMUM OUT-TO-OUT WHEEL SPACING AT EACH END OF THE MACHINE OF 103".

A MAXIMUM DISTANCE FROM THE CENTERLINE OF THE FASCIA GIRDER TO THE FACE OF THE SAFETY HANDRAIL OF 65".

ITEM 516 - STRUCTURAL EXPANSION JOINT INCLUDING ELASTOMERIC STRIP SEAL, AS PER PLAN

THIS ITEM SHALL INCLUDE ALL WORK NECESSARY TO PROPERLY PLACE THE STRUCTURAL EXPANSION JOINT (I.E. STEEL RETAINERS, STEEL PLATES AND ANCHOR BARS, AND WELDED SHEAR STUDS TO BE CAST INTO THE BRIDGE DECK AND PARAPETS) AND INSTALL THE ELASTOMERIC STRIP SEAL AS SHOWN ON SHEETS 30/33 THROUGH 32/33 AND STANDARD BRIDGE DRAWING EXJ-4-87.

ALL STRUCTURAL STEEL MEMBERS SHALL BE LEVEL UF AND ALL REQUIREMENTS OF 513 APPLY TO SHOP FABRICATED MEMBERS. PERFORM WORK FOR FIELD FABRICATED MEMBERS ACCORDING TO ITEM 513, EXCEPT AS MODIFIED HEREIN. THE DEPARTMENT WILL NOT REQUIRE THE CONTRACTOR PERFORMING FIELD FABRICATION TO BE PRE-QUALIFIED AS SPECIFIED IN SUPPLEMENT 1078. SUBMIT A WRITTEN LETTER OF MATERIAL ACCEPTANCE, 501.06, TO THE ENGINEER. PROVIDE SHOP DRAWINGS ACCORDING TO 513.04 OR SUPPLY THE ENGINEER WITH "AS BUILT" DRAWINGS MEETING 513.04 AFTER COMPLETION OF FIELD FABRICATION. THE ENGINEER WILL REVIEW THE SUBMITTED DRAWINGS FOR CONCURRENCE WITH THE FINAL AS-BUILT CONDITION. IF NECESSARY, THE ENGINEER MAY CONTACT THE OFFICE OF STRUCTURAL ENGINEERING FOR TECHNICAL ASSISTANCE. IF THE ENGINEER IS SATISFIED WITH THE "AS-BUILT" DRAWINGS AND THE DELIVERED MATERIALS, SUPPLY A COPY OF THE DRAWINGS, STAMPED AND DATED, ALONG WITH MICROFILM, TO THE STRUCTURAL, WELDING AND METALS SECTION OF THE OFFICE OF MATERIAL MANAGEMENT FOR RECORD PURPOSES.

THIS ITEM INCLUDES NEW STRUCTURAL STEEL BARS FOR RECONSTRUCTION OF THE EXISTING BRIDGE JOINT AS DETAILED ON SHEETS 30/33 THROUGH 32/33. NEW STRUCTURAL STEEL MAY BE EITHER ASTM A709 GRADE 50, YIELD STRENGTH 50,000 PSI OR ASTM A709 GRADE 36, YIELD STRENGTH 36,000 PSI.

PAYMENT FOR ALL EQUIPMENT, MATERIALS, AND LABOR REQUIRED TO PERFORM THE WORK OUTLINED ABOVE SHALL BE INCLUDED IN THE FOOT CONTRACT PRICE FOR ITEM 516, STRUCTURAL EXPANSION JOINT INCLUDING ELASTOMERIC STRIP SEAL, AS PER PLAN, UNLESS SEPARATELY ITEMIZED IN THE PLANS.

ITEM 622 - CONCRETE BARRIER END SECTION, TYPE D, REINFORCED, AS PER PLAN

THIS ITEM CONSISTS OF CONSTRUCTING NEW PARAPET TRANSITIONS OFF THE STRUCTURE AS DETAILED ON SHEETS 22/33 THROUGH 29/33 AND CONFORM TO STD. DWG. SBR-1-99.

THE VERTICAL REINFORCING STEEL PLACED IN THE BASE OF THE PARAPET SHALL BE DOWELED INTO THE EXISTING FOUNDATION AND ABUTMENT AREA AS DETAILED.

THE CONCRETE FOR THE TRANSITIONS SHALL BE THE SAME CLASS AND MIX DESIGN AS THAT USED FOR THE CONCRETE PARAPETS ON THE STRUCTURE. ALL REINFORCING STEEL SHALL BE EPOXY COATED AND CONFORM TO 509 OF THE CMS.

PAYMENT FOR ALL LABOR, EQUIPMENT, AND MATERIALS REQUIRED TO PERFORM THE WORK OUTLINED ABOVE SHALL BE INCLUDED IN THE EACH CONTRACT PRICE FOR ITEM 622, CONCRETE BARRIER END SECTION, TYPE D, REINFORCED, AS PER PLAN, UNLESS SEPARATELY ITEMIZED IN THE PLANS.

ESTIMATED QUANTITIES FOR BRIDGE NO. ROS-23-1533 L SFN: 7100930

ITEM	ITEM EXT.	TOTAL	UNIT	DESCRIPTION	ABUTMENTS	PIERS	SUPERSTRUCTURE	PARAPET	GENERAL	SEE SHEET NO.
202	11201	LUMP		PORTIONS OF STRUCTURE REMOVED, AS PER PLAN						2/33
202	22900	134	SQ YD	APPROACH SLAB REMOVED					134	
503	21101	162	CU YD	UNCLASSIFIED EXCAVATION, AS PER PLAN	162					2/33
509	10000	182,312	POUND	EPOXY COATED REINFORCING STEEL	7,933		161,682	12,697		
510	10000	564	EACH	DOWEL HOLES WITH NONSHRINK, NONMETALLIC GROUT	402				150	
512	10100	2,064	SQ YD	SEALING OF CONCRETE SURFACES (EPOXY-URETHANE)	147	833		989	95	
512	33000	96	SQ YD	TYPE 2 WATERPROOFING	96					
513	20000	2,970	EACH	WELDED STUD SHEAR CONNECTORS			2970			
514	00050	13,200	SQ FT	SURFACE PREPARATION OF EXISTING STRUCTURAL STEEL			13,200			
514	00056	13,200	SQ FT	FIELD PAINTING OF EXISTING STRUCTURAL STEEL, PRIME COAT			13,200			
514	00060	13,200	SQ FT	FIELD PAINTING STRUCTURAL STEEL, INTERMEDIATE COAT			13,200			
514	00066	13,200	SQ FT	FIELD PAINTING STRUCTURAL STEEL, FINISH COAT			13,200			
514	00504	200	MAN HOUR	GRINDING FINS, TEARS, SLIVERS ON EXISTING STRUCTURAL STEEL			200			
516	11211	131	FT	STRUCTURAL EXPANSION JOINT INCLUDING ELASTOMERIC STRIP SEAL, AS PER PLAN	131					3/33
516	45305	25	EACH	REFURBISH BEARING DEVICE, AS PER PLAN	10	15				3/33
516	47001	LUMP		JACKING AND TEMPORARY SUPPORT OF SUPERSTRUCTURE, AS PER PLAN						2/33
518	12300	5	EACH	SCUPPERS, INCLUDING SUPPORTS			5			
518	21200	48	CU YD	POROUS BACKFILL WITH FILTER FABRIC	48					
622	25011	4	EACH	CONCRETE BARRIER END SECTION, TYPE D, REINFORCED, AS PER PLAN					4	3/33
898	10211	487	CU YD	QC/QA CONCRETE, CLASS QSC2, SUPERSTRUCTURE (DECK), AS PER PLAN			487			2/33
898	10705	217	SQ YD	QC/QA CONCRETE, CLASS QSC2, SUPERSTRUCTURE (APPROACH SLAB), (T=15"), AS PER PLAN					217	2/33
898	11000	119	CU YD	QC/QA CONCRETE, CLASS QSC2, SUPERSTRUCTURE (PARAPET)				119		
898	20150	57	CU YD	QC/QA CONCRETE, CLASS QSC1, SUBSTRUCTURE (ABUTMENT)	57					

DESIGN AGENCY
STATE OF OHIO
DEPARTMENT OF TRANSPORTATION
DISTRICT 9 PRODUCTION

DESIGNED MRH | CHECKED JTH | DRAWN MRH | REVISED | REVIEWED LAW | DATE 10/07/08 | STRUCTURE FILE NUMBER 7100930

ESTIMATED QUANTITIES
BRIDGE NO. ROS-23-1533 L
OVER NORFOLK SOUTHERN RAILROAD AND C.R. 235

ROS-23-12.84
PID No. 79964

I:\project\District-wide\2009PM-79964\bridge\ros-23-1533l\estimated_quantities.dgn 07-NOV-2008 10:11AM mhauck

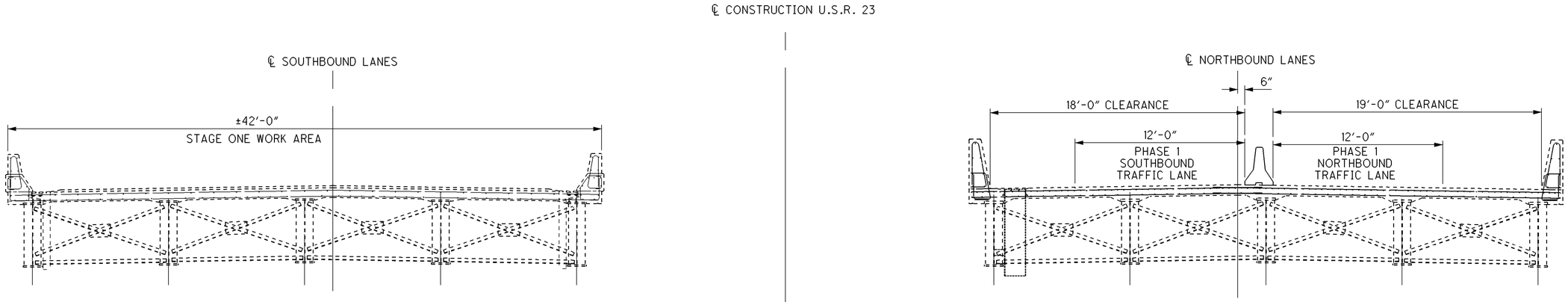

PROPOSED PHASE I MAINTENANCE OF TRAFFIC

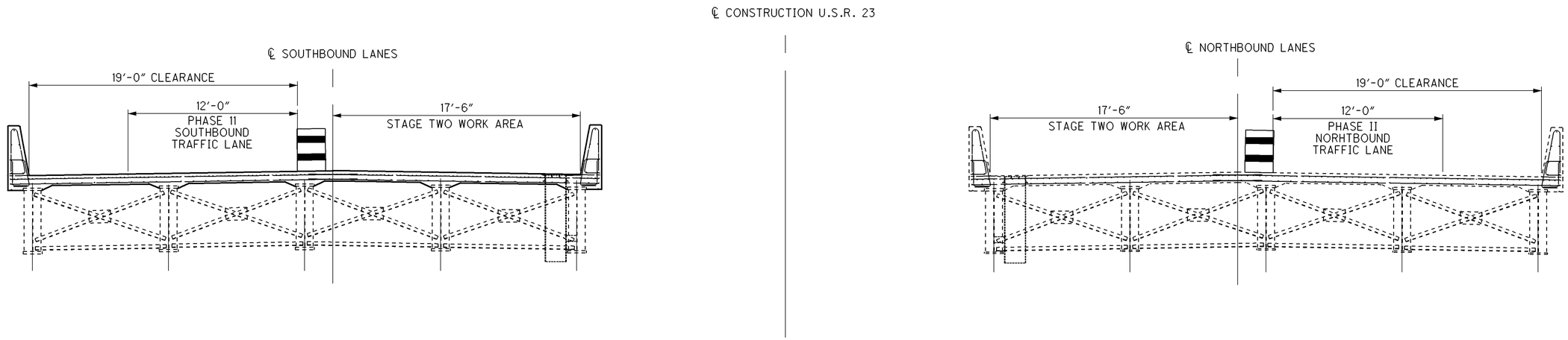

PROPOSED PHASE II MAINTENANCE OF TRAFFIC

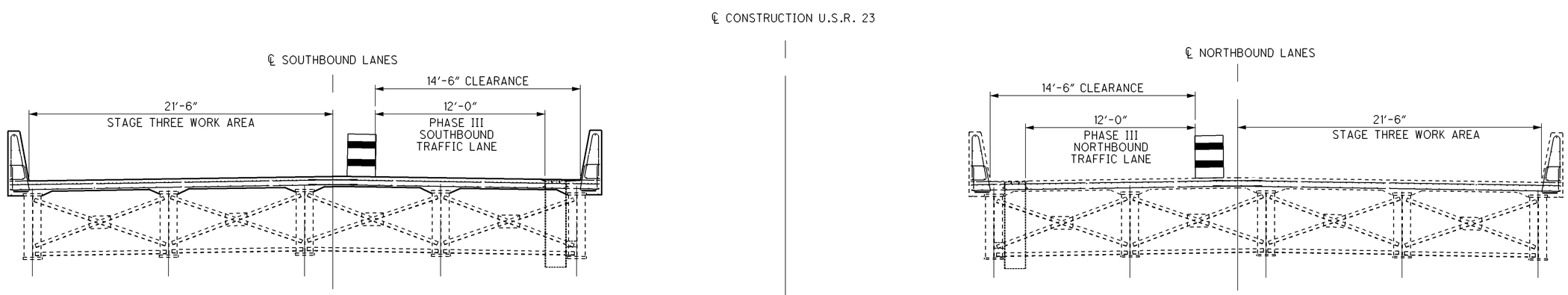

PROPOSED PHASE III MAINTENANCE OF TRAFFIC

DESIGN AGENCY
STATE OF OHIO
DEPARTMENT OF TRANSPORTATION
DISTRICT 9 PRODUCTION

DESIGNED	DRAWN	REVIEWED	DATE
MRH	MRH	LAW	10/07/08
CHECKED	REVISED	STRUCTURE FILE NUMBER	
JTH		7100930	

MAINTENANCE OF TRAFFIC
BRIDGE NO.: ROS-23-1533 L
OVER NORFOLK SOUTHERN RAILROAD AND C.R. 235

ROS-23-12.84
PID No. 79964

I:\project\District-wide\2009PM-79964\bridge\ros-23-1533l\mot.dgn 07-NOV-2008 10:13AM mhauck

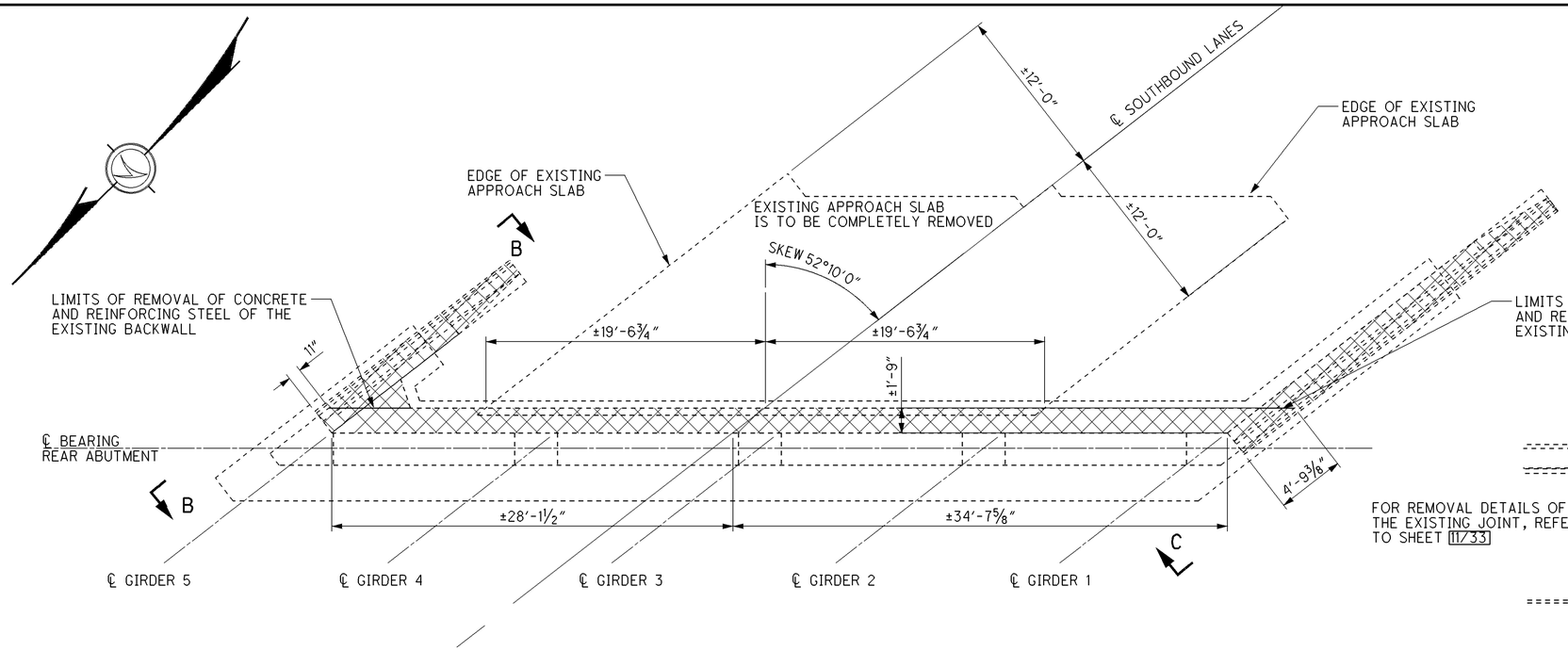

EXISTING PLAN VIEW

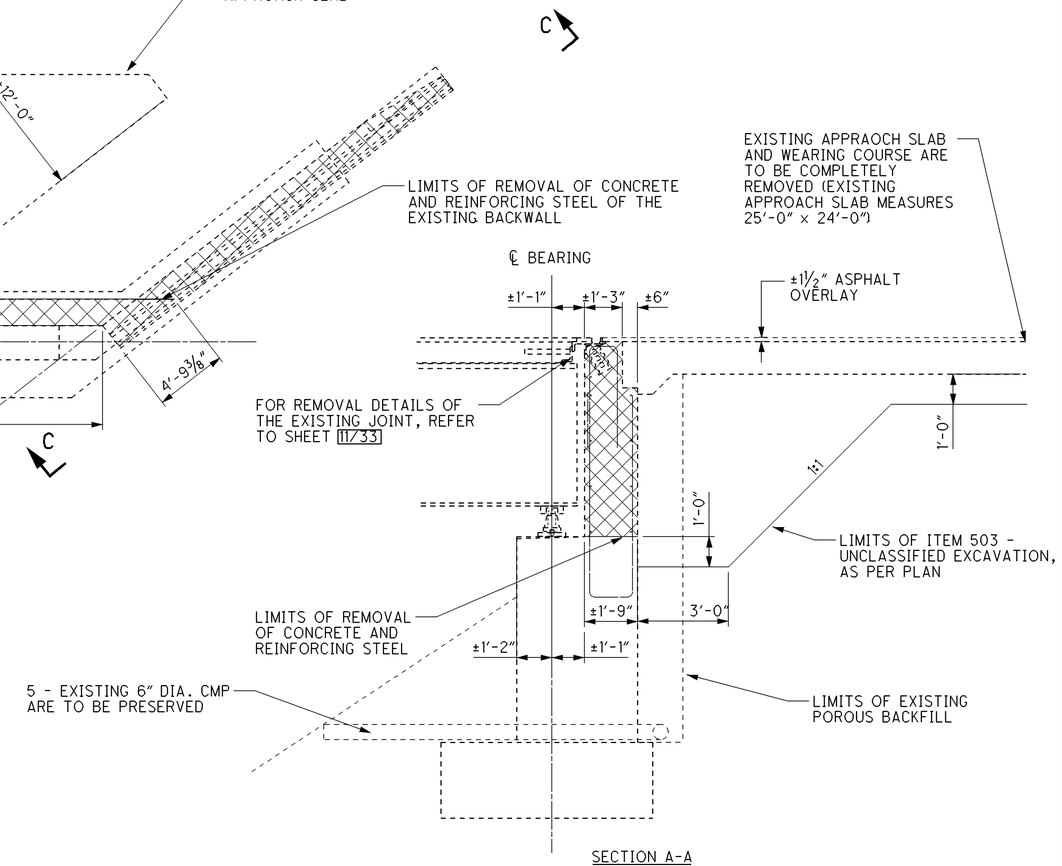

SECTION A-A

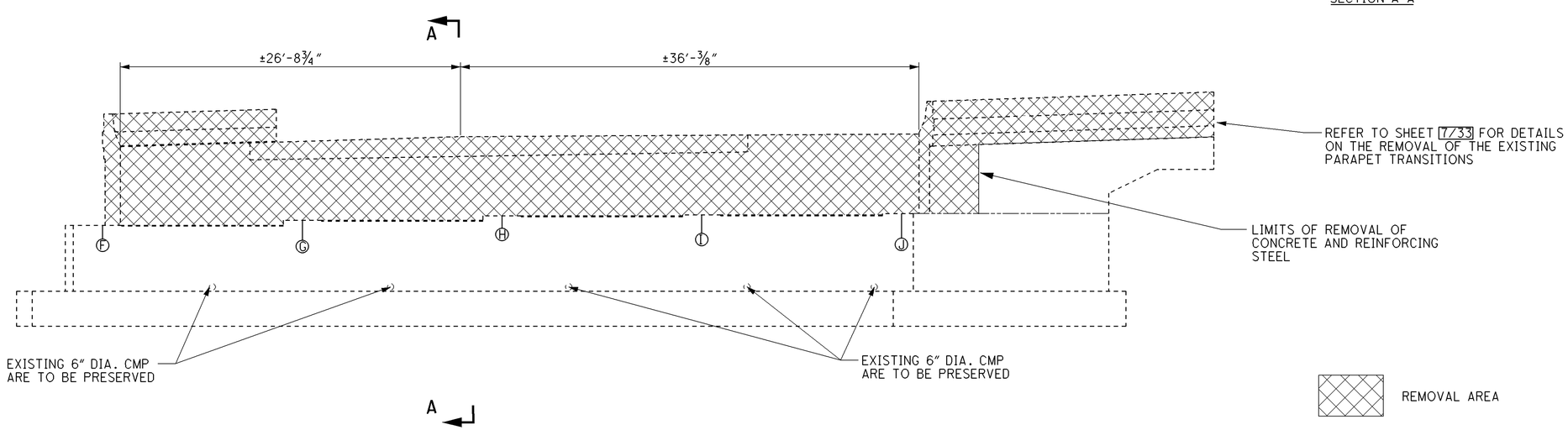

EXISTING ELEVATION VIEW

EXISTING BEAM SEAT ELEVATIONS

F	G	H	I	J
±703.90	±704.28	±704.64	±704.71	±704.80

NOTE: FOR SECTIONS B-B AND C-C REFER TO SHEET 7/33

DESIGN AGENCY
STATE OF OHIO
DEPARTMENT OF TRANSPORTATION
DISTRICT 9 PRODUCTION

DESIGNED	DRAWN	REVIEWED	DATE
MRH	MRH	LAW	10/07/08
CHECKED	REVISED	STRUCTURE FILE NUMBER	
JTH		7100930	

REMOVAL DETAILS - REAR ABUTMENT

BRIDGE NO. ROS-23-1533 L
OVER NORFOLK SOUTHERN RAILROAD AND C.R. 235

ROS-23-12.84
PID No. 79964

I:\project\District-wide\2009PM-79964\bridge\ros-23-1533\left_ex_rear_abt.dgn 07-NOV-2008 10:13AM mhauck

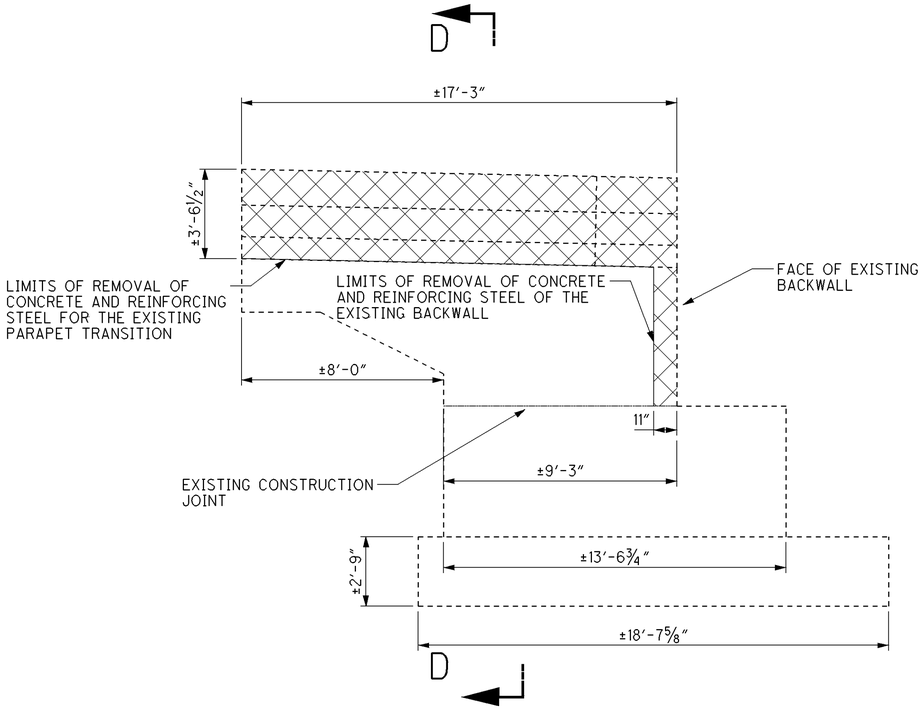

SECTION B-B

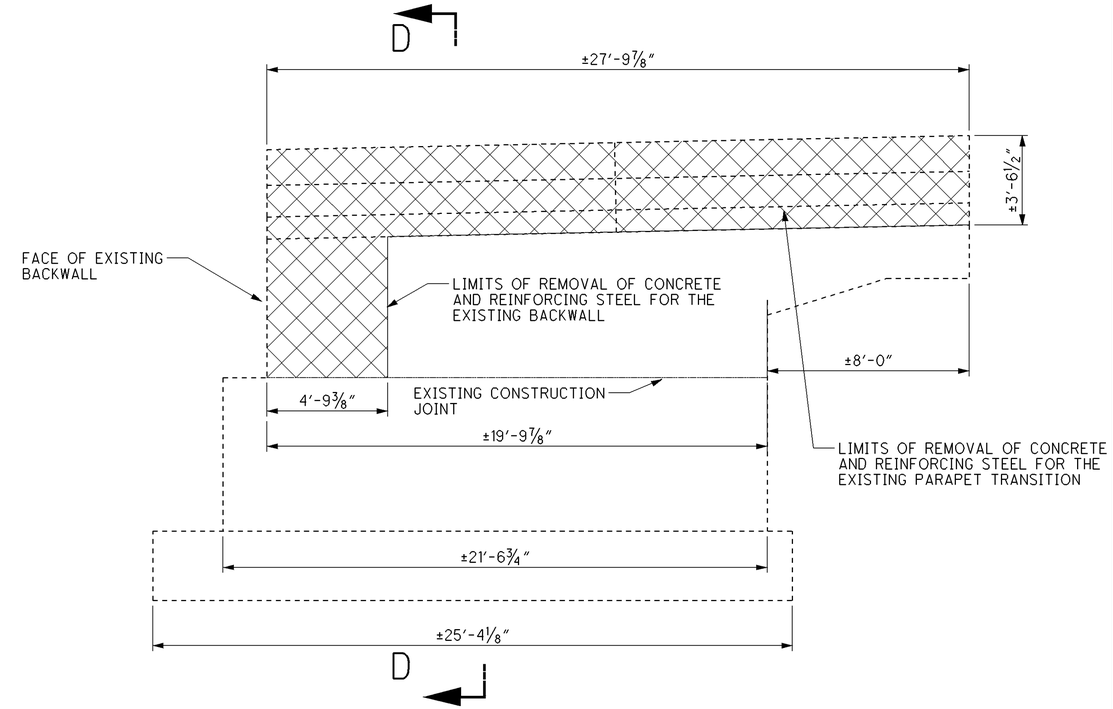

SECTION C-C

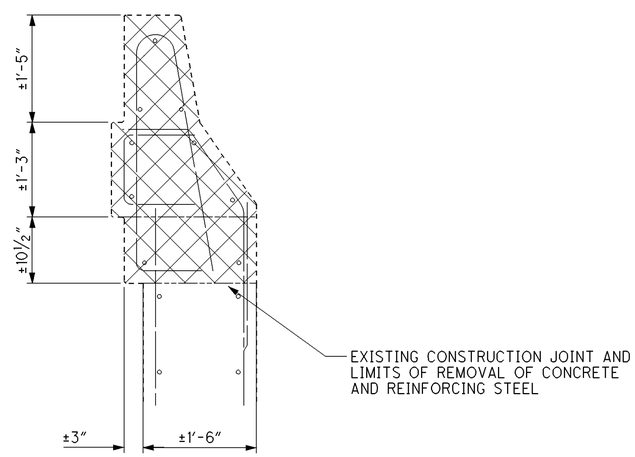

SECTION D-D

DESIGN AGENCY
STATE OF OHIO
DEPARTMENT OF TRANSPORTATION
DISTRICT 9 PRODUCTION

DESIGNED	DRAWN	REVIEWED	DATE
MRH	MRH	LAW	10/07/08
CHECKED	REVISED	STRUCTURE FILE NUMBER	
JTH		7100930	

REMOVAL DETAILS - REAR ABUTMENT SECTIONS

BRIDGE NO. ROS-23-1533 L
OVER NORFOLK SOUTHERN RAILROAD AND C.R. 235

ROS-23-12.84
PID No. 79964

I:\project\District-wide\2009PM-79964\bridge\ros-23-1533\left_ex_rear_abt_sections.dgn 07-NOV-2008 10:14AM mhauck

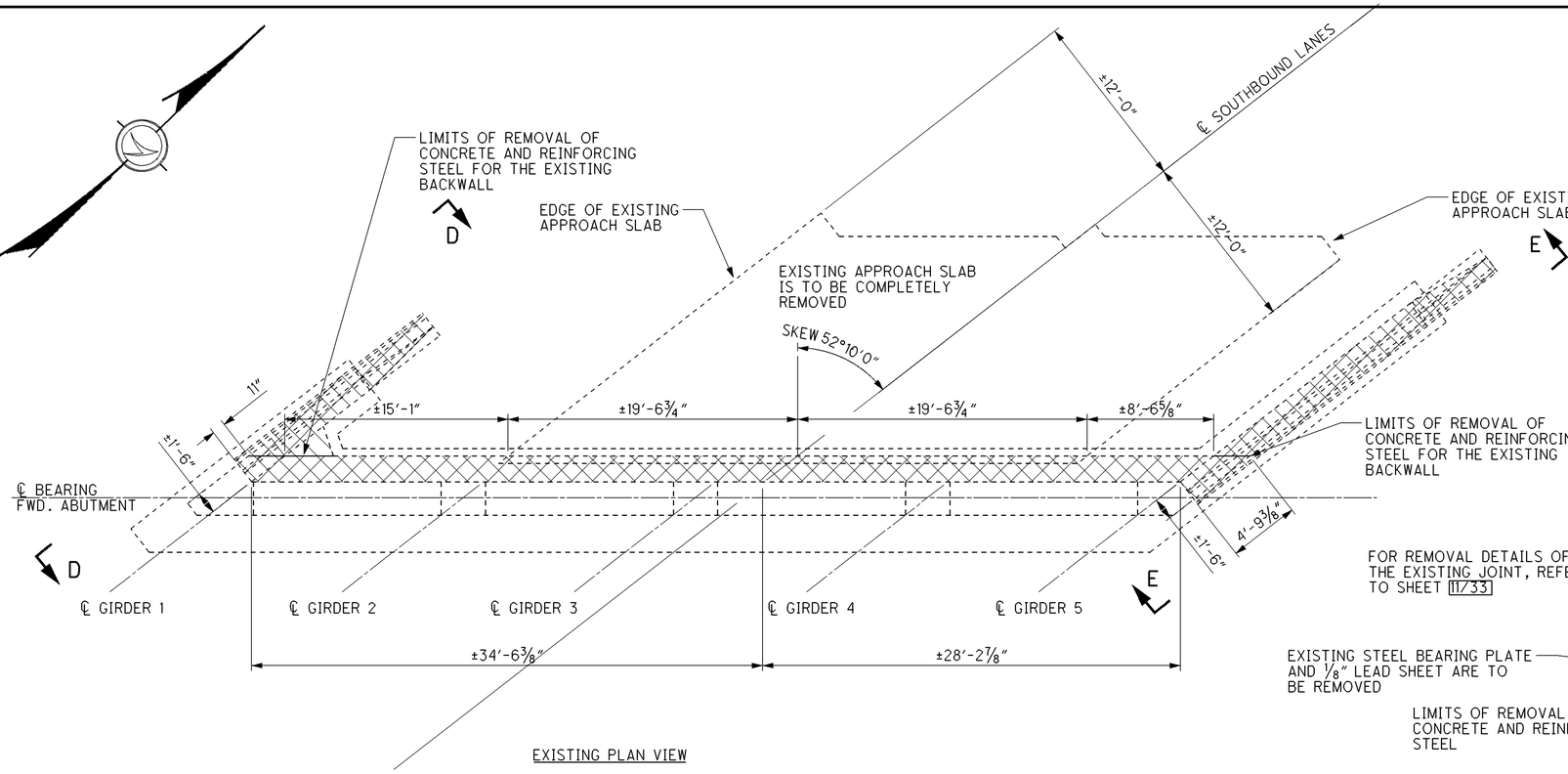

EXISTING PLAN VIEW

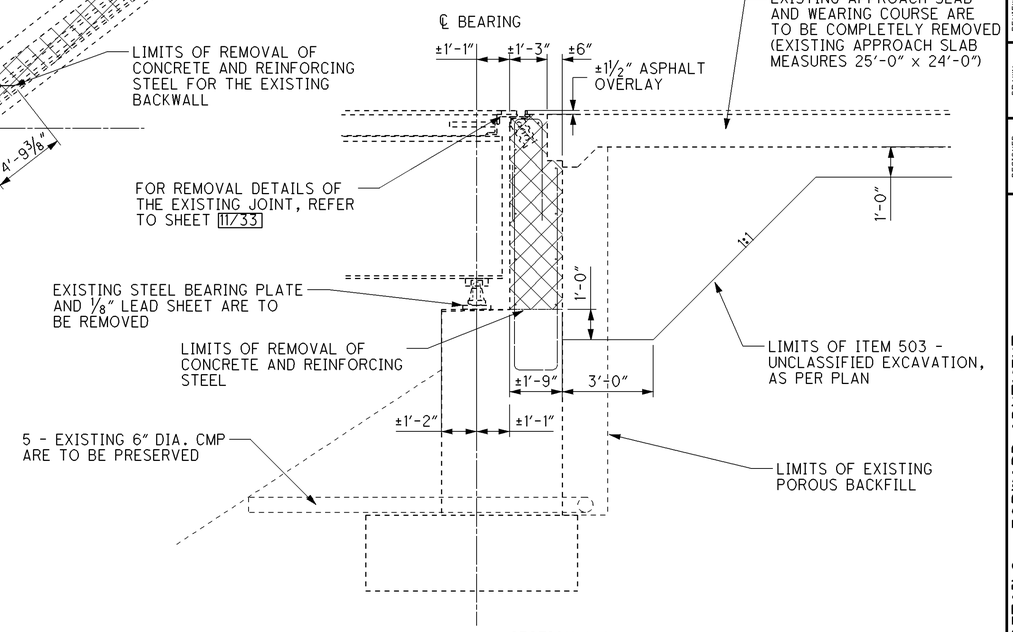

SECTION A-A

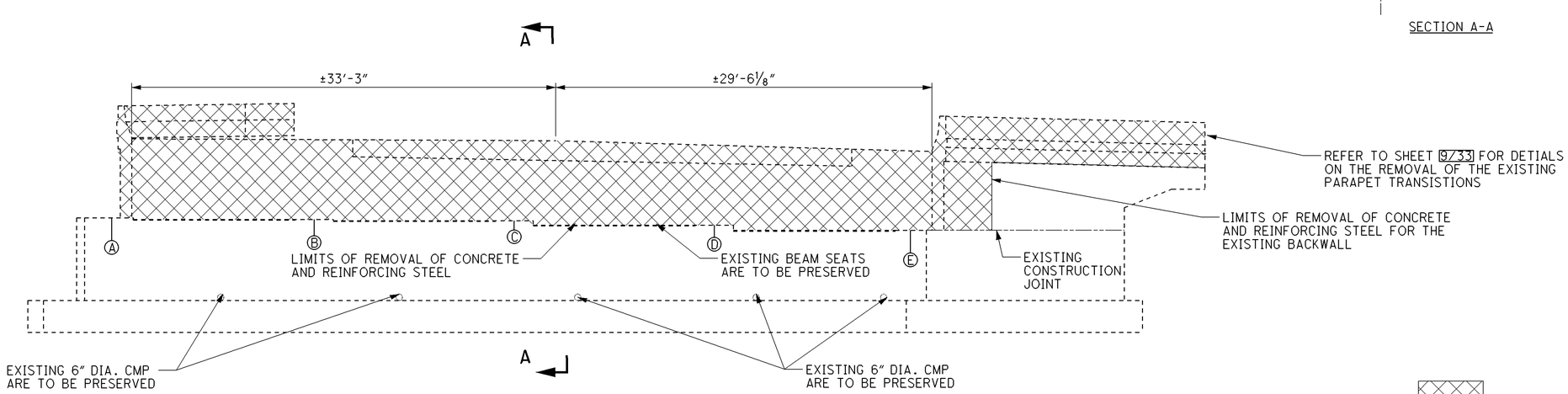

EXISTING ELEVATION VIEW

EXISTING BEAM SEAT ELEVATIONS

A	B	C	D	E
±697.21	±697.10	±696.99	±696.65	±696.23

REMOVAL AREA

NOTE: FOR SECTIONS D-D AND E-E REFER TO SHEET 9/33

DESIGN AGENCY
STATE OF OHIO
DEPARTMENT OF TRANSPORTATION
DISTRICT 9 PRODUCTION

DESIGNED	DRAWN	REVIEWED	DATE
MRH	MRH	LAW	10/07/08
CHECKED	REVISED	STRUCTURE FILE NUMBER	
JKW		7100930	

REMOVAL DETAILS - FORWARD ABUTMENT

BRIDGE NO. ROS-23-1533 L
OVER NORFOLK SOUTHERN RAILROAD AND C.R. 235

ROS-23-12.84
PID No. 79964

I:\project\District-wide\2009PM-79964\bridge\ros-23-1533\left_ex_fwd_abt.dgn 07-NOV-2008 10:15AM mhauck

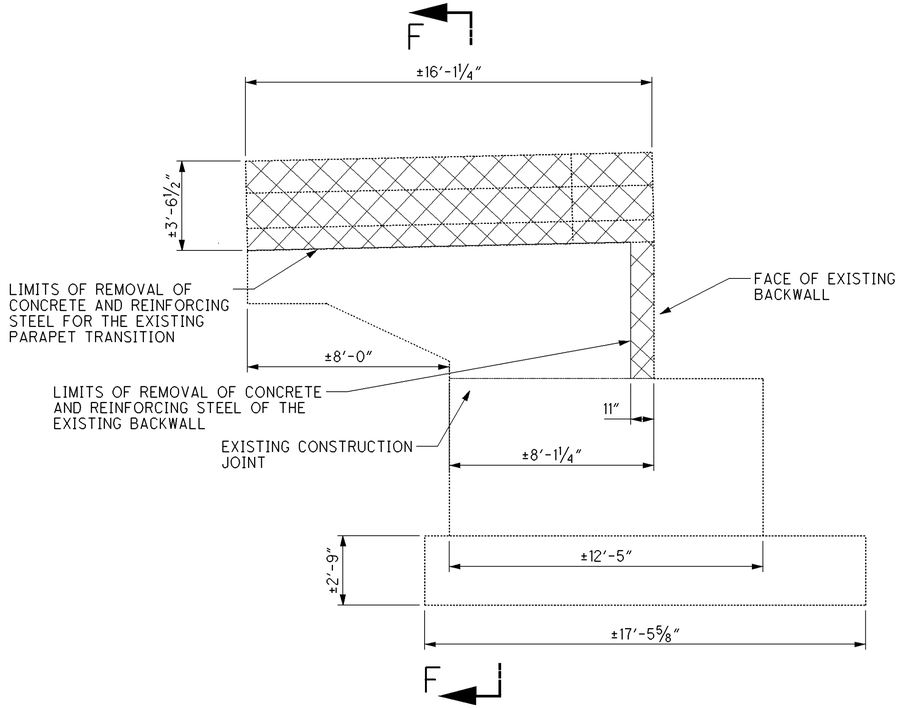

SECTION D-D

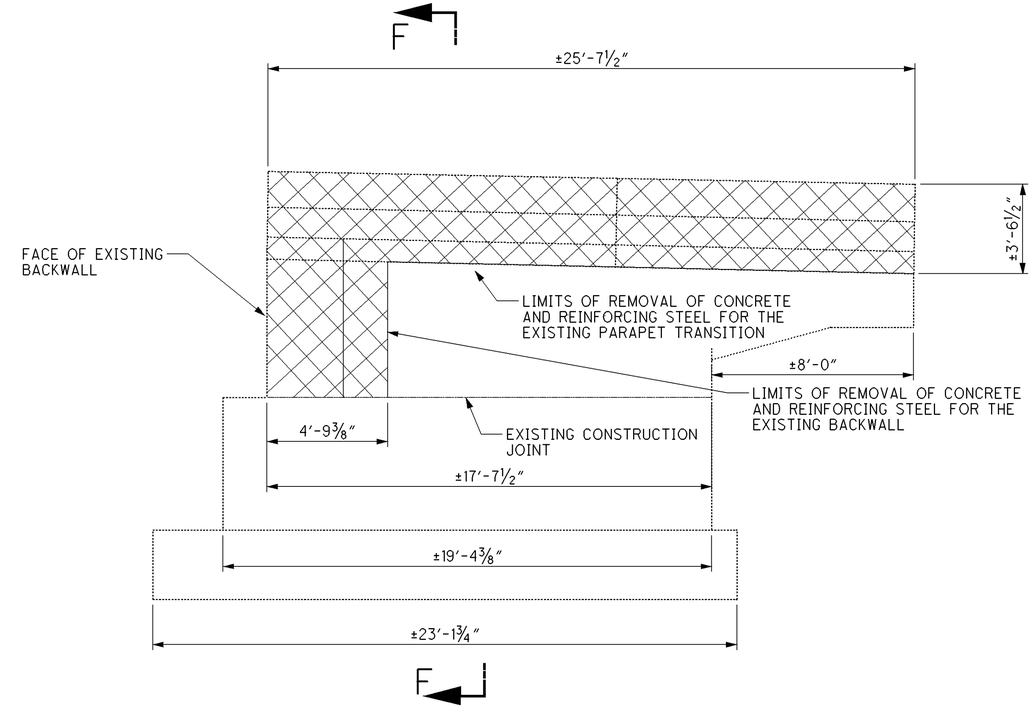

SECTION E-E

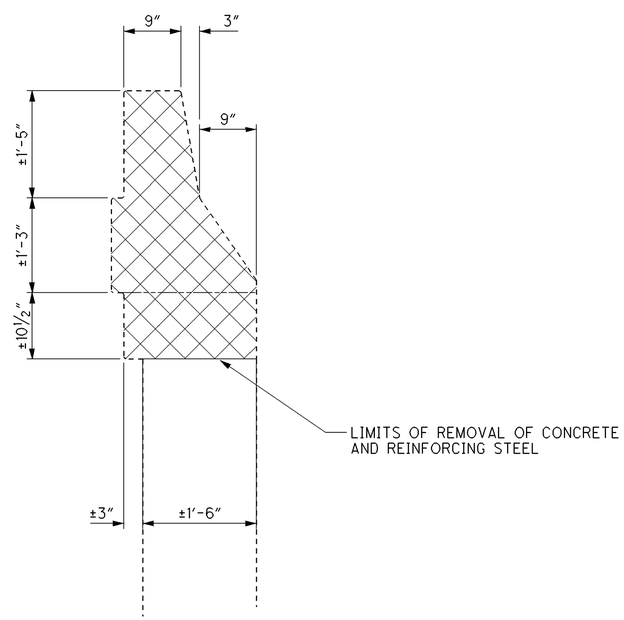

SECTION F-F

DESIGN AGENCY
STATE OF OHIO
DEPARTMENT OF TRANSPORTATION
DISTRICT 9 PRODUCTION

DESIGNED	DRAWN	REVIEWED	DATE
MRH	MRH	LAW	10/07/08
CHECKED	REVISED	STRUCTURE FILE NUMBER	
JTH		7100930	

REMOVAL DETAILS - FORWARD ABUTMENT SECTIONS

BRIDGE NO. ROS-23-1533 L
OVER NORFOLK SOUTHERN RAILROAD AND C.R. 235

ROS-23-12.84
PID No. 79964

I:\project\District-wide\2009PM-79964\bridge\ros-23-1533l\left_ex_fwd_abt_sections.dgn 07-NOV-2008 10:15AM mhauck

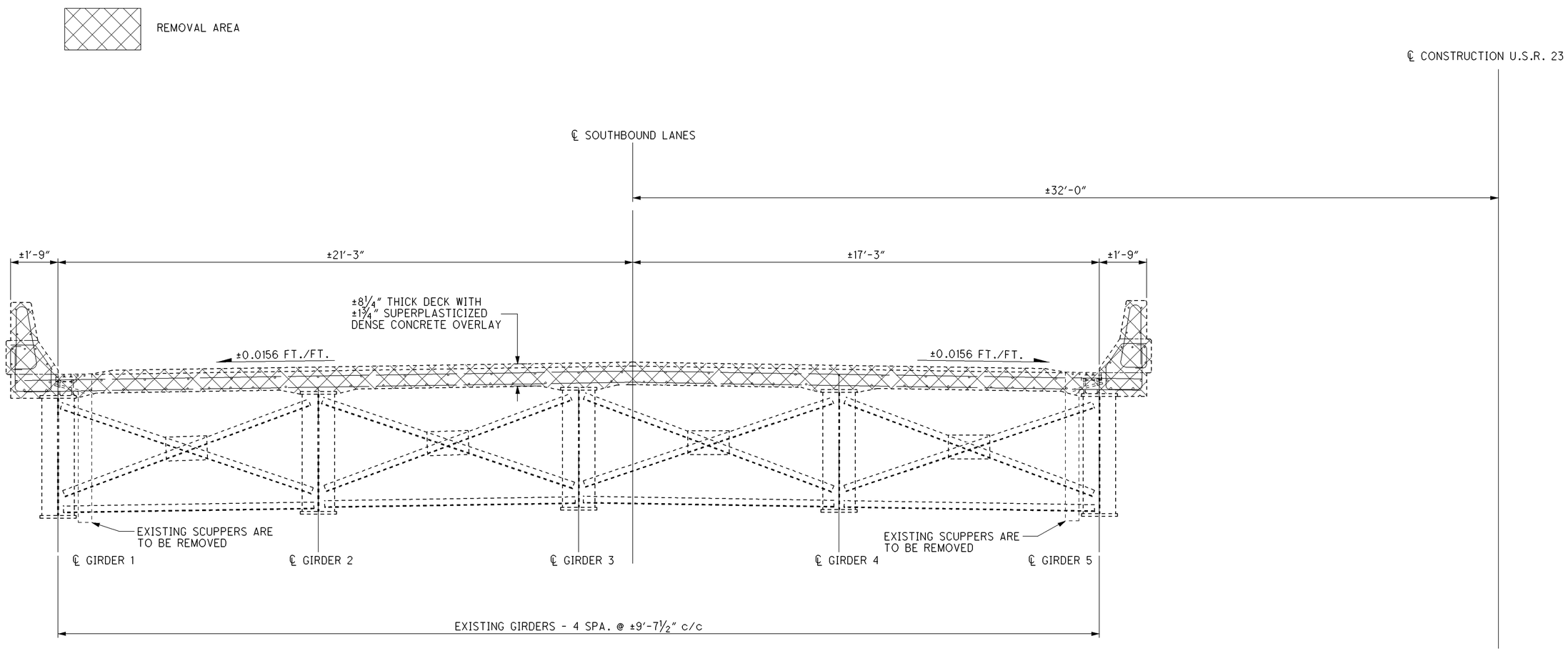

EXISTING TRANSVERSE SECTION

DESIGN AGENCY
STATE OF OHIO
DEPARTMENT OF TRANSPORTATION
DISTRICT 9 PRODUCTION

DESIGNED	DRAWN	REVIEWED	DATE
MRH	MRH	LAW	10/07/08
CHECKED	REVISED	STRUCTURE FILE NUMBER	
JTH		7100930	

REMOVAL DETAILS - TRANSVERSE SECTION
BRIDGE NO. ROS-23-1533 L
OVER NORFOLK SOUTHERN RAILROAD AND C.R. 235

ROS-23-12.84
PID No. 79964

I:\project\District-wide\2009PM-79964\bridge\ros-23-1533\left_transverse.dgn 07-NOV-2008 10:16AM mhauck

NOTES:

FOR REMOVAL DETAILS OF THE REAR ABUTMENT, REFER TO SHEET 6/33 AND 7/33.

FOR REMOVAL DETAILS OF THE FORWARD ABUTMENT, REFER TO SHEET 8/33 AND 9/33.

FOR REMOVAL DETAILS OF THE EXISTING DECK, REFER TO SHEET 10/33.

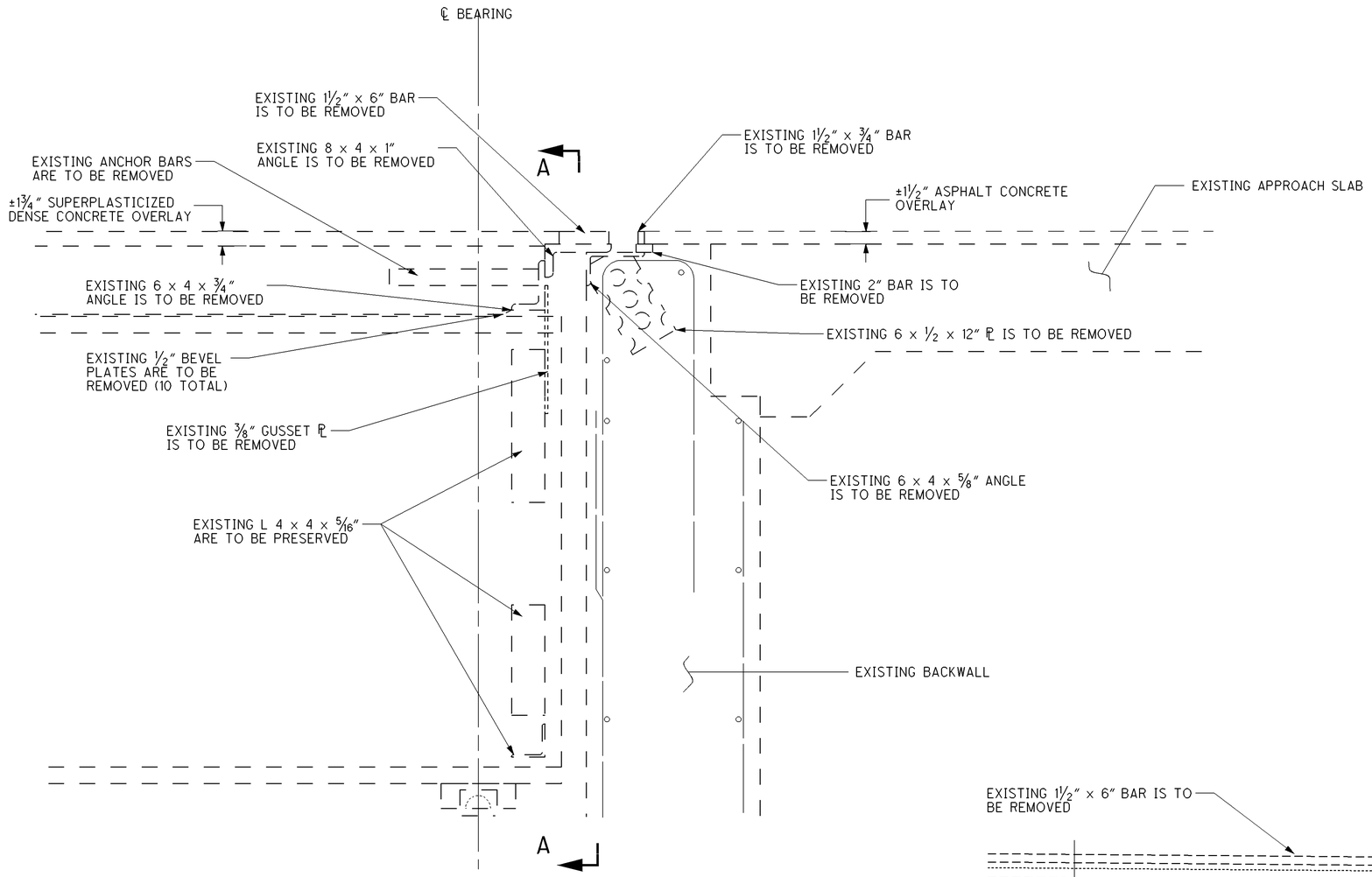

JOINT DETAILS

APPLIES TO: BOTH THE REAR AND FORWARD ABUTMENTS OF THE SOUTHBOUND LANES

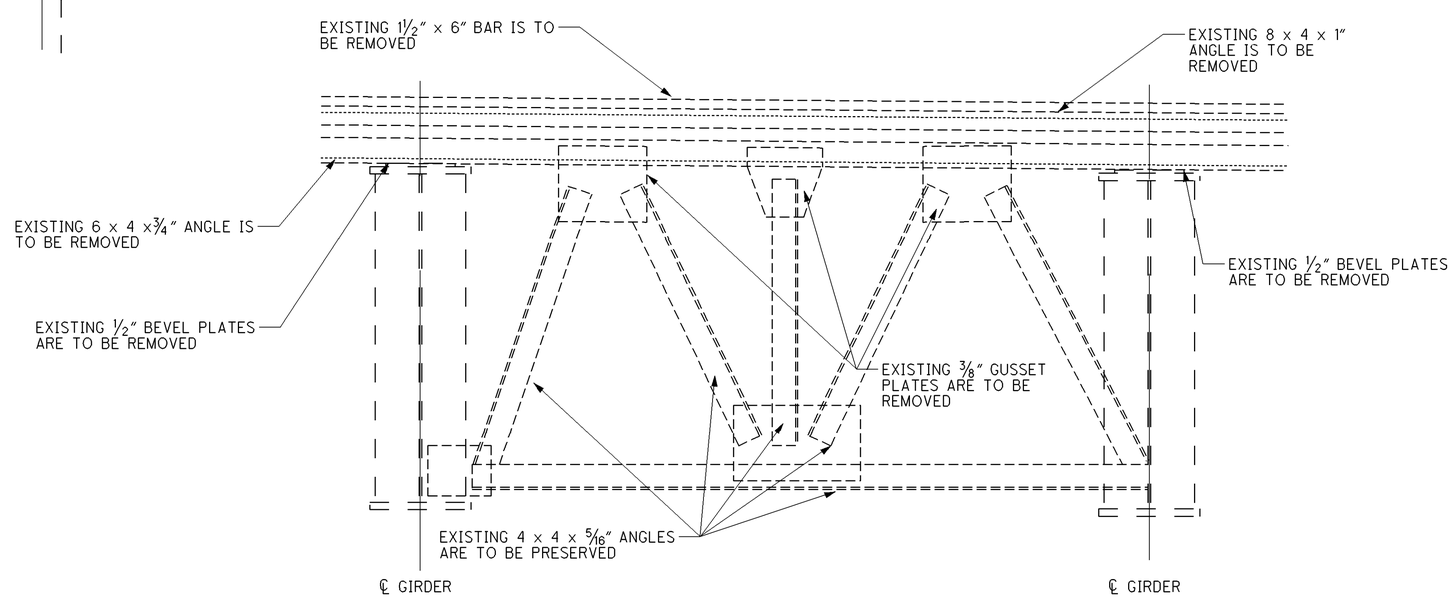

SECTION A-A

APPLIES TO: END CROSSRAMES AT THE FORWARD AND REAR ABUTMENTS OF THE SOUTHBOUND LANES (TYPICAL FOUR ALL 4 BAYS)

DESIGN AGENCY
STATE OF OHIO
DEPARTMENT OF TRANSPORTATION
DISTRICT 9 PRODUCTION

DESIGNED	DRAWN	REVIEWED	DATE
MRH	MRH	LAW	10/07/08
CHECKED	REVISED	STRUCTURE FILE NUMBER	
JTH		7100930	

REMOVAL DETAILS - EXISTING EXPANSION JOINT

BRIDGE NO. ROS-23-1533 L
OVER NORFOLK SOUTHERN RAILROAD AND C.R. 235

ROS-23-12.84
PID No. 79964

I:\project\District-wide\2009PM-79964\bridge\ros-23-1533\joint_removal_details.dgn 07-NOV-2008 10:17AM mhauck

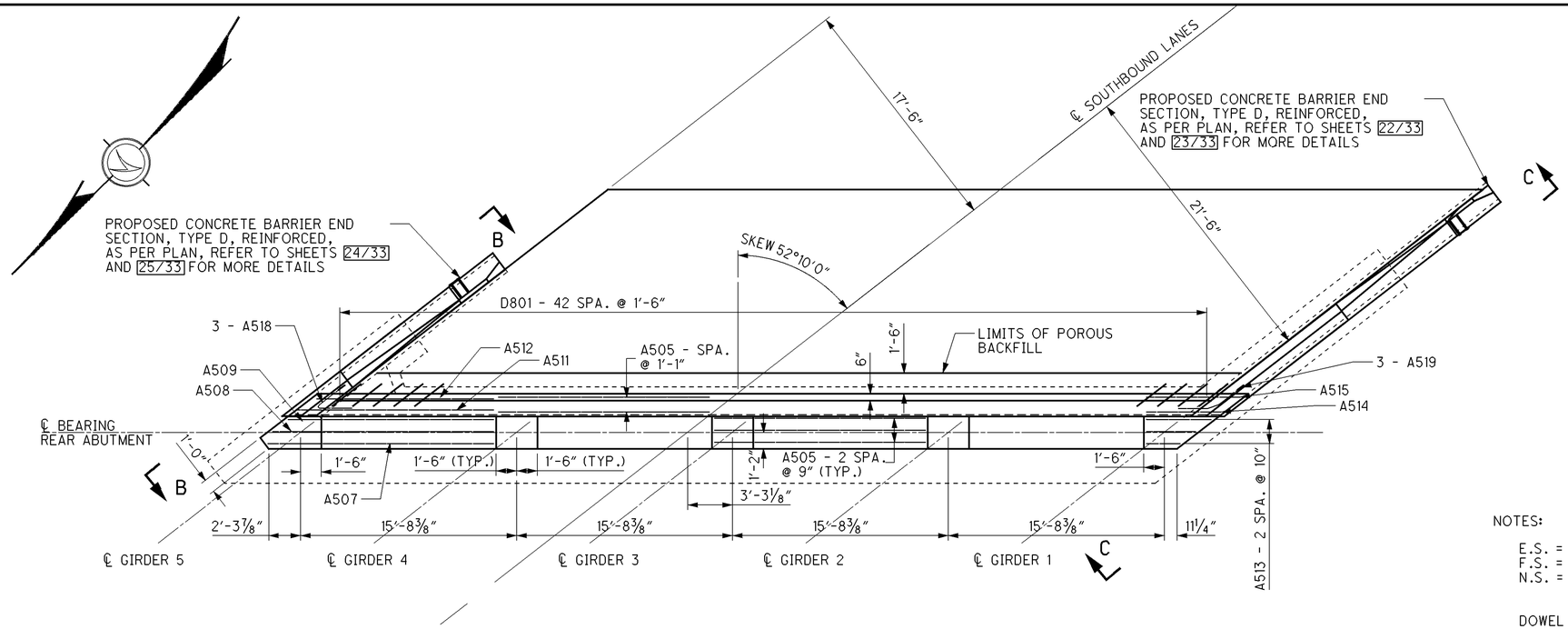

PROPOSED PLAN VIEW

NOTES:

E.S. = EACH SIDE
F.S. = FAR SIDE
N.S. = NEAR SIDE

DOWEL HOLES SHALL ALLOW FOR AN EMBEDMENT DEPTH OF 1'-0" MINIMUM FOR THE PROPOSED REINFORCING STEEL.

FOR SECTIONS A-A, B-B AND C-C REFER TO SHEET 13/33

SEALING OF CONCRETE SURFACES (EPOXY-URETHANE):

LIMITS OF SEALING ARE NOT SHOWN FOR CLARITY, ALL EXPOSED SURFACES OF ABUTMENT ABOVE THE GROUND LINE ARE TO BE SEALED AND ALL EXPOSED SURFACES OF THE CONCRETE BARRIER END SECTION, TYPE D, REINFORCED, AS PER PLAN ARE TO BE SEALED FORM THE GROUND LINE ON THE OUTSIDE TO 9" OUT FROM THE TOE ONTO THE APPROACH SLAB ON THE INSIDE.

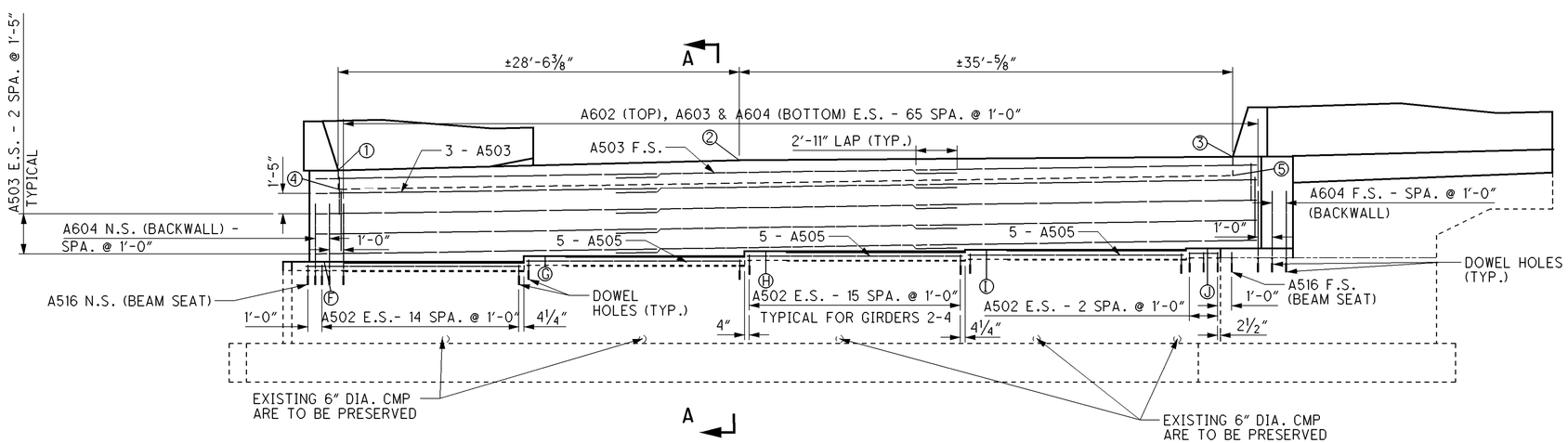

PROPOSED ELEVATION VIEW

PROPOSED ELEVATIONS

1	2	3	4	5
711.01	711.74	711.98	709.68	710.65

PROPOSED SEAT ELEVATIONS

LOCATION	DECK ELEVATION	BOTTOM OF GIRDER ELEVATION	EXISTING ROCKER THICKNESS (IN.)(INCLUDING EXISTING LOAD PLATE)	EXISTING SEAT ELEVATION	PROPOSED GIRDER SEAT
F	710.97	705.54	12 1/8	703.90	704.52
G	711.38	705.95	12 1/8	704.28	704.93
H	711.72	706.29	12 1/8	704.64	705.27
I	711.83	706.40	12 1/8	704.71	705.38
J	711.94	706.51	12 1/8	704.80	705.49

DESIGN AGENCY
STATE OF OHIO
DEPARTMENT OF TRANSPORTATION
DISTRICT 9 PRODUCTION

DESIGNED	DRAWN	REVIEWED	DATE
MRH	MRH	LAW	10/07/08
CHECKED	REVISED	STRUCTURE FILE NUMBER	
JTH		7100930	

PROPOSED REAR ABUTMENT
BRIDGE NO. ROS-23-1533 L
OVER NORFOLK SOUTHERN RAILROAD AND C.R. 235

ROS-23-12.84
PID No. 79964

i:\project\District-wide\2009PM-79964\bridge\ros-23-1533\prop_left_rear_abtut.dgn 07-NOV-2008 10:18AM mhauck

NOTES:

REFER TO SHEETS 30/33 AND 32/33 FOR DETAILS OF THE PROPOSED EXPANSION JOINT.

DOWEL HOLES SHALL ALLOW FOR AN EMBEDMENT DEPTH OF 1'-0" MINIMUM OF THE PROPOSED REINFORCING STEEL.

REFER TO SHEETS 22/33 THROUGH 25/33 FOR DETAILS OF THE PROPOSED CONCRETE BARRIER END SECTIONS, TYPE D, REINFORCED, AS PER PLAN.

TYPE 2 WATERPROOFING SHALL BE PLACED FROM THE LIMITS OF ITEM 503, UNCLASSIFIED EXCAVATION, AS PER PLAN TO THE BOTTOM OF THE PROPOSED APPROACH SLAB BETWEEN THE WINGWALLS OF THE ABUTMENT AS SHOWN.

xxx = LIMITS OF SEALING OF CONCRETE SURFACES (EPOXY-URETHANE)

SEALING OF BEAM SEATS:

IF THE BEAMS SEATS ARE SEALED WITH AN EPOXY OR NON-EPOXY SEALER PRIOR TO RESETTING THE BEARINGS, DO NOT APPLY SEALER TO THE CONCRETE SURFACES UNDER THE PROPOSED BEARING LOCATIONS. IF THESE LOCATIONS ARE SEALED, REMOVE THE SEALER TO THE SATISFACTION OF THE ENGINEER PRIOR TO SETTING THE BEARINGS. THE DEPARTMENT WILL NOT PAY FOR THIS REMOVAL.

BACKWALL CONCRETE:

IN ADDITION TO 511.10, DO NOT PLACE BACKWALL CONCRETE ABOVE THE OPTIONAL CONSTRUCTION JOINT AT THE APPROACH SLAB SEAT UNTIL AFTER THE DECK CONCRETE IN THE SPAN ADJACENT TO THE ABUTMENT HAS BEEN PLACED.

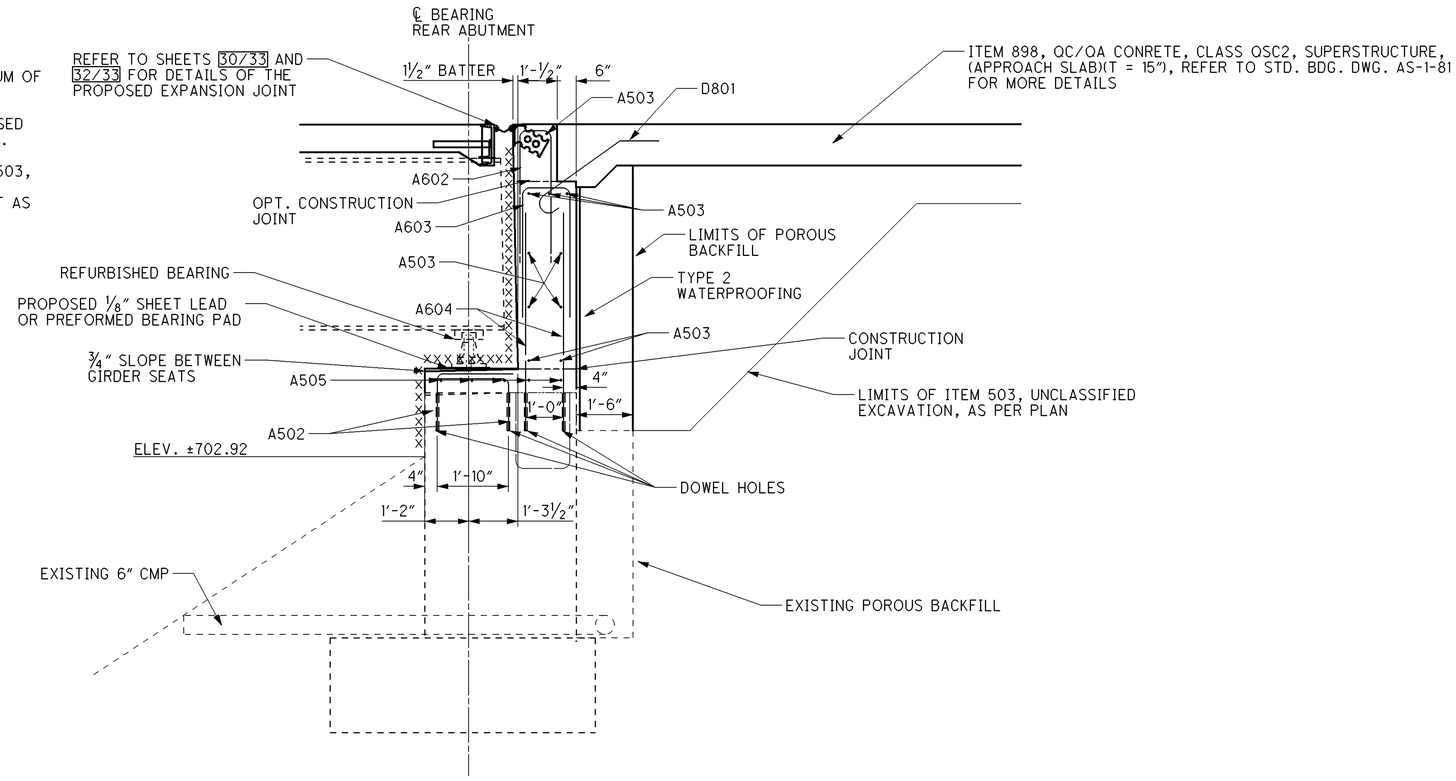

SECTION A-A

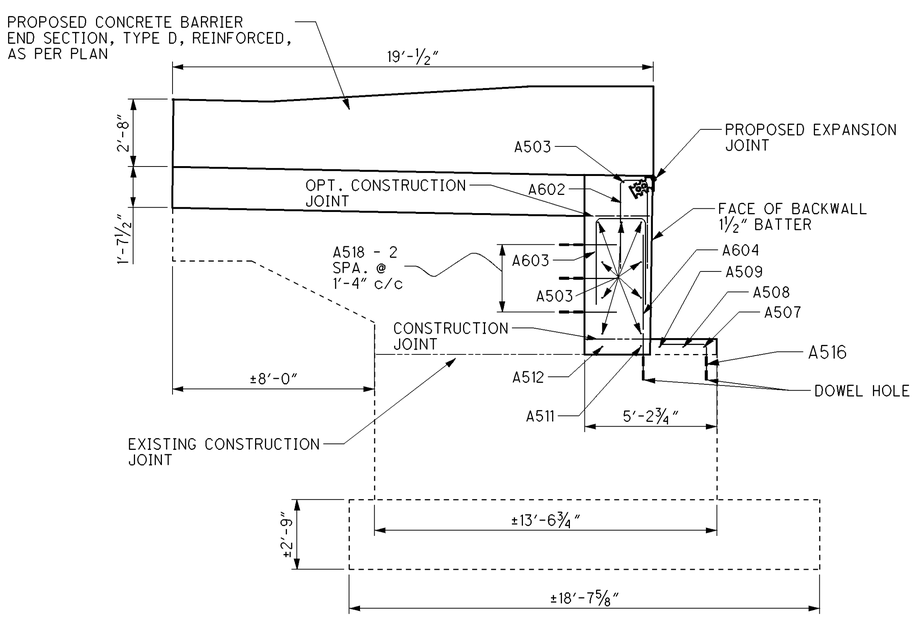

SECTION B-B

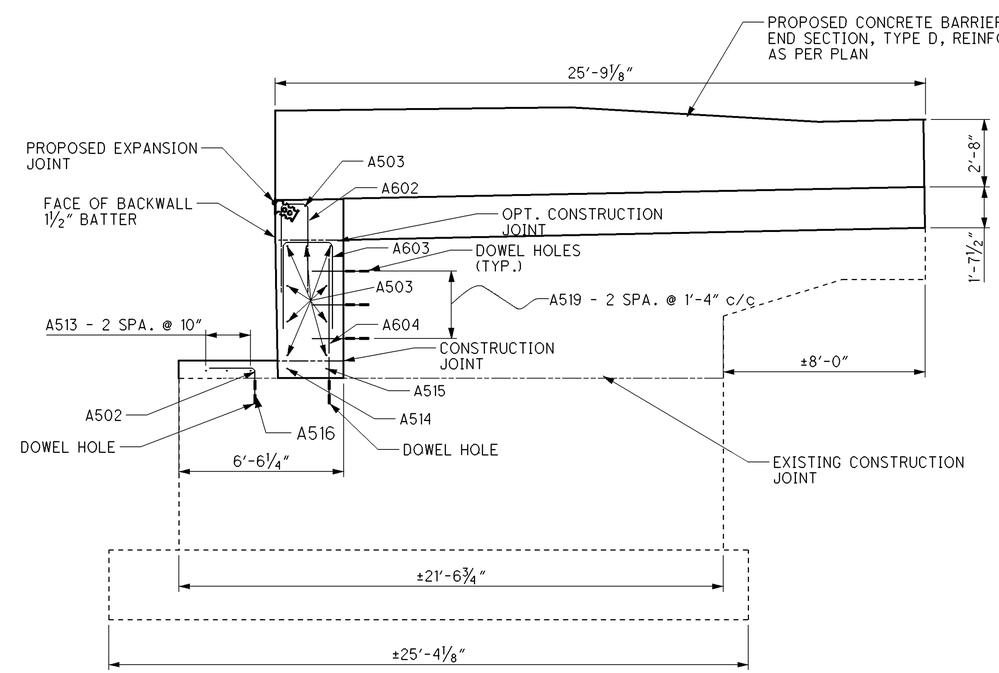

SECTION C-C

DESIGN AGENCY
STATE OF OHIO
DEPARTMENT OF TRANSPORTATION
DISTRICT 9 PRODUCTION

DESIGNED	DRAWN	REVIEWED	DATE
MRH	MRH	LAW	10/07/08
CHECKED	REVISED	STRUCTURE FILE NUMBER	
JTH		7100930	

PROPOSED REAR ABUTMENT SECTIONS
BRIDGE NO. ROS-23-1533 L
OVER NORFOLK SOUTHERN RAILROAD AND C.R. 235

ROS-23-12.84
PID No. 79964

I:\project\District-wide\2009PM-79964\bridge\ros-23-1533\prop_left_rear_abut_details.dgn 07-NOV-2008 10:19AM mhauck

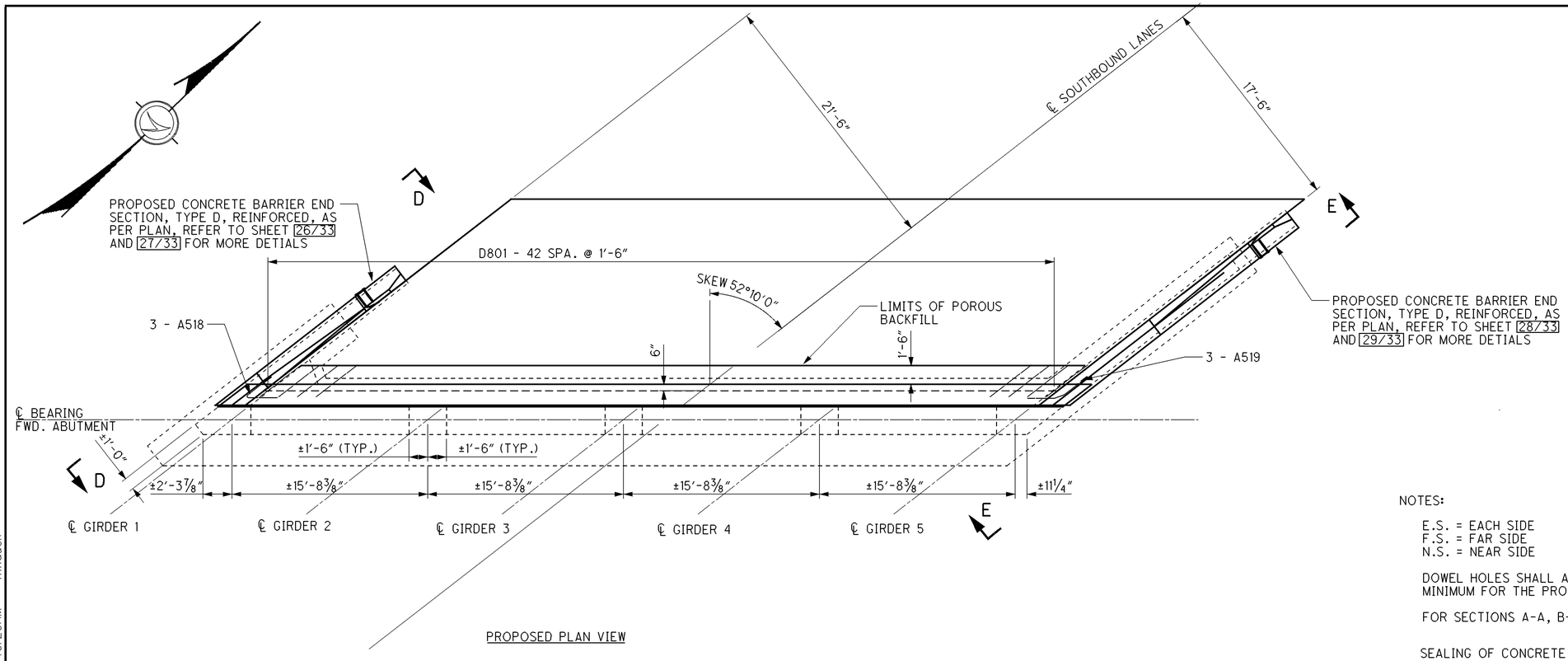

PROPOSED PLAN VIEW

NOTES:

E.S. = EACH SIDE
F.S. = FAR SIDE
N.S. = NEAR SIDE

DOWEL HOLES SHALL ALLOW FOR AN EMBEDMENT DEPTH OF 1'-0" MINIMUM FOR THE PROPOSED REINFORCING STEEL.

FOR SECTIONS A-A, B-B AND C-C REFER TO SHEET 15/33

SEALING OF CONCRETE SURFACES (EPOXY-URETHANE):

LIMITS OF SEALING ARE NOT SHOWN FOR CLARITY, ALL EXPOSED SURFACES OF ABUTMENT ABOVE THE GROUND LINE ARE TO BE SEALED AND ALL EXPOSED SURFACES OF THE CONCRETE BARRIER END SECTION, TYPE D, REINFORCED, AS PER PLAN ARE TO BE SEALED FORM THE GROUND LINE ON THE OUTSIDE TO 9" OUT FROM THE TOE ONTO THE APPROACH SLAB ON THE INSIDE.

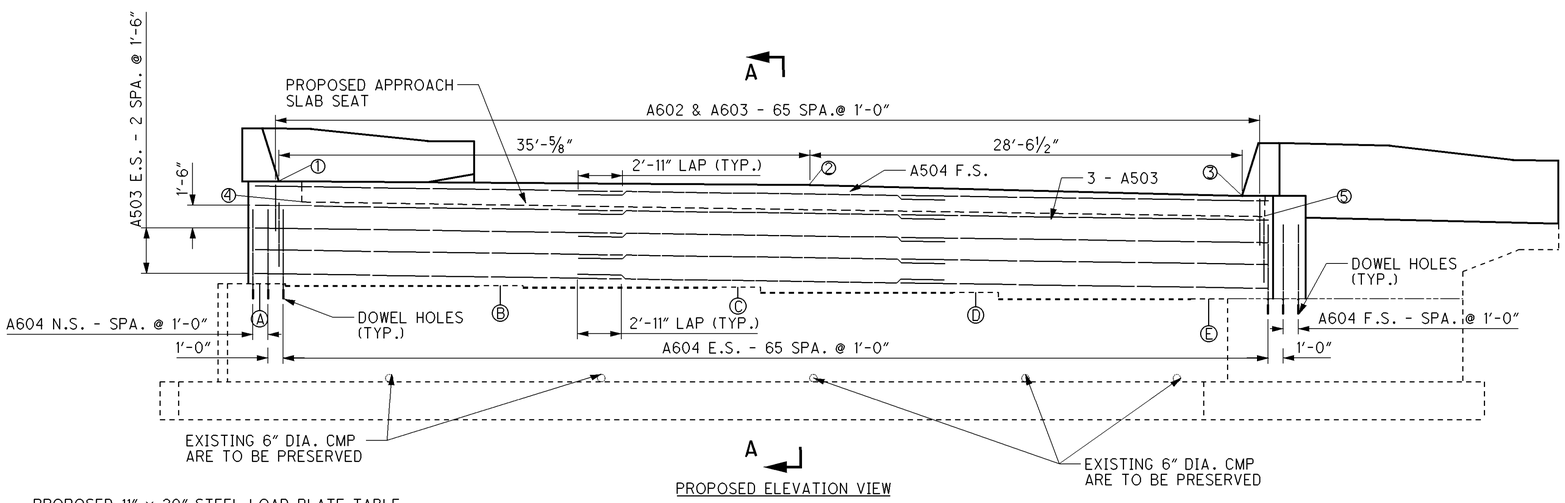

PROPOSED ELEVATION VIEW

PROPOSED 11" x 20" STEEL LOAD PLATE TABLE

LOCATION	DECK ELEVATION	BOTTOM OF BEAM ELEVATION	EXISTING ROCKER THICKNESS (in.)	EXISTING SEAT ELEVATION	PLATE THICKNESS (in.)
A	704.00	698.57	10 5/8	697.21	5 1/2
B	703.89	698.46	10 5/8	697.10	5 1/2
C	703.79	698.36	10 5/8	696.99	5 1/2
D	703.45	698.02	10 5/8	696.65	5 1/2
E	703.05	697.62	10 5/8	696.23	6

PROPOSED ELEVATIONS

1	2	3	4	5
703.96	703.73	703.00	702.63	701.67

DESIGN AGENCY
STATE OF OHIO
DEPARTMENT OF TRANSPORTATION
DISTRICT 9 PRODUCTION

DESIGNED	DRAWN	REVIEWED	DATE
MRH	MRH	LAW	10/07/08
CHECKED	REVISED	STRUCTURE FILE NUMBER	
JTH		7100930	

PROPOSED FORWARD ABUTMENT
BRIDGE NO. ROS-23-1533 L
OVER NORFOLK SOUTHERN RAILROAD AND C.R. 235

ROS-23-12.84
PID No. 79964

I:\project\District-wide\2009PM-79964\bridge\ros-23-1533\prop_left_fwd_abut.dgn 07-NOV-2008 10:20AM mhauck

NOTES:

REFER TO SHEETS 30/33 AND 32/33 FOR DETAILS OF THE PROPOSED EXPANSION JOINT.

DOWEL HOLES SHALL ALLOW FOR AN EMBEDMENT DEPTH OF 1'-0" MINIMUM OF THE PROPOSED REINFORCING STEEL.

REFER TO SHEETS 26/33 THROUGH 29/33 FOR DETAILS OF THE PROPOSED CONCRETE BARRIER END SECTIONS, TYPE D, REINFORCED, AS PER PLAN.

TYPE 2 WATERPROOFING SHALL BE PLACED FROM THE LIMITS OF ITEM 503, UNCLASSIFIED EXCAVATION, AS PER PLAN TO THE BOTTOM OF THE PROPOSED APPROACH SLAB BETWEEN THE WINGWALLS OF THE ABUTMENT AS SHOWN.

xxx = LIMITS OF SEALING OF CONCRETE SURFACES (EPOXY-URETHANE)

SEALING OF BEAM SEATS:

IF THE BEAMS SEATS ARE SEALED WITH AN EPOXY OR NON-EPOXY SEALER PRIOR TO RESETTING THE BEARINGS, DO NOT APPLY SEALER TO THE CONCRETE SURFACES UNDER THE PROPOSED BEARING LOCATIONS. IF THESE LOCATIONS ARE SEALED, REMOVE THE SEALER TO THE SATISFACTION OF THE ENGINEER PRIOR TO SETTING THE BEARINGS. THE DEPARTMENT WILL NOT PAY FOR THIS REMOVAL.

BACKWALL CONCRETE:

IN ADDITION TO 511.10, DO NOT PLACE BACKWALL CONCRETE ABOVE THE OPTIONAL CONSTRUCTION JOINT AT THE APPROACH SLAB SEAT UNTIL AFTER THE DECK CONCRETE IN THE SPAN ADJACENT TO THE ABUTMENT HAS BEEN PLACED.

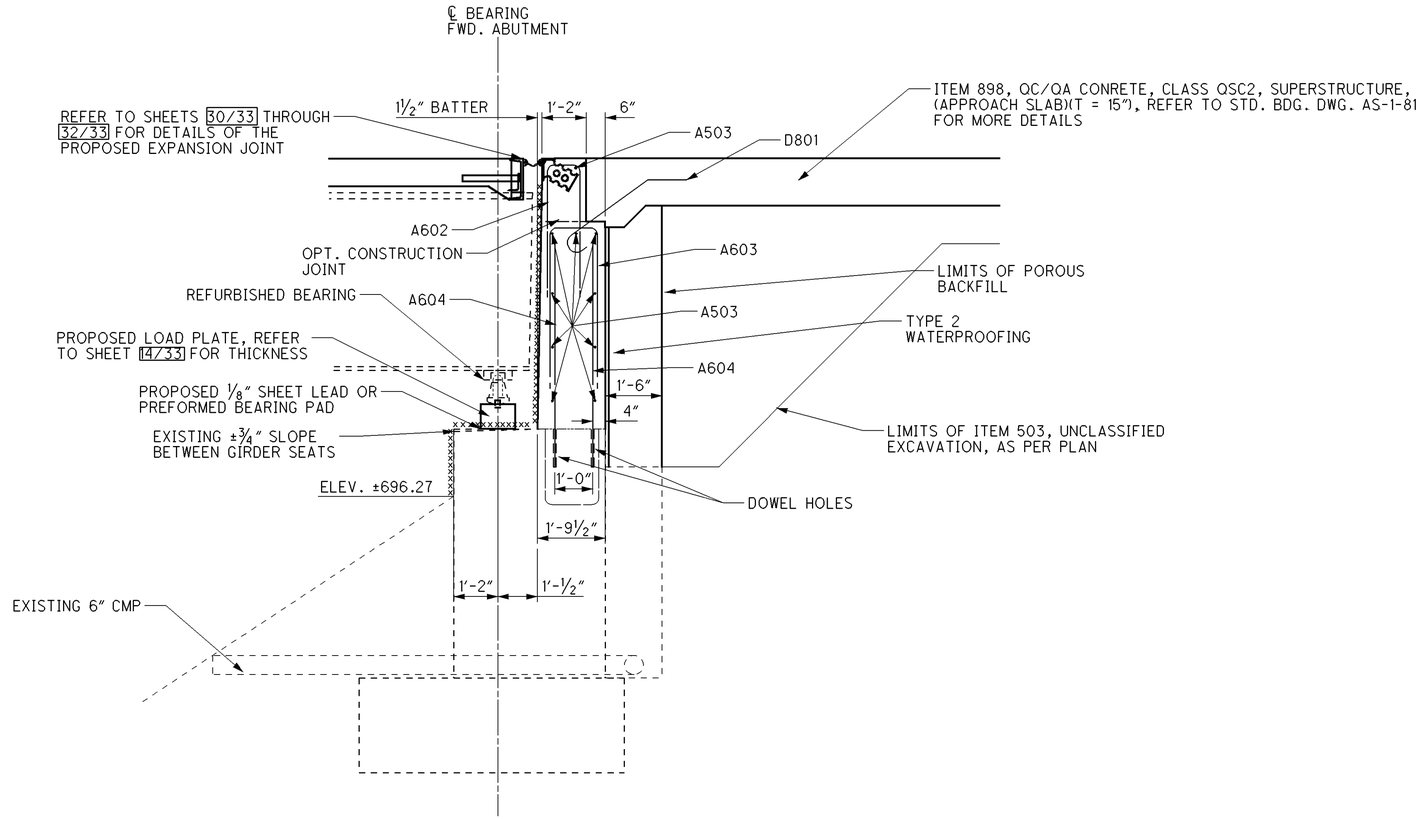

SECTION A-A

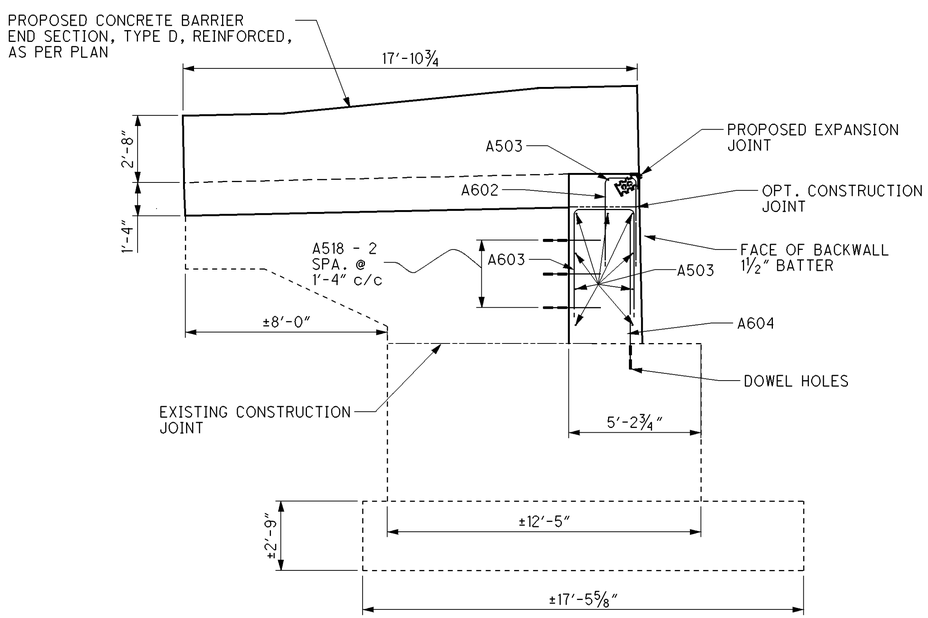

SECTION D-D

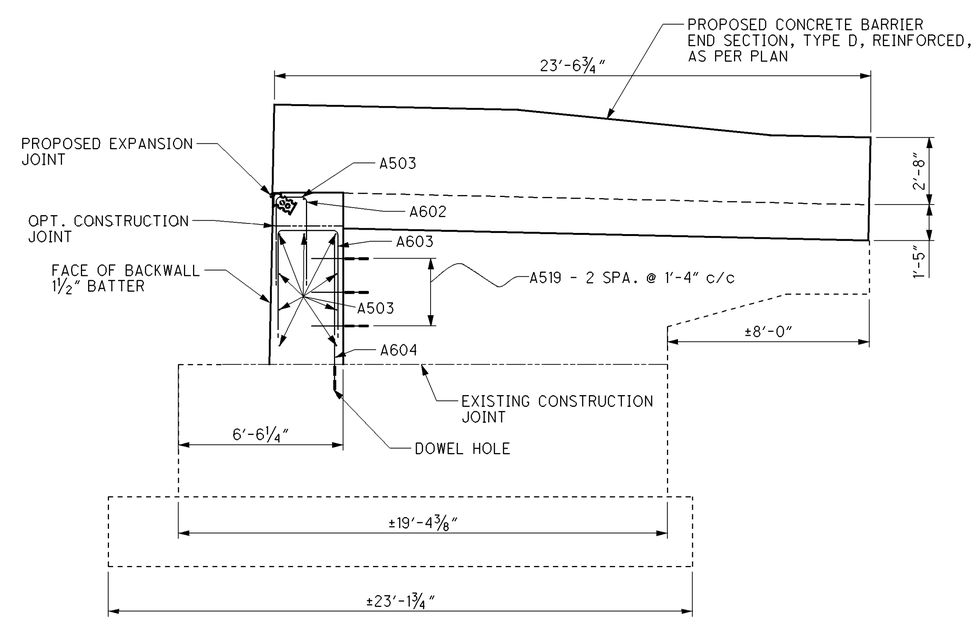

SECTION E-E

DESIGN AGENCY
STATE OF OHIO
DEPARTMENT OF TRANSPORTATION
DISTRICT 9 PRODUCTION

DESIGNED	DRAWN	REVIEWED	DATE
MRH	MRH	LAW	10/07/08
CHECKED	REVISED	STRUCTURE FILE NUMBER	
JTH		7100930	

PROPOSED FORWARD ABUTMENT SECTIONS
BRIDGE NO. ROS-23-1533 L
OVER NORFOLK SOUTHERN RAILROAD AND C.R. 235

ROS-23-12.84
PID No. 79964

I:\project\District-wide\2009PM-79964\bridge\ros-23-1533\prop_left_fwd_abut_det.dgn 07-NOV-2008 10:21AM mhauck

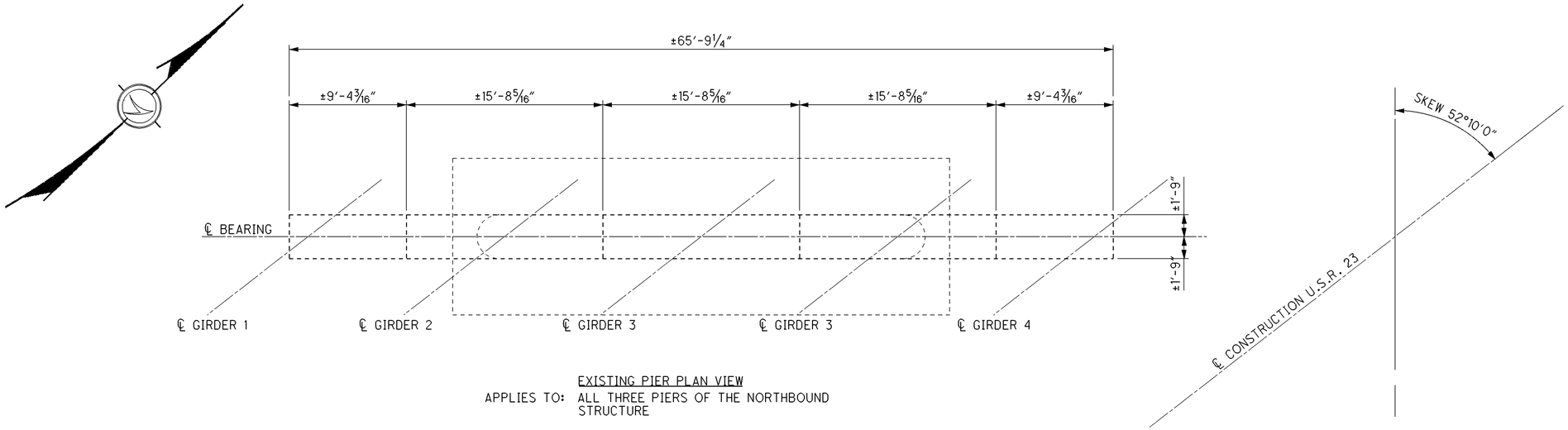

EXISTING PIER PLAN VIEW

APPLIES TO: ALL THREE PIERS OF THE NORTHBOUND STRUCTURE

SEALING OF BEAM SEATS:

IF THE BEAMS SEATS ARE SEALED WITH AN EPOXY OR NON-EPOXY SEALER PRIOR TO SETTING THE BEARINGS, DO NOT APPLY SEALER TO THE CONCRETE SURFACES UNDER THE PROPOSED BEARING LOCATIONS. IF THESE LOCATIONS ARE SEALED, REMOVE THE SEALER TO THE SATISFACTION OF THE ENGINEER PRIOR TO SETTING THE BEARINGS. THE DEPARTMENT WILL NOT PAY FOR THIS REMOVAL.

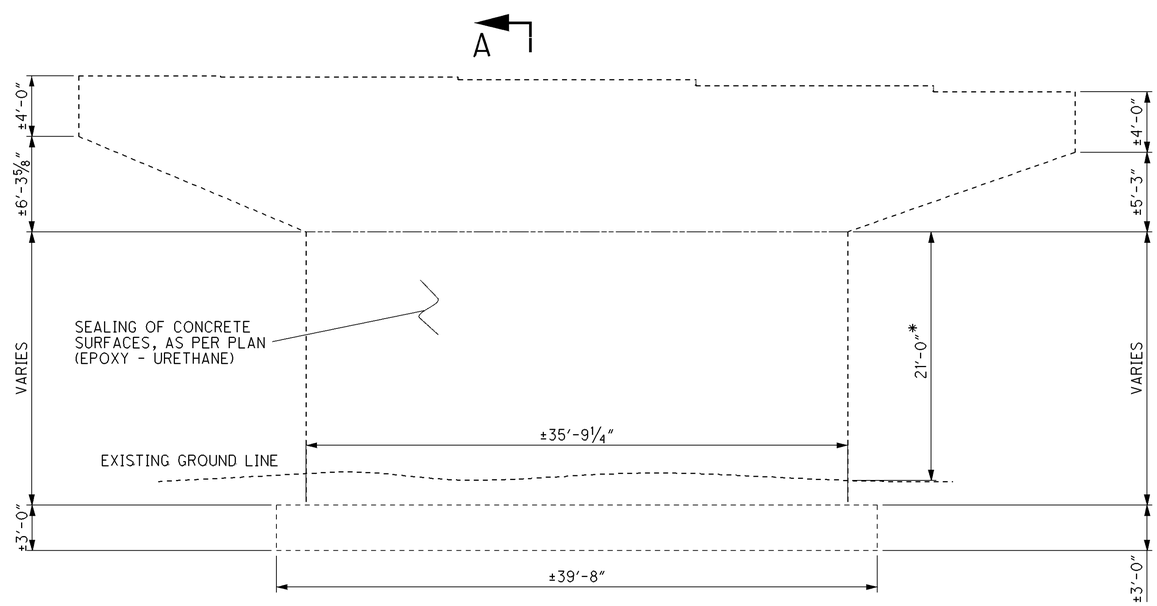

EXISTING PIER ELEVATION VIEW

APPLIES TO: ALL THREE PIERS OF THE NORTHBOUND STRUCTURE

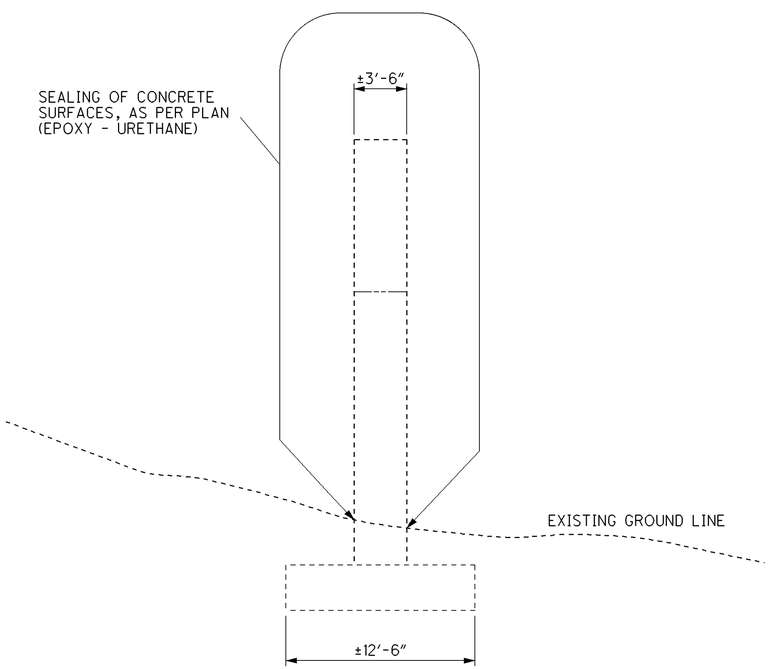

SECTION A-A

* = THE INDICATED DIMENSION IS AN AVERAGE OF ALL THREE PIERS AND WAS USED FOR ESTIMATING ITEM 513, SEALING OF CONCRETE SURFACES (EPOXY-URETHANE), AS PER PLAN

DESIGN AGENCY
STATE OF OHIO
DEPARTMENT OF TRANSPORTATION
DISTRICT 9 PRODUCTION

DESIGNED	DRAWN	REVIEWED	DATE
MRH	MRH	LAW	10/07/08
CHECKED	REVISED	STRUCTURE FILE NUMBER	
JTH		7100930	

EXISTING PIER DETAILS
BRIDGE NO. ROS-23-1533 L
OVER NORFOLK SOUTHERN RAILROAD AND C.R. 235

ROS-23-12.82
PID No. 79964

I:\project\District-wide\2009PM-79964\bridge\ros-23-1533\left_pier.dgn 07-NOV-2008 10:21AM mhauck

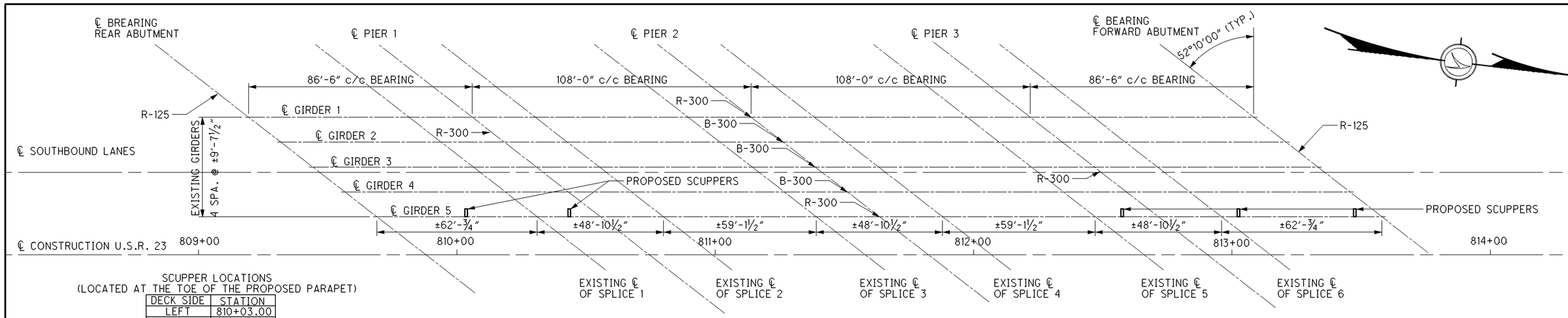

SCUPPER LOCATIONS
(LOCATED AT THE TOE OF THE PROPOSED PARAPET)

DECK SIDE	STATION
LEFT	810+03.00
LEFT	810+43.00
LEFT	812+57.00
LEFT	813+02.00
LEFT	813+47.00

NOTE: FOR ADDITIONAL INFORMATION ON THE PROPOSED SCUPPERS, REFER TO STD. BDG. DWG. GSD-1-99 AND SHEET 18/33.

EXISTING FRAMING PLAN

NOTE: THE R-125, R-300, AND B-300 REFER TO THE BEARING DEVICE LOCATED ALONG THAT CENTER LINE. FOR THE TYPE OF BEARING THAT IS REFERENCED, REFER TO STD. BDG. DWG RB-1-55

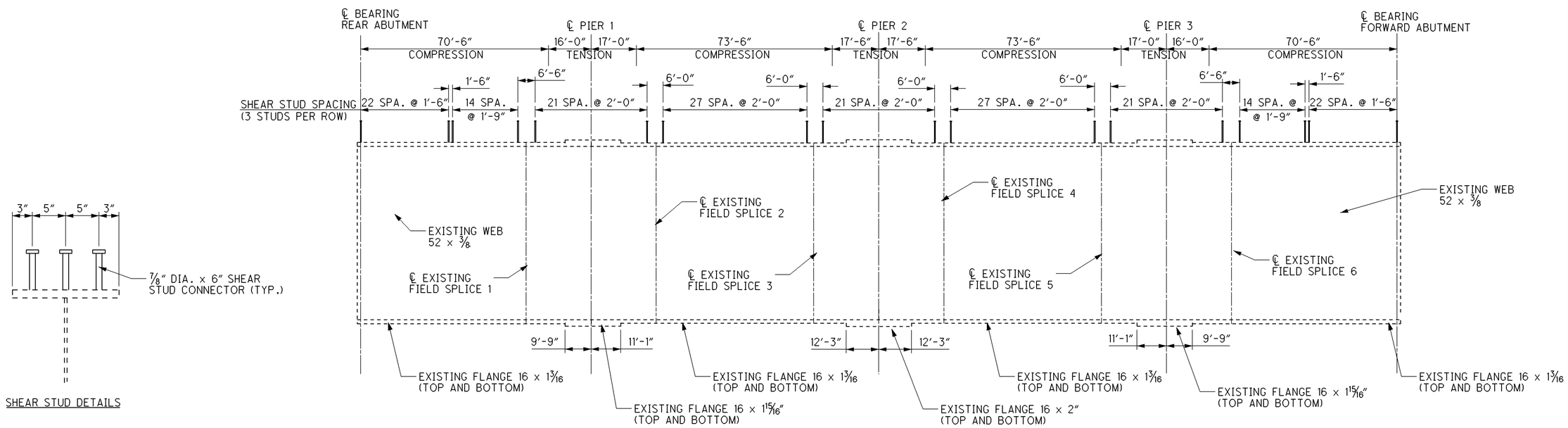

SHEAR STUD DETAILS

NOTE: WELD ATTACHMENT OF SUPPORTS FOR CONCRETE DECK FINISHING MACHINE TO AREAS OF THE FASCIA STRINGER FLANGES DESIGNATED "COMPRESSION". DO NOT WELD ATTACHMENTS TO AREAS DESIGNATED "TENSION". FILLET WELDS TO COMPRESSION FLANGES SHALL BE AT LEAST 1" FROM EDGE OF FLANGE, BE NO MORE THAN 2" LONG, AND BE AT LEAST ¼" FOR THICKNESSES UP TO ¾" OR 5/16" FOR GREATER THAN ¾" THICK.

TYPICAL GIRDER DETIALS

NOTE: ITEM 512, FEILD PAINTING STRUCTURAL STEEL SHALL INCLUDE BUT NOT LIMITED TO THE ENTIRE AREA OF THE WEB, THE ENTIRE BOTTOM FLANG, THE BOTTOM OF THE TOP FLANGE, ALL BEARINGS, CROSSFRAMES, AND STIFFENERS.

CAMBER TABLE
DEFLECTIONS ARE ALL MEASURED IN INCHES

	SPAN 1					SPAN 2				SPAN 3				SPAN 4			
	℄ REAR BEARING	¼ POINT	½ POINT	¾ POINT	℄ PIER 1	¼ POINT	½ POINT	¾ POINT	℄ PIER 2	¼ POINT	½ POINT	¾ POINT	℄ PIER 2	¼ POINT	½ POINT	¾ POINT	℄ FRWD. BEARING
DEFLECTION DUE TO WEIGHT OF STEEL	0	⅛	⅛	1/16	0	⅛	3/16	⅛	0	⅛	3/16	⅛	0	1/16	⅛	⅛	0
DEFLECTION DUE TO REMAINING DEADLOAD	0	9/16	11/16	5/16	0	⅜	¾	⅜	0	⅜	¾	⅜	0	5/16	11/16	9/16	0
REQUIRED SHOP CAMBER	0	11/16	13/16	⅜	0	½	15/16	½	0	½	15/16	½	0	⅜	13/16	11/16	0

NOTE: CAMBER IS AN ESTIMATE OF THE EXISTING GIRDERS AND IS FOR INFORMATION ONLY.
CAMBER IS THE SAME FOR ALL 5 GIRDERS.

NOTE

DESIGN AGENCY
STATE OF OHIO
DEPARTMENT OF TRANSPORTATION
DISTRICT 9 PRODUCTION

DESIGNED	DRAWN	REVIEWED	DATE
MRH	MRH	LAW	10/07/08
CHECKED	REVISED	STRUCTURE FILE NUMBER	
JTH		7100930	

EXISTING FRAMING PLAN AND STEEL DETAILS
BRIDGE NO. ROS-23-1533 L
OVER NORFOLK SOUTHERN RAILROAD AND C.R 235

ROS-23-12.84
PID No. 79964

I:\project\District-wide\2009PM-79964\bridge\ros-23-1533\left_framing_plan.dgn 07-NOV-2008 10:22AM mhauck

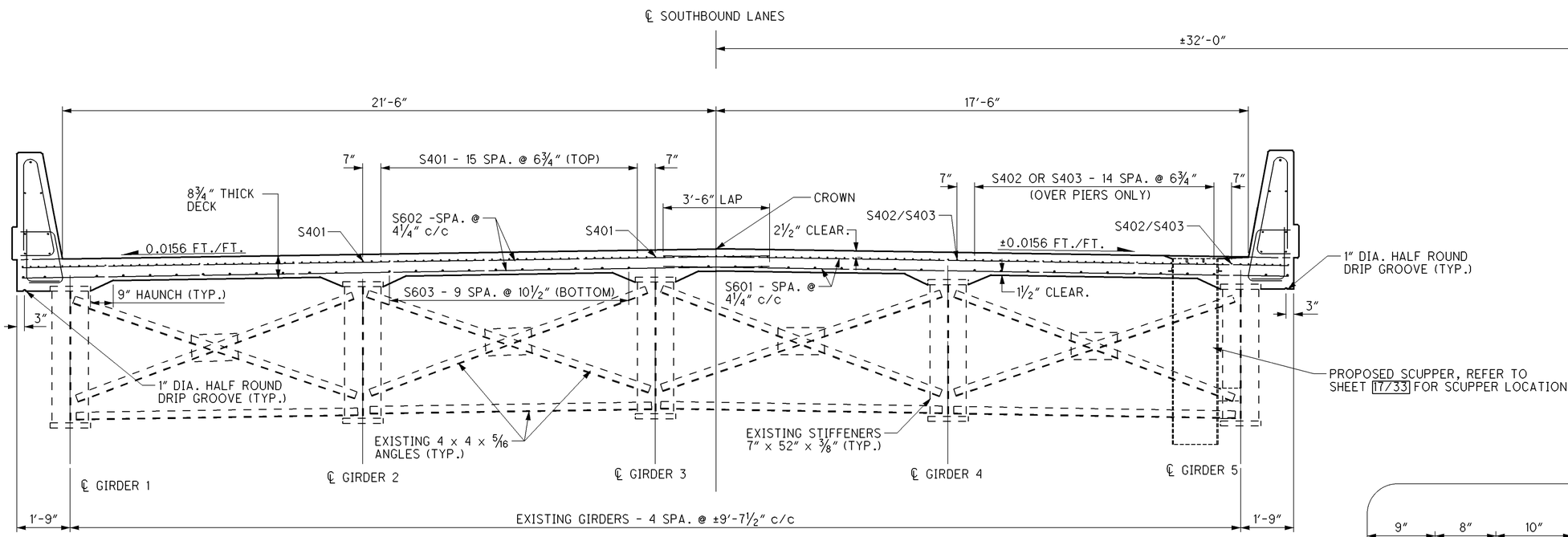

TRANSVERSE SECTION

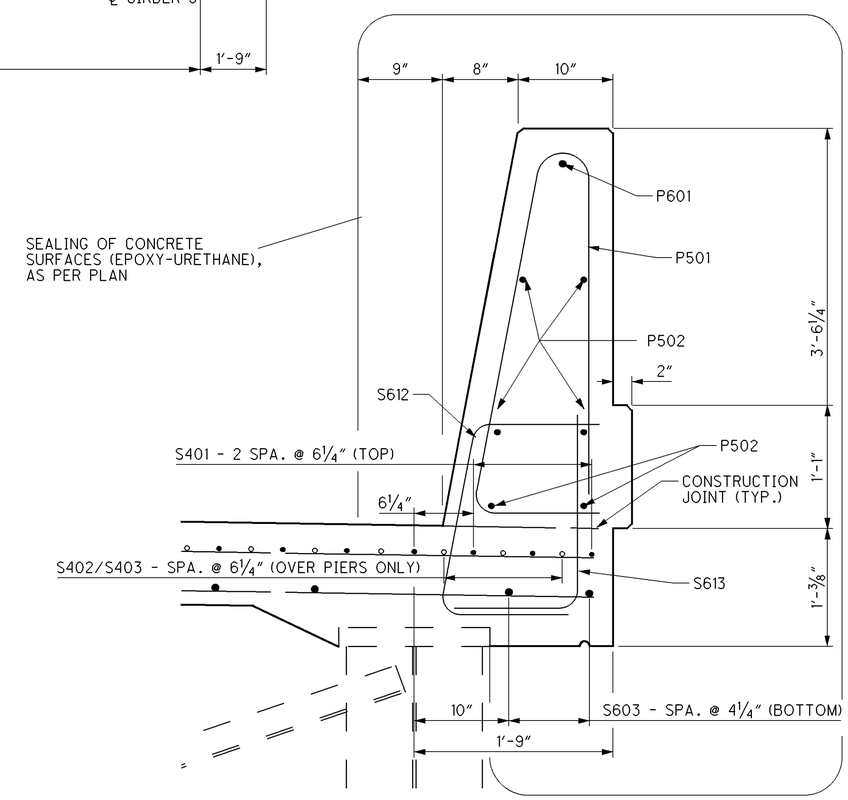

PROPOSED DECK EDGE

APPLIES TO: BOTH THE LEFT AND RIGHT EDGE OF DECK OF THE SOUTHBOUND LANES

NOTES:

DECK SLAB QUANTITY: THE ESTIMATED QUANTITY OF DECK SLAB CONCRETE IS BASED ON THE CONSTANT DECK THICKNESS, AS SHOWN PLUS THE QUANTITY OF CONCRETE THAT FORMS EACH BEAM HAUNCH. THE ESTIMATE ASSUMES A CONSTANT HAUNCH THICKNESS OF 2 INCHES PLUS THE THICKNESS OF THE TOP FLANGE AND A CONSTANT HAUNCH WIDTH OUTSIDE THE EDGE OF EACH BEAM FLANGE OF 9 INCHES. DEVIATE FROM THIS HAUNCH THICKNESS AS NECESSARY TO PLACE THE DECK SURFACE AT THE FINISHED GRADE. THE ALLOWABLE TOLERANCE FOR THE HAUNCH WIDTH OUTSIDE THE EDGE OF EACH BEAM IS ±3 INCHES.

THIS HAUNCH THICKNESS WAS MEASURED AT THE CENTERLINE OF THE BEAM, FROM THE SURFACE OF THE DECK TO THE BOTTOM OF THE TOP FLANGE MINUS THE DECK SLAB THICKNESS. THE AREA OF ALL EMBEDDED STEEL PLATES HAS BEEN DEDUCTED FROM THE HAUNCH QUANTITY IN ACCORDANCE WITH 511.24.

FOR ADDITIONAL DETIALS OF THE PROPOSED SCUPPER, REFER TO STD. BDG. DWG. GSD-1-99.
FOR ADDITIONAL DETIALS OF THE PROPOSED PARAPET, REFER TO STD. BDG. DWG. SBR-1-99.

I:\project\District-wide\2009PM-79964\bridge\ros-23-1533\left_prop_transverse.dgn 07-NOV-2008 10:24AM mhauck

DESIGN AGENCY
STATE OF OHIO
DEPARTMENT OF TRANSPORTATION
DISTRICT 9 PRODUCTION

REVIEWED LAW DATE 10/07/08
STRUCTURE FILE NUMBER 7100930
DRAWN MRH REVISED
DESIGNED MRH CHECKED JTH

PROPOSED TRANSVERSE SECTION
BRIDGE NO. ROS-23-1533 L
OVER NORFOLK SOUTHERN RAILROAD AND C.R. 235

ROS-23-12.84
PID No. 79964

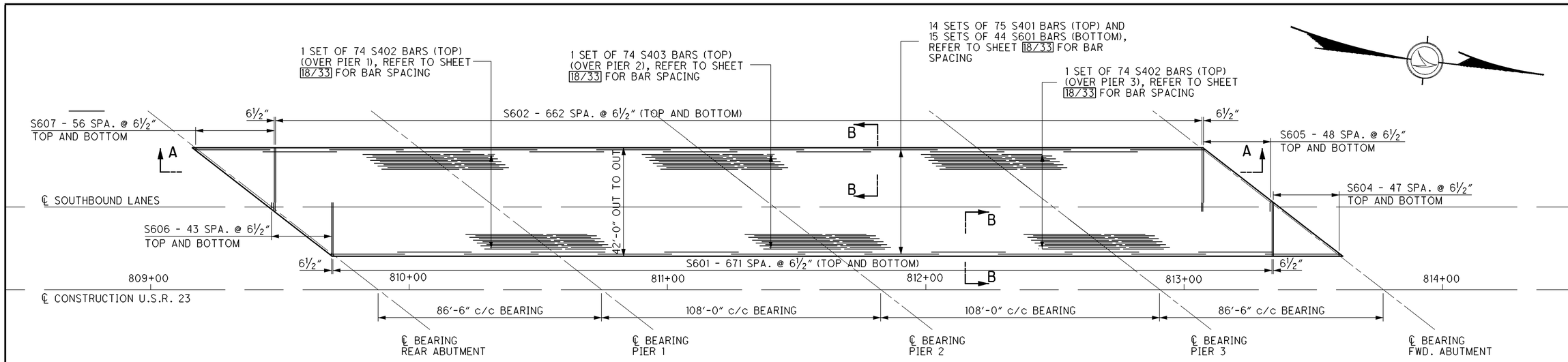

DECK PLAN VIEW

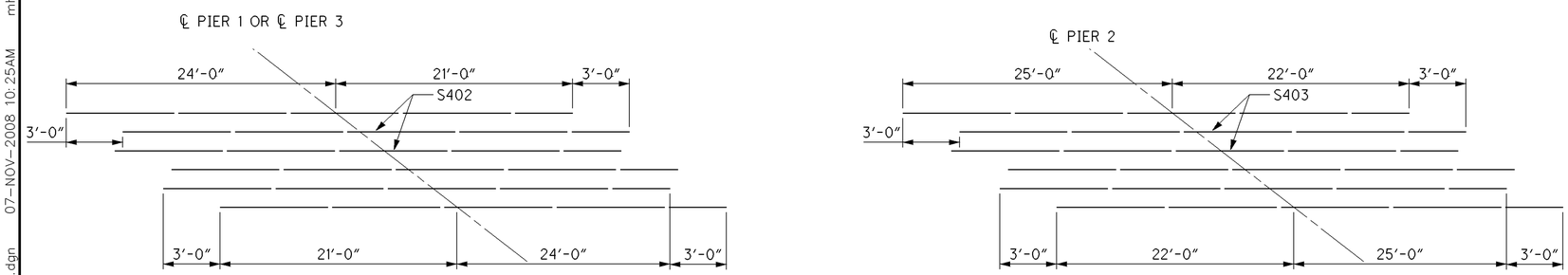

STAGGER DIAGRAMS

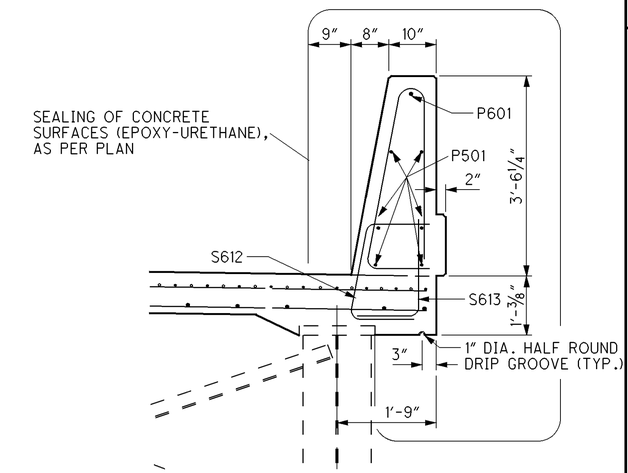

SECTION B-B
APPLIES TO: BOTH THE LEFT AND RIGHT EDGE OF DECK OF THE SOUTHBOUND LANES

REFER TO STD. BDG. DWG. SBR-1-99 FOR ADDITIONAL DETAILS

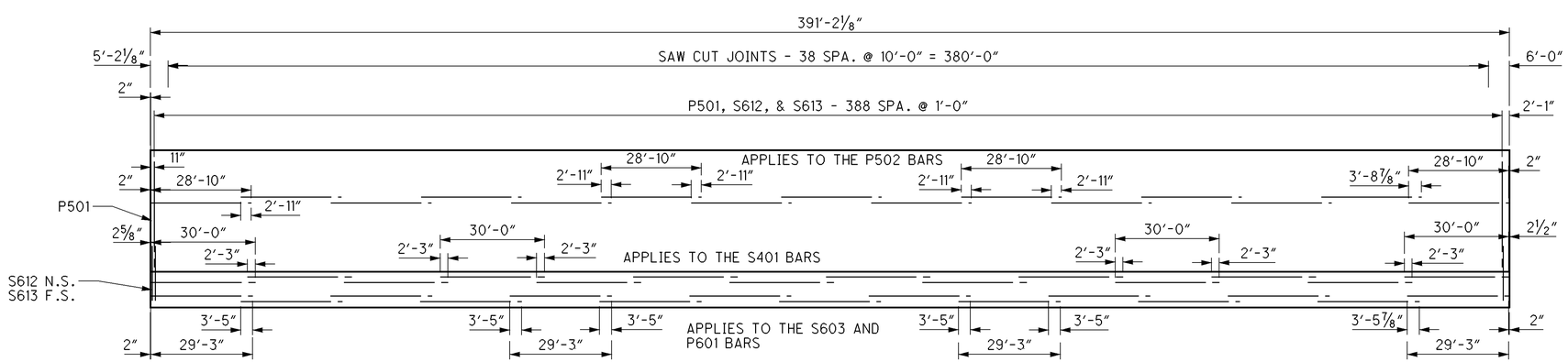

SECTION A-A
APPLIES TO: BOTH THE LEFT AND RIGHT PARAPET OF THE SOUTHBOUND LANES

NOTE: ALL MEASUREMENTS ARE ALONG THE TOE OF THE PROPOSED PARAPET

DESIGN AGENCY
STATE OF OHIO
DEPARTMENT OF TRANSPORTATION
DISTRICT 9 PRODUCTION

DESIGNED	DRAWN	REVIEWED	DATE
MRH	MRH	LAW	10/07/08
CHECKED	REVISED	STRUCTURE FILE NUMBER	
JTH		7100963O	

SUPERSTRUCTURE DETAILS

BRIDGE NO. ROS-23-1533 L
OVER NORFOLK SOUTHERN RAILROAD AND C.R 235

ROS-23-12.84
PID No. 79964

I:\project\District-wide\2009PM-79964\bridge\ros-23-1533\prop_left_deck_details.dgn 07-NOV-2008 10:25AM mhauck

SCREED ELEVATIONS

LOCATION	DESCRIPTION	℄ BRG. RA	1/8 SPAN	1/4 SPAN	3/8 SPAN	1/2 SPAN	5/8 SPAN	3/4 SPAN	7/8 SPAN	PIER 1	1/8 SPAN	1/4 SPAN	3/8 SPAN	1/2 SPAN	5/8 SPAN	3/4 SPAN	7/8 SPAN
TOE OF LEFT PARAPET	STATION	809+19.12	809+29.93	809+40.75	809+51.56	809+62.37	809+73.18	809+84.00	809+94.81	810+05.62	810+19.12	810+32.62	810+46.12	810+59.62	810+73.12	810+86.62	811+00.12
	TOP OF SLAB ELEV.	711.93	711.71	711.49	711.27	711.05	710.83	710.61	710.39	710.17	709.89	709.62	709.34	709.06	708.79	708.52	708.24
	DEFLECTION (FT)	0.00	0.03	0.06	0.07	0.06	0.05	0.03	0.02	0.00	0.01	0.04	0.07	0.08	0.07	0.04	0.01
	SCREED ELEVATION	711.93	711.74	711.55	711.34	711.11	710.88	710.64	710.41	710.17	709.90	709.66	709.41	709.14	708.86	708.56	708.25
CROWN	STATION	809+46.80	809+57.61	809+68.43	809+79.24	809+90.05	810+00.86	810+11.68	810+22.49	810+33.30	810+46.80	810+60.30	810+73.80	810+87.30	811+00.80	811+14.30	811+27.80
	TOP OF SLAB ELEV.	711.70	711.48	711.26	711.04	710.82	710.60	710.38	710.16	709.94	709.66	709.39	709.11	708.83	708.56	708.29	708.01
	DEFLECTION (FT)	0.00	0.03	0.06	0.07	0.06	0.05	0.03	0.02	0.00	0.01	0.04	0.07	0.08	0.07	0.04	0.01
	SCREED ELEVATION	711.70	711.51	711.32	711.11	710.88	710.65	710.41	710.18	709.94	709.67	709.43	709.18	708.91	708.63	708.33	708.02
TOE OF RIGHT PARAPET	STATION	809+69.33	809+80.14	809+90.96	810+01.77	810+12.58	810+23.39	810+34.21	810+45.02	810+55.83	810+69.33	810+82.83	810+96.33	811+09.83	811+23.33	811+36.83	811+50.33
	TOP OF SLAB ELEV.	710.97	710.75	710.53	710.31	710.09	709.86	709.65	709.42	709.21	708.93	708.66	708.38	708.10	707.83	707.56	707.28
	DEFLECTION (FT)	0.00	0.03	0.06	0.07	0.06	0.05	0.03	0.02	0.00	0.01	0.04	0.07	0.08	0.07	0.04	0.01
	SCREED ELEVATION	710.97	710.78	710.59	710.38	710.15	709.91	709.68	709.44	709.21	708.94	708.70	708.45	708.18	707.90	707.60	707.29

LOCATION	DESCRIPTION	PIER 2	1/8 SPAN	1/4 SPAN	3/8 SPAN	1/2 SPAN	5/8 SPAN	3/4 SPAN	7/8 SPAN	PIER 3	1/8 SPAN	1/4 SPAN	3/8 SPAN	1/2 SPAN	5/8 SPAN	3/4 SPAN	7/8 SPAN	℄ BRG. FA
TOE OF LEFT PARAPET	STATION	811+13.62	811+27.12	811+40.62	811+54.12	811+67.62	811+81.12	811+94.62	812+08.12	812+21.62	812+32.43	812+43.25	812+54.06	812+64.87	812+75.68	812+86.50	812+97.31	813+08.12
	TOP OF SLAB ELEV.	707.96	707.69	707.41	707.14	706.86	706.59	706.31	706.04	705.76	705.54	705.32	705.10	704.88	704.66	704.44	704.22	704.00
	DEFLECTION (FT)	0.00	0.01	0.04	0.07	0.08	0.07	0.04	0.01	0.00	0.02	0.03	0.05	0.06	0.07	0.06	0.03	0.00
	SCREED ELEVATION	707.96	707.70	707.45	707.21	706.94	706.66	706.35	706.05	705.76	705.56	705.35	705.15	704.94	704.73	704.50	704.25	704.00
CROWN	STATION	811+41.30	811+54.80	811+68.30	811+81.80	811+95.30	812+08.80	812+22.30	812+35.80	812+49.30	812+60.11	812+70.93	812+81.74	812+92.55	813+03.36	813+14.18	813+24.99	813+35.80
	TOP OF SLAB ELEV.	707.73	707.46	707.18	706.91	706.63	706.36	706.08	705.81	705.53	705.31	705.09	704.87	704.65	704.43	704.21	703.99	703.77
	DEFLECTION (FT)	0.00	0.01	0.04	0.07	0.08	0.07	0.04	0.01	0.00	0.02	0.03	0.05	0.06	0.07	0.06	0.03	0.00
	SCREED ELEVATION	707.73	707.47	707.22	706.98	706.71	706.43	706.12	705.82	705.53	705.33	705.12	704.92	704.71	704.50	704.27	704.02	703.77
TOE OF RIGHT PARAPET	STATION	811+63.83	811+77.33	811+90.83	812+04.33	812+17.83	812+31.33	812+44.83	812+58.33	812+71.83	812+82.64	812+93.46	813+04.27	813+15.08	813+25.89	813+36.71	813+47.52	813+58.33
	TOP OF SLAB ELEV.	707.00	706.73	706.45	706.18	705.90	705.63	705.35	705.08	704.80	704.58	704.36	704.14	703.92	703.69	703.48	703.25	703.04
	DEFLECTION (FT)	0.00	0.01	0.04	0.07	0.08	0.07	0.04	0.01	0.00	0.02	0.03	0.05	0.06	0.07	0.06	0.03	0.00
	SCREED ELEVATION	707.00	706.74	706.49	706.25	705.98	705.70	705.39	705.09	704.80	704.60	704.39	704.19	703.98	703.76	703.54	703.28	703.04

SCREED ELEVATIONS

SCREED ELEVATIONS SHOWN REPRESENT THE THEORETICAL DECK SURFACE PRIOR TO DEFLECTION CAUSED BY DECK PLACEMENT AND OTHER ANTICIPATED DEAD LOADS.

FINAL DECK SURFACE ELEVATIONS

FINAL DECK SURFACE ELEVATIONS SHOWN REPRESENT THE DECK SURFACE LOCATION AFTER ANTICIPATED DEAD LOAD DEFLECTIONS HAVE OCCURRED.

TOP OF HAUNCH ELEVATIONS

TOP OF HAUNCH ELEVATIONS SHOWN REPRESENT THE THEORETICAL LOCATION OF THE BOTTOM OF THE DECK ABOVE THE BEAM HAUNCH PRIOR TO DEFLECTION CAUSED BY DECK PLACEMENT AND OTHER ANTICIPATED DEAD LOADS.

HAUNCH ELEVATIONS

LOCATION	DESCRIPTION	℄ BRG. RA	1/8 SPAN	1/4 SPAN	3/8SPAN	1/2 SPAN	5/8 SPAN	3/4 SPAN	7/8 SPAN	PIER 1	1/8 SPAN	1/4 SPAN	3/8 SPAN	1/2 SPAN	5/8 SPAN	3/4 SPAN	7/8 SPAN
℄ OF GIRDER 1	STATION	809+19.44	809+30.25	809+41.07	809+51.88	809+62.69	809+73.50	809+84.32	809+95.13	810+05.94	810+19.44	810+32.94	810+46.44	810+59.94	810+73.44	810+86.94	811+00.44
	HAUNCH ELEVATION	711.20	711.01	710.82	710.60	710.38	710.14	709.91	709.67	709.44	709.17	708.93	708.68	708.41	708.13	707.83	707.52
℄ OF GIRDER 2	STATION	809+31.83	809+42.65	809+53.46	809+64.27	809+75.08	809+85.90	809+96.71	810+07.52	810+18.33	810+31.83	810+45.33	810+58.83	810+72.33	810+85.83	810+99.33	811+12.83
	HAUNCH ELEVATION	711.09	710.90	710.71	710.50	710.27	710.04	709.80	709.57	709.33	709.07	708.82	708.58	708.30	708.03	707.72	707.42
℄ OF GIRDER 3	STATION	809+44.23	809+55.04	809+65.86	809+76.66	809+87.48	809+98.29	810+09.11	810+19.91	810+30.73	810+44.23	810+57.73	810+71.23	810+84.73	810+98.23	811+11.73	811+25.23
	HAUNCH ELEVATION	710.99	710.80	710.61	710.40	710.17	709.94	709.70	709.47	709.23	708.97	708.72	708.48	708.20	707.92	707.62	707.31
℄ OF GIRDER 4	STATION	809+56.62	809+67.43	809+78.25	809+89.05	809+99.87	810+10.68	810+21.50	810+32.30	810+43.12	810+56.62	810+70.12	810+83.62	810+97.12	811+10.62	811+24.12	811+37.62
	HAUNCH ELEVATION	710.65	710.46	710.27	710.06	709.83	709.60	709.36	709.13	708.89	708.63	708.38	708.13	707.86	707.58	707.28	706.97
℄ OF GIRDER 5	STATION	809+69.49	809+80.30	809+91.12	810+01.93	810+12.74	810+23.55	810+34.37	810+45.18	810+55.99	810+69.49	810+82.99	810+96.49	811+09.99	811+23.49	811+36.99	811+50.49
	HAUNCH ELEVATION	710.25	710.06	709.87	709.66	709.43	709.19	708.96	708.72	708.49	708.22	707.98	707.73	707.46	707.18	706.88	706.57

LOCATION	DESCRIPTION	PIER 2	1/8 SPAN	1/4 SPAN	3/8 SPAN	1/2 SPAN	5/8 SPAN	3/4 SPAN	7/8 SPAN	PIER 3	1/8 SPAN	1/4 SPAN	3/8 SPAN	1/2 SPAN	5/8SPAN	3/4 SPAN	7/8 SPAN	℄ BRG. FA
℄ OF GIRDER 1	STATION	811+13.94	811+27.44	811+40.94	811+54.44	811+67.94	811+81.44	811+94.94	812+08.44	812+21.94	812+32.75	812+43.57	812+54.38	812+65.19	812+76.00	812+86.82	812+97.63	813+08.44
	HAUNCH ELEVATION	707.23	706.97	706.72	706.48	706.21	705.93	705.62	705.32	705.03	704.83	704.62	704.42	704.21	704.00	703.77	703.52	703.27
℄ OF GIRDER 2	STATION	811+26.33	811+39.83	811+53.33	811+66.83	811+80.33	811+93.83	812+07.33	812+20.83	812+34.33	812+45.15	812+55.96	812+66.77	812+77.58	812+88.40	812+99.21	813+10.02	813+20.83
	HAUNCH ELEVATION	707.12	706.86	706.61	706.37	706.10	705.82	705.51	705.21	704.92	704.72	704.51	704.31	704.10	703.89	703.66	703.41	703.16
℄ OF GIRDER 3	STATION	811+38.73	811+52.23	811+65.73	811+79.23	811+92.73	812+06.23	812+19.73	812+33.23	812+46.73	812+57.54	812+68.36	812+79.16	812+89.98	813+00.79	813+11.61	813+22.41	813+33.23
	HAUNCH ELEVATION	707.02	706.76	706.51	706.27	706.00	705.72	705.41	705.11	704.82	704.62	704.41	704.21	704.00	703.79	703.56	703.31	703.06
℄ OF GIRDER 4	STATION	811+51.12	811+64.62	811+78.12	811+91.62	812+05.12	812+18.62	812+32.12	812+45.62	812+59.12	812+69.93	812+80.75	812+91.55	813+02.37	813+13.18	813+24.00	813+34.80	813+45.62
	HAUNCH ELEVATION	706.68	706.42	706.17	705.93	705.66	705.38	705.07	704.77	704.48	704.28	704.07	703.87	703.66	703.45	703.22	702.97	702.72
℄ OF GIRDER 5	STATION	811+63.99	811+77.49	811+90.99	812+04.49	812+17.99	812+31.49	812+44.99	812+58.49	812+71.99	812+82.80	812+93.62	813+04.43	813+15.24	813+26.05	813+36.87	813+47.68	813+58.49
	HAUNCH ELEVATION	706.28	706.02	705.77	705.53	705.26	704.98	704.67	704.37	704.08	703.88	703.67	703.47	703.26	703.05	702.82	702.57	702.32

NOTE: FOR SCREED AND HAUNCH LOCATIONS, REFER TO SHEET 21/33

DESIGN AGENCY
STATE OF OHIO
DEPARTMENT OF TRANSPORTATION
DISTRICT 9 PRODUCTION

REVIEWED LAW DATE 10/07/08
STRUCTURE FILE NUMBER 7100930
DRAWN MRH REVISED
DESIGNED MRH CHECKED JTH

SCREED AND HAUNCH ELEVATIONS
BRIDGE NO. ROS-23-1533 L
OVER NORFOLK SOUTHERN RAILROAD AND C.R. 235

ROS-23-12.84
PID No. 79964

i:\project\District-wide\2009PM-79964\bridge\ros-23-1533\left_elevations.dgn 07-NOV-2008 10:26AM mhauck

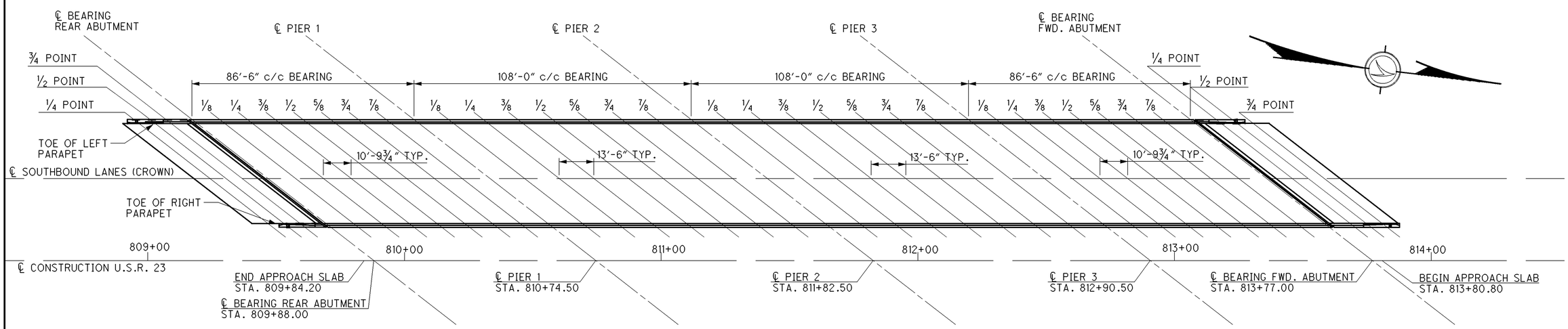

PROPOSED PLAN VIEW

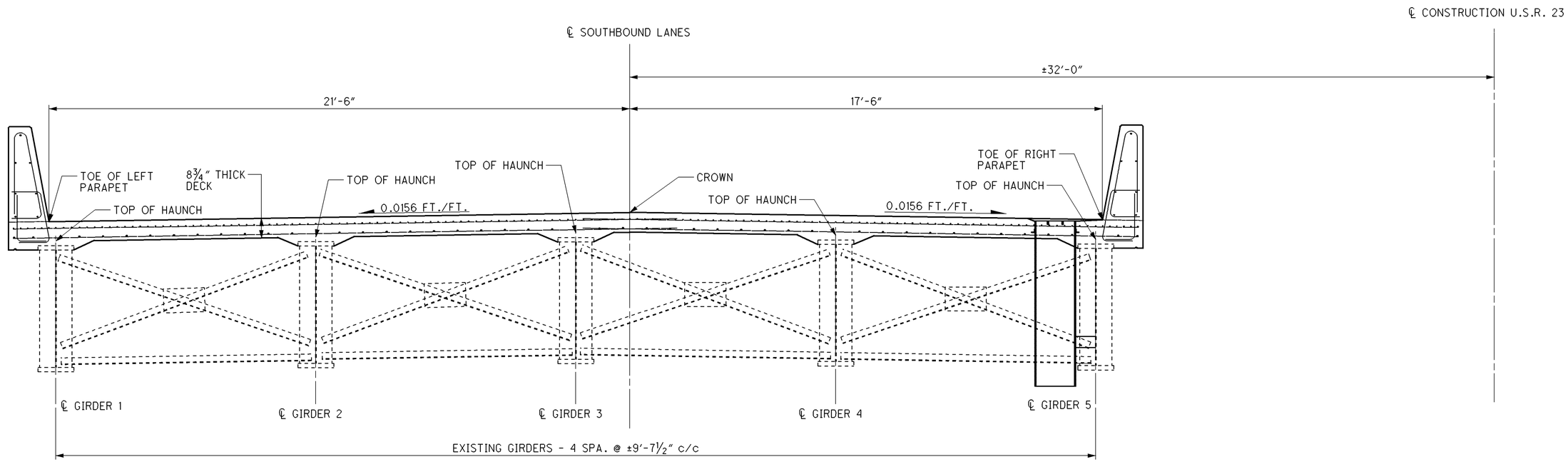

PROPOSED TRANSVERSE SECTION

NOTE: REFER TO SHEET 20/33 FOR SCREED AND TOP OF HAUNCH ELEVATIONS.

PROPOSED APPROACH SLAB ELEVATIONS

LOCATION	DESCRIPTION	REAR APPROACH SLAB					FORWARD APPRAOCH SLAB				
		BEGIN APPROACH SLAB	1/4 POINT	1/2 POINT	3/4 POINT	END APPROACH SLAB	BEGIN APPROACH SLAB	1/4 POINT	1/2 POINT	3/4 POINT	END APPROACH SLAB
TOE OF LEFT	STATION	808+90.31	808+96.56	809+02.81	809+09.06	809+15.31	813+11.92	813+18.17	813+24.42	813+30.67	813+36.92
	TOP OF SLAB ELEV.	712.52	712.39	712.26	712.14	712.01	703.92	703.79	703.66	703.54	703.41
CROWN	STATION	809+17.99	809+24.24	809+30.49	809+36.74	809+42.99	813+39.60	813+45.85	813+52.10	813+58.35	813+64.60
	TOP OF SLAB ELEV.	712.29	712.16	712.04	711.91	711.78	703.69	703.56	703.44	703.31	703.18
TOE OF RIGH	STATION	809+40.52	809+46.77	809+53.02	809+59.27	809+65.52	813+62.13	813+68.38	813+74.63	813+80.88	813+87.13
	TOP OF SLAB ELEV.	711.56	711.43	711.30	711.17	711.05	702.96	702.83	702.70	702.57	702.45

BENCH MARK #1

CENTERLINE MONUMENT: STA. 809+50.00
ELEV. = 710.256

BENCH MARK #2

CENTERLINE MONUMENT: STA. 814+15.00
ELEV. = 701.186

DESIGN AGENCY
STATE OF OHIO
DEPARTMENT OF TRANSPORTATION
DISTRICT 9 PRODUCTION

DESIGNED	DRAWN	REVIEWED	DATE
MRH	MRH	LAW	10/07/08
CHECKED	REVISED	STRUCTURE FILE NUMBER	
JTH		7100930	

PROPOSED APPROACH SLAB ELEVATIONS AND SCREED LOCATIONS

BRIDGE NO. ROS-23-1533 L
OVER NORFOLK SOUTHERN RAILROAD AND C.R. 235

ROS-23-12.84
PID No. 79964

I:\project\District-wide\2009PM-79964\bridge\ros-23-1533\left_eleve_location.dgn 07-NOV-2008 10:27AM mhauck

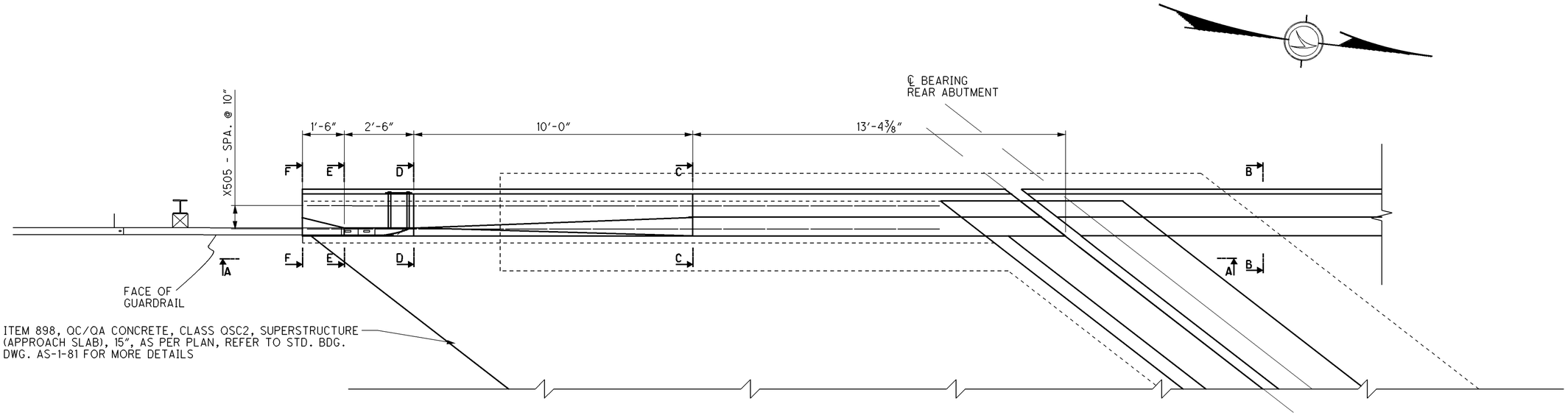

TYPICAL CONCRETE BARRIER END SECTION, TYPE D, REINFORCED, AS PER PLAN
END SECTION A - FOR LOCATION REFER TO SHEET 1/33
FOR SECTIONS B-B, C-C, D-D, E-E, AND F-F REFER TO SHEET 23/33

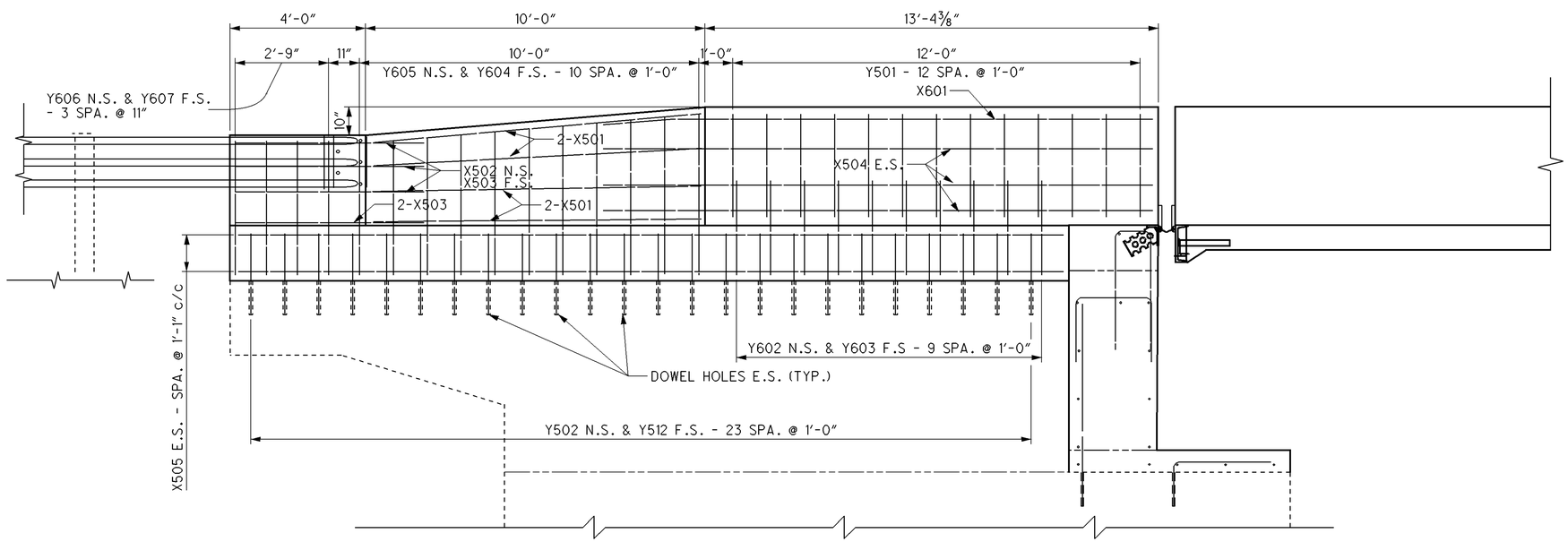

SECTION A-A

NOTE: E.S. = EACH SIDE
F.S. = FAR SIDE
N.S. = NEAR SIDE

DOWEL HOLES SHALL ALLOW FOR AN EMBEDMENT DEPTH OF 1'-0" MIN. FOR THE PROPOSED REINFORCING STEEL.

DESIGN AGENCY
STATE OF OHIO
DEPARTMENT OF TRANSPORTATION
DISTRICT 9 PRODUCTION

DESIGNED	DRAWN	REVIEWED	DATE
MRH	MRH	LAW	10/07/08
CHECKED	REVISED	STRUCTURE FILE NUMBER	
JTH		7100930	

CONCRETE BARRIER END SECTION, TYPE D, REINFORCED, AS PER PLAN

BRIDGE NO. ROS-23-1533 L OVER NORFOLK SOUTHERN RAILROAD AND C.R. 235

ROS-23-12.84
PID No. 79964

I:\project\District-wide\2009PM-79964\bridge\ros-23-1533l\transistion_a.dgn 07-NOV-2008 10:28AM mhauck

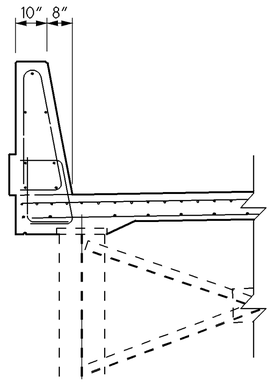

SECTION B-B

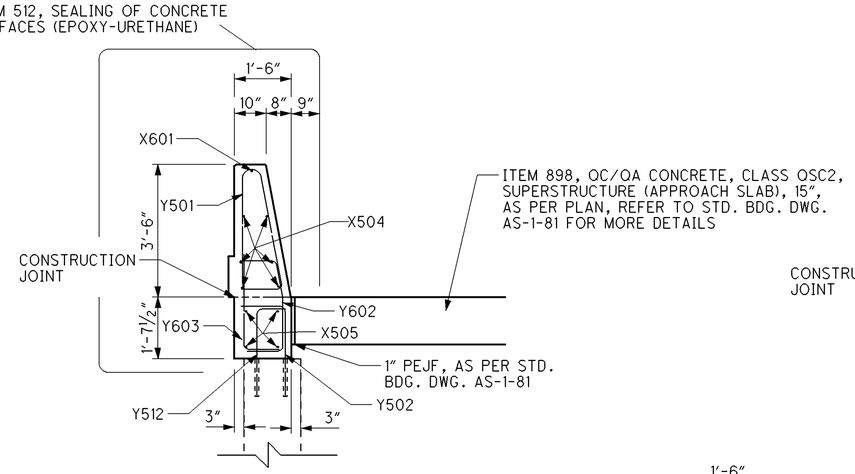

SECTION C-C

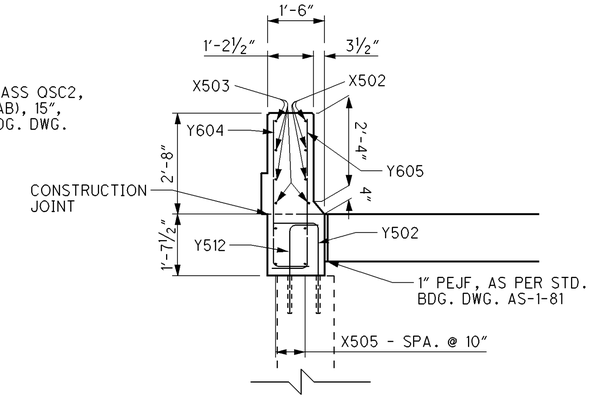

SECTION D-D

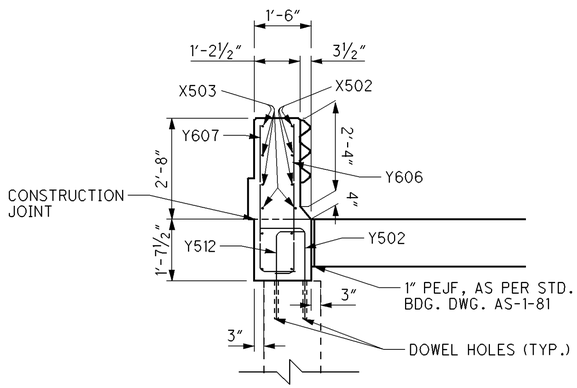

SECTION E-E

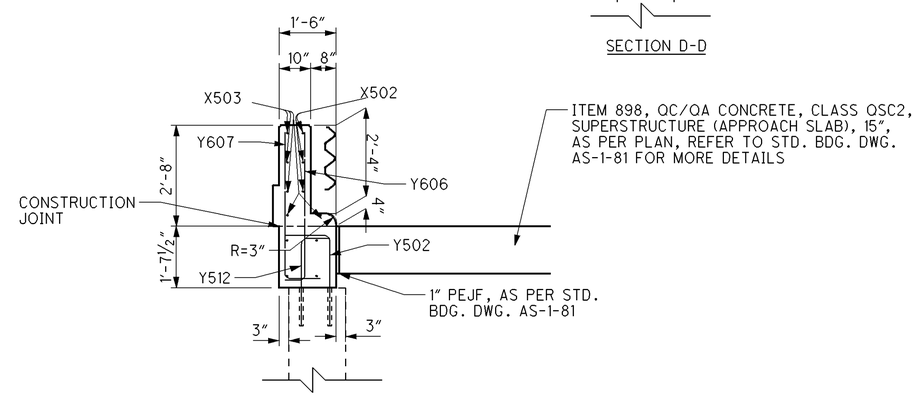

SECTION F-F

REINFORCING STEEL LIST*

MARK	NUMBER	LENGTH	SHAPE	A	B	C	D
X501	8	10′-0″	STR.				
X502	3	5′-6″	TYPE 2	1′-8″	2′-5″	1′-5″	
X503	5	5′-6″	STR.				
X504	6	16′-2″	STR.				
X505	4	22′-8″	STR.				
Y501	13	7′-5″	TYPE 1	1′-1″	3′-2″	3′-0″	
Y502	24	3′-6″″	TYPE 4	1′-2″	2′-5″		
Y512	24	3′-1″	TYPE 4	9″	2′-5″		
X601	1	16′-2″	STR.	FIELD BEND IF NECESSARY			
Y602	10	4′-9″	TYPE 3	1′-1″	1′-4″	1′-5″	
Y603	10	3′-8″	TYPE 4	1′-1″	2′-9″		
Y604	1 SER. 11 BARS	4′-10″ TO 5′-8″	TYPE 4	1′-1″	3′-11″ TO 4′-9″	1″ INC.	
Y605	1 SER. 11 BARS	4′-10″ TO 5′-8″	TYPE 5	1′-1″	1′-5″	2′-6″ TO 3′-4″	1″ INC.
Y606	4	4′-3″	TYPE 4	6″	3′-11″		
Y607	4	4′-10″	TYPE 4	1′-1″	3′-11″		

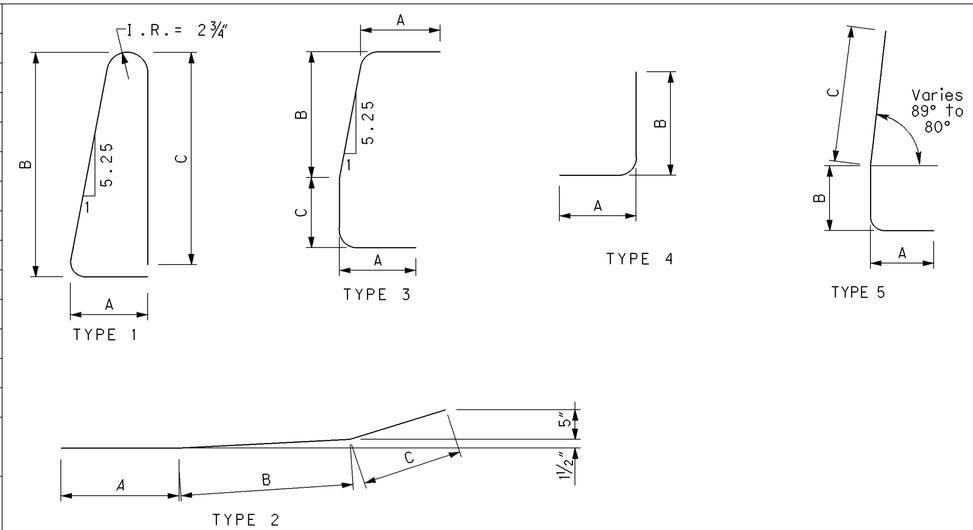

NOTE: E.S. = EACH SIDE
F.S. = FAR SIDE
N.S. = NEAR SIDE
PEJF = PREFORMED ELASTOMERIC JOINT FILLER

DOWEL HOLES SHALL ALLOW FOR AN EMBEDMENT DEPTH OF 1′-0″ MIN. FOR THE PROPOSED REINFORCING STEEL.

DESIGN AGENCY
STATE OF OHIO
DEPARTMENT OF TRANSPORTATION
DISTRICT 9 PRODUCTION

DESIGNED	DRAWN	REVIEWED	DATE
MRH	MRH	LAW	10/07/08
CHECKED	REVISED	STRUCTURE FILE NUMBER	
JTH		7100930	

CONCRETE BARRIER END SECTION, TYPE D, REINFORCED, AS PER PLAN

BRIDGE NO. ROS-23-1533 L OVER NORFOLK SOUTHERN RAILRAOD AND C.R. 235

ROS-23-12.82
PID No. 79964

I:\project\District-wide\2009PM-79964\bridge\ros-23-1533\transition_a.dgn 07-NOV-2008 10:29AM mhauck

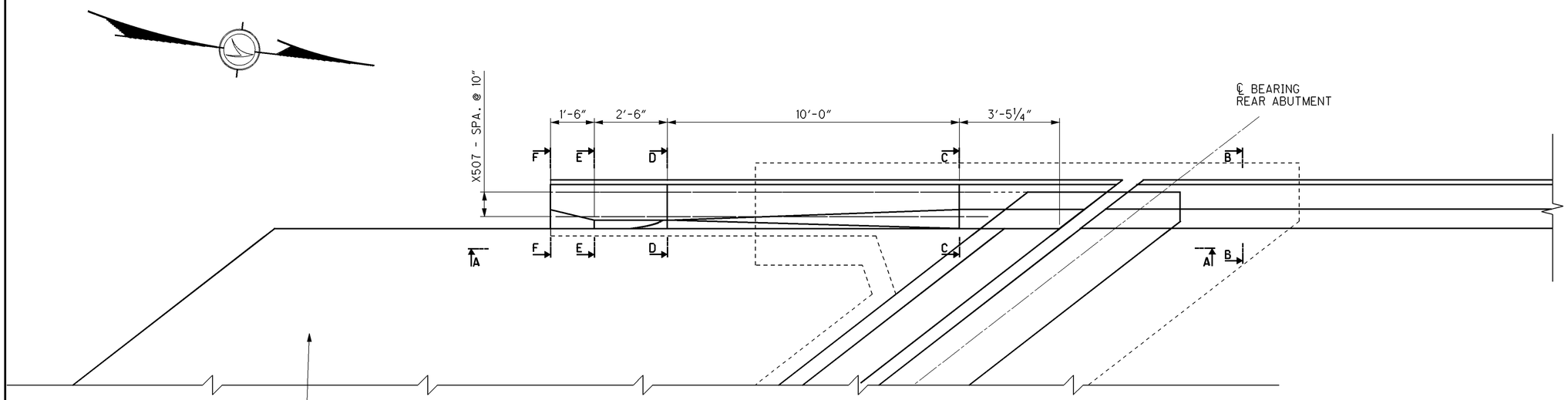

TYPICAL CONCRETE BARRIER END SECTION, TYPE D, REINFORCED, AS PER PLAN
END SECTION B - FOR LOCATION REFER TO SHEET 1/33
FOR SECTIONS B-B, C-C, D-D, E-E, AND F-F REFER TO SHEET 25/33

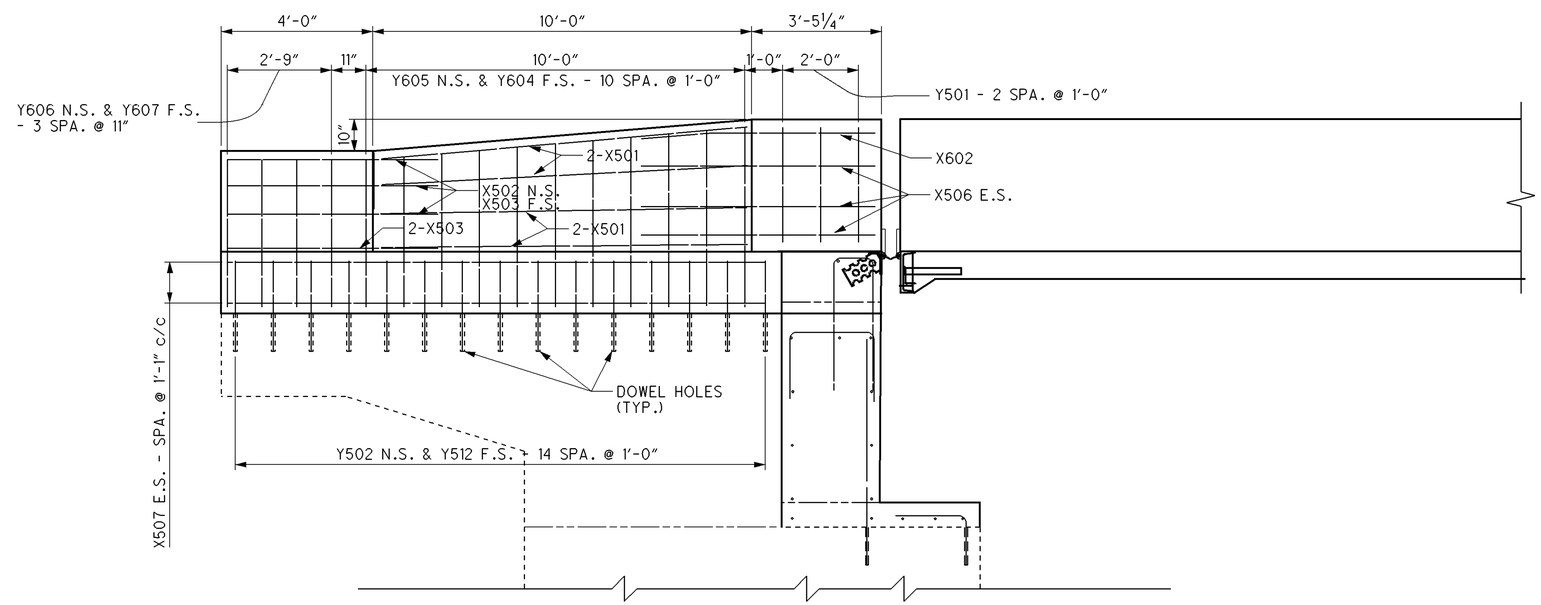

SECTION A-A

NOTE: E.S. = EACH SIDE
F.S. = FAR SIDE
N.S. = NEAR SIDE

DOWEL HOLES SHALL ALLOW FOR AN EMBEDMENT DEPTH OF 1'-0" MIN. FOR THE PROPOSED REINFORCING STEEL.

DESIGN AGENCY
STATE OF OHIO
DEPARTMENT OF TRANSPORTATION
DISTRICT 9 PRODUCTION

DESIGNED	DRAWN	REVIEWED	DATE
MRH	MRH	LAW	10/07/08
CHECKED	REVISED	STRUCTURE FILE NUMBER	
JTH		7100930	

CONCRETE BARRIER END SECTION, TYPE D, REINFORCED, AS PER PLAN

BRIDGE NO. ROS-23-1533 L OVER NORFOLK SOUTHERN RAILROAD AND C.R. 235

ROS-23-12.84
PID No. 79964

I:\project\District-wide\2009PM-79964\bridge\ros-23-1533l\transistion_b.dgn 07-NOV-2008 10:29AM mhauck

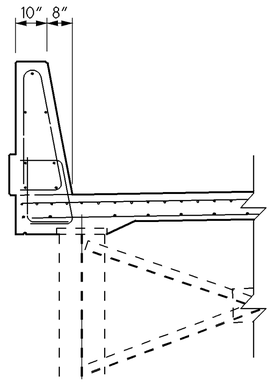

SECTION B-B

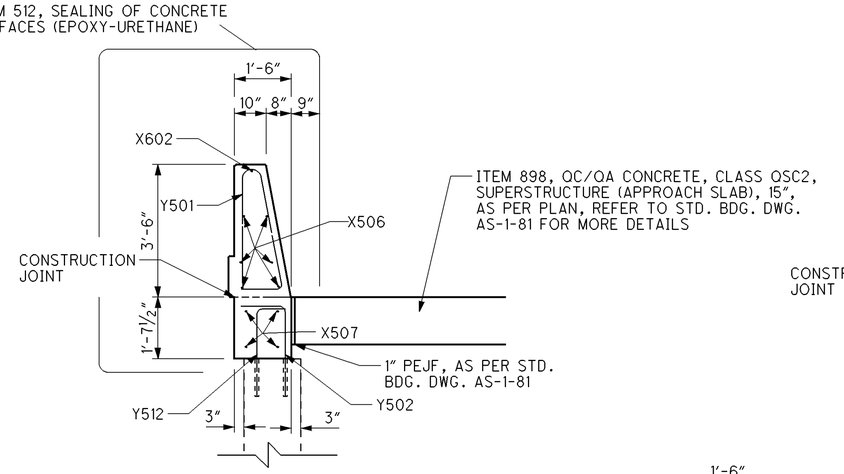

SECTION C-C

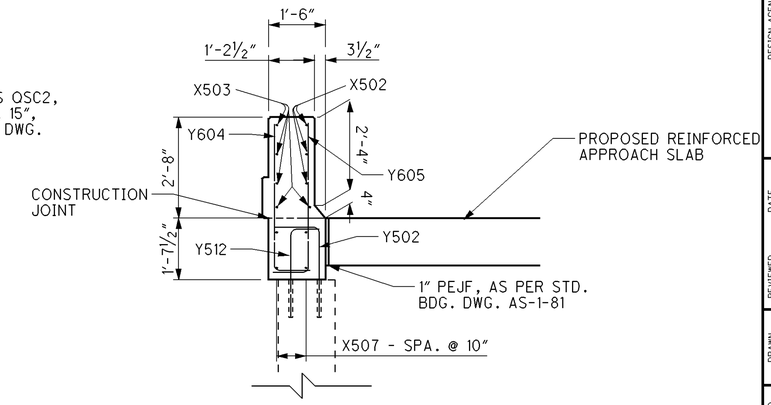

SECTION D-D

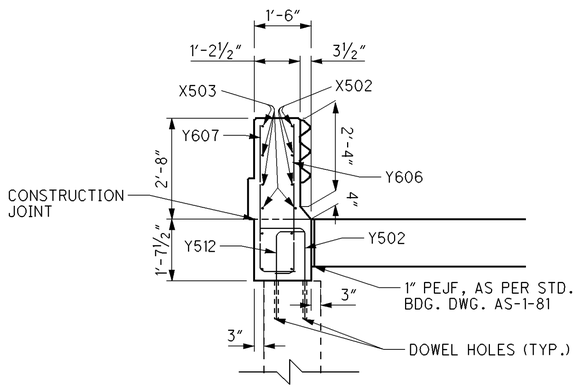

SECTION E-E

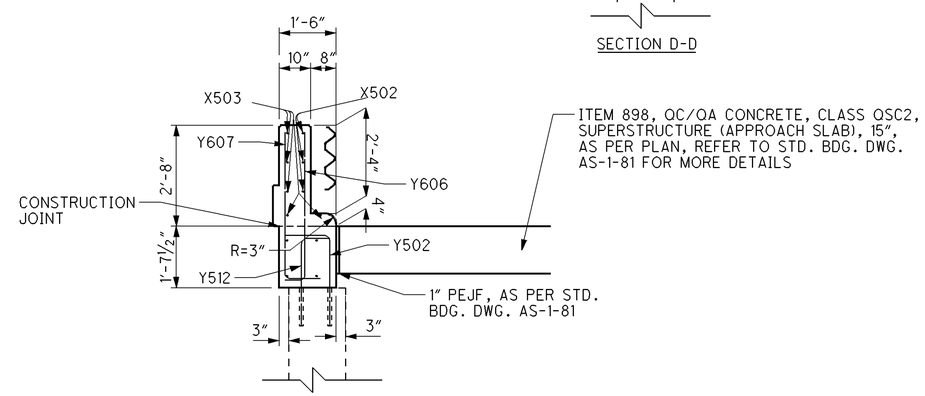

SECTION F-F

REINFORCING STEEL LIST*

MARK	NUMBER	LENGTH	SHAPE	A	B	C	D
X501	8	10′-0″	STR.				
X502	3	5′-6″	TYPE 2	1′-8″	2′-5″	1′-5″	
X503	5	5′-6″	STR.				
X506	6	6′-2″	STR.				
X507	4	14′-10″	STR.				
Y501	13	7′-5″	TYPE 1	1′-1″	3′-2″	3′-0″	
Y502	15	3′-6″	TYPE 4	1′-2″	2′-5″		
Y512	15	3′-1″	TYPE 4	9″	2′-5″		
X602	1	6′-2″	STR.	FIELD BEND IF NECESSARY			
Y604	1 SER. 11 BARS	4′-10″ TO 5′-8″	TYPE 4	1′-1″	3′-11″ TO 4′-9″	1″ INC.	
Y605	1 SER. 11 BARS	4′-10″ TO 5′-8″	TYPE 5	1′-1″	1′-5″	2′-6″ TO 3′-4″	1″ INC.
Y606	4	4′-3″	TYPE 4	6″	3′-11″		
Y607	4	4′-10″	TYPE 4	1′-1″	3′-11″		

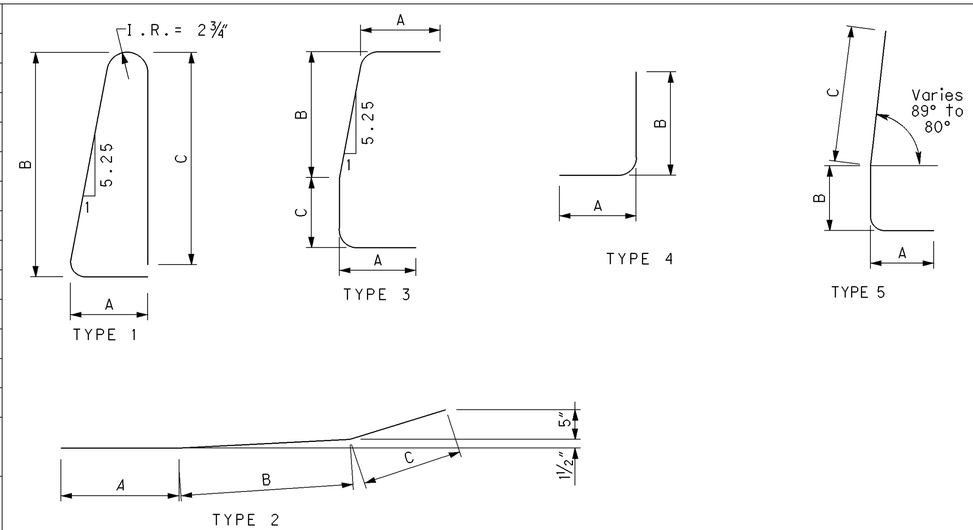

NOTE: E.S. = EACH SIDE
F.S. = FAR SIDE
N.S. = NEAR SIDE
PEJF = PREFORMED ELASTOMERIC JOINT FILLER

DOWEL HOLES SHALL ALLOW FOR AN EMBEDMENT DEPTH OF 1′-0″ MIN. FOR THE PROPOSED REINFORCING STEEL.

DESIGN AGENCY
STATE OF OHIO
DEPARTMENT OF TRANSPORTATION
DISTRICT 9 PRODUCTION

DESIGNED	DRAWN	REVIEWED	DATE
MRH	MRH	LAW	10/07/08
CHECKED	REVISED	STRUCTURE FILE NUMBER	
JTH		7100930	

CONCRETE BARRIER END SECTION, TYPE D, REINFORCED, AS PER PLAN

BRIDGE NO. ROS-23-1533 L OVER NORFOLK SOUTHERN RAILROAD AND C.R. 235

ROS-23-12.84
PID No. 79964

I:\project\District-wide\2009PM-79964\bridge\ros-23-1533\transition_b.dgn 07-NOV-2008 10:29AM mhauck

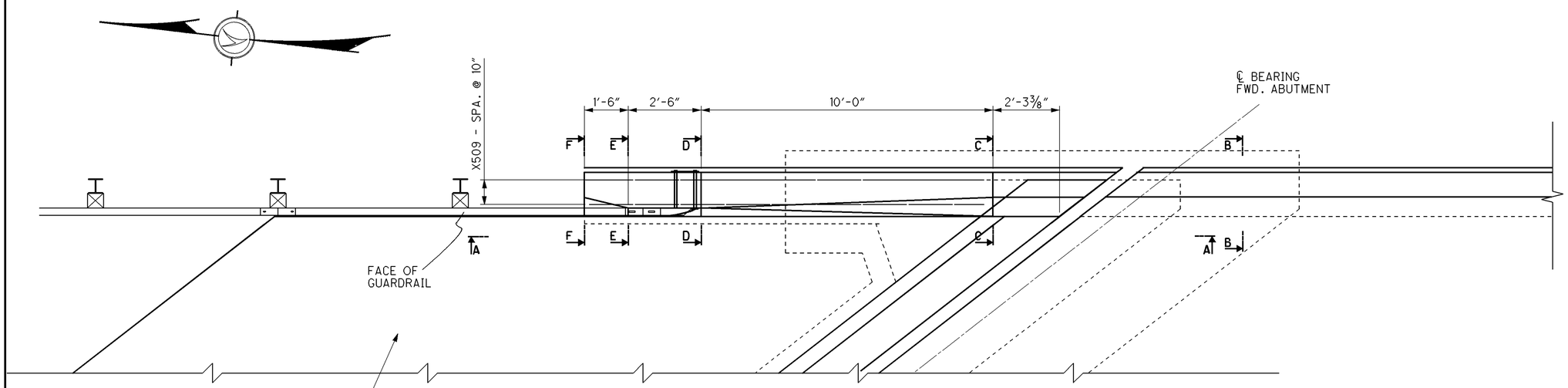

ITEM 898, QC/QA CONCRETE, CLASS QSC2, SUPERSTRUCTURE (APPROACH SLAB), 15", AS PER PLAN, REFER TO STD. BDG. DWG. AS-1-81 FOR MORE DETAILS

TYPICAL CONCRETE BARRIER END SECTION, TYPE D, REINFORCED, AS PER PLAN
END SECTION C - FOR LOCATION REFER TO SHEET 1/33
FOR SECTIONS B-B, C-C, D-D, E-E, AND F-F REFER TO SHEET 27/33

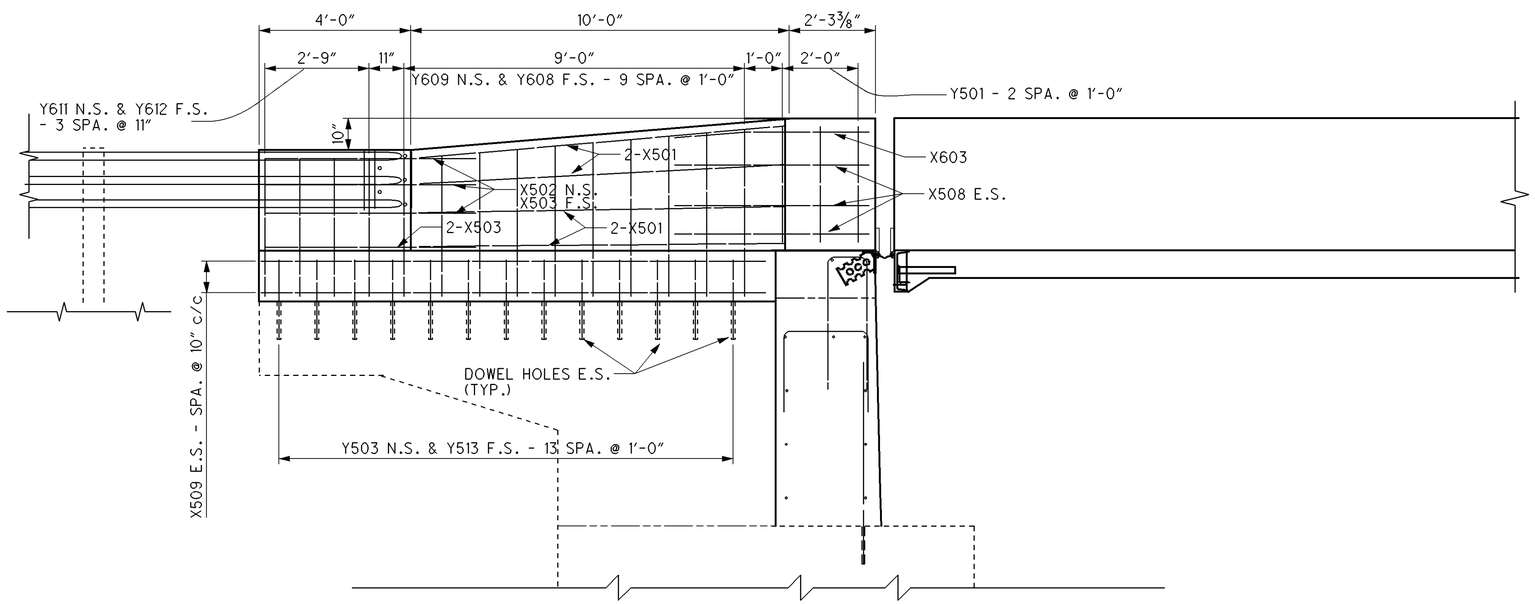

SECTION A-A

NOTE: E.S. = EACH SIDE
F.S. = FAR SIDE
N.S. = NEAR SIDE

DOWEL HOLES SHALL ALLOW FOR AN EMBEDMENT DEPTH OF 1'-0" MIN. FOR THE PROPOSED REINFORCING STEEL.

DESIGN AGENCY
STATE OF OHIO
DEPARTMENT OF TRANSPORTATION
DISTRICT 9 PRODUCTION

DESIGNED	DRAWN	REVIEWED	DATE
MRH	MRH	LAW	10/07/08
CHECKED	REVISED	STRUCTURE FILE NUMBER	
JTH		7100930	

CONCRETE BARRIER END SECTION, TYPE D, REINFORCED, AS PER PLAN

BRIDGE NO. ROS-23-1533 L OVER NORFOLK SOUTHERN RAILROAD AND C.R. 235

ROS-23-12.84
PID No. 79964

I:\project\District-wide\2009PM-79964\bridge\ros-23-1533\transistion_c.dgn 07-NOV-2008 10:30AM mhauck

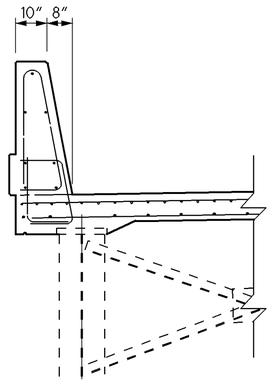

SECTION B-B

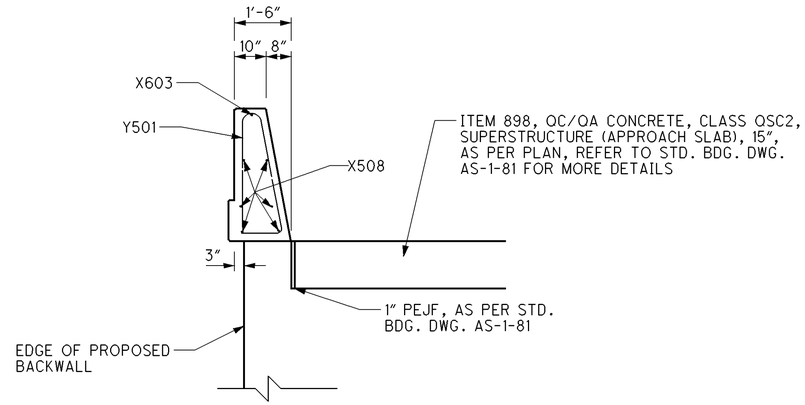

SECTION C-C

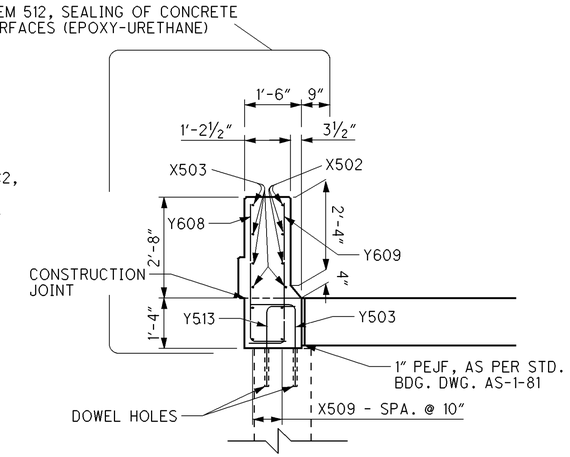

SECTION D-D

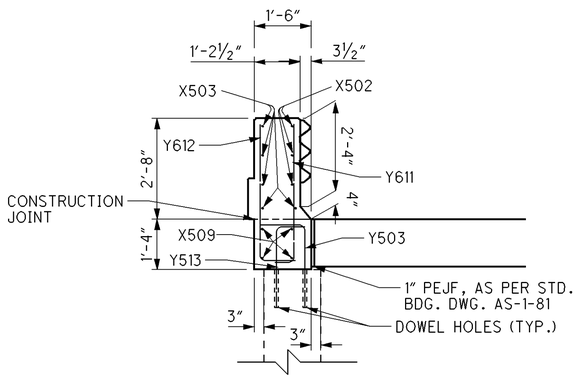

SECTION E-E

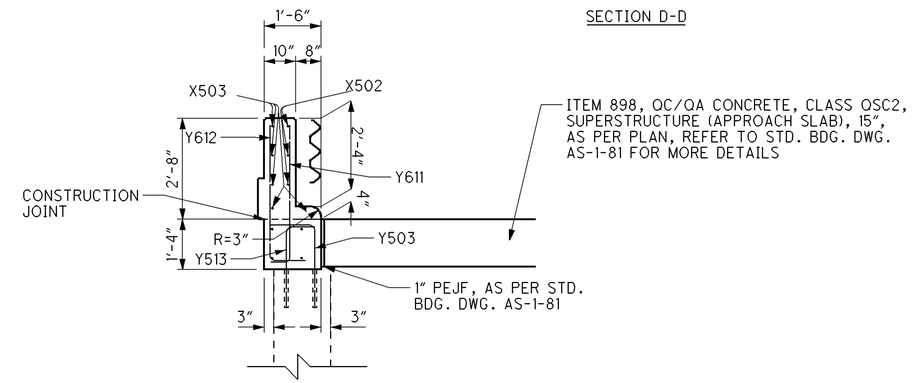

SECTION F-F

REINFORCING STEEL LIST*

MARK	NUMBER	LENGTH	SHAPE	A	B	C	D
X501	8	10′-0″	STR.				
X502	3	5′-6″	TYPE 2	1′-8″	2′-5″	1′-5″	
X503	5	5′-6″	STR.				
X508	6	5′-0″	STR.				
X509	4	13′-6″	STR.				
Y501	3	7′-5″	TYPE 1	1′-1″	3′-2″	3′-0″	
Y503	14	3′-3″	TYPE 4	1′-2″	2′-2″		
Y513	14	2′-10″	STR.	9″	2′-2″		
X603	1	5′-0″	STR.	FIELD BEND IF NECESSARY			
Y608	1 SER. 10 BARS	4′-7″ TO 5′-4″	TYPE 4	1′-1″	3′-8″ TO 4′-5″	1″ INC.	
Y609	1 SER. 10 BARS	4′-7″ TO 5′-4″	TYPE 5	1′-1″	1′-2″	2′-6″ TO 3′-3″	1″ INC.
Y611	4	4′-0″	TYPE 4	6″	3′-8″		
Y612	4	4′-7″	TYPE 4	1′-1″	3′-8″		

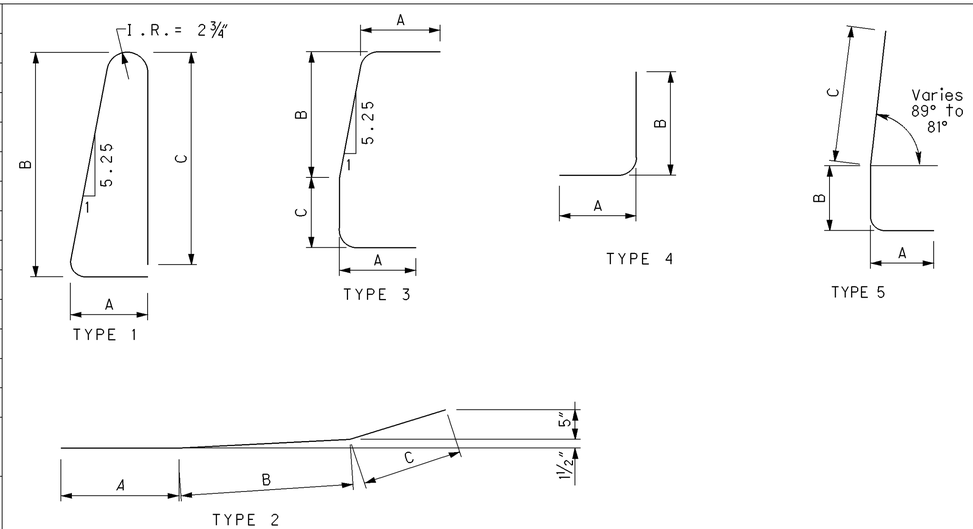

NOTE: E.S. = EACH SIDE
F.S. = FAR SIDE
N.S. = NEAR SIDE
PEJF = PREFORMED ELASTOMERIC JOINT FILLER

DOWEL HOLES SHALL ALLOW FOR AN EMBEDMENT DEPTH OF 1′-0″ MIN. FOR THE PROPOSED REINFORCING STEEL.

DESIGN AGENCY
STATE OF OHIO
DEPARTMENT OF TRANSPORTATION
DISTRICT 9 PRODUCTION

DESIGNED	DRAWN	REVIEWED	DATE
MRH	MRH	LAW	10/07/08
CHECKED	REVISED	STRUCTURE FILE NUMBER	
JTH		7100930	

CONCRETE BARRIER END SECTION, TYPE D, REINFORCED, AS PER PLAN

BRIDGE NO. ROS-23-1533 L OVER NORFOLK SOUTHERN RAILROAD AND C.R. 235

ROS-23-12.84
PID No. 79964

I:\project\District-wide\2009PM-79964\bridge\ros-23-1533\transistion_c.dgn 07-NOV-2008 10:30AM mhauck

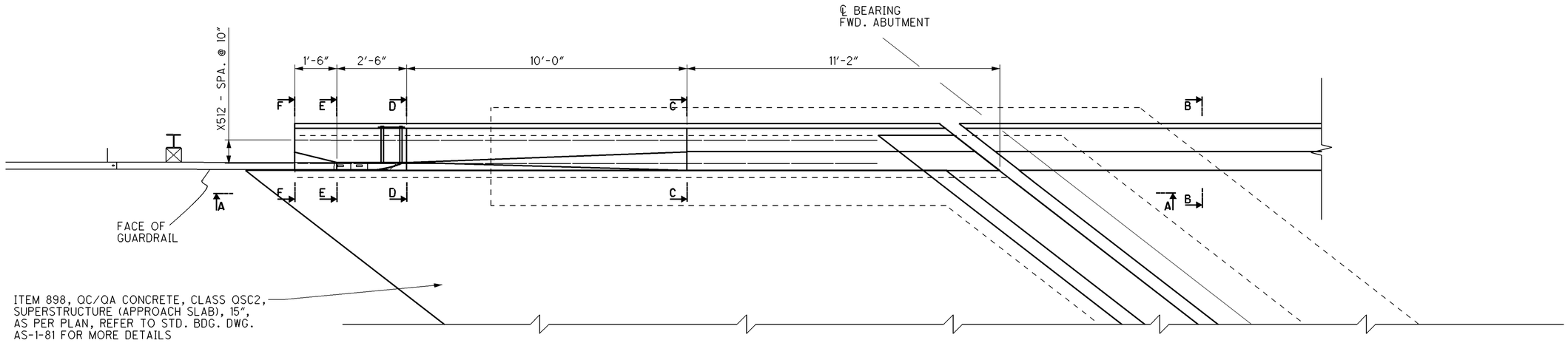

TYPICAL CONCRETE BARRIER END SECTION, TYPE D, REINFORCED, AS PER PLAN
END SECTION D - FOR LOCATION REFER TO SHEET 1/33
FOR SECTIONS B-B, C-C, D-D, E-E, AND F-F REFER TO SHEET 29/33

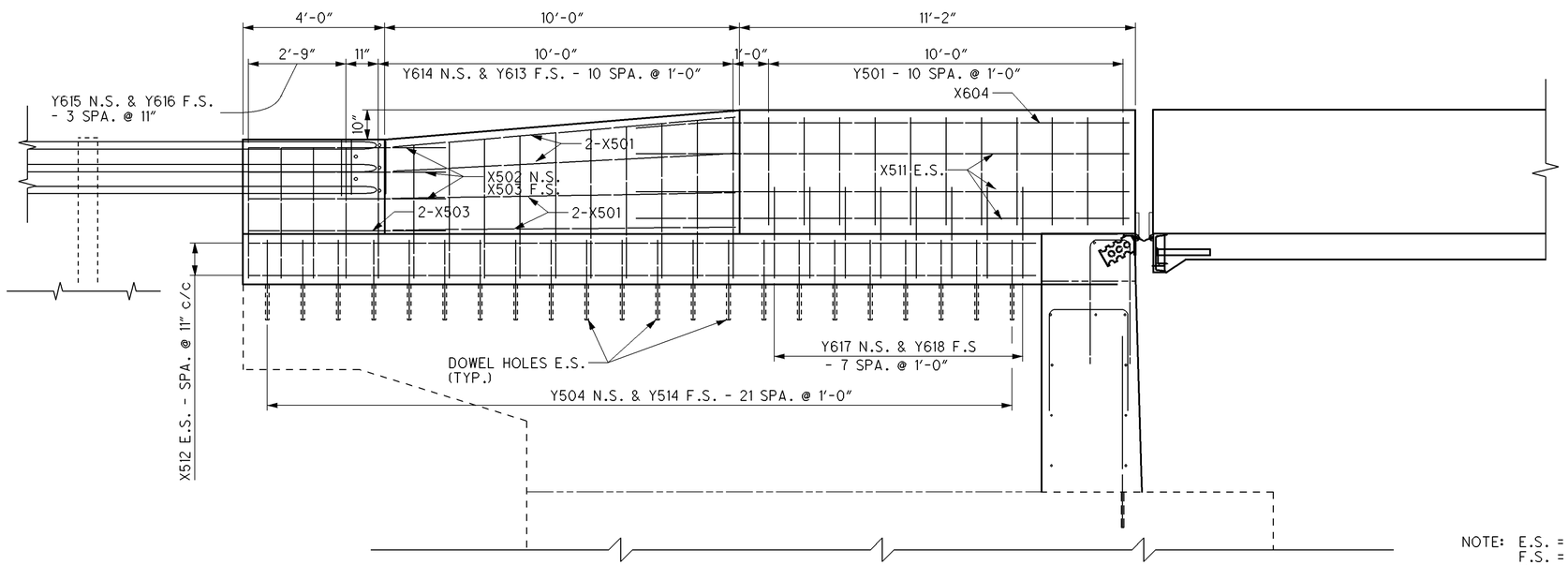

SECTION A-A

NOTE: E.S. = EACH SIDE
F.S. = FAR SIDE
N.S. = NEAR SIDE

DOWEL HOLES SHALL ALLOW FOR AN EMBEDMENT DEPTH OF 1'-0" MIN. FOR THE PROPOSED REINFORCING STEEL.

DESIGN AGENCY
STATE OF OHIO
DEPARTMENT OF TRANSPORTATION
DISTRICT 9 PRODUCTION

DESIGNED	DRAWN	REVIEWED	DATE
MRH	MRH	LAW	10/07/08
CHECKED	REVISED	STRUCTURE FILE NUMBER	
JTH		7100930	

CONCRETE BARRIER END SECTION, TYPE D, REINFORCED, AS PER PLAN

BRIDGE NO. ROS-23-1533 L OVER NORFOLK SOUTHERN RAILROAD AND C.R. 235

ROS-23-12.84
PID No. 79964

I:\project\District-wide\2009PM-79964\bridge\ros-23-1533l\transistion_d.dgn 07-NOV-2008 10:32AM mhauck

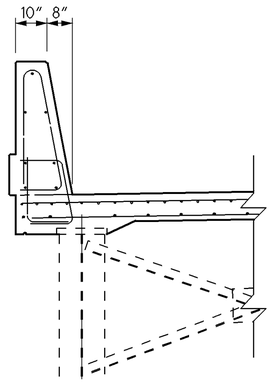

SECTION B-B

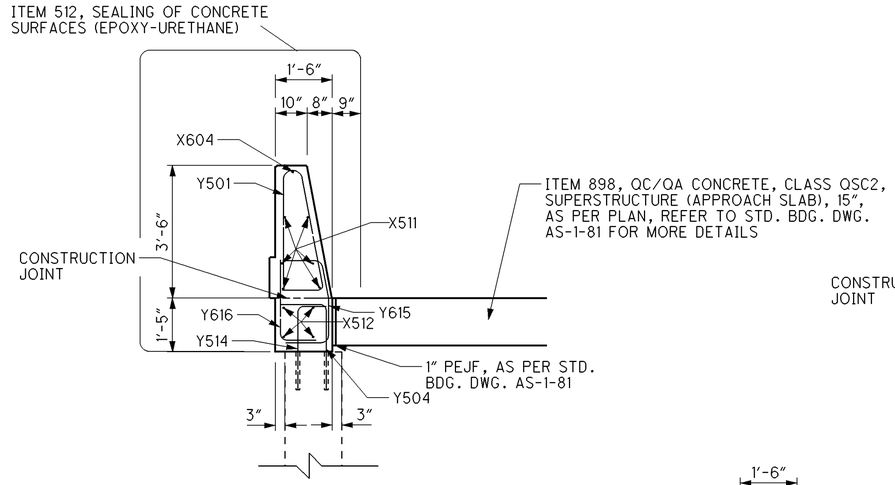

SECTION C-C

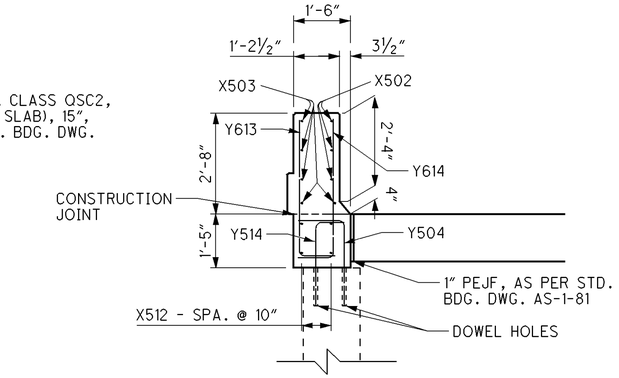

SECTION D-D

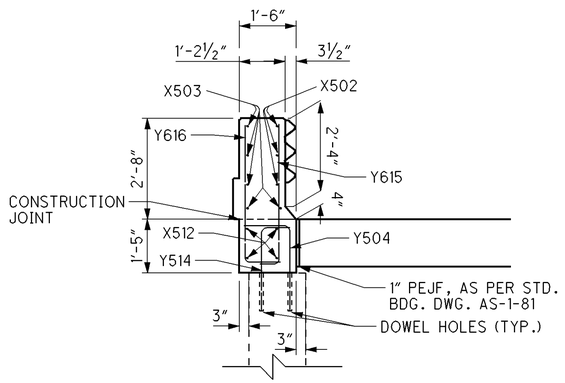

SECTION E-E

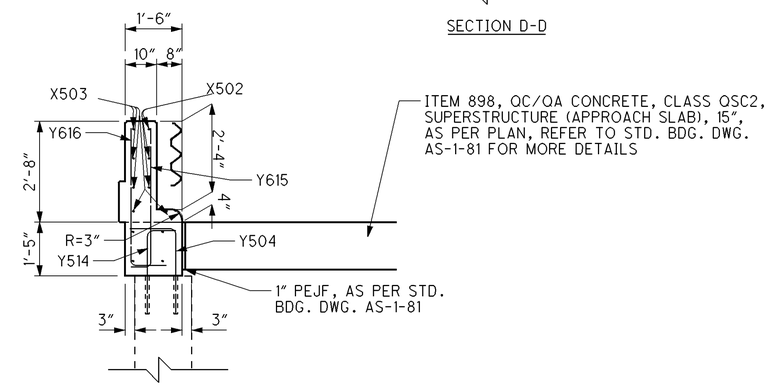

SECTION F-F

REINFORCING STEEL LIST*							
MARK	NUMBER	LENGTH	SHAPE	A	B	C	D
X501	8	10′-0″	STR.				
X502	3	5′-6″	TYPE 2	1′-8″	2′-5″	1′-5″	
X503	5	5′-6″	STR.				
X511	6	13′-11″	STR.				
X512	4	20′-8″	STR.				
Y501	11	7′-5″	TYPE 1	1′-1″	3′-2″	3′-0″	
Y504	22	3′-4″	TYPE 4	1′-2″	2′-3″		
Y514	22	2′-11″	STR.	9″	2′-3″		
X604	1	13′-11″	STR.	FIELD BEND IF NECESSARY			
Y613	1 SER. 11 BARS	4′-8″ TO 5′-7″	TYPE 4	1′-1″	3′-9″ TO 4′-7″	1″ INC.	
Y614	1 SER. 11 BARS	4′-8″ TO 5′-6″	TYPE 5	1′-1″	1′-3″	2′-6″ TO 3′-4″	1″ INC.
Y615	4	4′-1″	TYPE 4	6″	3′-9″		
Y616	4	4′-7″	TYPE 4	1′-1″	3′-9″		
Y617	8	4′-5″	TYPE 3	1′-1″	1′-4″	1′-3″	
Y618	8	3′-6″	TYPE 4	1′-1″	2′-7″		

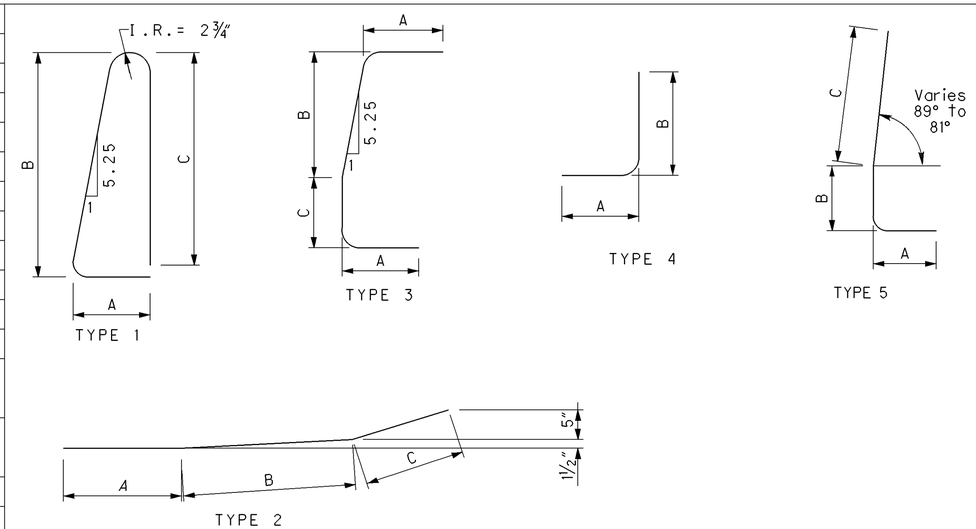

NOTE: E.S. = EACH SIDE
F.S. = FAR SIDE
N.S. = NEAR SIDE
PEJF = PREFORMED ELASTOMERIC JOINT FILLER

DOWEL HOLES SHALL ALLOW FOR AN EMBEDMENT DEPTH OF 1′-0″ MIN. FOR THE PROPOSED REINFORCING STEEL.

DESIGN AGENCY
STATE OF OHIO
DEPARTMENT OF TRANSPORTATION
DISTRICT 9 PRODUCTION

DESIGNED	DRAWN	REVIEWED	DATE
MRH	MRH	LAW	10/07/08
CHECKED	REVISED	STRUCTURE FILE NUMBER	
JTH		7100930	

CONCRETE BARRIER END SECTION, TYPE D, REINFORCED, AS PER PLAN

BRIDGE NO. ROS-23-1533 L OVER NORFOLK SOUTHERN RAILROAD AND C.R. 235

ROS-23-12.84
PID No. 79964

I:\project\District-wide\2009PM-79964\bridge\ros-23-1533\transition_d.dgn 07-NOV-2008 10:32AM mhauck

NOTES:

FOR ADDITION DETAILS REFER TO STD. BDG DWG. EXJ-4-87 AND STD. BDG. DWG. GSD-1-96.

FOR SECTION C-C, REFER TO SHEET 31/33

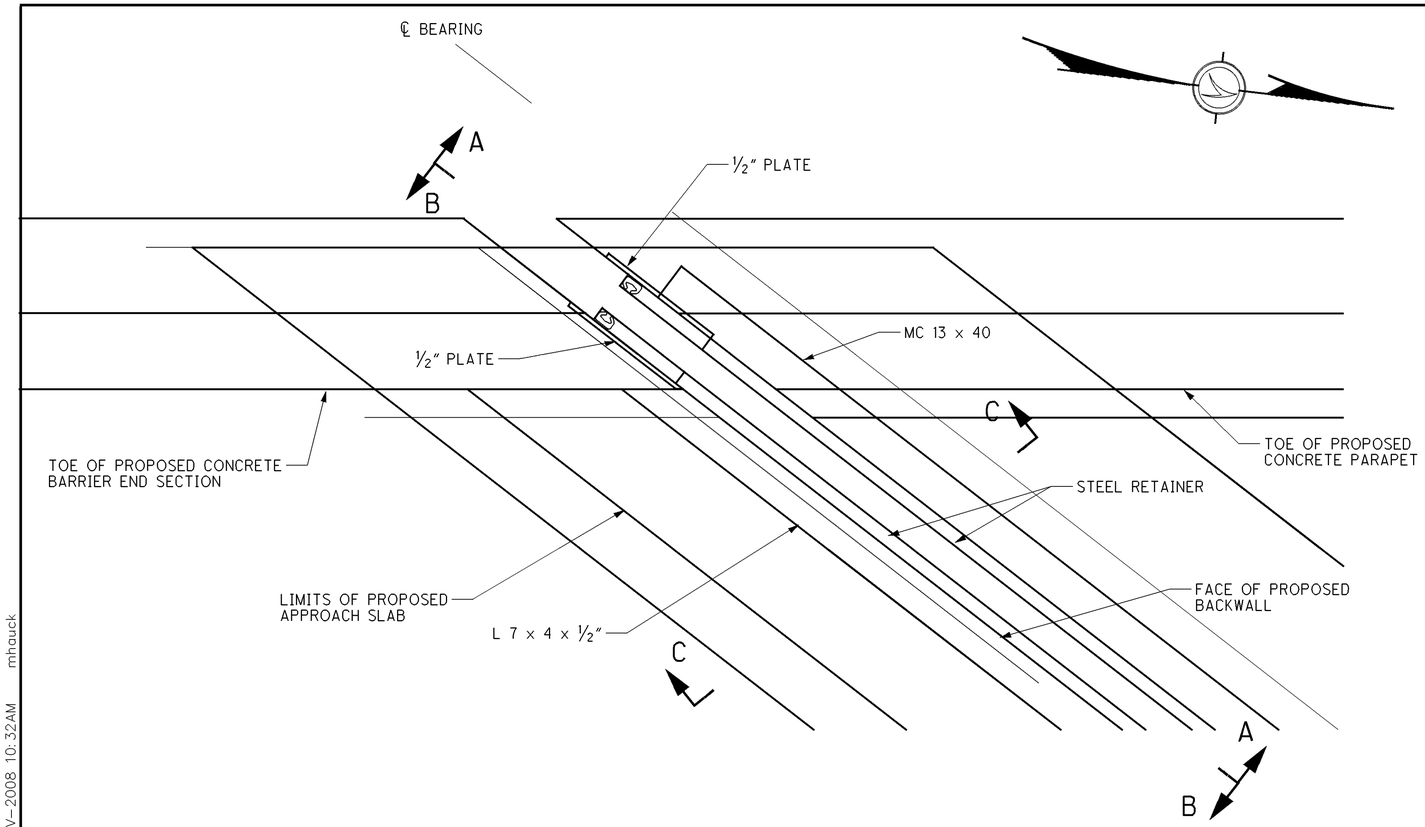

PART PLAN VIEW
LEFT SIDE OF DECK AT REAR ABUTMENT SHOWN

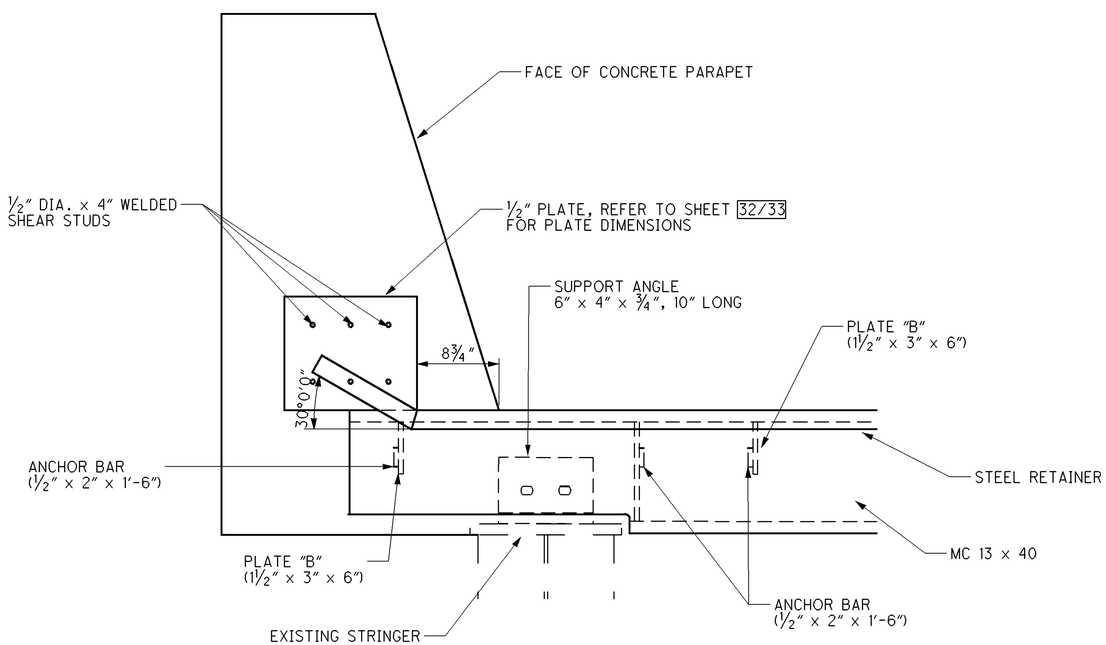

SECTION A-A

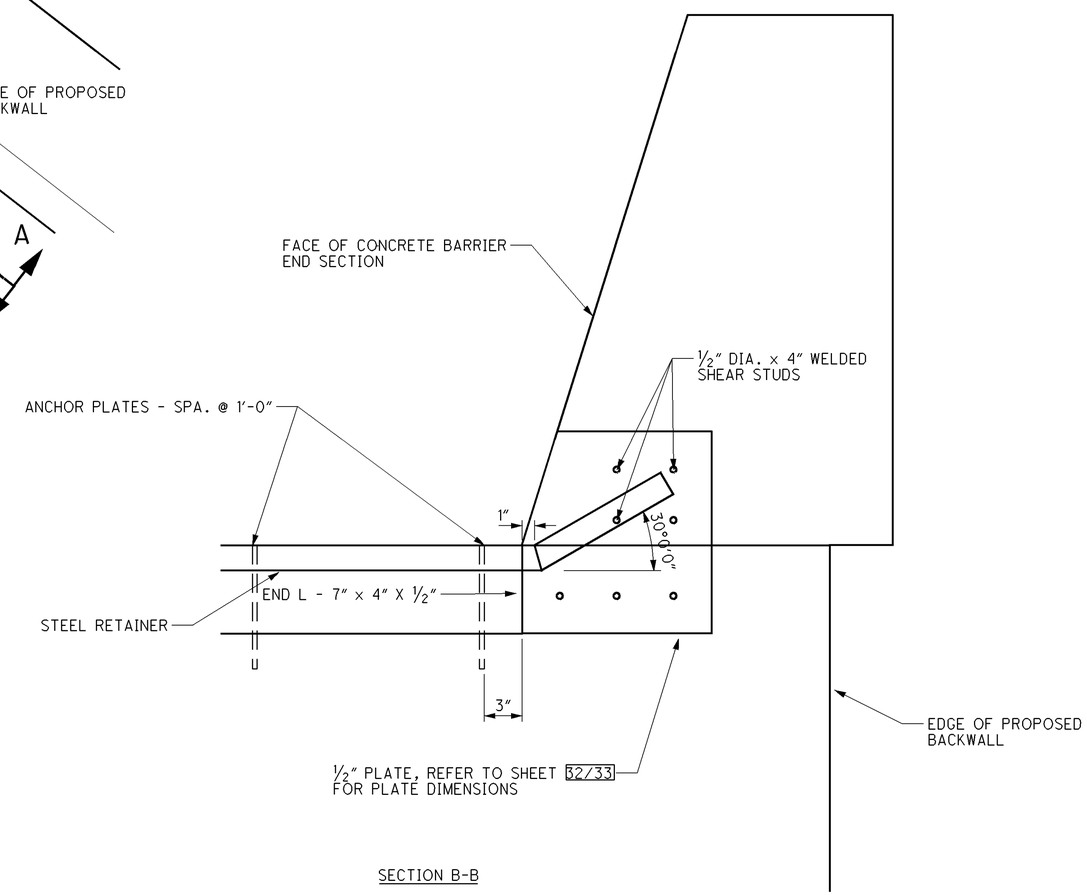

SECTION B-B

DESIGN AGENCY
STATE OF OHIO
DEPARTMENT OF TRANSPORTATION
DISTRICT 9 PRODUCTION

DESIGNED	DRAWN	REVIEWED	DATE
MRH	MRH	LAW	10/07/08
CHECKED	REVISED	STRUCTURE FILE NUMBER	
JTH		7100930	

PROPOSED EXPANSION JOINT DETAILS

BRIDGE NO. ROS-23-1533 L
OVER NORFOLK SOUTHERN RAILROAD AND C.R.235

ROS-23-12.84
PID No. 79964

I:\project\District-wide\2009PM-79964\bridge\ros-23-1533\prop_left_joint_sections.dgn 07-NOV-2008 10:32AM mhauck

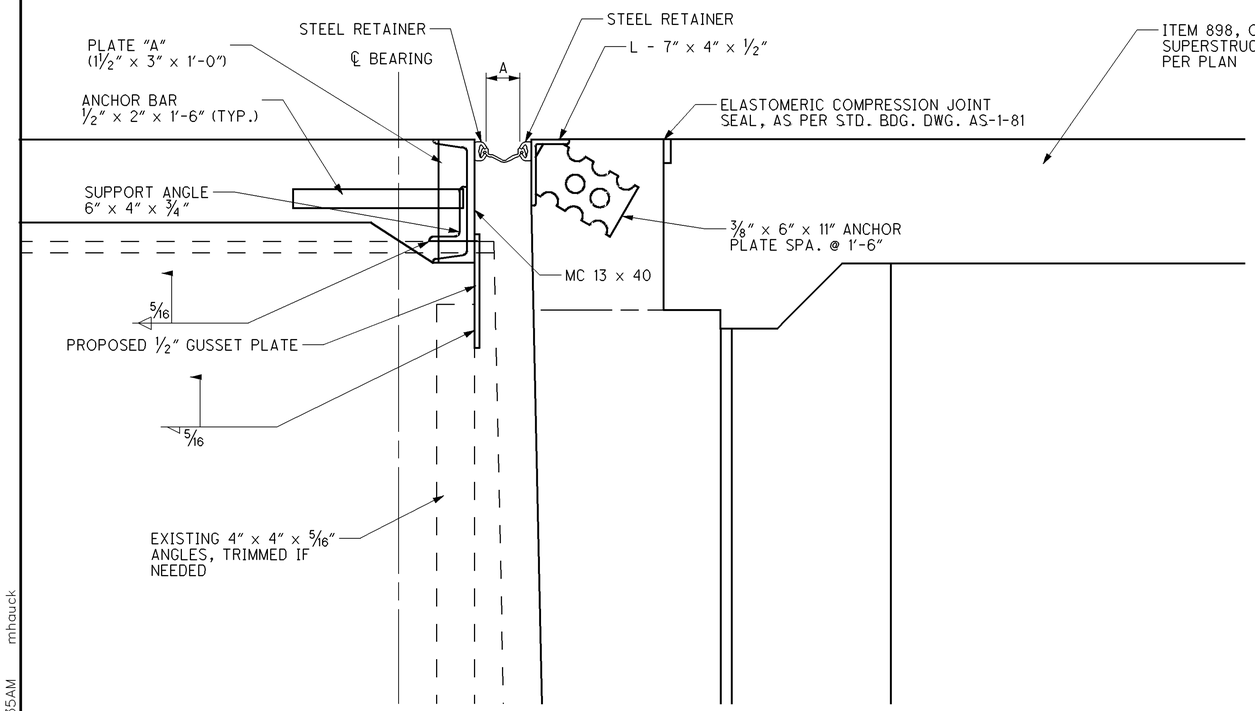

SECTION C-C

NEOPRENE STRIP SEAL SPECIFICATIONS
A = 3" @ 60°

MAXIMUM MOVEMENT PERPENDICULAR	MAXIMUM MOVEMENT PARALLEL	JOINT OPENING
INCHES	INCHES	INCHES
4.0	±0.5	1.0-5.0

NOTE: THE PROPOSED JOINT IS DESIGN FOR A JOINT OPENING OF 3" @ 60° F AND WITH 1½" WIDE STEEL RETAINERS. THE CONTRACTOR MAY CHOOSE TO USE A DIFFERENT SIZE RETAINER, BUT MUST SUBMIT SHOP DRAWINGS OF PROVISIONS MADE TO MAINTAIN THE JOINT OPENING OF 3" @ 60° F. THESE MUST BE APPROVED BY THE ENGINEER BEFORE WORK CAN BEGIN ON THE JOINT AND SHALL BE NO ADDITIONAL COST TO THE STATE FOR CHANGES MADE BY THE CONTRACTOR.

FOR ADDITIONAL DETAILS REFER TO STD. BDG DWG. EXJ-4-87 AND STD. GSD. DWG. GSD-1-96.

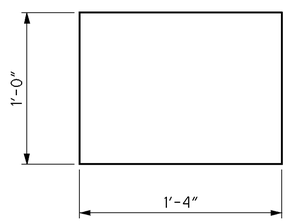

PLATE C
(16 REQUIRED)

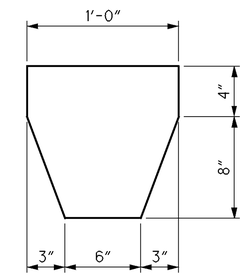

PLATE D
(8 REQUIRED)

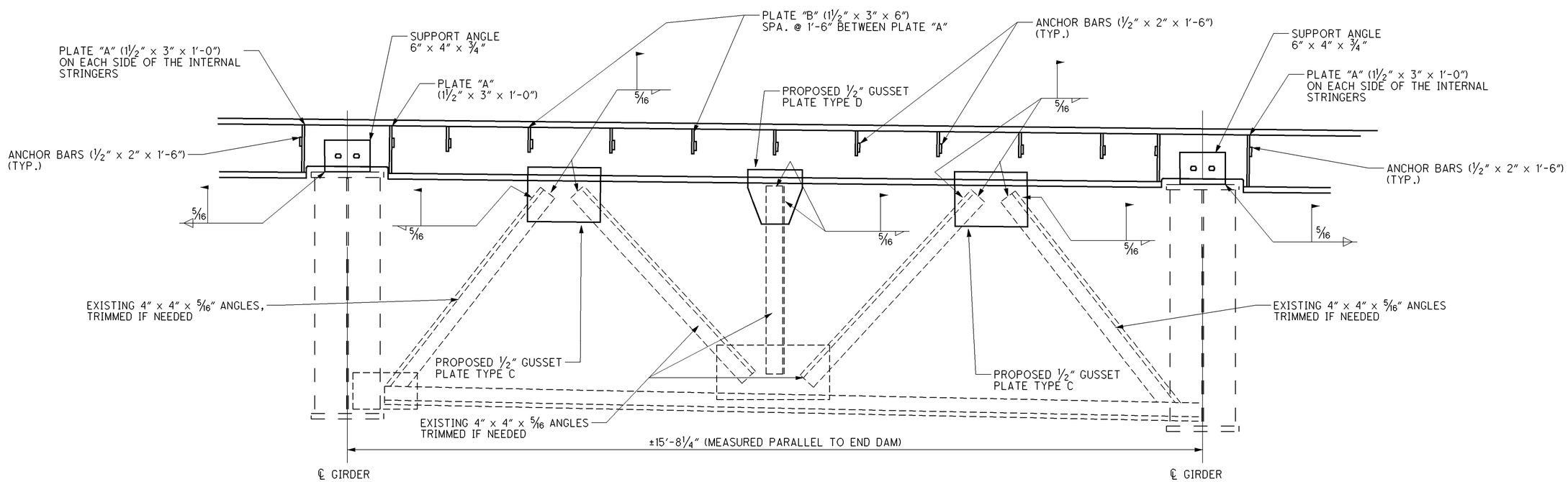

PROPOSED PART TRANSVERSE SECTION

DESIGN AGENCY
STATE OF OHIO
DEPARTMENT OF TRANSPORTATION
DISTRICT 9 PRODUCTION

DESIGNED	DRAWN	REVIEWED	DATE
MRH	MRH	LAW	10/07/08
CHECKED	REVISED	STRUCTURE FILE NUMBER	
JTH		7100930	

PROPOSED EXPANSION JOINT SECTIONS

BRIDGE NO. ROS-1533 L
OVER NORFOLK SOUTHERN RAILROAD AND C.R. 235

ROS-23-12.84
PID No. 79964

I:\project\District-wide\2009PM-79964\bridge\ros-23-1533\prop_left_joint_details.dgn 07-NOV-2008 10:35AM mhauck

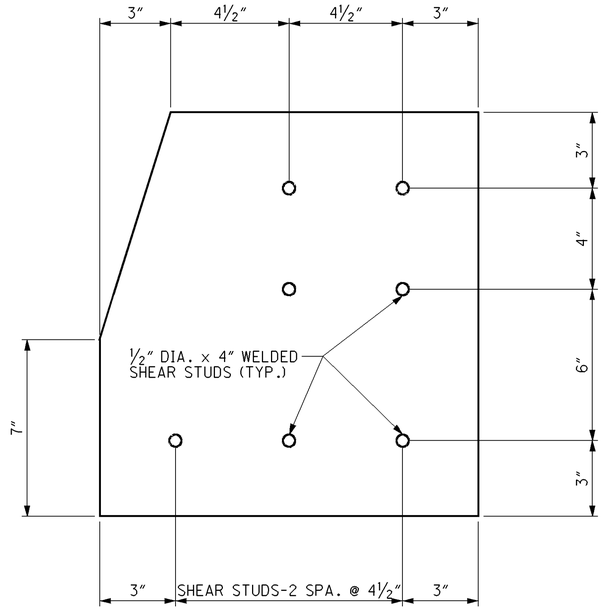

½″ PLATE

APPLIES TO: BOTH THE LEFT SIDE OF THE REAR ABTUMENT AND THE RIGHT SIDE OF THE FORWARD ABUTMENT ON THE BACKWALL SIDE OF THE EXPANSION JOINT

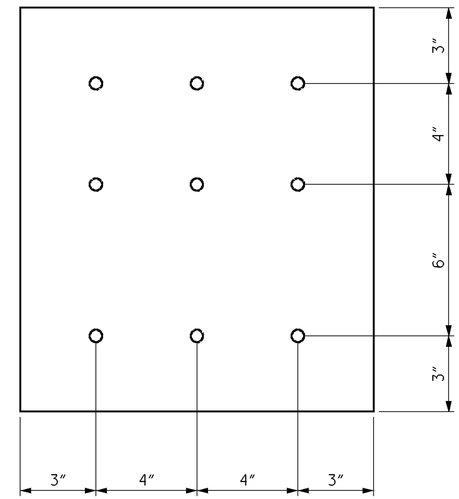

½″ PLATE (1′-4″ x 1′-2″)

APPLIES TO: BOTH THE RIGHT SIDE OF THE REAR ABTUMENT AND THE LEFT SIDE OF THE FORWARD ABUTMENT ON THE BACKWALL SIDE OF THE EXPANSION JOINT

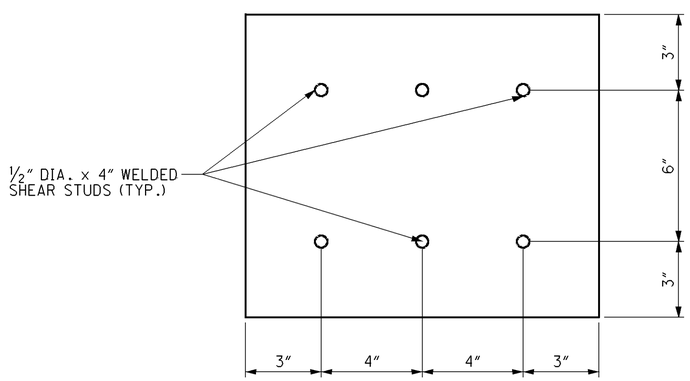

½″ PLATE (1′-0″ x 1′-2″)

APPLIES TO: BOTH THE LEFT SIDE OF THE REAR ABTUMENT AND THE RIGHT SIDE OF THE FORWARD ABUTMENT ON THE DECK SIDE OF THE EXPANSION JOINT

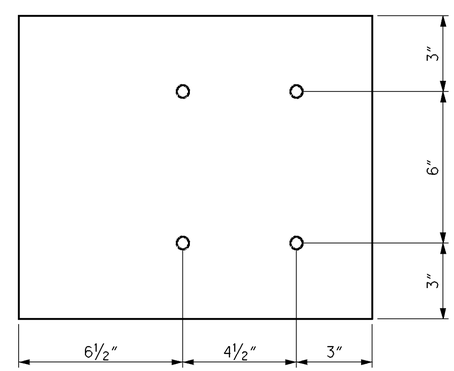

½″ PLATE (1′-0″ x 1′-2″)

APPLIES TO: BOTH THE RIGHT SIDE OF THE REAR ABTUMENT AND THE LEFT SIDE OF THE FORWARD ABUTMENT ON THE DECK SIDE OF THE EXPANSION JOINT

NOTES: PLATES SHALL MEET ALL OF THE REQUIREMENTS AS SET FORTH IN STD. BDG. DWG. EXJ-4-87 AND STD. BDG. DWG. GSD-1-96
FOR ADDITIONAL DETAILS OF THE PROPOSED EXPANSION JOINT REFER TO SHEETS 30/33 AND 31/33

DESIGN AGENCY
STATE OF OHIO
DEPARTMENT OF TRANSPORTATION
DISTRICT 9 PRODUCTION

DESIGNED	DRAWN	REVIEWED	DATE
MRH	MRH	LAW	10/07/08
CHECKED	REVISED	STRUCTURE FILE NUMBER	
JTH		7100930	

PROPOSED EXPANSION JOINT PLATE DETIALS
BRIDGE NO. ROS-1533 L
OVER NORFOLK SOUTHERN RAILROAD AND C.R. 235

ROS-23-12.84
PID No. 79964

I:\project\District-wide\2009PM-79964\bridge\ros-23-1533\plate_details_left.dgn 07-NOV-2008 10:36AM mhauck

MARK	NO.	LENGTH	WEIGHT	TYPE	A	B	C	INCR
			REAR ABUTMENT					
A502	132	3′-3″	447	1	2′-0″	1′-5″		
A503	30	24′-3″	759	STR				
A505	15	15′-4″	240	STR				
A507	1	16′-5″	17	STR				
A508	1	16′-2″	17	STR				
A509	1	15′-0″	16	STR				
A511	1	14′-2″	15	STR				
A512	1	13′-1″	14	STR				
A513	1 SR OF 3	2′-6″ TO 4′-10″	11	STR				1′-2″
A514	1	5′-6″	6	STR				
A515	1	6′-11″	7	STR				
A516	2	2′-3″	5	1	1′-0″	1′-5″		
A518	3	2′-10″	9	11	1′-0″	1′-0″	2′-0″	
A519	*3*	*4′-9″*	*15*	*13*	*2′-0″*	*9½″*	*3¼″*	*2′-0″*
A602	66	6′-9″	669	2	3′-2″	0′-9″	3′-2″	
A603	66	9′-4″	925	2	4′-3″	1′-2″	4′-3″	
A604	70	5′-9″	605	STR				
D801	43	5′-4″	612	18	3′-0″	1′-5″	0′-7″	
REAR ABUTMENT TOTAL = 4,374								
			FORWARD ABUTMENT					
A503	30	24′-3″	759	STR				
A518	3	2′-10″	9	11	1′-0″	1′-0″	2′-0″	
A519	*3*	*4′-9″*	*15*	*13*	*2′-0″*	*9½″*	*3¼″*	*2′-0″*
A602	66	6′-9″	669	2	3′-2″	0′-9″	3′-2″	
A603	66	9′-4″	925	2	4′-3″	1′-2″	4′-3″	
A604	66	5′-9″	570	STR				
D801	43	5′-4″	612	18	3′-0″	1′-5″	0′-7″	
FORWARD ABUTMENT TOTAL = 3,559								
REAR ABUTMENT TOTAL = 4,374								
ABUTMENT TOTAL = 7,933								

MARK	NO.	LENGTH	WEIGHT	TYPE	A	B	C	INCR
			SUPERSTRUCTURE					
			TOP					
S401	1050	30′-0″	21042	STR				
S402	148	45′-0″	4449	STR				
S403	74	47′-0″	2323	STR				
S601	672	20′-7″	20772	STR				
S602	663	24′-7″	24477	STR				
S604	1 SR OF 48	0′-8″ TO 20′-3″	754	STR				0′-5″
S605	1 SR OF 49	4′-5″ TO 24′-5″	1061	STR				0′-5″
S606	1 SR OF 44	2′-5″ TO 20′-4″	752	STR				0′-5″
S607	1 SR OF 57	0′-8″ TO 24′-0″	1056	STR				0′-5″
			BOTTOM					
S601	672	20′-7″	20772	STR				
S602	663	24′-7″	24477	STR				
S603	660	29′-3″	28996	STR				
S604	1 SR OF 48	0′-8″ TO 20′-3″	754	STR				0′-5″
S605	1 SR OF 49	4′-5″ TO 24′-5″	1061	STR				0′-5″
S606	1 SR OF 44	2′-5″ TO 20′-4″	752	STR				0′-5″
S607	1 SR OF 57	0′-8″ TO 24′-0″	1056	STR				0′-5″
S612	780	3′-6″	4101	28	1′-8″	1′-1″		
S613	780	2′-7″	3027	1	1′-1″	1′-8″		
SUPERSTRUCTURE TOTAL = 161,682								

MARK	NO.	LENGTH	WEIGHT	TYPE	A	B	C	INCR
			PARAPET					
P501	780	7′-4″	5966	23	1′-1″	3′-2″	3′-0″	R = 2¾″
P502	180	28′-10″	5413	STR				
P601	30	29′-3″	1318	STR				
PARAPET TOTAL = 12,697								

ALL TOTALS ARE CARRIED TO THE ESTIMATED QUANTITIES ON SHEET 4/33

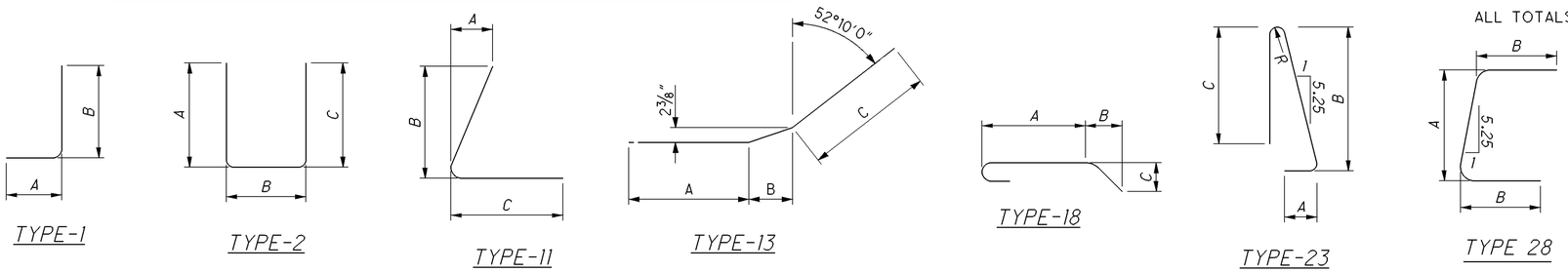

THE BAR SIZE NUMBER IS SPECIFIED ON THE PLANS IN THE BAR MARK COLUMN. THE FIRST DIGIT WHERE THREE DIGITS ARE USED, AND THE FIRST TWO DIGITS WHERE FOUR ARE USED, INDICATES THE BAR SIZE NUMBER. FOR EXAMPLE, W601 IS A NO. 6 BAR. BAR DIMENSIONS SHOWN ARE OUT TO OUT UNLESS OTHERWISE INDICATED. R INDICATES INSIDE RADIUS, UNLESS OTHERWISE NOTED. "STD." WRITTEN IN PLACE OF A DIMENSION INDICATES A STANDARD BEND AT THE END OF THE BAR.

ALL REINFORCING STEEL TO BE EPOXY COATED.

DESIGN AGENCY
STATE OF OHIO
DEPARTMENT OF TRANSPORTATION
DISTRICT 9 PRODUCTION

DESIGNED	DRAWN	REVIEWED	DATE
MRH	MRH	LAW	10/07/08
CHECKED	REVISED	STRUCTURE FILE NUMBER	
JTH		7100930	

REINFORCING STEEL LIST
BRIDGE NO. ROS-23-1533 L
OVER NORFOLK SOUTHERN RAILROAD AND C.R. 235

ROS-23-12.84
PID No. 79964

I:\project\District-wide\2009PM-79964\bridge\ros-23-1533\resteel_left.dgn 07-NOV-2008 10:38AM mhauck

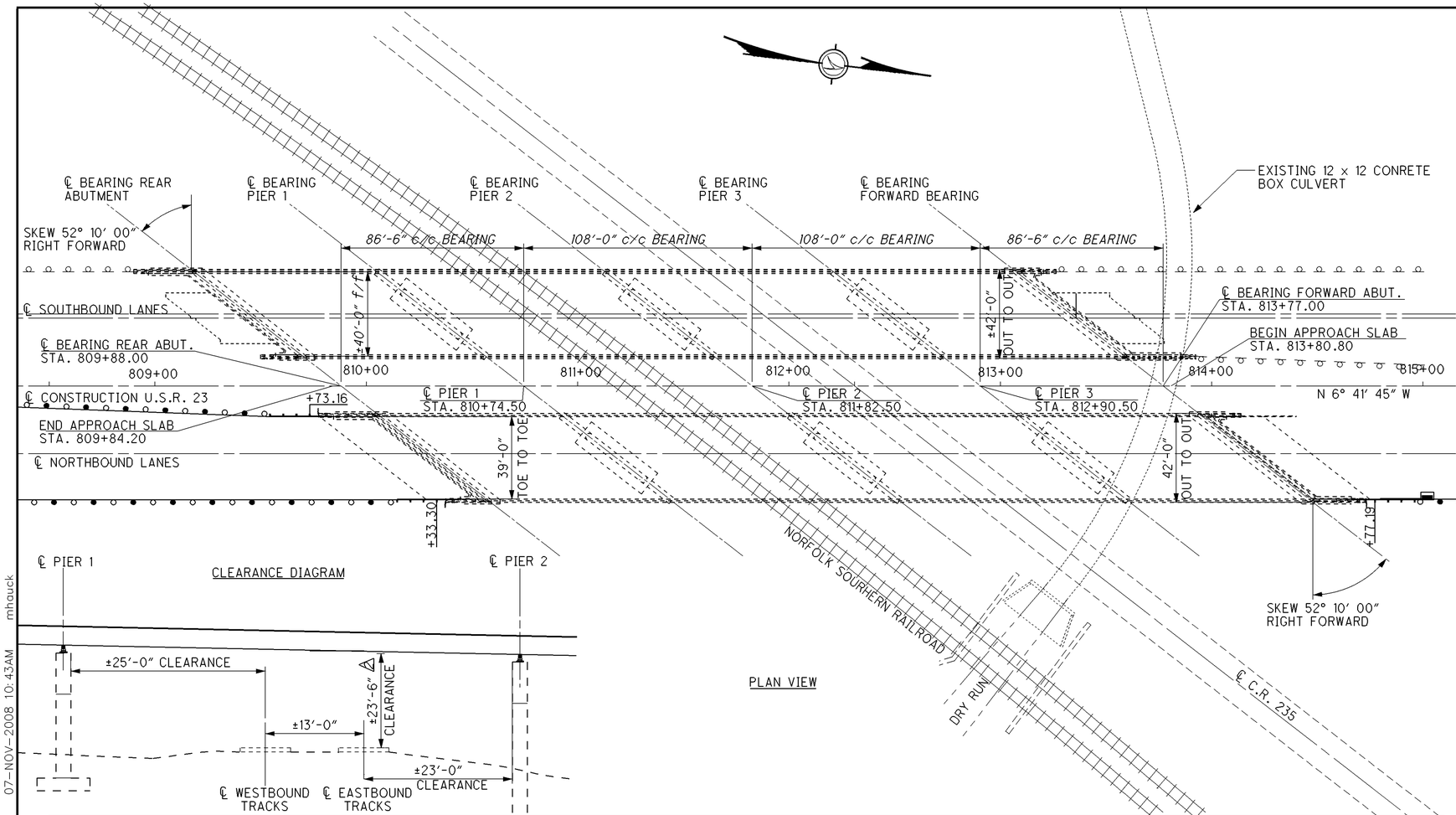

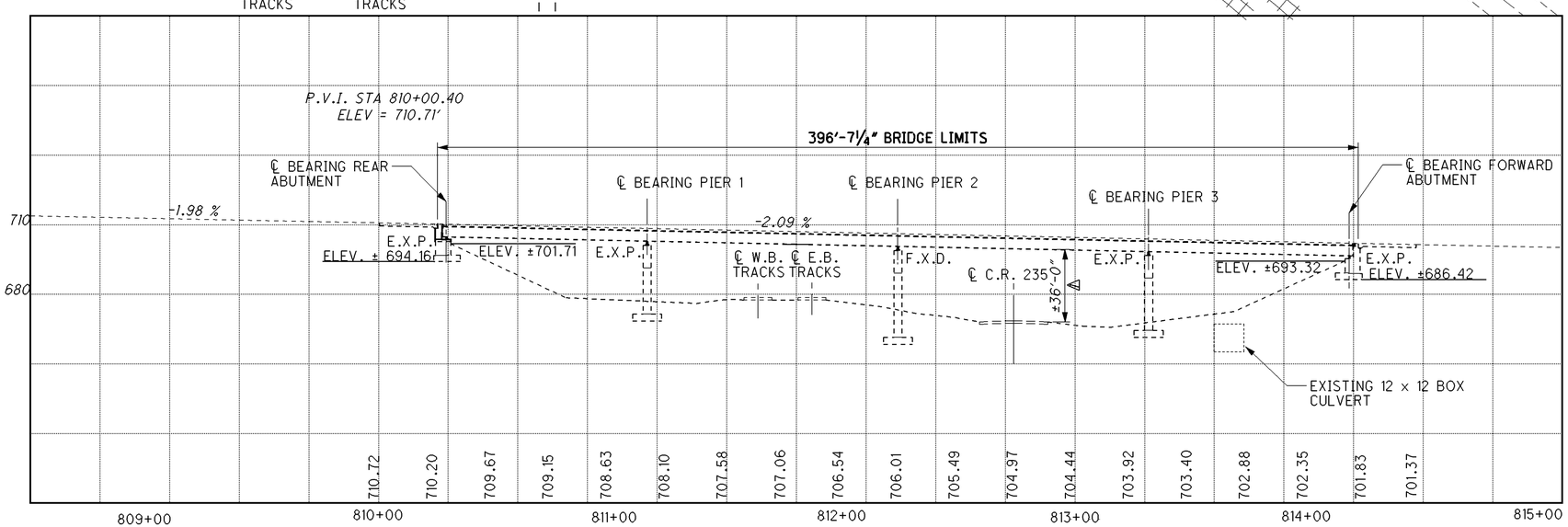

BENCHMARK DATA

BM #1 STA. 809+50.00 ELEV. 710.256 @ ℄ CONSTRUCTION U.S.R. 23
BM #2 STA. 814+15.00 ELEV. 701.186 @ ℄ CONSTRUCTION U.S.R. 23

FOR ADDITIONAL BENCHMARK INFORMATION. SEE ROADWAY PLAN SHEET 65/82

NOTES

DESIGN TRAFFIC:
2006 ADT = 19,240
2006 ADTT = 3,580

LEGEND

1 ● 16′-6″ REQUIRED MINIMUM VERTICAL CLEARANCE
±36′-0″ ACTUAL MINIMUM VERTICAL CLEARANCE

2 ● 23′-0″ REQUIRED MINIMUM VERTICAL CLEARANCE FOR RAILROAD
±23′-6″ ACTUAL MINIMUM VERTICAL CLEARANCE FOR RAILROAD

PROPOSED WORK

PAINTING OF EXISTING STRUCTURAL STEEL GIRDERS

SEALING OF EXISTING PIERS WITH EPOXY-URETHANE SEALER

EXISTING STRUCTURE

TYPE: 4 SPAN CONTINUOS WELDED PLATE GIRDER WITH COMPOSITE REINFORCED CONCRETE DECK WITH STUB TYPE REINFORCED CONCRETE PIERS SUPPORTED BY SPREAD FOOTINGS

SPANS: 86′-6″, 108′-0″, 108′-0″, 86′-6″ c/c BEARING

ROADWAY: 39-0″ TOE/TOE PARAPET

LOADING: HS20-44 CASE II AND ALTERNATE MILITARY

SKEW: 52° 10′ 00″ RIGHT FORWARD

APPROACH SLABS: 25′-0″ LONG (AS-1-81)

ALIGNMENT: TANGENT

CROWN: 0.0156 FT/FT

WEARING SURFACE: 1″ MONOLITHIC CONCRETE

STRUCTURAL FILE NUMBER: 7100965

COORDINATES: LATITUDE 39° 22′ 49″ N
LONGITUDE 82° 58′ 8″ W

DESIGN AGENCY
STATE OF OHIO
DEPARTMENT OF TRANSPORTATION
DISTRICT 9 PRODUCTION

DESIGNED	DRAWN	REVIEWED	DATE
MRH	MRH	LAW	10/7/08
CHECKED	REVISED	STRUCTURE FILE NUMBER	
JKW		7100965	

ROSS COUNTY
STA. 809+84.20
STA. 813+80.80

SITE PLAN
BRIDGE NO. ROS-23-1533 R
OVER NORFOLK SOUTHERN RAILROAD, C.R. 235, AND DRY RUN

ROS-23-12.84
PID No. 79964

I:\project\District-wide\2009PM-79964\bridge\ros-23-1533l\right_site_plan.dgn 07-NOV-2008 10:43AM mhauck

EXISTING BRIDGE PLANS

DETAIL DRAWINGS OF THE EXISTING BRIDGE MAY BE INSPECTED AT THE DISTRICT 9 OFFICE AT 650 EASTERN AVENUE IN CHILLICOTHE, OHIO.

EXISTING STRUCTURE VERIFICATION

DETAILS AND DIMENSIONS SHOWN ON THESE PLANS PERTAINING TO THE EXISTING STRUCTURE HAVE BEEN OBTAINED FROM THE PLANS OF THE EXISTING STRUCTURE AND FROM FIELD OBSERVATIONS AND MEASUREMENTS. CONSEQUENTLY, THEY ARE INDICATIVE OF THE EXISTING STRUCTURE AND THE PROPOSED WORK BUT THEY SHALL BE CONSIDERED TENTATIVE AND APPROXIMATE. THE CONTRACTOR IS REFERRED TO CMS SECTIONS 102.05, 105.02 AND 513.04.

BASE CONTRACT BID PRICE UPON A RECOGNITION OF THE UNCERTAINTIES DESCRIBED ABOVE AND UPON A PREBID EXAMINATION OF THE EXISTING STRUCTURE. HOWEVER, THE DEPARTMENT WILL PAY FOR ALL PROJECT WORK BASED UPON ACTUAL DETAILS AND DIMENSIONS THAT HAVE BEEN VERIFIED IN THE FIELD.

CONSTRUCTION CLEARANCE

MAINTAIN A CONSTRUCTION CLEARANCE OF 13 FEET HORIZONTALLY FROM THE CENTER OF TRACKS AND 22 FEET VERTICALLY FROM A POINT LEVEL WITH THE TOP OF THE HIGHER RAIL, AND 13 FEET FROM THE CENTER OF TRACKS, AT ALL TIMES.

ESTIMATED QUANTITIES FOR BRIDGE NO. ROS-23-1533 R SFN: 7100965

ITEM	ITEM EXT.	TOTAL	UNIT	DESCRIPTION	ABUTMENTS	PIERS	SUPERSTRUCTURE	PARAPET	GENERAL	SEE SHEET NO.
512	10100	833	SQ YD	SEALING OF CONCRETE SURFACES (EPOXY-URETHANE)		833				
514	00050	13,200	SQ FT	SURFACE PREPARATION OF EXISTING STRUCTURAL STEEL			13,200			
514	00056	13,200	SQ FT	FIELD PAINTING OF EXISTING STRUCTURAL STEEL, PRIME COAT			13,200			
514	00060	13,200	SQ FT	FIELD PAINTING STRUCTURAL STEEL, INTERMEDIATE COAT			13,200			
514	00066	13,200	SQ FT	FIELD PAINTING STRUCTURAL STEEL, FINISH COAT			13,200			
514	00504	200	MAN HOUR	GRINDING FINS, TEARS, SLIVERS ON EXISTING STRUCTURAL STEEL			200			

DESIGN AGENCY
STATE OF OHIO
DEPARTMENT OF TRANSPORTATION
DISTRICT 9 PRODUCTION

DESIGNED MRH | CHECKED JTH | DRAWN MRH | REVIEWED LAW | DATE 10/7/08 | REVISED | STRUCTURE FILE NUMBER 7100965

ESTIMATED QUANTITIES
BRIDGE NO. ROS-23-1533 R
OVER NORFOLK SOUTHERN RAILROAD, C.R. 235 AND DRY RUN

ROS-23-12.84
PID No. 79964

I:\project\District-wide\2009PM-79964\bridge\ros-23-1533\right_quantities.dgn 07-NOV-2008 10:44AM mhauck

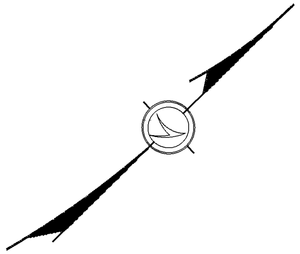

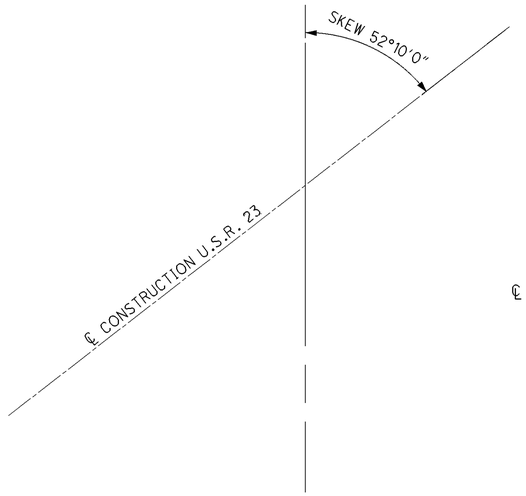

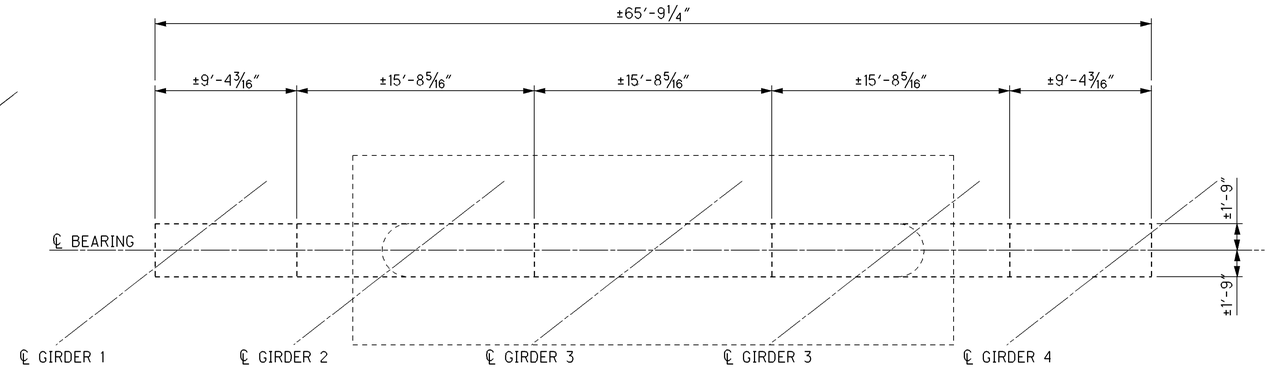

EXISTING PIER PLAN VIEW

APPLIES TO: ALL THREE PIERS OF THE NORTHBOUND STRUCTURE

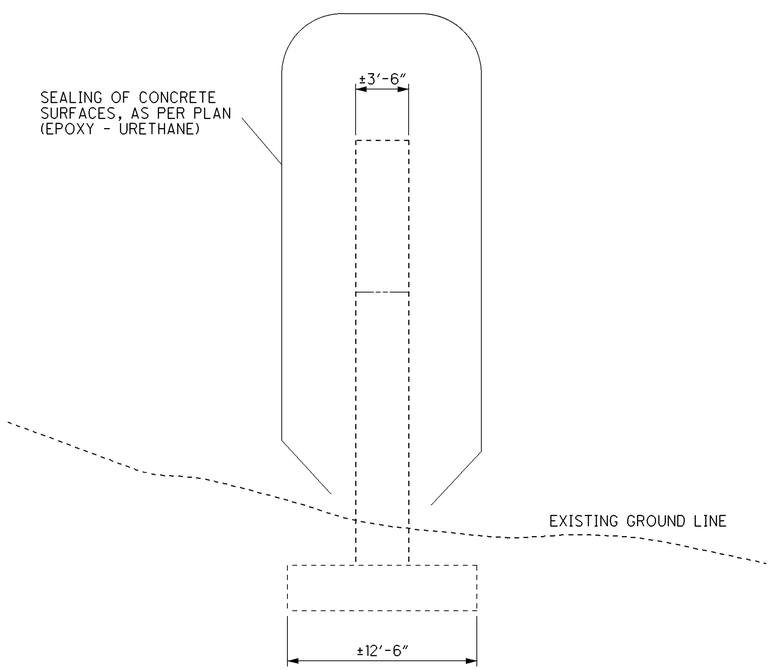

SECTION A-A

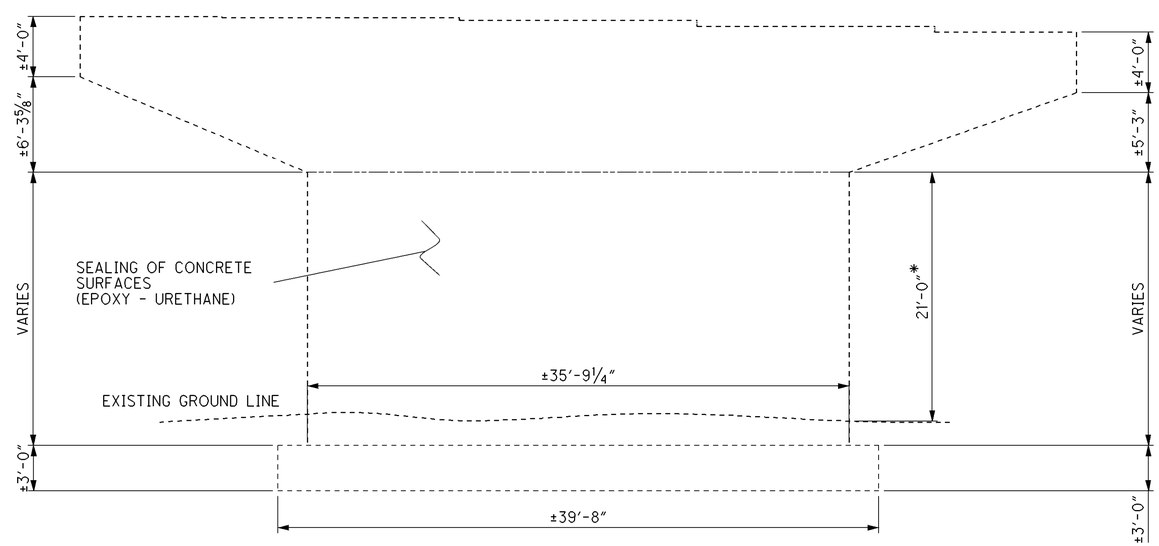

EXISTING PIER ELEVATION VIEW

APPLIES TO: ALL THREE PIERS OF THE NORTHBOUND STRUCTURE

* = THE INDICATED DIMENSION IS AN AVERAGE OF ALL THREE PIERS AND WAS USED FOR ESTIMATING ITEM 513, SEALING OF CONCRETE SURFACES (EPOXY-URETHANE), AS PER PLAN

DESIGN AGENCY
STATE OF OHIO
DEPARTMENT OF TRANSPORTATION
DISTRICT 9 PRODUCTION

DESIGNED	DRAWN	REVIEWED	DATE
MRH	MRH	LAW	10/7/08
CHECKED	REVISED	STRUCTURE FILE NUMBER	
JTH		7100965	

EXISTING PIER DETAILS

BRIDGE NO. ROS-23-1546 L
OVER NORFOLK SOUTHERN RAILROAD, C.R. 235, AND DRY RUN

ROS-23-12.84
PID No. 79964

I:\project\District-wide\2009PM-79964\bridge\ros-23-1533\right_pier.dgn 07-NOV-2008 10:45AM mhauck

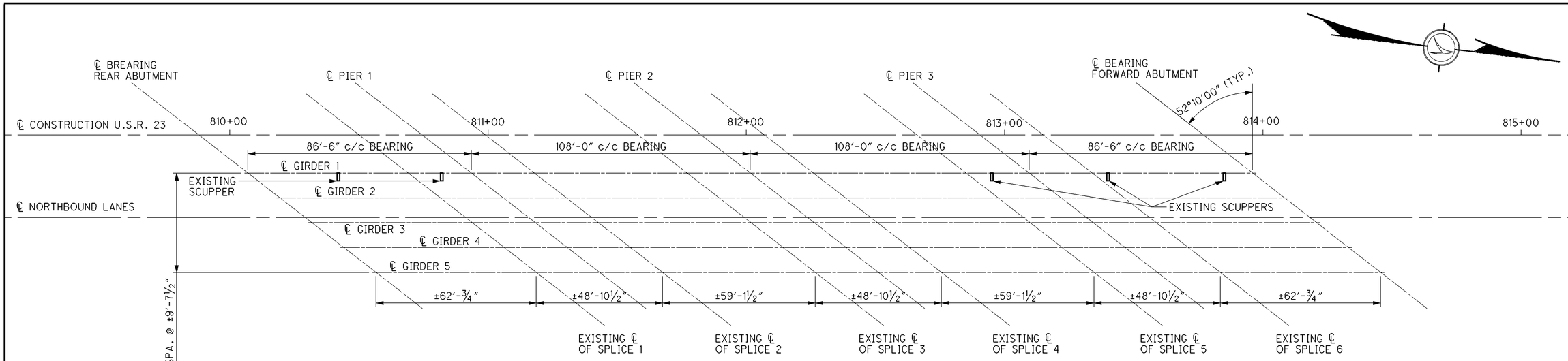

EXISTING FRAMING PLAN

SCUPPER LOCATIONS

DECK SIDE	STATION
LEFT	±810+42.00
LEFT	±810+82.00
LEFT	±812+95.00
LEFT	±813+40.00
LEFT	±813+85.00

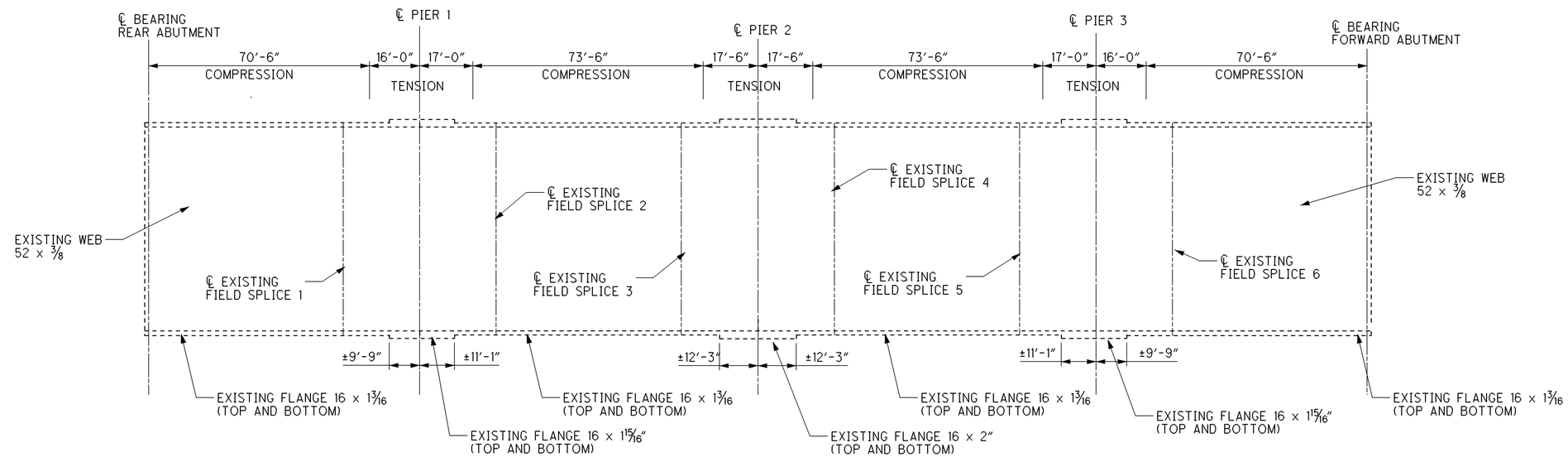

TYPICAL GIRDER DETIALS

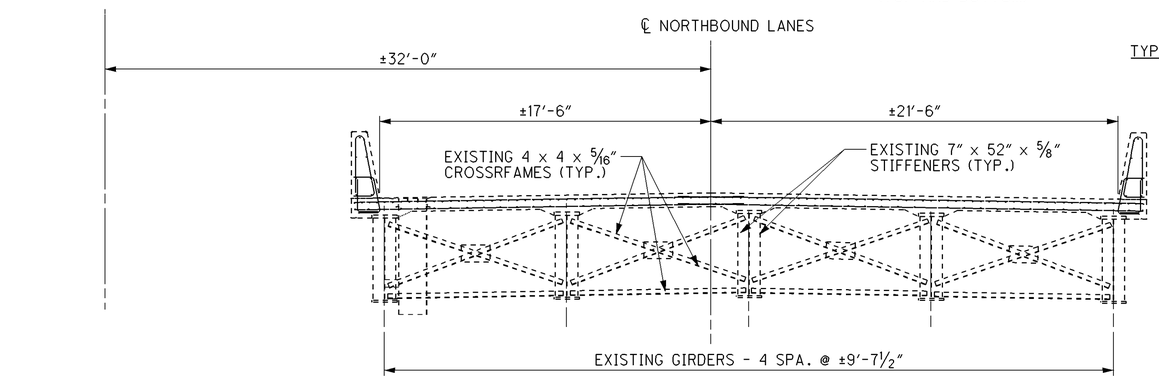

EXISTING TRANSVERSE SECTION

NOTE: ITEM 512, FEILD PAINTING STRUCTURAL STEEL SHALL INCLUDE BUT NOT LIMITED TO THE ENTIRE AREA OF THE WEB, THE ENTIRE BOTTOM FLANG, THE BOTTOM OF THE TOP FLANGE, ALL BEARINGS, CROSSFRAMES, AND STIFFENERS.

DESIGN AGENCY
STATE OF OHIO
DEPARTMENT OF TRANSPORTATION
DISTRICT 9 PRODUCTION

DESIGNED	DRAWN	REVIEWED	DATE
MRH	MRH	LAW	10/7/08
CHECKED	REVISED	STRUCTURE FILE NUMBER	
JKW		7100965	

EXISTING FRAMING PLAN AND STEEL DETAILS
BRIDGE NO. ROS-23-1533 R
OVER NORFOLK SOUTHERN RAILROAD, C.R 235, AND DRY RUN

ROS-23-12.84
PID No. 79964

I:\project\District-wide\2009PM-79964\bridge\ros-23-1533\right_steel_details.dgn 07-NOV-2008 10:46AM mhauck