#5017

**DESIGN DESIGNATION**

Current A.D.T. (1981) = 2170 D = 55 %
Design Year A.D.T. (2000) = 3140 T = 5 %
D.H.V. = 408 V = 60 M.P.H.

| FHWA REGION | STATE | PROJECT | |
|---|---|---|---|
| 5 | OHIO | BRS-335(7) | |

1 / 20

SANDUSKY COUNTY
SAN-19-17.09
BRS-335(7)

# STATE OF OHIO
# DEPARTMENT OF TRANSPORTATION
# BRIDGE No. SAN-19-17.09, S.R. 19 over MUDDY CREEK
## SANDUSKY COUNTY
## RICE TOWNSHIP

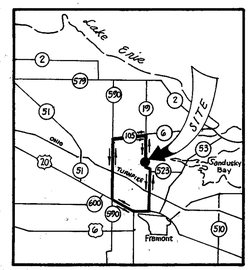


DETOUR MAP
(See Sheet No. 3)

Scale of Miles
0 5 10

## INDEX OF SHEETS


Title Sheet ..... 1
Typical Section ..... 2
General Notes ..... 3
Schedules, Subsummaries & General Summary ..... 4
Plan & Profile ..... 5
Cross Sections ..... 6-10
Structure Over 20 Foot Span ..... 11-16
Right-of-Way Plan ..... 17-20


## CONVENTIONAL SIGNS

Section Line
Center Line
Property Line
Fence Line ... exist. ... new
Guard Rail
Railroads

Pole Lines ..... telephone ... power ... indicate
Underground Utilities
Trees or Stumps ..... existing ... remove
Existing Right-of-Way
Proposed Right-of-Way ..... R/W
Township Line
County Line

## LINE DATA

Begin Work ..... Sta. 901+75
Begin Project ..... Sta. 902+75
End Project ..... Sta. 909+75
End Work ..... Sta. 910+50

Length of Project .... 700 Lin. Ft. or 0.133 mile

Net Length of Work .... 875 Lin. Ft. or 0.166 mile

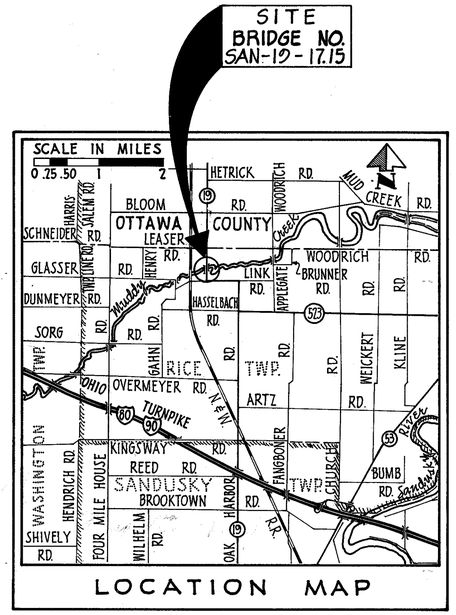


LOCATION MAP

Portion to be Improved
Federal Roads
State Roads
Other Roads
Detours

## SCALES

Plan
Profile, Horizontal — 0' 10' 20' 30' 40' 50'
Profile, Vertical
Cross Sections, Horizontal & Vertical — 0' 1' 2' 3' 4' 5'

## 1981 SPECIFICATIONS

The standard specifications of the State of Ohio, Department of Transportation, including changes and supplemental specifications listed in the proposal shall govern this improvement.

I hereby approve these plans and declare that the making of this improvement will require the closing to traffic of the highway and that detours will be provided as indicated on sheet number one (1)

APPROVED _____
DATE _____ SANDUSKY COUNTY ENGINEER

APPROVED Max D. Moorhead
DATE 7-15-81 DISTRICT DEPUTY DIRECTOR OF TRANSPORTATION

APPROVED Robert B. Pfeifer
DATE 8-18-81 ENGINEER, BUREAU OF BRIDGES & STRUCTURAL DESIGN

APPROVED Howard E. Nolan
DATE 10-23-81 CHIEF ENGINEER, PLANNING & DESIGN

APPROVED David L. Weir
DATE 10-23-81 DIRECTOR, DEPARTMENT OF TRANSPORTATION

PLANS PREPARED BY:
MANNIK & SCHNEIDER, INC.
TOLEDO OHIO
BY: Jaan Mannik
DATE: July 2, 1981

## BENCH MARK DATA

USC & GS Bench Mark:
Standard Disk in Concrete Post
stamped B-20 1934
Located at the S.W. Corner of the
Junction of Road 6 (Elmore Eastern Road)
and the N.&W. R.R.
Elevation . . . . 588.329

| SUPPLEMENTAL PRINTS OF STANDARD CONSTRUCTION DRAWINGS | | | | | |
|---|---|---|---|---|---|
| DRAWING NO. | DATE | DRAWING NO. | DATE | DRAWING NO. | DATE |
| AS-1-72 | 6-30-72 | | | | |
| BP-5 | 7-16-81 | MC-3 | 6-1-73 | | |
| | | | | | |
| GR-1 | 12-6-76 | MC-11 | 8-1-78 | | |
| GR-2B | 12-6-76 | | | | |
| | | PSBD-1-71 | 9-1-71 | | |
| GR-3 | 12-6-76 | | | | |
| | | | | | |
| GR-4 | 12-6-76 | | | | |
| DBR-2-73 | 4-10-73 | | | | |
| | | | | | |

| SUPPLEMENTAL SPECIFICATIONS | |
|---|---|
| | |
| | |
| 836 | 3-12-75 |
| 1001 | 1-3-77 |
| | |
| | |
| | |
| | |
| | |

DEPARTMENT OF TRANSPORTATION
FEDERAL HIGHWAY ADMINISTRATION

APPROVED:

DIVISION ADMINISTRATOR DATE

FILE NO.
SANDUSKY COUNTY
DATE OF LETTING _____ 19 ___
CONTRACT NO. _____
SAN-19-17.09

OHDCI

K&E 17 0453 12-77 MC 7285*

# TYPICAL SECTION

## TYPE 404 on 301

| F.H.W.A. REGION | STATE | PROJECT | |
|---|---|---|---|
| 5 | OHIO | BRS-335 (7) | |



SANDUSKY COUNTY
SAN-19-17.09

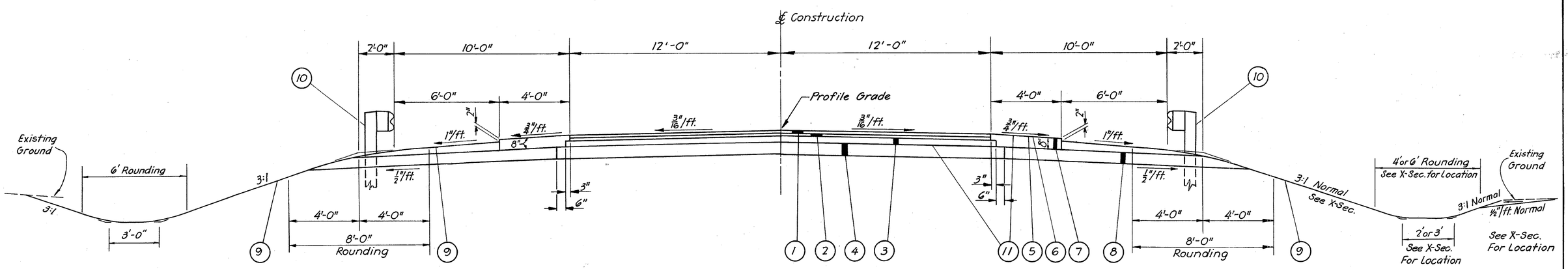


The Above Typical Section Applies between the following Stations:
Sta. 902+75 to Sta. 905+49.41
Sta. 907+20.59 to Sta. 909+75

## LEGEND

| | | |
|---|---|---|
| 1 | Item 404 | 1 1/4" Asphalt Concrete AC-20 |
| 2 | Item 402 | 1 3/4" Asphalt Concrete AC-20 |
| 3 | Item 301 | 5" Bituminous Aggregate Base, AC-20, RT-11 or RT-12 |
| 4 | Item 304 | 8" Aggregate Base |
| 5 | Item 409 | Seal Coat Bituminous Material, Applied at the rate of 0.30 Gal./Sq. Yd. |
| 6 | Item 409 | Seal Coat Cover Aggregate No.8 Applied at the rate of 0.008 Cu. Yd./Sq. Yd. |
| 7 | Item 304 | Aggregate Base |
| 8 | Item 605 | Aggregate Drains |
| 9 | Item 659 | Seeding and Mulching |
| 10 | Item 606 | Guardrail, Type 5 (See Schedule for Locations) |
| 11 | Item 408 | Bituminous Prime Coat, Applied at the rate of 0.40 Gal./Sq. Yd. |
| 12 | Item 407 | Tack Coat - Applied at the rate of 0.10 Gal./Sq. Yd.<br>Cover Aggregate - Applied at the rate of 7 lbs./Sq. Yd., 703.06 |
| 13 | Item 402 | Variable - 1" Min. to 1 3/4" Max., Asphalt Concrete AC-20 |

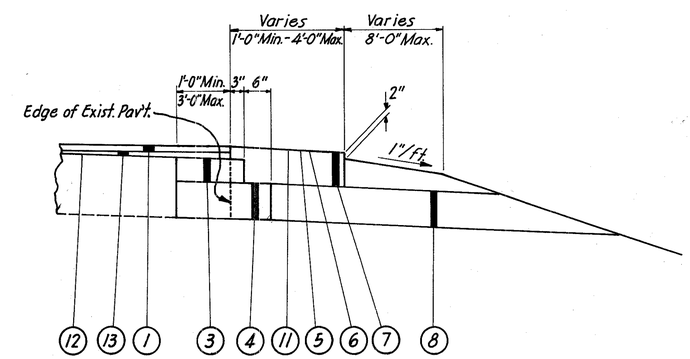


## PARTIAL TYPICAL SECTION FOR WIDENING AND RE-SURFACING

Applies between the following stations:
Sta. 901+75 to 902+75
Sta. 909+75 to 910+50



OHDCI

# GENERAL NOTES

MOBILIZATION, AS PER PLAN

*The Contractor shall provide a suitable field office having a minimum of 150 Sq. ft. of floor space which shall be in accordance with 619.01 and 619.02. Payment for the above shall be included in the lump sum bid for item 624 Mobilization, as per plan.*

MAINTAINING TRAFFIC

THE CONTRACTOR SHALL ERECT AND MAINTAIN ALL SIGNS, LIGHTS AND BARRICADES AS PER ITEM 614 AT THE LIMITS OF THE PROJECT. BARRICADES SHALL BE AS PER STANDARD DRAWING MC-3 OR APPROVED EQUAL. TRAFFIC DETOUR ROUTES REQUIRED FOR THIS PROJECT ARE TO BE AS SHOWN ON DETOUR MAP, (SEE TITLE SHEET.) ALL LIGHTING OF THE DETOUR SIGNS WILL BE PROVIDED AND MAINTAINED BY THE CONTRACTOR.

SEEDING

QUANTITIES FOR SEEDING ARE CALCULATED FOR THE SOIL AREAS BETWEEN THE RIGHT-OF-WAY LINES AND WITHIN THE WORK LIMITS FOR AREAS OUTSIDE THE RIGHT-OF-WAY LINES COVERED BY WORK EASEMENTS, SLOPE EASEMENTS OR SPECIAL AGREEMENT EASEMENTS.

THE SEED MIXTURE TO BE USED FOR THIS PROJECT IS AS SPECIFIED FOR URBAN AREAS AS CALLED FOR IN 659.09, APPLIED AT THE RATE OF 3 POUNDS PER 1000 SQUARE FEET.

COMMERCIAL FERTILIZER

COMMERCIAL FERTILIZER SHALL BE APPLIED AT THE RATE OF 20 POUNDS PER 1000 SQUARE FEET.

ROUNDING OF CORNERS SHOWN ON CROSS SECTIONS

THE ROUNDING CORNERS SHOWN ON THE TYPICAL SECTIONS, APPLY TO ALL CROSS SECTIONS EVEN THOUGH OTHERWISE SHOWN ON THESE PLANS.

ELEVATION DATUM

ELEVATION DATA IS BASED ON U.S.G.S. DATUM.

UTILITY OWNERSHIP

THE CONTRACTOR SHALL NOTIFY ALL INVOLVED UTILITIES COMPANIES AT LEAST FIVE (5) CONSTRUCTION DAYS BEFORE ANY CONSTRUCTION IS PERFORMED IN THE AREA.

THE FOLLOWING IS A LIST OF THE OWNERS OF UTILITIES KNOWN TO BE WITHIN THE LIMITS OF CONSTRUCTION.

ELECTRIC TOLEDO EDISON COMPANY-EDISON PLAZA,
300 MADISON AVENUE, TOLEDO, OHIO 43652

TELEPHONE GENERAL TELEPHONE COMPANY OF OHIO
117 NORTH SANDUSKY STREET
BELLEVUE, OHIO 44811

UNDERGROUND UTILITIES

THE LOCATIONS OF THE UNDERGROUND UTILITIES SHOWN ON THE PLANS HAVE BEEN OBTAINED BY DILIGENT FIELD CHECKS AND SEARCHES OF AVAILABLE RECORDS. IT IS BELIEVED THAT THEY ARE ESSENTIALLY CORRECT, BUT THE STATE OF OHIO DOES NOT GUARANTEE THEIR ACCURACY OR COMPLETENESS.

BEFORE EXCAVATING IN THE VICINITY OF THE PROJECT, CONTACT OHIO UTILITIES PROTECTION SERVICE (800) 362-2764 FOR THE EXACT LOCATION OF UNDERGROUND UTILITIES.

REMOVAL OF TREES

ALL TREES SPECIFICALLY MARKED FOR REMOVAL WITHIN THE CONSTRUCTION LIMITS OF THIS PROJECT SHALL BE REMOVED UNDER THE LUMP SUM PRICE BID FOR ITEM 201, CLEARING AND GRUBBING, EXCEPT THAT THOSE TREES FOR WHICH PROTECTION AND PRESERVATION WORK IS INDICATED ELSEWHERE IN THESE PLANS SHALL NOT BE REMOVED.

THE FOLLOWING IS AN APPROXIMATE ESTIMATE OF THE NUMBER OF TREES AND STUMPS TO BE REMOVED.

| SIZES | NO. TREES |
|---|---|
| 18" | 23 |
| 30" | 2 |
| 48" | 1 |

THE ABOVE ESTIMATE IS APPROXIMATE AND THE STATE OF OHIO RESERVES THE RIGHT TO ORDER THE REMOVAL OF ADDITIONAL TREES OUTSIDE OF THE LIMITS OF CONSTRUCTION BUT WITHIN THE RIGHT-OF-WAY AND/OR EASEMENT LINES. PAYMENT FOR THE REMOVAL OF THESE ADDITIONAL TREES OR STUMPS SHALL BE INCLUDED IN THE LUMP SUM PRICE BID FOR ITEM 201, CLEARING AND GRUBBING.

ESTIMATED QUANTITIES

SPECIFIC LOCATIONS AND USAGE OF ESTIMATE QUANTITIES SET UP ON THIS PLAN TO BE USED "AS DIRECTED BY THE ENGINEER" SHALL BE MADE A MATTER OF RECORD BY INCORPORATION INTO THE FINAL CHANGE ORDER GOVERNING COMPLETION OF THIS PROJECT. ESTIMATED QUANTITIES OF MATERIALS SHALL NOT BE ORDERED FOR DELIVERY TO THE PROJECT UNLESS AUTHORIZED BY THE ENGINEER.

LOCATION OF GUARDRAIL

THE LOCATIONS OF GUARDRAIL RUNS, AS SHOWN IN THESE PLANS, ARE SUBJECT TO ADJUSTMENT TO ASSURE THAT THE PLANNED INSTALLATIONS WILL AFFORD MAXIMUM PROTECTION FOR TRAFFIC.

APPROACH SLAB

JACKING HOLES, AS SHOWN ON AS-1-72 SHALL BE OMITTED. THE REINFORCING IN THE TOP OF THE SLAB SHALL BE 3" CLEAR.

WATER POLLUTION, SOIL EROSION AND SILTATION CONTROL

THE FOLLOWING ESTIMATED QUANTITIES ARE TO BE USED AS DIRECTED BY THE ENGINEER FOR EROSION AND SILTATION CONTROL MEASURES:

| | | |
|---|---|---|
| 207 | STRAW OR HAY BALES | 20 EACH |
| 207 | TEMPORARY SLOPE DRAINS | 88 LIN. FT. |
| 207 | TEMPORARY BENCHES, DIKES DAMS AND SEDIMENT BASINS | 5 CU. YD. |

DUST CONTROL

THE FOLLOWING QUANTITIES HAVE BEEN CARRIED TO THE GENERAL SUMMARY FOR USE AS DIRECTED BY THE ENGINEER TO CONTROL DUST ORIGINATING WITHIN THE PROJECT LIMITS:

| | | |
|---|---|---|
| ITEM 616 | 1 TON | CALCIUM CHLORIDE |
| ITEM 616 | 50 M. GAL. | WATER |

WATERING AND MOWING PERMANENT SEEDED AREAS

THE FOLLOWING ESTIMATED QUANTITIES ARE TO BE USED AS DIRECTED BY THE ENGINEER TO PROMOTE GROWTH AND TO CARE FOR THE PERMANENT SEEDED AREAS, AS PER 659.09:

| | | |
|---|---|---|
| 659 | WATER | 14.4 M. GALS. |
| 659 | MOWING | 60 M. SQ. FT. |

MANNIK & SCHNEIDER, INC.
CONSULTING ENGINEERS & SURVEYORS TOLEDO, OHIO

GENERAL NOTES

| DESIGNED | TRACED | CHECKED | REVIEWED | DATE | REVISED |
|---|---|---|---|---|---|
| RWF | KLM | KLM | | | |




BRUNING

K&E 17 0453 12-77 MC 7285*

| F.H.W.A. REGION | STATE | PROJECT | |
|---|---|---|---|
| 5 | OHIO | BRS-335(7) | |



SANDUSKY COUNTY
SAN-19-17.00

QUANTITIES
CALC. BY KLM DATE 10/80
CK'D. BY PRL DATE 10/80

## PAVEMENT CALCULATIONS

| Station From | Station To | ① Net Length | ② Average Width | ③ Item Area ①×②/9 | (P) Number | 203 Subgrade Compaction ③ | 404 1¼" Asphalt Concrete ③×1.25/36 | 402 1¾" Asphalt Concrete ③×1.75/36 | 402 1" Min. Asphalt Concrete ③×1.375 Mi/36 | 407 Tack Coat ③×0.1 | 408 Prime Coat ③×0.4 | 301 5" Bit. Aggr. Base ③×5/36 | 304 8" Aggregate Base ③×8/36 | 304 6" Aggregate Base ③×6/36 | 407 Cover Aggreg. ③×7/2000 | 409 Seal Coat Bit. Material ③×0.3 | 409 Seal Coat Cover Aggreg. ③×0.008 |
|---|---|---|---|---|---|---|---|---|---|---|---|---|---|---|---|---|---|
| | | Lin. Ft. | Lin. Ft. | Sq. Yd. | | Sq. Yd. | Cu. Yd. | | | Gal. | Gal. | | Cu. Yd. | | Ton | Gal. | Cu. Yd. |
| 901+75 | 902+75 | 100 | 22.25 | 247.22 | 1 | | 8.58 | | | | | | | | | | |
| 901+75 | 902+75 | 100 | 5.50 | 61.11 | 1 | | | | | | | 8.49 | | | | | |
| 901+75 | 902+75 | 55 | 22.25 | 135.97 | 1 | | | | 5.10 | | | | | | | | |
| 901+75 | 902+75 | 100 | 18.50 | 205.55 | 1 | | | | | 20.56 | | | | | 0.72 | | |
| 901+75 | 902+75 | 100 | 5 | 55.55 | 1 | | | | | | 22.22 | | 12.34 | | | 16.67 | 0.44 |
| 902+75 | 905+49.41 | 274.41 | 24 | 731.76 | 2 | 731.76 | 25.41 | 35.57 | | | | | | | | | |
| 902+75 | 905+49.41 | " | 24.5 | 747.01 | 2 | | | | | | | 103.75 | | | | | |
| 902+75 | 905+49.41 | " | 25.5 | 777.50 | 2 | | | | | | | | 172.78 | | | | |
| 902+75 | 905+49.41 | " | 8 | 243.92 | 2 | | | | | | | | 54.20 | | | 73.18 | 1.95 |
| 902+75 | 905+49.41 | Deduct for 301 Step in Shoulder | | | 2 | | | | | | | | -2.12 | | | | |
| 902+75 | 905+49.41 | 274.41 | 33.5 | 1021.41 | 2 | | | | | | 408.56 | | | | | | |
| 905+49.41 | 905+74.41 | 25 | 44 | 122.22 | 3 | 122.22 | 4.24 | 5.94 | | 12.22 | | | | 21.30 | 0.43 | | |
| 906+95.59 | 907+20.59 | 25 | 44 | 122.22 | 4 | 122.22 | 4.24 | 5.94 | | 12.22 | | | | 20.37 | 0.43 | | |
| 907+20.59 | 909+75 | 254.41 | 24 | 678.43 | 5 | 678.43 | 23.56 | 32.98 | | | | | | | | | |
| 907+20.59 | 909+75 | " | 24.5 | 692.56 | 5 | | | | | | | 96.19 | | | | | |
| 907+20.59 | 909+75 | " | 25.5 | 720.83 | 5 | | | | | | | | 160.18 | | | | |
| 907+20.59 | 909+75 | " | 8 | 226.14 | 5 | | | | | | | | 50.25 | | | 67.84 | 1.81 |
| 907+20.59 | 909+75 | Deduct for 301 Step in Shoulder | | | 5 | | | | | | | | -3 | | | | |
| 907+20.59 | 909+75 | 254.41 | 33.5 | 946.97 | 5 | | | | | | 378.79 | | | | | | |
| 909+75 | 910+50 | 75 | 22.25 | 185.42 | 6 | | 6.44 | | | | | | | | | | |
| 909+75 | 910+50 | 75 | 5.50 | 45.83 | 6 | | | | | | | 6.36 | | | | | |
| 909+75 | 910+50 | 25 | 22.25 | 61.81 | 6 | | | | 2.36 | | | | | | | | |
| 909+75 | 910+50 | 75 | 18.50 | 154.17 | 6 | | | | | 15.42 | | | | | 0.54 | | |
| 909+75 | 910+50 | 75 | 5 | 41.67 | 6 | | | | | | 16.67 | | 9.26 | | | 12.50 | 0.33 |
| Subtotal | | | | | | 1654.63 | 72.47 | 80.43 | 7.55 | 60.42 | 826.24 | 214.79 | 453.89 | 41.67 | 2.12 | 170.19 | 4.53 |
| TOTALS TO GENERAL SUMMARY | | | | | | 1655 | 73 | 88 | | 61 | 827 | 215 | 496 | | 3 | 171 | 5 |

## AGGREGATE DRAIN SCHEDULE

| Location From | Location To | Spacing | Number Of Drains | Average Length Of Drains | 605 Total Length Of Drains Lin. Ft. |
|---|---|---|---|---|---|
| 901+75 Rt. | 902+25 Rt. | 50' | 2 | 14' | 28 |
| 902+00 Lt. | 902+50 Lt. | 50' | 2 | 11' | 22 |
| 902+75 Rt. | 905+25 Rt. | 50' | 6 | 14.5' | 87 |
| 903+00 Lt. | 905+00 Lt. | 50' | 5 | 15' | 75 |
| 905+00 Lt. | 905+45 Lt. | 45' | 1 | 14' | 14 |
| 907+25 Rt. | 909+75 Rt. | 50' | 6 | 14.5' | 87 |
| 907+50 Lt. | 909+50 Lt. | 50' | 5 | 14.4' | 72 |
| 909+75 Lt. | 910+25 Lt. | 50' | 2 | 4' | 8 |
| 910+00 Rt. | 910+30 Rt. | 30' | 2 | 4' | 8 |
| Total To General Summary | | | | | 401 |

QUANTITIES
CALC. BY KLM DATE 11/80
CK'D. BY PRL DATE 11/80

## GENERAL SUMMARY

| Ref. No. | Item | Quantity | Unit | Description |
|---|---|---|---|---|
| | | | | **ROADWAY** |
| | 201 | Lump Sum | Lump Sum | Clearing and Grubbing |
| | 203 | 3534 | Cu. Yd. | Embankment |
| | 203 | 1865 | Cu. Yd. | Excavation Not Including Embankment Construction |
| | 203 | 1655 | Sq. Yd. | Subgrade Compaction |
| | 606 | 532.64 | Lin. Ft. | Guard Rail, Type 5 |
| | 606 | 4 | Ea. | Anchor Assembly, Standard Type A |
| | 606 | 4 | Ea. | Bridge Terminal Assembly, Standard Type B |
| | 616 | 1 | Ton | Calcium Chloride |
| | 616 | 50 | M. Gal. | Water |
| | | | | **DRAINAGE** |
| | 605 | 401 | Lin. Ft. | Aggregate Drains |
| | | | | **EROSION CONTROL** |
| | 207 | 88 | Lin. Ft. | Temporary Slope Drains |
| | 207 | 5 | Cu. Yd. | Temporary Benches, Dikes, Dams and Sediment Basins |
| | 207 | 20 | Ea. | Straw or Hay Bales |
| | 659 | 6647 | Sq. Yd. | Seeding and Mulching |
| | 659 | 0.60 | Ton | Commercial Fertilizer |
| | 659 | 14.4 | M. Gal. | Water |
| | 659 | 60 | M. Sq. Ft. | Mowing |
| | | | | **PAVEMENT** |
| | 301 | 215 | Cu. Yd. | Bituminous Aggregate Base, AC-20, RT-11 or RT-12 |
| | 304 | 496 | Cu. Yd. | Aggregate Base |
| | 402 | 88 | Cu. Yd. | Asphalt Concrete AC-20 |
| | 404 | 73 | Cu. Yd. | Asphalt Concrete AC-20 |
| | 407 | 3 | Ton | Cover Aggregate |
| | 407 | 61 | Gal. | Tack Coat |
| | 408 | 827 | Gal. | Bituminous Prime Coat |
| | 409 | 171 | Gal. | Seal Coat Bituminous Material |
| | 409 | 5 | Cu. Yd. | Seal Coat Cover Aggregate No. 8 |
| | 611 | 245 | Sq. Yd. | Reinforced Concrete Approach Slab (T=15") |
| | | | | **MISCELLANEOUS** |
| | 614 | Lump Sum | Lump Sum | Maintaining Traffic |
| | 623 | Lump Sum | Lump Sum | Construction Layout Stakes |
| | 624 | Lump Sum | Lump Sum | Mobilization, As Per Plan |
| | | | | **STRUCTURE OVER 20 FOOT SPAN** |
| | | | | See Sheet No. 12 For Estimated Quantities |

QUANTITIES
CALC. BY KLM DATE 10/80
CK'D. BY PRL DATE 10/80

## APPROACH SLAB SCHEDULE

| Station From | Station To | Ⓛ Length | Ⓦ Width | 611 Reinforced Concrete Approach Slab Ⓛ×Ⓦ/9 | 304 6" Aggregate Base Ⓛ×Ⓦ/54 | 203 Subgrade Compaction Ⓛ×Ⓦ/9 |
|---|---|---|---|---|---|---|
| | | Lin. Ft. | Lin. Ft. | Sq. Yd. | Cu. Yd. | Sq. Yd. |
| 905+49.41 | 905+74.41 | 25 | 44 | 122.22 | | 122.22 |
| | | | 46 | | 21.30 | |
| 906+95.59 | 907+20.59 | 15 | 44 | 122.22 | | 122.22 |
| | | | 46 | | 20.37 | |
| Totals to Pavement Schedule | | | | | 41.67 | 244.44 |
| TOTAL TO GENERAL SUMMARY | | | | 245 | | |

QUANTITIES
CALC. BY RWF DATE 12/80
CK'D. BY CMS DATE 12/80

## GUARD RAIL SCHEDULE

| Sheet Number | (G) Number | Station From | Station To | Side | 606 Guard Rail Type 5 Lin. Ft. | 606 Assemblies Bridge Terminal Type B Each | 606 Assemblies Anchor Type A Each |
|---|---|---|---|---|---|---|---|
| 5 | 1 | 904+12.22 | 905+70.93 | Rt. | 133.31 | 1 | 1 |
| 5 | 2 | 904+20.28 | 905+78.29 | Lt. | 133.01 | 1 | 1 |
| 5 | 3 | 906+91.71 | 908+49.72 | Rt. | 133.01 | 1 | 1 |
| 5 | 4 | 906+99.47 | 908+57.78 | Lt. | 133.31 | 1 | 1 |
| TOTALS TO GENERAL SUMMARY | | | | | 532.64 | 4 | 4 |

QUANTITIES
CALC. BY KLM DATE 10/80
CK'D. BY LWU DATE 10/80

## EARTHWORK & SEEDING SCHEDULE

| Sheet Number | 203 Excavation Not Including Embankment Construction Cu. Yd. | 203 Embankment Cu. Yd. | 659 Seeding Sq. Yd. |
|---|---|---|---|
| 6 | 204 | 512 | 1703 |
| 7 | 576 | 1246 | 1792 |
| 8 | 512 | 1043 | 1273 |
| 9 | 483 | 733 | 1879 |
| Totals To General Summary | 1865 | 3534 | 6647 |

## COMMERCIAL FERTILIZER

Area to be Seeded (Sq. Yd.) × 9 Ft. / 1000 Ft. × 20 Lbs. / 2000 Lbs.

6647 Sq. Yd. × 9/1000 × 20/2000 = 0.50 Ton

TOTAL TO GENERAL SUMMARY = 0.60 TON

QUANTITIES
CALC. BY KLM DATE 10/80
CK'D. BY LWU DATE 10/80

OHDC1

BRS-335(7)

SANDUSKY COUNTY
SAN-19-17.09

MICROFILMED
AUG 29 1980

QUANTITIES
CALC. BY K.L.M. DATE 10/80
CKD. BY R.L. DATE 10/80




PAVED SHOULDER TAPER DETAIL

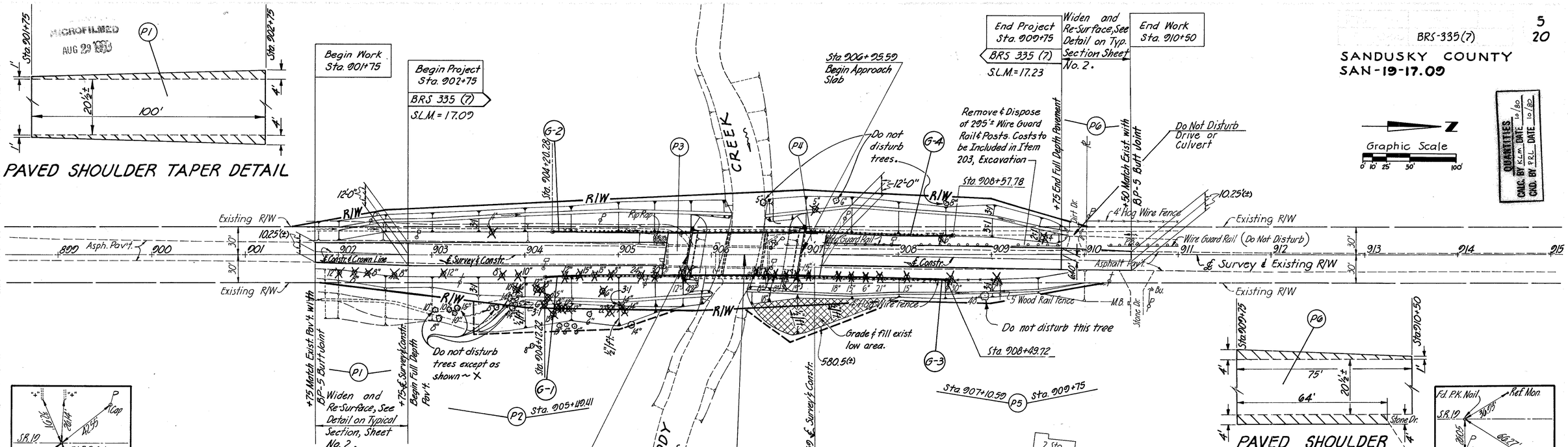


S. R. 19 Sta. 902+00 to Sta. 913+00

OHDCI

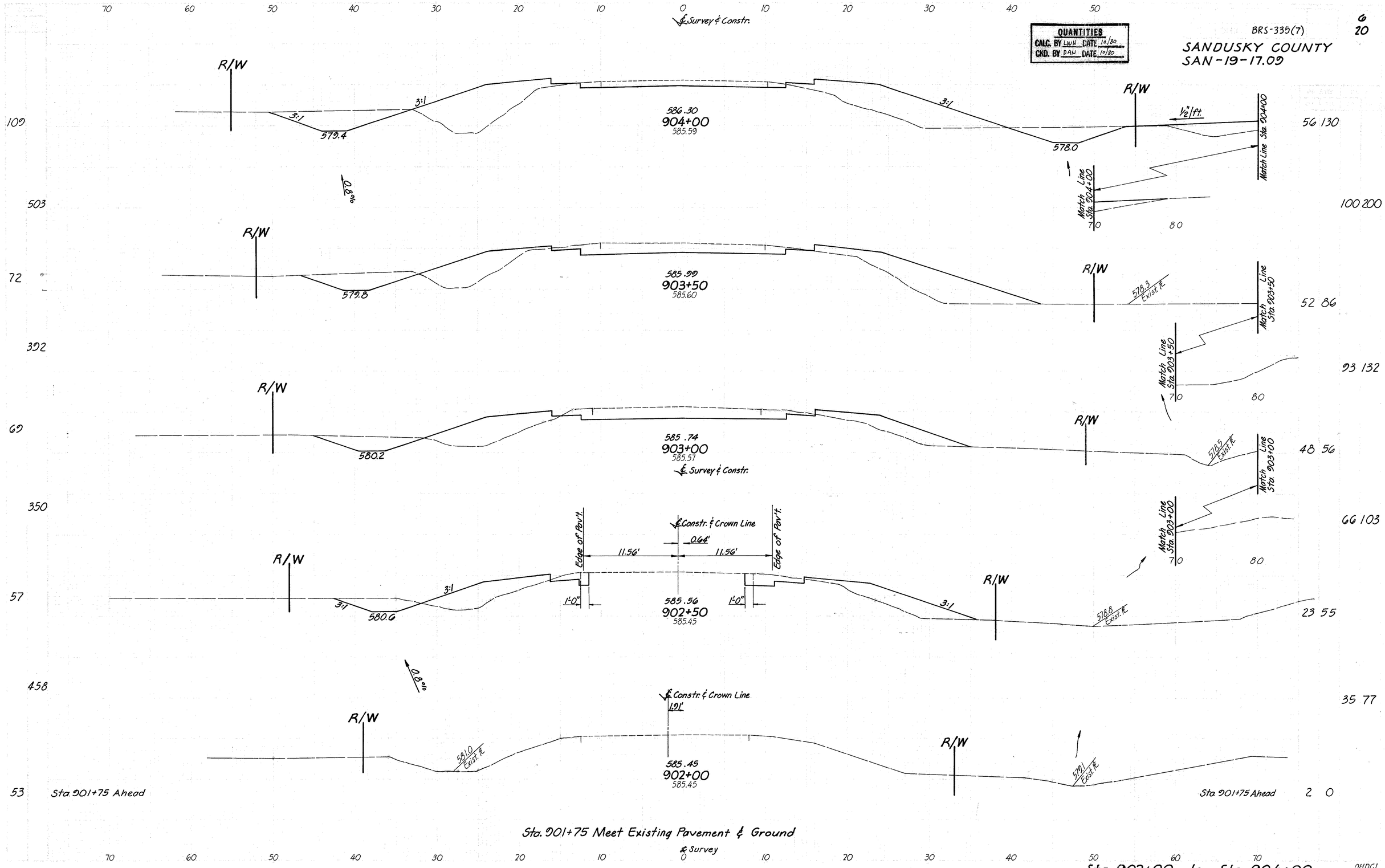
QUANTITIES
CALC. BY LWN DATE 10/80
CKD. BY DAN DATE 10/80
BRS-339(7)
SANDUSKY COUNTY
SAN-19-17.09
6
20
℄ Survey & Constr.
R/W
3:1
579.4
586.30
904+00
585.59
578.0
1/2"/ft.
Match Line Sta. 904+00
56 130
100 200
0.8%
579.8
585.90
903+50
585.60
578.3 Exist. ℄
Match Line Sta. 903+50
52 86
93 132
580.2
585.74
903+00
585.57
578.5 Exist. ℄
Match Line Sta. 903+00
48 56
66 103
Edge of Pav't.
℄ Constr. & Crown Line
0.64'
11.56'
1'-0"
580.6
585.56
902+50
585.45
578.8 Exist. ℄
23 55
35 77
1.91'
581.0 Exist. ℄
585.45
902+00
578.1 Exist. ℄
Sta. 901+75 Ahead
2 0
Sta. 901+75 Meet Existing Pavement & Ground
Sta. 902+00 to Sta 904+00
OHDG1

QUANTITIES
CALC. BY KLM DATE 10/80
CKD. BY LWN DATE 10/80

BRS-335(7)

SANDUSKY COUNTY
SAN.-19-17.09

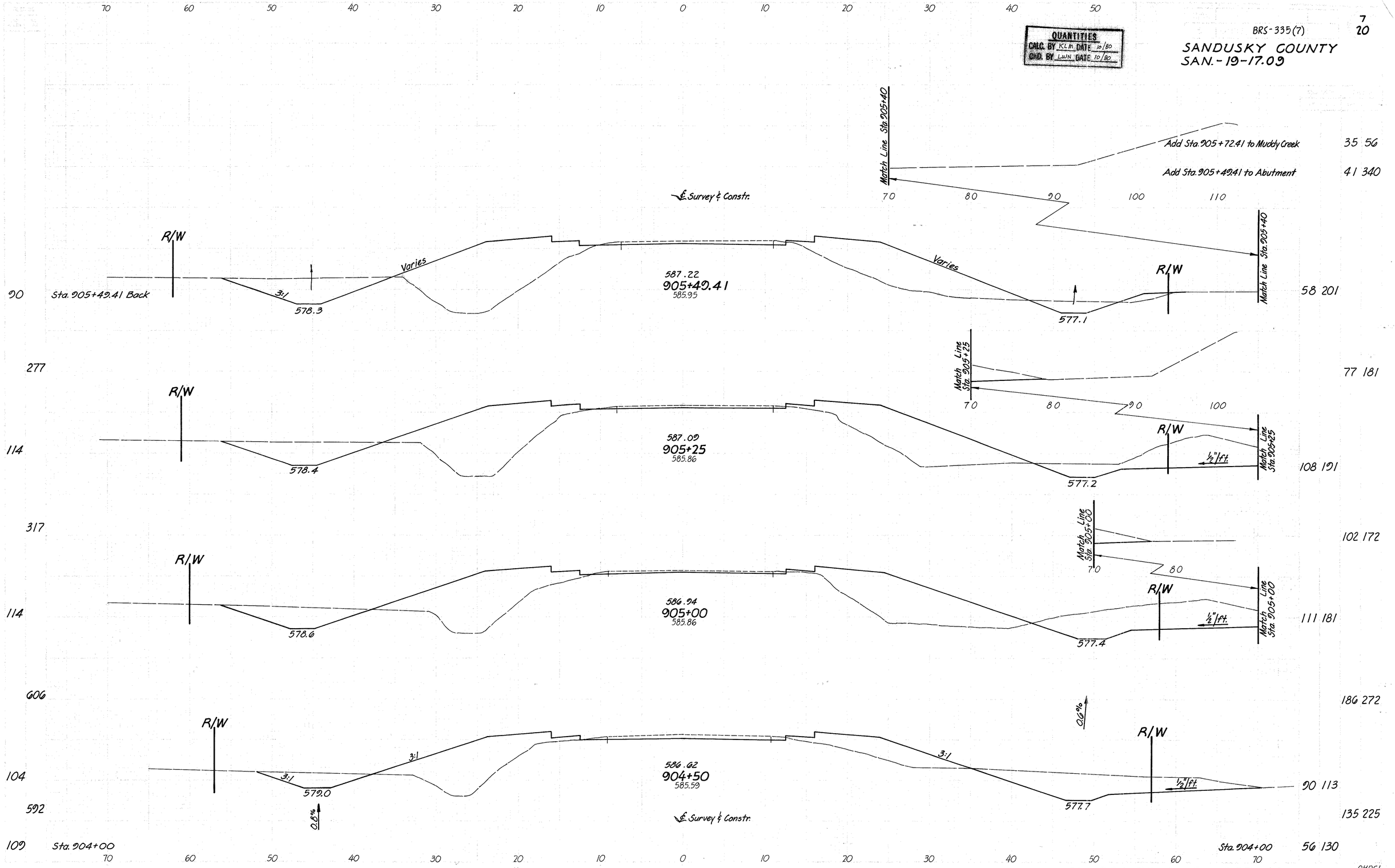

BRS-335(7)

SANDUSKY COUNTY
SAN.-19-17.09

QUANTITIES
CALC. BY LWN DATE 10/80
CKD. BY DAN DATE 10/80

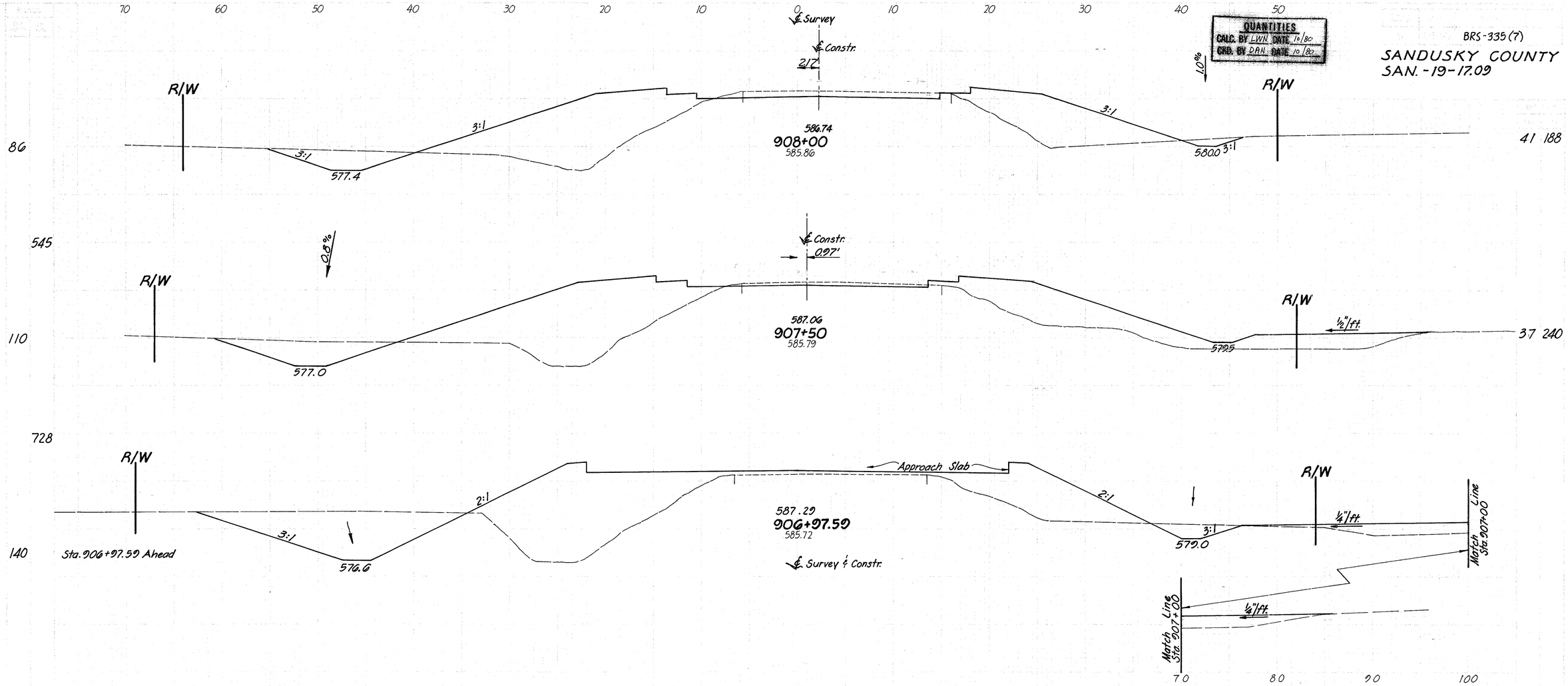


| | | |
|---|---|---|
| Sta. 907+10.59 Ahead | 88 266 | |
| Sta. 907+10.59 Back | 88 251 | 42 121 |
| Sta. 906+97.59 Ahead | 88 251 | |

Add from Muddy Creek to Sta. 906+97.59 — 307 157

Sta. 907+00 to Sta. 908+00

OHDOT

BRS-335 (7)

SANDUSKY COUNTY
SAN.-19-17.09

| QUANTITIES | |
|---|---|
| CALC. BY LWN | DATE 10/80 |
| CKD. BY DAN | DATE 10/80 |

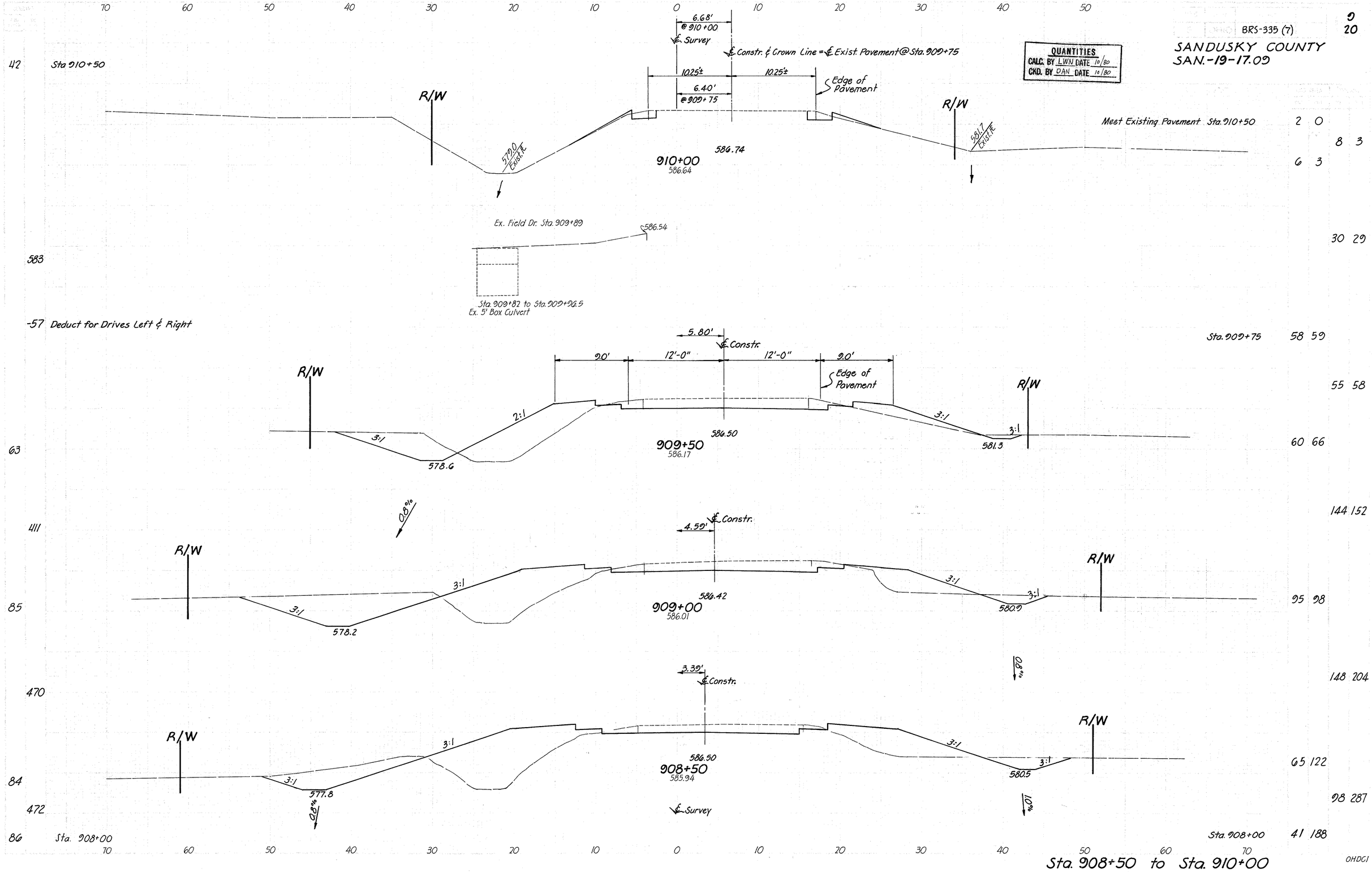

BRS-335(7)

SANDUSKY COUNTY
SAN.-19-17.09

| QUANTITIES | |
|---|---|
| CALC. BY LWN | DATE 10/80 |
| CKD. BY DAN | DATE 10/80 |

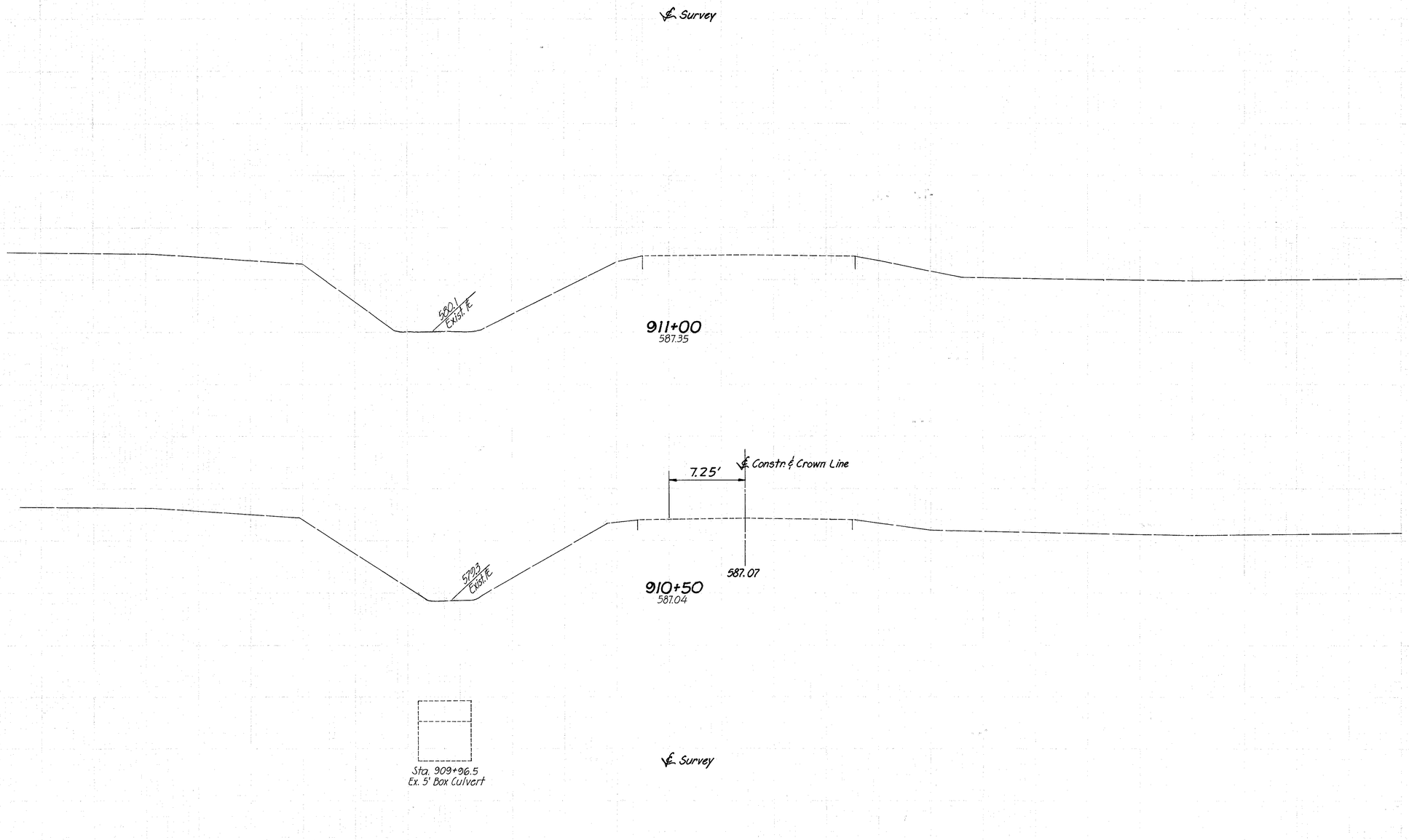


Sta. 910+50 to Sta. 911+00

OHDCI

| F.H.W.A. REGION | STATE | PROJECT | |
|---|---|---|---|
| 5 | OHIO | BRS-335 ( ) | |

11/20

SANDUSKY COUNTY
SAN-19-17.09

MICROFILMED
AUG 29 1986

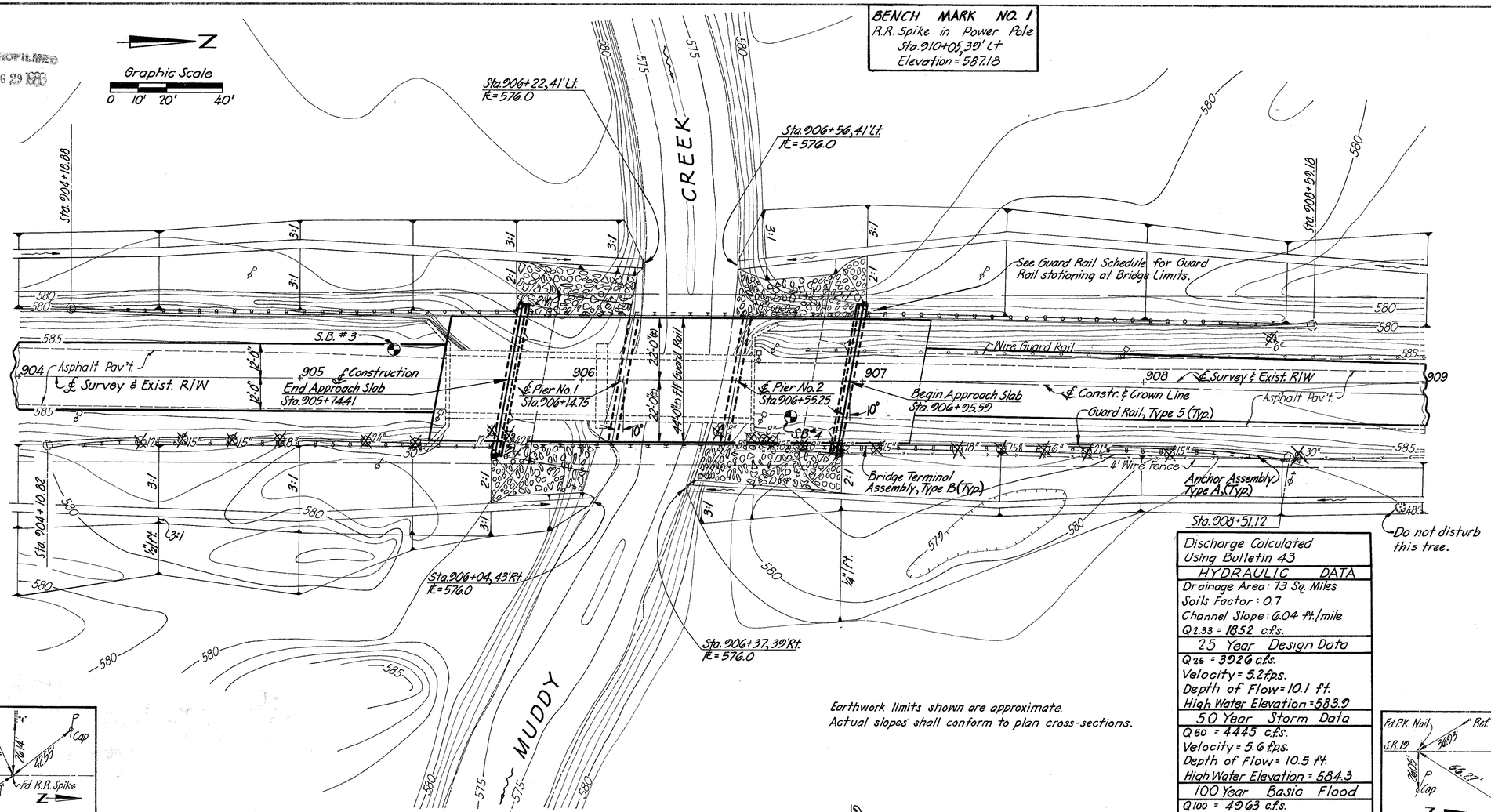


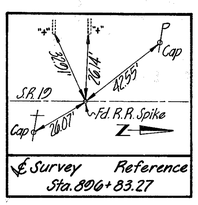


| Discharge Calculated Using Bulletin 43 HYDRAULIC DATA |
|---|
| Drainage Area: 73 Sq. Miles |
| Soils Factor: 0.7 |
| Channel Slope: 6.04 ft./mile |
| $Q_{2.33}$ = 1852 c.f.s. |
| **25 Year Design Data** |
| $Q_{25}$ = 3926 c.f.s. |
| Velocity = 5.2 f.p.s. |
| Depth of Flow = 10.1 ft. |
| High Water Elevation = 583.9 |
| **50 Year Storm Data** |
| $Q_{50}$ = 4445 c.f.s. |
| Velocity = 5.6 f.p.s. |
| Depth of Flow = 10.5 ft. |
| High Water Elevation = 584.3 |
| **100 Year Basic Flood** |
| $Q_{100}$ = 4963 c.f.s. |
| Velocity = 6.2 f.p.s. |
| Depth of Flow = 11.0 ft. |
| High Water Elevation = 584.8 |

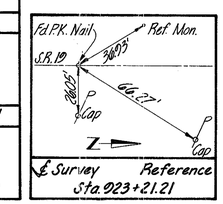


## EXISTING STRUCTURE

TYPE: 2 Span Reinforced Conc. Girder with Reinforced Conc. Floor Beams & Slab on Full Height Non-Reinforced Conc. Pier & Abutments.
SPANS: 2 @ 50'-0" Clear
ROADWAY: 20'-0" f/f Girders
LOADING: Unknown
SKEW: None
CONDITION: Extremely Poor. Pier & Abutments Severely Cracked & Spalled. Deck has been Repaired Extensively.
Existing Structure to be Removed.

ADT Year(2000) = 4820

## PROPOSED STRUCTURE

TYPE: Three Span Prestressed Concrete Box Beams on Capped Pile Substructures.
SPANS: 3 @ 38.98' c/c Bearings
ROADWAY: 44'-0" f/f Guard Rail
SKEW: 10°00' L.F.
LOADING: HS 20-44 and the Alternate Military Loading.
WEARING SURFACE: 2½" Asphalt Concrete
SUPERELEVATION: None
APPROACH SLABS: AS-1-72 25'
ALIGNMENT: Tangent

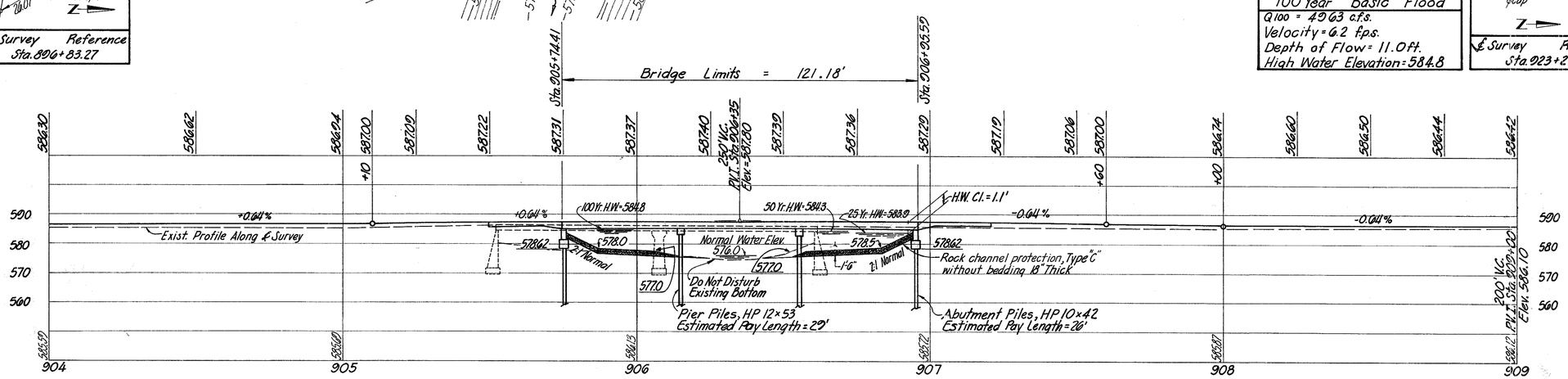


PROFILE ALONG ℄ CONSTRUCTION

MANNIK & SCHNEIDER, INC. 1/6
CONSULTING ENGINEERS & SURVEYORS TOLEDO, OHIO

# SITE PLAN

Bridge No. SAN-19-17.15
S.R. 19 over Muddy Creek

Sta. 905+74.41 Sandusky County

| DESIGNED | TRACED | CHECKED | REVIEWED | DATE | REVISED |
|---|---|---|---|---|---|
| RWF | LWN DN | C.M.S. | JM | 1-9-81 | |

BRUNING

OHDCI

K&E MC 223

MICROFILMED
AUG 29 1980

| FED ROAD DIVISION | STATE | PROJECT | |
|---|---|---|---|
| 5 | OHIO | BRS-335( ) | |



SANDUSKY COUNTY
SAN-19-17.09

# GENERAL NOTES-STRUCTURE

STANDARD DRAWINGS

REFERENCE SHALL BE MADE TO STANDARD DRAWINGS AS-1-72 DATED 6-30-72, DBR-2-73 DATED 4-10-73, PSBD-1-71 (3 SHEETS) DATED 9-1-71.

SUPPLEMENTAL CONSTRUCTION SPECIFICATIONS

REFERENCE SHALL BE MADE TO SUPPLEMENTAL SPECIFICATION NO. 836 DATED 3-12-75.

DESIGN SPECIFICATIONS

THIS STRUCTURE CONFORMS TO "STANDARD SPECIFICATIONS FOR HIGHWAY BRIDGES" ADOPTED BY THE AMERICAN ASSOCIATION FOR STATE HIGHWAY AND TRANSPORTATION OFFICIALS, 1977, INCLUDING INTERIM SPECIFICATIONS AND THE OHIO "SUPPLEMENT" TO THESE SPECIFICATIONS.

DESIGN DATA

DESIGN LOADING - HS20-44 AND THE ALTERNATE MILITARY LOADING

CONCRETE CLASS C -
UNIT STRESS 1333 p.s.i. FOR SUBSTRUCTURE

REINFORCING STEEL - ASTM A615, A616 OR A617 - UNIT STRESS 20,000 p.s.i.

CONCRETE FOR PRESTRESSED CONCRETE BEAMS -
UNIT STRESS 2200 p.s.i. COMPRESSION
444 p.s.i. TENSION

PRESTRESSING STRAND ASTM A416
$f'_s$ = 270,000 p.s.i.
INITIAL STRESS = 0.70 $f'_s$

REMOVAL AND DISPOSAL OF EXISTING BRIDGE

WHEN NO LONGER REQUIRED TO MAINTAIN TRAFFIC, THE EXISTING BRIDGE SHALL BE REMOVED. AT THE CONTRACTOR'S OPTION, EXISTING CONCRETE REMOVED FROM ABUTMENTS MAY BE USED AS EMBANKMENT PROTECTION MATERIAL, AS DIRECTED BY THE PROJECT ENGINEER, PROVIDING THAT THE MATERIAL MEETS THE GRADATION REQUIREMENTS OF SECTION 601.08. ALL OF THE ABOVE SHALL BE INCLUDED IN THE UNIT PRICE BID FOR ITEM 202, STRUCTURE REMOVED.

EMBANKMENT CONSTRUCTION

THE EMBANKMENTS SHALL BE CONSTRUCTED TO THE LEVEL OF THE SUBGRADE FOR A MINIMUM DISTANCE OF 50 FEET BACK OF THE ABUTMENTS. EXCAVATION SHALL THEN BE MADE FOR THE ABUTMENTS

PILE CAPACITY

ABUTMENT PILES SHALL BE DRIVEN TO A MINIMUM BEARING CAPACITY OF 32 TONS PER PILE.

PIER PILES SHALL BE DRIVEN TO A MINIMUM BEARING CAPACITY OF 36 TONS

ABUTMENT PILE SPECIFICATION

AT THE CONTRACTOR'S OPTION, STEEL PILES H P 12X53 MAY BE SUBSTITUTED FOR THE THE H P 10X42 ABUTMENT PILES SPECIFIED.

ITEM 836 CONCRETE CURING AND PROTECTIVE MEMBRANE

APPLICATION SHALL BE MADE TO ALL SURFACES ABOVE GROUND LINE OF WING WALLS IN ADDITION TO THOSE SURFACES DESCRIBED IN SUPPLEMENTAL SPECIFICATION NO. 836. THE COST OF THIS APPLICATION SHALL BE INCLUDED IN THE UNIT PRICE BID FOR ITEM 511 CONCRETE.

APPEARANCE OF BRIDGE

THE CONTRACTOR SHALL BE RESPONSIBLE FOR THE REMOVAL OF ALL FOREIGN MATERIAL SUCH AS WATERPROOFING PRIMER OR OTHER ASPHALTIC MATERIALS. AS SOON AS PRACTICABLE FROM THE FASCIA BEAMS, AND/OR ABUTMENTS.

Comp. By: R.W.F. Date: 12/80

## ESTIMATED QUANTITIES

Checked By: JM Date: 1-9-81

| Item | Total | Unit | Description | Abuts | Piers | Superstr. | General |
|---|---|---|---|---|---|---|---|
| 202 | LUMP | LUMP | STRUCTURE REMOVED | | | | LUMP |
| 403 | 23 | CU. YD. | ASPHALT CONCRETE AC-20 | | | 23 | |
| 404 | 21 | CU. YD. | ASPHALT CONCRETE AC-20 | | | 21 | |
| 503 | 117 | CU. YD. | UNCLASSIFIED EXCAVATION | 117 | | | |
| 505 | LUMP | LUMP | TEST PILE | LUMP | | | |
| 507 | 420 | LIN. FT. | STEEL PILES, HP 10 × 42 | 420 | | | |
| 507 | 470 | LIN. FT. | STEEL PILES, HP 12 × 53 | | 470 | | |
| 509 | 12,617 | LBS | REINFORCING STEEL | 7376 | 4278 | 963 | |
| 511 | 72 | CU. YD. | CLASS "C" CONCRETE ABUTMENTS, AS PER PLAN | 72 | | | |
| 511 | 22 | CU. YD. | CLASS "C" CONCRETE PIERS | | 22 | | |
| 512 | 596 | SQ. YD. | TYPE D WATERPROOFING | | | 596 | |
| 515 | 33 | EACH | PRESTRESSED CONCRETE BRIDGE MEMBERS (4' X 40'-0"), AS PER PLAN | | | 33 | |
| 516 | 169 | SQ. FT. | 1" THICK PREFORMED EXPANSION JOINT FILLER | 169 | | | |
| 516 | 132 | EACH | 1" THICK ELASTOMERIC BEARING PADS (5"X15") | 44 | 88 | | |
| 517 | 242.36 | LIN. FT. | RAILING (DEEP BEAM RAIL WITH STEEL TUBULAR BACK-UP AND TYPE 2 STEEL POSTS AND BOLTS) | | | 242.36 | |
| 518 | 31 | CU. YD. | POROUS BACKFILL | 31 | | | |
| 601 | 347 | CU. YD. | ROCK CHANNEL PROTECTION, TYPE "C" WITHOUT BEDDING | | | | 347 |
| SPECIAL | 187 | SQ. FT. | STEEL DRIP STRIP | | | 187 | |

MANNIK & SCHNEIDER, INC.
CONSULTING ENGINEERS & SURVEYORS

2/6

GENERAL NOTES & ESTIMATED QUANTITIES

Sandusky County Bridge No. SAN-19-17.15
SR 19 over Muddy Creek
Sta 905+74.41 Sandusky County

| DESIGNED | TRACED | CHECKED | REVIEWED | DATE | REVISED |
|---|---|---|---|---|---|
| RWF | KLM | CMS | JM | 1-9-81 | |

MICROFILMED
AUG 29 1983

| F.H.W.A. REGION | STATE | PROJECT | |
|---|---|---|---|
| 5 | OHIO | BRS-335 () | |



SANDUSKY COUNTY
SAN-19-17.09

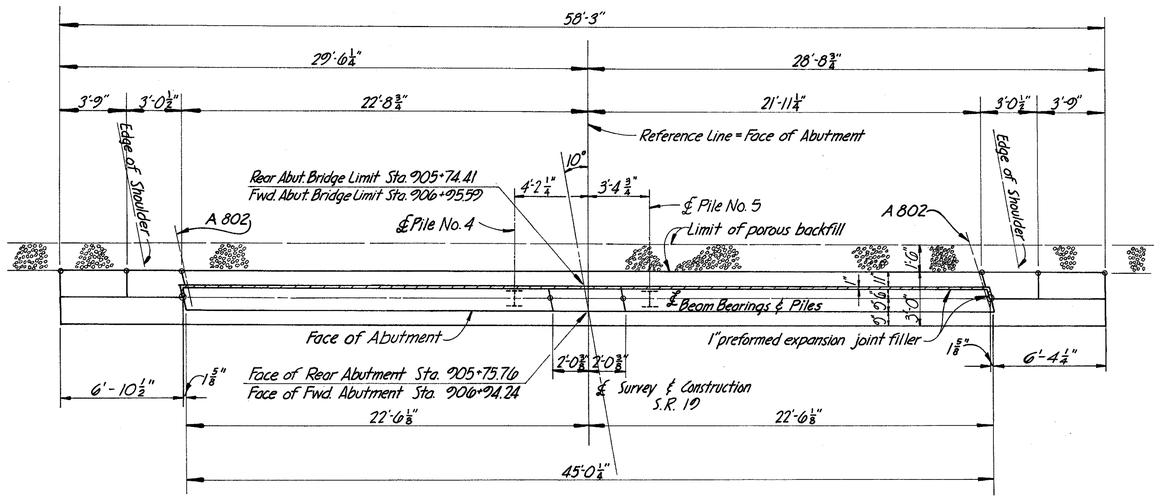


## PLAN

( Superstructure not shown)

## NOTES

Porous Backfill shall extend upward to the plane of the subgrade and laterally to the surface of the embankment slopes.

Bridge Seat Reinforcing: Reinforcing steel in the vicinity of the bridge seat shall be accurately placed to avoid interference with the drilling of anchor dowel holes.

Anchor Dowels: See std. dwg. PSBD-1-71, Sheet No. 1 for additional notes and details pertaining to anchor dowel installation.

Wingwalls: the wingwalls above the beam seat construction joint shall be constructed after the transverse tie rods have been tensioned, shear keys have been mortared, and the placement of anchor dowels have been completed.

○~ Indicates elevation location point

Rear Abutment
Forward Abutment

Reinforcing Steel Lap Lengths: Laps for reinforcing steel shall be as follows:
No. 10 bars = 4'-2"
No. 8 bars = 2'-7"
No. 5 bars = 1'-4"
No. 4 bars = 1'-0"

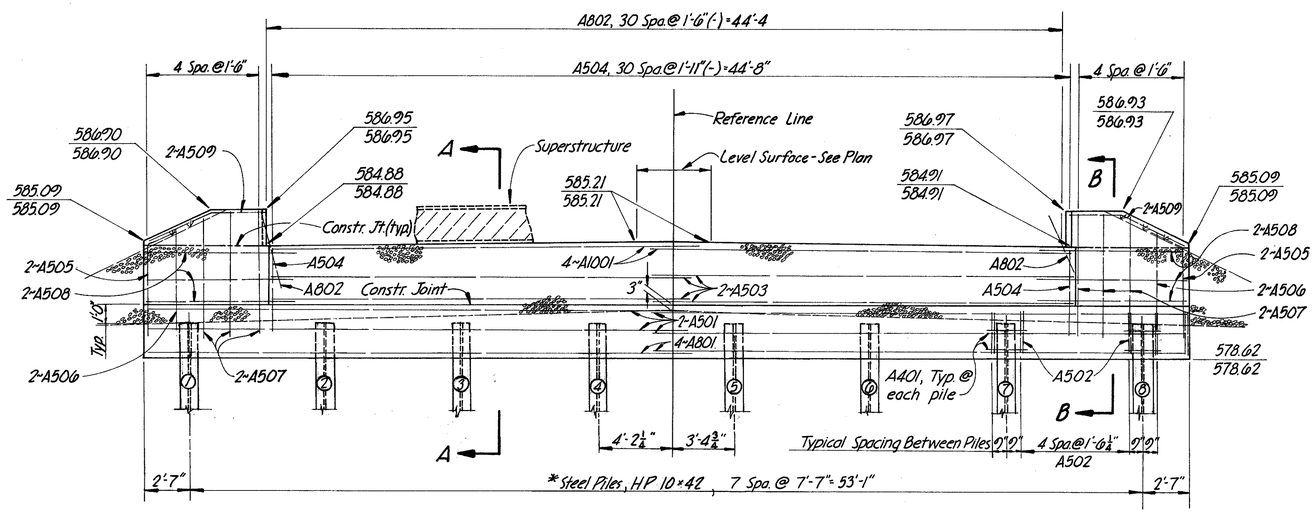


## ELEVATION

* At the contractor's option, Steel Piles HP 12×53 may be substituted for the HP 10×42 Piles specified.

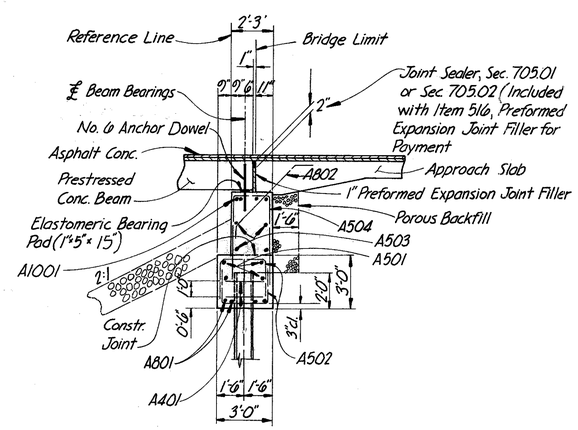


## SECTION A-A

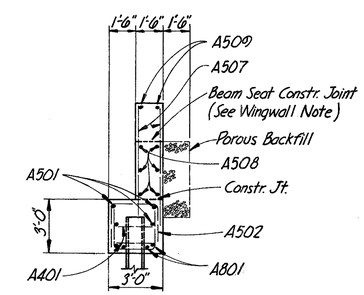


## SECTION B-B

MANNIK & SCHNEIDER, INC. 3/6
CONSULTING ENGINEERS & SURVEYORS TOLEDO, OHIO

# ABUTMENT DETAILS

Bridge No. SAN-19-17.15
S.R. 19 over Muddy Creek

Sta. 905+74.41 Sandusky County

| DESIGNED | TRACED | CHECKED | REVIEWED | DATE | REVISED |
|---|---|---|---|---|---|
| RWF | DAN | CMS | JAH | 1-9-81 | |

BRUNING

OHDC1

MICROFILMED
AUG 29 1980

| F.H.W.A. REGION | STATE | PROJECT | |
|---|---|---|---|
| 5 | OHIO | BRS-335 () | |



SANDUSKY COUNTY
SAN-19-17.00

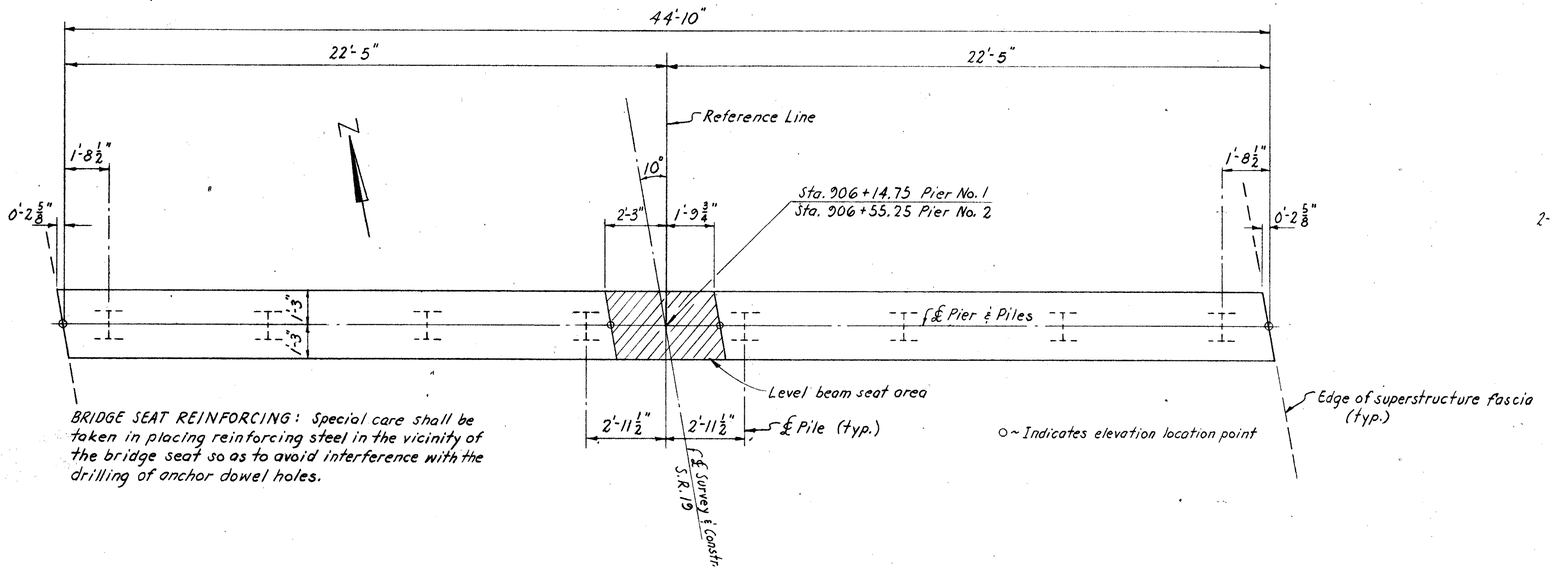


BRIDGE SEAT REINFORCING: Special care shall be taken in placing reinforcing steel in the vicinity of the bridge seat so as to avoid interference with the drilling of anchor dowel holes.

## PLAN
(Superstructure not shown)

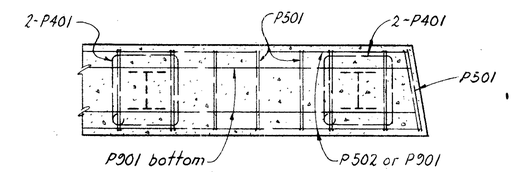


## SECTION D-D

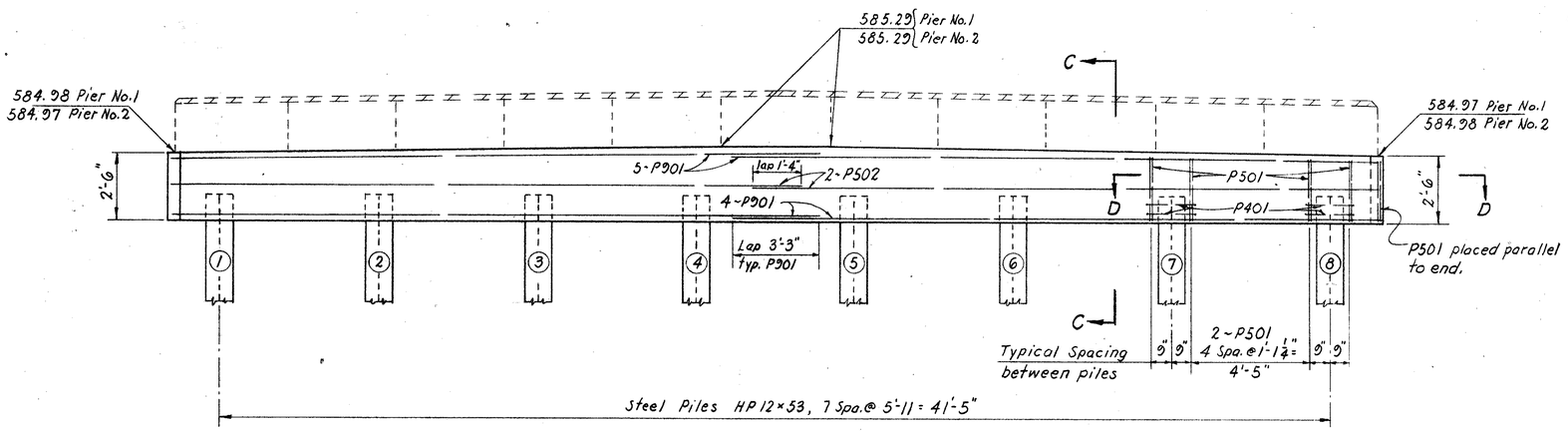


## ELEVATION

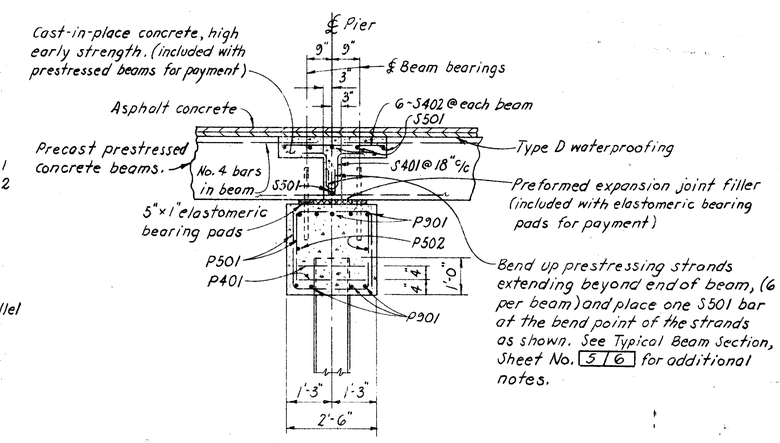


## SECTION C-C

See Std. Dwg. PSBD-1-71 for additional notes and details.

MANNIK & SCHNEIDER, INC.
CONSULTING ENGINEERS & SURVEYORS — TOLEDO, OHIO

4/6

# PIER DETAILS

Bridge No. SAN-19-17.15
S.R. 19 over Muddy Creek
Sta. 905+74.41 — Sandusky County

| DESIGNED | TRACED | CHECKED | REVIEWED | DATE | REVISED |
|---|---|---|---|---|---|
| RWF | RWF | CMS | JH | 1-9-81 | |

OHO C1

BRUNING

K&E® MC 223

MICROFILMED AUG 29 1983

| F.H.W.A. REGION | STATE | PROJECT | |
|---|---|---|---|
| 5 | OHIO | BRS-335( ) | |

15/20

# SANDUSKY COUNTY
# SAN. 19-17.09

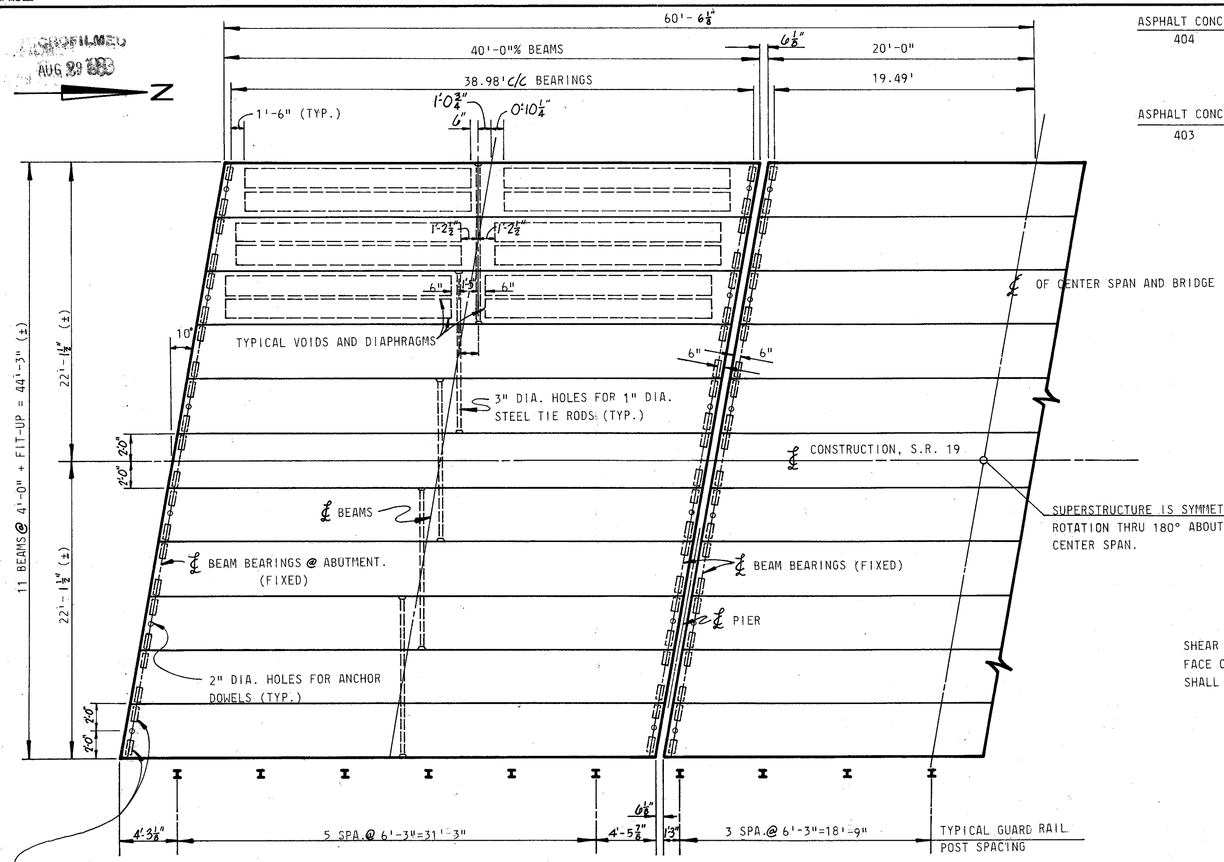


TWO ELASTOMERIC BEARING PADS OF 60 HARDNESS, 1"X5"X15" LONG, AT EACH END OF EACH BEAM. IN ADDITION TO THE REQUIRED 1" THICK ELASTOMERIC BEARING PADS SPECIFIED ABOVE, TWENTY TWO ADDITIONAL PREFORMED BEARING PADS PER ITEM 711.21, 1/8" THICK X 5" X 15" SHALL BE PROVIDED AS SHIMS TO ACCOMMODATE ANY NON-PARALLELISM BETWEEN BOTTOM OF BEAMS AND BRIDGE SEAT. COST OF THE 1/8" SHIMS TO BE INCLUDED WITH ITEM 516, 1" THICK ELASTOMERIC BEARING PADS.

## SUPERSTRUCTURE PLAN

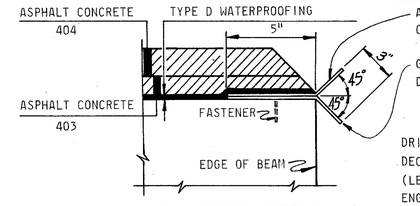


## DRIP STRIP DETAIL

DRIP STRIP: PRIOR TO APPLYING THE TYPE D WATERPROOFING, A BENT DRIP STRIP SHALL BE INSTALLED ALONG THE EDGES OF THE DECK AS SHOWN. THE STRIPS SHALL BE FASTENED AT 1'-6" C/C MAXIMUM WITH $1\frac{1}{4}$" X $\frac{5}{32}$" X $\frac{1}{4}$" FLAT HEAD DRIVE PIN AND WASHER. (LENGTH X SHANK DIA. X HEAD DIA.) OR #10 GALVANIZED SCREWS AND EXPANSION ANCHORS, SUBJECT TO THE APPROVAL OF THE ENGINEER. THE STRIPS SHALL BE PLACED THE FULL LENGTH OF THE DECK, ENDING AT THE FACE OF THE ABUTMENT WINGWALL OR STEEL END DAM ANGLE. WHERE SPLICES ARE REQUIRED A 3" (MIN.) LAP SHALL BE USED WITH A FASTENER THROUGH THE LAP. STEEL FOR GALVANIZED STRIPS SHALL BE 8"X0.105" AND SHALL MEET THE REQUIREMENTS OF ASTM A568. GALVANIZING SHALL BE IN ACCORDANCE WITH 711.02. STAINLESS STEEL SHALL BE 20 GUAGE ASTM A167, TYPE 304, MILL FINISH. PAYMENT SHALL BE MADE AT THE CONTRACT PRICE BID FOR ITEM SPECIAL, SQ. FT., STEEL DRIP STRIP, WHICH SHALL INCLUDE ALL MATERIALS, LABOR, TOOLS AND INCIDENTALS NECESSARY TO COMPLETE THE ITEM.

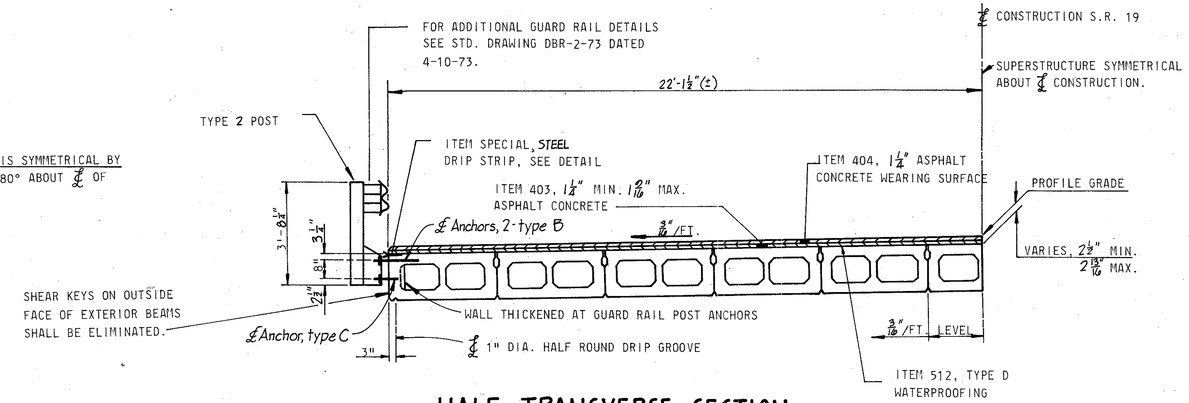


## HALF TRANSVERSE SECTION

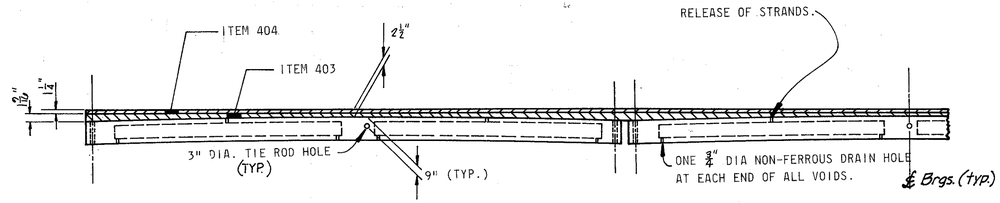


## BEAM ELEVATION

ASPHALT CONCRETE SURFACE COURSE SHALL CONSIST OF A VARIABLE THICKNESS OF 403 AND A $1\frac{1}{4}$" THICKNESS OF 404. THE 403 SHALL BE PLACED IN TWO OPERATIONS, THE FIRST COURSE SHALL BE OF $1\frac{1}{2}$" UNIFORM THICKNESS. THE SECOND COURSE SHALL BE FEATHERED TO PLACE THE SURFACE PARALLEL TO AND $1\frac{1}{4}$" BELOW FINAL PAVEMENT SURFACE ELEVATION.

## NOTES

A. SEE THE FOLLOWING SHEETS OF STD. DWG. PSBD-1-71 FOR NOTES AND DETAILS NOT SHOWN.

SHEET 1 OF 3

NOTES:
1. TRANSVERSE TIE RODS
2. GALVANIZING
3. ANCHOR DOWELS
4. NON-SHRINKING MORTAR AND GROUT
5. MORTARING OF SHEAR KEYS

DETAILS:
1. BEAM LIFTING INSERTS
2. ANCHOR DOWELS
3. DETAILS AND REINFORCEMENT OF BEAM ENDS
4. WALL THICKENING AT GUARD RAIL ANCHORS. GUARD RAIL SHALL BE AS PER STD. DWG. DBR-2-73 INSTEAD OF DBR-1-71

SHEET 2 OF 3

DETAILS:
1. END DETAILS OF TRANSVERSE TIE ROD ANCHORAGE
2. BEAM DIMENSIONAL TOLERANCES
3. NORMAL CROWN TREATMENT AT ℄ ROADWAY

SHEET 3 OF 3

DETAILS:
1. B21-48 NON-COMPOSITE BEAMS
2. LONGITUDINAL REINFORCING STEEL
3. BENT REINFORCING BARS

B. BEAM MANUFACTURER SHALL SHOW COMPLETE DETAILS OF BEAM REINFORCING ON HIS SHOP PLANS. THE TOP LONGITUDINAL BARS, SHALL BE 2" CLEAR FROM THE TOP OF THE BOX BEAM.

## CAMBER AND DEFLECTION

CALCULATED CAMBER AT TIME OF PAVING, INCLUDING ALLOWANCE FOR CAMBER GROWTH DUE TO CREEP IS $\frac{1}{2}$"
CALCULATED DEFLECTION DUE TO WEIGHT OF SURFACE COURSE AND GUARD RAIL IS $\frac{1}{16}$".
CAMBER OF $\frac{1}{8}$" AT CENTER OF SPANS IS REQUIRED FOR CREST VERTICAL CURVE.
NET FINAL CAMBER OF BEAMS IS $\frac{5}{16}$" THIS IS $\frac{5}{16}$" IN EXCESS OF THE AMOUNT REQUIRED TO PLACE THE TOP OF THE BEAM PARALLEL TO PROFILE GRADE. THIS EXCESS AMOUNT SHALL BE COMPENSATED FOR BY THICKENING THE 403 LEVELING COURSE FROM $1\frac{1}{4}$" AT CENTER OF SPAN, TO $1\frac{9}{16}$" AT ENDS OF SPAN.

PROVIDE REINFORCING STEEL IN BEAM AS SHOWN IN BEAM DESIGNATION B21-48, SHEET 3 OF 3 OF STD. DWG. PSPD-1-71. PROVIDE FOUR ADDITIONAL NO. 4 BARS 6'-0" LONG AT EACH END OF EACH BEAM. SEE SHEET 1 OF 3 FOR REINFORCEMENT DETAILS AT THE ENDS OF THE BEAMS.

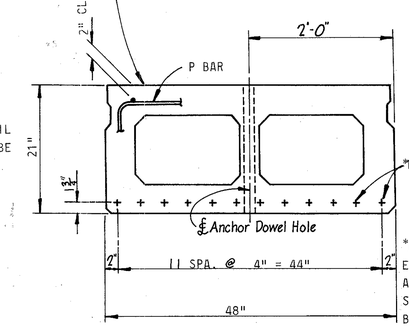


*12- $\frac{1}{2}$" DIA. 270 K PRESTRESSING STRANDS. INITIAL TENSION = 28,900 LBS. PER STRAND.

*AT PIER CONNECTION ENDS OF BEAMS, ALLOW ALTERNATE PRESTRESSING STRANDS (6) TO PROTRUDE BEYOND THE END OF BEAM APPROX. 12". SEE SECTION C-C, SHEET NO 4/6 FOR ADDITIONAL NOTES.

## TYPICAL BEAM SECTION B-21-48

MANNIK & SCHNEIDER, INC. 5/6
CONSULTING ENGINEERS & SURVEYORS TOLEDO, OHIO

## SUPERSTRUCTURE DETAILS
Bridge No. SAN. 19-17.15
S.R. 19 Over Muddy Creek

Sta. 905+74.41 Sandusky County

| DESIGNED | TRACED | CHECKED | REVIEWED | DATE | REVISED |
|---|---|---|---|---|---|
| RWF | DAW | CMS | JCL | 1-3-81 | |

OHDC1

AUG 9 1983

# REINFORCING STEEL LIST

| MARK | NO. | LENGTH | TYPE | a | b | c | d | e | WEIGHT |
|---|---|---|---|---|---|---|---|---|---|

## ABUTMENTS

| MARK | NO. | LENGTH | TYPE | a | b | c | d | e | WEIGHT |
|---|---|---|---|---|---|---|---|---|---|
| A1001 | 16 | 24'-5" | S | | | | | | 1681 |
| A801 | 16 | 30'-3" | S | | | | | | 1292 |
| A802 | 62 | 6'-4" | R | 4'-11" | 1'-1" | 0'-6" | | | 1048 |
| A501 | 16 | 20'-7" | S | | | | | | 494 |
| A502 | 156 | 6'-5" | C | 2'-10" | 2'-8" | | | | 1044 |
| A503 | 16 | 23'-0" | S | | | | | | 384 |
| A504 | 62 | 11'-2" | C | 4'-0" | 1'-11" | | | | 722 |
| A505 | 8 | 5'-11" | E | 4'-8" | 1'-4" | 1'-2" | 0'-7" | | 40 |
| A506 | 8 | 5'-5" | S | | | | | | 45 |
| A507 | 24 | 6'-6" | S | | | | | | 163 |
| A508 | 24 | 8'-0" | S | | | | | | 200 |
| A509 | 8 | 6'-4" | E | 3'-11" | 2'-6" | 1'-3" | 2'-0" | | 53 |
| A401 | 32 | 9'-5" | D | 2'-5" | 1'-9" | | | | 201 |
| | | | | | | | | Total Abutments | 7376 |

## PIERS

| MARK | NO. | LENGTH | TYPE | a | b | c | d | e | WEIGHT |
|---|---|---|---|---|---|---|---|---|---|
| P901 | 36 | 24'-4" | S | | | | | | 2078 |
| P501 | 156 | 5'-0" | C | 1'-11" | 2'-2" | | | | 936 |
| P502 | 8 | 23'-5" | S | | | | | | 195 |
| P401 | 32 | 7'-11" | D | 2'-0¾" | 1'-8" | | | | 169 |
| | | | | | | | | Total Piers | 4278 |

## SUPERSTRUCTURE

| MARK | NO. | LENGTH | TYPE | a | b | c | d | e | WEIGHT |
|---|---|---|---|---|---|---|---|---|---|
| S401 | 62 | 3'-8" | Q | 0'-5½" | 1'-0" | 0'-4" | Std. | | 152 |
| S402 | 132 | 2'-8" | S | | | | | | 235 |
| S501 | 24 | 23'-0" | S | | | | | | 576 |
| | | | | | | | | Total Superstructure | 963 |

## SPIRAL BARS

| MARK | NO. | CORE DIA.% | SPIRAL | LENGTH | PITCH | NO.TURNS | WEIGHT |
|---|---|---|---|---|---|---|---|
| | | | | | | | |
| TOTAL (included with piers) | | | | | | | |

SANDUSKY COUNTY
SAN-19-17.09

| F.H.W.A. REGION | STATE | PROJECT | |
|---|---|---|---|
| 5 | OHIO | BRS-335 ( ) | |

16/20

## BENDING DIAGRAMS

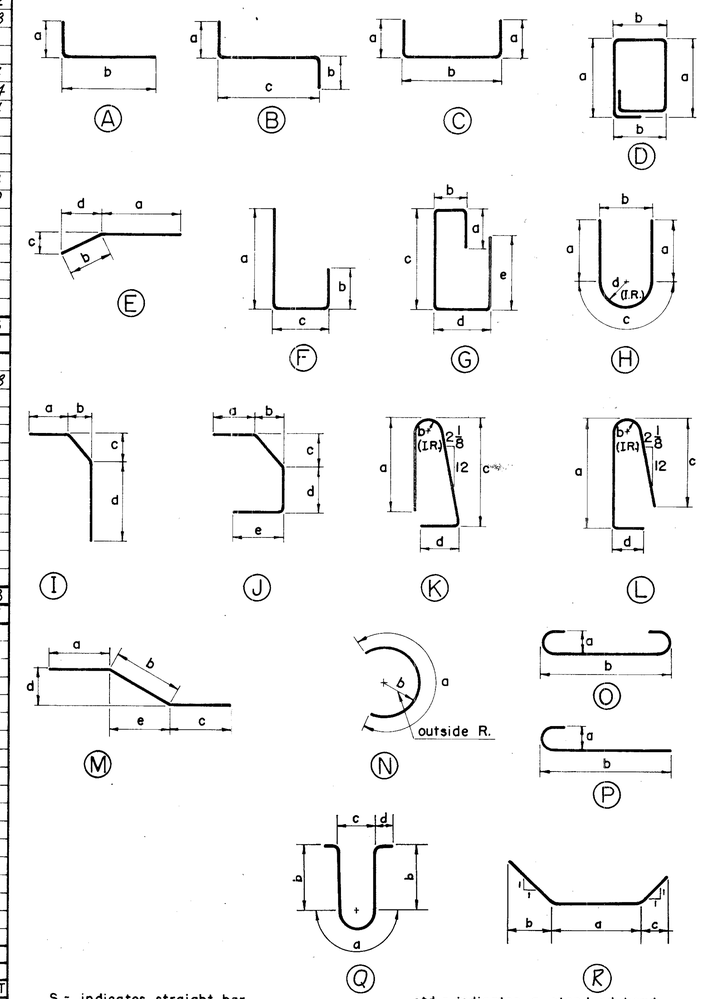


S = indicates straight bar. std. = indicates a standard bend.
All dimensions are out to out unless otherwise indicated.

REINFORCING STEEL SAMPLES

REFER TO CMS SECTIONS 106.03, 700, 709.01 THROUGH 709.05 AND 709.08. SUFFICIENT ADDITIONAL REINFORCING STEEL SHALL BE PROVIDED FOR SAMPLING. RANDOM SAMPLES SHALL BE REPLACED IN THE STRUCTURES BY THE ADDITIONAL STEEL, SPLICED IN ACCORDANCE WITH 509.08.

TOTAL WEIGHT OF ALL BARS:
12,617 Lbs.

MANNIK & SCHNEIDER INC.
CONSULTING ENGINEERS & SURVEYORS

6/6

REINFORCING STEEL LIST
Bridge No. SAN-19-17.15
S.R. 19 over Muddy Creek

Sta. 905+74.41 Sandusky County

| DESIGNED | TRACED | CHECKED | REVIEWED | DATE | REVISED |
|---|---|---|---|---|---|
| RWF | LWN | CMS | JH | 1-5-81 | |

BRUNING

OHDC1

K&E 17 0453 12-77 MC 7285*

State Of Ohio, Department Of Transportation

# CENTERLINE SURVEY PLAT

S.R. 19 SEC. 17.15

Rice Township, Sandusky County, Ohio
Part of the Northeast 1/4 of Sec. 20 and Part of the Northwest 1/4 of Section 28, all in T.6N., R.15E.

STATE JOB# 02314 (0)

| F.H.W.A. REGION | STATE | PROJECT | |
|---|---|---|---|
| 5 | OHIO | BRS-335(7) | |

17/20

SANDUSKY COUNTY
SAN-19-17.15

1/4

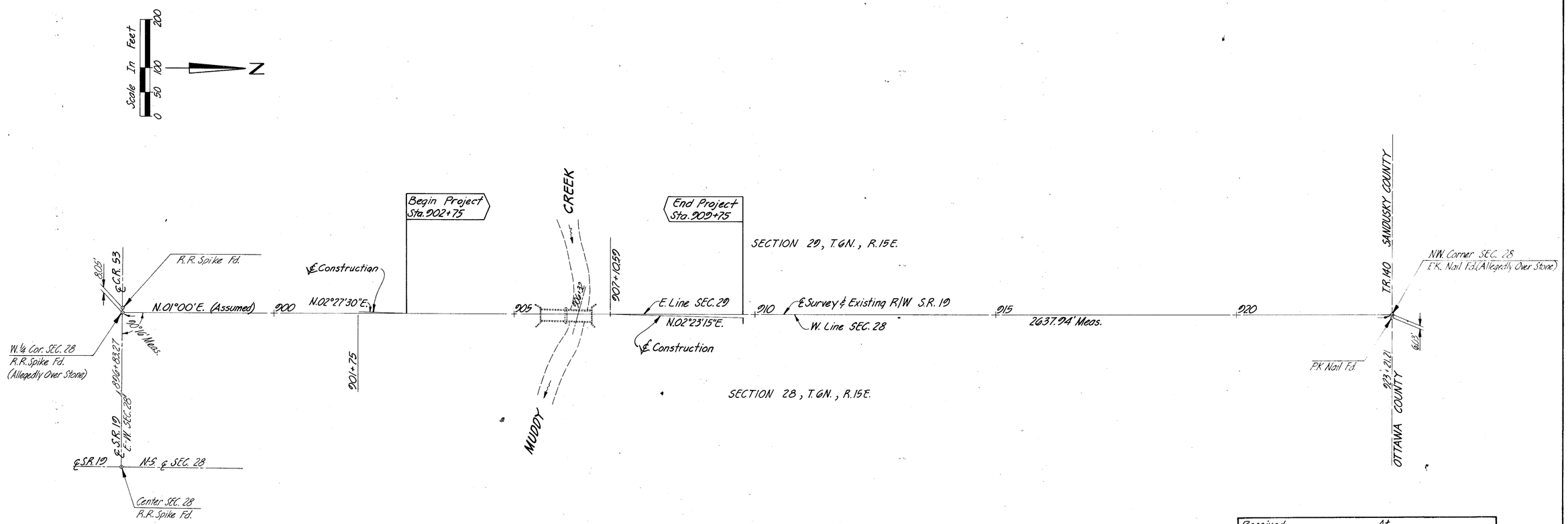


| | |
|---|---|
| Received | At |
| Recorded APRIL 1, 1981 | |
| Plat Book 9 | Page 81 |
| Signed | Fee |

Date 3-23-81 Max D. Whitehead
District Deputy Director
Registered Engineer No. 8411

I hearby certify that this plat is a true delineation of a centerline survey made for the Ohio Department of Transportation in 1978.

Gordon W. MacCammon Date Dec. 5, 1980
Registered Surveyor No. 4075

STATE OF OHIO GORDON W. MacCAMMON 4075 SURVEYOR

| Revision | Date | Description |
|---|---|---|
| | | |

CENTERLINE SURVEY PLAT

| Drawn | Checked | Date | Type Funds |
|---|---|---|---|
| LWN | MFP | | |

OHDC1

K&E 17 0453 11-74 MC31968

# PROPERTY MAP

Part of NE ¼ Sec. 20 and Part of NW¼ Sec. 28,
all in T.6N., R.15E.
Rice Township, Sandusky County, Ohio

STATE JOB#
02314 (0)

| CALC. BY | F.H.W.A. REGION | STATE | PROJECT | |
|---|---|---|---|---|
| CHKD. BY | 5 | OHIO | BRS-335(7) | |
| DATE | | | | |

18/20

2/4

SANDUSKY COUNTY
SAN-10-1715

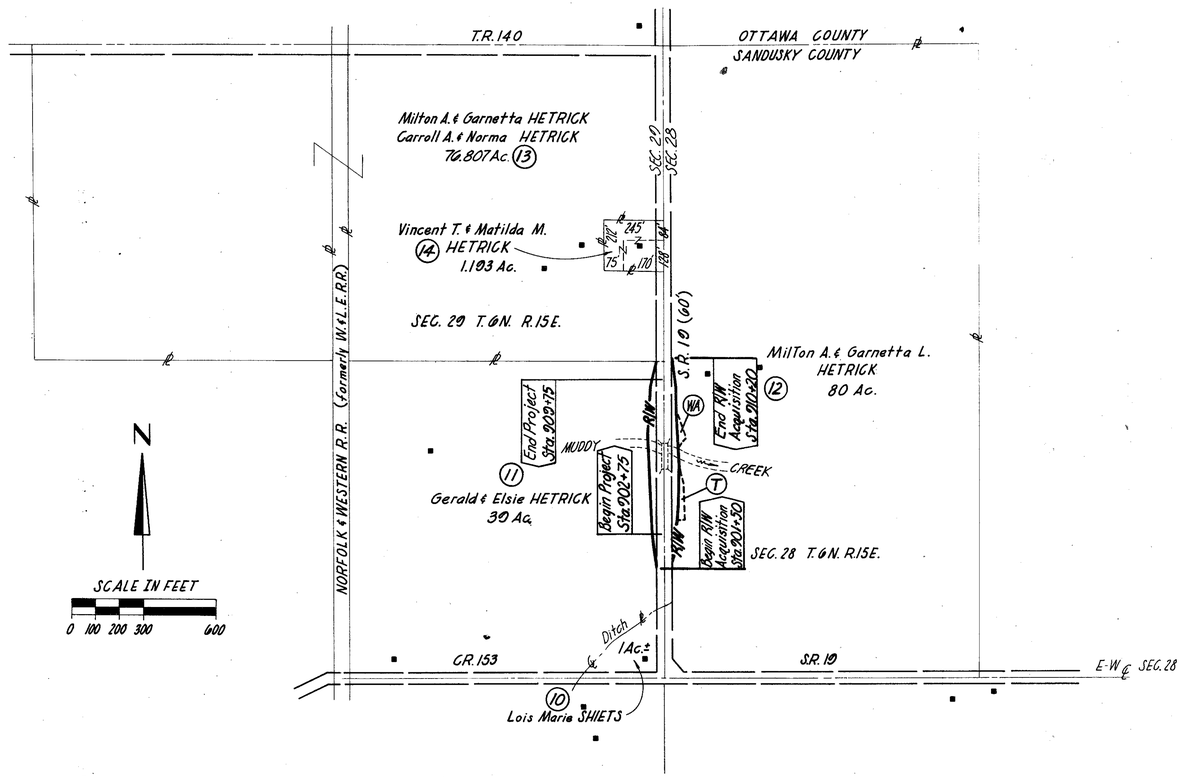


## UTILITY OWNERS

| TYPE | NAME & ADDRESS |
|---|---|
| Electric | Toledo Edison Company - Edison Plaza<br>300 Madison Ave., Toledo, Ohio 43652 |
| Telephone | General Telephone Co., of Ohio<br>117 N. Sandusky Street<br>Bellevue, Ohio 44811 |

| REV. | DATE | DESCRIPTION |
|---|---|---|
| 1 | 6/30/81 | Change WA-1 to T |

PROPERTY MAP

OHDG1

K&E 12 0453 12-77 MC 72854

TOTAL NUMBER OF
2 OWNERSHIPS
0 TOTAL TAKES
0 OWNERSHIPS WITH STRUCTURES INVOLVED
0 OWNERSHIPS WITH "P" ITEMS

STATE JOB# 02314 (0)

| CALC. BY DATE | F.H.W.A. REGION | STATE | PROJECT | |
|---|---|---|---|---|
| CHKD. BY DATE | 5 | OHIO | BRS-335(7) | |

10/20

SANDUSKY COUNTY
SAN-19-17.15

3/4

# SUMMARY OF ADDITIONAL RIGHT-OF-WAY REQUIRED

| PARCEL NO. | OWNER | SHEET NO. | OWNERS RECORD BOOK | OWNERS RECORD PAGE | RECORD AREA | TOTAL P.R.O. Acres / S.F. | GROSS TAKE Acres / S.F. | P.R.O. IN TAKE Acres / S.F. | NET TAKE Acres / S.F. | STRUCTURE | NET RESIDUE AGRES LEFT | NET RESIDUE AGRES RIGHT | TYPE FUNDS | REMARKS AND PERSONALTY | AS ACQUIRED BOOK | AS ACQUIRED PAGE |
|---|---|---|---|---|---|---|---|---|---|---|---|---|---|---|---|---|
| | | | | | | | | | | | | | BRS | | | |
| 10 | LOIS MARIE SHIETS | 4 | 256 | 347 | 1.0 AC | 0.42 AC | NOT REQUIRED | | | – | | | | | | |
| 11 | GERALD & ELSIE HETRICK | 4 | 216 | 559 | 39.0 AC | 1.37 AC | 45,052 S.F. | 22,567 S.F. | 22,485 S.F. | – | 37.114 | | | | | |
| 12 | MILTON A. & GARNETTA L. HETRICK | 4 | 185 | 137 | 80.0 AC | 2.54 AC | 42,000 S.F. | 25,200 S.F. | 16,800 S.F. | – | | 77.074 | | | | |
| | | | 185 | 139 | | | | | | | | | | | | |
| | | | 209 | 258 | | | | | | | | | | | | |
| | | | 231 | 463 | | | | | | | | | | | | |
| 12T | | 4 | | | | | | | 4,695 S.F. | | | | | GRADING | | |
| 12WA | | 4 | | | | | | | 3,281 S.F. | | | | | GRADING | | |
| 13 | MILTON A. & GARNETTA HETRICK, CARROL A. & NORMA HETRICK & IDA HETRICK (L.E.) | 4 | 279 | 618 | 76.807 AC | 1.95 AC | NOT REQUIRED | | | – | | | | | | |
| 14 | VINCENT T. & MATILDA M. HETRICK | 4 | 213 | 142 | 1.193 AC | 0.15 AC | NOT REQUIRED | | | – | | | BRS | | | |
| | | | 261 | 424 | | | | | | | | | | | | |

**Note:** Deed Area – Total P.R.O. = Net Residue + Net Take

| Revision | Date | Description |
|---|---|---|
| 1 | 6/30/81 | WA-1 to T, WA-2 to WA |

Summary of Additional Right-of-Way Required

| Drawn | Checked | Date | Type Funds |
|---|---|---|---|
| PRL | MFP | | |

OHDG1

R&E 17 0453 12-77 MC 7235*

SECTION 20, T. 6N., R. 15 E.
RICE TOWNSHIP

STATE JOB#
02314 (0)

| CALC. BY | F.H.W.A. REGION | STATE | PROJECT | |
|---|---|---|---|---|
| DATE | 5 | OHIO | BRS-355(7) | |
| CHKD BY | | | | |
| DATE | | | | |

20/20

SANDUSKY COUNTY
SAN-10-17.15

4/4

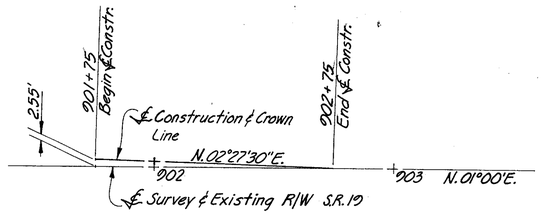


## ℄ CONSTRUCTION DETAIL

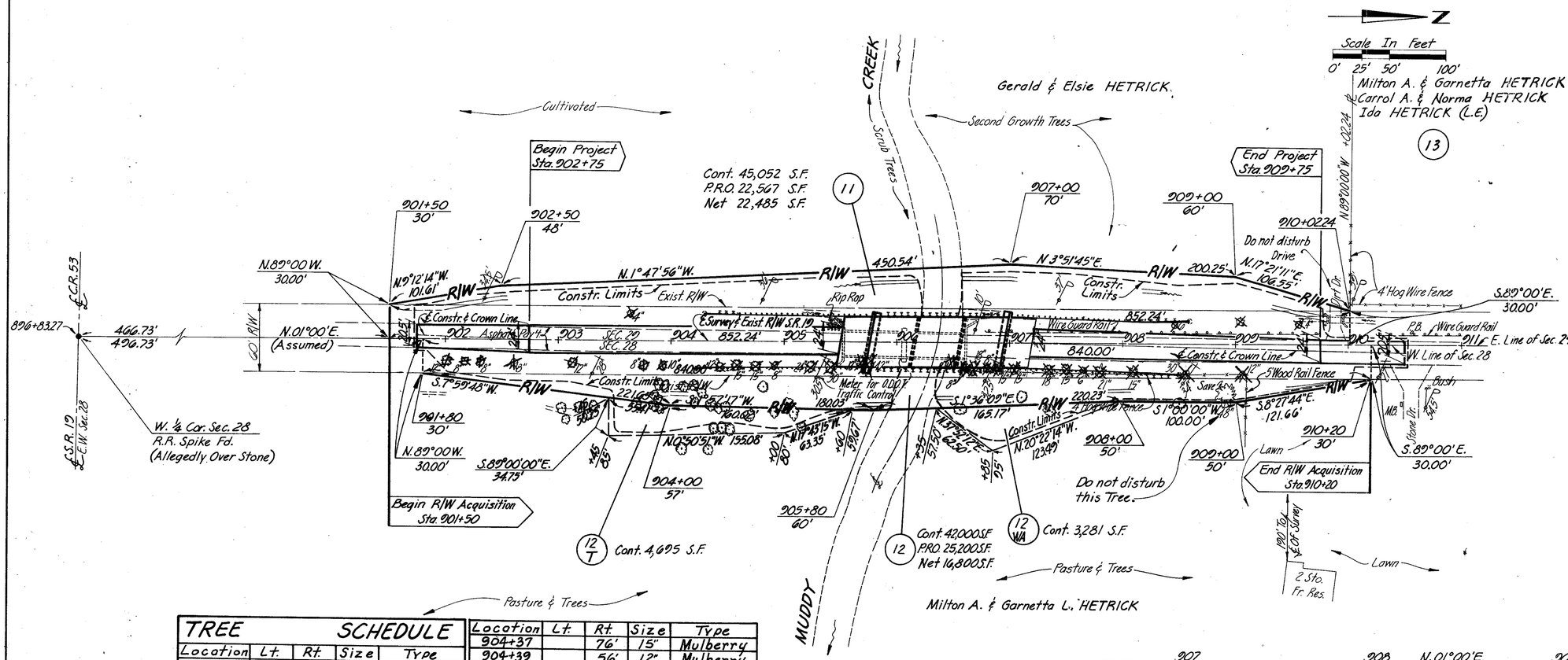


| TREE SCHEDULE | | | | |
|---|---|---|---|---|
| Location | Lt. | Rt. | Size | Type |
| 902+01.5 | | 19.5' | 12" | Walnut |
| 902+17 | | 19.5' | 8" | Walnut |
| 902+31 | | 20' | 8" | Maple |
| 903+12 | | 20' | 12" | Maple |
| 903+75 | | 22' | 8" | Maple |
| 903+92 | | 22' | 10" | Box Elder |
| 904+43 | | 23' | 12" | Box Elder |
| 904+58 | | 21.5' | 15" | Maple |
| 904+75 | | 22' | 15" | Maple |
| 904+92 | | 22' | 8" | Maple |
| 905+235 | | 22.5' | 24" | Box Elder |
| 905+41 | | 22.5' | 30" | Willow |
| 905+68 | | 18.5' | 12" | Elm |
| 905+74 | | 20' | 42" | Cotton Wood |
| 906+48 | | 18' | 8" | Elm |
| 906+61 | | 20' | 8" | Elm |
| 906+63 | | 22.5' | 8" | Elm |
| 906+68 | | 22' | 18" | Elm |
| 906+79 | | 23' | 8" | Walnut |
| 906+905 | | 23.5' | 15" | Walnut |
| 907+04 | | 24' | 15" | Maple |
| 907+335 | | 24.5' | 18" | Maple |
| 907+49 | | 24' | 15" | Walnut |
| 907+64 | | 24' | 6" | Walnut |
| 907+79 | | 25.5' | 21" | Maple |
| 908+08.5 | | 25.5' | 15" | Cotton Wood |
| 908+91.5 | | 44' | 48" | Maple |

Pasture & Trees

| TREE SCHEDULE | | | | |
|---|---|---|---|---|
| Location | Lt. | Rt. | Size | Type |
| 903+04 | | 58' | 10" | Ash |
| 903+07 | | 68' | 8" | Ash |
| 903+19 | | 59' | 10" | Locust |
| 903+25 | | 63' | 10" | Ash |
| 903+28 | | 58' | 15" | Ash |
| 903+70 | | 56' | 8" | Ash |
| 903+85 | | 47' | 14" | Ash |
| 903+87 | | 49' | 8" | Ash |
| 903+87 | | 54' | 5" | Ash |
| 903+88 | | 56' | 14" | Ash |
| 903+90 | | 38' | 10" | Ash |
| 903+92 | | 38' | 6" | Ash |
| 904+08 | | 95' | 8" | Mulberry |
| 904+12 | | 37' | 12" | Mulberry |
| 904+18 | | 38' | 8" | Mulberry |
| 904+20 | | 53' | 6" | Mulberry |
| 904+25 | | 45' | 15" | Mulberry |
| 904+31 | | 94' | 15" | Mulberry |
| 904+35 | | 55' | 8" | Mulberry |
| 904+37 | | 76' | 15" | Mulberry |
| 904+39 | | 56' | 12" | Mulberry |
| 904+44 | | 76' | 6" | Mulberry |
| 904+46 | | 57' | 12" | Mulberry |
| 904+53 | | 77' | 6" | Mulberry |
| 904+69 | | 64' | 6" | Mulberry |
| 904+83 | | 38' | 6" | Mulberry |
| 904+91 | | 60' | 22" | Sycamore |
| 905+02 | | 55' | 14" | Ash |
| 905+07 | | 60' | 14" | Ash |
| 905+14 | | 75' | 14" | Ash |
| 906+55 | | 55' | 5" | Ash |
| 907+10 | | 48' | 5" | Ash |
| 907+34 | | 58' | 6" | Ash |
| 908+50 | | 53' | 8" | Elm |

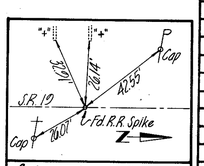


℄ Survey Reference
Sta 896+83.27

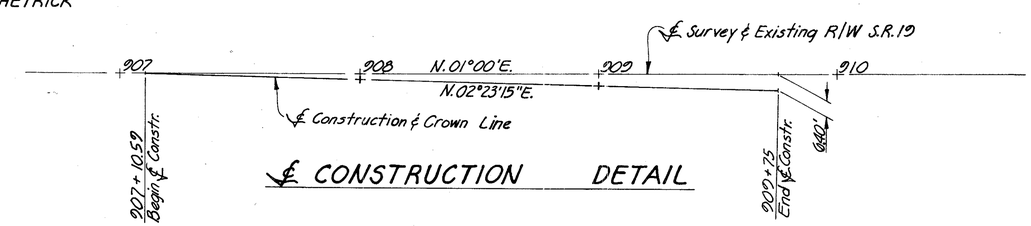


## ℄ CONSTRUCTION DETAIL

SECTION 28, T. 6N., R. 15E.
RICE TOWNSHIP

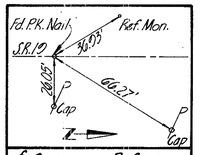


℄ Survey Reference
Sta. 923+21.21

| Revision | Date | Description |
|---|---|---|
| 2 | 7/2/81 | Additional trees rt. |
| 1 | 6/30/81 | WA-1 to T, WA-2 to WA |

RIGHT-OF-WAY PLAN
Sta. 902+00 to Sta. 911+00

| Drawn | Checked | Date | Type Funds |
|---|---|---|---|
| LWN | MFP | | |

OHDCI

MICROFILMED
AUG 29 1983



## GENERAL INFORMATION

### DRIVE SAMPLE BORINGS - DRIVE-PRESS SAMPLE BORINGS

DRIVE SAMPLE BORINGS ARE MADE BY MEANS OF A ROTARY-TYPE DRILL RIG, EMPLOYING A 2" O.D., 1-3/8" I.D. SAMPLER, AT 2-1/2 AND/OR 5-FOOT DEPTH INTERVALS, DRIVEN BY MEANS OF A 140 POUND DROP-HAMMER WITH A FREE FALL OF 30 INCHES. THE NUMBER OF BLOWS REQUIRED TO DRIVE THE SAMPLER 18 INCHES IS CONSIDERED THE STANDARD PENETRATION TEST.

DRIVE-PRESS SAMPLE BORINGS ARE MADE BY MEANS OF A ROTARY-TYPE DRILL RIG, EMPLOYING A 3" O.D. THIN-WALL PRESS SAMPLER. THE PRESS SAMPLER IS ADVANCED BY CONTINUOUS UNIFORM PRESSURE, APPLIED BY THE DRILL RIG.

ROCK CORES ARE MADE WITH "NX" WIRE LINE CORING EQUIPMENT WITH SPECIALLY DESIGNED CORE BARRELS FOR MAXIMUM CORE RECOVERY.

THE BORING LOG SHEETS SHOW A GRAPHIC PLOT OF THE INFORMATION OBTAINED, INCLUDING DEPTH AND ELEVATION OF THE SAMPLE, NUMBER OF BLOWS FOR THE STANDARD PENETRATION TESTS IN THREE 6 INCH INCREMENTS, DEPTH OF PRESS SAMPLES, FIELD SAMPLE NUMBER, SAMPLE DESCRIPTION - BASED ON LABORATORY TESTS AND THE CASAGRANDE AC CLASSIFICATION SYSTEM - AND GRADATION, PLASTICITY, AND MOISTURE CONTENT DETERMINATIONS. RESULTS OF STRENGTH AND CONSOLIDATION TESTING, IF PERFORMED, APPEAR ON SEPARATE ENCLOSURES. ALSO SHOWN ARE THE RESULTS OF THE ROCK CORE RUNS AND THE ROCK QUALITY DESIGNATION.

## LEGEND

Press and/or Drive Samples and/or Core Boring Location - Plan View

Footing on Pile

Horizontal Bars with an "X" on Boring Log indicates the Depth the Sample was Taken

Number of Blows for "Standard Penetration" Test
x = Number of Blows for Second Six (6) inches
y = Number of Blows for Third Six (6) inches

Free Water

Static Water Level

—— Number  Indicates the Elevation of the Top of the Boring, the Bottom of the Boring, and/or the Change of Material Types

## GEOLOGY OF THE SITE

THE STRUCTURE SITE IS LOCATED IN A SHALLOW SWALE CREATED BY THE MEANDERING MUDDY CREEK. GEOLOGICALLY THE SITE IS SITUATED IN A WISCONSIN AGE GLACIAL GROUND MORAINE WHICH IS COMPRISED OF AN UNSORTED, UNSTRATIFIED MIXTURE OF CLAY, SILT, SAND, AND COARSER FRAGMENTS DEPOSITED DISCONTINUOUSLY BY ADVANCING ICE. AT THE STRUCTURE LOCATION THE SURROUNDING HIGH GROUND IS LIKELY TO BE LACUSTRINE SOILS CONSISTING OF SILTS AND CLAYS. THE ROCK UNDERLYING THIS SITE IS THE MONROE DOLOMITE OF SILURIAN AGE.

## EXPLORATION

THE EXPLORATION CONSISTED OF TWO DRIVE SAMPLE-CORE BORINGS MADE ON NOVEMBER 28 AND NOVEMBER 29, 1978. TWO UNDISTURBED SHELBY TUBE SAMPLES (3" O.D.) WERE TAKEN IN THESE BORINGS. "NX" WIRE LINE CORES WERE TAKEN OF THE ROCK ENCOUNTERED AT EACH BORING LOCATION. STRENGTH TESTS WERE RUN ON THE SHELBY TUBE SAMPLES AND CLASSIFICATION TESTS WERE RUN ON TYPICAL SPLIT SPOON SAMPLES.

## INVESTIGATIONAL FINDINGS

THE BORINGS INDICATE A RELATIVELY UNIFORM SOIL PROFILE WITH THE VARIOUS STRATA FROM BOTH BORINGS BEING FOUND AT APPROXIMATELY THE SAME ELEVATION. ASPHALT AND GRANULAR BASE MATERIAL OVERLIE BOTH BORING LOCATIONS TO A DEPTH OF 6 INCHES. UNDERLYING THIS MATERIAL IS FOUND A BROWN AND GRAY SILTY CLAY FILL TO A DEPTH OF 4.5 FEET (ELEVATION 581.5±). BETWEEN 4.5 FEET AND APPROXIMATELY 10.0 FEET (ELEVATION 576), IS THEN FOUND A BROWN AND GRAY SILTY CLAY SOIL WHICH APPEARS TO BE OF LACUSTRINE ORIGIN. AT 9.5 FEET (ELEVATION 576.4) IN BORING NO. 4, A BROWN AND GRAY CLAYEY SILT AND SAND IS ENCOUNTERED WHICH EXTENDS TO 13.0 FEET (ELEVATION 573). AT 10.5 FEET (ELEVATION 575.5) AND 13.0 FEET (ELEVATION 573) IN BORINGS 3 and 4 RESPECTIVELY, A GRAY SANDY SILTY CLAY WAS FOUND. THIS GLACIAL TILL EXTENDED TO 21.5 FEET (ELEVATION 564.5±) IN BOTH BORINGS. AT THIS DEPTH A GRAY WET SAND IS FOUND. THIS SAND HAS A VARYING GRAVEL AND SILT CONTENT WITH DEPTH AND BETWEEN THE TWO BORINGS. AT BORING NO. 3 THE SAND EXTENDED TO THE TOP OF THE ROCK. AT BORING NO. 4 THE SAND EXTENDED TO 28.0 FEET (ELEVATION 558±) WHERE A GRAY SANDY SILTY CLAY WAS AGAIN ENCOUNTERED. ROCK WAS LOCATED IN BORINGS 3 and 4 AT 31.5 FEET (ELEVATION 554.5) AND 32.0 FEET (ELEVATION 553.9) RESPECTIVELY. THE ROCK IS THE MONROE DOLOMITE FORMATION AND 10.5 FEET WAS CORED AT BORING NO. 3 WHILE ONLY 7.5 FEET WAS CORED AT BORING NO. 4.

THE RESULTS OF THE FIELD AND LABORATORY TESTS INDICATE THAT THE SOIL PROFILE IS RELATIVELY SOFT TO A DEPTH OF APPROXIMATELY 13.0 FEET. BELOW THIS DEPTH THE GLACIAL TILL SOIL IS VERY STIFF AND INCREASES IN STRENGTH WITH DEPTH. THE SANDS UNDERLYING THE TILL ARE VERY DENSE AND DO CARRY FREE WATER. THE MONROE DOLOMITE UNDERLYING THIS PROFILE IS A SOUND ROCK WITH ONLY LIMITED WEATHERING AND FRACTURING NEAR THE SURFACE OF THE ROCK AT BORING LOCATION NO. 4 WITH APPROXIMATELY 12 INCHES OF FRACTURED ROCK INDICATED AT BORING NO. 3. THE ROCK STRATA EXHIBITS MASSIVE LAYERING APPARENTLY DEVOID OF MUD SEAMS.

*SOIL INFORMATION - All available soil and bedrock information which can be conveniently shown on the soil profile and/or structure foundation investigation sheets has been so reported. Additional subsurface investigation may have been made to study some special aspect of the project. Copies of this data, if any, may be inspected in the District Deputy Directors Office, the Bureau of Tests at 1600 West Broad Street, the Pavement and Soils Section of the Bureau of Roadway Design or in the Bridge Bureau at 25 South Front Street.*

**BOWSER - MORNER**
DAYTON • TOLEDO • MAYSVILLE, KY.

**STRUCTURE FOUNDATION INVESTIGATION**
**SAN-19-17.15**

| SCALE | DRAWN G.M.N. | DATE 1-4-79 | JOB NO |
|---|---|---|---|
| —— | CHECKED JRX | DATE 2-28-79 | 19980 C |

BRUNING 44-131 380973

SANDUSKY COUNTY
SAN – 19 – 17.09

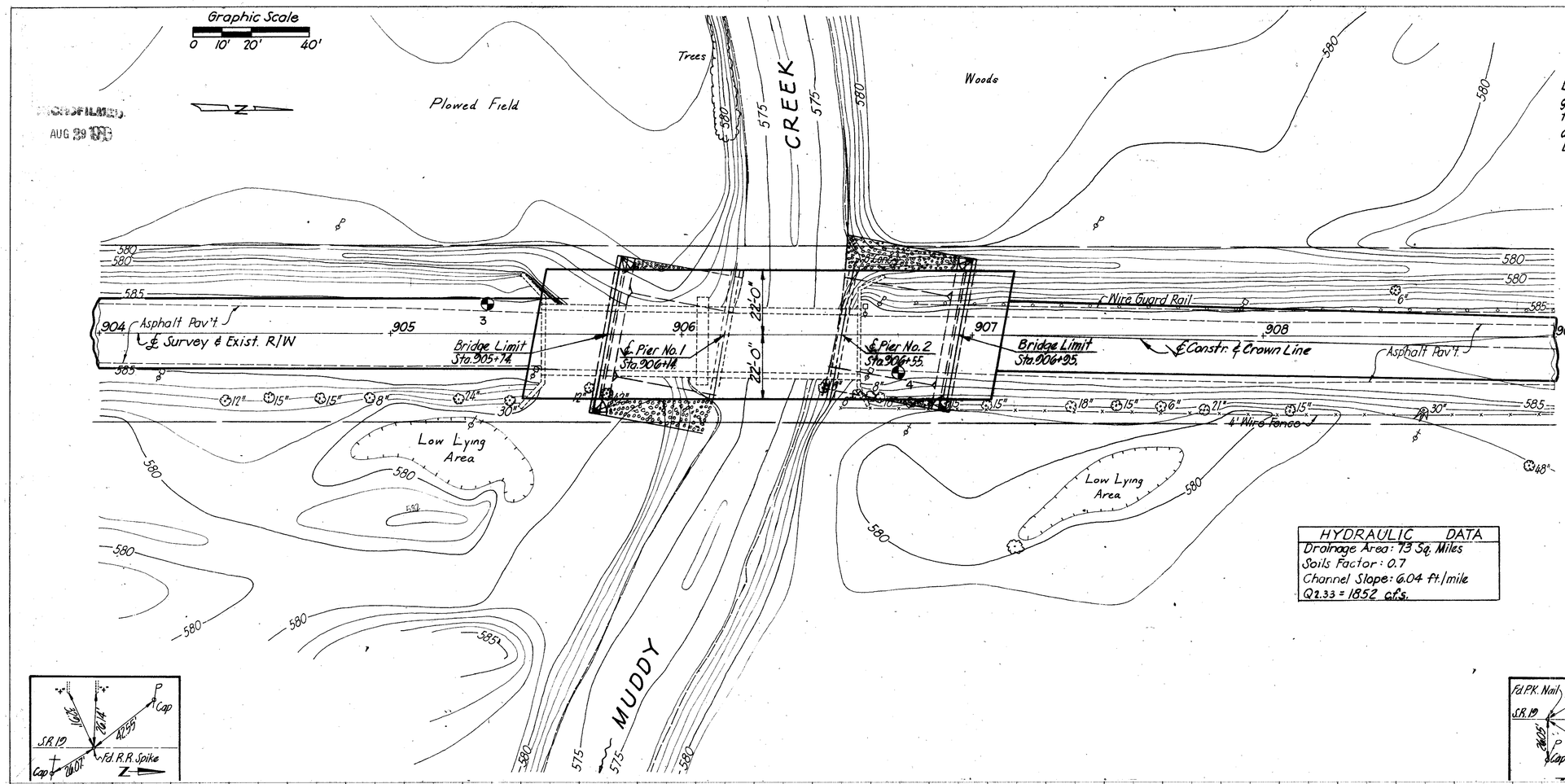


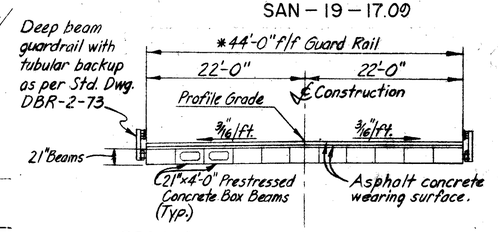


PROPOSED TRANSVERSE SECTION
*Nominal dimension, fit-up not included

Indicates location of soils boring

| HYDRAULIC DATA |
|---|
| Drainage Area: 73 Sq. Miles |
| Soils Factor: 0.7 |
| Channel Slope: 6.04 ft./mile |
| Q2.33 = 1852 c.f.s. |

**EXISTING STRUCTURE**

TYPE: 2 Span Reinforced Conc. Girder with Reinforced Conc. Floor Beams & Slab on Full Height Non-Reinforced Conc. Pier & Abutments.
SPANS: 2 @ 50'-0" Clear
ROADWAY: 20'-0" f/f Girders
LOADING: Unknown
SKEW: None
CONDITION: Extremely Poor. Pier & Abutments Severely Cracked & Spalled. Deck has been Repaired Extensively.
Existing Structure to be Removed.




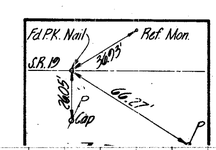


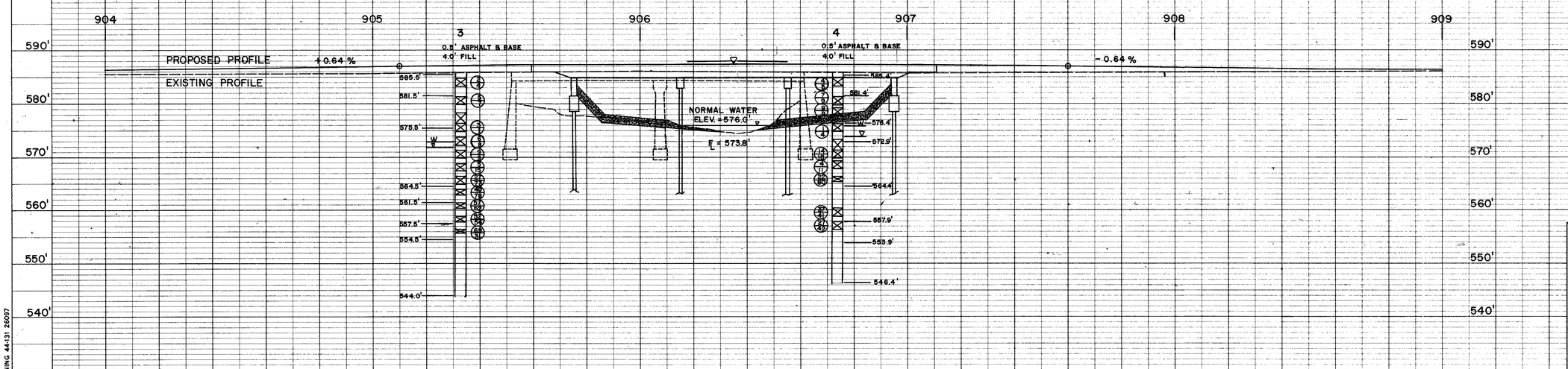


NOTE: SOIL STRATA ARE INTERPOLATED BETWEEN BORINGS

**BOWSER - MORNER**
TESTING LABORATORIES INC.
DAYTON • TOLEDO • MAYSVILLE, KY.

STRUCTURE FOUNDATION INVESTIGATION
SAN – 19 – 17.15

| HORIZONTAL SCALE | DRAWN G.M.N. | DATE 1-22-79 | JOB NO. |
|---|---|---|---|
| 1" = 20' | CHECKED J.R.H. | DATE 2-28-79 | 19980 C |

SOIL PROFILE

MICROFILMED AUG 29 1979

BRUNING 44-131 26097

MICROFILMED
AUG 22 1980

MICROFILMED
AUG 12 1980



## LOG OF BORING

Date Started 11-29-78
Date Completed 11-30-78
Boring No. 3 % Recovery

Sampler Type Split spoon Dia. 1 3/8" I.D.
Shelby tube Dia. 3" O.D.
Station and Offset Station 905 + 33 – 10' Left

Static
Ground Water Elev. 572.0'
Surface Elev. 586.0'

* A.A.S.H.T.O. M145-73

| Elev. | Depth | Std. Pen. (N) | % Rec. Rec. | % Rec. Prog. | Description | Sample No. | % Agg. | % C.S. | % F.S. | % Silt | % Clay | L.L. | P.I. | W.C. | * Class |
|---|---|---|---|---|---|---|---|---|---|---|---|---|---|---|---|
| 585.5 | 0 | | | | Asphalt and base | | | | | | | | | | |
| | 2 | 3- 2- 4 | 33 | | (FILL) Mottled gray and brown silty clay | 1A | 5 | 4 | 11 | 34 | 46 | 40 | 21 | 23.0 | A-6(16) |
| 581.5 | 4 | | | | | | | | | | | | | | |
| | 6 | 4- 5- 7 | 94 | | Gray slightly organic silt and clay | 2A | 0 | 0 | 10 | 45 | 45 | 50 | 27 | 29.1 | A-7-6 (27) |
| | 8 | | 96 | | (With 6" sand and silt seam at 9.0') | **1C | 0 | 0 | 12 | 59 | 29 | 31 | 13 | 26.1 | A-6(10) |
| 575.5 | 10 | 2- 3- 1 | 78 | | | 3A | | | | | | | | 25.0 | Visual |
| | 12 | | | | Gray silty sandy clay | | | | | | | | | | |
| | 14 | 4- 6- 8 | 100 | | | 4A | 5 | 8 | 16 | 31 | 40 | 29 | 13 | 21.5 | A-6(7) |
| | 16 | 8- 9- 9 | 0 | | | 5A | | | | | | | | -- | |
| | 18 | 2- 5-15 | 0 | | | 6A | | | | | | | | -- | |
| 564.5 | 20 | 27-73/4" | 100 | | | 7A | 15 | 10 | 18 | 32 | 25 | 22 | 8 | 17.1 | A-4(2) |
| | 22 | 40-78 | 100 | | Gray silty sand and gravel | 8A | 32 | 8 | 30 | 21 | 8 | * | | 9.4 | A-3(0) |
| | 24 | | | | | | | | | | | | | | |
| 561.5 | 26 | 57-62 | 83 | | Gray sand | 9A | | | | | | | | 17.0 | Visual |
| | 28 | 52-54 | 92 | | | 10A | 0 | 11 | 77 | | 12 | * | | 16.5 | A-2-4(0) |
| 557.5 | 30 | 69-31/1" | 86 | | Gray silty sand with some gravel | 11A | | | | | | | | 8.0 | Visual |
| 554.5 | 32 | | | | Gray Monroe Dolomite | | | | | | | | | | |
| | 34 | | 100 | | Rock Quality Designation - 62% | ***1B | | | | | | | | | |
| | 36 | | | | | | | | | | | | | | |
| | 38 | | | | | | | | | | | | | | |
| | 40 | | 96 | | Rock Quality Designation - 93% | ***2B | | | | | | | | | |
| 544.0 | | | | | Bottom of boring. * Non-plastic. ** Specific Gravity=2.68. *** NX core size. | | | | | | | | | | |

## LOG OF BORING

Date Started 11-28-78
Date Completed 11-28-78
Boring No. 4 % Recovery

Sampler Type Split spoon Dia. 1 3/8" I.D.
Shelby tube Dia. 3" O.D.
Station and Offset Station 906 + 74 – 13' Right

Static
Ground Water Elev. 573.9
Surface Elev. 585.9'

* A.A.S.H.T.O. M145-73

| Elev. | Depth | Std. Pen. (N) | % Rec. Rec. | % Rec. Prog. | Description | Sample No. | % Agg. | % C.S. | % F.S. | % Silt | % Clay | L.L. | P.I. | W.C. | Class |
|---|---|---|---|---|---|---|---|---|---|---|---|---|---|---|---|
| 585.4 | 0 | | | | Asphalt and base | | | | | | | | | | |
| | 2 | 2- 4- 5 | 78 | | (FILL) Brown slightly organic clayey, sandy silt | 1A | 3 | 4 | 19 | 44 | 30 | 30 | 15 | 20.9 | A-6(9) |
| 581.4 | 4 | | | | | | | | | | | | | | |
| | 6 | 4- 7- 9 | 67 | | Mottled brown and gray clayey, sandy silt | 2A | | | | | | | | 32.1 | Visual |
| | 8 | 7- 9- 9 | 100 | | | 3A | 0 | 0 | 12 | 52 | 36 | 39 | 21 | 16.4 | A-6(18) |
| 576.4 | 10 | 2- 1- 4 | 100 | | Mottled brown and gray clayey silt and sand | 4A | 0 | 0 | 26 | 49 | 25 | 23 | 8 | 24.1 | A-4(3) |
| | 12 | | | | | | | | | | | | | | |
| 572.9 | 14 | | 100 | | Gray sandy silt and clay | ** 1C | 6 | 11 | 20 | 31 | 32 | 24 | 9 | 14.5 | A-4(3) |
| | 16 | 9-14-18 | 33 | | | 5A | | | | | | | | 15.4 | Visual |
| | 18 | 2- 4-11 | 100 | | | 6A | | | | | | | | 18.1 | Visual |
| | 20 | 22-80/2" | 100 | | | 7A | 4 | 5 | 9 | 19 | 63 | 33 | 14 | 16.1 | A-6(10) |
| 564.4 | 22 | | 33 | | | 1B | False core run - apparent flaters | | | | | | | | |
| | 24 | | | | Gray sand with some gravel | | | | | | | | | | |
| | 26 | 13-37-41 | 72 | | | 8A | 20 | 24 | 45 | | 11 | * | | 16.0 | A-2-4(0) |
| 557.9 | 28 | | | | | | | | | | | | | | |
| | 30 | 21-27-42 | 56 | | Gray sandy silt and clay | 9A | 6 | 4 | 10 | 28 | 52 | 30 | 12 | 7.8 | A-6(8) |
| 553.9 | 32 | | | | | | | | | | | | | | |
| | 34 | | | | Gray Monroe Dolomite | | | | | | | | | | |
| | 36 | | 100 | | Rock Quality Designation - 68% | ***2B | | | | | | | | | |
| | 38 | | 100 | | Rock Quality Designation - 55% | ***3B | | | | | | | | | |
| 546.4 | | | | | Bottom of boring<br>* Non-plastic<br>** Specific Gravity = 2.72<br>*** NX core size | | | | | | | | | | |

19980-C

### UNCONFINED COMPRESSION TEST

Project: SANDUSKY COUNTY BRIDGE 19-17.15
Boring No: 3 - Station 905 + 33 - 10 feet Left
Sample No: 1C
Surface Elevation: 586.0'
Depth Interval of Sample: 7.5-9.5'
Depth Interval of Strata: 4.5-10.5'
Depth of Interval of Test Sample: 8.75-9.25'
Sample Recovery: 1.75'

| SPECIMEN DATA | | CLASSIFICATION DATA | |
|---|---|---|---|
| Initial Diameter | 2.843" | % Aggregate | = 0 |
| Initial Height | 6" | % C.S. | = 0 |
| Test Specimen Weight | 2.8 lbs. | % F.S. | = 12 |
| Moisture Content | 26.1 % | % Silt | = 59 |
| Wet Unit Weight | 125.2 pcf | % Clay | = 29 |
| Dry Unit Weight | 99.3 pcf | L.L. | = 31 |
| Unconfined Compression Strength | 1210 psf | P.I. | = 13 |
| Load Increment at Failure | 56 lbs. | | |
| Height at Failure | 5.75" | | |
| Test Method | ASTM-D2166-66 | | |
| Soil Classification | Gray slightly organic silt and clay, A-6(10) | | |

FAILURE SKETCH

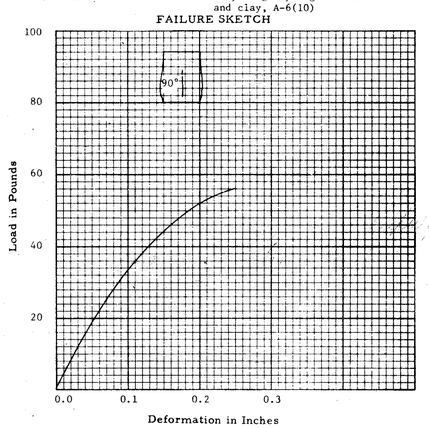


19980-C

### UNCONFINED COMPRESSION TEST

Project: SANDUSKY COUNTY BRIDGE 19-17.15
Boring No: 4 - Station 906 + 74 - 13 feet Right
Sample No: 1C
Surface Elevation: 585.9'
Depth Interval of Sample: 12.5-14.5'
Depth Interval of Strata: 13.0-22.0'
Depth of Interval of Test Sample: 13.5-14.0'
Sample Recovery: 1.5'

| SPECIMEN DATA | | CLASSIFICATION DATA | |
|---|---|---|---|
| Initial Diameter | 2.843" | % Aggregate | = 6 |
| Initial Height | 6" | % C.S. | = 11 |
| Test Specimen Weight | 3.1 lbs. | % F.S. | = 20 |
| Moisture Content | 14.5 % | % Silt | = 31 |
| Wet Unit Weight | 139.2 pcf | % Clay | = 32 |
| Dry Unit Weight | 121.5 pcf | L.L. | = 24 |
| Unconfined Compression Strength | 6210 psf | P.I. | = 9 |
| Load Increment at Failure | 318 lbs. | | |
| Height at Failure | 5.2" | | |
| Test Method | ASTM-D2166-66 | | |
| Soil Classification | Gray sandy silt and clay, A-4(3) | | |

FAILURE SKETCH

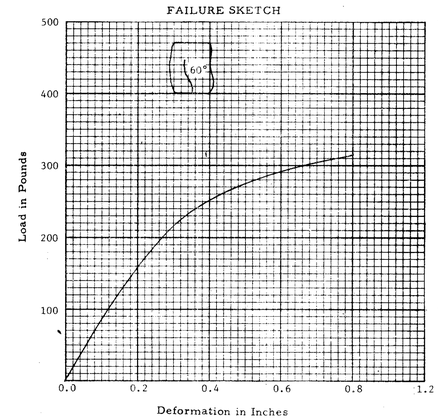


**BOWSER - MORNER**
DAYTON • TOLEDO • MAYSVILLE, KY.

STRUCTURE FOUNDATION INVESTIGATION
SAN — 19 – 17.15

| SCALE | DRAWN G.M.N. | DATE 1-22-79 | JOB NO 19980 C |
|---|---|---|---|
| | CHECKED J.R.H. | DATE 2-28-79 | |

2004-18-1500
10-6-11