PID NO. 96713

FEDERAL PROJECT NO. NON-FEDERAL

CONSTRUCTION PROJECT NO.

STATE OF OHIO
DEPARTMENT OF TRANSPORTATION
SAN-6-23.58
ACCIDENT REPAIR

SAN - 6-23.58
141053 PID - 96713
Dist 2 5/8/2014

-Contract Proposal Available @ www.contracts.dot.state.oh.us/home

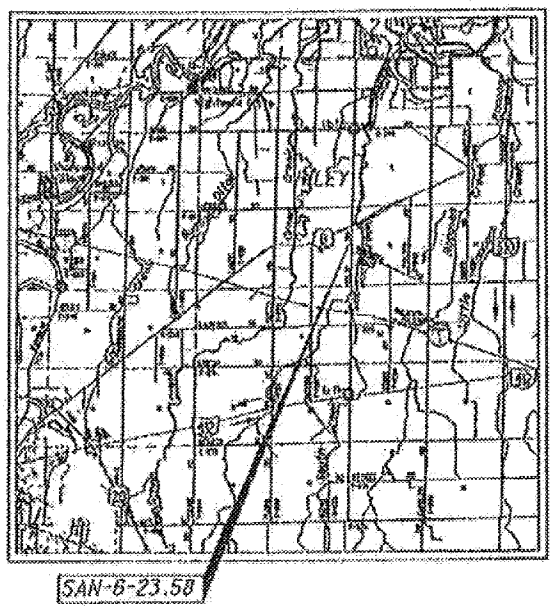

LOCATION MAP

LATITUDE: N 41°23'60" LONGITUDE: W 83°0'38"

2013 SPECIFICATIONS

THE STATE SPECIFICATIONS OF THE STATE OF OHIO, DEPARTMENT OF TRANSPORTATION, INCLUDING CHANGES AND SUPPLEMENTAL SPECIFICATIONS LISTED IN THE PROPOSAL SHALL GOVERN THIS PROJECT.

I HERBY APPROVE THESE PLANS AND DECLARE THAT THE MAKING OF THIS IMPROVEMENT WILL REQUIRE THE CLOSING TO TRAFFIC OF THE HIGHWAY AND THAT PROVISIONS FOR THE MAINTENANCE AND SAFETY OF TRAFFIC WILL BE AS SET FORTH ON THE PLANS AND ESTIMATES.

INDEX OF SHEETS:

TITLE SHEET	1
GENERAL PLAN	2
ESTIMATED QUANTITIES	3
GENERAL NOTES	4-4A
REAR ABUTMENT DETAILS	5-6
FORWARD ABUTMENT DETAILS	7-8
SUPERSTRUCTURE DETAILS	9-10
REINFORCEMENT SCHEDULE	11

APPROVED [signature] P.E.
DATE 2 MAR 14 DISTRICT DEPUTY DIRECTOR

APPROVED [signature]
DATE 3-12-14 DIRECTOR, DEPARTMENT OF TRANSPORTATION

PROJECT DESCRIPTION:

REPAIR OF ACCIDENT DAMAGE TO THE CONCRETE BEAM BRIDGE OVER SOUTH CREEK ON US6.

UNDERGROUND UTILITIES

CONTACT BOTH SERVICES
CALL TWO WORKING DAYS
BEFORE YOU DIG

CALL
1-800-362-2764
(TOLL FREE)
OHIO UTILITIES PROTECTION SERVICE
NON-MEMBERS
MUST BE CALLED DIRECTLY

OIL & GAS PRODUCERS UNDERGROUND PROTECTION SERVICE CALL: 1-800-925-0988

ENGINEERS SEAL:

STATE OF OHIO
NATINA R. ARISS
E-76901
REGISTERED
PROFESSIONAL ENGINEER

SIGNED: [signature]
DATE: 3-11-14

STANDARD CONSTRUCTION DRAWINGS		SUPPLEMENTAL SPECIFICATIONS	
TST-1-99	1-17-14	800	1/17/14
MSG-3.1	7-19-13		
MSG-2.1	7-19-13		
MT-101.60	7-19-13		
		SPECIAL PROVISIONS	

PLANS PREPARED BY:
DISTRICT TWO
PRODUCTION DEPARTMENT
NATINA R. ARISS

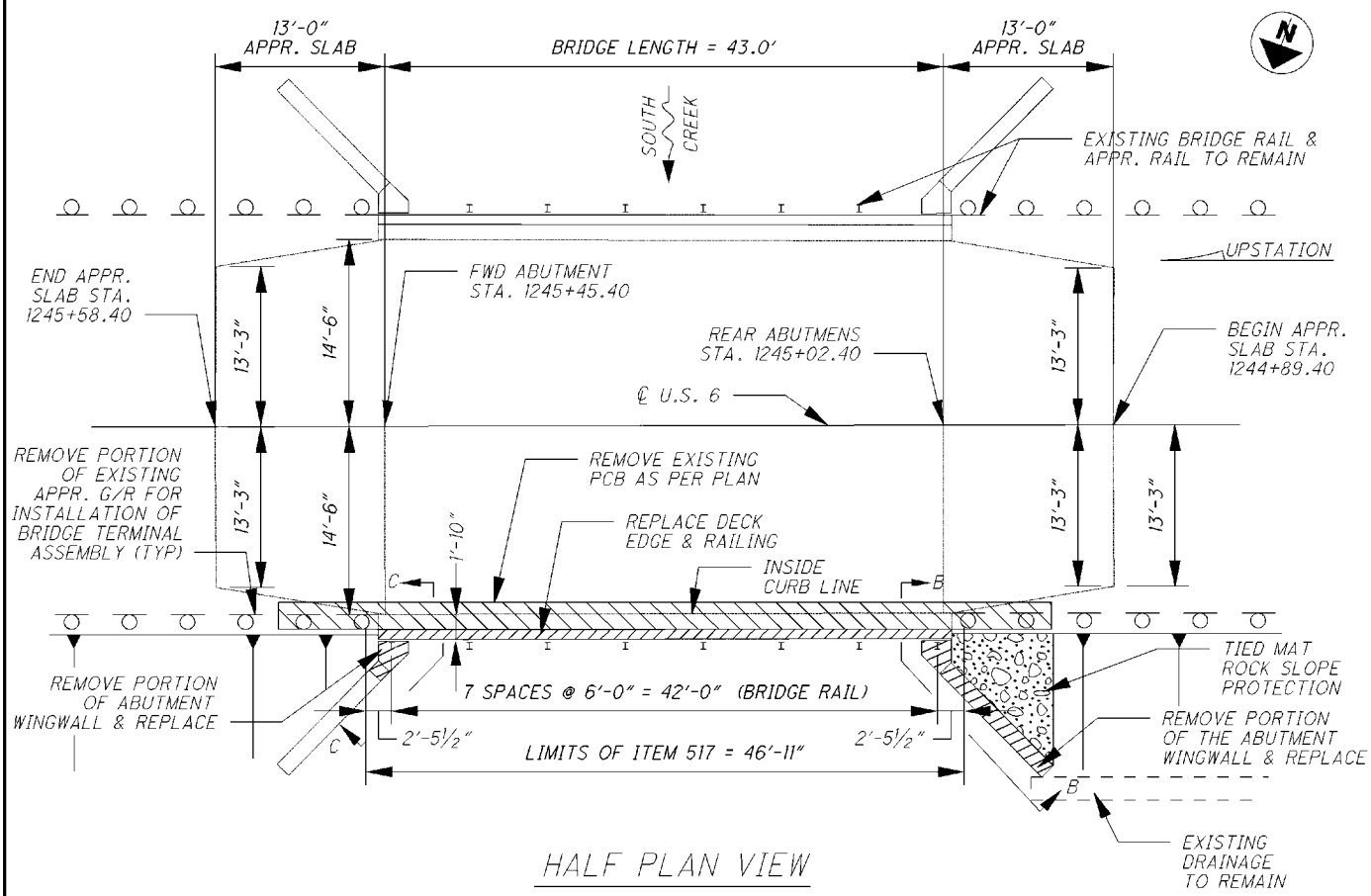

HALF PLAN VIEW

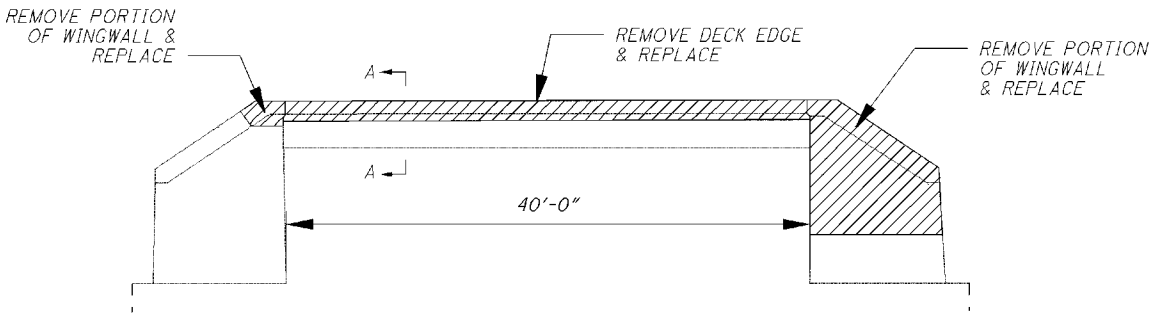

ELEVATION VIEW

NOTE:
SECTION A-A, SEE SHT. 9 OF 11
VIEW B-B, SEE SHT. 5 OF 11
VIEW C-C, SEE SHT. 7 OF 11

EXISTING STRUCTURE TO BE REPAIRED
TYPE: SIMPLE SPAN CONCRETE BEAM
SPANS: 40'-0" C/C ABUT. BRG
ROADWAY: 29'-0" F/F CURB
LOADING: H-15 CAPACITY
SKEW: NONE
APPROACH SLABS: 13'-0" CONCRETE
SUBSRUCTURE: CONCRETE
STRUCTURAL FILE NUMBER: 7200811
DATE BUILT: 1927

PROPOSED WORK
1. ESTABLISH DETOUR, CLOSE STRUCTURE TO THRU TRAFFIC.
2. REMOVE PCB FOR STORAGE AS DIRECTED BY ENGINEER.
3. REMOVE PORTIONS OF S. FASCIA BEAM AND S. ABUTUMENT WINGWALLS.
4. RECONSTRUCT PORTIONS OF STRUCTURE REMOVED.
5. INSTALL BRIDGE RAILING AND APPR. G/R.
6. OPEN BRIDGE TO TRAFFIC

GENERAL PLAN

SAN-6-23.58

DRAWN NRA
CHECKED JTB

ESTIMATED QUANTITIES (01/STR/BR)								
ITEM	EXTENSION	TOTAL	UNIT	DESCRIPTION	ABUT.	SUPER.	GEN.	SHEET #
202	11003	LUMP		STRUCTURE REMOVED, OVER 20 FOOT SPAN, AS PER PLAN				
202	30701	60	FT	CONCRETE BARRIER REMOVED, AS PER PLAN			60	4/11
202	38000	50	FT	GUARDRAIL REMOVED				
503	11100	LUMP		COFFERDAMS AND EXCAVATION BRACING			LUMP	
503	21100	11	CU YD	UNCLASSIFIED EXCAVATION	11			
509	10001	721	POUND	EPOXY COATED REINFORCING STEEL, AS PER PLAN	447	274		
509	20001	50	POUND	REINFORCING STEEL, REPLACEMENT OF EXISTING REINFORCING STEEL, AS PER PLAN			50	4/11
510	10000	128	EACH	DOWEL HOLES WITH NONSHRINK, NONMETALLIC GROUT	42	86		
511	34412	2	CU YD	CLASS QC2 CONCRETE WITH QC/QA, SUPERSTRUCTURE		2		
511	45712	4	CU YD	CLASS QC1 CONCRETE WITH QC/QA, ABUTMENT	4			
512	10300	5	SQ YD	SEALING CONCRETE BRIDGE DECKS WITH HMWM RESIN		5		
516	13200	12	SQ FT	1/2" PREFORMED EXPANSION JOINT FILLER	12			
517	70000	46.92	FT	RAILING (TWIN STEEL TUBE)		46.92		
518	21200	3	CU YD	POROUS BACKFILL WITH FILTER FABRIC	3			
519	11100	50	SQ FT	PATCHING CONCRETE STRUCTURE	50			
601	21060	7	SQ YD	TIED CONCRETE BLOCK MAT, TYPE 2	7			
606	15050	25	FT	GUARDRAIL, TYPE MGS				
606	35002	2	EACH	MGS BRIDGE TERMINAL ASSEMBLY, TYPE 1			2	
614	11000	LUMP		MAINTAINING TRAFFIC			LUMP	
624	10000	LUMP		MOBILIZATION			LUMP	
614	12420	LUMP		DETOUR SIGNING			LUMP	
614	18600	2	SNMT	PORTABLE CHANGEABLE MESSAGE SIGN			2	4A/11

DESIGN DATA:

CONCRETE CLASS QC1 - COMPRESSIVE STRENGTH 4000 PSI (ABUTMENT)

CONCRETE CLASS QC2 - COMPRESSIVE STRENGTH 4500 PSI (SUPERSTRUCTURE)

REINFORCING STEEL - ASTM A615 OR A996, GRADE 60, MINIMUM YIELD STRENGTH 60,000 PSI

REFER TO THE FOLLOWING STANDARD DRAWINGS:

TST-1-99	DATED 1-17-14
MSG-3.1	DATED 7-19-13
MSG-2.1	DATED 7-19-13
MT-101.60	DATED 7-19-13

ITEM 202, PORTIONS OF STRUCTURE REMOVED, OVER 20' SPAN, AS PER PLAN:

THIS ITEM SHALL INCLUDE THE ELEMENTS INDICATED IN THE PLANS AND GENERAL NOTES AND THAT ARE NOT SEPERATELY LISTED FOR PAYMENT. ITEMS TO BE REMOVED INCLUDE ALL EXISTING MATERIALS BEING REPLACED BY NEW CONSTRUCTION AND MISCELLANEOUS ITEMS THAT ARE NOT SHOWN TO BE INCORPORATED INTO THE FINAL CONSTRUCTION AND ARE DIRECTED TO BE REMOVED BY THE ENGINEER. THE USE OF EXPLOSIVES, HEADACHE VALLS AND/OR HOE-RAMS WILL NOT BE PERMITTED. THE METHOD OF REMOVAL AND THE WEIGHT OF HAMMER SHALL BE APPROVED BY THE ENGINEER. PERFORM ALL WORK IN A MANNER THAT WILL NOT CUT, ELONGATE OR DAMAGE THE EXISTING REINFORCING STEEL TO BE PRESERVED. CHIPPING HAMMERS SHALL NOT BE HEAVIER THAN THE NORMAL 90-POUND CLASS. PNEMATIC HAMMERS SHALL NOT BE PLACED IN DIRECT CONTACT WITH REINFORCING STEEL THAT IS TO BE REATAINED IN THE REBUILT STRUCTURE. SUBMIT CONSTRUCTION PLANS ACCORDING TO CMS 501.05.

CUT LINE CONSTRUCTION JOINT PREPARATION:

SAW CUT BOUNDARIES OF PROPOSED CONCRETE REMOVALS 1 INCH DEEP. REMOVE CONCRETE TO A ROUGH SURFACE. LEAVE THE EXISTING REINFORCING STEEL, IF REQUIRED IN THE PLANS, IN PLACE. INSTALL DOWEL BARS IF SPECIFIED. PRIOR TO CONCRETE PLACEMENT ABRASIVELY CLEAN JOINT SURFACES AND EXISTING EXPOSED REINFORCEMENT TO REMOVE LOOSE AND DISINTEGRATED CONCRETE AND LOOSE RUST. THOROUGHLY CLEAN THE JOINT SURFACE AND EXPOSED REINFORCEMENT OF ALL DIRT, DUST, RUST OR OTHER FOREIGN MATERIAL BY THE USE OF WATER, AIR UNDER PRESSURE, OR OTHER METHODS THAT PRODUCE SATISFACTORY RESULTS. EXISTING REINFORCING STEEL DOES NOT HAVE TO HAVE A BRIGHT STEEL FINISH, BUT REMOVE ALL PACK AND LOOSE RUST. THOROUGHLY DRENCH EXISTING CONCRETE SURFACES WITH CLEAN WATER AND ALLOW TO DRY TO A DAMP CONDITION BEFORE PLACING CONCRETE.

SUBSTRUCTURE CONCRETE REMOVAL:

REMOVE CONCRETE BY MEANS OF APPROVED PNEUMATIC HAMMERS EMPLOYING POINTED AND BLUNT CHISEL TOOLS. HYDRAULIC HOE-RAM TYPE HAMMERS WILL NOT BE PERMITTED. THE WEIGHT OF THE HAMMER SHALL NOT BE MORE THAN 35 POUNDS FOR REMOVAL WITHIN 18 INCHES OF PORTIONS TO BE PRESERVED. OUTSIDE THE 18 INCH LIMIT, THE CONTRACTOR MAY USE HAMMERS NOT EXCEEDING 90 POUNDS UPON THE APPROVAL OF THE ENGINEER. DO NOT PLACE PNEUMATIC HAMMERS IN DIRECT CONTACT WITH REINFORCING STEEL THAT IS TO BE RETAINED IN THE REBUILT

ITEM 202, CONCRETE BARRIER REMOVED, AS PER PLAN:

WHEN NO LONGER NEED TO MAINTAIN TRAFFIC, THE CONTRACTOR SHALL REMOVE AND DELIVER THE BARRIER TO THE FOLLOWING LOCATION:

ODOT OTTAWA COUNTY GARAGE
307 S. RAILROAD ST.
OAK HARBOR, OH 43449

EXISTING STRUCTURE VERIFICATION:

DETAILS AND DIMENSIONS SHOWN ON THESE PLANS PERTAINING TO THE EXISTING STRUCTURE HAVE BEEN OBTAINED FROM PLANS OF THE EXISTING STRUCTURE AND FROM FIELD OBSERVATIONS AND MEASUREMENTS. CONSEQUENTLY, THEY ARE INDICATIVE OF THE EXISTING STRUCTURE AND THE PROPOSED WORK BUT THEY SHALL BE CONSIDERED TENTATIVE AND APPROXIMATE. THE CONTRACTOR IS REFERRED TO CMS SECTIONS 102.05, 105.02 AND 513.04. BASE CONTRACT BID PRICES UPON A RECOGNITION OF THE UNCERTAINTIES DESCRIBED ABOVE AND UPON A PREBID EXAMINATION OF THE EXISTING STRUCTURE. HOWEVER, THE DEPARTMENT WILL PAY FOR ALL PROJECT WORK BASED UPON ACTUAL DETAILS AND DIMENSIONS WHICH HAVE BEEN VERIFIED

ITEM 509 REINFORCING STEEL, REPLACEMENT OF EXISTING REINFORCING STEEL, AS PER PLAN:

REPLACE ALL EXISTING REINFORCING BARS DEEMED BY THE ENGINEER TO BE UNUSABLE BECAUSE OF CORROSION. THE DEPARTMENT WILL MEASURE THE REPLACEMENT REINFORCING STEEL BY THE NUMBER OF POUNDS ACCEPTED IN PLACE.

REPLACE ALL EXISTING REINFORCING STEEL BARS WHICH ARE TO BE INCORPORATED INTO THE NEW WORK AND ARE DEEMED BY THE ENGINEER TO BE MADE UNUSABLE BY CONCRETE REMOVAL OPERATIONS WITH NEW EPOXY COATED REINFORCING STEEL OF THE SAME SIZE AT NO COST TO THE DEPARTMENT.

ITEM 614, MAINTAINING TRAFFIC:

UPON APPROVAL BY THE ENGINEER, THE CONTRACTOR SHALL CLOSE US-6 BETWEEN US-20 AND SR 510 AND ESTABLISH AND MAINTAIN THE FOLLOWING DETOUR FOR THE DURATION OF THE PROJECT:

FROM US-6 EAST ON US-20 DETOUR EAST TO SR-412, EAST ON SR-412 TO SR-510, NORTH SR-510 TO EAST US-6.

THE CONTRACTOR SHALL FURNISH AND MAINTAIN THE FOLLOWING SIGNAGE AS PER THE OHIO MANUAL OF UNIFORM TRAFFIC CONTROL DEVICES, CHAPTER 6F:

DETOUR SIGNS M4-9:
- E.B. US-20 @ US-6
- E.B. US-20 @ EXIT RAMP TO SR-412
- E.B. SR-412 @ EXIT RAMP FROM US-20
- E.B. SR-412 @ SR-510
- N.B. SR-510 @ US-6
- W.B. US-6 @ S.B. SR-510
- S.B. SR-510 @ W.B. SR-412
- W.B. SR-412 @ RAMP TO US-20

END DETOUR SIGNS M4-8A:
- E.B. US-6 @ TR 256
- W.B. US-20 @ END OF RAMP FROM SR-412

ROAD CLOSED TO THRU TRAFFIC R11-4:
- E.B. US 6 @ CR-198
- W.B. US-6 @ SR-510

PAYMENT FOR DETOUR SIGNAGE SHALL BE PAID FOR UNDER ITEM 614, DETOUR SIGNING, LUMP SUM.

GENERAL NOTES

SAN-6-23.58

DRAWN NRA
CHECKED JTB

ITEM 614, MAINTAINING TRAFFIC (CONTINUED):

THE CONTRACTOR SHALL FURNISH AND MAINTAIN CHANGEABLE MESSAGE BOARDS WITH DETOUR INFORMATION AT THE FOLLOWING LOCATIONS:

E.B. US-6 LOCATED BEFORE THE RAMP TO US-6 OVER US-20

W.B. US-6 LOCATED NEAR TR 250

PAYMENT FOR MESSAGE BOARDS SHALL BE MADE PER ITEM 631, SNMT, PORTABLE CHANGEABLE MESSAGE SIGN.

BARRICADES AS PER STANDARD DRAWING MT-101.6 SHALL BE LOCATED EAST OF CR 232 AND WEST OF TR 240. THE LOCATION OF THE BARRICADE SHALL BE SO THAT ACCESS TO LOCAL PROPERTIES IS MAINTAINED. PAYMENT FOR BARRICADES SHALL BE INCIDENTAL TO ITEM 614, MAINTAINING TRAFFIC.

THE DURATION OF THE DETOUR SHALL NOT EXCEED 28 DAYS. AFTER THE ALLOTED DAYS, LIQUIDATED DAMAGES WILL BE ASSESSED AS PER CMS 108.07.

GENERAL NOTES (CONTINUED)

SAN-6-23.58

DRAWN NRA
CHECKED JTB

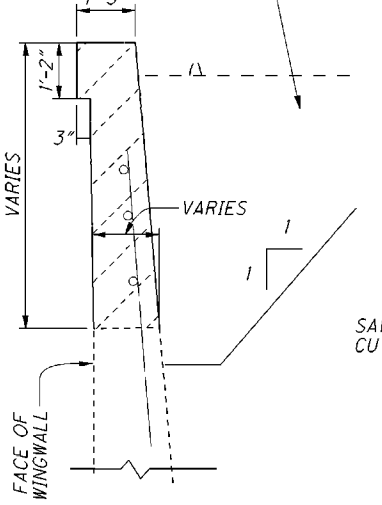

SECTION D-D

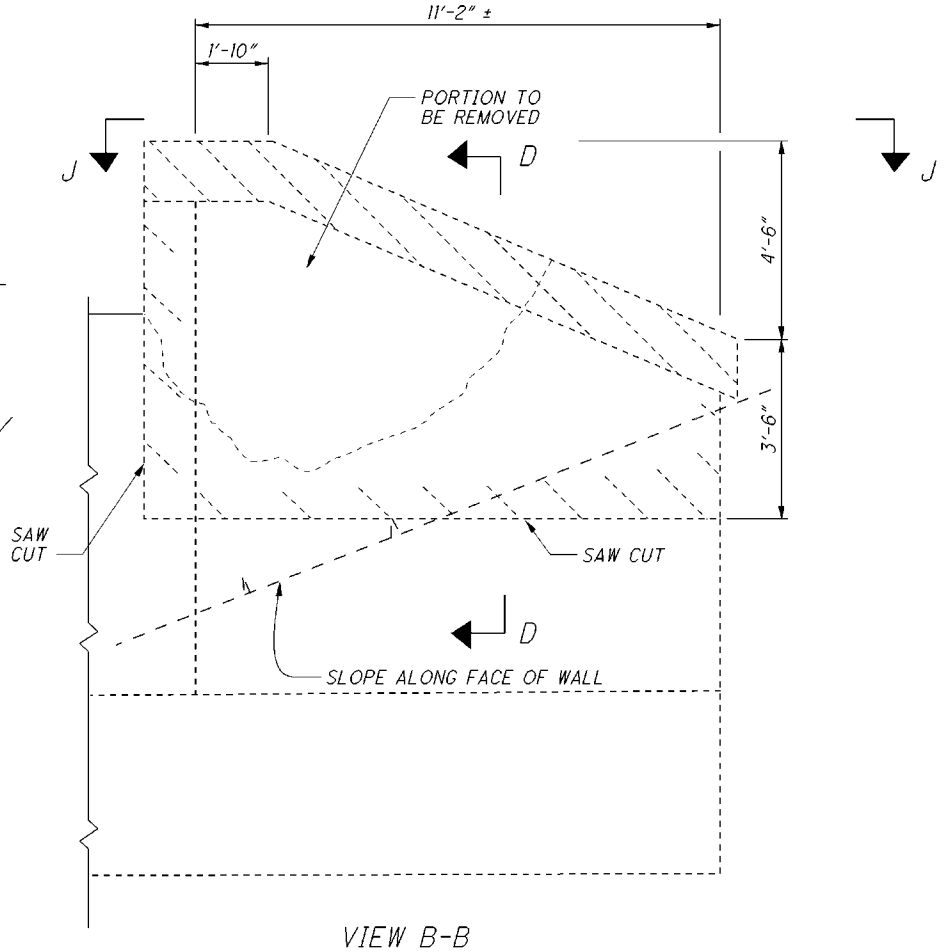

VIEW B-B

ELEVATION

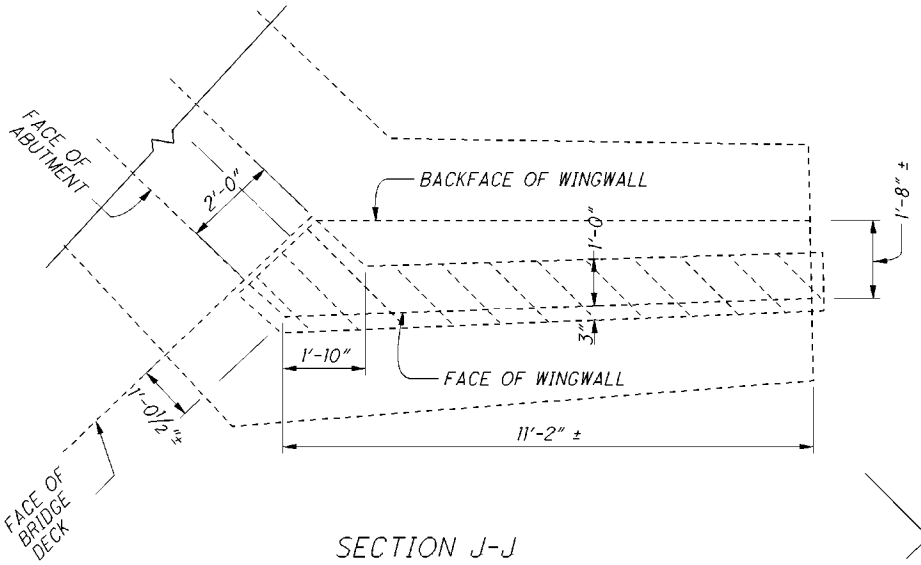

SECTION J-J

PLAN

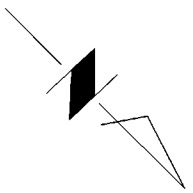

REAR ABUTMENT WINGWALL REMOVAL

SAN-6-23.58

DRAWN NRA
CHECKED JTB

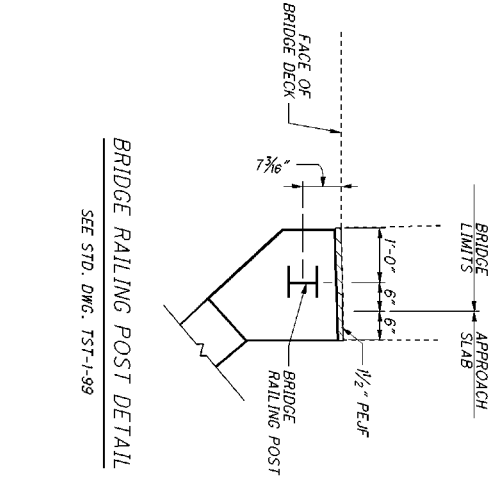

BRIDGE RAILING POST DETAIL

SEE STD. DWG. TST-1-99

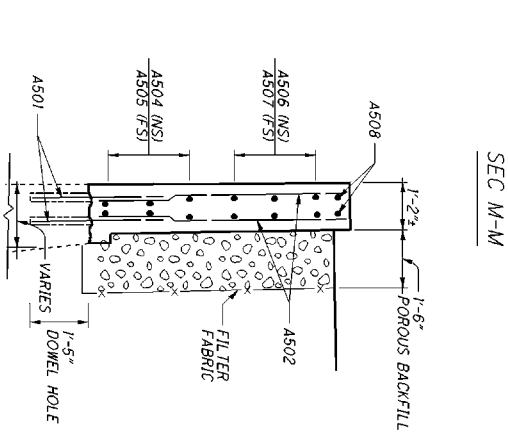

SECTION N-N

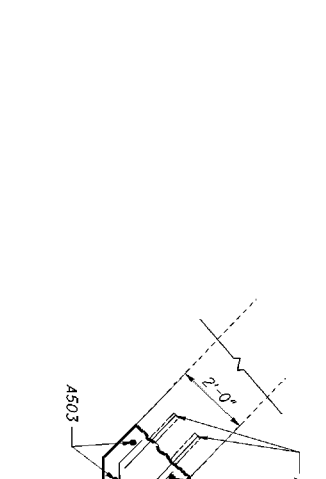

SEC M-M

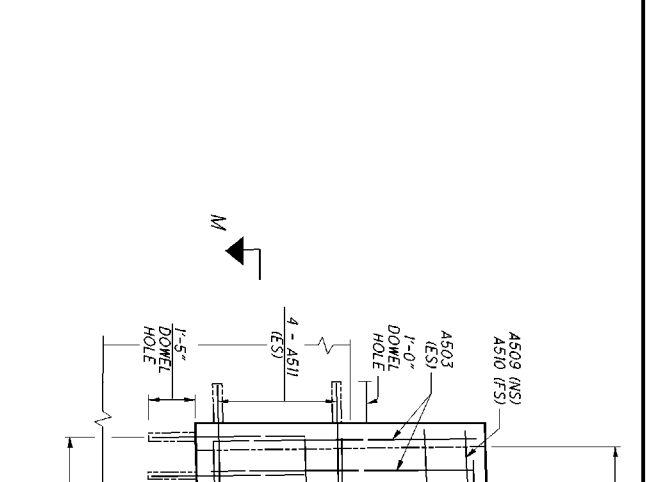

VIEW B-B

DRAWN NRA	SAN-6-23.58	REAR ABUTMENT REPAIR DETAILS	6 / 11
CHECKED JTB			

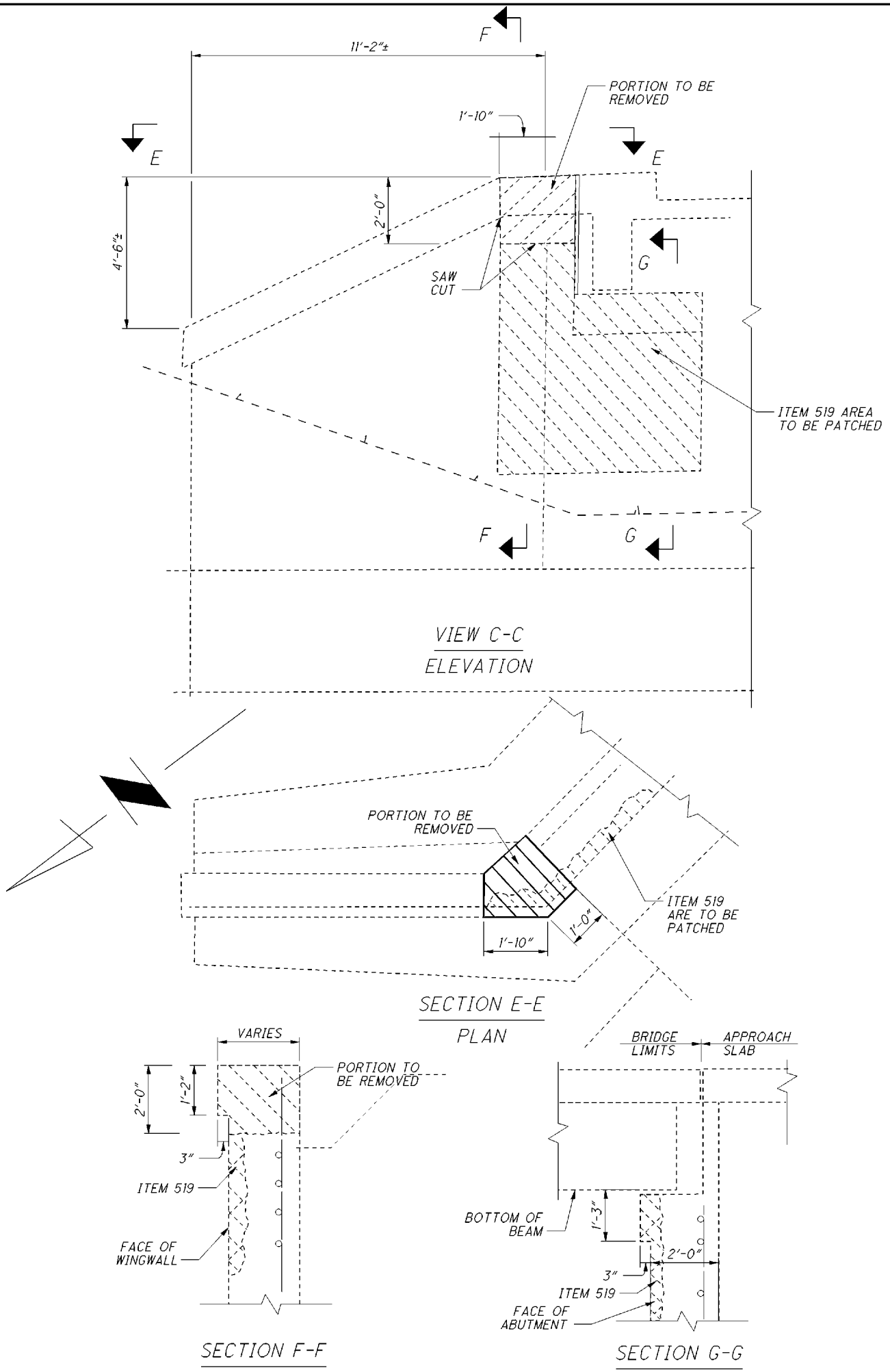

7 / 11

FWD ABUTMENT & WINGWALL REMOVAL AND REPAIR

SAN-6-23.58

DRAWN NRA

CHECKED JTB

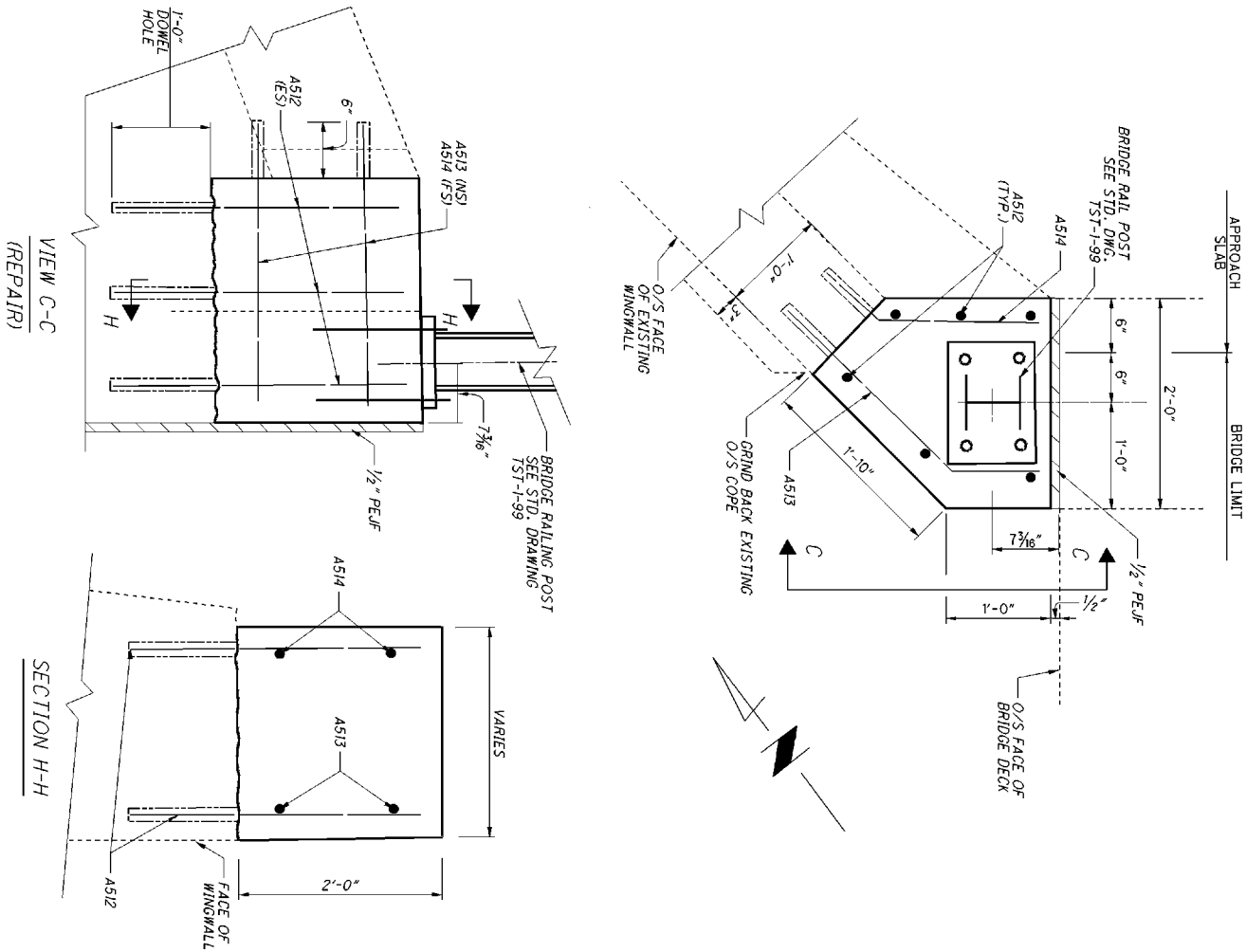

DRAWN NRA	SAN-6-23.58	FWD. ABUTMENT REPAIR DETAIL	8 / 11
CHECKED JTB			

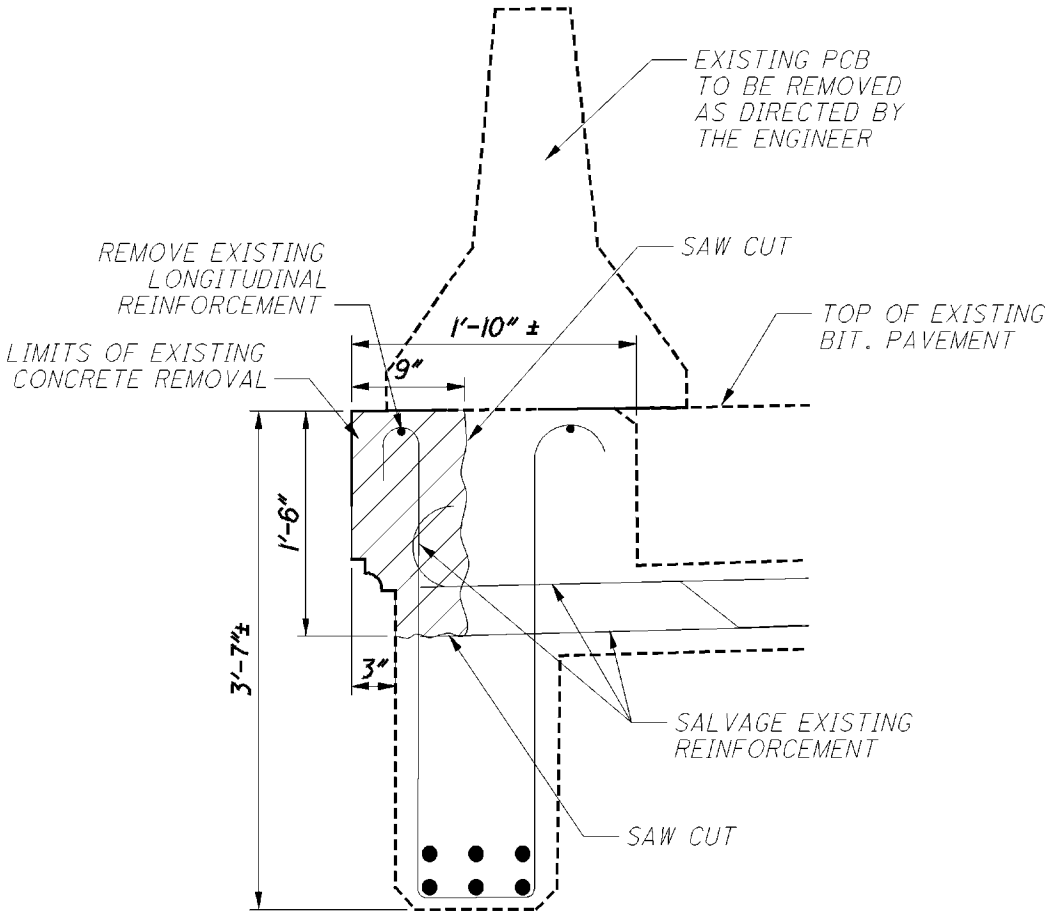

SECTION A-A

EXISTING TYPICAL SECTION

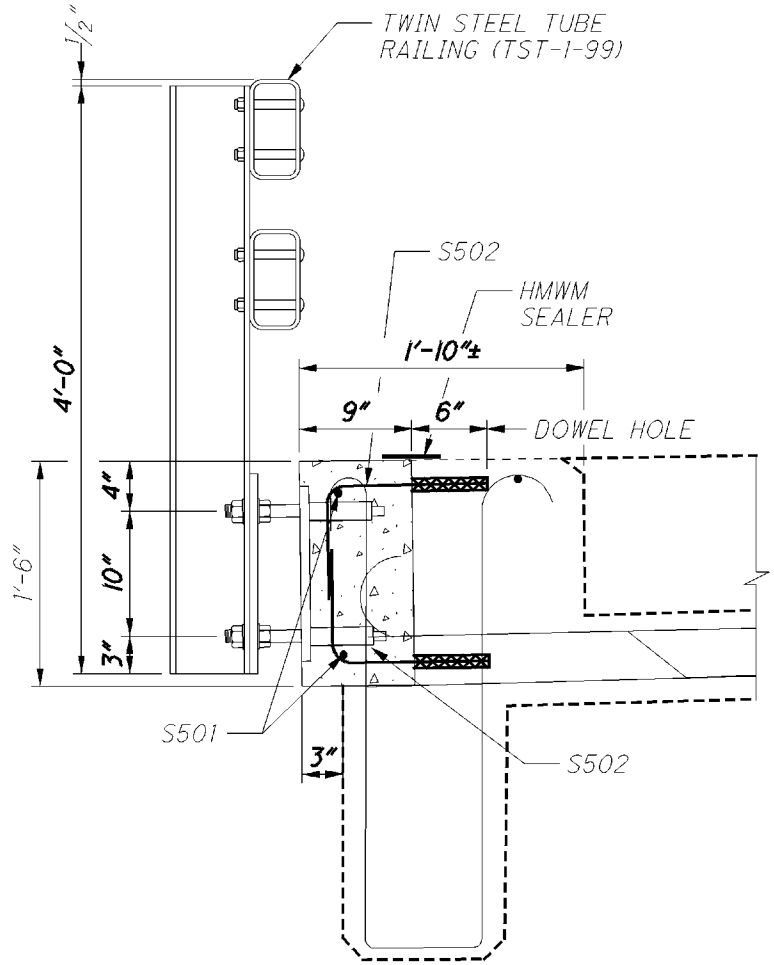

PROPOSED TYPICAL SECTION

DRAWN NRA	SAN-6-23.58	TYPICAL SECTION	9 / 11
CHECKED JTB			

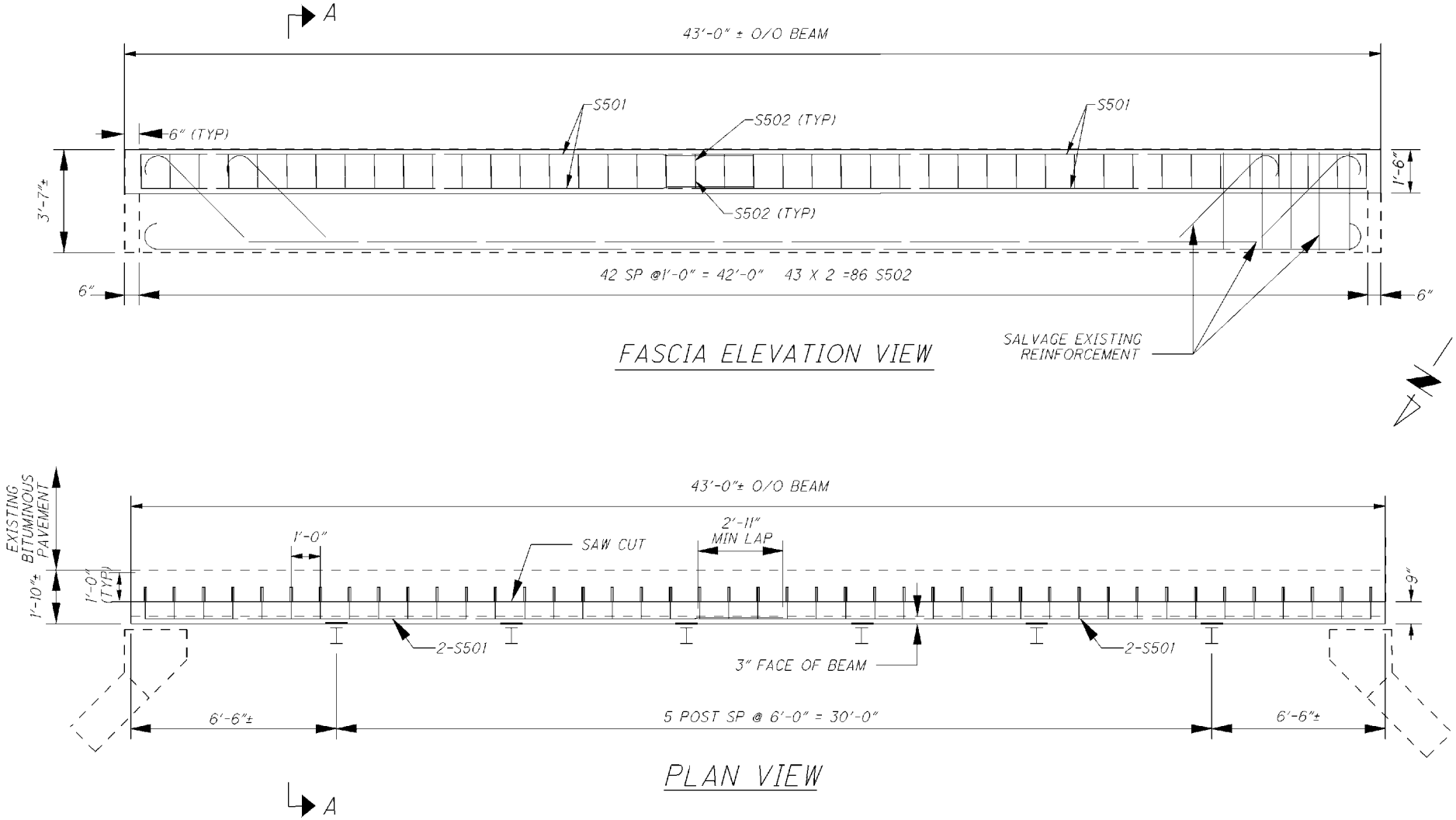

DRAWN NRA	SAN-6-23.58	DECK REINFORCEMENT DETAILS	10/11
CHECKED JTB			

SUPERSTRUCTURE REINFORCEMENT SCHEDULE					
MARK	NUMBER	LENGTH	SHAPE	SERIES INC	WEIGHT
S501	4	22'-10"	STR.		95
S502	86	2'-0"	BENT		179
				TOTAL =	274

ABUTMENT REINFORCEMENT SCHEDULE					
MARK	NUMBER	LENGTH	SHAPE	SERIES INC	WEIGHT
A501	24	4'-5"	STR		111
A502	2 SER 10	3'-5" TO 7'-8"	STR	5 5/8"	116
A503	4	7'-11"	STR		33
A504	3	11'-9"	BENT		37
A505	3	10'-8"	BENT		34
A506	1 SER 3	9'-11" TO 5'-0"	BENT	2'-5' 1/2"	23
A507	1 SER 3	8'-10" TO 3'-11"	BENT	2'-5 1/2"	20
A508	2	11'-8"	BENT		24
A509	1	2'-1"	BENT		2
A510	1	1'-3"	STR		2
A511	8	2'-0"	STR		17
A512	6	2'-10"	STR		18
A513	2	2'-10"	BENT		6
A514	2	1'-11"	BENT		4
				TOTAL =	447

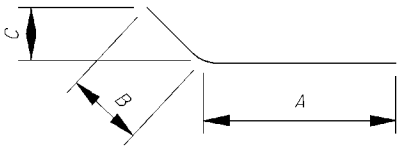

MARK	A	B	C
A504	10'-11"	11"	7 3/4"
A505	9'-5"	1'-4"	11 3/8"
A506	9'-1" TO 4'-2" INCR = 2'-5 1/2"	11"	7 3/4"
A507	7'-7" TO 2'-8" INCR = 2'-5 1/2"	1'-4"	11 3/8"
A508	10'-2"	1'-7"	8 1/4"
A509	1'-6"	8"	5 5/8"
A513	2'-3"	8"	5 5/8"
A514	1'-6"	6"	4 1/4"

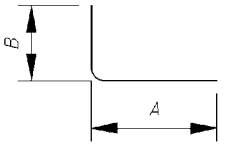

MARK	A	B
A502	1'-1"	1'-1"

BENDING DIAGRAMS

DRAWN NRA
CHECKED JTB

SAN-6-23.58

REINFORCEMENT SCHEDULES