SCI-139-10.75	OHIO FHWA REGION	1/28
BRF-1055 (8)	FEDERAL PROJECT	

STATE OF OHIO
DEPARTMENT OF TRANSPORTATION
SCI-139-10.75
MADISON TOWNSHIP
SCIOTO COUNTY
RECONSTRUCTION OF EXISTING SEPARATED CROSSING OVER CSX TRANSPORTATION, INC.

MICROFILMED
AUG 31 1995

DESIGN DESIGNATION

Current A.D.T. (1991) = 3350
Design Year A.D.T. (2011)) = 4090
D.H.V. = 409
D = 55 %
T = 2 %
V = 35 M.P.H.
Design Speed Limit = 35 M.P.H.
Functional Classification : Major Collector – Secondary

DESIGN EXCEPTIONS - NONE REQUIRED

CONVENTIONAL SIGNS

County Line
Township Line
Section Line
Corporation Line or
Fence Line (existing) (proposed)
Center Line 352 353
Trees , Stumps , (to be removed)
Utility Poles: Telephone , Power , Light

Limited Access (only) LA
Right of Way (only) RW
Existing Railroad Right-of-Way Ex.R.R. R/W
Existing Right of Way Ex. R/W
Property Line (in existing fence)
Railroad or
Guardrail (existing) (proposed)

INDEX OF SHEETS

Title Sheet	1	Plan & Profile	7,8
Typical Sections	2	Cross Sections	9,10
General Notes	3	Railroad Supplemental Site Plan	11
Calculations	4	Railroad Cross Sections	12-14
Miscellaneous Details	5	Structure Over 20' Span	15-23
Miscellaneous Details & Detour Map	5A-D	Right of Way	24-28
General Summary	6,6A		

LINE DATA

Begin Project	Sta. 567 + 50.00
End Project	Sta. 571 + 23.43
Length of Project	373.43 L.F. or 0.071 mile
Begin Work	Sta. 567 + 00
End Work	Sta. 571 + 75.00
Length of Work	475.00 L.F. or 0.090 Mile

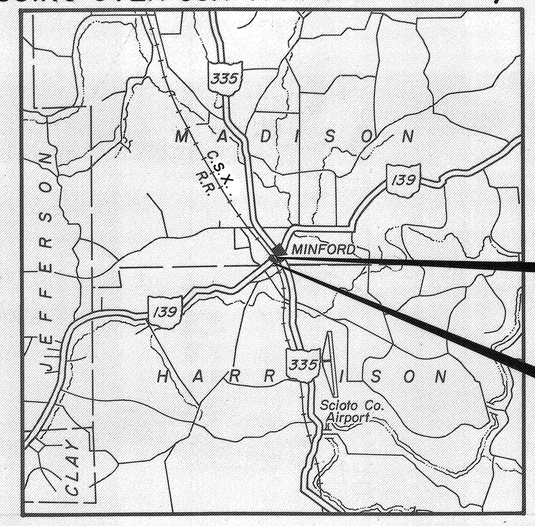

END PROJECT
STA. 571+23.43
S.L.M. 10.82

BEGIN PROJECT
STA. 567 + 50
S.L.M. 10.75

LOCATION MAP

SCALE IN MILES
0 1 2 3

Portion to be improved
State & Federal Routes
Other Roads

SCALES

Railroad Site Plan, Cross Sections As Noted
Plan: 0 20' 40'
Profile: Horizontal 0 20' 40', Vertical 0 5' 10'
Cross Section: Horizontal 0 5' 10', Vertical 0 5' 10'

1991 SPECIFICATIONS

The standard specifications of the State of Ohio, Department of Transportation, including changes and supplemental specifications listed in the proposal shall govern this improvement.

I hereby approve these plans and declare that the making of this improvement will require the closing to traffic of the highway and that detours will be provided as indicated on the plans.

ALL REFERENCES TO FEDERAL NUMBER BRS-1055(8) APPEARING IN THESE PLANS SHALL BE CONSIDERED TO READ BRF-1055(8).

Approved J. W. Watkins
Date 2-27-92 District Deputy Director of Transportation

Approved B.D. Hankulammi /WEH
Date 3-17-92 Engineer, Bureau of Bridges and Structural Design

Approved George L. Bunting
Date 6/2/92 Deputy Director, Planning and Design

Approved Jerry Wray
Date 6-2-92 Director, Department of Transportation

2 WORKING DAYS BEFORE YOU DIG
CALL TOLL FREE 800-362-2764
OHIO UTILITIES PROTECTION SERVICE

STRUCTURE PLANS REVIEWED BY:
Burgess & Niple, Limited
Engineers and Architects

Plan Prepared By:
EVANS, MECHWART, HAMBLETON & TILTON, INC.
Gahanna, Ohio

SUPPLEMENTAL PRINTS OF STANDARD CONSTRUCTION DRAWINGS					
BP-5	10-1-87	CB-2-2-A&B	5-1-79	AS-1-81	11-27-81
		HW-4A	4-1-80	BR-1	5-29-79
GR-1.1	5-6-91	HW-4B	4-1-80	PSBD-1-81	6-20-89
GR-1.2	5-6-91			EXJ-3-82	8-1-84
GR-2.1	5-6-91	MC-4	7-26-76	MT-99.10	11-14-86
GR-3.1	5-6-91	MC-7	10-15-76	TC-41.10	8-29-84
GR-4.2	5-6-91	MC-11	8-1-78	TC-41.20	3-26-79
		MC-10	5-1-76	TC-52.10	4-3-79
		MC-5	6-12-75	TC-52.20	4-3-79

SUPPLEMENTAL SPECIFICATIONS			
		820	3-18-92
802	4-13-90	849	12-24-85
836	11-12-85		
841	5-16-84		
843	7-29-88		
931	3-18-92		
942	3-18-92		
944	3-18-92		
949	9-26-86		

Project: SCI-139-10.75

Date of Letting _____ 19 _____, Contract No. _____

DEPARTMENT OF TRANSPORTATION
FEDERAL HIGHWAY ADMINISTRATION

APPROVED:

DIVISION ADMINISTRATOR DATE

TYPICAL SECTION

TYPE 404 ON 301

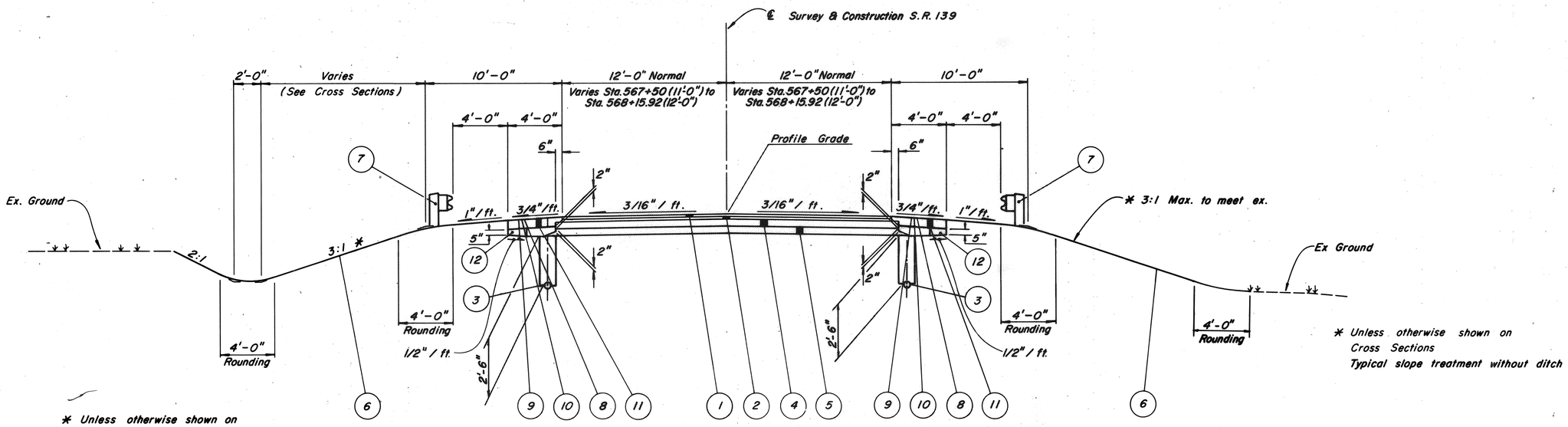

NORMAL SECTION

Limiting Stations

Sta. 567 + 50 to Sta. 568 + 15.92
Sta. 570 + 41.08 to Sta. 571 + 23.43

NOTE: SEE SHEET 7 FOR EXISTING PAVEMENT MAKEUP.

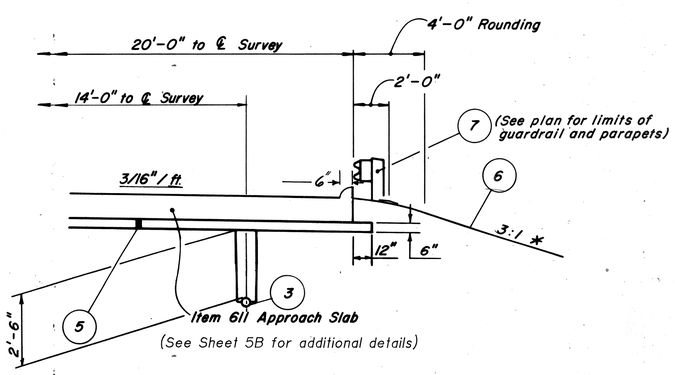

PARTIAL SECTION
SUBBASE DETAIL AT APPROACH SLAB

Limiting Stations

Sta. 568 + 15.92 to Sta. 568 + 40.92
Sta. 570 + 16.08 to Sta. 570 + 41.08

LEGEND

1. Item 404 – 1 1/4" Asphalt Concrete, AC-20
2. Item 403 – 1 3/4" Asphalt Concrete, AC-20
3. Item 605 – 6" Shallow Pipe Underdrain
4. Item 301 – 8" Bituminous Aggregate Base, AC-20
5. Item 304 – 6" Aggregate Base, as per plan
6. Item 659 – Seeding and Mulching
7. Item 606 – Guardrail, Type 5
8. Item 409 – Seal Coat Cover Aggregate No. 8, 0.008 cu. yd. / sq. yd.
9. Item 408 – Bituminous Prime Coat, 0.40 Gal. / sq. yd.
10. Item 409 – Seal Coat Bituminous Material, 0.30 Gal. / sq. yd.
11. Item 304 – 8" Aggregate Base, as per plan.
12. Item 304 – Aggregate Base, as per plan

GENERAL NOTES

ALL ELEVATIONS ARE BASED ON U.S.G.S. DATUM.

ROUNDING OF CORNERS SHOWN ON CROSS SECTIONS

The rounded corners shown on the typical sections, apply to all cross sections even though otherwise shown on these plans.

UNDERGROUND UTILITIES

The locations of the underground utilities shown on the plans are as obtained from the owners of the utility as required by Section 153.64 ORC.

CONSTRUCTION ADJACENT TO RAILWAY

The Contractor shall notify the CSX Transportation, Inc. and obtain all permits and meet all safety requirements before commencing work on the project. See, also, Sheet 17 for additional notes related to the demolition of the existing structure and the construction of the new structure.

EROSION CONTROL

Items 601 and 670 are provided in the plans for erosion control. Rock of a stable nature will not be removed in order to place this item. The Engineer shall check and non-perform quantities or adjust locations and quantities for this item where indicated by conditions during construction.

~~ITEM 614 BARRIER REFLECTORS~~

~~These reflectors and their mounting shall conform to Supplemental Specification 802 except that spacing shall be as shown on the plans. (50% of S.S. 802 spacing).~~

ITEM 304 AGGREGATE BASE, AS PER PLAN

Materials furnished for these items shall exclude all slag except granulated slag or crushed air-cooled blast furnace slag.

UTILITY OWNERSHIP

The following utilities and owners are located within the work limits of the project:

Columbia Gas of Ohio
802 Clare Avenue
P.O. Box 1147
Portsmouth, Ohio 45662
(614) 354-2836

Minford Telephone Company
P.O. Box 181
Minford, Ohio 45653
(614) 820-2151

Scioto County Regional Water
Authority District I
P.O. Box 310
Lucasville, Ohio 45648
(614) 259-2301

Ohio Power Co.
P.O. Box 721
Portsmouth, Ohio 45662
(614) 353-4131

U.S. Sprint Communication Co.
3065 Hargrove Road, Suite 700
Atlanta, Georgia 30339
(404) 859-8830
Att. Ralph Moore

CLEARING AND GRUBBING

Although there are no trees and/or stumps specifically marked for removal within the limits of this project, a lump sum quantity has been included in the General Summary for Item 201, Clearing and Grubbing. All provisions as set forth in the specifications under this item shall be included in the lump sum price bid for Item 201, Clearing and Grubbing.

TEMPORARY CUTSLOPES

Once the slope excavation has begun on either side, it shall continue as weather permits to completion. Placement of the granular material, sand blanket, drain pipes and embankment shall begin as soon as each excavation is complete. The temporary cutslopes are to remain unsupported for as short a period of time as possible.

TEMPORARY SOIL EROSION AND SEDIMENT CONTROL

The following estimated quantities are to be used as directed by the Engineer, for temporary erosion and sediment control measures:

ITEM 207 Straw or Hay Bales	25 Each
ITEM 207 Temporary Seeding & Mulching	350 Sq. Yds.
ITEM 659 Repair Seeding and Mulching	75 Sq. Yds.
ITEM 659 Water	1 M. Gal.
ITEM 659 Commercial Fertilizer	0.02 Tons

SEEDING AND MULCHING

Quantities for seeding are calculated for the soil areas between the work limits, as shown on the cross sections.

WATER PERMANENT SEEDED AREAS

The following estimated quantities are to be used as directed by the Engineer to promote growth and to care for the permanent seeded areas, as per 659.09:

ITEM 659 Water 4 M. Gal.

CONTINGENCY QUANTITIES

The Contractor shall not order materials or perform work listed in the General Summary for items designated by plan note to be used "as directed by the Engineer" unless authorized by the Engineer. The actual work locations and quantities used at the Engineer's discretion shall be made a matter of record by incorporation into the final change order governing completion of this project.

CONNECTION TO EXISTING PIPE

Where the plans provide for proposed conduit to be connected to, or to cross either over or under an existing sewer, it shall be the responsibility of the Contractor to locate the existing pipe both as to line and grade before he starts to lay the proposed conduit. Payment for all operations described above shall be included in the unit price bid for pertinent 603 conduit items.

LOCATION OF GUARDRAIL

The locations of guardrail runs, as shown on these plans, are subject to adjustment to assure that the planned installation shall afford maximum protection for traffic.

ITEM 407 TACK COAT

The rate of application of 407 Tack Coat shall be subject to adjustment, as directed by the Engineer.
Plan quantities indicated an average application rate of 0.10 gallons of tack coat per square yard for estimating purposes only.

SLOPE RECONSTRUCTION

The forward and rear abutment slopes are to be reconstructed to the limits shown on the plan & profile (sheet 7) and the Railroad Cross Sections (sheet 13). The estimated quantities for this work are shown on sheet 13.

After demolition of the existing structure , the abutment slopes are to be excavated to the limits shown . This work is to be performed in accordance with 203 Excavation.
The granular material below the top of the pier footings shall meet the requirements of 203 and be paid for under 203 Embankment Using Granular Material.

The footings for the piers may be constructed prior to placement of this material; the reinforcing projecting from the pier footings shall be protected during embankment reconstruction.

The sand blanket to be placed at the bottom of the reconstructed slope is to meet the requirements of 703.02. Payment for this work will be at the unit price bid for 203 Embankment Using Sand.

The perforated underdrain shall be constructed per the detail on sheet 5 and paid for at the unit price bid for 605 6" Unclassified Pipe Underdrain , As Per Plan.

The 203 Embankment shall be placed and compacted on level bends and paid for at the unit price bid for 203 Embankment , As Per Plan

MAINTENANCE OF TRAFFIC

The detour shown on this sheet shall not be placed into effect until the Contractor is ready to remove the existing bridge.Until the detour is placed into effect, two-way traffic shall be maintained at all times. While the detour is in effect the Contractor shall continuously proceed with work on the bridge, including approach slabs and guardrail, until that portion of the work is completed. If the Contractor cannot proceed with construction of the adjoining pavement because of weather or scheduling limitations, the detour shall be removed and the remainder of the work shall be accomplished under traffic. The duration of the detour shall be subject to the approval of the Engineer.

The Contractor shall furnish, erect, maintain and subsequently remove approved traffic control devices as per Item 614, Maintaining Traffic, including barricades and signs in accordance with Plate C-7 of the Ohio Manual of Uniform Traffic Control Devices, Current Edition, Latest Revision. Detour signs and supports will be erected and maintained by the State. The Contractor shall provide at least two weeks notice to the District Traffic Engineer prior to closure.

Access to local property owners shall be maintained at all times.

Payment for this work shall be included in the unit price bid for Item 614, Maintaining Traffic.

The following estimated quantities have been included in the General Summary to be used as directed by the Engineer for the maintenance of traffic:

Item 404 Bituminous Concrete for Maintaining Traffic	10 C.Y.
Item 410 Traffic Compacted Surface Type A & B	50 C.Y.
Item 616 Calcium Chloride	1 Ton
Item 616 Water	1 M. Gal.

HOUSE CONNECTIONS

Existing roof drains, footer drains or yard drains, disturbed by the proposed work, shall be provided with unobstructed outlets by connecting to a storm sewer, manhole, catch basin, or with a free outlet.

The location, type, size and grade of required replacements will be determined by the Engineer during construction.

The following Estimated quantities have been included in the General Summary for the work noted above:

Item 603 4" Conduit Type E, 707.19 50 Lin. Ft.

None of the above materials shall be ordered by the Contractor until authorized by the Engineer.

ITEM SPECIAL PRECAST REINFORCED CONCRETE OUTLET

Precast reinforced concrete outlets are to be used at all underdrain outlets as per detail on Sheet 5A. The following estimated quantities have been included in the General Summary for the work noted above.

Item Special Precast Reinforced Concrete Outlet 2 Each

CONDUIT END TREATMENT

Immediately after placement of any conduits, the Contractor shall construct the end treatments required by the plans at both the outlet and inlet ends. This shall include headwalls, concrete riprap, rock channel protection, sodding, etc.

DETOUR LIMITATION

Two-way traffic shall be maintained at all times, except that for (a period)(periods) not to exceed (a combined total of) 120 consecutive calendar days, through traffic may be detoured as shown on Sheet 5A.

WATER FOR DUST CONTROL

The following estimated quantity has been included in the General Summary to be used as directed by the Engineer for the maintenance of traffic.

Item 616 Water 50 M. Gal.

CALCULATIONS

ITEM 202 PAVEMENT REMOVED
FROM STA. 567+50 TO STA. 568+49 = 99 L.F.
FROM STA. 569+90 TO STA. 571+23.43 = 133.43 L.F. Width = 22 L.F.
(99 L.F. + 133.43 L.F.) x 22' ÷ 9 = 568 S.Y. (CARRIED TO GENERAL SUMMARY)

ITEM 202 WEARING COURSE REMOVED
From Sta. 567+30 to Sta. 567+50 = 20 L.F. Width = 22 L.F.
Area = 20 x 22 x 1/9 = 48.9 S.Y.
From Sta. 571+23.43 to Sta. 571+75
Area by Planimeter = 257.8 S.Y.
Total = 306.7 S.Y.
TOTAL ITEM 202 TO GENERAL SUMMARY = 307 S.Y.

ITEM 203 SUBGRADE COMPACTION
From Sta. 567+50 to Sta. 568+15.92 = 65.92 L.F. Avg. Width = 23 L.F.
Area = 65.92 x 23 x 1/9 = 168.5 S.Y.
From Sta. 568+15.92 to Sta. 568+40.92 = 25 L.F. Width = 40 L.F.
Area = 25 x 40 x 1/9 = 111.1 S.Y.
From Sta. 570+16.08 to Sta. 570+41.08 = 25 L.F. Width = 40 L.F.
Area 25 x 40 x 1/9 = 111.1 S.Y.
From Sta. 570+41.08 to Sta. 571+23.43 = 82.35 L.F. Width = 24 L.F.
Area = 82.35 x 24 x 1/9 = 219.6 S.Y.
Total = 610.3 S.Y.
TOTAL ITEM 203 TO GENERAL SUMMARY = 610 S.Y.

ITEM 301 BITUMINOUS AGGREGATE BASE (T=8")
From Sta. 567+50 to Sta. 568+15.92 = 65.92 L.F. Avg. Width = 24 L.F.
Volume = 65.92 x 24 x 8/12 x 1/27 = 39.06 C.Y.
From Sta. 570+41.08 to Sta. 571+23.43 = 82.35 L.F. Width = 25 L.F.
Volume = 82.35 x 25 x 8/12 x 1/27 = 50.83 C.Y.
Total = 89.89 C.Y.
TOTAL ITEM 301 TO GENERAL SUMMARY = 90 C.Y.

ITEM 304 AGGREGATE BASE (T=17" Berm), AS PER PLAN
Rt. From Sta. 567+30.00 to Sta. 567+33 = 3.0 L.F. Width = 4 L.F.
Volume = 3.0 x 4 x 17/12 x 1/27 = 0.63 C.Y.
From Sta. 567+61 to Sta. 567 + 90 = 29+32 L.F. Width = 4 L.F.
Volume = 32 x 4 x 17/12 x 1/27 = 6.7 C.Y.
From Sta. 570 + 41.08 to Sta. 570+82.5 = 41.42 L.F. Width = 4 L.F.
Volume = 41.42 x 4 x 17/12 x 1/27 = 8.7 C.Y.
From Sta. 571+05 to Sta. 571+23.43 = 18.43 L.F. Width = 4 L.F.
Volume = 18.43 x 4 x 17/12 x 1/27 = 3.87 C.Y.
Lt. From Sta. 567+30 to Sta. 567+64 = 34 L.F. Width = 4 L.F.
Volume = 34 x 4 x 17/12 x 1/27 = 7.14 C.Y.
From Sta. 567+88 to Sta 568+15.92 = 27.92 L.F. Width = 4 L.F.
Volume = 27.92 x 4 x 17/12 x 1/27 = 5.86 C.Y.
From Sta. 570+41.08 to Sta. 570+66 = 24.92 L.F. Width = 4 L.F.
Volume = 24.92 x 4 x 17/12 x 1/27 = 5.23 C.Y.
Lt & Rt Radius Return at Intersection
79.39' + 77.18' − 5' (driveway) = 151.57 L.F. Width = 4 L.F.
Volume 151.57 x 4 x 8/12 x 1/27 = 14.97 C.Y.
Sub-Total = 53.1 C.Y.

ITEM 304 AGGREGATE BASE (T=6"), AS PER PLAN
From Sta. 567+50 to Sta. 568+15.92 = 65.92 L.F. Avg. Width = 24 L.F.
Volume = 65.92 x 23 x 6/12 x 1/27 = 28.1 C.Y.
From Sta. 570+41.08 to Sta. 571+23.43 = 82.35 L.F. Width = 25 L.F.
Volume = 82.35 x 24 x 6/12 x 1/27 = 36.6 C.Y.
Sub-Total = 64.7 C.Y.

ITEM 304 AGGREGATE BASE (Under Approach Slab, T=6"), AS PER PLAN
From Sta. 568+15.92 to Sta. 568+40.92 = 25 L.F. Width = 41 L.F.
Volume = 25 x 42 x 6/12 x 1/27 = 19.44
From Sta. 570+16.08 to Sta. 570+41.08 = 25 L.F. Width = 41 L.F.
Volume = 25 x 42 x 6/12 x 1/27 = 19.44
Sub-Total = 38.88
Total = 156.7 C.Y.
TOTAL ITEM 304 TO GENERAL SUMMARY = 157 C.Y.

ITEM 403 ASPHALT CONCRETE (T=1.75")
From Sta. 567+50 to Sta. 568+40.92 = 90.92 L.F. Avg. Width = 23 L.F.
Volume = 90.92 x 23 x 1.75/12 x 1/27 = 11.29 C.Y.
From Sta. 570+41.08 to Sta. 571+23.43 = 82.35 L.F. Width = 24 L.F.
Volume = 82.35 x 24 x 1.75/12 x 1/27 = 10.68 C.Y.
Total = 21.97 C.Y.
TOTAL ITEM 403 TO GENERAL SUMMARY = 22 C.Y.

ITEM 404 ASPHALT CONCRETE (T=1.25")
From Sta. 567+30 to Sta. 568+15.92 = 85.92 L.F. Avg. Width = 23 L.F.
Volume = 85.92 x 23 x 1.25/12 x 1/27 = 7.6 C.Y.
From Sta. 570+41.08 to Sta. 571+23.43 = 82.35 L.F. Width = 24 L.F.
Volume = 82.35 x 24 x 1.25/12 x 1/27 = 7.63 C.Y.
Sub-Total = 15.2 C.Y.

ITEM 404 ASPHALT CONCRETE (T Varies)
From Sta. 571+22.80 to Sta. 571+75
Area by Planimeter = 2320 S.F.
Average T = 6"
Volume = 2320 x 6/12 x 1/27 = 42.96 C.Y.
Total = 58.2 C.Y.
TOTAL ITEM 404 TO GENERAL SUMMARY = 58 C.Y.

ITEM 407 TACK COAT
From Sta. 567+30 to Sta. 567+50 = 20 L.F. Width = 22 L.F.
Area = 20 x 22 x 1/9 = 48.9 S.Y.
From Sta. 571+23.43 to Sta. 571+75
Area by Planimeter = 257.8 S.Y.
Total Area = 306.7 S.Y.
Application Rate 0.10 Gal/S.Y.
306.7 x 0.10 = 30.67 Gal.
TOTAL ITEM 407 TO GENERAL SUMMARY = 31 GAL.

ITEM 408 BITUMINOUS PRIME COAT
Area = Item 304 Aggregate Base (8" Berm) 2.12 S.Y./C.Y.
Total Area = 53.1 x 2.12 = 112.5 S.Y.
Application Rate 0.40 Gal./S.Y.
Volume = 0.40 x 112.5 = 45.00 Gal.
TOTAL ITEM 408 TO GENERAL SUMMARY = 45 GAL.

ITEM 409 SEAL COAT BITUMINOUS MATERIAL
Area from Item 408 = 112.5 S.Y.
Application Rate = 0.30 Gal./S.Y.
Volume = 112.5 x 0.30 = 33.8 Gal.
TOTAL ITEM 409 TO GENERAL SUMMARY = 34 GAL.

ITEM 409 SEAL COAT COVER AGGREGATE NO. 8
Area from Item 408 = 112.5 S.Y.
Application Rate = 0.008 C.Y./S.Y.
Volume = 0.008 x 112.5 = 0.9 C.Y.
TOTAL ITEM 409 TO GENERAL SUMMARY = 1 C.Y.

ITEM 614 TEMPORARY CENTER LINES, CLASS II
From Sta. 567+30 to Sta. 571+70 = 440 L.F.
Length = 440 x 1/5280 = 0.08 Mi.
TOTAL ITEM 614 TO GENERAL SUMMARY = 0.08 Mi.

ITEM 642 CENTER LINES SOLID DOUBLE
From Sta. 567+30 to Sta. 571+70 = 440 L.F.
Length = 440 x 1/5280 = 0.08 Mi.
TOTAL ITEM 621 TO GENERAL SUMMARY = 0.08 Mi.

ITEM 642 4" EDGE LINES (WHITE)
From Sta. 567+30 to Sta. 571+70 = 440 L.F.
Length = 2 x 440 x 1/5280 = 0.17 Mi.
TOTAL ITEM 621 TO GENERAL SUMMARY = 0.17 Mi.

ITEM 659 COMMERCIAL FERTILIZER
Seeding Area = 1755 S.Y.
Quantity = 1755 x 9 x 1/1000 x 20 x 1/2000 = 0.16 Tons
TOTAL ITEM 659 TO GENERAL SUMMARY = 0.16 TONS

ITEM 659 WATER
Temporary Seeding Area from Sheet 3 = 350 S.Y.
Quantity = 350 x 9 x 1/1000 x 240 Gal. = 756 Gal.
TOTAL ITEM 659 TO GENERAL SUMMARY = 1 M.Gal.

ITEM 659 AGRICULTURAL LIMING
Seeding Area = 1755 S.Y.
Quantity = 1755 x 9 x 1/1000 x 100 x 1/2000 = 0.79 Ton
TOTAL ITEM 659 TO GENERAL SUMMARY = 0.79 TON

ITEM 802 BARRIER REFLECTOR, TYPE A
From Sta. 568+16.25 to Sta. 568+26.75 Rt. = 10.5 L.F.
Quantity = 10.5 L.F. x 1/50 + 1 = 1.21 or 2 Each
From Sta. 567+91.25 to Sta. 568+26.75 Lt. = 35.5 L.F.
Quantity = 35.5 L.F. x 1/50 + 1 = 1.71 or 2 Each
From Sta. 570+30.25 to Sta. 570+78.25 Rt. = 48 L.F.
Quantity = 48 L.F. x 1/50 + 1 = 1.96 or 2 Each
From Sta. 570+30.25 to Sta. 570+53.25 Lt. = 23 L.F.
Quantity = 23 L.F. x 1/50 + 1 = 1.46 or 2 Each
TOTAL ITEM 802 TO GENERAL SUMMARY = 8 EACH

ITEM 802 BARRIER REFLECTOR, TYPE B
From Sta. 568+26.75 to Sta. 570+30.25 Rt. & Lt. = 203.5 L.F.
Quantity 203.5 L.F. x 1/50 x 2 + 1 = 9.14 or 10 Each
TOTAL ITEM 802 TO GENERAL SUMMARY = 10 EACH

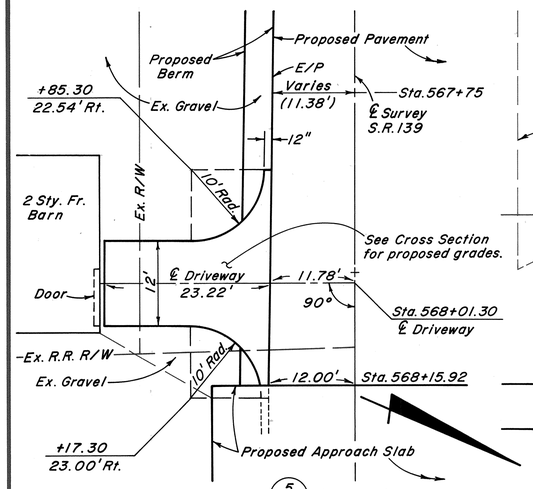

DRIVEWAY DETAIL (5/P) (Sheet 7)

Pavement Composition: Item 404, 1" Asphalt Concrete, AC-20 (Driveways) on Item 301, 5" Bituminous Aggregate Base

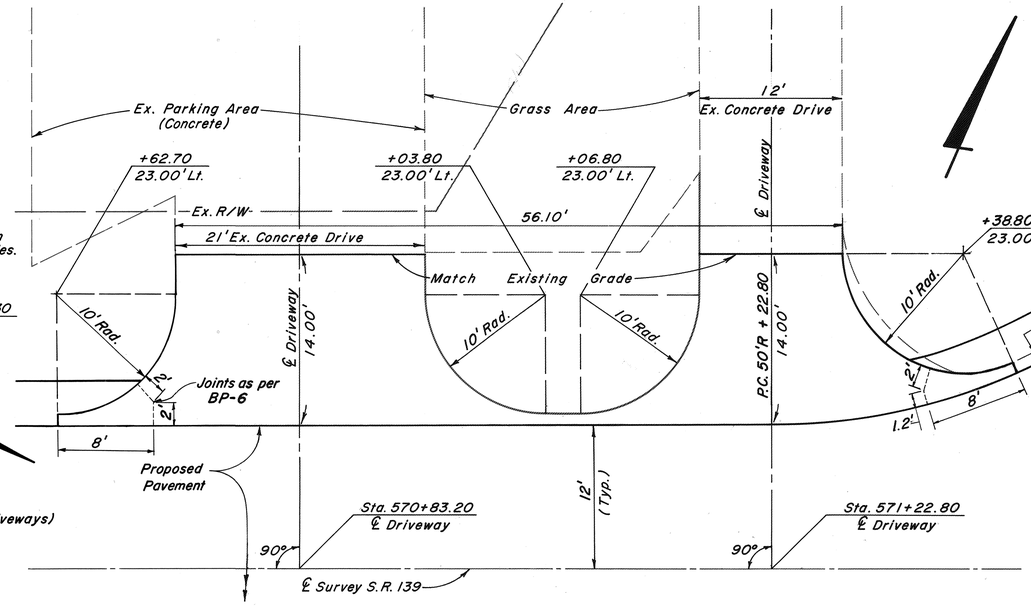

DRIVEWAY DETAIL (2/P) (Sheet 8)

Pavement Composition: Item 452, 8" Plain Portland Cement Concrete Pavement

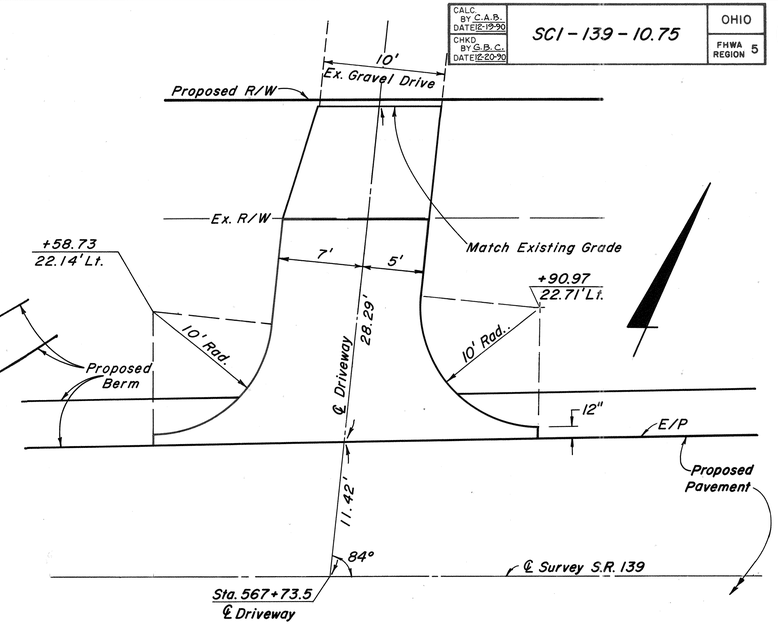

DRIVEWAY DETAIL (2/P) (Sheet 7)

Pavement Composition: Item 404, 1" Asphalt Concrete, AC-20 (Driveways) on Item 301, 5" Bituminous Aggregate Base

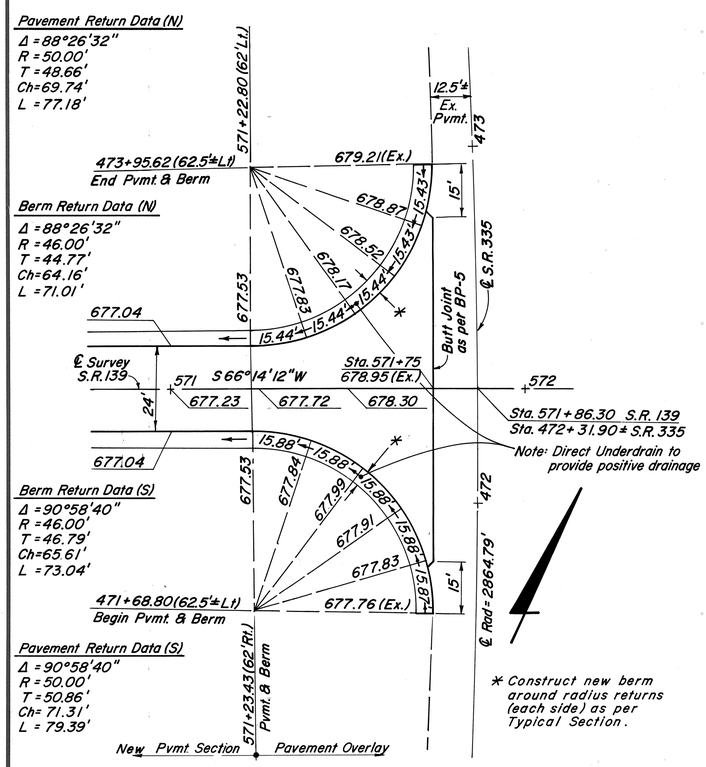

INTERSECTION DETAIL

S.R. 139 & S.R. 335

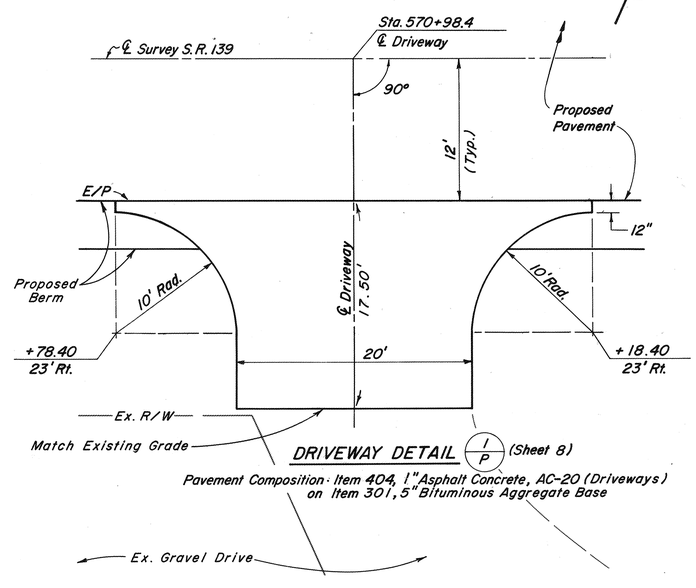

DRIVEWAY DETAIL (1/P) (Sheet 8)

Pavement Composition: Item 404, 1" Asphalt Concrete, AC-20 (Driveways) on Item 301, 5" Bituminous Aggregate Base

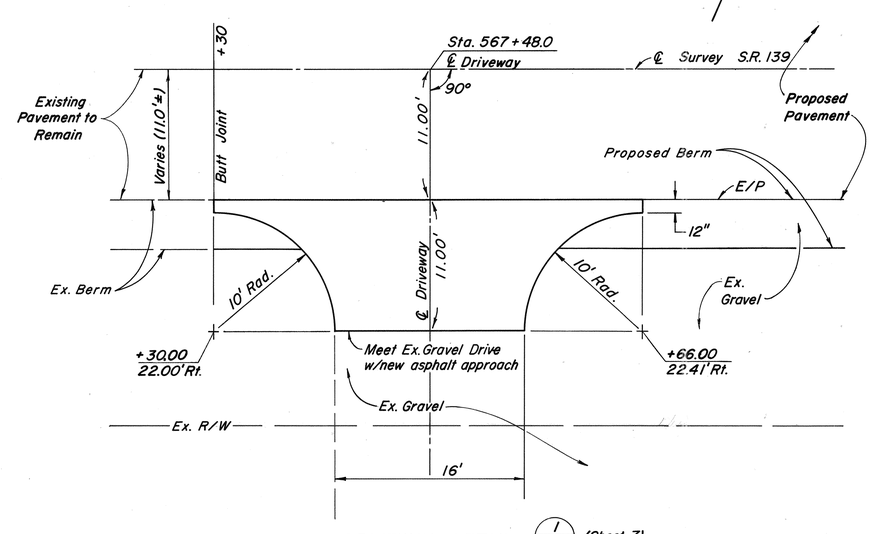

DRIVEWAY DETAIL (1/P) (Sheet 7)

Pavement Composition: Item 404, 1" Asphalt Concrete, AC-20 (Driveways) on Item 301, 4" Bituminous Aggregate Base

The Concrete outlet shall meet the requirements of Item 604 in the Construction & Materials Specifications. Payment shall be made on an Each basis. Payment shall include the cost of the Sod & Wire Cloth.

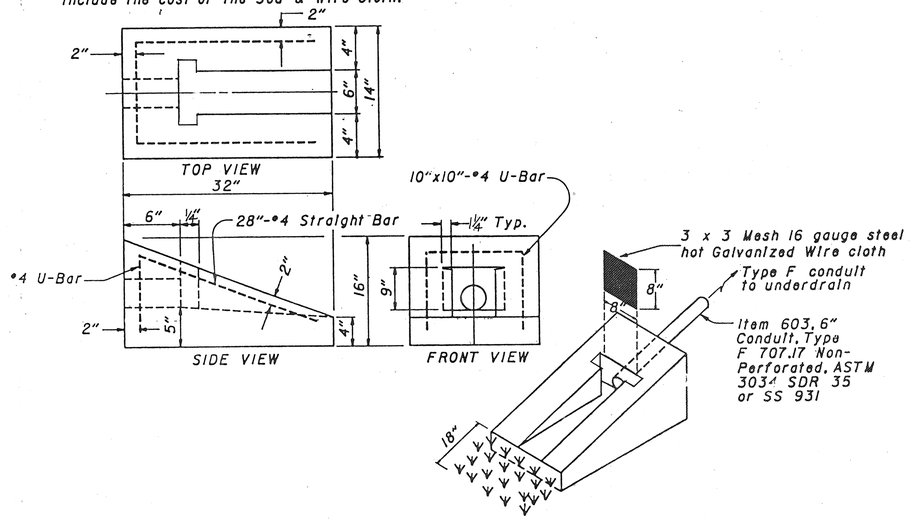

PRECAST REINFORCED CONCRETE OUTLET

NOTE: The Sod shall be in accordance with Item 660 and staked at each corner approximately 3 inches in from the edge.

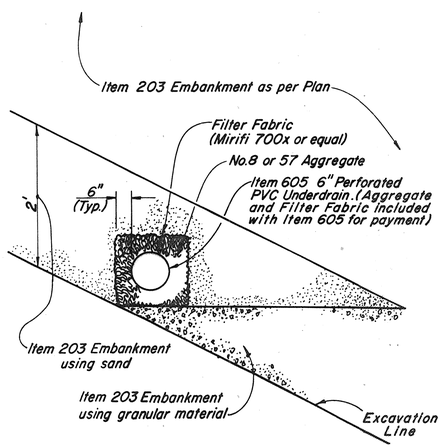

6" UNCLASSIFIED PIPE UNDERDRAIN, AS PER PLAN

(See Sheet 7 for location)

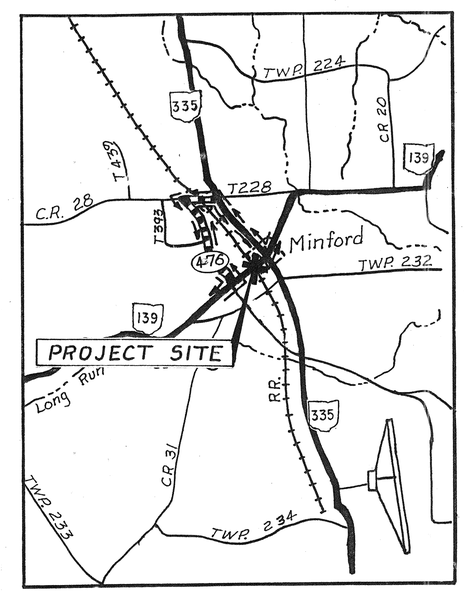

DETOUR MAP

0 1 2
Scale in miles

CALC BY C.A.B. DATE 12-19-90	SCI-139-10.75	OHIO
CHKD BY G.P.C. DATE 12-20-90		FHWA REGION 5

5B
28

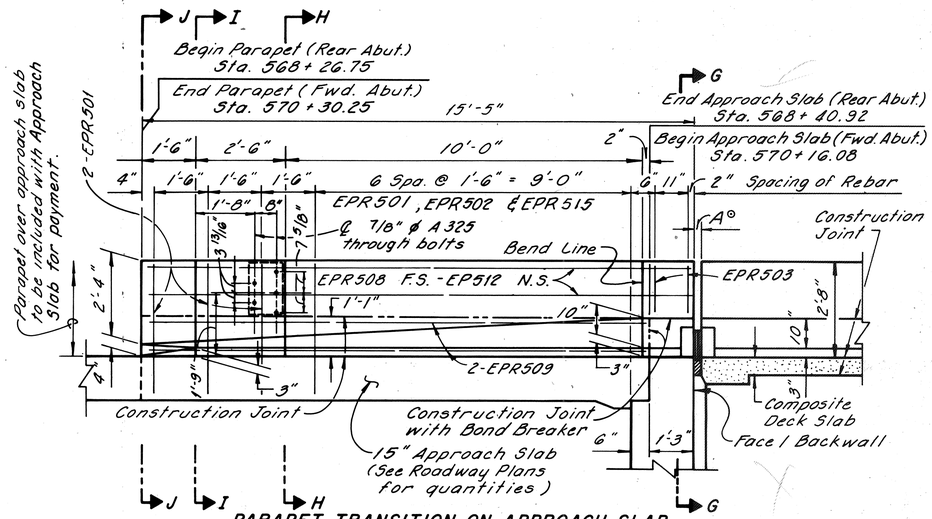

PARAPET TRANSITION ON APPROACH SLAB
(LOOKING AT PARAPET FROM ROADWAY SIDE)

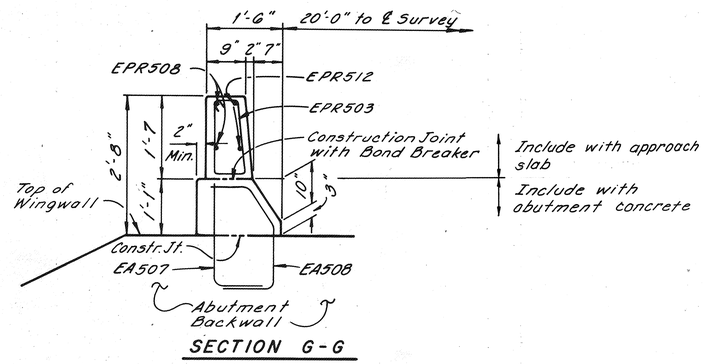

SECTION G-G

NOTES:
1.) See ODOT Std. Dwg. GR-3.1 for details related to parapet transition.

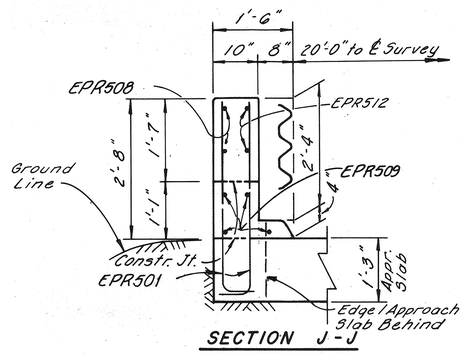

SECTION J-J

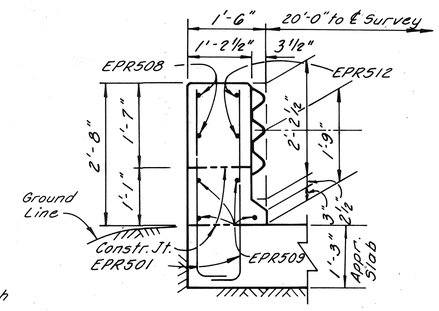

SECTION I-I

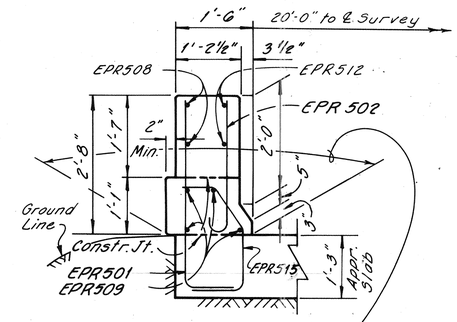

SECTION H-H

This surface to be sealed using concrete sealant; (Typ. for parapet on approach slab) cost to be included w/approach slab for payment.

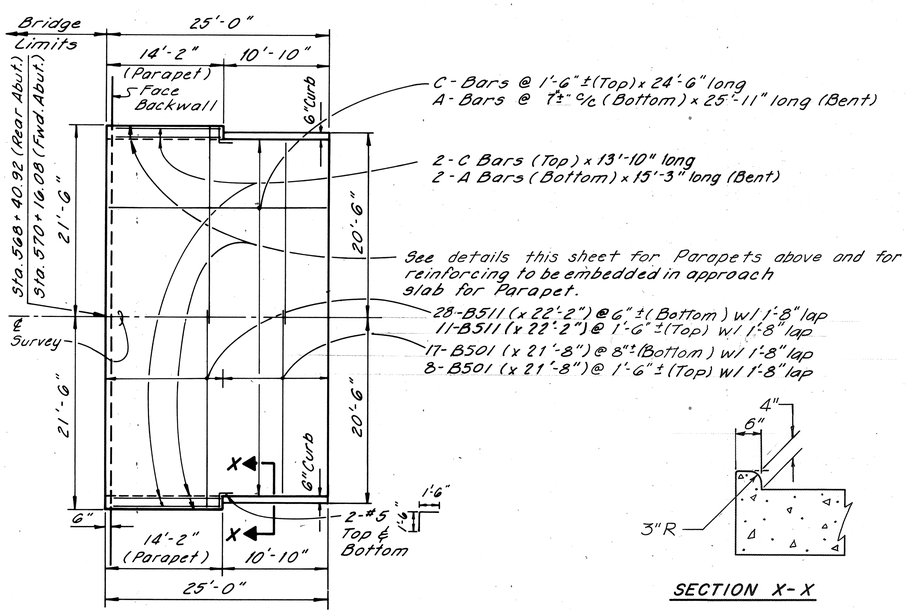

APPROACH SLAB DETAIL
(SEE ODOT STD. DWG. AS-1-81)

Approach Slab Rebar to be included with Item G11 Approach Slab for payment. (See Roadway Plans). Reference to rebar to correspond to callouts on ODOT Std. Dwg. AS-1-81. For reinforcement not shown see the Standard Drawing.

SECTION X-X

Reinforcing steel for four Approach Slab Parapets				
Mark	No.	Length	Weight	Shape
EPR501	52	4'-5"	240	Bent
EPR502	28	3'-0"	88	Bent
EPR503	8	3'-9"	31	Bent
EPR508	8	15'-2"	127	STR
EPR509	16	13'-10"	231	STR
EPR512	8	14'-11"	124	Bent
EPR515	28	2'-10"	71	Bent

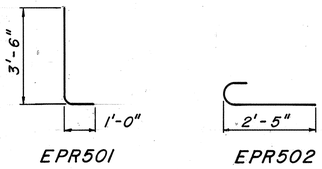

EPR501 EPR502

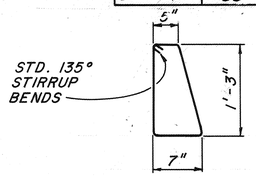

EPR503

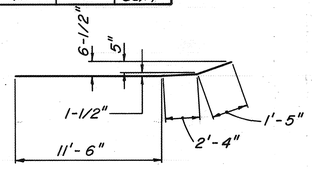

EPR512

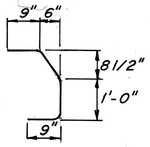

EPR515

TO BE INCLUDED WITH APPROACH SLAB FOR PAYMENT

APPROACH SLAB & PARAPET TRANSITION DETAILS

TEMPORARY SIGN SUPPORT REQUIREMENTS

A. PLACEMENT OF SIGNS WHICH WILL REMAIN MORE THAN ONE DAY:

1) LATERAL PLACEMENT TO NEAREST EDGE OF SIGNS SHALL BE AS FOLLOWS:

   a) ON THE RIGHT SIDE OF THE ROAD FOR APPROACHING TRAFFIC (EXCEPT FOR DUAL MOUNTED SIGNS AND SIGNS DESIGNATED IN THE PLANS FOR LEFT SIDE MOUNTING).

   b) CURBED ROADWAY - PREFERABLY 2 FT. (MINIMUM 1 FT.) BEHIND FACE OF CURB.

   c) UNCURBED ROADWAY-12 FT. FROM EDGE OF TRAFFIC LANE OR 6 FT. FROM EDGE OF PAVED OR USEABLE SHOULDER, WHICHEVER IS GREATER.

   d) BEHIND GUARDRAIL OR BARRIER - PREFERABLY 2 FT. BEHIND FACE OF GUARDRAIL (MINIMUM 1 FT.) FOR SIGNS ON CLASS A SUPPORTS: 4 FT. FOR CLASS B OR C SUPPORTS 1 FT. BEHIND FACE OF CONCRETE BARRIER UNLESS BARRIER TOP MOUNTING IS REQUIRED BY THE PLAN.

2) VERTICAL CLEARANCE OF SIGNS, MEASURED ABOVE ROADWAY ELEVATION; SHALL BE AS FOLLOWS:

   a) RURAL - 5 FT. WHEN PARKED CARS, CONSTRUCTION EQUIPMENT, ETC WILL NOT OBSCURE SIGN VISIBILITY.

   b) RURAL AREAS WITH PARKED CARS OR CONSTRUCTION EQUIPMENT - 7 FT.

   c) URBAN - 7 FT.

   d) CARE SHALL BE TAKEN TO ASSURE THAT SIGNS WILL NOT BE OBSCURED BY CONSTRUCTION EQUIPMENT, TREES, WEEDS OR OTHER OBSTACLES. BRUSH, WEEDS OR GRASS WITHIN THE RIGHT OF WAY SHALL BE TRIMMED AS NECESSARY. SIGNS SHALL NORMALLY BE VISIBLE TO TRAFFIC 400 TO 600 FT. IN ADVANCE OF THE SIGN.

3) SUPPORTS FOR SIGNS WHICH WILL REMAIN IN PLACE MORE THAN ONE DAY SHALL BE FIXED RATHER THAN PORTABLE EXCEPT IN SITUATIONS WHERE THE SIGN MUST REST ON PERMANENT PAVEMENT OR OTHER SURFACE WHICH WOULD BE DAMAGED BY INSERTION OF POST TYPE SUPPORTS.

B. PLACEMENT OF SIGNS WHICH WILL REMAIN FOR ONE DAY OR LESS:

1) SAME AS A-1 ABOVE EXECPT THAT SIGNS MAY BE PLACED ON THE ROADWAY ONLY IF THEY DO NOT INTRUDE INTO A TRAFFIC LANE IN USE.

2) MINIMUM OF 1 FT. ABOVE ROADWAY

C. CLASSES OF SUPPORTS:

ALL TEMPORARY SIGN SUPPORTS SHALL BE OF THE FOLLOWING TYPES:

1) CLASS A:

   SUPPORTS SHALL BE USED FOR EXPOSED LOCATIONS ON HIGHWAYS WHERE TRAFFIC APPROACH SPEEDS OF 40 MPH AND HIGHER ARE ENCOUNTERED. THEY ARE ALSO SUITABLE FOR USE IN ALL OTHER LOCATIONS.

2) CLASS B:

   SUPPORTS SHALL BE USED FOR EXPOSED LOCATIONS ON HIGHWAYS WHERE TRAFFIC APPROACH SPEEDS OF LESS THAN 40 MPH ARE ENCOUNTERED. THEY ARE ALSO SUITABLE FOR USE IN ALL APPLICATIONS DEFINED FOR CLASS C SUPPORTS.

3) CLASS C:

   SUPPORTS MAY ONLY BE USED WHERE FULLY PROTECTED BY GUARDRAIL, CONCRETE BARRIER AND IN LOCATIONS POSITIVELY PROTECTED FROM TRAFFIC SUCH AS ON RETAINING WALLS OR WHERE TRAFFIC APPROACH SPEEDS ARE LESS THAN 25 MPH.

D. TRAFFIC APPROACH SPEEDS:

TRAFFIC APPROACH SPEEDS SHALL BE THE LOCALLY POSTED SPEED (NOT ADVISORY SPEED SIGNS) OR THE MEASURED ACTUAL (85TH PERCENTILE) SPEED (IF AVAILABLE) OF APPROACHING TRAFFIC, WHICHEVER IS HIGHER, ADJACENT TO THE SIGN LOCATION.

TABLE

APPROACH SPEED (MPH)	COMPLETELY PROTECTED BY GUARDRAIL OR BARRIER	PARTLY PROTECTED BY GUARDRAIL OR BARRIER ✳	GREATER THAN 30' FROM EDGE OF PAVEMENT	WITHIN 30' FROM EDGE OF PAVEMENT
40 AND HIGHER	A, B OR C	A OR B	A OR B ✳✳	A ONLY
26 TO 39	A, B OR C	A OR B	A OR B	A OR B
0 TO 25	A, B OR C	A, B OR C	A, B OR C	A, B OR C

✳ IF SUPPORTS ARE BEHIND GUARDRAIL BUT NOT FULLY 5.5' BEHIND FACE OF RAIL OR IF SIGN IS NOT 1' BEHIND FACE OF CONCRETE BARRIER.

✳✳ 30' CRITERION IS BASED UPON STRAIGHT ROADWAY AND A SLOPE OF 6:1 OR FLATTER. SUPPORTS ON THE OUTSIDE OF CURVES OR LOCATED DOWN A SLOPE (STEEPER THAN 6:1) WILL REQUIRE USE OF CLASS A SUPPORTS.

E. BALLASTING

BALLASTING OF PORTABLE SUPPORTS SHALL BE WITH SANDBAGS PLACED WITHIN 1 FT. OF THE GROUND. IN NO CASE SHALL HARD OBJECTS BE USED FOR BALLAST.

F. STRENGTH OF SIGN SUPPORTS

THE CONTRACTOR SHALL CHOOSE SIGN SUPPORTS OF ADEQUATE STRENGTH AND WITH ADEQUATE FOUNDATIONS AND ANCHORAGE TO SUPPORT THE SIGN SIZES ERECTED. PROPRIETARY DEVICES SHALL NOT BE LOADED BEYOND THE LIMITS RECOMMENDED BY THE MANUFACTURER. SLIP BASE TYPE BREAKAWAY BEAM CONNECTIONS SHALL BE AT LEAST PARTIALLY EMBEDDED IN CONCRETE CONSISTING OF A 1 FT. DEEP BY 12" DIAMETER COLLAR. SIGN SUPPORTS WHICH FAIL UNDER TYPICAL WIND LOAD CONDITIONS SHALL BE IMMEDIATELY MODIFIED OR REPLACED WITH A SUPPORT OF ADEQUATE STRENGTH.

G. PROHIBITED SUPPORTS

THE FOLLOWING SUPPORT TYPES SHALL NOT BE PERMITTED ON PROJECTS:

1) SUPPORTS FABRICATED FROM AUTOMOTIVE AXLE DIFFERENTIAL ASSEMBLIES AND SIMILARLY HEAVY ASSEMBLIES WHICH CANNOT BE CONSIDERED BREAKAWAY TYPE.

2) SUPPORTS CONSISTING OF VERTICAL POSTS WITH ANGLED BRACES MADE FROM DRIVEPOST OR OTHER RIGID ELEMENTS.

CLASS A SUPPORTS

FIXED SUPPORTS

1) ALL #2, #3, AND #4 POST WHEN INSTALLED SINGLY OR IN PAIRS ACCORDING TO THE DETAILS OF TC-41.20. THE NUMBER OF SUPPORTS SHALL BE AS SHOWN ON TC-52.10 AND TC-52.20.

2) THE FOLLOWING POST TYPES, WHEN INSTALLED SINGLY, BY IMBEDMENT OR DRIVING INTO EARTH TO A DEPTH OF ABOUT 42 INCHES:

   a) - UP TO 4" X 4" WOOD

   b) - UP TO 2 INCH DIAMETER SCHEDULE 40 STEEL PIPE

   c) - UP TO 3 INCH DIAMETER SCHEDULE 40 ALUMINUM PIPE

   d) - UP TO 2¼INCH SQUARE, 12 GAUGE WALL, PUNCHED STEEL POST

   e) - UP TO 6" X 8" WOOD WITH BREAKAWAY HOLES SHOWN BELOW

3) THE FOLLOWING POST TYPES WHEN INSTALLED IN PAIRS WITH LESS THAN 7 FT. BETWEEN POSTS, BY IMBEDMENT OR DRIVING INTO EARTH TO A DEPTH OF ABOUT 42 INCHES:

   a) - UP TO 4" X 4" WOOD

   b) - UP TO 2 INCH DIAMETER SCHEDULE 40 STEEL PIPE

   c) - UP TO 3 INCH DIAMETER SCHEDULE 40 ALUMINUM PIPE

   d) - UP TO 2 INCH SQUARE, 14 GAUGE WALL, PUNCHED STEEL POST

4) FIXED TYPE III BARRICADES:

5) ALL BREAKAWAY CONNECTION BEAM SUPPORTS, WHEN INSTALLED ACCORDING TO THE PROPER DETAILS SHOWN ON TC-41.10 WITH A MINIMUM CLEAR DISTANCE BETWEEN SUPPORTS OF 7 FT. FOR SUPPORTS LARGER THAN W6 X 9.

6) ANY BREAKAWAY POST OR POST AND CONNECTION WHICH HAS BEEN CRASH TESTED AND APPROVED BY THE FHWA AS SATISFYING THE BREAKAWAY CRITERIA DESCRIBED IN 630.06.

(CONTINUED ON SHEET 5D)

ALL WORK AND TRAFFIC CONTROL DEVICES SHALL BE IN ACCORDANCE WITH 614 AND OTHER APPLICABLE PORTIONS OF THE C & M SPECIFICATIONS AS WELL AS IN ACCORDANCE WITH PART 7 OF THE OMUTCD. PAYMENT FOR ALL LABOR, EQUIPMENT AND MATERIALS TO PROVIDE THIS METHOD OF TRAFFIC CONTROL SHALL BE INCLUDED IN THE LUMP SUM BID FOR 614 MAINTAINING TRAFFIC, UNLESS SEPARATELY ITEMIZED IN THE PLAN.

REVISED BY:	DATE:	
210510		DATE 05/07/90
TEMPORARY SIGN SUPPORT		
PLAN INSERT SHEET		

CALC BY ____ DATE ____		OHIO	5D
CHKD BY ____ DATE ____	SCI-139-10.75	FHWA REGION 5	28

CLASS A SUPPORTS

FIXED

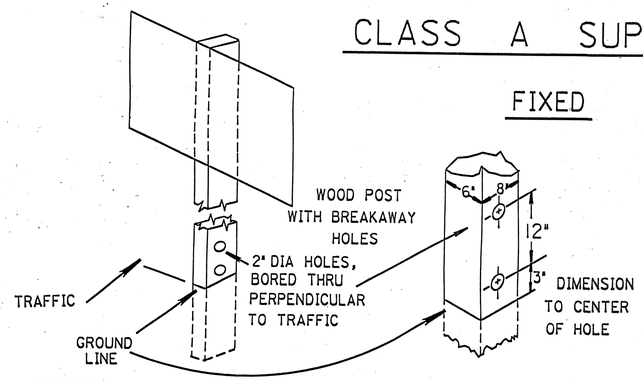

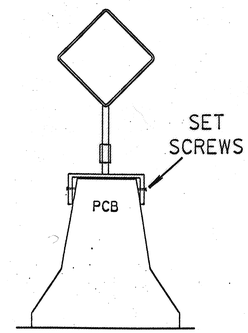

PORTABLE

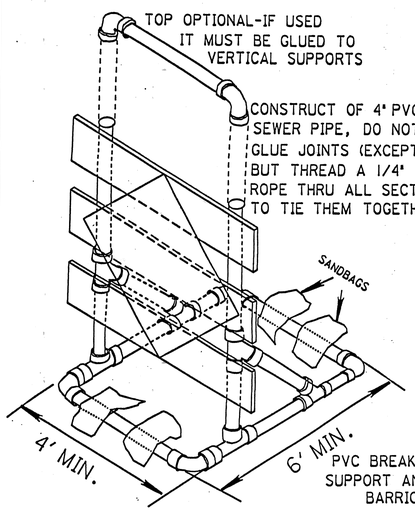

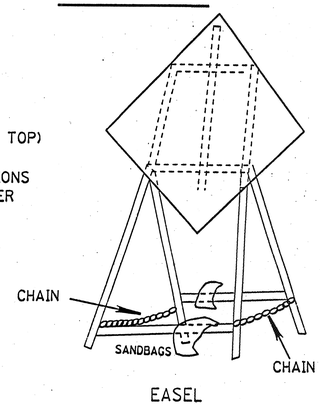

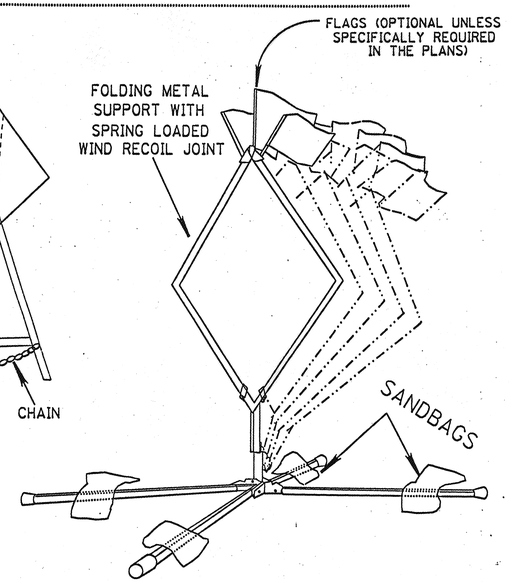

STUBBING STANDARD

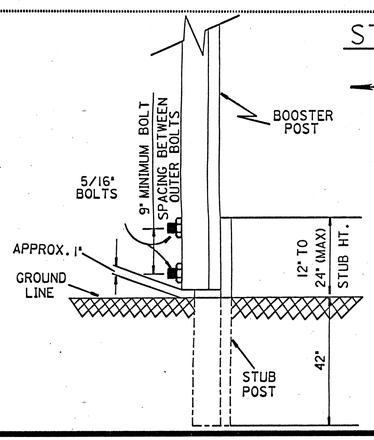

NOTES

1. FOR USE WITH #3 POST OR SMALLER ONLY
2. BOLTS SHALL BE STEEL OR ALUMINUM
3. A MINIMUM OF TWO FASTENERS SHALL BE USED PER ASSEMBLY
4. BOOSTER POST SHALL BE MOUNTED BEHIND STUB POST
5. BOOSTER POST SHALL BE THE SAME OR 1 LB./FT. LESS THAN STUB POST

CLASS B SUPPORTS

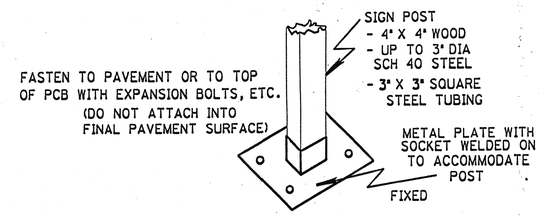

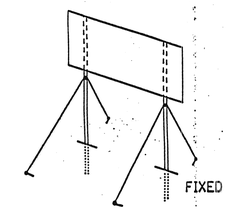

ANY CLASS A SIGN POST WITH GUY WIRES ADDED TO INCREASE SIGN CARRYING ABILITY. (GUY WIRES SHALL NOT BE HEAVIER THAN 1/8" DIA. BRAIDED CABLE. GUY ANCHORS SHALL NOT EXTEND MORE THAN 6" ABOVE GROUND SURFACE).

CLASS C SUPPORTS

1. ALL BEAM TYPE SUPPORTS WITHOUT BREAKAWAY CONNECTIONS.
2. SUPPORTS SIMILAR TO BUT LARGER THAN PERMITTED FOR CLASS A OR B.
3. THE STEEL DRUM(S) SHOWN BELOW MAY BE USED ONLY WHEN LOCATED BEHIND GUARDRAIL OR BARRIER.

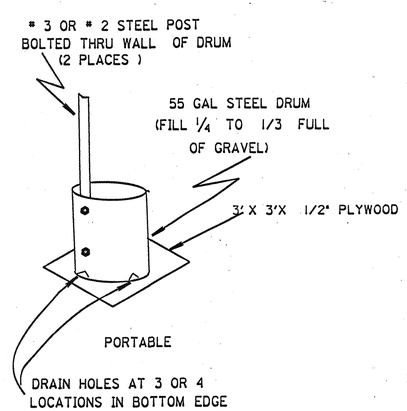

ALL WORK AND TRAFFIC CONTROL DEVICES SHALL BE IN ACCORDANCE WITH 614 AND OTHER APPLICABLE PORTIONS OF THE C & M SPECIFICATIONS AS WELL AS IN ACCORDANCE WITH PART 7 OF THE OMUTCD. PAYMENT FOR ALL LABOR, EQUIPMENT AND MATERIALS TO PROVIDE THIS METHOD OF TRAFFIC CONTROL SHALL BE INCLUDED IN THE LUMP SUM BID FOR 614 MAINTAINING TRAFFIC, UNLESS SEPARATELY ITEMIZED IN THE PLAN.

REVISED BY:	DATE:	
210511		DATE 05/07/90
TEMPORARY SIGN SUPPORT		
PLAN INSERT SHEET		

WCC

GENERAL SUMMARY

ITEM	SHEET NUMBERS 3	4	7	8	12	13	14	ITEM	ITEM EXT.	GRAND TOTAL	UNIT	DESCRIPTION
												ROADWAY
201								201	11000	Lump		Clearing and Grubbing
202		568		90				202	23000	658	S.Y.	Pavement Removed
202		307						202	23500	307	S.Y.	Wearing Course Removed
202				103				202	32500	103	L.F.	Curb and Gutter Removed
202			52					202	35100	52	L.F.	Pipe Removed, 24" and Under
202			211	12				202	38000	223	L.F.	Guardrail Removed
203			128	95		5163		203	12000	5386	C.Y.	Excavation Not Including Embankment Construction
203			166	330				203	20000	496	C.Y.	Embankment
203		610						203	50000	610	S.Y.	Subgrade Compaction
606			75	50				606	13000	125	L.F.	Guardrail, Type 5
606			2	2				606	26500	4	Each	Anchor Assembly, Type T
606			4					606	35000	4	Each	Bridge Terminal Assembly, Type I
												EROSION CONTROL
207	350							207	10000	350	S.Y.	Temporary Seeding and Mulching
207	25							207	70000	25	Each	Straw or Hay Bales
601			4					601	32200	4	C.Y.	Rock Channel Protection, Type C With Filter
659			564	624	122	170	275	659	10000	1755	S.Y.	Seeding and Mulching
659	75							659	14000	75	S.Y.	Repair Seeding and Mulching
670			456					670	40000	456	S.Y.	Ditch Erosion Protection
659	0.02	0.16						659	20000	0.18	Ton	Commercial Fertilizer
659		0.79						659	30000	0.79	Ton	Agricultural Liming
659	5							659	35000	5	M.Gal.	Water
												DRAINAGE
602			0.20					602	20000	0.2	C.Y.	Concrete Masonry
603	50							603	00400	50	L.F.	4" Conduit Type E 707.19
603			32					603	00900	32	L.F.	6" Conduit, Type B
603			10					603	01500	10	L.F.	6" Conduit, Type F, 707.17 Nonperforated ASTM 3034 SDR 35, or Supplemental Spec. 931
603			52					603	04400	52	L.F.	12" Conduit, Type B
603			32	5				603	04600	37	L.F.	12" Conduit, Type C
603			27					603	06400	27	L.F.	15" Conduit, Type D
604			2	2				604	04500	4	Each	Catch Basin, No. 2-2B
605			265	320				605	11100	585	L.F.	6" Shallow Pipe Underdrain 707.17 ASTM 3034 SDR 35 or Supplemental Spec. 931 Perforated as per 707.15
												SLOPE RECONSTRUCTION
203						3612		203	20001	3612	C.Y.	Embankment, As Per Plan (SEE SHEET 3)
203						359		203	21000	359	C.Y.	Embankment Using Granular Material
203						542		203	21100	542	C.Y.	Embankment Using Sand
601						267		601	20000	267	S.Y.	Crushed Aggregate Slope Protection
Special						2		Special	60436600	2	Each	Precast Reinforced Concrete Outlet (See Sheet 5A)
605						350		605	13301	350	L.F.	6" Unclassified Pipe Underdrain, As Per Plan, 707.17 ASTM 3034 SDR 35 OR Supplemental Spec. 931 perforated As Per 707.15

GENERAL SUMMARY

ITEM	SHEET NUMBERS 3	4	7	8	12	13	14	ITEM	ITEM EXT.	GRAND TOTAL	UNIT	DESCRIPTION
												PAVEMENT
301		90	13	7				301	10002	110	C.Y.	Bituminous Aggregate Base, AC–20
304		157	4					304	20001	161	C.Y.	Aggregate Base, As Per Plan
403		22						403	20000	22	C.Y.	Asphalt Concrete, AC–20
404		58						404	20000	58	C.Y.	Asphalt Concrete, AC–20
404			3	2				404	25000	5	C.Y.	Asphalt Concrete, AC–20 (Driveways)
407		31						407	10000	31	Gal.	Tack Coat
408		45						408	10000	45	Gal.	Bituminous Prime Coat
409		34						409	20000	34	Gal.	Seal Coat Bituminous Material
409		1						409	12000	1	C.Y.	Seal Coat Cover Aggregate, No. 8
452				55				452	12000	55	S.Y.	8" Plain Concrete Pavement
611			222					611	25001	222	S.Y.	Reinforced Concrete Approach Slab (T=15") , as per plan (SEE SHEET 5B)
												TRAFFIC CONTROL
642		0.17						642	00102	0.17	Mile	Edge Line , TYPE 2
642		0.08						642	00302	0.08	Mile	Center Line , TYPE 2
802		8						802	00100	8	Each	Barrier Reflector, Type A
802		10						802	00200	10	Each	Barrier Reflector, Type B
												MAINTENANCE OF TRAFFIC
616	51							616	10000	51	M.Gal.	Water
616	1							616	20000	1	Ton	Calcium Chloride
404	10							404	35000	10	C.Y.	Bituminous Concrete for Maintaining Traffic
410	50							410	12000	50	C.Y.	Traffic Compacted Surface, Type A or B
614		0.08						614	21400	0.08	Mile	Temporary Center Line , Class II
614	Lump							614	11000	Lump		Maintaining Traffic
619								619	15000	Lump		Field Office , Type A
623								623	10000	Lump		Construction Layout Stakes
624								624	10000	Lump		Mobilization

Structure over 20' Span, For Estimated Quantities
See Sheet No. 17 Bridge No. SCI–139–1078

Benchmarks

Chis. □ Top of 1st Step of Walk Leading to 1 1/2 Story White Frame House
Elev. = 676.13

At Minford, at the Inter. of S.R. 335 & S.R. 139, Set in the Top of the N. end of the E. Abut. of S.R. 139, Overpass over the C & O Railroad, 13' N. of ℄ of S.R. 139, approx. 65 Yds. W. of S.R. 335, 1 1/2' S. of N. end of Abut. level w/ road Disc. stamped "K215 1958"
Elev. = 673.46

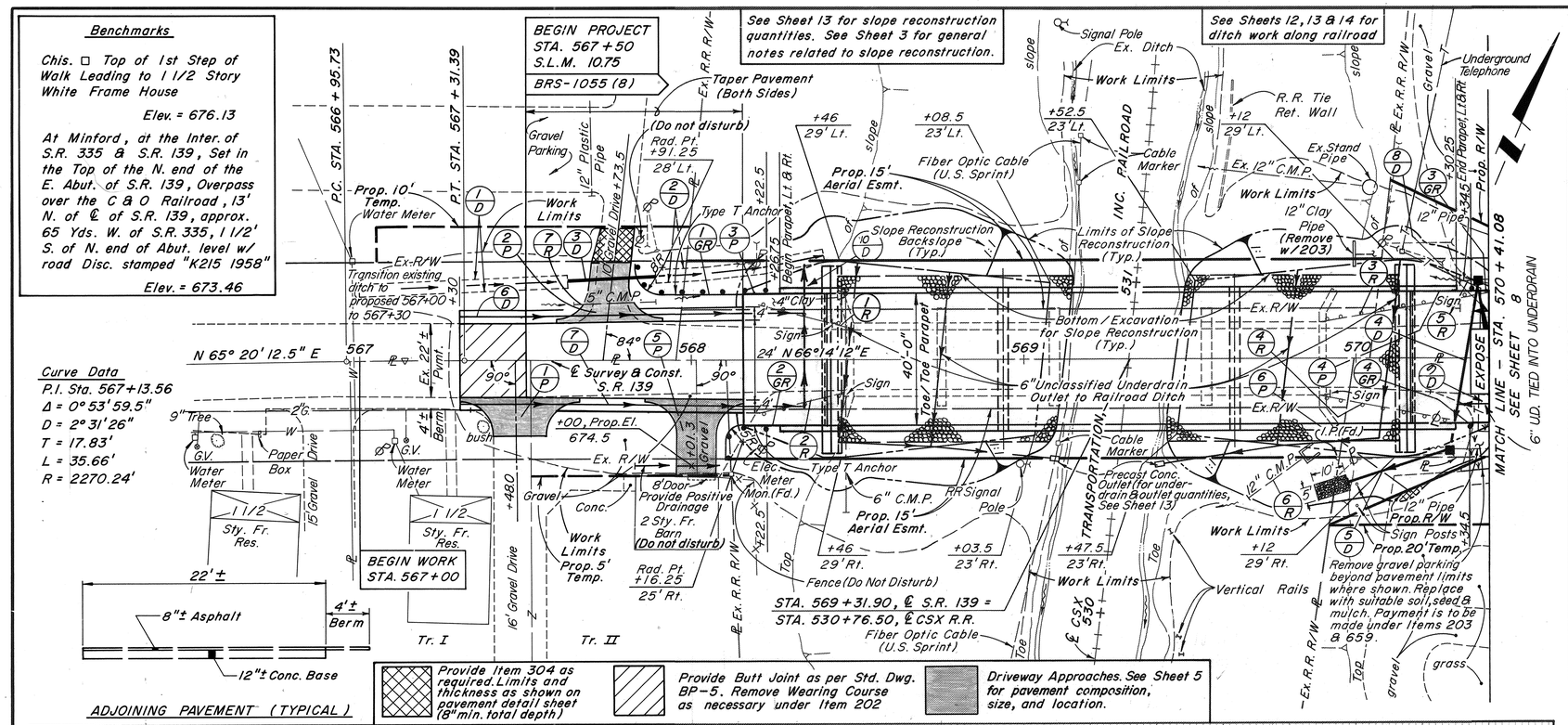

Curve Data
P.I. Sta. 567+13.56
Δ = 0° 53' 59.5"
D = 2° 31' 26"
T = 17.83'
L = 35.66'
R = 2270.24'

REFERENCE POINT
P.I. Sta. 567+13.56

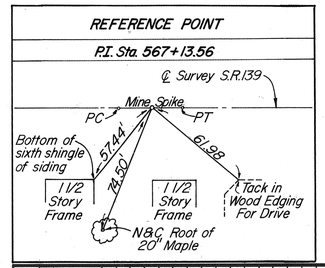

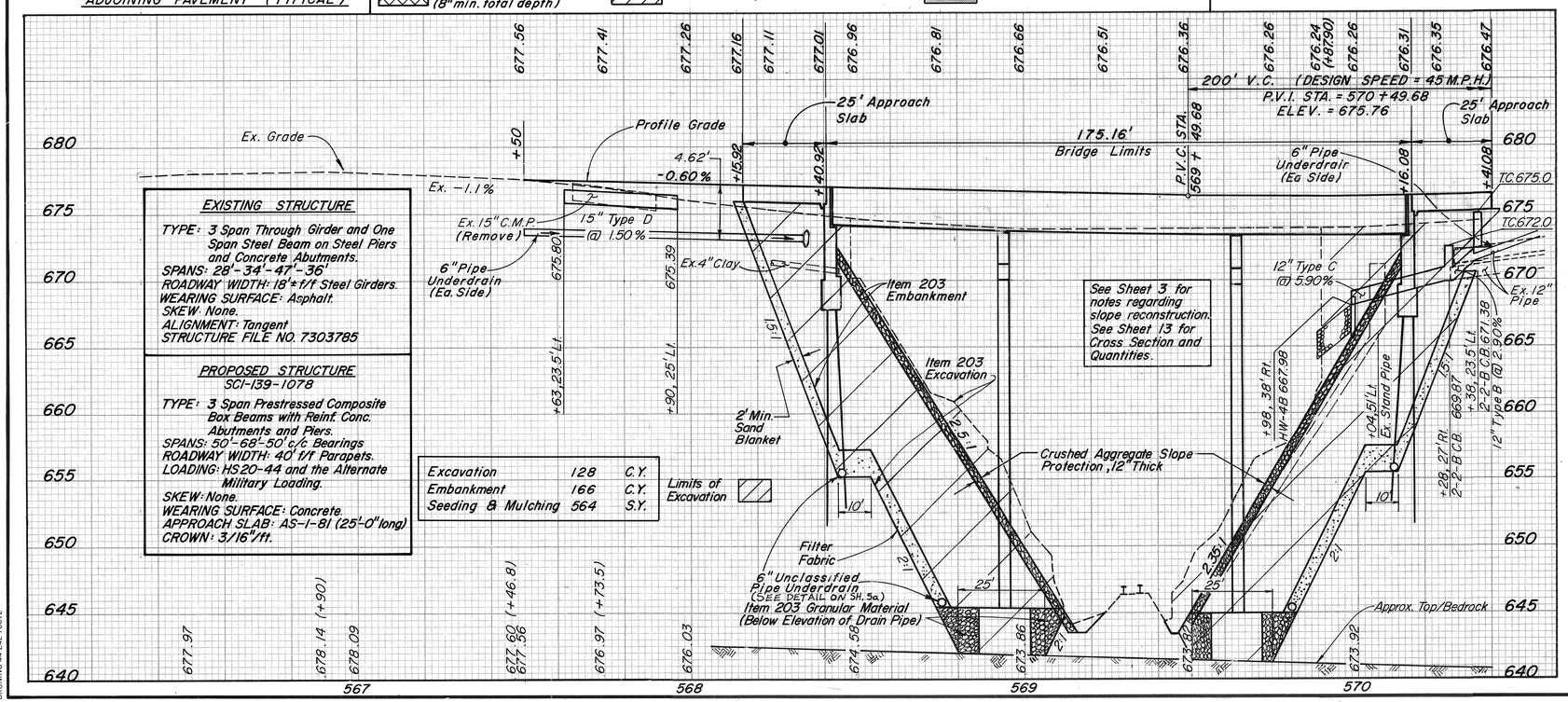

EXISTING STRUCTURE
TYPE: 3 Span Through Girder and One Span Steel Beam on Steel Piers and Concrete Abutments.
SPANS: 28'-34'-47'-36'
ROADWAY WIDTH: 18'± f/f Steel Girders.
WEARING SURFACE: Asphalt.
SKEW: None.
ALIGNMENT: Tangent
STRUCTURE FILE NO. 7303785

PROPOSED STRUCTURE
SCI-139-1078
TYPE: 3 Span Prestressed Composite Box Beams with Reinf. Conc. Abutments and Piers.
SPANS: 50'-68'-50' c/c Bearings
ROADWAY WIDTH: 40' f/f Parapets.
LOADING: HS20-44 and the Alternate Military Loading.
SKEW: None.
WEARING SURFACE: Concrete.
APPROACH SLAB: AS-1-81 (25'-0" long)
CROWN: 3/16"/ft.

Excavation	128	C.Y.
Embankment	166	C.Y.
Seeding & Mulching	564	S.Y.

Limits of Excavation

ESTIMATED QUANTITIES

REF. NO.	STATION TO STATION	SIDE	202 Pipe Guardrail Removed 24" & Under Lin.Ft.	202 Bituminous Aggregate Base (Tar Varies) Cu.Yd.	304 Aggregate Base Lin.Ft.	404 Asphalt Concrete (1"=1") Cu.Yd.	603 Conduit Type B 6" Lin.Ft.	606 Guardrail Type 5 Lin.Ft.	606 Bridge Terminal Assembly Type Each	606 Anchor Assembly Type T Each	670 Ditch Erosion Protect. Sq.Yd.	601 R.C.P. Type C 1/2" Thk. w/Filter Cu.Yd.	602 Concrete Masonry Cu.Yd.	605 6" Shallow Pipe UD# Lin.Ft.	605 6" Ty.F & Ty.C Lin.Ft.	603 Conduit 12" Ty.B Lin.Ft.	611 Reinforced Concrete Approach Slab (Ty.5) Sq.Yd.	603 Conduit 15" Type D Lin.Ft.	604 2-2-B Catch Basin Each
1-R	568+20 to 568+46	Lt.	46																
2-R	568+20 to 568+46	Rt.	46																
3-R	569+75 to 570+41.08	Lt.	66																
4-R	569+75 to 570+29	Rt.	53																
5-R	570+32 to 570+39	Lt.			6														
6-R	569+68 to 569+84	Rt.			21														
7-R	567+64 to 567+89	Lt.			25														
1-GR	567+83 to 568+28.75	Lt.						375 **	1										
2-GR	568+11 to 569+28.75	Rt.						12.50 *	1										
3-GR	570+28.25 to 570+40.75	Lt.						12.50	1										
4-GR	570+28.25 to 570+40.75	Rt.						12.50	1										
1-D	567+00 to 567+63	Lt.									252								
2-D	567+90 to 568+40.92	Lt.									204								
3-D	567+63 to 567+90	Lt.																	
4-D	570+28 to 570+38	Lt. & Rt.																	
5-D	569+98 to 570+28	Rt.										4	0.20						
6-D	567+30 to 568+44	Lt.												117					
7-D	567+30 to 568+44	Rt.												134					
8-D	570+13 to 570+41.08	Lt.													5				
9-D	570+13 to 570+41.08	Rt.													9				
1-P	567+30 to 567+66	Lt.																	
2-P	567+62.71 to 567+90.97	Lt.																	
3-P	568+69.92 to 568+40.92	Lt. & Rt.																	
4-P	570+16.08 to 570+41.08	Lt. & Rt.																	
5-P	567+85.3 to 568+17.30	Rt.																	
6-P	570+10 to 570+23	Rt.																	
10D	568+34															32			
TOTAL TO GENERAL SUMMARY			211	52	13	4	3	75	4	2	456	4	0.20	265	10	32	52	222	27	2

* Guardrail run 2-GR includes 7.9 L.F. of rail on a 5' Radius
** Guardrail run 1-GR includes 12.5 L.F. on a 8' Radius

PLAN & PROFILE STA. 566 + 50 TO STA. 570+41.08

BRUNING 44-242 70872

Benchmark

Chis. □ W. Corner of Conc. Base for Traffic Signal Support Pole S.E. Corner of Inter. S.R. 139 & S.R. 335.

Elev. = 679.50

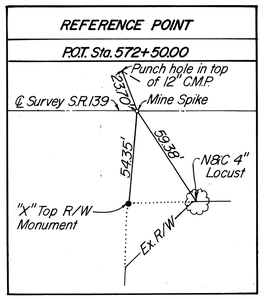

Driveway Approaches. See Sheet 5 for pavement composition, size, and location.

Pavement overlay and widening per Typical Section, Sheet 2 Provide Butt Joint as per Std. Dwg. BP-5. Remove Wearing Course as necessary under Item 202

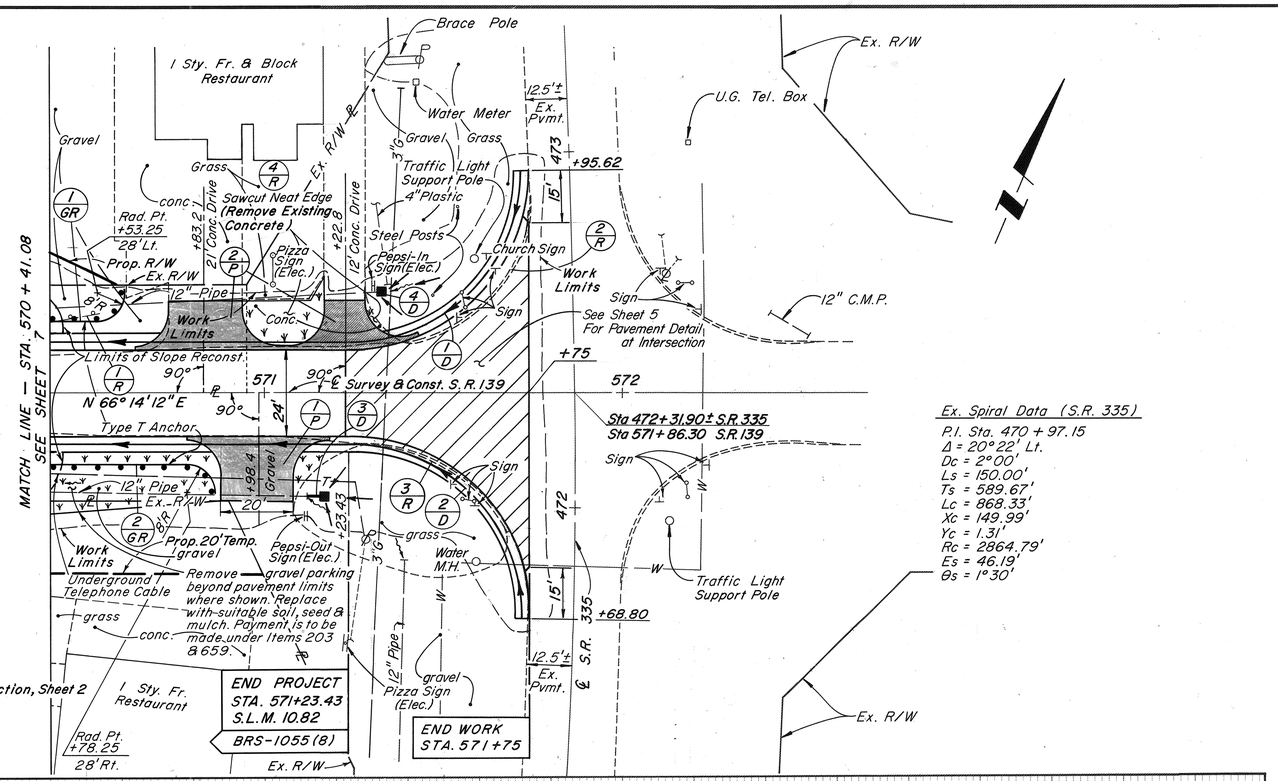

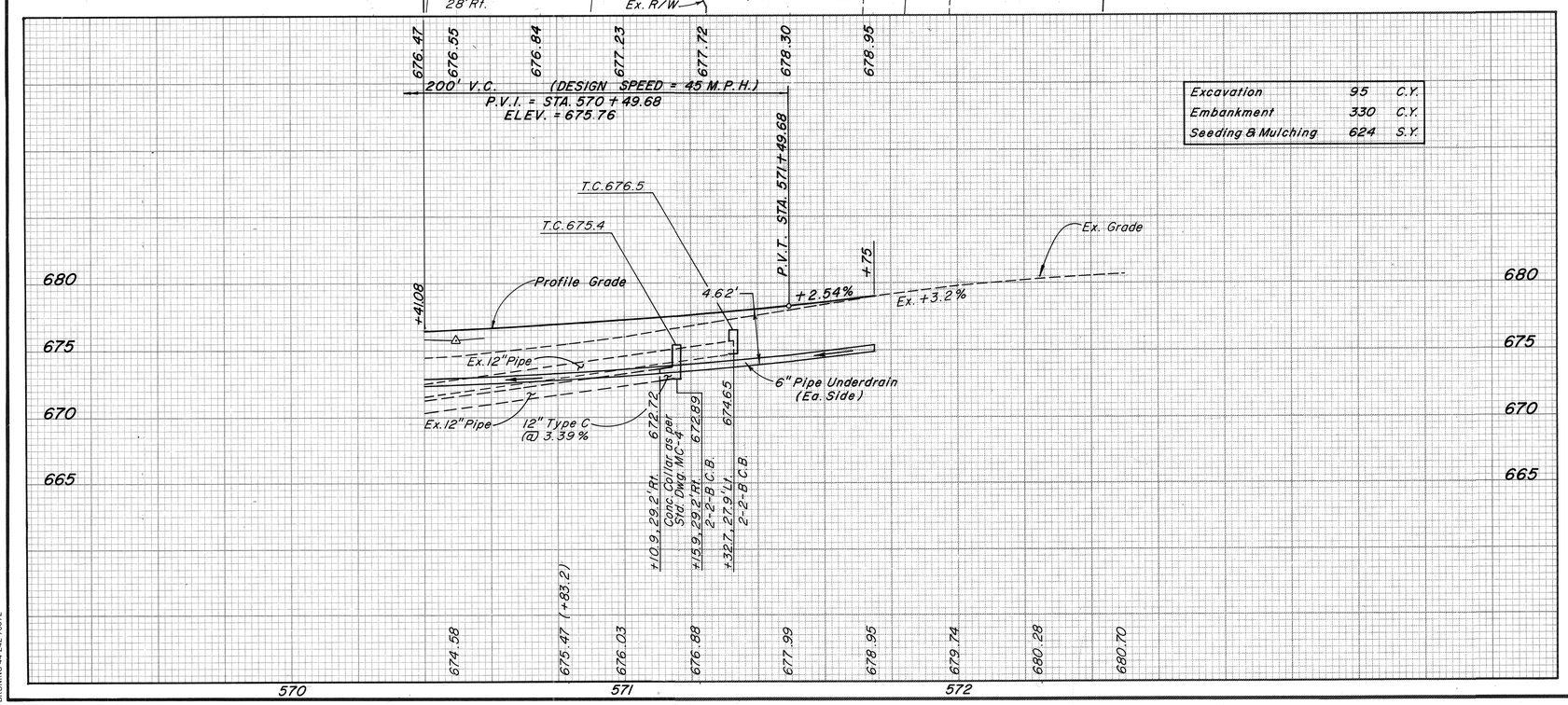

Excavation	95	C.Y.
Embankment	330	C.Y.
Seeding & Mulching	624	S.Y.

REF. NO.	STATION TO STATION	SIDE	202 Guardrail Removed Lin.Ft.	202 Curb & Gutter Removed Lin.Ft.	202 Pvmt. Removed Sq.Yd.	606 Guardrail Type 5 Lin.Ft.	606 Anchor Assembly Type T Each	301 Bitum. Aggregate Base (T=5") Cu.Yd.	404 Asphalt Concrete (T=1") Cu.Yd.	452 Plain Conc. Pavement (T=8") Sq.Yd.	605 6" Shallow Pipe Underdrain Lin.Ft.	603 12" Conduit Type C Lin.Ft.	604 2-2-B Catch Basin Each	SEE SHEET NO.
1-R	570+41.08 to 570+53	Lt.	12											
2-R	571+39 to 571+74	Lt.		56										
3-R	571+34 to 571+68	Rt.		47										
4-R	570+67 to 571+38	Lt.			90									
1-GR	570+40.75 to 570+61	Lt.				12.5*	1							
2-GR	570+40.75 to 570+86	Rt.				37.5*	1							
1-P	570+78 to 571+18	Rt.						7	2	55				
2-P	570+67 to 571+38	Lt.												
1-D	570+41.08 to 571+71.72	Lt.									160			
2-D	570+41.08 to 571+72.35	Rt.									160			
3-D	571+11 to 571+16	Rt.										5	1	
4-D	571+33	Lt.											1	
TOTAL TO GENERAL SUMMARY			12	103	90	50	2	7	2	55	320	5	2	

ESTIMATED QUANTITIES

* Guardrail Run 1-GR & 2-GR includes 12.5 L.F. of rail on a 8' radius.

707.17 ASTM 3034 SDR 35 or SS931 Perforated as per 707.15.

PLAN & PROFILE STA. 570+41.08 TO STA. 572+50

BRUNING 44-242 70872

CALC BY C.A.P. DATE 12-19-90	SCI - 139 - 10.75	OHIO	9
CHKD. BY G.B.C. DATE 12-20-90		FHWA REGION 5	28

0 5 10
SCALE IN FEET

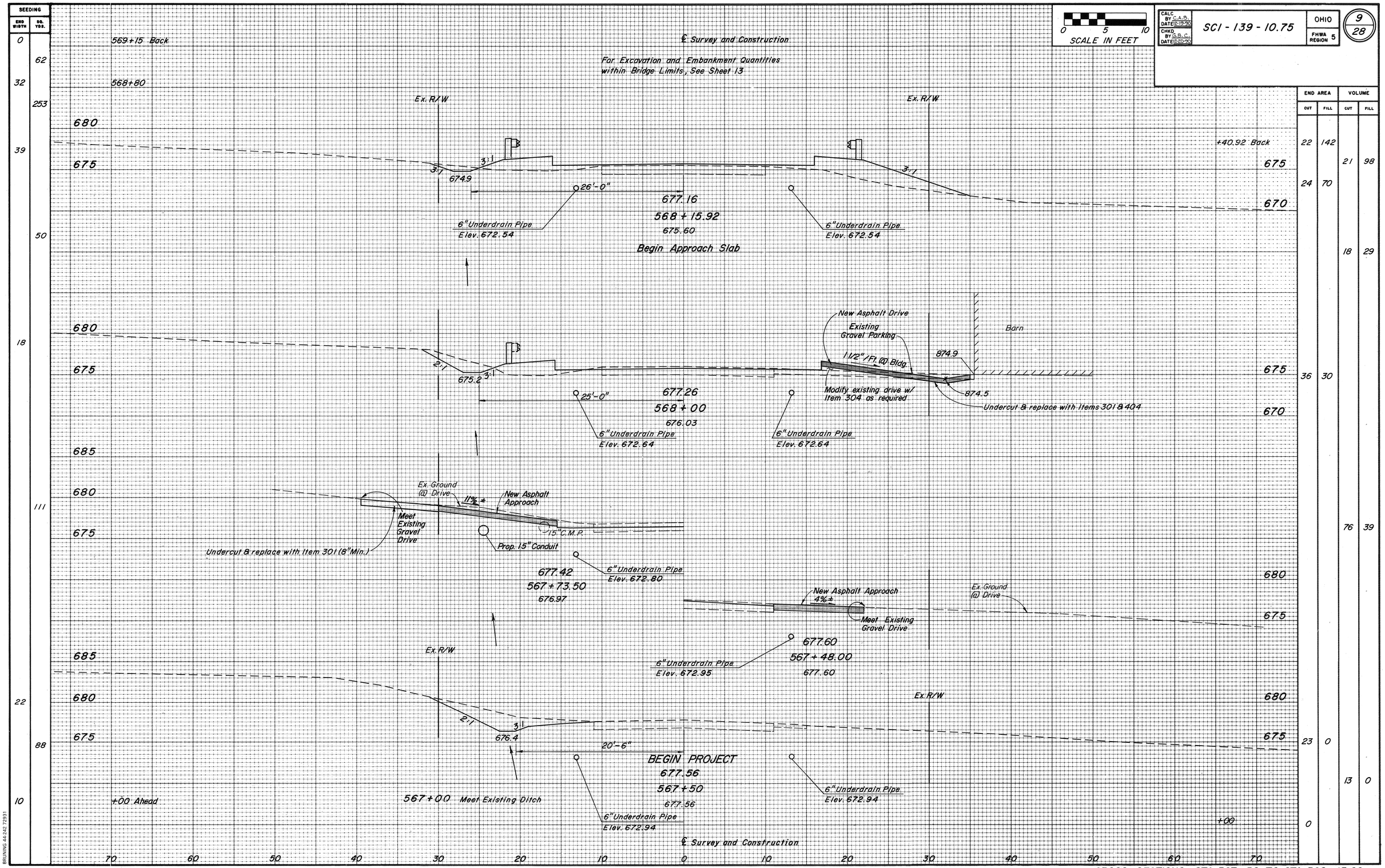

END AREA CUT	END AREA FILL	VOLUME CUT	VOLUME FILL
22	142		
		21	98
24	70		
		18	29
36	30		
		76	39
23	0		
		13	0
0			

CROSS SECTIONS STA. 567+50 TO STA. 568+15.92

BRUNING 44-242-72931

CALC BY C.A.B. DATE 12-19-90	SCI - 139 - 10.75	OHIO	10
CHKD BY G.B.C. DATE 12-20-90		FHWA REGION 5	28

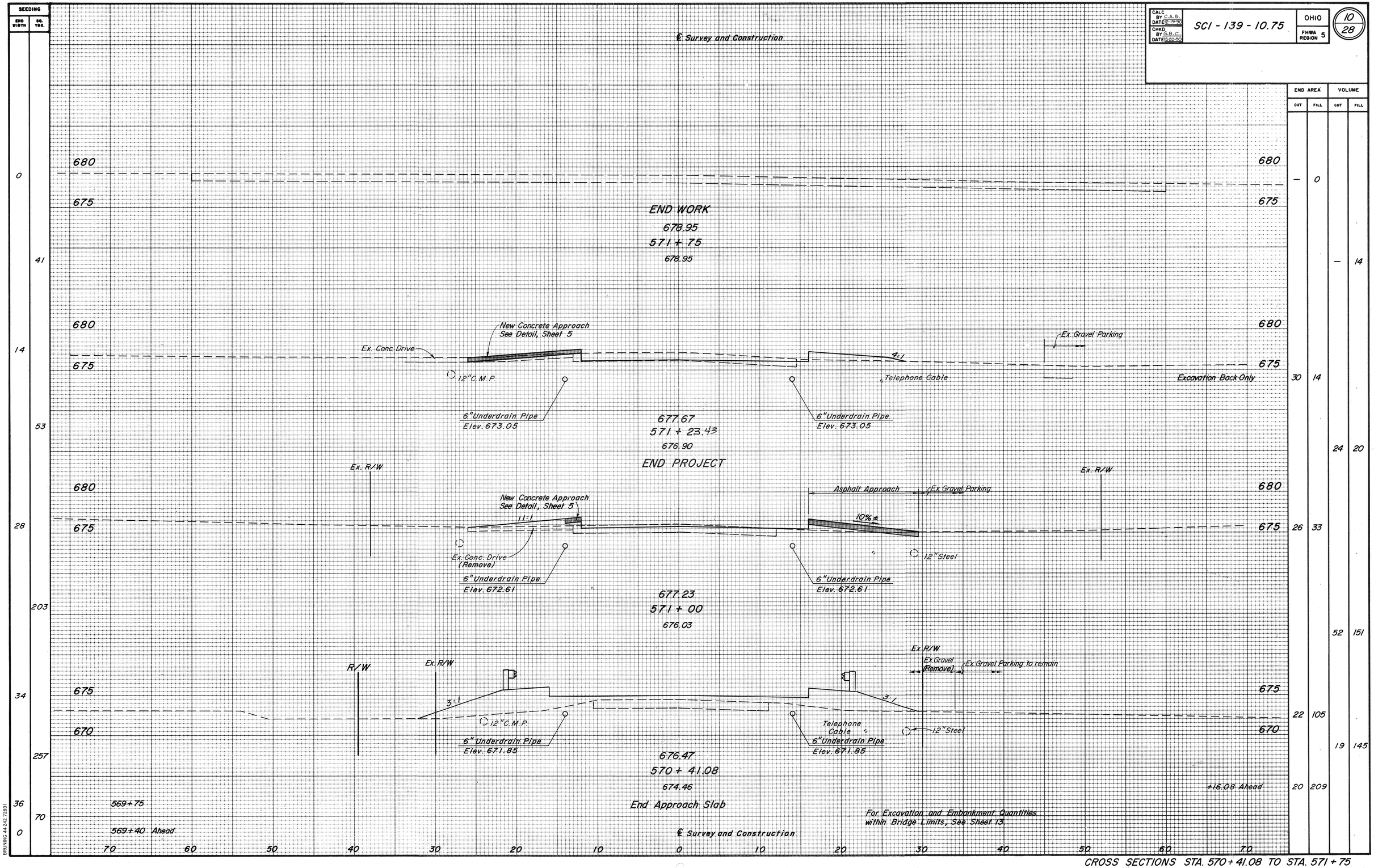

CROSS SECTIONS STA. 570 + 41.08 TO STA. 571 + 75

BRUNING 44-242 72931

CALC. BY C.A.B. DATE 12-19-90	SCI-139-10.75	OHIO
CHKD. BY G.B.C. DATE 12-20-90		FHWA REGION 5

SUPPLEMENTAL SITE PLAN
CSX TRANSPORTATION, INC.

1 Curve Data
P.I. Sta. 561+07.52
Δ = 3° 31' 07"
D = 1° 24' 00"
R = 4092.412'
T = 125.700'
L = 251.321'
E = 1.93'

2 Curve Data
P.I. Sta. 564+49.89
Δ = 4° 19' 04"
D = 2° 41' 43"
R = 2125.860'
T = 80.140'
L = 160.204'
E = 1.51'

3 Curve Data
P.I. Sta. 567+13.56
Δ = 0° 53' 59.5"
D = 2° 31' 26"
R = 2270.237'
T = 17.828'
L = 35.655'
E = 0.07'

4 Curve Data
P.I. Sta. 576+61.91
Δ = 28° 21' 17.7"
D = 6° 35' 18"
R = 869.647'
T = 219.690'
L = 430.376'
E = 27.32'

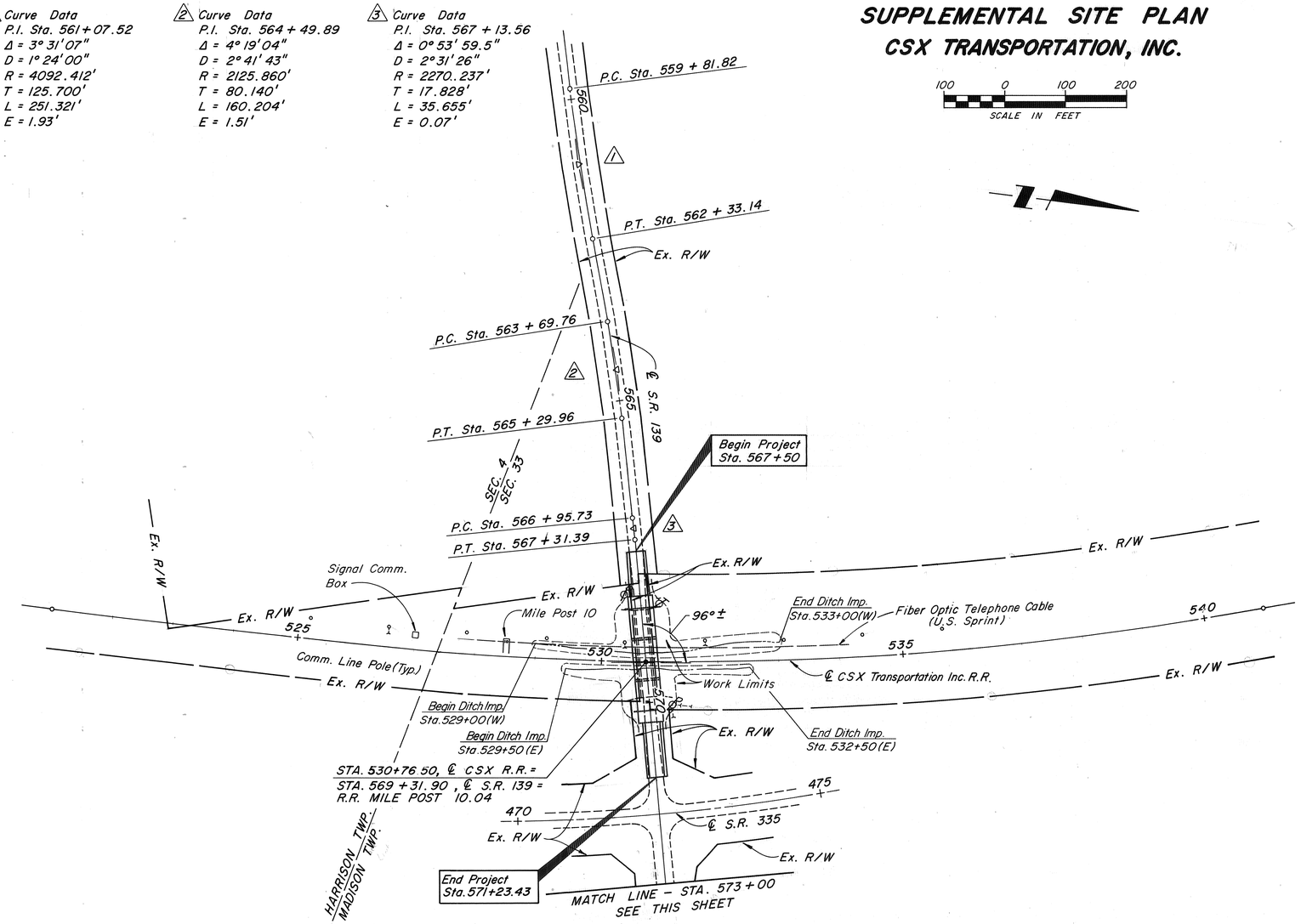

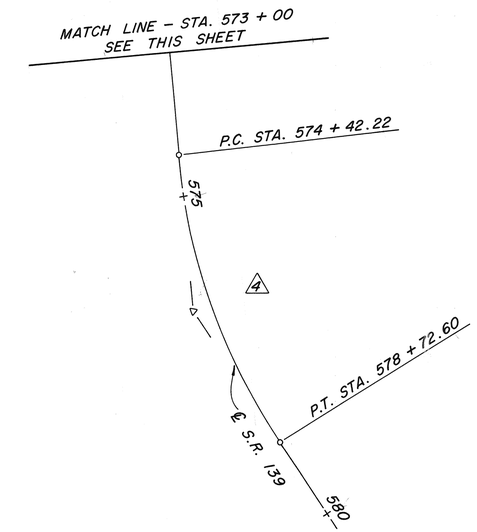

UTILITY OWNERS

1. Minford Telephone Company
2. Ohio Power Co.
3. Columbia Gas of Ohio
4. Scioto County Regional Water Authority District I
5. U.S. Sprint Communication Co.

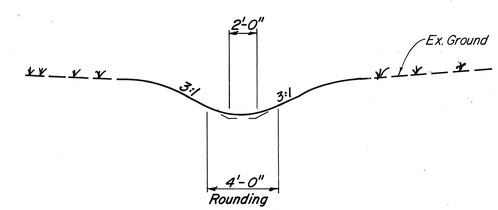

RAILROAD DITCH TYPICAL SECTION

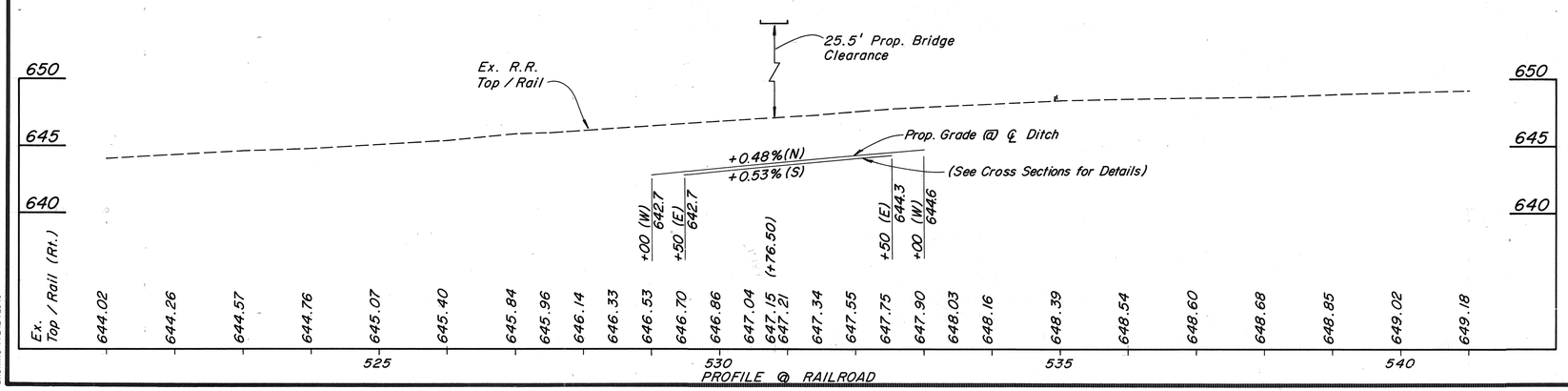

SITE PLAN SHOWING CSX RAILROAD

BRUNING 44-242 72946

SEEDING	
END WIDTH	SQ. YDS.
26	
97	
9	
25	
0	

0 10 20
SCALE IN FEET

CALC BY C.A.B. DATE 12-19-90	SCI-139-10.75	OHIO	12/28
CHKD BY G.B.C. DATE 12-20-90		FHWA REGION 5	

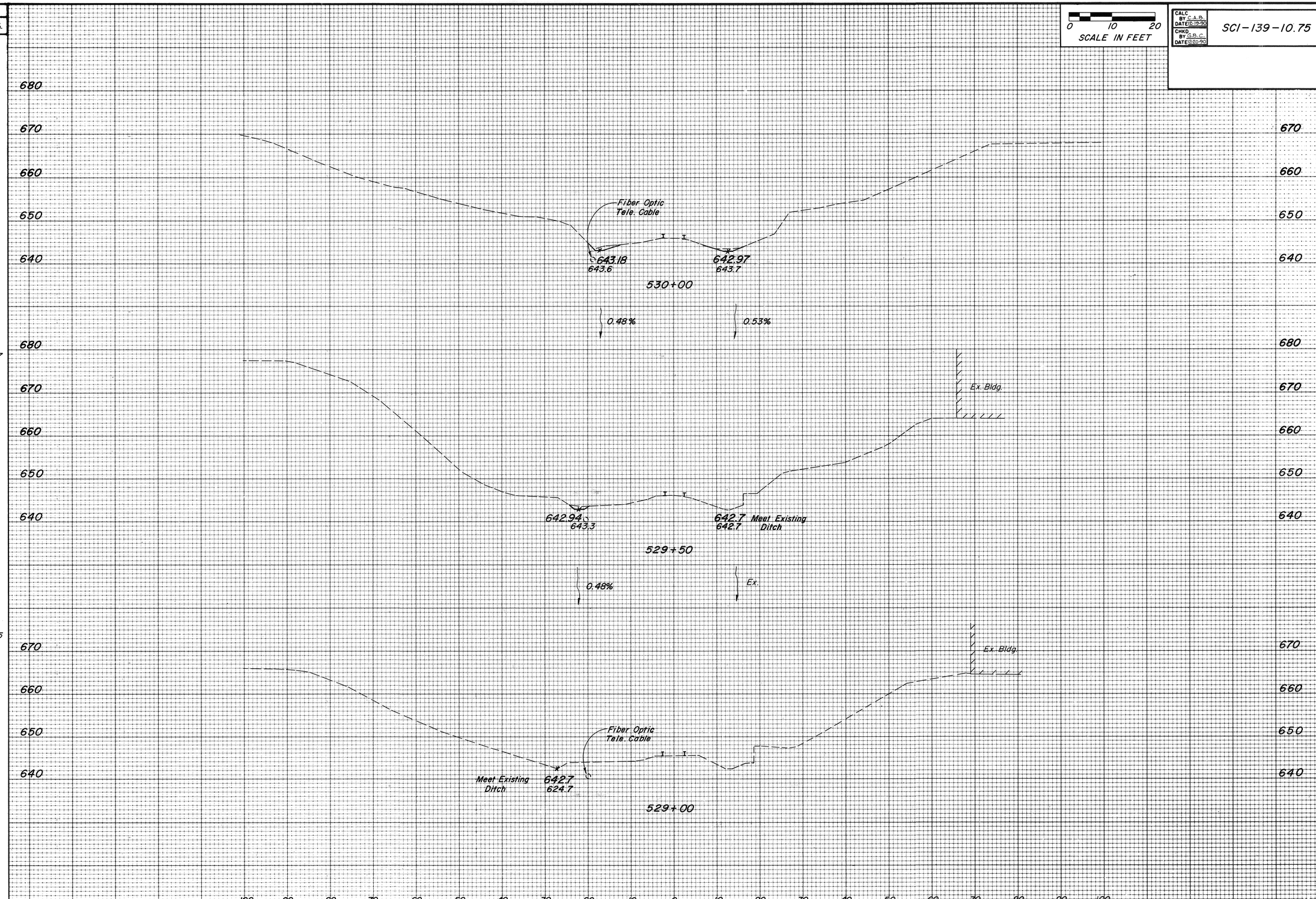

END AREA		VOLUME	
CUT	FILL	CUT	FILL

BRUNING 44-242 72931

X-SECTIONS CSX R.R. STA. 529+00 TO STA. 530+00

SEEDING	
END WIDTH	SQ. YDS.
19	
	49
16	
17	
54	
22	
67	

SCALE IN FEET: 0 10 20

CALC BY C.A.B. DATE 12-19-90	SCI-139-10.75	OHIO
CHKD BY G.B.C. DATE 12-20-90		FHWA REGION 5

13 / 28

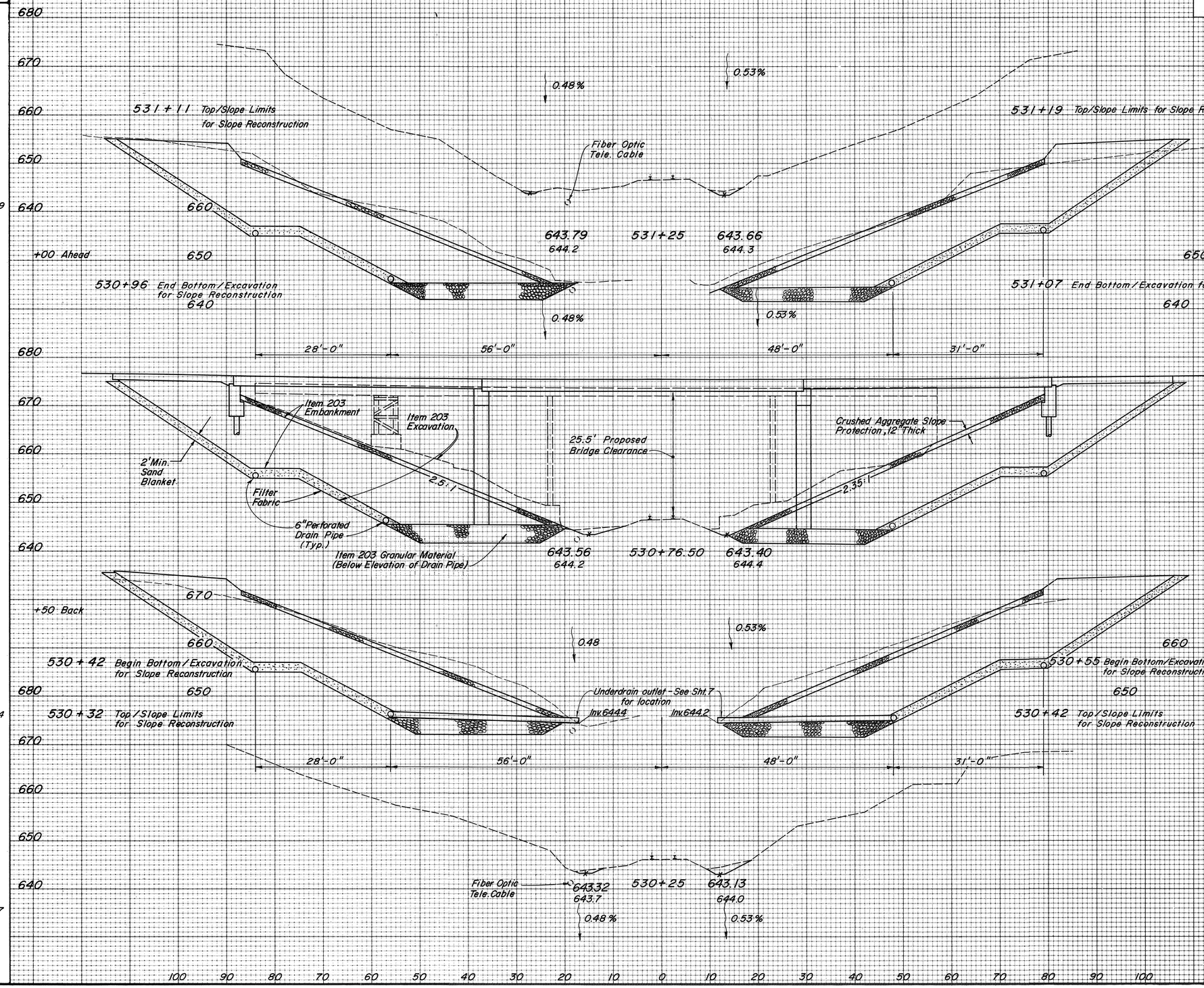

END AREA		VOLUME	
CUT	FILL	CUT	FILL

SLOPE RECONSTRUCTION, AS PER PLAN

Sta.	End Area Cut	End Area Fill G.M.	End Area Fill Sand	End Area Fill 203	Volume Cut	Volume Fill G.M.	Volume Fill Sand	Volume Fill 203
Rt.								
+19	0	0	0	0				
		0 AH.	0 AH.		222	0	0	163
+07	1000	90 BK.	38 BK.	735				
					2013	173	266	1464
+55	1090	90 AH.	38 AH.	785				
		0 BK.	0 BK.		262	0	0	189
+42	0	0	0	0				
Lt.								
+11	0	0	0	0				
		0 AH.	0 AH.		300	0	0	197
+96	1080	93 BK.	38 BK.	710				
					2165	186	276	1460
+42	1085	93 AH.	38 AH.	750				
		0 BK.	0 BK.		201	0	0	139
+32	0	0	0	0				

ESTIMATED QUANTITIES

203 Embankment, Using Granular Material	203 Embankment, Using Sand	203 Embankment, As per Plan	605 6" Unclassified Pipe Underdrain As per Plan
359 C.Y.	542 C.Y.	3612 C.Y.	350 L.F.

SPECIAL
Precast Concrete Outlet
2 EACH

203 Excavation not Including Embankment Construction
5163 C.Y.

601 Crushed Aggregate Slope Protection
267 S.Y.

X-SECTIONS CSX R.R. STA. 530+25 TO STA. 531+25

BRUNING 44-242-72931

SEEDING	
END WIDTH	SQ. YDS.
0	
	39
14	
	86
17	
	150

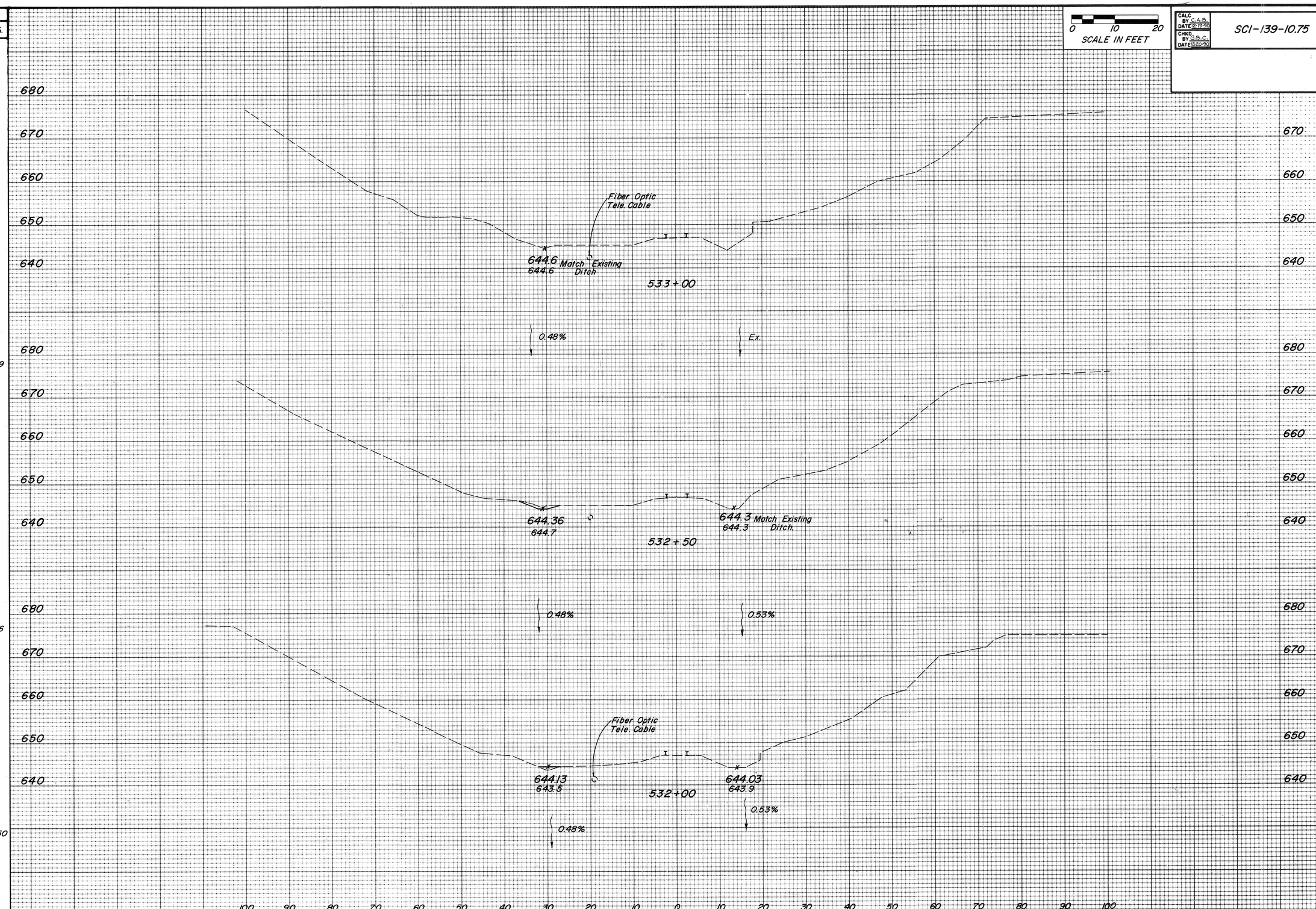

END AREA		VOLUME	
CUT	FILL	CUT	FILL

CALC BY C.A.B. DATE 12-19-90	SCI-139-10.75	OHIO	14 / 28
CHKD BY G.B.C. DATE 12-20-90		FHWA REGION 5	

X- SECTIONS CSX R.R. STA. 532+00 TO STA. 533+00

BRUNING 44-242 72931

CALC BY P.S.M. DATE 6-18-90	SCI-139-10.75	OHIO	15
CHKD BY G.B.C. DATE 6-21-90		FHWA REGION 5	28

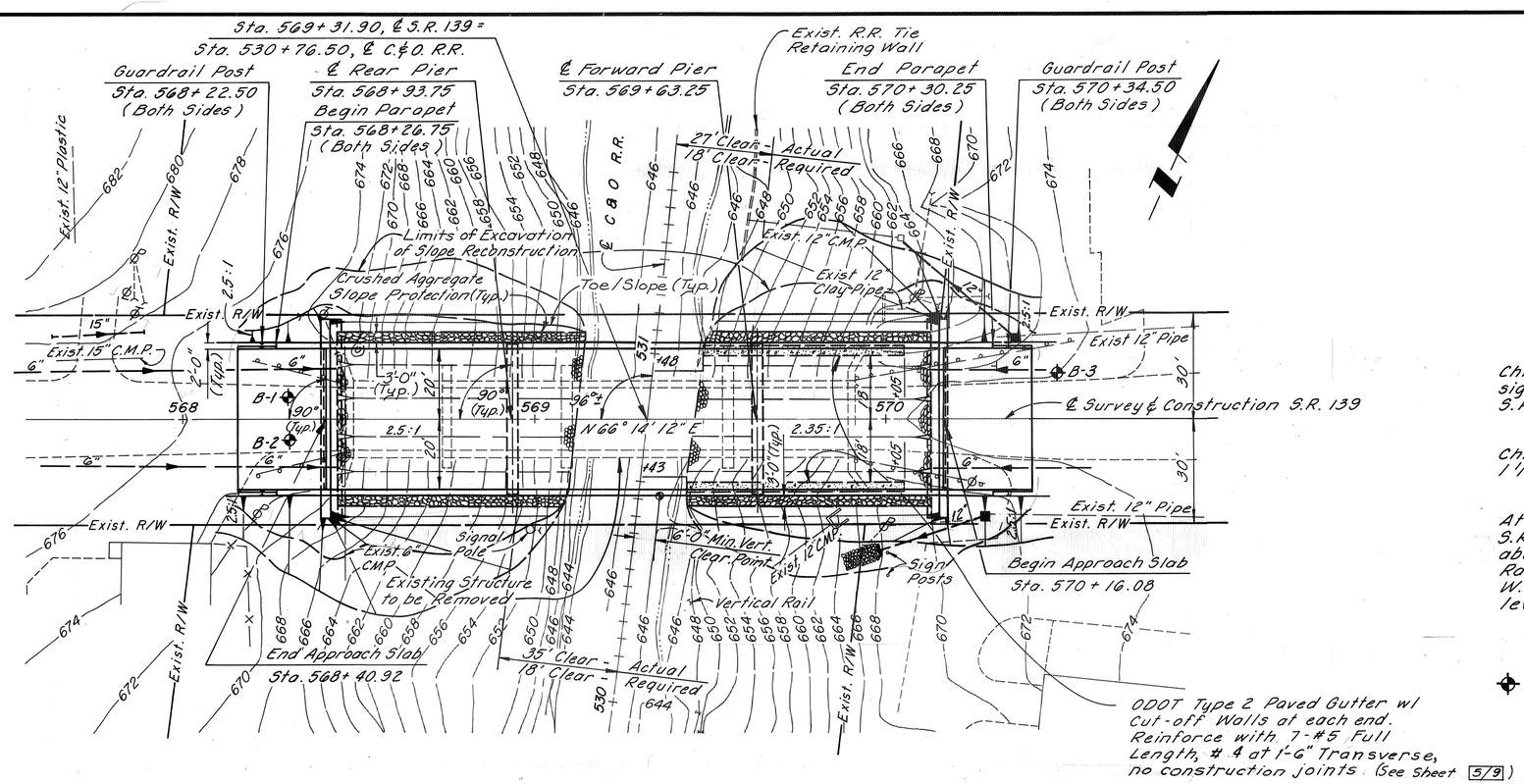

Earthwork Limits shown are approximate. Actual slopes shall conform to plan cross sections.

Design Year ADT (2009) = 4090

BENCH MARKS

Chisled "□" W. corner of concrete base for traffic signal support pole N.E. corner of intersection of S.R. 139 and S.R. 335.

Elev. 679.50

Chisled "□" Top of 1st step of walk leading to 1 1/2 Sty. white frame house.

Elev. 676.13

At Minford, at the intersection of S.R. 335 and S.R. 139, set in the top of the N. end of the E. abutment of S.R. 139 overpass over the C&O Railroad, 13' N. of ℄ of S.R. 139, approx. 65 yds. W. of S.R. 335, 1 1/2' S. of N. end of abutment level with road. Disc. stamped "K215 1958".

Elev. 673.46

✦ = Boring Locations

PLAN

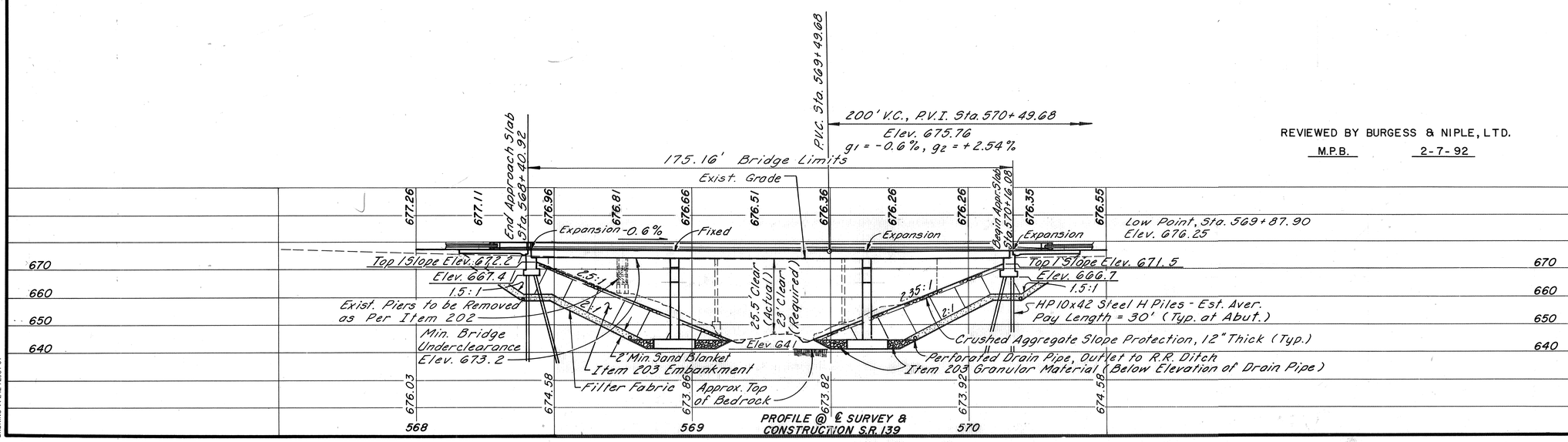

REVIEWED BY BURGESS & NIPLE, LTD.
M.P.B. 2-7-92

EXISTING STRUCTURE

TYPE: 3 Span Through Girder and One Span Steel Beam on Steel Piers and Concrete Abutments
SPANS: 28'-34'-47'-36'
ROADWAY WIDTH: 18'± f/f Steel Girders
WEARING SURFACE: Asphalt
SKEW: None
ALIGNMENT: Tangent
STRUCTURE FILE NO. 7303785

PROPOSED STRUCTURE SCI-139-1078

TYPE: 3 Span Prestressed Composite Box Beams with Reinf. Conc. Abutments and Piers
SPANS: 50'-68'-50' c/c Bearings
ROADWAY WIDTH: 40' f/f Parapets
LOADING: HS 20-44 and the Alternate Military Loading
SKEW: None
WEARING SURFACE: Concrete
APPROACH SLAB: AS-1-81 (25'-0" long)
CROWN: 3/16" / ft.

EVANS, MECHWART, HAMBLETON & TILTON, INC.
Consulting Engineers
170 MILL STREET GAHANNA, OHIO

1/9

SITE PLAN

BRIDGE NO. SCI-139-1078
OVER
CHESAPEAKE & OHIO R.R.
SCIOTO COUNTY
STA. 568+40.92 to STA. 570+16.08

DESIGNED	DRAWN	TRACED	CHECKED	REVIEWED	DATE	REVISED
P.S.M.	R.L.M.		G.B.C.	G.B.C.	4-17-89	

BRUNING 44-242-72931-01

CALC. BY P.S.M. DATE 1-31-91	SCI - 139 - 10.75	OHIO
CHKD. BY G.B.C. DATE 1-31-91		FHWA REGION 5

16/28

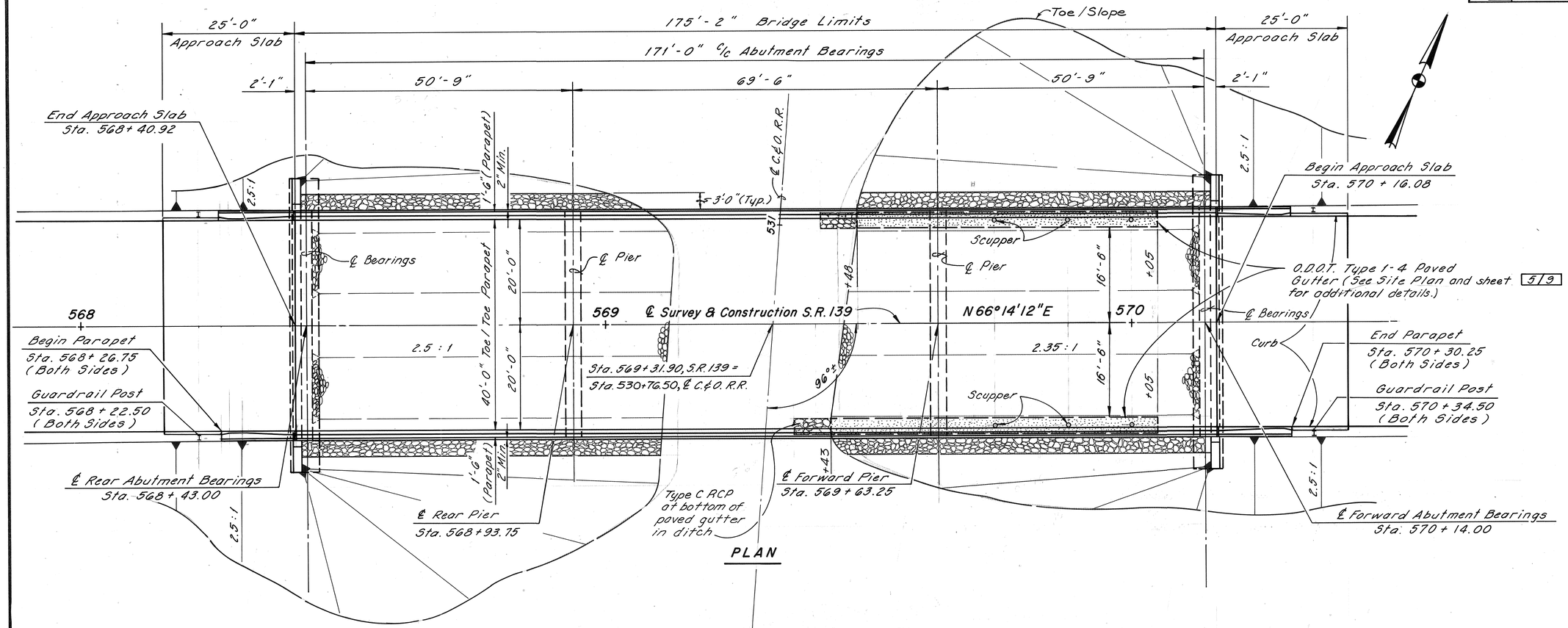

Embankment: For embankment reconstruction details, see roadway plans.

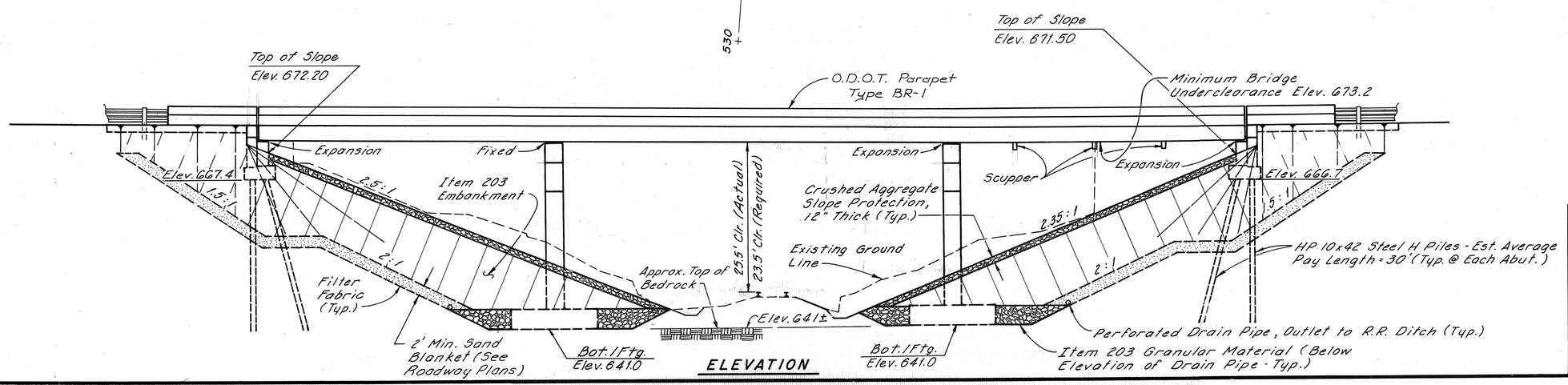

EVANS, MECHWART, HAMBLETON & TILTON, INC.
Consulting Engineers
170 MILL STREET GAHANNA, OHIO

2/9

GENERAL PLAN AND ELEVATION

BRIDGE NO. SCI-139-1078

SCIOTO COUNTY

DESIGNED	DRAWN	TRACED	CHECKED	REVIEWED	DATE	REVISED
P.S.M.	D.D.W.		G.B.C.	G.B.C.	1/31/91	

BRUNING 44-242 72931-01

3-2337

GENERAL NOTES

REFERENCE shall be made to Standard Drawings:

EXJ-3-82	Dated 8-01-84
AS-1-81 Sheets 1, 2 & 3	Dated 11-27-81
BR-1	Dated 05-29-79
PSBD-1-81 Sheets 1, 2, 3 & 4	Dated 06-20-89
Supplemental Specification 836	Dated 11-12-85
849	Dated 12-24-85
949	Dated 9-26-86

DESIGN SPECIFICATIONS: This structure conforms to "Standard Specifications for Highway Bridges" adopted by the American Association of State Highway and Transportation Officials, 1989 including the 1990 and 1991 interim specifications and the Ohio "Supplement" to these Specifications.

DESIGN DATA:

Design Loading – HS-20-44 and the Alternate Military loading.
Concrete Class S – Compressive strength 4,500 p.s.i.
Concrete Class C – Compressive strength 4,000 p.s.i.
Reinforcing Steel – ASTM A615, A616, A617 – Grade 60 minimum yield strength 60,000 p.s.i.
Concrete for prestressed beams – Unit stress 2,200 p.s.i. compression, 444 p.s.i. tension
Prestressing strand ASTM A416 – f's = 270,000 p.s.i. Initial stress = 0.70 f's
Reinforcing steel for prestressed beams as per CMS Section 515, Grade 40 or Grade 60

DECK PROTECTION METHOD: Epoxy coated reinforcing steel and sealing of concrete surfaces.

REMOVAL OF EXISTING STRUCTURE: When no longer needed to maintain traffic the existing structure shall be removed.

ITEM SPECIAL, SEALING OF CONCRETE SURFACES: A concrete sealer shall be applied to the following concrete surfaces: All surfaces shown on sheet 4/9, 5/9, and 7/9.

See Proposal Note for surface preparation requirements, application rates, material requirements and application procedures.

UTILITY LINES: All expense involved in relocating the affected utility lines shall be borne by the Owners. The Contractor and Owners are requested to cooperate by arranging their work in such a manner that inconvenience to either will be held to a minimum.

EMBANKMENT CONSTRUCTION: Excavation shall be made for the slope reconstruction as detailed on the roadway plans. Pier footings shall then be constructed. Reinforcing from the piers shall be protected and then embankment shall be constructed to the level of the subgrade. Excavation may then be made for the abutments and piers and piles driven for the abutments.

FOUNDATION BEARING PRESSURE: Pier footings, as designed, provide a maximum bearing pressure of 2 tons per square foot.

FOOTINGS shall extend a minimum of 3" inches into bedrock or to the elevation shown whichever is lower.

CONSTRUCTION CLEARANCE OF 18' horizontally from the center of tracks and 23' vertically from a point level with the top of the higher rail, and 4 feet from the center of tracks shall be maintained at all times.

RAILROAD AERIAL LINES will be relocated by the Railroad. The Contractor shall use all precautions necessary to see that the lines are not disturbed during the construction stage and shall cooperate with the Railroad in the relocation of these lines. The cost of the relocation shall be included in the railroad force account work.

Minimum lap lengths for reinforcing steel are as follows:

BAR SIZE	LAP
No. 4	1'-4"
No. 5	1'-8"
No. 8	4'-6"
No. 9	5'-0"
No. 10	5'-6"
No. 11	7'-0"

PILES shall be driven to refusal on bedrock. Refusal shall be considered as attained by penetrating soft bedrock with a minimum resistance of 20 blows per inch, or refusal shall be considered as attained after the pile has contacted hard bedrock and the pile has then received at least 20 blows.

The design load is 30 tons per pile for the abutment piles.

MONOLITHIC WEARING SURFACE is assumed, for design purposes, to be 1" thick.

ITEM 511, CLASS S CONCRETE, SUPERSTRUCTURE, AS PER PLAN; Membrane curing per Supplemental Specification 836 will not be permitted. Concrete shall be cured by Method (a), Water Curing.

COMPRESSION SEALS for each joint shall be furnished in one continuous piece.

STRUCTURE EXCAVATION: Abutment excavation shall conform to and be included with Item 503, Unclassified Excavation. Pier excavation below bedrock surface shall conform to and be included with Item 503, Rock and/or Shale Excavation. All other excavation shall be included in roadway quantities for payment.

PROTECTION OF TRAFFIC: Prior to any demolition, erection and/or construction over active traffic, the contractor shall submit his plans for the protection of that traffic to the Director for approval. These plans shall include provision for any devices and structures that may be necessary to ensure such protection. The cost for this protection shall be included with Structure Removed for payment.

ELASTOMERIC TEST PAD: The elastomeric bearing manufacturer shall supply a plain elastomeric pad for testing purposes. The pad shall be furnished from the same batch of neoprene that is used in the fabrication of the laminated elastomeric bearings and the fabricator shall certify the identity of the elastomer. The pad shall have a 1/2 inch thickness, and shall have minimum length and width dimensions of 6 inches. Payment for the test pad will be included in the price bid for the bearings.

ITEM SPECIAL URETHANE TOPCOAT SEALER: This item shall consist of the application of a urethane topcoat sealer over concrete areas coated with epoxy. These areas being as noted in Item Special-Sealing of Concrete Surfaces (Epoxy). The color of the urethane coating shall be Federal Color Standard No. 37722 (WHITE).

The urethane coating shall be applied between 1 and 10 days after the application of the epoxy. The epoxy shall be clean and dry before the urethane is applied. Application shall be by airless spray.

All work shall be in accordance with the Manufacture's recommendations and as directed by the Engineer.

The urethane top coat shall be one of the following products:

1) Ameron's AMERCOAT 450 H.S.
2) Poly-Carb's MARK 73
3) Tnemec's SERIES 70 ENDURA SHIELD
4) Dural's AQUATHANE/URETHANE 37722

The cost of all labor, equipment, and material to accomplish this item of work shall be paid under:

ITEM	UNIT	DESCRIPTION
SPECIAL	SQ.YD.	URETHANE TOPCOAT SEALER

ITEM	ITEM EXT.	TOTAL	UNIT	DESCRIPTION	ABUTMENT REAR	ABUTMENT FORWARD	SUPER	PIERS	GEN'L
202	11002	LUMP	SUM	STRUCTURE REMOVED, OVER 20 FOOT SPAN					LUMP
503	11100	LUMP	SUM	COFFERDAMS, CRIBS, AND SHEETING					LUMP
503	21100	225	CU. YD.	UNCLASSIFIED EXCAVATION	87	87		51	
503	31100	6	CU. YD.	ROCK AND/OR SHALE EXCAVATION				6	
505	11100	LUMP	SUM	PILE DRIVING EQUIPMENT MOBILIZATION					LUMP
507	11100	780	LIN.FT.	STEEL PILES, HP 10x42	390	390			
509	15800	53,259	LBS.	EPOXY COATED REINFORCING STEEL, GRADE 60	4381	4380	21,522	22,976	
511	31601	183	CU. YD.	CLASS S CONCRETE, SUPERSTRUCTURE, AS PER			183		
				PLAN					
511*	33404	183	CU. YD.	CLASS S CONCRETE, SUPERSTRUCTURE (USING			183		
				SHRINKAGE COMPENSATING CEMENT)					
				(SEE PROPOSAL NOTE)					
511*	33410	LUMP	SUM	CLASS S CONCRETE (USING SHRINKAGE COMPEN-			LUMP		
				SATING CEMENT), FOR PRE-PLACEMENT TESTING					
				(SEE PROPOSAL NOTE)					
511	42000	152	CU. YD.	CLASS C CONCRETE, PIER ABOVE FOOTINGS				152	
511	43500	128	CU. YD.	CLASS C CONCRETE, ABUTMENT INCLUDING FOOTING	64	64			
511	46500	82	CU. YD.	CLASS C CONCRETE, FOOTING				82	
Spec.	51267502	459	SQ. YD.	SEALING OF CONCRETE SURFACES (EPOXY) **	25	25	409		
Spec.	51271500	459	SQ. YD.	URETHANE TOPCOAT SEALER	25	25	409		
515	51630	2	EACH	PRESTRESSED CONCRETE COMPOSITE BOX BEAM			2		
				(50'-62' LENGTH)(CB27-36)(SEE PROPOSAL NOTE)					
515	51640	1	EACH	PRESTRESSED CONCRETE COMPOSITE BOX BEAM			1		
				(62'-76' LENGTH)(CB27-36)(SEE PROPOSAL NOTE)					
515	54830	20	EACH	PRESTRESSED CONCRETE COMPOSITE BOX BEAM			20		
				(40'-50' LENGTH)(CB27-48)(SEE PROPOSAL NOTE)					
515	54850	10	EACH	PRESTRESSED CONCRETE COMPOSITE BOX BEAM			10		
				(62'-78' LENGTH)(CB27-48)(SEE PROPOSAL NOTE)					
516	10500	86	LIN. FT	STRUCTURAL EXPANSION JOINT AND ELASTOMERIC COMPRES-			86		
				SION SEAL					
516	43100	132	EACH	ELASTOMERIC BEARING WITH INTERNAL LAMINATES ONLY (NEOPRENE) (1" x 6" x 12")	22	22		88	
518	12000	6	EACH	SCUPPER, INCLUDING SUPPORTS			6		
518	21200	36	CU. YD.	POROUS BACKFILL WITH FILTER FABRIC	18	18			
518	41100	112	LIN. FT.	6" PERFORATED HELICAL CORRUGATED	56	56			
				STEEL PIPE, 707.01					
518	41200	110	LIN. FT.	6" NON-PERFORATED HELICAL CORRUGATED	55	55			
				STEEL PIPE INCLUDING SPECIALS, 707.01					
601	20000	781	SQ. YD.	CRUSHED AGGREGATE SLOPE PROTECTION					781
601	34200	5	CU. YD.	ROCK CHANNEL PROTECTION, TYPE C					5
				WITHOUT FILTER					
601	38001	129	LIN. FT.	PAVED GUTTER, TYPE 1-4, AS PER PLAN					129

* Alternate Bid Item: These two items shall constitute an alternate bid to Class S concrete, superstructure, as per plan.

* * See proposal note.

EVANS, MECHWART, HAMBLETON & TILTON, INC.
Consulting Engineers
170 MILL STREET GAHANNA, OHIO

3/9

GENERAL NOTES & ESTIMATED QUANTITIES

BRIDGE NO. SCI-139-1078

SCIOTO COUNTY

DESIGNED	DRAWN	TRACED	CHECKED	REVIEWED	DATE	REVISED
P.S.M.	L.L.L.		G.B.C.	G.B.C.	01-11-91	

SCI139 G 12/28/90 A.W.L.

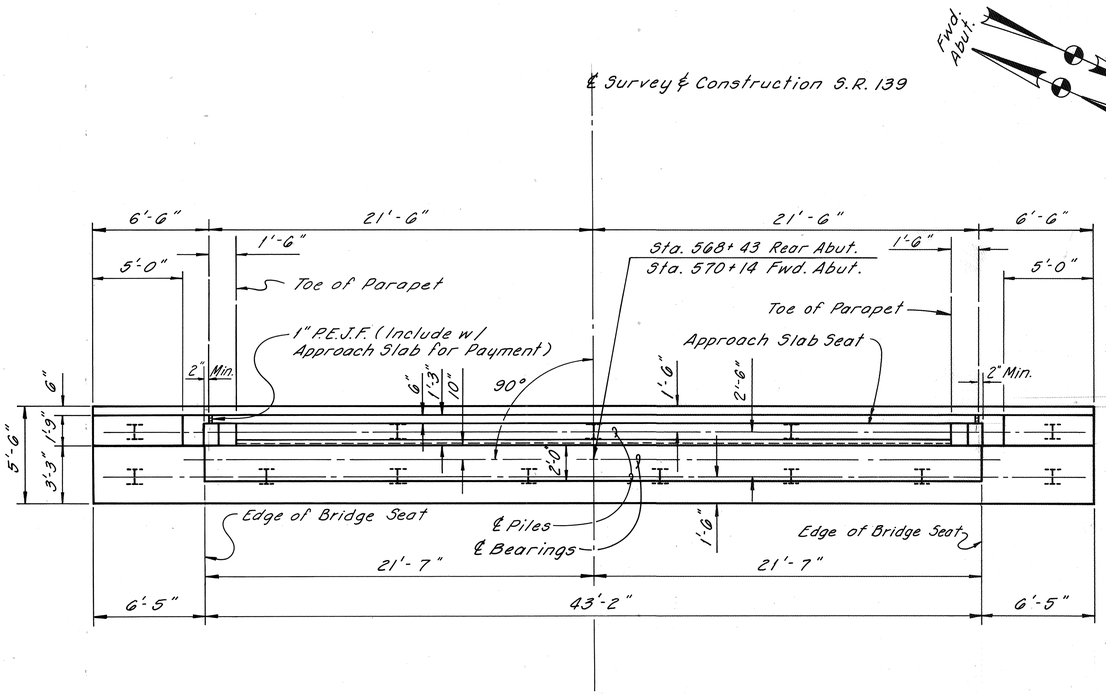

PLAN

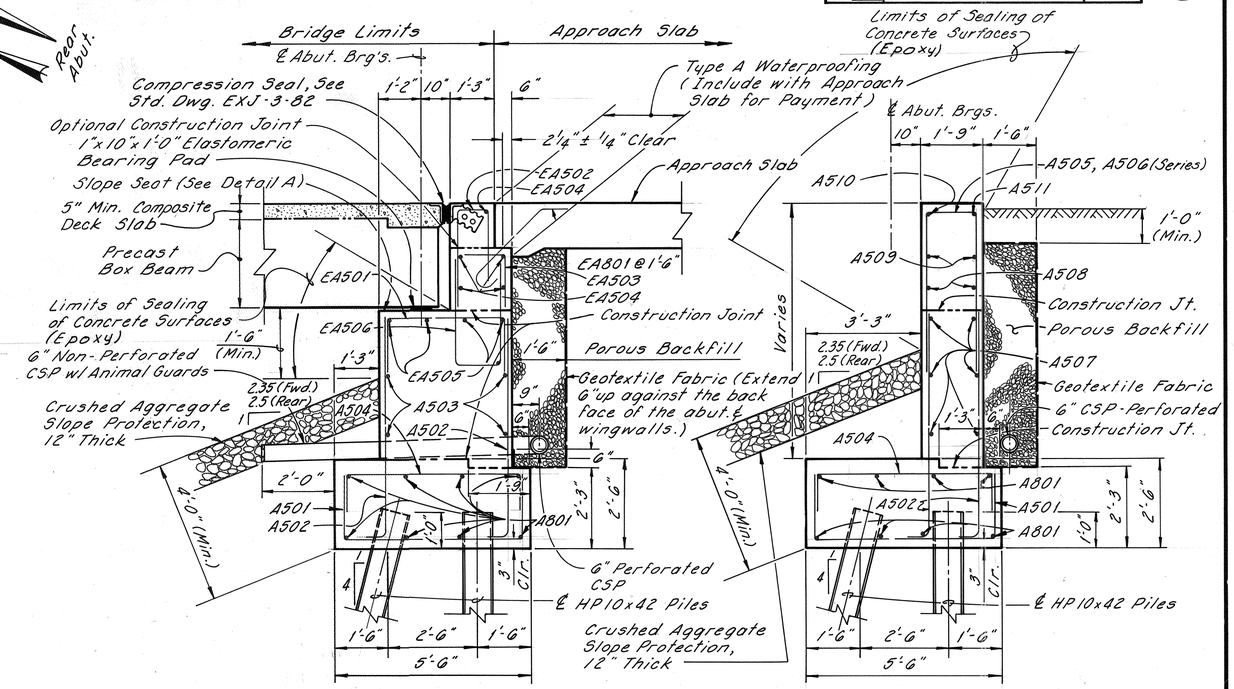

SECTION A-A

SECTION B-B

POROUS BACKFILL, 1'-6" thick, shall extend upward to the plane of the subgrade, to 1'-0" from final surface elevation, and laterally to the ends of the wingwalls. Geotextile Fabric conforming to 712.09, Type A, shall be placed between the porous backfill and soil backfill. Geotextile Fabric shall be included with porous backfill for payment.

BRIDGE SEAT REINFORCING: Reinforcing steel in the vicinity of the bridge seat shall be accurately placed to avoid interference with the drilling of the anchor bar holes.

CONCRETE ABOVE BRIDGE SEAT shall not be placed until beams are completely erected.

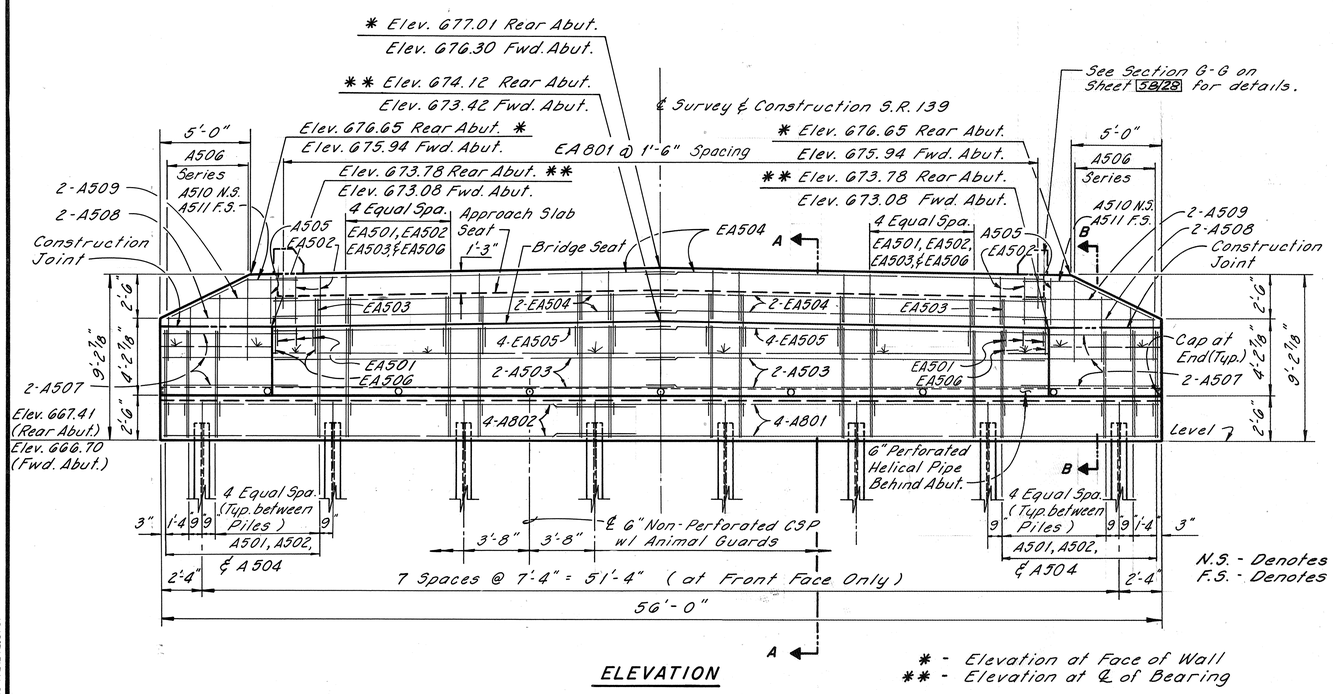

ELEVATION

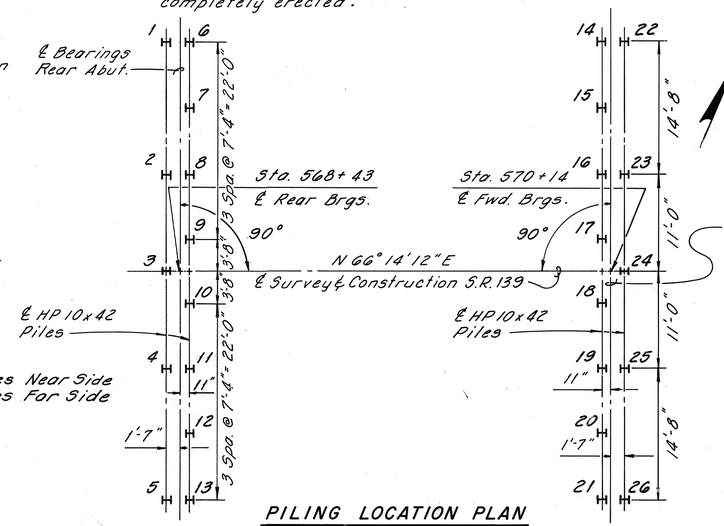

PILING LOCATION PLAN

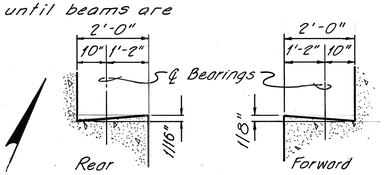

Bridge Seat Slope

DETAIL A

EVANS, MECHWART, HAMBLETON & TILTON, INC.
Consulting Engineers
170 MILL STREET GAHANNA, OHIO

4/9

ABUTMENT DETAILS
BRIDGE NO. SCI-139-1078

SCIOTO COUNTY

DESIGNED	DRAWN	TRACED	CHECKED	REVIEWED	DATE	REVISED
P.S.M.	D.D.W.		G.B.C.	G.B.C.	1/31/91	

BRUNING 44-242 72931-01

CALC BY P.S.M. DATE 1-29-91	SCI-139-10.75	OHIO
CHKD BY G.B.C. DATE 1-31-91		FHWA REGION 5

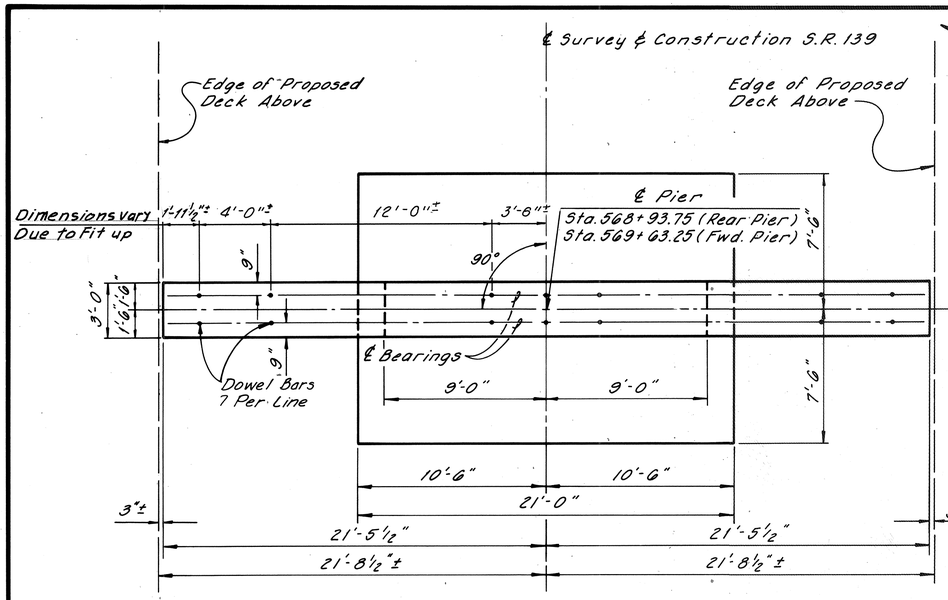

PLAN

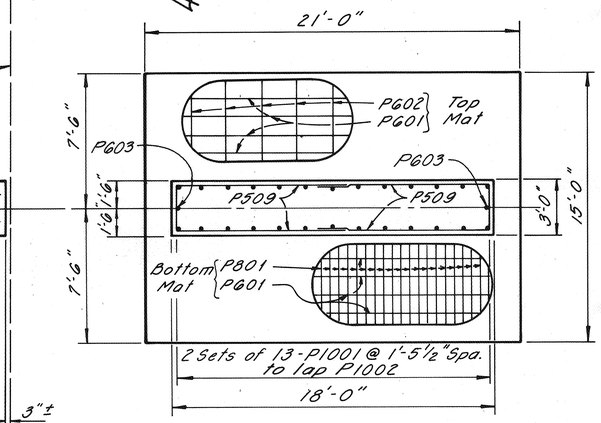

SECTION E-E

BRIDGE SEAT REINFORCING: Reinforcing steel in the vincinity of the bridge seat shall be accurately placed to avoid interference with the drilling of the anchor bar holes.

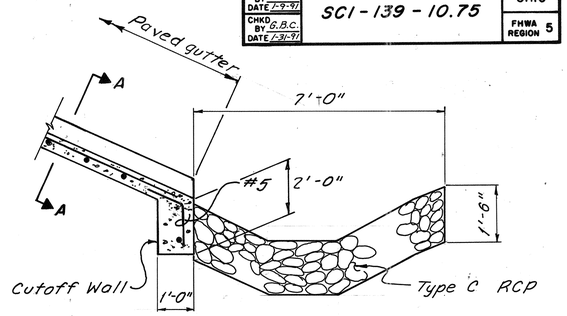

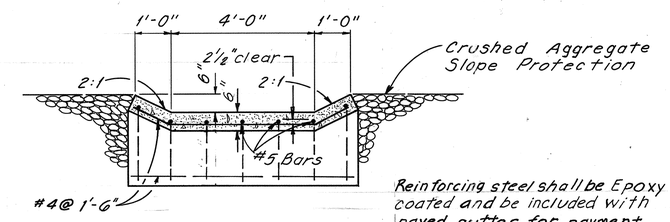

SECTION A-A

Reinforcing steel shall be Epoxy coated and be included with paved gutter for payment

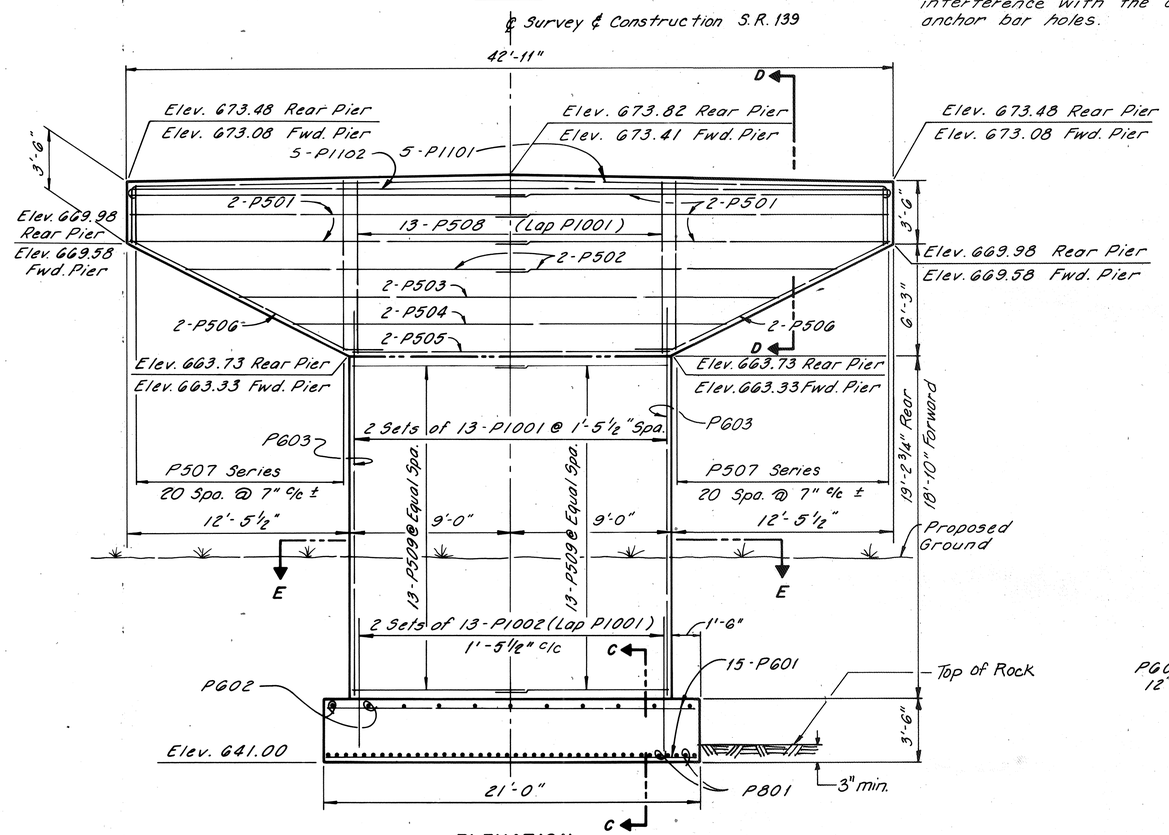

ELEVATION

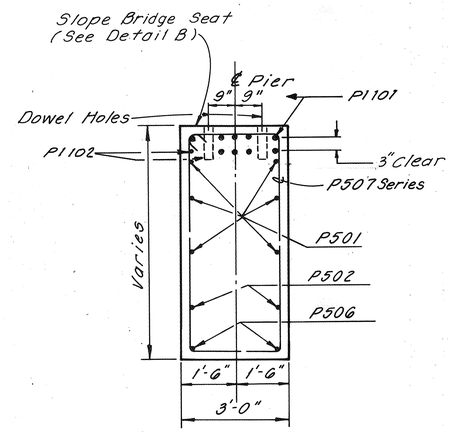

SECTION D-D

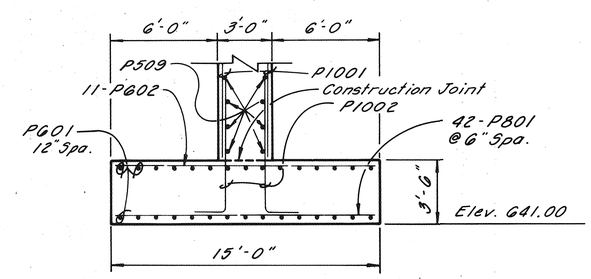

SECTION C-C

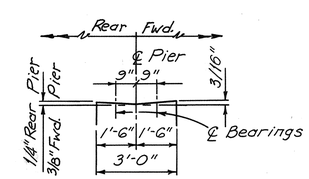

DETAIL B

BRIDGE SEAT SLOPE

EVANS, MECHWART, HAMBLETON & TILTON, INC.
Consulting Engineers
170 MILL STREET GAHANNA, OHIO

5/9

PIER DETAILS
BRIDGE NO. SCI-139-1078

SCIOTO COUNTY

DESIGNED	DRAWN	TRACED	CHECKED	REVIEWED	DATE	REVISED
P.S.M.	D.D.W.		G.B.C.	G.B.C.	1/31/91	

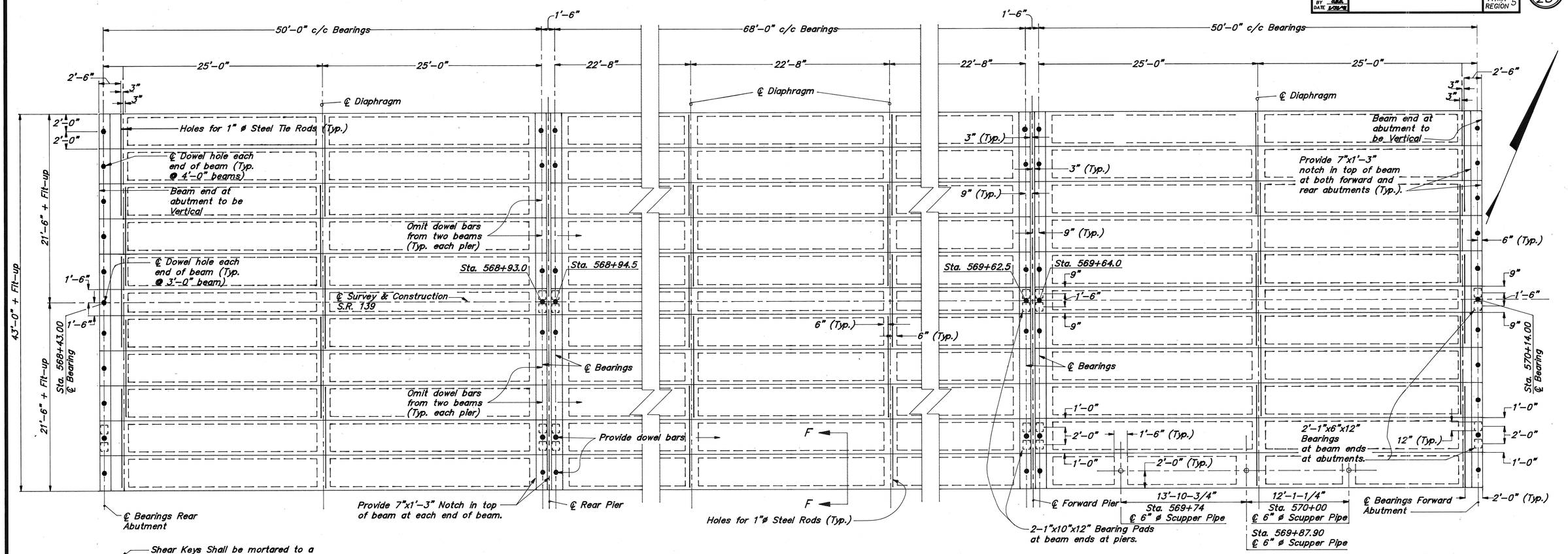

DECK PLAN

For Section F-F See Sheet 8/9.
Omit dowel bars at piers as indicated above.

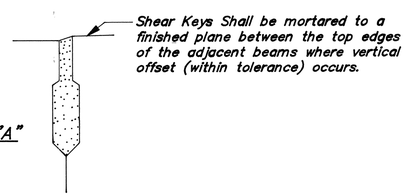

DETAIL "A"

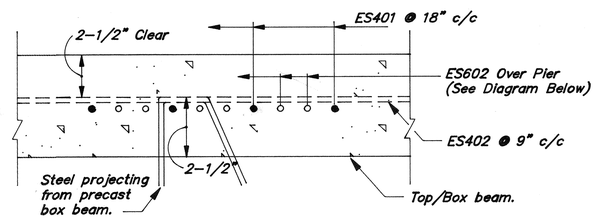

Deck Slab Reinforcing Detail

NOTE:
See Std. Dwg. PSBD-1-81 for additional details.

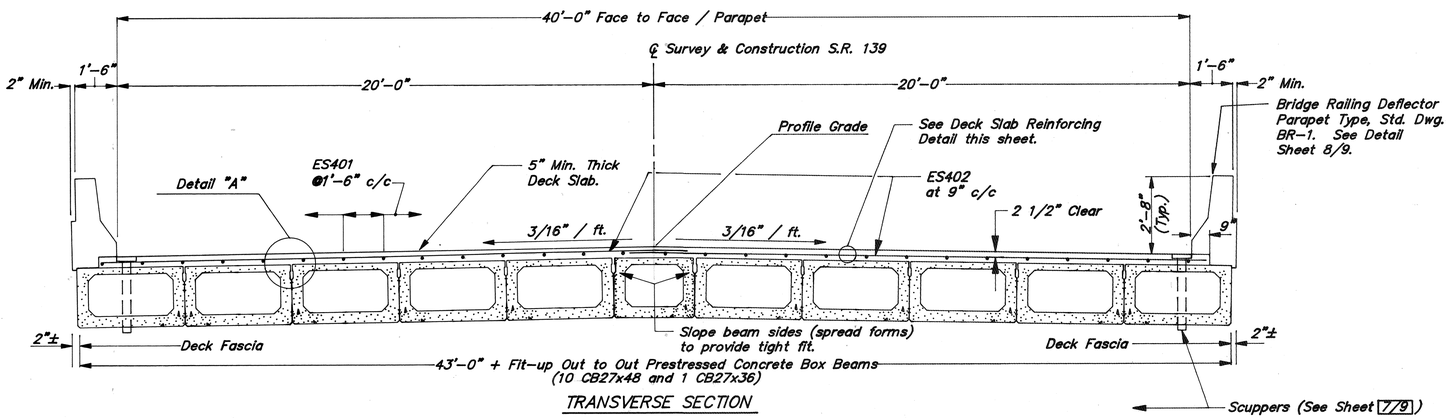

TRANSVERSE SECTION

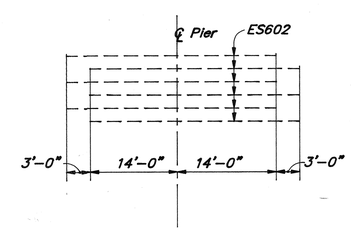

DIAGRAM OF #6 BARS OVER PIERS

EVANS, MECHWART, HAMBLETON & TILTON, INC.
Consulting Engineers
170 MILL STREET GAHANNA, OHIO

6/9

SUPERSTRUCTURE DETAILS

BRIDGE NO. SCI-139-1078

SCIOTO COUNTY

DESIGNED	DRAWN	TRACED	CHECKED	REVIEWED	DATE	REVISED
P.S.M.	A.W.L.		G.B.C.	G.B.C.	06-10-90	

S:\139\SCI.DWG 1/29/91 A.W.L.

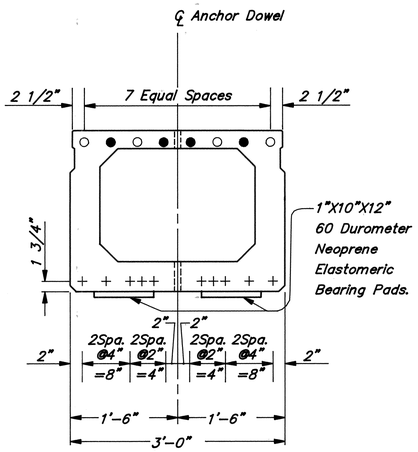

TYPICAL BEAM CB27-36
SECTION
(50' SPAN)

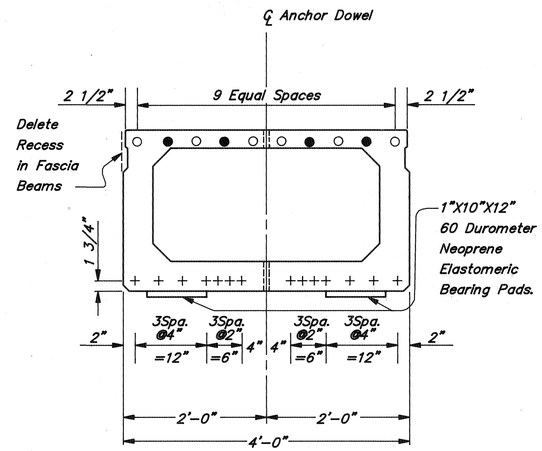

TYPICAL BEAM CB27-48
SECTION
(50' SPAN)

SYMBOLS:
+ 1/2" Seven wire strand *
● # 5 Bars, full length
○ # 5 Bars, 7'-0" at each end of each beam

* Grade 270 Uncoated, stress relieved strands, As=0.153 sq. in.

REINFORCEMENT NOT ALL SHOWN

NOTE: See Sheet 8/9 Section F-F for #5 rebar at outside beam to anchor parapet. Include with box beam for payment. Spacing to match parapet rebar spacing as detailed on Sheet 8/9.

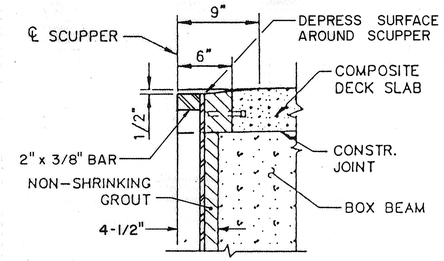

SECTION B-B

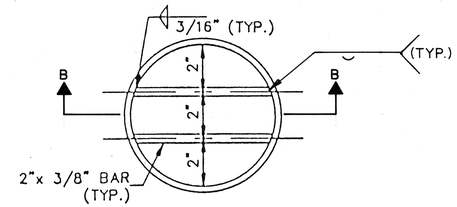

PLAN VIEW

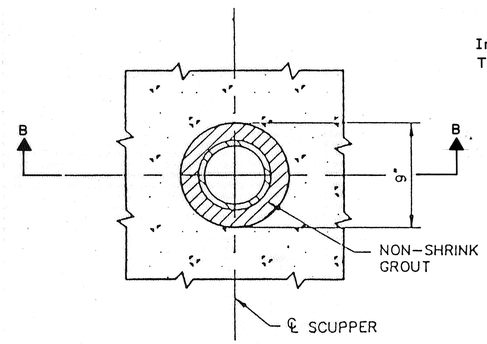

SECTION A-A

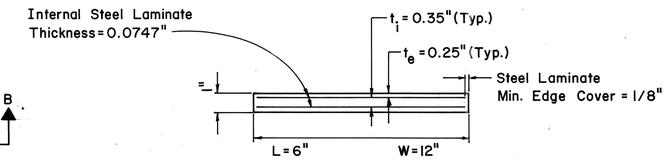

LAMINATED ELASTOMERIC EXPANSION BEARING
50 DUROMETER

MAXIMUM DEAD LOAD = 16.9^k
MAXIMUM LIVE LOAD = 13.1^k
MAXIMUM DESIGN LOAD = 30.0^k

BASIS OF PAYMENT: THE UNIT BID PRICE SHALL INCLUDE ALL MATERIALS, LABOR AND INCIDENTALS NECESSARY TO FURNISH AND INSTALL LAMINATED ELASTOMERIC BEARINGS EITHER FIXED OR EXPANSION.

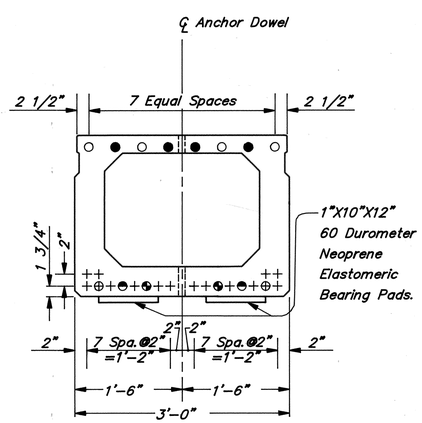

TYPICAL BEAM CB27-36
SECTION
(68' SPAN)

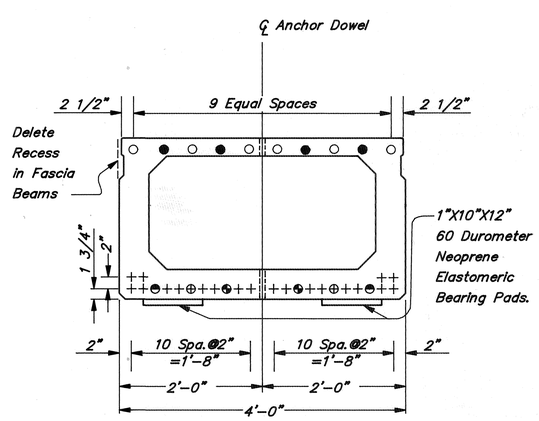

TYPICAL BEAM CB27-48
SECTION
(68' Span)

SYMBOLS:
+ 1/2" Seven wire strand *
⊕ 1/2" Seven wire strand, debonded 1'-6", each end *
◔ 1/2" Seven wire strand, debonded 2'-6", each end *
◓ 1/2" Seven wire strand, debonded 4'-6", each end *
● #5 Bars, Full Length
○ #5 Bars, 12'-0" at each end of each beam

* Grade 270 Uncoated, stress relieved strands, As=0.153 sq. in.

REINFORCEMENT NOT ALL SHOWN

SYMBOLS:
+ 1/2" Seven wire strand *
⊕ 1/2" Seven wire strand, debonded 1'-6", each end *
◔ 1/2" Seven wire strand, debonded 2'-6", each end *
◓ 1/2" Seven wire strand, debonded 3'-6", each end *
● #5 Bars, Full Length
○ #5 Bars, 11'-3" at each end of each beam

* Grade 270 Uncoated, stress relieved strands, As=0.153 sq. in.

REINFORCEMENT NOT ALL SHOWN

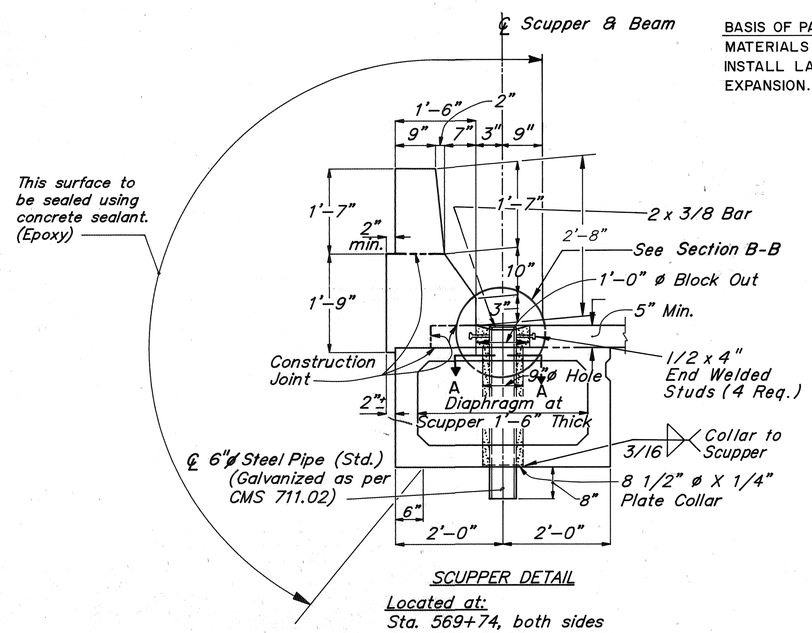

SCUPPER DETAIL

Located at:
Sta. 569+74, both sides
Sta. 569+87.90, both sides
Sta. 570+00, both sides

EVANS, MECHWART, HAMBLETON & TILTON, INC.
Consulting Engineers
170 MILL STREET GAHANNA, OHIO

7/9

MISCELLANEOUS DETAILS
BRIDGE NO. SCI-139-1078

SCIOTO COUNTY

DESIGNED	DRAWN	TRACED	CHECKED	REVIEWED	DATE	REVISED
P.S.M.	A.W.L.	A.W.L.	P.S.M.	G.B.C.	01-31-91	

CALC BY P.S.M. DATE 1-3-91	SCI - 139 - 10.75	OHIO
CHKD BY G.B.C. DATE 1-31-91		FHWA REGION 5

22/28

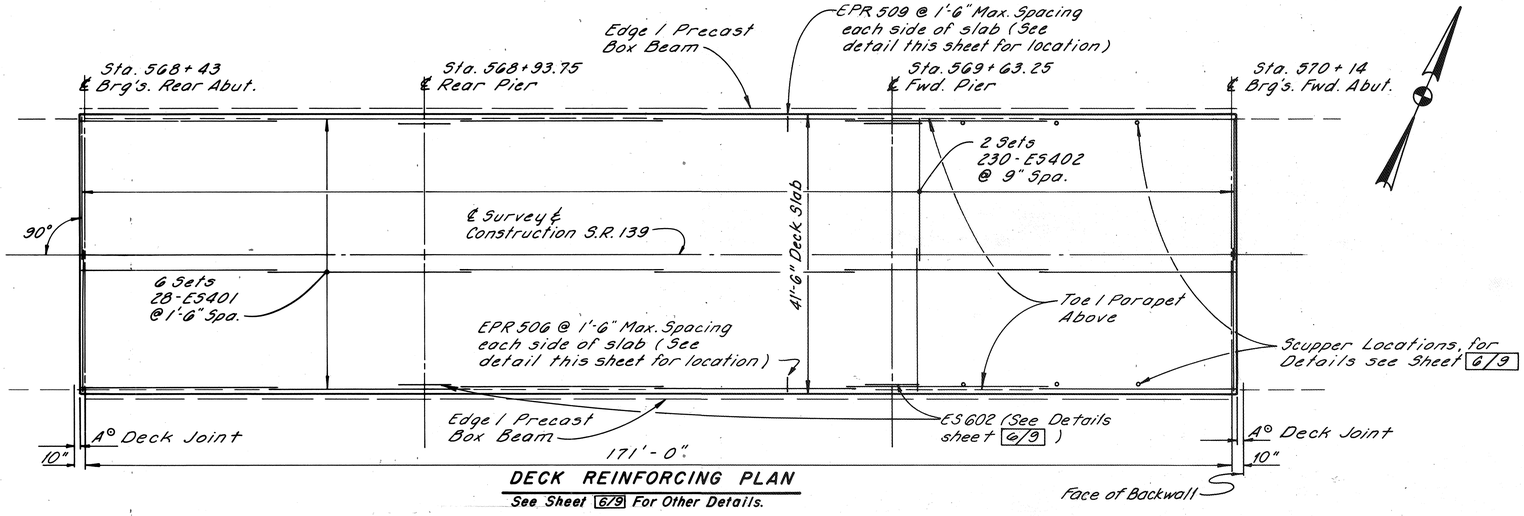

DECK REINFORCING PLAN

See Sheet 6/9 For Other Details.

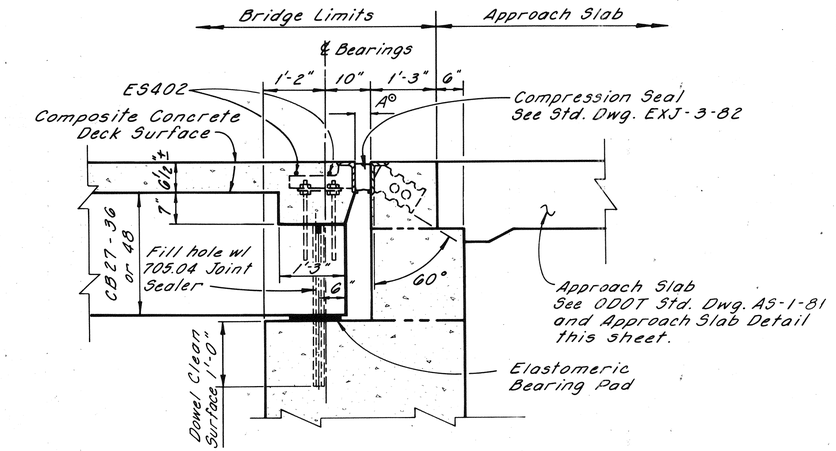

TYPICAL SECTION AT ABUTMENTS

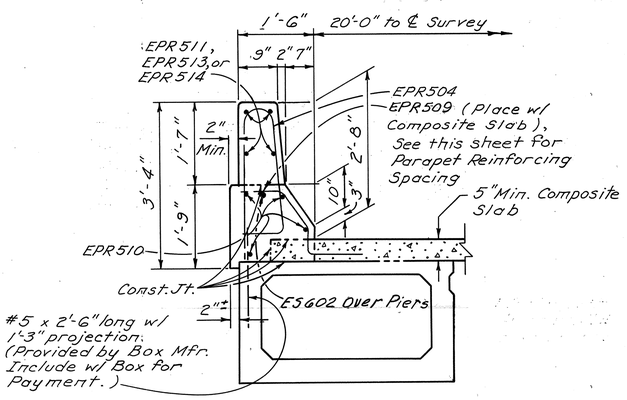

SECTION F-F

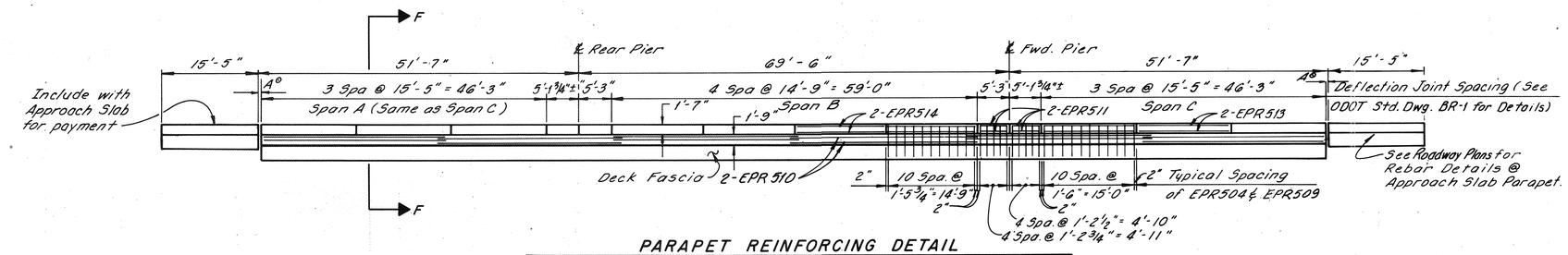

PARAPET REINFORCING DETAIL

LOOKING FROM OUTSIDE OF BRIDGE (TYPICAL EACH SIDE OF BRIDGE)

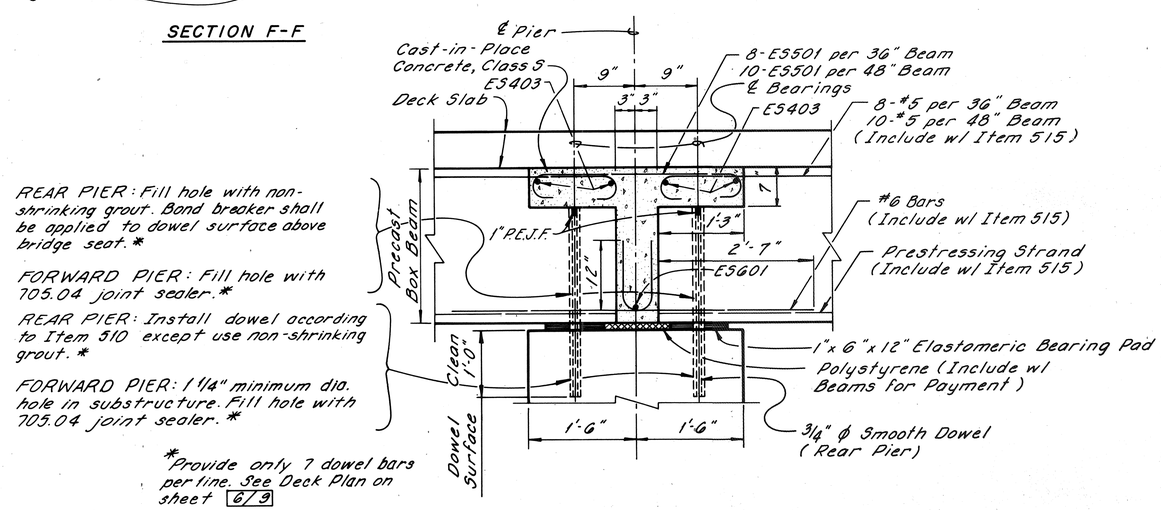

REAR PIER: Fill hole with non-shrinking grout. Bond breaker shall be applied to dowel surface above bridge seat.*

FORWARD PIER: Fill hole with 705.04 joint sealer.*

REAR PIER: Install dowel according to Item 510 except use non-shrinking grout.*

FORWARD PIER: 1 1/4" minimum dia. hole in substructure. Fill hole with 705.04 joint sealer.*

*Provide only 7 dowel bars per line. See Deck Plan on sheet 6/9

TYPICAL SECTION THRU BEAMS AT PIERS

See Std. Dwg. PSBD-1-81, Sht. 4/4 for additional details.

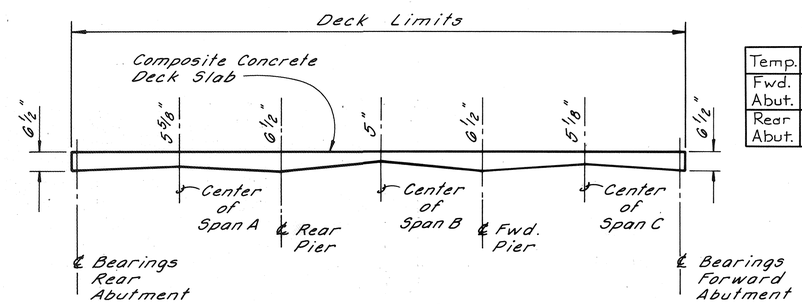

COMPOSITE DECK SLAB DETAIL

DIMENSION A ⊙

Temp.	30°F	40°F	50°F	60°F	70°F	80°F	90°F
Fwd. Abut.	2 3/8"	2 5/16"	2 1/4"	2 1/4"	2 1/4"	2 3/16"	2 1/8"
Rear Abut.	2 3/8"	2 5/16"	2 1/4"	2 1/4"	2 1/4"	2 3/16"	2 1/8"

DEFLECTION AND CAMBER: Calculated box beam camber at the time of placement of concrete slab, including an allowance for camber growth due to creep is 1" for Span A, 2" for Span B, and 1" for Span C.

Calculated deflection due to weight of composite concrete wearing surface and railings is 1/8" for Span A, 1/2" for Span B, and 1/8" for Span C.

Net final camber of beam is 7/8" for Span A, 1 1/2" for Span B, and 7/8" for Span C. A 1/2" adjustment for vertical curve is required for Span C. The minimum thickness of the Deck Slab is 5". See Detail above.

EVANS, MECHWART, HAMBLETON & TILTON, INC.
Consulting Engineers
170 MILL STREET GAHANNA, OHIO

8/9

MISCELLANEOUS DETAILS

BRIDGE NO. SCI-139-1078

SCIOTO COUNTY

DESIGNED	DRAWN	TRACED	CHECKED	REVIEWED	DATE	REVISED
P.S.M.	D.D.W.		G.B.C.	G.B.C.	1/31/91	

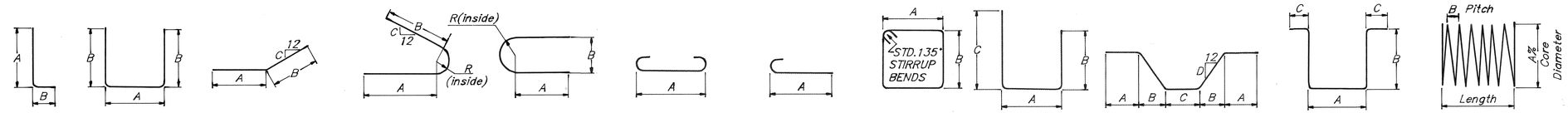

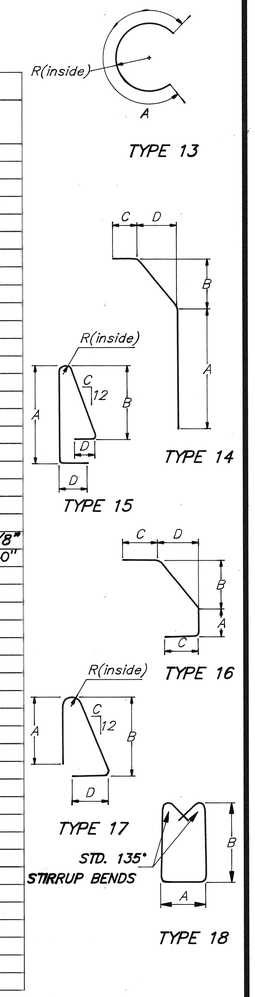

ABUTMENTS

MARK			TOTAL NO.	LENGTH	WEIGHT	TYPE	A	B	C	D	R
A501			78	8'-5"	685	2	5'-0"	1'-10"			
A502			156	6'-10"	1112	1	5'-11"	1'-0"			
A503			16	22'-4"	373	STR					
A504			78	7'-9"	630	2	5'-0"	1'-6"			
A505			4	6'-6"	27	2	1'-5"	2'-8"			
A506(S)			4SETS OF 4	5'-2"to 9'-8"	124	2	1'-5"	2'-0"TO *4'-3"	*Varies by 9" Increments		
A507			24	8'-0"	200	STR					
A508			8	7'-6"	63	STR					
A509			8	5'-3"	44	STR					
A510			4	8'-0"	33	3	2'-9"	5'-4"	6		
A511			4	6'-6"	27	3	1'-3"	5'-4"	6		
A801			16	34'-0"	1452	STR					
A802			16	26'-6"	1132	STR					
				TOTAL	5902						

EPOXY COATED ABUTMENT

MARK			TOTAL NO.	LENGTH	WEIGHT	TYPE	A	B	C	D	R
EA501			62	6'-2"	399	2	3'-5"	1'-6"			
EA502			58	5'-4"	323	9	11"	2'-0"	2'-8"		
EA503			54	2'-4"	131	1	1'-5"	1'-0"			
EA504			20	23'-4"	487	STR					
EA505			16	22'-4"	373	STR					
EA506			56	4'-11"	373	2	1'-5"	2'-6"			
EA507			8	3'-1"	26	1	2'-2"	1'-0"			
EA508			4	2'-10"	12	16	1-0"	8-1/2"	9"	6"	
EA801			56	4'-11"	735	19	1'-0"	2'-7"			
				TOTAL	2859						

PIERS

MARK			TOTAL NO.	LENGTH	WEIGHT	TYPE	A	B	C	D	R
P501			24	22'-3"	557	STR					
P502			8	19'-6"	163	STR					
P503			4	29'-6"	123	STR					
P504			4	23'-6"	98	STR					
P505			4	17'-6"	73	STR					
P506			8	15'-2"	127	3	1'-6"	13'-8"			
P507			4Series of 21	12'-7"to 25'-3"	1657	8	2'-8"	3'-3"to 9'-7"*	* Varies by 3-7/8" Increments		
P508			26	21'-9"	590	2	2'-8"	9'-8"			
P509			52	21'-11"	1189	2	2'-8"	9'-9"			
P601			60	20'-6"	1848	STR					
P602			22	14'-6"	479	STR					
P603			4	22'-0"	132	STR					
P801			84	14'-6"	3252	STR					
P1001			52	22'-6"	5035	STR					
P1002			52	12'-2"	2729	1	11'-0"	1'-6"			
P1101			10	48'-1"	2555	2	42'-5"	3'-2"			
P1102			10	44'-7"	2369	6	41'-5"				
				TOTAL	22,976						

SUPERSTRUCTURE - EPOXY COATED

MARK			TOTAL NO.	LENGTH	WEIGHT	TYPE	A	B	C	D	R
ES401			168	29'-9"	3339	STR					
ES402			460	21'-2"	6504	STR					
ES403			16	22'-0"	235	STR					
ES501			216	4'-0"	901	6	2'-10"				
ES601			4	23'-0"	138	STR					
ES602			112	31'-0"	5215	STR					
				TOTAL	16,332						

PARAPET - EPOXY COATED

MARK			TOTAL NO.	LENGTH	WEIGHT	TYPE	A	B	C	D	R
EPR504			260	5'-8"	1537	17	2'-8"	2'-3"	1-1/4"	9"	2-1/8"
EPR509			260	2'-11"	791	21	9'-1/2"	6"	8'-1/2"	6"	E=1'-0"
EPR510			48	29'-4"	1469	STR					
EPR511			32	4'-10"	161	STR					
EPR513			48	15'-0"	751	STR					
EPR514			32	14'-5"	481	STR					
				TOTAL	5190						

NOTE : All Reinforcing Bars shall be Epoxy Coated.

BAR SIZE is indicated in the bar mark. The first digit where three digits are used and the first two digits where four are used, indicates the bar size number. For example E601 is a No. 6 size bar and E1101 is a No. 11 size bar.

* SPIRAL DETAILS shall be in accordance with CRSI Standard Practice, except as otherwise shown.

BAR DIMENSIONS shown are out to out, unless otherwise indicated.

"STD" written in place of a dimension indicates a standard bend at the end of the bar.

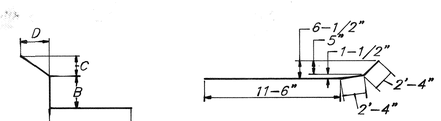

EVANS, MECHWART, HAMBLETON & TILTON, INC.
Consulting Engineers
170 MILL STREET GAHANNA, OHIO

9/9

REINFORCING STEEL LIST
BRIDGE NO. SCI-139-1078

SCIOTO COUNTY

DESIGNED	DRAWN	TRACED	CHECKED	REVIEWED	DATE	REVISED
P.S.M.	A.W.L.		G.B.C.	G.B.C.	01-31-91	

S23139.DWG 10/26/91 A.W.L.

CALC. BY C.A.D. DATE 3-2-90 CHKD. BY L.D.C. DATE 3-2-90	SCI-139-10.75	OHIO FHWA REGION 5

24/28

1/5

SCIOTO COUNTY
SCI-139-10.75

CENTERLINE SURVEY PLAT

STATE ROUTE 139, SECTION 10.74

SCIOTO COUNTY, OHIO

MADISON TOWNSHIP

T.4, R.20, Sec. 33

CONGRESS LANDS

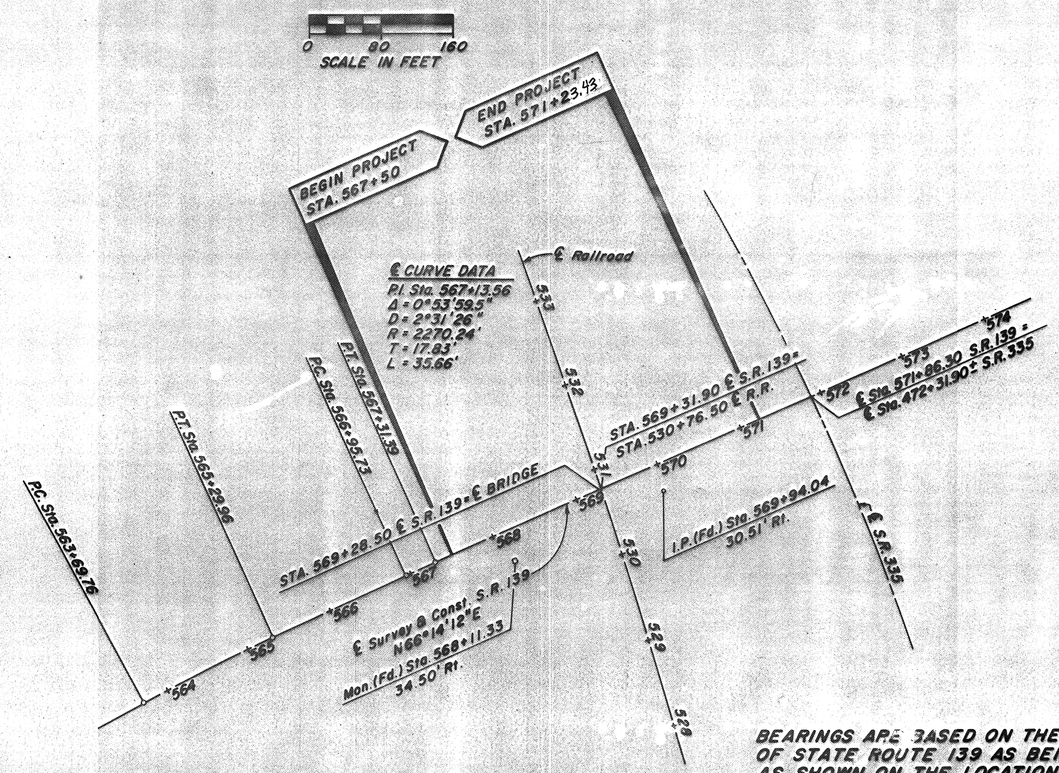

Reference Monuments To Be Set After Construction

Station	Dist. from ℄ Lt.	Rt.
567+31.39	18'	18'
570+50.00	18'	18'

DETAIL FOR SETTING MONUMENTS

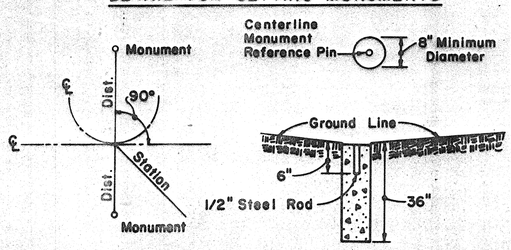

BEARINGS ARE BASED ON THE CENTERLINE OF STATE ROUTE 139 AS BEING N66°14'12"E AS SHOWN ON THE LOCATION PLAN ENTITLED "SCI.-335-(8.10)(10.06) SCIOTO COUNTY" AND RECORDED IN MISC. VOL. 2, PAGE 109, DATED APRIL 1, 1955.

I HEREBY CERTIFY THAT THIS PLAT IS A TRUE DELINEATION OF A SURVEY MADE FOR THE OHIO DEPARTMENT OF TRANSPORTATION IN 1988 BY EVANS, MECHWART, HAMBLETON & TILTON, INC.

LAWRENCE E. BALL, P.S. No. 6878 DATE 6-11-91

SIGNED J. H. Watkins

DATE 9-23-91 DISTRICT DEPUTY DIRECTOR

RECEIVED _____, 19__

RECEIVED _____, 19__

MISC. VOL. 6 PAGE 534

10-3-91

DATE RECORDED

SEAL

STATE OF OHIO LAWRENCE E. BALL 6878 REGISTERED

REV.	DATE	DESCRIPTION
		Completion Date: 6-21-91

S.R. 139 CENTERLINE SURVEY PLAT

CALC BY C.A.P. DATE 12-19-90	SCI-139-10.75	OHIO
CHKD BY G.P.C. DATE 12-20-90		FHWA REGION 5

25/28

2/5

SCIOTO COUNTY
SCI-139-10.75

PROPERTY MAP

STATE ROUTE 139, SECTION 10.74

SCIOTO COUNTY, OHIO

MADISON TOWNSHIP

T.4N, R.20W, Sec. 33

CONGRESS LANDS

0 100 200
SCALE IN FEET

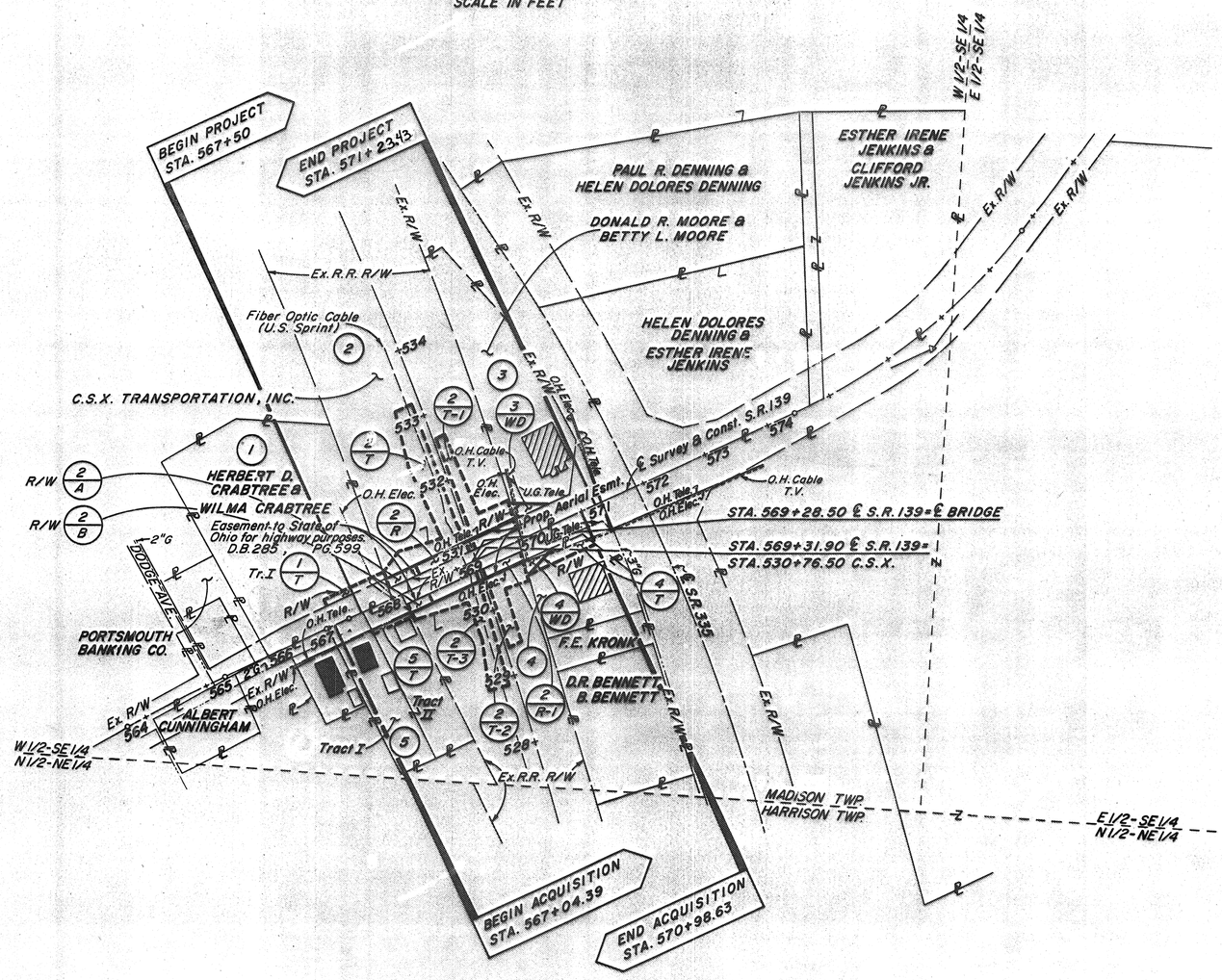

LEGEND

- RESIDENCE
- OUT BUILDING
- BUSINESS

(4) EDWARD LEWIS & SHIRLEY M. LEWIS, AKA SHIRLEY LEWIS

(5) PAUL R. BRICKEY

UNDERGROUND UTILITIES

The locations of the underground utilities shown on the plans are as obtained from the utility as required by Sec. 153.64, Ohio Revised Code.

UTILITY OWNERSHIP

Minford Telephone Company
P.O. Box 181
Minford, Ohio 45653
(614) 820-2151

Ohio Power Co.
301-315 Cleveland Ave. S.W.
Canton, Ohio 44702
(216) 438-7040

Columbia Gas of Ohio
802 Clare Avenue
P.O. Box 1147
Portsmouth, Ohio 4566[illegible]
(614) 354-2836

Scioto County Regional Water Authority District 1
P.O. Box 310
Lucasville, Ohio 45648
(614) 259-2301

U.S. Sprint Communication Co.
3065 Hargrove Rd., Suite 700
Atlanta, Georgia 30339
(404) 859-8830
Att. Ralph Moore

Warner Cable
Route 5, P.O. Box 21A
Lucasville, Ohio 45648
(614) 259-4170

REV.	DATE	DESCRIPTION
		Completion Date: [illegible]-21-91

PROPERTY MAP

TOTAL NUMBER OF...
5 OWNERSHIPS
0 TOTAL TAKES
0 OWNERSHIPS WITH STRUCTURES INVOLVED
1 OWNERSHIPS WITH "P" ITEMS

SUMMARY OF ADDITIONAL RIGHT OF WAY

*.000

NOTE: RECORD AREA AFTER OUT SALES MINUS TOTAL P.R.O. MINUS NET TAKE EQUALS NET RESIDUE.

CALC. BY C.A.B. DATE 12-12-90	SCI-139-10.75	OHIO
CHKD. BY G.B.C. DATE 12-20-90		FHWA REGION 5

26/28

3/5

STATE JOB NO. 09982(0) PID NO. 4815

PARCEL	OWNER	AUDITORS PARCEL NO.	SHEET NO.	OWNERS RECORD BOOK	OWNERS RECORD PAGE	RECORD AREA	TOTAL P.R.O.	GROSS TAKE	P.R.O. IN TAKE	NET TAKE	STRUCTURE	NET RESIDUE LEFT	NET RESIDUE RIGHT	TYPE FUND	REMARKS AND PERSONALTY	AS ACQUIRED BOOK	AS ACQUIRED PAGE
1-T	HERBERT D. CRABTREE & WILMA CRABTREE	10-0834*	3	811	546	1.42	—	0.022	0	0.022			—	STATE	To Construct Drive (1 Year)		
2-R	CSX TRANSPORTATION, INC.	—	4	142	260	—		0.054	0	0.054		—	—		Aerial Easement		
				174	305												
2-R1	" "		4					0.051	0	0.051					Aerial Easement		
2-A	" "		4					0.017	0	0.017					Roadway Construction		
2-B	" "		4					0.013	0	0.013					Roadway Construction		
2-T	" "		4					0.237	0	0.237					Ditch Construction		
2-T1	" "		4					0.120	0	0.120					Ditch Construction		
2-T2	" "		4					0.095	0	0.095					Ditch Construction		
2-T3	" "		4					0.137	0	0.137					Ditch Construction		
3-WD	DONALD R. MOORE & BETTY L. MOORE	10-0978*	3	761	103	0.88	—	0.015	0	0.015		0.865	—				
4-WD	EDWARD LEWIS & SHIRLEY M. LEWIS	10-0590*	3	749	905	0.37	—	0.010	0	0.010	P	—	0.360		Sign and/or Pole		
	aka SHIRLEY LEWIS *			757	336										* Land Contract Vol 674 Pg 108 Gary & Shirley Does		
4-T	" "		3					0.036	0	0.036					To Construct Drive (1 Year)		
5-T	PAUL R. BRICKEY	10-0144*	3	797	477	0.50		0.007	0	0.007					To Construct Drive (1 Year)		
				829	585												

REV.	DATE	DESCRIPTION
RDB	1/27/92	Added L.C. Par 4 WD Completion Date: 6-21-91

SUMMARY OF ADDITIONAL RIGHT-OF-WAY.

STATE ROUTE 139, SECTION 10.74

SCIOTO COUNTY, OHIO
MADISON TOWNSHIP
T.4N, R.20W, Sec. 33
CONGRESS LANDS

CALC BY C.A.B. DATE 12-19-90	SCI-139-10.75	OHIO
CHKD BY G.B.C. DATE 12-20-90		FHWA REGION 5

27/28

4/5

SCIOTO COUNTY
SCI-139-10.75

PROP. R/W & TEMP. ESMT. CURVE DATA

(A) Δ=0°18'33"
R=5589.58'
Ch.=30.16', Brg. N17°51'48"W

(B) Δ=0°40'53"
R=2300.24'
Ch.=27.36', Brg. S65°53'45"W

(C) Δ=0°40'53"
R=2310.24'
Ch.=27.47', Brg. N65°53'45"E

(D) Δ=0°06'11"
R=5589.58'
Ch.=10.05', Brg. S18°04'10"E

(E) Δ=0°17'53"
R=5809.58'
Ch.=30.21', Brg. N17°00'08"W

(F) Δ=0°14'48"
R=5809.58'
Ch.=25.00', Brg. N17°16'28"W

℄ CURVE DATA

P.I. Sta. 567+13.56
Δ=0°53'59.5"
D=2°31'26"
T=17.83'
L=35.66'
R=2270.24'

(1) HERBERT D. CRABTREE & WILMA CRABTREE

(2) CSX TRANSPORTATION, INC.

(3) DONALD R. MOORE & BETTY L. MOORE

0 20 40
SCALE IN FEET

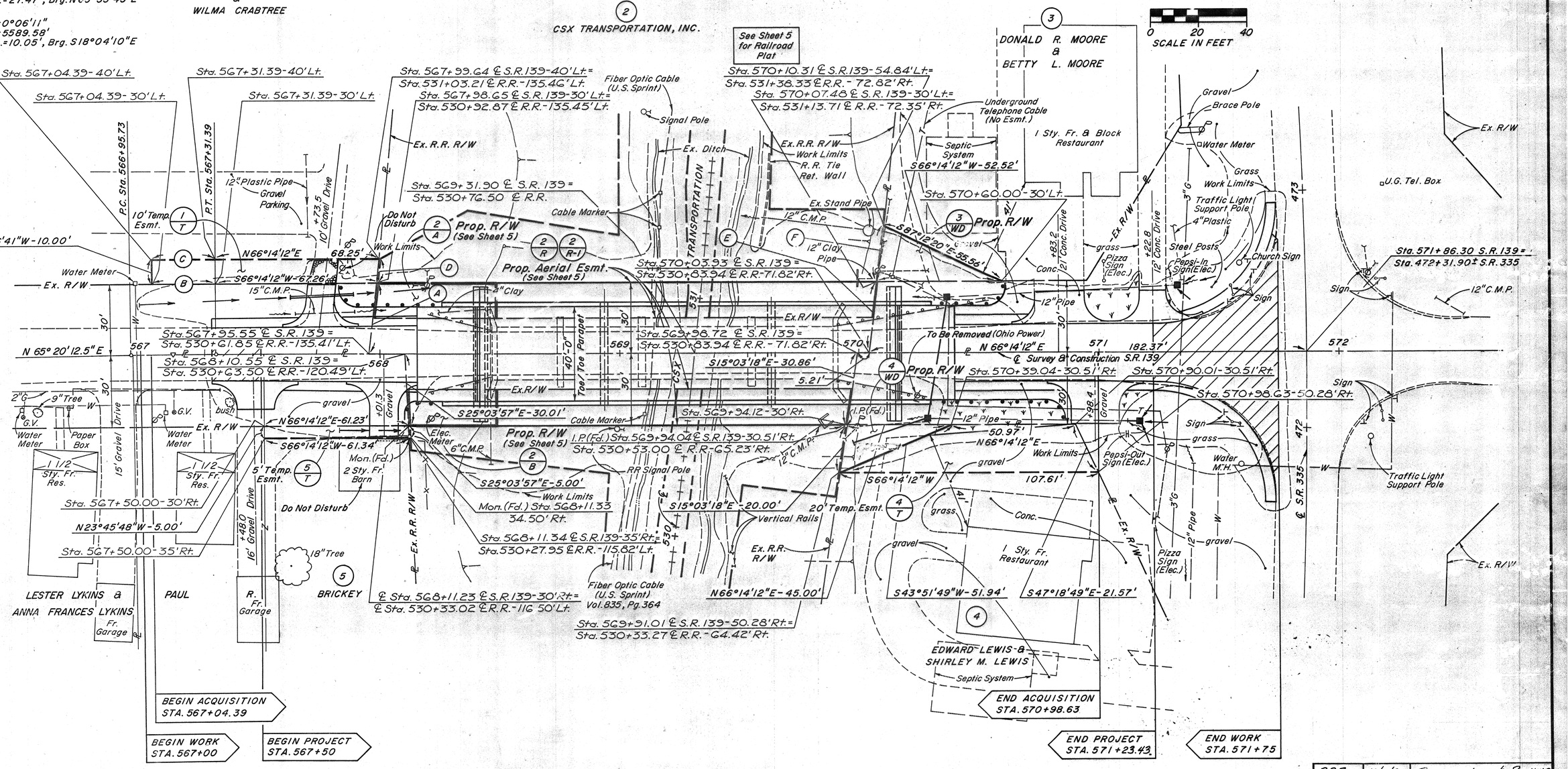

REV.	DATE	DESCRIPTION
R.D.B.	10/9/91	Removed post Pr. 4WD
		Completion Date: 6-21-91

SCI-139-10.75 R/W PLAN STA. 566+50 TO STA. 572+50

STATE ROUTE 139, SECTION 10.74

SCIOTO COUNTY, OHIO

MADISON TOWNSHIP

T.4N, R.20W, Sec. 33

CONGRESS LANDS

CALC BY C.A.B. DATE 12-19-90	SCI-139-10.75	OHIO
CHKD BY G.P.C. DATE 12-20-90		FHWA REGION 5

28/28

5/5

SCIOTO COUNTY
SCI-139-10.75

0 20 40
SCALE IN FEET

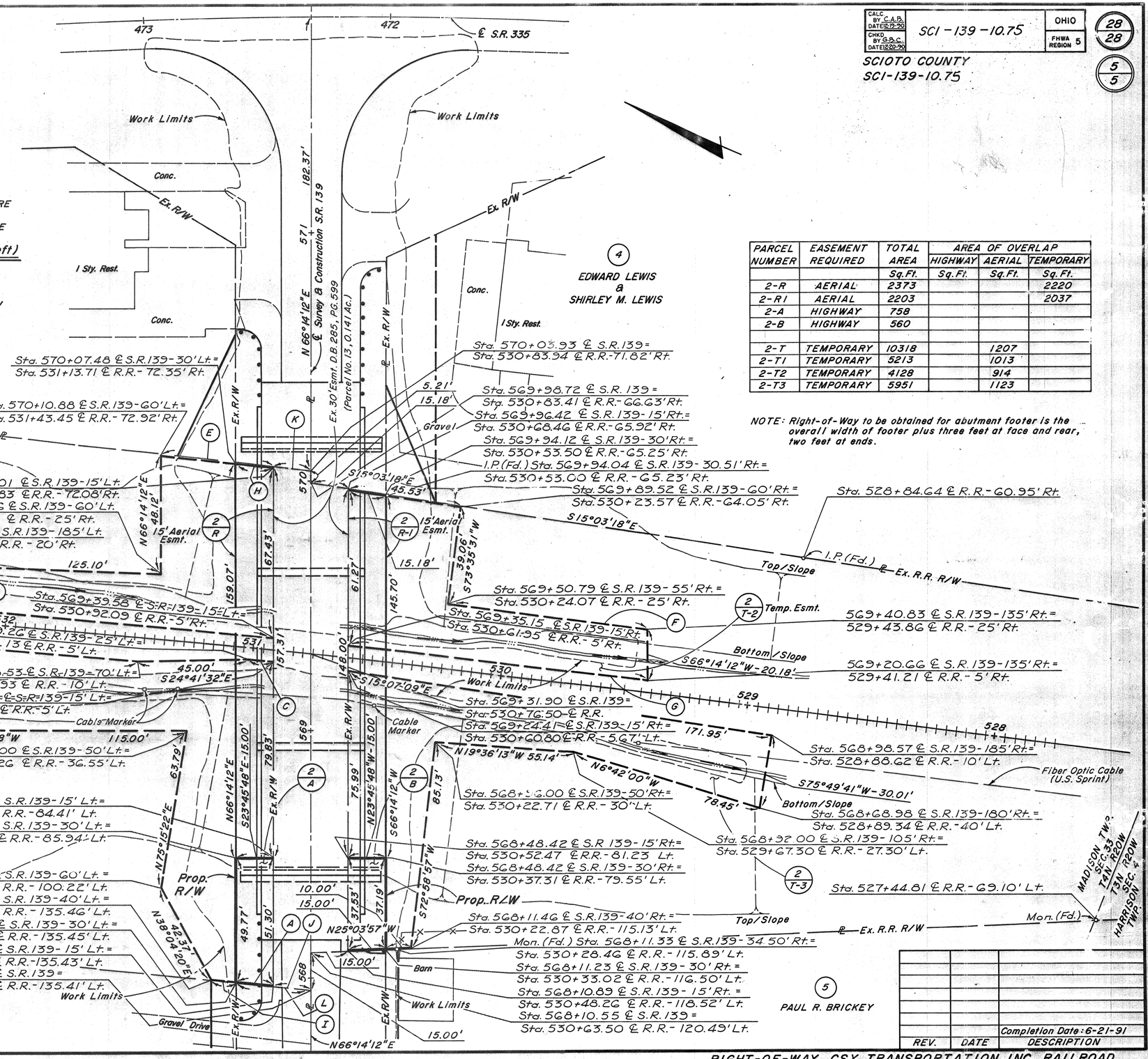

PARCEL NUMBER	EASEMENT REQUIRED	TOTAL AREA	AREA OF OVERLAP HIGHWAY	AERIAL	TEMPORARY
		Sq.Ft.	Sq.Ft.	Sq.Ft.	Sq.Ft.
2-R	AERIAL	2373			2220
2-R1	AERIAL	2203			2037
2-A	HIGHWAY	758			
2-B	HIGHWAY	560			
2-T	TEMPORARY	10318		1207	
2-T1	TEMPORARY	5213		1013	
2-T2	TEMPORARY	4128		914	
2-T3	TEMPORARY	5951		1123	

NOTE: Right-of-Way to be obtained for abutment footer is the overall width of footer plus three feet at face and rear, two feet at ends.

CURVE DATA (CONTINUED, Bottom Left)

(A) Δ=0°09'16" R=5589.58' Ch.=15.08', Brg. N17°56'26"W

(B) Δ=2°04'16" R=4854.02' Ch.=175.46', Brg. S19°36'47"E

(C) Δ=0°07'07" R=4859.02' Ch.=10.05', Brg. S17°59'26"E

(D) Δ=2°00'28" R=4869.02' Ch.=170.60', Brg. N18°56'50"W

(E) Δ=0°26'48" R=5809.58' Ch.=45.30', Brg. S17°13'32"E

(F) Δ=0°56'41" R=4889.02' Ch.=80.62', Brg. S16°40'11"E

(G) Δ=1°25'21" R=4869.02' Ch.=120.87', Brg. N16°52'38"W

(H) Δ=0°08'56" R=5809.58' Ch.=15.10', Brg. S17°04'36"E

(I) Δ=0°06'11" R=5589.58' Ch.=10.05', Brg. N18°04'10"W

CURVE DATA (CONTINUED)

(J) Δ=0°09'16" R=5589.58' Ch.=15.09', Brg. N17°47'10"W

(K) Δ=0°08'56" R=5809.58' Ch.=15.10', Brg. N16°55'40"W

(L) Δ=0°18'33" R=5589.58' Ch.=30.16', Brg. N17°51'48"W

REV.	DATE	DESCRIPTION
		Completion Date: 6-21-91

RIGHT-OF-WAY CSX TRANSPORTATION, INC. RAILROAD

TE-118
600-6-78

SCIOTO COUNTY
SCI-139-10.75
1/4
BRS-1055 (8)

GEOLOGY OF THE SITE

THE STRUCTURE SITE IS LOCATED IN THE HIGHLY DISSECTED UNGLACIATED PORTION OF THE ALLEGHENY PLATEAU REGION ON THE RATHER BROAD TERRACE FLOODPLAIN OF ROCKY FORK CREEK, IN AN AREA WHERE RATHER DEEP VALLEY FILL AND ALLUVIAL OVERLIE SILTSTONE BEDROCK OF DEVONIAN AGE.

EXPLORATION

THE EXPLORATION CONSISTED OF TWO DRIVE SAMPLE-CORE BORINGS AND ONE DRIVE PRESS-CORE BORING MADE BY MEANS OF A MECHANICALLY-POWERED HOLLOW STEM ROTARY EARTH AUGER MOUNTED ON A MOBILE PLATFORM, PERFORMED ON MARCH 29, 1988 AND JANUARY 9 AND 10, 1990.

INVESTIGATIONAL FINDINGS AND OBSERVATIONS

THE BORINGS DISCLOSED THAT RELATIVELY FLAT LYING BEDROCK SURFACE OCCURING AT APPROXIMATELY ELEVATIONS 642.0 AND 641.0 FEET IS OVERLAIN BY SOFT ELASTIC CLAYS AND CLAYS. BORING B-1, WHICH ENCOUNTERED BEDROCK SURFACE AT 32.5 FEET, ELEVATION 642.1 FEET, WAS DISCONTINUED AT 39.0 FOOT DEPTH, ELEVATION 635.6 FEET AFTER PENETRATING 7.0 FEET BELOW BEDROCK SURFACE. BORING B-2 WAS TERMINATED AT 51.0 FOOT DEPTH, ELEVATION 624.9 FEET AFTER PENETRATING 18.0 FEET BELOW BEDROCK SURFACE ENCOUNTERED AT 32.0 FOOT DEPTH, ELEVATION 642.4 FEET. BORING B-3 ENCOUNTERED BEDROCK SURFACE AT 33.5 FEET, ELEVATION 640.8 FEET AND WAS EXTENDED TO 38.5 FEET, ELEVATION 635.8 FEET WHERE IT TERMINATED 5.0 FEET BELOW BEDROCK SURFACE.

FREE WATER WAS OBSERVED IN BORING B-2 AT ELEVATION 646.9 FEET.

TWO TRIAXIAL COMPRESSION TESTS WERE MADE AT STATION 568+30, 6' RT. AND ARE INCLUDED ON PLAN SHEETS 3 OF 4 AND 4 OF 4.

LEGEND

- Auger Boring Location - Plan View.
- Press and / or Drive Sample and / or Core Boring Location - Plan View.
- Drive Rod Penetration Resistance Sounding Location - Plan View.
- Capped Pile.
- Footing
- Footing on Pile
- TR — Top of Rock
- Horizontal Bar on Boring Log Indicates the Depth the Sample Was Taken.
- X/Y/Z — Figures Beside the Boring Log in Profile Indicate the Number of Blows for Standard Penetration Test.
  - X = Number of Blows for First 6 inches.
  - Y = Number of Blows for Second 6 inches.
  - Z = Number of Blows for Third 6 inches.
- Drive Rod Penetration Resistance Sounding Log - Profile
- Casing
- Resistance "R" < 10,000 lbs.
- Resistance "R" > 10,000 lbs.
- Z — Indicates Final Measurement of Penetration, in Inches.
- W — Indicates Free Water Elevation.
- Indicates Static Water Elevation.

SYMBOLS OF ROCK TYPES

- Coal
- Weathered Mudstone or Claystone
- Mudstone or Claystone
- Weathered Shale
- Shale
- Weathered Siltstone
- Siltstone
- Weathered Sandstone
- Sandstone
- Leached Dolomite
- Dolomite
- Leached Limestone
- Limestone
- Boulders or Cobbles

GENERAL INFORMATION

Drive Rod Penetration Sounding Tests

Drive rod penetration resistance tests constitute driving a 1.315-inch diameter steel rod, with a 45° cone point, into the ground, using a 122-pound drop-hammer with a free fall of five feet. At one or two-foot depth intervals, a measurement is taken to determine the amount of penetration achieved in three hammer drops. This reading is converted to an empirical value for capacity "R", in thousands of pounds (which is a measure of both the point resistance and frictional resistance on the rod), by using charts prepared by the Ohio Department of Highways, Bureau of Bridges, on the basis of correlation study of rod penetration with past performance of pile driving. For interpretation, a graph is prepared by plotting the value "R" against the depth at which the reading was taken, and connecting the plotted points. The curve so obtained reflects the density of subsurface materials in a manner that can be readily compared with data from similar tests at other locations on the structure site. From this comparison, the overall uniformity of subsurface condition may be evaluated.

Drive Sample Borings - Drive-Press Sample Borings

Drive sample borings are made by means of a rotary-type drill rig, employing a 2" O.D., 1-3/8" I.D. sampler, at 2-1/2 and / or 5-foot depth intervals, driven by means of a 140 - pound drop-hammer with a free fall of 30 inches. The number of blows required to drive the sampler 18 inches is considered the standard penetration test.

Drive-press sample borings are made by means of a rotary-type drill rig, employing a 2" O.D., 1-3/8" I.D. drive sampler, and 3" O.D. thin-wall press sampler. The press sampler is advanced by continuous uniform pressure, applied by the drill rig.

The boring log sheets show a graphic plot of the information obtained, including depth and elevation of the sample, number of blows for the standard penetration tests in three 6-inch increments, depth of press samples, field sample number, sample description - based on laboratory tests and the Casagrande AC classification system - and gradation, plasticity, and moisture content determinations. Results of strength and consolidation testing, if performed, appear on separate enclosures.

At depths where materials are bouldery or gravelly to the extent that the sampler can not be driven, a wash sample is procured for visual classification, in order to determine the general character of the material. These samples are not considered sufficiently representative to warrant laboratory testing.

Particle Size Definitions

Boulders	12"	Cobbles	2.0mm (No. 10 sieve)	Gravel	.42mm (No. 40 sieve)	Coarse Sand	0.074mm (No. 200 sieve)	Fine Sand	0.005mm	Silt	Clay

NOTE - ALL AVAILABLE SOIL AND BEDROCK INFORMATION WHICH CAN BE CONVENIENTLY SHOWN ON THE STRUCTURE FOUNDATION INVESTIGATION SHEETS HAS BEEN SO REPORTED. ADDITIONAL SUBSURFACE INVESTIGATIONS MAY HAVE BEEN MADE TO STUDY SOME SPECIAL ASPECT OF THE PROJECT. COPIES OF THIS DATA, IF ANY, MAY BE INSPECTED IN THE DISTRICT DEPUTY DIRECTOR'S OFFICE, THE BUREAU OF TESTS AT 1600 WEST BROAD STREET, THE PAVEMENT AND SOILS SECTION OF THE BUREAU OF LOCATION AND DESIGN OR IN THE BRIDGE BUREAU AT 25 SOUTH FRONT STREET.

REVISED 2/6/90

*NOTE: Information shown by this subsurface investigation was obtained solely for the use in establishing design controls for the project. The State of Ohio does not guarantee the accuracy of this data and it is not to be construed as a part of the plans governing construction of the project.

OHIO DEPARTMENT OF TRANSPORTATION
DIVISION OF HIGHWAYS — TESTING LABORATORY
1600 WEST BROAD STREET, COLUMBUS, OHIO 43223

STRUCTURE FOUNDATION INVESTIGATION
BRIDGE NO. SCI-139-1078
OVER B.& O. RAILROAD
SEC. SCI-139-10.78

CHECKED BY	REVIEWED BY	DATE
A.F.	R.D.R.	5/16/88

CALC. BY R.S.M. DATE 4-7-89	SCI-139-10.75	OHIO
CHKD. BY G.B.C. DATE 4-17-89		FHWA REGION 5

2/4

Design Year A.D.T. (2009) = 4090

Earthwork limits shown are approx. Actual slopes shall conform to plan cross sections.

Benchmarks

Chis. "□" W. corner of conc. base for traffic signal support pole N.E. corner of Inter. S.R. 139 & S.R. 335

Elev. = 679.50

Chis. "□" Top of 1st. step of walk leading to 1 ½ sty. white frame house

Elev. = 676.13

At Minford, at the Inter. of S.R. 335 & S.R. 139, set in the top of the N. end of the E. abut. of S.R. 139, Overpass over the C & O Railroad, 13' N. of ℄ of S.R. 139, approx. 65 yds. W. of S.R. 335, 1½' S. of N. end of abut. level w/ road. Disc. stamped "K215 1958"

Elev. = 673.46

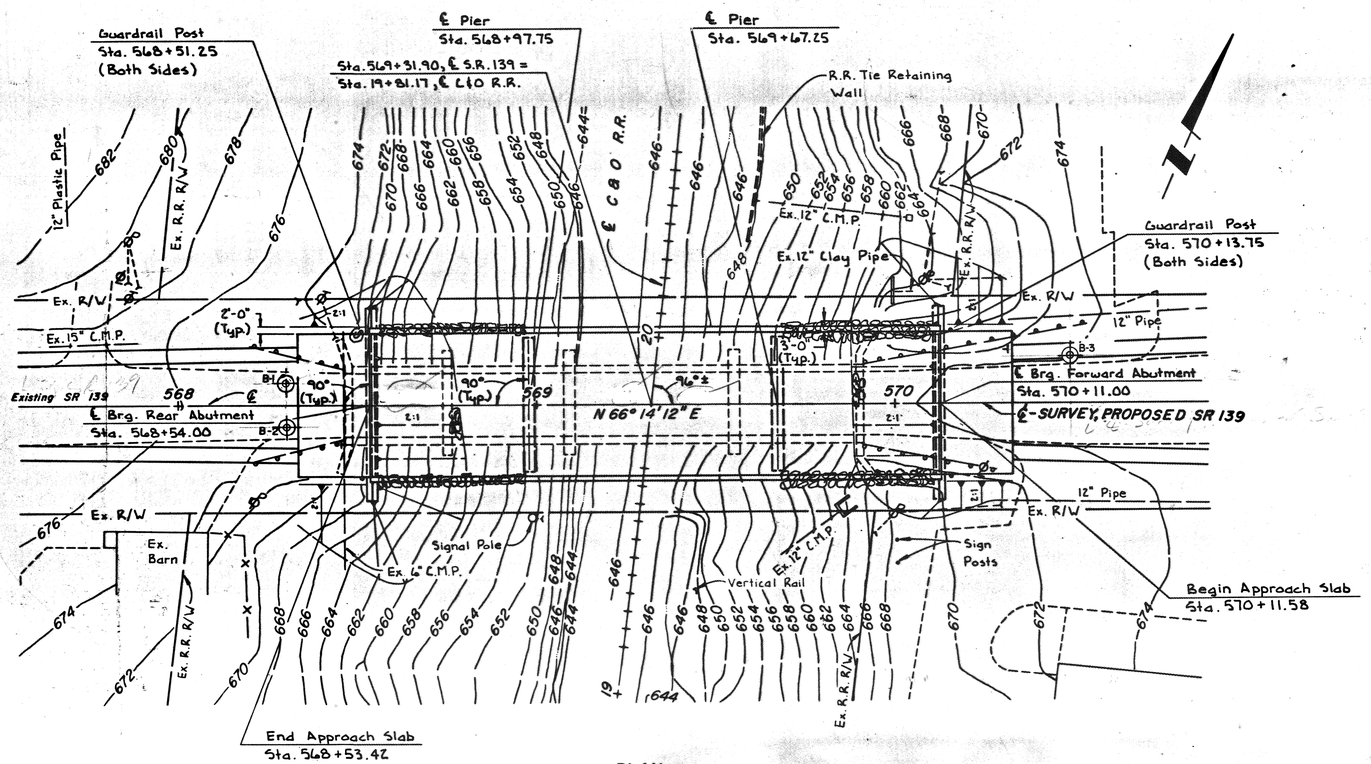

PLAN

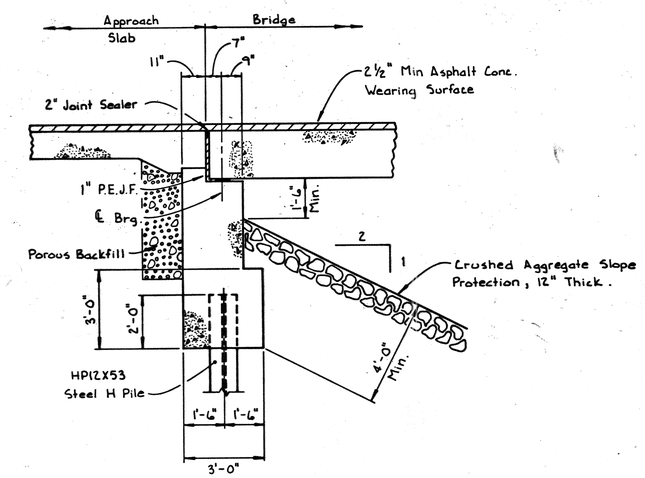

SECTION A-A

EMBANKMENT CONSTRUCTION: The embankments shall be constructed to the level of the subgrade. Excavation may then be made for the abutments and piers and piles driven.

REMOVAL OF EXISTING STRUCTURE: When no longer needed to maintain traffic the existing structure shall be removed. Existing substructure (including piers) shall be removed to at least 2'-0" below proposed ground line and as necessary to facilitate the driving of the proposed abutment and pier piles. Suitable waste masonry may be placed as channel protection as directed by the Engineer. Removal of existing structure shall be in accordance with Item 202.

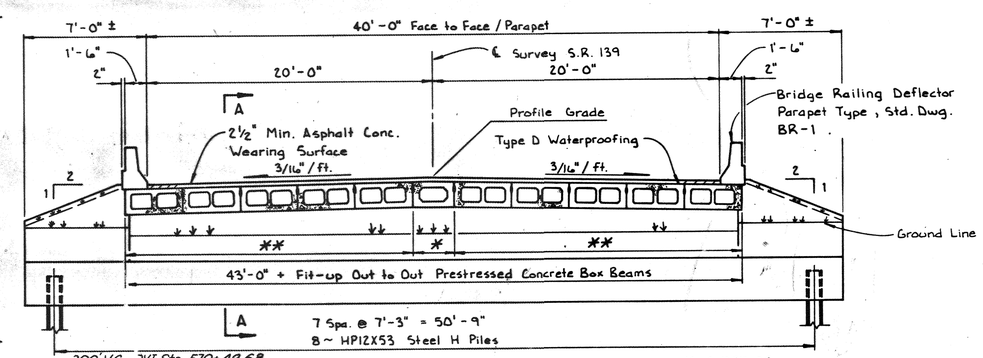

TYPICAL BRIDGE CROSS SECTION
(At Abutment)

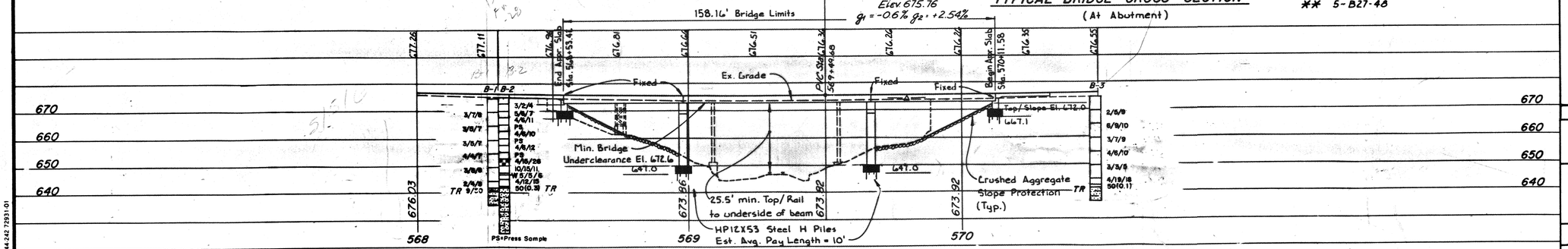

PROFILE @ ℄ SURVEY

REVISED 2/6/90

EXISTING STRUCTURE

TYPE: 3 Span Steel Beam Bridge on Concrete Gravity Abutments
SPAN: 145' ±
ROADWAY WIDTH: 18' ± f/f Steel Parapet
WEARING SURFACE: Asphalt
SKEW: None
ALIGNMENT: Tangent
STRUCTURE FILE NUMBER: 7303785

PROPOSED STRUCTURE
SCI-139-1078

TYPE: 3 Span Prestressed Concrete Box Beams with Capped Pile Abutments and Piers
SPAN: 43'-68'-43' c/c Bearings
ROADWAY WIDTH: 40' f/f Parapets
LOADING: HS20-44 and the Alternate Military Loading.
SKEW: None
WEARING SURFACE: Min. 2½" Asphalt
APPROACH SLAB: AS-1-81 (20'-0" Long)
CROWN: 3/16" / ft.

OHIO DEPARTMENT OF TRANSPORTATION
DIVISION OF HIGHWAYS-TESTING LABORATORY
1600 WEST BROAD STREET COLUMBUS, OHIO 43223

STRUCTURE FOUNDATION INVESTIGATION
BRIDGE NO. SCI-139-1078
OVER B. & O. RAILROAD
SEC. SCI-139-10.78

PLAN AND PROFILE

DRAWN BY	CHECKED BY	REVIEWED BY	DATE
W.L.C.H.	A.F.	R.D.R.	5/16/88

BRUNING 44 242 72931-01

LOG OF BORING

Date Started 3/29/88 | Sampler Type SS | Dia. 1 3/8" | Water Elev. ----
Date Completed 3/29/88 | Casing: Length | Dia.
Boring No. B-1 | Station & Offset 568+30, 6' LT. (REAR ABUT.) | Surface Elev. 674.6'

Elev.	Depth	Std. Pen. (N)	Rec. ft.	Loss ft.	Description	Sample No.	% Agg.	% C.S.	% F.S.	% Silt	% Clay	L.L.	P.I.	W.C.	SHTL Class.
674.6	0														
673.8		AUGERED			ASPHALT	-	-	-	-	-	-	-	-	-	VISUAL
672.8	2	AUGERED			CONCRETE	-	-	-	-	-	-	-	-	-	VISUAL
	4														
669.6	6	3/7/8			BROWN AND GRAY SILTY SAND	1	0	1	7	45	47	40	20	22	A-6B
	8														
664.6	10	3/5/7			BROWN WITH GRAY ELASTIC CLAY	2	0	0	0	17	83	68	38	29	A-7-5
	12														
659.6	14	3/5/7			BROWNISH GRAY ELASTIC CLAY	3	0	1	2	13	84	63	31	33	A-7-5
	16														
654.6	18	4/4/7			BROWN CLAY	4	0	0	0	24	76	57	31	34	A-7-6
	20														
649.6	22	3/8/8			GRAY ORGANIC SILTY CLAY	5	0	0	1	65	34	39	18	28	A-6B
	24														
644.6	26	2/4/8			BROWN FINE SAND	6	0	20	70	10	0	NP	NP	29	A-3
	28				TOP OF ROCK										
642.1	30	9/50			GRAY WEATHERED CLAY SHALE	7	-	-	-	-	-	-	-	1	VISUAL
640.6	32		5.0	0.0	SILTSTONE, GRAY, DENSE, HARD WITH SCATTERED THIN CLAY SEAMS, BROKEN. NO CORE LOSS.										
	34														
	36														
	38														
635.6	40				BOTTOM OF BORING										

LOG OF BORING

Date Started 1/9/90 | Sampler Type SS | Dia 1 3/8" | Water Elev. 646.9'
Date Completed 1/10/90 | Casing: Length | Dia.
Boring No. B-2 | Station & Offset 568+30, 6' RT. (REAR ABUTMENT) | Surface Elev 674.9'

Elev.	Depth	Std. Pen. (N)	Rec. ft.	Loss ft.	Description	Sample No.	% Agg.	% C.S.	% F.S.	% Silt	% Clay	L.L.	P.I.	W.C.	SHTL Class.
674.9'	0														
673.4	2	AUGERED			ASPHALT, CONCRETE AND BRICKSBATS	-	-	-	-	-	-	-	-	-	VISUAL
672.4	4	3/2/4			BROWN SILT AND CLAY	1	0	2	6	34	58	38	15	19	A-6A
669.9	6	5/6/7			BROWN SILTY CLAY	2	0	1	9	39	51	46	20	22	A-7-6
667.4	8	4/6/11			BROWN AND GRAY CLAY	3	0	1	6	30	63	48	22	25	A-7-6
664.9	10	PRESS			GRAY ELASTIC CLAY	4	0	0	0	9	91	64	30	29	A-7-5
662.4	12	4/6/10			BROWN AND GRAY ELASTIC CLAY	5	0	1	0	9	90	55	22	31	A-7-5
659.9	14	PRESS			GRAY ELASTIC CLAY	6	0	0	0	3	97	60	16	34	A-7-5
657.4	16	4/6/12			RED AND BROWN CLAY	7	0	0	0	15	85	58	29	29	A-7-6
654.9	18	PRESS			GRAY ELASTIC CLAY	8	0	0	0	10	90	60	23	31	A-7-5
652.4	20	4/15/26			RED, BROWN AND GRAY SANDY CLAY W/COBBLES	9	0	5	15	14	66	48	21	30	A-7-6
649.9	22	10/15/11			BROWN FINE SAND	10	0	2	91	6	1	NP	NP	4	A-3
647.4	24	5/5/6			BROWN SILTY SAND	11	0	2	72	14	12	NP	NP	7	A-3A
644.9	26	4/12/15			BROWN AND GRAY SILTY SAND	12	0	16	73	10	1	NP	NP	21	A-3A
642.4	28	50(0.3)			GRAY BROKEN SILTSTONE — TOP OF ROCK	13	0	6	25	64	5	NP	NP	12	VISUAL
642.1	30		1.9	0.3											
	32														
	34														
	36		5.0	0.0											
	38														
	40		4.7	0.3	SILTSTONE, GRAY, DENSE, HARD WITH SCATTERED THIN CLAY SEAMS, BROKEN. CORE LOSS 3%										
	42														
	44														
	46		4.9	0.1											
	48														
624.9	50				BOTTOM OF BORING										

State of Ohio
Department of Transportation
Division of Highways
Testing Laboratory

TRIAXIAL COMPRESSION TEST

Station & Offset 568+30, 6' RT.
Sample No. 4 Lab. No. 60935 A&B
Depth 10.1' - 11.1' Rate of Strain
Type of Test UNCONSOLIDATED, UNDRAINED WITH PORE PRESSURE

Project Ident. SCIOTO CO.
SCI-139-10.78

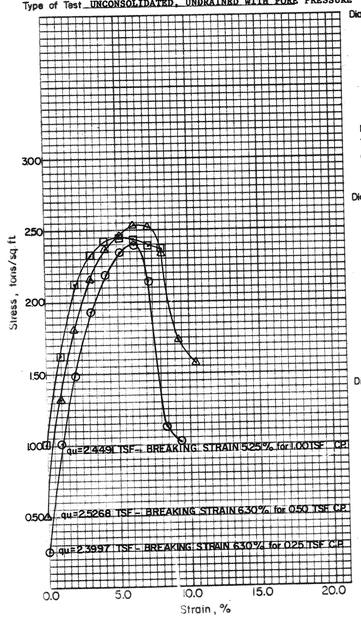

Diagram of Failure | Diagram of Failure

Penetrometer 2.50
Torvane 1.0
Chamber Pressure 1.00 kg./cm²

Diagram of Failure | Diagram of Failure

Penetrometer 2.50
Torvane 1.0
Chamber Pressure 0.50 kg./cm²

Diagram of Failure | Diagram of Failure

Penetrometer 2.50
Torvane 1.0
Chamber Pressure 0.25 kg./cm²

Remarks

Form TE-194

State of Ohio
Department of Transportation
Division of Highways
Testing Laboratory

TRIAXIAL COMPRESSION TEST

Station & Offset 568+30, 6' RT.
Sample No. 4 Lab. No. 60935 A&B
Depth 10.1' - 11.1'

Project Ident. SCIOTO CO.
SCI-139-10.78

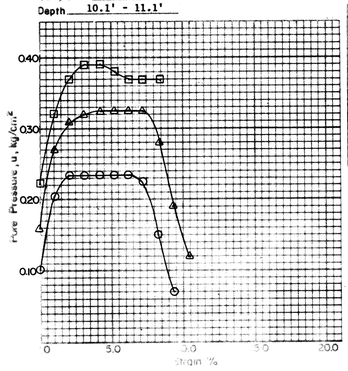

Physical Characteristics								Applied Load kg/cm²
% Agg.	% C.S.	% F.S.	% Silt	% Clay	L.L.	P.I.	W.C.	
0	0	0	8	92	66	33	29	0.25
0	0	1	8	91	63	30	28	0.50
0	0	0	12	88	63	29	31	1.00

Visual Description GRAY ELASTIC CLAY

Wet Density (lbs./cu. ft.)	Dry Density (lbs./cu. ft.)	Applied Load kg/cm²
123.28	95.22	0.25
121.08	94.80	0.50
120.26	91.48	1.00

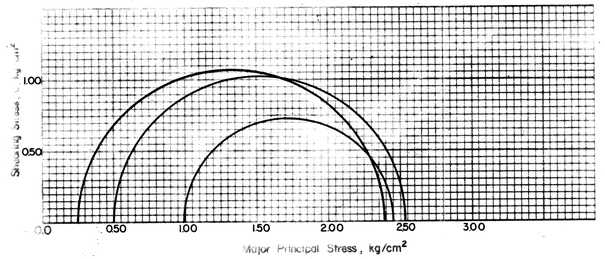

Form TE-21

REVISED 2/6/90

OHIO DEPARTMENT OF TRANSPORTATION
DIVISION OF HIGHWAYS - TESTING LABORATORY
1600 WEST BROAD STREET COLUMBUS, OHIO 43223

STRUCTURE FOUNDATION INVESTIGATION
BRIDGE NO. SCI-139-10.78
OVER B.&O. RAILROAD
SEC. SCI-139-10.78

BORING DATA

TYPED BY	CHECKED BY	REVIEWED BY	DATE
L.A.S.	A.F.	R D R	5/16/88

State of Ohio
Department of Transportation
Division of Highways
Testing Laboratory

UNCONFINED COMPRESSION TEST

Boring No. ____ Station & Offset 568+30, 6' RT.
Field No. 6 Lab No. No. 60936
Depth 15.8' - 16.3'

Project Identification SCIOTO CO.
SCI-139-10.78

Specimen Data
Diameter 2.85 IN. Wet Density 117.64 LB/CU.FT.
Length 6.00 IN. Dry Density 87.80 LB/CU.FT.
Specific Gravity ____

Physical Characteristics							
% +#4	% C.S.	% F.S.	% Silt	% Clay	L.L.	P.I.	W.C.
0	0	0	3	97	60	16	34

Visual Description GRAY ELASTIC CLAY

Diagram of Failure

Diagram of Failure

Penetrometer 3.50 TSF Torvane 1.0 TSF
Remarks:
ASTM D-2166
qu=1.6005 TSF BREAKING STRAIN 4.00%

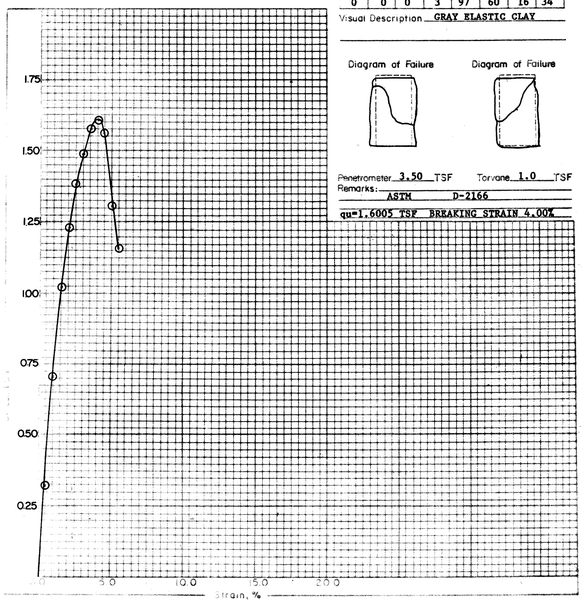

Form TE-48

State of Ohio
Department of Transportation
Division of Highways
Testing Laboratory

TRIAXIAL COMPRESSION TEST

Station & Offset 568+30, 6' RT.
Sample No. 8 Lab. No. 60937, A&B
Depth 20.2' - 21.2' Rate of Strain 0.52% MIN.
Type of Tes: UNCONSOLIDATED, UNDRAINED WITH PORE PRESSURE

Project Ident. SCIOTO CO.
SCI-139-10.78

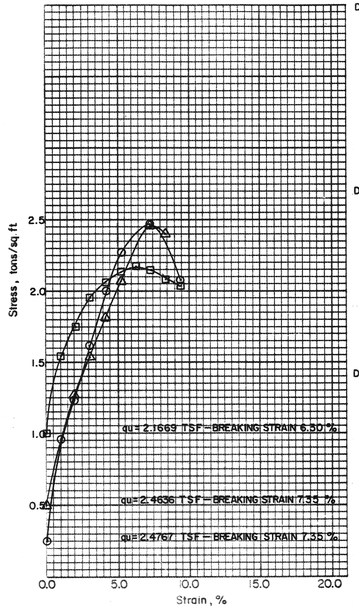

Diagram of Failure

Diagram of Failure

Penetrometer 2.50
Torvane 1.0
Chamber Pressure 1.00 kg./cm²

Diagram of Failure

Diagram of Failure

Penetrometer 2.25
Torvane 1.0
Chamber Pressure 0.50 kg./cm²

Diagram of Failure

Diagram of Failure

Penetrometer 1.75
Torvane 1.0
Chamber Pressure 0.25 kg./cm²

Remarks

Form TE-194

State of Ohio
Department of Transportation
Division of Highways
Testing Laboratory

SCI-139-10.75 4/4

TRIAXIAL COMPRESSION TEST

Station & Offset 568+30, 6' RT.
Sample No. 8 Lab. No. 60937, A&B
Depth 20.2' - 21.2'

Project Ident. SCIOTO CO.
SCI-139-10.78

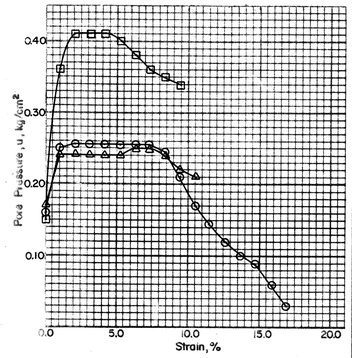

Physical Characteristics								Applied Load kg/cm²
% Agg.	% C.S.	% F.S.	% Silt	% Clay	L.L.	P.I.	W.C.	
0	0	0	11	89	60	24	33	0.25
0	0	0	7	93	60	22	31	0.50
0	0	1	12	87	60	23	32	1.00

Visual Description GRAY ELASTIC CLAY

Wet Density (lbs./cu.ft.)	Dry Density (lbs./cu.ft.)	Applied Load kg/cm²
116.87	87.66	0.25
119.06	90.64	0.50
117.12	88.50	1.00

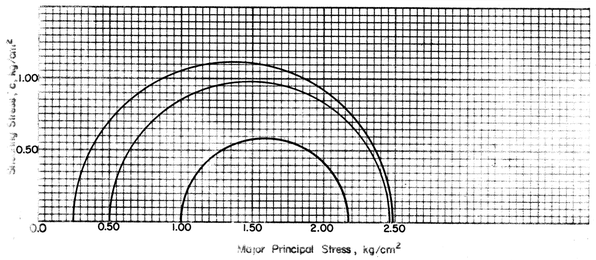

Form TE-21

LOG OF BORING

Date Started 3/29/88
Date Completed 3/29/88
Boring No. B-3

Sampler Type SS Dia. 1 3/8"
Casing: Length ____ Dia. ____
Station & Offset 570+49, 13' LT. (FWD. ABUT.)

Water Elev. ----
Surface Elev. 674.3'

Elev.	Depth	Std. Pen. (N)	Rec. ft.	Loss ft.	Description	Sample No.	% Agg.	% C.S.	% F.S.	% Silt	% Clay	L.L.	P.I.	W.C.	SHTL Class.
674.3'	0														
673.3		AUGERED			BERM MATERIAL	-	-	-	-	-	-	-	-	-	VISUAL
	2														
	4	AUGERED			BROWN SILT AND CLAY (DRILLER'S DESCRIPTION)	-	-	-	-	-	-	-	-	-	VISUAL
669.3															
	6	2/5/9			BROWN CLAY	1	2	3	10	40	45	47	25	18	A-7-6
	8														
664.3	10														
	12	6/9/10			BROWN ELASTIC CLAY	2	0	0	0	14	86	66	33	29	A-7-5
	14														
659.3	16	3/7/9			BROWN ELASTIC CLAY	3	0	0	0	9	91	63	32	34	A-7-5
	18														
654.3	20														
	22	4/6/10			BROWN CLAY	4	0	0	1	16	83	59	30	36	A-7-6
	24														
649.3	26	3/3/5			BROWN SILTY SAND	5	0	17	72	6	5	NP	NP	4	A-3A
	28														
644.3	30				TOP OF ROCK										
	32	4/9/18			BROWN SANDY SILT	6	0	14	36	31	19	22	7	34	A-4A
641.8		50(0.1)			BROWN SILTY SAND	7	7	13	59	18	3	NP	NP	18	A-3A
640.8	34														
	36		4.6	0.4	SILTSTONE, GRAY, HARD, DENSE WITH SCATTERED THIN CLAY SEAMS, BROKEN. CORE LOSS 8%.										
635.8	38														
	40				BOTTOM OF BORING										

REVISED 2/6 /90

OHIO DEPARTMENT OF TRANSPORTATION
DIVISION OF HIGHWAYS - TESTING LABORATORY
1500 WEST BROAD STREET - COLUMBUS, OHIO 43223

STRUCTURE FOUNDATION INVESTIGATION
BRIDGE NO. SCI-139-10 78
OVER B.&O. RAILROAD
SEC. SCI-139-10.78

BORING DATA

TYPED BY	CHECKED BY	REVIEWED BY	DATE
L.A.S.	A.F.	RDR	5/16/88

SCI-139-10.75 P-22 BOR