DESIGN DESIGNATION
Current ADT(1982) = 504
Design Year ADT(2002) = 660
D.H.V. = 66
D = 50%
T = 14%
V = 50 M.P.H.

MICROFILMED
NOV 27 1985

STATE OF OHIO
DEPARTMENT OF TRANSPORTATION

SEN-19-1.96
BLOOM TOWNSHIP
SENECA COUNTY

OHIO	1 / 12
FHWA REGION 5	
BRS-336(6)	FEDERAL PROJECT

SEN-19-1.96
SENECA COUNTY

MICROFILMED
NOV 26 1985

BRS-336(6)

UNDERGROUND UTILITIES
TWO WORKING DAYS
BEFORE YOU DIG
Call 800-362-2764 (Toll free)
OHIO UTILITIES PROTECTION SERVICE
Non-Members
Must be called directly

CONVENTIONAL SIGNS

County Line
Township Line
Section Line
Corporation Line or
Fence Line (existing) (proposed)
Center Line 352 353
Trees, Stumps, (to be removed)
Utility Poles: Telephone, Power, Light.
Limited Access (only) LA
Right of Way (only) RW
Limited Access & Right of Way LA & RW
Existing Right of Way
Property Line (in existing fence)
Railroad or
Guardrail (existing) (proposed)
Construction Limits

INDEX OF SHEETS

Title Sheet — 1
General Notes and General Summary — 2
Construction Details and Subsummaries — 3
Alignment and Profile — 4
Roadway Cross Sections — 5
Channel Cross Sections — 6
Structures Over 20' Span — 7-10
Temporary Pavement Markings — 11
Right Of Way — 12

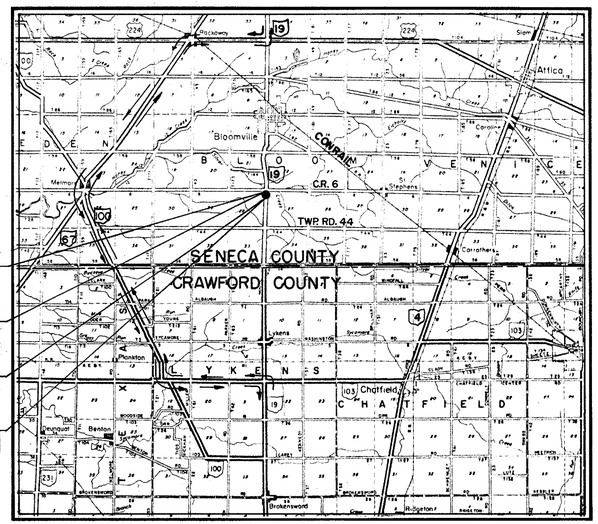

LOCATION MAP

SCALE IN MILES
0 1 2 3 4

1983 SPECIFICATIONS

The standard specifications of the State of Ohio, Department of Transportation, including changes and supplemental specifications listed in the proposal shall govern this improvement.

I hereby approve these plans and declare that the making of this improvement will require the closing to traffic of the highway and that provisions for the maintenance and safety of traffic will be as set forth on the plans and estimates.

Approved R. J. German
Date 6-26-84 District Deputy Director of Transportation

LINE DATA

PROJECT
Begin Project Sta. 103+40
End Project Sta. 105+00
Net Length of Project = 160 Lin. Ft. or 0.030 Miles

WORK
Begin Work Sta. 102+70
End Work Sta. 105+70
Net Length of Work = 300 Lin. Ft. or 0.057 Miles

Portion to be improved
State & Federal Routes
Other Roads
Detour

SCALES

Plan 0 10 20 30 40
Profile: Horizontal 0 10 20 30 40, Vertical 0 5 10
Cross Section: Horizontal 0 5 10, Vertical 0 5 10

SUPPLEMENTAL SPECIFICATIONS		
803	5-27-83	

JPR Approved Walter J. Jestings / WTF
Date 7-12-84 Engineer, Bureau of Bridges and Structural Design

Approved Wayne H. Kauble
Date 10-31-84 Chief Engineer, Planning and Design

SUPPLEMENTAL PRINTS OF STANDARD CONSTRUCTION DRAWINGS					
BP-5	7-16-81				
GR-1	2-5-82				
GR-2B	2-5-82				
GR-3	2-5-82				
GR-4	2-5-82				
DBR-2-73	4-10-73				
PSBD-1-81	9-18-81				
AS-1-81	11-27-81				

Approved Warren J. Smith
Date 10-31-84 Director, Department of Transportation

Plan Prepared By:
Structure: Samborn, Steketee, Otis & Evans, Inc.
Roadway: District 2 - O.D.O.T.

SEAL

DEPARTMENT OF TRANSPORTATION
FEDERAL HIGHWAY ADMINISTRATION
APPROVED:
DIVISION ADMINISTRATOR DATE

Project: SEN-19-1.96
Date of Letting _____ 19__, Contract No. _____

LD0300 Rev. 11-1-78

GENERAL NOTES

SEN-19-1.96
SENECA COUNTY

QUANTITIES
CALC BY R.G.R. DATE 12-12-83
CKD BY J.C.W. DATE 4-9-84

FIELD OFFICE:

THE CONTRACTOR SHALL PROVIDE A SUITABLE FIELD OFFICE HAVING A MINIMUM OF 150 SQ. FT. OF FLOOR SPACE. PAYMENT SHALL BE AT THE LUMP SUMP PRICE BID FOR ITEM 619, FIELD OFFICE.

ROUNDING OF CORNERS SHOWN ON CROSS SECTIONS:

THE ROUNDED CORNERS SHOWN ON THE TYPICAL SECTIONS APPLY TO ALL CROSS SECTIONS EVEN THOUGH OTHERWISE SHOWN ON THESE PLANS.

CONTINGENCY QUANTITIES:

THE CONTRACTOR SHALL NOT ORDER MATERIALS OR PERFORM WORK FOR PLAN ITEMS SET UP TO BE USED "AS DIRECTED BY THE ENGINEER" UNLESS AUTHORIZED BY THE ENGINEER. THE ACTUAL WORK LOCATIONS AND QUANTITIES USED AT THE ENGINEER'S DISCRETION SHALL BE MADE A MATTER OF RECORD BY INCORPORATION INTO THE FINAL CHANGE ORDER GOVERNING COMPLETION OF THIS PROJECT.

LOCATION OF GUARDRAIL:

THE LOCATIONS OF GUARDRAIL RUNS, AS SHOWN IN THESE PLANS, ARE SUBJECT TO ADJUSTMENT PRIOR TO FINAL ACCEPTANCE. THE ENGINEER SHALL BE SATISFIED THAT ALL INSTALLATIONS WILL AFFORD MAXIMUM PROTECTION FOR TRAFFIC.

LIGHTS AND SIGNS AT ADJACENT ROAD INTERSECTIONS:

THE CONTRACTOR SHALL, IN ADDITION TO THE GENERAL REQUIREMENTS OF ITEM 614 ON THIS PROJECT, PERFORM THE FOLLOWING:

PROVIDE, ERECT, AND MAINTAIN STANDARD 48" X 30" SIZE "ROAD CLOSED" SIGNS, SIGN SUPPORTS, AND LIGHTS AT THE FOLLOWING LOCATIONS DURING THE PERIOD IN WHICH THE AFFECTED ROAD IS CLOSED TO TRAFFIC:

1. S.R. 19 & TWP. RD. 44
2. S.R. 19 & CO. RD. 6

SIGN SUPPORTS AND LIGHTS FOR "ROAD CLOSED" SIGNS SHALL BE AS DETAILED IN THE OHIO MANUAL OF UNIFORM TRAFFIC CONTROL DEVICES. PAYMENT FOR PROVIDING, ERECTING, MAINTAINING, AND REMOVING LIGHTS, SIGNS, AND SIGN SUPPORTS SHALL BE INCLUDED IN THE LUMP SUM PRICE BID FOR ITEM 614 MAINTAINING TRAFFIC.

UNDERGROUND UTILITIES:

THE LOCATIONS OF THE UNDERGROUND UTILITIES SHOWN ON THE PLANS ARE AS OBTAINED FROM THE OWNERS OF THE UTILITY AS REQUIRED BY SECTION 153.64 ORC.

PERMANENT PAVEMENT MARKING:

ALL PERMANENT PAVEMENT MARKING SHALL BE FURNISHED AND PLACED BY ODOT.

IN ORDER TO PROVIDE AMPLE WORKING TIME FOR THE INSTALLATION OF THE PERMANENT PAVEMENT MARKING, THE PROJECT ENGINEER SHALL NOTIFY THE DISTRICT TRAFFIC ENGINEER A MINIMUM OF FIVE WORKING DAYS PRIOR TO OPENING THE ROAD TO TRAFFIC.

SHOULD THERE BE ANY REASON THAT THE PERMANENT PAVEMENT MARKING CANNOT BE INSTALLED PRIOR TO OPENING THE ROAD TO TRAFFIC, TEMPORARY PAVEMENT MARKING MUST BE INSTALLED. IN NO CIRCUMSTANCES CAN THE ROAD BE OPENED WITHOUT PAVEMENT MARKINGS BEING IN PLACE.

UTILITIES:

THE CONTRACTOR SHALL NOTIFY AT LEAST FIVE (5) WORKING DAYS BEFORE BREAKING GROUND, ALL UTILITIES HAVING WIRES, POLES OR OTHER STRUCTURES THAT MAY BE AFFECTED BY THIS PROJECT, INCLUDING ALL STRUCTURES WHICH ARE AFFECTED BUT NOT SHOWN ON THESE PLANS.

OWNERSHIP:

POWER: OHIO POWER COMPANY
301 CLEVELAND AVENUE, SW
CANTON, OHIO 44701
TELEPHONE: 216-456-8173

TELEPHONE: GENERAL TELEPHONE COMPANY
117 NORTH SANDUSKY STREET
BELLEVUE, OHIO 44811
TELEPHONE: 419-483-8158

ELEVATION DATUM:

ALL ELEVATIONS ARE BASED ON U.S.G.S. DATUM.

CONSTRUCTION NOISE:

IN ORDER TO MINIMIZE ANY ADVERSE CONSTRUCTION NOISE IMPACTS, ANY POWER-OPERATED CONSTRUCTION-TYPE DEVICE SHALL NOT BE OPERATED BETWEEN THE HOURS OF 10:00 P.M. AND 6:00 A.M. IN ADDITION, ANY POWER-OPERATED CONSTRUCTION-TYPE DEVICE SHALL NOT BE OPERATED IN SUCH A MANNER THAT THE NOISE CREATED SUBSTANTIALLY EXCEEDS THE NOISE CUSTOMARILY AND NECESSARILY ATTENDANT TO THE REASONABLE AND EFFICIENT PERFORMANCE OF SUCH EQUIPMENT.

407 TACK COAT:

THE TACK COAT AND COVER AGGREGATE OPERATION SHALL BE DETERMINED AS SPEC. 407.05. PLAN QUANTITIES INDICATE AVERAGE APPLICATION RATES OF 0.10 GALLONS PER SQUARE YARD OF TACK COAT AND 7 POUNDS PER SQUARE YARD OF COVER AGGREGATE FOR ESTIMATING PURPOSES ONLY.

SEEDING:

QUANTITIES FOR SEEDING ARE CALCULATED FOR THE SOIL AREAS BETWEEN TEN (10) FEET OUTSIDE THE WORK LIMITS, AS SHOWN ON THE CROSS SECTIONS, OR TO THE RIGHT-OF-WAY LINE, IF SUCH LINE IS LESS THAN TEN (10) FEET FROM THE WORK LIMITS.

UTILITIES NOTIFICATION:

AT LEAST TWO WORKING DAYS PRIOR TO COMMENCING CONSTRUCTION OPERATIONS IN AN AREA WHICH MAY INVOLVE UNDERGROUND UTILITY FACILITIES, THE CONTRACTOR SHALL NOTIFY THE PROJECT ENGINEER, THE REGISTERED UTILITY PROTECTION SERVICE AND THE OWNERS OF EACH UNDERGROUND UTILITY FACILITY SHOWN IN THE PLANS.

THE OWNER OF THE UNDERGROUND UTILITY FACILITY SHALL, WITHIN FORTY-EIGHT HOURS, EXCLUDING SATURDAYS, SUNDAYS AND LEGAL HOLIDAYS, AFTER NOTICE IS RECEIVED, STAKE, MARK OR OTHERWISE DESIGNATE THE LOCATION OF THE UNDERGROUND UTILITY FACILITIES IN THE CONSTRUCTION AREA IN SUCH A MANNER AS TO INDICATE THEIR COURSE TOGETHER WITH THE APPROXIMATE DEPTH AT WHICH THEY WERE INSTALLED. THE MARKING OR LOCATING SHALL BE COORDINATED TO STAY APPROXIMATELY TWO DAYS AHEAD OF THE PLANNED CONSTRUCTION.

TEMPORARY PAVEMENT MARKING:

FOR TEMPORARY PAVEMENT MARKING NOTES, SEE SHEET NO. 11.

GENERAL SUMMARY

ITEM	QUANTITY	UNIT	DESCRIPTION
			ROADWAY
201	Lump		Clearing and Grubbing
202	161	Sq.Yd.	Wearing Course Removed
202	55	Sq.Yd.	Riprap Removed
202	120	Lin.Ft.	Guardrail Removed for Storage
203	126	Cu.Yd.	Excavation, Not Including Embankment Construction
203	81	Cu.Yd.	Embankment
203	178	Sq.Yd.	Subgrade Compaction
606	322.68	Lin.Ft.	Guardrail, Type 5
606	4	Each	Anchor Assembly, Standard Type A
606	4	Each	Bridge Terminal Assembly, Standard Type B
614	0.03	Miles	Temporary Center Lines, Class II
			EROSION CONTROL
601	7	Cu.Yd.	Rock Channel Protection, Type D without Filter
659	1190	Sq.Yd.	Seeding and Mulching
659	0.11	Ton	Commercial Fertilizer
			PAVEMENT
305	20	Sq.Yd.	9" Portland Cement Concrete Base
310	32	Cu.Yd.	Subbase, Type I
402	15	Cu.Yd.	Asphalt Concrete, AC-20
404	11	Cu.Yd.	Asphalt Concrete, AC-20
407	36	Gal.	Tack Coat
407	2	Ton	Cover Aggregate
611	178	Sq.Yd.	Reinforced Concrete Approach Slab (T=15")
			STRUCTURES OVER 20' SPAN
			Br. No. SEN-19-0197- For Quantities See Sh. No. 8
614	Lump		Maintaining Traffic
619	Lump		Field Office
623	Lump		Construction Layout Stakes
624	Lump		Mobilization

FHWA REGION	STATE	PROJECT	
5	OHIO	BRS-336(6)	

SEN-19-1.96
SENECA COUNTY

QUANTITIES
CALC BY R.G.R. DATE 12/12/83
CKD BY J.C.V. DATE 4-9-84

TYPICAL CONSTRUCTION DETAILS

TYPE 404

PAVEMENT & DRAINAGE

REFERENCE NUMBER	STATION FROM	STATION TO	202 WEARING COURSE REMOVED	202 RIP RAP REMOVED	203 SUBGRADE COMPACTION	407 TACK COAT COVER AGGREGATE @27#/SQ.YD.	305 9" PORTLAND CEMENT CONCRETE BASE	310 SUBBASE	402 ASPHALT CONCRETE	404 ASPHALT CONCRETE	407 TACK COAT BITUMINOUS MATERIAL	611 APPROACH SLAB	601 ROCK CHANNEL PROTECTION
			Sq. Yd.	Sq. Yd.	Sq. Yd.	Ton	Sq. Yd.	Cu. Yd	Cu. Yd.	Cu. Yd.	Gal.	Sq. Yd.	Cu. Yd.
1-P*	103+40	103+71.27	79.1			0.3			3.3	2.2	7.9		
2-P	103+71.27	103+75.27			10.0	0.1	10.0	1.8	0.4	0.3	1.0		
3-P	103+75.27	104+00.27			79.0	0.3		14.0	3.7	2.5	8.9	88.9	
4-P	104+38.93	104+63.93			79.0	0.3		14.0	3.7	2.5	8.9	88.9	
5-P	104+63.93	104+67.93			10.0	0.1	10.0	1.8	0.4	0.3	1.0		
6-P	104+67.93	105+00	81.1			0.3			3.4	2.3	8.1		
1-R	103+78 Lt.	103+99 Lt.		21.0									
2-R	103+60 Rt.	103+99 Rt.		34.0									
1-D	104+04 Lt.	104+12 Lt.											3.5
2-D	104+02 Rt.	104+09 Rt.											2.9
TOTALS TO GENERAL SUMMARY			160.2	55.0	178.0	1.4	20.0	31.6	14.9	10.1	35.8	177.8	6.4

GUARDRAIL

REFERENCE NUMBER	STATION FROM	STATION TO	SIDE	606 GUARDRAIL TYPE 5	606 ANCHOR ASSEMBLY TYPE A	606 BRIDGE TERMINAL ASSEMBLY TYPE B		202 GUARDRAIL REMOVED FOR STORAGE
				Lin. Ft.	Each	Each		Lin. Ft.
1-G	102+97.72	104+00.27	Lt.	77.55	1	1		
2-G	104+38.93	105+47.72	Lt	83.79	1	1		
3-G	102+91.47	104+00.27	Rt.	83.80	1	1		
4-G	104+38.93	105+41.47	Rt.	77.54	1	1		
5-G	103+67	103+97	Lt.					30
6-G	104+42	104+72	Lt.					30
7-G	103+67	103+97	Rt.					30
8-G	104+41	104+71	Rt.					30
TOTALS TO GENERAL SUMMARY				322.68	4	4		120

Note: * The 404 and 402 courses on the shoulders may be placed at the same time that the 404 and 402 courses are placed on the adjacent lanes of pavement. However, the shoulders shall be placed in a separate operation if the Contractors equipment does not have the capacity to place the material to the proposed slopes as shown on Sections B-B and C-C

~ SYMBOLS ~

Applies to sheet numbers 3 and 4

Remove a sufficient amount of existing wearing course so as to lay 1" 404 on a minimum thickness of 1½"-402

1" 404 on 1½"-402 on 9"-305 on 6"-310

Rock Channel Protection, Type D W/O Filter

~ PLAN ~

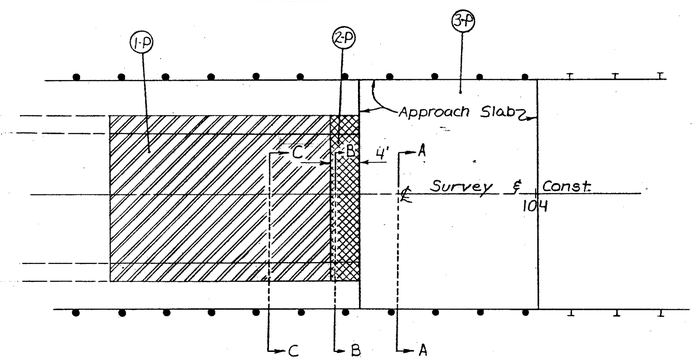

~ PAVEMENT LEGEND ~

1. Item 404 - 1" Asphalt Concrete, AC-20
2. Item 402 - 1½" Asphalt Concrete, AC-20
3. Item 407 - Tack Coat, applied at the rate of 0.10 Gal. per Sq. Yd. and with Cover Aggregate
4. Item 606 - Guardrail, Type 5
5. Item 659 - Seeding and Mulching
6. Item 305 - 9" Portland Cement Concrete Base
7. Item 310 - 6" Subbase, Type I
8. Item 611 - Reinforced Concrete Approach Slab (T=15")

Note: * Pavement slope varies from matching existing pavement slope at butt joint to 3/16" per Ft. at Section B-B

* Slope of paved shoulder shall vary to meet proposed 3/16" per ft. slope at approach slab.

Sections A-A, B-B & C-C show right side only. Left side shall be constructed same as right side.

~ SECTION A-A ~

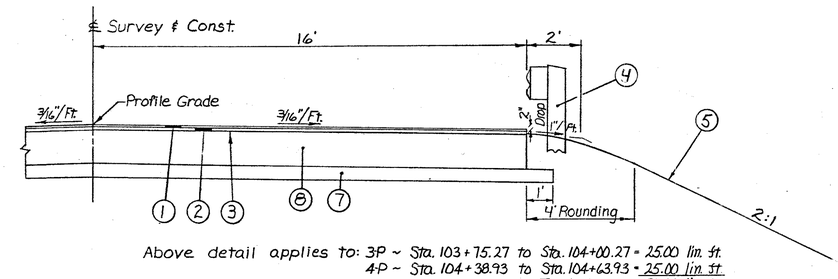

Above detail applies to: 3-P ~ Sta. 103+75.27 to Sta. 104+00.27 = 25.00 lin. ft.
4-P ~ Sta. 104+38.93 to Sta. 104+63.93 = 25.00 lin. ft.
Total length = 50.00 lin. ft.

~ SECTION B-B ~

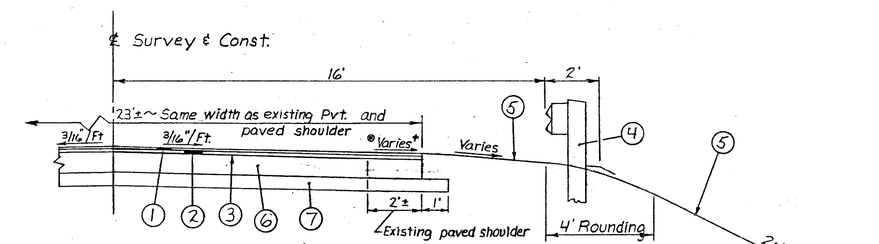

Above detail applies to: 2-P ~ Sta. 103+71.27 to Sta. 103+75.27 = 4.00 lin. ft.
5-P ~ Sta. 104+63.93 to Sta. 104+67.93 = 4.00 lin. ft.
Total length = 8.00 lin. ft.

~ SECTION C-C ~

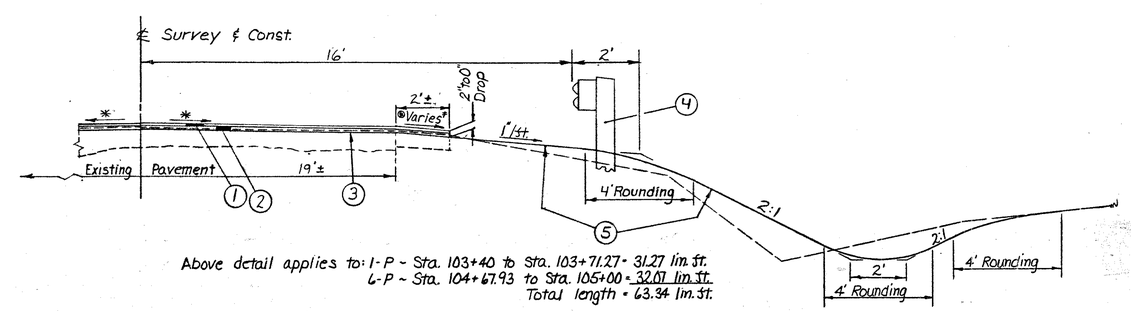

Above detail applies to: 1-P ~ Sta. 103+40 to Sta. 103+71.27 = 31.27 lin. ft.
6-P ~ Sta. 104+67.93 to Sta. 105+00 = 32.07 lin. ft.
Total length = 63.34 lin. ft.

FED. RD. DIVISION	STATE	PROJECT	
5	OHIO	BRS-336(6)	

4 / 12

SEN-19-1.96
SENECA COUNTY

MICROFILMED
NOV 27 1995

Boat spike 1" below surface, harrowtooth 5" below surface
℄ Survey
Shiner 34.51'
29.45'
111.04'
Shiner
36" Maple
P.K. Mon.
P.O.T. ~ Sta. 94+00.00

DATA ON PROPOSED STRUCTURE

TYPE: Prestressed concrete box beams on modified existing abutments.
SPAN: 37'-6" c/c Bearing
ROADWAY: 32' f/f of Guardrail
SKEW: 0°
LOADING: HS20-44 and the alternate military loading
WEARING SURFACE: 2½" Asphalt Concrete
SUPERELEVATION: None
APPROACH SLABS: AS-1-81. 25' Long
ALIGNMENT: Tangent

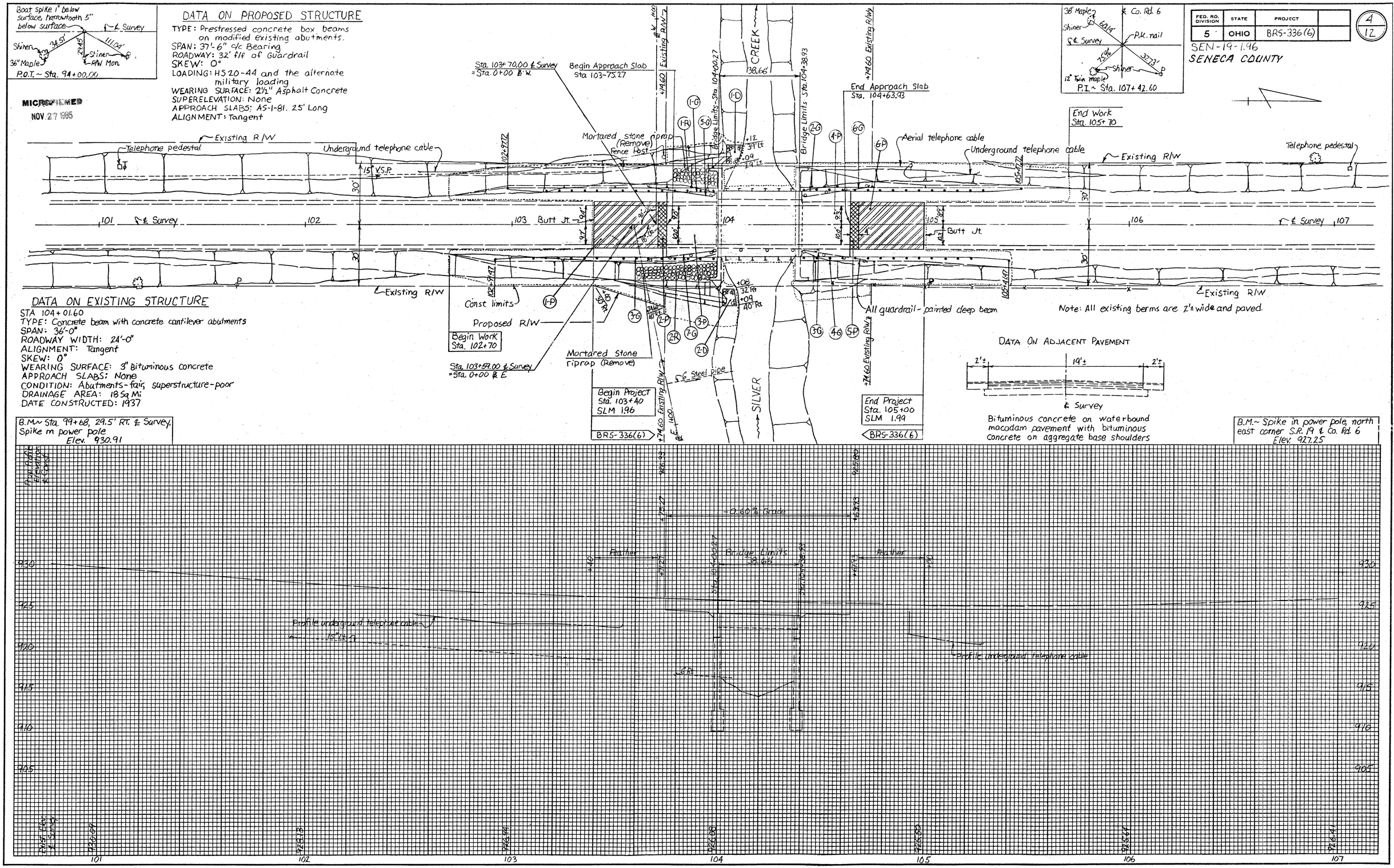

DATA ON EXISTING STRUCTURE

STA 104+01.60
TYPE: Concrete beam with concrete cantilever abutments
SPAN: 36'-0"
ROADWAY WIDTH: 24'-0"
ALIGNMENT: Tangent
SKEW: 0°
WEARING SURFACE: 3" Bituminous concrete
APPROACH SLABS: None
CONDITION: Abutments - fair, superstructure - poor
DRAINAGE AREA: 18 Sq Mi
DATE CONSTRUCTED: 1937

B.M.~ Sta. 99+68, 29.5' RT. ℄ Survey, Spike in power pole Elev. 930.91

B.M.~ Spike in power pole, north east corner S.R. 19 & Co. Rd. 6 Elev. 927.25

STA 101+00 TO STA 107+00

X-SECTIONS ~ STA. 102+00 TO STA. 106+00

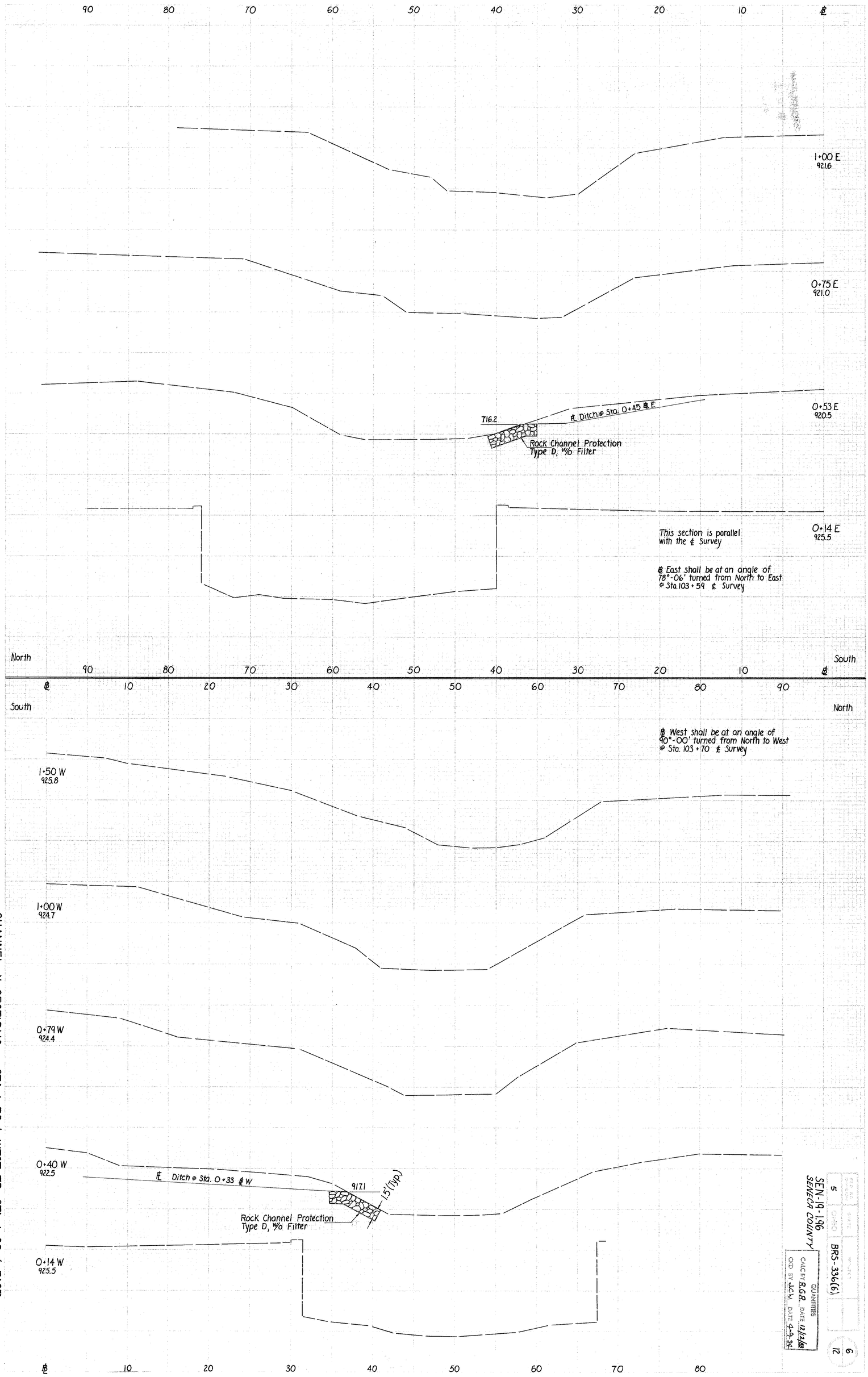

CHANNEL X-SECTIONS ~ STA. 1+50 ℄ WEST TO STA. 1+00 ℄ EAST

5	OHIO	BRS-336(6)	6 / 12

SEN-19-1.96
SENECA COUNTY

QUANTITIES
CALC BY B.G.B. DATE 12/14/88
CKD BY J.C.M. DATE 4-9-84

FHWA REGION	STATE	PROJECT	
5	OHIO		

7/12

SEN-19-1.96
SENECA COUNTY

DESIGN DESIGNATION

Current ADT (1982)	504
Design Year ADT (2002)	660
DH	66
D	50%
T	14%
V	50 M.P.H.

MICROFILMED NOV 27 1985

Rate at transverse deck slope shall be 3/4" / ft.
20± wide approach pavement

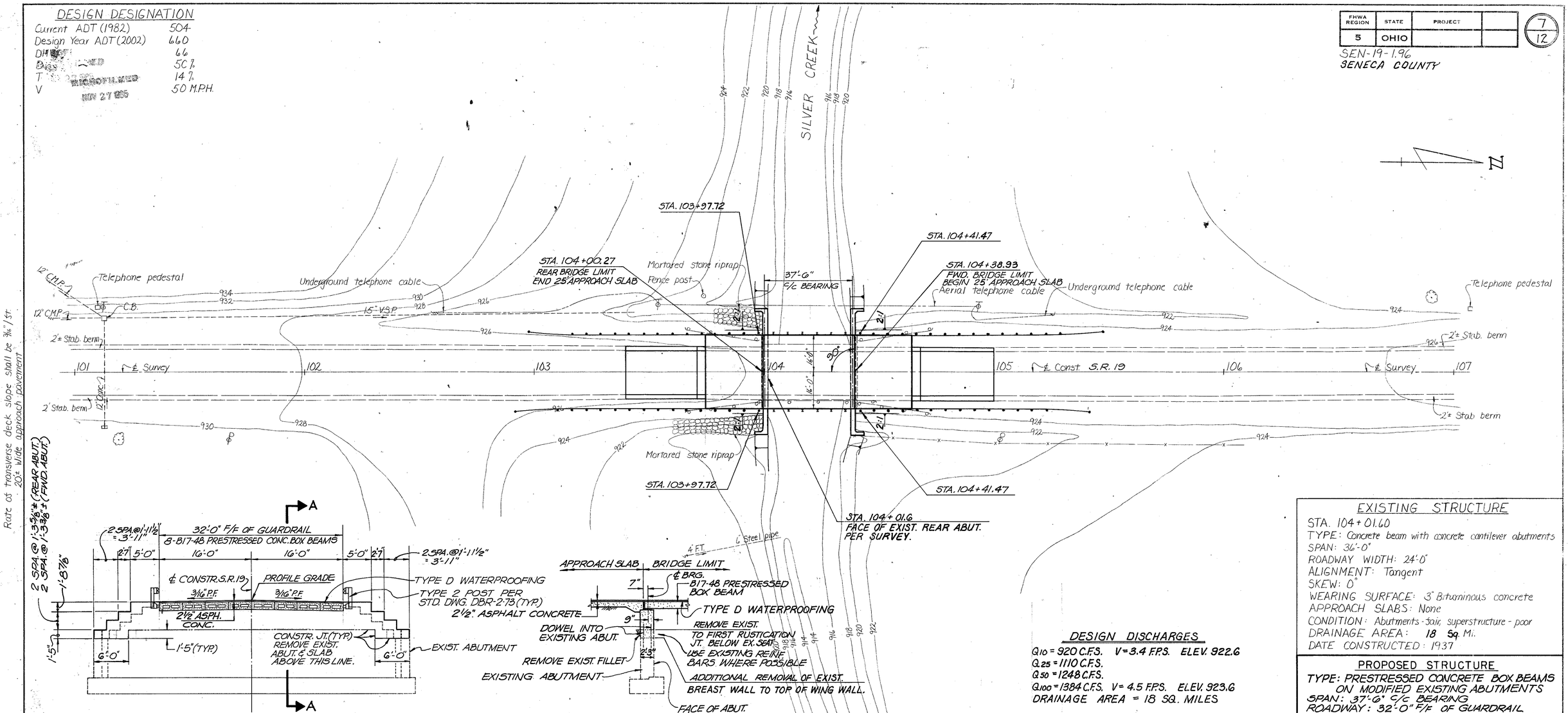

TYPICAL BRIDGE CROSS SECTION

SECTION A-A

DESIGN DISCHARGES

Q_{10} = 920 C.F.S. V = 3.4 F.P.S. ELEV. 922.6
Q_{25} = 1110 C.F.S.
Q_{50} = 1248 C.F.S.
Q_{100} = 1384 C.F.S. V = 4.5 F.P.S. ELEV. 923.6
DRAINAGE AREA = 18 SQ. MILES

EXISTING STRUCTURE

STA. 104+01.60
TYPE: Concrete beam with concrete cantilever abutments
SPAN: 36'-0"
ROADWAY WIDTH: 24'-0"
ALIGNMENT: Tangent
SKEW: 0°
WEARING SURFACE: 3" Bituminous concrete
APPROACH SLABS: None
CONDITION: Abutments - fair, superstructure - poor
DRAINAGE AREA: 18 Sq. Mi.
DATE CONSTRUCTED: 1937

PROPOSED STRUCTURE

TYPE: PRESTRESSED CONCRETE BOX BEAMS ON MODIFIED EXISTING ABUTMENTS
SPAN: 37'-6" C/c BEARING
ROADWAY: 32'-0" F/F OF GUARDRAIL
LOADING: HS 20-44 & ALTERNATE MILITARY LOADING
SKEW: 0°
SURFACE COURSE: 2½" MIN. ASPHALT CONCRETE
APPROACH SLAB: AS-1-81 (25' LG. x 32' WD.)
ALIGNMENT: TANGENT

STRUCTURE FILE NO. 74-00969

B.M. ~ Spike in ℗, N.E. Corner S.R. 19 + Co. Rd. 6 ~ Elev. 927.25

B.M. ~ Sta. 99+68, 29.5' Rt. ℄ Survey Spike in ℗ ~ Elev. 930.91

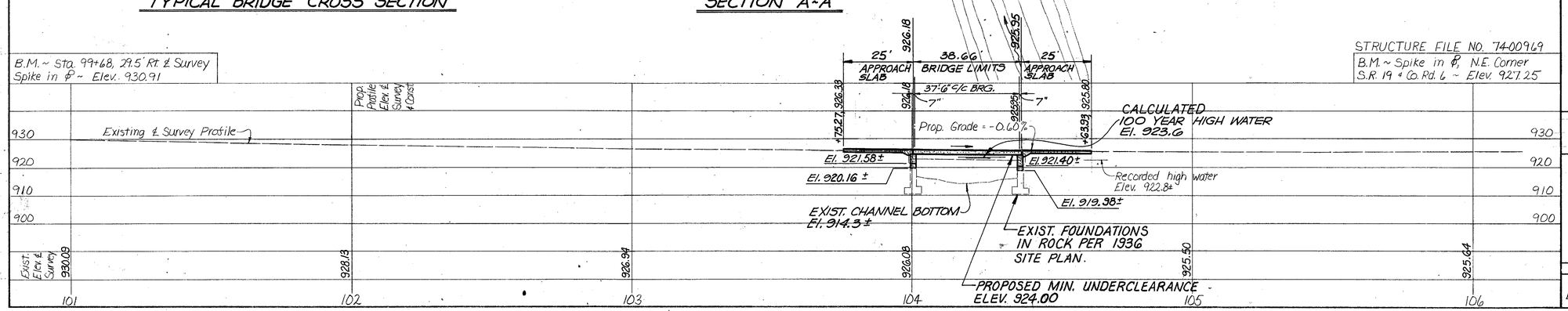

SAMBORN, STEKETEE, OTIS AND EVANS, INC.
ENGINEERS ARCHITECTS PLANNERS
1001 MADISON AVE. TOLEDO, OHIO

SITE PLAN

BRIDGE NO. SEN-19-0197
OVER SILVER CREEK

SENECA COUNTY — STA. 104+00.27 TO STA. 104+38.93

Scale: 1" = 20'

Present Topography		Proposed Work			
Surveyed	Drawn	Designed	Drawn	Checked	Reviewed
District	District	CHB	JW	BJH 12-1-83	AMC

F.H.W.A. REGION	STATE	PROJECT	TYPE FUNDS
5	OHIO		

8 / 12

SEN-19-1.96
SENECA COUNTY

MICROFILMED NOV 27 1985

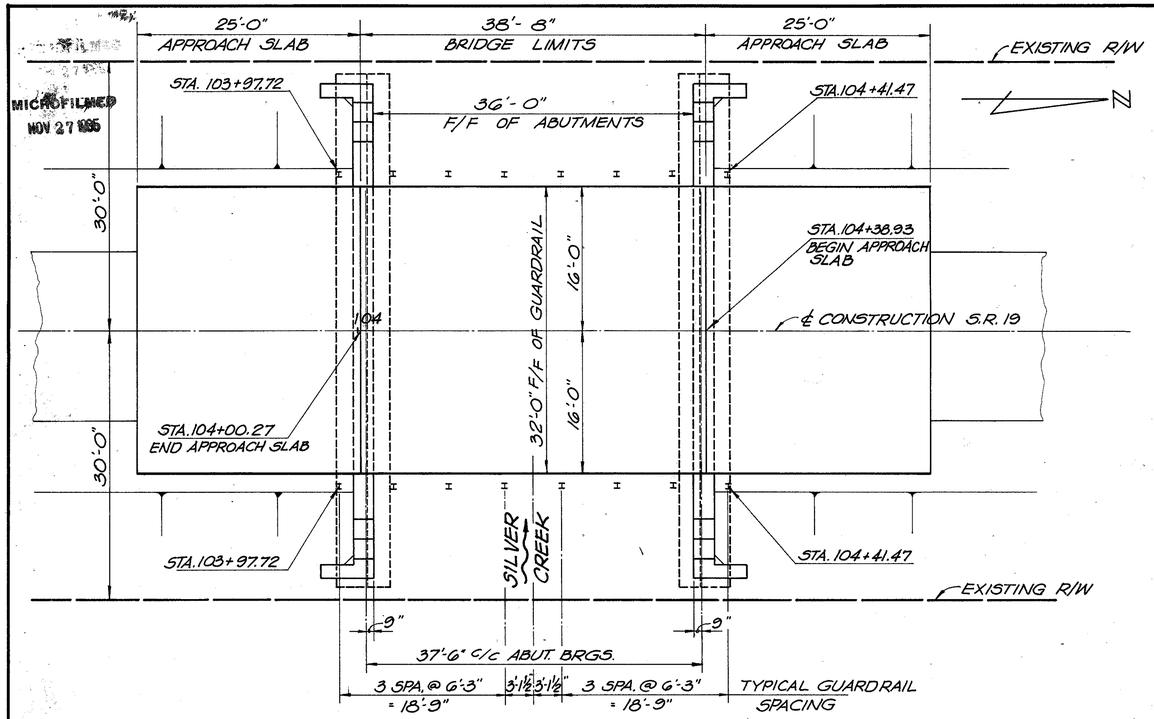

PLAN

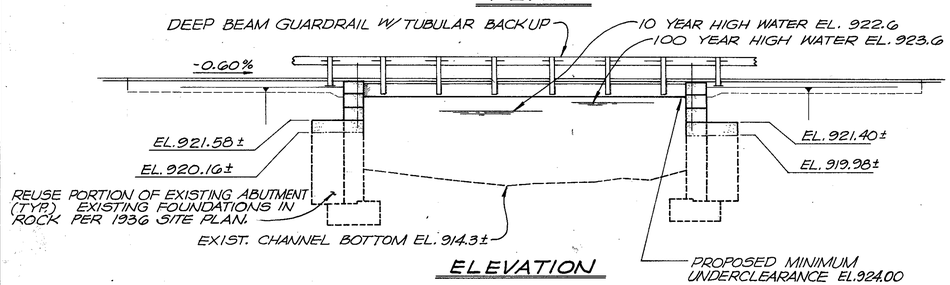

ELEVATION

GENERAL NOTES

REFERENCE SHALL BE MADE TO STANDARD DRAWINGS:
DBR-2-73 DATED 4-10-73
PSBD-1-81 SHEETS 1, 2, 3 AND 4 OF 4 DATED 9-18-81
AS-1-81 SHEETS 1, 2 AND 3 OF 3 DATED 11-27-81

DESIGN SPECIFICATIONS: THIS STRUCTURE CONFORMS TO "STANDARD SPECIFICATIONS FOR HIGHWAY BRIDGES" ADOPTED BY THE AMERICAN ASSOCIATION OF STATE HIGHWAY AND TRANSPORTATION OFFICIALS, 1977, INCLUDING 1978, 1979, 1980, 1981, 1982 & 1983 INTERIM SPECIFICATION AND THE OHIO SUPPLEMENT TO THESE SPECIFICATIONS.

DESIGN DATA: DESIGN LOADING - HS20-44 AND THE ALTERNATE MILITARY LOADING
CONCRETE - CLASS C - f'_c = 4000 P.S.I. FOR SUBSTRUCTURE, UNIT STRESS = 1333 P.S.I.
REINFORCING STEEL - ASTM A615, A616 OR A617 - UNIT STRESS = 20,000 P.S.I.
CONCRETE FOR PRESTRESSED CONCRETE BEAMS - UNIT STRESS = 2200 P.S.I. COMPRESSION
UNIT STRESS = 444 P.S.I. TENSION
PRESTRESSING STRANDS - ASTM A416 - f'_s = 270,000 P.S.I., INITIAL STRESS = 0.70 f'_s
DECK PROTECTION METHOD: TYPE D WATERPROOFING AND ASPHALT CONCRETE OVERLAY

REMOVAL OF EXISTING STRUCTURE: WHEN NO LONGER NEEDED TO MAINTAIN TRAFFIC THE EXISTING SUPERSTRUCTURE AND PORTIONS OF EXISTING ABUTMENTS SHALL BE REMOVED.

UTILITY LINES: ALL EXPENSES INVOLVED IN RELOCATING THE AFFECTED UTILITY LINES SHALL BE BORNE BY THE OWNERS. THE CONTRACTOR AND OWNERS ARE REQUESTED TO COOPERATE BY ARRANGING THEIR WORK IN SUCH A MANNER THAT INCONVENIENCE TO EITHER WILL BE HELD TO A MINIMUM.

EXISTING STRUCTURE VERIFICATION: DETAILS AND DIMENSIONS SHOWN ON THESE PLANS PERTAINING TO THE EXISTING STRUCTURE HAVE BEEN OBTAINED FROM PLANS OF THE EXISTING STRUCTURE AND FROM FIELD OBSERVATIONS AND MEASUREMENTS. CONSEQUENTLY, THEY ARE INDICATIVE OF THE EXISTING STRUCTURE AND THE PROPOSED WORK BUT THEY SHALL BE CONSIDERED TENTATIVE AND APPROXIMATE. THE CONTRACTOR IS REFERRED TO CMS SECTIONS 102.05 AND 105.02. CONTRACT BID PRICES SHALL BE BASED UPON A RECOGNITION OF THE UNCERTAINTIES DESCRIBED ABOVE AND UPON A PREBID EXAMINATION OF THE EXISTING STRUCTURE BY THE CONTRACTOR. HOWEVER, ALL PROJECT WORK SHALL BE BASED UPON ACTUAL DETAILS AND DIMENSIONS WHICH HAVE BEEN VERIFIED BY THE CONTRACTOR IN THE FIELD.

ITEM SPECIAL, SEALING OF CONCRETE SURFACES: A CONCRETE SEALER, EITHER SILANE OR AN EPOXY SEALER, SHALL BE APPLIED TO THE CONCRETE SURFACES SHOWN ON SHEET 3/3. SEE THE PROPOSAL FOR SURFACE PREPARATION REQUIREMENTS, APPLICATION RATES, MATERIALS REQUIREMENTS AND APPLICATION PROCEDURES.

ESTIMATED QUANTITIES (BRIDGE Nº SEN-19-0197)

ITEM	TOTAL	UNIT	DESCRIPTION	ABUTMENTS REAR	ABUTMENTS FWD	SUPER-STR.	GEN'L		
202	LUMP	SUM	PORTIONS OF STRUCTURE REMOVED				LUMP		
403	7	CU.YD.	ASPHALT CONCRETE (AC-20)			7			
404	5	CU.YD.	ASPHALT CONCRETE (AC-20)			5			
503	230	CU.YD.	UNCLASSIFIED EXCAVATION	115	115				
509	2342	LBS.	REINFORCING STEEL	1171	1171				
510	132	EACH	DOWEL HOLES	66	66				
511	40	CU.YD.	CLASS C CONCRETE, ABUTMENTS	20	20				
512	154	SQ.YD.	TYPE D WATERPROOFING	1	1	152			
515	309.36	LIN.FT.	PRESTRESSED CONCRETE BRIDGE MEMBERS B17-48			309.36			
516	19	SQ.FT.	½" PREFORMED EXPANSION JOINT FILLER	9.5	9.5				
516	100	SQ.FT.	1" PREFORMED EXPANSION JOINT FILLER	50	50				
516	32	EACH	½" x 5" x 10" ELASTOMERIC BEARING PADS (50 DUROMETER)	16	16				
516	16	EACH	⅛" x 5" x 10" PREFORMED BEARING PADS, 711.21	8	8				
516	64	LIN.FT.	JOINT SEALER, 705.01 or 705.02	32	32				
517	77.33	LIN.FT.	RAILING (DEEP BEAM RAIL W/TUBULAR BACKUP AND STEEL POSTS AND BOLTS)			77.33			
518	54	CU.YD.	POROUS BACKFILL	27	27				
SPECIAL	57	SQ.FT.	STEEL DRIP STRIP			57			
SPECIAL	16	SQ.YD.	Sealing of Concrete Surfaces (See Proposal Note)			16			

DESIGN DESIGNATION
CURRENT ADT (1982) 504
DESIGN YEAR ADT (2002) 660
DHV 66
D 50%
T 14%
V 50 MPH

DESIGN DISCHARGES
Q_{10} = 920 CFS V = 3.4 FPS ELEV. 922.6
Q_{25} = 1110 CFS
Q_{50} = 1248 CFS
Q_{100} = 1384 CFS V = 4.5 FPS ELEV. 923.6
DRAINAGE AREA = 18 SQ. MILES

PROPOSED STRUCTURE
TYPE: PRESTRESSED CONCRETE BOX BEAMS ON MODIFIED EXISTING ABUTMENTS
SPAN: 37'-6" C/c BEARINGS
ROADWAY: 32'-0" F/F OF GUARDRAIL
SKEW: 0°
SURFACE COURSE: 2½" MIN. ASPHALT CONCRETE
APPROACH SLAB: AS-1-81 (25' LG. x 32' WD.)
ALIGNMENT: TANGENT

REINFORCING STEEL LIST (BRIDGE Nº SEN-19-0197)

ABUTMENTS MARK	Nº	LENGTH	WEIGHT	SHAPE	NUMBER REAR	NUMBER FWD
A501	56	3'-2"	185	BENT	28	28
A502	8	4'-7"	38	STR.	4	4
A503	8	23'-3"	194	STR.	4	4
A504	8	25'-2"	210	STR.	4	4
A505	8	5'-8"	47	STR.	4	4
A506	8	5'-2"	43	BENT	4	4
A507	16	6'-7"	110	BENT	8	8
A601	64	3'-11"	377	STR.	32	32
A602	24	5'-4"	192	STR.	12	12
A603	16	3'-9"	90	STR.	8	8
A604	28	2'-5"	102	STR.	14	14
A801	44	6'-5"	754	BENT	22	22

BENDING DIAGRAMS

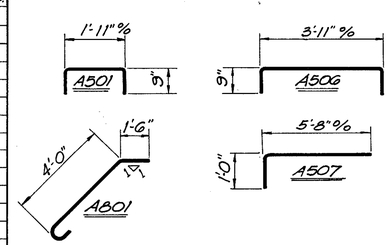

REINFORCING STEEL SAMPLES: REFER TO CMS SECTIONS 106.03, 700, 709.01 THROUGH 709.05 AND 709.08. SUFFICIENT ADDITIONAL REINFORCING STEEL SHALL BE PROVIDED FOR SAMPLING. RANDOM SAMPLES SHALL BE REPLACED IN THE STRUCTURES BY THE ADDITIONAL STEEL, SPLICED IN ACCORDANCE WITH 509.08.

QUANTITIES CALCULATED BY: JW
DATE: 11-18-83
QUANTITIES CHECKED BY: BJH
DATE: 12-2-83

1 / 3

SAMBORN, STEKETEE, OTIS AND EVANS, INC.
ENGINEERS ARCHITECTS PLANNERS
1001 MADISON AVE. TOLEDO, OHIO

GENERAL PLAN AND ELEVATION
GEN'L NOTES, EST. QUANT., REINF. STL. LIST
BRIDGE Nº SEN-19-0197
OVER SILVER CREEK
SENECA COUNTY STA. 104+00.27 TO STA. 104+38.93

DESIGNED	DRAWN	TRACED	CHECKED	REVIEWED	DATE	REVISED
CHB	JW	—	BJH 12-2-83	AMC	12-83	

MICROFILMED
NOV 27 1995

F.H.W.A. REGION	STATE	PROJECT	TYPE FUNDS
5	OHIO		

9 / 12

SEN-19-1.96
SENECA COUNTY

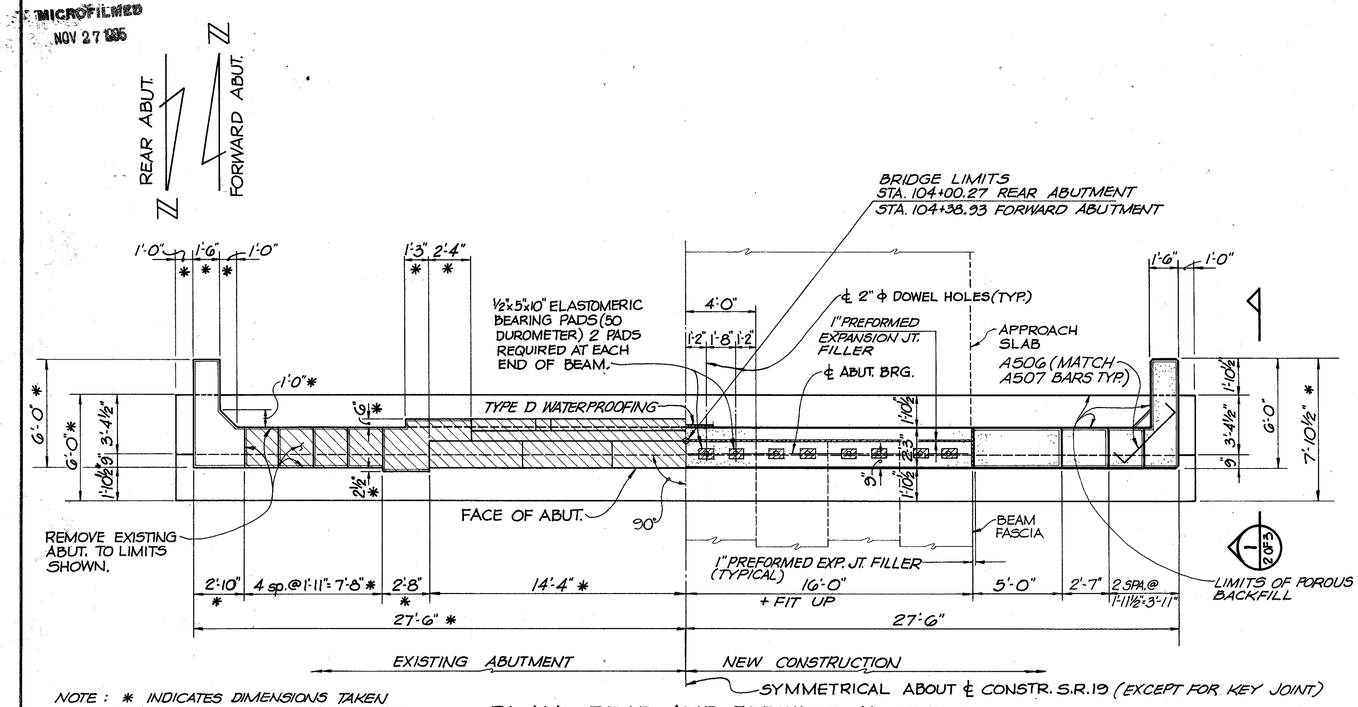

NOTE: * INDICATES DIMENSIONS TAKEN FROM ORIGINAL DESIGN DRAWINGS DATED 10/27/36.

PLAN - REAR AND FORWARD ABUTMENT

R.A. DENOTES REAR ABUTMENT
F.A. DENOTES FORWARD ABUTMENT
N.S. DENOTES NEAR SIDE
F.S. DENOTES FAR SIDE
E.S. DENOTES EACH SIDE

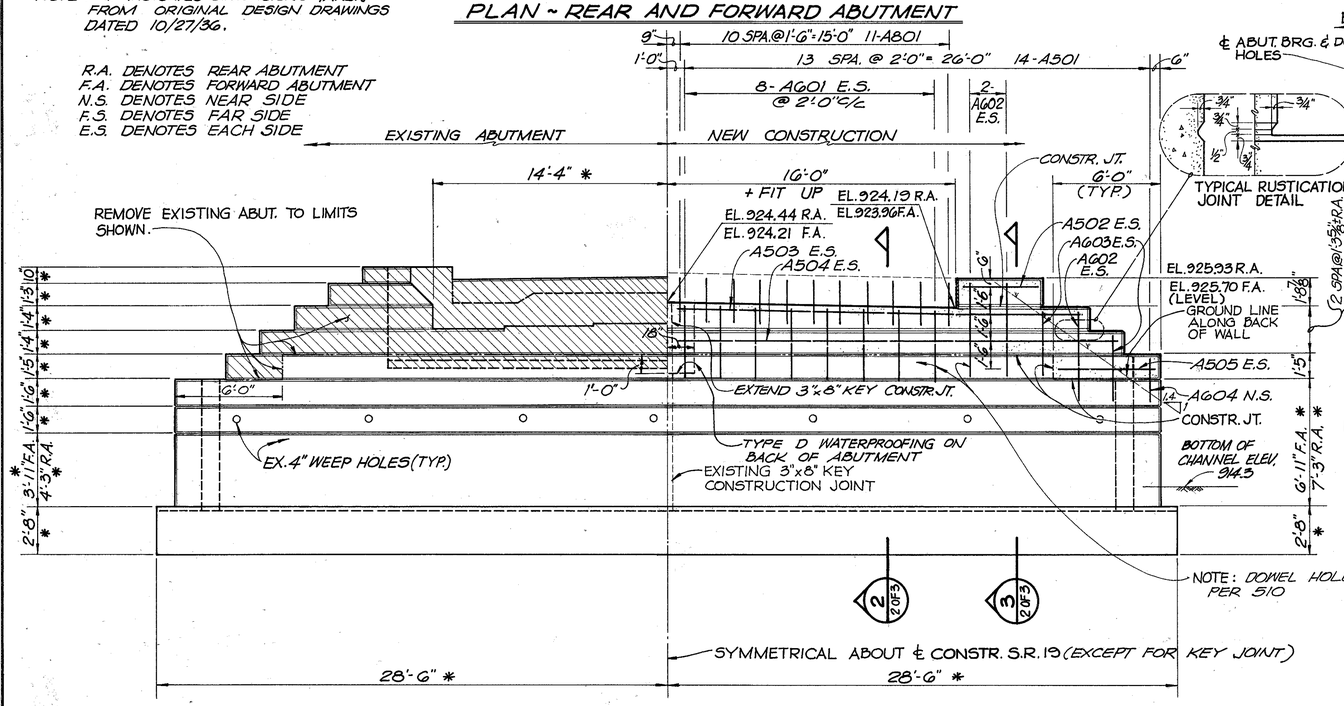

ELEVATION - REAR AND FORWARD ABUTMENT

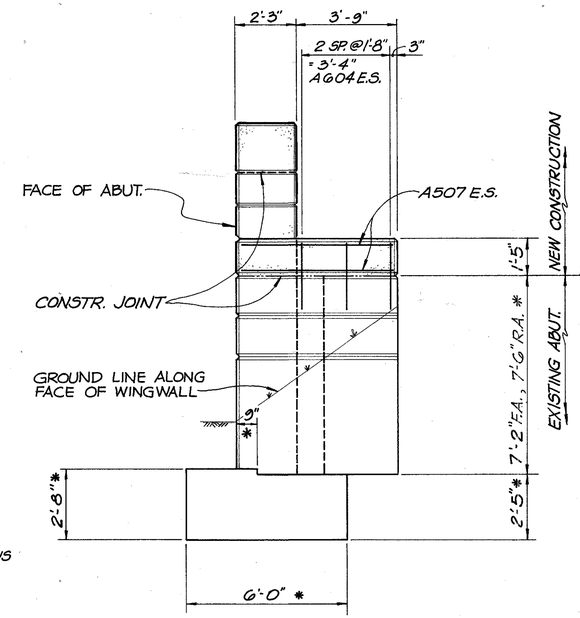

DETAIL 1 (2 OF 3)

NOTES:

BRIDGE SEAT REINFORCING: SPECIAL CARE SHALL BE TAKEN IN PLACING REINFORCING STEEL IN THE VICINITY OF THE BRIDGE SEATS OF THE ABUTMENTS SO AS TO AVOID INTERFERENCE WITH DRILLING OF ANCHOR BAR HOLES.

DO NOT PLACE CONCRETE ABOVE BRIDGE SEAT UNTIL AFTER BEAMS ARE COMPLETELY ERECTED.

POROUS BACKFILL: EXISTING POROUS BACKFILL SHALL BE COMPLETELY REMOVED AND REPLACED WITH NEW, FROM 6" BELOW EXISTING WEEP HOLES AND SHALL EXTEND UPWARD TO THE PLANE OF THE SUBGRADE AND LATERALLY TO THE SURFACE OF THE EMBANKMENT SLOPES.

EMBANKMENT CONSTRUCTION: THE EXISTING ABUTMENT DESIGN UTILIZES THE HORIZONTAL RESTRAINT PROVIDED BY THE DECK SLAB. THEREFORE EXISTING POROUS BACKFILL AND EMBANKMENT SHALL BE REMOVED DOWN TO 6" BELOW THE WEEPHOLES, AND SHALL NOT BE REPLACED UNTIL AFTER PLACEMENT OF NEW BRIDGE DECK. THE EMBANKMENT SHALL BE REMOVED AND REPLACED ON A 1.5 TO 1 SLOPE.

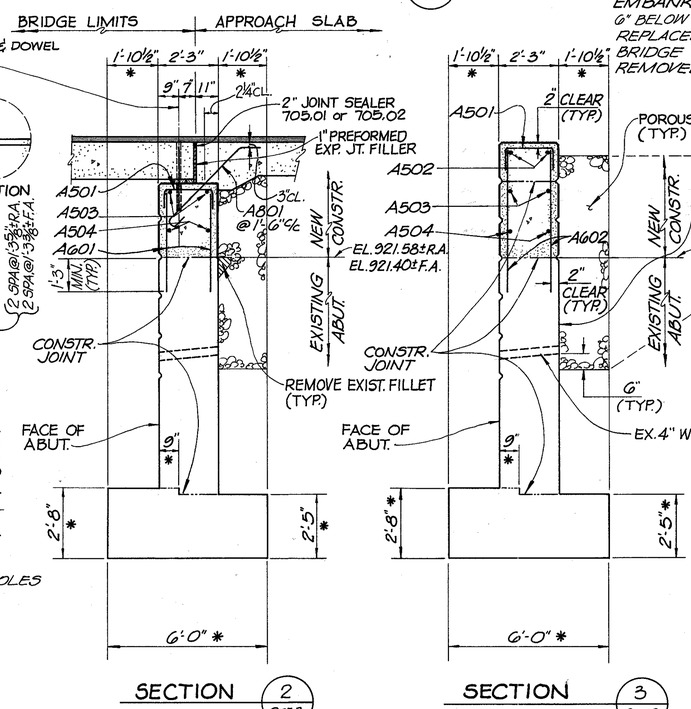

SECTION 2 (2 OF 3)

SECTION 3 (2 OF 3)

2 / 3

SAMBORN, STEKETEE, OTIS AND EVANS, INC.
ENGINEERS ARCHITECTS PLANNERS
1001 MADISON AVE. TOLEDO, OHIO

ABUTMENT DETAILS
BRIDGE Nº SEN-19-0197
OVER SILVER CREEK

SENECA COUNTY STA. 104+00.27 TO STA. 104+38.93

DESIGNED	DRAWN	TRACED	CHECKED	REVIEWED	DATE	REVISED
CHB	3W	-	BJH 12-1-83	AMC	12-83	

MICROFILMED
NOV 27 1995

FHWA REGION	STATE	PROJECT	TYPE FUNDS
5	OHIO		

10 / 12

SEN - 19 - 1.96
SENECA COUNTY

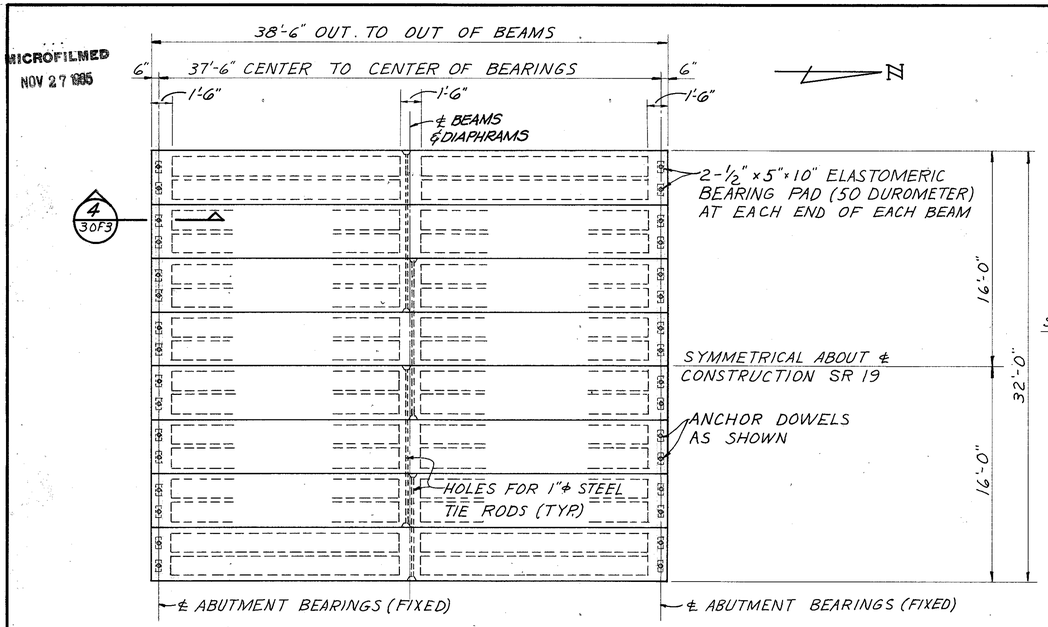

DECK PLAN

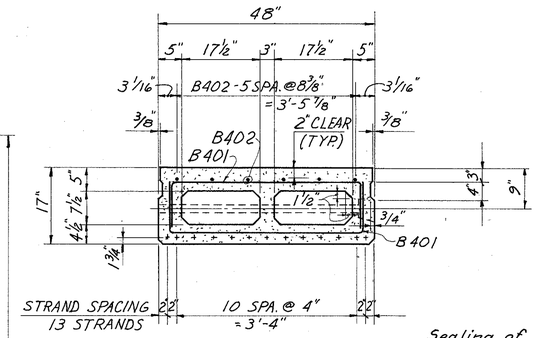

SECTION 5 (3OF3)

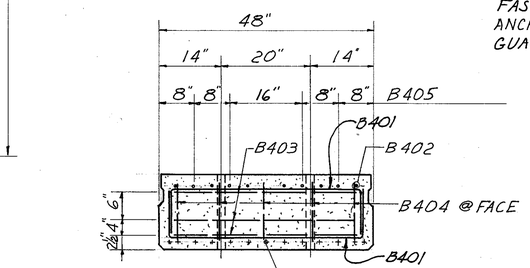

SECTION 6 (3OF3)

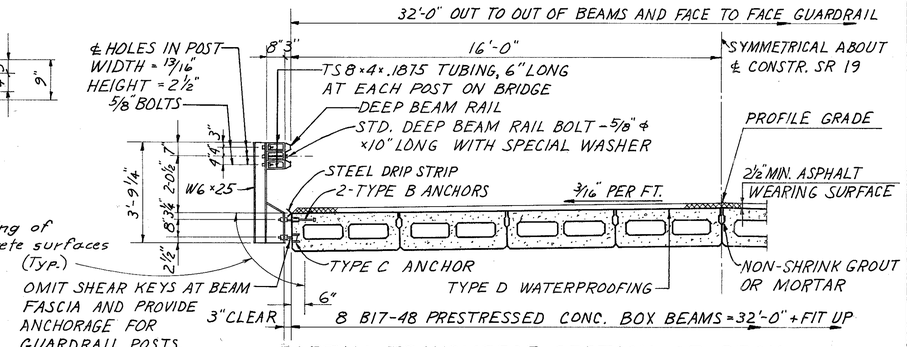

PARTIAL TRANSVERSE SECTION OF DECK

NOTE: FOR RAILING DETAILS SEE "DEEP BEAM BRIDGE GUARDRAIL WITH TUBULAR BACKUP" STANDARD DRAWING DBR-2-73 DATED 4-10-73. TYPE 2 POSTS SHALL BE USED.

NOTES:

ASPHALT CONCRETE SURFACE COURSE SHALL CONSIST OF A VARIABLE THICKNESS OF 403 AND 1 1/4" THICKNESS OF 404. THE 403 SHALL BE PLACED IN TWO OPERATIONS. THE FIRST COURSE SHALL BE OF 1 1/2" UNIFORM THICKNESS. THE SECOND COURSE SHALL BE FEATHERED TO PLACE THE SURFACE PARALLEL TO AND 1 1/4" BELOW FINAL PAVEMENT SURFACE ELEVATION.

ADDITIONAL DETAILS AND NOTES: SEE STANDARD DRAWING PSBD-1-81 SHEETS 1, 2, 3 AND 4 FOR BEAM LIFTING INSERTS, DETAILS OF TRANSVERSE TIE ROD ANCHORAGE, NORMAL CROWN TREATMENT AT ℄ ROADWAY, BEAM DIMENSIONAL TOLERANCES AND NOTES ON TRANSVERSE TIE RODS, GALVANIZING, ANCHOR DOWELS, NON-SHRINKING MORTAR AND GROUT, MORTARING OF SHEAR KEYS, WALL THICKENING OF FACIA BEAM AT GUARDRAIL ANCHORS AND BEAM REINFORCING STEEL.

BEARING PAD SHIMS: 2 - 1/8" PREFORMED BEARING PADS PER BEAM SHALL BE PROVIDED FOR USE AS SHIMS WHERE NEEDED FOR PROPER SEATING OF PRESTRESSED BEAMS. ANY UNUSED SHIMS SHALL BECOME THE PROPERTY OF THE STATE.

CONCRETE STRESSES:
MINIMUM CONCRETE STRENGTH AT 28 DAYS $f'c$ = 5500 P.S.I. MINIMUM CONCRETE STRENGTH AT TIME OF INITIAL PRESTRESS $f'ci$ = 4000 P.S.I.

PRESTRESSING STRANDS: 1/2" DIA., 270 K, SEVEN WIRE UNCOATED, STRESS RELIEVED STRAND. A_s = 0.153 SQ. INCH.

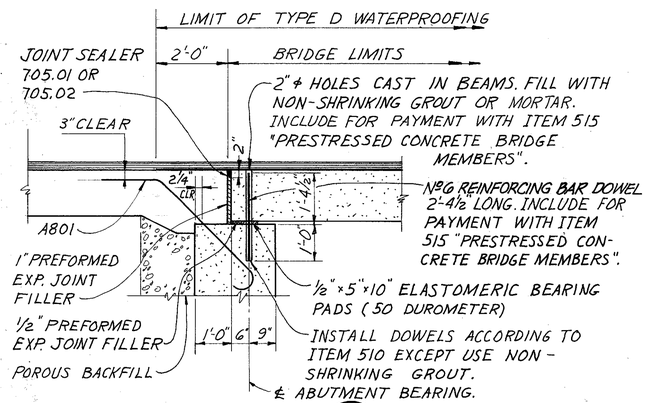

SECTION 4 (3OF3)

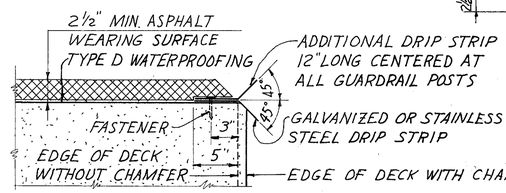

DRIP STRIP: PRIOR TO APPLYING TYPE D WATERPROOFING, A BENT DRIP STRIP SHALL BE INSTALLED ALONG THE EDGES OF THE DECK AS SHOWN. THE STRIPS SHALL BE FASTENED AT 1'-6" c/c MAXIMUM WITH 1 1/4" x 5/32" x 1/4" FLAT HEAD DRIVE PIN AND WASHER (LENGTH x SHANK DIA. x HEAD DIA.) OR #10 GALVANIZED SCREWS AND EXPANSION ANCHORS SUBJECT TO THE APPROVAL OF THE ENGINEER. THE STRIPS SHALL BE PLACED THE FULL LENGTH OF THE DECK, ENDING AT THE FACE OF THE ABUTMENT WINGWALL. WHERE SPLICES ARE REQUIRED, A 3" (MIN) LAP SHALL BE USED WITH A FASTENER THROUGH THE LAP. STEEL FOR GALVANIZED STRIPS SHALL BE 8" x 0.105" AND SHALL MEET THE REQUIREMENTS OF ASTM A568. GALVANIZING SHALL BE IN ACCORDANCE WITH 711.02. STAINLESS STEEL SHALL BE 20 GAUGE ASTM A167, TYPE 304 MILL FINISH. PAYMENT SHALL BE AT THE CONTRACT PRICE BID FOR ITEM SPECIAL, SQ. FT., STEEL DRIP STRIP WHICH SHALL INCLUDE ALL MATERIALS, LABOR, TOOLS AND INCIDENTALS NECESSARY TO COMPLETE THE ITEM.

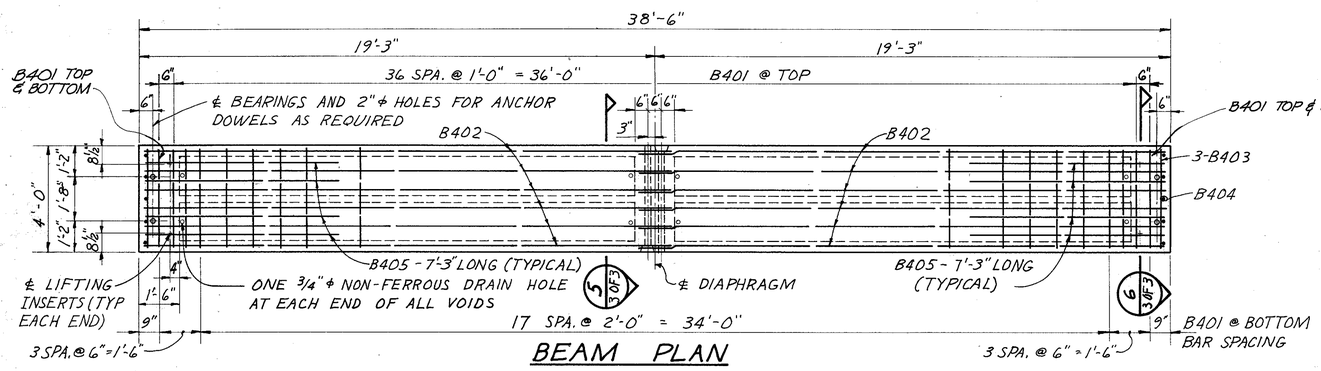

BEAM PLAN

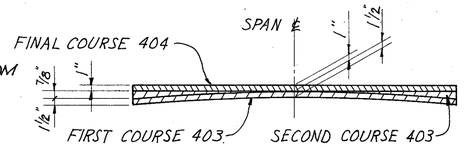

ASPHALT CONCRETE SURFACE COURSE DIAGRAM

CALUCATED CAMBER AT TIME OF PAVING, INCLUDING ALLOWANCE FOR CAMBER GROWTH DUE TO CREEP IS 1". CALCULATED DEFLECTION DUE TO WEIGHT OF SURFACE COURSE AND RAILING IS 1/8". NET FINAL CAMBER IS 7/8". THIS IS 7/8" IN EXCESS OF THE AMOUNT REQUIRED TO PLACE THE TOP OF THE BEAM PARALLEL TO PROFILE GRADE. THIS EXCESS AMOUNT SHALL BE COMPENSATED FOR BY THICKENING THE 403 LEVELING COURSE FROM 1 1/4" AT THE CENTER OF THE SPAN TO 2 1/8" AT THE END OF THE BEAMS.

3 / 3

SAMBORN, STEKETEE, OTIS AND EVANS, INC.
ENGINEERS ARCHITECTS PLANNERS
1001 MADISON AVE. TOLEDO, OHIO

SUPERSTRUCTURE DETAILS
BRIDGE Nº SEN - 19 - 0197
OVER SILVER CREEK
SENECA COUNTY STA. 104+00.27 TO STA. 104+38.93

DESIGNED	DRAWN	TRACED	CHECKED	REVIEWED	DATE	REVISED
CHB	RCM	–	BJH 12-1-83	AMC	12-83	

TEMPORARY PAVEMENT MARKINGS
NOTE B

GENERAL

THE CONTRACTOR SHALL FURNISH, INSTALL, MAINTAIN, AND WHEN NECESSARY, REMOVE TEMPORARY RETROREFLECTIVE PAVEMENT MARKINGS ON EXISTING, RECONSTRUCTED, RESURFACED OR TEMPORARY ROADS WITHIN THE WORK LIMITS, IN ACCORDANCE WITH THE FOLLOWING REQUIREMENTS.

THE MARKINGS SHALL BE MAINTAINED IN GOOD CONDITION DURING THE REQUIRED SERVICE PERIOD TO PROVIDE DAY AND NIGHT VISIBILITY. THE MARKINGS SHALL BE REPAIRED OR REPLACED AS DIRECTED BY THE ENGINEER TO MAINTAIN REQUIRED VISIBILITY AND/OR REFLECTIVITY AT NO ADDITIONAL COST TO THE STATE.

MATERIALS

UNLESS OTHERWISE INDICATED ON THE PLANS, TEMPORARY PAVEMENT MARKINGS MAY BE OF PAINT, PAVEMENT MARKING TAPE OR REMOVABLE PAVEMENT MARKING TAPE (TYPE R TAPE).

A. PAINT

PAINT SHALL COMPLY WITH 708.14 AND SHALL BE APPLIED IN ACCORDANCE WITH 621 EXCEPT AS MODIFIED HEREIN.

B. PAVEMENT MARKING TAPE

FLEXIBLE RETROREFLECTIVE PREFORMED PRESSURE SENSITIVE TAPE SHALL HAVE STRAIGHT EDGES AND BE FREE OF CRACKS. THE TAPE SHALL CONSIST OF PIGMENT AND FILLERS WITH SUFFICIENT BINDER AND PLASTICIZER TO RETAIN GLASS BEADS HAVING A REFRACTIVE INDEX MEETING THE MINIMUM REFLECTIVE INTENSITY STANDARD STATED IN THE MANUFACTURERS INFORMATION. THE TAPE SHALL BE FLEXOLITE "WET REFLECTIVE", 3M "SCOTCHLANE", OR AN APPROVED EQUAL.

THE GLASS BEADS SHALL BE DISTRIBUTED UNIFORMLY THROUGHOUT THE TAPE WITH SUFFICIENT SURFACE BEADS TO PROVIDE OPTIMUM REFLECTORIZATION AT ALL TIMES.

PAVEMENT MARKING TAPE SHALL COMPLY WITH THE COLOR REQUIREMENTS OF 708.14.

THE TAPE SHALL HAVE A PRECOATED ADHESIVE LAYER FOR PAVEMENT APPLICATION WITHOUT THE USE OF HEAT, SOLVENTS OR ADDITIONAL ADHESIVES. THE ADHESIVE SHALL BE SUFFICIENT TO RETAIN COMPLETE MARKINGS ON THE PAVEMENT SURFACE THROUGHOUT THE USEFUL LIFE OF THE MARKINGS.

IN ADDITION TO THE FOREGOING, ALL TEMPERATURE APPLICATION REQUIREMENTS AND OTHER APPLICABLE MANUFACTURERS MATERIAL AND APPLICATION INSTRUCTIONS SHALL BE FOLLOWED.

WHEN APPROVED BY THE ENGINEER THE CONTRACTOR MAY USE REMOVABLE PAVEMENT MARKING TAPE (TYPE R TAPE), IN LIEU OF THAT DESCRIBED ABOVE, TO FACILITATE REMOVAL OF MARKINGS.

C. REMOVABLE PAVEMENT MARKING TAPE (TYPE R TAPE)

THE MARKING MATERIAL SHALL BE A MIXTURE OF POLYMERIC MATERIALS, PIGMENTS, REINFORCING MEDIUM TO FACILITATE REMOVAL, GLASS BEADS THROUGHOUT THE PIGMENTED PORTION, AND A RETROREFLECTIVE LAYER OF GLASS BEADS BONDED TO THE TOP SURFACE.

THE TAPE SHALL BE PRECOATED WITH A PRESSURE SENSITVE ADHESIVE CAPABLE OF TEMPORARILY BONDING TO ASPHALT CONCRETE OR PORTLAND CEMENT CONCRETE PAVEMENT AT AN AMBIENT TEMPERATURE OF NOT LESS THAN 50° F AND RISING, AT A PAVEMENT TEMPERATURE OF NOT LESS THAN 50° F NOR MORE THAN 150° F, WITHOUT THE USE OF HEAT, SOLVENTS, AND ADDITIONAL ADHESIVES OR ACTIVATORS.

MATERIALS SHALL CONFORM TO THE COLOR REQUIREMENTS OF 708.14.

THE TAPE SHALL BE REMOVABLE FROM APSHALT AND PORTLAND CEMENT CONCRETE INTACT OR IN LARGE PIECES AT TEMPERATURES ABOVE 40° F WITHOUT USE OF HEAT, SOLVENTS, GRINDING, OR SANDBLASTING. REMOVAL SHALL NOT RESULT IN DAMAGE TO OR OBJECTIONABLE STAINING OF THE PAVEMENT.

GLASS BEADS SHALL BE PROVIDED IN A PROPER SIZE, QUANTITY AND DISTRIBUTION TO ASSURE OPTIMUM RETROREFLECTIVITY AS THE FILM WEARS. THE FOLLOWING INITIAL AVERAGE REFLECTANCE VALUES AT 86.0 ENTRANCE ANGLE AS MEASURED IN ACCORDANCE WITH THE TESTING PROCEDURES OF FEDERAL TEST METHOD 370 SHALL BE CERTIFIED:

	WHITE		YELLOW	
OBSERVATION ANGLE	0.2	0.5	0.2	0.5
SPECIFIC LUMINANCE	1770	1270	1310	810

(MCD/FT^2)/FC

THE TAPE SHALL BE 3-M COMPANY'S "STAMARK, DETOUR GRADE (SERIES 57L0, 5711, 6270, 6211)" OR AN APPROVED EQUAL.

THE CONTRACTOR SHALL FURNISH TO THE ENGINEER CERTIFICATION THAT THE MATERIAL SUPPLIED MEETS THE PROPERTIES SPECIFIED HEREIN.

LAYOUT

THE TEMPORARY MARKINGS SHALL BE ACCURATELY LAID OUT IN CONFORMANCE WITH 621.051 AND SHALL BE LOCATED IN A TRUE LINE ON THE CENTER LINE, LANE LINE, EDGE LINE, OR CHANNELIZING LINE WHERE PERMANENT MARKINGS WOULD LIE UNLESS OTHERWISE SPECIFIED IN THE PLANS.

PLACEMENT

TEMPORARY MARKINGS SHALL BE PLACED IN ACCORDANCE WITH THE FOLLOWING REQUIREMENTS, UNLESS OTHERWISE SPECIFIED IN THE PLANS.

TEMPORARY MARKINGS SHALL BE COMPLETE AND IN PLACE ON ALL PAVEMENT PRIOR TO EXPOSING IT TO TRAFFIC. WHEN TEMPORARY MARKINGS ARE NO LONGER NEEDED, THEY SHALL BE REMOVED BY THE CONTRACTOR IN ACCORDANCE WITH 621.134 AND NECESSARY PAVEMENT MARKINGS INSTALLED BEFORE THE FLOW OF TRAFFIC IS CHANGED TO THE NEXT PHASE OR RETURNED TO ITS NORMAL CHANNEL.

WHERE PERMANENT PAVEMENT MARKINGS ARE CALLED FOR IN THE PLANS, THE CONTRACTOR SHALL FURNISH AND PLACE THE PERMANENT MARKINGS WITHIN 30 CALENDAR DAYS FOLLOWING COMPLETION OF ALL SURFACE COURSES IN A SINGLE ROADWAY OR PRIOR TO THE END OF THE CONSTRUCTION SEASON, WHICHEVER COMES FIRST. PERMANENT MARKINGS SHALL NOT BE PLACED OVER ANY TAPE MARKINGS.

A. CLASS I MARKINGS

CLASS I MARKINGS SHALL BE AS DEFINED IN 621, EXCEPT AS FOLLOWS:
1) LANE LINES SHALL BE 4-INCHES IN WIDTH.
2) TRANSVERSE LINES SHALL BE 8-INCHES IN WIDTH.
3) STOP LINES SHALL BE 12-INCHES IN WIDTH.
4) CROSS WALK LINES SHALL BE 8-INCHES IN WIDTH.

GORE MARKINGS SHALL CONSIST OF TWO CHANNELIZING LINES PLACED AT THE THEORETICAL OR TEMPORARY GORE OF RAMPS AND DIVERGING OR CONVERGING ROADWAYS.

THE PAINT APPLICATION RATE SHALL BE NOT LESS THAN 16 GALLONS PER MILE FOR SOLID 4-INCH LINES, 24 GALLONS PER MILE FOR SOLID 6-INCH LINES, 48 GALLONS PER MILE FOR SOLID 12-INCH LINES, AND 4 GALLONS PER MILE FOR 4-INCH DASHED LINES.

B. CLASS II MARKINGS

CENTER LINES SHALL CONSIST OF SINGLE, YELLOW 12-INCH BY 4-INCH DASHES SPACED AT A MAXIMUM OF 40-FOOT INTERVALS.

LANE LINES SHALL CONSIST OF WHITE 12-INCH BY 4-INCH DASHES SPACED AT A MAXIMUM OF 40-FOOT INTERVALS.

CHANNELIZING LINES SHALL CONSIST OF WHITE 12-INCH BY 4-INCH DASHES SPACED AT A MAXIMUM OF 20-FOOT INTERVALS.

GORE MARKINGS SHALL BE TWO CONTINUOUS, WHITE 50-FOOT BY 4-INCH LINES PLACED AT THE THEORETICAL GORE OF AN EXIT RAMP OR DIVERGING ROADWAYS.

THE PAINT APPLICATION RATE SHALL BE NOT LESS THAN 16 GALLONS PER MILE FOR GORE MARKINGS, 0.8 GALLONS PER MILE FOR CHANNELIZING LINE, AND 0.4 GALLONS PER MILE FOR LANE LINE AND CENTER LINE.

CONFLICTING MARKINGS

THE CONTRACTOR SHALL, PRIOR TO, PLACING TEMPORARY MARKINGS, REMOVE ALL EXISTING CONFLICTING MARKINGS VISIBLE TO THE TRAVELING PUBLIC DURING DAYLIGHT OR NIGHTTIME HOURS IN ACCORDANCE WITH 621.134. THE COST FOR REMOVAL OF CONFLICTING MARKINGS SHALL BE INCIDENTAL TO THE VARIOUS PAY ITEMS.

METHOD OF MEASUREMENT

TEMPORARY PAVEMENT MARKINGS WILL BE MEASURED COMPLETE IN PLACE, BY CLASS AND MATERIAL, IN THE UNITS DESIGNATED. DASHED LINE QUANTITIES WILL BE THE LENGTH OF THE COMPLETED STRIPE, INCLUDING GAPS, INTERSECTIONS, AND OTHER SECTIONS OF PAVEMENT NOT NORMALLY MARKED, IN ACCORDANCE WITH 621.15.

TEMPORARY PAVEMENT MARKINGS WILL INCLUDE THE LAYOUT, APPLICATION AND REMOVAL OF THE MARKINGS, WHEN REQUIRED.

BASIS OF PAYMENT

PAYMENT FOR ACCEPTED QUANTITIES COMPLETE IN PLACE WILL BE MADE AT THE CONTRACT UNIT PRICE. PAYMENT SHALL BE FULL COMPENSATION FOR ALL MATERIALS, LABOR, INCIDENTALS AND EQUIPMENT FOR PLACEMENT, MAINTENANCE AND NECESSARY REMOVAL OF THE MARKINGS.

ITEM	UNIT	DESCRIPTION
614	MILES	TEMPORARY LANE LINES, CLASS ____, (PAINT, TAPE OR TYPE R TAPE)
614	MILES	TEMPORARY CENTER LINES, CLASS II, (PAINT, TAPE OR TYPE R TAPE)
614	MILES/LIN. FT.	TEMPORARY CHANNELIZING LINES, CLASS ____, (PAINT, TAPE OR TYPE R TAPE)
614	MILES	TEMPORARY EDGE LINES, CLASS I, (PAINT, TAPE OR TYPE R TAPE)
614	LIN. FT.	TEMPORARY GORE MARKING, CLASS II, (PAINT, TAPE OR TYPE R TAPE)
614	LIN. FT.	TEMPORARY STOP LINES, CLASS I, (PAINT, TAPE OR TYPE R TAPE)
614	LIN. FT.	TEMPORARY CROSSWALK LINES, CLASS I, (PAINT, TAPE OR TYPE R TAPE)
614	EACH	TEMPORARY LANE ARROWS, CLASS I, (PAINT, TAPE OR TYPE R TAPE)
614	EACH	TEMPORARY WORD "ONLY" ON PAVEMENT, 72-INCH, CLASS I, (PAINT OR TAPE)
614	LIN. FT.	TEMPORARY TRANSVERSE LINES, CLASS I, (PAINT, TAPE OR TYPE R TAPE)

A QUANTITY OF 0.03 MILES OF TEMPORARY CENTER LINES, CLASS II IS CARRIED TO THE GENERAL SUMMARY TO BE USED AS DIRECTED BY THE ENGINEER.

5/13/82

N.E. 1/4, SEC. 28, BLOOM TWP., T1N, R16E

FHWA REGION	STATE	PROJECT	
5	OHIO		

12/12

SEN. 19-1.97
JOB NO 027920

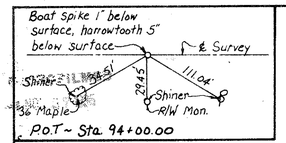

REFERENCE

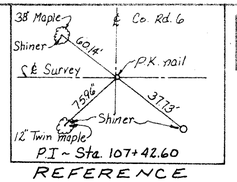

REFERENCE

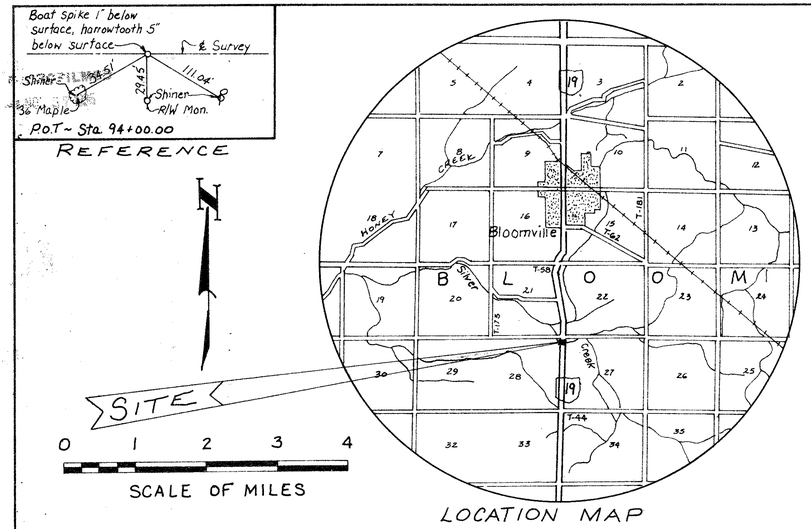

LOCATION MAP

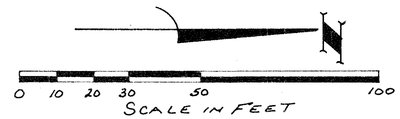

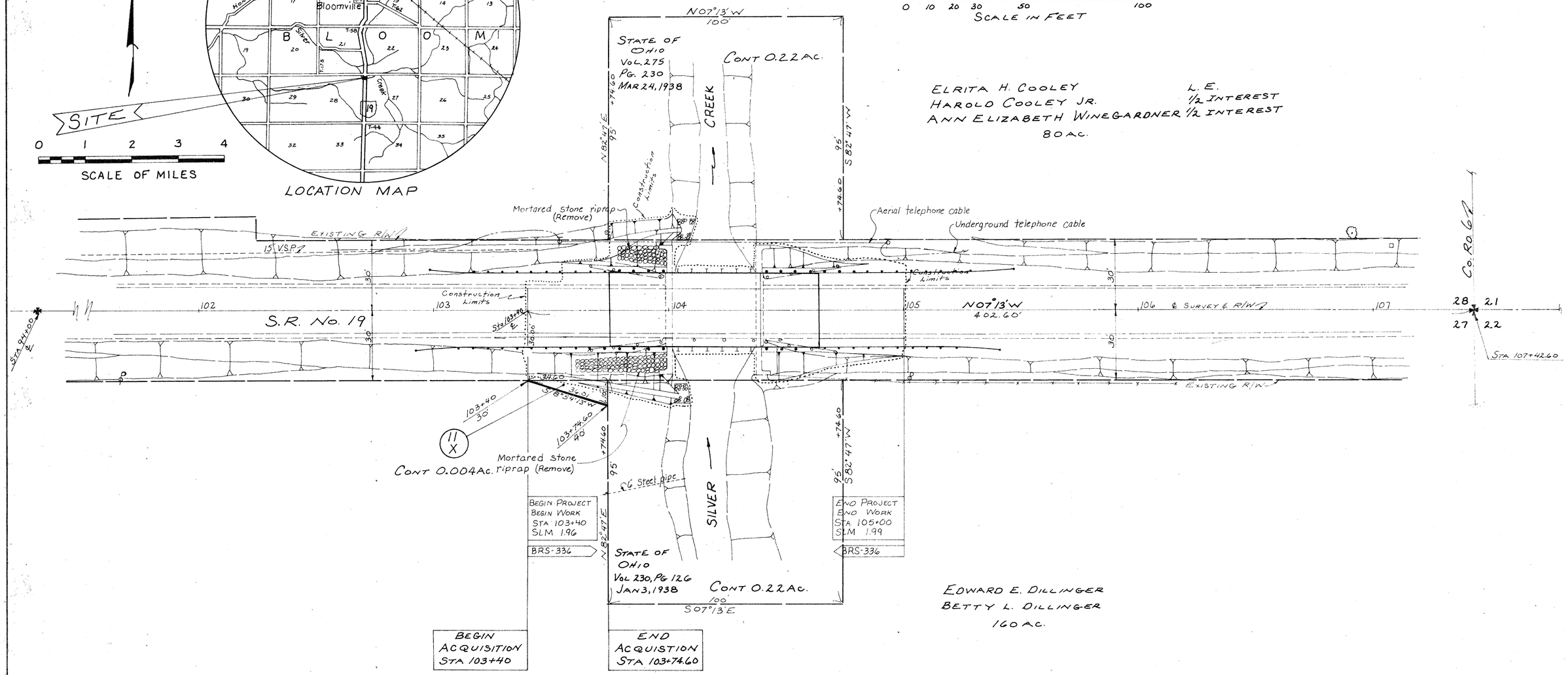

ELRITA H. COOLEY — L.E.
HAROLD COOLEY JR. — 1/2 INTEREST
ANN ELIZABETH WINEGARDNER — 1/2 INTEREST
80 AC.

EDWARD E. DILLINGER
BETTY L. DILLINGER
160 AC.

PARCEL No.	OWNER	DEED RECORD VOL.	DEED RECORD PAGE	DEED AREA ACRES	TOTAL PRO ACRES	TOTAL TAKE ACRES	PRO IN TAKE ACRES	NET TAKE ACRES	RESIDUE ACRES	REMARKS
11X	EDWARD E. & BETTY L. DILLINGER	374	746	160	1.82	0.004	0.000	0.004	159.996	GRADE DITCH-RELOCATE

PARCEL No	DATE	REMARKS

N.W. 1/4 SEC. 27, BLOOM TWP., T1N, R16E