ljaynes@D04CD122 - 16520gt.m - Thursday October 07 1999 10:41:10 AM EDT

STATE OF OHIO
DEPARTMENT OF TRANSPORTATION

STA-172-14.210

PERRY TOWNSHIP
STARK COUNTY

metric units

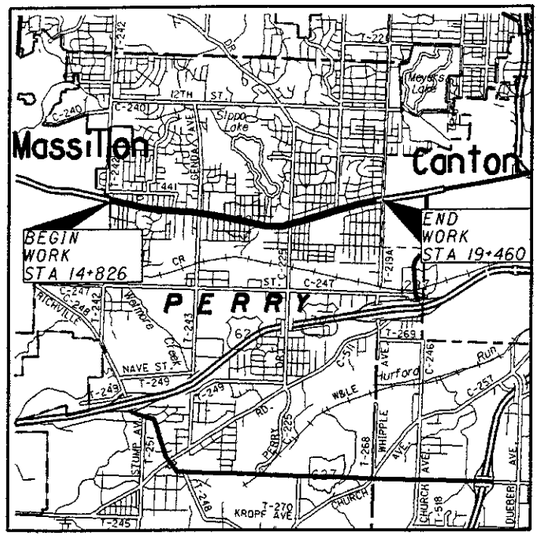

LOCATION MAP

LATITUDE: 40°47'34" LONGITUDE: 81°27'20"

SCALE IN KILOMETERS

0 1 2 3 4

N

PORTION TO BE IMPROVED
STATE & FEDERAL ROUTES
OTHER ROADS

PROJECT DESCRIPTION

THE UPGRADING AND COORDINATION OF SEVEN (7) SIGNALIZED INTERSECTIONS BETWEEN THE CITIES OF MASSILLON AND CANTON IN STARK COUNTY

TITLE SHEET	1
LOCATION MAP	2
GENERAL NOTES	3-4
MAINTENANCE OF TRAFFIC	5
GENERAL SUMMARY	6-7
TRAFFIC CONTROL PLAN SHEETS	8-24
POLE DETAILS	25
SIGNAL DETAILS	26
TIME-SPACE DIAGRAMS	27-29
RIGHT-OF-WAY SHEETS	30-32

1997 SPECIFICATIONS

THE STANDARD SPECIFICATIONS OF THE STATE OF OHIO, DEPARTMENT OF TRANSPORTATION, INCLUDING CHANGES AND SUPPLEMENTAL SPECIFICATIONS LISTED IN THE PROPOSAL SHALL GOVERN THIS IMPROVEMENT.

I HEREBY APPROVE THESE PLANS AND DECLARE THAT THE MAKING OF THIS IMPROVEMENT WILL NOT REQUIRE THE CLOSING TO TRAFFIC OF THE HIGHWAY AND THAT PROVISIONS FOR THE MAINTENANCE AND SAFETY OF TRAFFIC WILL BE AS SET FORTH IN THESE PLANS

STATE OF OHIO
LISA A. JAYNES
E-56841
REGISTERED PROFESSIONAL ENGINEER

SIGNED: Lisa A Jaynes
DATED: 10-6-99

PLAN PREPARED BY:
OHIO DEPARTMENT OF TRANSPORTATION
DISTRICT 4 PRODUCTION

STATE OF OHIO
BRYAN E. McCOY
E-27739
REGISTERED PROFESSIONAL ENGINEER

SIGNED: Bryan E McCoy
DATED: 10-8-99

RIGHT-OF-WAY PLAN PREPARED BY:
MCCOY ASSOCIATES

UNDERGROUND UTILITIES
TWO WORKING DAYS
BEFORE YOU DIG
CALL 1-800-362-2764 (TOLL FREE)
OHIO UTILITIES PROTECTION SERVICE
NON-MEMBERS
MUST BE CALLED DIRECTLY

STANDARD CONSTRUCTION DRAWINGS								SUPPLEMENTAL SPECIFICATIONS	
HL-30.11M	3-31-95	MT-35.10M	1-30-95						
		MT-35.11M	1-30-95					806	9-9-97
TC-21.20M	12-10-96	MT-95.31M	4-25-94					830	10-21-98
TC-41.20M	7-1-94	MT-95.32M	4-25-94					842	1-6-99
TC-41.41M	3-31-94	MT-97.10M	4-25-94					863	9-9-97
TC-42.20M	3-31-94	MT-105.10M	4-25-94					899	10-21-98
TC-52.10M	7-29-94	MT-105.11M	4-25-94					905	4-1-98
TC-52.20M	7-29-94							907	10-21-98
TC-81.10M	12-10-96								
TC-82.10	1-19-99								
TC-82.11	1-19-99								
TC-83.10M	11-24-93								
TC-83.20M	11-24-93								
TC-84.20M	11-24-93								
TC-85.10M	11-24-93								
TC-85.20M	11-24-93								

APPROVED David R Dreger
DATE 10/13/99 DISTRICT DEPUTY DIRECTOR

APPROVED Gordon Proctor Jr.
DATE 11-29-99 DIRECTOR, DEPARTMENT OF TRANSPORTATION

STA SR 172-14.210
000117
DIST 04

PID# 16520
03-08-00

FEDERAL PROJECT NO. TE21-G000(066)
PID NO. 16520
CONSTRUCTION PROJECT NO.
RAILROAD INVOLVEMENT NONE
STA-172-14.210

ljaynes@D04CD122 - 16520st.m - Friday August 27 1999 10:36:34 AM EDT

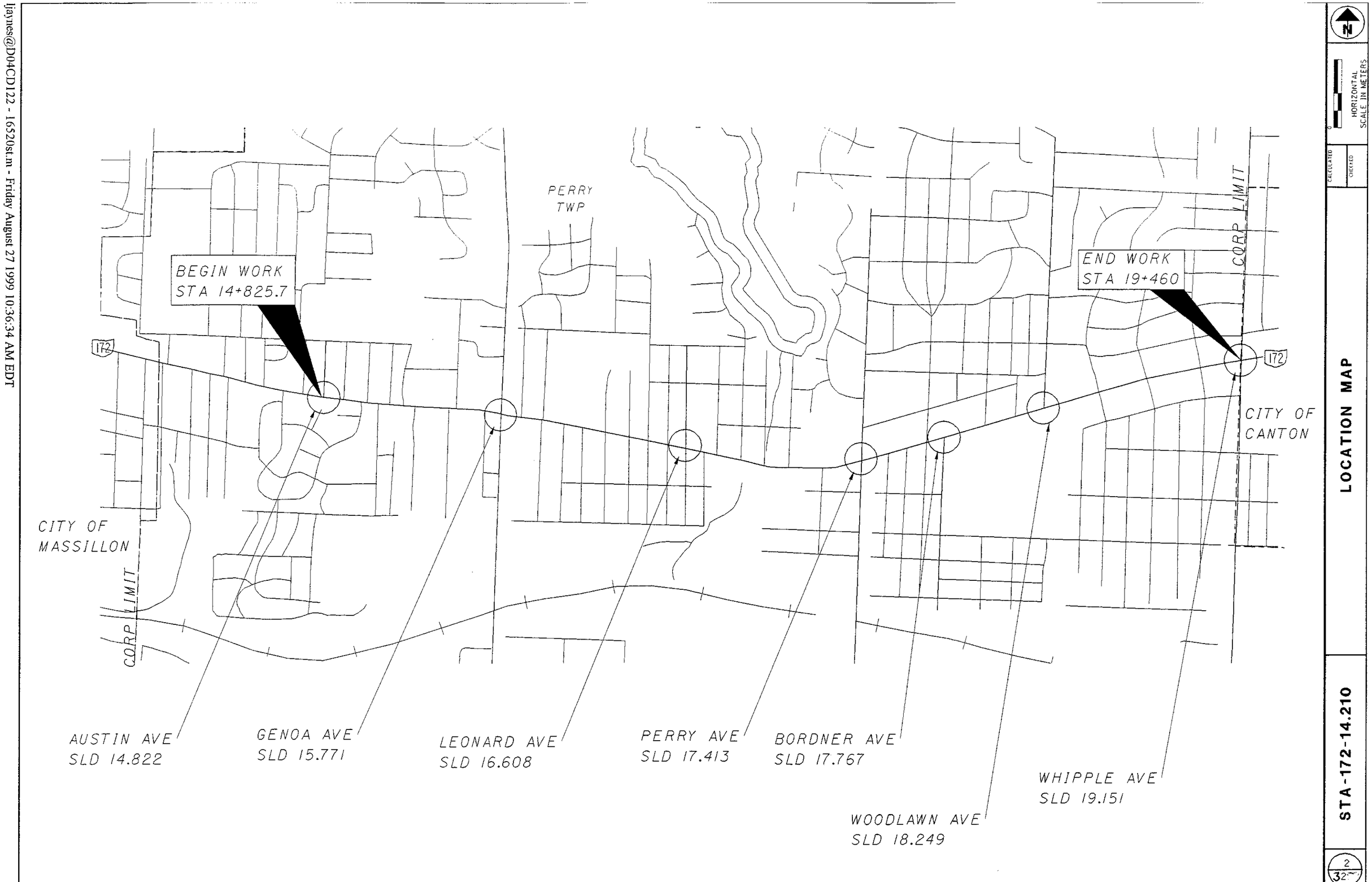

jjaynes@D04CD122 - 16520tn1.m - Friday October 01 1999 10:31:15 AM EDT

ITEM 625 - GROUND ROD, AS PER PLAN

IN ADDITION TO ITEM 625.10, THIS ITEM SHALL CONSIST OF FURNISHING AND RUNNING OF A SEVEN (7) STRAND #4 COPPER WIRE FROM THE TOP OF THE GROUND ROD AND ATTACHING IT TO THE NEUTRAL BAR IN THE CABINET.

PAYMENT SHALL BE MADE AT THE CONTRACT UNIT PRICE PER EACH.

GUARANTEE

THE CONTRACTOR SHALL GUARANTEE THAT THE TRAFFIC CONTROL SYSTEM INSTALLED AS PART OF THIS CONTRACT SHALL OPERATE SATISFACTORILY FOR A PERIOD OF 90 DAYS FOLLOWING COMPLETION OF THE 10 DAY PERFORMANCE TEST. IN THE EVENT OF AN UNSATISFACTORY OPERATION, THE CONTRACTOR SHALL CORRECT FAULTY INSTALLATIONS, MAKE REPAIRS AND REPLACE DEFECTIVE PARTS WITH NEW PARTS OF EQUAL OR BETTER QUALITY. EQUIPMENT, MATERIALS AND LABOR COSTS INCURRED IN CORRECTING AN UNSATISFACTORY OPERATION SHALL BE BORNE BY THE CONTRACTOR.

THE GUARANTEE SHALL COVER THE FOLLOWING ITEMS OF THE TRAFFIC CONTROL SYSTEM: CONTROLLERS AND ASSOCIATED EQUIPMENT, AND DETECTOR UNITS.

CUSTOMARY MANUFACTURERS GUARANTEES FOR THE FOREGOING ITEMS SHALL BE TURNED OVER TO THE STATE FOLLOWING ACCEPTANCE OF THE EQUIPMENT.

THE COST OF GUARANTEEING THE TRAFFIC CONTROL SYSTEM WILL BE INCIDENTAL TO AND INCLUDED IN THE CONTRACT UNIT PRICE OF THE VARIOUS ITEMS MAKING UP THE SYSTEM.

ITEM 632 - LOOP DETECTOR UNITS, BY TYPE, AS PER PLAN

IN ADDITION TO THE REQUIREMENTS OF 632 AND 732.07 OR 732.08, LOOP DETECTOR UNITS SHALL HAVE THE FOLLOWING REQUIREMENTS OR FEATURES:

THE OUTPUT DEVICE SHALL BE A RELAY, AND ALL CONTACTS SHALL BE INCLUDED IN THE WIRING HARNESS.

THE UNIT SHALL BE SELF TUNING.

THE UNIT'S ELECTRICAL CONNECTION PLUGS OR WIRING HARNESS SHALL ALLOW READY PLACEMENT WITH A SINGLE CHANNEL AMPLIFIER AS DESCRIBED IN THE FINAL PARAGRAPH OF 732.07

EACH UNIT SHALL BE LABELED TO CORRESPOND TO ITS PHASE AND DIRECTION.

DELAY INHIBIT SHALL BE CONNECTED ON ALL DETECTOR HARNESSES FOR THEIR RESPECTIVE PHASE GREENS.

ITEM 632- PEDESTRIAN SIGNAL HEADS, TYPE D2

ALL PEDESTRIAN SIGNAL HEADS SHALL USE THE INTERNATIONAL SYMBOLS.

ITEM 632 - VEHICULAR SIGNAL HEAD, BY TYPE, AS PER PLAN

THIS ITEM SHALL CONSIST OF THE FURNISHING AND PLACING OF A SIGNAL HEAD. THIS ITEM SHALL CONFORM TO 632.05, 732.01 AND 732.04 EXCEPT THE ENTRANCE FITTING SHALL BE OF THE TRI-STUD DESIGN WITH SERRATED RINGS IN ORDER TO ACHIEVE LOCKING. BALANCE ADJUSTERS SHALL ONLY BE USED WHERE NECESSARY. BALANCE ADJUSTERS SHALL NOT BE USED ON ONE-WAY HEADS.

PAYMENT SHALL BE MADE AT THE CONTRACT UNIT PRICE PER EACH.

ITEM 632 - POWER SERVICE, AS PER PLAN

POWER SERVICE SHALL BE AS PER SPECIFICATION 632 AND STANDARD CONSTRUCTION DRAWING TC-83.10M WITH THE FOLLOWING EXCEPTIONS: 1) THE METER BASE MOUNTING HEIGHT SHALL BE NO MORE THAN 1.5 METER HIGH TO THE CENTER OF THE METER BASE FROM THE GROUND. 2) THE CONTRACTOR SHALL SUPPLY THE NECESSARY METER BASES. 3) ALL POWER SERVICES SHALL BE METERED. THE METER SHALL HAVE A LEVER OPERATED BYPASS.

DISCONNECT SWITCH ENCLOSURES FURNISHED IN ACCORDANCE WITH ITEM 632, POWER SERVICE, AS PER PLAN, SHALL INCLUDE A PADLOCK EQUAL TO MASTER NO. 4BKA OR WILSON BOHANNON 660, WITH LOCK BODY OF BRONZE OR BRASS AND KEYING SHALL BE TO THE STATE MASTER.

ADDITIONAL HOLES IN EXISTING POLES FOR POWER SERVICE, PEDESTRIAN HEADS, ETC, SHALL BE DRILLED, REAMED OR HOLE SAWED. FLAME CUTTING [OXYACETALENE OR ELECTRICAL ARC] WILL NOT BE ACCEPTED. ALL CUT EDGES OR OTHER DEFECTS IN THE ZINC COATING SHALL BE CLEANED AND COVERED WITH TWO COATS OF ZINC-RICH REPAIR PAINT. THE CONTRACTOR SHALL WELD A 38MM B.H.C. 700MM FROM THE BASE PLATE ON EXISTING POLES FOR THE NEW POWER SERVICE.

THE CONTRACTOR SHALL CONTACT THE METER SECTION OF THE POWER COMPANY FOR INFORMATION REGARDING THE METER BASE INSTALLATION PRIOR TO ORDERING POLES. THE CONTRACTOR WILL BE RESPONSIBLE FOR REQUESTING AND SCHEDULING ANY INSPECTIONS THE POWER COMPANY MAY REQUIRE FOR THE POWER SERVICE HOOK UP. THE CONTRACTOR SHALL BE RESPONSIBLE TO CONTACT THE POWER COMPANY FOR THE ELECTRICAL SERVICE CONNECTION. UNDER NO CIRCUMSTANCES SHALL THE CONTRACTOR SPLICE POWER CABLE INTO THE POWER COMPANY'S CIRCUITS. THE VOLTAGE SUPPLIED SHALL BE NOMINALLY 120 VOLTS. THE CONTRACTOR IS RESPONSIBLE FOR OBTAINING ANY NECESSARY PERMITS AND THE PAYING OF ALL FEES. THE CONTRACTOR SHALL PAY ALL POWER CHARGES UNTIL THE SIGNAL IS ACCEPTED BY THE MAINTAINING AGENCY.

UNDERDRAINS FOR PULLBOXES

REFERENCE IS MADE TO STANDARD DRAWING HL-30.11M FOR DETAILS OF DRAINING PULLBOXES. UNDERDRAINS FOR PULLBOXES SHALL BE USED AS DIRECTED BY THE ENGINEER AND SHALL BE PROVIDED WHERE THE LENGTH REQUIRED FOR A SATISFACTORY OUTLET DOES NOT EXCEED APPROXIMATELY 12 METER. AN ESTIMATED QUANTITY OF 204 METER OF ITEM 603, 100MM CONDUIT TYPE E IS INCLUDED IN THE GENERAL SUMMARY FOR THIS PURPOSE.

ITEM SPECIAL - PLASTIC CAUTION TAPE

THE LOCATION OF UNDERGROUND CONDUIT AND BURIED ELECTRICAL CABLES SHALL BE MARKED BY THE USE OF A CONTINUOUS IDENTIFYING TAPE BURIED IN THE TRENCH ABOVE THE LINE. THE IDENTIFYING TAPE SHALL BE AN INERT MATERIAL, APPROXIMATELY 150MM WIDE COMPOSED OF POLYETHYLENE PLASTIC, HIGHLY RESISTANT TO ALKALIS, ACIDS, OR OTHER CHEMICAL COMPONENTS LIKELY TO BE ENCOUNTERED IN SOILS. THE TAPE SHALL BE BRIGHT RED WITH IDENTIFYING PRINTING "ELECTRIC" IN BLACK LETTERS, ONE SIDE ONLY. TAPE SHALL BE SUPPLIED IN CONTINUOUS ROLLS WITH THE IDENTIFYING LETTERING REPEATED CONTINUOUSLY THE FULL LENGTH OF THE TAPE. IDENTIFYING TAPE SHALL BE BURIED ON THE ELECTRIC LINE TRENCH WITH ONE STRIP APPROXIMATELY 150MM TO 250MM BELOW THE FINAL FINISHED GRADE. THE TAPE SHALL BE PLACED IN THE TRENCH WITH THE PRINTED SIDE UP AND SHALL BE ESSENTIALLY PARALLEL WITH THE FINISHED SURFACE. THE CONTRACTOR SHALL TAKE NECESSARY PRECAUTIONS TO INSURE THAT THE TAPE IS NOT PULLED, DISTORTED, OR OTHERWISE MISPLACED IN COMPLETING THE TRENCH BACKFILL. THE TAPE SHALL BE PAID FOR PER METER OF ITEM SPECIAL - "PLASTIC CAUTION TAPE" COMPLETE AND IN PLACE.

ITEM 632 REMOVAL OF TRAFFIC SIGNAL INSTALLATION, AS PER PLAN

THIS WORK SHALL CONSIST OF THE REMOVAL OF PORTIONS OF THE EXISTING TRAFFIC SIGNAL INSTALLATION AS SHOWN ON THE PLANS AND AS HEREIN SPECIFIED. THE ITEMS TO BE REMOVED AND THE DISPOSAL INSTRUCTIONS FOR EACH ITEM ARE SHOWN BELOW. THE CONTRACTOR SHALL NOTIFY O.D.O.T., DISTRICT 4, PAUL ENSINGER, (330) 297-0801 EXT 334, TO PICK UP THE SALVAGED EQUIPMENT. AT LEAST THREE (3) WORKING DAYS NOTICE SHALL BE GIVEN FOR PICKUP. AT THE COMPLETION OF THE PROJECT, ANY STORED ITEMS STILL REMAINING ON THE SITE SHALL BE PROPERLY DISPOSED OF BY THE CONTRACTOR.

WITH THE EXCEPTION OF ITEMS WHOSE REMOVAL IS NECESSARY TO PERMIT THE INSTALLATION OF THE NEW SIGNAL EQUIPMENT, NO ITEM SHALL BE REMOVED UNTIL THE NEW INSTALLATION IS IN FULL OPERATION, UNLESS OTHERWISE DIRECTED BY THE ENGINEER.

THE CONTRACTOR SHALL MAKE ARRANGEMENTS WITH THE POWER COMPANY TO DISCONNECT THE EXISTING POWER SERVICE BEFORE THE EXISTING SIGNAL INSTALLATIONS ARE REMOVED.

PAYMENT FOR ITEM 632 REMOVAL OF TRAFFIC SIGNAL INSTALLATION WILL BE AS PER 632.28.

LOCATION	ITEMS STORED FOR ODOT	ITEMS DISPOSED OF BY CONTRACTOR
AUSTIN AVE	CONTROLLER/CABINET VEH. SIGNAL HEADS	WIRING, CABLING, WOOD POLES, PULLBOXES
GENOA AVE	CONTROLLER/CABINET, VEH. SIGNAL HEADS, PED. SIGNAL HEADS PUSHBUTTONS	WIRING, CABLING, PULLBOXES, ETC
LEONARD AVE	CONTROLLER/CABINET VEH. SIGNAL HEADS, PED. SIGNAL HEADS PUSHBUTTONS	WIRING, CABLING, WOOD POLES PULLBOXES, ETC
PERRY AVE	CONTROLLER/CABINET, VEH. SIGNAL HEADS, PED. SIGNAL HEADS	STEEL POLES, WIRING, CABLING, PULLBOXES, ETC
BORDNER AVE	CONTROLLER/CABINET, VEH. & PED SIGNAL HEADS, PUSHBUTTONS	STEEL POLES, WIRING, CABLING, PULLBOXES, ETC
WOODLAWN AVE	CONTROLLER/CABINET VEH. & PED SIGNAL HEADS	WIRING
WHIPPLE AVE	CONTROLLER/CABINET VEHICULAR SIGNAL HEADS	WIRING

ITEM 632 - SIGNALIZATION MISC.:REMOVE AND REPLACE LASHING RODS

THIS WORK WILL REQUIRE THE CONTRACTOR TO CAREFULLY REMOVE THE LASHING RODS ACROSS AN EXISTING SIGNAL SPAN SO THAT NEW CABLE(S) CAN BE INSTALLED. AS THE CABLE(S) IS INSTALLED IT SHALL BE CAREFULLY LASHED WITH THE OTHER EXISTING CABLES UTILIZING NEW CONTRACTOR FURNISHED LASHING RODS, MEETING THE REQUIREMENTS OF ITEM 732.18. THIS PAY ITEM WILL ONLY BE USED IF THE EXISTING LASHING RODS CANNOT ACCEPT NEW CABLE(S)

PAYMENT FOR THIS ITEM OF WORK WILL BE METER OF LASHING ROD REPLACED AND INCLUDE ALL LABOR AND EQUIPMENT, INCLUDING TRAFFIC CONTROL, TO PERFORM THE WORK DESCRIBED ABOVE.

A QUANTITY OF 10 METERS OF ITEM 632- SIGNALIZATION MISC., REMOVE AND REPLACE LASHING RODS, HAS BEEN CARRIED TO THE GENERAL SUMMARY.

CALCULATED

CHECKED

GENERAL NOTES

STA-172-14.210

ljaynes@D04CD122 - 16520ln1.m - Friday October 01 1999 10:32:21 AM EDT

ITEM 633 CONTROLLER, ACTUATED, BY-PHASE, SOLID STATE DIGITAL, MICROPROCESSOR, AS PER PLAN

THE OVERLAP PROGRAMMING SHALL BE BY USE OF AN INTERCHANGEABLE PLUG IN PRINTED CIRCUIT BOARD ASSEMBLY AS DESCRIBED IN PART 14 OF TS-1-1989. ALL CONTROLLER MEMORIES SHALL BE NON-VOLATILE AND SHALL NOT REQUIRE BATTERIES OR OTHER SOURCES OF ENERGY TO RETAIN DATA WHILE POWER IS REMOVED FROM THE CONTROLLER.

IN ADDITION TO NEMA REQUIREMENTS, THE CONFLICT MONITOR SHALL ALSO HAVE EXTENDED MONITORING OPERATIONAL FOR EACH LOAD SWITCH IN USE (IN ACCORDANCE WITH 733.04 PART 3B). THE MONITOR SHALL MONITOR EACH LOAD SWITCH SEPARATELY. THE DESIGN OF THE MONITOR SHALL USE MICROPROCESSOR ARCHITECTURE AND LIQUID CRYSTAL DISPLAYS. THE CONFLICT MONITOR SHALL HAVE AN EVENT LOGGING MEMORY. A MINIMUM OF NINE (9) EVENTS SHALL BE LOGGED. EXAMPLES OF EVENTS INCLUDE: POWER OUTAGES, CONFLICTS, ETC. EVENTS SHALL BE DISPLAYED ON THE CONFLICT MONITOR'S LIQUID CRYSTAL DISPLAY, WHEN INTERROGATED.

THE MINIMUM NUMBER OF LOAD SWITCH SOCKETS IN THE CABINET FOR 5, 6, 7 AND 8 PHASE CONTROLLERS SHALL BE 16. ALL 'NO-SKIP' FUNCTIONS SHALL BE HARDWIRED ONTO THE BACK PANEL OF THE CABINET.

THE CONTROLLER SHALL HAVE INTERNAL TIME-BASED-COORDINATION. THE CABINET SHALL BE HARD-WIRED CAPABLE

ALL SIGNAL CABLE AND LOOP DETECTOR LEADIN CABLE TERMINATIONS IN THE CABINET SHALL HAVE NO MORE THAN 100MM OF THE OUTER INSULATING JACKET REMOVED.

THE CONTROLLER CABINET SHALL BE KEYED TO THE STATE MASTER. THE CONTROLLER CABINET SHALL NOT BE PAINTED. CONTROLLER CABINET SIZE SHALL COMPLY TO THE REQUIREMENTS OF NEMA TS-1 SECTION 14. PRINTED BOARD TYPE BACK PANELS OF THE CONTROLLER CABINET WILL NOT BE ACCEPTABLE. SOLDERED CONNECTIONS WILL BE PERMITTED FOR WIRING ON THE BACK SIDE OF THE BACK PANEL.

THE FOUNDATION SHALL BE ORIENTED WITH RESPECT TO THE INTERSECTION IN A MANNER THAT WILL PROVIDE MAINTENANCE PERSONNEL WITH A VIEW OF THE INTERSECTION WHILE WORKING ON THE CONTROLLER THE CONTROLLER FOUNDATION SHALL EXTEND 76MM ABOVE GROUND LEVEL RATHER THAN THE 300MM AS STATED ON STANDARD CONSTRUCTION DRAWING TC-83.20M. THE CONTROLLER SHALL INCLUDE A RISER CONSTRUCTED FROM 5052-H32 SHEET ALUMINUM ALLOY WHICH HAS A THICKNESS OF 32MM. THE OUTSIDE SURFACES OF THE RISER AND CONTROLLER CABINET SHALL MATCH. THE RISER SHALL BE CONSTRUCTED AS PER THE DETAIL ON SHEET 27.

PAYMENT FOR ITEM 633 CONTROLLER, BY PHASE, SOLID STATE DIGITAL MICROPROCESSOR, AS PER PLAN WILL BE AT THE CONTRACT BID PRICE PER EACH COMPLETE AND IN PLACE INCLUDING ALL CONNECTIONS TESTED AND ACCEPTED.

633- CONTROLLER, MISC.: INSTALLATION OF EXISTING TIME CLOCK, AS PER PLAN

THIS ITEM SHALL CONSIST OF THE REMOVAL OF THE TIME CLOCK AND PANEL FROM THE EXISTING CABINET AND IT'S RE-INSTALLATION INTO THE NEW CABINET. THE POWER FOR THE TIME CLOCK SHALL BE FROM THE SAME POWER SERVICE AS THE SIGNAL.

PAYMENT FOR ITEM 633 CONTROLLER, MISC.: RE-INSTALLATION OF EXISTING TIME CLOCK, AS PER PLAN WILL BE PAID AT THE CONTRACT BID PRICE PER EACH AND SHALL INCLUDE ALL LABOR AND EQUIPMENT NECESSARY TO PERFORM THE WORK.

UTILITIES

THE FOLLOWING UTILIES AND OWNERS ARE LOCATED WITHIN THE WORK LIMITS OF THIS PROJECT:

AMERITECH
50 W. BOWERY ST
AKRON, OH 44308
ATTN: JIM MCLAUGHLIN
330-384-8057

TIME WARNER CABLE
5520 WHIPPLE AVE
N. CANTON, OH 44720
ATTN: STEVE WEAVER
330-633-9203

OHIO EDISON
1910 W. MARKET ST
AKRON, OH 44313
ATTN: GLENN BOWMAN
330-384-4711

AEP
301 CLEVELAND AVE SW
CANTON, OH 44701
ATTN: MIKE BUSCH
330-438-7721

MASSILLON CABLE
P.O. BOX 814
MASSILLON, OH 44648
ATTN: NEIL TRAVIS
330-833-4134

EAST OHIO GAS
4725 SOUTHWAY ST SW
CANTON, OH 44706
ATTN: KATE ELLIS
330-478-3136

CANTON WATER DEPARTMENT
2664 HARRISBURG AVE NE
CANTON, OH 44705
ATTN: DAVE WILLIAMS
330-489-3310

STARK COUNTY SANITARY ENGINEER
1701 MAHONING RD NE
CANTON, OH 44705
ATTN: JIM JONES
330-438-9304

CONSUMER OHIO WATER CO.
P.O. BOX 584
MASSILLON, OH 44648
ATTN: WILLIE MAURER
330-833-4156

632 LOOP DETECTOR LEAD-IN CABLE, INTEGRAL MESSENGER WIRE TYPE, NO.14AWG, AS PER PLAN

TO AVOID UNNECESSARY SPLICES, THE LENGTH OF THE CABLE FROM AN AERIAL LOCATION THROUGH A POLE OR CONDUIT TO A PULLBOX OR CONTROLLER HOUSING SHALL BE THE SAME CABLE, MINUS THE INTEGRAL MESSENGER WIRE.

THE INTEGRAL MESSENGER WIRE THAT SUPPORTS THE CABLE SHALL BE CUT AWAY AND REMOVED BEFORE THE CABLE IS PULLED THROUGH A POLE OR CONDUIT. EXTREME CARE SHOULD BE USED IN CUTTING AWAY THIS LENGTH OF INTEGRAL MESSENGER WIRE SO AS NOT TO DAMAGE OR NICK THE CABLE INSULATION. A SPECIAL SPLITTING TOOL FOR FIGURE "8" WIRE SHALL BE USED TO DO THIS WORK.

ANY DAMAGE DONE TO THE INSULATION SHALL REQUIRE THE WHOLE LENGTH OF CABLE TO BE REPLACED.

PAYMENT FOR REMOVING THIS LENGTH OF INTEGRAL MESSENGER WIRE SHALL BE INCIDENTAL TO THIS ITEM. PAYMENT WILL INCLUDE ALL NECESSARY LABOR, MISCELLANEOUS HARDWARE AND EQUIPMENT REQUIRED TO PROVIDE FOR THIS ITEM OF WORK IN ACCORDANCE WITH SPECIFICATION 632.

PAYMENT WILL BE AT THE CONTRACTED UNIT PRICE, PER METER.

REUSE OF TRAFFIC CONTROL ITEM; MESSENGER WIRE WITH 3-CONDUCTOR, NO.14AWG SIGNAL CABLE

THIS ITEM SHALL CONSIST OF THE CAREFUL DISCONNECTION OF THE SCHOOL FLASHER WIRES FROM THE EXISTING CONTROLLER AND SIGNAL POLE AND THE RECONNECTION OF THESE WIRES TO THE PROPOSED CONTROLLER AND SIGNAL POLE.

PAYMENT FOR THIS ITEM WILL BE AT THE CONTRACT BID PRICE PER EACH DICONNECTION/RECONNECTION AND SHALL INCLUDE ALL LABOR, MATERIAL AND EQUIPMENT NECESSARY TO PERFORM THE WORK.

CONTROLLER ITEM, MISC.: REUSE OF THE EXISTING CABINET FOUNDATION

THIS ITEM SHALL CONSIST OF THE CAREFUL REMOVAL OF THE EXISTING CONTROLLER CABINET FROM ITS FOUNDATION. ALL WIRES SHALL BE LABELED BEFORE BEING DISCONNECTED FROM THE CABINET TO ENSURE THE PROPER RECONNECTION TO THE PROPOSED CABINET. THE CONTRACTOR SHALL VERIFY THE SIZE OF THE EXISTING FOUNDATION PRIOR TO THE ORDERING OF THE PROPOSED CONTROLLERS.

PAYMENT FOR THIS ITEM WILL BE AT THE CONTRACT PRICE BID PER EACH CABINET FOUNDATION THAT IS REUSED AND SHALL INCLUDE ALL LABOR, MATERIAL AND EQUIPMENT NECESSARY TO PERFORM THE WORK.

CALCULATED
CHECKED

GENERAL NOTES

STA-172-14.210

ljaynes@D04CD122 - 16520tn1.m - Friday October 01 1999 10:31:48 AM EDT

ITEM 614 MAINTAINING TRAFFIC

ALL WORK AND TRAFFIC CONTROL DEVICES SHALL BE IN ACCORDANCE WITH 614 AND OTHER APPLICABLE PORTIONS OF THE SPECIFICATIONS, AS WELL AS THE OHIO MANUAL OF UNIFORM TRAFFIC CONTROL DEVICES, CURRENT EDITION, LATEST REVISION.

LENGTH AND DURATION OF LANE CLOSURE AND RESTRICTIONS SHALL BE AT THE APPROVAL OF THE ENGINEER. IT IS THE INTENT TO MINIMIZE THE IMPACT TO THE TRAVELING PUBLIC. LANE CLOSURES OR RESTRICTIONS OVER SEGMENTS OF THE PROJECT IN WHICH NO WORK IS ANTICIPATED WITHIN A REASONABLE TIME FRAME, AS DETERMINED BY THE ENGINEER, SHALL NOT BE PERMITTED. THE LEVEL OF UTILIZATION OF MAINTENANCE OF TRAFFIC DEVICES SHALL BE COMMENSURATE WITH THE WORK IN PROGRESS.

IF IT IS NECESSARY TO STOP ALL TRAFFIC FOR THE ERECTION OF SPAN WIRE, THE WORK SHALL BE SO ARRANGED THAT THE STOPPAGE IS LESS THAN TEN (10) MINUTES IN ANY ONE (1) THIRTY (30) MINUTE PERIOD. NO STOPPAGE OF TRAFFIC SHALL OCCUR FOR THE ERECTION OF SIGNAL SUPPORTS, CUTTING AND INSTALLING LOOP DETECTOR WIRE, OR HANGING SPAN WIRE AND SIGNAL HEADS, WITHOUT A LAW ENFORCEMENT OFFICER WITH A PATROL CAR AT THE SITE FOR ASSISTANCE IN CONTROLLING TRAFFIC. IT SHALL BE THE CONTRACTOR'S RESPONSIBILITY TO PROVIDE THE SERVICES AND SCHEDULING OF SAID LAW ENFORCEMENT OFFICER WITH PATROL CAR.

THE CONTRACTOR SHALL FURNISH AND MAINTAIN ALL FLAGS, FLAGGERS, WATCHERS, BARRICADES, SIGNS, SIGN SUPPORTS AND INCIDENTALS RELATED TO TRAFFIC CONTROL.

SIGNS FURNISHED SHALL BE IN NEW OR LIKE NEW CONDITIONS. LIKE NEW SIGNS SHALL BE SUBJECT TO THE APPROVAL OF THE PROJECT ENGINEER. THE CONTRACTOR SHALL BE RESPONSIBLE AT ALL TIMES FOR PROVIDING AND MAINTAINING LIGHTS, SIGNS, AND BARRICADES FOR THE MAINTENANCE OF TRAFFIC AND SAFETY OF HIS/HER WORK AT THE LOCATIONS SHOWN ON THESE PLANS OR AS DIRECTED BY THE ENGINEER.

NO WORK SHALL BE PERFORMED AND ALL EXISTING LANES SHALL BE OPENED TO TRAFFIC AND ALL SIGNALS IN OPERATION DURING THE FOLLOWING DESIGNATED HOLIDAYS OR EVENTS:

MEMORIAL DAY	FOURTH OF JULY	HALL OF FAME WEEK
LABOR DAY	THANKSGIVING	

DAY OF THE WEEK	TIMES ALL LANES MUST BE OPEN TO TRAFFIC
SUNDAY	12:00N FRIDAY THROUGH 12:00N MONDAY
MONDAY	12:00N FRIDAY THROUGH 12:00N TUESDAY
TUESDAY	12:00N MONDAY THROUGH 12:00N WEDNESDAY
WEDNESDAY	12:00N TUESDAY THROUGH 12:00N THURSDAY
THURSDAY	12:00N WEDNESDAY THROUGH 12:00N MONDAY
FRIDAY	12:00N THURSDAY THROUGH 12:00N MONDAY
SATURDAY	12:00N FRIDAY THROUGH 12:00N MONDAY

THERE SHALL NOT BE ANY EXTENSIONS DUE TO WEATHER OR MATERIAL DELAYS WHATSOEVER.

SHALL THE CONTRACTOR FAIL TO MEET ANY OF THESE REQUIREMENTS, THE CONTRACTOR SHALL BE ASSESSED LIQUIDATED DAMAGES IN ACCORDANCE WITH 108.07 OF THE CONSTRUCTION AND MATERIALS SPECIFICATIONS.

NO LANE CLOSURE SHALL BE IMPLEMENTED DURING THE HOURS OF 6:00am TO 9:00am OR 4:00pm TO 6:00pm WEEKDAYS. ALL ADVANCE WARNING SIGNS FOR ANY CONDITION WHICH RESTRICTS TRAFFIC SHALL BE ERECTED BEFORE ANY SUCH RESTRICTION IS PUT INTO EFFECT. ALL SUCH SIGNS SHALL BE COVERED OR REMOVED FROM THE VIEW OF TRAFFIC WHEN THEY ARE NOT APPLICABLE, AS DETERMINED BY THE ENGINEER. FOR WORK WHICH IS CONFINED TO THE SHOULDER, TRAFFIC CONTROL SHALL CONFORM TO PLATES C-11,C-12,C-13 OF THE UNIFORM TRAFFIC CONTROL DEVICES (OMUTCD).

IF THE CONTRACTOR FAILS TO COMPLY WITH THE PROVISIONS FOR TRAFFIC CONTROL AS SET FORTH IN THESE PLANS AND PROVISIONS OF THE OMUTCD AND THE FAILURE RESULTS IN A CONDITION AT THE WORK SITE WHICH IS UNSAFE FOR TRAFFIC, THE ENGINEER SHALL SUSPEND WORK UNTIL THE CONTRACTOR COMPLIES WITH THE NECESSARY REQUIREMENTS.

TWO-WAY TRAFFIC ON A MINIMUM OF TWO 10-FOOT LANES SHALL BE MAINTAINED BY USE OF THE EXISTING PAVEMENT. ONE WAY TRAFFIC MAY BE PERMITTED DURING PLACEMENT OF TRAFFIC SIGNAL HEADS SUBJECT TO THE APPROVAL OF THE ENGINEER.

MAINTENANCE OF TRAFFIC SIGNAL INSTALLATION

THE CONTRACTOR SHALL BE RESPONSIBLE FOR MAINTAINING TRAFFIC SIGNAL INSTALLATIONS WITHIN THE PROJECT UNDER THE FOLLOWING CONDITIONS:

A) EXISTING SIGNAL INSTALLATIONS WHICH THE PLANS REQUIRE THE CONTRACTOR TO ADJUST, MODIFY, ADD ONTO OR REMOVE, OR WHICH THE CONTRACTOR ACTUALLY ADJUSTS, MODIFIES OR OTHERWISE DISTURBS. THE CONTRACTOR SHALL BE RESPONSIBLE FOR THE ENTIRE INSTALLATION (AT AN INTERSECTION) FROM THE TIME PHYSICAL WORK BEGINS UNTIL THE INSTALLATION HAS BEEN SUBSEQUENTLY REMOVED OR MODIFIED AND THE WORK IS ACCEPTED.

B) NEW OR REUSED SIGNAL INSTALLATIONS OR DEVICES, INSTALLED BY THE CONTRACTOR. THE CONTRACTOR SHALL BE RESPONSIBLE FOR MAINTENANCE OF THESE FROM THE TIME OF INSTALLATION UNTIL THE WORK IS ACCEPTED.

THE CONTRACTOR SHALL CORRECT AS QUICKLY AS POSSIBLE ALL OUTAGES OR MALFUNCTIONS. THE CONTRACTOR SHALL PROVIDE THE PROJECT ENGINEER SUCH ADDRESSES AND PHONE NUMBERS WHERE HIS MAINTENANCE FORCES CAN BE CONTACTED. THE CONTRACTOR SHALL PROVIDE ONE OR MORE PERSONS TO RECEIVE ALL CALLS AND DISPATCH THE NECESSARY MAINTENANCE FORCES TO CORRECT OUTAGES. SUCH A PERSON OR PERSONS MAY BE USED TO PERFORM OTHER DUTIES AS LONG AS PROMPT ATTENTION IS GIVEN TO THESE CALLS AND A PERSON IS READILY AVAILABLE CONTINUOUSLY 24 HOURS A DAY, 7 DAYS A WEEK. ALL LAMP OUTAGES, THE CONTRACTOR SHALL HAVE THE MALFUNCTION CORRECTED AND/OR REPAIRED TO THE SATISFACTION OF THE ENGINEER WITHIN FOUR HOURS OF THE NOTIFICATION OR LIQUIDATED DAMAGES OF $500 PER HOUR SHALL BE ASSESSED THE CONTRACTOR. ELECTRICAL FAILURES, EQUIPMENT MALFUNCTIONS AND MISALIGNED SIGNAL HEADS SHALL BE CORRECTED TO THE SATISFACTION OF THE PROJECT ENGINEER WITH THE SIGNAL BACK IN SERVICE WITHIN FOUR HOURS AFTER THE CONTRACTOR HAS BEEN NOTIFIED OF THE OUTAGES

IN THE EVENT NEW SIGNALS ARE DAMAGED PRIOR TO ACCEPTANCE ALL DAMAGED EQUIPMENT EXCEPT POLES AND CONTROL EQUIPMENT SHALL BE REPLACED BY THE CONTRACTOR TO THE SATISFACTION OF THE PROJECT ENGINEER WITH THE SIGNAL BACK IN SERVICE WITHIN 8 HOURS AFTER THE CONTRACTOR'S NOTIFIED OF THE OUTAGE. IF POLES AND/OR CONTROL EQUIPMENT ARE DAMAGED AND MUST BE REPLACED, THE CONTRACTOR SHALL MAKE TEMPORARY REPAIRS AS NECESSARY TO BRING THE SIGNAL BACK INTO FULL OPERATION WITHIN THE ALLOWED EIGHT HOUR PERIOD, AND SHALL MAKE PERMANENT REPAIRS OF REPLACEMENT AS SOON AS POSSIBLE. NONE OF THE ABOVE SHALL BE CONSTRUED AS COLLECTIVE OR CONSECUTIVE OUTAGE TIME PERIODS AT ANY ONE LOCATION. WHERE MORE THAN ONE OUTAGE OCCURS AT ANY ONE LOCATION, THEN THE ALLOTTED TIME LIMIT SHALL BE FOR THE WORST SINGLE OUTAGE.

WHERE OUTAGES ARE THE DIRECT RESULT OF A VEHICLE ACCIDENT THE RESPONSE OF THE CONTRACTOR SHALL BE AS OUTLINED ABOVE. THE CONTRACTOR SHALL BE RESPONSIBLE FOR COLLECTION OF ANY DAMAGES FOR THIS WORK FROM THOSE PARTIES RESPONSIBLE FOR THE DAMAGES AS PER 107.16.

WHERE THE CONTRACTOR HAS FAILED TO OR CANNOT RESPOND TO AN OUTAGE OR SIGNAL EQUIPMENT MALFUNCTION, AT THESE LOCATIONS WITHIN HIS RESPONSIBILITY, WITHIN PERIODS AS SPECIFIED ABOVE, THE PROJECT ENGINEER MAY INVOKE THE PROVISIONS OF SECTION 105.15 AND ANY SUBSEQUENT BILLINGS TO THE STATE FOR POLICE SERVICES AND MAINTENANCE SERVICES BY THE CITY FORCES SHALL BE DEDUCTED FROM MONEYS DUE TO BECOME DUE THE CONTRACTOR IN ACCORDANCE WITH PROVISIONS OF SECTION 105.15.

THE CONTRACTOR SHALL PROVIDE THE MAINTENANCE SERVICES ENTIRELY WITH HIS FORCES OR HE MAY CHOOSE TO ENTER INTO A MUTUALLY ACCEPTABLE AGREEMENT WITH THE LOCAL MAINTAINING AGENCY TO PROVIDE THE MAINTENANCE. THE CONTRACTOR SHALL INFORM THE PROJECT ENGINEER, IN WRITING, OF THE MAINTENANCE METHOD SELECTED.

THE CONTRACTOR SHALL BE RESPONSIBLE FOR ANY DAMAGE DUE TO ANY TRAFFIC SIGNAL COMPONENTS REQUIRED TO BE HANDLED DURING THE RELOCATION OF POLES AND REVISIONS TO THE SIGNAL SYSTEM.

WHEN A TRAFFIC SIGNAL MUST BE TAKEN OUT OF SERVICE BY THE CONTRACTOR, DUE TO CONSTRUCTION PROCEDURES, THIS OUTAGE SHALL NOT EXCEED 4 HOURS AND SHALL NOT INCLUDE THE HOURS OF 6:00AM TO 9:00AM AND 4:00PM TO 6:00PM. ANY SIGNALIZED INTERSECTION, WHERE THE SIGNAL IS OUT OF SERVICE DUE TO CONSTRUCTION PROCEDURES, OR DUE TO AN OUTAGE OR MALFUNCTION OF EQUIPMENT AS DESCRIBED ABOVE, SHALL BE PROTECTED, BY THE CONTRACTOR, BY THE INSTALLATION OF TEMPORARY "STOP" SIGNS, EXCEPT FOR THE FOLLOWING INTERSECTIONS WHICH SHALL BE PROTECTED BY OFF-DUTY STATE PATROL OFFICER OR SHERIFF, HIRED BY THE CONTRACTOR.

MAINTENANCE OF TRAFFIC SIGNAL INSTALLATION, CONT.

1. I72/PERRY
2. I72/WOODLAWN
3. I72/WHIPPLE

ANY VEHICULAR TRAFFIC SIGNAL HEAD, EITHER NEW OR EXISTING WHICH WILL BE OUT OF OPERATION SHALL BE COVERED, AS DESCRIBED IN 632.24.

THE CONTRACTOR SHALL MAINTAIN COMPLETE RECORDS OF MALFUNCTIONS INCLUDING: 1. TIME OF NOTIFICATION OF MALFUNCTION; 2. TIME OF WORK CREWS ARRIVAL TO CORRECT THE MALFUNCTION; 3. ACTIONS TAKEN TO CORRECT THE MALFUNCTION, INCLUDING A LIST OF PARTS REPAIRED OR REPLACED; 4. A DIAGNOSIS OF REASON FOR THE MALFUNCTION AND PROBABILITY OF REOCCURRENCE; AND 5. TIME OF COMPLETION OF REPAIR AND SYSTEM RESTORED TO FULL SERVICE. A COPY OF THESE RECORDS SHALL BE PROVIDED TO THE ENGINEER WITHIN THREE (3) WORKING DAYS FOLLOWING COMPLETION OF EACH REPAIR.

ALL COSTS RESULTING FROM THE ABOVE REQUIREMENTS SHALL BE CONSIDERED TO BE INCLUDED IN THE LUMP SUM PRICE BID FOR ITEM 614, MAINTAINING TRAFFIC.

LAW ENFORCEMENT OFFICER WITH PATROL CAR

IN ADDITION TO THE REQUIREMENTS OF 614 AND THE CURRENT EDITION, LATEST REVISION OF THE OHIO MANUAL OF UNIFORM TRAFFIC DEVICES (OMUTCD), THE CONTRACTOR SHALL PROVIDE THE SERVICE OF LAW ENFORCEMENT OFFICERS (LEO) WITH AN OFFICIAL PATROL CAR WITH WORKING TOP MOUNTED EMERGENCY FLASHING LIGHTS, AT THE ENGINEER'S REQUEST, FOR THE PURPOSE OF CONTROLLING TRAFFIC FOR THE FOLLOWING TASKS:

DURING THE ENTIRE ADVANCE PREPARATION AND CLOSURE SEQUENCE WHERE COMPLETE BLOCKAGE OF TRAFFIC IS REQUIRED.

DURING A SIGNAL INSTALLATION.

THE LEO'S ARE CONSIDERED TO BE EMPLOYED BY THE CONTRACTOR AND THE CONTRACTOR SHALL BE RESPONSIBLE FOR THEIR ACTIONS. ALTHOUGH THEY ARE EMPLOYED BY THE CONTRACTOR, THE PROJECT ENGINEER SHALL HAVE CONTROL OVER THEIR PLACEMENT. THE OFFICIAL PATROL CAR SHALL BE A PUBLIC SAFETY VEHICLE AS REQUIRED BY THE OHIO REVISED CODE.

INFORMATION REGARDING ARRANGEMENTS AND PAYMENTS BY THE CONTRACTOR FOR THE LEO MAY BE OBTAINED BY CONTACTING THE OHIO HIGHWAY PATROL 1970 WEST BROAD STREET, COLUMBUS, OHIO 43223, TELEPHONE: 614-466-2660. IF AFTER CONTACTING THE OHIO HIGHWAY PATROL, IT IS DETERMINED THAT THEY CANNOT SUPPLY THE LEO, THEN AN AUTHORIZED MUNICIPAL OR COUNTY POLICE OFFICER EQUIPPED WITH A MARKED AND FLASHER-LIGHT EQUIPPED OFFICIAL POLICE OR PATROL CAR SHALL BE PROVIDED.

LEO'S WITH PATROL CAR REQUIRED BY THE TRAFFIC MAINTENANCE TASKS ABOVE SHALL BE PAID FOR ON A UNIT PRICE (HOURLY) BASIS UNDER ITEM 614-LAW ENFORCEMENT OFFICER WITH PATROL CAR. THE FOLLOWING ESTIMATED QUANTITIES HAVE BEEN CARRIED TO THE GENERAL SUMMARY:

ITEM 614 - LAW ENFORCEMENT OFFICER WITH PATROL CAR 140 HOURS

THE HOURS PAID SHALL INCLUDE MINIMUM SHOW-UP TIME REQUIRED BY THE LAW ENFORCEMENT AGENCY INVOLVED.

IF THE CONTRACTOR WISHES TO UTILIZE LEO'S FOR FLAGGING AND TRAFFIC CONTROL OTHER THAN FOR THAT REQUIRED IN THESE PLANS, HE MAY DO SO AT HIS OWN EXPENSE. PAYMENT FOR THE EXCESS ABOVE THE CONTRACT REQUIREMENTS WILL BE INCLUDED UNDER ITEM 614 MAINTAINING TRAFFIC.

METHOD OF PAYMENT

PAYMENT FOR THE MAINTENANCE OF TRAFFIC ITEMS, UNLESS SPECIFIED SEPARATELY, SHALL BE AT THE LUMP SUM BID FOR ITEM 614 MAINTAINING TRAFFIC, WHICH SHALL INCLUDE ALL LABOR, EQUIPMENT AND INCIDENTALS TO COMPLETE THE WORK AS DETAILED IN THE PLANS.

ljaynes@D04CD122 - 16520gs.m - Friday October 01 1999 10:35:20 AM EDT

SHEET NUMBER 3		9	11	14	16	19	21	24			ITEM	ITEM EXT.	GRAND TOTAL	UNIT	DESCRIPTION	SEE SHEET NO.
															TRAFFIC SIGNALS	
204											603	00400	204	METER	100MM CONDUIT, TYPE E	
		11	6	4	31	22					625	25400	74	METER	CONDUIT, 51MM, 713.04	
		3			2						625	25500	5	METER	CONDUIT, 76MM, 713.04	
		14	1	1		19					625	29000	35	METER	TRENCH	
			5	3	33	3					625	29500	44	METER	TRENCH IN PAVED AREA, TYPE A	
		1	6	3	3	2					625	30700	15	EACH	PULL BOX, 713.08, 450MM	
		1			1						625	30706	2	EACH	PULL BOX, 713.08, 600MM	
					1						625	31506	1	EACH	PULL BOX, REMOVED AND REPLACED	
		2	2	4	4	2					625	32000	14	EACH	GROUND ROD	
		1			1						625	32001	2	EACH	GROUND ROD, AS PER PLAN	3
		14	6	4	33	22					SPE	62536000	79	METER	PLASTIC CAUTION TAPE	3
						3.5		3.5			630	03100	7.0	METER	GROUND MOUNTED SUPPORT, NO. 3 POST	
						2					630	79000	2	EACH	SIGN HANGER ASSEMBLY, SPAN WIRE	
		2	2	2		2		1			630	79500	9	EACH	SIGN SUPPORT ASSEMBLY, POLE MOUNTED	
		0.40	0.40	0.40		0.40		0.40			630	80102	2.0	SQ.METER	SIGN, FLATSHEET, TYPE G	
						2					630	87100	2	EACH	REMOVAL OF OVERHEAD MOUNTED SIGN AND REERECTION	
		6	5	8	4	4	1				632	00301	28	EACH	VEHICULAR SIGNAL HEAD, 3-SECTION, 300MM LENS, ONE-WAY, AS PER PLAN	3
			3		4		2	2			632	00501	11	EACH	VEHICULAR SIGNAL HEAD, 5-SECTION, 300MM LENS, ONE-WAY, AS PER PLAN	3
						1					632	01101	1	EACH	VEHICULAR SIGNAL HEAD, 3-SECTION, 300MM LENS, TWO-WAY, AS PER PLAN	3
		2	6	2	8	2	4				632	20600	24	EACH	PEDESTRIAN SIGNAL HEAD, TYPE D2	3
		6	8	8	8	6					632	25000	36	EACH	COVERING OF VEHICULAR SIGNAL HEAD	
			6	2	8	2					632	25010	18	EACH	COVERING OF PEDESTRIAN SIGNAL HEAD	
		2	6	2	8	2		2			632	26000	22	EACH	PEDESTRIAN PUSHBUTTON	
		1	7	2	8	1	1				632	26500	20	EACH	DETECTOR LOOP	
		2	7	2		1	4				632	27009	16	EACH	LOOP DETECTOR UNIT, DELAY AND EXTENSION TYPE, AS PER PLAN	3
					4			3			632	27103	7	EACH	LOOP DETECTOR UNIT, 2-CHANNEL, AS PER PLAN	3
		85	84	84	127	35					632	30300	415	METER	MESSENGER WIRE, 7 STRAND, 11MM DIA. WITH ACCESSORIES	
		141	275	86	469	84		96			632	40300	1151	METER	SIGNAL CABLE, 3-CONDUCTOR, NO.14AWG	
		98	98	180		84					632	40500	460	METER	SIGNAL CABLE, 5-CONDUCTOR, NO.14AWG	
		106	172	32	222		108	78			632	40700	718	METER	SIGNAL CABLE, 7-CONDUCTOR, NO.14AWG	
		2	2	4	4	2					632	64000	14	EACH	STRAIN POLE FOUNDATION	
					1						632	64020	1	EACH	PEDESTAL FOUNDATION	
		72	118	88	176	17	96				632	65200	567	METER	LOOP DETECTOR LEAD-IN CABLE	
			127		66						632	65203	193	METER	LOOP DETECTOR LEAD-IN CABLE, INTEGRAL MESSENGER WIRE TYPE, NO.14AWG, AS PER PLAN	4
		12	9	8	14	8	11	12			632	69300	74	METER	POWER CABLE, 3-CONDUCTOR, NO.4AWG	
		1	1	1	1	1	1				632	70001	6	EACH	POWER SERVICE, AS PER PLAN	3
			2		1						632	70300	3	EACH	CONDUIT RISER, 38MM DIA.	
		2	2	4	4	2					632	82600	14	EACH	STRAIN POLE, TYPE TC-81.10M, DESIGN 6	
					1						632	89900	1	EACH	PEDESTAL, 2.4M TRANSFORMER BASE	
		1	1	1	1	1	1	1			632	90101	7	EACH	REMOVAL OF TRAFFIC SIGNAL INSTALLATION, AS PER PLAN	3
						1					632	90104	1	EACH	REUSE OF TRAFFIC CONTROL ITEM: MESSENGER WIRE WITH 3-CONDUCTOR NO.14AWG SIGNAL CABLE	4
10											632	90500	10	METER	SIGNALIZATION MISC.:REMOVE AND REPLACE LASHING ROD	3

GENERAL SUMMARY

STA-172-14.210

SHEET NUMBER											ITEM	ITEM EXT.	GRAND TOTAL	UNIT	DESCRIPTION	SEE SHEET NO.
5		9	11	14	16	19	21	24								
															TRAFFIC SIGNALS	
				1		1					633	34001	2	EACH	CONTROLLER, ACTUATED, 4-PHASE SOLID STATE DIGITAL,	4
															MICROPROCESSOR, AS PER PLAN	
		1	1		1		1	1			633	38001	5	EACH	CONTROLLER, ACTUATED, 8-PHASE SOLID STATE DIGITAL	4
															MICROPROCESSOR, AS PER PLAN	
		0.72			1.10						633	70000	1.82	C.METER	CONCRETE FOR CABINET FOUNDATION	
		0.8	0.8	0.8	0.8	0.8					633	70500	4	S.METER	CONTROLLER WORK PAD	
						1					633	99000	1	EACH	CONTROLLER ITEM MISC.: RE-INSTALLATION OF EXISTING TIME CLOCK	4
							1	1			633	99000	2	EACH	CONTROLLER ITEM MISC.: REUSE OF EXISTING CABINET FOUNDATION	4
															MAINTENANCE OF TRAFFIC	
140											614	11100	140	HOUR	LAW ENFORCEMENT OFFICER WITH PATROL CAR	
											614	11000	LUMP		MAINTAINING TRAFFIC	
											623	10000	LUMP		CONSTRUCTION LAYOUT STAKES	
											624	10000	LUMP		MOBILIZATION	
											806	16000	9	MONTH	FIELD OFFICE, TYPE A	

CALCULATED LAJ
CHECKED KJG

GENERAL SUMMARY

STA-172-14.210

jjaynes@D04CD122 - 16520gs.m - Friday October 01 1999 10:35:51 AM EDT

ljaynes@D04CD122 - 16520tp1.m - Friday October 01 1999 10:37:18 AM EDT

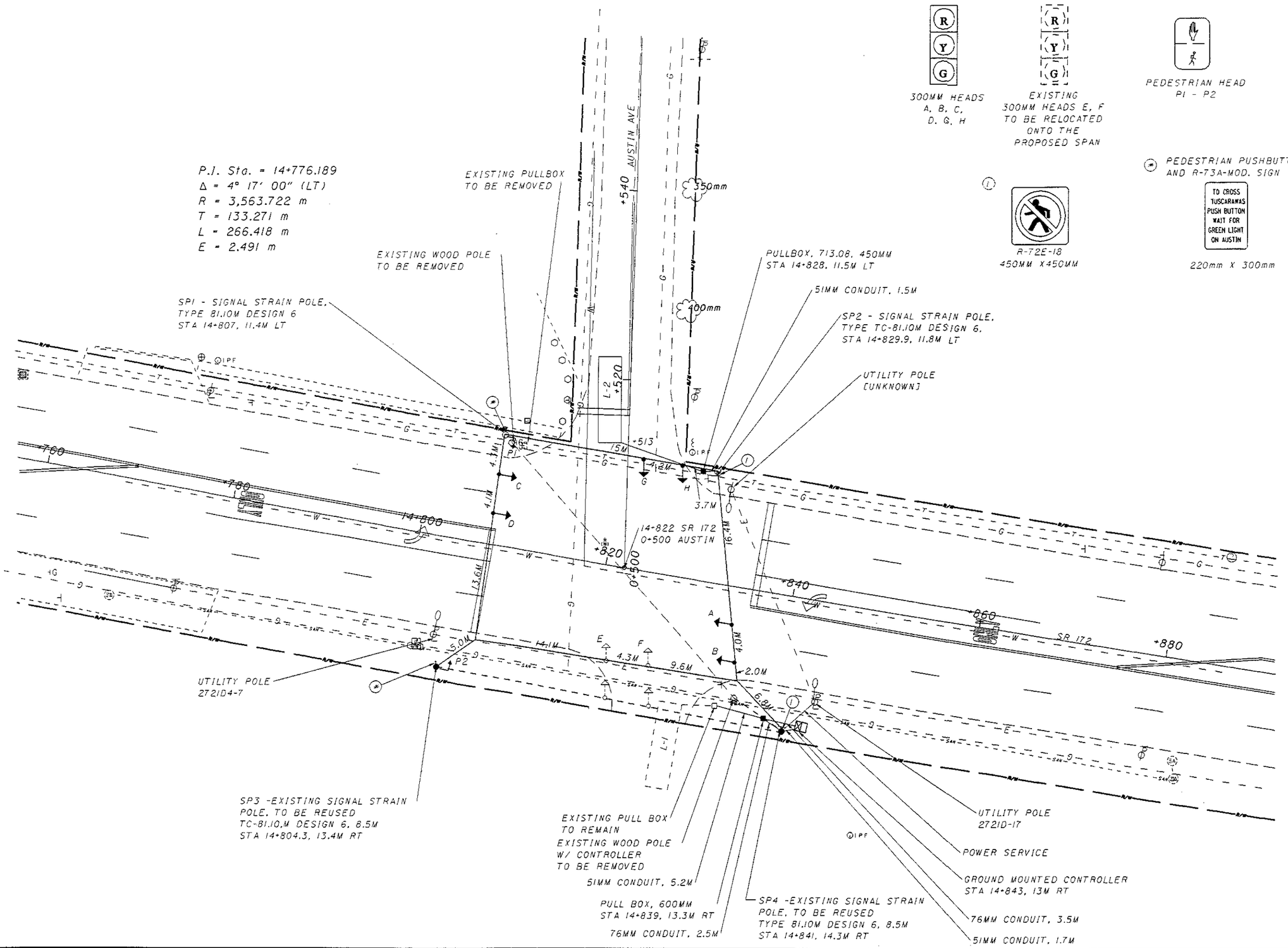

SIGNAL PLAN
SR 172 AND AUSTIN AVE

STA-172-14.210

8
32

ljaynes@D04CD122 - 16520td2.m - Friday October 01 1999 10:43:18 AM EDT

ITEM DESCRIPTION	ITEM #	UNIT	QTY
GROUND ROD	625	EA	2
GROUND ROD, AS PER PLAN	625	EA	1
PULLBOX, 450MM, 713.08	625	EA	1
PULLBOX, 600MM, 713.08	625	EA	1
PLASTIC CAUTION TAPE	SPE	M	14.4
TRENCH	625	M	14.4
CONDUIT, 51MM, 713.04	625	M	10.9
CONDUIT, 76MM, 713.04	625	M	3.5
VEHICULAR SIGNAL HEAD, 3-SECTION, 300MM LENS, ONE WAY, AS PER PLAN	632	EA	6
PEDESTRIAN SIGNAL HEAD, TYPE D2	632	EA	2
PEDESTRIAN PUSH BUTTON	632	EA	2
LOOP DETECTOR UNIT, DELAY AND EXTENSION TYPE, AS PER PLAN	632	EA	2
DETECTOR LOOP	632	EA	1
STRAIN POLE FOUNDATION	632	EA	2
STRAIN POLE, TYPE TC-81.10M, DESIGN 6, 8.5M	632	EA	2
MESSENGER WIRE, 7 STRAND, 11MM DIA W/ ACCESSORIES	632	M	84.5
SIGNAL CABLE, 3-CONDUCTOR, NO.14AWG	632	M	141
SIGNAL CABLE, 5-CONDUCTOR, NO.14AWG	632	M	98
SIGNAL CABLE, 7-CONDUCTOR, NO.14AWG	632	M	106
LOOP DETECTOR LEAD-IN CABLE	632	M	72
POWER CABLE, 3-CONDUCTOR, NO.4AWG	632	M	12
POWER SERVICE, AS PER PLAN	632	EA	1
COVERING OF VEHICULAR SIGNAL HEAD	632	EA	6
REMOVAL OF SIGNAL INSTALLATION, AS PER PLAN	632	EA	1
SIGN, FLATSHEET, TYPE G	630	S.M.	0.40
SIGN SUPPORT ASSEMBLY, POLE MOUNTED	630	EA	2
CONTROLLER WORK PAD	633	S.M.	0.8
CONTROLLER, ACTUATED, 8 PHASE, SOLID STATE DIGITAL MICROPROCESSOR, AS PER PLAN	633	EA	1
CONCRETE FOR CABINET FOUNDATION	633	C.M.	0.72

SIGNAL TIMING CHART

TIMING INTERVAL	Ø2	Ø4	Ø6	Ø8
MIN. GREEN	15	12	15	12
MAX. INITIAL				
YELLOW CLEAR	4	4	4	4
RED CLEAR	2	2	2	2
MAX GREEN I	28	22	28	22
MAX GREEN II				
MIN. EXTENSION		3		3
PED. WALK		5		5
PED. CLEAR		14		14
RECALL	MIN	NON-LOCK	MIN	NON-LOCK

COORDINATION

	Ø2	Ø4	Ø6	Ø8
CYCLE 1 CYCLE LENGTH 110 SEC OFFSET = 73%	69%	31%	69%	31%
CYCLE 2 CYCLE LENGTH 110 SEC OFFSET = 65%	68%	32%	68%	32%
CYCLE 3 CYCLE LENGTH 120 SEC OFFSET = 75%	67%	33%	67%	33%

SIGNAL DISPLAY

HEAD	PHASE 2+6				PHASE 4+8				FLASH
A	G	G	Y	R	R	R	R	R	Y
B	G	G	Y	R	R	R	R	R	Y
C	G	G	Y	R	R	R	R	R	Y
D	G	G	Y	R	R	R	R	R	Y
E	R	R	R	R	G	G	Y	R	R
F	R	R	R	R	G	G	Y	R	R
G	R	R	R	R	G	G	Y	R	R
H	R	R	R	R	G	G	Y	R	R

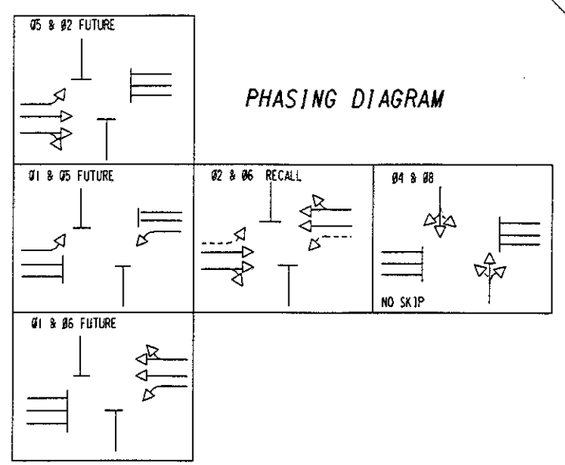

PHASING DIAGRAM

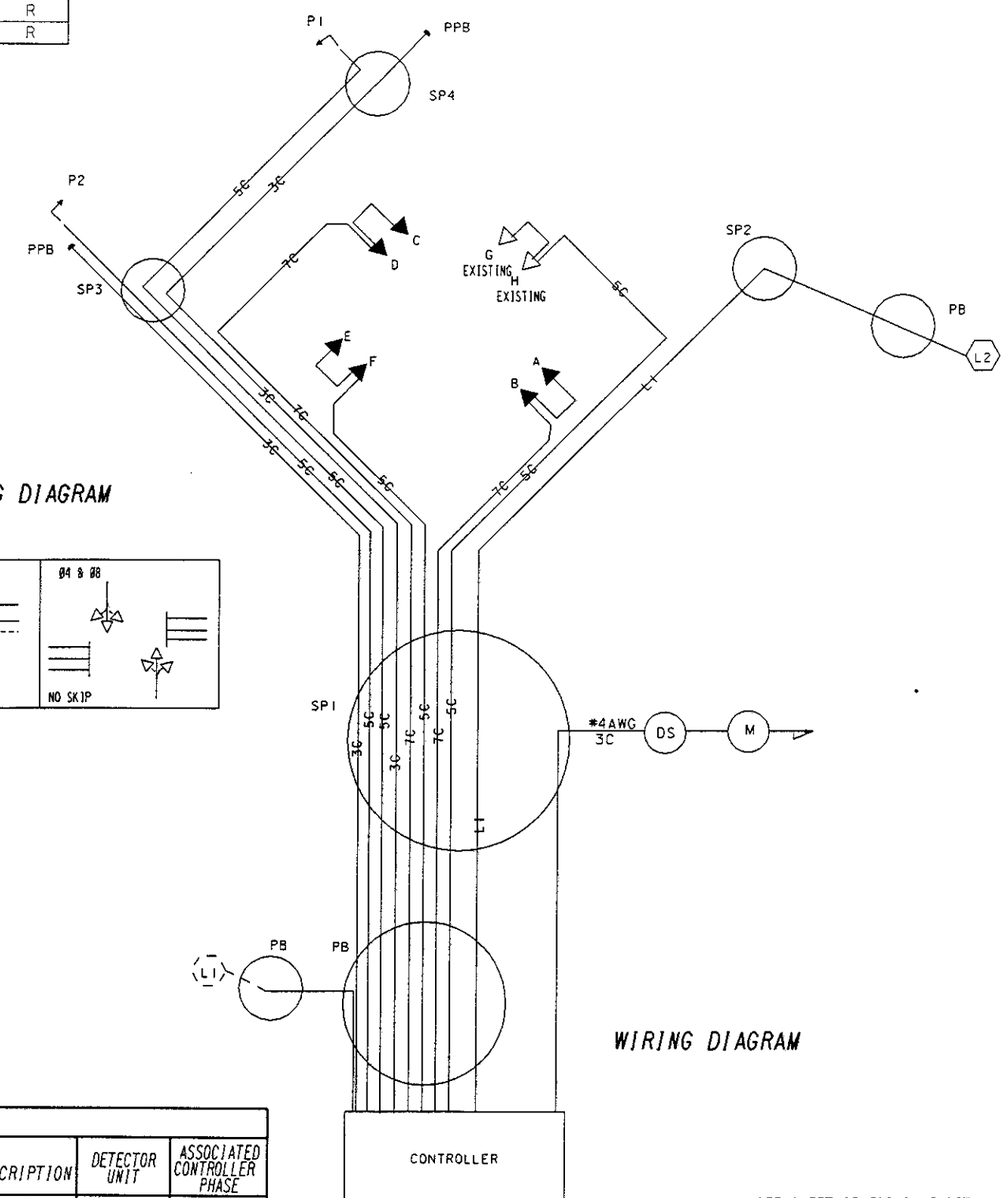

WIRING DIAGRAM

VEHICLE LOOP DETECTOR

LOOP #	LOCATION	SIZE	TYPE	# TURNS	DELAY	DELAY INHIBITED DURING	DESCRIPTION	DETECTOR UNIT	ASSOCIATED CONTROLLER PHASE
L-1	EXISTING		PRESENCE	3	10SEC	Ø 8	NB	1	Ø 8
L-2	0+513 AUSTIN AVE	1.8M X9.1M	PRESENCE	3	10SEC	Ø 4	SB	2	Ø 4

SEE SHEET 25 FOR POLE DETAILS

CALCULATED LAJ
CHECKED KJG

SR 172 AND AUSTIN AVE
SIGNAL DETAILS

STA-172-14.210

jjaynes@D04CD122 - 16520tp1.m - Friday October 01 1999 11:12:58 AM EDT

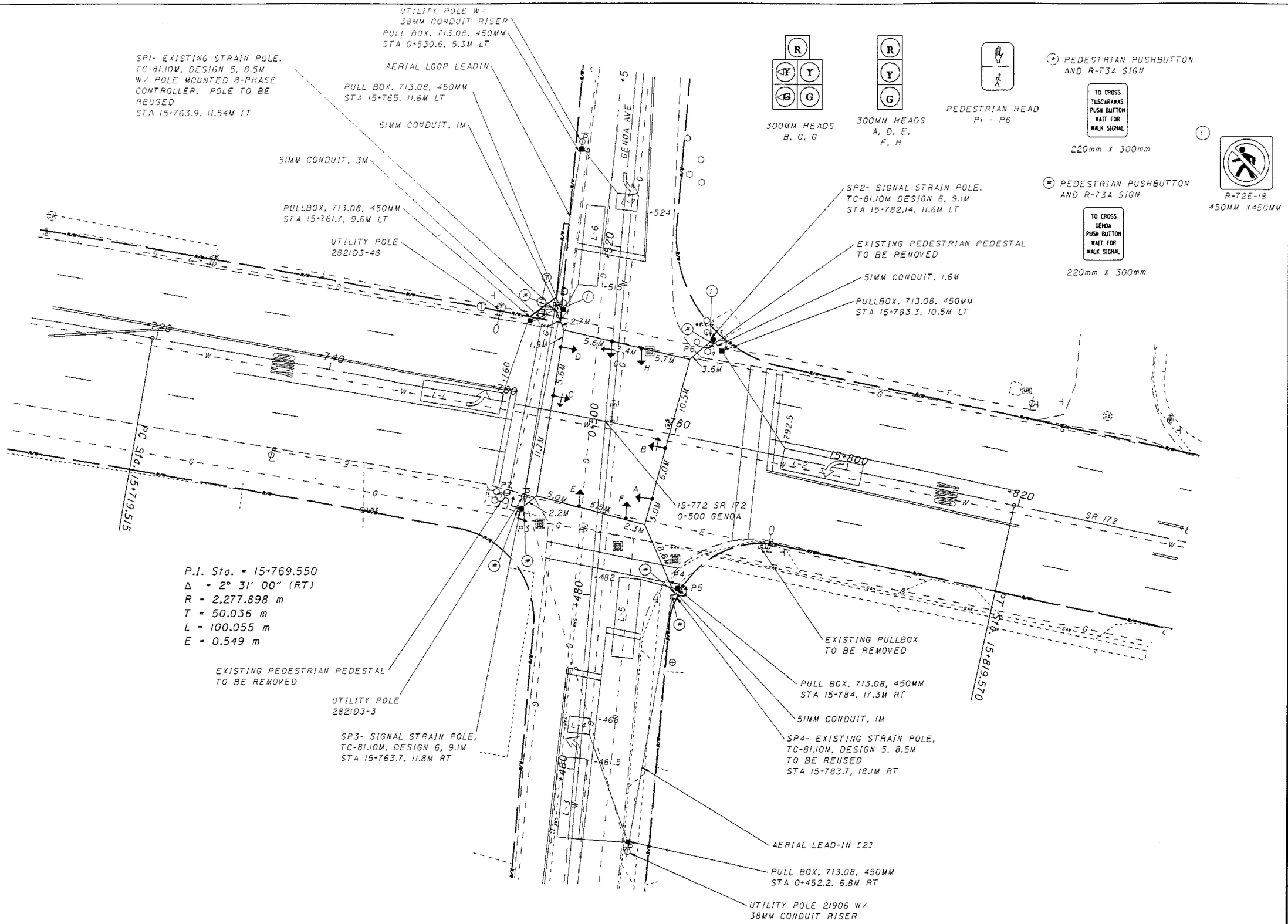

HORIZONTAL
SCALE IN METERS

CALCULATED

CHECKED

SIGNAL PLAN
SR 172 AND GENOA AVE

STA-172-14.210

10
32

ljaynes@D04CD122 - 16520ld2.m - Friday October 01 1999 11:03:19 AM EDT

ITEM DESCRIPTION	ITEM #	UNIT	QTY
GROUND ROD	625	EA	2
PULLBOX, 450MM, 713.08	625	EA	6
TRENCH	625	M	1
TRENCH IN PAVED AREAS, TYPE A	625	M	4.6
CONDUIT, 51MM, 713.04	625	M	5.6
VEHICULAR SIGNAL HEAD, 3-SECTION, 300MM LENS, ONE WAY, AS PER PLAN	632	EA	5
VEHICULAR SIGNAL HEAD, 5-SECTION, 300MM LENS, ONE WAY, AS PER PLAN	632	EA	3
PEDESTRIAN SIGNAL HEAD, TYPE D2	632	EA	6
PEDESTRIAN PUSH BUTTON	632	EA	6
LOOP DETECTOR UNIT, DELAY AND EXTENSION TYPE, AS PER PLAN	632	EA	7
DETECTOR LOOP	632	EA	7
STRAIN POLE FOUNDATION	632	EA	2
STRAIN POLE, TYPE TC-81.10M, DESIGN 6, 8.5M	632	EA	2
CONDUIT RISER, 38MM	632	EA	2
LOOP DETECTOR LEAD-IN CABLE, INTEGRAL MESSENGER WIRE TYPE, NO.14AWG, AS PER PLAN	632	M	127
MESSENGER WIRE, 7 STRAND, 11MM DIA W/ ACCESSORIES	632	M	83.5
SIGNAL CABLE, 3-CONDUCTOR, NO.14AWG	632	M	275
SIGNAL CABLE, 5-CONDUCTOR, NO.14AWG	632	M	98
SIGNAL CABLE, 7-CONDUCTOR, NO.14AWG	632	M	172
LOOP DETECTOR LEAD-IN CABLE	632	M	118
POWER CABLE, 3-CONDUCTOR, NO.4AWG	632	M	9
POWER SERVICE, AS PER PLAN	632	EA	1
COVERING OF VEHICULAR SIGNAL HEAD	632	EA	8
COVERING OF PEDESTRIAN SIGNAL HEAD	632	EA	6
REMOVAL OF SIGNAL INSTALLATION, AS PER PLAN	632	EA	1
CONTROLLER WORK PAD	633	S.M.	0.8
CONTROLLER, ACTUATED, 8 PHASE, SOLID STATE DIGITAL MICROPROCESSOR, AS PER PLAN	633	EA	1
SIGN, FLATSHEET, TYPE G	630	S.M.	0.40
SIGN SUPPORT ASSEMBLY, POLE MOUNTED	630	EA	2
PLASTIC CAUTION TAPE	SPE	M	5.6

SIGNAL DISPLAY

HEAD	PHASE 1+5				2+6				3+8 [ACTIVE DURING CYCLE 3]				4+8				9				FLASH
A	G	G	Y	R	G	G	Y	R	R	R	R	R	R	R	R	R	R	R	R	R	R
B	R	R	R	R	G	G	Y	R	R	R	R	R	R	R	R	R	R	R	R	R	R
C	G	G	Y	R	G	G	Y	R	R	R	R	R	R	R	R	R	R	R	R	R	R
D	R	R	R	R	G	G	Y	R	R	R	R	R	R	R	R	R	R	R	R	R	R
E	R	R	R	R	R	R	R	R	R	R	R	R	G	G	Y	R	R	R	R	R	R
F	R	R	R	R	R	R	R	R	R	R	R	R	G	G	Y	R	R	R	R	R	R
G	R	R	R	R	R	R	R	R	G/G	G/G	Y/G	R/G	G	G	Y	R	R	R	R	R	R
H	R	R	R	R	R	R	R	R	G	G	G	G	G	G	Y	R	R	R	R	R	R
P1	DW	DW	DW	DW	DW	DW	DW	DW	DW	DW	DW	DW	DW	DW	DW	DW	WALK	FDW	DW	DW	DARK
P2	DW	DW	DW	DW	DW	DW	DW	DW	DW	DW	DW	DW	DW	DW	DW	DW	WALK	FDW	DW	DW	DARK
P3	DW	DW	DW	DW	WALK	FDW	DW	DW	DW	DW	DW	DW	DW	DW	DW	DW	DW	DW	DW	DW	DARK
P4	DW	DW	DW	DW	WALK	FDW	DW	DW	DW	DW	DW	DW	DW	DW	DW	DW	DW	DW	DW	DW	DARK
P5	DW	DW	DW	DW	DW	DW	DW	DW	DW	DW	DW	DW	DW	DW	DW	DW	WALK	FDW	DW	DW	DARK
P6	DW	DW	DW	DW	DW	DW	DW	DW	DW	DW	DW	DW	DW	DW	DW	DW	WALK	FDW	DW	DW	DARK

PHASING DIAGRAM

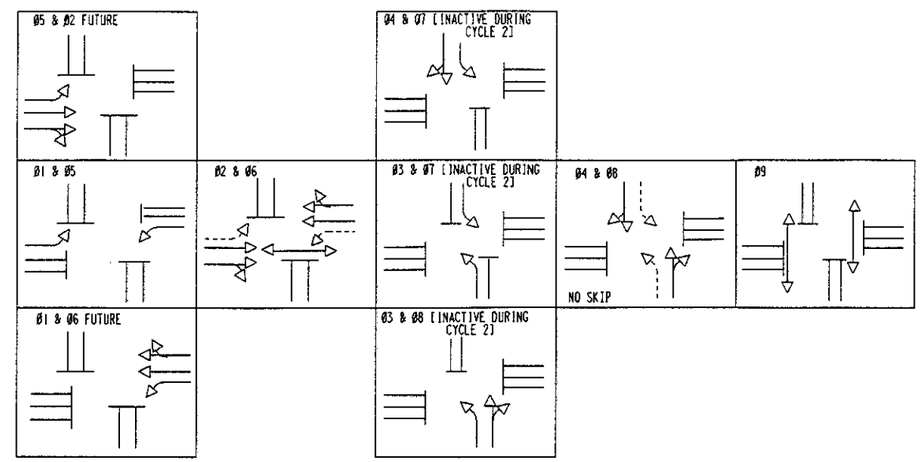

SIGNAL TIMING CHART

TIMING INTERVAL	Ø1	Ø2	Ø3	Ø4	Ø5	Ø6	Ø7	Ø8	Ø9
MIN. GREEN	8	12	8	8	8	12	8	8	
MAX. INITIAL									
YELLOW CLEAR	3	4	3	4	3	4	3	4	
RED CLEAR	1	2	1	2	1	2	1	2	
MAX GREEN I	12	35	12	25	12	35	12	25	
MAX GREEN II									
MIN. EXTENSION	3		3	3	3		3	3	
PED. WALK									8
PED. CLEAR									14
RECALL	NON-LOCK	MIN			NON-LOCK	MIN			

COORDINATION

	Ø1	Ø2	Ø3	Ø4	Ø5	Ø6	Ø7	Ø8	Ø9
CYCLE 1 CYCLE LENGTH 110 SEC OFFSET = 11%	11%	33%	13%	24%	11%	33%	13%	24%	20%
CYCLE 2 CYCLE LENGTH 110 SEC OFFSET = 5%	11%	37%	INACTIVE	32%	11%	37%	INACTIVE	32%	20%
CYCLE 3 CYCLE LENGTH 120 SEC OFFSET = 14%	10%	36%	15%	21%	10%	36%	11%	25%	18%

SEE SHEET 25 FOR POLE DETAILS

VEHICLE LOOP DETECTOR

LOOP #	LOCATION	SIZE	TYPE	# TURNS	DELAY	DELAY INHIBITED DURING	DESCRIPTION	DETECTOR UNIT	ASSOCIATED CONTROLLER PHASE
L-1	STA 15+760 SR172	1.8X 7.6	PRESENCE	3	5SEC	Ø5 GRN	EB LT	1	Ø5
L-2	STA 15+792.5 SR172	1.8X 7.6	PRESENCE	3	5SEC	Ø1 GRN	WB LT	2	Ø1
L-3	STA 0+61.5 GENOA	1.8X 7.6	PRESENCE	3	5SEC	Ø3 GRN	NB LT FAR	3	Ø3
L-4	STA 0+468 GENOA	1.8X 2.4	PRESENCE	4			NB LT NEAR	4	Ø3
L-5	STA 0+482 GENOA	1.8X 9.1	PRESENCE	3	15SEC	Ø8 GRN	NB	5	Ø8
L-6	STA 0+515 GENOA	1.8X 9.1	PRESENCE	3	15SEC	Ø4 GRN	SB	6	Ø4
L-7	STA 0+524 GENOA	1.8X 2.4	PRESENCE	4			SB LT	7	Ø7

CALCULATED LAJ
CHECKED KJG

SR 172 AND GENOA
SIGNAL DETAILS

STA-172-14.210

ljaynes@D04CD122 - 16520td2.m - Friday August 27 1999 02:33:25 PM EDT

CALCULATED
CHECKED

SR 172 AND GENOA
SIGNAL DETAILS

STA-172-14.210

ljaynes@D04CD122 - 16520tp1.m - Friday October 01 1999 11:06:01 AM EDT

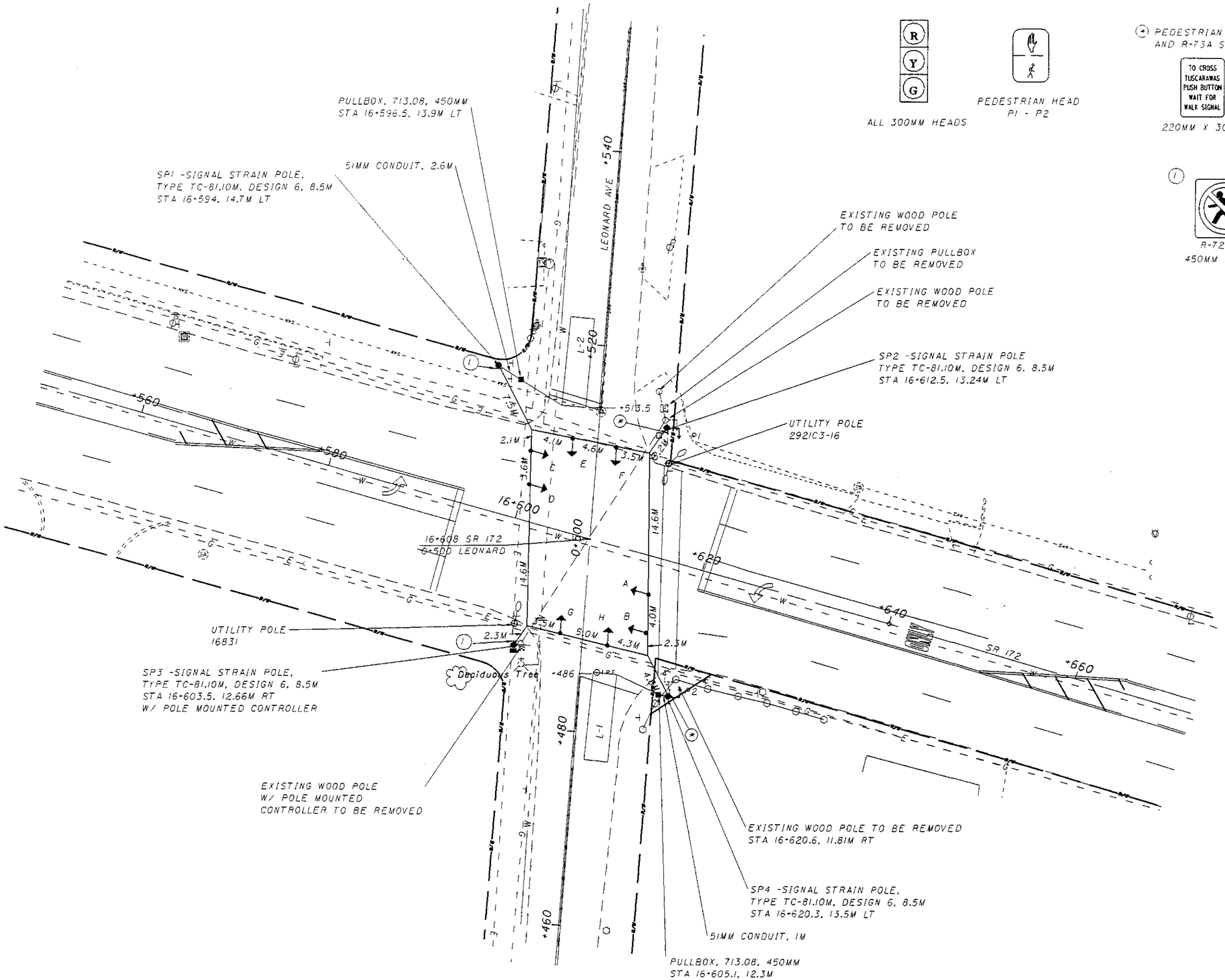

SIGNAL PLAN
STA 172 AND LEONARD

STA-172-14.210

ljaynes@D04CD122 - 16520id2.m - Friday October 01 1999 11:10:00 AM EDT

ITEM DESCRIPTION	ITEM #	UNIT	QTY
GROUND ROD	625	EA	4
PULLBOX, 450MM, 713.08	625	EA	3
PLASTIC CAUTION TAPE	SPE	M	3.6
TRENCH	625	M	1
TRENCH IN PAVED AREAS, TYPE A	625	M	2.6
CONDUIT, 51MM, 713.04	625	M	3.6
VEHICULAR SIGNAL HEAD, 3-SECTION, 300MM LENS, ONE WAY, AS PER PLAN	632	EA	8
PEDESTRIAN SIGNAL HEAD, TYPE D2	632	EA	2
PEDESTRIAN PUSH BUTTON	632	EA	2
LOOP DETECTOR UNIT, DELAY AND EXTENSION TYPE, AS PER PLAN	632	EA	2
DETECTOR LOOP	632	EA	2
STRAIN POLE FOUNDATION	632	EA	4
STRAIN POLE, TYPE TC-81.10W, DESIGN 6, 8.5M	632	EA	4
MESSENGER WIRE, 7 STRAND, 11MM DIA W/ ACCESSORIES	632	M	84
SIGNAL CABLE, 3-CONDUCTOR, NO.14AWG	632	M	86
SIGNAL CABLE, 5-CONDUCTOR, NO.14AWG	632	M	180
SIGNAL CABLE, 7-CONDUCTOR, NO.14AWG	632	M	32
LOOP DETECTOR LEAD-IN CABLE	632	M	88
POWER CABLE, 3-CONDUCTOR, NO.4AWG	632	M	8
POWER SERVICE, AS PER PLAN	632	EA	1
COVERING OF VEHICULAR SIGNAL HEAD	632	EA	8
COVERING OF PEDESTRIAN SIGNAL HEAD	632	EA	2
REMOVAL OF SIGNAL INSTALLATION, AS PER PLAN	632	EA	1
CONTROLLER WORK PAD	633	S.M.	0.8
CONTROLLER, ACTUATED, 4 PHASE, SOLID STATE DIGITAL MICROPROCESSOR, AS PER PLAN	633	EA	1
SIGN, FLATSHEET, TYPE G	630	S.M.	0.40
SIGN SUPPORT ASSEMBLY, POLE MOUNTED	630	EA	2

		PHASE								
		2				4				FLASH
HEAD	A	G	G	Y	R	R	R	R	R	Y
	B	G	G	Y	R	R	R	R	R	Y
	C	G	G	Y	R	R	R	R	R	Y
	D	G	G	Y	R	R	R	R	R	Y
	E	R	R	R	R	G	G	Y	R	R
	F	R	R	R	R	G	G	Y	R	R
	G	R	R	R	R	G	G	Y	R	R
	H	R	R	R	R	G	G	Y	R	R
	P1	DW	DW	DW	DW	WALK	FDW	DW	DW	DARK
	P2	DW	DW	DW	DW	WALK	FDW	DW	DW	DARK

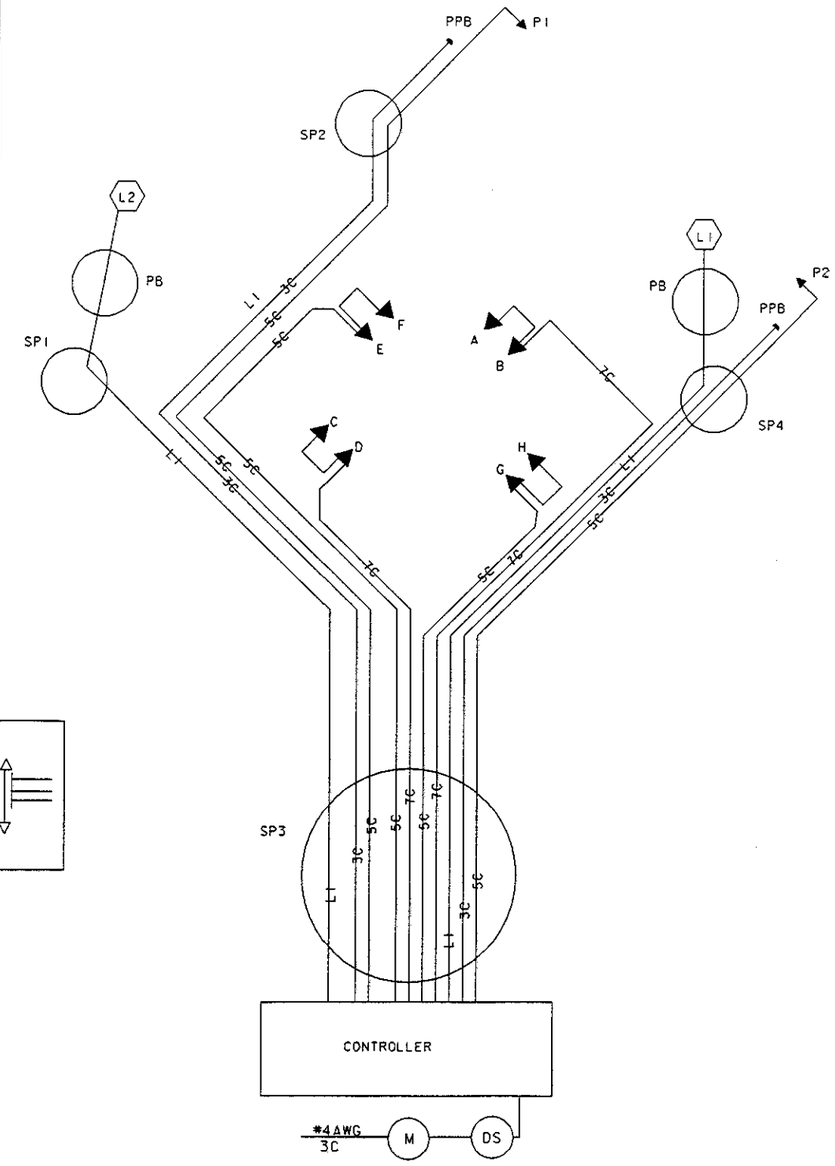

WIRING DIAGRAM

SIGNAL TIMING CHART		
TIMING INTERVAL	Ø2	Ø4
MIN. GREEN	15	12
MAX. INITIAL		
YELLOW CLEAR	4	4
RED CLEAR	2	2
MAX GREEN I	40	20
MAX GREEN II		
MIN. EXTENSION		3
PED. WALK		5
PED. CLEAR		15
RECALL	MIN	NONLOCK

COORDINATION		
	Ø2	Ø4
CYCLE 1	68%	32%
CYCLE LENGTH 110 SEC		
OFFSET = 76%		
CYCLE 2	73%	27%
CYCLE LENGTH 110 SEC		
OFFSET = 72%		
CYCLE 3	71%	29%
120LE LENGTH 140 SEC		
OFFSET = 83%		

PHASING DIAGRAM

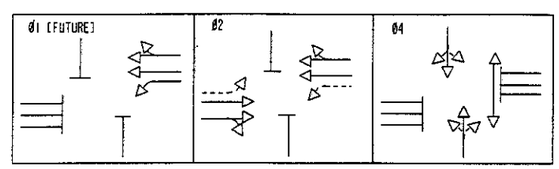

VEHICLE LOOP DETECTOR									
LOOP #	LOCATION	SIZE	TYPE	# TURNS	DELAY	DELAY INHIBITED DURING	DESCRIPTION	DETECTOR UNIT	ASSOCIATED CONTROLLER PHASE
L-1	STA 0+486 LEONARD	2.4M X9.1M	PRESENCE	3	10 SEC	Ø 4 GRN	NB	1	Ø 4
L-2	STA 0+513.5 LEONARD	2.4M X9.1M	PRESENCE	3	10 SEC	Ø 4 GRN	SB	2	Ø 4

SEE SHEET 25 FOR POLE DETAILS

CALCULATED LAJ
CHECKED KJG

SR 172 AND LEONARD
SIGNAL DETAILS

STA-172-14.210

ljaynes@D04CD122 - 16520tp2.m - Friday October 01 1999 12:06:14 PM EDT

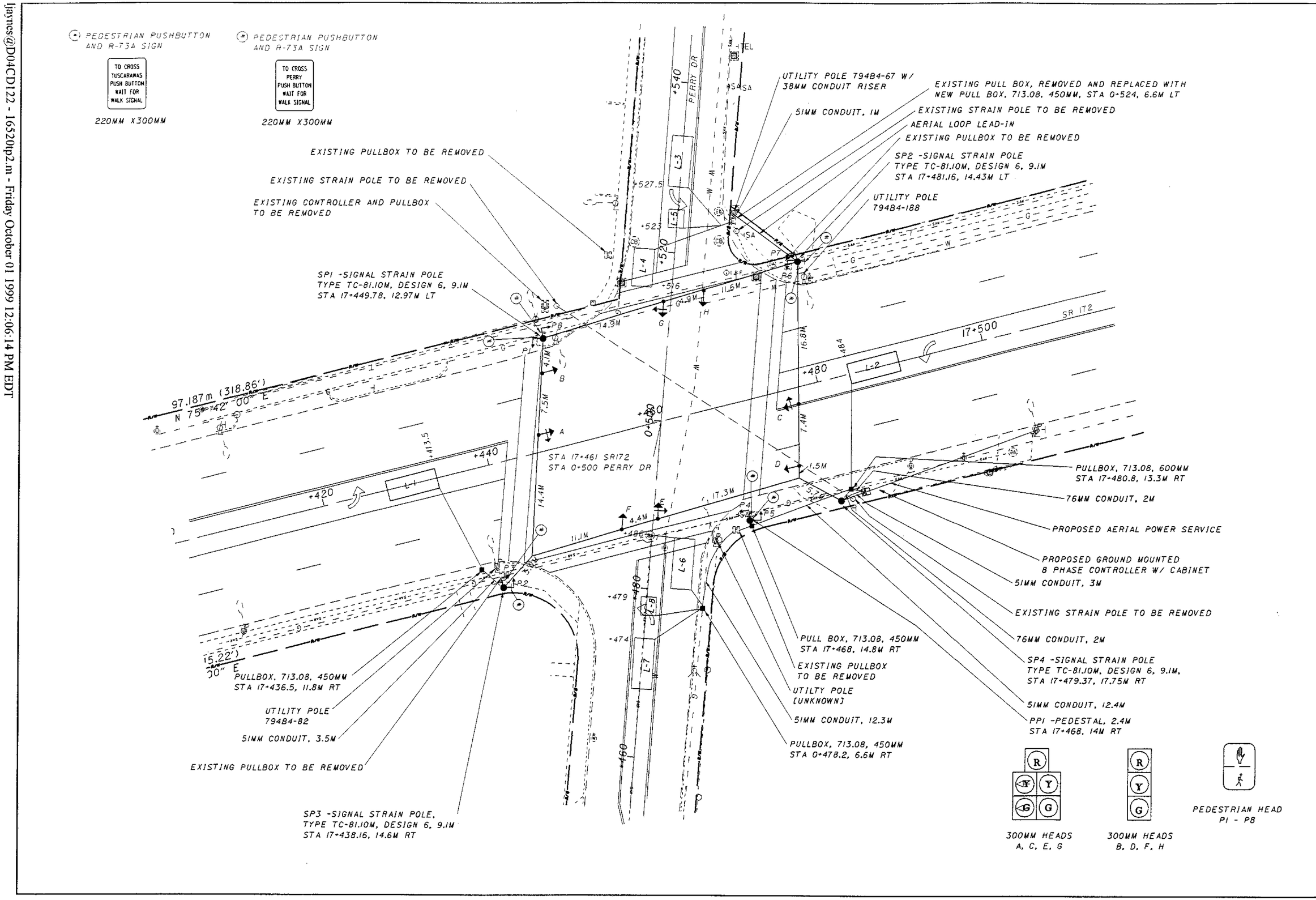

SIGNAL PLAN
SR 172 AND PERRY DR

STA-172-14.210

ljaynes@D04CD122 - 16520id3.m - Friday October 01 1999 12:22:52 PM EDT

ITEM DESCRIPTION	ITEM #	UNIT	QTY
GROUND ROD	625	EA	4
GROUND ROD, AS PER PLAN	625	EA	1
PULLBOX, 450MM, 713.08	625	EA	3
PULLBOX, 600MM, 713.08	625	EA	1
PULLBOX, REMOVED AND REPLACED	625	EA	1
TRENCH IN PAVED AREAS, TYPE A	625	M	33
CONDUIT, 51MM, 713.04	625	M	31
CONDUIT, 76MM, 713.04	625	M	2
CONDUIT RISER, 38MM DIA	625	EA	1
VEHICULAR SIGNAL HEAD, 3-SECTION, 300MM LENS, ONE WAY, AS PER PLAN	632	EA	4
VEHICULAR SIGNAL HEAD, 5-SECTION, 300MM LENS, ONE WAY, AS PER PLAN	632	EA	4
PEDESTRIAN SIGNAL HEAD, TYPE D2	632	EA	8
PEDESTRIAN PUSH BUTTON	632	EA	8
LOOP DETECTOR UNIT, 2-CHANNEL, AS PER PLAN	632	EA	4
DETECTOR LOOP	632	EA	8
STRAIN POLE FOUNDATION	632	EA	4
STRAIN POLE, TYPE TC-81.10M, DESIGN 6, 8.5M	632	EA	4
PEDESTAL, 2.4M, TRANSFORMER BASE	632	EA	1
PEDESTAL FOUNDATION	632	EA	1
MESSENGER WIRE, 7 STRAND, 11MM DIA W/ ACCESSORIES	632	M	126.5
SIGNAL CABLE, 3-CONDUCTOR, NO.14AWG	632	M	469
SIGNAL CABLE, 7-CONDUCTOR, NO.14AWG	632	M	222
LOOP DETECTOR LEAD-IN CABLE	632	M	176
LOOP DETECTOR LEAD-IN CABLE, INTEGRAL MESSENGER WIRE TYPE, NO.14 AWG, AS PER PLAN	632	M	66
POWER CABLE, 3-CONDUCTOR, NO.4AWG	632	M	14
POWER SERVICE, AS PER PLAN	632	EA	1
COVERING OF VEHICULAR SIGNAL HEAD	632	EA	8
COVERING OF PEDESTRIAN SIGNAL HEAD	632	EA	8
REMOVAL OF SIGNAL INSTALLATION, AS PER PLAN	632	EA	1
CONTROLLER WORK PAD	633	S.M.	0.8
CONTROLLER, ACTUATED, 8 PHASE, SOLID STATE DIGITAL MICROPROCESSOR, AS PER PLAN	633	EA	1
CONCRETE FOR CABINET FOUNDATION	633	C.M.	1.1
PLASTIC CAUTION TAPE	SPE	M	33

SIGNAL DISPLAY

PHASE

HEAD	1+5 *				1+6				2+5				2+6				3+7 **				3+8				4+7				4+8				FLASH
A	◄G	◄G	◄Y	R	G/G	G/G	Y/G	G	R	R	R	R	G	G	Y	R	R	R	R	R	R	R	R	R	R	R	R	R	R	R	R	R	R
B	R	R	R	R	G	G	G	G	R	R	R	R	G	G	Y	R	R	R	R	R	R	R	R	R	R	R	R	R	R	R	R	R	R
C	◄G	◄G	◄Y	R	R	R	R	R	G/G	G/G	Y/G	G	G	G	Y	R	R	R	R	R	R	R	R	R	R	R	R	R	R	R	R	R	R
D	R	R	R	R	R	R	R	R	G	G	G	G	G	G	Y	R	R	R	R	R	R	R	R	R	R	R	R	R	R	R	R	R	R
E	R	R	R	R	R	R	R	R	R	R	R	R	R	R	R	R	◄G	◄G	◄Y	R	R	R	R	R	G/G	G/G	Y/G	G	G	G	Y	R	R
F	R	R	R	R	R	R	R	R	R	R	R	R	R	R	R	R	R	R	R	R	R	R	R	R	G	G	G	G	G	G	Y	R	R
G	R	R	R	R	R	R	R	R	R	R	R	R	R	R	R	R	◄G	◄G	◄Y	R	◄G/G	◄G/G	◄Y/G	G	R	R	R	R	G	G	Y	R	R
H	R	R	R	R	R	R	R	R	R	R	R	R	R	R	R	R	R	R	R	R	G	G	G	G	R	R	R	R	G	G	Y	R	R
P1	DW	DW	DW	DW	DW	DW	DW	DW	DW	DW	DW	DW	DW	DW	DW	DW	DW	DW	DW	DW	DW	DW	DW	DW	DW	DW	DW	DW	WALK	FDW	DW	DW	DARK
P2	DW	DW	DW	DW	DW	DW	DW	DW	DW	DW	DW	DW	DW	DW	DW	DW	DW	DW	DW	DW	DW	DW	DW	DW	DW	DW	DW	DW	WALK	FDW	DW	DW	DARK
P3	DW	DW	DW	DW	DW	DW	DW	DW	DW	DW	DW	DW	WALK	FDW	DW	DW	DW	DW	DW	DW	DW	DW	DW	DW	DW	DW	DW	DW	DW	DW	DW	DW	DARK
P4	DW	DW	DW	DW	DW	DW	DW	DW	DW	DW	DW	DW	WALK	FDW	DW	DW	DW	DW	DW	DW	DW	DW	DW	DW	DW	DW	DW	DW	DW	DW	DW	DW	DARK
P5	DW	DW	DW	DW	DW	DW	DW	DW	DW	DW	DW	DW	DW	DW	DW	DW	DW	DW	DW	DW	DW	DW	DW	DW	DW	DW	DW	DW	WALK	FDW	DW	DW	DARK
P6	DW	DW	DW	DW	DW	DW	DW	DW	DW	DW	DW	DW	DW	DW	DW	DW	DW	DW	DW	DW	DW	DW	DW	DW	DW	DW	DW	DW	WALK	FDW	DW	DW	DARK
P7	DW	DW	DW	DW	DW	DW	DW	DW	DW	DW	DW	DW	WALK	FDW	DW	DW	DW	DW	DW	DW	DW	DW	DW	DW	DW	DW	DW	DW	DW	DW	DW	DW	DARK
P8	DW	DW	DW	DW	DW	DW	DW	DW	DW	DW	DW	DW	WALK	FDW	DW	DW	DW	DW	DW	DW	DW	DW	DW	DW	DW	DW	DW	DW	DW	DW	DW	DW	DARK

* - IF PRECEDING 1+6, 'A' SHALL REMAIN GREEN ARROW.
* - IF PRECEDING 2+5, 'C' SHALL REMAIN GREEN ARROW.
** - IF PRECEDING 3+8, 'G' SHALL REMAIN GREEN ARROW.
** - IF PRECEDING 4+7, 'E' SHALL REMAIN GREEN ARROW.

VEHICLE LOOP DETECTOR

LOOP #	LOCATION	SIZE	TYPE	# TURNS	DELAY	DELAY INHIBITED BY	DESCRIPTION	DETECTOR UNIT	ASSOCIATED CONTROLLER PHASE
L-1	STA 17+413.5 SR172	2.4M X6M	PRESENCE	3	5 SEC	Ø 5 GRN	EB LT	1	Ø 5
L-2	STA 17+484 SR172	2.4M X6M	PRESENCE	3	5 SEC	Ø 1 GRN	WB LT NEAR	1	Ø 1
L-3	STA 0+527.5 PERRY	1.8M X6M	PRESENCE	3	5 SEC	Ø 7 GRN	SB LT FAR	2	Ø 7
L-4	STA 0+523 PERRY	2.4M X9.1M	PRESENCE	3	15 SEC	Ø 4 GRN	SB THRU	2	Ø 4
L-5	STA 0+516 PERRY	1.8M X2.4M	PRESENCE	4			SB LT	3	Ø 7
L-6	STA 0+486 PERRY	2.4M X9.1M	PRESENCE	3	15 SEC	Ø 8 GRN	NB THRU	3	Ø 8
L-7	STA 0+478 PERRY	1.8M X6M	PRESENCE	3	5 SEC	Ø 3 GRN	NB LT FAR	4	Ø 3
L-8	STA 0+474 PERRY	1.8M X2.4M	PRESENCE	4			NB LT NEAR	4	Ø 3

SEE SHEET 25 FOR POLE DETAILS

SIGNAL TIMING CHART

TIMING INTERVAL	Ø1	Ø2	Ø3	Ø4	Ø5	Ø6	Ø7	Ø8
MIN. GREEN	8	12	8	8	8	12	8	8
MAX. INITIAL								
YELLOW CLEAR	3	4	3	4	3	4	3	4
RED CLEAR	1	2	1	2	1	2	1	2
MAX GREEN 1	12	25	12	22	12	25	12	22
MAX GREEN 11								
MIN. EXTENSION	3		3	3	3		3	3
PED. WALK		5		5		5		5
PED. CLEAR		12		18		12		18
RECALL		MIN	NONLOCK		NONLOCK	MIN	NONLOCK	

COORDINATION

	Ø1	Ø2	Ø3	Ø4	Ø5	Ø6	Ø7	Ø8
CYCLE 1 CYCLE LENGTH 110 SEC OFFSET = 0%	13%	33%	13%	42%	13%	33%	13%	42%
CYCLE 2 CYCLE LENGTH 110 SEC OFFSET = 0%	15%	35%	14%	36%	13%	37%	15%	35%
CYCLE 3 CYCLE LENGTH 120 SEC OFFSET = 0%	16%	35%	12%	38%	12%	39%	12%	38%

CALCULATED LAJ
CHECKED KJG

SR 172 AND PERRY SIGNAL DETAILS

STA-172-14.210

ljaynes@D04CD122 - 16520td3.m - Friday October 01 1999 12:23:23 PM EDT

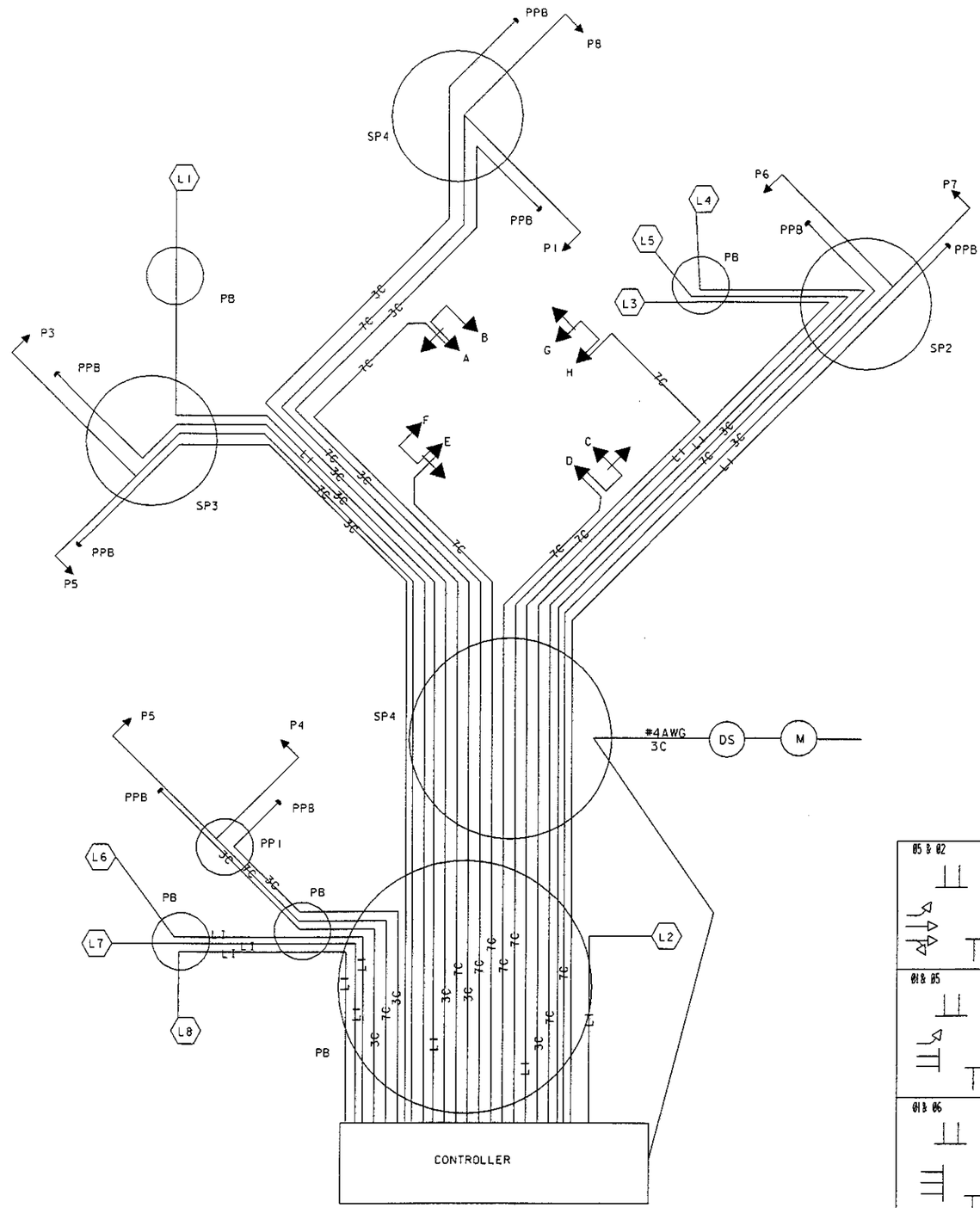

WIRING DIAGRAM

PHASING DIAGRAM

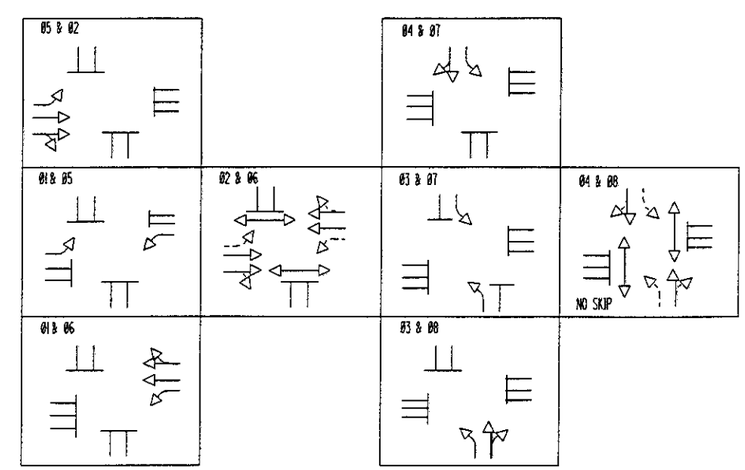

CALCULATED LAJ
CHECKED KJG

SR 172 AND PERRY
SIGNAL DETAILS

STA-172-14.210

ljaynes@D04CD122 - 16520pl.m - Friday August 27 1999 10:15:34 AM EDT

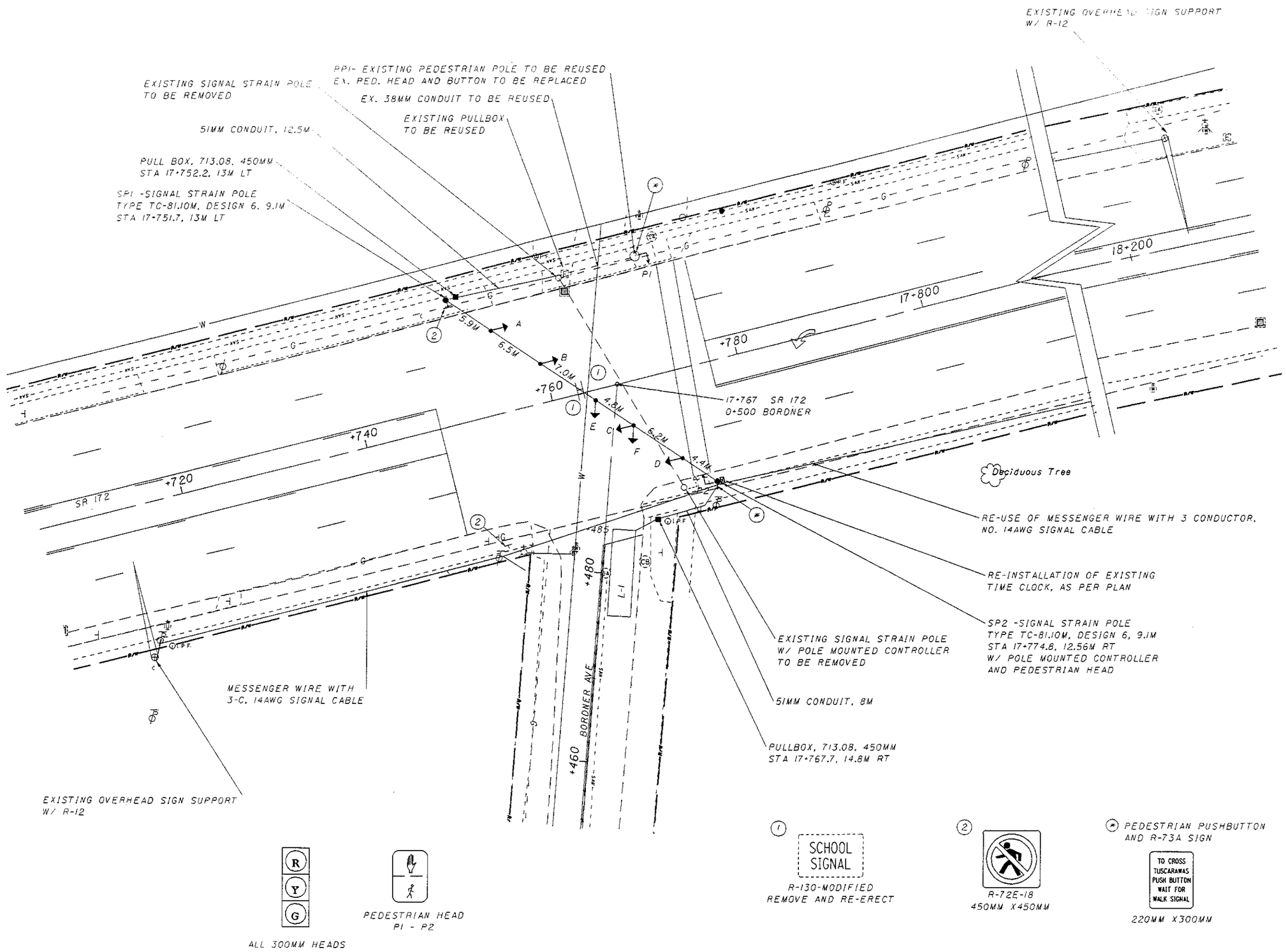

SIGNAL PLAN
STA 172 AND BORDNER

STA-172-14.210

ljaynes@D04CD122 - 16520td2.m - Friday October 01 1999 12:27:14 PM EDT

ITEM DESCRIPTION	ITEM #	UNIT	QTY
GROUND ROD	625	EA	2
PULLBOX, 450MM, 713.08	625	EA	2
TRENCH	625	M	19
TRENCH IN PAVED AREAS, TYPE A	625	M	3
CONDUIT, 51MM, 713.04	625	M	22
VEHICULAR SIGNAL HEAD, 3-SECTION, 300MM LENS, TWO WAY, AS PER PLAN	632	EA	1
VEHICULAR SIGNAL HEAD, 3-SECTION, 300MM LENS, ONE WAY, AS PER PLAN	632	EA	4
PEDESTRIAN SIGNAL HEAD, TYPE D2	632	EA	2
PEDESTRIAN PUSH BUTTON	632	EA	2
LOOP DETECTOR UNIT, DELAY AND EXTENSION TYPE, AS PER PLAN	632	EA	1
DETECTOR LOOP	632	EA	1
STRAIN POLE FOUNDATION	632	EA	2
STRAIN POLE, TYPE TC-81.10M, DESIGN 6, 8.5M	632	EA	2
REUSE OF MESSENGER WIRE,WITH 3-CONDUCTOR NO.14AWG SIGNAL CABLE	632	EA	1
MESSENGER WIRE, 7 STRAND, 11MM DIA W/ ACCESSORIES	632	M	35
SIGNAL CABLE, 3-CONDUCTOR, NO.14AWG	632	M	84
SIGNAL CABLE, 5-CONDUCTOR, NO.14AWG	632	M	84
LOOP DETECTOR LEAD-IN CABLE	632	M	17
POWER CABLE, 3-CONDUCTOR, NO.4AWG	632	M	8
POWER SERVICE, AS PER PLAN	632	EA	1
COVERING OF VEHICULAR SIGNAL HEAD	632	EA	6
COVERING OF PEDESTRIAN SIGNAL HEAD	632	EA	2
REMOVAL OF SIGNAL INSTALLATION, AS PER PLAN	632	EA	1
CONTROLLER WORK PAD	633	S.M.	0.8
CONTROLLER, ACTUATED, 4 PHASE, SOLID STATE DIGITAL MICROPROCESSOR, AS PER PLAN	633	EA	1
CONTROLLER, MISC.: RE-INSTALLATION OF EXISTING TIME CLOCK	633	EA	1
SIGN HANGER ASSEMBLY, SPAN WIRE	630	EA	2
SIGN SUPPORT ASSEMBLY, POLE MOUNTED	630	EA	1
SIGN, FLATSHEET, TYPE G	630	S.M.	0.40
GROUND MOUNTED SUPPORT, #3 POST	630	M	3.5
REMOVAL OF OVERHEAD MOUNTED SIGN AND REERECTION	630	EA	2
PLASTIC CAUTION TAPE	SPE	M	22

PHASING DIAGRAM

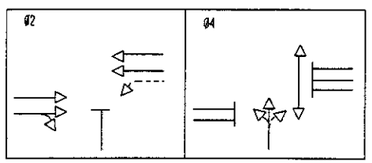

SIGNAL DISPLAY

		PHASE 2				PHASE 4				FLASH
HEAD	A	G	G	Y	R	R	R	R	R	Y
	B	G	G	Y	R	R	R	R	R	Y
	C	G	G	Y	R	R	R	R	R	Y
	D	G	G	Y	R	R	R	R	R	Y
	E	R	R	R	R	G	G	Y	R	R
	F	R	R	R	R	G	G	Y	R	R
	P1	DW	DW	DW	DW	WALK	FDW	DW	DW	DARK
	P2	DW	DW	DW	DW	WALK	FDW	DW	DW	DARK

VEHICLE LOOP DETECTOR

LOOP #	LOCATION	SIZE	TYPE	# TURNS	DELAY	DELAY INHIBITED BY	DESCRIPTION	DETECTOR UNIT	ASSOCIATED CONTROLLER PHASE
L-1	STA 0+485 BORDNER	2.4M X9.1M	PRESENCE	3	15 SEC	Ø 4 GRN	NB	1	Ø 4

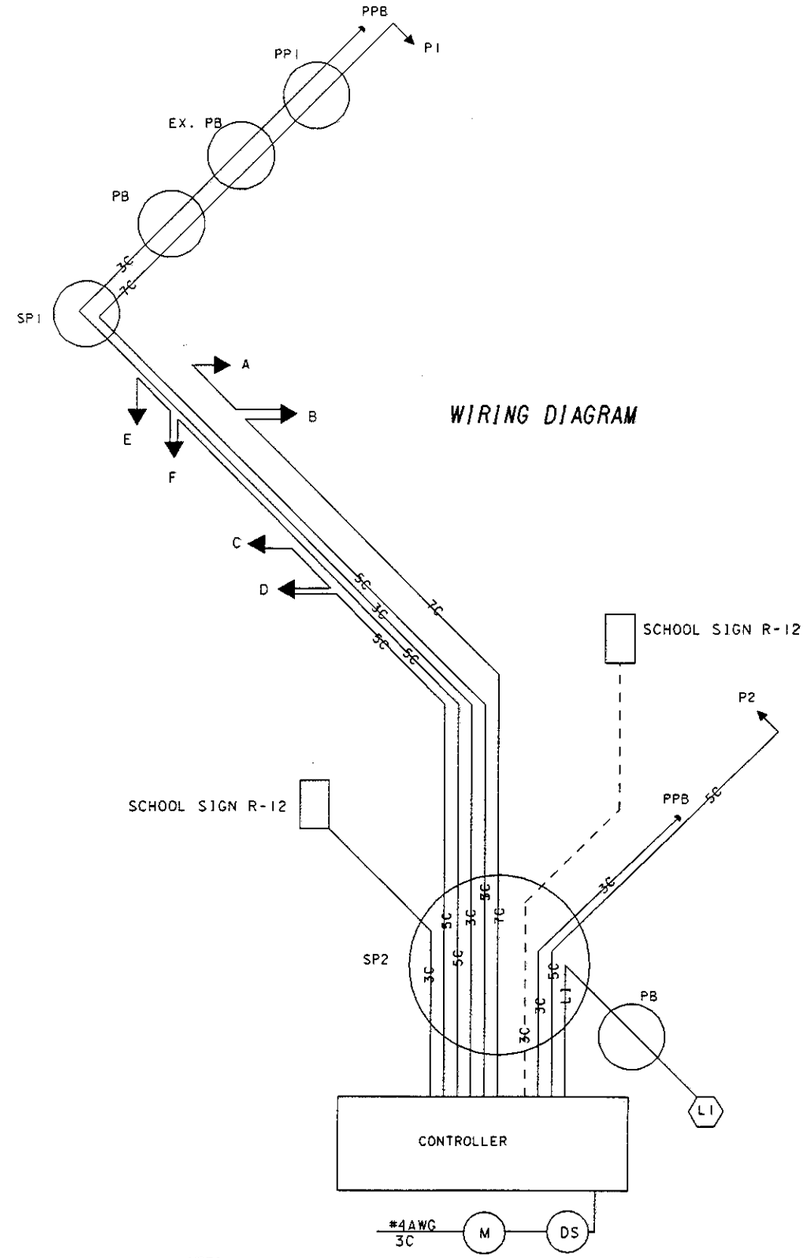

WIRING DIAGRAM

NOTES:
- SIGNAL IS ON SCHOOL TIME CLOCK.
  ACTUATED OPERATION TIMES ARE:
  7:15AM TO 8:05AM AND 2:40PM TO 3:25PM DURING THE SCHOOL YEAR
- THE SIGNAL IS ON FLASH AT ALL OTHER TIMES

SEE SHEET 24 FOR POLE DETAILS

SIGNAL TIMING CHART

TIMING INTERVAL	Ø2	Ø4
MIN. INITIAL	15	12
MAX. INITIAL		
YELLOW CLEAR	4	4
RED CLEAR	2	2
MAX GREEN I	40	20
MAX GREEN II		
MIN. EXTENSION		3
PED. WALK		5
PED. CLEAR		17
RECALL	MIN	NONLOCK

COORDINATION

	Ø2	Ø4
CYCLE 1 CYCLE LENGTH 110 SEC OFFSET = 62%	73%	27%
CYCLE 2 CYCLE LENGTH 110 SEC OFFSET = 68%	78%	22%
CYCLE 3	FLASH	FLASH

CALCULATED LAJ
CHECKED KJG

SR 172 AND BORDNER AVE
SIGNAL DETAILS

STA-172-14.210

ljaynes@D04CD122 - 16520tp2.m - Friday October 01 1999 12:28:52 PM EDT

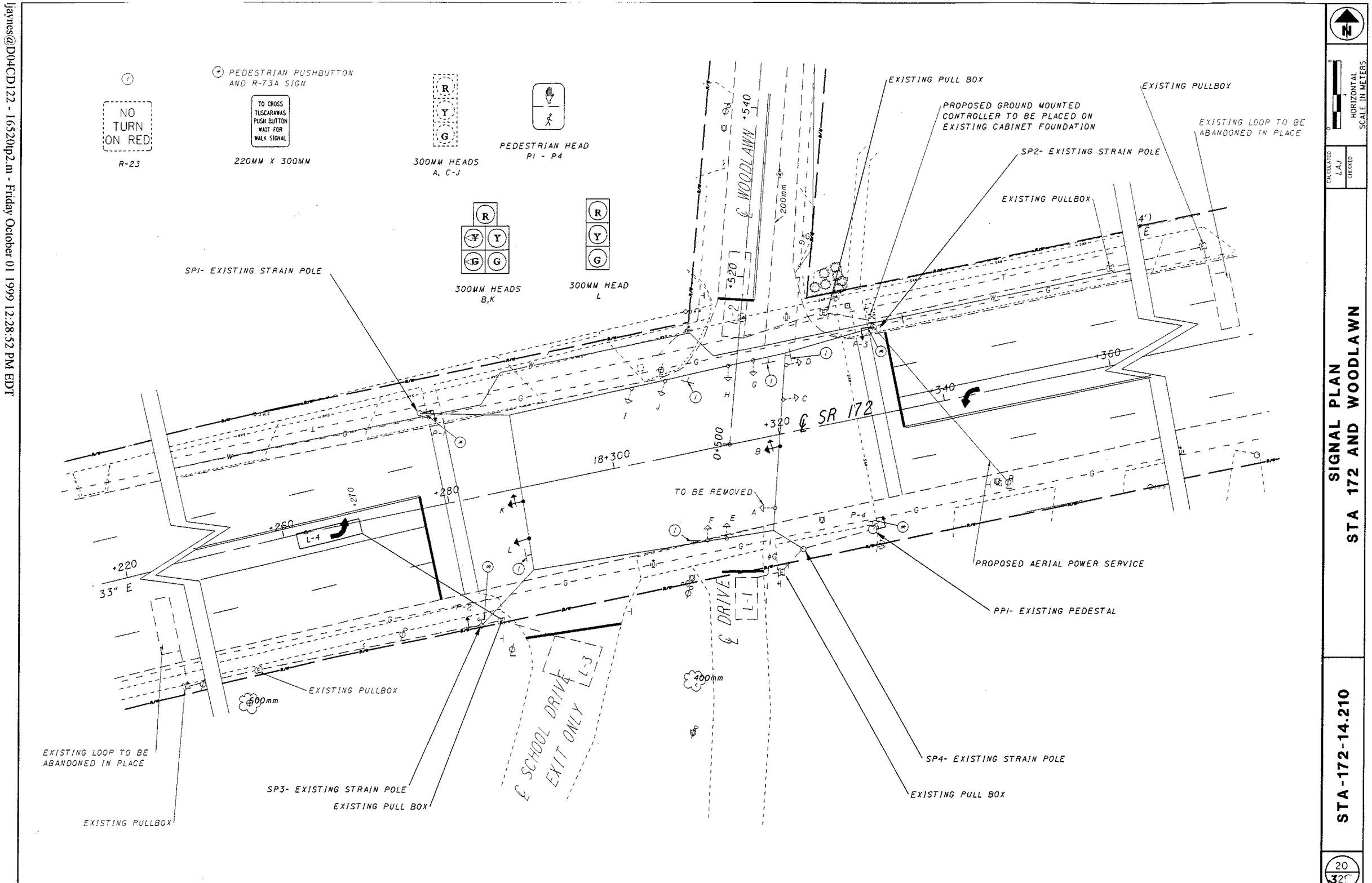

SIGNAL PLAN
STA 172 AND WOODLAWN

STA-172-14.210

ljaynes@D04CD122 - 16520id3.m - Friday October 01 1999 12:57:24 PM EDT

ITEM DESCRIPTION	ITEM #	UNIT	QTY
VEHICULAR SIGNAL HEAD, 3-SECTION, 300MM LENS, ONE WAY, AS PER PLAN	632	EA	1
VEHICULAR SIGNAL HEAD, 5-SECTION, 300MM LENS, ONE WAY, AS PER PLAN	632	EA	2
PEDESTRIAN SIGNAL HEAD, TYPE D2	632	EA	4
POWER CABLE, 3-CONDUCTOR, NO.4AWG	632	M	11
POWER SERVICE, AS PER PLAN	632	EA	1
DETECTOR LOOP	632	EA	1
SIGNAL CABLE, 7-CONDUCTOR, NO.14AWG	632	M	108
LOOP DETECTOR LEADIN CABLE	632	M	96
LOOP DETECTOR UNIT, DELAY AND EXTENSION TYPE, AS PER PLAN	632	EA	4
REMOVAL OF SIGNAL INSTALLATION, AS PER PLAN	632	EA	1
CONTROLLER, ACTUATED, 8 PHASE, SOLID STATE DIGITAL MICROPROCESSOR, AS PER PLAN	633	EA	1
CONTROLLER,MISC.: REUSE OF EXISTING CABINET FOUNDATION	633	EA	2

SIGNAL DISPLAY

HEAD	PHASE 2+6				3				4				2+5 (INACTIVE DURING CYCLE 1)				FLASH
B	G	G	Y	R	R	R	R	R	R	R	R	R	G	G	Y	R	Y
C	G	G	Y	R	R	R	R	R	R	R	R	R	R	R	R	R	Y
D	G	G	Y	R	R	R	R	R	R	R	R	R	R	R	R	R	Y
E	R	R	R	R	G	G	Y	R	R	R	R	R	R	R	R	R	R
F	R	R	R	R	G	G	Y	R	R	R	R	R	R	R	R	R	R
G	R	R	R	R	G	G	Y	R	R	R	R	R	R	R	R	R	R
H	R	R	R	R	G	G	Y	R	R	R	R	R	R	R	R	R	R
I	R	R	R	R	R	R	R	R	G	G	Y	R	R	R	R	R	R
J	R	R	R	R	R	R	R	R	G	G	Y	R	G	G	Y	R	R
K	G	G	Y	R	R	R	R	R	R	R	R	R	G	G	Y	R	Y
L	G	G	Y	R	R	R	R	R	R	R	R	R	G	G	Y	R	Y
P1	DW	DW	DW	DW	DW	DW	DW	DW	WALK	FDW	DW	DW	DW	DW	DW	DW	DARK
P2	DW	DW	DW	DW	DW	DW	DW	DW	WALK	FDW	DW	DW	DW	DW	DW	DW	DARK
P3	DW	DW	DW	DW	WALK	FDW	DW	DW	DW	DW	DW	DW	DW	DW	DW	DW	DARK
P4	DW	DW	DW	DW	WALK	FDW	DW	DW	DW	DW	DW	DW	DW	DW	DW	DW	DARK

SIGNAL TIMING CHART

TIMING INTERVAL	Ø2	Ø3	Ø4	Ø5	Ø6
MIN. GREEN	12	8	12	8	12
MAX. INITIAL					
YELLOW CLEAR	4	4	4	3	4
RED CLEAR	2	2	2	1	2
MAX GREEN I	45	33	22	12	45
MAX GREEN II					
MIN. EXTENSION		3	3	3	
PED. WALK		7	7		
PED. CLEAR		16	16		
RECALL	MIN			NONLOCK	MIN

COORDINATION

	Ø2	Ø3	Ø4	Ø5	Ø6
CYCLE 1 CYCLE LENGTH 110 SEC OFFSET = 59%	40%	39%	21%	INACTIVE	40%
CYCLE 2 CYCLE LENGTH 110 SEC OFFSET = 51%	45%	35%	20%	11%	35%
CYCLE 3 CYCLE LENGTH 120 SEC OFFSET = 50%	48%	33%	18%	10%	38%

PHASING DIAGRAM

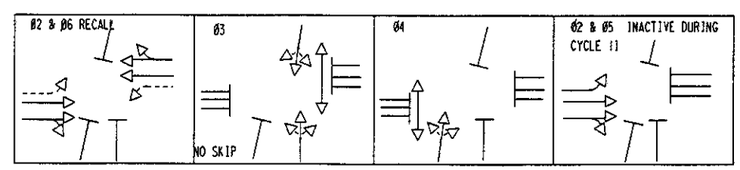

VEHICLE LOOP DETECTOR

LOOP #	LOCATION	SIZE	TYPE	# TURNS	DELAY	DELAY INHIBITED BY	DESCRIPTION	DETECTOR UNIT	ASSOCIATED CONTROLLER PHASE
L-1	EXISTING	2.4M X9.1M	PRESENCE	3	15 SEC	Ø 3 GRN	NB THRU	1	Ø 3
L-2	EXISTING	2.4M X9.1M	PRESENCE	3	15 SEC	Ø 3 GRN	SB THRU	2	Ø 3
L-3	EXISTING	2.4M X9.1M	PRESENCE	3	15 SEC	Ø 4 GRN	SCHOOL DRIVE	3	Ø 4
L-4	STA 18+270 SR172	2.4M X6M	PRESENCE	3	5 SEC	Ø 5 GRN	EB LT	4	Ø 5

CALCULATED LAJ
CHECKED KJG

SR 172 AND WOODLAWN
SIGNAL DETAILS

STA-172-14.210

ljaynes@D04CD122 - 16520td3.m - Friday October 01 1999 01:00:20 PM EDT

WIRING DIAGRAM

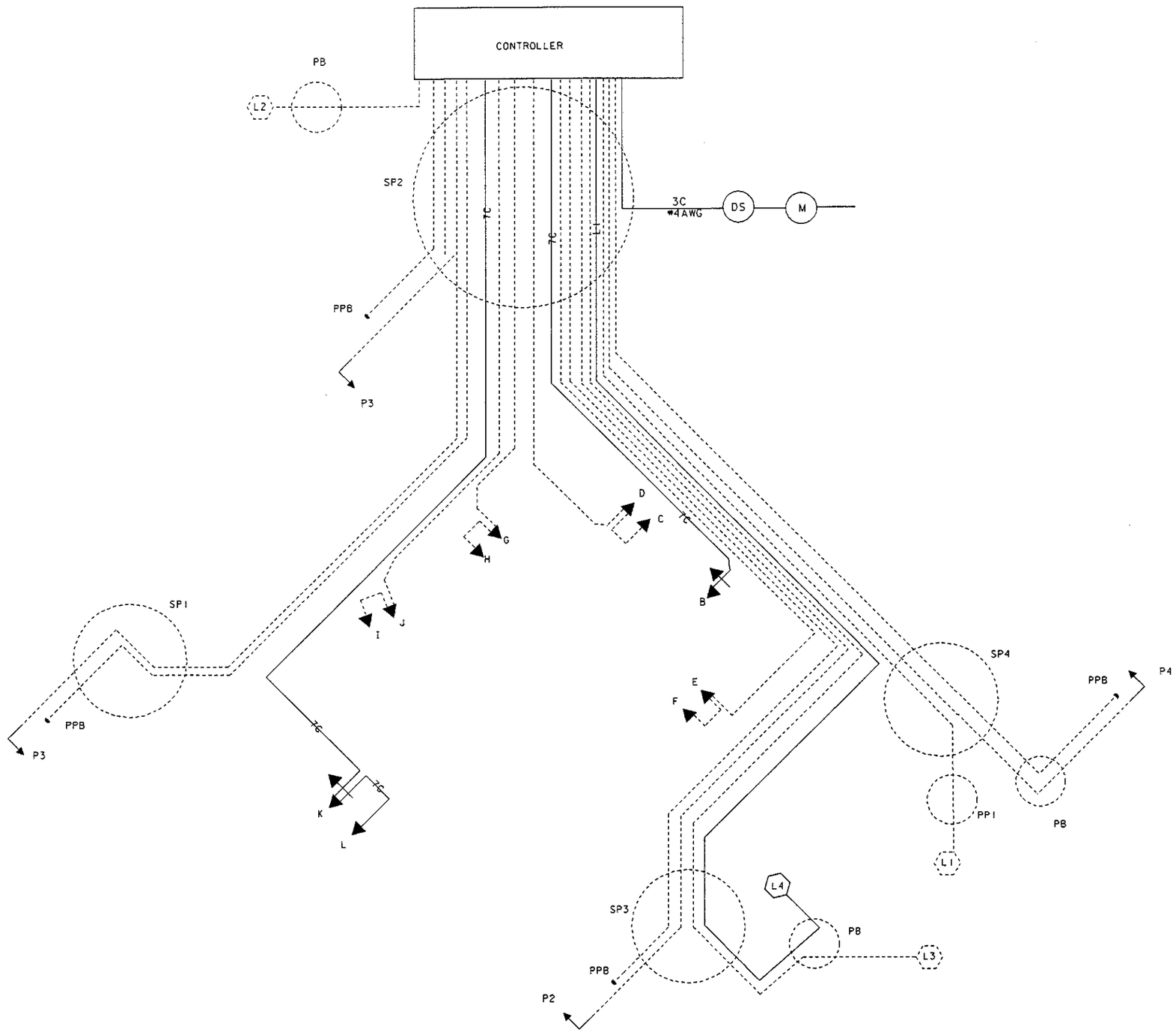

CALCULATED

CHECKED

SR 172 AND WOODLAWN
SIGNAL DETAILS

STA-172-14.210

ljaynes@D04CD122 - 16520tp2.m - Friday October 01 1999 01:04:33 PM EDT

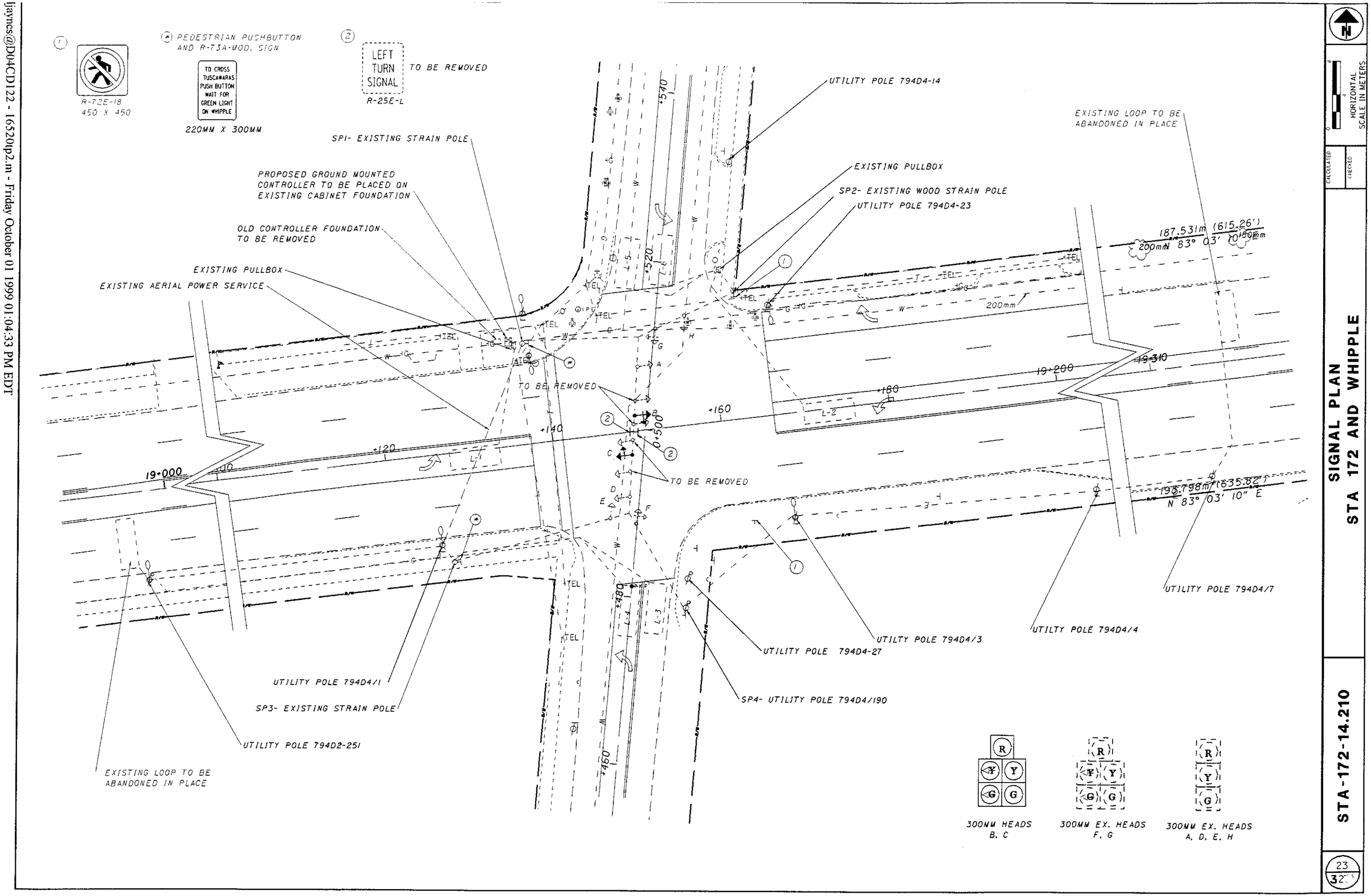

ljaynes@D04CD122 - 16520td3.m - Friday October 01 1999 01:44:25 PM EDT

ITEM DESCRIPTION	ITEM #	UNIT	QTY
VEHICULAR SIGNAL HEAD, 5-SECTION, 300MM LENS, ONE WAY, AS PER PLAN	632	EA	2
PEDESTRIAN PUSH BUTTON	632	EA	2
SIGNAL CABLE, 3-CONDUCTOR, NO.14AWG	632	M	96
SIGNAL CABLE, 7 -CONDUCTOR, NO.14AWG	632	M	78
LOOP DETECTOR UNIT, 2-CHANNEL, AS PER PLAN	632	EA	3
REMOVAL OF SIGNAL INSTALLATION, AS PER PLAN	632	EA	1
SIGN, FLATSHEET, TYPE G	630	S.M.	0.40
SIGN SUPPORT ASSEMBLY, POLE MOUNTED	630	EA	1
GROUND MOUNTED SUPPORT, #3 POST	630	M	3.5
CONTROLLER, ACTUATED, 8 PHASE, SOLID STATE DIGITAL MICROPROCESSOR, AS PER PLAN	633	EA	1
CONTROLLER,MISC.: REUSE OF EXISTING CABINET FOUNDATION	633	EA	1

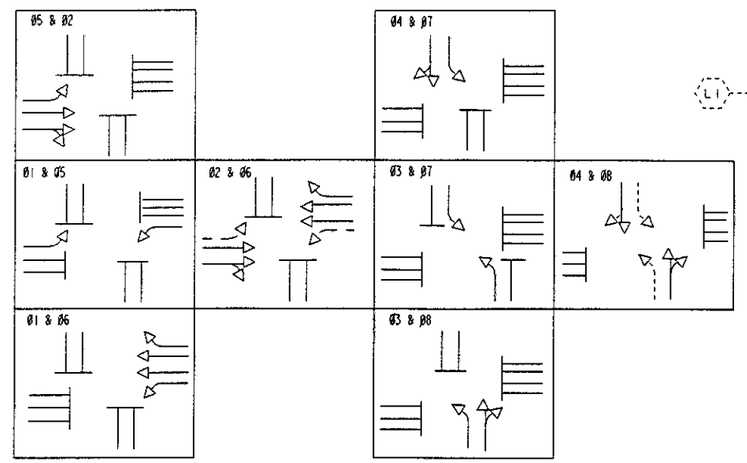

WIRING DIAGRAM

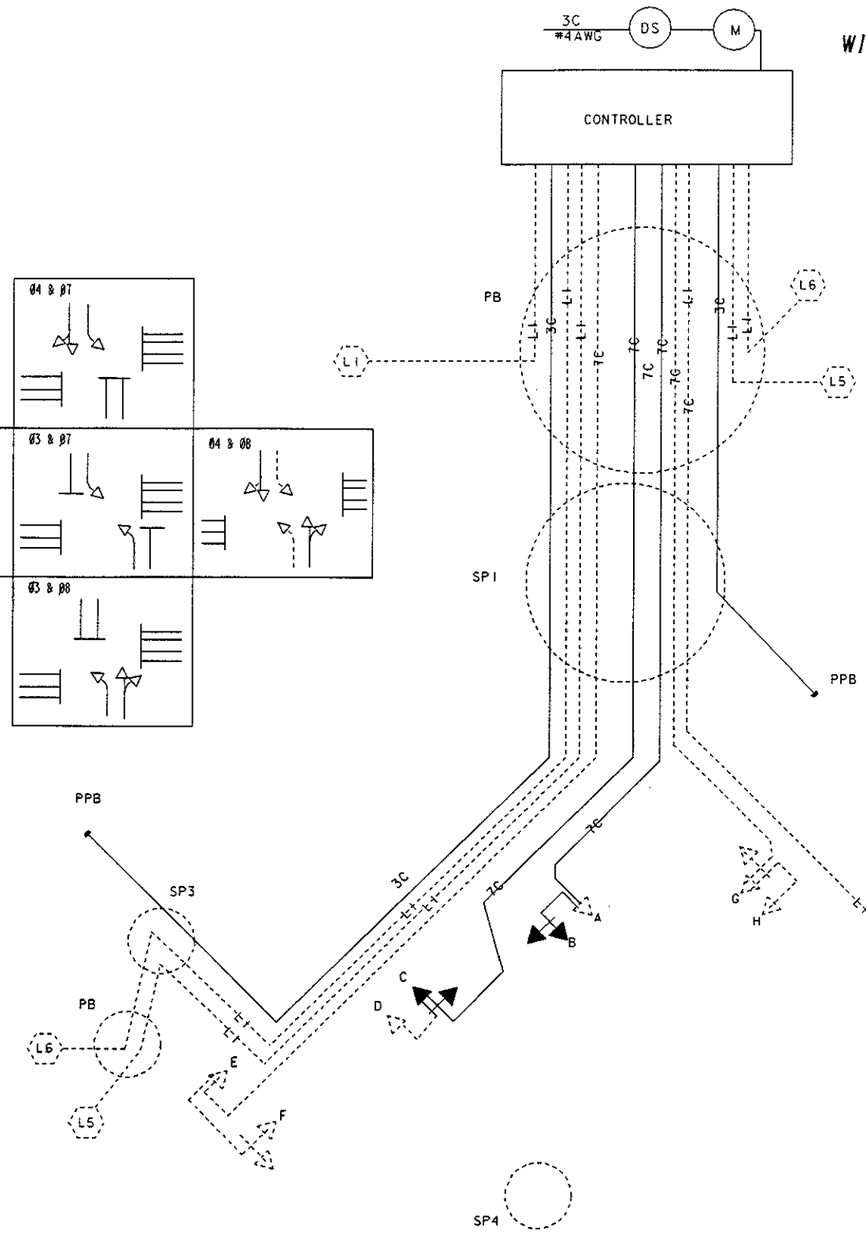

SIGNAL TIMING CHART

TIMING INTERVAL	Ø1	Ø2	Ø3	Ø4	Ø5	Ø6	Ø7	Ø8
MIN. GREEN	8	12	8	12	8	12	8	12
MAX. INITIAL								
YELLOW CLEAR	3	4	3	4	3	4	3	4
RED CLEAR	1	2	1	2	1	2	1	2
MAX GREEN I	12	30	12	22	12	30	12	22
MAX GREEN II								
MIN. EXTENSION	3		3		3		3	
PED. WALK				5				5
PED. CLEAR				15				15
RECALL		MIN		NONLOCK		MIN		NONLOCK

COORDINATION

	Ø1	Ø2	Ø3	Ø4	Ø5	Ø6	Ø7	Ø8
CYCLE 1 CYCLE LENGTH 110 SEC OFFSET = 7%	13%	45%	13%	30%	13%	45%	13%	30%
CYCLE 2 CYCLE LENGTH 110 SEC OFFSET = 97%	14%	44%	14%	29%	18%	39%	14%	29%
CYCLE 3 CYCLE LENGTH 120 SEC OFFSET = 3%	12%	47%	13%	29%	13%	46%	12%	30%

* - IF PRECEDING 1+6, 'B' SHALL REMAIN GREEN ARROW.
* - IF PRECEDING 2+5, 'C' SHALL REMAIN GREEN ARROW.
** - IF PRECEDING 3+8, 'G' SHALL REMAIN GREEN ARROW.
** - IF PRECEDING 4+7, 'F' SHALL REMAIN GREEN ARROW.

SIGNAL DISPLAY

HEAD	PHASE 1+5 *	1+6	2+5	2+6	3+7 **	3+8	4+7	4+8	FLASH
A	R R R R	G G G G	R R R R	G G Y R	R R R R	R R R R	R R R R	R R R R	R
B	G G Y R	G/G G/G Y/G G	R R R	G G Y R	R R R R	R R R R	R R R R	R R R R	R
C	G G Y R	R R R R	G/G G/G Y/G	G G Y R	R R R R	R R R R	R R R R	R R R R	R
D	R R R R	R R R R	G G G G	G G Y R	R R R R	R R R R	R R R R	R R R R	R
E	R R R R	R R R R	R R R R	R R R R	G/G G/G Y/G R	R R R R	G/G G/G Y/G G	G G Y R	R
F	R R R R	R R R R	R R R R	R R R R	R R R R	R R R R	G G G G	G G Y R	R
G	R R R R	R R R R	R R R R	R R R R	G/G G/G Y/G R	G/G G/G Y/G G	R R R R	G G Y R	R
H	R R R R	R R R R	R R R R	R R R R	R R R R	G G G G	R R R R	G G Y R	R

CALCULATED LAJ
CHECKED KJG

SR 172 AND WHIPPLE
SIGNAL DETAILS

STA-172-14.210

ljaynes@D04CD122 - 16520id4.m - Friday October 01 1999 01:40:39 PM EDT

SR 172 @ AUSTIN

POLE SIZES & SPAN ATTACHMENT HEIGHT				POLE FABRICATION ACCESSORY LOCATIONS-CLOCKWISE FROM HANDHOLE AT 0 DEGREES								FIELD ORIENTATION		
					CABLE ENTRANCES									
POLE	TC 81.10M POLE DESIGN NO.	POLE HT. (M)	ATTACHMENT HT. (M)	ANCHOR BOLT REF. LINE	1 SIGNAL CABLE ANGLE-HT. DEG.-M.	2 POWER CABLE ANGLE-HT. DEG.-MM	CONTROL CABINET	PED. SIGNALS	PED. PUSH BUTTON	METER BASE ANGLE HT	DISC. SWITCH ANGLE HT	INDEX LINE ANGLE (HANDHOLE)	ANCHOR BOLT REF. LINE	UNUSED FOUNDN CONDUIT ELL 51MM DIA.
1	6	8.5	7.4	45°	180°-7.1M				225°			135°	90°	135°
2	6	8.5	7.4	45°	180°-7.1M							225°	90°	
3	6 EX.	8.5	7.8		180°-7.2M				135°					135°
4	6 EX.	8.5	7.9		180°-7.5M	225°-700MM				225°-1.5M	225°-1.2M			

SR 172 @ GENOA

POLE SIZES & SPAN ATTACHMENT HEIGHT				POLE FABRICATION ACCESSORY LOCATIONS-CLOCKWISE FROM HANDHOLE AT 0 DEGREES								FIELD ORIENTATION		
					CABLE ENTRANCES									
POLE	TC 81.10M POLE DESIGN NO.	POLE HT. (M)	ATTACHMENT HT. (M)	ANCHOR BOLT REF. LINE	1 SIGNAL CABLE ANGLE-HT. DEG.-M.	2 POWER CABLE ANGLE-HT. DEG.-MM	CONTROL CABINET	PED. SIGNALS	PED. PUSH BUTTON	METER BASE ANGLE HT	DISC. SWITCH ANGLE HT	INDEX LINE ANGLE (HANDHOLE)	ANCHOR BOLT REF. LINE	UNUSED FOUNDN CONDUIT ELL 51MM DIA.
1	5 EX.	8.5	7.5											
2	6	8.5	7.5	45°	180°-7.2M			45°	135°			225°	90°	90°
3	6	8.5	7.3	45°	180°-7.0M			45°/315°	135°			225°	90°	
4	5 EX.	8.5	8.1											

SR 172 @ LEONARD

POLE SIZES & SPAN ATTACHMENT HEIGHT				POLE FABRICATION ACCESSORY LOCATIONS-CLOCKWISE FROM HANDHOLE AT 0 DEGREES								FIELD ORIENTATION		
					CABLE ENTRANCES									
POLE	TC 81.10M POLE DESIGN NO.	POLE HT. (M)	ATTACHMENT HT. (M)	ANCHOR BOLT REF. LINE	1 SIGNAL CABLE ANGLE-HT. DEG.-M.	2 POWER CABLE ANGLE-HT. DEG.-MM	CONTROL CABINET	PED. PEDESTRIAN SIGNALS	PED. PUSH BUTTON	METER BASE ANGLE HT	DISC. SWITCH ANGLE HT	INDEX LINE ANGLE (HANDHOLE)	ANCHOR BOLT REF. LINE	UNUSED FOUNDN CONDUIT ELL 51MM DIA.
1	6	8.5	8.0	45°	180°-7.7M							135°	90°	
2	6	8.5	7.74	45°	180°-7.4M			45°	120°			200°	90°	135°
3	6	8.5	7.28	45°	180°-7M	90°-700MM	320°			90°-1.5M	90°-1.2M	190°	90°	45°
4	6	8.5	7.78	45°	180°-7.4M			330°	200°			135°	90°	

SR 172 @ BORDNER

POLE SIZES & SPAN ATTACHMENT HEIGHT				POLE FABRICATION ACCESSORY LOCATIONS-CLOCKWISE FROM HANDHOLE AT 0 DEGREES								FIELD ORIENTATION		
					CABLE ENTRANCES									
POLE	TC 81.10M POLE DESIGN NO.	POLE HT. (M)	ATTACHMENT HT. (M)	ANCHOR BOLT REF. LINE	1 SIGNAL CABLE ANGLE-HT. DEG.-M.	2 POWER CABLE ANGLE-HT. DEG.-MM	CONTROL CABINET	PED. SIGNALS	PED. PUSH BUTTON	METER BASE ANGLE HT	DISC. SWITCH ANGLE HT	INDEX LINE ANGLE (HANDHOLE)	ANCHOR BOLT REF. LINE	UNUSED FOUNDN CONDUIT ELL 51MM DIA.
1	6	8.5	7.8M	45°	180°-7.5M							135°	90°	
2	6	8.5	7.8M	45°	315°-7.5M	180°-700MM	90°	270°	270°	180°-1.5M	180°-1.2M	180°	90°	

SR 172 @ PERRY

POLE SIZES & SPAN ATTACHMENT HEIGHT				POLE FABRICATION ACCESSORY LOCATIONS-CLOCKWISE FROM HANDHOLE AT 0 DEGREES								FIELD ORIENTATION		
					CABLE ENTRANCES									
POLE	TC 81.10M POLE DESIGN NO.	POLE HT. (M)	ATTACHMENT HT. (M)	ANCHOR BOLT REF. LINE	1 SIGNAL CABLE ANGLE-HT. DEG.-M.	2 POWER CABLE ANGLE-HT. DEG.-MM	CONTROL CABINET	PED. SIGNALS	PED. PUSH BUTTON	METER BASE ANGLE HT	DISC. SWITCH ANGLE HT	INDEX LINE ANGLE (HANDHOLE)	ANCHOR BOLT REF. LINE	UNUSED FOUNDN CONDUIT ELL 51MM DIA.
1	6	8.5	7.4	45°	180°-7.1M			45°/315°	110°/240°			135°	90°	135°
2	6	8.5	7.4	45°	180°-7.1M			250°/315°	210°/110°			225°	90°	180°
3	6	9.1	8.0	45°	180°-7.7M			120°/225°	165°/245°			180°	90°	
4	6	9.1	8.5	45°	180°-8.2M	90°-700MM				90°-1.8M	90°-1.2M	135°	90°	
PP1		2.4		45°					170°/270°			180°	90°	

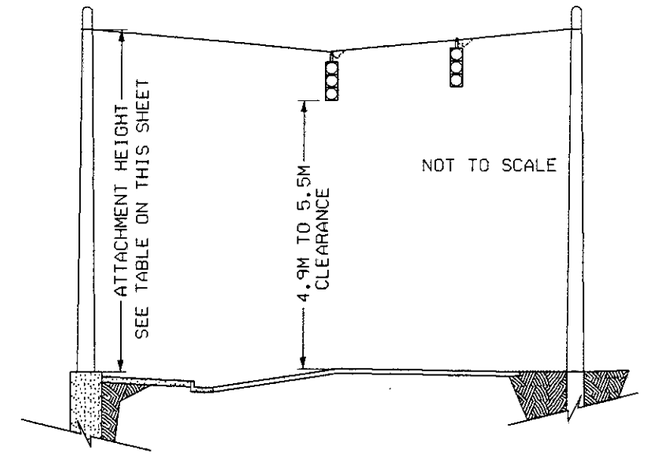

SEE ODOT STANDARD CONSTRUCTION DRAWING TC-21.20M FOR FOUNDATION DETAILS

SEE ODOT STANDARD CONSTRUCTION DRAWING TC-81.10M FOR ADDITIONAL POLE DATA

POLE LEFT OF ℄ | POLE RIGHT OF ℄

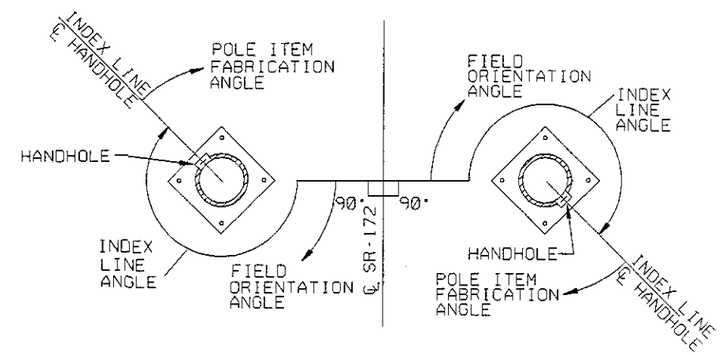

SIGNAL STRAIN POLE ORIENTATION DETAILS

NOTES:

1. ALL ANGLES MEASURED CLOCKWISE
2. INDEX LINE GOES THROUGH THE CENTER OF THE HANDHOLE
3. ALL CABLE ENTRANCES ARE 51MM, EXCEPT POWER SERVICE ENTRANCE. WHICH IS 38MM.
4. UNUSED B.H.C. SHALL HAVE A GALVANIZED PLUG

CALCULATED | CHECKED

POLE DETAILS

STA-172-14.210

ljaynes@D04CD122 - 16520td1.m - Friday August 27 1999 10:37:07 AM EDT

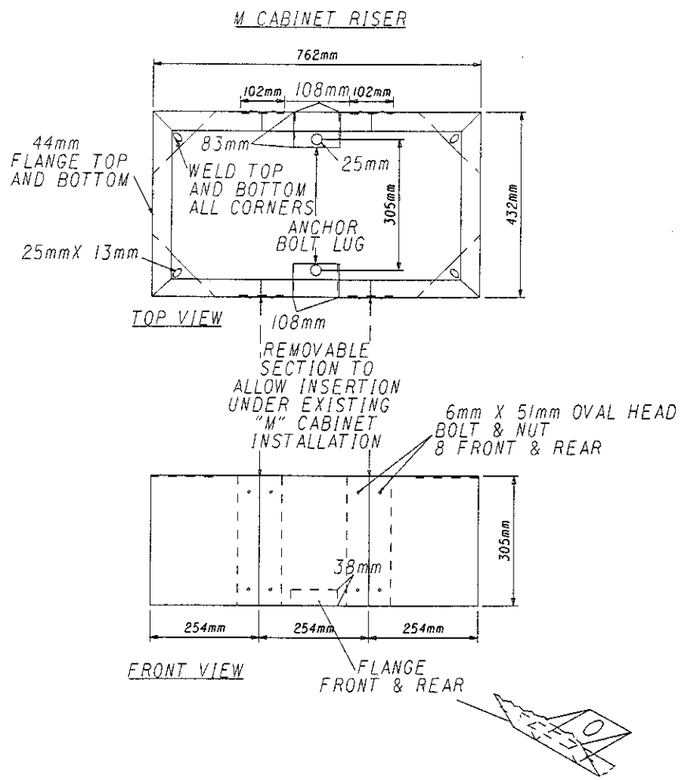

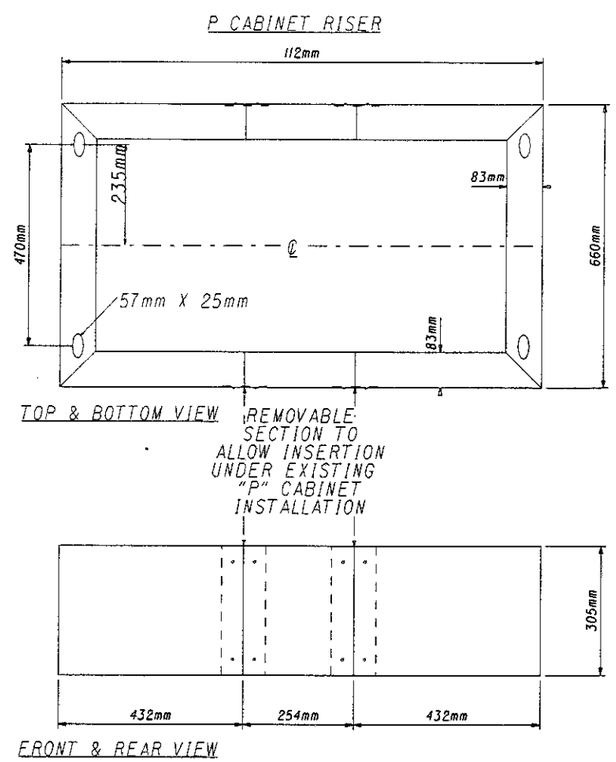

MATERIAL: ALUMINUM ALLOY (SPEC. 5052 H-32) 3mm

FABRICATION: RISER TO HAVE REMOVEABLE SECTION
FRONT AND REAR TO ALLOW INSTALLATION

WHEN REQUIRED: FEDERAL YELLOW OVER A THREE STAGE IRON
PHOSPHATE COATING WITH ZINC CHROMATE PRIMER

DRAWING MODIFIED TO SHOW "P" RISER

CALCULATED

CHECKED

SIGNAL DETAILS

STA-172-14.210

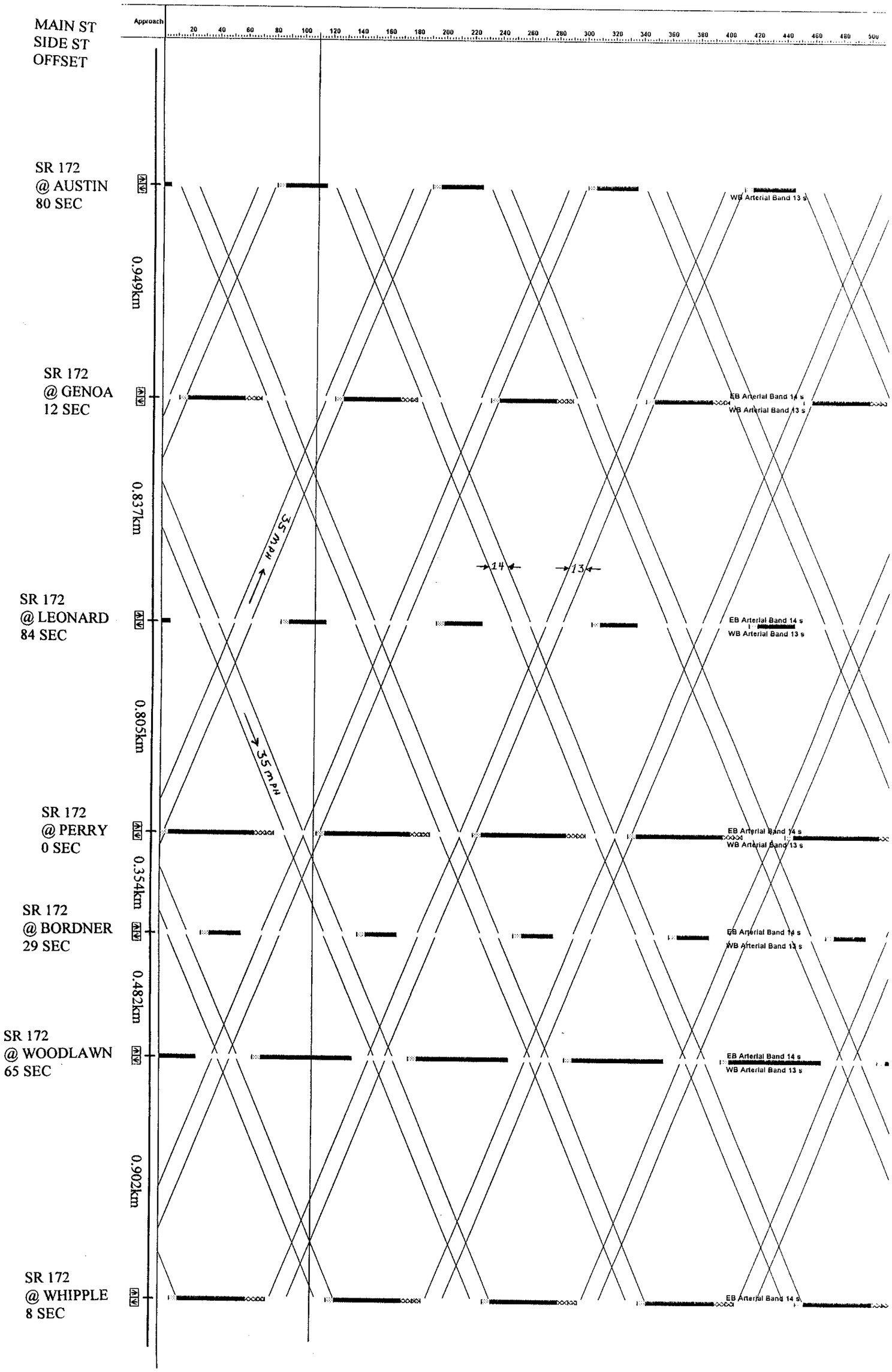

27/32

STA-172-14.210

CYCLE 1 TIME-SPACE DIAGRAM
[7:00AM TO 9:00AM]

CALCULATED

CHECKED

ynes@D04CD122 - 165201.m - Friday September 10 1999 12:40:07 PM EDT

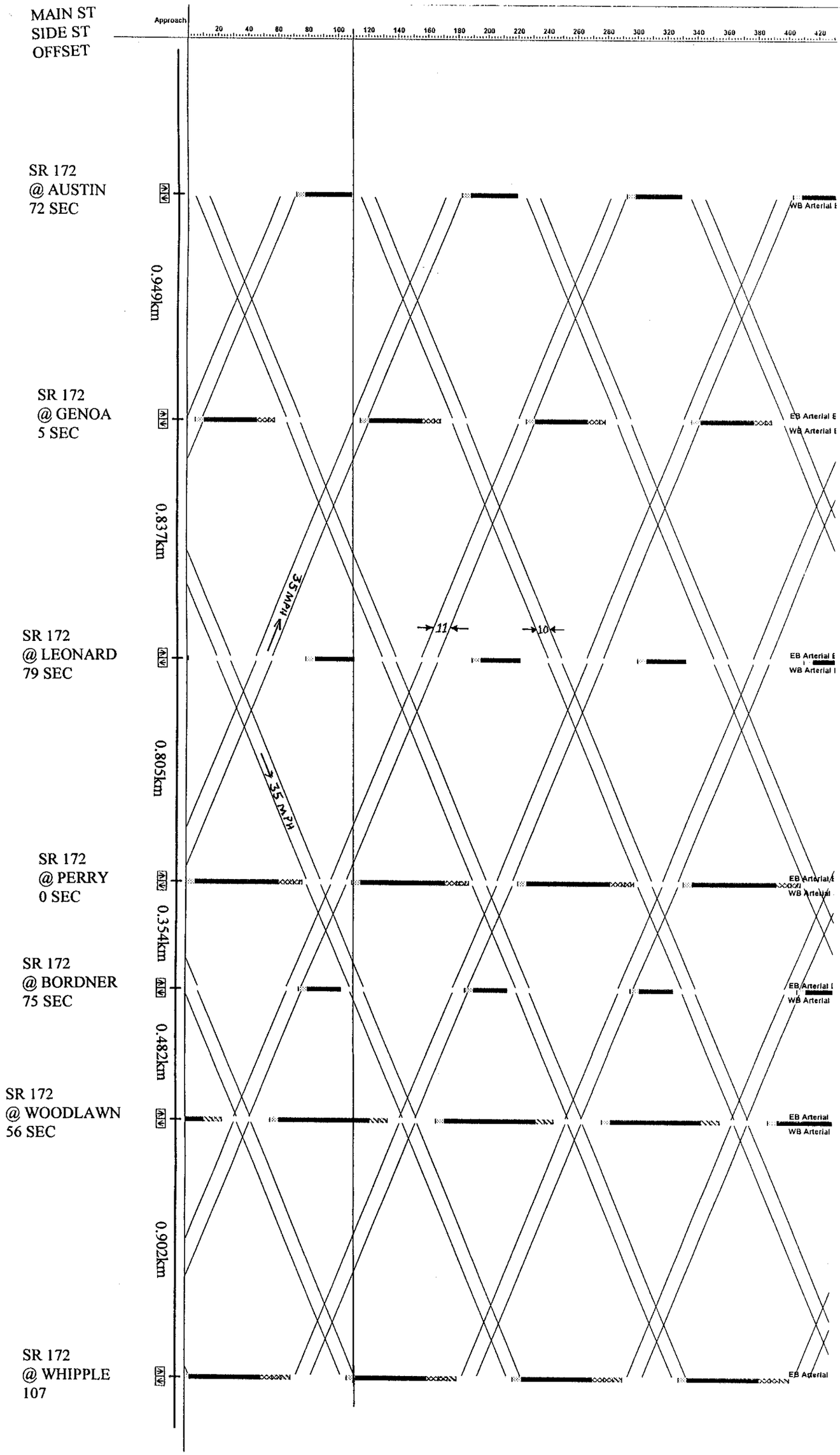

28 / 32	STA-172-14.210	CYCLE 2 TIME-SPACE DIAGRAM [OFF PEAK]

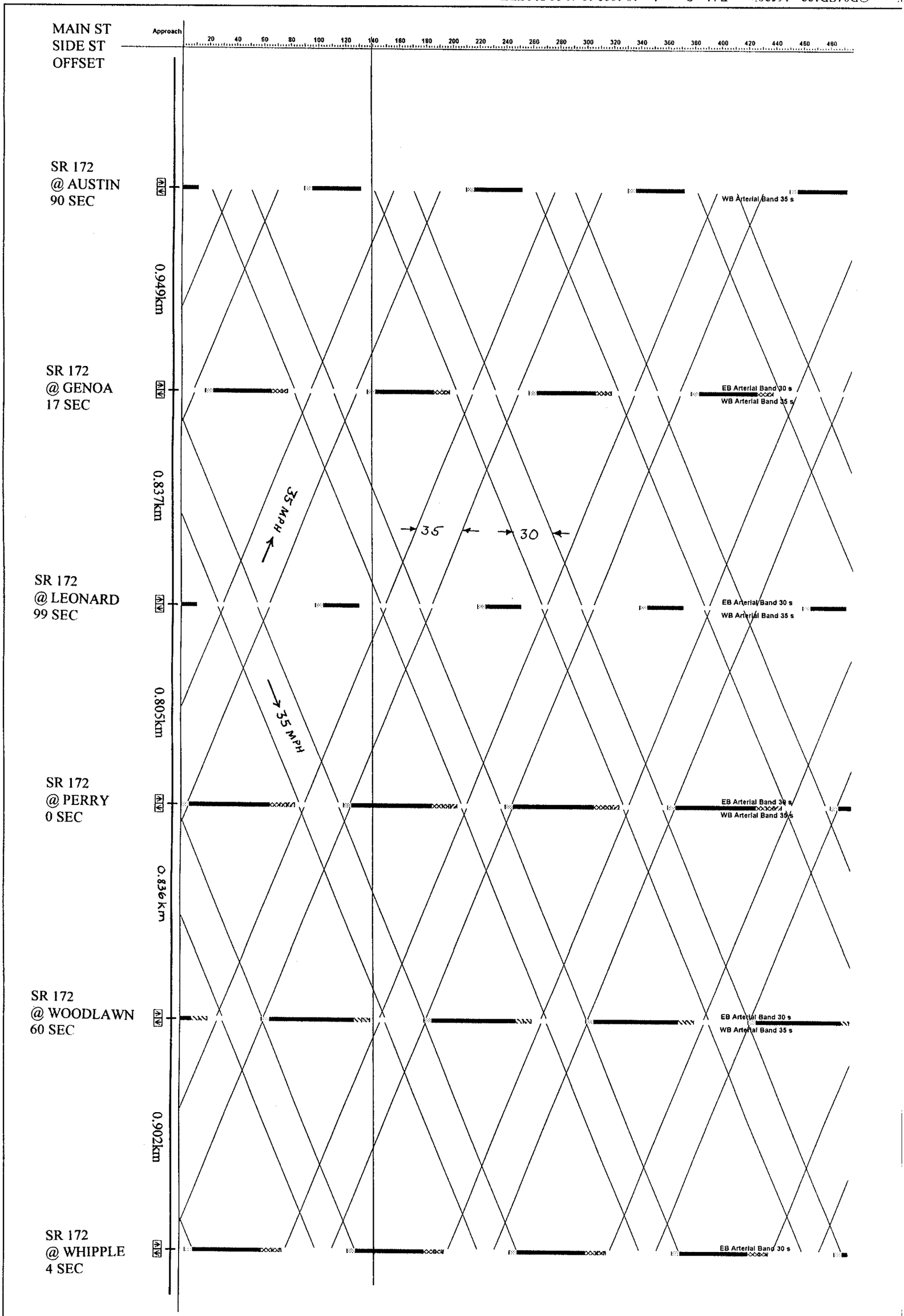

29/32	STA-172-14.210	CYCLE 3 TIME-SPACE DIAGRAM [4:00PM TO 6:00PM]

CALCULATED
CHECKED

PROPERTY MAP

CONVENTIONAL SIGNS

County Line
Township Line
Section Line
Corporation Line or
Fence Line (existing) (proposed)
Center Line
Trees ,Stumps (to be removed)
Utility Poles: Telephone , Power , Light
Limited Access (only) LA
Right of Way (only) RW
Limited Access & Right of Way LA & RW
Existing Right of Way EX. R/W
Property Line (in existing fence)
Proposed Pole = ●
Overhead Wire = —OH—
Proposed Pull Box = ■
Existing Pull Box = (PB)

EXISTING RIGHT OF WAY WIDTH AND LOCATION DETERMINED FROM INFORMATION RECEIVED FROM THE OHIO DEPARTMENT OF TRANSPORTATION DISTRICT 4.

UNDERGROUND UTILITIES

THE LOCATION OF UNDERGROUND UTILITIES SHOWN ON THE PLANS ARE AS OBTAINED FROM THE OWNERS OF THE UTILITIES AS REQUIRED BY SECTION 153.64 O.R.C.

UTILITY OWNERS

SEE SHEET NUMBER 3 FOR UTILITY OWNERS.

metric units

SCALE IN METERS

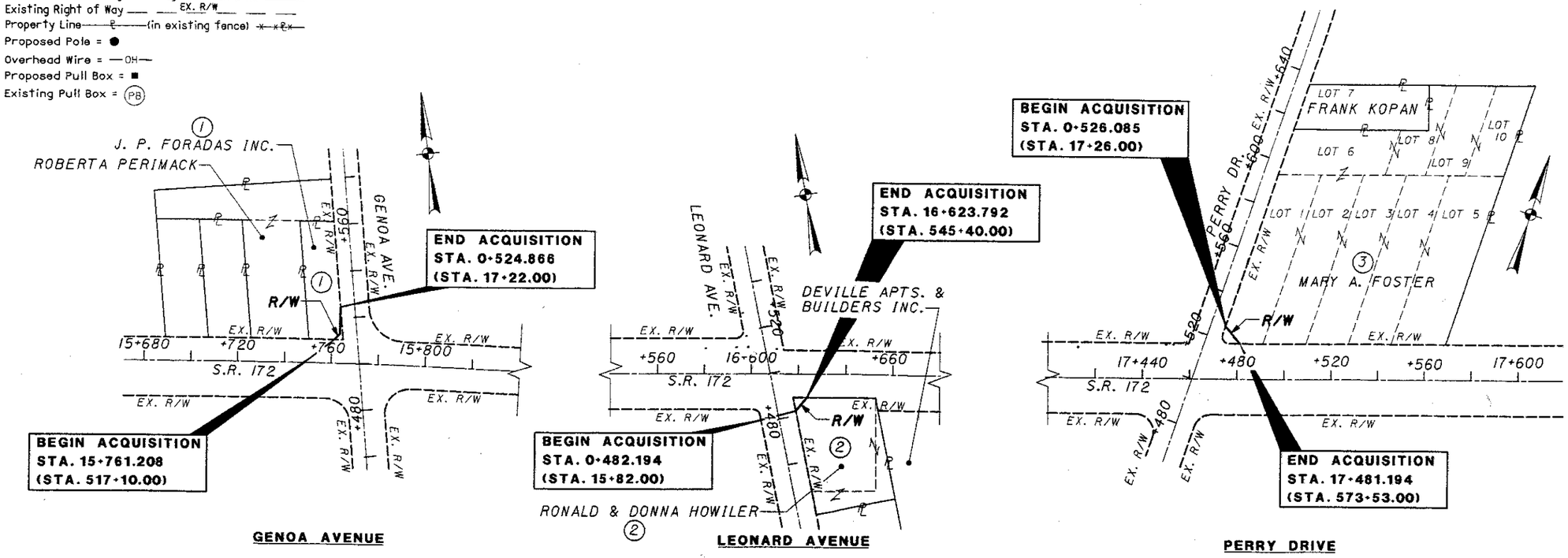

TOTAL NUMBER OF :
3 OWNERSHIPS
0 TOTAL TAKES
0 OWNERSHIPS WITH STRUCTURES INVOLVED
0 OWNERSHIPS WITH "P" ITEMS

SUMMARY OF ADDITIONAL RIGHT OF WAY REQUIRED

NET RESIDUE = RECORD AREA - TOTAL PRO - NET TAKE

ALL AREAS IN SQUARE METERS (SQUARE FEET)

GRANTEE:

ALL RIGHT OF WAY ACQUIRED IN THE NAME OF STATE OF OHIO UNLESS OTHERWISE SHOWN.

PARCEL NO.	OWNER	SHEET NO.	OWNERS RECORD BOOK	OWNERS RECORD PAGE	AUDITOR'S PARCEL	RECORD AREA	TOTAL P.R.O.	GROSS TAKE	P.R.O. IN TAKE	NET TAKE	STRUCTURE	NET RESIDUE LEFT	NET RESIDUE RIGHT	TYPE FUND	REMARKS AND PERSONALTY	AS ACQUIRED BOOK	AS ACQUIRED PAGE
1SH	J. P. FORADAS INC. 3775 CLEVELAND AVE. NW CANTON, OH 44709	2	1752	505	4309384	740.550	0	11.7351	0	11.7351		735.694					
						(7971.48)		(126.32)	0	(126.32)		(7919.208)					
2SH	RONALD & DONNA HOWILER	2	252	627	4301011	1076.429	0	17.4011	0	17.4011			1069.550		FENCE ENCROACHMENT		
	FIRST AMERICAN REAL ESTATE TAX SERVICE, 17187 N. LAUREL PARK DR., SUITE 437, LIVONIA, MI 48152				4306079	(11586.96)		(187.31)	0	(187.31)			(11512.638)				
3SH	MARY A. FOSTER 1715 TURNBERRY CIRCLE NW CANTON, OH 44708	3	99024211		4317867	1392.073	0	28.3271	0	28.3271			1380.742				
						(14984.64)		(304.92)	0	(304.92)			(14862.672)				

STARK COUNTY, PERRY TWP. SECTIONS 10, 11, & 12 TWP. T-10, R-9

(1 SQ. FOOT = 0.0929 SQ. METER)

REV	DATE	DESCRIPTION

PLAN COMPLETED: 9/15/99

PID NO.

RIGHT OF WAY PLAN

STA-172-14.210

1/3

30/32

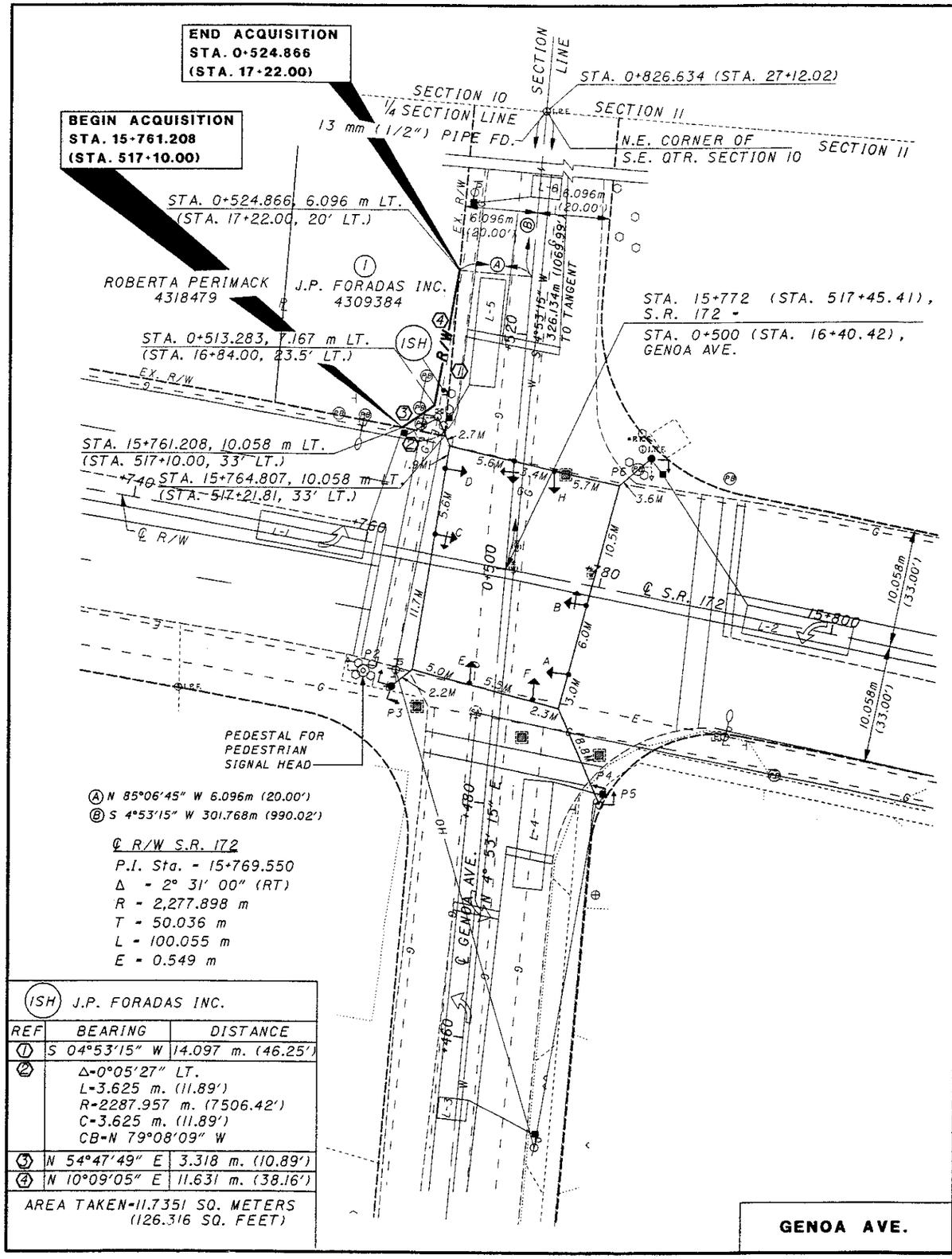

(1SH) J.P. FORADAS INC.

REF	BEARING	DISTANCE
1	S 04°53'15" W	14.097 m. (46.25')
2	Δ=0°05'27" LT. L=3.625 m. (11.89') R=2287.957 m. (7506.42') C=3.625 m. (11.89') CB=N 79°08'09" W	
3	N 54°47'49" E	3.318 m. (10.89')
4	N 10°09'05" E	11.631 m. (38.16')

AREA TAKEN=11.7351 SQ. METERS
(126.316 SQ. FEET)

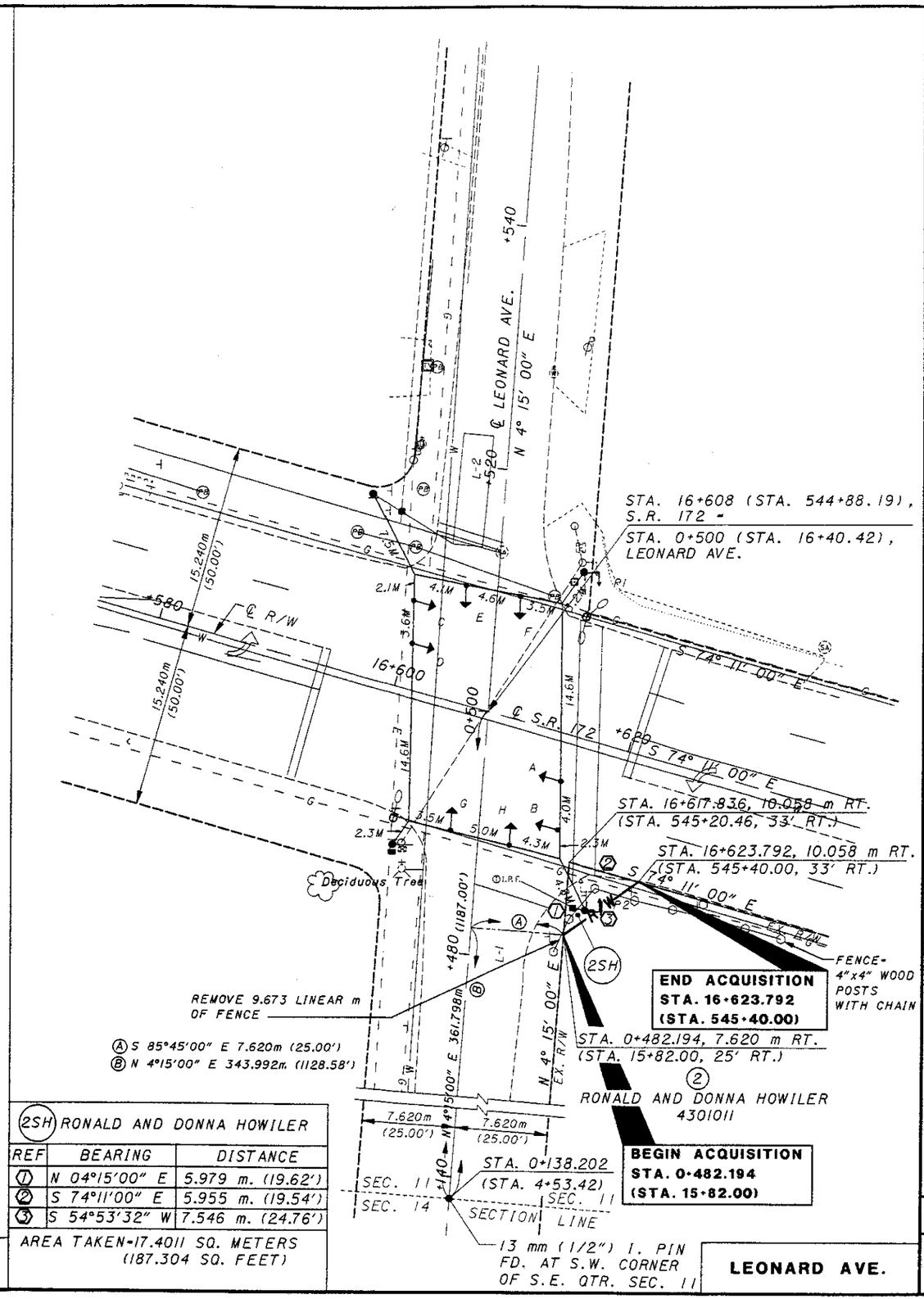

(2SH) RONALD AND DONNA HOWILER

REF	BEARING	DISTANCE
1	N 04°15'00" E	5.979 m. (19.62')
2	S 74°11'00" E	5.955 m. (19.54')
3	S 54°53'32" W	7.546 m. (24.76')

AREA TAKEN=17.4011 SQ. METERS
(187.304 SQ. FEET)

GENOA AVE.

LEONARD AVE.

SCALE IN METERS

CALCULATED

CHECKED

RIGHT OF WAY PLAN
SR 172 & GENOA AVE./SR 172 & LEONARD AVE.

STA-172-14.210

2/3

31/32

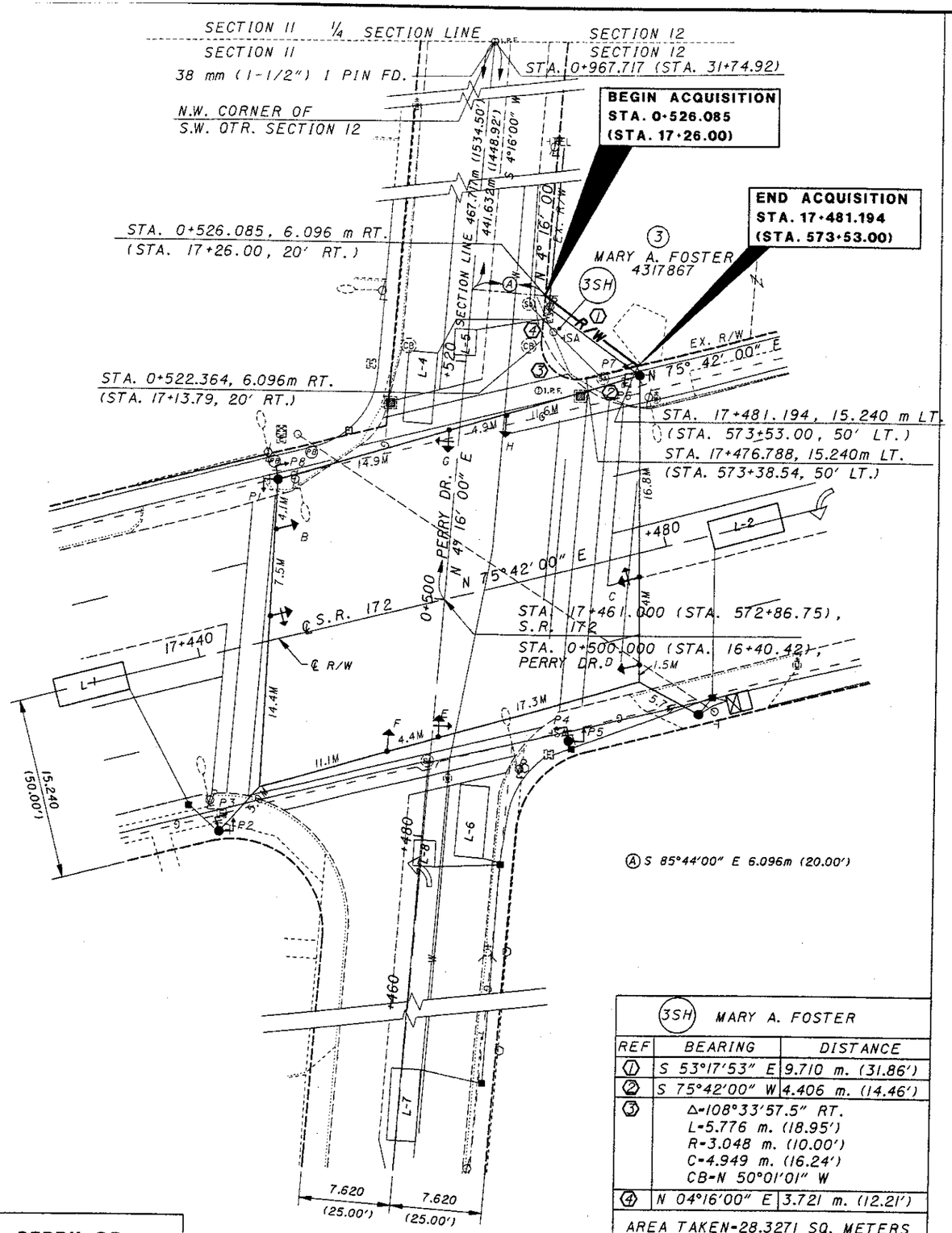

PERRY DR.

3SH MARY A. FOSTER		
REF	BEARING	DISTANCE
1	S 53°17'53" E	9.710 m. (31.86')
2	S 75°42'00" W	4.406 m. (14.46')
3	Δ=108°33'57.5" RT. L=5.776 m. (18.95') R=3.048 m. (10.00') C=4.949 m. (16.24') CB=N 50°01'01" W	
4	N 04°16'00" E	3.721 m. (12.21')

AREA TAKEN=28.3271 SQ. METERS
(304.910 SQ. FEET)

UTILITIES

THE FOLLOWING UTILITIES AND OWNERS ARE LOCATED WITHIN THE WORK LIMITS OF THIS PROJECT:

AMERITECT
50 W. BOWERY ST.
AKRON, OH 44308
ATTN: JIM McLAUGHLIN
330-384-8057

TIME WARNER CABLE
5520 WHIPPLE AVE.
N. CANTON, OH 44720
ATTN: STEVE WEAVER
330-633-9203

OHIO EDISON
1910 W. MARKET ST.
AKRON, OH 44313
ATTN: GLENN BOWMAN
330-384-4711

AEP
301 CLEVELAND AVE. SW
CANTON, OH 44701
ATTN: MIKE BUSCH
330-438-7721

MASSILLON CABLE
P.O. BOX 814
MASSILLON, OH 44648
ATTN: NEIL TRAVIS
330-833-4134

EAST OHIO GAS
4725 SOUTHWAY ST. SW
CANTON, OH 44706
ATTN: KATE ELLIS
330-478-3136

CANTON WATER DEPARTMENT
2664 HARRISBURG AVE. NE
CANTON, OH 44705
ATTN: DAVE WILLIAMS
330-438-9304

STARK COUNTY SANITARY ENGINEER
1701 MAHONING RD. NE
CANTON, OH 44705
ATTN: JIM JONES
330-438-9304

CONSUMER OHIO WATER CO.
P.O. BOX 584
MASSILLON, OH 44648
ATTN: WILLIE MAURER
330-833-4156

N

SCALE IN METERS

CALCULATED LAJ
CHECKED

RIGHT OF WAY PLAN
SR 172 & PERRY DR.

STA-172-14.210

3/3

32/32