BRIDGE LOAD RATING SUMMARY REPORT
OFFICE OF STRUCTURAL ENGINEERING
OHIO DEPARTMENT OF TRANSPORTATION

SFN	BRIDGE NUMBER	DISTRICT	GPS COORDINATES	
			LATITUDE:	LONGITUDE:
7731175	SUM-BAR-010-0361	4	41.011667	-81.618333

ORIGINAL CONSTRUCTION YEAR	REHABILITATION YEAR	OVERALL STRUCTURE LENGTH	FEATURE INTERSECTED
1995		75 ft	Wolf Creek

SPECIAL ASSUMPTIONS & COMMENTS

Original plans (December 1992) and field measurements (7/2/21) were used for load rating.
Structure Type = simple span, prestressed concrete box beam (composite); 15-CB27-48 p/s box beams
No. Spans = 1 ; Span Length = 70.0 ft.; Skew = 0°
Bridge Width = 62.0 ft. o/o deck; Roadway width = 50.0 ft. f/f curb; two 5.0 ft. walks w/ 1.0 ft sidewalk railing.
Bridge Deck = 6" (avg.) reinforced concrete
Beam Properties: f'c=5.5 ksi; f'ci=4 ksi; As=0.153 in2; fs=270 ksi; # Strands = 26 (full section)

No section loss was used in analysis

	PLEASE SELECT ON RIGHT, WHERE APPROPRIATE, BY USING THE DROP DOWN ARROW BUTTON
LOAD RATING PURPOSE :	8 - Update Analysis Model and Software
GENERAL APPRAISAL (0-9) :	7
***(708)* LOAD RATING SOFTWARE :**	3 - AASHTO BrR (VIRTIS)
SOFTWARE VERSION :	6.8.4.3001
***(709)* RATING SOURCE :**	1 - Plan information available for load rating analysis
***(63)(65)* RATING METHOD :**	6 - Load Factor (LF) rating reported by rating factor (RF)
(31) ORIGINAL DESIGN LOADING :	6 - HS20-44 & Alternate Military Loading

STRUCTURE RATING SUMMARY

OHIO LEGAL VEHICLES

Loading Type	GVW (Tons)	Operating Rating RF	Legal Weight (Tons)
2F1	15	5.037	15.00
3F1	23	3.365	23.00
4F1	27	2.972	27.00
5C1	40	3.321	40.00

SPECIALIZED HAULING VEHICLES (SHV)

SU4	27	2.950	27.00
SU5	31	2.673	31.00
SU6	34.75	2.395	34.75
SU7	38.75	2.193	38.75

EMERGENCY VEHICLES (EV)

Check box if this is an NBI bridge ☑

EV2	28.75	2.895	28.75
EV3	43	2.238	43.00

DESIGN VEHICLE

Loading Type	Rating by RF	
	Operating	Inventory
HS20 Loading	2.441	1.060

Overall Legal Posting Rating	150%
Posting Recommendation	**No Load Posting is Recommended**

Sign Posting Recommendation:

AGENCY/FIRM/OFFICE	Arcadis / Akron, OH	Report Date	9/1/2021

	Rated By	Reviewed By
Name:	Nicholas E. Swank	Frank J. Getz
PE Number:		66992
Phone Number:	(330) 515-5729	(330) 515-5677
Email:	nick.swank@arcadis.com	frank.getz@arcadis.com

STATE OF OHIO
FRANK JOHN GETZ
E-66992
REGISTERED
PROFESSIONAL ENGINEER

BAR-010-0361 (SFN 7731175) Load Rating
Wooster Road over Wolf Creek

Load Rating Parameters/Assumptions:

- Structure Type: Prestressed Concrete Box Beam, Simple
  - No of Spans = 1; Span Length = 70’ c/c bearing; Skew = 0°
  - Bridge Width = 62.0’
  - Roadway Width = 50.0’
  - 15 – CB27-48 p/s concrete box beams
  - Reinforced concrete deck = 6” avg. thickness
  - Year of Construction = 1995
  - Prestressed Concrete Box Beam Properties
    - Beam Size
      - CB27-48 (15 Beams)
    - Concrete
      - f’c = 5,500 psi ; f’ci = 4,000 psi
    - Prestressing Strands
      - Dia. = 1/2 in.; A_{strand} = 0.153 in^2
      - F_s= 270,000 psi
      - # of strands = 26 (full section)
      - Section Loss (see Inspection Findings)
        - None
- Existing Plans (December 1992) were available.
  - Existing structure dimensions were field verified during inspection on 7/2/2021.
  - This structure was not previously load rated.

- The bridge was load rated using AASHTOWare BrR.
  - ***No Load Posting is recommended.***

Inspection Findings:

- A load rating inspection was performed on 7/2/2021. The superstructure was rated in *Very Good* Condition and the substructure was rated in *Good* condition.
    - There were a few minor hairline cracks in bridge deck/wearing surface.
    - The rip-rap channel protection is being washed away and the steel sheet piling is leaning.

Bridge Rating Results Report

	Bridge Id	Vehicle	Rating Level	Rating Factor	Rating Method	Capacity (Ton)	Time Stamp	Rated By	Impact	Lane	Up	DB	Ve
	7731175	EV2~1	Legal Operating	2.895	LFD	83.24	Thursday, July 15, 202	brr	As Requested	As Requested	☑	☐	
	7731175	EV3~1	Legal Operating	2.238	LFD	81.45	Thursday, July 15, 202	brr	As Requested	As Requested	☑	☐	
	7731175	HS 20-44	Inventory	1.060	LFD	38.15	Thursday, July 15, 202	brr	As Requested	As Requested	☑	☐	
	7731175	HS 20-44	Operating	2.441	LFD	87.88	Thursday, July 15, 202	brr	As Requested	As Requested	☑	☐	
	7731175	SU4	Legal Operating	2.950	LFD	79.65	Thursday, July 15, 202	brr	As Requested	As Requested	☑	☐	
	7731175	SU5	Legal Operating	2.673	LFD	82.86	Thursday, July 15, 202	brr	As Requested	As Requested	☑	☐	
	7731175	SU6	Legal Operating	2.395	LFD	83.24	Thursday, July 15, 202	brr	As Requested	As Requested	☑	☐	
	7731175	SU7	Legal Operating	2.193	LFD	84.99	Thursday, July 15, 202	brr	As Requested	As Requested	☑	☐	
	7731175	OH-2F1	Legal Operating	5.037	LFD	75.55	Thursday, July 15, 202	brr	As Requested	As Requested	☑	☐	
	7731175	OH-3F1	Legal Operating	3.365	LFD	77.39	Thursday, July 15, 202	brr	As Requested	As Requested	☑	☐	
	7731175	OH-4F1	Legal Operating	2.972	LFD	80.24	Thursday, July 15, 202	brr	As Requested	As Requested	☑	☐	
	7731175	OH-5C1	Legal Operating	3.321	LFD	132.84	Thursday, July 15, 202	brr	As Requested	As Requested	☑	☐	

Member Rating Results Report

	Bridge Id	Structure	Member	Vehicle	Rating Level	Rating Factor	Capacity (Ton)	Location (ft)	Rating Method	Up	DB	Time Stamp	Rated By	Im	Ma	Ve	Di
	7731175	Superstructure	G1	EV2~1	Legal Oper	2.90	83.24	35.000	LFD	☑	☐	Thursday, July 15, 2021	brr	A	A		
	7731175	Superstructure	G2	EV2~1	Legal Oper	2.90	83.24	35.000	LFD	☑	☐	Thursday, July 15, 2021	brr	A	A		
	7731175	Superstructure	G3	EV2~1	Legal Oper	2.90	83.24	35.000	LFD	☑	☐	Thursday, July 15, 2021	brr	A	A		
	7731175	Superstructure	G4	EV2~1	Legal Oper	2.90	83.24	35.000	LFD	☑	☐	Thursday, July 15, 2021	brr	A	A		
	7731175	Superstructure	G5	EV2~1	Legal Oper	2.90	83.24	35.000	LFD	☑	☐	Thursday, July 15, 2021	brr	A	A		
	7731175	Superstructure	G6	EV2~1	Legal Oper	2.90	83.24	35.000	LFD	☑	☐	Thursday, July 15, 2021	brr	A	A		
	7731175	Superstructure	G7	EV2~1	Legal Oper	2.90	83.24	35.000	LFD	☑	☐	Thursday, July 15, 2021	brr	A	A		
	7731175	Superstructure	G8	EV2~1	Legal Oper	2.90	83.24	35.000	LFD	☑	☐	Thursday, July 15, 2021	brr	A	A		
	7731175	Superstructure	G9	EV2~1	Legal Oper	2.90	83.24	35.000	LFD	☑	☐	Thursday, July 15, 2021	brr	A	A		
	7731175	Superstructure	G10	EV2~1	Legal Oper	2.90	83.24	35.000	LFD	☑	☐	Thursday, July 15, 2021	brr	A	A		
	7731175	Superstructure	G11	EV2~1	Legal Oper	2.90	83.24	35.000	LFD	☑	☐	Thursday, July 15, 2021	brr	A	A		
	7731175	Superstructure	G12	EV2~1	Legal Oper	2.90	83.24	35.000	LFD	☑	☐	Thursday, July 15, 2021	brr	A	A		
	7731175	Superstructure	G13	EV2~1	Legal Oper	2.90	83.24	35.000	LFD	☑	☐	Thursday, July 15, 2021	brr	A	A		
	7731175	Superstructure	G14	EV2~1	Legal Oper	2.90	83.24	35.000	LFD	☑	☐	Thursday, July 15, 2021	brr	A	A		
	7731175	Superstructure	G15	EV2~1	Legal Oper	2.90	83.24	35.000	LFD	☑	☐	Thursday, July 15, 2021	brr	A	A		
	7731175	Superstructure	G1	EV3~1	Legal Oper	2.24	81.45	35.000	LFD	☑	☐	Thursday, July 15, 2021	brr	A	A		
	7731175	Superstructure	G2	EV3~1	Legal Oper	2.24	81.45	35.000	LFD	☑	☐	Thursday, July 15, 2021	brr	A	A		
	7731175	Superstructure	G3	EV3~1	Legal Oper	2.24	81.45	35.000	LFD	☑	☐	Thursday, July 15, 2021	brr	A	A		
	7731175	Superstructure	G4	EV3~1	Legal Oper	2.24	81.45	35.000	LFD	☑	☐	Thursday, July 15, 2021	brr	A	A		
	7731175	Superstructure	G5	EV3~1	Legal Oper	2.24	81.45	35.000	LFD	☑	☐	Thursday, July 15, 2021	brr	A	A		
	7731175	Superstructure	G6	EV3~1	Legal Oper	2.24	81.45	35.000	LFD	☑	☐	Thursday, July 15, 2021	brr	A	A		
	7731175	Superstructure	G7	EV3~1	Legal Oper	2.24	81.45	35.000	LFD	☑	☐	Thursday, July 15, 2021	brr	A	A		
	7731175	Superstructure	G8	EV3~1	Legal Oper	2.24	81.45	35.000	LFD	☑	☐	Thursday, July 15, 2021	brr	A	A		
	7731175	Superstructure	G9	EV3~1	Legal Oper	2.24	81.45	35.000	LFD	☑	☐	Thursday, July 15, 2021	brr	A	A		
	7731175	Superstructure	G10	EV3~1	Legal Oper	2.24	81.45	35.000	LFD	☑	☐	Thursday, July 15, 2021	brr	A	A		
	7731175	Superstructure	G11	EV3~1	Legal Oper	2.24	81.45	35.000	LFD	☑	☐	Thursday, July 15, 2021	brr	A	A		
	7731175	Superstructure	G12	EV3~1	Legal Oper	2.24	81.45	35.000	LFD	☑	☐	Thursday, July 15, 2021	brr	A	A		
	7731175	Superstructure	G13	EV3~1	Legal Oper	2.24	81.45	35.000	LFD	☑	☐	Thursday, July 15, 2021	brr	A	A		
	7731175	Superstructure	G14	EV3~1	Legal Oper	2.24	81.45	35.000	LFD	☑	☐	Thursday, July 15, 2021	brr	A	A		
	7731175	Superstructure	G15	EV3~1	Legal Oper	2.24	81.45	35.000	LFD	☑	☐	Thursday, July 15, 2021	brr	A	A		
	7731175	Superstructure	G1	HS 20-44	Inventory	1.06	38.15	35.000	LFD	☑	☐	Thursday, July 15, 2021	brr	A	A		
	7731175	Superstructure	G1	HS 20-44	Operating	2.44	87.88	35.000	LFD	☑	☐	Thursday, July 15, 2021	brr	A	A		
	7731175	Superstructure	G2	HS 20-44	Inventory	1.06	38.15	35.000	LFD	☑	☐	Thursday, July 15, 2021	brr	A	A		

Member Rating Results Report

	Bridge Id	Structure	Member	Vehicle	Rating Level	Rating Factor	Capacity (Ton)	Location (ft)	Rating Method	UDp	DB	Time Stamp	Rated By	I m	L a	V e	D i
	7731175	Superstructure	G2	HS 20-44	Operating	2.44	87.88	35.000	LFD	☑	☐	Thursday, July 15, 2021	brr	A	A		
	7731175	Superstructure	G3	HS 20-44	Inventory	1.06	38.15	35.000	LFD	☑	☐	Thursday, July 15, 2021	brr	A	A		
	7731175	Superstructure	G3	HS 20-44	Operating	2.44	87.88	35.000	LFD	☑	☐	Thursday, July 15, 2021	brr	A	A		
	7731175	Superstructure	G4	HS 20-44	Inventory	1.06	38.15	35.000	LFD	☑	☐	Thursday, July 15, 2021	brr	A	A		
	7731175	Superstructure	G4	HS 20-44	Operating	2.44	87.88	35.000	LFD	☑	☐	Thursday, July 15, 2021	brr	A	A		
	7731175	Superstructure	G5	HS 20-44	Inventory	1.06	38.15	35.000	LFD	☑	☐	Thursday, July 15, 2021	brr	A	A		
	7731175	Superstructure	G5	HS 20-44	Operating	2.44	87.88	35.000	LFD	☑	☐	Thursday, July 15, 2021	brr	A	A		
	7731175	Superstructure	G6	HS 20-44	Inventory	1.06	38.15	35.000	LFD	☑	☐	Thursday, July 15, 2021	brr	A	A		
	7731175	Superstructure	G6	HS 20-44	Operating	2.44	87.88	35.000	LFD	☑	☐	Thursday, July 15, 2021	brr	A	A		
	7731175	Superstructure	G7	HS 20-44	Inventory	1.06	38.15	35.000	LFD	☑	☐	Thursday, July 15, 2021	brr	A	A		
	7731175	Superstructure	G7	HS 20-44	Operating	2.44	87.88	35.000	LFD	☑	☐	Thursday, July 15, 2021	brr	A	A		
	7731175	Superstructure	G8	HS 20-44	Inventory	1.06	38.15	35.000	LFD	☑	☐	Thursday, July 15, 2021	brr	A	A		
	7731175	Superstructure	G8	HS 20-44	Operating	2.44	87.88	35.000	LFD	☑	☐	Thursday, July 15, 2021	brr	A	A		
	7731175	Superstructure	G9	HS 20-44	Inventory	1.06	38.15	35.000	LFD	☑	☐	Thursday, July 15, 2021	brr	A	A		
	7731175	Superstructure	G9	HS 20-44	Operating	2.44	87.88	35.000	LFD	☑	☐	Thursday, July 15, 2021	brr	A	A		
	7731175	Superstructure	G10	HS 20-44	Inventory	1.06	38.15	35.000	LFD	☑	☐	Thursday, July 15, 2021	brr	A	A		
	7731175	Superstructure	G10	HS 20-44	Operating	2.44	87.88	35.000	LFD	☑	☐	Thursday, July 15, 2021	brr	A	A		
	7731175	Superstructure	G11	HS 20-44	Inventory	1.06	38.15	35.000	LFD	☑	☐	Thursday, July 15, 2021	brr	A	A		
	7731175	Superstructure	G11	HS 20-44	Operating	2.44	87.88	35.000	LFD	☑	☐	Thursday, July 15, 2021	brr	A	A		
	7731175	Superstructure	G12	HS 20-44	Inventory	1.06	38.15	35.000	LFD	☑	☐	Thursday, July 15, 2021	brr	A	A		
	7731175	Superstructure	G12	HS 20-44	Operating	2.44	87.88	35.000	LFD	☑	☐	Thursday, July 15, 2021	brr	A	A		
	7731175	Superstructure	G13	HS 20-44	Inventory	1.06	38.15	35.000	LFD	☑	☐	Thursday, July 15, 2021	brr	A	A		
	7731175	Superstructure	G13	HS 20-44	Operating	2.44	87.88	35.000	LFD	☑	☐	Thursday, July 15, 2021	brr	A	A		
	7731175	Superstructure	G14	HS 20-44	Inventory	1.06	38.15	35.000	LFD	☑	☐	Thursday, July 15, 2021	brr	A	A		
	7731175	Superstructure	G14	HS 20-44	Operating	2.44	87.88	35.000	LFD	☑	☐	Thursday, July 15, 2021	brr	A	A		
	7731175	Superstructure	G15	HS 20-44	Inventory	1.06	38.15	35.000	LFD	☑	☐	Thursday, July 15, 2021	brr	A	A		
	7731175	Superstructure	G15	HS 20-44	Operating	2.44	87.88	35.000	LFD	☑	☐	Thursday, July 15, 2021	brr	A	A		
	7731175	Superstructure	G1	SU4	Legal Oper	2.95	79.65	35.000	LFD	☑	☐	Thursday, July 15, 2021	brr	A	A		
	7731175	Superstructure	G2	SU4	Legal Oper	2.95	79.65	35.000	LFD	☑	☐	Thursday, July 15, 2021	brr	A	A		
	7731175	Superstructure	G3	SU4	Legal Oper	2.95	79.65	35.000	LFD	☑	☐	Thursday, July 15, 2021	brr	A	A		
	7731175	Superstructure	G4	SU4	Legal Oper	2.95	79.65	35.000	LFD	☑	☐	Thursday, July 15, 2021	brr	A	A		
	7731175	Superstructure	G5	SU4	Legal Oper	2.95	79.65	35.000	LFD	☑	☐	Thursday, July 15, 2021	brr	A	A		
	7731175	Superstructure	G6	SU4	Legal Oper	2.95	79.65	35.000	LFD	☑	☐	Thursday, July 15, 2021	brr	A	A		

Member Rating Results Report

	Bridge Id	Structure	Member	Vehicle	Rating Level	Rating Factor	Capacity (Ton)	Location (ft)	Rating Method	Up	DB	Time Stamp	Rated By	Im	Ma	Ve	Di
	7731175	Superstructure	G7	SU4	Legal Oper	2.95	79.65	35.000	LFD	☑	☐	Thursday, July 15, 2021	brr	A	A		
	7731175	Superstructure	G8	SU4	Legal Oper	2.95	79.65	35.000	LFD	☑	☐	Thursday, July 15, 2021	brr	A	A		
	7731175	Superstructure	G9	SU4	Legal Oper	2.95	79.65	35.000	LFD	☑	☐	Thursday, July 15, 2021	brr	A	A		
	7731175	Superstructure	G10	SU4	Legal Oper	2.95	79.65	35.000	LFD	☑	☐	Thursday, July 15, 2021	brr	A	A		
	7731175	Superstructure	G11	SU4	Legal Oper	2.95	79.65	35.000	LFD	☑	☐	Thursday, July 15, 2021	brr	A	A		
	7731175	Superstructure	G12	SU4	Legal Oper	2.95	79.65	35.000	LFD	☑	☐	Thursday, July 15, 2021	brr	A	A		
	7731175	Superstructure	G13	SU4	Legal Oper	2.95	79.65	35.000	LFD	☑	☐	Thursday, July 15, 2021	brr	A	A		
	7731175	Superstructure	G14	SU4	Legal Oper	2.95	79.65	35.000	LFD	☑	☐	Thursday, July 15, 2021	brr	A	A		
	7731175	Superstructure	G15	SU4	Legal Oper	2.95	79.65	35.000	LFD	☑	☐	Thursday, July 15, 2021	brr	A	A		
	7731175	Superstructure	G1	SU5	Legal Oper	2.67	82.86	35.000	LFD	☑	☐	Thursday, July 15, 2021	brr	A	A		
	7731175	Superstructure	G2	SU5	Legal Oper	2.67	82.86	35.000	LFD	☑	☐	Thursday, July 15, 2021	brr	A	A		
	7731175	Superstructure	G3	SU5	Legal Oper	2.67	82.86	35.000	LFD	☑	☐	Thursday, July 15, 2021	brr	A	A		
	7731175	Superstructure	G4	SU5	Legal Oper	2.67	82.86	35.000	LFD	☑	☐	Thursday, July 15, 2021	brr	A	A		
	7731175	Superstructure	G5	SU5	Legal Oper	2.67	82.86	35.000	LFD	☑	☐	Thursday, July 15, 2021	brr	A	A		
	7731175	Superstructure	G6	SU5	Legal Oper	2.67	82.86	35.000	LFD	☑	☐	Thursday, July 15, 2021	brr	A	A		
	7731175	Superstructure	G7	SU5	Legal Oper	2.67	82.86	35.000	LFD	☑	☐	Thursday, July 15, 2021	brr	A	A		
	7731175	Superstructure	G8	SU5	Legal Oper	2.67	82.86	35.000	LFD	☑	☐	Thursday, July 15, 2021	brr	A	A		
	7731175	Superstructure	G9	SU5	Legal Oper	2.67	82.86	35.000	LFD	☑	☐	Thursday, July 15, 2021	brr	A	A		
	7731175	Superstructure	G10	SU5	Legal Oper	2.67	82.86	35.000	LFD	☑	☐	Thursday, July 15, 2021	brr	A	A		
	7731175	Superstructure	G11	SU5	Legal Oper	2.67	82.86	35.000	LFD	☑	☐	Thursday, July 15, 2021	brr	A	A		
	7731175	Superstructure	G12	SU5	Legal Oper	2.67	82.86	35.000	LFD	☑	☐	Thursday, July 15, 2021	brr	A	A		
	7731175	Superstructure	G13	SU5	Legal Oper	2.67	82.86	35.000	LFD	☑	☐	Thursday, July 15, 2021	brr	A	A		
	7731175	Superstructure	G14	SU5	Legal Oper	2.67	82.86	35.000	LFD	☑	☐	Thursday, July 15, 2021	brr	A	A		
	7731175	Superstructure	G15	SU5	Legal Oper	2.67	82.86	35.000	LFD	☑	☐	Thursday, July 15, 2021	brr	A	A		
	7731175	Superstructure	G1	SU6	Legal Oper	2.40	83.24	35.000	LFD	☑	☐	Thursday, July 15, 2021	brr	A	A		
	7731175	Superstructure	G2	SU6	Legal Oper	2.40	83.24	35.000	LFD	☑	☐	Thursday, July 15, 2021	brr	A	A		
	7731175	Superstructure	G3	SU6	Legal Oper	2.40	83.24	35.000	LFD	☑	☐	Thursday, July 15, 2021	brr	A	A		
	7731175	Superstructure	G4	SU6	Legal Oper	2.40	83.24	35.000	LFD	☑	☐	Thursday, July 15, 2021	brr	A	A		
	7731175	Superstructure	G5	SU6	Legal Oper	2.40	83.24	35.000	LFD	☑	☐	Thursday, July 15, 2021	brr	A	A		
	7731175	Superstructure	G6	SU6	Legal Oper	2.40	83.24	35.000	LFD	☑	☐	Thursday, July 15, 2021	brr	A	A		
	7731175	Superstructure	G7	SU6	Legal Oper	2.40	83.24	35.000	LFD	☑	☐	Thursday, July 15, 2021	brr	A	A		
	7731175	Superstructure	G8	SU6	Legal Oper	2.40	83.24	35.000	LFD	☑	☐	Thursday, July 15, 2021	brr	A	A		
	7731175	Superstructure	G9	SU6	Legal Oper	2.40	83.24	35.000	LFD	☑	☐	Thursday, July 15, 2021	brr	A	A		

Member Rating Results Report

	Bridge Id	Structure	Member	Vehicle	Rating Level	Rating Factor	Capacity (Ton)	Location (ft)	Rating Method	Up	DB	Time Stamp	Rated By	Im	Ma	Ve	Di
	7731175	Superstructure	G10	SU6	Legal Oper	2.40	83.24	35.000	LFD	☑	☐	Thursday, July 15, 2021	brr	A	A		
	7731175	Superstructure	G11	SU6	Legal Oper	2.40	83.24	35.000	LFD	☑	☐	Thursday, July 15, 2021	brr	A	A		
	7731175	Superstructure	G12	SU6	Legal Oper	2.40	83.24	35.000	LFD	☑	☐	Thursday, July 15, 2021	brr	A	A		
	7731175	Superstructure	G13	SU6	Legal Oper	2.40	83.24	35.000	LFD	☑	☐	Thursday, July 15, 2021	brr	A	A		
	7731175	Superstructure	G14	SU6	Legal Oper	2.40	83.24	35.000	LFD	☑	☐	Thursday, July 15, 2021	brr	A	A		
	7731175	Superstructure	G15	SU6	Legal Oper	2.40	83.24	35.000	LFD	☑	☐	Thursday, July 15, 2021	brr	A	A		
	7731175	Superstructure	G1	SU7	Legal Oper	2.19	84.99	35.000	LFD	☑	☐	Thursday, July 15, 2021	brr	A	A		
	7731175	Superstructure	G2	SU7	Legal Oper	2.19	84.99	35.000	LFD	☑	☐	Thursday, July 15, 2021	brr	A	A		
	7731175	Superstructure	G3	SU7	Legal Oper	2.19	84.99	35.000	LFD	☑	☐	Thursday, July 15, 2021	brr	A	A		
	7731175	Superstructure	G4	SU7	Legal Oper	2.19	84.99	35.000	LFD	☑	☐	Thursday, July 15, 2021	brr	A	A		
	7731175	Superstructure	G5	SU7	Legal Oper	2.19	84.99	35.000	LFD	☑	☐	Thursday, July 15, 2021	brr	A	A		
	7731175	Superstructure	G6	SU7	Legal Oper	2.19	84.99	35.000	LFD	☑	☐	Thursday, July 15, 2021	brr	A	A		
	7731175	Superstructure	G7	SU7	Legal Oper	2.19	84.99	35.000	LFD	☑	☐	Thursday, July 15, 2021	brr	A	A		
	7731175	Superstructure	G8	SU7	Legal Oper	2.19	84.99	35.000	LFD	☑	☐	Thursday, July 15, 2021	brr	A	A		
	7731175	Superstructure	G9	SU7	Legal Oper	2.19	84.99	35.000	LFD	☑	☐	Thursday, July 15, 2021	brr	A	A		
	7731175	Superstructure	G10	SU7	Legal Oper	2.19	84.99	35.000	LFD	☑	☐	Thursday, July 15, 2021	brr	A	A		
	7731175	Superstructure	G11	SU7	Legal Oper	2.19	84.99	35.000	LFD	☑	☐	Thursday, July 15, 2021	brr	A	A		
	7731175	Superstructure	G12	SU7	Legal Oper	2.19	84.99	35.000	LFD	☑	☐	Thursday, July 15, 2021	brr	A	A		
	7731175	Superstructure	G13	SU7	Legal Oper	2.19	84.99	35.000	LFD	☑	☐	Thursday, July 15, 2021	brr	A	A		
	7731175	Superstructure	G14	SU7	Legal Oper	2.19	84.99	35.000	LFD	☑	☐	Thursday, July 15, 2021	brr	A	A		
	7731175	Superstructure	G15	SU7	Legal Oper	2.19	84.99	35.000	LFD	☑	☐	Thursday, July 15, 2021	brr	A	A		
	7731175	Superstructure	G1	OH-2F1	Legal Oper	5.04	75.55	35.000	LFD	☑	☐	Thursday, July 15, 2021	brr	A	A		
	7731175	Superstructure	G2	OH-2F1	Legal Oper	5.04	75.55	35.000	LFD	☑	☐	Thursday, July 15, 2021	brr	A	A		
	7731175	Superstructure	G3	OH-2F1	Legal Oper	5.04	75.55	35.000	LFD	☑	☐	Thursday, July 15, 2021	brr	A	A		
	7731175	Superstructure	G4	OH-2F1	Legal Oper	5.04	75.55	35.000	LFD	☑	☐	Thursday, July 15, 2021	brr	A	A		
	7731175	Superstructure	G5	OH-2F1	Legal Oper	5.04	75.55	35.000	LFD	☑	☐	Thursday, July 15, 2021	brr	A	A		
	7731175	Superstructure	G6	OH-2F1	Legal Oper	5.04	75.55	35.000	LFD	☑	☐	Thursday, July 15, 2021	brr	A	A		
	7731175	Superstructure	G7	OH-2F1	Legal Oper	5.04	75.55	35.000	LFD	☑	☐	Thursday, July 15, 2021	brr	A	A		
	7731175	Superstructure	G8	OH-2F1	Legal Oper	5.04	75.55	35.000	LFD	☑	☐	Thursday, July 15, 2021	brr	A	A		
	7731175	Superstructure	G9	OH-2F1	Legal Oper	5.04	75.55	35.000	LFD	☑	☐	Thursday, July 15, 2021	brr	A	A		
	7731175	Superstructure	G10	OH-2F1	Legal Oper	5.04	75.55	35.000	LFD	☑	☐	Thursday, July 15, 2021	brr	A	A		
	7731175	Superstructure	G11	OH-2F1	Legal Oper	5.04	75.55	35.000	LFD	☑	☐	Thursday, July 15, 2021	brr	A	A		
	7731175	Superstructure	G12	OH-2F1	Legal Oper	5.04	75.55	35.000	LFD	☑	☐	Thursday, July 15, 2021	brr	A	A		

Member Rating Results Report

	Bridge Id	Structure	Member	Vehicle	Rating Level	Rating Factor	Capacity (Ton)	Location (ft)	Rating Method	UDp	DB	Time Stamp	Rated By	Im	LVa	Ve	Di
	7731175	Superstructure	G13	OH-2F1	Legal Oper	5.04	75.55	35.000	LFD	☑	☐	Thursday, July 15, 2021	brr	A	A		
	7731175	Superstructure	G14	OH-2F1	Legal Oper	5.04	75.55	35.000	LFD	☑	☐	Thursday, July 15, 2021	brr	A	A		
	7731175	Superstructure	G15	OH-2F1	Legal Oper	5.04	75.55	35.000	LFD	☑	☐	Thursday, July 15, 2021	brr	A	A		
	7731175	Superstructure	G1	OH-3F1	Legal Oper	3.37	77.39	35.000	LFD	☑	☐	Thursday, July 15, 2021	brr	A	A		
	7731175	Superstructure	G2	OH-3F1	Legal Oper	3.37	77.39	35.000	LFD	☑	☐	Thursday, July 15, 2021	brr	A	A		
	7731175	Superstructure	G3	OH-3F1	Legal Oper	3.37	77.39	35.000	LFD	☑	☐	Thursday, July 15, 2021	brr	A	A		
	7731175	Superstructure	G4	OH-3F1	Legal Oper	3.37	77.39	35.000	LFD	☑	☐	Thursday, July 15, 2021	brr	A	A		
	7731175	Superstructure	G5	OH-3F1	Legal Oper	3.37	77.39	35.000	LFD	☑	☐	Thursday, July 15, 2021	brr	A	A		
	7731175	Superstructure	G6	OH-3F1	Legal Oper	3.37	77.39	35.000	LFD	☑	☐	Thursday, July 15, 2021	brr	A	A		
	7731175	Superstructure	G7	OH-3F1	Legal Oper	3.37	77.39	35.000	LFD	☑	☐	Thursday, July 15, 2021	brr	A	A		
	7731175	Superstructure	G8	OH-3F1	Legal Oper	3.37	77.39	35.000	LFD	☑	☐	Thursday, July 15, 2021	brr	A	A		
	7731175	Superstructure	G9	OH-3F1	Legal Oper	3.37	77.39	35.000	LFD	☑	☐	Thursday, July 15, 2021	brr	A	A		
	7731175	Superstructure	G10	OH-3F1	Legal Oper	3.37	77.39	35.000	LFD	☑	☐	Thursday, July 15, 2021	brr	A	A		
	7731175	Superstructure	G11	OH-3F1	Legal Oper	3.37	77.39	35.000	LFD	☑	☐	Thursday, July 15, 2021	brr	A	A		
	7731175	Superstructure	G12	OH-3F1	Legal Oper	3.37	77.39	35.000	LFD	☑	☐	Thursday, July 15, 2021	brr	A	A		
	7731175	Superstructure	G13	OH-3F1	Legal Oper	3.37	77.39	35.000	LFD	☑	☐	Thursday, July 15, 2021	brr	A	A		
	7731175	Superstructure	G14	OH-3F1	Legal Oper	3.37	77.39	35.000	LFD	☑	☐	Thursday, July 15, 2021	brr	A	A		
	7731175	Superstructure	G15	OH-3F1	Legal Oper	3.37	77.39	35.000	LFD	☑	☐	Thursday, July 15, 2021	brr	A	A		
	7731175	Superstructure	G1	OH-4F1	Legal Oper	2.97	80.24	35.000	LFD	☑	☐	Thursday, July 15, 2021	brr	A	A		
	7731175	Superstructure	G2	OH-4F1	Legal Oper	2.97	80.24	35.000	LFD	☑	☐	Thursday, July 15, 2021	brr	A	A		
	7731175	Superstructure	G3	OH-4F1	Legal Oper	2.97	80.24	35.000	LFD	☑	☐	Thursday, July 15, 2021	brr	A	A		
	7731175	Superstructure	G4	OH-4F1	Legal Oper	2.97	80.24	35.000	LFD	☑	☐	Thursday, July 15, 2021	brr	A	A		
	7731175	Superstructure	G5	OH-4F1	Legal Oper	2.97	80.24	35.000	LFD	☑	☐	Thursday, July 15, 2021	brr	A	A		
	7731175	Superstructure	G6	OH-4F1	Legal Oper	2.97	80.24	35.000	LFD	☑	☐	Thursday, July 15, 2021	brr	A	A		
	7731175	Superstructure	G7	OH-4F1	Legal Oper	2.97	80.24	35.000	LFD	☑	☐	Thursday, July 15, 2021	brr	A	A		
	7731175	Superstructure	G8	OH-4F1	Legal Oper	2.97	80.24	35.000	LFD	☑	☐	Thursday, July 15, 2021	brr	A	A		
	7731175	Superstructure	G9	OH-4F1	Legal Oper	2.97	80.24	35.000	LFD	☑	☐	Thursday, July 15, 2021	brr	A	A		
	7731175	Superstructure	G10	OH-4F1	Legal Oper	2.97	80.24	35.000	LFD	☑	☐	Thursday, July 15, 2021	brr	A	A		
	7731175	Superstructure	G11	OH-4F1	Legal Oper	2.97	80.24	35.000	LFD	☑	☐	Thursday, July 15, 2021	brr	A	A		
	7731175	Superstructure	G12	OH-4F1	Legal Oper	2.97	80.24	35.000	LFD	☑	☐	Thursday, July 15, 2021	brr	A	A		
	7731175	Superstructure	G13	OH-4F1	Legal Oper	2.97	80.24	35.000	LFD	☑	☐	Thursday, July 15, 2021	brr	A	A		
	7731175	Superstructure	G14	OH-4F1	Legal Oper	2.97	80.24	35.000	LFD	☑	☐	Thursday, July 15, 2021	brr	A	A		
	7731175	Superstructure	G15	OH-4F1	Legal Oper	2.97	80.24	35.000	LFD	☑	☐	Thursday, July 15, 2021	brr	A	A		

Member Rating Results Report

	Bridge Id	Structure	Member	Vehicle	Rating Level	Rating Factor	Capacity (Ton)	Location (ft)	Rating Method	UDp	UDB	Time Stamp	Rated By	Im	Ia	LVe	Di
	7731175	Superstructure	G1	OH-5C1	Legal Oper	3.32	132.84	42.000	LFD	☑	☐	Thursday, July 15, 2021	brr	A	A		
	7731175	Superstructure	G2	OH-5C1	Legal Oper	3.32	132.84	42.000	LFD	☑	☐	Thursday, July 15, 2021	brr	A	A		
	7731175	Superstructure	G3	OH-5C1	Legal Oper	3.32	132.84	42.000	LFD	☑	☐	Thursday, July 15, 2021	brr	A	A		
	7731175	Superstructure	G4	OH-5C1	Legal Oper	3.32	132.84	42.000	LFD	☑	☐	Thursday, July 15, 2021	brr	A	A		
	7731175	Superstructure	G5	OH-5C1	Legal Oper	3.32	132.84	42.000	LFD	☑	☐	Thursday, July 15, 2021	brr	A	A		
	7731175	Superstructure	G6	OH-5C1	Legal Oper	3.32	132.84	42.000	LFD	☑	☐	Thursday, July 15, 2021	brr	A	A		
	7731175	Superstructure	G7	OH-5C1	Legal Oper	3.32	132.84	42.000	LFD	☑	☐	Thursday, July 15, 2021	brr	A	A		
	7731175	Superstructure	G8	OH-5C1	Legal Oper	3.32	132.84	42.000	LFD	☑	☐	Thursday, July 15, 2021	brr	A	A		
	7731175	Superstructure	G9	OH-5C1	Legal Oper	3.32	132.84	42.000	LFD	☑	☐	Thursday, July 15, 2021	brr	A	A		
	7731175	Superstructure	G10	OH-5C1	Legal Oper	3.32	132.84	42.000	LFD	☑	☐	Thursday, July 15, 2021	brr	A	A		
	7731175	Superstructure	G11	OH-5C1	Legal Oper	3.32	132.84	42.000	LFD	☑	☐	Thursday, July 15, 2021	brr	A	A		
	7731175	Superstructure	G12	OH-5C1	Legal Oper	3.32	132.84	42.000	LFD	☑	☐	Thursday, July 15, 2021	brr	A	A		
	7731175	Superstructure	G13	OH-5C1	Legal Oper	3.32	132.84	42.000	LFD	☑	☐	Thursday, July 15, 2021	brr	A	A		
	7731175	Superstructure	G14	OH-5C1	Legal Oper	3.32	132.84	42.000	LFD	☑	☐	Thursday, July 15, 2021	brr	A	A		
	7731175	Superstructure	G15	OH-5C1	Legal Oper	3.32	132.84	42.000	LFD	☑	☐	Thursday, July 15, 2021	brr	A	A		

7731175
SUM-M0010-03610 - Superstructure
Wooster Rd / Wolf Creek
07/15/21

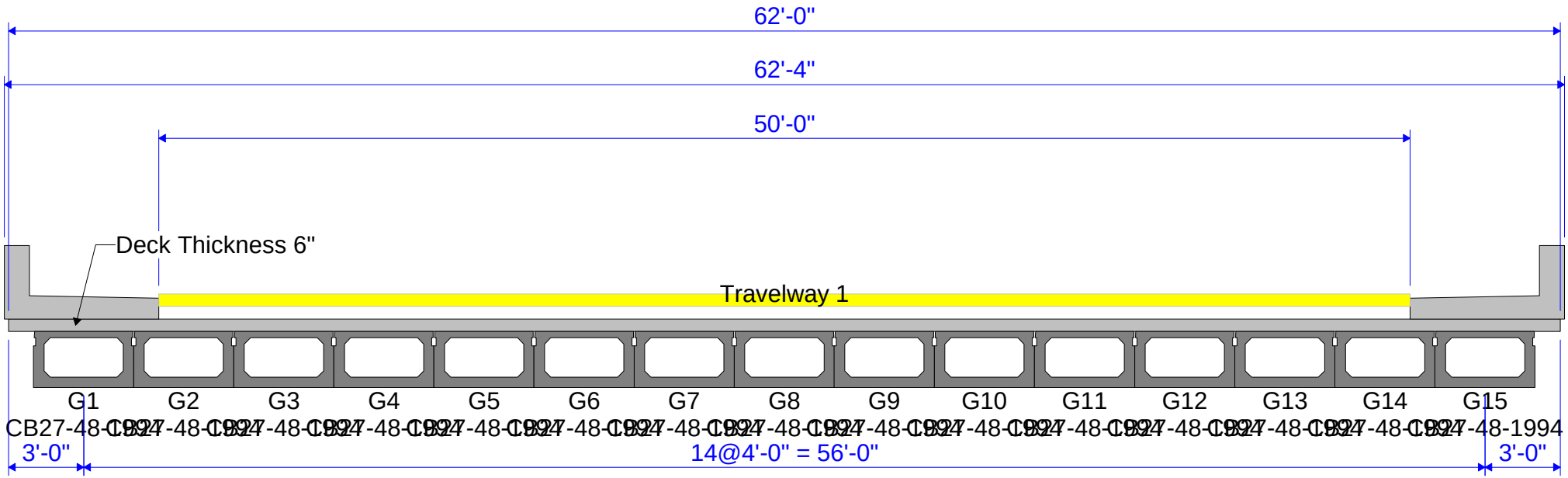

F.H.W.A. REGION	STATE	REGION	
5	OHIO		

15
34

SUMMIT COUNTY
SUM-WOOSTER ROAD

EARTHWORK NOTE:
EARTHWORK LIMITS SHOWN ARE APPROXIMATE. ACTUAL SLOPES SHALL CONFORM TO PLAN CROSS-SECTIONS.

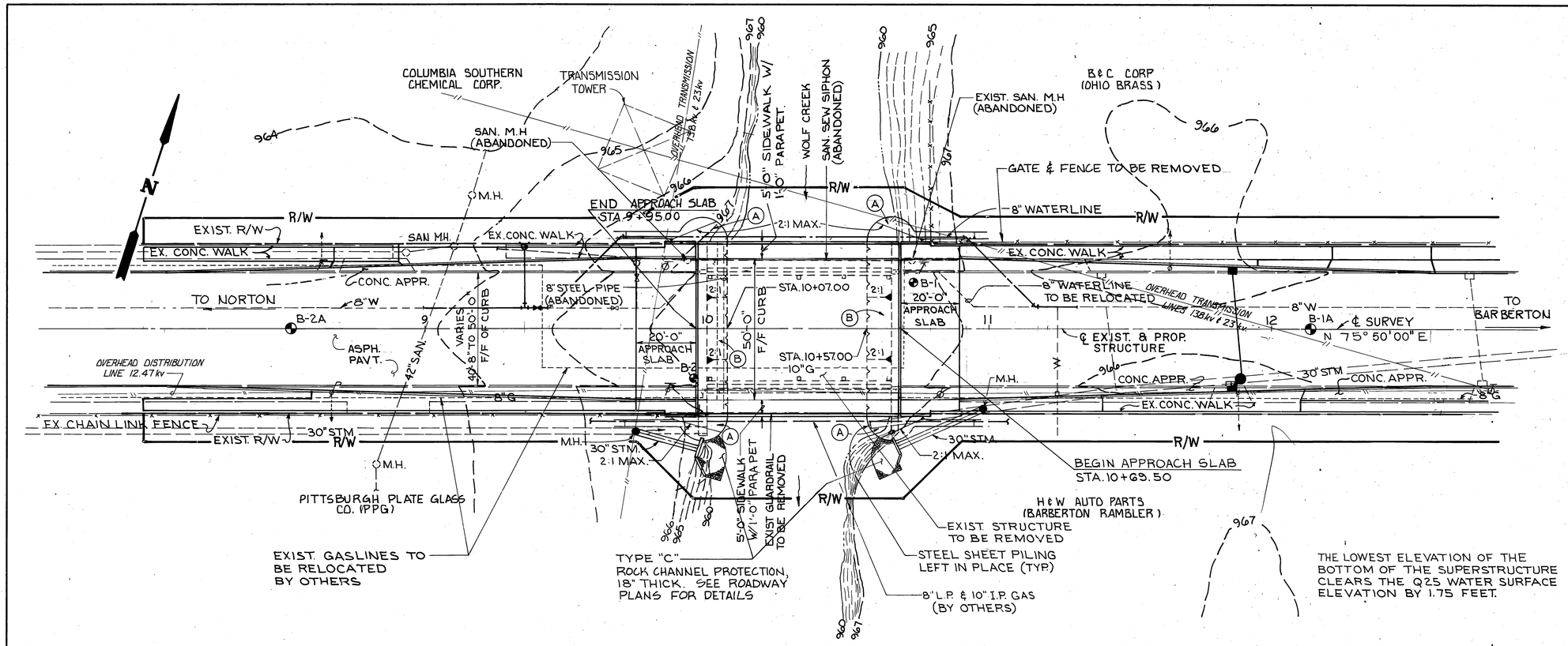

SOIL BORINGS

BORE HOLE	STA.	OFFSET	ELEV.
B-1	10+74	16' LT	967.20
B-2	9+95	17' RT.	967.00
B-1A	12+16	℄	966.00
B-2A	8+50	℄	964.00

DESIGN DESIGNATION
CURRENT 1993 ADT = 11,793
DESIGN YEAR 2013 ADT = 15639
ADTT = 3%

D.H.V.	1564
D.	55
T.	3
V.	35
LEGAL SPEED	35 M.P.H.
DESIGN SPEED	35 M.P.H.

FUNCTIONAL CLASSIFICATION: URBAN ARTERIAL

HYDRAULIC DATA
DRAINAGE AREA = 62.5 SQ. MI.
DISCHARGE: Q25 = 1585 C.F.S.
Q100 = 2075 C.F.S.
VELOCITY: V25 = 4.18 F.P.S.
V100 = 4.86 F.P.S.

PROPOSED STRUCTURE
25 YR. H.W. = 962.19 FT.
100 YR. H.W. = 963.32 FT.

SLOPE PROTECTION UNDER BRIDGE

(A) RIPRAP USING 6" REINFORCED CONCRETE SLAB ON TOP OF 18" TYPE "D" ROCK CHANNEL PROTECTION WITH FABRIC FILTER. (SEE GENERAL PLAN FOR LIMITS).

(B) TYPE "D" ROCK CHANNEL PROTECTION WITH FABRIC FILTER, 24" THICK. (SEE GENERAL PLAN FOR LIMITS).

◕ INDICATE SOIL BORING LOCATIONS.

BENCH MARK
W. TOP FLANGE BOLT IN HYDRANT 11-143
STA. 14+01.8
ELEV. 972.76

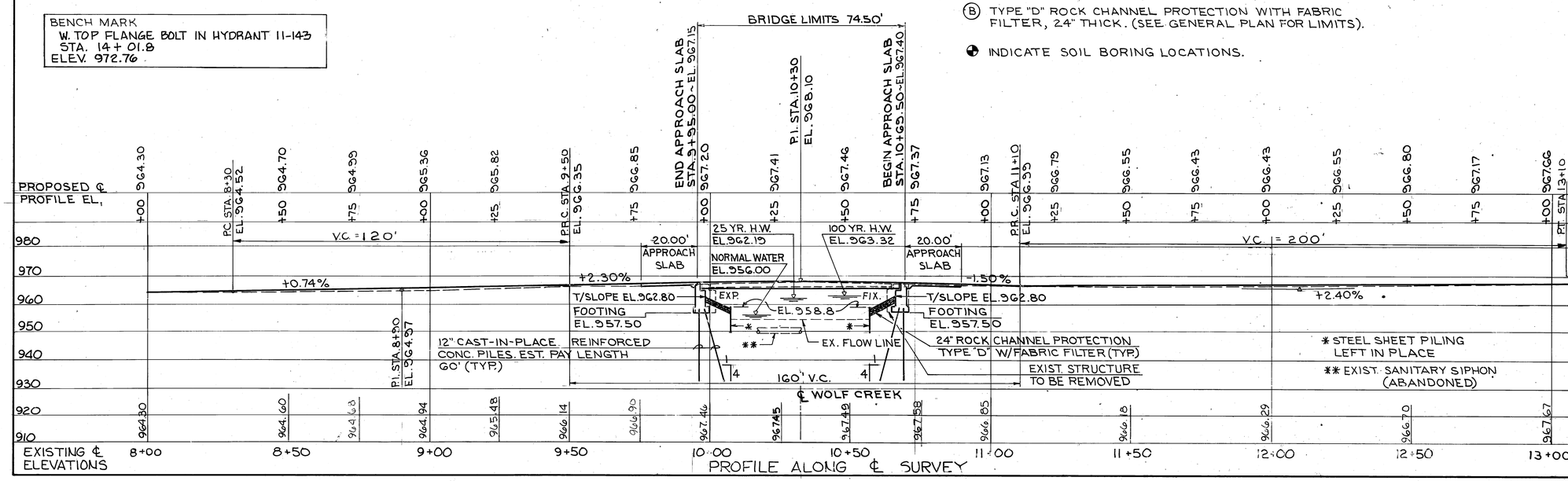

EXISTING STRUCTURE
TYPE: 1 SPAN RIVETED PLATE GIRDER ON STONE AND CONCRETE ABUTMENTS.
SPAN: 65'-6" F/F ABUTMENTS
ROADWAY: 40'-8" F/F CURB
SKEW: NONE
ALIGNMENT: TANGENT
APPROACH SLAB: NONE
WEARING SURFACE: ASPHALT CONCRETE
CONDITION: POOR BUILT 1910
STRUCTURE FILE No: 77-31035

PROPOSED STRUCTURE
TYPE: PRESTRESSED CONCRETE COMPOSITE BOX BEAMS WITH STUB ABUTMENTS ON REINFORCED CONCRETE PILES.
SPAN: 70'-0" C/C BEARINGS
ROADWAY: 50'-0" F/F CURB W/2-5'-0" SIDEWALKS
LOADING: HS 20-44 & ALT. MILITARY LOADING
SKEW: NONE
WEARING SURFACE: 5 1/2" CONC. OVERLAY
APPROACH SLAB: 20'-0" (AS-1-81)
ALIGNMENT: TANGENT
CROWN: 3/16"/FT.

J.D.V. & A. INC.
2162 FRONT STREET
CUYAHOGA FALLS, OHIO 44221
ENGINEERS ARCHITECTS PLANNERS

1/15

SITE PLAN
BRIDGE NO. SUM-WOOSTER RD
OVER WOLF CREEK
SUMMIT CO. STA. 9+95.00 TO STA. 10+69.50

BAR 10-036

DESIGNED	DRAWN	TRACED	CHECKED	REVIEWED	DATE	REVISED
BRH	DRK		JRS	BK	12/92	

SFN: 7738175

F.H.W.A. REGION	STATE	PROJECT	
5	OHIO		

16
34

SUMMIT COUNTY
SUM-WOOSTER ROAD

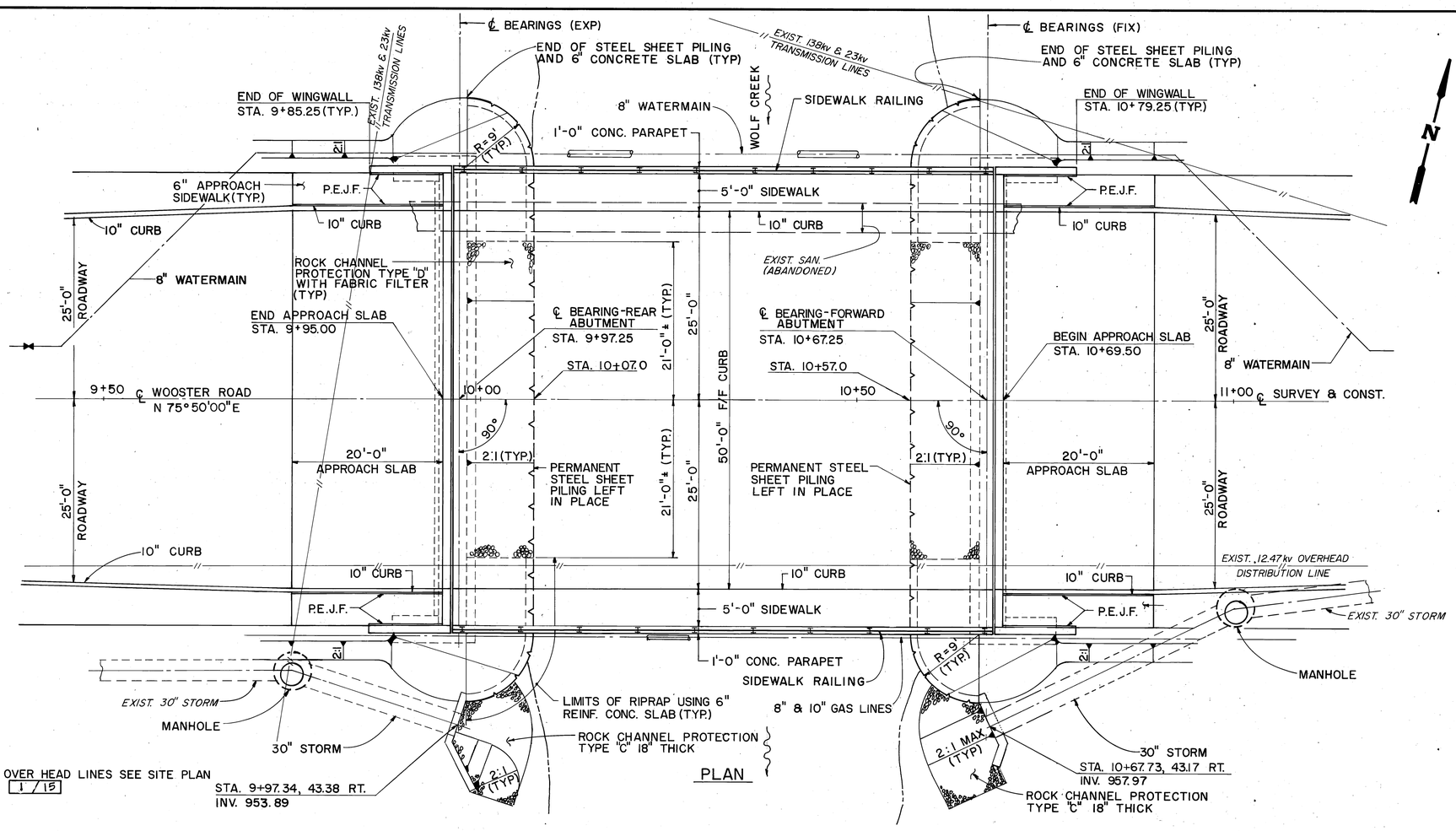

NOTE:
FOR OVER HEAD LINES SEE SITE PLAN SHT. 1/15

PLAN

NOTES:

1. STEEL SHEET PILING LEFT IN PLACE SHALL HAVE A MINIMUM SECTION MODULUS OF 5.0 CU. IN. PER FT. OF WALL.
2. FOR WATERMAIN DETAILS WITHIN THE BRIDGE LIMITS, SEE SHEET 11/15.
3. FOR GASLINES DETAILS WITHIN THE BRIDGE LIMITS, SEE SHEET 12/15.
4. FOR STORM LINE HEADWALL DETAILS, SEE ROADWAY PLANS.

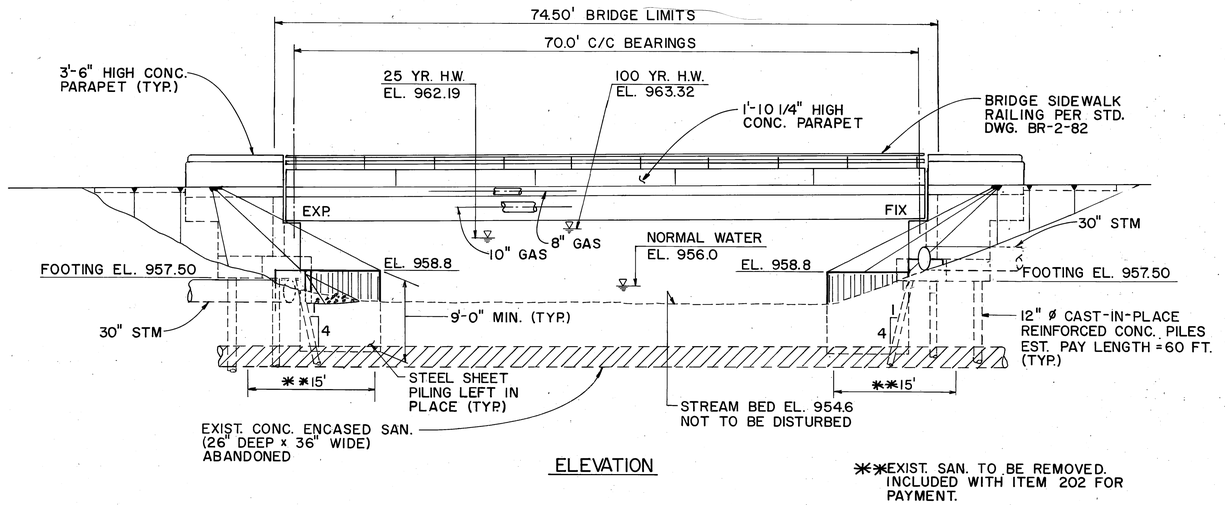

ELEVATION

**EXIST. SAN. TO BE REMOVED. INCLUDED WITH ITEM 202 FOR PAYMENT.

BAR 10-0361

JDJ&A, INC.
2162 FRONT STREET
CUYAHOGA FALLS, OHIO 44221
ENGINEERS ARCHITECTS PLANNERS

2/15

GENERAL PLAN & ELEVATION

BRIDGE NO. SUM-WOOSTER RD. OVER WOLF CREEK

DESIGNED	DRAWN	TRACED	CHECKED	REVIEWED	DATE	REVISED
BRH	BRH	KW	JRO	BK	12/92	

SFN 772175

88011

F.H.W.A. REGION	STATE	PROJECT		17 / 34
5	OHIO			

SUMMIT COUNTY
SUM-WOOSTER ROAD

ESTIMATED QUANTITIES

	BY	DATE
CALC.	BRH	12/92
CHECKED	BK	1/93

ITEM	ITEM EXT.	GRAND TOTAL	UNIT	DESCRIPTION	SUPER STRUCT.	ABUT.	GENERAL
202	11002	LUMP	LUMP	STRUCTURE REMOVED, OVER 20 FOOT SPAN			LUMP
503	11100	LUMP	LUMP	COFFERDAMS, CRIBS AND SHEETING			LUMP
503	21100	334	CU YD	UNCLASSIFIED EXCAVATION		334	
504	11100	1625	SQ FT	STEEL SHEET PILING LEFT IN PLACE			1625
505	11100	LUMP	LUMP	PILE DRIVING EQUIPMENT MOBILIZATION			LUMP
507	22201	TOTAL	LIN FT	12" CAST-IN-PLACE REINFORCED CONCRETE PILES , AS PER PLAN		2640	
509	15800	25205	POUND	EPOXY COATED REINFORCING STEEL, GRADE 60	9127	16078	
511	31601	114	CU YD	CLASS S CONCRETE, SUPERSTRUCTURE , AS PER PLAN	114		
511	43500	230	CU YD	CLASS C CONCRETE, ABUTMENT INCLUDING FOOTING		230	
SPEC.	51267500	215	SQ YD	SEALING OF CONCRETE SURFACES *	215		
SPEC.	51267502	135	SQ YD	SEALING OF CONCRETE SURFACES (EPOXY) *		135	
SPEC.	51271500	135	SQ YD	URETHANE TOP COAT SEALER *		135	
513	11301	1400	POUND	STRUCTURAL STEEL, A588 AISC CATEGORY I, AS PER PLAN	1400		
515	54851	15	EACH	PRESTRESSED CONCRETE COMPOSITE BOX BEAM (62'-78' LENGTH) CB27-48,AS PER PLAN *	15		
516	10500	124	LIN FT	STRUCTURAL EXPANSION JOINT INCLUDING ELASTOMERIC COMPRESSION SEAL	124		
516	41100	30	EACH	1/8" PREFORMED BEARING PAD, 711.21	30		
516	43100	60	EACH	ELASTOMERIC BEARING WITH INTERNAL LAMINATES ONLY((NEOPRENE) 1 3/8"x7"x11"	60		
517	71500	188	LIN FT	RAILING (CONCRETE PARAPET WITH DOUBLE PIPE RAIL)	144	44	
518	21200	52	CU YD	POROUS BACKFILL WITH FILTER FABRIC		52	
SPEC.		LUMP	LUMP	GASLINES SUPPORT FRAMING (THE EAST OHIO GAS COMPANY)			LUMP

* SEE PROPOSAL NOTE

CONSTRUCTION CONSTRAINTS

THE BRIDGE DEMOLITION AND RECONSTRUCTION SHALL BE CAREFULLY PERFORMED NOT TO DISTURB THE STREAM. THE CONTRACTOR SHALL DRIVE ALL SHEETING NECESSARY AS SHOWN ON PLANS AND DIRECTED BY THE ENGINEER TO MINIMIZE STREAM DISTURBANCE.

WATERMAIN SERVICE DURING BRIDGE CONSTRUCTION IS NOT REQUIRED TO BE MAINTAINED ACROSS THE STREAM. HOWEVER, THE EXISTING SERVICE LINE AND A FIRE HYDRANT IN THE BRIDGE APPROACHES SHALL BE MAINTAINED IN SERVICE AT ALL TIMES.

GAS LINE SERVICE IS NOT REQUIRED TO BE MAINTAINED DURING THE PERIOD OF APRIL 15 THRU OCTOBER 15. THE CONTRACTOR AND THE OWNER ARE REQUESTED TO COOPERATE BY ARRANGING THEIR WORK IN SUCH A MANNER THAT INCONVENIENCE TO EITHER WILL BE HELD TO A MINIMUM.

SUGGESTED CONSTRUCTION SEQUENCE

1. INSTALL WATERMAIN SECTION, VALVES AND HYDRANT AS OUTLINED IN WATERMAIN CONSTRUCTION SEQUENCE.
2. REMOVE EXISTING BRIDGE SUPERSTRUCTURE.
3. DRIVE STEEL SHEET PILING LEFT IN PLACE, AS SHOWN ON GENERAL PLAN & ELEVATION, AND OTHER TEMPORARY SHEETING AS REQUIRED TO MINIMIZE DISTURBANCE TO THE STREAM.
4. REMOVE THE EXISTING BRIDGE SUBSTRUCTURE AND PORTION OF THE ABANDONED SANITARY AS SHOWN ON THE GENERAL PLAN AND ELEVATION SHEET 2 / 15
5. CONSTRUCT THE 30" STORM.
6. CONSTRUCT EMBANKMENT TO THE LEVEL OF SUBGRADE.
7. CONSTRUCT THE BRIDGE SUBSTRUCTURE.
8. CONSTRUCT THE BRIDGE SUPERSTRUCTURE AND UTILITIES SUPPORTS.
9. INSTALL THE 8"ø WATERMAIN.

GENERAL NOTES

REFERENCE SHALL BE MADE TO STANDARD DRAWINGS :
AS-1-81 DATED 11-27-81
BR-2-82 DATED 11-1-82
PSBD-1-81 REVISED 06-20-89
EXJ-3-82 REVISED 08-01-84
AND TO SUPPLEMENTAL SPECIFICATIONS :
836 DATED 11-12-85
849 DATED 12-24-85
949 DATED 9-26-86

DESIGN SPECIFICATIONS

THIS STRUCTURE CONFORMS TO "STANDARD SPECIFICATIONS FOR HIGHWAY BRIDGES" ADOPTED BY THE AMERICAN ASSOCIATION OF STATE HIGHWAY AND TRANSPORTATION OFFICIALS, FIFTEENTH EDITION, 1992, AND THE OHIO "SUPPLEMENT" TO THESE SPECIFICATIONS.

DESIGN LOADING

HS20-44 AND THE ALTERNATE MILITARY LOADING.

DESIGN STRESSES

CONCRETE CLASS S - COMPRESSIVE STRENGTH 4500 P.S.I.
CONCRETE CLASS C - COMPRESSIVE STRENGTH 4000 P.S.I.
REINFORCING STEEL - ASTM A615, A616, A617 - GRADE 60 MINIMUM YIELD STRENGTH 60,000 P.S.I. (REINFORCING STEEL IN PRESTRESSED BOX BEAMS MAY BE GRADE 40 AS PER CMS 515)

CONCRETE FOR PRESTRESSED BEAMS - UNIT STRESS 2200 P.S.I. COMPRESSION, 444 P.S.I. TENSION

PRESTRESSING STRAND ASTM A416, STRESS RELIEVED
F's = 270,000 P.S.I.

INITIAL STRESS = 0.70 F's

DECK PROTECTION METHOD

EPOXY COATED BARS AND SEALING OF CONCRETE SURFACE.

REMOVAL OF EXISTING STRUCTURES

WHEN NO LONGER NEEDED TO MAINTAIN TRAFFIC, THE EXISTING STRUCTURE SHALL BE REMOVED PER ITEM 202, STRUCTURES REMOVED.

PILE DESIGN LOADS

THE DESIGN LOAD FOR THE ABUTMENT PILES IS 48 TONS PER PILE.

12 INCH PRECAST PRESTRESSED CONCRETE PILES MAY BE SUBSTITUTED FOR THE 12 INCH CAST-IN-PLACE REINFORCED CONCRETE PILES SHOWN ON THESE PLANS. DRAWINGS SHOWING DETAILS OF AND SPECIFICATION FOR PRESTRESSED CONCRETE PILES ARE AVAILABLE FROM THE DIRECTOR (BUREAU OF BRIDGES). IF THE PRESTRESSED PILE ALTERNATE IS CHOSEN, THE METHOD OF MEASUREMENT AND BASIS OF PAYMENT SHALL BE THE SAME AS FOR CAST-IN-PLACE REINFORCED CONCRETE PILES PER 507.

UTILITY LINES

ALL EXPENSE INVOLVED IN RELOCATING THE AFFECTED UTILITY LINES SHALL BE BORNE BY THE OWNERS OF THE SAID UTILITIES. THE CONTRACTOR AND SAID OWNER ARE REQUESTED TO CO-OPERATE BY ARRANGING THEIR WORK IN SUCH A MANNER THAT INCONVENIENCE TO EITHER WILL BE HELD TO A MINIMUM.

EMBANKMENT CONSTRUCTION

THE EMBANKMENT SHALL BE CONSTRUCTED TO THE LEVEL OF SUBGRADE. EXCAVATION MAY THEN BE MADE FOR THE ABUTMENTS AND PILE DRIVEN.

ITEM 507 - 12" CAST-IN-PLACE REINFORCED CONCRETE PILES, AS PER PLAN

IN ADDITION TO THE REQUIREMENTS OF ITEM 507, THE PILES FOR THE FORWARD ABUTMENT SHALL MEET THE REQUIREMENTS SET FORTH HEREIN.

DUE TO THE PROXIMITY OF THE OVERHEAD OHIO EDISON CO. POWER LINES, THE PILE DRIVING EQUIPMENT SHALL BE LOCATED ON A BENCH BEHIND THE ABUTMENT. PILES SHALL BE DRIVEN IN SHORT LENGTHS (10'TO 12'), AS APPROVED BY THE ENGINEER. PRIOR TO COMMENCING EACH DAY'S WORK UNDER THE POWER LINES, THE LOWER 23KV LINES SHALL BE DE-ENERGIZED BY OHIO EDISON CO. A POSITIVE DIRECT MEANS OF COMMUNICATION SHALL BE ESTABLISHED BETWEEN THE CONTRACTOR AND OHIO EDISON TO ASSURE THAT ALL PARTIES ARE NOTIFIED OF THE DE-ENERGIZING. ALL APPLICABLE PROVISIONS OF OSHA AND OTHER REGULATORY AGENCIES HAVING JURISDICTION SHALL APPLY AS THOUGH THE POWER LINES ARE ACTIVE. AT THE END OF EACH DAY'S CONSTRUCTION OPERATIONS, THE LINES MAY BE RE-ENERGIZED, ONCE AN ALL-CLEAR SIGNAL IS GIVEN BY THE CONTRACTOR.

ITEM 511 - CLASS S CONCRETE, SUPERSTRUCTURE, AS PER PLAN

THE CLASS S CONCRETE FOR THE COMPOSITE DECK AND SIDEWALK SLABS SHALL BE MODIFIED BY THE USE OF AN INORGANIC WATER-PROOFING ADMIXTURE. THE ADMIXTURE SHALL BE IPANEX AS MANUFACTURED BY IPA SYSTEMS, PHILADELPHIA, PA. THE MIXTURE SHALL BE ADDED TO THE CONCRETE AT THE PLANT AT A RATE IN ACCORDANCE WITH THE MANUFACTURER'S INSTRUCTIONS. THE WATERPROOFING ADMIXTURE SHALL BE PROPERLY MIXED AND INSTALLED BY A FACTORY APPROVED TECHNICIAN. MEMBRANE CURING PER SUPPLEMENTAL SPECIFICATION 836 WILL NOT BE PERMITTED. CONCRETE SHALL BE CURED BY METHOD (a) WATER CURING. PAYMENT FOR THE WATERPROOFING ADMIXTURE SHALL BE INCLUDED WITH ITEM 511 - CLASS S CONCRETE, SUPERSTRUCTURE, AS PER PLAN.

ITEM 515 - PRESTRESSED CONCRETE BOX BEAM (62'-78') CB27-48, AS PER PLAN

THE CONCRETE FOR THE PRESTRESSED CONCRETE BOX BEAM SHALL BE MODIFIED BY THE USE OF AN INORGANIC WATERPROOFING ADMIXTURE. THE ADMIXTURE SHALL BE IPANEX AS MANUFACTURED BY IPA SYSTEMS, PHILADELPHIA, PA. THE ADMIXTURE SHALL BE ADDED TO THE CONCRETE AT THE PLANT AT A RATE IN ACCORDANCE WITH THE MANUFACTURER'S INSTRUCTIONS. THE WATERPROOFING SHALL BE MIXED AND INSTALLED BY A FACTORY APPROVED TECHNICIAN. PAYMENT FOR THE WATERPROOFING ADMIXTURE SHALL BE INCLUDED WITH ITEM 515 - PRESTRESSED CONCRETE BOX BEAM (62'-78') CB27-48, AS PER PLAN.

ITEM 513 - STRUCTURAL STEEL, A588 AISC CATEGORY I, AS PER PLAN

UNDER THIS ITEM THE CONTRACTOR SHALL FURNISH ALL LABOR, MATERIALS, INCIDENTALS AND EQUIPMENT NECESSARY TO CONSTRUCT THE STRUCTURAL STEEL FRAMING / BRACKETS FOR WATERMAIN SUPPORT ALONG THE NORTH SIDE OF WOOSTER ROAD BRIDGE AS SHOWN ON PLANS AND PER THE REQUIREMENTS OF ITEM 513. THIS ITEM INCLUDES, BUT NOT LIMITED TO, STEEL FRAMING / BRACKETS, FIELD PAINTING CARBON STEEL MEMBERS IN ACCORDANCE WITH 514.05 OF THE CMS, STAINLESS STEEL ANCHOR BOLTS WITH NUTS AND WASHERS, AND ELASTOMERIC PADS COMPLETE IN PLACE.

ITEM SPECIAL - GASLINES SUPPORT FRAMING (THE EAST OHIO GAS COMPANY)

UNDER THIS ITEM THE CONTRACTOR SHALL FURNISH ALL LABOR, MATERIALS, INCIDENTALS AND EQUIPMENT NECESSARY TO CONSTRUCT THE STEEL FRAMING ALONG THE SOUTH SIDE OF THE WOOSTER ROAD BRIDGE OVER WOLF CREEK AS SHOWN ON SHEETS 14 AND 15 OF 15.

METHOD OF MEASUREMENT : THIS ITEM SHALL BE MEASURED FOR PAYMENT ON A LUMP SUM BASIS FOR ALL THE WORK REQUIRED TO CONSTRUCT THE GASLINES SUPPORT FRAMING COMPLETE IN PLACE AS SHOWN ON PLANS.

BASIS OF PAYMENT : PAYMENT WILL BE MADE AT CONTRACT PRICE FOR :

ITEM	UNIT	DESCRIPTION
SPECIAL	LUMP SUM	GASLINES SUPPORT FRAMING (THE OHIO GAS Co.)

ITEM SPECIAL-SEALING OF CONCRETE SURFACES

A SEALER SHALL BE APPLIED TO THE EXPOSED CONCRETE SURFACES OF THE BRIDGE AS SHOWN ON SHEETS 5/15, 6/15 & 9/15 SEE PROPOSAL NOTE FOR SEALER MATERIAL AND SURFACE PREPARATION REQUIREMENTS AND APPLICATION RATES AND PROCEDURES.

JDJ&A, INC.
2162 FRONT STREET
CUYAHOGA FALLS, OHIO 44221
ENGINEERS ARCHITECTS PLANNERS

3 / 15

ESTIMATED QUANTITIES AND GENERAL NOTES

BRIDGE No. SUM-WOOSTER RD. OVER WOLF CREEK

DESIGNED	DRAWN	TRACED	CHECKED	REVIEWED	DATE	REVISED
BRH	RWM		JRO	BK	12-'92	

BAR 10-0361

SFN: 773175

\88011\BRQUANT.DWG

C:\D\88011\BRQUANT Wed Jun 2 08:06:45 1993 RWM

F.H.W.A. REGION	STATE	PROJECT	
5	OHIO		

21
34

SUMMIT COUNTY
SUM-WOOSTER ROAD

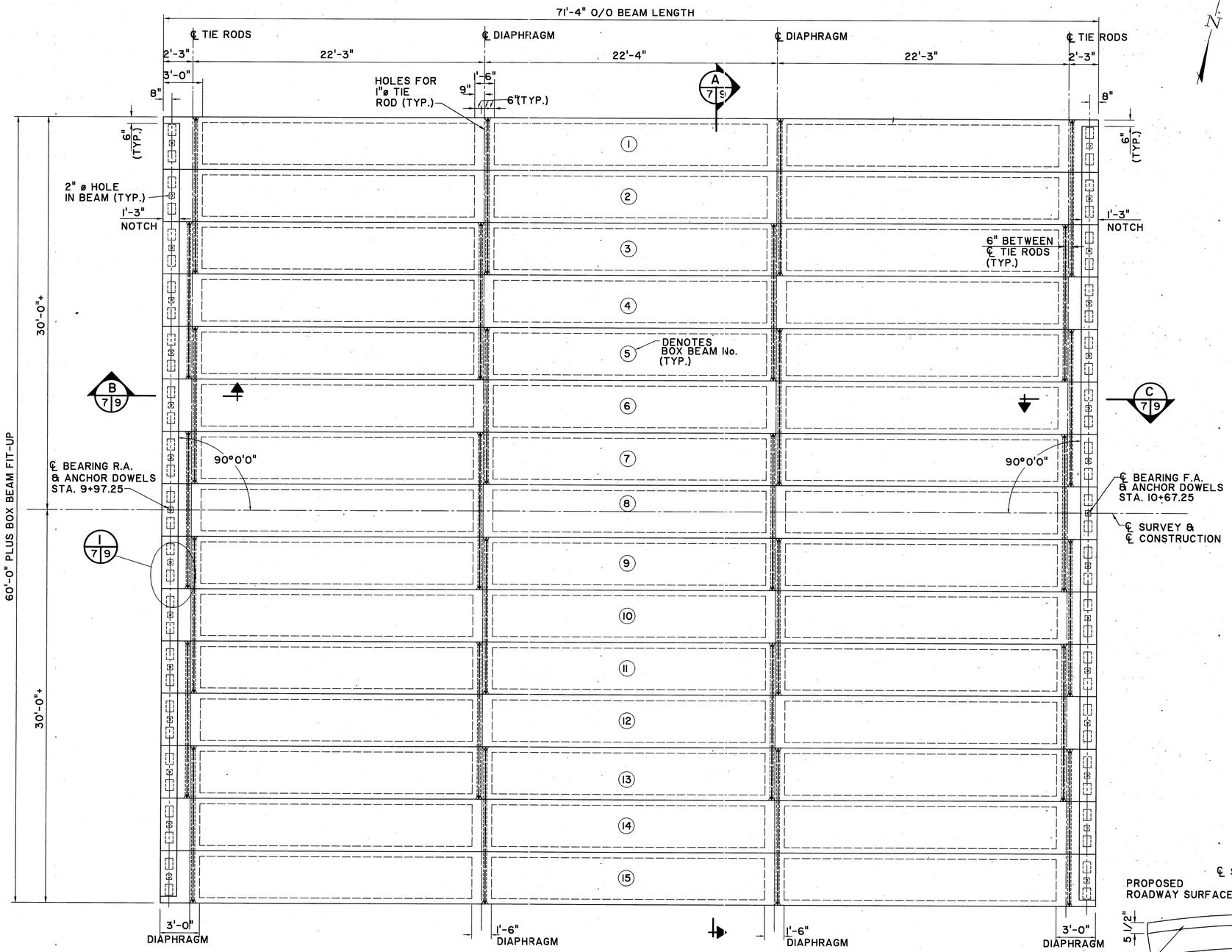

FRAMING PLAN

NOTES :

1. THE FOLLOWING DETAILS FROM STANDARD DRAWING PSBD-I-81 APPLY TO THIS PROJECT.

   a. SHEET I OF 4
   BEAM LIFTING INSERTS, DETAILS AND REINFORCEMENT OF BEAM ENDS, ANCHOR DOWELS AND PLAN - FASCIA BEAM WITH NOTCH.

   b. SHEET 2 OF 4
   TYPICAL PLANS OF DIAPHRAGMS AND TRANSVERSE TIE RODS, NORMAL CROWN TREATMENT AT CENTERLINE OF ROADWAY, BEAM DIMENSIONAL TOLERANCES, AND END DETAILS OF TRANSVERSE TIE ROD ANCHORAGE.

   c. SHEET 3 OF 4
   48 INCH WIDE COMPOSITE BEAM (CB27-48)

2. THE FOLLOWING NOTES FROM STANDARD DRAWING PSBD-I-81 APPLY TO THIS PROJECT.

   a. SHEET I OF 4
   TRANSVERSE TIE RODS, GALVANIZING, ANCHOR DOWELS, NOTCHES, END OF BEAMS, MORTARING OF SHEAR KEYS, COMPOSITE BRIDGES, AND AS REQUIRED TO SUPPLEMENT THE APPLICABLE DETAILS.

   b. SHEET 2 OF 4
   AS REQUIRED TO SUPPLEMENT THE APPLICABLE DETAILS.

   c. SHEET 3 OF 4
   AS REQUIRED TO SUPPLEMENT THE APPLICABLE DETAILS.

   d. SHEET4 OF 4
   AS REQUIRED TO SUPPLEMENT THE APPLICABLE DETAILS.

3. CALCULATED CAMBER
   COMPOSITE CONCRETE DECK SLAB : CALCULATED CAMBER OF BEAMS AT TIME OF PAVING, INCLUDING ALLOWANCE FOR CAMBER GROWTH DUE TO CREEP IS (Cc=2.0"). ESTIMATED DEFLECTION OF BEAMS DUE TO WEIGHT OF DECK SLAB AND RAILING (PARAPETS, SIDEWALKS, ETC.) IS (D=3/4"). NET CAMBER IS (-5/8"), WHICH IS LESS THAN NECESSARY TO PLACE THE DECK SLAB SURFACE PARALLEL TO THE PROPOSED ROADWAY SURFACE. TO COMPENSATE FOR THIS INSUFFICIENT CURVATURE, THE DECK SLAB SHALL BE THICKENED FROM 5 1/2" AT SPANS ENDS TO (6 1/8") AT MID SPAN.

4. FOR PRESTRESSED CONCRETE BOX BEAM DETAILS, SEE SHEET 9/15

5. FOR ELASTOMERIC PAD DETAILS, SEE SHEET 9/15

6. FOR DECK PLAN DETAILS, SEE SHEET 8/15

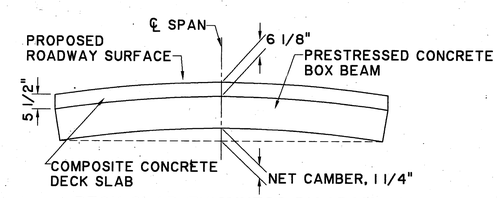

DECK SLAB THICKNESS DIAGRAM
(COMPENSATION FOR NET CURVATURE)

BAR 10-0361

JDJ&A, INC.
2162 FRONT STREET
CUYAHOGA FALLS, OHIO 44221
ENGINEERS ARCHITECTS PLANNERS

7/15

FRAMING PLAN

BRIDGE No. SUM-WOOSTER RD.
OVER WOLF CREEK

DESIGNED	DRAWN	TRACED	CHECKED	REVIEWED	DATE	REVISED
BRH	RWM		JRO	BK	12-'92	

SFN: 7731175

\88011\DECKPLAN.DWG

C:\D\88011\DECKPLAN Fri May 28 08:19:13 1993 RWM

F.H.W.A. REGION	STATE	PROJECT	
5	OHIO		

23/34

SUMMIT COUNTY
SUM-WOOSTER ROAD

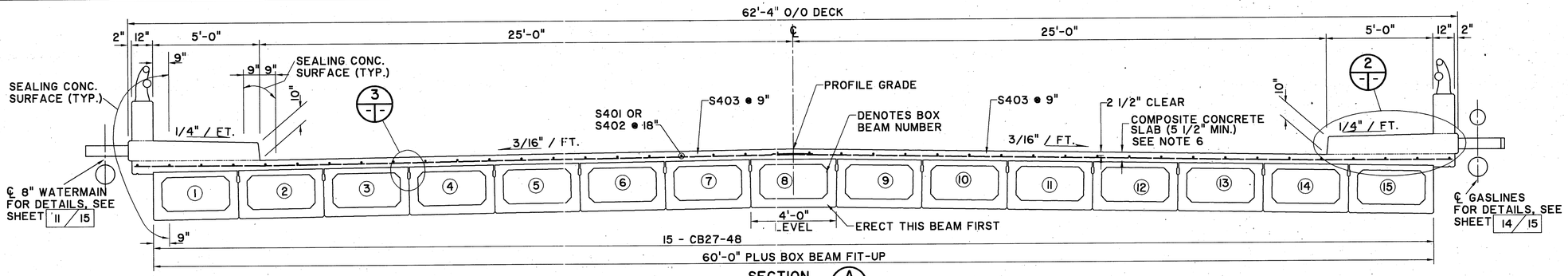

SECTION A (7/9 8/9)

NOTES :

1. FOR FRAMING PLAN, SEE SHEET 7/15
2. FOR DECK PLAN, SEE SHEET 8/15
3. FOR REINFORCING STEEL LIST, SEE SHEET 10/15
4. SEE DECK PLAN & FRAMING PLAN, FOR ADDITIONAL NOTES.
5. THIS IS THE NOMINAL DIMENSION. THE PAY QUANTITY OF THAT PORTION OF THE DECK CONCRETE OVER THE BEAMS SHALL BE BASED ON THE AVERAGE OF THIS DIMENSION AND THE DEPTH AT BEAM BEARINGS EVEN THOUGH DEVIATION FROM THE AVERAGE MAY OCCUR BECAUSE THE TOP OF THE BEAM MAY NOT HAVE THE CAMBER ANTICIPATED IN THE DESIGN : I.E. Cc, THE CAMBER OF BEAMS SHALL BE MEASURED IN THE FIELD BEFORE THE DECK IS PLACED. THE ACTUAL DEPTH AT MID-SPAN SHALL BE THE NOMINAL DIMENSION PLUS OR MINUS THE DIFFERENCE BETWEEN THE ACTUAL AND ANTICIPATED CAMBER.
6. PREFORMED EXPANSION JOINT FILLER IN THE PARAPET DEFLECTION JOINTS MAY BE EITHER 1/4" GRAY SPONGE RUBBER OR 1/4" GRAY CELLULAR POLYVINYL CHLORIDE (PVC) SPONGE. FILLER SHALL MEET THE REQUIREMENTS OF AASHTO M-153, TYPE I, EXCEPT DENSITY OF PVC SPONGE SHALL NOT BE LESS THAN 20 LBS. PER CUBIC FOOT. INCLUDE WITH ITEM 517-RAILING FOR PAYMENT.

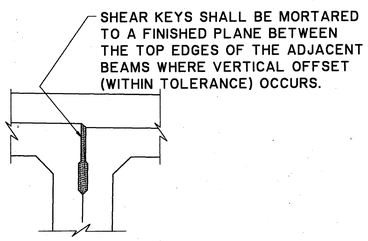

DETAIL 3

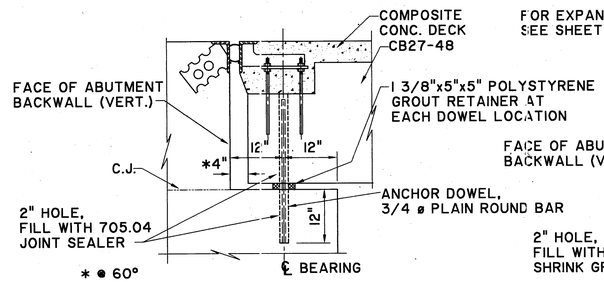

SECTION B
EXPANSION TYPE BEARING (7/9 8/9)

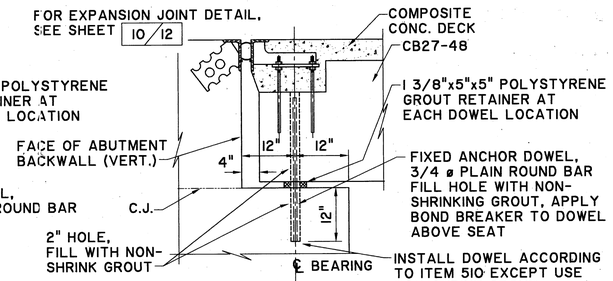

SECTION C
FIXED TYPE BEARING (7/9 8/9)

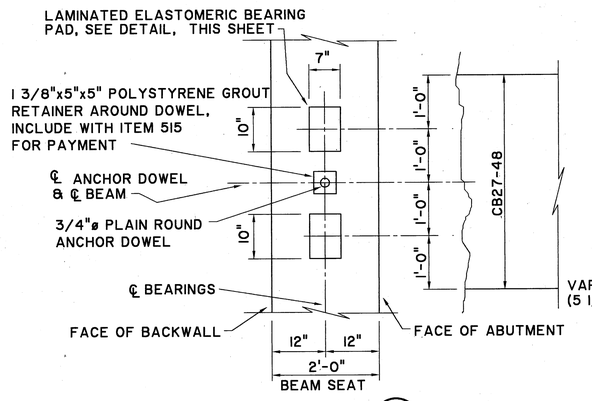

DETAIL 1 (7/9)

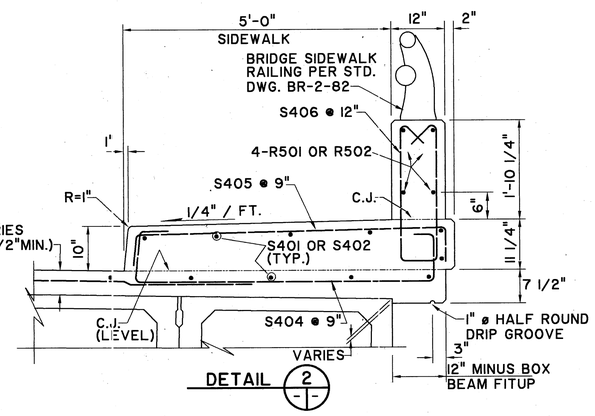

DETAIL 2 (-/-)

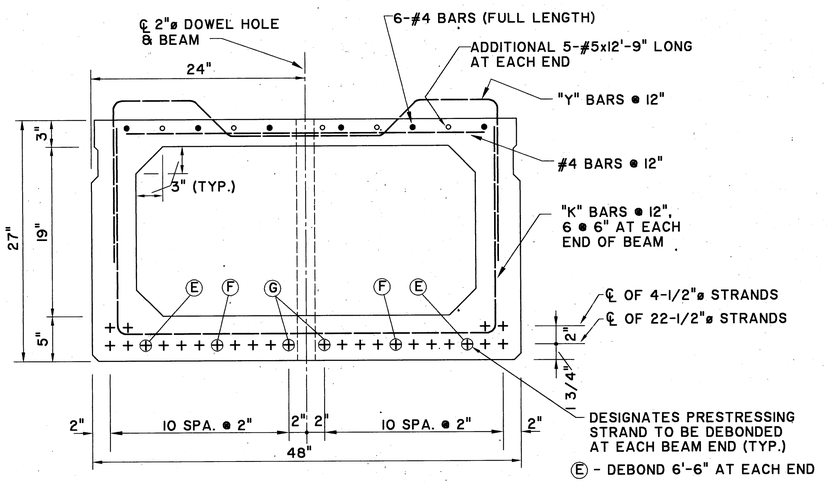

Ⓔ - DEBOND 6'-6" AT EACH END
Ⓕ - DEBOND 2'-6" AT EACH END
Ⓖ - DEBOND 1'-6" AT EACH END

REINFORCEMENT DETAILS - CB27-48

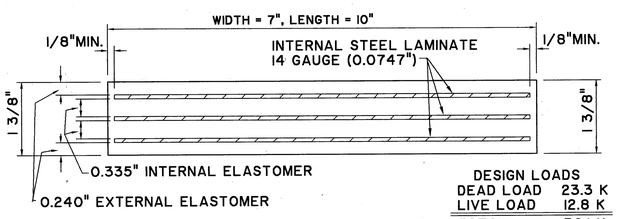

LAMINATED ELASTOMERIC BEARING
(50 DUROMETER ELASTOMER)

DESIGN LOADS	
DEAD LOAD	23.3 K
LIVE LOAD	12.8 K
TOTAL	36.1 K

MAXIMUM ESTIMATED SHEAR DEFORMATION = 0.56"

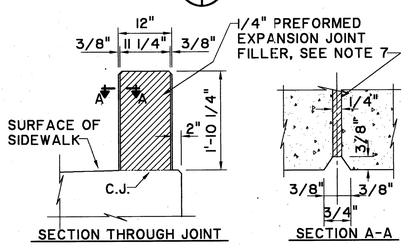

SECTION THROUGH JOINT
SECTION A-A

DEFLECTION JOINT DETAILS

JDJ&A, INC.
2162 FRONT STREET
CUYAHOGA FALLS, OHIO 44221
ENGINEERS ARCHITECTS PLANNERS

9/15

MISC. FRAMING & DECK DETAILS

BRIDGE No. SUM-WOOSTER RD. OVER WOLF CREEK

DESIGNED	DRAWN	TRACED	CHECKED	REVIEWED	DATE	REVISED
BRH	RWM		JRO	BK	12-'92	

BAR 10-036.1
SFN: 7731175

C:\DJ\88011\DECKDET1 Fri May 28 08:47:15 1993 RWM

\88011\DECKDET1.DWG

Photo No. 1: Bridge Profile (looking north)

Photo No. 2: Bridge/Roadway section (looking west)

Photo No. 3: Underside of superstructure.

Photo No. 4: Washed out rip-rap and leaning sheet piling

Photo No. 5: Damp/dark areas, patches and delaminations along joints between beams (typ.)