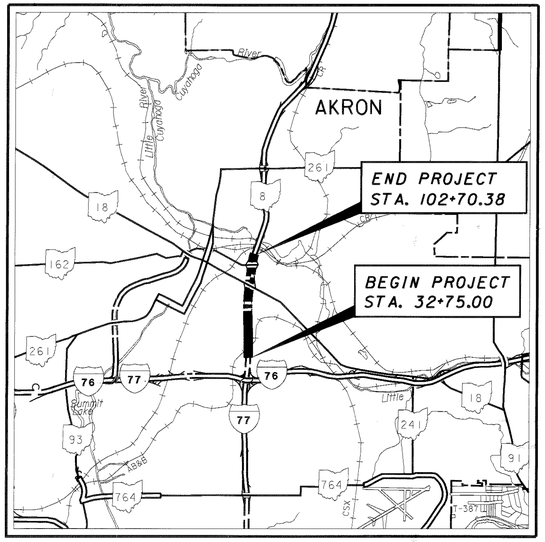

LOCATION MAP

LATITUDE: 41°04'30" LONGITUDE: 81°30'30"

SCALE IN MILES

0 1 2 3 4

N

PORTION TO BE IMPROVED

INTERSTATE & DIVIDED HIGHWAY

UNDIVIDED STATE & FEDERAL ROUTES

OTHER ROADS

FOR DESIGN DESIGNATIONS & DESIGN EXCEPTIONS - SEE SHEETS 3, 4 & 5.

4/1/2002

TRACINGS SUBMITTAL

UNDERGROUND UTILITIES
TWO WORKING DAYS
BEFORE YOU DIG
CALL 1-800-362-2764 (TOLL FREE)
OHIO UTILITIES PROTECTION SERVICE
NON-MEMBERS
MUST BE CALLED DIRECTLY

PLAN PREPARED BY:

DLZ OHIO, INC.
1000 Rockefeller Bldg.
614 W. Superior Ave.
Cleveland, Ohio 44113

ENGINEERS SEAL:

STATE OF OHIO
VICKIE L. WILDEMAN
E-55556
REGISTERED PROFESSIONAL ENGINEER

SIGNED: Vickie L Wildeman
DATE: April 1 2002

STATE OF OHIO
DEPARTMENT OF TRANSPORTATION
SUM-8-0.63
PART 1 OF 2 PARTS
CITY OF AKRON
SUMMIT COUNTY

INDEX OF SHEETS:
SEE SHEET 2

LIMITED ACCESS

THIS IMPROVEMENT IS ESPECIALLY DESIGNED FOR THROUGH TRAFFIC AND HAS BEEN DECLARED A LIMITED ACCESS HIGHWAY OR FREEWAY BY ACTION OF THE DIRECTOR IN ACCORDANCE WITH THE PROVISIONS OF SECTION 5511.02 OF THE OHIO REVISED CODE.

PROJECT DESCRIPTION

RECONSTRUCTION OF 1.3 MILES OF STATE ROUTE 8 IN THE CITY OF AKRON FROM NORTH OF THE CENTRAL INTERCHANGE TO THE NORTH EXPRESSWAY VIADUCT. CONSTRUCTION/ RECONSTRUCTION OF SERVICE ROADS ALONG THE EAST AND WEST SIDES OF STATE ROUTE 8. CONSTRUCTION OF RETAINING WALLS AND CONSTRUCTION/RECONSTRUCTION OF INTERCHANGE RAMPS BETWEEN THE SERVICE ROADS AND STATE ROUTE 8. RECONSTRUCTION OF STRUCTURES AT BEACON STREET, EXCHANGE STREET, FORGE STREET, AND MARKET STREET INSTALLATION OF DRAINAGE FACILITIES TRAFFIC CONTROL DEVICES AND LIGHTING.

1997 SPECIFICATIONS

THE STANDARD SPECIFICATIONS OF THE STATE OF OHIO, DEPARTMENT OF TRANSPORTATION, INCLUDING CHANGES AND SUPPLEMENTAL SPECIFICATIONS LISTED IN THE PROPOSAL SHALL GOVERN THIS IMPROVEMENT.

I HEREBY APPROVE THESE PLANS AND DECLARE THAT THE MAKING OF THIS IMPROVEMENT WILL NOT REQUIRE THE CLOSING TO TRAFFIC OF THE HIGHWAY AND THAT PROVISIONS FOR THE MAINTENANCE AND SAFETY OF TRAFFIC WILL BE AS SET FORTH ON THE PLANS AND ESTIMATES.

UNDER AUTHORITY OF SECTION 4511.21, DIVISION (I) OF THE OHIO REVISED CODE, THE REVISED PRIMA FACIE SPEED LIMITS AS INDICATED HEREIN ARE DETERMINED TO BE REASONABLE AND SAFE, AND ARE HEREBY ESTABLISHED FOR THE DURATION OF THIS PROJECT. THE PRIMA FACIE SPEED LIMIT OR LIMITS HEREBY ESTABLISHED SHALL BECOME EFFECTIVE WHEN APPROPRIATE SIGNS GIVING NOTICE THEREOF ARE ERECTED.

SUBMITTED Michael L. McGlinchy
DATE 5/29/2002 PUBLIC UTILITIES BUREAU MANAGER, CITY OF AKRON

APPROVED Joseph P. Kibler
DATE 5/29/02 DIRECTOR OF PUBLIC SERVICE, CITY OF AKRON

APPROVED [signature]
DATE 6-4-02 DISTRICT DEPUTY DIRECTOR

APPROVED Gordon Proctor
DATE 7-16-02 DIRECTOR, DEPARTMENT OF TRANSPORTATION

STANDARD CONSTRUCTION DRAWINGS										SUPPLEMENTAL SPECIFICATIONS	
BP-1.1	7/28/00	GR-3.2M	10/21/97	HL-30.33M	8/31/94	TC-18.24	1/18/02	AS-1-81	4/20/01	SS 846	9/9/97
BP-2.1	7/28/00	GR-4.1M	11/30/94	HL-40.10	7/20/01	TC-18.26	1/18/02	VPF-1-90M	3/20/95	SS 849	6/14/95
BP-2.2	7/28/00	GR-4.2M	10/21/97	HL-50.11	7/20/01	TC-21.10	1/19/01	BR-1	1/6/99	SS 851	10/12/99
BP-2.3	7/28/00	GR-5.1M	4/21/95	HL-50.21	7/20/01	TC-21.20	1/19/01	PCB-91	7/6/99	SS 863	10/12/99
BP-3.1	7/28/00	GR-5.3M	11/30/94	HL-60.11	7/20/01	TC-21.40	1/18/02	SICD-1-96	4/20/01	SS 864	7/11/00
BP-4.1	7/28/00	GR-6.1M	1/3/96	HL-60.12	7/20/01	TC-22.10	1/19/01	GSD-1-96	4/20/01	SS 870	3/27/01
BP-5.1	7/28/00			HL-60.31	7/20/01	TC-22.20	1/19/01	EXJ-4-87	4/20/01	SS 877	4/13/99
		I-2.2	7/20/01			TC-31.21	4/20/01			SS 899	10/21/98
CB-1.2	7/20/01			MT-35.10	4/20/01	TC-32.10	10/19/01	CITY OF AKRON		SS 905	4/1/98
CB-2.1	7/20/01	MH-1.2	7/20/01	MT-95.30M	4/25/94	TC-32.11	10/19/01	BP-5.0	1/11/02	SS 906	5/5/98
CB-2.2	7/20/01			MT-95.31M	4/25/94	TC-41.10	1/19/01	BP-5.1	1/11/02	SS 908	11/7/00
CB-2.3	7/20/01	RM-2.1M	7/12/95	MT-95.32M	4/25/94	TC-41.20	1/19/01	BP-5.2	1/11/02	SS 907	10/21/98
CB-3.2	7/20/01	RM-4.1M	10/21/97	MT-95.40M	4/25/94	TC-41.40	1/18/02	BP-5.3	1/11/02	SS 910	7/11/00
CB-3.4	7/20/01	RM-4.3M	10/21/97	MT-95.41M	4/25/94	TC-41.50	1/19/01	BP-5.4	1/11/02	SS 911	7/10/97
		RM-4.4M	10/21/97	MT-97.10M	4/25/94	TC-42.10	1/19/01	BP-5.5	1/11/02	SS 954	9/9/97
DM-1.1	7/20/01			MT-98.14M	6/24/93	TC-42.20	4/20/01	MH-2	9/23/97		
DM-1.2	7/20/01	HL-10.11M	5/1/95	MT-98.19M	3/1/96	TC-51.11	4/20/01	MH-9	5/1/98	SPECIAL PROVISIONS	
DM-4.1	7/20/01	HL-10.12	7/20/01	MT-99.20M	1/30/95	TC-52.10	4/20/01			AKRON CMS	
DM-4.3	7/20/01	HL-10.13M	5/1/95	MT-101.60M	4/25/94	TC-52.20	4/20/01	SUPPLEMENTAL SPECIFICATIONS		661	1999
DM-4.4	7/20/01	HL-10.31	7/20/01	MT-102.10M	1/30/95	TC-65.10	10/19/01			662	1999
		HL-20.11M	3/31/95	MT-102.20M	1/30/95	TC-65.11	10/19/01			663	1999
F-1.1	7/28/00	HL-20.13M	1/31/97	MT-105.10M	4/25/94	TC-71.10M	9/1/93	SS 806	9/9/97		
F-3.1	7/28/00	HL-20.14M	5/1/95	MT-105.11M	4/25/94	TC-72.20	1/19/01	SS 808	4/13/99		
F-3.3	7/28/00	HL-20.15M	3/31/95	MT-110.10M	3/1/96	TC-81.20	5/1/00	SS 815	2/22/00		
		HL-30.11	7/20/01	MT-110.20M	3/1/96	TC-82.10	1/19/01	SS 816	4/21/97		
GR-1.1M	10/21/97	HL-30.21M	5/1/95	MT-120.00	3/1/00	TC-83.10	5/1/00	SS 830	10/21/98		
GR-1.2M	1/3/96	HL-30.22	7/20/01			TC-83.20	5/1/00	SS 842	1/6/99		
GR-2.1M	4/14/98	HL-30.31M	5/1/95	TC-7.65	1/19/01	TC-84.20	5/1/00	SS 843	5/5/98		
GR-3.1M	10/21/97	HL-30.32M	8/14/96	TC-12.30	1/19/01	TC-85.20	5/1/00	SS 844	1/6/99		

FEDERAL PROJECT NO.

PID NO. 20356

CONSTRUCTION PROJECT NO.

RAILROAD INVOLVEMENT NONE

SUM-8-0.63

1 / 1088

SUM-8-0.63
020423 PID #20356
DIST 04 10-09-02

TITLE SHEET	1
INDEX SHEET	2
SCHEMATIC PLAN	3-5
REFERENCE TIES	6-8
TYPICAL SECTIONS	
EXISTING TYPICALS	9-18
PROPOSED TYPICALS - S.R. 8	19-22
PROPOSED TYPICALS - GOODKIRK AND FOUNTAIN	23-24
PROPOSED TYPICALS - RAMPS	25-26
PROPOSED TYPICALS - SIDE AND CROSS STREETS	27-29
GENERAL NOTES	30-34
MAINTENANCE OF TRAFFIC	
TYPICAL SECTIONS	35-41
GENERAL NOTES	42, 42A, 43-46, 46A
SUBSUMMARY	47-48
DETOURS	49-52, 52A-52I
PHASING PLANS	53-64, 64A-64C, 65-88, 88A-88C, 89-107, 107A-107D, 108-125, 122A-125A, 122B-125B
DETAILS	126-136
PLAN INSERT SHEET	137
GENERAL SUMMARY	138-142
SUBSUMMARIES	
CURB AND UNDERDRAIN	143-154
DRAINAGE	155-166
DRIVEWAY	167
EARTHWORK AND SEEDING AND MULCHING	168-169
FENCE	170
GUARDRAIL	171-174
ROADWAY	175-180
SANITARY	181-182
WALK	183-185
PAVEMENT CALCULATIONS	186-193
STORM WATER POLLUTION PREVENTION PLAN	194-199
PLAN AND PROFILES	
S.R. 8	200-237
GOODKIRK STREET	238-252
FOUNTAIN STREET	253-265
RAMP TI	266-267
RAMP S	268-270
RAMP PI	271-274
RAMP QI	275-277
RAMP KI	278-280
RAMP LI	281-284
RAMP I	285-287
RAMP J	288-289
OHIO STREET	290-291
PARKWOOD AVENUE	292
NASH STREET (WEST)	293
VINE STREET	294
ORCHARD STREET	295
NASH STREET (EAST)	296
MASON AVENUE	297
CROSS SECTIONS	
S.R. 8 LT	298-360
S.R. 8 RT	361-420
PARKWOOD AVENUE	421-431
CURB AND UNDERDRAIN PLAN	
S.R. 8	432-449
GOODKIRK STREET	450-464
FOUNTAIN STREET	465-477
RAMP TI	478
RAMP S	479-480
RAMP PI	481-482
RAMP QI	483-484
RAMP KI	485-486
RAMP LI	487-488
RAMP I	489-490
RAMP J	491-492
PARKWOOD AVENUE	493
PAVEMENT DETAILS	
S.R. 8	494-502
GOODKIRK STREET	503-524
FOUNTAIN STREET	525-544
EWING CUL-DE-SACS	545
SUPERELEVATION TABLE	546
APPROACH SLAB DETAILS	547-561
DRIVEWAY PROFILES	562-572
DRIVEWAY DETAILS	573-575
CITY OF AKRON CURB RAMP DETAILS	576-582
PIPE PROFILES	583-596
DRAINAGE DETAILS	597-605
RETAINING WALLS	
1	606-609
2	610-617
3	618-632
4	633-637
5	638-641
6	642-647
7	648-655
8	656-669
9	670-672
10	673-678
WATER WORK	
GENERAL NOTES	679-684
GENERAL SUMMARY	685
SUBSUMMARY	686-689
PLAN AND PROFILES	690-702
WATER PIPE PROFILES	703-704, 704A
WATER DETAILS	705-708
TRAFFIC CONTROL	
SIGNING AND PAVEMENT MARKING	
GENERAL SUMMARY	709-711, 711A-711B
PAVEMENT MARKING SUBSUMMARY	712-715, 715A
SIGNING SUBSUMMARY	716-754
SIGN LIGHTING SUBSUMMARY	755-756, 756A
SIGNING AND PAVEMENT MARKING PLANS	
S.R. 8	757-764
GOODKIRK STREET	765-770
FOUNTAIN STREET	771-776
OVERHEAD SIGN DETAILS	777-783, 783A
GROUND MOUNTED SIGN DETAILS	784-787
MISCELLANEOUS TRAFFIC CONTROL DETAILS	788, 788A-788E
SIGNALS	
GENERAL NOTES	789-793, 793A-793G
SUBSUMMARY	794-799
TRAFFIC SIGNAL PLANS AND DETAILS	
FOUNTAIN STREET/CARROLL STREET	800-801
FOUNTAIN STREET/BUCHTEL AVENUE	802-803
FOUNTAIN STREET/MARKET STREET	804-805
FOUNTAIN STREET/FORGE STREET	806-807
FOUNTAIN STREET/PERKINS STREET	808-809
GOODKIRK STREET/EXCHANGE STREET	810-811
GOODKIRK STREET/CARROLL STREET	812-813
GOODKIRK STREET/BUCHTEL AVENUE	814-815
GOODKIRK STREET/MARKET STREET	816-817
GOODKIRK STREET/FORGE STREET	818-819
GOODKIRK STREET/PERKINS STREET	820-821
INTERCONNECT PLAN	822-827, 827A, 827B
SIGNAL DETAILS	828-830
LIGHTING	
SCHEMATIC PLAN	831-833
GENERAL NOTES	834-835
GENERAL SUMMARY	836
SUBSUMMARY	837-855
REMOVAL PLAN	856-858
PLAN LAYOUT	859-867
CIRCUIT SCHEMATICS	868-869
DETAILS	870-872
BRIDGES	
BEACON STREET	873-910
EXCHANGE STREET	911-939
CARROLL STREET	940-945
BUCHTEL AVENUE	946-950
MARKET STREET	951-953, 953A, 954-976, 976A-976E, 977-981
FORGE STREET	982-993, 993A-993B, 994-1002
PERKINS STREET	1003-1007
FENCE PLAN	1008-1013
RIGHT-OF-WAY PLANS	
(NOT USED)	1014
CENTERLINE PLAT	1015-1018
PROPERTY MAP	1019-1021
UTILITY MAP	1022-1024
SUMMARY OF ADDITIONAL RIGHT-OF-WAY	1025-1036
RIGHT-OF-WAY PLANS	1037-1088
SOIL BORING SHEETS	1/37-37/37
STRUCTURE FOUNDATION INVESTIGATION SHEETS	
S.R. 8 BRIDGE OVER EXCHANGE STREET	1/3-3/3
MARKET STREET BRIDGE	1/4-4/4
FORGE STREET BRIDGE	1/3-3/3

CALCULATED

CHECKED

INDEX SHEET

SUM-8-0.63

CURVE DATA (EXISTING)

P.I. STA. = 27+35.64, ℄ CONSTR. S.R. 8
Δ = 6° 51′ 07″ (LT)
Dc = 1° 00′ 41″
R = 5,664.59′
T = 339.11′
L = 677.41′
E = 10.14′
e_{max} = 0.016 (NDC 0.027)

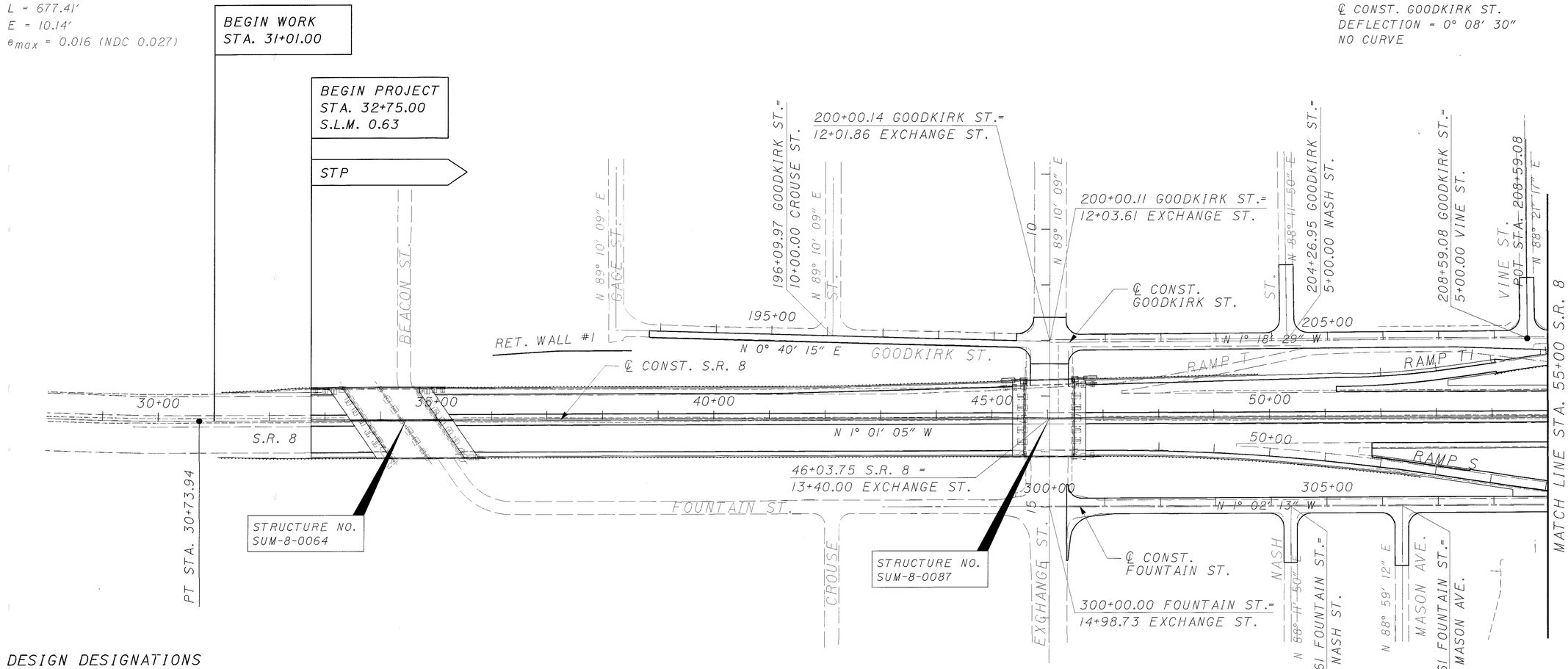

DESIGN DESIGNATIONS

S.R. 8

(BEGIN PROJECT TC RAMPS TI & S)

CURRENT ADT (2004)	115160
DESIGN YEAR ADT (2024)	123380
DESIGN HOURLY VOLUME	11104
DIRECTIONAL DISTRIBUTION	62%
TRUCKS (24 HOUR)	6.5%
DESIGN SPEED	60 MPH
LEGAL SPEED	50 MPH

DESIGN FUNCTIONAL CLASSIFICATION - URBAN EXPRESSWAY

DESIGN EXCEPTIONS

DESIGN FEATURE	APPROVAL DATES	SHEET NUMBERS
GRADED/CURBED SHOULDER WIDTH	5/04/01	19,20,21,22
HORIZONTAL ALIGNMENT (LACK OF SPIRALS)	5/04/01	5
SUPERELEVATION (MAX. RATE)	5/04/01	5
HORIZONTAL CLEARANCE	5/04/01	216,218,232
SUPERELEVATION (TRANSITION)	5/04/01	546

GOODKIRK STREET

(SOUTH OF RAMPS TI & S)

CURRENT ADT (2004)	5020
DESIGN YEAR ADT (2024)	5190
DESIGN HOURLY VOLUME	467
TRUCKS (24 HOUR)	3%
DESIGN SPEED	35 MPH
LEGAL SPEED	35 MPH

DESIGN FUNCTIONAL CLASSIFICATION - URBAN COLLECTOR

DESIGN EXCEPTIONS

NONE REQUIRED

FOUNTAIN STREET

(SOUTH OF RAMPS TI & S)

CURRENT ADT (2004)	3920
DESIGN YEAR ADT (2024)	4060
DESIGN HOURLY VOLUME	365
TRUCKS (24 HOUR)	3%
DESIGN SPEED	35 MPH
LEGAL SPEED	35 MPH

DESIGN FUNCTIONAL CLASSIFICATION - URBAN COLLECTOR

DESIGN EXCEPTIONS

DESIGN FEATURE	APPROVAL DATES	SHEET NUMBERS
STOPPING SIGHT DISTANCE (VERTICAL)	5/04/01	263-264

N

HORIZONTAL SCALE IN FEET
0 50 100 200

SCHEMATIC PLAN & DESIGN DESIGNATIONS

SUM-8-0.63

3
1088

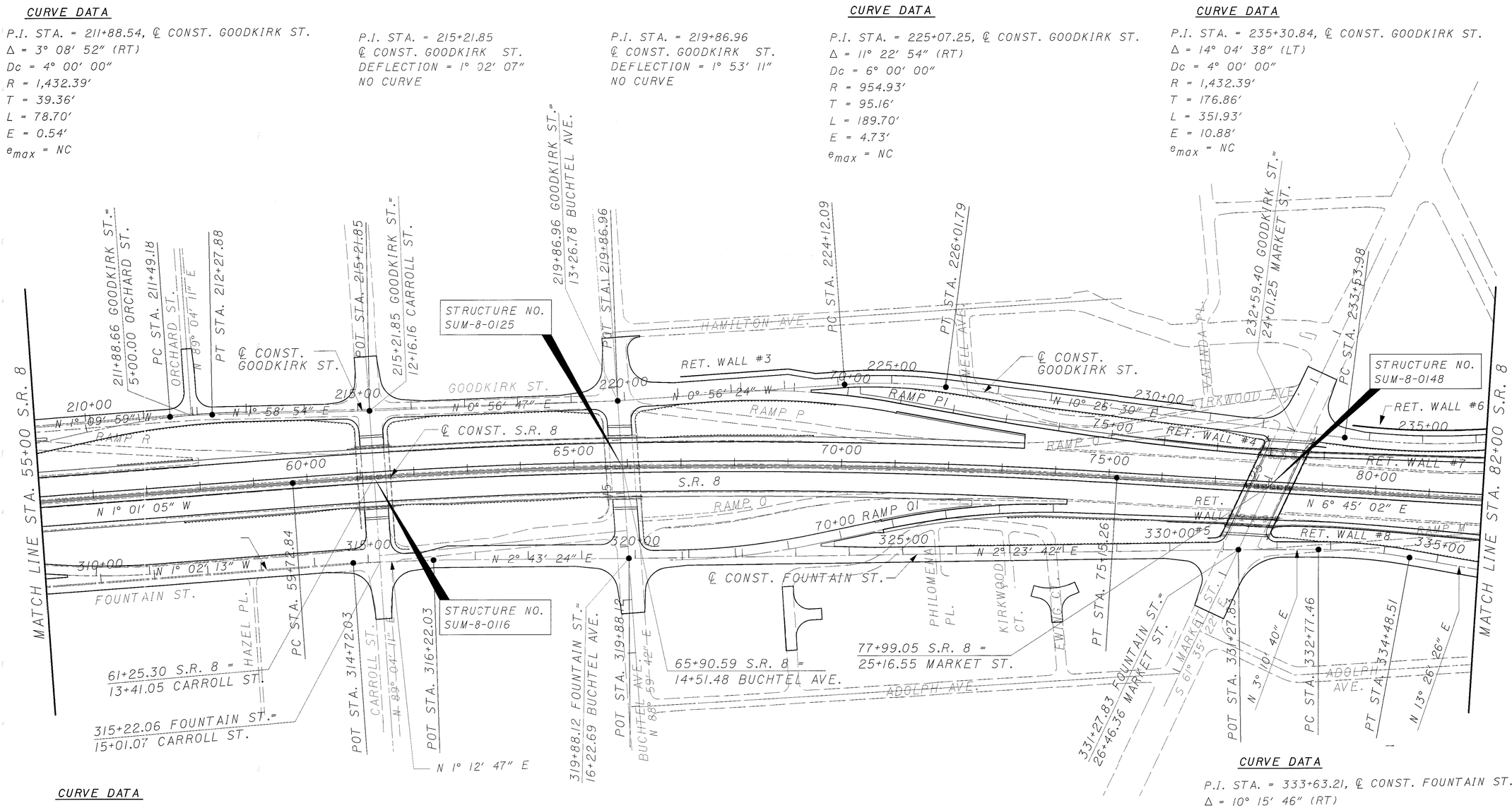

N

0 50 100 200
HORIZONTAL SCALE IN FEET

SCHEMATIC PLAN & DESIGN DESIGNATIONS

SUM-8-0.63

I:\projects\9922100\civil\dgs2.dgn

DESIGN DESIGNATIONS

CURVE DATA

P.I. STA. = 241+44.37,
℄ CONST. GOODKIRK ST.
Δ = 9° 59′ 55″ (RT)
Dc = 4° 00′ 00″
R = 1,432.39′
T = 125.30′
L = 249.96′
E = 5.47′
e_{max} = NC

PARKWOOD AVENUE

DESIGN SPEED	20
LEGAL SPEED	20

DESIGN FUNCTIONAL CLASSIFICATION
LOCAL STREET

DESIGN EXCEPTIONS

NONE REQUIRED

S.R. 8
(NORTH OF RAMPS I & J)

CURRENT ADT (2004)	118930
DESIGN YEAR ADT (2024)	127290
DESIGN HOURLY VOLUME	11456

GOODKIRK STREET
(MARKET ST. TO PERKINS ST.)

CURRENT ADT (2004)	6040
DESIGN YEAR ADT (2024)	6250
DESIGN HOURLY VOLUME	563

FOUNTAIN STREET
(MARKET ST. TO PERKINS ST.)

CURRENT ADT (2004)	9770
DESIGN YEAR ADT (2024)	10130
DESIGN HOURLY VOLUME	912

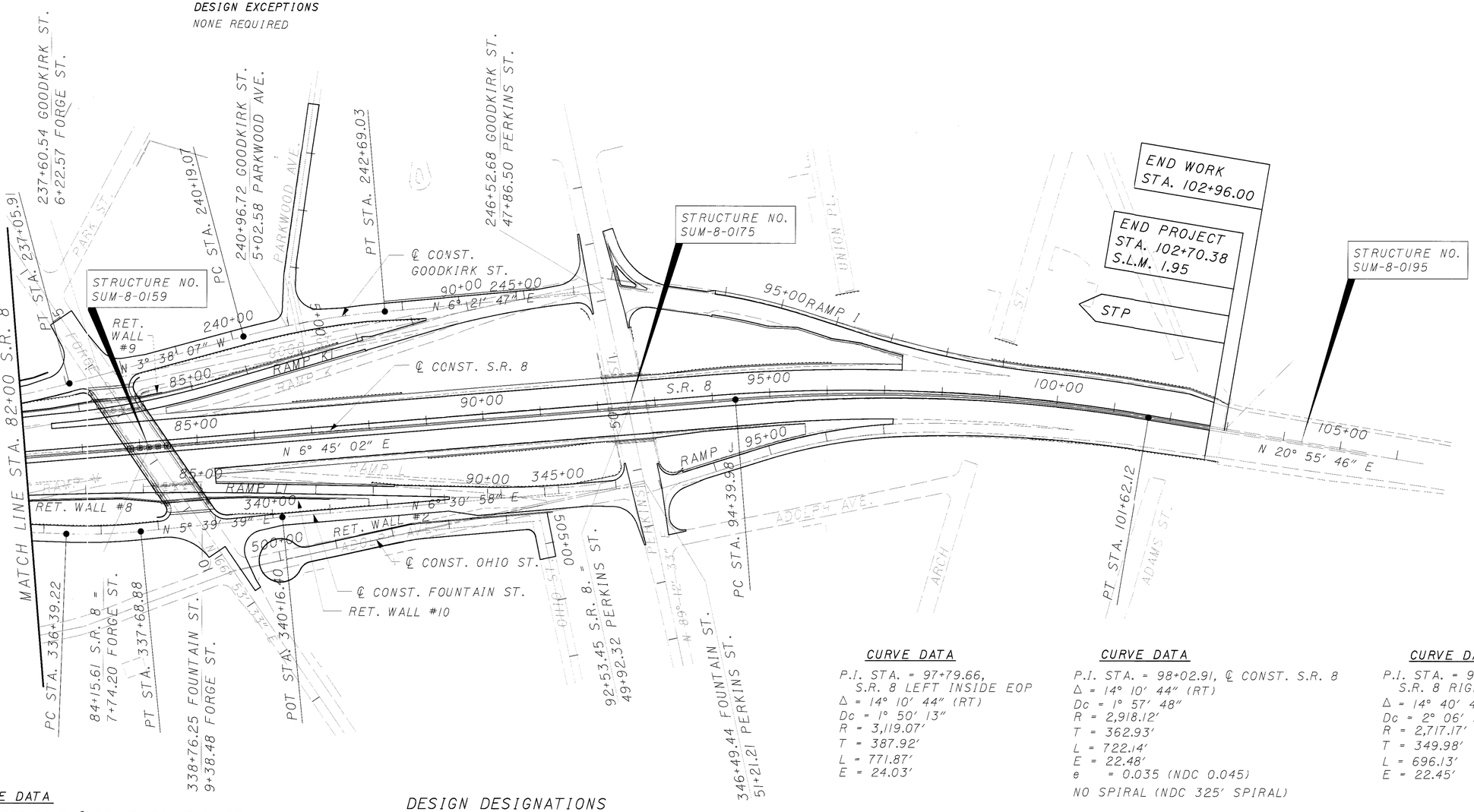

CURVE DATA

P.I. STA. = 97+79.66,
S.R. 8 LEFT INSIDE EOP
Δ = 14° 10′ 44″ (RT)
Dc = 1° 50′ 13″
R = 3,119.07′
T = 387.92′
L = 771.87′
E = 24.03′

CURVE DATA

P.I. STA. = 98+02.91, ℄ CONST. S.R. 8
Δ = 14° 10′ 44″ (RT)
Dc = 1° 57′ 48″
R = 2,918.12′
T = 362.93′
L = 722.14′
E = 22.48′
e = 0.035 (NDC 0.045)
NO SPIRAL (NDC 325′ SPIRAL)

CURVE DATA

P.I. STA. = 98+14.58,
S.R. 8 RIGHT INSIDE EOP
Δ = 14° 40′ 44″ (RT)
Dc = 2° 06′ 31″
R = 2,717.17′
T = 349.98′
L = 696.13′
E = 22.45′

CURVE DATA

P.I. STA = 337+04.15, ℄ CONST. FOUNTAIN ST.
Δ = 7° 46′ 47″ (LT)
Dc = 6° 00′ 00″
R = 954.93′
T = 64.93′
L = 129.66′
E = 2.20′
e_{max} = NC

P.I. STA. = 340+16.40,
℄ CONST. FOUNTAIN ST.
DEFLECTION = 0° 51′ 19″
NO CURVE

DESIGN DESIGNATIONS

OHIO STREET

DESIGN SPEED	25
LEGAL SPEED	25

DESIGN FUNCTIONAL CLASSIFICATION -
LOCAL STREET

DESIGN EXCEPTIONS

DESIGN FEATURE	APPROVAL DATES	SHEET NUMBERS
HORIZONTAL ALIGNMENT (DEFLECTION)	5/04/01	291

HORIZONTAL SCALE IN FEET

SCHEMATIC PLAN & DESIGN DESIGNATIONS

SUM-8-0.63

i:\projects\9922100\civildsc3.dgn

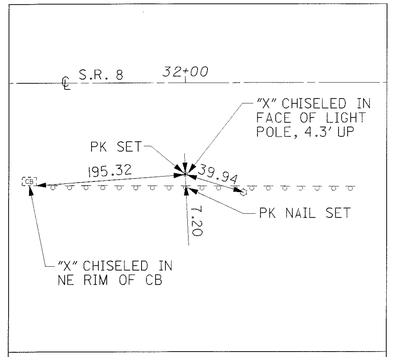

STA. 32+00, 60' RT, ℄ S.R. 8

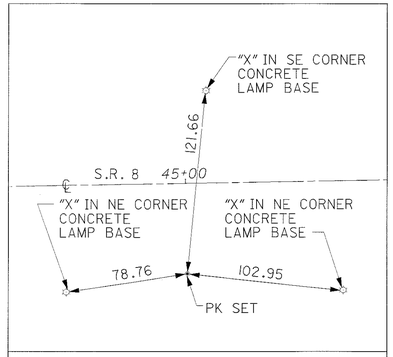

STA. 45+00, 60' RT, ℄ S.R. 8

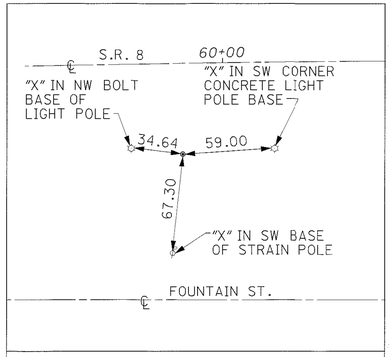

PC STA. 59+72.84, 60' RT, ℄ S.R. 8

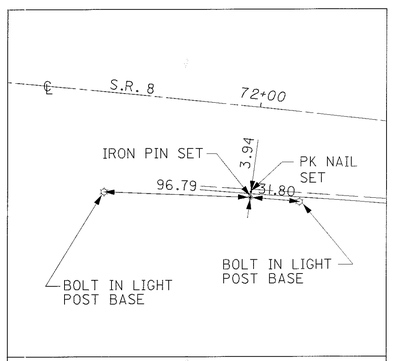

STA. 72+00, 60' RT, ℄ S.R. 8

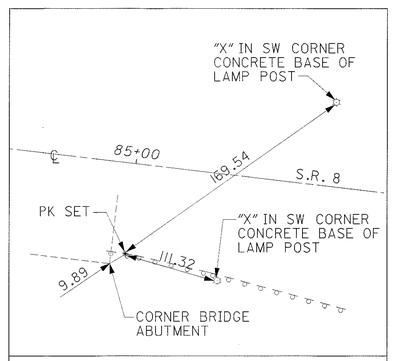

STA. 85+00, 60' RT, ℄ S.R. 8

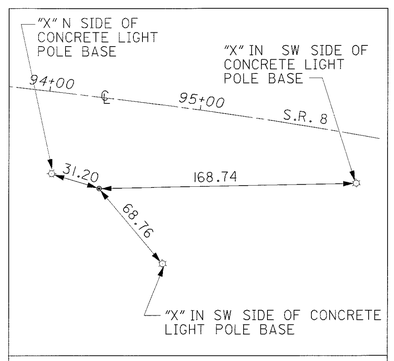

PC STA. 94+39.98, 60' RT, ℄ S.R. 8

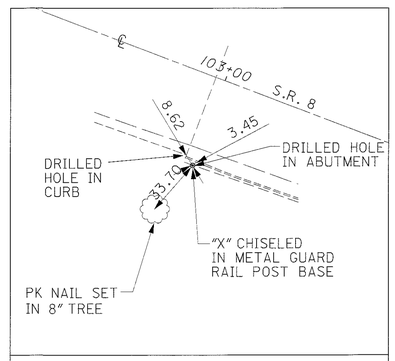

STA. 103+00, ℄ S.R. 8, 60' RT, ℄ S.R. 8

S.R. 8 REFERENCE TIES

N

HORIZONTAL SCALE IN FEET
0 50 100

REFERENCE TIES - S.R. 8

SUM-8-0.63

6
1088

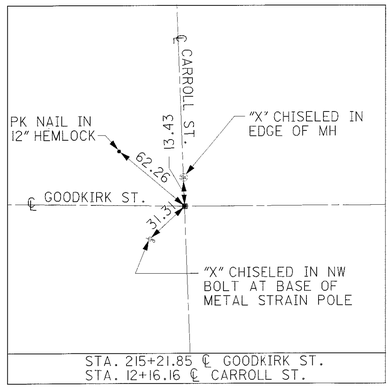

STA. 215+21.85 ℄ GOODKIRK ST.
STA. 12+16.16 ℄ CARROLL ST.

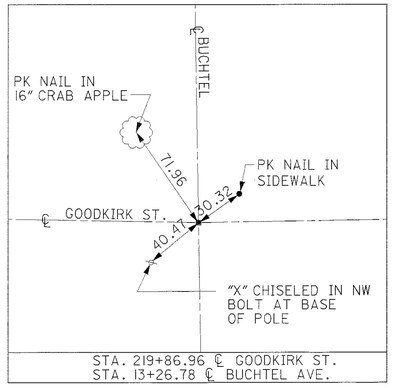

STA. 219+86.96 ℄ GOODKIRK ST.
STA. 13+26.78 ℄ BUCHTEL AVE.

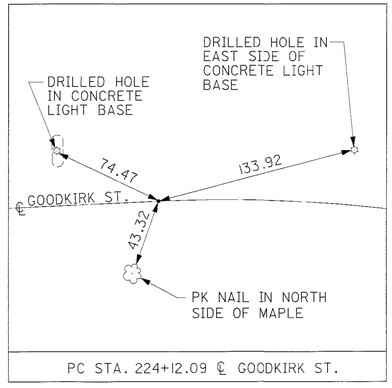

PC STA. 224+12.09 ℄ GOODKIRK ST.

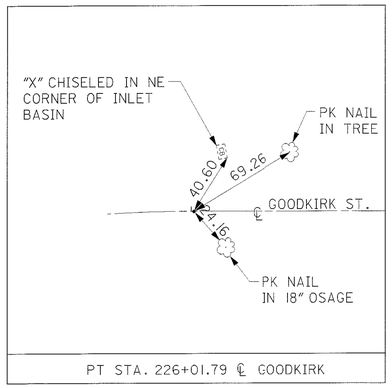

PT STA. 226+01.79 ℄ GOODKIRK

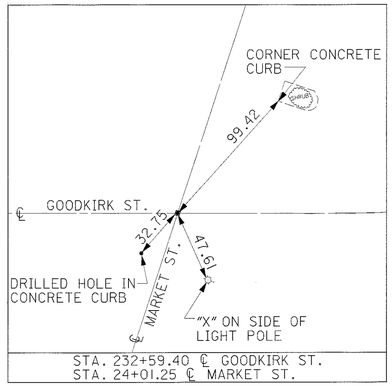

STA. 232+59.40 ℄ GOODKIRK ST.
STA. 24+01.25 ℄ MARKET ST.

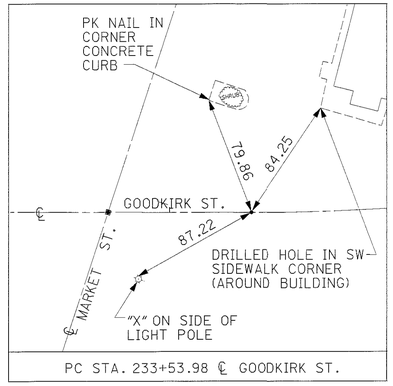

PC STA. 233+53.98 ℄ GOODKIRK ST.

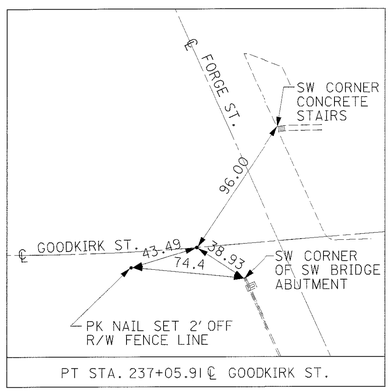

PT STA. 237+05.91 ℄ GOODKIRK ST.

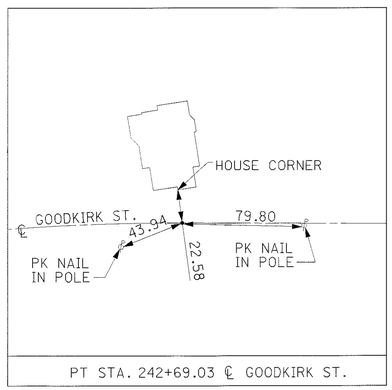

PT STA. 242+69.03 ℄ GOODKIRK ST.

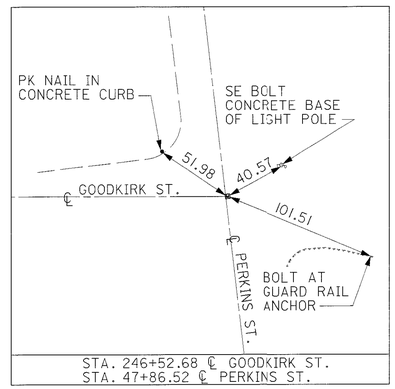

STA. 246+52.68 ℄ GOODKIRK ST.
STA. 47+86.52 ℄ PERKINS ST.

GOODKIRK ST. REFERENCE TIES

N

HORIZONTAL SCALE IN FEET
0 50 100

REFERENCE TIES - GOODKIRK ST.

SUM-8-0.63

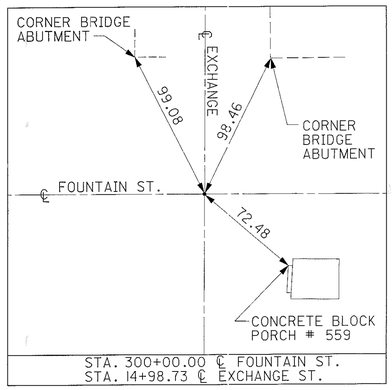

STA. 300+00.00 ℄ FOUNTAIN ST.
STA. 14+98.73 ℄ EXCHANGE ST.

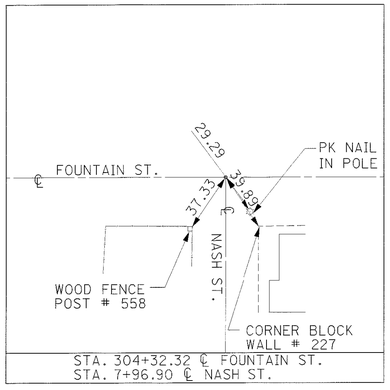

STA. 304+32.32 ℄ FOUNTAIN ST.
STA. 7+96.90 ℄ NASH ST.

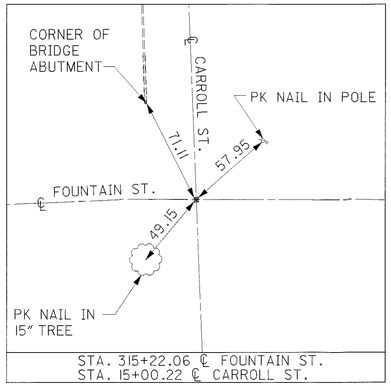

STA. 315+22.06 ℄ FOUNTAIN ST.
STA. 15+00.22 ℄ CARROLL ST.

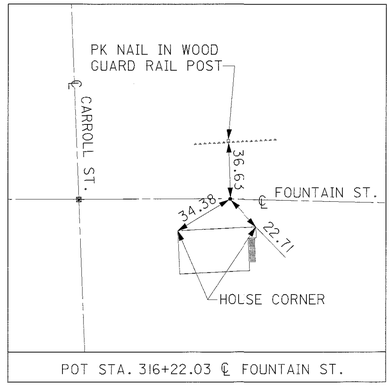

POT STA. 316+22.03 ℄ FOUNTAIN ST.

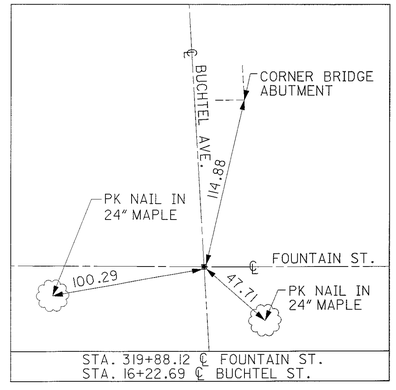

STA. 319+88.12 ℄ FOUNTAIN ST.
STA. 16+22.69 ℄ BUCHTEL ST.

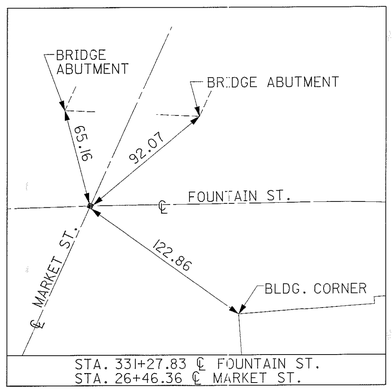

STA. 331+27.83 ℄ FOUNTAIN ST.
STA. 26+46.36 ℄ MARKET ST.

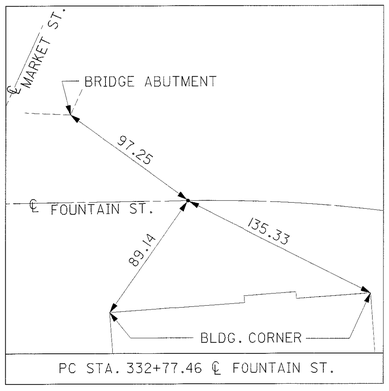

PC STA. 332+77.46 ℄ FOUNTAIN ST.

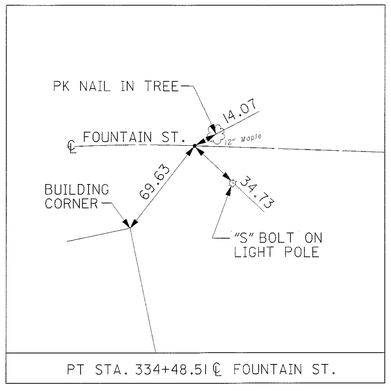

PT STA. 334+48.51 ℄ FOUNTAIN ST.

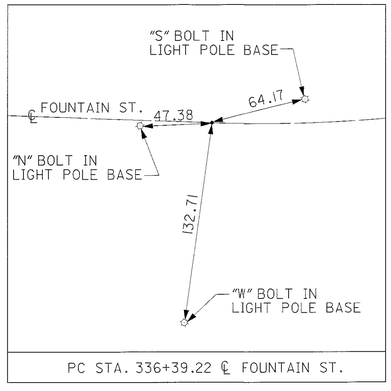

PC STA. 336+39.22 ℄ FOUNTAIN ST.

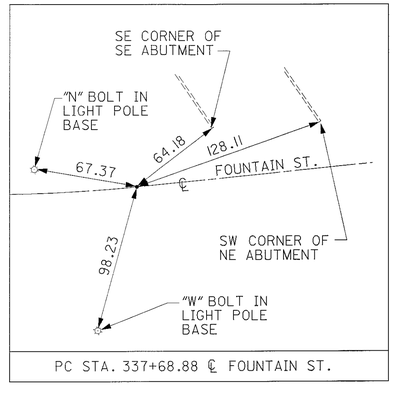

PC STA. 337+68.88 ℄ FOUNTAIN ST.

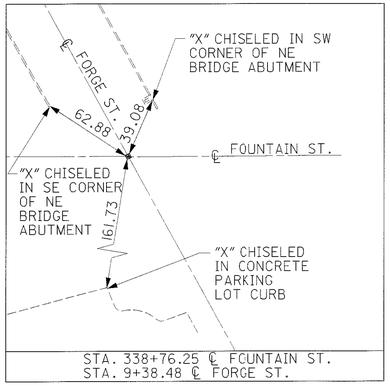

STA. 338+76.25 ℄ FOUNTAIN ST.
STA. 9+38.48 ℄ FORGE ST.

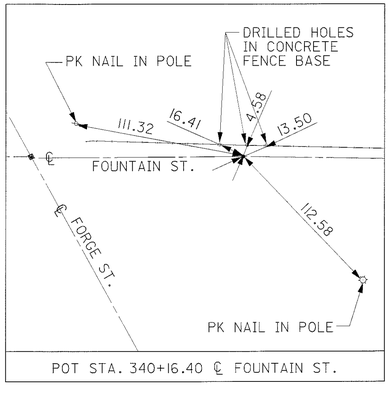

POT STA. 340+16.40 ℄ FOUNTAIN ST.

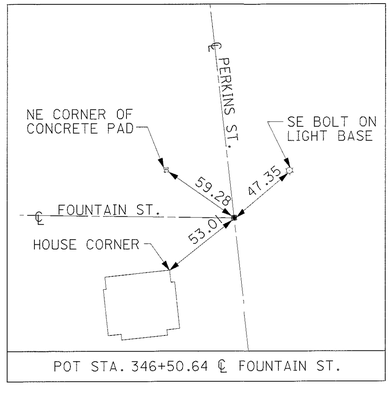

POT STA. 346+50.64 ℄ FOUNTAIN ST.

FOUNTAIN ST. REFERENCE TIES

N

0 50 100 HORIZONTAL SCALE IN FEET

REFERENCE TIES - FOUNTAIN ST.

SUM-8-0.63

8
1088

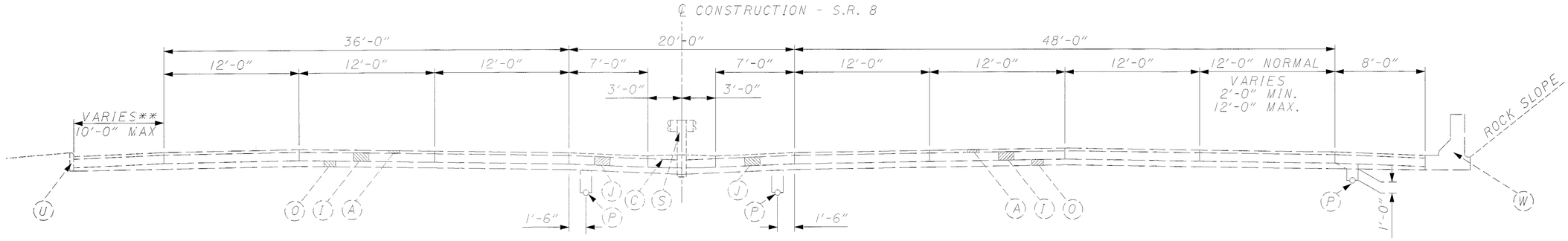

** - VARIES 2'-6" TO 10'-0"

S.R. 8

STA. 23+96.62 TO STA. 32+39.63 (RIGHT SIDE ONLY) = 843.01 LIN. FT.
**STA. 31+05 TO STA. 32+53.54 (LEFT SIDE ONLY) = 148.54 LIN. FT.
STA. 32+53.54 TO STA. 46+52.60 (LEFT SIDE ONLY) = 1399.20 LIN. FT.
STA. 32+39.63 TO STA. 33+72.60 = 132.97 LIN. FT.
STA. 35+05.66 TO STA. 45+61.10 = 1055.44 LIN. FT.
STA. 46+52.60 TO STA. 51+57.66 (RIGHT SIDE ONLY) = 505.06 LIN. FT.

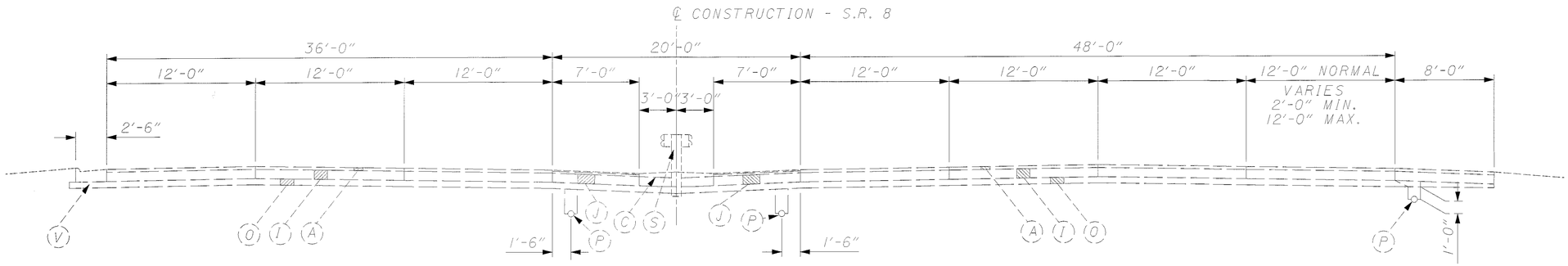

S.R. 8

STA. 23+96.62 TO STA. 31+05 (LEFT SIDE ONLY) = 708.38 LIN. FT.
STA. 46+52.60 TO STA. 51+57.66 (LEFT SIDE ONLY) = 505.06 LIN. FT.
STA. 51+57.66 TO STA. 57+35.63 = 577.97 LIN. FT.

EXISTING LEGEND

- (A) EXISTING 3" (AVG.) ASPHALT CONCRETE
- (C) EXISTING CONCRETE MEDIAN
- (I) EXISTING 9" (AVG.) CONCRETE BASE
- (J) EXISTING POROUS AGGREGATE BASE COURSE
- (O) EXISTING SUBBASE, 6" MIN. (AVG.)
- (P) EXISTING UNDERDRAIN
- (S) EXISTING GUARDRAIL, BARRIER TYPE 5
- (U) EXISTING CURB, TYPE 6
- (V) EXISTING CURB AND GUTTER
- (W) EXISTING CONCRETE BARRIER

EXISTING TYPICAL SECTIONS - S.R. 8

SUM-8-0.63

i:\projects\9922100\civil\ts\gy001.dgn

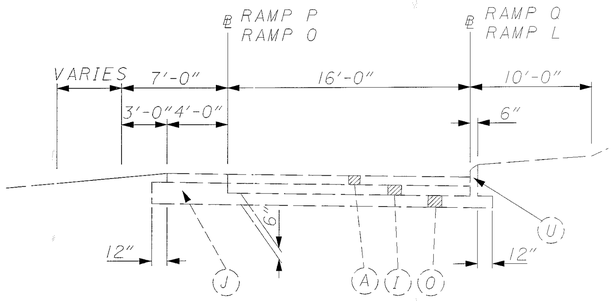

RAMP "L"

RAMP "O"

RAMP "P"

RAMP "Q"

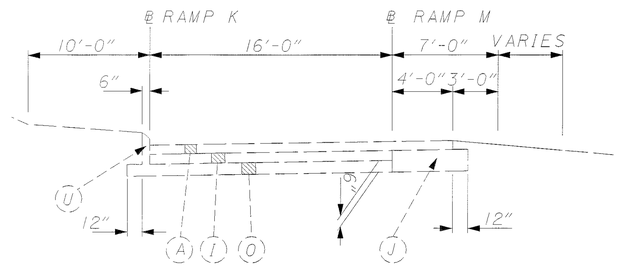

RAMP "K"

RAMP "M"

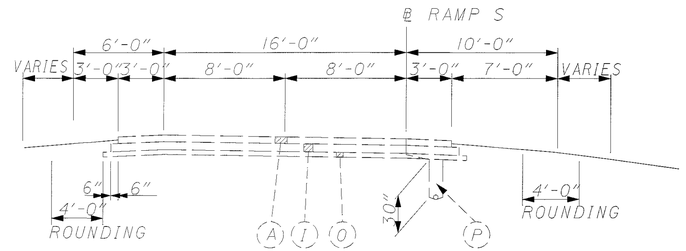

RAMP "S"

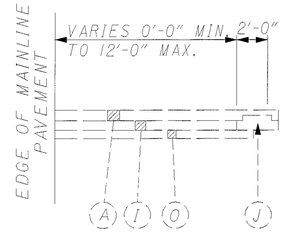

RAMP "S" ACCELERATION/DECELERATION LANES

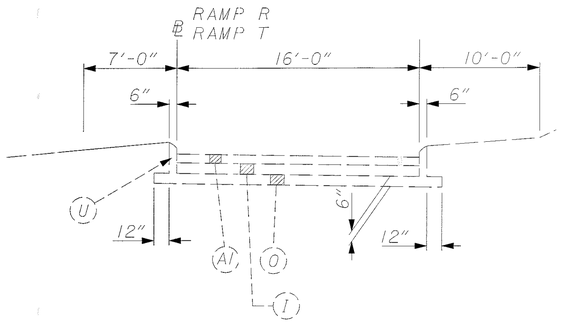

RAMP "R"

RAMP "T"

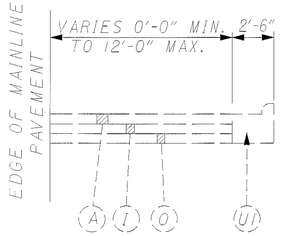

RAMP ACCELERATION/DECELERATION LANE

RAMPS: K, L, M, O, P, Q, R, T

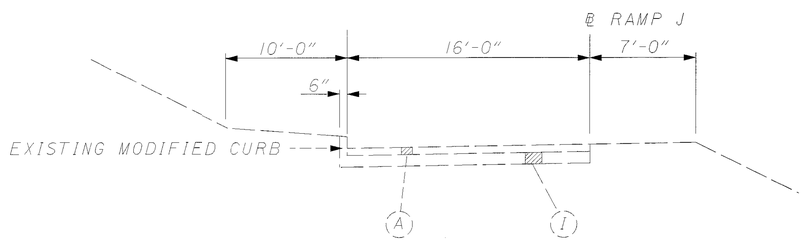

RAMP "J"

RAMP "I"

RAMP "I" IS MIRROR IMAGE OF RAMP "J".

EXISTING LEGEND

- (A) EXISTING 3" (AVG.) ASPHALT CONCRETE
- (AI) EXISTING 1¾" (AVG.) ASPHALT CONCRETE
- (I) EXISTING 9 " (AVG.) CONCRETE BASE
- (J) EXISTING POROUS AGGREGATE BASE COURSE
- (O) EXISTING SUBBASE 6" MIN. (AVG.)
- (P) EXISTING UNDERDRAIN
- (U) EXISTING CURB, TYPE 6
- (UI) EXISTING CURB, TYPE 2A

EXISTING TYPICAL SECTIONS - RAMPS I,J,K,L,M,N,O,P,Q,R,S,T

SUM-8-0.63

10
1088

i:\projects\9922100\civil\ts\gy001.dgn

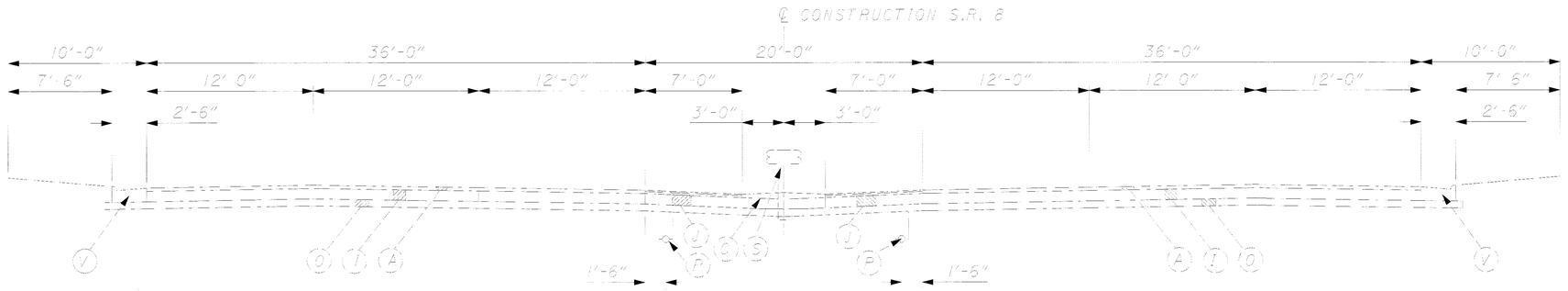

S.R. 8

STA. 57+35.63 TO STA. 91+30.63 = 3395.00 LIN. FT.

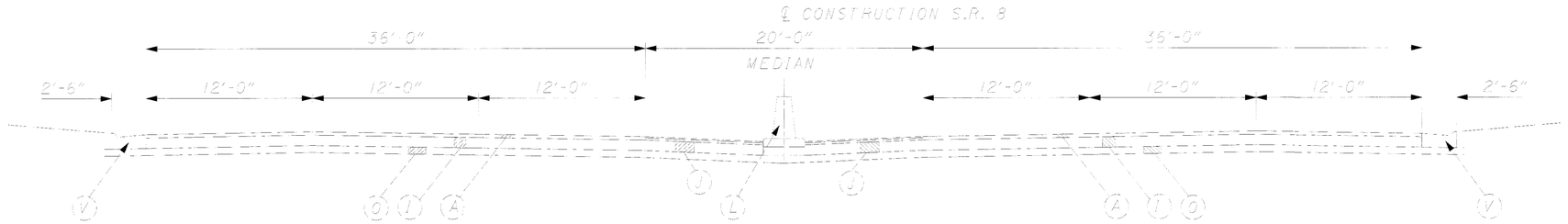

S.R. 8

STA. 91+30.63 TO STA. 97+23.13 (LEFT SIDE ONLY) = 592.50 LIN. FT.
STA. 91+30.63 TO STA. 97+62.08 (RIGHT SIDE ONLY) = 631.45 LIN. FT.

EXISTING LEGEND

- (A) EXISTING 3" (AVG.) ASPHALT CONCRETE
- (C) EXISTING CONCRETE MEDIAN PAVEMENT
- (I) EXISTING 9" (AVG.) CONCRETE BASE
- (J) EXISTING POROUS AGGREGATE BASE COURSE
- (L) EXISTING CONCRETE BARRIER MEDIAN
- (O) EXISTING SUBBASE, 6" (AVG.) MIN.
- (P) EXISTING UNDERDRAIN
- (S) EXISTING GUARDRAIL, BARRIER TYPE 5
- (V) EXISTING CURB & GUTTER

EXISTING TYPICAL SECTIONS - S.R. 8

SUM-8-0.63

i:\projects\9922001\civil\ts\gy00.dgn

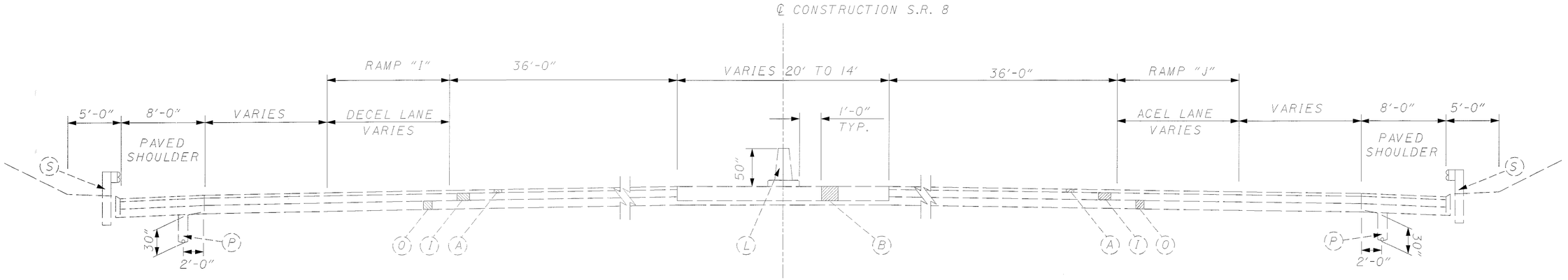

S.R. 8

STA. 97+23.13 TO STA. 101+09.63 (LEFT SIDE ONLY) = 385.60 LIN. FT.
STA. 97+62.08 TO STA. 101+09.63 (RIGHT SIDE ONLY) = 347.55 LIN. FT.
STA. 91+30.63 TO STA. 97+23.13 (MEDIAN ONLY) = 592.50 LIN. FT.

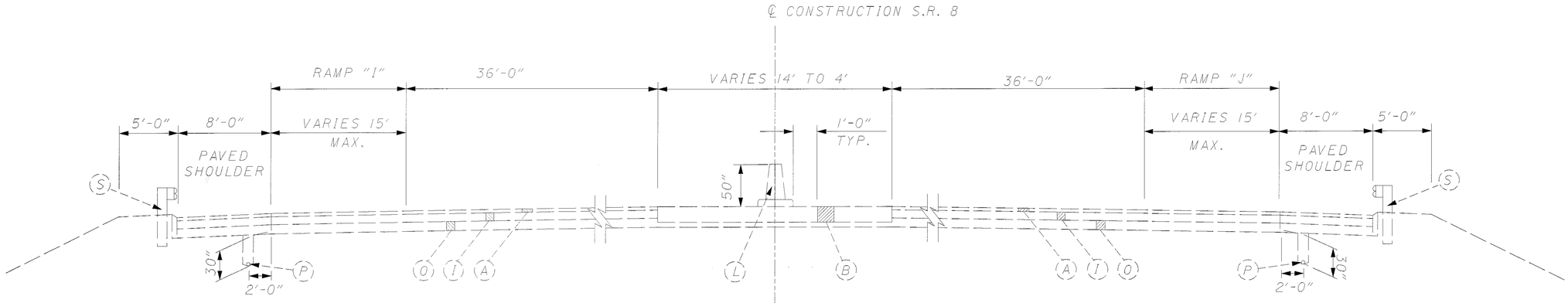

S.R. 8

STA. 101+09.63 TO STA. 102+24.03 (LEFT SIDE ONLY) = 114.40 LIN. FT.
STA. 101+09.63 TO STA. 102+24.03 (RIGHT SIDE ONLY) = 114.40 LIN. FT.
STA. 97+23.13 TO STA. 102+24.03 (MEDIAN ONLY) = 500.90 LIN. FT.

EXISTING LEGEND

(A) EXISTING 3" (AVG.) ASPHALT CONCRETE

(B) EXISTING 9" (AVG.) REINFORCED CONCRETE PAVEMENT

(I) EXISTING 9 " (AVG.) CONCRETE BASE

(L) EXISTING CONCRETE BARRIER MEDIAN

(O) EXISTING SUBBASE, 6" (AVG.) MIN.

(P) EXISTING UNDERDRAIN

(S) EXISTING GUARDRAIL, BARRIER TYPE 5

EXISTING TYPICAL SECTIONS - S.R. 8

SUM-8-0.63

12
1088

i:\projects\992100\civil\ts\gy001.dgn

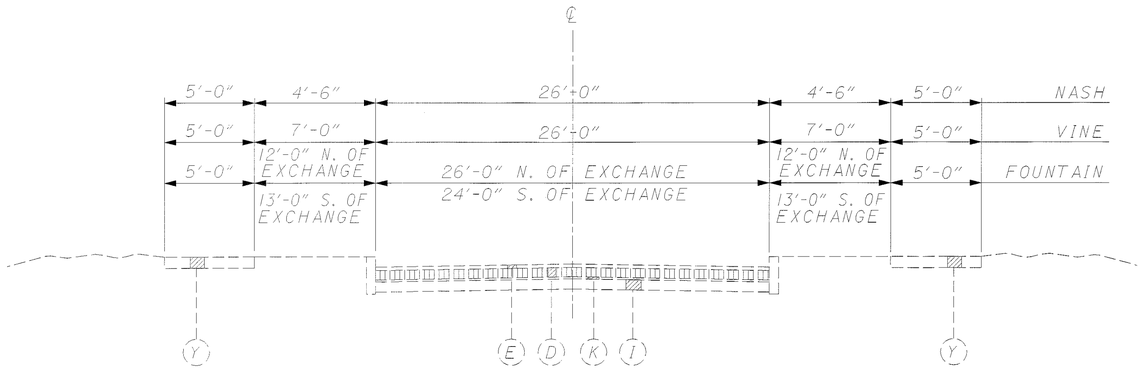

NASH, VINE, AND FOUNTAIN ST.

NASH ST.

(WEST) STA. 2+00.00 TO STA. 5+00.00 = 300.00 LIN. FT.

(EAST) STA. 7+96.90 TO STA. 11+00.00 = 303.10 LIN. FT.

VINE ST.

STA. 2+00.00 TO STA. 5+00.00 = 300.00 LIN. FT.

FOUNTAIN ST.

STA. 300+91.00 TO STA. 315+22.06 = 1522.06 LIN. FT.

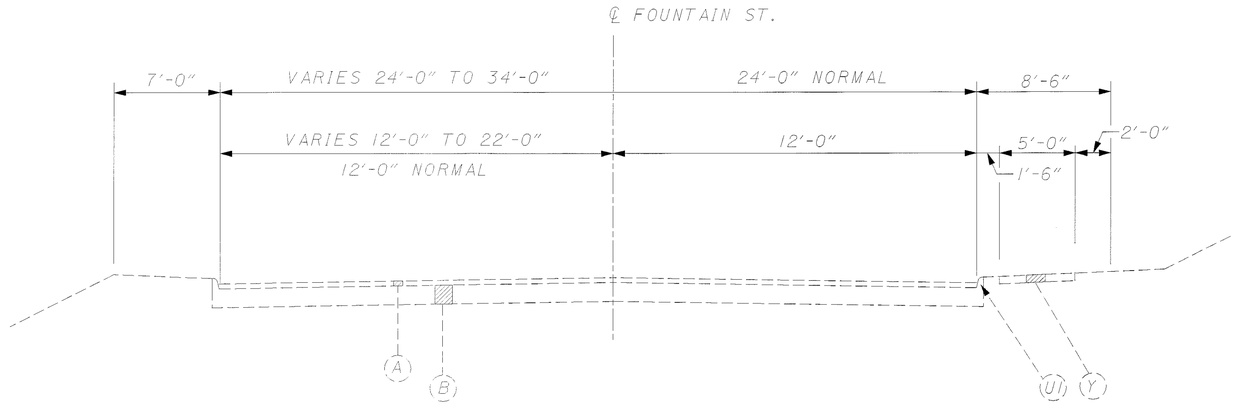

FOUNTAIN ST.

STA. 315+22.06 TO STA. 319+88.12 = 466.06 LIN. FT.

EXISTING LEGEND

(A) EXISTING 3" (AVG.) ASPHALT CONCRETE

(B) EXISTING 9" (AVG.) REINFORCED CONCRETE PAVEMENT

(D) EXISTING 4" BRICK

(E) EXISTING 3" (AVG.) ASPHALT

(I) EXISTING 4" (AVG.) CONCRETE BASE

(K) EXISTING 1" (AVG.) SAND

(UI) EXISTING CURB, TYPE 2A

(Y) EXISTING 4" CONCRETE WALK

EXISTING TYPICAL SECTIONS - VINE, NASH, AND FOUNTAIN ST.

SUM-8-0.63

13
1088

i:/projects/9922101/civil/ts/gy002.dgn

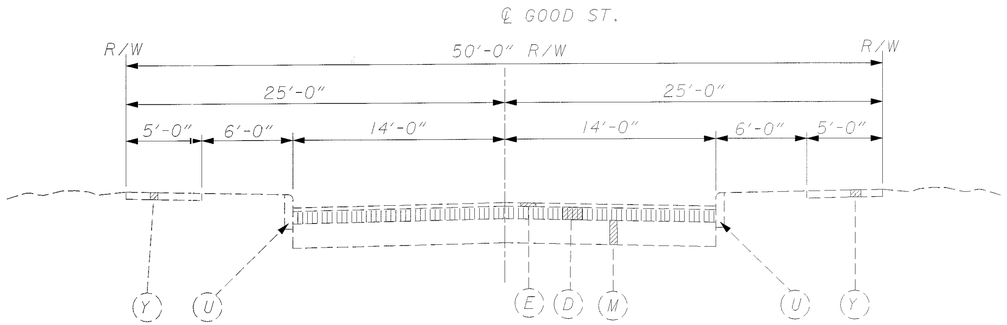

GOOD ST.

FORGE ST. TO PERKINS ST. = APPROX. 878 LIN. FT.

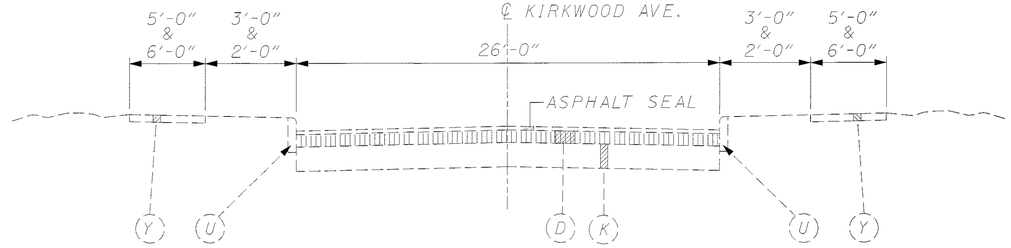

KIRKWOOD AVE.

HAMILTON AVE. TO PERKINS ST. = APPROX. 574 LIN. FT.

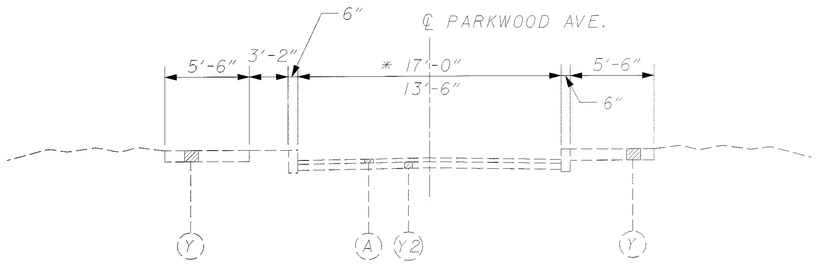

PARKWOOD AVE.

* STA. 1+14.88 TO STA. 4+13.95 = 299.07 LIN. FT.
STA. 4+13.95 TO STA. 5+00.00 = 86.05 LIN. FT.

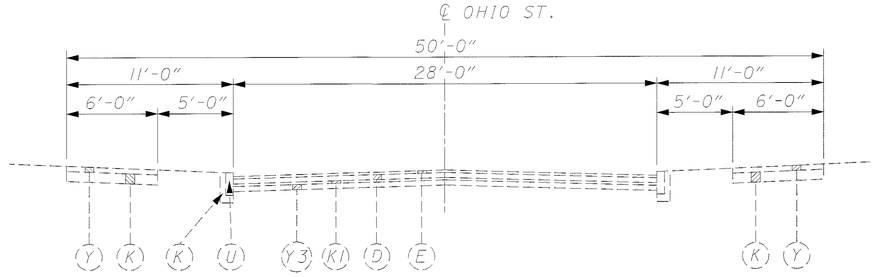

OHIO ST.

STA. 504+59.11 TO STA. 507+00.00 = 240.89 LIN. FT.

EXISTING LEGEND

- (A) EXISTING 3" (AVG.) ASPHALT CONCRETE
- (D) EXISTING 4" BRICK
- (E) EXISTING 3" (AVG.) ASPHALT
- (K) EXISTING SAND
- (K1) EXISTING 2" SAND
- (M) EXISTING 12" (AVG.) SLAG BASE
- (U) EXISTING CURB
- (Y) EXISTING 4" CONCRETE WALK
- (Y2) EXISTING 5" AGGREGATE BASE
- (Y3) EXISTING 4" CONCRETE BASE

EXISTING TYPICAL SECTIONS - GOOD, KIRKWOOD, PARKWOOD, AND OHIO

SUM-8-0.63

14
1088

i:/projects/9922100/civil/ts/gy005.dgn

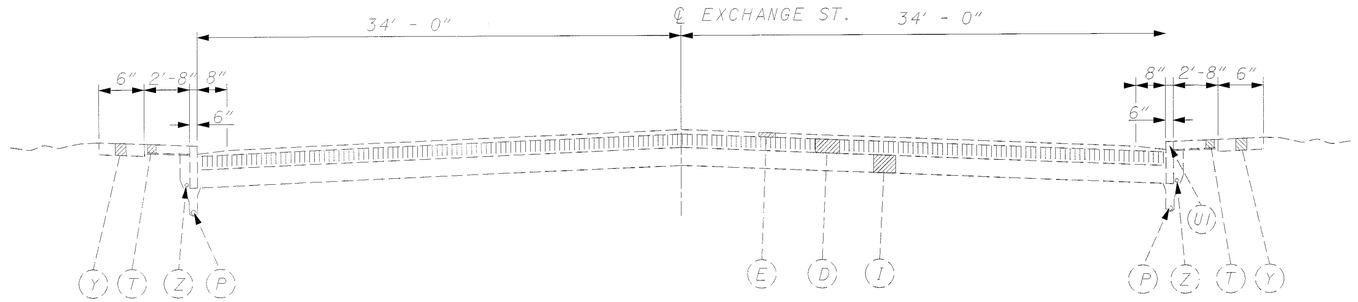

EXCHANGE ST.

STA. 11+00.00 TO STA. 16+50.00 = 550 LIN. FT.

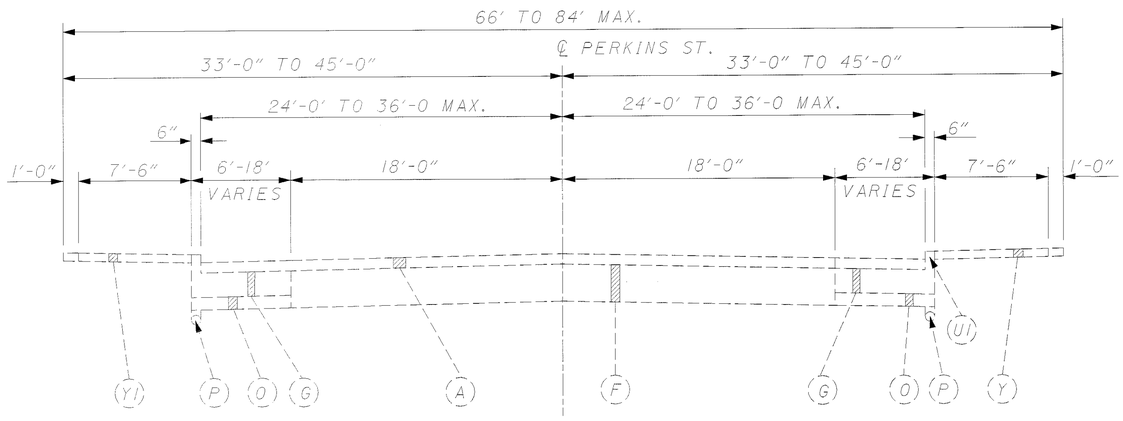

PERKINS ST.

STA. 46+50.00 TO STA. 53+00.00 = 650 LIN. FT.

EXISTING LEGEND

(A) EXISTING 3" (AVG.) ASPHALT CONCRETE
(D) EXISTING 4" BRICK
(E) EXISTING 3" (AVG.) ASPHALT
(F) EXISTING 9" (AVG.) REINFORCED CONCRETE
(G) EXISTING 8" (AVG.) REINFORCED CONCRETE
(I) EXISTING 6" (AVG.) CONCRETE BASE
(O) EXISTING SUBBASE
(P) EXISTING UNDERDRAIN
(T) EXISTING BRICK WALK
(UI) EXISTING CURB
(Y) EXISTING 6" CONCRETE WALK
(Z) EXISTING 2" STREET LIGHT CONDUIT

EXISTING TYPICAL SECTIONS - PERKINS AND EXCHANGE

SUM-8-0.63

15
1088

i:/projects/9922l001/civil/ts/gy004.dgn

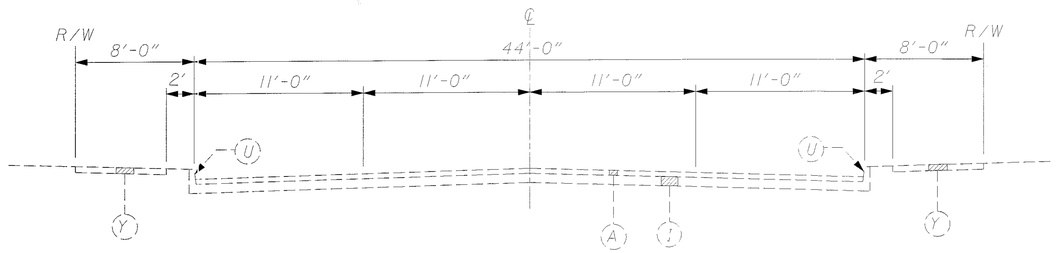

BUCHTEL AVE.

STA. 12+07.78 TO STA. 17+25.38 = 517.60 LIN. FT.

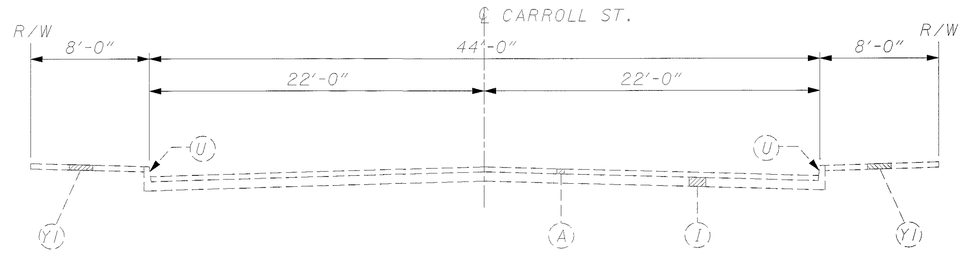

CARROLL ST.

STA. 11+14.22 TO STA. 16+06.90 = 492.68 LIN. FT.

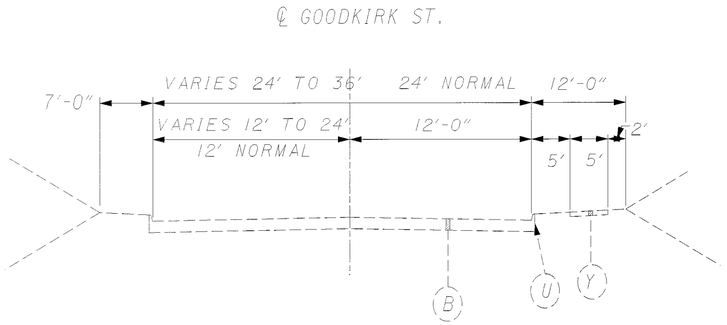

GOODKIRK ST.

STA. 192+19.83 TO STA. 219+86.96 = 2767.13 LIN. FT.

EXISTING LEGEND

- (A) EXISTING 3" (AVG.) ASPHALT CONCRETE
- (B) EXISTING 9" (AVG) REINFORCED CONCRETE PAVEMENT
- (I) EXISTING 9" (AVG.) CONCRETE BASE
- (U) EXISTING CURB, TYPE 2-B
- (Y) EXISTING 4" CONCRETE WALK
- (YI) EXISTING 6" CONCRETE WALK

EXISTING TYPICAL SECTIONS - CARROLL, BUCHTEL AND GOODKIRK

SUM-8-0.63

16
1088

i:/projects/9922100/civil/ts/gy007.dgn

EXISTING TYPICAL SECTIONS - EWING, ADOLPH AND ORCHARD ST.

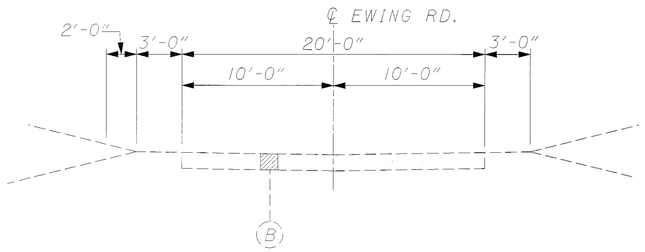

EWING RD.

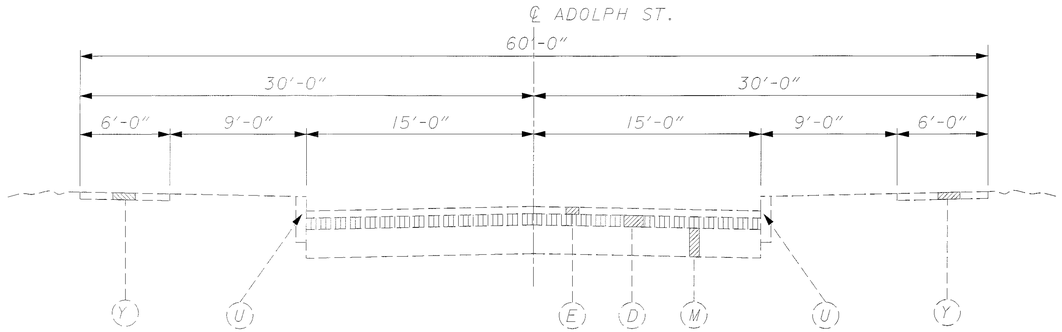

ADOLPH ST. SOUTH OF PERKINS ST.

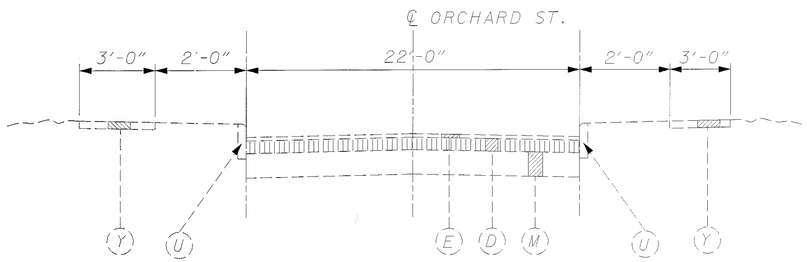

ORCHARD ST.

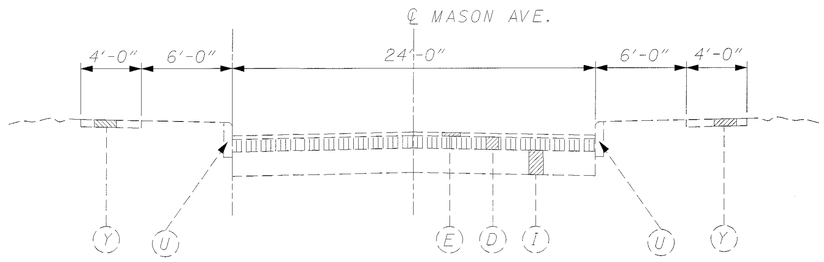

MASON AVE.

EXISTING LEGEND

(B) EXISTING 9" (AVG.) REINFORCED CONCRETE PAVEMENT

(D) EXISTING 4" BRICK

(E) EXISTING 3" (AVG.) ASPHALT

(I) EXISTING 4" (AVG.) CONCRETE BASE

(M) EXISTING 12" (AVG.) SLAG BASE

(U) EXISTING SANDSTONE CURB

(Y) EXISTING CONCRETE WALK

SUM-8-0.63

17
1088

i:\projects\9922100\civil\ts\gy008.dgn

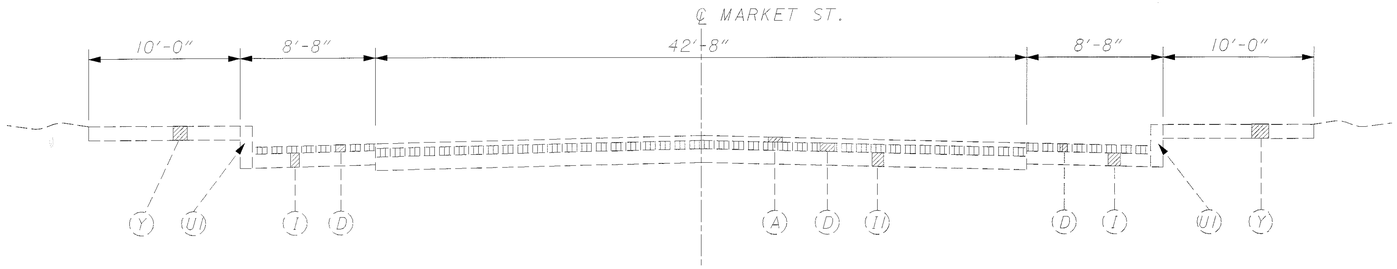

MARKET STREET

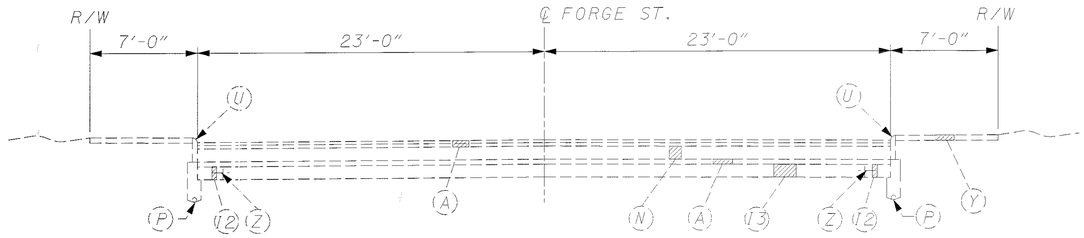

FORGE STREET

WEST OF GOOD ST. TO WEST OF ADOLPH AVE.

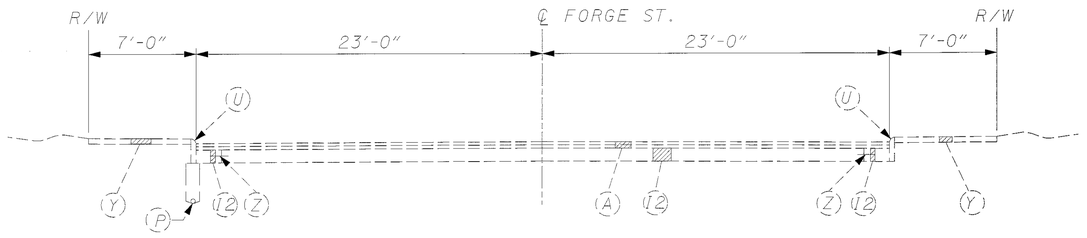

FORGE STREET

WEST OF ADOLPH AVE. TO EAST OF ADOLPH AVE.

EXISTING LEGEND

(A) EXISTING 3" (AVG.) ASPHALT CONCRETE
(D) EXISTING 4" BRICK
(I) EXISTING 6" (AVG.) CONCRETE BASE
(II) EXISTING 7" (AVG.) CONCRETE BASE
(I2) EXISTING 9" (AVG.) CONCRETE BASE
(I3) EXISTING 9" (AVG.) REINFORCED CONCRETE
(N) EXISTING BITUMINOUS AGGREGATE BASE (13½" TO 2" DEPTH)
(P) EXISTING UNDERDRAIN
(U) EXISTING CURB, TYPE 6
(UI) EXISTING LIMESTONE CURB
(Y) EXISTING 6" CONCRETE WALK
(Z) EXISTING NO. 4 DOWELL BARS

i:/projects/ 9922001/civil/dwgs/ts/gy006.dgn

EXISTING TYPICAL SECTIONS - FORGE AND MARKET ST.

SUM-8-0.63

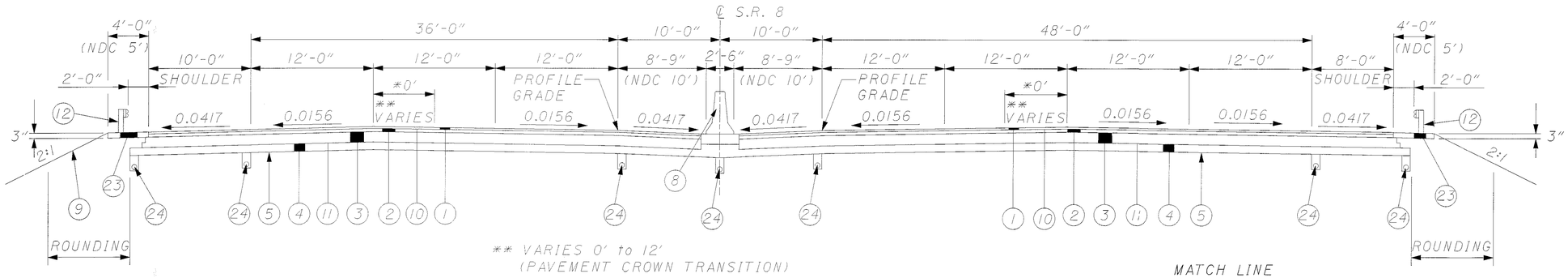

** VARIES 0' to 12'
(PAVEMENT CROWN TRANSITION)

NORMAL SECTION - S.R. 8

* STA. 32+75.00 TO STA. 33+46.26 = 71.26 LIN. FT.
* STA. 35+29.32 TO STA. 36+00.00 = 70.68 LIN. FT.
** STA. 36+00.00 TO STA. 37+00.00 = 100 LIN. FT.

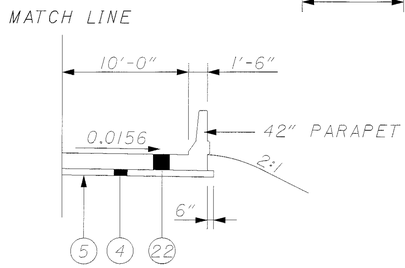

APPROACH SLAB - SHOULDER DETAIL

† STA. 33+47.60 TO STA. 33+72.60 (RT) = 25.00 LIN. FT.

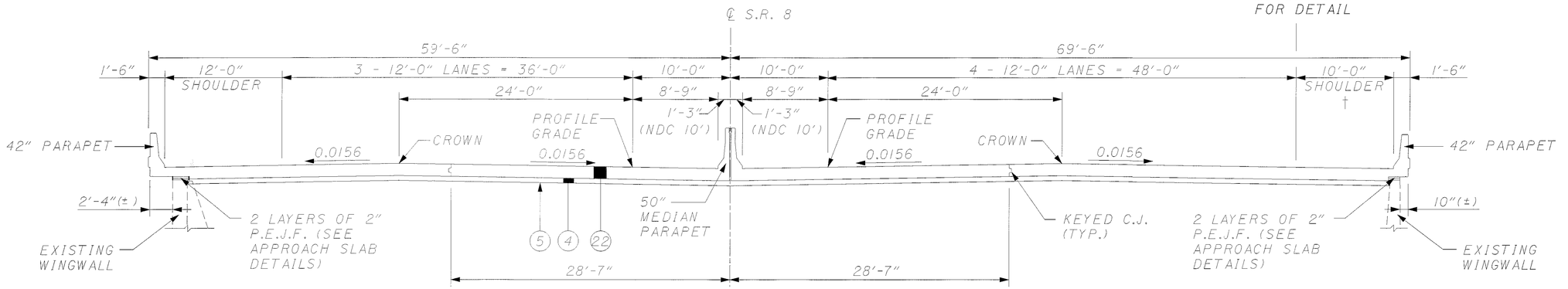

APPROACH SLAB SECTION - S.R. 8

† STA. 33+46.26 TO STA. 33+71.26 = 25.00 LIN. FT.
STA. 35+04.32 TO STA. 35+29.32 = 25.00 LIN. FT.

FOR APPROACH SLAB DETAILS,
SEE SHEET 547-561

LEGEND

(1) ITEM 446, 1½" ASPHALT CONCRETE SURFACE COURSE, TYPE 1H
(2) ITEM 446, 1¾" ASPHALT CONCRETE INTERMEDIATE COURSE, TYPE 2, PG64-28
(3) ITEM 302, 9½" BITUMINOUS AGGREGATE BASE, PG64-22
(4) ITEM 304, 6" AGGREGATE BASE
(5) ITEM 203, SUBGRADE COMPACTION
(6) SS 830, CURB, TYPE 6
(8) ITEM 622, CONCRETE BARRIER, TYPE B1
(9) SS 870, SEEDING AND MULCHING
(10) ITEM 407, TACK COAT FOR INTERMEDIATE COURSE
(11) ITEM 408, BITUMINOUS PRIME COAT
(12) ITEM 606, GUARDRAIL, TYPE 5
(13) ITEM 622, CONCRETE BARRIER, TYPE D
(22) ITEM 611, REINFORCED CONCRETE APPROACH SLAB (T=15")
(23) ITEM 448, ASPHALT CONCRETE INTERMEDIATE COURSE, TYPE 1, UNDER GUARDRAIL, PG 64-22
(24) ITEM 605, 6" SHALLOW PIPE UNDERDRAIN WITH FABRIC WRAP (18" DEEP)

† STA. 60+90.00 TO STA. 102+70.38
IN ROCK CUT: ITEM 605,
6" ROCK CUT UNDERDRAIN
WITH FABRIC WRAP (12" DEEP)

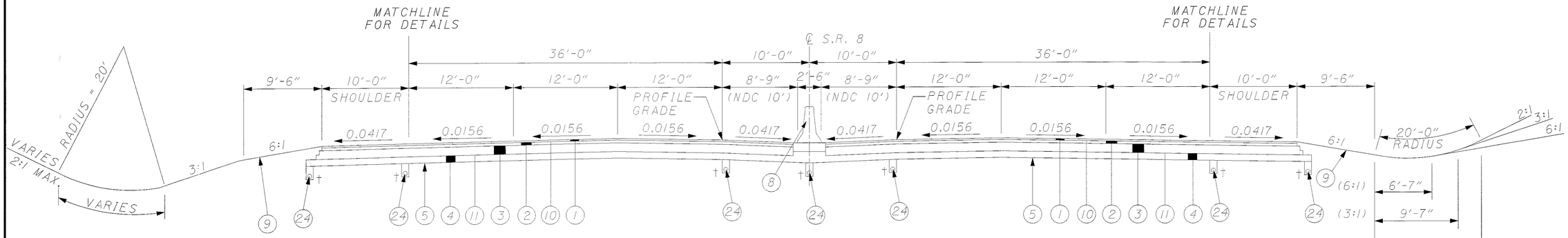

NORMAL SECTION - S.R. 8

STA. 37+00.00 TO STA. 45+37.38 = 837.38 LIN. FT.
STA. 46+68.88 TO STA. 92+20.78 = 4551.90 LIN. FT.
STA. 92+20.78 TO STA. 92+84.78 (RIGHT SIDE ONLY) = 64.00 LIN. FT.

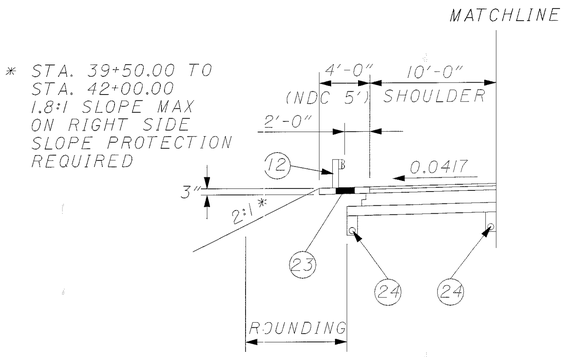

GUARDRAIL DETAIL

STA. 37+00.00 TO STA. 45+37.83 (BOTH SIDES) = 837.83 LIN. FT.
STA. 46+69.33 TO STA. 48+50.00 (BOTH SIDES) = 180.67 LIN. FT.
STA. 48+50.00 TO STA. 51+50.00 (RIGHT SIDE) = 300.00 LIN. FT.

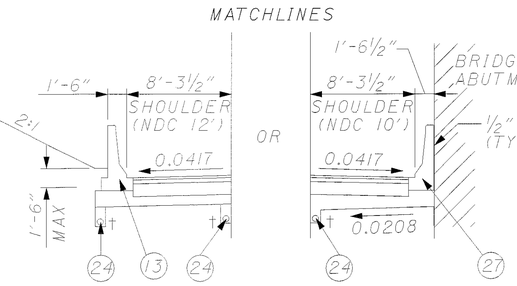

BARRIER DETAIL

STA. 60+80.40 TO STA. 61+58.98 (RIGHT SIDE) = 78.58 LIN. FT.
STA. 60+91.95 TO STA. 66+34.26 (LEFT SIDE) = 657.69 LIN. FT.
STA. 65+46.50 TO STA. 66+26.69 (RIGHT SIDE) = 81.19 LIN. FT.
STA. 92+09.97 TO STA. 92+95.98 (LEFT SIDE) = 86.01 LIN. FT.
STA. 92+10.77 TO STA. 92+96.78 (RIGHT SIDE) = 86.01 LIN. FT.

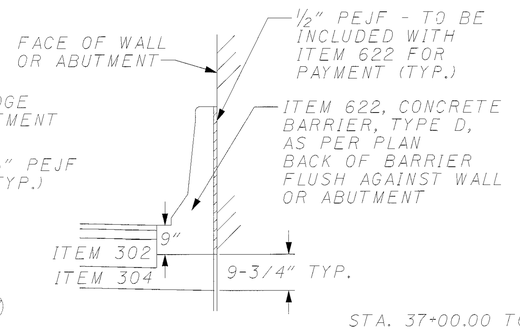

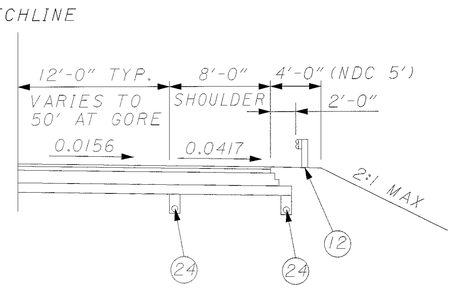

DROP LANE DETAIL

STA. 37+00.00 TO STA. 51+50.00 (RIGHT SIDE ONLY) = 1450 LIN. FT.

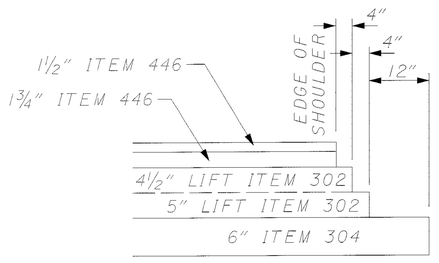

PAVEMENT DETAIL

LEGEND

(1) ITEM 446, 1½" ASPHALT CONCRETE SURFACE COURSE, TYPE IH

(2) ITEM 446, 1¾" ASPHALT CONCRETE INTERMEDIATE COURSE, TYPE 2, PG64-28

(3) ITEM 302, 9½" BITUMINOUS AGGREGATE BASE, PG64-22

(4) ITEM 304, 6" AGGREGATE BASE

(5) ITEM 203, SUBGRADE COMPACTION

(6) SS 830, CURB, TYPE 6

(8) ITEM 622, CONCRETE BARRIER, TYPE BI

(9) SS 870, SEEDING AND MULCHING

(10) ITEM 407, TACK COAT FOR INTERMEDIATE COURSE

(11) ITEM 408, BITUMINOUS PRIME COAT

(12) ITEM 606, GUARDRAIL, TYPE 5

(13) ITEM 622, CONCRETE BARRIER, TYPE D

(23) ITEM 448, ASPHALT CONCRETE INTERMEDIATE COURSE, TYPE 1, UNDER GUARDRAIL, PG 64-22

(24) ITEM 605, 6" SHALLOW PIPE UNDERDRAIN WITH FABRIC WRAP (18" DEEP)

(27) ITEM 622, CONCRETE BARRIER, TYPE D, AS PER PLAN

TYPICAL SECTIONS - S.R. 8

SUM-8-0.63

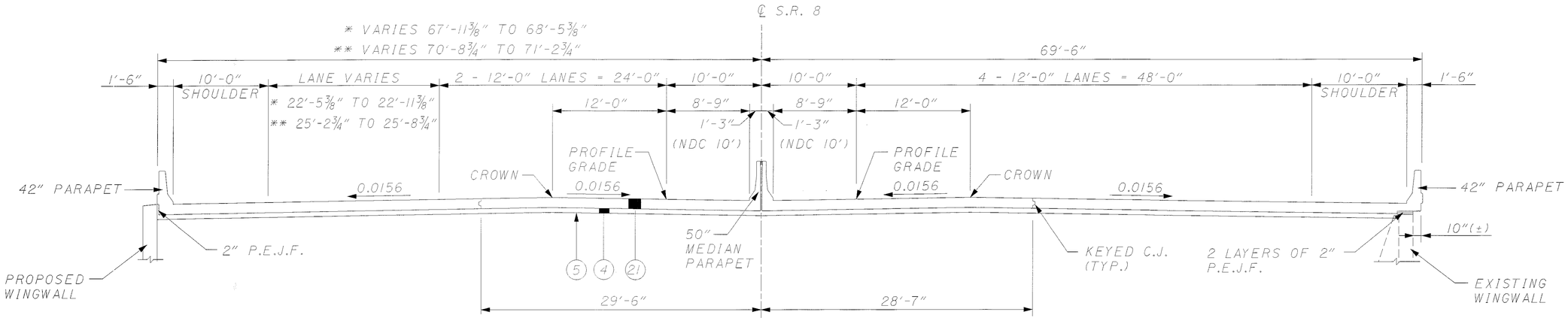

FOR APPROACH SLAB DETAILS, SEE SHEETS 547-561.

APPROACH SLAB SECTION - S.R. 8

* STA. 45+37.38 TO STA. 45+57.38 = 20.00 LIN. FT.
** STA. 46+48.88 TO STA. 46+68.88 = 20.00 LIN. FT.

LEGEND

(1) ITEM 446, 1½" ASPHALT CONCRETE SURFACE COURSE, TYPE 1H

(2) ITEM 446, 1¾" ASPHALT CONCRETE INTERMEDIATE COURSE, TYPE 2, PG64-28

(3) ITEM 302, 9½" BITUMINOUS AGGREGATE BASE, PG64-22

(4) ITEM 304, 6" AGGREGATE BASE

(5) ITEM 203, SUBGRADE COMPACTION

(6) SS 830, CURB, TYPE 6

(8) ITEM 622, CONCRETE BARRIER, TYPE B1

(9) SS 870, SEEDING AND MULCHING

(10) ITEM 407, TACK COAT FOR INTERMEDIATE COURSE

(11) ITEM 408, BITUMINOUS PRIME COAT

(12) ITEM 606, GUARDRAIL, TYPE 5

(13) ITEM 622, CONCRETE BARRIER, TYPE D

(21) ITEM 611, REINFORCED CONCRETE APPROACH SLAB (T=13")

TYPICAL SECTIONS - S.R. 8

SUM-8-0.63

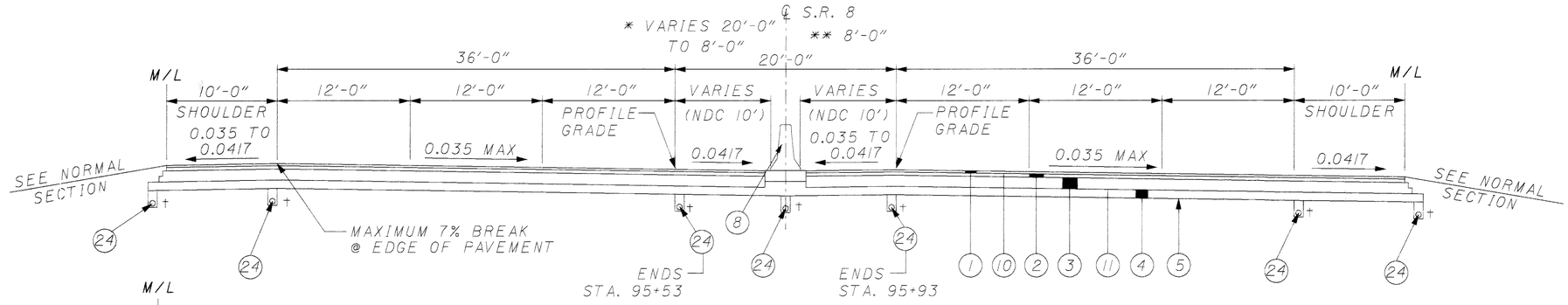

SUPERELEVATED SECTION - S.R. 8

STA. 92+20.78 TO STA. 93+91.74 (LEFT SIDE ONLY) = 170.96 LIN. FT.
STA. 92+84.78 TO STA. 92+96.78 (RIGHT SIDE ONLY) = 12 LIN. FT.
* STA. 93+91.74 TO STA. 101+63.60 (LEFT SIDE ONLY) = 771.86 LIN. FT.
* STA. 95+59.66 TO STA. 97+16.31 (RIGHT SIDE ONLY) = 156.65 LIN. FT.
** STA. 101+63.60 TO STA. 102+70.38 (LEFT SIDE ONLY) = 106.78 LIN. FT.

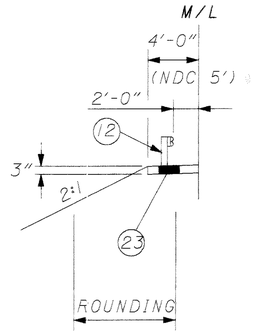

GUARDRAIL DETAIL

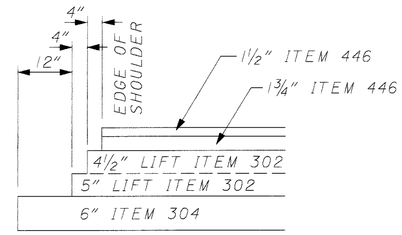

PAVEMENT DETAIL

STA. 101+50.00 TO STA. 102+70.38 (BOTH SIDES) = 120.38 LIN. FT.

† STA. 60+90.00 TO STA. 102+70.38 IN ROCK CUT: ITEM 605, 6" ROCK CUT UNDERDRAIN WITH FABRIC WRAP (12" DEEP)

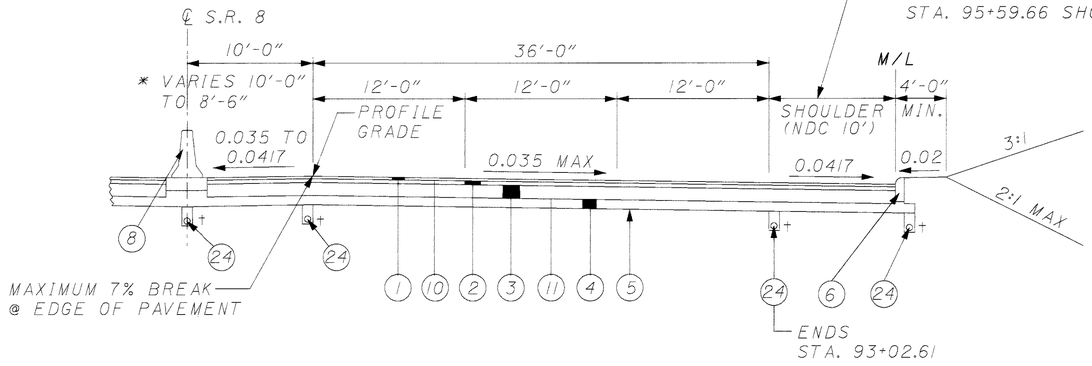

CURBED SUPERELEVATED SECTION - S.R. 8

STA. 92+96.78 TO STA. 94+64.60 (RIGHT SIDE ONLY) = 167.82 LIN. FT.
* STA. 94+64.60 TO STA. 95+59.66 (RIGHT SIDE ONLY) = 95.06 LIN. FT.
STA. 97+16.31 TO STA. 102+70.38 (RIGHT SIDE ONLY) = 554.07 LIN. FT.

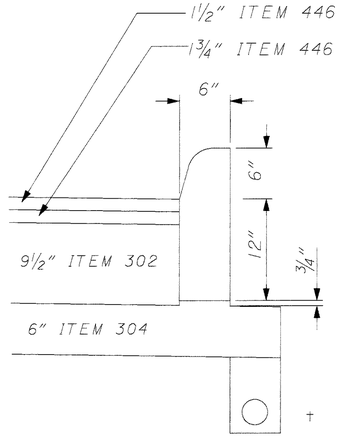

CURB DETAIL

LEGEND

1. ITEM 446, 1½" ASPHALT CONCRETE SURFACE COURSE, TYPE 1H
2. ITEM 446, 1¾" ASPHALT CONCRETE INTERMEDIATE COURSE, TYPE 2, PG64-28
3. ITEM 302, 9½" BITUMINOUS AGGREGATE BASE, PG64-22
4. ITEM 304, 6" AGGREGATE BASE
5. ITEM 203, SUBGRADE COMPACTION
6. SS 830, CURB, TYPE 6
8. ITEM 622, CONCRETE BARRIER, TYPE B1
10. ITEM 407, TACK COAT FOR INTERMEDIATE COURSE
11. ITEM 408, BITUMINOUS PRIME COAT
13. ITEM 622, CONCRETE BARRIER, TYPE D
23. ITEM 448, ASPHALT CONCRETE INTERMEDIATE COURSE, TYPE 1, UNDER GUARDRAIL, PG 64-22
24. ITEM 605, 6" SHALLOW PIPE UNDERDRAIN WITH FABRIC WRAP (18" DEEP)

REVISIONS: 05/15/2002 by EMS

TYPICAL SECTIONS - S.R. 8

SUM-8-0.63

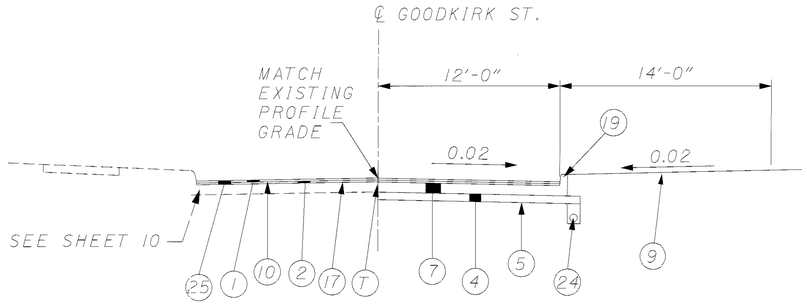

NORMAL SECTION- GOODKIRK STREET

STA. 192+80.00 TO STA. 199+40.38 = 660.38 LIN. FT.

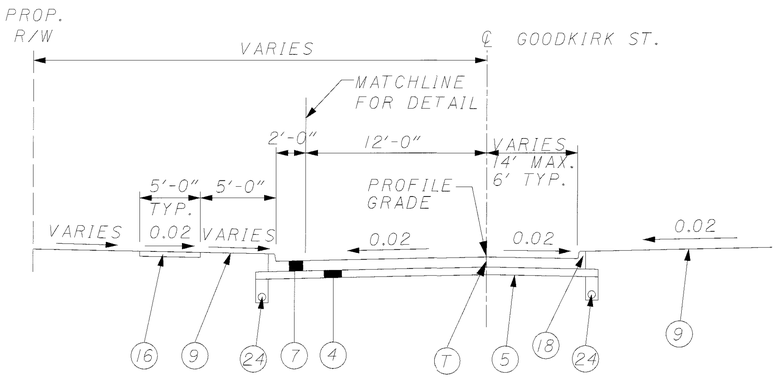

NORMAL SECTION - GOODKIRK STREET - 1 LANE

STA. 223+58.42 TO STA. 227+48.52 = 390.10 LIN. FT. (SEE WALL DETAIL - 2)

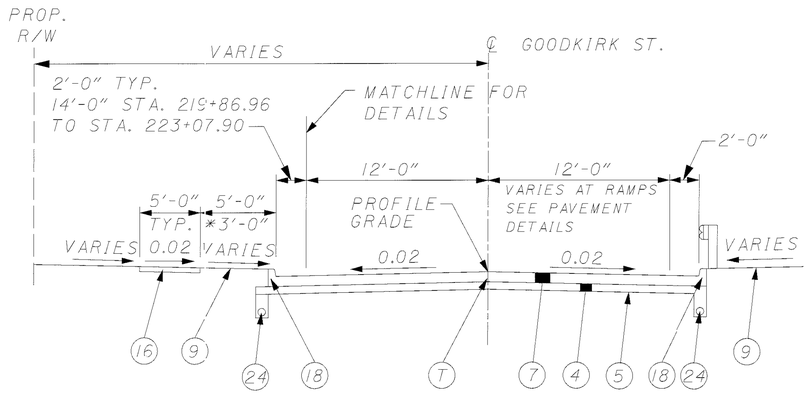

NORMAL SECTION - GOODKIRK STREET

STA. 199+40.38 TO STA. 215+21.85 = 1581.47 LIN. FT. (SEE WALL DETAIL - 1)
* STA. 215+21.85 TO STA. 219+86.96 = 465.11 LIN. FT.
STA. 219+86.96 TO STA. 223+58.42 = 371.46 LIN. FT. (SEE WALL DETAIL - 2)
STA. 227+48.52 TO STA. 246+27.83 = 1879.31 LIN. FT. (SEE WALL DETAIL - 2)

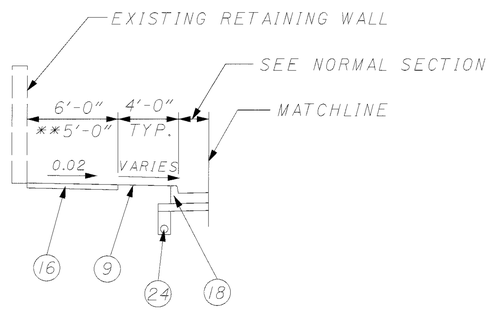

WALL DETAIL - 1

**STA. 205+81.96 TO STA. 205+91.96 = 10.00 LIN. FT.
STA. 205+91.96 TO STA. 208+59.08 = 267.12 LIN. FT.

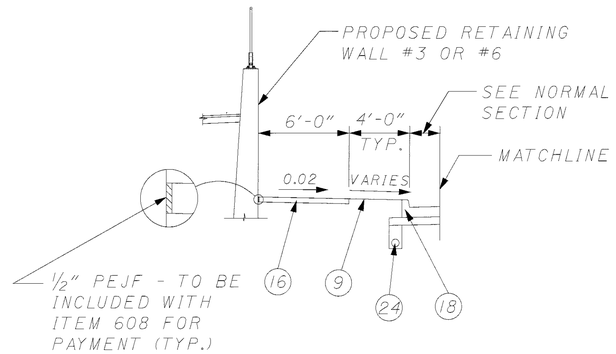

WALL DETAIL - 2

STA. 221+07.20 TO STA. 230+67.10 = 959.90 LIN. FT.
STA. 233+66.57 TO STA. 236+73.78 = 307.21 LIN. FT.

LEGEND

(1) ITEM 446, 1½" ASPHALT CONCRETE SURFACE COURSE, TYPE 1H

(2) ITEM 446, 1¾" ASPHALT CONCRETE INTERMEDIATE COURSE, TYPE 2, PG 64-28

(4) ITEM 304, 6" AGGREGATE BASE

(5) ITEM 203, SUBGRADE COMPACTION

(7) ITEM 451, 8" REINFORCED CONCRETE PAVEMENT

(9) SS 870, SEEDING AND MULCHING

(10) ITEM 407, TACK COAT FOR INTERMEDIATE COURSE

(16) ITEM 608, 4" CONCRETE WALK

(17) ITEM 407, TACK COAT

(18) SS 830, CURB, TYPE 2-A

(19) SS 830, CURB, TYPE 2-B

(24) ITEM 605, 6" SHALLOW PIPE UNDERDRAIN WITH FABRIC WRAP (18" DEEP)

(25) ITEM 254, PAVEMENT PLANING, BITUMINOUS, 3"

(T) LONGITUDINAL JOINTS WITH TIES

FOR JOINT LOCATION, SEE PAVEMENT DETAIL SHEETS 503 TO 545.

NOTE: PAVEMENT THICKNESS AND MATERIAL FOR CARROLL ST. AND BUCHTEL AVE. SHALL MATCH GOODKIRK ST. SEE SHEET 27.

TYPICAL SECTIONS - GOODKIRK

SUM-8-0.63

23
1088

i:\projects\992100\civil\ts\gy001.dgn

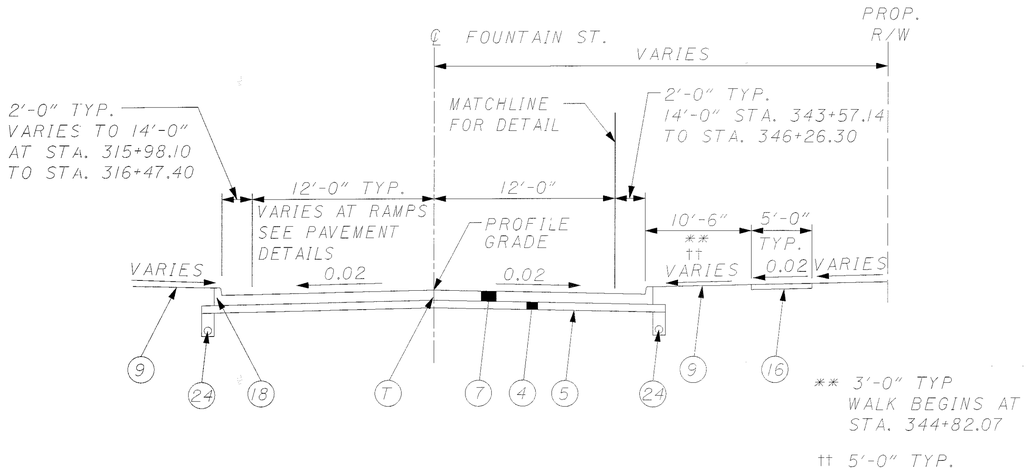

NORMAL SECTION - FOUNTAIN STREET

STA. 300+31.12 TO STA. 311+07.91 = 1076.79 LIN. FT.
STA. 315+22.06 TO STA. 316+47.40 = 125.34 LIN.FT.
†† STA. 319+88.12 TO STA. 338+76.25 = 1888.13 LIN. FT
** STA. 343+57.14 TO STA. 346+26.30 = 269.16 LIN. FT.

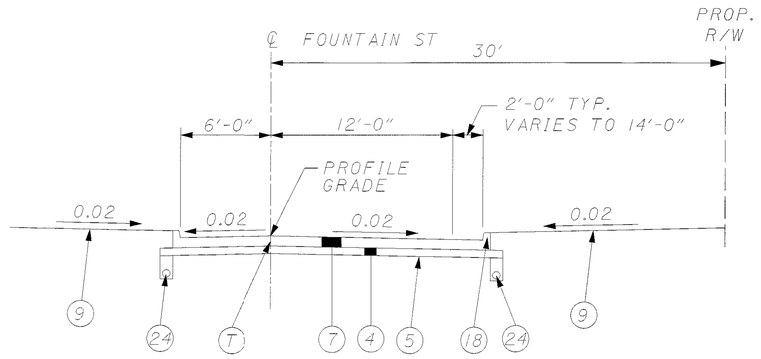

NORMAL SECTION - FOUNTAIN STREET - 1 LANE

STA. 338+76.25 TO STA. 343+57.14 = 480.89 LIN. FT.

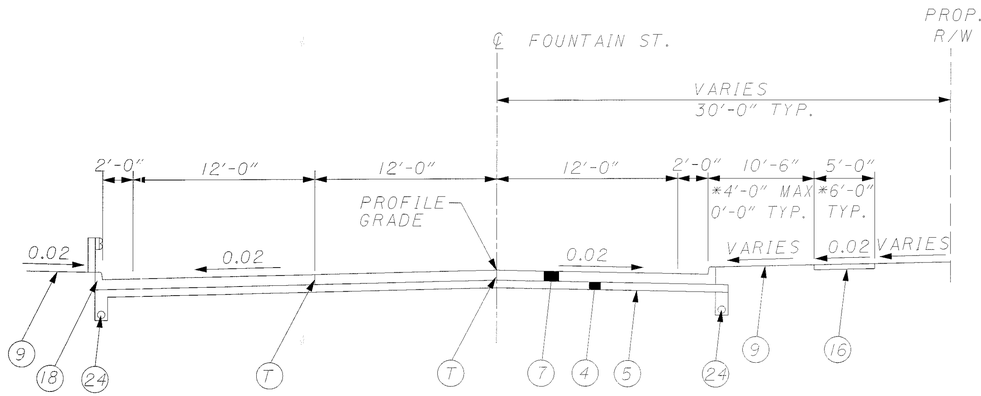

NORMAL SECTION - FOUNTAIN STREET - 3 LANES

STA. 311+07.91 TO STA. 315+22.06 = 414.15 LIN.FT.
* STA. 316+47.40 TO STA. 319+88.12 = 340.72 LIN. FT.

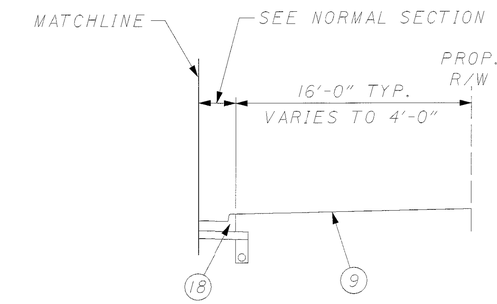

TREELAWN DETAIL

STA. 338+76.25 TO STA. 3344+82.07 = 605.82 LIN. FT.

LEGEND

(4) ITEM 304, 6" AGGREGATE BASE
(5) ITEM 203, SUBGRADE COMPACTION
(7) ITEM 451, 8" REINFORCED CONCRETE PAVEMENT
(9) SS 870, SEEDING AND MULCHING
(16) ITEM 608, 4" CONCRETE WALK
(18) SS 830, CURB, TYPE 2-A
(24) ITEM 605, 6" SHALLOW PIPE UNDERDRAIN WITH FABRIC WRAP (18" DEEP)
(T) LONGITUDINAL JOINTS WITH TIES

FOR JOINT LOCATION, SEE PAVEMENT DETAIL SHEETS 503 TO 545.

TYPICAL SECTIONS - FOUNTAIN

SUM-8-0.63

I:\projects\9922100\civil\ts\gy001.dgn

+ IN ROCK CUT: ITEM 605,
6" ROCK CUT UNDERDRAIN
WITH FABRIC WRAP (12" DEEP)
SEE CROSS SECTIONS

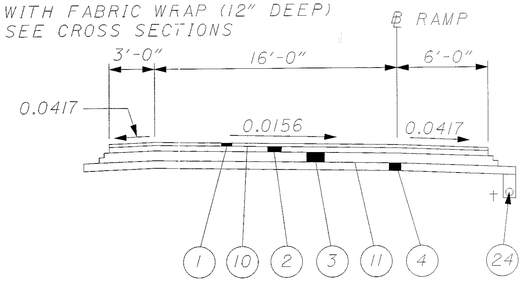

NORMAL SECTION

RAMP S STA. 53+09.32 TO STA. 53+60.76
RAMP S STA. 53+60.76 TO STA. 55+25.55 (CURBED LT)
RAMP L-1 STA. 85+26.54 TO STA. 88+03.22
RAMP J STA. 93+04.47 TO STA. 94+53.46 (CURBED RT)

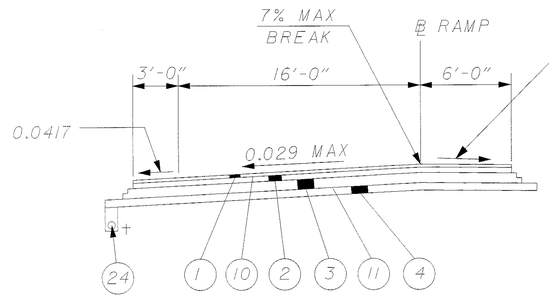

SUPERELEVATED SECTION (CURVE LEFT)

RAMP S STA. 55+25.55 TO STA. 55+46.11 (CURBED LT)
RAMP L-1 STA. 88+36.60 TO STA. 89+33.76 (CURBED LT)
RAMP L-1 STA. 88+03.22 TO STA. 88+36.60

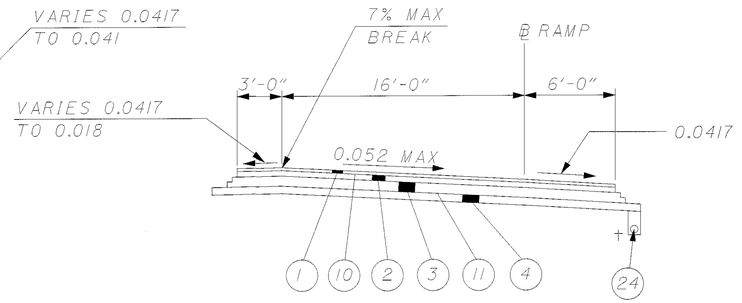

SUPERELEVATED SECTION (CURVE RIGHT)

RAMP S STA. 51+83.28 TO 53+09.32
RAMP Q-1 STA. 70+80.00 TO STA. 74+25.00
RAMP J STA. 94+53.44 TO 97+16.31 (CURBED RT)

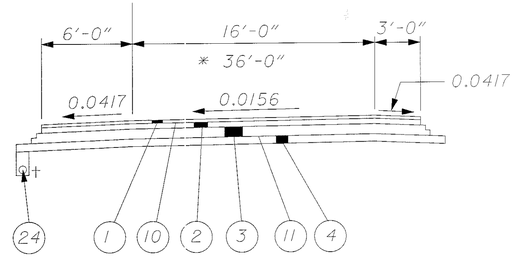

NORMAL SECTION

RAMP P-1 STA. 71+63.19 TO STA. 72+30.08
RAMP K-1 STA. 86+19.06 TO STA. 88+08.00
* RAMP I STA. 92+08.35 TO STA. 92+84.85 (CURBED LT & RT)

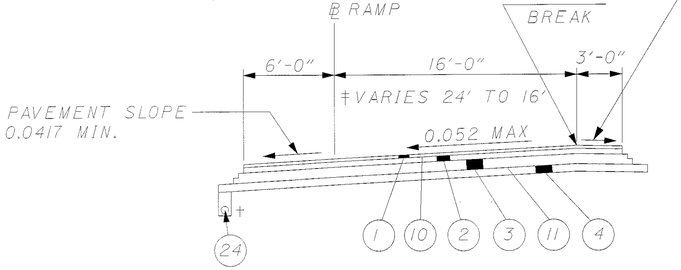

SUPERELEVATED SECTION (CURVE LEFT)

RAMP T-1 STA. 51+20.00 TO STA. 54+07.00
RAMP P-1 STA. 72+30.08 TO STA. 73+39.54
RAMP K-1 STA. 82+49.73 TO 86+19.06
‡ RAMP I STA. 95+96.74 TO STA 96+50.98
RAMP I STA. 96+50.98 TO STA 97+26.47

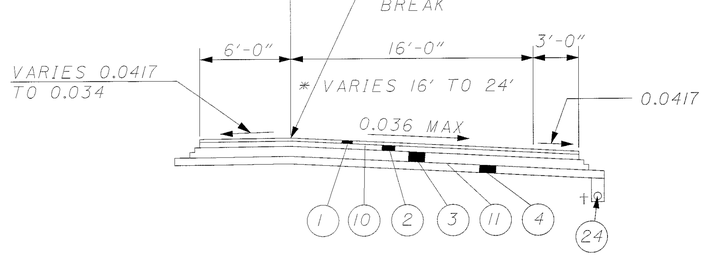

SUPERELEVATED SECTION (CURVE RIGHT)

RAMP P-1 STA. 69+31.90 TO STA. 70+95.83 (CURBED RT)
RAMP P-1 STA. 70+95.83 TO STA. 71+63.19
* RAMP I STA. 92+84.85 TO STA. 93+82.36 (CURBED LT & RT)
* RAMP I STA. 93+82.36 TO STA. 94+85.14
** RAMP I STA. 94+85.14 TO STA. 95+96.74

RAMP	MAXIMUM SUPERELEVATION RATE	
	CURVE LEFT	CURVE RIGHT
I	0.038	0.036
J		0.038
K-1	0.052	0.029
L-1	0.029	NC
P-1	0.020	0.029
Q-1	0.029	0.052
S	0.029	0.028
T-1	0.052	0.029

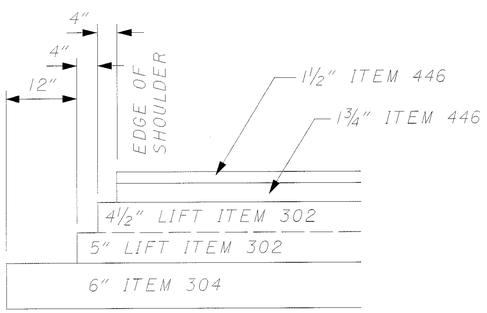

PAVEMENT DETAIL

NOTE: FOR GRADING BEYOND PAVEMENT, SEE CROSS SECTIONS

LEGEND

(1) ITEM 446, 1½" ASPHALT CONCRETE SURFACE COURSE, TYPE IH
(2) ITEM 446, 1¾" ASPHALT CONCRETE INTERMEDIATE COURSE, TYPE 2, PG64-28
(3) ITEM 302, 9½" BITUMINOUS AGGREGATE BASE, PG64-22
(4) ITEM 304, 6" AGGREGATE BASE
(10) ITEM 407, TACK COAT FOR INTERMEDIATE COURSE
(11) ITEM 408, BITUMINOUS PRIME COAT
(24) ITEM 605, 6" SHALLOW PIPE UNDERDRAIN WITH FABRIC WRAP (18" DEEP)

FOR CURBED RAMP TYPICAL SECTION, SEE SHEET 26.

TYPICAL SECTIONS - RAMPS

SUM-8-0.63

i:\projects\992100N\civil\ts\gy00i.dgn

† IN ROCK CUT: ITEM 605,
6" ROCK CUT UNDERDRAIN
WITH FABRIC WRAP (12" DEEP)
SEE CROSS SECTIONS

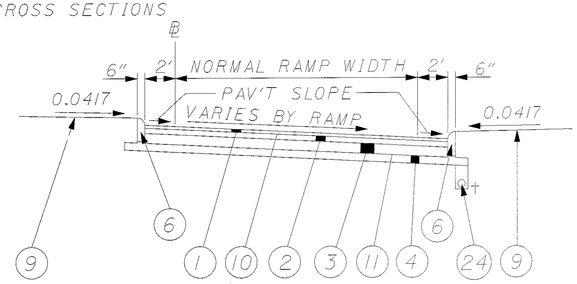

CURBED RAMP DETAIL

RAMP S NORMAL, CURVE LT (OPPOSITE HAND)
RAMP P-I CURVE RT
RAMP L-I NORMAL, CURVE LT (OPPOSITE HAND)
RAMP I CURVE RT, NORMAL

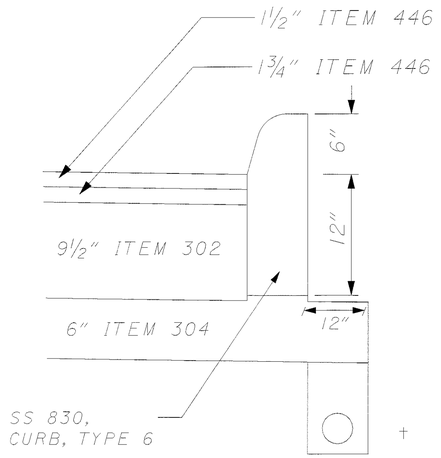

CURB DETAIL

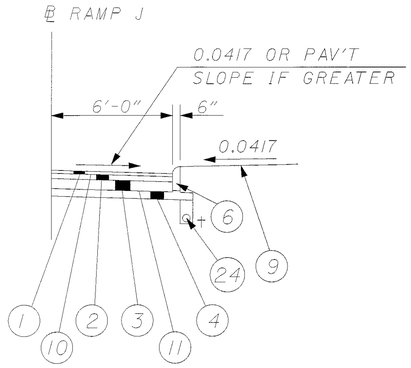

CURBED SHOULDER DETAIL
RAMP J

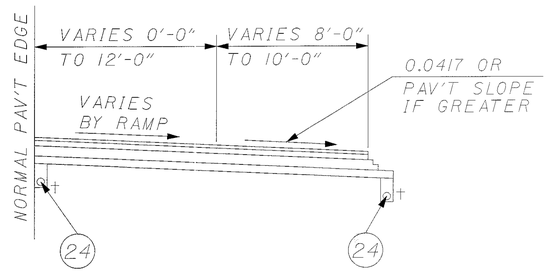

SPEED CHANGE LANES

RAMPS S, Q-I, L-I AND J
RAMPS T-I, P-I, K-I AND I (OPPOSITE HAND)

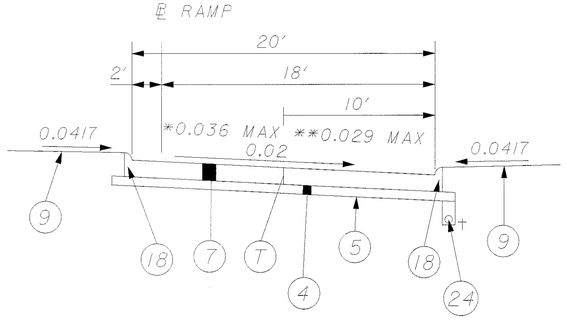

REINF. CONCRETE RAMP - NORMAL AND SUPERELEVATED SECTION (CURVE RIGHT)

RAMP T1 STA. 54+07.00 TO STA. 55+23.84
*RAMP K-I STA. 88+08.00 TO STA. 89+24.05
**RAMP Q-I STA. 69+60.74 TO STA. 69+95.20 (OPPOSITE HAND, CURVE LEFT)

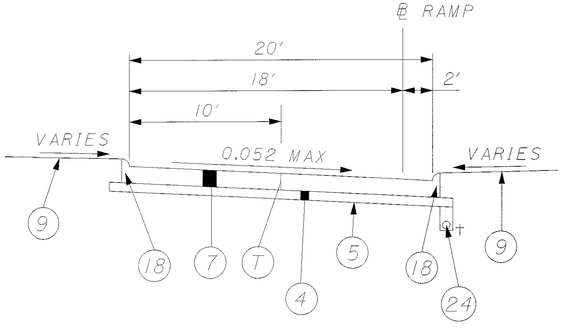

REINF. CONCRETE RAMP - SUPERELEVATED SECTION (CURVE RIGHT)

RAMP Q-I STA. 69+95.20 TO STA. 70+80.00

LEGEND

(1) ITEM 446, 1½" ASPHALT CONCRETE SURFACE COURSE, TYPE IH
(2) ITEM 446, 1¾" ASPHALT CONCRETE INTERMEDIATE COURSE, TYPE 2, PG64-28
(3) ITEM 302, 9½" BITUMINOUS AGGREGATE BASE, PG64-22
(4) ITEM 304, 6" AGGREGATE BASE
(5) ITEM 203, SUBGRADE COMPACTION
(6) SS 830, CURB, TYPE 6
(7) ITEM 451, 8" REINFORCED CONCRETE PAVEMENT
(9) SS 870, SEEDING AND MULCHING
(10) ITEM 407, TACK COAT FOR INTERMEDIATE COURSE
(11) ITEM 408, BITUMINOUS PRIME COAT
(18) SS 830, CURB, TYPE 2-A
(24) ITEM 605, 6" SHALLOW PIPE UNDERDRAIN WITH FABRIC WRAP (18" DEEP)
(T) LONGITUDINAL JOINTS WITH TIES

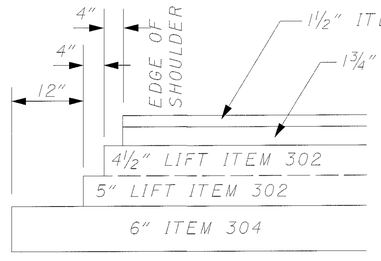

PAVEMENT DETAIL

FOR JOINT LOCATION, SEE PAVEMENT DETAIL SHEETS 503 TO 545.

FOR SPECIFIC RAMP CROSS SLOPES SEE SHEET 25.

TYPICAL SECTIONS - RAMPS

SUM-8-0.63

i:\projects\9922100\civil\ts\gy001.dgn

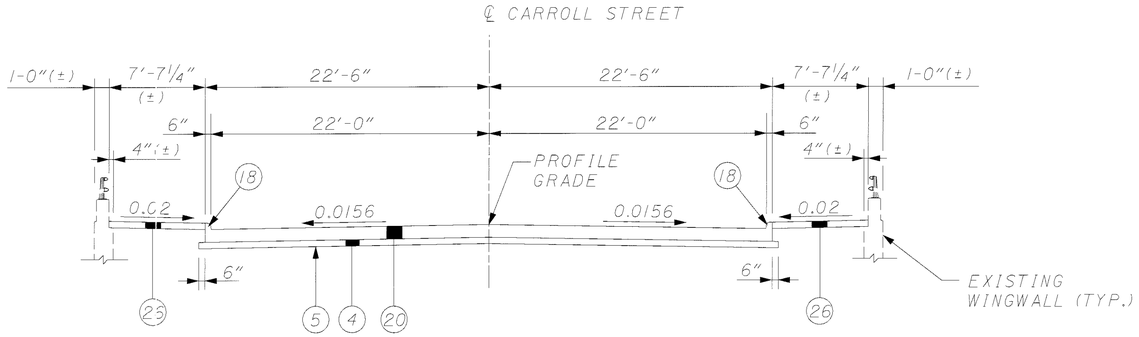

APPROACH SLAB SECTION - CARROLL ST.

STA. 12+66.20 TO STA. 12+81.20 = 15.00 LIN. FT.
STA. 14+00.89 TO STA. 14+15.89 = 15.00 LIN. FT.
30.00 LIN. FT

NORMAL SECTION - CARROLL ST.

FOR PAVEMENT BUILD UP SEE GOODKIRK STREET, SHEET 23.
CONSTRUCT WIDTH AND SLOPE AS PER INTERSECTION DETAILS, SHEETS 509 AND 531.

STA. 11+14.69 TO STA. 12+66.20 = 151.51 LIN. FT.
STA. 14+15.89 TO STA. 16+06.89 = 191.00 LIN. FT.
342.51 LIN. FT

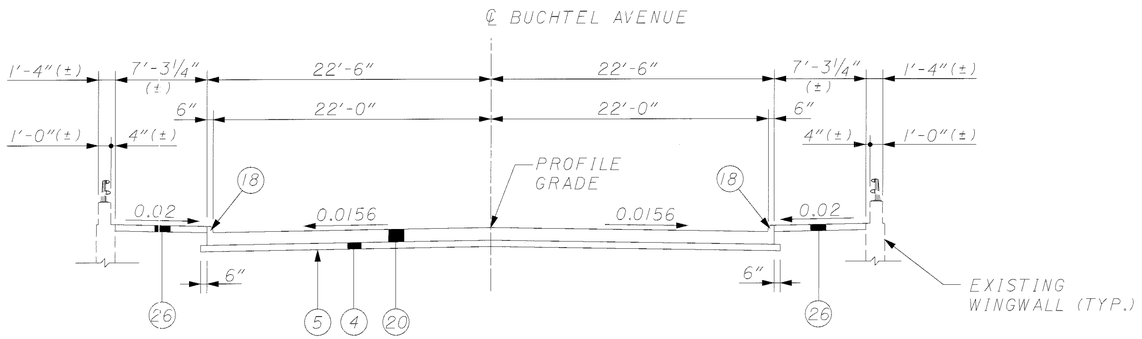

APPROACH SLAB SECTION - BUCHTEL AVE.

STA. 13+76.64 TO STA. 13+91.64 = 15.00 LIN. FT.
STA. 15+11.32 TO STA. 15+26.32 = 15.00 LIN. FT.
30.00 LIN. FT

NORMAL SECTION - BUCHTEL AVE.

FOR PAVEMENT BUILD UP SEE GOODKIRK STREET, SHEET 23.
CONSTRUCT WIDTH AND SLOPE AS PER INTERSECTION DETAILS, SHEETS 511 AND 533.

STA. 12+07.79 TO STA. 13+76.64 = 168.85 LIN. FT.
STA. 15+26.32 TO STA. 17+25.38 = 199.06 LIN. FT.
367.91 LIN. FT

LEGEND

(4) ITEM 304, 6" AGGREGATE BASE
(5) ITEM 203, SUBGRADE COMPACTION
(18) SS 830, CURB, TYPE 2-A (INCLUDE FOR PAYMENT WITH ITEM 611)
(20) ITEM 611, REINFORCED CONCRETE APPROACH SLAB (T=12")
(26) ITEM 608, 6" CONCRETE WALK

TYPICAL SECTIONS - CARROLL AND BUCHTEL

SUM-8-0.63

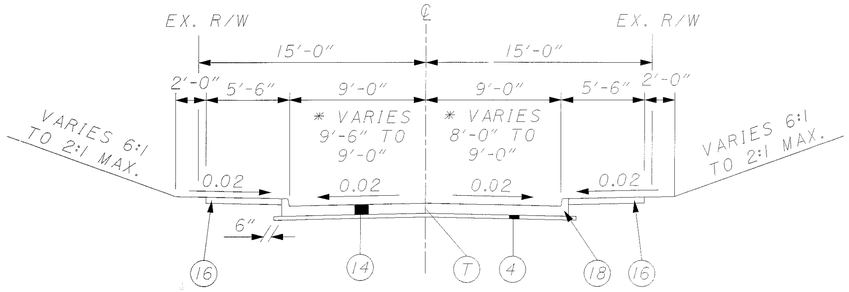

NORMAL SECTION - PARKWOOD AVENUE

* STA. 1+15.00 TO STA. 1+95.00 = 80.00 LIN. FT.
STA. 1+95.00 TO STA. 2+60.00 = 65.00 LIN. FT.

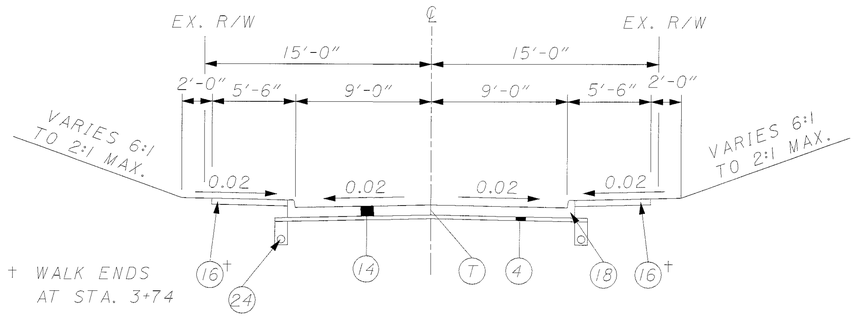

NORMAL SECTION - PARKWOOD AVENUE

STA. 2+60.00 TO STA. 5+02.58 = 242.58 LIN. FT.

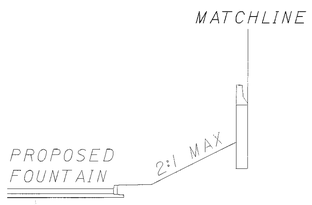

WALL DETAIL - OHIO STREET

STA. 501+50.00 TO STA. 504+59.11 = 309.11 LIN. FT.

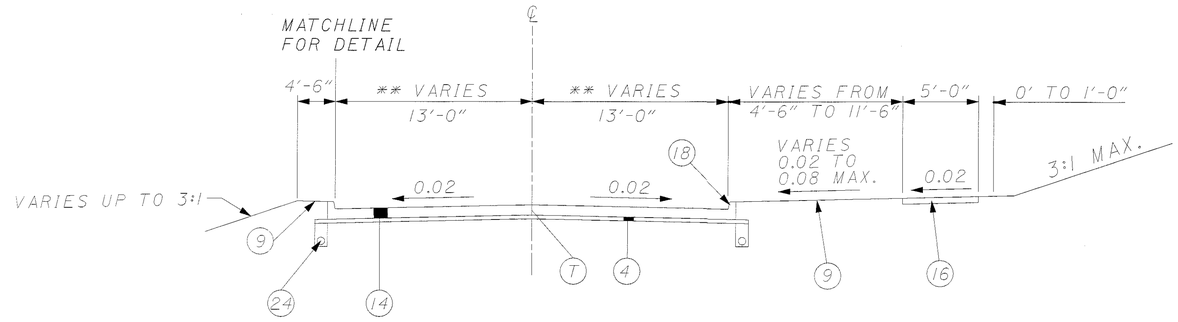

NORMAL SECTION - OHIO STREET

** STA. 500+00.00 TO STA. 500+50.00 = 50.00 LIN. FT.
STA. 500+50.00 TO STA. 504+33.10 = 383.10 LIN. FT. (SEE WALL DETAIL)
** STA. 504+33.10 TO STA. 505+26.00 = 92.90 LIN. FT.

LEGEND

(4) ITEM 304, 4" AGGREGATE BASE
(9) SS 870, SEEDING AND MULCHING
(14) ITEM 452, 7" PLAIN CONCRETE PAVEMENT
(16) ITEM 608, 4" CONCRETE WALK
(18) SS 830, CONCRETE CURB, TYPE 2-A
(24) ITEM 605, 6" SHALLOW PIPE UNDERDRAIN WITH FABRIC WRAP (18" DEEP)
(T) LONGITUDINAL JOINT WITH TIES

FOR JOINT LOCATION, SEE PAVEMENT DETAIL SHEETS 503 TO 545.

TYPICAL SECTIONS - PARKWOOD AND OHIO

SUM-8-0.63

I:\projects\9922100\civil\ts\gy001.dgn

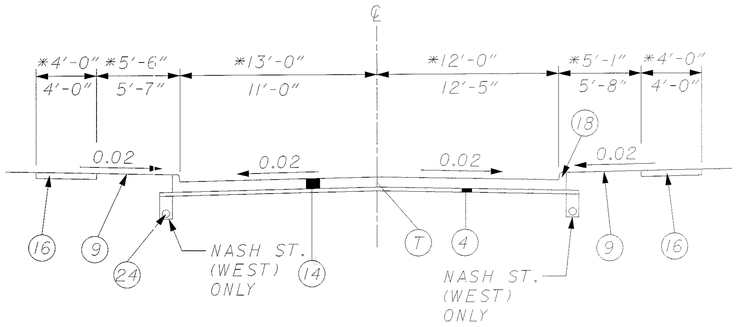

NORMAL SECTION - NASH ST.

* STA. 3+63.00 TO STA. 5+00.00 = 137.00 LIN. FT. (WEST)
STA. 7+96.90 TO STA. 9+00.00 = 103.10 LIN. FT. (EAST)

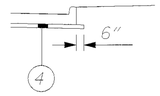

NASH ST. (EAST) DETAIL

WITHOUT UNDERDRAIN

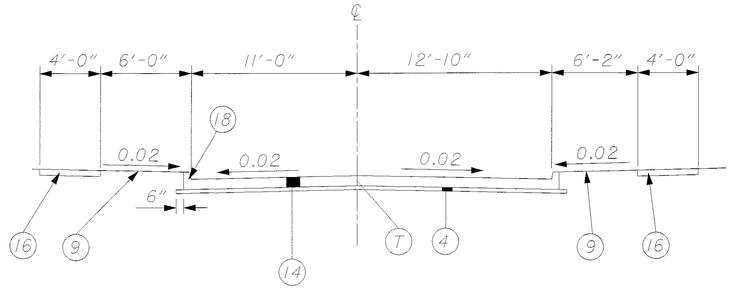

NORMAL SECTION - MASON AVE.

STA. 0+39.00 TO 1+10.00 = 71.00 LIN. FT.

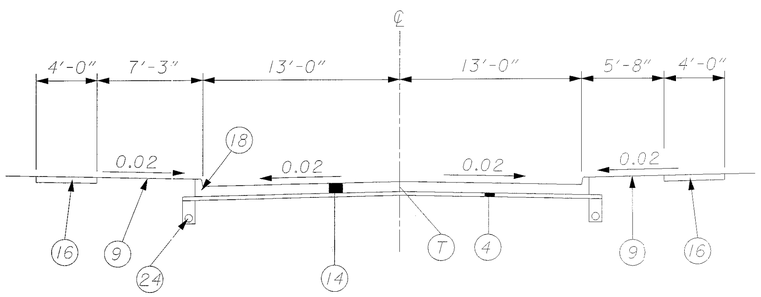

NORMAL SECTION - VINE ST.

STA. 3+90.00 TO STA. 5+00.00 = 110.00 LIN. FT.

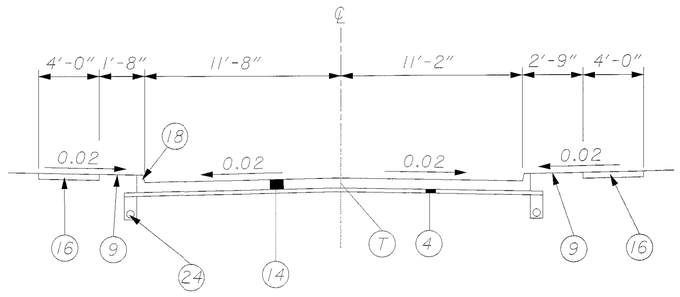

NORMAL SECTION - ORCHARD ST.

STA. 3+75.00 TO STA. 5+00.00 = 125.00 LIN. FT.

LEGEND

(4) ITEM 304, 4" AGGREGATE BASE

(9) SS 870, SEEDING AND MULCHING

(14) ITEM 452, 7" PLAIN CONCRETE PAVEMENT

(16) ITEM 608, 4" CONCRETE WALK

(18) ITEM SS 830, CURB, TYPE 2-A

(24) ITEM 605, 6" SHALLOW PIPE UNDERDRAIN WITH FABRIC WRAP (18" DEEP)

(T) LONGITUDINAL JOINT WITH TIES

FOR JOINT LOCATION, SEE PAVEMENT DETAIL SHEETS 503 TO 545.

i:\projects\9922100l\civil\ts\vgy001.dgn

TYPICAL SECTIONS - NASH, VINE, ORCHARD, AND MASON

SUM-8-0.63

GENERAL

ROUNDING

THE ROUNDING AT SLOPE BREAKPOINTS SHOWN ON THE TYPICAL SECTIONS APPLY TO ALL CROSS-SECTIONS EVEN THOUGH OTHERWISE SHOWN.

UTILITIES

LISTED BELOW ARE ALL UTILITIES LOCATED WITHIN THE PROJECT CONSTRUCTION LIMITS TOGETHER WITH THEIR RESPECTIVE OWNERS:

AKRON THERMAL
226 OPPORTUNITY PARKWAY
AKRON, OHIO 44307
330-374-0600

CITY OF AKRON PUBLIC WORKS
1436 TRIPLETT BOULEVARD
AKRON, OHIO 44306
STEPHEN DUBETZ 330-375-2831

CITY OF AKRON SEWER MAINTENANCE
1055 HOME AVENUE
AKRON, OHIO 44310-3501
PAUL CORY 330-375-2666

CITY OF AKRON TRAFFIC ENGINEERING DIVISION
1420 TRIPLETT BOULEVARD, BLDG. #2
AKRON, OHIO 44306-3390
DAVID GASPER 330-375-2851

CITY OF AKRON WATER DEPARTMENT
565 JOHNSTON STREET
AKRON, OHIO 44311-1816
RON LANCIANESE 330-375-2420

AMERITECH
50 WEST BOWERY STREET, 4TH FLOOR
AKRON, OHIO 44308
330-384-8057

BP OIL
4421 BRADLEY ROAD
CLEVELAND, OHIO 44109
216-586-2080

DOMINION EAST OHIO GAS
2100 EASTWOOD AVENUE
AKRON, OHIO 44305
330-798-7104

OHIO EDISON
1910 WEST MARKET STREET
AKRON, OHIO 44313
330-384-4711

TIME WARNER CABLE
1655 BRITTAIN ROAD
AKRON, OHIO 44310
330-630-7950

THE LOCATION OF THE UNDERGROUND UTILITIES SHOWN ON THE PLANS ARE AS OBTAINED FROM THE OWNERS AS REQUIRED BY SECTION 153.64 O.R.C.

CONTINGENCY QUANTITIES

THE CONTRACTOR SHALL NOT ORDER MATERIALS OR PERFORM WORK FOR ITEMS DESIGNATED BY PLAN NOTE TO BE USED "AS DIRECTED BY THE ENGINEER" UNLESS AUTHORIZED BY THE ENGINEER. THE ACTUAL WORK LOCATIONS AND QUANTITIES USED FOR SUCH ITEMS SHALL BE INCORPORATED INTO THE FINAL CHANGE ORDER GOVERNING COMPLETION OF THIS PROJECT.

ELEVATION DATUM

ALL ELEVATIONS ARE BASED ON U.S.G.S. DATUM.

WORK LIMITS

THE WORK LIMITS SHOWN ON THESE PLANS ARE FOR PHYSICAL CONSTRUCTION ONLY. THE INSTALLATION AND OPERATION OF ALL TEMPORARY TRAFFIC CONTROL AND TEMPORARY TRAFFIC CONTROL DEVICES REQUIRED BY THESE PLANS SHALL BE PROVIDED BY THE CONTRACTOR WHETHER INSIDE OR OUTSIDE THESE WORK LIMITS.

COOPERATION BETWEEN CONTRACTORS

IT IS ANTICIPATED THAT OTHER CONTRACTORS WILL BE WORKING ON PROJECTS ADJACENT TO OR WITHIN THE LIMITS OF THIS PROJECT, EITHER FOR THE STATE OR FOR OTHER PUBLIC AGENCIES. THE CONTRACTOR SHALL COOPERATE AND COORDINATE HIS OPERATIONS INCLUDING PROVISIONS FOR THE MAINTENANCE OF TRAFFIC, WITH THE CONTRACTORS OF OTHER PROJECTS THAT MAY BE IN FORCE DURING THE LIFE OF THIS CONTRACT.

THE CONTRACTOR'S ATTENTION IS SPECIFICALLY DRAWN TO SECTION 105.07 OF THE CONTRUCTION AND MATERIAL SPECIFICATIONS. NO WAIVER OF THE PROVISIONS OF SECTION 105.07 IS INTENDED.

CONVERSION OF STANDARD CONSTRUCTION DRAWINGS

THE METRIC STANDARD DRAWINGS REFERENCED IN THIS PLAN SHALL BE CONVERTED TO ENGLISH UNITS USING THE SI (METRIC) TO ENGLISH CONVERSION FACTORS PROVIDED IN SECTION 109.011 OF THE 1997 CONSTRUCTION AND MATERIALS SPECIFICATIONS. THE APPENDIX OF ASTM E 380 SHALL BE UTILIZED FOR ANY ADDITIONAL CONVERSION FACTORS REQUIRED. CONVERSIONS SHALL BE APPROPRIATELY PRECISE AND SHALL REFLECT STANDARD INDUSTRY ENGLISH VALUES WHERE SUITABLE.

ROADWAY

CLEARING AND GRUBBING

ALTHOUGH THERE ARE NO TREES OR STUMPS SPECIFICALLY MARKED FOR REMOVAL WITHIN THE LIMITS OF THE PROJECT, A LUMP SUM QUANTITY HAS BEEN INCLUDED IN THE GENERAL SUMMARY FOR ITEM 201, CLEARING AND GRUBBING. UNLESS SPECIFICALLY MARKED "SAVE" IN THE PLANS, ALL EXISTING TREES WITHIN THE CONSTRUCTION LIMITS SHALL BE REMOVED UNDER THE LUMP SUM BID FOR ITEM 201. ALL PROVISIONS AS SET FORTH IN THE SPECIFICATIONS UNDER THIS ITEM SHALL BE INCLUDED IN THE IN THE LUMP SUM PRICE BID FOR ITEM 201, CLEARING AND GRUBBING.

MONUMENTS

MONUMENTS SHALL BE CONSTRUCTED IN ACCORDANCE WITH DETAILS AS SHOWN ON THE STANDARD CONSTRUCTION DRAWINGS AND AT THE LOCATIONS SHOWN ON SHEETS 206-265.

ITEM 203 - EXCAVATION NOT INCLUDING EMBANKMENT CONSTRUCTION

IF UNSUITABLE FOUNDATION SOILS ARE ENCOUNTERED IN THE AREAS OF THE PROPOSED ROADBED, THEY SHALL BE REMOVED AND REPLACED WITH SUITABLE MATERIAL MEETING THE REQUIREMENTS OF 203.08. THE LOCATIONS AND DIMENSIONS WILL BE AS DETERMINED BY THE ENGINEER.

THE FOLLOWING CONTINGENCY QUANTITIES HAVE BEEN INCLUDED IN THE GENERAL SUMMARY TO BE USED AS DIRECTED BY THE ENGINEER:

ITEM 203, EMBANKMENT	5000 CU. YD.
ITEM 203, EXCAVATION NOT INCLUDING EMBANKMENT CONSTRUCTION	5000 CU. YD.

ITEM 203 - PROOF ROLLING

AN ESTIMATED QUANTITY FOR THIS ITEM HAS BEEN PROVIDED IN THE GENERAL SUMMARY FOR USE AS DIRECTED BY THE ENGINEER.

ITEM 203, PROOF ROLLING	55 HOURS

ITEM 606 - ANCHOR ASSEMBLY, TYPE E-98

THIS ITEM SHALL CONSIST OF FURNISHING AND INSTALLING EITHER OF THE FOLLOWING GUARDRAIL END TERMINALS.

1) THE ET-2000 (1997) MANUFACTURED BY SYRO, INC., 1170 N. STATE STREET, GIRARD, OHIO 44420 (TELEPHONE: 330-545-4373).

THE LENGTH OF THE ET-2000 (1997) SYSTEM IS CONSIDERED TO BE 50'-0", INCLUSIVE OF TWO 25'-0" LONG RAIL ELEMENTS. INSTALLATION SHALL BE AT THE LOCATIONS SPECIFIED IN THE PLANS, IN ACCORDANCE WITH THE MANUFACTURER'S SPECIFICATIONS AS DETAILED ON THE FOLLOWING PRE-APPROVED SHOP DRAWINGS:

DWG. NO.	DRAWING NAME	DWG./ REV. DATE	ODOT APPROVAL DATE
SSS265M	ET-2000 (1997) PLAN, ELEVATION AND SECTIONS	6/20/97	3/6/98

2) THE SKT-350 MANUFACTURED BY ROAD SYSTEMS, INC., 7631 NEW CASTLE DRIVE, FRANKFORT, IL 60423 (TELEPHONE: 815-464-5917).

THE LENGTH OF THE SKT-350 SYSTEM IS CONSIDERED TO BE 50'-0", INCLUSIVE OF FOUR 12'-6" LONG RAIL ELEMENTS. INSTALLATION SHALL BE AT THE LOCATIONS SPECIFIED IN THE PLANS, IN ACCORDANCE WITH THE MANUFACTURER'S SPECIFICATIONS AS DETAILED ON THE FOLLOWING PRE-APPROVED SHOP DRAWINGS:

DWG. NO.	DRAWING NAME	DWG./ REV. DATE	ODOT APPROVAL DATE
SKT-4M	SEQUENTIAL KINKING TERMINAL (SKT-350) ASSEMBLY WITH 4 FOUNDATION TUBES	12/11/97	3/6/98

THE FACE OF THE TYPE E-98 IMPACT HEAD SHALL BE COVERED WITH A SHEET OF TYPE G REFLECTIVE SHEETING, PER CMS 730.19, APPROXIMATELY 18" X 18".

PAYMENT FOR THE ABOVE WORK SHALL BE MADE AT THE UNIT PRICE BID FOR ITEM 606, ANCHOR ASSEMBLY, TYPE E-98, EACH, AND SHALL INCLUDE ALL LABOR, TOOLS, EQUIPMENT AND MATERIALS NECESSARY TO CONSTRUCT A COMPLETE AND FUNCTIONAL ANCHOR ASSEMBLY SYSTEM, INCLUDING ALL RELATED TRANSITIONS, REFLECTIVE SHEETING, HARDWARE, GRADING, EMBANKMENT AND EXCAVATION NOT SEPARATELY SPECIFIED, AS REQUIRED BY THE MANUFACTURER.

PAVING UNDER GUARDRAIL

THIS OPERATION SHALL INCLUDE PREPARATION OF THE GRADED SHOULDER AND PAVING UNDER THE GUARDRAIL USING 448 ASPHALT CONCRETE INTERMEDIATE COURSE, TYPE 1, UNDER GUARDRAIL, PG 64-22.

PREPERATION OF THE SHOULDER SHALL CONSIST OF EXCAVATING TOPSOIL, PLACING GRANULAR MATERIAL AND APPLYING HERBICIDE AS SPECIFIED IN THE PLANS AND IN ACCORDANCE WITH THE FOLLOWING:

ALL COLLECTED DEBRIS AND TOPSOIL, INCLUDING RHIZOMES, ROOTS AND OTHER VEGETATIVE PLANT MATERIAL SHALL BE REMOVED AND DISPOSED OF AS SPECIFIED IN 203.05.

THE REMOVED MATERIAL SHALL BE REPLACED WITH THREE (3) INCHES OF COMPACTABLE GRANULAR MATERIAL CONFORMING TO 203.02 PLACED TO GRADE AS DETAILED ON THE TYPICAL SECTION OR AS APPROVED BY THE ENGINEER.

HERBICIDE SHALL BE EPA APPROVED FOR PAVING UNDER GUARDRAIL. IT SHALL BE APPLIED TO THE PREPARED AREA AFTER FINAL LEVELING AND GRADING HAS BEEN COMPLETED. THE APPLICATION SHALL BE JUST PRIOR TO PAVING AND SHALL STRICTLY ADHERE TO THE MANUFACTURER'S INSTRUCTIONS.

EACH SUCCESSFUL BIDDER MUST BE LICENSED BY THE OHIO DEPARTMENT OF AGRICULTURE AS A COMMERCIAL APPLICATOR AND ALL PERSONS INVOLVED IN THE ACTUAL SPRAYING SHALL BE LICENSED AS COMMERCIAL OPERATORS IN THE APPROPRIATE SPRAY CATEGORY.

CALCULATED VLW CHECKED BF

GENERAL NOTES

SUM-8-0.63

ROADWAY (CONT.)

HERBICIDE LABEL, MATERIAL SAFETY DATA SHEET AND COPY OF APPLICATORS LICENSES SHALL BE SUBMITTED TO THE ENGINEER FOR VERIFICATION PRIOR TO COMMENCING WORK.

PAVING UNDER GUARDRAIL SHALL CONSIST OF PLACING ITEM 448 TO THE DEPTH SPECIFIED USING ONE OF THE FOLLOWING METHODS:

METHOD A: 1) SET GUARDRAIL POSTS

2) PLACE ITEM 448

METHOD B: 1) PLACE ITEM 448

2) BORE ASPHALT AT POST LOCATIONS (MAY BE OMITTED IF STEEL POSTS ARE USED)

3) SET GUARDRAIL POSTS

4) PATCH AROUND POSTS. THE MATERIALS USED FOR PATCHING SHALL BE A BITUMINOUS CONCRETE APPROVED BY THE ENGINEER. PATCHED AREAS SHALL BE COMPACTED USING EITHER HAND OR MECHANICAL METHODS. FINISHED SURFACES SHALL BE SMOOTH AND SLOPED TO DRAIN AWAY FROM THE POSTS.

ALL EQUIPMENT, MATERIALS AND LABOR REQUIRED TO PERFORM THE WORK OUTLINED ABOVE, WITH THE EXCEPTION OF SETTING GUARDRAIL POSTS, SHALL BE INCLUDED FOR PAYMENT UNDER ITEM 448, ASPHALT CONCRETE, INTERMEDIATE COURSE, TYPE 1, UNDER GUARDRAIL, PG 64-22.

FENCE LENGTHS

THE LENGTHS OF FENCE SHOWN IN THE PLANS ARE HORIZONTAL DIMENSIONS. MEASUREMENTS OF THE FINAL QUANTITIES SHALL BE MADE IN ACCORDANCE WITH ITEM 607.

EROSION CONTROL

SEEDING AND MULCHING

THE FOLLOWING QUANTITIES ARE PROVIDED TO PROMOTE GROWTH AND CARE OF PERMANENT SEEDED AREAS:

870, SOIL ANALYSIS TEST	3 EACH
870, TOPSOIL	12267 CU. YD.
870, MOWING	248 M SQ. FT.

SEEDING AND MULCHING SHALL BE APPLIED TO ALL AREAS OF EXPOSED SOIL BETWEEN THE RIGHT-OF-WAY LINES, AND WITHIN THE CONSTRUCTION LIMITS FOR AREAS OUTSIDE THE RIGHT-OF-WAY LINES COVERED BY WORK AGREEMENT OR SLOPE EASEMENT. QUANTITY CALCULATIONS FOR SEEDING AND MULCHING, ARE BASED ON THESE LIMITS.

SEEDING AND MULCHING OF LAWNS

IN ADDITION TO "AREAS IN FRONT OF RESIDENCES" REFERRED TO IN 870.13, THE SPECIAL PREPARATION SHALL BE EXTENDED TO ENCOMPASS ALL LAWNS AND/OR LAWN-LIKE AREAS AS DETERMINED BY THE ENGINEER.

TEMPORARY SOIL EROSION AND SEDIMENT CONTROL

THE FOLLOWING ESTIMATED QUANTITIES ARE TO BE PLACED BY THE CONTRACTOR WITH THE ENGINEER'S CONCURRENCE FOR TEMPORARY EROSION AND SEDIMENT CONTROL MEASURES:

877, TEMPORARY SEEDING AND MULCHING	22100 SQ. YD.
877, TEMPORARY SLOPE DRAINS	240 LIN. FT.
877, TEMPORARY SEDIMENT BASINS AND SEDIMENT DAMS	268 CU. YD.
877, TEMPORARY PERIMETER FILTER FABRIC FENCE	12150 LIN. FT.
877, TEMPORARY DITCH CHECK FILTER FABRIC FENCE	330 LIN. FT.
877, TEMPORARY INLET PROTECTION FILTER FABRIC FENCE	1430 LIN. FT.
877, TEMPORARY DIKES	240 CU. YD.
877, SEDIMENT REMOVAL	1950 CU. YD.
601, ROCK CHANNEL PROTECTION, TYPE C (WITH FILTER)	500 CU. YD.
601, ROCK CHANNEL PROTECTION, TYPE C (WITHOUT FILTER)	3400 CU. YD.
870, COMMERCIAL FERTILIZER	4.72 TON
870, REPAIR SEEDING AND MULCHING	5550 SQ. YD.
870, WATER	48 M GAL.
870, INTER-SEEDING	5550 SQ. YD.

EROSION CONTROL

ITEMS 601 & 670 ARE PROVIDED IN THE PLANS FOR EROSION CONTROL. ROCK OF A STABLE NATURE SHALL NOT BE REMOVED IN ORDER TO PLACE ANY OF THESE ITEMS AND TURF OF A STABLE NATURE SHALL NOT BE REMOVED TO PLACE 660. THE ENGINEER SHALL CHECK AND NON-PERFORM QUANTITIES OR ADJUST LOCATIONS AND QUANTITIES OF THESE ITEMS WHERE INDICATED BY FIELD CONDITIONS DURING CONSTRUCTION. IN ADDITION, THESE ITEMS SHALL MEET THE REQUIREMENT OF 108.04.

ITEM 877 - TEMPORARY BENCHES, DAMS AND SEDIMENT BASINS

THE SEDIMENT BASIN QUANTITIES LISTED ON THIS STORM WATER POLLUTION PREVENTION PLAN ARE THE STORAGE VOLUMES REQUIRED FOR THE SEDIMENT BASIN.

THE PAY QUANTITY FOR EACH BASIN SHALL BE DETERMINED AS THE ACTUAL AMOUNT OF EXCAVATION OR EMBANKMENT REQUIRED TO PROVIDE THAT STORAGE VOLUME.

STORM WATER POLLUTION PREVENTION PLAN

THE CONDITIONS OF THE NPDES CONSTRUCTION STORM WATER GENERAL PERMIT (SEE PROPOSAL) SHALL BE MET DURING ALL STAGES OF CONSTRUCTION. THE LOCATION AND TIMING OF ALL EROSION AND SEDIMENT CONTROL ITEMS SHALL BE FIELD ADJUSTED TO PREVENT SIGNIFICANT IMPACTS ON RECEIVING WATERS. IMPLEMENTATION OF THIS STORM WATER POLLUTION PREVENTION PLAN SHALL CONTINUE THROUGHOUT THE DURATION OF THE PROJECT OR UNTIL SUCH TIME THAT THE UPSLOPE DISTURBED AREAS ARE STABILIZED.

INSTALLATION OF SEDIMENT BASINS/DAMS, PERIMETER FILTER FABRIC FENCE, AND DITCH CHECKS SHALL BE CONCURRENT WITH CLEARING AND GRUBBING AND/OR GRADING OPERATIONS.

ALL REASONABLE ATTEMPTS SHOULD BE MADE TO MINIMIZE THE TOTAL AREA OF DISTURBED LAND.

AREAS TO REMAIN DORMANT FOR MORE THAN 45 DAYS SHOULD BE IMMEDIATELY STABILIZED WITH TEMPORARY SEEDING AND MULCHING, EROSION CONTROL MATTING OR OTHER APPROPRIATE EROSION CONTROL MEASURES.

ADDITIONAL QUANTITIES OF TEMPORARY SOIL EROSION AND SEDIMENT CONTROL ITEMS ARE GIVEN IN THE GENERAL NOTES.

PAVEMENT

CONTRACTION AND/OR EXPANSION JOINTS

ALTHOUGH SPECIFIC LOCATIONS OF CERTAIN CONTRACTION AND EXPANSION JOINTS HAVE BEEN DETAILED ON THIS PLAN, NO WAIVER OF THE SPECIFICATIONS IS INTENDED. PROVISION OF EXPANSION JOINTS AT ALL MAJOR STRUCTURES AND THE MAXIMUM SPACING BETWEEN CONTRACTION JOINTS SHALL, IN ALL CASES, BE IN ACCORDANCE WITH STANDARD CONSTRUCTION DRAWING BP-2.2 AND THE SPECIFICATIONS.

CONTRACTION JOINTS IN CONCRETE PAVEMENT OR BASE WIDENING

WHERE NEW CONCRETE IS PLACED ADJACENT TO EXISTING CONCRETE, CONTRACTION JOINTS SHALL BE PROVIDED IN THE NEW CONCRETE SO AS TO FORM CONTINUOUS JOINTS WITH THOSE IN THE EXISTING CONCRETE.

THE MAXIMUM DISTANCE BETWEEN THE JOINTS IN THE NEW CONCRETE SHALL BE IN ACCORDANCE WITH STANDARD CONSTRUCTION DRAWING BP-2.2, IF NECESSARY, ADDITIONAL JOINTS SHALL BE PROVIDED IN THE NEW CONCRETE AT APPROXIMATELY EQUAL INTERVALS BETWEEN EXISTING JOINTS THAT EXCEED THE MAXIMUM SPACING.

PART-WIDTH CONSTRUCTION

BECAUSE OF THE NECESSITY TO BUILD THIS PROJECT UNDER TRAFFIC AND TO CONSTRUCT THE FULL PAVEMENT WIDTH IN STAGES, EXTREME CARE SHALL BE TAKEN TO PREVENT THE CONSTRUCTION OF A BUTT JOINT IN THE BASE COURSES. LONGITUDINAL JOINTS SHALL BE LAPPED AS SHOWN ON STANDARD CONSTRUCTION DRAWING BP-3.1.

MEDIAN AND/OR CURBING ON APPROACH SLABS

THE SHAPE OF THE MEDIAN AND/OR CURBING ON APPROACH SLABS SHALL BE TRANSITIONED, FROM THE STANDARD SECTION ON THE APPROACHES TO THE SECTION USED ON THE BRIDGE, WITHIN THE LIMITS OF THE APPROACH SLAB, OR AS INDICATED IN THE PLANS.

ITEM 407 - TACK COAT AND ITEM 407 - TACK COAT FOR INTERMEDIATE COURSE

THE RATE OF APPLICATION OF THE 407 TACK COAT SHALL BE SUBJECT TO ADJUSTMENT AS DIRECTED BY THE ENGINEER. FOR ESTIMATING PURPOSES ONLY, THE PLAN QUANTITIES INDICATE AN AVERAGE APPLICATION RATE OF:

407, TACK COAT	0.075 GAL./SQ. YD.
407, TACK COAT FOR INTERMEDIATE COURSE	0.04 GAL./SQ. Y.D

ITEM 851 REINFORCED CONCRETE PAVEMENT

ALL REFERENCES TO ITEM 451 REINFORCED CONCRETE PAVEMENT SHALL BE ASSUMED TO BE SUPPLEMENTAL SPECIFICATION ITEM 851.

SHEETING AND BRACING FOR TRENCH EXCAVATION, AS PER PLAN

SHEETING AND/OR BRACING SHALL BE PROVIDED ALONG GOODKIRK ST. IN THE VICINITY OF THE FIRST ENERGY TRANSMISSION POLES OR AS DIRECTED BY THE ENGINEER. THE CONTRACTOR SHALL FURNISH AND INSTALL TIMBER AND OTHER SHEETING AND BRACING AND SHALL TAKE ALL PRECAUTIONS REQUIRED TO PREVENT ANY CAVING OR SETTLING OF EXCAVATION OR TRENCH WALLS. THE TYPE AND AMOUNT OF SUCH PROTECTION SHALL BE CONSISTENT WITH THE MAGNITUDE OF THE WORK AND THE CHARACTER OF THE MATERIAL IN WHICH THE EXCAVATION IS MADE, AND SHALL BE IN ACCORDANCE WITH THE LATEST OSHA REGULATIONS.

WHEN SHEET PILING IS USED, IT SHALL BE HELD IN PLACE BY LONGITUDINAL BEAMS AND CROSS BRACES OR STRUTS AS REQUIRED TO RESTRAIN THE TOP OF THE SHEETING. IF TIMBER SHEETING AND BRACING IS USED, IT SHALL BE OF GOOD QUALITY HARDWOOD CONSTRUCTION.

WHEN THE BACKFILL IS HIGH ENOUGH TO REMOVE THE SHEETING AND BRACING WITH SAFETY, AND WHERE NO WRITTEN ORDER FROM THE ENGINEER HAS BEEN GIVEN TO LEAVE THE SAME IN PLACE, THE SHEETING AND BRACING SHALL BE REMOVED IN SUCH A MANNER AS TO PREVENT DAMAGE BY CAVING OF THE TRENCH WALLS OR UNDERMINING THE PIPE BEDDING.

FIRST ENERGY SHALL BE CONTACTED FOURTEEN (14) CALANDAR DAYS PRIOR TO BEGINNING EXCAVATION IN THE VICINITY OF THE TRANSMISSION POLES. IF ADDITIONAL POLE STABALIZATION IS REQUIRED, FIRST ENERGY SHALL COMPLETE THE INSTALLATION OF ALL POLE ATTACHMENTS AND DEVICES PRIOR TO THE BEGINNING OF EXCAVATION.

THE FOLLOWING ESTIMATED QUANTITY HAS BEEN CARRIED TO THE GENERAL SUMMARY:

ITEM 603, CONDUIT, MISC.: SHEETING AND BRACING FOR TRENCH EXCAVATION, AS PER PLAN	300 LIN. FT.

CALCULATED VLW
CHECKED EDS

GENERAL NOTES

SUM-8-0.63

31
1088

CALCULATED BF CHECKED VLW

GENERAL NOTES

DRAINAGE

CROSSINGS AND CONNECTIONS TO EXISTING PIPES AND UTILITIES

WHERE PLANS PROVIDE FOR A PROPOSED CONDUIT TO BE CONNECTED TO, OR CROSS OVER OR UNDER AN EXISTING SEWER OR UNDERGROUND UTILITY, THE CONTRACTOR SHALL LOCATE THE EXISTING PIPES OR UTILITIES BOTH AS TO LINE AND GRADE BEFORE STARTING TO LAY THE PROPOSED CONDUIT.

IF IT IS DETERMINED THAT THE ELEVATION OF THE EXISTING CONDUIT, OR EXISTING APPURTENANCE TO BE CONNECTED, DIFFERS FROM THE PLAN ELEVATION OR RESULTS IN A CHANGE IN THE PLAN CONDUIT SLOPE, THE ENGINEER SHALL BE NOTIFIED BEFORE STARTING CONSTRUCTION OF ANY PORTION OF THE PROPOSED CONDUIT WHICH WILL BE AFFECTED BY THE VARIANCE IN THE EXISTING ELEVATIONS.

IF IT IS DETERMINED THAT THE PROPOSED CONDUIT WILL INTERSECT AN EXISTING SEWER OR UNDERGROUND UTILITY IF CONSTRUCTED AS SHOWN ON THE PLAN, THE ENGINEER SHALL BE NOTIFIED BEFORE STARTING CONSTRUCTION OF ANY PORTION OF THE PROPOSED CONDUIT WHICH WOULD BE AFFECTED BY THE INTERFERENCE WITH AN EXISTING FACILITY.

PAYMENT FOR ALL THE OPERATIONS DESCRIBED ABOVE SHALL BE INCLUDED IN THE CONTRACT PRICE FOR THE PERTINENT 603 CONDUIT ITEM.

REVIEW OF DRAINAGE FACILITIES

BEFORE ANY WORK IS STARTED ON THE PROJECT AND AGAIN BEFORE FINAL ACCEPTANCE BY THE STATE, REPRESENTATIVES OF THE STATE AND THE CONTRACTOR, ALONG WITH LOCAL REPRESENTATIVES, SHALL MAKE AN INSPECTION OF ALL EXISTING SEWERS WHICH ARE TO REMAIN IN SERVICE AND WHICH MAY BE AFFECTED BY THE WORK. THE CONDITION OF THE EXISTING CONDUITS AND THEIP APPURTENANCE SHALL BE DETERMINED FROM FIELD OBSERVATIONS. RECORDS OF THE INSPECTION SHALL BE KEPT IN WRITING BY THE STATE.

ALL NEW CONDUITS, INLETS, CATCH BASINS, AND MANHOLES CONSTRUCTED AS A PART OF THE PROJECT SHALL BE FREE OF ALL FOREIGN MATTER AND IN A CLEAN CONDITION BEFORE THE PROJECT WILL BE ACCEPTED BY THE STATE.

ALL EXISTING SEWERS INSPECTED INITIALLY BY THE ABOVE MENTIONED PARTIES SHALL BE MAINTAINED AND LEFT IN A CONDITION REASONABLY COMPARABLE TO THAT DETERMINED BY THE ORIGINAL INSPECTION. ANY CHANGE IN THE CONDITION RESULTING FROM THE CONTRACTOR'S OPERATIONS SHALL BE CORRECTED BY THE CONTRACTOR TO THE SATISFACTION OF THE ENGINEER.

PAYMENT FOR ALL OPERATIONS DESCRIBED ABOVE SHALL BE INCLUDED IN THE CONTRACT PRICE FOR THE PERTINENT 603 CONDUIT ITEMS.

RESIDENTIAL AND COMMERCIAL DRAINAGE CONNECTIONS

EXISTING ROOF DRAINS, FOOTER DRAINS, OR YARD DRAINS, DISTURBED BY THE WORK, SHALL BE PROVIDED WITH UNOBSTRUCTED OUTLETS BY CONNECTING A CONDUIT THROUGH THE CURB OR INTO A DRAINAGE STRUCTURE. THE LOCATION, TYPE, SIZE AND GRADE OF THE NEW CONDUIT REQUIRED TO REPLACE OR EXTEND THE EXISTING DRAIN WILL BE DETERMINED BY THE ENGINEER.

THE FOLLOWING CONDUIT TYPES MAY BE USED: 707.33, 707.41 NON-PERFORATED, 707.42, 707.43, 707.45, 707.46, 707.47, 707.51, 707.52 PS46 MIN.

THE FOLLOWING ESTIMATED QUANTITIES HAVE BEEN INCLUDED IN THE GENERAL SUMMARY FOR USE AS DIRECTED BY THE ENGINEER FOR THE WORK NOTED ABOVE:

603, 6" CONDUIT, TYPE B, FOR DRAINAGE CONNECTION 500 LIN. FT.

603, 6" CONDUIT, TYPE C, FOR DRAINAGE CONNECTION 500 LIN. FT.

603, 6" CONDUIT, TYPE F, FOR DRAINAGE CONNECTION 500 LIN. FT.

ITEM 603 - CONDUIT, MISC.: FILL AND PLUG EXISTING CONDUIT

THIS ITEM SHALL CONSIST OF THE CONSTRUCTION OF BULKHEADS IN AN EXISTING CONDUIT AND FILLING THE AREA THUS SEALED OFF WITH LEAN GROUT, ITEM 613, SAND OR OTHER MATERIAL APPROVED BY THE ENGINEER.

BULKHEADS SHALL BE LOCATED AT THE LIMITS OF THE AREA TO BE FILLED AS INDICATED ON THE PLANS. THE BULKHEADS SHALL CONSIST OF BRICK OR CONCRETE MASONRY WITH A MINIMUM THICKNESS OF 24 INCHES.(SEE DETAIL SHEET DD4)

THE FILL MATERIAL SHALL BE PUMPED INTO PLACE, OR PLACED BY OTHER MEANS APPROVED BY THE ENGINEER, SO THAT, AFTER SETTLEMENT, AT LEAST 90 PERCENT OF THE CROSS-SECTIONAL AREA OF THE CONDUIT, FOR ITS ENTIRE LENGTH, SHALL BE FILLED. THE LENGTH OF FILLED AND PLUGGED CONDUIT TO BE PAID FOR SHALL BE THE ACTUAL NUMBER OF LINEAR FEET (MEASURED ALONG THE CENTERLINE OF EACH CONDUIT FROM OUTER FACE TO OUTER FACE OF BULKHEADS) FILLED AND PLUGGED AS DESCRIBED ABOVE.

THE LENGTH, MEASURED AS PROVIDED ABOVE, SHALL BE PAID FOR AT THE CONTRACT PRICE PER LINEAR FOOT FOR, ITEM 603 - CONDUIT, MISC.:, FILL AND PLUG EXISTING CONDUIT.

MANHOLES, CATCH BASINS AND INLETS REMOVED OR ABANDONED

ALL CASTINGS SHALL BE CAREFULLY REMOVED AND STORED WITHIN THE RIGHT OF WAY FOR SALVAGE BY CITY FORCES.

PAYMENT FOR ALL OF THE ABOVE SHALL BE INCLUDED IN THE CONTRACT PRICE FOR THE PERTINENT 202 ITEM.

STRUCTURES ADJUSTED TO GRADE

WHERE CERTAIN STRUCTURES ARE DETERMINED BY THE ENGINEER TO REQUIRE TOTAL REPLACEMENT IN LIEU OF ADJUSTMENT TO GRADE, THEY SHALL BE COMPLETELY REMOVED AND REPLACED WITH A NEW STRUCTURE OF THE TYPE SPECIFIED BY ENGINEER AND IN ACCORDANCE WITH ITEM 604. THE FOLLOWING ESTIMATED QUANTITIES HAVE BEEN INCLUDE FOR USE AS DIRECTED BY THE ENGINEER:

604, CATCH BASIN, NO 3	5 EACH
604, MANHOLE, NO. 3	10 EACH

ITEM SPECIAL- MISCELLANEOUS METAL

EXISTING CASTINGS MAY PROVE TO BE UNSUITABLE FOR REUSE, AS DETERMINED BY THE ENGINEER. IT SHALL BE THE CONTRACTOR'S RESPONSIBILITY TO PROVIDE THE CASTINGS OF THE REQUIRED TYPE, SIZE AND STRENGTH (HEAVY OR LIGHT DUTY) FOR THE PARTICULAR STRUCTURE IN QUESTION. ALL MATERIAL SHALL MEET ITEM 604 OF THE SPECIFICATIONS AND SHALL HAVE THE PRIOR APPROVAL OF THE ENGINEER.

THE FOLLOWING ESTIMATED QUANTITY HAS BEEN CARRIED TO THE GENERAL SUMMARY FOR USE AS DIRECTED BY THE ENGINEER.

SPECIAL, MISCELLANEOUS METAL 15000 POUNDS

THE CONTRACTOR IS CAUTIONED TO USE EXTREME CARE IN THE REMOVAL, STORAGE AND REPLACEMENT OF ALL EXISTING CASTINGS. CASTINGS DAMAGED BY THE NEGLIGENCE OF THE CONTRACTOR, AS DETERMINED BY THE ENGINEER, SHALL BE REPLACED WITH THE PROPER NEW CASTINGS AT THE EXPENSE OF THE CONTRACTOR.

ITEM 604 - INLET NO. I-3D50, TYPE A, AS PER PLAN

THIS ITEM SHALL CONSIST OF THE REMOVAL OF THE EXISTING MANHOLE TO A DEPTH OF 4 FT. BELOW THE PROPOSED GRADE AND MODIFY THE EXISTING STRUCTURE TO SUPPORT THE PROPOSED INLET. FOR FURTHER DETAILS, SEE STANDARD CONSTRUCTION DRAWING I-2.2M.

PAYMENT FOR THIS REMOVAL, REPLACEMENT, EXCAVATION, BACKFILL, LABOR COMPLETE AND IN PLACE, SHALL BE PAID FOR AT THE CONTRACT PRICE BID FOR ITEM 604 - INLET NO. I-3D50, TYPE A, AS PER PLAN.

ITEM 605 - 6" SHALLOW PIPE UNDERDRAINS, AS PER PLAN

THE UNDERDRAINS AT THE TYPE A PRESSURE RELIEF JOINTS BE SHALL 707.32 TYPE CP OR 707.41 AS SHOWN ON THE STANDARD CONSTRUCTION DRAWING BP-2.3.

CONSTRUCTION NOISE

ANY POWER OPERATED CONTRUCTION TYPE DEVICE, SHALL NOT BE OPERATED AT ANY TIME IN SUCH A MANNER THAT THE NOISE CREATED SUBSTANTIALLY EXCEEDS THE NOISE CUSTOMARILY AND NECESSARLIY ATTENDANT TO THE REASONABLE AND EFFICIENT PERFORMANCE OF SUCH EQUIPMENT.

ITEM SPECIAL-PRESSURE RELIEF JOIN, TYPE A

THIS ITEM SHALL BE CONSTRUCTED AS SHOWN ON STANDARD CONSTRUCTION DRAWING BP-2.3

SANITARY SEWER NOTES

GENERAL

ALL SANITARY SEWER WORK SHALL CONFORM TO THE CONTRACT DRAWINGS AND THE LATEST OHIO DEPARTMENT OF TRANSPORTATION CONSTRUCTION AND MATERIAL SPECIFICATIONS (CMS).

SANITARY SEWER PIPE (12-INCH DIAMETER AND SMALLER) SHALL BE VITRIFIED CLAY PIPE, ITEM 603, 706.08 WITH JOINTS AS PER 706.12. SANITARY SEWER PIPE (16-INCH DIAMETER AND LARGER) SHALL BE REINFORCED CONCRETE PIPE, EPOXY COATED, ITEM 603, 706.03 TYPE A, WITH O-RING GASKETED JOINTS.

THE CONTRACTOR SHALL UNCOVER THE EXISTING PIPES AND VERIFY THE ELEVATIONS AT PARKWOOD COURT, STATION 1+20, 1' LT. PRIOR TO STARTING WORK. IN CASE OF DISCREPANCY, THE ENGINEER MAY ADJUST THE FLOW LINES AS REQUIRED. THE COST OF THE WORK SHALL BE INCLUDED IN OTHER ITEMS OF WORK AND NO ADDITIONAL COMPENSATION SHALL BE MADE.

LINES, GRADES, AND CONSTRUCTION STAKING

THE CONTRACTOR SHALL BE RESPONSIBLE FOR THE STAKING OF THE SANITARY SEWER LINE. ALL LAYOUT WORK, CONSTRUCTION STAKING, AND VERTICAL CONTROL SHALL BE PERFORMED BY A REGISTERED SURVEYOR LICENSED BY THE STATE OF OHIO.

THE CONTRACTOR SHALL INSURE THAT THE FINISHED WORK CONFORMS TO THE LINE, GRADE, ELEVATION, AND DIMENSION OF THE PLANS. THERE SHALL BE NO SPECIAL COMPENSATION TO THE CONTRACTOR FOR THE COST OF ANY WORK OR DELAY OCCASIONED BY GIVEN LINES, GRADES, ELEVATIONS, OTHER NECESSARY MEASUREMENT, OR BY INSPECTION.

THE WORK UNDER THIS ITEM SHALL BE PAID FOR UNDER THE UNIT PRICES BID FOR VARIOUS ITEMS OF WORK AND NO ADDITIONAL COMPENSATION SHALL BE PROVIDED.

SUM-8-0.63

EXISTING SERVICE CONNECTIONS

ALL ACTIVE SERVICE CONNECTIONS WITHIN THE SANITARY SEWER TRENCH SHALL BE SUPPORTED ACROSS THE TRENCH AND PROTECTED.

IF THESE CONNECTIONS ARE DAMAGED, THEY SHALL BE REPLACED IN KIND. THE COST FOR SUPPORTING OR REPLACING THE SERVICE CONNECTIONS WITHIN THE SANITARY SEWER RELOCATION WORK LIMITS SHALL BE INCLUDED IN OTHER ITEMS OF WORK AND NO ADDITIONAL COMPENSATION WILL BE MADE.

USE OF SEWERS AND CONDUITS

THE STATE SHALL HAVE THE RIGHT TO CONNECT ANY SEWER, CONDUIT, OR PIPE LINE WITH THE SEWERS AND THEIR APPURTENANCES, HEREIN DESCRIBED, OR TO GRANT PERMITS TO MAKE CONNECTIONS, AND NO EXTRA ALLOWANCES SHALL BE MADE TO SAID CONTRACTOR ON ACCOUNT THEREOF.

MAINTAINING SEWAGE FLOW

THE CONTRACTOR SHALL BE REQUIRED TO BY-PASS AND MAINTAIN THE FLOW IN ALL EXISTING LIVE SANITARY AND STORM SEWERS DURING CONSTRUCTION. SEWER FLOWS SHALL BE MAINTAINED AT THE EXISTING LEVEL OF SERVICE. THE METHOD EMPLOYED SHALL BE APPROVED BY THE ENGINEER. IF THE EXISTING SANITARY SEWER IS DAMAGED, SEWAGE SHALL BE PUMPED TO THE NEXT DOWNSTREAM MANHOLE WHILE REPAIRS ARE BEING MADE. NO STORM WATER RUNOFF WILL BE PERMITTED TO BE DIVERTED TO ANY SANITARY SEWER. THE FULL COST OF BY-PASSING AND MAINTAINING SEWAGE FLOW SHALL BE INCLUDED IN THE PRICES BID FOR OTHER ITEMS OF WORK AND NO ADDITIONAL COMPENSATION WILL BE ALLOWED THEREFORE.

REMOVING WATER

THE CONTRACTOR SHALL AT ALL TIMES DURING CONSTRUCTION, PROVIDE AND MAINTAIN AMPLE MEANS AND DEVICES WITH WHICH TO PROMPTLY REMOVE AND PROPERLY DISPOSE OF ALL WATER ENTERING THE TRENCHES OR OTHER PARTS OF THE WORK, AND KEEP SAID EXCAVATIONS AS DRY AS POSSIBLE UNTIL THE STRUCTURES TO BE INSTALLED THEREIN ARE COMPLETED. ALL WATER PUMPED OR DRAINED FROM THE WORK SHALL BE DISPOSED OF IN A SUITABLE MANNER WITHOUT DAMAGE TO ADJACENT PROPERTY, OR TO SEWERS, PAVEMENTS, ELECTRICAL CONDUITS, OR PROPOSED SANITARY SEWERS. THE FULL COST OF REMOVING ALL WATER SHALL BE INCLUDED AS INCIDENTAL IN THE UNIT PRICE BID FOR THE VARIOUS ITEMS OF WORK AND NO ADDITIONAL COMPENSATION SHALL BE PROVIDED.

EXCAVATION AND PREPARATION OF TRENCH

UNLESS OTHERWISE PROVIDED, ALL EXCAVATION SHALL BE UNCLASSIFIED AND SHALL INCLUDE THE REMOVAL AND DISPOSAL OF ALL MATERIAL ENCOUNTERED IN EXCAVATION, INCLUDING PAVEMENT SURFACE, PAVEMENT BASE, AND OTHER MATERIALS. IT SHALL ALSO INCLUDE THE PLACING AND REMOVAL OF THE SHEETING AND BRACING, AND REMOVING WATER ENCOUNTERED. ALL EXCAVATED MATERIALS SHALL BE STORED IN CONVENIENT PILES NEAR THE CONSTRUCTION SITES AND REMOVED FROM THE SITE OF THE WORK UNLESS OTHERWISE SPECIFIED.

SHEETING AND BRACING FOR TRENCH EXCAVATION

THE CONTRACTOR SHALL FURNISH AND INSTALL TIMBER AND OTHER SHEETING AND BRACING, AND SHALL TAKE ALL PRECAUTIONS REQUIRED TO PREVENT ANY CAVING OR SETTLING OF EXCAVATION OR TRENCH WALLS. THE TYPE AND AMOUNT OF SUCH PROTECTION SHALL BE CONSISTENT WITH THE MAGNITUDE OF THE WORK AND THE CHARACTER OF THE MATERIAL IN WHICH THE EXCAVATION IS MADE, AND SHALL BE IN ACCORDANCE WITH THE LATEST OSHA REGULATIONS.

WHEN SHEET PILING IS USED, IT SHALL BE HELD IN PLACE BY LONGITUDINAL BEAMS AND CROSS BRACES OR STRUTS AS REQUIRED TO RESTRAIN THE TOP OF THE SHEETING. IF TIMBER SHEETING AND BRACING IS USED, IT SHALL BE OF GOOD QUALITY HARDWOOD CONSTRUCTION.

THE ENTIRE COST OF SUCH WORK SHALL BE INCLUDED IN THE UNIT PRICES BID FOR SEWERS IN PLACE AND NO ADDITIONAL COMPENSATION SHALL BE PROVIDED THEREFORE.

WHEN THE BACKFILL IS HIGH ENOUGH TO REMOVE THE SHEETING AND BRACING WITH SAFETY, AND WHERE NO WRITTEN ORDER FROM THE ENGINEER HAS BEEN GIVEN TO LEAVE THE SAME IN PLACE, THE SHEETING AND BRACING SHALL BE REMOVED IN SUCH A MANNER AS TO PREVENT DAMAGE BY CAVING OF THE TRENCH WALLS OR UNDERMINING THE SEWER PIPE BEDDING.

WHENEVER TIMBER OR OTHER SHEETING IS DRIVEN TO A DEPTH BELOW THE ELEVATION OF THE BOTTOM OF THE PIPE, THAT PORTION OF THE SHEETING BELOW THE ELEVATION OF THE TOP OF PIPE SHALL NOT BE DISTURBED OR REMOVED. PAYMENT FOR THE PORTION OF THE SHEETING BELOW THE ELEVATION OF THE TOP OF THE PIPE WHICH CANNOT BE REMOVED OR DISTURBED SHALL BE INCLUDED IN THE UNIT PRICE BID FOR SEWERS IN PLACE AND NO SEPARATE PAYMENT WILL BE MADE THEREFORE.

REMOVAL OF EXCAVATED MATERIAL

ALL MATERIAL IN EXCESS OF THAT REQUIRED FOR BACKFILL AND ALL MATERIAL NOT SUITABLE OR NOT APPROVED BY THE ENGINEER FOR BACKFILL MUST BE REMOVED FROM THE SITE OF THE WORK AND DISPOSED OF AT OTHER LOCATIONS BY THE CONTRACTOR. THE CONTRACTOR IS RESPONSIBLE FOR OBTAINING PERMISSION (AND PERMITS, IF NEEDED) FOR SUCH DISPOSAL. THE COST OF REMOVING ALL EXCAVATED MATERIAL, INCLUDING EARTH, OLD PIPE, PAVING MATERIALS, CONCRETE, AND OTHER DEBRIS CREATED IN THE COURSE OF THE WORK SHALL BE INCLUDED IN THE UNIT PRICE BID FOR OTHER ITEMS OF WORK AND NO ADDITIONAL COMPENSATION WILL BE ALLOWED THEREFORE.

MANHOLE, (MISC. AKRON MH-2)

MANHOLES SHALL BE BUILT IN ACCORDANCE WITH THE CITY OF AKRON DEPARTMENT OF PUBLIC SERVICE BUREAU OF ENGINEERING, DWG MH-2. MANHOLES SHALL BE CONSTRUCTED WITH A BRICK CHANNEL AND BENCH TO PROVIDE A CONTINUOUS FLOW LINE THROUGH THE MANHOLE. ALL INTERIOR CONCRETE SURFACES SHALL BE EPOXY COATED PER ITEM 706.03.

MANHOLE, (MISC. AKRON MH-9)

DROP MANHOLES SHALL BE BUILT IN ACCORDANCE WITH THE CITY OF AKRON DEPARTMENT OF PUBLIC SERVICE BUREAU OF ENGINEERING, DWG MH-9. MANHOLES SHALL BE CONSTRUCTED WITH A BRICK CHANNEL AND BENCH TO PROVIDE A CONTINUOUS FLOW LINE THROUGH THE MANHOLE. ALL INTERIOR CONCRETE SURFACES SHALL BE EPOXY COATED PER ITEM 706.03.

THE PROPOSED DROP MANHOLE AT STATION 331+55.3, 22.7' LT. (FOUNTAIN ST.) SHALL HAVE A 15-INCH DIAMETER DROP STACK.

ACCEPTANCE TEST FOR SANITARY SEWERS

NEW SANITARY SEWERS SHALL BE TESTED AS FOLLOWS:

A. LOW PRESSURE AIR TEST
B. PHOTOGRAPHIC TEST

A. LOW PRESSURE AIR TEST (SEWERS 24-INCH DIAMETER AND SMALLER)

AS SOON AFTER A REASONABLE SECTION OF THE SEWER AND THE MANHOLES HAVE BEEN COMPLETED, THE CONTRACTOR SHALL FURNISH ALL EQUIPMENT, MATERIALS, AND PERSONNEL TO CONDUCT A "LINE ACCEPTANCE" TEST USING LOW PRESSURE AIR. THE EQUIPMENT TO BE USED SHALL HAVE PRIOR APPROVAL AND THE TEST SHALL BE CONDUCTED UNDER THE SUPERVISION OF THE ENGINEER. THE LINE ACCEPTANCE TEST SHALL BE CONDUCTED AFTER BACKFILLING HAS BEEN COMPLETED.

ALL SLANTS, TEES, MANHOLE TERMINATIONS, OR END OF LATERAL STUBS SHALL BE SUITABLY CAPPED TO WITHSTAND THE INTERNAL TEST PRESSURES. SUCH CAPS SHALL BE A TYPE WHICH IS EASILY REMOVABLE FOR FUTURE LATERAL CONNECTIONS OR EXTENSIONS.

AFTER A MANHOLE-TO-MANHOLE SECTION OF THE LINE HAS BEEN CLEANED, IT SHOULD BE PLUGGED AT EACH MANHOLE WITH PNEUMATIC PLUGS INFLATED TO 35 PSIG INTERNAL PRESSURE. THE DESIGN OF THE PLUGS SHALL BE SUCH THAT THEY WILL HOLD AGAINST THE LINE TEST PRESSURE WITHOUT REQUIRING EXTERNAL BLOCKING OR BRACING. EACH PNEUMATIC PLUG SHALL HAVE A SEALING LENGTH EQUAL TO OR GREATER THAN THE DIAMETER OF THE PIPE IN WHICH IT IS TO BE USED SO THAT EFFECTIVE SEALING WILL ALWAYS TAKE PLACE AROUND ANY NODULE OR LUMP THAT MAY BE ON THE INNER SURFACE OF THE PIPE. BEFORE ACTUAL LINE TESTING STARTS, THE PNEUMATIC PLUGS SHALL PASS THE FOLLOWING QUALIFYING TEST IN THE PRESENCE OF THE ENGINEER: ONE LENGTH OF PIPE SHALL BE LAID ON THE GROUND AND SEALED AT BOTH ENDS WITH THE PNEUMATIC PLUGS TO BE CHECKED; AIR SHALL BE INTRODUCED INTO THE PIPE UNTIL THE PIPE PRESSURE REACHES 15 PSIG. THE PNEUMATIC PLUGS SHALL PASS THE AFOREMENTIONED QUALIFICATIONS BEFORE BEING USED TO TEST THE ACTUAL INSTALLATION.

ONE PNEUMATIC PLUG USED IN THIS TESTING PROCEDURE SHALL HAVE TWO FACTORY EQUIPPED HOSE CONNECTIONS. IN ADDITION TO THAT HOSE CONNECTION USED ONLY FOR THE INFLATION OF THE PNEUMATIC PLUG. ONE OF THE ADDITIONAL HOSE CONNECTIONS SHALL BE USED FOR CONTINUOUSLY READING THE AIR PRESSURE RISE IN THE SEALED LINE. THE SECOND ADDITIONAL HOSE CONNECTION SHALL BE USED ONLY FOR INTRODUCING LOW PRESSURE AIR INTO THE SEALED LINE.

THERE SHALL BE A MINIMUM THREE INCH (3") DIAMETER, 0-36 PSIG GAUGE SUPPLIED FOR READING THE INTERNAL PRESSURE OF THE LINE BEING TESTED.

CALIBRATIONS FROM THE 0-10 PSIG RANGE SHALL BE IN TENTHS OF POUNDS (NOT OUNCES) AND THIS 0-10 PORTION SHALL COVER 90% OF THE COMPLETE DIAL RANGE.

LOW PRESSURE AIR SHALL BE INTRODUCED INTO THE SEALED LINE UNTIL THE INTERNAL PRESSURE REACHES 4.0 PSIG GREATER THAN THE AVERAGE BACK PRESSURE OF ANY GROUND WATER PRESSURE THAT MAY BE OVER THE PIPE. AT LEAST TWO (2) MINUTES SHALL BE ALLOWED FOR THE AIR PRESSURE TO STABILIZE. AFTER THE STABILIZATION PERIOD, THE HOSE FOR INTRODUCING LOW PRESSURE AIR INTO THE SEALED LINE SHALL BE DISCONNECTED FROM THE AIR SOURCE IN SUCH A MANNER AS TO RETAIN THE PRESSURE IN THE SEALED LINE. THE STARTING PRESSURE SHALL NOT EXCEED 9.0 PSI.

THE PORTION OF THE LINE BEING TESTED SHALL BE ACCEPTED IF THE PORTION UNDER TEST DOES NOT LOSE AIR AT A RATE GREATER THAN 0.003 CFM PER SQUARE FOOT OF INTERNAL PIPE SURFACE WHEN TESTED AT AN AVERAGE PRESSURE OF 3.0 PSIG GREATER THAN ANY PRESSURE EXERTED BY GROUND WATER THAT MAY BE OVER THE PIPE AT THE TIME OF THE TEST.

THE ABOVE REQUIREMENTS SHALL BE ACCOMPLISHED BY PERFORMING THE TEST AS FOLLOWS: THE TIME REQUIRED IN MINUTES FOR THE PRESSURE TO DECREASE FROM 3.5 TO 2.5 PSIG GREATER THAN THE AVERAGE BACK PRESSURE OF ANY GROUND WATER THAT MAY BE OVER THE PIPE SHALL NOT BE LESS THAN THE TIME SHOWN FOR THE GIVEN DIAMETER IN THE FOLLOWING TABLE:

PIPE DIAMETER IN INCHES	MINUTES
8	4.0
10	5.0
12	5.5

REVISIONS: 05/15/2002 by MAM

CALCULATED JDS

CHECKED TGH

GENERAL NOTES

SUM-8-0.63

ACCEPTANCE TEST FOR SANITARY SEWERS (CONT.)

A. LOW PRESSURE AIR TEST (CONT.)

WHERE HIGH GROUND WATER IS KNOWN TO EXIST, THE HEIGHT IN FEET OF GROUND WATER ABOVE THE INVERT OF THE SEWER SHALL BE DIVIDED BY 2.3 TO ESTABLISH THE POUNDS OF PRESSURE THAT WILL BE ADDED TO THE INTERNAL AIR PRESSURE USED FOR THE LINE ACCEPTANCE TEST IN DETERMINING THE TIME IN MINUTES FOR THE AIR PRESSURE TO DECREASE 1.0 PSIG.

THE CONTRACTOR SHALL FURNISH ALL LABOR, EQUIPMENT, MATERIAL, AND WATER, INCLUDING GAUGES AND METERS, ALL COSTS TO THE CONTRACTOR REQUIRED BY THESE TESTS ARE TO BE INCLUDED IN THE UNIT PRICES BID PER LINEAR FOOT FOR THE PERTINENT 603 ITEM.

IF THE INSTALLATION FAILS TO MEET THE REQUIREMENTS OF THIS TEST, THE CONTRACTOR SHALL DETERMINE AT HIS OWN EXPENSE, THE SOURCE OF LEAKAGE. THE CONTRACTOR SHALL REPAIR OR REPLACE ALL DEFECTIVE MATERIALS AND/OR WORKMANSHIP WITH THE METHOD APPROVED BY THE ENGINEER, AND THEN RE-TEST THE INSTALLATION FOR COMPLIANCE WITH THESE SPECIFICATIONS.

B. PHOTOGRAPHIC TEST

ALL SANITARY SEWERS CONSTRUCTED UNDER THIS CONTRACT SHALL BE SUBJECT TO VISUAL INSPECTION AND SHALL HAVE A FINAL INSPECTION BY TELEVISED METHODS. THE CONTRACTOR SHALL CLEAN THE SEWER AND SHALL ENGAGE THE SERVICES OF A COMPETENT NON-AFFILIATED FIRM TO TELEVISE THE SEWER.

THE SEWER SHALL BE TELEVISED AND RECORDED ON STD. C-120 VHS VIDEO CASSETTES. THE TAPE, ALONG WITH AN AUDIO COMMENTARY AND A WRITTEN REPORT AS TO THE CONDITION OF THE SEWER, SHALL BE SUBMITTED TO THE ENGINEER.

BEFORE ACCEPTANCE OF THE SEWER BY THE ENGINEER, THE CONTRACTOR SHALL REPAIR ANY DEFECTS WHICH ARE FOUND WITH METHOD APPROVED BY THE ENGINEER, AND THE REPAIRED SEWER SHALL THEN BE REINSPECTED BY THE METHOD PREVIOUSLY SPECIFIED HEREIN.

THE COST OF CLEANING AND TELEVISING THE SANITARY SEWER SHALL BE INCLUDED IN THE PRICE BID FOR SEWERS AND NO SEPARATE COMPENSATION SHALL BE PROVIDED. THIS COST SHALL INCLUDE ANY RECLEANING NEEDED DUE TO REPAIR OF ANY DEFECTS.

SANITARY CONNECTIONS

ANY RECORDED OR UNRECORDED ACTIVE CONNECTION TO A SANITARY SEWER ENCOUNTERED DURING CONSTRUCTION SHALL BE RECONNECTED TO THE EXISTING OR PROPOSED SANITARY SEWER TO THE SATISFACTION OF THE ENGINEER.

THE FOLLOWING CONDUIT TYPES MAY BE USED: 707.47 OR 706.08 WITH JOINTS AS PER 706.12.

THE FOLLOWING ESTIMATED QUANTITIES HAVE BEEN INCLUDED IN THE GENERAL SUMMARY FOR USE AS DIRECTED BY THE ENGINEER FOR THE WORK NOTED ABOVE:

603, 6" CONDUIT, TYPE B 250 LIN. FT.

603, 6" CONDUIT, TYPE C 250 LIN. FT.

CONSTRUCTION SEQUENCE AND FLOW BYPASSING FOR SANITARY SEWER WORK AT EAST SIDE OF MARKET STREET BRIDGE

THE FOLLOWING CONSTRUCTION SEQUENCE IS RECOMMENDED FOR THE SANITARY SEWER WORK ON THE EAST SIDE OF THE MARKET STREET BRIDGE:

1.) AFTER THE DRAINAGE SYSTEM DOWNSTREAM OF STORM MANHOLE (STA. 331+45, 26' RT.) IS CONSTRUCTED, BEGIN THE SANITARY SEWER WORK.

2.) CONSTRUCT THE PROPOSED 30-INCH AND 33-INCH DIAMETER SEWERS AND MANHOLES BETWEEN STATIONS 331+62.64, 46.6' LT. AND STA. 330+99.2, 1.1' LT. DIRECT FLOWS TO THE NEW SEWER SYSTEM.

3.) REMOVE THE EXISTING SEWER SYSTEM BETWEEN STATIONS 331+62, 41' LT. AND STA. 330+99.2, 1.1 LT.

THE EXISTING SANITARY SEWER FLOWS ON MARKET ST. WILL NEED TO BE MAINTAINED UNTIL THE PROPOSED SEWER IMPROVEMENTS ARE IN PLACE. THE CONTRACTOR SHALL FURNISH ALL LABOR, MATERIALS, POWER, MAINTENANCE, ETC. TO IMPLEMENT A TEMPORARY FLOW BYPASS SYSTEM FOR THE PURPOSE OF DIVERTING EXISTING FLOW AROUND OR THROUGH THE WORK AREA, AS NECESSARY THROUGHOUT THE DURATION OF THE SANITARY WORK. THE DESIGN AND OPERATION OF THE TEMPORARY FLOW BYPASS SYSTEM SHALL BE THE RESPONSIBILITY OF THE CONTRACTOR. THE CONTRACTOR SHALL SUBMIT DETAILED PLANS OF THE PROPOSED TEMPORARY FLOW BYPASS SYSTEM TO THE OWNER PRIOR TO CONSTRUCTION. FLOWS SHALL BE BYPASSED TO THE EXISTING 33-INCH DIAMETER TRUNK LINE ON MARKET ST.

THE FLOW BYPASS SYSTEM MAY REQUIRE THE DESIGN AND CONSTRUCTION OF TEMPORARY MANHOLE OR SEWER OPENINGS, SPECIAL FITTINGS, BULKHEADS, PLUGS, FLUME PIPES, AND/OR TEMPORARY PUMPING SYSTEM. THE COST OF THE TEMPORARY FLOW BYPASS SYSTEM SHALL BE INCLUDED IN THE PRICE BID FOR THE SANITARY SEWERS AND NO SEPARATE COMPENSATION SHALL BE PROVIDED.

84-INCH DIAMETER PRECAST MANHOLE - TYPE I AND 120-INCH DIAMETER PRECAST MANHOLE - TYPE I

THE PRECAST MANHOLES SHALL BE DESIGNED FOR AASHTO HS-25 LOADING. THE CONTRACTOR SHALL SUBMIT SHOP DRAWINGS AND STRUCTURAL DESIGN CALCULATIONS PREPARED AND SEALED BY AN OHIO REGISTERED PROFESSIONAL ENGINEER.

ALL INTERIOR CONCRETE SURFACES OF THE 84" AND 120" DIAMETER MANHOLES SHALL BE EPOXY COATED PER ITEM 706.03.

THE 84" DIAMETER MANHOLE IS LOCATED AT STA. 78+16.53, 61.08' LT ℄ SR8. THE 120" DIAMETER MANHOLE IS LOCATED AT STA. 232+65.66, 39.66' LT ℄ GOODKIRK ST.

FOR THE PROPOSED 120-INCH DIAMETER PRECAST MANHOLE - TYPE I, THE 54" DIAMETER CONNECTION PIPES SHALL BE INCLUDED FOR PAYMENT WITH THE STRUCTURE.

ENVIROMENTAL

ENDANGERED SPECIES HABITAT

THIS PROJECT IS WITHIN THE RANGE OF THE FEDERALLY ENDANGERED INDIANA BAT (MYOTIS SODALIS) AND MAY IMPACT SUMMER ROOSTING HABITAT FOR THIS SPECIES. THE SUMMER ROOSTING HABITAT FOR THE INDIANA BAT CONSISTS OF LIVING OR DEAD TREES OR SNAGS WITH EXFOLIATING, PEELING OR LOOSE BARK, SPLIT TRUNKS AND/OR BRANCHES OR CAVITIES. THEREFORE, ANY UNAVOIDABLE CUTTING OF TREES WILL BE PERFORMED ONLY AFTER SEPTEMBER 15 AND BEFORE APRIL 15.

ASBESTOS NOTIFICATION

AN ASBESTOS SURVEY OF THE SUM-8-0064 (SFN 7700091), SUM-8-0087 (SFN 7700156), SUM-8-0116 (SFN 7700180), SUM-8-0125 (SFN 7700210), SUM-8-0159 (SFN 7700245) AND SUM-8-0175 (SFN 7700334) BRIDGES SCHEDULED FOR REHABILITATION OR REPLACEMENT WAS CONDUCTED BY A CERTIFIED ASBESTOS HAZARD EVALUATION SPECIALIST. THE SURVEY DETERMINED THAT NO ASBESTOS IS PRESENT ON THESE BRIDGES.

AN ASBESTOS SURVEY OF THE SUM-8-0148 (SFN 7708297) BRIDGE SCHEDULED FOR REPLACEMENT WAS CONDUCTED BY A CERTIFIED ASBESTOS HAZARD EVALUATION SPECIALIST. APPROXIMATELY 4940 LINEAR FEET OF CATEGORY II NONFRIABLE ASBESTOS MATERIAL (CHRYSOTILE) WAS IDENTIFIED AS 4-INCH TRANSITE PIPE. THE REMOVAL AND DISPOSAL OF THE ASBESTOS CONTAINING MATERIAL MUST COMPLY WITH THE OHIO ADMINISTRATIVE CODE, THE OCCUPATIONAL SAFETY AND HEALTH ADMINISTRATIVE (OSHA) REGULATIONS AND THE NATIONAL EMISSION STANDARD FOR HAZARDOUS AIR POLLUTANTS (NESHAP) STANDARD FOR ASBESTOS.

THE CONTRACTOR SHALL PROVIDE AN INDIVIDUAL TRAINED IN THE PROVISIONS OF THE NESHAP ON SITE TO DIRECT THE REMOVAL OF THE ASBESTOS CONTAINING MATERIAL.

A COPY OF THE OHIO ENVIRONMENTAL PROTECTION AGENCY (OEPA) NOTIFICATION OF DEMOLITION AND RENOVATION FORM, PARTIALLY COMPLETED AND SIGNED BY THE BRIDGE OWNER, FOR EACH BRIDGE STRUCTURE WILL BE PROVIDED TO THE SUCCESSFUL BIDDER. THE CONTRACTOR SHALL COMPLETE THE FORMS AND SUBMIT THEM TO:

AKRON REGIONAL AIR QUALITY MANAGEMENT DISTRICT
146 S. HIGH STREET, SUITE 904
AKRON, OHIO 44308
LYNN M. MALCOLM, ADMINISTRATOR
TELEPHONE: (330) 375-2480
FAX: (330) 375-2402

AT LEAST TEN (10) WORKING DAYS PRIOR TO THE START OF THE DEMOLITION/REHABILITATION OF THE BRIDGES. THE CONTRACTOR SHALL PROVIDE A COPY OF THE COMPLETED FORMS TO THE ENGINEER.

FOR THE BRIDGES WITH NO ASBESTOS PRESENT, INFORMATION REQUIRED ON THE FORMS WILL INCLUDE:

- THE NAME, ADDRESS, TELEPHONE/FAX NUMBERS AND CONTACT PERSON OF THE DEMOLITION/GENERAL CONTRACTOR.
- THE SCHEDULED DATES FOR THE START AND COMPLETION OF THE BRIDGE REMOVAL OR RENOVATION/REHABILITATION.
- A DESCRIPTION OF THE PLANNED DEMOLITION OR RENOVATION/REHABILITATION WORK AND THE METHOD(S) TO BE USED.

FOR THE BRIDGE WITH ASBESTOS PRESENT, INFORMATION THAT MAY BE REQUIRED ON THE FORM WILL INCLUDE:

- THE NAME, ADDRESS, TELEPHONE/FAX NUMBERS AND CONTACT PERSON OF THE DEMOLITION/GENERAL CONTRACTOR.
- THE NAME, ADDRESS, TELEPHONE/FAX NUMBERS AND CONTACT PERSON OF THE ASBESTOS REMOVAL CONTRACTOR.
- THE SCHEDULED DATES FOR THE START AND COMPLETION OF THE BRIDGE REMOVAL OR RENOVATION/REHABILITATION.
- THE DATE(S) AND HOURS OF OPERATION FOR THE ASBESTOS REMOVAL.
- A DESCRIPTION OF THE PLANNED DEMOLITION OR RENOVATION/REHABILITATION WORK AND THE METHOD(S) TO BE USED.
- A DESCRIPTION OF WORK PRACTICES AND ENGINEERING CONTROLS TO BE USED TO PREVENT EMISSIONS OF ASBESTOS AT THE SITE.
- THE NAME(S), ADDRESS(ES), TELEPHONE/FAX NUMBERS AND CONTACT PERSON(S) OF THE WASTE TRANSPORTER(S) TO BE USED.
- THE NAME, ADDRESS, TELEPHONE/FAX NUMBERS AND CONTACT PERSON OF THE WASTE DISPOSAL FACILITY TO BE USED.
- A DESCRIPTION OF PROCEDURES TO BE FOLLOWED IN THE EVENT THAT UNEXPECTED ASBESTOS IS FOUND OR PREVIOUSLY NONFRIABLE ASBESTOS MATERIAL BECOMES CRUMBLED, PULVERIZED OR REDUCED TO POWDER.

A COPY OF THE OEPA FORMS ARE AVAILABLE FOR INSPECTION AT THE ODOT DISTRICT 4 OFFICE,
705 OAKWOOD STREET
RAVENNA, OHIO, 44266.

BASIS OF PAYMENT

THE CONTRACTOR SHALL FURNISH ALL FEES, LABOR, EQUIPMENT AND MATERIALS NECESSARY TO COMPLETE, SUBMIT AND COMPLY WITH THE OEPA ℄NOTIFICATION FORMS AND TO REMOVE, TRANSPORT AND DISPOSE OF THE ASBESTOS CONTAINING MATERIAL. PAYMENT FOR THIS WORK SHALL BE MADE UNDER THE CONTRACT LUMP SUM PRICE BID FOR:

ITEM SPECIAL, REMOVAL AND DISPOSAL OF APPROXIMATELY 4940 LINEAR FEET OF CATEGORY II NONFRIABLE ASBESTOS CONTAINING MATERIAL, AS PER PLAN.

REVISIONS: 05/15/2002 by MAM
CALCULATED JDS
CHECKED TGH

GENERAL NOTES

SUM-8-0.63

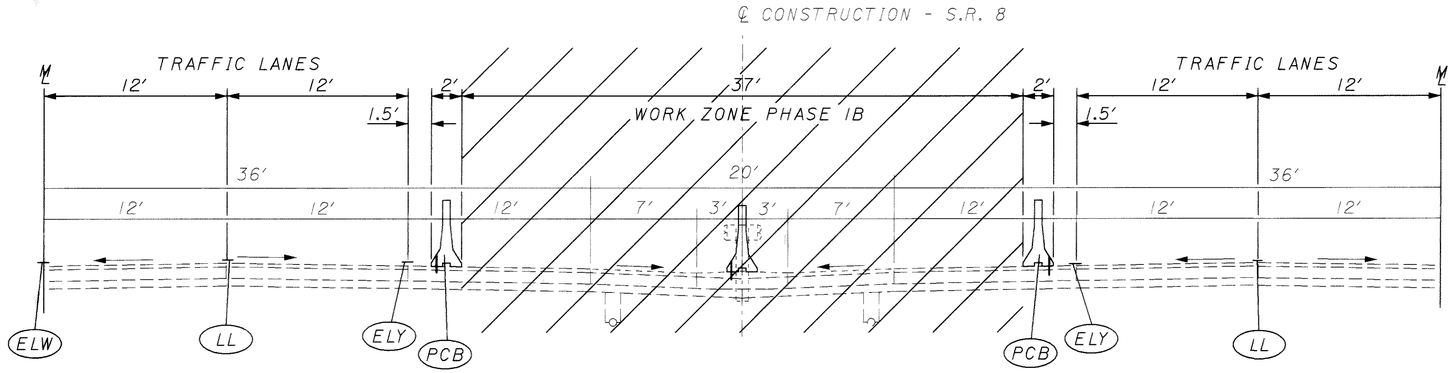

S.R. 8

STA. 32+65.00 TO STA. 91+30.65 = 5611.65 LIN. FT.*

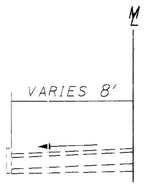

STA. 32+39.63 TO STA. 46+52.60 (LT) = 1412.97 LIN. FT.

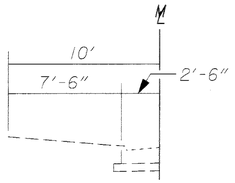

STA. 23+96.62 TO STA. 32+39.63 (LT) = 843.01 LIN. FT.
STA. 46+52.60 TO STA. 91+30.63 (LT) = 4349.03 LIN. FT.*
STA. 57+35.63 TO STA. 91+30.63 (RT, OPPOSITE HAND) = 3266 LIN. FT.*

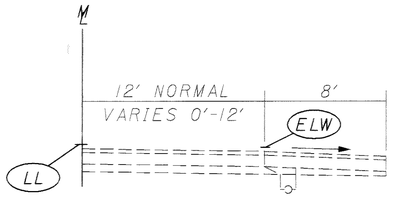

STA. 32+75 TO STA. 51+57.66 (RT) = 1882.66 LIN. FT.

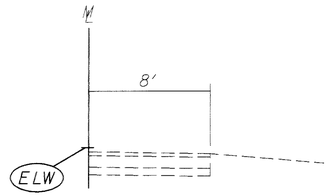

STA. 51+57.66 TO STA. 57+35.63 (RT) = 577.97 LIN. FT.

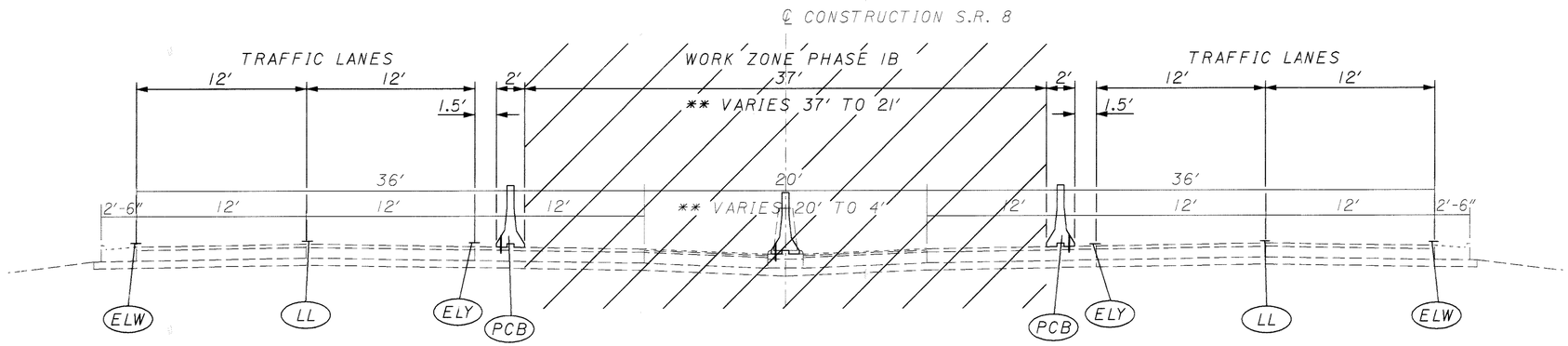

S.R. 8

STA. 91+30.63 TO STA. 97+23.13 (LEFT SIDE ONLY) = 520.50 LIN. FT.*
STA. 91+30.63 TO STA. 97+62.08 (RIGHT SIDE ONLY) = 559.45 LIN. FT.*
**STA. 97+23.13 TO STA. 102+70.38 (LEFT SIDE ONLY) = 547.25 LIN. FT.
**STA. 97+62.08 TO STA. 102+70.38 (RIGHT SIDE ONLY) = 508.30 LIN. FT.

NOTE: OUTSIDE EDGELINE LOCATION VARIES SEE PLANSHEETS

* BRIDGE STATION EXCEPTIONS NOTED ON SHEET 36

LEGEND

- (LL) ITEM 614 - TEMPORARY LANE LINE
- (ELW) ITEM 614 - TEMPORARY EDGE LINE (WHITE)
- (ELY) ITEM 614 - TEMPORARY EDGE LINE (YELLOW)
- (PCB) ITEM 622 - PORTABLE CONCRETE BARRIER, 50″, AS PER PLAN

REVISIONS: 05/15/2002 by EMS

PHASE 1B MOT TYPICAL SECTIONS - S.R. 8

SUM-8-0.63

I:\projects\9922100\civil\ts\gy001.dgn

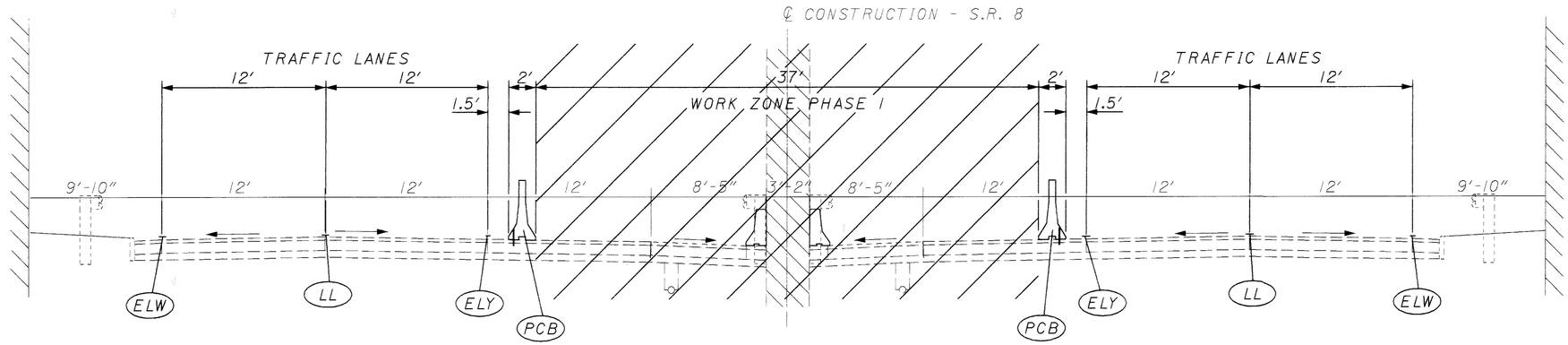

S.R. 8

STA. 60+92.30 TO STA. 61+57.30 = 65 LIN. FT. (CARROLL ST. BRIDGE)
STA. 65+58.59 TO STA. 66+22.59 = 64 LIN. FT. (BUCHTEL AVE. BRIDGE)
STA. 92+17.45 TO STA. 92+89.45 = 72 LIN. FT. (PERKINS ST. BRIDGE)

NOTE: OUTSIDE EDGELINE LOCATION VARIES
SEE PLANSHEETS

LEGEND

LL	ITEM 614 - TEMPORARY LANE LINE
ELW	ITEM 614 - TEMPORARY EDGE LINE (WHITE)
ELY	ITEM 614 - TEMPORARY EDGE LINE (YELLOW)
PCB	ITEM 622 - PORTABLE CONCRETE BARRIER, 50", AS PER PLAN

REVISIONS: 05/15/2002 by EMS

PHASE 1B MOT TYPICAL SECTIONS - S.R. 8

SUM-8-0.63

i:\projects\9922100\civil\ts\gy001.dgn

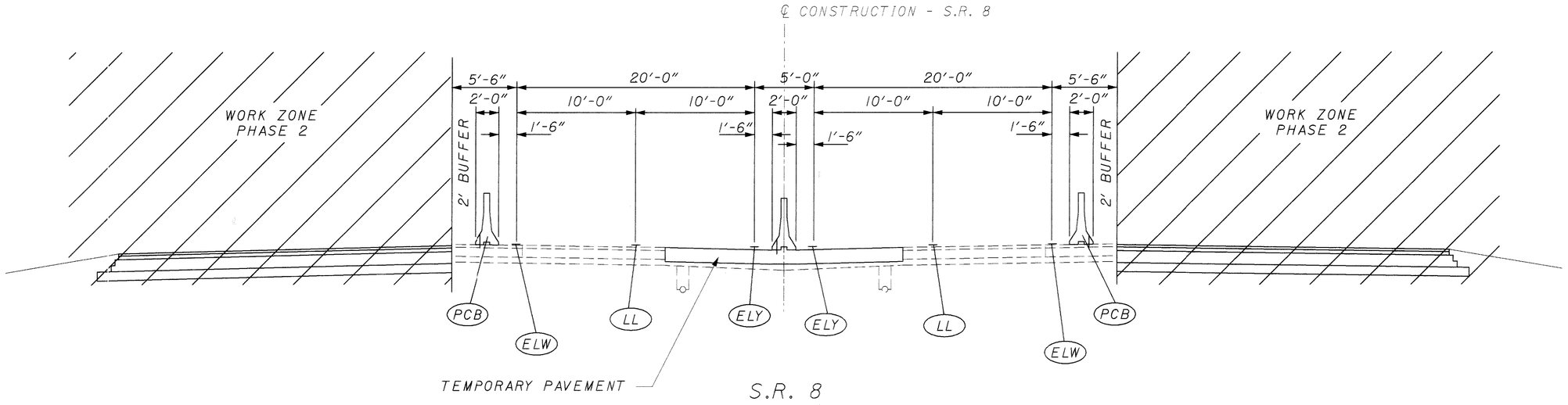

S.R. 8

STA. 31+50.00 TO STA. 45+61.10 = 1055.44 LIN. FT.
STA. 46+52.60 TO STA. 91+30.63 = 4349.03 LIN. FT.*

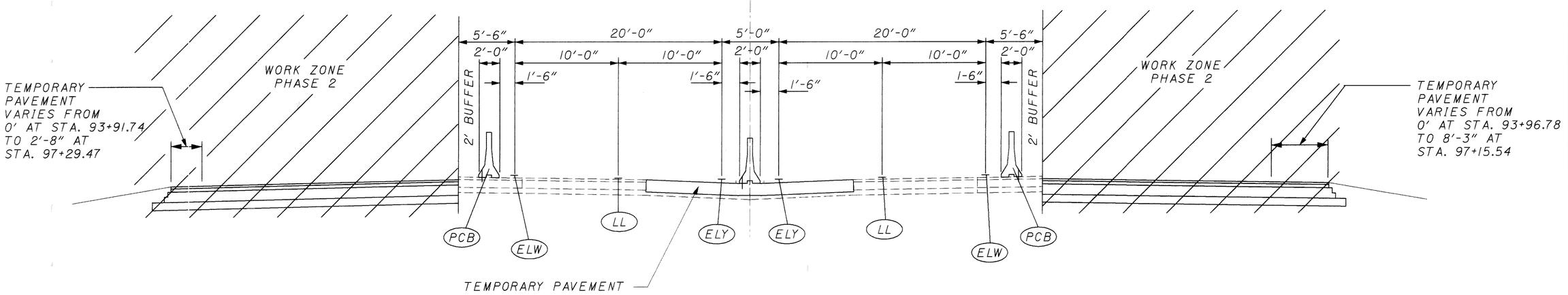

S.R. 8

STA. 91+30.63 TO STA. 97+30.00 (LEFT SIDE ONLY) = 527.37 LIN. FT.*
STA. 91+30.63 TO STA. 97+15.00 (RIGHT SIDE ONLY) = 512.37 LIN. FT.*

LEGEND

- (LL) ITEM 614 - TEMPORARY LANE LINE
- (ELW) ITEM 614 - TEMPORARY EDGE LINE (WHITE)
- (ELY) ITEM 614 - TEMPORARY EDGE LINE (YELLOW)
- (PCB) ITEM 622 - PORTABLE CONCRETE BARRIER, 50", AS PER PLAN

* BRIDGE STATION EXCEPTIONS NOTED ON SHEET 38

REVISIONS: 05/15/2002 by EMS

PHASE 2 MOT TYPICAL SECTIONS - S.R. 8

SUM-8-0.63

I:\projects\9922001\civil\ts\gy001.dgn

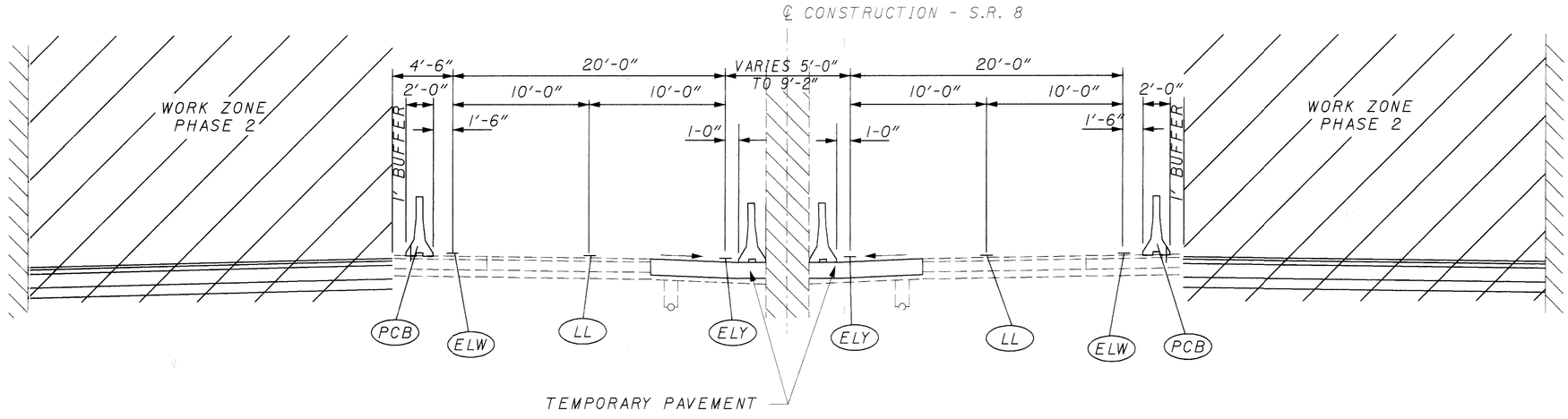

S.R. 8

STA. 60+25.00 TO STA. 62+25.00 = 200 LIN. FT. (CARROLL ST. BRIDGE)
STA. 64+90.00 TO STA. 66+90.00 = 200 LIN. FT. (BUCHTEL AVE. BRIDGE)
STA. 76+89.00 TO STA. 79+09.00 = 220 LIN. FT. (MARKET ST. BRIDGE)
STA. 83+11.00 TO STA. 85+21.00 = 210 LIN. FT. (FORGE ST. BRIDGE)
STA. 91+53.00 TO STA. 93+53.00 = 200 LIN. FT. (PERKINS ST. BRIDGE)

LEGEND

LL	ITEM 614 - TEMPORARY LANE LINE
ELW	ITEM 614 - TEMPORARY EDGE LINE (WHITE)
ELY	ITEM 614 - TEMPORARY EDGE LINE (YELLOW)
PCB	ITEM 622 - PORTABLE CONCRETE BARRIER, 50", AS PER PLAN

REVISIONS: 05/15/2002 by EMS

PHASE 2 MOT TYPICAL SECTIONS - S.R. 8

SUM-8-0.63

i:\projects\992100\civil\ts\gy001.dgn

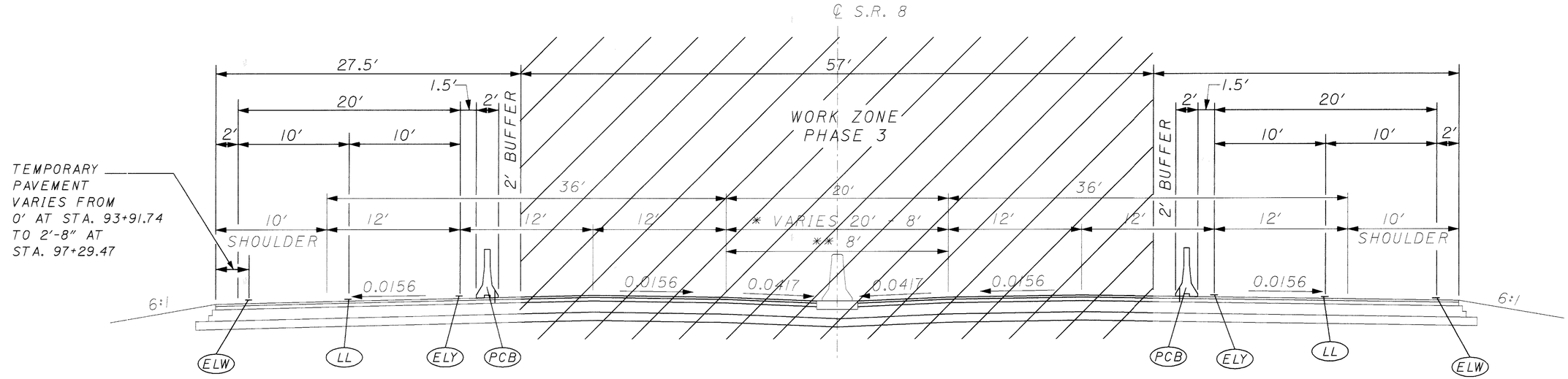

NORMAL AND SUPERELEVATED SECTION - S.R. 8

NOTE: 28′ OF PAVEMENT CONSTRUCTED IN PHASE TWO. (28′ NEEDED IN NON-BRIDGE AREAS FOR TRAFFIC IN PHASE TWO.)

† STA. 32+65.00 TO STA. 92+96.78 = 5830.78 LIN. FT.
STA. 92+96.78 TO STA. 93+91.74 (LEFT SIDE ONLY) = 94.96 LIN. FT.
* STA. 93+91.74 TO STA. 101+63.60 (LEFT SIDE ONLY) = 771.86 LIN. FT.
* STA. 95+59.66 TO STA. 97+16.31 (RIGHT SIDE ONLY) = 156.65 LIN. FT.
** STA. 101+63.60 TO STA. 102+70.38 (LEFT SIDE ONLY) = 106.78 LIN. FT.

LEGEND

(LL) ITEM 614 - TEMPORARY LANE LINE

(ELW) ITEM 614 - TEMPORARY EDGE LINE (WHITE)

(ELY) ITEM 614 - TEMPORARY EDGE LINE (YELLOW)

(PCB) ITEM 622 - PORTABLE CONCRETE BARRIER, 50″, AS PER PLAN

† BRIDGE STATION EXCEPTIONS AS NOTED ON SHEET 40.

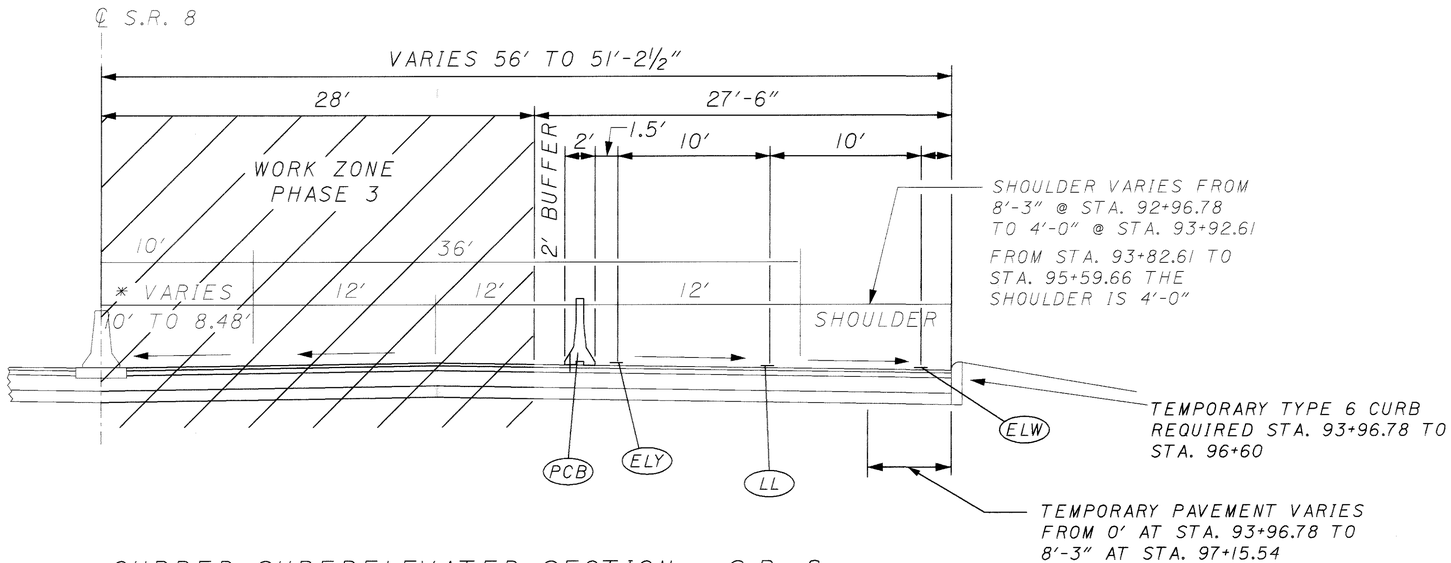

CURBED SUPERELEVATED SECTION - S.R. 8

STA. 92+96.78 TO STA. 94+64.60 (RIGHT SIDE ONLY) = 167.82 LIN. FT.
* STA. 94+64.60 TO STA. 95+59.66 (RIGHT SIDE ONLY) = 95.06 LIN. FT.
STA. 97+16.31 TO STA. 102+70.38 (RIGHT SIDE ONLY) = 554.07 LIN. FT.

REVISIONS: 05/15/2002 by EMS

PHASE 3 MOT TYPICAL SECTIONS - S.R. 8

SUM-8-0.63

i:\projects\9922100\civil\ts\gy001.dgn

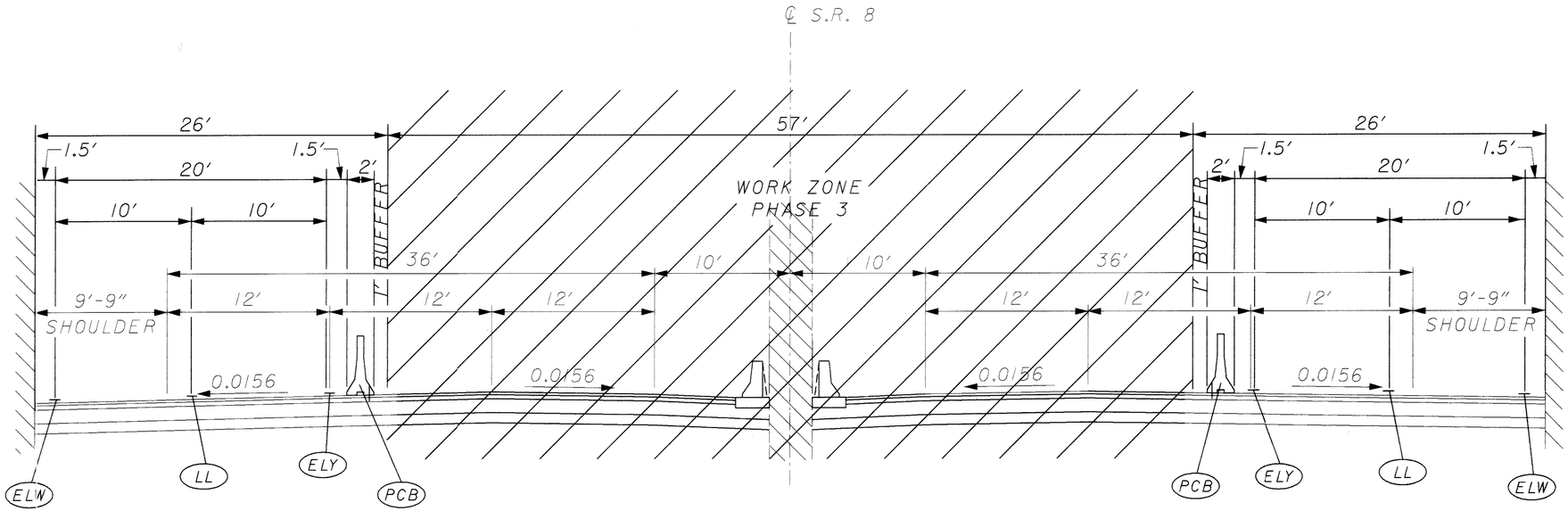

STA. 65+58.59 TO STA. 66+22.59 = 64 LIN. FT. (BUCHTEL AVE. BRIDGE)
STA. 60+92.30 TO STA. 61+57.30 = 65 LIN. FT. (CARROLL ST. BRIDGE)
STA. 92+17.45 TO STA. 92+89.45 = 72 LIN. FT. (PERKINS ST. BRIDGE)

LEGEND

LL	ITEM 614 - TEMPORARY LANE LINE
ELW	ITEM 614 - TEMPORARY EDGE LINE (WHITE)
ELY	ITEM 614 - TEMPORARY EDGE LINE (YELLOW)
PCB	ITEM 622 - PORTABLE CONCRETE BARRIER, 50", AS PER PLAN

REVISIONS: 05/15/2002 by EMS

PHASE 3 MOT TYPICAL SECTIONS - S.R. 8

SUM-8-0.63

i:\projects\99221001\civil\ts\gy001.dgn

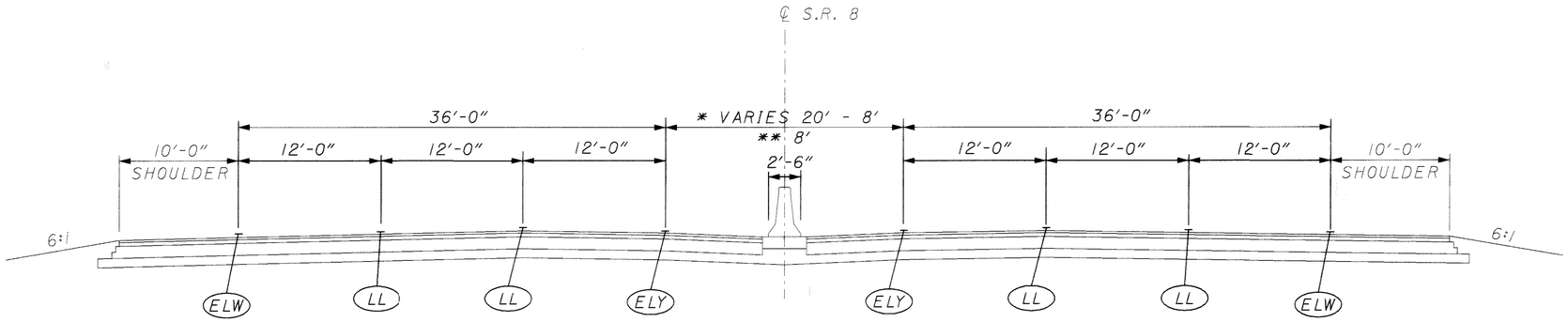

S.R. 8

STA. 32+75.00 TO STA. 95+10.00 (LEFT) = 6235.00 LIN. FT.
STA. 32+75.00 TO STA. 95+50.00 (RIGHT) = 6275.00 LIN. FT.

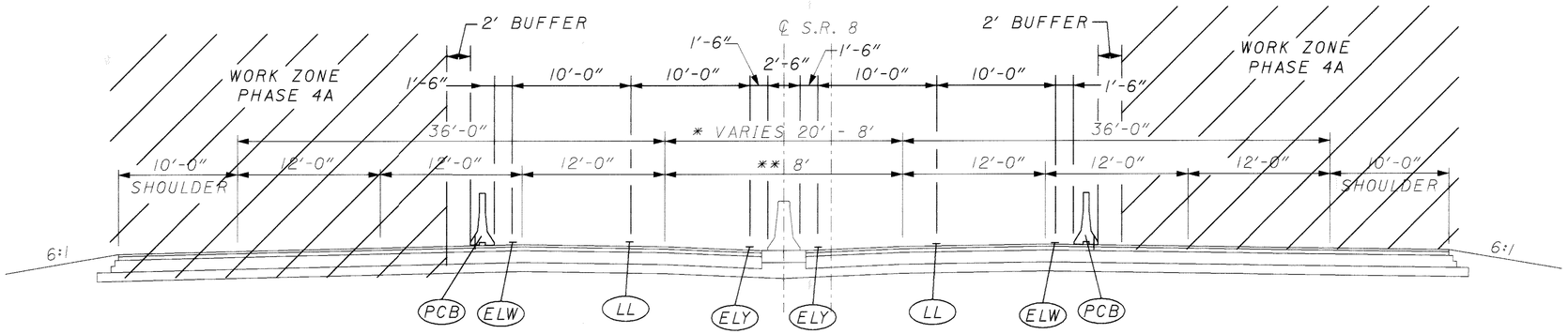

S.R. 8

STA. 95+10.00 TO STA. 102+70.38 (LEFT) = 760.38 LIN. FT.
STA. 95+50.00 TO STA. 102+70.38 (RIGHT) = 720.38 LIN. FT.

* STA. 93+91.74 TO STA. 101+63.60 (LEFT SIDE ONLY) = 771.86 LIN. FT.
* STA. 95+59.66 TO STA. 101+60.73 (RIGHT SIDE ONLY) = 601.07 LIN. FT.
** STA. 101+63.60 TO STA. 102+70.38 (LEFT SIDE ONLY) = 106.78 LIN. FT.
** STA. 101+60.73 TO STA. 102+70.38 (RIGHT SIDE ONLY) = 109.65 LIN. FT.

REVISIONS: 05/15/2002 by EMS

PHASE 4A MOT TYPICAL SECTIONS - S.R. 8

SUM-8-0.63

MAINTENANCE OF TRAFFIC

THIS ITEM SHALL CONSIST OF MAINTENANCE OF TRAFFIC ON EXISTING ROADWAYS AND RAMPS IN ACCORDANCE WITH THE OHIO MANUAL OF UNIFORM TRAFFIC CONTROL DEVICES FOR STREETS AND HIGHWAYS, CURRENT EDITION, LATEST REVISION, THE SPECIFICATIONS AND THE FOLLOWING:

DURING THE CONSTRUCTION OF THIS IMPROVEMENT, THE CONTRACTOR SHALL MAINTAIN A MINIMUM OF TWO 10 FOOT LANES IN EACH DIRECTION ON S.R. 8 BY USE OF THE EXISTING PAVEMENT AND SHOULDERS, COMPLETED PAVEMENT AND SHOULDERS, TEMPORARY PAVEMENT OR DETOUR ROUTES AS DESCRIBED IN PHASES 1 THROUGH 4. TWO-WAY TRAFFIC SHALL BE MAINTAINED ON MARKET STREET WITH A MINIMUM OF ONE 10 FOOT LANE IN EACH DIRECTION BY USE OF EXISTING PAVEMENT OR COMPLETED PAVEMENT. ONE WAY TRAFFIC SHALL BE MAINTAINED ON THE EXISTING PORTION OF GOODKIRK AND FOUNTAIN STREETS BY USE OF EXISTING PAVEMENT OR COMPLETED PAVEMENT. TRAFFIC SHALL BE MAINTAINED AS INDICATED ON S.R. 8 RAMPS. TIME CONSTRAINTS FOR PHASES OF WORK ARE AS STATED IN THE FOLLOWING SHEETS.

THE FOLLOWING IS A SUMMARY OF THE MAINTENANCE OF TRAFFIC FOR THIS IMPROVEMENT:

PHASE 1A: PERMANENTLY CLOSE RAMPS K, L, M, O, P, Q, & R.

CLOSE FORGE STREET. THE FORGE STREET CLOSURE IS A CRITICAL ITEM. ALL BRIDGE APPURTENANCES INCLUDING APPROACHES, DECK AND FINAL PAVING SHALL BE COMPLETED AS PER THE INCENTIVE/DISINCENTIVE NOTE, SHEET 46A. FURTHER DETAILS ARE CONTAINED IN THE "INCENTIVE/DISINCENTIVE PROGRAM" SECTION OF THE PLAN.

CONSTRUCT THE MARKET STREET BRIDGE, AS DETAILED IN THE NOTE ON SHEET 46, MAINTAINING TRAFFIC. THE DURATION OF THE MARKET STREET PARTIAL CLOSURES SHALL BE LIMITED AS FOLLOWS:

STAGE ONE CONSTRUCTION: THE DURATION OF THIS PHASE SHALL BE LIMITED TO 193 CALENDAR DAYS FROM THE BEGINNING OF WORK. ALL BRIDGE APPURTENANCES INCLUDING APPROACHES, DECK, FINAL PAVING AND CONTRACTOR PLACED UTILITIES, NOT INCLUDING PAINTING SHALL BE COMPLETED WITHIN THE 193 DAY LIMIT. LIQUIDATED DAMAGES WILL BE ASSESSED IN THE AMOUNT OF $5000/DAY FOR EACH CALENDAR DAY THAT TRAFFIC RESTRICTIONS REMAIN IN PLACE FOR WORK BEYOND THE SPECIFIED LIMIT FOR THIS PHASE.

STAGE TWO CONSTRUCTION: THE PORTION OF THE WORK ON THE MARKET STREET BRIDGE WHICH TAKES PLACE AFTER AMERTECH HAS COMPLETED INSTALLATION OF THEIR FIBEROPTIC CABLES IS A CRITICAL ITEM. THIS PHASE SHALL BEGIN AFTER COMPLETION OF STAGE ONE OF THE MARKET STREET BRIDGE WORK, OR 5 CALENDAR DAYS FOLLOWING THE COMPLETION OF AMERITECH CABLE SPLICING, WHICHEVER IS LATER. ALL BRIDGE APPURTENANCES INCLUDING APPROACHES, DECK, FINAL PAVING, CONTRACTOR PLACED UTILITIES, AND PAINTING SHALL BE COMPLETED WITHIN 110 CALENDAR DAYS OF THE BEGINNING OF WORK ON THIS PHASE OF THE MARKET STREET BRIDGE. AN INCENTIVE BONUS WILL BE PAID IN THE AMOUNT OF $5,000/DAY TO A MAXIMUM OF $300,000 FOR EACH CALENDAR DAY THAT ALL LANES ARE OPEN TO TRAFFIC ON FINAL PAVEMENT PRIOR TO THE 145 CALENDAR DAY LIMIT. THIS INCLUDES COMPLETION OF ALL PAVEMENT WORK ON MARKET STREET, BETWEEN STATION 22+80.46 AND 27+49.96. A DISINCENTIVE DAILY AMOUNT WILL BE ASSESSED IN THE AMOUNT OF $5000/DAY FOR EACH CALENDAR DAY THAT TRAFFIC RESTRICTIONS REMAIN IN PLACE FOR WORK BEYOND THE SPECIFIED LIMIT FOR THIS PHASE. FURTHER DETAILS ARE CONTAINED IN THE "INCENTIVE/DISINCENTIVE PROGRAM" SECTION OF THE PLAN NOTES.

CONSTRUCT FOUNTAIN AND GOODKIRK SERVICE ROADS, MAINTAINING TRAFFIC ON THE EXISTING PORTIONS. NOTE THAT PART OF FOUNTAIN ST, BETWEEN RAMP "S" AND CARROLL ST WILL BE CONSTRUCTED DURING PHASE 3.

CONSTRUCT ALL RETAINING WALLS

PURSUE PARTIAL CONSTRUCTION OF RAMPS KI, LI, PI, QI, AND TI AT THE SERVICE ROAD CONNECTIONS. RAMP "T" IS TO REMAIN IN SERVICE DURING THIS PHASE. RAMP "S" WILL BE CONSTRUCTED DURING PHASE 3.

CONSTRUCT CUL-DE-SACS FOR EWING COURT.

CLOSE OHIO STREET AND ADOLPH STREET NORTH OF FORGE STREET TO THROUGH TRAFFIC. MAINTAIN LOCAL ACCESS BY USE OF THE EXISTING PAVEMENT, TEMPORARY PAVEMENT OR THE NEW PAVEMENT.

CLOSE PARKWOOD AVENUE TO THROUGH TRAFFIC. MAINTAIN TWO WAY TRAFFIC FOR LOCAL ACCESS TO ABUTTING PROPERTIES EXCEPT FOR A PERIOD OF 60 CONSECUTIVE CALENDAR DAYS WHEN THE ROAD MAY BE CLOSED TO CONSTRUCTION. ACCESS TO ABUTTING PROPERTIES BY EMERGENCY AND SERVICE VEHICLES SHALL BE PROVIDED AT ALL TIMES. LIQUIDATED DAMAGES SHALL BE ASSESSED AT THE RATE OF $300 PER DAY FOR EACH CALENDAR DAY THAT PARKWOOD AVE. REMAINS CLOSED TO LOCAL ACCESS BEYOND THE SPECIFIED 60 DAY LIMIT.

PURSUE THE WORK ON THE CARROLL AND BUCHTEL STREET BRIDGES IN THE TWO PHASES SHOWN ON THE PLANS. WORK ON CARROLL AND BUCHTEL SHALL BE COORDINATED WITH THE INTERSECTION WORK ON GOODKIRK AND FOUNTAIN STREETS. ALL BRIDGE AND STREET WORK REQUIRING LANE CLOSURES ON ONE SIDE OF CARROLL AND BUCHTEL SHALL BE COMPLETED BEFORE TRAFFIC IS SWITCHED TO THE SECOND PHASE.

OPEN FOUNTAIN & GOODKIRK STREETS

OPEN FOUNTAIN & GOODKIRK STREETS

PHASE 1B: DETOUR RAMP FROM I-76 EASTBOUND TO SR-8

REMOVE CONCRETE MEDIAN AND GUARDRAIL AND PLACE PORTABLE CONCRETE BARRIER, TEMPORARY PAVEMENT AND TEMPORARY DRAINAGE STRUCTURES.

PHASE 2: COMPLETE PHASE 1B PRIOR TO BEGINNING PHASE 2. PHASE 1A CONSTRUCTION WILL CONTINUE.

SHIFT SR-8 TRAFFIC TO THE INSIDE SHOULDER AND LANE AGAINST THE PORTABLE CONCRETE BARRIER. CONSTRUCT THE OUTER SHOULDER, OUTER LANE, PORTIONS OF THE MIDDLE LANES AND RAMP CONNECTIONS FOR RAMPS KI, LI, PI AND QI.

RAMP "S" (CARROLL ST.) TRAFFIC SHALL BE MAINTAINED DURING THIS PHASE, USING THE EXISTING PAVEMENT, PROPOSED PAVEMENT OR TEMPORARY PAVEMENT WITHIN THE WORK AREA. ANY DISCONTINUITIES IN PROFILE SHALL BE WEDGED WITH ASPHALT AT A RATE NOT LESS THAN 25 FEET OF HORIZONTAL LENGTH PER VERTICAL INCH.

RAMP "S" MAY BE CLOSED FOR A PERIOD OF NOT MORE THAN SEVEN CALENDAR DAYS IMMEDIATELY PRIOR TO THE IMPLEMENTATION OF PHASE 3, TO COMPLETE WORK ON NORTHBOUND SR-8. THIS SEVEN-DAY PERIOD SHALL BE INCLUDED IN THE 30-DAY CLOSURE PERIOD PERMITTED FOR RAMP "S" IN PHASE 3. RAMP "LI" (PERKINS ST.) SHALL BE FULLY OPEN TO TRAFFIC PRIOR TO CLOSING RAMP "S".

PHASE 3: SHIFT SR-8 TRAFFIC TO THE OUTER SHOULDER AND OUTER LANE. CONSTRUCT INNER LANES AND MEDIAN OF SR-8.

CONSTRUCT THE INNER * BEACON AND EXCHANGE STREET BRIDGES.

CONSTRUCT RAMP "S" AND THE PORTION OF FOUNTAIN STREET BETWEEN RAMP "S" AND CARROLL ST., AS SHOWN ON PLAN SHEETS 54, 55 AND 106. RAMP "LI" (PERKINS ST.) SHALL BE FULLY OPEN TO TRAFFIC PRIOR TO CLOSING RAMP "S". THE TOTAL TIME PERIOD THIS AREA MAY BE CLOSED SHALL NOT EXCEED 30 DAYS, INCLUDING ANY CLOSURE TIME IN PHASE 2. LIQUIDATED DAMAGES OF $1,000 PER DAY WILL BE ASSESSED FOR EACH DAY RAMP "S" OR FREEWAY ACCESS TO CARROLL ST. REMAINS CLOSED PAST THE 30 CALENDAR DAY PERIOD.

PHASE 4A: CONSTRUCT RAMPS I AND J. DETOURING TRAFFIC. THE RAMP FROM I-76 EASTBOUNDTO SR-8 NORTHBOUND SHALL BE OPENED PRIOR TO CLOSING RAMP J. THE SOUTHBOUND EXIT RAMP TO BUCHTEL AVE. SHALL BE OPEN PRIOR TO CLOSING RAMP I.

PLACE THE SURFACE COURSE AND FINAL PAVEMENT MARKINGS ON SR-8

ALL LANES AND RAMPS SHALL BE OPEN BETWEEN THE HOURS OF 6:00 AM AND 10:00 AM AND BETWEEN 4:00 PM AND 7:00 PM WEEKDAYS.

TWO LANES OF TRAFFIC SHALL BE OPEN BETWEEN THE HOURS OF 10:00 AM AND 4:00 PM, WEEKDAYS.

ONE LANE OF TRAFFIC MAY BE MAINTAINED BETWEEN THE HOURS OF 7:00 PM AND 6:00 AM WEEKDAYS

TWO LANES OF TRAFFIC SHALL BE OPEN BETWEEN THE HOURS OF NOON AND 6:00 PM, WEEKENDS.

ONE LANE OF TRAFFIC MAY BE MAINTAINED BETWEEN THE HOURS OF 6:00 PM AND NOON, WEEKENDS.

ALL LANES SHALL BE OPEN TO TRAFFIC DURING NON-WORKING HOURS.

PHASE 4B: COMPLETE THE LEFT AND CENTER LANE PAVEMENT BETWEEN 93+00 AND 102+96, AS SHOWN ON SHEETS 122A, 123A, 124A AND 125A.

REDUCTION OF MAINLINE TRAFFIC TO ONE LANE IS PERMITTED OVER ONE WEEKEND FOR THE NORTHBOUND SIDE AND ONE WEEKEND FOR THE SOUTHBOUND SIDE FOR THE PURPOSE OF CONSTRUCTION THE LEFT AND CENTER LANE. ONE LANE OF TRAFFIC MAY BE MAINTAINED BETWEEN 6:00 PM ON A FRIDAY TO 6:00 AM ON A MONDAY.

THIS PERIOD MAY BE EXTENDED TO 6:00 AM ON A TUESDAY FOR THE FOLLOWING HOLIDAY WEEKENDS:

NEW YEAR'S DAY (CELEBRATED ON MONDAY)
MEMORIAL DAY
INDEPENDENCE DAY (CELEBRATED ON MONDAY)
LABOR DAY

THIS PERIOD MAY BE EXTENDED TO BEGIN ON 6:00 PM ON A THURSDAY FOR THE FOLLOWING HOLIDAYS:

NEW YEAR'S DAY (CELEBRATED ON A FRIDAY
INDEPENDENCE DAY (CELEBRATED ON A FRIDAY)

REVISIONS: 05/15/2002 by MCR

CALCULATED KME
CHECKED TRB

MAINTENANCE OF TRAFFIC GENERAL NOTES

SUM-8-0.63

PHASE 4C: COMPLETE THE RIGHT LANE BETWEEN 93+00 AND 102+96, AS SHOWN ON SHEETS 122B, 123B, 124B AND 125B.

PHASE 4B AND 4C MAY BE CONSTRUCTED DURING PHASE 1B, PHASE 2 AND PHASE 3, WHEN MAINLINE TRAFFIC IS RESTRICTED TO TWO LANES IN EACH DIRECTION.

IF PHASE 4C IS CONSTRUCTED DURING PHASE 4A, IT SHALL BE STARTED AT THE BEGINNING OF THE PHASE, BEFORE THREE LANE TRAFFIC IS RESTORED TO THE MAINLINE. IN THIS CASE, PHASE 4C SHALL BE COMPLETED WITHIN A 14 CALANDER DAY PERIOD. LIQUIDATED DAMAGES OF $1.000 PER DAY WILL BE ASSESSED FOR EACH DAY EITHER LANE (NORTHBOUND OR SOUTHBOUND) REMAINS CLOSED PAST THE 14 CALENDAR DAY PERIOD.

EXCHANGE STREET - THE DETAILS SHOWN OF SHEETS 54, 126 AND 127 SHOW SOME WORK TAKING PLACE IN THE RIGHT LANE OF TRAFFIC. THIS LANE MAY BE CLOSED TO TRAFFIC DURING THE FOLLOWING TIME PERIODS:

7:00 PM AND 6:00 AM WEEKDAYS

ALL DAY ON SATURDAYS WHEN THERE ARE NO HOME FOOTBALL OR BASKETBALL GAMES AT THE UNIVERSITY OF AKRON. ON GAME DAYS, TWO LANES IN EACH DIRECTION SHALL BE OPEN FROM TWO HOURS BEFORE THE START OF THE GAME TO TWO HOURS AFTER THE GAME IS OVER.

ALL DAY SUNDAY.

FURTHER DETAILS ARE CONTAINED IN THE "INCENTIVE/DISINCENTIVE PROGRAM" SECTION OF THE PLAN NOTES.

PRIOR TO STARTING WORK, AND PRIOR TO IMPLEMENTATION OF EACH DETOUR AND/OR CLOSURE OF ANY RAMP, THE CONTRACTOR SHALL GIVE THE CITY OF AKRON ENGINEER (330-375-2355), THE CITY OF AKRON TRAFFIC ENGINEER (330-375-2851) AND THE PUBLIC RELATIONS CONSULTANT (330-655-0665) A MINIMUM OF EIGHTEEN (18) DAYS NOTICE AND GIVE THE OHIO DEPARTMENT OF TRAMSPORTATION (ODOT) TRAFFIC OFFICE (330-297-0801, ext. 339) A MINIMUM OF EIGHTEEN (18) DAYS NOTICE. THE CITY AND PUBLIC RELATIONS CONSULTANT SHALL NOTIFY AFFECTED SCHOOLS, POLICE, FIRE, HOSPITAL, TOWNSHIP AND MEDIA REGARDING CLOSURES OR DETOURS. THE CITY SHALL ERECT SIGNING ON CITY STREETS WITH SIGNS PROVIDED BY THE CONTRACTOR.

LENGTH AND DURATION OF LANE CLOSURES AND RESTRICTIONS SHALL BE AT THE APPROVAL OF THE ENGINEER. IT IS THE INTENT TO MINIMIZE THE IMPACT TO THE TRAVELING PUBLIC. LANE CLOSURES OR RESTRICTIONS OVER SEGMENTS OF THE PROJECT IN WHICH NO WORK IS ANTICIPATED WITHIN A REASONABLE TIME FRAME, AS DETERMINED BY THE ENGINEER, SHALL NOT BE PERMITTED. THE LEVEL OF UTILIZATION OF MAINTENANCE OF TRAFFIC DEVICES SHALL BE COMMENSURATE WITH THE WORK IN PROGRESS.

NOTICE OF CLOSURE SIGNS, OC-60 A OR B, SHALL BE ERECTED BY THE CONTRACTOR AT LEAST ONE WEEK IN ADVANCE OF THE SCHEDULED ROAD OR RAMP CLOSURE. THE SIGNS SHALL BE ERECTED ON THE RIGHT HAND SIDE OF THE ROAD/RAMP FACING TRAFFIC. THEY SHALL BE PLACED SO AS NOT TO INTERFERE WITH THE VISIBILITY OF ANY OTHER TRAFFIC CONTROL SIGNS. ON ROADWAYS, THEY SHOULD BE ERECTED AT THE POINT OF CLOSURE. THE SIGNS MAY BE ERECTED ANYWHERE ON RAMPS AS LONG AS THEY ARE VISIBLE TO THE MOTORISTS USING THE RAMP. ON ENTRANCE RAMPS, THE SIGN SHALL BE ERECTED WELL IN ADVANCE OF THE MERGE AREA TO AVOID DISTRACTING MOTORISTS.

ONLY DURING OFF-PEAK PERIODS (ie. ANY PERIOD OTHER THAN 6-8AM AND 4-6PM) SHALL THE CONTRACTOR INSTALL AND SUBSEQUENTLY RESET ALL TRAFFIC CONTROL NECESSARY FOR MAINTAINING TRAFFIC FOR EACH CONSTRUCTION PHASE.

THE CONTRACTOR MAY REDUCE THE NUMBER OF THROUGH TRAFFIC LANES ON S.R. 8 TO ONE LANE IN EACH DIRECTION ON WEEKENDS FROM 6:00 PM TO 12:00 PM (NOON) AND FROM 7:00 PM TO 6:00AM WEEKDAYS. LIQUIDATED DAMAGES SHALL BE ASSESSED IN THE AMOUNT OF $2000 PER HOUR FOR EACH HOUR THAT THE LANE REDUCTION REMAINS BEYOND THE SPECIFIED LIMIT.

UNDER NO CIRCUMSTANCES SHALL THE CONTRACTOR BE PERMITTED TO HAVE WORK ZONES THAT ALTERNATELY CLOSE BOTH THE PASSING LANE AND THE DRIVING LANE UNLESS THE DISTANCE BETWEEN THE DRUMS, BARRICADES OR CONES EXCEED TWO (2) MILES.

CONES SHALL NOT BE ACCEPTABLE TRAFFIC CONTROL DEVICES FOR LANE RESTRICTIONS OR LANE REDUCTIONS THAT ARE IN OPERATION ONE-HALF HOUR AFTER SUNSET OR ONE HALF-HOUR BEFORE SUNRISE. ALL NIGHTTIME LANE RESTRICTIONS SHALL REQUIRE DRUMS OR BARRICADES AT A MAXIMUM SPACING OF FIFTY (50) FEET.

NO FULL DEPTH BRIDGE REPAIR SHALL BE PERFORMED OVER AN OPEN LANE. A SAFETY NET OR PLATFORM SHALL BE REQUIRED TO PROTECT THE ROADWAY, RAILROAD OR STREAM DURING THE REMOVAL OF THE EXISTING CONCRETE PARAPET AND DECK. THE

CONTRACTOR SHALL PROVIDE A SAFETY NET OR PLATFORM OF SUITABLE STRENGTH ON THE UNDERSIDE OF THE DECK. THE DESIGN OF THE NET OR PLATFORM SHALL CONFORM WITH OSHA REQUIREMENTS AND THE APPROVAL OF THE ENGINEER AND SHALL REMAIN IN PLACE UNTIL THE WORK HAS BEEN COMPLETED AND ACCEPTED OR AS DIRECTED BY THE ENGINEER. THE CONTRACTOR SHALL SUBMIT A DEMOLITION PLAN AND SAFETY NET OR PLATFORM DESIGN 10 DAYS PRIOR TO COMMENCING ANY DEMOLITION FOR APPROVAL BY THE ENGINEER. THE SUBMITTAL SHALL BE IN WRITING TO THE DISTRICT CONSTRUCTION ENGINEER WITH A COPY TO THE PROJECT ENGINEER.

PRIOR TO OPENING TO TRAFFIC EACH LANE SHALL BE IN A SAFE, PASSABLE CONDITION. ALL TRANSVERSE JOINTS SHALL EXTEND ACROSS THE FULL LANE AND SHOULDER WIDTH AND SHALL BE FREE FROM UNEVEN LONGITUDINAL JOINTS. THE CONTRACTOR SHALL PROVIDE ASPHALT WEDGES FOR TRANSVERSE JOINTS WHEREVER THERE ARE PAVEMENT ELEVATION DIFFERENCES.

AN ESTIMATED QUANTITY OF ITEM 622 PORTABLE CONCRETE BARRIER, 32" BRIDGE MOUNTED, AND AN ESTIMATED QUANTITY OF ITEM 622 PORTABLE CONCRETE BARRIER, 50", BRIDGE-MOUNTED AND AN ESTIMATED QUANTITY OF ITEM 622 PORTABLE CONCRETE BARRIER, 50" HAVE BEEN PROVIDED FOR THIS PROJECT. THE BARRIER SHALL BE PLACED AS SHOWN IN THE PLANS WHEN WORK IS BEING DONE ON THE BRIDGE.

IN ADDITION TO THE REQUIREMENTS OF 614 WORK ZONE PAVEMENT MARKINGS (614.10), AT THE END OF EACH DAY OF WORK, THE CONTRACTOR SHALL REPLACE (WITH TEMPORARY MARKINGS) ALL LANE, EDGE, STOP OR CHANNELIZING LINES THAT WERE REMOVED OR COVERED DURING THE PAVEMENT REMOVAL OR PLACEMENT OPERATIONS. QUANTITIES FOR SUCH REPLACEMENT ARE CARRIED AS PART OF THE ITEMS LISTED UNDER 614 TEMPORARY PAVEMENT MARKINGS.

A QUANTITY OF 58 EACH, ITEM 614 WORK ZONE MARKING SIGN HAS BEEN INCLUDED IN THE PLAN. THIS QUANTITY SHALL INCLUDE, BUT NOT BE LIMITED TO, THE FOLLOWING SIGNS: OW-62 [BUMP], OW-7I[TWO-WAY TRAFFIC], OW-167 [NO EDGE LINES], R-33 [DO NOT PASS], R-34 [PASS WITH CARE], OW-171 [UNEVEN LANES SYMBOL] , OW- 166 [WATCH FOR TRAFFIC] AND SPECIAL 48"x48" [ACCIDENT AHEAD].

THE CONTRACTOR SHALL, WITHIN THE WORK LIMITS, FURNISH, MAINTAIN, AND REMOVE ALL CONSTRUCTION TRAFFIC CONTROL SIGNS, FLAGS, FLAGGERS, WATCHERS, LIGHTING, BARRICADES, SIGN SUPPORTS, CONES AND INCIDENTALS IN COMFORMANCE WITH ITEM 614, MAINTAINING TRAFFIC, THE LATEST EDITION, NEWEST REVISION OF THE OHIO MANUAL OF UNIFORM TRAFFIC CONTROL DEVICES (OMUTCD), AND OTHER APPLICABLE PORTIONS OF THE SPECIFICATIONS. PAYMENT FOR THIS TRAFFIC CONTROL CONFORMANCE WORK, UNLESS SPECIFIED SEPARATELY, SHALL BE INCLUDED IN THE LUMP SUM PRICE BID FOR ITEM 614, MAINTAINING TRAFFIC WHICH SHALL INCLUDE ALL LABOR, EQUIPMENT, MATERIALS, AND INCIDENTALS TO COMPLETE THE ABOVE WORK.

THE FOLLOWING ESTIMATED QUANTITIES HAVE BEEN INCLUDED IN THE GENERAL SUMMARY FOR USE AS DIRECTED BY THE ENGINEER FOR THE MAINTENANCE OF TRAFFIC.

ITEM 410, TRAFFIC COMPACTED SURFACE, TYPE A OR B	500 CU YD
ITEM 614, BITUMINOUS CONCRETE FOR MAINTAINING TRAFFIC	100 CU YD
ITEM 616, CALCIUM CHLORIDE	25 TON
ITEM 616, WATER	250 M GAL

ITEM 614 MAINTAINING TRAFFIC MISC. - TRAFFIC SAFETY COORDINATOR

THE CONTRACTOR SHALL HAVE A FULL-TIME TRAFFIC SAFETY COORDINATOR (TSC) OR A QUALIFIED REPRESENTATIVE OF THE TSC ON DUTY AND AT THE PROJECT SITE 24 HOURS A DAY WHENEVER ACTIVE CONSTRUCTION WORK IS BEING PERFORMED AND/OR WHENEVER AN ACTIVE MAINTENANCE OF TRAFFIC ZONE IS IN PLACE OR BEING SET UP WITHIN THE LIMITS OF THIS PROJECT. THE TSC SHALL BE FAMILIAR WITH THE TRAFFIC CONTROL REQUIREMENTSIN THE PLAN AND HAVE NO OTHER DUTIES EXCEPT WHAT APPEARS IN THIS NOTE. THE TSC SHALL BE RESPONSIBLE FOR THE CONTRACTOR'S MAINTENANCE OF TRAFFIC OPERATIONS. THE CONTRACTOR SHALL DESIGNATE A QUALIFIED INDIVIDUAL TO THE POSITION (OTHER THAN THE SUPERINTENDENT), IN WRITING TO THE DISTRICT CONSTRUCTION ENGINEER FOR APPROVAL, PRIOR TO THE PRECONSTRUCTION CONFERENCE. INCLUDEDIN THIS SUBMITTAL SHALL BE THE TSC'S RESUME SHOWING TRAFFIC EXPERIENCE, TRAINING, AND EDUCATION, ETC. PROJECT WORK SHALL NOT BEGIN WITHOUT AN APPROVED TSC. ANY REPRESENTATIVE OF THE TSCMUST ALSO HAVE DISTRICT APPROVAL. THE APPOINTED TSC SHALL BE PRESENT AT THE PRECONSTRUCTION CONFERENCE. THE TSC SHALL BE RESPONSIBLE FOR THE MAINTENANCE OF TRAFFIC AS OUTLINED IN THE MAINTENANCE PLAN AND SHALL ALSO BE RESPONSIBLE FOR THE FOLLOWING.

A. UNDERSTAND AND BE FAMILIAR WITH THE REQUIREMENTS OF THE OHIO MANUAL OF UNIFORM TRAFFIC CONTROL DEVICES, (OMUTCD) CURRENT EDITION, LATEST REVISION, THE TRAFFIC MAINTENANCE AND SAFETY PROVISIONS OF THE CONTRACT PROPOSAL, AND ODOT'S TRAFFIC MANAGEMENTS PROGRAM (TMP).

B. CONSTANTLY MONITOR AND REVIEW THE TRAFFIC CONTROL DEVICES TO DETERMINE OPERATIONALPROBLEMS OR AREAS OF NONCOMPLIANCE WITH THE MAINTENANCE OF TRAFFIC PLANS WHICH SHOULD BE IMMEDIATELY REPORTED TO THE CONTRACTOR FOR CORRECTIVE ACTION.

C. COORDINATE MAINTENANCE OF TRAFFIC OPERATIONS WITH THE PROJECT ENGINEER AND THE ODOT TRAFFIC SAFETY COORDINATOR (TSC).

D. ATTEND MONTHLY MEETINGS WITH THE PROJECT ENGINEER AND CPC TO REVIEW AND RECOMMEND PROCEDURES FOR REVISIONS IN THE MAINTENANCE OF TRAFFIC OPERATIONS.

E. HOLD TRAFFIC SAFETY MEETINGS WITH THE CONTRACTOR AND SUBCONTRACTOR'S SUPERINTENDENTSAND FOREMEN PRIOR TO AND DURING CONSTRUCTION. (THE PROJECT ENGINEER AND CPC SHALL BE INVITED TO ATTEND THESE MEETINGS.) PAYMENT FOR THIS INDIVIDUAL AND EQUIPMENT SHALL AT THE LUMP-SUM PRICE BID FOR ITEM 614 MAINTAINING TRAFFIC MISC.-SAFETY COORDINATOR.

REVISIONS: 05/15/2002 by MCR

CALCULATED KME CHECKED TRB

MAINTENANCE OF TRAFFIC GENERAL NOTES

SUM-8-0.63

F. A DAILY RECORD OF THE MAINTENANCE OF TRAFFIC INSPECTION SHALL BE GIVEN TO THE PROJECT ENGINEER,IN WRITING, AND SHALL INCLUDE A RECORD OF DEFICIENCIES AND RESOLUTION OF THE DEFICIENCIES. A MINIMUM OF TWO REVIEWS EACH WEEK SHALL BE PERFORMED DURING THE HOURS OF DARKNESS. ONE OF THE NIGHT INSPECTIONS SHALL BE PERFORMED ON A SATURDAY OR SUNDAY NIGHT. THE FOLLOWINGS ITEMS SHALL BE INCLUDED IN EACH REVIEW: TRAFFIC CONTROL DEVICE CONDITION, PLACEMENT, VISIBILITY, TRAFFIC FLOW CONDITIONS, INCIDENTS, CONGESTION POINTS, DELAYS, ADEQUACY OF ADVANCE INFORMATIONAL SIGNS BEYOND THE PROJECT LIMITS, INTERACTION OF WORK VEHICLES AND TRAFFIC, EVIDENCE OF ACCIDENTS, PROPER STORAGE OF MATERIALS AND EQUIPMENT, CONFORMANCE WITH THE TRAFFIC CONTROL PLAN, ADEQUACY OF TRAFFIC CONTROL PLAN, CONFLICTING OR NONCONFORMING PAVEMENT MARKINGS.

IN ADDITION TO THE REQUIREMENTS OF ITEM 614 AND THE LATEST EDITION OF THE OMUTCD, THE TSC SHALL HAVE A VEHICLE, EQUIPPED WITH A CELLULAR TELEPHONE. THE TSC SHALL ALSO BE PROVIDED WITH AN ELECTRONIC PAGER. THE TELEPHONE AND PAGER NUMBERS SHALL BE PROVIDED TO THE PROJECT ENGINEER, LAW ENFORCEMENTS PERSONNEL, AND THE ODOT CPC.

PAYMENT FOR THIS INDIVIDUAL AND EQUIPMENT SHALL AT THE LUMP-SUM PRICE BID FOR ITEM 614 MAINTAINING TRAFFIC MISC.-SAFETY COORDINATOR.

ITEM 604, LAW ENFORCEMENT OFFICER (WITH PATROL CAR)

IN ADDITION TO THE REQUIREMENTS OF 614, & THE LATEST EDITION OF THE OHIO MANUAL OF UNIFORM TRAFFIC CONTROL DEVICES (OMUTCD) A UNIFORMED LAW ENFORCEMENT OFFICER AND OFFICIAL PATROL CAR WITH WORKING TOP MOUNTED EMERGENCY FLASHING LIGHTS SHALL BE PROVIDED FOR CONTROLLING TRAFFIC AS DIRECTED BY ENGINNER FOR THE FOLLOWING TASKS:

FOR LANE CLOSURES: DURING INITIAL SET-UP PERIODS. TEAR DOWN PERIODS, SUBSTANTIAL SHIFTS OF A CLOSURE POINT OR WHEN NEW LAND CLOSURE ARRANGEMENTS ARE INITIATED.

DURING THE ENTIRE ADVANCE PREPARATION AND CLOSURE SEQUENCE WHERE COMPLETE BLOCKAGE OF TRAFFIC IS REQUIRED.

DURING THE REMOVAL OF ANY BRIDGE PARAPETS OR REMOVAL OF OVERHEAD SIGNS WHERE TRAFFIC IS MAINTAINED.

DURING PEAK TRAFFIC TIMES (6:00 AM - 10:00 AM AND 4:00 PM - 8:00 PM). (DURING THIS TIME, ONE OFFICER IN PATROL CAR, SHALL PATROL THE CONSTRUCTION AREA). THE ASSIGNMENT OF THIS OFFICER WILL BE MADE EXCLUSIVELY BY THE POST COMMANDER.

LAW ENFORCEMENT OFFICERS (L.E.O.'S) SHOULD NOT BE USED WHERE THE OMUTCD INTENDS THAT FLAGGERS BE USED. THE LEO'S ARE CONSIDERED TO BE EMPLOYED BY THE CONTRACTOR AND THE CONTRACTOR SHALL BE RESPONSIBLE FOR THEIR ACTIONS. ALTHOUGH THEY ARE EMPLOYED BY THE CONTRACTOR, THE PROJECT ENGINEER SHALL HAVE CONTROL OVER THEIR PLACEMENT. THE OFFICIAL PATROLLER SHALL BE A PUBLIC SAFETY VEHICLE AS REQUIRE BY THE OHIO REVISED CODE.

THE CONTRACTOR SHALL MAKE ARRANGEMENTS FOR THESE SERVICES WITH :

STATE HIGHWAY PATROL
4710 SCHUFFEL DRIVE NW
N. CANTON 44720
(330) 433-6200

LAW ENFORCEMENT OFFICERS (WITH PATROL CAR) REQUIRED BY THE TRAFFIC MAINTENANCE TASKS ABOVE SHALL BE PAID FOR ON AN HOURLY BASIS UNDER ITEM 614 - LAW ENFORCEMENT OFFICER WITH PATROL CAR. THE FOLLOWING ESTIMATED QUANTITIES HAVE BEEN CARRIED TO THE GENERAL SUMMARY:

ITEM 614, LAW ENFORCEMENT OFFICER	200	HOURS
ITEM 614, LAW ENFORCEMENT OFFICER WITH PATROL CAR	6750	HOURS

THE HOURS PAID SHALL INCLUDE MINIMUM SHOW-UP TIME REQUIRED BY THE LAW ENFORCEMENT AGENCY INVOLVED.

IF CONTRACTORS WISH TO UTILIZE LEO'S FOR FLAGGING AND TRAFFIC CONTROL OTHER THAN FOR THAT REQUIRED IN THESE PLANS, THEY MAY DO SO AT THEIR OWN EXPENSE. PAYMENT FOR THE EXCESS ABOVE THE CONTRACT REQUIREMENTS WILL BE INCLUDED UNDER ITEM 614 MAINTAINING TRAFFIC.

STOPPAGE OF MAINLINE TRAFFIC

ANY TIME TRAFFIC MUST BE COMPLETELY STOPPED ON A FREEWAY OR INTERSTATE, IT SHALL BE DONE IN THE FOLLOWING MANNER: THE COMPLETE TRAFFIC STOPPAGE ON ALL LANES OF ANY DIRECTIONAL ROADWAY SHALL BE NO MORE THAN 20 MINUTES IN ANY ONE CONSECUTIVE ONE HOUR PERIOD. COMPLETE STOPPAGE SHALL ONLY BE PERMITTED ON WEEKENDS 6:00 PM TO 12:00 (NOON) AND FROM MIDNIGHT TO 5:00 AM WEEKDAYS.

A MINIMUM OF TWO (2) LAW ENFORCEMENT OFFICERS (LEO) WITH PATROL CARS SHALL BE USED TO PACE MOTORISTS TO A STOP. THERE SHALL BE ONE LEO FOR EACH LANE ON THE FREEWAY.

AFTER TRAFFIC HAS BEEN SLOWED, ONE (1) PATROL CAR SHALL TRAVEL ALONG THE ROADWAY SHOULDER 500 FEET BEHIND THE BACKUP OF STOPPED VEHICLES. WHERE STOPPAGE OCCURS IN THE VICINITY OF FREEWAY ENTRANCES, THE CONTRACTOR SHALL PLACE FLAGGERS ON THE RAMPS TO STOP TRAFFIC. PATROL CARS SHALL HAVE FLASHING BEACONS TO PROVIDE ADEQUATE VISIBILITY TO APPROACHING MOTORISTS.

THE CONTRACTOR/PERMITEE SHALL ERECT AND MAINTAIN "ROAD WORK AHEAD" (OW-134-48), "PREPARE TO STOP" (OW-152-48), AND "STOP AHEAD" (OW-45-48) SIGNS. EACH SIGN SHALL BE EQUIPPED WITH A TYPE B FLASHING BARRICADE WARNING LIGHT IN ACCORDANCE WITH SECTION 7G-6 OF THE OMUTCD. PATROL CARS AND SIGNS SHALL BE LOCATED IN ACCORDANCE WITH THE DETAIL BELOW.

A PORTABLE CHANGEABLE MESSAGE SIGN, TYPE TO BE ON ODOT'S PREAPPROVED LIST, SHALL BE PLACED 1.5 TO 2 MILES IN ADVANCE OF THE CLOSURE OR AS DIRECTED BY THE ENGINEER.

THE CONTRACTOR SHALL NOTIFY THE ENGINEER/PERMIT OFFICE AND THE ODOT PUBLIC INFORMATION OFFICE, 330-297-0801 EXT-211, THREE (3) DAYS PRIOR TO ANY MAINLINE TRAFFIC STOPPAGE.

AKRON CITY HOSPITAL

LOCAL ACCESS TO THE AKRON CITY HOSPITAL SHALL BE MAINTAINED AT ALL TIMES. CONTRACTOR TO SUBMIT PLAN TO ENGINEER FOR APPROVAL PRIOR TO ANY CHANGE IN ACCESS.

DUST CONTROL

THE CONTRACTOR SHALL FURNISH AND APPLY WATER AND CALCIUM CHLORIDE FOR DUST CONTROL AS DIRECTED BY THE ENGINEER. THE FOLLOWING CONTINGENCY QUANTITIES HAVE BEEN INCLUDED FOR DUST CONTROL PURPOSES:

ITEM 616, WATER	750	M GAL
ITEM 616, CALCIUM CHLORIDE	75	TON

SIGNS AT ADJACENT ROAD INTERSECTIONS (DETOURS)

THE CONTRACTOR SHALL, IN ADDITION TO THE GENERAL REQUIREMENTS OF ITEM 614 ON THE PROJECT PERFORM THE FOLLOWING: PROVIDE, ERECT, AND MAINTAIN STANDARD 48"X30" SIZE "ROAD CLOSED" OR 60"X30" SIZE "ROAD CLOSED TO THRU TRAFFIC" SIGN SUPPORTS AT THE LOCATIONS SHOWN ON THE PLANS DURING PERIOD(S) IN WHICH THE AFFECTED ROADS ARE CLOSED TO TRAFFIC.

SIGN SUPPORTS FOR "ROAD CLOSED" SIGNS SHALL BE AS DETAILED IN THE OHIO MANUAL OF UNIFORM TRAFFIC CONTROL DEVICES. PAYMENT FOR PROVIDING, ERECTING, MAINTAINING, AND REMOVING SIGNS, AND SIGN SUPPORTS SHALL BE INCLUDED IN THE LUMP SUM PRICE BID FOR ITEM 614 MAINTAINING TRAFFIC.

COVERING OF SIGNS

WHERE THE PLANS CALL FOR A PERMANENT SIGN TO BE OVERLAYED, THE CONTRACTOR SHALL DO SO IN SUCH A MANNER AS TO AVOID DAMAGING THE PERMANENT SIGN WHEN THE OVERLAY IS REMOVED. THE OVERLAY SHALL BE TOTALLY OPAQUE. THE USE OF ADHESIVE TAPE APPLIED DIRECTLY TO A SIGN FACE IS STRICTLY PROHIBITED. THE THE OVERLAYS MAY BE RIVETED TO THE PERMANENT SIGN. THE CONTRACTOR SHALL PROVIDE ALL OF THE PLAQUES, SIGNS AND SIGN PANELS NECESSARY.

ITEM SPECIAL, REPLACEMENT SIGN

FLAT SHEET SIGNS FURNISHED BY THE CONTRACTOR IN ACCORDANCE WITH THE REQUIREMENTS OF THE PLANS, SPECIFICATIONS AND PROPOSAL WHICH BECOME DAMAGED BY TRAFFIC FOR REASONS BEYOND THE CONTROL TO THE CONTRACTOR SHALL BE REPLACED IN KIND WHEN ORDERED BY THE ENGINEER. REPLACEMENT SIGNS SHALL BE NEW. OTHER MATERIALS MAY BE IN USED BUT GOOD CONDITION SUBJECT TO APPROVAL BY THE ENGINEER.

PAYMENT FOR THE NEW SIGNS SHALL BE MADE AT THE CONTRACT PRICE PER SQUARE FOOT FOR ITEM SPECIAL, REPLACEMENT SIGN, AND SHALL INCLUDE THE COST OF REMOVING AND DISPOSING OF DAMAGED SIGNS, HARDWARE AND SUPPORTS, AND PROVIDING THE NECESSARY REPLACEMENT HARDWARE, SUPPORTS, ETC.

AN ESTIMATED QUANTITY OF 500 SQUARE FEET HAS BEEN PROVIDED IN THE GENERAL SUMMARY.

REVISIONS: 05/15/2002 by EMS

CALCULATED KME
CHECKED TRB

MAINTENANCE OF TRAFFIC GENERAL NOTES

SUM-8-0.63

GUARDRAIL REPLACEMENT

NO HAZARD SHALL BE LEFT UNPROTECTED EXCEPT FOR THE ACTUAL TIME NECESSARY TO REMOVE THE EXISTING GUARDRAIL, PREPARE THE SITE, AND INSTALL NEW GUARDRAIL IN A CONTINUOUS OPERATION. THE REMOVAL OF ALL GUARDRAIL SHALL AT ALL TIMES BE AS DIRECTED BY THE ENGINEER. NO GUARDRAIL SHALL BE REMOVED UNTIL THE REPLACEMENT MATERIAL IS ON THE SITE, READY FOR INSTALLATION. FAILURE TO COMPLY WITH THIS REQUIREMENT SHALL BE DEEMED SUFFICIENT CAUSE TO ORDER WORK SUSPENDED UNTIL SUCH TIME AS THE ENGINEER IS ASSURED OF COMPLIANCE.

ALTERNATE AND DETOUR ROUTES

THE CONTRACTOR SHALL FURNISH, ERECT, MAINTAIN AND REMOVE ALL SIGNS ON THE INTERSTATE SYSTEM AND SR-8. AT THE COMPLETION OF THE PROJECT, THE 30"X24" SPECIAL SIGNS FOR THE BLUE AND GREENALTERNATE ROUTES SHALL BE STORED FOR PICKUP BY THE CITY OF AKRON.

PAYMENT FOR SIGNS INSTALLED SHALL BE "ITEM 614; MAINTAINING TRAFFIC, MISC.: ALTERNATE AND DETOUR ROUTE SIGNS, TYPE G, FLAT SHEET, AS PER PLAN, SQUARE FOOT", AND AS "ITEM 614; MAINTAINING TRAFFIC, MISC.: ALTERNATE AND DETOUR ROUTE SIGNS, TYPE G, EXTRUSHEET, AS PER PLAN, SQUARE FOOT". THE UNIT PRICE SHALL INCLUDE ALL POSTS, SUPPORTS; ATTACHMENT ASSEMBLIES AND HARDWARE NECESSARY FOR A COMPLETE INSTALLATION AND ALL GROUND AND ATTACHMENT RESTORATION AFTER REMOVAL.

THE CONTRACTOR SHALL FURNISH ALL SIGNS MATERIALS FOR USE ON CITY STREETS, INDICATED ON THE PLANS BY AN ASTERISK (*) FOR INSTALLATION, MAINTENANCE AND REMOVAL BY THE CITY. THE CONTRACTOR SHALL FURNISH FIVE (5) ADDITIONAL 30"X24" SPECIAL SIGNS FOR THE BLUE ALTERNATE ROUTE AND FIVE (5) ADDITIONAL 30"X24" SPECIAL SIGNS FOR THE GREEN ALTERNATE ROUTE. THE CONTRACTOR SHALL ALSO FURNISH A QUANTITY OF 100 NEW GROUND MOUNTED SUPPORTS, #3, FOR USE IN INSTALLING THESE SIGNS. THE SIGNS AND POSTS SHALL BE DELIVERED TO: CITY OF AKRON,
CONTACT:
7 CALENDAR DAYS BEFORE DELIVERY. ALL MATERIALS SHALL BECOME PROPERTY OF THE CITY OF AKRON. PAYMENT FOR SIGNS FURNISHED SHALL BE "ITEM 614, MAINTAINING TRAFFIC MISC.: ALTERNATE AND DETOUR ROUTE SIGNS, MATERIALS ONLY, TYPE G, SQUARE FOOT.

ITEM 614, WORK ZONE SPEED LIMIT SIGN

THE CONTRACTOR SHALL FURNISH, INSTALL, MAINTAIN, COVER DURING SUSPENSION OF WORK, AND REMOVE WORK ZONE SPEED LIMIT SIGNS AND SUPPORTS (R-10-48, 45 MPH) AND (R-11B-48) WITHIN THE WORK LIMITS IN ACCORDANCE WITH THE FOLLOWING REQUIREMENTS.

THE CONTRACTOR SHALL COVER OR REMOVE ANY EXISTING SPEED LIMIT OR MINIMUM SPEED SIGNS WITHIN THE REDUCED SPEED ZONE. THESE SIGNS SHALL BE RESTORED DURING SUSPENSION OR TERMINATION OF THE REDUCED SPEED LIMIT. THE EXPENSE OF COVERING OR REMOVAL AND RESTORATION OF EXISTING SPEED LIMIT OR MINIMUM SPEED SIGNS IS INCIDENTAL TO THE PAY ITEM FOR THE WORK ZONE SPEED LIMIT SIGNS.

THE WORK ZONE SPEED LIMIT SIGNS MAY BE ERECTED AND COVERED PRIOR TO STARTING WORK OR MAY BE ERECTED UNCOVERED NO MORE THAN 4 HOURS BEFORE THE ACTUAL START OF WORK. THE SIGNS SHALL BE REMOVED OR COVERED NO LATER THAN 4 HOURS FOLLOWING RESTORATION OF ALL LANES OF TRAFFIC WITH NO RESTRICTIONS OR SOONER AS DIRECTED BY THE ENGINEER.

THE CONTRACTOR SHALL ERECT A WORK ZONE SPEED LIMIT SIGN IN ADVANCE OF ANY LANE RESTRICTION EXPECTED TO LAST AT LEAST 30 DAYS OR AS DIRECTED BY THE ENGINEER. THE R-10-48 SIGNS SHALL BE MOUNTED AS FOLLOWS: ON BOTH SIDES OF DIVIDED HIGHWAYS, 500 FEET IN ADVANCE OF THE LANE REDUCTION TAPER; THE RIGHT SIDE ON UNDIVIDED HIGHWAYS, 250 FEET IN ADVANCE OF THE LANE REDUCTION TAPER. THESE SIGNS SHALL BE REPEATED, ON THE SIDE NEAREST TRAFFIC, EVERY ½ MILE FOR 45 MPH ZONES AND SHALL ALSO BE ERECTED IMMEDIATELY AFTER EACH ENTRANCE RAMP WITHIN THE ZONE.

THE R-11B-48 SIGNS SHALL BE ERECTED ON BOTH SIDES OF DIVIDED HIGHWAYS 1500 FEET IN ADVANCE OF THE REDUCTION TAPER. THE R-11B-48 SIGNS SHALL BE ERECTED ON THE RIGHT SIDE ON UNDIVIDED HIGHWAYS, 750 FEET IN ADVANCE OF THE REDUCTION TAPER ON UNDIVIDED HIGHWAYS. A R-8A SIGN SHALL BE ERECTED AT THE END OF ANY REDUCED SPEED ZONE TO INDICATE THE RESUMPTION OF THE STATUTORY SPEED LIMIT.

THE CONTRACTOR MAY USE SIGNS AND SUPPORTS IN USED BUT GOOD CONDITION PROVIDED THE SIGNS MEET CURRENT ODOT SPECIFICATIONS. SIGN FACES SHALL BE REFLECTORIZED WITH TYPE G SHEETING COMPLYING WITH THE REQUIREMENTS OF 730.19 AND U.S. DEPARTMENT OF TRANSPORTATION SUPPLEMENTAL SPECIFICATION FOR TYPE III-C SHEETING, FP-85. WORK ZONE SPEED LIMIT SIGNS SHALL BE MOUNTED ON TWO (2) ITEM 630 GROUND MOUNTED SUPPORTS, NO. 4 POSTS.

WORK ZONE SPEED LIMIT SIGN AND SUPPORTS WILL BE MEASURED AS THE NUMBER OF SIGN INSTALLATIONS, INCLUDING THE SIGN AND NECESSARY SUPPORTS. IF A SIGN AND SUPPORT COMBINATION IS REMOVED AND REERECTED AT ANOTHER LOCATION WITHIN THE PROJECT DUE TO CHANGES IN THE SPEED ZONE DIRECTED BY THE ENGINEER, IT SHALL BE CONSIDERED ANOTHER UNIT.

PAYMENT FOR ACCEPTED QUANTITIES, COMPLETE, IN PLACE WILL BE MADE AT THE CONTRACT UNIT PRICE. PAYMENT SHALL BE FULL COMPENSATION FOR ALL MATERIALS, LABOR, INCIDENTALS AND EQUIPMENT FOR FURNISHING, ERECTION, MAINTENANCE, COVERING DURING SUSPENSION OF WORK, AND REMOVAL OF THE SIGNS AND SUPPORTS.

ITEM 614 WORK ZONE SPEED LIMIT SIGN 75 EACH

DETOUR OF PEDESTRIANS

WHEN A SIDEWALK IS CLOSED OR A TEMPORARY WALK IS PROVIDED, PEDESTRIANS SHALL BE WARNED, GUIDED AND PROTECTED IN ACCORDANCE WITH DETAILS PROVIDED IN STANDARD DRAWINGS MT-110.10M AND MT-110.20M.

ITEM 614, BARRIER REFLECTORS AND/OR OBJECT MARKERS

BARRIER REFLECTORS AND/OR OBJECT MARKERS SHALL BE INSTALLED ON ALL PORTABLE CONCRETE BARRIER USED FOR TRAFFIC CONTROL. BARRIER REFLECTORS, OBJECT MARKERS AND THEIR INSTALLATION SHALL CONFORM TO THE APPROPRIATE PROPOSAL NOTE AND ITEM 626 EXCEPT THAT THE SPACING SHALL BE 30 FEET. AN ESTIMATED QUANTITY OF 1822 EACH OF ITEM 614 BARRIER REFLECTOR, TYPE B, AND 1822 EACH OF ITEM 614 OBJECT MARKERS HAVE BEEN PROVIDED AND CARRIED TO THE GENERAL SUMMARY.

ITEM 614, DOUBLED FINES IN WORK ZONE SIGN

R-180-48 SIGNS SHALL BE FURNISHED, ERECTED, AND MAINTAINED IN GOOD CONDITION AND/OR REPLACED AS NECESSARY AND SUBSEQUENTLY REMOVED BY THE CONTRACTOR. SIGNS SHALL BE MOUNTED AT THE APPROPRIATE OFFSETS AND ELEVATIONS AS PRESCRIBED BY THE OHIO MANUAL OF UNIFORM TRAFFIC CONTROL DEVICES. THEY SHALL BE MAINTAINED ON SUPPORTS MEETING CURRENT SAFETY CRITERIA.

THE SIGNS SHALL BE COVERED OR REMOVED WHEN THE CONSTRUCTION ZONE IS DISCONTINUED FOR 30 DAYS OR MORE.

THE CONTRACTOR MAY USE SIGNS AND SUPPORTS IN USED BUT GOOD CONDITION PROVIDED THE SIGNS MEET CURRENT ODOT SPECIFICATIONS. SIGN FACES SHALL BE REFLECTORIZED WITH TYPE G SHEETING COMPLYING WITH THE REQUIREMENTS OF 730.19 AND U.S. DEPARTMENT OF TRANSPORTATION SUPPLEMENTAL SPECIFICATION FOR TYPE III-C SHEETING, FP-85.

DOUBLE FINES IN WORK ZONES SIGNS AND SUPPORTS WILL BE MEASURED AS THE NUMBER OF SIGN INSTALLATIONS, INCLUDING THE SIGN AND NECESSARY SUPPORTS. IF A SIGN AND SUPPORT COMBINATION IS REMOVED AND REERECTED AT ANOTHER LOCATION AS DIRECTED BY THE ENGINEER, IT SHALL BE CONSIDERED ANOTHER UNIT.

PAYMENT FOR ACCEPTED QUANTITIES, COMPLETE, IN PLACE WILL BE MADE AT THE CONTRACT UNIT PRICE. PAYMENT SHALL BE FULL COMPENSATION FOR ALL MATERIALS, LABOR, INCIDENTALS AND EQUIPMENT FOR FURNISHING, ERECTING, MAINTAINING, COVERING DURING SUSPENSION OF WORK, AND REMOVAL OF THE SIGN AND SUPPORT.

ITEM 614, DOUBLED FINES IN WORK ZONE SIGN 40 EACH

FLOODLIGHTING

FLOODLIGHTING OF THE WORK SITE FOR OPERATIONS CONDUCTED DURING NIGHT TIME PERIODS SHALL BE ACCOMPLISHED SO THAT THE LIGHTS DO NOT CAUSE GLARE TO THE DRIVERS ON THE ROADWAY. TO ENSURE THE ADEQUACY OF THE FLOODLIGHT PLACEMENT, THE CONTRACTOR AND THE ENGINEER SHALL DRIVE THROUGH THE WORK SITE EACH NIGHT WHEN THE LIGHTING IS IN PLACE AND OPERATIVE PRIOR TO COMMENCING ANY WORK. IF GLARE IS DETECTED THE LIGHT PLACEMENT AND SHIELDING SHALL BE ADJUSTED TO THE SATISFACTION OF THE ENGINEER BEFORE WORK PROCEEDS.

PAYMENT FOR ALL LABOR, EQUIPMENT AND MATERIALS SHALL BE INCLUDED IN THE LUMP SUM CONTRACT PRICE FOR MAINTAINING TRAFFIC.

ITEM SPECIAL CELLULAR PHONE

THE CONTRACTOR SHALL FURNISH SIX (6) NEXTELL ACTIVITY 250 PLUS RADIOS, WITH A MINIMUM OF 250 MINUTES OF USE PER MONTH PER PHONE.

PAYMENT SHALL BE UNDER "ITEM SPECIAL-CELULAR PHONE, EACH"

ITEM SPECIAL CELLULAR PHONE 2 EACH

ITEM 614 PORTABLE CHANGEABLE MESSAGE SIGN, CLASS I, AS PER PLAN

THE CONTRACTOR SHALL FURNISH, INSTALL, MAINTAIN AND REMOVE, WHEN NO LONGER NEEDED, FOUR [4] CHANGEABLE MESSAGE SIGNS, ON SITE, FOR THE DURATION OF THE PROJECT. THE SIGNS SHALL BE ON ODOT'S PREAPPROVED LIST.

EACH SIGN SHALL BE TRAILER MOUNTED AND EQUIPPED WITH A FUNCTIONAL DIMMING MECHANISM TO DIM THE SIGN DURING DARKNESS AND A TAMPER AND VANDAL PROOF ENCLOSURE. EACH SIGN SHALL BE PROVIDED WITH APPROPRIATE TRAINING AND OPERATION INSTRUCTIONS TO ENABLE ON-SITE PERSONNEL TO OPERATE AND TROUBLESHOOT THE UNIT. THE SIGN SHALL ALSO BE CAPABLE OF BEING POWERED BY AN ELECTRICAL SERVICE DROP FROM A LOCAL UTILITY COMPANY.

PLACEMENT, OPERATION, MAINTENANCE AND ALL ACTIVATION OF THE SIGNS BY THE CONTRACTOR SHALL BE AS DIRECTED BY THE ENGINEER. THE PCMS SHALL BE LOCATED IN A HIGHLY VISIBLE POSITION YET PROTECTED FROM TRAFFIC. THE PCMS SHOULD NOT BE LOCATED IN THE MEDIAN OF THE HIGHWAY UNLESS IT IS PROTECTED FROM BOTH DIRECTIONS OF TRAFFIC. THE PCMS SHOULD BE LOCATED BEHIND GUARDRAIL WHEREVER POSSIBLE. THE CONTRACTOR SHALL, AT THE DIRECTION OF THE ENGINEER, RELOCATE THE PCMS TO IMPROVE THE VISIBILITY OR ACCOMMODATE CHANGED CONDITIONS. WHEN NOT IN USE, THE PCMS WILL BE OFF, FACING AWAY FROM ALL TRAFFIC AND SHALL DISPLAY ONE OR MORE HIGH INTENSITY YELLOW REFLECTIVE SHEETING SURFACES OF 9-INCH BY 15-INCH MINIMUM SIZE FACING TRAFFIC.

THE ENGINEER SHALL BE PROVIDED ACCESS TO EACH SIGN UNIT AND SHALL BE PROVIDED WITH APPROPRIATE TRAINING AND OPERATION INSTRUCTIONS TO ENABLE PERSONNEL TO OPERATE AND TROUBLESHOOT THE UNIT AND TO REVISE SIGN MESSAGES, IF NECESSARY.

ALL MESSAGES TO BE DISPLAYED ON THE SIGN WILL BE PROVIDED BY THE CONTRACTOR. A LIST OF ALL REQUIRED PREPROGRAMMED MESSAGES WILL BE GIVEN TO THE CONTRACTOR AT THE PROJECT PRECONSTRUCTION CONFERENCE. THE SIGN SHALL HAVE TWO DIFFERENT MEMORIES [PROM AND RAM] AND CAPABILITY TO STORE UP TO 99 MESSAGES IN EACH MEMORY. SIGN MESSAGES SHALL BE LEGIBLE FROM 650 FT MINIMUM. THE SIGN LEGEND SHALL BE CAPABLE OF BEING CHANGED IN THE FIELD. IN ORDER TO CONVEY A MAXIMUM OF INFORMATION AT A SINGLE GLANCE, ONLY THREE LINE PRESENTATION FORMATS WITH A MAXIMUM OF SIX MESSAGE PHASES WILL BE PERMITTED. NORMALLY, ONLY A MAXIMUM OF THREE MESSAGE PHASES SHOULD BE EMPLOYED. PCMS FORMAT SHALL PERMIT THE COMPLETE MESSAGE FOR EACH PHASE TO BE READ AT LEAST ONCE.

THE PCMS SHALL CONTAIN AN ACCURATE CLOCK AND PROGRAMMING LOGIC WHICH WILL ALLOW THE SIGN TO BE ACTIVATED, DE-ACTIVATED OR MESSAGES CHANGED AUTOMATICALLY AT DIFFERENT TIMES OF THE DAY FOR DIFFERENT DAYS OF THE WEEK.

THE PCMS SHALL CONTAIN A CELLULAR TELEPHONE DATA LINK WHICH WILL [IN ACTIVE CELLULAR PHONE AREAS] ALLOW REMOTE SIGN ACTIVATION, DEACTIVATION, MESSAGE CHANGES, MESSAGE ADDITIONS AND REVISIONS TO TIME OF DAY PROGRAMS. THE SYSTEM SHALL ALSO PERMIT VERIFICATION OF CURRENT AND PROGRAMMED MESSAGES.

THE PCMS UNIT SHALL BE MAINTAINED IN GOOD WORKING ORDER BY THE CONTRACTOR IN ACCORDANCE WITH THE PROVISIONS OF 614.03(C). THE CONTRACTOR SHALL PRIOR TO ACTIVATING THE UNIT, MAKE ARRANGEMENTS WITH AN AUTHORIZED SERVICE AGENT FOR THE PCMS TO ASSURE PROMPT SERVICE IN THE EVENT OF FAILURE. ANY FAILURE SHALL NOT RESULT IN THE SIGN BEING OUT OF SERVICE FOR MORE THAN 12 HOURS INCLUDING WEEKENDS. FAILURE TO COMPLY MAY RESULT IN AN ORDER TO STOP WORK AND OPEN ALL TRAFFIC LANES AND/OR IN THE DEPARTMENT TAKING APPROPRIATE ACTION TO SAFELY CONTROL TRAFFIC AND THE ENTIRE COST TO CONTROL TRAFFIC ACCRUED BY THE DEPARTMENT WILL BE DEDUCTED FROM MONEYS DUE, OR TO BECOME DUE THE CONTRACTOR ON HIS CONTRACT.

THE CONTRACTOR SHALL BE RESPONSIBLE FOR 24 HOURS PER DAY OPERATION AND MAINTENANCE OF THESE SIGNS ON THE PROJECT FOR THE DURATION OF THE PHASES WHEN THE PLAN REQUIRES THEIR USE.

THE REQUIREMENT TO FURNISH, INSTALL, MAINTAIN AND REMOVE A PCMS UNIT ON THIS PROJECT SHALL NOT IN ANY WAY RELIEVE THE CONTRACTOR OF HIS RESPONSIBILITIES AS OUTLINED IN 104.04.

ITEM 614 PORTABLE CHANGEABLE MESSAGE SIGN, AS PER PLAN (CONT.)

PAYMENT FOR THE ABOVE DESCRIBED ITEM SHALL BE AT THE CONTRACT UNIT PRICE BID FOR EACH SIGN MONTH OF ITEM 614 PORTABLE CHANGEABLE MESSAGE SIGN, AS PER PLAN AND SHALL INCLUDE ALL LABOR, MATERIALS, EQUIPMENT, FUELS, LUBRICATING OILS, SOFTWARE, HARDWARE AND INCIDENTALS TO PERFORM THE ABOVE DESCRIBED WORK.

ITEM 614 PORTABLE CHANGEABLE MESSAGE SIGN, AS PER PLAN
144 SIGN MONTH

CONTRACTOR'S EQUIPMENT - OPERATION AND STORAGE

THE CONTRACTOR'S EQUIPMENT SHALL BE OPERATED IN THE DIRECTION OF TRAFFIC. A QUALIFIED FLAGGER SHALL BE EMPLOYED WHERE THE CONTRACTOR'S EQUIPMENT MUST MERGE WITH THE TRAFFIC STREAM. THE CONTRACTOR'S EQUIPMENT SHALL BE EQUIPPED WITH AT LEAST ONE AMBER FLASHING LIGHT. PAVERS, ROLLERS AND OTHER EQUIPMENT MAY BE PARKED IN AREAS ALONG THE HIGHWAY WHEN PAVING OPERATIONS ARE SCHEDULED TO CONTINUE WITHIN THE NEXT WORKDAY: OTHERWISE THE EQUIPMENT SHALL BE STORED AT A STORAGE AREA OUTSIDE THE L/A, THE LOCATION OF WHICH SHALL HAVE PRIOR APPROVAL OF THE ENGINEER. WHEN PARKING ALONG THE HIGHWAY THE EQUIPMENT SHALL BE PLACED AND DELINEATED AS PER 614.03. NO EQUIPMENT SHALL BE PARKED IN THE MEDIAN OF THE HIGHWAY. ADEQUATE BARRICADES AND LIGHTS SHALL BE PLACED ON THE PAVEMENT SIDE OF THE EQUIPMENT TO IDENTIFY THE LIMITS OF THE EQUIPMENT. ALL OTHER EQUIPMENT, INCLUDING PRIVATE VEHICLES, SHALL BE STORED AT THE APPROVED CONTRACTOR'S STORAGE AREA. NO EQUIPMENT SHALL BE PARKED ON PRIVATE PROPERTY UNLESS PRIOR APPROVAL OF THE OWNER AND THE PROJECT ENGINEER/SUPERVISOR HAS BEEN GRANTED.

ITEM 614 VEHICLE ASSISTANCE

THE CONTRACTOR SHALL PROVIDE A VEHICLE WITH OPERATOR ABLE TO ASSIST OR REMOVE DISABLED VEHICLES FROM THE TRAVELED LANE TO REESTABLISH FREE FLOWING TRAFFIC WITHIN THE WORK ZONE, WHICH IS UNDER CONSTRUCTION. THE EXCEPTION IS TRAFFIC ACCIDENTS WHICH ARE NOT TO BE MOVED WITHOUT DIRECTION OF THE OHIO STATE HIGHWAY PATROL.

THE RESPONSE TIME SHOULD BE WITHIN TEN MINUTES OF THE VEHICLE BEING REPORTED AS DISABLED. THE INTENT IS TO PERFORM THIS WORK IN A VERY SHORT TIME PERIOD TO AVOID TRAFFIC FROM BACKING UP. THE VEHICLE SHALL BE EQUIPPED WITH AT LEAST THE FOLLOWING: FUEL CANS OF GAS AND DIESEL, FLARES, CONES, JUMPER CABLES, AMBER LIGHTS, CELL PHONE (TO RECEIVE TROUBLE CALLS AND TO CALL TOW VEHICLES.

THE HOURS FOR THIS VEHICLE WITH OPERATOR ARE 24 HOURS PER DAY AND SEVEN DAYS PER WEEK.

THE CONTRACTOR IS NOT TO REMOVE THE VEHICLE EXCEPT TO THE SHOULDER OR OFF THE TRAVELED LANE. COMMERCIAL TOW OPERATORS ARE TO BE CONTACTED TO REMOVE THE DISABLED VEHICLE FROM THE ROADWAY AT THE VEHICLE OWNER'S EXPENSE.

ANY DAMAGE DONE TO DISABLED VEHICLES SHALL BE BORNE BY THE CONTRACTOR (THE STATE SHALL BE HELD HARMLESS).

IN ORDER FOR VERIFYING EACH INSTANCE, THE CONTRACTOR IS REQUIRED TO SUBMIT DOCUMENTATION THAT REFLECTS THE DATE, TIME, VEHICLE MAKE AND MODEL, LICENSE NUMBER OF THE VEHICLE AND THE DRIVER'S NAME. THIS DOCUMENTATION SHALL BE SUBMITTED TO THE ENGINEER WITHIN (3) WORKING DAYS. PAYMENT FOR EACH OCCURRENCE WILL NOT BE PROCESSED FOR THIS ITEM UNTIL THIS DOCUMENTATION IS RECEIVED.

ALL COSTS ASSOCIATED WITH THE REQUIREMENTS MENTIONED ABOVE SHALL BE INCLUDED IN THE EACH PRICE BID FOR ITEM 614 - MAINTAINING TRAFFIC, MISC.: VEHICLE ASSISTANCE. AN ESTIMATED QUANTITY OF 180 HOURS IS PROVIDED TO BE USED AS DIRECTED BY THE ENGINEER.

ITEM 615 TEMPORARY PAVEMENT, CLASS A, AS PER PLAN

IN ADDITION TO THE REQUIREMENTS OF 615, THIS ITEM REPLACES THE 7 INCHES OF ITEM 301 BITUMINOUS AGGREGATE BASE WITH 9 INCHES OF ITEM 301 BITUMINOUS AGGREGATE BASE.

UPON COMPLETION OF THE PROJECT, THE CONTRACTOR SHALL REMOVE THE TEMPORARY PAVEMENT INCLUDING ANY TEMPORARY DRAINAGE FACILITIES. THE AFFECTED EXISTING EARTH MEDIAN AND PAVED SHOULDERS SHALL BE RESTORED TO THEIR ORIGINAL CONDITION AS DIRECTED BY THE ENGINEER AND AS PER 615.08.

TEMPORARY PAVEMENTS SHALL NOT BE OPENED TO TRAFFIC UNTIL ALL TEMPORARY TRAFFIC CONTROL DEVICES, SIGNS, PAVEMENT MARKINGS AND PORTABLE CONCRETE BARRIERS HAVE BEEN ERECTED AND APPROVED BY THE ENGINEER.

ALTHOUGH ESTIMATES FOR TEMPORARY EXCAVATION, EMBANKMENT, CURBING, AND TEMPORARY DRAINAGE FACILITIES HAVE BEEN SHOWN ON THE PLAN DETAILS, THESE ITEMS SHALL BE CONSIDERED INCIDENTAL TO, AND INCLUDED WITH PAYMENT FOR ITEM 615 TEMPORARY PAVEMENT, CLASS A, AS PER PLAN.

WHEN A QUANTITY OR PORTION OF A QUANTITY COULD BE PAID FOR EITHER AS ITEM 615 TEMPORARY PAVEMENT, CLASS A, AS PER PLAN OR A PERMANENT CONSTRUCTION PAY ITEM, THE PAYMENT SHALL BE MADE AS PER THE SPECIFICATIONS OF THE PERMANENT CONSTRUCTION PAY ITEM.

ITEM SPECIAL - TEMPORARY TRAFFIC SIGNAL

A TEMPORARY TRAFFIC SIGNAL SHALL BE PLACED AT THE FOLLOWING INTERSECTION AS SHOWN ON SHEETS 126 TO 136:

GOODKIRK STREET AND EXCHANGE STREET
GOODKIRK STREET AND CARROLL STREET
FOUNTAIN STREET AND EXCHANGE STREET
FOUNTAIN STREET AND CARROLL STREET

THIS ITEM SHALL INCLUDE ALL COSTS ASSOCIATED WITH PROVIDING, ERECTING, MAINTAINING, AND SUBSEQUENTLY REMOVING ALL EQUIPMENT, EXISTING MARKINGS, AND NEW MARKINGS AS REQUIRED TO PROVIDE A COMPLETE FUNCTIONING SIGNAL INSTALLATION AS DETAILED IN THESE PLANS. THE CONTRACTOR SHALL NOTIFY THE CITY OF AKRON TRAFFIC ENGINEER (330-375-2851) THREE (3) WORKING DAYS BEFORE ANY TEMPORARY TRAFFIC SIGNAL IS PLACED INTO OPERATION. SIGNAL SHUTDOWN AND/OR LANE BLOCKAGE SHALL NOT OCCUR DURING THE HOURS OF 7:00 AM TO 8:30 AM OR 4:00 PM TO 6:00 PM EXCEPT WITH THE PERMISSION OF THE ENGINEER. IF IT IS NECESSARY TO STOP ALL TRAFFIC FOR THE ERECTION OF SIGNAL SUPPORTS, THE WORK SHALL BE ARRANGED SO THAT THE STOPPAGE IS LESS THAN TEN (10) MINUTES IN ANY ONE (1) THIRTY (30) MINUTE PERIOD. NO STOPPAGE OF TRAFFIC SHALL OCCUR FOR THE ERECTION OF OVERHEAD SUPPORTS WITHOUT A LAW ENFORCEMENT OFFICER WITH PATROL CAR BEING AT THE SITE FOR ASSISTANCE IN CONTROLLING TRAFFIC. THE FOLLOWING QUANTITY HAS BEEN CARRIED TO THE GENERAL SUMMARY:

ITEM SPECIAL - TEMPORARY TRAFFIC SIGNAL 4 EACH

MARKET STREET BRIDGE CONSTRUCTION

THE CONTRACTOR SHALL CONSTRUCT MARKET STREET BRIDGE MAINTAINING TRAFFIC AS DETAILED AND SEQUENCED IN THE PLANS. THE MARKET STREET BRIDGE PORTION OF PHASE 1A-1 SHALL BE COMPLETED PRIOR TO THE START OF PHASE 1A-1 (UTILITY). PHASE 1A-1 (UTILITY) IS REQUIRED TO ENABLE THE RELOCATION OF UNDERGROUND LINES BY AMERITECH. THE CONTRACTOR SHALL COORDINATE THE DURATION OF PHASE 1A-1 (UTILITY) WITH THE UTILITY COMPANY. THE MARKET STREET BRIDGE PORTION OF PHASE 1A-2 MAY BEGIN IMMEDIATELY AFTER THE COMPLETION OF PHASE 1A-1 (UTILITY) WORK BY AMERITECH. SEE MARKET STREET BRIDGE STAGE CONSTRUCTION SHEETS FOR FURTHER STRUCTURAL CONSTRUCTION DETAILS.

ITEM 622 PORTABLE CONCRETE BARRIER, 50", AS PER PLAN

THE PORTABLE CONCRETE BARRIER SHALL CONFORM TO 622 AND RM-4.1M EXCEPT:

EACH BARRIER SECTION SHALL BE ANCHORED TO THE EXISTING OR PROPOSED PAVEMENT IN ACCORDANCE WITH PCB-DD

ONLY THE PIN AND LOOP CONNECTING HARDWARE SHOWN IN RM-4.1M SHALL BE USED TO CONNECT PCB SECTIONS.

DRAINAGE CONSTRUCTION

THE CONTRACTOR SHALL SEQUENCE THE CONSTRUCTION OF THE NEW DRAINAGE SYSTEM IN SUCH A MANNER THAT AN OUTLET IS PROVIDED FOR EXISTING DRAINAGE FACILITIES AT ALL TIMES. TEMPORARY DRAINAGE STRUCTURES AT EXISTING AND PROPOSED DRAINAGE CROSSINGS WILL BE REQUIRED AS PROVIDED IN THE PLANS. REDUCTION OF ONE LANE OF TRAFFIC AT PROPOSED DRAINAGE CROSSINGS OF ROADWAYS BEING USED FOR MAINTAINING TRAFFIC WILL BE DONE ON NIGHTS AND WEEKENDS ONLY AS DESCRIBED IN THE MAINTENANCE OF TRAFFIC NOTE, SHEET 42. DRAINAGE TRENCHES ACROSS THE MAINTENANCE OF TRAFFIC LANES SHALL BE COMPLETED, BACKFILLED AND SURFACED WITH AN APPROVED SURFACE COURSE AT THE END OF THE WORK PERIOD.

ALTERNATE MAINTENANCE OF TRAFFIC PLANS

IF THE CONTRACTOR SO ELECTS, HE MAY SUBMIT ALTERNATE METHODS FOR MAINTENANCE OF TRAFFIC PROVIDED THE INTENT OF THE ABOVE PROVISIONS IS FOLLOWED AND NO ADDITIONAL INCONVENIENCE TO THE TRAVELING PUBLIC RESULTS THEREFROM. NO ALTERNATE PLAN SHALL BE PLACED IN EFFECT UNTIL APPROVAL HAS BEEN GRANTED IN WRITING BY THE ODOT DISTRICT CONSTRUCTION ENGINEER. ALTERNATE MOT PLANS SHALL NOT BE CONSIDERED FOR VALUE ENGINEERING.

ACCESS TO PROPERTIES

ACCESS TO ALL PROPERTIES SHALL BE MAINTAINED AS PER SECTION 104.04 OF THE CONSTRUCTION AND MATERIAL SPECIFICATIONS MANUAL. AREAS WITH MULTIPLE DRIVES SHALL HAVE ONE OF THE DRIVES OPENED AT ALL TIMES. SHORT-TERM FULL CLOSURES OF A SINGLE ACCESS WILL BE PERMITTED WITH THE PROPERTY OWNER AND/OR TENANT'S AGREEMENT. SUCH FULL CLOSURES SHALL BE SCHEDULED AND COORDINATED WITH THE PROPERTY OWNER/TENANT.

IN ADDITION TO THE ABOVE REQUIREMENTS, THE FOLLOWING COMMERCIAL DRIVES SHALL BE FULLY MAINTAINED DURING BUSINESS HOURS. ANY ALTERNATIVE ARRANGEMENT WHICH MAY BE WORKED OUT WITH THE LOCAL MANAGER SHALL BE DOCUMENTED IN WRITING.

FOUNTAIN STREET STATION 308+36.8, RT. U-HAUL
FOUNTAIN STREET STATION 311+43.2, RT. U-HAUL

PEDESTRIAN MOVEMENT

THE CONTRACTOR SHALL BE RESPONSIBLE FOR THE PROTECTION AND SAFE MOVEMENT OF PEDESTRIANS THROUGH, AROUND, OR DETOURED AWAY FROM THE CONSTRUCTION SITE. TRAFFIC CONTROL FOR PEDESTRIAN MOVEMENT SHALL BE AS PER FIGURES MT-110.10, MT-110.20 AND MT-110.30.

CONSTRUCTION ZONE

ACCESS TO THE WORK AREA SHALL BE AT THE EXTREME ENDS OF THE PROJECT. THE CONTRACTOR SHALL NOT BE PERMITTED TO BREAK THE PORTABLE CONCRETE BARRIER TO ALLOW ACCESS FOR HIS EQUIPMENT OF MATERIALS.

SR 8 MAINLINE CONSTRUCTION PHASING

TO EXPEDITE CONSTRUCTION ON THE SOUTH PORTION OF THE MAINLINE, LANE SHIFTS ARE PERMITTED WITHIN THE PROJECT AS SHOWN ON INTERIM MAINLINE TRANSITION SHEETS 88A, 88B AND 88C. THIS TRANSITION ALLOWS FOR CONCURRENT MAINLINE CONSTRUCTION WITH APPROVAL FROM THE ENGINEER AS FOLLOWS:

PHASE 2 SOUTH AND PHASE 1 NORTH
PHASE 3 SOUTH AND PHASE 1 NORTH
PHASE 3 SOUTH AND PHASE 2 NORTH

REVISIONS: 05/15/2002 by EMS

CALCULATED KME
CHECKED TRB

MAINTENANCE OF TRAFFIC GENERAL NOTES

SUM-8-0.63

INCENTIVE/DISINCENTIVE

DEFINITIONS AND TERMS

CRITICAL WORK = ALL WORK ITEMS BETWEEN THE FOLLOWING LIMITING STATIONS:
SR 8 MAINLINE- ALL PAVEMENT WITHIN THE PROJECT LIMITS AND APPROACHES
FORGE ST- BEGINNING AT STATION 5+02.05; ENDING AT STATION 10+84.54
MARKET ST, STAGE TWO- BEGINNING AT STATION 22+80.46; ENDING AT STATION 27+49.96
WITH THE EXCEPTION OF LANDSCAPING, LIGHTING, FENCE INSTALLATION OR STRUCTURE PAINTING NOT REQUIRING ADDITIONAL LANE CLOSURES AND FINAL CLEANUP.

INCENTIVE/DISINCENTIVE CLAUSES FOR COMPLETION OF CRITICAL WORK = A CONTRACT PROVISION WHICH COMPENSATES THE CONTRACTOR A FIXED AMOUNT OF MONEY FOR EACH CALENDAR DAY THE WORK DESIGNATED AS CRITICAL WORK IS COMPLETED AND UNRESTRICTED TRAFFIC RESTORED ON THE PROJECT BEFORE THE EXPIRATION OF THE INCENTIVE/DISINCENTIVE TIME ESTABLISHED IN THE CONTRACT. DISINCENTIVE CLAUSE IS A CONTRACT PROVISION WHICH ASSESSES A DEDUCTION FROM THE CONTRACT AMOUNT FOR EACH CALENDAR DAY THE CONTRACTOR OVERRUNS THE INCENTIVE/DISINCENTIVE TIME ESTABLISHED IN THE CONTRACT FOR THE COMPLETION OF THE CRITICAL WORK. ASSESSMENT OF A DISINCENTIVE DAILY AMOUNT WILL NOT IN ANY WAY BE CONSTRUED AS THE ASSESSMENT OF A PENALTY.

INCENTIVE/DISINCENTIVE DAILY AMOUNT = A FIXED AMOUNT OF MONEY AWARDED OR ASSESSED THE CONTRACTOR FOR EACH DAY ALL IDENTIFIED CRITICAL WORK DEFINED ABOVE IS COMPLETED PRIOR TO OR AFTER THE EXPIRATION OF THE INCENTIVE/ DISINCENTIVE TIME. THIS AMOUNT IS SET AS THE FOLLOWING FOR THIS PROJECT:
SR 8 MAINLINE- $7500/DAY
FORGE ST- $5000/DAY
MARKET ST, STAGE TWO- $5000/DAY

INCENTIVE/DISINCENTIVE TIME = ALL CRITICAL WORK SHALL BE COMPLETED BY:
SR 8 MAINLINE- 747 CALENDER DAYS FROM THE START OF PHASE 1B (I.E., THE FIRST MAINLINE CLOSURE)

FORGE ST- APRIL 25, 2003
MARKET ST, STAGE TWO - 120 CALENDER DAYS

LIQUIDATED DAMAGES = THE DAILY AMOUNT OF MONEY ESTABLISHED IN 108.07 TO BE DEDUCTED FROM THE CONTRACT AMOUNT FOR ADDITIONAL COSTS, OTHER THAN THE DISINCENTIVE DAILY AMOUNT, INCURRED BY THE DEPARTMENT DUE TO THE CONTRACTOR'S FAILURE TO COMPLETE ALL CONTRACT WORK ON OR BEFORE THE COMPLETION DATE OF THE CONTRACT TIME ESTABLISHED IN THE CONTRACT OR EXTENDED CONTRACT TIME GRANTED UNDER 108.06. ASSESSMENT OF LIQUIDATED DAMAGES AMOUNT WILL NOT IN ANY WAY BE CONSTRUED AS THE ASSESSMENT OF A PENALTY.

LIMITATION OF OPERATIONS- THE CONTRACTOR IS ADVISED THAT TIME IS OF THE ESSENCE IN THE CONTRACT AND THAT HE WILL BE PERMITTED TO WORK AT NIGHT, ON SATURDAYS AND SUNDAYS. SHOULD THE CONTRACTOR'S PROGRESS FALL BEHIND THE APPROVED PROGRESS SCHEDULE, THE DEPARTMENT WILL ALLOW AND THE CONTRACTOR SHALL WORK ADDITIONAL CREWS AND/OR ADDITIONAL SHIFTS AS MAY BE NECESSARY IN ORDER TO MAINTAIN THE ACCEPTED PROGRESS SCHEDULE. DATE OF COMPLETION- THE CONTRACTOR HEREBY ACKNOWLEDGES AND AGREES THAT THE UNIT PRICES AS QUOTED IN THIS PROPOSAL CONTAIN AND CONTEMPLATE COSTS ASSOCIATED WITH EXPEDITING THE PROJECT TO MEET THE WORKS SCHEDULED COMPLETION DATES AS DEFINED ABOVE. IT SHALL BE MUTUALLY UNDERSTOOD AND AGREED BY AND BETWEEN THE PARTIES TO THE CONTRACT THAT THE DEPARTMENT WILL SUSTAIN DAMAGE SHOULD THE CONTRACTOR NOT COMPLETE ITS WORK UNDER THE WORK COMPLETION DATES STATED ABOVE.

THE CONTRACTOR SHALL COMPLETE THE WORK ON OR BEFORE THE INCENTIVE/ DISINCENTIVE TIMES SPECIFIED ABOVE. OTHERWISE, THE DEPARTMENT SHALL PROCEED AS PROVIDED IN 108.07 OR 108.08. SHOULD THE CONTRACTOR COMPLETE THE CRITICAL WORK BEFORE OR AFTER THE INCENTIVE/DISINCENTIVE TIME THEREOF, OR BEFORE OR AFTER AN EXTENDED DATE DETERMINED AS SPECIFIED HEREIN, THE DEPARTMENT SHALL AWARD INCENTIVE PAYMENT OR ASSESS DISINCENTIVE PAYMENT AS DEFINED ABOVE.

IF THE CONTRACTOR FINDS IT IMPOSSIBLE DUE TO ANY OF THE REASONS SET OUT BELOW TO COMPLETE THE WORK BY THE COMPLETION DATE OR AS EXTENDED IN ACCORDANCE WITH THE PROVISIONS OF THIS SUBSECTION, THE CONTRACTOR MAY MAKE A WRITTEN REQUEST TO THE ENGINEER FOR AN EXTENSION OF TIME SETTING FORTH THEREIN ONE OR MORE OF THE BELOW LISTED REASONS WHICH THE CONTRACTOR BELIEVES WILL JUSTIFY THE GRANTING OF HIS REQUEST. REQUESTS FOR EXTENSIONS OF TIME SHALL BE FILED IN WRITING BY THE CONTRACTOR WITH THE ENGINEER NOT LATER THAN TEN (10) DAYS FOLLOWING THE TERMINATION OF THE DELAY. THE CONTRACTOR'S PLEAS THAT INSUFFICIENT TIME WAS SPECIFIED IS NOT A VALID REASON FOR EXTENSION OF TIME.

IF THE ENGINEER FINDS THAT THE WORK WAS DELAYED DUE TO ONE OR MORE OF THE REASONS SET OUT BELOW, THEN HE MAY EXTEND THE TIME FOR COMPLETION OF THE CONTRACT AND, WHERE WARRANTED, THE INCENTIVE/DISINCENTIVE TIME IN SUCH AMOUNT AS THE CONDITIONS JUSTIFY.

EXTENSIONS OF TIME SHALL ONLY BE GRANTED FOR DELAYS IN MATERIAL DELIVERY IF SUCH DELAYS ARE INDUSTRY-WIDE, AREA-WIDE LABOR STRIKES AND LOCK-OUTS, SITE SPECIFIC FLOODING, WIND OR TORNADO DAMAGES, FIRE, EARTHQUAKES, ACTS OF WAR, OR BY ANY CAUSE WHICH THE ENGINEER SHALL DECIDE JUSTIFIES THE DELAY. FURTHER EXTENSIONS OF TIME MAY BE GRANTED FOR INCREASES IN BID ITEM QUANTITIES WHICH EXCEED THE LIMITS SET IN 104.02 OF THE SPECIFICATIONS, AND FOR WORK NOT ORIGINALLY CONTEMPLATED BY THE CONTRACT AND WHICH IN THE OPINION OF THE ENGINEER IMPACTS THE CRITICAL PATH OF THE PROJECT. IN THESE CASES, THE SCHEDULE FOR COMPLETION OF WORK SHALL BE EXTENDED FOR A PERIOD EQUAL TO THE DELAY SO CAUSED. THE ENGINEER MAY POSTPONE THE COMPLETION DATES BY THE NUMBER OF CALENDER DAYS HE DETERMINES. NO SUCH DELAY SHALL BE RECOGNIZED UNLESS IT ALONE INCREASES THE OVERALL CRITICAL PATH DURATION OF THE SCHEDULE IN EFFECT AT THE TIME OF DELAY. THERE SHALL BE NO EXTENSIONS OF TIME GRANTED FOR OTHER WEATHER-RELATED CONDITIONS, INCLUDING BUT NOT LIMITED TO, INCLEMENT WEATHER.

EXTENSIONS OF INCENTIVE/DISINCENTIVE TIME WILL NOT BE GRANTED UNLESS, IN THE DETERMINATION OF THE ENGINEER, ONE OR MORE OF THE ABOVE-REFERENCED EXTRAORDINARY CIRCUMSTANCES OCCUR. THE CONTRACTOR SHALL FULLY JUSTIFY WHY ADDITIONAL MANPOWER AND EQUIPMENT, ADDITIONAL SHIFTS AND 24-HOUR WORK DAYS CANNOT BE UTILIZED TO MAINTAIN THE ORIGINAL INCENTIVE/DISINCENTIVE TIME SCHEDULE, AT THE SOLE EXPENSE OF THE CONTRACTOR.

ACCEPTANCE, MEASUREMENT AND PAYMENT
INCENTIVE/DISINCENTIVE PAYMENT PLAN

THIS PROJECT CANNOT BE SAFELY AND EFFICIENTLY USED UNTIL THE CRITICAL WORK UNDER THIS CONTRACT, AS DEFINED ABOVE, IS COMPLETED AND ACCEPTED BY THE DEPARTMENT.

ON THIS BASIS, THE CONTRACTOR SHALL BE ENTITLED TO AN INCENTIVE PAYMENT FOR THE EARLY COMPLETION OF ALL WORK DESIGNATED AS CRITICAL WORK, INCLUDING CLEANUP, BEFORE THE EXPIRATION OF THE INCENTIVE/DISINCENTIVE TIME AS DEFINED ABOVE.

INCENTIVE PAYMENTS WILL BE AWARDED THE CONTRACTOR IN THE AMOUNT OF THE INCENTIVE/DISINCENTIVE DAILY AMOUNT MULTIPLIED BY THE TOTAL NUMBER OF FULL DAYS COMPLETION IS ACHIEVED PRIOR TO EXPIRATION OF THE INCENTIVE/DISINCENTIVE TIME AS DEFINED ABOVE; HOWEVER,THE TOTAL INCENTIVE PAYMENT SHALL NOT EXCEED THE FOLLOWING AMOUNTS:
SR 8 MAINLINE- $750,000
FORGE ST- $200,000
MARKET ST, STAGE TWO- $300,000

FAILURE OF THE CONTRACTOR TO COMPLETE CRITICAL WORK AS REQUIRED BY THE CONTRACT BEFORE EXPIRATION OF THE INCENTIVE/DISINCENTIVE TIME SHALL RESULT IN ASSESSMENT OF A DISINCENTIVE PAYMENT. DISINCENTIVE PAYMENT SHALL BE DEDUCTED FROM PAYMENTS DUE THE CONTRACTOR OR THE SURETY. THERE SHALL BE NO MAXIMUM DISINCENTIVE PAYMENT.

SHOULD IT BECOME APPARENT THAT DUE TO SIGNIFICANT DELAYS CAUSED BY THE CONTRACTOR, A DISINCENTIVE PAYMENT WILL BE ASSESSED, THE DEPARTMENT MAY DEVELOP AND IMPLEMENT A WITHHOLDING SCHEDULE TO RETAIN FUNDS FROM PARTIAL PAYMENTS DUE THE CONTRACTOR. IF THE TOTAL DISINCENTIVE PAYMENT EXCEEDS THE AMOUNT PAYABLE TO THE CONTRACTOR, THE EXCESS SHALL BE PAID TO THE DEPARTMENT BY THE CONTRACTOR OR THE SURETY.

SUBSTANTIAL COMPLETION, AS DISCUSSED IN 109.071 AND 109.072, OF CRITICAL WORK SHALL NOT QUALIFY FOR COMPLETION OF CRITICAL WORK. ANY BERM OR LANE CLOSURE REQUIRED TO COMPLETE ANY ITEM OF WORK AFTER REOPENING TO UNRESTRICTED HIGHWAY TRAFFIC, SHALL BE CAUSE TO REVISE THE COMPLETION DATE OF CRITICAL WORK AND EITHER REDUCE INCENTIVE PAYMENT, IF THE CLOSURE OCCURS PRIOR TO THE END OF THE INCENTIVE/DISINCENTIVE TIME OR ASSESS DISINCENTIVE PAYMENT IF THE CLOSURE OCCURS AFTER THE END OF THE INCENTIVE/DISINCENTIVE TIME.

FOR THE PURPOSE OF CALCULATING INCENTIVE/DISINCENTIVE PAYMENTS, A DAY SHALL BE DEFINED AS EACH 24 HOUR PERIOD PRECEDING OR FOLLOWING 12:00 O'CLOCK MIDNIGHT.

THE INCENTIVE PAYMENT DUE OR THE DISINCENTIVE PAYMENT CHARGED THE CONTRACTOR, WILL BE PROCESSED BY CHANGE ORDER AFTER COMPLETION AND ACCEPTANCE OF THE CRITICAL WORK ON THE PROJECT.

ACCEPTANCE OF WORK

WHEN THE CRITICAL WORK IS COMPLETED TO THE SATISFACTION OF THEENGINEER AND THE PROJECT IS OPEN TO UNRESTRICTED TRAFFIC, THE DEPARTMENT WILL MAKE A PARTIAL ACCEPTANCE OF THE CRITICAL WORK. THIS WILL RELIEVE THE CONTRACTOR OF THE RESPONSIBILITY FOR MAINTENANCE OF THE COMPLETED WORK, BUT THE CONTRACTOR WILL BE REQUIRED TO REPAIR ANY DAMAGE CAUSED BY HIS OPERATIONS, DEFECTIVE WORK, OR NONCOMPLIANCE WITH THE PLANS, SPECIFICATIONS AND CONTRACT, UNTIL THE FINAL ESTIMATE HAS BEEN APPROVED BY THE DEPARTMENT. FINAL ACCEPTANCE OF THE TOTAL PROJECT WILL BE IN ACCORDANCE WITH 109.073.

REVISIONS: 05/15/2002 by MAM

CALCULATED KME
CHECKED TRB

MAINTENANCE OF TRAFFIC GENERAL NOTES

SUM-8-0.63

SHEET NO.	PHASE	614 TEMPORARY LANE LINE, CLASS 1, 740.06, TYPE 1	614 TEMPORARY CENTER LINE, CLASS 1, 740.06, TYPE 1	614 TEMPORARY EDGE LINE, CLASS 1, 740.06, TYPE 1	614 TEMPORARY CHANNELIZING LINE, CLASS 1, 740.06, TYPE 1	614 TEMPORARY DOTTED LINE, CLASS 1, 740.06, TYPE 1	614 TEMPORARY TRANSVERSE LINE, CLASS 1, 740.06, TYPE 1	614 TEMPORARY STOP LINE, CLASS 1, 740.06, TYPE 1	614 TEMPORARY IMPACT ATTENUATOR	615 TEMPORARY PAVEMENT, CLASS A, AS PER PLAN	622 PORTABLE CONCRETE BARRIER, 50", AS PER PLAN	622 PORTABLE CONCRETE BARRIER, 32", BRIDGE MOUNTED	622 PORTABLE CONCRETE BARRIER, 50", BRIDGE MOUNTED	630 SIGN EXTRUSHEET, TYPE G, AS PER PLAN	630 SIGN, FLAT SHEET, TYPE G, AS PER PLAN	630 SIGN, FLAT SHEET, TYPE G, AS PER PLAN, MATERIALS ONLY
		MILE	MILE	MILE	LF	LF	LF	LF	EA	SY	LF	LF	LF	SF	SF	SF
52D														10	140	58
52E																113
52F														38	140	310
52G														77		91
52H														160		18
52I														114		226
53	1A1			0.11							588					
54		0.08	0.11	0.55	121			127			182					
55			0.10	0.43				70								
56			0.14	0.13												
57			0.13	0.14								460				
58				0.11						105	168					
59			0.06	0.10	160			24		173	180					
60				0.02												
61			0.07	0.06												
62			0.18	0.10												
63		0.01	0.34	0.19	200			84								
64																
65	1A2			0.06												
66		0.03	0.12	0.60	121			127								
67		0.03	0.12	0.61				95								
68		0.03	0.15	0.15												
69			0.16	0.13								580				
70				0.08						38						
71				0.06				24		57						
72				0.02												
73			0.10	0.05												
74			0.07	0.07												
75		0.01	0.32	0.23	110			87								
76																
77	1B			0.15							668					
78				0.31	254											
79		0.30		0.51					1	156	651		460			
80		0.41		0.45						1989	2610		90			
81		0.34		0.35						1889	2304		396			
82		0.34		0.41						2000	2700					
83		0.34		0.36						2000	2703					
84		0.34		0.68						2000	2700					
85		0.34		0.55						2000	2700					
86		0.34		0.43						1778	2500					
87		0.57		0.39					1		1160					
88				0.05												
											2912					
88A	2S-1N	0.55		1.10							1342					
88B	3S-1N	0.25		0.51							3256					
88C	3S-2N	0.62		1.23												
TOTALS SHEET 47		4.93	2.17	11.48	966			638	2	14185	29324	1050	946	399	280	816

CALCULATED KME
CHECKED CRP

MAINTENANCE OF TRAFFIC SUBSUMMARY

SUM-8-0.63

SHEET NO.	PHASE	614 TEMPORARY LANE LINE, CLASS 1, 740.06, TYPE 1 MILE	614 TEMPORARY CENTER LINE, CLASS 1, 740.06, TYPE 1 MILE	614 TEMPORARY EDGE LINE, CLASS 1, 740.06, TYPE 1 MILE	614 TEMPORARY CHANNELIZING LINE, CLASS 1, 740.06, TYPE 1 LF	614 TEMPORARY DOTTED LINE, CLASS 1, 740.06, TYPE 1 LF	614 TEMPORARY TRANSVERSE LINE, CLASS 1, 740.06, TYPE 1 LF	614 TEMPORARY STOP LINE, CLASS 1, 740.06, TYPE 1 LF	614 TEMPORARY IMPACT ATTENUATOR EACH	615 TEMPORARY PAVEMENT, CLASS A, AS PER PLAN SY	622 PORTABLE CONCRETE BARRIER, 50", AS PER PLAN LF	622 PORTABLE CONCRETE BARRIER, 32", BRIDGE MOUNTED LF	622 PORTABLE CONCRETE BARRIER, 50", BRIDGE MOUNTED LF	630 SIGN EXTRUSHEET, TYPE G, AS PER PLAN SF	630 SIGN, FLAT SHEET, TYPE G, AS PER PLAN SF	630 SIGN, FLAT SHEET, TYPE G, AS PER PLAN, MATERIALS ONLY SF
89	2			0.08												
90				0.27												
91				0.59												
92		0.17		0.97					2	200	630		307			
93		0.34		0.68							1741		59			
94		0.34		0.68		320			1		1536		264			
95		0.34		0.68							1800					
96		0.34		0.68							1802					
97		0.34		0.68							1800					
98		0.34		0.68							1800					
99		0.34		0.70					1		400					
100		0.24		0.61	1054						251					
101					146											
102	3			0.14												
103				0.67	400		288			244						
104		0.11		1.04					1		782		307			
105		0.38		0.68	700						1741		59			
106		0.34		0.68	600		175				1536		264			
107		0.34		0.68							1800					
108		0.34		0.75							1802					
109		0.42		0.70	250		427				1800					
110		0.32		0.80	210		215				1800					
111		0.17		0.88	520				1	269	1800					
112		0.27		0.76	636		452				1000					
113		0.09		0.20												
114	4A															
115		0.17		0.06	167											
116		0.79		0.40	174											
117		0.72		0.68	700											
118		0.63		0.84	1300		560									
119		0.63		0.68												
120		0.59		0.68												
121		0.51		0.80	835	458	657									
122		0.51		0.88	967	241	785									
123		0.49		0.63							579					
123A	4B								1		11400					
123B	4C										1000					
		0.22														
124		0.22		0.45							1152					
124A	4B										1880					
124B	4C										940					
125				0.08												
136A		0.42														
TOTALS SHEET 48		11.67		21.46	8659	1019	3559		7	713	42,772		1260			
TOTALS FROM SHEET 47		4.93	2.17	11.48	966			638	2	14185	29,324	1050	946	399	280	816
TOTALS CARRIED TO GENERAL SUMMARY		16.60	2.17	32.94	9625	1019	3559	638	9	14898	72,096	1050	2206	399	280	816

CALCULATED KME
CHECKED CRP

MAINTENANCE OF TRAFFIC SUBSUMMARY

SUM-8-0.63

PHASE IA NOTES

PHASE IA SHALL CONSIST OF CONSTRUCTING THE FORGE STREET BRIDGE. TRAFFIC SHALL BE DETOURED ALONG MARKET STREET (SEE FORGE STREET CONSTRUCTION DETOUR).

PHASE IA SHALL ALSO CONSIST OF THE CONSTRUCTION OF THE MARKET STREET BRIDGE STRUCTURE, RETAINING WALLS I-10, FOUNTAIN STREET, GOODKIRK STREET AND PARTIAL CONSTRUCTION OF RAMPS KI, LI, PI, QI, S AND T.

SEQUENCE OF OPERATION

1. IMPLEMENT THE PERMANENT STREET CLOSURES AT EWING COURT, PARKWOOD STREET, OHIO STREET, KIRKWOOD AVENUE, VALINDA PLACE, GOOD STREET, MELL AVENJE AND ADOLPH STREET.

2. IMPLEMENT THE FORGE STREET CONSTRUCTION DETOUR AS SHOWN. TRAFFIC SHALL BE DETOURED IN ACCORDANCE WITH THE MAINTENANCE OF TRAFFIC (MOT) PLANS AND ODOT STANDARD DRAWINGS MT-101.60M, MT-105.10M AND MT-105.11M

3. IMPLEMENT THE MARKET STREET BRIDGE ½ WIDTH CLOSURE IN ACCORDANCE WITH THESE MOT PLANS AND ODOT STANDARD DRAWING MT-95.41M.

4. IMPLEMENT THE HALF WIDTH CLOSURE OF GOODKIRK STREET BETWEEN EXCHANGE STREET AND CARROLL STREET IN ACCORDANCE WITH THE MOT PLANS. CLOSE GOODKIRK STREET FROM CARROLL STREET TO BUCHTEL AVENUE. IMPLEMENT CONSTRUCTION DETOUR AS SHOWN ON THE PLANS.

5. IMPLEMENT THE FULL CLOSURE OF FOUNTAIN STREET BETWEEN EXCHANGE STREET AND CARROLL STREET IN ACCORDANCE WITH THE MOT PLANS. CLOSE FOUNTAIN STREET FROM CARROLL STREET TO BUCHTEL AVENUE. IMPLEMENT CONSTRUCTION DETOUR AS SHOWN ON THE PLANS.

6. CONSTRUCT THE PROPOSED IMPROVEMENTS CALLED FOR BY THE TYPICAL SECTIONS, PLAN AND PROFILES, CROSS SECTIONS, BRIDGE PLANS AND OTHER PLAN RELATED INFORMATION FOR FORGE STREET.

7. CONSTRUCT THE PROPOSED IMPROVEMENTS CALLED FOR BY THE TYPICAL SECTIONS, PLAN AND PROFILES, CROSS SECTIONS, BRIDGE PLANS AND OTHER PLAN RELATED INFORMATION FOR MARKET STREET.

8. BEGIN THE CONSTRUCTION OF THE PROPOSED IMPROVEMENTS CALLED FOR BY THE TYPICAL SECTIONS, PLAN AND PROFILES, CROSS SECTIONS AND OTHER PLAN RELATED INFORMATION FOR GOODKIRK STREET FROM STA. 200+00 TO STA. 246+52.68.

9. BEGIN THE CONSTRUCTION OF THE PROPOSED IMPROVEMENTS CALLED FOR BY THE TYPICAL SECTIONS, PLAN AND PROFILES, CROSS SECTIONS AND OTHER PLAN RELATED INFORMATION FOR FOUNTAIN STREET FROM STA. 300+00 TO STA. 346+49.44.

10. BEGIN THE CONSTRUCTION OF THE PROPOSED IMPROVEMENTS CALLED FOR BY THE PLAN AND PROFILES, CROSS SECTIONS, RETAINING WALL PLANS AND OTHER PLAN RELATED INFORMATION FOR RETAINING WALLS I THROUGH 10.

11. BEGIN THE CONSTRUCTION OF THE PROPOSED IMPROVEMENTS CALLED FOR BY THE PLAN AND PROFILES, CROSS SECTIONS AND OTHER PLAN RELATED INFORMATION FOR RAMPS KI, LI, PI AND QI.

12. REMOVE THE FORGE STREET CONSTRUCTION DETOUR AFTER THE COMPLETION OF THE FORGE STREET CONSTRUCTION IMPROVEMENTS.

13. DURING THE CONSTRUCTION OF THE FORGE AND MARKET STREET BRIDGES OVER S.R. 8, THE CONTRACTOR SHALL SUBMIT A WORK SCHEDULE WITH ANY POSSIBLE LANE CLOSURE TIMES TO THE ENGINEER FOR APPROVAL. IF NECESSARY FOR CERTAIN OPERATIONS, SR 8 TRAFFIC MAY BE CLOSED FOR MINIMUM PERIODS IN ACCORDANCE WITH THE MOT GENERAL NOTES AND ODOT STANDARD DRAWING MT-97.10M.

FORGE STREET CONSTRUCTION DETOUR (PHASE IA)

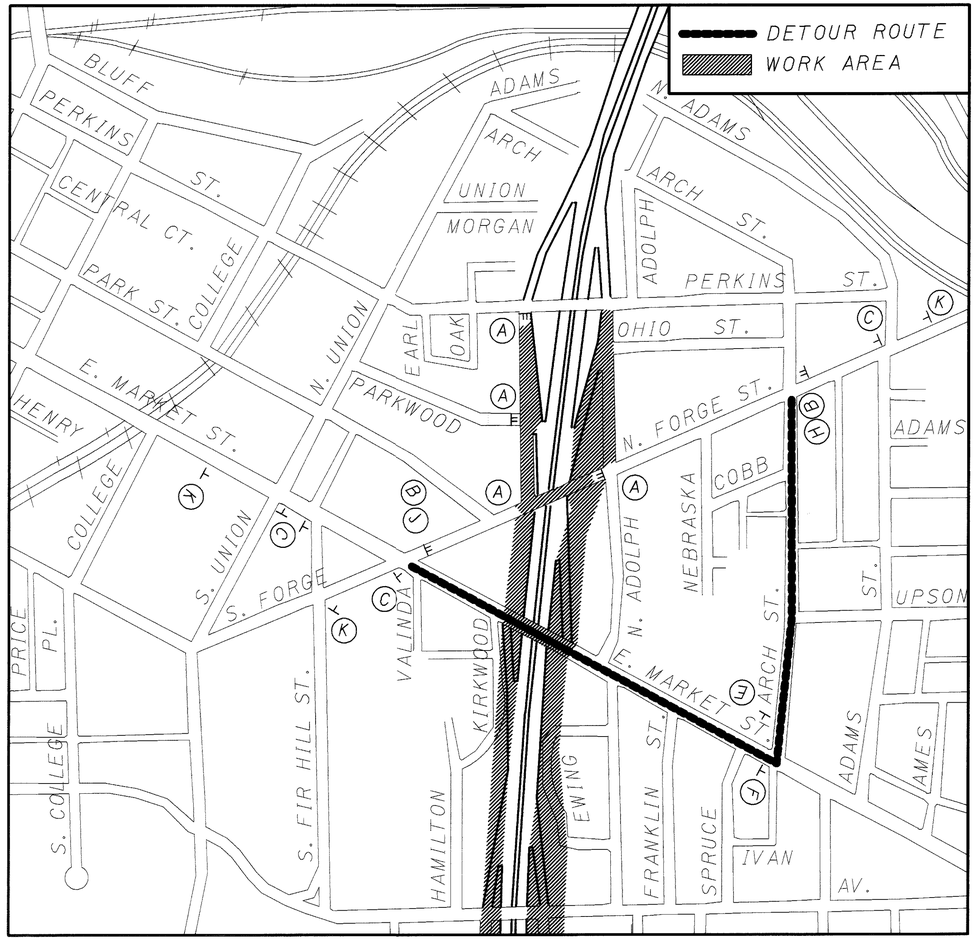

SIGN (A)	SIGN (B)	SIGN (C)	SIGN (D)	SIGN (E)	SIGN (F)	SIGN (G)	SIGN (H)	SIGN (J)	SIGN (K)
LIGHTS ROAD CLOSED R-75-48 ON TYPE III BARRICADE AS PER MT 101.60	LIGHTS ROAD CLOSED 0.2 MILES AHEAD LOCAL TRAFFIC ONLY R-76A-60 ON TYPE III BARRICADE AS PER MT 101.60	D-14-XX FORGE ST. DETOUR AHEAD OW-127-48	D-14 FORGE ST. DETOUR OC-29-30	D-14 FORGE ST. DETOUR OC-29R-30	D-14 FORGE ST. DETOUR OC-29L-30	D-14 FORGE ST. END DETOUR OC-30-24	DETOUR OC-14L-48	DETOUR OC-14R-48	ROAD CLOSED AHEAD OW-120-48

REVISIONS: 05/15/2002 by MAM

NOT TO SCALE

PHASE 1A - MAINTENANCE OF TRAFFIC
DETOUR MAP/SEQUENCE OF OPERATION NOTES

SUM-8-0.63

11:41:49 PM
06/13/2002
u:\00-010sr-8\n\civil\mot\md00plta.dgn

PHASE 1B NOTES

PHASE 1B SHALL CONSIST OF CONSTRUCTING A TEMPORARY PAVEMENT AND PORTABLE CONCRETE BARRIER MEDIAN ON SR 8.

PHASES 1A AND 1B SHALL OCCUR SIMULTANEOUSLY.

SEQUENCE OF OPERATION

1. IMPLEMENT THE I-76 EAST TO SR 8 NORTH CONSTRUCTION DETOUR AS SHOWN ON SHEET MR2. TRAFFIC SHALL BE DETOURED IN ACCORDANCE WITH THESE MOT PLANS AND ODOT STANDARD DRAWINGS MT-101.60M, MT-105.10M AND MT-105.11M

2. IMPLEMENT THE I-76 WEST TO SR 8 NORTH ALTERNATE ROUTE.

3. IMPLEMENT THE SR 8 INNER LANE CLOSURES, NORTH AND SOUTHBOUND.

4. CONSTRUCT TEMPORARY PAVEMENT, TEMPORARY DRAINAGE STRUCTURES AND PLACE PORTABLE CONCRETE BARRIER AS CALLED FOR BY THE MOT TYPICAL SECTIONS, MOT PLAN SHEETS AND OTHER PLAN RELATED INFORMATION.

PHASE 2 NOTES

PHASE 2 SHALL CONSIST OF CONSTRUCTING THE SR 8 OUTER SHOULDER, THE CONNECTIONS TO RAMPS K1, L1, P1, Q1, S AND T1, THE SR8 OUTER LANE, AND SIX FEET OF CENTER LANE PAVEMENT FROM STA. 33+10 TO STA. 97+80.00, NORTH AND SOUTHBOUND.

PHASE 2 SHALL ALSO CONSIST OF CONSTRUCTING TEMPORARY RETAINING WALLS AND TEMPORARY PAVEMENT IN THE RAMP I AND J AREAS.

PHASE 1B SHALL BE COMPLETE PRIOR TO BEGINNING PHASE 2, PHASE 1A MAY BE CONSTRUCTED SIMULTANEOUSLY.

SEQUENCE OF OPERATION

1. CONTINUE THE I-76 EAST TO SR 8 NORTH CONSTRUCTION DETOUR AS SHOWN FOR PHASES 1B.

2. SHIFT SR 8 TRAFFIC TO INNER LANE AND SHOULDER AS SHOWN IN THE MOT TYPICAL SECTIONS FOR PHASE 2.

3. CONSTRUCT SR 8 PROPOSED PAVEMENT AND BRIDGE DECKS AS CALLED FOR BY THE BRIDGE PLANS, THE TYPICAL SECTIONS, PLAN AND PROFILES, CROSS SECTIONS AND OTHER PLAN RELATED INFORMATION FROM STA. 33+10 TO STA. 102+70.38.

4. CONSTRUCT TEMPORARY PAVEMENT AS CALLED FOR IN THE MOT TYPICAL SECTIONS, THE MOT GENERAL NOTES AND OTHER PLAN RELATED INFORMATION IN THE RAMP I AND RAMP J AREAS.

PHASE 3 NOTES

PHASE 3 SHALL CONSIST OF CONSTRUCTING SR 8 INNER LANES FROM STA. 33+10 TO STA. 102+70.38.

PHASES 1A, 1B AND 2 SHALL BE COMPLETE PRIOR TO BEGINNING PHASE 3.

SEQUENCE OF OPERATION

1. CONTINUE THE I-76 EAST TO SR 8 NORTH CONSTRUCTION DETOUR AS SHOWN FOR PHASE 1B.

2. SHIFT SR 8 TRAFFIC TO OUTER LANE, OUTER SHOULDER, AND IN SOME CASES TEMPORARY PAVEMENT AS CALLED FOR IN THE MOT TYPICAL SECTIONS.

3. CONSTRUCT SR 8 PROPOSED PAVEMENT AND BRIDGE DECKS AS CALLED FOR BY THE BRIDGE PLANS, THE TYPICAL SECTIONS, PLAN AND PROFILES, CROSS SECTIONS AND OTHER PLAN RELATED INFORMATION FROM STA. 33+10 TO STA. 102+70.38.

CALCULATED | CHECKED

PHASES 1B, 2 & 3 - MAINTENANCE OF TRAFFIC SEQUENCE OF OPERATION NOTES

SUM-8-0.63

11:41:50 PM
06/13/2002
u:\00-010sr-8\civil\mot\vnd005plb.dgn

RAMP FROM I-76 EAST TO SR 8 NORTH CONSTRUCTION CLOSURE -SEE SHEET 52H FOR DAETOUR SIGNAGE

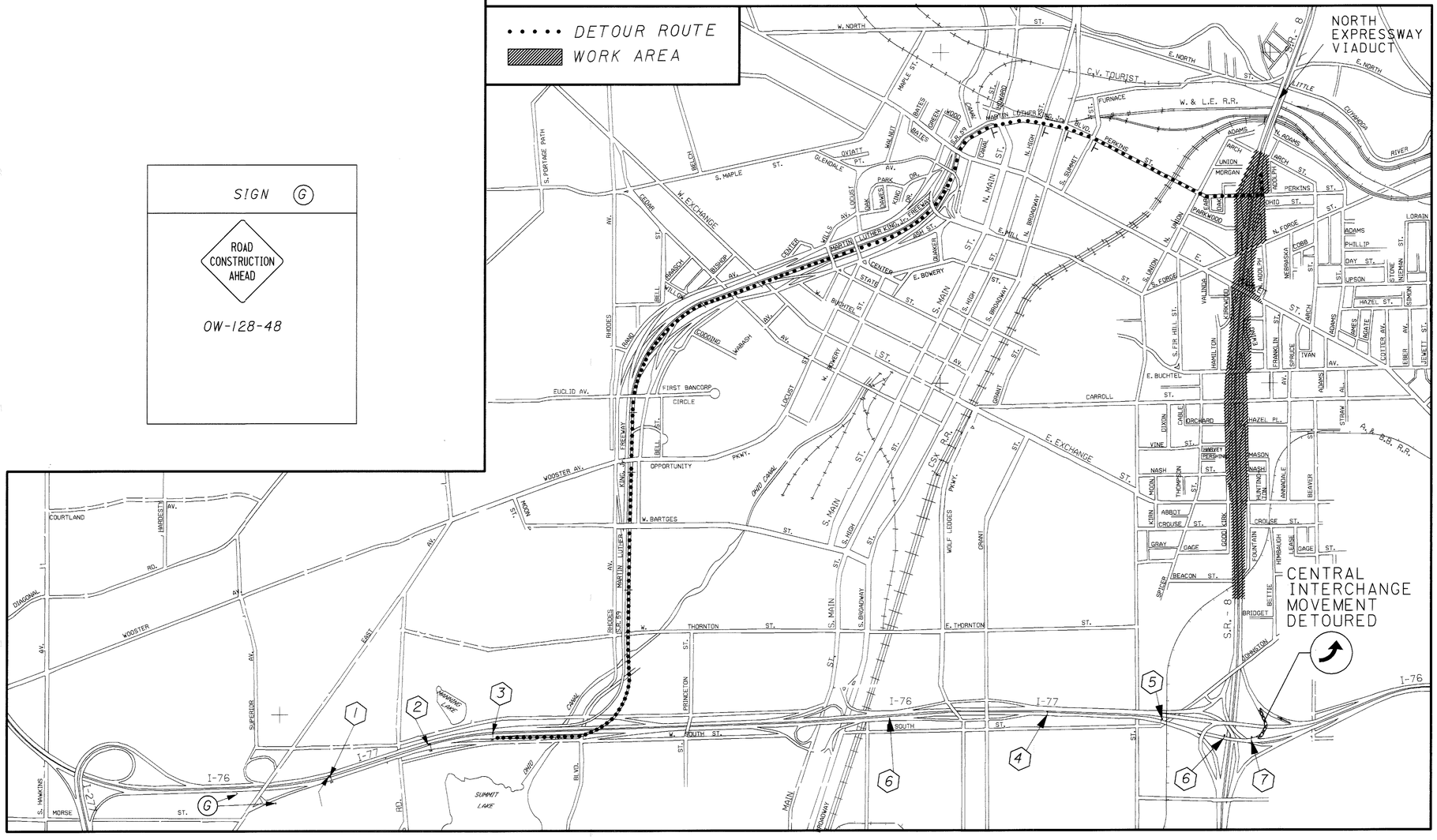

SIGN (G)

ROAD CONSTRUCTION AHEAD

OW-128-48

(1)

EXIT 21C
59 EAST
Downtown
½ MILE

EXIT 21B
Lakeshore
Bowry St
¼ MILE

(2)

INTERSTATE 76 EAST
INTERSTATE 77 SOUTH
Youngstown
Canton

EXIT 21C
59 EAST
Downtown
ONLY

EXIT 21B
Lakeshore
Bowery St

(3)

EXIT 22A
Main St
Broadway
1 MILE

EXIT 21C
59 EAST
Downtown
EXIT ONLY

FOR DETOUR SIGNING ON SR-59, SEE SHEETS _____THRU_____.

(4)

EXIT 23B
8 NORTH
Cuyahoga Falls
LEFT ¾ MILE
96" x 24" CLOSED

(5)

EXIT 23B
University
Of
Akron
NEXT LEFT
96" x 24" CLOSED

(6)

EXIT 23B
8 NORTH
Cuyahoga Falls
96" x 24" CLOSED

(7)

EXIT 23B
8 NORTH
Cuyahoga Falls
96" x 24" CLOSED

SEE CLOSURE DETAIL SHEET 77

REVISIONS: 05/15/2002 by MAM

NOT TO SCALE

CALCULATED

CHECKED

EB TO NB RAMP - MAINTENANCE OF TRAFFIC DETOUR MAP

SUM-8-0.63

51
1088

11:41:50 PM
06/13/2002
us\00-010sr-81\civil\mot\md005plb.dgn

PHASE 4A NOTES

PHASE 4A SHALL CONSIST OF RAMP I AND RAMP J CONSTRUCTION (SEE PHASE 4A CONSTRUCTION DETOUR).

SEQUENCE OF OPERATION

1. IMPLEMENT THE I-76 EAST TO SR 8 NORTH CONSTRUCTION DETOUR AS SHOWN FOR PHASE 4A. TRAFFIC SHALL BE DETOURED IN ACCORDDANCE WITH THESE MOT PLANS AND ODOT STANDARD DRAWINGS MT-101.60M, MT-105.10M AND MT-105.11M

2. CONTINUE THE I-76 WEST TO SR 8 NORTH ALTERNATE ROUTE.

3. IMPLEMENT THE SR 8 OUTER LANE CLOSURES ON SR 8 NORTH FROM SOUTH OF PERKINS. STREET TO NORTH OF THE HIGH LEVEL BRIDGE AND ON SR 8 SOUTH, FROM NORTH OF THE HIGH LEVEL BRIDGE TO SOUTH OF PERKINS STREET.

4. CONSTRUCT PAVEMENT AND EARTHWORK AS CALLED FOR BY THE TYPICAL SECTIONS, PLAN AND PROFILES, CROSS SECTIONS AND OTHER PLAN RELATED INFORMATION FOR RAMP I FROM STA. 91+82.06 TO STA. 99+79.44.

5. CONSTRUCT PAVEMENT AND EARTHWORK AS CALLED FOR BY THE TYPICAL SECTIONS, PLAN AND PROFILES, CROSS SECTIONS AND OTHER PLAN RELATED INFROMATION FOR RAMP J FROM STA. 92+73.35 TO STA. 97+16.31.

RAMP I AND RAMP J NOTES

1. RAMPS I AND J SHALL BE CLOSED FOR A TIME PERIOD NOT TO EXCEED 60 DAYS. THIS TIME PERIOD SHALL BEGIN WHEN THE CONTRACTOR IMPLEMENTS THE PHASE 4A CONSTRUCTION DETOUR.

2. SEE MOT GENERAL NOTES FOR ADDITIONAL REQUIREMENTS.

PHASE 4B NOTES

PHASE 4B SHALL CONSIST OF SURFACE COURSE CONSTRUCTION ON SR 8.

PHASE 4B SHALL ALSO CONSIST OF PERMANENT PAVEMENT MARKING AND FINAL SIGN PLACEMENT.

SEQUENCE OF OPERATION

1. CONSTRUCT SURFACE COURSE AS CALLED FOR BY THE TYPICAL SECTION, PLAN AND PROFILES, CROSS SECTIONS AND OTHER PLAN RELATED INFORMATION FOR SR 8 FROM STA. 33+10 TO STA. 102+70.38.

2. CONSTRUCT PERMANENT PAVEMENT MARKING AND SIGNING AS CALLED FOR BY THE TRAFFIC CONTROL PLANS AND OTHER PLAN RELATED INFORMATION FOR SR 8 FROM STA. 33+10 TO STA. 102+70.38.

3. OPEN ALL LANES ON SR 8.

4. REMOVE THE CONSTRUCTION DETOUR FOR THE RAMP FROM I-76 EAST TO SR 8 NORTH.

SIGN (A)	SIGN (B)	SIGN (C)	SIGN (D)
DETOUR OM-23-24 NORTH M-37-36 8 M-2-36	DETOUR OM-23-24 NORTH M-37-36 8 M-2-36 ↑ M-26-30	DETOUR OM-23-24 NORTH M-37-36 8 M-2-36 ↰ M-21-30	DETOUR OM-23-24 NORTH M-37-36 8 M-2-36 ↱ M-19-30

RAMP FROM I-76 EAST TO SR 8 NORTH CONSTRUCTION DETOUR (PHASE 4A)

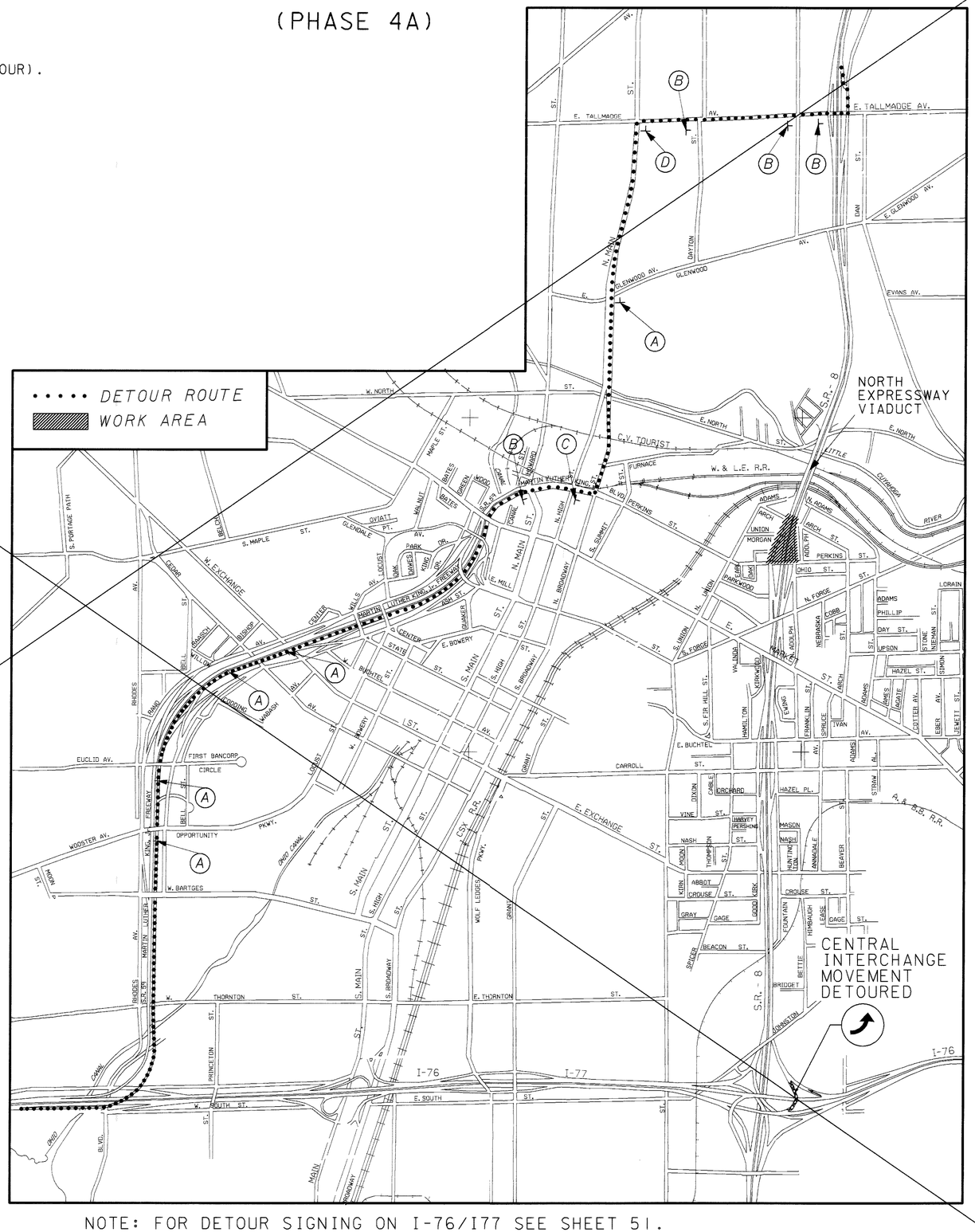

NOTE: FOR DETOUR SIGNING ON I-76/I77 SEE SHEET 51.

REVISIONS: 05/15/2002 by MAM

NOT TO SCALE

CALCULATED

CHECKED

MAINTENANCE OF TRAFFIC
PHASES 4A & 4B - SEQUENCE OF OPERATION NOTES
DETOUR MAP

SUM-8-0.63

12:48:21 PM
06/14/2002
J:\00-0105R-8\1\Civil\Mot\M-E\requested files\NP001PLL.DGN

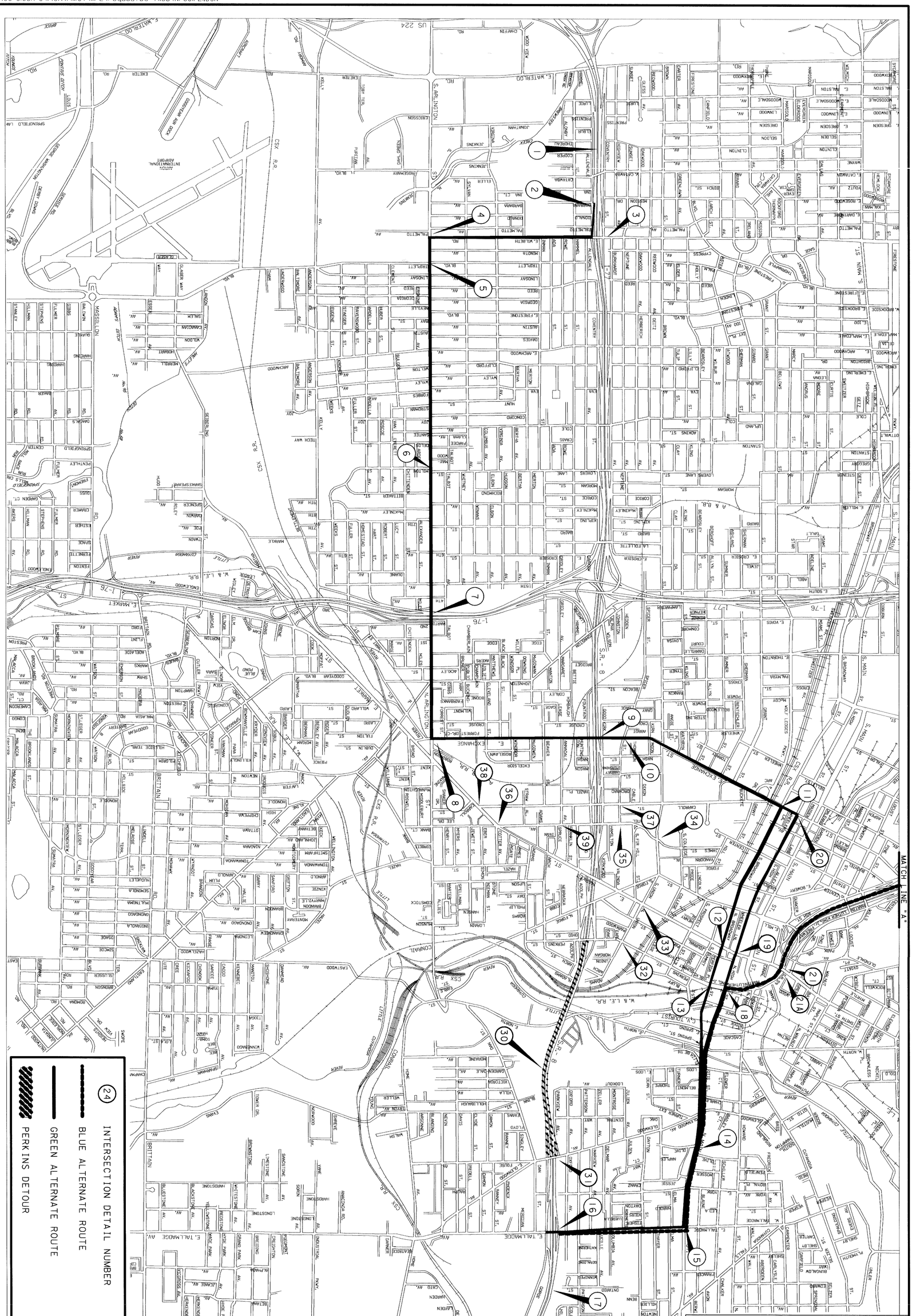

REVISIONS: 05/15/2002 by MAM

52A 1088	SUM-8-0.63	ALTERNATE & DETOUR ROUTES	CALCULATED RM CHECKED	NOT TO SCALE	N

12:48:24 PM
06/14/2002
J:\00-0105R-8\I\Civil\Mot\M-E\requested files\NP001APLI.DGN

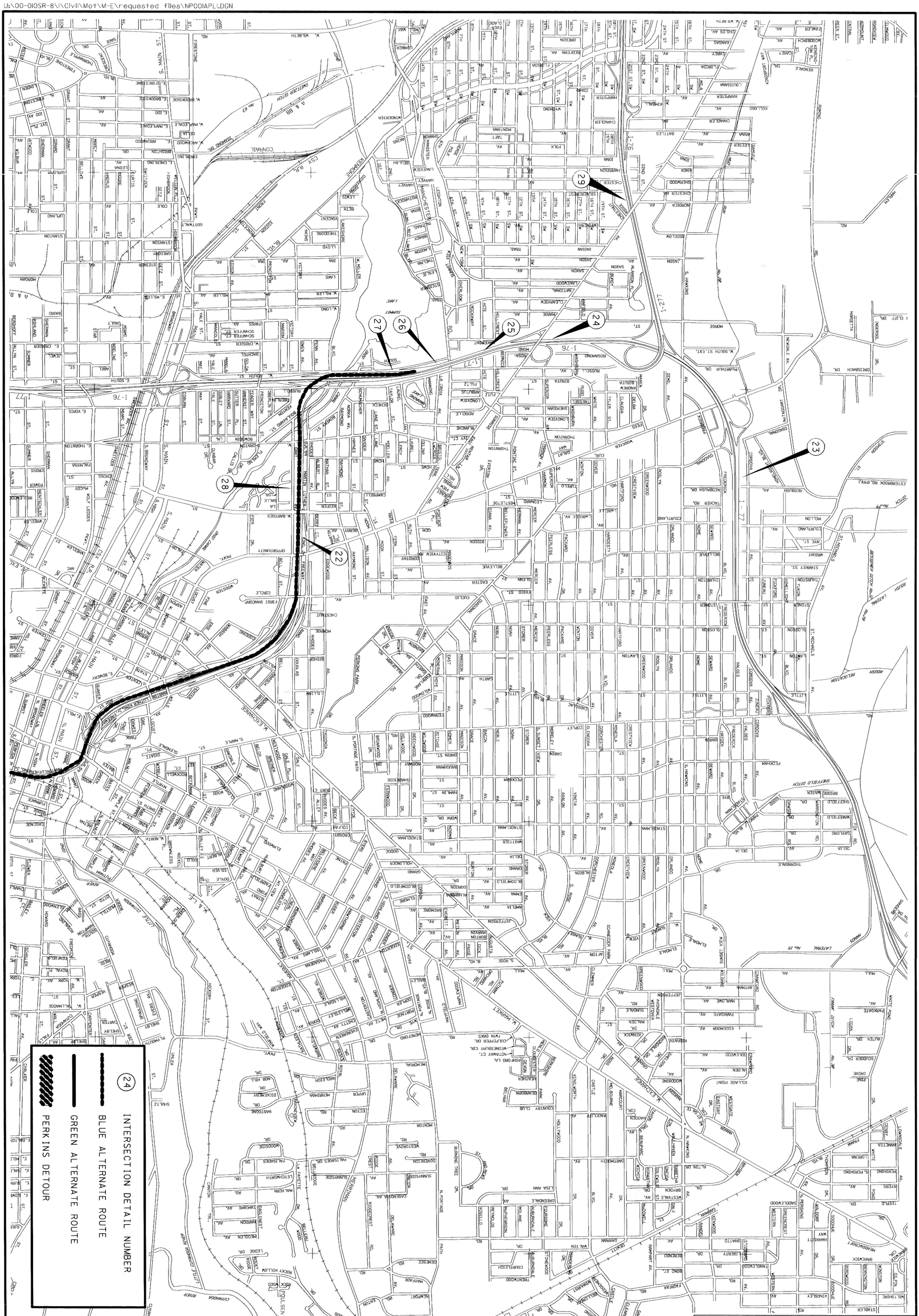

REVISIONS: 05/15/2002 - by MAM

52B 1088	SUM-8-0.63	ALTERNATE & DETOUR ROUTES	CALCULATED RM CHECKED	NOT TO SCALE

FREEWAY SIGN SUPPORTS

ALL TEMPORARY SUPPORTS NOT PROTECTED BY RAIL OR BARRIER SHALL BE CONFORMABLE TO NCHRP 350. BREAKAWAY STEEL BEAM SUPPORTS, BREAKAWAY WOODEN SUPPORTS OR NON-YIELDING SUPPORTS PROTECTED BY TEMPORARY ATTENUATORS ARE ACCEPTABLE. THE CONTRACTOR USE ODOT STANDARD DRAWINGS DESIGNS, OR SUBMIT HIS SUPPORT DESIGN TO THE ENGINEER PRIOR TO CONSTRUCTION.

MAINTENANCE OF TRAFFIC DURING SIGN ERECTION

NO LANES SHALL BE CLOSED ON I-76 AND I-77 BETWEEN THE HOURS OF 6:00 AM AND 7:00 PM, MONDAY THROUGH FRIDAY, 6:00 PM TO 12:00 NOON ON WEEKENDS, NO LANES SHALL BE CLOSED ON SR-59 OR OTHER CITY STREETS BETWEEN THE HOURS OF 6:00 AM TO 9:00 AND BETWEEN 3:00 PM AND 6:00 PM, MONDAY THROUGH FRIDAY.

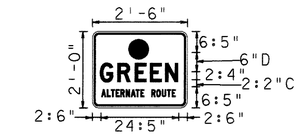

BORDER
R=1:4"
TH=0:4"
IN=0:4"

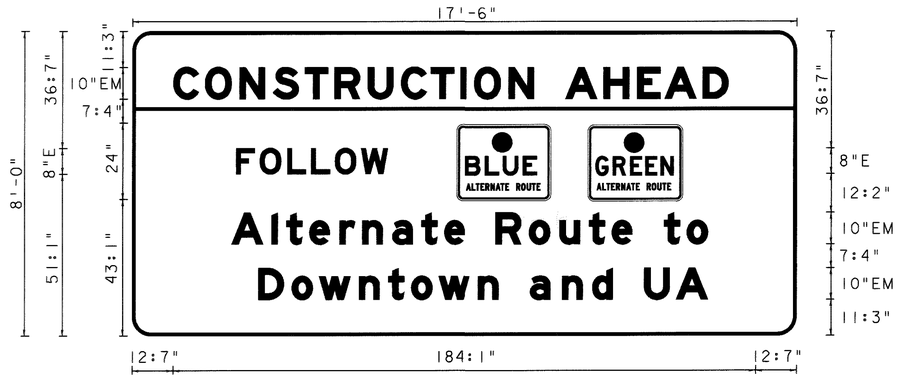

BORDER
R=6"
TH=1"

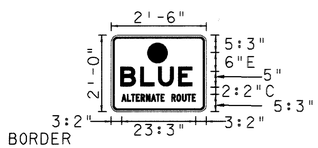

BORDER
R=1:4"
TH=0:4"
IN=0:4"

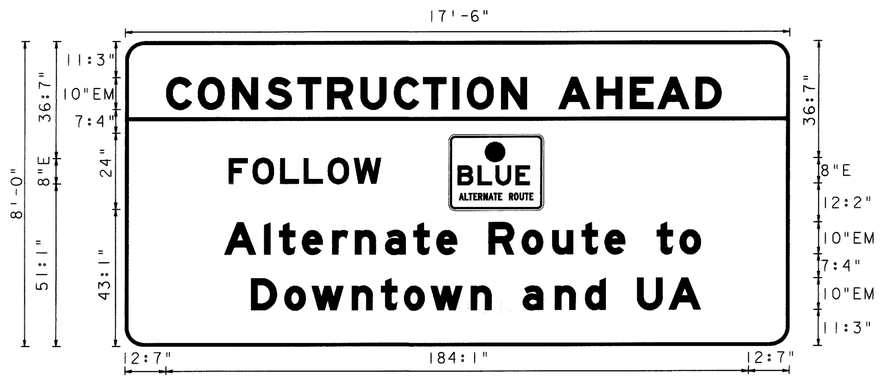

BORDER
R=6"
TH=1"

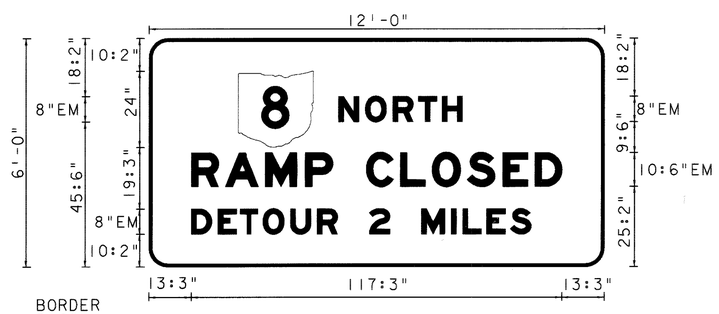

BORDER
R=6"
TH=1"

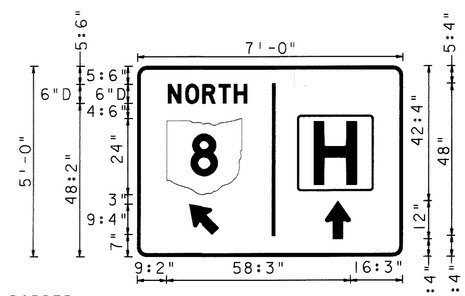

BORDER
R=3"
TH=1"

REVISIONS: 05/15/2002 by MAM

NOT TO SCALE

CALCULATED RM
CHECKED

ALTERNATE & DETOUR ROUTES
NOTES & DETAILS

SUM-8-0.63

52C
1088

lt:4:51 PM
06/13/2002
u:\00-0108r-8\civil\mot\m-ev\requested files\np00insll.dgn

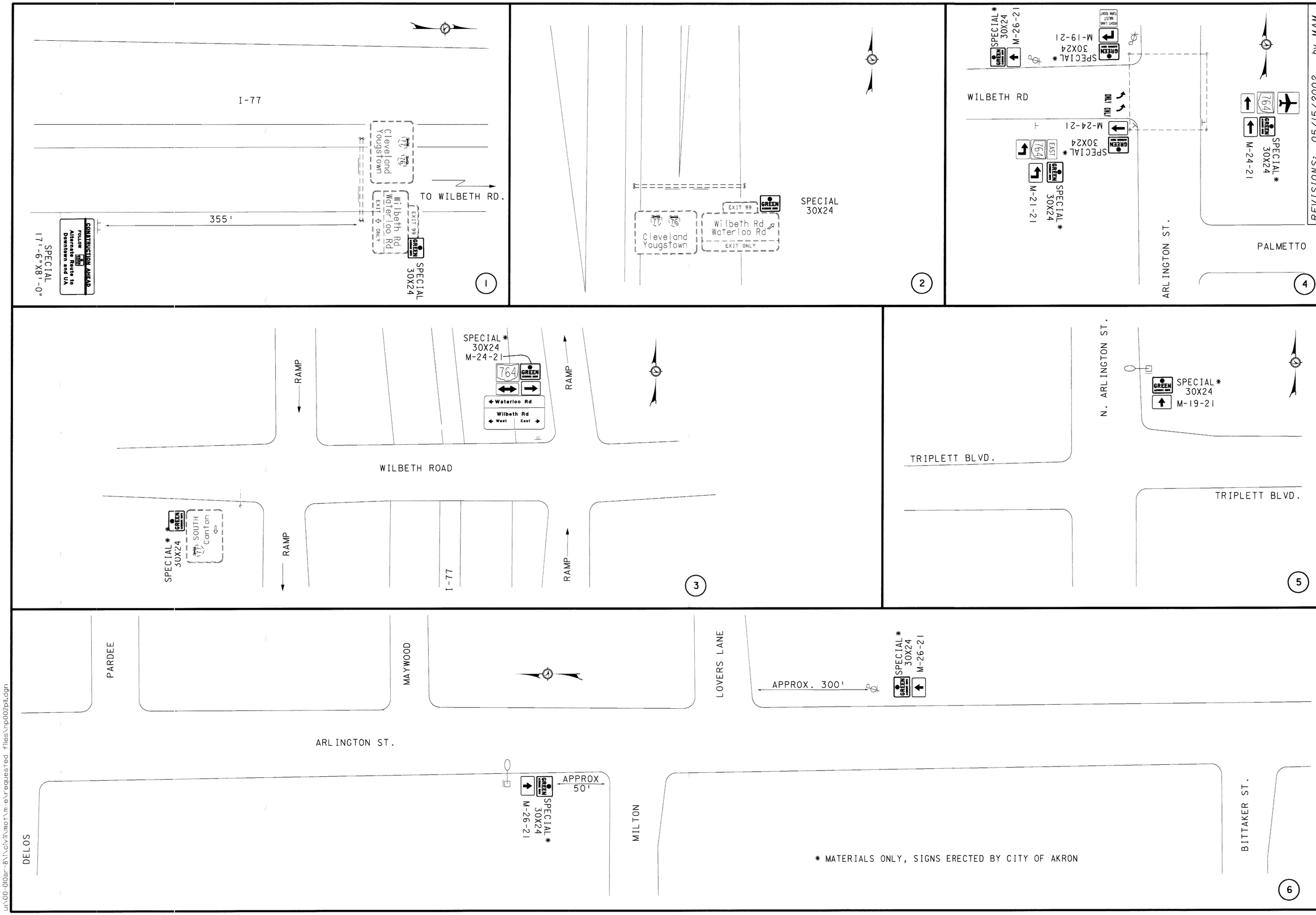

REVISIONS: 05/15/2002 by MAM

NOT TO SCALE

CALCULATED

CHECKED

ALTERNATE AND DETOUR ROUTE DETAILS

SUM-8-0.63

52D
1088

11:41:52 PM
06/13/2002
u:\00-010sr-8\1\civil\mot\m-e\requested files\np002pll.dgn

11:41:53 PM
06/13/2002
u:\00-010sr-8\i\civil\mot\m-e\requested files\np003pii.dgn

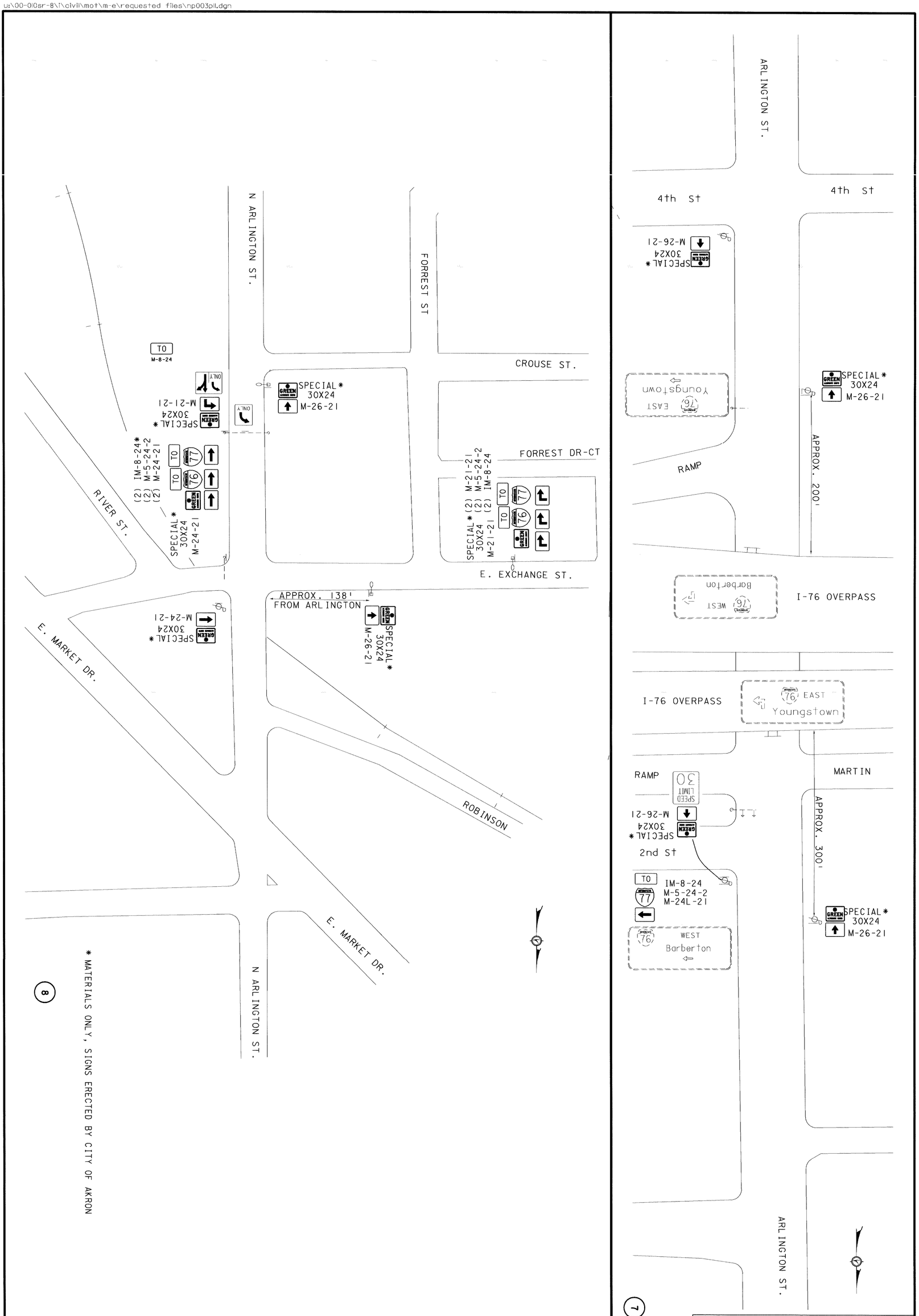

* MATERIALS ONLY, SIGNS ERECTED BY CITY OF AKRON

REVISIONS: 05/15/2002 by MAM

52E 1088	SUM-8-0.63	ALTERNATE AND DETOUR ROUTE DETAILS	CALCULATED / CHECKED	NOT TO SCALE

11:4155 PM
06/13/2002
u:\00-010sr-8\i\civil\mot\m-e\requested files\np004pll.dgn

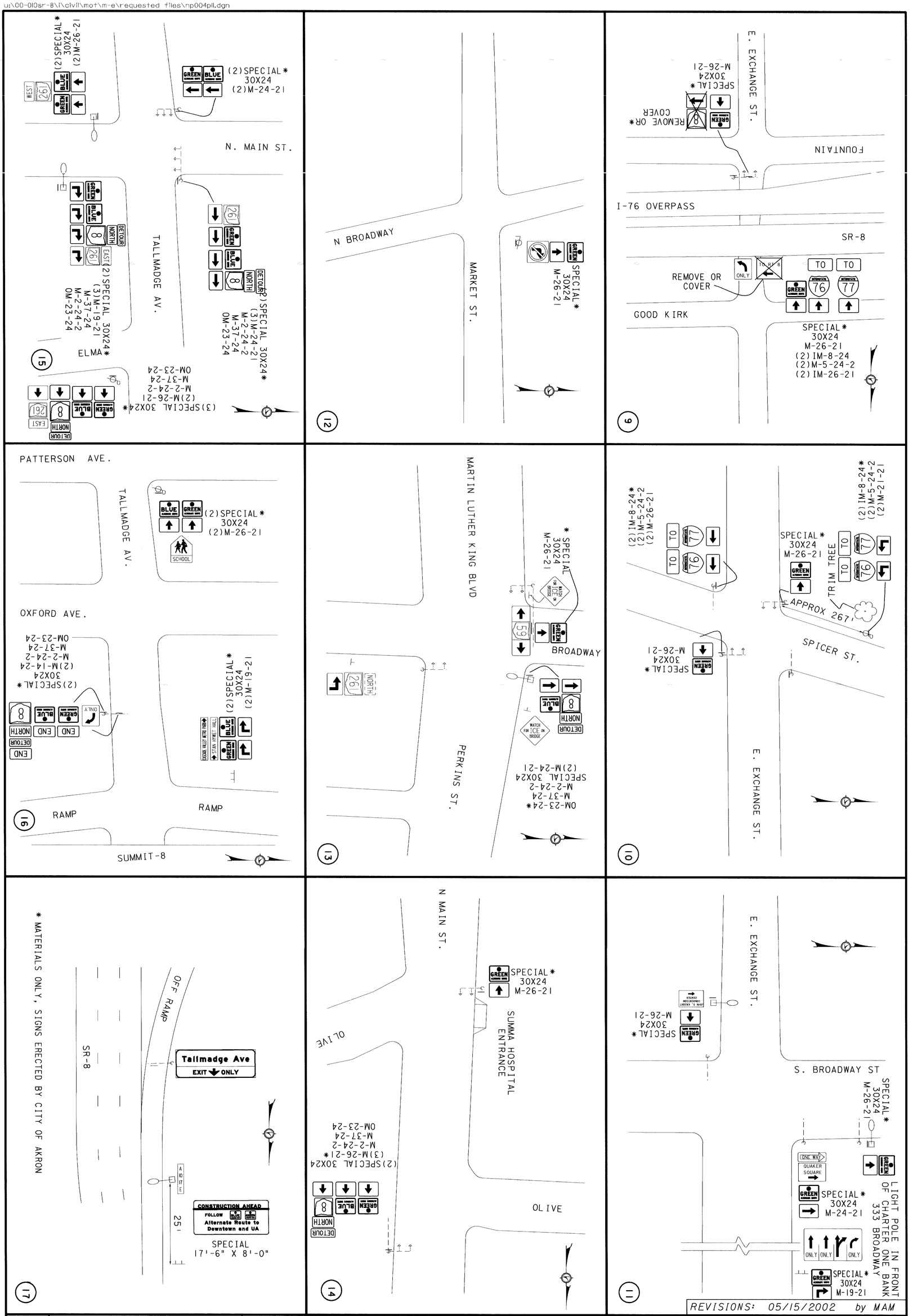

REVISIONS: 05/15/2002 by MAM

52F 1088	SUM-8-0.63	ALTERNATE AND DETOUR ROUTE DETAILS	CALCULATED / CHECKED	NOT TO SCALE

11:41:56 PM
06/13/2002
u:\00-010sr-8\f\civil\mot\m-e\requested files\np005pil.dgn

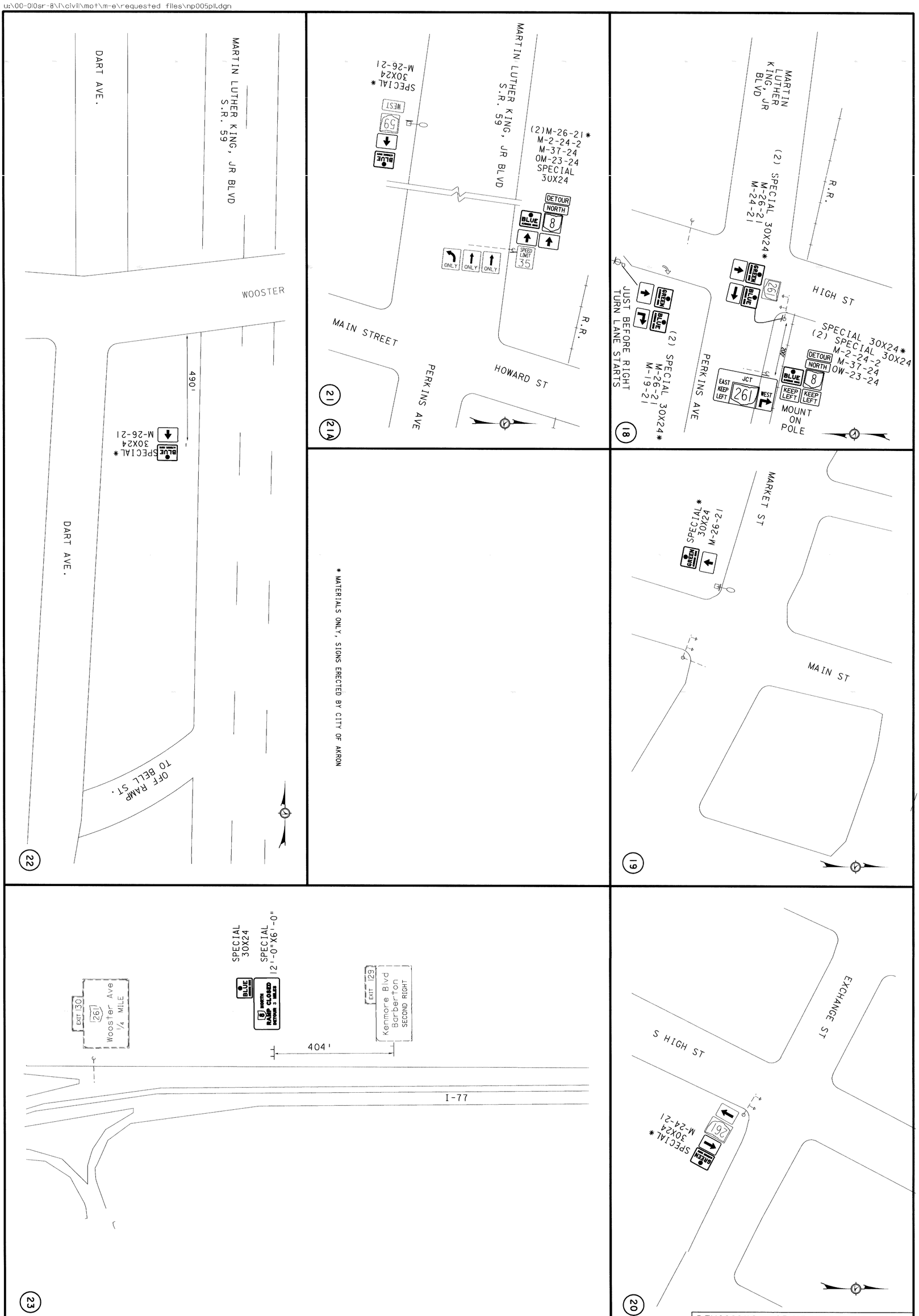

REVISIONS: 05/15/2002 by MAM

526 / 1088	SUM-8-0.63	ALTERNATE AND DETOUR ROUTE DETAILS	CALCULATED / CHECKED	NOT TO SCALE

11:41:59 PM
06/13/2002
u:\00-010sr-8\i\civil\mot\m-e\requested files\np006pll.dgn

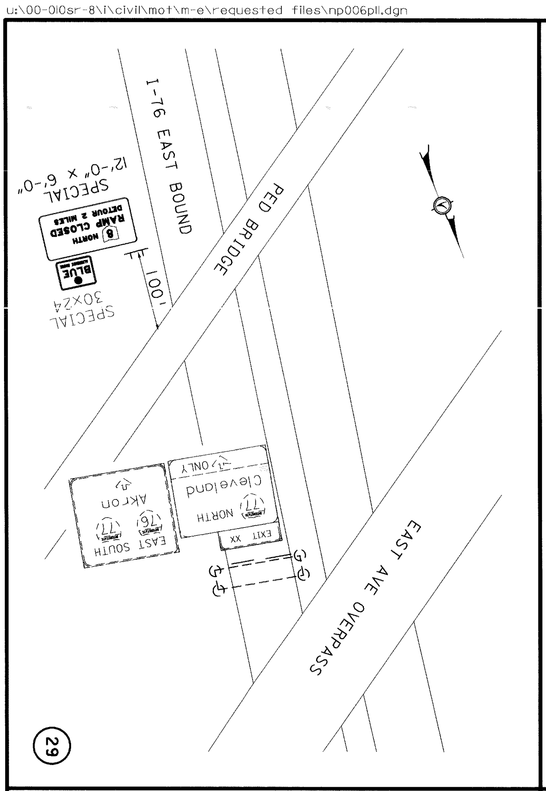

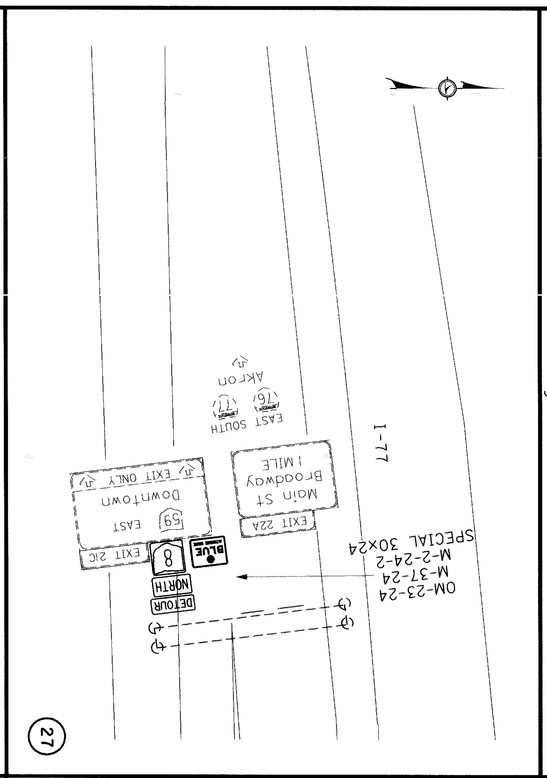

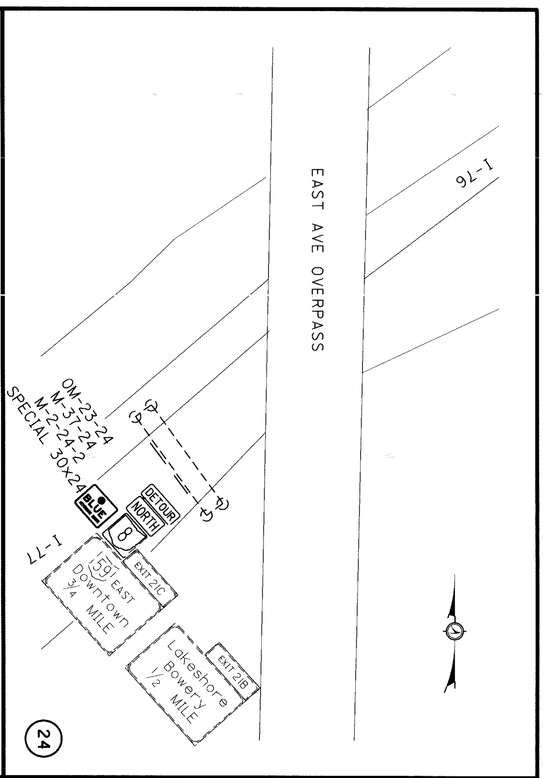

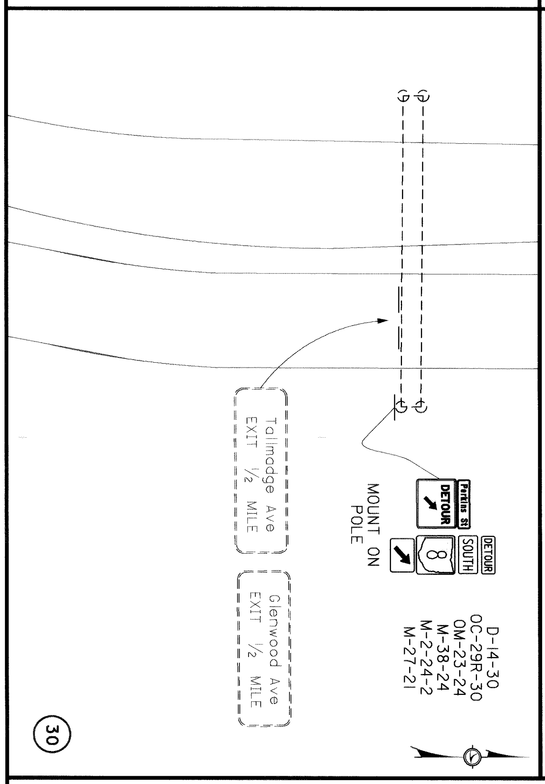

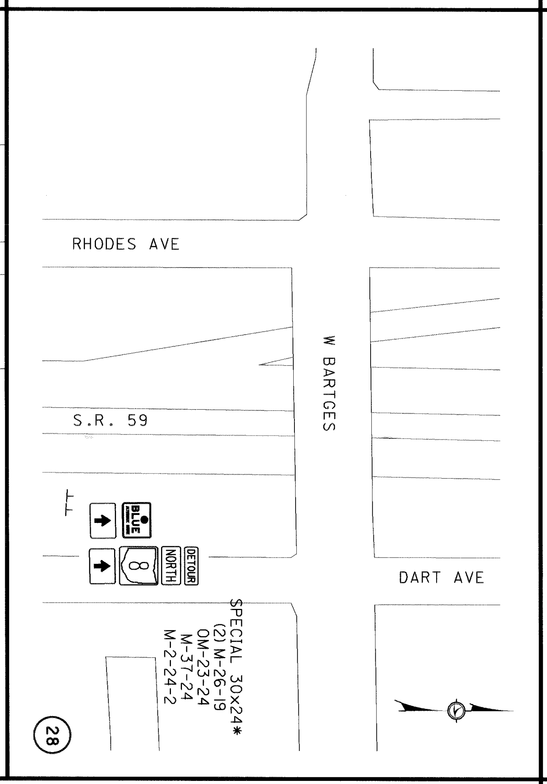

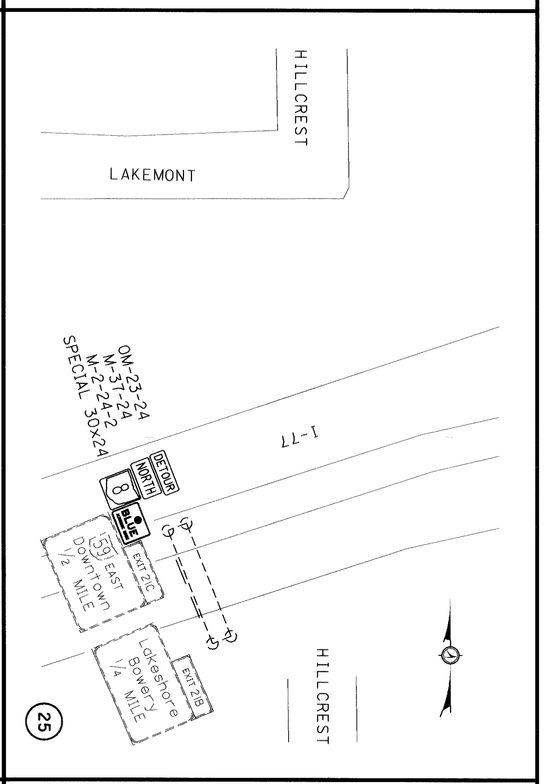

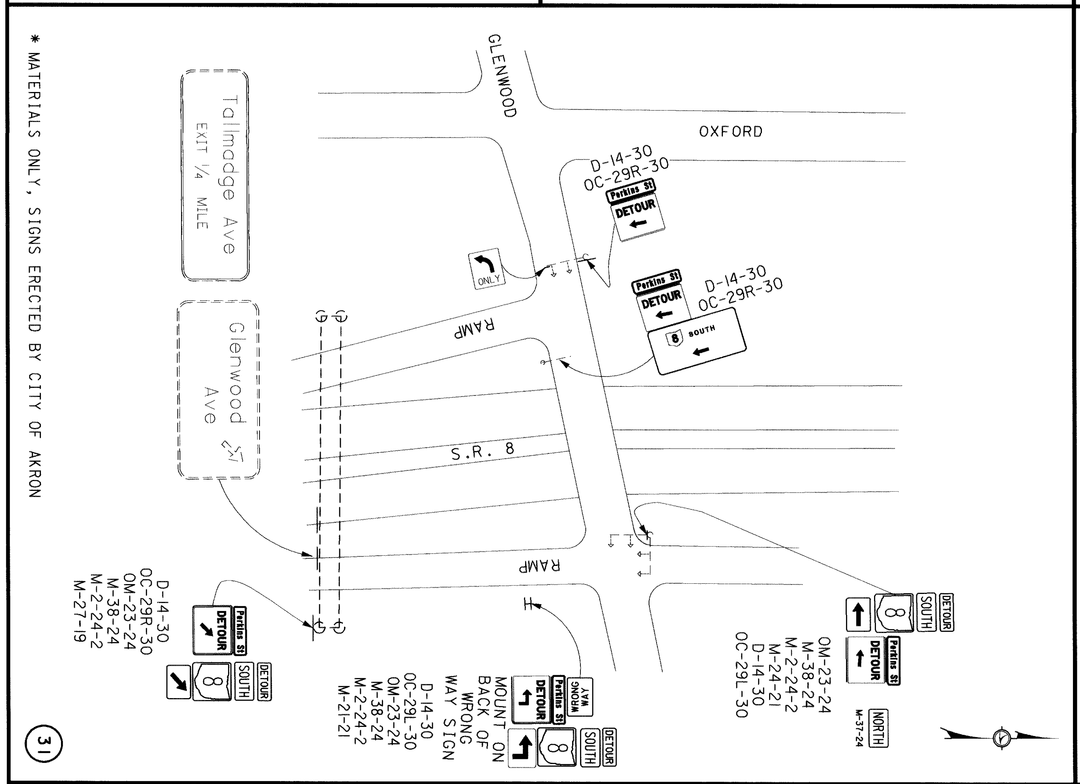

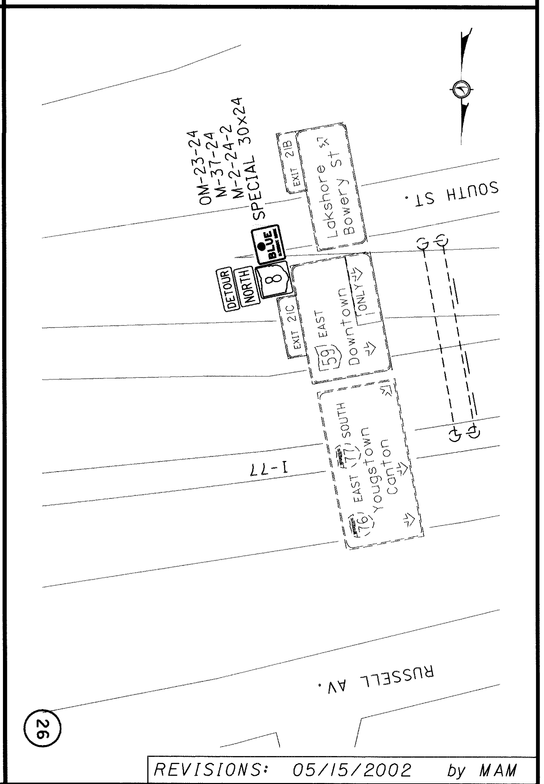

REVISIONS: 05/15/2002 by MAM

52H 1088	SUM-8-0.63	ALTERNATE AND DETOUR ROUTE DETAILS	CALCULATED / CHECKED	NOT TO SCALE

11:42:01 PM
06/13/2002
u:\00-010sr-8\l\civil\mot\m-e\requested files\np007pll.dgn

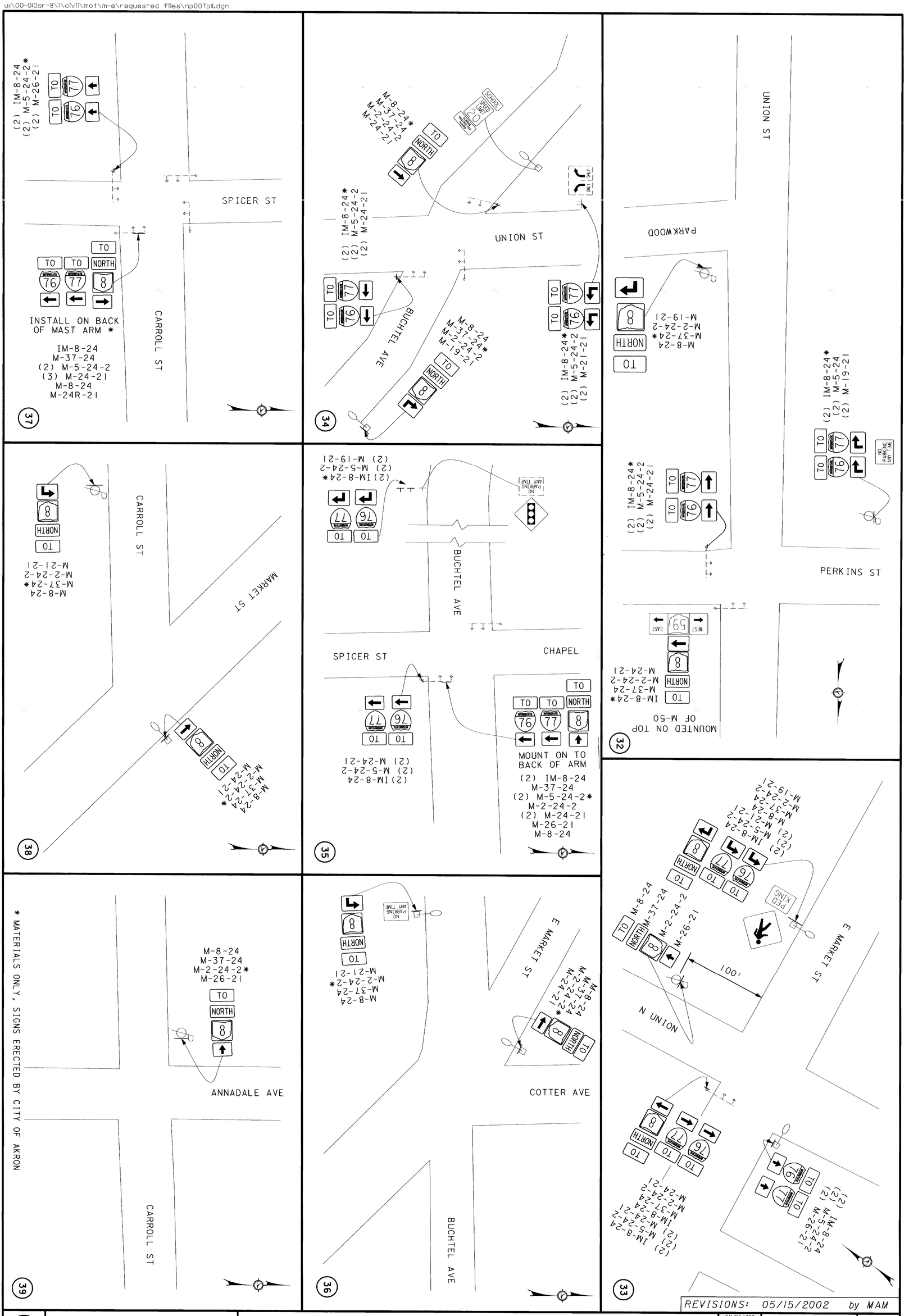

521 / 1088	SUM-8-0.63	ALTERNATE AND DETOUR ROUTE DETAILS	CALCULATED / CHECKED	NOT TO SCALE

LEGEND

ELW	TEMPORARY EDGE LINE (WHITE)
ELY	TEMPORARY EDGE LINE (YELLOW)
CLS	TEMPORARY CENTER LINE - DOUBLE SOLID
CHL	TEMPORARY CHANNELIZING LINE (WHITE)
LL	TEMPORARY LANE LINE
SL	TEMPORARY STOP LINE
LA	TEMPORARY LANE ARROW
WP	TEMPORARY WORD ON PAVEMENT, 72"
LLS	TEMPORARY SOLID LANE LINE
TLW	TEMPORARY TRANSVERSE LINE WHITE
	POST MOUNTED SIGN
	PORTABLE CONCRETE BARRIER
	TEMPORARY DRUMS
	DIRECTION OF TRAFFIC ARROW
	TEMPORARY TRAFFIC SIGNAL
	TEMPORARY PAVEMENT
	WORK AREA
	INTERSECTION PAVEMENT TO BE INSTALLED DURING NIGHT OR WEEKEND CONSTRUCTION

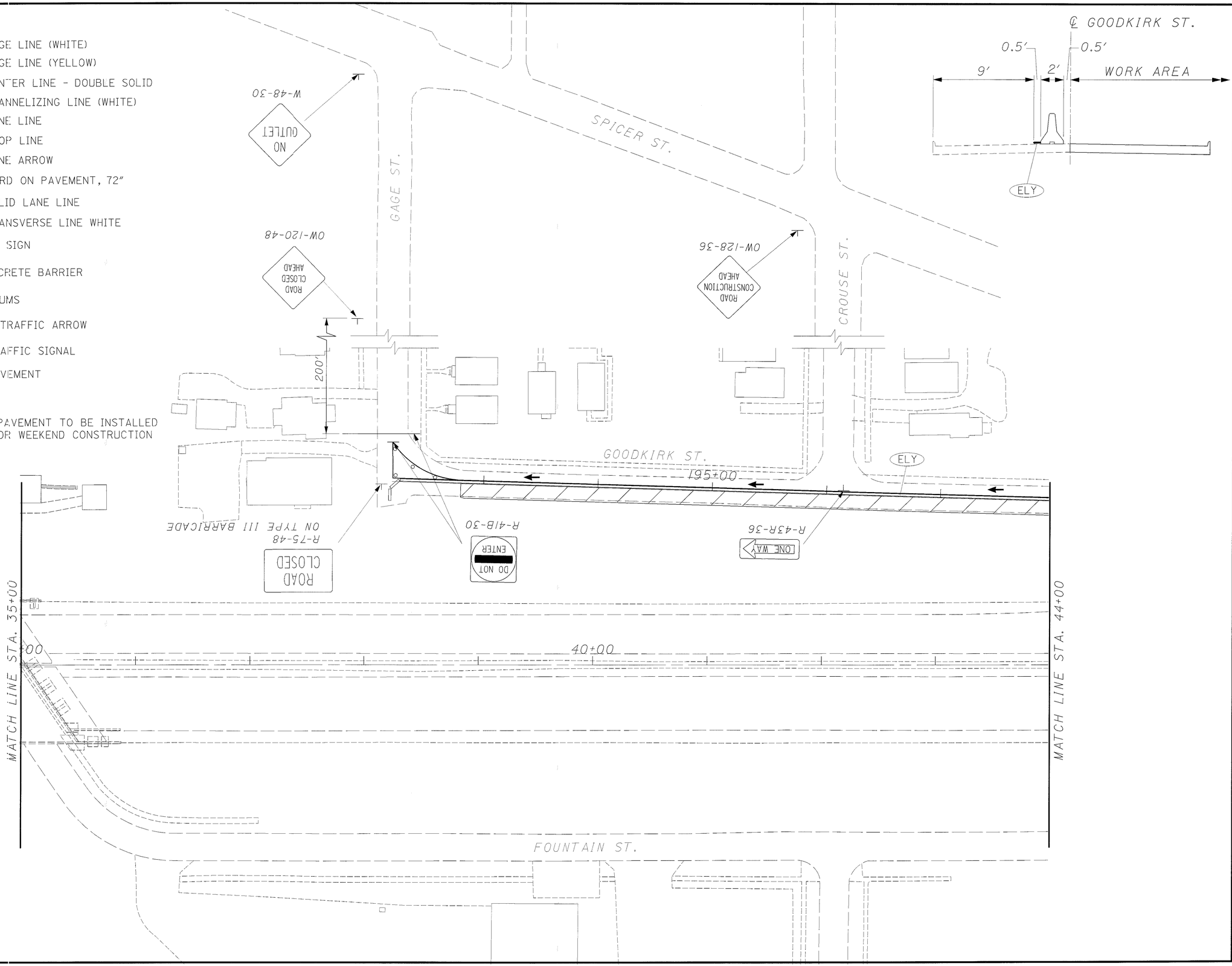

N

HORIZONTAL SCALE IN FEET
0 20 40 80

CALCULATED KME
CHECKED

MAINTENANCE OF TRAFFIC PHASE 1A-1

SUM-8-0.63

53
1088

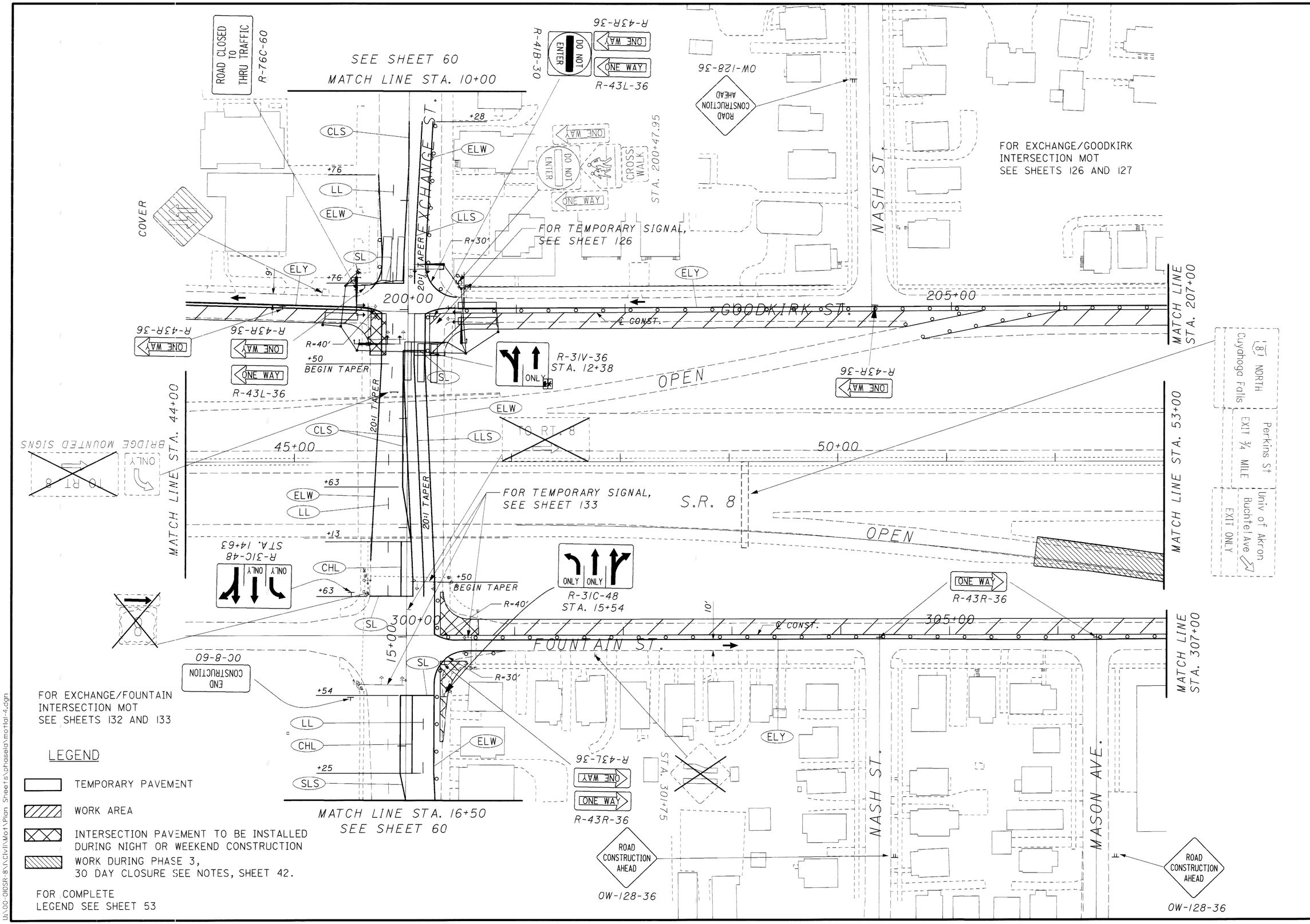

LEGEND

- TEMPORARY PAVEMENT
- WORK AREA
- INTERSECTION PAVEMENT TO BE INSTALLED DURING NIGHT OR WEEKEND CONSTRUCTION
- WORK DURING PHASE 3, 30 DAY CLOSURE SEE NOTES, SHEET 42.

FOR COMPLETE LEGEND SEE SHEET 53

REVISIONS: 05/15/2002 by MAM

HORIZONTAL SCALE IN FEET

CALCULATED KME

CHECKED

MAINTENANCE OF TRAFFIC PHASE 1A-1

SUM-8-0.63

12:45:00 PM
06/14/2002
U:\00-010SR-8\1\Civil\Mot\Plan Sheets\phasela\motlal-4.dgn

11:42:04 PM
06/13/2002
u:\00-010sr-8\1\civil\mot\plan sheets\phase1a\mot1a1-5.dgn

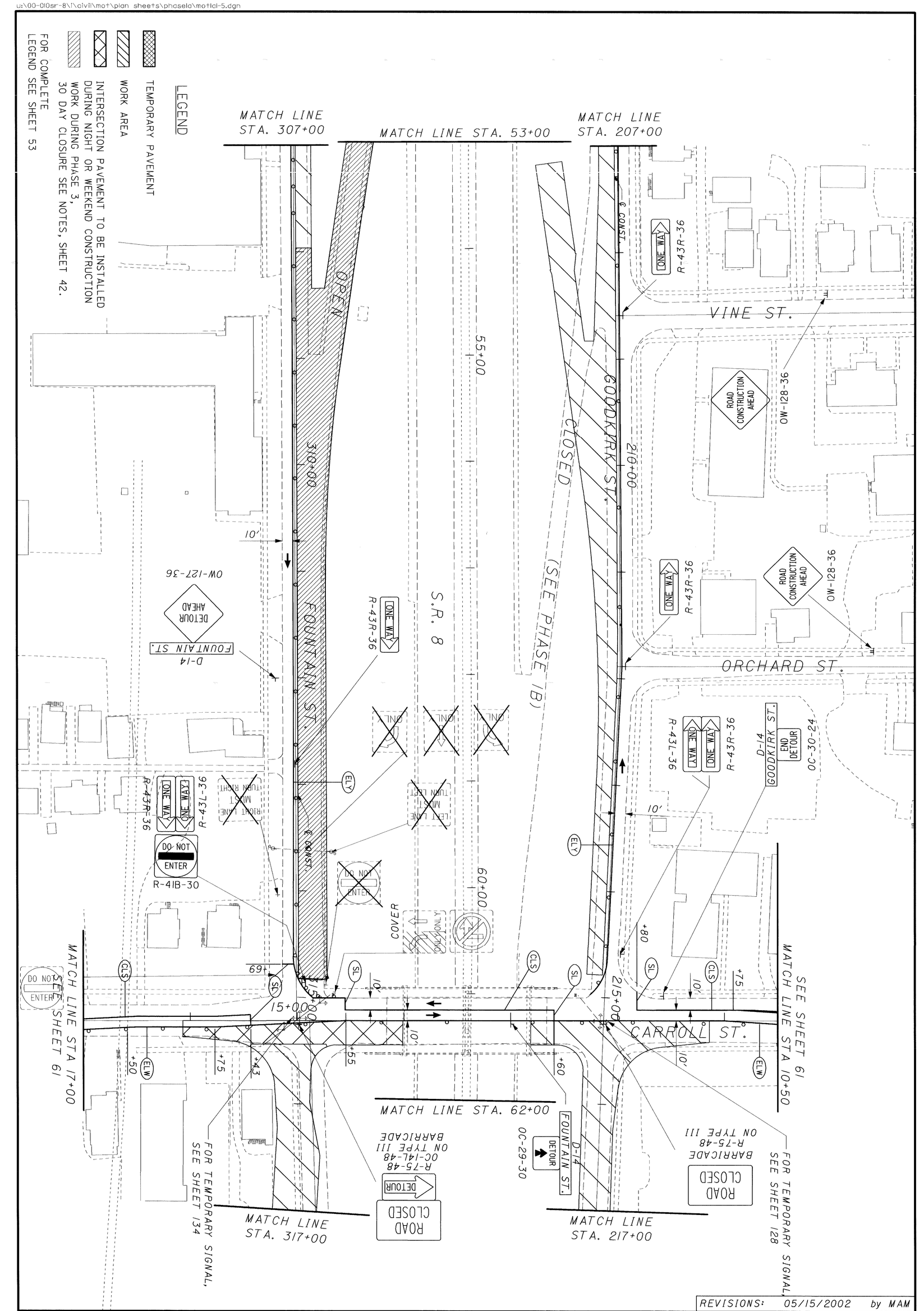

REVISIONS: 05/15/2002 by MAM

55 / 1088	SUM-8-0.63	MAINTENANCE OF TRAFFIC PHASE 1A-1	CALCULATED KME / CHECKED	HORIZONTAL SCALE IN FEET (0, 20, 40, 80)

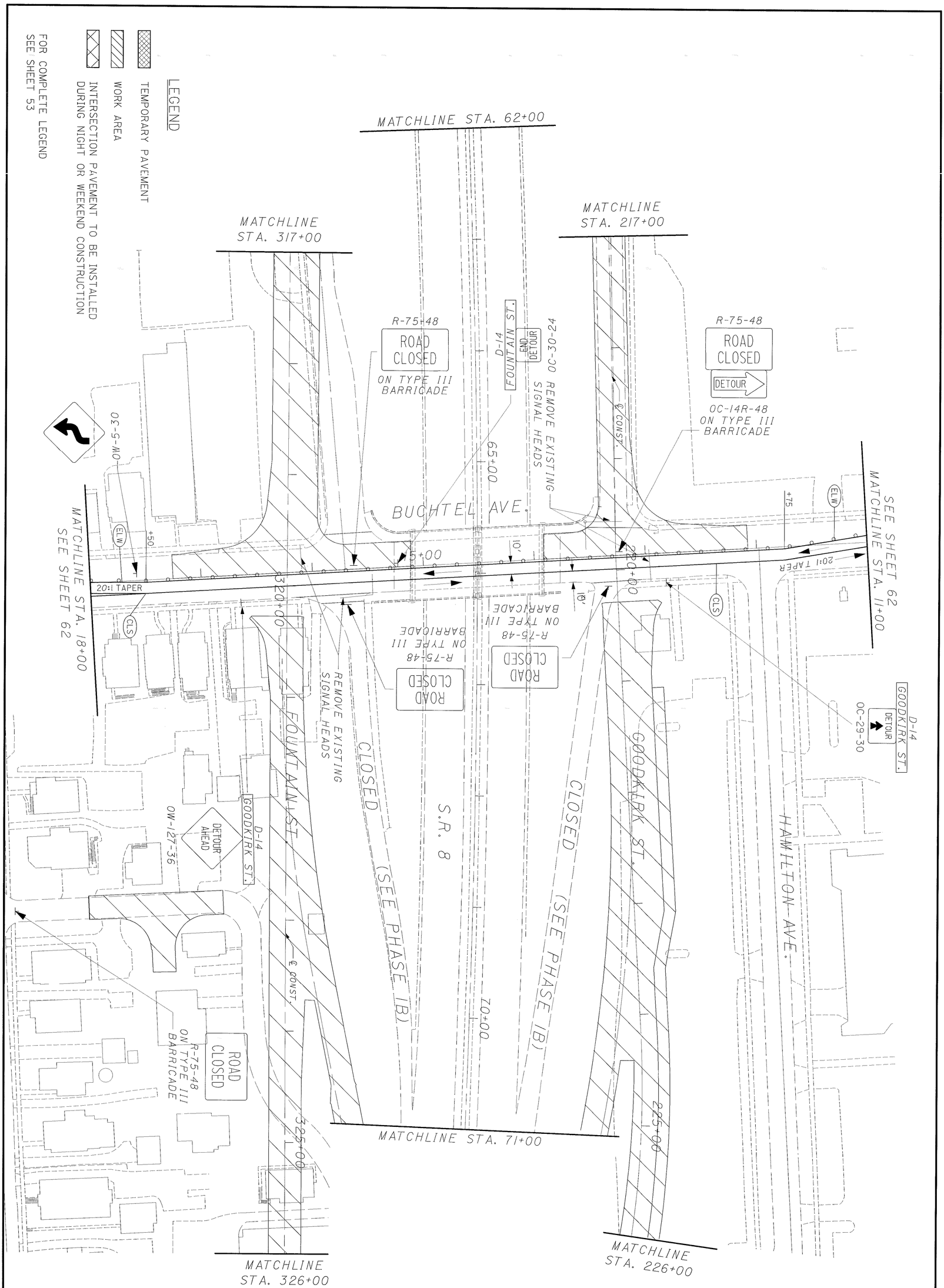

56 / 1088	SUM-8-0.63	MAINTENANCE OF TRAFFIC PHASE 1A-1	CALCULATED KME / CHECKED	HORIZONTAL SCALE IN FEET (0, 20, 40, 80)

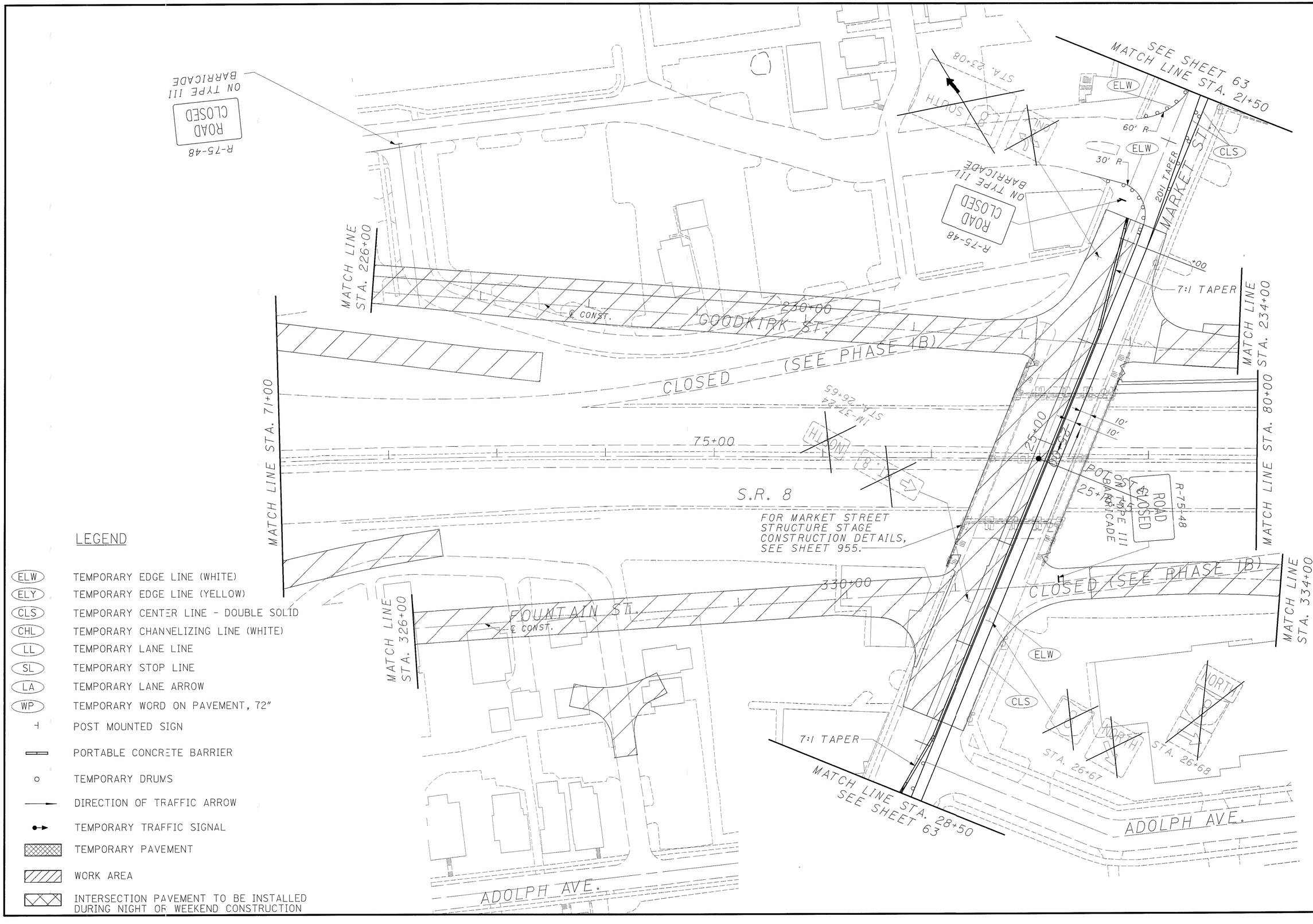

LEGEND

ELW	TEMPORARY EDGE LINE (WHITE)
ELY	TEMPORARY EDGE LINE (YELLOW)
CLS	TEMPORARY CENTER LINE - DOUBLE SOLID
CHL	TEMPORARY CHANNELIZING LINE (WHITE)
LL	TEMPORARY LANE LINE
SL	TEMPORARY STOP LINE
LA	TEMPORARY LANE ARROW
WP	TEMPORARY WORD ON PAVEMENT, 72"
	POST MOUNTED SIGN
	PORTABLE CONCRETE BARRIER
	TEMPORARY DRUMS
	DIRECTION OF TRAFFIC ARROW
	TEMPORARY TRAFFIC SIGNAL
	TEMPORARY PAVEMENT
	WORK AREA
	INTERSECTION PAVEMENT TO BE INSTALLED DURING NIGHT OR WEEKEND CONSTRUCTION

N

HORIZONTAL SCALE IN FEET
0 20 40 80

CALCULATED KME
CHECKED

MAINTENANCE OF TRAFFIC
PHASE 1A-1

SUM-8-0.63

57
1088

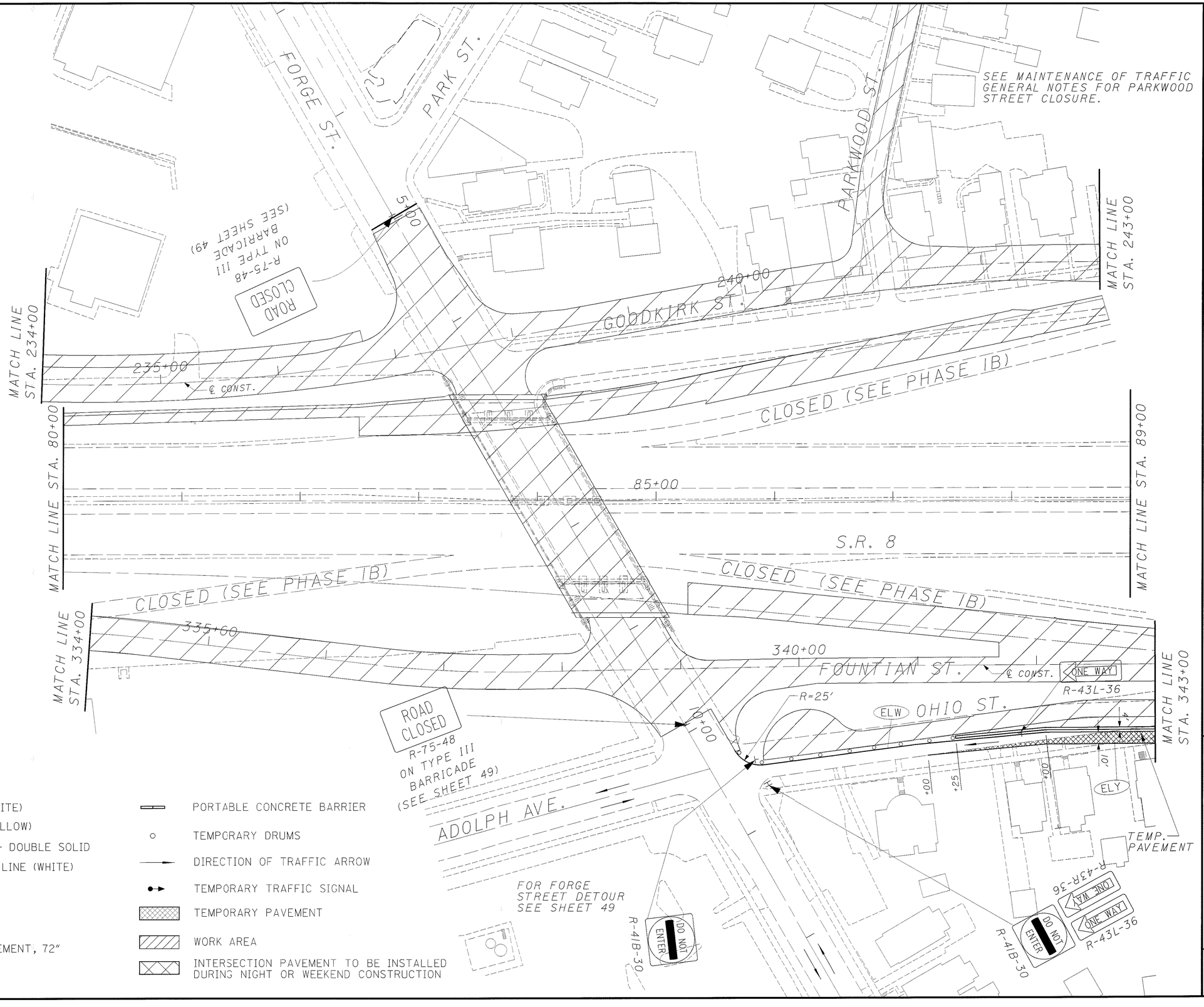

MAINTENANCE OF TRAFFIC PHASE 1A-1

SUM-8-0.63

58
1088

LEGEND

ELW	TEMPORARY EDGE LINE (WHITE)
ELY	TEMPORARY EDGE LINE (YELLOW)
CLS	TEMPORARY CENTER LINE - DOUBLE SOLID
CHL	TEMPORARY CHANNELIZING LINE (WHITE)
LL	TEMPORARY LANE LINE
SL	TEMPORARY STOP LINE
LA	TEMPORARY LANE ARROW
WP	TEMPORARY WORD ON PAVEMENT, 72"
⊣	POST MOUNTED SIGN
═	PORTABLE CONCRETE BARRIER
○	TEMPORARY DRUMS
→	DIRECTION OF TRAFFIC ARROW
●→	TEMPORARY TRAFFIC SIGNAL
▨	TEMPORARY PAVEMENT
▨	WORK AREA
▨	INTERSECTION PAVEMENT TO BE INSTALLED DURING NIGHT OR WEEKEND CONSTRUCTION

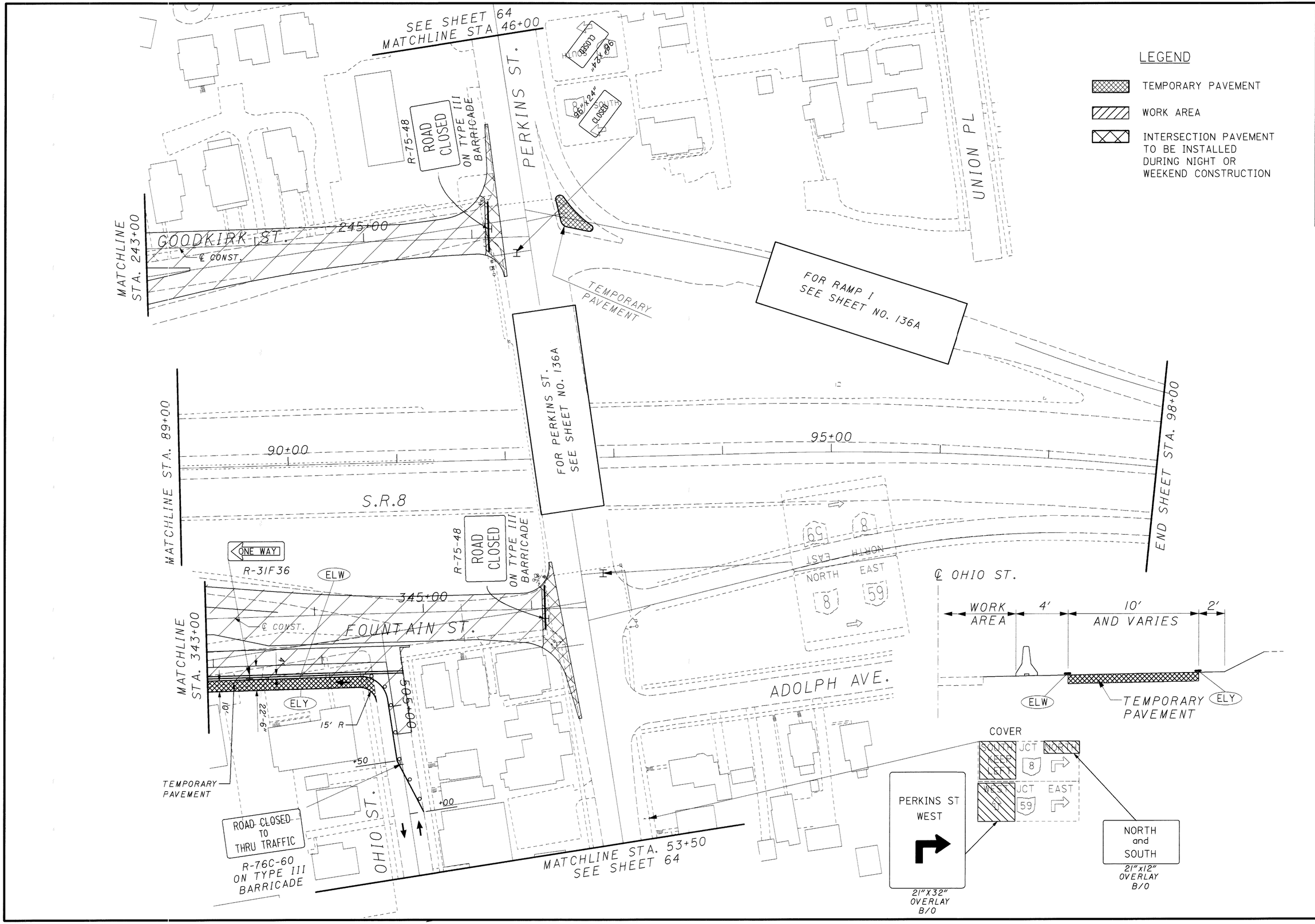

REVISIONS: 05/15/2002 by MAM

HORIZONTAL SCALE IN FEET 0 20 40 80

CALCULATED KME

CHECKED

MAINTENANCE OF TRAFFIC PHASE 1A-1

SUM-8-0.63

LEGEND

ELW	TEMPORARY EDGE LINE (WHITE)
ELY	TEMPORARY EDGE LINE (YELLOW)
CLS	TEMPORARY CENTER LINE - DOUBLE SOLID
CHL	TEMPORARY CHANNELIZING LINE (WHITE)
LL	TEMPORARY LANE LINE
SL	TEMPORARY STOP LINE
LA	TEMPORARY LANE ARROW
WP	TEMPORARY WORD ON PAVEMENT, 72"

	POST MOUNTED SIGN
	PORTABLE CONCRETE BARRIER
	TEMPORARY DRUMS
	DIRECTION OF TRAFFIC ARROW
	TEMPORARY TRAFFIC SIGNAL
	TEMPORARY PAVEMENT

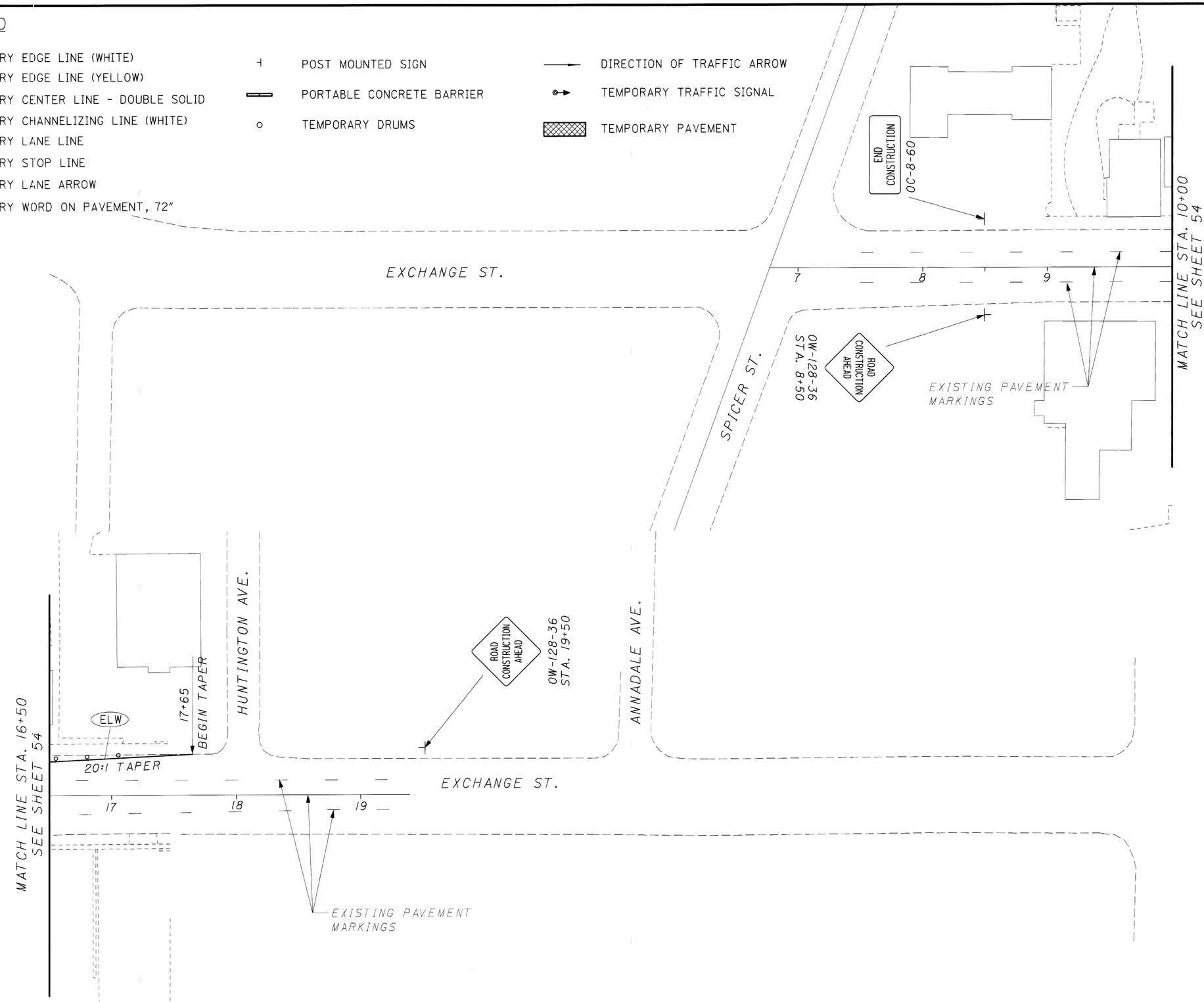

N

0 20 40 80
HORIZONTAL SCALE IN FEET

CALCULATED
CHECKED

MAINTENANCE OF TRAFFIC
PHASE 1A-1 - EXCHANGE STREET

SUM-8-0.63

11:42:06 PM
06/13/2002
u:\00-010sr-8\1\civil\mot\plan sheets\phasela\motial-exc.dgn

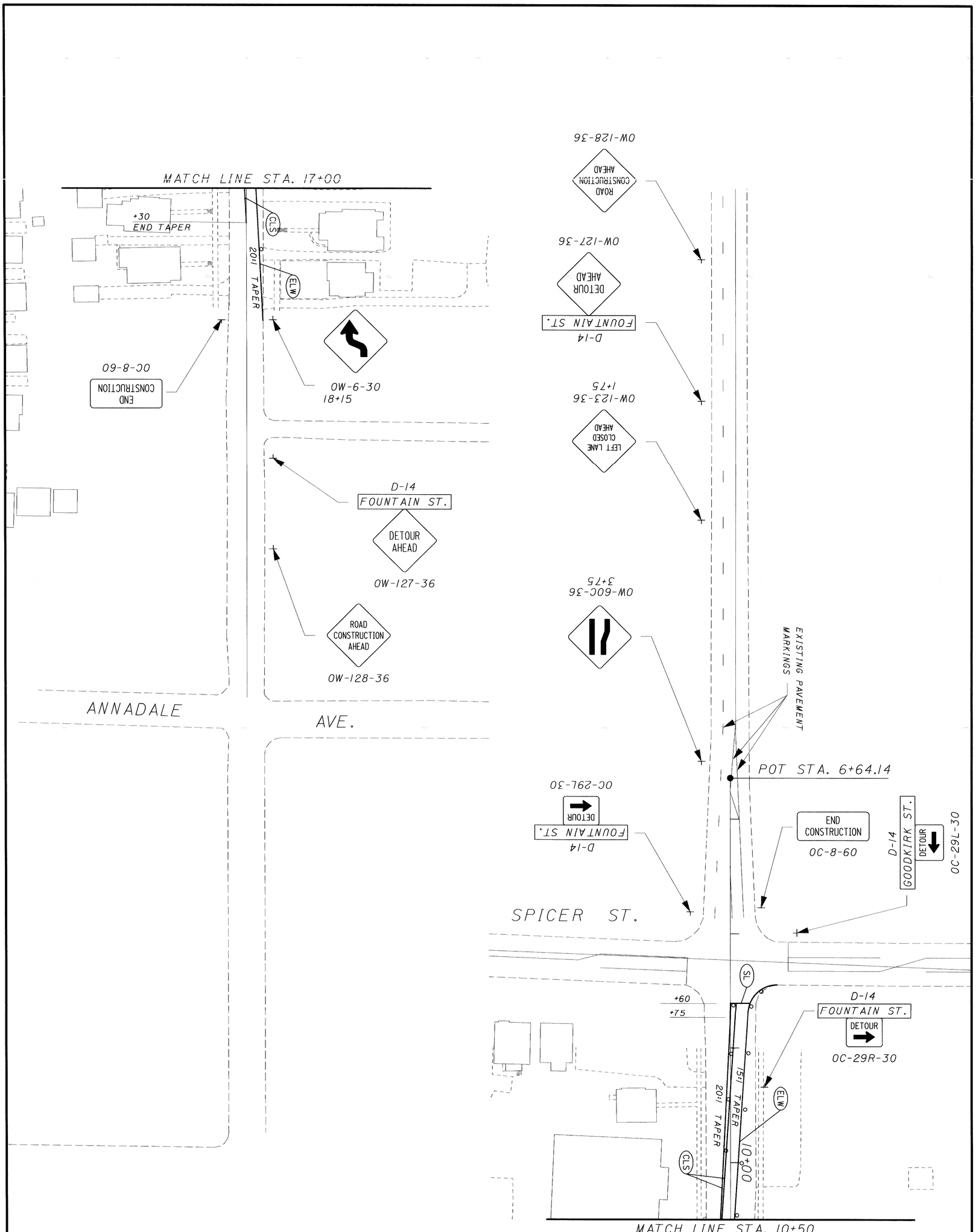

FOR LEGEND SEE SHEET 60

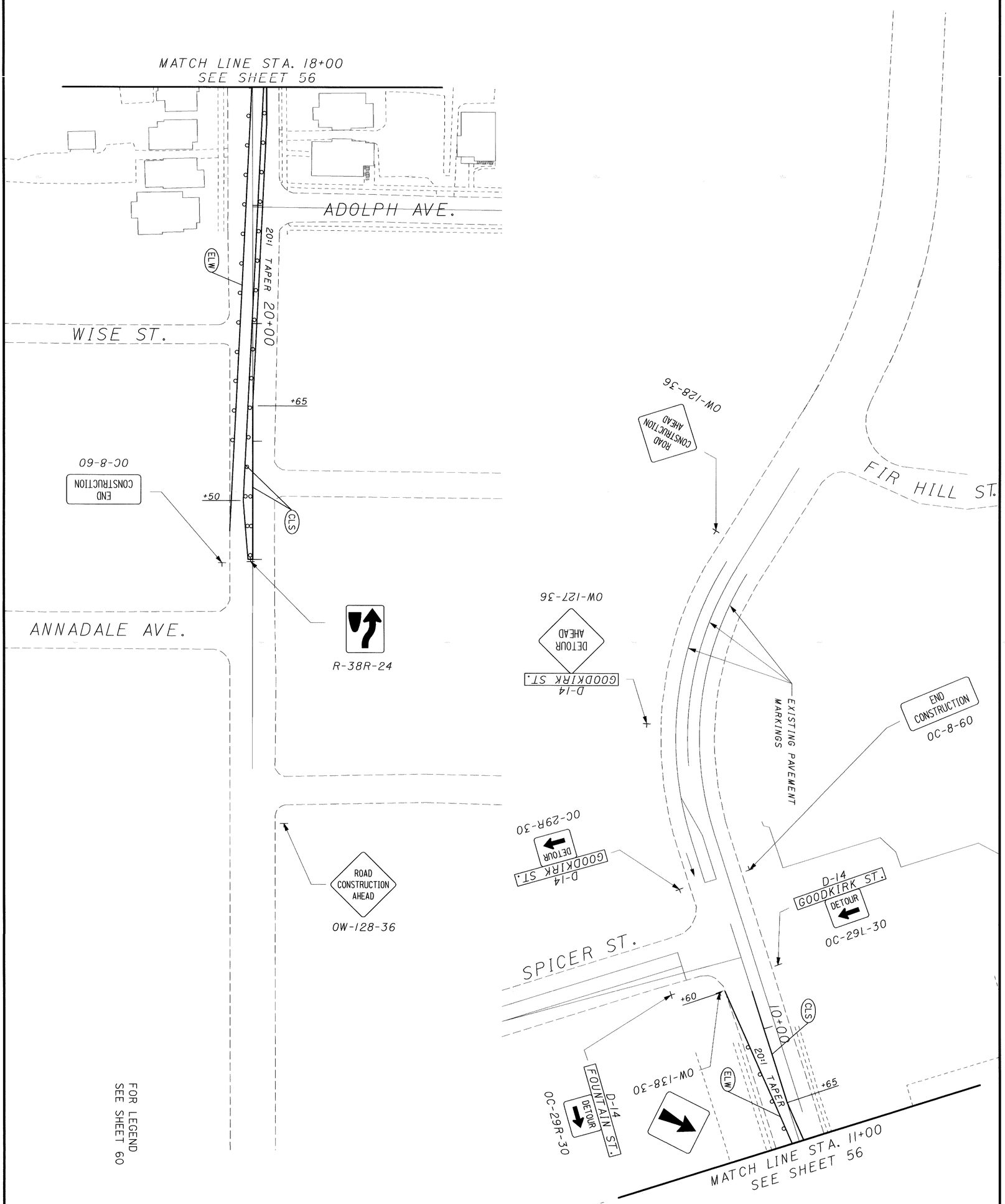

62 / 1088	SUM-8-0.63	MAINTENANCE OF TRAFFIC PHASE 1A-1 - BUCHTEL AVENUE	CALCULATED CHECKED	0 40 20 80 HORIZONTAL SCALE IN FEET

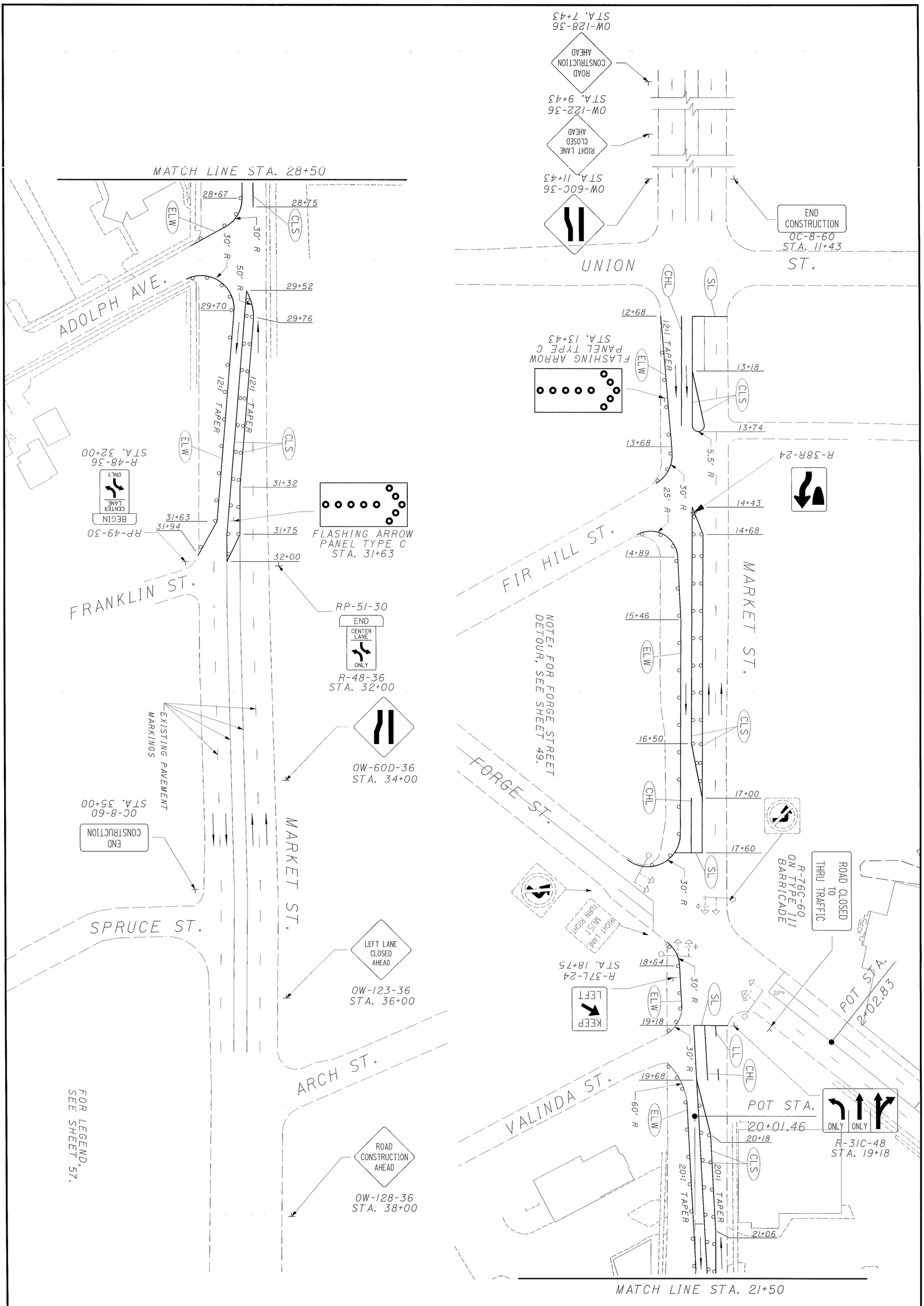

63 / 1088	SUM-8-.063	MAINTENANCE OF TRAFFIC PHASE 1A-1 - MARKET STREET	CALCULATED CHECKED	0 40 20 80 HORIZONTAL SCALE IN FEET	N

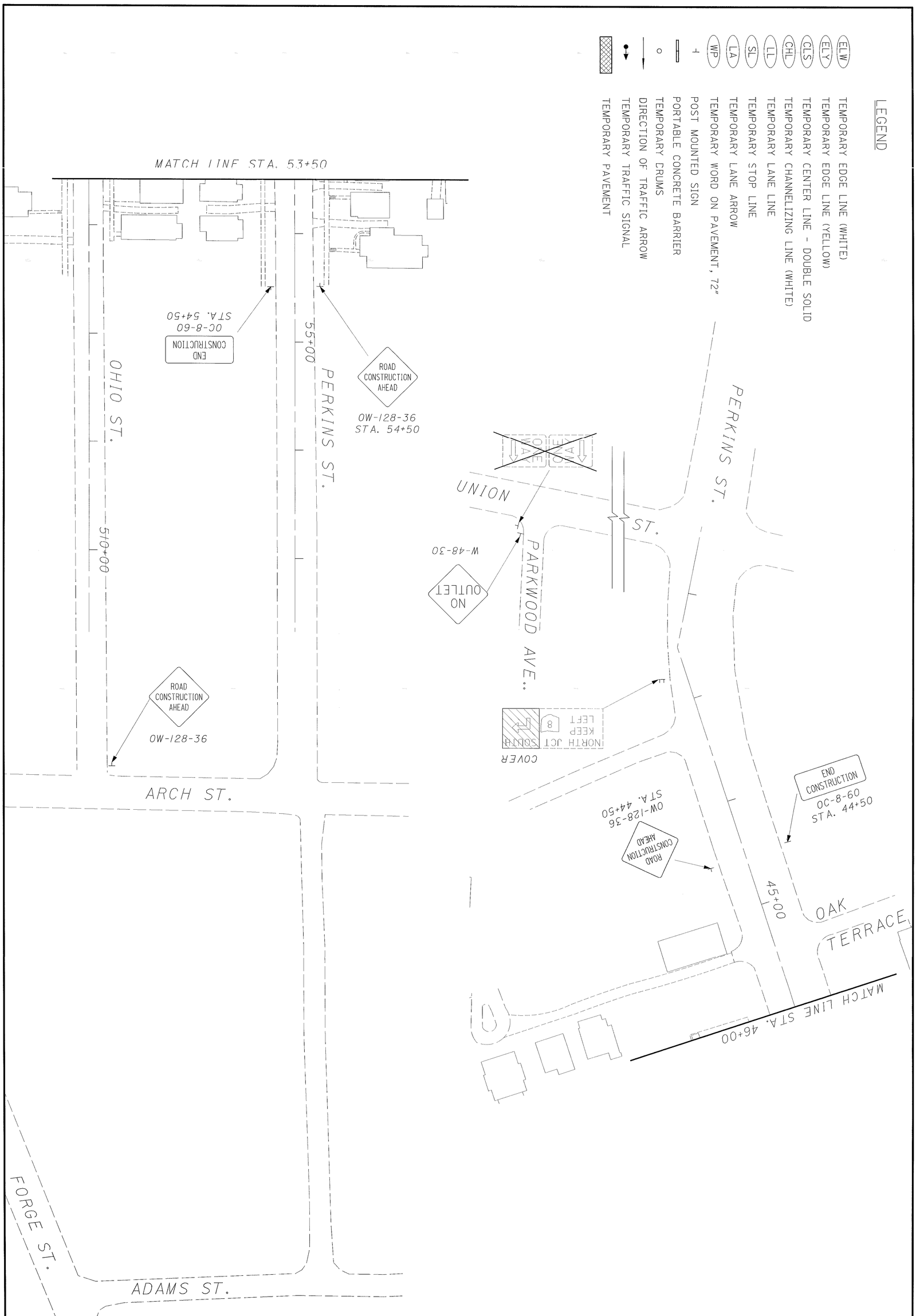

64 / 1088	SUM-8-0.63	MAINTENANCE OF TRAFFIC PHASE 1A-1 - PERKINS STREET	CALCULATED / CHECKED	0 20 40 80 HORIZONTAL SCALE IN FEET

NOTE:

FOR DISPOSITION OF S.R. 8
LEAD-IN SIGNS ON MARKET STREET,
SEE PHASE 1A-1, SHEET 57.

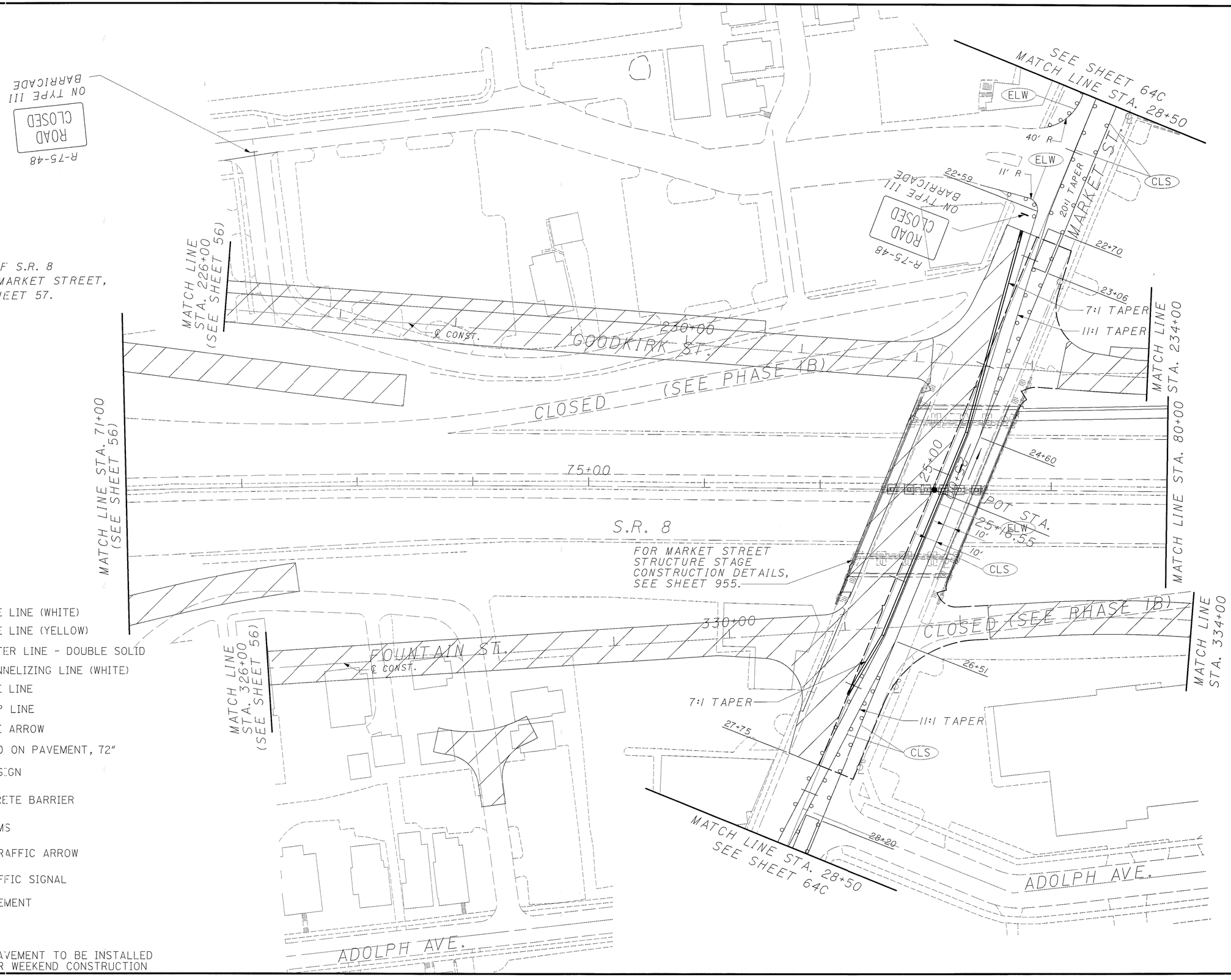

LEGEND

ELW	TEMPORARY EDGE LINE (WHITE)
ELY	TEMPORARY EDGE LINE (YELLOW)
CLS	TEMPORARY CENTER LINE - DOUBLE SOLID
CHL	TEMPORARY CHANNELIZING LINE (WHITE)
LL	TEMPORARY LANE LINE
SL	TEMPORARY STOP LINE
LA	TEMPORARY LANE ARROW
WP	TEMPORARY WORD ON PAVEMENT, 72"
	POST MOUNTED SIGN
	PORTABLE CONCRETE BARRIER
	TEMPORARY DRUMS
	DIRECTION OF TRAFFIC ARROW
	TEMPORARY TRAFFIC SIGNAL
	TEMPORARY PAVEMENT
	WORK AREA
	INTERSECTION PAVEMENT TO BE INSTALLED DURING NIGHT OR WEEKEND CONSTRUCTION

HORIZONTAL SCALE IN FEET
0 20 40 80

CALCULATED DJC
CHECKED

MAINTENANCE OF TRAFFIC
PHASE 1A-1 (UTILITY)

SUM-8-0.63

64A
1088

LEGEND

ELW	TEMPORARY EDGE LINE (WHITE)
ELY	TEMPORARY EDGE LINE (YELLOW)
CLS	TEMPORARY CENTER LINE - DOUBLE SOLID
CHL	TEMPORARY CHANNELIZING LINE (WHITE)
LL	TEMPORARY LANE LINE
SL	TEMPORARY STOP LINE
LA	TEMPORARY LANE ARROW
WP	TEMPORARY WORD ON PAVEMENT, 72"
⊣	POST MOUNTED SIGN
	PORTABLE CONCRETE BARRIER
○	TEMPORARY DRUMS
→	DIRECTION OF TRAFFIC ARROW
●→	TEMPORARY TRAFFIC SIGNAL
	TEMPORARY PAVEMENT
	WORK AREA
	INTERSECTION PAVEMENT TO BE INSTALLED DURING NIGHT OR WEEKEND CONSTRUCTION

N

0 20 40 80
HORIZONTAL SCALE IN FEET

CALCULATED KME
CHECKED

MAINTENANCE OF TRAFFIC PHASE 1A-1 (UTILITY)

SUM-8-0.63

64B
1088

11:42:10 PM
06/13/2002
u:\00-010sr-8\1\civil\mot\plan sheets\phase1a\motia1-mrk-a.dgn

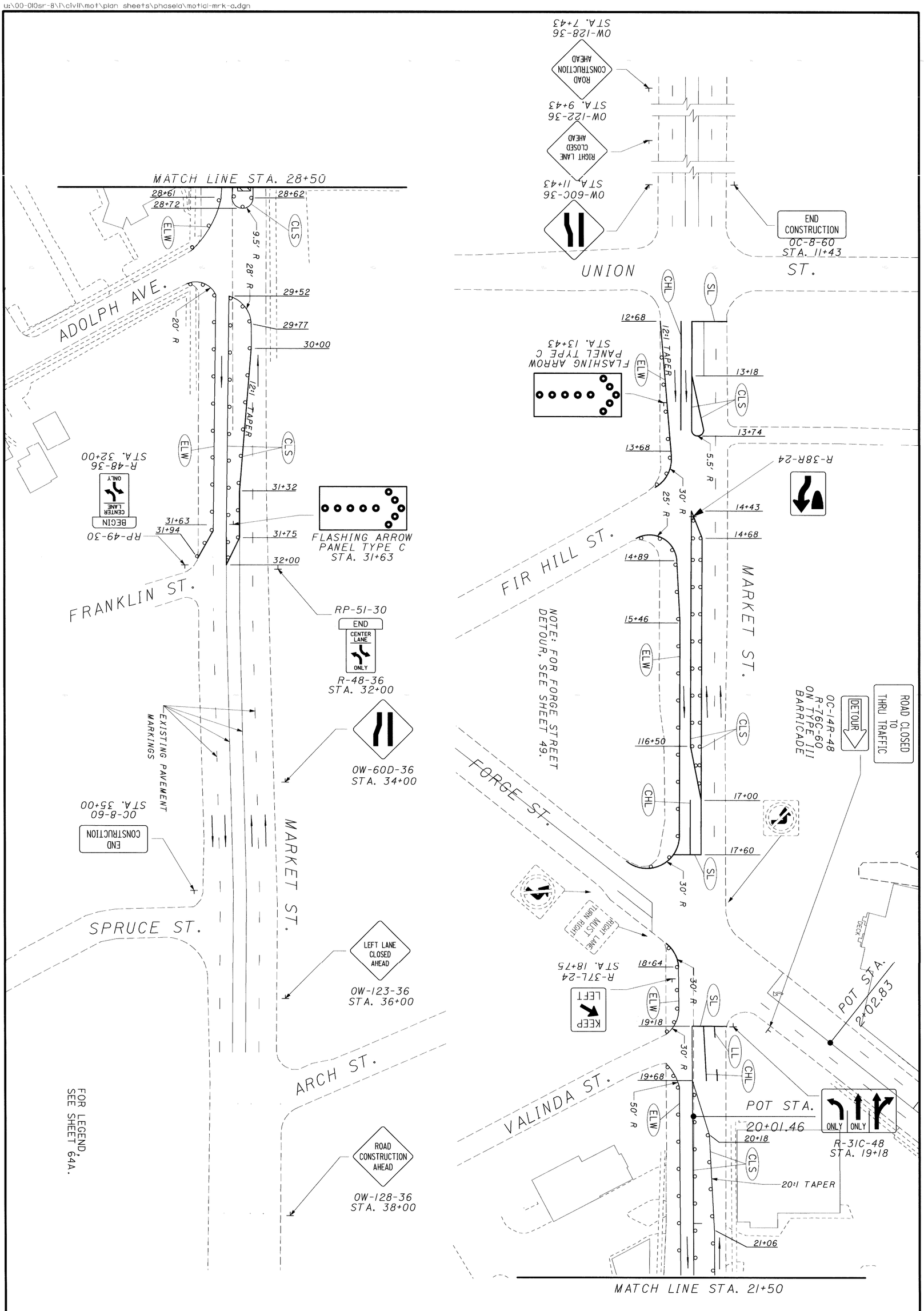

REVISIONS: 05/15/2002 by MAM

64C (1088)	SUM-8-.063	MAINTENANCE OF TRAFFIC PHASE 1A-1 (UTILITY) - MARKET STREET	CALCULATED DJC CHECKED 0 40 20 80 HORIZONTAL SCALE IN FEET

LEGEND

- (ELW) TEMPORARY EDGE LINE (WHITE)
- (ELY) TEMPORARY EDGE LINE (YELLOW)
- (CLS) TEMPORARY CENTER LINE - DOUBLE SOLID
- (CHL) TEMPORARY CHANNELIZING LINE (WHITE)
- (LL) TEMPORARY LANE LINE
- (SL) TEMPORARY STOP LINE
- (LA) TEMPORARY LANE ARROW
- (WP) TEMPORARY WORD ON PAVEMENT, 72"
- POST MOUNTED SIGN
- PORTABLE CONCRETE BARRIER
- TEMPORARY DRUMS
- DIRECTION OF TRAFFIC ARROW
- TEMPORARY TRAFFIC SIGNAL
- TEMPORARY PAVEMENT
- WORK AREA
- INTERSECTION PAVEMENT TO BE INSTALLED DURING NIGHT OR WEEKEND CONSTRUCTION

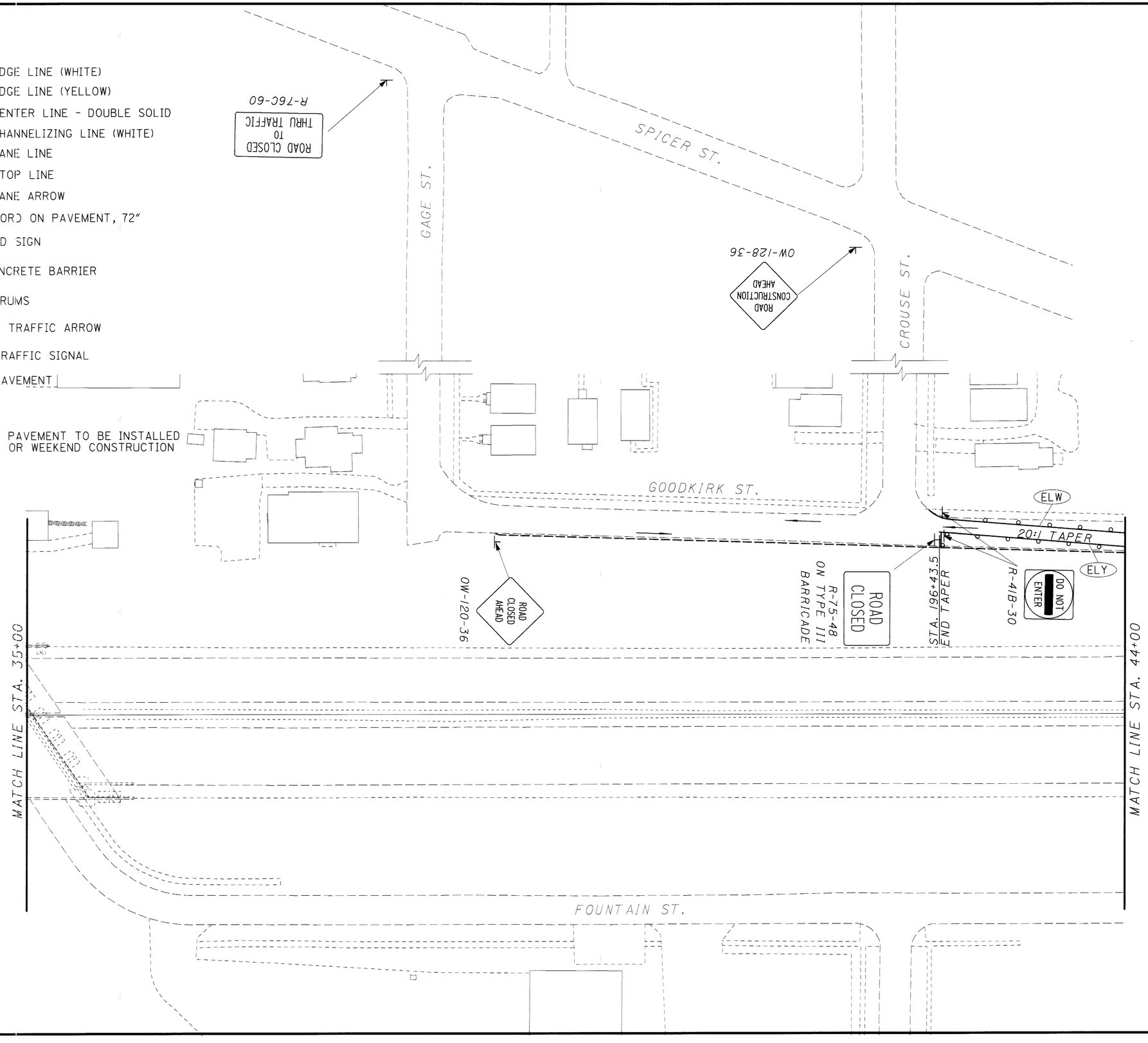

N

0 20 40 80 HORIZONTAL SCALE IN FEET

CALCULATED | CHECKED

MAINTENANCE OF TRAFFIC
PHASE IA-2

SUM-8-0.63

65
1088

SEE SHEET 72
MATCH LINE STA. 10+00

MATCH LINE STA. 16+50
SEE SHEET 72

MATCH LINE STA. 44+00

MATCH LINE STA. 53+00

MATCH LINE STA. 207+00

MATCH LINE STA. 307+00

SEE SHEETS 126+127
FOR INTERSECTION MOT DETAIL

SPICER ST.

GOODKIRK ST.

FOUNTAIN ST.

HUNTINGTON AVE.

NASH ST.

MASON AVE.

EXCHANGE ST.

S.R. 8

OPEN

OPEN

COVER

R-41B-30 DO NOT ENTER

R-43R-36 ONE WAY

R-43L-36 ONE WAY

OW-120-36 ROAD CLOSED AHEAD

R-75-48 ON TYPE III BARRICADE ROAD CLOSED

R-31K-36 STA. 11+76 ONLY

R-31C-48 STA. 14+63 ONLY ONLY

R-31C-48 STA. 15+54 ONLY ONLY

R-31V-36 STA. 12+50 ONLY

R-43R-36 ONE WAY

R-43L-36 ONE WAY

OC-8-60 END CONSTRUCTION

R-75-48 ON TYPE III BARRICADE ROAD CLOSED

OW-120-36 ROAD CLOSED AHEAD

R-75-48 ON TYPE III BARRICADE ROAD CLOSED

CLS +77

LL

ELW

SL

+76

ELW

LLS

ELW

SL

+46

R=30'

200+00

20:1 TAPER

ELY

R=25'

198+95 BEGIN TAPER

+50 BEGIN TAPER

R-43R-36 ONE WAY

LLS

ELW

45+00

20H TAPER

+63

CLS

20:1 TAPER

+13

+30

CHL

+63

+50 BEGIN TAPER

R=30'

SL

300+00

15+00

SL

+54

CLS

LL

CHL

ELW

+25

+25

R-43L-36 ONE WAY

ELW

℄ CONST.

205+00

R=50'

+50

ELW

SL

LLS

ELW

50+00

ELW

℄ CONST.

305+00

LEGEND

ELW	TEMPORARY EDGE LINE (WHITE)
ELY	TEMPORARY EDGE LINE (YELLOW)
CLS	TEMPORARY CENTER LINE - DOUBLE SOLID
CHL	TEMPORARY CHANNELIZING LINE (WHITE)
LL	TEMPORARY LANE LINE
SL	TEMPORARY STOP LINE
LA	TEMPORARY LANE ARROW
WP	TEMPORARY WORD ON PAVEMENT, 72"
	POST MOUNTED SIGN
	PORTABLE CONCRETE BARRIER
	TEMPORARY DRUMS
	DIRECTION OF TRAFFIC ARROW
	TEMPORARY TRAFFIC SIGNAL
	TEMPORARY PAVEMENT
	WORK AREA
	INTERSECTION PAVEMENT TO BE INSTALLED DURING NIGHT OR WEEKEND CONSTRUCTION

NOTE:

FOR S.R. 8 LEAD IN SIGNS DISPOSITION ON EXCHANGE STREET, SEE SHEET 54.

FOR TEMPORARY SIGNALS, SEE SHEETS 127 AND 133.

8 NORTH
Cuyahoga Falls
Perkins St
EXIT ¾ MILE
Univ of Akron
Buchtel Ave
EXIT ONLY

REVISIONS: 05/15/2002 by MAM

CALCULATED KME
CHECKED

HORIZONTAL SCALE IN FEET
0 20 40 80

MAINTENANCE OF TRAFFIC PHASE 1A-2

SUM-8-0.63

66
1088

SPICER ST.

OW-120-36 ROAD CLOSED AHEAD

OW-120-36 ROAD CLOSED AHEAD

R-75-48 ON TYPE III BARRICADE

ROAD CLOSED

R-75-48 ON TYPE III BARRICADE

ROAD CLOSED

VINE ST.

ORCHARD ST.

SEE SHEET 73
MATCH LINE STA 10+50

CARROLL ST.

CLS +00

ELW

SL +64

FOR TEMPORARY SIGNAL, SEE SHEET 129

R-43R-36 ONE WAY

ONE WAY

R-43L-36

ONLY

R-31B-36

MATCH LINE STA. 207+00

℄ CONST.

210+00

215+00

R=30'

R=40'

SL

LL

+61

+33

+29

ELW

ELY

GOODKIRK ST.

SEE SHEETS 128 AND 129
FOR INTERSECTION MOT DETAIL

MATCH LINE STA. 217+00

R-43R-36 ONE WAY

ONE WAY

R-43L-36

R-41B-30 ENTER

DO NOT ENTER

D-14-48 FOUNTAIN ST. DETOUR

OC-29-30

R-75-48 OC-14L-48 ON TYPE III BARRICADE

DETOUR

ROAD CLOSED

MATCH LINE STA. 53+00

55+00

60+00

S.R. 8

ONLY

ONE WAY

ELW

CLS

+29

+50

SL

MATCH LINE STA. 62+00

R=50'

MATCH LINE STA. 307+00

310+00

315+00

ELW +40

FOUNTAIN ST.

℄ CONST.

R=30'

+33

+00

+14

+29

SL

MATCH LINE STA. 317+00

FOR TEMPORARY SIGNAL, SEE SHEET 135

ELW

+06

+10

ELW

OW-127-36 DETOUR AHEAD

D-14-48 FOUNTAIN ST.

R-43L-36 ONE WAY

ONE WAY

R-43R-36

R-41B-30 DO NOT ENTER

CLS

MATCH LINE STA 17+00
SEE SHEET 73

LEGEND

ELW	TEMPORARY EDGE LINE (WHITE)
ELY	TEMPORARY EDGE LINE (YELLOW)
CLS	TEMPORARY CENTER LINE - DOUBLE SOLID
CHL	TEMPORARY CHANNELIZING LINE (WHITE)
LL	TEMPORARY LANE LINE
SL	TEMPORARY STOP LINE
LA	TEMPORARY LANE ARROW
WP	TEMPORARY WORD ON PAVEMENT, 72"
⊣	POST MOUNTED SIGN
	PORTABLE CONCRETE BARRIER
○	TEMPORARY DRUMS
	DIRECTION OF TRAFFIC ARROW
	TEMPORARY TRAFFIC SIGNAL
	TEMPORARY PAVEMENT
	WORK AREA
	INTERSECTION PAVEMENT TO BE INSTALLED DURING NIGHT OR WEEKEND CONSTRUCTION
	COMMERCIAL DRIVES TO BE MAINTAINED DURING BUSINESS HOURS. SEE NOTE, SHEET 46

REVISIONS: 05/15/2002 by MAM

HORIZONTAL SCALE IN FEET 0 20 40 80

CALCULATED KME CHECKED

MAINTENANCE OF TRAFFIC PHASE 1A-2

SUM-8-0.63

67 1088

11:42:13 PM
06/13/2002
u:\00-010sr-8\civil\mot\plan sheets\phase1a\mot1a2-5.dgn

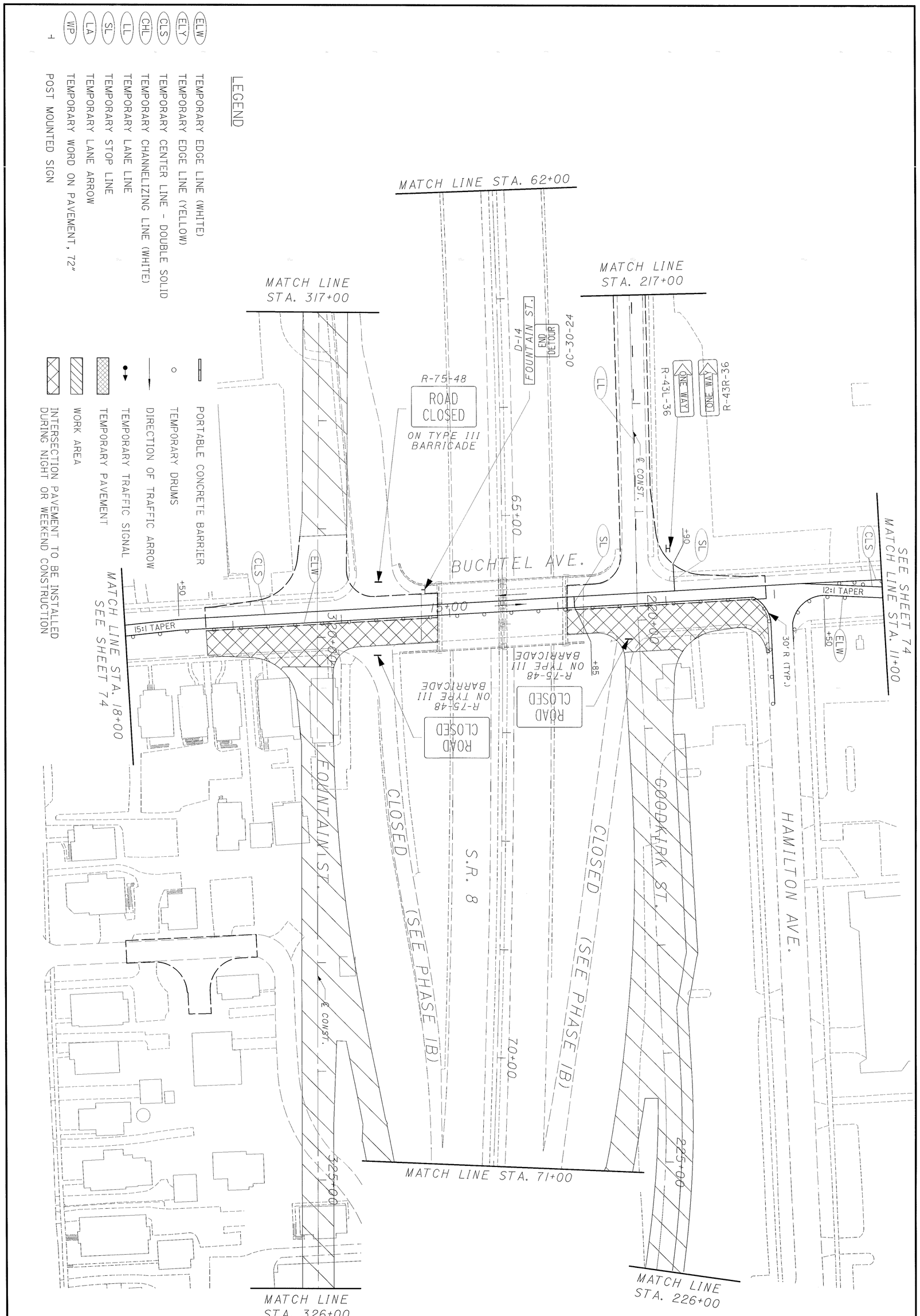

68 / 1088	SUM-8-0.63	MAINTENANCE OF TRAFFIC PHASE 1A-2	CALCULATED CRP / CHECKED	HORIZONTAL SCALE IN FEET (0, 20, 40, 80)

NOTE:

FOR DISPOSITION OF S.R. 8 LEAD-IN SIGNS ON MARKET STREET, SEE PHASE 1A-1, SHEET 57.

R-75-48 ROAD CLOSED ON TYPE III BARRICADE

MATCHLINE STA. 226+00

MATCHLINE STA. 71+00

℄ CONST.

GOODKIRK ST.

230+00

CLOSED (SEE PHASE 1B)

75+00

S.R. 8

SEE SHEET 75 MATCHLINE STA. 21+50

22+10 END TAPER

20:1 TAPER

21+70

MARKET ST.

ELW

22+50 END TAPER

7:1 TAPER

CLS

12'

R-75-48 ROAD CLOSED ON TYPE I/II BARRICADE

OW-5-30 STA. 22+50

MATCHLINE STA. 234+00

MATCHLINE STA. 80+00

25+00

25+16.55 POT STA.

FOR MARKET STREET STRUCTURE STAGE CONSTRUCTION DETAILS SEE SHEET 955.

330+00

FOUNTAIN ST.

℄ CONST.

MATCHLINE STA. 326+00

CLOSED (SEE PHASE 1B)

MATCHLINE STA. 334+00

26+44 BEGIN TAPER

28+00 BEGIN TAPER

29' R TYP.

MATCHLINE STA. 28+50 SEE SHEET 75

R-75-48 ROAD CLOSED ON TYPE III BARRICADE

ADOLPH AVE.

ADOLPH AVE.

LEGEND

TEMPORARY PAVEMENT

WORK AREA

INTERSECTION PAVEMENT TO BE INSTALLED DURING NIGHT OR WEEKEND CONSTRUCTION

FOR COMPLETE LEGEND SEE SHEET 53

N

0 20 40 80 HORIZONTAL SCALE IN FEET

CALCULATED DJC CHECKED

MAINTENANCE OF TRAFFIC PHASE 1A-2

SUM-8-0.63

69 1088

11:42:14 PM
06/13/2002
u:\00-010sr-8\i\civil\mot\plan sheets\phase1a\mot1a2-8.dgn

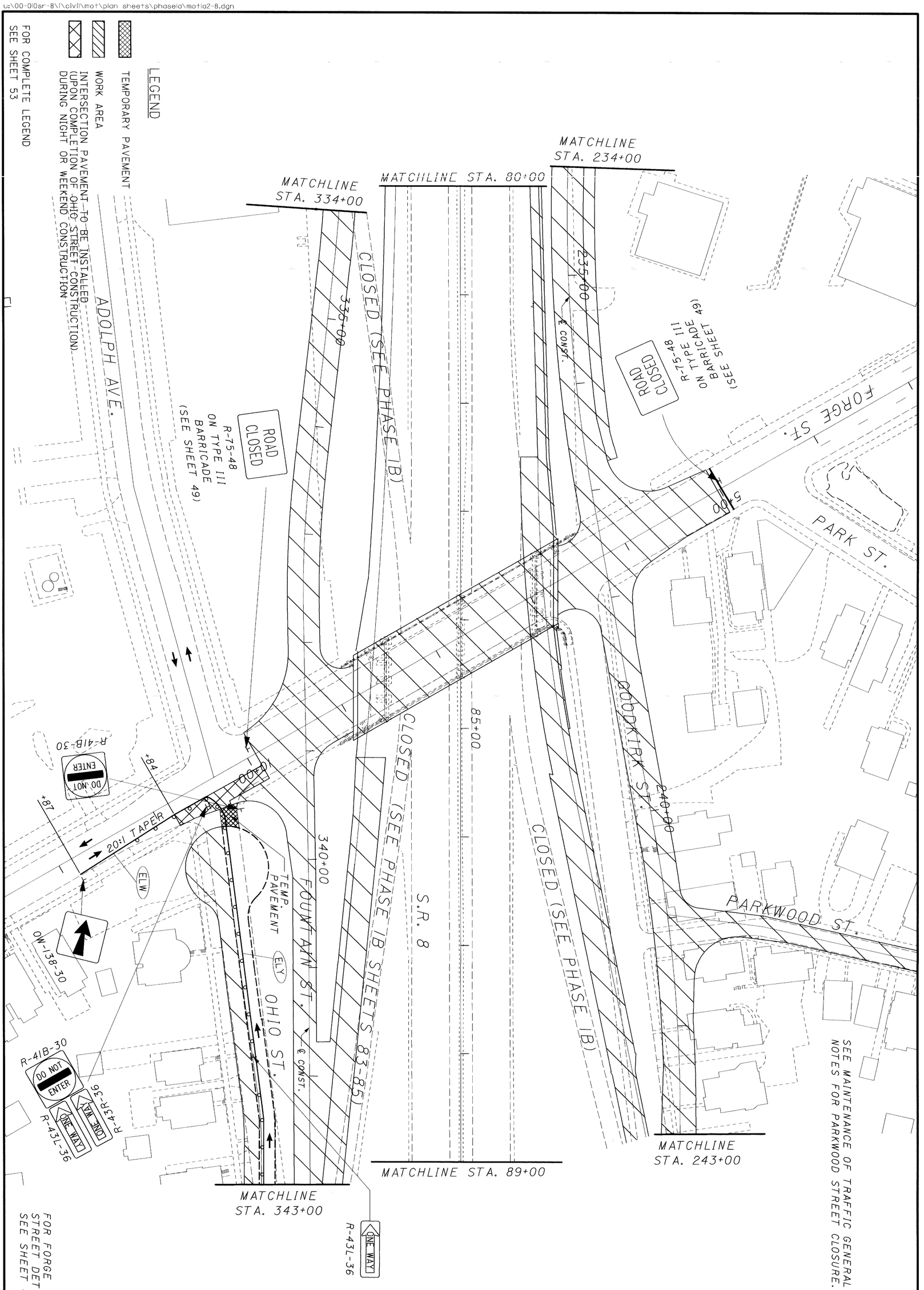

REVISIONS: 05/15/2002 by MAM

70 (1088)	SUM-8-0.63	MAINTENANCE OF TRAFFIC PHASE 1A-2	CALCULATED DJC / CHECKED	0 40 / 20 80 HORIZONTAL SCALE IN FEET

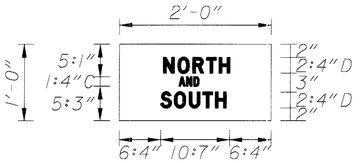

TEMPORARY
OVERLAY
BLACK/ORANGE

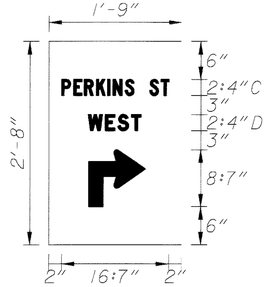

TEMPORARY
OVERLAY
BLACK/ORANGE

LEGEND

ELW	TEMPORARY EDGE LINE (WHITE)
ELY	TEMPORARY EDGE LINE (YELLOW)
CLS	TEMPORARY CENTER LINE - DOUBLE SOLID
CHL	TEMPORARY CHANNELIZING LINE (WHITE)
LL	TEMPORARY LANE LINE
SL	TEMPORARY STOP LINE
LA	TEMPORARY LANE ARROW
WP	TEMPORARY WORD ON PAVEMENT, 72"
	POST MOUNTED SIGN
	PORTABLE CONCRETE BARRIER
	TEMPORARY DRUMS
	DIRECTION OF TRAFFIC ARROW
	TEMPORARY TRAFFIC SIGNAL
	TEMPORARY PAVEMENT
	WORK AREA
	INTERSECTION PAVEMENT TO BE INSTALLED DURING NIGHT OR WEEKEND CONSTRUCTION

MATCH LINE STA 46+00
PERKINS ST.
R-75-48
ROAD CLOSED
ON TYPE III BARRICADE
96"x24"
CLOSED
DO NOT ENTER
+26
UNION PL
GOODKIRK ST.
245+00
℄ CONST.
MATCH LINE STA. 243+00
TEMPORARY PAVEMENT
FOR RAMP 1
SEE SHEET NO. 136A
FOR PERKINS ST.
SEE SHEET NO. 136A
MATCH LINE STA. 89+00
90+00
95+00
END SHEET STA. 98+00
S.R.8
ONE WAY
R-31F36
345+00
℄ CONST.
FOUNTAIN ST.
MATCH LINE STA. 343+00
ELY
+50
+00
ROAD CLOSED TO THRU TRAFFIC
R-76C-60
ON TYPE III BARRICADE
MATCH LINE STA. 53+50
69
8
EAST
NORTH
NORTH
EAST
8
59
ADOLPH AVE.
COVER
SOUTH
KEEP
LEFT
JCT
NORTH
8
WEST
JCT
EAST
59
PERKINS ST
WEST
21"X32"
NORTH
and
SOUTH
21"x12"

REVISIONS: 05/15/2002 by MAM

CALCULATED KME
CHECKED

HORIZONTAL SCALE IN FEET
0 20 40 80

MAINTENANCE OF TRAFFIC
PHASE 1A-2

SUM-8-0.63

71
1088

11:42:19 PM
06/13/2002
u:\00-010sr-8\i\civil\mot\plan sheets\phase1a\mot1a2-exc.dgn

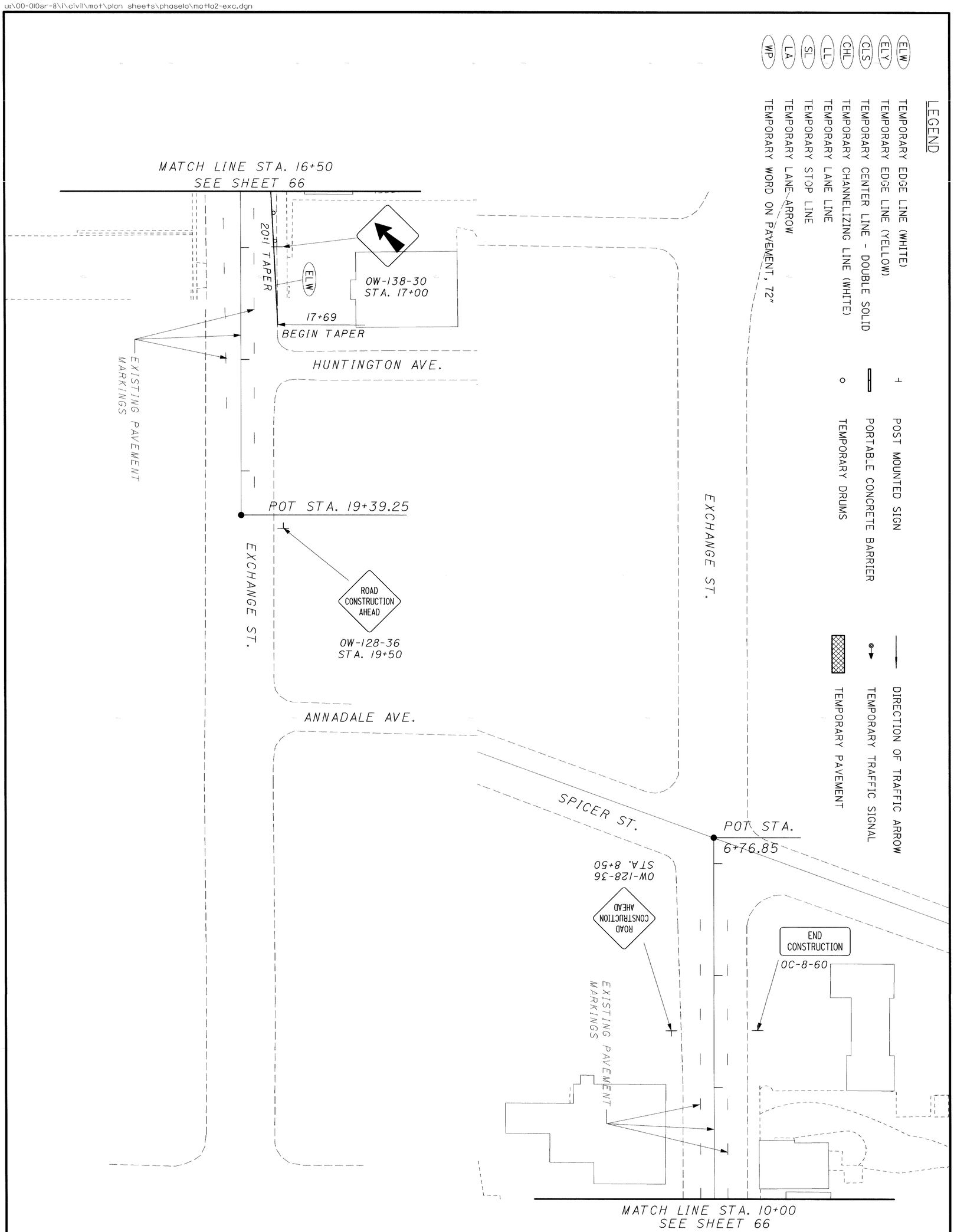

REVISIONS: 05/15/2002 by MAM

72 / 1088	SUM-8-0.63	MAINTENANCE OF TRAFFIC PHASE 1A-2 - EXCHANGE STREET	CALCULATED / CHECKED	0 20 40 80 HORIZONTAL SCALE IN FEET

11:42:20 PM
06/13/2002
u:\00-010sr-8\1\civil\mot\plan sheets\phase1a\mot1a2-car.dgn

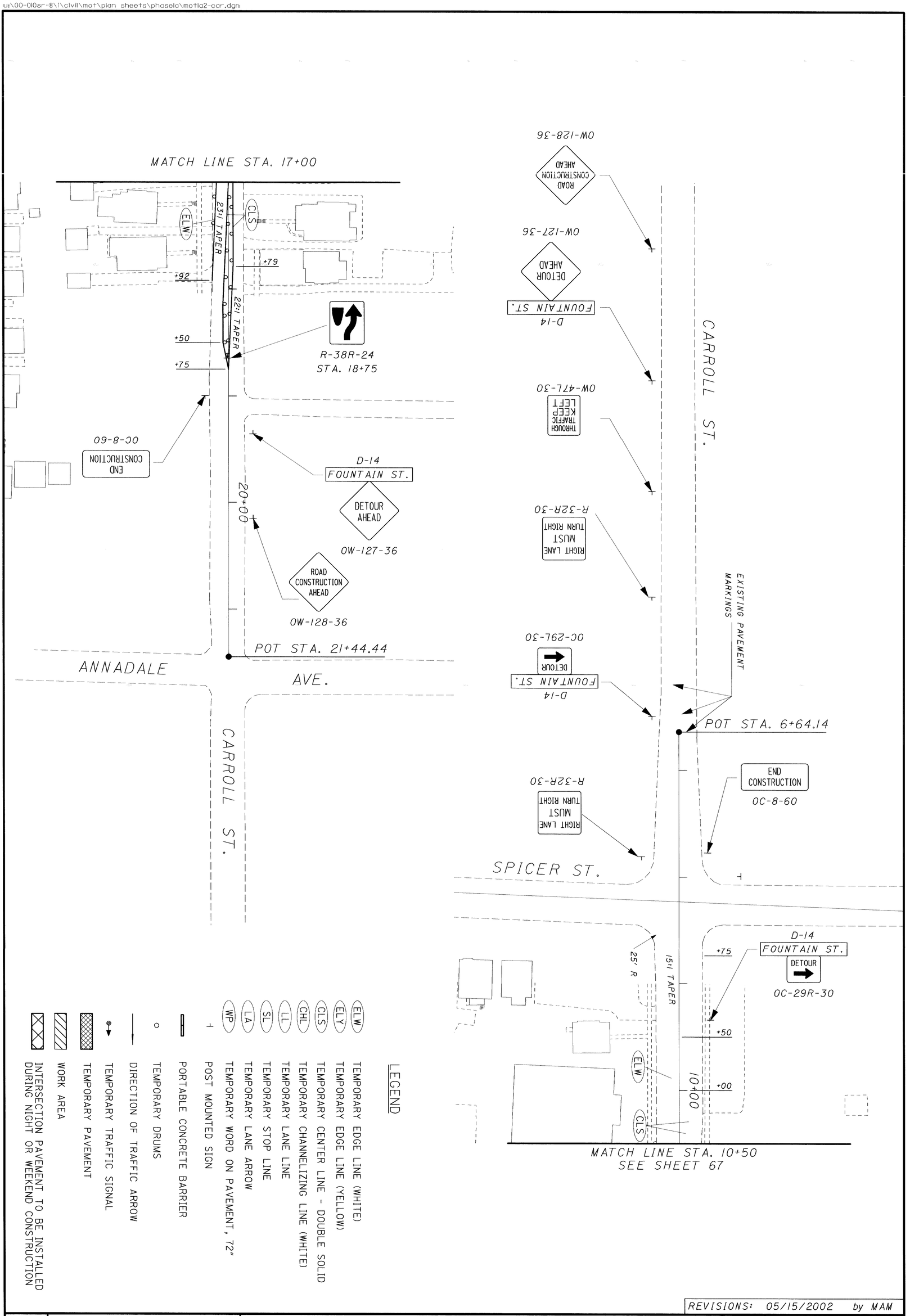

LEGEND

- ELW — TEMPORARY EDGE LINE (WHITE)
- ELY — TEMPORARY EDGE LINE (YELLOW)
- CLS — TEMPORARY CENTER LINE - DOUBLE SOLID
- CHL — TEMPORARY CHANNELIZING LINE (WHITE)
- LL — TEMPORARY LANE LINE
- SL — TEMPORARY STOP LINE
- LA — TEMPORARY LANE ARROW
- WP — TEMPORARY WORD ON PAVEMENT, 72"
- POST MOUNTED SIGN
- PORTABLE CONCRETE BARRIER
- TEMPORARY DRUMS
- DIRECTION OF TRAFFIC ARROW
- TEMPORARY TRAFFIC SIGNAL
- TEMPORARY PAVEMENT
- WORK AREA
- INTERSECTION PAVEMENT TO BE INSTALLED DURING NIGHT OR WEEKEND CONSTRUCTION

REVISIONS: 05/15/2002 by MAM

73 / 1088	SUM-8-0.63	MAINTENANCE OF TRAFFIC PHASE 1A-2 - CARROLL STREET	CALCULATED CHECKED 0 40 80 / 20 HORIZONTAL SCALE IN FEET

11:42:21PM
06/13/2002
U:\00-010sr-8\I\civil\mot\plan sheets\phase1a\mot1c2-buc.dgn

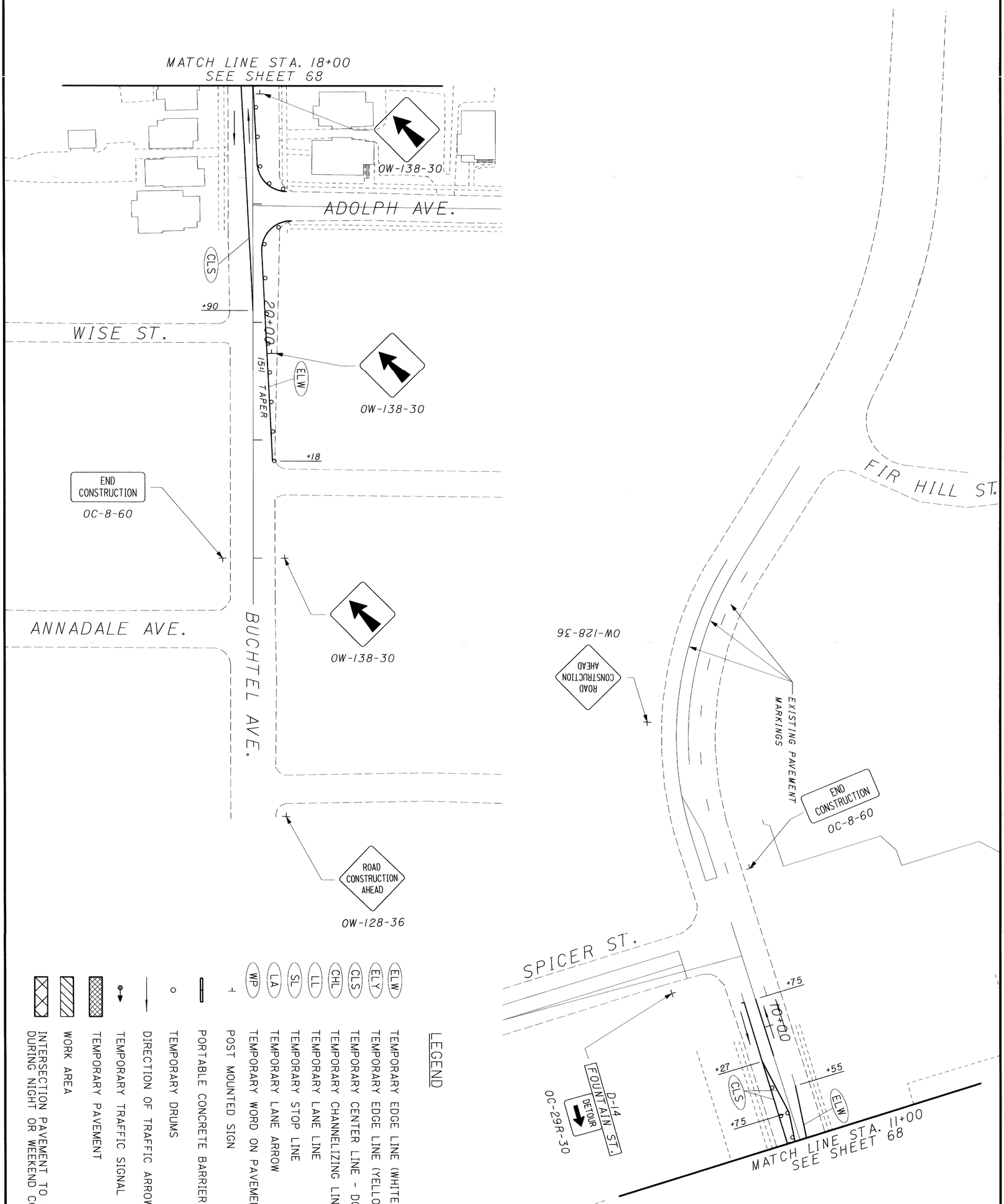

LEGEND

- TEMPORARY EDGE LINE (WHITE) — ELW
- TEMPORARY EDGE LINE (YELLOW) — ELY
- TEMPORARY CENTER LINE - DOUBLE SOLID — CLS
- TEMPORARY CHANNELIZING LINE (WHITE) — CHL
- TEMPORARY LANE LINE — LL
- TEMPORARY STOP LINE — SL
- TEMPORARY LANE ARROW — LA
- TEMPORARY WORD ON PAVEMENT, 72" — WP
- POST MOUNTED SIGN
- PORTABLE CONCRETE BARRIER
- TEMPORARY DRUMS
- DIRECTION OF TRAFFIC ARROW
- TEMPORARY TRAFFIC SIGNAL
- TEMPORARY PAVEMENT
- WORK AREA
- INTERSECTION PAVEMENT TO BE INSTALLED DURING NIGHT OR WEEKEND CONSTRUCTION

REVISIONS: 05/15/2002 by MAM

74 / 1088	SUM-8-0.63	MAINTENANCE OF TRAFFIC PHASE 1A-2 - BUCHTEL AVENE	CALCULATED CHECKED 0 20 40 80 HORIZONTAL SCALE IN FEET N

11:42:24 PM
06/13/2002
u:\00-010sr-8\1\civil\mot\plan sheets\phase1a\mot1a2-mrk.dgn

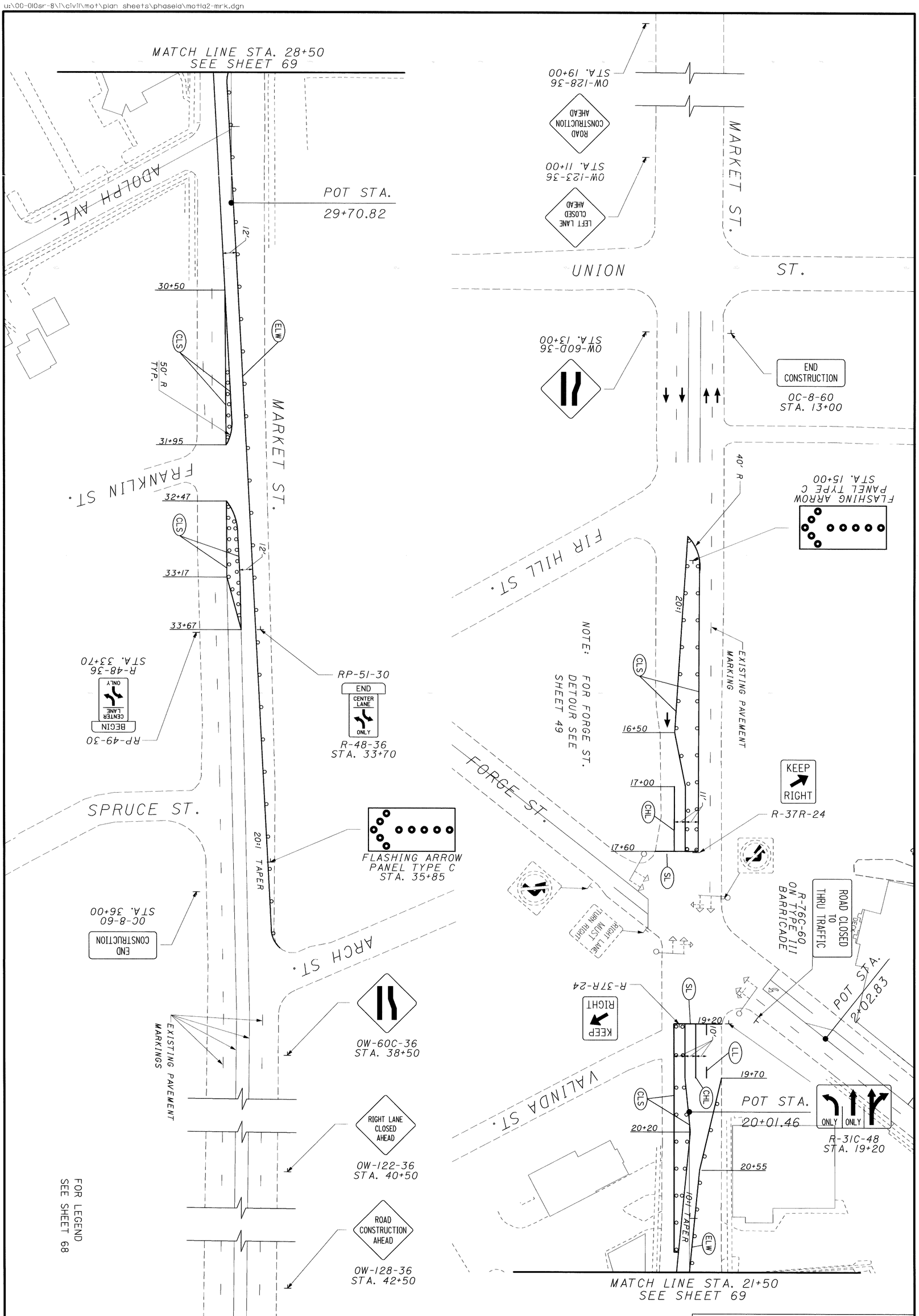

REVISIONS: 05/15/2002 by MAM

75 / 1088	SUM-8-.063	MAINTENANCE OF TRAFFIC PHASE 1A-2 - MARKET STREET	CALCULATED DJC CHECKED 0 40 20 80 HORIZONTAL SCALE IN FEET

LEGEND

- (ELW) TEMPORARY EDGE LINE (WHITE)
- (ELY) TEMPORARY EDGE LINE (YELLOW)
- (CLS) TEMPORARY CENTER LINE - DOUBLE SOLID
- (CHL) TEMPORARY CHANNELIZING LINE (WHITE)
- (LL) TEMPORARY LANE LINE
- (SL) TEMPORARY STOP LINE
- (LA) TEMPORARY LANE ARROW
- (WP) TEMPORARY WORD ON PAVEMENT, 72"
- POST MOUNTED SIGN
- PORTABLE CONCRETE BARRIER
- TEMPORARY DRUMS
- DIRECTION OF TRAFFIC ARROW
- TEMPORARY TRAFFIC SIGNAL
- TEMPORARY PAVEMENT
- WORK AREA
- INTERSECTION PAVEMENT TO BE INSTALLED DURING NIGHT OR WEEKEND CONSTRUCTION

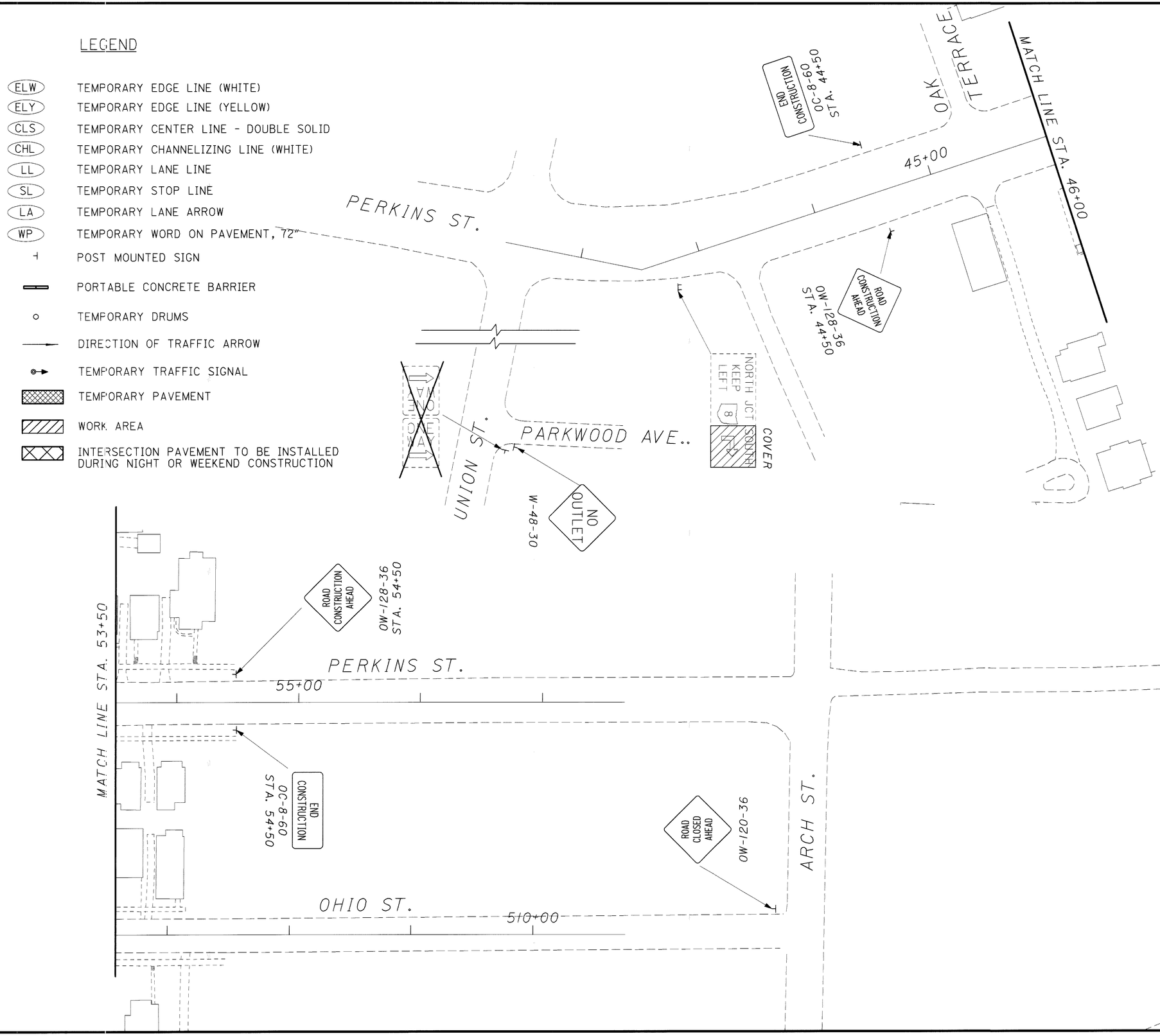

REVISIONS: 05/15/2002 by MAM

HORIZONTAL SCALE IN FEET
0 20 40 80

CALCULATED | CHECKED

MAINTENANCE OF TRAFFIC
PHASE 1A-2 - PERKINS STREET

SUM-8-0.63

76
1088

11:42:47 PM
06/13/2002
u:\00-010sr-8\civil\mot\plan sheets\phase1a\mot1a2-perk.dgn

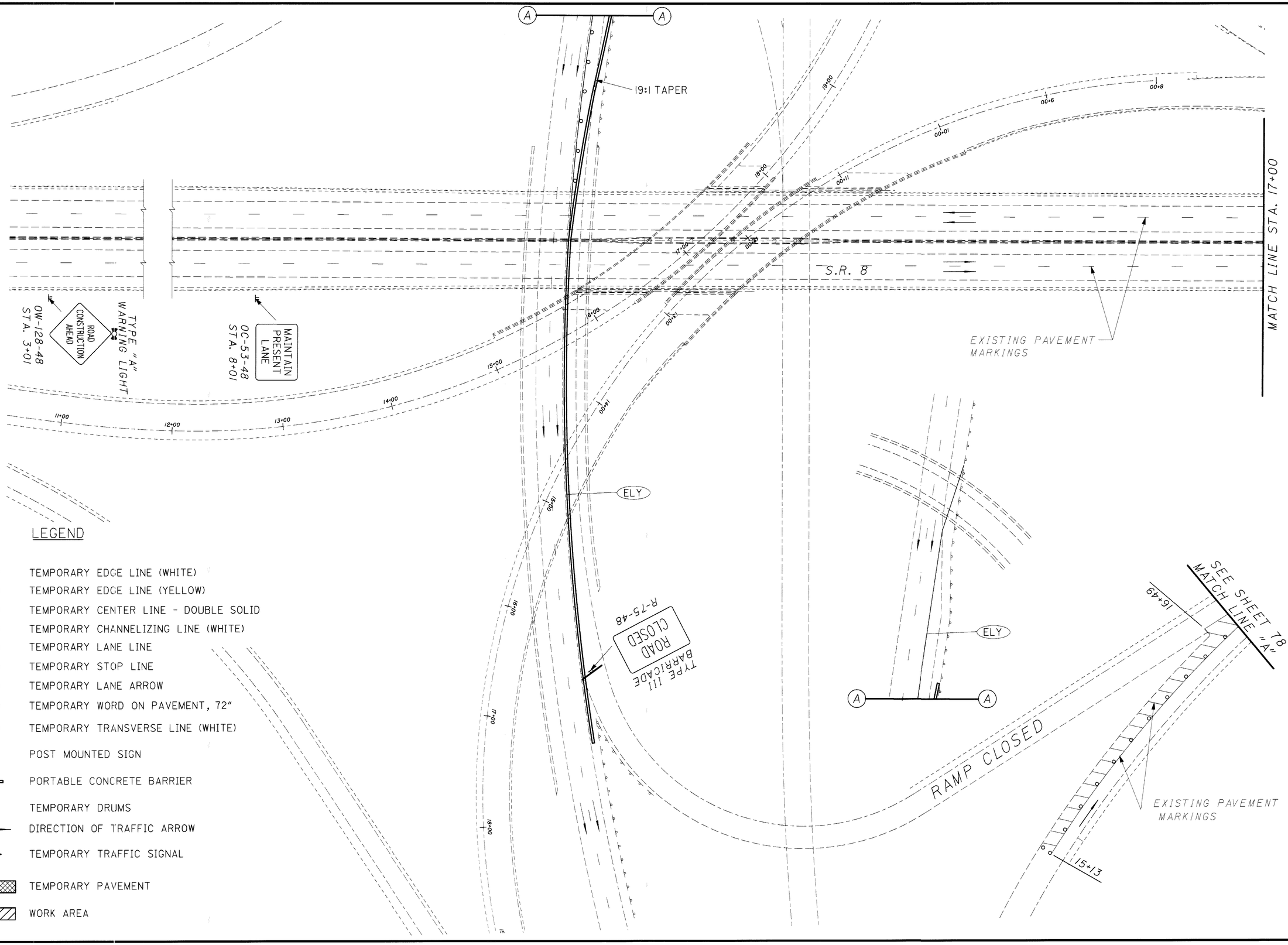

LEGEND

ELW	TEMPORARY EDGE LINE (WHITE)
ELY	TEMPORARY EDGE LINE (YELLOW)
CLS	TEMPORARY CENTER LINE - DOUBLE SOLID
CHL	TEMPORARY CHANNELIZING LINE (WHITE)
LL	TEMPORARY LANE LINE
SL	TEMPORARY STOP LINE
LA	TEMPORARY LANE ARROW
WP	TEMPORARY WORD ON PAVEMENT, 72"
TLW	TEMPORARY TRANSVERSE LINE (WHITE)
	POST MOUNTED SIGN
	PORTABLE CONCRETE BARRIER
	TEMPORARY DRUMS
	DIRECTION OF TRAFFIC ARROW
	TEMPORARY TRAFFIC SIGNAL
	TEMPORARY PAVEMENT
	WORK AREA

HORIZONTAL SCALE IN FEET
0 20 40 80

CALCULATED KME
CHECKED

MAINTENANCE OF TRAFFIC PHASE 1B

SUM-8-0.63

77
1088

11:42:48 PM
06/13/2002
u:\00-010sr-8\1\civil\mot\plan sheets\phaselb\mp00plb.dgn

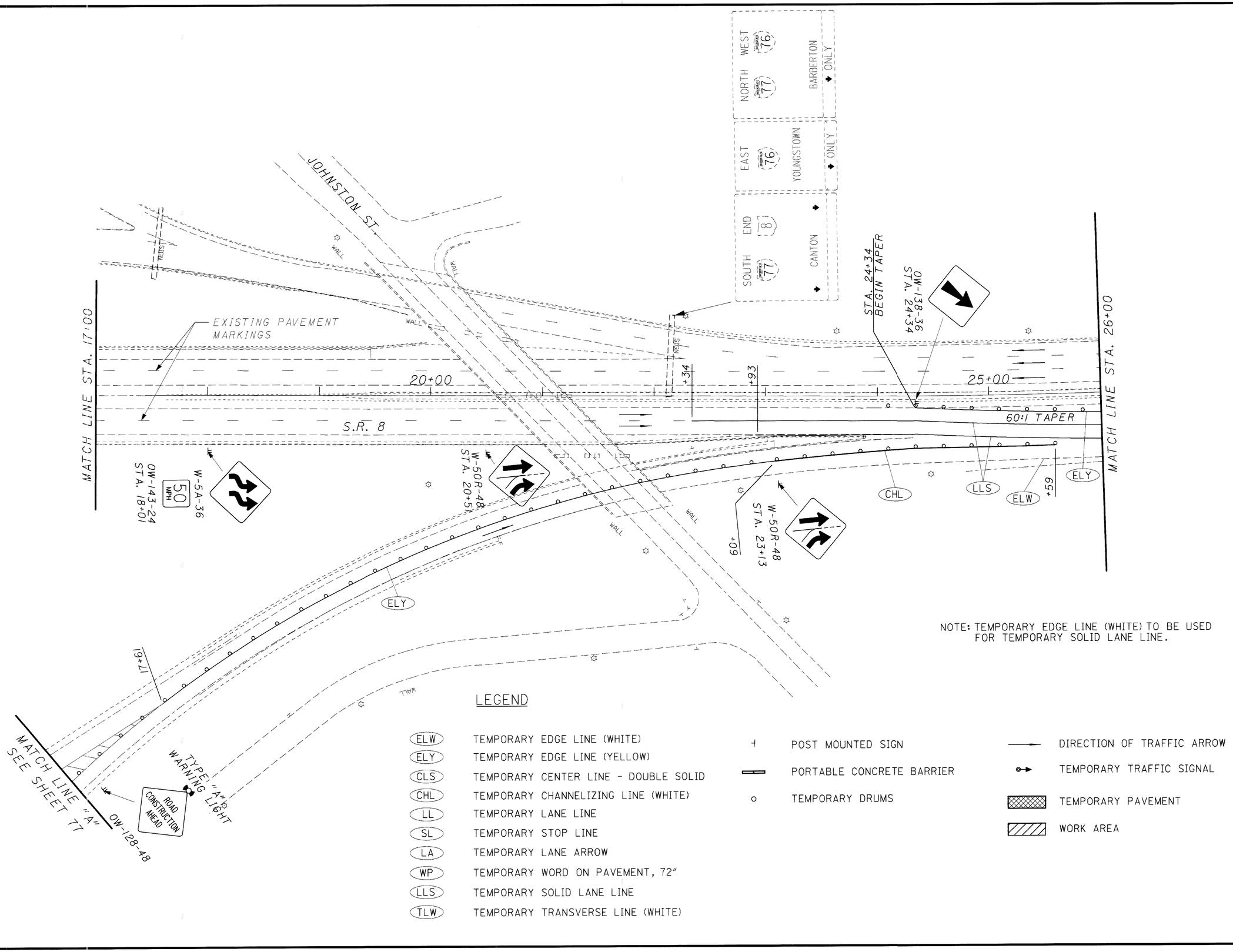

NOTE: TEMPORARY EDGE LINE (WHITE) TO BE USED FOR TEMPORARY SOLID LANE LINE.

LEGEND

ELW	TEMPORARY EDGE LINE (WHITE)
ELY	TEMPORARY EDGE LINE (YELLOW)
CLS	TEMPORARY CENTER LINE - DOUBLE SOLID
CHL	TEMPORARY CHANNELIZING LINE (WHITE)
LL	TEMPORARY LANE LINE
SL	TEMPORARY STOP LINE
LA	TEMPORARY LANE ARROW
WP	TEMPORARY WORD ON PAVEMENT, 72"
LLS	TEMPORARY SOLID LANE LINE
TLW	TEMPORARY TRANSVERSE LINE (WHITE)

POST MOUNTED SIGN	DIRECTION OF TRAFFIC ARROW
PORTABLE CONCRETE BARRIER	TEMPORARY TRAFFIC SIGNAL
TEMPORARY DRUMS	TEMPORARY PAVEMENT
	WORK AREA

REVISIONS: 05/15/2002 by MAM

CALCULATED KME

CHECKED

HORIZONTAL SCALE IN FEET 0 20 40 80

MAINTENANCE OF TRAFFIC PHASE 1B

SUM-8-0.63

78
1088

11:42:48 PM
06/13/2002
s:\00-010sr-8\1-civil\mot\plan sheets\phase1b\mp01plb.dgn

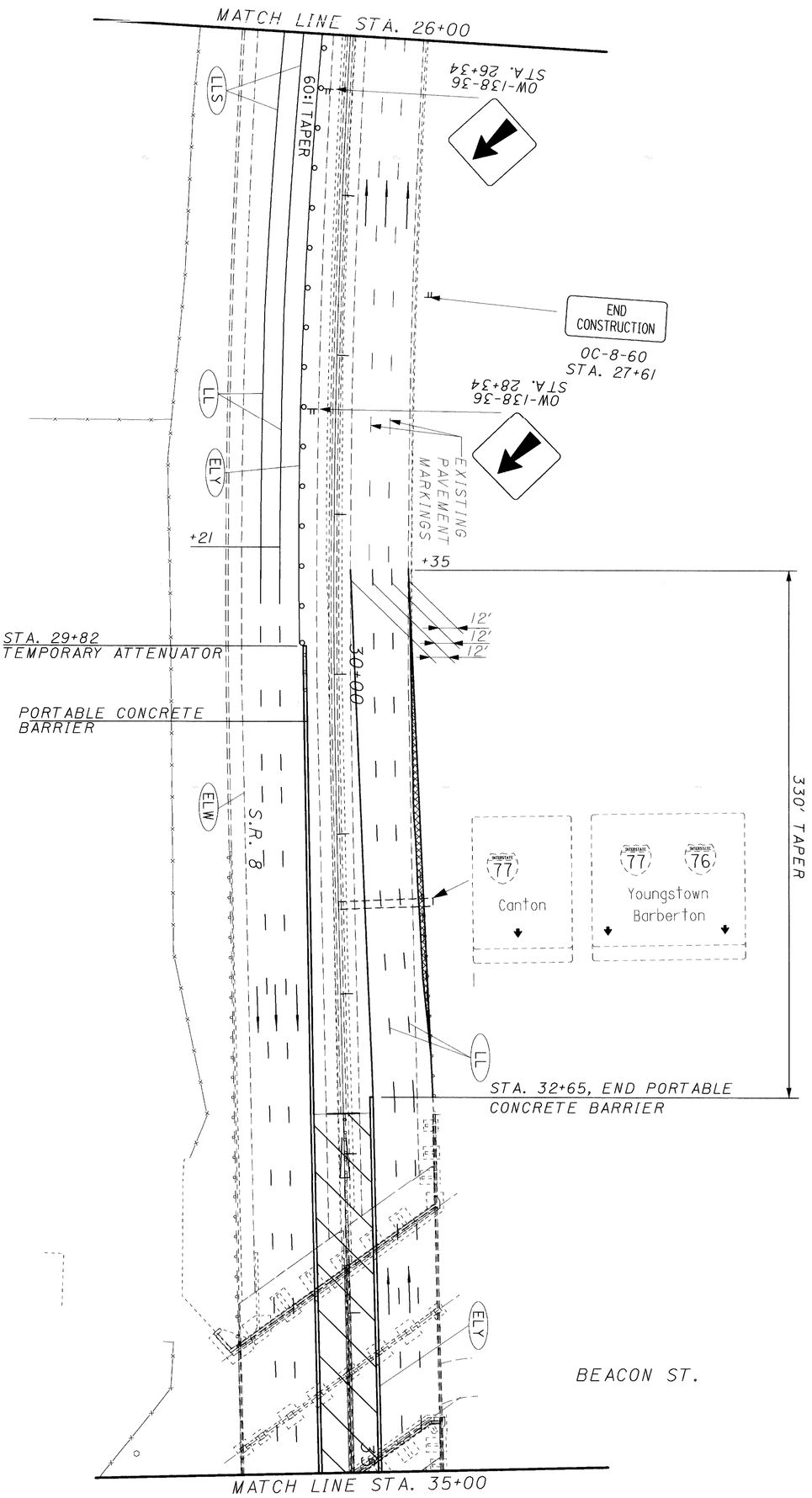

NOTE: TEMPORARY EDGE LINE (WHITE) TO BE USED FOR TEMPORARY SOLID LANE LINE.

LEGEND

- ELW — TEMPORARY EDGE LINE (WHITE)
- ELY — TEMPORARY EDGE LINE (YELLOW)
- CLS — TEMPORARY CENTER LINE - DOUBLE SOLID
- CHL — TEMPORARY CHANNELIZING LINE (WHITE)
- LL — TEMPORARY LANE LINE
- SL — TEMPORARY STOP LINE
- LA — TEMPORARY LANE ARROW
- WP — TEMPORARY WORD ON PAVEMENT, 72"
- LLS — TEMPORARY SOLID LANE LINE

- POST MOUNTED SIGN
- PORTABLE CONCRETE BARRIER
- TEMPORARY DRUMS
- TEMPORARY TRAFFIC SIGNAL
- DIRECTION OF TRAFFIC ARROW
- TEMPORARY PAVEMENT
- WORK AREA

REVISIONS: 05/15/2002 by MAM

79 / 1088	SUM-8-0.63	MAINTENANCE OF TRAFFIC PHASE 1B	CALCULATED KME / CHECKED	HORIZONTAL SCALE IN FEET (0, 20, 40, 80)

11:42:50 PM
06/13/2002
u:\00-010sr-8\i\civil\mot\plan sheets\phase1b\mpl03plb.dgn

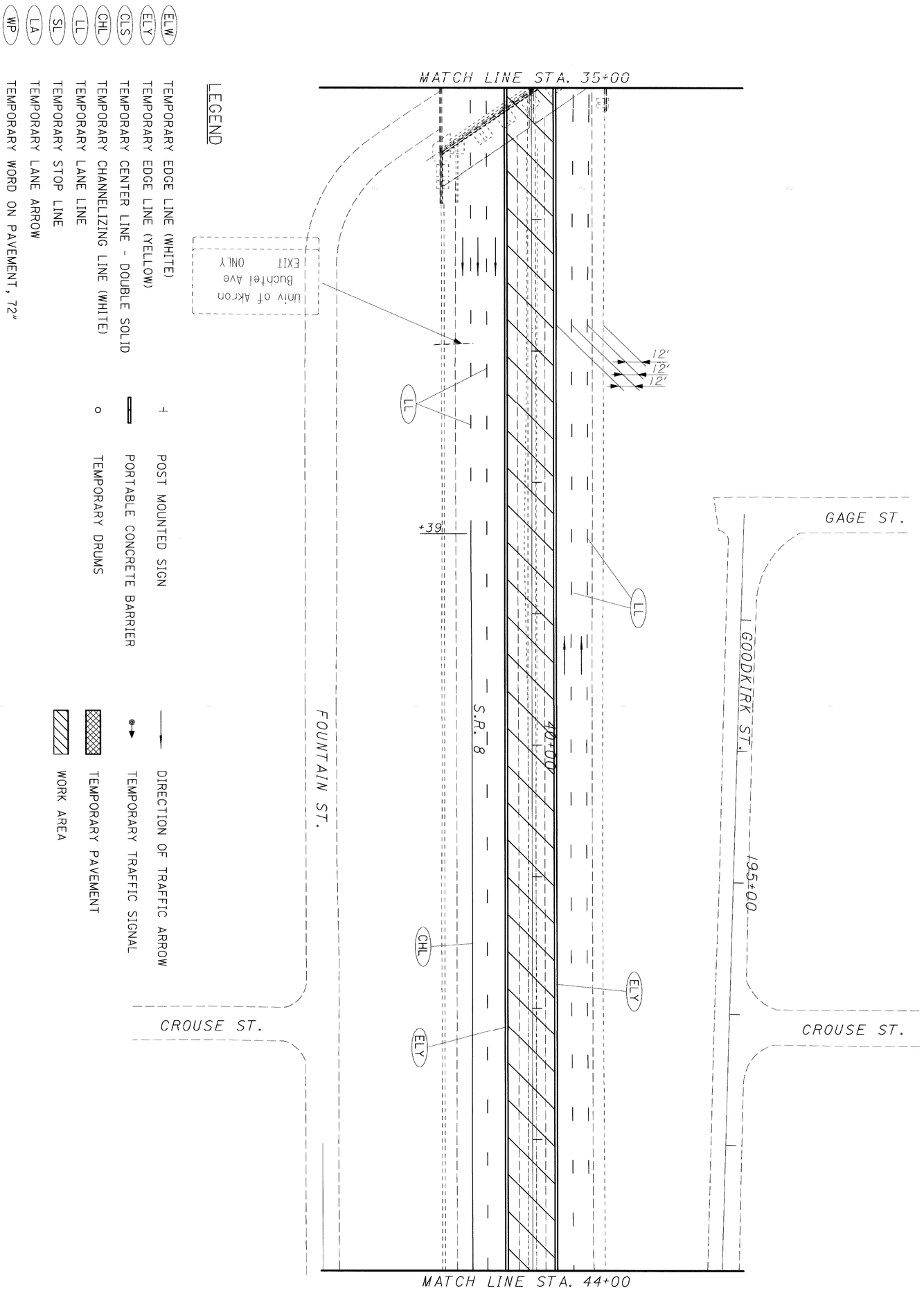

REVISIONS: 05/15/2002 by MAM

80 / 1088	SUM-8-0.63	MAINTENANCE OF TRAFFIC PHASE 1B	CALCULATED KME CHECKED	0 40 20 80 HORIZONTAL SCALE IN FEET

11:42:52 PM
06/13/2002
u:\00-010sr-8\1\civil\mot\plan sheets\phaseIb\mpl04plb.dgn

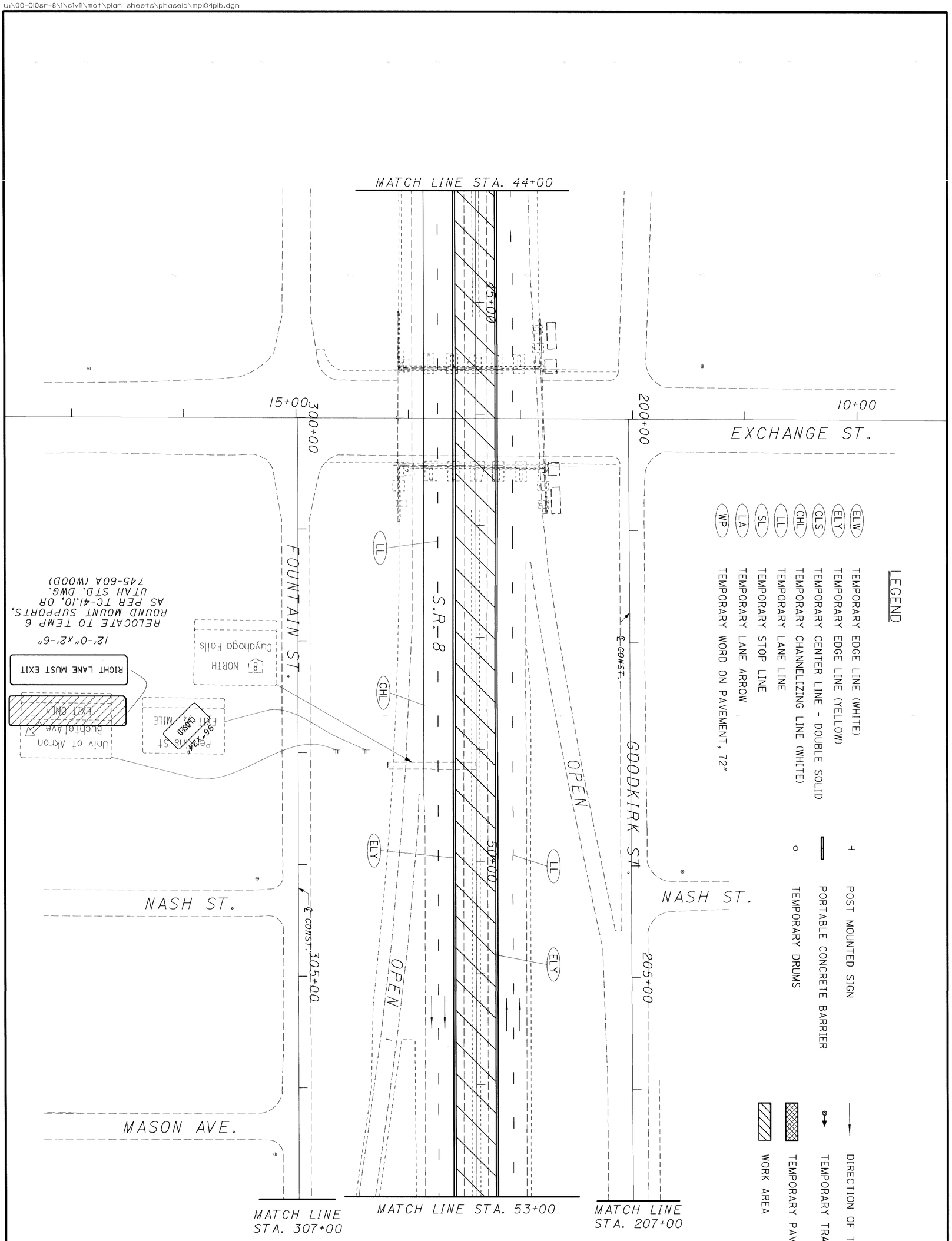

LEGEND

- ELW — TEMPORARY EDGE LINE (WHITE)
- ELY — TEMPORARY EDGE LINE (YELLOW)
- CLS — TEMPORARY CENTER LINE - DOUBLE SOLID
- CHL — TEMPORARY CHANNELIZING LINE (WHITE)
- LL — TEMPORARY LANE LINE
- SL — TEMPORARY STOP LINE
- LA — TEMPORARY LANE ARROW
- WP — TEMPORARY WORD ON PAVEMENT, 72"
- POST MOUNTED SIGN
- PORTABLE CONCRETE BARRIER
- TEMPORARY DRUMS
- DIRECTION OF TRAFFIC ARROW
- TEMPORARY TRAFFIC SIGNAL
- TEMPORARY PAVEMENT
- WORK AREA

REVISIONS: 05/15/2002 by MAM

81 / 1088

SUM-8-0.63

MAINTENANCE OF TRAFFIC
PHASE 1B

CALCULATED KME
CHECKED

HORIZONTAL SCALE IN FEET
0 20 40 80

N

11:42:53 PM
06/13/2002
u:\00-010sr-8\1\civil\mot\plan sheets\phaseIb\mpl05pIb.dgn

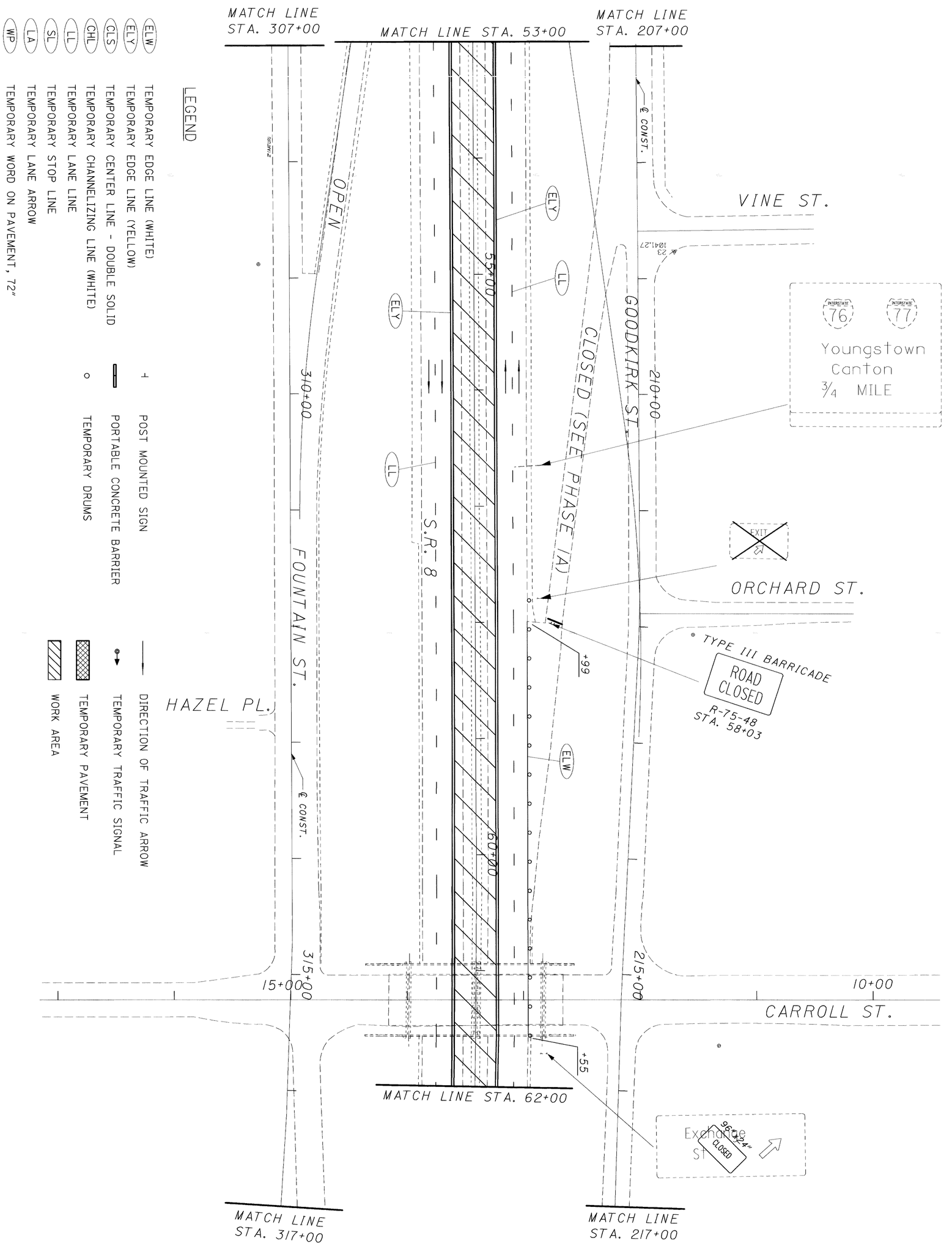

REVISIONS: 05/15/2002 by MAM

82 / 1088	SUM-8-0.63	MAINTENANCE OF TRAFFIC PHASE 1B	CALCULATED KME / CHECKED	HORIZONTAL SCALE IN FEET (0, 20, 40, 80)

11:42:54 PM
06/13/2002
U:\00-010sr-8\i\civil\mot\plan sheets\phaseIb\mpl06plb.dgn

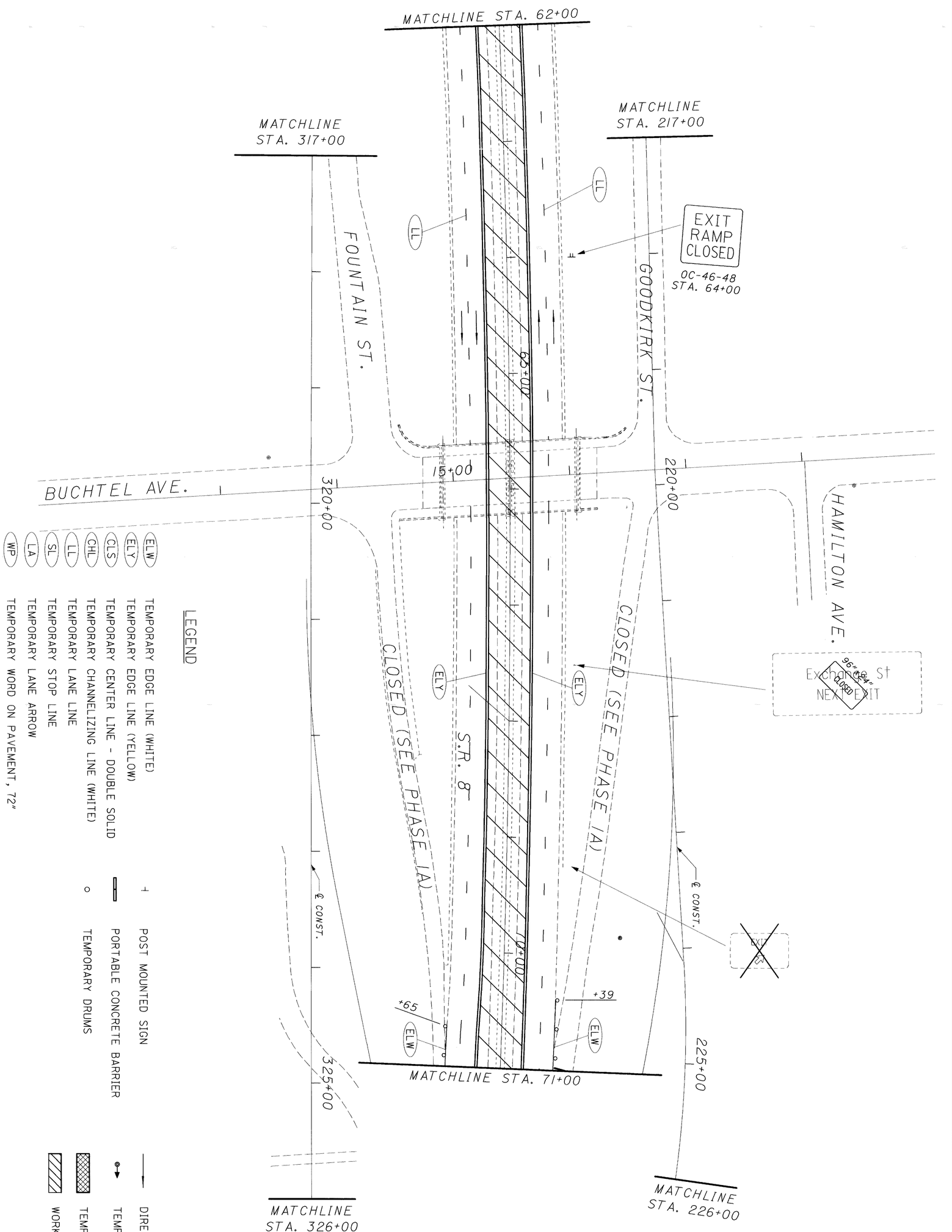

LEGEND

- ELW — TEMPORARY EDGE LINE (WHITE)
- ELY — TEMPORARY EDGE LINE (YELLOW)
- CLS — TEMPORARY CENTER LINE - DOUBLE SOLID
- CHL — TEMPORARY CHANNELIZING LINE (WHITE)
- LL — TEMPORARY LANE LINE
- SL — TEMPORARY STOP LINE
- LA — TEMPORARY LANE ARROW
- WP — TEMPORARY WORD ON PAVEMENT, 72"

- POST MOUNTED SIGN
- PORTABLE CONCRETE BARRIER
- TEMPORARY DRUMS
- DIRECTION OF TRAFFIC ARROW
- TEMPORARY TRAFFIC SIGNAL
- TEMPORARY PAVEMENT
- WORK AREA

83 / 1088	SUM-8-0.63	MAINTENANCE OF TRAFFIC PHASE 1B	CALCULATED KME / CHECKED	HORIZONTAL SCALE IN FEET (0, 20, 40, 80)

11:42:55 PM
06/13/2002
u:\00-010sr-8\i\civil\mot\plan sheets\phaselb\mp107plb.dgn

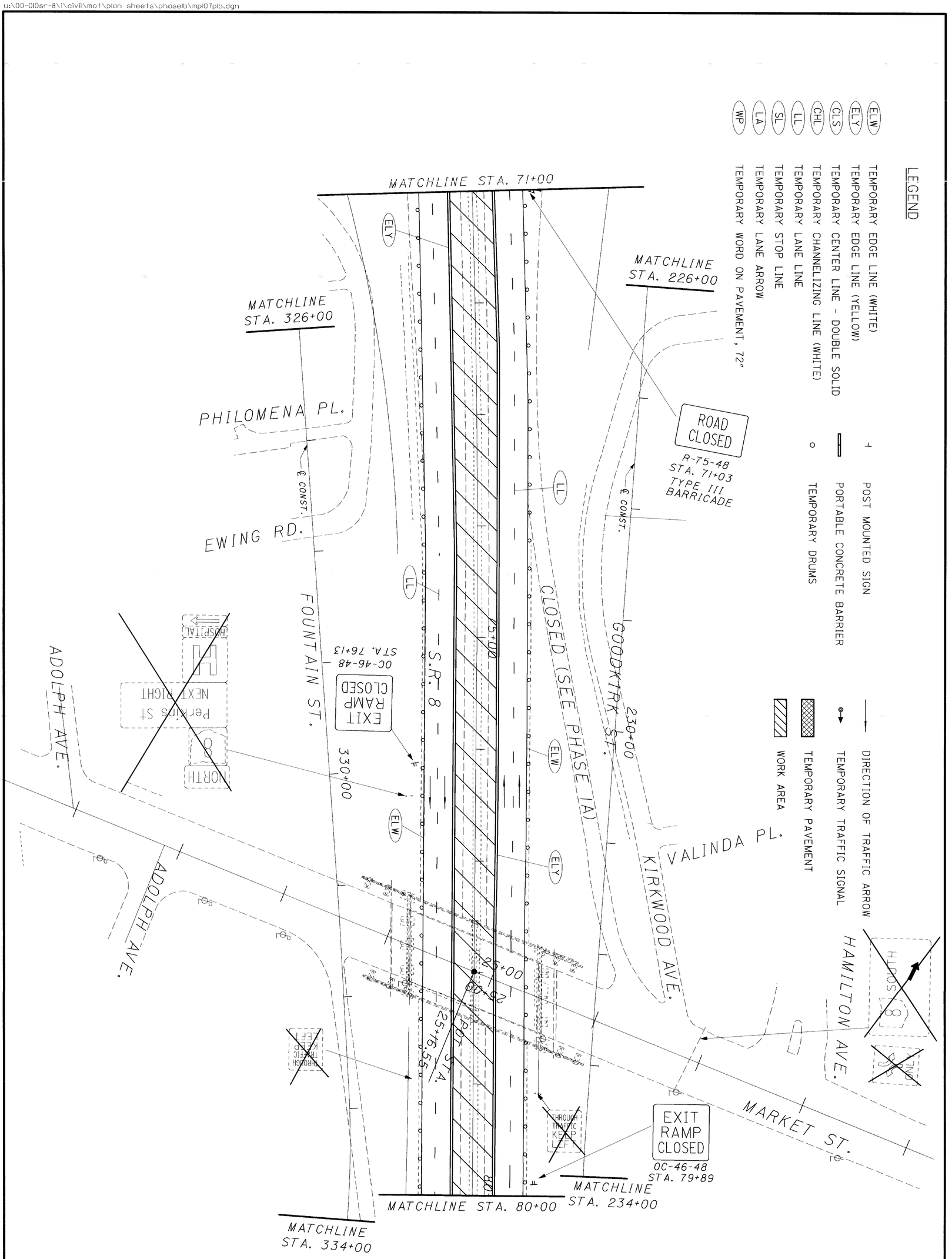

84 / 1088	SUM-8-0.63	MAINTENANCE OF TRAFFIC PHASE 1B	CALCULATED KME CHECKED	0 20 40 80 HORIZONTAL SCALE IN FEET

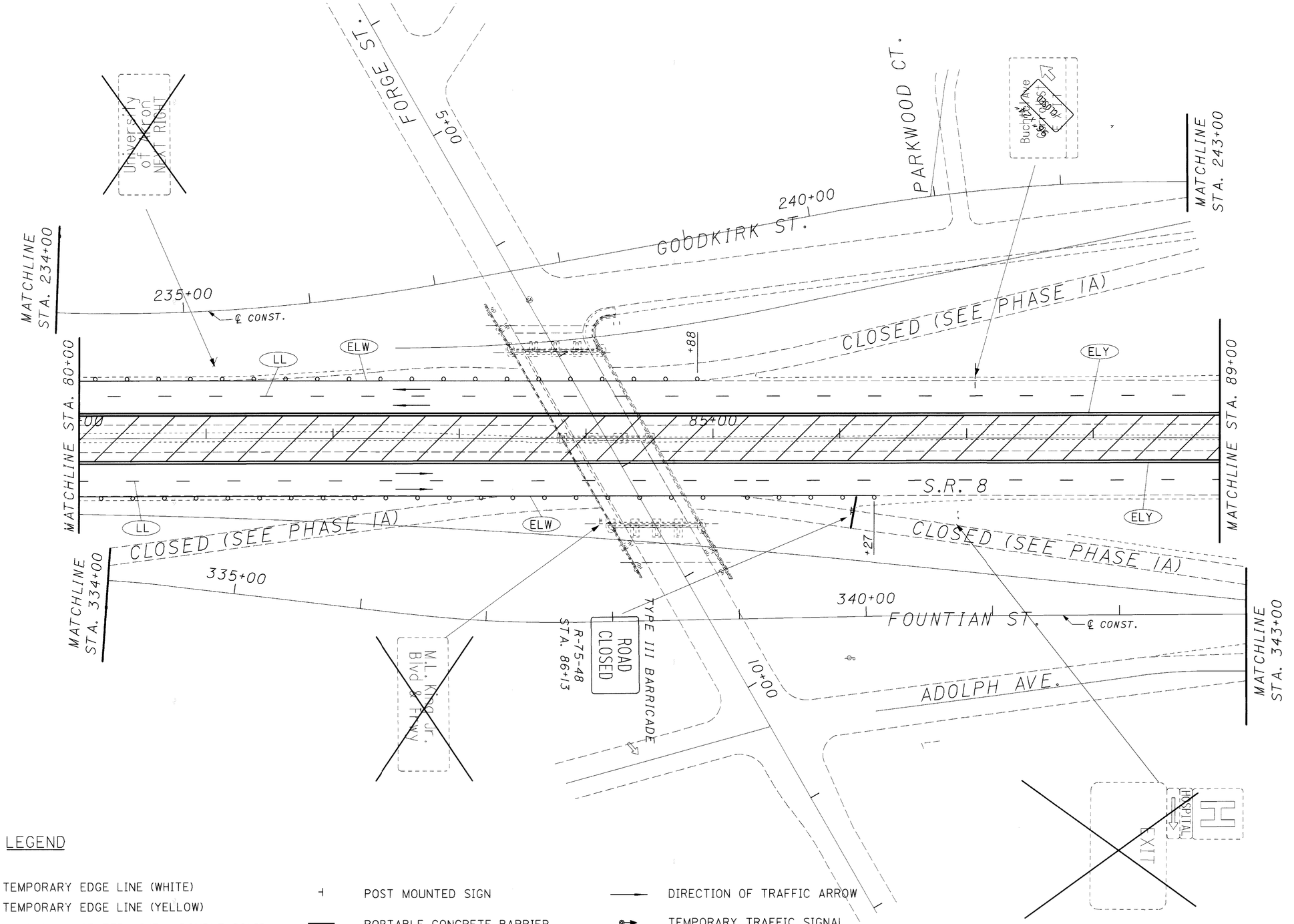

LEGEND

ELW	TEMPORARY EDGE LINE (WHITE)
ELY	TEMPORARY EDGE LINE (YELLOW)
CLS	TEMPORARY CENTER LINE - DOUBLE SOLID
CHL	TEMPORARY CHANNELIZING LINE (WHITE)
LL	TEMPORARY LANE LINE
SL	TEMPORARY STOP LINE
LA	TEMPORARY LANE ARROW
WP	TEMPORARY WORD ON PAVEMENT, 72"

	POST MOUNTED SIGN
	PORTABLE CONCRETE BARRIER
	TEMPORARY DRUMS

	DIRECTION OF TRAFFIC ARROW
	TEMPORARY TRAFFIC SIGNAL
	TEMPORARY PAVEMENT
	WORK AREA

N

HORIZONTAL SCALE IN FEET
0 20 40 80

CALCULATED KME
CHECKED

MAINTENANCE OF TRAFFIC
PHASE 1B

SUM-8-0.63

85
1088

11:42:56 PM
06/13/2002
u:\00-0108r-8\civil\mot\plan sheets\phase1b\mpl08p1b.dgn

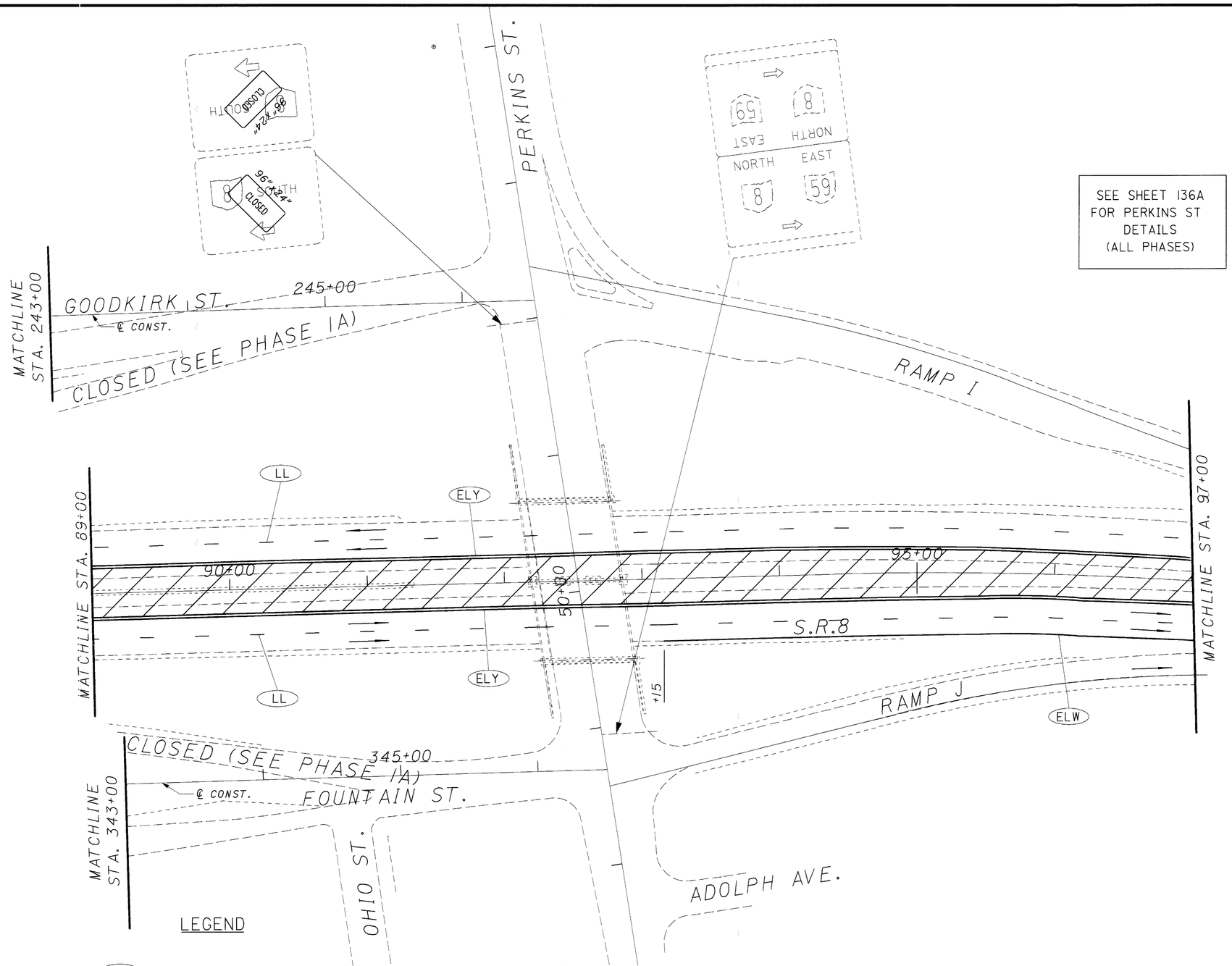

LEGEND

ELW	TEMPORARY EDGE LINE (WHITE)	⊣	POST MOUNTED SIGN	⟶	DIRECTION OF TRAFFIC ARROW
ELY	TEMPORARY EDGE LINE (YELLOW)	═	PORTABLE CONCRETE BARRIER	⊶	TEMPORARY TRAFFIC SIGNAL
CLS	TEMPORARY CENTER LINE - DOUBLE SOLID	○	TEMPORARY DRUMS	▨	TEMPORARY PAVEMENT
CHL	TEMPORARY CHANNELIZING LINE (WHITE)			▨	WORK AREA
LL	TEMPORARY LANE LINE				
SL	TEMPORARY STOP LINE				
LA	TEMPORARY LANE ARROW				
WP	TEMPORARY WORD ON PAVEMENT, 72"				

N

HORIZONTAL SCALE IN FEET
0 20 40 80

CALCULATED KME
CHECKED

MAINTENANCE OF TRAFFIC PHASE 1B

SUM-8-0.63

86
1088

11:42:59 PM
06/13/2002
u:\00-010sr-8\l\civil\mot\plan sheets\phaselb\mpll0plb.dgn

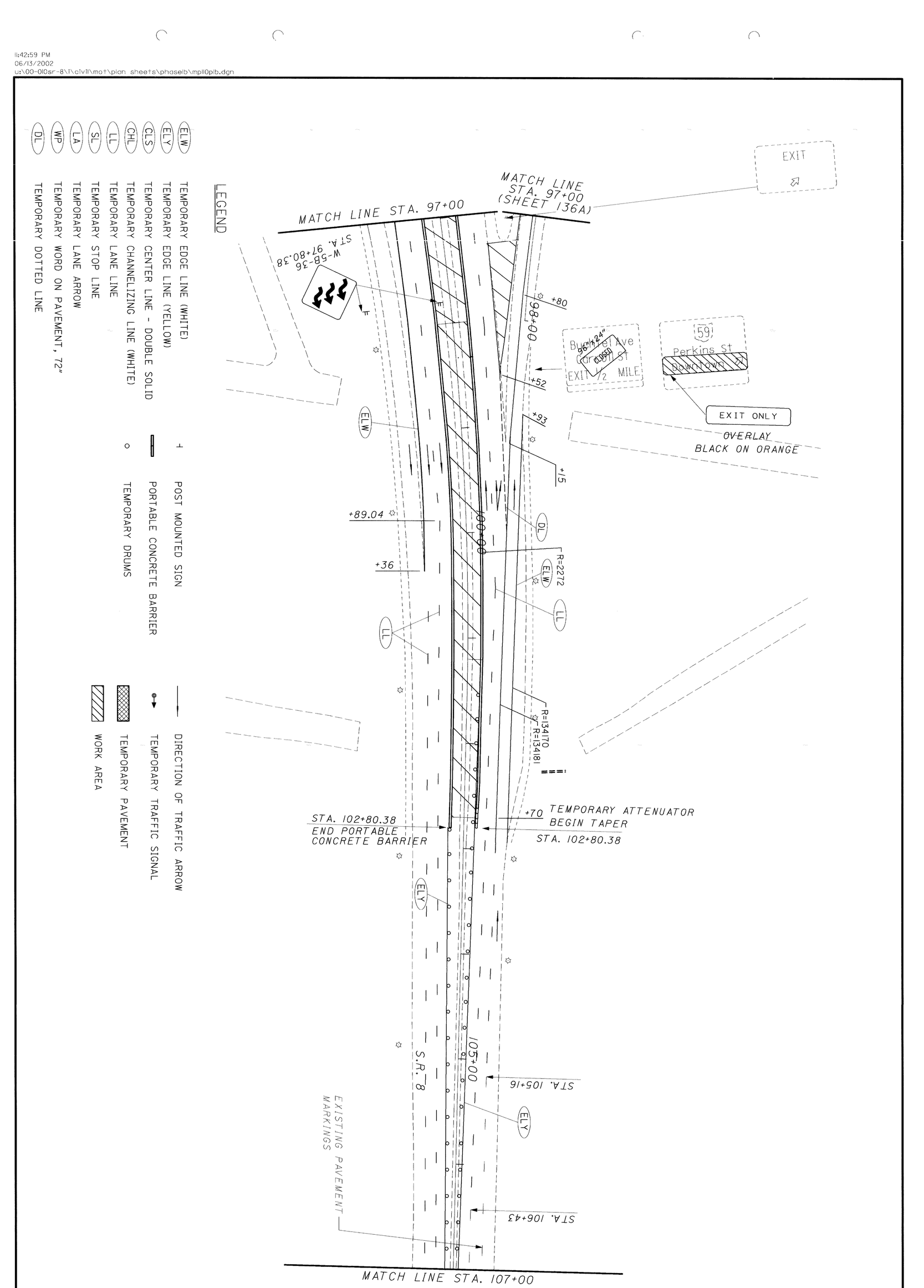

REVISIONS: 05/15/2002 by MAM

87 / 1088	SUM-8-0.63	RAMP I MAINTENANCE OF TRAFFIC PHASE 1B	CALCULATED KME / CHECKED	0 40 / 20 80 HORIZONTAL SCALE IN FEET

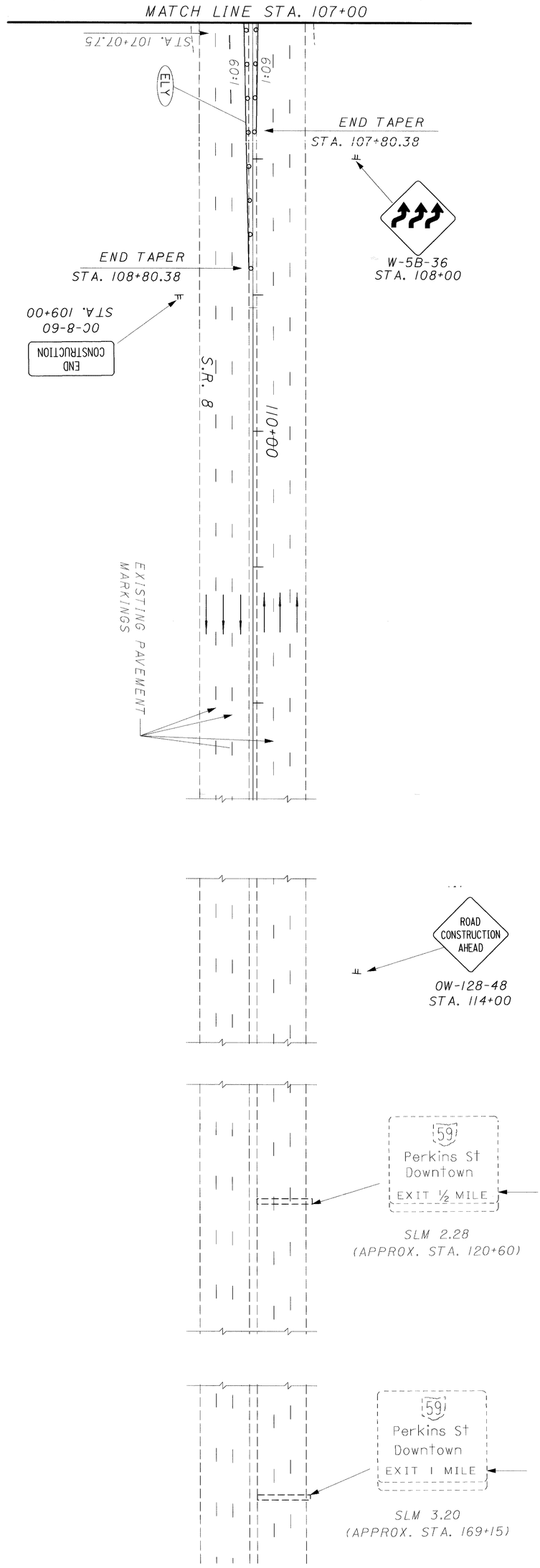

LEGEND

- ELW — TEMPORARY EDGE LINE (WHITE)
- ELY — TEMPORARY EDGE LINE (YELLOW)
- CLS — TEMPORARY CENTER LINE - DOUBLE SOLID
- CHL — TEMPORARY CHANNELIZING LINE (WHITE)
- LL — TEMPORARY LANE LINE
- SL — TEMPORARY STOP LINE
- LA — TEMPORARY LANE ARROW
- WP — TEMPORARY WORD ON PAVEMENT, 72"

- POST MOUNTED SIGN
- PORTABLE CONCRETE BARRIER
- TEMPORARY DRUMS
- DIRECTION OF TRAFFIC ARROW
- TEMPORARY TRAFFIC SIGNAL
- TEMPORARY PAVEMENT
- WORK AREA

OFFSET TO CENTER OF SB LANES	CENTERLINE STATION	OFFSET TO CENTER OF NB LANES
	PC 61+67.00	15.5510'
14.1089'	61+92.00	-
14.2160'	62.00.00	15.8173'
14.9490'	62+50.00	16.3672'
15.5593'	63+00.00	16.9180'
16.2286'	63+50.00	17.4795'
16.9002'	64+00.00	18.0374'
17.5696'	64+50.00	18.6130'
18.2553'	65+00.00	19.1850'
18.9086'	65+50.00	19.7676'
19.5793'	66+00.00	20.3518'
20.2730'	66+50.00	20.9353'
20.9305'	67+00.00	21.5378'
20.5837'	67+50.00	22.1399'
21.2535'	68+00.00	22.7448'
22.9350'	68+50.00	23.3516'

OFFSET TO CENTER OF SB LANES	CENTERLINE STATION	OFFSET TO CENTER OF NB LANES
23.5884'	69+00.00	23.9725'
24.2534'	69+50.00	24.5962'
24.9216'	70+00.00	25.2189'
25.6118'	70+50.00	25.8506'
26.2534'	71+00.00	26.4899'
26.9265'	71+50.00	27.1298'
27.5832'	72+00.00	27.7544'
28.2500'	72+50.00	28.4208'
28.9242'	73+00.00	29.0892'
29.5729'	73+50.00	29.7539'
30.2374'	74+00.00	30.4193'
30.8978'	74+50.00	31.0938'
31.5739	75+00.00	31.7696'
32.1679'	75+50.00	32.4307'
32.5652	76+23.00	33.4599'
32.7395'	76+48.00	34.0000'

TEMPORARY CURVE DATA SOUTHBOUND
PI=69+86
PC=61+92
PT=76+48
DELTA=7°46'07"
Dc=0°0'31"

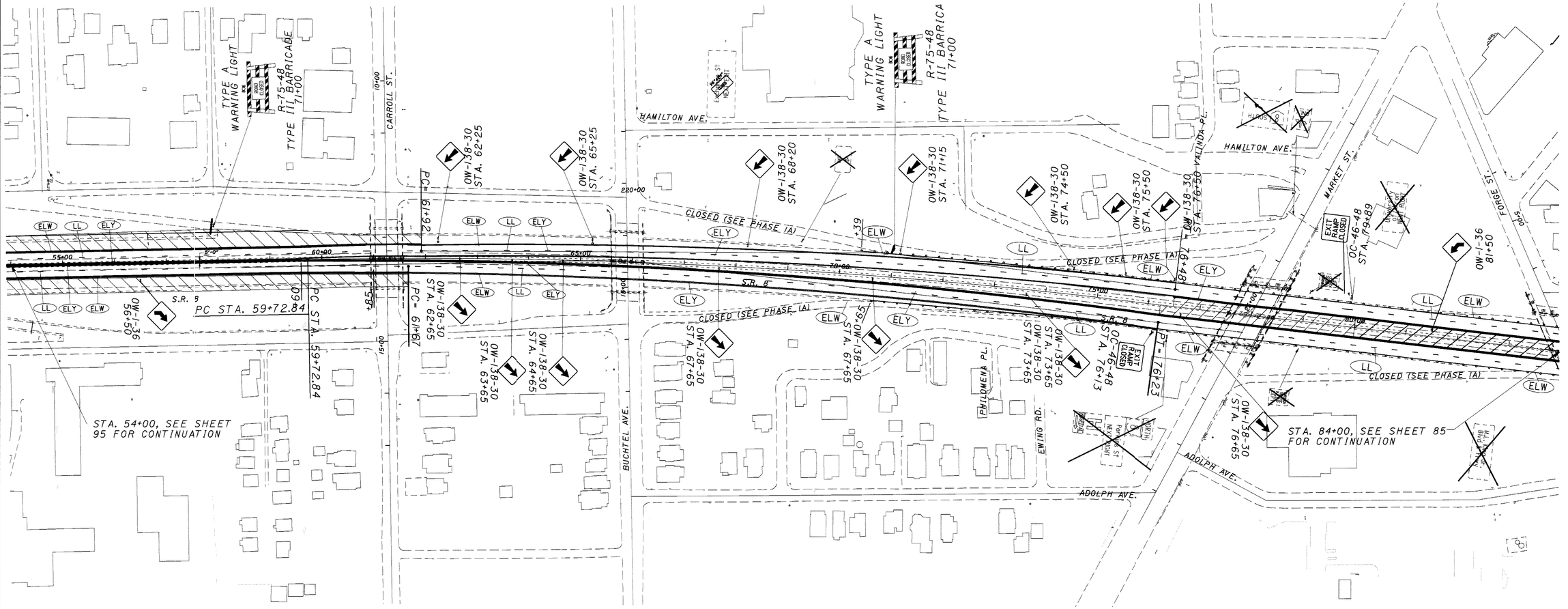

TEMPORARY CURVE DATA NORTHBOUND
PI=64+76
PC=61+67
PT=76+23
DELTA=7°46'07"
Dc=0°0'31"

REVISIONS: 05/15/2002 by DM

HORIZONTAL SCALE IN FEET 0 50 100 200

CALCULATED

CHECKED

INTERIM MAINLINE TRANSITION
PHASE 2 SOUTH TO PHASE 1 NORTH

SUM-8-0.63

88A
1088

11:43:02 PM
06/13/2002
u:\00-010sr-8\1\civil\mot\m-e\transition\nb100s8.dgn

OFFSET TO CENTER OF SB LANES	CENTERLINE STATION	OFFSET TO CENTER OF NB LANES
23.880+'	68+00.00	38.0797'
23.1124'	68+50.00	37.2247'
22.4146'	69+00.00	36.3227'
21.8052'	69+50.00	35.3557'
21.2410'	70+00.00	34.3394'
20.7646'	70+50.00	33.2606'
20.3596'	71+00.00	32.1330'
20.0290'	71+50.00	30.9391'
19.7704'	72+00.00	29.7002'
19.5856'	72+50.00	28.3966'
19.4734'	73+00.00	37.0434'
19.4344'	73+50.00	25.6268'
19.4685'	74+00.00	24.1620'
19.5753'	74+50.00	22.6339'
19.7557'	75+00.00	21.0558'
19.8363'	75+15.26	-
19.9555'	75+50.00	19.4688'
-	77+00.05	15.6575'

OFFSET TO CENTER OF SB LANES	CENTERLINE STATION	OFFSET TO CENTER OF NB LANES
20.0189'	76+00.00	18.0364'
19.9596'	76+50.00	16.7674'
19.7045'	77+00.00	15.6626'
19.1231'	77+50.00	14.7218'
18.3925'	78+00.00	13.94.51'
17.4859'	78+50.00	13.3324'
16.4302'	79+00.00	12.8838'
15.2163'	79+50.00	12.5991'
13.8443'	80+00.00	12.4785'
12.5000'	80+40.00	12.5000'

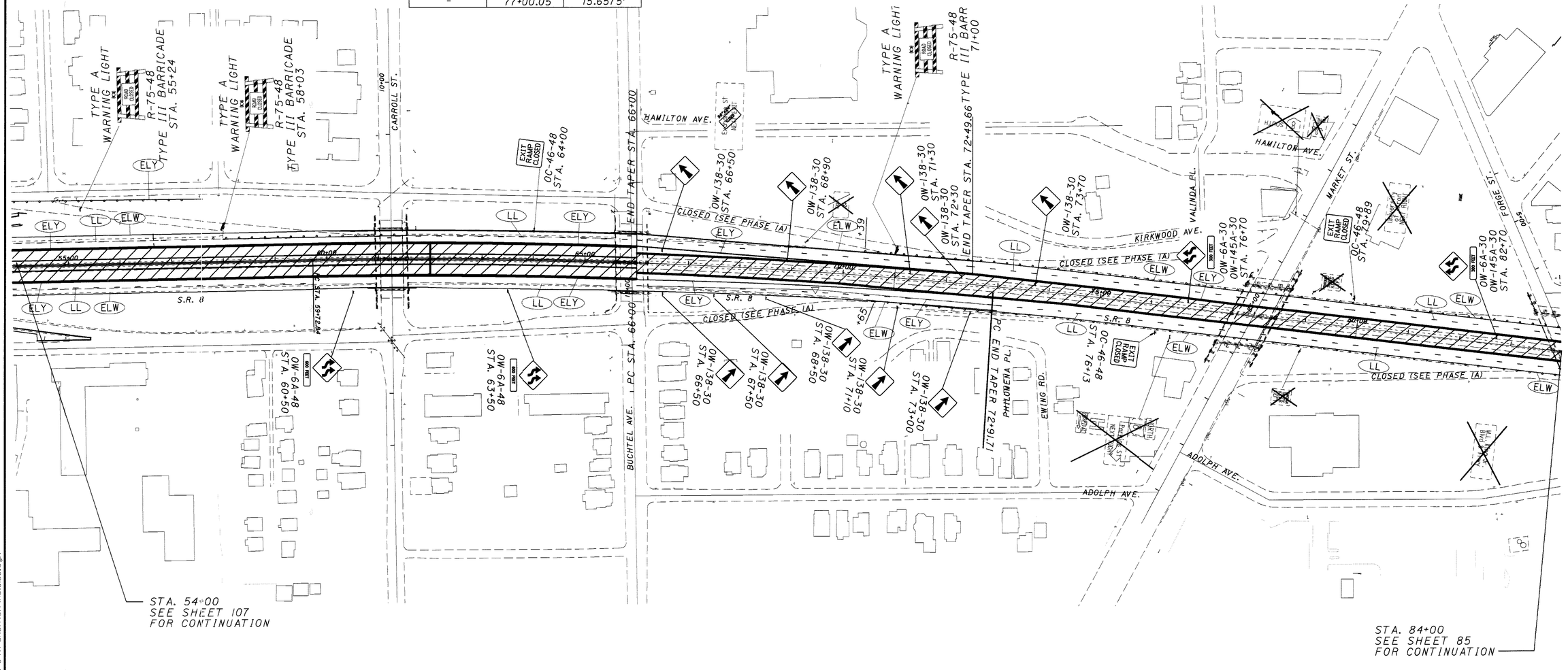

TEMPORARY CURVE DATA NORTHBOUND
PI=64+76
PC=66+00
PT=72+91.71
DELTA=8°17'26"
Dc=2°16'08"

REVISIONS: 05/15/2002 by DM

HORIZONTAL SCALE IN FEET
0 100 200

CALCULATED | CHECKED

INTERIM MAINLINE TRANSITION
PHASE 3 SOUTH TO PHASE 1 NORTH

SUM-8-0.63

88B
1088

11:43:03 PM
06/13/2002
c:\00-010sr-8\1\civil\mot\m-e\transition\nb10ts8.dgn

TEMPORARY CURVE2 DATA SOUTHBOUND
PI=60+89.4
PC=59+72.84
PT=60+.00.00
DELTA=3.6465°
DC=3°08'46"

TEMPORARY CURVEI DATA SOUTHBOUND
PI=70+95.36
PC=76+00.05
PT=65+00.00
DELTA=4.8646°
DC=3°38'02"

OFFSET TO CENTER OF SB LANES	CENTERLINE STATION	OFFSET TO CENTER OF NB LANES
44.0000'	59+72.84	44.0000'
43.1355'	60+00.00	44.0429'
41.5666'	60+50.00	44.0982'
40.0502'	61+00.00	44.0233'
38.6029'	61+50.00	44.0259'
37.2248'	62+00.00	43.9048'
35.8802'	62+50.00	43.7271'
34.5832'	63+00.00	43.4490'
33.3654'	63+50.00	43.2068'
32.1932'	64+00.00	42.8540'
31.0863'	64+50.00	42.4601'
30.0323'	65+00.00	42.0023'
28.8319'	65+50.00	41.4887'
27.7002'	66+00.00	40.9208'
26.6542'	66+50.00	40.2850'
25.6348'	67+00.00	40.2925'
24.7248'	67+50.00	38.8666'

OFFSET TO CENTER OF SB LANES	CENTERLINE STATION	OFFSET TO CENTER OF NB LANES
43.9414	PC 66+00.00	44.0309'
41.9206	66+50.00	43.2009'
40.1071	67+00.00	42.4889'
38.5263	67+50.00	41.7444'
37.1452	68+00.00	41.0670'
36.0162	68+50.00	41.3911'
35.0897	69+00.00	39.7471'
34.3888	69+50.00	39.1257'
33.9048	70+00.00	38.5330'
33.6436	70+50.00	37.9695'
33.6018	71+00.00	37.4299'
33.7801	71+50.00	36.9059'
34.1805	72+00.00	36.4380'
34.6226	72+49.00	35.9355'

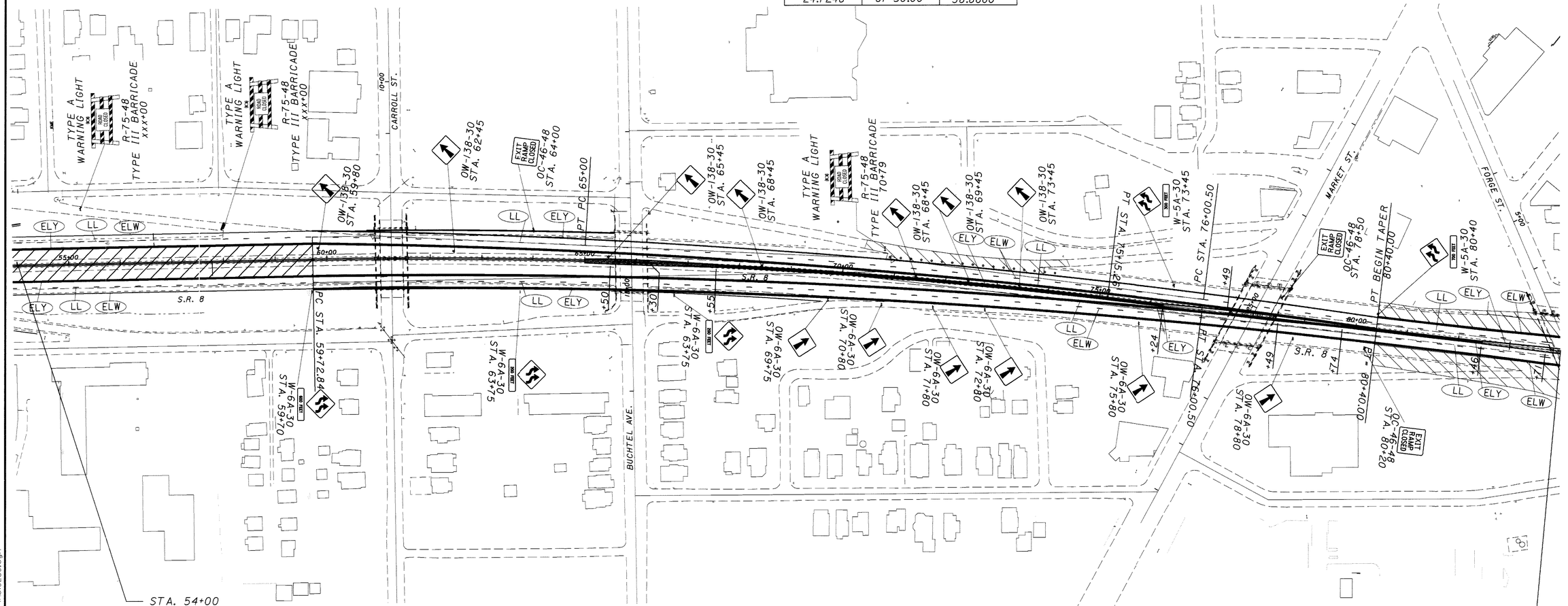

STA. 54+00
SEE SHEET 107
FOR CONTINUATION

STA. 84+00
SEE SHEET 98
FOR CONTINUATION

TEMPORARY CURVE DATA NORTHBOUND
PI=69+76.56
PC=59+72.84
PT=80+40.00
DELTA=7.7686°
DC=0°27'37"

REVISIONS: 05/15/2002 by DM

CALCULATED | CHECKED

HORIZONTAL SCALE IN FEET
0 100 200

INTERIM MAINLINE TRANSITION
PHASE 3 SOUTH TO PHASE 2 NORTH

SUM-8-0.63

88C
1088

11:43:05 PM
06/13/2002
u:\00-010sr-8\i\civil\mot\m-e\transition\nb102s8.dgn

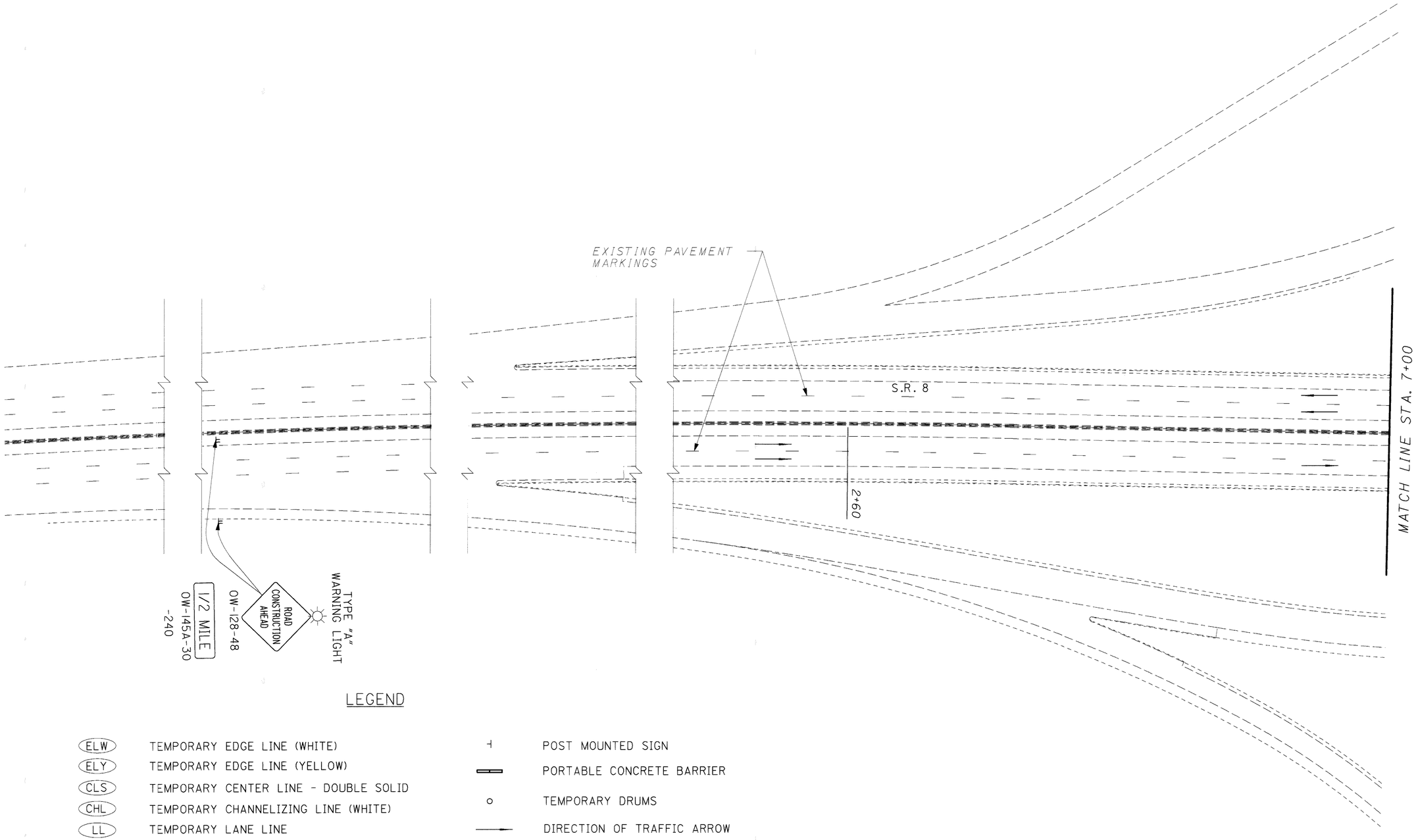

LEGEND

ELW	TEMPORARY EDGE LINE (WHITE)
ELY	TEMPORARY EDGE LINE (YELLOW)
CLS	TEMPORARY CENTER LINE - DOUBLE SOLID
CHL	TEMPORARY CHANNELIZING LINE (WHITE)
LL	TEMPORARY LANE LINE
SL	TEMPORARY STOP LINE
LA	TEMPORARY LANE ARROW
WP	TEMPORARY WORD ON PAVEMENT, 72"

	POST MOUNTED SIGN
	PORTABLE CONCRETE BARRIER
	TEMPORARY DRUMS
	DIRECTION OF TRAFFIC ARROW
	TEMPORARY TRAFFIC SIGNAL
	TEMPORARY PAVEMENT
	WORK AREA
	INTERSECTION PAVEMENT TO BE INSTALLED DURING NIGHT OR WEEKEND CONSTRUCTION

REVISIONS: 05/15/2002 by MAM

HORIZONTAL SCALE IN FEET
0 20 40 80

CALCULATED | CHECKED

MAINTENANCE OF TRAFFIC PHASE 2

SUM-8-0.63

89
1088

11:43:06 PM
06/13/2002
u:\00-00sr-8\n\civil\mot\plan sheets\phase2\mpl2ap2.dgn

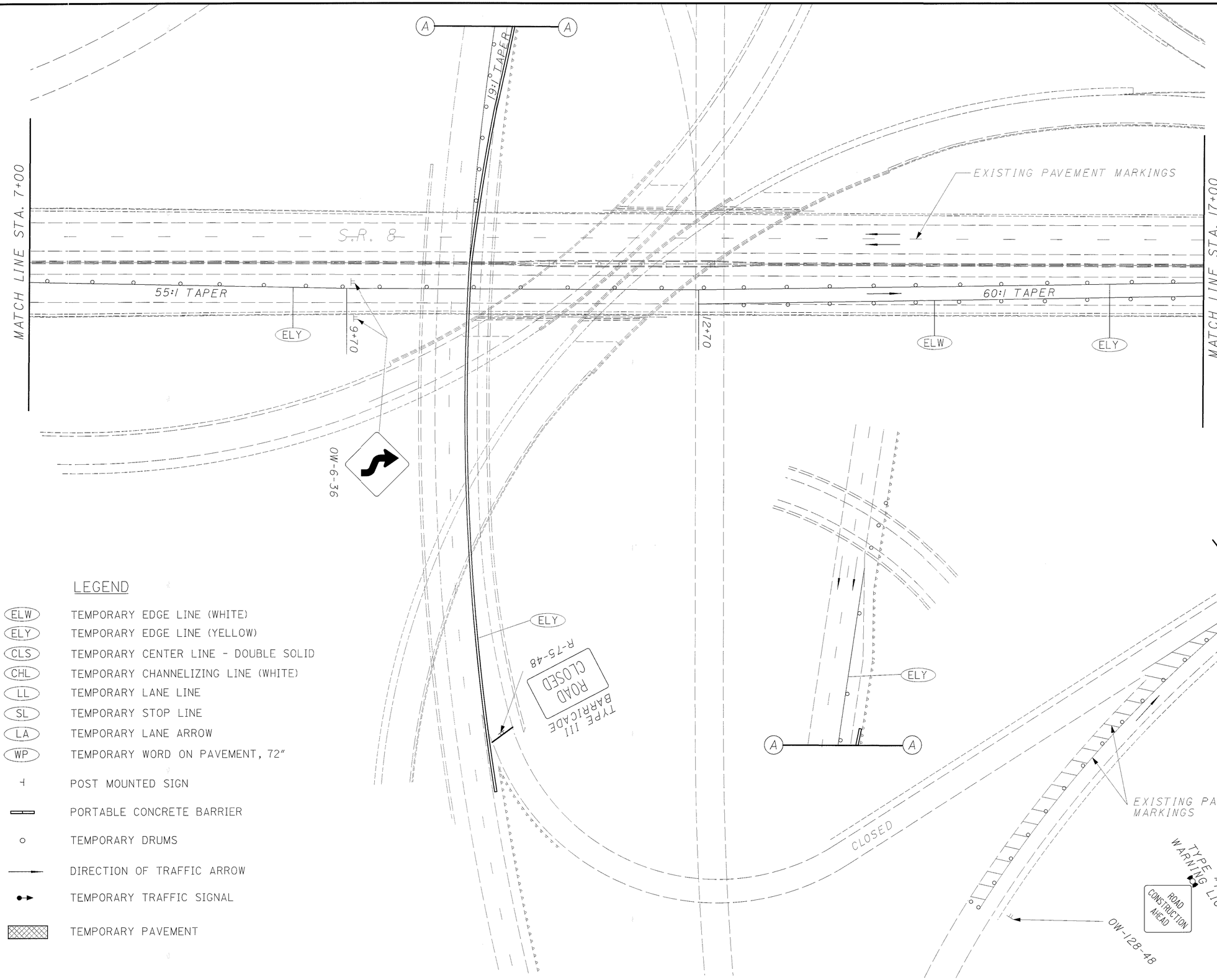

LEGEND

ELW	TEMPORARY EDGE LINE (WHITE)
ELY	TEMPORARY EDGE LINE (YELLOW)
CLS	TEMPORARY CENTER LINE - DOUBLE SOLID
CHL	TEMPORARY CHANNELIZING LINE (WHITE)
LL	TEMPORARY LANE LINE
SL	TEMPORARY STOP LINE
LA	TEMPORARY LANE ARROW
WP	TEMPORARY WORD ON PAVEMENT, 72"
	POST MOUNTED SIGN
	PORTABLE CONCRETE BARRIER
	TEMPORARY DRUMS
	DIRECTION OF TRAFFIC ARROW
	TEMPORARY TRAFFIC SIGNAL
	TEMPORARY PAVEMENT

N

0 20 40 80
HORIZONTAL SCALE IN FEET

CALCULATED | CHECKED

MAINTENANCE OF TRAFFIC PHASE 2

SUM-8-0.63

90
1088

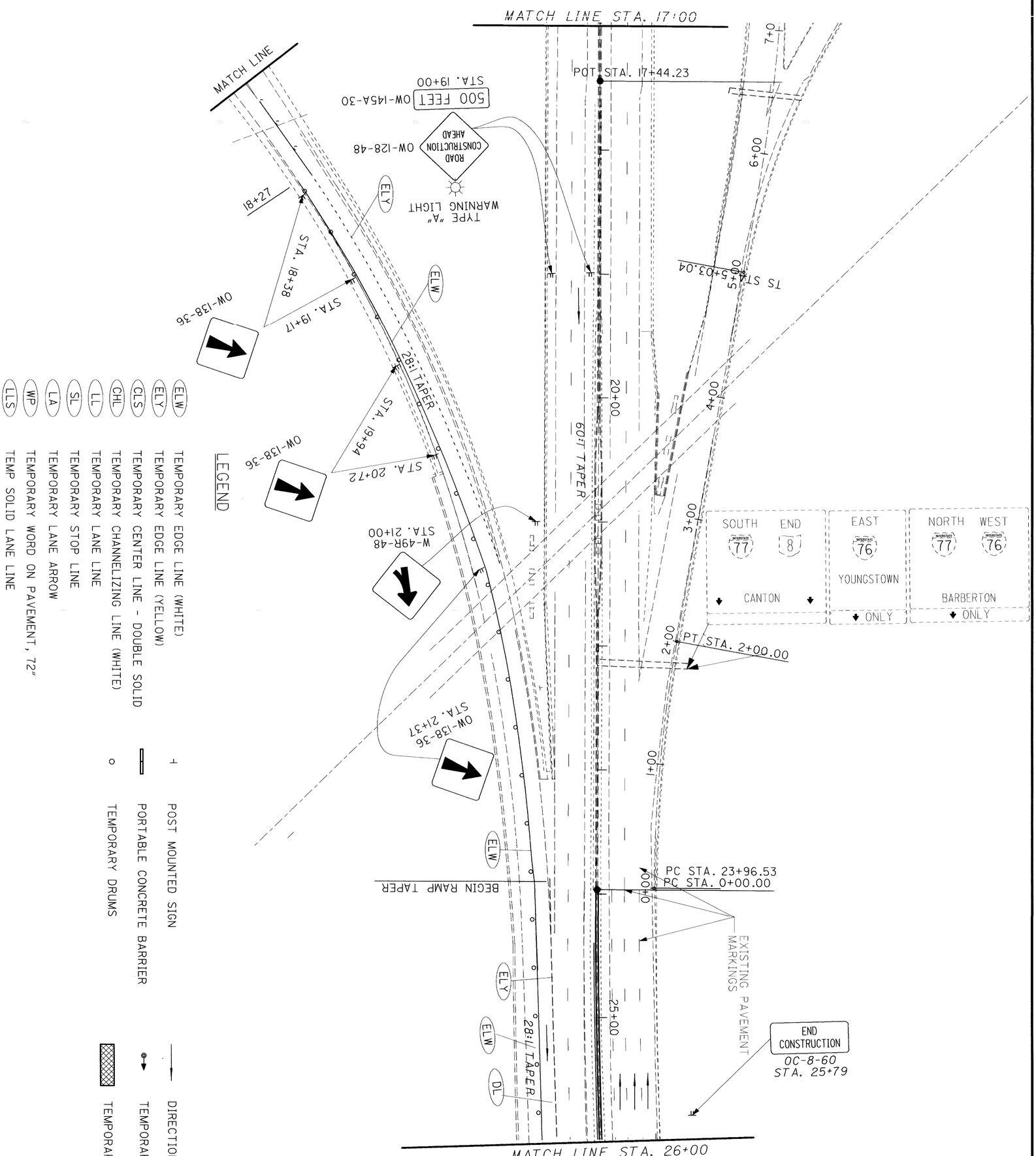

LEGEND

- ELW — TEMPORARY EDGE LINE (WHITE)
- ELY — TEMPORARY EDGE LINE (YELLOW)
- CLS — TEMPORARY CENTER LINE - DOUBLE SOLID
- CHL — TEMPORARY CHANNELIZING LINE (WHITE)
- LL — TEMPORARY LANE LINE
- SL — TEMPORARY STOP LINE
- LA — TEMPORARY LANE ARROW
- WP — TEMPORARY WORD ON PAVEMENT, 72"
- LLS — TEMP SOLID LANE LINE
- POST MOUNTED SIGN
- PORTABLE CONCRETE BARRIER
- TEMPORARY DRUMS
- DIRECTION OF TRAFFIC ARROW
- TEMPORARY TRAFFIC SIGNAL
- TEMPORARY PAVEMENT

REVISIONS: 05/15/2002 by MAM

16 / 1088	SUM-8-0.63	MAINTENANCE OF TRAFFIC PHASE 2	CALCULATED / CHECKED; 0 40 20 80 HORIZONTAL SCALE IN FEET; N

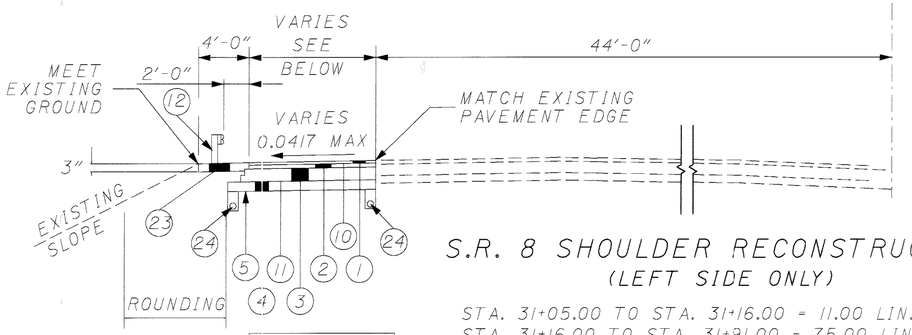

SEE LEGEND SHEET 20

S.R. 8 SHOULDER RECONSTRUCTION
(LEFT SIDE ONLY)

STA. 31+05.00 TO STA. 31+16.00 = 11.00 LIN. FT.
STA. 31+16.00 TO STA. 31+91.00 = 75.00 LIN. FT.
STA. 31+91.00 TO STA. 32+53.00 = 62.00 LIN. FT.
STA. 32+53.00 TO STA. 32+75.00 = 22.00 LIN. FT.

SHOULDER TO BE RECONSTRUCTED AS SHOWN IN TYPICAL SECTION (SEE ABOVE). PAYMENT FOR SHOULDER RECONSTRUCTION TO BE INCLUDED IN THE LUMP SUM PRICE BID FOR ITEM 614-MAINTAINING TRAFFIC.

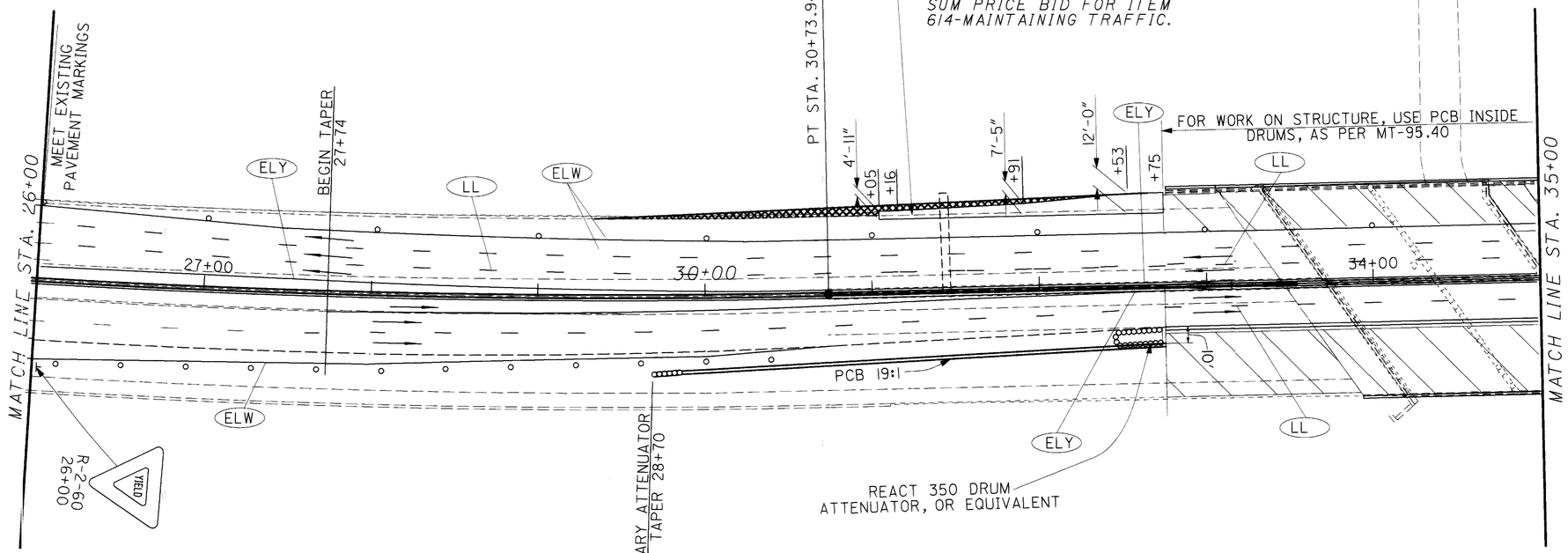

LEGEND

ELW	TEMPORARY EDGE LINE (WHITE)	POST MOUNTED SIGN	DIRECTION OF TRAFFIC ARROW
ELY	TEMPORARY EDGE LINE (YELLOW)	PORTABLE CONCRETE BARRIER	TEMPORARY TRAFFIC SIGNAL
CLS	TEMPORARY CENTER LINE - DOUBLE SOLID	TEMPORARY DRUMS	TEMPORARY PAVEMENT
CHL	TEMPORARY CHANNELIZING LINE (WHITE)		WORK AREA
LL	TEMPORARY LANE LINE		
SL	TEMPORARY STOP LINE		
LA	TEMPORARY LANE ARROW		
WP	TEMPORARY WORD ON PAVEMENT, 72"		
LLS	TEMPORARY SOLID LANE LINE		

REVISIONS: 05/15/2002 by MAM

HORIZONTAL SCALE IN FEET
0 20 40 80

CALCULATED | CHECKED

MAINTENANCE OF TRAFFIC
PHASE 2

SUM-8-0.63

11:43:08 PM
06/13/2002
u:\00-010sr-8\civil\mot\plan sheets\phase2\mpl4p2.dgn

11:43:10 PM
06/13/2002
u:\00-010sr-8\f\civil\mot\plan sheets\phase2\mpl15p2.dgn

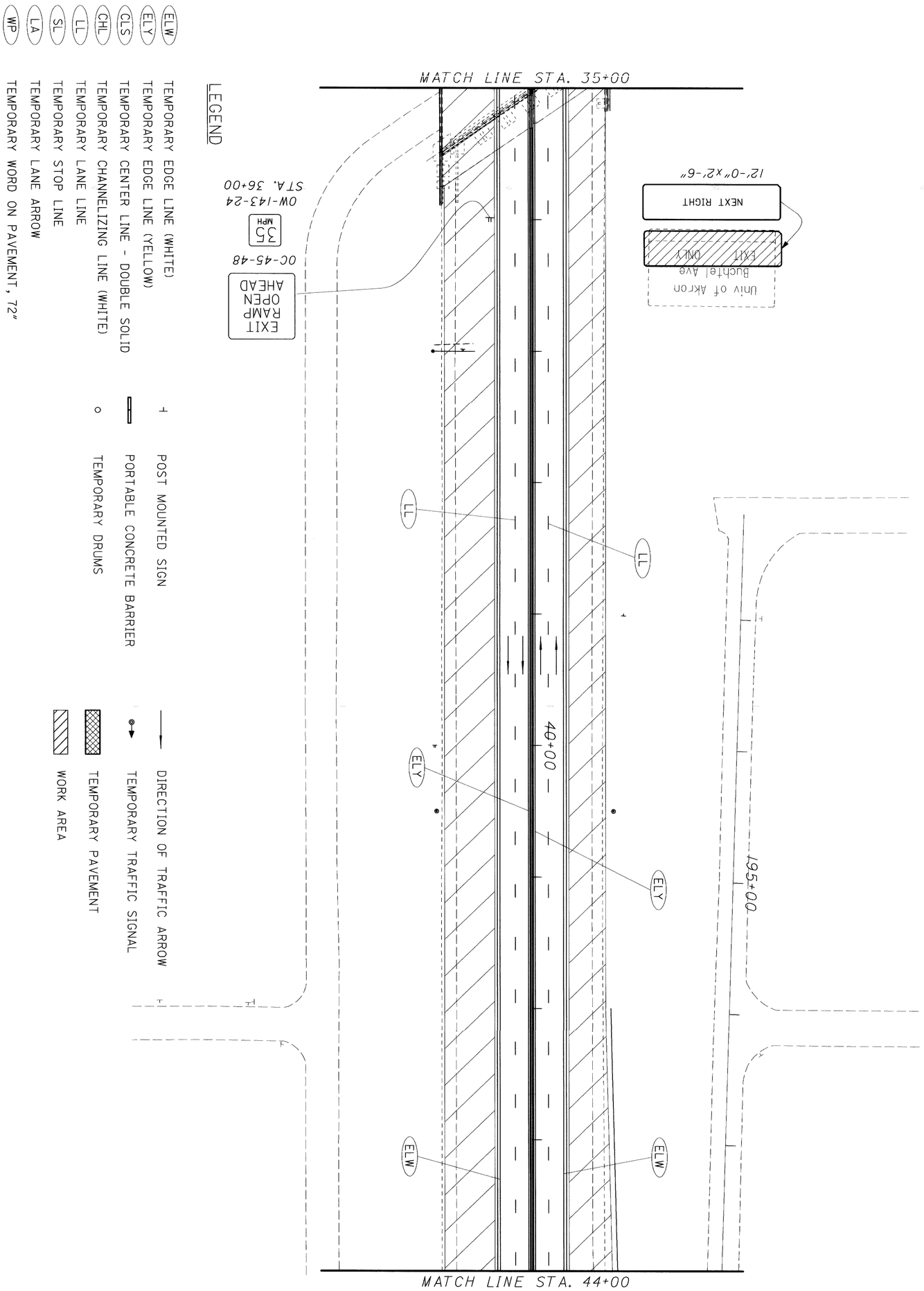

REVISIONS: 05/15/2002 by MAM

93
1088

SUM-8-0.63

MAINTENANCE OF TRAFFIC
PHASE 2

CALCULATED

CHECKED

0 20 40 80
HORIZONTAL SCALE IN FEET

N

11:43:10 PM
06/13/2002
u:\00-010sr-8\i\civil\mot\plan sheets\phase2\mpl6p2.dgn

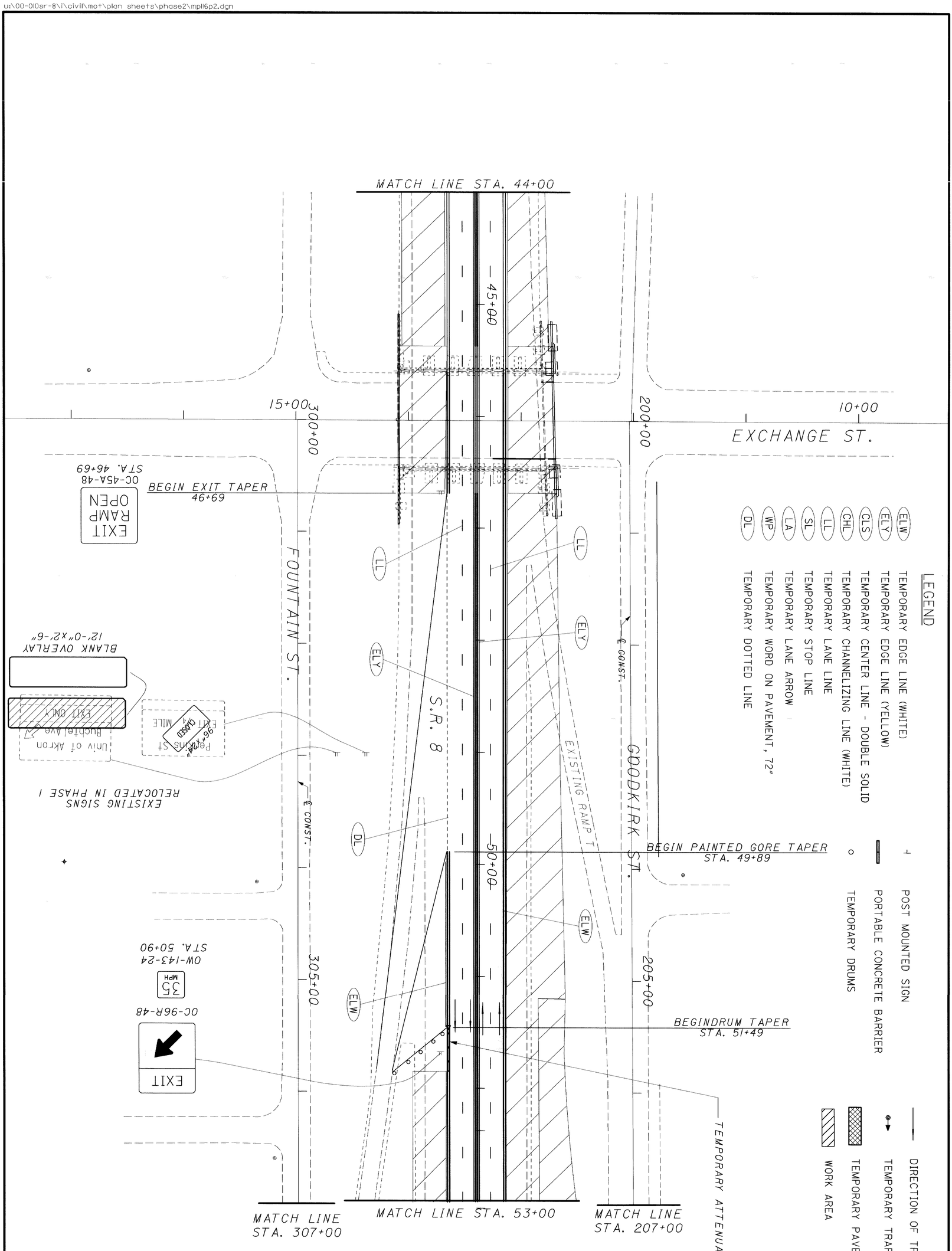

REVISIONS: 05/15/2002 by MAM

94 / 1088	SUM-8-0.63	MAINTENANCE OF TRAFFIC PHASE 2	CALCULATED KME / CHECKED	HORIZONTAL SCALE IN FEET (0, 20, 40, 80)

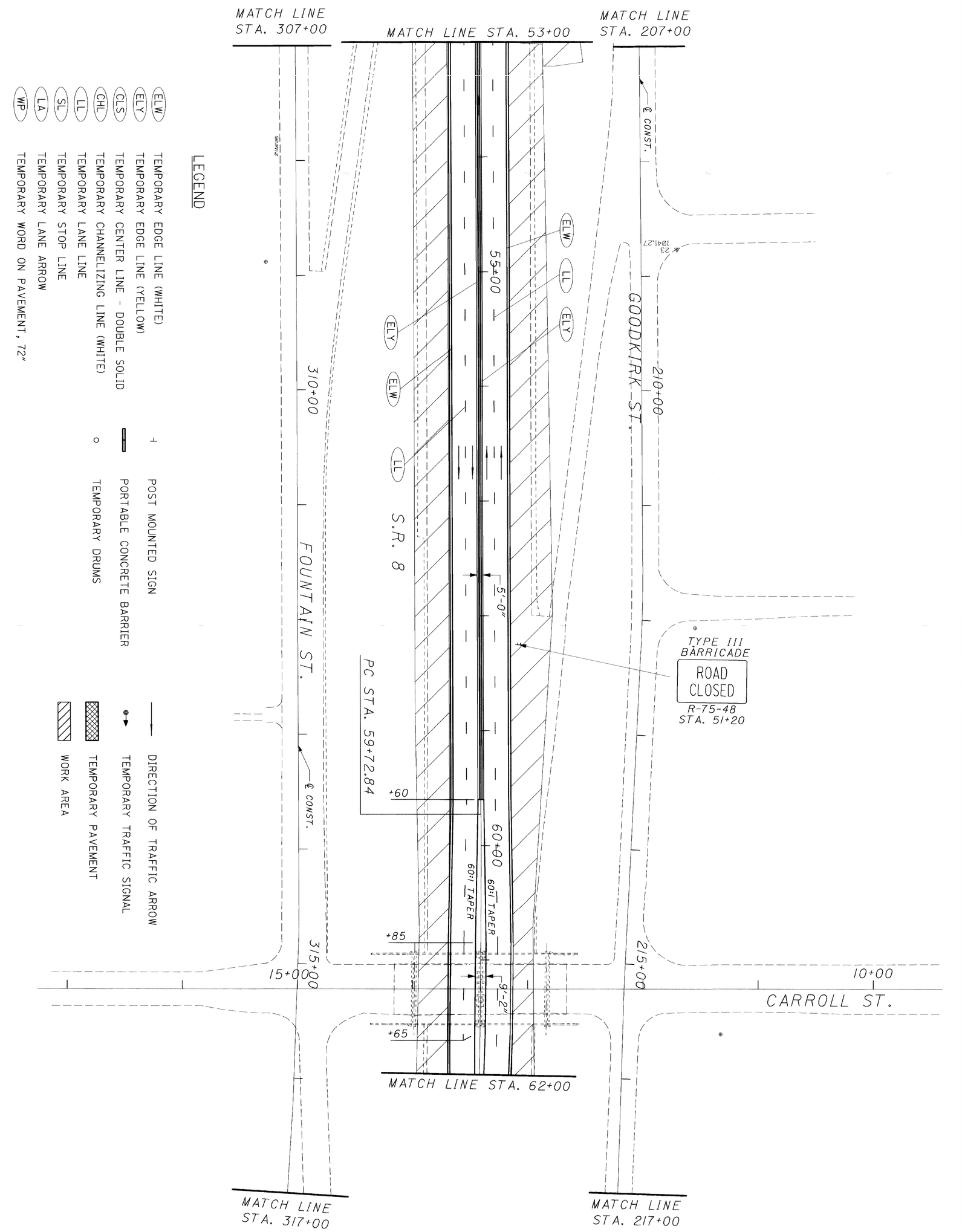

LEGEND

- ELW — TEMPORARY EDGE LINE (WHITE)
- ELY — TEMPORARY EDGE LINE (YELLOW)
- CLS — TEMPORARY CENTER LINE - DOUBLE SOLID
- CHL — TEMPORARY CHANNELIZING LINE (WHITE)
- LL — TEMPORARY LANE LINE
- SL — TEMPORARY STOP LINE
- LA — TEMPORARY LANE ARROW
- WP — TEMPORARY WORD ON PAVEMENT, 72"

- POST MOUNTED SIGN
- PORTABLE CONCRETE BARRIER
- TEMPORARY DRUMS
- DIRECTION OF TRAFFIC ARROW
- TEMPORARY TRAFFIC SIGNAL
- TEMPORARY PAVEMENT
- WORK AREA

95 / 1088

SUM-8-0.63

MAINTENANCE OF TRAFFIC
PHASE 2

CALCULATED KME
CHECKED

0 20 40 80
HORIZONTAL SCALE IN FEET

N

11:43:12 PM
06/13/2002
u:\00-010sr-8\i\civil\mot\plan sheets\phase2\mpll8p2.dgn

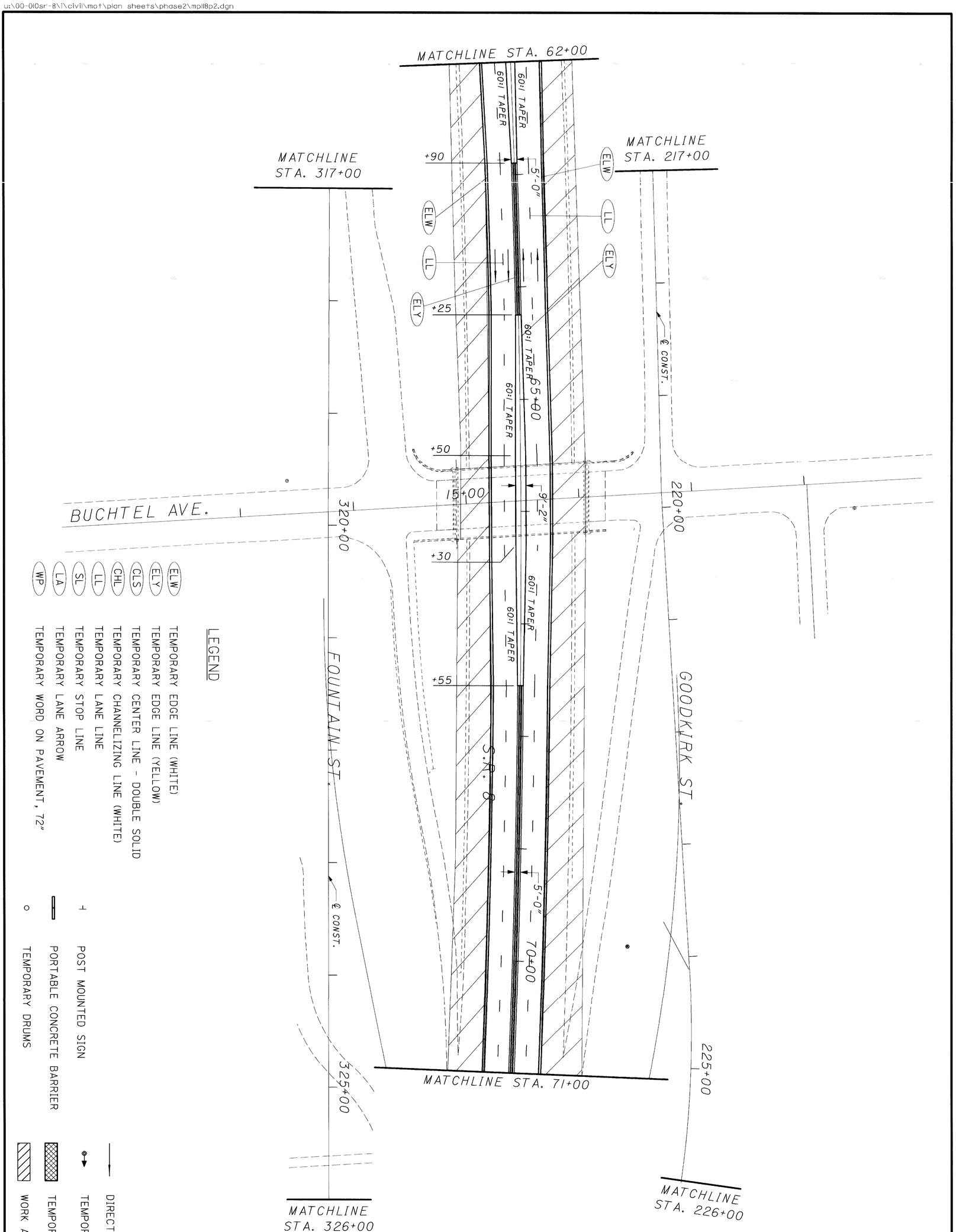

LEGEND

ELW	TEMPORARY EDGE LINE (WHITE)
ELY	TEMPORARY EDGE LINE (YELLOW)
CLS	TEMPORARY CENTER LINE - DOUBLE SOLID
CHL	TEMPORARY CHANNELIZING LINE (WHITE)
LL	TEMPORARY LANE LINE
SL	TEMPORARY STOP LINE
LA	TEMPORARY LANE ARROW
WP	TEMPORARY WORD ON PAVEMENT, 72"
	DIRECTION OF TRAFFIC ARROW
	TEMPORARY TRAFFIC SIGNAL
	TEMPORARY PAVEMENT
	WORK AREA
	POST MOUNTED SIGN
	PORTABLE CONCRETE BARRIER
	TEMPORARY DRUMS

96 1088	SUM-8-0.63	MAINTENANCE OF TRAFFIC PHASE 2	CALCULATED - CHECKED	0 40 20 80 HORIZONTAL SCALE IN FEET

LEGEND

ELW	TEMPORARY EDGE LINE (WHITE)
ELY	TEMPORARY EDGE LINE (YELLOW)
CLS	TEMPORARY CENTER LINE - DOUBLE SOLID
CHL	TEMPORARY CHANNELIZING LINE (WHITE)
LL	TEMPORARY LANE LINE
SL	TEMPORARY STOP LINE
LA	TEMPORARY LANE ARROW
WP	TEMPORARY WORD ON PAVEMENT, 72"

- POST MOUNTED SIGN
- PORTABLE CONCRETE BARRIER
- TEMPORARY DRUMS
- DIRECTION OF TRAFFIC ARROW
- TEMPORARY TRAFFIC SIGNAL
- TEMPORARY PAVEMENT
- WORK AREA

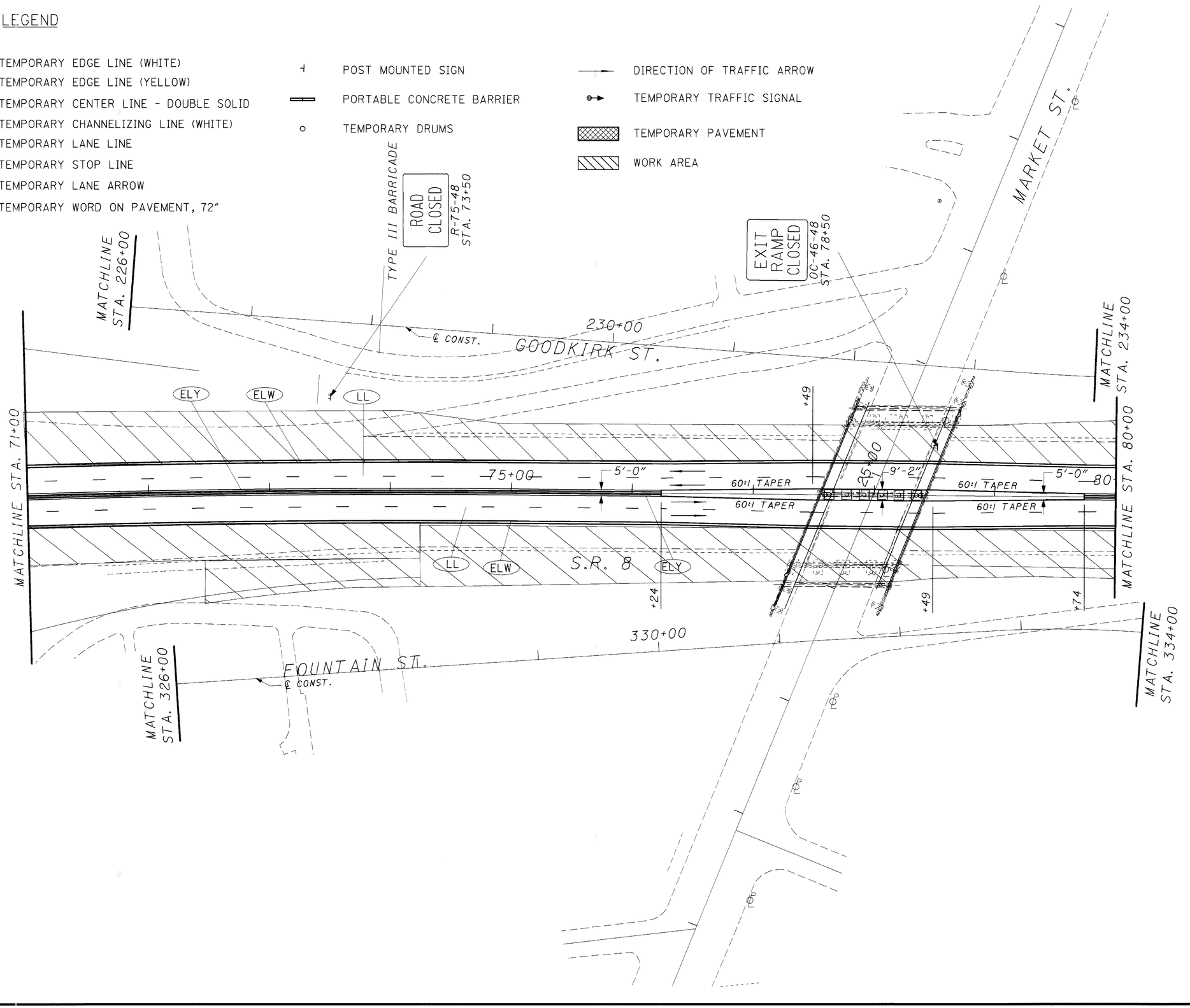

N

HORIZONTAL SCALE IN FEET
0 20 40 80

CALCULATED -
CHECKED

MAINTENANCE OF TRAFFIC PHASE 2

SUM-8-0.63

97
1088

11:43:13 PM
06/13/2002
u:\00-010sr-8\V\civil\mot\plan sheets\phase2\mpll9p2.dgn

11:43:14 PM
06/13/2002
u:\00-010sr-8\i\civil\mot\plan sheets\phase2\mpl20p2.dgn

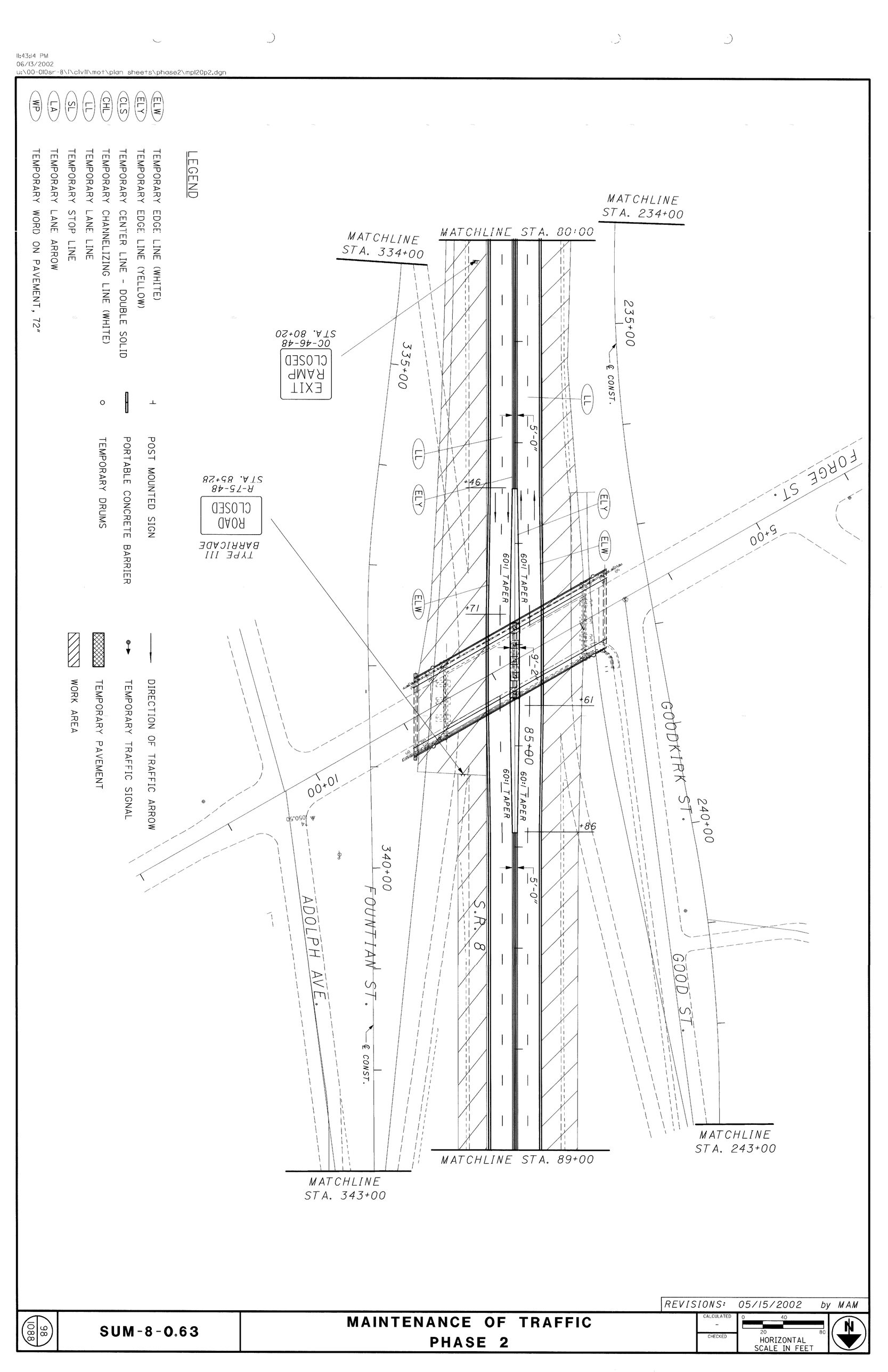

REVISIONS: 05/15/2002 by MAM

98 1088	SUM-8-0.63	MAINTENANCE OF TRAFFIC PHASE 2	CALCULATED – CHECKED; 0 40 20 80 HORIZONTAL SCALE IN FEET; N

REVISIONS: 05/15/2002 by MAM

99
1088

SUM-8-0.63

MAINTENANCE OF TRAFFIC
PHASE 2

CALCULATED -
CHECKED

0 20 40 80
HORIZONTAL SCALE IN FEET

N

LEGEND

(ELW)	TEMPORARY EDGE LINE (WHITE)	POST MOUNTED SIGN
(ELY)	TEMPORARY EDGE LINE (YELLOW)	DIRECTION OF TRAFFIC ARROW
(CLS)	TEMPORARY CENTER LINE - DOUBLE SOLID	PORTABLE CONCRETE BARRIER
(CHL)	TEMPORARY CHANNELIZING LINE (WHITE)	TEMPORARY TRAFFIC SIGNAL
(LL)	TEMPORARY LANE LINE	TEMPORARY DRUMS
(SL)	TEMPORARY STOP LINE	TEMPORARY PAVEMENT
(LA)	TEMPORARY LANE ARROW	WORK AREA
(WP)	TEMPORARY WORD ON PAVEMENT, 72"	
(LLS)	TEMPORARY SOLID LANE LINE	

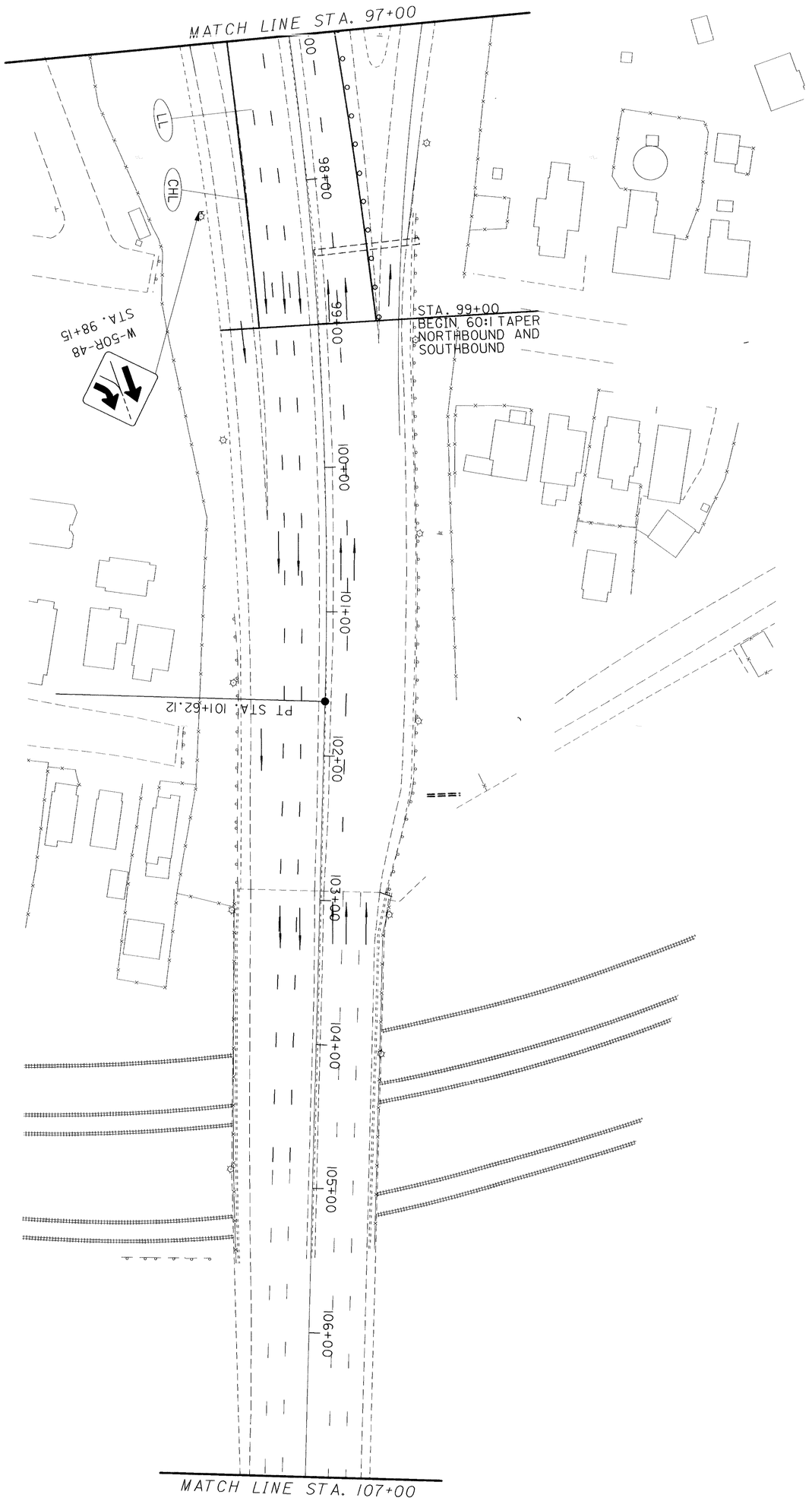

REVISIONS: 05/15/2002 by MAM

100 / 1088	SUM-8-0.63	RAMP I MAINTENANCE OF TRAFFIC PHASE 2	CALCULATED / CHECKED	HORIZONTAL SCALE IN FEET (0, 20, 40, 80)

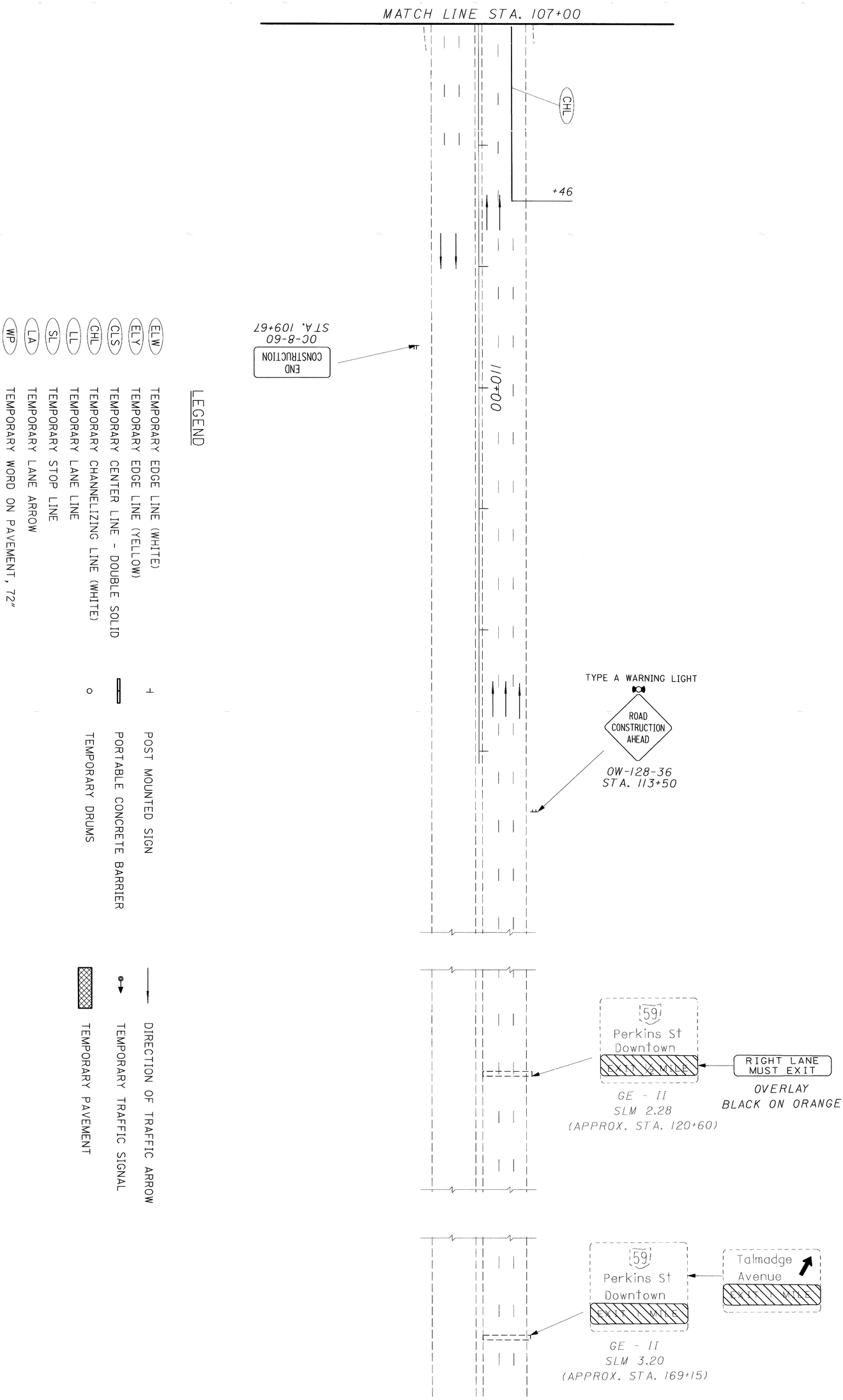

REVISIONS: 05/15/2002 by MAM

101 / 1088	SUM-8-0.63	MAINTENANCE OF TRAFFIC PHASE 2	CALCULATED CHECKED	0 20 40 80 HORIZONTAL SCALE IN FEET

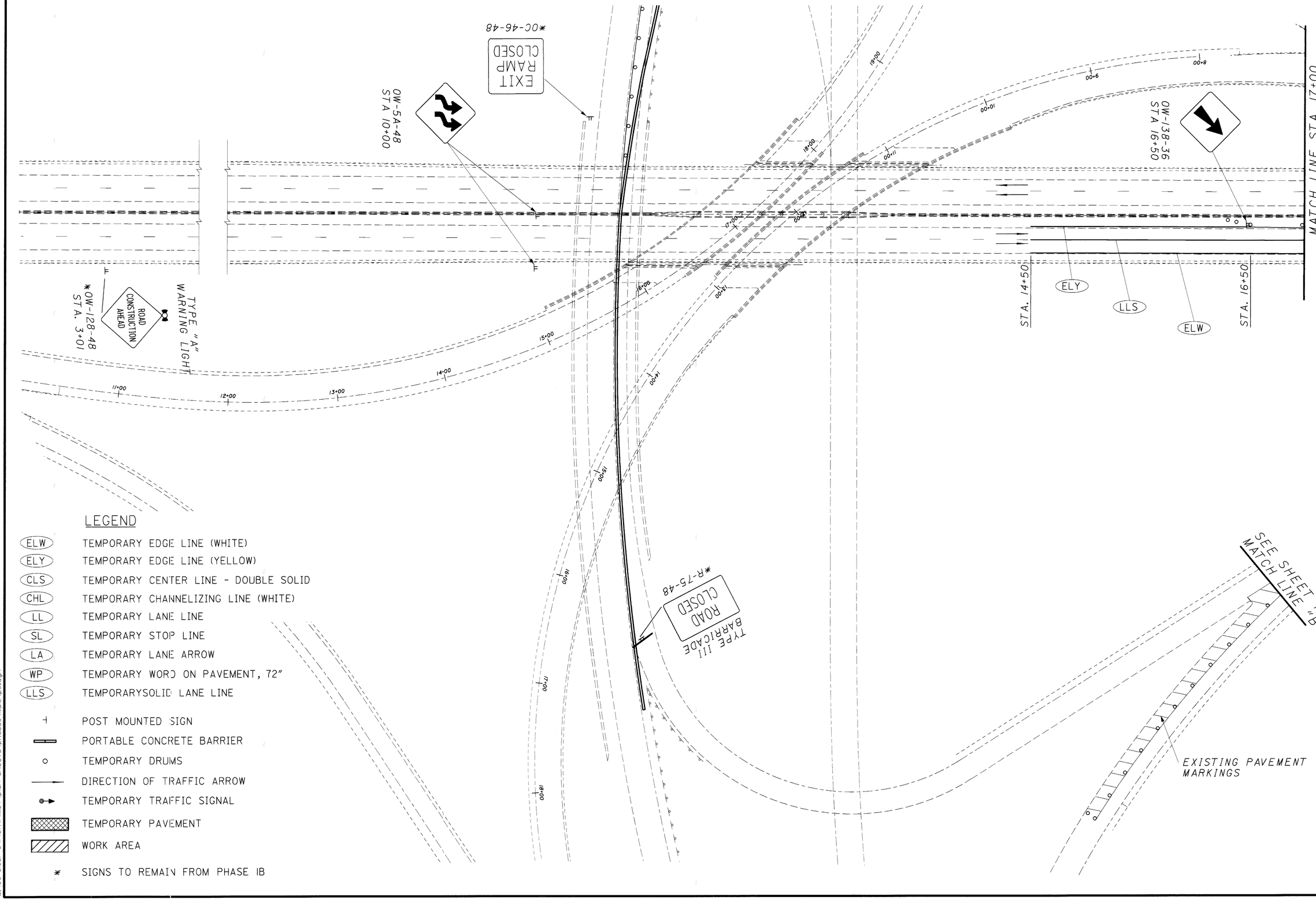

LEGEND

ELW	TEMPORARY EDGE LINE (WHITE)
ELY	TEMPORARY EDGE LINE (YELLOW)
CLS	TEMPORARY CENTER LINE - DOUBLE SOLID
CHL	TEMPORARY CHANNELIZING LINE (WHITE)
LL	TEMPORARY LANE LINE
SL	TEMPORARY STOP LINE
LA	TEMPORARY LANE ARROW
WP	TEMPORARY WORD ON PAVEMENT, 72"
LLS	TEMPORARYSOLID LANE LINE
	POST MOUNTED SIGN
	PORTABLE CONCRETE BARRIER
	TEMPORARY DRUMS
	DIRECTION OF TRAFFIC ARROW
	TEMPORARY TRAFFIC SIGNAL
	TEMPORARY PAVEMENT
	WORK AREA
*	SIGNS TO REMAIN FROM PHASE IB

HORIZONTAL SCALE IN FEET
0 20 40 80

CALCULATED KME
CHECKED

MAINTENANCE OF TRAFFIC PHASE 3

SUM-8-0.63

102
1088

11:43:55 PM
06/13/2002
u:\00-010sr-8\1\civil\mot\plan sheets\phase3\mp24p3.dgn

11:43:56 PM
06/13/2002
u:\00-010sr-8\1\civil\mot\plan sheets\phase3\mpl25p3.dgn

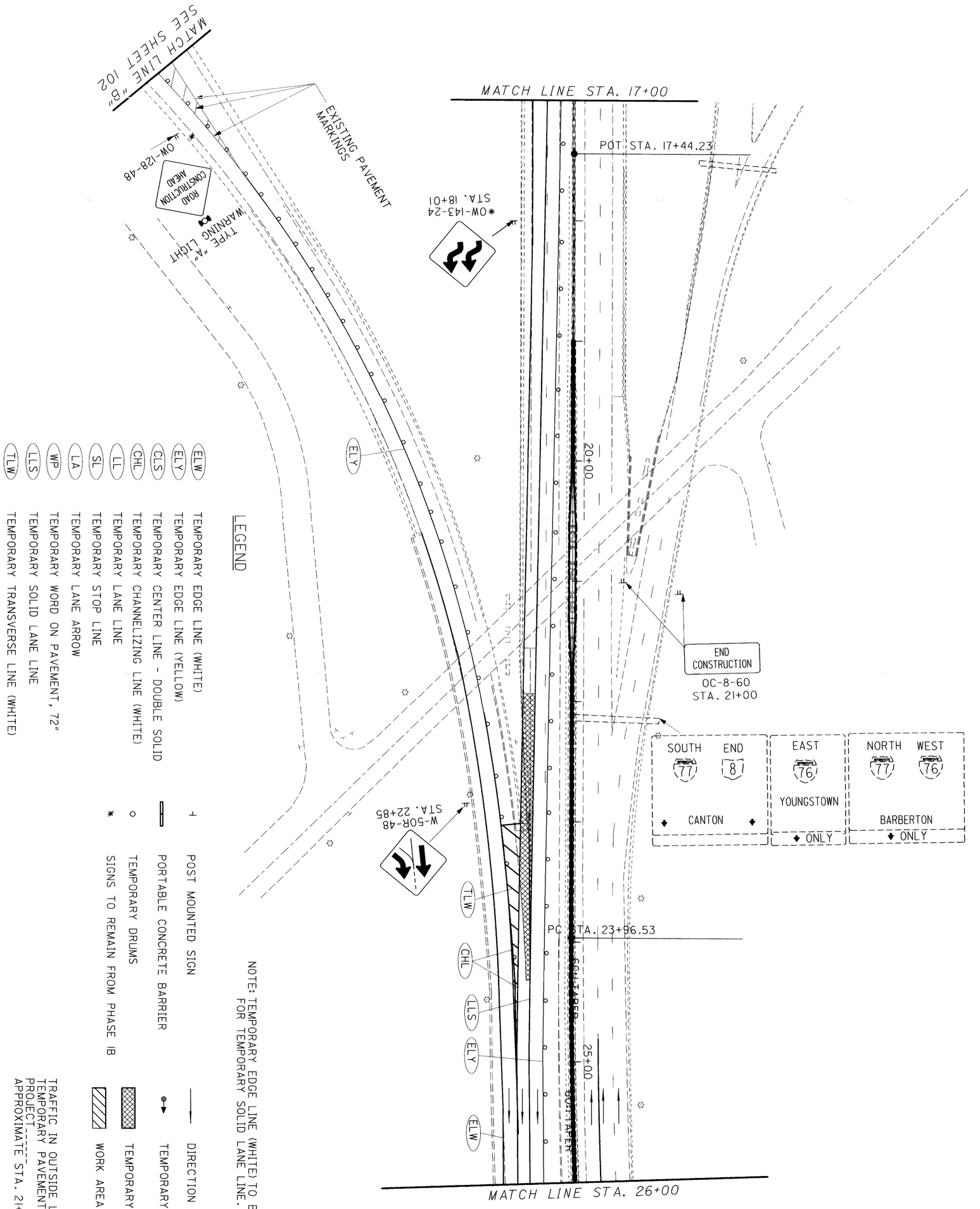

LEGEND

ELW	TEMPORARY EDGE LINE (WHITE)
ELY	TEMPORARY EDGE LINE (YELLOW)
CLS	TEMPORARY CENTER LINE - DOUBLE SOLID
CHL	TEMPORARY CHANNELIZING LINE (WHITE)
LL	TEMPORARY LANE LINE
SL	TEMPORARY STOP LINE
LA	TEMPORARY LANE ARROW
WP	TEMPORARY WORD ON PAVEMENT, 72"
LLS	TEMPORARY SOLID LANE LINE
TLW	TEMPORARY TRANSVERSE LINE (WHITE)

POST MOUNTED SIGN

PORTABLE CONCRETE BARRIER

TEMPORARY DRUMS

SIGNS TO REMAIN FROM PHASE IB

DIRECTION OF TRAFFIC ARROW

TEMPORARY TRAFFIC SIGNAL

TEMPORARY PAVEMENT

WORK AREA

NOTE: TEMPORARY EDGE LINE (WHITE) TO BE USED FOR TEMPORARY SOLID LANE LINE.

TRAFFIC IN OUTSIDE LANE NB OVER EXISTING TEMPORARY PAVEMENT CONSTRUCTED UNDER PROJECT _____ APPROXIMATE STA. 21+94 TO STA. 24+35

REVISIONS: 05/15/2002 by MAM

103 / 1088	SUM-8-0.63	RAMP "S" MAINTENANCE OF TRAFFIC PHASE 3	CALCULATED / CHECKED / HORIZONTAL SCALE IN FEET (0 20 40 80)

11:43:57 PM
06/13/2002
u:\00-010sr-8\i\civil\mot\plan sheets\phase3\mpl26p3.dgn

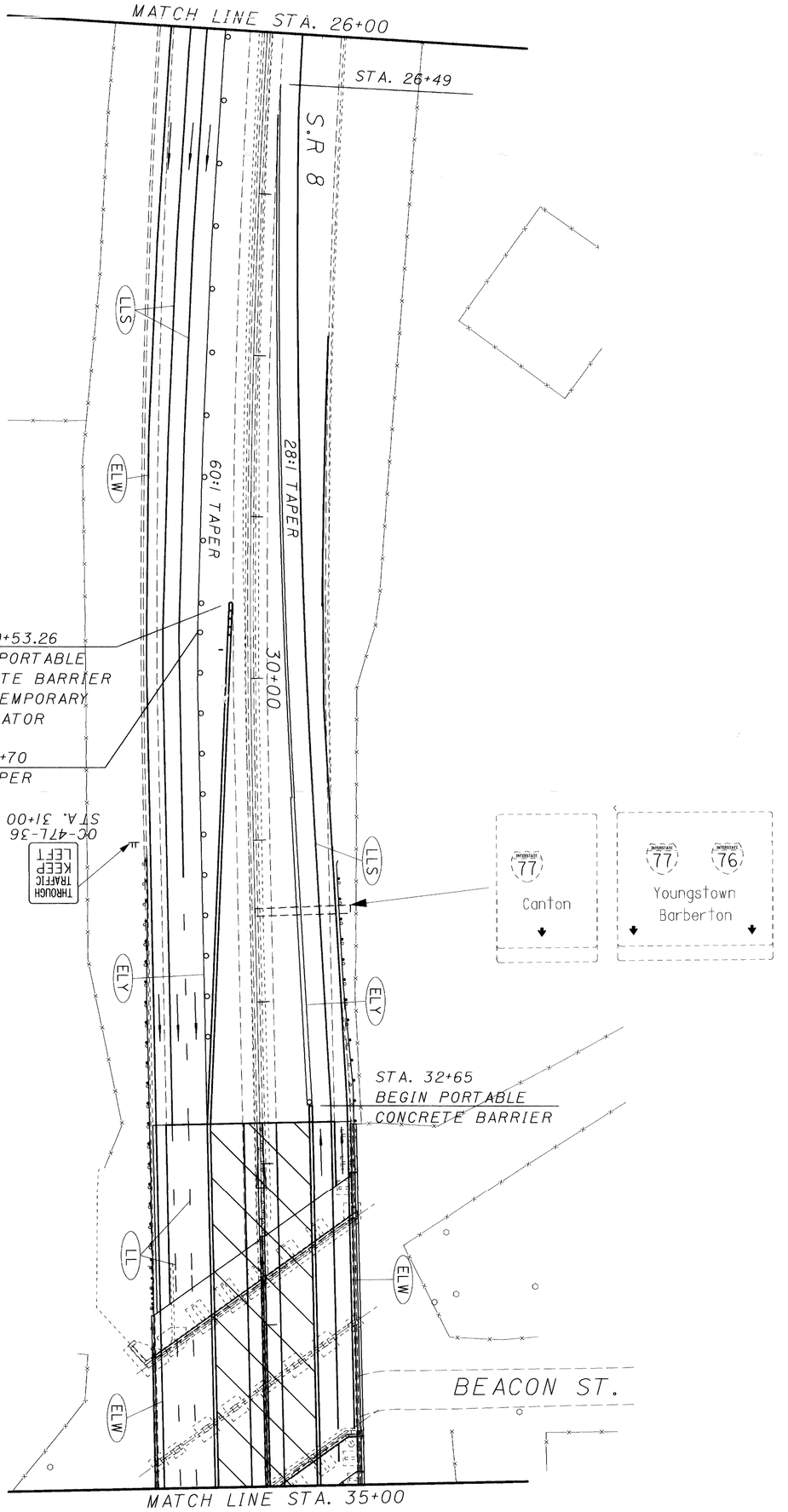

LEGEND

ELW	TEMPORARY EDGE LINE (WHITE)
ELY	TEMPORARY EDGE LINE (YELLOW)
CLS	TEMPORARY CENTER LINE - DOUBLE SOLID
CHL	TEMPORARY CHANNELIZING LINE (WHITE)
LL	TEMPORARY LANE LINE
SL	TEMPORARY STOP LINE
LA	TEMPORARY LANE ARROW
WP	TEMPORARY WORD ON PAVEMENT, 72"
LLS	TEMPORARY SOLID LANE LINE
*	SIGNS TO REMAIN FROM PHASE IB

POST MOUNTED SIGN

PORTABLE CONCRETE BARRIER

TEMPORARY DRUMS

DIRECTION OF TRAFFIC ARROW

TEMPORARY TRAFFIC SIGNAL

TEMPORARY PAVEMENT

WORK AREA

104
1088

SUM-8-0.63

MAINTENANCE OF TRAFFIC
PHASE 3

CALCULATED KME
CHECKED

0 40
20 80
HORIZONTAL SCALE IN FEET

N

11:43:58 PM
06/13/2002
U:\X00-0\08r-8\I\civil\mot\plan sheets\phase3\mpl27p3.dgn

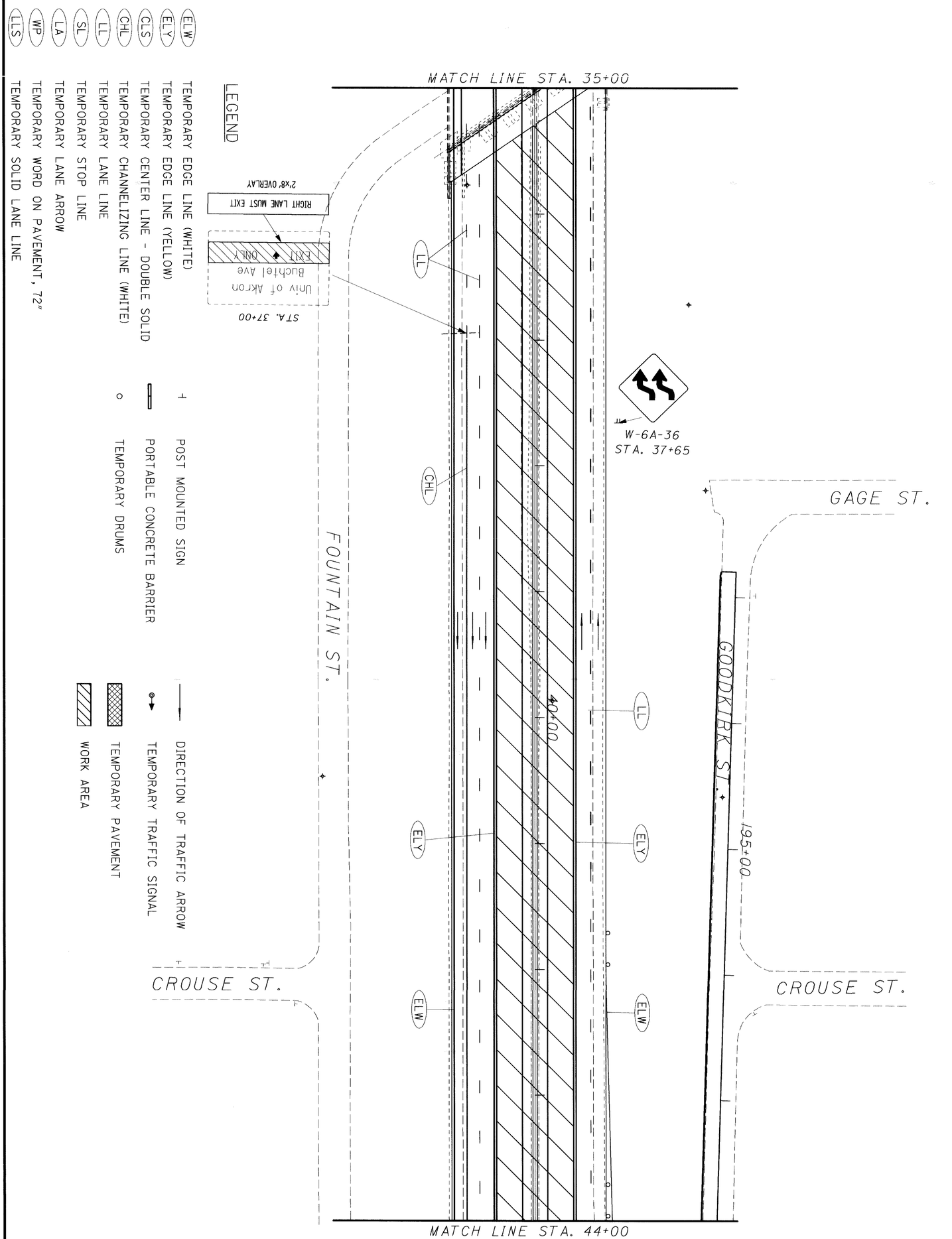

105 / 1088	SUM-8-0.63	MAINTENANCE OF TRAFFIC PHASE 3	CALCULATED KME CHECKED	0 40 20 80 HORIZONTAL SCALE IN FEET

11:43:59 PM
06/13/2002
u:\00-010sr-8\i\civil\mot\plan sheets\phase3\mpl28p3.dgn

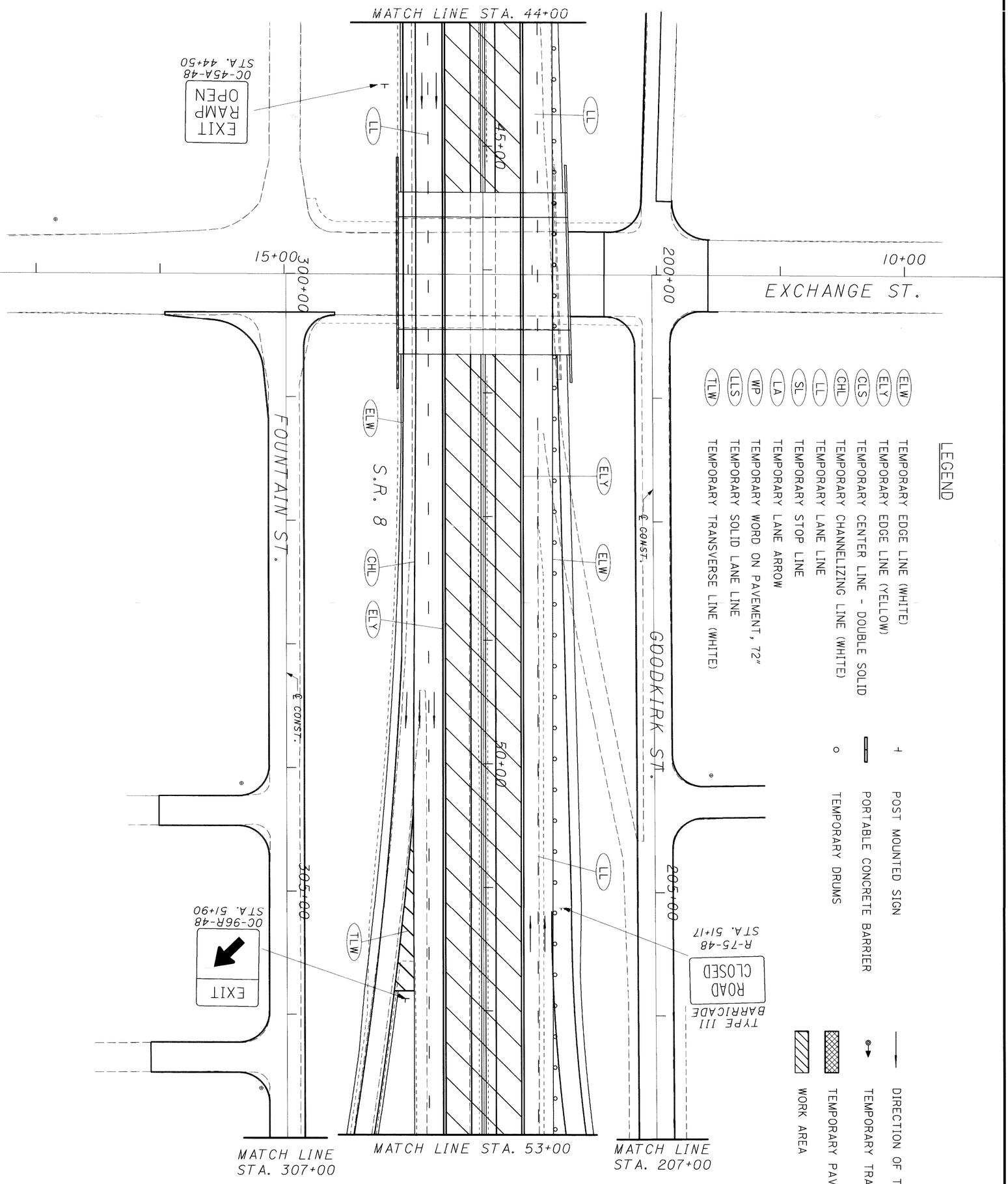

REVISIONS: 05/15/2002 by MAM

106 / 1088	SUM-8-0.63	MAINTENANCE OF TRAFFIC PHASE 3	CALCULATED KME / CHECKED	0 40 20 80 HORIZONTAL SCALE IN FEET

11:44:00 PM
06/13/2002
u:\00-010sr-8\i\civil\mot\plan sheets\phase3\mpl29p3.dgn

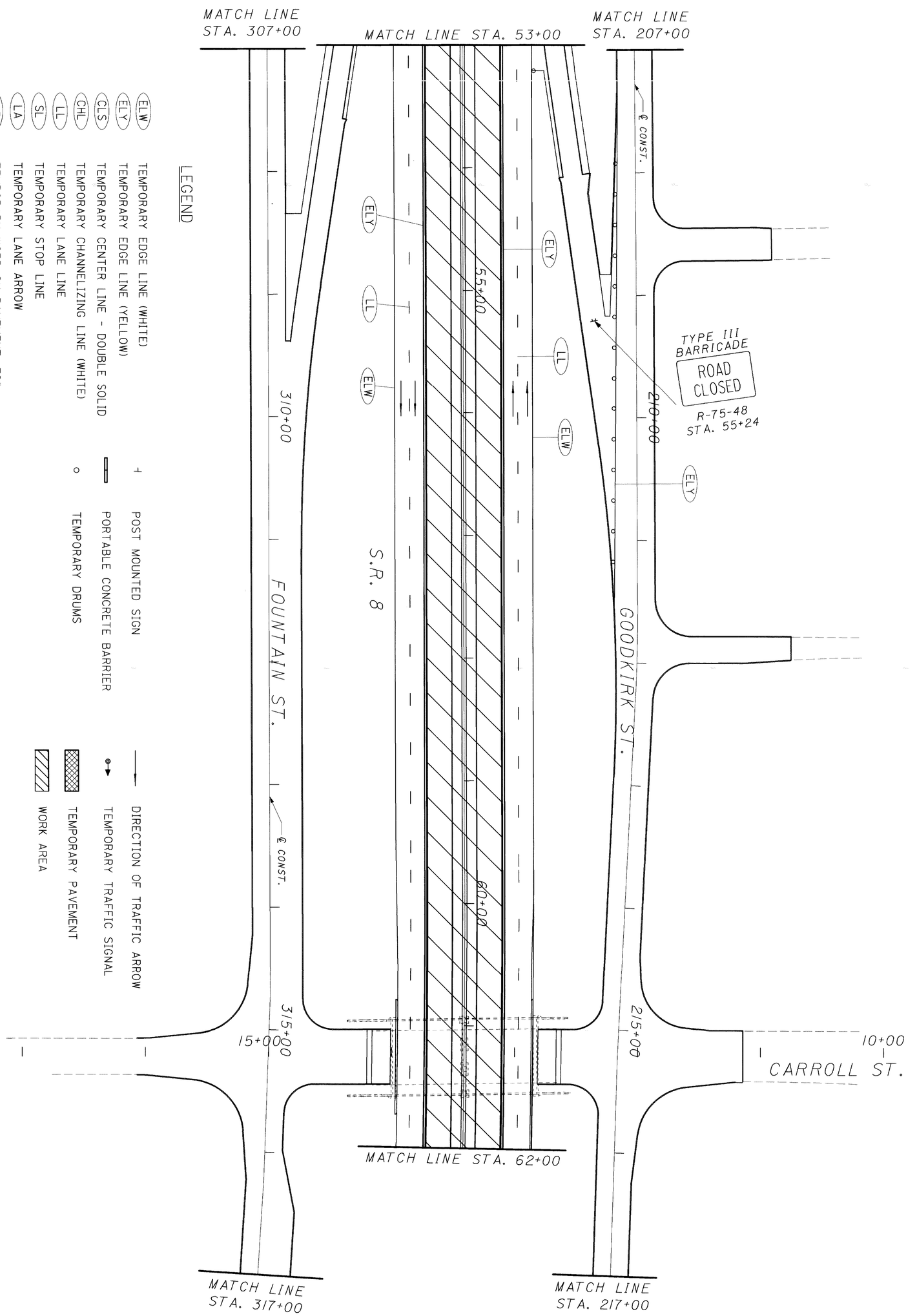

LEGEND

- ELW — TEMPORARY EDGE LINE (WHITE)
- ELY — TEMPORARY EDGE LINE (YELLOW)
- CLS — TEMPORARY CENTER LINE - DOUBLE SOLID
- CHL — TEMPORARY CHANNELIZING LINE (WHITE)
- LL — TEMPORARY LANE LINE
- SL — TEMPORARY STOP LINE
- LA — TEMPORARY LANE ARROW
- WP — TEMPORARY WORD ON PAVEMENT, 72"
- ELY — TEMPORARY SOLID LANE LINE
- POST MOUNTED SIGN
- PORTABLE CONCRETE BARRIER
- TEMPORARY DRUMS
- DIRECTION OF TRAFFIC ARROW
- TEMPORARY TRAFFIC SIGNAL
- TEMPORARY PAVEMENT
- WORK AREA

107 / 1088	SUM-8-0.63	**MAINTENANCE OF TRAFFIC PHASE 3**	CALCULATED KME; CHECKED; 0 40 20 80 HORIZONTAL SCALE IN FEET; N

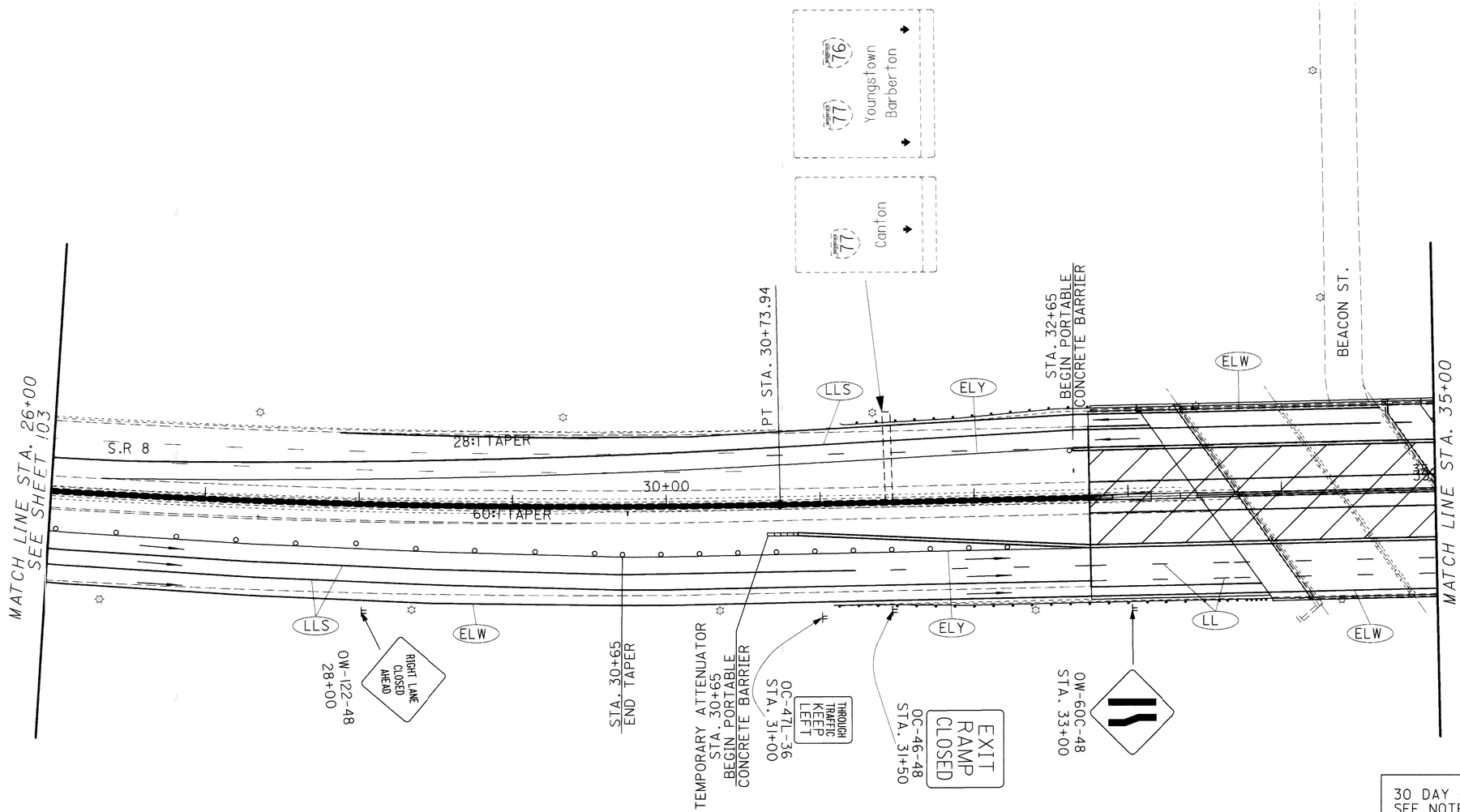

30 DAY CLOSURE
SEE NOTES, SHEET 42

LEGEND

ELW	TEMPORARY EDGE LINE (WHITE)
ELY	TEMPORARY EDGE LINE (YELLOW)
CLS	TEMPORARY CENTER LINE - DOUBLE SOLID
CHL	TEMPORARY CHANNELIZING LINE (WHITE)
LL	TEMPORARY LANE LINE
SL	TEMPORARY STOP LINE
LA	TEMPORARY LANE ARROW
WP	TEMPORARY WORD ON PAVEMENT, 72"
LLS	TEMPORARY SOLID LANE LINE
*	SIGNS TO REMAIN FROM PHASE IB
⊣	POST MOUNTED SIGN
▭	PORTABLE CONCRETE BARRIER
○	TEMPORARY DRUMS
——→	DIRECTION OF TRAFFIC ARROW
⊙→	TEMPORARY TRAFFIC SIGNAL
▨	TEMPORARY PAVEMENT
▨	WORK AREA

FOR RAMP "S" OPEN, SEE SHEET 104

REVISIONS: 05/15/2002 by MAM

CALCULATED KME
CHECKED

0 20 40 80
HORIZONTAL SCALE IN FEET

N

MAINTENANCE OF TRAFFIC
RAMP "S" MAINLINE STA. 26+00 - 35+00
PHASE 3 MATCH LINE

SUM-8-0.63

11:44:03 PM
06/13/2002
s:\00-0105r-8\\civil\mot\m-e\ramp s\rmp26p3.dgn

11:44:04 PM
06/13/2002
u:\00-010sr-8\1\civil\mot\m-e\ramp_s\nmp27p3.dgn

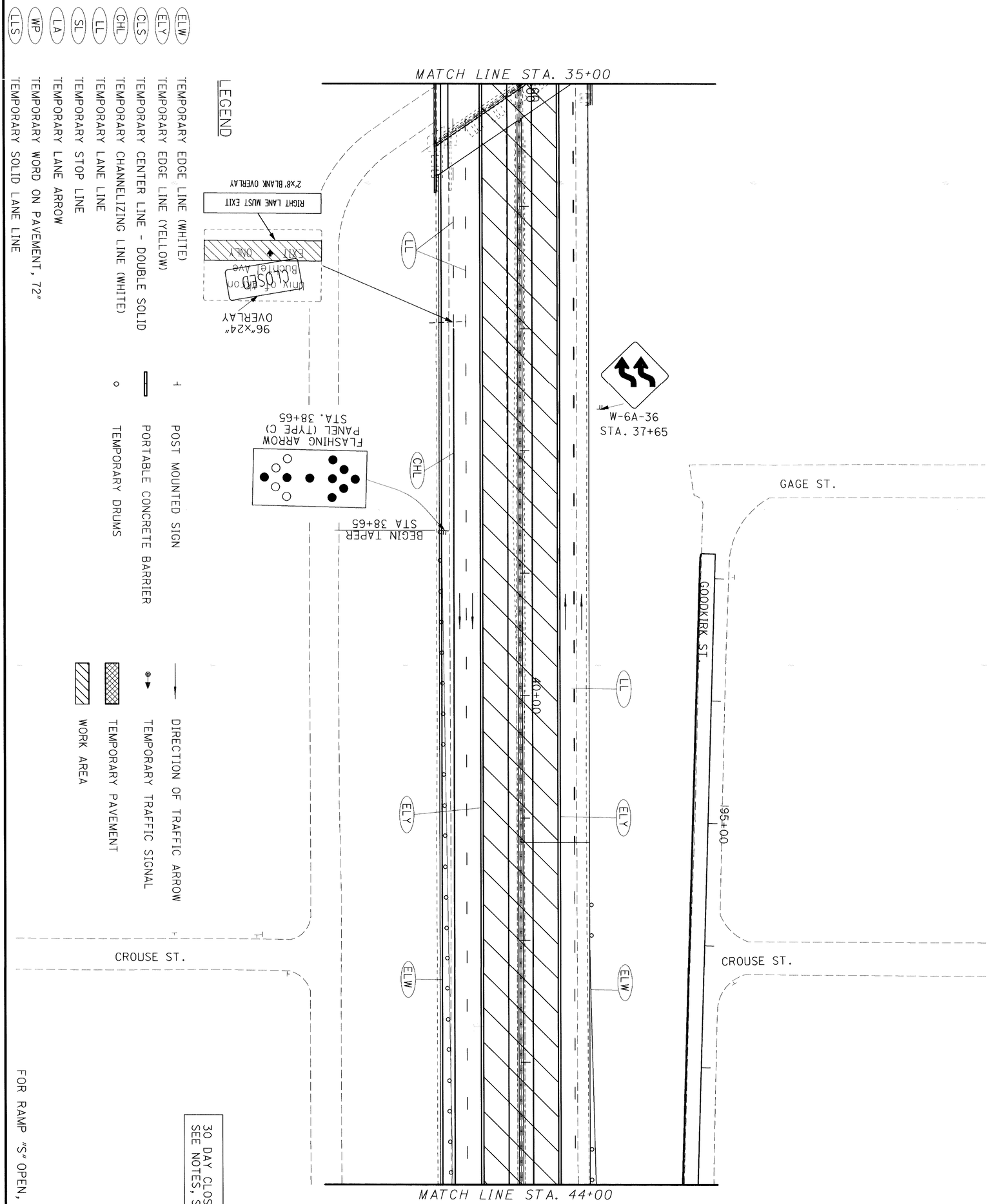

REVISIONS: 05/15/2002 by MAM

107B (1088)	SUM-8-0.63	RAMP "S" MAINTENANCE OF TRAFFIC PHASE 3	CALCULATED / CHECKED	HORIZONTAL SCALE IN FEET (0, 20, 40, 80)

11:44:05 PM
06/13/2002
u:\00-010sr-8\l\civil\mot\m-e\ramp_s\nmp28p3.dgn

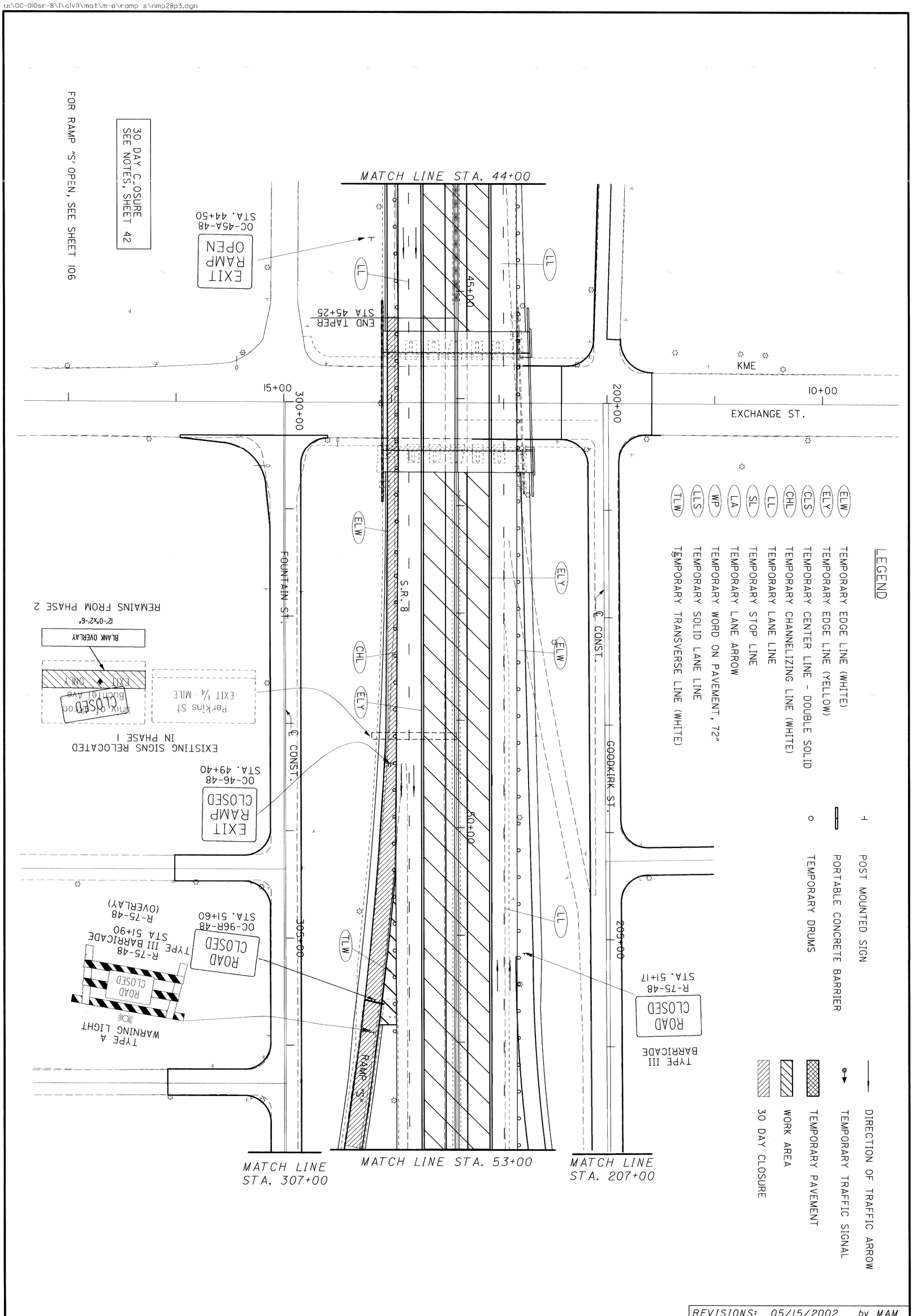

REVISIONS: 05/15/2002 by MAM

107C 1088	SUM-8-0.63	RAMP "S" MAINTENANCE OF TRAFFIC PHASE 3	CALCULATED / CHECKED — HORIZONTAL SCALE IN FEET (0, 20, 40, 80)

RAMP "S" MAINTENANCE OF TRAFFIC PHASE 3

SUM-8-0.63

107D
1088

REVISIONS: 05/15/2002 by MAM

CALCULATED

CHECKED

HORIZONTAL SCALE IN FEET
0 20 40 80

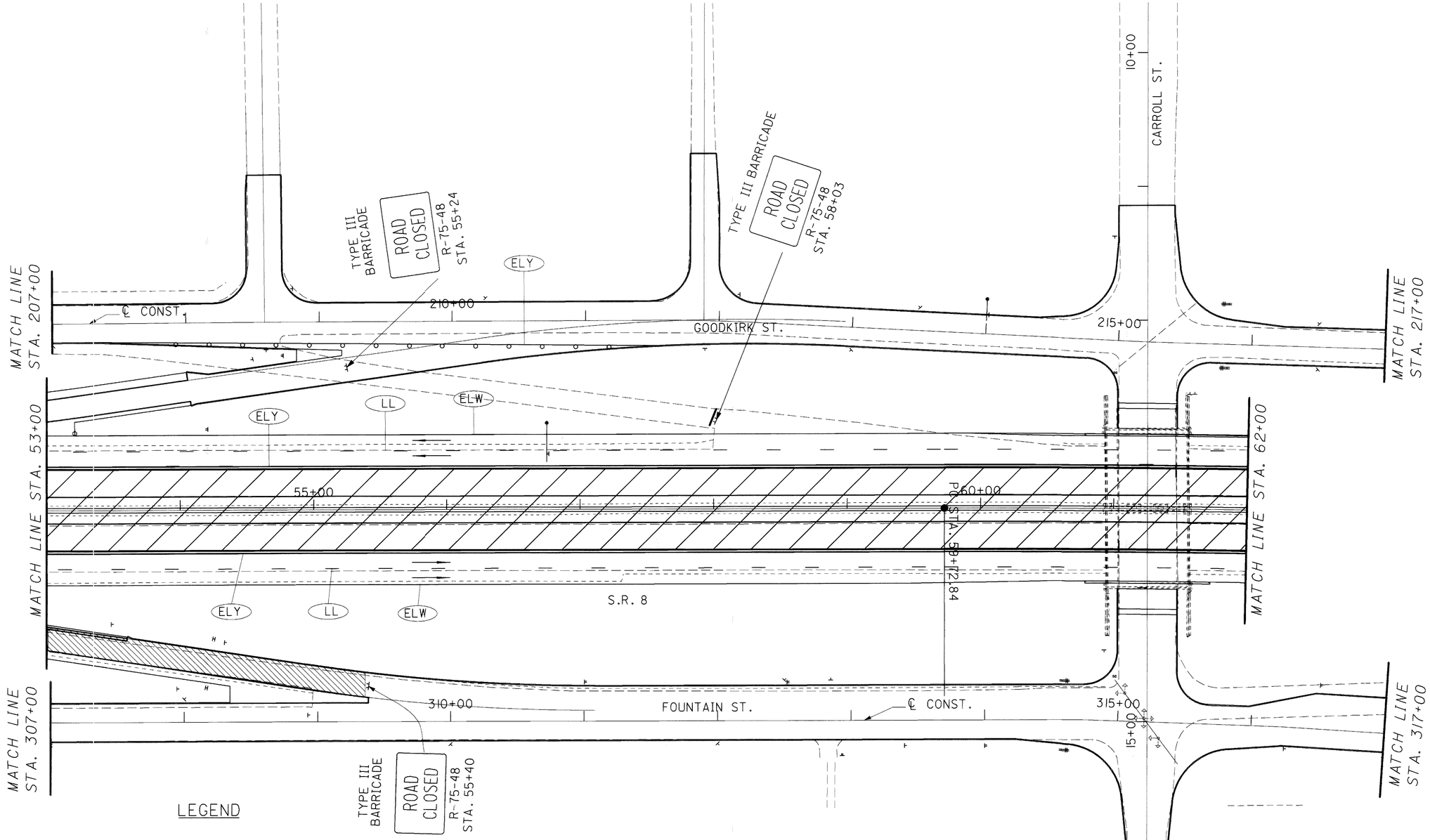

LEGEND

ELW	TEMPORARY EDGE LINE (WHITE)
ELY	TEMPORARY EDGE LINE (YELLOW)
CLS	TEMPORARY CENTER LINE - DOUBLE SOLID
CHL	TEMPORARY CHANNELIZING LINE (WHITE)
LL	TEMPORARY LANE LINE
SL	TEMPORARY STOP LINE
LA	TEMPORARY LANE ARROW
WP	TEMPORARY WORD ON PAVEMENT, 72"
ELY	TEMPORARY SOLID LANE LINE

⊣	POST MOUNTED SIGN
▬	PORTABLE CONCRETE BARRIER
○	TEMPORARY DRUMS

——→	DIRECTION OF TRAFFIC ARROW
⊙→	TEMPORARY TRAFFIC SIGNAL
▨	TEMPORARY PAVEMENT
▨	WORK AREA
▨	30 DAY CLOSURE

30 DAY CLOSURE
SEE NOTES, SHEET 42

FOR RAMP "S" OPEN, SEE SHEET 107

11:44:06 PM
06/13/2002
u:\00-00sr-8\1\civil\mot\m-ev\ramp_s\rmp29s3.dgn

11:44:07 PM
06/13/2002
u:\00-010sr-8\l\civil\mot\plan sheets\phase3\mpl30p3.dgn

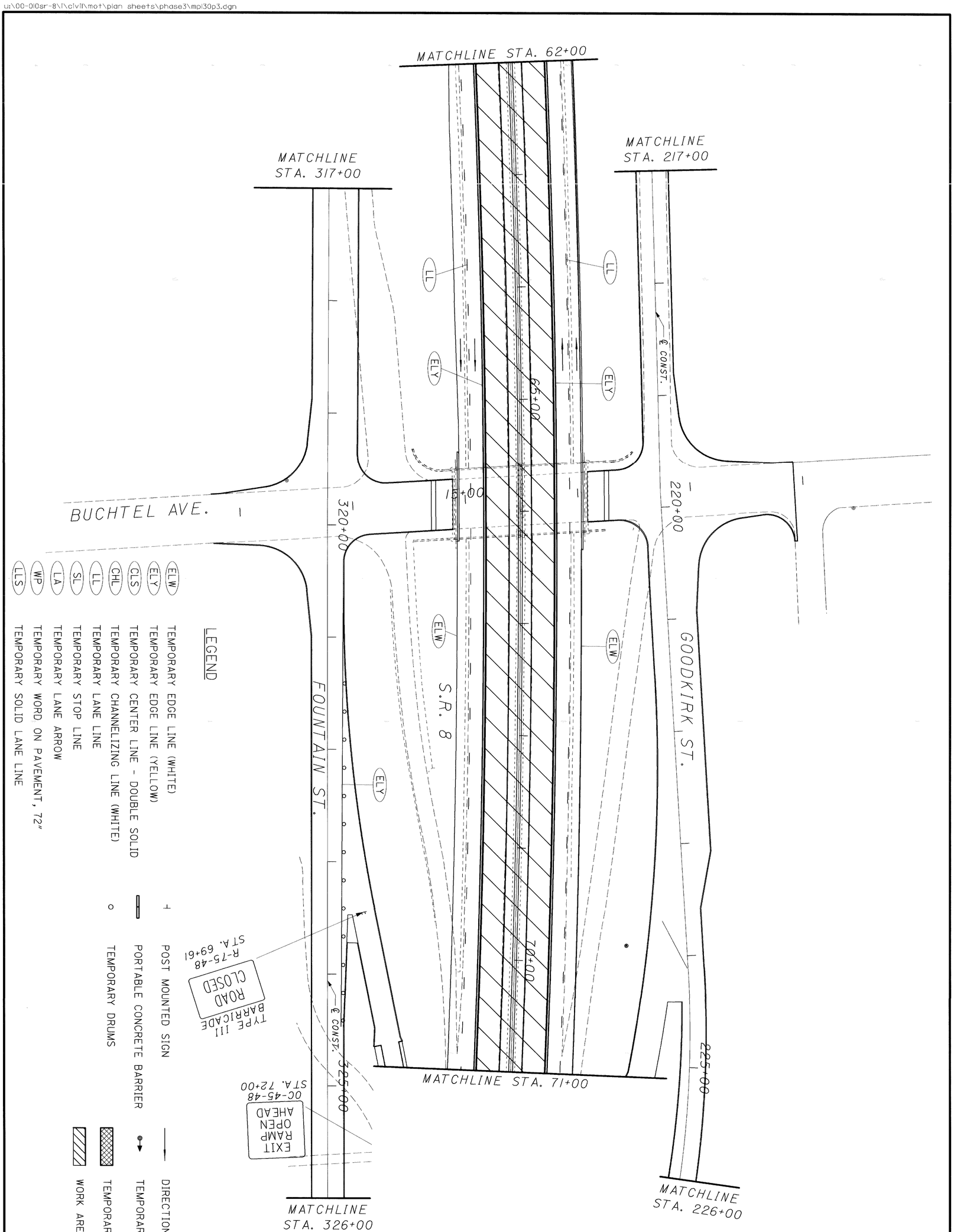

LEGEND

ELW	TEMPORARY EDGE LINE (WHITE)
ELY	TEMPORARY EDGE LINE (YELLOW)
CLS	TEMPORARY CENTER LINE - DOUBLE SOLID
CHL	TEMPORARY CHANNELIZING LINE (WHITE)
LL	TEMPORARY LANE LINE
SL	TEMPORARY STOP LINE
LA	TEMPORARY LANE ARROW
WP	TEMPORARY WORD ON PAVEMENT, 72"
LLS	TEMPORARY SOLID LANE LINE

	POST MOUNTED SIGN
	PORTABLE CONCRETE BARRIER
	TEMPORARY DRUMS
	DIRECTION OF TRAFFIC ARROW
	TEMPORARY TRAFFIC SIGNAL
	TEMPORARY PAVEMENT
	WORK AREA

108 / 1088	SUM-8-0.63	MAINTENANCE OF TRAFFIC PHASE 3	CALCULATED KME / CHECKED	0 40 20 80 HORIZONTAL SCALE IN FEET

11:44:08 PM
06/13/2002
u:\00-010sr-8\l\civil\mot\plan sheets\phase3\mpl3lp3.dgn

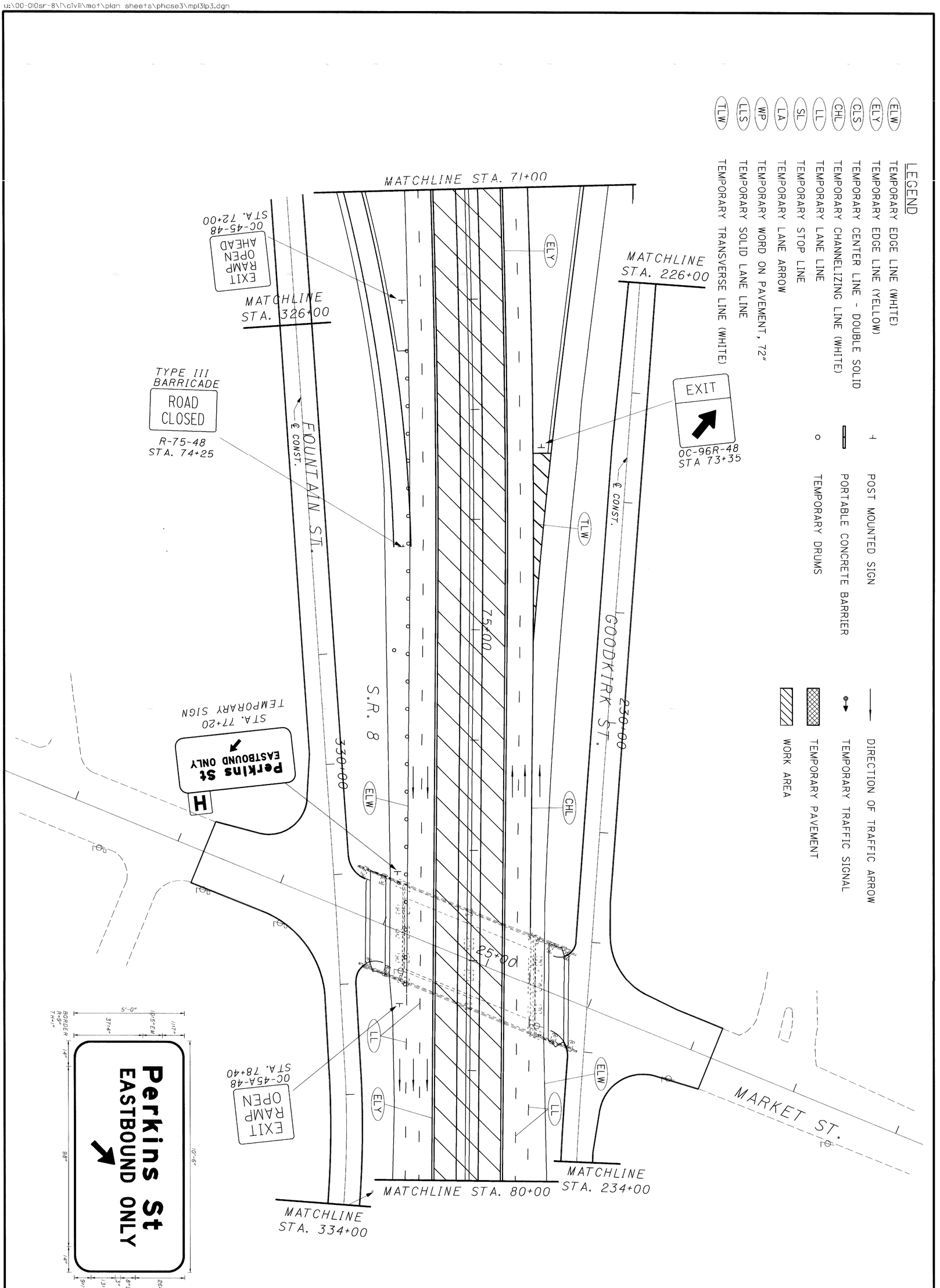

REVISIONS: 05/15/2002 by MAM

109 / 1080	SUM-8-0.63	MAINTENANCE OF TRAFFIC PHASE 3	CALCULATED KME / CHECKED	0 20 40 80 HORIZONTAL SCALE IN FEET

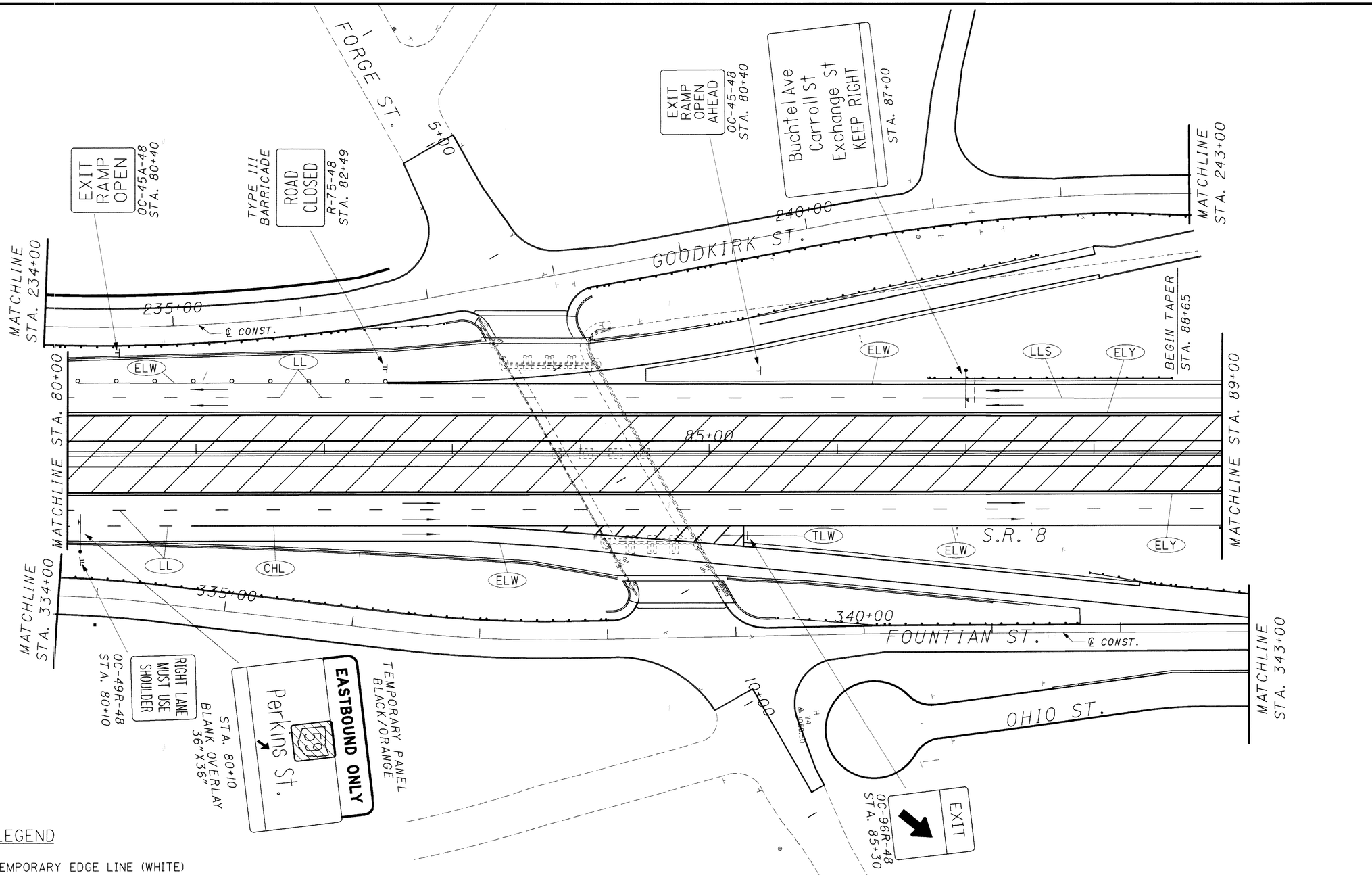

LEGEND

ELW	TEMPORARY EDGE LINE (WHITE)
ELY	TEMPORARY EDGE LINE (YELLOW)
CLS	TEMPORARY CENTER LINE - DOUBLE SOLID
CHL	TEMPORARY CHANNELIZING LINE (WHITE)
LL	TEMPORARY LANE LINE
SL	TEMPORARY STOP LINE
LA	TEMPORARY LANE ARROW
WP	TEMPORARY WORD ON PAVEMENT, 72"
LLS	TEMPORARY SOLID LANE LINE
TLW	TEMPORARY TRANSVERSE LINE (WHITE)

	POST MOUNTED SIGN
	PORTABLE CONCRETE BARRIER
	TEMPORARY DRUMS
	DIRECTION OF TRAFFIC ARROW
	TEMPORARY TRAFFIC SIGNAL
	TEMPORARY PAVEMENT
	WORK AREA

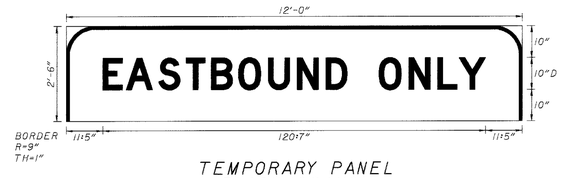

TEMPORARY PANEL
BLACK/ORANGE

REVISIONS: 05/15/2002 by MAM

CALCULATED KME
CHECKED

0 20 40 80
HORIZONTAL SCALE IN FEET

MAINTENANCE OF TRAFFIC
PHASE 3

SUM-8-0.63

110
1088

11:44:09 PM
06/13/2002
u:\00-00sr-81\civil\mot\plan sheets\phase3\mpl32p3.dgn

A TEMPORARY CB-3A CATCH BASIN SHALL BE PLACED AT STA. 95+10 RT IN LINE WITH THE TEMPORARY CURBING. THE CB SHALL OUTLET WITH A TEMP. 15" TYPE B CONDUIT TO THE CB AT STA. 94+30. THE CB AT STA. 94+30 SHALL BE USED AS A TEMPORARY CB AND WILL REQUIRE A MODIFIED CASTING IN ORDER FOR THE BASE NOT TO HAVE TO BE RESET FROM ITS FINAL PROPOSED POSITION. THE CB AT STA. 94+30 SHOULD BE OUTLET TO THE EXISTING INLET @ STA. 93+11.41 USING A TEMPORARY 15" TYPE C CONDUIT. THE TEMPORARY CB'S SHALL HAVE AN OUTLET AT ALL TIMES DURING PHASE 3. PAYMENT FOR THE ABOVE SHALL BE INCLUDED IN ITEM 614 TEMPORARY PAVEMENT CLASS A, AS PER PLAN.

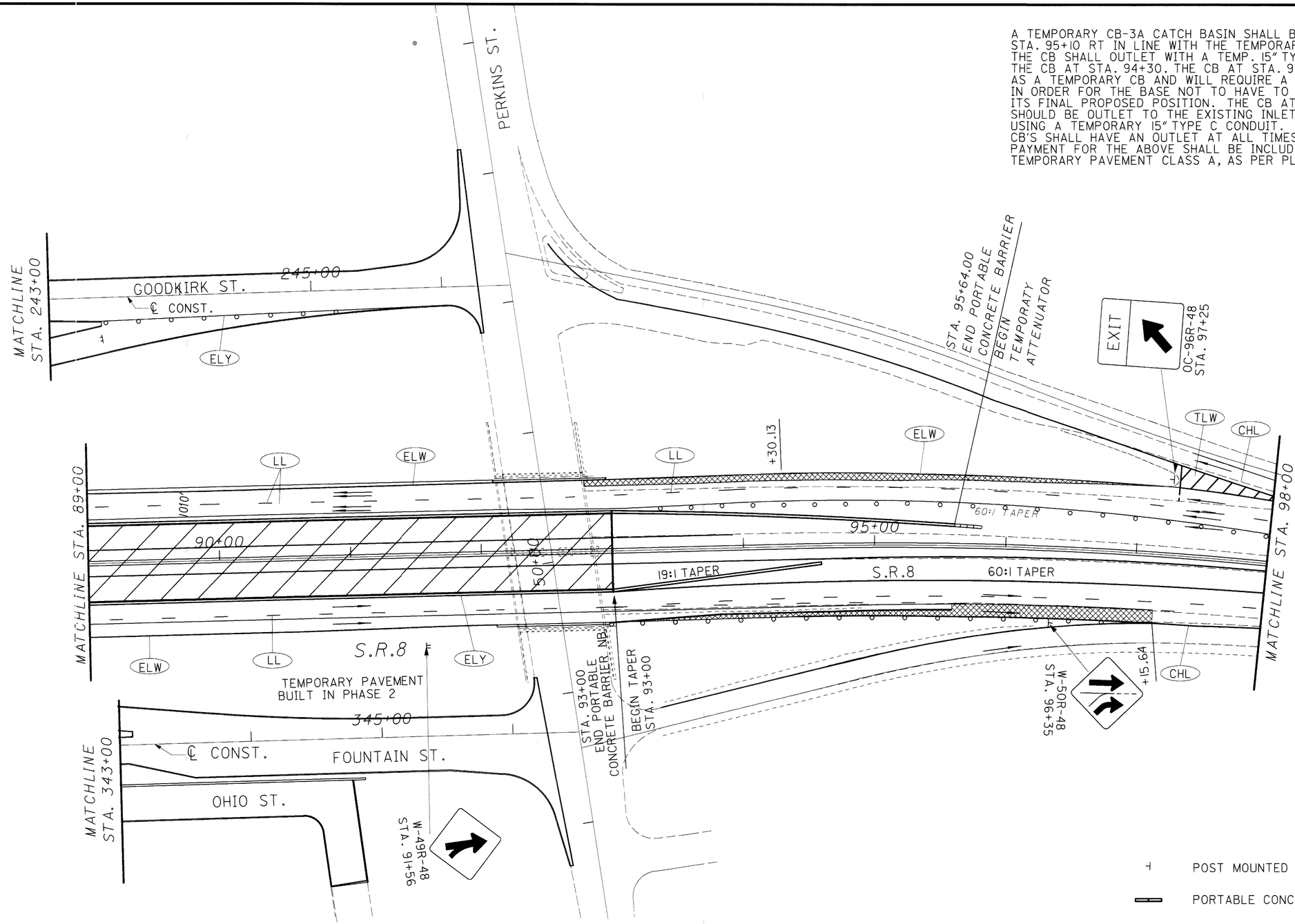

LEGEND

ELW	TEMPORARY EDGE LINE (WHITE)	SL	TEMPORARY STOP LINE
ELY	TEMPORARY EDGE LINE (YELLOW)	LA	TEMPORARY LANE ARROW
CLS	TEMPORARY CENTER LINE - DOUBLE SOLID	WP	TEMPORARY WORD ON PAVEMENT, 72"
CHL	TEMPORARY CHANNELIZING LINE (WHITE)	LLS	TEMPORARY SOLID LANE LINE
LL	TEMPORARY LANE LINE	DL	TEMPORARY DOTTED LINE

- POST MOUNTED SIGN
- PORTABLE CONCRETE BARRIER
- TEMPORARY DRUMS
- DIRECTION OF TRAFFIC ARROW
- TEMPORARY TRAFFIC SIGNAL
- TEMPORARY PAVEMENT
- WORK AREA

REVISIONS: 05/15/2002 by MAM

HORIZONTAL SCALE IN FEET 0 20 40 80

CALCULATED KME CHECKED

MAINTENANCE OF TRAFFIC PHASE 3

SUM-8-0.63

111
1088

11:44:10 PM
06/13/2002
u:\00-0108r-8\civil\mot\plan sheets\phase3\mp33p3.dgn

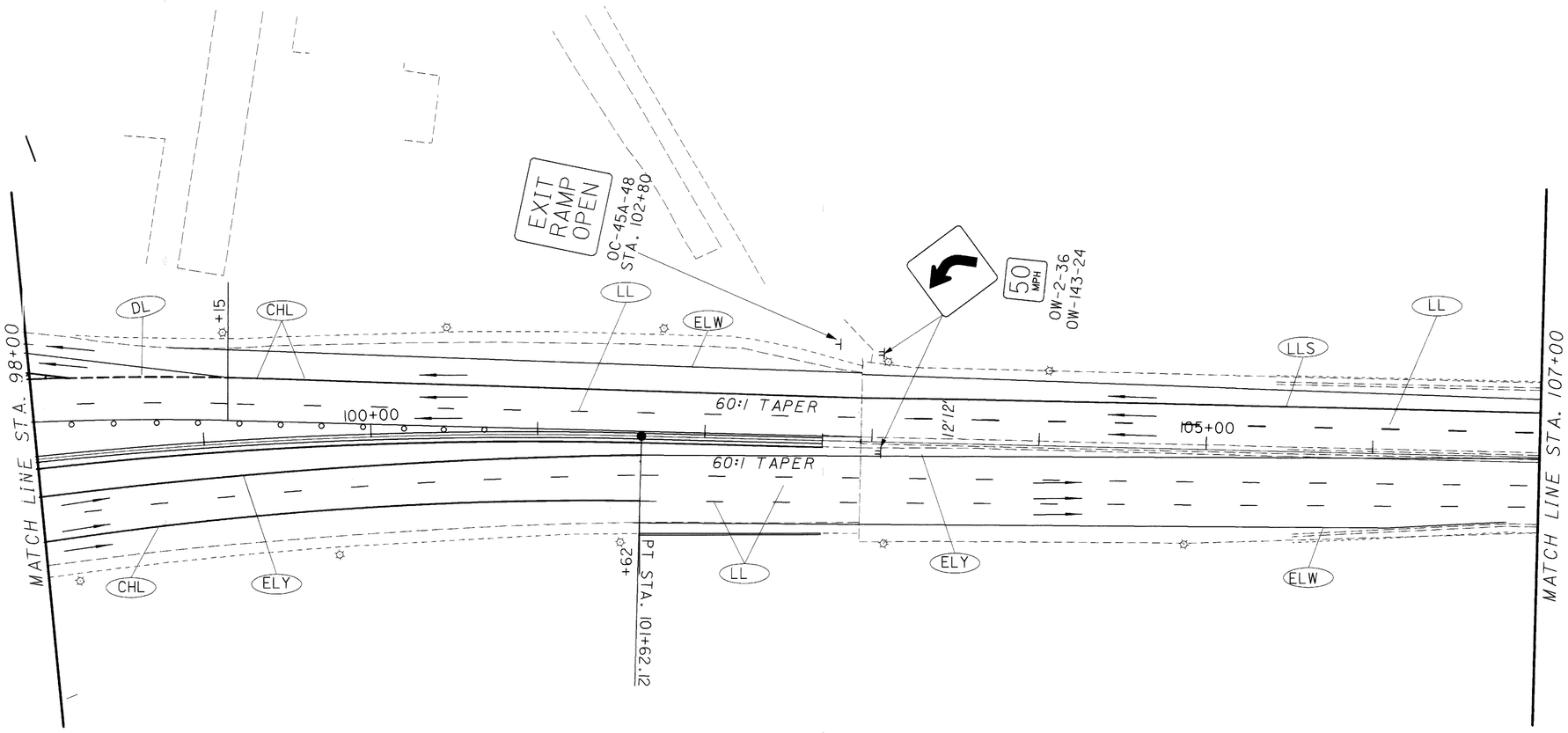

LEGEND

ELW	TEMPORARY EDGE LINE (WHITE)				
ELY	TEMPORARY EDGE LINE (YELLOW)	⊣	POST MOUNTED SIGN	——→	DIRECTION OF TRAFFIC ARROW
CLS	TEMPORARY CENTER LINE - DOUBLE SOLID	▬	PORTABLE CONCRETE BARRIER	⊗→	TEMPORARY TRAFFIC SIGNAL
CHL	TEMPORARY CHANNELIZING LINE (WHITE)	○	TEMPORARY DRUMS	▨	TEMPORARY PAVEMENT
LL	TEMPORARY LANE LINE			▨	WORK AREA
SL	TEMPORARY STOP LINE				
LA	TEMPORARY LANE ARROW				
WP	TEMPORARY WORD ON PAVEMENT, 72"				
LLS	TEMPORARY SOLID LANE LINE				
TLW	TEMPORARY TRANSVERSE LINE (WHITE)				

REVISIONS: 05/15/2002 by MAM

CALCULATED KME
CHECKED

HORIZONTAL SCALE IN FEET
0 20 40 80

MAINTENANCE OF TRAFFIC
PHASE 3

SUM-8-0.63

112
1088

11:44:11 PM
06/13/2002
u:\00-010sr-81\civil\mot\plan sheets\phase3\mp34p3.dgn

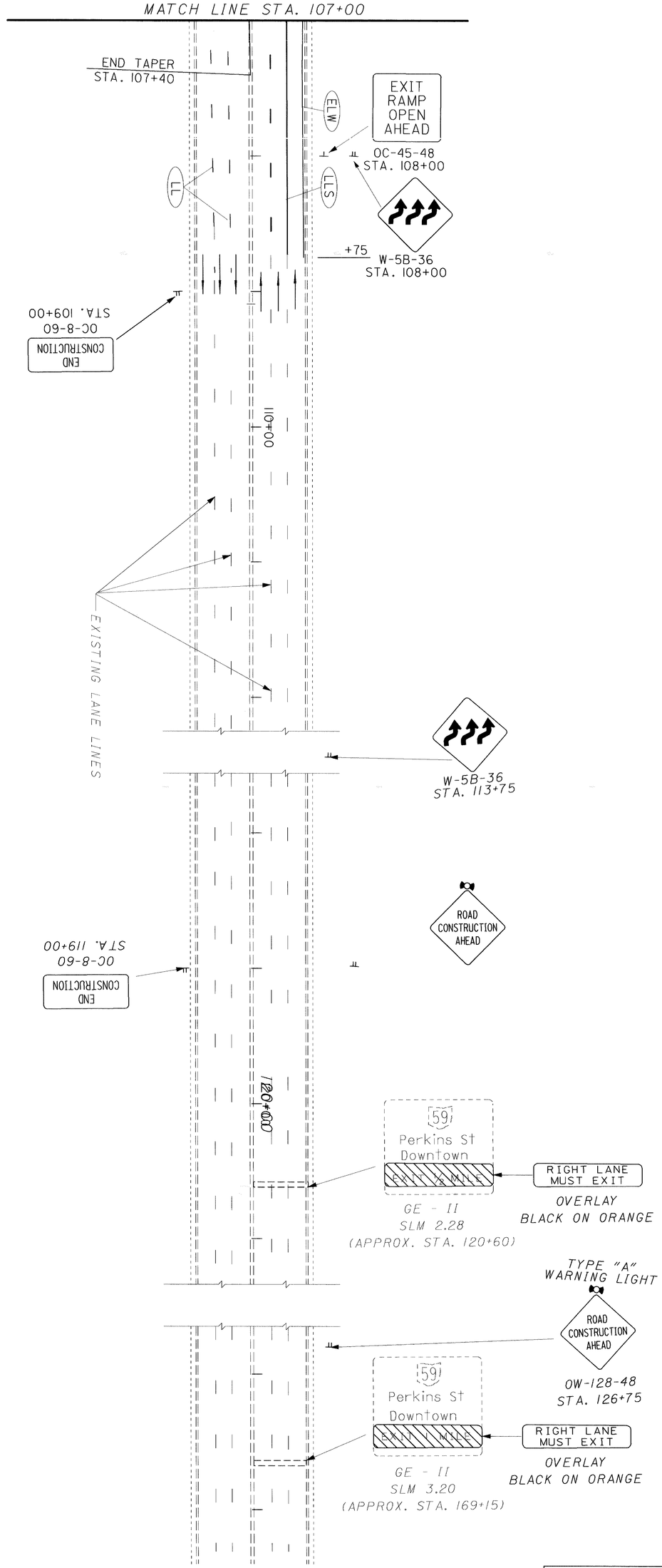

LEGEND

- ELW — TEMPORARY EDGE LINE (WHITE)
- ELY — TEMPORARY EDGE LINE (YELLOW)
- CLS — TEMPORARY CENTER LINE - DOUBLE SOLID
- CHL — TEMPORARY CHANNELIZING LINE (WHITE)
- LL — TEMPORARY LANE LINE
- SL — TEMPORARY STOP LINE
- LA — TEMPORARY LANE ARROW
- WP — TEMPORARY WORD ON PAVEMENT, 72"
- LLS — TEMPORARY SOLID LANE LINE

- POST MOUNTED SIGN
- PORTABLE CONCRETE BARRIER
- TEMPORARY DRUMS
- DIRECTION OF TRAFFIC ARROW
- TEMPORARY TRAFFIC SIGNAL
- TEMPORARY PAVEMENT
- WORK AREA

REVISIONS: 05/15/2002 by MAM

113 / 1088	SUM-8-0.63	MAINTENANCE OF TRAFFIC PHASE 3	CALCULATED KME / CHECKED	0 20 40 80 HORIZONTAL SCALE IN FEET

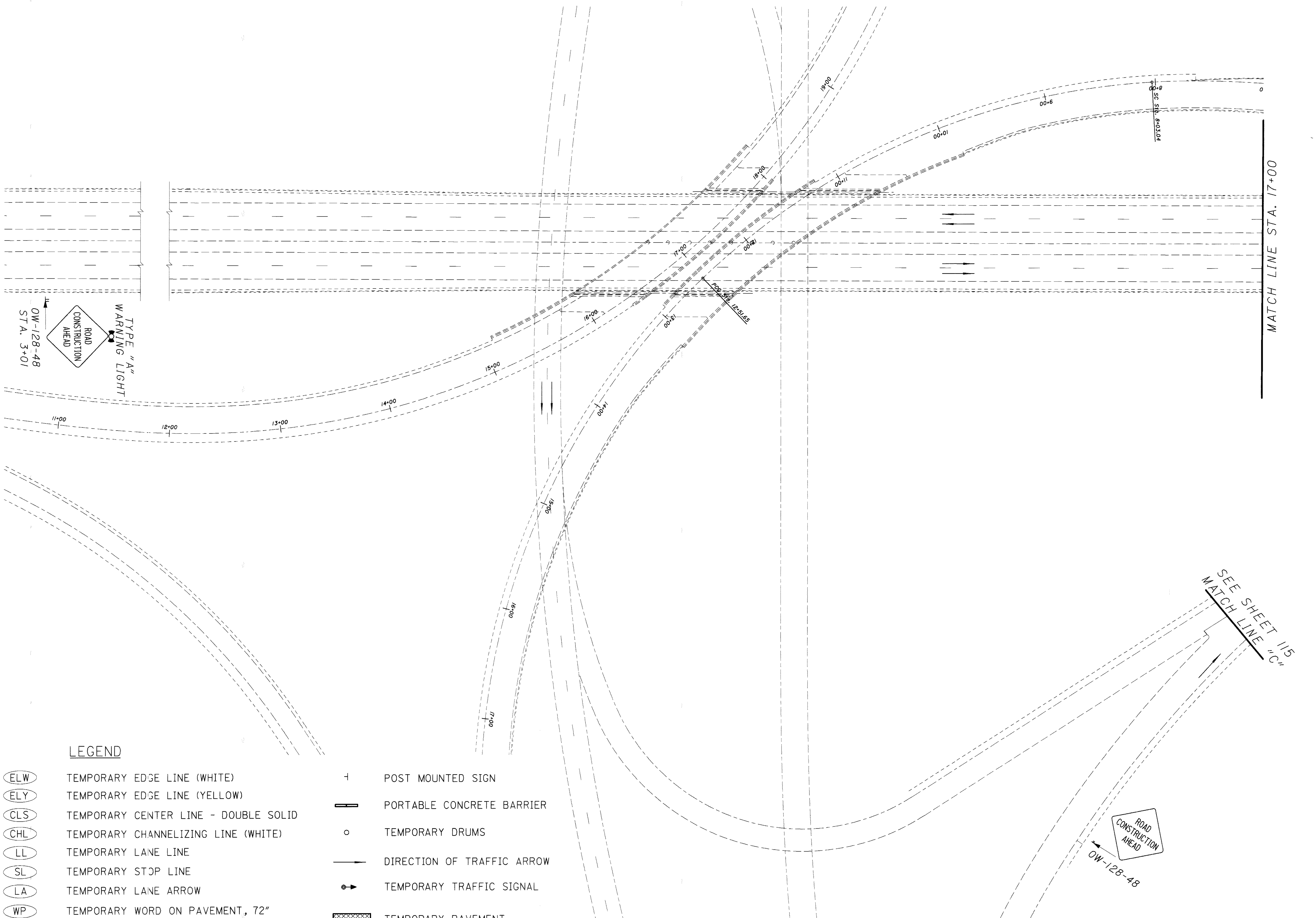

LEGEND

ELW	TEMPORARY EDGE LINE (WHITE)
ELY	TEMPORARY EDGE LINE (YELLOW)
CLS	TEMPORARY CENTER LINE - DOUBLE SOLID
CHL	TEMPORARY CHANNELIZING LINE (WHITE)
LL	TEMPORARY LANE LINE
SL	TEMPORARY STOP LINE
LA	TEMPORARY LANE ARROW
WP	TEMPORARY WORD ON PAVEMENT, 72"

- POST MOUNTED SIGN
- PORTABLE CONCRETE BARRIER
- TEMPORARY DRUMS
- DIRECTION OF TRAFFIC ARROW
- TEMPORARY TRAFFIC SIGNAL
- TEMPORARY PAVEMENT

REVISIONS: 05/15/2002 by MAM

0 20 40 80
HORIZONTAL SCALE IN FEET

CALCULATED
CHECKED

MAINTENANCE OF TRAFFIC PHASE 4A

SUM-8-0.63

114
1088

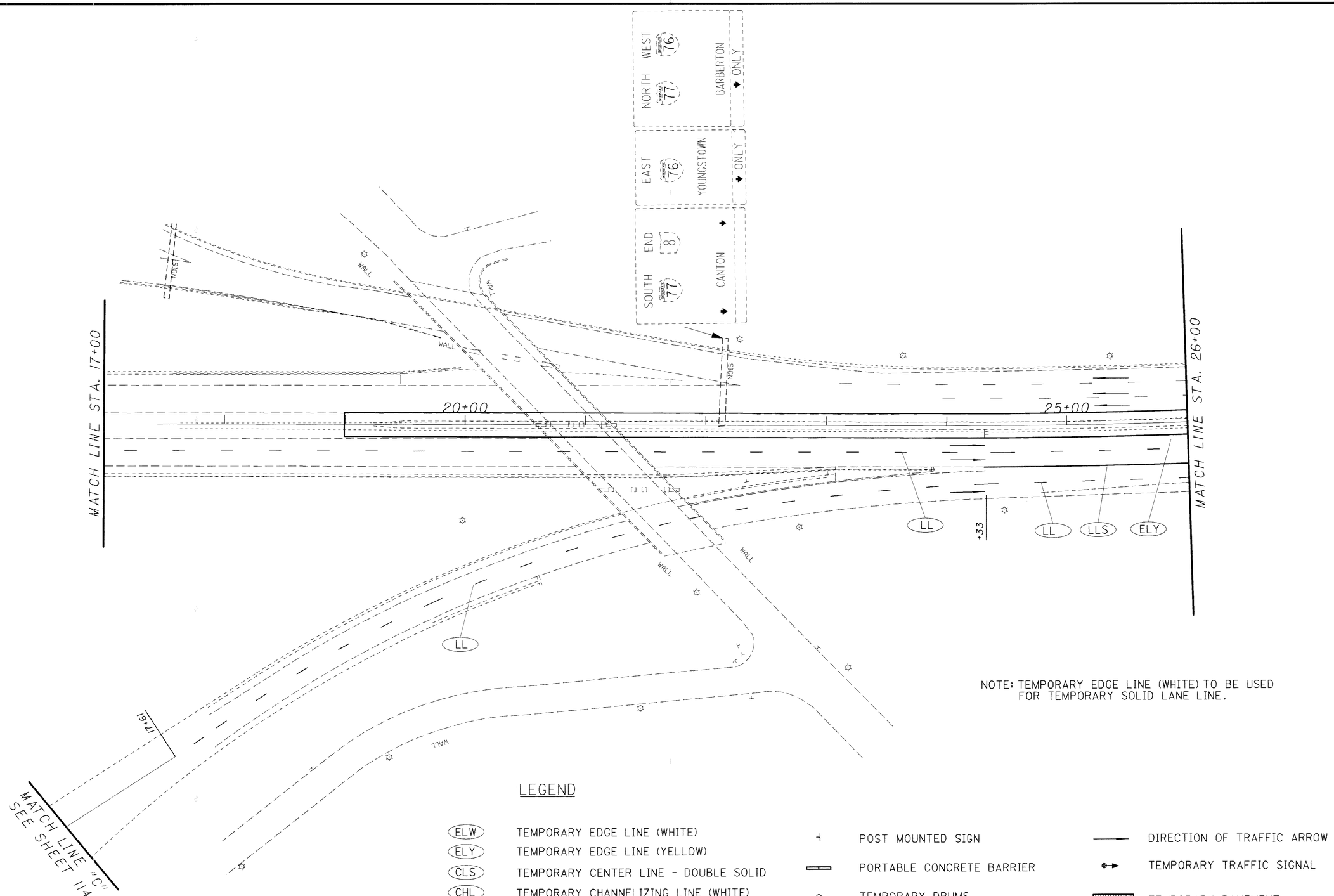

NOTE: TEMPORARY EDGE LINE (WHITE) TO BE USED FOR TEMPORARY SOLID LANE LINE.

LEGEND

ELW	TEMPORARY EDGE LINE (WHITE)
ELY	TEMPORARY EDGE LINE (YELLOW)
CLS	TEMPORARY CENTER LINE - DOUBLE SOLID
CHL	TEMPORARY CHANNELIZING LINE (WHITE)
LL	TEMPORARY LANE LINE
SL	TEMPORARY STOP LINE
LA	TEMPORARY LANE ARROW
WP	TEMPORARY WORD ON PAVEMENT, 72"
LLS	TEMPORARY SOLID LANE LINE

	POST MOUNTED SIGN
	PORTABLE CONCRETE BARRIER
o	TEMPORARY DRUMS

	DIRECTION OF TRAFFIC ARROW
	TEMPORARY TRAFFIC SIGNAL
	TEMPORARY PAVEMENT
	WORK AREA

REVISIONS: 05/15/2002 by MAM

CALCULATED KME
CHECKED

HORIZONTAL SCALE IN FEET
0 20 40 80

MAINTENANCE OF TRAFFIC PHASE 4A

SUM-8-0.63

115
1088

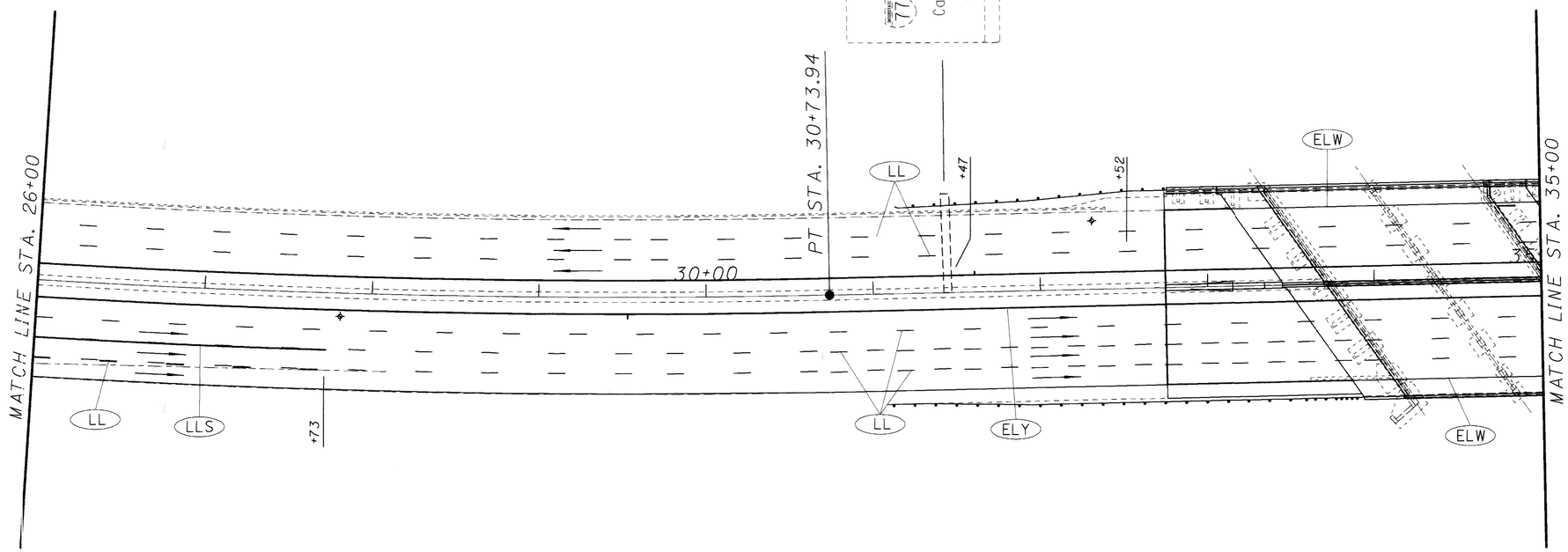

LEGEND

ELW	TEMPORARY EDGE LINE (WHITE)
ELY	TEMPORARY EDGE LINE (YELLOW)
CLS	TEMPORARY CENTER LINE - DOUBLE SOLID
CHL	TEMPORARY CHANNELIZING LINE (WHITE)
LL	TEMPORARY LANE LINE
SL	TEMPORARY STOP LINE
LA	TEMPORARY LANE ARROW
WP	TEMPORARY WORD ON PAVEMENT, 72"
LLS	TEMPORARY SOLID LANE LINE

	POST MOUNTED SIGN
	PORTABLE CONCRETE BARRIER
	TEMPORARY DRUMS

	DIRECTION OF TRAFFIC ARROW
	TEMPORARY TRAFFIC SIGNAL
	TEMPORARY PAVEMENT
	WORK AREA

REVISIONS: 05/15/2002 by MAM

CALCULATED KME
CHECKED

HORIZONTAL SCALE IN FEET
0 20 40 80

MAINTENANCE OF TRAFFIC PHASE 4A

SUM-8-0.63

116
1088

11:44:17 PM
06/13/2002
u:\00-010sr-8\1\civil\mot\plan sheets\phase4\mp138p4a.dgn

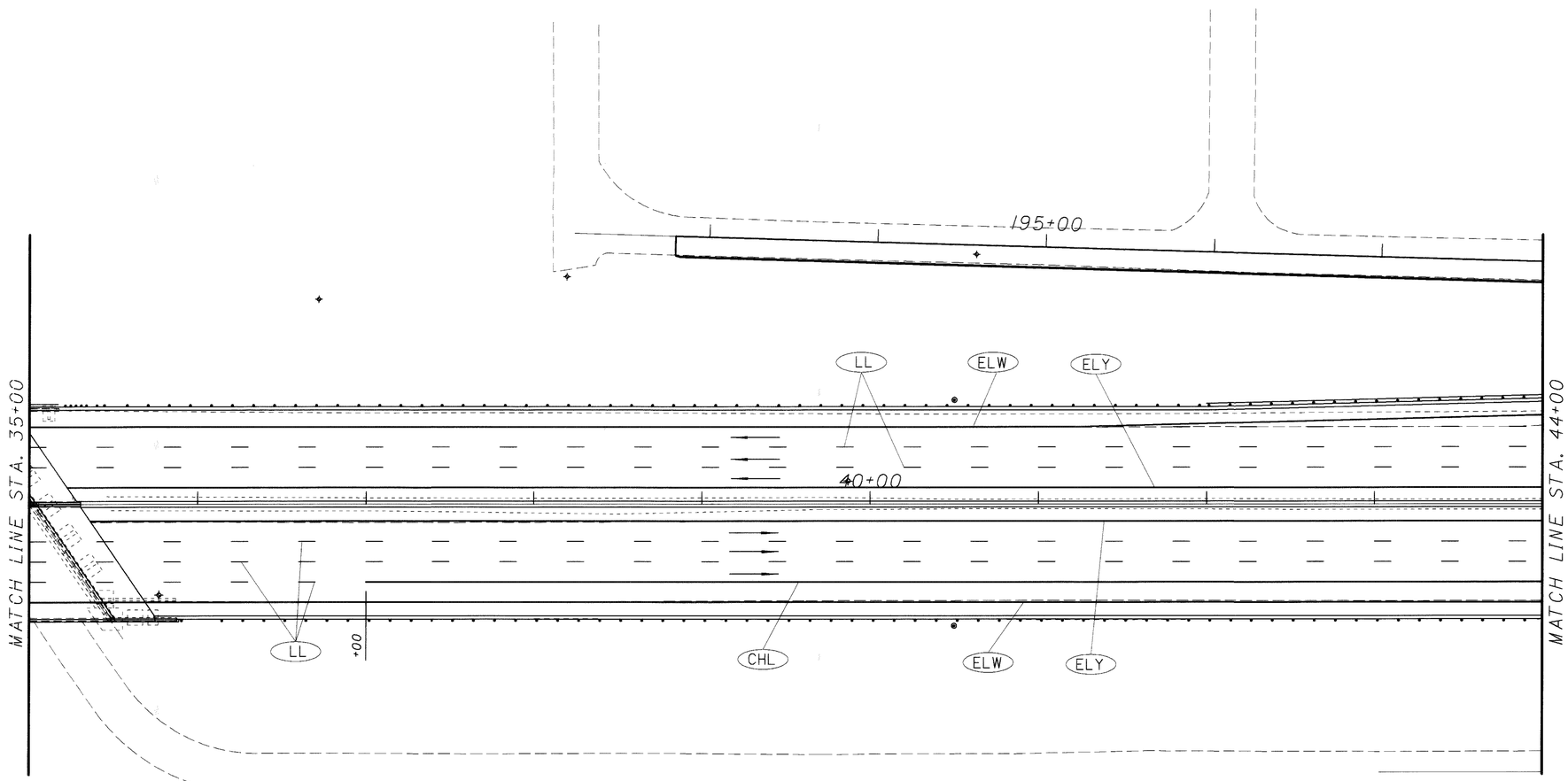

LEGEND

ELW	TEMPORARY EDGE LINE (WHITE)
ELY	TEMPORARY EDGE LINE (YELLOW)
CLS	TEMPORARY CENTER LINE - DOUBLE SOLID
CHL	TEMPORARY CHANNELIZING LINE (WHITE)
LL	TEMPORARY LANE LINE
SL	TEMPORARY STOP LINE
LA	TEMPORARY LANE ARROW
WP	TEMPORARY WORD ON PAVEMENT, 72"

POST MOUNTED SIGN

PORTABLE CONCRETE BARRIER

TEMPORARY DRUMS

DIRECTION OF TRAFFIC ARROW

TEMPORARY TRAFFIC SIGNAL

TEMPORARY PAVEMENT

WORK AREA

N

0 20 40 80
HORIZONTAL SCALE IN FEET

CALCULATED KME
CHECKED

MAINTENANCE OF TRAFFIC PHASE 4A

SUM-8-0.63

11:44:18 PM
06/13/2002
u:\00-010sr-8\i\civil\mot\plan sheets\phase4\mpl39p4a.dgn

LEGEND

ELW	TEMPORARY EDGE LINE (WHITE)
ELY	TEMPORARY EDGE LINE (YELLOW)
CLS	TEMPORARY CENTER LINE - DOUBLE SOLID
CHL	TEMPORARY CHANNELIZING LINE (WHITE)
LL	TEMPORARY LANE LINE
SL	TEMPORARY STOP LINE
LA	TEMPORARY LANE ARROW
WP	TEMPORARY WORD ON PAVEMENT, 72"
TLW	TEMPORARY TRANSVERSE LINE (WHITE)

POST MOUNTED SIGN

PORTABLE CONCRETE BARRIER

TEMPORARY DRUMS

DIRECTION OF TRAFFIC ARROW

TEMPORARY TRAFFIC SIGNAL

TEMPORARY PAVEMENT

WORK AREA

HORIZONTAL SCALE IN FEET
0 20 40 80

CALCULATED KME
CHECKED

MAINTENANCE OF TRAFFIC PHASE 4A

SUM-8-0.63

118
1088

11:44:19 PM
06/3/2002
u:\00-010sr-8\civil\mot\plan sheets\phase4\mpl40p4a.dgn

11:44:19 PM
06/13/2002
u:\00-010sr-8\f\civil\mot\plan sheets\phase4\mpl4lp4a.dgn

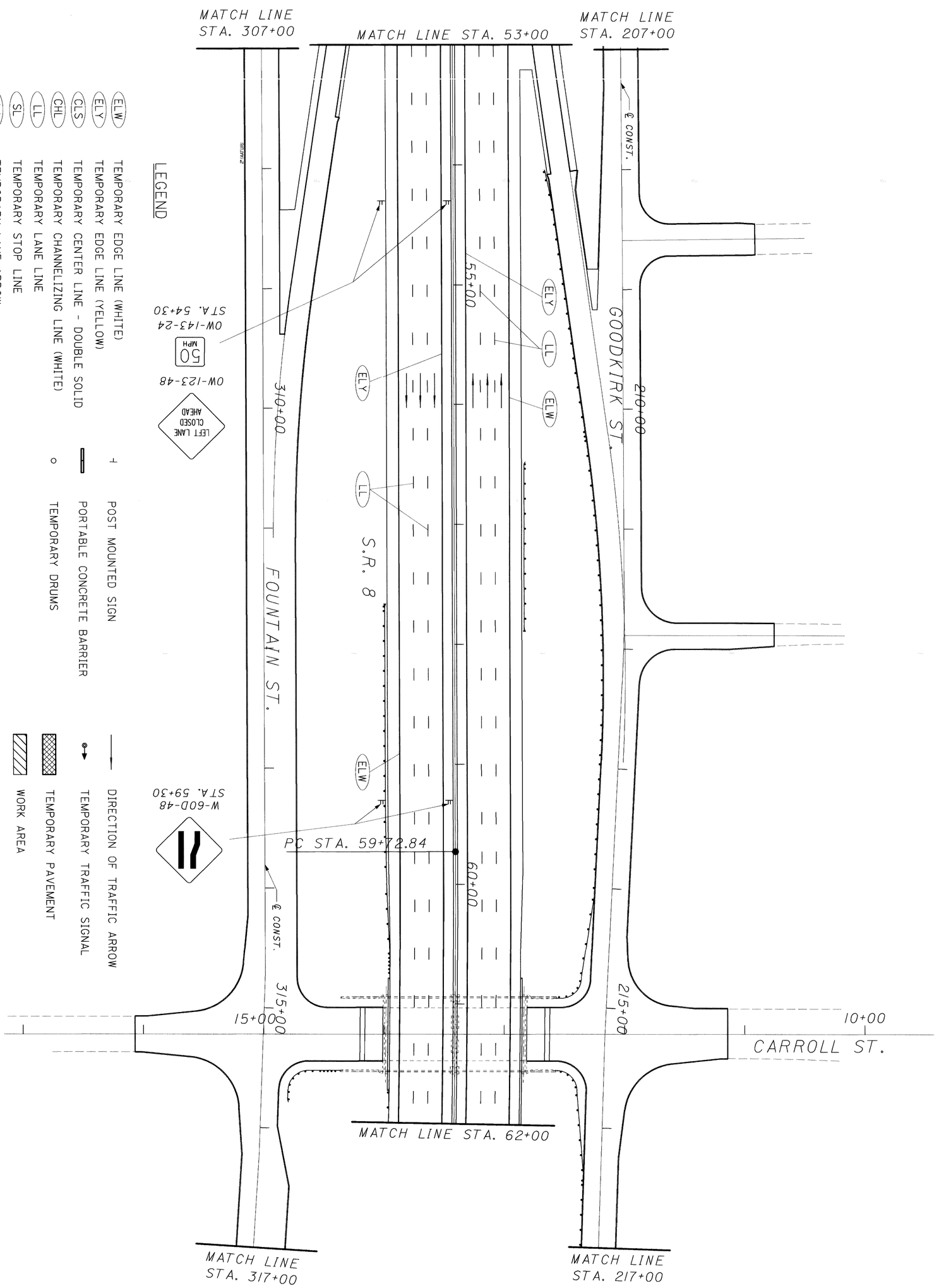

119 / 1088	SUM-8-0.63	MAINTENANCE OF TRAFFIC PHASE 4A	CALCULATED KME / CHECKED	0 20 40 80 HORIZONTAL SCALE IN FEET

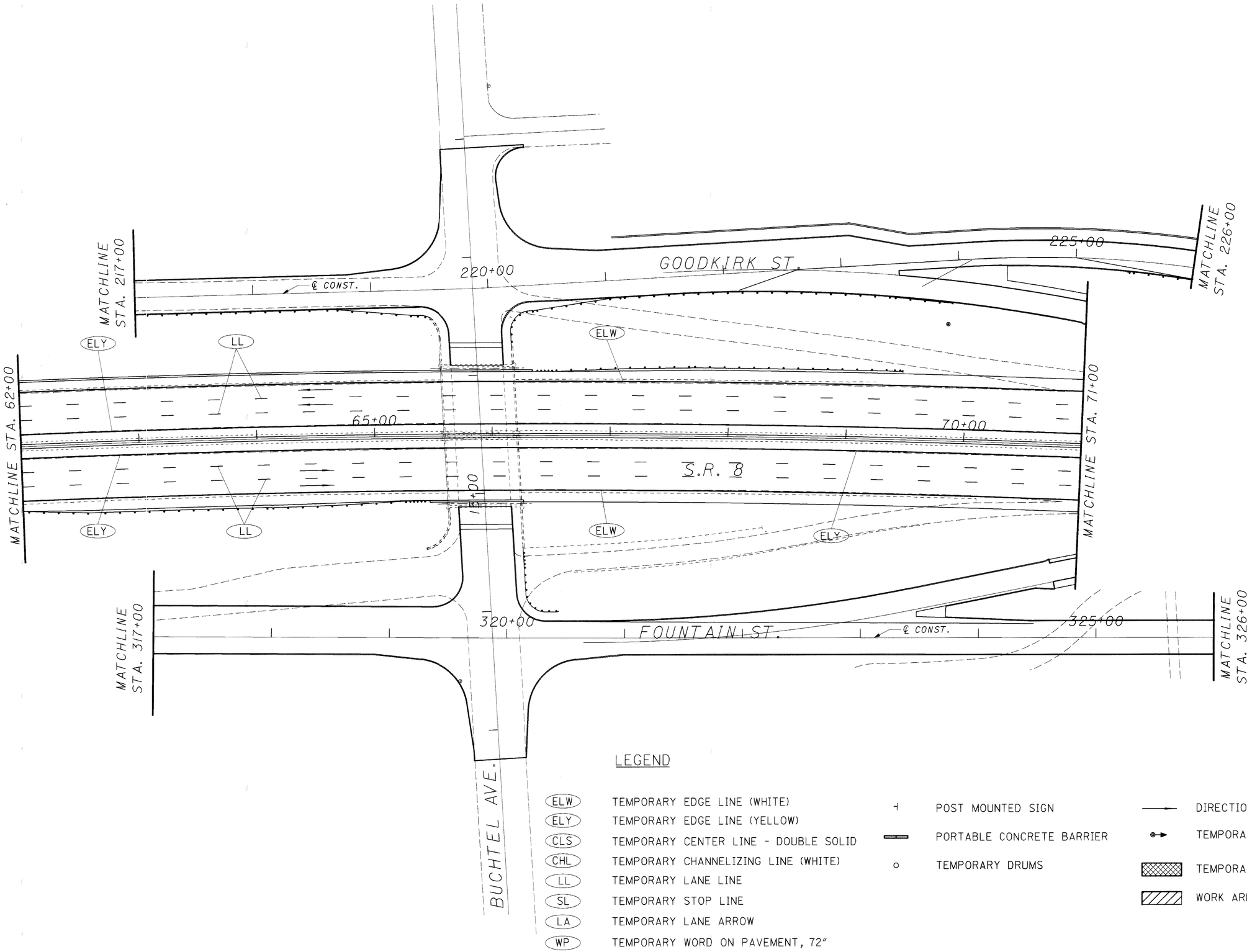

LEGEND

ELW	TEMPORARY EDGE LINE (WHITE)		POST MOUNTED SIGN		DIRECTION OF TRAFFIC ARROW
ELY	TEMPORARY EDGE LINE (YELLOW)		PORTABLE CONCRETE BARRIER		TEMPORARY TRAFFIC SIGNAL
CLS	TEMPORARY CENTER LINE - DOUBLE SOLID	o	TEMPORARY DRUMS		TEMPORARY PAVEMENT
CHL	TEMPORARY CHANNELIZING LINE (WHITE)				WORK AREA
LL	TEMPORARY LANE LINE				
SL	TEMPORARY STOP LINE				
LA	TEMPORARY LANE ARROW				
WP	TEMPORARY WORD ON PAVEMENT, 72"				

REVISIONS: 05/15/2002 by EMS

HORIZONTAL SCALE IN FEET
0 20 40 80

CALCULATED KME
CHECKED

MAINTENANCE OF TRAFFIC PHASE 4A

SUM-8-0.63

120
1088

11:44:22 PM
06/13/2002
L:\00-090sr-8\civil\mot\plan sheets\phase4\mpl42p4a.dgn

11:44:23 PM
06/13/2002
u:\00-010sr-8\l\civil\mot\plan sheets\phase4\mpl43p4a.dgn

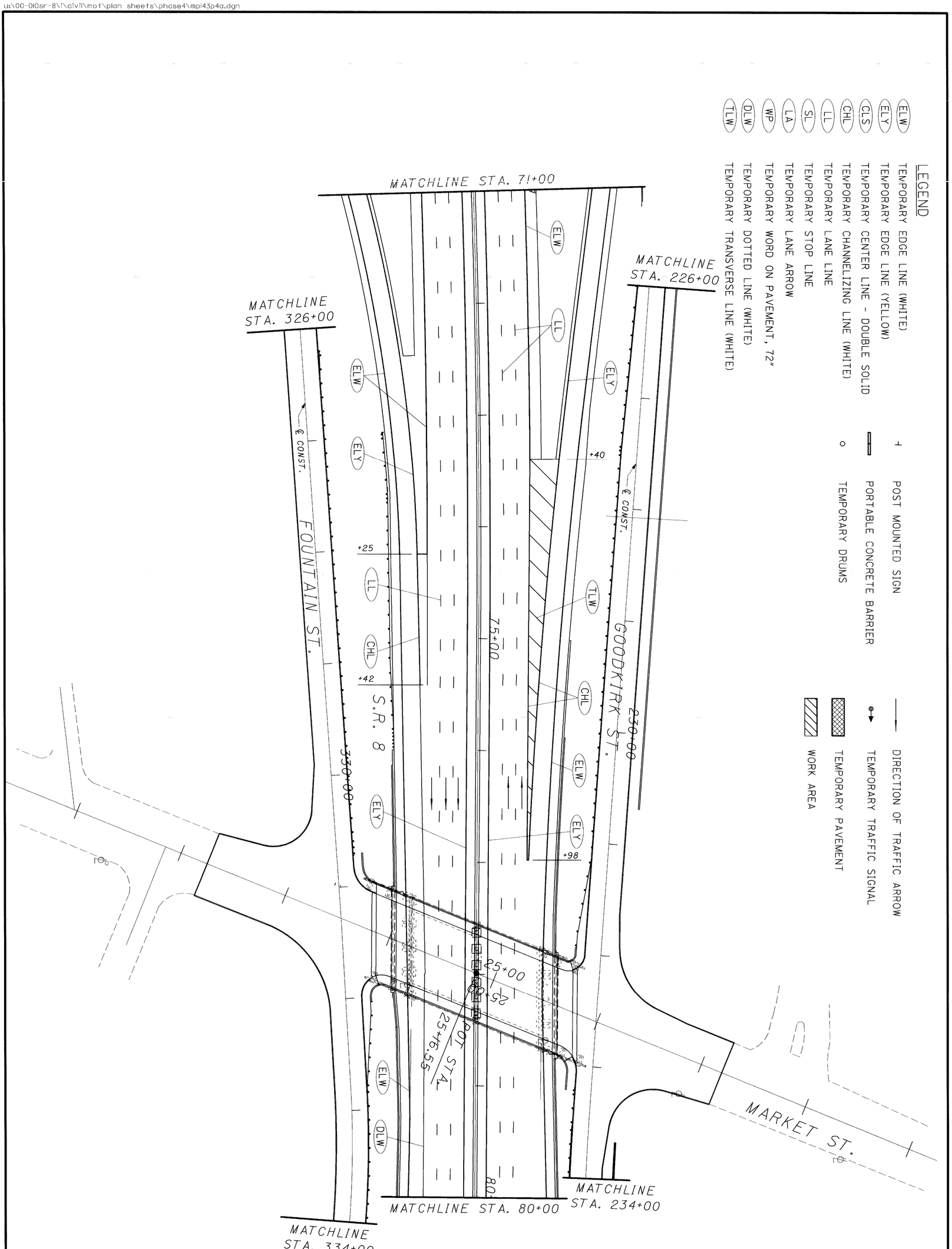

REVISIONS: 05/15/2002 by MAM

121 / 1088	SUM-8-0.63	MAINTENANCE OF TRAFFIC PHASE 4A	CALCULATED KME / CHECKED	0 40 20 80 HORIZONTAL SCALE IN FEET

11:44:24 PM
06/13/2002
\\1\00-010sr-8\i\civil\mot\plan sheets\phase4\mpl44p4a.dgn

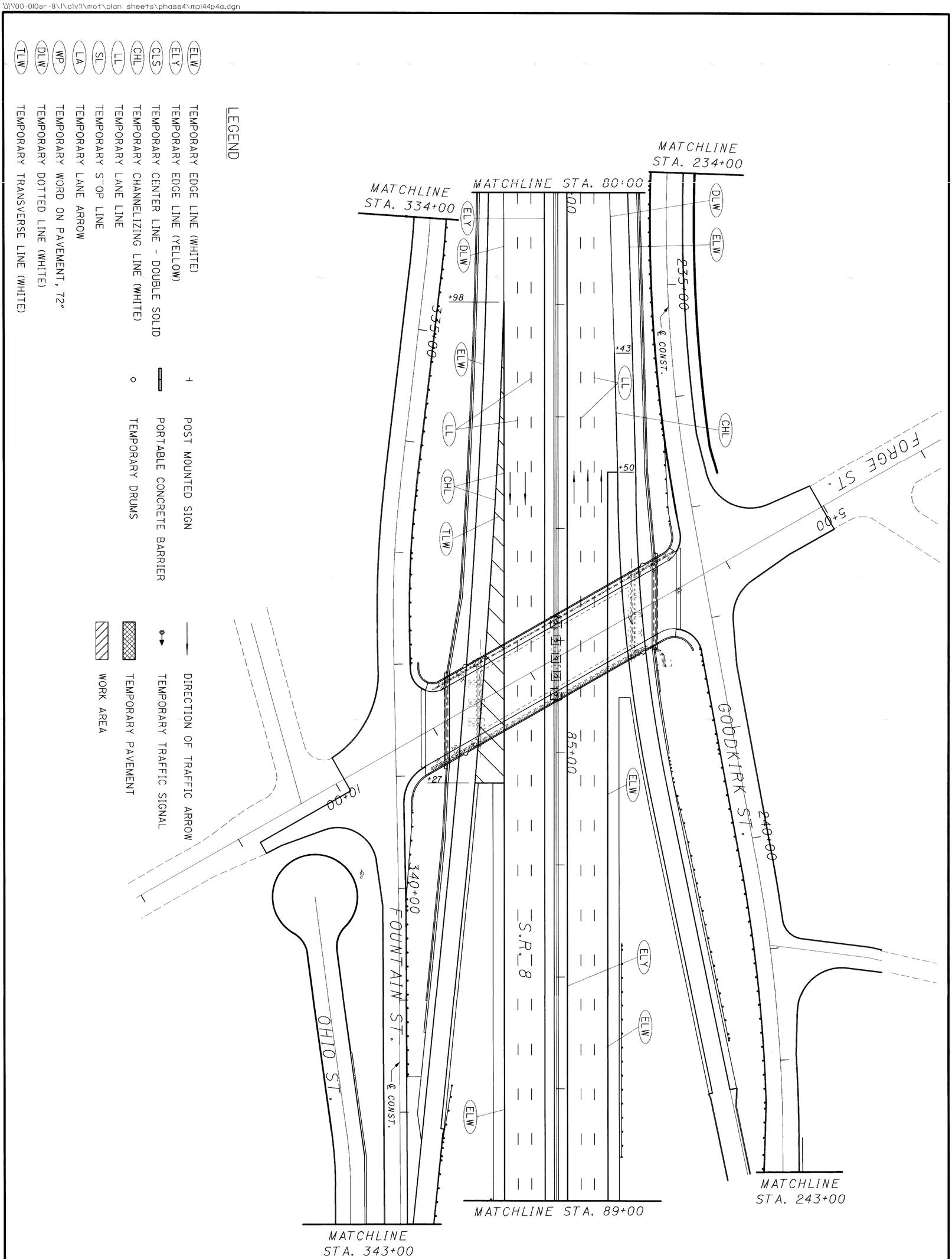

122 / 1088	**SUM-8-0.63**	**MAINTENANCE OF TRAFFIC PHASE 4A**	CALCULATED KME / CHECKED	0 20 40 80 HORIZONTAL SCALE IN FEET

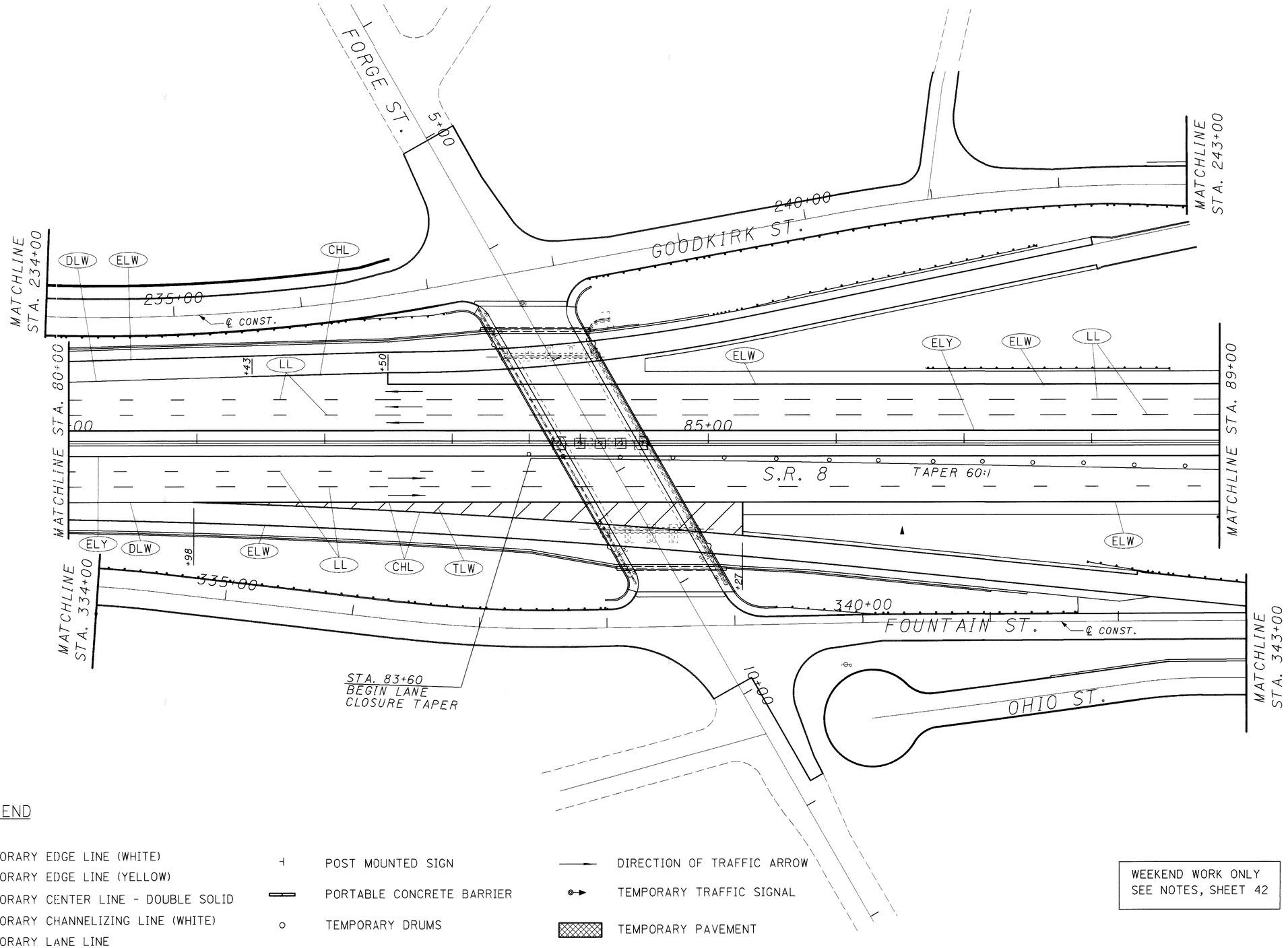

LEGEND

ELW	TEMPORARY EDGE LINE (WHITE)	POST MOUNTED SIGN	DIRECTION OF TRAFFIC ARROW
ELY	TEMPORARY EDGE LINE (YELLOW)	PORTABLE CONCRETE BARRIER	TEMPORARY TRAFFIC SIGNAL
CLS	TEMPORARY CENTER LINE - DOUBLE SOLID	TEMPORARY DRUMS	TEMPORARY PAVEMENT
CHL	TEMPORARY CHANNELIZING LINE (WHITE)		WORK AREA
LL	TEMPORARY LANE LINE		
SL	TEMPORARY STOP LINE		
LA	TEMPORARY LANE ARROW		
WP	TEMPORARY WORD ON PAVEMENT, 72"		
DLW	TEMPORARY DOTTED LINE (WHITE)		
TLW	TEMPORARY TRANSVERSE LINE (WHITE)		

WEEKEND WORK ONLY
SEE NOTES, SHEET 42

N

HORIZONTAL SCALE IN FEET
0 20 40 80

CALCULATED KME
CHECKED

MAINTENANCE OF TRAFFIC
PHASE 4B

SUM-8-0.63

122A
1088

11:45:01 PM
06/3/2002
W:\V00-010sr-8\V\civil\mot\plan sheets\phase4\mpl44p4b.dgn

12:53:33 PM
06/14/2002
D:\00-0105R-8\I\Civil\Mot\Plan Sheets\phase4\mpl44p4c.dgn

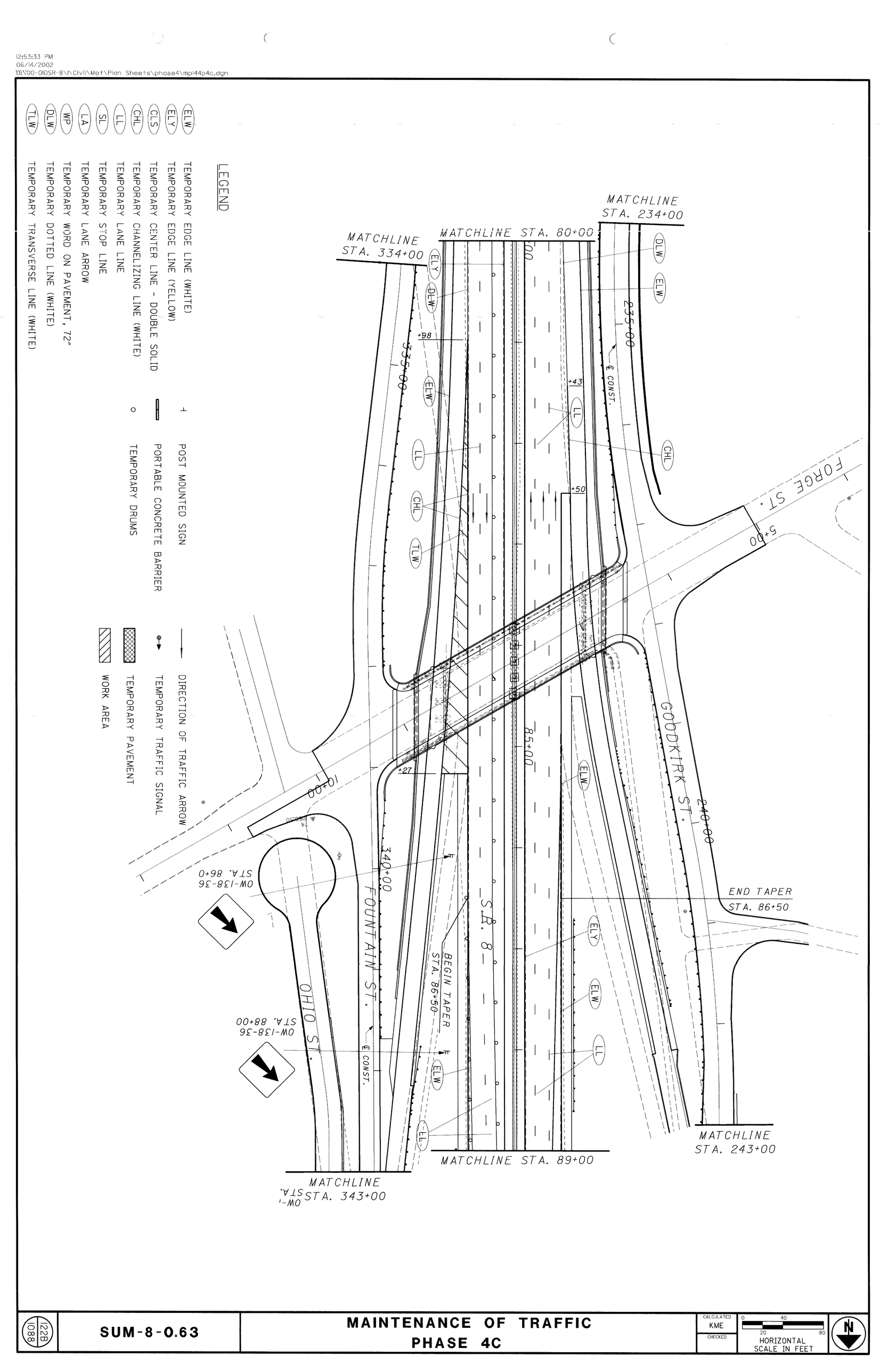

122B 1088	SUM-8-0.63	MAINTENANCE OF TRAFFIC PHASE 4C	CALCULATED KME / CHECKED	0 40 20 80 HORIZONTAL SCALE IN FEET

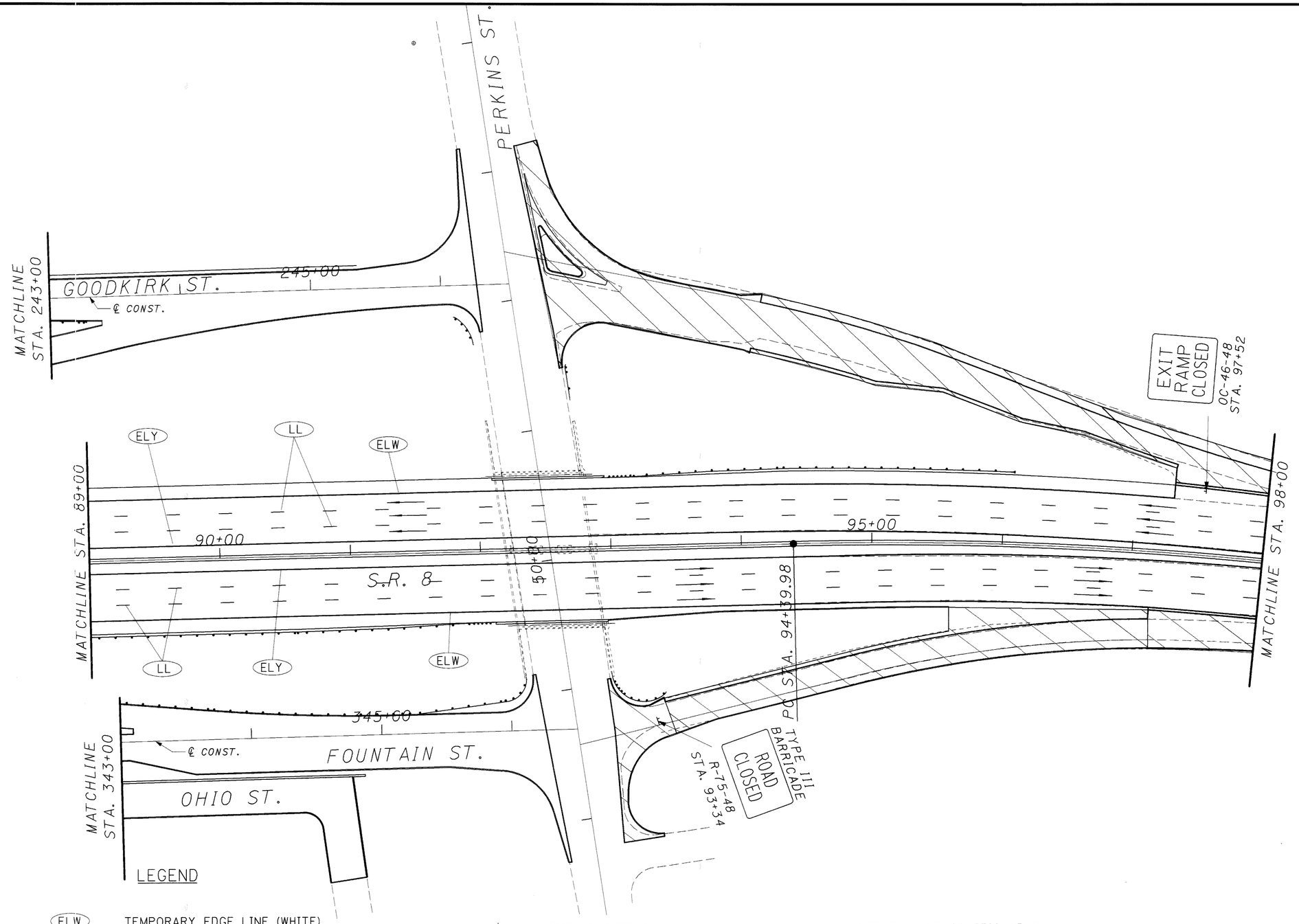

ELW	TEMPORARY EDGE LINE (WHITE)		POST MOUNTED SIGN		DIRECTION OF TRAFFIC ARROW
ELY	TEMPORARY EDGE LINE (YELLOW)		PORTABLE CONCRETE BARRIER		TEMPORARY TRAFFIC SIGNAL
CLS	TEMPORARY CENTER LINE - DOUBLE SOLID		TEMPORARY DRUMS		TEMPORARY PAVEMENT
CHL	TEMPORARY CHANNELIZING LINE (WHITE)				WORK AREA
LL	TEMPORARY LANE LINE				14 DAY CLOSURE SEE NOTES, SHEET 42
SL	TEMPORARY STOP LINE				
LA	TEMPORARY LANE ARROW				
WF	TEMPORARY WORD ON PAVEMENT, 72"				

REVISIONS: 05/15/2002 by MAM

CALCULATED KME
CHECKED

HORIZONTAL SCALE IN FEET
0 20 40 80

MAINTENANCE OF TRAFFIC PHASE 4A

SUM-8-0.63

123
1088

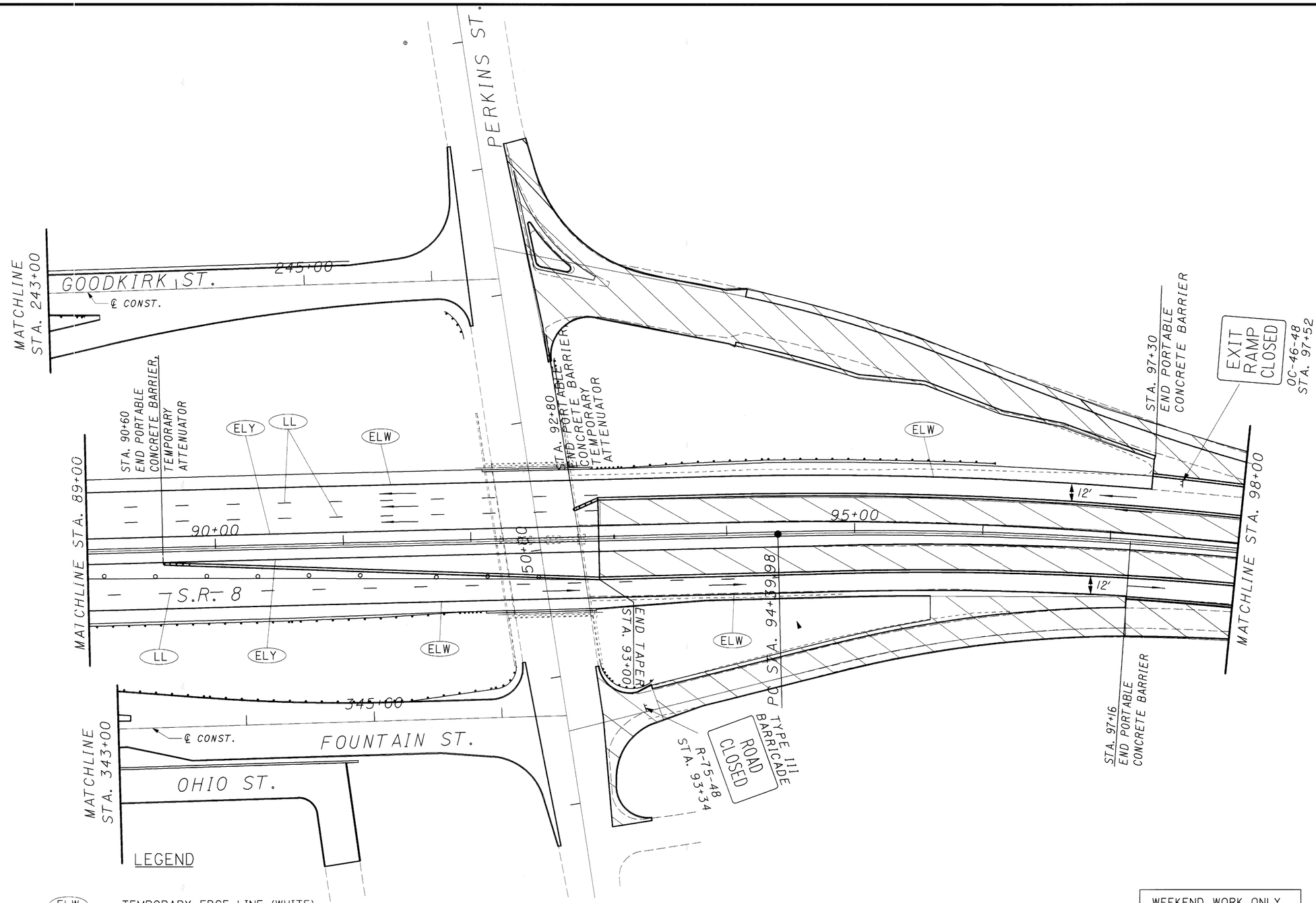

LEGEND

(ELW)	TEMPORARY EDGE LINE (WHITE)
(ELY)	TEMPORARY EDGE LINE (YELLOW)
(CLS)	TEMPORARY CENTER LINE - DOUBLE SOLID
(CHL)	TEMPORARY CHANNELIZING LINE (WHITE)
(LL)	TEMPORARY LANE LINE
(SL)	TEMPORARY STOP LINE
(LA)	TEMPORARY LANE ARROW
(WF)	TEMPORARY WORD ON PAVEMENT, 72"

⊣	POST MOUNTED SIGN
▬	PORTABLE CONCRETE BARRIER
○	TEMPORARY DRUMS
——→	DIRECTION OF TRAFFIC ARROW
⊗→	TEMPORARY TRAFFIC SIGNAL
▨	TEMPORARY PAVEMENT
▨	WORK AREA
▨	14 DAY CLOSURE SEE NOTES, SHEET 42

WEEKEND WORK ONLY
SEE NOTES, SHEET 42

REVISIONS: 05/15/2002 by MAM

CALCULATED KME
CHECKED

HORIZONTAL SCALE IN FEET
0 20 40 80

MAINTENANCE OF TRAFFIC
PHASE 4B

SUM-8-0.63

123A
1088

12:47:25 PM
06/14/2002
\\JAX00-0\DSR-8\1\Civil\Mot\Plan Sheets\phase4\mp145p4b.dgn

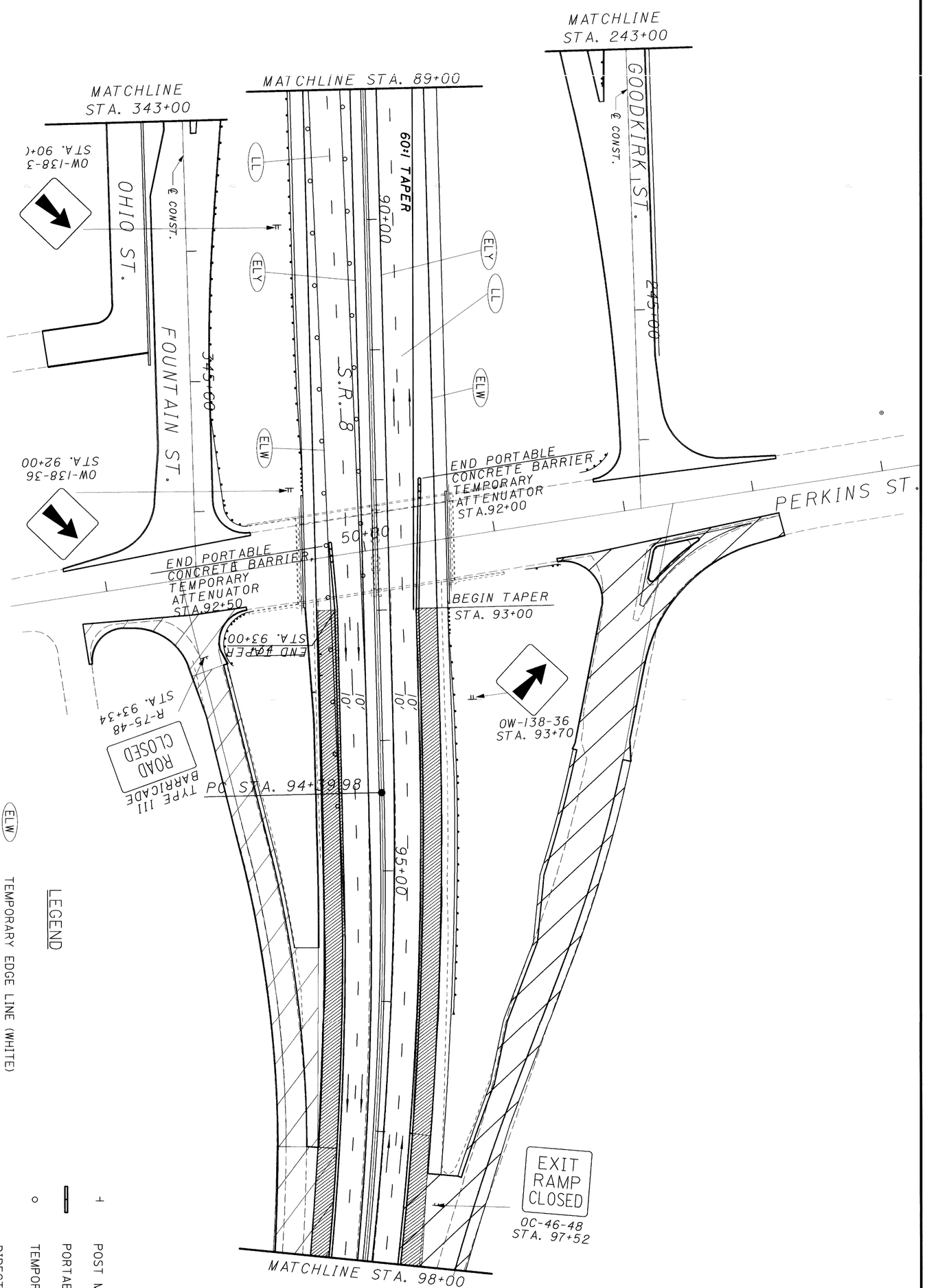

LEGEND

- ELW — TEMPORARY EDGE LINE (WHITE)
- ELY — TEMPORARY EDGE LINE (YELLOW)
- CLS — TEMPORARY CENTER LINE - DOUBLE SOLID
- CHL — TEMPORARY CHANNELIZING LINE (WHITE)
- LL — TEMPORARY LANE LINE
- SL — TEMPORARY STOP LINE
- LA — TEMPORARY LANE ARROW
- WP — TEMPORARY WORD ON PAVEMENT, 72"

- POST MOUNTED SIGN
- PORTABLE CONCRETE BARRIER
- TEMPORARY DRUMS
- DIRECTION OF TRAFFIC ARROW
- TEMPORARY TRAFFIC SIGNAL
- TEMPORARY PAVEMENT
- WORK AREA
- 14 DAY CLOSURE SEE NOTES, SHEET 42

REVISIONS: 05/15/2002 by MAM

123B 1088

SUM-8-0.63

MAINTENANCE OF TRAFFIC PHASE 4C

CALCULATED KME
CHECKED

0 20 40 80
HORIZONTAL SCALE IN FEET

N

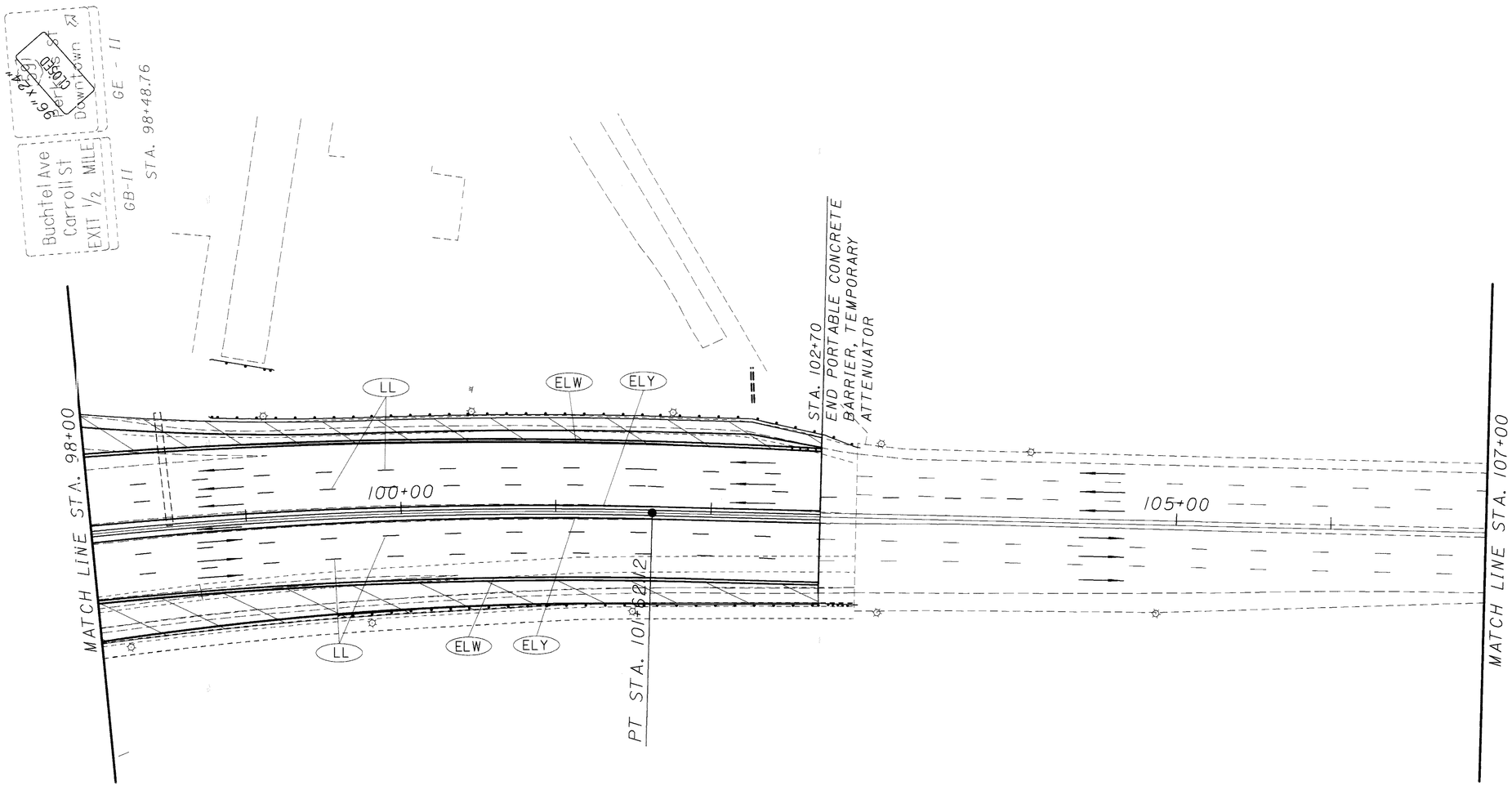

LEGEND

ELW	TEMPORARY EDGE LINE (WHITE)
ELY	TEMPORARY EDGE LINE (YELLOW)
CLS	TEMPORARY CENTER LINE - DOUBLE SOLID
CHL	TEMPORARY CHANNELIZING LINE (WHITE)
LL	TEMPORARY LANE LINE
SL	TEMPORARY STOP LINE
LA	TEMPORARY LANE ARROW
WP	TEMPORARY WORD ON PAVEMENT, 72"

- POST MOUNTED SIGN
- PORTABLE CONCRETE BARRIER
- TEMPORARY DRUMS
- DIRECTION OF TRAFFIC ARROW
- TEMPORARY TRAFFIC SIGNAL
- TEMPORARY PAVEMENT
- WORK AREA
- 14 DAY CLOSURE SEE NOTES, SHEET 42

REVISIONS: 05/15/2002 by MAM

0 20 40 80
HORIZONTAL SCALE IN FEET

CALCULATED KME
CHECKED

MAINTENANCE OF TRAFFIC PHASE 4A

SUM-8-0.63

12:46:18 PM
06/14/2002
\\J:\00-010SR-8\1\Civil\Mot\Plan Sheets\phase4\mp146p4a.dgn

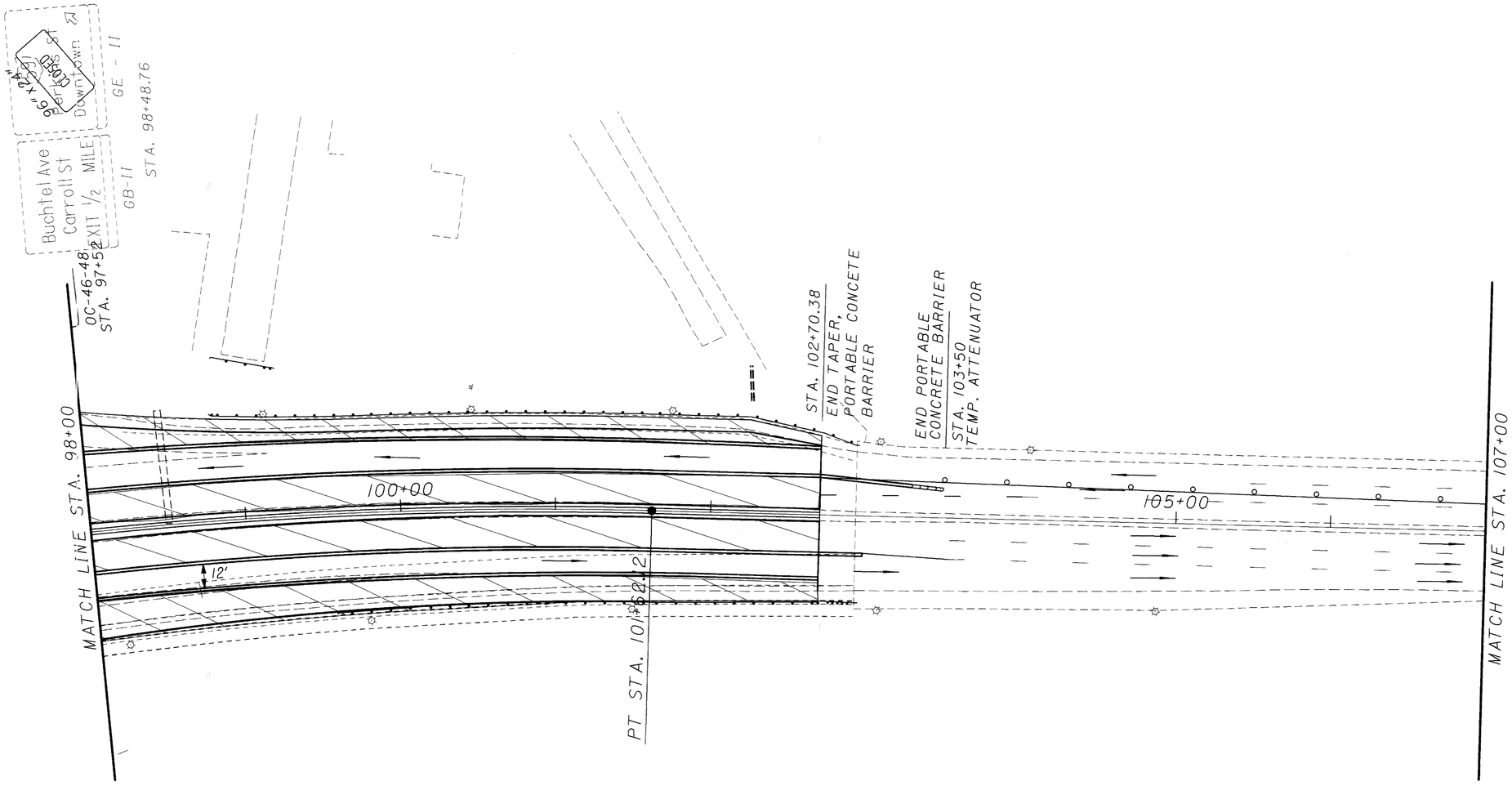

LEGEND

ELW	TEMPORARY EDGE LINE (WHITE)
ELY	TEMPORARY EDGE LINE (YELLOW)
CLS	TEMPORARY CENTER LINE - DOUBLE SOLID
CHL	TEMPORARY CHANNELIZING LINE (WHITE)
LL	TEMPORARY LANE LINE
SL	TEMPORARY STOP LINE
LA	TEMPORARY LANE ARROW
WP	TEMPORARY WORD ON PAVEMENT, 72"

⊣	POST MOUNTED SIGN
▬	PORTABLE CONCRETE BARRIER
○	TEMPORARY DRUMS

——→	DIRECTION OF TRAFFIC ARROW
⊗→	TEMPORARY TRAFFIC SIGNAL
▨	TEMPORARY PAVEMENT
▨	WORK AREA
▨	14 DAY CLOSURE SEE NOTES, SHEET 42

WEEKEND WORK ONLY
SEE NOTES, SHEET 42

REVISIONS: 05/15/2002 by MAM

CALCULATED KME
CHECKED

HORIZONTAL SCALE IN FEET
0 20 40 80

MAINTENANCE OF TRAFFIC
PHASE 4B

SUM-8-0.63

124A
1088

11:45:07 PM
06/13/2002
\\XN00-010sr-8\h\civil\mot\plan sheets\phase4\mp46p4b.dgn

11:45:09 PM
06/13/2002
\\N00-010sr-8\i\civil\mot\plan sheets\phase4\mpl46p4c.dgn

LEGEND

(ELW) TEMPORARY EDGE LINE (WHITE)
(ELY) TEMPORARY EDGE LINE (YELLOW)
(CLS) TEMPORARY CENTER LINE - DOUBLE SOLID
(CHL) TEMPORARY CHANNELIZING LINE (WHITE)
(LL) TEMPORARY LANE LINE
(SL) TEMPORARY STOP LINE
(LA) TEMPORARY LANE ARROW
(WP) TEMPORARY WORD ON PAVEMENT, 72"

POST MOUNTED SIGN
PORTABLE CONCRETE BARRIER
TEMPORARY DRUMS

DIRECTION OF TRAFFIC ARROW
TEMPORARY TRAFFIC SIGNAL
TEMPORARY PAVEMENT
WORK AREA
14 DAY CLOSURE
SEE NOTES, SHEET 42

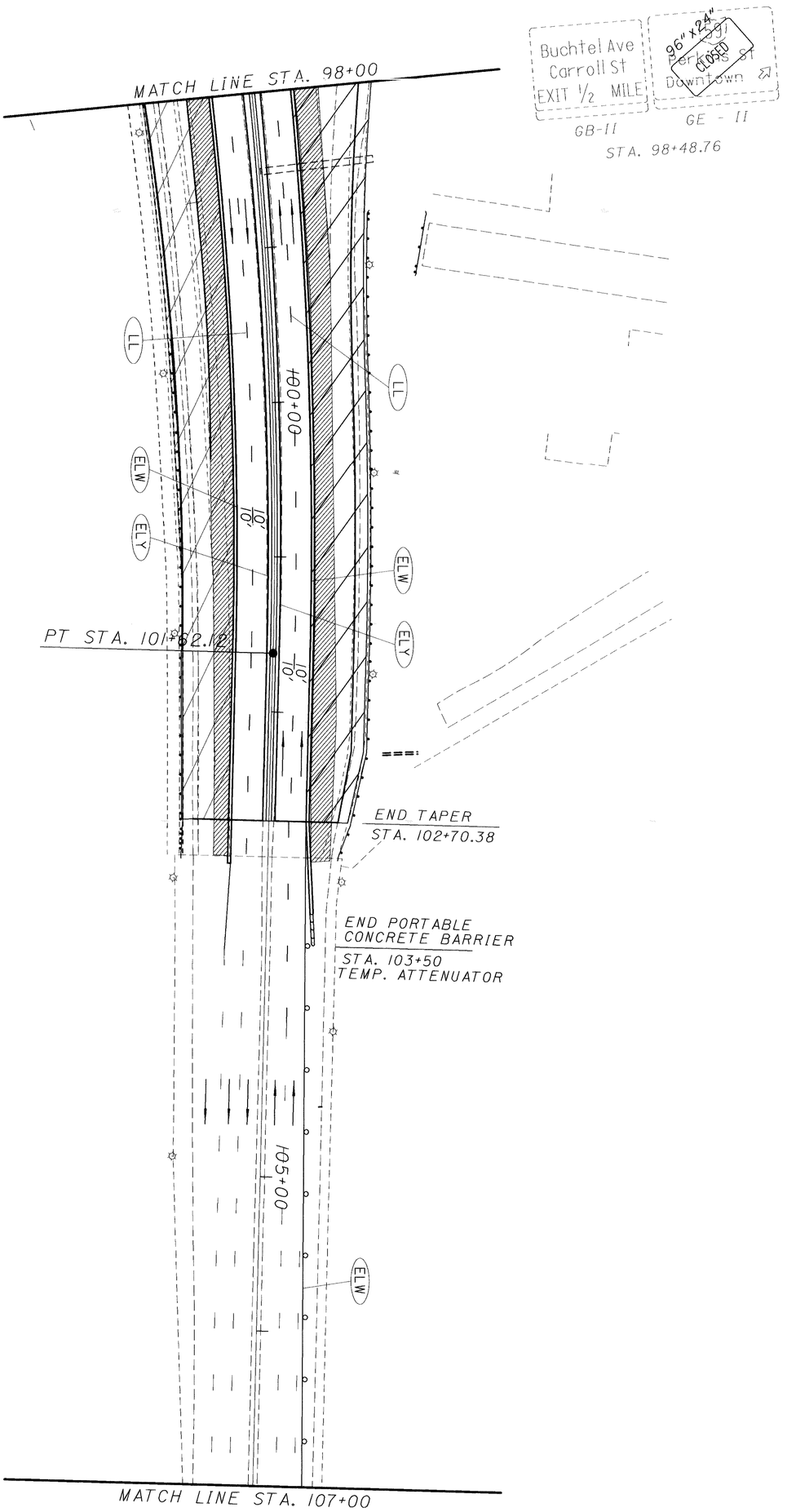

REVISIONS: 05/15/2002 by MAM

124B 1088	SUM-8-0.63	MAINTENANCE OF TRAFFIC PHASE 4C	CALCULATED KME; CHECKED; 0 20 40 80 HORIZONTAL SCALE IN FEET; N

11:44:25 PM
06/13/2002
\\X00-010sr-8\I\civil\mot\plan sheets\phase4\mpl47p4a.dgn

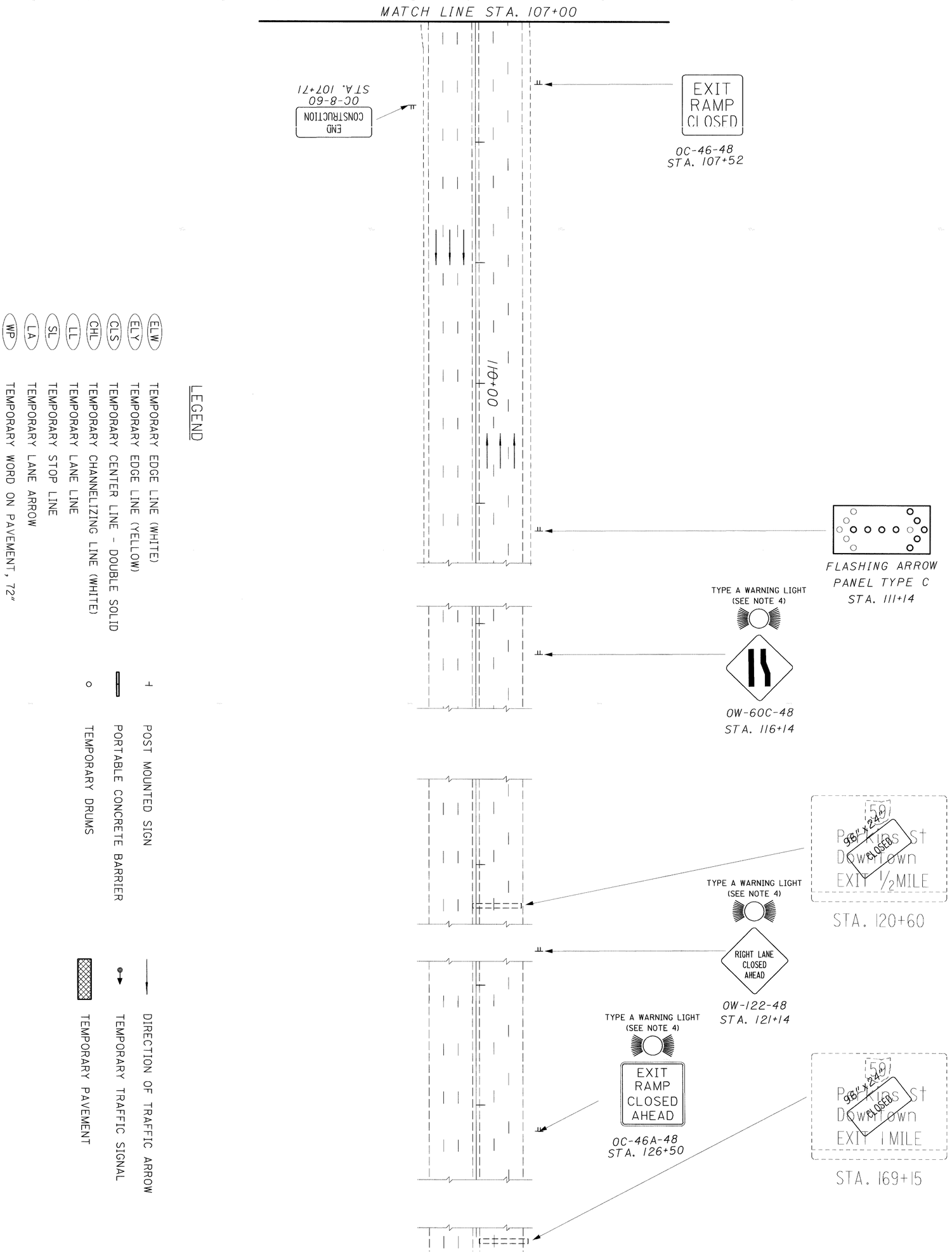

REVISIONS: 05/15/2002 by MAM

125 / 1088	SUM-8-0.63	MAINTENANCE OF TRAFFIC PHASE 4A	CALCULATED / CHECKED	HORIZONTAL SCALE IN FEET (0, 20, 40, 80)

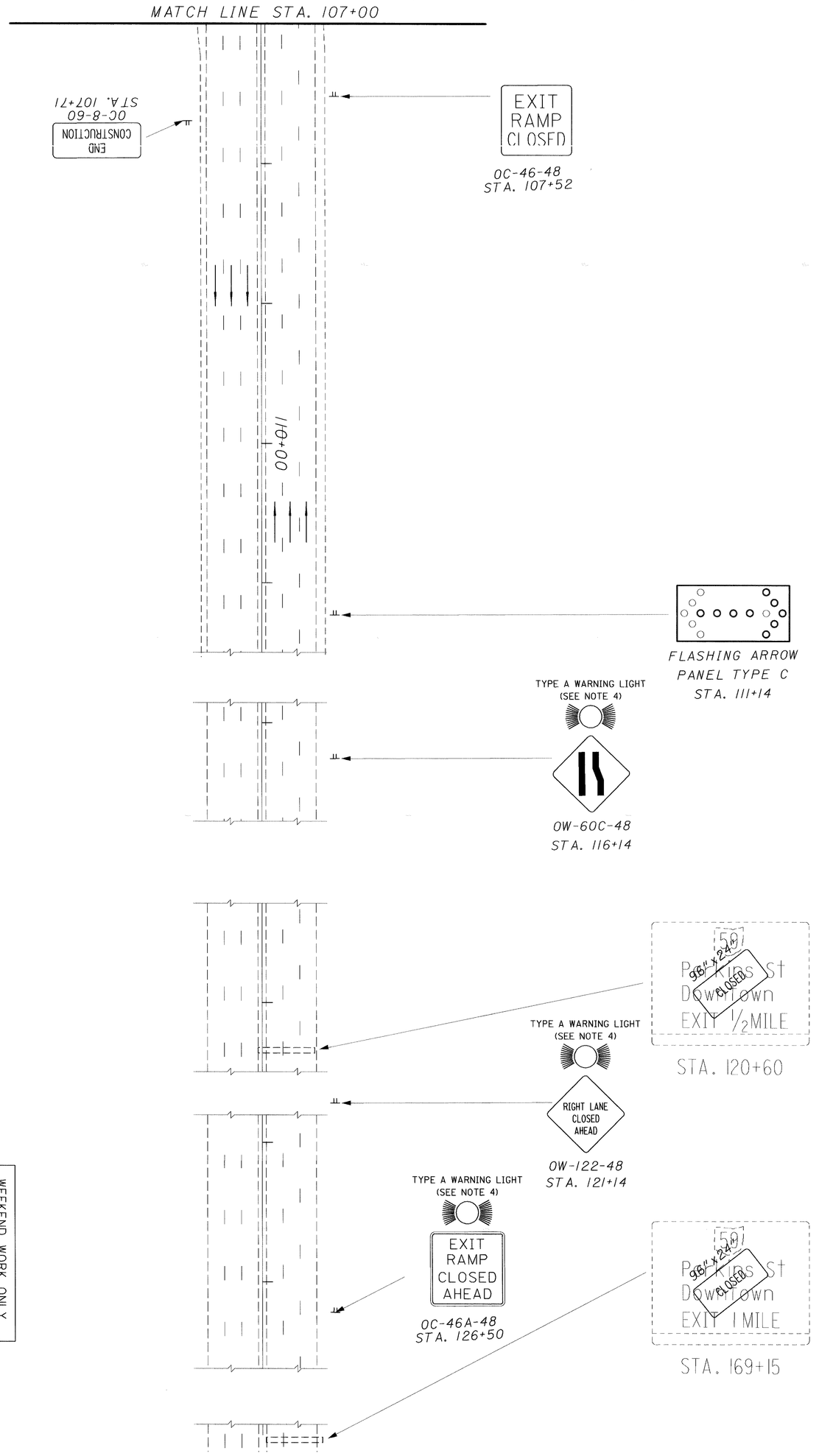

LEGEND

ELW	TEMPORARY EDGE LINE (WHITE)
ELY	TEMPORARY EDGE LINE (YELLOW)
CLS	TEMPORARY CENTER LINE - DOUBLE SOLID
CHL	TEMPORARY CHANNELIZING LINE (WHITE)
LL	TEMPORARY LANE LINE
SL	TEMPORARY STOP LINE
LA	TEMPORARY LANE ARROW
WP	TEMPORARY WORD ON PAVEMENT, 72"

	POST MOUNTED SIGN
	PORTABLE CONCRETE BARRIER
o	TEMPORARY DRUMS
	DIRECTION OF TRAFFIC ARROW
	TEMPORARY TRAFFIC SIGNAL
	TEMPORARY PAVEMENT

WEEKEND WORK ONLY
SEE NOTES, SHEET 42

REVISIONS: 05/15/2002 by MAM

125A
1088

SUM-8-0.63

MAINTENANCE OF TRAFFIC
PHASE 4B

CALCULATED
CHECKED

0 40
20 80
HORIZONTAL SCALE IN FEET

N

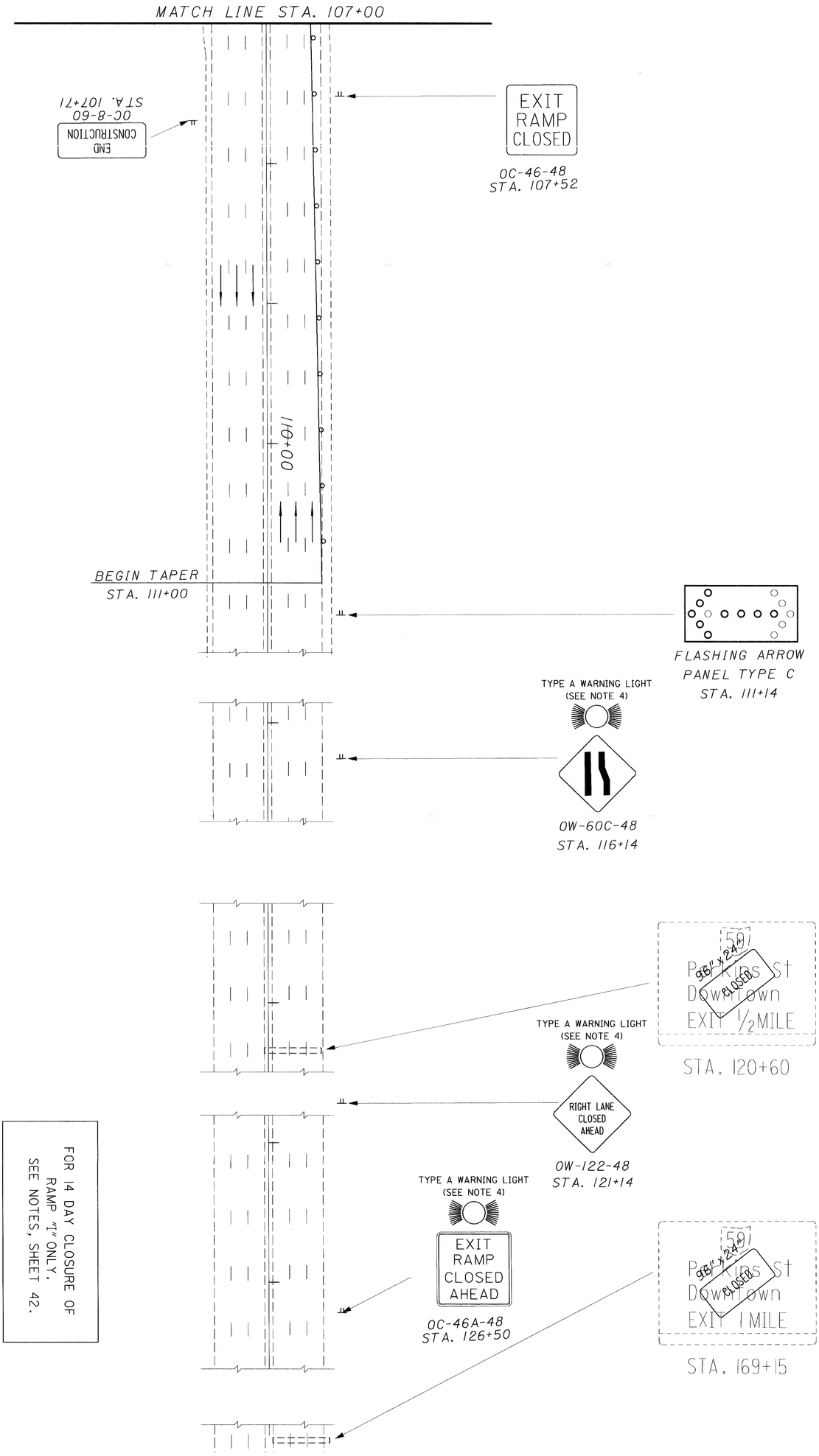

LEGEND

ELW	TEMPORARY EDGE LINE (WHITE)
ELY	TEMPORARY EDGE LINE (YELLOW)
CLS	TEMPORARY CENTER LINE - DOUBLE SOLID
CHL	TEMPORARY CHANNELIZING LINE (WHITE)
LL	TEMPORARY LANE LINE
SL	TEMPORARY STOP LINE
LA	TEMPORARY LANE ARROW
WP	TEMPORARY WORD ON PAVEMENT, 72"

+	POST MOUNTED SIGN
	PORTABLE CONCRETE BARRIER
o	TEMPORARY DRUMS
	DIRECTION OF TRAFFIC ARROW
	TEMPORARY TRAFFIC SIGNAL
	TEMPORARY PAVEMENT

FOR 14 DAY CLOSURE OF RAMP "1" ONLY. SEE NOTES, SHEET 42.

REVISIONS: 05/15/2002 by MAM

125B (1088)	SUM-8-0.63	MAINTENANCE OF TRAFFIC PHASE 4C	CALCULATED / CHECKED	HORIZONTAL SCALE IN FEET 0 20 40 80

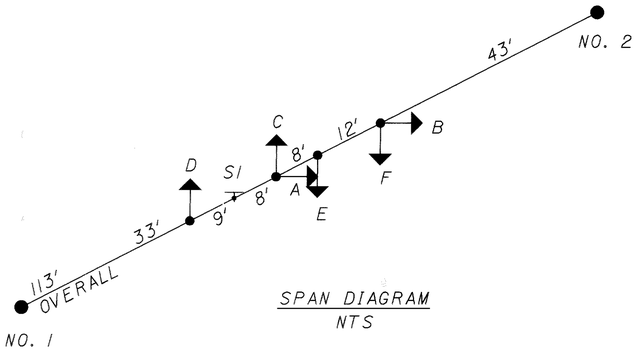

SPAN DIAGRAM
NTS

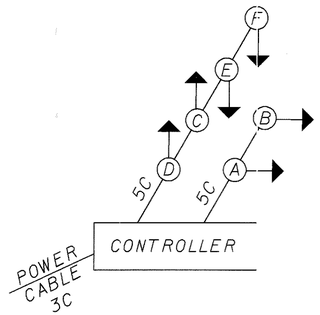

WIRING DIAGRAM
NTS

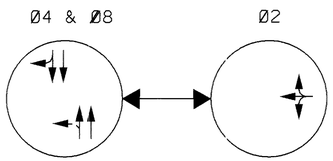

PHASE DIAGRAM

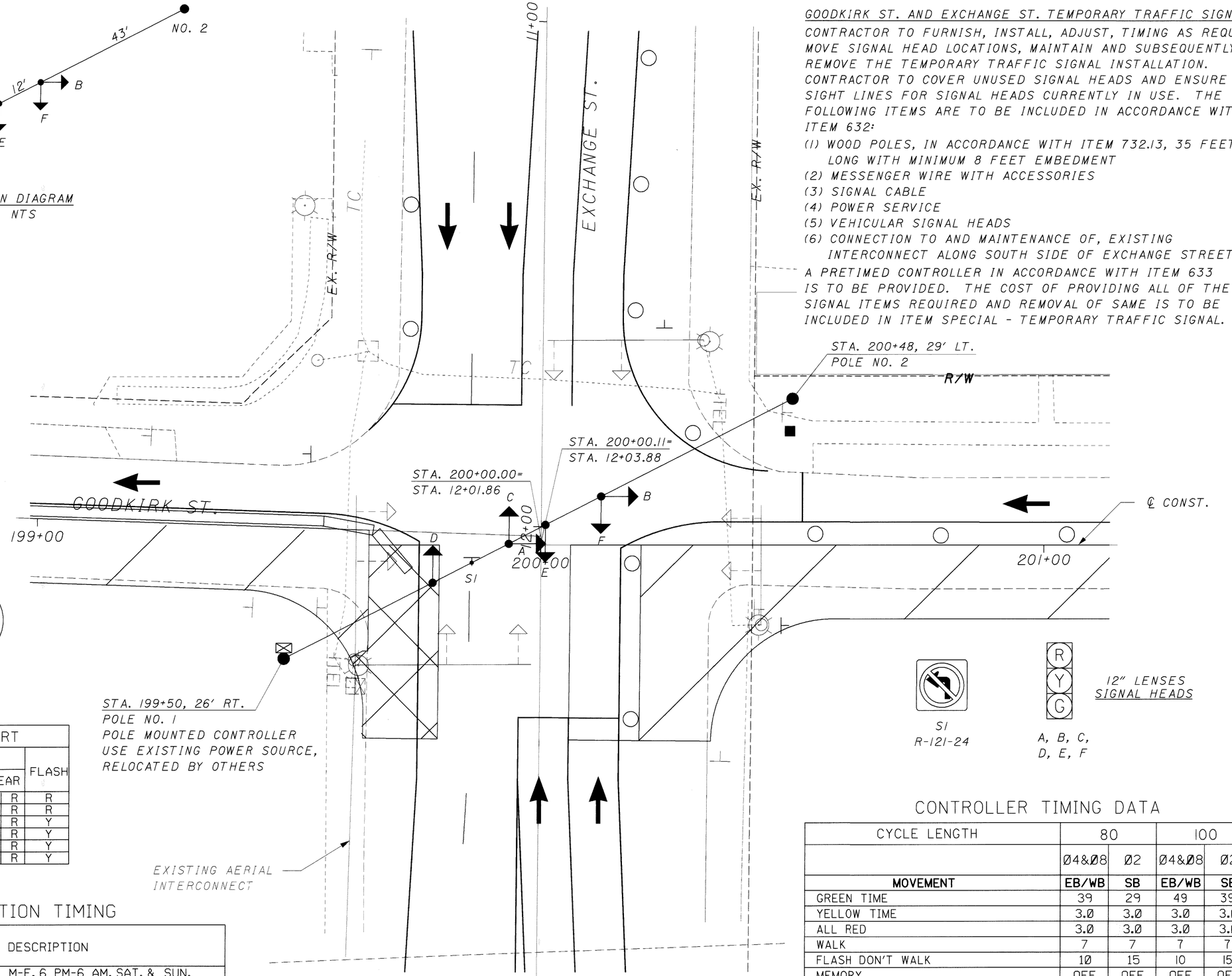

GOODKIRK ST. AND EXCHANGE ST. TEMPORARY TRAFFIC SIGNAL

CONTRACTOR TO FURNISH, INSTALL, ADJUST, TIMING AS REQUIRED, MOVE SIGNAL HEAD LOCATIONS, MAINTAIN AND SUBSEQUENTLY REMOVE THE TEMPORARY TRAFFIC SIGNAL INSTALLATION. CONTRACTOR TO COVER UNUSED SIGNAL HEADS AND ENSURE SIGHT LINES FOR SIGNAL HEADS CURRENTLY IN USE. THE FOLLOWING ITEMS ARE TO BE INCLUDED IN ACCORDANCE WITH ITEM 632:

(1) WOOD POLES, IN ACCORDANCE WITH ITEM 732.13, 35 FEET LONG WITH MINIMUM 8 FEET EMBEDMENT
(2) MESSENGER WIRE WITH ACCESSORIES
(3) SIGNAL CABLE
(4) POWER SERVICE
(5) VEHICULAR SIGNAL HEADS
(6) CONNECTION TO AND MAINTENANCE OF, EXISTING INTERCONNECT ALONG SOUTH SIDE OF EXCHANGE STREET.

A PRETIMED CONTROLLER IN ACCORDANCE WITH ITEM 633 IS TO BE PROVIDED. THE COST OF PROVIDING ALL OF THE SIGNAL ITEMS REQUIRED AND REMOVAL OF SAME IS TO BE INCLUDED IN ITEM SPECIAL - TEMPORARY TRAFFIC SIGNAL.

SI
R-121-24

12" LENSES
SIGNAL HEADS

A, B, C,
D, E, F

SIGNAL DISPLAY CHART

SIGNAL HEAD	Ø4 & Ø8			Ø2			FLASH
	R/W	CLEAR		R/W	CLEAR		
A	R	R	R	G	Y	R	R
B	R	R	R	G	Y	R	R
C	G	Y	R	R	R	R	Y
D	G	Y	R	R	R	R	Y
E	G	Y	R	R	R	R	Y
F	G	Y	R	R	R	R	Y

COORDINATION TIMING

CYCLE/OFFSET	PHASE		DESCRIPTION
	Ø4&Ø8	Ø2	
80/58	45	35	M-F, 6 PM-6 AM, SAT. & SUN.
100/31	55	45	M-F, 6 AM-6 PM

CONTROLLER TIMING DATA

CYCLE LENGTH	80		100	
	Ø4&Ø8	Ø2	Ø4&Ø8	Ø2
MOVEMENT	**EB/WB**	**SB**	**EB/WB**	**SB**
GREEN TIME	39	29	49	39
YELLOW TIME	3.0	3.0	3.0	3.0
ALL RED	3.0	3.0	3.0	3.0
WALK	7	7	7	7
FLASH DON'T WALK	10	15	10	15
MEMORY	OFF	OFF	OFF	OFF
RECALL	MAX	MAX	MAX	MAX

HORIZONTAL SCALE IN FEET
0 5 10 20

CALCULATED CRP
CHECKED

MAINTENANCE OF TRAFFIC DETAIL
GOODKIRK ST. AND EXCHANGE ST. - PHASE 1A-1

SUM-8-0.63

126
1088

11:45:36 PM
06/13/2002
u:\00-010sr-8\civil\mot\temp signals\md040exc.dgn

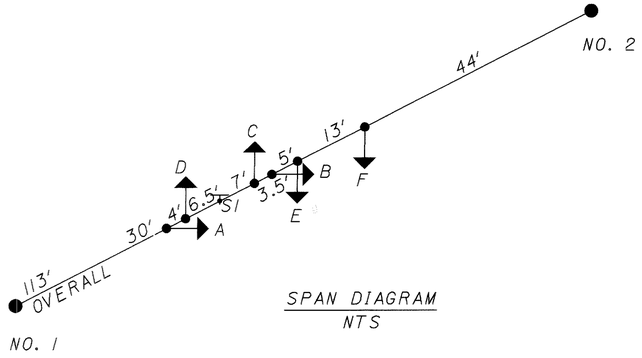

SPAN DIAGRAM
NTS

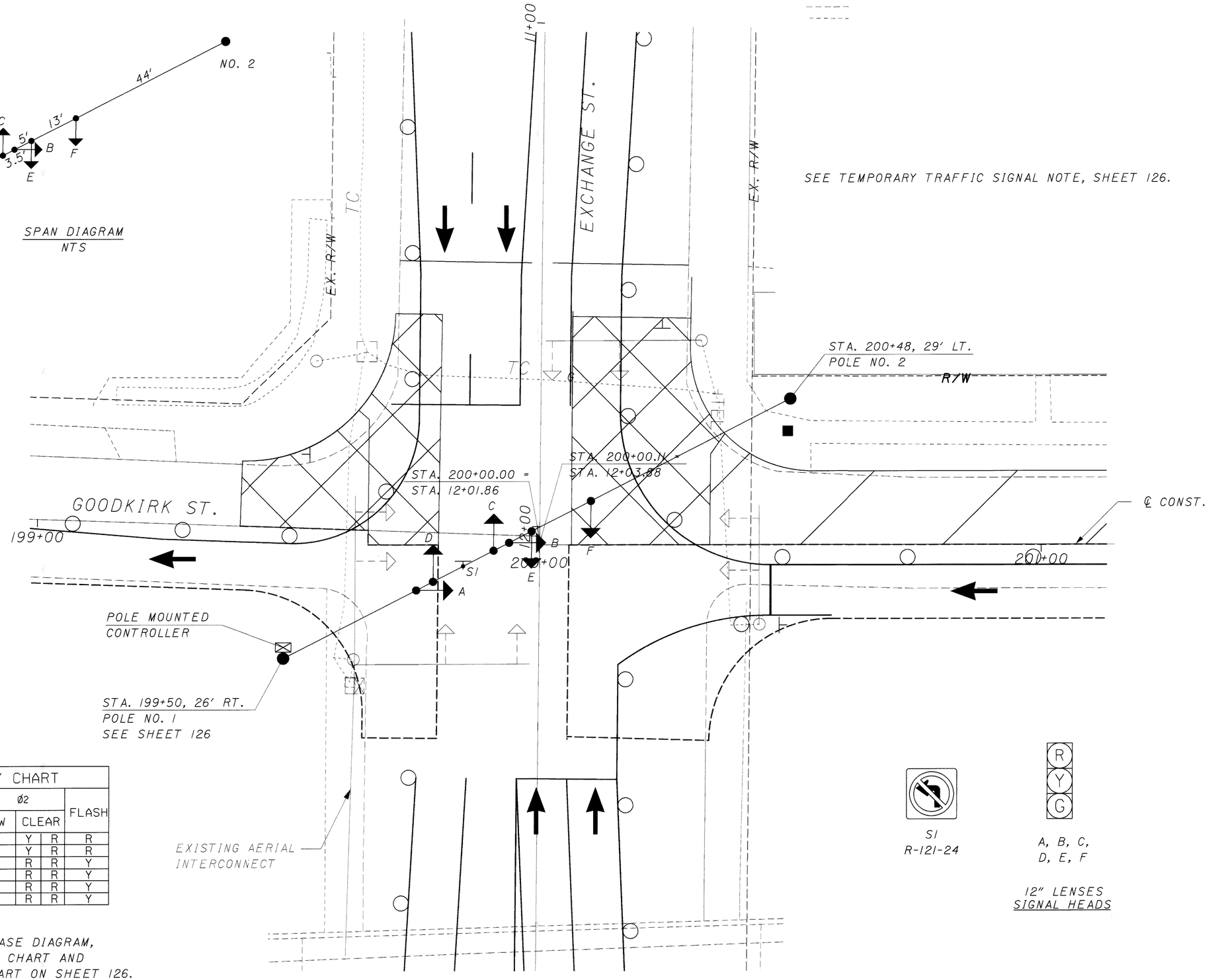

SIGNAL DISPLAY CHART							
SIGNAL HEAD	Ø4 & Ø8			Ø2			FLASH
	R/W	CLEAR		R/W	CLEAR		
A	R	R	R	G	Y	R	R
B	R	R	R	G	Y	R	R
C	G	Y	R	R	R	R	Y
D	G	Y	R	R	R	R	Y
E	G	Y	R	R	R	R	Y
F	G	Y	R	R	R	R	Y

SEE WIRING DIAGRAM, PHASE DIAGRAM, CONTROLLER TIMING DATA CHART AND COORDINATION TIMING CHART ON SHEET 126.

HORIZONTAL SCALE IN FEET
0 5 10 20

CALCULATED CRP
CHECKED

MAINTENANCE OF TRAFFIC DETAIL
GOODKIRK ST. AND EXCHANGE ST. - PHASE 1A-2

SUM-8-0.63

11:45:37 PM
06/13/2002
u:\00-010sr-8\1\civil\mot\temp signals\md04lexc.dgn

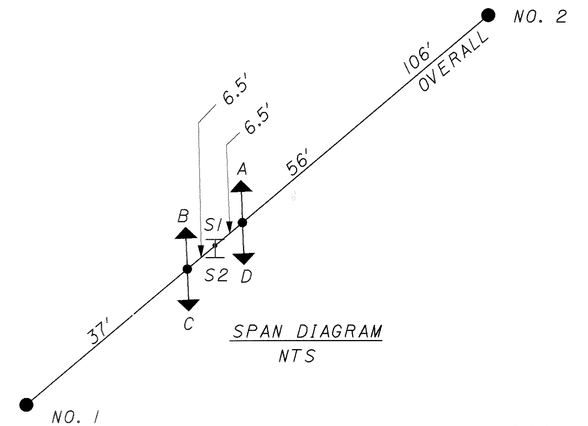

SPAN DIAGRAM
NTS

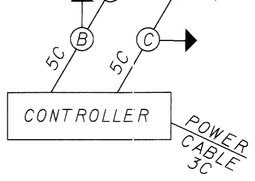

WIRING DIAGRAM
NTS

SIGNAL DISPLAY CHART	
SIGNAL HEAD	FLASH
A	Y
B	Y
C	Y
D	Y

GOODKIRK ST. AND CARROLL ST. TEMPORARY TRAFFIC SIGNAL

CONTRACTOR TO FURNISH, INSTALL, ADJUST, TIMING AS REQUIRED, MOVE SIGNAL HEAD LOCATIONS, MAINTAIN AND SUBSEQUENTLY REMOVE THE TEMPORARY TRAFFIC SIGNAL INSTALLATION. CONTRACTOR TO COVER UNUSED SIGNAL HEADS AND ENSURE SIGHT LINES FOR SIGNAL HEADS CURRENTLY IN USE. THE FOLLOWING ITEMS ARE TO BE INCLUDED IN ACCORDANCE WITH ITEM 632:

(1) WOOD POLES, IN ACCORDANCE WITH ITEM 732.13, 35 FEET LONG WITH MINIMUM 8 FEET EMBEDMENT.
(2) MESSENGER WIRE WITH ACCESSORIES.
(3) SIGNAL CABLE
(4) POWER SERVICE
(5) VEHICULAR SIGNAL HEADS

A PRETIMED CONTROLLER IN ACCORDANCE WITH ITEM 633 IS TO BE PROVIDED. THE COST OF PROVIDING ALL OF THE SIGNAL ITEMS REQUIRED AND REMOVAL OF SAME IS TO BE INCLUDED IN ITEM SPECIAL - TEMPORARY TRAFFIC SIGNAL.

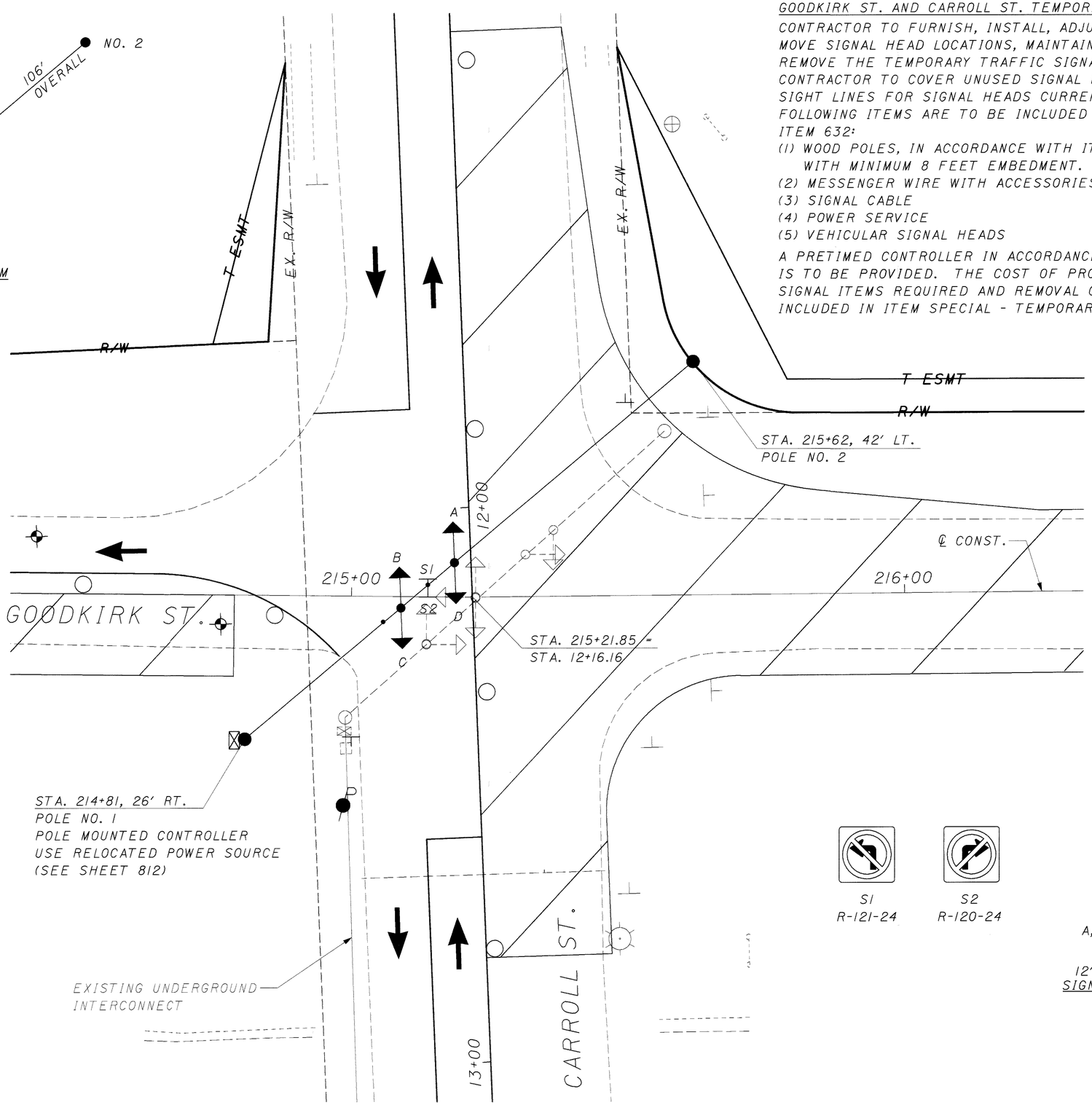

S1
R-121-24

S2
R-120-24

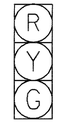

A, B, C, D

12" LENSES
SIGNAL HEADS

N

HORIZONTAL SCALE IN FEET
0 5 10 20

CALCULATED CRP
CHECKED

MAINTENANCE OF TRAFFIC DETAIL
GOODKIRK ST. AND CARROLL ST. - PHASE 1A-1

SUM-8-0.63

128
1088

11:45:39 PM
06/13/2002
u:\00-010sr-8-1\civil\mot\temp signals\md042car.dgn

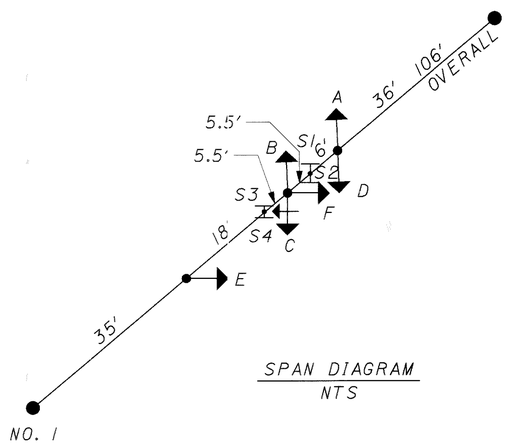

SPAN DIAGRAM
NTS

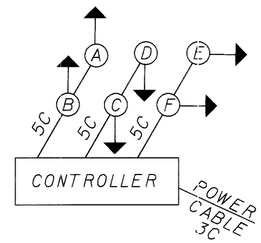

WIRING DIAGRAM
NTS

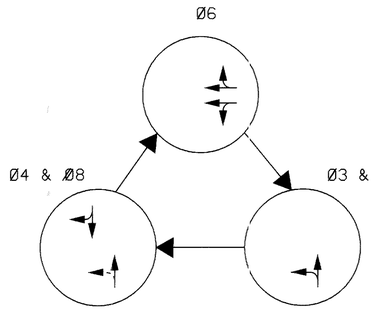

PHASE DIAGRAM

SEE TEMPORARY TRAFFIC SIGNAL NOTE, SHEET 128.

SIGNAL DISPLAY CHART										
SIGNAL HEAD	Ø6			Ø3 & Ø8			Ø4 & Ø8			
	R/W	CLEAR		R/W	CLEAR		R/W	CLEAR		FLASH
A	R	R	R	R	R	R	G	Y	R	Y
B	R	R	R	R	R	R	G	Y	R	Y
C	R	R	R	G/G	G/Y	G	G	Y	R	Y
D	R	R	R	G	G	G	G	Y	R	Y
E	G	Y	R	R	R	R	R	R	R	R
F	G	Y	R	R	R	R	R	R	R	R

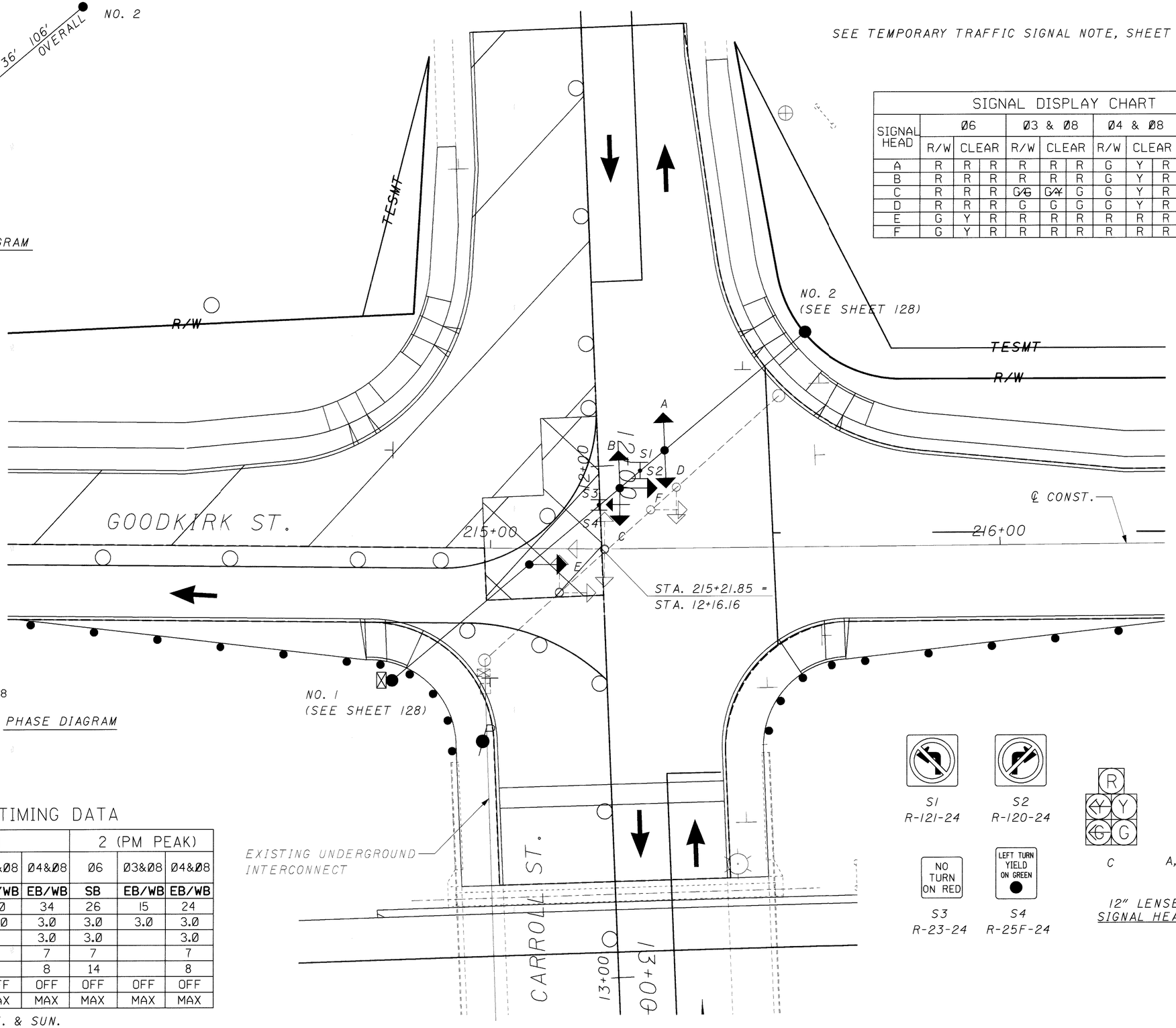

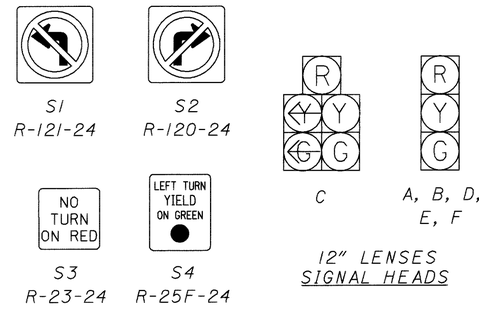

12" LENSES
SIGNAL HEADS

CONTROLLER TIMING DATA

DIAL	1			2 (PM PEAK)		
	Ø6	Ø3&Ø8	Ø4&Ø8	Ø6	Ø3&Ø8	Ø4&Ø8
MOVEMENT	**SB**	**EB/WB**	**EB/WB**	**SB**	**EB/WB**	**EB/WB**
GREEN TIME	21	10	34	26	15	24
YELLOW TIME	3.0	3.0	3.0	3.0	3.0	3.0
ALL RED	3.0		3.0	3.0		3.0
WALK	7		7	7		7
FLASH DON'T WALK	14		8	14		8
MEMORY	OFF	OFF	OFF	OFF	OFF	OFF
RECALL	MAX	MAX	MAX	MAX	MAX	MAX

DIAL 1, M-F 6 PM TO 4 PM, SAT. & SUN.
DIAL 2, M-F 4 PM TO 6 PM.

HORIZONTAL SCALE IN FEET
0 5 10 20

CALCULATED CRP
CHECKED

MAINTENANCE OF TRAFFIC DETAIL
GOODKIRK ST. AND CARROLL ST. - PHASE 1A-2

SUM-8-0.63

11:45:40 PM
06/13/2002
u:\00-0l0sr-8\1\civil\mot\temp signals\md043cor.dgn

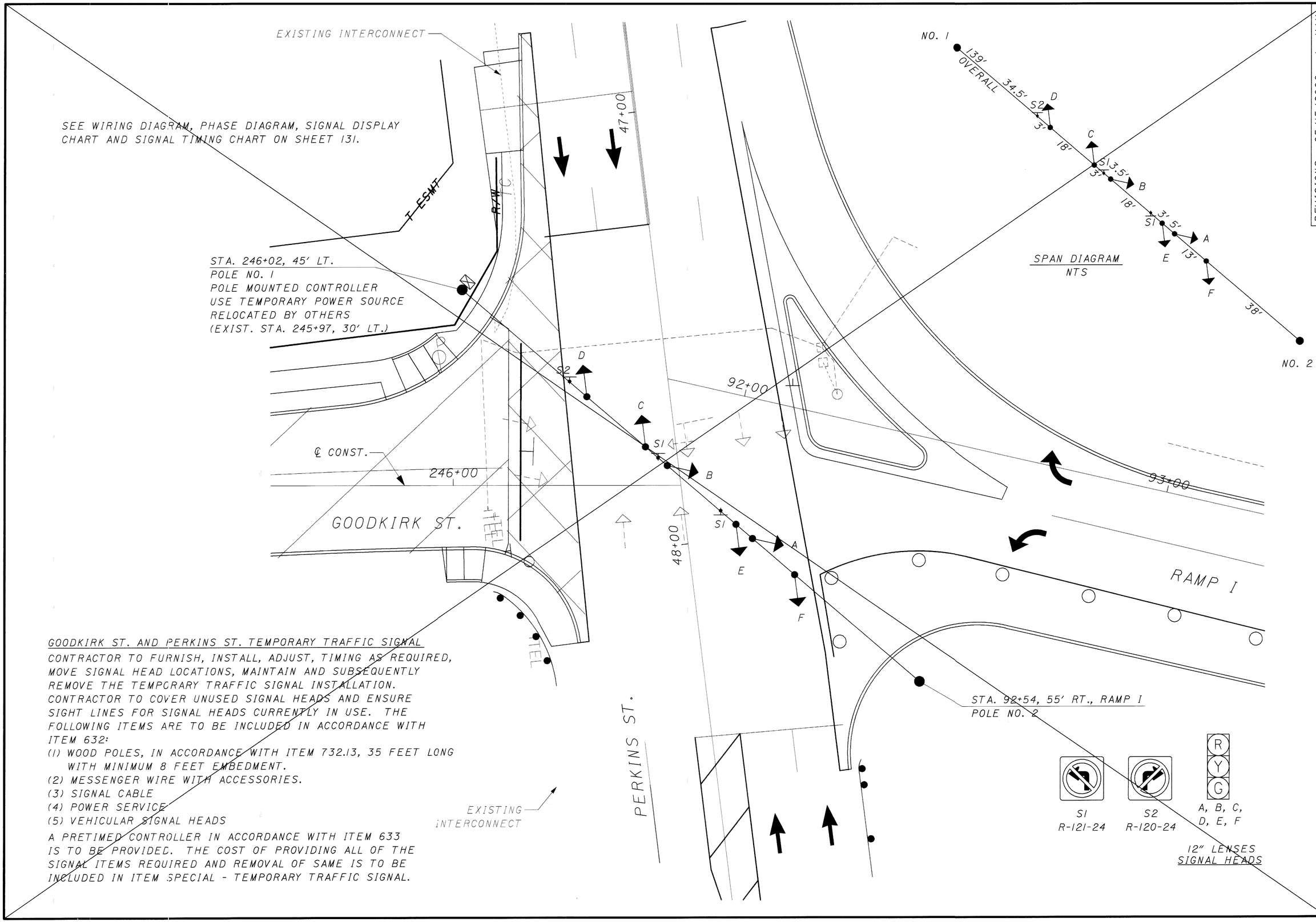

GOODKIRK ST. AND PERKINS ST. TEMPORARY TRAFFIC SIGNAL

CONTRACTOR TO FURNISH, INSTALL, ADJUST, TIMING AS REQUIRED, MOVE SIGNAL HEAD LOCATIONS, MAINTAIN AND SUBSEQUENTLY REMOVE THE TEMPORARY TRAFFIC SIGNAL INSTALLATION. CONTRACTOR TO COVER UNUSED SIGNAL HEADS AND ENSURE SIGHT LINES FOR SIGNAL HEADS CURRENTLY IN USE. THE FOLLOWING ITEMS ARE TO BE INCLUDED IN ACCORDANCE WITH ITEM 632:

(1) WOOD POLES, IN ACCORDANCE WITH ITEM 732.13, 35 FEET LONG WITH MINIMUM 8 FEET EMBEDMENT.
(2) MESSENGER WIRE WITH ACCESSORIES.
(3) SIGNAL CABLE
(4) POWER SERVICE
(5) VEHICULAR SIGNAL HEADS

A PRETIMED CONTROLLER IN ACCORDANCE WITH ITEM 633 IS TO BE PROVIDED. THE COST OF PROVIDING ALL OF THE SIGNAL ITEMS REQUIRED AND REMOVAL OF SAME IS TO BE INCLUDED IN ITEM SPECIAL - TEMPORARY TRAFFIC SIGNAL.

REVISIONS: 05/15/2002 by MAM

HORIZONTAL SCALE IN FEET 0 5 10 20

CALCULATED CRP
CHECKED

MAINTENANCE OF TRAFFIC DETAIL
GOODKIRK ST. AND PERKINS ST. - PHASE 1A

SUM-8-0.63

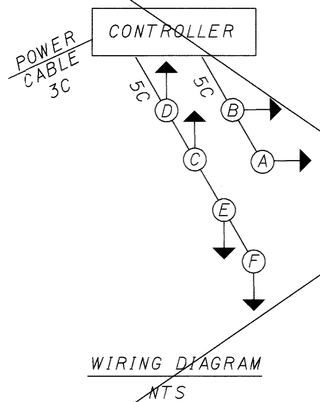

WIRING DIAGRAM
NTS

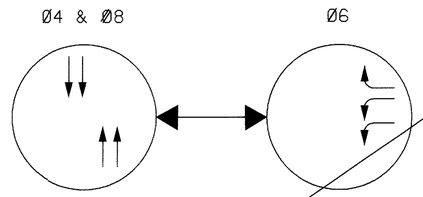

PHASE DIAGRAM

SIGNAL DISPLAY CHART

SIGNAL HEAD	Ø4 & Ø8			Ø6			
	R/W	CLEAR		R/W	CLEAR		FLASH
A	R	R	R	G	Y	R	R
B	R	R	R	G	Y	R	R
C	G	Y	R	R	R	R	Y
D	G	Y	R	R	R	R	Y
E	G	Y	R	R	R	R	Y
F	G	Y	R	R	R	R	Y

CONTROLLER TIMING DATA

DIAL	1		2	
	Ø4&Ø8	Ø2	Ø4&Ø8	Ø2
MOVEMENT	**EB/WB**	**SB**	**EB/WB**	**SB**
GREEN TIME	46	22	52	16
YELLOW TIME	3.0	3.0	3.0	3.0
ALL RED	3.0	3.0	3.0	3.0
WALK	7		7	
FLASH DON'T WALK	10		10	
MEMORY	OFF	OFF	OFF	OFF
RECALL	MAX	MAX	MAX	MAX

COORDINATION TIMING

CYCLE/OFFSET	PHASE		DESCRIPTION
	Ø4&Ø8	Ø2	
DIAL 1/0	52	28	M-F, 6 AM-9 AM
DIAL 2/0	58	22	M-F, 9 AM-6 AM, SAT. & SUN.

REVISIONS: 05/15/2002 by MAM

CALCULATED CRP
CHECKED

HORIZONTAL SCALE IN FEET
0 5 10 20

N

MAINTENANCE OF TRAFFIC DETAIL
GOODKIRK ST. AND PERKINS ST. - PHASE 1A

SUM-8-0.63

131
1088

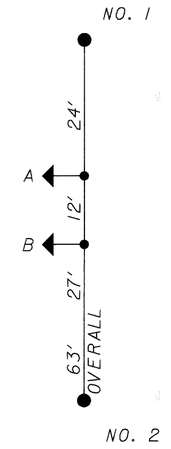

SPAN DIAGRAM
NTS

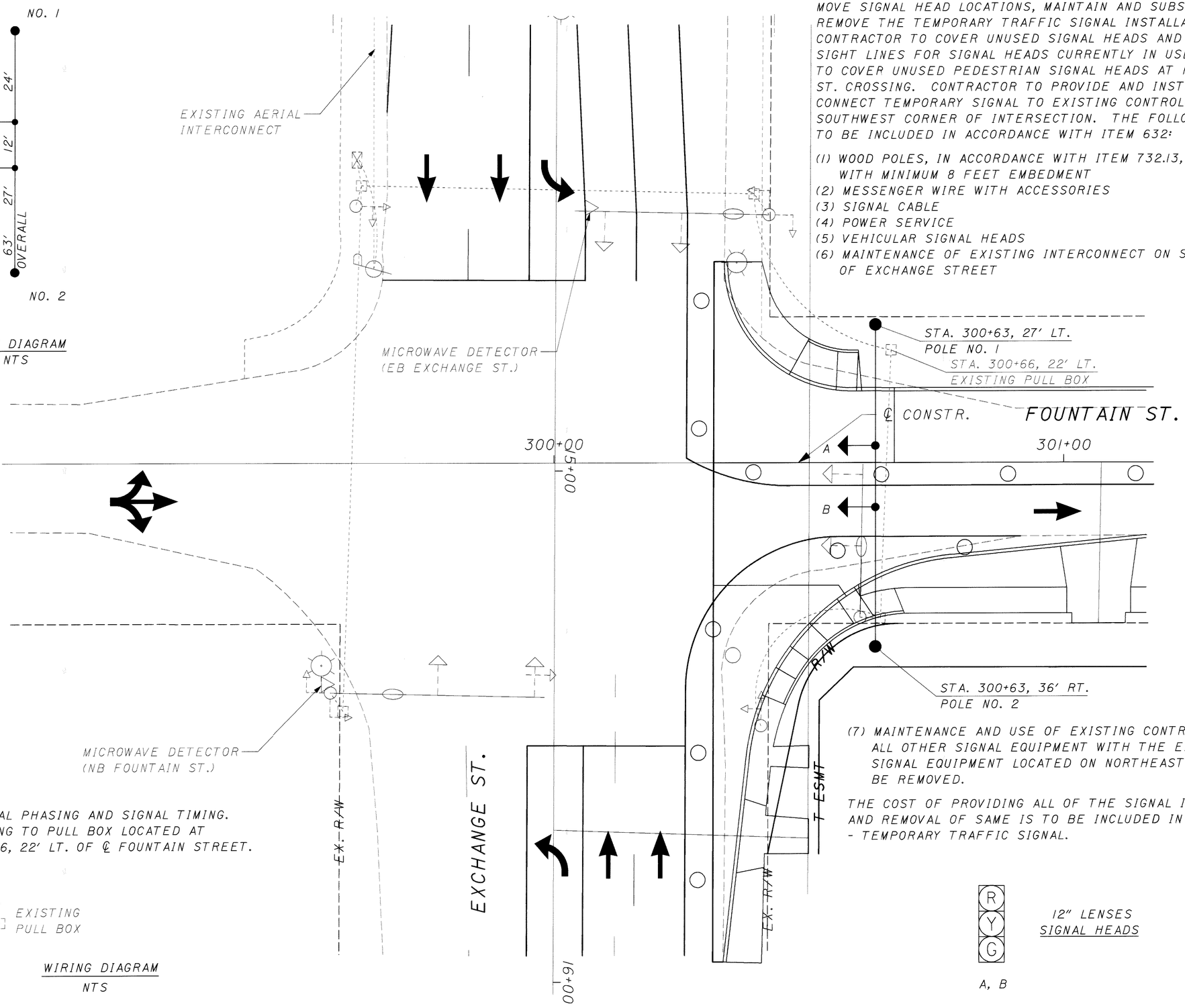

USE EXISTING SIGNAL PHASING AND SIGNAL TIMING.
USE EXISTING WIRING TO PULL BOX LOCATED AT APPROX. STA. 330+66, 22' LT. OF ℄ FOUNTAIN STREET.

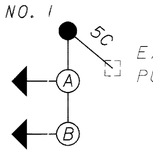

WIRING DIAGRAM
NTS

FOUNTAIN ST. AND EXCHANGE ST. TEMPORARY TRAFFIC SIGNAL

CONTRACTOR TO FURNISH, INSTALL, ADJUST, TIMING AS REQUIRED, MOVE SIGNAL HEAD LOCATIONS, MAINTAIN AND SUBSEQUENTLY REMOVE THE TEMPORARY TRAFFIC SIGNAL INSTALLATION. CONTRACTOR TO COVER UNUSED SIGNAL HEADS AND ENSURE SIGHT LINES FOR SIGNAL HEADS CURRENTLY IN USE. CONTRACTOR TO COVER UNUSED PEDESTRIAN SIGNAL HEADS AT NORTH FOUNTAIN ST. CROSSING. CONTRACTOR TO PROVIDE AND INSTALL WIRING TO CONNECT TEMPORARY SIGNAL TO EXISTING CONTROLLER AT SOUTHWEST CORNER OF INTERSECTION. THE FOLLOWING ITEMS ARE TO BE INCLUDED IN ACCORDANCE WITH ITEM 632:

(1) WOOD POLES, IN ACCORDANCE WITH ITEM 732.13, 35 FEET LONG WITH MINIMUM 8 FEET EMBEDMENT
(2) MESSENGER WIRE WITH ACCESSORIES
(3) SIGNAL CABLE
(4) POWER SERVICE
(5) VEHICULAR SIGNAL HEADS
(6) MAINTENANCE OF EXISTING INTERCONNECT ON SOUTH SIDE OF EXCHANGE STREET

(7) MAINTENANCE AND USE OF EXISTING CONTROLLER AND ALL OTHER SIGNAL EQUIPMENT WITH THE EXCEPTION OF SIGNAL EQUIPMENT LOCATED ON NORTHEAST CORNER, TO BE REMOVED.

THE COST OF PROVIDING ALL OF THE SIGNAL ITEMS REQUIRED AND REMOVAL OF SAME IS TO BE INCLUDED IN ITEM SPECIAL - TEMPORARY TRAFFIC SIGNAL.

12" LENSES
SIGNAL HEADS

A, B

N

HORIZONTAL SCALE IN FEET
0 5 10 20

CALCULATED CRP
CHECKED

MAINTENANCE OF TRAFFIC DETAIL
FOUNTAIN ST. AND EXCHANGE ST. - PHASE 1A-1

SUM-8-0.63

132
1088

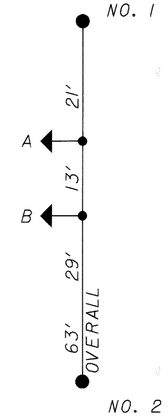

SPAN DIAGRAM
NTS

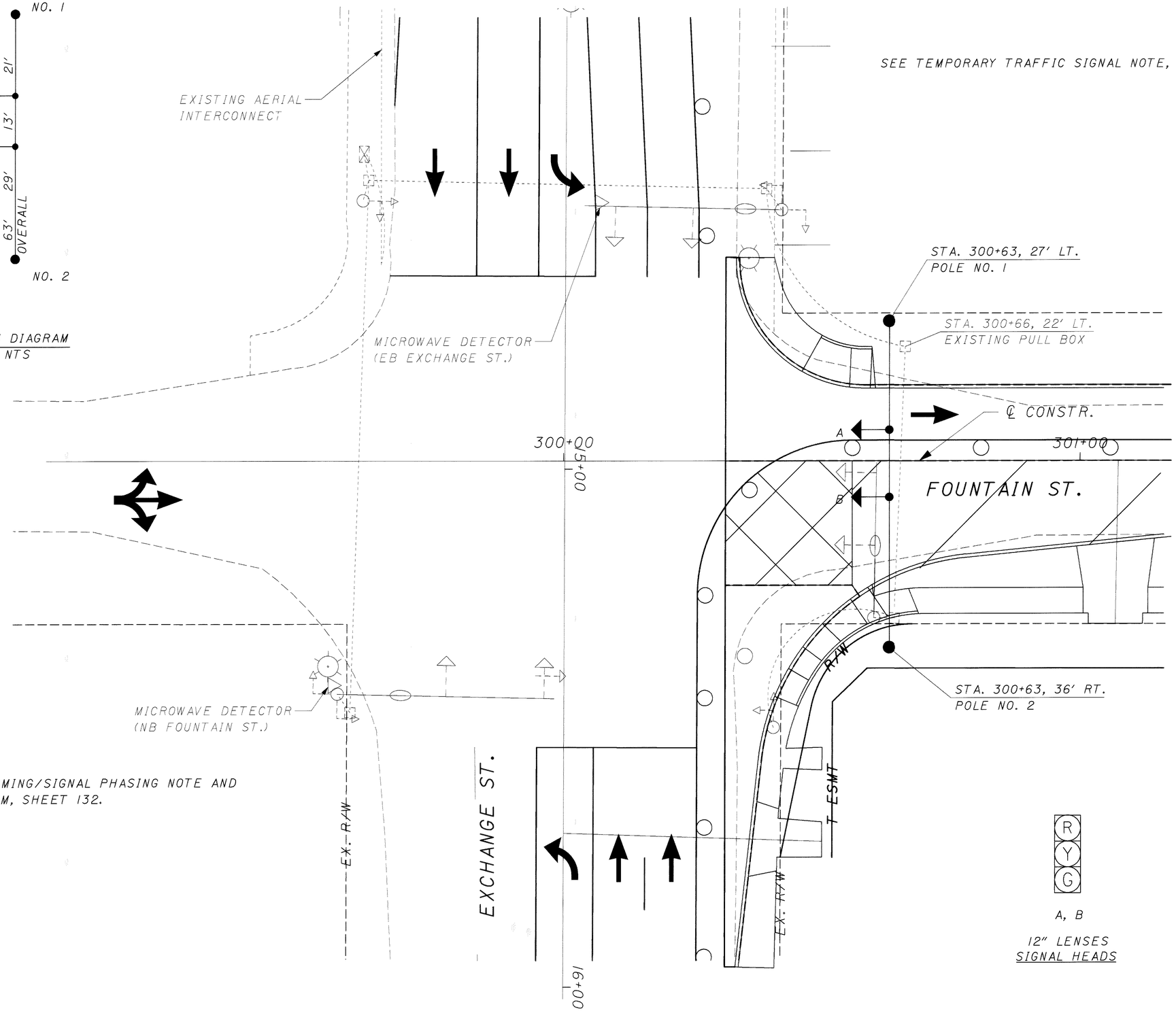

SEE SIGNAL TIMING/SIGNAL PHASING NOTE AND WIRING DIAGRAM, SHEET 132.

N

HORIZONTAL SCALE IN FEET
0 5 10 20

CALCULATED CRP
CHECKED

MAINTENANCE OF TRAFFIC DETAIL
FOUNTAIN ST. AND EXCHANGE ST. - PHASE 1A-2

SUM-8-0.63

133
1088

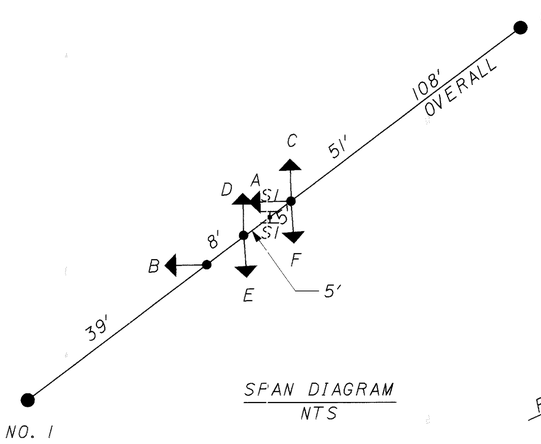

SPAN DIAGRAM
NTS

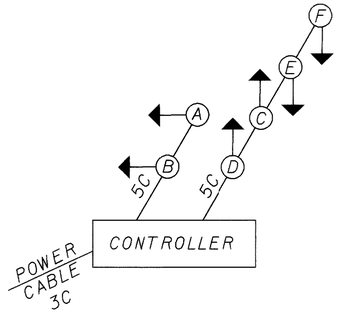

WIRING DIAGRAM
NTS

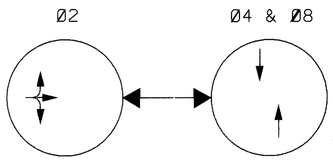

PHASE DIAGRAM

SIGNAL DISPLAY CHART							
SIGNAL HEAD	Ø2			Ø4&Ø8			
	R/W	CLEAR		R/W	CLEAR		FLASH
A	G	Y	R	R	R	R	Y
B	G	Y	R	R	R	R	Y
C	R	R	R	G	Y	R	R
D	R	R	R	G	Y	R	R
E	R	R	R	G	Y	R	R
F	R	R	R	G	Y	R	R

CONTROLLER TIMING DATA

DIAL	1		2	
	Ø4&Ø8	Ø2	Ø4&Ø8	Ø2
MOVEMENT	**EB/WB**	**SB**	**EB/WB**	**SB**
GREEN TIME	29	49	29	39
YELLOW TIME	3.0	3.0	3.0	3.0
ALL RED	3.0	3.0	3.0	3.0
WALK	7	7	7	7
FLASH DON'T WALK	10	15	10	15
MEMORY	OFF	OFF	OFF	OFF
RECALL	MAX	MAX	MAX	MAX

DIAL 1, M-F 7 AM TO 9 AM AND 4 PM TO 6 PM.
DIAL 2, M-F 9 AM TO 4 PM AND 6 PM TO 7 AM, SAT. & SUN.

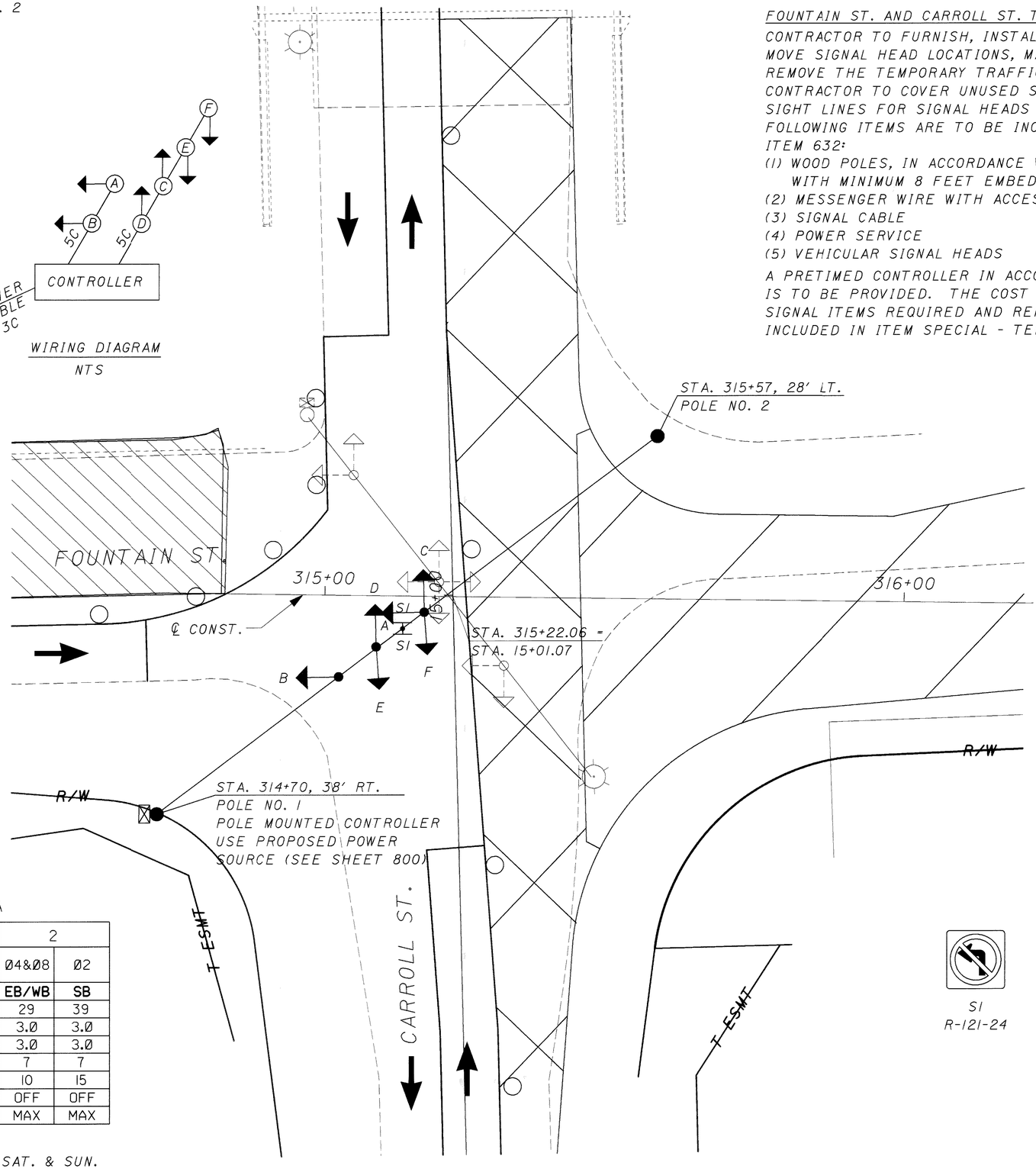

SI
R-121-24

A, B, C,
D, E, F

12" LENSES
SIGNAL HEADS

FOUNTAIN ST. AND CARROLL ST. TEMPORARY TRAFFIC SIGNAL

CONTRACTOR TO FURNISH, INSTALL, ADJUST, TIMING AS REQUIRED, MOVE SIGNAL HEAD LOCATIONS, MAINTAIN AND SUBSEQUENTLY REMOVE THE TEMPORARY TRAFFIC SIGNAL INSTALLATION. CONTRACTOR TO COVER UNUSED SIGNAL HEADS AND ENSURE SIGHT LINES FOR SIGNAL HEADS CURRENTLY IN USE. THE FOLLOWING ITEMS ARE TO BE INCLUDED IN ACCORDANCE WITH ITEM 632:

(1) WOOD POLES, IN ACCORDANCE WITH ITEM 732.13, 35 FEET LONG WITH MINIMUM 8 FEET EMBEDMENT.
(2) MESSENGER WIRE WITH ACCESSORIES.
(3) SIGNAL CABLE
(4) POWER SERVICE
(5) VEHICULAR SIGNAL HEADS

A PRETIMED CONTROLLER IN ACCORDANCE WITH ITEM 633 IS TO BE PROVIDED. THE COST OF PROVIDING ALL OF THE SIGNAL ITEMS REQUIRED AND REMOVAL OF SAME IS TO BE INCLUDED IN ITEM SPECIAL - TEMPORARY TRAFFIC SIGNAL.

N

0 5 10 20
HORIZONTAL SCALE IN FEET

CALCULATED CRP
CHECKED

MAINTENANCE OF TRAFFIC DETAIL
FOUNTAIN ST. AND CARROLL ST. - PHASE 1A-1

SUM-8-0.63

134
1088

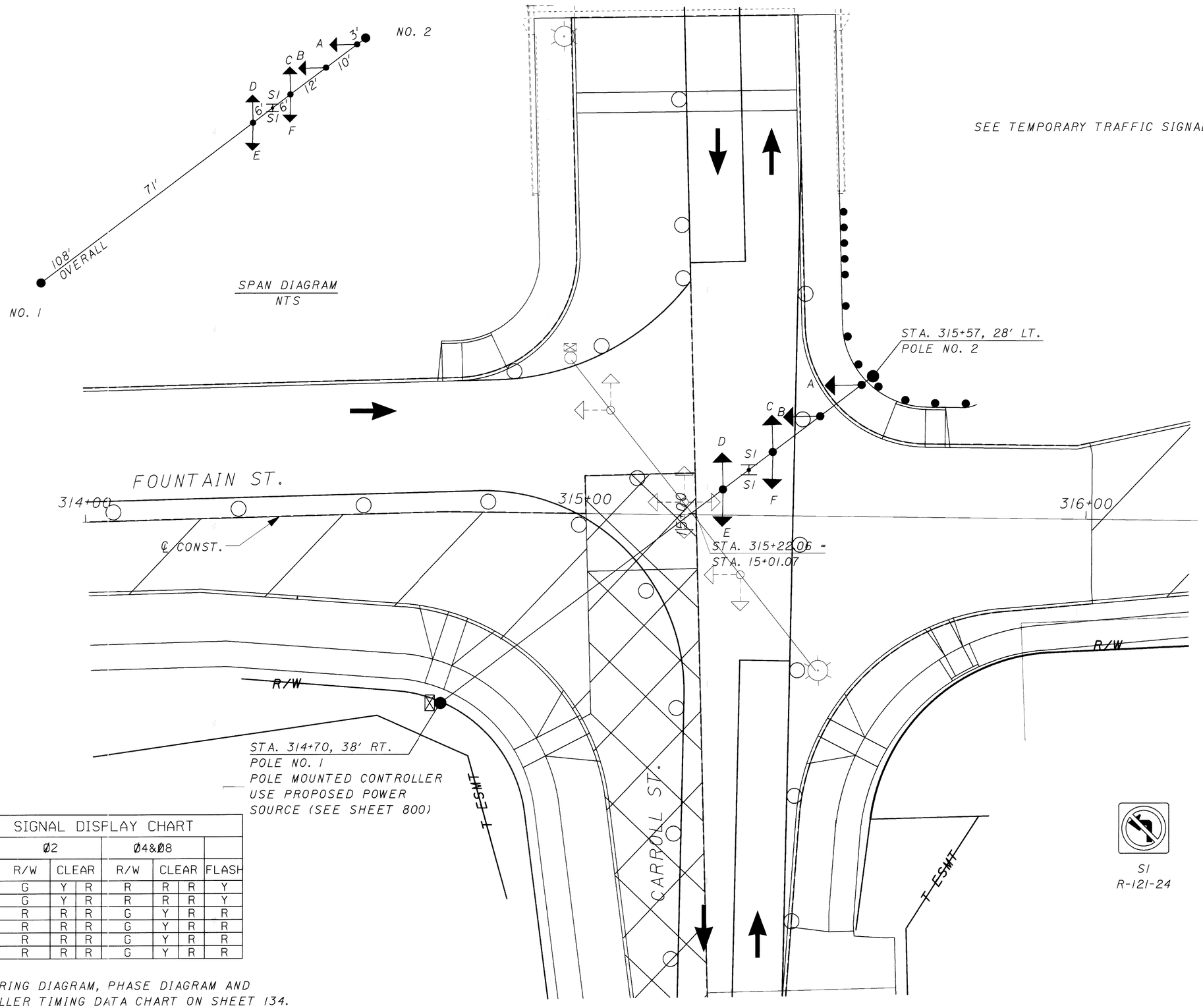

SIGNAL DISPLAY CHART							
SIGNAL HEAD	Ø2			Ø4&Ø8			
	R/W	CLEAR		R/W	CLEAR		FLASH
A	G	Y	R	R	R	R	Y
B	G	Y	R	R	R	R	Y
C	R	R	R	G	Y	R	R
D	R	R	R	G	Y	R	R
E	R	R	R	G	Y	R	R
F	R	R	R	G	Y	R	R

SEE WIRING DIAGRAM, PHASE DIAGRAM AND CONTROLLER TIMING DATA CHART ON SHEET 134.

SI
R-121-24

R
Y
G

A, B, C,
D, E, F

12" LENSES
SIGNAL HEADS

N

HORIZONTAL SCALE IN FEET
0 5 10 20

CALCULATED CRP
CHECKED

MAINTENANCE OF TRAFFIC DETAIL
FOUNTAIN ST. AND CARROLL ST. - PHASE 1A-2

SUM-8-0.63

135
1088

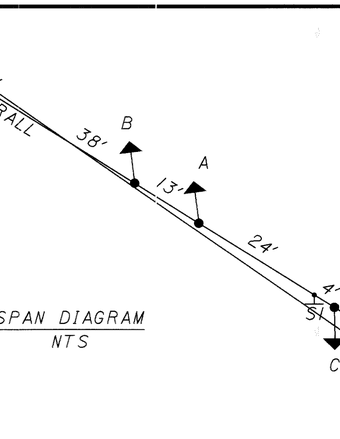

SPAN DIAGRAM
NTS

EXISTING INTERCONNECT

STA. 346+00, 31' LT.
POLE NO. 1
POLE MOUNTED CONTROLLER
USE PROPOSED POWER
SOUPCE (SEE SHEET 808)

STA. 346+49.44 = STA. 51+21.21

℄ CONST. 346+00

FOUNTAIN ST.

STA. 92+73.21 = STA. 51+42.81

51+00

52+00

93+00

℄ CONST. RAMP J

STA. 93+10, 23' RT, RAMP J
POLE NO. 2

L/A R/W

E.X. R/W

PERKINS ST.

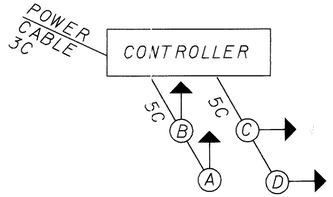

WIRING DIAGRAM
NTS

SIGNAL DISPLAY CHART	
SIGNAL HEAD	FLASH
A	Y
B	Y
C	Y
D	Y

S1
R-121-24

R
Y
G
A, B, C, D

12" LENSES
SIGNAL HEADS

FOUNTAIN ST. AND PERKINS ST. TEMPORARY TRAFFIC SIGNAL

CONTRACTOR TO FURNISH, INSTALL, ADJUST, TIMING AS REQUIRED, MOVE SIGNAL HEAD LOCATIONS, MAINTAIN AND SUBSEQUENTLY REMOVE THE TEMPORARY TRAFFIC SIGNAL INSTALLATION. CONTRACTOR TO COVER UNUSED SIGNAL HEADS AND ENSURE SIGHT LINES FOR SIGNAL HEADS CURRENTLY IN USE. THE FOLLOWING ITEMS ARE TO BE INCLUDED IN ACCORDANCE WITH ITEM 632:

(1) WOOD POLES, IN ACCORDANCE WITH ITEM 732.13, 40 FEET LONG WITH MINIMUM 8 FEET EMBEDMENT.
(2) MESSENGER WIRE WITH ACCESSORIES.
(3) SIGNAL CABLE
(4) POWER SERVICE
(5) VEHICULAR SIGNAL HEADS

A PRETIMED CONTROLLER IN ACCORDANCE WITH ITEM 633 IS TO BE PROVIDED. THE COST OF PROVIDING ALL OF THE SIGNAL ITEMS REQUIRED AND REMOVAL OF SAME IS TO BE INCLUDED IN ITEM SPECIAL - TEMPORARY TRAFFIC SIGNAL.

REVISIONS: 05/15/2002 by MAM

N

HORIZONTAL SCALE IN FEET
0 5 10 20

CALCULATED CRP
CHECKED

MAINTENANCE OF TRAFFIC DETAIL FOUNTAIN ST. AND PERKINS ST. - PHASE 1A

SUM-8-0.63

136
1088

LEGEND

ELW	TEMPORARY EDGE LINE (WHITE)
ELY	TEMPORARY EDGE LINE (YELLOW)
CLS	TEMPORARY CENTER LINE - DOUBLE SOLID
CHL	TEMPORARY CHANNELIZING LINE (WHITE)
LL	TEMPORARY LANE LINE
SL	TEMPORARY STOP LINE
LA	TEMPORARY LANE ARROW
WP	TEMPORARY WORD ON PAVEMENT, 72"
LLS	TEMPORARY SOLID LANE LINE
TLW	TEMPORARY TRANSVERSE LINE WHITE

POST MOUNTED SIGN

PORTABLE CONCRETE BARRIER

TEMPORARY DRUMS

DIRECTION OF TRAFFIC ARROW

TEMPORARY TRAFFIC SIGNAL

TEMPORARY PAVEMENT

WORK AREA

INTERSECTION PAVEMENT TO BE INSTALLED DURING NIGHT OR WEEKEND CONSTRUCTION

SPECIAL SIGN DETAIL

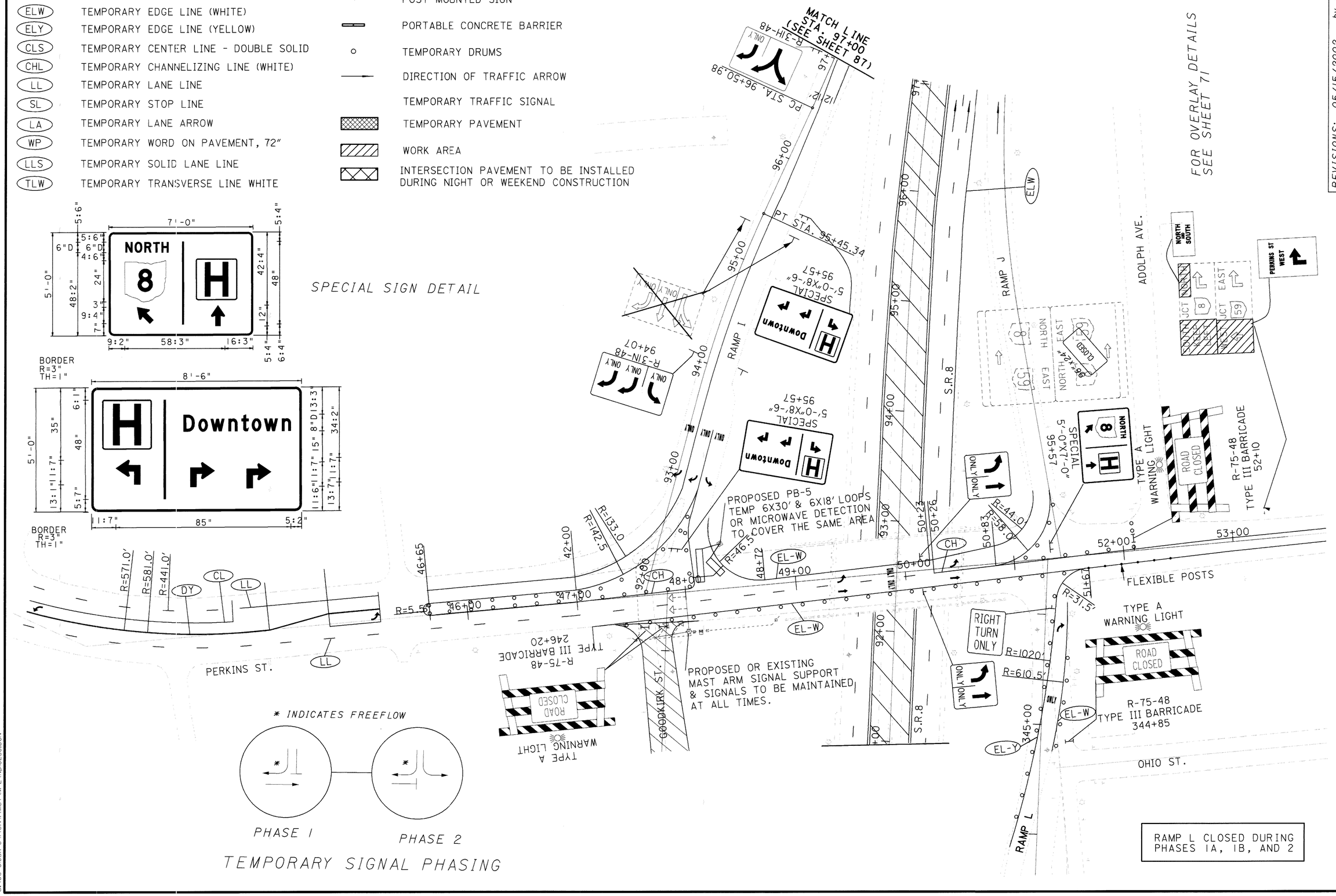

TEMPORARY SIGNAL PHASING

RAMP L CLOSED DURING PHASES 1A, 1B, AND 2

REVISIONS: 05/15/2002 by MAM

HORIZONTAL SCALE IN FEET 0 20 40 80

CALCULATED

CHECKED

MAINTENANCE OF TRAFFIC DETAIL PERKINS ST. - ALL PHASES

SUM-8-0.63

136A
1088

10:00:01 PM
06/13/2002
U:\00-010SR-8\1\Civil\Mot\M-E\Np102S8.DGN

GENERAL NOTES

1. It is intended that this drawing be used for treatment of drop-offs that develop during construction operations, and that are not otherwise provided for in the construction plans. Where the plans do not provide specific items for labor, equipment, or materials to implement the drop-off treatments specified herein, they shall be included for payment in the lump sum bid for Item 614 - Maintaining Traffic.

2. While the need for certain advisory signing is noted herein, it is not intended that this be indicative of all signing that may be required to advise or warn motorist, and all requirements of the Ohio Manual of Uniform Traffic Control Devices (OMUTCD) must be fulfilled.

3. In urban or otherwise heavily developed areas where pedestrians and/or bicyclists may be present in significant numbers, additional signing and protective measures other than those shown herein may be required.

4. The drop-off treatment selected for use at any given location shall be appropriate for the prevailing conditions at the site.

5. Where concrete barrier is specified, it shall be in accordance with Standard Construction Drawing RM-4.2 and Item 622.

6. When drums are specified for a drop-off condition, a minimum number of four drums shall be used. Spacing shall be as indicated in the plans or as specified in the OMUTCD.

7. When OW-151 (Low Shoulder) signs or OW-171 (Uneven Lanes symbol), OWP-171 (uneven lane plaque), and OC-53 (Maintain Present Lane) signs are required, they shall be placed 750' in advance of the condition, on all intersecting entrance ramps within the limits of the condition and immediately beyond all intersecting roadways within the limits of the condition. When the drop-off condition extends more than one-half mile, additional signs shall be erected at intervals of a maximum of one mile.

8. For locations, such as at ramps, lane shifts, lane closures, etc., where traffic is required to negotiate any difference in elevation between pavements, the Optional Wedge Treatment shall be provided.

9. Portable concrete barrier shall be placed on the same level as the traffic surface and shall not encroach on lane width(s) designated as the minimum required for traffic use. Where drums are used, and their presence would reduce traveled lane widths to less than 10', drums may be placed on the opposite level from that of traffic provided the drop-off depth does not exceed 5" and approval is granted by the Project Engineer.

10. Pavement Repairs (or similar work):

   a. Lengths greater than 60 feet - utilize appropriate treatment from Condition I.

   b. Lengths of 60 feet or less - repairs shall be affected in accordance with Item 255.08. Drums may be used as a separator adjacent to the traveled lane.

CONDITION I

1. These treatments are to be used for resurfacing, pavement planing excavation, etc., between, beside or within traveled lanes.

Distance From Traveled Lane	D (in)	Treatment
1FT-12FT	< 1½	Erect OW-171, AND OWP-171.
1FT-12FT	1½-3	1. Lane closure utilizing drums* as shown below. (use only on 3 or more lanes) - or - 2. Optional Wedge Treatment.
1FT-12FT	3 - 5	Lane closure utilizing drums as shown below
1FT-12FT	5 - 12	Lane closure utilizing portable concrete barrier as shown below.
>12FT-20FT	12 - 24	Lane closure utilizing drums as shown below
>12FT-20FT	>24	Lane closure utilizing portable concrete barrier as shown below.

*Cones may be used for daytime only conditions.

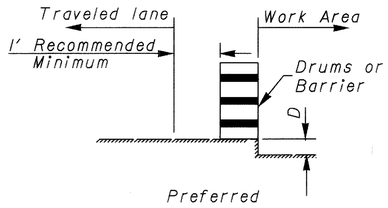

Preferred

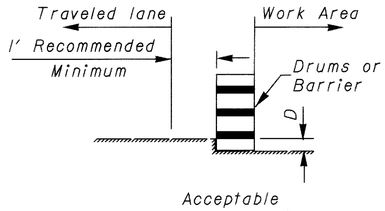

Acceptable (see note #9)

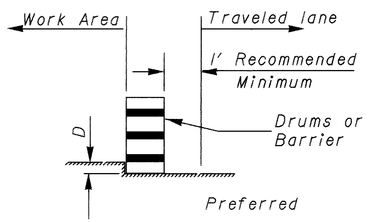

Preferred

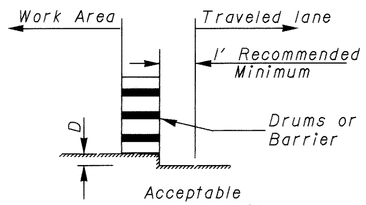

Acceptable (see note #9)

OPTIONAL WEDGE TREATMENT

(MILLING OR RESURFACING)

1. This treatment may be used when permitted for Condition I only.

2. OW-171, OWP-171, and OC-53 signs required.

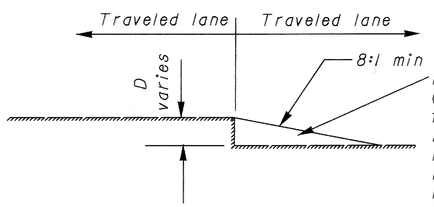

Firm and unyielding material (to be removed prior to placing the abutting pavement course) All labor, equipment, materials, and incidentals to provide and subsequently remove the pavement wedge shall be included and paid under the lump sum bid for Item 614- Maintaining Traffic

CONDITION II

DROPOFFS WITHIN GRADED SHOULDER AREA
[except for linear grading areas]

The treatments indicated below are for use in conjunction with resurfacing, planing, or excavation within the graded shoulder area.

Distance From Traveled Lane	D (in)	Treatment
1FT-12FT	< 1½	1.) If edgelines are present, no treatment necessary. or 2.) Erect OW-171, OWP-171, and OC-53 signs
1FT-12FT	1½- 5	1) If min. lane widths* requirements can be met, maintain lanes utilizing drums as shown below. - or - 2) If min. lane width* requirements cannot be met, close adjacent lane utilizing drums. (use only on 3 or more lanes) - or - 3) Optional shoulder treatment
>12FT-30FT	<= 24	Shoulder closure utilizing drums as shown below
>12FT-30FT	>24	Shoulder closure utilizing portable concrete barrier as shown below.

*Minimum lane widths shall be 10' unless otherwise specified in the plans.

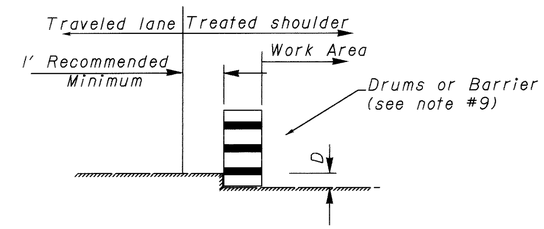

OPTIONAL SHOULDER TREATMENT

1. This treatment shall not be used within a bituminous shoulder where a hot longitudinal joint per 401.15 is required.

2. OW-151 signs required.

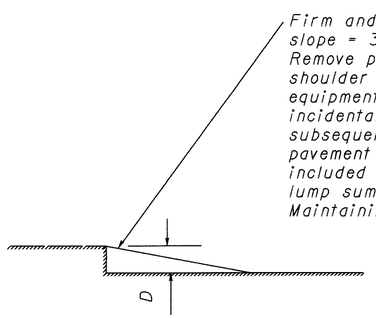

Firm and unyielding material slope = 3:1 or flatter. Remove prior to placing the shoulder course. All labor, equipment, materials and incidentals to provide and subsequently remove the pavement wedge shall be included and paid under the lump sum bid for item 614 - Maintaining Traffic.

DROPOFFS IN WORK ZONES

SUM-8-0.63

REVISED 4/27/99
\\OHDOT\TRAFFIC\MOT\DROPOFF.DGN

SHEET NUMBER											PARTICIPATION		ITEM	ITEM EXT.	GRAND TOTAL	UNIT	DESCRIPTION	SEE SHEET NO.
30	31	154	167	169	170	174	180	185	193		PROJECT	LOCAL						
																	ROADWAY	
LUMP											LUMP		201	11000	LUMP		CLEARING AND GRUBBING	
									1930		1930		202	22900	1930	SQ. YD.	APPROACH SLAB REMOVED	
			894						113505		114399		202	23000	114399	SQ. YD.	PAVEMENT REMOVED	
									5148		5148		202	24000	5148	SQ. YD.	BRICK BASE REMOVED	
								47870			47870		202	30000	47870	SQ. FT.	WALK REMOVED	
								LUMP			LUMP		202	30204	LUMP		STEPS REMOVED	
									3563		3563		202	30600	3563	SQ. YD.	CONCRETE MEDIAN REMOVED	
							1129				1129		202	30700	1129	LIN. FT.	CONCRETE BARRIER REMOVED	
									56		56		202	30800	56	SQ. YD.	TRAFFIC ISLAND REMOVED	
		11449					1955				13404		202	32000	13404	LIN. FT.	CURB REMOVED	
		8071					2198				10269		202	32500	10269	LIN. FT.	CURB AND GUTTER REMOVED	
							7794				7794		202	35100	7794	LIN. FT.	PIPE REMOVED, 24" AND UNDER	
							1009				1009		202	35200	1009	LIN. FT.	PIPE REMOVED, OVER 24"	
						11642					11642		202	38000	11642	LIN. FT.	GUARDRAIL REMOVED	
						4954					4954		202	38300	4954	LIN. FT.	GUARDRAIL REMOVED, BARRIER DESIGN	
							35				35		202	58000	35	EACH	MANHOLE REMOVED	
							87				87		202	58100	87	EACH	CATCH BASIN REMOVED	
							3				3		202	58700	3	EACH	MANHOLE ABANDONED	
					11272						11272		202	75000	11272	LIN. FT.	FENCE REMOVED	
5000			345	223310							228655		203	12000	228655	CU. YD.	EXCAVATION NOT INCLUDING EMBANKMENT	
																	CONSTRUCTION	
5000				19462							24462		203	20000	24462	CU. YD.	EMBANKMENT	
55											55		203	45000	55	HOUR	PROOF ROLLING	
									154164		154164		203	50000	154164	SQ. YD.	SUBGRADE COMPACTION	
							1156				1156		603	98300	1156	LIN. FT.	CONDUIT, MISC.: FILL AND PLUG EXISTING CONDUIT	
							12				12		604	38500	12	EACH	MONUMENT ASSEMBLY	
							15				15		604	40500	15	EACH	REFERENCE MONUMENT	
						10677.15					10677.15		606	13000	10677.15	LIN. FT.	GUARDRAIL, TYPE 5	
						13					13		606	22010	13	EACH	ANCHOR ASSEMBLY, TYPE E-98	
						1					1		606	25000	1	EACH	ANCHOR ASSEMBLY, TYPE A	
						21					21		606	26500	21	EACH	ANCHOR ASSEMBLY, TYPE T	
						15					15		606	35000	15	EACH	BRIDGE TERMINAL ASSEMBLY, TYPE 1	
						16					16		606	35100	16	EACH	BRIDGE TERMINAL ASSEMBLY, TYPE 2	
					13193						13193		607	23000	13193	LIN. FT.	FENCE, TYPE CLT	
								66491			43988	22504	608	10000	66492	SQ. FT.	4" CONCRETE WALK	
								121			121		608	40000	121	LIN. FT.	CONCRETE STEPS, TYPE A	
								8			8		SPECIAL	60849000	8	EACH	CURB RAMP, TYPE 1, CITY OF AKRON SPECIFICATIONS	579
								36			36		SPECIAL	60849000	36	EACH	CURB RAMP, TYPE 2, CITY OF AKRON SPECIFICATIONS	580
								28			28		SPECIAL	60849000	28	EACH	CURB RAMP, TYPE 3, CITY OF AKRON SPECIFICATIONS	581
							6543				6543		622	23404	6543	LIN. FT.	CONCRETE BARRIER, TYPE B1	
							784				784		622	24000	784	LIN. FT.	CONCRETE BARRIER, TYPE D	
							1930				1930		622	24001	1930	LIN. FT.	CONCRETE BARRIER, TYPE D, AS PER PLAN	20
																	EROSION CONTROL	
	500										500		601	32200	500	CU. YD.	ROCK CHANNEL PROTECTION, TYPE C WITH FILTER	
	3400										3400		601	34200	3400	CU. YD.	ROCK CHANNEL PROTECTION, TYPE C WITHOUT FILTER	

CALCULATED BF
CHECKED VLW

GENERAL SUMMARY

SUM-8-0.63

04:10:05 PM
07/09/2002
\\Y00-010SR-8\\Civil\gensummary\sg01.dgn

SHEET NUMBER											PARTICIPATION		ITEM	ITEM EXT.	GRAND TOTAL	UNIT	DESCRIPTION	SEE SHEET NO.
31	32	154	165	166	169		194				PROJECT	LOCAL						
																	EROSION CONTROL (CON'T)	
					157						157		660	20000	157	SQ. YD.	SODDING REINFORCED	
3											3		870	00100	3	EACH	SOIL ANALYSIS TEST	
12267											12267		870	00200	12267	CU. YD.	PLACING TOPSOIL	
					111017						111017		870	10000	111017	SQ. YD.	SEEDING AND MULCHING	
5550											5550		870	14000	5550	SQ. YD.	REPAIR SEEDING AND MULCHING	
5550											5550		870	15000	5550	SQ. YD.	INTER-SEEDING	
4.72					14.99						19.71		870	20000	19.71	TON	COMMERCIAL FERTILIZER	
					45.96						45.96		870	30000	45.96	TON	AGRICULTURAL LIME	
48					600						648		870	35000	648	M GAL.	WATER	
248											248		870	40000	248	M SQ. FT.	MOWING	
22100											22100		877	10000	22100	SQ. YD.	TEMPORARY SEEDING AND MULCHING	
12150							24297				36447		877	30100	36447	LIN. FT.	TEMPORARY PERIMETER FILTER FABRIC FENCE	
330							663				993		877	30200	993	LIN. FT.	TEMPORARY DITCH CHECK FILTER FABRIC FENCE	
1430							2860				4290		877	30300	4290	LIN. FT.	TEMPORARY INLET PROTECTION FILTER FABRIC FENCE	
240							2405				2645		877	40000	2645	LIN. FT.	TEMPORARY SLOPE DRAINS	
268							2570				2838		877	50000	2838	CU. YD.	TEMPORARY SEDIMENT BASINS AND DAMS	
240							2400				2640		877	55000	2640	CU. YD.	TEMPORARY DIKES	
1950											1950		877	60000	1950	CU. YD.	SEDIMENT REMOVAL	
																	DRAINAGE	
	500	1181									1681		603	00900	1681	LIN. FT.	6" CONDUIT, TYPE B	
	500										500		603	01100	500	LIN. FT.	6" CONDUIT, TYPE C	
	500	1540									2040		603	01500	2040	LIN. FT.	6" CONDUIT, TYPE F	
			3963								3963		603	04400	3963	LIN. FT.	12" CONDUIT, TYPE B, 706.02	
			775								775		603	04600	775	LIN. FT.	12" CONDUIT, TYPE C, 706.02	
			330								330		603	05200	330	LIN. FT.	12" CONDUIT, TYPE F, 707.33	
			3629								3629		603	05900	3629	LIN. FT.	15" CONDUIT, TYPE B, 706.02	
			140								140		603	06100	140	LIN. FT.	15" CONDUIT, TYPE C, 706.02	
			299								299		603	06700	299	LIN. FT.	15" CONDUIT, TYPE F, 707.33	
			1042								1042		603	07400	1042	LIN. FT.	18" CONDUIT, TYPE B, 706.02	
			717								717		603	07600	717	LIN. FT.	18" CONDUIT, TYPE C, 706.02	
			1426								1426		603	08900	1426	LIN. FT.	21" CONDUIT, TYPE B, 706.02	
			137								137		603	08900	137	LIN. FT.	21" CONDUIT, TYPE B, 706.02, D-1500	
			300								300		603	09100	300	LIN. FT.	21" CONDUIT, TYPE C, 706.02	
			46								46		603	09700	46	LIN. FT.	21" CONDUIT, TYPE F, 707.33	
			122								122		603	10400	122	LIN. FT.	24" CONDUIT, TYPE B, 706.02	
			588								588		603	11900	588	LIN. FT.	27" CONDUIT, TYPE B, 706.02	
			300								300		603	12100	300	LIN. FT.	27" CONDUIT, TYPE C, 706.02	
			965								965		603	16400	965	LIN. FT.	36" CONDUIT, TYPE B, 706.02	
			528								528		603	16400	528	LIN. FT.	36" CONDUIT, TYPE B, 706.02, D-1000	
			305								305		603	16600	305	LIN. FT.	36" CONDUIT, TYPE C, 706.02	
			585								585		603	16600	585	LIN. FT.	36" CONDUIT, TYPE C, 706.02, D-1000	
			353								353		603	19400	353	LIN. FT.	42" CONDUIT, TYPE B, 706.02	
			140								140		603	19400	140	LIN. FT.	42" CONDUIT, TYPE B, 706.02, D-2250	
300											300		603	98300	300	LIN. FT.	CONDUIT MISC.: SHEETING AND BRACING FOR TRENCH EXCAVATION, AS PER PLAN	31
	5			85							90		604	00400	90	EACH	CATCH BASIN No. 3	
				17							17		604	01600	17	EACH	CATCH BASIN No. 5	
				6							6		604	01800	6	EACH	CATCH BASIN No. 5A	
				1							1		604	02000	1	EACH	CATCH BASIN No. 6	
				9							9		604	04900	9	EACH	CATCH BASIN No. 2-3	

CALCULATED BF
CHECKED VLW

GENERAL SUMMARY

SUM-8-0.63

04:46:23 PM
07/10/2002
\\R100-010SR-8\N\Civil\gensummary\sg01.dgn

SHEET NUMBER										PARTICIPATION		ITEM	ITEM EXT.	GRAND TOTAL	UNIT	DESCRIPTION	SEE SHEET NO.
32	154	166	167	174	193	503				PROJECT	LOCAL						
																DRAINAGE (CON'T)	
		1								1		604	09000	1	EACH	CATCH BASIN ADJUSTED TO GRADE	
		5								5		604	15200	5	EACH	INLET, No. 3D50	
		1								1		604	15201	1	EACH	INLET, No. 3D50, AS PER PLAN, TYPE A	32
		1								1		604	15201	1	EACH	INLET, No. 3D50, AS PER PLAN, TYPE B	598
		18								18		604	22500	18	EACH	INLET MISC.: BARRIER INLET, AS PER PLAN	597
		1								1		604	22500	1	EACH	INLET, MISC.: BARRIER INLET CHAMBER, TYPE A	604
		1								1		604	22500	1	EACH	INLET, MISC.: BARRIER INLET CHAMBER, TYPE B	605
		76								76		604	31500	76	EACH	MANHOLE No. 3	
10		6								16		604	34500	16	EACH	MANHOLE ADJUSTED TO GRADE	
	10									10		604	36600	10	EACH	PRECAST REINFORCED CONCRETE OUTLET	
15000										15000		SPECIAL	60450000	15000	POUND	SPECIAL - MISCELLANOUS METAL	32
	578									578		605	11101	578	LIN. FT.	6" SHALLOW PIPE UNDERDRAIN, AS PER PLAN	32
	38372									38372		605	11110	38372	LIN. FT.	6" SHALLOW PIPE UNDERDRAIN WITH FABRIC WRAP	
	27688									27688		605	13510	27688	LIN. FT.	6" ROCK CUT UNDERDRAIN WITH FABRIC WRAP	
					931					931		254	01000	931	SQ. YD.	PAVEMENT PAVEMENT PLANING, BITUMINOUS, 3"	
						367				367		254	01001	367	SQ. YD.	PAVEMENT PLANING, BITUMINOUS, AS PER PLAN	503
			38							38		301	48000	38	CU. YD.	BITUMINOUS AGGREGATE BASE, PG64-22 (DRIVEWAYS)	
					26428					26428		302	46000	26428	CU. YD.	BITUMINOUS AGGREGATE BASE, PG64-22	
			82		25983					26065		304	20000	26065	CU. YD.	AGGREGATE BASE	
					70					70		407	10000	70	GAL	TACK COAT	
					4054					4054		407	14000	4054	GAL	TACK COAT FOR INTERMEDIATE COURSE	
					42055					42055		408	10000	42055	GAL	BITUMINOUS PRIME COAT	
					4917					4917		446	46040	4917	CU. YD.	ASPHALT CONCRETE INTERMEDIATE COURSE, TYPE 2, PG64-28	
					4225	45				4270		446	50000	4270	CU. YD.	ASPHALT CONCRETE SURFACE COURSE, TYPE IH	
				240						240		448	46060	240	CU. YD.	ASPHALT CONCRETE INTERMEDIATE COURSE, TYPE 1, PG64-22 (UNDER GUARDRAIL)	
			10							10		448	48020	10	CU. YD.	ASPHALT CONCRETE SURFACE COURSE, TYPE 1, PG64-22 (DRIVEWAYS)	
					42939					42939		451	13000	42939	SQ. YD.	8" REINFORCED CONCRETE PAVEMENT	
					482					482		SPECIAL	45130000	482	LIN. FT.	PRESSURE RELIEF JOINT, TYPE A	32
			566							566		452	10000	566	SQ. YD.	6" PLAIN CONCRETE PAVEMENT	
					4666					4666		452	11000	4666	SQ. YD.	7" PLAIN CONCRETE PAVEMENT	
			306							306		452	12000	306	SQ. YD.	8" PLAIN CONCRETE PAVEMENT	
					300					300		611	10000	300	SQ. YD.	REINFORCED CONCRETE APPROACH SLAB (T=12")	
					611					611		611	15000	611	SQ. YD.	REINFORCED CONCRETE APPROACH SLAB (T=13")	
					714					714		611	25000	714	SQ. YD.	REINFORCED CONCRETE APPROACH SLAB (T=15")	
					273					273		611	98100	273	SQ. YD.	APPROACH SLAB MISC.: REINFORCED CONCRETE APPROACH SLAB (T=14") HS-25 LOADING	
					304					304		611	98100	304	SQ. YD.	APPROACH SLAB MISC.: REINFORCED CONCRETE APPROACH SLAB (T=17") HS-25 LOADING	
	22549									22549		830	14000	22549	LIN. FT.	CURB, TYPE 2-A	
	709									709		830	16000	709	LIN. FT.	CURB, TYPE 2-B	
	2269									2269		830	26000	2269	LIN. FT.	CURB, TYPE 6	
					103					103		830	54000	103	SQ. YD.	6" CONCRETE TRAFFIC ISLAND	
																FOR WATER WORK, SEE SHEET 685	

CALCULATED BF
CHECKED VLW

GENERAL SUMMARY

SUM-8-0.63

140
1088

01:47:01 PM
07/10/2002
\\3\V00-0\0SR-8\1\Civil\gensummary\gg01.dgn

SHEET NUMBER											PARTICIPATION		ITEM	ITEM EXT.	GRAND TOTAL	UNIT	DESCRIPTION	SEE SHEET NO.
34	42	43	44	45	46	48	182				PROJECT	LOCAL						
																	SANITARY	
							1240				1240		202	35100	1240	LIN. FT.	PIPE REMOVED, 24" AND UNDER	
							109				109		202	35200	109	LIN. FT.	PIPE REMOVED, OVER 24"	
							10				10		202	58000	10	EACH	MANHOLE REMOVED	
							1				1		202	58700	1	EACH	MANHOLE ABANDONED	
							LUMP				LUMP		202	98000	LUMP		REMOVAL MISC.: JUNCTION CHAMBER	
250											250		603	00900	250	LIN. FT.	6" CONDUIT, TYPE B	
250											250		603	01100	250	LIN. FT.	6" CONDUIT, TYPE C	
							1345				1345		603	01800	1345	LIN. FT.	8" CONDUIT, TYPE B, 706.08	
							1509				1509		603	04400	1509	LIN. FT.	12" CONDUIT, TYPE B, 706.08	
							4				4		603	05900	4	LIN. FT.	15" CONDUIT, TYPE B, 706.08	
							6				6		603	08900	6	LIN. FT.	21" CONDUIT, TYPE B, 706.08	
							83				83		603	13400	83	LIN. FT.	30" CONDUIT, TYPE B, 706.03, D-2000	
							21				21		603	14900	21	LIN. FT.	33" CONDUIT, TYPE B, 706.03, D-1000	
							33				33		603	14900	33	LIN. FT.	33" CONDUIT, TYPE B, 706.03, D-3000	
							22				22		603	20900	22	LIN. FT.	48" CONDUIT, TYPE B, 706.03, D-3000	
							1				1		604	32500	1	EACH	MANHOLE, MISC.: 84" DIA. PRECAST MANHOLE, TYPE 1	601
							1				1		604	32500	1	EACH	MANHOLE, MISC.: 120" DIA. PRECAST MANHOLE, TYPE 1	603
							17				17		604	32500	17	EACH	MANHOLE, MISC.: AKRON MH-2	
							2				2		604	32500	2	EACH	MANHOLE, MISC.: AKRON MH-9 (DROP MANHOLE)	
							11				11		604	34500	11	EACH	MANHOLE ADJUSTED TO GRADE	
																	FOR LIGHTING, SEE SHEET 836	
																	FOR TRAFFIC CONTROL, SEE SHEETS 709-710	
																	FOR TRAFFIC SIGNALS, SEE SHEETS 710-711, 711A	
																	FOR REFERENCE MARKERS, SEE SHEETS 711B	
																	FOR RETAINING WALLS, SEE SHEETS 606,617, 632, 635-637, 641, 644-647, 650-655, 657, 675-678	
																	FOR STRUCTURES, SEE SHEETS 877, 915, 941, 947, 954, 985, 1004	
																	MAINTENANCE OF TRAFFIC	
	500										500		410	12000	500	CU. YD.	TRAFFIC COMPACTED SURFACE, TYPE A OR B	42A
		6750									6750		614	11100	6750	HOUR	LAW ENFORCEMENT OFFICER WITH PATROL CAR	43
		200									200		614	11200	200	HOUR	LAW ENFORCEMENT OFFICER	43
					4						4		SPECIAL	61411300	4	EACH	TEMPORARY TRAFFIC SIGNAL	46
						9					9		614	12350	9	EACH	TEMPORARY IMPACT ATTENUATOR	48
	50										50		614	12460	50	EACH	WORK ZONE MARKING SIGN	42
			75								75		614	12470	75	EACH	WORK ZONE SPEED LIMIT SIGN	44
			40								40		614	12480	40	EACH	DOUBLED FINES IN WORK ZONE SIGN	44
		500									500		SPECIAL	61412500	500	SQ. FT.	REPLACEMENT SIGN	43
	100										100		614	13000	100	CU. YD.	BITUMINOUS CONCRETE FOR MAINTAINING TRAFFIC	
			1822								1822		614	13300	1822	EACH	BARRIER REFLECTOR, TYPE B	44
			1822								1822		614	13350	1822	EACH	OBJECT MARKER	44
				180							180		614	18000	180	HOURS	MAINTAINING TRAFFIC, MISC.: VEHICLE ASSISTANCE	45
				144							144		614	18601	144	SNMT	PORTABLE CHANGEABLE MESSAGE SIGN, AS PER PLAN	45
						16.60					16.60		614	20200	16.60	MILE	TEMPORARY LANE LINE, CLASS I, 740.06, TYPE I	48
						2.17					2.17		614	21200	2.17	MILE	TEMPORARY CENTER LINE, CLASS I, 740.06, TYPE I	48

CALCULATED MAM
CHECKED MCR

GENERAL SUMMARY

SUM-8-0.63

141
1088

04:10:05 PM
07/09/2002
u:\00\D10SR-8\Civil\gensummary\gs01.dgn

SHEET NUMBER 42	43	44	48	PARTICIPATION PROJECT	LOCAL	ITEM	ITEM EXT.	GRAND TOTAL	UNIT	DESCRIPTION	SEE SHEET NO.
										MAINTENANCE OF TRAFFIC (CON'T)	
			32.94	32.94		614	22200	32.94	MILE	TEMPORARY EDGE LINE, CLASS I, 740.06, TYPE I	48
			9625	9625		614	23400	9625	LIN. FT.	TEMPORARY CHANNELIZING LINE, CLASS I, 740.06, TYPE I	48
			1019	1019		614	24400	1019	LIN. FT.	TEMPORARY DOTTED LINE, CLASS I, 740.06, TYPE I	48
			3559	3559		614	25400	3559	LIN. FT.	TEMPORARY TRANSVERSE LINE, CLASS I, 740.06, TYPE I	48
			638	638		614	26400	638	LIN. FT.	TEMPORARY STOP LINE, CLASS I, 740.06, TYPE I	48
			14898	14898		615	20001	14898	S.Y.	TEMPORARY PAVEMENT, CLASS A, AS PER PLAN	46
250	750			1000		616	10000	1000	MGAL	WATER	43
25	75			100		616	20000	100	TON	CALCIUM CHLORIDE	43
			72096	72096		622	40031	72096	LIN. FT.	PORTABLE CONCRETE BARRIER, 50", AS PER PLAN	46
			1040	1050		622	40040	1050	LIN. FT.	PORTABLE CONCRETE BARRIER, 32", BRIDGE MOUNTED	48
			2206	2206		622	40046	2206	LIN. FT.	PORTABLE CONCRETE BARRIER, 50", BRIDGE MOUNTED	48
		2		2		SPECIAL	69086000	2	EACH	CELLULAR PHONE	44
			280	280		630	80103	280	S.F.	SIGN, FLAT SHEET, TYPE G, AS PER PLAN,	48
			816	816		630	80103	816	S.F.	SIGN, FLAT SHEET, TYPE G, AS PER PLAN, MATERIALS ONLY	48
			399	399		630	80205	399	S.F.	SIGN EXTRUSHEET, TYPE G, AS PER PLAN	48
				LUMP		614	11000	LUMP		MAINTAINING TRAFFIC	
				LUMP		623	10000	LUMP		CONSTRUCTION LAYOUT STAKES	
				LUMP		624	10000	LUMP		MOBILIZATION	
				48		806	16020	48	MONTH	FIELD OFFICE, TYPE C	
										FOR LANDSCAPING GENERAL SUMMARY	
										SEE PART II, SHEET 2	

CALCULATED MAM
CHECKED MCR

GENERAL SUMMARY

SUM-8-0.63

01:28:09 PM
07/10/2002
\\00-010SR-8\I\Civil\gensummary\gg01.dgn

REF NO.	SHEET NO.	STATION FROM	STATION TO	OFFSET FROM ℄	202 CURB REMOVED LIN. FT	202 CURB & GUTTER REMOVED LIN. FT	603 6" CONDUIT, TYPE B LIN. FT	603 6" CONDUIT, TYPE F LIN. FT	604 PRECAST REINFORCED CONC. OUTLET EACH	605 6" SHALLOW PIPE UNDERDRAIN W/FAB. (18" DEEP) LIN. FT	605 6" SHALLOW PIPE UNDERDRAIN, AS PER PLAN LIN. FT	605 6" ROCK CUT UNDERDRAIN W/FAB. (12" DEEP) LIN. FT	BENDS AND BRANCHES FOR INFORMATION ONLY: 6" X 6" TEE EACH	6" X 30° BEND EACH	6" X 45° BEND/ WYE EACH	6" X 60° BEND EACH	6" X 90° BEND EACH	6" X 60° BEND/ WYE	830 CURB, TYPE 2-A LIN. FT	830 CURB, TYPE 2-B LIN. FT	830 CURB, TYPE 6 LIN. FT
		S.R. - 8																			
1U	432	32+76.00	33+08.00	56' LT				10	1	32			1								
2U		32+76.00	33+15.00	46' LT			10			39							1				
3U		32+75.00	33+40.00	10' LT			10			65				1		1					
4U		32+75.00	33+42.00	℄				10		57											
5U		32+75.00	33+44.00	10' RT			10			69							1				
6U		32+75.00	33+86.00	58' RT			10			111				1							
7U		32+75.00	33+91.00	66' RT				10	1	116								1			
8U		34+93.00	36+00.00	56' LT						107											
9U		35+00.00	36+00.00	46' LT						100											
10U		35+24.00	36+00.00	10' LT						76											
11U		35+32.00	36+00.00	℄						68											
12U		35+38.00	36+00.00	10' RT						62											
13U		35+71.00	36+00.00	58' RT						29											
14U		35+76.00	36+00.00	66' RT						24											
1U	433	36+00.00	40+00.00	56' LT				10	1	400			1								
2U		36+00.00	40+00.00	46' LT			10			400							1				
3U		36+00.00	40+00.00	10' LT						400											
4U		36+00.00	40+00.00	℄						400											
5U		36+00.00	40+00.00	10' RT						400											
6U		36+00.00	40+00.00	58' RT						400											
7U		36+00.00	40+00.00	66' RT						400											
1U	434	40+00.00	44+00.00	VARIES						400											
2U		40+00.00	44+00.00	46' LT						400											
3U		40+00.00	41+92.00	10' LT			10			192							1				
4U		40+00.00	42+00.00	℄				10		190			1								
5U		40+00.00	42+00.00	10' RT			10			200							1				
6U		40+00.00	41+00.00	58' RT			10			100							1				
7U		40+00.00	41+00.00	66' RT				10	1	100			1								
8U		41+00.00	44+00.00	58' RT						300											
9U		41+00.00	44+00.00	66' RT						300											
10U		42+02.00	44+00.00	10' LT						198											
11U		42+02.00	44+00.00	℄						198											
12U		42+02.00	44+00.00	10' RT						198											
1U	435	44+00.00	45+13.00	VARIES				10	1	113			1								
2U		44+00.00	45+13.00	46' LT			18			113			1								
3U		44+00.00	45+13.00	10' LT			36			113							1				
4U		44+00.00	45+08.00	℄			10			108							1				
5U		44+00.00	45+08.00	10' RT			48			108			1								
6U		44+00.00	45+08.00	58' RT			10			108			1								
7U		44+00.00	45+08.00	66' RT				10	1	108			1								
8U		46+70.00	48+00.00	VARIES						130											
9U		46+70.00	48+00.00	46' LT						130											
10U		46+70.00	48+00.00	10' LT						130											
11U		46+70.00	48+00.00	℄						130											
12U		46+70.00	48+00.00	10' RT						130											
13U		46+70.00	48+00.00	58' RT						130											
14U		46+70.00	48+00.00	66' RT						130											
TOTALS CARRIED TO 154							202	80	6	8212			9	2		2	8	1			

CALCULATED CRP CHECKED TMA

CURB & UNDERDRAIN SUBSUMMARY

SUM-8-0.63

03:42:55 PM
06/13/2002
u:\00-010sr-8\1\civil\subsummary\ud010sum.dgn

REF NO.	SHEET NO.	STATION FROM	STATION TO	OFFSET FROM ℄	202 CURB REMOVED LIN. FT	202 CURB & GUTTER REMOVED LIN. FT	603 6" CONDUIT, TYPE B LIN. FT	603 6" CONDUIT, TYPE F LIN. FT	604 PRECAST REINFORCED CONC. OUTLET EACH	605 6" SHALLOW PIPE UNDERDRAIN W/FAB. (18" DEEP) LIN. FT	605 6" SHALLOW PIPE UNDERDRAIN, AS PER PLAN LIN. FT	605 6" ROCK CUT UNDERDRAIN W/FAB. (12" DEEP) LIN. FT	BENDS AND BRANCHES FOR INFORMATION ONLY 6" X 6" TEE EACH	6" X 30° BEND EACH	6" X 45° BEND/ WYE EACH	6" X 60° BEND EACH	6" X 90° BEND EACH					830 CURB, TYPE 2-A LIN. FT	830 CURB, TYPE 2-B LIN. FT	830 CURB, TYPE 6 LIN. FT	
		S.R. - 8																							
1U	436	48+00.00	51+40.00	VARIES				36		366			1		1										
2U		48+00.00	51+40.00	46' LT			33			340							1								
3U		48+00.00	51+90.00	10' LT			10			390							1								
4U		48+00.00	51+90.00	℄				10		380			1												
5U		48+00.00	52+00.00	10' RT			10			400							1								
6U		48+00.00	52+00.00	58' RT			8			400							1								
7U		48+00.00	52+00.00	VARIES				10	1	400			1												
8U		48+80.00	52+00.00	46' RT						320															
9U		51+40.00	52+00.00	36' RT						60															
10U		51+90.00	52+00.00	10' LT						10															
11U		51+84.00	52+00.00	56' RT						16															
1U	437	53+00.00	56+00.00	56' LT						300															
2U		52+00.00	56+00.00	46' LT						400															
3U		52+00.00	56+00.00	10' LT						400															
4U		52+10.00	56+00.00	℄						390															
5U		52+00.00	56+00.00	10' RT						400															
6U		52+00.00	56+00.00	46' RT			10			400							1								
7U		52+00.00	56+00.00	56' RT				42		400			1												
1U	438	56+00.00	57+50.00	56' LT				15		150			1												
2U		56+00.00	57+50.00	46' LT			10			150							1								
3U		56+00.00	60+00.00	10' LT						400															
4U		56+00.00	60+00.00	℄						400															
5U		56+00.00	60+00.00	10' RT						400															
6U		56+00.00	60+00.00	46' RT						400															
7U		56+00.00	60+00.00	56' RT						400															
8U		57+55.00	60+00.00	56' LT						245															
9U		57+55.00	60+00.00	46' LT						245															
1U	439	60+00.00	60+85.00	56' LT				10		75			1	2											
2U		60+00.00	60+80.00	46' LT			10			80							1								
3U		60+00.00	60+75.00	10' LT			10			75							1								
4U		60+00.00	60+80.14	℄				10		81			1												
5U		60+00.00	60+80.00	10' RT			10			80			1												
6U		60+00.00	60+90.00	46' RT						90			1												
7U		60+00.00	60+70.00	56' RT			10			70							1								
8U		NOT USED																							
9U		60+90.00	62+00.00	46' LT			16					110					2								
10U		61+05.00	64+00.00	10' LT			10					295					1								
11U		60+80.14	64+00.00	℄				10				310	2												
12U		60+80.00	64+00.00	10' RT								320													
13U		60+90.00	62+00.00	46' RT			47					110	1												
14U		NOT USED																							
15U		62+05.00	63+50.00	56' LT			10					145					1								
16U		62+00.00	63+50.00	46' LT			10	10				140	1												
17U		62+05.00	64+00.00	46' RT			10					195					1								
18U		62+05.00	64+00.00	56' RT				10				195	1			2									
19U		63+50.00	64+00.00	56' LT			10	10				40	1												
20U		63+55.00	64+00.00	46' LT			10					45					1								
TOTALS CARRIED TO 154							244	153	1	9113		1905	15	2	3.		15								

CALCULATED CRP CHECKED TMA

CURB & UNDERDRAIN SUBSUMMARY

SUM-8-0.63

144
1088

03:42:56 PM
06/13/2002
u:\00-00sr-8\civil\subsummary\udl02sum.dgn

REF NO.	SHEET NO.	STATION FROM	STATION TO	OFFSET FROM ℄	202 CURB REMOVED LIN. FT	202 CURB & GUTTER REMOVED LIN. FT	603 6" CONDUIT, TYPE B LIN. FT	603 6" CONDUIT, TYPE F LIN. FT	604 PRECAST REINFORCED CONC. OUTLET EACH	605 6" SHALLOW PIPE UNDERDRAIN W/FAB. (18" DEEP) LIN. FT	605 6" SHALLOW PIPE UNDERDRAIN, AS PER PLAN LIN. FT	605 6" ROCK CUT UNDERDRAIN W/FAB. (12" DEEP) LIN. FT	BENDS AND BRANCHES FOR INFORMATION ONLY: 6" X 6" TEE EACH	6" X 30° BEND EACH	6" X 45° BEND/ WYE EACH	6" X 60° BEND EACH	6" X 90° BEND EACH	830 CURB, TYPE 2-A LIN. FT	830 CURB, TYPE 2-B LIN. FT	830 CURB, TYPE 6 LIN. FT
		S.R. - 8																		
1U	440	64+00.00	65+35.00	56' LT								135								
2U		64+00.00	65+35.00	46' LT								135								
3U		64+00.00	68+00.00	10' LT								400								
4U		64+00.00	68+00.00	℄								400								
5U		64+00.00	68+00.00	10' RT								400								
6U		64+00.00	66+70.00	46' RT								270								
7U		64+00.00	65+40.00	56' RT								140								
8U		NOT USED																		
9U		65+45.00	66+65.00	46' LT			5					115			1					
10U		66+70.00	68+00.00	56' LT				10				130	1		2					
11U		66+70.00	68+00.00	46' LT			10					130					1			
12U		66+70.00	68+00.00	46' RT			10					130					1			
13U		66+70.00	68+00.00	56' RT				27				130	1		2					
1U	441	68+00.00	72+00.00	56' LT								400								
2U		68+00.00	72+00.00	46' LT								400								
3U		68+00.00	72+00.00	10' LT								400								
4U		68+00.00	72+00.00	℄								400								
5U		68+00.00	72+00.00	10' RT								400								
6U		68+00.00	72+00.00	46' RT			10					400					1			
7U		68+00.00	72+00.00	56' RT				10				400	1							
1U	442	72+00.00	73+00.00	56' LT				10				100	1							
2U		72+00.00	73+00.00	46' LT			10					100					1			
3U		72+00.00	76+00.00	10' LT								400								
4U		72+00.00	76+00.00	℄								400								
5U		72+00.00	76+00.00	10' RT								400								
6U		72+05.00	76+00.00	46' RT								395								
7U		73+05.00	76+00.00	46' LT								295								
8U		73+75.00	75+45.00	RT			5					165			1					
9U		73+75.00	75+50.00	RT			5					165			1					
10U		74+60.00	75+80.00	LT			10					120					1			
11U		74+60.00	76+00.00	LT								140	1							
12U		75+50.00	76+00.00	RT								50								
13U		75+50.00	76+00.00	RT								50								
1U	443	NOT USED																		
2U		76+18.00	77+03.00	LT			10					75	1							
3U		76+00.00	77+00.00	46' LT			15					100					1			
4U		76+00.00	79+29.28	10' LT			10					330					1			
5U		76+00.00	79+45.59	℄				10				336	2							
6U		76+00.00	79+32.48	10' RT			10					333					1			
7U		76+00.00	76+95.00	46' RT			18					95					1			
8U		76+00.00	76+95.00	RT			10					95	2				1			
9U		76+00.00	76+05.00	RT			15										1			
10U		NOT USED																		
11U		77+05.00	79+38.18	LT			10					234	1				1			
12U		77+05.00	79+38.18	46' LT			15					234					1			
13U		77+00.00	79+40.00	46' RT			13					240					1			
14U		77+05.00	78+50.00	RT			10					135								
15U		NOT USED																		
16U		NOT USED																		
TOTALS CARRIED TO 154							201	67				10302	11		7		14			

CALCULATED CRP CHECKED TMA

CURB & UNDERDRAIN SUBSUMMARY

SUM-8-0.63

145
1088

03:42:56 PM
06/13/2002
u:\00-0l0sr-8\l\civil\subsummary\ud03sum.dgn

REF NO.	SHEET NO.	STATION FROM	STATION TO	OFFSET FROM ℄	202 CURB REMOVED LIN. FT	202 CURB & GUTTER REMOVED LIN. FT	603 6" CONDUIT, TYPE B LIN. FT	603 6" CONDUIT, TYPE F LIN. FT	604 PRECAST REINFORCED CONC. OUTLET EACH	605 6" SHALLOW PIPE UNDERDRAIN W/FAB. (18" DEEP) LIN. FT	605 6" SHALLOW PIPE UNDERDRAIN, AS PER PLAN LIN. FT	605 6" ROCK CUT UNDERDRAIN W/FAB. (12" DEEP) LIN. FT	BENDS AND BRANCHES FOR INFORMATION ONLY: 6" X 6" TEE EACH	6" X 30° BEND EACH	6" X 45° BEND/ WYE EACH	6" X 60° BEND EACH	6" X 90° BEND EACH	830 CURB, TYPE 2-A LIN. FT	830 CURB, TYPE 2-B LIN. FT	830 CURB, TYPE 6 LIN. FT
		S.R. - 8																		
17U	443	NOT USED																		
18U		NOT USED																		
19U		79+53.00	80+00.00	LT			10					47	1				1			
20U		79+53.00	80+00.00	46' LT			16					47					1			
21U		79+58.80	80+00.00	10' LT			10					42					1			
22U		79+45.59	80+00.00	℄				10				45	2							
23U		79+62.00	80+00.00	10' RT			10					38					1			
24U		79+50.00	80+00.00	46' RT			13					50					1			
25U		79+50.00	80+00.00	RT			10					50	1				1			
26U		NOT USED																		
27U		NOT USED																		
28U		76+00.00	76+15.00	67' LT			10					5								
29U		78+54.00	79+40.00	59.5'RT			10					86	1				1			
1U	444	NOT USED																		
2U		80+00.00	80+75.00	LT								75								
3U		80+00.00	84+00.00	46' LT								400								
4U		80+00.00	84+00.00	10' LT								400								
5U		80+00.00	84+00.00	℄								400								
6U		80+00.00	84+00.00	10' RT								400								
7U		80+00.00	84+00.00	46' RT								400								
8U		80+00.00	80+75.00	RT								75								
9U		NOT USED																		
10U		NOT USED																		
11U		80+85.00	81+65.00	LT			10					80					2			
12U		80+85.00	81+53.00	RT			10					68					2			
13U		NOT USED																		
14U		NOT USED																		
15U		81+75.00	82+95.00	LT			10					120					2			
16U		81+66.00	82+32.00	RT			10					66					2			
17U		NOT USED																		
18U		NOT USED																		
19U		83+25.00	84+00.00	LT			35					75					2			
20U		82+45.00	83+12.00	RT			10					67					2			
21U		NOT USED																		
22U		83+27.00	83+95.00	RT			10					68					2			
23U		NOT USED																		
1U	445	NOT USED																		
2U		84+00.00	84+25.00	LT								25								
3U		84+00.00	84+55.00	46' LT								55								
4U		84+00.00	85+95.00	10' LT								195								
5U		84+00.00	85+95.00	℄								195								
6U		84+00.00	85+95.00	10' RT								195								
7U		84+00.00	88+00.00	46' RT			10					400					1			
8U		84+00.00	88+00.00	56' RT			22					400	1							
9U		84+00.00	85+25.00	RT			11					125	1							
10U		NOT USED																		
11U		84+60.00	88+00.00	56' LT			5					340	1							
12U		84+60.00	88+00.00	46' LT			10					340					1			
13U		86+17.00	88+00.00	10' LT			10					183					1			
14U		86+00.00	88+00.00	℄				10				190	2							
15U		86+17.00	88+00.00	10' RT			10					183					1			
TOTALS CARRIED TO 154							262	20				5930	10				25			

CALCULATED CRP CHECKED TMA

CURB & UNDERDRAIN SUBSUMMARY

SUM-8-0.63

03:42:57 PM
06/13/2002
u:\00-010sr-8\1\civil\subsummary\udl04sum.dgn

REF NO.	SHEET NO.	STATION FROM	STATION TO	OFFSET FROM ℄	202 CURB REMOVED LIN. FT	202 CURB & GUTTER REMOVED LIN. FT	603 6" CONDUIT, TYPE B LIN. FT	603 6" CONDUIT, TYPE F LIN. FT	604 PRECAST REINFORCED CONC. OUTLET EACH	605 6" SHALLOW PIPE UNDERDRAIN W/FAB. (18" DEEP) LIN. FT	605 6" SHALLOW PIPE UNDERDRAIN, AS PER PLAN LIN. FT	605 6" ROCK CUT UNDERDRAIN W/FAB. (12" DEEP) LIN. FT	BENDS AND BRANCHES FOR INFORMATION ONLY: 6" X 6" TEE EACH	6" X 30° BEND EACH	6" X 45° BEND/ WYE EACH	6" X 60° BEND EACH	6" X 90° BEND EACH	830 CURB, TYPE 2-A LIN. FT	830 CURB, TYPE 2-B LIN. FT	830 CURB, TYPE 6 LIN. FT
		S.R. - 8																		
1U	446	88+00.00	88+95.00	56' LT								95								
2U		88+00.00	89+95.00	46' LT								95								
3U		88+00.00	92+00.00	10' LT								400								
4U		88+00.00	92+00.00	℄								400								
5U		88+00.00	92+00.00	10' RT								400								
6U		88+00.00	88+45.00	46' RT								45								
7U		88+00.00	88+45.00	56' RT								45								
8U		89+00.00	92+00.00	56' RT				12				300	1							
9U		89+00.00	92+00.00	46' RT			10					300					1			
10U		88+50.00	92+00.00	46' RT			10					350					1			
11U		88+50.00	92+00.00	56' RT				15				350	1							
1U	447	NOT USED																		
2U		92+00.00	93+00.00	46' LT								100								
3U		92+00.00	93+71.00	10' LT								171								
4U		92+00.00	93+50.00	℄								150								
5U		92+00.00	93+66.00	10' RT								166								
6U		92+00.00	93+12.00	46' RT								112								
7U		NOT USED																		
8U		93+06.50	96+00.00	56' LT				19				294	1				1			
9U		93+06.50	96+00.00	46' LT			10					294					1			
10U		93+76.00	95+53.00	10' LT			10					177					1			
11U		93+55.00	95+95.00	℄				10				230	2							
12U		93+71.00	95+93.00	10' RT			10					222					1			
13U		93+55.00	94+26.00	RT			10					61								
14U		94+30.00	96+00.00	50' RT			10					160								
1C		92+96.78	95+59.66	RT																261
1U	448	96+00.00	97+30.00	56' LT								130								
2U		96+00.00	98+75.00	46' LT								275								
3U		96+00.00	100+00.00	℄				10				390								
4U		96+00.00	98+50.00	50' RT								250								
5U		98+50.00	100+00.00	RT			28					150					2			
6U		97+35.00	100+00.00	LT				19				265	1							
7U		97+35.00	100+00.00	LT			10					265					1			
1C		97+16.31	100+00.00	RT																278
1U	449	100+00.00	102+70.38	60' LT				10	1			270	2							
2U		100+00.00	102+25.00	52' LT			10					225					1			
3U		100+00.00	102+70.38	℄			51					270					1			
4U		100+00.00	102+70.38	58' RT				10	1			270					1			
1C		100+00.00	102+70.38	RT																271
		GOODKIRK																		
1U	450	192+80.00	193+35.00	12' RT				10		45					1					
2U		193+35.00	194+00.00	RT				10		55					1					
1C		192+80.00	194+00.00	12' RT															120	
1U	451	194+00.00	196+50.00	12' RT						250										
2U		196+58.00	198+00.00	12' RT				10		132					1					
1C		194+00.00	198+00.00	RT	400														400	
1U	452	198+00.00	12+46.09	12' RT						175										
2U		200+40.00	202+00.00	14' LT				10		150					1					
3U		200+59.50	202+00.00	14' RT				10		130					1					
1C		198+00.00	12+82.12	RT	192													43	141	40
TOTALS CARRIED TO 154					592	169	155	2	937			7677	8		5		12	43	661	850

CALCULATED CRP CHECKED TMA

CURB & UNDERDRAIN SUBSUMMARY

SUM-8-0.63

03:42:57 PM
06/13/2002
u:\00-010sr-8\civil\subsummary\udl05sum.dgn

REF NO.	SHEET NO.	STATION FROM	STATION TO	OFFSET FROM ℄	202 CURB REMOVED	202 CURB & GUTTER REMOVED	603 6" CONDUIT, TYPE B	603 6" CONDUIT, TYPE F	604 PRECAST REINFORCED CONC. OUTLET	605 6" SHALLOW PIPE UNDERDRAIN W/FAB. (18" DEEP)	605 6" SHALLOW PIPE UNDERDRAIN, AS PER PLAN	605 6" ROCK CUT UNDERDRAIN W/FAB. (12" DEEP)	BENDS AND BRANCHES FOR INFORMATION ONLY: 6" X 6" TEE	6" X 30° BEND	6" X 45° BEND/ WYE	6" X 60° BEND	6" X 90° BEND	830 CURB, TYPE 2-A	830 CURB, TYPE 2-B	830 CURB, TYPE 6
		FROM	TO		LIN. FT	LIN. FT	LIN. FT	LIN. FT	EACH	LIN. FT	LIN. FT	LIN. FT	EACH	EACH	EACH	EACH	EACH	LIN. FT	LIN. FT	LIN. FT
		GOODKIRK																		
2C	452	199+39.38	11+57.23	LT		54													48	
3C		11+50.22	202+00.00	LT		192												199		
4C		12+82.13	202+00.00	RT		192												181		40
1U	453	202+00.00	4+45.00	14' LT						224										
2U		202+00.00	203+90.00	14' RT						190										
3U		204+75.00	206+00.00	14' LT				10		115					1					
4U		204+00.00	206+00.00	14' RT				10		190					1					
5U		3+63.00	4+55.00	12' RT				10		82					1					
6U		3+63.00	204+75.00	13' LT				10		136					1					
1C		202+00.00	206+00.00	RT.		385												400		
2C		202+00.00	3+63.00	LT.	158	193												327		
3C		3+63.00	206+00.00	LT.	158	140												272		
1U	454	206+00.00	207+12.00	14' LT						112										
2U		206+00.00	207+12.00	14' RT						112										
3U		207+21.62	208+82.85	RT				10		151					1					
4U		207+21.62	4+63.00	14' LT				10		125					1					
5U		54+25.27	210+00.00	18' RT				10		170					1					
6U		4+73.00	210+00.00	14' LT				10		118					1					
7U		3+90.00	4+55.00	13' RT				10		55					1					
8U		3+90.00	4+71.05	13' LT				10		73					1					
1C		206+00.00	208+82.88	RT		283												283		
2C		206+00.00	3+90.00	LT	110	219												331		
3C		3+90.00	210+00.00	LT	116	94												214		
4C		54+07.00	210+00.00	RT		135												198		
1U	455	210+00.00	211+32.00	18' RT						132										
2U		210+00.00	04+53.00	14' LT						189										
3U		4+53.00	212+31.00	LT				10		27					1					
4U		212+31.00	213+88.00	14' LT				10		147					1					
5U		211+40.00	214+00.00	14' RT				10		250					1					
6U		213+95.00	214+00.00	14' LT				5							1					
7U		3+75.00	4+57.00	RT				10		72					1					
8U		3+75.00	4+57.00	LT				10		72					1					
1C		210+00.00	214+00.00	RT		400												400		
2C		210+00.00	3+75.00	LT	132	145												277		
3C		3+75.00	214+00.00	LT	126	175												301		
1U	456	214+00.00	12+61.92	14' RT						121							1			
2U		214+00.00	11+41.00	14' LT				5		126										
3U		11+15.00	215+90.00	LT				10		106					1					
4U		12+61.92	215+80.00	RT				10		40	46				1		1			
5U		215+80.00	218+00.00	14' RT				10		210					1					
6U		215+90.00	218+00.00	14' LT				10		201					1					
1C		214+00.00	12+66.22	RT		150												140		
2C		214+00.00	11+14.69	LT		169												165		
3C		11+14.49	218+00.00	LT		335												321		
4C		12+66.22	218+00.00	RT		300												294		
1U	457	218+00.00	13+71.34	14' RT						187										
2U		218+00.00	218+75.00	14' LT						67										
3U		218+75.00	12+23.00	LT				10		141					1					
4U		13+71.43	13+73.88	RT				15	1		44									
TOTALS CARRIED TO 154					800	3561		225	1	3941	90				21		2	4303	48	40

CALCULATED CRP CHECKED TMA

CURB & UNDERDRAIN SUBSUMMARY

SUM-8-0.63

148
1088

03:42:58 PM
06/13/2002
u:\00-010sr-8\1\civil\subsummery\udl06sum.dgn

REF NO.	SHEET NO.	STATION FROM	STATION TO	OFFSET FROM ℄	202 CURB REMOVED	202 CURB & GUTTER REMOVED	603 6" CONDUIT, TYPE B	603 6" CONDUIT, TYPE F	604 PRECAST REINFORCED CONC. OUTLET	605 6" SHALLOW PIPE UNDERDRAIN W/FAB. (18" DEEP)	605 6" SHALLOW PIPE UNDERDRAIN, AS PER PLAN	605 6" ROCK CUT UNDERDRAIN W/FAB. (12" DEEP)	BENDS AND BRANCHES FOR INFORMATION ONLY: 6" X 6" TEE	6" X 30° BEND	6" X 45° BEND/ WYE	6" X 60° BEND	6" X 90° BEND	830 CURB, TYPE 2-A	830 CURB, TYPE 2-B	830 CURB, TYPE 6
					LIN. FT	LIN. FT	LIN. FT	LIN. FT	EACH	LIN. FT	LIN. FT	LIN. FT	EACH	EACH	EACH	EACH	EACH	LIN. FT	LIN. FT	LIN. FT
		GOODKIRK																		
5U	457	12+40.00	221+50.00	LT				10		155					1					
6U		221+60.00	222+00.00	14' LT						40										
7U		13+73.88	222+00.00	RT						214										
1C		218+00.00	13+79.15	RT		191												206		
2C		218+00.00	12+07.79	LT		265												241		
3C		12+09.79	222+00.00	LT		323												279		
4C		13+79.15	222+00.00	RT		237												232		
1U	458	222+00.00	224+75.00	14' LT				10		267					1					
2U		222+00.00	223+70.00	RT				10		163					1					
3U		223+70.00	70+90.00	RT				10		117					1					
4U		224+83.00	226+00.00	14' LT						117										
5U		224+41.32	226+00.00	RT						157										
1C		222+00.00	70+95.83	RT		303												147		162
2C		222+00.00	226+00.00	LT														407		
3C		224+41.30	226+00.00	RT														157		
1U	459	226+00.00	226+25.00	14' LT				10		15					1					
2U		226+00.00	227+75.00	RT				10		165					1					
3U		226+33.00	227+75.00	14' LT				10		132					1					
4U		227+83.00	229+25.00	14' LT				10		132					1					
5U		227+83.00	229+25.00	14' RT				10		132					1					
6U		229+33.00	230+00.00	14' RT						67										
7U		229+33.00	230+00.00	14' LT						67										
1C		226+00.00	230+00.00	RT	384													400		
2C		226+00.00	230+00.00	LT	355													400		
1U	460	230+00.00	231+11.00	14' RT				10		101					1					
2U		230+00.00	231+11.00	14' LT				10		101					1					
3U		231+11.00	231+86.00	14' RT				10		65					1					
4U		231+11.00	22+80.46	LT				10		214					1					
5U		231+94.00	232+53.82	RT				10			52				1					
6U		232+53.82	233+03.83	RT			10				40				1					
7U		233+12.00	234+00.00	14' RT						88										
8U		22+80.46	234+00.00	14' LT						154										
1C		230+00.00	24+38.64	RT	279													219		
2C		230+00.00	22+80.46	LT	265													335		
3C		22+80.46	234+00.00	LT	155													156		
4C		24+11.00	234+00.00	RT														111		
1U	461	234+00.00	235+26.83	14' RT				10		117					1					
2U		234+00.00	235+26.83	14' LT				10		117					1					
3U		235+26.83	237+02.00	14' RT				10		165					1					
4U		235+26.83	5+02.05	14' LT				10		245					1					
5U		5+02.05	238+00.00	14' LT						115										
6U		237+10.03	238+00.00	RT				10			82			1						
1C		234+00.00	6+35.00	RT														383		
2C		234+00.00	5+02.05	LT	149													339		
3C		5+02.05	238+00.00	LT	149													121		
TOTALS CARRIED TO 154					1736	1319	10	190		3422	174			1	19			4133		162

CALCULATED BF CHECKED TMA

CURB & UNDERDRAIN SUBSUMMARY

CURB

SUM-8-0.63

149
1088

03:42:58 PM
06/13/2002
u:\00-010sr-8\civil\subsummary\ud107sum.dgn

REF NO.	SHEET NO.	STATION FROM	STATION TO	OFFSET FROM ℄	202 CURB REMOVED LIN. FT	202 CURB & GUTTER REMOVED LIN. FT	603 6" CONDUIT, TYPE B LIN. FT	603 6" CONDUIT, TYPE F LIN. FT	604 PRECAST REINFORCED CONC. OUTLET EACH	605 6" SHALLOW PIPE UNDERDRAIN W/FAB. (18" DEEP) LIN. FT	605 6" SHALLOW PIPE UNDERDRAIN, AS PER PLAN LIN. FT	605 6" ROCK CUT UNDERDRAIN W/FAB. (12" DEEP) LIN. FT	BENDS AND BRANCHES FOR INFORMATION ONLY: 6" X 6" TEE EACH	6" X 30° BEND EACH	6" X 45° BEND/ WYE EACH	6" X 60° BEND EACH	6" X 90° BEND EACH	830 CURB, TYPE 2-A LIN. FT	830 CURB, TYPE 2-B LIN. FT	830 CURB, TYPE 6 LIN. FT
		GOODKIPK																		
1U	462	238+00.00	238+06.00	RT							6									
2U		238+00.00	4+78.53	14' LT				10		288					1					
3U		238+58.00	241+50.00	14' RT				10		282					1					
4U		241+50.00	242+00.00	RT				10		40					1					
5U		4+68.56	242+00.00	14' LT				10		51					1					
1C		6+68.00	242+00.00	RT	352													403		
2C		238+00.00	4+75.05	LT	303													303		
3C		241+56.80	242+00.00	LT	65													43		
1U	463	242+00.00	243+39.60	RT						140										
2U		242+00.00	246+00.00	14' LT						401										
3U		88+25.70	246+00.00	RT				10		355					1					
1C		88+08.00	246+00.00	RT	395													374		
2C		242+00.00	243+39.60	RT	194													139		
3C		242+00.00	246+00.00	LT	402													403		
1U	464	246+00.00	46+84.00	14' LT						74										
2U		246+00.00	48+19.39	RT						35										
1C		246+00.00	48+19.39	RT	55													41		
2C		246+00.00	46+78.92	LT	91													81		
		FOUNTAIN																		
1U	465	15+96.28	300+67.00	RT				10		80					1					
2U		300+67.00	302+00.00	14' RT				10		122										
3U		300+51.00	302+00.00	14' LT				10		143					1					
1C		15+96.28	302+00.00	RT	235													224		
2C		14+59.28	302+00.00	LT	179													181		
1U	466	302+00.00	302+77.00	14' RT						77										
2U		302+00.00	304+67.00	14' LT				10		257										
3U		302+85.00	304+10.00	14' RT				10		115					1					
4U		304+75.00	306+00.00	14' RT				10		115					1					
5U		304+75.00	306+00.00	14' LT				10		115					1					
1C		302+00.00	9+00.00	RT	307													302		
2C		302+00.00	306+00.00	LT	400													400		
3C		9+00.00	306+00.00	RT	238													232		
1U	467	306+00.00	306+15.00	14' RT						17										
2U		306+00.00	309+38.00	14' LT						338										
3U		306+70.00	309+32.00	14' RT				10		252					1					
4U		54+47.65	310+00.00	26' LT				10		149					1					
5U		309+40.00	310+00.00	14' RT				10		50					1					
1C		306+00.00	1+10.00	RT	109													108		
2C		1+10.00	310+00.00	RT	444													438		
3C		306+00.00	308+34.25	LT	234													234		
4C		53+60.75	310+00.00	LT	246													60		185
1U	468	310+00.00	312+03.00	26' LT						203										
2U		310+00.00	312+03.00	14' RT						203										
3U		312+11.00	314+00.00	14' RT				10		179					1					
4U		312+11.00	314+00.00	26' LT				10		179					1					
TOTALS CARRIED TO 154					4249			170		4260	6				15			3966		185

* CARROLL STATION

CALCULATED BF CHECKED TMA

CURB & UNDERDRAIN SUBSUMMARY

SUM-8-0.63

03:42:59 PM
06/13/2002
u:\00-00sr-8\1\civil\subsummary\udl08sum.dgn

CURB & UNDERDRAIN SUBSUMMARY

CALCULATED BF CHECKED TMA

REF NO.	SHEET NO.	STATION FROM	STATION TO	OFFSET FROM ℄	202 CURB REMOVED	202 CURB & GUTTER REMOVED	603 6" CONDUIT, TYPE B	603 6" CONDUIT, TYPE F	604 PRECAST REINFORCED CONC. OUTLET	605 6" SHALLOW PIPE UNDERDRAIN W/FAB. (18" DEEP)	605 6" SHALLOW PIPE UNDERDRAIN, AS PER PLAN	605 6" ROCK CUT UNDERDRAIN W/FAB. (12" DEEP)	BENDS AND BRANCHES FOR INFORMATION ONLY: 6" X 6" TEE	6" X 30° BEND	6" X 45° BEND/ WYE	6" X 60° BEND	6" X 90° BEND	830 CURB, TYPE 2-A	830 CURB, TYPE 2-B	830 CURB, TYPE 6
		FOUNTAIN			LIN. FT	LIN. FT	LIN. FT	LIN. FT	EACH	LIN. FT	LIN. FT	LIN. FT	EACH	EACH	EACH	EACH	EACH	LIN. FT	LIN. FT	LIN. FT
1C	468	310+00.00	314+00.00	LT	400													400		
2C		310+00.00	314+00.00	RT	400													400		
1U	469	314+00.00	315+00.00	14' RT						110										
2U		314+00.00	14+42.35*	26' LT						111										
3U		14+21.89*	14+40.00*	RT				10			33				1		1			
4U		14+21.89*	14+40.00*	LT				10			32				1		1			
5U		14+48.00*	316+17.84	LT				10		92					1					
6U		315+55	316+17.84	RT				10		58					1					
7U		316+17.84	318+00.00	14' RT				10		172					1					
8U		316+17.84	318+00.00	26' LT				10		172					1					
1C		314+00.00	16+06.89	RT	50	135												175		
2C		314+00.00	14+15.88	LT	47	124												145		
3C		14+15.88	318+00.00	LT		319												320		
4C		16+06.89	318+00.00	RT		356												326		
1U	470	318+00.00	319+55.00	14' RT						159										
2U		318+00.00	15+63.00	26' LT						179										
3U		15+32.35*	15+55.00*	RT				10			36				1		1			
4U		15+32.35*	15+55.00*	LT				10			36				1		1			
5U		15+63.00	322+00.00	LT						226										
6U		320+25.00	322+00.00	14' RT						183										
1C		318+00.00	17+25.38	RT		296												235		
2C		318+00.00	15+26.32	LT		191												221		
3C		15+26.32	322+00.00	LT		201												265		
4C		17+25.38	322+00.00	RT		328												246		
1U	471	322+00.00	68+50.00**	LT				10		25					1					
2U		322+00.00	322+38.00	14' RT				10		27					1					
3U		322+46.00	325+51.55	14' RT				10		294					1					
4U		323+71.93	325+51.55	LT				10		170					1					
5U		68+58.00**	70+60.00**	LT/RT			28			201							1			
6U		325+51.55	326+00.00	14' RT				10		39					1					
7U		325+51.55	326+00.00	14' LT				10		39					1					
1C		322+00.00	326+00.00	RT														400		
2C		323+71.93	326+00.00	LT														228		
3C		322+00.00	70+80.00	LT														264		
4C		2+92.00	4+12.20	RT														120		
5C		2+92.00	2+92.00	℄														20		
6C		2+92.00	3+37.20	LT														82		
7C		3+37.20	3+57.20	LT														20		
8C		3+57.20	4+12.20	LT														92		
1U	472	326+00.00	327+42.00	14' RT						142										
2U		326+00.00	330+00.00	14' LT						400										
3U		327+50.00	329+42.00	14' RT				10		182					1					
4U		329+50.00	330+00.00	RT				10		40					1					
TOTALS CARRIED TO 154					897	1950	28	160		3021	137				16		5	3959		

** RAMP QI STATION * BUCHTEL STATION
*** MARKET STATION

SUM-8-0.63

03:42:59 PM
06/13/2002
u:\00-0108r-8\civil\subsummary\udl09sum.dgn

CURB & UNDERDRAIN SUBSUMMARY

CALCULATED BF CHECKED TMA

REF NO.	SHEET NO.	STATION FROM	STATION TO	OFFSET FROM ℄	202 CURB REMOVED LIN. FT	202 CURB & GUTTER REMOVED LIN. FT	603 6" CONDUIT, TYPE B LIN. FT	603 6" CONDUIT, TYPE F LIN. FT	604 PRECAST REINFORCED CONC. OUTLET EACH	605 6" SHALLOW PIPE UNDERDRAIN W/FAB. (18" DEEP) LIN. FT	605 6" SHALLOW PIPE UNDERDRAIN, AS PER PLAN LIN. FT	605 6" ROCK CUT UNDERDRAIN W/FAB. (12" DEEP) LIN. FT	BENDS AND BRANCHES FOR INFORMATION ONLY: 6" X 6" TEE EACH	6" X 30° BEND EACH	6" X 45° BEND/ WYE EACH	6" X 60° BEND EACH	6" X 90° BEND EACH	830 CURB, TYPE 2-A LIN. FT	830 CURB, TYPE 2-B LIN. FT	830 CURB, TYPE 6 LIN. FT
		FOUNTAIN																		
1C	472	326+00.00	330+00.00	RT														400		
2C		326+00.00	330+00.00	LT														400		
3C		8+25.50	8+25.50	LT/RT														78		
4C		8+25.50	8+36.88	RT														20		
5C		8+36.88	8+90.07	RT														72		
6C		8+90.07	8+36.88	LT														72		
7C		8+36.88	8+25.50	LT														20		
1U	473	330+00.00	26+30.78	14' LT						111										
2U		330+00.00	27+47.00***	RT						102										
3U		27+75.21***	26+95.79***	LT				10		69					1					
4U		26+88.00***	332+03.00	RT				10		73					1					
5U		331+06.41	332+03.00	LT				10			88			1						
6U		332+03.00	333+67.00	14' RT				10		154					1					
7U		332+03.00	334+00.00	14' LT				10		187					1					
8U		333+75.00	334+00.00	14' RT				10		15					1					
1C		330+00.00	27+75.21	RT	151													132		
2C		330+00.00	26+12.79	LT														118		
3C		26+12.79	334+00.00	LT		281												226		
4C		27+75.21	334+00.00	RT		368												359		
1U	474	334+00.00	336+25.00	14' LT						225										
2U		336+25.00	338+00.00	14' LT				8		167					1					
3U		334+00.00	336+25.00	14' RT						225										
4U		336+25.00	338+00.00	14' RT						175										
1C		334+00.00	338+00.00	RT														402		
2C		334+00.00	338+00.00	LT														399		
1U	475	338+00.00	338+02.00	14' LT				2												
2U		338+00.00	338+12.00	14' RT				10		2					1					
3U		338+02.00	338.93.50	LT				10			83				1					
4U		10+84.54	342+00.00	14' RT						344										
5U		339+23.33	341+65.00	6' LT				10		232					1					
6U		499+62.50*	500+65.22*	LT				10		123					1					
7U		499+62.50*	500+65.22*	RT				10		123					1					
8U		500+65.22*	502+00.00*	13' LT				10		125					1					
9U		500+65.22*	502+00.00*	13' RT				10		125					1					
1C		338+00.00	8+90.00	RT	96													30		
2C		338+00.00	9+91.54	RT														98		
3C		9+23.00	341+68.40	LT	109													284		
4C		10+84.54	342+00.00	RT	231													342		
5C		499+62.50*	501+42.70*	LT	228													211		
6C		499+62.50*	501+93.40*	RT														260		
1U	476	342+00.00	342+11.16	14' RT				10		1					1					
2U		342+11.15	346+00.00	RT				10		380					1					
3U		88+45.00	346+00.00	LT				10		372					1					
4U		502+00.00*	505+25.00*	LT						352							1			
5U		502+00.00*	502+11.03*	RT						3										
6U		502+11.00*	505+25.00*	RT				10		273					1					
TOTALS CARRIED TO 154					815	649		180		3958	171			1	17		1	3923		

* OHIO STATION

SUM-8-0.63

03:43:00 PM
06/13/2002
u:\00-010sr-8\i\civil\subsummary\udl10sum.dgn

REF NO.	SHEET NO.	STATION FROM	STATION TO	OFFSET FROM ℄	202 CURB REMOVED LIN. FT	202 CURB & GUTTER REMOVED LIN. FT	603 6" CONDUIT, TYPE B LIN. FT	603 6" CONDUIT, TYPE F LIN. FT	604 PRECAST REINFORCED CONC. OUTLET EACH	605 6" SHALLOW PIPE UNDERDRAIN W/FAB. (18" DEEP) LIN. FT	605 6" SHALLOW PIPE UNDERDRAIN, AS PER PLAN LIN. FT	605 6" ROCK CUT UNDERDRAIN W/FAB. (12" DEEP) LIN. FT	BENDS AND BRANCHES FOR INFORMATION ONLY: 6" X 6" TEE EACH	6" X 30° BEND EACH	6" X 45° BEND/ WYE EACH	6" X 60° BEND EACH	6" X 90° BEND EACH	830 CURB, TYPE 2-A LIN. FT	830 CURB, TYPE 2-B LIN. FT	830 CURB, TYPE 6 LIN. FT
		FOUNTAIN																		
1C	476	88+36.60	346+00.00	LT	384													286		97
2C		342+00.00	346+00.00	RT	245													402		
3C		501+93.40*	505+25.00*	RT	327													298		
4C		344+76.73	505+25.00*	LT	77													79		
1U	477	346+00.00	52+30.39	RT						83										
2U		346+00.00	50+84.75	LT						33										
1C		346+00.00	52+30.39	RT	105													85		
2C		346+00.00	50+84.75	LT	36													35		
		RAMP T1																		
1U	478	51+70.00	54+50.00	LT				10		280							1			
1C		54+07.00	54+89.61	LT														83		
		RAMP S																		
1U	479	52+00.00	54+00.00	6' RT						200										
2U	480	54+00.00	54+36.00	6' RT				10		36					1					
		RAMP P1																		
1U	481	71+00.00	74+00.00	RT/LT			25			300							2			
2U		73+40.00	74+00.00	℄						60										
1U	482	74+00.00	74+60.00	8' LT			10			50					2					
2U		74+00.00	74+60.00	℄			10			50					1					
		RAMP Q1																		
1U	483	70+61.00	73+00.00	6' RT								239								
1C		69+86.32	70+80.00	RT														94		
2U	484	73+00.00	73+75.00	6' RT			10					65			1					
		RAMP K1																		
1U	485	84+25.00	86+00.00	6' LT				10				164			1					
1U	486	86+00.00	88+25.00	6' LT								225								
1C		88+08.00	89+24.05	LT														117		
TOTALS CARRIED TO 154					1174		55	30		1092		693			6		3	1479		97

CALCULATED BF CHECKED TMA

CURB & UNDERDRAIN SUBSUMMARY

SUM-8-0.63

153
1088

03:43:00 PM
06/13/2002
u:\00-010sr-8N1\civil\subsummary\uddlsum.dgn

REF NO.	SHEET NO.	STATION FROM	STATION TO	OFFSET FROM ℄	202 CURB REMOVED	202 CURB & GUTTER REMOVED	603 6" CONDUIT, TYPE B	603 6" CONDUIT, TYPE F	604 PRECAST REINFORCED CONC. OUTLET	605 6" SHALLOW PIPE UNDERDRAIN W/FAB. (18" DEEP)	605 6" SHALLOW PIPE UNDERDRAIN, AS PER PLAN	605 6" ROCK CUT UNDERDRAIN W/FAB. (12" DEEP)	BENDS AND BRANCHES FOR INFORMATION ONLY 6" X 6" TEE	6" X 30° BEND	6" X 45° BEND/ WYE	6" X 60° BEND	6" X 90° BEND	830 CURB, TYPE 2-A	830 CURB, TYPE 2-B	830 CURB, TYPE 6
					LIN. FT	LIN. FT	LIN. FT	LIN. FT	EACH	LIN. FT	LIN. FT	LIN. FT	EACH	EACH	EACH	EACH	EACH	LIN. FT	LIN. FT	LIN. FT
		RAMP LI																		
1U	487	85+30.00	86+50.00	6' RT				10				110			1					
1U	488	86+50.00	88+46.00	6' RT								196								
2U		88+50.00	89+00.00	6' RT			10					40								
		RAMP J																		
1U	489	48+56.19*	93+40.00	RT				10				117			1					
2U		93+48.00	94+00.00	38' RT								52								
1C		48+56.19*	93+82.36	RT	164															169
2C		46+81.46*	93+82.36	LT	215															231
1U	490	94+00.00	96+00.00	RT				30				190					1			
2U		95+75.00	97+35.91	6' LT				20				161					1			
		RAMP J																		
1U	491	93+00.00	96+00.00	6' RT				10				300			1					
1C		52+20.20	96+00.00		399															364
2C		50+96.62	93+44.39		53															54
1U	492	96+00.00	96+25.00	6' RT				10				15								
1C		96+00.00	97+16.31	RT	117															117
		PARKWOOD																		
1U	493	2+60.00	4+68.56	9' LT				10		208					1					
2U		2+60.00	4+78.53	9' RT				10		208					1					
1C		1+15.00	241+56.80	LT	412													383		
2C		1+15.00	4+75.05	RT	418													360		
			TOTAL THIS SHEET		1778		10	110		416		1181			5		2	743		935
			TOTAL SHEET 143				202	80	6	8212			9	2		2	8			
			TOTAL SHEET 144				244	153	1	9113		1905	15	2	3		15			
			TOTAL SHEET 145				201	67				10302	11		7		14			
			TOTAL SHEET 146				262	20				5930	10				25			
			TOTAL SHEET 147			592	169	155	2	937		7677	8		5		12	43	661	850
			TOTAL SHEET 148	800	3561		225	1	3941	90					21		2	4303	48	40
			TOTAL SHEET 149	1736	1319	10	190		3422	174				1	19			4133		162
			TOTAL SHEET 150	4249			170		4260	6					15			3966		185
			TOTAL SHEET 151	897	1950	28	160		3021	137					16		5	3959		
			TOTAL SHEET 152	815	649		180		3958	171				1	17		1	3923		
			TOTAL SHEET 153	1174		55	30		1092		693				6		3	1479		97
TOTALS CARRIED TO GENERAL SUMMARY					11449	8071	1181	1540	10	38372	578	27688	53	6	114	2	87	22549	709	2269

* PERKINS STATION

CALCULATED BF CHECKED TMA

CURB & UNDERDRAIN SUBSUMMARY

SUM-8-0.63

07:10:46 PM
06/13/2002
u:\00-010sr-8\civil\subsummary\udl2su_m.dgn

REF NO.	SHEET NO.	STATION FROM	STATION TO	SIDE	603 12" CONDUIT, TYPE B, 706.02 LIN.FT.	603 12" CONDUIT, TYPE C, 706.02 LIN.FT.	603 12" CONDUIT, TYPE F, 707.33 LIN.FT.	603 15" CONDUIT, TYPE B, 706.02 LIN.FT.	603 15" CONDUIT, TYPE C, 706.02 LIN.FT.	603 15" CONDUIT, TYPE F, 707.33 LIN.FT.	603 18" CONDUIT, TYPE B, 706.02 LIN.FT.	603 18" CONDUIT, TYPE C, 706.02 LIN.FT.	603 21" CONDUIT, TYPE B, 706.02 LIN.FT.	603 21" CONDUIT, TYPE B, 706.02, D-1500 LIN.FT.	603 21" CONDUIT, TYPE C, 706.02 LIN.FT.	603 21" CONDUIT, TYPE F, 707.33 LIN.FT.	603 24" CONDUIT, TYPE B, 706.02 LIN.FT.	603 27" CONDUIT, TYPE B, 706.02 LIN.FT.	603 27" CONDUIT, TYPE C, 706.02 LIN.FT.	603 36" CONDUIT, TYPE B, 706.02 LIN.FT.	603 36" CONDUIT, TYPE B, 706.02, D-1000 LIN.FT.	603 36" CONDUIT, TYPE C, 706.02 LIN.FT.	603 36" CONDUIT, TYPE C, 706.02, D-1000 LIN.FT.	603 42" CONDUIT, TYPE B, 706.02 LIN.FT.	603 42" CONDUIT, TYPE B, 706.02, D-2250 LIN.FT.
		S.R. 8																							
1D	202	33+44.39		℄																					
1D	206	42+00	195+95.96*	LT				70		81															
1D	208	200+46*	48+00	LT																	151				
1D	210	48+00	49+10	LT																	110				
2D		49+10	51+70	LT																			260		
3D		51+70	52+00	LT																	31				
4D		51+70	52+00	LT				104																	
1D	212	52+00	54+35	LT																	236				
2D		54+35	56+00	LT																			165		
1D	214	56+00	57+60	LT																			160		
2D		57+60	59+25	LT																		165			
3D		59+25	60+00	LT																75					
1D	216	60+00	60+85	LT																87					
2D		60+85		LT				6																	
3D		60+85	62+00	LT														116							
4D		62+00	62+00	LT/RT							118														
5D		62+00	62+00	LT				10																	
6D		216+00*	62+00	LT				11	4	50															
7D		62+00	63+60	LT									160												
8D		63+60	63+60	LT				6																	
9D		63+60	64+00	LT									40												
10D		60+80.14	60+85	LT							48														
1D	218	64+00	65+40	LT									140												
2D		219+42*	65+40	LT									46			46									
3D		65+40	66+70	LT				130																	
4D		66+70	66+70	LT/RT				121																	
5D		66+70	66+70	LT				11																	
1D	222	73+00	74+60	LT				162																	
2D		74+60	76+00	LT				139																	
3D		75+50		RT				12																	
4D		75+50	76+00	RT							50														
5D		72+00	73+75	RT				177																	
6D		73+75	75+50	RT				175																	
1D	224	76+00	76+15	LT				16																	
2D		76+15	76+15	LT				6																	
3D		76+15	76+15	LT	6																				
4D		76+15	77+03	LT				88																	
5D		77+03	77+03	LT				6																	
6D		76+00	77+03	RT							103														
7D		77+03	77+03	RT									6												
8D		77+03	77+03	LT/RT									130												
9D		77+03	78+16.53	LT									114												
TOTALS CARRIED TO 165					6			1250	4	131	319		636			46		116		162	528	165	585		

* GOODKIRK STATION

CALCULATED BF CHECKED KME

DRAINAGE SUBSUMMARY

SUM-8-0.63

07:10:47 PM
06/13/2002
\\R100-010sr-8\n\civil\subsummary\dsl01su.dgn

DRAINAGE SUBSUMMARY

CALCULATED BF | CHECKED KME

REF NO.	SHEET NO.	STATION FROM	STATION TO	SIDE	604 CATCH BASIN, NO. 3 EACH	604 CATCH BASIN, NO. 3A EACH	604 CATCH BASIN, NO. 5 EACH	604 CATCH BASIN, NO. 5A EACH	604 CATCH BASIN, NO. 6 EACH	604 CATCH BASIN, NO. 2-3 EACH	604 CATCH BASIN ADJUSTED TO GRADE EACH	604 INLET, NO. I-3D50 EACH	604 INLET, NO. I-3D50, TYPE A, AS PER PLAN, EACH	604 INLET, NO. I-3D50, TYPE B AS PER PLAN, EACH	604 INLET, MISC.: BARRIER INLET, AS PER PLAN EACH	604 MANHOLE, NO. 3 EACH		604 MANHOLE ADJUSTED TO GRADE EACH	604 INLET, MISC.: BARRIER INLET CHAMBER, TYPE A EACH	604 INLET, MISC.: BARRIER INLET CHAMBER, TYPE B EACH			PIPE SPECIALS EACH		
		S.R. 8																						
1D	202	33+44.39		℄									1											
1D	206	42+00	195+95.96*	LT								1											2	
1D	208	200+46*	48+00	LT																				
1D	210	48+00	49+10	LT				1																
2D		49+10	51+70	LT				1																
3D		51+70	52+00	LT																				
4D		51+70	52+00	LT								1												
1D	212	52+00	54+35	LT												1								
2D		54+35	56+00	LT																				
1D	214	56+00	57+60	LT				1																
2D		57+60	59+25	LT				1																
3D		59+25	60+00	LT																				
1D	216	60+00	60+85	LT												1								
2D		60+85		LT											1									
3D		60+85	62+00	LT												1								
4D		62+00	62+00	LT/RT			1																	
5D		62+00	62+00	LT						1														
6D		216+00*	62+00	LT												1							2	
7D		62+00	63+60	LT												1								
8D		63+60	63+60	LT											1									
9D		63+60	64+00	LT																				
10D		60+80.14	60+85	LT										1										
1D	218	64+00	65+40	LT												1								
2D		219+42*	65+40	LT												1							2	
3D		65+40	66+70	LT												1								
4D		66+70	66+70	LT			1																	
5D		66+70	66+70	LT			1																	
1D	222	73+00	74+60	LT			1																	
2D		74+60	76+00	LT												1								
3D		75+50		RT			1																	
4D		75+50	76+00	RT												1								
5D		72+00	73+75	RT												1								
6D		73+75	75+50	RT												1								
1D	224	76+00	76+15	LT																				
2D		76+15	76+15	LT											1									
3D		76+15	76+15	LT						1														
4D		76+15	77+03	LT												1								
5D		77+03	77+03	LT											1									
6D		76+00	77+03	RT																				
7D		77+03	77+03	RT											1									
8D		77+03	77+03	LT/RT												1								
9D		77+03	78+16.53	LT												1								
TOTALS CARRIED TO 166							5	4		2		2	1	1	5	15							6	

* GOODKIRK STATION

SUM-8-0.63

07:10:47 PM
06/13/2002
\\Y00-010sr-8\h\civil\subsummary\ds10sum.dgn

REF NO.	SHEET NO.	STATION FROM	STATION TO	SIDE	603 12" CONDUIT, TYPE B, 706.02 LIN.FT.	603 12" CONDUIT, TYPE C, 706.02 LIN.FT.	603 12" CONDUIT, TYPE F, 707.33 LIN.FT.	603 15" CONDUIT, TYPE B, 706.02 LIN.FT.	603 15" CONDUIT, TYPE C, 706.02 LIN.FT.	603 15" CONDUIT, TYPE F, 707.33 LIN.FT.	603 18" CONDUIT, TYPE B, 706.02 LIN.FT.	603 18" CONDUIT, TYPE C, 706.02 LIN.FT.	603 21" CONDUIT, TYPE B, 706.21 LIN.FT.	603 21" CONDUIT, TYPE B, 706.02, D-1500 LIN.FT.	603 21" CONDUIT, TYPE C, 706.02 LIN.FT.	603 21" CONDUIT, TYPE F, 707.33 LIN.FT.	603 24" CONDUIT, TYPE B, 706.02 LIN.FT.	603 27" CONDUIT, TYPE B, 706.21 LIN.FT.	603 27" CONDUIT, TYPE C, 706.02 LIN.FT.	603 36" CONDUIT, TYPE B, 706.02 LIN.FT.	603 36" CONDUIT, TYPE B, 706.02, D-1000 LIN.FT.	603 36" CONDUIT, TYPE C, 706.02 LIN.FT.	603 36" CONDUIT, TYPE C, 706.02, D-1000 LIN.FT.	603 42" CONDUIT, TYPE B, 706.02 LIN.FT.	603 42" CONDUIT, TYPE B, 706.02, D-2250 LIN.FT.
		S.R. 8																							
10D	224	78+16.53	78+26.41	LT	12																				
11D		78+50	78+50	RT							6														
12D		78+50	78+50.66	RT							6														
13D		78+50	79+46	RT							95														
14D		79+46	79+46	RT				6																	
15D		79+46	79+46	RT									61												
16D		79+46	79+46	LT													57								
17D		79+46	80+00	LT																				54	
18D		79+46	80+00	RT				54																	
1D	226	80+00	80+80	LT																				80	
2D		80+00	80+80	RT				80																	
3D		80+80	80+80	LT				4																	
4D		80+80	80+80	RT				6																	
5D		80+80	81+70	LT																				90	
6D		80+80	81+60	RT				80																	
7D		81+70	81+70	LT				6																	
8D		81+60	81+60	RT				6																	
9D		81+70	83+00	LT																				129	
10D		81+60	82+40	RT				80																	
11D		82+40	82+40	RT				6																	
12D		82+40	83+20	RT				80																	
13D		83+00	83+00	LT				8																	
14D		82+99.47	83+00	LT				6																	
15D		83+00	84+00	LT																		100			
16D		83+20	83+20	RT				6																	
17D		83+19.60	83+20	RT				6																	
18D		83+40	84+00	RT				80																	
19D		84+00	84+00	RT				10																	
1D	228	84+00	84+60	LT																		61			
2D		84+24	84+60	LT				44																	
3D		84+60	86+00	LT																			140		
4D		85+00	86+00	LT				107																	
5D		87+05	87+05	RT				50																	
6D		85+30	86+00	RT				76																	
7D		86+00	86+00	RT													65								
8D		86+00	86+00	LT														72							
9D		86+00	88+00	LT															200						
10D		86+00	87+05	RT								105													
11D		87+05	88+00	RT								95													
1D	230	88+00	89+00	LT															100						
2D		88+00	88+50	RT								50													
3D		89+00	92+00	LT														300							
1D	232	92+00	93+00	LT														100							
2D		93+55	93+55	RT				51																	
3D		93+00	93+55	LT				75																	
4D		93+00	93+00	LT	18																				
5D		93+55	94+30	RT				75																	
6D		93+00	96+00	LT									300												
TOTALS CARRIED TO 165					30			1004			107	250	361				122	472	300	161		140		353	

CALCULATED BF
CHECKED KME

DRAINAGE SUBSUMMARY

SUM-8-0.63

157
1088

07:10:47 PM
06/13/2002
u:\00-010sr-8\Civil\subsummary\dsl02sum.dgn

REF NO.	SHEET NO.	STATION FROM	STATION TO	SIDE	604 CATCH BASIN NO. 3 EACH	604 CATCH BASIN, NO. 3A EACH	604 CATCH BASIN, NO. 5 EACH	604 CATCH BASIN, NO. 5A EACH	604 CATCH BASIN, NO. 6 EACH	604 CATCH BASIN, NO. 2-3 EACH	604 CATCH BASIN ADJUSTED TO GRADE EACH	604 INLET, NO. I-3D50 EACH	604 INLET, NO. I-3D50, TYPE A, AS PER PLAN, EACH	604 INLET, NO. I-3D50, TYPE B AS PER PLAN, EACH	604 INLET, MISC.: BARRIER INLET, AS PER PLAN EACH	604 MANHOLE, NO. 3 EACH		604 MANHOLE ADJUSTED TO GRADE EACH	604 INLET, MISC.: BARRIER INLET CHAMBER, TYPE A EACH	604 INLET, MISC.: BARRIER INLET CHAMBER, TYPE B EACH			604 PIPE SPECIALS EACH		
		S.R. 8																						
10D	224	78+16.53	78+26.41	LT											1									
11D		78+50	78+50	RT											1									
12D		78+50	78+50.66	RT						1														
13D		78+50	79+46	RT												1								
14D		79+46	79+46	RT											1									
15D		79+46	79+46	RT												1								
16D		79+46	79+46	LT																1				
17D		79+46	80+00	LT																				
18D		79+46	80+00	RT																				
1D	226	80+00	80+80	LT												1								
2D		80+00	80+80	RT												1								
3D		80+80	80+80	LT											1									
4D		80+80	80+80	RT											1									
5D		80+80	81+70	LT												1								
6D		80+80	81+60	RT												1								
7D		81+70	81+70	LT											1									
8D		81+60	81+60	RT											1									
9D		81+70	83+00	LT												1								
10D		81+60	82+40	RT												1								
11D		82+40	82+40	RT											1									
12D		82+40	83+20	RT												1								
13D		83+00	83+00	LT											1									
14D		82+99.47	83+00	LT						1														
15D		83+00	84+00	LT																				
16D		83+20	83+20	RT											1									
17D		83+19.60	83+20	RT						1														
18D		83+40	84+00	RT												1								
19D		84+00	84+00	RT											1									
1D	228	84+00	84+60	LT												1								
2D		84+24	84+60	LT											1									
3D		84+60	86+00	LT				1																
4D		85+00	86+00	LT			1																	
5D		87+03	87+03	RT						1														
6D		85+30	86+00	RT											1									
7D		86+00	86+00	RT			1																	
8D		86+00	86+00	LT								1												
9D		86+00	88+00	LT																				
10D		86+00	87+05	RT												1								
11D		87+05	88+00	RT																				
1D	230	88+00	89+00	LT				1																
2D		88+00	88+50	RT			1																	
3D		89+00	92+00	LT												1								
1D	232	92+00	93+00	LT												1								
2D		93+55	93+55	RT	1																			
3D		93+00	93+55	LT								1												
4D		93+00	93+00	LT			1																	
5D		93+55	94+30	RT	1																			
6D		93+00	96+00	LT												1								
TOTALS CARRIED TO 166					2		4	2		4		2			13	15				1				

CALCULATED KME
CHECKED BF

DRAINAGE SUBSUMMARY

SUM-8-0.63

158
1088

07:10:48 PM
06/13/2002
u:\00-010sr-8\1\civil\subsummary\dsl02sum.dgn

REF NO.	SHEET NO.	STATION FROM	STATION TO	SIDE	603 12" CONDUIT, TYPE B, 706.02 LIN.FT.	603 12" CONDUIT, TYPE C, 706.02 LIN.FT.	603 12" CONDUIT, TYPE F, 707.33 LIN.FT.	603 15" CONDUIT, TYPE B, 706.02 LIN.FT.	603 15" CONDUIT, TYPE C, 706.02 LIN.FT.	603 15" CONDUIT, TYPE F, 707.33 LIN.FT.	603 18" CONDUIT, TYPE B, 706.02 LIN.FT.	603 18" CONDUIT, TYPE C, 706.02 LIN.FT.	603 21" CONDUIT, TYPE B, 706.02 LIN.FT.	603 21" CONDUIT, TYPE B, 706.02, D-1500 LIN.FT.	603 21" CONDUIT, TYPE C, 706.02 LIN.FT.	603 21" CONDUIT, TYPE F, 707.33 LIN.FT.	603 24" CONDUIT, TYPE B, 706.02 LIN.FT.	603 27" CONDUIT, TYPE B, 706.02 LIN.FT.	603 27" CONDUIT, TYPE C, 706.02 LIN.FT.	603 36" CONDUIT, TYPE B, 706.02 LIN.FT.	603 36" CONDUIT, TYPE B, 706.02, D-1000 LIN.FT.	603 36" CONDUIT, TYPE C, 706.02 LIN.FT.	603 36" CONDUIT, TYPE C, 706.02, D-1000 LIN.FT.	603 42" CONDUIT, TYPE B, 706.02 LIN.FT.	603 42" CONDUIT, TYPE B, 706.02, D-2250 LIN.FT.
		S.R. 8																						
1D	234	96+00	96+00	LT									66											
2D		96+00	96+00	RT							89													
3D		96+00	96+81.03♦♦	RT				80																
		GOODKIRK ST.																						
1D	238	192+40.00	192+40.02	RT		9	11					1												
2D		193+34.77		RT				4																
1D	239	194+04	194+19	RT																15				
2D		194+19	195+96	RT																177				
3D		195+96	196+58	RT																62				
4D		196+58	196+58	RT	6																			
5D		196+58	197+21	RT																63				
6D		197+21	43+25.08*	RT	16																			
7D		197+21	198+00	RT																79				
1D	240	198+00	200+46	RT																246				
2D		200+40	200+46	LT/RT	26																			
3D		200+46	200+59.56	RT	16																			
4D		200+46	46+63*	RT	23																			
1D	241	49+10*	204+00	RT	97																			
2D		204+00	204+00	RT	8																			
3D		204+00	4+55**	LT/RT	53																			
4D		204+00	204+75	LT/RT	78																			
5D		51+70*	206+00	RT		36																		
1D	242	207+21.62	207+21.62	LT/RT	28																			
2D		206+00	207+21.62	RT		123																		
3D		4+55***	4+71.05***	LT	21																			
4D		207+21.62	207+21.62	RT																				
5D		4+75***	4+71.05***	LT	21																			
1D	243	211+56	4+57●	LT/RT	54																			
2D		4+57●	4+57●	LT	21																			
3D		211+56	212+31	LT/RT	73																			
4D		59+25*	213+95	LT/RT	40	6	65																	
5D		4+57●	4+57●	LT																				
1D	244	11+33●●	216+00	LT/RT	135																			
2D		215+90	216+00	LT/RT	25																			
3D		215+80	216+00	RT	22																			
1D	245	218+75	219+42	LT	67																			
2D		12+15●●●	12+30●●●	RT	23																			
3D		12+30●●●	12+40●●●	LT/RT	30																			
4D		12+30●●●		RT																				
5D		219+82.83	221+50	LT	167																			
1D	246	223+70	224+75	RT	109																			
2D		224+75	224+75	LT	14																			
3D		224+75	70+90♦	RT	61																			
4D		224+75	226+00	RT	125																			
TOTALS CARRIED TO 165					1338	174	76	84			89		87							642				

* S.R.- 8 STATION
** NASH ST. STATION
*** VINE ST. STATION
● ORCHARD ST. STATION
●● CARROLL ST. STATION
●●● BUCHTEL AVE. STATION
♦ RAMP P1
♦♦ RAMP J

CALCULATED BF
CHECKED KME

DRAINAGE SUBSUMMARY

SUM-8-0.63

159
1088

07:10:48 PM
06/13/2002
u:\00-0108r-8\civil\subsummary\dsl03sum.dgn

REF NO.	SHEET NO.	STATION FROM	STATION TO	SIDE	604 CATCH BASIN, NO. 3 EACH	604 CATCH BASIN, NO. 3A EACH	604 CATCH BASIN, NO. 5 EACH	604 CATCH BASIN, NO. 5A EACH	604 CATCH BASIN, NO. 6 EACH	604 CATCH BASIN, NO. 2-3 EACH	604 CATCH BASIN ADJUSTED TO GRADE EACH	604 INLET, NO. I-3D50 EACH	604 INLET, NO. I-3D50, TYPE A, AS PER PLAN, EACH	604 INLET, NO. I-3D50, TYPE B AS PER PLAN, EACH	604 INLET, MISC.: BARRIER INLET AS PER PLAN EACH	604 MANHOLE, NO. 3 EACH		604 MANHOLE ADJUSTED TO GRADE EACH	604 INLET, MISC.: BARRIER INLET CHAMBER, TYPE A EACH	604 INLET, MISC.: BARRIER INLET CHAMBER, TYPE B EACH			604 PIPE SPECIALS EACH		
		S.R. 8																						
1D	234	96+00	96+00	LT								1												
2D		96+00	96+00	RT												1								
3D		96+00	96+81.03♦♦	RT	1																			
		GOODKIRK ST.																						
1D	238	192+40	192+40.02	RT						1													2	
2D		193+34.77		RT	1																			
1D	239	194+04	194+19	RT												1								
2D		194+19	195+96	RT												1								
3D		195+96	196+58	RT												1								
4D		196+58	196+58	RT	1																			
5D		196+58	197+21	RT												1								
6D		197+21	43+25.08*	RT							1													
7D		197+21	198+00	RT																				
1D	240	198+00	200+46	RT												1								
2D		200+40	200+46	LT/RT	1																			
3D		200+46	200+59.56	RT	1																			
4D		200+46	46+63*	RT			1																	
				LT																				
1D	241	49+10*	204+00	RT												1								
2D		204+00	204+00	RT	1																			
3D		204+00	4+55**	LT/RT	1																			
4D		204+00	204+75	LT/RT	1																			
5D		51+70*	206+00	RT																				
1D	242	207+21.62	207+21.62	LT/RT	1																			
2D		206+00	207+21.62	RT												1								
3D		4+55***	4+75***	LT	1																			
4D		207+21.62	207+21.62	RT	1																			
5D		4+75***	4+71.05***	LT	1																			
1D	243	211+56	4+57●	LT/RT												1								
2D		4+57●	4+57●	LT	1																			
3D		211+56	212+31	LT/RT	1																			
4D		59+25*	213+95	LT/RT	1																		2	
5D		4+57●	4+57●	LT	1																			
1D	244	11+33●●	216+00	LT/RT	1																			
2D		215+90	216+00	LT/RT	1																			
3D		215+80	216+00	RT	1																			
1D	245	218+75	219+42	LT	1																			
2D		12+15●●●	12+30●●●	RT	1																			
3D		12+30●●●	12+40●●●	LT/RT	1																			
4D		12+30●●●		RT												1								
5D		219+82.83	221+50	LT	1													1						
1D	246	223+70	224+75	RT	1																			
2D		224+75	224+75	LT	1																			
3D		224+75	70+90♦	RT	1																			
4D		224+75	226+00	RT												1								
TOTALS CARRIED TO 166					26		1			1	1	1				11		1					4	

* S.R.- 8 STATION
** NASH ST. STATION
*** VINE ST. STATION
● ORCHARD ST. STATION
●● CARROLL ST. STATION
●●● BUCHTEL AVE. STATION
♦ RAMP P1
♦♦ RAMP J

CALCULATED BF
CHECKED KME

DRAINAGE SUBSUMMARY

SUM-8-0.63

160
1088

07:10:48 PM
06/13/2002
u:\00-010sr-8\1\civil\subsummary\dsl03sum.dgn

REF NO.	SHEET NO.	STATION FROM	STATION TO	SIDE	603 12" CONDUIT, TYPE B, 706.02 LIN.FT.	603 12" CONDUIT, TYPE C, 706.02 LIN.FT.	603 12" CONDUIT, TYPE F, 707.33 LIN.FT.	603 15" CONDUIT, TYPE B, 706.02 LIN.FT.	603 15" CONDUIT, TYPE C,706.02 LIN.FT.	603 15" CONDUIT, TYPE F, 707.33 LIN.FT.	603 18" CONDUIT, TYPE B, 706.02 LIN.FT.	603 18" CONDUIT, TYPE C, 706.02 LIN.FT.	603 21" CONDUIT, TYPE B, 706.02 LIN.FT.	603 21" CONDUIT, TYPE B, 706.02, D-1500 LIN.FT.	603 21" CONDUIT, TYPE C, 706.02 LIN.FT.	603 21" CONDUIT, TYPE F, 707.33 LIN.FT.	603 24" CONDUIT, TYPE B, 706.02 LIN.FT.	603 27" CONDUIT, TYPE B, 706.02 LIN.FT.	603 27" CONDUIT, TYPE C, 706.02 LIN.FT.	603 36" CONDUIT, TYPE B, 706.02 LIN.FT.	603 36" CONDUIT, TYPE B, 706.02, D-1000 LIN.FT.	603 36" CONDUIT, TYPE C, 706.02 LIN.FT.	603 36" CONDUIT, TYPE C, 706.02, D-1000 LIN.FT.	603 42" CONDUIT, TYPE B, 706.02 LIN.FT.	603 42" CONDUIT, TYPE B, 706.02, D-2250 LIN.FT.
		GOODKIRK ST.																						
1D	247	226+00	226+15	RT	15																			
2D		226+00	226+21.80	LT	24																			
3D		226+30	226+46.13	LT	17																			
4D		226+15	226+30	LT/RT	4			41																
5D		226+15	226+25	LT/RT	17																			
6D		226+15	228+08	℄							193													
7D		227+75	228+08	LT	36																			
8D		227+75	228+08	RT	36																			
9D		228+08	229+25	℄									117											
10D		229+25	229+25	LT	14																			
11D		229+25	229+25	RT	14																			
12D		229+25	230+00	℄									75											
13D		226+21.80	226+30	LT	8																			
14D		228+07.05	228+08	LT	53																			
1D	248	230+00	231+11	℄									111											
2D		230+65.52	231+11	LT	59																			
3D		231+10.86	231+11	RT	14																			
4D		231+10.86	231+11	LT	14																			
5D		231+11	232+10	℄										99										
6D		231+94	232+10	RT	21																			
7D		232+10	232+38.72	RT										38										
8D		232+65.66	233+04	℄	66																			
9D		232+65.66	233+63	LT																				102
10D		79+45.59*	233+63	LT/RT																				38
11D		233+63	234+00	LT	37																			
12D		232+38.72		LT																				
13D		230+93																						
1D	249	234+00	235+26	LT	125																			
2D		235+26.43	235+26	LT	8																			
3D		235+26.43	235+26	RT/LT	20																			
4D		237+10	83+00*	RT/LT		8	13																	
1D	250	84+24*	238+38	RT				18		35														
2D		238+38	238+50	RT	14																			
3D		238+38	241+25	RT				286																
4D		4+78.53**	241+25	LT/RT	45																			
5D		241+25	4+68.56**	LT/RT	34																			
6D		241+25	241+50	RT	28																			
		FOUNTAIN ST.																						
1D	253	300+39.54	300+43.46	LT	18																			
2D		300+39.54	300+60	LT									39											
3D		300+39.54	300+67	RT	31																			
4D		300+60	302+00	LT											140									
1D	254	302+00	303+60	LT											160									
2D		302+85	303+60	RT	78																			
3D		303+60	303+60	LT				30																
4D		303+60	304+75	LT	115																			
5D		304+75	304+75	LT	8																			
6D		303+60	306+00	LT								240												
7D		304+75	304+75	LT/RT	20																			
TOTALS CARRIED TO 165					993	8	13	375		35	193	240	342	137	300									140

* S.R. 8 STATION ** PARKWOOD CT. STATION

CALCULATED BF CHECKED KME

DRAINAGE SUBSUMMARY

SUM-8-0.63

161
1088

07:10:49 PM
06/13/2002
u:\00-010sr-8\1\civil\subsummary\dsl04sum.dgn

DRAINAGE SUBSUMMARY

CALCULATED BF CHECKED KME

SUM-8-0.63

REF NO.	SHEET NO.	STATION FROM	STATION TO	SIDE	604 CATCH BASIN, NO. 3 EACH	604 CATCH BASIN, NO. 3A EACH	604 CATCH BASIN, NO. 5 EACH	604 CATCH BASIN, NO. 5A EACH	604 CATCH BASIN, NO.6 EACH	604 CATCH BASIN, NO. 2-3 EACH	604 CATCH BASIN ADJUSTED TO GRADE EACH	604 INLET, NO. I-3D50 EACH	604 INLET, NO. I-3D50, TYPE A, AS PER PLAN, EACH	604 INLET, NO. I-3D50, TYPE B AS PER PLAN, EACH	604 INLET, MISC.: BARRIER INLET AS PER PLAN EACH	604 MANHOLE, NO. 3 EACH		604 MANHOLE ADJUSTED TO GRADE EACH	604 INLET, MISC.: BARRIER INLET CHAMBER, TYPE A EACH	604 INLET, MISC.: BARRIER INLET CHAMBER, TYPE B EACH			PIPE SPECIALS EACH		
		GOODKIRK ST.																						
ID	247	226+00	226+15	RT																				
2D		226+00	226+21.80	LT						1														
3D		226+30	226+46.13	LT																				
4D		226+15	226+30	LT/RT												1								
5D		226+15	226+25	LT/RT	1																			
6D		226+15	228+08	℄												1								
7D		227+75	228+08	LT	1																			
8D		227+75	228+08	RT	1																			
9D		228+08	229+25	℄												1								
10D		229+25	229+25	LT	1																			
11D		229+25	229+25	RT	1																			
12D		229+25	230+00	℄												1								
13D		226+21.80	226+30	LT																				
14D		228+07.05	228+08	LT					1															
ID	248	230+00	231+11	℄																				
2D		230+67.29	231+11	LT						1														
3D		231+10.86	231+11	RT	1																			
4D		231+10.86	231+11	LT	1																			
5D		231+11	232+10	℄												1								
6D		231+94	232+10	RT	1																			
7D		232+10	232+38.72	RT												1								
8D		232+65.66	233+04	℄	1																			
9D		232+65.66	233+63	LT												1								
10D		79+45.59*	233+63	LT/RT															1					
11D		233+63	234+00	LT																				
12D		232+38.72		LT														1						
13D		230+93																1						
ID	249	234+00	235+26	LT												1								
2D		235+26.43	235+26	LT	1																			
3D		235+26.43	235+26	RT/LT	1																			
4D		237+10	83+00*	RT/LT	1																			
ID	250	84+24*	238+38	RT												1							2	
2D		238+38	238+50	RT	1																			
3D		238+38	241+25	RT												1								
4D		4+78.53**	241+25	LT/RT	1																			
5D		241+25	4+68.56**	LT/RT	1																			
6D		241+25	241+50	RT	1																			
		FOUNTAIN ST.																						
ID	253	300+39.54	300+43.46	LT	1																			
2D		300+39.54	300+60	LT			1											1						
3D		300+39.54	300+67	RT	1																			
4D		300+60	302+00	LT																				
ID	254	302+00	303+60	LT			1																	
2D		302+85	303+60	RT	1																			
3D		303+60	303+60	LT												1								
4D		303+60	304+75	LT												1								
5D		304+75	304+75	LT/RT	1																			
6D		303+60	306+00	LT																				
7D		304+75	304+75	LT/RT	1																			
TOTALS CARRIED TO 166					21		2		1	2						12		3	1				2	

* S.R. 8 STATION ** PARKWOOD CT. STATION

07:10:49 PM
06/13/2002
u:\00-010sr-RX\civil\subsummary\dsi04sum.dgn

REF NO.	SHEET NO.	STATION FROM	STATION TO	SIDE	603 12" CONDUIT, TYPE B, 706.02 LIN.FT.	603 12" CONDUIT, TYPE C, 706.02 LIN.FT.	603 12" CONDUIT, TYPE F, 707.33 LIN.FT.	603 15" CONDUIT, TYPE B, 706.02 LIN.FT.	603 15" CONDUIT, TYPE C, 706.02 LIN.FT.	603 15" CONDUIT, TYPE F, 707.33 LIN.FT.	603 18" CONDUIT, TYPE B, 706.02 LIN.FT.	603 18" CONDUIT, TYPE C, 706.02 LIN.FT.	603 21" CONDUIT, TYPE B, 706.02 LIN.FT.	603 21" CONDUIT, TYPE B, 706.02, D-1500 LIN.FT.	603 21" CONDUIT, TYPE C, 706.02 LIN.FT.	603 21" CONDUIT, TYPE F, 707.33 LIN.FT.	603 24" CONDUIT, TYPE B, 706.02 LIN.FT.	603 27" CONDUIT, TYPE B, 706.02 LIN.FT.	603 27" CONDUIT, TYPE C, 706.02 LIN.FT.	603 36" CONDUIT, TYPE B, 706.02 LIN.FT.	603 36" CONDUIT, TYPE B, 706.02, D-1000 LIN.FT.	603 36" CONDUIT, TYPE C, 706.02 LIN.FT.	603 36" CONDUIT, TYPE C, 706.02, D-1000 LIN.FT.	603 42" CONDUIT, TYPE B, 706.02 LIN.FT.	603 42" CONDUIT, TYPE B, 706.02, D-2250 LIN.FT.
		FOUNTAIN ST.																						
1D	255	306+00	306+67	LT								67												
2D		306+67	306+70	LT/RT	35																			
3D		306+67	308+27	LT								160												
4D		308+27	54+47.65*	LT	34																			
5D		308+27	309+40	LT/RT	118																			
6D		308+27	309+97	LT							174													
1D	256	309+97	311+97	LT		201																		
2D		311+97	312+11	LT		28	31																	
3D		312+11	312+11	LT/RT	34																			
4D		311+97	312+11		14																			
1D	257	14+40***	14+30***	LT/RT	40																			
2D		14+30***	62+00**	LT		17	43																	
3D		62+00**	316+17.78	LT		15	61																	
4D		316+00	316+17.84	LT/RT	18																			
5D		14+40***	14+30***	LT	11																			
6D		316+00	316+17.84	LT/RT	38																			
1D	258	15+55 ◗	15+48 ●	LT/RT	39																			
2D		15+48 ◗	66+70**	LT		25	42																	
3D		15+42.91 ●		LT																				
4D		15+55 ◗	15+48 ●	LT	9																			
1D	259	68+50 ◗●	322+37	LT	24																			
2D		322+37	322+38	RT	14																			
3D		322+37	70+60 ●●	LT								213												
4D		325+51.55	325+61	LT/RT	22																			
5D		325+51.55	72+00**	LT		48																		
6D		325+51.55	325+61	LT	12																			
1D	260	327+50	327+79	RT	30																			
2D		327+46.39	327+79	RT	28	7	33																	
3D		327+79	328+18.45	RT	32	5	31																	
4D		327+79	329+50	RT				171																
5D		329+50	329+50	RT	8																			
6D		329+50	330+00	RT				50																
1D	261	330+00	330+80	RT				80																
2D		27+55 ●●●	330+80	RT	89																			
3D		330+80	77+03**	LT				24		32														
4D		26+95.79 ●●	331+45	RT	34																			
5D		332+03	332+28	RT	32																			
6D		332+03	332+28	LT	26																			
7D		332+28	78+50**	LT	34																			
8D		332+28	333+75	RT	148																			
9D		27+39.58 ●●		RT																				
10D		331+45	332+28	LT/RT	89																			
TOTALS CARRIED TO 165					1012	346	241	538		32	174	227												

* RAMP S STATION
** S.R.-8 STATION
*** CARROLL ST. STATION
● BUCHTEL ST. STATION
●● RAMP QI STATION
●●● MARKET ST. STATION
◗ OHIO ST. STATION

CALCULATED BF
CHECKED KME

DRAINAGE SUBSUMMARY

SUM-8-0.63

163
1088

07:10:49 PM
06/13/2002
u:\00-010sr-8\civil\subsummery\dsi05sum.dgn

REF NO.	SHEET NO.	STATION FROM	STATION TO	SIDE	604 CATCH BASIN, NO. 3 EACH	604 CATCH BASIN, NO. 3A EACH	604 CATCH BASIN, NO. 5 EACH	604 CATCH BASIN, NO. 5A EACH	604 CATCH BASIN, NO. 6 EACH	604 CATCH BASIN, NO. 2-3 EACH	604 CATCH BASIN ADJUSTED TO GRADE EACH	604 INLET, NO. I-3D50 EACH	604 INLET, NO. I-3D50, TYPE A, AS PER PLAN, EACH	604 INLET, NO. I-3D50, TYPE B AS PER PLAN, EACH	604 INLET MISC.: BARRIER INLET, AS PER PLAN EACH	604 MANHOLE, NO. 3 EACH		604 MANHOLE ADJUSTED TO GRADE EACH	604 INLET, MISC.: BARRIER INLET CHAMBER, TYPE A EACH	604 INLET, MISC.: BARRIER INLET CHAMBER, TYPE B EACH			PIPE SPECIALS EACH		
		FOUNTAIN ST.																							
1D	255	306+00	306+67	LT												1									
2D		306+67	306+70	LT/RT	1																				
3D		306+67	308+27	LT												1									
4D		308+27	54+47.65*	LT	1																				
5D		308+27	309+40	LT/RT	1																				
6D		308+27	309+97	LT			1																		
1D	256	309+97	311+97	LT			1																		
2D		311+97	311+97	LT												1								2	
3D		311+97	312+11	LT/RT	1																				
4D		311+97	312+11	LT	1																				
1D	257	14+40***	14+30***	LT/RT	1																				
2D		14+30***	62+00**	LT												1								2	
3D		62+00**	316+17.78	LT												1								2	
4D		316+00 •	316+17.84	LT/RT	1																				
5D		14+40***	14+30***	LT	1																				
6D		316+00	316+17.84	LT/RT	1																				
1D	258	15+55 •	15+48 •	LT/RT	1																				
2D		15+48 •	66+70**	LT												1								2	
3D		15+42.91 •		LT														1							
4D		15+55 •	15+48	LT	1																				
1D	259	68+50 ••	322+37	LT	1																				
2D		322+37	322+38		1																				
3D		322+37	70+60 ••	LT												1									
4D		325+51.55	325+61	LT/RT	1																				
5D		325+51.55	72+00**	LT												1								2	
6D		325+51.55	325+61	LT	1																				
1D	260	327+50	327+79	RT	1																				
2D		327+46.39	327+79	RT	1																			2	
3D		327+79	328+18.45	RT	1																			2	
4D		327+79	329+50	RT												1									
5D		329+50	329+50	RT	1																				
6D		329+50	330+00	RT												1									
1D	261	330+00	330+80	RT																					
2D		27+55 •••	330+80	RT	1																				
3D		330+80	77+03**	LT												1								2	
4D		27+00 ••	331+45	RT	1																				
5D		332+03	332+28	RT	1																				
6D		332+03	332+28	LT	1																				
7D		332+28	78+50**	LT												1									
8D		332+28	333+75	RT	1																				
9D		27+39.58 ••		RT														1							
10D		331+45	332+28	LT/RT												1									
TOTALS CARRIED TO 166					26		2									13		2						16	

* RAMP S STATION
** S.R.-8 STATION
*** CARROLL ST. STATION
• BUCHTEL ST. STATION
•• RAMP QI STATION
••• MARKET ST. STATION
♦ OHIO ST. STATION

CALCULATED BF
CHECKED KME

DRAINAGE SUBSUMMARY

SUM-8-0.63

07:10:49 PM
06/13/2002
u:\00-0106r-8\h\civil\subsummary\ds105sum.dgn

REF NO.	SHEET NO.	STATION FROM	STATION TO	SIDE	603 12" CONDUIT, TYPE B, 706.02 LIN.FT.	603 12" CONDUIT, TYPE C, 706.02 LIN.FT.	603 12" CONDUIT, TYPE F, 707.33 LIN.FT.	603 15" CONDUIT, TYPE B, 706.02 LIN.FT.	603 15" CONDUIT, TYPE C, 706.02 LIN.FT.	603 15" CONDUIT, TYPE F, 707.33 LIN.FT.	603 18" CONDUIT, TYPE B, 706.02 LIN.FT.	603 18" CONDUIT, TYPE C, 706.02 LIN.FT.	603 21" CONDUIT, TYPE B, 706.02 LIN.FT.	603 21" CONDUIT, TYPE B, 706.02, D-1500 LIN.FT.	603 21" CONDUIT, TYPE C, 706.02 LIN.FT.	603 21" CONDUIT, TYPE F, 707.33 LIN.FT.	603 24" CONDUIT, TYPE B, 706.02 LIN.FT.	603 27" CONDUIT, TYPE B, 706.02 LIN.FT.	603 27" CONDUIT, TYPE C, 706.02 LIN.FT.	603 36" CONDUIT, TYPE B, 706.02 LIN.FT.	603 36" CONDUIT, TYPE B, 706.02, D-1000 LIN.FT.	603 36" CONDUIT, TYPE C, 706.02 LIN.FT.	603 36" CONDUIT, TYPE C, 706.02, D-1000 LIN.FT.	603 42" CONDUIT, TYPE B, 706.02 LIN.FT.	603 42" CONDUIT, TYPE B, 706.02, D-2250 LIN.FT.
1D	263	338+02	338+09.23	LT/RT	21																			
2D		338+09.23	86+00**	RT	172																			
3D		86+00**	86+00**	RT				61		28														
4D		500+55 ♦	86+00**	LT/RT	97																			
5D		500+55 ♦	500+65.22 ♦	RT	22																			
6D		500+55 ♦	500+65.22 ♦	RT	12																			
7D		338+09.23	338+12	RT	9																			
1D	264	342+24.72	502+11 ♦	RT/LT	44																			
2D		342+11.16	342+24.72	LT	14																			
3D		342+24.72	88+50**	LT	32																			
		RAMP TI																						
1D	266	54+25.21	54+35**	RT		13																		
2D		54+35**	4+75 ●	LT/RT				96																
1D	267	211+56*	57+60**	LT/RT				26		41														
2D		211+40*	211+56*	LT/RT	21																			
		RAMP PI																						
1D	273	74+50**	74+60**	LT	16																			
		RAMP QI																						
1D	276	70+60**	72+00**	RT					136															
2D		72+00**	72+00**	LT/RT				42																
		RAMP KI																						
1D	279	88+22**	88+22**	RT		4																		
2D		88+22**	89+00**	RT		103																		
		RAMP LI																						
1D	283	341+65***	88+50**	LT	64																			
2D		88+45	88+50**	LT/RT	26																			
3D		88+50**	88+50**	LT/RT				55																
		RAMP I																						
1D	285	93+40	93+00**	RT		127																		
1D	286	95+87.56**	95+91.10**	LT	12																			
2D		95+91.10**	96+00**	LT				98		32														
3D		96+13.35**	95+91.10**	LT	22																			
4D		96+00**	97+50	LT/RT							160													
			TOTAL THIS SHEET		584	247		378	136	101	160													
			TOTAL 155		6			1250	4	131	319		636			46		116		162	528	165	585		
			TOTAL 157		30			1004			107	250	361				122	472	300	161		140		353	
			TOTAL 159		1338	174	76	84			89		87							642					
			TOTAL 161		993	8	13	375		35	193	240	342	137	300										140
			TOTAL 163		1012	346	241	538		32	174	227													
TOTALS CARRIED TO GENERAL SUMMARY					3963	775	330	3629	140	299	1042	717	1426	137	300	46	122	588	300	965	528	305	585	353	140

* GOODKIRK ST. STATION
** S.R.- 8 STATION
*** FOUNTAIN ST. STATION
● VINE ST. STATION

CALCULATED BF
CHECKED KME

DRAINAGE SUBSUMMARY

SUM-8-0.63

07:10:50 PM
06/13/2002
u:\00-010s--8\1\civil\subsummary\dsl06sum.dgn

REF NO.	SHEET NO.	STATION FROM	STATION TO	SIDE	604 CATCH BASIN, NO. 3 EACH	604 CATCH BASIN, NO. 3A EACH	604 CATCH BASIN, NO. 5 EACH	604 CATCH BASIN, NO. 5A EACH	604 CATCH BASIN, NO. 6 EACH	604 CATCH BASIN, NO. 2-3 EACH	604 CATCH BASIN ADJUSTED TO GRADE EACH	604 INLET, NO. I-3D50 EACH	604 INLET, NO. I-3D50, TYPE A, AS PER PLAN, EACH	604 INLET, NO. I-3D50, TYPE B AS PER PLAN, EACH	604 INLET, MISC.: BARRIER INLET, AS PER PLAN EACH	604 MANHOLE, NO. 3 EACH		604 MANHOLE ADJUSTED TO GRADE EACH	604 INLET, MISC.: BARRIER INLET CHAMBER, TYPE A EACH	604 INLET, MISC.: BARRIER INLET CHAMBER, TYPE B EACH			PIPE SPECIALS EACH		
ID	263	338+02	338+09.23	LT/RT	1																			
2D		338+09.23	86+00**	RT												1								
3D		86+00**	86+00**	RT												1						2		
4D		500+55 ♦	86+00**	LT/RT												1								
5D		500+55 ♦	500+65.22♦	RT	1																			
6D		500+55 ♦	500+65.22♦	RT	1																			
7D		338+09.23	338+12	RT	1																			
ID	264	342+24.72	502+11 ♦	RT/LT	1																			
2D		342+11.16	342+24.72	LT	1																			
3D		342+24.72	88+50**	LT												1								
		RAMP TI																						
ID	266	54+25.21	54+35**	RT	1																			
2D		54+35**	4+75 ●	LT/RT												1								
ID	267	211+56*	57+60**	LT/RT												1						2		
2D		211+40*	211+56*	LT/RT	1																			
		RAMP PI																						
ID	273	74+50**	74+60**	LT			1																	
		RAMP QI																						
ID	276	70+60**	72+00**	RT												1								
2D		72+00**	72+00**	LT/RT			1																	
		RAMP KI																						
ID	279	88+22**	88+22**	RT	1																			
2D		88+22**	89+00**	RT												1								
		RAMP LI																						
ID	283	341+65***	88+50**	LT	1																			
2D		88+45	88+50**	LT/RT	1																			
3D		88+50**	88+50**	LT/RT												1								
		RAMP I																						
ID	285	93+40	93+00**	RT	1																			
ID	286	95+87.56**	95+91.10**	LT																				
2D		95+91.10**	96+00**	LT												1						2		
3D		96+13.35**	95+91.10**	LT																				
4D		96+00**	97+50	LT/RT			1																	
			TOTAL THIS SHEET		12		3									10						6		
			TOTAL 156				5	4		2		2	1	1	5	15						6		
			TOTAL 158		2		4	2		4		2			13	15				1				
			TOTAL 160		26		1			1	1	1				11		1				4		
			TOTAL 162		21		2		1	2						12		3	1					
			TOTAL 164		24		2									13		2				16		
TOTALS CARRIED TO GENERAL SUMMARY					85		17	6	1	9	1	5	1	1	18	76		6	1	1			32	

* GOODKIRK ST. STATION
** S.R.- 8 STATION
*** FOUNTAIN ST. STATION
● VINE ST. STATION

CALCULATED BF CHECKED KME

DRAINAGE SUBSUMMARY

SUM-8-0.63

166
1088

07:05:50 PM
06/13/2002
u:\00-0103sr-8\l\civil\su.ib\summary\dsl06sum.dgn

DRIVEWAY SUBSUMMARY

CALCULATED RW
CHECKED KLM

REF NO.	SHEET NO.	LOCATION		SIDE	RESIDENTIAL OR COMMERCIAL DRIVE	PROPOSED DRIVE WIDTH	APRON AREA	DRIVE AREA	DRIVE TYPE DETAIL		202	203					301		304		448	452	
		STREET	STATION								PAVEMENT REMOVED	EXCAVATION 5.0" DEPTH	EXCAVATION 6.0" DEPTH	EXCAVATION 8.0" DEPTH	EXCAVATION 10.0" DEPTH	EXCAVATION MISC.	3.75" BITUMINOUS AGGREGATE BASE, PG64-22 (DRIVEWAYS)	4.75" BITUMINOUS AGGREGATE BASE, PG64-22 (DRIVEWAYS)	8.0" AGGREGATE BASE	10.0" AGGREGATE BASE	1.25" ASPHALT CONCRETE SURFACE COURSE, TYPE I, PG64-22 (DRIVEWAYS)	6" PLAIN CONCRETE PAVEMENT	8" PLAIN CONCRETE PAVEMENT
						FT.	SQ. YD.	SQ. YD.			SQ. YD.	CU. YD.	CU. YD.	CU. YD.	CU. YD.	CU. YD.	CU. YD.	CU. YD.	CU. YD.	CU. YD.	CU. YD.	SQ. YD.	SQ. YD.
1DR	241	GOODKIRK	202+08.85	LT	R	12.0	14.0	43.0	B		57.0		1.0			3.5			9.6			14.0	
2DR		GOODKIRK	203+13.13	LT	R	16.0	17.5	12.5	B		17.0		0.5	3.0					3.0			17.5	
1DR	243	GOODKIRK	210+76.11	LT	C	24.0	26.0	38.5	B		20.5		7.0	1.0				5.1			1.3		25.5
1DR	252	PERKINS	46+95.19	RT	C	20.0	25.0		C		25												25.0
1DR	253	EXCHANGE	15+70.28	LT	R	7.5	8.0	7.0	C		8.0			1.5					1.5			8.0	
2DR		FOUNTAIN	301+07.37	RT	R	10.5	21.5	2.5	A		18.0		1.0	0.5					0.5			21.5	
3DR		FOUNTAIN	301+48.81	RT	R	8.0	22.5	9.0	A		17.5		1.0	1.5					2.0			22.5	
4DR		FOUNTAIN	301+90.13	RT	R	8.0	22.5	7.0	A		18.0		1.0	1.5					1.5			22.5	
1DR	254	FOUNTAIN	302+30.11	RT	R	8.0	22.5	5.5	A		20.0		1.0	1.0					1.0			22.5	
2DR		FOUNTAIN	302+69.66	RT	R	8.0	22.5	2.0	A		16.5		1.5	0.5					0.5			22.5	
3DR		FOUNTAIN	303+11.30	RT	R	4.0	11.5	2.5	A		8.5		1.5	0.5					0.5			11.5	
4DR		FOUNTAIN	303+15.30	RT	R	4.0	11.5	2.5	A		8.5		1.5	0.5					0.5			11.5	
5DR		FOUNTAIN	303+46.04	RT	R	8.0	22.5	10.5	A		16.5		1.5	2.0					2.5			22.5	
6DR		FOUNTAIN	305+04.54	RT	R	4.5	17.0	7.0	A		21.5		1.5									24.0	
7DR		FOUNTAIN	305+12.63	RT	R	4.5	17.0	7.0	A		21.5		1.5									24.0	
8DR		FOUNTAIN	305+50.78	RT	R	6.5	22.5	4.5	A		15.0		1.5									26.5	
1DR	255	FOUNTAIN	308+36.76	RT	C	27.5	55.5	39.3	B		63.0		6.5					5.2			1.4		55.5
1DR	256	FOUNTAIN	311+43.21	RT	C	27.5	48.5	13.8	A		71.5		1.0					1.8			0.5		48.5
2DR		FOUNTAIN	312+85.32	LT	R	6.0	22.5	1.5	A		27.0		0.5									23.0	
1DR	257	CARROLL	15+95.47	LT	C	20.0	37.0	18.3	A		39.5		3.0	0.5				2.4			0.6		37.0
1DR	258	BUCHTEL	17+00.30	RT	C	23.5	22.5	46.8	C		33.0		8.0	2.0				6.2			1.6		22.5
1DR	265	PERKINS	52+02.56	RT	R	5.5	10.5	6.5	C		16.0		1.0									17.0	
1DR	290	OHIO	500+18.40	RT	R	6.0	17.0	8.0	B		12.0		1.5	2.0					2.0			17.0	
2DR		OHIO	501+55.97	RT	R	9.0	24.0	11.9	A		18.5	1.5	1.0				1.2				0.4	24.0	
3DR		OHIO	501+96.48	RT	R	6.5	24.0	1.4	A		17.0	0.5	1.0				0.1				0.1	24.0	
4DR		OHIO	502+68.29	RT	R	8.0	18.0	3.5	B		18.0		0.5	1.0					1.0			18.0	
1DR	291	OHIO	503+31.81	RT	C	24.0	26.5	48.2	B		43.5	6.5	2.0			5.5		6.4			1.7		26.5
1DR	292	PARKWOOD	2+27.15	RT	R	9.0	8.0	10.0	C		10.0		0.5	2.0					2.0			8.0	
2DR		PARKWOOD	2+43.27	LT	R	7.0	8.0	7.5	C		6.5		0.5	1.5					1.5			8.0	
3DR		PARKWOOD	3+10.46	RT	R	10.0	8.0	41.0	C		9.5		0.5	9.0		41.5			9.0			8.0	
4DR		PARKWOOD	3+55.27	RT	R	16.5	13.0	150.5	C		12.5			33.5		134.0			33.5			13.0	
1DR	293	NASH (WEST)	3+97.62	RT	R	10.0	13.5		B		14.0		0.5									13.5	
2DR		NASH (WEST)	4+04.94	LT	R	8.0	13.5	22.0	B		32.0		0.5			6.0						35.5	
1DR	294	VINE	4+18.16	RT	R	8.5	15.0	4.7	A		11.5	0.5	0.5				0.5				0.2	15.0	
2DR		VINE	4+33.88	LT	C	21.0	32.0	45.2	A		32.5		7.5	0.5				6.0			1.5		32.0
1DR	295	ORCHARD	4+31.80	LT	C	22.0	16.0	25.0	C		17.0			0.5	7.5					7.5			16.0
2DR		ORCHARD	4+38.43	RT	C	20.0	17.0	18.4	C		17.5		3.0	0.5				2.4			0.6		17.0
1DR	296	NASH (EAST)	8+70.26	RT	R	8.0	14.0	10.0	A		11.5		0.5	2.0					2.0			14.0	
1DR	297	MASON	0+77.87	RT	R	9.0	14.5	7.5	A		19.0		0.5									22.0	
										SUBTOTAL	861.5	9.0	63.5	68.5	7.5	190.5	1.8	35.5	74.1	7.5	9.9	531	305.5
										TOTALS CARRIED TO GENERAL SUMMARY	862	339					38		82		10	531	306

SUM-8-0.63

07:05:51 PM
06/13/2002
u:\00-010sr-8\tv\civil\subsummary\dr-01sum.dgn

SHEET	LOCATION	EXCAVATION NOT INCLUDING EMBANKMENT CONSTRUCTION	EMBANKMENT	SEEDING AND MULCHING
		CU. YARDS	CU. YARDS	SQ. YDS
	NASH ST. (WEST)			
293	STA. 3+63.00 TO STA. 4+60.00	162	1	256
	VINE ST.			
294	STA. 3+90.00 TO STA. 4+66.00	107	15	228
	ORCHARD ST.			
295	STA. 3+75.00 TO STA. 4+64.00	137	9	220
	NASH ST. (EAST)			
296	STA. 8+36.00 TO STA. 9+00.00	84	5	178
	MASON AVE.			
297	STA. 0+38.00 TO STA. 1+10.00	117	4	237
	S.R. 8 - LEFT SIDE			
298	STA. 31+00.00 TO STA. 32+00.00	0	0	0
299	STA. 32+50.00 TO STA. 33+00.00	44	356	282
300	STA. 33+50.00 TO STA. 34+00.00	25	494	236
301	STA. 34+50.00 TO STA. 35+00.00	0	0	0
302	STA. 35+50.00 TO STA. 36+50.00	62	871	1208
303	STA. 37+00.00 TO STA. 37+50.00	26	847	975
304	STA. 38+00.00 TO STA. 38+50.00	102	737	1047
305	STA. 39+00.00 TO STA. 39+50.00	151	481	1148
306	STA. 40+00.00 TO STA. 40+50.00	135	719	1127
307	STA. 41+00.00 TO STA. 41+50.00	141	710	1114
308	STA. 42+00.00 TO STA. 42+50.00	132	577	1072
309	STA. 43+00.00 TO STA. 44+00.00	178	806	1459
310	STA. 44+50.00 TO STA. 45+50.00	159	276	1072
311	STA. 46+00.00 TO STA. 47+00.00	70	61	439
312	STA. 47+50.00 TO STA. 48+50.00	828	87	1269
313	STA. 49+00.00 TO STA. 50+00.00	687	74	1147
314	STA. 50+50.00 TO STA. 51+50.00	500	185	1253
315	STA. 52+00.00 TO STA. 52+50.00	715	19	719
316	STA. 53+00.00 TO STA. 53+50.00	651	13	555
317	STA. 54+00.00 TO STA. 55+00.00	825	48	864
318	STA. 55+50.00 TO STA. 56+00.00	610	380	756
319	STA. 56+50.00 TO STA. 57+50.00	898	503	1403
320	STA. 58+00.00 TO STA. 59+00.00	787	68	1475
321	STA. 59+50.00 TO STA. 60+00.00	833	6	1045
322	STA. 60+50.00 TO STA. 61+00.00	941	0	744
323	STA. 61+50.00 TO STA. 62+00.00	138	3	228
324	STA. 62+50.00 TO STA. 63+00.00	463	16	861
325	STA. 63+50.00 TO STA. 64+00.00	296	41	822
326	STA. 64+50.00 TO STA. 65+00.00	228	41	825
327	STA. 65+50.00 TO STA. 66+00.00	160	60	558
328	STA. 66+50.00 TO STA. 67+00.00	1851	75	764
329	STA. 67+50.00 TO STA. 68+00.00	2437	116	975
330	STA. 68+50.00 TO STA. 69+00.00	2926	41	928
331	STA. 69+50.00 TO STA. 70+00.00	3775	0	945
332	STA. 70+50.00 TO STA. 71+00.00	4668	0	978
333	STA. 71+50.00 TO STA. 72+00.00	5259	0	937

SHEET	LOCATION	EXCAVATION NOT INCLUDING EMBANKMENT CONSTRUCTION	EMBANKMENT	SEEDING AND MULCHING
		CU. YARDS	CU. YARDS	SQ. YDS
	S.R. 8 - LEFT SIDE CONTINUED			
334	STA. 72+50.00 TO STA. 73+00.00	4800	0	811
335	STA. 73+50.00 TO STA. 74+00.00	3939	0	600
336	STA. 74+50.00 TO STA. 75+00.00	2639	0	575
337	STA. 75+50.00 TO STA. 76+00.00	1368	181	564
338	STA. 76+50.00 TO STA. 77+50.00	1036	685	936
339	STA. 78+00.00 TO STA. 79+00.00	419	207	214
340	STA. 79+50.00 TO STA. 80+00.00	1197	225	294
341	STA. 80+50.00 TO STA. 81+00.00	1483	75	269
342	STA. 81+50.00 TO STA. 82+00.00	1516	81	292
343	STA. 82+50.00 TO STA. 83+00.00	1352	79	352
344	STA. 83+50.00 TO STA. 84+00.00	312	1	78
345	STA. 84+50.00 TO STA. 85+50.00	5086	0	1342
346	STA. 86+00.00 TO STA. 86+50.00	6070	0	1531
347	STA. 87+00.00 TO STA. 87+50.00	6570	0	1666
348	STA. 88+00.00 TO STA. 88+50.00	6706	0	1656
349	STA. 89+00.00 TO STA. 90+00.00	9901	0	2452
350	STA. 90+50.00 TO STA. 91+00.00	5715	0	1778
351	STA. 91+50.00 TO STA. 92+00.00	4170	0	1478
352	STA. 92+50.00 TO STA. 93+00.00	549	63	539
353	STA. 93+50.00 TO STA. 94+00.00	1574	344	1561
354	STA. 94+50.00 TO STA. 95+00.00	1622	86	1530
355	STA. 95+50.00 TO STA. 96+00.00	1576	40	1453
356	STA. 96+50.00 TO STA. 97+50.00	2335	63	1625
357	STA. 98+00.00 TO STA. 99+50.00	1435	160	1219
358	STA. 100+00.00 TO STA. 101+50.00	355	254	791
359	STA. 102+00.00 TO STA. 103+00.00	102	190	511
360	STA. 103+50.00	0	0	0
	PARKWOOD AVE.			
421	STA. 1+00.00 TO STA. 1+20.00	2	0	10
422	STA. 1+40.00 TO STA. 1+60.00	8	2	45
423	STA. 1+80.00 TO STA. 1+95.00	11	2	52
424	STA. 2+00.00 TO STA. 2+20.00	19	1	45
425	STA. 2+40.00 TO STA. 2+60.00	58	0	98
426	STA. 2+80.00 TO STA. 3+00.00	146	0	122
427	STA. 3+20.00 TO STA. 3+40.00	319	0	192
428	STA. 3+60.00 TO STA. 3+80.00	1355	0	267
429	STA. 4+00.00 TO STA. 4+13.94	465	0	295
SHEET TOTALS CARRIED TO 169		108578	11484	59592

CALCULATED JE
CHECKED KMM

EARTHWORK AND SEEDING & MULCHING SUBSUMMARY

SUM-8-0.63

EARTHWORK AND SEEDING & MULCHING SUBSUMMARY

SHEET	LOCATION	EXCAVATION NOT INCLUDING EMBANKMENT CONSTRUCTION	EMBANKMENT	SEEDING AND MULCHING
		CU. YARDS	CU. YARDS	SQ. YDS
	S.R. 8 - RIGHT SIDE			
361	STA. 30+50.00 TO STA. 31+50.00	0	0	0
362	STA. 32+00.00 TO STA. 32+75.00	16	1	14
363	STA. 33+00.00 TO STA. 34+00.00	96	15	77
364	STA. 34+50.00 TO STA. 35+50.00	0	0	0
365	STA. 36+00.00 TO STA. 37+00.00	202	216	834
366	STA. 37+50.00 TO STA. 38+50.00	278	125	475
367	STA. 39+00.00 TO STA. 39+50.00	310	91	342
368	STA. 40+00.00 TO STA. 40+50.00	288	79	442
369	STA. 41+00.00 TO STA. 41+50.00	139	70	453
370	STA. 42+00.00 TO STA. 42+50.00	140	57	403
371	STA. 43+00.00 TO STA. 43+50.00	197	24	200
372	STA. 44+00.00 TO STA. 44+50.00	220	9	292
373	STA. 45+00.00 TO STA. 45+50.00	212	6	250
374	STA. 46+00.00 TO STA. 46+50.00	0	0	242
375	STA. 47+00.00 TO STA. 47+50.00	312	5	791
376	STA. 48+00.00 TO STA. 49+00.00	570	13	997
377	STA. 49+50.00 TO STA. 50+00.00	422	17	973
378	STA. 50+50.00 TO STA. 51+00.00	702	9	906
379	STA. 51+50.00 TO STA. 52+50.00	780	38	1339
380	STA. 53+00.00 TO STA. 54+00.00	288	227	1405
381	STA. 54+50.00 TO STA. 55+50.00	173	297	1425
382	STA. 56+00.00 TO STA. 57+00.00	522	243	1617
383	STA. 57+50.00 TO STA. 58+50.00	691	399	1638
384	STA. 59+00.00 TO STA. 60+00.00	2000	213	1750
385	STA. 60+50.00 TO STA. 61+00.00	1437	28	889
386	STA. 61+50.00 TO STA. 62+00.00	649	0	342
387	STA. 62+50.00 TO STA. 63+00.00	2553	0	1311
388	STA. 63+50.00 TO STA. 64+00.00	2718	0	1277
389	STA. 64+50.00 TO STA. 65+50.00	4587	0	1826
390	STA. 64+50.00 TO STA. 65+50.00	1502	0	659
391	STA. 67+00.00 TO STA. 68+00.00	5910	0	2190
392	STA. 68+50.00 TO STA. 69+50.00	8824	0	2179
393	STA. 70+00.00 TO STA. 71+00.00	12700	0	2264
394	STA. 71+50.00 TO STA. 72+50.00	13692	0	2175
395	STA. 73+00.00 TO STA. 73+50.00	8267	0	1261
396	STA. 74+00.00 TO STA. 75+00.00	9470	0	1644
397	STA. 75+50.00 TO STA. 76+50.00	5085	0	1264
398	STA. 77+00.00 TO STA. 77+50.00	1153	0	394
399	STA. 78+00.00 TO STA. 78+50.00	143	113	142
400	STA. 79+00.00 TO STA. 79+50.00	580	878	578
401	STA. 80+00.00 TO STA. 80+50.00	599	1372	559
402	STA. 81+00.00 TO STA. 81+50.00	703	1536	622
403	STA. 82+00.00 TO STA. 82+50.00	628	1085	713
404	STA. 83+00.00 TO STA. 83+50.00	814	137	769
405	STA. 84+00.00 TO STA. 84+50.00	1092	0	533
406	STA. 85+00.00 TO STA. 85+50.00	511	0	161
407	STA. 86+00.00 TO STA. 86+50.00	2865	0	906
408	STA. 87+00.00 TO STA. 87+50.00	3753	8	1222
409	STA. 88+00.00 TO STA. 88+50.00	4138	7	1106
410	STA. 89+00.00 TO STA. 89+50.00	3729	3	1011
411	STA. 90+00.00 TO STA. 91+00.00	4066	0	1483
412	STA. 91+50.00 TO STA. 92+00.00	1688	0	1042
413	STA. 92+50.00 TO STA. 93+00.00	428	0	305
414	STA. 93+50.00 TO STA. 94+50.00	545	508	1280
415	STA. 95+00.00 TO STA. 95+50.00	625	20	841
416	STA. 96+00.00 TO STA. 97+00.00	438	0	479
417	STA. 97+50.00 TO STA. 98+50.00	115	15	219
418	STA. 99+00.00 TO STA. 100+50.00	47	39	266
419	STA. 101+00.00 TO STA. 102+50.00	91	71	597
420	STA. 102+70.38 TO STA. 103+50.00	29	4	51
SHEET TOTALS		114732	7978	51425
168 SHEET TOTALS		108578	11484	59592
TOTALS CARRIED TO GENERAL SUMMARY		223310	19462	111017

1000 SQ FT = 111.1 SQ YDS

ITEM 870 - COMMERCIAL FERTILIZER
RATE = 30 LB/1000 SQ. FEET OF SEED AND MULCH
TOTAL = $\frac{30 \text{ LB (AREA)}}{1000 \text{ SQ FT}}$ = 29,841 LB = 14.92 TONS

ITEM 870 - AGRICULTURAL LIMING
RATE = 92 LB/1000 SQ. FEET OF SEED AND MULCH
TOTAL = $\frac{92 \text{ LB (AREA)}}{1000 \text{ SQ FT}}$ = 91,511 LB = 45.76 TONS

ITEM 870 - WATER
RATE = 300 GAL/1000 SQ. FEET (2 APPLICATIONS)
TOTAL = $\frac{300 \text{ GAL (AREA)}}{1000 \text{ SQ FT}}$ x 2 = 597 M GAL

SHEET	LOCATION	SIDE	ITEM 660 SODDING REINFORCED
			SQ. YDS.
	BEACON STREET BRIDGE		
871	STA. 35+20.00	LT	47
871	STA. 35+88.00	RT	37
	EXCHANGE STREET BRIDGE		
909	STA. 46+92.00	LT	29
909	STA. 46+96.00	RT	44
TOTALS CARRIED TO GENERAL SUMMARY			157

CALCULATED JE
CHECKED KMM

EARTHWORK AND SEEDING & MULCHING SUBSUMMARY

SUM-8-0.63

REF NO.	SHEET NO.	STATION FROM	STATION TO	SIDE	202 FENCE REMOVED LIN.FT.		607 FENCE, TYPE CLT LIN.FT.
1R	1008	34+69.00	44+00.00	LT	933		
1F		34+64.14	36+02.00	LT			229
2F		38+52.05	44+00.00	LT			552
1R	1009	44+00.00	45+60.00	LT	218		
2R		200+44.00	204+00.00	RT	413		
3R		206+27.00	208+24.00	LT	197		
4R		204+10.00	208+95.79	RT	484		
5R		300+45.00	308+45.00	RT	845		
6R		308+57.00	308+97.00	LT	41		
1F		44+00.00	45+60.00	LT			212
2F		200+44.00	208+50.00	RT			851
3F		208+30.00	208+95.79	RT			66
4F		300+41.93	307+95.00	LT			807
5F		307+80.00	308+97.00	LT			118
1R	1010	308+97.00	314+89.00	LT	666		
2R		208+95.79	209+17.00	RT	21		
3R		209+17.00	214+93.00	RT	614		
4R		215+53.50	219+57.34	RT	477		
5R		315+49.60	319+50.00	LT	477		
6R		320+25.00	321+86.18	LT	161		
7R		220+21.00	222+04.42	RT	186		
1F		308+97.00	314+87.42	LT			647
2F		208+95.79	214+94.13	RT			631
3F		215+55.16	219+57.91	RT			466
4F		315+51.74	319+49.76	LT			533
5F		320+12.45	321+86.11	LT			249
6F		220+19.00	222+04.17	RT			220
7F		220+25.85	221+07.19	LT			128
1R	1011	321+86.18	330+95.00	LT	943		
2R		222+04.42	227+80.00	RT	570		
3R		230+92.00	232+19.00	LT	132		
4R		232+98.00	236+18.00	LT/RT	346		
5R		331+60.00	335+78.00	RT	414		
1F		321+86.11	324+29.00	LT			246
2F		324+08.00	330+74.00	LT			667
3F		222+04.17	225+06.00	RT			301
4F		225+00.00	232+00.00	RT			703
5F		230+67.07	232+37.75	LT			177
6F		233+25.00	233+66.56	LT			55
7F		233+22.00	236+16.53	RT			298
8F		332+03.00	335+76.21	LT			378
9F		331+53.59	335+80.97	RT			429
SUBTOTAL					8138		8963

REF NO.	SHEET NO.	STATION FROM	STATION TO	SIDE	202 FENCE REMOVED LIN.FT.		607 FENCE, TYPE CLT LIN.FT.
1R	1012	335+78.00	338+71.00	LT	350		
2R		236+18.00	237+42.00	RT	138		
3R		243+33.42	246+30.24	RT	383		
4R		338+89.00	343+82.81	LT	517		
5R		343+80.00	346+12.00	LT	288		
6R		92+37.00	94+60.05	LT	228		
7R		93+11.00	94+91.32	RT	181		
1F		335+80.97	338+53.00	RT			278
2F		335+76.21	337+98.86	LT			220
3F		236+16.53	237+10.83	RT			96
4F		238+64.00	242+84.00	RT			417
5F		242+73.00	246+30.24	RT			426
6F		87+98.70	346+05.94	LT			483
7F		339+30.39	341+76.95	LT			247
8F		339+76.24	343+15.00	RT			339
9F		93+31.00	94+86.89	RT			165
10F		91+86.26	94+59.95	LT			346
1R	1013	94+60.05	102+20.40	LT	724		
2R		94+91.32	96+50.73	RT	145		
3R		100+38.65	102+22.51	RT	180		
1F		94+86.89	96+50.73	RT			147
2F		94+59.95	102+20.40	LT			883
3F		100+38.65	102+22.51	RT			183
SUBTOTAL					3134		4230
TOTALS CARRIED TO GENERAL SUMMARY					11272		13193

CALCULATED KME
CHECKED TRB

FENCE SUBSUMMARY

SUM-8-0.63

07:10:51 PM
06/13/2002
u:\00-010sr-8\n\civil\subsummary\fsl01sum.dgn

REF NO.	SHEET NO.	STATION FROM	STATION TO	SIDE		202 GUARDRAIL REMOVED LIN.FT.	202 GUARDRAIL REMOVED, BARRIER DESIGN LIN.FT.		448 ASPHALT CONCRETE INTERMEDIATE COURSE, TYPE 1, UNDER GUARDRAIL, PG64-22 CU. YD.		606 GUARDRAIL, TYPE 5 LIN.FT.	606 ANCHOR ASSEMBLY, TYPE E-98 EACH	606 ANCHOR ASSEMBLY, TYPE A EACH	606 ANCHOR ASSEMBLY, TYPE T EACH		606 BRIDGE TERMINAL ASSEMBLY, TYPE 1 EACH	606 BRIDGE TERMINAL ASSEMBLY, TYPE 2 EACH									
		SR8																									
1R	200	31+24	32+00	LT		76																					
2R		31+01	32+00	RT		93																					
1GR		31+15.97	32+00	LT					3		71.53			1													
2GR		31+07.63	32+00	RT					3		92.37						1										
2R	202	32+00	32+74	LT		74																					
3R		32+75	33+70	℄			95																				
4R		32+00	34+20	RT		220																					
5R		35+17	36+00	LT		83																					
6R		35+05	36+00	℄			95																				
7R		35+88	36+00	RT		12																					
1GR		32+00	32+78.47	LT					3		78.47						1										
2GR		32+00	33+94.95	RT					7		195.13					1											
3GR		35+15.12	36+00.00	LT					3		84.88					1											
4GR		35+86.88	36+00.00	RT					1		13.12						1										
2R	204	36+00	40+00	LT		400																					
3R		36+00	40+00	℄			400																				
4R		36+00	40+00	RT		400																					
1GR		36+00	40+00	LT					15		400.00																
2GR		36+00	40+00	RT					15		400.00																
3R	206	40+00	44+00	LT		400																					
4R		40+00	44+00	℄			400																				
5R		40+00	44+00	RT		400																					
1GR		40+00	44+00	LT					15		400.00																
2GR		40+00	44+00	RT					15		400.00																
2R	208	44+00	45+15	LT		115																					
3R		44+00	45+57	℄			157																				
4R		44+00	45+08	RT		108																					
5R		46+49	48+00	℄			151																				
6R		46+97	48+00	RT		103																					
1GR		44+00	45+17.47	LT					4		117.47						1										
2GR		44+00	45+10.97	RT					4		110.97					1											
3GR		46+89.35	48+00	LT					4		110.65					1											
4GR		46+94.38	48+00	RT					4		105.62						1										
5R	210	48+00	52+00	℄			400																				
6R		48+00	51+31	RT		331																					
1GR		48+00	49+76.85	LT					7		126.85	1															
2GR		48+00	52+00	RT					15		400.00																
3R	212	52+00	56+00	℄			400																				
1GR		52+00	52+69.38	RT					3		56.88			1													
8R	214	56+42	57+85	LT		150																					
9R		56+00	60+00	℄			400																				
10R		59+84	60+00	RT		16																					
1GR		56+50	57+87.50	LT					5		75.00	1		1													
2GR		57+68.49	60+00	RT					9		181.51	1															
TOTALS CARRIED TO 174						2981	2498		135		3420.45	3		3		4	5										

CALCULATED RW
CHECKED TMA

GUARDRAIL SUBSUMMARY

SUM-8-0.63

171
1088

07:10:52 PM
06/13/2002
u:\00-010sr--8\1\civil\subsummary\gr10lsum.dgn

REF NO.	SHEET NO.	STATION FROM	STATION TO	SIDE		202 GUARDRAIL REMOVED	202 GUARDRAIL REMOVED, BARRIER DESIGN		448 ASPHALT CONCRETE INTERMEDIATE COURSE, TYPE I, UNDER GUARDRAIL, PG64-22		606 GUARDRAIL, TYPE 5	606 ANCHOR ASSEMBLY, TYPE E-98	606 ANCHOR ASSEMBLY, TYPE A	606 ANCHOR ASSEMBLY, TYPE T		606 BRIDGE TERMINAL ASSEMBLY, TYPE 1	606 BRIDGE TERMINAL ASSEMBLY, TYPE 2
						LIN.FT.	LIN.FT.		CU. YD.		LIN.FT.	EACH	EACH	EACH		EACH	EACH
		SR8															
9R	216	60+67	62+65	LT		200											
10R		60+00	64+00	℄		320	240										
11R		60+00	61+84	RT		184											
1GR		60+00	60+80.99	RT					3		80.99					1	
2GR		61+71.04	64+00	RT					8		228.96						1
4R	218	65+31	67+93	LT		262											
5R		64+00	68+00	℄		320	240										
6R		64+53	66+78	RT		225											
1GR		64+00	65+48.61	RT					6		148.61					1	
2GR		66+32.17	68+00	LT					6		167.83					1	
4R	220	68+00	72+00	℄			400										
1GR		68+00	69+44.67	LT					5		94.67	1					
11R	222	72+00	76+00	℄			400										
12R		75+25	76+00	RT		75											
1GR		73+16.46	76+00	RT					11		233.54	1					
6R	224	77+51	80+00	LT		249											
7R		76+00	80+00	℄		380	210										
8R		76+00	78+50	RT		250											
1GR		76+00	76+02.10	RT					1		3.96					1	
6R	226	80+00	84+00	LT		400											
7R		80+00	84+00	℄		140	330										
8R		83+31	84+00	RT		69											
7R	228	84+00	84+70	LT		70											
8R		84+00	88+00	℄		210	295										
9R		84+00	86+53	RT		256											
1GR		86+72.00	88+00	LT					5		115.50			1			
5R	230	91+84	92+00	LT		16											
6R		88+00	91+41	℄			341										
7R		91+29	92+00	RT		71											
1GR		88+00	88+59.50	LT					2		9.50	1					
2GR		89+00.37	92+00	RT					11		249.63	1					
8R	232	92+00	93+72	LT		172											
9R		92+00	93+21	RT		121											
1GR		92+00	92+12.87	RT					1		12.87					1	
2GR		92+93.88	96+06.38	LT					12		262.5	1				1	
4R	234	98+25	100+00	LT		175											
1GR		98+82.52	100+00	LT					4		104.98			1			
TOTALS CARRIED TO 174						4165	2456		75		1711.68	5		2		6	1

CALCULATED RW
CHECKED TMA

GUARDRAIL SUBSUMMARY

SUM-8-0.63

172
1088

07:10:52 PM
06/13/2002
u:\00-010sr-81\civil\subsummary\gr102sum.dgn

REF NO.	SHEET NO.	STATION FROM	STATION TO	SIDE		202 GUARDRAIL REMOVED	202 GUARDRAIL REMOVED, BARRIER DESIGN		448 ASPHALT CONCRETE INTERMEDIATE COURSE, TYPE I, UNDER GUARDRAIL, PG64-22		606 GUARDRAIL, TYPE 5	606 ANCHOR ASSEMBLY, TYPE E-98	606 ANCHOR ASSEMBLY, TYPE A	606 ANCHOR ASSEMBLY, TYPE T		606 BRIDGE TERMINAL ASSEMBLY, TYPE 1	606 BRIDGE TERMINAL ASSEMBLY, TYPE 2
						LIN.FT.	LIN.FT.		CU. YD.		LIN.FT.	EACH	EACH	EACH		EACH	EACH
		SR8															
1R	236	100+00	102+93	LT		300											
2R		101+02	102+94	RT		192											
1GR		100+00	102+95.02	LT					11		295.02						1
2GR		99+58.37	102+95.87	RT					13		287.50	1				1	
		GOODKIRK ST.															
1GR	242	54+04.98 *	56+07.56 *	RT					1		190.08			1			
1GR	243	56+07.56 *	59+02.89 *	RT							295.33						
2GR		212+94.41	214+00	RT							105.59						
8R	244	214+38	214+92	RT		71											
9R		215+54	218+00	RT		256											
1GR		214+00	12+58.60 **	RT							109.00						1
2GR		12+59.30 **	218+00	RT							261.04						1
3R	245	218+00	219+47	RT		150											
4R		220+19	222+00	RT		185											
1GR		218+00	219+51.46	RT							151.46						1
2GR		13+79.82 †	221+49.46	RT							154.73						1
3GR		67+31.47 ††	67+82.32 ††	RT							50.85						
1R	246	222+00	222+79	RT		80											
1GR		67+82.32 ††	69+76.74 ††	RT							144.42	1					
2GR		225+46.19	226+00	RT							41.31			1			
9R	247	227+82	230+00	RT		250											
1GR		226+00	230+00	RT							400.00						
6R	248	230+00	231+32	RT		138											
7R		230+00	232+07	RT		250											
1GR		230+00	231+96.19	RT							196.19						1
2GR		233+21.98	234+00	RT							65.52			1			
1GR	249	234+00	237+12.70	RT							321.98						1
6R	250	240+86	242+00	RT		117											
1GR		238+25.85	242+00	RT							361.65			1			
2GR		85+00.53 •	87+63.03 •	LT							212.50	1				1	
2R	251	242+00	243+94	RT		196											
1GR		242+00	243+25.85	RT					2		75.85	1					
1R	252	246+09	48+29 ••	RT		50											
2R		48+81 ••	92+93 ♦	RT		113											
1GR		246+11.37	48+28.57 ••	RT							12.5			1			
2GR		48+56.38 ••	48+81.38 ••	RT							12.5			1			
TOTALS CARRIED TO 174						2348			27		3745.02	4		6		2	7

* RAMP T1 STATION
** CARROLL ST. STATION
† BUCHTEL AVE. STATION
†† RAMP P1 STATION
• RAMP K1 STATION
•• PERKINS ST. STATION
♦ RAMP I ST. STATION

CALCULATED RW
CHECKED TMA

GUARDRAIL SUBSUMMARY

SUM-8-0.63

07:10:53 PM
06/13/2002
us\00-0108r-RX\civil\subsummary\gr103sum.dgn

REF NO.	SHEET NO.	STATION FROM	STATION TO	SIDE		202 GUARDRAIL REMOVED LIN.FT.	202 GUARDRAIL REMOVED, BARRIER DESIGN LIN.FT.		448 ASPHALT CONCRETE INTERMEDIATE COURSE, TYPE I, UNDER GUARDRAIL, PG64-22 CU. YD.		606 GUARDRAIL, TYPE 5 LIN.FT.	606 ANCHOR ASSEMBLY, TYPE E-98 EACH	606 ANCHOR ASSEMBLY, TYPE A EACH	606 ANCHOR ASSEMBLY, TYPE T EACH		606 BRIDGE TERMINAL ASSEMBLY, TYPE 1 EACH	606 BRIDGE TERMINAL ASSEMBLY, TYPE 2 EACH
		FOUNTAIN ST.															
4R	257	315+50	318+00	LT		286											
1GR		14+34.40 *	315+75.60	LT							50.00			1		1	
2R	258	318+00	319+31	LT		131											
3R		320+16	322+00	LT		185											
1GR		15+46.17 **	320+42.07	LT							62.50			1		1	
4R	259	322+00	322+15	LT		15											
5R		325+22	326+00	LT		79											
1R	260	326+00	327+92	LT		196											
1GR		326+20.80	330+00	LT							354.20		1				
3R	261	331+85	334+00	LT		219											
1GR		330+00	330+70.80	LT							58.30			1			
2GR		332+02.06	334+00	LT							197.94						1
1R	262	334+00	335+33	LT		139											
1GR		334+00	337+99.11	LT							389.56			1			
2R	263	341+66	342+00	LT		34											
1GR		339+29.00	341+66.50	LT							225.00			1			1
2R	264	342+00	346+00	LT		417											
1GR		87+98.57 +	91+42.07 +	LT					3		293.50	1					
2GR		345+17.47	346+00	LT							82.53						
1R	265	346+00	346+11	LT		33											
1GR		346+00	50+85.74 ++	LT							23.97						1
2R		93+10 +++	96+24 +++	LT		338											
2GR		50+93.29 ++	93+45.01 +++	LT							37.5			1		1	
		RAMP J															
7R	286	END OF UNION PL.				38											
1GR		END OF UNION PL.									12.5			2			
1R	287	END OF ARCH ST.				38											
1GR		END OF ARCH ST.									12.5			2			
			TOTAL THIS SHEET			2148			3		1800.00	1	1	10		3	3
			TOTAL 171			2981	2498		135		3420.45	3		3		4	5
			TOTAL 172			4165	2456		75		1711.68	5		2		6	1
			TOTAL 173			2348			27		3745.02	4		6		2	7
TOTALS CARRIED TO GENERAL SUMMARY						11642	4954		240		10677.15	13	1	21		15	16

* CARROLL ST. STATION
** BUCHTEL AVE. STATION
+ RAMP LI STATION
++ PERKINS ST. STATION
+++ RAMP J STATION

CALCULATED RW
CHECKED TMA

GUARDRAIL SUBSUMMARY

SUM-8-0.63

07:10:53 PM
06/13/2002
u:\00-00sr-81\civil\subsummary\gr104sum.dgn

REF NO.	SHEET NO.	STATION FROM	STATION TO	SIDE	202 STRUCTURE REMOVED LUMP	202 CURB REMOVED LIN. FT.	202 CURB AND GUTTER REMOVED LIN. FT.	202 PIPE REMOVED, 24" AND UNDER LIN. FT.	202 PIPE REMOVED, OVER 24" LIN. FT.	202 CATCH BASIN REMOVED EACH	202 MANHOLE REMOVED EACH	202 MANHOLE ABANDONED EACH	202 CONCRETE BARRIER REMOVED LIN. FT.	603 CONDUIT MISC.: FILL AND PLUG EXISTING CONDUIT LIN. FT.		604 MONUMENT ASSEMBLY EACH	604 REFERENCE MONUMENT EACH		622 CONCRETE BARRIER, TYPE BI LIN. FT.	622 CONCRETE BARRIER, TYPE D LIN. FT.	622 CONCRETE BARRIER, TYPE D, AS PER PLAN LIN. FT.				
		S.R. 8																							
1R	202	NOT USED																							
2R		32+75.00	32+96.62	LT			22																		
3R		35+05.66	36+00.00	LT		94																			
1B		32+75.00	33+34.39	℄															59.5						
2B		33+54.39	33+69.46	℄															15						
3B		35+30.41	36+00.00	℄															69.6						
1R	204	36+09.04	40+00.00	℄				391			1														
2R		36+00.00	40+00.00	LT		400																			
1B		36+00.00	40+00.00	℄															400						
1R	206	40+00.00	41+08.23	℄				108																	
2R		43+08.31	44+00.00	℄				92				1													
3R		40+00.00	44+00.00	LT		400																			
1B		40+00.00	41+90.00	℄															190						
2B		42+10.00	44+00.00	℄															190						
1M		40+50.00		LT													1								
2M		40+50.00		RT													1								
1R	208	44+00.00	45+08.40	℄				108			1														
2R		44+00.00	45+16.00	LT		116																			
1B		44+00.00	45+37.38	℄															137.4						
2B		46+68.88	48+00.00	℄															131.1						
1R	210	50+07.80	50+33.20	LT				41		1	1														
2R		50+35.00	50+37.60	LT				20		1															
3R		48+00.00	49+83.35	℄								1		202											
4R		49+83.35	52+00.00	℄										217											
6R		48+00.00	52+00.00	RT			400																		
1B		48+00.00	51+90.00	℄															390.0						
1M		50+00.00		LT													1								
2M		50+00.00		RT													1								
1R	212	52+00.00	54+32.16	℄								1		232											
2R		54+32.16	56+00.00	℄										168											
1B		52+10.00	56+00.00	℄															390.0						
1R	214	57+10.19	57+60.60	LT				70		1															
2R		57+60.60	58+19.70	LT				97		1															
3R		58+19.70	58+90.70	LT				71		1															
4R		56+00.00	57+60.60	℄							1			161											
5R		57+60.60	59+55.86	℄					195		1														
6R		59+55.86	60+00.00	℄				44																	
7R		59+55.86	60+00.00	LT				57																	
8R		56+00.00	58+00.00	LT			200																		
1B		56+00.00	60+00.00	℄															400						
1M		59+72.84		LT													1								
2M		59+72.84		RT													1								
TOTALS CARRIED TO SHEET 180					1010	622	1099	195	5	5	3		980			6		2372.5							

CALCULATED BF
CHECKED KME

ROADWAY SUBSUMMARY

SUM-8-0.63

07:10:54 PM
06/13/2002
u:\00-00sr-8\1\civil\subsummary\rs10lsum.dgn

REF NO.	SHEET NO.	STATION FROM	STATION TO	SIDE		202 CURB REMOVED LIN. FT.	202 CURB AND GUTTER REMOVED LIN. FT.	202 PIPE REMOVED, 24" AND UNDER LIN. FT.	202 PIPE REMOVED, OVER 24" LIN. FT.	202 CATCH BASIN REMOVED EACH	202 MANHOLE REMOVED EACH	202 MANHOLE ABANDONED EACH	202 CONCRETE BARRIER REMOVED LIN. FT.	603 CONDUIT MISC.; FILL AND PLUG EXISTING CONDUIT LIN. FT.		604 MONUMENT ASSEMBLY EACH	604 REFERENCE MONUMENT EACH		622 CONCRETE BARRIER, TYPE BI LIN. FT.	622 CONCRETE BARRIER, TYPE D LIN. FT.	622 CONCRETE BARRIER, TYPE D, AS PER PLAN LIN. FT.				
		S.R. 8																							
1R	216	60+00.00	60+73.24	℄				73			1														
2R		60+73.24	60+98.96	LT				27			1														
3R		60+98.96	61+31.90	LT/RT				64		1															
4R		61+00.00	61+53.70	LT				55			1														
5R		61+53.70	61+79.55	LT				27			1														
6R		61+79.55	64+00.00	℄				220																	
7R		60+98.95	61+16.70	LT				43		1															
8R		60+00.00	60+34.50	LT				39																	
9R		60+00.00	64+00.00	LT			200																		
1B		60+00.00	60+70.14	℄															70.1						
2B		60+90.14	64+00.00	℄															310.0						
3B		60+78.01	64+00.00	LT																258	64				
4B		60+78.89	61+73.05	RT																	94				
1R	218	64+00.00	65+33.44	℄				133			1														
2R		65+33.44	65+33.44	LT				46		1															
3R		65+30.70	65+33.44	RT				48		1															
4R		64+00.00	68+00.00	LT			336																		
1B		64+00.00	68+00.00	℄															400.0						
2B		64+00.00	66+34.26	LT																169	65				
3B		65+46.50	66+26.69	RT																	80				
1R	220	69+95.80	70+09.91	RT				79		1															
2R		70+09.40	70+09.91	LT				72		1															
3R		70+09.91	72+00.00	℄				190			1														
1B		68+00.00	72+00.00	℄															400.0						
1M		70+00.00		LT													1								
2M		70+00.00		RT													1								
1R	222	72+00.00	73+07.74	℄				108																	
2R		226.42.87	73+07.74	LT				153																	
3R		73+07.74	75+07.60	℄				200			1														
4R		73+42.30		LT						1															
5R		74+10.20		RT						1															
6R		75+04.20	75+07.60	LT				78		1															
7R		75+07.60	75+92.56	LT				106			1														
8R		75+92.56	76+00.00	LT				7			1														
9R		75+07.70	75+10.50	RT				49		1															
1B		72+00.00	76+00.00	℄															400.0						
2B		75+00.00	75+87.26	LT																87					
3B		75+87.26	76+00.00	LT																	13				
1M		75+15.26		RT													1								
1R	224	76+00.00	78+11.00	LT				211																	
2R		78+18.50	79+61.29	LT					162		1														
3R		79+40.00	79+60.10	LT				53		1															
4R		79+34.70	79+60.10	RT				55		1															
5R		79+61.29	80+00.00	LT					39																
1B		76+00.00	79+36.00	℄															336.0						
TOTALS CARRIED TO SHEET 180							536	2136	201	12	10						3		1916.1	514	316				

CALCULATED BF
CHECKED KME

ROADWAY SUBSUMMARY

SUM-8-0.63

07:10:54 PM
06/13/2002
u:\00-010sr-8\t\civil\subsummary\rs02sum.dgn

REF NO.	SHEET NO.	STATION FROM	STATION TO	SIDE	202 STRUCTURE REMOVED LUMP	202 CURB REMOVED LIN. FT.	202 CURB AND GUTTER REMOVED LIN. FT.	202 PIPE REMOVED, 24" AND UNDER LIN. FT.	202 PIPE REMOVED, OVER 24" LIN. FT.	202 CATCH BASIN REMOVED EACH	202 MANHOLE REMOVED EACH	202 MANHOLE ABANDONED EACH	202 CONCRETE BARRIER REMOVED LIN. FT.	603 CONDUIT MISC.: FILL AND PLUG EXISTING CONDUIT LIN. FT.		604 MONUMENT ASSEMBLY EACH	604 REFERENCE MONUMENT EACH		622 CONCRETE BARRIER, TYPE BI LIN. FT.	622 CONCRETE BARRIER, TYPE D LIN. FT.	622 CONCRETE BARRIER, TYPE D, AS PER PLAN LIN. FT.				
		S.R. 8																							
2B	224	79+56.00	80+00.00	℄															44						
3B		76+00.00	76+05.00	LT																	5				
4B		76+25.00	76+93.00	LT																	68				
5B		77+13.00	78+16.00	LT																	103				
6B		78+36.00	79+36.00	LT																	100				
7B		79+56.00	80+00.00	LT																	44				
8B		76+00.00	76+13.91	RT																14					
9B		76+13.91	76+93.00	RT																	79				
10B		77+13.00	78+40.00	RT																	127				
11B		78+60.00	79+36.00	RT																	76				
12B		79+56.00	80+00.00	RT																	44				
1R	226	80+00.00	80+58.63	℄					59		1														
2R		80+58.63	83+25.50	RT					267		1														
3R		82+77.12	83+25.50	RT				91		1															
4R		83+25.50	83+80.00	RT					55		1														
5R		83+80.00	84+00.00	RT					20																
6R		80+00.00	84+00.00	LT			231																		
1B		80+00.00	84+00.00	℄															400.00						
2B		80+00.00	80+70.00	LT																	70				
3B		80+90.00	81+60.00	LT																	70				
4B		81+80.00	82+90.00	LT																	110				
5B		83+10.00	84+00.00	LT																	90				
6B		80+00.00	80+70.00	RT																	70				
7B		80+90.00	81+50.00	RT																	60				
8B		81+70.00	82+30.00	RT																	60				
9B		82+50.00	83+10.00	RT																	60				
10B		83+30.00	83+90.00	RT																	60				
1R	228	84+21.54	84+63.98	LT				85		1															
2R		84+63.98	85+04.74	RT				72		1															
3R		86+11.80	86+30.43	LT				50		1															
4R		86+11.80	87+07.60	RT				107		1															
5R		84+00.00	84+63.98	RT					64		1														
6R		84+63.98	86+11.80	LT/RT					148		1														
10R		85+30.00	88+00.00	LT			270																		
1B		84+00.00	85+90.00	℄															190.0						
2B		86+10.00	88+00.00	℄															190.0						
3B		84+00.00	84+14.00	LT																	14				
4B		84+34.00	85+02.63	LT																56	11				
5B		84+10.00	85+20.00	RT																	110				
6B		85+40.00	87+21.64	RT																	183				
7B		87+21.64	87+50.00	RT																28					
1M		85+50.00		LT													1								
2M		85+50.00		RT													1								
1R	230	89+07.52	89+09.67	LT				65		1															
2R		89+08.18	89+09.67	RT				62		1															
3R		89+03.60	90+54.63	RT				158		1															
4R		89+09.67		℄							1														
5R		91+83.00	92+00.00	LT			17																		
8R		91+41.16	92+00.00	℄										59											
1B		88+00.00	92+00.00	℄															400.0						
TOTALS CARRIED TO SHEET 180							518	690	613	8	6		59				2		1224	98	1614				

CALCULATED BF CHECKED KME

ROADWAY SUBSUMMARY

SUM-8-0.63

07:10:55 PM
06/13/2002
u:\00-010sr-8\N\civil\subsummary\rsi03sum.dgn

REF NO.	SHEET NO.	STATION FROM	STATION TO	SIDE	202 STRUCTURE REMOVED LUMP	202 CURB REMOVED LIN. FT.	202 CURB AND GUTTER REMOVED LIN. FT.	202 PIPE REMOVED, 24" AND UNDER LIN. FT.	202 PIPE REMOVED, OVER 24" LIN. FT.	202 CATCH BASIN REMOVED EACH	202 MANHOLE REMOVED EACH	202 MANHOLE ABANDONED EACH	202 CONCRETE BARRIER REMOVED LIN. FT.	603 CONDUIT MISC.: FILL AND PLUG EXISTING CONDUIT LIN. FT.		604 MONUMENT ASSEMBLY EACH	604 REFERENCE MONUMENT EACH		622 CONCRETE BARRIER, TYPE BI LIN. FT.	622 CONCRETE BARRIER, TYPE D LIN. FT.	622 CONCRETE BARRIER, TYPE D, AS PER PLAN LIN. FT.				
		S.R. 8																							
1R	232	92+87.64		RT							1														
2R		93+05.25		℄						1															
3R		93+05.25	93+05.78	LT				59		1															
4R		93+05.25	93+20.94	RT				68		1															
5R		95+08.35		℄						1															
6R		95+06.24	95+08.35	LT				60		1															
7R		95+07.65	95+08.35	RT				48		1															
8R		92+00.00	96+00.00	LT			324																		
9R		92+00.00	96+00.00	RT		266	198																		
10R		92+00.00	96+00.00	℄									400												
1B		92+00.00	93+45.00	℄															145						
2B		93+65.00	95+90.00	℄															225						
3B	232	92+09.98	92+95.88	LT																86					
4B		92+10.78	92+96.78	RT																86					
1M		94+39.98		LT													1								
2M		94+39.98		RT													1								
1R	234	97+07.34		℄						1															
2R		97+07.34	97+21.99	RT				77		1															
3R		97+07.34	97+52.22	LT				97		1															
4R		96+00.00	100+00.00	℄		231																			
1B		96+10.00	100+00.00	℄									400						390.0						
1R	236	100+00.00	102+24.03	LT		224																			
2R		100+00.00	102+24.03	RT		224																			
1B		100+00.00	102+70.38	℄									270						270.4						
1M		101+62.12		LT													1								
2M		101+62.12		RT													1								
		GOODKIRK																							
1R	239	196+57.20	197+21.75	LT/RT				73																	
2R		196+57.20	196+58	LT/RT				23		1															
1R	240	200+58.56	200+58.71	LT/RT				18		1															
2R		200+58.56	200+86.17	RT				37		1															
3R		200+15.53	200+58.56	RT				44																	
1M		200+00.11		℄												1									
1R	241	204+13.90	204+2928	LT				33		1															
2R		204+29.28	204+43.39	LT				34		1															
3R		204+29.28	204+65.03	LT				36		1															
1R	242	208+45.56	208+62.20	LT				30		1															
2R		208+62.20	208+75.35	LT				31		1															
3R		208+62.20	209+08.91	LT				47		1															
4R		208+62.20	208+88.68	LT/RT				40		1															
1R	243	211+75.37	211+88.51	LT				32		1															
2R		211+88.21	221+88.51	LT/RT				23		1															
3R		211+88.51	212+01.70	LT				33		1															
4R		211+88.51	212+30.16	LT				42		1															
1M		215+21.85														1									
1R	244	214+96.05	215+22.25	LT				52		1															
2R		215+22.25	215+44.56	LT				36		1															
3R		215+44.56	215+83.71	LT				39		1															
4R		215+22.25	215+77.10	LT/RT				60		1															
5R		215+22.25	215+77.88	LT				57		1															
TOTALS CARRIED TO SHEET 180						945	522	1229		28	1		1070			2	4		1030.4	172					

CALCULATED BF
CHECKED KME

ROADWAY SUBSUMMARY

SUM-8-0.63

07:10:55 PM
06/13/2002
u:\00-00sr-8\v1\civil\subsummary\sr8104sum.dgn

REF NO.	SHEET NO.	STATION FROM	STATION TO	SIDE	202 STRUCTURE REMOVED LUMP	202 CURB REMOVED LIN. FT.	202 CURB AND GUTTER REMOVED LIN. FT.	202 PIPE REMOVED, 24" AND UNDER LIN. FT.	202 PIPE REMOVED, OVER 24" LIN. FT.	202 CATCH BASIN REMOVED EACH	202 MANHOLE REMOVED EACH	202 MANHOLE ABANDONED EACH	202 CONCRETE BARRIER REMOVED LIN. FT.	603 CONDUIT MISC.: FILL AND PLUG EXISTING CONDUIT LIN. FT.		604 MONUMENT ASSEMBLY EACH	604 REFERENCE MONUMENT EACH		622 CONCRETE BARRIER, TYPE BI LIN. FT.	622 CONCRETE BARRIER, TYPE D LIN. FT.	622 CONCRETE BARRIER, TYPED, AS PER PLAN LIN. FT.				
		GOODKIRK																							
6R	244	215+77.88	215+77.10	LT/RT				23		1															
7R		215+77.88	215+83.71	LT				35		1															
IM		215+21.85		℄												1									
IR	245	219+63.23	219+82.83	LT				37		1															
2R		219+82.83	220+12.19	LT				32		1															
IM		219+86.96		℄												1									
IR	247	226+21.87	226+42.87	LT				38		1															
2R		226+30	226+42.87	LT				34																	
3R		226+46.13	226+42.87	LT				37		1															
4R		228+07.05	228+08.37	RT				75		1															
5R		228+07.88	228+49.13	LT				41		1															
6R		229+35.72	229+43.68	RT				12		1															
7R		228+08.37	229+35.72	RT				128			1														
IR	248	230+83.40	230+92.60	LT				22		1															
2R		232+33.31	232+38.72	LT				7		1															
3R		230+93.72		LT							1														
IM		232+59.40		℄												1									
IM	249	237+60.54		℄												1									
IR	250	238+28.98	238+40.90	RT				19		1															
2R		238+28.98	238+35.59	RT				18		1															
IM	252	246+52.68		℄												1									
		FOUNTAIN																							
IR	253	300+36.10	300+39.54	LT				45		1															
2R		300+39.54	300+52.97	LT				25		1															
3R		300+39.54	300+53.16	RT				26		1															
4R		300+39.54	302+00.00	LT										176											
IM		300+00.20		RT												1									
IR	255	308+41.84	308+58.15	LT				21		1															
2R		308+58.15		LT						1															
3R		308+58.15	308+90.68	LT				38		1															
IR	257	315+45.13	315+92.33	LT				55		1															
2R		315+92.33	315+92.15	LT				23		1															
3R		61+79.55 (SR-8)	315+92.33	LT				132		1															
IM		315+22.07		RT												1									
IR	258	319+17.60	65+30.70 (SR-8)	LT				56		1															
IM		319+88.12		℄												1									
IR	259	323+15.09	324+41.75	RT				127			1														
2R		324+41.75	325+66.16	LT/RT				148			1														
3R		325+66.16	325+69.21	LT				57			1														
TOTALS CARRIED TO SHEET 180								1311		23	5			176		8									

CALCULATED BF CHECKED KME

ROADWAY SUBSUMMARY

SUM-8-0.63

REF NO.	SHEET NO.	STATION FROM	STATION TO	SIDE	202 STRUCTURE REMOVED LUMP	202 CURB REMOVED LIN. FT.	202 CURB AND GUTTER REMOVED LIN. FT.	202 PIPE REMOVED, 24" AND UNDER LIN. FT.	202 PIPE REMOVED, OVER 24" LIN. FT.	202 CATCH BASIN REMOVED EACH	202 MANHOLE REMOVED EACH	202 MANHOLE ABANDONED EACH	202 CONCRETE BARRIER REMOVED LIN. FT.	603 CONDUIT MISC.: FILL AND PLUG EXISTING CONDUIT LIN. FT.		604 MONUMENT ASSEMBLY EACH	604 REFERENCE MONUMENT EACH		622 CONCRETE BARRIER, TYPE BI LIN. FT.	622 CONCRETE BARRIER, TYPE D LIN. FT.	622 CONCRETE BARRIER, TYPE D, AS PER PLAN LIN. FT.				
		FOUNTAIN																							
1R	260	327+75.32	327+83.23	LT/RT				104			1														
1R		329+69.40	329+72.59	LT/RT				40		1															
1R		329+65.22	330+00	RT				36		1															
1R	261	330+98.69	331+03.36	LT				5		1															
2R		331+10.94	331+37.53	RT				48		1															
1M		331+27.83		℄												1									
1R	263	339+21.35	339+23.96	LT/RT				52		1															
1M		338+76.25		℄												1									
1R	264	343+34.55	345+39.02	RT				206			1														
1M	265	346+50.49		℄												1									
		RAMP G1																							
1R	276	71+53.45	71+82.91	RT				29		1															
2R		71+82.91	73+00	RT				115			1														
1R	277	73+00	73+10.39	RT				10																	
2R		73+10.39	73+94.02	RT				82			1														
3R		73+94.02	74+05.18	RT				111			1														
4R		73+94.02	73+96.41	RT				16		1															
		RAMP J																							
1R	286	94+00.91	95+75.67	RT				171		1															
2R		95+68.42	95+75.67	RT				16		1															
3R		95+75.67	95+76.54	RT/LT				37		1															
4R		95+76.54		LT						1															
5R		96+29.59		LT							1														
6R		97+45.27		LT							1														
		PARKWOOD																							
1R	292	I-20	3+45.50	LT				226			1														
2R		3+45.00	3+67.00	LT				25																	
			TOTAL THIS SHEET					1329		11	8					3									
			TOTAL SHEET 175			1010	622	1099	195	5	5	3		980			6		2228						
			TOTAL SHEET 176	LUMP			536	2136	201	12	10						3		1876	514	316				
			TOTAL SHEET 177				518	690	613	8	6		59				2		1184	98	1649				
			TOTAL SHEET 178			945	522	1229		28	1		1070			1	4		1005						
			TOTAL SHEET 179					1311		23	5			176		8									
TOTALS CARRIED TO GENERAL SUMMARY					LUMP	1955	2198	7794	1009	87	35	3	1129	1156		12	15		6293	612	1965				

CALCULATED BF
CHECKED KME

ROADWAY SUBSUMMARY

SUM-8-0.63

REF NO.	SHEET NO.	STATION FROM	STATION TO	SIDE	202 PIPE REMOVED, 24" AND UNDER LIN. FT.	202 PIPE REMOVED, OVER 24" LIN. FT.	202 MANHOLE REMOVED EACH	202 MANHOLE ABANDONED EACH	202 REMOVAL MISC.: JUNCTION CHAMBER LUMP		603 8" CONDUIT, TYPE B 706.08 LIN. FT.	603 12" CONDUIT, TYPE B 706.08 LIN. FT.	603 15" CONDUIT, TYPE B 706.08 LIN. FT.	603 21" CONDUIT, TYPE B, 706.08, LIN. FT.	603 30" CONDUIT, TYPE B, 706.03, D-2000 LIN. FT.	603 33" CONDUIT, TYPE B, 706.03, D-1000 LIN. FT.	603 33" CONDUIT, TYPE B, 706.03, D-3000 LIN. FT.	603 48" CONDUIT, TYPE B, 706.03, D-3000 LIN. FT.		604 MANHOLE, MISC.: 84" DIA PRECAST MANHOLE, TYPE 1 EACH	604 MANHOLE, MISC.: AKRON MH-2 EACH	604 MANHOLE, MISC.: AKRON MH-9 (DROP MANHOLE) EACH	604 MANHOLE ADJUSTED TO GRADE EACH	
		SR 8																						
1S	224	78+10.27	78+16.53	LT												21								
2S		78+16.53	78+24.45	LT														6		1				
9R		78+10.27	78+12.75	LT		11	1																	
10R		78+12.75	78+24.45	LT		13			LUMP															
		GOODKIRK ST.																						
1S	240	200+15.58		RT																				1
2S		200+16		LT											8							1		
3S		200+16	202+00	LT								184	4											
1S	241	202+00	204+29	LT								229										1		
2S		204+29	206+00	LT								171												
3S		204+29.28		LT																				1
1S	242	206+00	208+59	LT								259	4									1		
2S		208+59	210+00	LT								141												
3S		208+62.20		LT																				1
1S	243	210+00	211+87	LT								187		6								1		
2S		211+87	214+00	LT								213												
3S		211+88.51		LT																				1
1S	244	214+00	215+14	LT								114										1		
2S		215+14	215+22.25	LT								11												
3S		215+22.25		LT																				1
1S	247	226+42.87	230+00	LT							357											1		
8R		229+15.45	230+00	RT	89		1																	
1S	248	230+00	230+26	LT							26													
2S		230+26	230+91	LT							67											1		
3S		230+89	230+91	LT							37											1		
4S		230+91	232+18	LT							131												1	
5S		232+18	232+86	LT							72											1		
6S		232+86		LT																				1
4R		230+00	230+97.10	LT	102																			
5R		232+39.21	232+86	LT	48																			
1R	249	237+71.11	238+00	RT	28		1																	
1S		237+65		RT																		1		
3R	250	238+00	238+30	RT	29		1																	
4R		238+30	241+08.14	RT	279		1																	
5R		241+08.14	242+00	RT	92																			
1R	251	242+00	245+69.55	RT/LT	371		1																	
TOTALS CARRIED TO SHEET 182					1038	24	6	-	LUMP		690	1509	8	6	8	21	-	6		1	10	1	6	

CALCULATED JDS CHECKED TGH

SANITARY SUBSUMMARY

SUM-8-0.63

CALCULATED JDS CHECKED TGH

SANITARY SUBSUMMARY

REF NO.	SHEET NO.	STATION FROM	STATION TO	SIDE	202 PIPE REMOVED, 24" AND UNDER (LIN. FT.)	202 PIPE REMOVED, OVER 24" (LIN. FT.)	202 MANHOLE REMOVED (EACH)	202 MANHOLE ABANDONED (EACH)	202 REMOVAL MISC.: JUNCTION CHAMBER (LUMP)		603 8" CONDUIT, TYPE B 706.08 (LIN. FT.)	603 12" CONDUIT, TYPE B 706.08 (LIN. FT.)	603 15" CONDUIT, TYPE B 706.08 (LIN. FT.)	603 21" CONDUIT, TYPE B 706.08 (LIN. FT.)	603 30" CONDUIT, TYPE B, 706.03, D-2000 (LIN. FT.)	603 33" CONDUIT, TYPE B, 706.03, D-1000 (LIN. FT.)	603 33" CONDUIT, TYPE B, 706.03, D-3000 (LIN. FT.)	603 48" CONDUIT, TYPE B, 706.03, D-3000 (LIN. FT.)		604 MANHOLE, MISC.: 84" DIA. PRECAST MANHOLE, TYPE I (EACH)	604 MANHOLE, MISC.: AKRON MH-2 (EACH)	604 MANHOLE, MISC.: AKRON MH-9 (DROP MANHOLE) (EACH)	604 MANHOLE ADJUSTED TO GRADE (EACH)	
		FOUNTAIN ST.																						
1S	254	304+31.06		RT																				1
1S	255	308+60.00		RT																				1
1S	256	313+44.00		RT																				1
		FOUNTAIN ST.																						
1S	261	330+99.2	331+43.4	LT/RT											46						1			
2S		331+43.4	331+53	RT/LT											29						1			
3S		331+53	331+62.64	LT													33					1		
4R		330+88.65		RT				1																
5R		330+99.09	331+03.36	LT		10																		
6R		331+03.36	331+62.8	LT		68	1																	
7R		331+45.00	331+65.70	RT/LT	49																			
8R		331+62.64	331+62.8	LT		7	1																	
9R		331+62.64	331+65.70	LT	23		1																	
1S	263	338+85.25		RT																				1
		RAMP 1																						
1S	286	96+02	98+00	LT							192													
1S	287	98+00	99+03	LT							100													
		OHIO ST.																						
1S	290	501+99.9		RT																	1			
2S		501+99.9	503+00	RT							100													
1R		501+99.9	503+00	RT/LT	101																			
1S	291	503+00	503+28.9	RT							29													
2S		503+28.9		RT																	1			
1R		503+00	503+28.76	LT	29		1																	
		PARKWOOD AVE.																						
1S	292	1+20		LT																	1			
2S		1+20	2+20	RT/LT							100										1			
3S		2+20	3+50	RT							130										1			
		VINE ST.																						
1S	294	4+17.42		LT																				1
TOTALS THIS SHEET					202	85	4	1	-		651	-	-	-	75	-	33	-		-	7	1	5	
TOTALS FROM SHEET 181					1038	24	6	-	LUMP		690	1509	8	6	8	21	-	6		1	10	1	6	
TOTALS CARRIED TO GENERAL SUMMARY					1240	109	10	1	LUMP		1341	1509	8	6	83	21	33	6		1	17	2	11	

SUM-8-0.63

REF NO.	SHEET NO.	STATION FROM	STATION TO	SIDE	202 WALK REMOVED SQ.FT.	202 STEPS REMOVED LUMP		608 4" CONCRETE WALK SQ.FT.	608 LOCAL 4" CONCRETE WALK SQ.FT.	608 CONCRETE STEPS, TYPE A LIN.FT.	SPECIAL CURB RAMP, TYPE 1, CITY OF AKRON SPECIFICATIONS EACH	SPECIAL CURB RAMP, TYPE 2, CITY OF AKRON SPECIFICATIONS EACH	SPECIAL CURB RAMP, TYPE 3, CITY OF AKRON SPECIFICATIONS EACH
		GOODKIPK											
1SW	240	199+39.38	11+57.22 *	LT	492			505			2		
2SW		199+45.00	12+82.12 *	RT				575				1	
3SW		12+82.13 *	200+56.05	RT				559				1	
4SW		11+50.21 *	202+00.00	LT	1192			1234			1	1	
1SW	241	202+00.00	4+68.76 **	LT	792			935					1
2SW		4+69.12 **	206+00.00	LT	572			815					1
1SW	242	206+00.00	3+90.00 •	LT	1093			1785					1
2SW		3+90.00 •	210+00.00	LT	721			876					1
1SW	243	210+00.00	4+65.37 ••	LT	640			782					1
2SW		4+69.64 ••	214+00.00	LT	882			1004					1
1SW	244	214+00.00	11+36.32 †	LT	629			684					2
2SW		214+74.70	12+80.94 †	RT	457			452				1	
3SW		12+81.47 †	215+70.28	RT	368			429				1	
4SW		11+21.59 †	218+00.00	LT	1607			1542					2
1SW	245	218+00.00	12+20.06 ††	LT	1152			1103					2
2SW		219+36.33	13+90.40 ††	RT	493			455				1	
3SW		13+92.85 ††	220+37.89	RT	354			461				1	
4SW		12+13.20 ††	222+00.00	LT	505				1638		1	2	
1SW	246	222+00.00	226+00.00	LT					2433				
1SW	247	226+51.53	230+00.00	LT/RT	2790								
2SW		226+00.00	230+00.00	LT					2400				
1SW	248	230+00.00	23+16.04 ♦	LT	799				1511				2
2SW		231+97.27	232+14.93	RT	660			211				1	
3SW		232+78.74	233+18.76	RT	371			278				1	
4SW		23+06.27 ♦	234+00.00	LT	373				802			1	
1SW	249	234+00.00	5+02.05 ♦♦	LT	915				2330			1	
2SW		237+13.68	237+40.06	RT	347			250				1	
3SW		5+02.05 ♦♦	238+00.00	LT	955				815			1	
1SW	250	238+00.00	4+00.00 □	LT	1806			1569			1		1
2SW		238+04.07	238+21.88	RT				242				1	
3SW		4+00.00 □	242+00.00	LT				684					1
1SW	251	242+00.00	246+00.00	LT	1894			2064				1	
1SW	252	246+00.00	47+05.3	LT	62			234					
2SW		246+00.00	48+19.39 □□	RT	270			275				1	
SUBTOTAL THIS SHEET					23191			20003	11929		5	18	16
TOTALS CARRIED TO 185					23191			31932			5	18	16

* EXCHANGE ST. STATION
** NASH ST. STATION
• VINE ST. STATION
•• ORCHARD ST. STATION
† CARROLL ST. STATION
†† BUCHTEL AVE. STATION
♦ MARKET ST. STATION
♦♦ FORGE ST. STATION
□ PARKWOOD AVE. STATION
□□ PERKINS ST. STATION

CALCULATED JNC
CHECKED KLM

WALK SUBSUMMARY

SUM-8-0.63

REF NO.	SHEET NO.	STATION FROM	STATION TO	SIDE	202 WALK REMOVED SQ.FT.	202 STEPS REMOVED LUMP		608 4" CONCRETE WALK SQ.FT.	608 LOCAL 4" CONCRETE WALK SQ.FT.	608 CONCRETE STEPS, TYPE A LIN.FT.	SPECIAL CURB RAMP, TYPE 1, CITY OF AKRON SPECIFICATIONS EACH	SPECIAL CURB RAMP, TYPE 2, CITY OF AKRON SPECIFICATIONS EACH	SPECIAL CURB RAMP, TYPE 3, CITY OF AKRON SPECIFICATIONS EACH
		FOUNTAIN											
1SW	253	300+34.04	300+60.25	LT				250				1	
2SW		15+96.29 *	302+00.00	RT	1051			891				2	
1SW	254	302+00.00	9+00.00 **	RT	1090			1164					1
2SW		9+00.00 **	306+00.00	RT	867			943					1
3SW				RT		LUMP				22			
4SW				RT		LUMP				16			
1SW	255	306+00.00	1+10.00 •	RT	364			425					1
2SW		1+10.00 •	310+00.00	RT	1579			2508					1
1SW	256	310+00.00	314+00.00	RT	1439			1930					
1SW	257	314+71.16	14+00.63 ••	LT	692			613				1	
2SW		314+00.00	16+08.22 ••	RT	818			958			2		
3SW		16+10.72 ••	318+00.00	RT	1684			1560			1		1
4SW		14+01.16 ••	315+72.49	LT	439			727				1	
1SW	258	319+35.37	15+10.10 †	LT	481			703				1	
2SW		318+00.00	17+10.96 †	RT	1279			1003				2	
3SW		17+20.02 †	322+00.00	RT	797				1176				2
4SW		15+12.55 †	320+38.39	LT				806				1	
1SW	259	325+19.10	325+54.82	LT/RT	262								
2SW		322+00.00	326+00.00	RT					2000				
1SW	260	329+87.65	330+00.00	LT/RT	262								
2SW		326+00.00	330+00.00	RT					2000				
1SW	261	330+73.80	331+13.78	LT	1177			370				1	
2SW		330+00.00	27+57.50 ††	RT					526				1
3SW		27+65.85 ††	334+00.00	RT	965				2190			2	
4SW		331+80.84	331+98.04	LT	469			226				1	
1SW	262	334+00.00	338+00.00	RT					2009				
1SW	263	338+03.06	338+24.39	LT	895			237				1	
2SW		338+00.00	338+82.25	RT					674			1	
3SW		338+81.87	339+28.25	LT	892			363				1	
1SW	264	505+26.15 ♦	346+00.00	RT	683			958					
1SW	265	346+00.00	346+16.95	LT	140			162				1	
2SW		346+00.00	52+19.55 ♦♦	RT	333			286					2
3SW		51+74.26 ♦♦	52+13.30 ♦♦	RT	261			259					2
SUBTOTAL THIS SHEET					18919	LUMP		17342	10575	38	3	17	12
TOTALS CARRIED TO 185					18919	LUMP		27917		38	3	17	12

* EXCHANGE ST. STATION
** NASH ST. STATION
• MASON AVE. STATION
•• CARROLL ST. STATION
† BUCHTEL AVE. STATION
†† MARKET ST. STATION
♦ OHIO ST. STATION
♦♦ PERKINS ST. STATION

CALCULATED JNC
CHECKED KLM

WALK SUBSUMMARY

SUM-8-0.63

184
1088

REF NO.	SHEET NO.	STATION FROM	STATION TO	SIDE	202 WALK REMOVED SQ.FT.	202 STEPS REMOVED LUMP		608 4" CONCRETE WALK SQ.FT.	608 LOCAL 4" CONCRETE WALK SQ.FT.	608 CONCRETE STEPS, TYPE A LIN.FT.	SPECIAL CURB RAMP, TYPE 1, CITY OF AKRON SPECIFICATIONS EACH	SPECIAL CURB RAMP, TYPE 2, CITY OF AKRON SPECIFICATIONS EACH	SPECIAL CURB RAMP, TYPE 3, CITY OF AKRON SPECIFICATIONS EACH
		OHIO											
1SW	290	499+41.29	503+00.00	LT/RT	1870			2457				1	
2SW						LUMP				25			
3SW						LUMP				20			
4SW						LUMP				20			
1SW	291	503+00.00	505+25.45	RT	1070			908					
		PARKWOOD											
1SW	292	1+94.98	4+00.00	LT	606			925					
2SW		1+95.00	4+00.00	RT	923			807					
		NASH ST. WEST											
1SW	293	3+63.00	4+69.12	LT	343			383					
2SW		3+63.00	4+68.76	RT	334			383					
3SW		4+56.00		LT	20					5			
		ORCHARD											
1SW	295	3+75.00	4+69.64	LT	331			295					
2SW		3+75.00	4+65.37	RT	247			277					
		VINE ST. SEE SHEET 242											
		NASH ST. EAST SEE SHEET 254											
		MASON AVE. SEE SHEET 255											
			TOTAL THIS SHEET		5744	LUMP		6435		70		1	
			TOTAL 183		23191			20003	11929		5	18	16
			TOTAL 184		18919	LUMP		17342	10575	38	3	17	12
SUBTOTALS THIS SHEET					47854	LUMP		43780	22504	108	8	36	28
TOTALS CARRIED TO GENERAL SUMMARY					47854	LUMP		66284		108	8	36	28

CALCULATED JNC
CHECKED KLM

WALK SUBSUMMARY

SUM-8-0.63

ITEM 202 - APPROACH SLAB REMOVED

S.R. 8 OVER BEACON

STA. 33+46.26 TO STA. 33+71.26	1345.65/9**	= 150 S.Y.
STA. 33+46.26 TO STA. 33+71.26	1659.05/9**	= 184 S.Y.
STA. 35+04.32 TO STA. 35+29.32	1335.52/9**	= 148 S.Y.
STA. 35+04.32 TO STA. 35+29.32	1645.15/9**	= 183 S.Y.

S.R. 8 OVER EXCHANGE

STA. 45+37.38 TO STA. 45+57.38	(20.00((67.87+68.37)/2))/9	= 130 S.Y.
STA. 45+37.38 TO STA. 45+57.38	(20.00(67.92))/9	= 163 S.Y.
STA. 46+48.88 TO STA. 46+68.88	(20.00(70.66+71.16)/2))/9	= 139 S.Y.
STA. 46+48.88 TO STA. 46+68.88	(20.00(67.92))/9	= 162 S.Y.
	S.R. 8 SUBTOTAL	= 1259 S.Y.

CARROLL STREET

STA. 12+66.22 TO STA. 12+81.22	(15.00(44.00))/9	= 73 S.Y.
STA. 14+00.88 TO STA. 14+15.88	(15.00(44.00))/9	= 73 S.Y.
	CARROLL SUBTOTAL	= 146 S.Y.

BUCHTEL AVENUE

STA. 13+79.15 TO STA. 13+94.15	(15.00(44.00))/9	= 73 S.Y.
STA. 15+11.32 TO STA. 15+26.32	(15.00(44.00))/9	= 73 S.Y.
	BUCHTEL SUBTOTAL	= 146 S.Y.

MARKET STREET

STA. 24+37.19 TO STA. 24+54.88	1035.61/9**	= 115 S.Y.
STA. 25+78.22 TO STA. 25+95.91	1034.11/9**	= 115 S.Y.
	MARKET SUBTOTAL	= 230 S.Y.

FORGE STREET

STA. 6+78.78 TO STA. 6+93.78	675.06/9**	= 75 S.Y.
STA. 8+54.62 TO STA. 8+69.62	666.34/9**	= 74 S.Y.
	FORGE SUBTOTAL	= 149 S.Y.
	ITEM TOTAL	1930 S.Y.

ITEM 202 - PAVEMENT REMOVED

S.R. 8

STA. 32+75.00 TO STA. 33+06.52	(31.52(117.54))/9	= 412 S.Y.
STA. 33+06.52 TO STA. 33+45.17	1034.06/9**	= 115 S.Y.
STA. 33+06.52 TO STA. 33+47.34	4143.22/9**	= 460 S.Y.
STA. 35+28.12 TO STA. 35+74.54	3414.77/9**	= 379 S.Y.
STA. 35+30.41 TO STA. 35+74.54	1359.66/9**	= 151 S.Y.
STA. 35+74.54 TO STA. 41+99.90	(625.36(117.48))/9	=8163 S.Y.
STA. 41+99.90 TO STA. 45+37.38	(337.48((50.67+54.46)/2))/9	=1971 S.Y.
STA. 41+99.90 TO STA. 45+37.38	(337.48(65.50))/9	=2456 S.Y.
STA. 46+68.88 TO STA. 48+47.21	9644.46/9**	=1072 S.Y.
STA. 46+68.88 TO STA. 47+04.82	(35.94(65.67))/9	= 262 S.Y.
STA. 47+04.82 TO STA. 49+40.80	15763.14/9**	=1751 S.Y.
STA. 48+47.21 TO STA. 57+85.53	(938.32(48.97))/9	=5105 S.Y.
STA. 49+40.80 TO STA. 51+60.19	(219.39(43.17))/9	=1052 S.Y.
STA. 51+60.19 TO STA. 57+30.64	(570.45(51.60))/9	=3271 S.Y.
STA. 57+30.64 TO STA. 70+11.71	(1281.07(45.21))/9	=6435 S.Y.
STA. 57+85.53 TO STA. 60+69.36	16240.55/9**	=1805 S.Y.
STA. 60+69.36 TO STA. 70+37.60	(968.24(45.46))/9	=4891 S.Y.
STA. 70+11.71 TO STA. 74+03.49	20862.13/9**	=2318 S.Y.
STA. 70+37.60 TO STA. 74+17.15	20768.50/9**	=2308 S.Y.
STA. 74+03.49 TO STA. 82+24.72	(821.23(46.05))/9	=4202 S.Y.
STA. 74+17.15 TO STA. 81+17.12	(699.97(45.20))/9	=3515 S.Y.
STA. 81+17.12 TO STA. 82+29.50	(112.38((45.55+51.60)/2))/9	= 607 S.Y.
STA. 82+24.72 TO STA. 87+10.48	23944.24/9**	=2660 S.Y.
STA. 82+29.50 TO STA. 85+36.49	15768.19/9**	=1752 S.Y.
STA. 85+36.49 TO STA. 91+34.44	(597.95((44.65+46.28)/2))/9	=3021 S.Y.
STA. 87+10.48 TO STA. 91+34.25	(423.77(45.48))/9	=2141 S.Y.
STA. 91+34.25 TO STA. 94+91.53	(357.28((45.94+47.70)/2))/9	=1859 S.Y.
STA. 91+34.44 TO STA. 95+12.41	(377.97((46.28+48.97)/2))/9	=2000 S.Y.
STA. 94+91.53 TO STA. 97+53.05	11949.16/9**	=1328 S.Y.
STA. 95+12.41 TO STA. 97+25.43	10822.09/9**	=1202 S.Y.
STA. 97+25.43 TO STA. 102+70.38	31652.10/9**	=3517 S.Y.
STA. 97+53.05 TO STA. 102+70.38	26299.52/9**	=2922 S.Y.
	S.R. 8 SUBTOTAL	=75103 S.Y.

** COMPUTER CALCULATED AREA

ITEM 202 - PAVEMENT REMOVED (CONT'D)

RAMP T

STA. 47+32.76 TO STA. 50+64.85	(336.17((15.58+14.28)/2))/9	= 558 S.Y.

RAMP S

STA. 49+39.70 TO STA. 51+58.73	8405.73/9**	= 934 S.Y.
STA. 51+58.73 TO STA. 52+04.68	(45.95((26.29+20.83)/2))/9	= 120 S.Y.
STA. 52+04.68 TO STA. 55+04.05	(299.37((20.83+20.63)/2))/9	= 690 S.Y.

RAMP R

STA. 54+71.60 TO STA. 58+03.05	5526.09/9**	= 614 S.Y.

RAMP P

STA. 66+05.25 TO STA. 66+37.24	628.35/9**	= 70 S.Y.
STA. 66+37.24 TO STA. 70+39.38	6571.76/9**	= 730 S.Y.

RAMP Q

STA. 66+17.95 TO STA. 66+68.81	1529.26/9**	= 170 S.Y.
STA. 66+68.81 TO STA. 68+30.50	3614.05/9**	= 402 S.Y.
STA. 68+30.50 TO STA. 70+12.14	(181.64((15.31+14.83)/2))/9	= 304 S.Y.
STA. 70+12.14 TO STA. 70+86.85	1188.70/9**	= 132 S.Y.

RAMP O

STA. 73+78.36 TO STA. 74+17.24	631.71/9**	= 70 S.Y.
STA. 74+17.24 TO STA. 76+85.57	(272.86((13.22+13.70)/2))/9	= 408 S.Y.
STA. 76+85.57 TO STA. 78+13.36	2337.75/9**	= 260 S.Y.

RAMP M

STA. 77+86.85 TO STA. 78+18.06	763.72	= 85 S.Y.
STA. 78+18.06 TO STA. 83+29.58	(515.00((13.35+13.50)/2))/9	= 768 S.Y.

RAMP K

STA. 84+82.18 TO STA. 89+77.60	7290.35/9**	= 810 S.Y.

RAMP L

STA. 85+16.63 TO STA. 91+02.71	8640.85/9**	= 960 S.Y.

RAMP I

STA. 92+08.35 TO STA. 93+88.03	9579.95/9**	=1064 S.Y.
STA. 93+88.03 TO STA. 95+93.87	(205.84((33.19+31.84)/2))/9	= 744 S.Y.
STA. 95+93.87 TO STA. 97+23.67	3838.44/9**	= 426 S.Y.

RAMP J

STA. 93+37.60 TO STA. 93+75.56	1386.00/9**	= 154 S.Y.
STA. 93+75.56 TO STA. 93+80.02	96.17/9**	= 11 S.Y.
STA. 93+80.02 TO STA. 97+53.99	(409.94(25.34))/9	=1154 S.Y.
STA. 97+53.99 TO STA. 100+36.29	6244.05/9**	= 694 S.Y.
	RAMP SUBTOTAL	=12332 S.Y.

GOODKIRK STREET

STA. 192+80.00 TO STA. 194+97.31	(217.31((11.27+10.57)/2))/9	= 264 S.Y.
STA. 194+97.31 TO STA. 196+11.61	(114.30((10.57+11.48)/2))/9	= 140 S.Y.
STA. 196+11.61 TO STA. 198+28.21	(216.60((11.48+10.96)/2))/9	= 270 S.Y.
STA. 198+28.21 TO STA. 199+40.39	(112.18((10.96+11.72)/2))/9	= 141 S.Y.
STA. 199+40.39 TO STA. 199+68.36	791.12/9**	= 88 S.Y.
STA. 200+32.08 TO STA. 200+50.83	532.00/9**	= 59 S.Y.
STA. 200+50.83 TO STA. 203+94.91	(344.08(22.51))/9	= 860 S.Y.
STA. 203+94.91 TO STA. 204+71.59	2062.68/9**	= 229 S.Y.
STA. 204+71.59 TO STA. 207+65.75	(294.16((38.20+36.00)/2))/9	=1213 S.Y.
STA. 207+65.75 TO STA. 209+05.69	5693.68/9**	= 633 S.Y.
STA. 209+05.69 TO STA. 211+56.68	(250.99(23.50))/9	= 655 S.Y.
STA. 211+56.68 TO STA. 212+24.77	1580.25/9**	= 176 S.Y.
STA. 212+24.77 TO STA. 214+29.75	(204.98(23.50))/9	= 535 S.Y.
STA. 214+29.75 TO STA. 214+39.86	2014.94/9**	= 224 S.Y.
STA. 215+44.12 TO STA. 215+77.08	994.08/9**	= 111 S.Y.
STA. 215+77.08 TO STA. 219+14.76	(337.68(23.48))/9	= 881 S.Y.
STA. 219+14.76 TO STA. 219+65.44	1505.50/9**	= 167 S.Y.
	GOODKIRK SUBTOTAL	6646 S.Y.

FOUNTAIN STREET

STA. 300+31.33 TO STA. 300+91.52	2491.68/9**	= 277 S.Y.
STA. 300+91.52 TO STA. 303+57.13	(265.61(25.00))/9	= 738 S.Y.
STA. 303+57.13 TO STA. 304+11.70	(54.57((25.00+24.23)/2))/9	= 149 S.Y.
STA. 304+11.70 TO STA. 304+55.11	1053.26/9**	= 117 S.Y.
STA. 304+55.11 TO STA. 305+72.37	(117.26((24.30+25.00)/2))/9	= 321 S.Y.
STA. 305+72.37 TO STA. 306+03.51	(31.14((25.00+25.89)/2))/9	= 88 S.Y.
STA. 306+03.51 TO STA. 306+66.18	1591.42/9**	= 177 S.Y.
STA. 306+66.18 TO STA. 308+95.94	(229.76(25.00))/9	= 638 S.Y.
STA. 308+95.94 TO STA. 310+90.75	8401.29/9**	= 933 S.Y.
STA. 310+90.75 TO STA. 312+48.44	(157.69((36.35+35.92)/2))/9	= 633 S.Y.
STA. 312+48.44 TO STA. 313+38.42	(89.98((35.92+36.20)/2))/9	= 360 S.Y.
STA. 313+38.42 TO STA. 314+46.14	(107.72((36.20+38.10)/2))/9	= 445 S.Y.

ITEM 202 - PAVEMENT REMOVED (CONT'D)

FOUNTAIN STREET (CONT'D)

STA. 314+46.14 TO STA. 315+00.21	2182.17/9**	= 242 S.Y.
STA. 315+43.07 TO STA. 315+75.84	1186.74/9**	= 132 S.Y.
STA. 315+75.84 TO STA. 317+27.93	3588.36/9**	= 399 S.Y.
STA. 317+27.93 TO STA. 317+99.40	1976.98/9**	= 220 S.Y.
STA. 317+99.40 TO STA. 319+65.46	5836.99/9**	= 649 S.Y.
	FOUNTAIN SUBTOTAL	=6518 S.Y.

EXCHANGE STREET

STA. 11+58.28 TO STA. 12+42.12	5286.25/9**	= 587 S.Y.
	EXCHANGE SUBTOTAL	= 587 S.Y.

CARROLL STREET

STA. 11+14.22 TO STA. 12+66.20	6446.98/9**	= 716 S.Y.
STA. 14+15.89 TO STA. 16+06.89	7534.55/9**	= 837 S.Y.
	CARROLL SUBTOTAL	=1553 S.Y.

BUCHTEL AVENUE

STA. 12+07.79 TO STA. 13+76.63	7549.68/9**	= 839 S.Y.
STA. 15+26.32 TO STA. 17+25.38	8723.40/9**	= 969 S.Y.
	BUCHTEL SUBTOTAL	=1808 S.Y.

MARKET STREET

STA. 22+80.46 TO STA. 24+37.19	9666.58/9**	=1074 S.Y.
STA. 25+95.91 TO STA. 27+75.21	10595.67/9**	=1177 S.Y.
	MARKET SUBTOTAL	=2251 S.Y.

FORGE STREET

STA. 5+02.05 TO STA. 6+78.78	7754.19/9**	= 862 S.Y.
STA. 8+69.62 TO STA. 9+91.67	6449.26/9**	= 717 S.Y.
	FORGE SUBTOTAL	=1579 S.Y.

NASH STREET (WEST)

STA. 3+63.00 TO STA. 4+17.07	(54.07(25.00))/9	= 150 S.Y.
STA. 4+17.07 TO STA. 4+63.71	(46.64((25.00+26.94)/2))/9	= 135 S.Y.
STA. 4+63.71 TO STA. 4+85.49	777.30/9**	= 86 S.Y.
	NASH (WEST) SUBTOTAL	= 371 S.Y.

NASH STREET (EAST)

STA. 8+10.70 TO STA. 8+35.60	652.47/9**	= 73 S.Y.
STA. 8+35.60 TO STA. 9+00.00	(64.40((23.56+23.49)/2))/9	= 168 S.Y.
	NASH (EAST) SUBTOTAL	= 241 S.Y.

MASON AVENUE

STA. 0+14.53 TO STA. 0+36.32	651.92/9**	= 72 S.Y.
STA. 0+36.32 TO STA. 0+87.58	(51.26((23.62+23.40)/2))/9	= 134 S.Y.
STA. 0+87.58 TO STA. 1+10.00	(22.42((23.40+23.76)/2))/9	= 59 S.Y.
	MASON SUBTOTAL	= 265 S.Y.

VINE STREET

STA. 3+90.00 TO STA. 4+57.43	(67.43(25.00))/9	= 187 S.Y.
STA. 4+57.43 TO STA. 4+85.59	1157.74/9**	= 129 S.Y.
	VINE SUBTOTAL	= 316 S.Y.

EWING COURT

BETWEEN CUL-DE-SACS	15117.39/9**	=1680 S.Y.
	EWING SUBTOTAL	=1680 S.Y.

KIRKWOOD AVENUE

MELL AVE. TO MARKET ST.	11347.08/9**	=1261 S.Y.
	KIRKWOOD SUBTOTAL	=1261 S.Y.

PARKWOOD AVENUE

STA. 1+15.00 TO STA. 1+78.43	(63.43((18.39+17.80)/2))/9	= 127 S.Y.
STA. 1+78.43 TO STA. 2+27.59	(49.16((17.80+17.00)/2))/9	= 95 S.Y.
STA. 2+27.59 TO STA. 4+03.95	(176.36(17.00))/9	= 333 S.Y.
STA. 4+03.95 TO GOOD ST.	1734.11/9**	= 193 S.Y.
	PARKWOOD SUBTOTAL	= 748 S.Y.

OHIO STREET

ADOLPH AVE. TO STA. 504+59.04	382.04/9**	= 42 S.Y.
STA. 504+59.04 TO STA. 505+25.86	(66.82((27.50+27.34)/2))/9	= 204 S.Y.
	OHIO SUBTOTAL	= 246 S.Y.
	ITEM TOTAL	113505 S.Y.

ITEM TOTALS CARRIED TO 193

CALCULATED CRP
CHECKED GLP

PAVEMENT CALCULATIONS

SUM-8-0.63

CALCULATED CRP
CHECKED GLP

PAVEMENT CALCULATIONS

SUM-8-0.63

ITEM 202 - BRICK BASE REMOVED

ORCHARD STREET

STA. 3+75.00 TO STA. 3+97.02	(22.02((18.64+19.76)/2))/9	= 47 S.Y.
STA. 3+97.02 TO STA. 4+34.81	(37.79((19.76+20.93)/2))/9	= 85 S.Y.
STA. 4+34.81 TO STA. 4+86.27	1490.54/9**	= 166 S.Y.
	ORCHARD SUBTOTAL	= 298 S.Y.

GOOD STREET

FORGE ST. TO PERKINS ST.	24953.77/9**	=2773 S.Y.
	GOOD SUBTOTAL	=2773 S.Y.

ADOLPH AVENUE

FORGE ST. TO PERKINS ST.	18691.84/9**	=2077 S.Y.
	ADOLPH SUBTOTAL	=2077 S.Y.
	ITEM TOTAL	5148 S.Y.

ITEM 202 - CONCRETE MEDIAN REMOVED

S.R. 8

STA. 32+75.00 TO STA. 33+47.34	(72.34(6.00))/9	= 48 S.Y.
STA. 35+28.12 TO STA. 45+37.38	(1009.26(6.00))/9	= 673 S.Y.
STA. 46+68.88 TO STA. 61+04.00	(1435.12(6.00))/9	= 957 S.Y.
STA. 61+47.30 TO STA. 65+68.56	(421.26(6.00))/9	= 281 S.Y.
STA. 66+12.63 TO STA. 77+67.70	(1155.07(6.00))/9	= 770 S.Y.
STA. 78+31.94 TO STA. 83+89.28	(557.24(6.00))/9	= 371 S.Y.
STA. 84+40.48 TO STA. 91+34.44	(693.96(6.00))/9	= 463 S.Y.
	ITEM TOTAL	3563 S.Y.

ITEM 202 - TRAFFIC ISLAND REMOVED

RAMP I

STA. 92+24.00	504.16/9**	= 56 S.Y.
	ITEM TOTAL	56 S.Y.

ITEM 203 - SUBGRADE COMPACTION

S.R. 8

STA. 32+75.00 TO STA. 33+06.52	31.52(125.00)/9	= 438 S.Y.
STA. 33+06.52 TO STA. 33+46.26	1192.52/9**	= 132 S.Y.
STA. 33+06.52 TO STA. 33+46.26	4224.62/9**	= 469 S.Y.
STA. 33+46.26 TO STA. 33+71.26	1489.99/9**	= 166 S.Y.
STA. 33+46.26 TO STA. 33+71.26	1736.64/9**	= 193 S.Y.
STA. 35+04.32 TO STA. 35+29.32	1462.27/9**	= 162 S.Y.
STA. 35+04.32 TO STA. 35+29.32	1735.51/9**	= 193 S.Y.
STA. 35+29.32 TO STA. 35+74.54	5220.10/9**	= 580 S.Y.
STA. 35+74.54 TO STA. 41+99.90	625.36(125.00)/9	= 8686 S.Y.
STA. 41+99.90 TO STA. 45+37.38	(337.48((65.94+57.50)/2))/9	= 2314 S.Y.
STA. 41+99.90 TO STA. 45+37.38	337.48(67.50)/9	= 2531 S.Y.
STA. 45+37.38 TO STA. 45+57.38	(20.00((67.87+68.37)/2))/9	= 151 S.Y.
STA. 45+37.38 TO STA. 45+57.38	(20.00(67.92))/9	= 151 S.Y.
STA. 46+48.88 TO STA. 46+68.88	(20.00((70.66+71.16)/2))/9	= 158 S.Y.
STA. 46+48.88 TO STA. 46+68.88	(20.00(67.92))/9	= 151 S.Y.
STA. 46+68.88 TO STA. 51+20.00	(451.12((69.23+80.50)/2))/9	= 3753 S.Y.
STA. 46+68.88 TO STA. 47+04.82	35.94(67.50)/9	= 270 S.Y.
STA. 47+04.82 TO STA. 51+84.03	37100.11/9**	= 4122 S.Y.
STA. 51+20.00 TO STA. 53+20.90	200.90(46.00)/9	= 1027 S.Y.
STA. 51+84.03 TO STA. 53+20.90	136.87(57.50)/9	= 874 S.Y.
STA. 53+20.90 TO STA. 59+44.24	623.34(115.00)/9	= 7965 S.Y.
STA. 59+44.24 TO STA. 59+93.01	48.77(57.50)/9	= 312 S.Y.
STA. 59+44.24 TO STA. 60+49.60	(105.36((57.50+55.79)/2))/9	= 663 S.Y.
STA. 59+93.01 TO STA. 60+55.14	(62.13((57.50+55.79)/2))/9	= 391 S.Y.
STA. 60+49.60 TO STA. 61+96.16	146.56(54.29)/9	= 887 S.Y.
STA. 60+55.14 TO STA. 66+63.28	608.14(54.29)/9	= 3698 S.Y.
STA. 61+96.16 TO STA. 62+58.84	(62.68((55.79+57.50)/2))/9	= 394 S.Y.
STA. 62+58.84 TO STA. 64+11.69	152.85(57.50)/9	= 977 S.Y.
STA. 64+11.69 TO STA. 65+17.21	(105.52((57.50+55.79)/2))/9	= 664 S.Y.
STA. 65+17.21 TO STA. 66+26.71	109.50(54.29)/9	= 662 S.Y.
STA. 66+26.71 TO STA. 67+67.77	141.06(57.50)/9	= 901 S.Y.
STA. 66+63.28 TO STA. 67+67.77	(104.49((55.79+57.50)/2))/9	= 658 S.Y.
STA. 67+67.77 TO STA. 72+46.04	478.27(115.00)/9	= 6111 S.Y.
STA. 72+46.04 TO STA. 73+40.00	93.96(57.50)/9	= 600 S.Y.
STA. 72+46.04 TO STA. 74+24.60	178.56(46.00)/9	= 913 S.Y.
STA. 73+40.00 TO STA. 82+49.73	69057.37/9**	= 7673 S.Y.
STA. 74+24.60 TO STA. 85+27.07	83753.11/9**	= 9306 S.Y.
STA. 82+49.73 TO STA. 84+50.62	200.89(46.00)/9	= 1027 S.Y.
STA. 84+50.62 TO STA. 85+27.07	76.45(57.50)/9	= 488 S.Y.
STA. 85+27.07 TO STA. 90+60.06	532.99(115.00)/9	= 6810 S.Y.
STA. 90+60.06 TO STA. 92+09.97	149.91(57.50)/9	= 958 S.Y.
STA. 90+60.06 TO STA. 91+81.62	(121.56((57.50+55.79)/2))/9	= 765 S.Y.
STA. 91+81.62 TO STA. 92+10.77	29.15(55.79)/9	= 181 S.Y.
STA. 92+09.97 TO STA. 92+95.98	86.01(55.79)/9	= 533 S.Y.
STA. 92+10.77 TO STA. 92+96.78	86.01(55.79)/9	= 533 S.Y.
STA. 92+95.98 TO STA. 93+25.13	29.15(55.79)/9	= 181 S.Y.
STA. 92+96.78 TO STA. 93+82.61	(85.83((54.79+50.50)/2))/9	= 502 S.Y.
STA. 93+25.13 TO STA. 93+91.74	(66.61((57.50+54.80)/2))/9	= 416 S.Y.
STA. 93+82.61 TO STA. 94+64.60	81.99(50.50)/9	= 460 S.Y.
STA. 93+91.74 TO STA. 97+29.47	18869.08/9**	= 2097 S.Y.
STA. 94+64.60 TO STA. 95+59.78	(95.18((50.50+48.98)/2))/9	= 526 S.Y.
STA. 95+59.78 TO STA. 97+15.54	6791.15/9**	= 755 S.Y.
STA. 97+15.54 TO STA. 102+70.38	34708.64/9**	= 3857 S.Y.
STA. 97+29.47 TO STA. 102+70.38	36139.05/9**	= 4015 S.Y.
* STA. 60+78.00 TO STA. 87+52.57	654.00(2.50)/9	= 182 S.Y.
✣ STA. 60+92.00 TO STA. 87+24.25	1887.00(2.00)/9	= 419 S.Y.
	S.R. 8 SUBTOTAL	= 94001 S.Y.

GOODKIRK ST.

STA. 192+80.00 TO STA. 192+83.13	(3.13((11.72+12.50)/2))/9	= 4 S.Y.
STA. 192+83.13 TO STA. 199+40.39	657.26(12.50)/9	= 913 S.Y.
STA. 199+40.39 TO STA. 200+58.21	7360.30/9**	= 818 S.Y.
STA. 200+58.21 TO STA. 203+89.61	331.40(29.00)/9	= 1068 S.Y.
STA. 203+89.61 TO STA. 204+64.61	2896.09/9**	= 322 S.Y.
STA. 204+64.61 TO STA. 207+32.84	268.23(29.00)/9	= 864 S.Y.

ITEM 203 - SUBGRADE COMPACTION (CONT'D)

GOODKIRK ST.

STA. 207+32.84 TO STA. 208+20.85	(88.01((32.56+29.00)/2))/9	= 301 S.Y.
STA. 208+20.85 TO STA. 209+16.79	4245.68/9**	= 472 S.Y.
▽ STA. 209+16.79 TO STA. 211+48.84	13013.63/9**	= 1446 S.Y.
STA. 211+48.84 TO STA. 212+27.61	3217.10/9**	= 357 S.Y.
STA. 212+27.61 TO STA. 212+93.30	1940.09/9**	= 216 S.Y.
STA. 212+93.30 TO STA. 214+39.86	146.56(29.00)/9	= 472 S.Y.
STA. 214+39.86 TO STA. 215+84.37	10906.15/9**	= 1212 S.Y.
STA. 215+84.37 TO STA. 216+24.37	(40.00((29.00+33.00)/2))/9	= 138 S.Y.
STA. 216+24.37 TO STA. 218+79.74	255.37(29.00)/9	= 823 S.Y.
STA. 218+79.74 TO STA. 219+19.74	(40.00((29.00+33.00)/2))/9	= 138 S.Y.
STA. 219+19.74 TO STA. 220+53.44	12562.79/9**	= 1396 S.Y.
STA. 220+53.44 TO STA. 220+93.44	(40.00((44.81+41.00)/2))/9	= 191 S.Y.
STA. 220+93.44 TO STA. 221+49.16	55.72(41.00)/9	= 254 S.Y.
◇ STA. 221+49.16 TO STA. 223+58.34	9112.85/9**	= 1013 S.Y.
STA. 223+58.34 TO STA. 224+12.09	53.75(20.50)/9	= 122 S.Y.
STA. 224+12.09 TO STA. 227+48.52	8292.56/9**	= 921 S.Y.
STA. 227+48.52 TO STA. 231+62.90	414.38(29.00)/9	= 1335 S.Y.
STA. 231+62.90 TO STA. 231+92.90	(30.00((29.00+31.00)/2))/9	= 100 S.Y.
STA. 231+92.90 TO STA. 233+50.78	12786.11/9**	= 1421 S.Y.
STA. 233+50.78 TO STA. 233+90.74	(39.96((29.00+33.00)/2))/9	= 138 S.Y.
STA. 233+90.74 TO STA. 236+34.20	243.46(29.00)/9	= 784 S.Y.
STA. 236+34.20 TO STA. 236+74.45	(40.25((29.00+33.00)/2))/9	= 139 S.Y.
STA. 236+74.45 TO STA. 238+46.04	12081.03/9**	= 1342 S.Y.
STA. 238+46.04 TO STA. 240+75.92	229.88(29.00)/9	= 741 S.Y.
STA. 240+75.92 TO STA. 241+53.49	3893.29/9**	= 433 S.Y.
STA. 241+53.49 TO STA. 241+96.26	(42.77((33.58+29.00)/2))/9	= 149 S.Y.
STA. 241+96.26 TO STA. 242+39.31	43.05(29.00)/9	= 139 S.Y.
STA. 242+39.31 TO STA. 243+39.60	(100.29((29.00+33.00)/2))/9	= 345 S.Y.
□ STA. 243+39.60 TO STA. 245+35.72	10711.76/9**	= 1190 S.Y.
STA. 245+35.72 TO STA. 246+27.83	4149.14/9**	= 461 S.Y.
	GOODKIRK SUBTOTAL	= 22178 S.Y.

FOUNTAIN ST.

STA. 300+31.33 TO STA. 300+77.90	2592.42/9**	= 288 S.Y.
STA. 300+77.90 TO STA. 301+17.90	(40.00((29.00+33.00)/2))/9	= 138 S.Y.
STA. 301+17.90 TO STA. 303+98.10	280.20(29.00)/9	= 903 S.Y.
STA. 303+98.10 TO STA. 304+71.60	2704.18/9**	= 300 S.Y.
STA. 304+71.60 TO STA. 305+97.78	126.18(29.00)/9	= 407 S.Y.
STA. 305+97.78 TO STA. 306+71.54	2715.61/9**	= 302 S.Y.
STA. 306+71.54 TO STA. 309+38.01	266.47(29.00)/9	= 859 S.Y.
△ STA. 309+38.01 TO STA. 311+07.91	7518.85/9**	= 835 S.Y.
STA. 311+07.91 TO STA. 314+22.81	314.90(41.00)/9	= 1435 S.Y.
STA. 314+22.81 TO STA. 314+62.81	(40.00((41.00+45.00)/2))/9	= 191 S.Y.
STA. 314+62.81 TO STA. 315+83.28	11624.88/9**	= 1292 S.Y.
STA. 315+83.28 TO STA. 316+47.40	2230.19/9**	= 248 S.Y.
STA. 316+47.40 TO STA. 318+87.08	239.68(41.00)/9	= 1092 S.Y.
STA. 318+87.08 TO STA. 319+27.08	(40.00((41.00+45.00)/2))/9	= 191 S.Y.
STA. 319+27.08 TO STA. 320+58.48	13546.76/9**	= 1505 S.Y.
STA. 320+58.48 TO STA. 320+65.20	(6.72((33.00+32.33)/2))/9	= 24 S.Y.
⊗ STA. 320+65.20 TO STA. 323+47.23	13552.59/9**	= 1506 S.Y.
STA. 323+47.23 TO STA. 324+47.23	(100.00((29.00+33.00)/2))/9	= 344 S.Y.
STA. 324+47.23 TO STA. 329+89.53	542.30(29.00)/9	= 1747 S.Y.
STA. 329+89.53 TO STA. 330+29.53	(40.00((29.00+34.00)/2))/9	= 140 S.Y.
STA. 330+29.53 TO STA. 332+11.19	14931.15/9**	= 1659 S.Y.
STA. 332+11.19 TO STA. 338+05.10	593.91(29.00)/9	= 1914 S.Y.
STA. 338+05.10 TO STA. 339+75.25	9844.90/9**	= 1094 S.Y.
STA. 339+75.25 TO STA. 340+15.36	(40.11((21.00+26.00)/2))/9	= 105 S.Y.
STA. 340+15.36 TO STA. 341+68.43	153.07(21.00)/9	= 357 S.Y.
STA. 341+68.43 TO STA. 343+06.62	138.19(20.50)/9	= 315 S.Y.
◪ STA. 343+06.62 TO STA. 345+17.47	9333.08/9**	= 1037 S.Y.
STA. 345+17.47 TO STA. 345+51.89	34.42(41.00)/9	= 157 S.Y.
STA. 345+51.89 TO STA. 345+91.89	(40.00((41.00+45.00)/2))/9	= 191 S.Y.
STA. 345+91.89 TO STA. 346+26.43	2550.15/9**	= 283 S.Y.
	FOUNTAIN SUBTOTAL	= 20859 S.Y.

** COMPUTER CALCULATED AREA

* AREA UNDER TYPE D BARRIER
✣ AREA UNDER TYPE D BARRIER, AS PER PLAN
▽ INCLUDES REINF. CONC. PART OF RAMP TI
◇ INCLUDES REINF. CONC. PART OF RAMP PI
□ INCLUDES REINF. CONC. PART OF RAMP KI
△ INCLUDES REINF. CONC. PART OF RAMP S
⊗ INCLUDES REINF. CONC. PART OF RAMP QI
◪ INCLUDES REINF. CONC. PART OF RAMP LI

ITEM TOTALS CARRIED TO 193

CALCULATED CRP
CHECKED GLP

PAVEMENT CALCULATIONS

SUM-8-0.63

ITEM 203 - SUBGRADE COMPACTION (CONT'D)

RAMP TI

STA. 51+20.00 TO STA. 53+18.91	7191.17/9**	= 799 S.Y.
STA. 53+18.91 TO STA. 54+07.00	88.09(25.00)/9	= 245 S.Y.

RAMP S

STA. 51+83.28 TO STA. 52+33.36	(50.08((27.00+25.00)/2))/9	= 145 S.Y.
STA. 52+33.36 TO STA. 53+60.76	127.40(25.00)/9	= 354 S.Y.
STA. 53+60.76 TO STA. 53+64.76	(4.00((25.50+24.50)/2))/9	= 11 S.Y.
STA. 53+64.76 TO STA. 54+42.19	77.43(24.50)/9	= 211 S.Y.
STA. 54+42.19 TO STA. 55+46.11	3077.09/9**	= 342 S.Y.

RAMP PI

STA. 69+31.90 TO STA. 70+23.55	2724.74/9**	= 303 S.Y.
STA. 70+23.55 TO STA. 70+91.83	68.28(24.50)/9	= 186 S.Y.
STA. 70+91.83 TO STA. 70+95.83	(4.00((24.50+25.50)/2))/9	= 11 S.Y.
STA. 70+95.83 TO STA. 72+89.49	193.66(25.00)/9	= 538 S.Y.
STA. 72+89.49 TO STA. 73+39.54	(50.05((25.00+27.00)/2))/9	= 145 S.Y.

RAMP QI

STA. 70+80.00 TO STA. 72+49.12	169.12(25.00)/9	= 470 S.Y.
STA. 72+49.12 TO STA. 74+25.00	6487.54/9**	= 721 S.Y.

RAMP KI

STA. 82+49.73 TO STA. 84+48.63	7775.97/9**	= 864 S.Y.
STA. 84+48.63 TO STA. 85+02.63	54.00(25.00)/9	= 150 S.Y.
STA. 85+02.63 TO STA. 88+08.00	305.37(25.00)/9	= 848 S.Y.

RAMP LI

STA. 85+26.54 TO STA. 85+76.58	(50.04((27.00+25.00)2))/9	= 145 S.Y.
STA. 85+76.58 TO STA. 87+92.27	215.69(25.00)/9	= 599 S.Y.
STA. 87+92.27 TO STA. 89+33.76	4265.21/9**	= 474 S.Y.

RAMP I

STA. 92+08.35 TO STA. 93+06.61	7088.02/9**	= 788 S.Y.
STA. 93+06.61 TO STA. 93+66.45	59.84(41.00)/9	= 273 S.Y.
STA. 93+66.45 TO STA. 93+82.36	675.06/9**	= 75 S.Y.
STA. 93+82.36 TO STA. 94+85.14	102.78(45.00)/9	= 514 S.Y.
STA. 94+85.14 TO STA. 95+37.56	(52.42((45.00+33.00)/2))/9	= 227 S.Y.
STA. 95+37.56 TO STA. 96+01.22	63.66(33.00)/9	= 233 S.Y.
STA. 96+01.22 TO STA. 96+51.22	(50.00((33.00+25.00)/2))/9	= 161 S.Y.
STA. 96+51.22 TO STA. 96+76.15	24.93(25.00)/9	= 69 S.Y.
STA. 96+76.15 TO STA. 97+26.34	(50.19((25.00+27.00)/2))/9	= 145 S.Y.

RAMP J

STA. 93+01.20 TO STA. 93+79.47	3204.05/9**	= 356 S.Y.
STA. 93+79.47 TO STA. 95+66.24	186.77(25.50)/9	= 529 S.Y.
STA. 95+66.24 TO STA. 97+16.31	5870.38/9**	= 652 S.Y.

RAMP SUBTOTAL = 11583 S.Y.

OHIO STREET

STA. 500+00.00 TO STA. 500+49.62	4927.38/9**	= 547 S.Y.
STA. 500+49.62 TO STA. 502+09.03	159.41(27.00)/9	= 478 S.Y.
STA. 502+09.03 TO STA. 502+59.86	1431.89/9**	= 159 S.Y.
STA. 502+59.86 TO STA. 504+33.11	173.25(26.50)/9	= 510 S.Y.
STA. 504+33.11 TO STA. 504+83.69	1399.30/9**	= 155 S.Y.
STA. 504+83.69 TO STA. 505+25.86	42.17(28.40)/9	= 133 S.Y.

OHIO SUBTOTAL = 1982 S.Y.

PARKWOOD AVENUE

STA. 1+15.00 TO STA. 2+02.50	1642.90/9**	= 183 S.Y.
STA. 2+02.50 TO STA. 3+91.57	189.07(19.00)/9	= 399 S.Y.
STA. 3+91.57 TO STA. 4+44.98	1104.57/9**	= 123 S.Y.

PARKWOOD SUBTOTAL = 705 S.Y.

ITEM 203 - SUBGRADE COMPACTION (CONT'D)

NASH STREET (WEST)

STA. 3+63.00 TO STA. 4+60.68	97.68(26.00)/9	= 282 S.Y.
STA. 4+60.68 TO STA. 4+67.44	180.99/9**	= 20 S.Y.

NASH (WEST) SUBTOTAL = 302 S.Y.

VINE STREET

STA. 3+90.00 TO STA. 4+02.59	334.41/9**	= 37 S.Y.
STA. 4+02.59 TO STA. 4+60.78	58.19(27.00)/9	= 175 S.Y.
STA. 4+60.78 TO STA. 4+68.33	205.34/9**	= 23 S.Y.

VINE SUBTOTAL = 235 S.Y.

ORCHARD STREET

STA. 3+75.00 TO STA. 4+12.70	787.88/9**	= 88 S.Y.
STA. 4+12.70 TO STA. 4+55.62	42.92(23.83)/9	= 114 S.Y.
STA. 4+55.62 TO STA. 4+70.24	352.00/9**	= 39 S.Y.

ORCHARD SUBTOTAL = 241 S.Y.

NASH STREET (EAST)

STA. 8+24.90 TO STA. 8+35.89	284.97/9**	= 32 S.Y.
STA. 8+35.89 TO STA. 9+00.00	64.11(24.42)/9	= 174 S.Y.

NASH (EAST) SUBTOTAL = 206 S.Y.

MASON AVENUE

STA. 0+28.00 TO STA. 0+38.99	287.69/9**	= 32 S.Y.
STA. 0+38.99 TO STA. 1+10.00	71.01(24.83)/9	= 196 S.Y.

MASON SUBTOTAL = 228 S.Y.

EWING COURT

SOUTH CUL-DE-SAC	3953.41/9**	= 439 S.Y.
NORTH CUL-DE-SAC	2951.44/9**	= 328 S.Y.

EWING SUBTOTAL = 767 S.Y.

CARROLL STREET

STA. 12+66.22 TO STA. 12+81.22	(15.00(45.00))/9	= 75 S.Y.
STA. 14+00.88 TO STA. 14+15.88	(15.00(45.00))/9	= 75 S.Y.

CARROLL SUBTOTAL = 150 S.Y.

BUCHTEL AVENUE

STA. 13+76.64 TO STA. 13+91.64	(15.00(45.00))/9	= 75 S.Y.
STA. 15+11.32 TO STA. 15+26.32	(15.00(45.00))/9	= 75 S.Y.

BUCHTEL SUBTOTAL = 150 S.Y.

MARKET STREET

STA. 24+23.62 TO STA. 24+38.62	1228.35/9**	= 136 S.Y.
STA. 25+97.81 TO STA. 26+12.81	1229.73/9**	= 137 S.Y.

MARKET SUBTOTAL = 273 S.Y.

FORGE STREET

STA. 6+50.99 TO STA. 6+70.96	1360.22/9**	= 151 S.Y.
STA. 8+87.94 TO STA. 9+07.94	1378.83/9**	= 153 S.Y.

FORGE SUBTOTAL = 304 S.Y.

ITEM TOTAL 154164 S.Y.

ITEM 254 - PAVEMENT PLANING, BITUMINOUS, 3"

GOODKIRK STREET

STA. 192+80.00 TO STA. 195+74.34	3340.97/9**	= 371 S.Y.
STA. 195+74.34 TO STA. 196+55.37	1473.97/9**	= 164 S.Y.
STA. 196+55.37 TO STA. 199+40.39	(285.02((12.90+12.10)/2)/9	= 396 S.Y.

ITEM TOTAL 931 S.Y.

ITEM 302 - BITUMINOUS AGGREGATE BASE, PG 64-22

S.R. 8

STA. 32+75.00 TO STA. 33+06.52	31.52(119.52)(9.5/12)/27	= 110 C.Y.
STA. 33+06.52 TO STA. 33+46.26	1063.36(9.5/12)/27**	= 31 C.Y.
STA. 33+06.52 TO STA. 33+46.26	4070.86(9.5/12)/27**	= 119 C.Y.
STA. 35+30.41 TO STA. 35+74.54	4983.50(9.5/12)/27**	= 146 C.Y.
STA. 35+74.54 TO STA. 41+99.90	625.36(119.52)(9.5/12)/27	=2192 C.Y.
STA. 41+99.90 TO STA. 45+37.38	337.48((54.76+63.20)/2)(9.5/12)/27	= 584 C.Y.
STA. 41+99.90 TO STA. 45+37.38	337.48(64.76)(9.5/12)/27	= 641 C.Y.
STA. 46+68.88 TO STA. 51+20.00	451.12((77.76+66.49)/2)(9.5/12)/27	= 954 C.Y.
STA. 46+68.88 TO STA. 47+04.82	35.94(64.76)(9.5/12)/27	= 68 C.Y.
STA. 47+04.82 TO STA. 51+84.03	35786.50(9.5/12)/27**	=1049 C.Y.
STA. 51+20.00 TO STA. 53+20.90	200.90(44.25)(9.5/12)/27	= 261 C.Y.
STA. 51+84.03 TO STA. 53+20.90	136.87(54.76)(9.5/12)/27	= 220 C.Y.
STA. 53+20.90 TO STA. 59+44.24	623.34(109.52)(9.5/12)/27	=2002 C.Y.
STA. 59+44.24 TO STA. 59+93.01	48.77(54.76)(9.5/12)/27	= 78 C.Y.
STA. 59+44.24 TO STA. 60+49.60	105.36((53.05+54.76)/2)(9.5/12)/27	= 167 C.Y.
STA. 59+93.01 TO STA. 60+55.14	62.13((53.05+54.76)/2)(9.5/12)/27	= 98 C.Y.
STA. 60+49.60 TO STA. 61+96.16	146.56(52.54)(9.5/12)/27	= 227 C.Y.
STA. 60+55.14 TO STA. 66+63.28	608.14(52.54)(9.5/12)/27	= 945 C.Y.
STA. 61+96.16 TO STA. 62+58.84	62.68((54.76+53.05)/2)(9.5/12)/27	= 99 C.Y.
STA. 62+58.84 TO STA. 64+11.69	152.85(54.76)(9.5/12)/27	= 245 C.Y.
STA. 64+11.69 TO STA. 65+17.21	105.52((54.76+53.05)/2)(9.5/12)/27	= 167 C.Y.
STA. 65+17.21 TO STA. 66+26.71	109.50(52.54)(9.5/12)/27	= 169 C.Y.
STA. 66+26.71 TO STA. 67+67.77	141.06(54.76)(9.5/12)/27	= 226 C.Y.
STA. 66+63.28 TO STA. 67+67.77	104.49((54.76+53.05)/2)(9.5/12)/27	= 165 C.Y.
STA. 67+67.77 TO STA. 72+46.04	478.27(109.52)(9.5/12)/27	=1536 C.Y.
STA. 72+46.04 TO STA. 73+40.00	93.96(54.76)(9.5/12)/27	= 151 C.Y.
STA. 72+46.04 TO STA. 74+24.60	178.56(44.25)(9.5/12)/27	= 232 C.Y.
STA. 73+40.00 TO STA. 82+49.73	67220.21(9.5/12)/27**	=1971 C.Y.
STA. 74+24.60 TO STA. 85+27.07	81637.14(9.5/12)/27**	=2394 C.Y.
STA. 82+49.73 TO STA. 84+50.62	200.89(44.25)(9.5/12)/27	= 261 C.Y.
STA. 84+50.62 TO STA. 85+27.07	76.45(54.76)(9.5/12)/27	= 123 C.Y.
STA. 85+27.07 TO STA. 90+60.06	532.99(109.52)(9.5/12)/27	=1712 C.Y.
STA. 90+60.06 TO STA. 92+09.97	149.91(54.76)(9.5/12)/27	= 241 C.Y.
STA. 90+60.06 TO STA. 91+81.62	121.56((53.05+54.76)/2)(9.5/12)/27	= 192 C.Y.
STA. 91+81.62 TO STA. 92+10.77	29.15(53.05)(9.5/12)/27	= 45 C.Y.
STA. 92+09.97 TO STA. 92+95.98	86.01(54.04)(9.5/12)/27	= 136 C.Y.
STA. 92+10.77 TO STA. 92+96.78	86.01(54.04)(9.5/12)/27	= 136 C.Y.
STA. 92+95.98 TO STA. 93+25.13	29.15(53.05)(9.5/12)/27	= 45 C.Y.
STA. 92+96.78 TO STA. 93+82.61	85.83((53.05+48.76)/2)(9.5/12)/27	= 128 C.Y.
STA. 93+25.13 TO STA. 93+91.74	66.61((53.05+54.76)/2)(9.5/12)/27	= 105 C.Y.
STA. 93+82.61 TO STA. 94+64.60	81.99(48.76)(9.5/12)/27	= 117 C.Y.
STA. 93+91.74 TO STA. 97+29.47	17943.29(9.5/12)/27**	= 526 C.Y.
STA. 94+64.60 TO STA. 95+59.78	95.18((47.24+48.76)/2)(9.5/12)/27	= 134 C.Y.
STA. 95+59.78 TO STA. 97+15.54	6440.69(9.5/12)/27**	= 189 C.Y.
STA. 97+15.54 TO STA. 102+70.38	33460.25(9.5/12)/27**	= 981 C.Y.
STA. 97+29.47 TO STA. 102+70.38	34656.30(9.5/12)/27**	=1016 C.Y.

S.R.8 SUBTOTAL = 23334 C.Y.

RAMP TI

STA. 51+20.00 TO STA. 53+18.91	7191.17(9.5/12)/27**	= 211 C.Y.
STA. 53+18.91 TO STA. 54+07.00	88.09(26.02)(9.5/12)/27	= 67 C.Y.

RAMP S

STA. 51+83.28 TO STA. 52+33.36	50.08((26.02+28.02)/2)(9.5/12)/27	= 40 C.Y.
STA. 52+33.36 TO STA. 53+60.76	127.40(26.02)(9.5/12)/27	= 97 C.Y.
STA. 53+60.76 TO STA. 53+64.76	4.00((24.51+25.51)/2)(9.5/12)/27	= 3 C.Y.
STA. 53+64.76 TO STA. 54+42.19	77.43(24.51)(9.5/12)/27	= 56 C.Y.
STA. 54+42.19 TO STA. 55+46.11	3025.43(9.5/12)/27**	= 89 C.Y.

RAMP PI

STA. 69+31.90 TO STA. 70+23.55	2679.48(9.5/12)/27**	= 79 C.Y.
STA. 70+23.55 TO STA. 70+91.83	68.28(24.51)(9.5/12)/27	= 49 C.Y.
STA. 70+91.83 TO STA. 70+95.83	4.00((25.51+24.51)/2)(9.5/12)/27	= 3 C.Y.
STA. 70+95.83 TO STA. 72+89.49	193.66(26.02)(9.5/12)/27	= 148 C.Y.
STA. 72+89.49 TO STA. 73+39.54	50.05((28.02+26.02)/2)(9.5/12)/27	= 40 C.Y.

RAMP QI

STA. 70+80.00 TO STA. 72+49.12	169.12(26.02)(9.5/12)/27	= 129 C.Y.
STA. 72+49.12 TO STA. 74+25.00	6576.65(9.5/12)/27**	= 193 C.Y.

ITEM TOTALS CARRIED TO 193

** COMPUTER CALCULATED AREA

CALCULATED CRP
CHECKED GLP

PAVEMENT CALCULATIONS

SUM-8-0.63

ITEM 302 - BITUMINOUS AGGREGATE BASE, PG 64-22 (CONT'D)

RAMP KI

STA. 82+49.73 TO STA. 84+48.63	7775.97(9.5/12)/27**	= 228 C.Y.
STA. 84+48.63 TO STA. 85+02.63	54.00(25.51)(9.5/12)/27	= 40 C.Y.
STA. 85+02.63 TO STA. 88+08.00	305.37(26.02)(9.5/12)/27	= 233 C.Y.

RAMP LI

STA. 85+26.54 TO STA. 85+76.58	50.04((28.02+26.02)/2)(9.5/12)/27	= 40 C.Y.
STA. 85+76.58 TO STA. 87+92.27	215.69(25.51)(9.5/12)/27	= 161 C.Y.
STA. 87+92.27 TO STA. 89+33.76	4239.13(9.5/12)/27**	= 124 C.Y.

RAMP I

STA. 92+08.35 TO STA. 93+06.61	6911.34(9.5/12)/27**	= 203 C.Y.
STA. 93+06.61 TO STA. 93+66.45	59.84(40.00)(9.5/12)/27	= 70 C.Y.
STA. 93+66.45 TO STA. 93+82.36	659.11(9.5/12)/27**	= 19 C.Y.
STA. 93+82.36 TO STA. 94+85.14	102.78(46.02)(9.5/12)/27	= 139 C.Y.
STA. 94+85.14 TO STA. 95+37.56	52.42((34.02+46.02)/2)(9.5/12)/27	= 62 C.Y.
STA. 95+37.56 TO STA. 96+01.22	63.66(34.02)(9.5/12)/27	= 64 C.Y.
STA. 96+01.22 TO STA. 96+51.22	50.00((26.02+34.02)/2)(9.5/12)/27	= 44 C.Y.
STA. 96+51.22 TO STA. 96+76.15	24.93(26.02)(9.5/12)/27	= 19 C.Y.
STA. 96+76.15 TO STA. 97+26.34	50.19((28.02+26.02)/2)(9.5/12)/27	= 40 C.Y.

RAMP J

STA. 93+01.20 TO STA. 93+79.47	3204.36(9.5/12)/27**	= 94 C.Y.
STA. 93+79.47 TO STA. 95+66.24	186.77(25.51)(9.5/12)/27	= 140 C.Y.
STA. 95+66.24 TO STA. 97+16.31	5795.82(9.5/12)/27**	= 170 C.Y.

RAMP SUBTOTAL = 3094 C.Y.

ITEM TOTAL 26428 C.Y.

ITEM 304 - AGGREGATE BASE

S.R. 8

STA. 32+75.00 TO STA. 33+06.52	31.52(121.84)(6/12)/27	= 71 C.Y.
STA. 33+06.52 TO STA. 33+46.26	1063.36(6/12)/27**	= 20 C.Y.
STA. 33+06.52 TO STA. 33+46.26	4169.52(6/12)/27**	= 77 C.Y.
STA. 33+46.26 TO STA. 33+71.26	(1489.99(6/12))/27**	= 28 C.Y.
STA. 33+46.26 TO STA. 33+71.26	(1736.64(6/12))/27**	= 32 C.Y.
STA. 35+04.32 TO STA. 35+29.32	(1462.27(6/12))/27**	= 27 C.Y.
STA. 35+04.32 TO STA. 35+29.32	(1735.51(6/12))/27**	= 32 C.Y.
STA. 35+30.41 TO STA. 35+74.54	5079.73(6/12)/27**	= 94 C.Y.
STA. 35+74.54 TO STA. 41+99.90	625.36(121.84)(6/12)/27	= 1411 C.Y.
STA. 41+99.90 TO STA. 45+37.38	337.48((64.36+55.92)/2)(6/12)/27	= 376 C.Y.
STA. 41+99.90 TO STA. 45+37.38	337.48(65.92)(6/12)/27	= 412 C.Y.
STA. 45+37.38 TO STA. 45+57.38	(20.00((67.87+68.37)/2)6/12)/27	= 25 C.Y.
STA. 45+37.38 TO STA. 45+57.38	(20.00)(67.92)(6/12)/27	= 25 C.Y.
STA. 46+48.88 TO STA. 46+68.88	(20.00((70.66+71.16)/2)6/12)/27	= 26 C.Y.
STA. 46+48.88 TO STA. 46+68.88	(20.00)(67.92)(6/12)/27	= 25 C.Y.
STA. 46+68.88 TO STA. 51+20.00	451.12((78.92+67.65)/2)(6/12)/27	= 612 C.Y.
STA. 46+68.88 TO STA. 47+04.82	35.94(65.92)(6/12)/27	= 44 C.Y.
STA. 47+04.82 TO STA. 51+84.03	36342.96(6/12)/27**	= 673 C.Y.
STA. 51+20.00 TO STA. 53+20.90	200.90(44.25)(6/12)/27	= 165 C.Y.
STA. 51+84.03 TO STA. 53+20.90	136.87(55.92)(6/12)/27	= 142 C.Y.
STA. 53+20.90 TO STA. 59+44.24	623.34(111.84)(6/12)/27	= 1291 C.Y.
STA. 59+44.24 TO STA. 59+93.01	48.77(55.92)(6/12)/27	= 51 C.Y.
STA. 59+44.24 TO STA. 60+49.60	105.36((54.21+55.92)/2)(6/12)/27	= 107 C.Y.
STA. 59+93.01 TO STA. 60+55.14	62.13((54.21+55.92)/2)(6/12)/27	= 63 C.Y.
STA. 60+49.60 TO STA. 61+96.16	146.56(52.54)(6/12)/27	= 143 C.Y.
STA. 60+55.14 TO STA. 66+63.28	608.14(52.54)(6/12)/27	= 597 C.Y.
STA. 61+96.16 TO STA. 62+58.84	62.68((55.92+54.21)/2)(6/12)/27	= 64 C.Y.
STA. 62+58.84 TO STA. 64+11.69	152.85(55.92)(6/12)/27	= 158 C.Y.
STA. 64+11.69 TO STA. 65+17.21	105.52((54.21+55.92)/2)(6/12)/27	= 108 C.Y.
STA. 65+17.21 TO STA. 66+26.71	109.50(52.54)(6/12)/27	= 107 C.Y.
STA. 66+26.71 TO STA. 67+67.77	141.06(55.92)(6/12)/27	= 146 C.Y.
STA. 66+63.28 TO STA. 67+67.77	104.49((55.92+54.21)/2)(6/12)/27	= 107 C.Y.
STA. 67+67.77 TO STA. 72+46.04	478.27(111.84)(6/12)/27	= 991 C.Y.
STA. 72+46.04 TO STA. 73+40.00	93.96(55.92)(6/12)/27	= 97 C.Y.
STA. 72+46.04 TO STA. 74+24.60	178.56(44.25)(6/12)/27	= 146 C.Y.
STA. 73+40.00 TO STA. 82+49.73	67507.33(6/12)/27**	= 1250 C.Y.
STA. 74+24.60 TO STA. 85+27.07	81855.80(6/12)/27**	= 1516 C.Y.

** COMPUTER CALCULATED AREA
† AREA UNDER TYPE BI MEDIAN BARRIER
* AREA UNDER TYPE D BARRIER
✠ AREA UNDER TYPE D BARRIER, AS PER PLAN
▽ INCLUDES REINF. CONC. PART OF RAMP TI
◇ INCLUDES REINF. CONC. PART OF RAMP PI
□ INCLUDES REINF. CONC. PART OF RAMP KI
△ INCLUDES REINF. CONC. PART OF RAMP S
⊗ INCLUDES REINF. CONC. PART OF RAMP QI
◪ INCLUDES REINF. CONC. PART OF RAMP LI

ITEM 304 - AGGREGATE BASE (CONT'D)

S.R. 8 (CONT'D)

STA. 82+49.73 TO STA. 84+50.62	200.89(44.25)(6/12)/27	= 165 C.Y.
STA. 84+50.62 TO STA. 85+27.07	76.45(55.92)(6/12)/27	= 79 C.Y.
STA. 85+27.07 TO STA. 90+60.06	532.99(111.84)(6/12)/27	= 1104 C.Y.
STA. 90+60.06 TO STA. 92+09.97	149.91(55.92)(6/12)/27	= 155 C.Y.
STA. 90+60.06 TO STA. 91+81.62	121.56((54.21+55.92)/2)(6/12)/27	= 124 C.Y.
STA. 91+81.62 TO STA. 92+10.77	29.15(54.21)(6/12)/27	= 29 C.Y.
STA. 92+09.97 TO STA. 92+95.98	86.01(52.54)(6/12)/27	= 86 C.Y.
STA. 92+10.77 TO STA. 92+96.78	86.01(52.54)(6/12)/27	= 86 C.Y.
STA. 92+95.98 TO STA. 93+25.13	29.15(54.21)(6/12)/27	= 29 C.Y.
STA. 92+96.78 TO STA. 93+82.61	85.83((49.75+54.04)/2)(6/12)/27	= 82 C.Y.
STA. 93+25.13 TO STA. 93+91.74	66.61((53.05+55.92)/2)(6/12)/27	= 67 C.Y.
STA. 93+82.61 TO STA. 94+64.60	81.99(49.81)(6/12)/27	= 76 C.Y.
STA. 93+91.74 TO STA. 97+29.47	18335.47(6/12)/27**	= 340 C.Y.
STA. 94+64.60 TO STA. 95+59.78	95.18((46.73+49.75)/2)(6/12)/27	= 85 C.Y.
STA. 95+59.78 TO STA. 97+15.54	6440.69(6/12)/27**	= 119 C.Y.
STA. 97+15.54 TO STA. 102+70.38	33460.25(6/12)/27**	= 620 C.Y.
STA. 97+29.47 TO STA. 102+70.38	35284.41(6/12)/27**	= 653 C.Y.
†STA. 32+75.00 TO STA. 102+70.38	6995.38(3.50)(6/12)/27	= 737 C.Y.
*STA. 60+78.00 TO STA. 87+52.57	654.00(2.50)(6/12)/27	= 49 C.Y.
✠STA. 60+92.00 TO STA. 87+24.25	1887.00(2.00)(6/12)/27	= 114 C.Y.

S.R. 8 SUBTOTAL = 15838 C.Y.

GOODKIRK ST.

STA. 192+80.00 TO STA. 192+83.13	(3.13)((12.72+13.5)/2)(6/12)/27	= 1 C.Y.
STA. 192+83.13 TO STA. 199+40.39	(657.26)(13.50)(6/12)/27	= 164 C.Y.
STA. 199+40.39 TO STA. 200+58.21	(7542.50(6/12))/27**	= 140 C.Y.
STA. 200+58.21 TO STA. 203+89.61	((331.40)(31.00)(6/12))/27	= 190 C.Y.
STA. 203+89.61 TO STA. 204+64.61	(304.90(6/12))/27**	= 56 C.Y.
STA. 204+64.61 TO STA. 207+32.84	((268.23)(31.00)(6/12))/27	= 154 C.Y.
STA. 207+32.84 TO STA. 208+20.85	88.01((31.00+34.56)/2)(6/12)/27	= 53 C.Y.
STA. 208+20.85 TO STA. 209+16.79	(4206.23(6/12))/27**	= 78 C.Y.
▽STA. 209+16.79 TO STA. 211+48.84	(13675.68(6/12))/27**	= 253 C.Y.
STA. 211+48.84 TO STA. 212+27.61	(3364.72(6/12))/27**	= 62 C.Y.
STA. 212+27.61 TO STA. 212+93.30	(2071.47(6/12))/27**	= 38 C.Y.
STA. 212+93.30 TO STA. 214+39.86	(146.56)(31.00)(6/12))/27	= 84 C.Y.
STA. 214+39.86 TO STA. 215+84.37	(11280.50(6/12))/27**	= 209 C.Y.
STA. 215+84.37 TO STA. 216+24.37	(40.00((31.00+35.00)/2)(6/12)/27	= 24 C.Y.
STA. 216+24.37 TO STA. 218+79.74	((255.37)(31.00)(6/12))/27	= 147 C.Y.
STA. 218+79.74 TO STA. 219+19.74	40.00((31.00+35.00)/2)(6/12)/27	= 24 C.Y.
STA. 219+19.74 TO STA. 220+53.44	(12942.08(6/12))/27**	= 240 C.Y.
STA. 220+53.44 TO STA. 220+93.44	40.00((43.00+46.81)/2)(6/12)/27	= 33 C.Y.
STA. 220+93.44 TO STA. 221+49.16	((55.72)(43.00)(6/12))/27	= 44 C.Y.
◇STA. 221+49.16 TO STA. 223+58.34	(9521.35(6/12))/27**	= 176 C.Y.
STA. 223+58.34 TO STA. 224+12.09	((53.75)(21.50)(6/12))/27	= 21 C.Y.
STA. 224+12.09 TO STA. 227+48.52	(8937.69(6/12))/27**	= 166 C.Y.
STA. 227+48.52 TO STA. 231+62.90	((414.38)(31.00)(6/12))/27	= 238 C.Y.
STA. 231+62.90 TO STA. 231+92.90	30.00((31.00+33.00)/2)(6/12)/27	= 18 C.Y.
STA. 231+92.90 TO STA. 233+50.78	(13112.11(6/12))/27**	= 243 C.Y.
STA. 233+50.78 TO STA. 233+90.74	39.96((31.00+35.00)/2)(6/12)/27	= 24 C.Y.
STA. 233+90.74 TO STA. 236+34.20	((243.46)(31.00)(6/12))/27	= 140 C.Y.
STA. 236+34.20 TO STA. 236+74.45	(40.25((31.00+35.00)/2)(6/12)/27	= 25 C.Y.
STA. 236+74.45 TO STA. 238+46.04	(12465.33(6/12))/27**	= 231 C.Y.
STA. 238+46.04 TO STA. 240+75.92	((229.88)(31.00)(6/12))/27	= 132 C.Y.
STA. 240+75.92 TO STA. 241+53.49	(4077.11(6/12))/27**	= 76 C.Y.
STA. 241+53.49 TO STA. 241+96.26	42.77((31.00+35.58)/2)(6/12)/27	= 26 C.Y.
STA. 241+96.26 TO STA. 242+39.31	((43.05)(31.00)(6/12))/27	= 25 C.Y.
STA. 242+39.31 TO STA. 243+39.60	100.29((31.00+35.00)/2)(6/12)/27	= 61 C.Y.
□STA. 243+39.60 TO STA. 245+35.72	(11334.57(6/12))/27**	= 210 C.Y.
STA. 245+35.72 TO STA. 246+27.83	(4386.35(6/12))/27**	= 81 C.Y.

GOODKIRK SUBTOTAL = 3887 C.Y.

FOUNTAIN ST.

STA. 300+31.33 TO STA. 300+77.90	(2753.00(6/12))/27**	= 51 C.Y.
STA. 300+77.90 TO STA. 301+17.90	40.00((31.00+35.00)/2)(6/12)/27	= 24 C.Y.
STA. 301+17.90 TO STA. 303+98.10	((280.20)(31.00)(6/12))/27	= 161 C.Y.
STA. 303+98.10 TO STA. 304+71.60	(2835.18(6/12))/27**	= 53 C.Y.
STA. 304+71.60 TO STA. 305+97.78	((126.18)(31.00)(6/12))/27	= 72 C.Y.
STA. 305+97.78 TO STA. 306+71.54	(2847.11(6/12))/27	= 53 C.Y.
STA. 306+71.54 TO STA. 309+38.01	((266.47)(31.00)(6/12))/27	= 153 C.Y.
△STA. 309+38.01 TO STA. 311+07.91	(7856.95(6/12))/27**	= 146 C.Y.

ITEM 304 - AGGREGATE BASE (CONT'D)

FOUNTAIN ST. (CONT'D)

STA. 311+07.91 TO STA. 314+22.81	((314.90)(43.00)(6/12))/27	= 251 C.Y.
STA. 314+22.81 TO STA. 314+62.81	40.00((43.00+47.00)/2)(6/12)/27	= 33 C.Y.
STA. 314+62.81 TO STA. 315+83.28	(12022.58(6/12))/27**	= 223 C.Y.
STA. 315+83.28 TO STA. 316+47.40	(2360.19(6/12))/27**	= 44 C.Y.
STA. 316+47.40 TO STA. 318+87.08	((239.68)(43.00)(6/12))/27	= 191 C.Y.
STA. 318+87.08 TO STA. 319+27.08	40.00((43.00+47.00)/2)(6/12)/27	= 33 C.Y.
STA. 319+27.08 TO STA. 320+58.48	(13968.16(6/12))/27**	= 259 C.Y.
STA. 320+58.48 TO STA. 320+65.20	6.72((34.33+35.00)/2)(6/12)/27	= 4 C.Y.
⊗STA. 320+65.20 TO STA. 323+47.23	(14328.27(6/12))/27**	= 265 C.Y.
STA. 323+47.23 TO STA. 324+47.23	100.00((31.00+35.00)/2)(6/12)/27	= 61 C.Y.
STA. 324+47.23 TO STA. 329+89.53	((542.30)(31.00)(6/12))/27	= 156 C.Y.
STA. 329+89.53 TO STA. 330+29.53	40.00((31.00+36.00)/2)(6/12)/27	= 25 C.Y.
STA. 330+29.53 TO STA. 332+11.19	(15323.15(6/12))/27**	= 284 C.Y.
STA. 332+11.19 TO STA. 338+05.10	((593.91)(31.00)(6/12))/27	= 341 C.Y.
STA. 338+05.10 TO STA. 339+75.25	(10165.54(6/12))/27**	= 188 C.Y.
STA. 339+75.25 TO STA. 340+15.36	40.11((23.00+28.00)/2)(6/12)/27	= 19 C.Y.
STA. 340+15.36 TO STA. 341+68.43	((153.07)(21.00)(6/12))/27	= 60 C.Y.
STA. 341+68.43 TO STA. 343+06.62	((138.19)(20.50)(6/12))/27	= 52 C.Y.
◪STA. 343+06.62 TO STA. 345+17.47	(9751.75(6/12))/27**	= 181 C.Y.
STA. 345+17.47 TO STA. 345+51.89	((34.42)(43.00)(6/12))/27	= 27 C.Y.
STA. 345+51.89 TO STA. 345+91.89	40.00((43.00+47.00)/2)(6/12)/27	= 33 C.Y.
STA. 345+91.89 TO STA. 346+26.43	(2665.77(6/12))/27**	= 49 C.Y.

FOUNTAIN SUBTOTAL = 3492 C.Y.

RAMP TI

STA. 51+20.00 TO STA. 53+18.91	7191.17(6/12)/27**	= 133 C.Y.
STA. 53+18.91 TO STA. 54+07.00	88.09(28.34)(6/12)/27	= 46 C.Y.

RAMP S

STA. 51+83.28 TO STA. 52+33.36	50.08((28.34+30.34)/2)(6/12)/27	= 27 C.Y.
STA. 52+33.36 TO STA. 53+60.76	127.40(28.34)(6/12)/27	= 67 C.Y.
STA. 53+60.76 TO STA. 53+64.76	4.00((28.23+27.23)/2)(6/12)/27	= 2 C.Y.
STA. 53+64.76 TO STA. 54+42.19	77.43(27.23)(6/12)/27	= 39 C.Y.
STA. 54+42.19 TO STA. 55+46.11	3186.85(6/12)/27**	= 59 C.Y.

RAMP PI

STA. 69+31.90 TO STA. 70+23.55	2820.89(6/12)/27**	= 52 C.Y.
STA. 70+23.55 TO STA. 70+91.83	68.28(27.17)(6/12)/27	= 34 C.Y.
STA. 70+91.83 TO STA. 70+95.83	4.00((28.17+27.17)/2)(6/12)/27	= 2 C.Y.
STA. 70+95.83 TO STA. 72+89.49	193.66(28.34)(6/12)/27	= 102 C.Y.
STA. 72+89.49 TO STA. 73+39.54	50.05((30.34+28.34)/2)(6/12)/27	= 27 C.Y.

RAMP QI

STA. 70+80.00 TO STA. 72+49.12	169.12(28.34)(6/12)/27	= 89 C.Y.
STA. 72+49.12 TO STA. 74+25.00	6780.02(6/12)/27**	= 126 C.Y.

RAMP KI

STA. 82+49.73 TO STA. 84+48.63	7775.97(6/12)/27**	= 144 C.Y.
STA. 84+48.63 TO STA. 85+02.63	54.00(26.67)(6/12)/27	= 27 C.Y.
STA. 85+02.63 TO STA. 88+08.00	305.37(28.34)(6/12)/27	= 160 C.Y.

RAMP LI

STA. 85+26.54 TO STA. 85+76.58	50.04((30.34+28.34)/2)(6/12)/27	= 27 C.Y.
STA. 85+76.58 TO STA. 87+92.27	215.69(28.34)(6/12)/27	= 113 C.Y.
STA. 87+92.27 TO STA. 89+33.76	4442.61(6/12)/27**	= 82 C.Y.

RAMP I

STA. 92+08.35 TO STA. 93+06.61	7463.46(6/12)/27**	= 138 C.Y.
STA. 93+06.61 TO STA. 93+66.45	59.84(43.13)(6/12)/27	= 48 C.Y.
STA. 93+66.45 TO STA. 93+82.36	708.96(6/12)/27**	= 13 C.Y.
STA. 93+82.36 TO STA. 94+85.14	102.78(48.34)(6/12)/27	= 92 C.Y.
STA. 94+85.14 TO STA. 95+37.56	52.42((36.34+48.34)/2)(6/12)/27	= 41 C.Y.
STA. 95+37.56 TO STA. 96+01.22	63.66(36.34)(6/12)/27	= 43 C.Y.
STA. 96+01.32 TO STA. 96+51.22	50.00((28.34+36.34)/2)(6/12)/27	= 30 C.Y.
STA. 96+51.22 TO STA. 96+76.15	24.93(28.34)(6/12)/27	= 13 C.Y.
STA. 96+76.15 TO STA. 97+26.34	50.19((30.34+28.34)/2)(6/12)/27	= 27 C.Y.

RAMP J

STA. 93+01.20 TO STA. 93+79.47	3555.66(6/12)/27**	= 66 C.Y.
STA. 93+79.47 TO STA. 95+66.24	186.77(28.23)(6/12)/27	= 98 C.Y.
STA. 95+66.24 TO STA. 97+16.31	6028.80(6/12)/27**	= 112 C.Y.

RAMP SUBTOTAL = 2079 C.Y.

ITEM TOTALS CARRIED TO 193

CALCULATED CRP | CHECKED GLP

PAVEMENT CALCULATIONS

SUM-8-0.63

ITEM 304 - AGGREGATE BASE (CONT'D)

OHIO STREET

STA. 500+00.00 TO STA. 500+49.62	(4960.00(4/12))/27**	=	61 C.Y.
STA. 500+49.62 TO STA. 502+09.03	((159.41)(29.00)(4/12))/27	=	57 C.Y.
STA. 502+09.03 TO STA. 502+59.86	(1412.46(4/12))/27**	=	17 C.Y.
STA. 502+59.86 TO STA. 504+33.11	((173.25)(27.50)(4/12))/27	=	59 C.Y.
STA. 504+33.11 TO STA. 504+83.69	(1494.03(4/12))/27**	=	18 C.Y.
STA. 504+83.69 TO STA. 505+25.86	((42.17)(30.40)(4/12))/27	=	16 C.Y.
	OHIO SUBTOTAL	=	228 C.Y.

PARKWOOD AVENUE

STA. 1+15.00 TO STA. 2+02.50	(1730.45(4/12))/27**	=	21 C.Y.
STA. 2+02.50 TO STA. 2+60.00	((57.50)(20.00)(4/12))/27	=	14 C.Y.
STA. 2+60.00 TO STA. 3+91.57	((131.57)(21.00)(4/12))/27	=	34 C.Y.
STA. 3+91.57 TO STA. 4+44.98	(1212.10(4/12))/27**	=	15 C.Y.
	PARKWOOD SUBTOTAL	=	84 C.Y.

NASH STREET (WEST)

STA. 3+63.00 TO STA. 4+60.68	((97.68)(28.00)(4/12))/27	=	34 C.Y.
STA. 4+60.68 TO STA. 4+67.44	(192.51(4/12))/27**	=	2 C.Y.
	NASH (WEST) SUBTOTAL	=	36 C.Y.

VINE STREET

STA. 3+90.00 TO STA. 4+02.59	(359.58(4/12))/27**	=	4 C.Y.
STA. 4+02.59 TO STA. 4+60.78	((58.19)(29.00)(4/12))/27	=	21 C.Y.
STA. 4+60.78 TO STA. 4+68.33	(221.24(4/12))/27**	=	3 C.Y.
	VINE SUBTOTAL	=	28 C.Y.

ORCHARD STREET

STA. 3+75.00 TO STA. 4+12.70	(863.23(4/12))/27**	=	11 C.Y.
STA. 4+12.70 TO STA. 4+55.62	((42.92)(24.15)(4/12))/27	=	13 C.Y.
STA. 4+55.62 TO STA. 4+70.24	(381.51(4/12))/27**	=	5 C.Y.
	ORCHARD SUBTOTAL	=	29 C.Y.

NASH STREET (EAST)

STA. 8+24.90 TO STA. 8+35.89	(295.49(4/12))/27**	=	4 C.Y.
STA. 8+35.89 TO STA. 9+00.00	((64.11)(25.42)(4/12))/27	=	20 C.Y.
	NASH (EAST) SUBTOTAL	=	24 C.Y.

MASON AVENUE

STA. 0+28.00 TO STA. 0+38.99	(298.28(4/12))/27**	=	4 C.Y.
STA. 0+38.99 TO STA. 1+10.00	((71.01)(25.76)(4/12))/27	=	23 C.Y.
	MASON SUBTOTAL	=	27 C.Y.

EWING COURT

SOUTH CUL-DE-SAC	(3786.28(4/12))/27**	=	47 C.Y.
NORTH CUL-DE-SAC	(2820.03(4/12))/27**	=	35 C.Y.
	EWING SUBTOTAL	=	82 C.Y.

CARROLL STREET

STA. 12+66.22 TO STA. 12+81.22	((15.00)(46.00)(6/12))/27	=	13 C.Y.
STA. 14+00.88 TO STA. 14+15.88	((15.00)(46.00)(6/12))/27	=	13 C.Y.
	CARROLL SUBTOTAL	=	26 C.Y.

BUCHTEL AVENUE

STA. 13+76.64 TO STA. 13+91.64	((15.00)(46.00)(6/12))/27	=	13 C.Y.
STA. 15+11.32 TO STA. 15+26.32	((15.00)(46.00)(6/12))/27	=	13 C.Y.
	BUCHTEL SUBTOTAL	=	26 C.Y.

MARKET STREET

STA. 24+23.62 TO STA. 24+38.62	1228.35(6/12)/27**	=	23 C.Y.
STA. 25+97.81 TO STA. 26+12.81	1229.73(6/12)/27**	=	23 C.Y.
	MARKET SUBTOTAL	=	46 C.Y.

FORGE STREET

STA. 6+50.99 TO STA. 6+70.96	1360.22(6/12)/27**	=	25 C.Y.
STA. 8+87.94 TO STA. 9+07.94	1378.83(6/12)/27**	=	26 C.Y.
	FORGE SUBTOTAL	=	51 C.Y.
	ITEM TOTAL		25983 C.Y.

ITEM 407- TACK COAT

GOODKIRK STREET

STA. 192+80.00 TO STA. 195+74.34	(3340.97/9)0.075**	=	28 Gal.
STA. 195+74.34 TO STA. 196+55.37	(1473.97/9)0.075**	=	12 Gal.
STA. 196+55.37 TO STA. 199+40.39	(285.02((12.90+12.10)/2))/9(0.075)	=	30 Gal.
	ITEM TOTAL		70 Gal.

ITEM 407 - TACK COAT FOR INTERMEDIATE COURSE

S.R. 8

STA. 32+75.00 TO STA. 33+06.52	(31.52(118.50)/9)0.04	=	17 Gal.
STA. 33+06.52 TO STA. 33+46.26	(1063.36/9)0.04**	=	5 Gal.
STA. 33+06.52 TO STA. 33+46.26	(4090.23/9)0.04**	=	18 Gal.
STA. 35+30.41 TO STA. 35+74.54	(494.79/9)0.04**	=	22 Gal.
STA. 35+74.54 TO STA. 41+99.90	(625.36(118.50)/9)0.04	=	329 Gal.
STA. 41+99.90 TO STA. 45+37.38	(337.48((62.69+54.25)/2)/9)0.04	=	88 Gal.
STA. 41+99.90 TO STA. 45+37.38	(337.48(64.25)/9)0.04	=	96 Gal.
STA. 46+68.88 TO STA. 51+20.00	(451.12((65.98+77.25)/2)/9)0.04	=	144 Gal.
STA. 46+68.88 TO STA. 47+04.82	(35.94(64.25)/9)0.04	=	10 Gal.
STA. 47+04.82 TO STA. 51+84.03	(35542.68/9)0.04**	=	158 Gal.
STA. 51+20.00 TO STA. 53+20.90	(200.90(44.25)/9)0.04	=	40 Gal.
STA. 51+84.03 TO STA. 53+20.90	(136.87(54.25)/9)0.04	=	33 Gal.
STA. 53+20.90 TO STA. 59+44.24	(623.34(108.50)/9)0.04	=	301 Gal.
STA. 59+44.24 TO STA. 59+93.01	(48.77(54.25)/9)0.04	=	12 Gal.
STA. 59+44.24 TO STA. 60+49.60	(105.36((54.25+52.54)/2)/9)0.04	=	25 Gal.
STA. 59+93.01 TO STA. 60+55.14	(62.13((54.25+52.54)/2)/9)0.04	=	15 Gal.
STA. 60+49.60 TO STA. 61+96.16	(146.56(52.54)/9)0.04	=	34 Gal.
STA. 60+55.14 TO STA. 66+63.28	(608.14(52.54)/9)0.04	=	142 Gal.
STA. 61+96.16 TO STA. 62+58.84	(62.68((52.54+54.25)/2)/9)0.04	=	15 Gal.
STA. 62+58.84 TO STA. 64+11.69	(152.85(54.25)/9)0.04	=	37 Gal.
STA. 64+11.69 TO STA. 65+17.21	(105.52((52.54+54.25)/2)/9)0.04	=	25 Gal.
STA. 65+17.21 TO STA. 66+26.71	(109.50(52.54)/9)0.04	=	26 Gal.
STA. 66+26.71 TO STA. 67+67.77	(141.06(54.25)/9)0.04	=	34 Gal.
STA. 66+63.28 TO STA. 67+67.77	(104.49((52.54+54.25)/2)/9)0.04	=	25 Gal.
STA. 67+67.77 TO STA. 72+46.04	(478.27(108.50)/9)0.04	=	231 Gal.
STA. 72+46.04 TO STA. 73+40.00	(93.96(54.25)/9)0.04	=	23 Gal.
STA. 72+46.04 TO STA. 74+24.60	(178.56(44.25)/9)0.04	=	35 Gal.
STA. 73+40.00 TO STA. 82+49.73	(67094.84/9)0.04**	=	298 Gal.
STA. 74+24.60 TO STA. 85+27.07	(81541.32/9)0.04**	=	362 Gal.
STA. 82+49.73 TO STA. 84+50.62	(200.89(44.25)/9)0.04	=	40 Gal.
STA. 84+50.62 TO STA. 85+27.07	(76.45(54.25)/9)0.04	=	18 Gal.
STA. 85+27.07 TO STA. 90+60.06	(532.99(108.50)/9)0.04	=	257 Gal.
STA. 90+60.06 TO STA. 92+09.97	(149.91(54.25)/9)0.04	=	36 Gal.
STA. 90+60.06 TO STA. 91+81.62	(121.56((52.54+54.25)/2)/9)0.04	=	29 Gal.
STA. 91+81.62 TO STA. 92+96.78	(115.16(52.54)/9)0.04	=	27 Gal.
STA. 92+09.97 TO STA. 93+25.13	(115.16(52.54)/9)0.04	=	27 Gal.
STA. 92+96.78 TO STA. 93+82.61	(85.83((52.54+48.25)/2)/9)0.04	=	19 Gal.
STA. 93+25.13 TO STA. 93+91.74	(3530.98/9)0.04**	=	16 Gal.
STA. 93+82.61 TO STA. 94+64.60	(81.99(48.25)/9)0.04	=	18 Gal.
STA. 93+91.74 TO STA. 96+00.00	(11111.19/9)0.04**	=	49 Gal.
STA. 94+64.60 TO STA. 95+59.79	(4461.61/9)0.04**	=	20 Gal.
STA. 95+59.79 TO STA. 96+00.00	(1732.68/9)0.04**	=	8 Gal.
STA. 96+00.00 TO STA. 100+00.00	(25381.04/9)0.04**	=	113 Gal.
STA. 96+00.00 TO STA. 100+00.00	(22984.37/9)0.04**	=	102 Gal.
STA. 100+00.00 TO STA. 102+70.38	(15657.47/9)0.04**	=	70 Gal.
STA. 100+00.00 TO STA. 102+70.38	(15215.89/9)0.04**	=	68 Gal.
	S.R. 8 SUBTOTAL	=	3517 Gal.

RAMP TI

STA. 51+20.00 TO STA. 53+18.91	(7191.17/9)0.04**	=	32 Gal.
STA. 53+18.91 TO STA. 54+07.00	((88.09(25.00))/9)0.04	=	10 Gal.

RAMP S

STA. 51+83.28 TO STA. 52+33.36	(50.08((27.00+25.00)/2))/9)0.04	=	6 Gal.
STA. 52+33.36 TO STA. 53+60.76	((127.40(25.00))/9)0.04	=	14 Gal.
STA. 53+60.76 TO STA. 53+64.76	(4.00((25.00+24.00)/2))/9)0.04	=	1 Gal.
STA. 53+64.76 TO STA. 54+42.19	((77.43(24.00))/9)0.04	=	8 Gal.
STA. 54+42.19 TO STA. 55+46.11	(3025.43/9)0.04**	=	13 Gal.

ITEM 407 - TACK COAT FOR INTERMEDIATE COURSE (CONT'D)

RAMP PI

STA. 69+31.90 TO STA. 70+23.55	(2679.48/9)0.04**	=	12 Gal.
STA. 70+23.55 TO STA. 70+91.83	((68.28(24.00))/9)0.04	=	7 Gal.
STA. 70+91.83 TO STA. 70+95.83	(4.00((24.00+25.00)/2))/9)0.04	=	1 Gal.
STA. 70+95.83 TO STA. 72+89.49	((193.66(25.00))/9)0.04	=	22 Gal.
STA. 72+89.49 TO STA. 73+39.54	(50.05((25.00+27.00)/2))/9)0.04	=	6 Gal.

RAMP QI

STA. 70+80.00 TO STA. 72+49.12	((169.12(25.00))/9)0.04	=	19 Gal.
STA. 72+49.12 TO STA. 74+25.00	(6487.54/9)0.04**	=	29 Gal.

RAMP KI

STA. 82+49.73 TO STA. 84+48.63	(7775.97/9)0.04**	=	35 Gal.
STA. 84+48.63 TO STA. 88+08.00	((359.37(25.00))/9)0.04	=	40 Gal.

RAMP LI

STA. 85+26.54 TO STA. 85+76.58	(50.04((27.00+25.00)/2))/9)0.04	=	6 Gal.
STA. 85+76.58 TO STA. 87+92.27	((215.69(25.00))/9)0.04	=	24 Gal.
STA. 87+92.27 TO STA. 89+33.76	(4216.57/9)0.04**	=	19 Gal.

RAMP I

STA. 92+08.35 TO STA. 93+06.61	(6911.34/9)0.04**	=	31 Gal.
STA. 93+06.61 TO STA. 93+66.45	((59.84(40.00))/9)0.04	=	11 Gal.
STA. 93+66.45 TO STA. 93+82.36	(659.11/9)0.04**	=	3 Gal.
STA. 93+82.36 TO STA. 94+85.14	((102.78(45.00))/9)0.04	=	21 Gal.
STA. 94+85.14 TO STA. 95+37.56	(52.42((45.00+33.00)/2))/9)0.04	=	9 Gal.
STA. 95+37.56 TO STA. 96+01.22	((63.66(33.00))/9)0.04	=	9 Gal.
STA. 96+01.22 TO STA. 96+51.22	(50.00((33.00+25.00)/2))/9)0.04	=	6 Gal.
STA. 96+51.22 TO STA. 96+76.15	((24.93(25.00))/9)0.04	=	3 Gal.
STA. 96+76.15 TO STA. 97+26.34	(50.19((25.00+27.00)/2))/9)0.04	=	6 Gal.

RAMP J

STA. 93+01.20 TO STA. 93+79.47	(3186.51/9)0.04**	=	14 Gal.
STA. 93+79.47 TO STA. 95+66.24	((186.77(25.00))/9)0.04	=	21 Gal.
STA. 95+66.24 TO STA. 97+16.31	(5795.82/9)0.04**	=	26 Gal.
	RAMP SUBTOTAL	=	464 Gal.

GOODKIRK STREET

STA. 192+80.00 TO STA. 195+74.34	(3340.97/9)0.04**	=	15 Gal.
STA. 192+80.00 TO STA. 192+83.13	(3.13((11.22+12.00)/2))/9(0.04)	=	0.2 Gal.
STA. 192+83.13 TO STA. 199+40.39	(657.26(12.00)/9)(0.04)	=	35 Gal.
STA. 195+74.34 TO STA. 196+55.37	(1473.97/9)0.04**	=	7 Gal.
STA. 196+55.37 TO STA. 199+40.39	(285.02((12.90+12.10)/2))/9(0.04)	=	16 Gal.
	GOODKIRK SUBTOTAL	=	73 Gal.
	ITEM TOTAL		4054 Gal.

ITEM 408 - BITUMINOUS PRIME COAT

S.R. 8

STA. 32+75.00 TO STA. 33+06.52	((31.52(121.84))/9)0.40	=	171 Gal.
STA. 33+06.52 TO STA. 33+46.26	(1063.36/9)0.40**	=	47 Gal.
STA. 33+06.52 TO STA. 33+46.26	(4169.52/9)0.40**	=	185 Gal.
STA. 35+30.41 TO STA. 35+74.54	(5079.73/9)0.40**	=	226 Gal.
STA. 35+74.54 TO STA. 41+99.90	((625.36(121.84))/9)0.40	=	3386 Gal.
STA. 41+99.90 TO STA. 45+37.38	((337.48((55.92+64.36)/2))/9)0.40	=	902 Gal.
STA. 41+99.90 TO STA. 45+37.38	((337.48(65.92))/9)0.40	=	989 Gal.
STA. 46+68.88 TO STA. 51+20.00	((451.12((67.65+78.92)/2))/9)0.40	=	1469 Gal.
STA. 46+68.88 TO STA. 47+04.82	((35.94(65.92))/9)0.40	=	105 Gal.
STA. 47+04.82 TO STA. 51+84.03	(36342.96/9)0.40**	=	1615 Gal.
STA. 51+20.00 TO STA. 53+20.90	((200.90(44.25))/9)0.40	=	395 Gal.
STA. 51+84.03 TO STA. 53+20.90	((136.87(55.92))/9)0.40	=	340 Gal.
STA. 53+20.90 TO STA. 59+44.24	((623.34(111.84))/9)0.40	=	3098 Gal.
STA. 59+44.24 TO STA. 59+93.01	((48.77(55.92))/9)0.40	=	121 Gal.
STA. 59+44.24 TO STA. 60+49.60	((105.36((55.92+54.21)/2))/9)0.40	=	258 Gal.
STA. 59+93.01 TO STA. 60+55.14	((62.13((55.92+54.21(/2))/9)0.40	=	152 Gal.
STA. 60+49.60 TO STA. 61+96.16	((146.56(52.54))/9)0.40	=	343 Gal.
STA. 60+55.14 TO STA. 66+63.28	((608.14(52.54))/9)0.40	=	1432 Gal.
STA. 61+96.16 TO STA. 62+58.84	((62.68((54.21+55.92)/2))/9)0.40	=	153 Gal.
STA. 62+58.84 TO STA. 64+11.69	((152.85(55.92))/9)0.40	=	380 Gal.
STA. 64+11.69 TO STA. 65+17.21	((105.52((55.92+54.21)/2))/9)0.40	=	258 Gal.
STA. 65+17.21 TO STA. 66+26.71	((109.50(52.54))/9)0.40	=	256 Gal.

ITEM TOTALS CARRIED TO 193

** COMPUTER CALCULATED AREA

CALCULATED CRP CHECKED GLP

PAVEMENT CALCULATIONS

SUM-8-0.63

ITEM 408 - BITUMINOUS PRIME COAT (CONT'D)

S.R. 8 (CONT'D)

STA. 66+26.71 TO STA. 67+67.77	((141.06(55.92))/9)0.40	= 351 Gal.
STA. 66+63.28 TO STA. 67+67.77	((104.49((54.21+55.92)/2))/9)0.40	= 256 Gal.
STA. 67+67.77 TO STA. 72+46.04	((478.27(111.84))/9)0.40	=2377 Gal.
STA. 72+46.04 TO STA. 73+40.00	((93.96(55.92))/9)0.40	= 234 Gal.
STA. 72+46.04 TO STA. 74+24.60	((178.56(44.25))/9)0.40	= 351 Gal.
STA. 73+40.00 TO STA. 82+49.73	(67507.33/9)0.40**.	=3000 Gal.
STA. 74+24.60 TO STA. 85+27.07	(81855.80/9)0.40**	=3638 Gal.
STA. 82+49.73 TO STA. 84+50.62	((200.89(44.25))/9)0.40	= 395 Gal.
STA. 84+50.62 TO STA. 85+27.07	((76.45(55.92))/9)0.40	= 190 Gal.
STA. 85+27.07 TO STA. 90+60.06	((532.99(111.84))/9)0.40	=2649 Gal.
STA. 90+60.06 TO STA. 92+09.97	((149.91(55.92))/9)0.40	= 373 Gal.
STA. 90+60.06 TO STA. 91+81.62	((121.56((55.92+54.21)/2))/9)0.40	= 298 Gal.
STA. 91+81.62 TO STA. 92+10.77	((29.15(54.21))/9)0.40	= 70 Gal.
STA. 92+09.97 TO STA. 92+95.98	((86.01(52.54))/9)0.40	= 201 Gal.
STA. 92+10.77 TO STA. 92+96.78	((86.01(52.54))/9)0.40	= 201 Gal.
STA. 92+95.98 TO STA. 93+25.13	((29.15(54.21))/9)0.40	= 70 Gal.
STA. 92+96.78 TO STA. 93+82.61	((85.83((52.54+48.25)/2))/9)0.40	= 192 Gal.
STA. 93+25.13 TO STA. 93+91.74	((66.61((55.92+53.05)/2))/9)0.40	= 161 Gal.
STA. 93+82.61 TO STA. 94+64.60	((81.99(48.25))/9)0.40	= 176 Gal.
STA. 93+91.74 TO STA. 97+29.47	(18335.47/9)0.40**	= 815 Gal.
STA. 94+64.60 TO STA. 95+59.78	((95.18((48.25+46.73)/2))/9)0.40	= 201 Gal.
STA. 95+59.78 TO STA. 97+15.54	(6440.69/9)0.40**	= 286 Gal.
STA. 97+15.54 TO STA. 102+70.38	(33460.25/9)0.40**	=1487 Gal.
STA. 97+29.47 TO STA. 102+70.38	(35284.41/9)0.40**	=1568 Gal.
†STA. 32+75.00 TO STA. 102+70.38	((6995.38(3.50))/9)0.40	=1088 Gal.
*STA. 60+78.00 TO STA. 87+52.57	((654.00(2.50))/9)0.40	= 73 Gal.
⌖STA. 60+92.00 TO STA. 87+24.25	((1887.00(2.00))/9)0.40	= 168 Gal.
	S.R. 8 SUBTOTAL	= 37150 Gal.

RAMP TI

STA. 51+20.00 TO STA. 53+18.91	(7191.17/9)0.40**	= 320 Gal.
STA. 53+18.91 TO STA. 54+07.00	((88.09(28.34))/9)0.400	= 111 Gal.

RAMP S

STA. 51+83.28 TO STA. 52+33.36	((50.08((30.34+28.34)/2))/9)0.40	= 65 Gal.
STA. 52+33.36 TO STA. 53+60.76	((127.40(28.34))/9)0.40	= 160 Gal.
STA. 53+60.76 TO STA. 53+64.76	((4.00((27.17+26.17)/2))/9)0.40	= 5 Gal.
STA. 53+64.76 TO STA. 54+42.19	((77.43(26.17))/9)0.40	= 90 Gal.
STA. 54+42.19 TO STA. 55+46.11	(3077.09/9)0.40**	= 137 Gal.

RAMP PI

STA. 69+31.90 TO STA. 70+23.55	(2679.48/9)0.40**	= 119 Gal.
STA. 70+23.55 TO STA. 70+91.83	((68.28(25.67))/9)0.40	= 78 Gal.
STA. 70+91.83 TO STA. 70+95.83	((4.00((25.67+26.67)/2))/9)0.40	= 5 Gal.
STA. 70+95.83 TO STA. 72+89.49	((193.66(28.34))/9)0.40	= 244 Gal.
STA. 72+89.49 TO STA. 73+39.54	((50.05((28.34+30.34)/2))/9)0.40	= 65 Gal.

RAMP QI

STA. 70+80.00 TO STA. 72+49.12	((169.12(28.34))/9)0.40	= 213 Gal.
STA. 72+49.12 TO STA. 74+25.00	(6780.02/9)0.40**	= 301 Gal.

RAMP KI

STA. 82+49.73 TO STA. 84+48.63	(7775.97/9)0.40**	= 346 Gal.
STA. 84+48.63 TO STA. 85+02.63	((54.00(26.67))/9)0.40	= 64 Gal.
STA. 85+02.63 TO STA. 88+08.00	((305.37(28.34))/9)0.40	= 385 Gal.

RAMP LI

STA. 85+26.54 TO STA. 85+76.58	((50.04((30.34+28.34)/2))/9)0.40	= 65 Gal.
STA. 85+76.58 TO STA. 87+92.27	((215.69(28.34))/9)0.40	= 272 Gal.
STA. 87+92.27 TO STA. 89+33.76	(4312.77/9)0.40**	= 192 Gal.

RAMP I

STA. 92+08.35 TO STA. 93+06.61	(7088.02/9)0.40**	= 315 Gal.
STA. 93+06.61 TO STA. 93+66.45	((59.84(41.00))/9)0.40	= 109 Gal.
STA. 93+66.45 TO STA. 93+82.36	(675.06/9)0.40**	= 30 Gal.
STA. 93+82.36 TO STA. 94+85.14	((102.78(48.34))/9)0.40	= 221 Gal.
STA. 94+85.14 TO STA. 95+37.56	((52.42((48.34+36.34)/2))/9)0.40	= 99 Gal.
STA. 95+37.56 TO STA. 96+01.22	((63.66(36.34))/9)0.40	= 103 Gal.
STA. 93+01.22 TO STA. 96+51.22	((50.00((36.34+28.34)/2))/9)0.40	= 72 Gal.
STA. 96+51.22 TO STA. 96+76.15	((24.93(28.34))/9)0.40	= 31 Gal.
STA. 96+76.15 TO STA. 97+26.34	((50.19((28.34+30.34)/2))/9)0.40	= 65 Gal.

** COMPUTER CALCULATED AREA

†AREA UNDER TYPE BI MEDIAN BARRIER
* AREA UNDER TYPE D BARRIER
⌖ AREA UNDER TYPE D BARRIER, AS PER PLAN

ITEM 408 - BITUMINOUS PRIME COAT (CONT'D)

RAMP J

STA. 93+01.20 TO STA. 93+79.47	(3245.09/9)0.40**	= 144 Gal.
STA. 93+79.47 TO STA. 95+66.24	((186.77(26.67))/9)0.40	= 221 Gal.
STA. 95+66.24 TO STA. 97+16.31	(5795.82/9)0.40**	= 258 Gal.
	RAMP SUBTOTAL	= 4905 Gal.
	ITEM TOTAL	42055 Gal.

ITEM 446 - 1½" ASPHALT CONCRETE SURFACE COURSE, TYPE IH

S.R. 8

STA. 32+75.00 TO STA. 33+06.52	(31.52)(118.5)(1.5/12)/27	= 17 C.Y.
STA. 33+06.52 TO STA. 33+46.26	((1132.91(1.5/12))/27**	= 5 C.Y.
STA. 33+06.52 TO STA. 33+46.26	(4097.18(1.5/12))/27**	= 19 C.Y.
STA. 35+30.41 TO STA. 35+74.54	(5095.79(1.5/12))/27**	= 24 C.Y.
STA. 35+74.54 TO STA. 37+00.00	(125.46)(118.50)(1.5/12)/27	= 69 C.Y.
STA. 37+00.00 TO STA. 41+20.00	(420.00)(118.50)(1.5/12)/27	= 230 C.Y.
STA. 41+20.00 TO STA. 41+99.90	(79.90)(118.50)(1.5/12)/27	= 44 C.Y.
STA. 41+99.90 TO STA. 45+37.38	337.48((54.25+62.69)/2)(1.5/12)/27	= 91 C.Y.
STA. 41+99.90 TO STA. 45+37.38	(337.48)(64.25)(1.5/12)/27	= 100 C.Y.
STA. 46+68.88 TO STA. 51+20.00	451.12((65.95+77.25)/2)(1.5/12)/27	= 150 C.Y.
STA. 46+68.88 TO STA. 47+04.82	(35.94)(64.25)(1.5/12)/27	= 11 C.Y.
STA. 47+04.82 TO STA. 51+84.03	(35542.68(1.5/12))/27**	= 165 C.Y.
STA. 51+20.00 TO STA. 53+20.90	(200.90)(44.25)(1.5/12)/27	= 41 C.Y.
STA. 51+84.03 TO STA. 53+20.90	(136.87)(54.25)(1.5/12)/27	= 34 C.Y.
STA. 53+20.90 TO STA .59+44.24	(623.34)(108.50)(1.5/12)/27	= 313 C.Y.
STA. 59+44.24 TO STA. 59+93.01	(48.77)(54.25)(1.5/12)/27	= 12 C.Y.
STA. 59+44.24 TO STA. 60+49.60	105.36((54.25+52.54)/2)(1.5/12)/27	= 26 C.Y.
STA. 59+93.01 TO STA. 60+55.14	62.13((54.25+52.54)/2)(1.5/12)/27	= 15 C.Y.
STA. 60+49.60 TO STA. 61+96.16	(146.56)(52.54)(1.5/12)/27	= 36 C.Y.
STA. 60+55.14 TO STA. 66+63.28	(608.14)(52.54)(1.5/12)/27	= 148 C.Y.
STA. 61+96.16 TO STA. 62+58.84	62.68((54.25+52.54)/2)(1.5/12)/27	= 15 C.Y.
STA. 62+58.84 TO STA. 64+11.69	(152.85)(54.25)(1.5/12)/27	= 38 C.Y.
STA. 64+11.69 TO STA. 65+17.21	105.52((54.25+52.54)/2)(1.5/12)/27	= 26 C.Y.
STA. 65+17.21 TO STA. 66+26.71	(109.50)(52.54)(1.5/12)/27	= 27 C.Y.
STA. 66+26.71 TO STA. 67+67.77	(141.06)(54.25)(1.5/12)/27	= 35 C.Y.
STA. 66+63.28 TO STA. 67+67.77	104.49((54.25+52.54)/2)(1.5/12)/27	= 26 C.Y.
STA. 67+67.77 TO STA. 72+46.04	(478.27)(110.25)(1.5/12)/27	= 244 C.Y.
STA. 72+46.04 TO STA. 73+40.00	(93.96)(54.25)(1.5/12)/27	= 24 C.Y.
STA. 72+46.04 TO STA. 74+24.60	(178.56)(44.25)(1.5/12)/27	= 37 C.Y.
STA. 73+40.00 TO STA. 82+49.73	(67094.84(1.5/12))/27**	= 311 C.Y.
STA. 74+24.60 TO STA. 85+27.07	(81541.32(1.5/12))/27**	= 378 C.Y.
STA. 82+49.73 TO STA. 84+50.62	(200.89)(44.25)(1.5/12)/27	= 41 C.Y.
STA. 84+50.62 TO STA. 85+27.07	(76.45)(54.25)(1.5/12)/27	= 19 C.Y.
STA. 85+27.07 TO STA. 90+60.06	(532.99)(110.25)(1.5/12)/27	= 272 C.Y.
STA. 90+60.06 TO STA. 92+09.97	(149.91)(54.25)(1.5/12)/27	= 38 C.Y.
STA. 90+60.06 TO STA. 91+81.62	121.56((54.25+52.54)/2)(1.5/12)/27	= 30 C.Y.
STA. 91+81.62 TO STA. 92+96.78	(115.16)(52.54)(1.5/12)/27	= 28 C.Y.
STA. 92+09.97 TO STA. 93+25.13	(115.16)(52.54)(1.5/12)/27	= 28 C.Y.
STA. 92+96.78 TO STA. 93+82.61	85.83((52.54+48.25)/2)(1.5/12)/27	= 20 C.Y.
STA. 93+25.13 TO STA. 93+91.74	(3530.98(1.5/12))/27**	= 16 C.Y.
STA. 93+82.61 TO STA. 94+64.60	(81.99)(48.25)(1.5/12)/27	= 18 C.Y.
STA. 93+91.74 TO STA. 96+00.00	(11111.19(1.5/12))/27**	= 51 C.Y.
STA. 94+64.60 TO STA. 95+59.79	(4461.61(1.5/12))/27**	= 21 C.Y.
STA. 95+59.79 TO STA. 96+00.00	(1732.68(1.5/12))/27**	= 8 C.Y.
STA. 96+00.00 TO STA. 100+00.00	(25381.04(1.5/12))/27**	= 118 C.Y.
STA. 96+00.00 TO STA. 100+00.00	(22984.37(1.5/12))/27**	= 106 C.Y.
STA. 100+00.00 TO STA. 102+70.38	(15657.47(1.5/12))/27**	= 72 C.Y.
STA. 100+00.00 TO STA. 102+70.38	(15215.89(1.5/12))/27**	= 70 C.Y.
	S.R.8 SUBTOTAL	= 3667 C.Y.

ITEM 446 - 1½" ASPHALT CONCRETE SURFACE COURSE, TYPE IH (CONT'D)

RAMP TI

STA. 51+20.00 TO STA. 53+18.91	(7191.17(1.5/12))/27**	= 33 C.Y.
STA. 53+18.91 TO STA. 54+07.00	(88.09)(25.00)(1.5/12)/27	= 10 C.Y.

RAMP S

STA. 51+83.28 TO STA. 52+33.36	50.08((27.00+25.00)/2)(1.5/12)/27	= 6 C.Y.
STA. 52+33.36 TO STA. 53+60.76	(127.40)(25.00)(1.5/12)/27	= 15 C.Y.
STA. 53+60.76 TO STA. 53+64.76	4.00((25.00+24.00)/2)(1.5/12)/27	= 1 C.Y.
STA. 53+64.76 TO STA. 54+42.19	(77.43)(24.00)(1.5/12)/27	= 9 C.Y.
STA. 54+42.19 TO STA. 55+46.11	(3025.43(1.5/12))/27**	= 14 C.Y.

RAMP PI

STA. 69+31.90 TO STA. 70+23.55	(2679.48(1.5/12))/27**	= 12 C.Y.
STA. 70+23.55 TO STA. 70+91.83	(68.28)(24.00)(1.5/12)/27	= 8 C.Y.
STA. 70+91.83 TO STA. 70+95.83	4.00((24.00+25.00)/2)(1.5/12)/27	= 1 C.Y.
STA. 70+95.83 TO STA. 72+89.49	(193.66)(25.00)(1.5/12)/27	= 22 C.Y.
STA. 72+89.49 TO STA. 73+39.54	50.05((25.00+27.00)/2)(1.5/12)/27	= 6 C.Y.

RAMP QI

STA. 70+80.00 TO STA. 72+49.12	(169.12)(25.00)(1.5/12)/27	= 20 C.Y.
STA. 72+49.12 TO STA. 74+25.00	(6487.54(1.5/12))/27**	= 30 C.Y.

RAMP KI

STA. 82+49.73 TO STA. 84+48.63	(7775.97(1.5/12))/27**	= 36 C.Y.
STA. 84+48.63 TO STA. 88+08.00	(359.37)(25.00)(1.5/12)/27	= 42 C.Y.

RAMP LI

STA. 85+26.54 TO STA. 85+76.58	50.04((27.00+25.00)/2)(1.5/12)/27	= 6 C.Y.
STA. 85+76.58 TO STA. 87+92.27	(215.69)(25.00)(1.5/12)/27	= 25 C.Y.
STA. 87+92.27 TO STA. 89+33.76	(4216.57(1.5/12))/27**	= 20 C.Y.

RAMP I

STA. 92+08.35 TO STA. 93+06.61	(6911.34(1.5/12))/27**	= 32 C.Y.
STA. 93+06.61 TO STA. 93+66.45	(59.84)(40.00)(1.5/12)/27	= 11 C.Y.
STA. 93+66.45 TO STA. 93+82.36	(659.11(1.5/12))/27**	= 3 C.Y.
STA. 93+82.36 TO STA. 94+85.14	(102.78)(45.00)(1.5/12)/27	= 21 C.Y.
STA. 94+85.14 TO STA. 95+37.56	52.42((45.00+33.00)/2)(1.5/12)/27	= 9 C.Y.
STA. 95+37.56 TO STA. 96+01.22	(63.66)(33.00)(1.5/12)/27	= 10 C.Y.
STA. 96+01.22 TO STA. 96+51.22	50.00((33.00+25.00)/2)(1.5/12)/27	= 7 C.Y.
STA. 96+51.22 TO STA. 96+76.15	(24.93)(25.00)(1.5/12)/27	= 3 C.Y.
STA. 96+76.15 TO STA. 97+26.34	50.19((25.00+27.00)/2)(1.5/12)/27	= 6 C.Y.

RAMP J

STA. 93+01.20 TO STA. 93+79.47	(3186.51(1.5/12))/27**	= 15 C.Y.
STA. 93+79.47 TO STA. 95+66.24	(186.77)(25.00)(1.5/12)/27	= 22 C.Y.
STA. 95+66.24 TO STA. 97+16.31	(5795.82(1.5/12))/27**	= 27 C.Y.
	RAMP SUBTOTAL	= 482 C.Y.

GOODKIRK STREET

STA. 192+80.00 TO STA. 195+74.34	(3340.97(1.5/12))/27**	= 15 C.Y.
STA. 192+80.00 TO STA. 192+83.13	3.13((11.22+12)/2)(1.5/12)/27	= 0.2 C.Y.
STA. 192+83.13 TO STA. 199+40.39	(657.26)(12)(1.5/12)/27	= 37 C.Y.
STA. 195+74.34 TO STA. 196+55.37	(1473.97(1.5/12))/27	= 7 C.Y.
STA. 196+55.37 TO STA. 199+40.39	285.02((12.9+12.1)/2)(1.5/12)/27	= 17 C.Y.
	GOODKIRK SUBTOTAL	= 76 C.Y.
	ITEM TOTAL	4225 C.Y.

ITEM TOTALS CARRIED TO 193

CALCULATED CRP
CHECKED GLP

PAVEMENT CALCULATIONS

ITEM 446 - 1¾" ASPHALT CONCRETE INTERMEDIATE COURSE, TYPE 2, PG 64-28

S.R. 8

STA. 32+75.00 TO STA. 33+06.52	((31.52)(118.50)(1.75/12)/27	=	20 C.Y.
STA. 33+06.52 TO STA. 33+46.26	(1132.91(1.75/12))/27**	=	6 C.Y.
STA. 33+06.52 TO STA. 33+46.26	(4097.18(1.75/12))/27**	=	22 C.Y.
STA. 35+30.41 TO STA. 35+74.54	(5095.79(1.75/12))/27**	=	28 C.Y.
STA. 35+74.54 TO STA. 41+99.90	((625.36)(118.50)(1.75/12))/27	=	400 C.Y.
STA. 41+99.90 TO STA. 45+37.38	((337.48((54.25+62.69)/2))(1.75/12))/27	=	107 C.Y.
STA. 41+99.90 TO STA. 45+37.38	((337.48)(64.25)(1.75/12))/27	=	117 C.Y.
STA. 46+68.88 TO STA. 51+20.00	((451.12((65.98+77.25)/2))(1.75/12))/27	=	175 C.Y.
STA. 46+68.88 TO STA. 47+04.82	((35.94)(64.25)(1.75/12))/27	=	12 C.Y.
STA. 47+04.82 TO STA. 51+84.03	(35542.68(1.75/12))/27**	=	192 C.Y.
STA. 51+20.00 TO STA. 53+20.90	((200.90)(44.25)(1.75/12))/27	=	48 C.Y.
STA. 51+84.03 TO STA. 53+20.00	((136.87)(54.25)(1.75/12))/27	=	40 C.Y.
STA. 53+20.90 TO STA. 59+44.24	((623.34)(108.50)(1.75/12))/27	=	365 C.Y.
STA. 59+44.24 TO STA. 59+93.01	((48.77)(54.25)(1.75/12))/27	=	14 C.Y.
STA. 59+44.24 TO STA. 60+49.60	((105.36((54.25+52.54)/2))(1.75/12))/27	=	30 C.Y.
STA. 59+93.01 TO STA. 60+55.14	((62.13((54.25+52.54)/2))(1.75/12))/27	=	18 C.Y.
STA. 60+49.60 TO STA. 61+96.16	((146.56)(52.54)(1.75/12))/27	=	42 C.Y.
STA. 60+55.14 TO STA. 66+63.28	((608.14)(52.54)(1.75/12))/27	=	173 C.Y.
STA. 61+96.16 TO STA. 62+58.84	((62.68((54.25+52.54)/2))(1.75/12))/27	=	18 C.Y.
STA. 62+58.84 TO STA. 64+11.69	((152.85)(54.25)(1.75/12))/27	=	45 C.Y.
STA. 64+11.69 TO STA. 65+17.21	((105.52((54.25+52.54)/2))(1.75/12))/27	=	30 C.Y.
STA. 65+17.21 TO STA. 66+26.71	((109.50)(54.29)(1.75/12))/27	=	32 C.Y.
STA. 66+26.71 TO STA. 67+67.77	((141.06)(54.25)(1.75/12))/27	=	41 C.Y.
STA. 66+63.28 TO STA. 67+67.77	((104.49((54.25+52.54)/2))(1.75/12))/27	=	30 C.Y.
STA. 67+67.77 TO STA. 72+46.04	((478.27)(108.50)(1.75/12))/27	=	280 C.Y.
STA. 72+46.04 TO STA. 73+40.00	((93.96)(54.25)(1.75/12))/27	=	28 C.Y.
STA. 72+46.04 TO STA. 74+24.60	((178.56)(44.25)(1.75/12))/27	=	43 C.Y.
STA. 73+40.00 TO STA. 82+49.73	(67094.84(1.75/12))/27**	=	362 C.Y.
STA. 74+24.60 TO STA. 85+27.07	(81541.32(1.75/12))/27**	=	440 C.Y.
STA. 82+49.73 TO STA. 84+50.62	((200.89)(44.25)(1.75/12))/27	=	48 C.Y.
STA. 84+50.62 TO STA. 85+27.07	((76.45)(54.25)(1.75/12))/27	=	22 C.Y.
STA. 85+27.07 TO STA. 90+60.06	((532.99)(108.50)(1.75/12))/27	=	312 C.Y.
STA. 90+60.06 TO STA. 92+09.97	((149.91)(54.25)(1.75/12))/27	=	44 C.Y.
STA. 90+60.06 TO STA. 91+81.62	((121.56((54.25+52.54)/2))(1.75/12))/27	=	35 C.Y.
STA. 91+81.62 TO STA. 92+96.78	((115.16)(52.54)(1.75/12))/27	=	33 C.Y.
STA. 92+09.97 TO STA. 93+25.13	((115.16)(52.54)(1.75/12))/27	=	33 C.Y.
STA. 92+96.78 TO STA. 93+82.61	((85.83((48.25+52.54)/2))(1.75/12))/27	=	23 C.Y.
STA. 93+25.13 TO STA. 93+91.74	(3530.98(1.75/12))/27**	=	19 C.Y.
STA. 93+82.61 TO STA. 94+64.60	((81.99)(50.00)(1.75/12))/27	=	22 C.Y.
STA. 93+91.74 TO STA. 96+00.00	((1111.19(1.75/12))/27**	=	60 C.Y.
STA. 94+64.60 TO STA. 95+59.79	(4461.61(1.75/12))/27**	=	24 C.Y.
STA. 95+59.79 TO STA. 96+00.00	(1732.68(1.75/12))/27**	=	9 C.Y.
STA. 96+00.00 TO STA. 100+00.00	(25381.04(1.75/12))/27**	=	137 C.Y.
STA. 96+00.00 TO STA. 100+00.00	(22984.37(1.75/12))/27**	=	124 C.Y.
STA. 100+00.00 TO STA. 102+70.38	(15657.47(1.75/12))/27**	=	85 C.Y.
STA. 100+00.00 TO STA. 102+70.38	(15215.89(1.75/12))/27**	=	82 C.Y.
	S.R. 8 SUBTOTAL	=	4270 C.Y.

RAMP TI

STA. 51+20.00 TO STA. 53+18.91	(7191.17(1.75/12))/27**	=	39 C.Y.
STA. 53+18.91 TO STA. 54+07.00	((88.09)(25.00)(1.75/12))/27	=	12 C.Y.

RAMP S

STA. 51+83.28 TO STA. 52+33.36	((50.08((27.00+25.00)/2))(1.75/12))/27	=	7 C.Y.
STA. 52+33.36 TO STA. 53+60.76	((127.40)(25.00)(1.75/12))/27	=	17 C.Y.
STA. 53+60.76 TO STA. 53+64.76	((4.00((25.00+24.00)/2))(1.75/12))/27	=	1 C.Y.
STA. 53+64.76 TO STA. 54+42.19	((77.43)(24.00)(1.75/12))/27	=	10 C.Y.
STA. 54+42.19 TO STA. 55+46.11	(3025.43(1.75/12))/27**	=	16 C.Y.

RAMP PI

STA. 69+31.90 TO STA. 70+23.55	(2679.48(1.75/12))/27**	=	14 C.Y.
STA. 70+23.55 TO STA. 70+91.83	((68.28)(24.00)(1.75/12))/27	=	9 C.Y.
STA. 70+91.83 TO STA. 70+95.83	((4.00((24.00+25.00)/2))(1.75/12))/27	=	1 C.Y.
STA. 70+95.83 TO STA. 72+89.49	((193.66)(25.00)(1.75/12))/27	=	26 C.Y.
STA. 72+89.49 TO STA. 73+39.54	((50.05((25.00+27.00)/2))(1.75/12))/27	=	7 C.Y.

RAMP QI

STA. 70+80.00 TO STA. 72+49.12	((169.12)(25.00)(1.75/12))/27	=	23 C.Y.
STA. 72+49.12 TO STA. 74+25.00	(6487.54(1.75/12))/27**	=	35 C.Y.

** COMPUTER CALCULATED AREA

▽ INCLUDES REINF. CONC. PART OF RAMP TI
◇ INCLUDES REINF. CONC. PART OF RAMP PI
□ INCLUDES REINF. CONC. PART OF RAMP KI

** COMPUTER CALCULATED AREA
▽ INCLUDES REINF. CONC. PART OF RAMP TI
◇ INCLUDES REINF. CONC. PART OF RAMP PI
□ INCLUDES REINF. CONC. PART OF RAMP KI

ITEM 446 - 1¾" ASPHALT CONCRETE INTERMEDIATE COURSE, TYPE 2, PG 64-28 (CONT'D)

RAMP KI

STA. 82+49.73 TO STA. 84+48.63	(7775.97(1.75/12))/27**	=	42 C.Y.
STA. 84+48.63 TO STA. 88+08.00	((359.37)(25.00)(1.75/12))/27	=	49 C.Y.

RAMP LI

STA. 85+26.54 TO STA. 85+76.58	((50.04((27.00+25.00)/2))(1.75/12))/27	=	7 C.Y.
STA. 85+76.58 TO STA. 87+92.27	((215.69)(25.00)(1.75/12))/27	=	29 C.Y.
STA. 87+92.27 TO STA. 89+33.76	(4216.57(1.75/12))/27**	=	23 C.Y.

RAMP I

STA. 92+08.35 TO STA. 93+06.61	(6911.34(1.75/12))/27**	=	37 C.Y.
STA. 93+06.61 TO STA. 93+66.45	((59.84)(40.00)(1.75/12))/27	=	13 C.Y.
STA. 93+66.45 TO STA. 93+82.36	(659.11(1.75/12))/27**	=	4 C.Y.
STA. 93+82.36 TO STA. 94+85.14	((102.78)(45.00)(1.75/12))/27	=	25 C.Y.
STA. 94+85.14 TO STA. 95+37.56	((52.42((45.00+33.00)/2))(1.75/12))/27	=	11 C.Y.
STA. 95+37.56 TO STA. 96+01.22	((63.66)(33.00)(1.75/12))/27	=	11 C.Y.
STA. 96+01.22 TO STA. 96+51.22	((50.00((33.00+25.00)/2))(1.75/12))/27	=	8 C.Y.
STA. 96+51.22 TO STA. 96+76.15	((24.93)(25.00)(1.75/12))/27	=	3 C.Y.
STA. 96+76.15 TO STA. 97+26.34	((50.19((25.00+27.00)/2))(1.75/12))/27	=	7 C.Y.

RAMP J

STA. 93+01.20 TO STA. 93+79.47	(3186.51(1.75/12))/27**	=	17 C.Y.
STA. 93+79.47 TO STA. 95+66.24	((186.77)(25.00)(1.75/12))/27	=	25 C.Y.
STA. 95+66.24 TO STA. 97+16.31	(5795.82(1.75/12))/27**	=	31 C.Y.
	RAMP SUBTOTAL	=	559 C.Y.

GOODKIRK STREET

STA. 192+80.00 TO STA. 195+74.34	(3340.97(1.75/12))/27**	=	18 C.Y.
STA. 192+80.00 TO STA. 192+83.13	((3.13)((11.22+12.00)/2)(1.75/12))/27	=	0.2 C.Y.
STA. 192+83.13 TO STA. 199+40.39	((657.26)(12.00)(1.75/12))/27	=	43 C.Y.
STA. 195+74.34 TO STA. 196+55.37	(1473.97(1.75/12))/27**	=	8 C.Y.
STA. 196+55.37 TO STA. 199+40.39	((285.02)((12.90+12.10)/2)(1.75/12))/27	=	19 C.Y.
	GOODKIRK SUBTOTAL	=	88 C.Y.
	ITEM TOTAL		4917 C.Y.

ITEM 451 - 8" REINFORCED CONCRETE PAVEMENT

GOODKIRK STREET

STA. 192+80.00 TO STA. 192+83.13	(3.13((11.72+12.50)/2))/9	=	4 S.Y.
STA. 192+83.13 TO STA. 199+40.39	(657.26(12.50))/9	=	913 S.Y.
STA. 199+40.39 TO STA. 200+58.21	7361.67/9**	=	818 S.Y.
STA. 200+58.21 TO STA. 203+89.61	(331.40(29.00))/9	=	1068 S.Y.
STA. 203+89.61 TO STA. 204+64.61	2900.49/9**	=	322 S.Y.
STA. 204+64.61 TO STA. 207+32.84	(268.23(29.00))/9	=	864 S.Y.
STA. 207+32.84 TO STA. 208+20.85	(88.01((29.00+32.56)/2))/9	=	301 S.Y.
STA. 208+20.85 TO STA. 209+16.79	4206.24/9**	=	467 S.Y.
▽STA. 209+16.79 TO STA. 211+48.84	13013.63/9**	=	1446 S.Y.
STA. 211+48.84 TO STA. 212+27.61	3217.10/9**	=	357 S.Y.
STA. 212+27.61 TO STA. 212+93.30	1940.10/9**	=	216 S.Y.
STA. 212+93.30 TO STA. 214+39.86	(146.56(29.00))/9	=	472 S.Y.
STA. 214+39.86 TO STA. 215+84.37	10906.15/9**	=	1212 S.Y.
STA. 215+84.37 TO STA. 216+24.37	(40.00((29.00+33.00)/2))/9	=	138 S.Y.
STA. 216+24.37 TO STA. 218+79.74	(255.37(29.00))/9	=	823 S.Y.
STA. 218+79.74 TO STA. 219+19.74	(40.00((29.00+33.00)/2))/9	=	138 S.Y.
STA. 219+19.74 TO STA. 220+53.44	11901.33/9**	=	1322 S.Y.
STA. 220+53.44 TO STA. 220+93.44	(40.00((41.00+44.81)/2))/9	=	191 S.Y.
STA. 220+93.44 TO STA. 221+49.16	(55.72(41.00))/9	=	254 S.Y.
◇STA. 221+49.16 TO STA. 223+58.34	9112.85/9**	=	1013 S.Y.
STA. 223+58.34 TO STA. 224+12.09	(53.75(20.50))/9	=	122 S.Y.
STA. 224+12.09 TO STA. 227+48.52	8292.23/9**	=	921 S.Y.
STA. 227+48.52 TO STA. 231+62.90	(414.38(29.00))/9	=	1335 S.Y.
STA. 231+62.90 TO STA. 231+92.90	(30.00((29.00+31.00)/2))/9	=	100 S.Y.
STA. 231+92.90 TO STA. 233+50.78	12786.16/9**	=	1421 S.Y.
STA. 233+50.78 TO STA. 233+90.74	(39.96((29.00+33.00)/2))/9	=	138 S.Y.
STA. 233+90.74 TO STA. 236+34.20	(243.46(29.00))/9	=	784 S.Y.
STA. 236+34.20 TO STA. 236+74.45	(40.25((29.00+33.00)/2))/9	=	139 S.Y.
STA. 236+74.45 TO STA. 238+46.04	12081.04/9**	=	1342 S.Y.
STA. 238+46.04 TO STA. 240+75.92	(229.88(29.00))/9	=	741 S.Y.
STA. 240+75.92 TO STA. 241+53.49	3895.29/9**	=	433 S.Y.
STA. 241+53.49 TO STA. 241+96.26	(42.77((29.00+33.58)/2))/9	=	149 S.Y.
STA. 241+96.26 TO STA. 242+39.31	(43.05(29.00))/9	=	139 S.Y.
STA. 242+39.31 TO STA. 243+39.60	(100.29((29.00+33.00)/2))/9	=	345 S.Y.
□STA. 243+39.60 TO STA. 245+35.72	10711.76/9**	=	1190 S.Y.
STA. 245+35.72 TO STA. 246+27.83	4149.14/9**	=	461 S.Y.
	GOODKIRK SUBTOTAL	=	22099 S.Y.

ITEM TOTALS CARRIED TO 193

SUM-8-0.63

CALCULATED CRP | CHECKED GLP

ITEM 451 - 8" REINFORCED CONCRETE PAVEMENT (CONT'D)

FOUNTAIN STREET

STA. 300+31.33 TO STA. 300+77.90	2592.42/9**	= 288 S.Y.
STA. 300+77.90 TO STA. 301+17.90	(40.00((29.00+33.00)/2))/9	= 138 S.Y.
STA. 301+17.90 TO STA. 303+98.10	(280.20(29.00))/9	= 903 S.Y.
STA. 303+98.10 TO STA. 304+71.60	2704.18/9**	= 300 S.Y.
STA. 304+71.60 TO STA. 305+97.78	(126.18(29.00))/9	= 407 S.Y.
STA. 305+97.78 TO STA. 306+71.54	(2715.61/9)**	= 302 S.Y.
STA. 306+71.54 TO STA. 309+38.01	(266.47(29.00))/9	= 859 S.Y.
ΔSTA. 309+38.01 TO STA. 311+07.91	7518.85/9**	= 835 S.Y.
STA. 311+07.91 TO STA. 314+22.81	(314.90(41.00))/9	=1435 S.Y.
STA. 314+22.81 TO STA. 314+62.81	(40.00((41.00+45.00)/2))/9	= 191 S.Y.
STA. 314+62.81 TO STA. 315+83.28	11624.88/9**	=1292 S.Y.
STA. 315+83.28 TO STA. 316+47.40	2230.19/9**	= 248 S.Y.
STA. 316+47.40 TO STA. 318+87.08	(239.68(41.00))/9	=1092 S.Y.
STA. 318+87.08 TO STA. 319+27.08	(40.00((41.00+45.00)/2))/9	= 191 S.Y.
STA. 319+27.08 TO STA. 320+58.48	13546.76/9**	=1505 S.Y.
STA. 320+58.48 TO STA. 320+65.20	(6.72((32.33+33.00)/2))/9	= 24 S.Y.
⊗STA. 320+65.20 TO STA. 323+47.23	13378.80/9**	=1487 S.Y.
STA. 323+47.23 TO STA. 324+47.23	(100.00((29.00+33.00)/2))/9	= 344 S.Y.
STA. 324+47.23 TO STA. 329+89.53	(542.30(29.00))/9	=1747 S.Y.
STA. 329+89.53 TO STA. 330+29.53	(40.00((29.00+34.00)/2))/9	= 140 S.Y.
STA. 330+29.53 TO STA. 332+11.19	14931.15/9**	=1659 S.Y.
STA. 332+11.19 TO STA. 338+05.10	(593.91(29.00))/9	=1914 S.Y.
STA. 338+05.10 TO STA. 339+75.25	9844.90/9**	=1094 S.Y.
STA. 339+75.25 TO STA. 340+15.36	(40.11((21.00+26.00)/2))/9	= 105 S.Y.
STA. 340+15.36 TO STA. 341+68.43	(153.07(21.00))/9	= 357 S.Y.
STA. 341+68.43 TO STA. 343+06.62	(138.19(20.50))/9	= 315 S.Y.
◪STA. 343+06.62 TO STA. 345+17.47	9333.08/9**	=1037 S.Y.
STA. 345+17.47 TO STA. 345+51.89	(34.42(41.00))/9	= 157 S.Y.
STA. 345+51.89 TO STA. 345+91.89	(40.00((41.00+45.00)/2))/9	= 191 S.Y.
STA. 345+91.89 TO STA. 346+26.43	2550.15/9**	= 283 S.Y.
	GOODKIRK SUBTOTAL	= 20840 S.Y.
	ITEM TOTAL	42939 S.Y.

ITEM SPECIAL - PRESSURE RELIEF JOINT, TYPE A

CARROLL STREET

STA. 12+66.22 TO STA. 12+81.22		= 45 L.F.
STA. 14+00.88 TO STA. 14+15.88		= 45 L.F.
	CARROLL SUBTOTAL	= 90 L.F.

BUCHTEL AVENUE

STA. 13+76.64 TO STA. 13+91.64		= 45 L.F.
STA. 15+11.32 TO STA. 15+26.32		= 45 L.F.
	BUCHTEL SUBTOTAL	= 90 L.F.

MARKET STREET

STA. 24+23.62 TO STA. 24+38.62		= 83 L.F.
STA. 25+97.81 TO STA. 26+12.81		= 76 L.F.
	MARKET SUBTOTAL	= 159 L.F.

FORGE STREET

STA. 6+50.99 TO STA. 6+70.96		= 73 L.F.
STA. 8+87.94 TO STA. 9+07.94		= 70 L.F.
	FORGE SUBTOTAL	= 143 L.F.
	ITEM TOTAL	482 L.F.

ITEM 452 - 7" PLAIN CONCRETE PAVEMENT

OHIO STREET

STA. 500+00.00 TO STA. 500+49.62	4927.38/9**	= 547 S.Y.
STA. 500+49.62 TO STA. 502+09.03	(159.41(27.00))/9	= 478 S.Y.
STA. 502+09.03 TO STA. 502+59.86	1431.89/9**	= 159 S.Y.
STA. 502+59.86 TO STA. 504+33.11	(173.25(26.50))/9	= 510 S.Y.
STA. 504+33.11 TO STA. 504+83.69	1399.30/9**	= 155 S.Y.
STA. 504+83.69 TO STA. 505+25.86	(42.17(28.40))/9	= 133 S.Y.
	OHIO SUBTOTAL	=1982 S.Y.

PARKWOOD AVENUE

STA. 1+15.00 TO STA. 2+02.50	1642.90/9**	= 183 S.Y.
STA. 2+02.50 TO STA. 3+91.57	(189.07(19.00))/9	= 399 S.Y.
STA. 3+91.57 TO STA. 4+44.98	1104.57/9**	= 123 S.Y.
	PARKWOOD SUBTOTAL	= 705 S.Y.

ITEM 452 - 7" PLAIN CONCRETE PAVEMENT (CONT'D)

NASH STREET (WEST)

STA. 3+63.00 TO STA. 4+60.68	(97.68(26.00))/9	= 282 S.Y.
STA. 4+60.68 TO STA. 4+67.44	180.99/9**	= 20 S.Y.
	NASH (WEST) SUBTOTAL	= 302 S.Y.

VINE STREET

STA. 3+90.00 TO STA. 4+02.59	334.41/9**	= 37 S.Y.
STA. 4+02.59 TO STA. 4+60.78	(58.19(27.00))/9	= 175 S.Y.
STA. 4+60.78 TO STA. 4+68.33	205.34/9**	= 23 S.Y.
	VINE SUBTOTAL	= 235 S.Y.

ORCHARD STREET

STA. 3+75.00 TO STA. 4+12.70	787.88/9**	= 88 S.Y.
STA. 4+12.70 TO STA. 4+55.62	(42.92(23.83))/9	= 114 S.Y.
STA. 4+55.62 TO STA. 4+70.24	352.00/9**	= 39 S.Y.
	ORCHARD SUBTOTAL	= 241 S.Y.

NASH STREET (EAST)

STA. 8+24.90 TO STA. 8+35.89	284.97/9**	= 32 S.Y.
STA. 8+35.89 TO STA. 9+00.00	(64.11(24.42))/9	= 174 S.Y.
	NASH (EAST) SUBTOTAL	= 206 S.Y.

MASON AVENUE

STA. 0+28.00 TO STA. 0+38.99	287.69/9**	= 32 S.Y.
STA. 0+38.99 TO STA. 1+10.00	(71.01(24.83))/9	= 196 S.Y.
	MASON SUBTOTAL	= 228 S.Y.

EWING COURT

SOUTH CUL-DE-SAC	3953.41/9**	= 439 S.Y.
NORTH CUL-DE-SAC	2951.44/9**	= 328 S.Y.
	EWING SUBTOTAL	= 767 S.Y.
	ITEM TOTAL	4666 S.Y.

ITEM 611 - REINFORCED CONCRETE APPROACH SLAB (T=12")

CARROLL STREET

STA. 12+66.22 TO STA .12+81.22	(15.00(45.00))/9	= 75 S.Y.
STA. 14+00.88 TO STA. 14+15.88	(15.00(45.00))/9	= 75 S.Y.
	CARROLL SUBTOTAL	= 150 S.Y.

BUCHTEL AVENUE

STA. 13+76.64 TO STA. 13+91.64	(15.00(45.00))/9	= 75 S.Y.
STA. 15+11.32 TO STA. 15+26.32	(15.00(45.00))/9	= 75 S.Y.
	BUCHTEL SUBTOTAL	= 150 S.Y.
	ITEM TOTAL	300 S.Y.

ITEM 611 - REINFORCED CONCRETE APPROACH SLAB (T=13")

S.R. 8 OVER EXCHANGE

STA. 45+37.38 TO STA. 45+57.38	(20.00((67.87+68.37)/2))/9	= 151 S.Y.
STA. 45+37.38 TO STA. 45+57.38	(20.00(67.92))/9	= 151 S.Y.
STA. 46+48.88 TO STA. 46+68.88	(20.00((70.66+71.16)/2))/9	= 158 S.Y.
STA. 46+48.88 TO STA. 46+68.88	(20.00(67.92))/9	= 151 S.Y.
	ITEM TOTAL	611 S.Y.

ITEM 611 - REINFORCED CONCRETE APPROACH SLAB (T=15")

S.R. 8 OVER BEACON

STA. 33+46.26 TO STA. 33+71.26	1489.99/9**	= 166 S.Y.
STA. 33+46.26 TO STA. 33+71.26	1736.64/9**	= 193 S.Y.
STA. 35+04.32 TO STA. 35+29.32	1462.27/9**	= 162 S.Y.
STA. 35+04.32 TO STA. 35+29.32	1735.51/9**	= 193 S.Y.
	ITEM TOTAL	714 S.Y.

ITEM 611 - APPROACH SLAB, MISC: REINFORCED CONCRETE (T=14") HS-25 LOADING

MARKET STREET

STA. 24+23.62 TO STA. 24+38.62	1228.35/9**	= 136 S.Y.
STA. 25+97.81 TO STA. 26+12.81	1229.73/9**	= 137 S.Y.
	ITEM TOTAL	273 S.Y.

ITEM 611 - APPROACH SLAB, MISC: REINFORCED CONCRETE (T=17") HS-25 LOADING

FORGE STREET

STA. 6+50.99 TO STA. 6+70.96	1360.22/9**	= 151 S.Y.
STA. 8+87.94 TO STA. 9+07.94	1378.83/9**	= 153 S.Y.
	ITEM TOTAL	304 S.Y.

ITEM 830 - 6" CONCRETE TRAFFIC ISLAND

RAMP I

RAMP I AND PERKINS STREET	514.24/9**	= 57 S.Y.
	RAMP I SUBTOTAL	= 57 S.Y.

GOODKIRK STREET

STA. 208+82.88 TO STA. 209+16.79	238.50/9**	= 27 S.Y.
	GOODKIRK SUBTOTAL	= 27 S.Y.

FOUNTAIN STREET

STA. 323+47.23 TO STA. 323+72.33	173.79/9**	= 19 S.Y.
	FOUNTAIN SUBTOTAL	= 19 S.Y.
	ITEM TOTAL	103 S.Y.

** COMPUTER CALCULATED AREA

Δ INCLUDES REINF. CONC. PART OF RAMP S
⊗ INCLUDES REINF. CONC. PART OF RAMP QI
◪ INCLUDES REINF. CONC. PART OF RAMP LI

SUMMARY OF PAVEMENT CALCULATIONS

ITEM NUMBER	DESCRIPTION	ITEM TOTAL
202	APPROACH SLAB REMOVED	1930 S.Y.
202	PAVEMENT REMOVED	113505 S.Y.
202	BRICK BASE REMOVED	5148 S.Y.
202	CONCRETE MEDIAN REMOVED	3563 S.Y.
202	TRAFFIC ISLAND REMOVED	56 S.Y.
203	SUBGRADE COMPACTION	154164 S.Y.
254	PAVEMENT PLANING, BITUMINOUS, 3"	931 S.Y.
302	BITUMINOUS AGGREGATE BASE, PG 64-22	26428 C.Y.
304	AGGREGATE BASE	25983 C.Y.
407	TACK COAT	70 Gallon
407	TACK COAT FOR INTERMEDIATE COURSE	4054 Gallon
408	BITUMINOUS PRIME COAT	42055 Gallon
446	1½" ASPHALT CONCRETE SURFACE COURSE, TYPE 1H	4225 C.Y.
446	1¾" ASPHALT CONCRETE INTERMEDIATE COURSE, TYPE 2, PG 64-28	4917 C.Y.
451	8" REINFORCED CONCRETE PAVEMENT	42939 S.Y.
SPECIAL	PRESSURE RELIEF JOINT, TYPE A	482 L.F.
452	7" PLAIN CONCRETE PAVEMENT	4666 S.Y.
611	REINFORCED CONCRETE APPROACH SLAB (T=12")	300 S.Y.
611	REINFORCED CONCRETE APPROACH SLAB (T=13")	611 S.Y.
611	REINFORCED CONCRETE APPROACH SLAB (T=15")	714 S.Y.
611	APPROACH SLAB, MISC: REINFORCED CONCRETE (T=14") HS-25 LOADING	273 S.Y.
611	APPROACH SLAB, MISC: REINFORCED CONCRETE (T=17") HS-25 LOADING	304 S.Y.
830	6" CONCRETE TRAFFIC ISLAND	103 S.Y.
TOTALS CARRIED TO GENERAL SUMMARY		

PAVEMENT CALCULATIONS

SUM-8-0.63

ESTIMATED QUANTITIES

LOCATION	SIDE	877 TEMP. PERIMETER FILTER FABRIC FENCE LIN. FT.	877 TEMP. DITCH CHECK FILTER FABRIC FENCE LIN. FT.	877 TEMP. INLET FILTER FABRIC FENCE LIN. FT.	877 TEMPORARY SLOPE DRAINS LIN. FT.	877 TEMP. SEDIMENT BASINS AND DAMS CU. YD.	877 TEMPORARY DIKES CU. YD.
AT DITCH CHECKS							
AT ALL CATCH BASINS				80			
35+85 TO 38+50		270					
FROM SHEET 194					200	350	400
FROM SHEET 195		2725	150	520	750	300	180
FROM SHEET 196		6158	138	640	400	600	520
FROM SHEET 197		6433	150	880	475	390	605
FROM SHEET 198		7171	175	680	460	630	455
FROM SHEET 199		1540	50	60	120	300	240
TOTALS CARRIED TO GEN. SUM.		24297	663	2860	2405	2570	2400

PROJECT DATA

TOTAL AREA (RIGHT-OF-WAY)	60.13 Ac
AREA TO UNDERGO EXCAVATION, FILLING OR GRADING	57.58 Ac
RUNOFF COEFFICIENT FOR PRE-CONSTRUCTION SITE	0.60 - 0.90
RUNOFF COEFFICIENT FOR POST-CONSTRUCTION SITE	0.60 - 0.90
SOIL DATA	SEE SOIL PROFILE
IMMEDIATE RECEIVING WATERS	LITTLE CUYAHOGA RIVER
SUBSEQUENT RECEIVING WATERS	CUYAHOGA RIVER

LEGEND

- CATCH BASIN (20 LIN. FT. EACH), I-3D50
- CATCH BASIN (20 LIN. FT. EACH), CB-5 & CB-5A
- CATCH BASIN (20 LIN. FT. EACH), CB-3A
- CATCH BASIN (20 LIN. FT. EACH), CB-2-2A
- CATCH BASIN (20 LIN. FT. EACH), CB-3
- CATCH BASIN (20 LIN. FT. EACH), INLET, MISC.: AS PER PLAN
- DITCH CHECK (12.5 LIN. FT. EACH)
- FF FILTER FABRIC FENCE
- MANHOLE

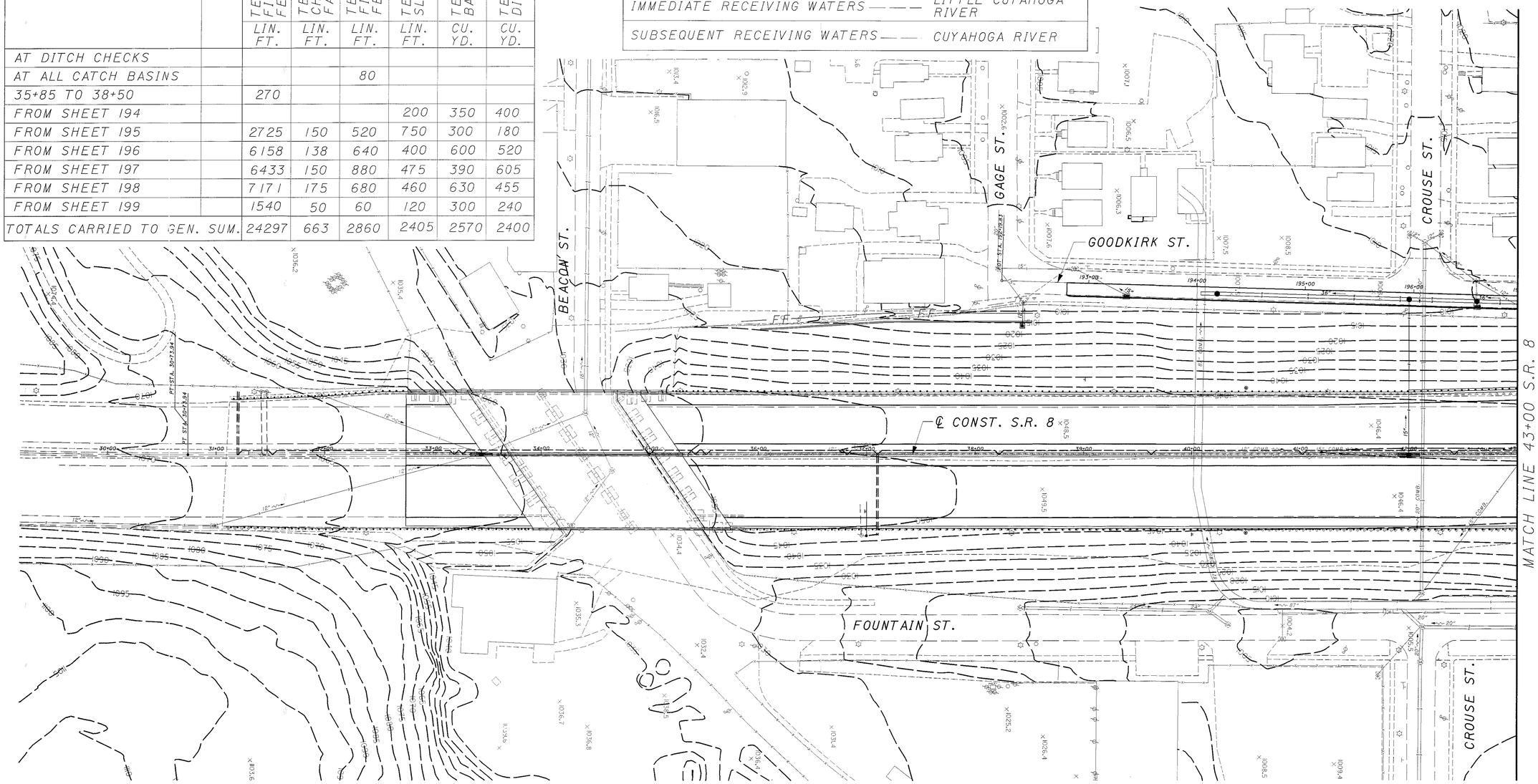

PROJECT DESCRIPTION

THE PROJECT CONSISTS OF THE RECONSTRUCTION OF 1.3 MILES OF STATE ROUTE 8 IN THE CITY OF AKRON FROM NORTH OF THE CENTRAL INTERCHANGE TO THE NORTH EXPRESSWAY VIADUCT BRIDGE. CONSTRUCTION/RECONSTRUCTION OF SERVICE ROADS ALONG THE EAST AND WEST SIDE OF STATE ROUTE 8. CONSTRUCTION OF RETAINING WALLS AND CONSTRUCTION/ RECONSTRUCTION OF INTERCHANGE RAMPS BETWEEN THE SERVICE ROADS AND STATE ROUTE 8. RECONSTRUCTION OF STRUCTURES AT BEACON STREET, EXCHANGE STREET, FORGE STREET, AND MARKET STREET. INSTALLATION OF DRAINAGE FACILITIES, TRAFFIC SIGNAL DEVICES AND LIGHTING.

USGS QUADRANT NO. N4100-W8130/7.5
AKRON WEST, OHIO
LONGITUDE: 81°-30'-30"*
LATITUDE: 41°-04'-30"*
* LONGITUDE AND LATITUDE TO APPROX. CENTER OF PROJECT

N

0 25 50 100 HORIZONTAL SCALE IN FEET

CALCULATED KME CHECKED BF

STORM WATER POLLUTION PREVENTION PLAN STA. 30+00 TO STA. 43+00

SUM-8-0.63

194
1088

ESTIMATED QUANTITIES

LOCATION	SIDE	877 TEMP. PERIMETER FILTER FABRIC FENCE LIN. FT.	877 TEMP. DITCH CHECK FILTER FABRIC FENCE LIN. FT.	877 TEMP. INLET FILTER FABRIC FENCE LIN. FT.	877 TEMPORARY SLOPE DRAINS LIN. FT.	877 TEMP. SEDIMENT BASINS AND DAMS CU. YD.	877 TEMPORARY DIKES CU. YD.
AT DITCH CHECKS			150				
AT ALL CATCH BASINS				520			
201+50 TO 208+75*	RT	725			50	75	20
47+50 TO 54+50	LT	700			600	60	120
49+00 TO 54+00	RT	500			50	90	40
301+00 TO 309+00**	LT	800			50	75	
TOTALS TO SHEET 194		2725	150	520	750	300	180

* = GOODKIRK ST. STATION
** = FOUNTAIN ST. STATION

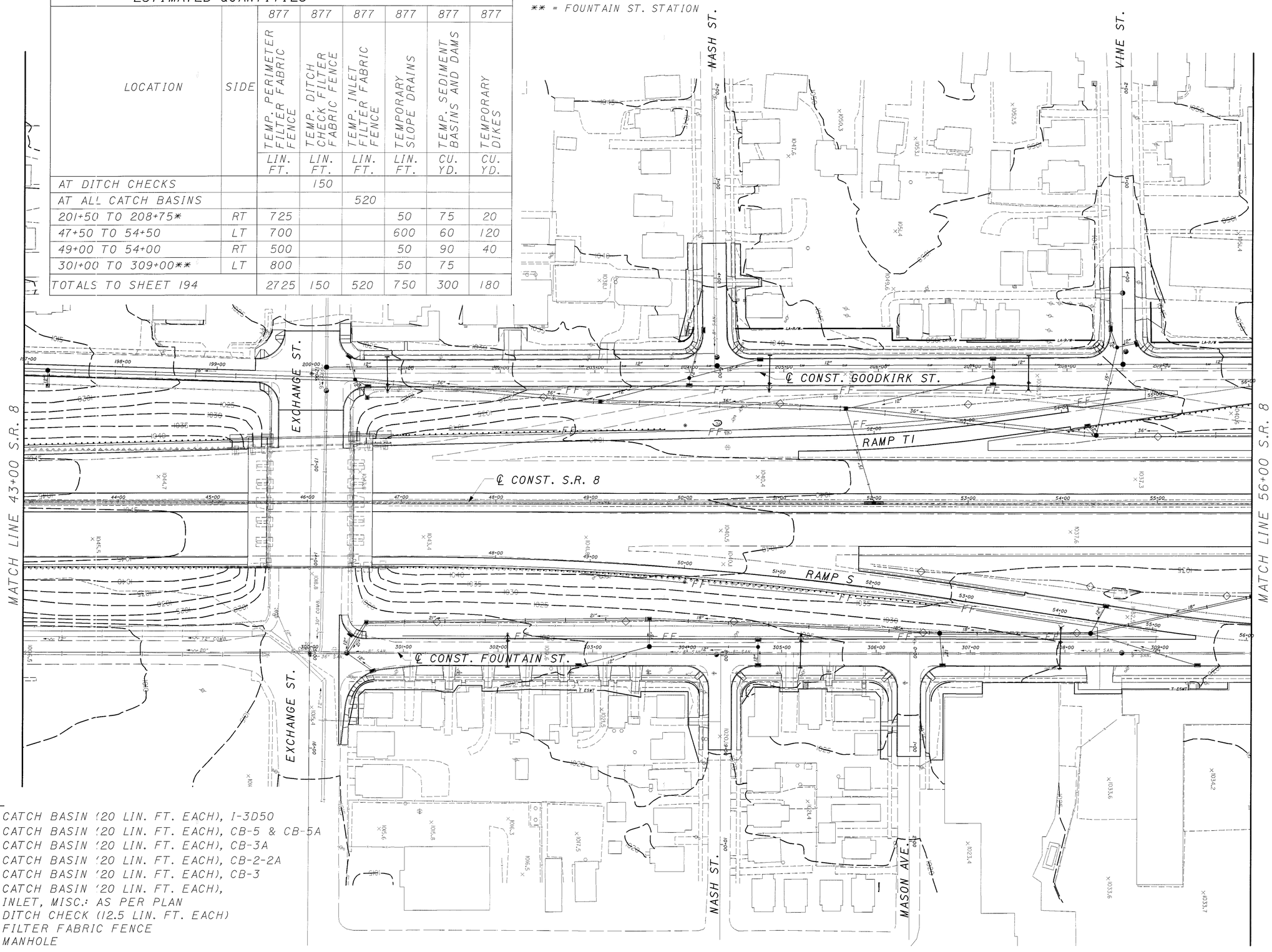

LEGEND

- CATCH BASIN (20 LIN. FT. EACH), I-3D50
- CATCH BASIN (20 LIN. FT. EACH), CB-5 & CB-5A
- CATCH BASIN (20 LIN. FT. EACH), CB-3A
- CATCH BASIN (20 LIN. FT. EACH), CB-2-2A
- CATCH BASIN (20 LIN. FT. EACH), CB-3
- CATCH BASIN (20 LIN. FT. EACH), INLET, MISC.: AS PER PLAN
- ◇ DITCH CHECK (12.5 LIN. FT. EACH)
- —FF— FILTER FABRIC FENCE
- ● MANHOLE

N

0 25 50 100 HORIZONTAL SCALE IN FEET

CALCULATED KME
CHECKED BF

STORM WATER POLLUTION PREVENTION PLAN
STA. 43+00 TO STA. 56+00

SUM-8-0.63

195
1088

ESTIMATED QUANTITIES

LOCATION	SIDE	877 TEMP. PERIMETER FILTER FABRIC FENCE LIN. FT.	877 TEMP. DITCH CHECK FILTER FABRIC FENCE LIN. FT.	877 TEMP. INLET FILTER FABRIC FENCE LIN. FT.	877 TEMPORARY SLOPE DRAINS LIN. FT.	877 TEMP. SEDIMENT BASINS AND DAMS CU. YD.	877 TEMPORARY DIKES CU. YD.
AT DITCH CHECKS			138				
AT ALL CATCH BASINS				640			
213+00 to 223+07*	LT	462			50	80	
210+00 to 223+00*	RT	1195			130	90	260
56+00 to 69+00	LT/RT	2600			50	260	
310+00 to 322+83**	LT	1191			120	130	240
315+60 to 322+83**	RT	710			50	40	20
TOTALS TO SHEET 194		6158	138	640	400	600	520

LEGEND

- CATCH BASIN (20 LIN. FT. EACH), I-3D50
- CATCH BASIN (20 LIN. FT. EACH), CB-5 & CB-5A
- CATCH BASIN (20 LIN. FT. EACH), CB-3A
- CATCH BASIN (20 LIN. FT. EACH), CB-2-2A
- CATCH BASIN (20 LIN. FT. EACH), CB-3
- CATCH BASIN (20 LIN. FT. EACH), INLET, MISC.: AS PER PLAN
- ◇ DITCH CHECK (12.5 LIN. FT. EACH)
- —FF— FILTER FABRIC FENCE
- ● MANHOLE

* = GOODKIRK ST. STATION
** = FOUNTAIN ST. STATION

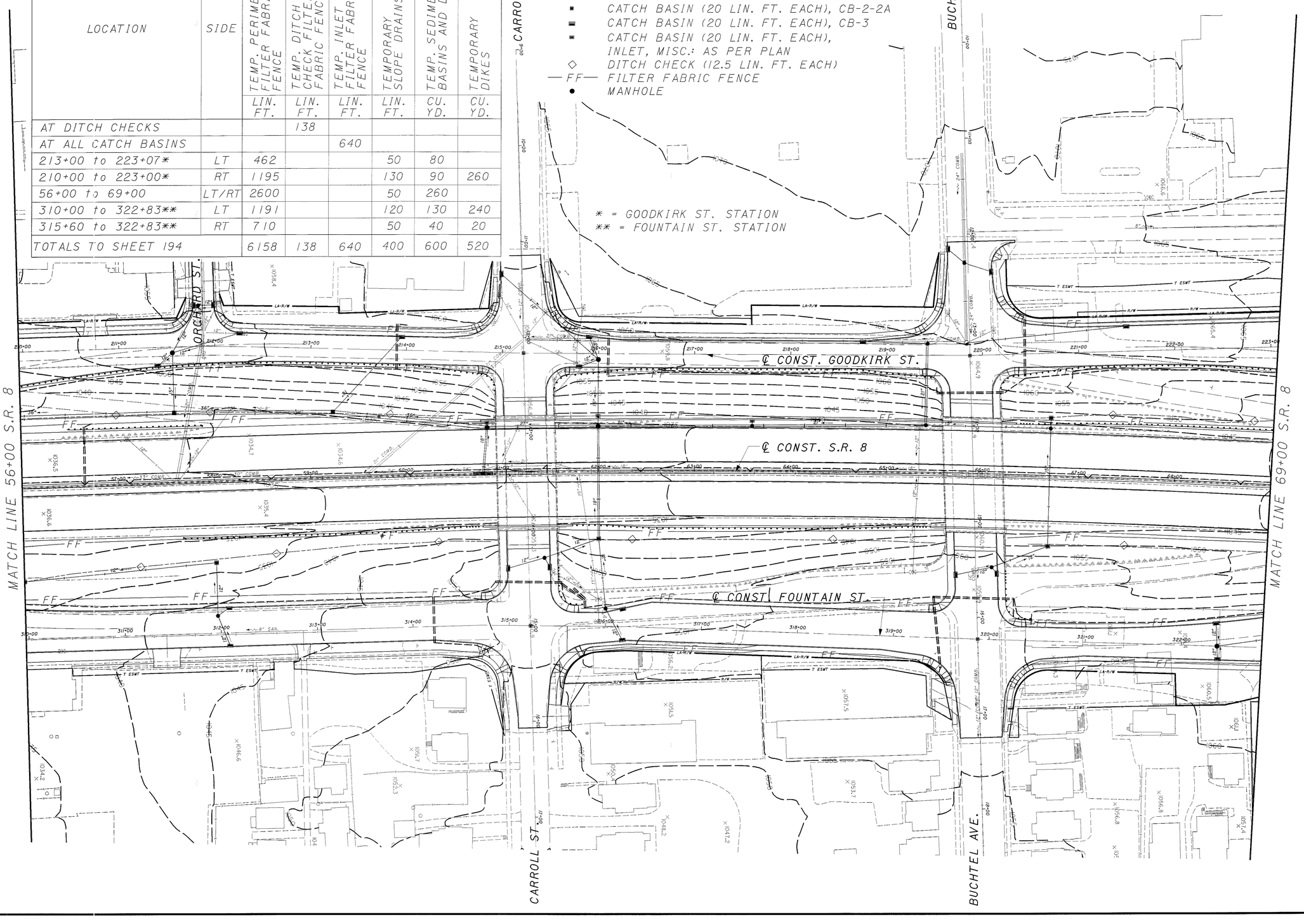

N

0 25 50 100 HORIZONTAL SCALE IN FEET

CALCULATED KME CHECKED BF

STORM WATER POLLUTION PREVENTION PLAN
STA. 56+00 TO STA. 69+00

SUM-8-0.63

196
1088

ESTIMATED QUANTITIES

LOCATION	SIDE	877 TEMP. PERIMETER FILTER FABRIC FENCE LIN. FT.	877 TEMP. DITCH CHECK, FILTER FABRIC FENCE LIN. FT.	877 TEMP. INLET FILTER FABRIC FENCE LIN. FT.	877 TEMPORARY SLOPE DRAINS LIN. FT.	877 TEMP. SEDIMENT BASINS AND DAMS CU. YD.	877 TEMPORARY DIKES CU. YD.
AT DITCH CHECKS			150				
AT ALL CATCH BASINS				880			
223+08 to 236+19*	LT/RT	2289			130	120	240
70+00 to 77+80Δ	LT	780			50	50	20
69+00 to 73+40	LT	440			50	50	
69+00 to 82+00	RT	740			50	25	
70+00 to 77+25ΔΔ	RT	725			50	15	40
322+84 to 335+79**	LT/RT	1459			145	130	205
TOTALS TO SHEET 194		6433	150	880	475	390	605

* = GOODKIRK ST. STATION
Δ = RAMP PI STATION
ΔΔ = RAMP QI STATION
** = FOUNTAIN ST. STATION

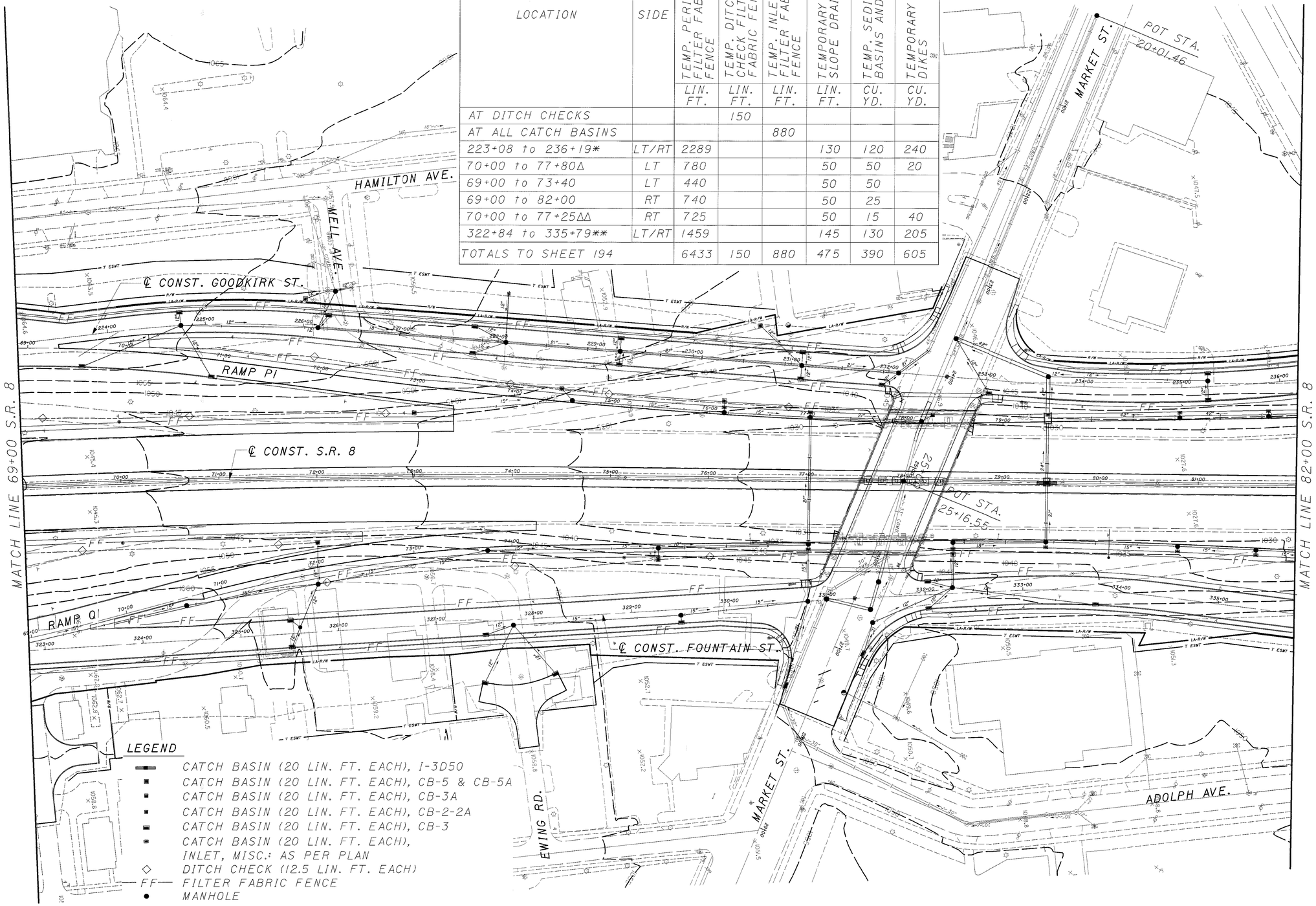

HORIZONTAL SCALE IN FEET
0 25 50 100

CALCULATED KME
CHECKED BF

STORM WATER POLLUTION PREVENTION PLAN
STA. 69+00 TO STA. 82+00

SUM-8-0.63

197
1088

ESTIMATED QUANTITIES

LOCATION	SIDE	877 TEMP. PERIMETER FILTER FABRIC FENCE LIN. FT.	877 TEMP. DITCH CHECK FILTER FABRIC FENCE LIN. FT.	877 TEMP. INLET FILTER FABRIC FENCE LIN. FT.	877 TEMPORARY SLOPE DRAINS LIN. FT.	877 TEMP. SEDIMENT BASINS AND DAMS CU. YD.	877 TEMPORARY DIKES CU. YD.
AT DITCH CHECKS			175				
AT ALL CATCH BASINS				680			
236+19 to 246+20*	LT/RT	1447			70	140	75
84+50 to 91+97 Δ	RT	747			50	35	80
92+75 to 94+70 ΔΔ	LT/RT	395			50	40	70
82+00 to 95+00	LT/RT	2065			50	260	40
335+79 to 346+00**	LT/RT	1241			90	100	180
85+28 to 346+00 •	LT	692			50	15	
500+45 to 504+46 ••	RT	401			50	30	
93+20 to 95+03 •••	RT	183			50	10	10
TOTALS TO SHEET 194		7171	175	680	460	630	455

* = GOODKIRK ST. STATION
Δ = RAMP KI STATION
ΔΔ = RAMP I STATION
** = FOUNTAIN ST. STATION
• = RAMP LI STATION
•• = OHIO ST. STATION
••• = RAMP J STATION

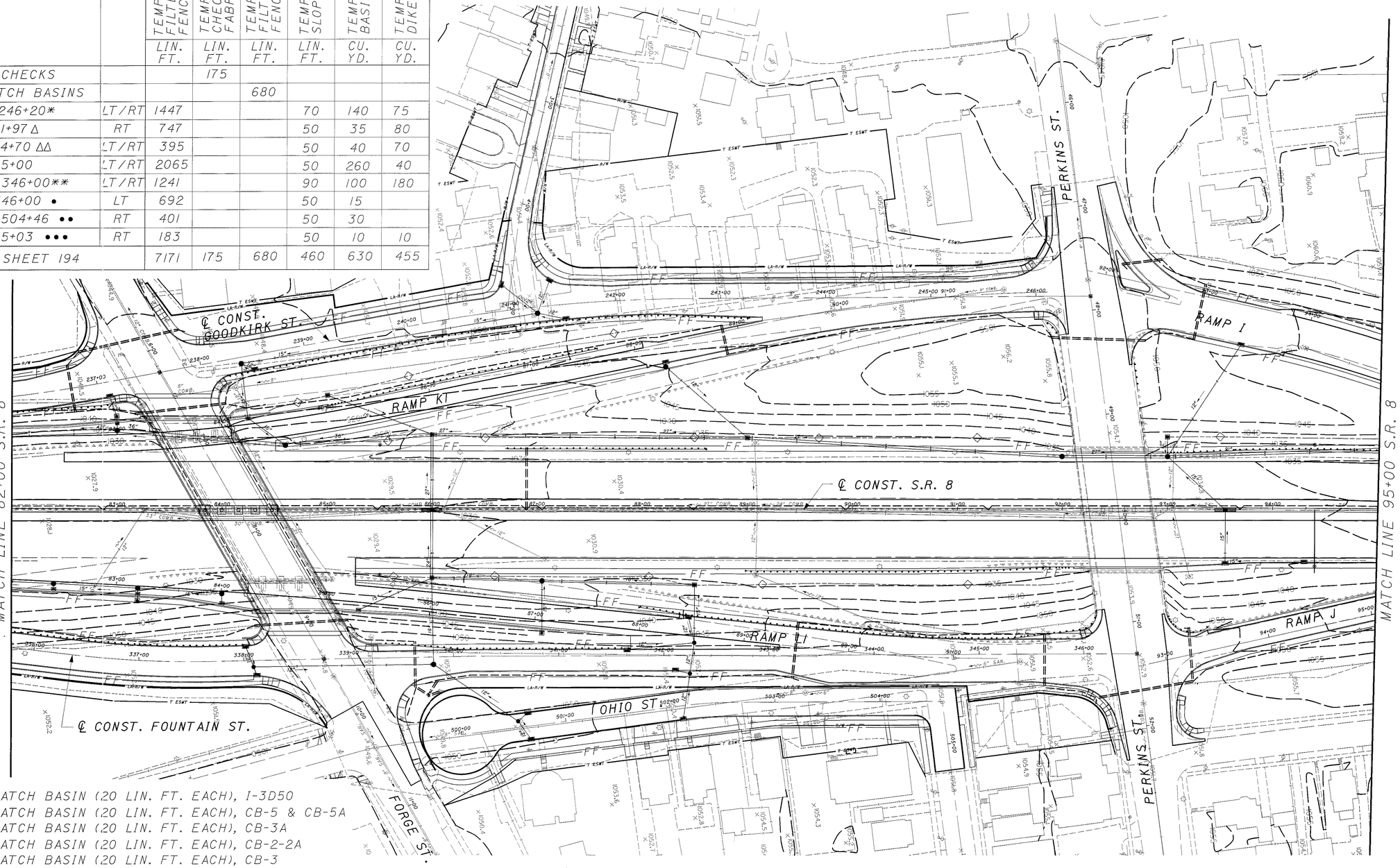

LEGEND

- CATCH BASIN (20 LIN. FT. EACH), I-3D50
- CATCH BASIN (20 LIN. FT. EACH), CB-5 & CB-5A
- CATCH BASIN (20 LIN. FT. EACH), CB-3A
- CATCH BASIN (20 LIN. FT. EACH), CB-2-2A
- CATCH BASIN (20 LIN. FT. EACH), CB-3
- CATCH BASIN (20 LIN. FT. EACH), INLET, MISC.: AS PER PLAN
- ◇ DITCH CHECK (12.5 LIN. FT. EACH)
- —FF— FILTER FABRIC FENCE
- • MANHOLE

N

0 50 100 HORIZONTAL SCALE IN FEET
25

CALCULATED KME CHECKED BF

STORM WATER POLLUTION PREVENTION PLAN
STA. 82+00 TO STA. 95+00

SUM-8-0.63

198
1088

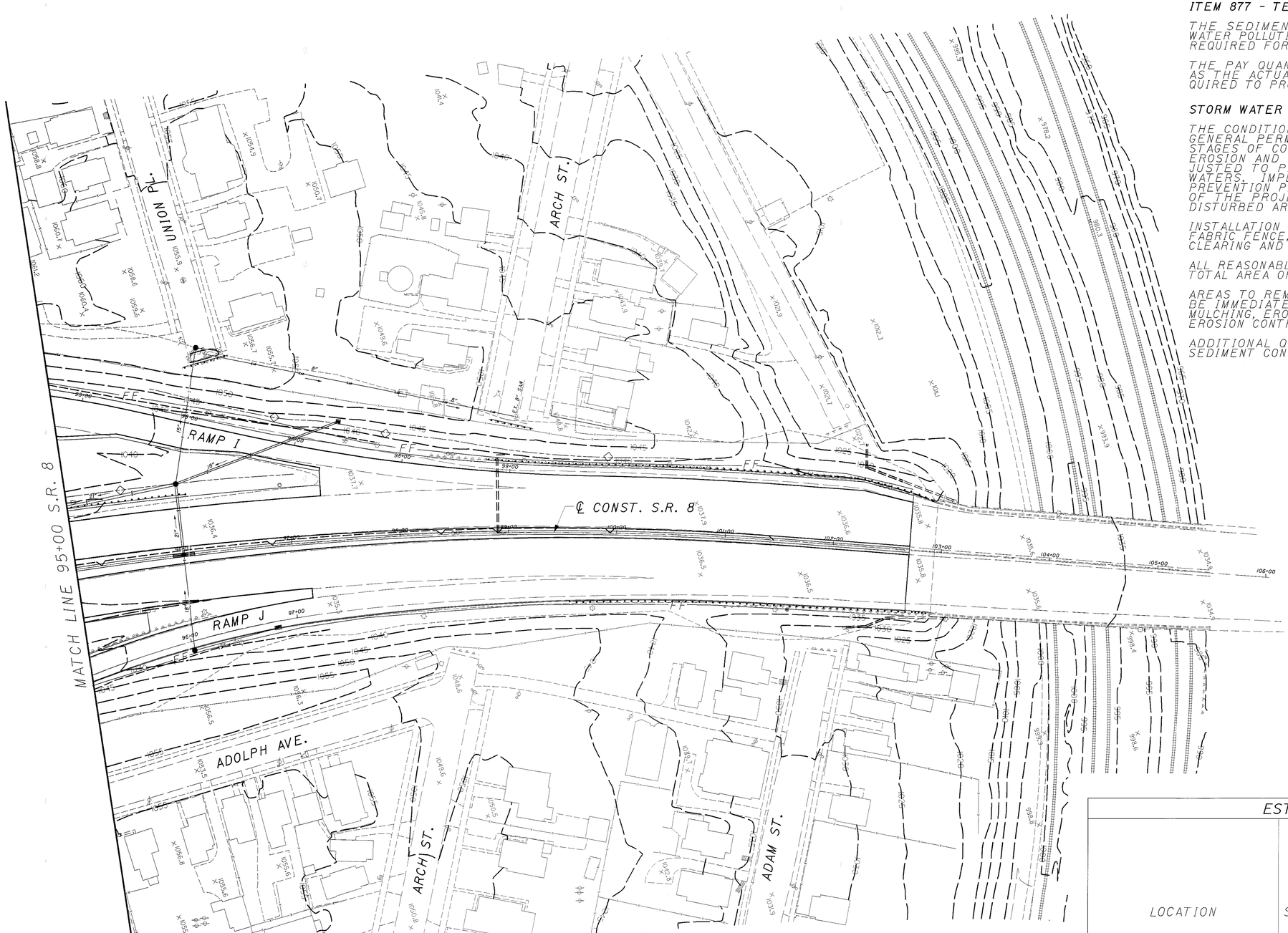

ITEM 877 - TEMPORARY BENCHES, DAMS AND SEDIMENT BASINS

THE SEDIMENT BASIN QUANTITIES LISTED ON THIS STORM WATER POLLUTION PREVENTION PLAN ARE THE STORAGE VOLUMES REQUIRED FOR THE SEDIMENT BASIN.

THE PAY QUANTITY FOR EACH BASIN SHALL BE DETERMINED AS THE ACTUAL AMOUNT OF EXCAVATION OR EMBANKMENT REQUIRED TO PROVIDE THAT STORAGE VOLUME.

STORM WATER POLLUTION PREVENTION PLAN

THE CONDITIONS OF THE NPDES CONSTRUCTION STORM WATER GENERAL PERMIT (SEE PROPOSAL) SHALL BE MET DURING ALL STAGES OF CONSTRUCTION. THE LOCATION AND TIMING OF ALL EROSION AND SEDIMENT CONTROL ITEMS SHALL BE FIELD ADJUSTED TO PREVENT SIGNIFICANT IMPACTS ON RECEIVING WATERS. IMPLEMENTATION OF THIS STORM WATER POLLUTION PREVENTION PLAN SHALL CONTINUE THROUGHOUT THE DURATION OF THE PROJECT OR UNTIL SUCH TIME THAT THE UPSLOPE DISTURBED AREAS ARE STABILIZED.

INSTALLATION OF SEDIMENT BASINS/DAMS, PERIMETER FILTER FABRIC FENCE, AND DITCH CHECKS SHALL BE CONCURRENT WITH CLEARING AND GRUBBING AND/OR GRADING OPERATIONS.

ALL REASONABLE ATTEMPTS SHOULD BE MADE TO MINIMIZE THE TOTAL AREA OF DISTURBED LAND.

AREAS TO REMAIN DORMANT FOR MORE THAN 45 DAYS SHOULD BE IMMEDIATELY STABILIZED WITH TEMPORARY SEEDING AND MULCHING, EROSION CONTROL MATTING OR OTHER APPROPRIATE EROSION CONTROL MEASURES.

ADDITIONAL QUANTITIES OF TEMPORARY SOIL EROSION AND SEDIMENT CONTROL ITEMS ARE GIVEN IN THE GENERAL NOTES.

LEGEND

- CATCH BASIN (20 LIN. FT. EACH), I-3D50
- CATCH BASIN (20 LIN. FT. EACH), CB-5 & CB-5A
- CATCH BASIN (20 LIN. FT. EACH), CB-3A
- CATCH BASIN (20 LIN. FT. EACH), CB-2-2A
- CATCH BASIN (20 LIN. FT. EACH), CB-3
- CATCH BASIN (20 LIN. FT. EACH), INLET, MISC.: AS PER PLAN
- ◇ DITCH CHECK (12.5 LIN. FT. EACH)
- —FF— FILTER FABRIC FENCE
- ● MANHOLE

ESTIMATED QUANTITIES

LOCATION	SIDE	877 TEMP. PERIMETER FILTER FABRIC FENCE (LIN. FT.)	877 TEMP. DITCH CHECK FILTER FABRIC FENCE (LIN. FT.)	877 TEMP. INLET FILTER FABRIC FENCE (LIN. FT.)	877 TEMPORARY SLOPE DRAINS (LIN. FT.)	877 TEMP. SEDIMENT BASINS AND DAMS (CU. YD.)	877 TEMPORARY DIKES (CU. YD.)
AT DITCH CHECKS			50				
AT ALL CATCH BASINS				60			
95+00 TO 102+70	LT/RT	1540			120	300	240
TOTALS TO SHEET 194		1540	50	60	120	300	240

HORIZONTAL SCALE IN FEET 0 25 50 100

CALCULATED KME CHECKED BF

STORM WATER POLLUTION PREVENTION PLAN STA. 95+00 TO STA. 105+00

SUM-8-0.63

199
1088

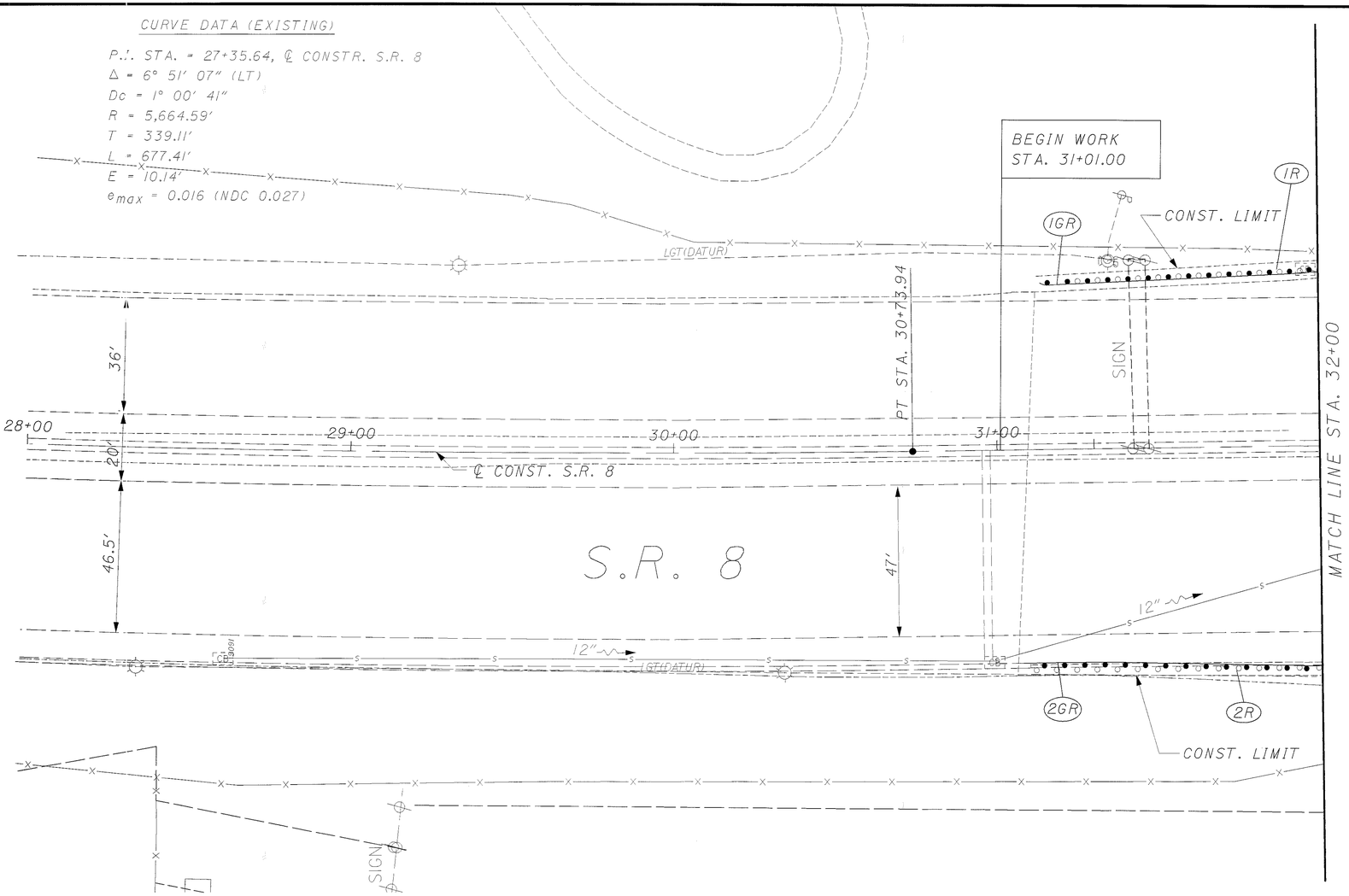

BENCHMARK #34

CHISELED "□" IN NE CORNER OF CONCRETE BASE OF LIGHT POLE #LAF-1-17. (FIRST POLE SOUTH OF BEACON STREET BRIDGE)

STA. 31+35.59, 57.77′ LT, ELEV. 1067.97

CROSS REFERENCES

SHEET NO.	DESCRIPTION
9	TYPICAL SECTIONS
171	GUARDRAIL SUBSUMMARY
298,361,362	CROSS SECTIONS
757	SIGNING AND PAVEMENT MARKING PLAN
859	LIGHTING PLAN

HORIZONTAL SCALE IN FEET
0 10 20 40

CALCULATED

CHECKED

PLAN - S.R. 8
STA. 28+00 TO STA. 32+00

SUM-8-0.63

200
1088

i:\projects\9922001\civil\dwg\ppl.dgn

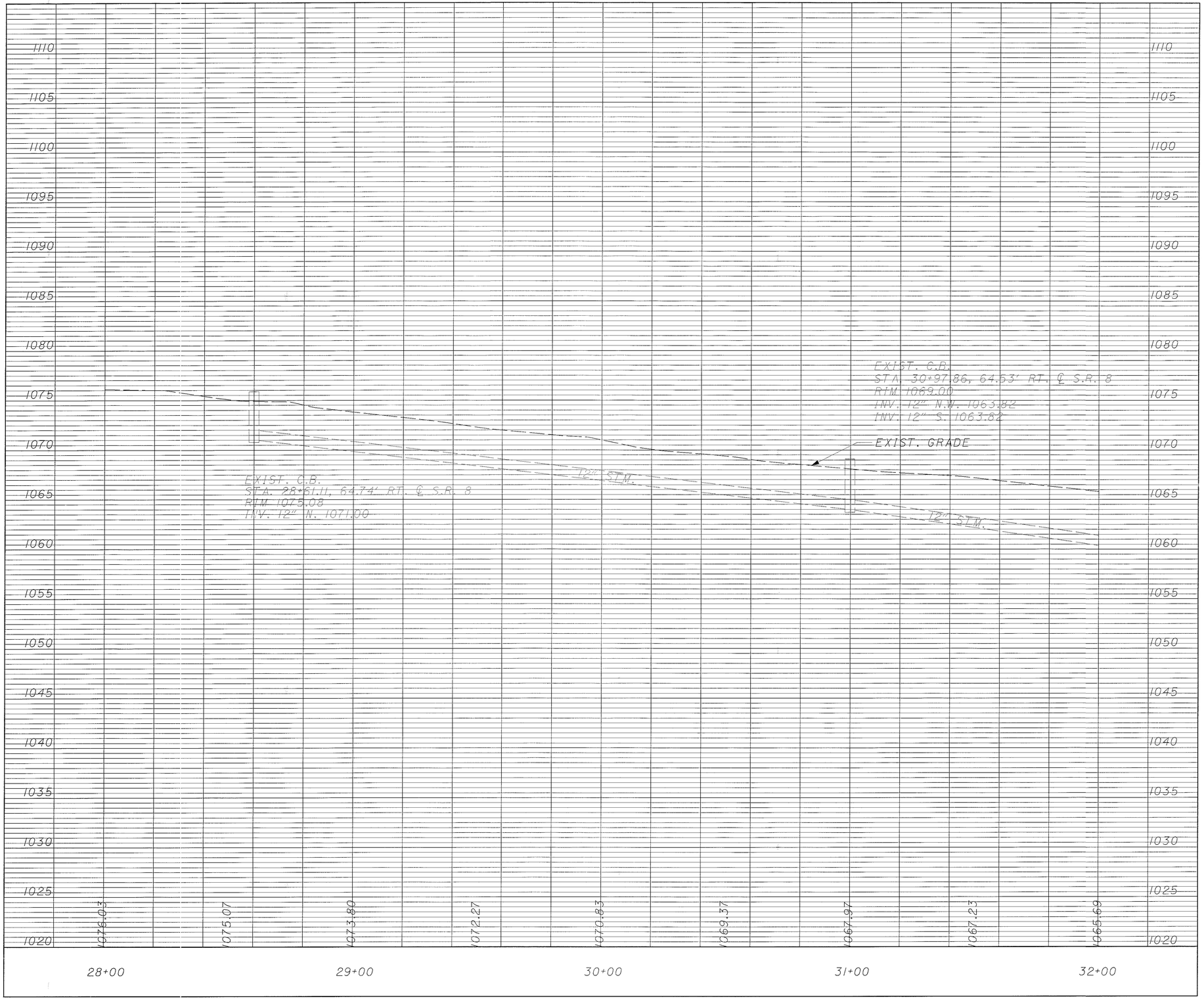

CALCULATED

CHECKED

PROFILE - S.R. 8

STA. 28+00 TO STA. 32+00

SUM-8-0.63

201
1088

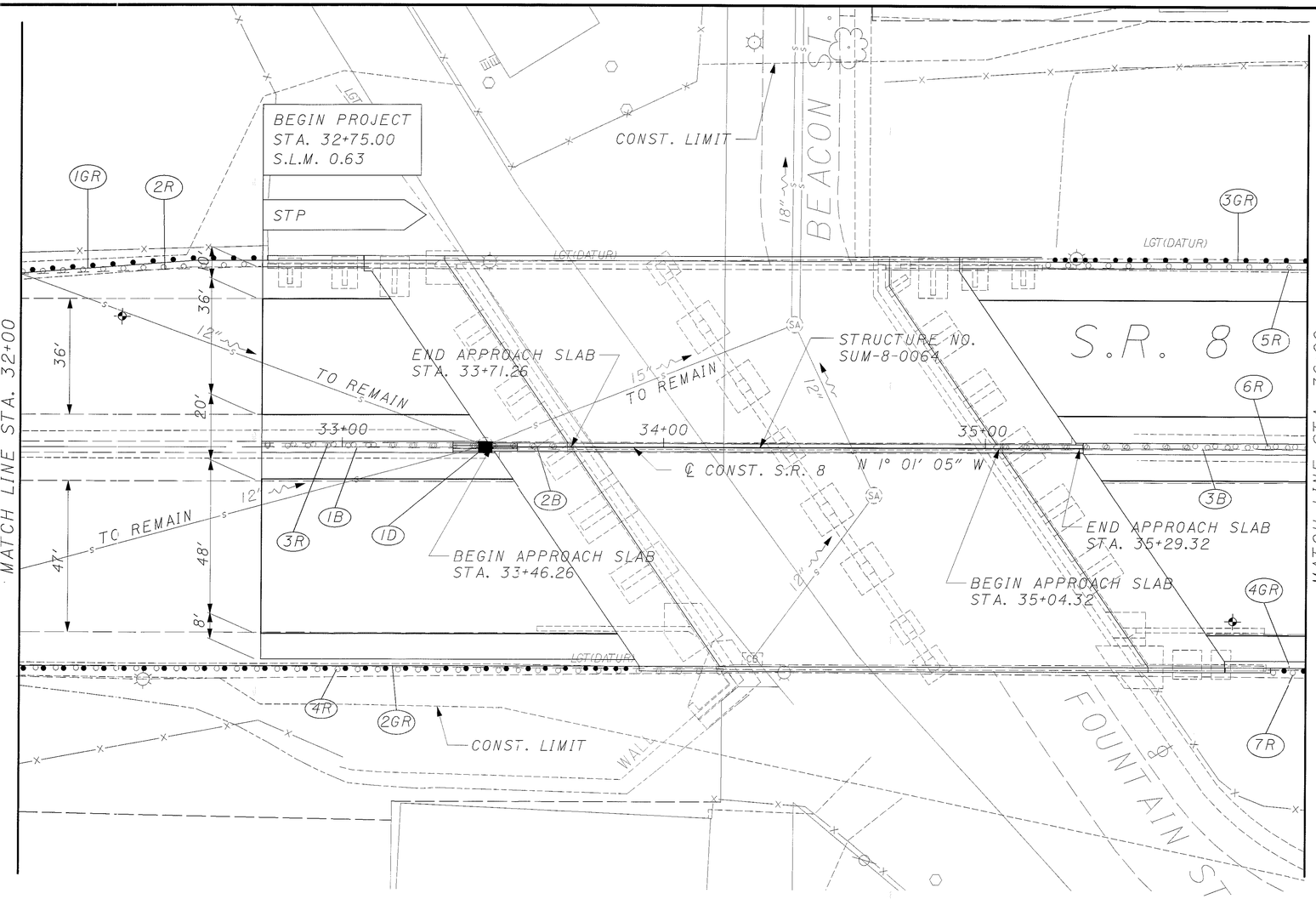

BENCHMARK #33

CHISELED "□" IN TOP SE CORNER OF BRIDGE WALL, NORTH SIDE OF EXPANSION JOINT.

STA. 34+68.98, 56.19' LT, ELEV. 1060.40

CROSS REFERENCES	
SHEET NO.	DESCRIPTION
19	TYPICAL SECTION
155,156	DRAINAGE SUBSUMMARY
171	GUARDRAIL SUBSUMMARY
175	ROADWAY SUBSUMMARY
298-302,362-365	CROSS SECTIONS
432	CURB AND UNDERDRAIN PLAN
494	PAVEMENT DETAILS
547-551	APPROACH SLAB DETAILS
757	SIGNING AND PAVEMENT MARKING PLAN
859	LIGHTING PLAN
873	BEACON STREET BRIDGE SITE PLAN

N

HORIZONTAL SCALE IN FEET
0 10 20 40

CALCULATED

CHECKED

PLAN - S.R. 8 STA. 32+00 TO STA. 36+00

SUM-8-0.63

202
1088

i:\projects\9922100\civil\dwgs\pp2.dgn

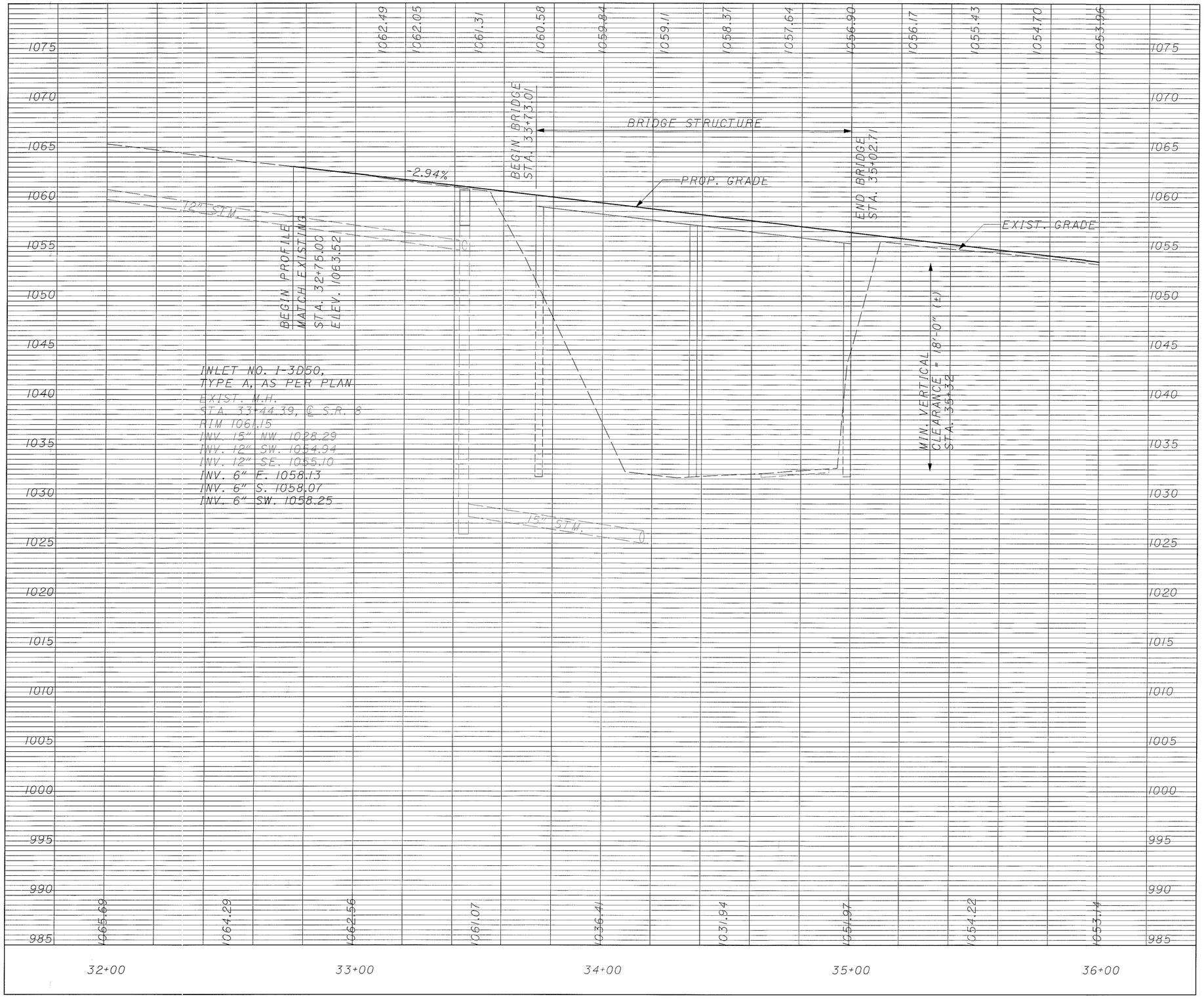

CALCULATED

CHECKED

PROFILE - S.R. 8

STA. 32+00 TO STA. 36+00

SUM-8-0.63

203
1088

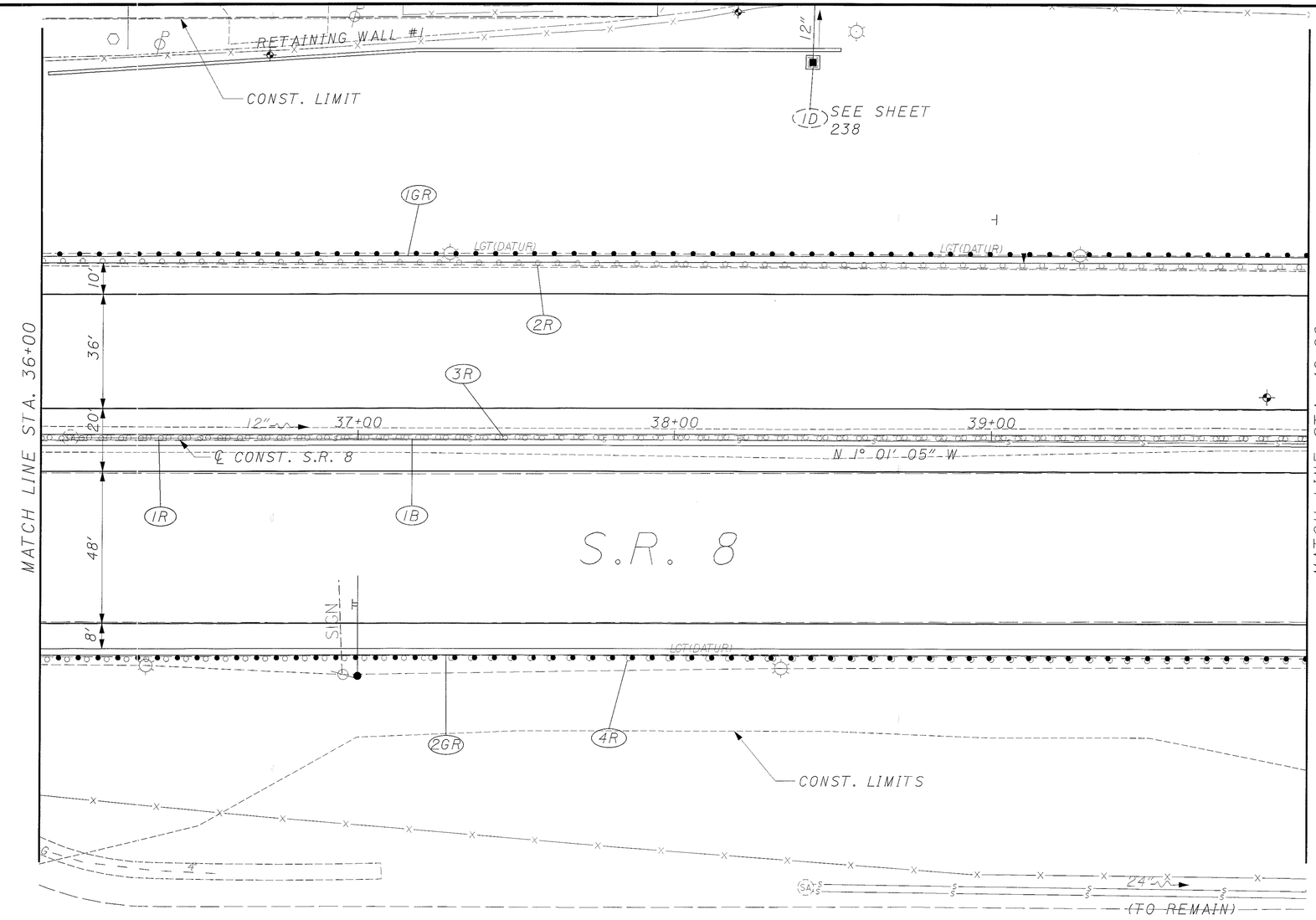

CROSS REFERENCES

SHEET NO.	DESCRIPTION
19,20	TYPICAL SECTION
171	GUARDRAIL SUBSUMMARY
175	ROADWAY SUBSUMMARY
302-306,365-368	CROSS SECTIONS
433	CURB AND UNDERDRAIN PLAN
494,495	PAVEMENT DETAILS
757,758	SIGNING AND PAVEMENT MARKING PLAN
860	LIGHTING PLAN

HORIZONTAL SCALE IN FEET
0 10 20 40

CALCULATED | CHECKED

PLAN - S.R. 8
STA. 36+00 TO STA. 40+00

SUM-8-0.63

204
1088

i:\projects\992200\civil\dwgs\pp3.dgn

PROFILE - S.R. 8
STA. 36+00 TO STA. 40+00

CALCULATED

CHECKED

SUM-8-0.63

205
1088

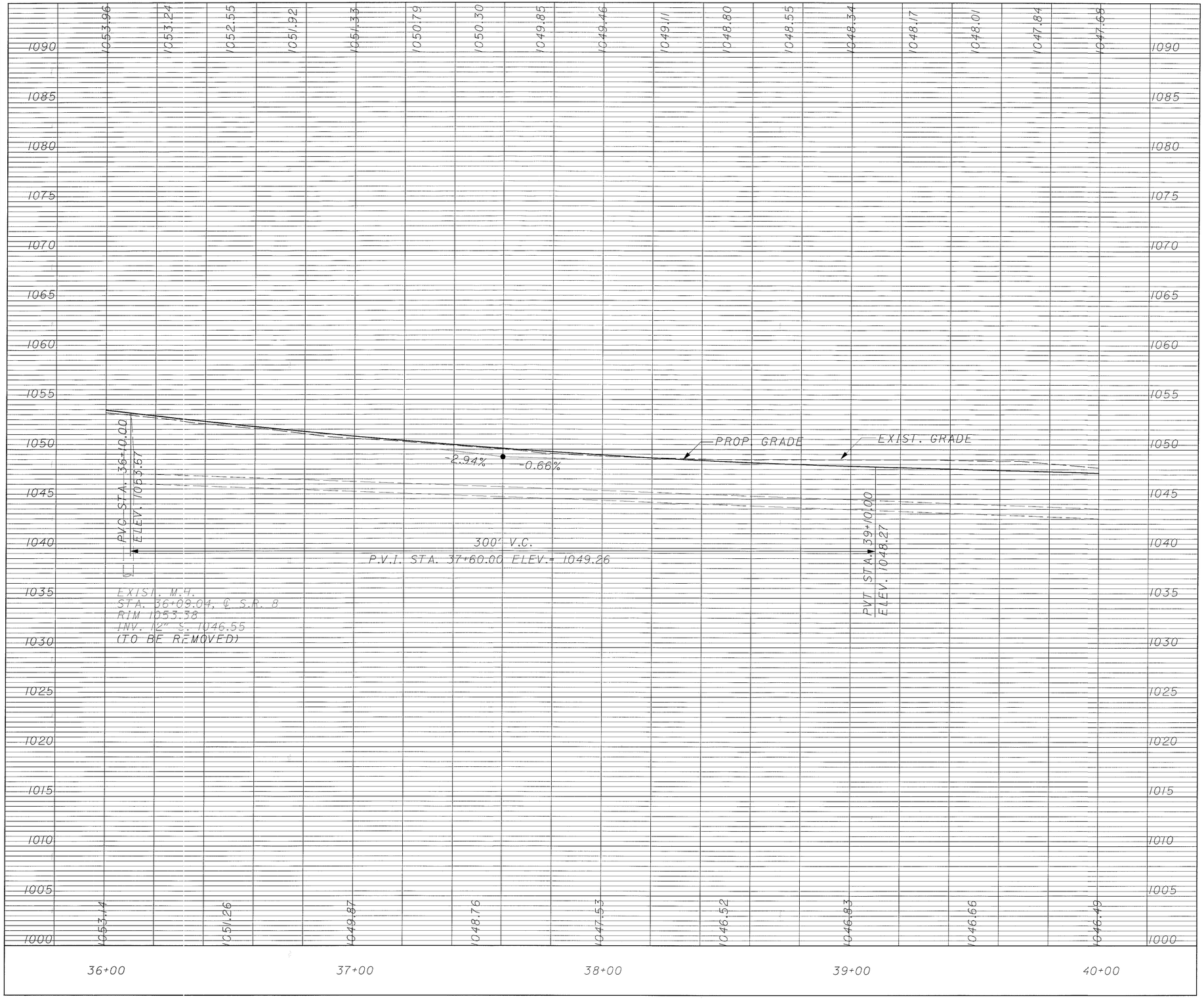

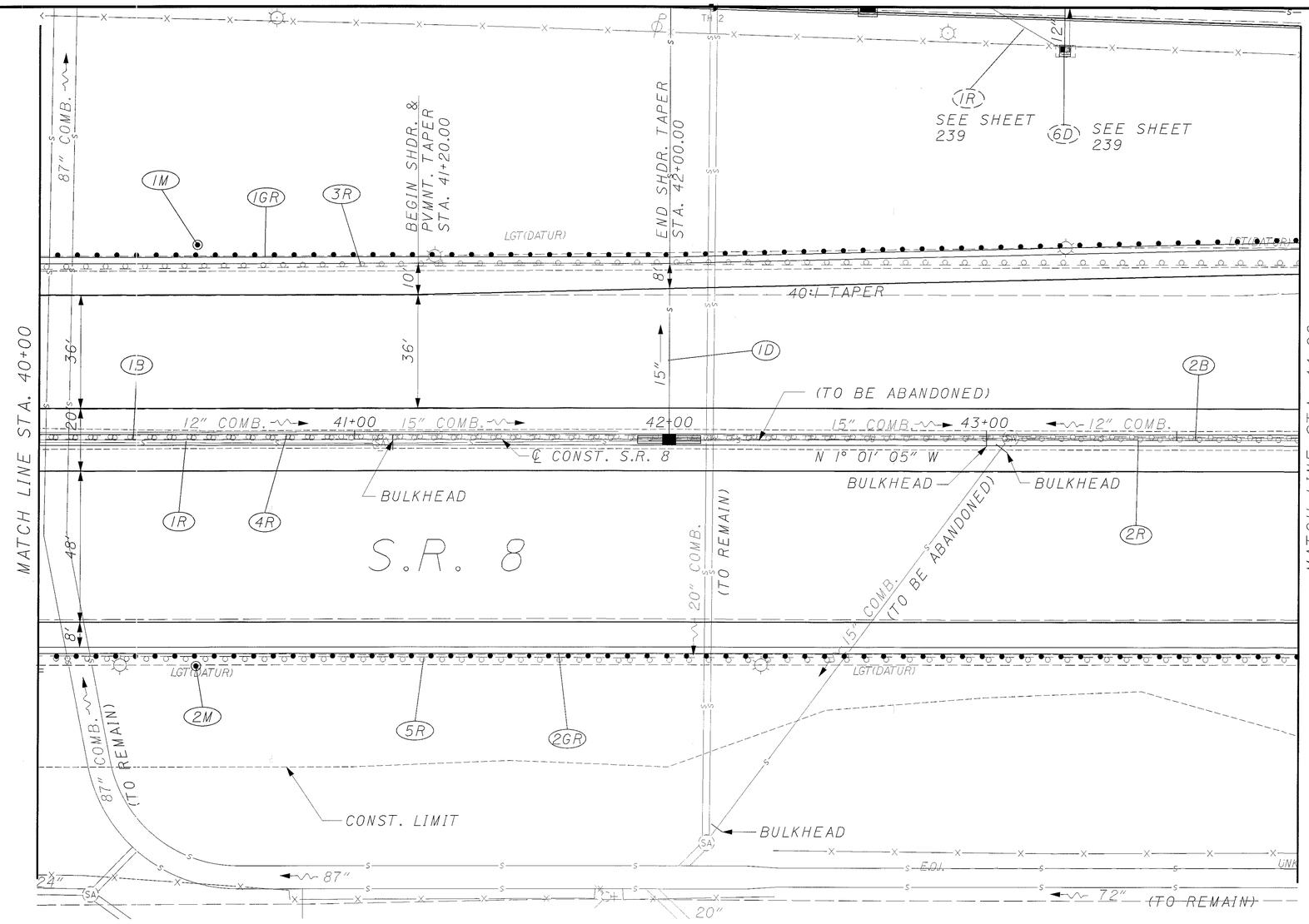

CROSS REFERENCES

SHEET NO.	DESCRIPTION
20	TYPICAL SECTION
155,156	DRAINAGE SUBSUMMARY
171	GUARDRAIL SUBSUMMARY
175	ROADWAY SUBSUMMARY
306-309,368-372	CROSS SECTIONS
434	CURB AND UNDERDRAIN PLAN
495	PAVEMENT DETAILS
758	SIGNING AND PAVEMENT MARKING PLAN
860	LIGHTING PLAN

N

HORIZONTAL SCALE IN FEET
0 10 20 40

CALCULATED

CHECKED

PLAN - S.R. 8
STA. 40+00 TO STA. 44+00

SUM-8-0.63

206
1088

i:\projects\992100\civil\dwgs\pp4.dgn

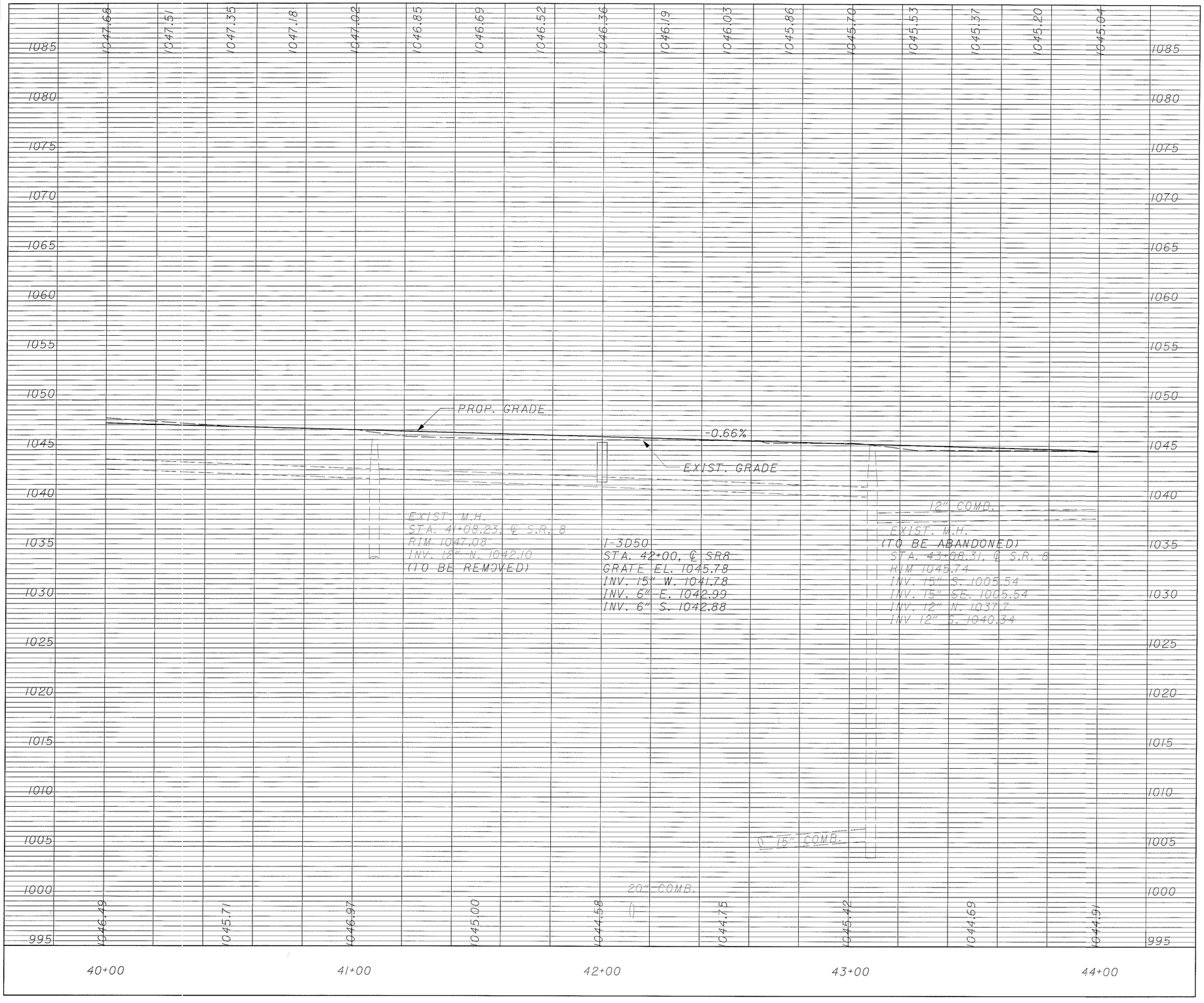

CALCULATED | CHECKED

PROFILE - S.R. 8
STA. 40+00 TO STA. 44+00

SUM-8-0.63

207
1088

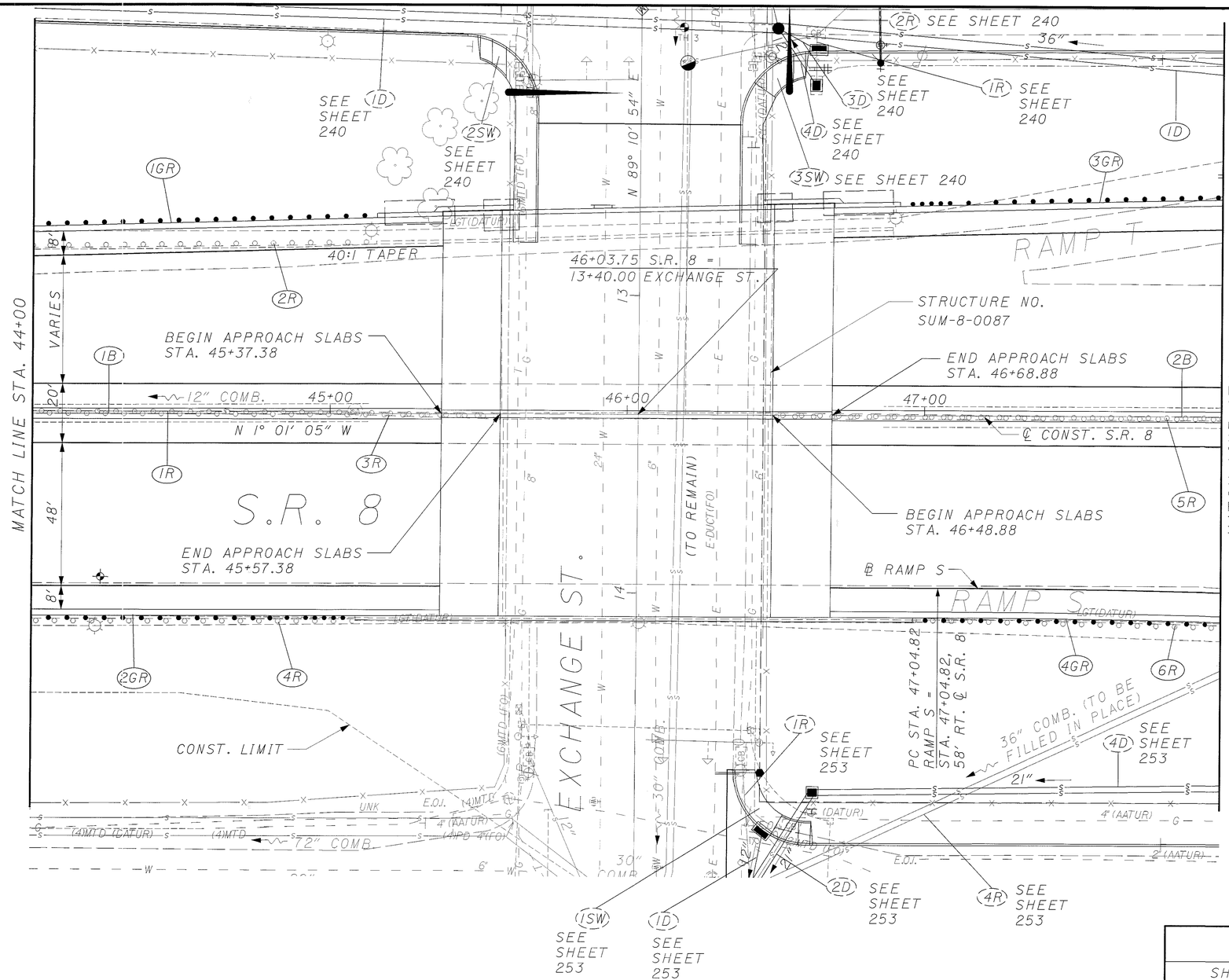

BENCHMARK #11

CHISELED "+" ON BOLT NE OF DAIRY MART SIGN AT PARKING LOT ENTRANCE OFF EXCHANGE ST. 62.1' WEST OF ℄ GOODKIRK ST 48' SO. ℄ EXCHANGE ST.

STA. 45+56.86, 202.00 LT, ELEV. 1028.20

BENCHMARK #12

CHISELED "□" ON NW CORNER OF 2.5' WIDE CONCRETE DIVIDING WALL AT NW CORNER OF PARKING LOT 588 E. EXCHANGE ST. 44.3' SO. ℄, 89,3' NW OF BUILDING CORNER.

STA. 45+59.36, 344.57 RT, ELEV. 1016.01

CROSS REFERENCES

SHEET NO.	DESCRIPTION
20	TYPICAL SECTION
155,156	DRAINAGE SUBSUMMARY
171	GUARDRAIL SUBSUMMARY
175	ROADWAY SUBSUMMARY
268	RAMP S PLAN AND PROFILE
309-312,372-376	CROSS SECTIONS
435	CURB AND UNDERDRAIN PLAN
496	PAVEMENT DETAILS
552,553	APPROACH SLAB DETAILS
758	SIGNING AND PAVEMENT MARKING PLAN
861	LIGHTING PLAN
911	EXCHANGE STREET BRIDGE SITE PLAN

N

HORIZONTAL SCALE IN FEET
0 10 20 40

CALCULATED

CHECKED

PLAN - S.R. 8
STA. 44+00 TO STA. 48+00

SUM-8-0.63

208
1088

i:\projects\9922100\civil\pp\gp005.dgn

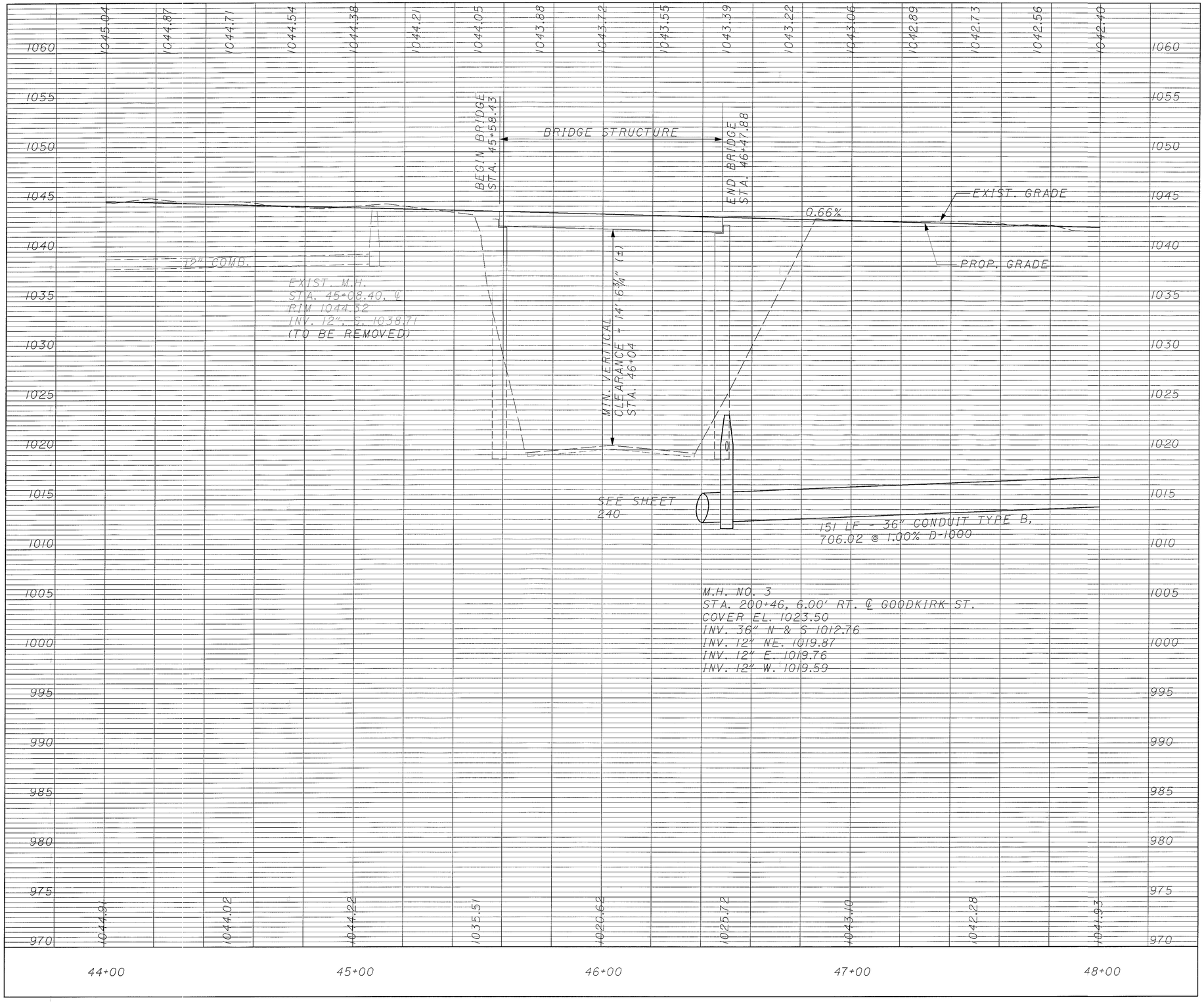

CALCULATED

CHECKED

PROFILE - S.R. 8
STA. 44+00 TO STA. 48+00

SUM-8-0.63

209
1088

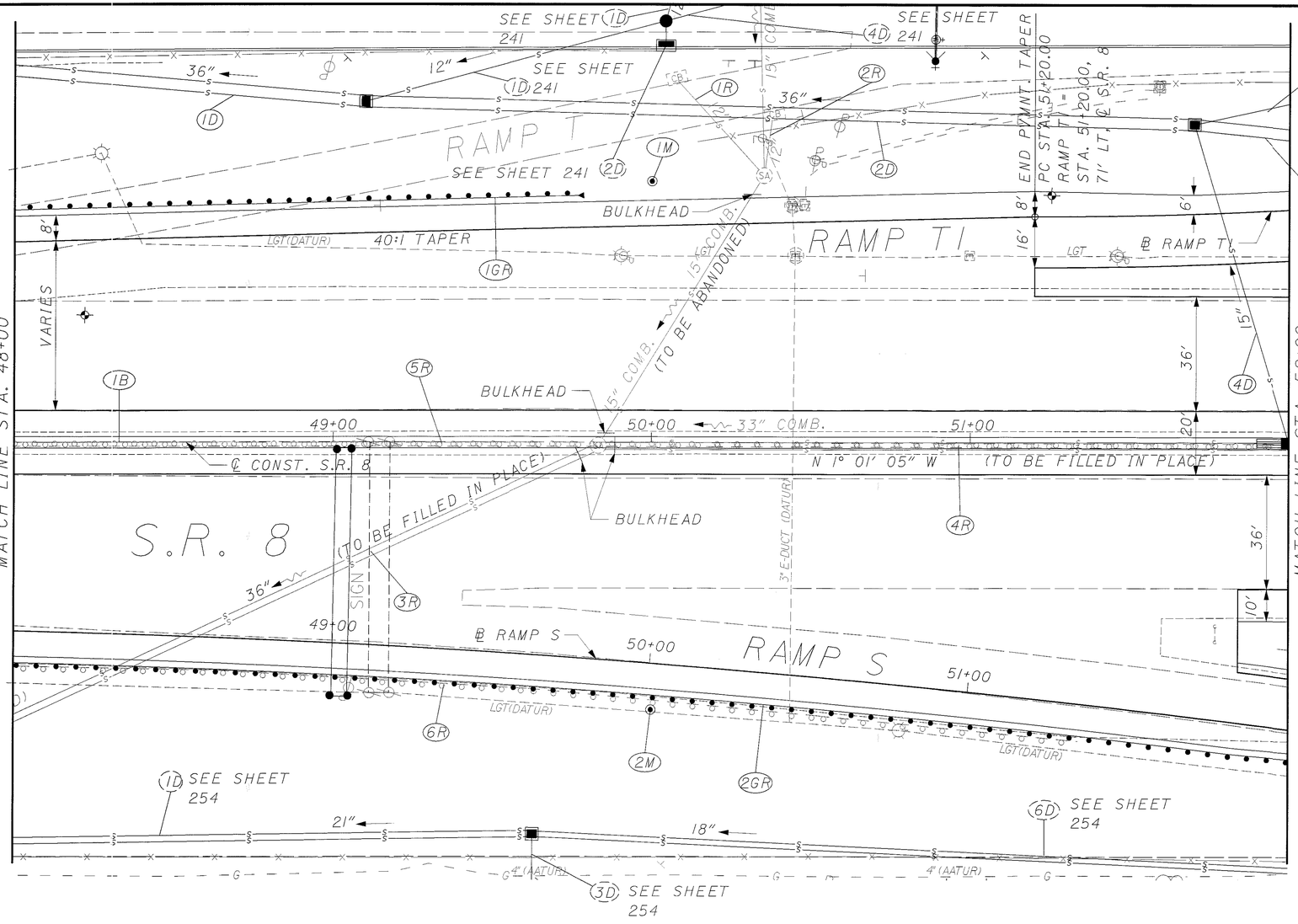

BENCHMARK #10

CHISELED "□" ON NW CORNER OF BOTTOM STEP AT #514 NASH ST.

STA. 50+09.17, 183.65 LT, ELEV. 1040.02

BENCHMARK #13

CHISELED "□" ON CONCRETE SW LAWNSIDE (SO) CORNER LOT NE CORNER FOUNTAIN ST. AND NASH ST. 25.5' FROM ℄ NASH 35.3' ℄ FOUNTAIN ST.

STA. 50+15.64, 195.39 RT, ELEV. 1022.32

CROSS REFERENCES

SHEET NO.	DESCRIPTION
20	TYPICAL SECTION
155,156	DRAINAGE SUBSUMMARY
171	GUARDRAIL SUBSUMMARY
175	ROADWAY SUBSUMMARY
266	RAMP T1 PLAN AND PROFILE
268,269	RAMP S PLAN AND PROFILE
312-315,376-379	CROSS SECTIONS
436	CURB AND UNDERDRAIN PLAN
496,497	PAVEMENT DETAILS
759	SIGNING AND PAVEMENT MARKING PLAN
861	LIGHTING PLAN

HORIZONTAL SCALE IN FEET
0 10 20 40
CALCULATED
CHECKED

PLAN - S.R. 8
STA. 48+00 TO STA. 52+00

SUM-8-0.63

210
1088

i:\projects\9922100\civil\dwgs\pp6.dgn

PROFILE - S.R. 8
STA. 48+00 TO STA. 52+00

CALCULATED | CHECKED

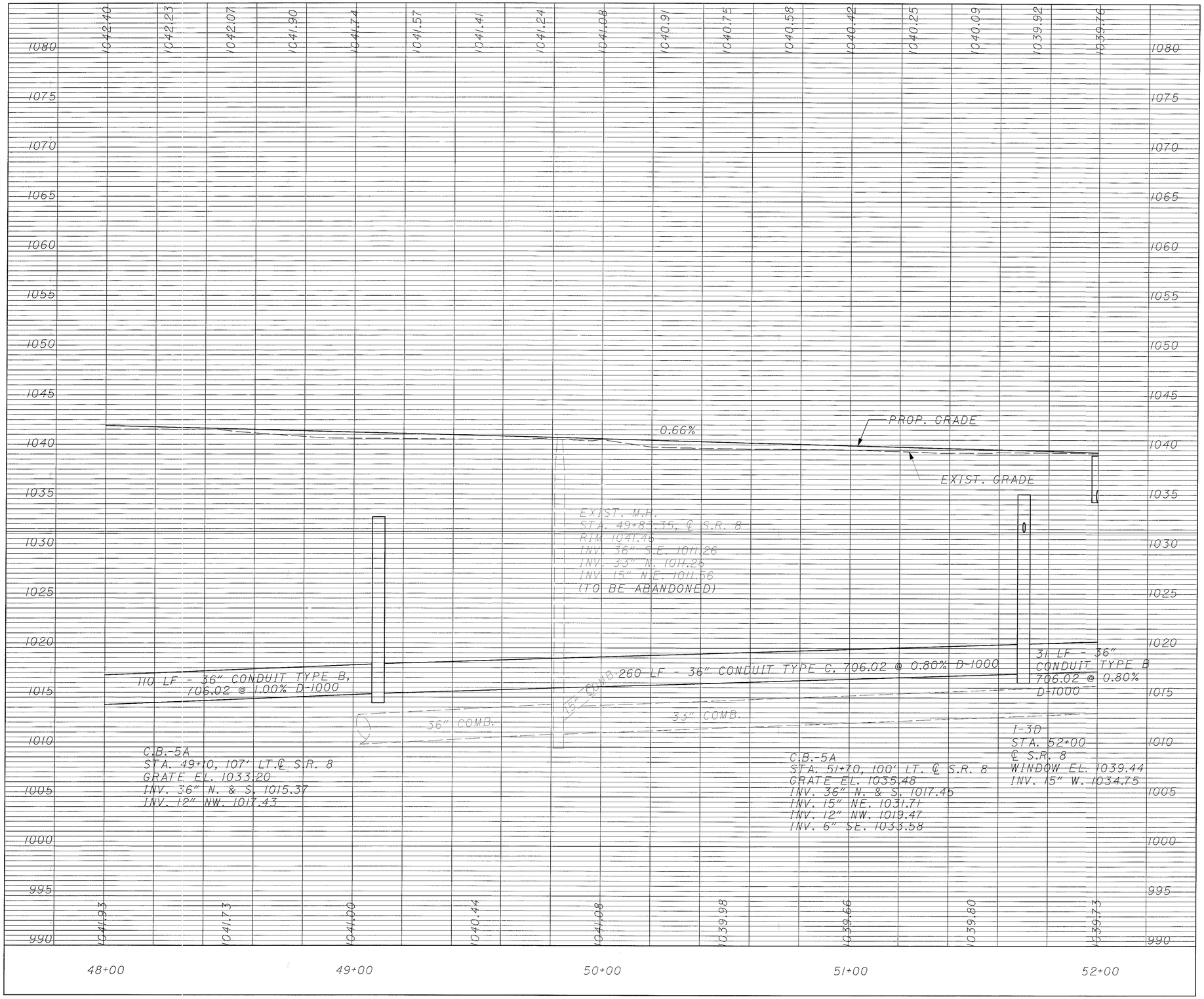

SUM-8-0.63

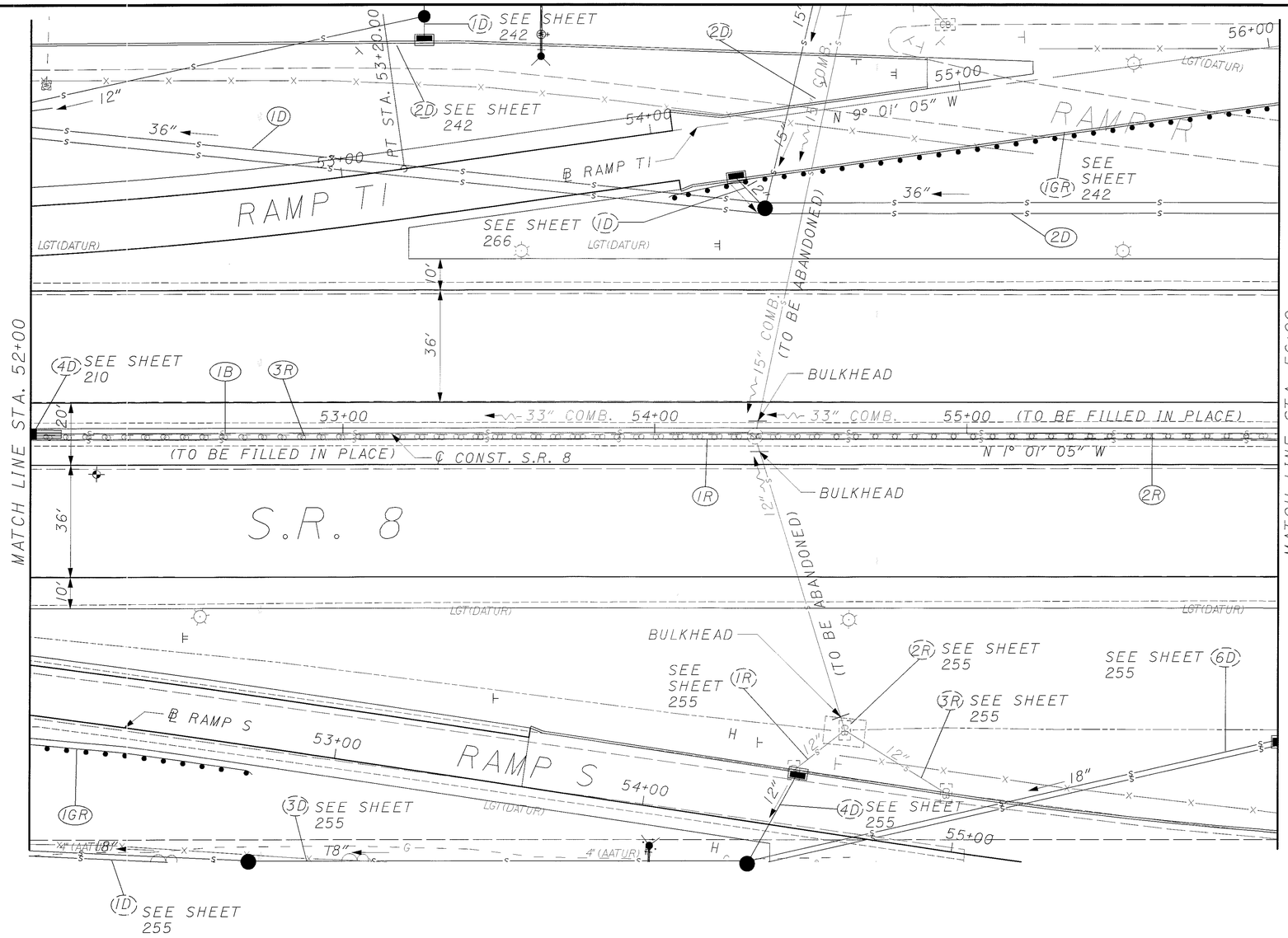

BENCHMARK #9

CHISELED "□" ON NE CORNER OF BOTTOM STEP AT #502 VINE ST.

STA. 54+36.75, 287.57 LT, ELEV. 1044.59

BENCHMARK #14

CHISELED "□" ON SW CORNER OF CONCRETE BASE FOR MAILBOX AT NE CORNER OF FOUNTAIN ST. AND MASON

STA. 52+62.66, 179+73 RT, ELEV. 1028.54

BENCHMARK #15

CHISELED "□" IN WEST EDGE OF SIDEWALK

STA. 54+91.07, 185.16 RT, ELEV. 1034.02

CROSS REFERENCES

SHEET NO.	DESCRIPTION
20	TYPICAL SECTION
155,156	DRAINAGE SUBSUMMARY
171	GUARDRAIL SUBSUMMARY
175	ROADWAY SUBSUMMARY
266,267	RAMP TI PLAN AND PROFILE
269,270	RAMP S PLAN AND PROFILE
315-318,379-382	CROSS SECTIONS
437	CURB AND UNDERDRAIN PLAN
497	PAVEMENT DETAILS
759	SIGNING AND PAVEMENT MARKING PLAN
861,862	LIGHTING PLAN

N

HORIZONTAL SCALE IN FEET
0 10 20 40

CALCULATED | CHECKED

PLAN - S.R. 8
STA. 52+00 TO STA. 56+00

SUM-8-0.63

212
1088

i:\projects\9922100\civil\dwgs\pp7.dgn

CALCULATED | CHECKED

PROFILE - S.R. 8
STA. 52+00 TO STA. 56+00

SUM-8-0.63

213
1088

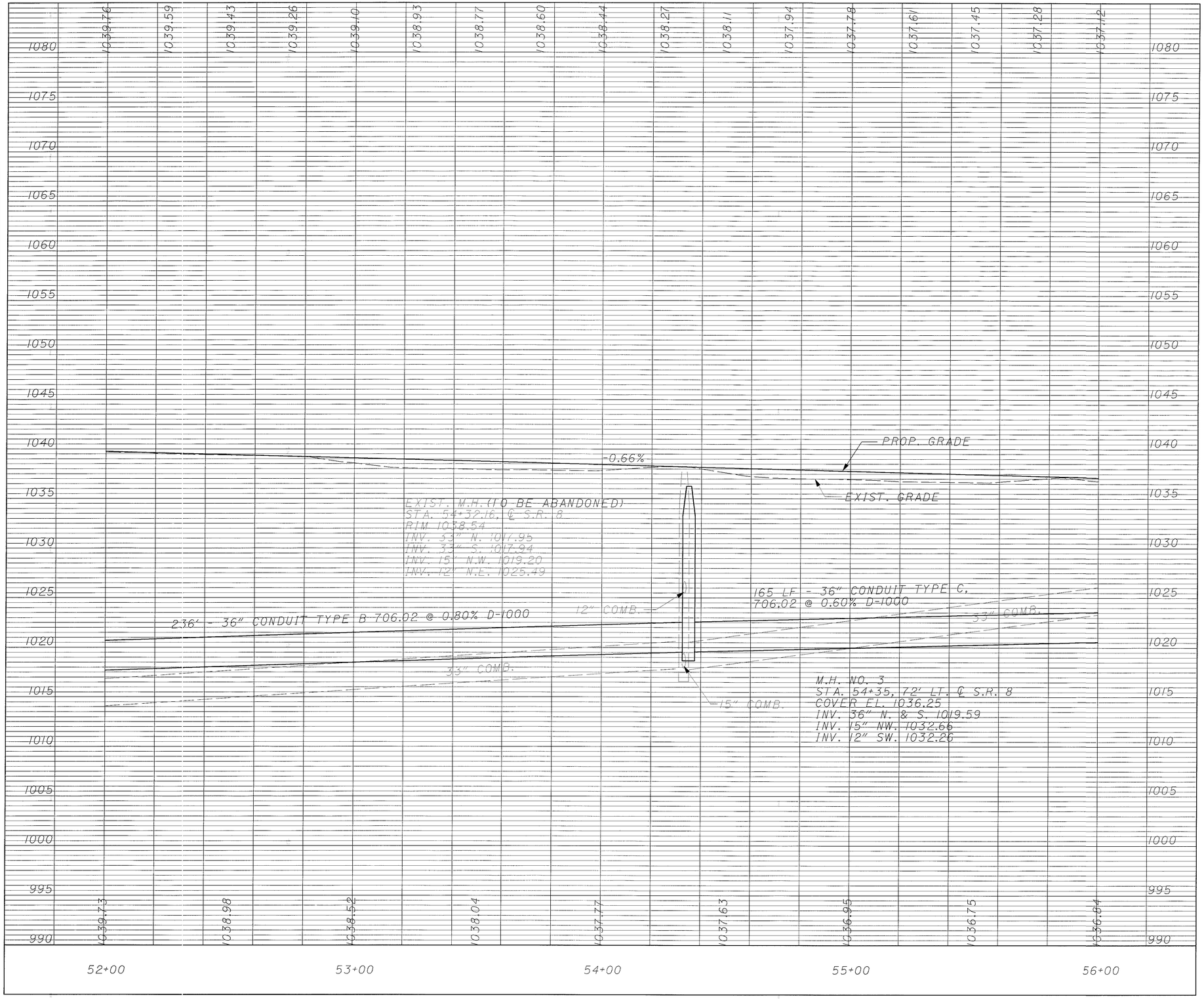

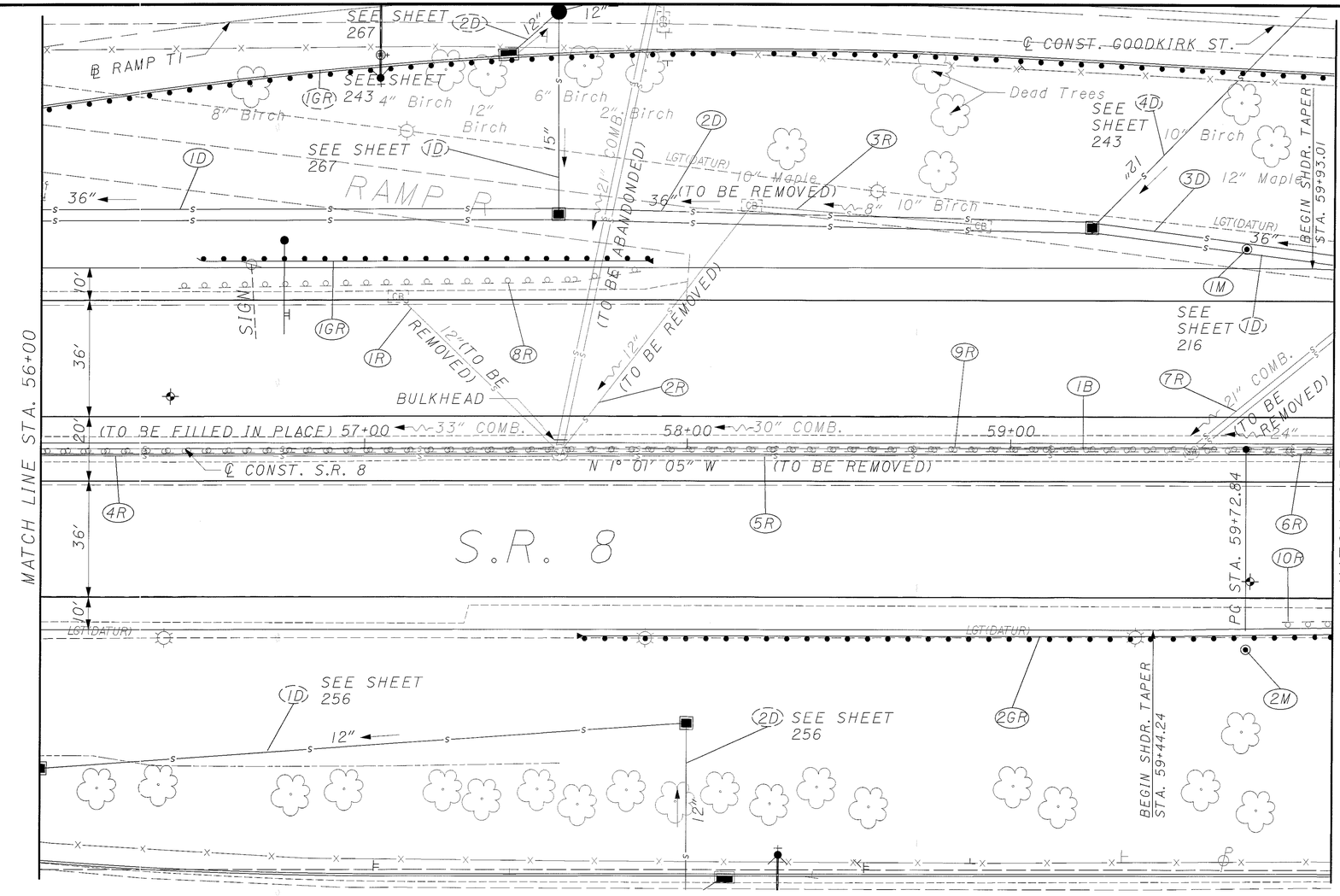

BENCHMARK #8

CHISELED "□" ON NW CORNER OF CONCRETE WALL AT NW CORNER OF GOODKIRK AND ORCHARD

STA. 58+10.87, 186.57 LT, ELEV. 1057.48

CURVE DATA

P.I. STA. = 67+45.23
Δ = 7° 46' 07" (RT)
Dc = 0° 30' 13"
R = 11,375.75'
T = 772.39'
L = 1,542.41'
E = 26.19'

CROSS REFERENCES

SHEET NO.	DESCRIPTION
20	TYPICAL SECTION
155,156	DRAINAGE SUBSUMMARY
171	GUARDRAIL SUBSUMMARY
175	ROADWAY SUBSUMMARY
318-321,382-384	CROSS SECTIONS
438	CURB AND UNDERDRAIN PLAN
759,760	SIGNING AND PAVEMENT MARKING PLAN
862	LIGHTING PLAN

N

HORIZONTAL SCALE IN FEET
0 10 20 40

CALCULATED | CHECKED

PLAN - S.R. 8
STA. 56+00 TO STA. 60+00

SUM-8-0.63

214
1088

I:\projects\9922100\civil\dwgs\pp8.dgn

CALCULATED | CHECKED

PROFILE - S.R. 8
STA. 56+00 TO STA. 60+00

SUM-8-0.63

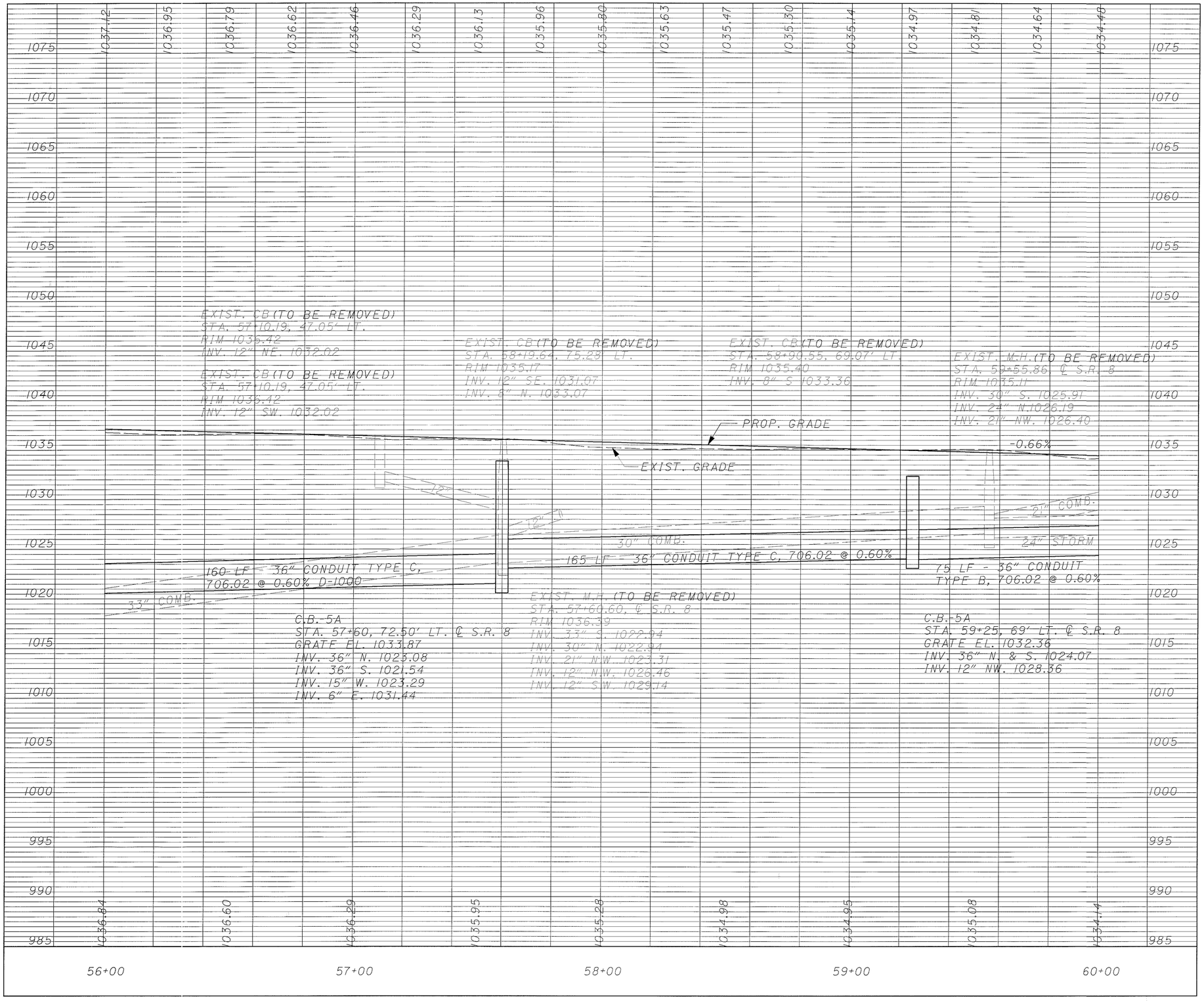

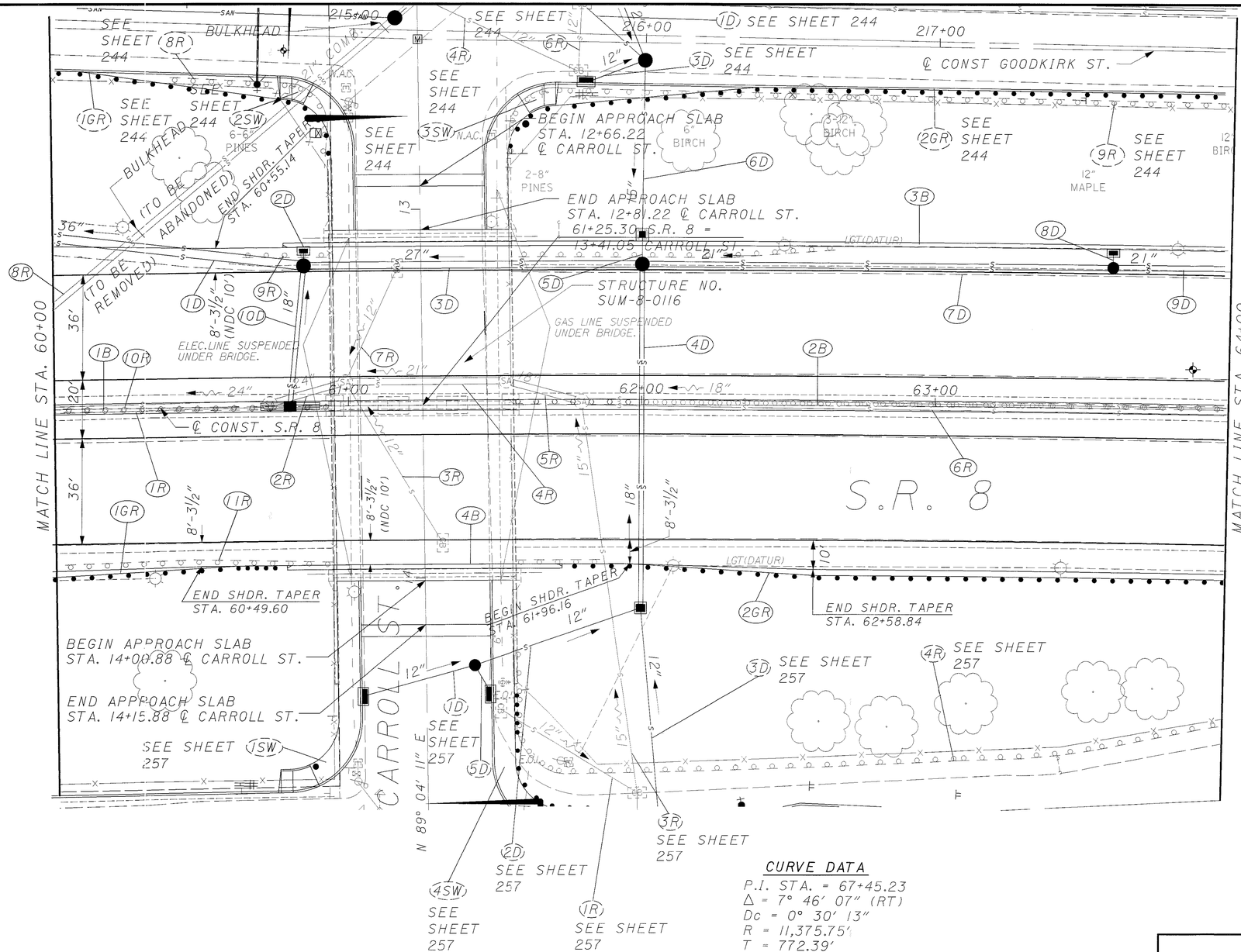

BENCHMARK #7

CHISELED "□" ON SW CORNER OF CONCRETE PAD FOR FLOOD LIGHT AT UNIV. OF AKRON SIGN 40' NO. OF ℄ CARROLL ST., 83' W OF ℄ GOODKIRK

STA. 61+61.75, 208.96 LT, ELEV. 1062.68

BENCHMARK #16

CHISELED "□" ON ON SE CORNER OF CONCRETE ENTRANCE PAD FOR 525 NASH ST. BELLA DORA APTS. 56.1' NO. OF ℄, 10.1' S.E. TO SW BUILDING CORNER.

STA. 61+61.75, 272.12 RT, ELEV. 1051.48

CURVE DATA

P.I. STA. = 67+45.23
Δ = 7° 46' 07" (RT)
Dc = 0° 30' 13"
R = 11,375.75'
T = 772.39'
L = 1,542.41'
E = 26.19'

CROSS REFERENCES

SHEET NO.	DESCRIPTION
20	TYPICAL SECTION
155,156	DRAINAGE SUBSUMMARY
172	GUARDRAIL SUBSUMMARY
176	ROADWAY SUBSUMMARY
321-325,384-388	CROSS SECTIONS
439	CURB AND UNDERDRAIN PLAN
760	SIGNING AND PAVEMENT MARKING PLAN
862,863	LIGHTING PLAN
940	CARROLL STREET BRIDGE SITE PLAN

HORIZONTAL SCALE IN FEET
0 10 20 40
CALCULATED
CHECKED

PLAN - S.R. 8
STA. 60+00 TO STA. 64+00

SUM-8-0.63

216
1088

i:\projects\99220\00\civil\dwgs\pp9.dgn

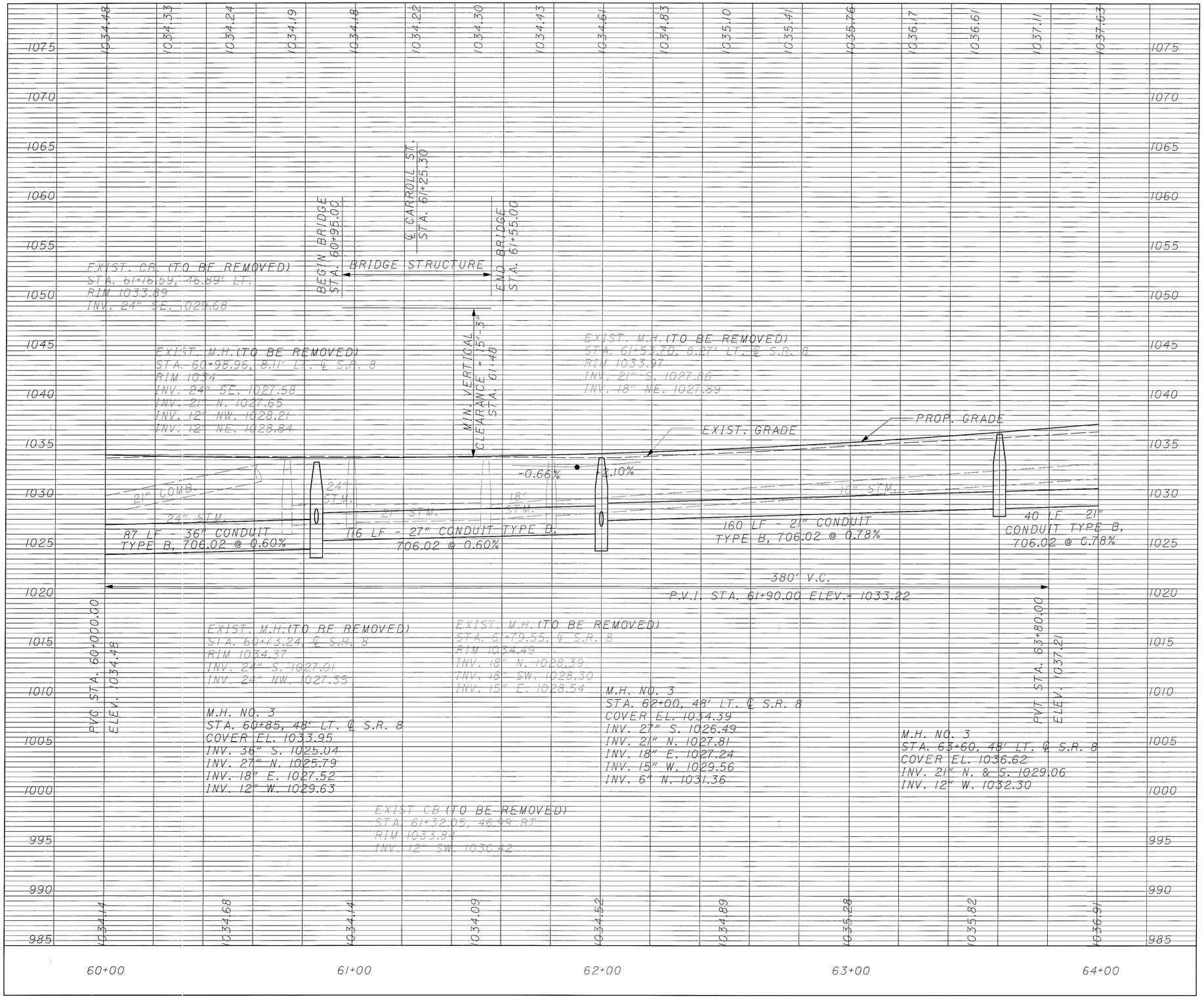

CALCULATED

CHECKED

PROFILE - S.R. 8
STA. 60+00 TO STA. 64+00

SUM-8-0.63

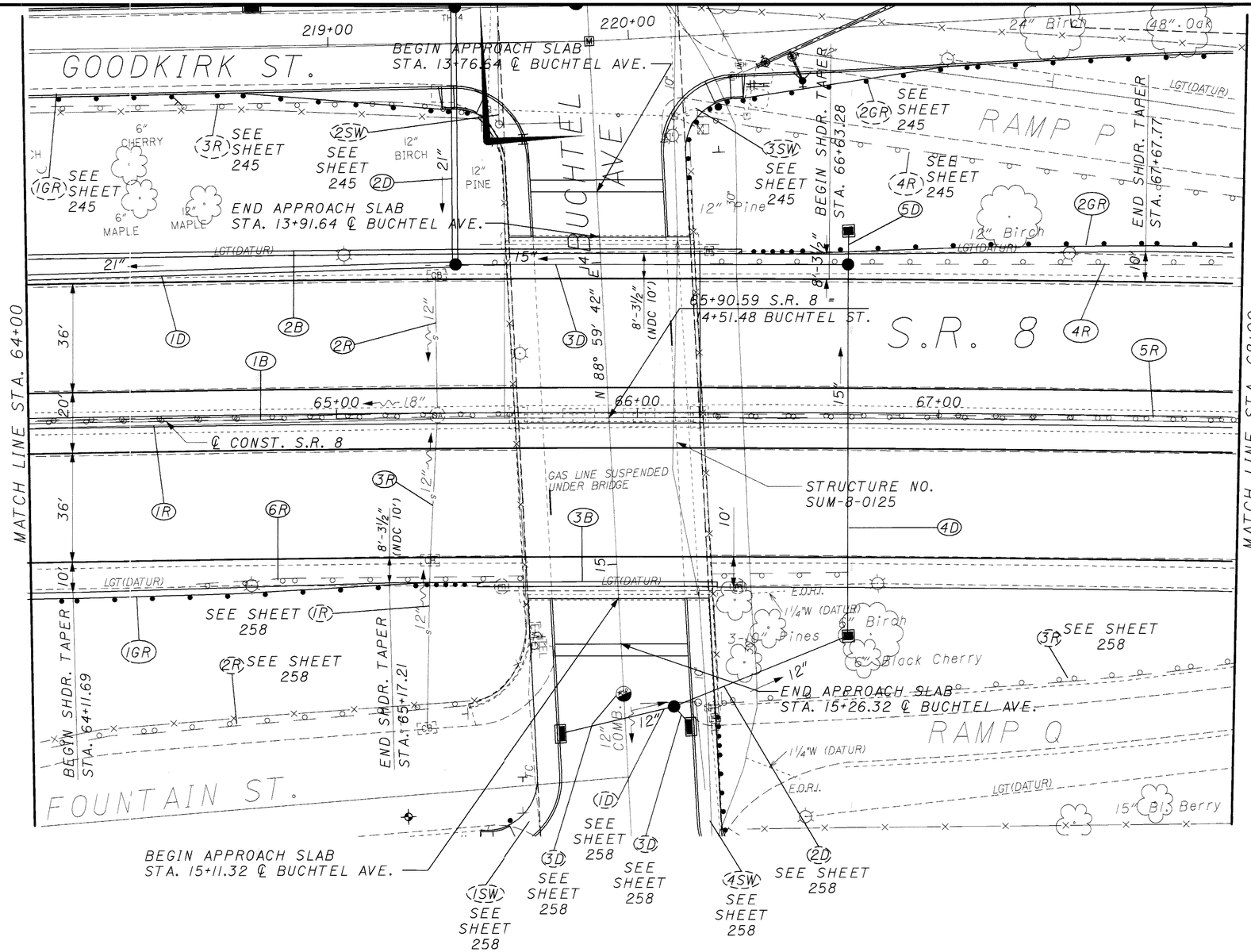

BENCHMARK #6

CHISELED "□" ON SE CORNER OF 1.5' SQ. CONCRETE PAD FOR SPEED LIMIT SIGN, 41' W OF BRICK RD. 27.6' N OF ℄ BUCHTEL ST.

STA. 65+97.71, 295.65 LT, ELEV. 1068.73

BENCHMARK #17

CHISELED "□" IN SIDEWALK 5' WEST OF CORNER ASP PARKING LOT.

STA. 65+71.82, 207.15 RT, ELEV. 1058.06

CURVE DATA

P.I. STA. = 67+45.23
Δ = 7° 46' 07" (RT.)
Dc = 0° 30' 13"
R = 11,375.75'
T = 772.39'
L = 1542.41'
E = 26.19'

CROSS REFERENCES

SHEET NO.	DESCRIPTION
20	TYPICAL SECTION
155,156	DRAINAGE SUBSUMMARY
172	GUARDRAIL SUBSUMMARY
176	ROADWAY SUBSUMMARY
325-329,388-391	CROSS SECTIONS
440	CURB AND UNDERDRAIN PLAN
760	SIGNING AND PAVEMENT MARKING PLAN
863	LIGHTING PLAN
946	BUCHTEL AVENUE BRIDGE SITE PLAN

N

HORIZONTAL SCALE IN FEET
0 10 20 40

CALCULATED | CHECKED

PLAN - S.R. 8
STA. 64+00 TO STA. 68+00

SUM-8-0.63

218
1088

i:\projects\9922100\civil\dwgs\ppl0.dgn

1037.63 1038.16 1038.68 1039.19 1039.66 1040.10 1040.52 1040.90 1041.26 1041.58 1041.87 1042.14 1042.37 1042.58 1042.75 1042.90 1043.01

1080 1075 1070 1065 1060 1055 1050 1045 1040 1035 1030 1025 1020 1015 1010 1005 1000 995 990

℄ BUCHTEL AVE.
STA. 65+90.59

BEGIN BRIDGE
STA. 65+60.32

BRIDGE STRUCTURE

END BRIDGE
STA. 66+21.54

MIN. VERTICAL CLEARANCE = 15'-5⅜"
STA. 66+15

1050' V.C.
P.V.I. STA. 68+70.00 ELEV. = 1049.60

PVC STA. 64+45.00
ELEV. 1038.58

PROP. GRADE

+2.10%

EXIST. GRADE

18" STM.
140 LF - 21" CONDUIT TYPE B, 706.02 @ 0.78%

130 LF - 15" CONDUIT
TYPE B, 706.02 @ 1.88%

M.H. NO. 3
STA. 66+70, 51' LT. ℄ S.R. 8
COVER EL. 1041.82
INV. 15" W. 1036.20
INV. 15 " S. & E. 1035.79

EXIST. M.H.(TO BE REMOVED)
STA. 65+33.44, ℄ S.R. 8
RIM 1039.84
INV. 18" S. 1032.19
INV. 12" W. 1034.38
INV. 12" E. 1033.96

M.H. NO. 3
STA. 65+40, 51' LT. ℄ S.R. 8
GRATE EL. 1040.05
INV. 21" S. & W. 1030.46
INV. 15" N. 1033.35
INV. 6" N. 1037.26

EXIST. CB (TO BE REMOVED)
STA. 65+30.81, 46.95 RT.
RIM 1039.47
INV. 12" E. & W. 1035.05

EXIST. CB (TO BE REMOVED)
STA. 65+33.40, 47.29 LT
RIM 1039.47
INV. 12" E. 1035.17

1036.91 1037.54 1039.01 1039.41 1040.62 1041.66 1042.43 1042.86 1044.05

64+00 65+00 66+00 67+00 68+00

CALCULATED | CHECKED

PROFILE - S.R. 8
STA. 64+00 TO STA. 68+00

SUM-8-0.63

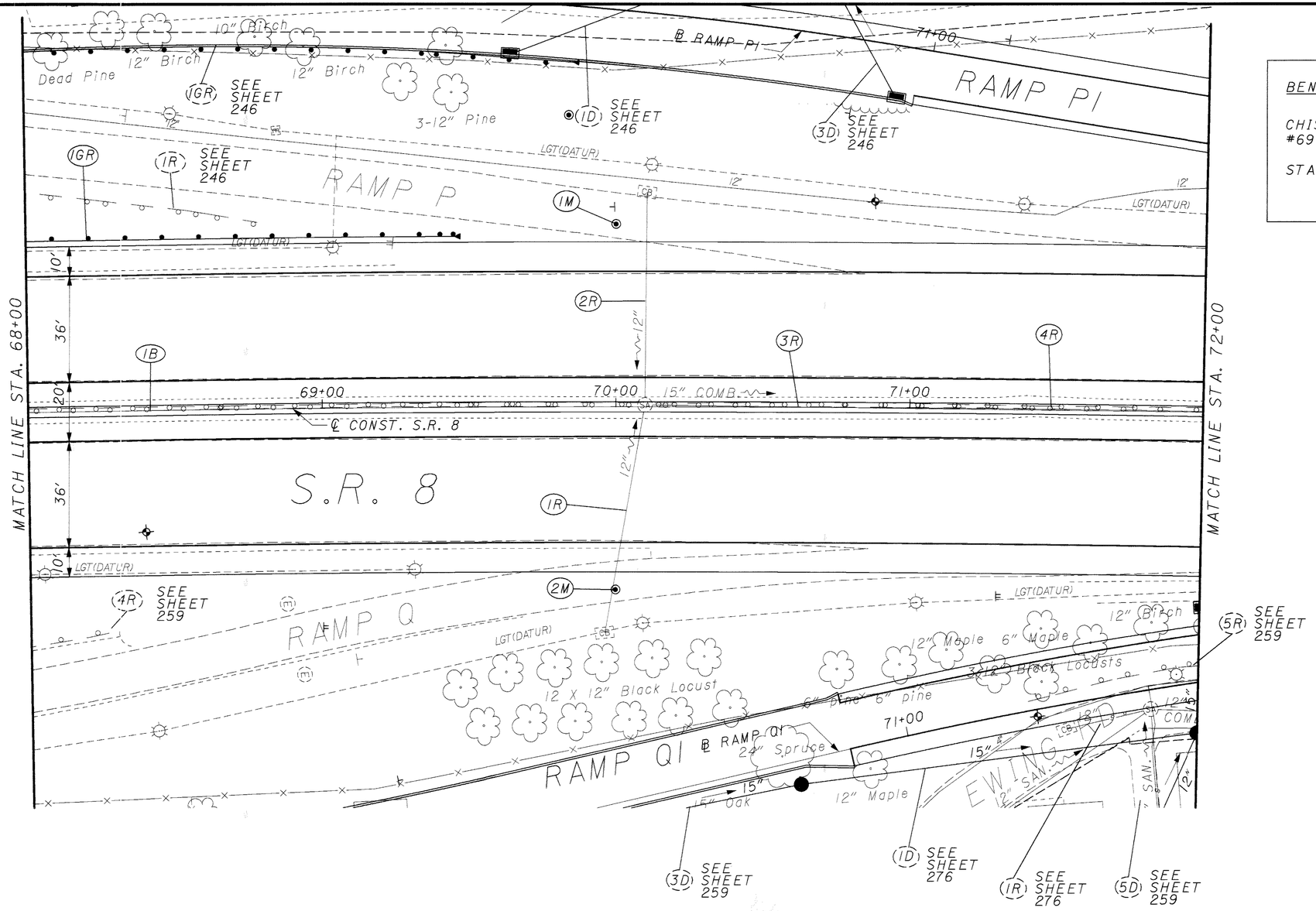

BENCHMARK #18

CHISELED "□" ON SW CORNER OF STEP TO #69 ADOLPH ST. AND EWING RD.

STA. 69+33.90, 450.97 RT, ELEV. 1056.32

CURVE DATA

P.I. STA. = 67+45.23
Δ = 7° 46′ 07″ (RT)
Dc = 0° 30′ 13″
R = 11,375.75′
T = 772.39′
L = 1,542.41′
E = 26.19′

CROSS REFERENCES

SHEET NO.	DESCRIPTION
20	TYPICAL SECTION
172	GUARDRAIL SUBSUMMARY
176	ROADWAY SUBSUMMARY
271,272	RAMP P1 PLAN AND PROFILE
275,276	RAMP Q1 PLAN AND PROFILE
329-333,391-394	CROSS SECTIONS
441	CURB AND UNDERDRAIN PLAN
761	SIGNING AND PAVEMENT MARKING PLAN
863,864	LIGHTING PLAN

REVISIONS: 05/15/2002 by MAM

N

0 10 20 40 HORIZONTAL SCALE IN FEET

CALCULATED | CHECKED

PLAN - S.R. 8
STA. 68+00 TO STA. 72+00

SUM-8-0.63

220
1088

i:\projects\9922100\civil\dwgs\ppll.dgn

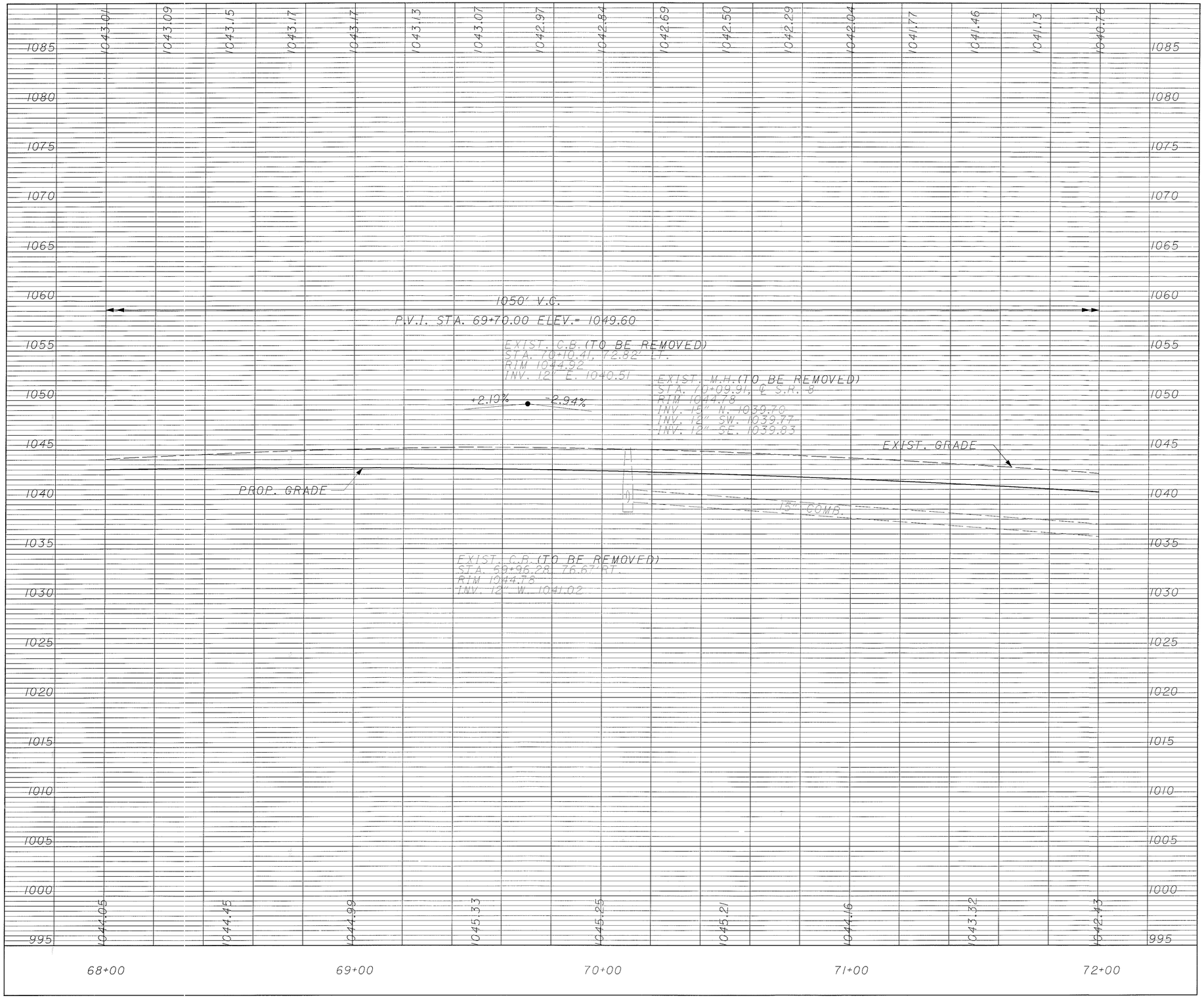

CALCULATED

CHECKED

PROFILE - S.R. 8

STA. 68+00 TO STA. 72+00

SUM-8-0.63

221
1088

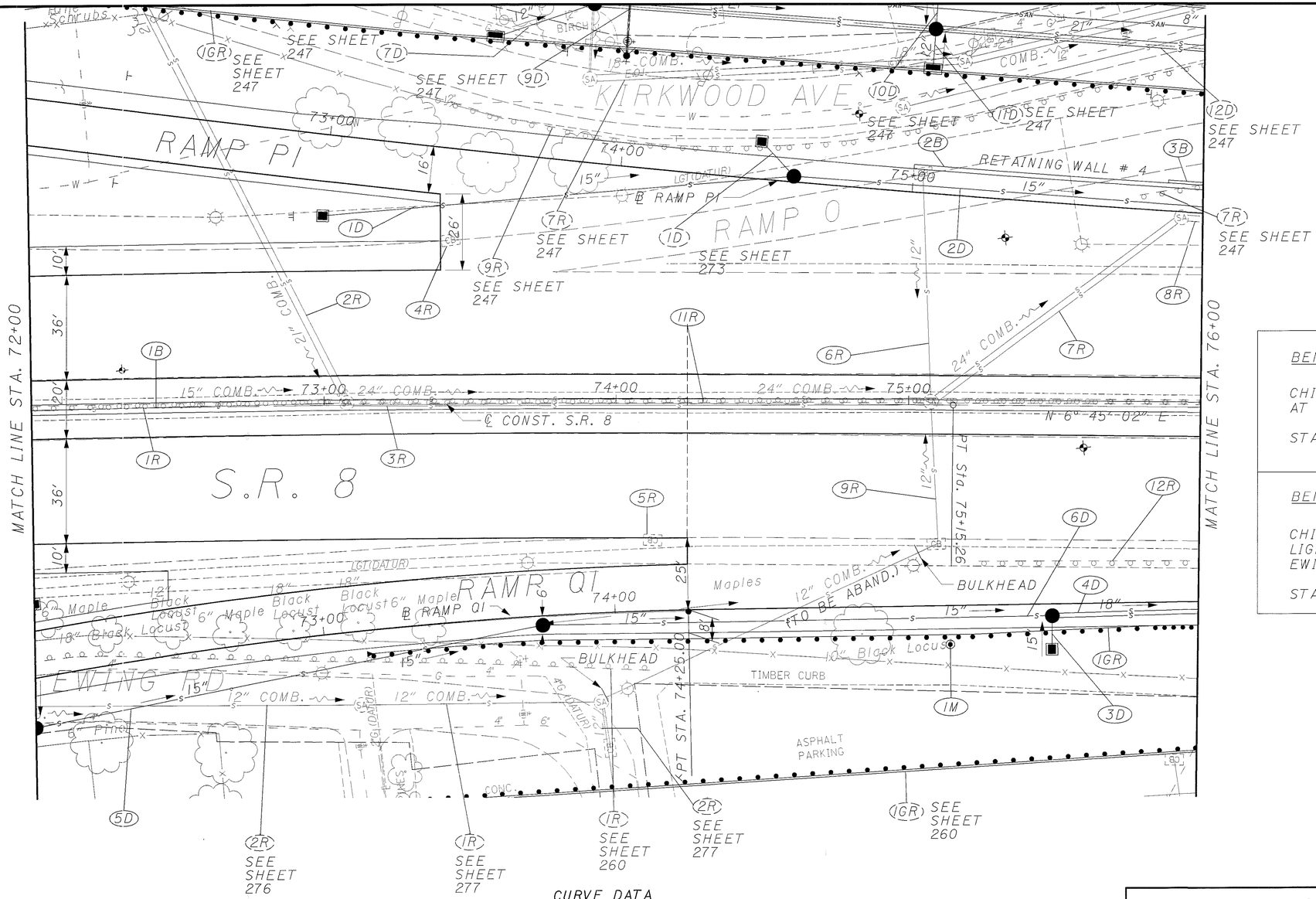

CURVE DATA

P.I. STA. = 67+45.23
Δ = 7° 46' 07" (RT)
Dc = 0° 30' 13"
R = 11,375.75'
T = 772.39'
L = 1,542.41'
E = 26.19'

BENCHMARK #5

CHISELED "□" ON SO. EDGE OF LIGHT POLE AT NE CORNER OF HAMILTON AND MILL.

STA. 72+51.96, 285.62 LT, ELEV. 1059.56

BENCHMARK #19

CHISELED "□" ON CONCRETE BASE FOR LIGHT POLE NO. OF #27 ADOLPH ST. AND EWING RD.

STA. 74+14.67, 408.28 RT, ELEV. 1059.54

CROSS REFERENCES

SHEET NO.	DESCRIPTION
20	TYPICAL SECTION
155,156	DRAINAGE SUBSUMMARY
172	GUARDRAIL SUBSUMMARY
176	ROADWAY SUBSUMMARY
273,274	RAMP PI PLAN AND PROFILE
277	RAMP QI PLAN AND PROFILE
333-337,394-397	CROSS SECTIONS
442	CURB AND UNDERDRAIN PLAN
498	PAVEMENT DETAILS
633	RETAINING WALL #4 PLAN
761	SIGNING AND PAVEMENT MARKING PLAN
864	LIGHTING PLAN

HORIZONTAL SCALE IN FEET
0 10 20 40
CALCULATED
CHECKED

PLAN - S.R. 8
STA. 72+00 TO STA. 76+00

SUM-8-0.63

222
1088

i:\projects\992200\civil\dwgs\ppl2.dgn

1050' V.C.
P.V.I. STA. 69+70.00 ELEV. = 1049.60

EXIST. M.H. (TO BE REMOVED)
STA. 73+07.74, ℄ S.R. 8
RIM 1040.37
INV. 24" N. 1033.68
INV. 21" SW. 1034.24
INV. 15" S. 1034.35

C.B. 5
STA. 73+00, 65' LT. ℄ S.R. 8
COVER EL. 1037.07
INV. 15" N. 1033.00
INV. 6" E. 1034.57

M.H. NO. 3
STA. 74+60, 78' LT. ℄ S.R. 8
COVER EL. 1034.43
INV. 15" N. & S. 1028.79
INV. 12" SW. 1029.55

EXIST. GRADE
PROP. GRADE

EXIST. M.H. (TO BE REMOVED)
STA. 75+07.60, ℄ S.R. 8
RIM 1034.36
INV. 24" NW. 1028.04
INV. 24" S. 1028.06
INV. 12" W. 1030.10
INV. 12" SE. 1028.59
INV. 12" E. 1030.38

PVT STA. 74+95.00
ELEV. 1034.19

21" COMB.
15" COMB.
24" COMB.
12" COMB.
24" COMB.

171 LF - 15" CONDUIT TYPE B, 706.02 @ 2.20%
162 LF - 15" CONDUIT TYPE B, 706.02 @ 2.60%
175 LF - 15" CONDUIT TYPE B, 706.02 @ 2.20%
139 LF - 15" CONDUIT TYPE B, 706.02 @ 2.64%
50 LF - 18" CONDUIT TYPE B, 706.02 @ 2.64%

PVC STA. 75+75.00
ELEV. 1031.84

450' V.C.
P.V.I. STA. 78+00.00 ELEV. = 1025.23

M.H. NO. 3
STA. 72+00, 109' RT. ℄ S.R. 8
COVER EL. 1038.57
INV. 15" S. 1034.07
INV. 15" N & W. 1033.87
INV. 12" SE. 1034.32

M.H. NO. 3
STA. 73+75, 75.85' RT. ℄ S.R. 8
COVER EL. 1036.07
INV. 15" N. & S. 1029.98

EXIST. C.B. (TO BE REMOVED)
STA. 75+10.04, 47.65' RT.
RIM 1034.81
INV. 12" W. & SE. 1030.74

EXIST. M.H. (TO BE REMOVED)
STA. 75+92.56, 64.93' RT.
RIM 1035.75
INV. 24" N. & SE. 1026.02

M.H. NO. 3
STA. 75+50, 71.80' RT. ℄ S.R. 8
COVER EL. 1031.86
INV. 18" N. 1025.90
INV. 15" S. & E. 1026.15
INV. 6" S. 1029.23

1040.76 1040.37 1039.94 1039.49 1039.00 1038.48 1037.94 1037.36 1036.76 1036.12 1035.46 1034.76 1034.04 1033.31 1032.57 1031.84 1031.13

1042.43 1041.27 1040.21 1038.58 1037.24 1035.70 1034.08 1032.45 1030.93

1075 1070 1065 1060 1055 1050 1045 1040 1035 1030 1025 1020 1015 1010 1005 1000 995 990 985

72+00 73+00 74+00 75+00 76+00

CALCULATED
CHECKED

PROFILE - S.R. 8
STA. 72+00 TO STA. 76+00

SUM-8-0.63

223
1088

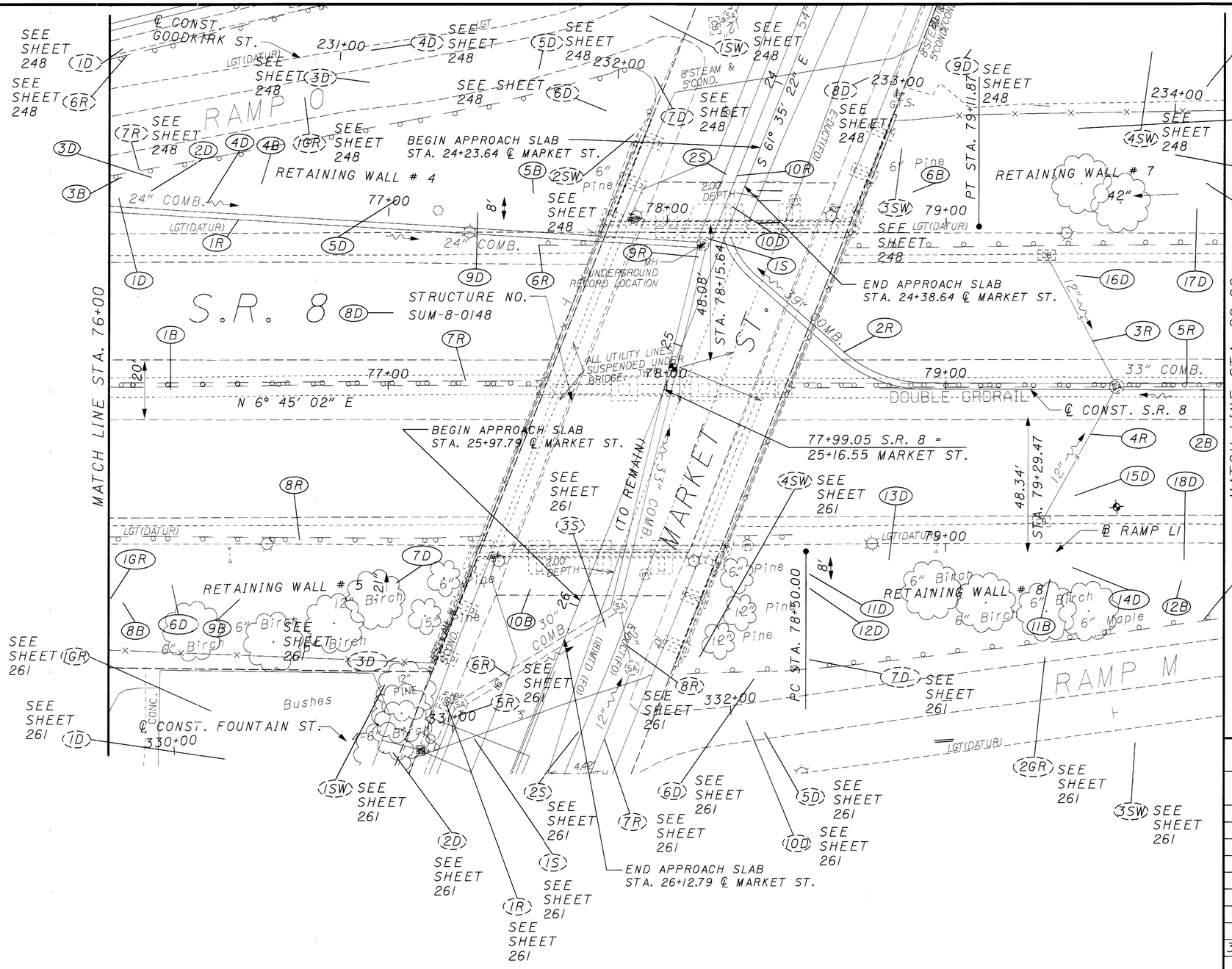

BENCHMARK #4

CHISELED "□" ON NE CORNER OF STEPS IN NORTHWEST ENTRANCE OF BUILDING AT SW CORNER OF MARKET AND KIRKWOOD

STA. 78+51.54, 242.68 LT, ELEV. 1046.85

BENCHMARK #20

CHISELED "□" ON SE CORNER OF CURB FOR PARKING LOT # 457 MARKET ST. AT NW CORNER OF MARKET ST. AND ADOLPH ST.

STA. 77+53.65, 241.36 RT, ELEV. 1051.01

CROSS REFERENCES

SHEET NO.	DESCRIPTION
20	TYPICAL SECTION
155,156,157	DRAINAGE SUBSUMMARY
172	GUARDRAIL SUBSUMMARY
176,177	ROADWAY SUBSUMMARY
181	SANITARY SUBSUMMARY
273,274	RAMP PI PLAN AND PROFILE
277	RAMP QI PLAN AND PROFILE
281	RAMP LI PLAN AND PROFILE
337-340,397-401	CROSS SECTIONS
443	CURB AND UNDERDRAIN PLAN
498,499	PAVEMENT DETAILS
554-557	APPROACH SLAB DETAILS
601	PLAN VIEW OF 1S AND 2S
604	BARRIER INLET CHAMBER - TYPE A
605	BARRIER INLET CHAMBER - TYPE B
633	RETAINING WALL #4 PLAN
638	RETAINING WALL #5 PLAN
648	RETAINING WALL #7 PLAN
656	RETAINING WALL #8 PLAN
761,762	SIGNING AND PAVEMENT MARKING PLAN
864	LIGHTING PLAN
951	MARKET STREET BRIDGE SITE PLAN

REVISIONS: 05/15/2002 by MAM

HORIZONTAL SCALE IN FEET 0 10 20 40

CALCULATED

CHECKED

PLAN - S.R. 8
STA. 76+00 TO STA. 80+00

SUM-8-0.63

224
1088

t:\projects\9922100\civil\dwgs\ppl3.dgn

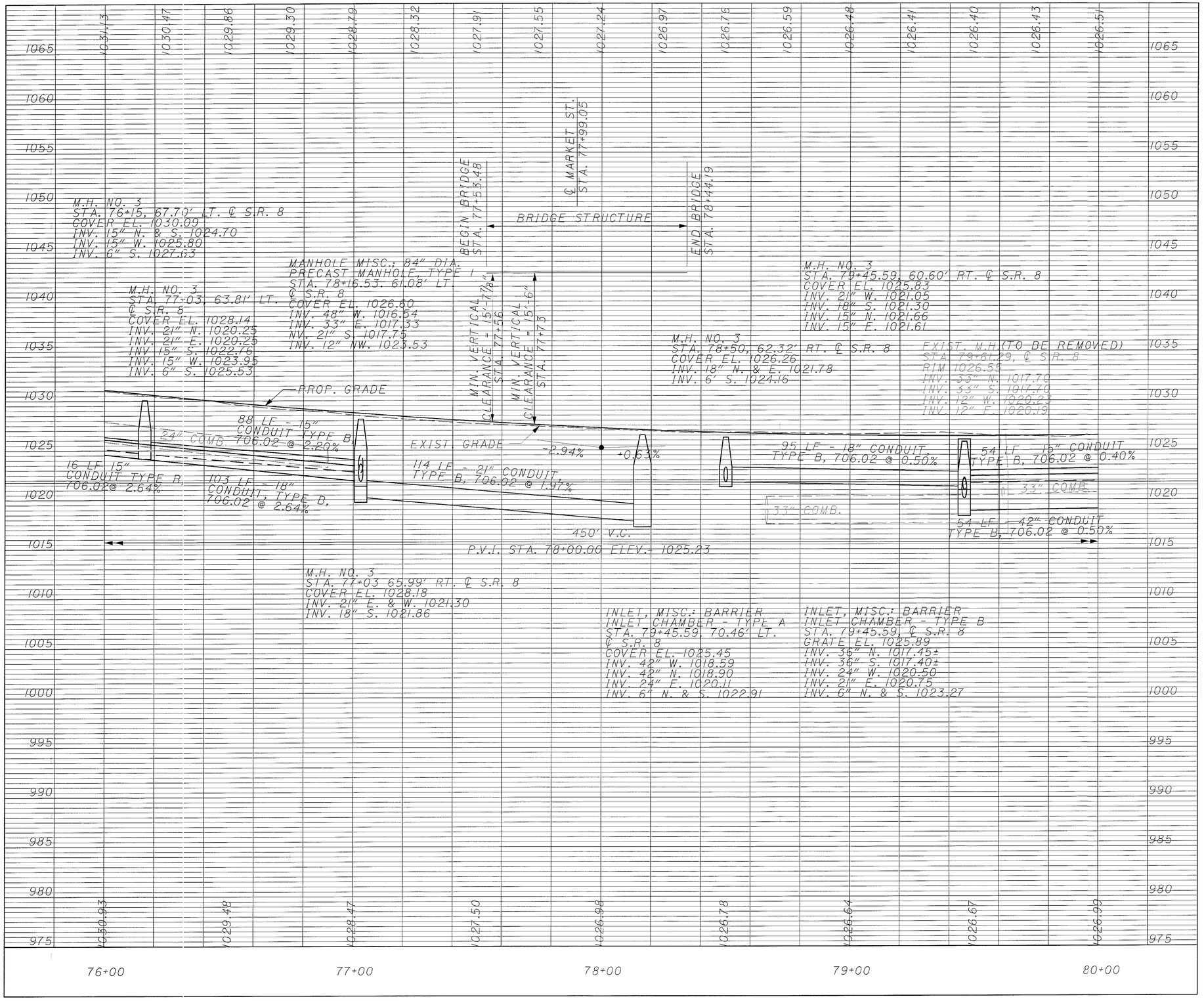

CALCULATED

CHECKED

PROFILE - S.R. 8

STA. 76+00 TO STA. 80+00

SUM-8-0.63

225
1088

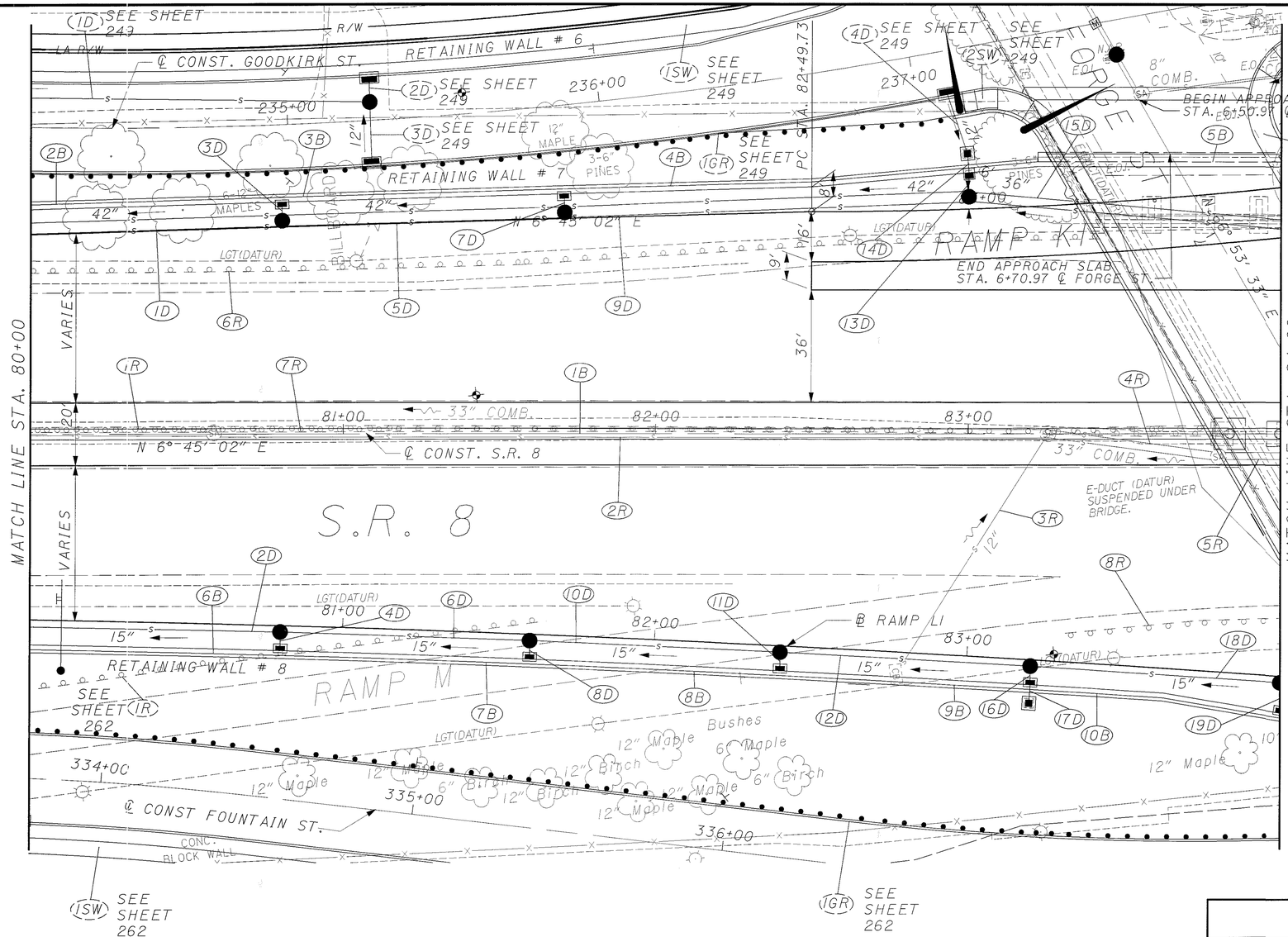

BENCHMARK #3

CHISELED "X" ON CURB SIDE CORNER OF CONCRETE SIDEWALK ON NORTH SIDE OF FORGE ST. 61.5' WEST OF INTERSECTION OF FORGE AND PARK, 23.9' NORTH OF ℄ FORGE ST.

STA. 82+53.90, 329.42 LT, ELEV. 1044.09

CROSS REFERENCES

SHEET NO.	DESCRIPTION
20	TYPICAL SECTION
157,158	DRAINAGE SUBSUMMARY
172	GUARDRAIL SUBSUMMARY
177	ROADWAY SUBSUMMARY
278	RAMP KI PLAN AND PROFILE
281,282	RAMP LI PLAN AND PROFILE
340-344,401-405	CROSS SECTIONS
444	CURB AND UNDERDRAIN PLAN
499,500	PAVEMENT DETAILS
648	RETAINING WALL #7
656	RETAINING WALL #8
762	SIGNING AND PAVEMENT MARKING PLAN
865	LIGHTING PLAN
982	FORGE STREET BRIDGE SITE PLAN
558-561	APPROACH SLAB DETAIILS

HORIZONTAL SCALE IN FEET
0 10 20 40

CALCULATED | CHECKED

PLAN - S.R. 8
STA. 80+00 TO STA. 84+00

SUM-8-0.63

226
1088

i:\projects\9922100\civil\dwgs\pp14.dgn

1070 1065 1060 1055 1050 1045 1040 1035 1030 1025 1020 1015 1010 1005 1000 995 990 985 980

1026.51 1026.65 1026.81 1026.96 1027.12 1027.28 1027.44 1027.59 1027.75 1027.91 1028.07 1028.22 1028.38 1028.54 1028.70 1028.85 1029.01

P.V.I. STA. 78+00.00 ELEV. 1025.23
450' V.C.

PVT STA. 80+25.00
ELEV. 1026.65

PROP. GRADE
EXIST. GRADE

80 LF - 15" CONDUIT TYPE B, 706.02 @ 0.50%
33" COMB.
80 LF - 42" CONDUIT TYPE B, 706.02 @ 0.40%

80 LF - 15" CONDUIT TYPE B, 706.02 @ 0.50%
33" COMB.
90 LF - 42" CONDUIT TYPE B, 706.02 @ 0.40%

80 LF - 15" CONDUIT TYPE B, 706.02 @ 0.50%
129 LF - 42" CONDUIT TYPE B, 706.02 @ 0.40%

+0.63%

80 LF - 15" CONDUIT TYPE B, 706.02 @ 0.50%
30" COMB.
80 LF - 36" CONDUIT TYPE B, 706.02 @ 0.50%

BEGIN BRIDGE STA. 83+80.34

MIN. VERTICAL CLEARANCE = 15'-6" STA. 83+55

MIN. VERTICAL CLEARANCE = 16'-5" STA. 83+87

M.H. NO. 3
STA. 80+80, 63.64' RT. ℄ S.R. 8
COVER EL. 1026.50
INV. 15" N. & S. 1022.33
INV. 15" E. 1022.39

EXIST. M.H. (TO BE REMOVED)
STA. 80+58.63, ℄ S.R. 8
RIM 1027.15
INV. 33" N. 1018.62
INV. 33" S. 1018.51

M.H. NO. 3
STA. 80+80.00, 68.24' LT. ℄ S.R. 8
COVER EL. 1026.52
INV. 42" N. & S. 1019.43
INV 15" W. 1022.23

M.H. NO. 3
STA. 81+60, 66.29' RT. ℄ S.R. 8
COVER EL. 1026.93
INV. 15" N. & S. 1022.73
INV. 15" E. 1022.73

M.H. NO. 3
STA. 81+70.00, 70.78' LT. ℄ S.R. 8
COVER EL. 1026.66
INV. 42" N. & S. 1019.79
INV. 15" W. 1022.04

M.H. NO. 3
STA. 82+40, 69.97' RT. ℄ S.R. 8
COVER EL. 1027.38
INV. 15" N. & S. 1023.13
INV. 15" E. 1023.13

EXIST. M.H. (TO BE REMOVED)
STA. 83+25.50, ℄ S.R. 8
RIM 1028.35
INV. 33" N. & S. 1020.68

M.H. NO. 3
STA. 83+20, 74.48' RT. ℄ S.R. 8
COVER EL. 1027.83
INV. 15" S. & N. 1023.53
INV. 15" E. 1023.69

M.H. NO. 3
STA. 84+00.00, 79.83' RT. ℄ S.R. 8
COVER EL. 1028.24
INV. 15" S. & E. 1023.93

EXIST. M.H. (TO BE REMOVED)
STA. 83+80.00, 7.33' RT. ℄ S.R. 8
RIM 1028.68
INV. 33" S. 1021.18
INV. 30" N. 1021.18

M.H. NO. 3
STA. 83+00.00, 75.89' LT. ℄ S.R. 8
COVER EL. 1026.85
INV. 42" S. 1021.31
INV. 36" N 1020.80
INV. 15" W & SW 1022.92

1026.99 1027.06 1027.37 1027.40 1027.71 1028.12 1028.32 1028.37 1028.57

80+00 81+00 82+00 83+00 84+00

CALCULATED | CHECKED

PROFILE - S.R. 8
STA. 80+00 TO STA. 84+00

SUM-8-0.63

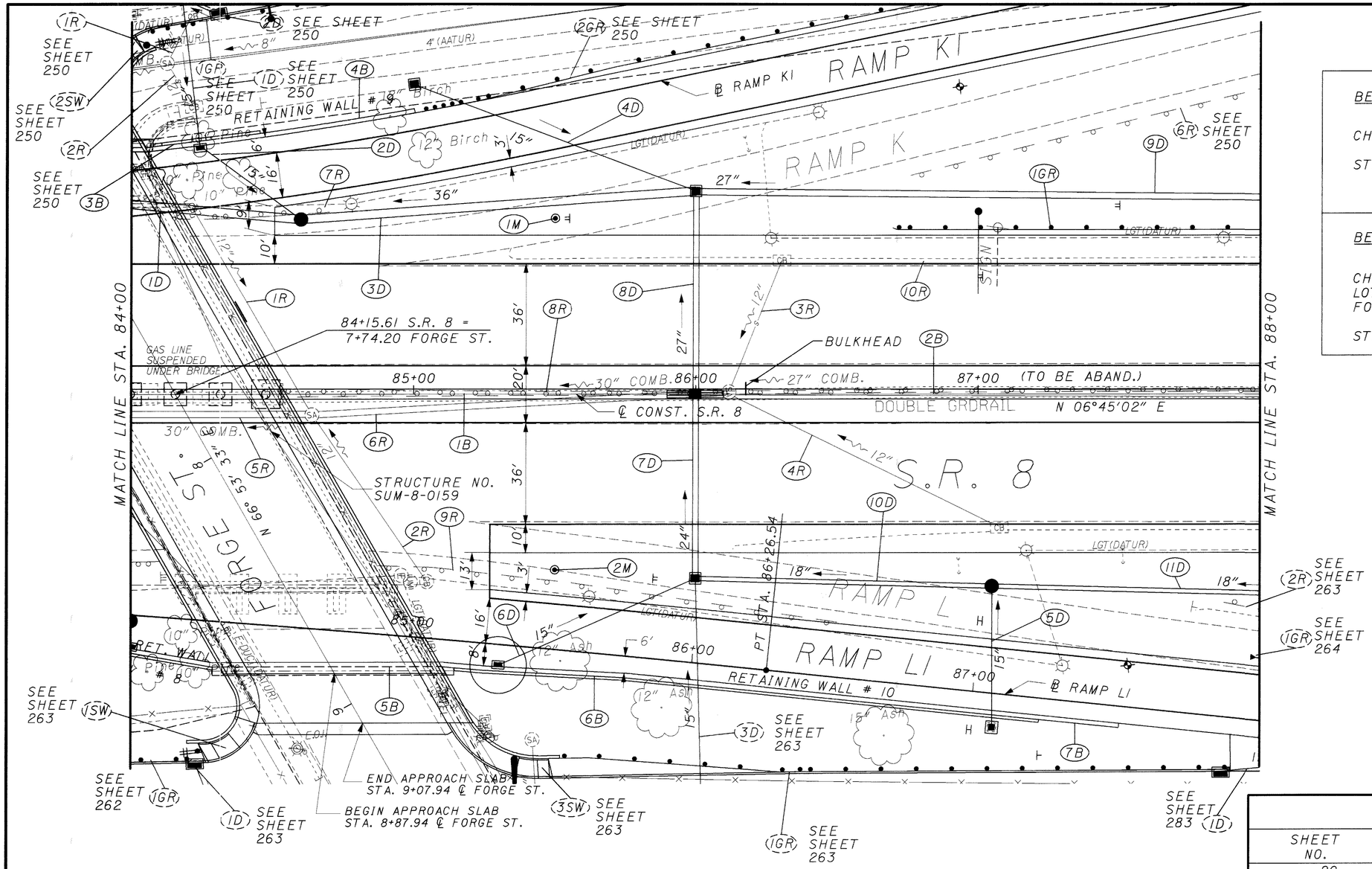

BENCHMARK #2

CHISELED "□" IN CONCRETE SW

STA. 86+62.63, 168.12 LT, ELEV. 1050.07

BENCHMARK #21

CHISELED "X" ON NW BOLT OF PARKING LOT LIGHT POLE AT SE CORNER OF FORGE ST. AND ADOLF ST.

STA. 85+55.74, 306.88 RT, ELEV. 1051.28

CROSS REFERENCES

SHEET NO.	DESCRIPTION
20	TYPICAL SECTION
157,158	DRAINAGE SUBSUMMARY
172	GUARDRAIL SUBSUMMARY
177	ROADWAY SUBSUMMARY
278,279	RAMP KI PLAN AND PROFILE
282,283	RAMP LI PLAN AND PROFILE
344-348,405-409	CROSS SECTIONS
445	CURB AND UNDERDRAIN PLAN
500	PAVEMENT DETAILS
345	PIPE PROFILE 2D
593	PIPE PROFILES 6D, 10D, & 11D
594	PIPE PROFILE 4D
656	RETAINING WALL #8
670	RETAINING WALL #9
673	RETAINING WALL #10
558-561	APPROACH SLAB DETAILS
762	SIGNING AND PAVEMENT MARKING PLAN
865	LIGHTING PLAN
982	FORGE STREET BRIDGE SITE PLAN

REVISIONS: 05/15/2002 by MAM

HORIZONTAL SCALE IN FEET

CALCULATED | CHECKED

PLAN - S.R. 8
STA. 84+00 TO STA. 88+00

SUM-8-0.63

228
1088

i:\projects\9922100\civil\dwgs\pp15.dgn

1029.01 1029.17 1029.33 1029.48 1029.64 1029.80 1029.96 1030.11 1030.27 1030.43 1030.59 1030.74 1030.90 1031.06 1031.22 1031.37 1031.53

℄ FORGE ST.
STA. 84+15.67

BRIDGE STRUCTURE

END BRIDGE
STA. 84+52.86

EXIST. C.B. (TO BE REMOVED)
STA. 85+04.71, 66.15' RT. ℄ S.R. 8
RIM 1030.48
INV. 12" SW. 1023.53

EXIST. C.B. (TO BE REMOVED)
STA. 86+30.43, 11.11' LT. ℄ S.R. 8
RIM 1030.31
INV. 12" SE. 1024.79

PROP. GRADE

+0.63%

EXIST. GRADE

61 LF - 36" CONDUIT
TYPE B, 706.02
@ 0.50%

30" COMB.

12" COMB.

12" COMB.

30" COMB.

140 LF - 36" CONDUIT
TYPE C, 706.02 @ 0.40%

200 LF - 27" CONDUIT TYPE C, 706.02 @ 0.60%

2" COMB.

27" COMB.

EXIST. M.H. (TO BE REMOVED)
STA. 84+63.98, 7.30 LT. ℄ S.R. 8
RIM 1029.17
INV. 30" N. 1021.78
INV. 30" S. 1021.78
INV. 12" NW. 1022.37
INV. 12" NE. 1022.45

EXIST. M.H. (TO BE REMOVED)
STA. 86+11.80, ℄ S.R. 8
RIM 1030.49
INV. 30" S. 1022.50
INV. 27" N. 1022.65
INV. 12" NW. 1023.53

EXIST. C.B. (TO BE REMOVED)
STA. 84+21.54, 66.77' LT. ℄ S.R. 8
RIM 1028.06
INV. 12" NE. 1023.46

C.B. - 5A
STA. 86+00, 72' LT. ℄ S.R. 8
GRATE EL. 1028.08
INV. 36" S. 1023.01
INV. 27" N. 1024.29
INV. 27" E. 1022.88
INV. 15" SW. 1024.26

M.H. NO. 3
STA. 84+60, 61.66' LT. ℄ S.R. 8
COVER EL. 1027.95
INV. 36" N. & S. 1022.45
INV. 15" SW. 1023.35
INV. 6" E. 1025.97

1070 1065 1060 1055 1050 1045 1040 1035 1030 1025 1020 1015 1010 1005 1000 995 990 985 980

1028.57 1028.94 1029.48 1029.48 1029.95 1030.09 1030.90 1031.03 1031.47

84+00 85+00 86+00 87+00 88+00

CALCULATED | CHECKED

PROFILE - S.R. 8
STA. 84+00 TO STA. 88+00

SUM-8-0.63

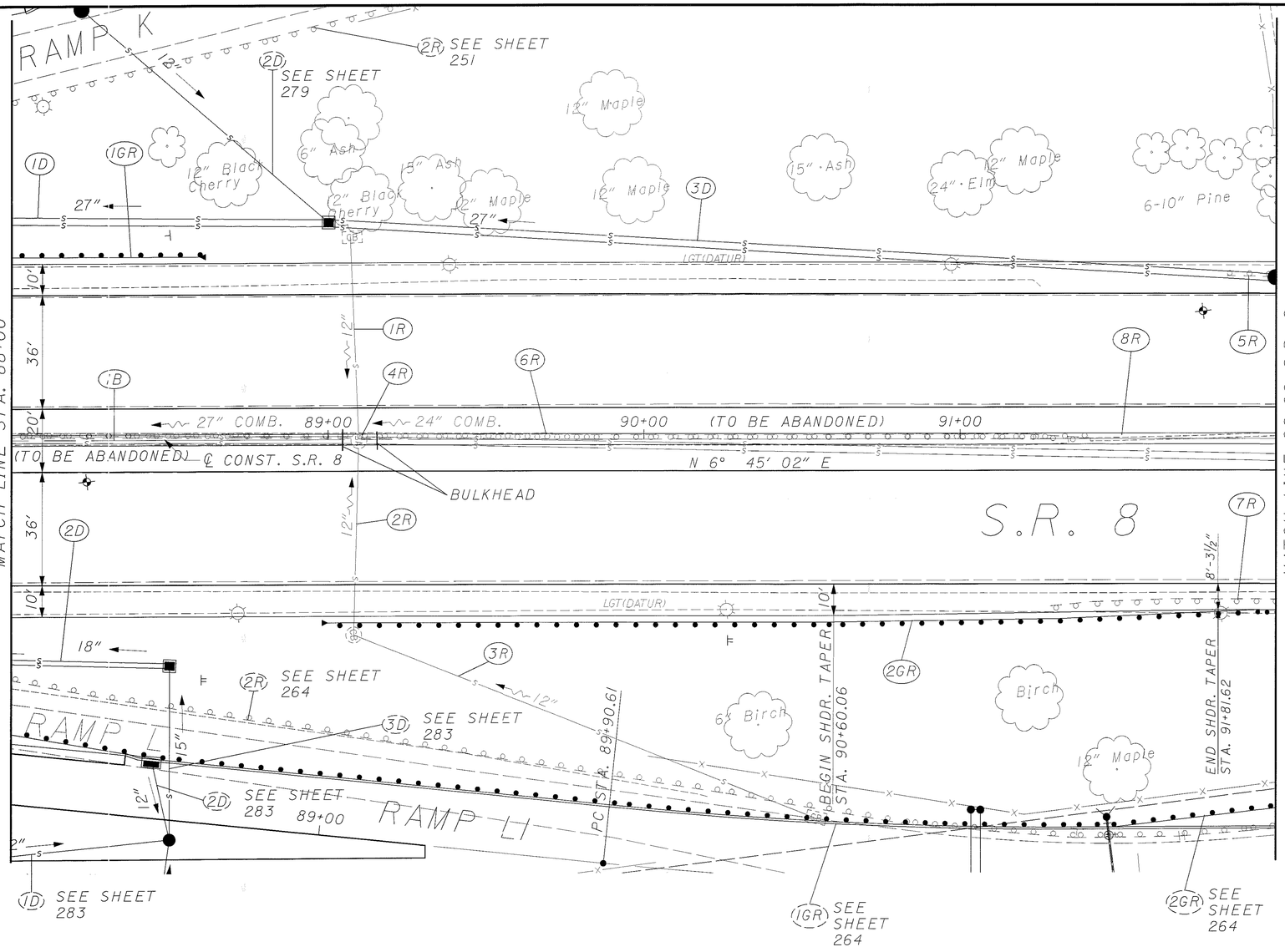

BENCHMARK #1

CHISELED "□" IN NW CORNER OF CONCRETE CURB IN PARKING LOT OF 360 PERKINS ST. 41.5' SO. OF ℄ PERKINS ST. 67.5' N.W. OF N.W. CORNER OF BUILDING.

STA. 91+57.55, 389.31 LT, ELEV. 1048.01

CROSS REFERENCES

SHEET NO.	DESCRIPTION
20	TYPICAL SECTION
157,158	DRAINAGE SUBSUMMARY
172	GUARDRAIL SUBSUMMARY
177	ROADWAY SUBSUMMARY
348-351,409-412	CROSS SECTIONS
446	CURB AND UNDERDRAIN PLAN
593	PIPE PROFILE 2D
763	SIGNING AND PAVEMENT MARKING PLAN
865,866	LIGHTING PLAN

HORIZONTAL SCALE IN FEET
0 10 20 40
CALCULATED
CHECKED

PLAN - S.R. 8
STA. 88+00 TO STA. 92+00

SUM-8-0.63

230
1088

i:\projects\992100N\civil\dwgs\pp16.dgn

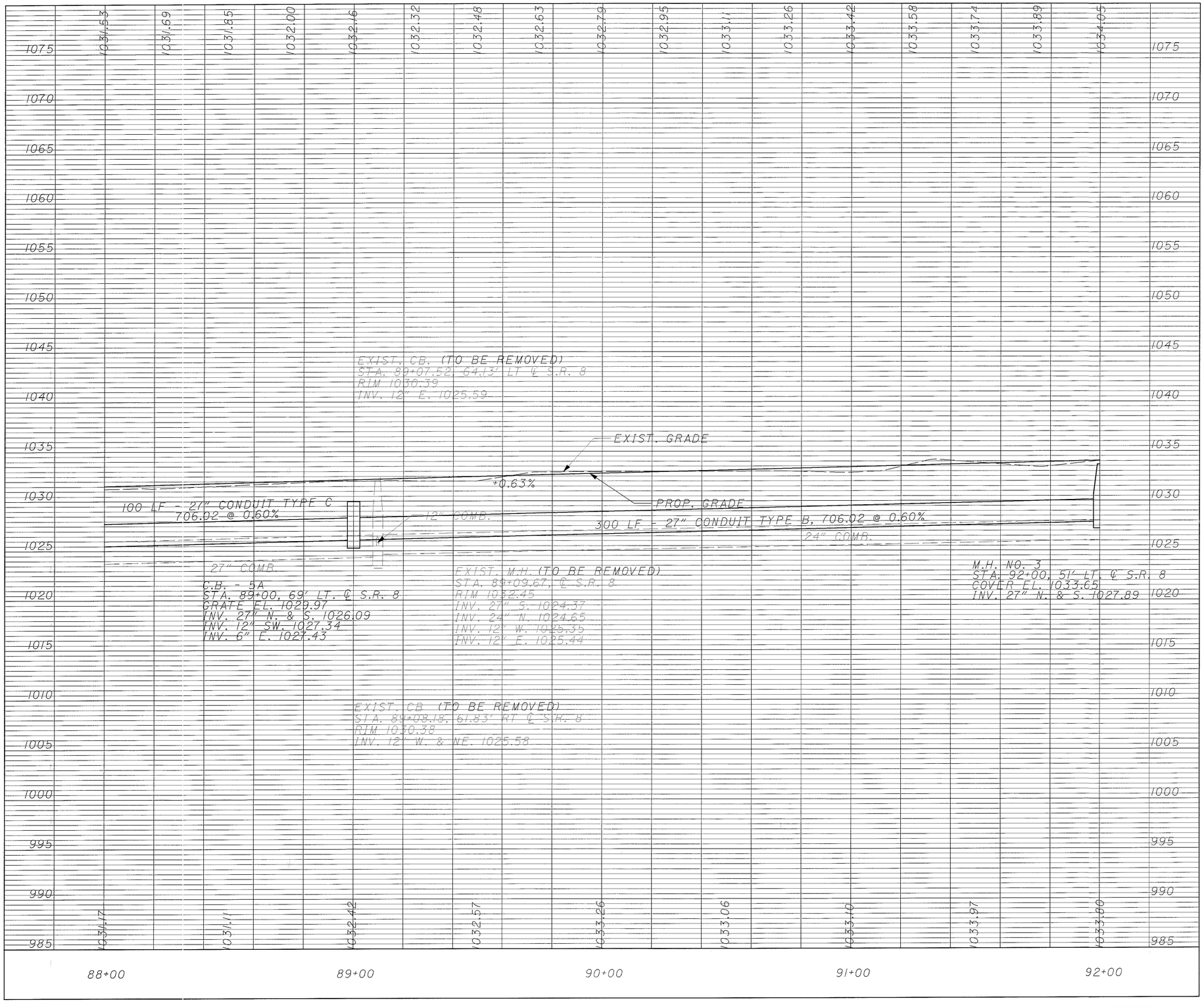

CALCULATED

CHECKED

PROFILE - S.R. 8

STA. 88+00 TO STA. 92+00

SUM-8-0.63

231
1088

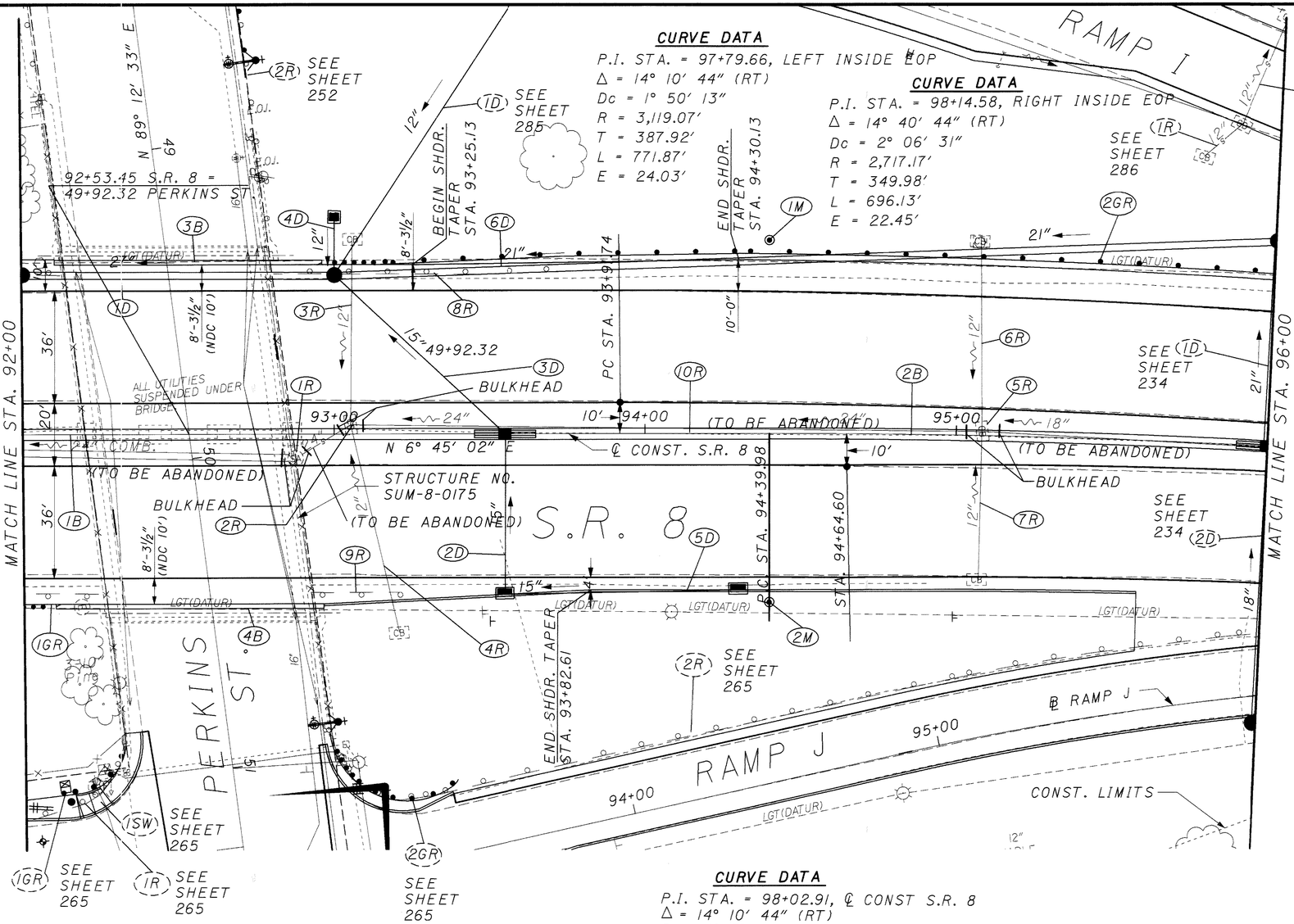

BENCHMARK #22

CHISELED "□" IN SIDEWALK IN FRONT OF HOUSE, 420 PERKINS AT SE CORNER OF PERKINS ST. AND ADOLF ST.

STA. 92+65.11, 293.28 RT, ELEV. 1051.65

CURVE DATA

P.I. STA. = 98+02.91, ℄ CONST S.R. 8
Δ = 14° 10′ 44″ (RT)
Dc = 1° 57′ 48″
R = 2,918.12
T = 362.93′
L = 722.14′
E = 22.48′
e_{max} = 0.035 (NDC e_{max} = 0.045)
NO SPIRAL (NDC 325′ SPIRAL)

CROSS REFERENCES

SHEET NO.	DESCRIPTION
20-22	TYPICAL SECTION
157,158	DRAINAGE SUBSUMMARY
172	GUARDRAIL SUBSUMMARY
178	ROADWAY SUBSUMMARY
288	RAMP J PLAN AND PROFILE
351-355,412-416	CROSS SECTIONS
447	CURB AND UNDERDRAIN PLAN
501	PAVEMENT DETAILS
546	SUPERELEVATION TABLE
595	PIPE PROFILE 5D
763	SIGNING AND PAVEMENT MARKING PLAN
866	LIGHTING PLAN
1003	PERKINS STREET BRIDGE SITE PLAN

HORIZONTAL SCALE IN FEET
0 10 20 40
CALCULATED
CHECKED

PLAN - S.R. 8
STA. 92+00 TO STA. 96+00

SUM-8-0.63

232
1088

I:\projects\9922001\civil\dwgs\ppif.dgn

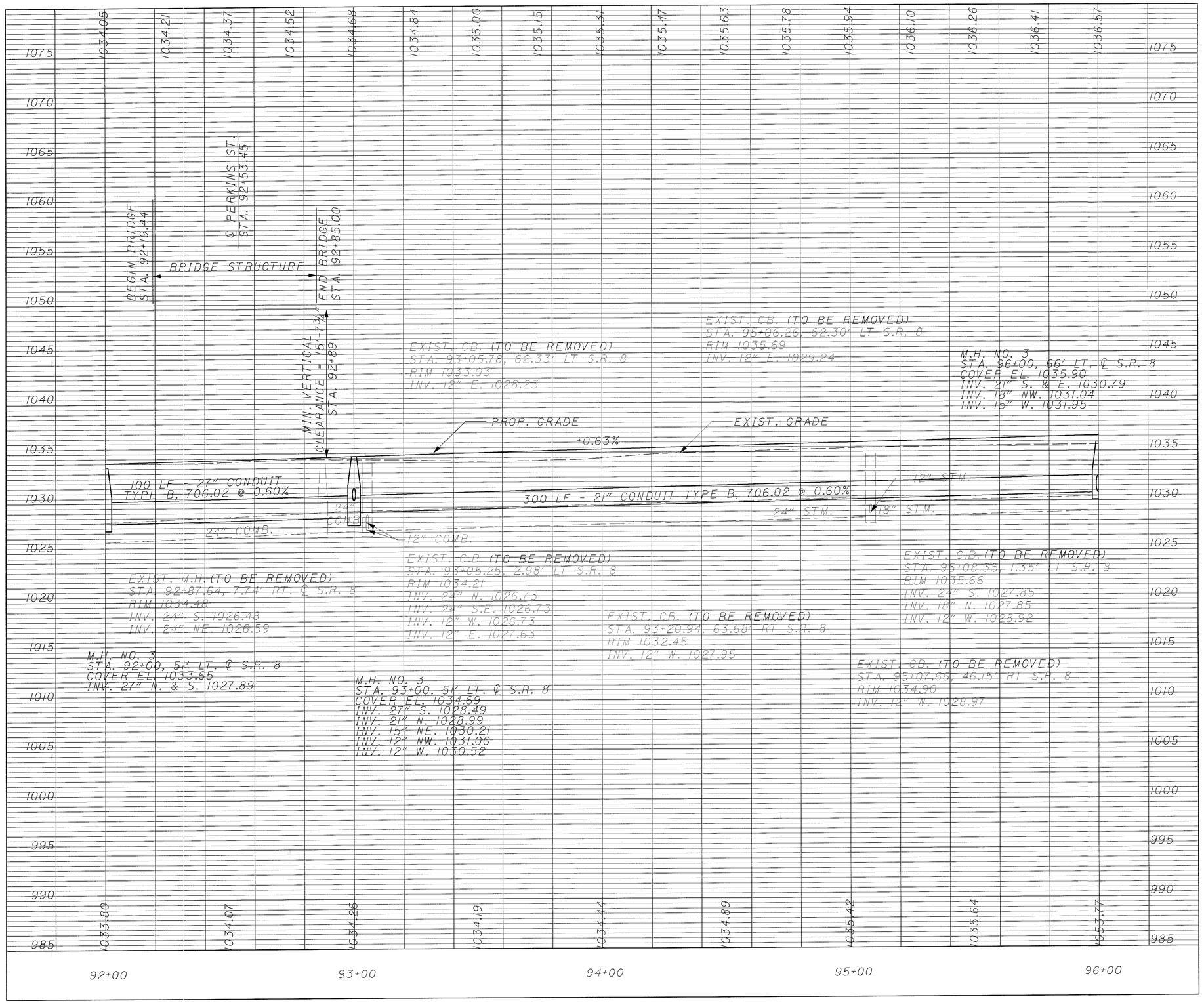

CALCULATED

CHECKED

PROFILE - S.R. 8

STA. 92+00 TO STA. 96+00

SUM-8-0.63

233
1088

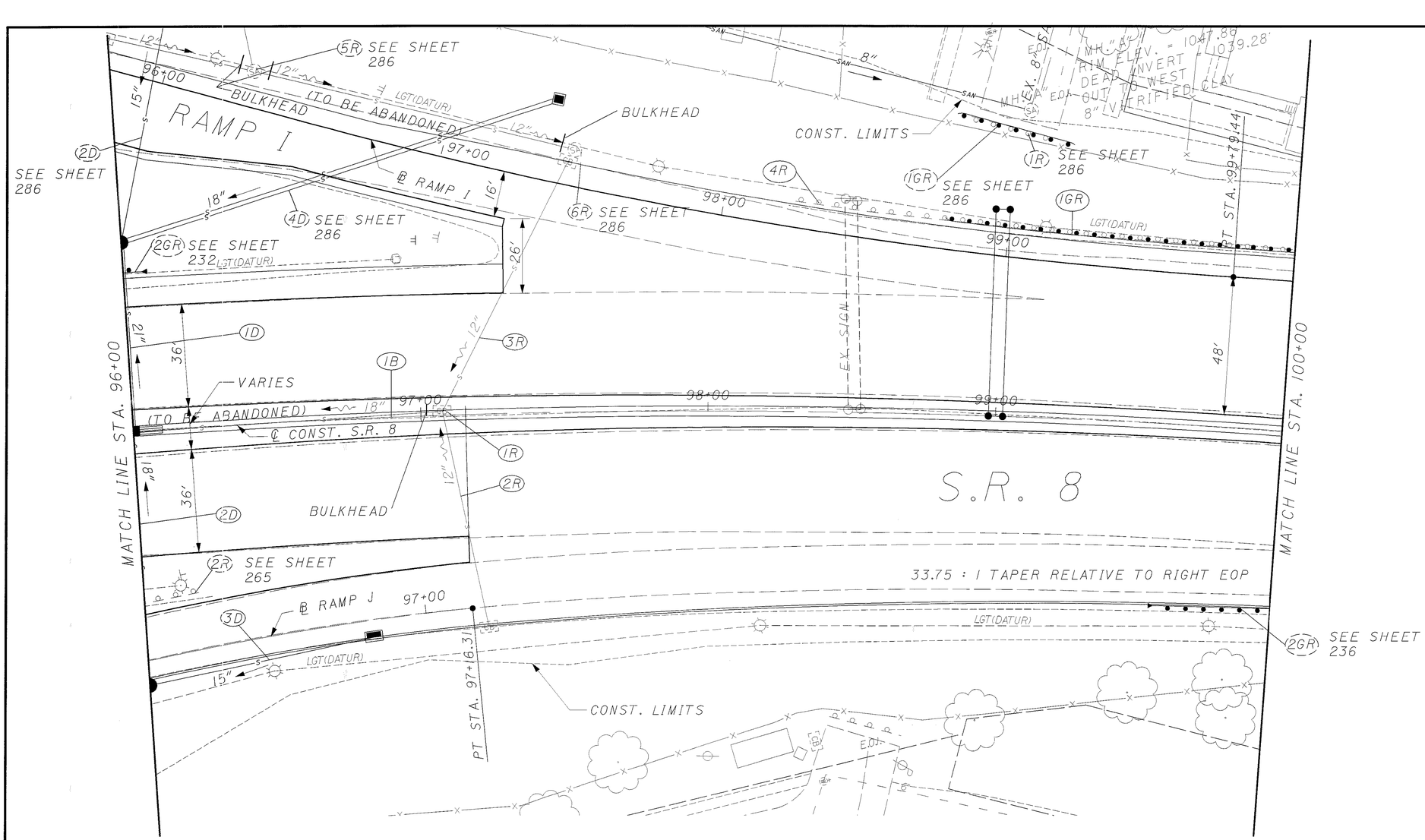

CURVE DATA

P.I. STA. = 97+79.66 (LEFT EOP)
Δ = 14° 10′ 44″ (RT)
Dc = 1° 50′ 13″
R = 3,119.07′
T = 387.92′
L = 771.87′
E = 24.03′

CURVE DATA

P.I. STA. = 98+02.91 (℄ S.R. 8)
Δ = 14° 10′ 44″ (RT)
Dc = 1° 57′ 48″
R = 2,918.12′
T = 362.93′
L = 722.14′
E = 22.48′
e_{max} = 0.035 (NDC e_{max} = 0.045)
NO SPIRAL (NDC 325′ SPIRAL)

CURVE DATA

P.I. STA. = 98+14.58 (RIGHT EOP)
Δ = 14° 40′ 44″ (RT)
Dc = 2° 06′ 31″
R = 2,717.17′
T = 349.98′
L = 696.13′
E = 22.45′

CROSS REFERENCES

SHEET NO.	DESCRIPTION
22	TYPICAL SECTION
159,160	DRAINAGE SUBSUMMARY
172	GUARDRAIL SUBSUMMARY
178	ROADWAY SUBSUMMARY
286,287	RAMP I PLAN AND PROFILE
289	RAMP J PLAN AND PROFILE
355-358,416-418	CROSS SECTIONS
448	CURB AND UNDERDRAIN PLAN
501,502	PAVEMENT DETAILS
546	SUPERELEVATION TABLE
595	PIPE PROFILE 3D
763,764	SIGNING AND PAVEMENT MARKING PLAN
866,867	LIGHTING PLAN

HORIZONTAL SCALE IN FEET
0 10 20 40
CALCULATED
CHECKED

PLAN - S.R. 8
STA. 96+00 TO STA. 100+00

SUM-8-0.63

234
1088

I:\projects\9922100\civil\dwgs\ppl8.dgn

CALCULATED | CHECKED

PROFILE - S.R. 8
STA. 96+00 TO STA. 100+00

SUM-8-0.63

235
1088

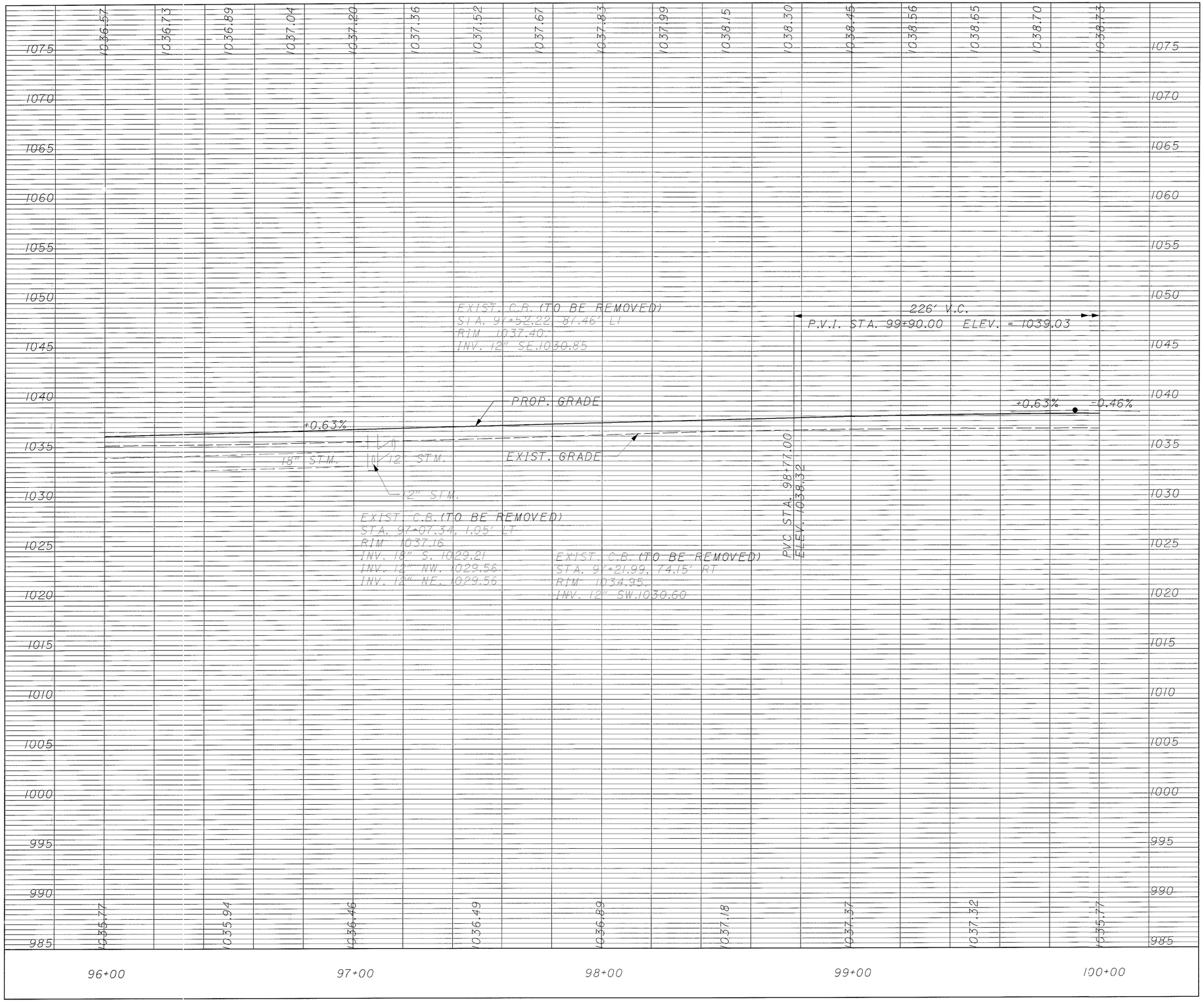

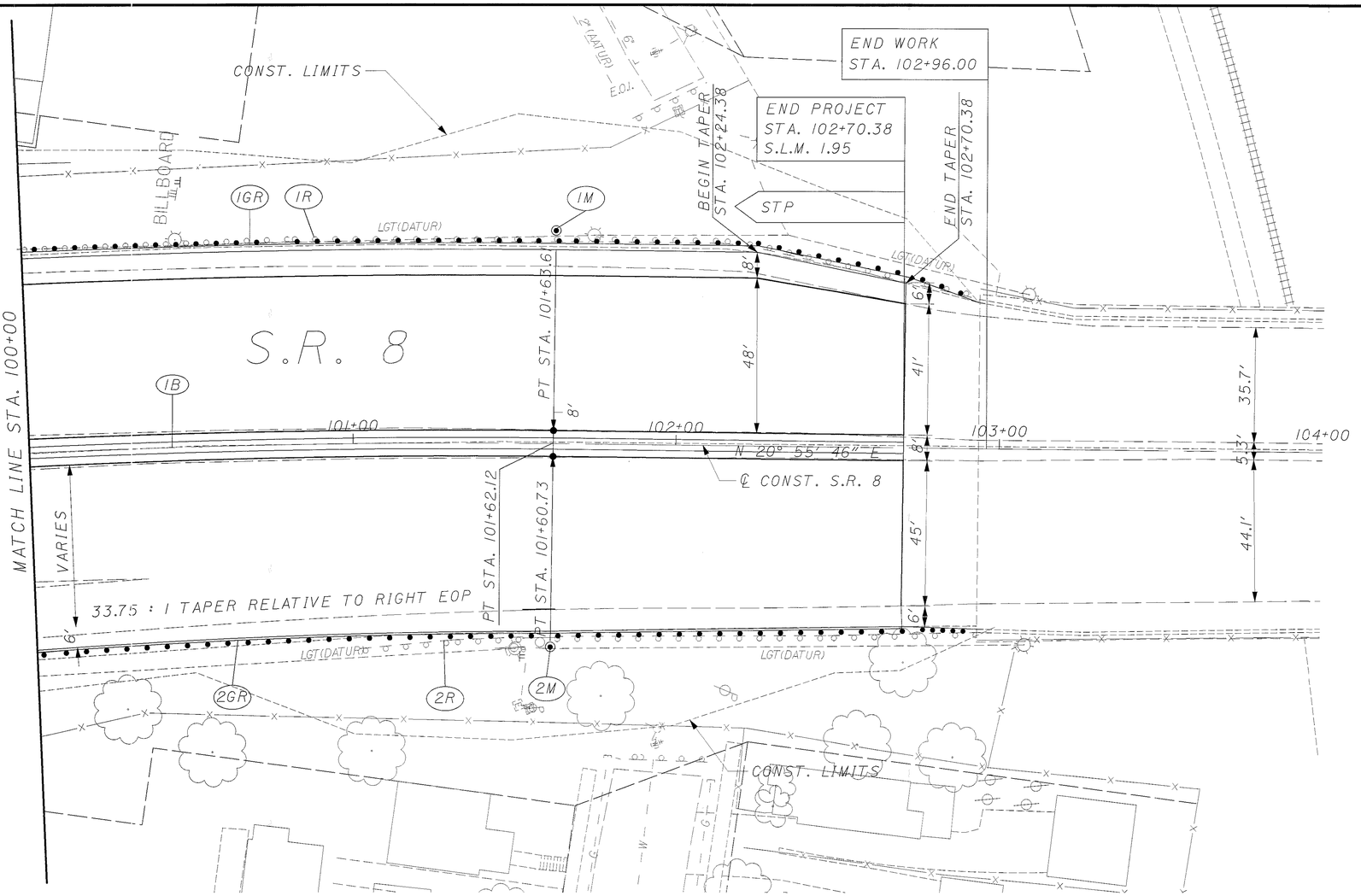

CURVE DATA

P.I. STA. = 98+14.58 (RIGHT EOP)
Δ = 14° 40' 44" (RT)
Dc = 2° 06' 31"
R = 2,717.17'
T = 349.98'
L = 696.13'
E = 22.45'

CURVE DATA

P.I. STA. = 97+79.66 (LEFT EOP)
Δ = 14° 10' 44" (RT)
Dc = 1° 50' 13"
R = 3,119.07'
T = 387.92'
L = 771.87'
E = 24.03'

CURVE DATA

P.I. STA. = 98+02.91 (℄ S.R. 8)
Δ = 14° 10' 44" (RT)
Dc = 1° 57' 48"
R = 2,918.12'
T = 362.93'
L = 722.14'
E = 22.48'
e_{max} = 0.035 (NDC e_{max} = 0.045)
NO SPIRAL (NDC 325' SPIRAL)

CROSS REFERENCES

SHEET NO.	DESCRIPTION
22	TYPICAL SECTION
173	GUARDRAIL SUBSUMMARY
178	ROADWAY SUBSUMMARY
358-360,418-420	CROSS SECTIONS
449	CURB AND UNDERDRAIN PLAN
502	PAVEMENT DETAILS
546	SUPERELEVATION TABLE
764	SIGNING AND PAVEMENT MARKING PLAN
867	LIGHTING PLAN

N

0 10 20 40
HORIZONTAL SCALE IN FEET

CALCULATED
CHECKED

PLAN - S.R. 8
STA. 100+00 TO STA. 104+00

SUM-8-0.63

236
1088

I:\projects\992100\civil\dwgs\ppl9.dgn

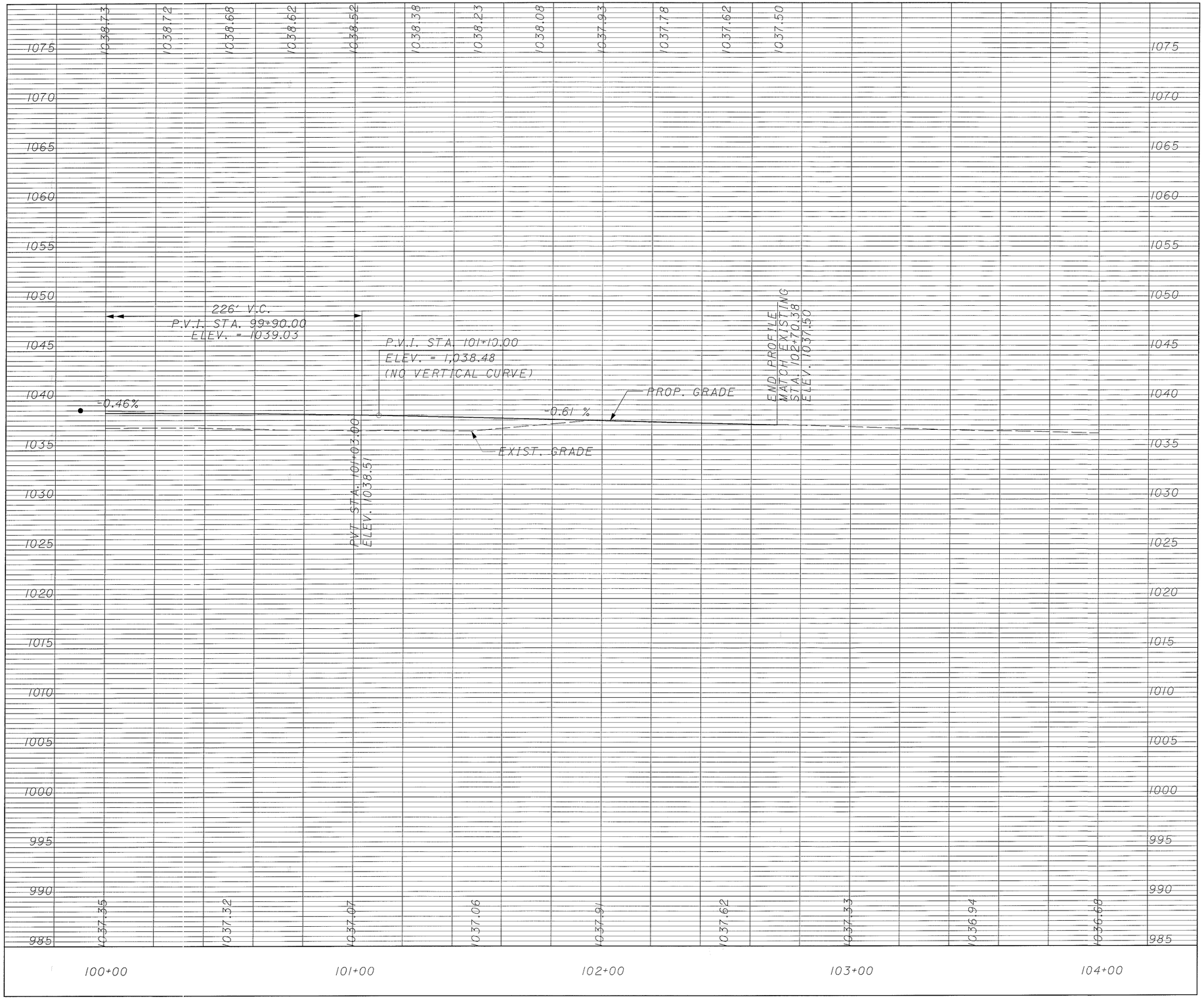

CALCULATED

CHECKED

PROFILE - S.R. 8

STA. 100+00 TO STA. 104+00

SUM-8-0.63

237
1088

CROSS REFERENCES	
SHEET NO.	DESCRIPTION
23	TYPICAL SECTION
150-160	DRAINAGE SUBSUMMARY
304-306	CROSS SECTIONS
304	PIPE PROFILE
450	CURB AND UNDERDRAIN PLAN
765	SIGNING AND PAVEMENT MARKING PLAN

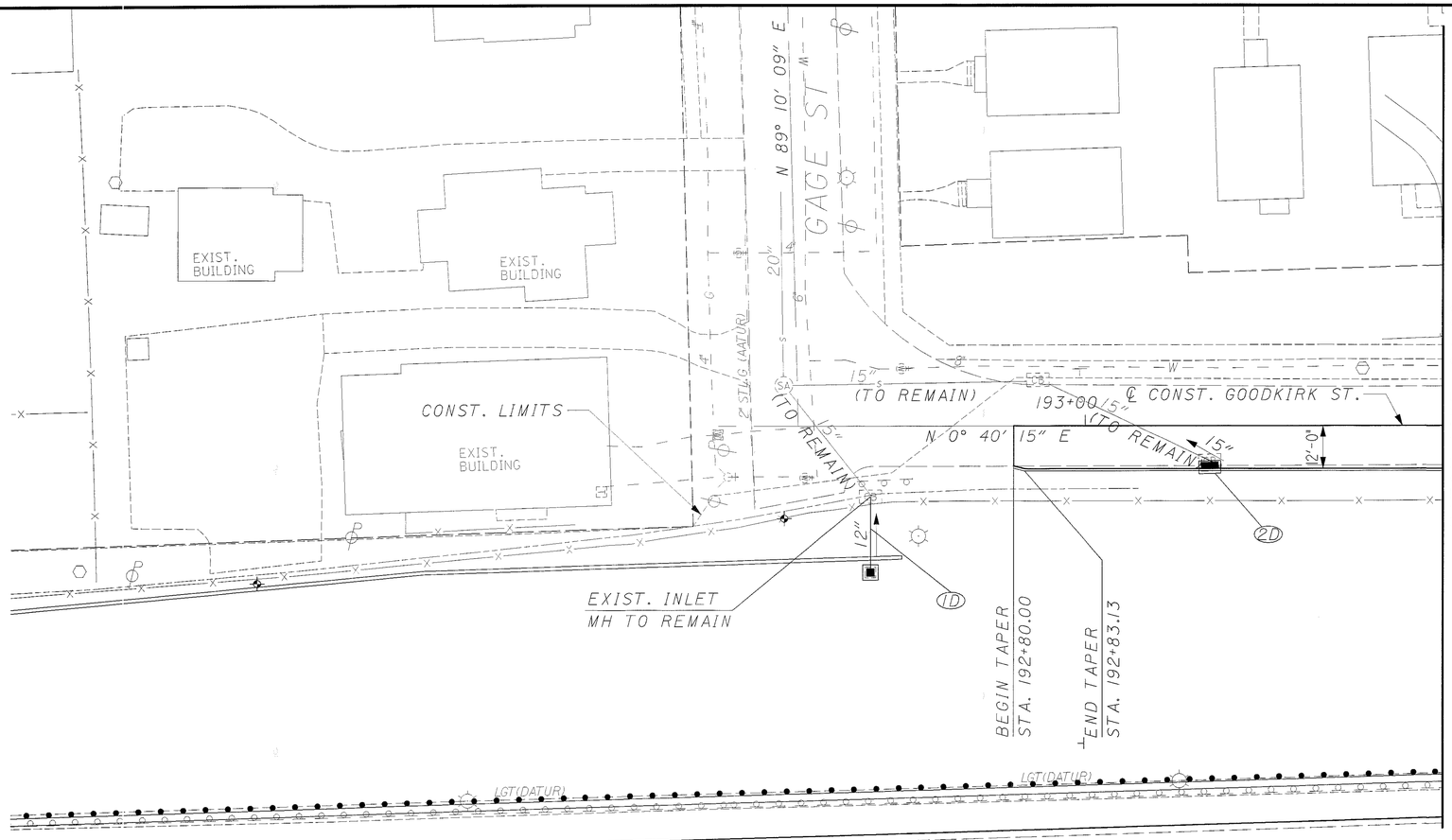

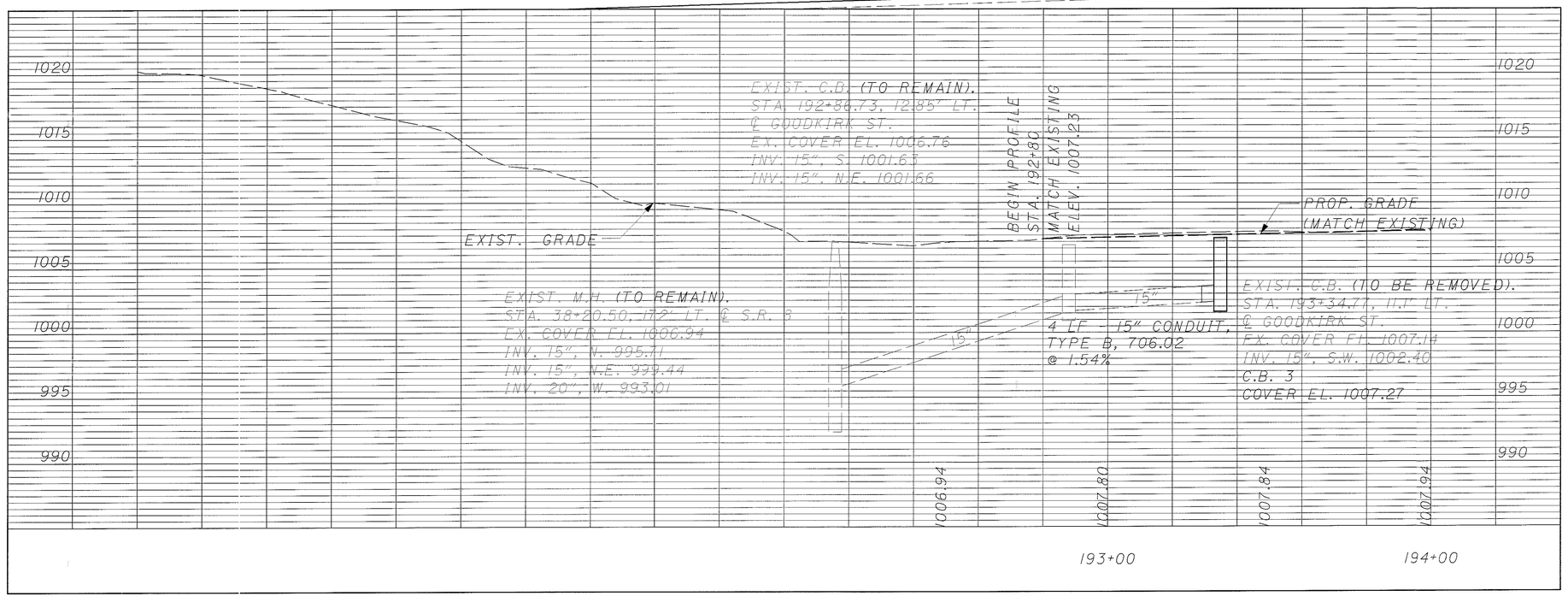

N

0 10 20 40
HORIZONTAL SCALE IN FEET

CALCULATED | CHECKED

PLAN AND PROFILE - GOODKIRK ST. STA. 190+00 TO STA. 194+00

SUM-8-0.63

238
1088

CROSS REFERENCES

SHEET NO.	DESCRIPTION
23	TYPICAL SECTION
159-160	DRAINAGE SUBSUMMARY
178	ROADWAY SUBSUMMARY
306-309	CROSS SECTIONS
308-309	PIPE PROFILE 4D AND 6D
451	CURB AND UNDERDRAIN PLAN
599	87" SEWER JUNCTION CHAMBER
765	SIGNING AND PAVEMENT MARKING PLAN

N

0 10 20 40
HORIZONTAL SCALE IN FEET

CALCULATED
CHECKED

PLAN AND PROFILE - GOODKIRK ST.
STA. 194+00 TO STA. 198+00

SUM-8-0.63

239
1088

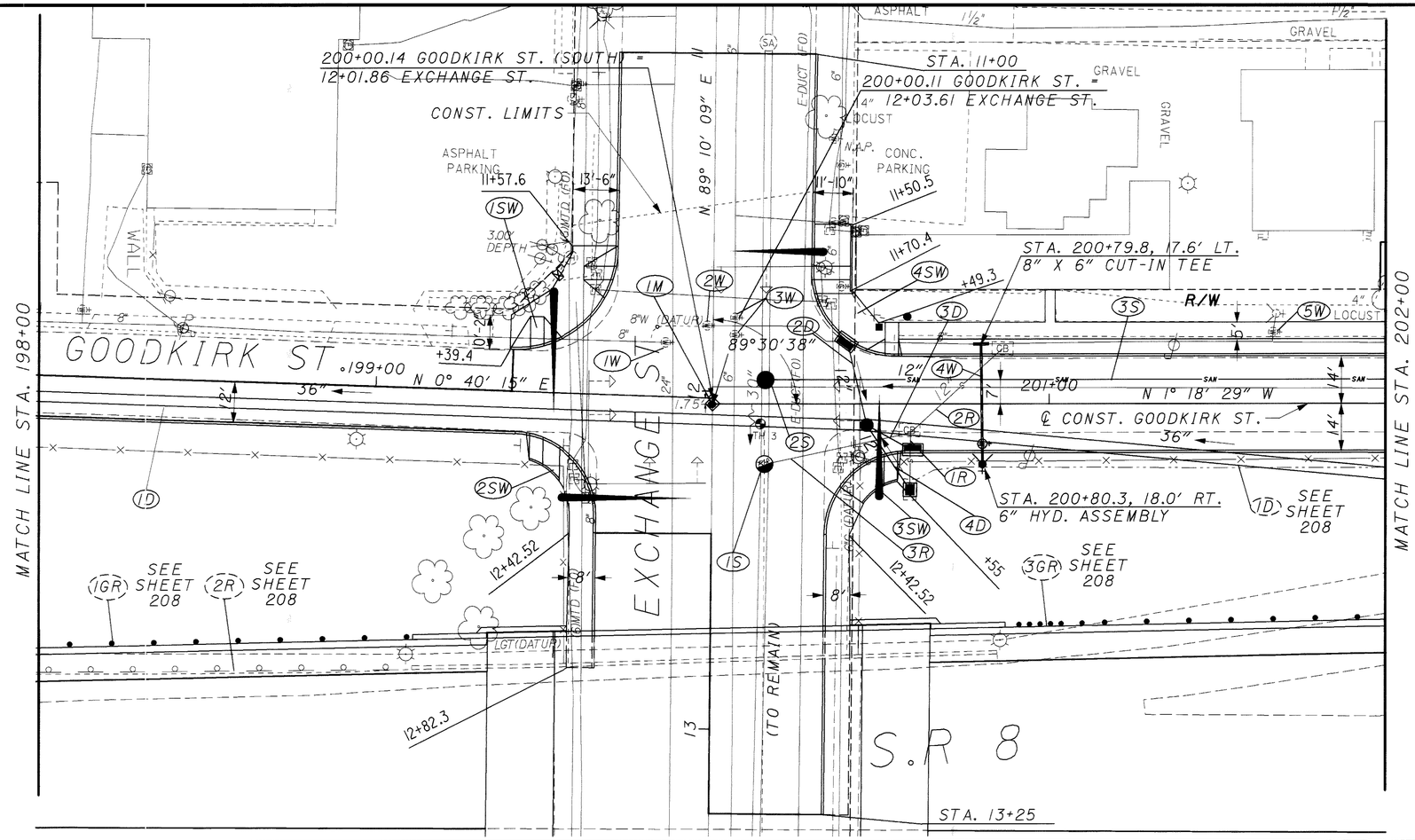

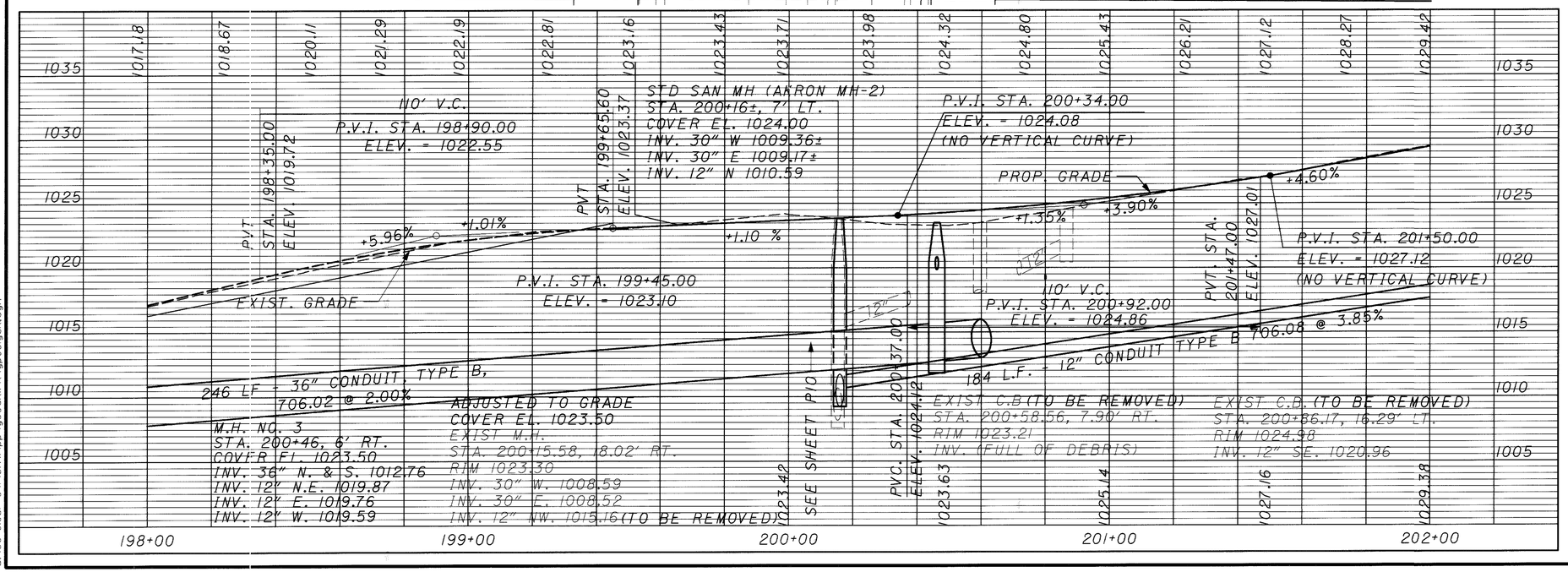

NOTE:
FOR EXCHANGE STREET PAVEMENT QUANTITIES, SEE SHEET 503.

CROSS REFERENCES

SHEET NO.	DESCRIPTION
23	TYPICAL SECTION
159-160	DRAINAGE SUBSUMMARY
178	ROADWAY SUBSUMMARY
181	SANITARY SUBSUMMARY
183	WALK SUBSUMMARY
309-312	CROSS SECTIONS
311	PIPE PROFILES 2D & 4D
452	CURB AND UNDERDRAIN PLAN
503-504	PAVEMENT DETAILS
583	PIPE PROFILE 3D
686-689	WATER SUBSUMMARY
765	SIGNING AND PAVEMENT MARKING PLAN
861	LIGHTING PLAN

HORIZONTAL SCALE IN FEET
0 10 20 40

CALCULATED
CHECKED

PLAN AND PROFILE - GOODKIRK ST.
STA. 198+00 TO STA. 202+00

SUM-8-0.63

240
1088

11:44:29 PM
06/13/2002
u:\00-010sr-81\civil\pp\goodkirk\gp00gdk.dgn

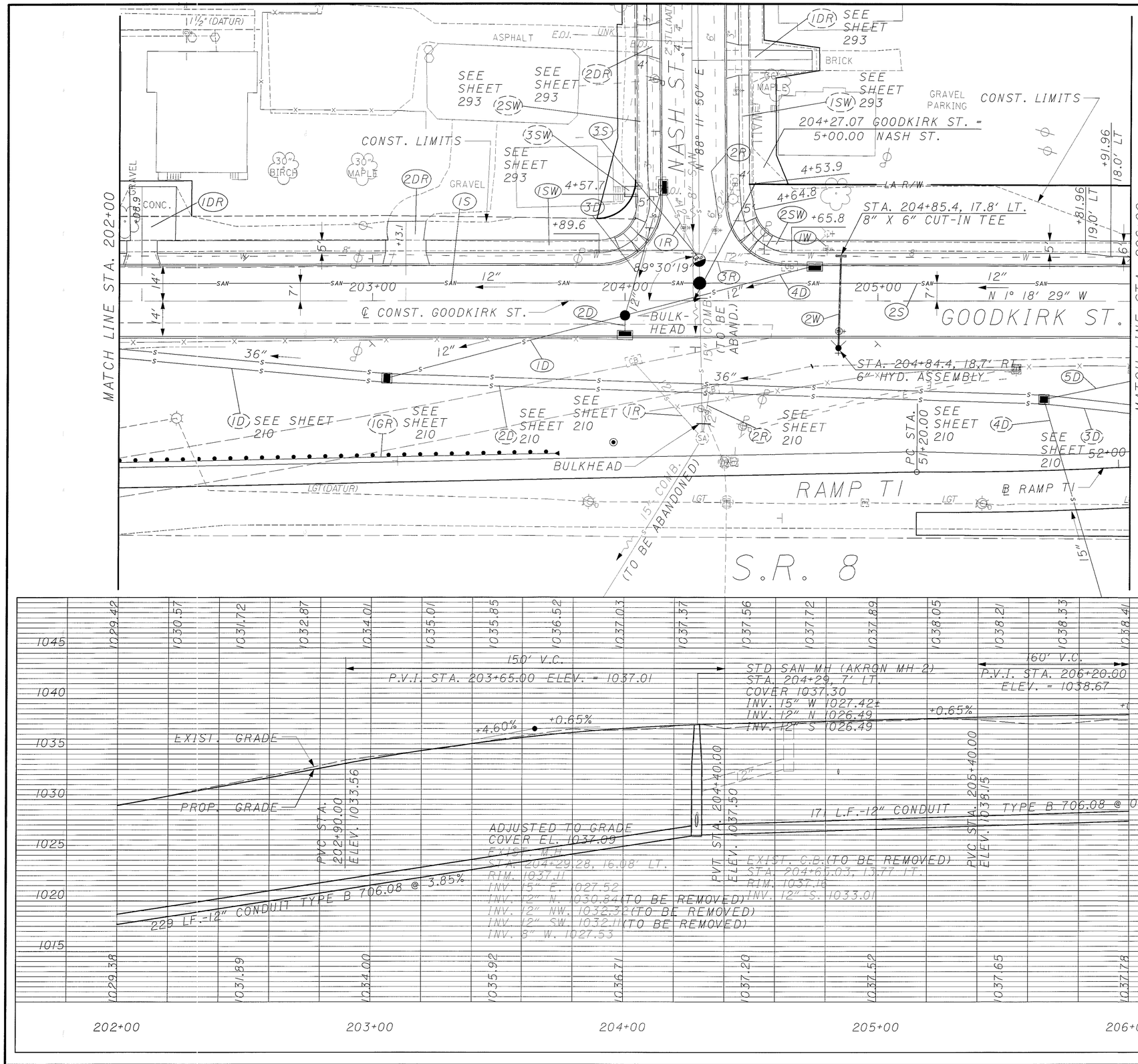

CROSS REFERENCES

SHEET NO.	DESCRIPTION
23	TYPICAL SECTION
159-160	DRAINAGE SUBSUMMARY
167	DRIVEWAY SUBSUMMARY
178	ROADWAY SUBSUMMARY
181	SANITARY SUBSUMMARY
183	WALK SUBSUMMARY
293	NASH ST. PLAN AND PROFILE
312-315	CROSS SECTIONS
313	PIPE PROFILE 2D & 3D
453	CURB AND UNDERDRAIN PLAN
494	DRIVEWAY PROFILES
505-506	PAVEMENT DETAILS
583	PIPE PROFILE 1D & 4D
585	PIPE PROFILE 5D
686-689	WATER SUBSUMMARY
765-766	SIGNING AND PAVEMENT MARKING PLAN
861	LIGHTING PLAN

HORIZONTAL SCALE IN FEET
0 10 20 40

CALCULATED
CHECKED

PLAN AND PROFILE - GOODKIRK ST.
STA. 202+00 TO STA. 206+00

SUM-8-0.63

241
1088

CROSS REFERENCES

SHEET NO.	DESCRIPTION
23	TYPICAL SECTION
159-160	DRAINAGE SUBSUMMARY
173	GUARDRAIL SUBSUMMARY
178	ROADWAY SUBSUMMARY
181	SANITARY SUBSUMMARY
183	WALK SUBSUMMARY
266-267	RAMP TI PLAN AND PROFILE
315-318	CROSS SECTIONS
454	CURB AND UNDERDRAIN PLAN
507-508	PAVEMENT DETAILS
584	PIPE PROFILE ID & 4D
585	PIPE PROFILE 2D, 3D & 5D
686-689	WATER SUBSUMMARY
766	SIGNING AND PAVEMENT MARKING PLAN
861-862	LIGHTING PLAN

HORIZONTAL SCALE IN FEET
0 10 20 40

CALCULATED

CHECKED

PLAN AND PROFILE - GOODKIRK ST. STA. 206+00 TO STA. 210+00

SUM-8-0.63

242
1088

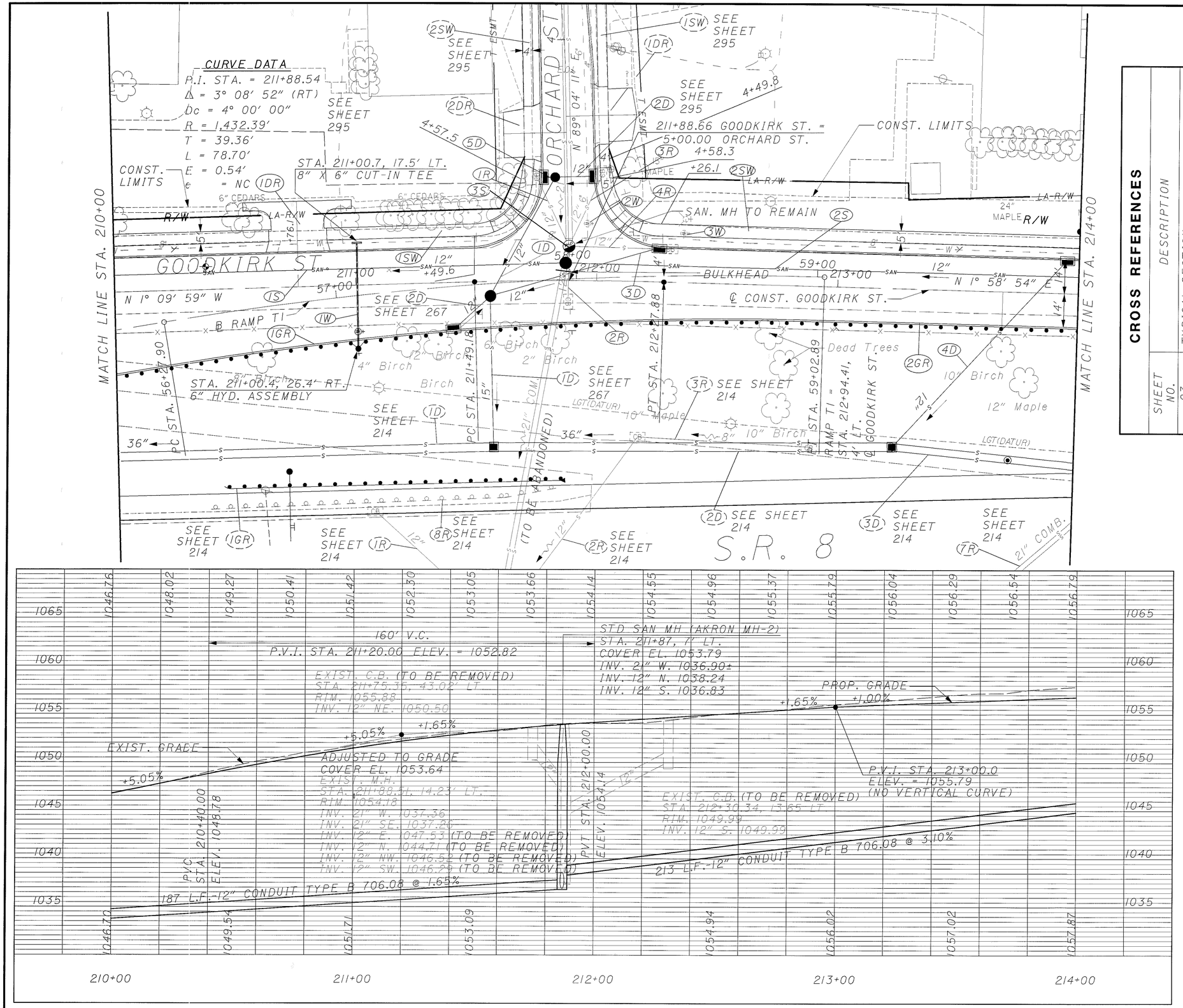

CROSS REFERENCES

SHEET NO.	DESCRIPTION
23	TYPICAL SECTION
159-160	DRAINAGE SUBSUMMARY
167	DRIVEWAY SUBSUMMARY
173	GUARDRAIL SUBSUMMARY
178	ROADWAY SUBSUMMARY
181	SANITARY SUBSUMMARY
183	WALK SUBSUMMARY
267	RAMP TI PLAN AND PROFILE
295	ORCHARD ST. PLAN AND PROFILE
318-321	CROSS SECTIONS
319	PIPE PROFILE ID
321	PIPE PROFILE 4D
455	CURB AND UNDERDRAIN PLAN
509-510	PAVEMENT DETAILS
562	DRIVEWAY PROFILES
585-586	PIPE PROFILES 2D, 3D & 5D
686-689	WATER SUBSUMMARY
766-767	SIGNING AND PAVEMENT MARKING PLAN
862	LIGHTING PLAN

N

0 10 20 40
HORIZONTAL SCALE IN FEET

CALCULATED

CHECKED

PLAN AND PROFILE - GOODKIRK ST.
STA. 210+00 TO STA. 214+00

SUM-8-0.63

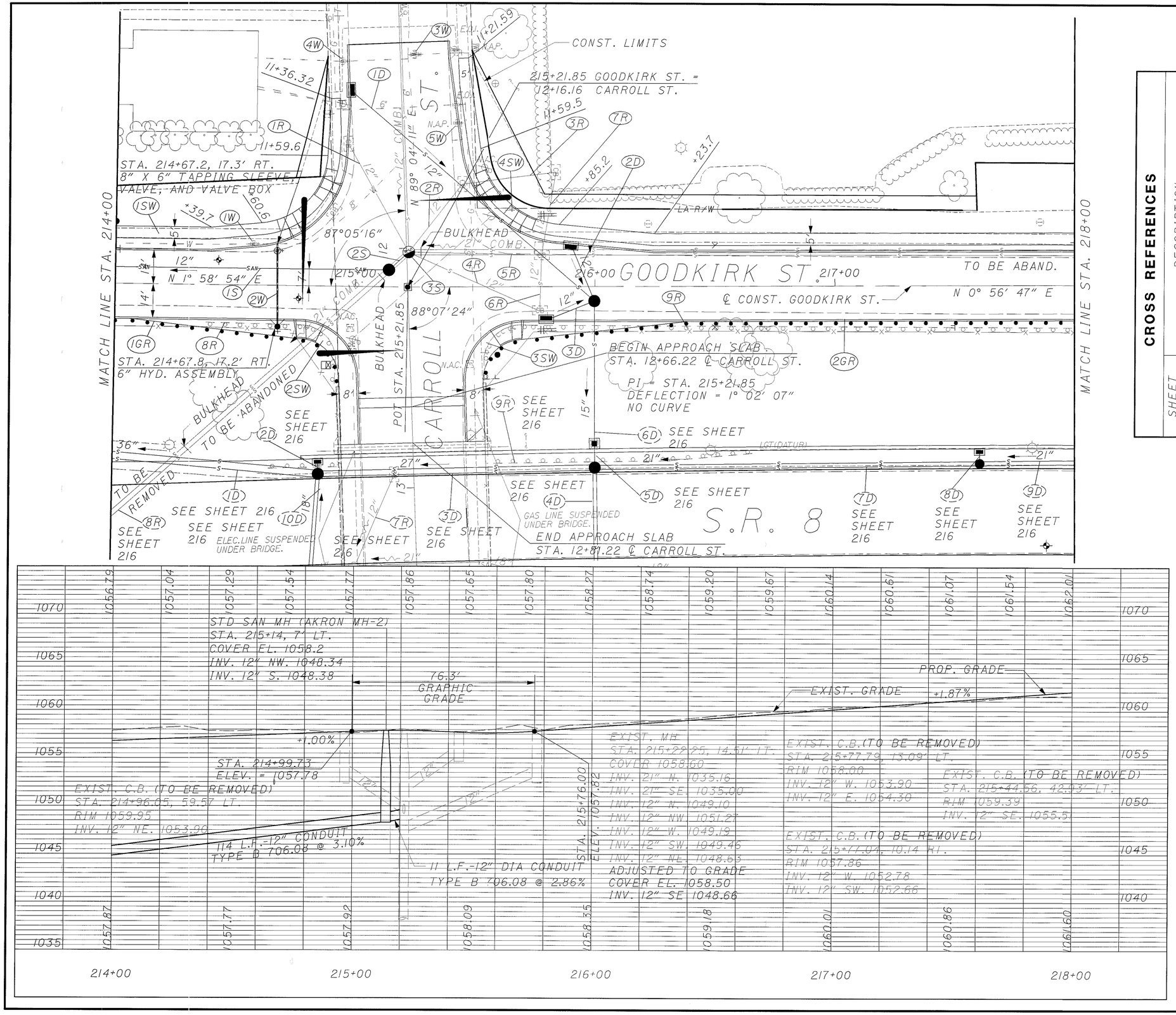

CROSS REFERENCES

SHEET NO.	DESCRIPTION
23	TYPICAL SECTION
159-160	DRAINAGE SUBSUMMARY
167	DRIVEWAY SUBSUMMARY
173	GUARDRAIL SUBSUMMARY
178-179	ROADWAY SUBSUMMARY
181	SANITARY SUBSUMMARY
183	WALK SUBSUMMARY
321-325	CROSS SECTIONS
323	PIPE PROFILE 2D
456	CURB AND UNDERDRAIN PLAN
509-510	PAVEMENT DETAILS
586	PIPE PROFILES 1D & 3D
686-689	WATER SUBSUMMARY
767	SIGNING AND PAVEMENT MARKING PLAN
812	CARROLL ST. SIGNAL PLAN
862-863	LIGHTING PLAN
940	CARROL STREET BRIDGE SITE PLAN

HORIZONTAL SCALE IN FEET 0 10 20 40

CALCULATED

CHECKED

PLAN AND PROFILE - GOODKIRK ST.
STA. 214+00 TO STA. 218+00

SUM-8-0.63

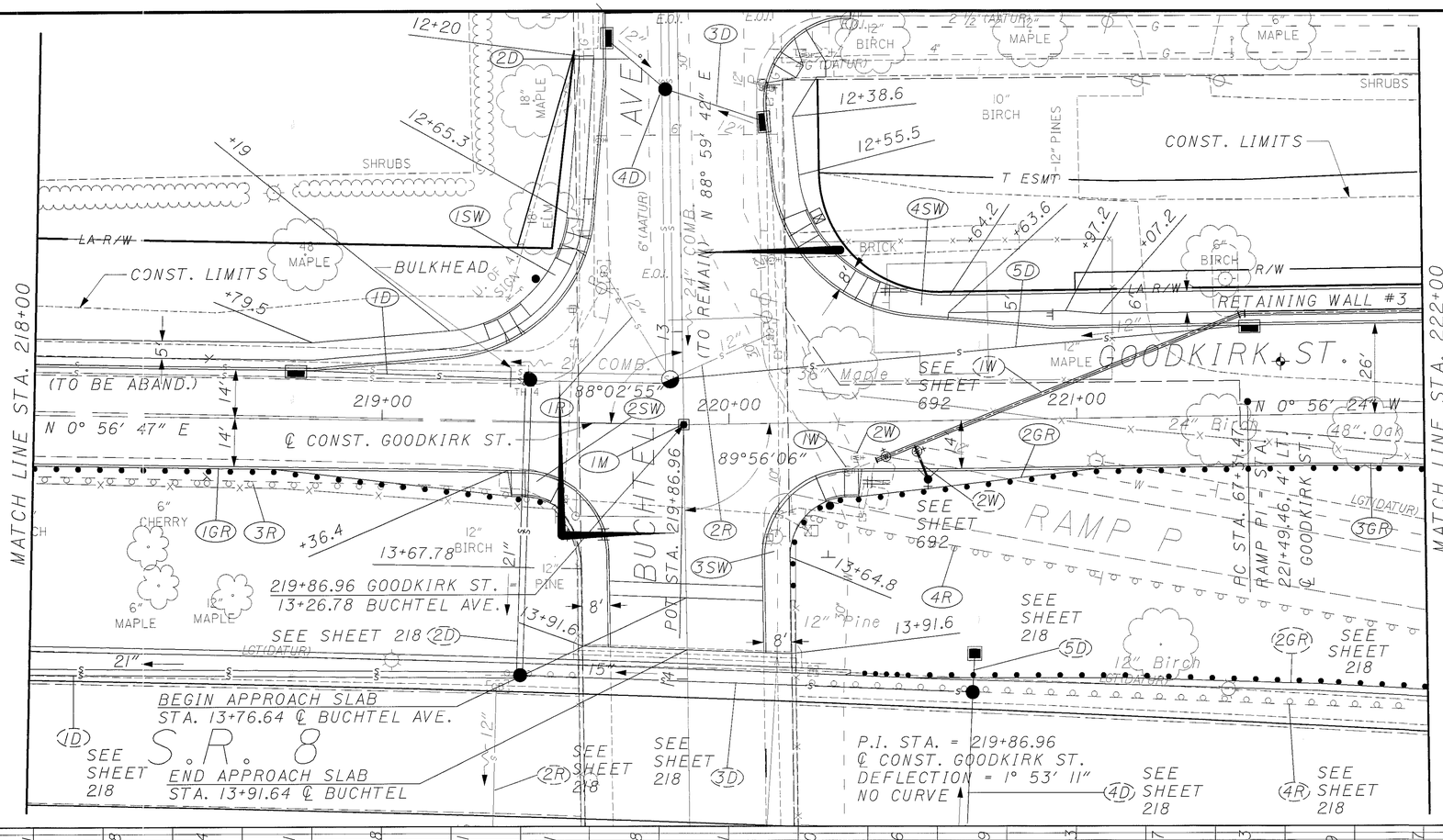

CROSS REFERENCES

SHEET NO.	DESCRIPTION
23	TYPICAL SECTION
159-160	DRAINAGE SUBSUMMARY
173	GUARDRAIL SUBSUMMARY
179	ROADWAY SUBSUMMARY
183	WALK SUBSUMMARY
325-330	CROSS SECTIONS
457	CURB AND UNDERDRAIN PLAN
511-512	PAVEMENT DETAILS
587	PIPE PROFILES ID, 2D & 3D
618	RETAINING WALL #3 PLAN
686-689	WATER SUBSUMMARY
767	SIGNING AND PAVEMENT MARKING PLAN
814	BUCHTEL AVE. SIGNAL
863	LIGHTING PLAN
946	BUCHTEL AVE. BRIDGE SITE PLAN

HORIZONTAL SCALE IN FEET
0 10 20 40

CALCULATED
CHECKED

PLAN AND PROFILE - GOODKIRK ST.
STA. 218+00 TO STA. 222+00

SUM-8-0.63

245
1088

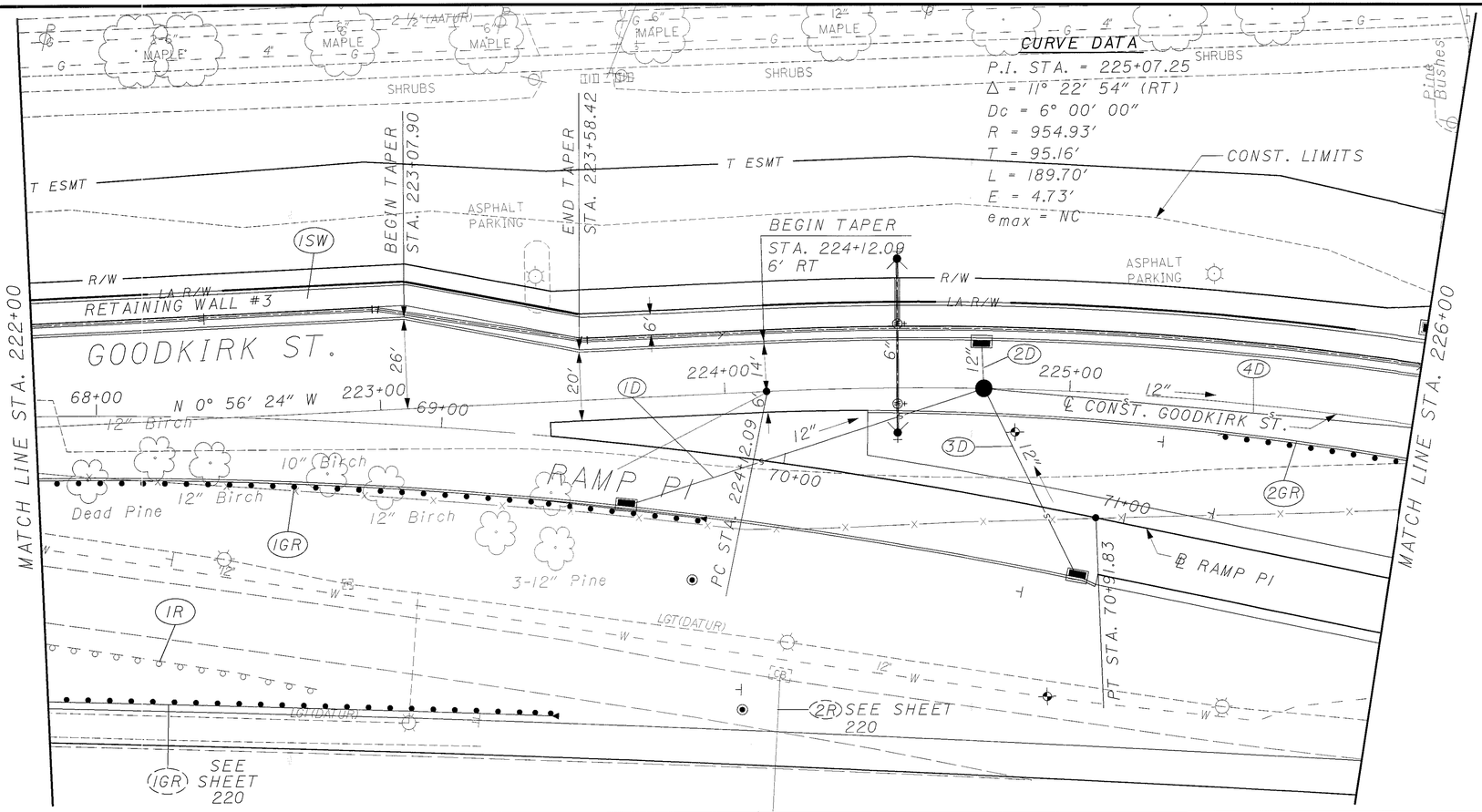

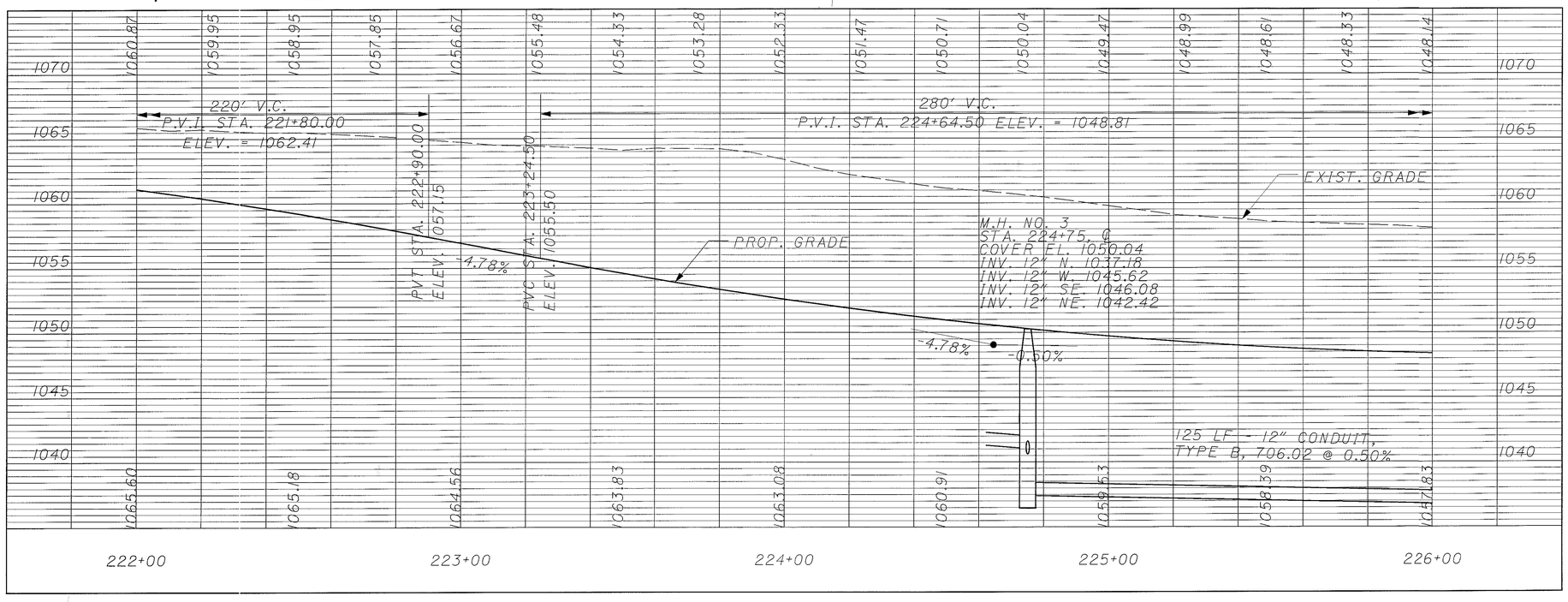

CROSS REFERENCES

SHEET NO.	DESCRIPTION
23	TYPICAL SECTION
159-160	DRAINAGE SUBSUMMARY
173	GUARDRAIL SUBSUMMARY
179	ROADWAY SUBSUMMARY
183	WALK SUBSUMMARY
271-272	RAMP PI PLAN AND PROFILE
330-333	CROSS SECTIONS
332	PIPE PROFILE 2D & 3D
458	CURB AND UNDERDRAIN PLAN
513-516	PAVEMENT DETAILS
587	PIPE PROFILE ID
618	RETAINING WALL #3 PLAN
693	WATERWORK PLAN
768	SIGNING AND PAVEMENT MARKING PLAN
863	LIGHTING PLAN

N

HORIZONTAL SCALE IN FEET
0 10 20 40

CALCULATED

CHECKED

PLAN AND PROFILE - GOODKIRK ST.
STA. 222+00 TO STA. 226+00

SUM-8-0.63

246
1088

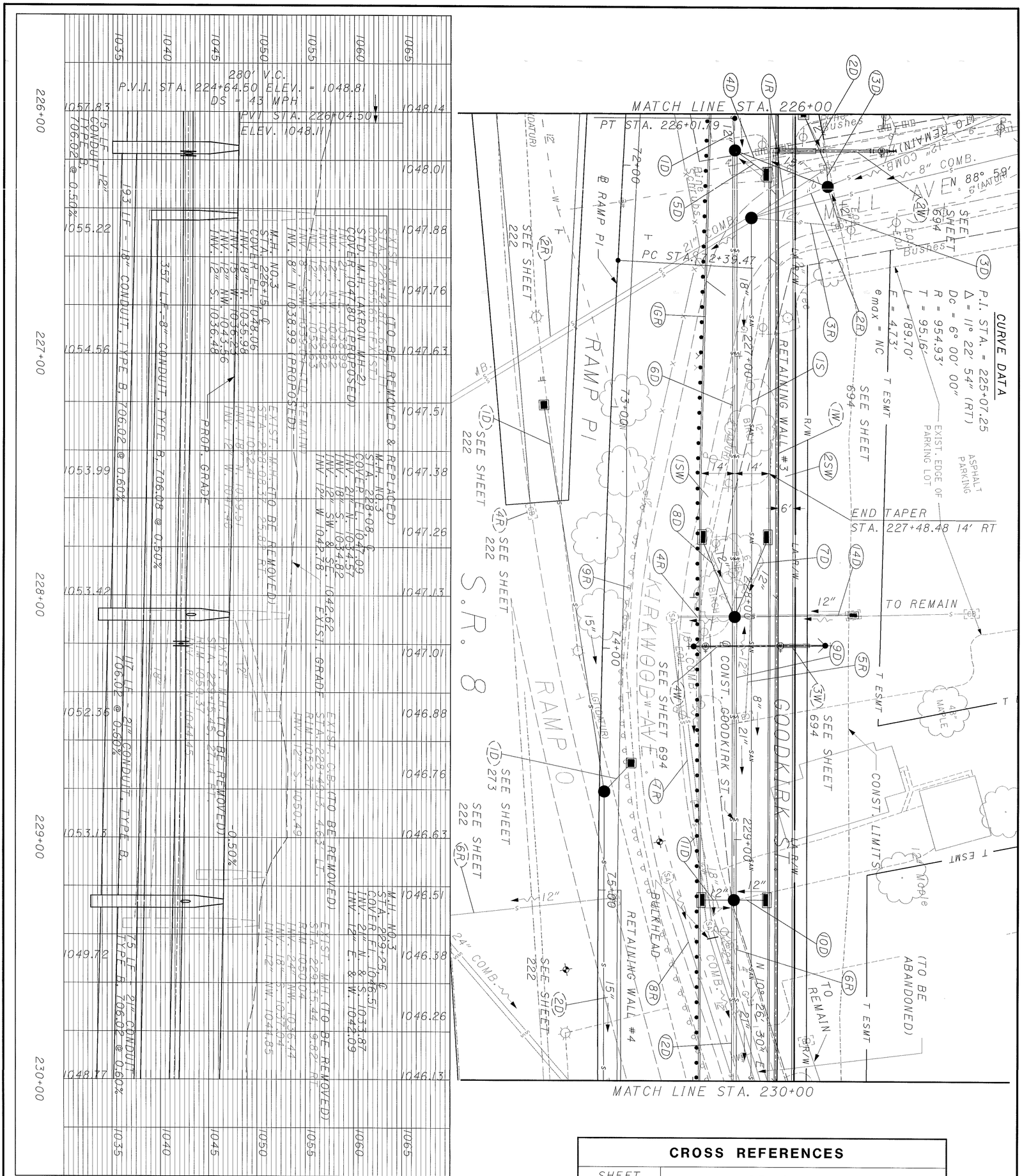

CROSS REFERENCES

SHEET NO.	DESCRIPTION
23	TYPICAL SECTION
161-162	DRAINAGE SUBSUMMARY
173	GUARDRAIL SUBSUMMARY
179	ROADWAY SUBSUMMARY
181	SANITARY SUBSUMMARY
183	WALK SUBSUMMARY
272-273	RAMP PI PLAN AND PROFILE
333-337	CROSS SECTIONS
333	PIPE PROFILE 4D & 5D
335-336	PIPE PROFILE 7D, 8D, 10D & 11D
459	CURB AND UNDERDRAIN PLAN
515-516	PAVEMENT DETAILS
583	PIPE PROFILES 2D, 3D & 13D
618	RETAINING WALL #3 PLAN
686-689	WATER SUBSUMMARY
768	SIGNING AND PAVEMENT MARKING PLAN
864	LIGHTING PLAN

247
1088

SUM-8-0.63

PLAN AND PROFILE - GOODKIRK ST.
STA. 226+00 TO STA. 230+00

CALCULATED
CHECKED

0 20 0 40
HORIZONTAL SCALE IN FEET

N

CURVE DATA

P.I. STA. = 235+30.84 BULK
Δ = 14° 04′ 38″ (LT) HEAD
Dc = 4° 00′ 00″ 10″ PIPE
R = 1432.39′
T = 176.86′
L = 351.93′
E = 10.88′ (TO BE ABAND.)
emax = NC

CROSS REFERENCES

SHEET NO.	DESCRIPTION
23	TYPICAL SECTION
161-162	DRAINAGE SUBSUMMARY
173	GUARDRAIL SUBSUMMARY
179	ROADWAY SUBSUMMARY
181	SANITARY SUBSUMMARY
183	WALK SUBSUMMARY
337-340	CROSS SECTIONS
338,340	PIPE PROFILE 3D, 4D & 10D
460	CURB AND UNDERDRAIN PLAN
517-518	PAVEMENT DETAILS
588,591	PIPE PROFILES 2D, 6D, 7D & 8D
596	PIPE PROFILE 3S
554-557	APPROACH SLAB DETAILS
603	120″ DIA. PRECAST MANHOLE - TYPE I
618	RETAINING WALL #3 PLAN
633	RETAINING WALL #4 PLAN
686-689	WATER SUBSUMMARY
768-769	SIGNING AND PAVEMENT MARKING PLAN
816	MARKET ST. SIGNAL
864	LIGHTING PLAN
951	MARKET STREET BRIDGE SITE PLAN

HORIZONTAL SCALE IN FEET
0 10 20 40
CALCULATED
CHECKED

PLAN AND PROFILE - GOODKIRK ST. STA. 230+00 TO STA. 234+00

SUM-8-0.63

248
1088

CROSS REFERENCES

SHEET NO.	DESCRIPTION
23	TYPICAL SECTION
161-162	DRAINAGE SUBSUMMARY
173	GUARDRAIL SUBSUMMARY
179	ROADWAY SUBSUMMARY
181	SANITARY SUBSUMMARY
183	WALK SUBSUMMARY
340-344	CROSS SECTIONS
341	PIPE PROFILES 2D & 3D
343	PIPE PROFILE 4D
461	CURB AND UNDERDRAIN PLAN
517-522	PAVEMENT DETAILS
558-561	APPROACH SLAB DETAILS
642	RETAINING WALL #6 PLAN
686-689	WATER SUBSUMMARY
769	SIGNING AND PAVEMENT MARKING PLAN
818	FORGE ST. SIGNAL
865	LIGHTING PLAN
982	FORGE STREET BRIDGE SITE PLAN

N

0 10 20 40 HORIZONTAL SCALE IN FEET

CALCULATED

CHECKED

PLAN AND PROFILE - GOODKIRK ST. STA. 234+00 TO STA. 238+00

SUM-8-0.63

249
1088

CURVE DATA
P.I. STA. = 241+44.37
Δ = 9° 59′ 55″ (RT)
Dc = 4° 00′ 00″
R = 1,432.39′
T = 125.30′
L = 249.96′
E = 5.47′
emax = NC

240+96.72 GOODKIRK ST. =
5+02.57 PARKWOOD AVE.

N 3° 38′ 07″ W

N 4° 55′ 00″ W

PC STA. 240+43.07

MATCH LINE STA. 238+00

MATCH LINE STA. 242+00

CONST. LIMITS

GOODKIRK ST.

PARKWOOD AVE.

RAMP KI

RAMP K

LA-R/W

GRAVEL

SEE SHEET 697

SEE SHEET 292

SEE SHEET 226

SEE SHEET 228

CROSS REFERENCES

SHEET NO.	DESCRIPTION
23	TYPICAL SECTION
161-163	DRAINAGE SUBSUMMARY
173	GUARDRAIL SUBSUMMARY
179	ROADWAY SUBSUMMARY
181	SANITARY SUBSUMMARY
183	WALK SUBSUMMARY
292	PARKWOOD AVE. PLAN AND PROFILE
344-348	CROSS SECTIONS
345,347	PIPE PROFILE ID
462	CURB AND UNDERDRAIN PLAN
519-522	PAVEMENT DETAILS
591	PIPE PROFILE 2D, 4D, 5D & 6D
686-689	WATER SUBSUMMARY
769-770	SIGNING AND PAVEMENT MARKING PLAN
865	LIGHTING PLAN
982	FORGE STREET BRIDGE SITE PLAN

M.H. NO. 3
STA. 238+38, 6′ RT,
℄ GOODKIRK ST.
COVER EL. 1045.22
INV. 15″ N. & E. 1032.85
INV. 12″ NE. 1040.70

EXIST. C.B. (TO BE REMOVED)
STA. 238+40.90, 12.94′ RT.
RIM 1047.31
INV. 12″ S.E. 1044.45

EXIST. GRADE

PROP. GRADE

-1.95%

EXIST. M.H. (TO BE REMOVED)
STA. 238+30.0, 27.5′ RT.
RIM 1047.11
INV. 8″ N. 1039.87
INV. 12″ S. 1039.60
INV. 12″ E. (UNKNOWN)
INV. 12″ W. (UNKNOWN)

PVC STA. 240+20.00
ELEV. 1041.80

360′ V.C.
ELEV. = 1038.29

P.V.I. STA. 242+00.00

286 LF - 15″ CONDUIT TYPE B, 706.02 @ 1.00%

EXIST. M.H. (TO BE REMOVED)
STA. 241+08.1, 40.2′ RT.
RIM 1050.30
INV. 8″ N. 1041.21
INV. 8″ S. 1041.13

M.H. NO. 3
STA. 241+25, 6′ RT, ℄ GOODKIRK ST.
COVER EL. 1040.45
INV. 15″ 1035.71
INV. 12″ NE. 1035.96
INV. 12″ NW. 1036.42
INV. 12″ SW. 1036.30

1060 1055 1050 1045 1040 1035 1030

238+00 239+00 240+00 241+00 242+00

HORIZONTAL SCALE IN FEET
0 10 20 40

CALCULATED
CHECKED

PLAN AND PROFILE - GOODKIRK ST.
STA. 238+00 TO STA. 242+00

SUM-8-0.63

250
1088

CROSS REFERENCES	
SHEET NO.	DESCRIPTION
23	TYPICAL SECTION
173	GUARDRAIL SUBSUMMARY
179	ROADWAY SUBSUMMARY
181	SANITARY SUBSUMMARY
183	WALK SUBSUMMARY
275-276	RAMP K1 PLAN AND PROFILE
348-351	CROSS SECTIONS
463	CURB AND UNDERDRAIN PLAN
521-524	PAVEMENT DETAILS
770	SIGNING AND PAVEMENT MARKING PLAN
865-866	LIGHTING PLAN

251 / 1088	SUM-8-0.63	PLAN AND PROFILE - GOODKIRK ST. STA. 242+00 TO STA. 246+00	CALCULATED / CHECKED; HORIZONTAL SCALE IN FEET (0, 20, 10, 40); N

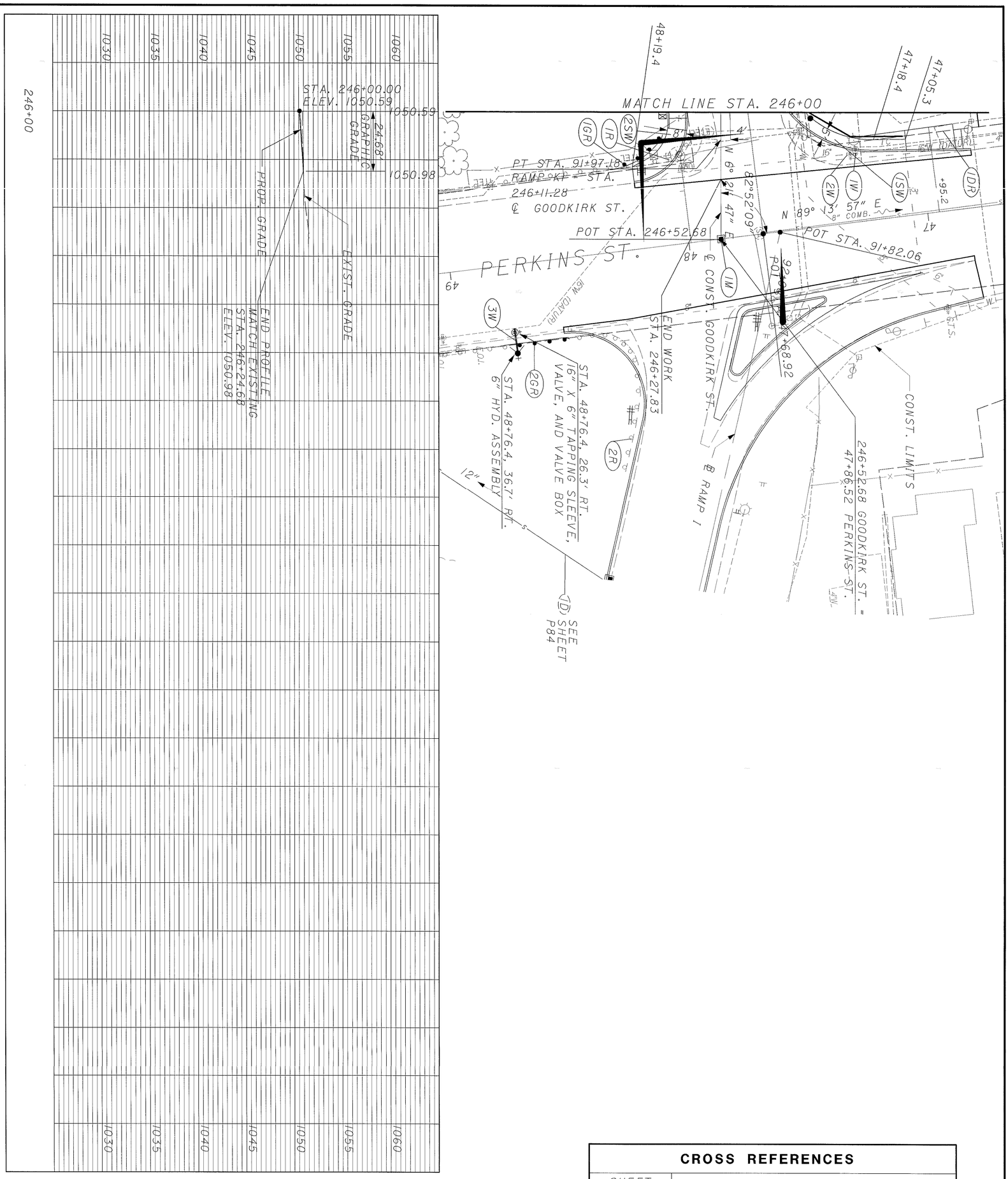

CROSS REFERENCES	
SHEET NO.	DESCRIPTION
23	TYPICAL SECTION
167	DRIVEWAY SUBSUMMARY
173	GUARDRAIL SUBSUMMARY
179	ROADWAY SUBSUMMARY
183	WALK SUBSUMMARY
285	RAMP I PLAN AND PROFILE
351-352	CROSS SECTIONS
464	CURB AND UNDERDRAIN PLAN
523-524	PAVEMENT DETAILS
570	DRIVEWAY PROFILES
686-689	WATER SUBSUMMARY
770	SIGNING AND PAVEMENT MARKING PLAN
820	PERKINS ST. SIGNAL
866	LIGHTING PLAN
1003	PERKINS STREET BRIDGE SITE PLAN

252
1088

SUM-8-0.63

PLAN AND PROFILE - GOODKIRK ST.
STA. 246+00 TO STA. 246+52.68

CALCULATED
CHECKED

0 20
10 40
HORIZONTAL SCALE IN FEET

N

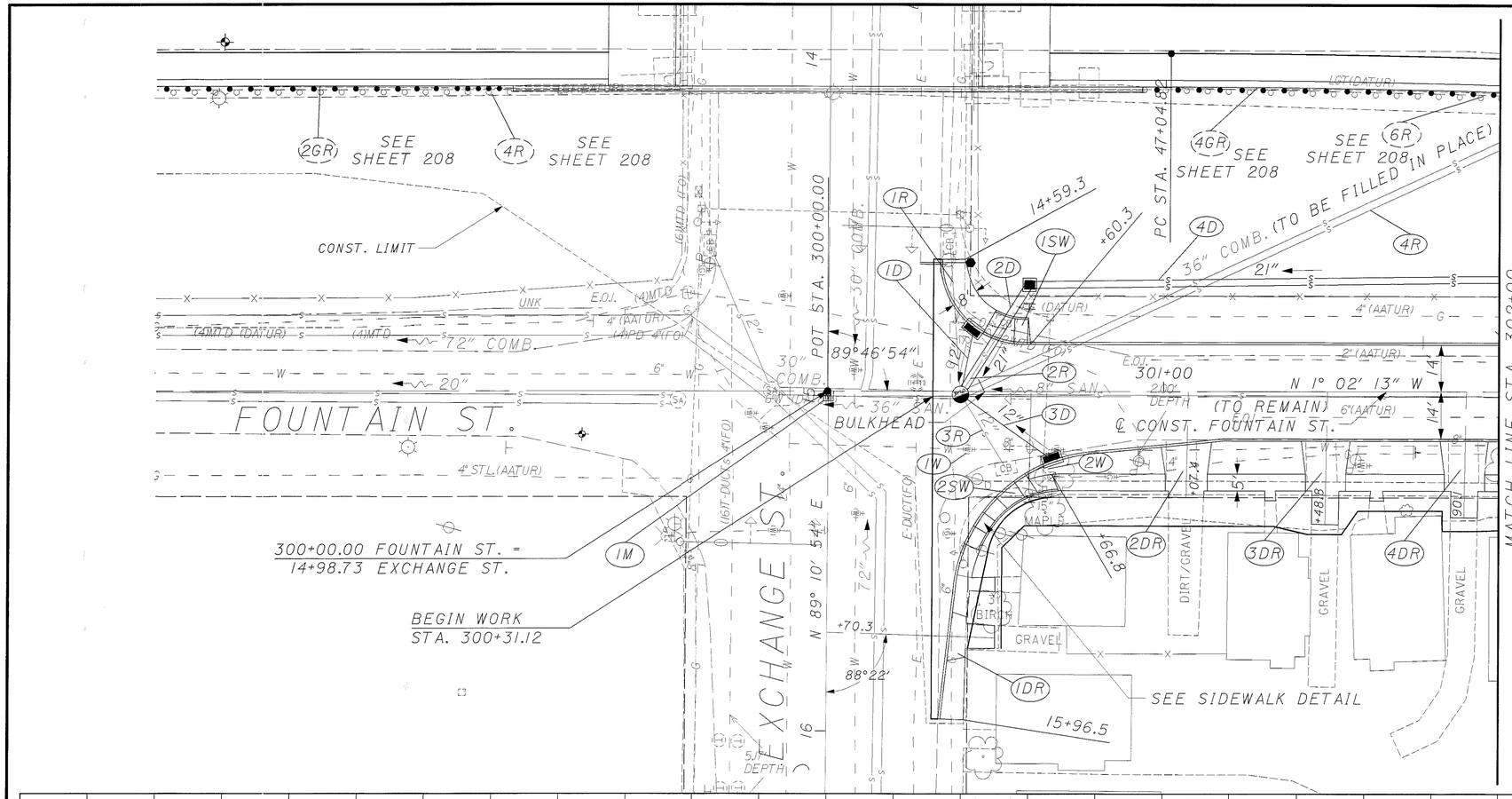

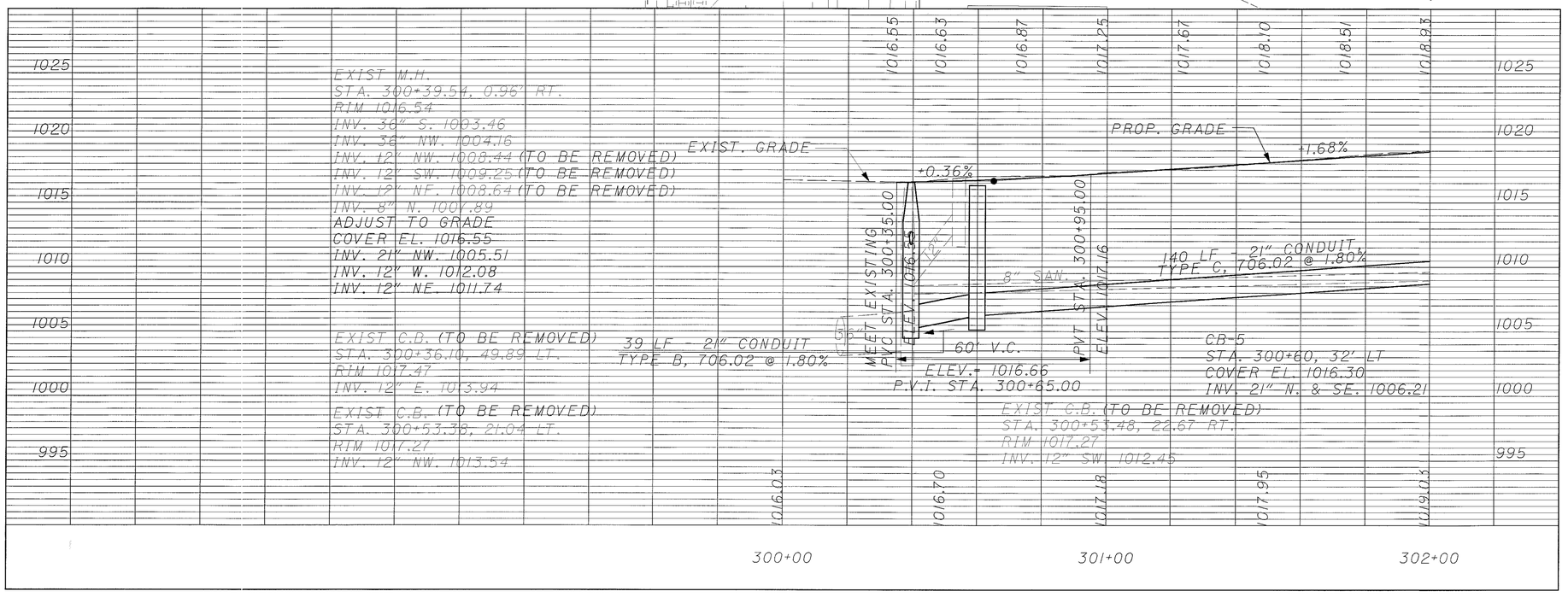

CROSS REFERENCES

SHEET NO.	DESCRIPTION
24	TYPICAL SECTION
163-164	DRAINAGE SUBSUMMARY
167	DRIVEWAY SUBSUMMARY
179	ROADWAY SUBSUMMARY
184	WALK SUBSUMMARY
372-376	CROSS SECTIONS
374	PIPE PROFILES
465	CURB AND UNDERDRAIN PLAN
525-526	PAVEMENT DETAILS
563	DRIVE PROFILES
686-689	WATER SUBSUMMARY
771	SIGNING AND PAVEMENT MARKING PLAN
861	LIGHTING PLAN

SIDEWALK DETAIL
N.E. CORNER
EXCHANGE ST. &
FOUNTAIN ST.

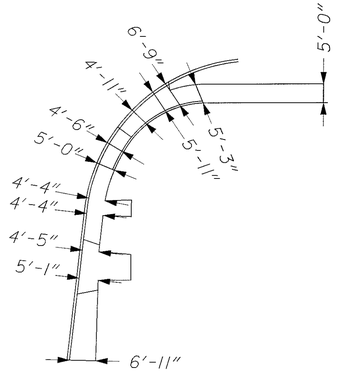

N

0 10 20 40
HORIZONTAL SCALE IN FEET

CALCULATED
CHECKED

PLAN AND PROFILE - FOUNTAIN ST. STA. 298+00 TO STA. 302+00

SUM-8-0.63

253
1088

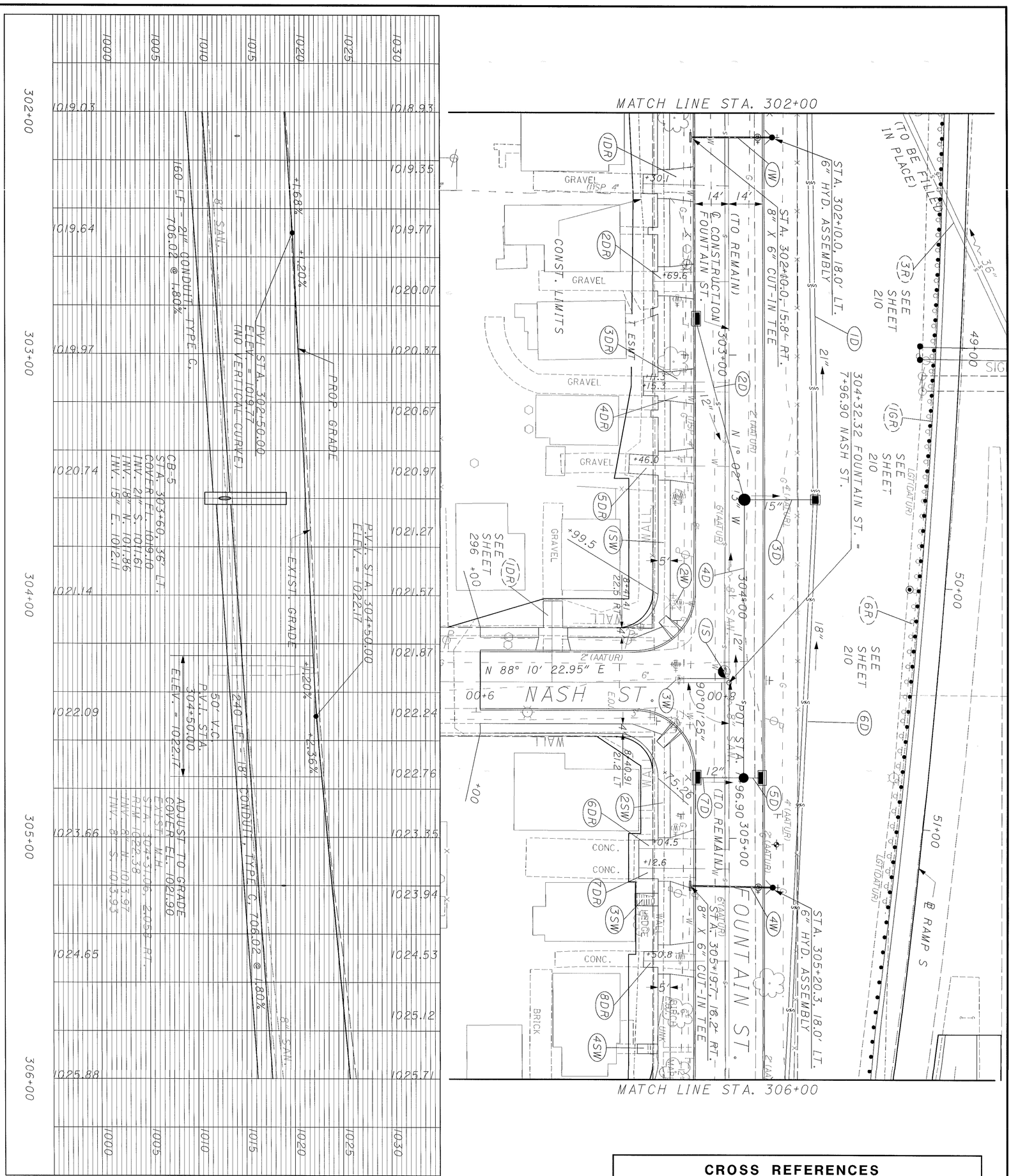

CROSS REFERENCES

SHEET NO.	DESCRIPTION
24	TYPICAL SECTION
161-162	DRAINAGE SUBSUMMARY
167	DRIVEWAY SUBSUMMARY
179	ROADWAY SUBSUMMARY
182	SANITARY SUBSUMMARY
184	WALK SUBSUMMARY
296	NASH STREET PLAN
376-379	CROSS SECTIONS
377-378	PIPE PROFILES 3D, 5D & 7D
466	CURB AND UNDERDRAIN PLAN
527-528	PAVEMENT DETAILS
583-584	PIPE PROFILES 2D & 4D
563-564	DRIVEWAY PROFILES
686-689	WATER SUBSUMMARY
771-772	SIGNING AND PAVEMENT MARKING PLAN
861	LIGHTING PLAN

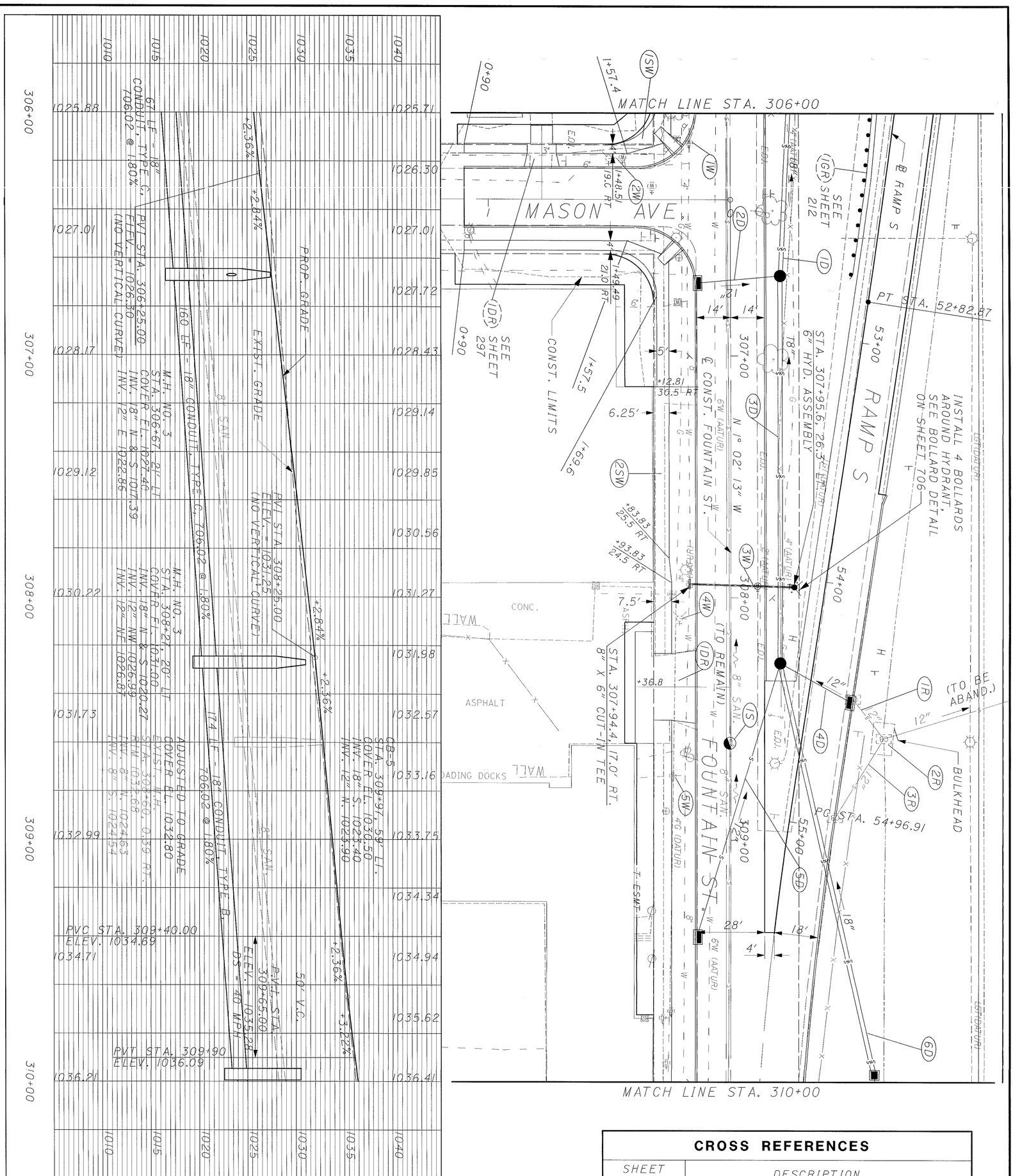

CROSS REFERENCES

SHEET NO.	DESCRIPTION
23	TYPICAL SECTION
163-164	DRAINAGE SUBSUMMARY
167	DRIVEWAY SUBSUMMARY
179	ROADWAY SUBSUMMARY
182	SANITARY SUBSUMMARY
184	WALK SUBSUMMARY
269-270	RAMP S PLAN AND PROFILE
297	MASON AVE. PLAN AND PROFILE
379-382	CROSS SECTIONS
379,381	PIPE PROFILE 2D & 4D
467	CURB AND UNDERDRAIN PLAN
529-532	PAVEMENT DETAILS
564	DRIVEWAY PROFILES
584	PIPE PROFILES 5D
686-689	WATER SUBSUMMARY
772	SIGNING AND PAVEMENT MARKING PLAN
861-862	LIGHTING PLAN

255
1088

SUM-8-0.63

PLAN AND PROFILE - FOUNTAIN ST.
STA. 306+00 TO STA. 310+00

CALCULATED
CHECKED

0 20
10 40
HORIZONTAL SCALE IN FEET

N

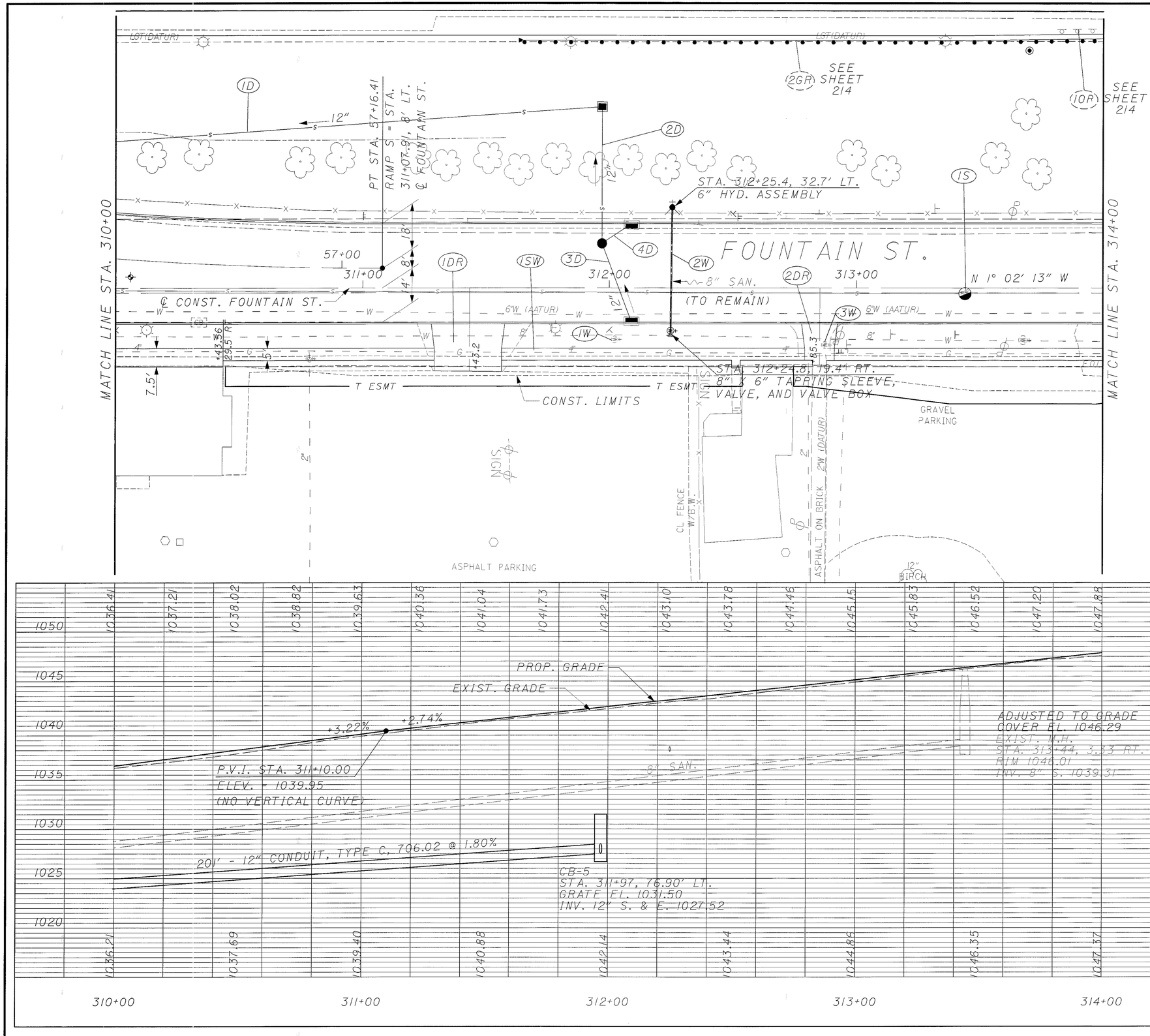

CROSS REFERENCES

SHEET NO.	DESCRIPTION
24	TYPICAL SECTION
163-164	DRAINAGE SUBSUMMARY
167	DRIVEWAY SUBSUMMARY
182	SANITARY SUBSUMMARY
184	WALK SUBSUMMARY
270	RAMP S PLAN AND PROFILE
382-384	CROSS SECTIONS
383	PIPE PROFILES 2D & 3D
468	CURB AND UNDERDRAIN PLAN
529-532	PAVEMENT DETAILS
564	DRIVEWAY PROFILES
686-689	WATER SUBSUMMARY
772	SIGNING AND PAVEMENT MARKING PLAN
862	LIGHTING PLAN
584	PIPE PROFILE 4D

N

0 10 20 40
HORIZONTAL SCALE IN FEET

CALCULATED
CHECKED

PLAN AND PROFILE - FOUNTAIN ST.
STA. 310+00 TO STA. 314+00

SUM-8-0.63

256
1088

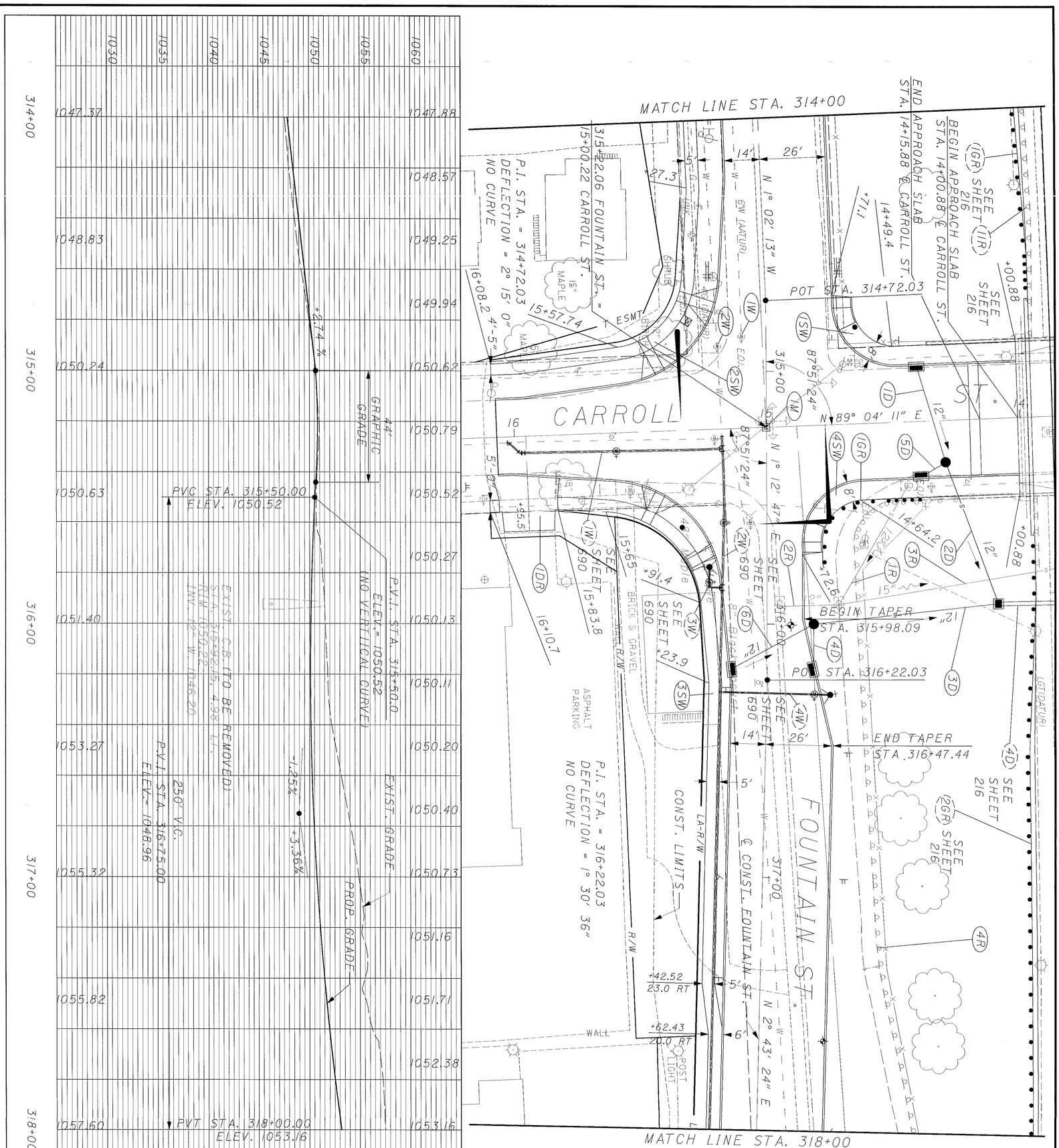

CROSS REFERENCES

SHEET NO.	DESCRIPTION
24	TYPICAL SECTION
163-164	DRAINAGE SUBSUMMARY
167	DRIVEWAY SUBSUMMARY
174	GUARDRAIL SUBSUMMARY
179	ROADWAY SUBSUMMARY
184	WALK SUBSUMMARY
384-388	CROSS SECTIONS
386	PIPE PROFILE 3D & 6D
469	CURB AND UNDERDRAIN PLAN
531-532	PAVEMENT DETAILS
568	DRIVEWAY PROFILES
586	PIPE PROFILES 1D, 2D & 5D
686-689	WATER SUBSUMMARY
773	SIGNING AND PAVEMENT MARKING PLAN
800	CARROLL ST. SIGNAL
862-863	LIGHTING PLAN
940	CARROLL STREET BRIDGE SITE PLAN
585	PIPE PROFILE 4D

257
1088

SUM-8-0.63

PLAN AND PROFILE - FOUNTAIN ST.
STA. 314+00 TO STA. 318+00

CALCULATED
CHECKED

0 20
10 40
HORIZONTAL SCALE IN FEET

N

CROSS REFERENCES

SHEET NO.	DESCRIPTION
24	TYPICAL SECTION
163-164	DRAINAGE SUBSUMMARY
167	DRIVEWAY SUBSUMMARY
174	GUARDRAIL SUBSUMMARY
179	ROADWAY SUBSUMMARY
184	WALK SUBSUMMARY
388-391	CROSS SECTIONS
470	CURB AND UNDERDRAIN PLAN
533-534	PAVEMENT DETAILS
568	DRIVEWAY PROFILES
587	PIPE PROFILES 1D, 2D & 4D
686-689	WATER SUBSUMMARY
773	SIGNING AND PAVEMENT MARKING PLAN
802	BUCHTEL AVE. SIGNAL
863	LIGHTING PLAN
946	BUCHTEL AVE. BRIDGE SITE PLAN

N

0 10 20 40
HORIZONTAL SCALE IN FEET

CALCULATED

CHECKED

PLAN AND PROFILE - FOUNTAIN ST.
STA. 318+00 TO STA. 322+00

SUM-8-0.63

258
1088

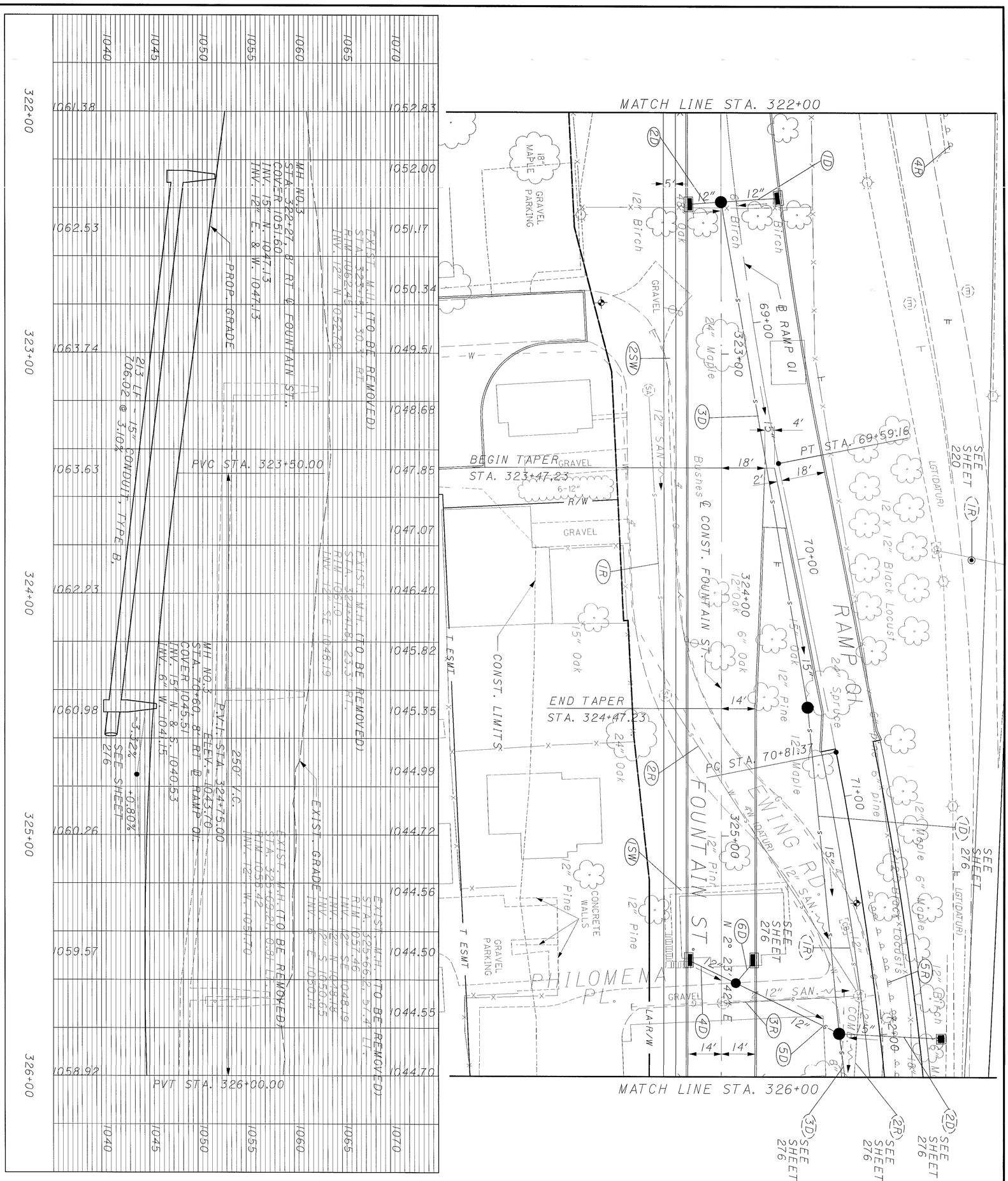

CROSS REFERENCES

SHEET NO.	DESCRIPTION
24	TYPICAL SECTION
163-164	DRAINAGE SUBSUMMARY
174	GUARDRAIL SUBSUMMARY
179	ROADWAY SUBSUMMARY
184	WALK SUBSUMMARY
221	PIPE PROFILE 3D
275-276	RAMP QI PLAN AND PROFILE
391-394	CROSS SECTIONS
392,394	PIPE PROFILES ID, 2D, 4D & 5D
471	CURB AND UNDERDRAIN PLAN
535-536	PAVEMENT DETAILS
773-774	SIGNING AND PAVEMENT MARKING PLAN
863	LIGHTING PLAN
588	PIPE PROFILE 6D

259
1088

SUM-8-0.63

PLAN AND PROFILE - FOUNTAIN ST.
STA. 322+00 TO STA. 326+00

CALCULATED
CHECKED

0 10 20 40
HORIZONTAL SCALE IN FEET

N

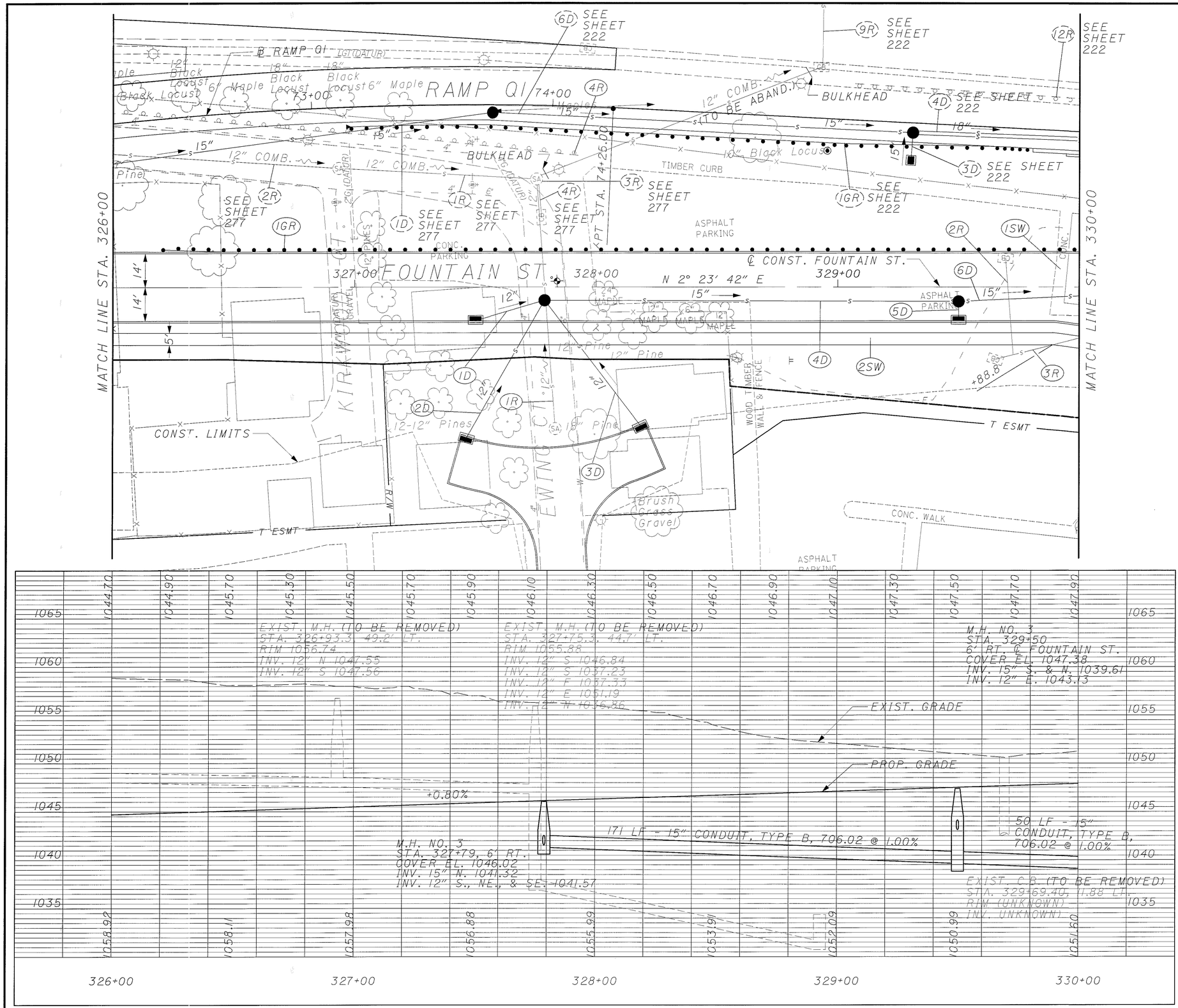

CROSS REFERENCES

SHEET NO.	DESCRIPTION
24	TYPICAL SECTION
163-164	DRAINAGE SUBSUMMARY
174	GUARDRAIL SUBSUMMARY
180	ROADWAY SUBSUMMARY
184	WALK SUBSUMMARY
276-277	RAMP QI PLAN AND PROFILE
394-397	CROSS SECTIONS
396-397	PIPE PROFILES 1D & 5D
472	CURB AND UNDERDRAIN PLAN
589	PIPE PROFILES 2D & 3D
774	SIGNING AND PAVEMENT MARKING PLAN
864	LIGHTING PLAN

N

0 10 20 40
HORIZONTAL SCALE IN FEET

CALCULATED | CHECKED

PLAN AND PROFILE - FOUNTAIN ST.
STA. 326+00 TO STA. 330+00

SUM-8-0.63

260
1088

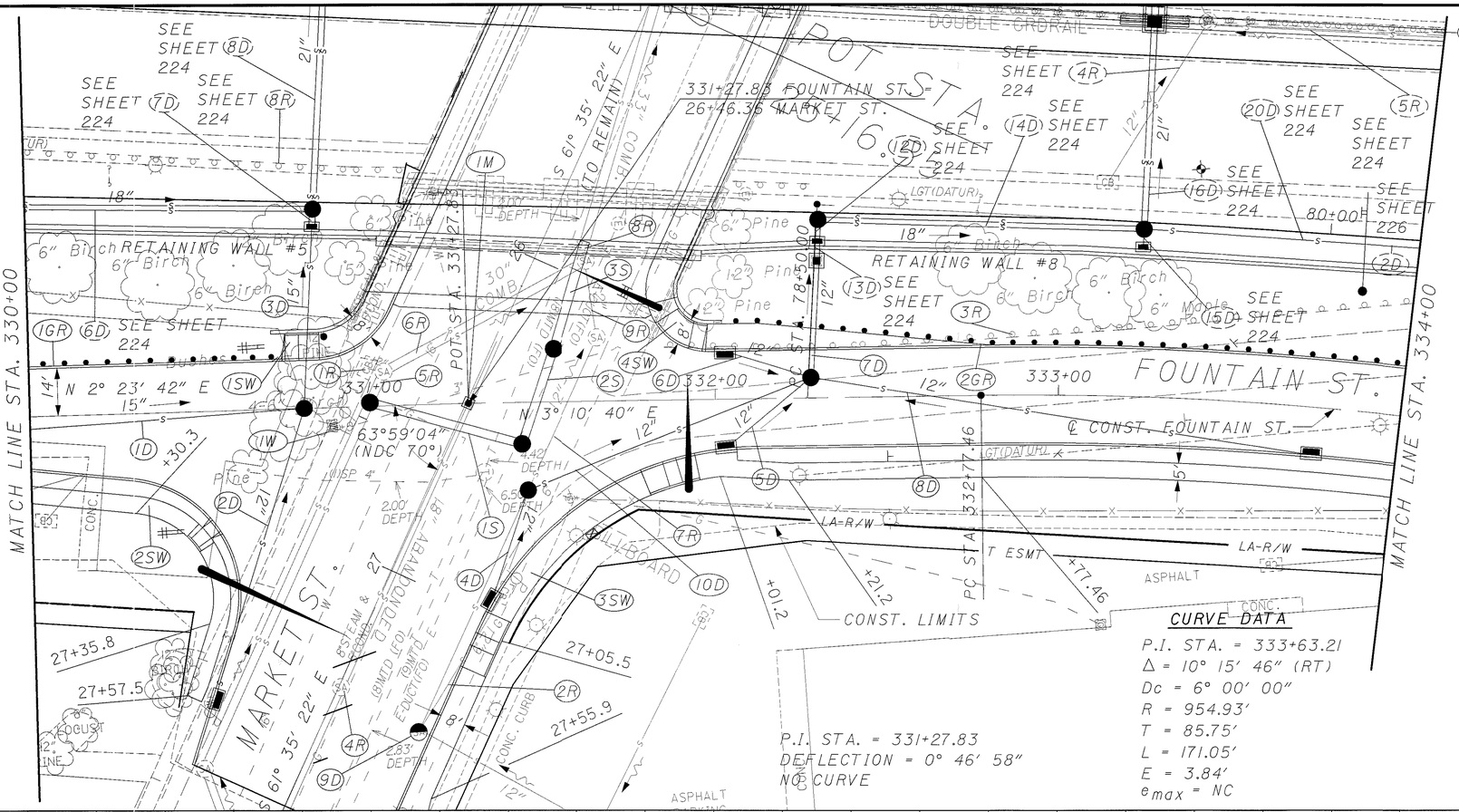

CURVE DATA

P.I. STA. = 333+63.21
Δ = 10° 15′ 46″ (RT)
Dc = 6° 00′ 00″
R = 954.93′
T = 85.75′
L = 171.05′
E = 3.84′
emax = NC

P.I. STA. = 331+27.83
DEFLECTION = 0° 46′ 58″
NC CURVE

CROSS REFERENCES

SHEET NO.	DESCRIPTION
24	TYPICAL SECTION
163-164	DRAINAGE SUBSUMMARY
174	GUARDRAIL SUBSUMMARY
180	ROADWAY SUBSUMMARY
182	SANITARY SUBSUMMARY
184	WALK SUBSUMMARY
397-401	CROSS SECTIONS
398-399	PIPE PROFILES 2D, 3D, 5D, 6D & 7D
473	CURB AND UNDERDRAIN PLAN
537-538	PAVEMENT DETAILS
554-557	APPROACH SLAB DETAILS
590	PIPE PROFILE 4D
596	PIPE PROFILES 1S & 2S
686-689	WATER SUBSUMMARY
701	WATER WORK PLAN
774	SIGNING AND PAVEMENT MARKING PLAN
804	MARKET STREET SIGNAL
864	LIGHTING PLAN
951	MARKET STREET BRIDGE SITE PLAN

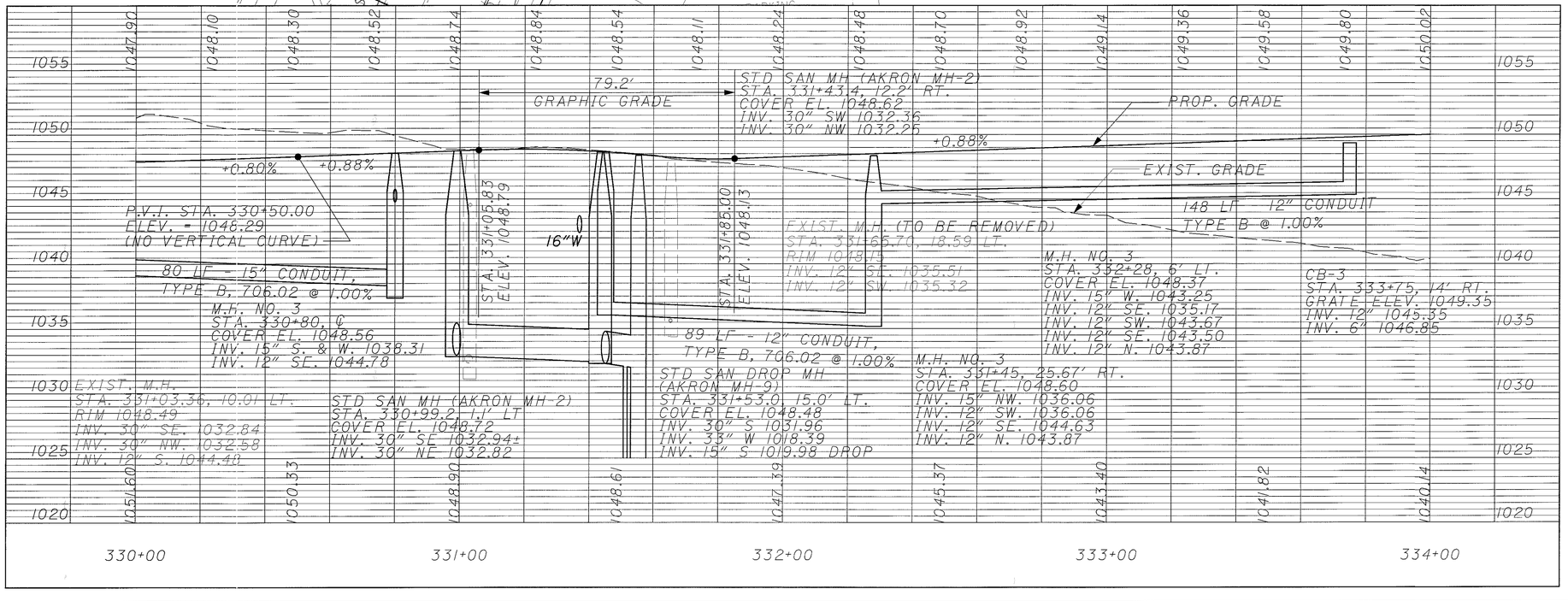

N

0 10 20 40 HORIZONTAL SCALE IN FEET

CALCULATED | CHECKED

PLAN AND PROFILE - FOUNTAIN ST. STA. 330+00 TO STA. 334+00

SUM-8-0.63

261
1088

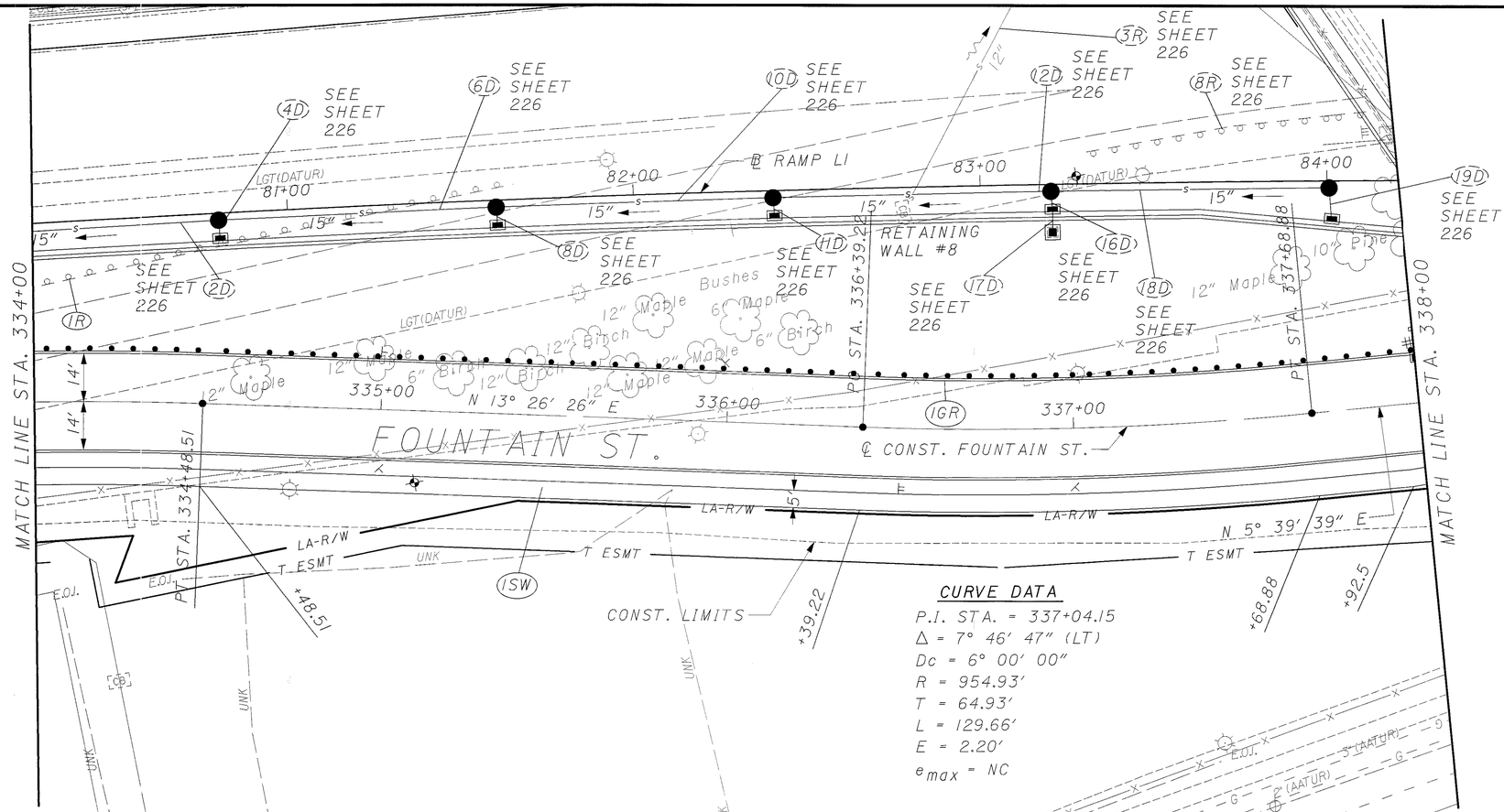

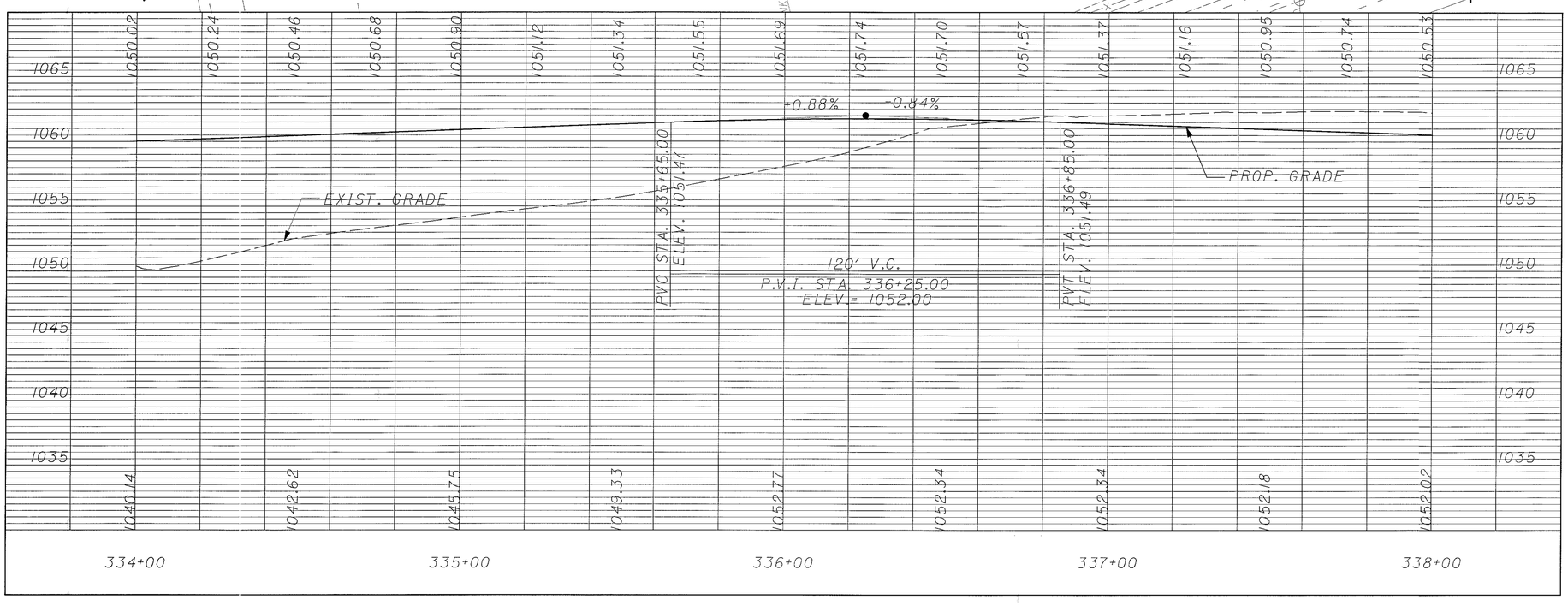

CURVE DATA

P.I. STA. = 337+04.15
Δ = 7° 46′ 47″ (LT)
Dc = 6° 00′ 00″
R = 954.93′
T = 64.93′
L = 129.66′
E = 2.20′
e_{max} = NC

CROSS REFERENCES

SHEET NO.	DESCRIPTION
24	TYPICAL SECTION
174	GUARDRAIL SUBSUMMARY
184	WALK SUBSUMMARY
401-405	CROSS SECTIONS
474	CURB AND UNDERDRAIN PLAN
775	SIGNING AND PAVEMENT MARKING PLAN
865	LIGHTING PLAN

HORIZONTAL SCALE IN FEET
0 10 20 40

CALCULATED
CHECKED

PLAN AND PROFILE - FOUNTAIN ST.
STA. 334+00 TO STA. 338+00

SUM-8-0.63

262
1088

CROSS REFERENCES

SHEET NO.	DESCRIPTION
24	TYPICAL SECTION
165-166	DRAINAGE SUBSUMMARY
174	GUARDRAIL SUBSUMMARY
180	ROADWAY SUBSUMMARY
182	SANITARY SUBSUMMARY
184	WALK SUBSUMMARY
290	OHIO STREET PLAN AND PROFILE
405-409	CROSS SECTIONS
405, 407-408	PIPE PROFILES 1D, 3D, 5D, 6D & 7D
475	CURB AND UNDERDRAIN PLAN
539-542	PAVEMENT DETAILS
558-561	APPROACH SLAB DETAILS
592	PIPE PROFILES 2D & 4D
610	RETAINING WALL 2 PLAN
775-776	SIGNING AND PAVEMENT MARKING PLAN
806	FORGE STREET SIGNALS
865	LIGHTING PLAN
982	FORGE STREET BRIDGE SITE PLAN

N

0 10 20 40
HORIZONTAL SCALE IN FEET

CALCULATED

CHECKED

PLAN AND PROFILE - FOUNTAIN ST. STA. 338+00 TO STA. 342+00

SUM-8-0.63

263
1088

PLAN AND PROFILE - FOUNTAIN ST.
STA. 342+00 TO STA. 346+00

SUM-8-0.63

264
1088

CALCULATED | CHECKED

HORIZONTAL SCALE IN FEET
0 10 20 40

N

CROSS REFERENCES

SHEET NO.	DESCRIPTION
24	TYPICAL SECTION
165-166	DRAINAGE SUBSUMMARY
174	GUARDRAIL SUBSUMMARY
180	ROADWAY SUBSUMMARY
184	WALK SUBSUMMARY
290-291	OHIO STREET PLAN AND PROFILE
409	PIPE PROFILES 1D & 3D
409-412	CROSS SECTIONS
476	CURB AND UNDERDRAIN PLAN
541-544	PAVEMENT DETAILS
610	RETAINING WALL 2 PLAN
700	WATER WORK PLAN
776	SIGNING AND PAVEMENT MARKING PLAN
865-866	LIGHTING PLAN
595	PIPE PROFILE 2D

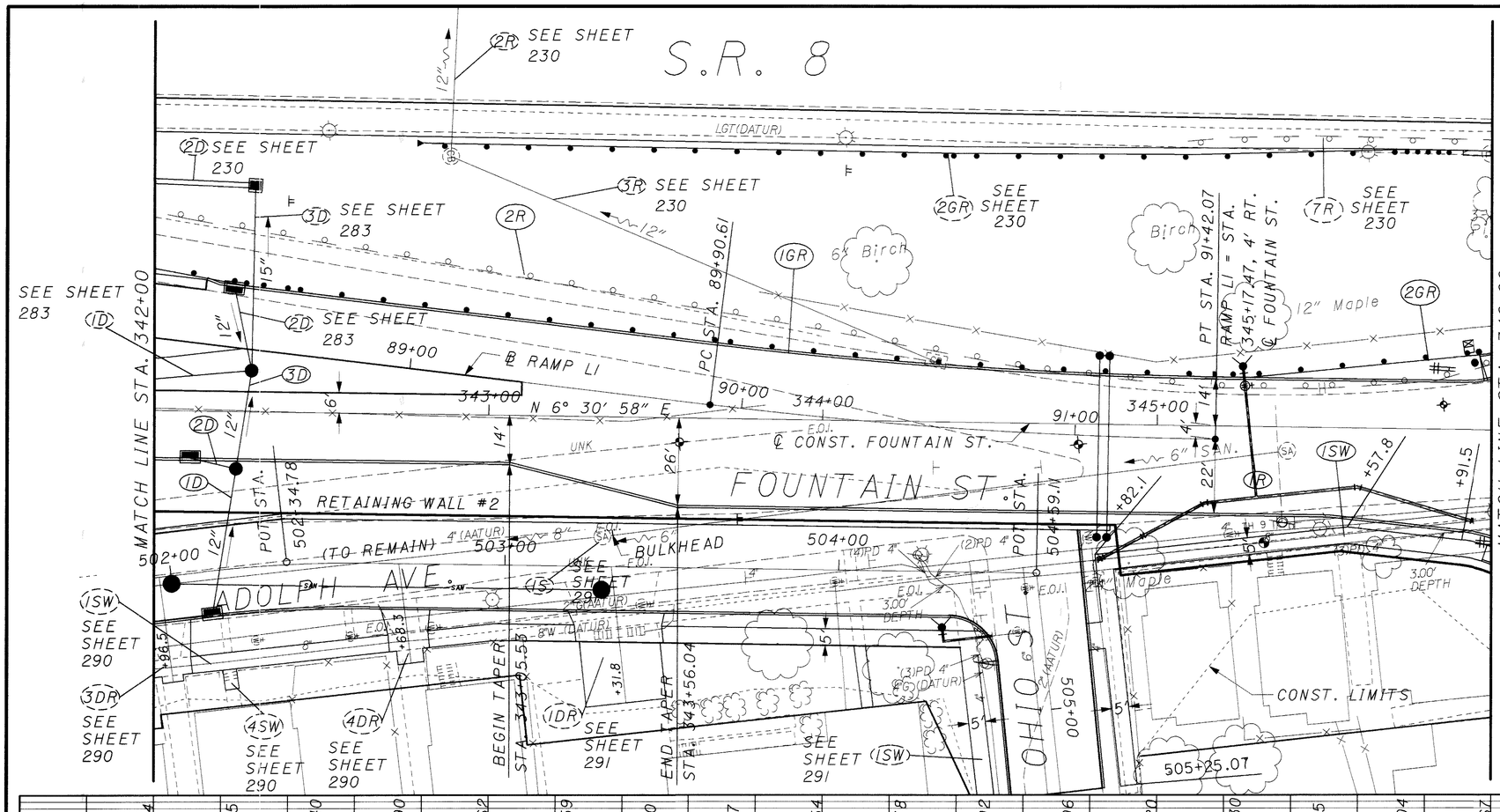

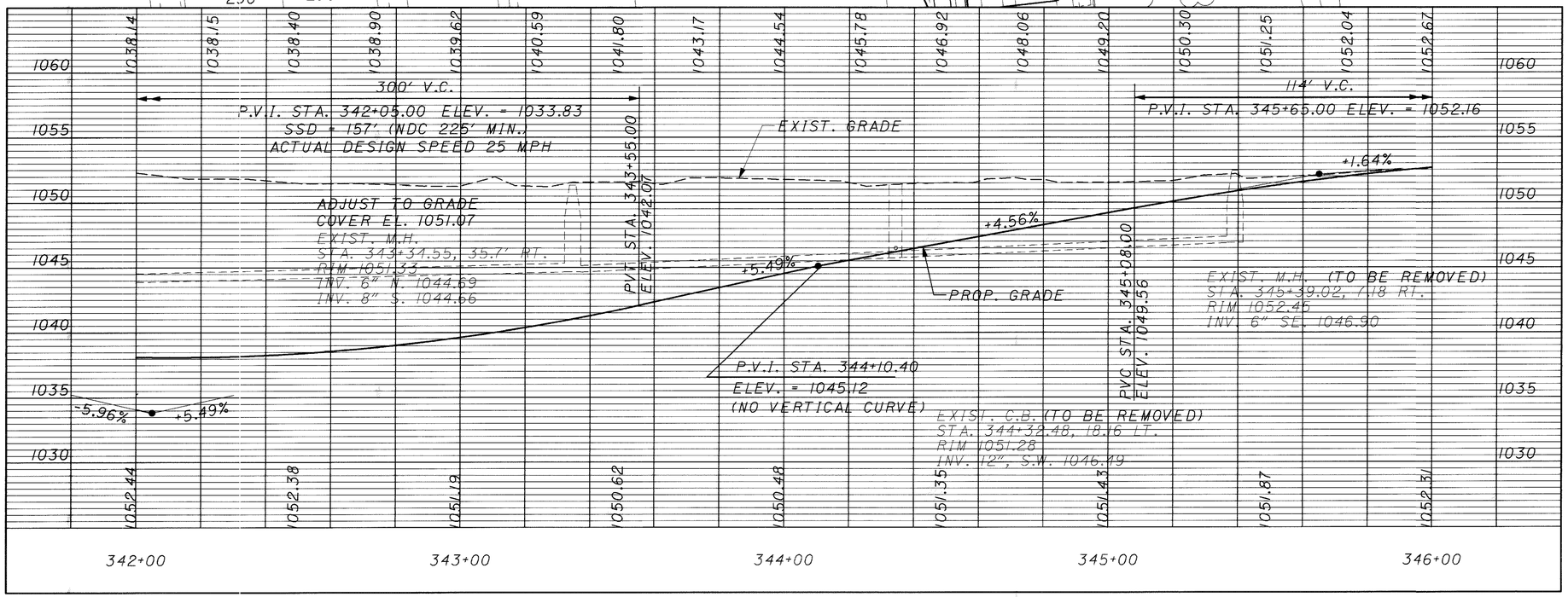

CROSS REFERENCES

SHEET NO.	DESCRIPTION
24	TYPICAL SECTION
174	GUARDRAIL SUBSUMMARY
180	ROADWAY SUBSUMMARY
184	WALK SUBSUMMARY
288	RAMP J PLAN AND PROFILE
412-413	CROSS SECTIONS
477	CURB AND UNDERDRAIN PLAN
543-544	PAVEMENT DETAILS
570	DRIVEWAY PROFILE
686-689	WATER SUBSUMMARY
776	SIGNING AND PAVEMENT MARKING PLAN
866	LIGHTING PLAN
1003	PERKINS STREET BRIDGE SITE PLAN

SUM-8-0.63

PLAN AND PROFILE - FOUNTAIN ST.
STA. 346+00 TO STA. 346+50.64

CALCULATED

CHECKED

0 10 20 40
HORIZONTAL SCALE IN FEET

N

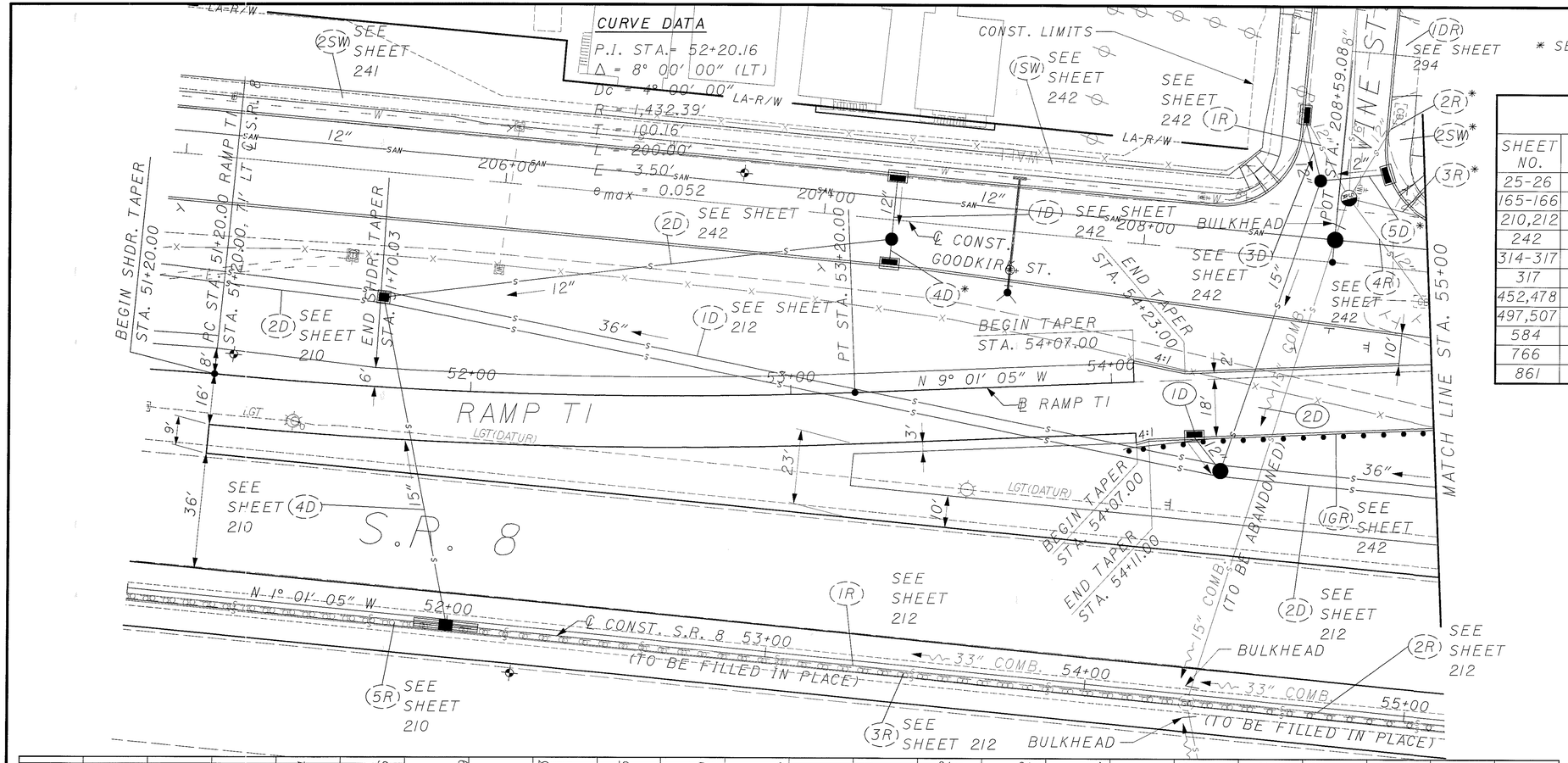

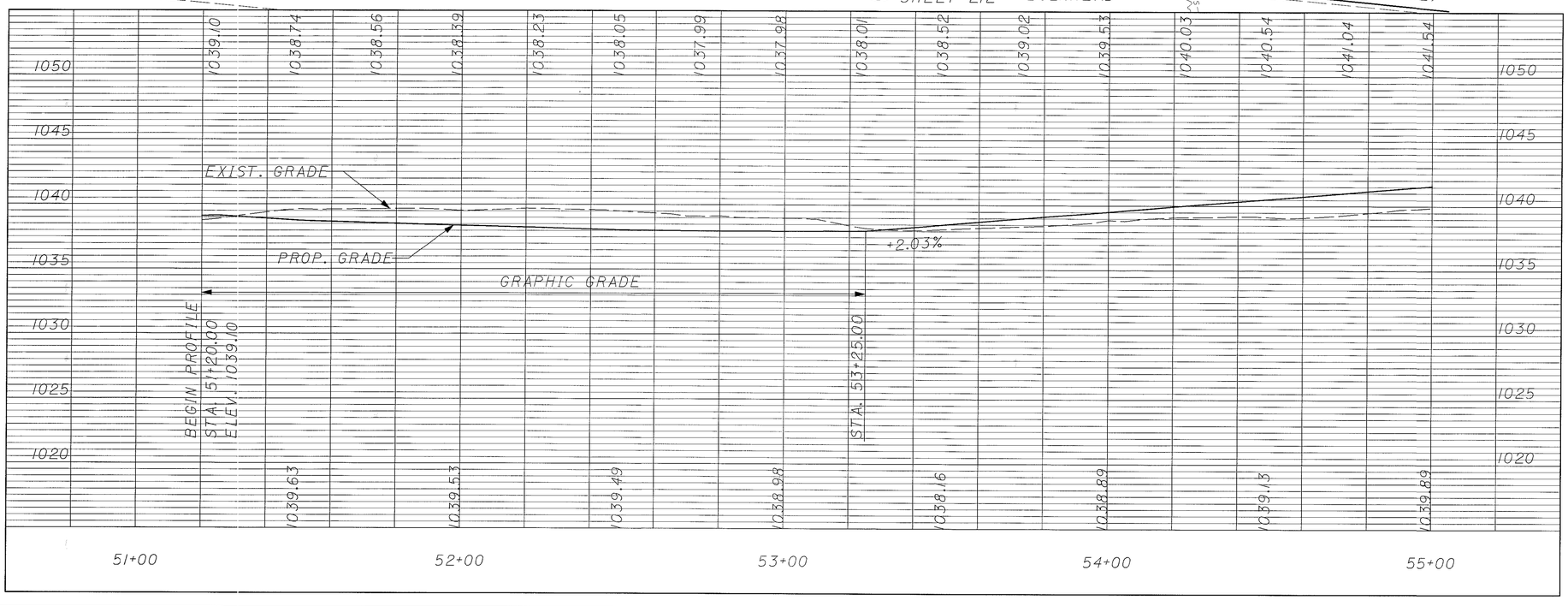

CROSS REFERENCES

SHEET NO.	DESCRIPTION
25-26	TYPICAL SECTION
165-166	DRAINAGE SUBSUMMARY
210,212	S.R. 8 PLAN
242	GOODKIRK PLAN AND PROFILE
314-317	CROSS SECTIONS
317	PIPE PROFILE 2D
452,478	CURB AND UNDERDRAIN PLAN
497,507	PAVEMENT DETAILS
584	PIPE PROFILE ID
766	SIGNING AND PAVEMENT MARKING PLAN
861	LIGHTING PLAN

HORIZONTAL SCALE IN FEET
0 10 20 40

CALCULATED

CHECKED

PLAN AND PROFILE - RAMP T1 STA. 51+20 TO STA. 55+00

SUM-8-0.63

266
1088

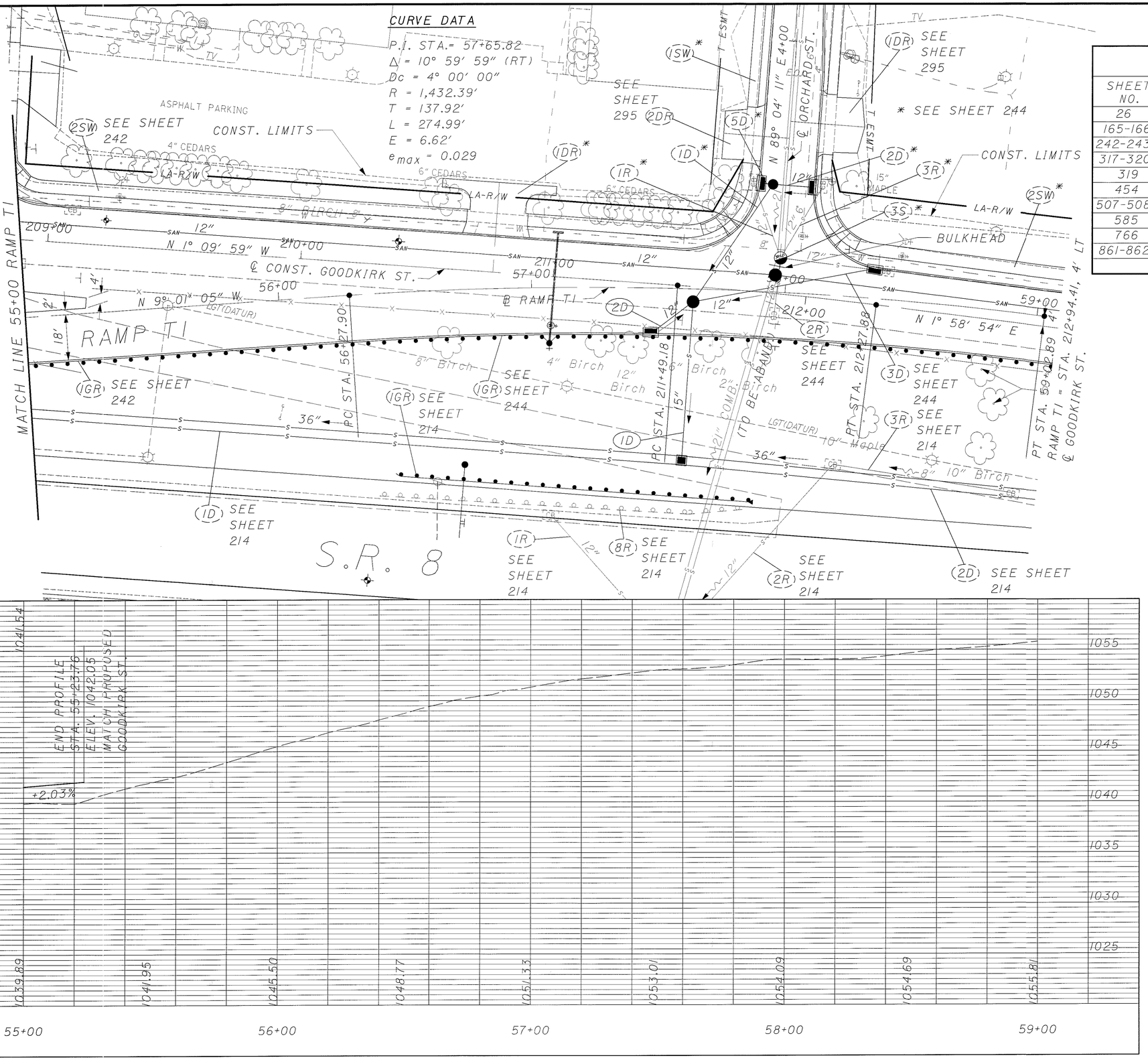

CROSS REFERENCES

SHEET NO.	DESCRIPTION
26	TYPICAL SECTION
165-166	DRAINAGE SUBSUMMARY
242-243	GOODKIRK PLAN AND PROFILE
317-320	CROSS SECTIONS
319	PIPE PROFILE ID
454	CURB AND UNDERDRAIN PLAN
507-508	PAVEMENT DETAILS
585	PIPE PROFILE 2D
766	SIGNING AND PAVEMENT MARKING PLAN
861-862	LIGHTING PLAN

N

0 10 20 40 HORIZONTAL SCALE IN FEET

CALCULATED | CHECKED

PLAN AND PROFILE - RAMP T1
STA. 55+00 TO STA. 59+02.89

SUM-8-0.63

267
1084

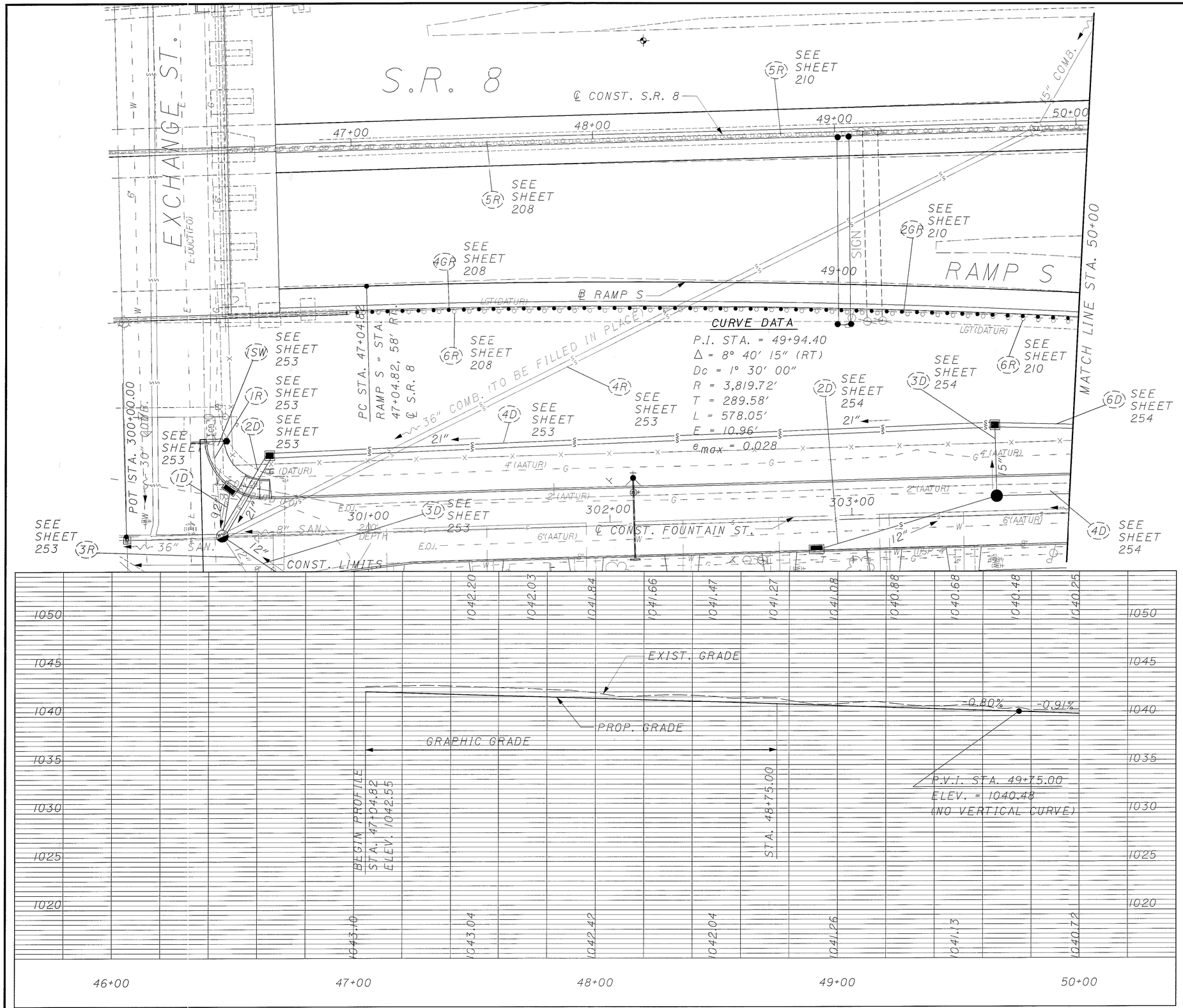

CROSS REFERENCES

SHEET NO.	DESCRIPTION
25-26	TYPICAL SECTION
208,210	S.R. 8 PLAN
375-377	CROSS SECTIONS
497	PAVEMENT DETAILS
772	SIGNING AND PAVEMENT MARKING PLAN
861	LIGHTING PLAN

HORIZONTAL SCALE IN FEET 0 10 20 40

CALCULATED

CHECKED

PLAN AND PROFILE - RAMP S
STA. 46+00 TO STA. 50+00

SUM-8-0.63

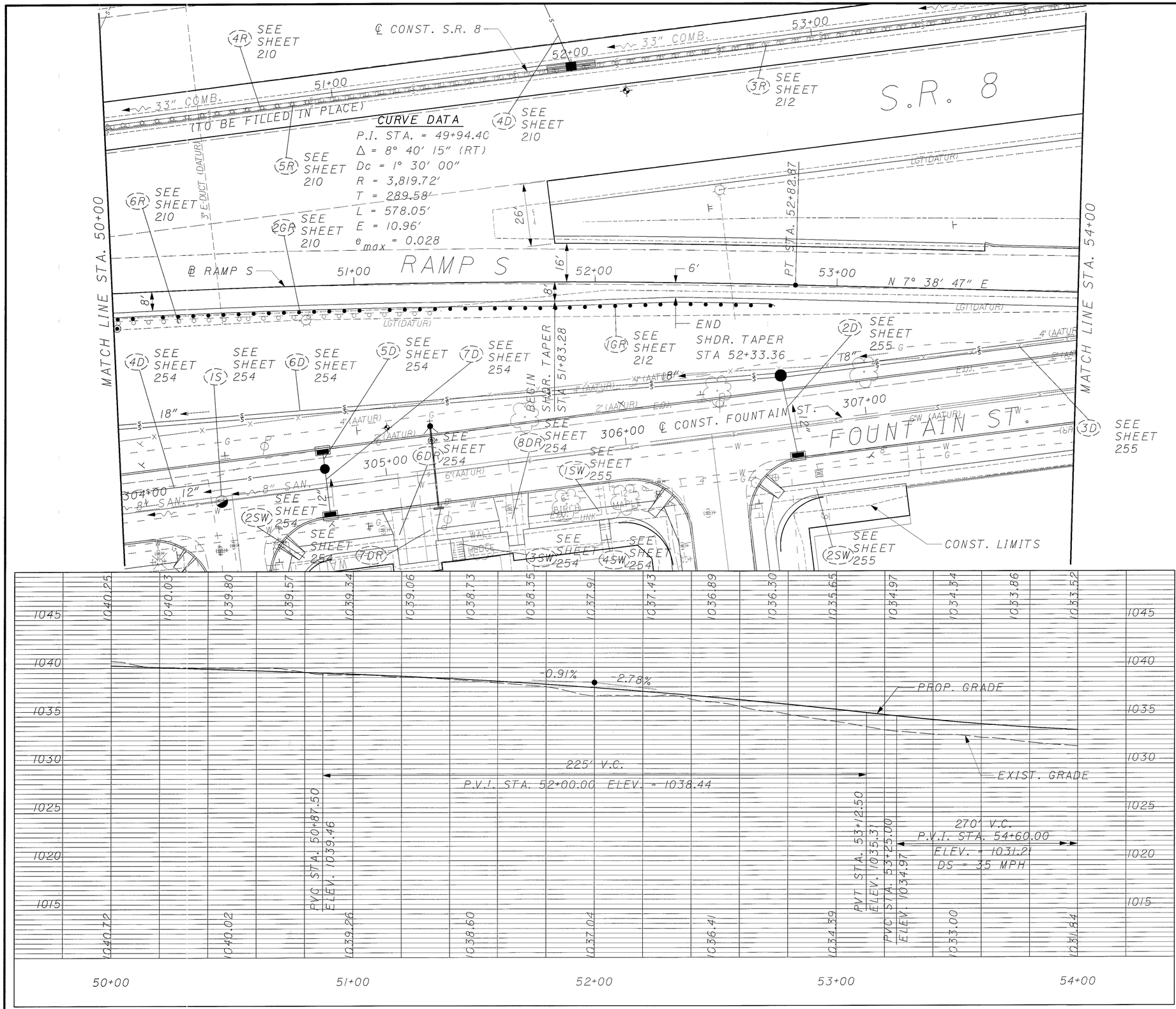

CROSS REFERENCES

SHEET NO.	DESCRIPTION
25-26	TYPICAL SECTION
210,212	S.R. 8 PLAN
377-380	CROSS SECTION
479	CURB AND UNDERDRAIN PLAN
497	PAVEMENT DETAILS
772	SIGNING AND PAVEMENT MARKING PLAN
861-862	LIGHTING PLAN

N

0 10 20 40 HORIZONTAL SCALE IN FEET

CALCULATED

CHECKED

PLAN AND PROFILE - RAMP S STA. 50+00 TO STA. 54+00

SUM-8-0.63

269
1088

CROSS REFERENCES

SHEET NO.	DESCRIPTION
25-26	TYPICAL SECTION
255-256	FOUNTAIN ST. PLAN AND PROFILE
380-382	CROSS SECTIONS
480	CURB AND UNDERDRAIN PLAN
498	PAVEMENT DETAILS
772	SIGNING AND PAVEMENT MARKING PLAN
862	LIGHTING PLAN

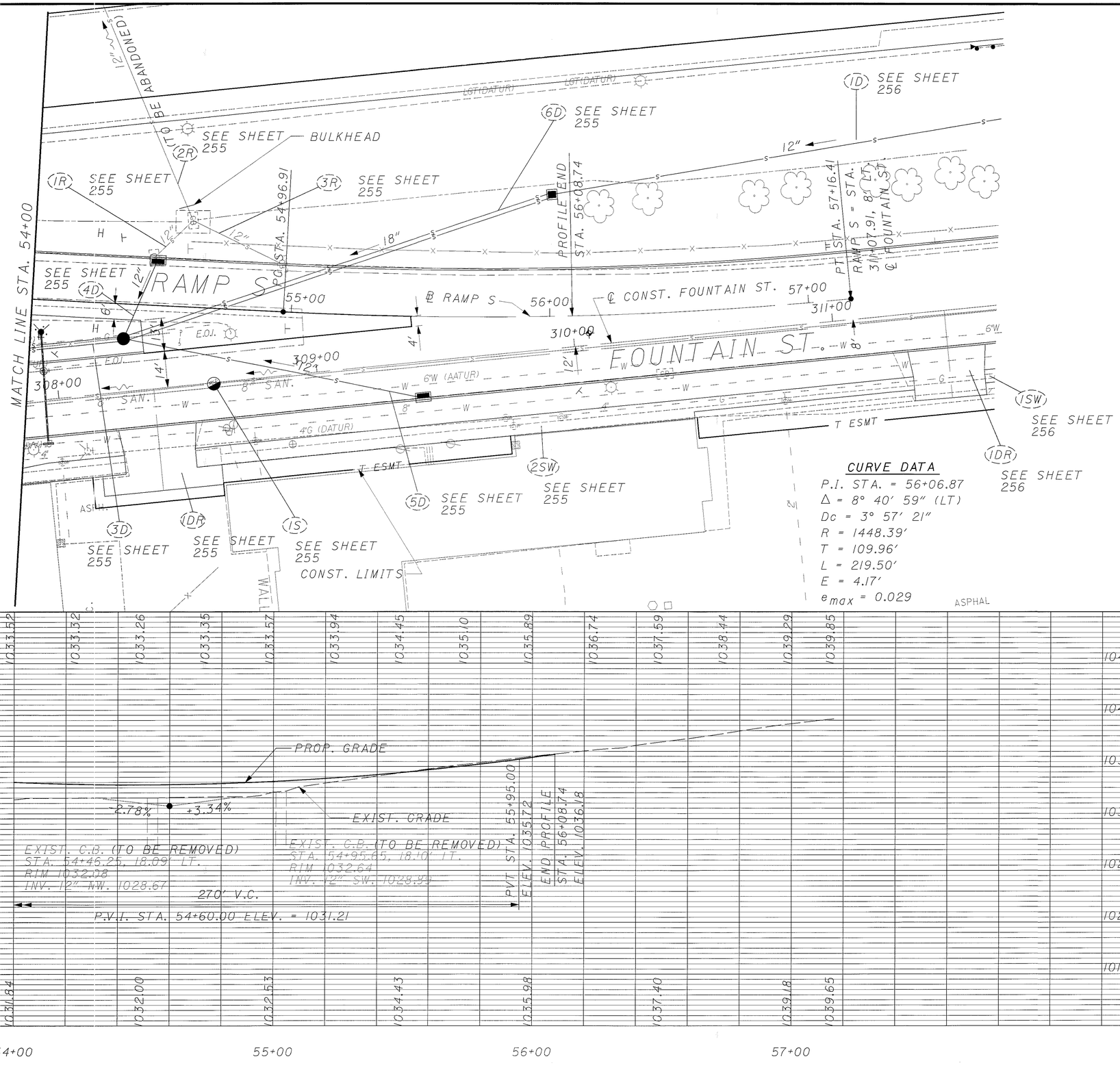

CURVE DATA

P.I. STA. = 56+06.87
Δ = 8° 40′ 59″ (LT)
Dc = 3° 57′ 21″
R = 1448.39′
T = 109.96′
L = 219.50′
E = 4.17′
e_{max} = 0.029

N

HORIZONTAL SCALE IN FEET
0 10 20 40

CALCULATED | CHECKED

PLAN AND PROFILE - RAMP S STA. 54+00 TO STA. 57+61.41

SUM-8-0.63

270
1088

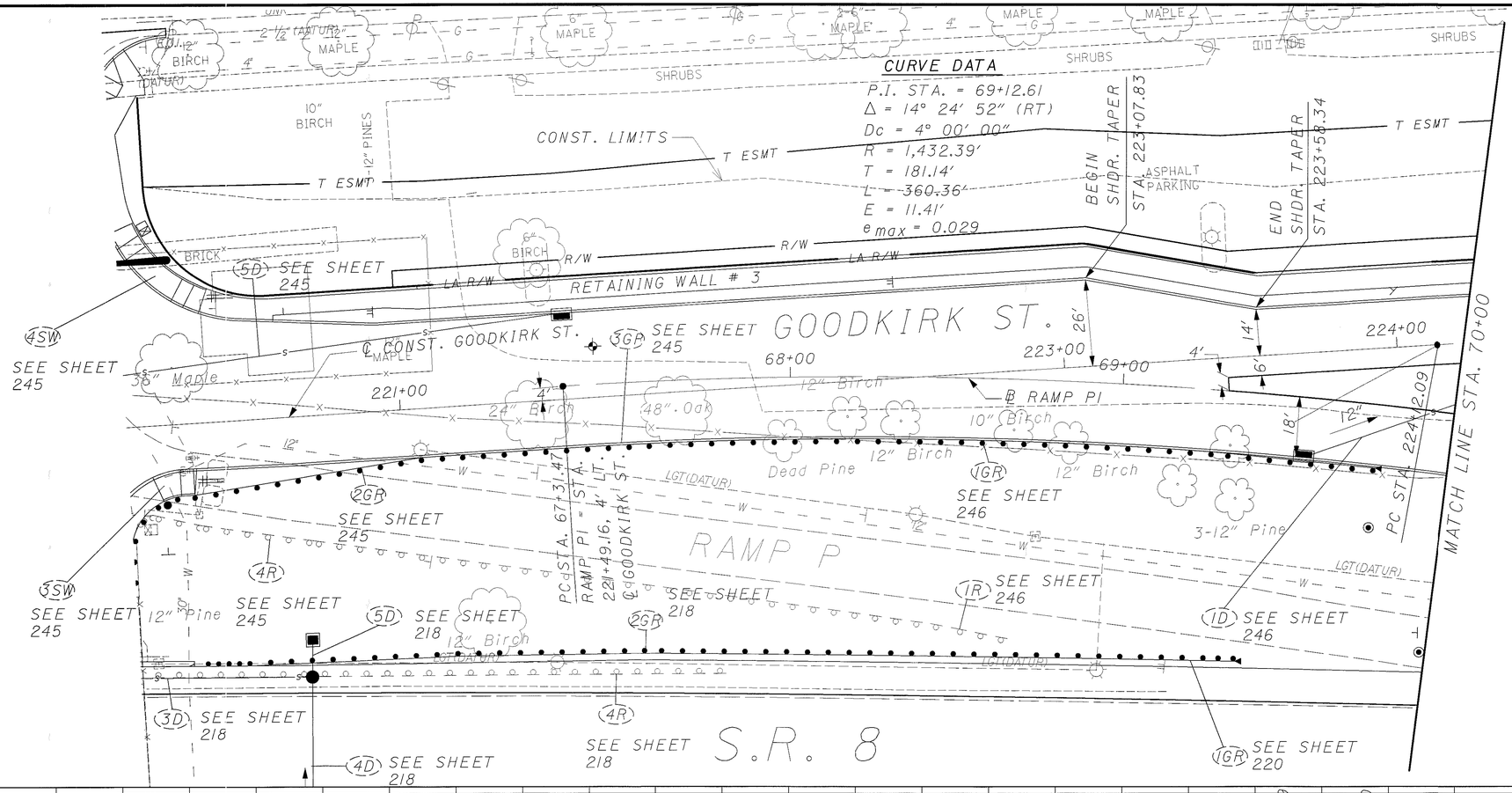
CURVE DATA
P.I. STA. = 69+12.61
Δ = 14° 24' 52" (RT)
Dc = 4° 00' 00"
R = 1,432.39'
T = 181.14'
L = 360.36'
E = 11.41'
e max = 0.029
CONST. LIMITS
T ESMT
R/W
LA R/W
RETAINING WALL # 3
BEGIN SHDR. TAPER STA. 223+07.83
END SHDR. TAPER STA. 223+58.34
ASPHALT PARKING
GOODKIRK ST.
℄ CONST. GOODKIRK ST.
℄ GOODKIRK ST.
RAMP P
℄ RAMP P1
PC STA. 67+31.47
RAMP P1 = 1 STA.
22+49.16, 4' LT.
PC STA. 224+12.09
MATCH LINE STA. 70+00
S.R. 8
SHRUBS
MAPLE
BIRCH
PINE
SEE SHEET 245
SEE SHEET 246
SEE SHEET 218
SEE SHEET 220

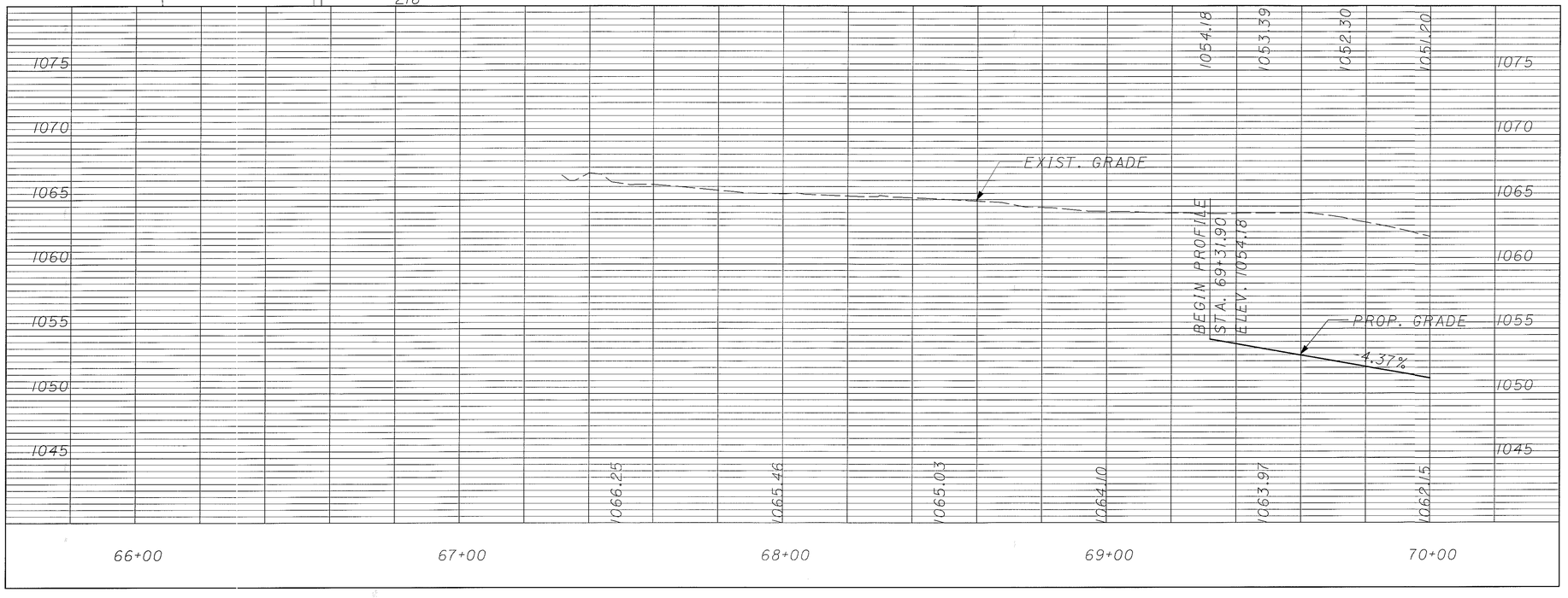

CROSS REFERENCES

SHEET NO.	DESCRIPTION
25-26	TYPICAL SECTION
245-246	GOODKIRK PLAN
336-337	CROSS SECTIONS
481	CURB AND UNDERDRAIN PLAN
498	PAVEMENT DETAILS
768	SIGNING AND PAVEMENT MARKING PLAN
863	LIGHTING PLAN

N

0 10 20 40 HORIZONTAL SCALE IN FEET

CALCULATED

CHECKED

PLAN AND PROFILE - RAMP P1
STA. 67+31.47 TO STA. 70+00

SUM-8-0.63

271
1088

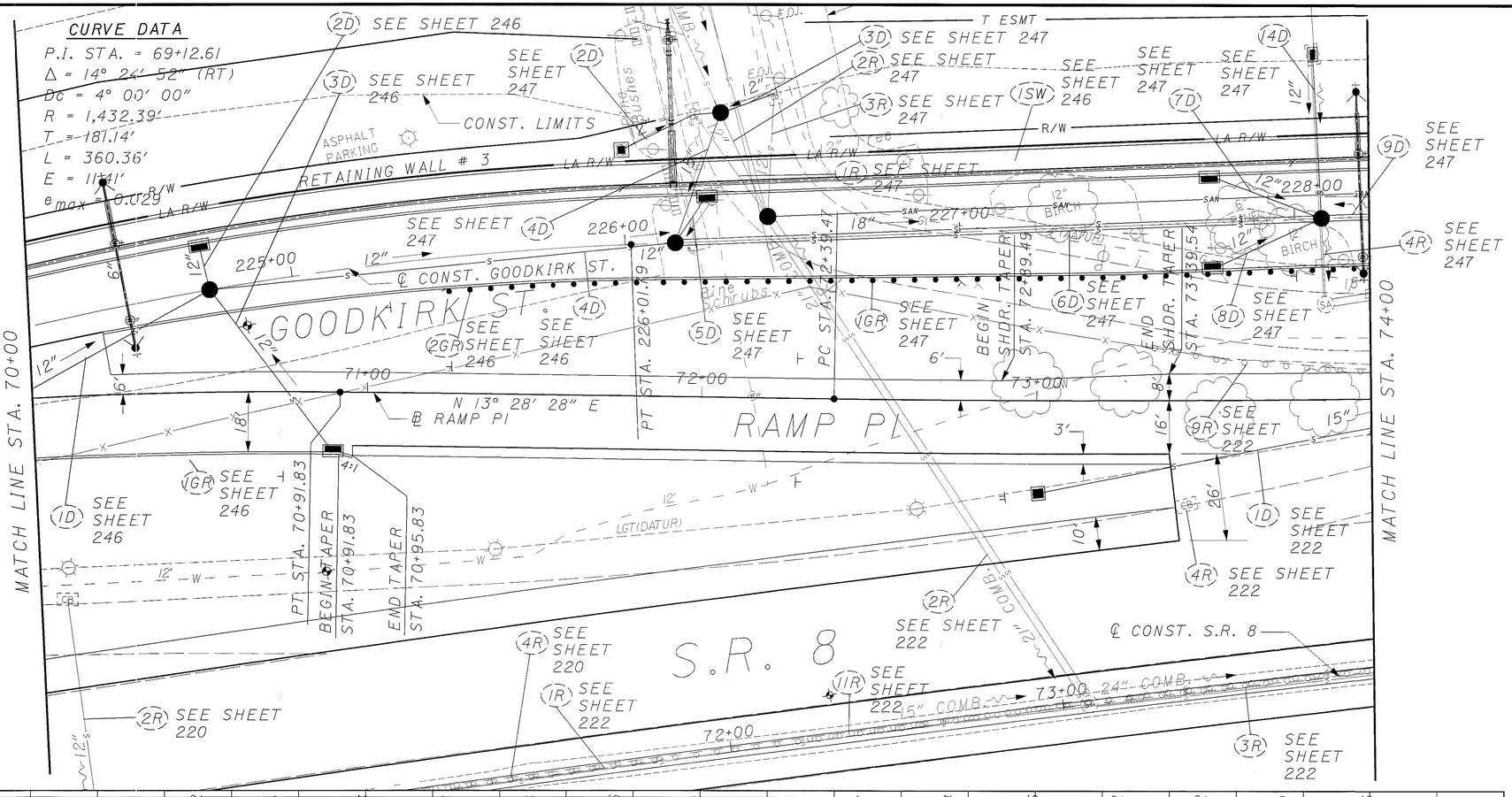

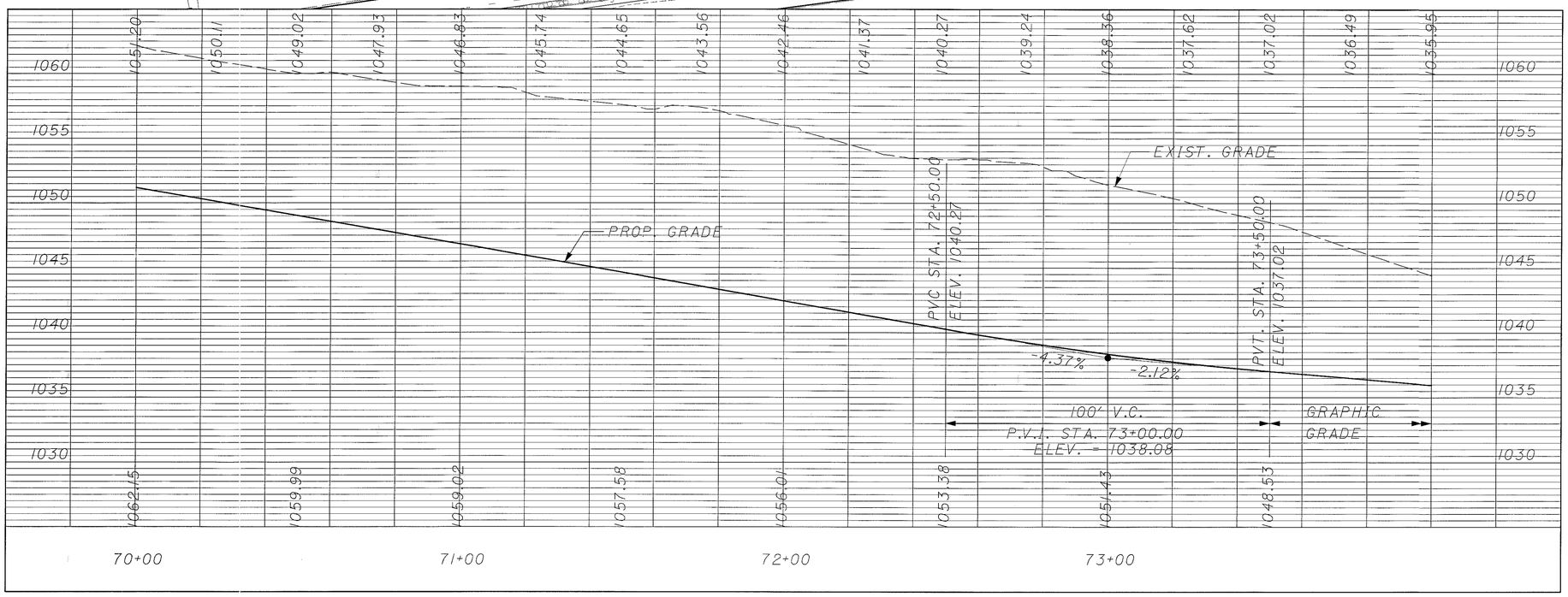

CURVE DATA

P.I. STA. = 75+76.06
Δ = 6° 43′ 26″ (LT)
Dc = 1° 00′ 00″
R = 5,729.58′
T = 336.59′
L = 672.40′
E = 9.88′
emax = 0.020

CROSS REFERENCES

SHEET NO.	DESCRIPTION
25-26	TYPICAL SECTION
220,222	S.R. 8 PLAN
246-247	GOODKIRK PLAN AND PROFILE
332-335	CROSS SECTIONS
481	CURB AND UNDERDRAIN PLAN
498, 513-514	PAVEMENT DETAILS
768	SIGNING AND PAVEMENT MARKING PLAN
863-864	LIGHTING PLAN

HORIZONTAL SCALE IN FEET
0 10 20 40

CALCULATED
CHECKED

PLAN AND PROFILE - RAMP P1 STA. 70+00 TO STA. 74+00

SUM-8-0.63

272
1088

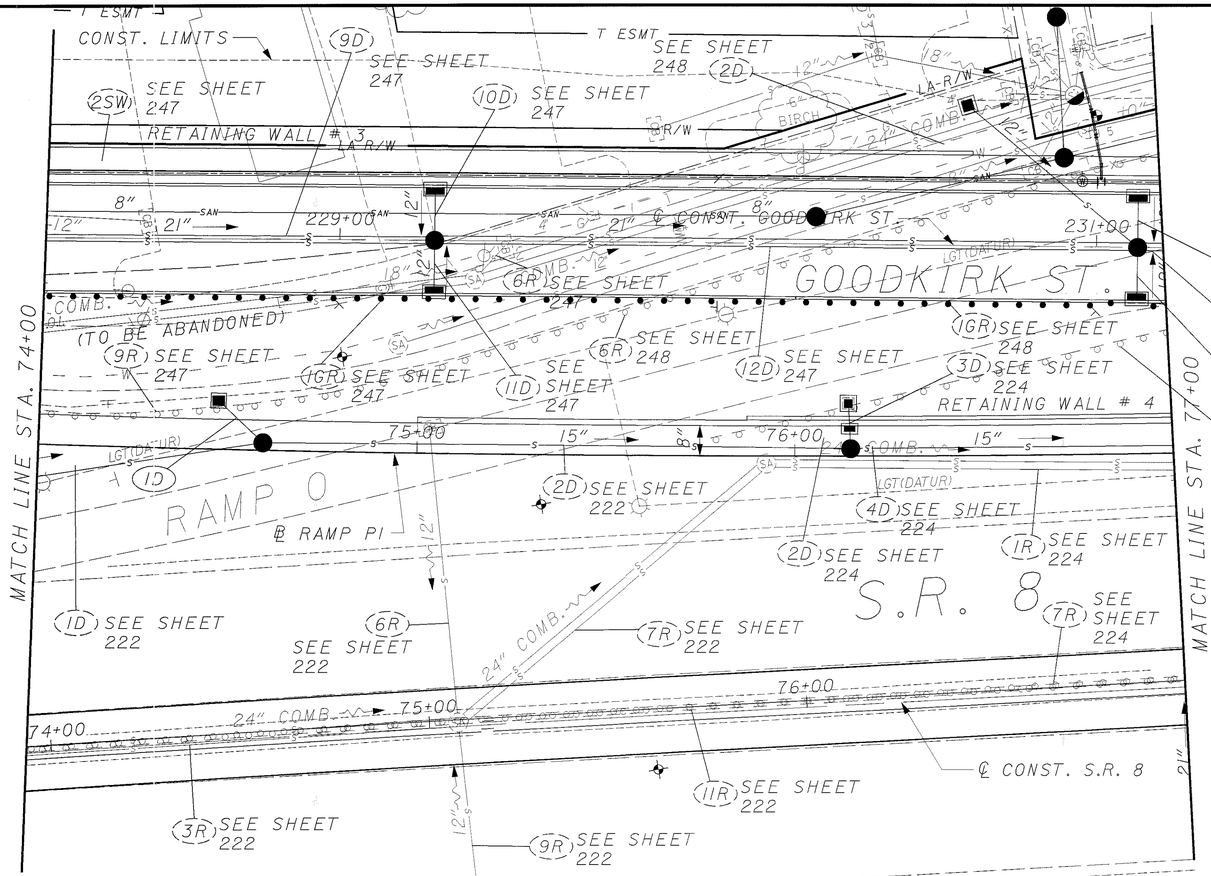

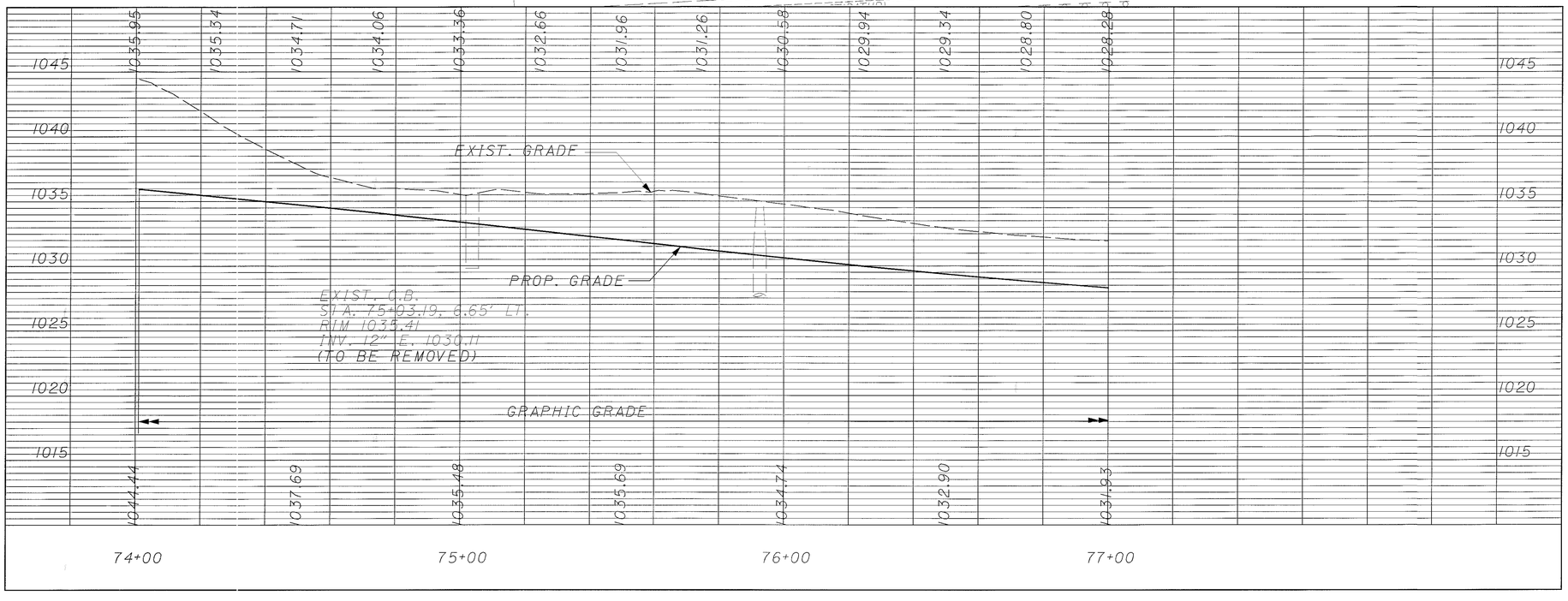

CURVE DATA

P.I. STA. = 75+76.06
Δ = 6° 43′ 26″ (LT)
Dc = 1° 00′ 00″
R = 5,729.58′
T = 336.59′
L = 672.40′
E = 9.88′
e_{max} = 0.020

CROSS REFERENCES

SHEET NO.	DESCRIPTION
25-26	TYPICAL SECTION
165	DRAINAGE SUBSUMMARY
222,224	S.R. 8 PLAN
335-338	CROSS SECTIONS
336	PIPE PROFILE ID
482	CURB AND UNDERDRAIN PLAN
498	PAVEMENT DETAILS
768	SIGNING AND PAVEMENT MARKING PLAN
864	LIGHTING PLAN

N

0 10 20 40 HORIZONTAL SCALE IN FEET

CALCULATED | CHECKED

PLAN AND PROFILE RAMP P1
STA. 74+00 TO STA. 77+00

SUM-8-0.63

273
1088

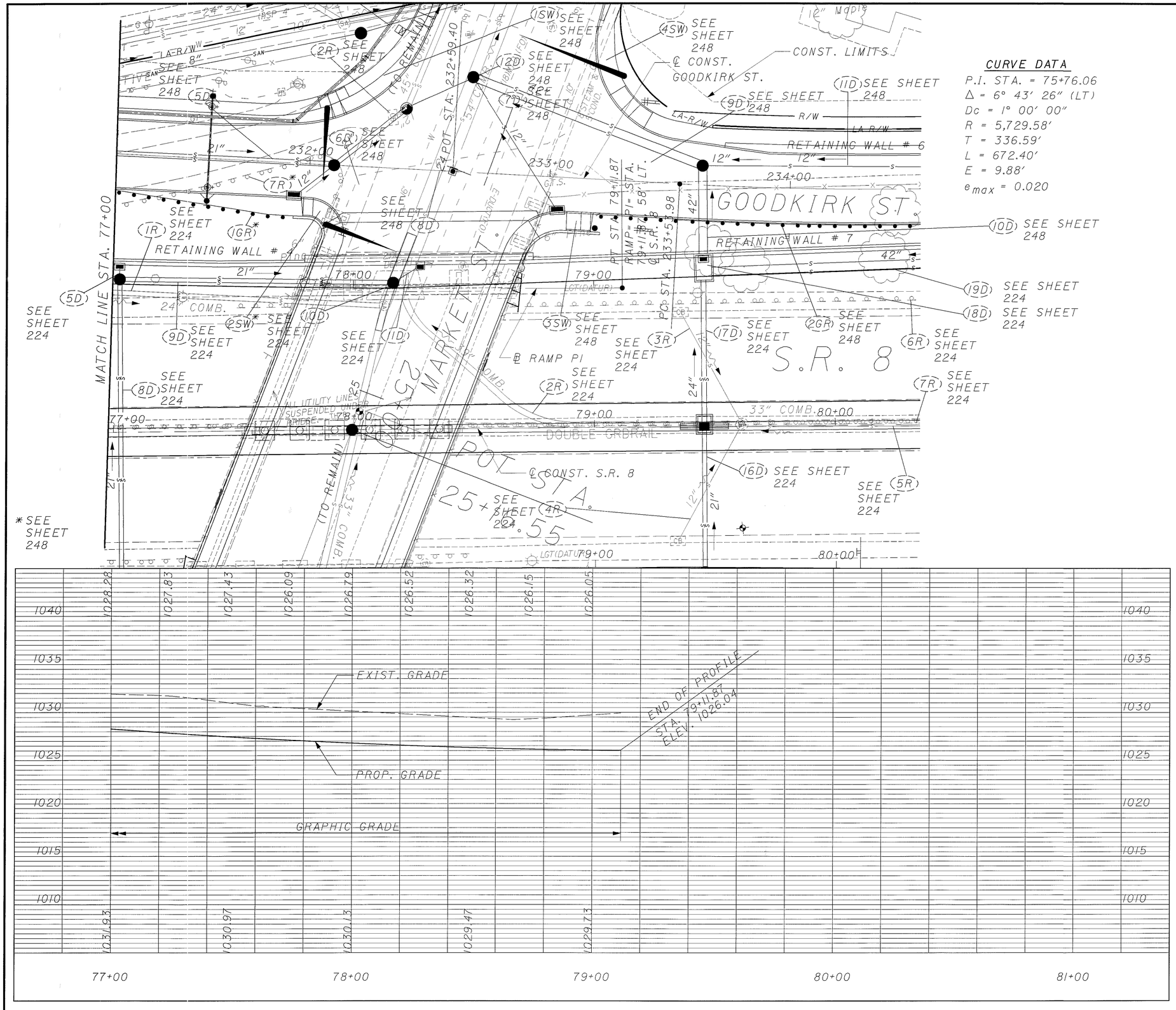

CURVE DATA

P.I. STA. = 75+76.06
Δ = 6° 43′ 26″ (LT)
Dc = 1° 00′ 00″
R = 5,729.58′
T = 336.59′
L = 672.40′
E = 9.88′
e_{max} = 0.020

CROSS REFERENCES

SHEET NO.	DESCRIPTION
25-26	TYPICAL SECTION
224	S.R. 8 PLAN
388-339	CROSS SECTIONS
443	CURB AND UNDERDRAIN PLAN
498	PAVEMENT DETAILS
768	SIGNING AND PAVEMENT MARKING PLAN
864	LIGHTING PLAN

N

0 10 20 40
HORIZONTAL SCALE IN FEET

CALCULATED
CHECKED

PLAN AND PROFILE - RAMP P1
STA. 77+00 TO STA. 79+11.87

SUM-8-0.63

274
1088

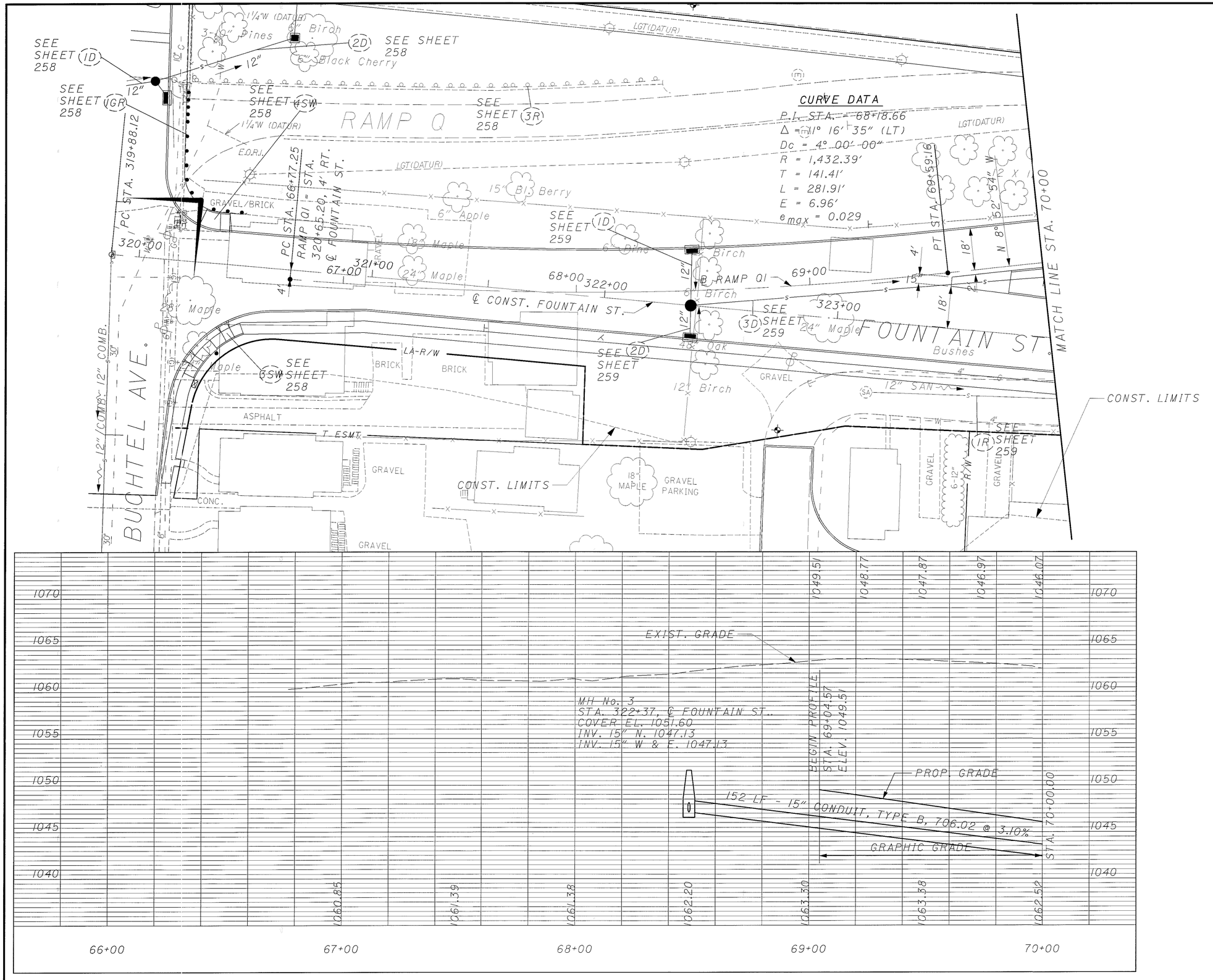

CROSS REFERENCES

SHEET NO.	DESCRIPTION
25-26	TYPICAL SECTION
258-259	FOUNTAIN STREET PLAN
390-393	CROSS SECTIONS
470-471	CURB AND UNDERDRAIN PLAN
534-535	PAVEMENT DETAILS
773	SIGNING AND PAVEMENT MARKING PLAN
863	LIGHTING PLAN

N

0 10 20 40
HORIZONTAL SCALE IN FEET

CALCULATED
CHECKED

PLAN AND PROFILE - RAMP Q1
STA. 66+77.25 TO STA. 70+00

SUM-8-0.63

275
1088

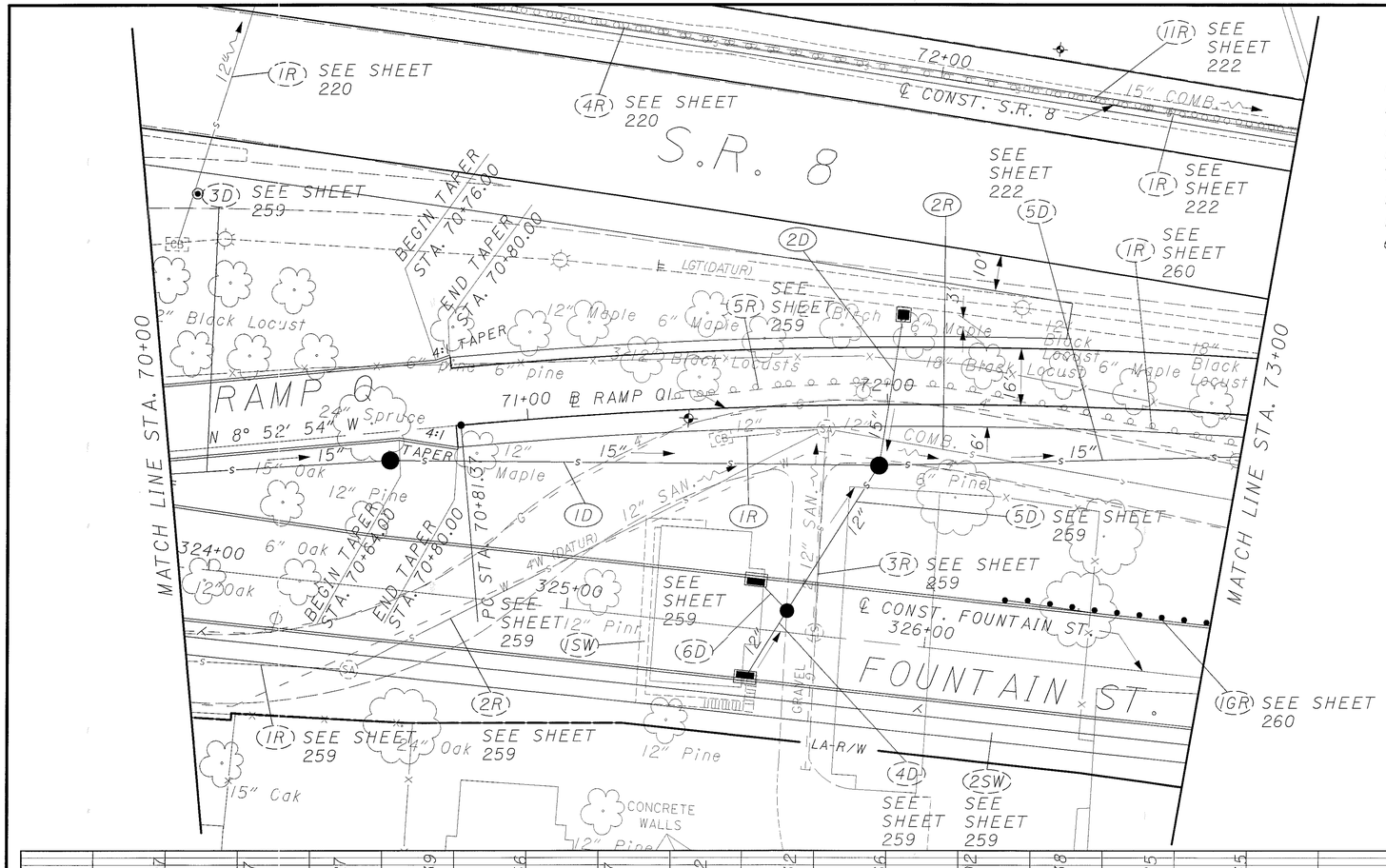

CURVE DATA

P.I. STA. = 72+54.01
Δ = 13° 44' 43" (RT)
Dc = 4° 00' 00"
R = 1,432.39'
T = 172.65'
L = 343.63'
E = 10.37'
emax = 0.052

CROSS REFERENCES

SHEET NO.	DESCRIPTION
25-26	TYPICAL SECTION
165-166	DRAINAGE SUBSUMMARY
180	ROADWAY SUBSUMMARY
220,222	S.R. 8 PLAN
259-260	FOUNTAIN PLAN AND PROFILE
393-395	CROSS SECTIONS
394	PIPE PROFILE 2D
483	CURB AND UNDERDRAIN PLAN
535-536	PAVEMENT DETAILS
774	SIGNING AND PAVEMENT MARKING PLAN
863-864	LIGHTING PLAN

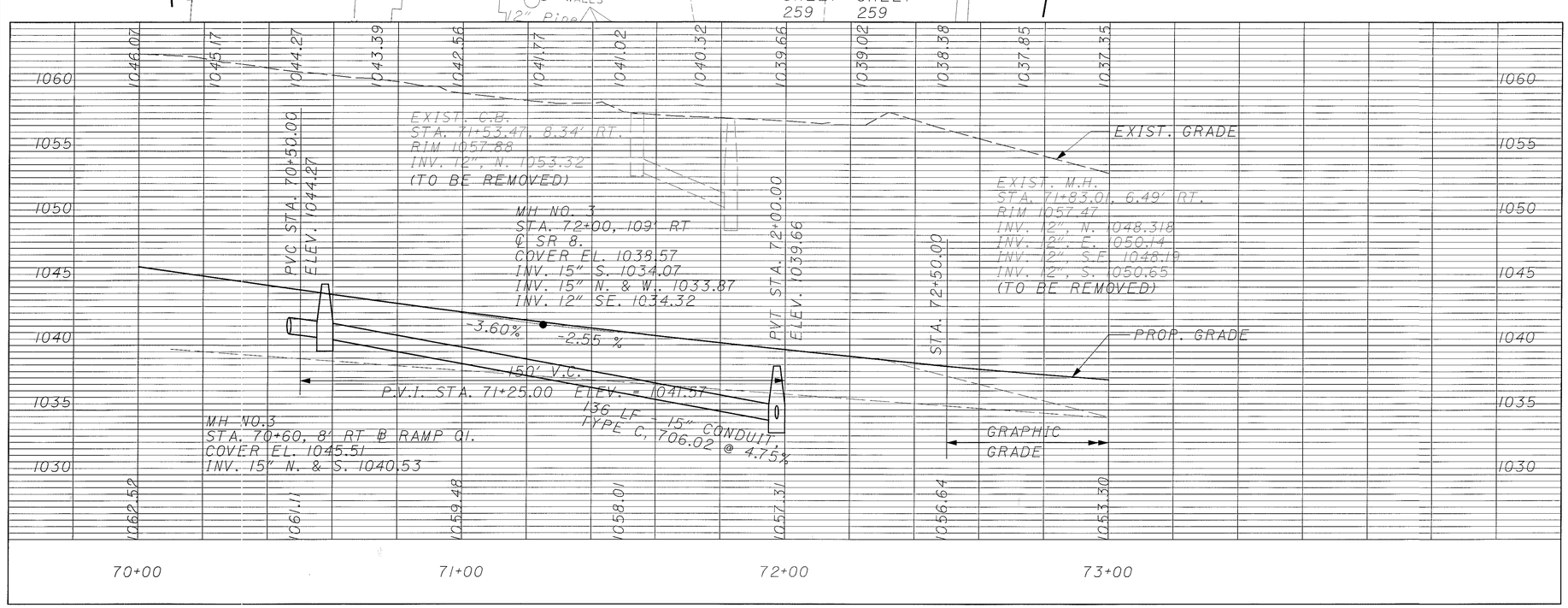

HORIZONTAL SCALE IN FEET
0 10 20 40
CALCULATED
CHECKED

PLAN AND PROFILE - RAMP Q1
STA. 70+00 TO STA. 73+00

SUM-8-0.63

276
1088

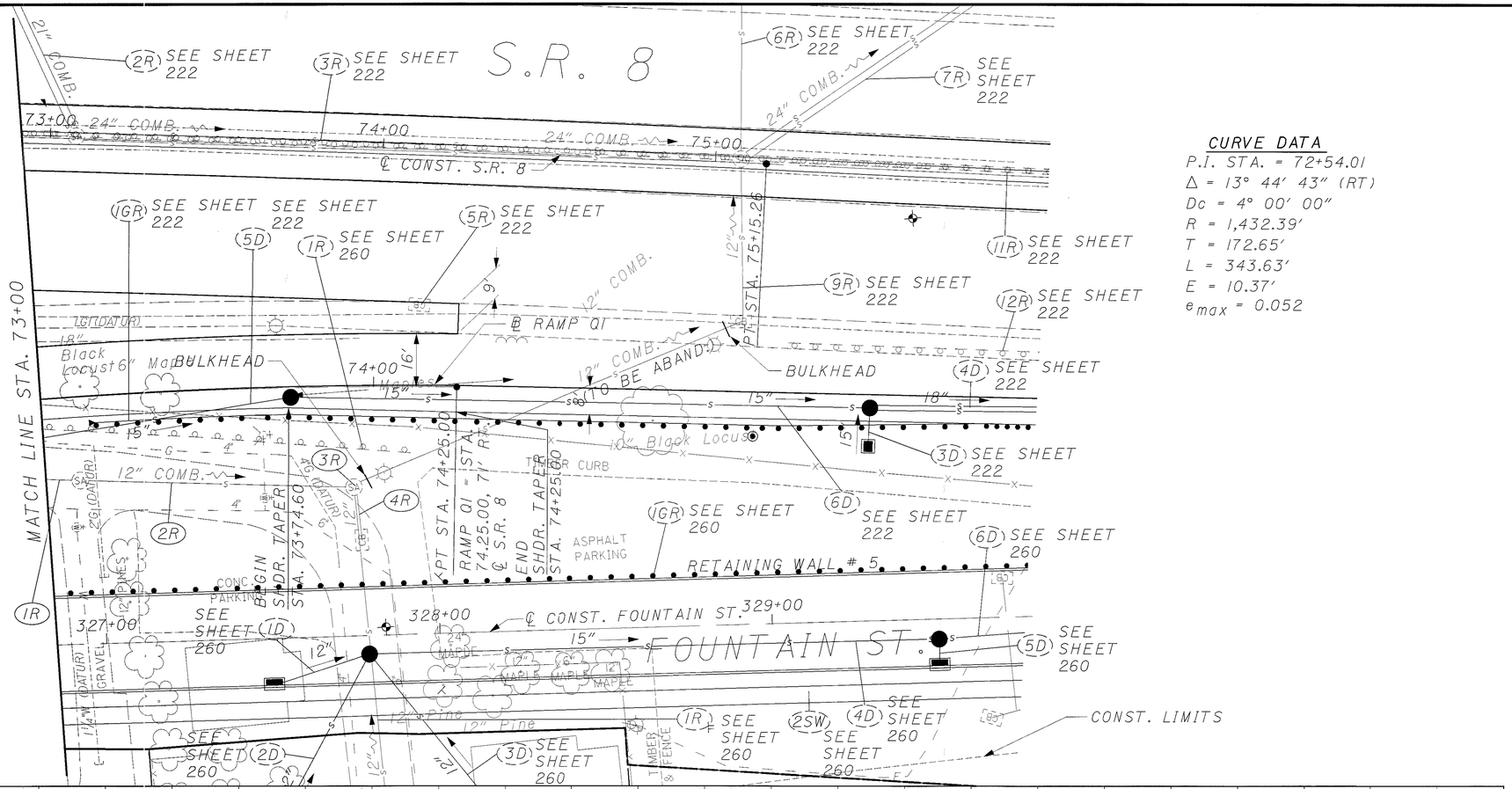

CURVE DATA

P.I. STA. = 72+54.01
Δ = 13° 44′ 43″ (RT)
Dc = 4° 00′ 00″
R = 1,432.39′
T = 172.65′
L = 343.63′
E = 10.37′
e_{max} = 0.052

CROSS REFERENCES

SHEET NO.	DESCRIPTION
25-26	TYPICAL SECTION
165-166	DRAINAGE SUBSUMMARY
180	ROADWAY SUBSUMMARY
222	S.R. 8 PLAN
395-396	CROSS SECTIONS
484	CURB AND UNDERDRAIN PLAN
498	PAVEMENT DETAILS
774	SIGNING AND PAVEMENT MARKING PLAN
864	LIGHTING PLAN

HORIZONTAL SCALE IN FEET
0 10 20 40
CALCULATED
CHECKED

PLAN AND PROFILE - RAMP Q1 STA. 73+00 TO STA. 76+00

SUM-8-0.63

277
1088

CURVE DATA

P.I. STA. = 83+96.07
Δ = 11° 40′ 01″ (LT)
Dc = 4° 00′ 00″
R = 1,432.39′
T = 146.34′
L = 291.68′
E = 7.46′
e_{max} = 0.052

CROSS REFERENCES

SHEET NO.	DESCRIPTION
25-26	TYPICAL SECTION
226,228	S.R. 8 PLAN
342,346	CROSS SECTION
485	CURB AND UNDERDRAIN PLAN
589	PAVEMENT DETAILS
769	SIGNING AND PAVEMENT MARKING PLAN
865	LIGHTING PLAN

HORIZONTAL SCALE IN FEET

CALCULATED
CHECKED

PLAN AND PROFILE - RAMP K1
STA. 82+49.73 TO STA. 86+00

SUM-8-0.63

278
1088

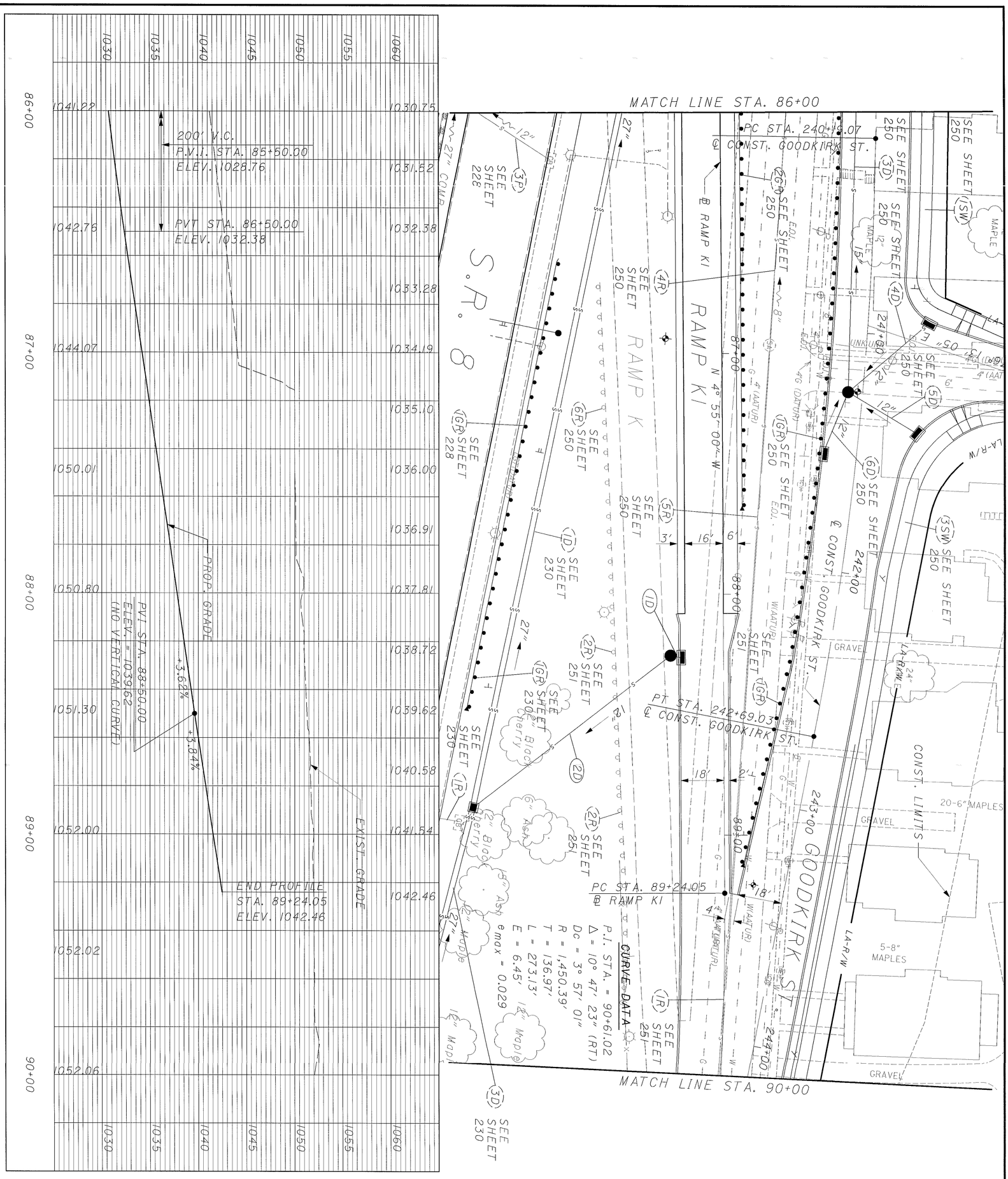

CROSS REFERENCES

SHEET NO.	DESCRIPTION
25-26	TYPICAL SECTION
165-166	DRAINAGE SUBSUMMARY
228,230	S.R. 8 PLAN
250-251	GOODKIRK PLAN AND PROFILE
346-349	CROSS SECTIONS
486	CURB AND UNDERDRAIN PLAN
521-522	PAVEMENT DETAILS
594	PIPE PROFILES 1D & 2D
769-770	SIGNING AND PAVEMENT MARKING PLAN
865-866	LIGHTING PLAN

279
1088

SUM-8-0.63

PLAN AND PROFILE - RAMP K1
STA. 86+00 TO STA. 90+00

CALCULATED
CHECKED

HORIZONTAL SCALE IN FEET

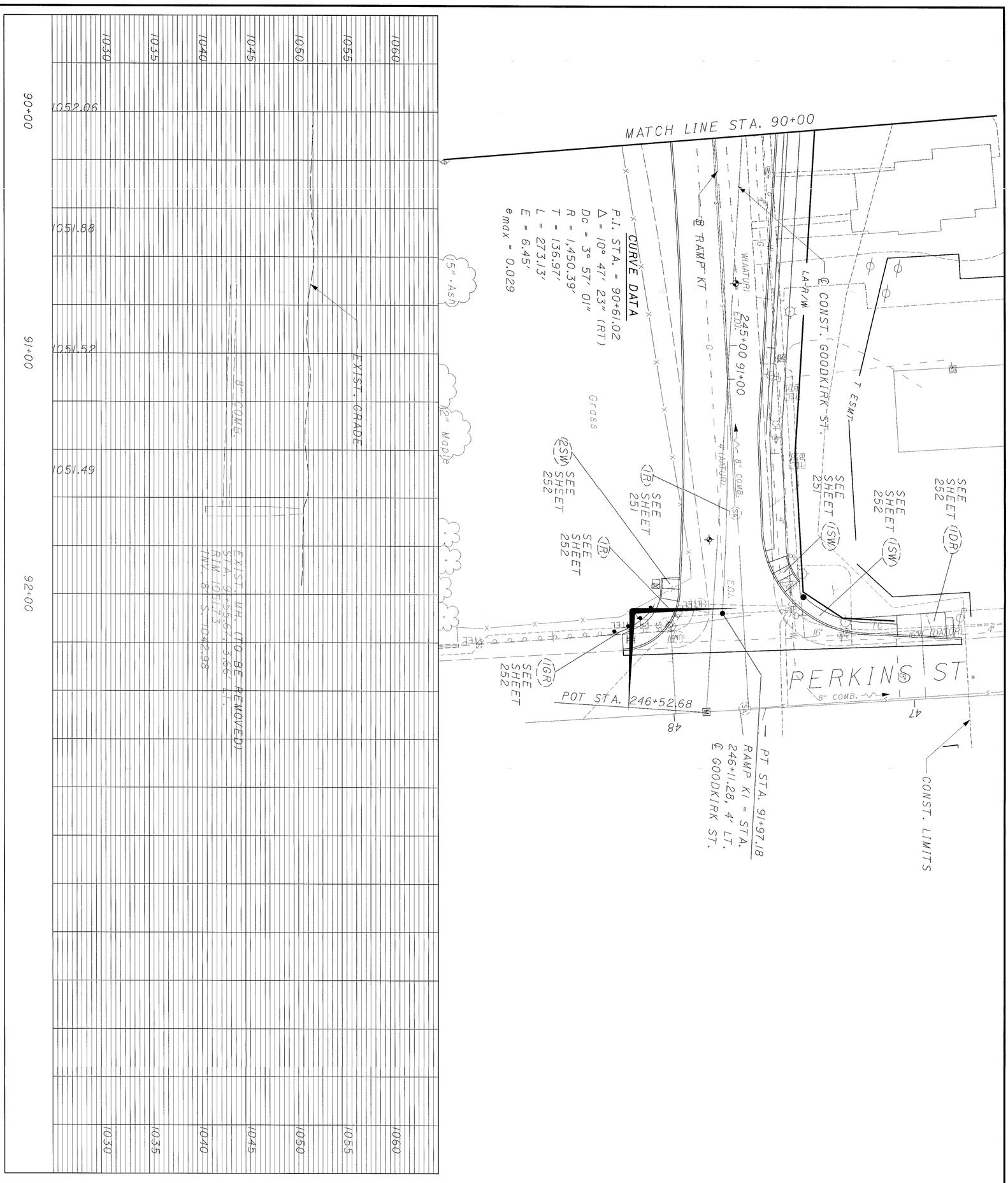

CROSS REFERENCES

SHEET NO.	DESCRIPTION
25-26	TYPICAL SECTION
251-252	GOODKIRK STREET PLAN
349-352	CROSS SECTIONS
463-464	CURB AND UNDERDRAIN PLAN
521-522	PAVEMENT DETAILS
770	SIGNING AND PAVEMENT MARKING PLAN
820	PERKINS STREET SIGNAL
866	LIGHTING PLAN

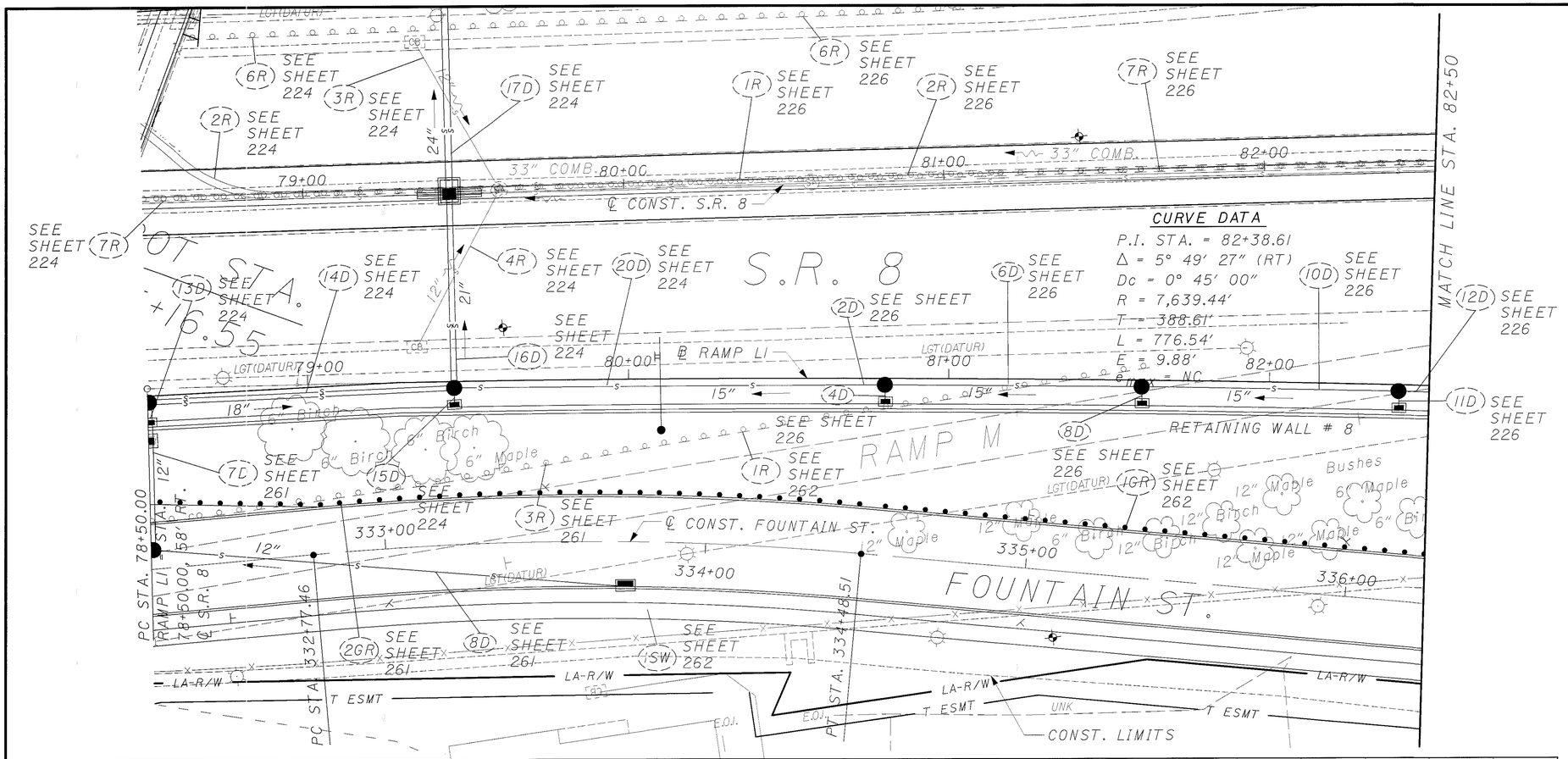

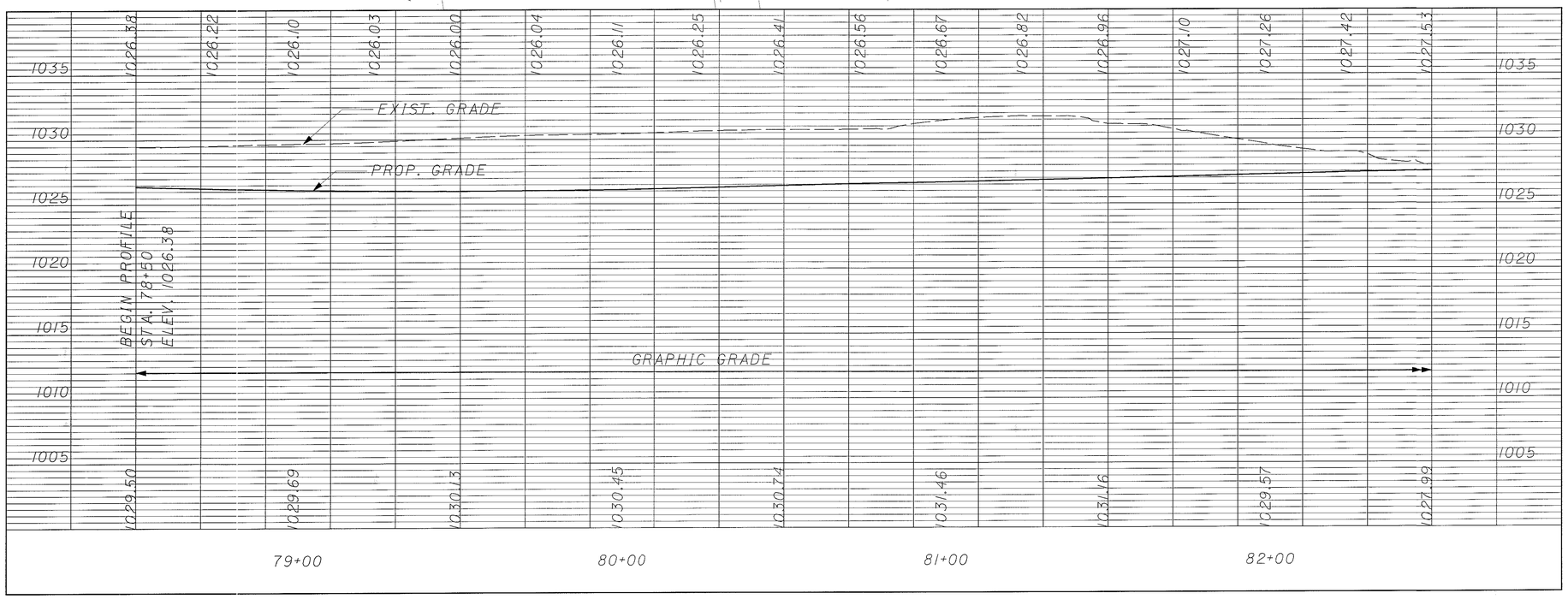

CROSS REFERENCES

SHEET NO.	DESCRIPTION
25-26	TYPICAL SECTION
224,226	S.R. 8 PLAN
399-403	CROSS SECTIONS
443-444	CURB AND UNDERDRAIN PLAN
500	PAVEMENT DETAILS
762	SIGNING AND PAVEMENT MARKING PLAN
865	LIGHTING PLAN

HORIZONTAL SCALE IN FEET
0 10 20 40

CALCULATED
CHECKED

PLAN AND PROFILE - RAMP L1
STA. 78+50 TO STA. 82+50

SUM-8-0.63

281
1088

CROSS REFERENCES

SHEET NO.	DESCRIPTION
25-26	TYPICAL SECTION
226, 228	S.R. 8 PLAN
403-407	CROSS SECTIONS
487	CURB AND UNDERDRAIN PLAN
500	PAVEMENT DETAILS
762	SIGNING AND PAVEMENT MARKING PLAN
865	LIGHTING PLAN

HORIZONTAL SCALE IN FEET
0 10 20 40

CALCULATED
CHECKED

PLAN AND PROFILE - RAMP L1
STA. 82+50 TO STA. 86+50

SUM-8-0.63

282
1084

CROSS REFERENCES

SHEET NO.	DESCRIPTION
25-26	TYPICAL SECTION
165-166	DRAINAGE SUBSUMMARY
228-230	S.R. 8 PLAN
290-291	FOUNTAIN ST. PLAN AND PROFILE
407-411	CROSS SECTIONS
409	PIPE PROFILE 3D
488	CURB AND UNDERDRAIN PLAN
541-542	PAVEMENT DETAILS
592	PIPE PROFILES ID & 2D
762,776	SIGNING AND PAVEMENT MARKING PLAN
865-866	LIGHTING PLAN

HORIZONTAL SCALE IN FEET
0 10 20 40

CALCULATED
CHECKED

PLAN AND PROFILE - RAMP L1
STA. 86+50 TO STA. 90+50

SUM-8-0.63

283
1088

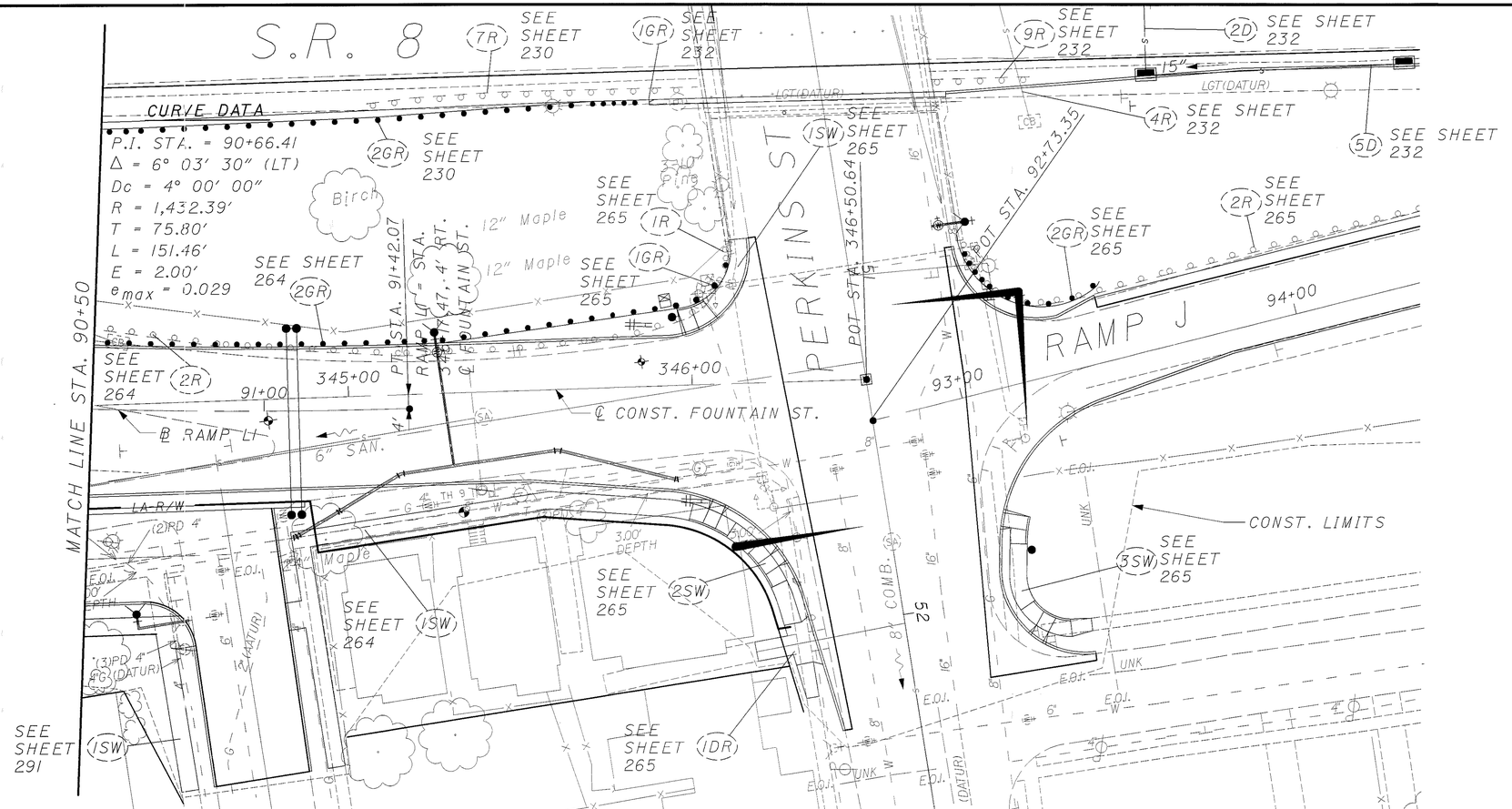

CROSS REFERENCES

SHEET NO.	DESCRIPTION
26	TYPICAL SECTION
264-265	FOUNTAIN ST. PLAN
411-413	CROSS SECTIONS
476-477	CURB AND UNDERDRAIN PLAN
541-542	PAVEMENT DETAILS
700	WATERWORK PLAN
776	SIGNING AND PAVEMENT MARKING PLAN
866	LIGHTING PLAN

HORIZONTAL SCALE IN FEET
0 10 20 40

CALCULATED

CHECKED

PLAN AND PROFILE - RAMP L1
STA. 90+50 TO STA. 91+42.07

SUM-8-0.63

284
1088

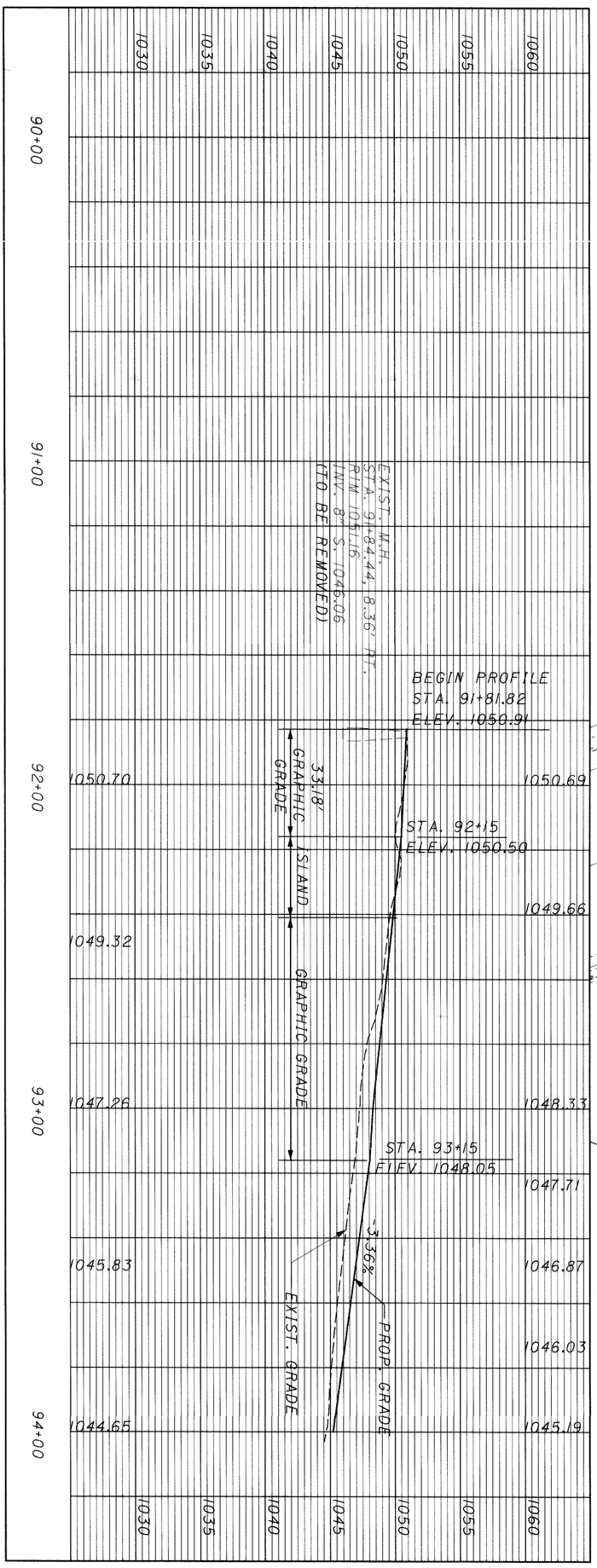

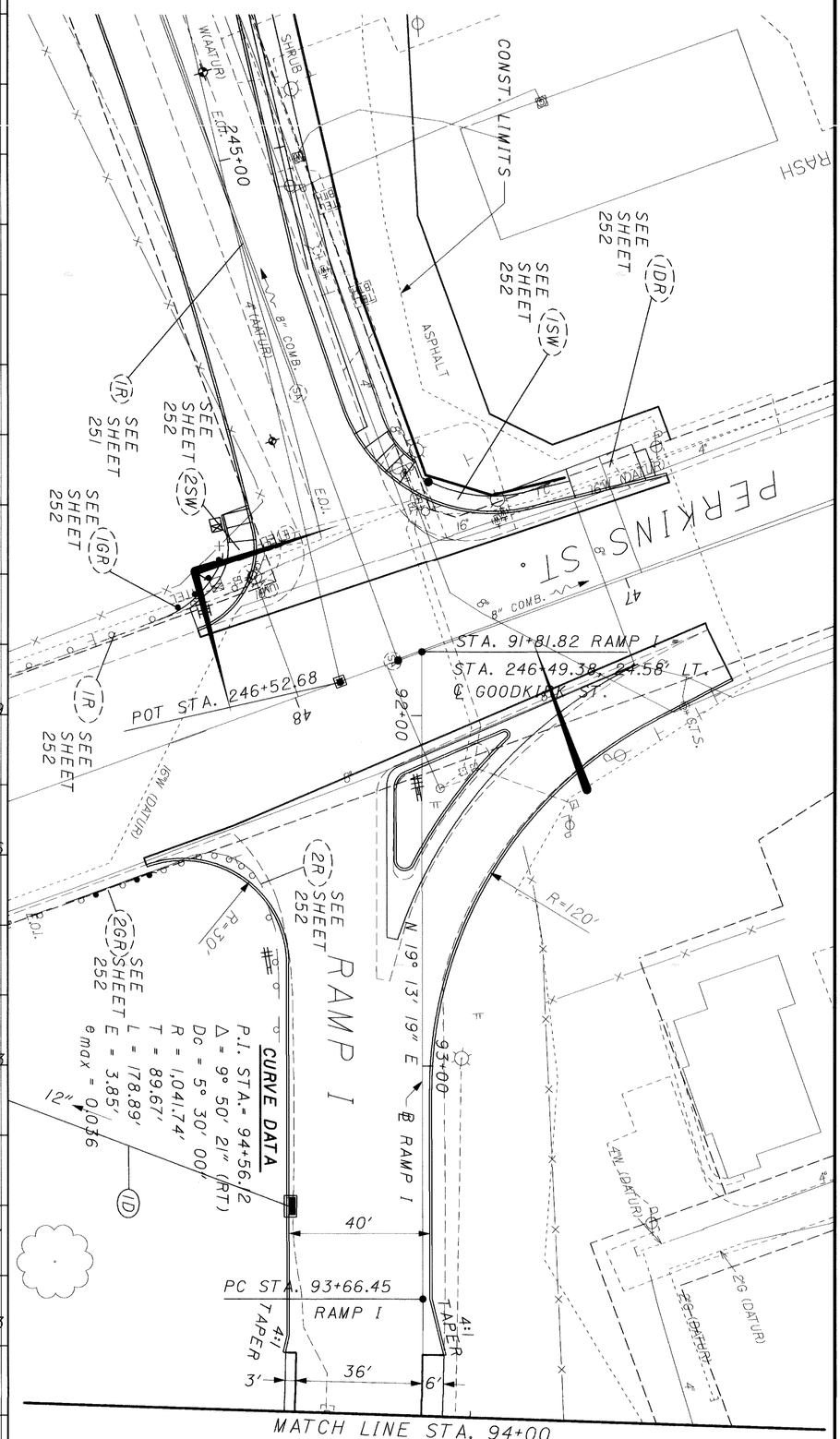

CROSS REFERENCES	
SHEET NO.	DESCRIPTION
25	TYPICAL SECTION
251-252	GOODKIRK PLAN
350-353	CROSS SECTIONS
489	CURB AND UNDERDRAIN PLAN
523-524	PAVEMENT DETAILS
594	PIPE PROFILE ID
770	SIGNING AND PAVEMENT MARKING PLAN
808	PERKINS ST. SIGNAL
866	LIGHTING PLAN
1003	PERKINS ST. BRIDGE SITE PLAN

REVISIONS: 05/15/2002 by MAM

REVISIONS: 05/15/2002 by MAM

285
1088

SUM-8-0.63

PLAN AND PROFILE - RAMP I
STA. 91+82.06 TO STA. 94+00

CALCULATED

CHECKED

0 20
10 40
HORIZONTAL SCALE IN FEET

N

CURVE DATA
P.I. STA.= 94+56.12
Δ = 9° 50' 21" (RT)
Dc = 5° 30' 00"
R = 1,041.74'
T = 89.67'
L = 178.89'
E = 3.85'
emax = 0.036

CURVE DATA
P.I. STA.= 98+15.76
Δ = 11° 29' 45" (LT)
Dc = 3° 30' 00"
R = 1,637.02'
T = 164.78'
L = 328.46'
E = 8.27'
emax = 0.038 (NDC 01048)

MATCH LINE STA. 94+00

MATCH LINE STA. 98+00

RAMP I

℄ RAMP I

CONST. LIMITS

EXIST. 8" SAN

BULKHEAD

(TO BE ABAN.)

(TO BE ABANDONED)

BULKHEAD

BULKHEAD

PT STA. 95+45.35

PC STA. 96+50.98

BEGIN SHDR TAPER STA. 96+76.15

END SHDR TAPER STA. 97+26.34

BEGIN TAPER STA. 94+85.14

END TAPER STA. 95+37.16

BEGIN TAPER STA. 96+01.32

END TAPER STA. 96+50.98

95+00

97+00

N 29° 03' 40" E

LGT(DATUR)

SEE SHEET 232

SEE SHEET 234

S.R. 8

(TO BE ABANDONED)

CROSS REFERENCES	
SHEET NO.	DESCRIPTION
25-26	TYPICAL SECTION
165-166	DRAINAGE SUBSUMMARY
174	GUARDRAIL SUBSUMMARY
180	ROADWAY SUBSUMMARY
182	SANITARY SUBSUMMARY
232, 234	S.R. 8 PLAN
353-357	CROSS SECTIONS
490	CURB AND UNDERDRAIN PLAN
501	PAVEMENT DETAILS
355	PIPE PROFILE 2D
595	PIPE PROFILE ID, 3D, & 4D
596	PIPE PROFILE IS
770	SIGNING AND PAVEMENT MARKING PLAN
866	LIGHTING PLAN

1050 1045 1040 1035 1030 1025 1020

1045.19 1044.35 1043.51 1042.67 1041.83 1041.07 1040.41 1039.86 1039.41 1039.07 1038.84 1038.71 1038.69 1038.78 1038.84 1038.86 1038.88

1044.65 1043.29 1041.94 1040.41 1039.08 1038.06 1036.99 1036.72

PROP. GRADE

EXIST. GRADE

GRAPHIC GRADE

PVC STA. 94+95
ELEV. 1042.00

-3.36%

+0.56%

230' V.C.

P.V.I. STA. 96+10.00 ELEV. = 1038.14

PVT STA. 97+25
ELEV. 1038.78

EXIST. C.B.
STA. 95+75.40, 26.67' RT
RIM 1040.01
INV. 12", S.E. 1037.56
INV. 12", W. 1036.11
(TO BE REMOVED)

EXIST. C.B.
STA. 97+43.77, 7.15' LT.
RIM 1037.40
INV. 12", W. 1030.85
INV. 12", S.E. 1030.85
(TO BE REMOVED)

94+00 95+00 96+00 97+00

HORIZONTAL SCALE IN FEET
0 10 20 40

CALCULATED

CHECKED

PLAN AND PROFILE - RAMP I
STA. 94+00 TO STA. 98+00

SUM-8-0.63

286
1088

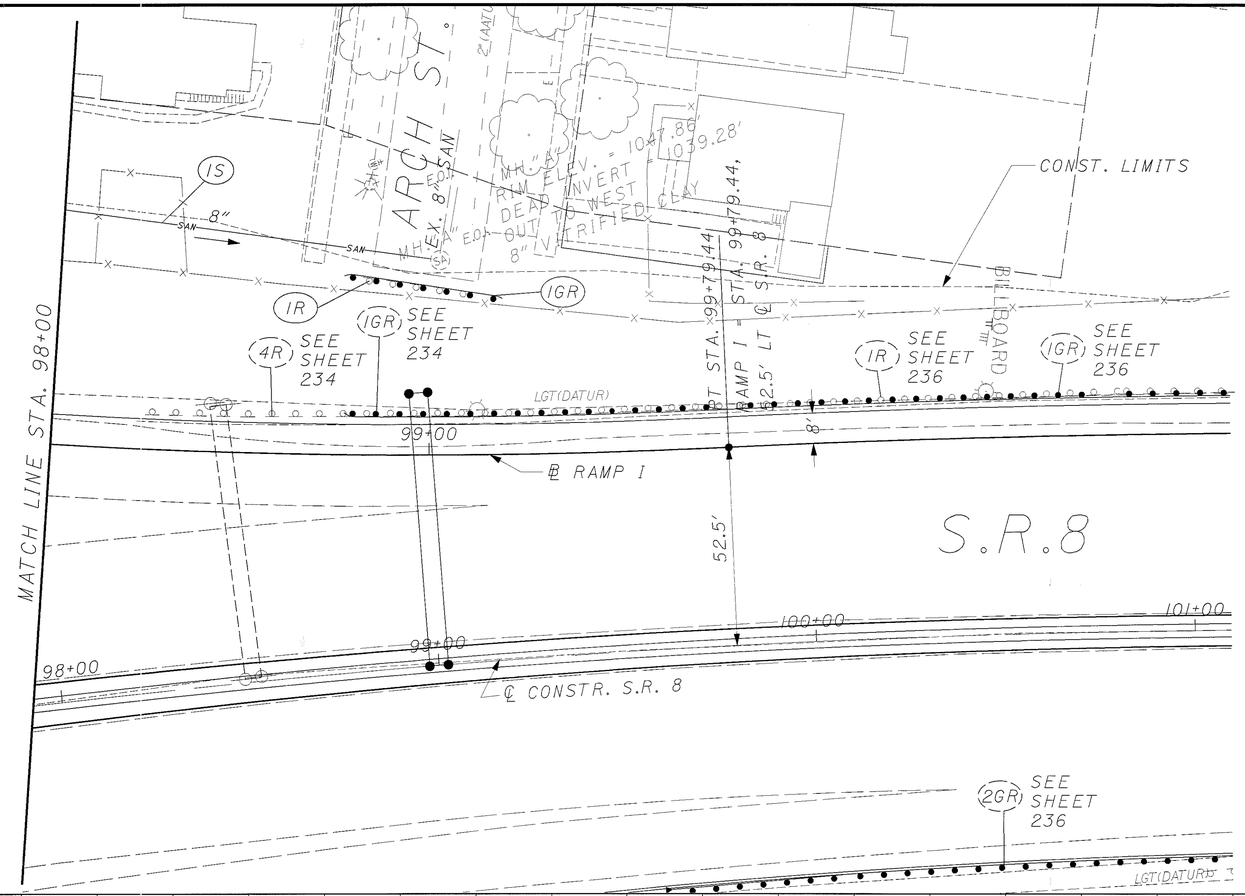

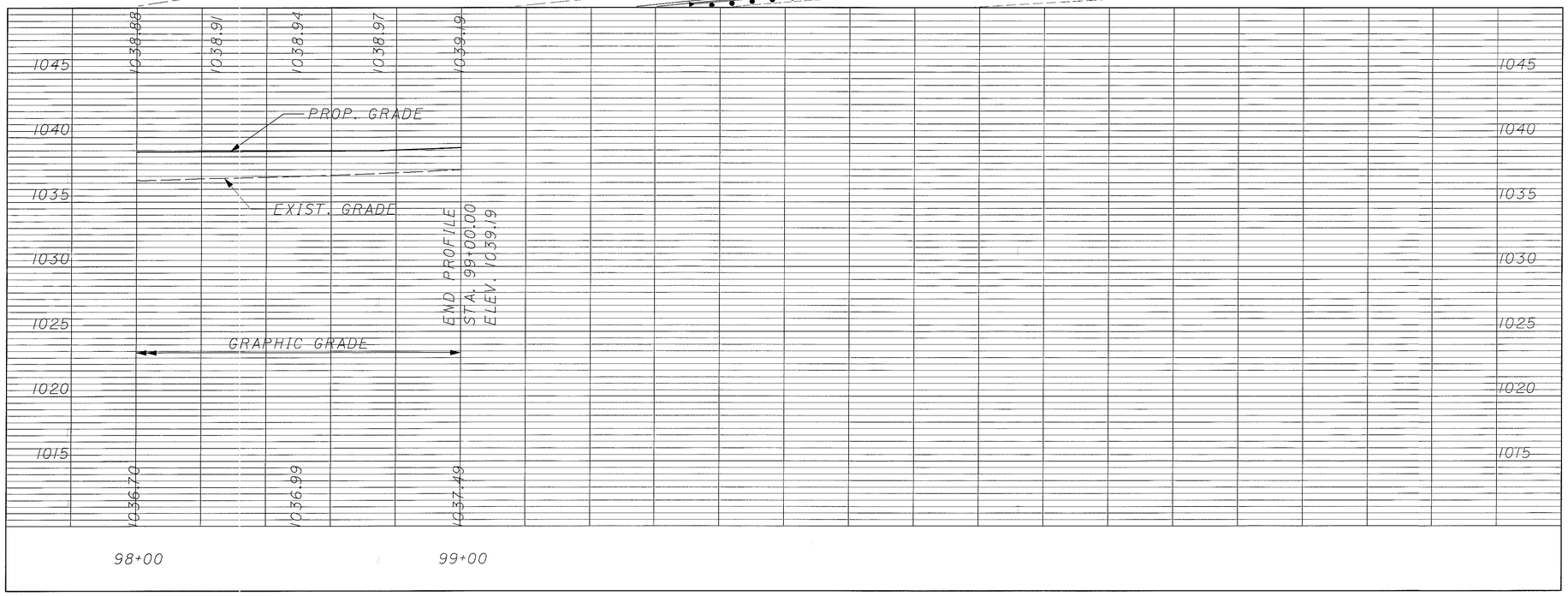

CURVE DATA

P.I. STA. = 98+15.76
Δ = 11° 29′ 45″ (LT)
Dc = 3° 30′ 00″
R = 1,637.02′
T = 164.78′
L = 328.46′
E = 8.27′
e_{max} = 0.038 (NDC 0.048)

CROSS REFERENCES

SHEET NO.	DESCRIPTION
26	TYPICAL SECTION
174	GUARDRAIL SUBSUMMARY
182	SANITARY SUBSUMMARY
234,236	S.R. 8 PLAN
357-358	CROSS SECTIONS
448-449	CURB AND UNDERDRAIN PLAN
501	PAVEMENT DETAILS
596	PIPE PROFILES IS
770	SIGNING AND PAVEMENT MARKING PLAN
867	LIGHTING PLAN

N

0 10 20 40 HORIZONTAL SCALE IN FEET

CALCULATED | CHECKED

PLAN AND PROFILE - RAMP I
STA 98+00 TO STA. 99+79.44

SUM-8-0.63

287
1088

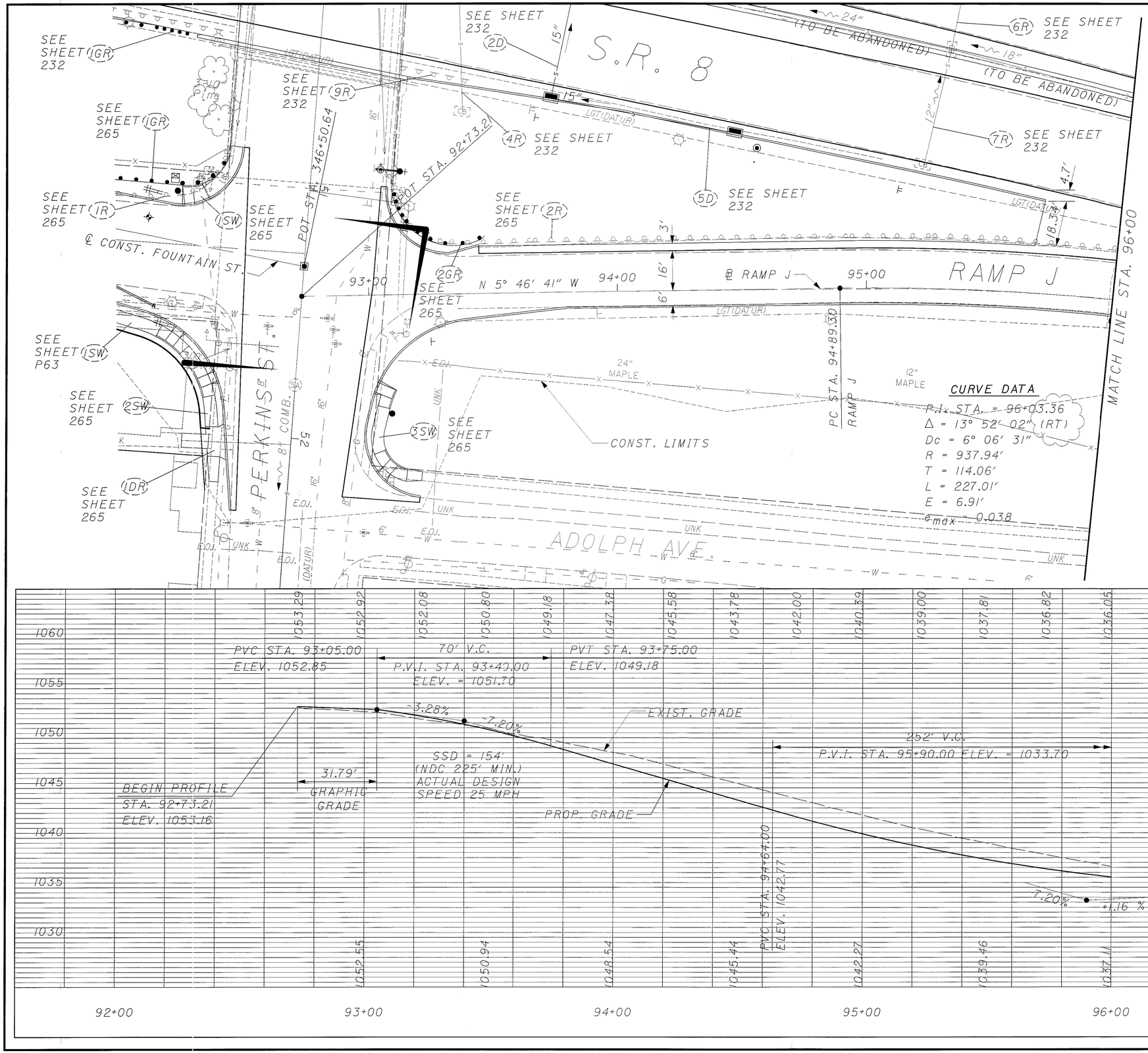

CROSS REFERENCES

SHEET NO.	DESCRIPTION
25-26	TYPICAL SECTION
232	S.R. 8 PLAN
413-416	CROSS SECTIONS
491	CURB AND UNDERDRAIN PLAN
543-544	PAVEMENT DETAILS
763	SIGNING AND PAVEMENT MARKING PLAN
808	PERKINS ST. SIGNAL
866	LIGHTING PLAN
1003	PERKINS ST. BRIDGE SITE PLAN

HORIZONTAL SCALE IN FEET
0 10 20 40

CALCULATED

CHECKED

PLAN AND PROFILE - RAMP J
STA. 92+00 TO STA. 96+00

SUM-8-0.63

288
1088

CROSS REFERENCES

SHEET NO.	DESCRIPTION
25-26	TYPICAL SECTION
234	S.R. 8 PLAN
416-417	CROSS SECTIONS
492	CURB AND UNDERDRAIN PLAN
501	PAVEMENT DETAILS
763-764	SIGNING AND PAVEMENT MARKING PLAN
866	LIGHTING PLAN

N

0 10 20 40
HORIZONTAL SCALE IN FEET

CALCULATED | CHECKED

PLAN AND PROFILE - RAMP J
STA. 96+00 TO STA. 98+50

SUM-8-06.3

289
1088

PLAN AND PROFILE - OHIO ST. STA. 500+00 TO STA. 503+00

SUM-8-0.63

290
1088

CALCULATED

CHECKED

HORIZONTAL SCALE IN FEET
0 10 20 40

CROSS REFERENCES

SHEET NO.	DESCRIPTION
28	TYPICAL SECTION
167	DRIVEWAY SUBSUMMARY
185	WALK SUBSUMMARY
263-264	FOUNTAIN ST. PLAN AND PROFILE
408-409	CROSS SECTIONS
475-476	CURB AND UNDERDRAIN PLAN
539-542	PAVEMENT DETAILS
565	DRIVEWAY PROFILES
610	RETAINING WALL #2 SITE PLAN
686-689	WATER SUBSUMMARY
775-776	SIGNING AND PAVEMENT MARKING PLAN
865	LIGHTING PLAN

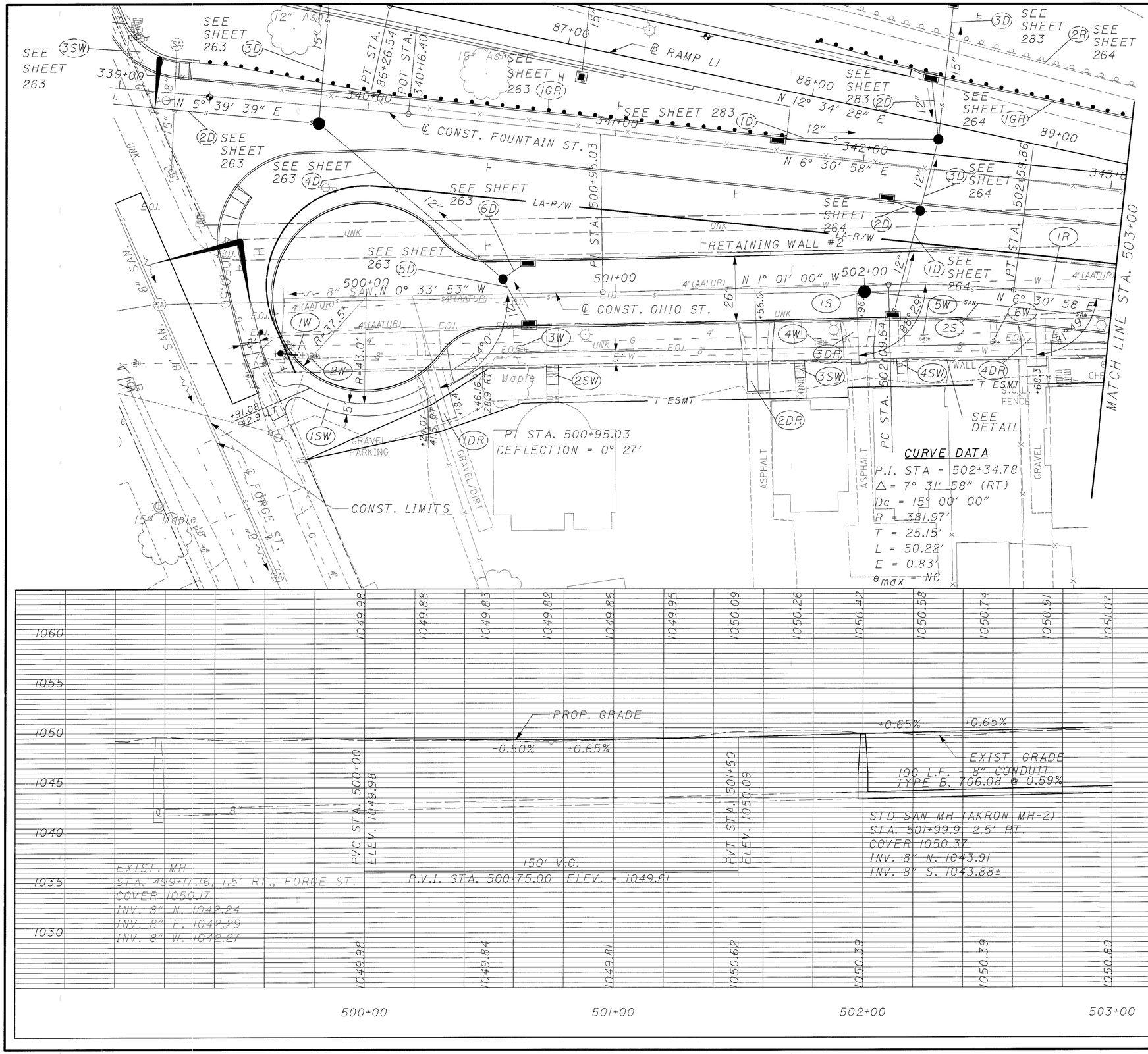

EXISTING WALL DETAIL
STA. 502+00 TO STA. 502+36

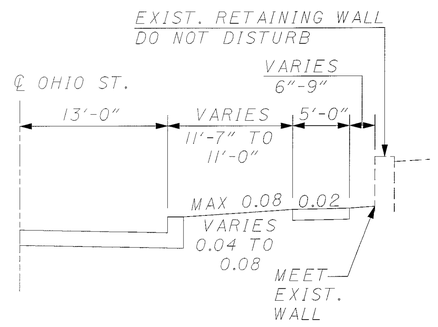

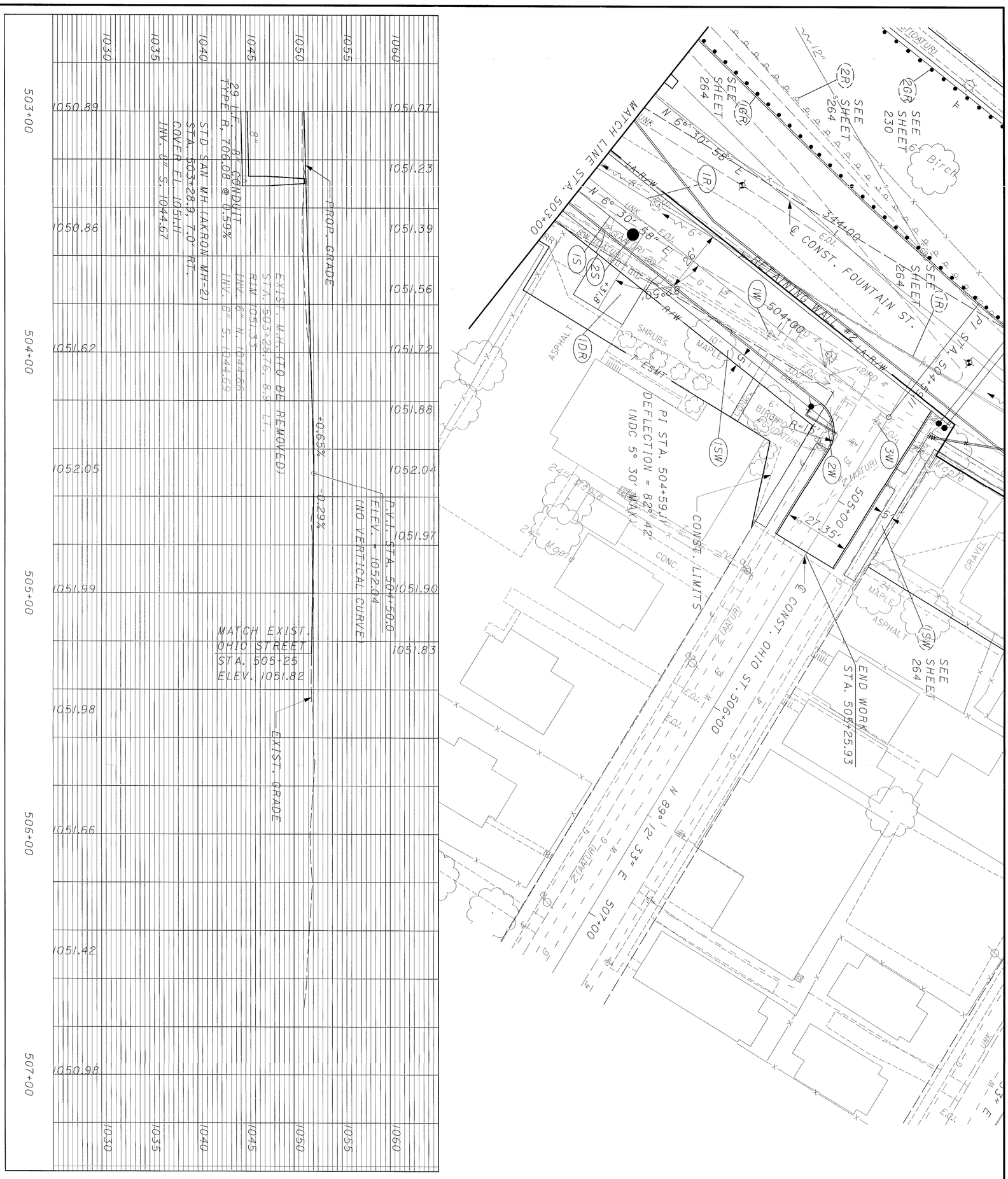

CROSS REFERENCES	
SHEET NO.	DESCRIPTION
28	TYPICAL SECTION
167	DRIVEWAY SUBSUMMARY
185	WALK SUBSUMMARY
264	FOUNTAIN ST. PLAN AND PROFILE
410-411	CROSS SECTIONS
476	CURB AND UNDERDRAIN PLAN
541-542	PAVEMENT DETAILS
565	DRIVEWAY PROFILES
610	RETAINING WALL #2 SITE PLAN
686-689	WATER SUBSUMMARY
776	SIGNING AND PAVEMENT MARKING PLAN
866	LIGHTING PLAN

291 / 1088	SUM-8-0.63	PLAN AND PROFILE - OHIO ST. STA. 503+00 TO STA. 507+00	CALCULATED / CHECKED	0 20 10 40 HORIZONTAL SCALE IN FEET

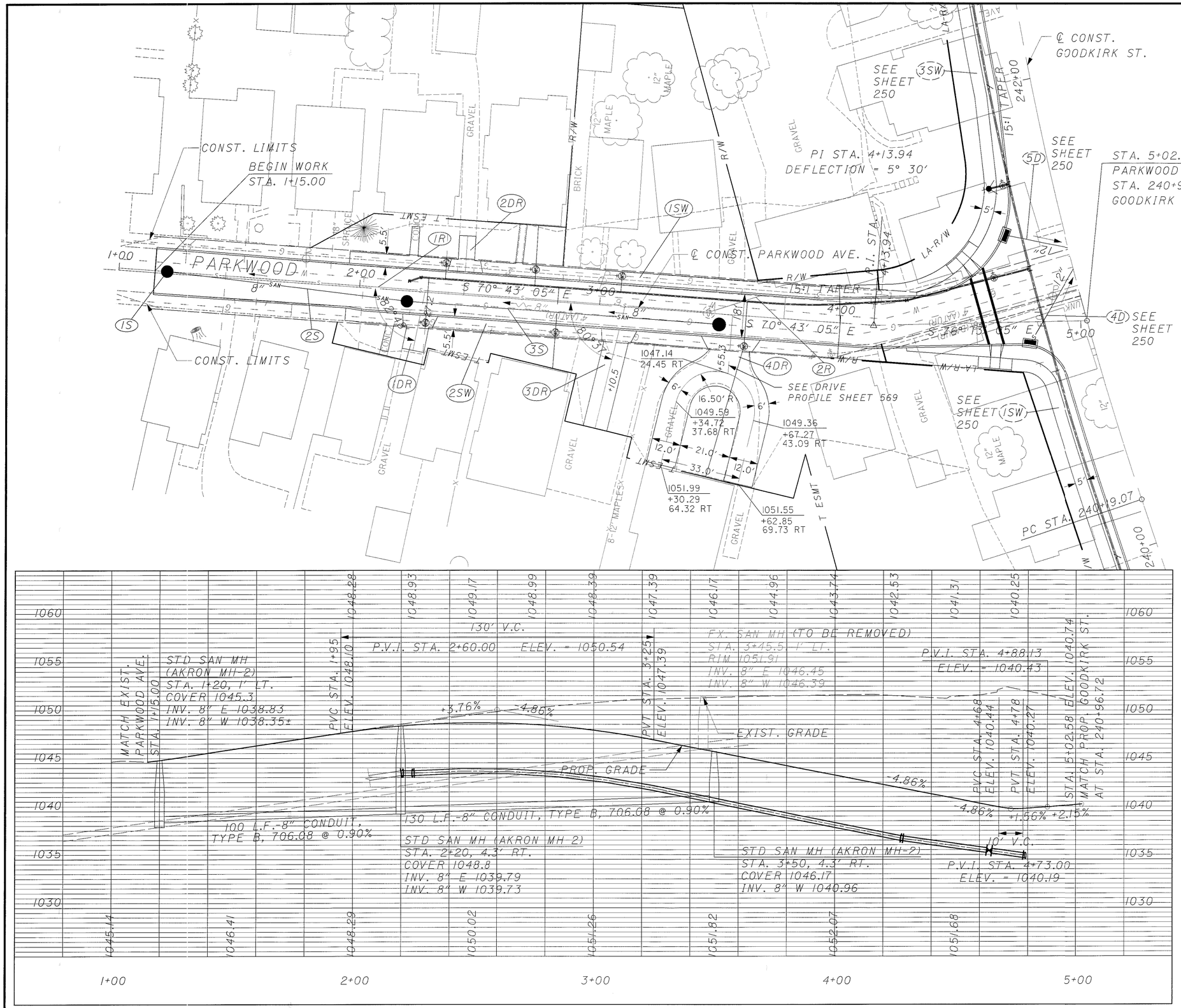

CROSS REFERENCES

SHEET NO.	DESCRIPTION
28	TYPICAL SECTION
167	DRIVEWAY SUBSUMMARY
180	ROADWAY SUBSUMMARY
182	SANITARY SUBSUMMARY
185	WALK SUBSUMMARY
250	GOODKIRK ST. PLAN AND PROFILE
421-431	CROSS SECTIONS
493	CURB AND UNDERDRAIN PLAN
521-522	PAVEMENT DETAILS
569	DRIVEWAY PROFILES
770	SIGNING AND PAVEMENT MARKING PLAN

HORIZONTAL SCALE IN FEET 0 10 20 40

CALCULATED

CHECKED

PLAN AND PROFILE - PARKWOOD AVE.
STA. 1+00 TO STA. 5+02.58

SUM-8-0.63

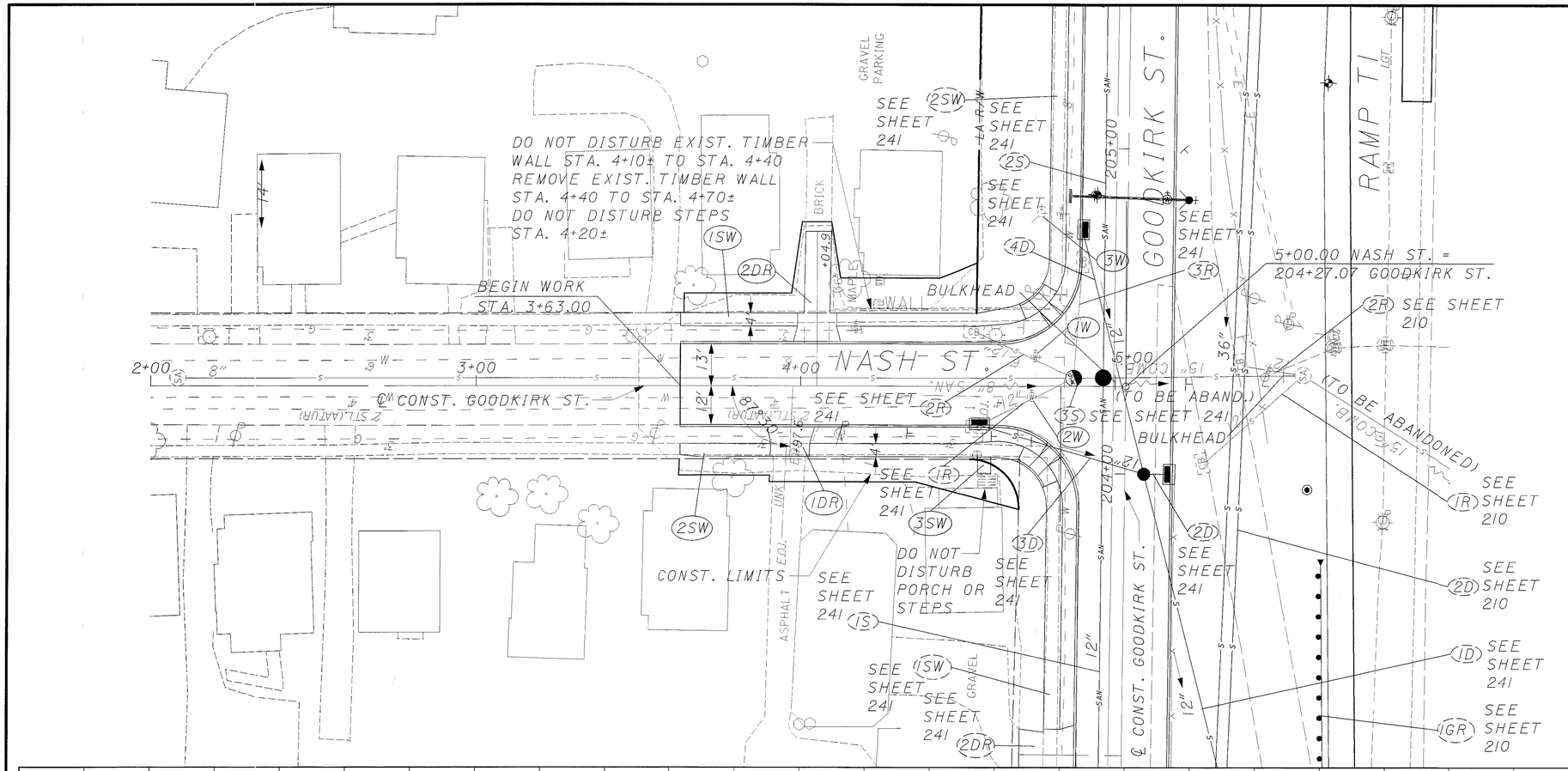

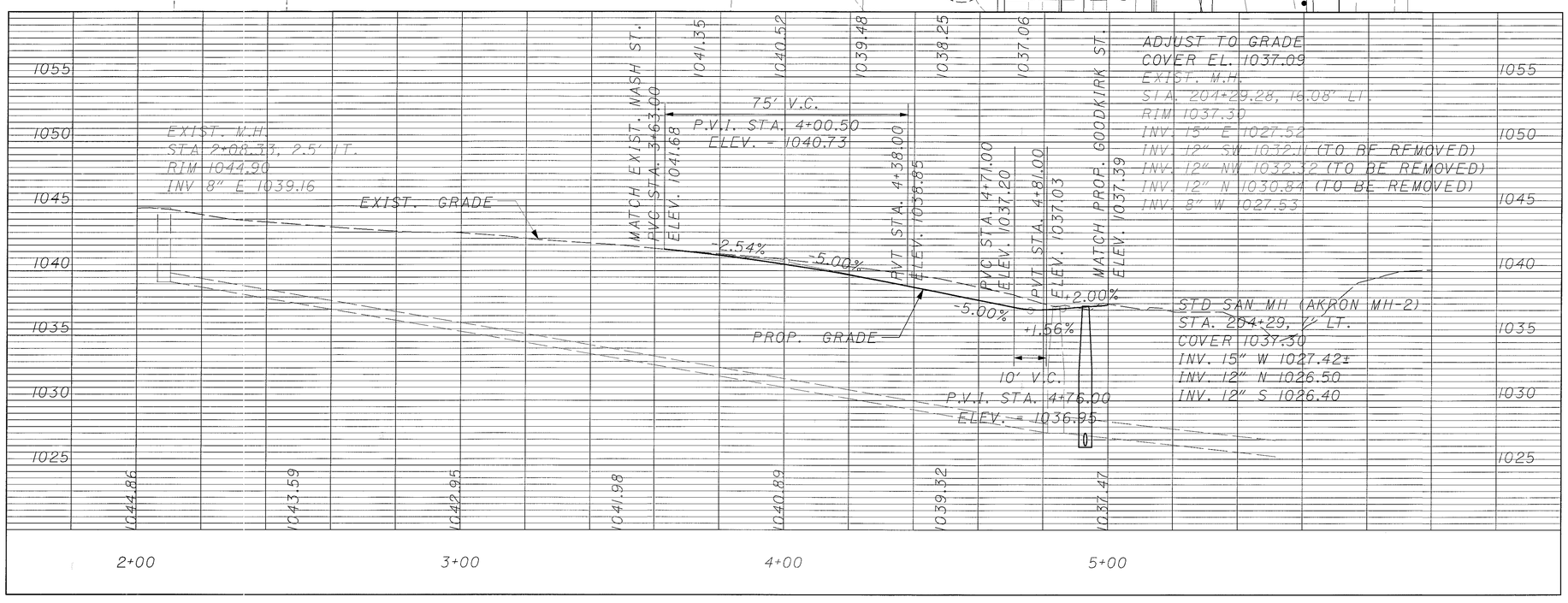

CROSS REFERENCES

SHEET NO.	DESCRIPTION
29	TYPICAL SECTION
167	DRIVEWAY SUBSUMMARY
185	WALK SUBSUMMARY
241	GOODKIRK ST. PLAN
453	CURB AND UNDERDRAIN PLAN
505-506	PAVEMENT DETAILS
566	DRIVEWAY PROFILES
686-689	WATER SUBSUMMARY
765	SIGNING AND PAVEMENT MARKING PLAN
861	LIGHTING PLAN

EARTHWORK SUMMARY

ITEM 203 - EXCAVATION NOT INCLUDING EMBANKMENT CONSTRUCTION: 162 CU. YD.

ITEM 203 - EMBANKMENT: 1 CU. YD.

ITEM 870 - SEEDING AND MULCHING: 256 SQ. YD.

QUANTITIES CARRIED TO SHEET 168

N

HORIZONTAL SCALE IN FEET 0 10 20 40

CALCULATED

CHECKED

PLAN AND PROFILE - NASH ST. (WEST) STA. 2+00 TO STA. 5+00

SUM-8-0.63

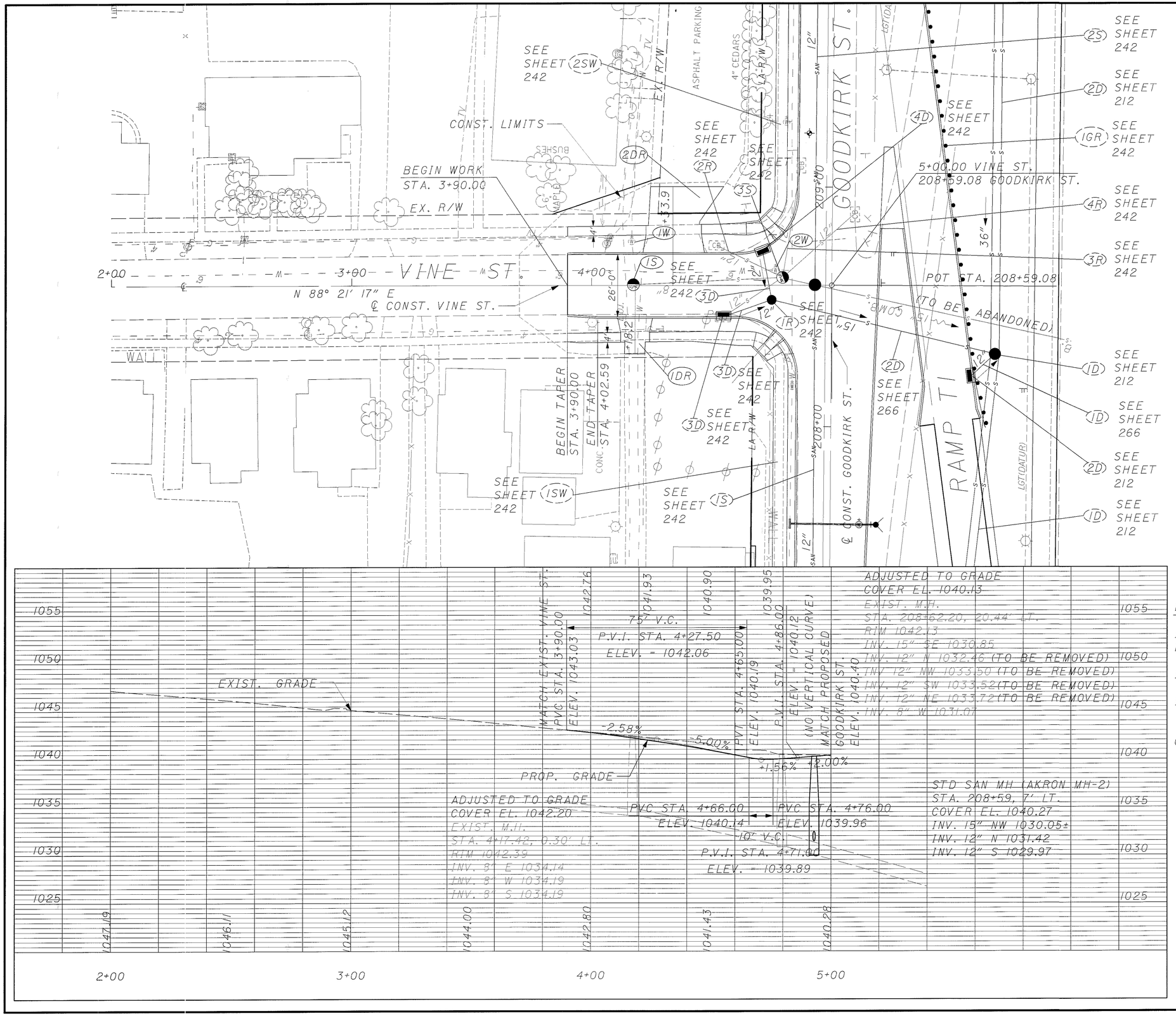

CROSS REFERENCES

SHEET NO.	DESCRIPTION
29	TYPICAL SECTION
167	DRIVEWAY SUBSUMMARY
182	SANITARY SUBSUMMARY
242	GOODKIRK ST. PLAN AND PROFILE
454	CURB AND UNDERDRAIN PLAN
507-508	PAVEMENT DETAILS
567	DRIVEWAY PROFILES
686-689	WATER SUBSUMMARY
766	SIGNING AND PAVEMENT MARKING PLAN
862	LIGHTING PLAN

HORIZONTAL SCALE IN FEET
0 10 20 40

CALCULATED
CHECKED

PLAN AND PROFILE - VINE ST. STA. 2+00.00 TO STA. 5+00.00

EARTHWORK SUMMARY

ITEM 203 - EXCAVATION NOT INCLUDING EMBANKMENT CONSTRUCTION: 107 CU. YD.

ITEM 203 - EMBANKMENT: 15 CU. YD.

ITEM 870 - SEEDING AND MULCHING: 228 SQ. YD.

QUANTITIES CARRIED TO SHEET 168

SUM-8-0.63

294
1088

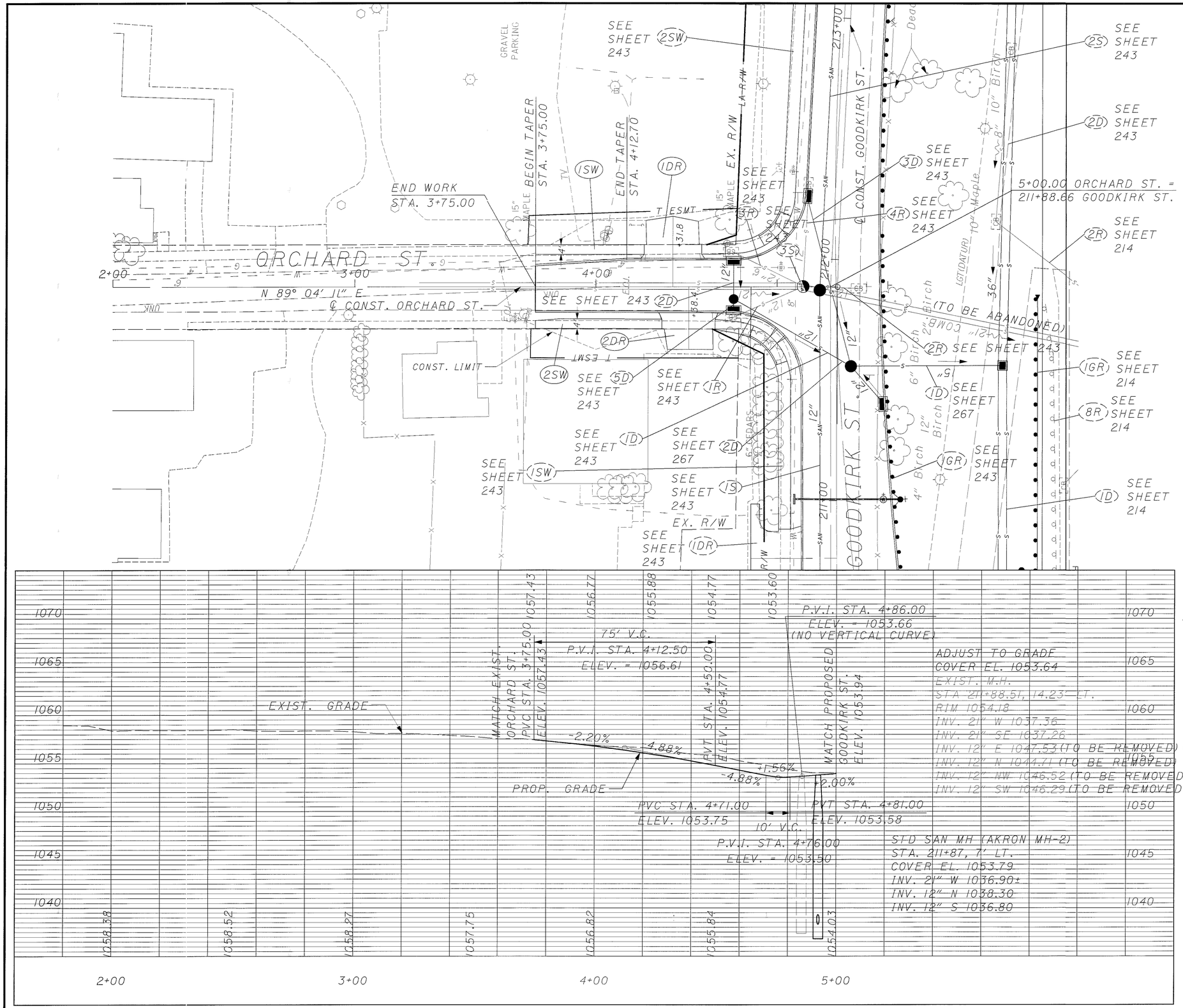

CROSS REFERENCES

SHEET NO.	DESCRIPTION
29	TYPICAL SECTION
167	DRIVEWAY SUBSUMMARY
185	WALK SUBSUMMARY
243	GOODKIRK ST. PLAN
455	CURB AND UNDERDRAIN PLAN
509-510	PAVEMENT DETAILS
568	DRIVEWAY PROFILES
766	SIGNING AND PAVEMENT MARKING PLAN
862	LIGHTING PLAN

HORIZONTAL SCALE IN FEET
0 10 20 40

CALCULATED
CHECKED

EARTHWORK SUMMARY

ITEM 203 - EXCAVATION NOT INCLUDING EMBANKMENT CONSTRUCTION: 137 CU. YD.

ITEM 203 - EMBANKMENT: 9 CU. YD.

ITEM 870 - SEEDING AND MULCHING: 220 SQ. YD.

QUANTITIES CARRIED TO SHEET 168

PLAN AND PROFILE - ORCHARD ST. STA. 2+00.00 TO 5+00.00

SUM-8-0.63

CROSS REFERENCES

SHEET NO.	DESCRIPTION
29	TYPICAL SECTION
167	DRIVEWAY SUBSUMMARY
251	FOUNTAIN ST. PLAN AND PROFILE
466	CURB AND UNDERDRAIN PLAN
527-528	PAVEMENT DETAILS
566	DRIVE PROFILES
771	SIGNING AND PAVEMENT MARKING PLAN
861	LIGHTING PLAN

EARTHWORK SUMMARY

ITEM 203 - EXCAVATION NOT INCLUDING EMBANKMENT CONSTRUCTION: 84 CU. YD.

ITEM 203 - EMBANKMENT: 5 CU. YD.

ITEM 870 - SEEDING AND MULCHING: 178 SQ. YD.

QUANTITIES CARRIED TO SHEET 168

HORIZONTAL SCALE IN FEET
0 10 20 40

CALCULATED

CHECKED

PLAN AND PROFILE NASH ST. (EAST) STA. 7+97.00 TO STA. 11+00.00

SUM-8-0.63

296
1088

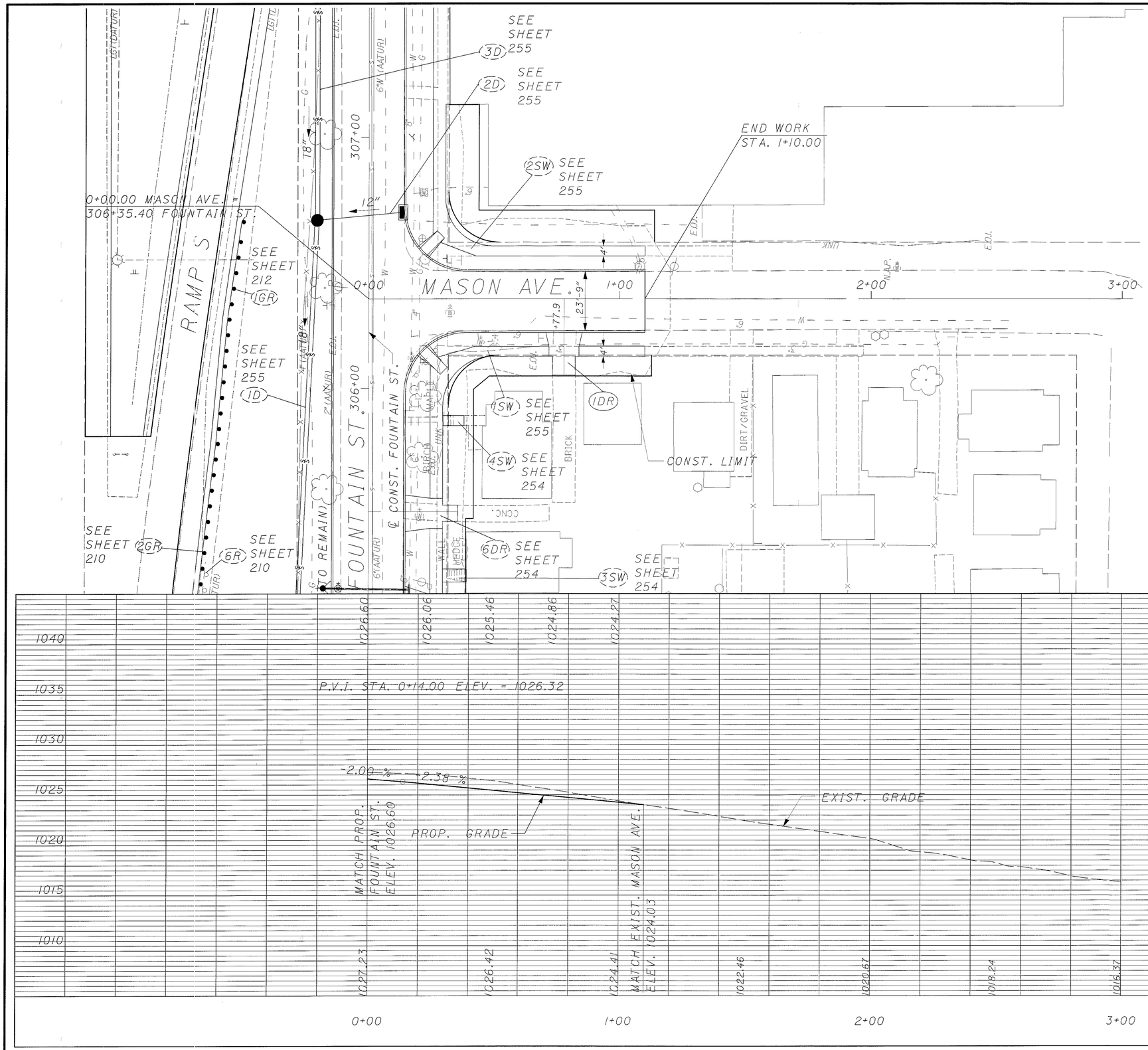

CROSS REFERENCES

SHEET NO.	DESCRIPTION
29	TYPICAL SECTION
167	DRIVEWAY SUBSUMMARY
254-255	FOUNTAIN ST. PLAN AND PROFILE
467	CURB AND UNDERDRAIN PLAN
527-528	PAVEMENT DETAILS
567	DRIVEWAY PROFILES
772	SIGNING AND PAVEMENT MARKING PLAN
861	LIGHTING PLAN

EARTHWORK SUMMARY

ITEM 203 - EXCAVATION NOT INCLUDING EMBANKMENT CONSTRUCTION: 117 CU. YD.

ITEM 203 - EMBANKMENT: 4 CU. YD.

ITEM 870 - SEEDING AND MULCHING: 237 SQ. YD.

QUANTITIES CARRIED TO SHEET 168

N

0 10 20 40 HORIZONTAL SCALE IN FEET

CALCULATED | CHECKED

PLAN AND PROFILE - MASON AVE. STA. 0+00.00 TO STA. 3+00.00

SUM-8-0.63

297
1088

FOR EARTHWORK AND SEEDING & MULCHING SUBSUMMARY
SEE SHEET 168

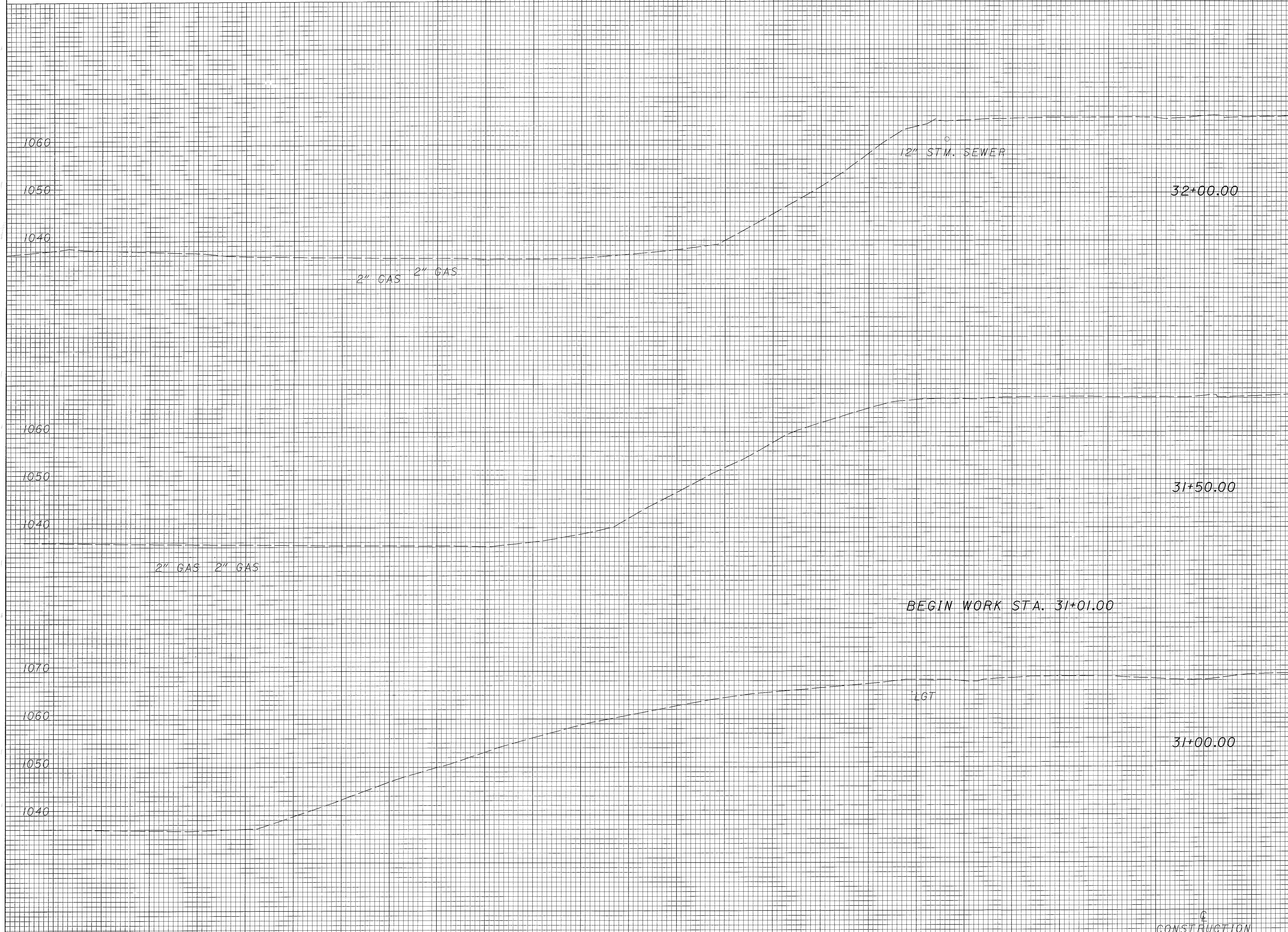

Station	SEEDING END WIDTH	SEEDING SQ. YDS.	END AREA CUT	END AREA FILL	VOLUME CUT	VOLUME FILL
32+00.00	0		0	0		
		0			0	0
31+50.00	0		0	0		
		0			0	0
31+00.00	0		0	0		
SHEET TOTAL		0			0	0

CALCULATED JE CHECKED KMM

CROSS SECTIONS - S.R. 8 LT.
STA. 31+00 TO STA. 32+00

SUM-8-0.63

FOR EARTHWORK AND SEEDING & MULCHING SUBSUMMARY SEE SHEET 168

SEEDING END WIDTH	SEEDING SQ. YDS.
85	
	200
59	
	82
0	
	0
	282

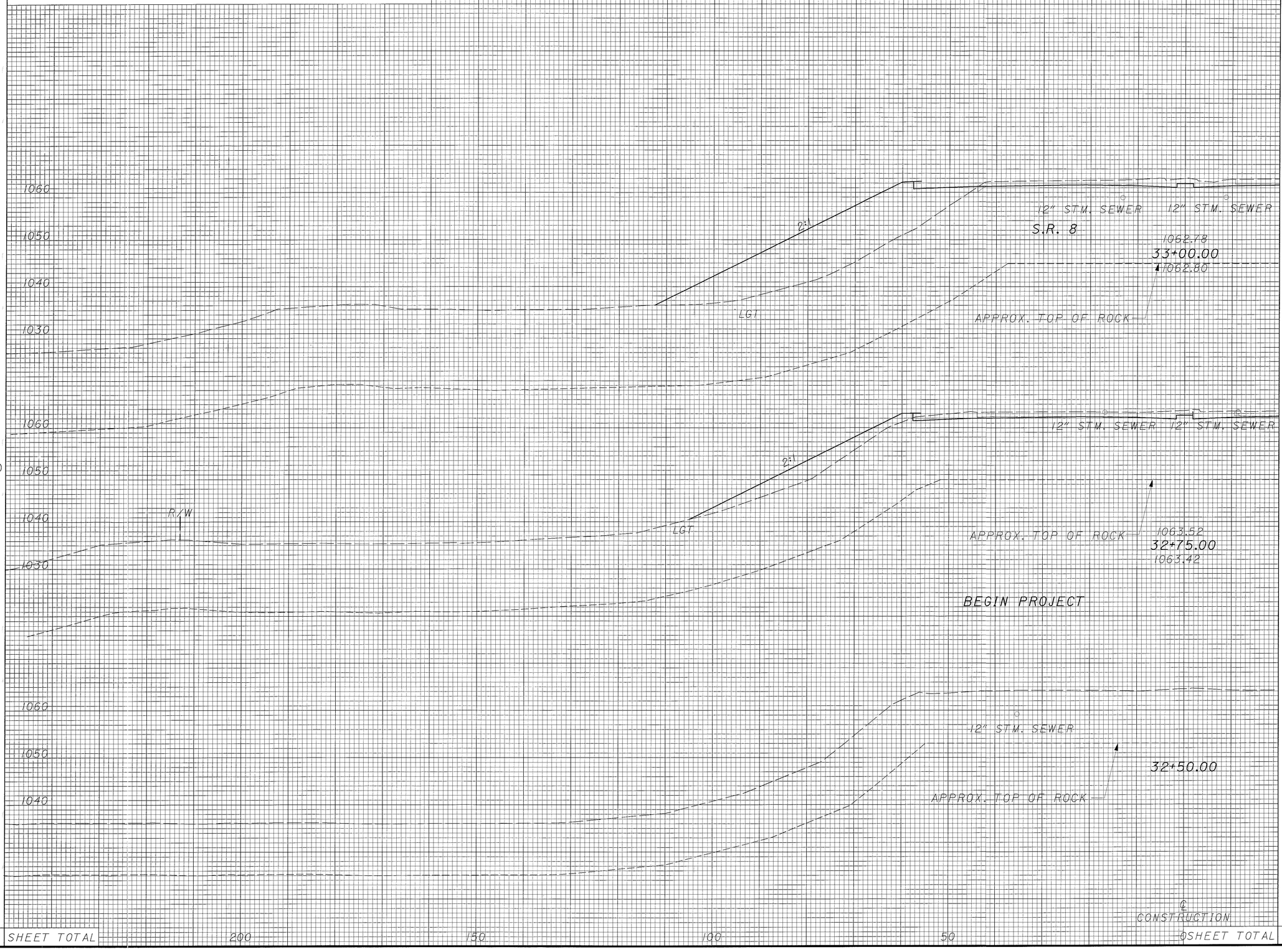

END AREA CUT	END AREA FILL	VOLUME CUT	VOLUME FILL
27	533		
		28	301
34	118		
		16	55
0	0		
		0	0
		44	356

CALCULATED JE
CHECKED KMM

CROSS SECTIONS - S.R. 8 LT.
STA. 32+50 TO STA. 33+00

SUM-8-0.63

299
1088

SEEDING	
END WIDTH	SQ. YDS.
0	
	0
0	
	0
0	
	236
	236

FOR EARTHWORK AND SEEDING & MULCHING SUBSUMMARY
SEE SHEET 168

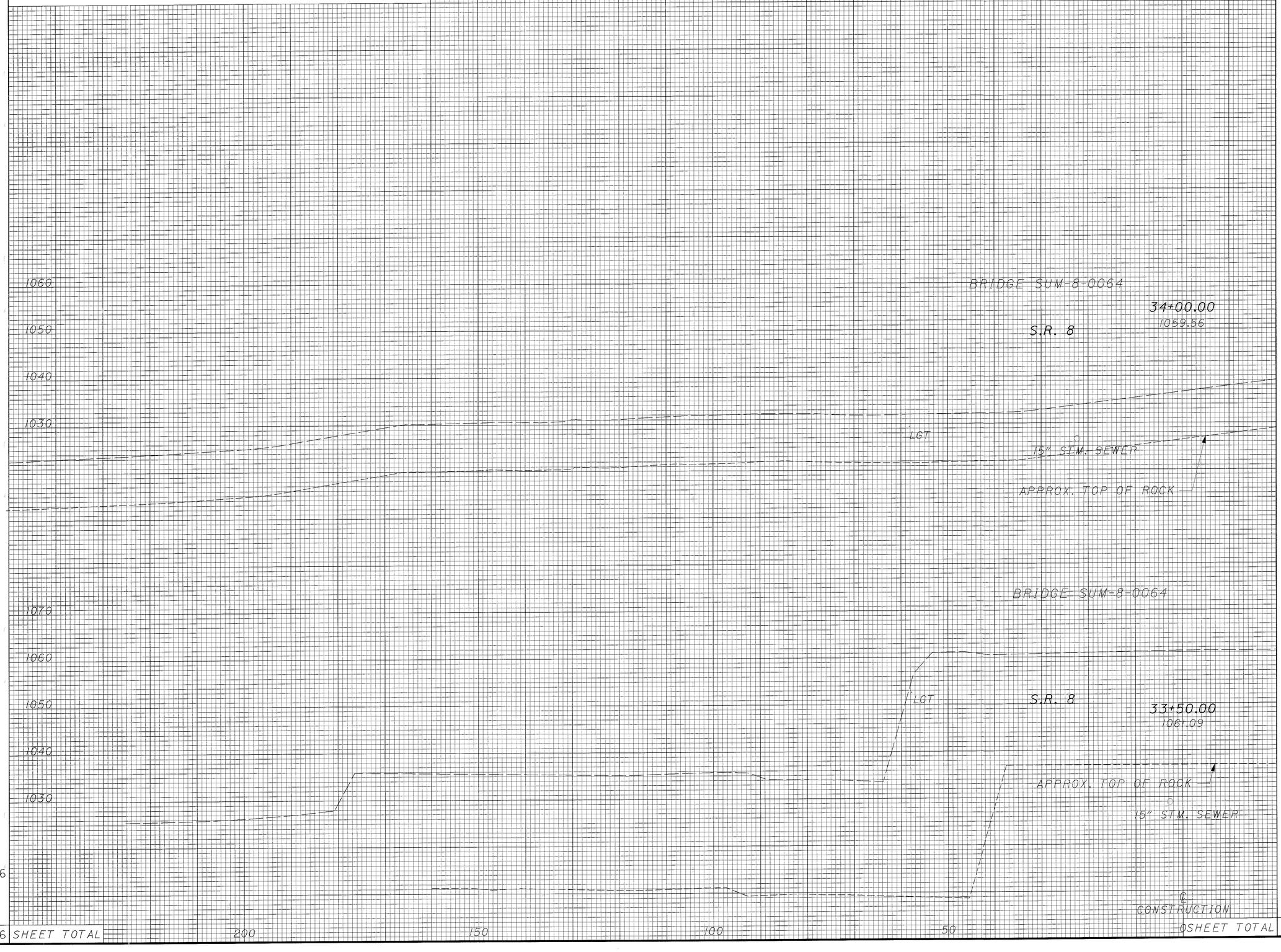

END AREA		VOLUME	
CUT	FILL	CUT	FILL
0	0		
		0	0
0	0		
		25	494
0			
SHEET TOTAL		25	494

CALCULATED JE
CHECKED KMM

CROSS SECTIONS - S.R. 8 LT.
STA. 33+50 TO STA. 34+00

SUM-8-0.63

300
1088

SEEDING	
END WIDTH	SQ. YDS.
0	
0	
0	
0	
0	SHEET TOTAL

FOR EARTHWORK AND SEEDING & MULCHING SUBSUMMARY SEE SHEET 168

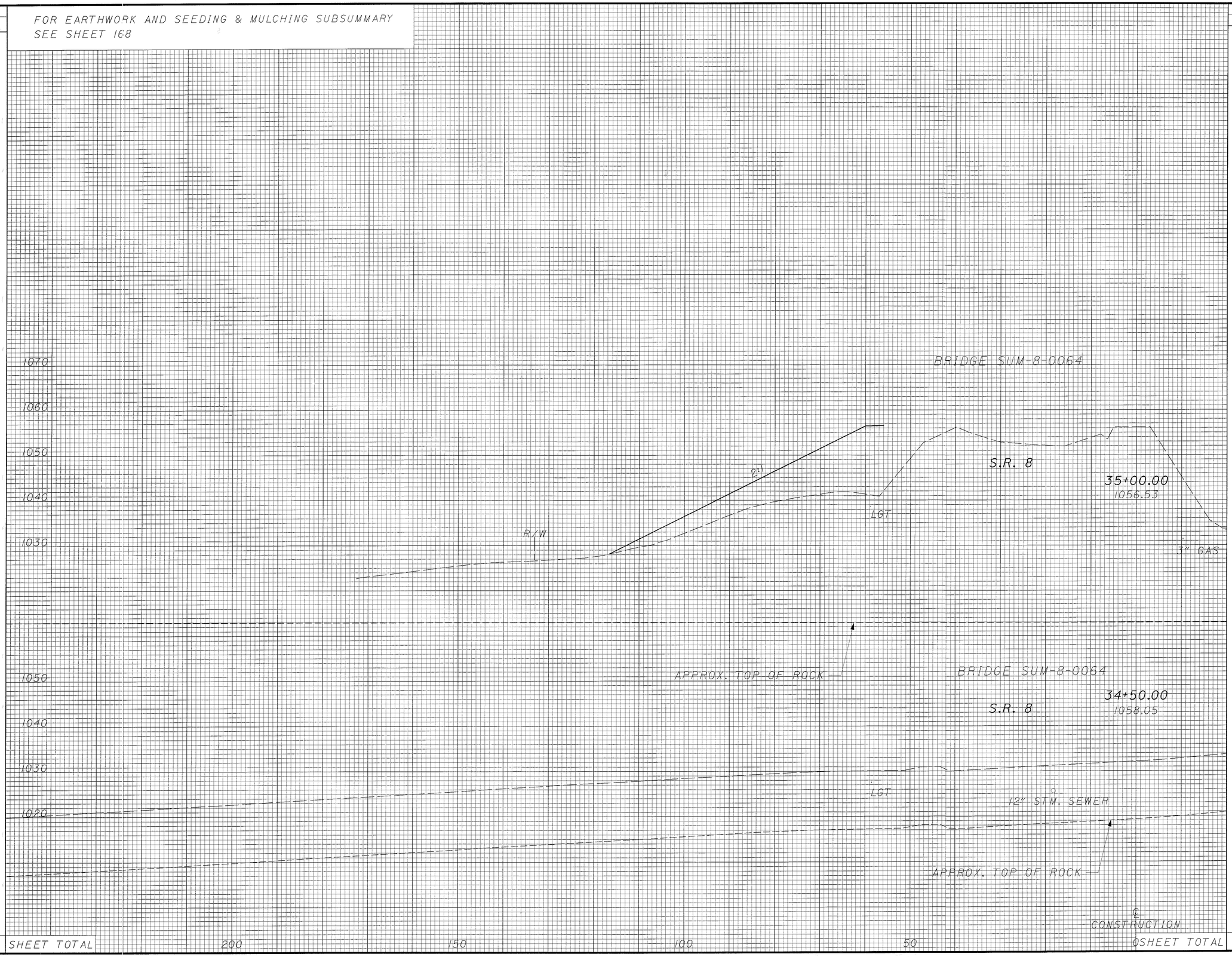

END AREA		VOLUME	
CUT	FILL	CUT	FILL
0	0		
		0	0
0	0		
		0	0
0	0		
		0	0
		0	0

CALCULATED JE
CHECKED KMM

CROSS SECTIONS - S.R. 8 LT.
STA. 34+50 TO STA. 35+00

SUM-8-0.63

301
1088

SEEDING	
END WIDTH	SQ. YDS.
87	
	483
87	
	483
87	
	242
	1208

FOR EARTHWORK AND SEEDING & MULCHING SUBSUMMARY SEE SHEET 168

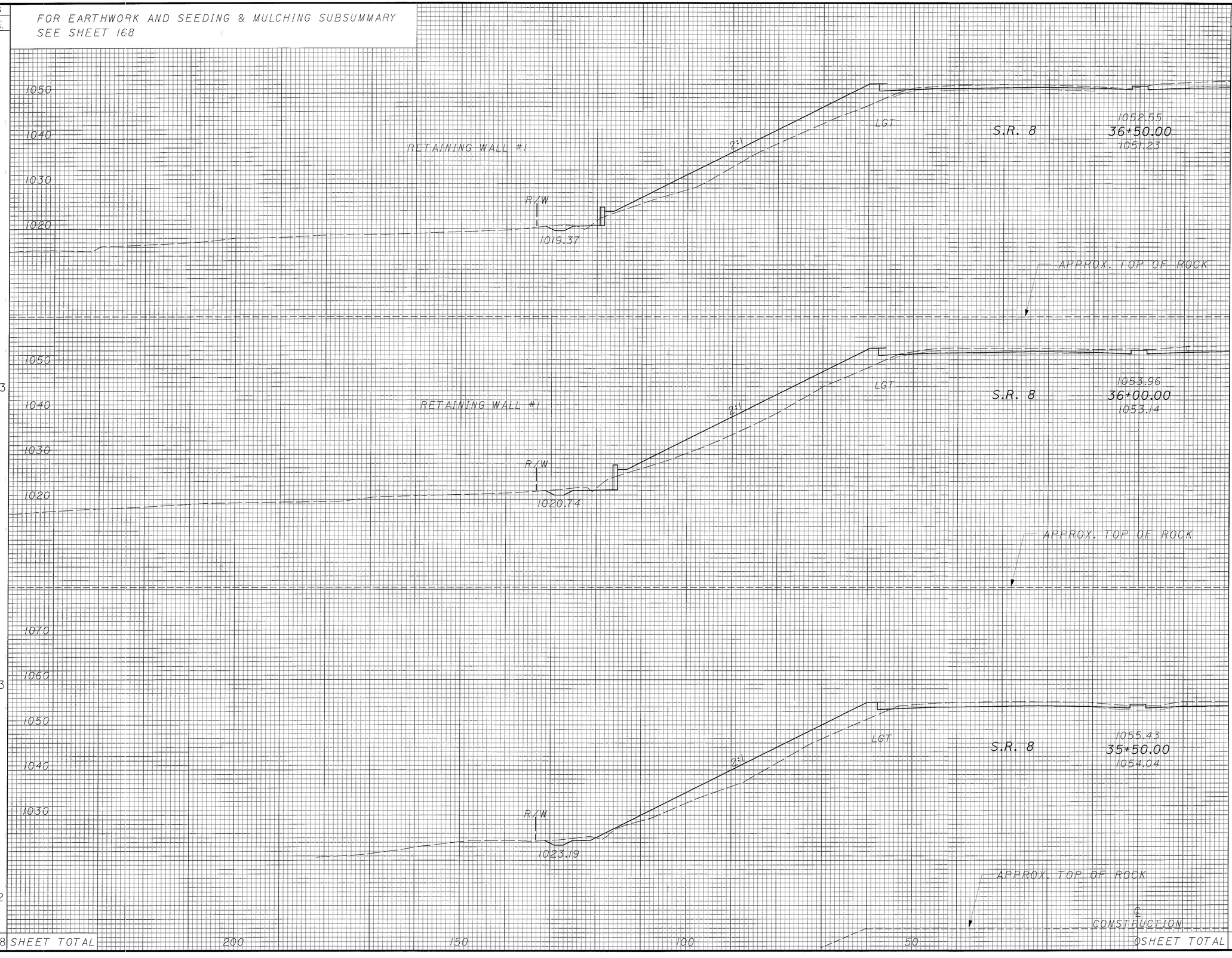

END AREA		VOLUME	
CUT	FILL	CUT	FILL
7	202		
		22	373
17	201		
		28	342
13	168		
		12	156
		62	871
SHEET TOTAL			

CALCULATED JE

CHECKED KMM

CROSS SECTIONS - S.R. 8 LT.
STA. 35+50 TO STA. 36+50

SUM-8-0.63

302
1088

SEEDING	
END WIDTH	SQ. YDS.
88	489
88	486
	975

FOR EARTHWORK AND SEEDING & MULCHING SUBSUMMARY SEE SHEET 168

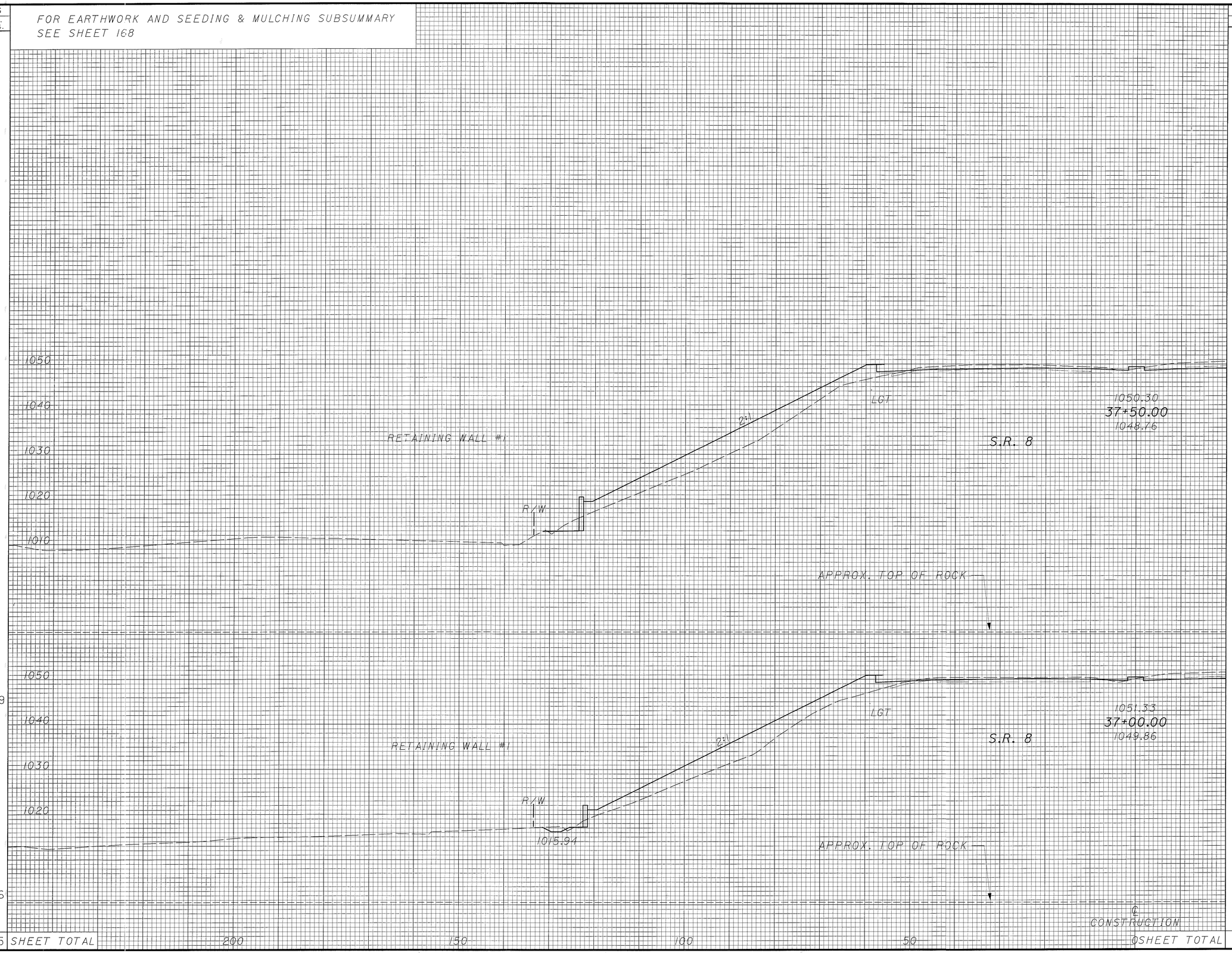

SHEET TOTAL	200	150	100	50	0 SHEET TOTAL

END AREA		VOLUME	
CUT	FILL	CUT	FILL
9	242		
14	442		
6	235		
12	405		
26	847		

CALCULATED JE

CHECKED KMM

CROSS SECTIONS - S.R. 8 LT.
STA. 37+00 TO STA. 37+50

SUM-8-0.63

303
1088

SEEDING	
END WIDTH	SQ. YDS.
99	
95	
	1047

FOR EARTHWORK AND SEEDING & MULCHING SUBSUMMARY
SEE SHEET 168

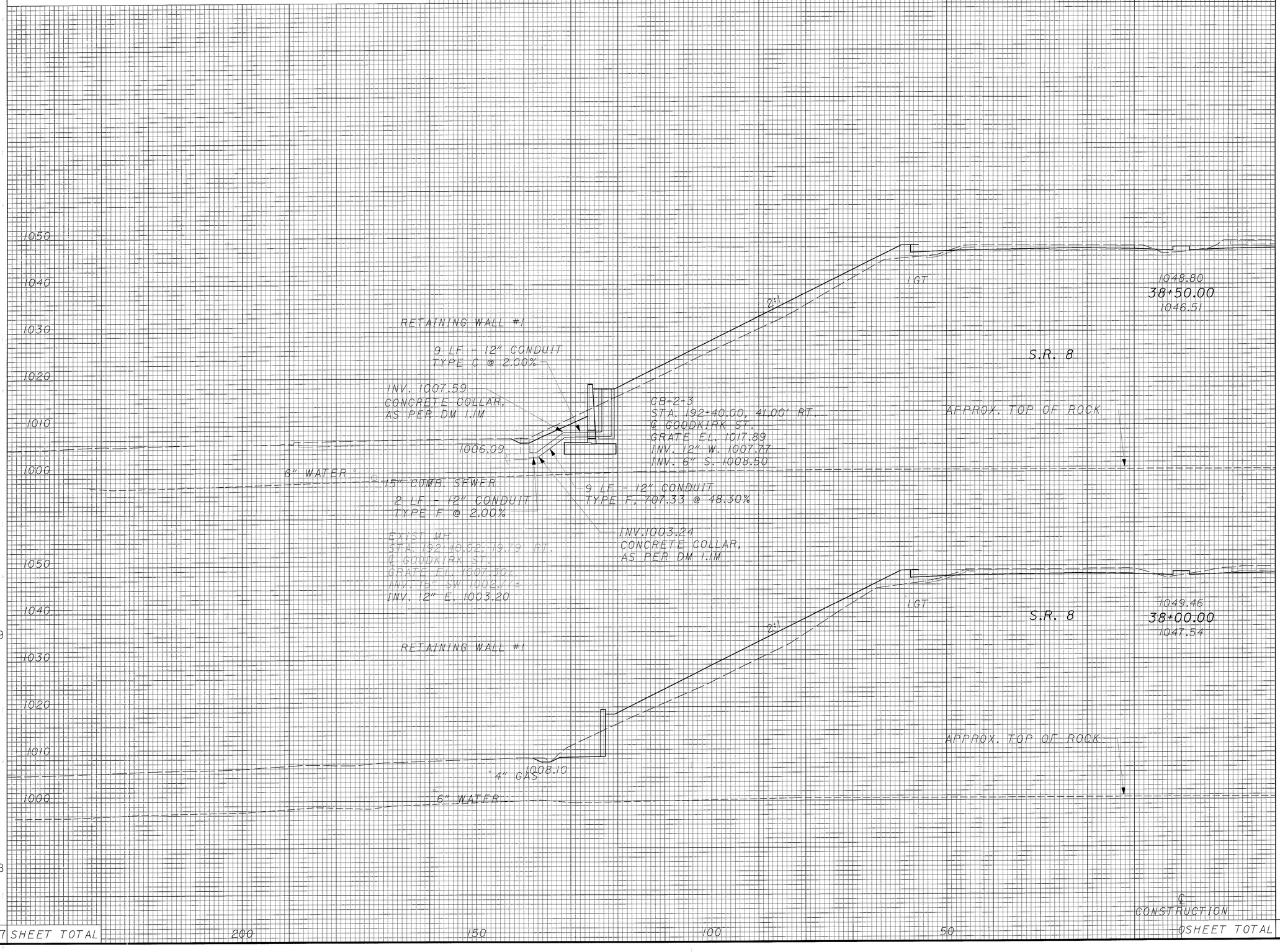

END AREA		VOLUME	
CUT	FILL	CUT	FILL
19	162		
		56	331
41	196		
		46	406
		102	737

1047 SHEET TOTAL 200 150 100 50 0 SHEET TOTAL

CALCULATED JE
CHECKED KMM

CROSS SECTIONS - S.R. 8 LT.
STA. 38+00 TO STA. 38+50

SUM-8-0.63

304
1088

SEEDING	
END WIDTH	SQ. YDS.
104	
105	581
	567
1148	SHEET TOTAL

FOR EARTHWORK AND SEEDING & MULCHING SUBSUMMARY
SEE SHEET 168

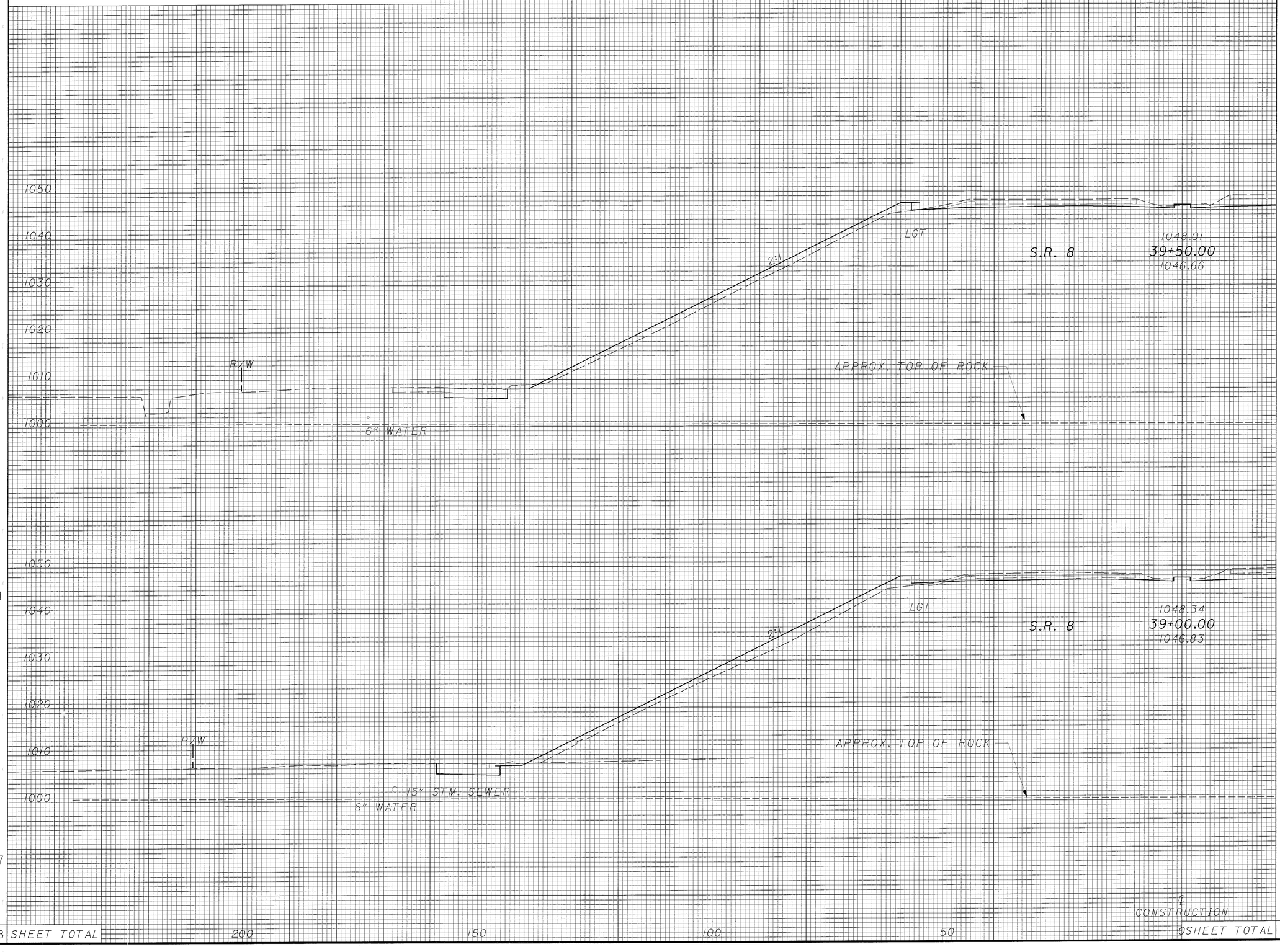

END AREA		VOLUME	
CUT	FILL	CUT	FILL
52	105		
		91	214
46	126		
		60	267
		151	481
	SHEET TOTAL		

CALCULATED JE
CHECKED KMM

CROSS SECTIONS - S.R. 8 LT.
STA. 39+00 TO STA. 39+50

SUM-8-0.63

305
1088

FOR EARTHWORK AND SEEDING & MULCHING SUBSUMMARY
SEE SHEET 168

SEEDING END WIDTH	SEEDING SQ. YDS.	END AREA CUT	END AREA FILL	VOLUME CUT	VOLUME FILL
100		32	233	58	419
101		31	219	77	300
	1127			135	719

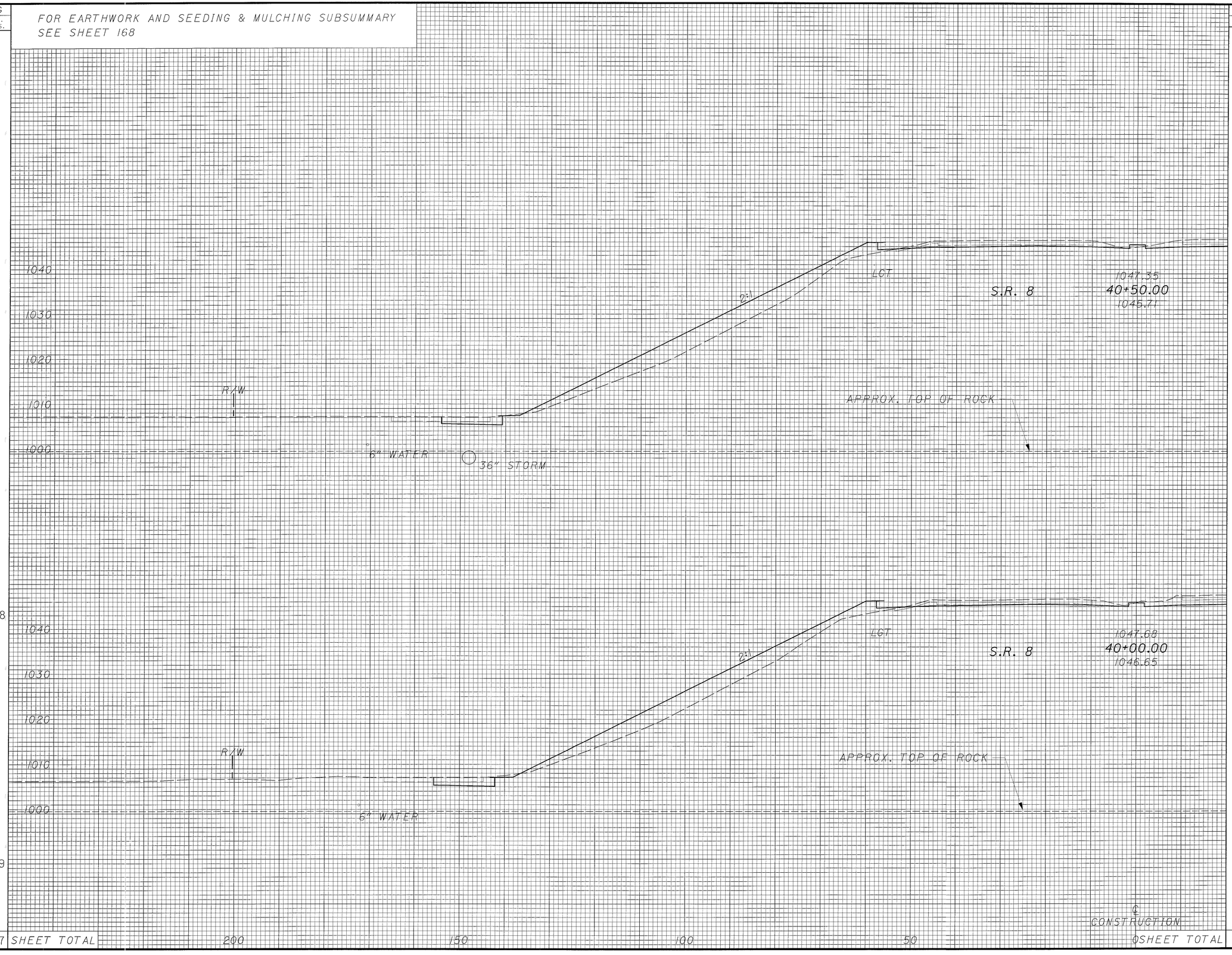

200 150 100 50 0 SHEET TOTAL

CALCULATED JE
CHECKED KMM

CROSS SECTIONS - S.R. 8 LT.
STA. 40+00 TO STA. 40+50

SUM-8-0.63

306
1088

FOR EARTHWORK AND SEEDING & MULCHING SUBSUMMARY
SEE SHEET 168

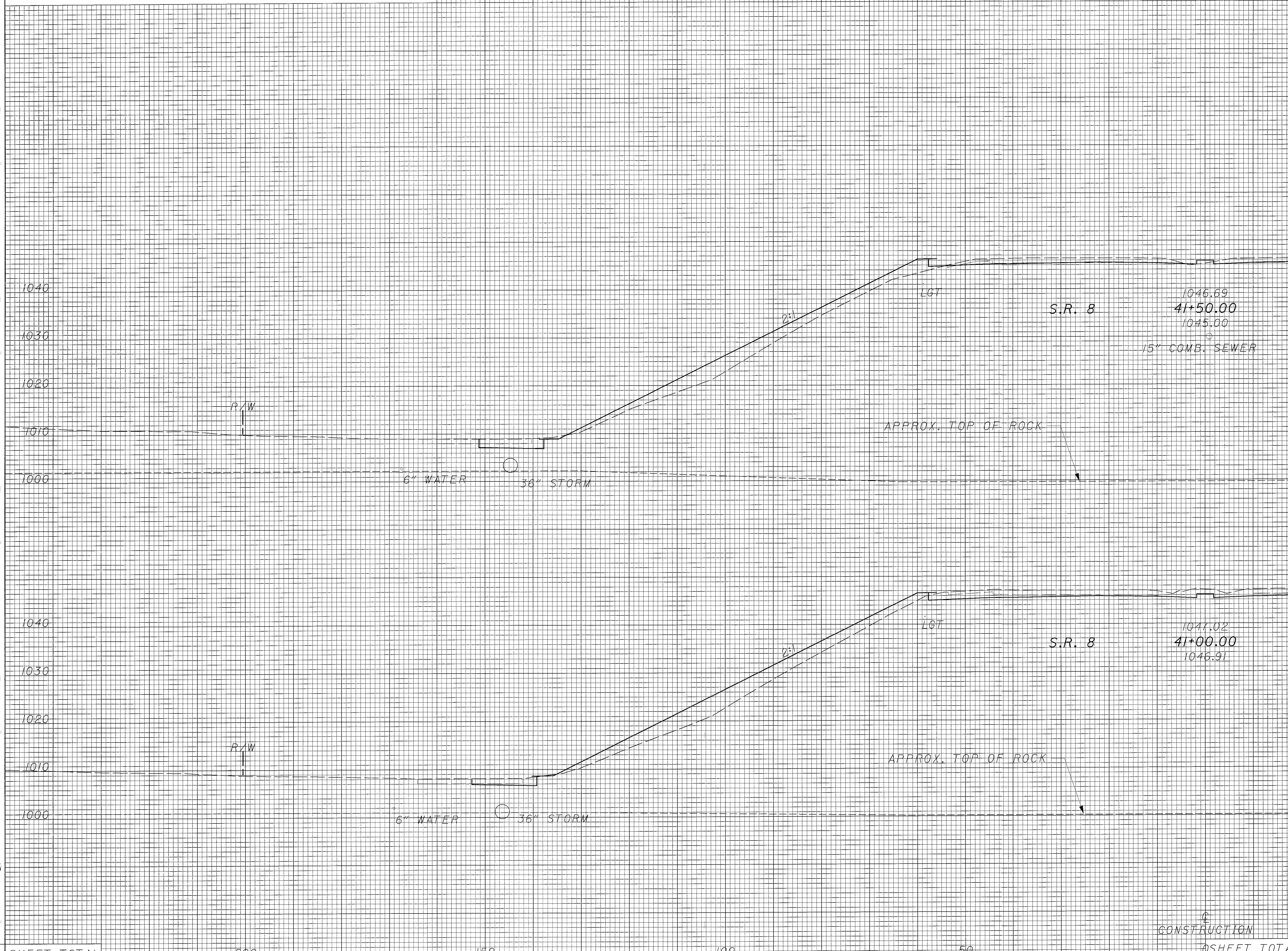

Seeding: End Width	Seeding: Sq. Yds.	End Area: Cut	End Area: Fill	Volume: Cut	Volume: Fill
		26	158		
103				68	320
	561	47	188		
99				73	390
	553				
SHEET TOTAL	1114			141	710

CALCULATED JE CHECKED KMM

CROSS SECTIONS - S.R. 8 LT.
STA. 41+00 TO STA. 41+50

SUM-8-0.63

307
1088

FOR EARTHWORK AND SEEDING & MULCHING SUBSUMMARY
SEE SHEET 168

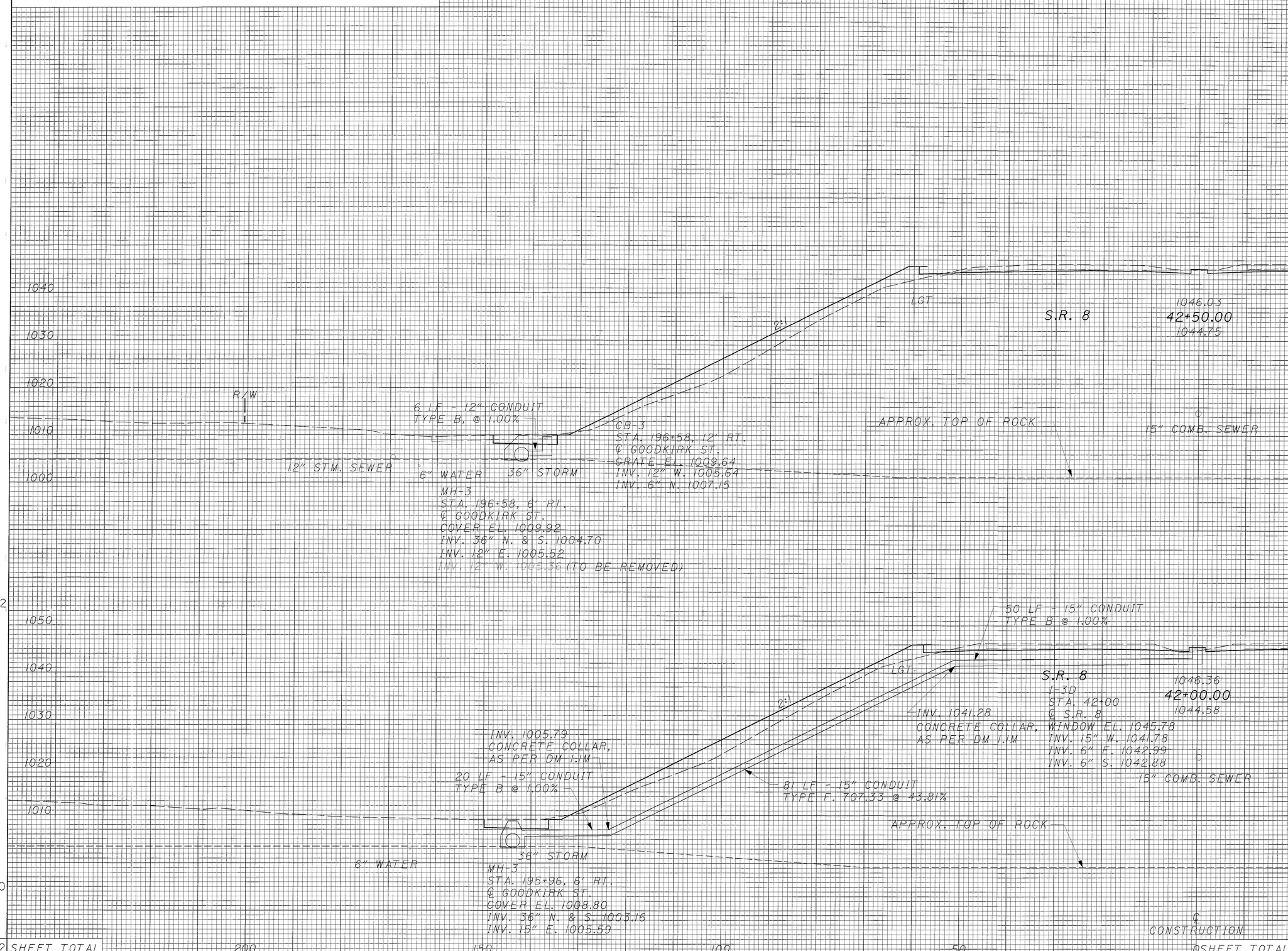

SEEDING END WIDTH	SEEDING SQ. YDS.	END AREA CUT	END AREA FILL	VOLUME CUT	VOLUME FILL
		35	170		
93				70	294
	522	41	148		
95				62	283
	550				
	1072 SHEET TOTAL			132	577

CALCULATED JE
CHECKED KMM

CROSS SECTIONS - S.R. 8 LT.
STA. 42+00 TO STA. 42+50

SUM-8-0.63

SEEDING	
END WIDTH	SQ. YDS.
82	
	467
86	
	486
89	
	506
	1459

FOR EARTHWORK AND SEEDING & MULCHING SUBSUMMARY SEE SHEET 168

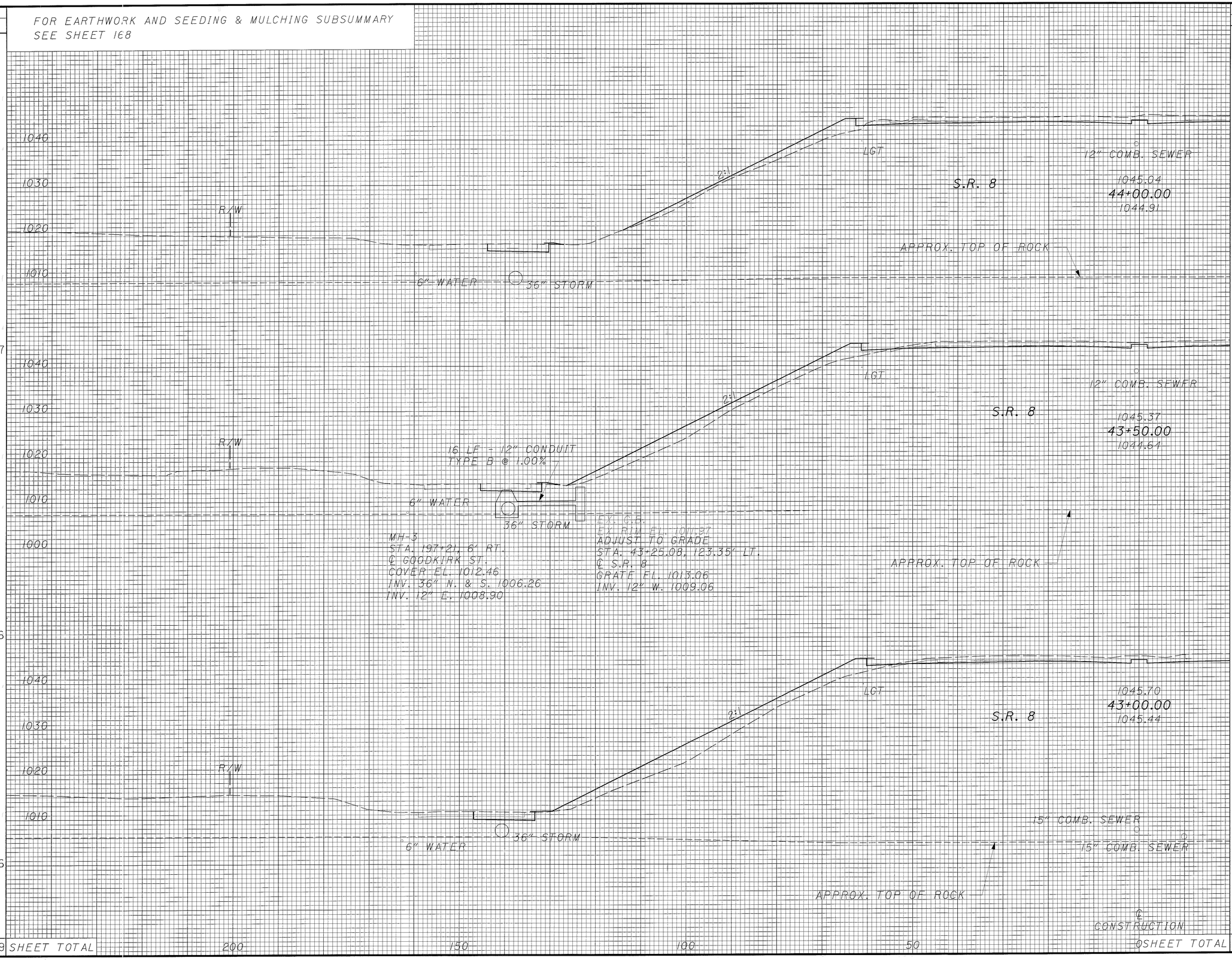

END AREA		VOLUME	
CUT	FILL	CUT	FILL
23	70		
		51	187
32	132		
		62	292
35	183		
		65	327
		178	806

200	150	100	50	0 SHEET TOTAL

CALCULATED JE

CHECKED KMM

CROSS SECTIONS - S.R. 8 LT. STA. 43+00 TO STA. 44+00

SUM-8-0.63

309
1088

SEEDING	
END WIDTH	SQ. YDS.
0	
	206
74	
	422
78	
	444
	1072

FOR EARTHWORK AND SEEDING & MULCHING SUBSUMMARY SEE SHEET 168

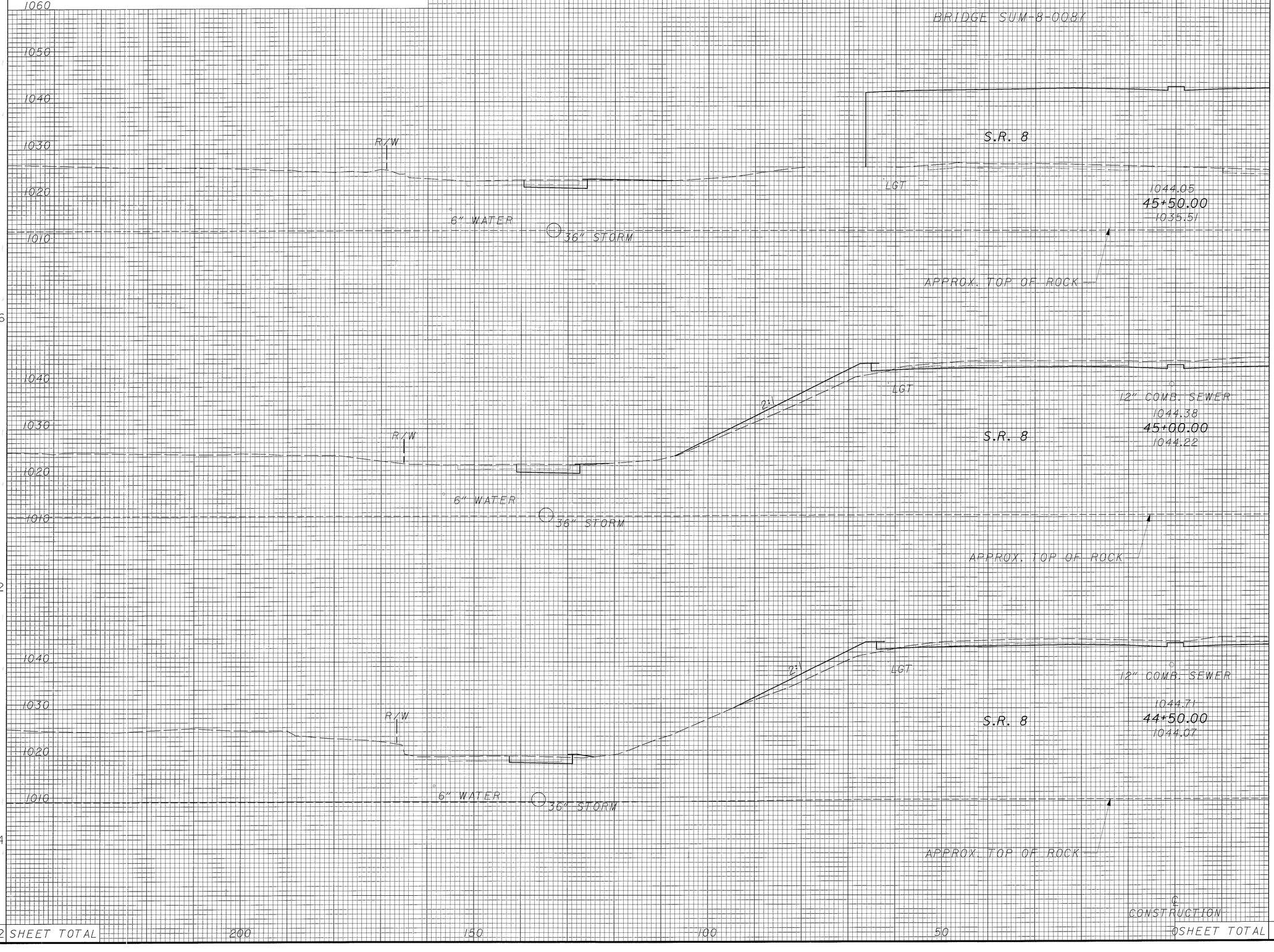

END AREA		VOLUME	
CUT	FILL	CUT	FILL
0	0		
		40	60
43	65		
		69	106
31	49		
		50	110
		159	276

CALCULATED JE
CHECKED KMM

CROSS SECTIONS - S.R. 8 LT.
STA. 44+50 TO STA. 45+50

SUM-8-0.63

310
1088

SEEDING	
END WIDTH	SQ. YDS.
81	439
77	0
	0
	0
	439

FOR EARTHWORK AND SEEDING & MULCHING SUBSUMMARY SEE SHEET 168

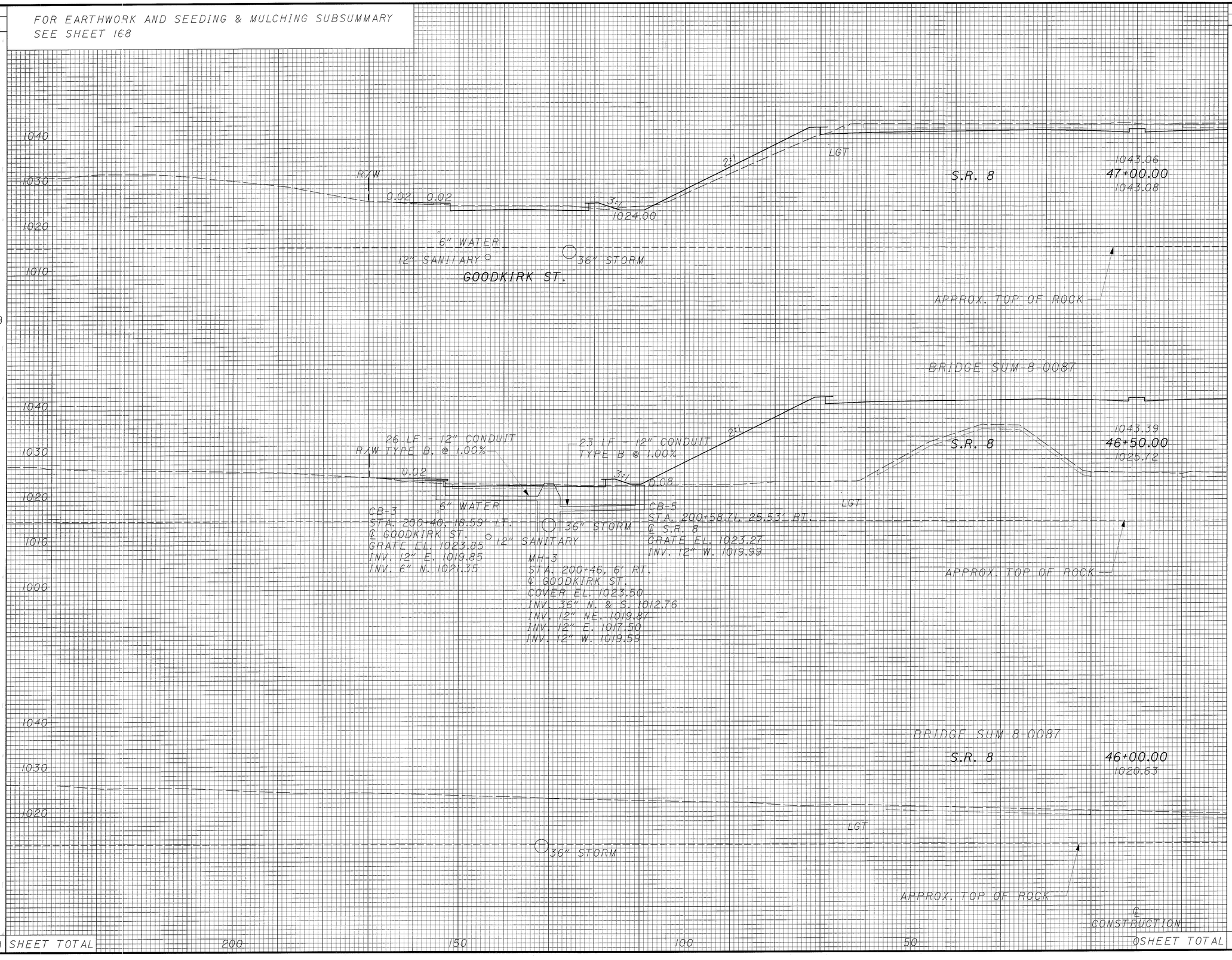

END AREA		VOLUME	
CUT	FILL	CUT	FILL
76	66		
		70	61
0	0		
0	0		
0	0		
0	0		
		70	61

CALCULATED JE
CHECKED KMM

CROSS SECTIONS - S.R. 8 LT.
STA. 46+00 TO STA. 47+00

SUM-8-0.63

311
1088

439 SHEET TOTAL 200 150 100 50 0 SHEET TOTAL

SEEDING		END AREA		VOLUME	
END WIDTH	SQ. YDS.	CUT	FILL	CUT	FILL
70	408	164	4	296	8
77	425	156	5	303	11
76	436	171	7	229	68
1269	SHEET TOTAL			828	87

FOR EARTHWORK AND SEEDING & MULCHING SUBSUMMARY SEE SHEET 168

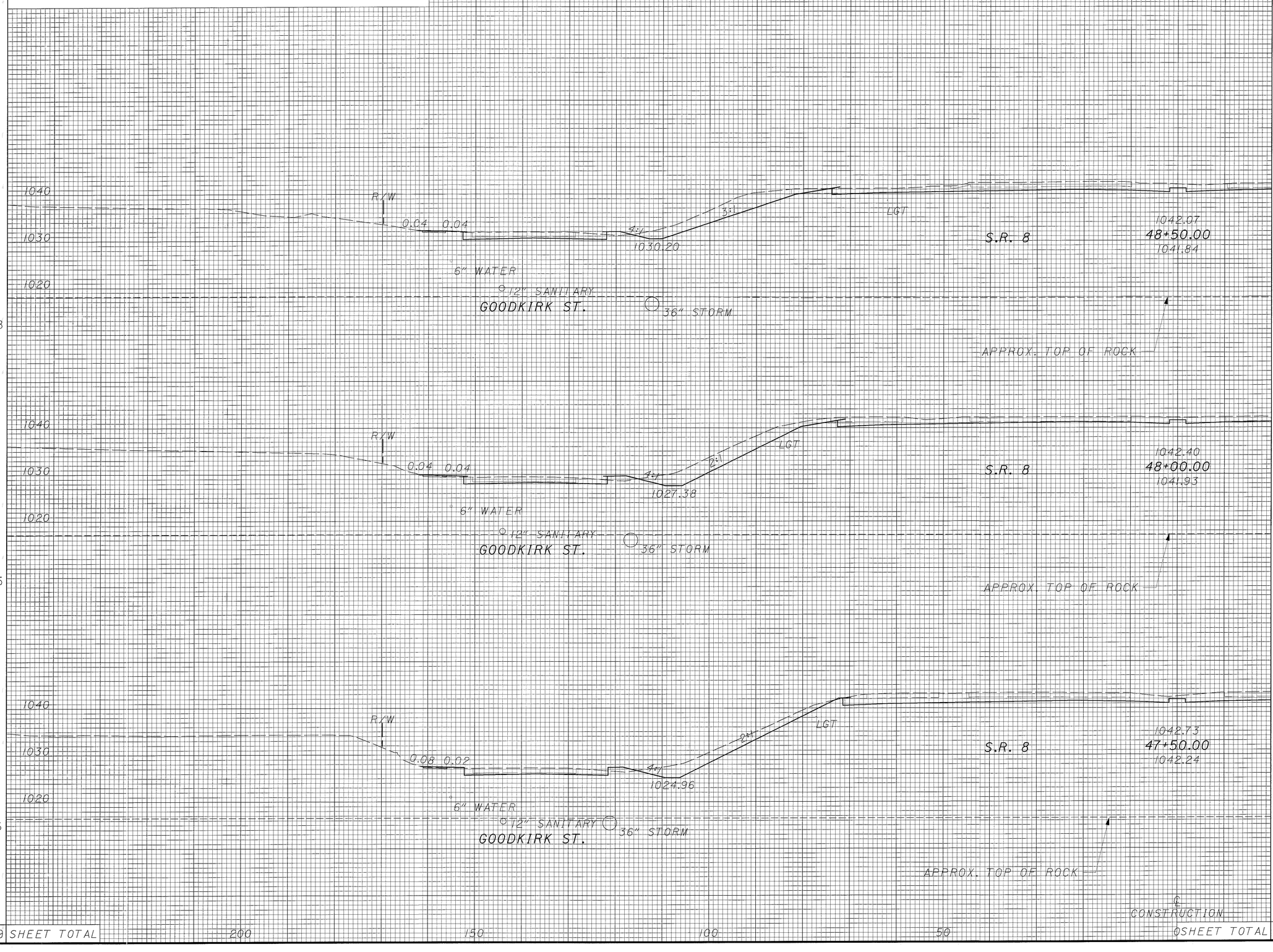

CALCULATED JE
CHECKED KMM

CROSS SECTIONS - S.R. 8 LT.
STA. 47+50 TO STA. 48+50

SUM-8-0.63

312
1088

SEEDING	
END WIDTH	SQ. YDS.
73	
	386
66	
	375
69	
	386
	1147

FOR EARTHWORK AND SEEDING & MULCHING SUBSUMMARY
SEE SHEET 168

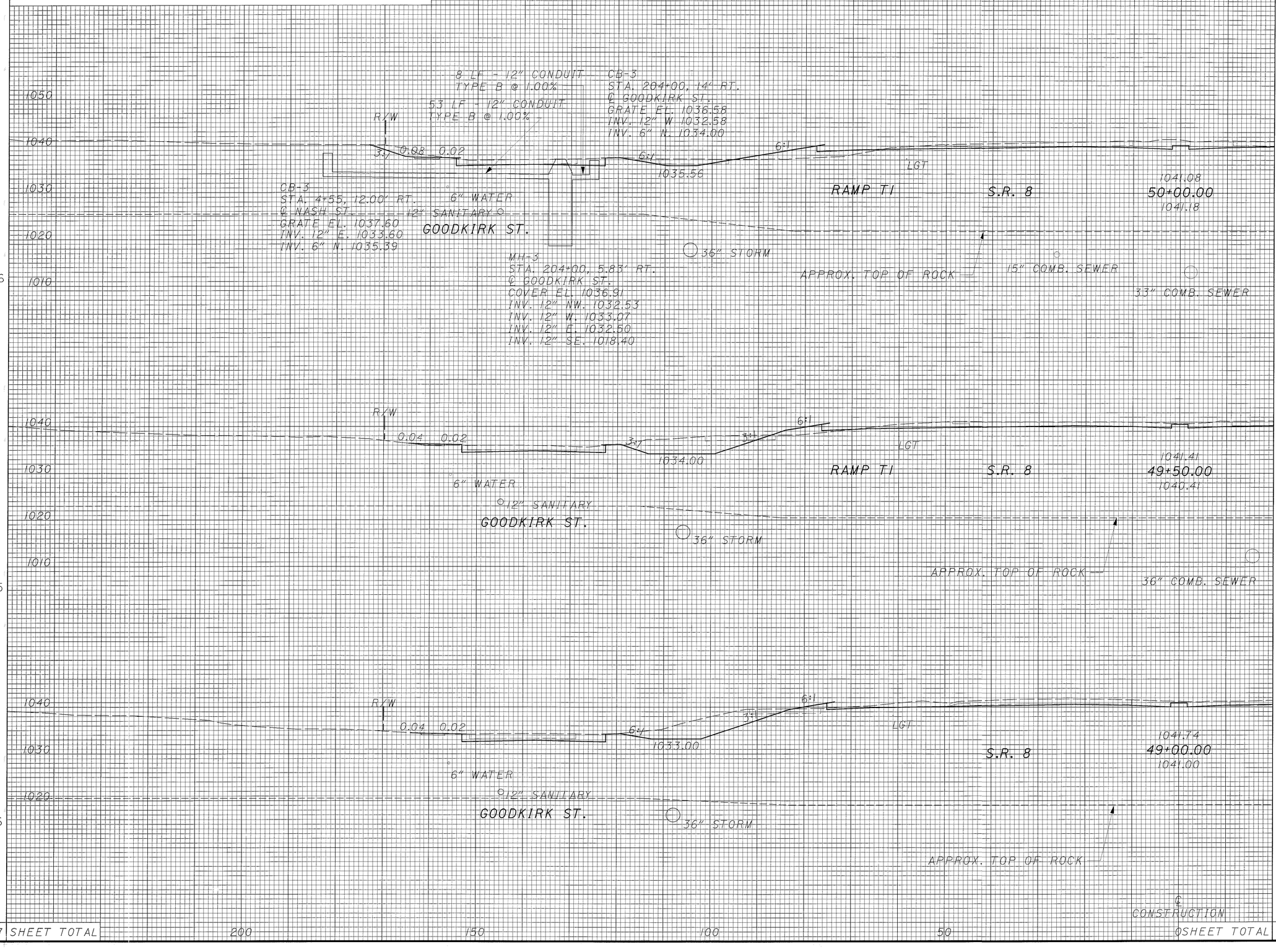

END AREA		VOLUME	
CUT	FILL	CUT	FILL
64	36		
		163	48
112	16		
		238	19
145	4		
		286	7
		687	74

CALCULATED JE
CHECKED KMM

CROSS SECTIONS - S.R. 8 LT.
STA. 49+00 TO STA. 50+00

SUM-8-0.63

FOR EARTHWORK AND SEEDING & MULCHING SUBSUMMARY
SEE SHEET 168

SEEDING END WIDTH	SEEDING SQ. YDS.	END AREA CUT	END AREA FILL	VOLUME CUT	VOLUME FILL
82	450	208	4	264	20
80	411	77	18	124	74
68	392	57	62	112	91
	1253 SHEET TOTAL			500	185

CALCULATED JE
CHECKED KMM

CROSS SECTIONS - S.R. 8 LT.
STA. 50+50 TO STA. 51+50

SUM-8-0.63

314
1088

SEEDING	
END WIDTH	SQ. YDS.
55	322
61	397
	719

FOR EARTHWORK AND SEEDING & MULCHING SUBSUMMARY SEE SHEET 168

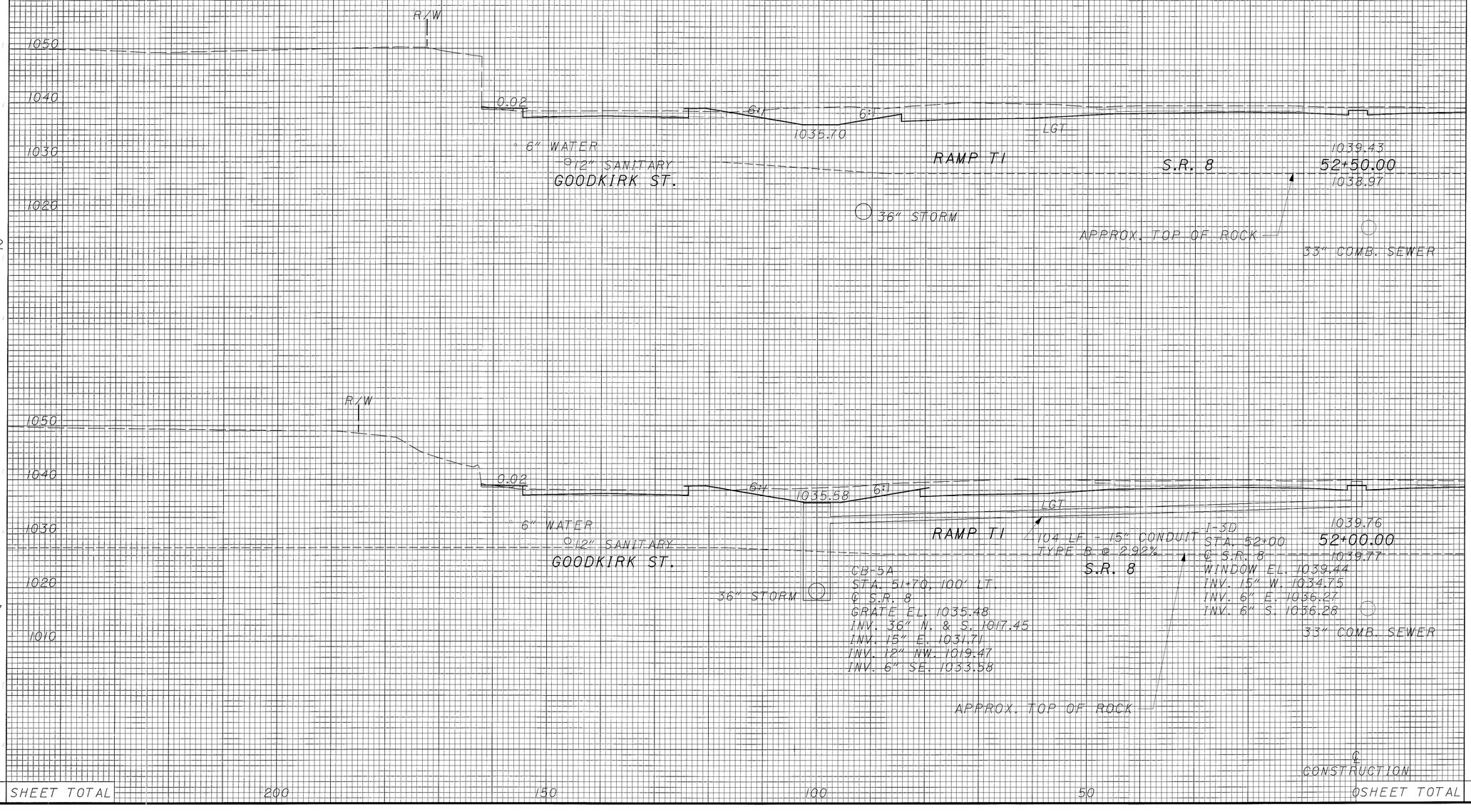

END AREA		VOLUME	
CUT	FILL	CUT	FILL
192	5		
186	6	350	10
		365	9
SHEET TOTAL		715	19

CALCULATED JE

CHECKED KMM

CROSS SECTIONS - S.R. 8 LT.
STA. 52+00 TO STA. 52+50

SUM-8-0.63

SEEDING	
END WIDTH	SQ. YDS.
43	261
51	294
	555

FOR EARTHWORK AND SEEDING & MULCHING SUBSUMMARY SEE SHEET 168

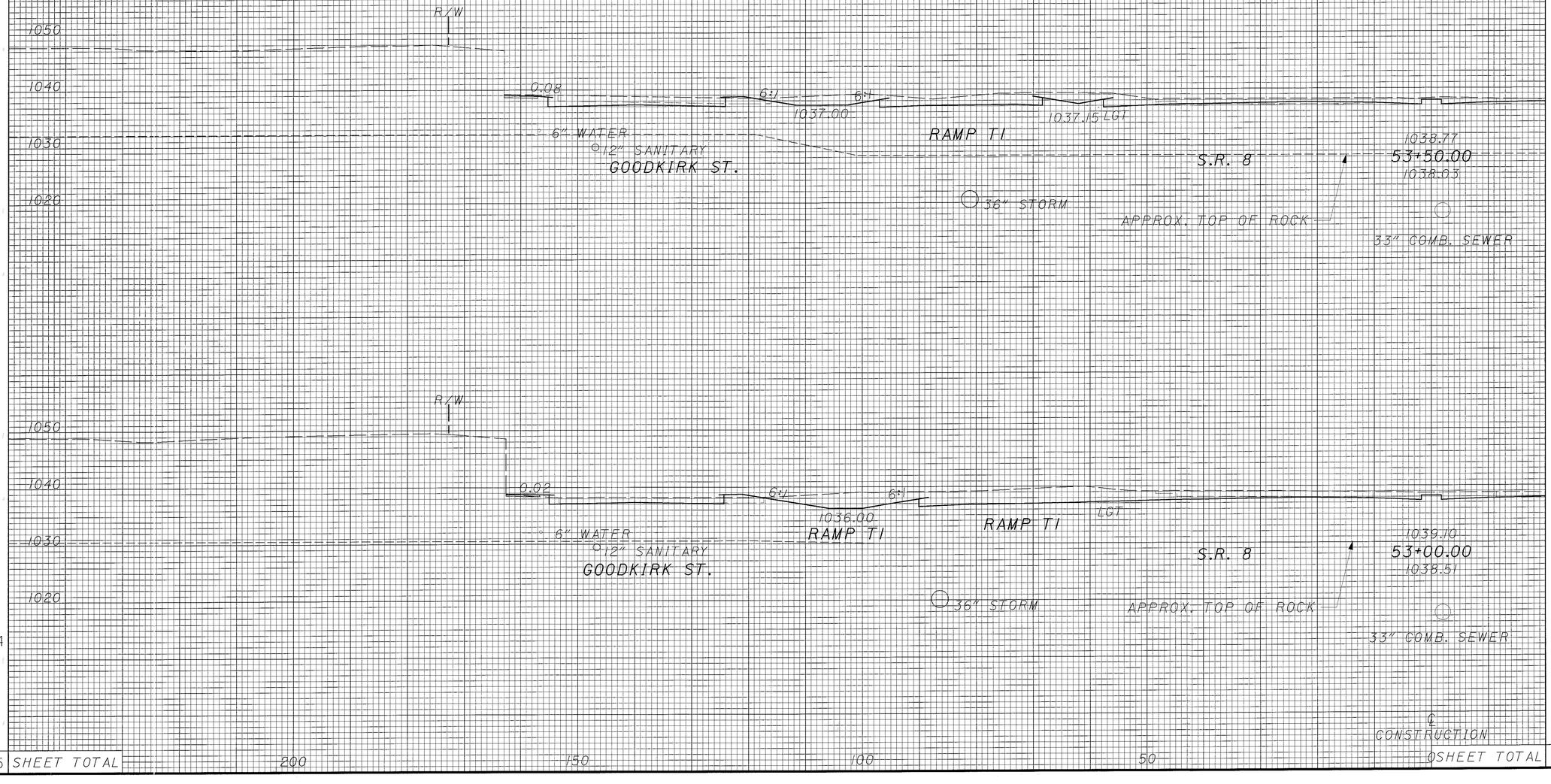

END AREA		VOLUME	
CUT	FILL	CUT	FILL
150	1		
306	5		
181	4		
345	8		
		651	13

SHEET TOTAL

OSHEET TOTAL

CALCULATED JE

CHECKED KMM

CROSS SECTIONS - S.R. 8 LT.
STA. 53+00 TO STA. 53+50

SUM-8-0.63

316
1088

SEEDING	
END WIDTH	SQ. YDS.
60	306
50	
54	269
	289
	864

FOR EARTHWORK AND SEEDING & MULCHING SUBSUMMARY SEE SHEET 168

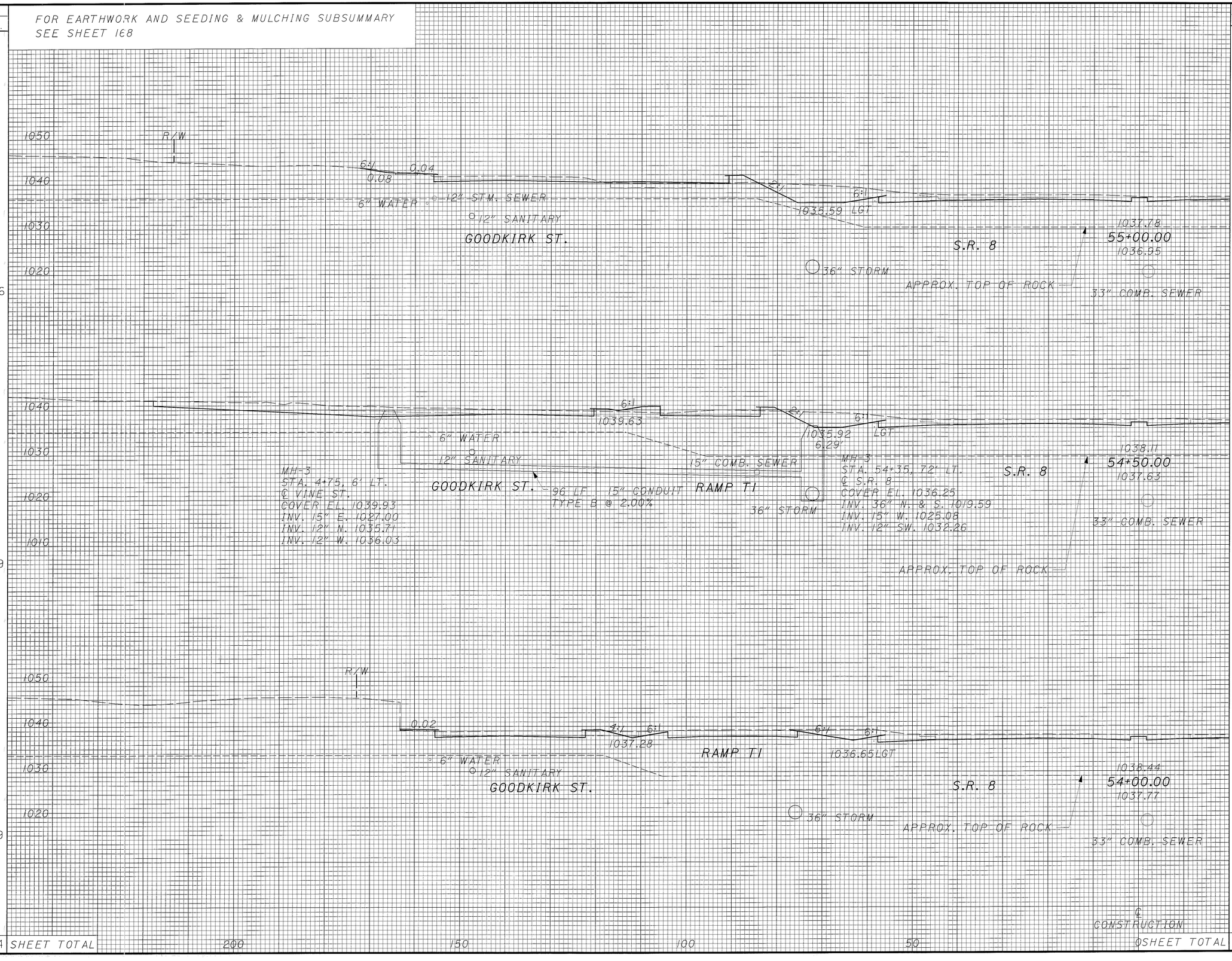

END AREA		VOLUME	
CUT	FILL	CUT	FILL
117	14		
198	15	292	27
289	17		
114	3		
		244	4
		825	48

SHEET TOTAL

CALCULATED JE

CHECKED KMM

CROSS SECTIONS - S.R. 8 LT. STA. 54+00 TO STA. 55+00

SUM-8-0.63

317
1088

FOR EARTHWORK AND SEEDING & MULCHING SUBSUMMARY
SEE SHEET 168

SEEDING END WIDTH	SEEDING SQ. YDS.	END AREA CUT	END AREA FILL	VOLUME CUT	VOLUME FILL
76					
		169	85		
	400				
				329	223
68					
		186	156		
	356				
				281	157
	756			610	380

SHEET TOTAL

SHEET TOTAL

CALCULATED JE

CHECKED KMM

CROSS SECTIONS - S.R. 8 LT.
STA. 55+50 TO STA. 56+00

SUM-8-0.63

318
1088

FOR EARTHWORK AND SEEDING & MULCHING SUBSUMMARY
SEE SHEET 168

SEEDING END WIDTH	SEEDING SQ. YDS.	END AREA CUT	END AREA FILL	VOLUME CUT	VOLUME FILL
	93				
		135	49		
	497			261	131
		147	93		
	86				
				308	190
	467				
		186	112		
	82				
				329	182
	439				
				898	503
1403	SHEET TOTAL		SHEET TOTAL		

CALCULATED JE
CHECKED KMM

CROSS SECTIONS - S.R. 8 LT.
STA. 56+50 TO STA. 57+50

SUM-8-0.63

319
1088

SEEDING	
END WIDTH	SQ. YDS.
96	
	533
96	
	475
75	
	467
	1475

FOR EARTHWORK AND SEEDING & MULCHING SUBSUMMARY SEE SHEET 168

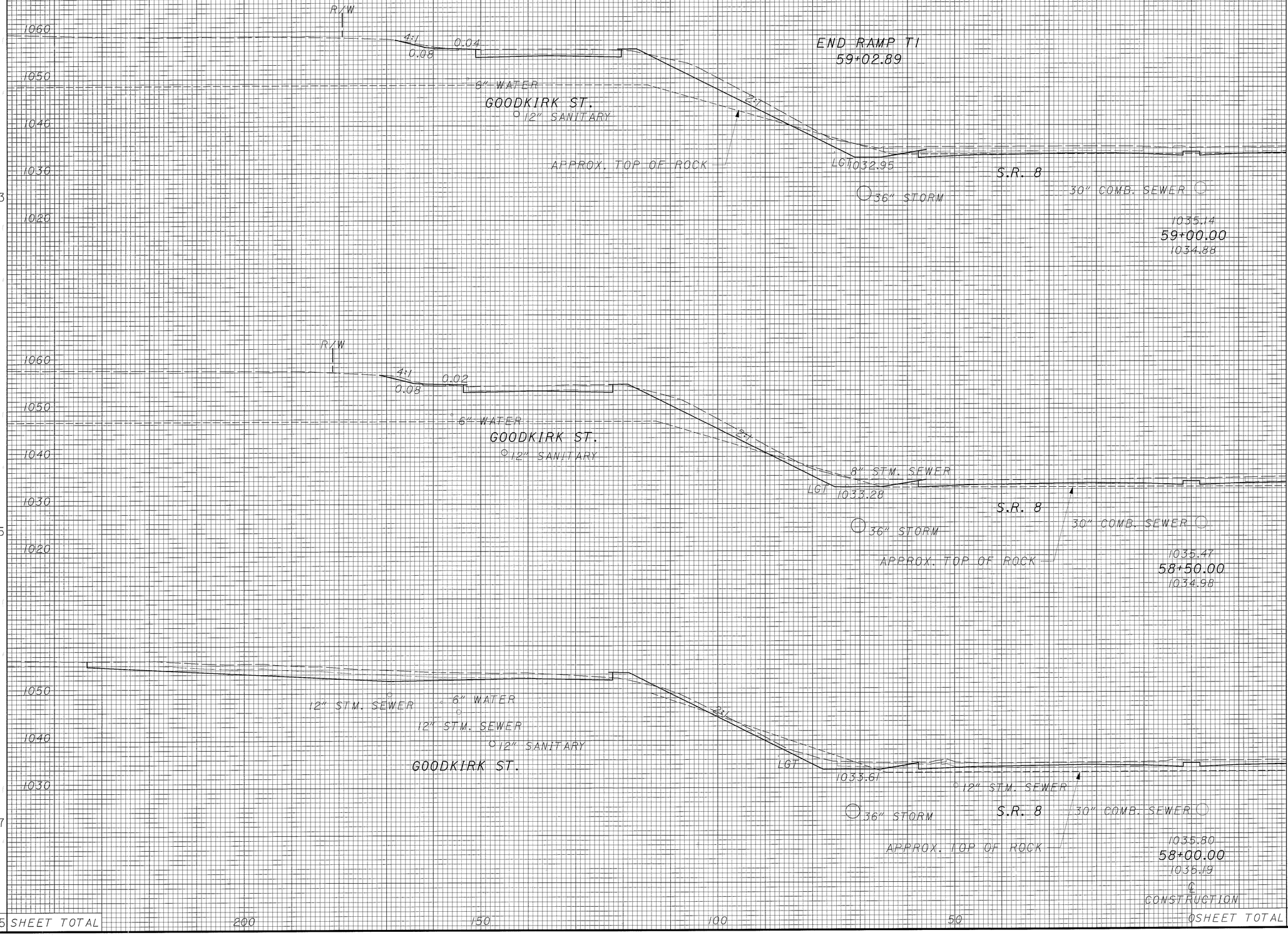

END AREA		VOLUME	
CUT	FILL	CUT	FILL
175	2		
		275	4
122	2		
		250	10
148	9		
		262	54
		787	68

200 150 100 50 0 SHEET TOTAL

CALCULATED JE

CHECKED KMM

CROSS SECTIONS - S.R. 8 LT.
STA. 58+50 TO STA. 59+00

SUM-8-0.63

320
1088

SEEDING	
END WIDTH	SQ. YDS.
90	514
95	531
	1045

FOR EARTHWORK AND SEEDING & MULCHING SUBSUMMARY
SEE SHEET 168

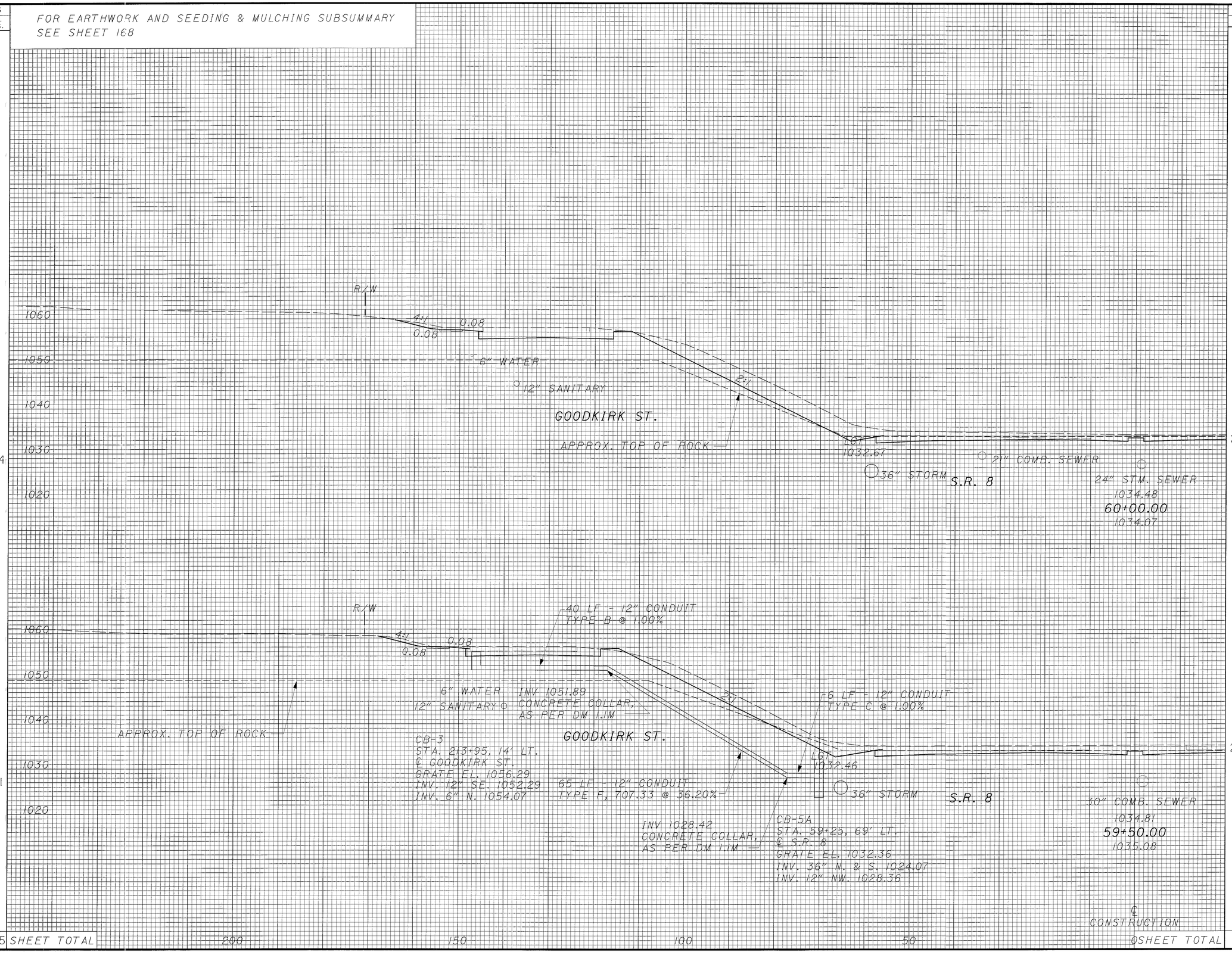

200	150	100	50	0

SHEET TOTAL

END AREA		VOLUME	
CUT	FILL	CUT	FILL
282	0		
466	2		
221	2		
367	4		
833	6		

SHEET TOTAL

CALCULATED JE
CHECKED KMM

CROSS SECTIONS - S.R. 8 LT.
STA. 59+50 TO STA. 60+00

SUM-8-0.63

321
1088

SEEDING	
END WIDTH	SQ. YDS.
0	
	247
89	
	497
744	SHEET TOTAL

FOR EARTHWORK AND SEEDING & MULCHING SUBSUMMARY
SEE SHEET 168

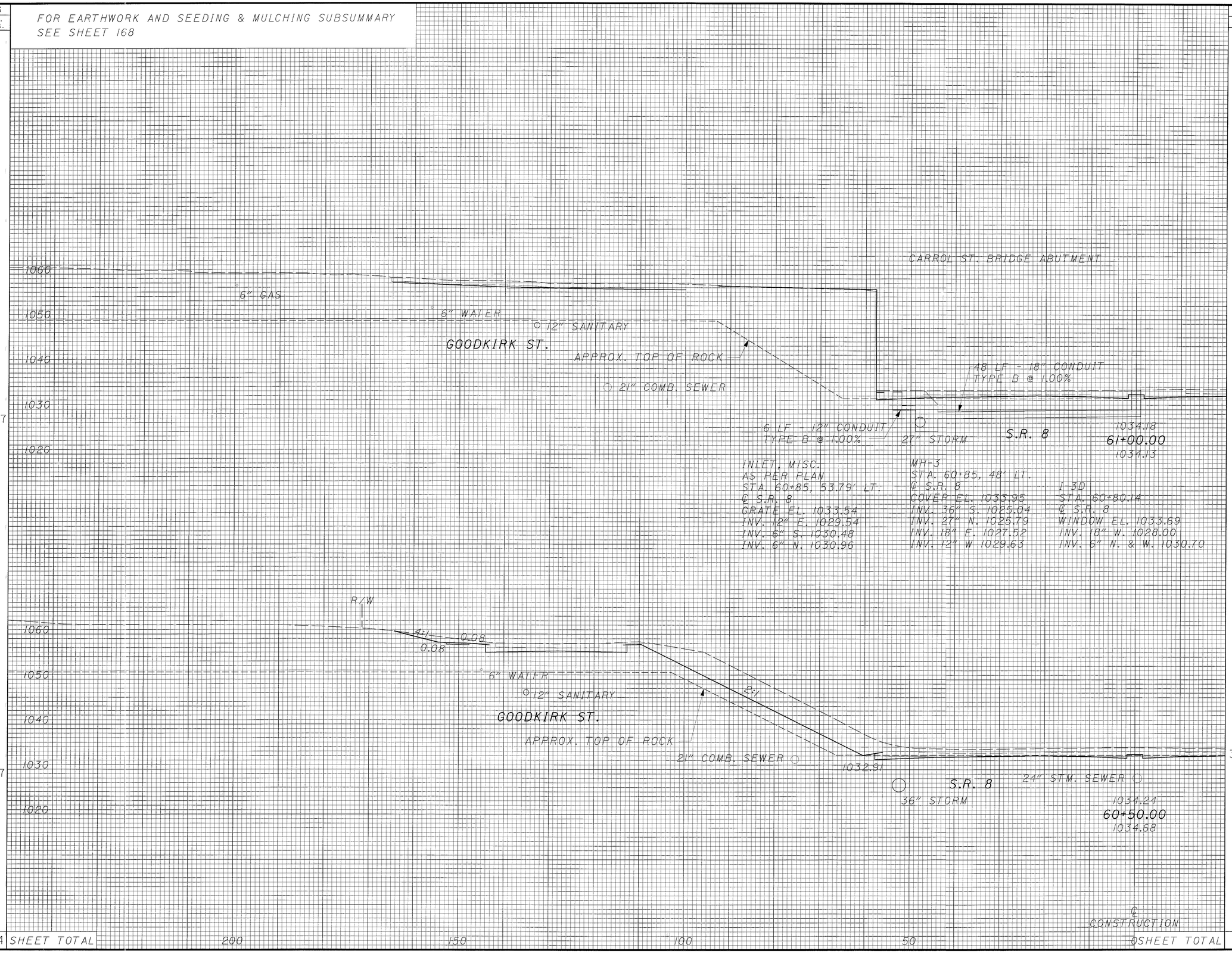

END AREA		VOLUME	
CUT	FILL	CUT	FILL
0	0		
		340	0
		367	0
		601	0
		941	0

CALCULATED JE
CHECKED KMM

CROSS SECTIONS - S.R. 8 LT.
STA. 60+50 TO STA. 61+00

SUM-8-0.63

322
1088

SEEDING	
END WIDTH	SQ. YDS.
82	
	228
0	
0	
228	SHEET TOTAL

FOR EARTHWORK AND SEEDING & MULCHING SUBSUMMARY
SEE SHEET 168

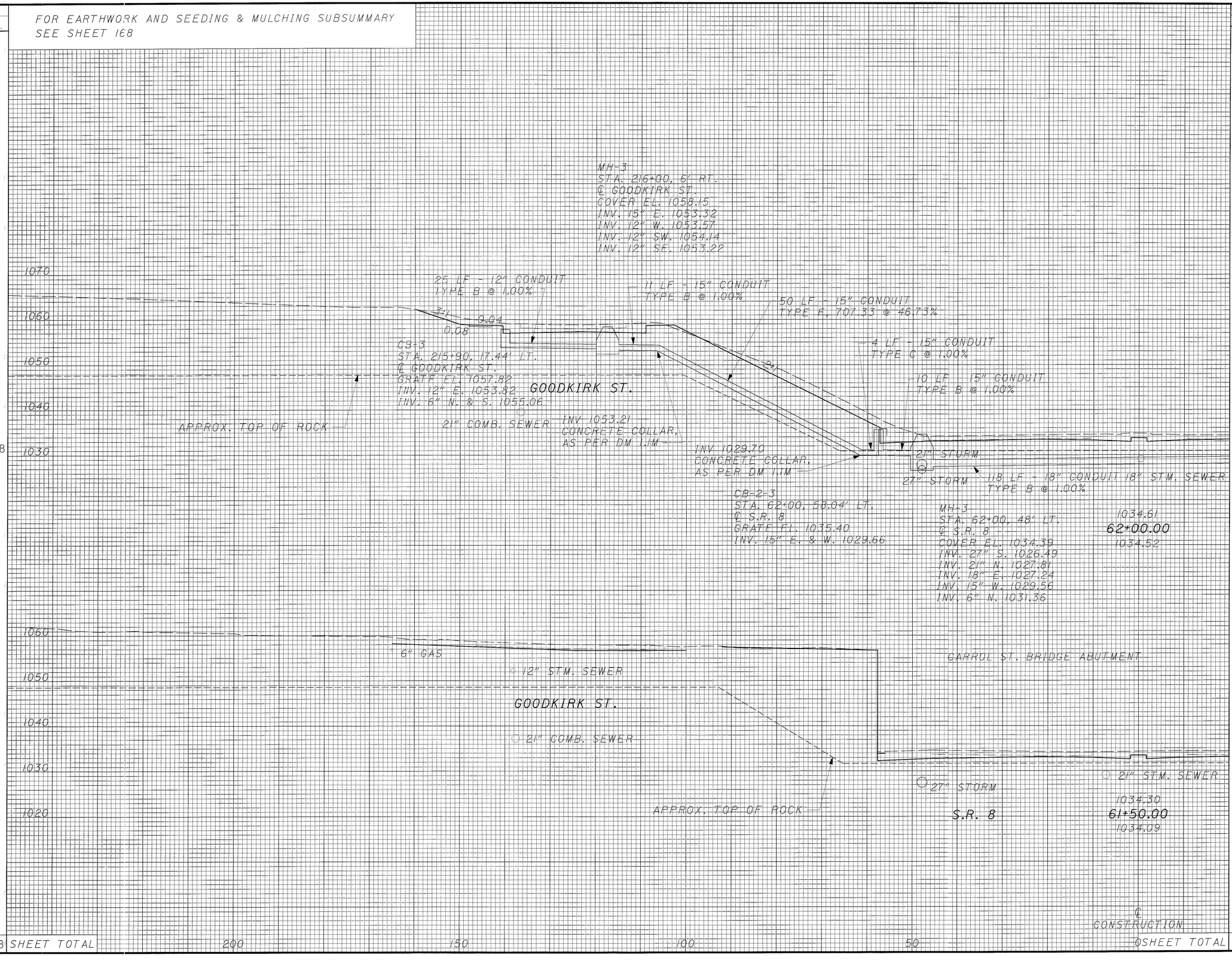

END AREA		VOLUME	
CUT	FILL	CUT	FILL
149	3		
		138	3
0	0		
		0	0
149	3	138	3

CALCULATED JE
CHECKED KMM

CROSS SECTIONS - S.R. 8 LT.
STA. 61+50 TO STA. 62+00

SUM-8-0.63

200 150 100 50 0 SHEET TOTAL

SEEDING	
END WIDTH	SQ. YDS.
76	422
76	439
	861

FOR EARTHWORK AND SEEDING & MULCHING SUBSUMMARY SEE SHEET 168

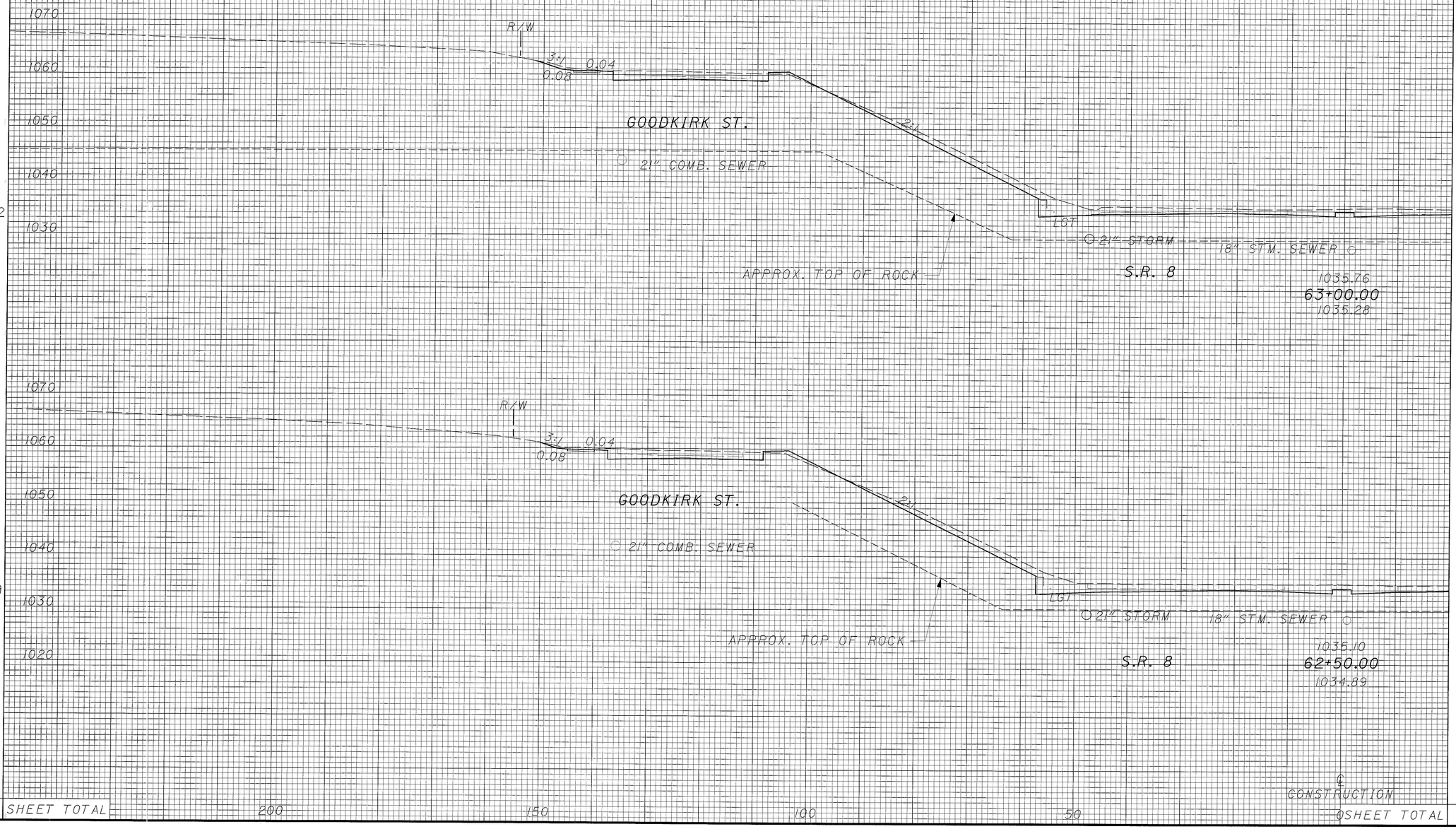

END AREA		VOLUME	
CUT	FILL	CUT	FILL
109	3		
213	8		
121	6		
250	8		
		463	16
SHEET TOTAL			

CALCULATED JE
CHECKED KMM

CROSS SECTIONS - S.R. 8 LT.
STA. 62+50 TO STA. 63+00

SUM-8-0.63

SEEDING	
END WIDTH	SQ. YDS.
74	
408	
73	
414	
	822

FOR EARTHWORK AND SEEDING & MULCHING SUBSUMMARY SEE SHEET 168

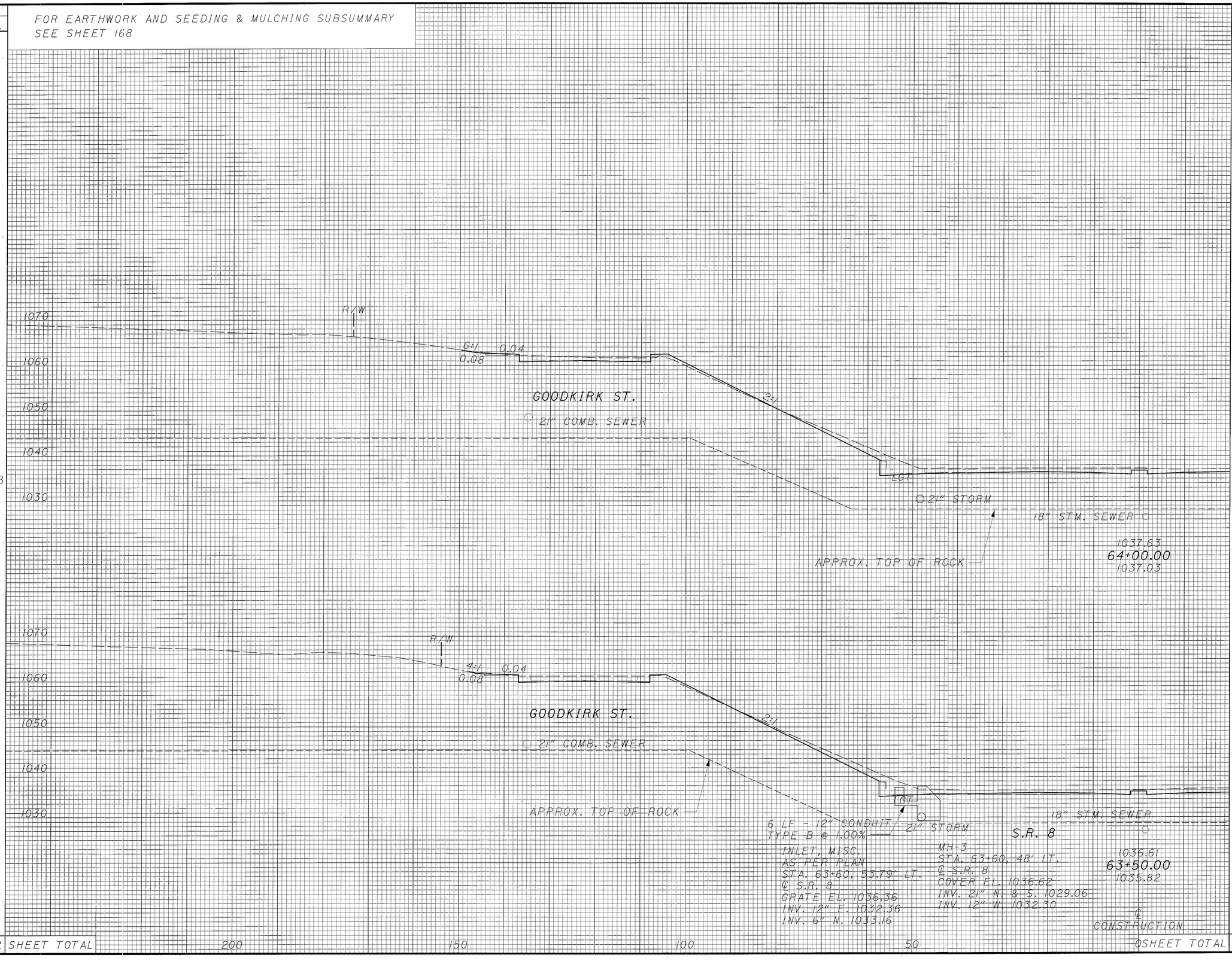

END AREA		VOLUME	
CUT	FILL	CUT	FILL
68	13		
		129	25
71	14		
		167	16
SHEET TOTAL		296	41

CALCULATED JE

CHECKED KMM

CROSS SECTIONS - S.R. 8 LT.
STA. 63+50 TO STA. 64+00

SUM-8-0.63

SEEDING	
END WIDTH	SQ. YDS.
77	
	417
73	
	408
	825

FOR EARTHWORK AND SEEDING & MULCHING SUBSUMMARY SEE SHEET 168

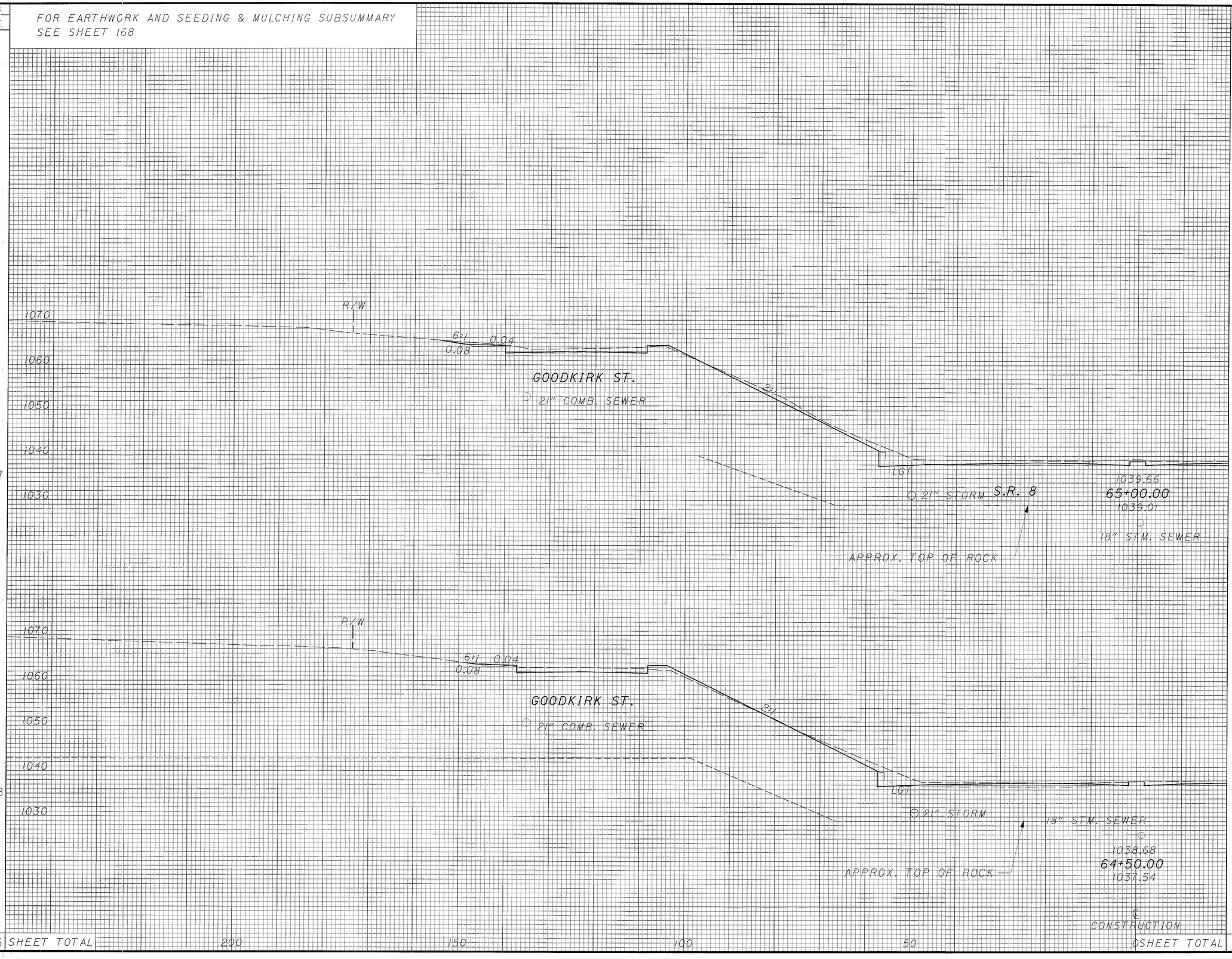

END AREA		VOLUME	
CUT	FILL	CUT	FILL
78	3		
119	16		
50	14		
109	25		
SHEET TOTAL		228	41

CALCULATED JE

CHECKED KMM

CROSS SECTIONS - S.R. 8 LT.
STA. 64+50 TO STA. 65+00

SUM-8-0.63

326
1088

SEEDING END WIDTH	SEEDING SQ. YDS.
0	
	172
62	
	386
558	SHEET TOTAL

FOR EARTHWORK AND SEEDING & MULCHING SUBSUMMARY
SEE SHEET 168

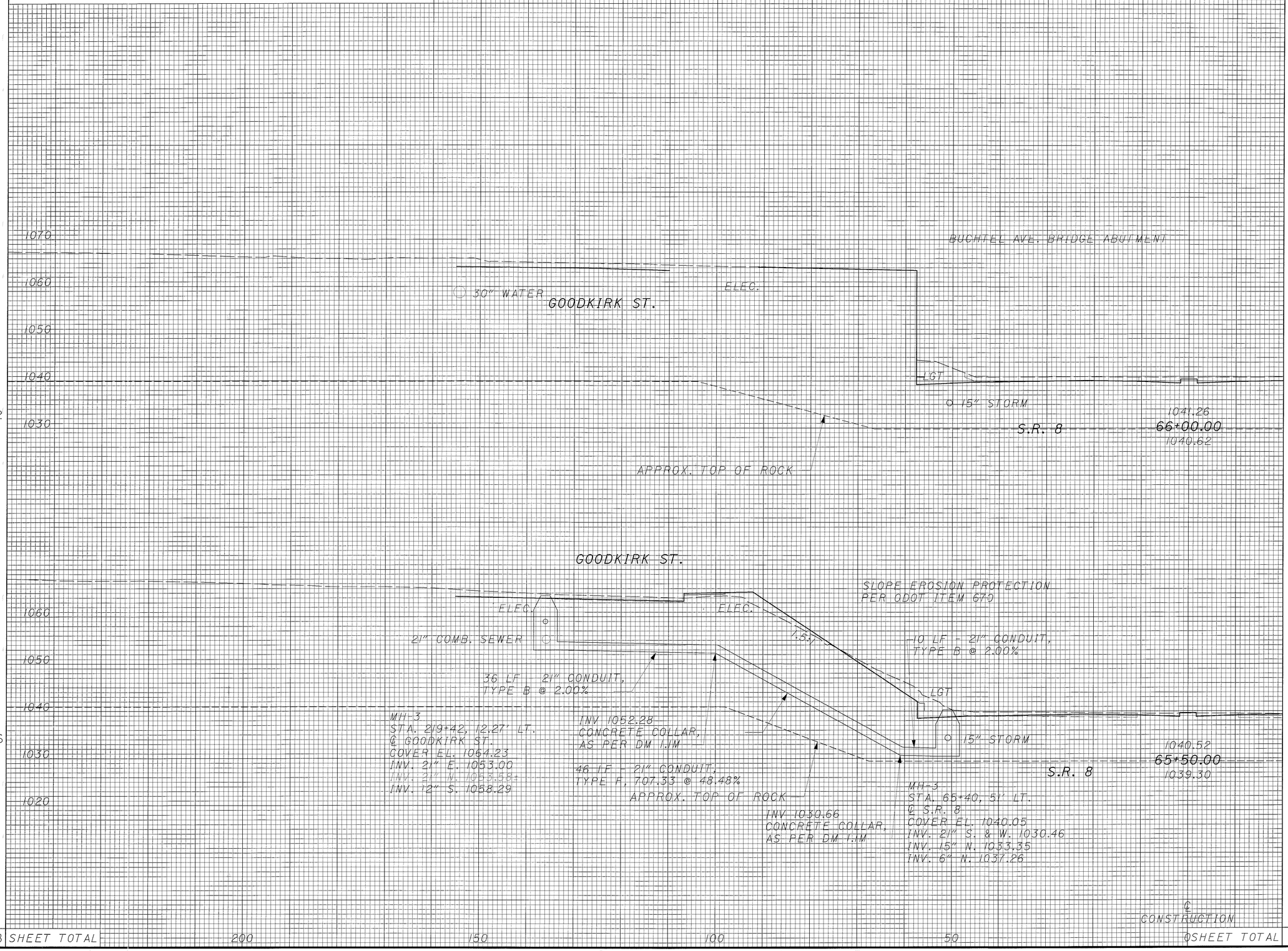

END AREA CUT	END AREA FILL	VOLUME CUT	VOLUME FILL
0	0		
		44	29
48	31		
		116	31
0	SHEET TOTAL	160	60

CALCULATED JE
CHECKED KMM

CROSS SECTIONS - S.R. 8 LT.
STA. 65+50 TO STA. 66+00

SUM-8-0.63

SEEDING	
END WIDTH	SQ. YDS.
95	
	514
90	
	250
	764

FOR EARTHWORK AND SEEDING & MULCHING SUBSUMMARY SEE SHEET 168

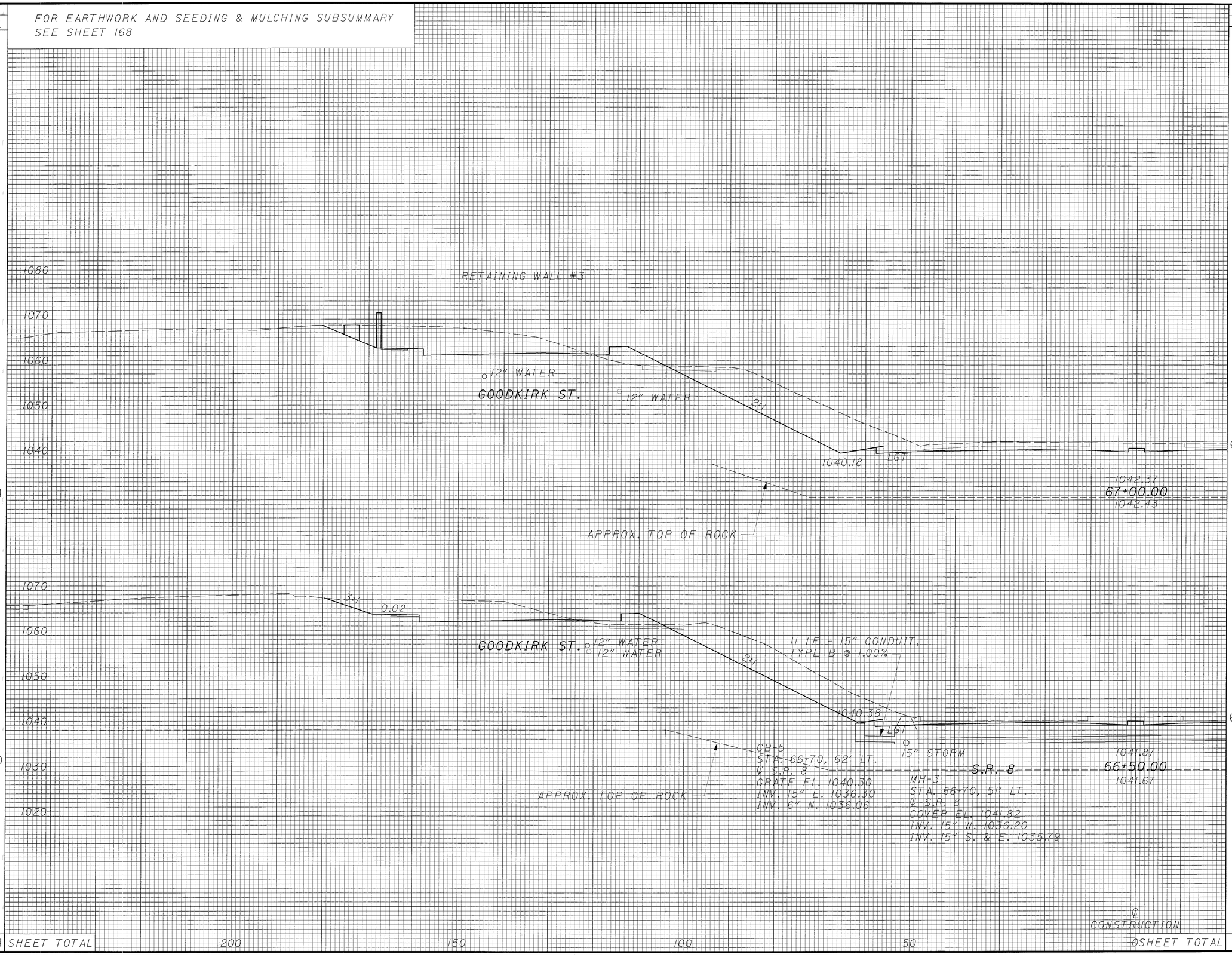

END AREA		VOLUME	
CUT	FILL	CUT	FILL
603	31		
1205	52		
698	25		
646	23		
SHEET TOTAL		1851	75

CALCULATED JE

CHECKED KMM

CROSS SECTIONS - S.R. 8 LT.
STA. 66+50 TO STA. 67+00

SUM-8-0.63

328
1088

FOR EARTHWORK AND SEEDING & MULCHING SUBSUMMARY
SEE SHEET 168

SEEDING END WIDTH	SEEDING SQ. YDS.	END AREA CUT	END AREA FILL	VOLUME CUT	VOLUME FILL
86	475	697	44		
85	500	1292	64		
		698	25		
		1205	52		
	975 SHEET TOTAL			2497	116

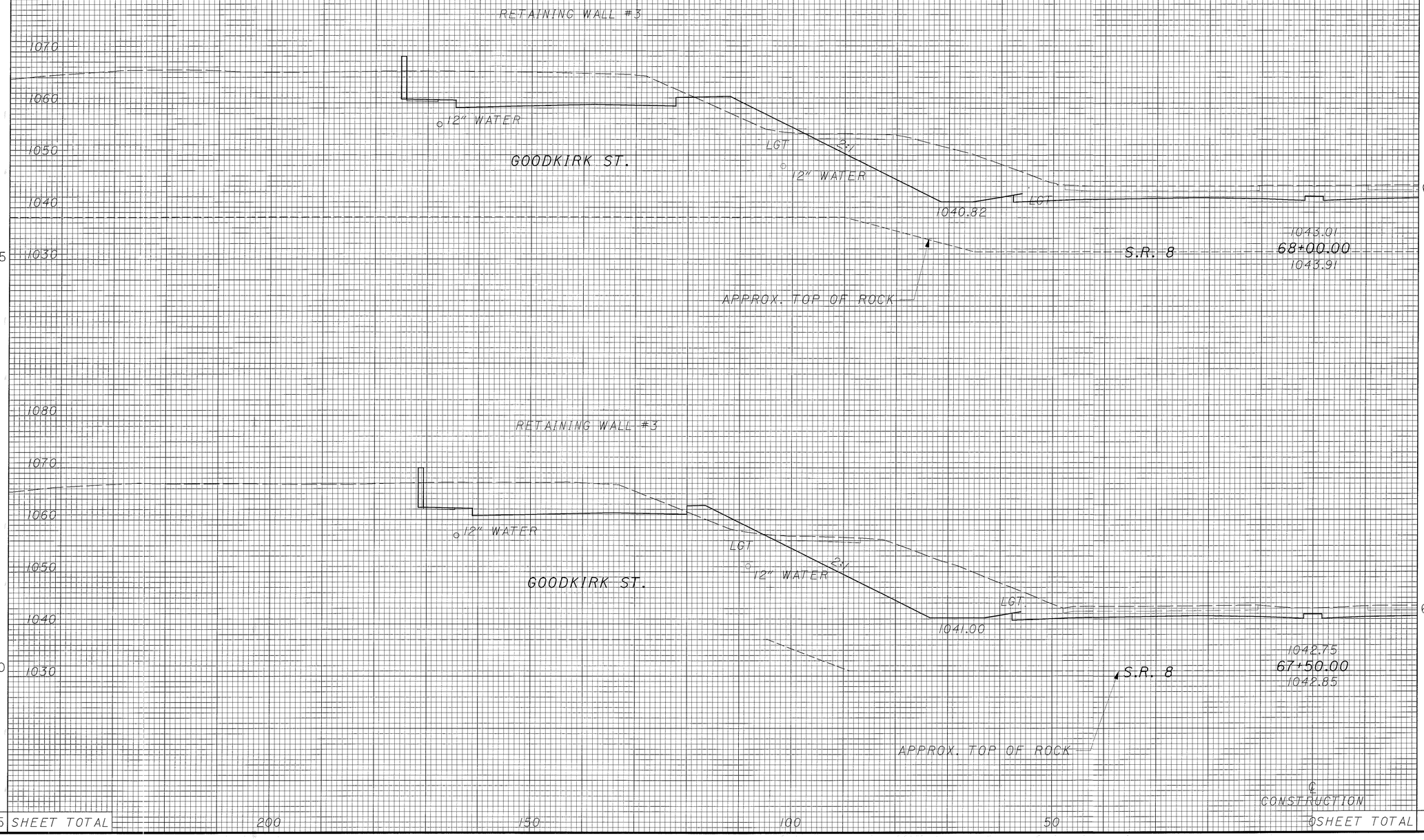

CALCULATED JE
CHECKED KMM

CROSS SECTIONS - S.R. 8 LT.
STA. 67+50 TO STA. 68+00

SUM-8-0.63

329
1088

SEEDING	
END WIDTH	SQ. YDS.

FOR EARTHWORK AND SEEDING & MULCHING SUBSUMMARY SEE SHEET 168

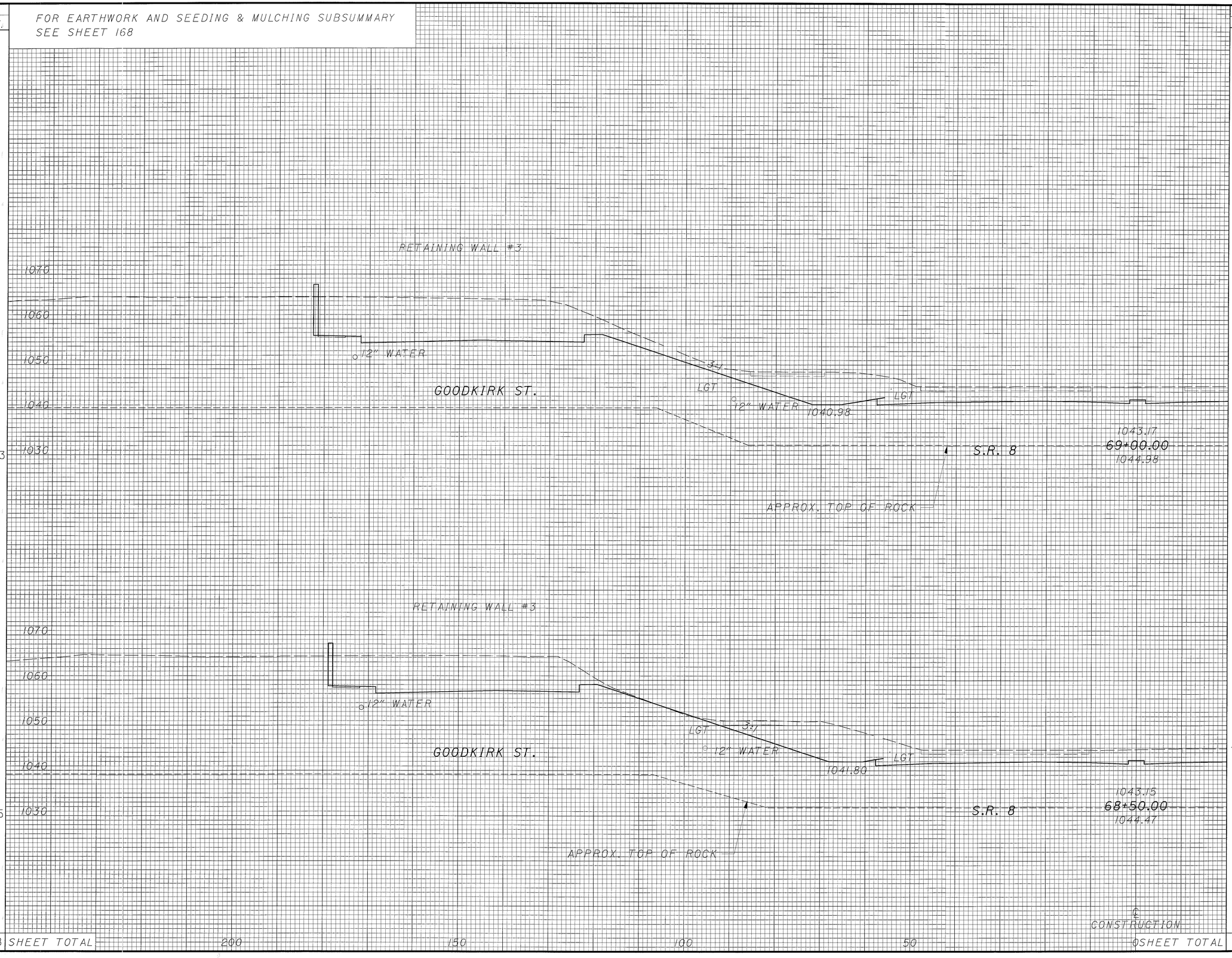

	SEEDING SQ. YDS.	END AREA CUT	END AREA FILL	VOLUME CUT	VOLUME FILL
78					
	453	951	0		
85					
	475	1581	0		
		756	0		
		1345	41		
	928 SHEET TOTAL			2926	41

200 150 100 50 0

CALCULATED JE

CHECKED KMM

CROSS SECTIONS - S.R. 8 LT.
STA. 68+50 TO STA. 69+00

SUM-8-0.63

330
1088

FOR EARTHWORK AND SEEDING & MULCHING SUBSUMMARY
SEE SHEET 168

SEEDING END WIDTH	SEEDING SQ. YDS.	END AREA CUT	END AREA FILL	VOLUME CUT	VOLUME FILL
90					
		1150	0		
	489				
				1980	0
86					
		988	0		
	456				
				1795	0
	945			3775	0

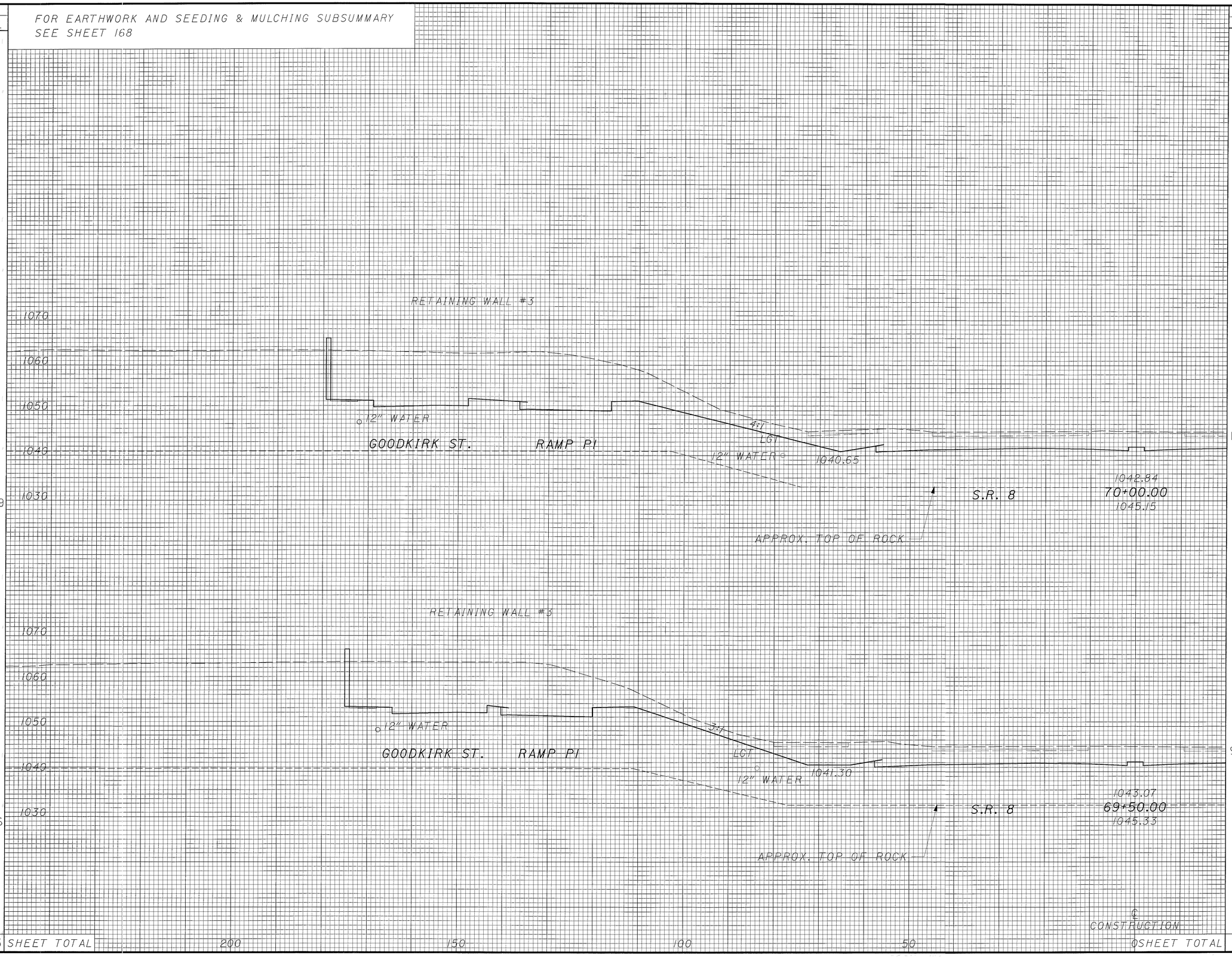

CALCULATED JE
CHECKED KMM

CROSS SECTIONS - S.R. 8 LT.
STA. 69+50 TO STA. 70+00

SUM-8-0.63

331
1088

SEEDING	
END WIDTH	SQ. YDS.
88	
	486
87	
	492
978	SHEET TOTAL

FOR EARTHWORK AND SEEDING & MULCHING SUBSUMMARY
SEE SHEET 168

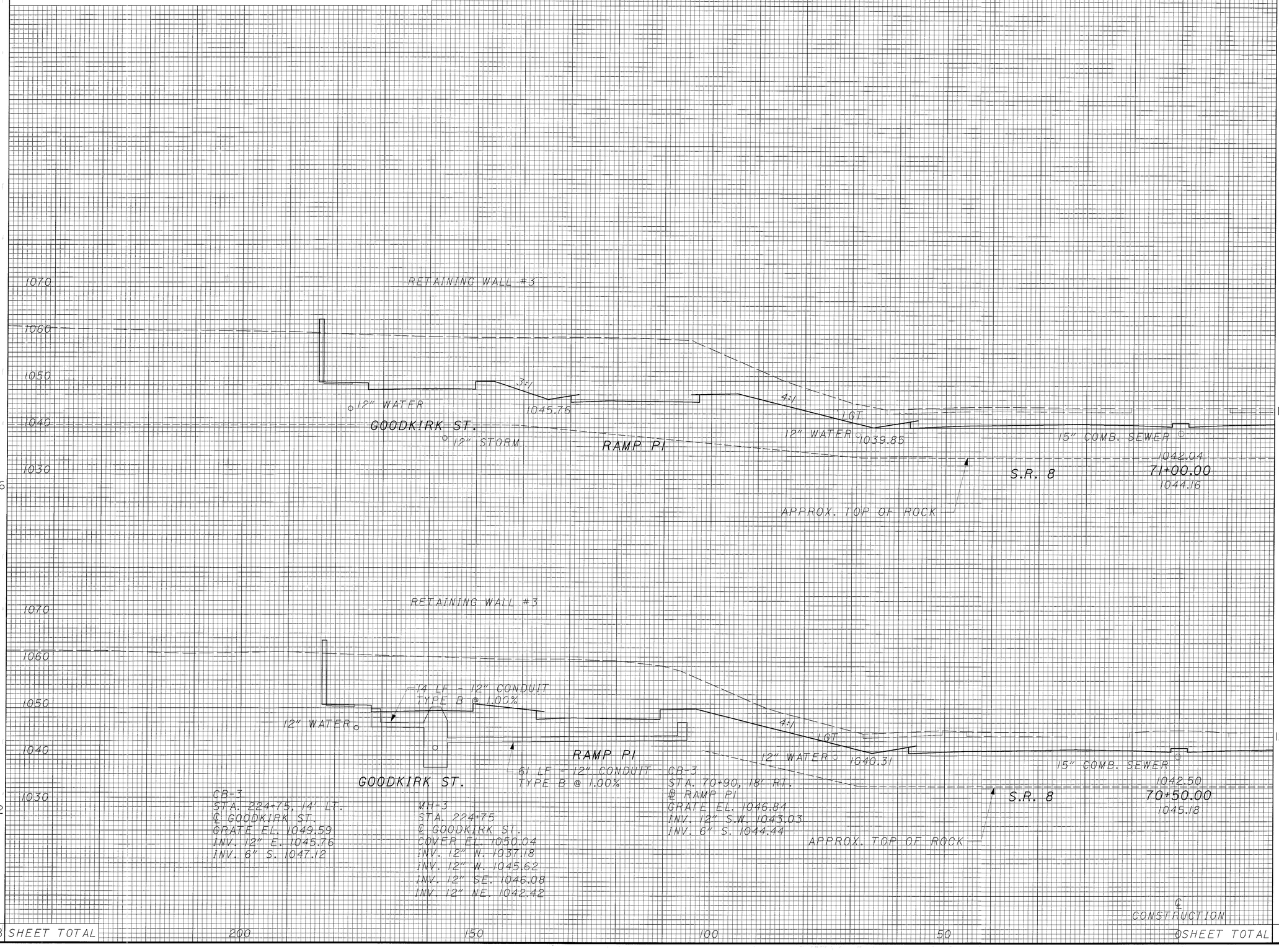

CB-3
STA. 224+75, 14' LT.
℄ GOODKIRK ST.
GRATE EL. 1049.59
INV. 12" E. 1045.76
INV. 6" S. 1047.12

MH-3
STA. 224+75
℄ GOODKIRK ST.
COVER EL. 1050.04
INV. 12" N. 1037.18
INV. 12" W. 1045.62
INV. 12" SE. 1046.08
INV. 12" NE. 1042.42

CB-3
STA. 70+90, 18' RT.
℄ RAMP PI
GRATE EL. 1046.84
INV. 12" S.W. 1043.03
INV. 6" S. 1044.44

200 150 100 50 0

END AREA		VOLUME	
CUT	FILL	CUT	FILL
1372	0		
		2437	0
1260	0		
		2231	0
SHEET TOTAL		4668	0

CALCULATED JE
CHECKED KMM

CROSS SECTIONS - S.R. 8 LT.
STA. 70+50 TO STA. 71+00

SUM-8-0.63

332
1088

SEEDING	
END WIDTH	SQ. YDS.
79	
85	
937	SHEET TOTAL

FOR EARTHWORK AND SEEDING & MULCHING SUBSUMMARY SEE SHEET 168

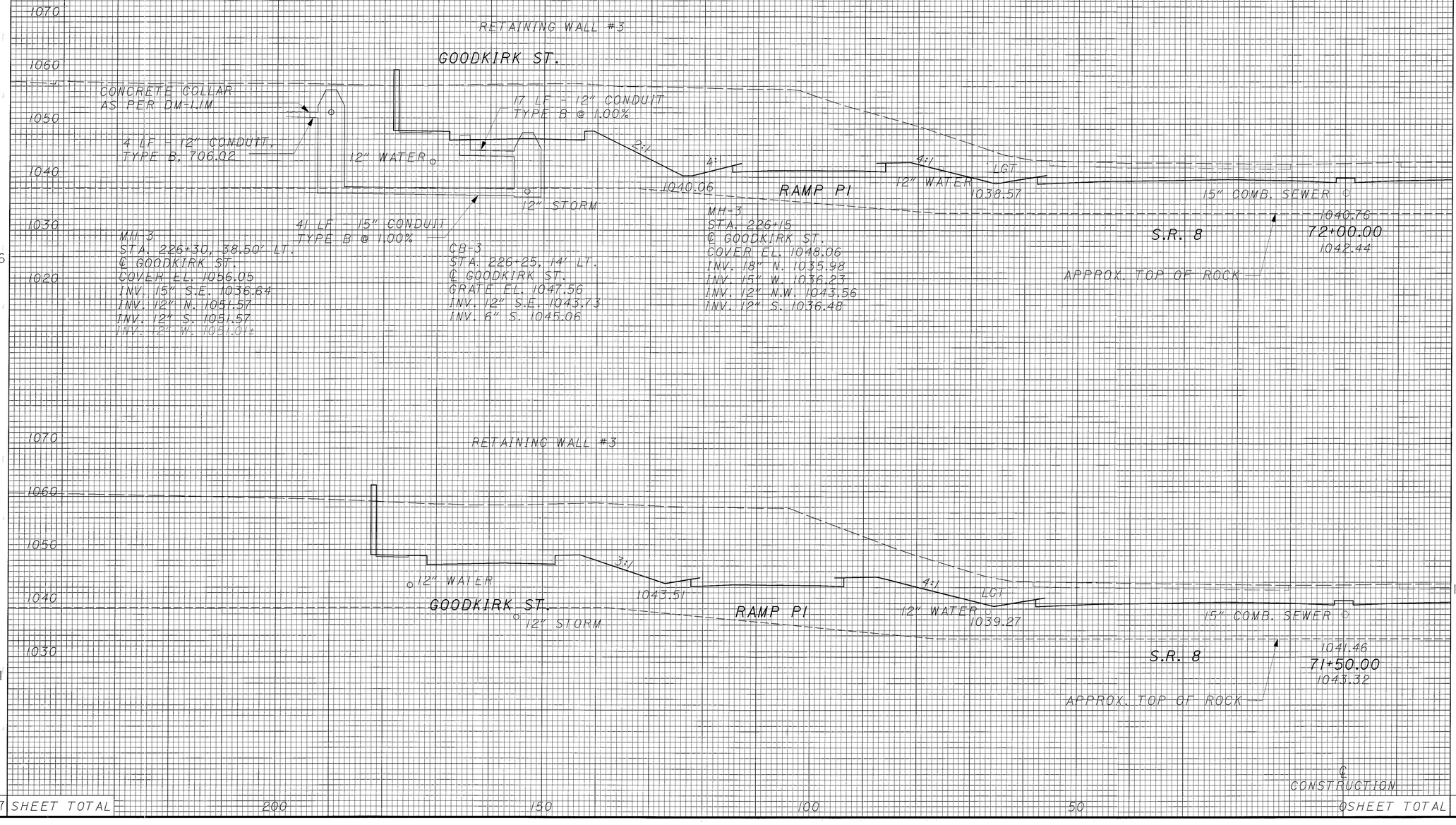

END AREA		VOLUME	
CUT	FILL	CUT	FILL
1429	0		
		2656	0
1439	0		
		2603	0
SHEET TOTAL		5259	0

CALCULATED JE

CHECKED KMM

CROSS SECTIONS - S.R. 8 LT.
STA. 71+50 TO STA. 72+00

SUM-8-0.63

333
1088

SEEDING	
END WIDTH	SQ. YDS.
67	
389	
73	
422	
811	SHEET TOTAL

FOR EARTHWORK AND SEEDING & MULCHING SUBSUMMARY
SEE SHEET 168

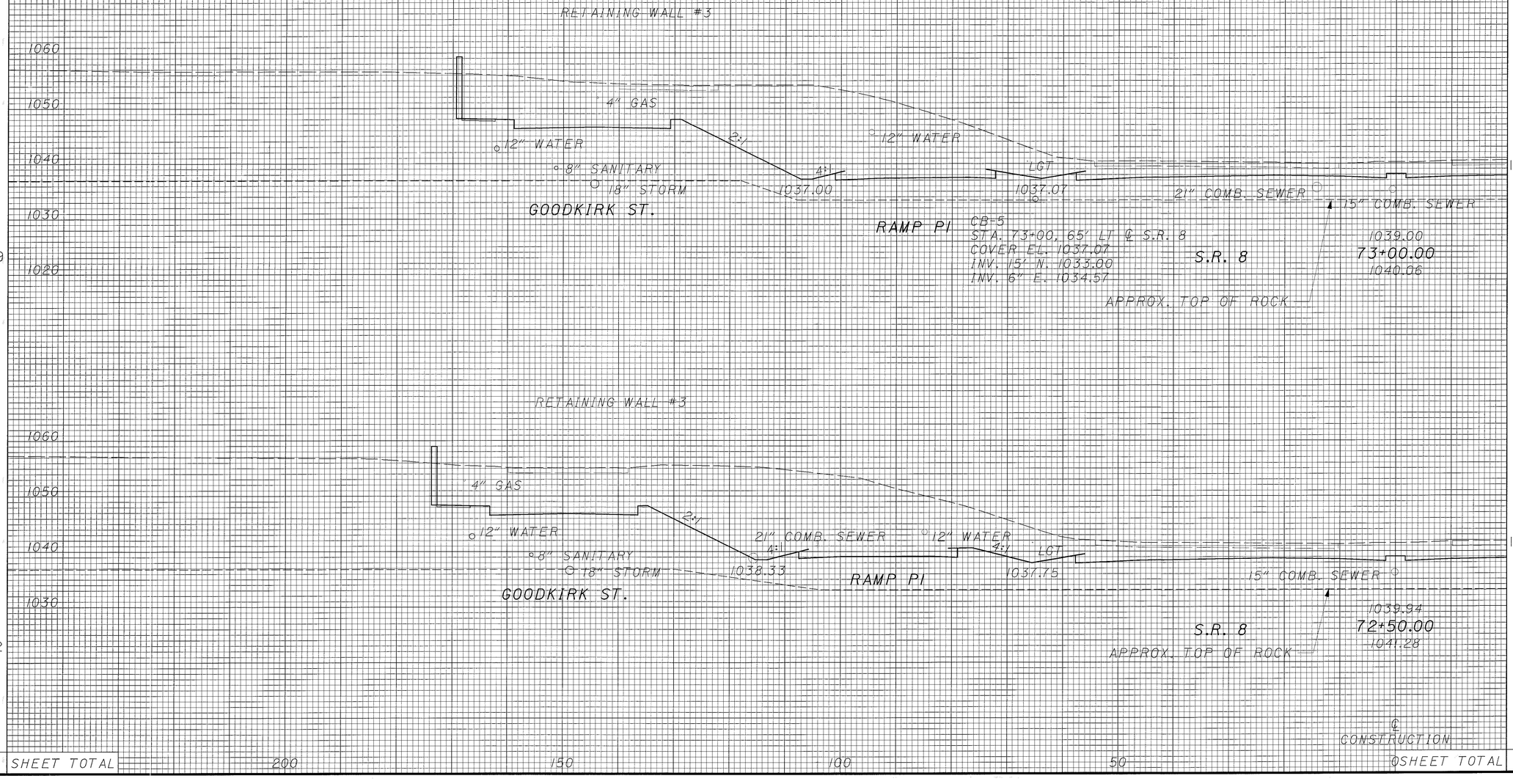

END AREA		VOLUME	
CUT	FILL	CUT	FILL
1200	0		
		2294	0
1277	0		
		2506	0
		4800	0
		℄SHEET TOTAL	

200 150 100 50

CALCULATED JE
CHECKED KMM

CROSS SECTIONS - S.R. 8 LT.
STA. 72+50 TO STA. 73+00

SUM-8-0.63

SEEDING	
END WIDTH	SQ. YDS.
51	
	278
49	
	322
600	SHEET TOTAL

FOR EARTHWORK AND SEEDING & MULCHING SUBSUMMARY
SEE SHEET 168

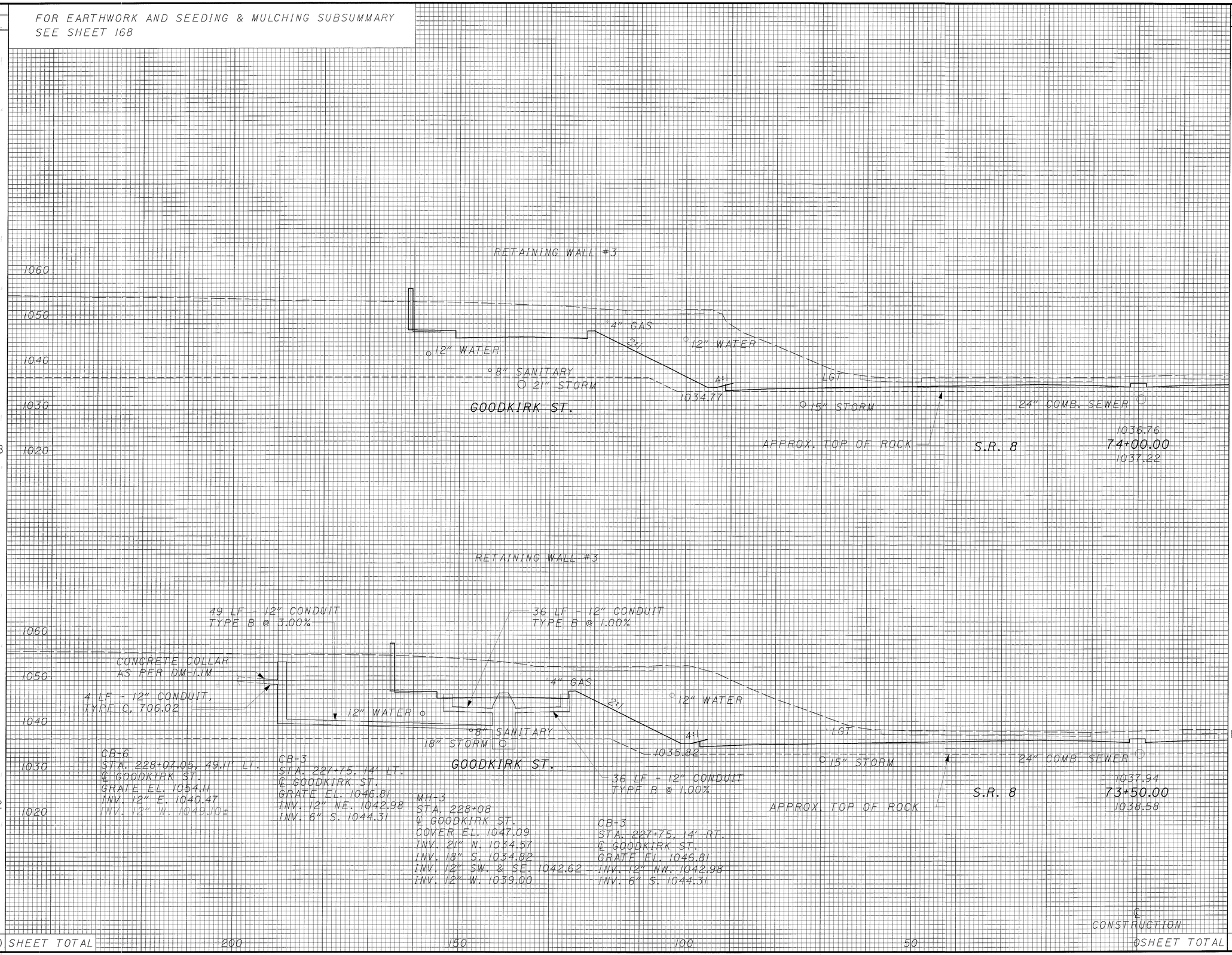

200	150	100	50	0 SHEET TOTAL

END AREA		VOLUME	
CUT	FILL	CUT	FILL
912	0		
1836	0		
1071	0		
2103	0		
3939	0		

CALCULATED JE
CHECKED KMM

CROSS SECTIONS - S.R. 8 LT.
STA. 73+50 TO STA. 74+00

SUM-8-0.63

335
1088

FOR EARTHWORK AND SEEDING & MULCHING SUBSUMMARY
SEE SHEET 168

SEEDING END WIDTH	SEEDING SQ. YDS.	END AREA CUT	END AREA FILL	VOLUME CUT	VOLUME FILL
52					
	289	504	0		
				1131	0
52					
	286	717	0		
				1508	0
	575 SHEET TOTAL			2639	0

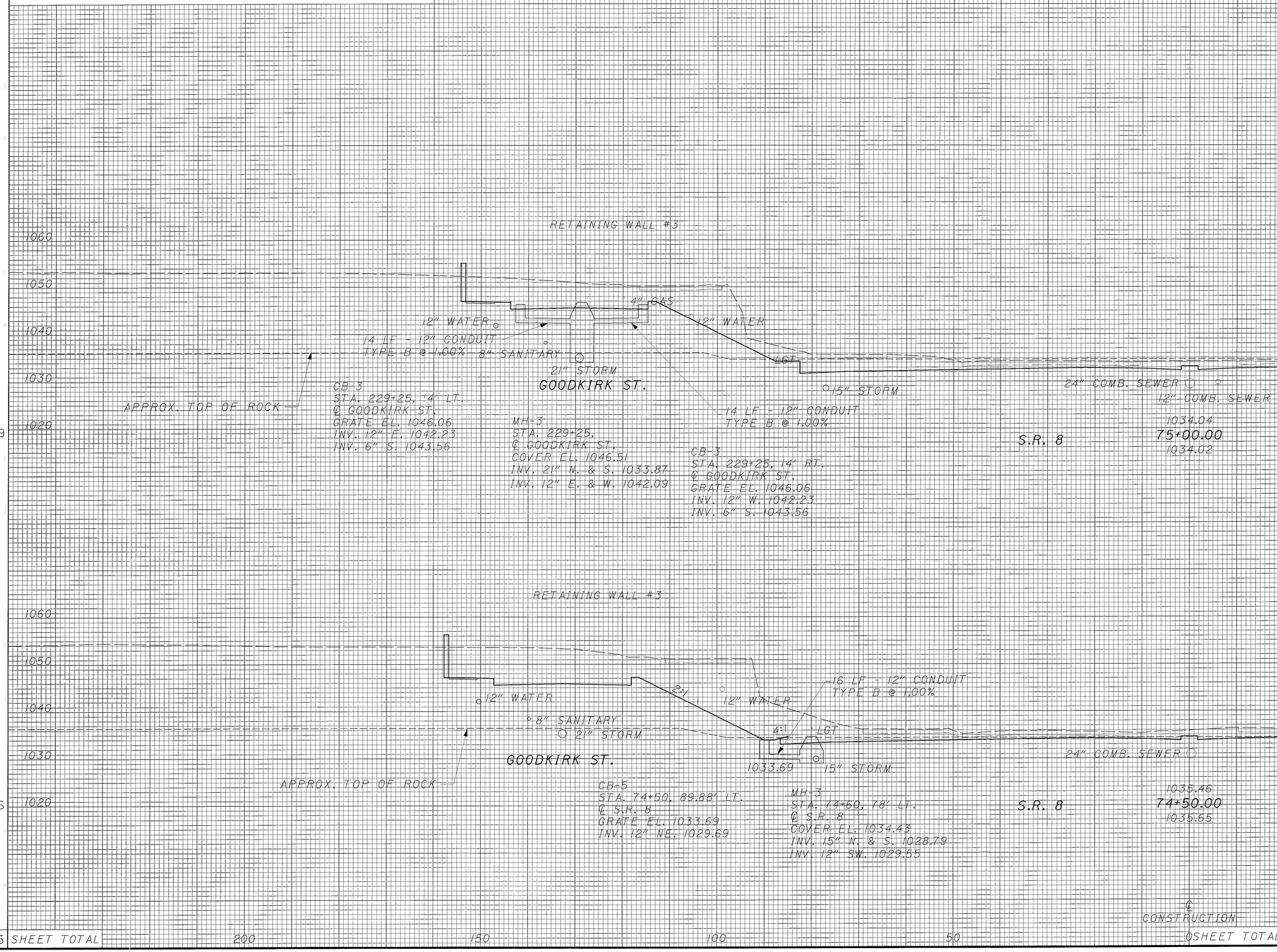

SHEET TOTAL

CALCULATED JE
CHECKED KMM

CROSS SECTIONS - S.R. 8 LT.
STA. 74+50 TO STA. 75+00

SUM-8-0.63

SEEDING	
END WIDTH	SQ. YDS.
49	
	278
51	
	286
	564

FOR EARTHWORK AND SEEDING & MULCHING SUBSUMMARY
SEE SHEET 168

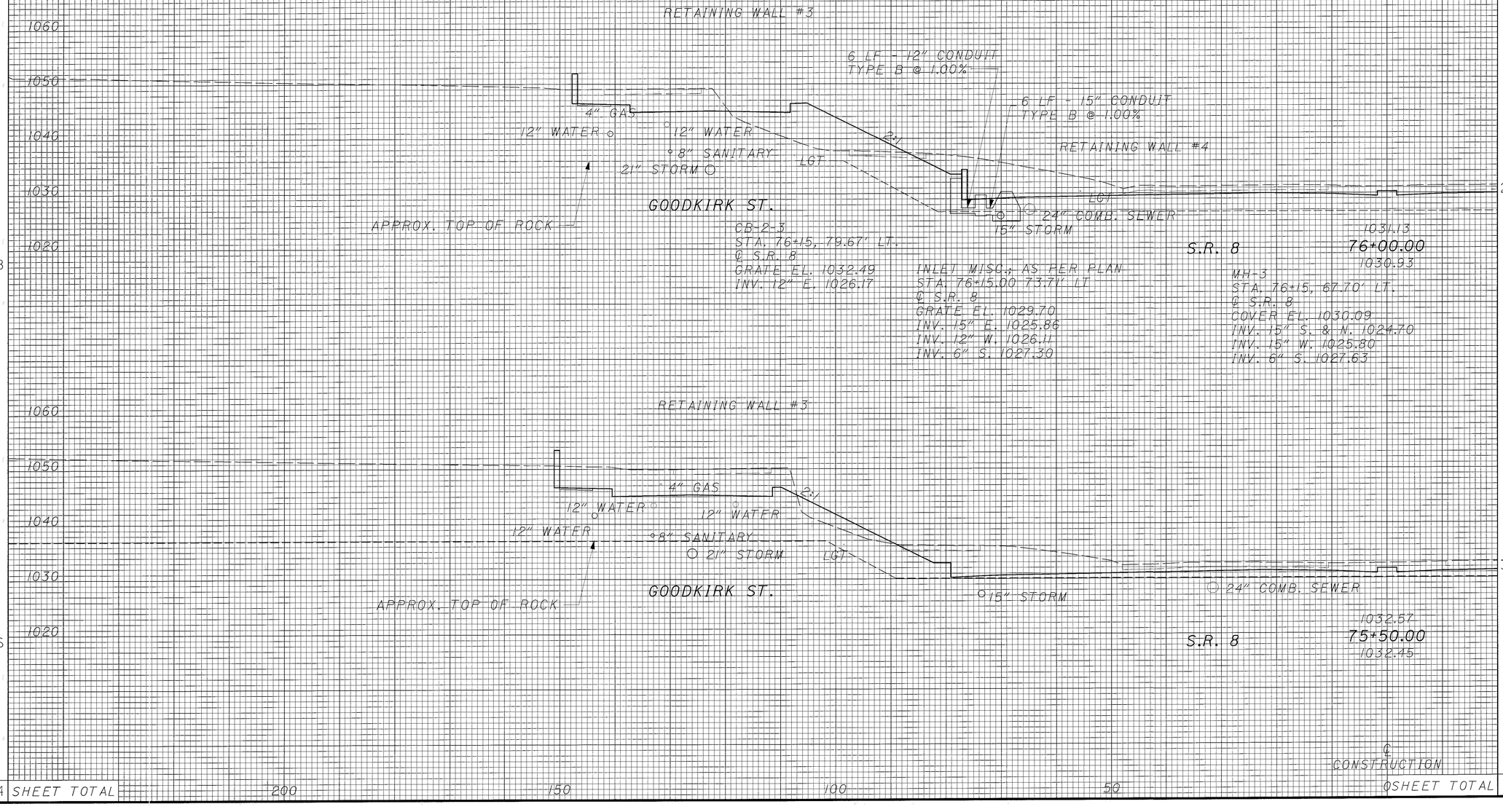

END AREA		VOLUME	
CUT	FILL	CUT	FILL
269	129		
		575	150
352	33		
		793	31
		1368	181

CALCULATED JE
CHECKED KMM

CROSS SECTIONS - S.R. 8 LT.
STA. 75+50 TO STA. 76+00

SUM-8-0.63

337
1088

200 150 100 50 ⌀SHEET TOTAL

SEEDING	
END WIDTH	SQ. YDS.
54	
	314
59	
	325
58	
	297
	936

FOR EARTHWORK AND SEEDING & MULCHING SUBSUMMARY
SEE SHEET 168

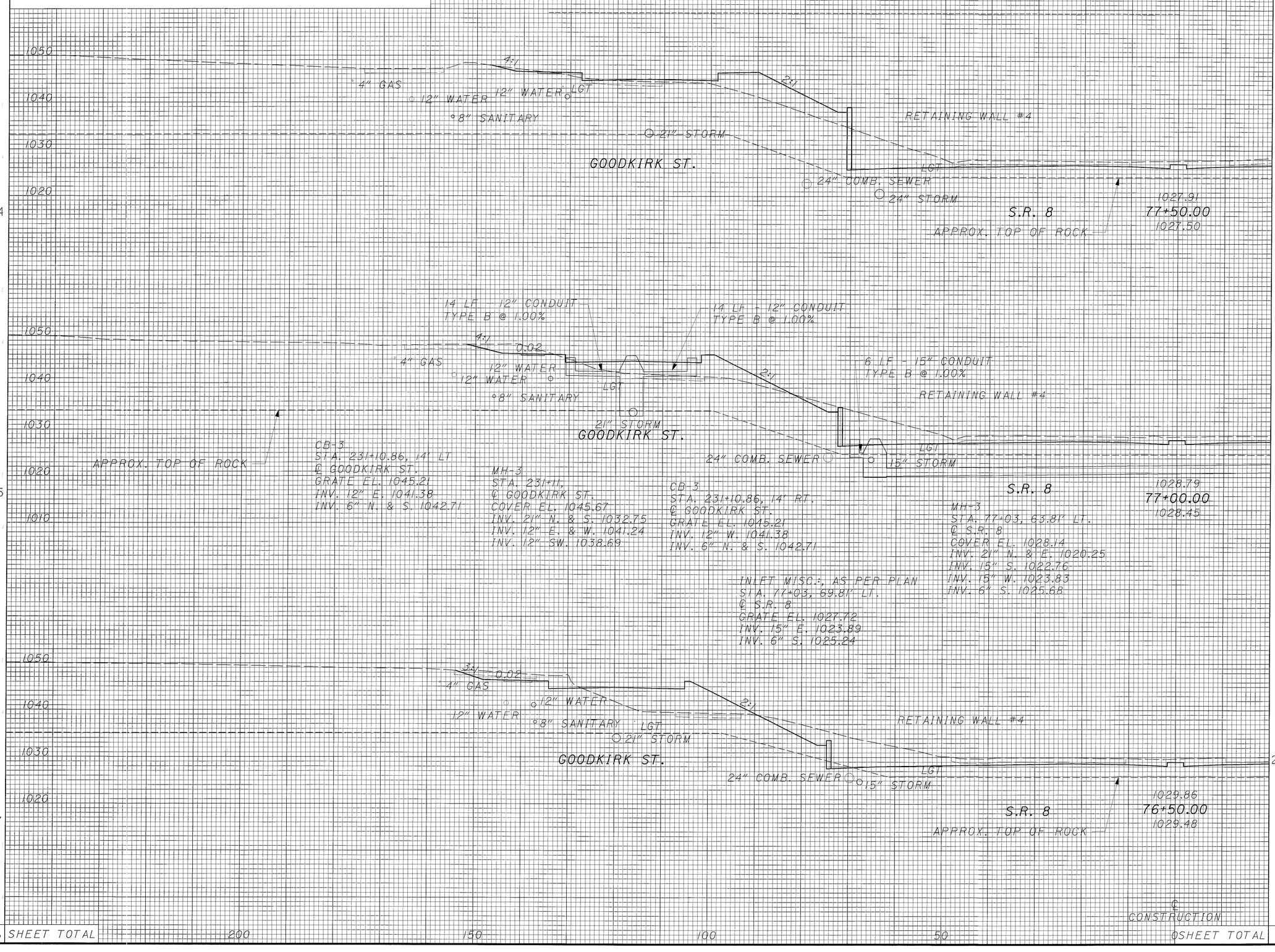

END AREA		VOLUME	
CUT	FILL	CUT	FILL
126	121		
		264	213
159	109		
		335	227
203	136		
		437	245
		1036	685
SHEET TOTAL			
OSHEET TOTAL			

CALCULATED JE
CHECKED KMM

CROSS SECTIONS - S.R. 8 LT.
STA. 76+50 TO STA. 77+50

SUM-8-0.63

338
1088

SEEDING	
END WIDTH	SQ. YDS.
23	
	64
0	
0	
0	
	150
214	SHEET TOTAL

FOR EARTHWORK AND SEEDING & MULCHING SUBSUMMARY
SEE SHEET 168

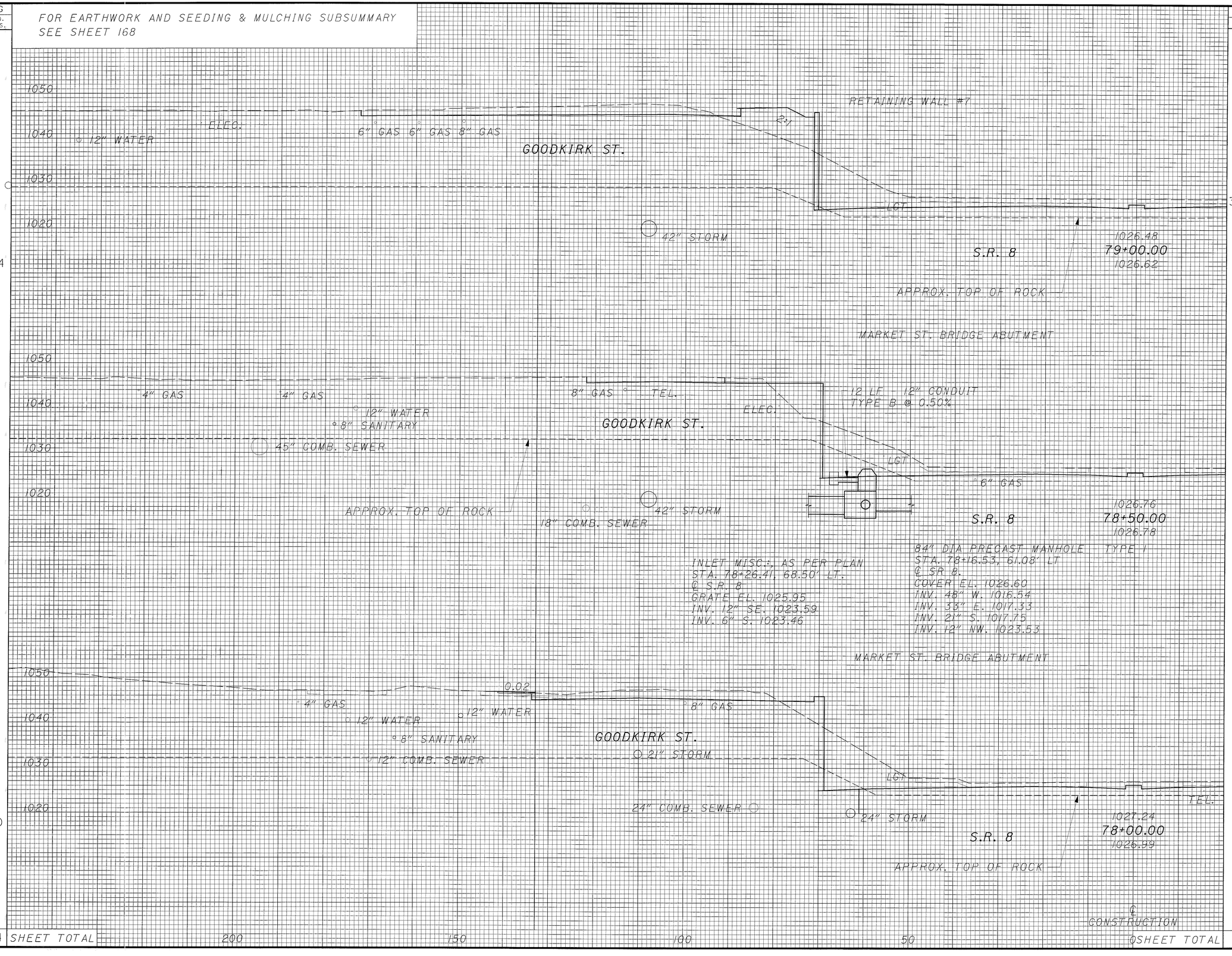

END AREA		VOLUME	
CUT	FILL	CUT	FILL
326	103		
		302	95
0	0		
0	0		
		0	0
0	0		
		117	112
		419	207
	SHEET TOTAL		

CALCULATED JE
CHECKED KMM

CROSS SECTIONS - S.R. 8 LT.
STA. 78+00 TO STA. 79+00

SUM-8-0.63

339
1088

SEEDING	
END WIDTH	SQ. YDS.
25	
150	
29	
144	
294	SHEET TOTAL

FOR EARTHWORK AND SEEDING & MULCHING SUBSUMMARY
SEE SHEET 168

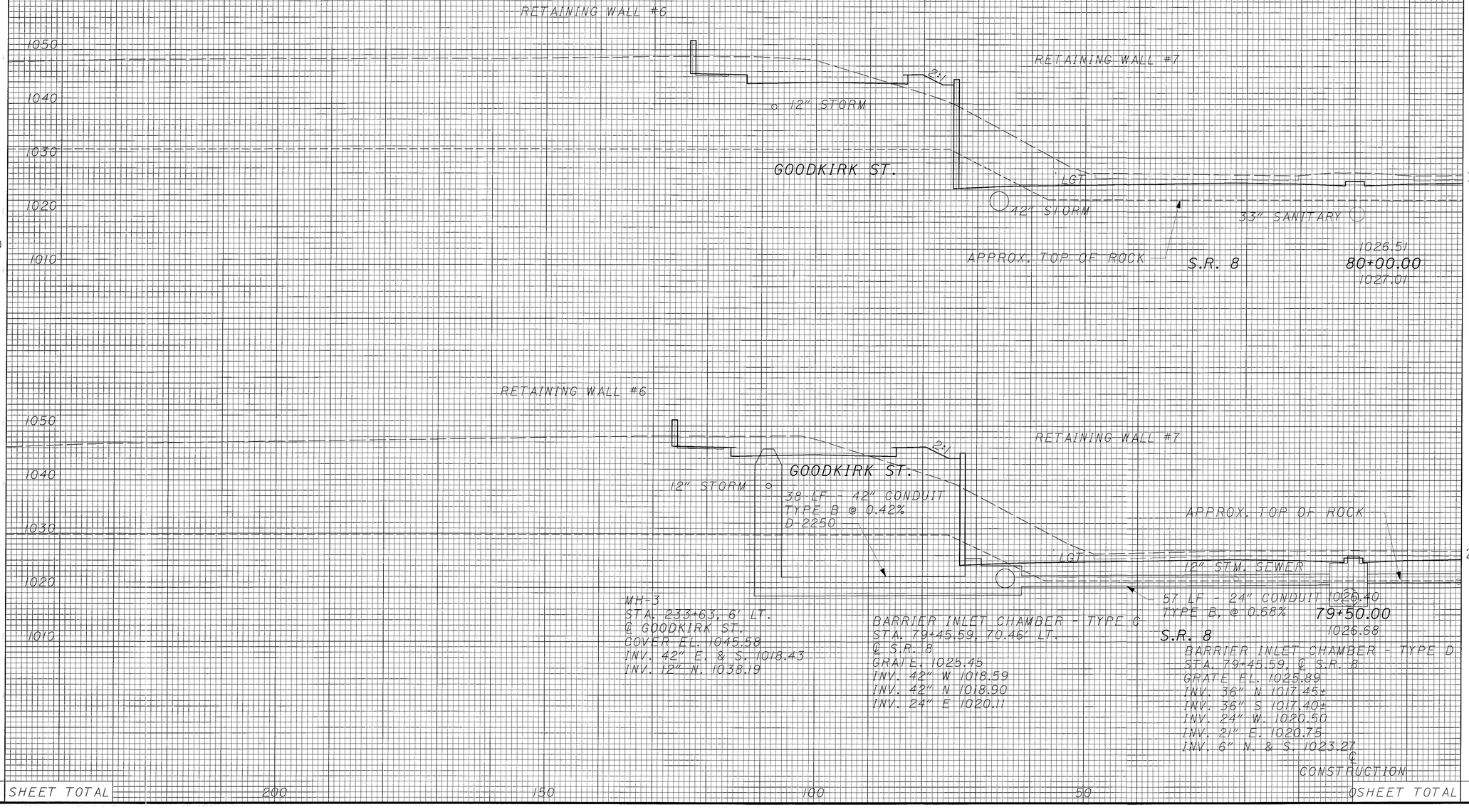

END AREA		VOLUME	
CUT	FILL	CUT	FILL
374	28		
		621	78
297	56		
		576	147
SHEET TOTAL		1197	225

CALCULATED JE
CHECKED KMM

CROSS SECTIONS - S.R. 8 LT.
STA. 79+50 TO STA. 80+00

SUM-8-0.63

340
1088

SEEDING	
END WIDTH	SQ. YDS.
24	133
24	136
	269

FOR EARTHWORK AND SEEDING & MULCHING SUBSUMMARY
SEE SHEET 168

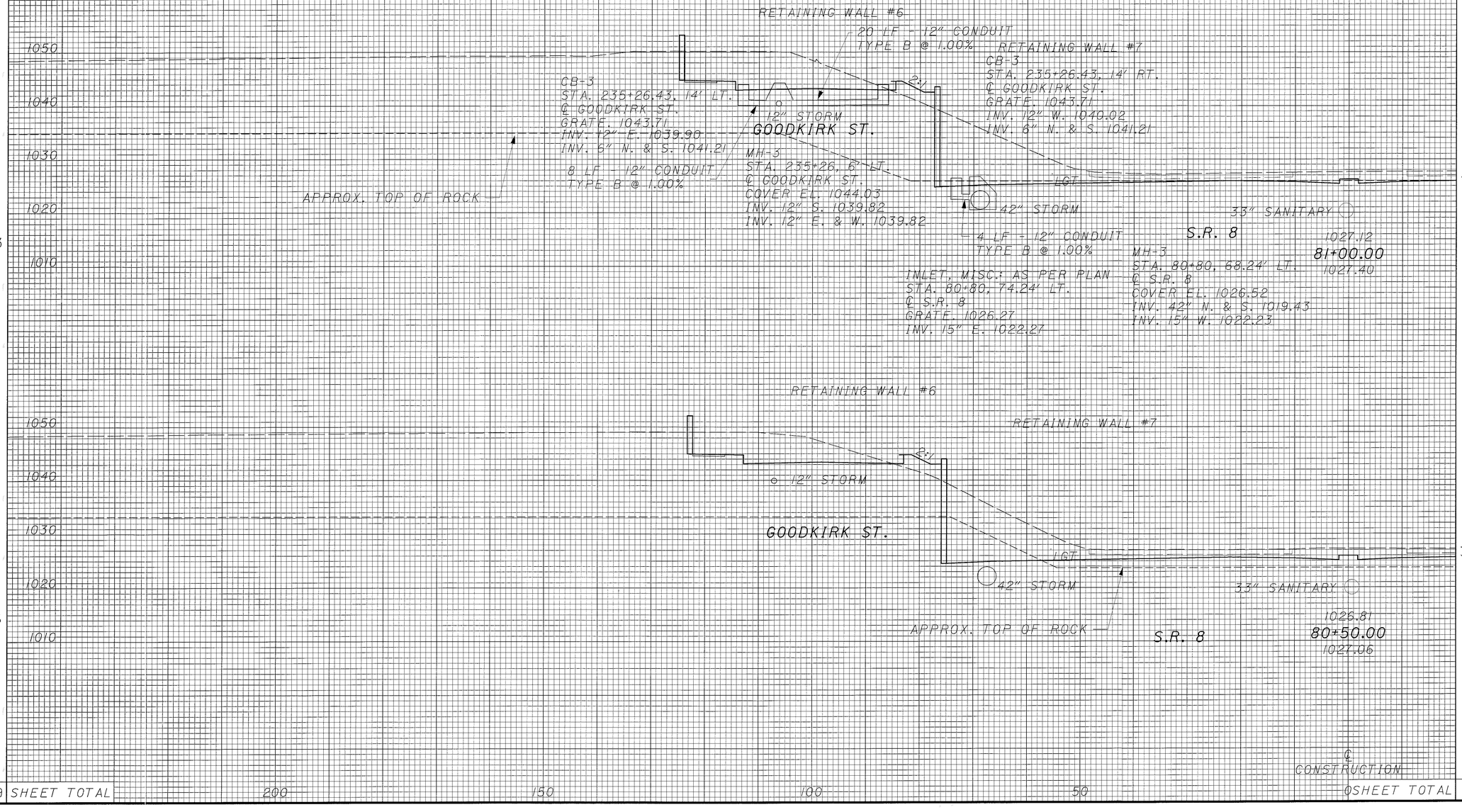

END AREA		VOLUME	
CUT	FILL	CUT	FILL
434	17		
		769	32
397	18		
		714	43
		1483	75

269 SHEET TOTAL | 200 | 150 | 100 | 50 | 0 SHEET TOTAL

CALCULATED JE | CHECKED KMM

CROSS SECTIONS - S.R. 8 LT.
STA. 80+50 TO STA. 81+50

SUM-8-0.63

341
1088

SEEDING	
END WIDTH	SQ. YDS.
29	153
26	139
	292

FOR EARTHWORK AND SEEDING & MULCHING SUBSUMMARY SEE SHEET 168

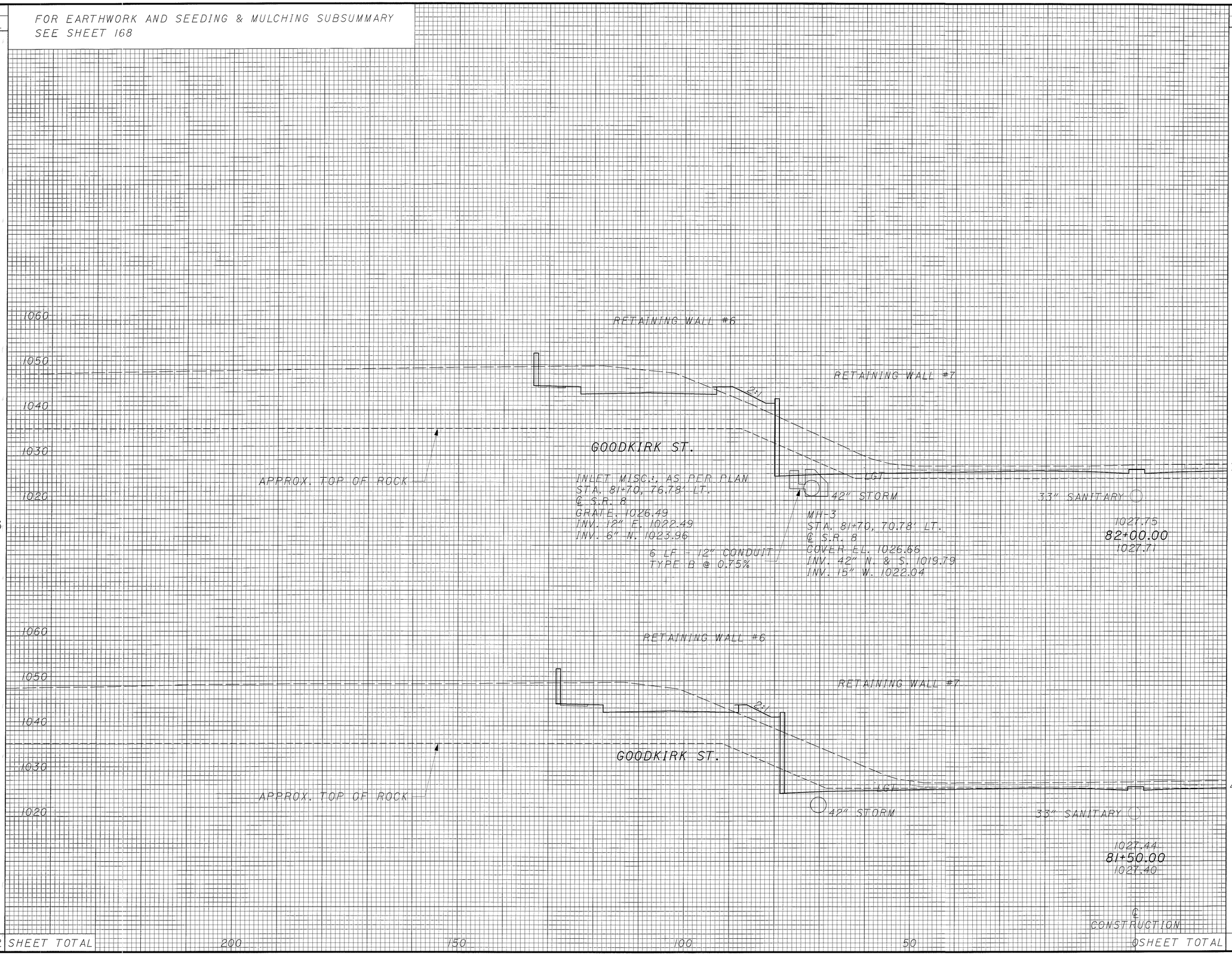

END AREA		VOLUME	
CUT	FILL	CUT	FILL
385	24		
		735	44
409	23		
		781	37
SHEET TOTAL		1516	81

CALCULATED JE
CHECKED KMM

CROSS SECTIONS - S.R. 8 LT.
STA. 81+50 TO STA. 82+00

SUM-8-0.63

342
1088

FOR EARTHWORK AND SEEDING & MULCHING SUBSUMMARY
SEE SHEET 168

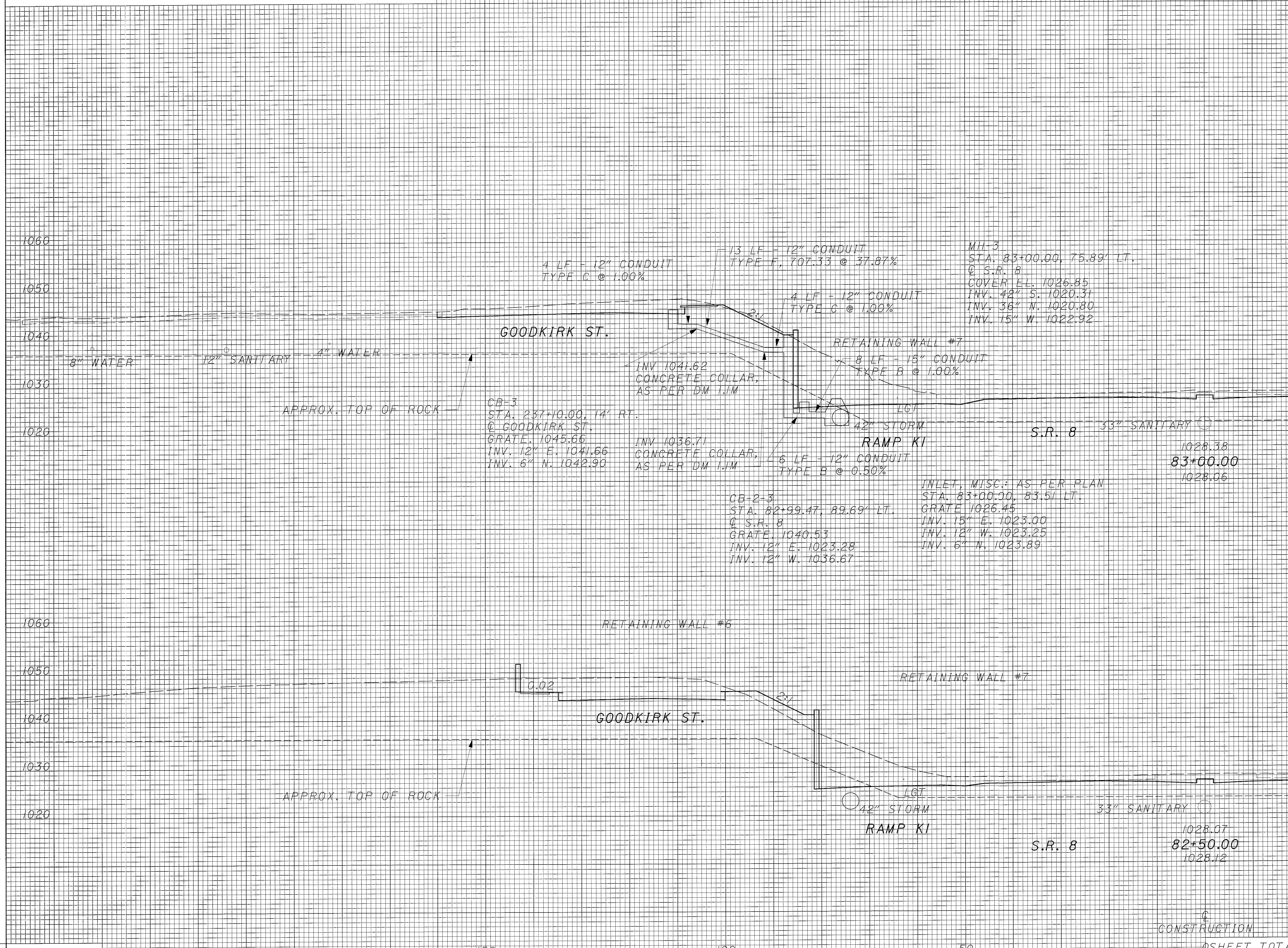

SEEDING END WIDTH	SEEDING SQ. YDS.
28	
	175
35	
	177
	352 SHEET TOTAL

END AREA CUT	END AREA FILL	VOLUME CUT	VOLUME FILL
337	1		
		654	29
369	30		
		698	50
0 SHEET TOTAL		1352	79

CALCULATED JE
CHECKED KMM

CROSS SECTIONS - S.R. 8 LT.
STA. 82+50 TO STA. 83+00

SUM-8-0.63

343
1088

SEEDING	
END WIDTH	SQ. YDS.
0	
	0
0	
	0
78	
78	SHEET TOTAL

FOR EARTHWORK AND SEEDING & MULCHING SUBSUMMARY
SEE SHEET 168

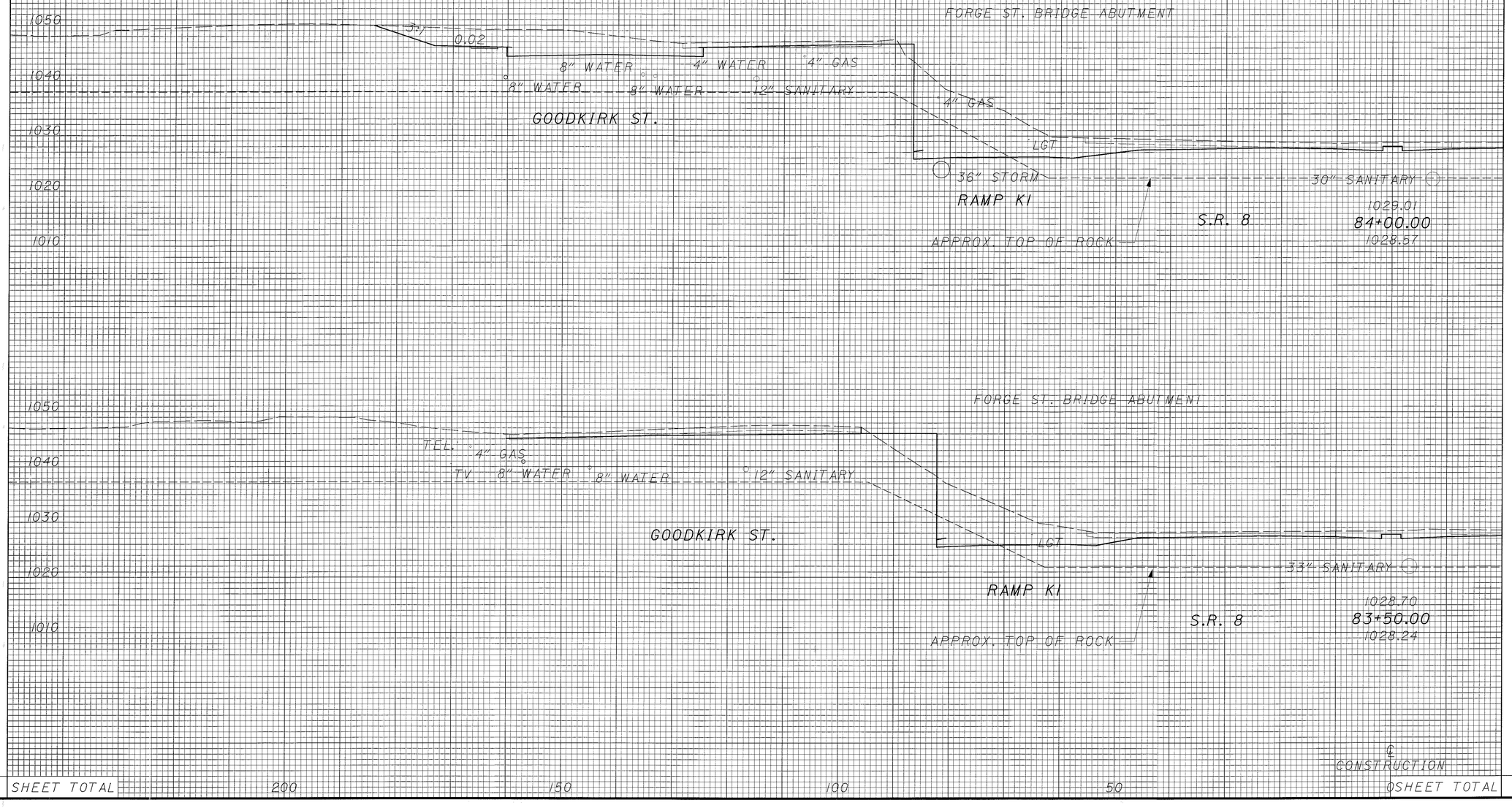

END AREA		VOLUME	
CUT	FILL	CUT	FILL
0	0		
		0	0
0	0		
		312	1
0	0	312	1

CALCULATED JE
CHECKED KMM

CROSS SECTIONS - S.R. 8 LT.
STA. 83+50 TO STA. 84+00

SUM-8-0.63

℄
CONSTRUCTION

FOR EARTHWORK AND SEEDING & MULCHING SUBSUMMARY
SEE SHEET 168

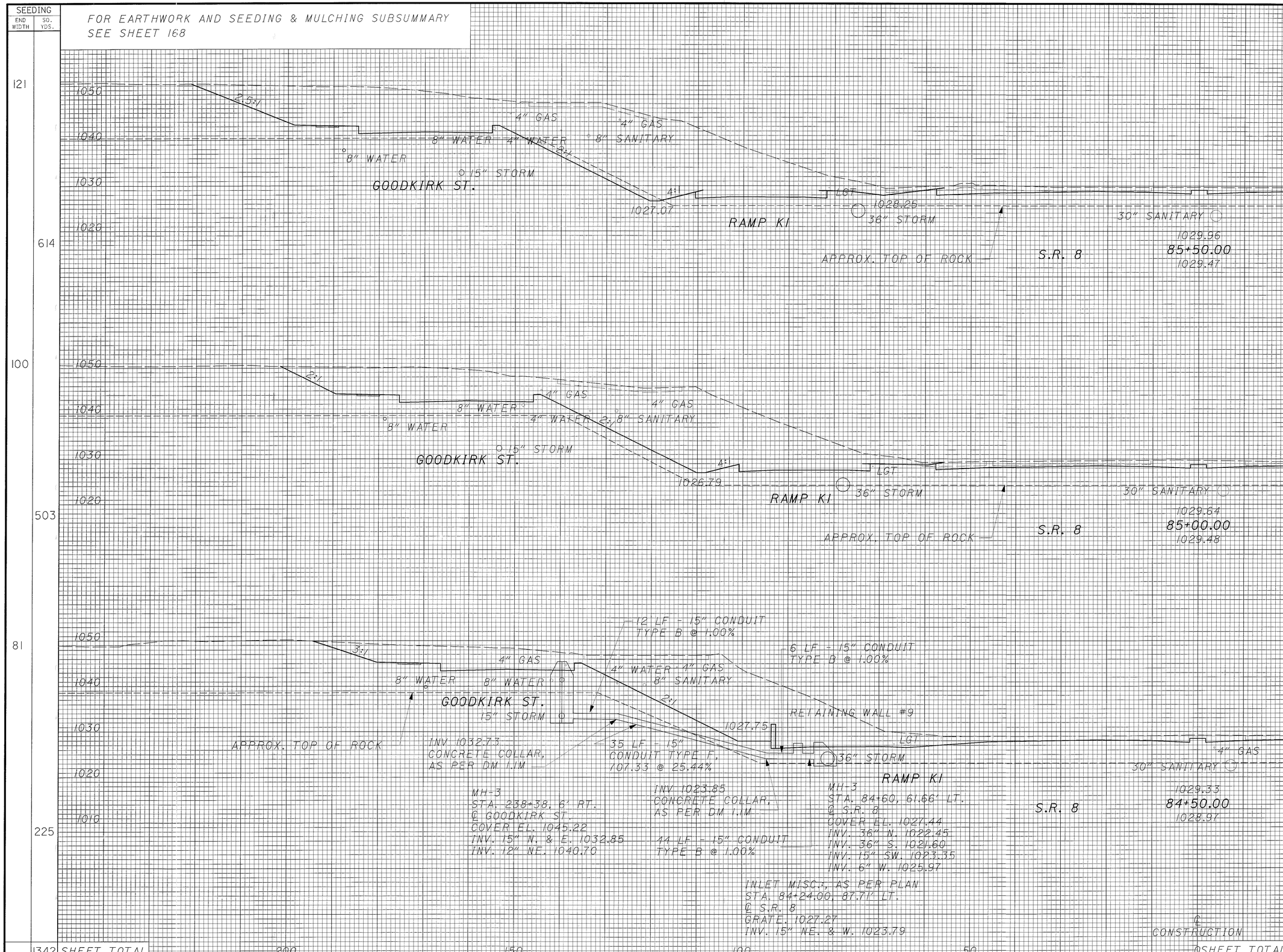

END AREA CUT	END AREA FILL	VOLUME CUT	VOLUME FILL
1412	0		
		2342	0
1117	0		
		1889	0
923	0		
		855	0
		5086	0

CALCULATED JE
CHECKED KMM

CROSS SECTIONS - S.R. 8 LT.
STA. 84+50 TO STA. 85+50

SUM-8-0.63

SEEDING	
END WIDTH	SQ. YDS.
150	
	806
140	
	725
	1531

FOR EARTHWORK AND SEEDING & MULCHING SUBSUMMARY
SEE SHEET 168

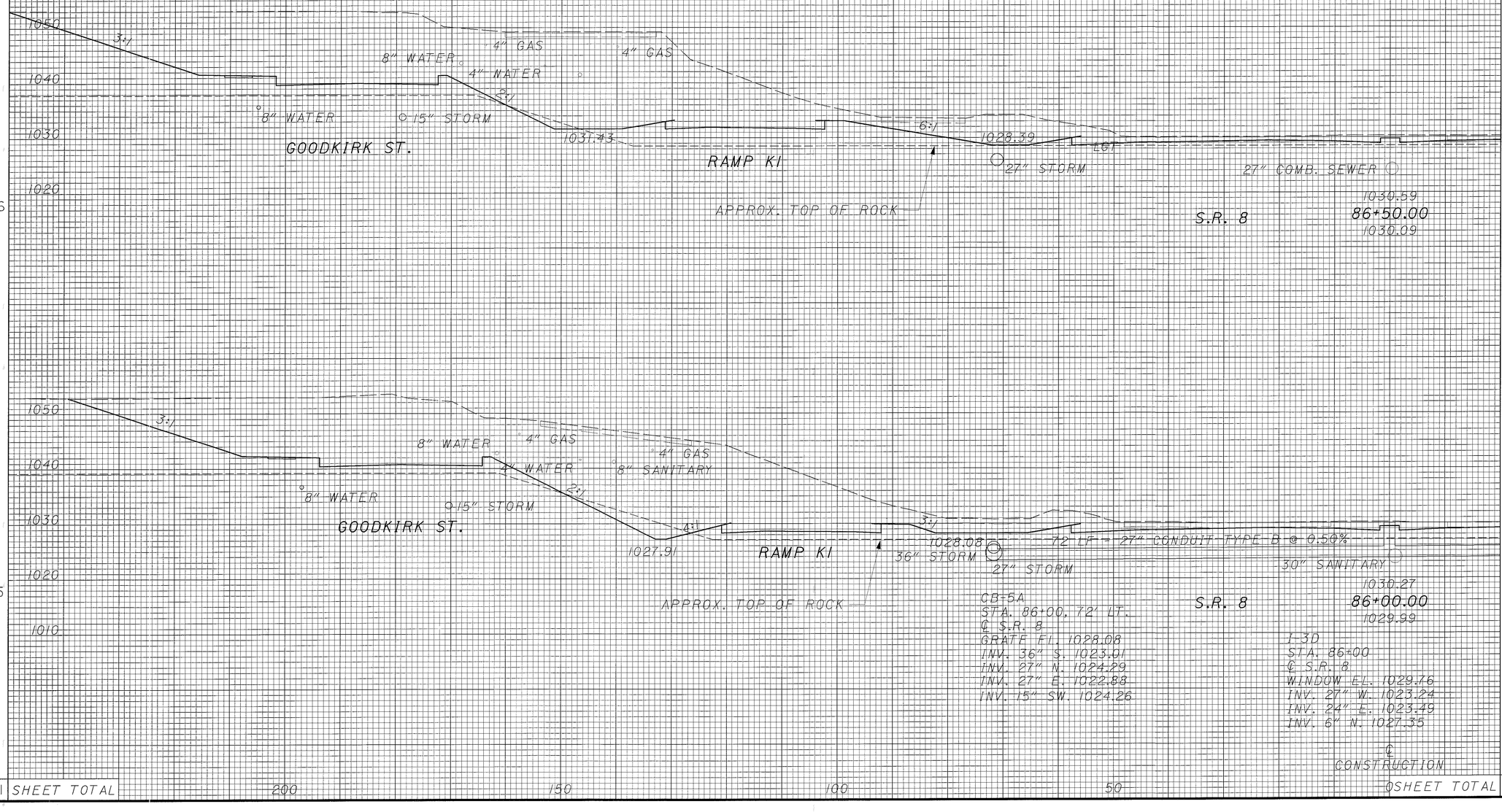

END AREA		VOLUME	
CUT	FILL	CUT	FILL
1773	0		
3202	0		
1685	0		
2868	0		
6070	0		

SHEET TOTAL

CALCULATED JE
CHECKED KMM

CROSS SECTIONS - S.R. 8 LT.
STA. 86+00 TO STA. 86+50

SUM-8-0.63

346
1088

FOR EARTHWORK AND SEEDING & MULCHING SUBSUMMARY SEE SHEET 168

SEEDING	
END WIDTH	SQ. YDS.
150	
833	
150	
833	
1666	SHEET TOTAL

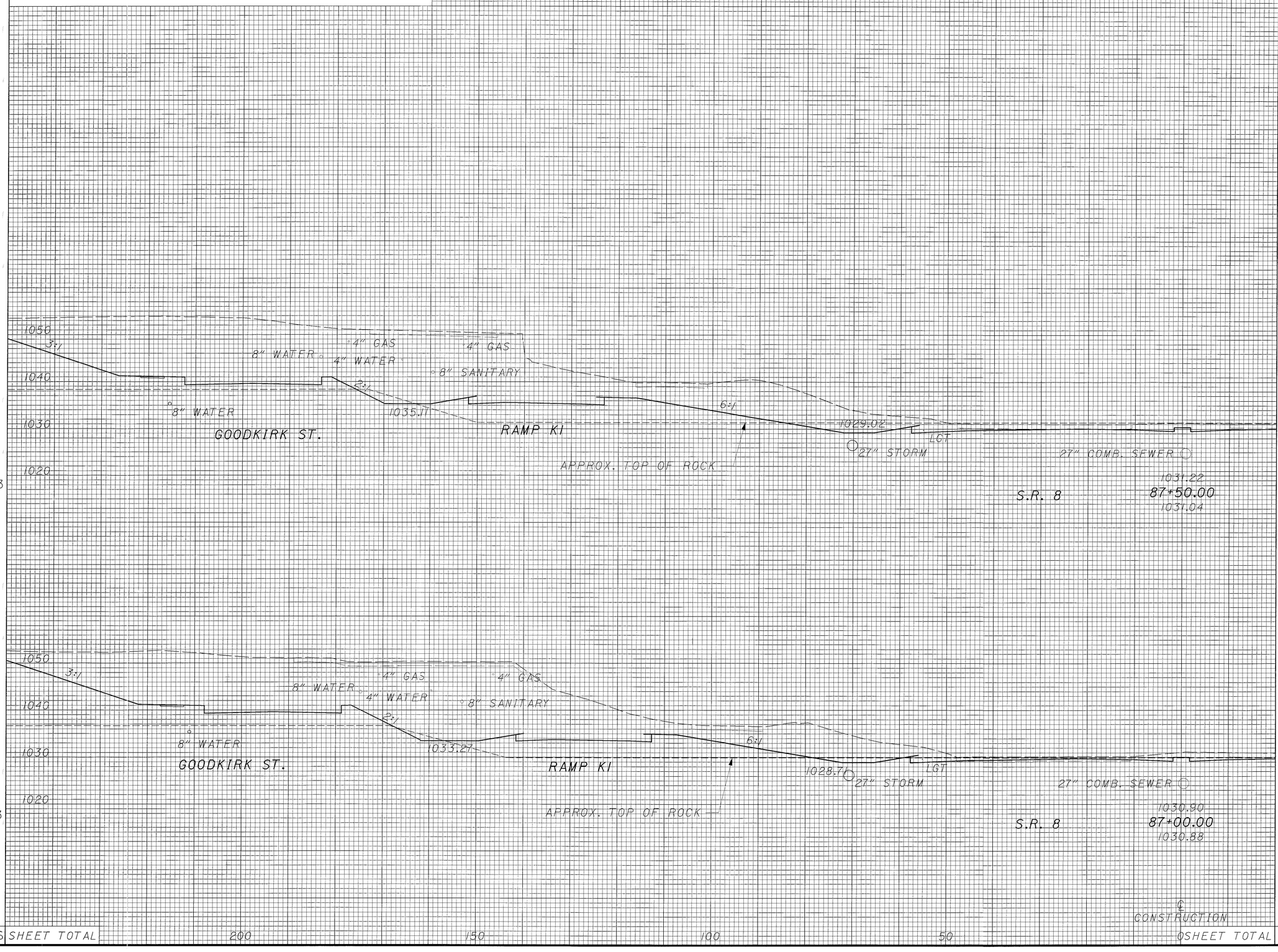

END AREA		VOLUME	
CUT	FILL	CUT	FILL
1872	0		
		3331	0
1725	0		
		3239	0
200	150	100	50
		6570	0

CALCULATED JE
CHECKED KMM

CROSS SECTIONS - S.R. 8 LT.
STA. 87+00 TO STA. 87+50

SUM-8-0.63

347
1088

SEEDING	
END WIDTH	SQ. YDS.

FOR EARTHWORK AND SEEDING & MULCHING SUBSUMMARY SEE SHEET 168

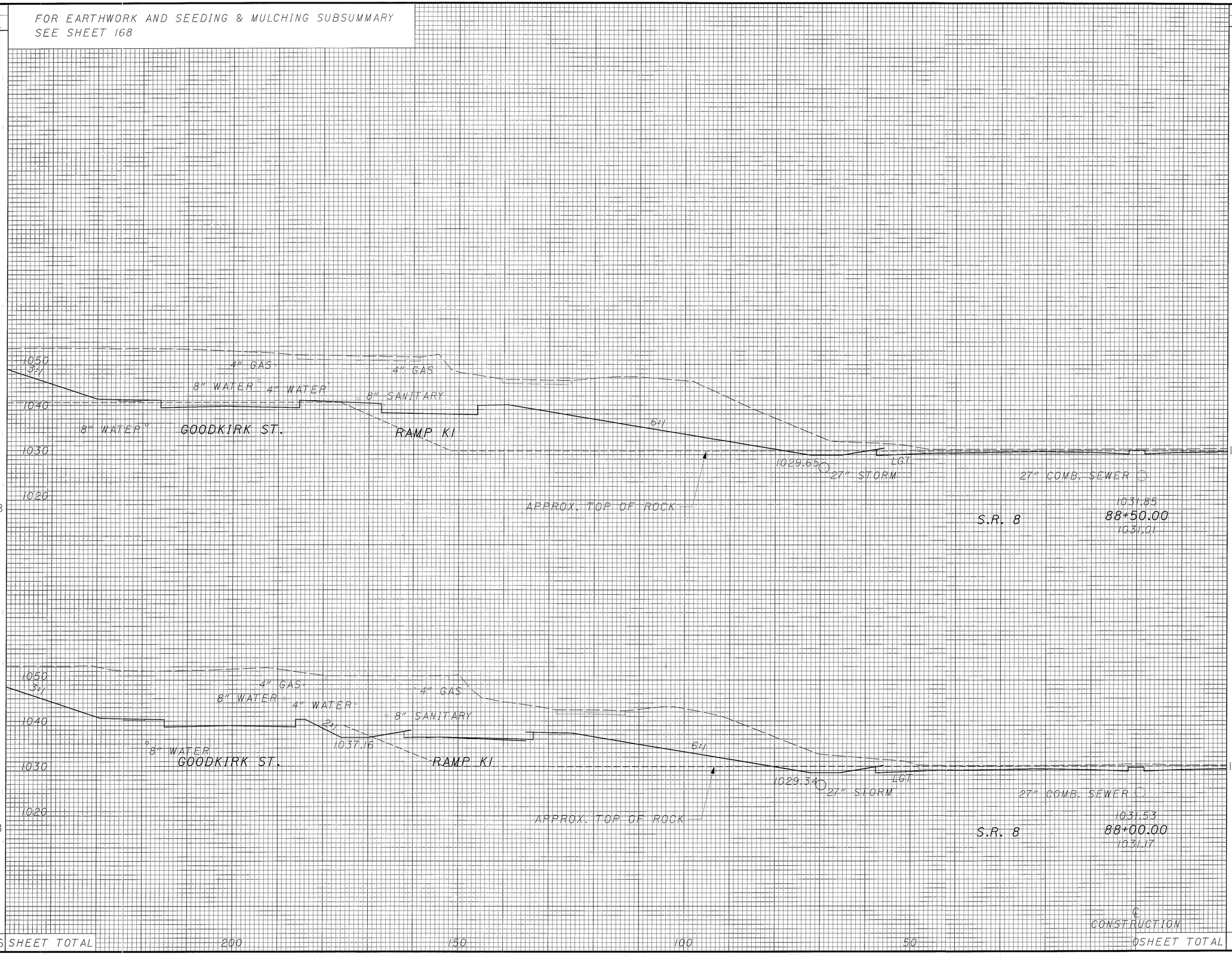

	SEEDING END WIDTH	SEEDING SQ. YDS.	END AREA CUT	END AREA FILL	VOLUME CUT	VOLUME FILL
150						
			1796	0		
					3318	0
148						
			1787	0		
					3388	0
	1656	SHEET TOTAL			6706	0
		200	150	100	50	OSHEET TOTAL

CALCULATED JE
CHECKED KMM

CROSS SECTIONS - S.R. 8 LT.
STA. 88+00 TO STA. 88+50

SUM-8-0.63

348
1088

FOR EARTHWORK AND SEEDING & MULCHING SUBSUMMARY
SEE SHEET 168

SEEDING END WIDTH	SEEDING SQ. YDS.	END AREA CUT	END AREA FILL	VOLUME CUT	VOLUME FILL
159					
	861	1677	0	3212	0
151					
	797	1792	0	3343	0
136					
	794	1818	0	3346	0
	2452 SHEET TOTAL			9901	0

1050 3%
1040
1030
1020
8" WATER
4" GAS
8" WATER
4" WATER
8" SANITARY
GOODKIRK ST.
6:1
APPROX. TOP OF ROCK
1030.60 LGT
27" STORM
24" COMB. SEWER
1032.79
90+00.00
1033.25
S.R. 8

1050 3%
1040
1030
1020
8" WATER
4" GAS
8" WATER
4" WATER
8" SANITARY
GOODKIRK ST.
6:1
APPROX. TOP OF ROCK
1030.28 LGT
27" STORM
24" COMB. SEWER
1032.48
89+50.00
1032.57
S.R. 8

1050 3%
1040
1030
1020
8" WATER
4" GAS
8" WATER
4" WATER
8" SANITARY
GOODKIRK ST.
RAMP KI
6:1
APPROX. TOP OF ROCK
1029.97 LGT
27" STORM
27" COMB. SEWER
1032.16
89+00.00
1032.37
S.R. 8

CB-5A
STA. 89+00, 69' LT.
℄ S.R. 8
COVER EL. 1029.97
INV. 27" N. & S. 1026.09
INV. 12" SW. 1027.34
INV. 6" E. 1027.43

200 150 100 50 ℄ CONSTRUCTION ℄SHEET TOTAL

CALCULATED JE
CHECKED KMM

CROSS SECTIONS - S.R. 8 LT.
STA. 89+00 TO STA. 90+00

SUM-8-0.63

349
1088

FOR EARTHWORK AND SEEDING & MULCHING SUBSUMMARY
SEE SHEET 168

SEEDING		END AREA		VOLUME	
END WIDTH	SQ. YDS.	CUT	FILL	CUT	FILL
159			1415	0	
				2736	0
161			1540	0	
				2979	0
1778	SHEET TOTAL			5715	0

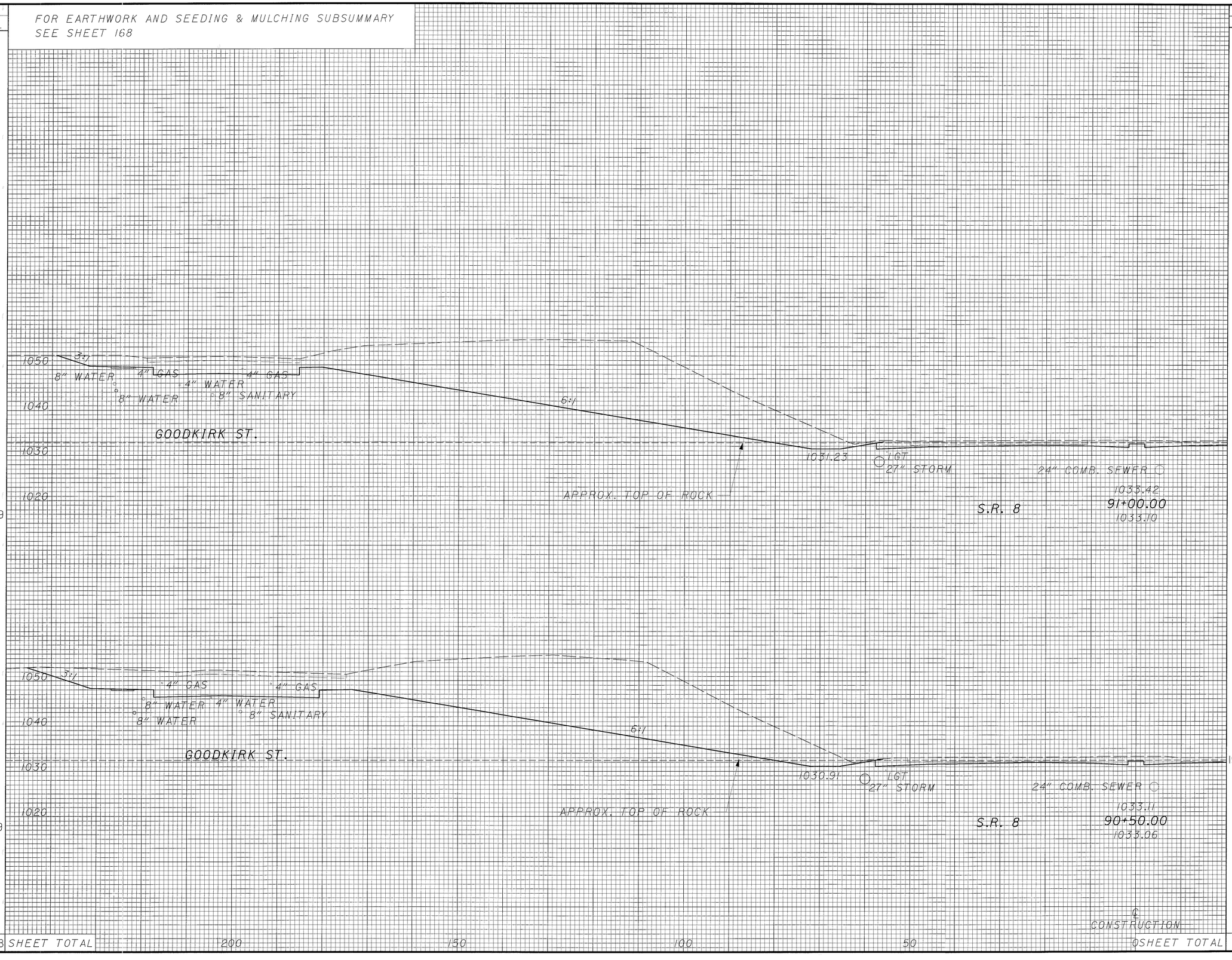

CALCULATED JE
CHECKED KMM

CROSS SECTIONS - S.R. 8 LT.
STA. 90+50 TO STA. 91+00

SUM-8-0.63

350
1088

SEEDING	
END WIDTH	SQ. YDS.
57	
597	
158	
881	
1478	SHEET TOTAL

FOR EARTHWORK AND SEEDING & MULCHING SUBSUMMARY SEE SHEET 168

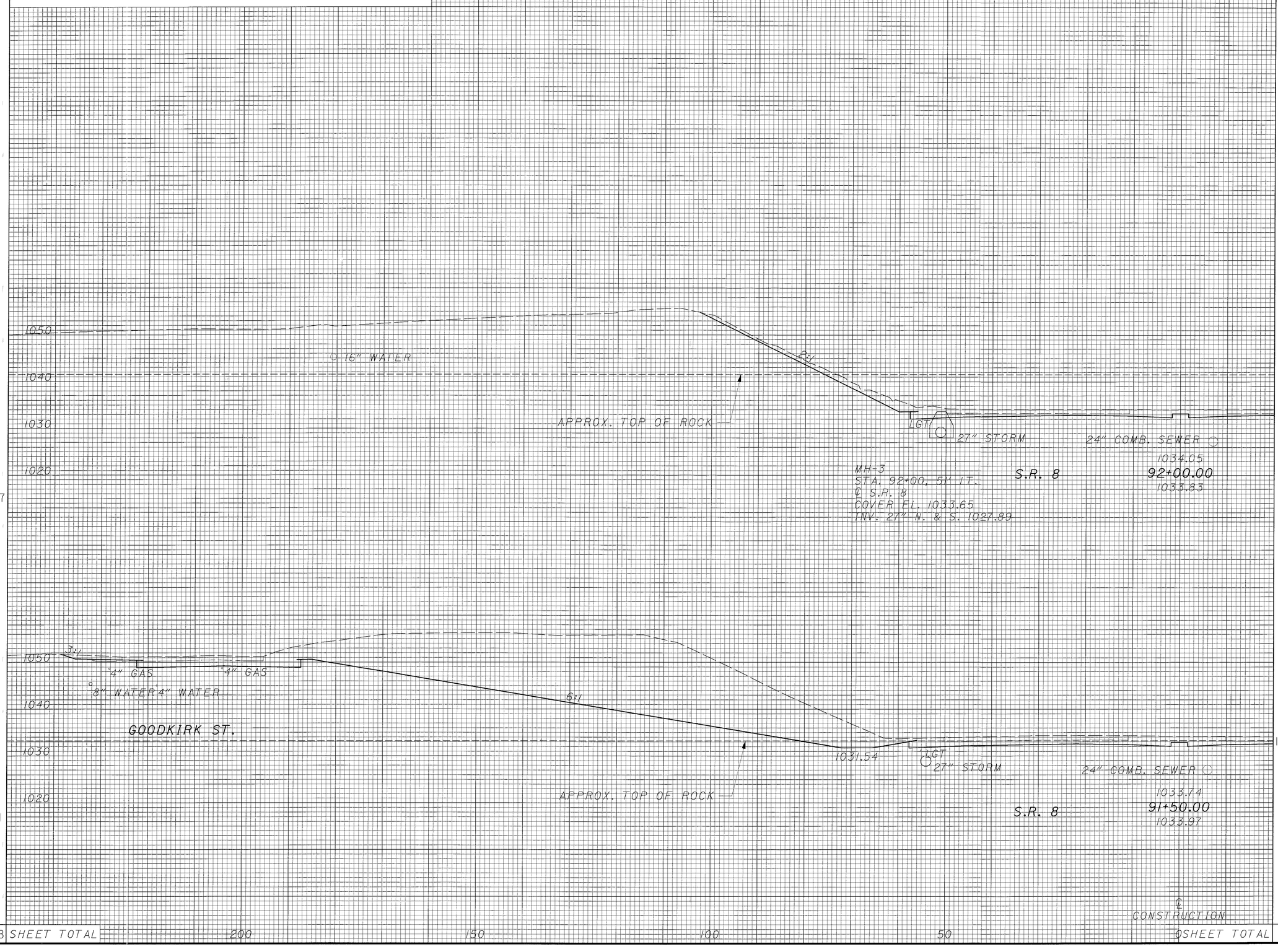

END AREA		VOLUME	
CUT	FILL	CUT	FILL
100	0		
		1476	0
1494	0		
		2694	0
		4170	0
SHEET TOTAL			

CALCULATED JE
CHECKED KMM

CROSS SECTIONS - S.R. 8 LT.
STA. 91+50 TO STA. 92+00

SUM-8-0.63

351
1088

SEEDING	
END WIDTH	SQ. YDS.
	137
	381
	0
	158
	539

FOR EARTHWORK AND SEEDING & MULCHING SUBSUMMARY SEE SHEET 168

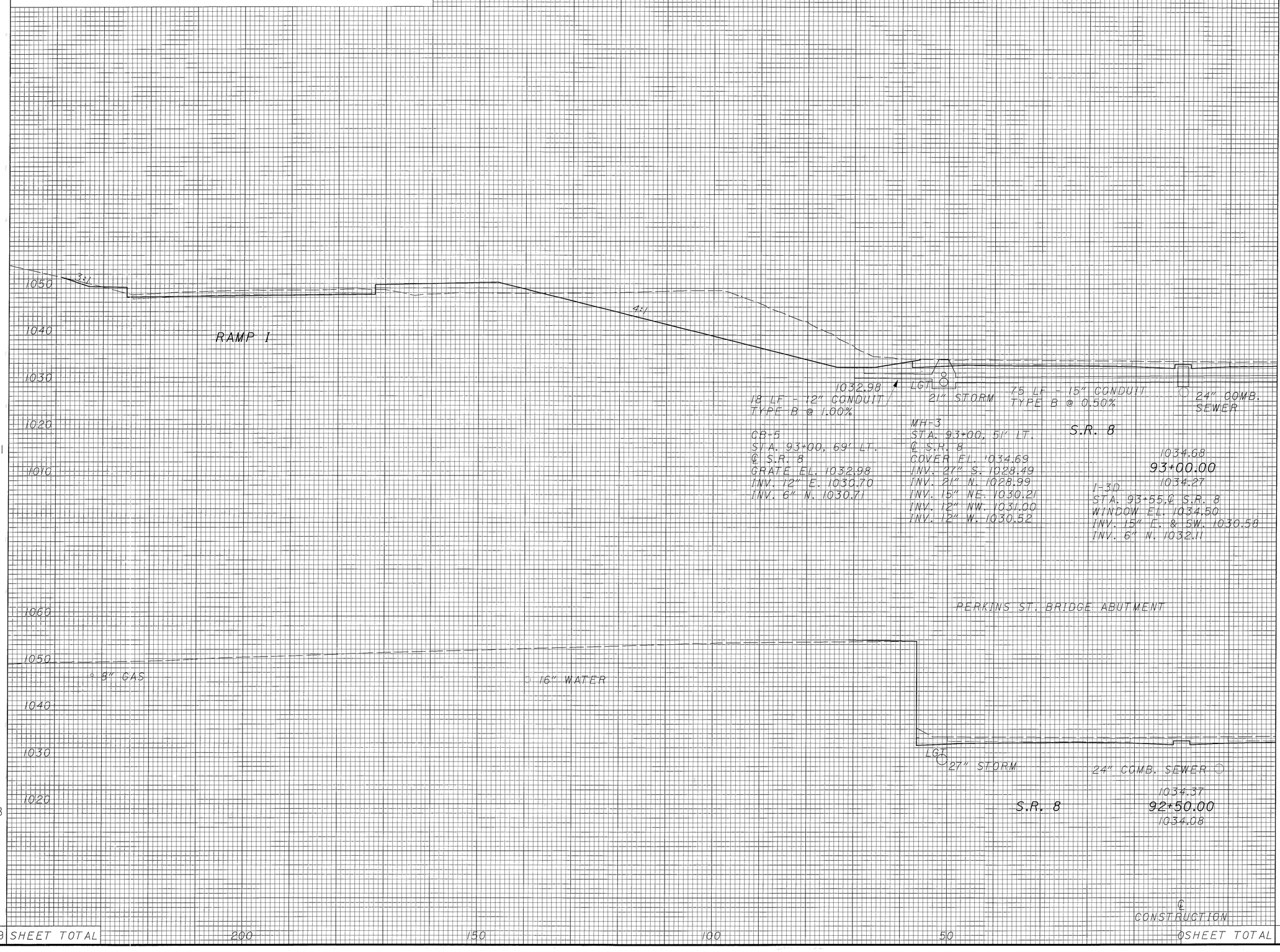

END AREA		VOLUME	
CUT	FILL	CUT	FILL
493	68		
456	63		
0	0		
93	0		
549	63		

SHEET TOTAL

200 150 100 50 0

CALCULATED JE

CHECKED KMM

CROSS SECTIONS - S.R. 8 LT.
STA. 92+50 TO STA. 93+00

SUM-8-0.63

FOR EARTHWORK AND SEEDING & MULCHING SUBSUMMARY
SEE SHEET 168

SEEDING END WIDTH	SEEDING SQ. YDS.	END AREA CUT	END AREA FILL	VOLUME CUT	VOLUME FILL
129					
		439	44		
	769				
				762	161
148					
		384	130		
	792				
				812	183
	1561	SHEET TOTAL		1574	344

1060
1050
1040
1030
1020
3:1
LGT
RAMP 1
6:1
1034.01
LGT ○ 21" STORM
24" COMB. SEWER ○
1035.31
S.R. 8
94+00.00
1034.44
1060
1050
1040
1030
1020
3:1
LGT
RAMP 1
4:1
1033.54
LGT ○ 21" STORM
24" COMB. SEWER ○
1035.00
S.R. 8
93+50.00
1034.18
℄
CONSTRUCTION
200
150
100
50
0
SHEET TOTAL

CALCULATED JE
CHECKED KMM

CROSS SECTIONS - S.R. 8 LT.
STA. 93+50 TO STA. 94+00

SUM-8-0.63

353
1088

FOR EARTHWORK AND SEEDING & MULCHING SUBSUMMARY
SEE SHEET 168

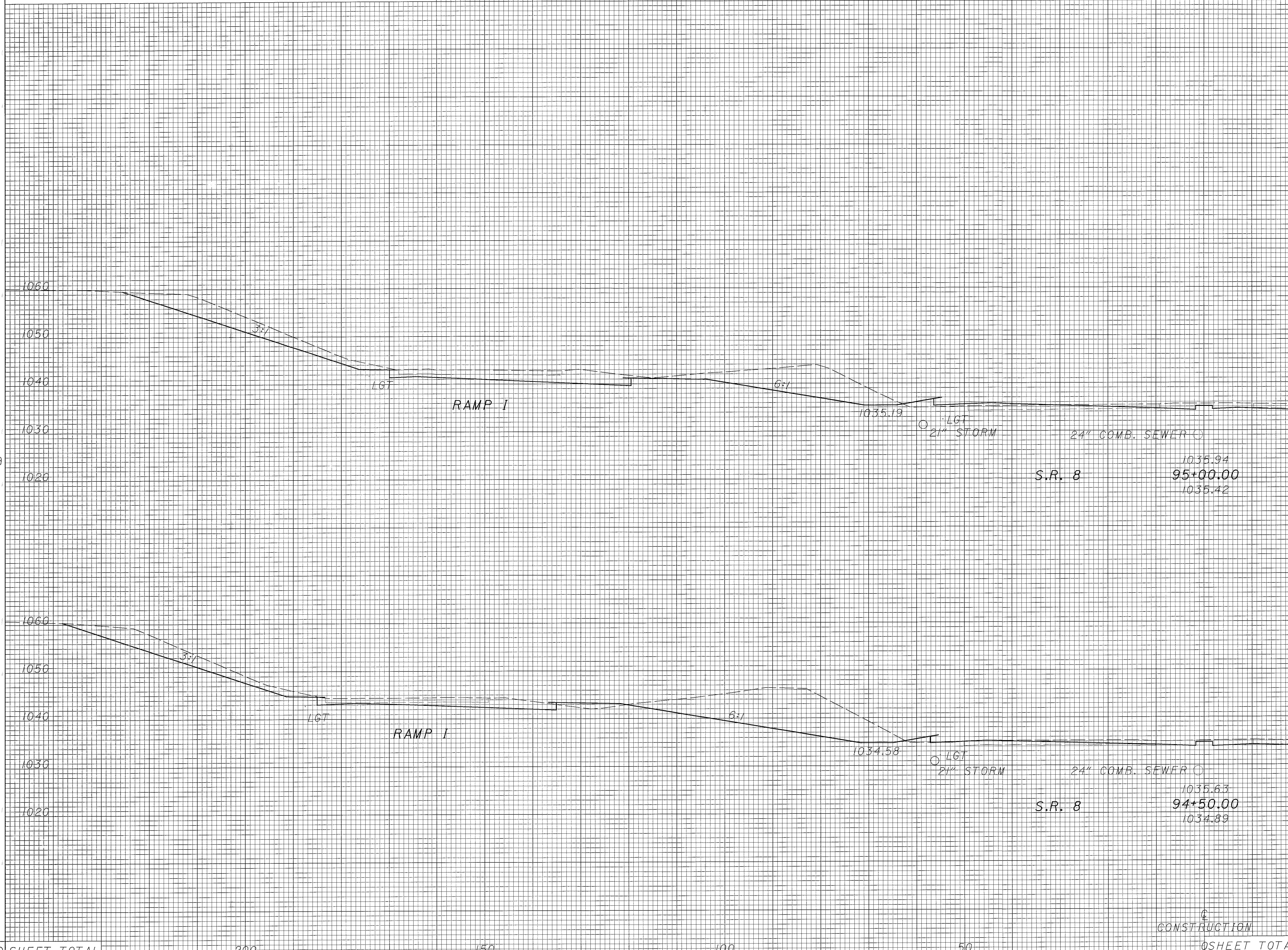

SEEDING END WIDTH	SEEDING SQ. YDS.
132	
	769
145	
	761
	1530 SHEET TOTAL

STATION	END AREA CUT	END AREA FILL	VOLUME CUT	VOLUME FILL
95+00.00	385	16		
			786	30
94+50.00	464	16		
			836	56
SHEET TOTAL			1622	86

CALCULATED JE | CHECKED KMM

CROSS SECTIONS - S.R. 8 LT.
STA. 94+50 TO STA. 95+00

SUM-8-0.63

SEEDING	
END WIDTH	SQ. YDS.
121	
	711
135	
	742
1453	SHEET TOTAL

FOR EARTHWORK AND SEEDING & MULCHING SUBSUMMARY
SEE SHEET 168

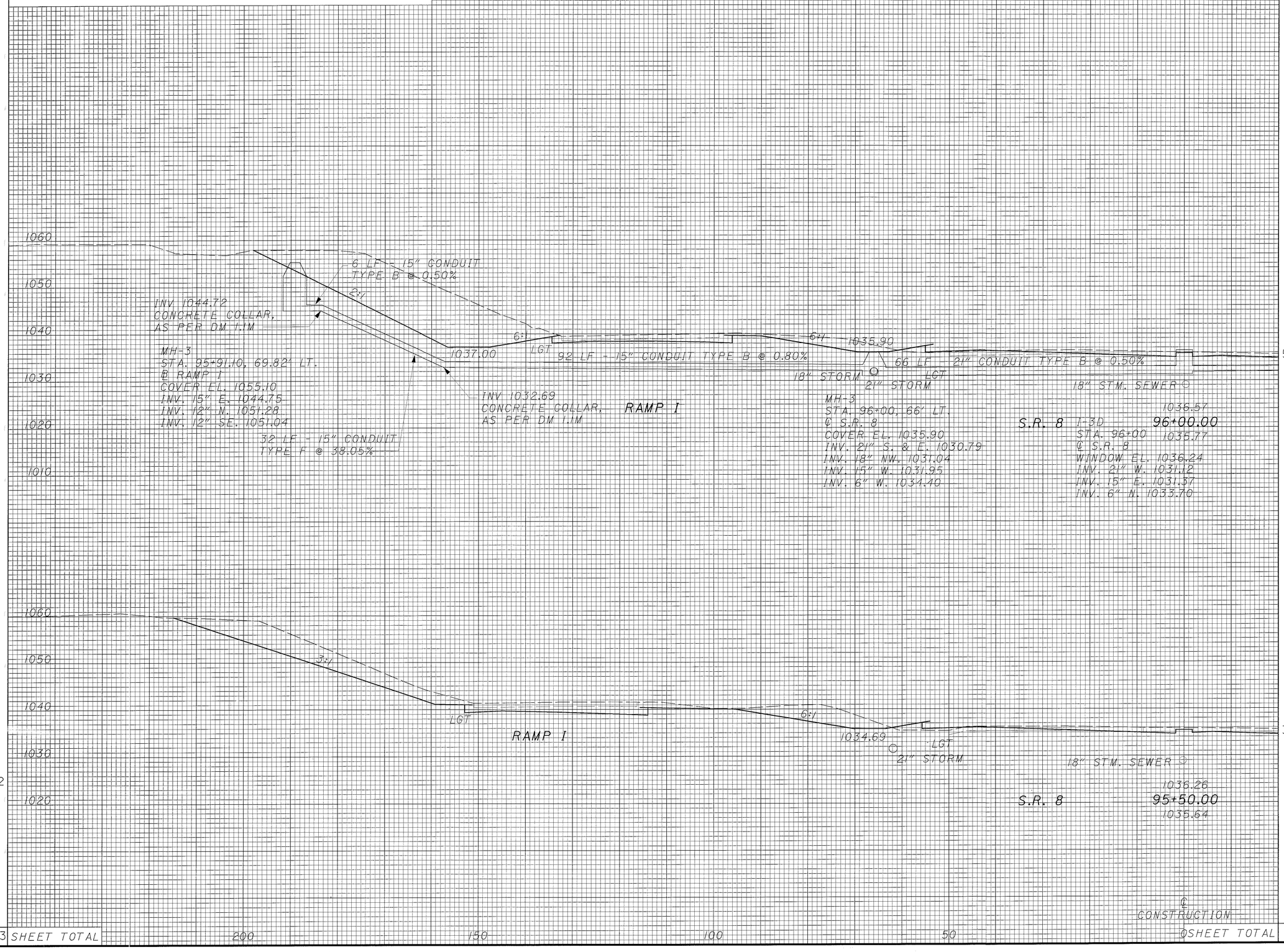

END AREA		VOLUME	
CUT	FILL	CUT	FILL
		573	7
		875	16
		372	10
		701	24
		1576	40

CALCULATED JE
CHECKED KMM

CROSS SECTIONS - S.R. 8 LT.
STA. 95+50 TO STA. 96+00

SUM-8-0.63

355
1088

SEEDING	
END WIDTH	SQ. YDS.
70	
	447
91	
	547
106	
	631
	1625

FOR EARTHWORK AND SEEDING & MULCHING SUBSUMMARY SEE SHEET 168

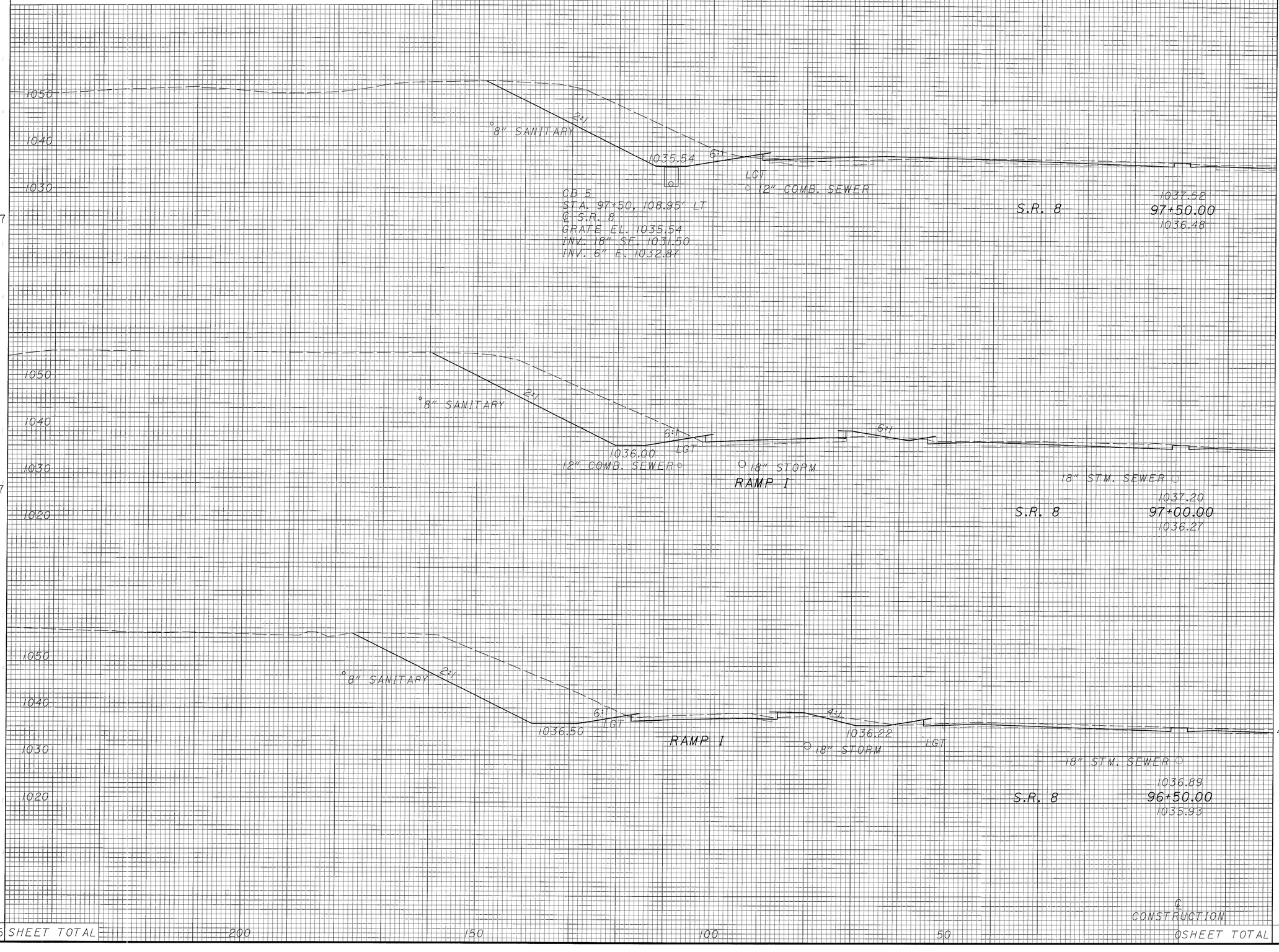

END AREA		VOLUME	
CUT	FILL	CUT	FILL
344	20		
362	9	654	27
440	11	743	19
		938	17
200	150	100	50
0 SHEET TOTAL		2335	63

CALCULATED JE
CHECKED KMM

CROSS SECTIONS - S.R. 8 LT.
STA. 96+50 TO STA. 97+50

SUM-8-0.63

356
1088

FOR EARTHWORK AND SEEDING & MULCHING SUBSUMMARY
SEE SHEET 168

SEEDING END WIDTH	SEEDING SQ. YDS.	END AREA CUT	END AREA FILL	VOLUME CUT	VOLUME FILL
43					
	239	91	12	181	31
43					
	278	105	22	290	48
57					
	333	208	30	419	45
63					
	369	245	19	545	36
	1219 SHEET TOTAL			1435	160 OSHEET TOTAL

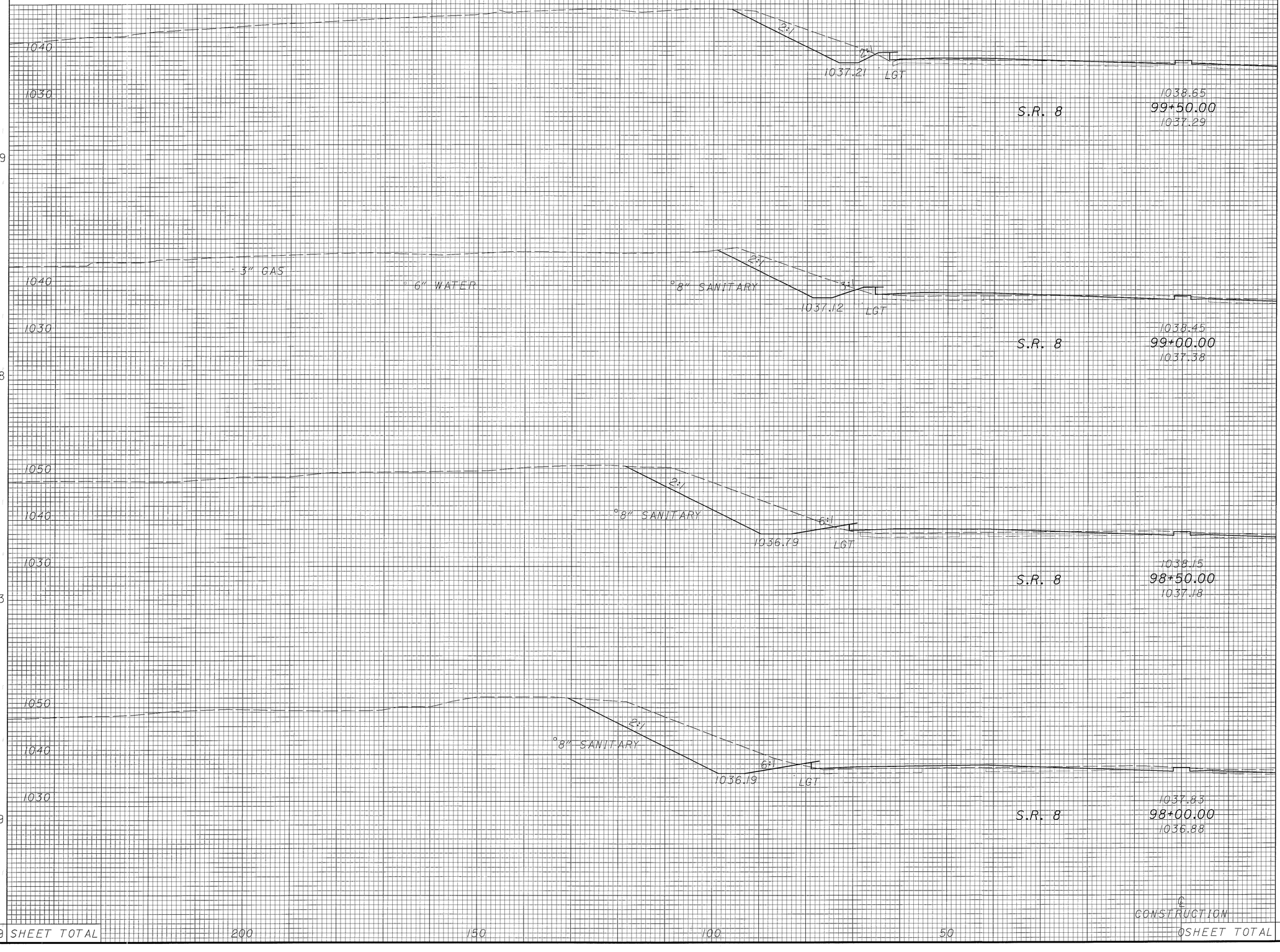

CALCULATED JE
CHECKED KMM

CROSS SECTIONS - S.R. 8 LT.
STA. 98+00 TO STA. 99+50

SUM-8-0.63

357
1088

FOR EARTHWORK AND SEEDING & MULCHING SUBSUMMARY SEE SHEET 168

SEEDING END WIDTH	SEEDING SQ. YDS.	END AREA CUT	END AREA FILL	VOLUME CUT	VOLUME FILL
44		12	77		
				33	96
	200				
28		24	27		
				69	59
	172				
34		51	37		
				108	61
	197				
37		66	29		
				145	38
	222				
	791 SHEET TOTAL		@SHEET TOTAL	355	254

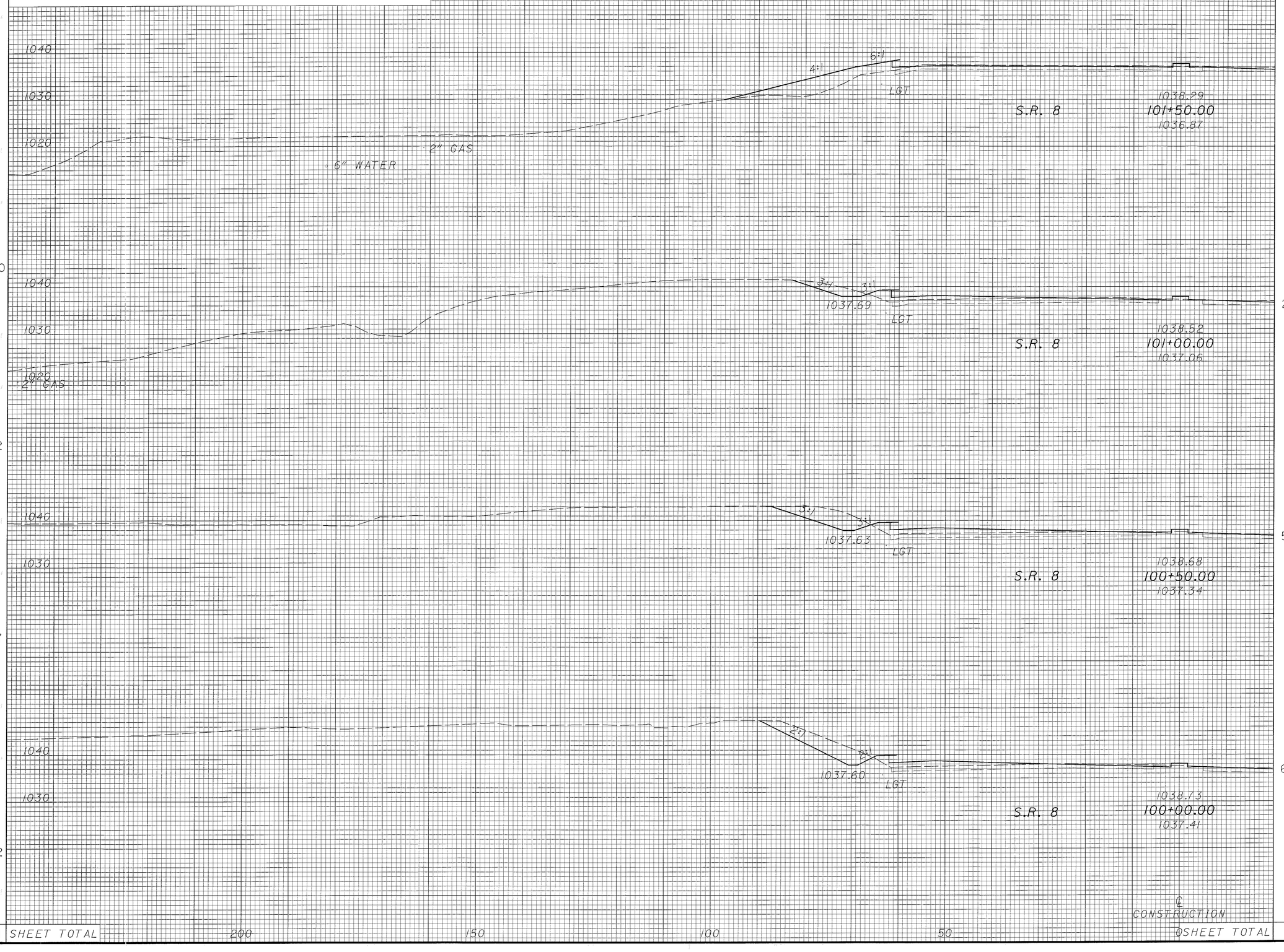

CALCULATED JE
CHECKED KMM

CROSS SECTIONS - S.R. 8 LT.
STA. 100+00 TO STA. 101+50

SUM-8-0.63

358
1088

FOR EARTHWORK AND SEEDING & MULCHING SUBSUMMARY SEE SHEET 168

SEEDING END WIDTH	SEEDING SQ. YDS.	END AREA CUT	END AREA FILL	VOLUME CUT	VOLUME FILL
		0	0		
0					
				12	10
	38	26	22		
23				18	17
	54	22	22		
25				41	56
	183	22	39		
41				31	107
	236				
	511 SHEET TOTAL			102	190

1030
1020
1010
1030
1020
1010
1030
1020
1030
1020

103+00.00
LGT
END WORK STA. 102+96.00
2:1
LGT
1037.74
102+70.38
1037.56
S.R. 8
END PROJECT
2:1
LGT
1037.83
102+50.00
1037.67
S.R. 8
2:1
LGT
1038.06
102+00.00
1037.95
S.R. 8
6" WATER
℄ CONSTRUCTION

200 150 100 50 0 SHEET TOTAL

CALCULATED JE
CHECKED KMM

CROSS SECTIONS - S.R. 8 LT.
STA. 102+00 TO STA. 103+00

SUM-8-0.63

359
1088

SEEDING	
END WIDTH	SQ. YDS.
0	
	0
	0 SHEET TOTAL

FOR EARTHWORK AND SEEDING & MULCHING SUBSUMMARY
SEE SHEET 168

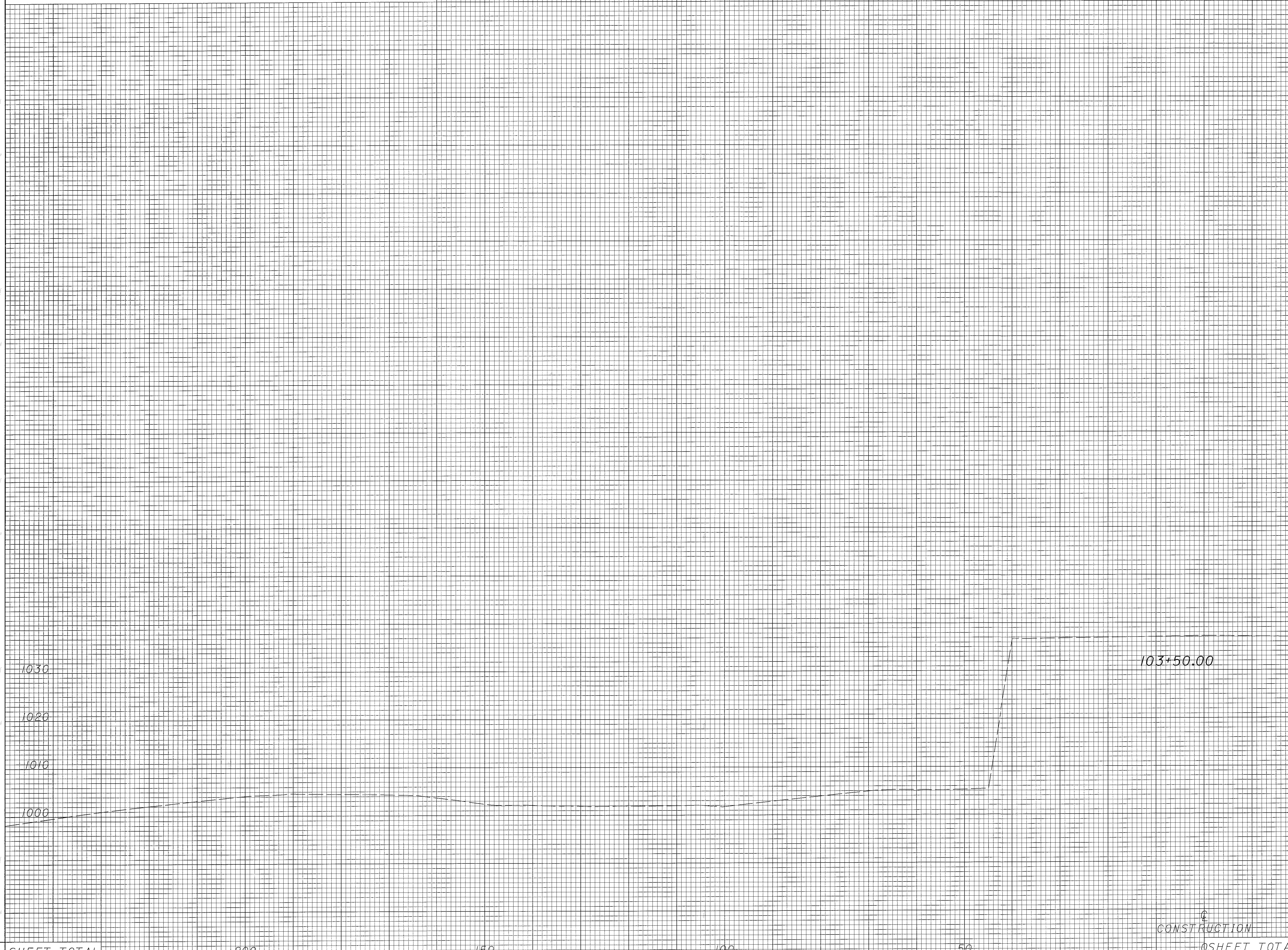

END AREA		VOLUME	
CUT	FILL	CUT	FILL
0	0		
		0	0
SHEET TOTAL		0	0

CALCULATED JE
CHECKED KMM

CROSS SECTIONS - S.R. 8 LT.
STA. 103+50

SUM-8-0.63

360/1088

SEEDING	
END WIDTH	SQ. YDS.
0	
	0
	0
	0
	0
0	0

FOR EARTHWORK AND SEEDING & MULCHING SUBSUMMARY
SEE SHEET 169

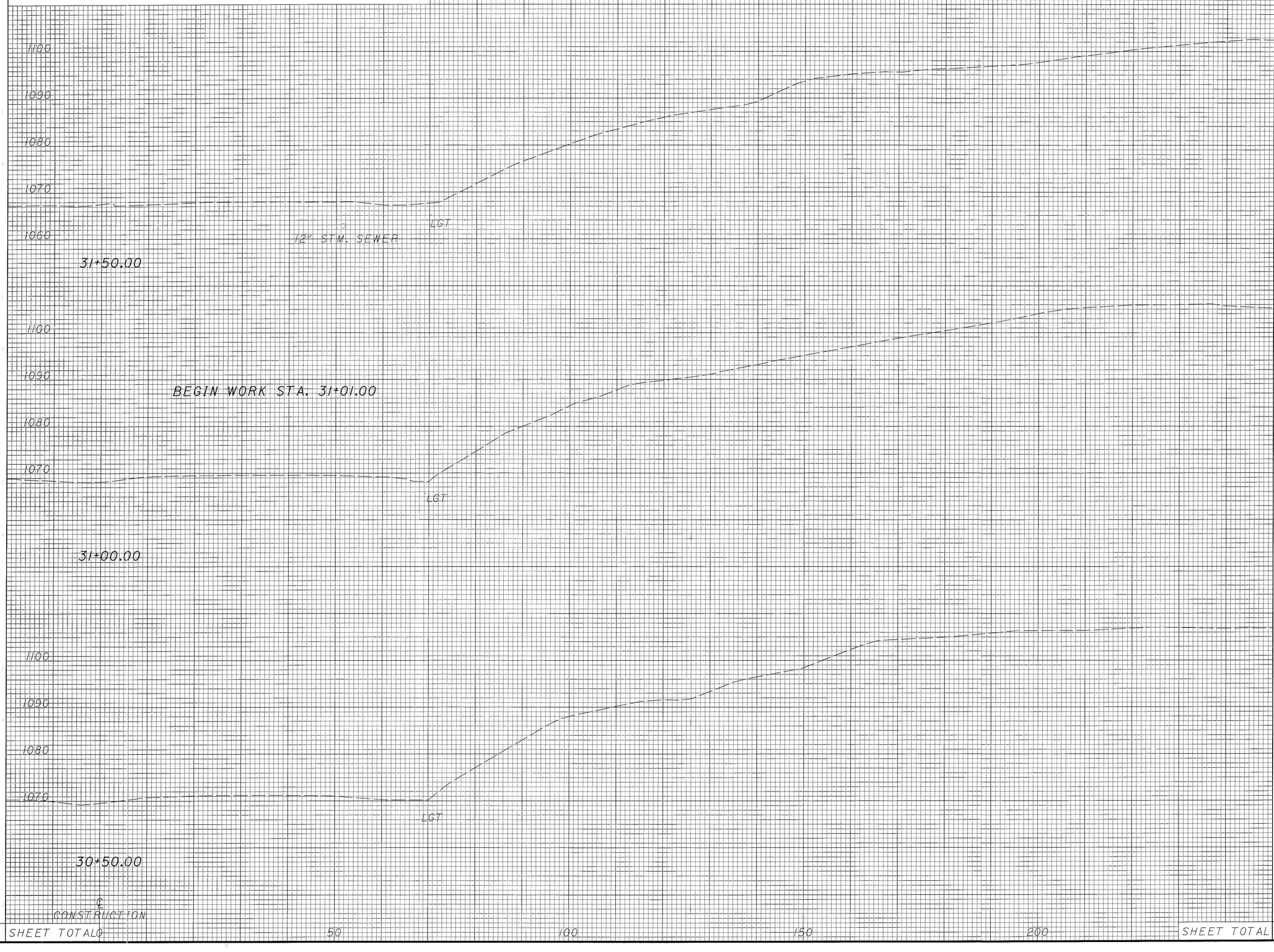

END AREA		VOLUME	
CUT	FILL	CUT	FILL
0	0		
		0	0
0	0		
		0	0
0	0		
		0	0
0	0		
		0	0
SHEET TOTAL		0	0

CALCULATED JE
CHECKED KMM

CROSS SECTIONS - S.R. 8 RT.
STA. 30+50 TO STA. 31+50

SUM-8-0.63

361
1088

FOR EARTHWORK AND SEEDING & MULCHING SUBSUMMARY
SEE SHEET 169

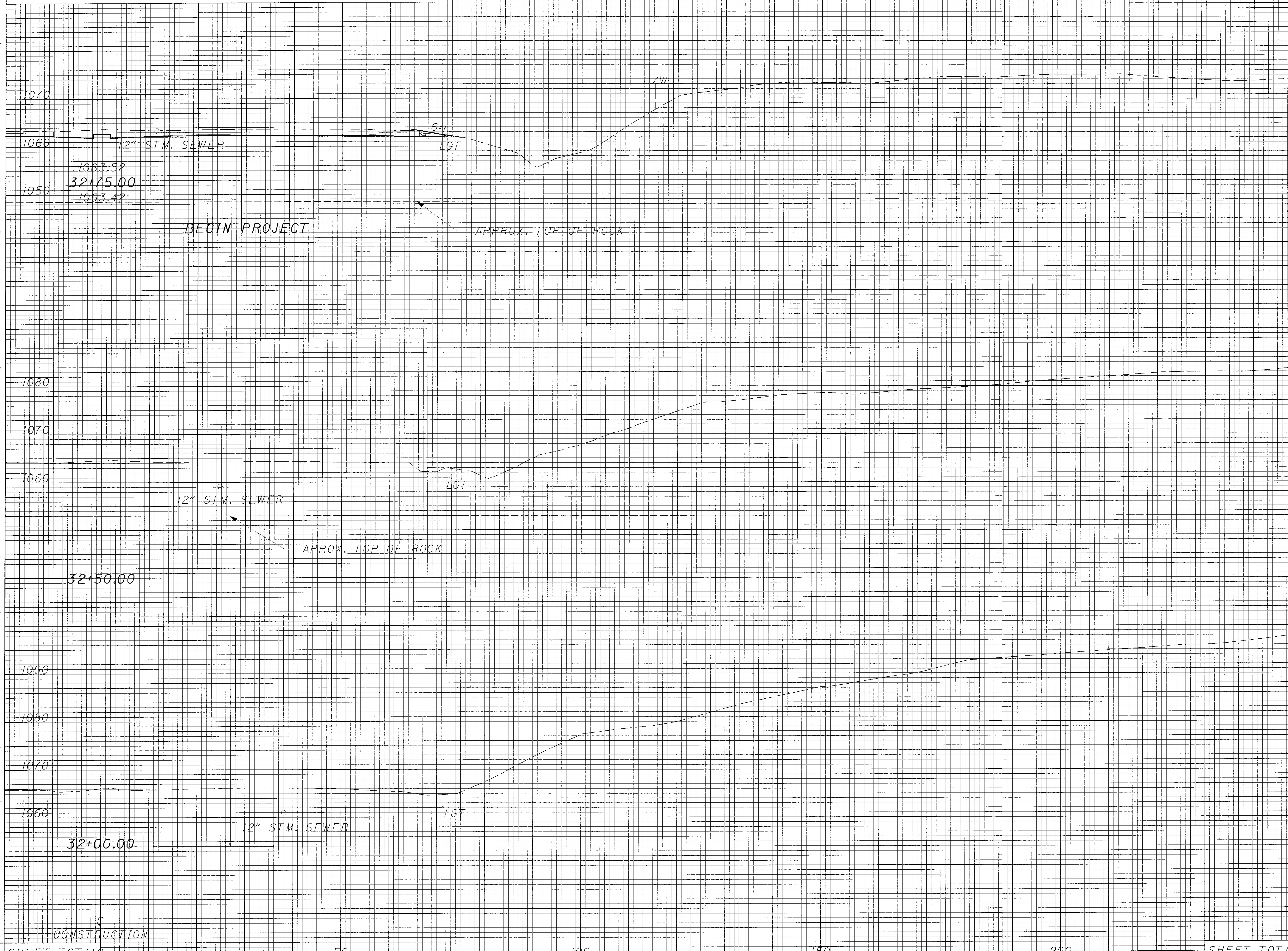

Station	Seeding End Width	Seeding Sq. Yds.	End Area Cut	End Area Fill	Volume Cut	Volume Fill
32+75.00	10		34	1		
		14			16	1
32+50.00	0		0	0		
		0			0	0
32+00.00	0		0	0		
		0				
SHEET TOTAL		14			16	1

CALCULATED JE
CHECKED KMM

CROSS SECTIONS - S.R. 8 RT.
STA. 32+00 TO STA. 32+75

SUM-8-0.63

FOR EARTHWORK AND SEEDING & MULCHING SUBSUMMARY
SEE SHEET 169

BRIDGE SUM-8-0064

34+00.00
1059.56

S.R. 8

1060
1050
1040
1030

R/W

LGT

APPROX. TOP OF ROCK

BRIDGE SUM-8-0064

1070
1060

2.5:1

LGT

1050

33+50.00
1061.09

S.R. 8

1040

R/W

1030

15" STM. SEWER

APPROX. TOP OF ROCK

2.5:1

1080

12" STM. SEWER 12" STM. SEWER

LGT

1050

1062.78
33+00.00
1062.80

S.R. 8

R/W

APPROX. TOP OF ROCK

℄
CONSTRUCTION

50 100 150 200

SEEDING END WIDTH	SEEDING SQ. YDS.	END AREA CUT	END AREA FILL	VOLUME CUT	VOLUME FILL
0	0	0	0	0	0
0	42	0	0	32	7
15	35	35	8	64	8
77	SHEET TOTAL			96	15

SHEET TOTAL

CALCULATED JE
CHECKED KMM

CROSS SECTIONS - S.R. 8 RT.
STA. 33+00 TO STA. 34+00

SUM-8-0.63

363
1088

FOR EARTHWORK AND SEEDING & MULCHING SUBSUMMARY
SEE SHEET 169

SEEDING	
END WIDTH	SQ. YDS.
0	
	0
0	
	0
0	
	0
0	
	0
0	SHEET TOTAL

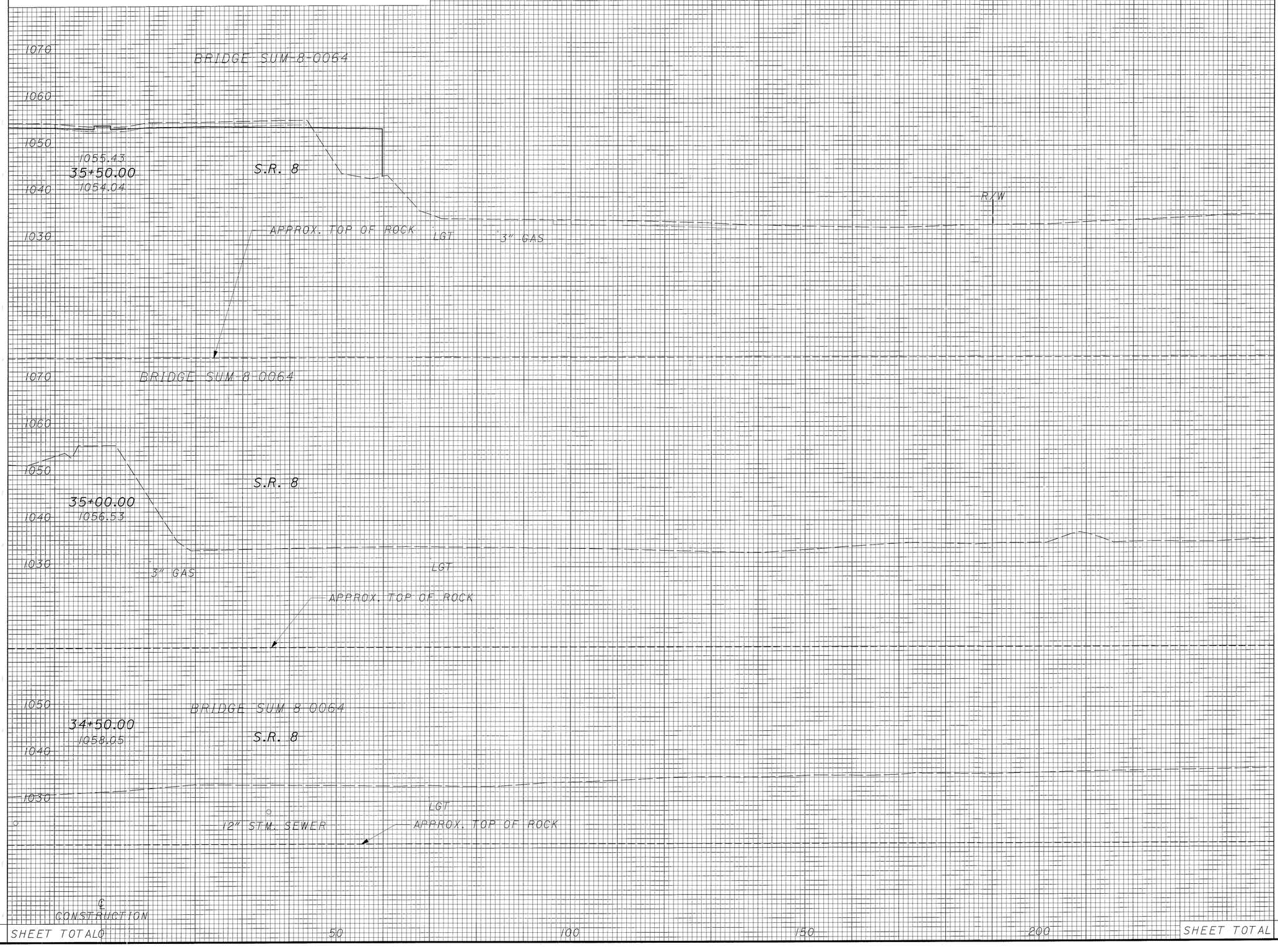

END AREA		VOLUME	
CUT	FILL	CUT	FILL
0	0		
		0	0
0	0		
		0	0
0	0		
		0	0
		0	0

CALCULATED JE
CHECKED KMM

CROSS SECTIONS - S.R. 8 RT.
STA. 34+50 TO STA. 35+50

SUM-8-0.63

SEEDING	
END WIDTH	SQ. YDS.
30	256
62	375
73	203
	834

FOR EARTHWORK AND SEEDING & MULCHING SUBSUMMARY
SEE SHEET 169

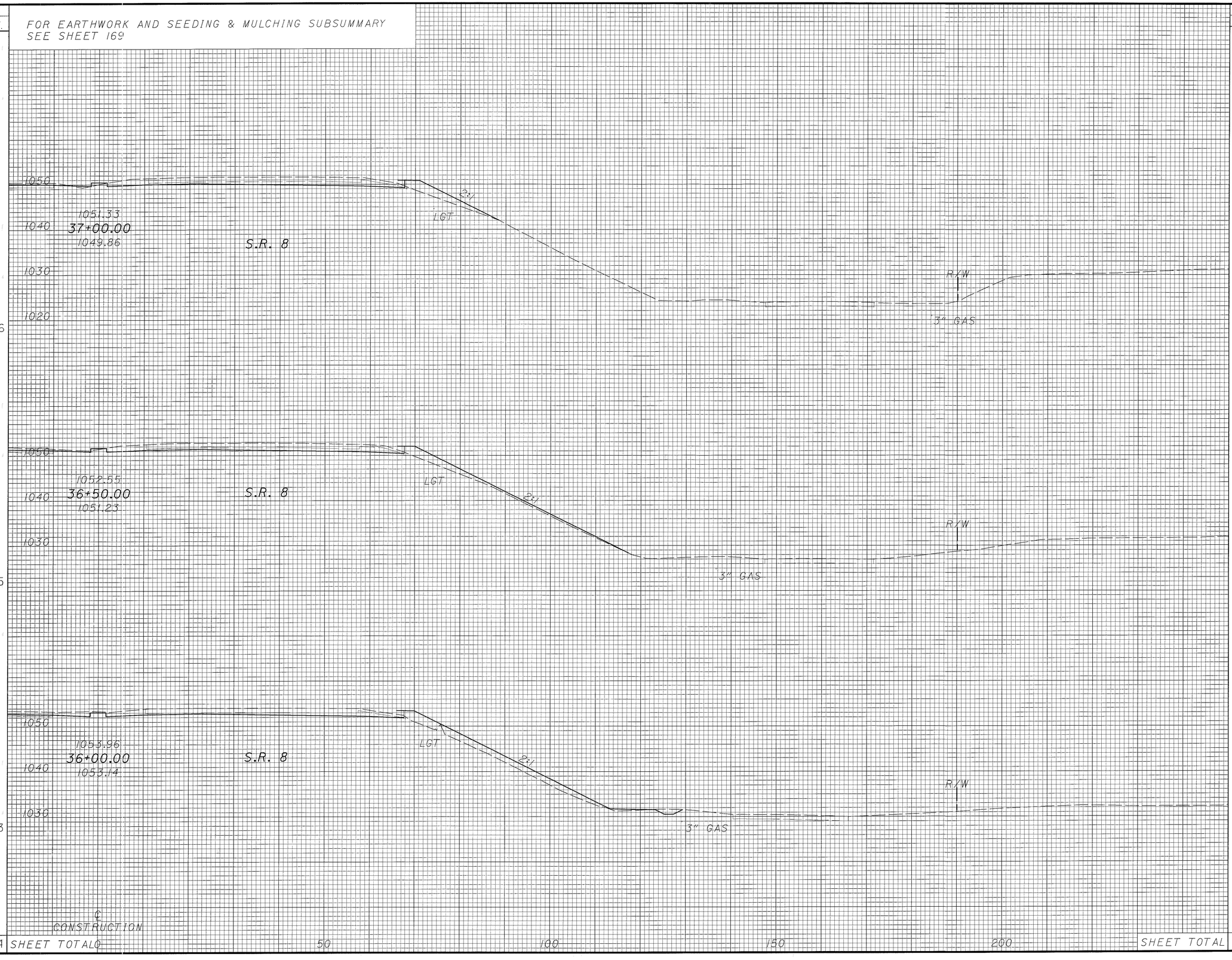

END AREA		VOLUME	
CUT	FILL	CUT	FILL
48	28		
		84	60
43	37		
		79	95
42	66		
		39	61
SHEET TOTAL		202	216

CALCULATED JE
CHECKED KMM

CROSS SECTIONS - S.R. 8 RT.
STA. 36+00 TO STA. 37+00

SUM-8-0.63

365
1088

SEEDING END WIDTH	SEEDING SQ. YDS.
29	161
29	156
27	158
	475

FOR EARTHWORK AND SEEDING & MULCHING SUBSUMMARY
SEE SHEET 169

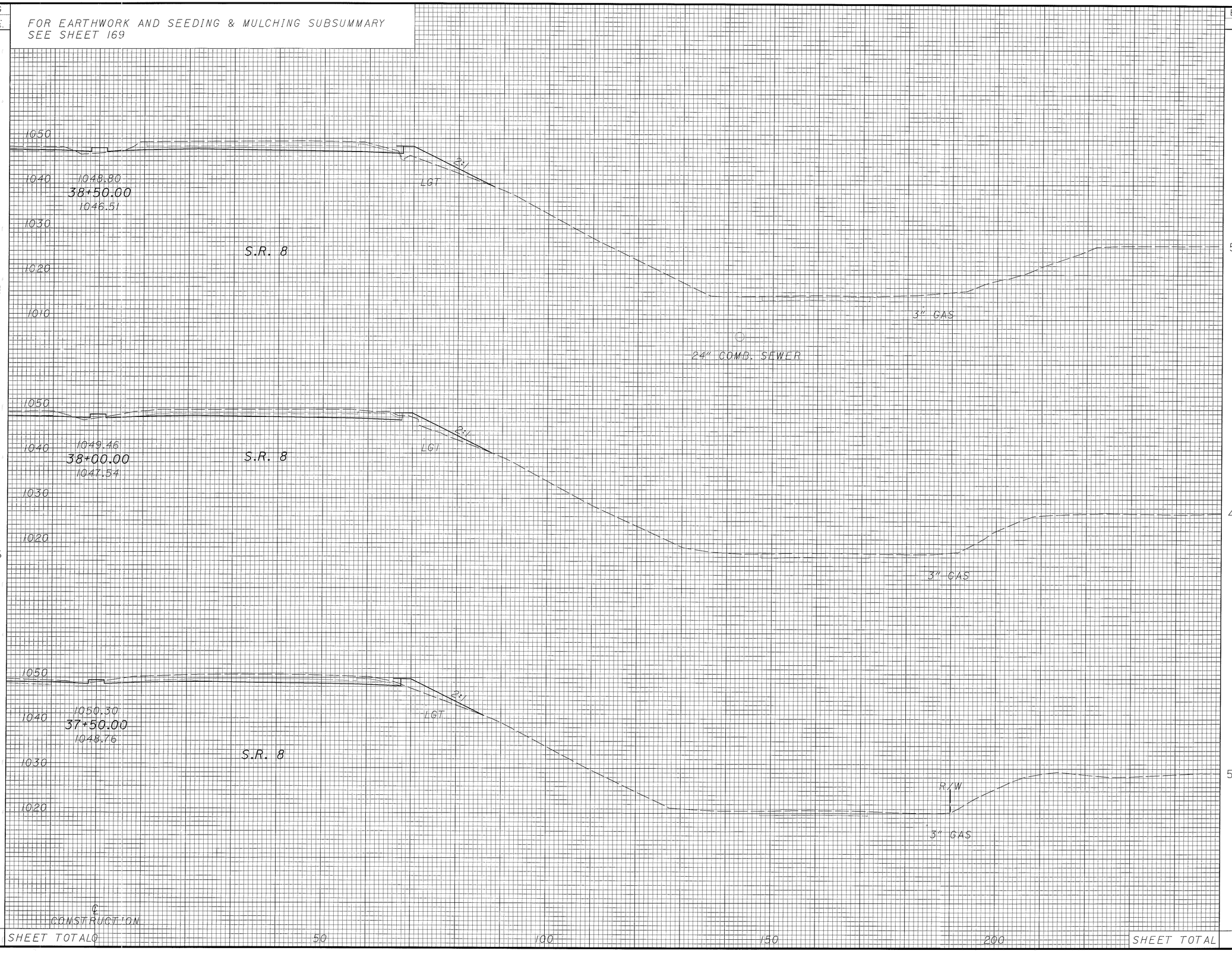

END AREA CUT	END AREA FILL	VOLUME CUT	VOLUME FILL
58	27		
		96	43
46	19		
		90	37
51	21		
		92	45
SHEET TOTAL		278	125

CALCULATED JE
CHECKED KMM

CROSS SECTIONS - S.R. 8 RT.
STA. 37+50 TI STA. 38+50

SUM-8-0.63

366
1088

SEEDING	
END WIDTH	SQ. YDS.
32	175
31	167
	342

FOR EARTHWORK AND SEEDING & MULCHING SUBSUMMARY
SEE SHEET 169

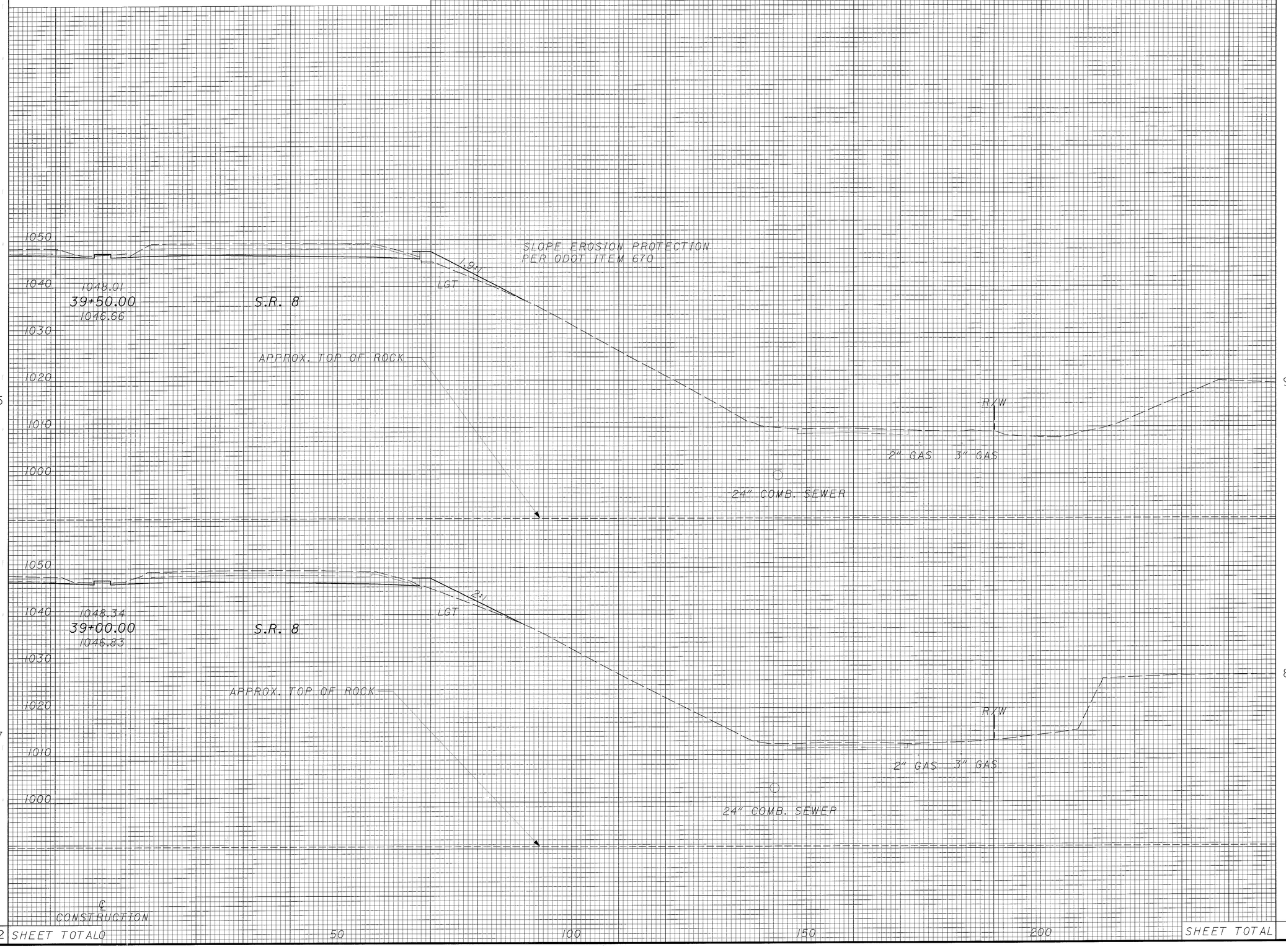

END AREA		VOLUME	
CUT	FILL	CUT	FILL
99	24		
		174	44
89	24		
		136	47
SHEET TOTAL		310	91

CALCULATED JE
CHECKED KMM

CROSS SECTIONS - S.R. 8 RT.
STA. 39+00 TO STA. 39+50

SUM-8-0.63

367
1088

SEEDING	
END WIDTH	SQ. YDS.
43	
	236
42	
	206
	442

FOR EARTHWORK AND SEEDING & MULCHING SUBSUMMARY SEE SHEET 169

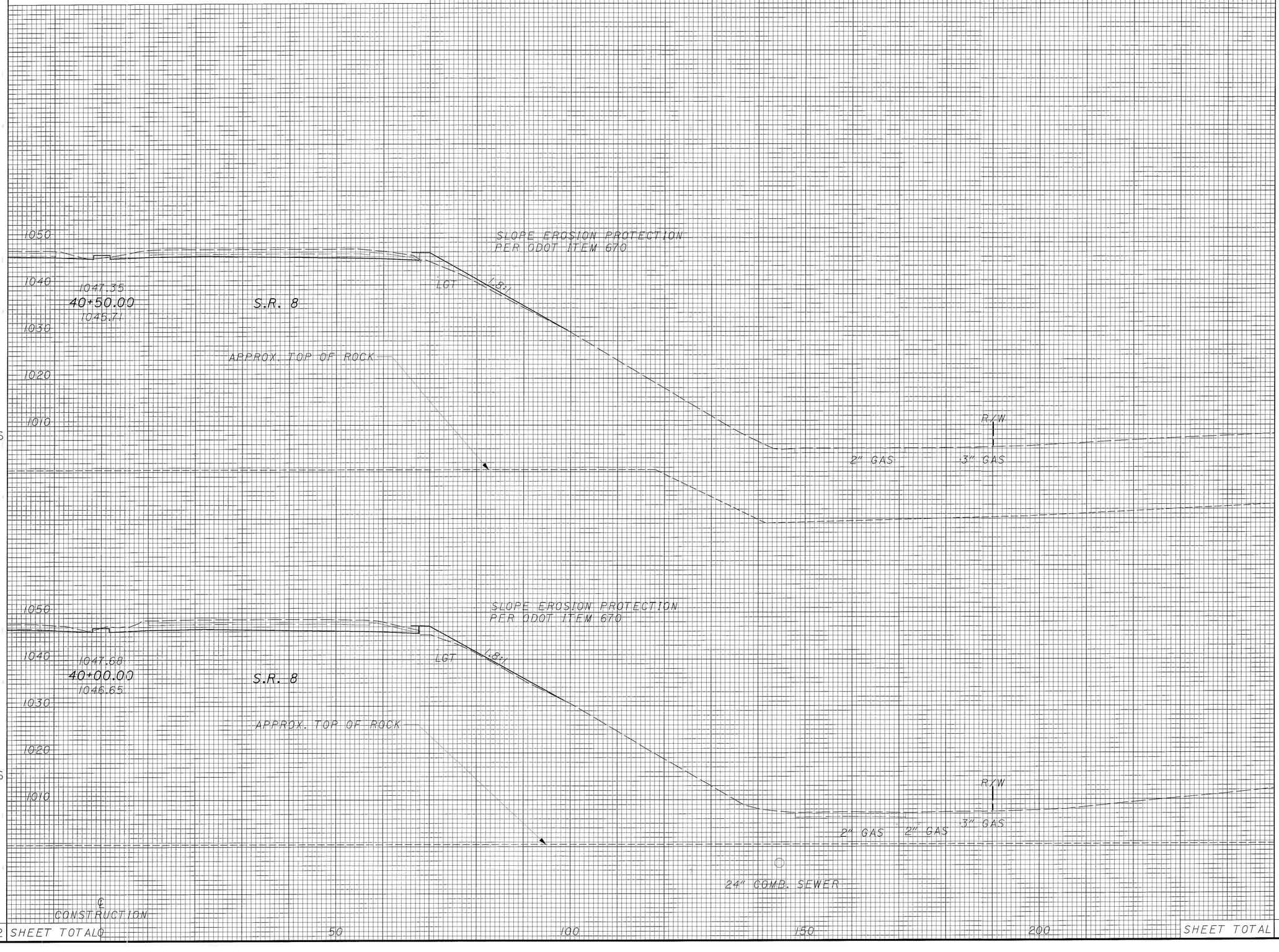

END AREA		VOLUME	
CUT	FILL	CUT	FILL
48	23		
120	39		
82	19		
168	40		
SHEET TOTAL		288	79

CALCULATED JE
CHECKED KMM

CROSS SECTIONS - S.R. 8 RT.
STA. 40+00 TO STA. 40+50

SUM-8-0.63

368
1088

SEEDING	
END WIDTH	SQ. YDS.
40	222
40	231
	453

FOR EARTHWORK AND SEEDING & MULCHING SUBSUMMARY
SEE SHEET 169

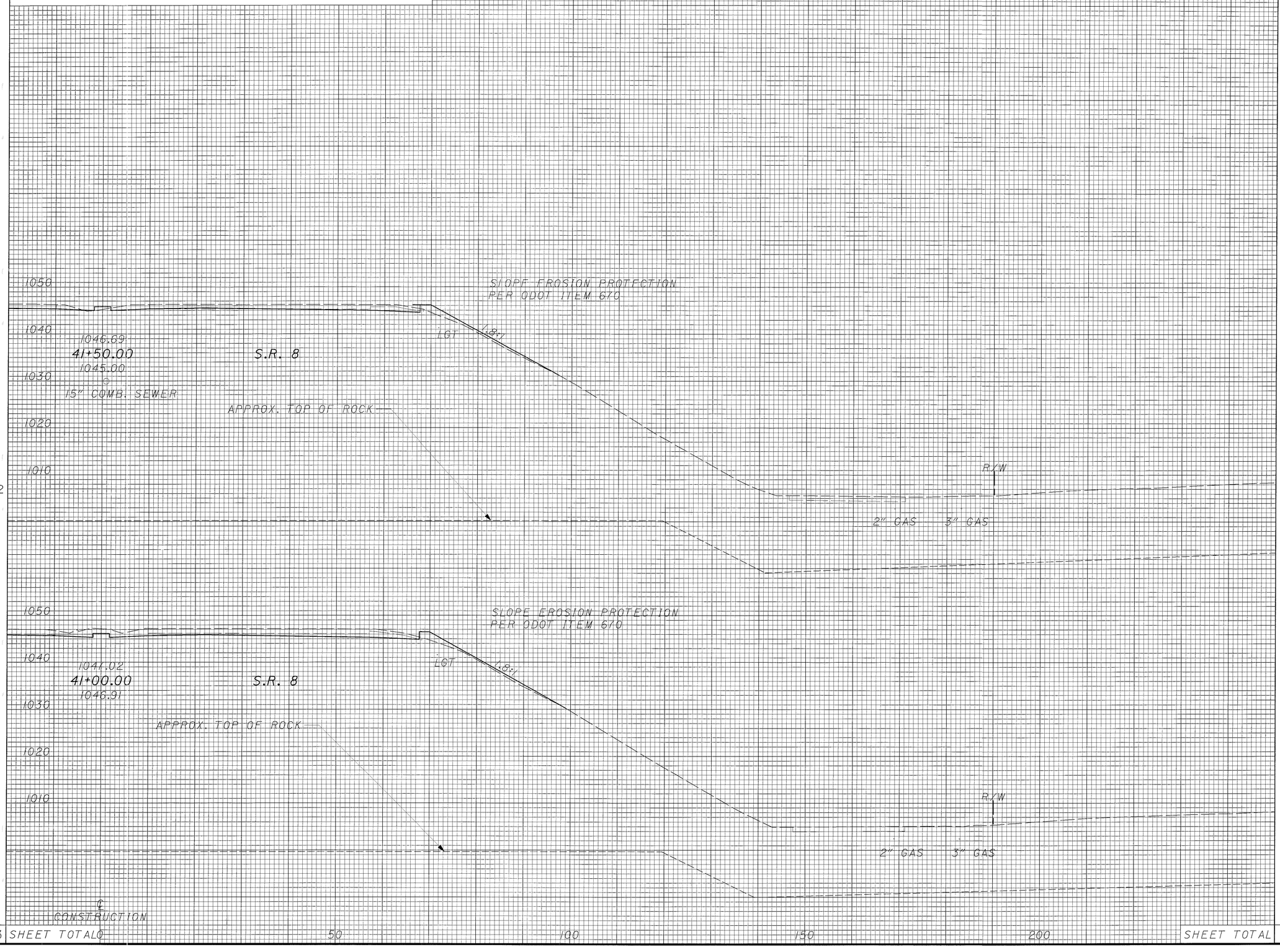

END AREA		VOLUME	
CUT	FILL	CUT	FILL
10	17		
		52	32
46	18		
		87	38
SHEET TOTAL		139	70

CALCULATED JE
CHECKED KMM

CROSS SECTIONS - S.R. 8 RT.
STA. 41+00 TO STA. 41+50

SUM-8-0.63

369
1088

FOR EARTHWORK AND SEEDING & MULCHING SUBSUMMARY
SEE SHEET 169

SEEDING END WIDTH	SEEDING SQ. YDS.	END AREA CUT	END AREA FILL	VOLUME CUT	VOLUME FILL
21					
		51	9		
	175				
				89	25
42					
		45	18		
	228				
				51	32
	403	SHEET TOTAL		140	57

1040
1030
1020
1010
1000
1050

1046.03
42+50.00
1044.75

S.R. 8

2"
LGT

APPROX. TOP OF ROCK

15" COMB. SEWER

R/W

4" GAS
2" GAS
4" GAS

15" COMB. SEWER

20" SANITARY

SLOPE EROSION PROTECTION
PER ODOT ITEM 670

1046.36
42+00.00
1044.58

S.R. 8

1-3D
STA. 42+00, ℄ S.R. 8
WINDOW EL. 1045.78
INV. 15" W. 1041.78
INV. 6" E. 1042.99
INV. 6" S. 1042.68

15" COMB. SEWER

APPROX. TOP OF ROCK

L.O.I.

2" GAS

℄
CONSTRUCTION

0 50 100 150 200

CALCULATED JE
CHECKED KMM

CROSS SECTIONS - S.R. 8 RT.
STA. 42+00 TO STA. 42+50

SUM-8-0.63

370
1088

SEEDING	
END WIDTH	SQ. YDS.
17	
	94
17	
106	
200	SHEET TOTALS

FOR EARTHWORK AND SEEDING & MULCHING SUBSUMMARY
SEE SHEET 169

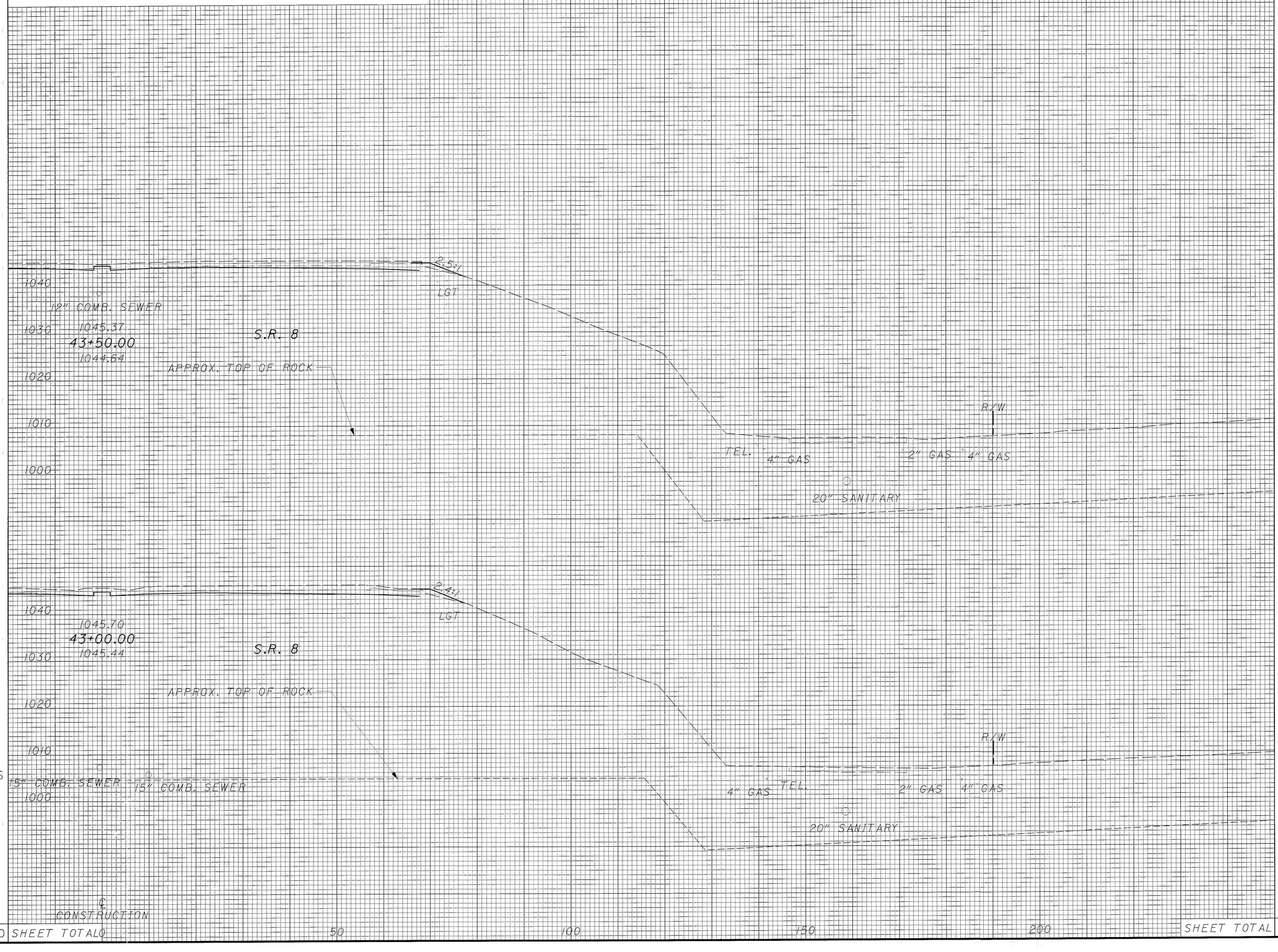

END AREA		VOLUME	
CUT	FILL	CUT	FILL
44	5		
95	10		
59	6		
102	14		
		197	24

SHEET TOTAL

CALCULATED JE
CHECKED KMM

CROSS SECTIONS - S.R. 8 RT.
STA. 43+00 TO STA. 43+50

SUM-8-0.63

371
1088

FOR EARTHWORK AND SEEDING & MULCHING SUBSUMMARY
SEE SHEET 169

SEEDING		END AREA		VOLUME	
END WIDTH	SQ. YDS.	CUT	FILL	CUT	FILL
28					
	161	74	2		
30					
	131	60	1		
	292			220	9
SHEET TOTALS					

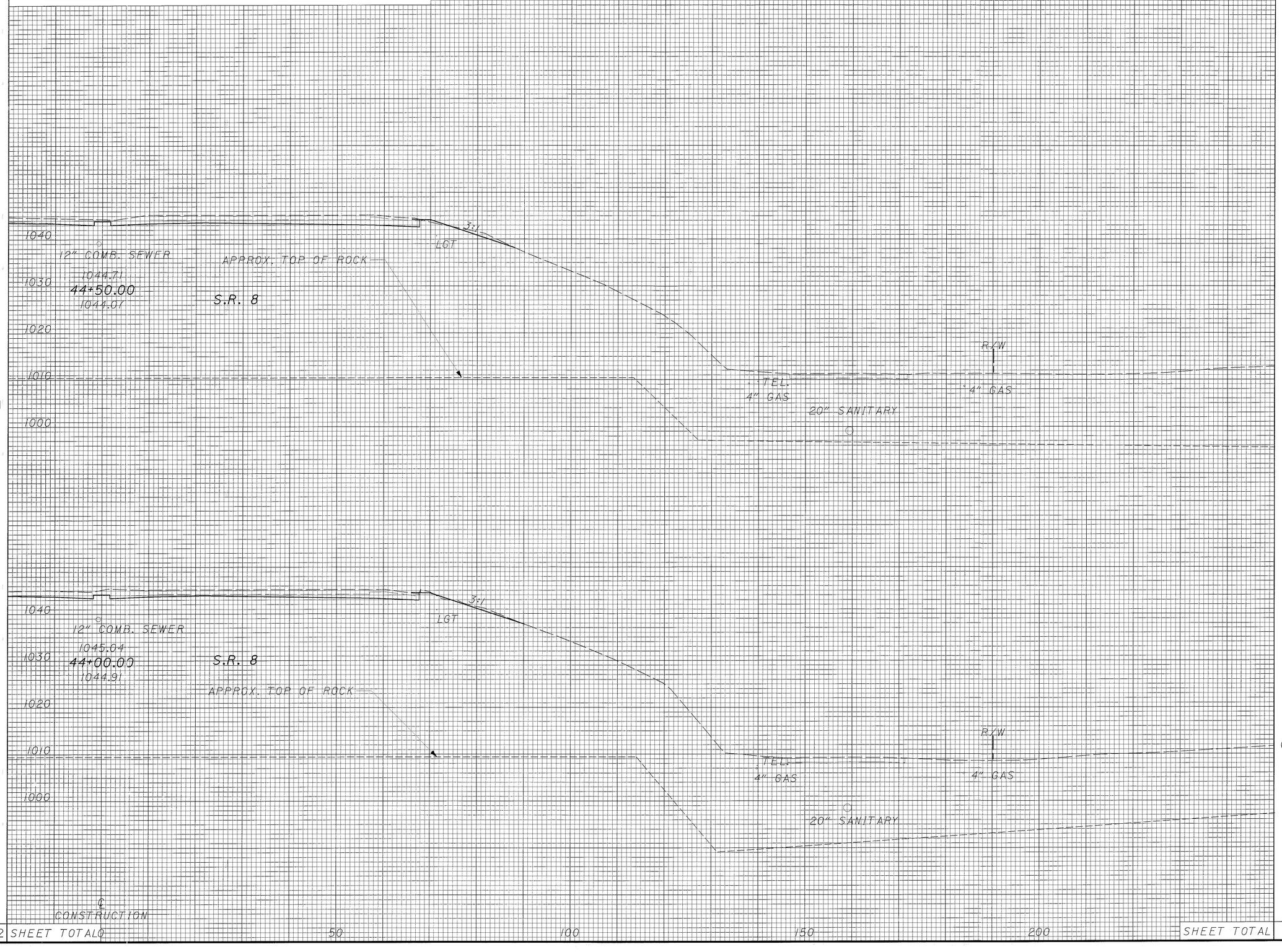

		124	3
		96	6
SHEET TOTAL			

CALCULATED JE
CHECKED KMM

CROSS SECTIONS - S.R. 8 RT.
STA. 44+00 TO STA. 44+50

SUM-8-0.63

372
1088

SEEDING	
END WIDTH	SQ. YDS.
0	
86	
31	
164	
250	SHEET TOTALS

FOR EARTHWORK AND SEEDING & MULCHING SUBSUMMARY SEE SHEET 169

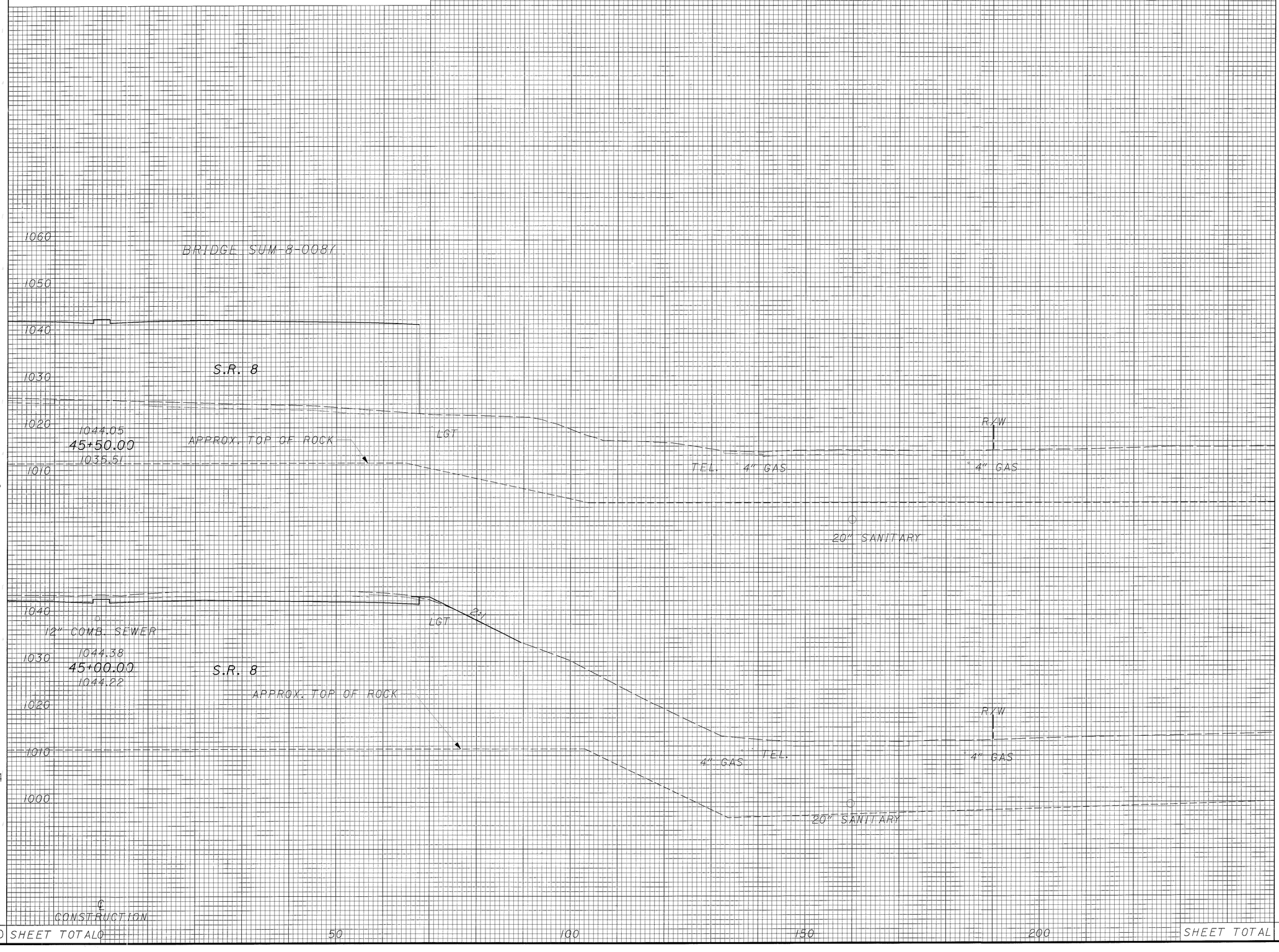

END AREA		VOLUME	
CUT	FILL	CUT	FILL
0	0		
		72	2
78	2		
		140	4
		212	6
	SHEET TOTAL		

CALCULATED JE

CHECKED KMM

CROSS SECTIONS - S.R. 8 RT.
STA. 45+00 TO STA. 45+50

SUM-8-0.63

373
1088

SEEDING	
END WIDTH	SQ. YDS.
87	
0	
0	
242	SHEET TOTALS

FOR EARTHWORK AND SEEDING & MULCHING SUBSUMMARY
SEE SHEET 169

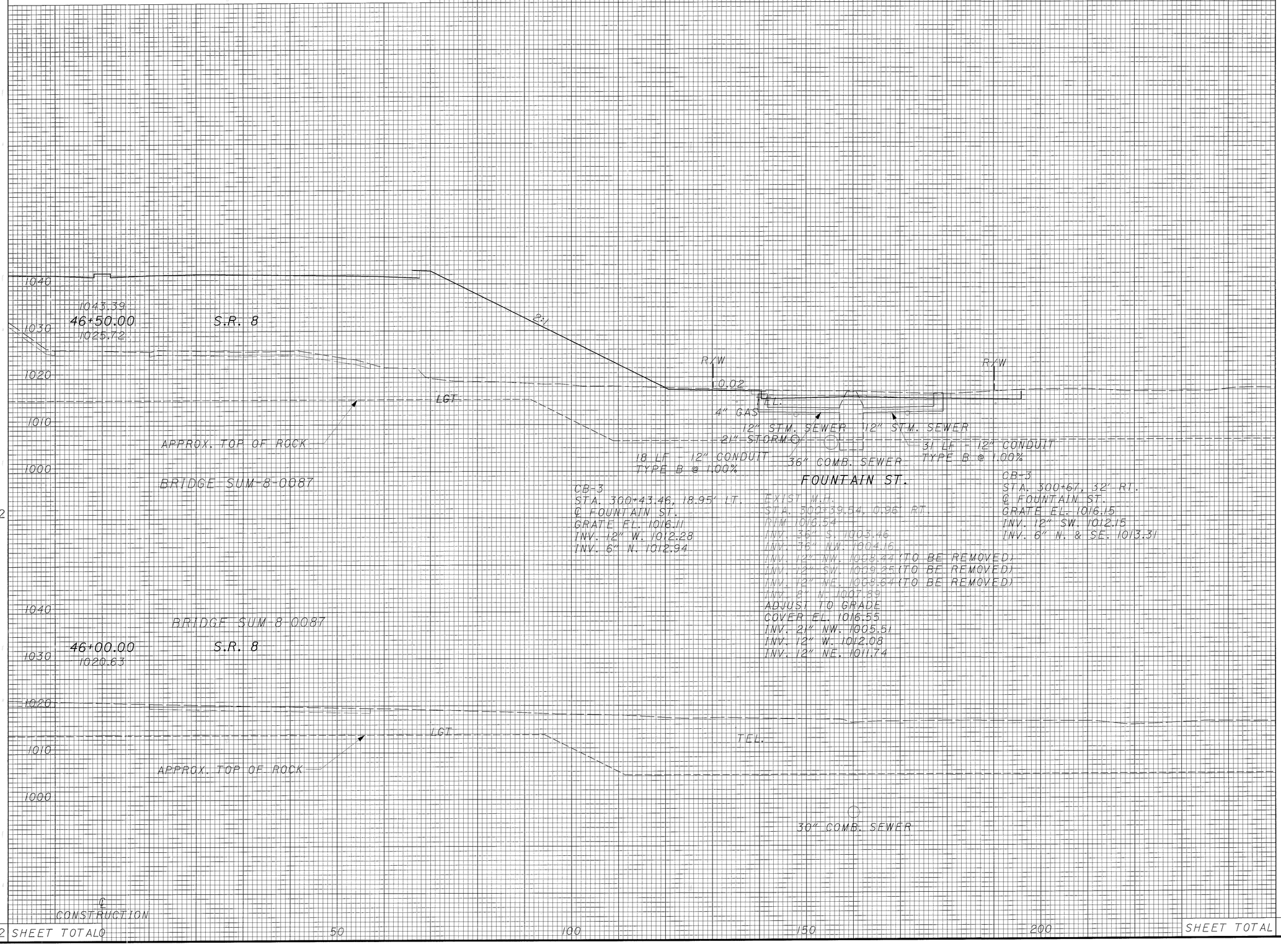

END AREA		VOLUME	
CUT	FILL	CUT	FILL
0	0		
		0	0
		0	0
		0	0
		0	0
SHEET TOTAL		0	0

CALCULATED JE
CHECKED KMM

CROSS SECTIONS - S.R. 8 RT.
STA. 46+00 TO STA. 46+50

SUM-8-0.63

374
1088

SEEDING	
END WIDTH	SQ. YDS.
96	408
51	383
	791

FOR EARTHWORK AND SEEDING & MULCHING SUBSUMMARY SEE SHEET 169

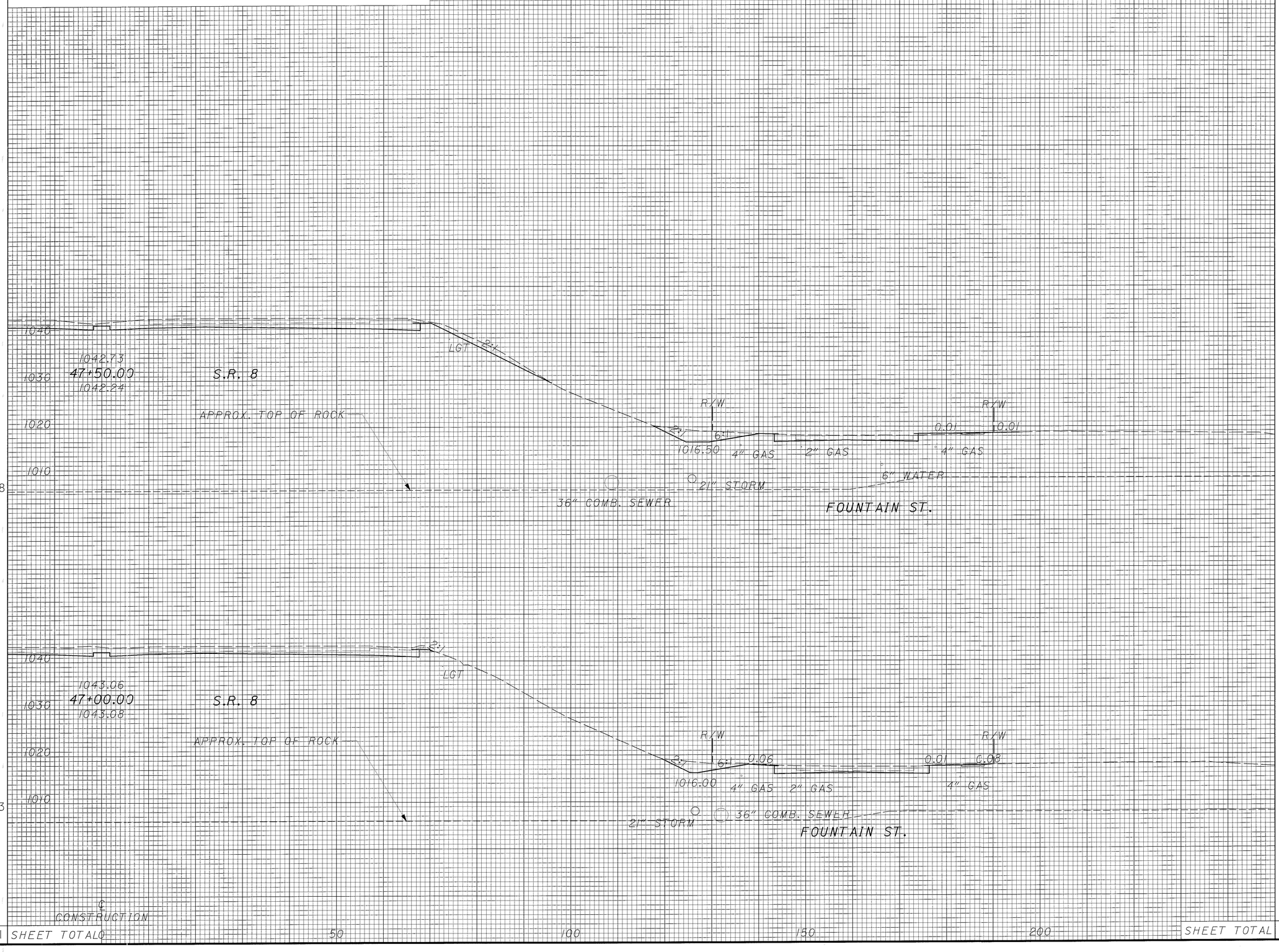

END AREA		VOLUME	
CUT	FILL	CUT	FILL
115	5		
		209	5
111	0		
		103	0
		312	5
SHEET TOTAL			

CALCULATED JE
CHECKED KMM

CROSS SECTIONS - S.R. 8 RT.
STA. 47+00 TO STA. 47+50

SUM-8-0.63

375
1088

SEEDING	
END WIDTH	SQ. YDS.
55	
	300
53	
	289
51	
	408
	997

FOR EARTHWORK AND SEEDING & MULCHING SUBSUMMARY
SEE SHEET 169

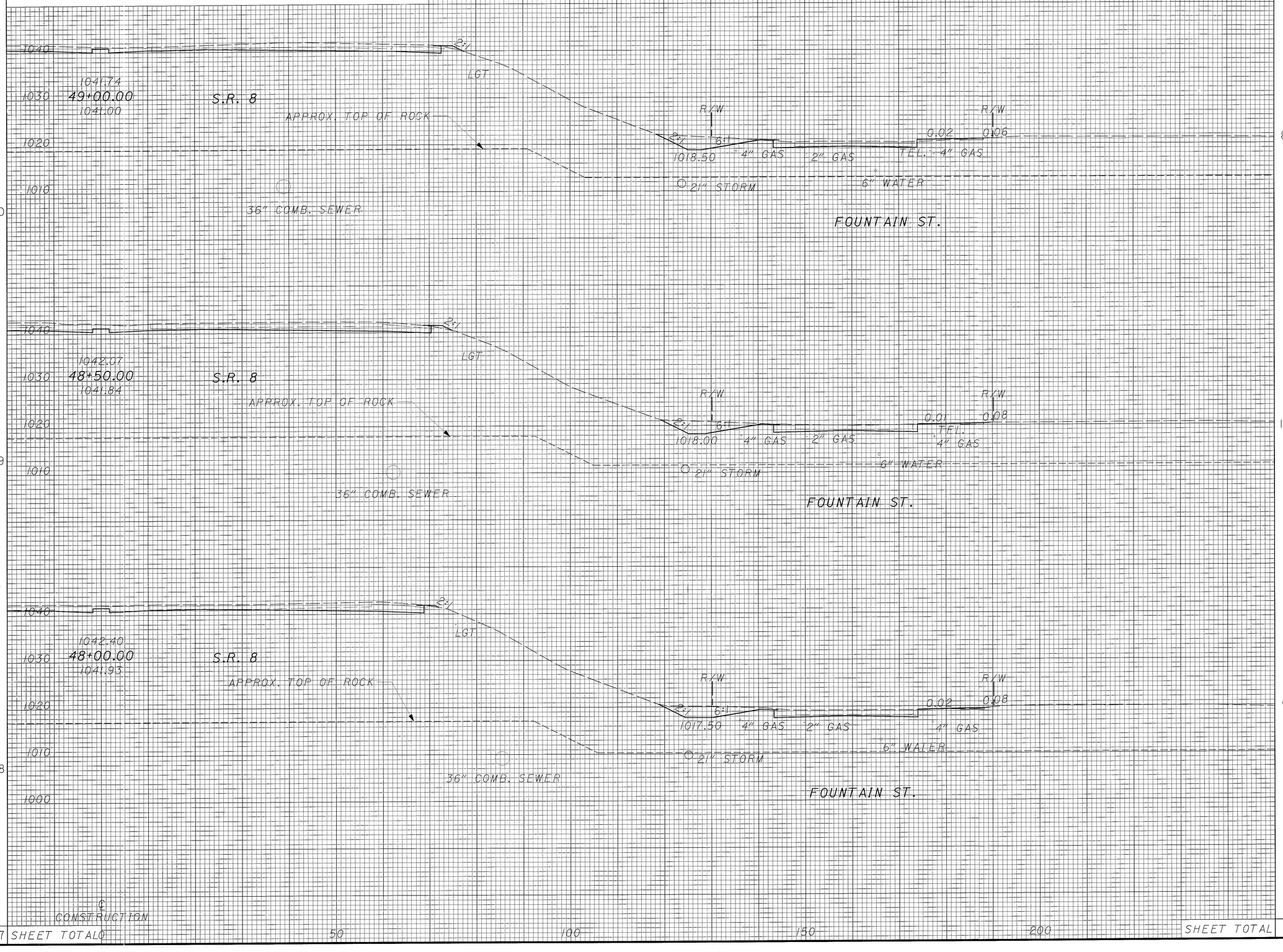

END AREA		VOLUME	
CUT	FILL	CUT	FILL
86	5		
		181	5
109	0		
		192	2
98	2		
		197	6
		570	13

SHEET TOTAL

CALCULATED JE
CHECKED KMM

CROSS SECTIONS - S.R. 8 RT.
STA. 48+00 TO STA. 49+00

SUM-8-0.63

376
1088

SEEDING		END AREA		VOLUME		CALCULATED	CHECKED
END WIDTH	SQ. YDS.	CUT	FILL	CUT	FILL	JE	KMM

FOR EARTHWORK AND SEEDING & MULCHING SUBSUMMARY SEE SHEET 165

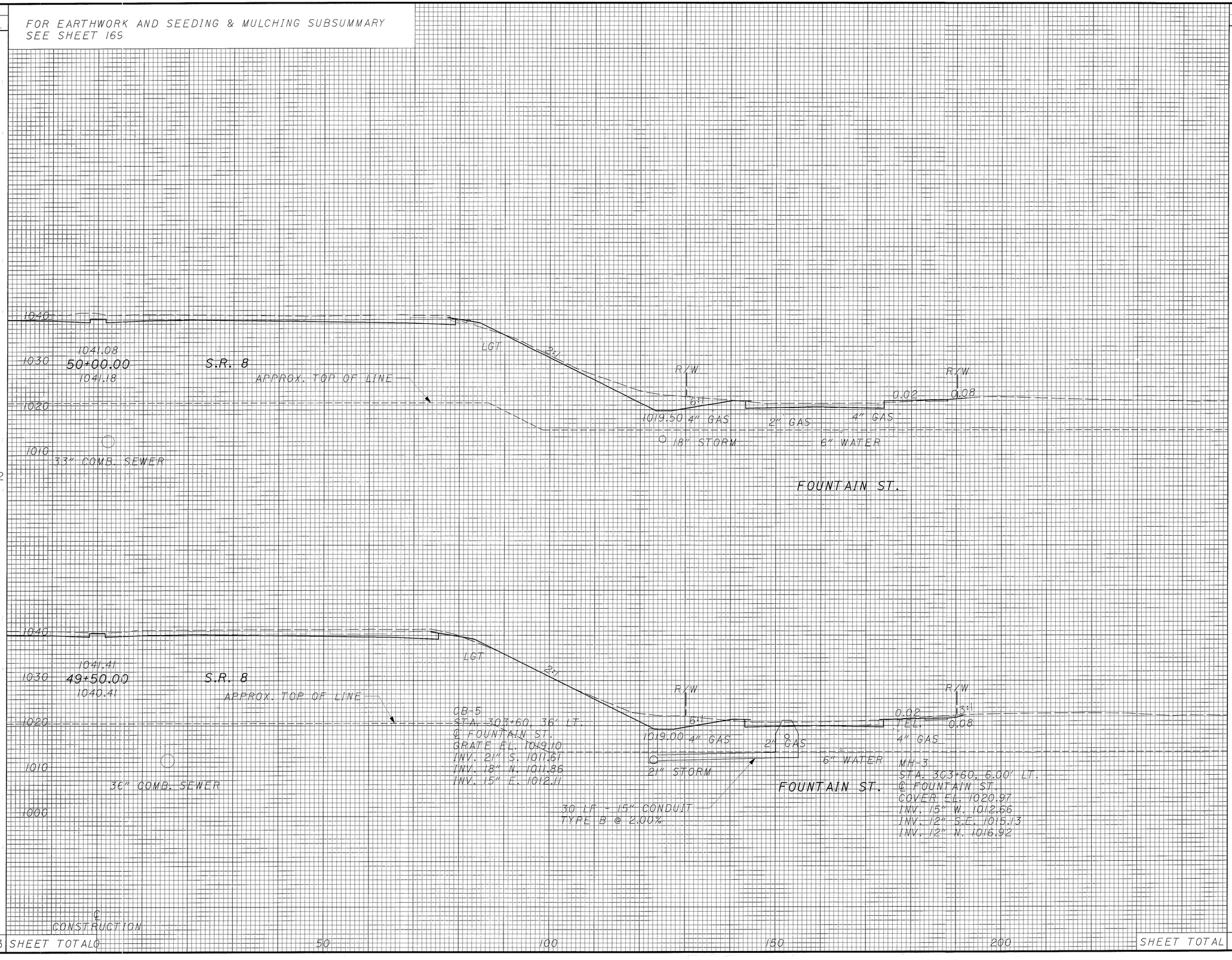

SEEDING END WIDTH	SEEDING SQ. YDS.	END AREA CUT	END AREA FILL	VOLUME CUT	VOLUME FILL
95					
		142	8		
	542				
				237	10
100					
		114	3		
	431				
				185	7
	973	SHEET TOTAL		422	17

CROSS SECTIONS - S.R. 8 RT.
STA. 49+50 TO STA. 50+00

SUM-8-0.63

SEEDING	
END WIDTH	SQ. YDS.
85	439
73	467
906	

FOR EARTHWORK AND SEEDING & MULCHING SUBSUMMARY
SEE SHEET 169

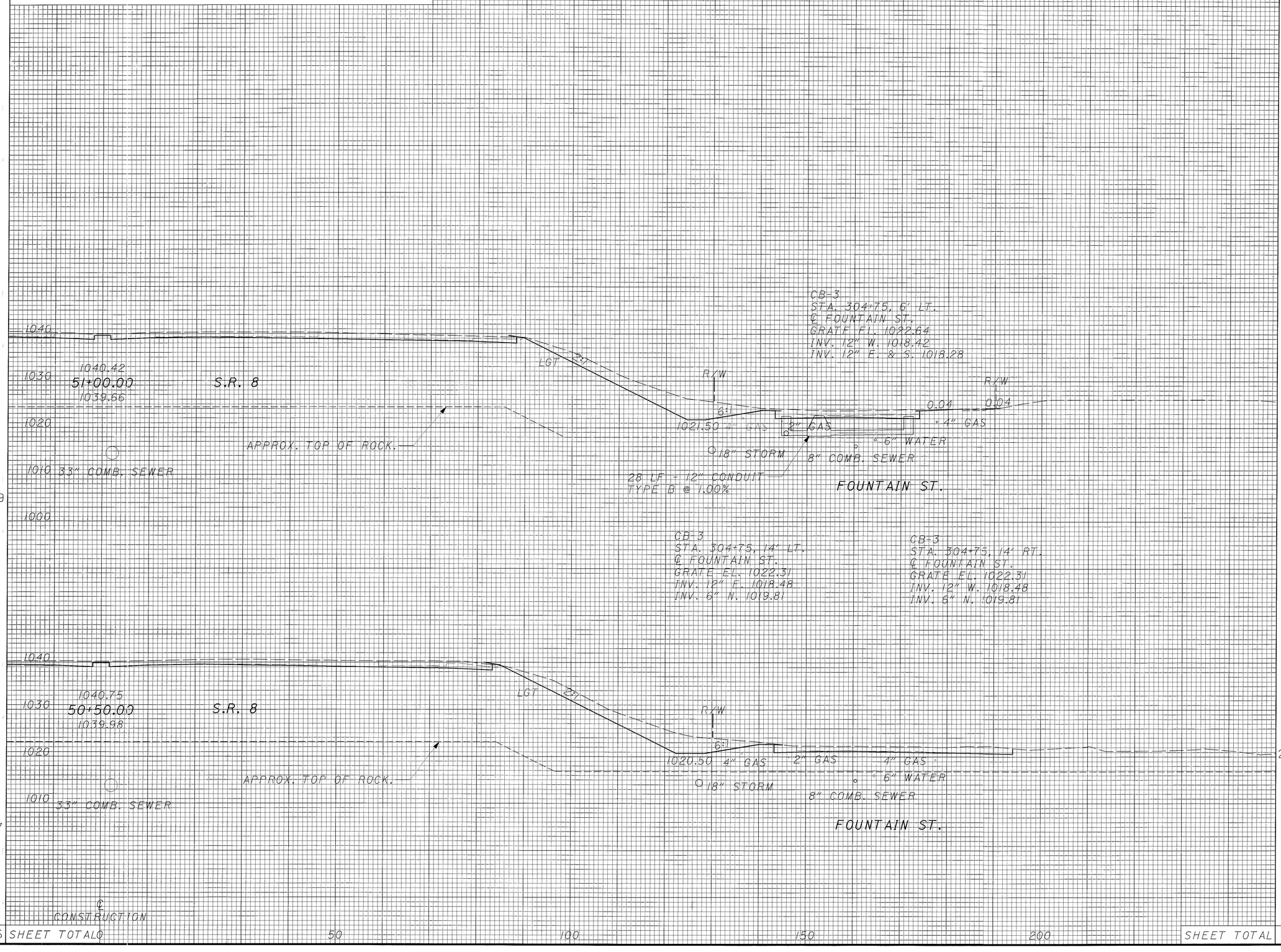

END AREA		VOLUME	
CUT	FILL	CUT	FILL
202	2		
379	2		
207	0		
323	7		
SHEET TOTAL		702	9

CALCULATED JE
CHECKED KMM

CROSS SECTIONS - S.R. 8 RT.
STA. 50+50 TO STA. 51+00

SUM-8-0.63

FOR EARTHWORK AND SEEDING & MULCHING SUBSUMMARY
SEE SHEET 169

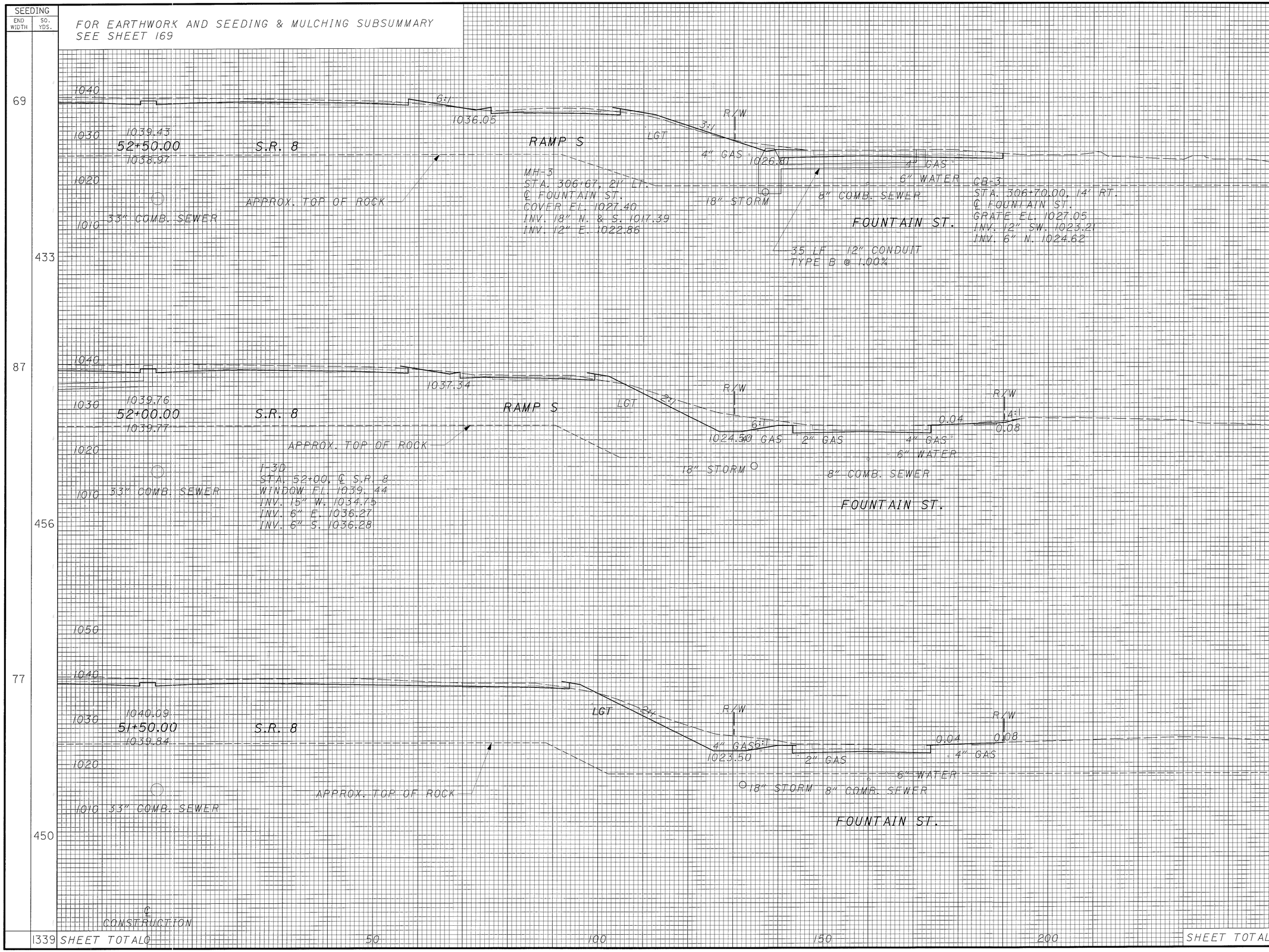

END AREA CUT	END AREA FILL	VOLUME CUT	VOLUME FILL
75	18		
		206	22
148	6		
		262	10
135	5		
		312	6
		780	38

CALCULATED JE
CHECKED KMM

CROSS SECTIONS - S.R. 8 RT.
STA. 51+50 TO STA. 52+50

SUM-8-0.63

379
1088

FOR EARTHWORK AND SEEDING & MULCHING SUBSUMMARY
SEE SHEET 169

SEEDING END WIDTH	SEEDING SQ. YDS.	END AREA CUT	END AREA FILL	VOLUME CUT	VOLUME FILL
97		48	63		
	508			91	89
86		50	33		
	472			87	76
84		44	49		
	425			110	62
	1405 SHEET TOTAL			288	227

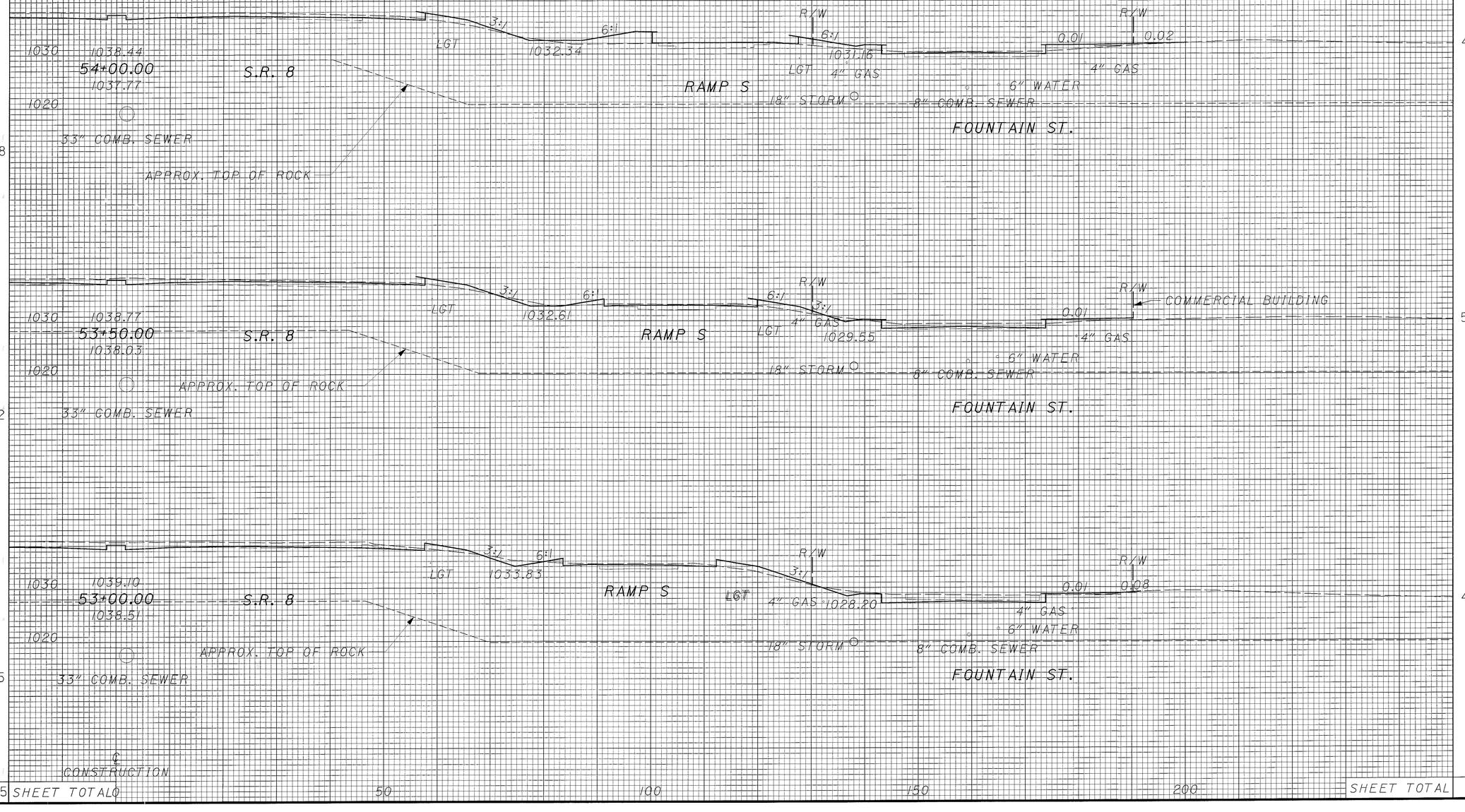

CALCULATED JE
CHECKED KMM

CROSS SECTIONS - S.R. 8 RT.
STA. 53+00 TO STA. 54+00

SUM-8-0.63

380
1088

SEEDING	
END WIDTH	SQ. YDS.
94	
	428
60	
	447
101	
	550
	1425

FOR EARTHWORK AND SEEDING & MULCHING SUBSUMMARY SEE SHEET 169

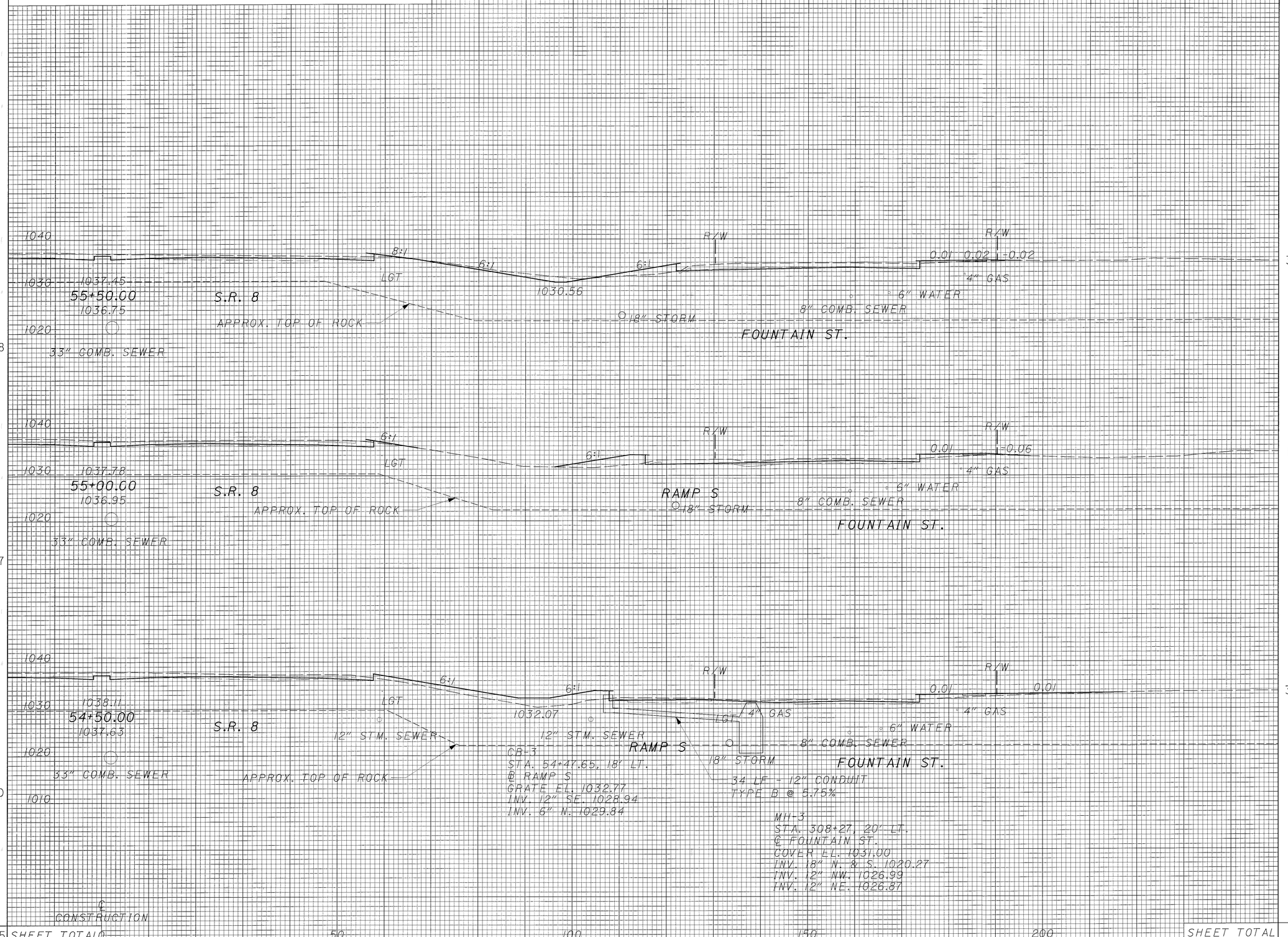

END AREA		VOLUME	
CUT	FILL	CUT	FILL
33	24		
		46	56
17	36		
		49	108
36	81		
		78	133
		173	297
SHEET TOTAL			

CALCULATED JE
CHECKED KMM

CROSS SECTIONS - S.R. 8 RT.
STA. 54+50 TO STA. 55+50

SUM-8-0.63

FOR EARTHWORK AND SEEDING & MULCHING SUBSUMMARY
SEE SHEET 169

SEEDING		END AREA		VOLUME	
END WIDTH	SQ. YDS.	CUT	FILL	CUT	FILL
100	553	112	68	202	122
99	539	106	64	194	79
95	525	103	21	126	42
	1617			522	243

CALCULATED JE
CHECKED KMM

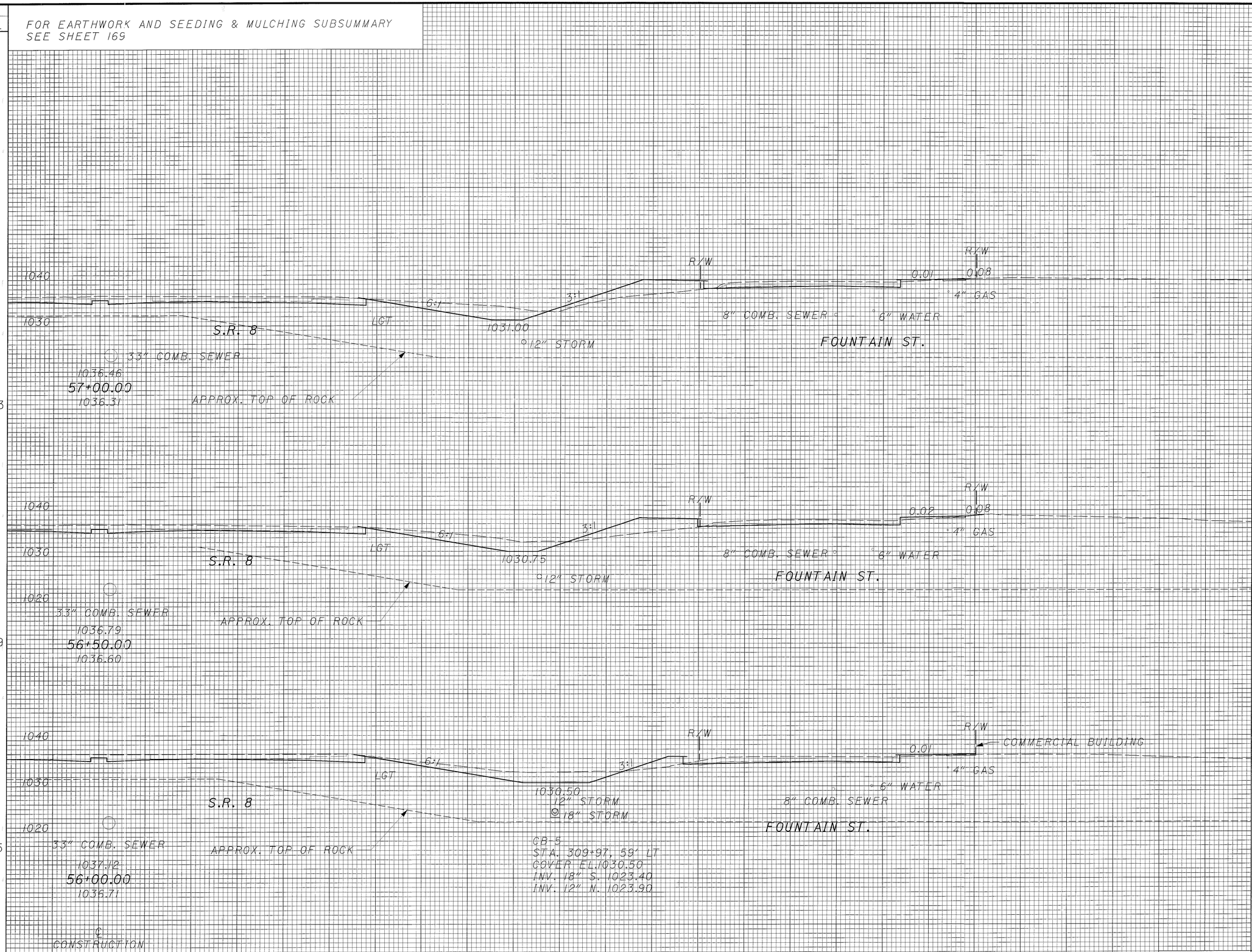

CROSS SECTIONS - S.R. 8 RT.
STA. 56+00 TO STA. 57+00

SUM-8-0.63

382
1088

SEEDING	
END WIDTH	SQ. YDS.
98	
	544
98	
	544
98	
	550
	1638

FOR EARTHWORK AND SEEDING & MULCHING SUBSUMMARY SEE SHEET 169

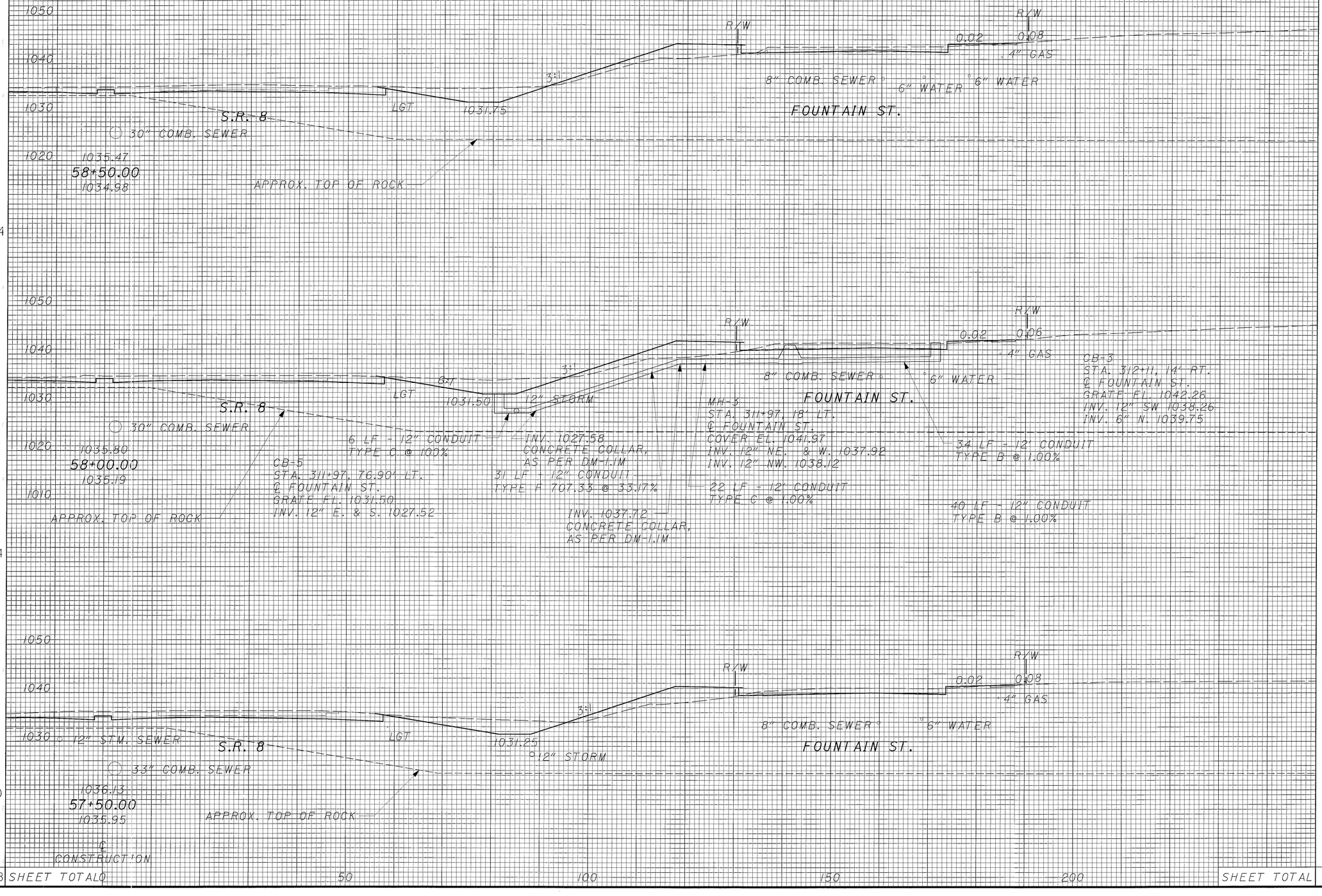

END AREA		VOLUME	
CUT	FILL	CUT	FILL
135	69		
		245	132
130	74		
		231	136
120	73		
		215	131
SHEET TOTAL		691	399

CALCULATED JE

CHECKED KMM

CROSS SECTIONS - S.R. 8 RT.
STA. 57+50 TO STA. 58+50

SUM-8-0.63

383
1088

SEEDING	
END WIDTH	SQ. YDS.
110	611
110	586
101	553
1750	SHEET TOTALS

FOR EARTHWORK AND SEEDING & MULCHING SUBSUMMARY SEE SHEET 169

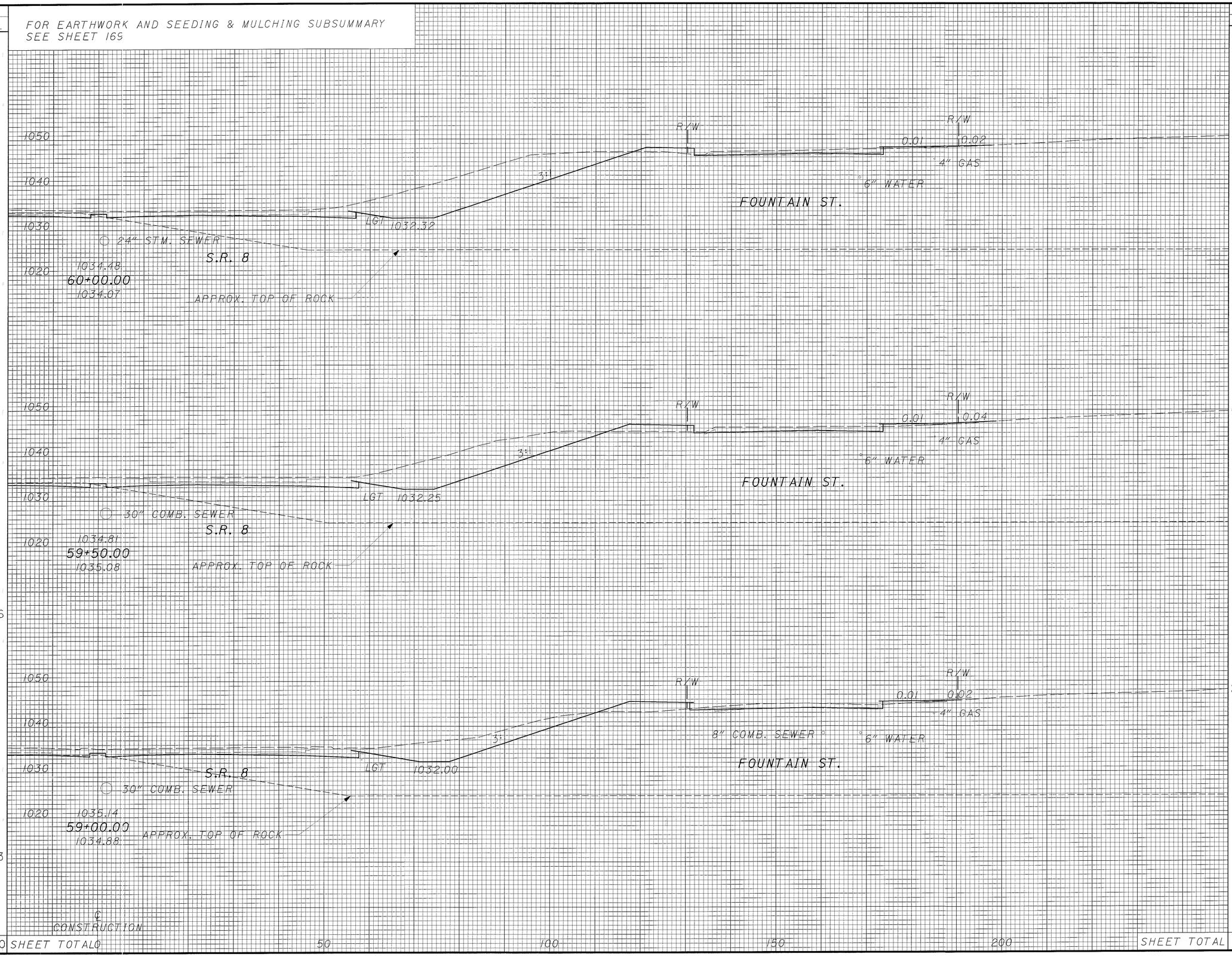

END AREA		VOLUME	
CUT	FILL	CUT	FILL
384	17		
		896	45
584	32		
		760	67
237	40		
		344	101
		2000	213
	SHEET TOTAL		

CALCULATED JE

CHECKED KMM

CROSS SECTIONS - S.R. 8 RT.
STA. 59+00 TO STA. 60+00

SUM-8-0.63

384
1088

SEEDING	
END WIDTH	SQ. YDS.
0	292
105	597
889	SHEET TOTALS

FOR EARTHWORK AND SEEDING & MULCHING SUBSUMMARY SEE SHEET 169

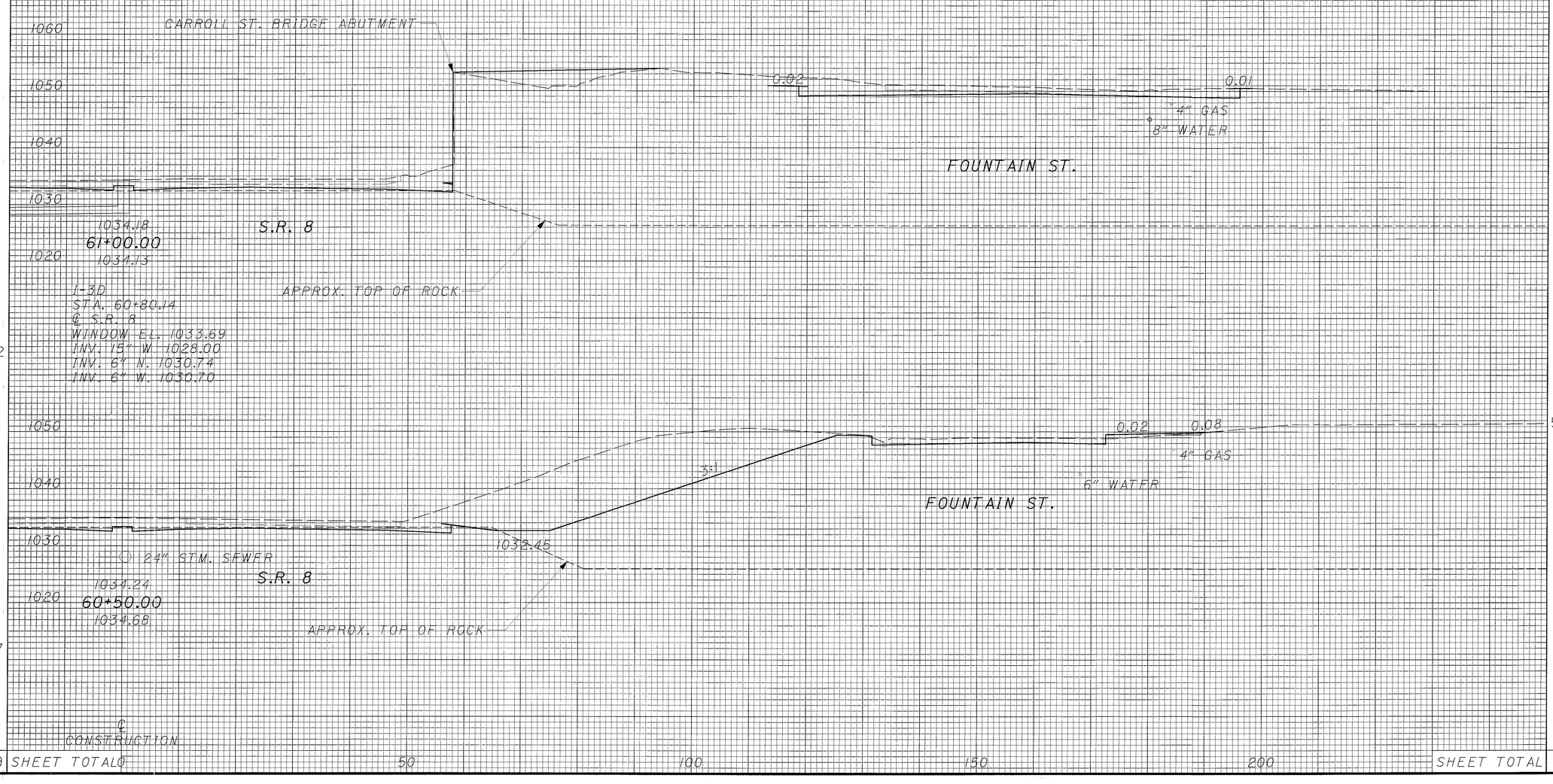

END AREA		VOLUME	
CUT	FILL	CUT	FILL
0	0		
		541	6
		584	7
		896	22
SHEET TOTAL		1437	28

CALCULATED JE

CHECKED KMM

CROSS SECTIONS - S.R. 8 RT.
STA. 60+50 TO STA. 61+00

SUM-8-0.63

SEEDING	
END WIDTH	SQ. YDS.
123	
342	
0	
0	
342	SHEET TOTAL

FOR EARTHWORK AND SEEDING & MULCHING SUBSUMMARY
SEE SHEET 169

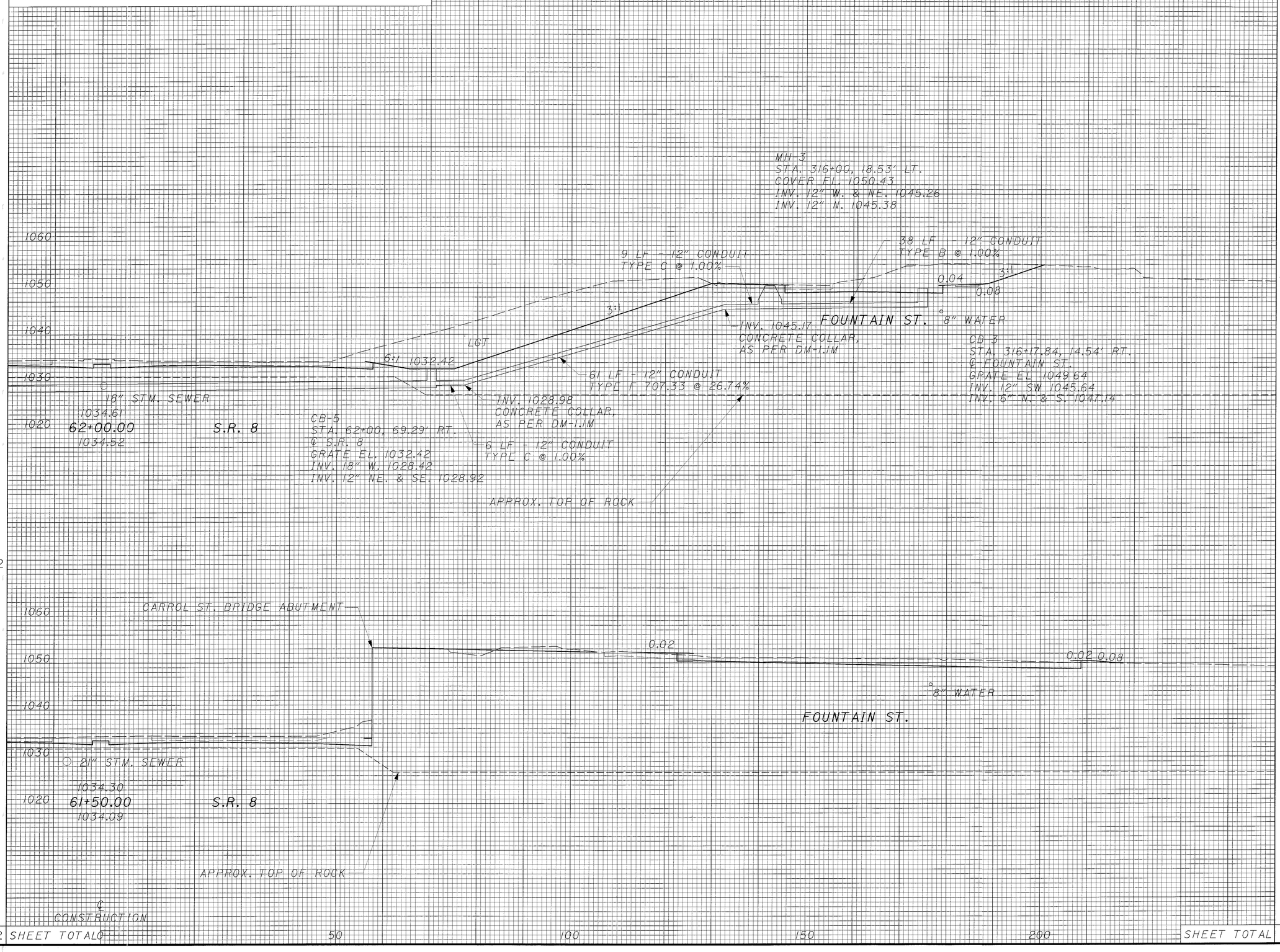

END AREA		VOLUME	
CUT	FILL	CUT	FILL
701	0		
		649	0
0	0		
0	0		
SHEET TOTAL		649	0

CALCULATED JE
CHECKED KMM

CROSS SECTIONS - S.R. 8 RT.
STA. 61+50 TO STA. 62+00

SUM-8-0.63

386
1088

FOR EARTHWORK AND SEEDING & MULCHING SUBSUMMARY
SEE SHEET 169

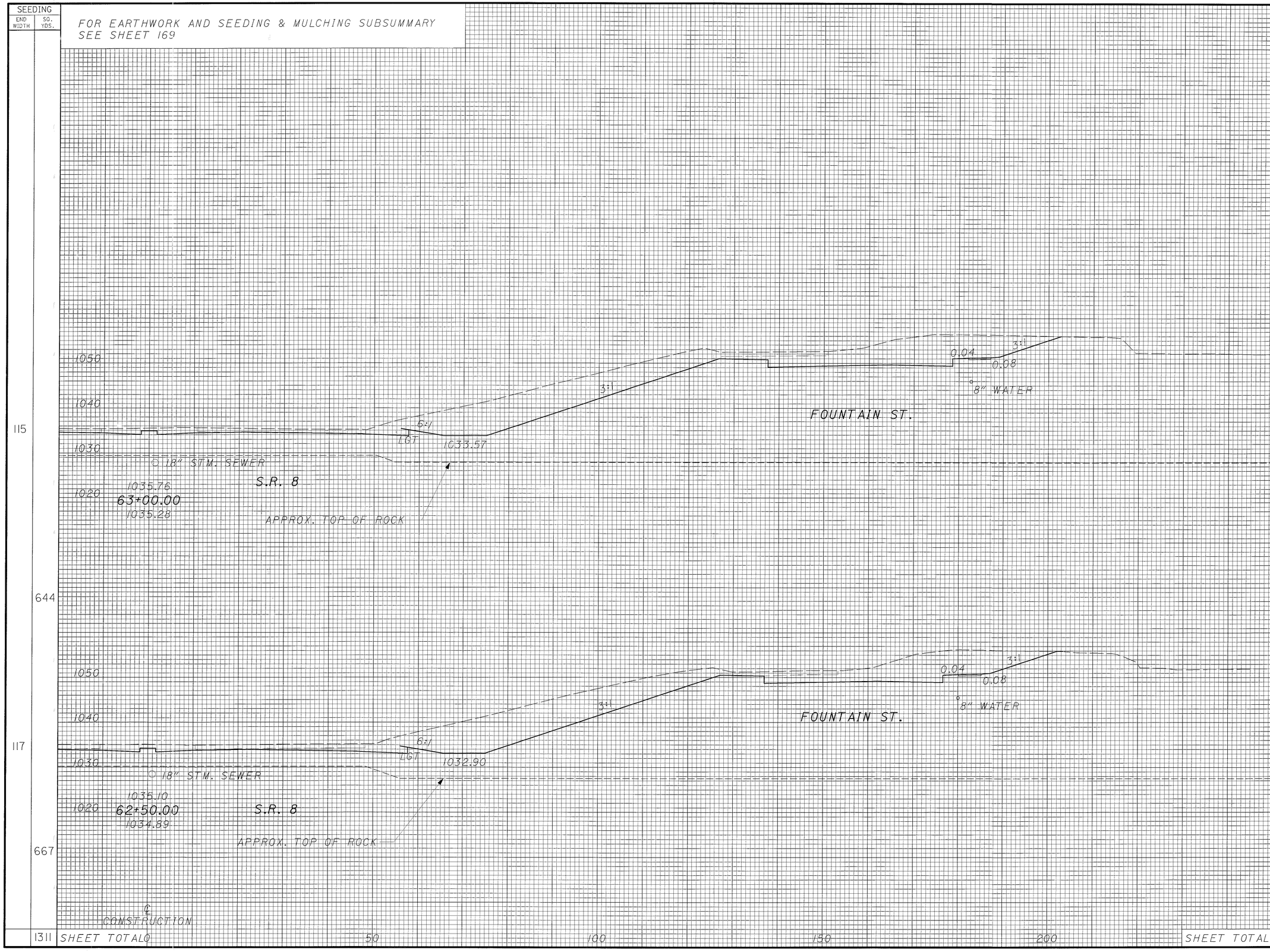

END AREA CUT	END AREA FILL	VOLUME CUT	VOLUME FILL
689	0		
		1271	0
684	0		
		1282	0
		2553	0

CALCULATED JE
CHECKED KMM

CROSS SECTIONS - S.R. 8 RT.
STA. 62+50 TO STA. 63+00

SUM-8-0.63

387
1088

SEEDING	
END WIDTH	SQ. YDS.
111	633
117	644
1277	SHEET TOTALS

FOR EARTHWORK AND SEEDING & MULCHING SUBSUMMARY SEE SHEET 169

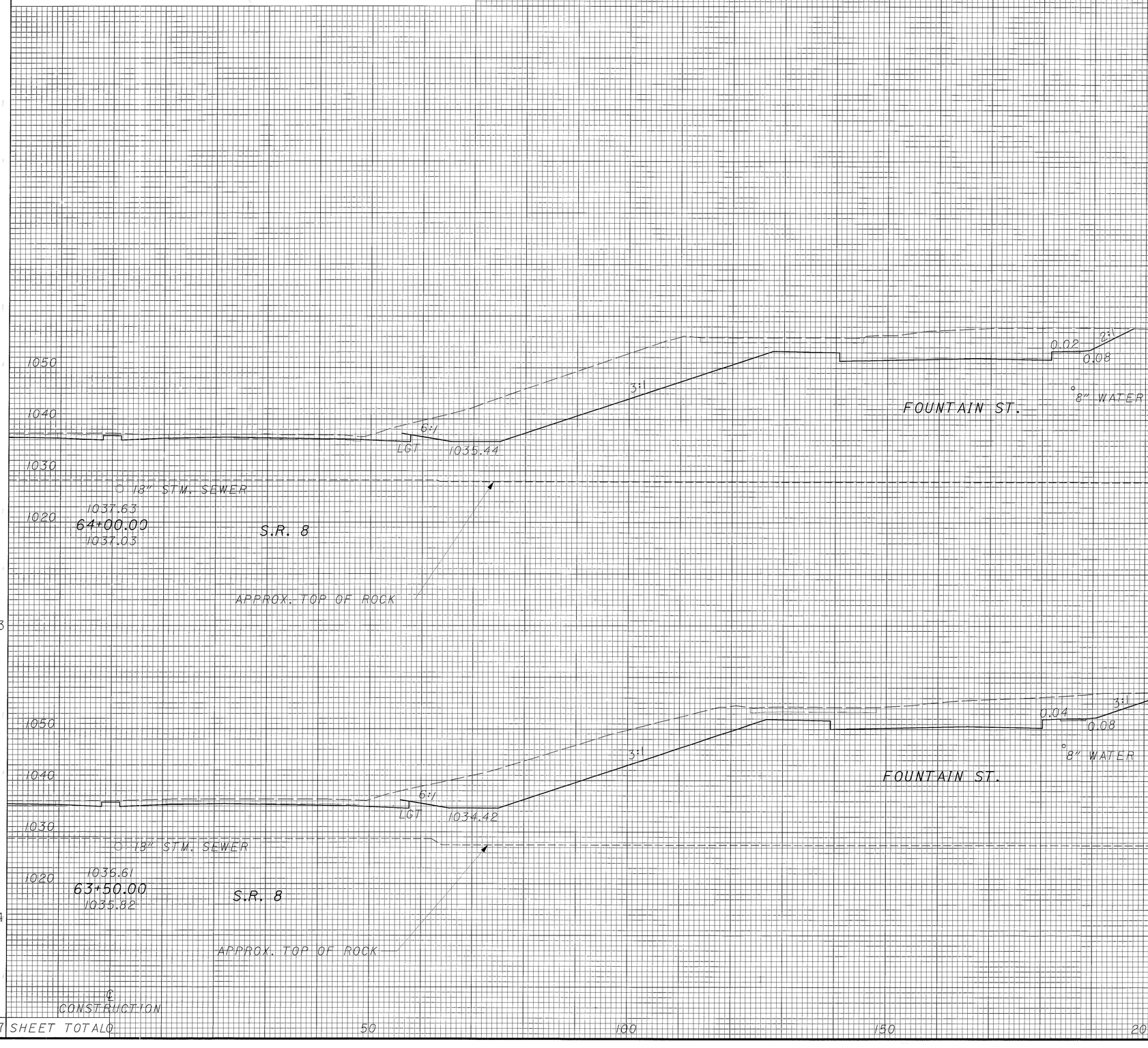

END AREA		VOLUME	
CUT	FILL	CUT	FILL
808	0		
		1414	0
719	0		
		1304	0
SHEET TOTAL		2718	0

CALCULATED JE

CHECKED KMM

CROSS SECTIONS - S.R. 8 RT.
STA. 63+50 TO STA. 64+00

SUM-8-0.63

388
1088

FOR EARTHWORK AND SEEDING & MULCHING SUBSUMMARY
SEE SHEET 169

SEEDING END WIDTH	SEEDING SQ. YDS.
110	606
108	606
110	614
	1826

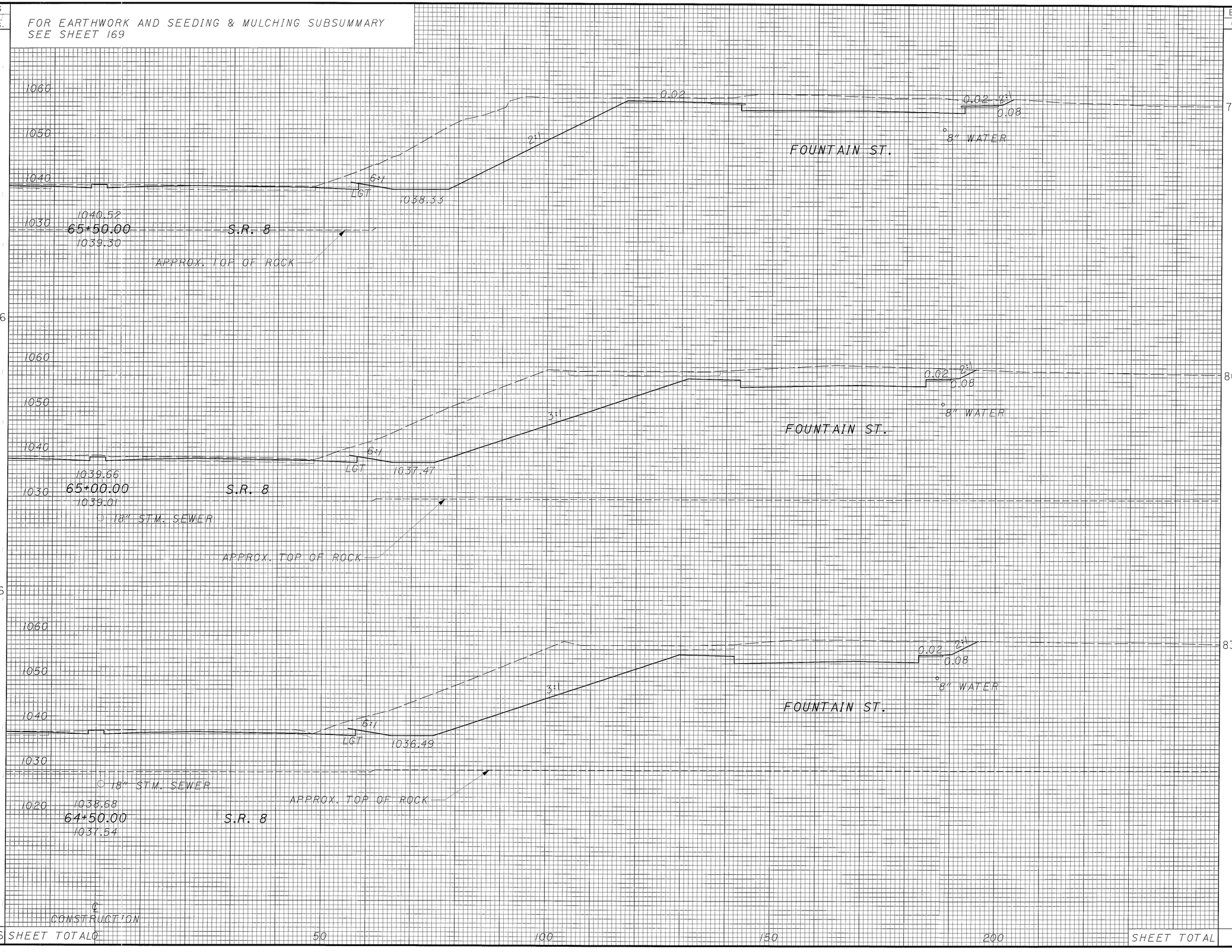

END AREA CUT	END AREA FILL	VOLUME CUT	VOLUME FILL
732	0		
		1481	0
868	0		
		1581	0
839	0		
		1525	0
SHEET TOTAL		4587	0

CALCULATED JE
CHECKED KMM

CROSS SECTIONS - S.R. 8 RT.
STA. 64+50 TO STA. 65+50

SUM-8-0.63

389
1088

SEEDING	
END WIDTH	SQ. YDS.
127	
353	
0	
306	
659	SHEET TOTAL

FOR EARTHWORK AND SEEDING & MULCHING SUBSUMMARY
SEE SHEET 169

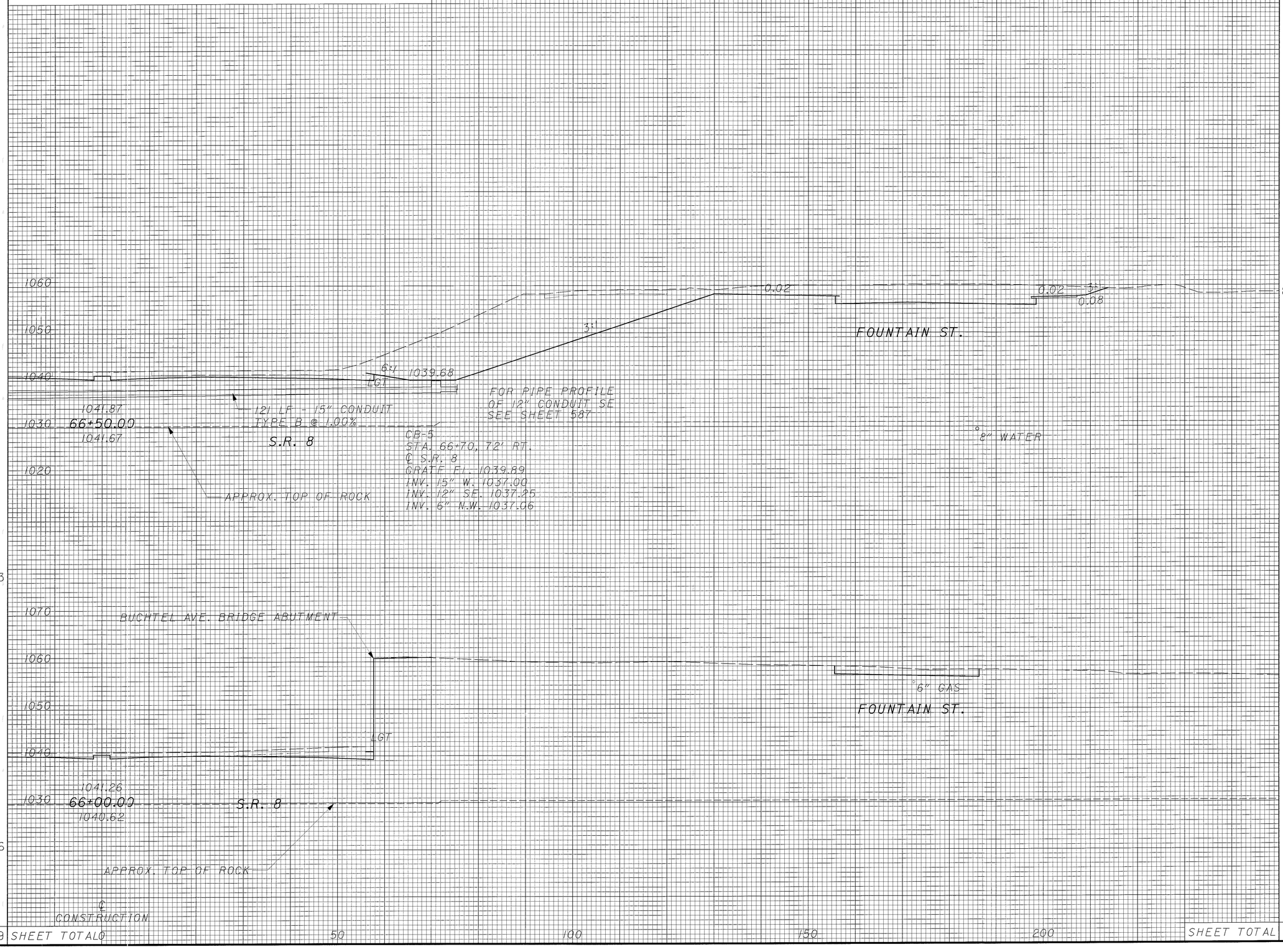

END AREA		VOLUME	
CUT	FILL	CUT	FILL
890	0		
824	0		
678	0		
0	0		
		1502	0

CALCULATED JE
CHECKED KMM

CROSS SECTIONS - S.R. 8 RT.
STA. 66+00 TO STA. 66+50

SUM-8-0.63

390
1088

FOR EARTHWORK AND SEEDING & MULCHING SUBSUMMARY
SEE SHEET 169

SEEDING END WIDTH	SEEDING SQ. YDS.
135	742
132	731
131	717
	2190

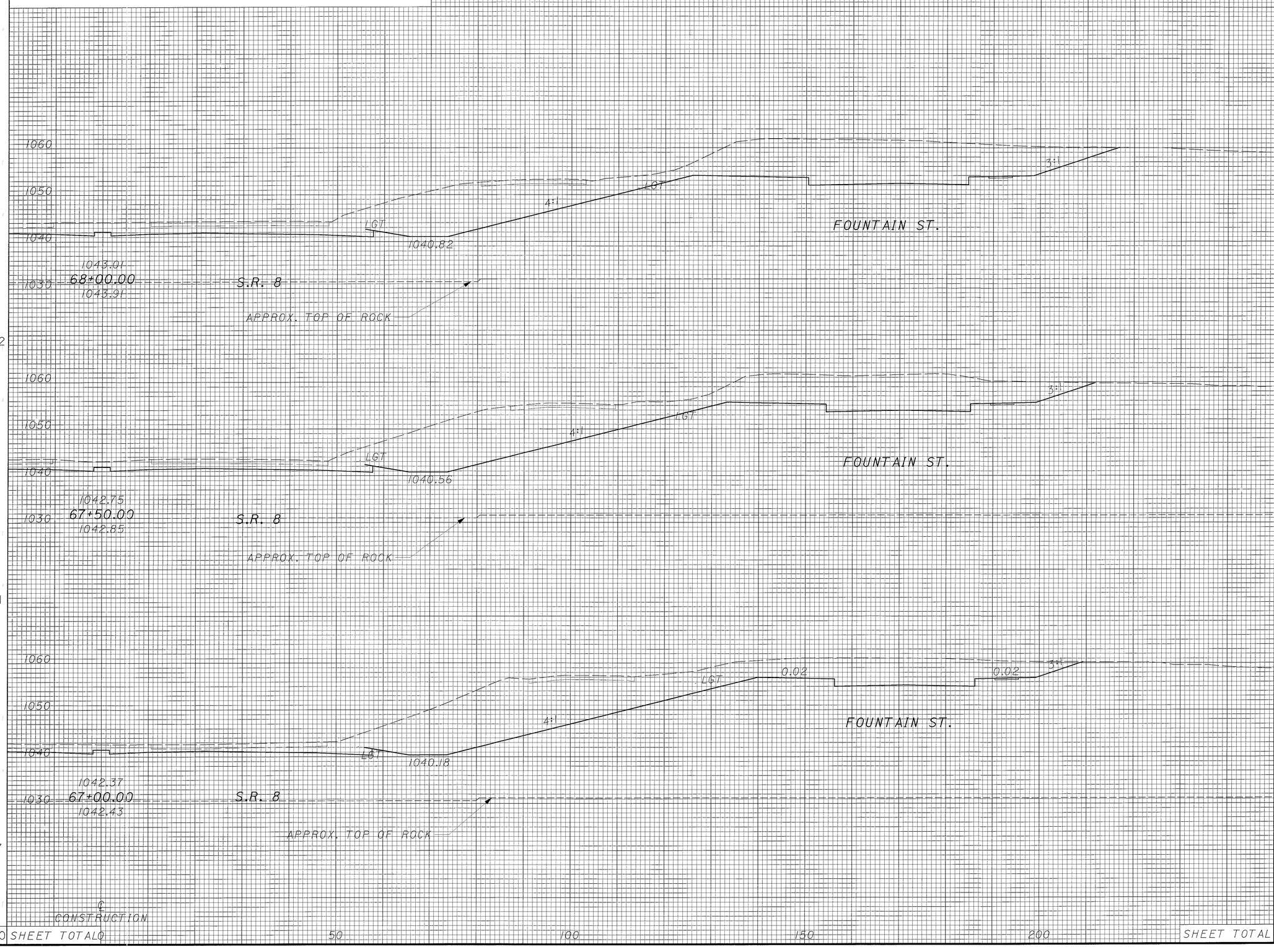

END AREA CUT	END AREA FILL	VOLUME CUT	VOLUME FILL
1198	0		
		2117	0
1088	0		
		1988	0
1059	0		
		1805	0
SHEET TOTAL		5910	0

CALCULATED JE
CHECKED KMM

CROSS SECTIONS - S.R. 8 RT.
STA. 67+00 TO STA. 68+00

SUM-8-0.63

391
1088

FOR EARTHWORK AND SEEDING & MULCHING SUBSUMMARY
SEE SHEET 169

SEEDING END WIDTH	SEEDING SQ. YDS.	END AREA CUT	END AREA FILL	VOLUME CUT	VOLUME FILL
		1934	0		
123				3380	0
	692	1716	0		
126				2962	0
	731	1483	0		
137				2482	0
	756				
2179	SHEET TOTAL			8824	0

1060
1050
1040
1030
1020

1043.07
69+50.00
1045.33
S.R. 8
APPROX. TOP OF ROCK
LGT
6:1
IC40.87
4" WATER
12" SANITARY
15" STORM
2:1
FOUNTAIN ST.

1043.17
69+00.00
1044.98
S.R. 8
APPROX. TOP OF ROCK
LGT
6:1
1040.98
15" STORM
2:1
EWING TURNAROUND
FOUNTAIN ST.

1043.15
68+50.00
1044.47
S.R. 8
APPROX. TOP OF ROCK
LGT
6:1
1040.96
3:1
24 LF 12" CONDUIT
TYPE B @ 1.00%
FOUNTAIN ST.
14 LF - 12" CONDUIT
TYPE B @ 1.00%

CB-3
STA. 68+50, 18' LT.
@ RAMP 01
GRATE EL. 1050.84
INV. 12" E. 1047.62
INV. 6" S. 1048.50

MH-3
STA. 322+37
℄ FOUNTAIN ST.
COVER EL. 1051.60
INV. 15" NW. 1047.13
INV. 12" W & E. 1047.13

CB-3
STA. 322+38, 14' RT.
℄ FOUNTAIN ST.
GRATE EL. 1051.11
INV. 12" W. 1047.52
INV. 6" S. 1048.61

℄
CONSTRUCTION

50 100 150 200

CALCULATED JE
CHECKED KMM

CROSS SECTIONS - S.R. 8 RT.
STA. 68+50 TO STA. 69+50

SUM-8-0.63

392
1088

FOR EARTHWORK AND SEEDING & MULCHING SUBSUMMARY SEE SHEET 169

SEEDING END WIDTH	SEEDING SQ. YDS.	END AREA CUT	END AREA FILL	VOLUME CUT	VOLUME FILL
		2466	0		
136				4482	0
	764	2375	0		
139				4313	0
	772	2283	0		
139				3905	0
	728				
2264	SHEET TOTALS			2700	0

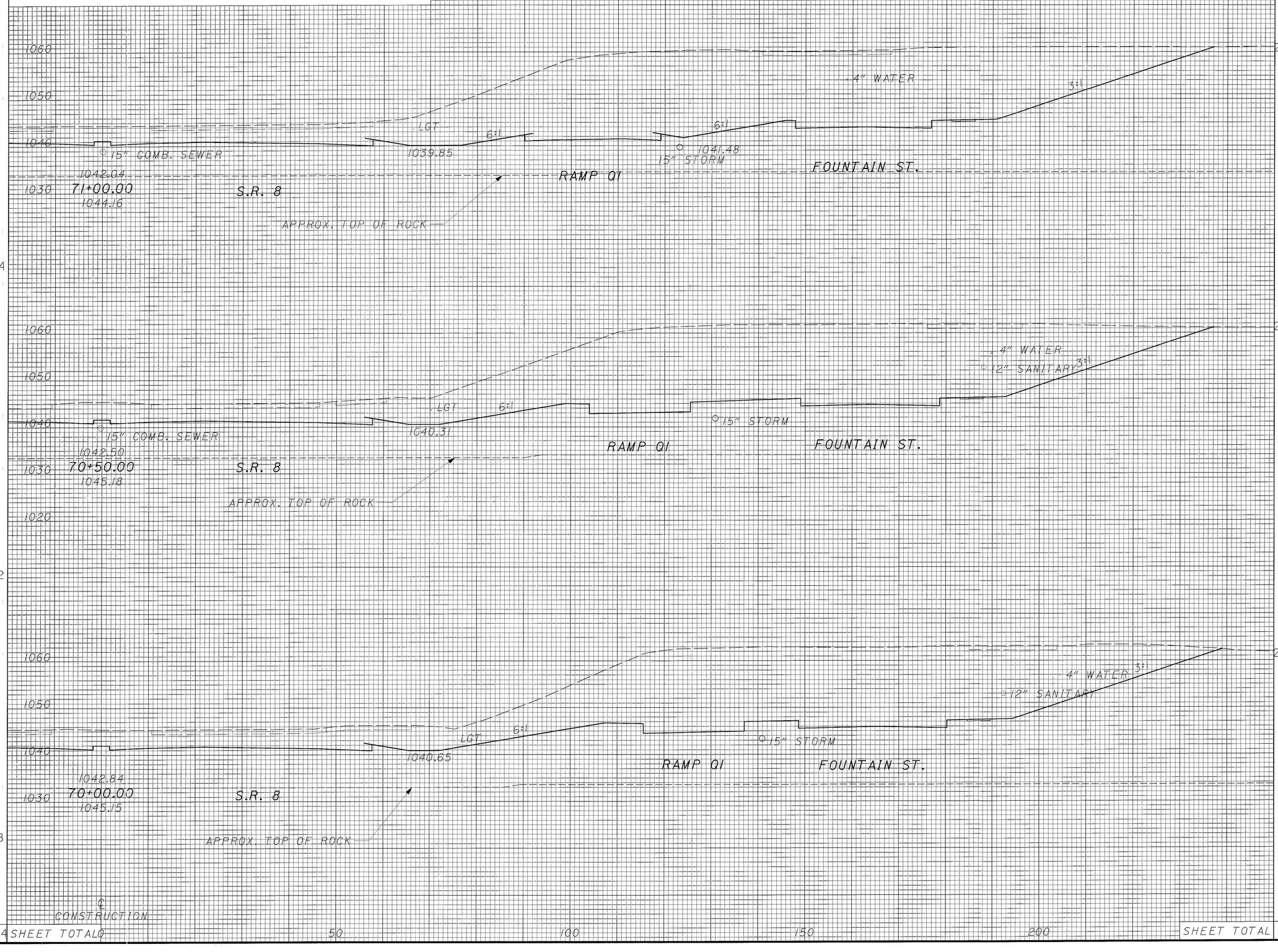

CALCULATED JE
CHECKED KMM

CROSS SECTIONS - S.R. 8 RT.
STA. 70+00 TO STA. 71+00

SUM-8-0.63

393
1088

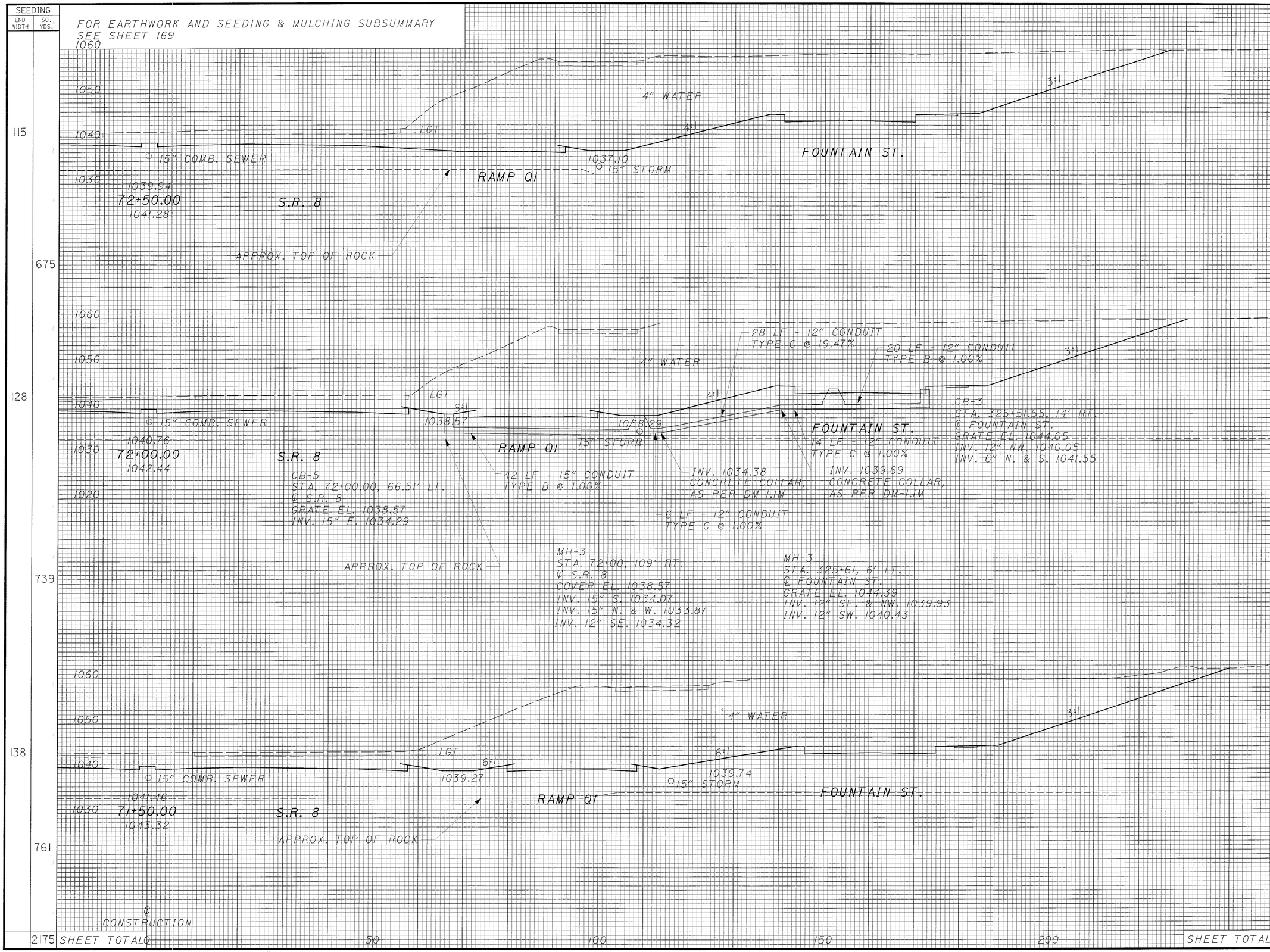

END AREA CUT	END AREA FILL	VOLUME CUT	VOLUME FILL
2414	0		
		4519	0
2467	0		
		4587	0
2487	0		
		4586	0
		13692	0

CALCULATED JE
CHECKED KMM

CROSS SECTIONS - S.R. 8 RT.
STA. 71+50 TO STA. 72+50

SUM-8-0.63

SEEDING	
END WIDTH	SQ. YDS.
105	
	617
117	
	644
1261	

FOR EARTHWORK AND SEEDING & MULCHING SUBSUMMARY SEE SHEET 169

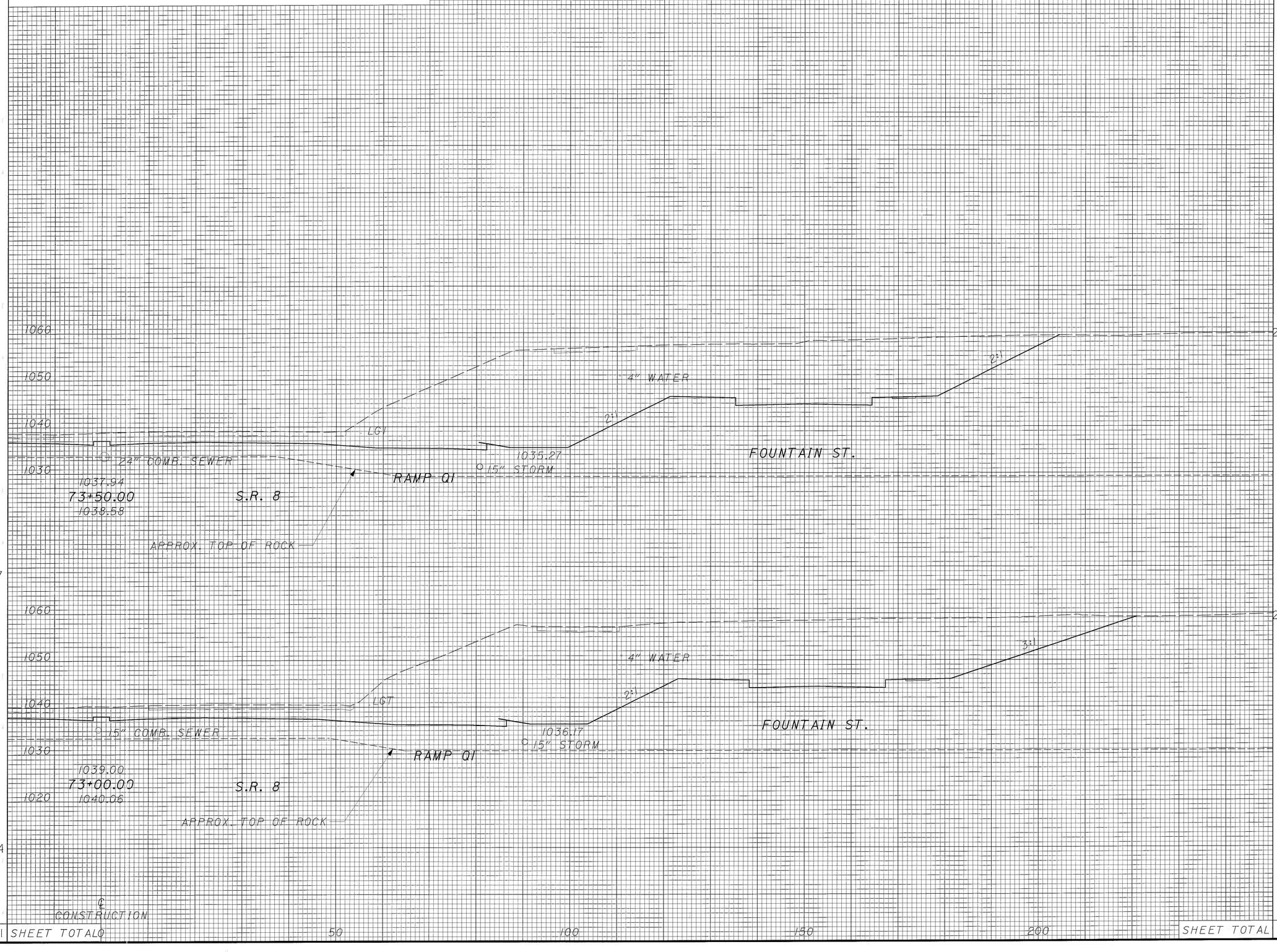

END AREA		VOLUME	
CUT	FILL	CUT	FILL
	2009	0	
	3946	0	
	2253	0	
	4321	0	
SHEET TOTAL	8267	0	

CALCULATED JE
CHECKED KMM

CROSS SECTIONS - S.R. 8 RT.
STA. 73+00 TO STA. 73+50

SUM-8-0.63

395
1088

FOR EARTHWORK AND SEEDING & MULCHING SUBSUMMARY
SEE SHEET 169

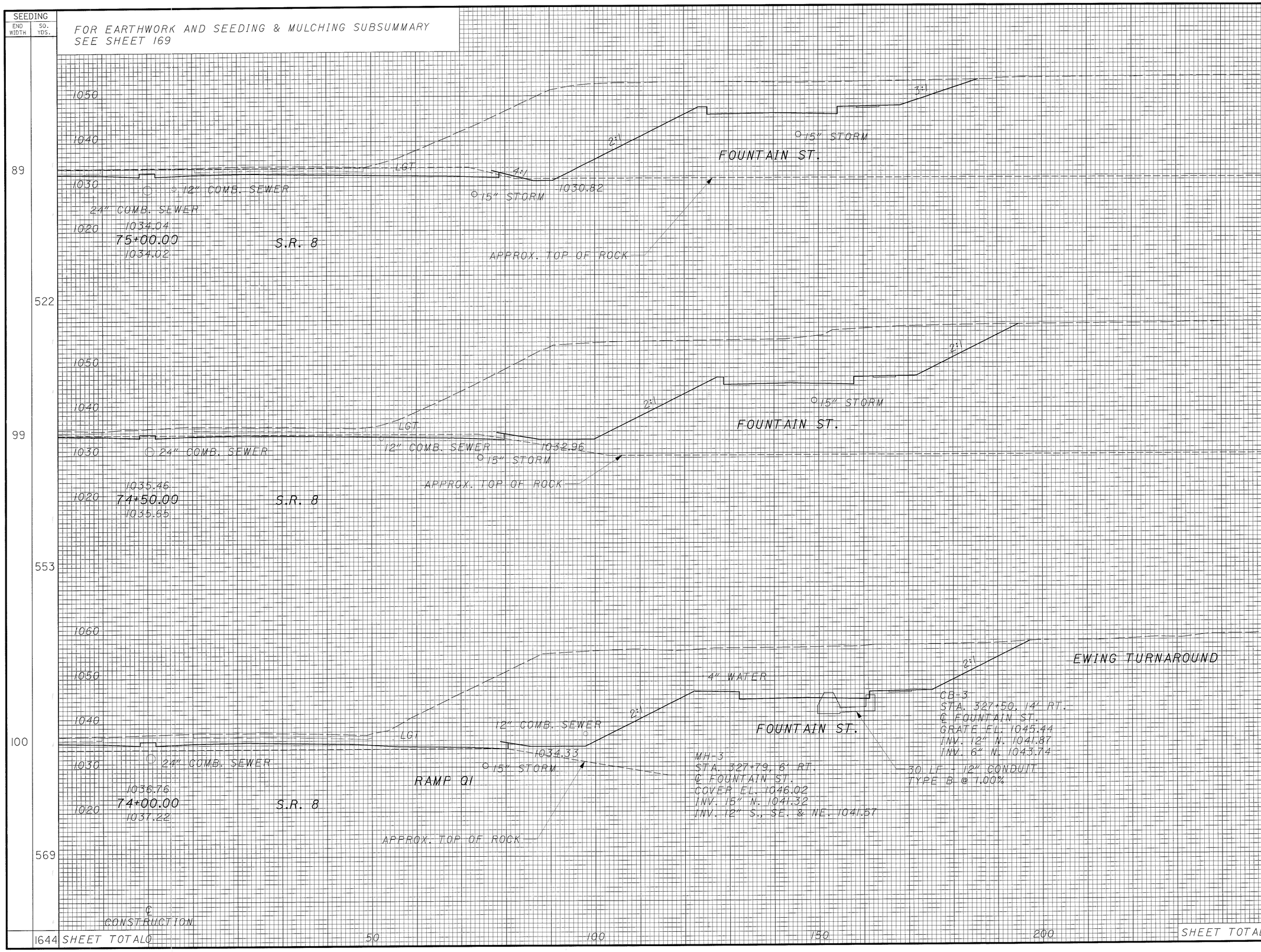

END AREA CUT	END AREA FILL	VOLUME CUT	VOLUME FILL
1255	0		
		2747	0
1712	0		
		3224	0
1770	0		
		3499	0
SHEET TOTAL		9470	0

CALCULATED JE
CHECKED KMM

CROSS SECTIONS - S.R. 8 RT.
STA. 74+00 TO STA. 75+00

SUM-8-0.63

396
1088

SEEDING	
END WIDTH	SQ. YDS.
56	
	358
73	
	431
82	
	475
1264	SHEET TOTALS

FOR EARTHWORK AND SEEDING & MULCHING SUBSUMMARY
SEE SHEET 169

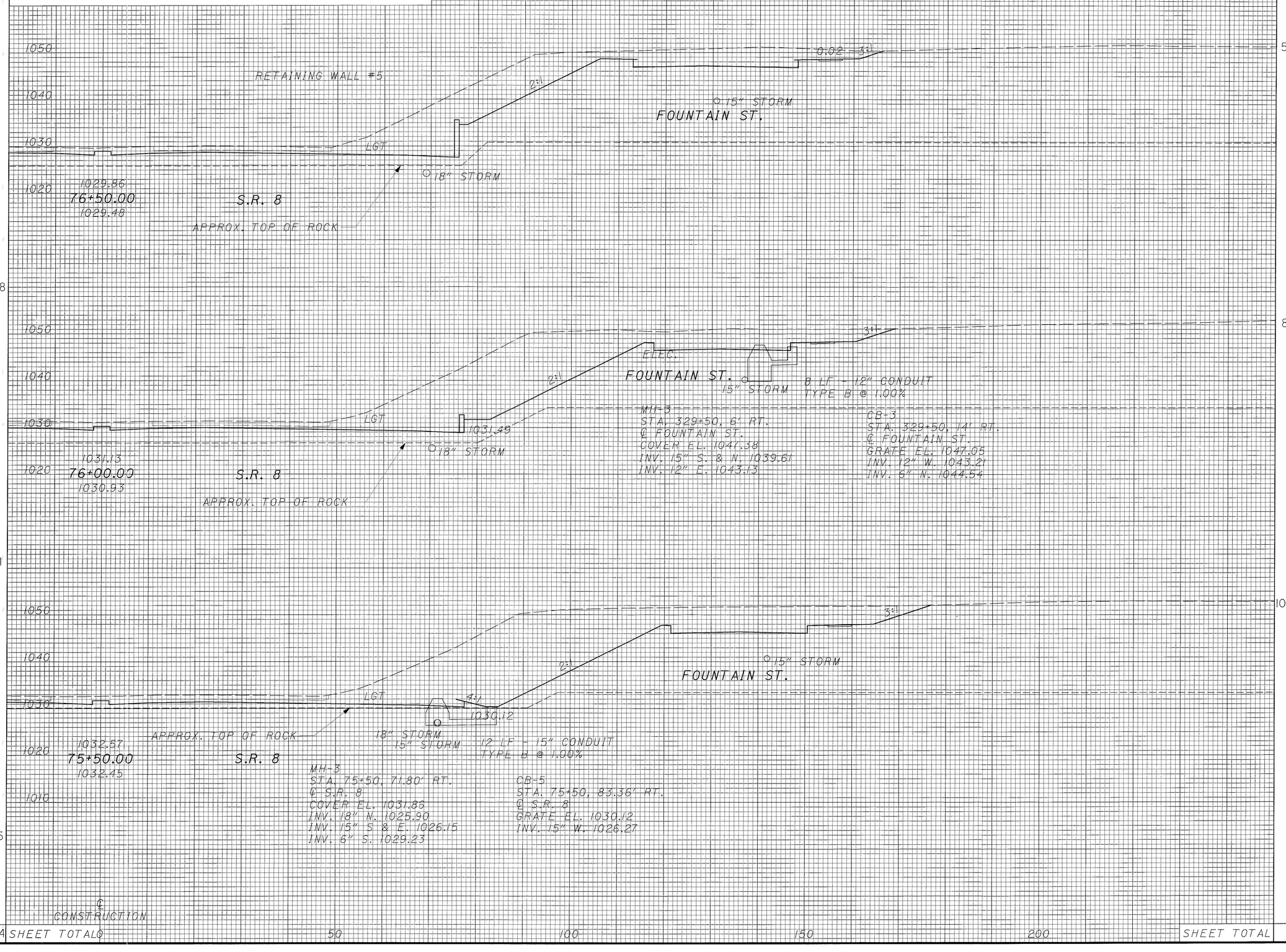

END AREA		VOLUME	
CUT	FILL	CUT	FILL
591	0		
		1302	0
815	0		
		1688	0
1008	0		
		2095	0
SHEET TOTAL		5085	0

CALCULATED JE
CHECKED KMM

CROSS SECTIONS - S.R. 8 RT.
STA. 75+50 TO STA. 76+50

SUM-8-0.63

SEEDING	
END WIDTH	SQ. YDS.
0	
119	
43	
275	
394	SHEET TOTAL

FOR EARTHWORK AND SEEDING & MULCHING SUBSUMMARY SEE SHEET 169

MARKET ST. BRIDGE ABUTMENT

1050
1040
1030
1020
1010

3" GAS 8" GAS 8" GAS TEL. TEL. TEL. ELEC. 6" GAS 12" SANITARY

30" COMB. SEWER

FOUNTAIN ST.

LGT

8" GAS

1027.91
77+50.00
1027.50

S.R. 8

APPROX. TOP OF ROCK

RETAINING WALL #5

6 LF - 21" CONDUIT
TYPE B @ 1.00%

2:1

FOUNTAIN ST.

15" STORM

TEL.

3" GAS
89 LF - 12" CONDUIT
TYPE B @ 1.00%

16" WATER

30" COMB. SEWER

INV. 1038.11
CONCRETE COLLAR,
AS PER DM-1.1M
32 LF - 15" CONDUIT
TYPE F 707.33 @ 45.52%

20 LF - 15" CONDUIT
TYPE B @ 1.00%

LGT

18" STORM

1028.79
77+00.00
1028.45

S.R. 8

130 LF - 21" CONDUIT
TYPE B @ 1.00%

MH-3
STA. 77+03, 65.99' RT.
℄ S.R. 8
COVER EL. 1028.18
INV. 21" E & W. 1021.55
INV. 18" S. 1021.86

INV. 1022.15
CONCRETE COLLAR,
AS PER DM-1.1M
4 LF - 15" CONDUIT
TYPE B @ 1.00%

INLET, MISC.: AS PER PLAN
STA. 77+03, 71.96' RT.
℄ S.R. 8
GRATE EL. 1027.76
INV. 21" W. 1021.61
INV. 15" E. 1022.11

MH-3
STA. 330+80,
℄ FOUNTAIN ST.
COVER EL. 1048.56
INV. 15" S. & W. 1038.31
INV. 12" SE 1044.78

APPROX. TOP OF ROCK

CB-3
STA. 27+55, 31.41' RT.
℄ MARKET ST.
GRATE EL. 1049.50
INV. 12" NW. 1045.67
INV. 6" E. 1046.34

℄
CONSTRUCTION

0 50 100 150 200

END AREA		VOLUME	
CUT	FILL	CUT	FILL
0	0		
		303	0
327	0		
		850	0
		1153	0

SHEET TOTAL

CALCULATED JE
CHECKED KMM

CROSS SECTIONS - S.R. 8 RT.
STA. 77+00 TO STA. 77+50

SUM-8-0.63

SEEDING	
END WIDTH	SQ. YDS.
51	
142	
0	
0	
142	SHEET TOTALO

FOR EARTHWORK AND SEEDING & MULCHING SUBSUMMARY
SEE SHEET 169

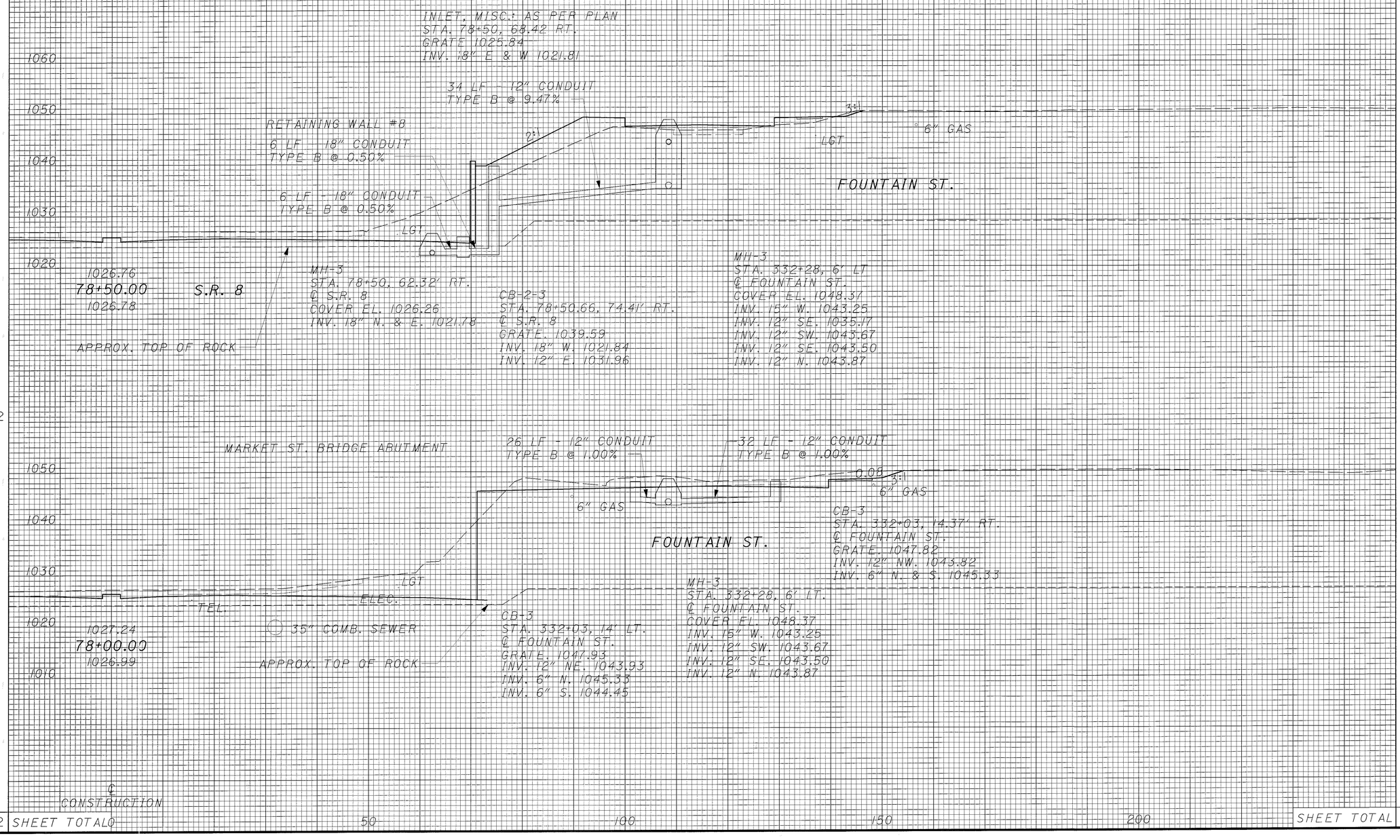

END AREA		VOLUME	
CUT	FILL	CUT	FILL
154	122		
		143	113
0	0		
		0	0
SHEET TOTAL		143	113

CALCULATED JE
CHECKED KMM

CROSS SECTIONS - S.R. 8 RT.
STA. 78+00 TO STA. 78+50

SUM-8-0.63

SEEDING		END AREA		VOLUME		
END WIDTH	SQ. YDS.	CUT	FILL	CUT	FILL	
						CALCULATED JE / CHECKED KMM

FOR EARTHWORK AND SEEDING & MULCHING SUBSUMMARY
SEE SHEET 169

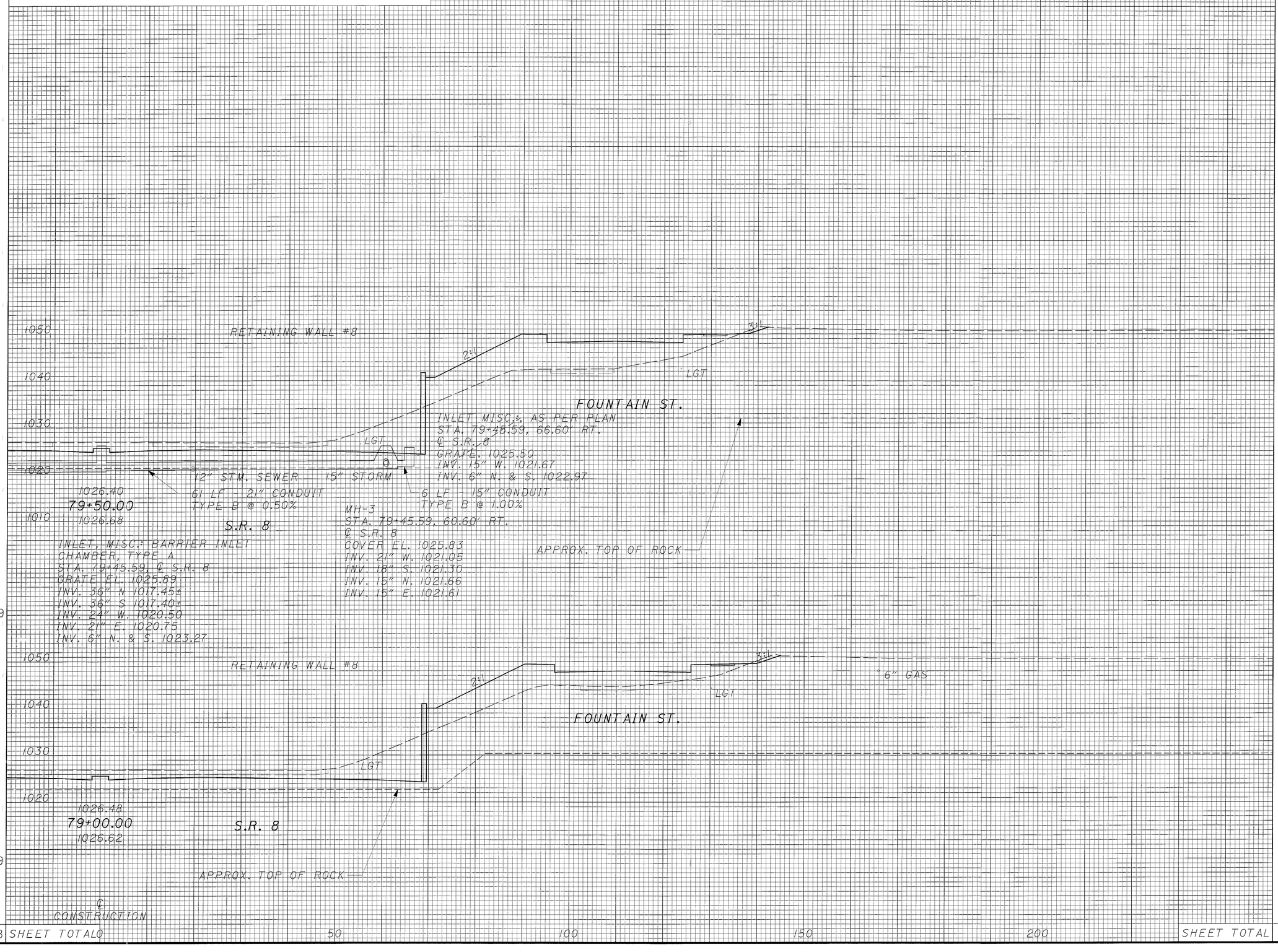

51						
		156	340			
				291	540	
289						
		158	243			
53						
289						
				289	338	
578	SHEET TOTAL			580	878	SHEET TOTAL

0 50 100 150 200

CROSS SECTIONS - S.R. 8 RT.
STA. 79+00 TO STA. 79+50

SUM-8-0.63

400
1088

SEEDING	
END WIDTH	SQ. YDS.
52	
281	
49	
278	
559	SHEET TOTALS

FOR EARTHWORK AND SEEDING & MULCHING SUBSUMMARY
SEE SHEET 169

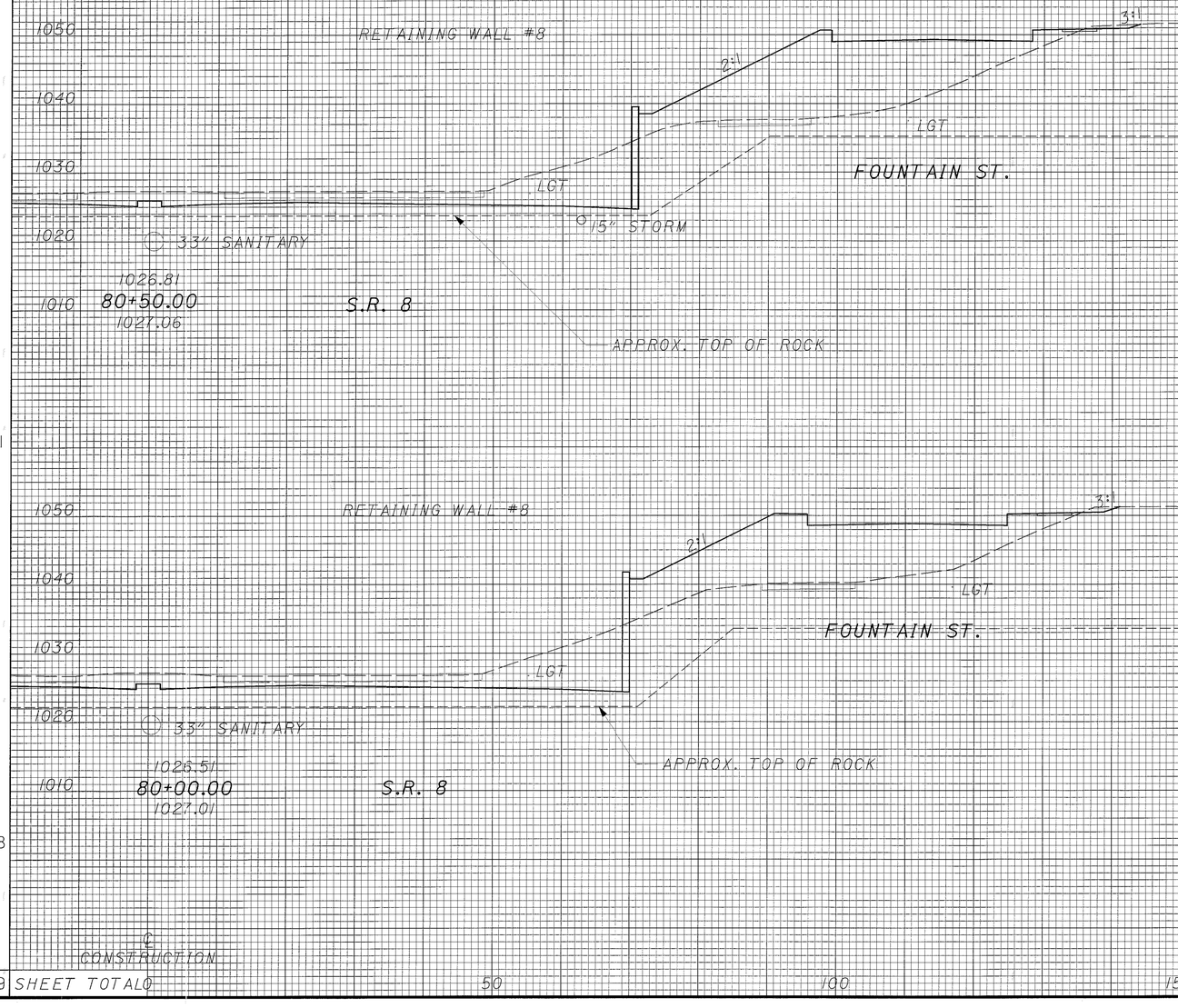

END AREA		VOLUME	
CUT	FILL	CUT	FILL
173	426		
		307	726
159	358		
		292	646
SHEET TOTAL		599	1372

CALCULATED JE
CHECKED KMM

CROSS SECTIONS - S.R. 8 RT.
STA. 80+00 TO STA. 80+50

SUM-8-0.63

401
1088

SEEDING END WIDTH	SEEDING SQ. YDS.
60	
	322
56	
	300
622	

FOR EARTHWORK AND SEEDING & MULCHING SUBSUMMARY
SEE SHEET 169

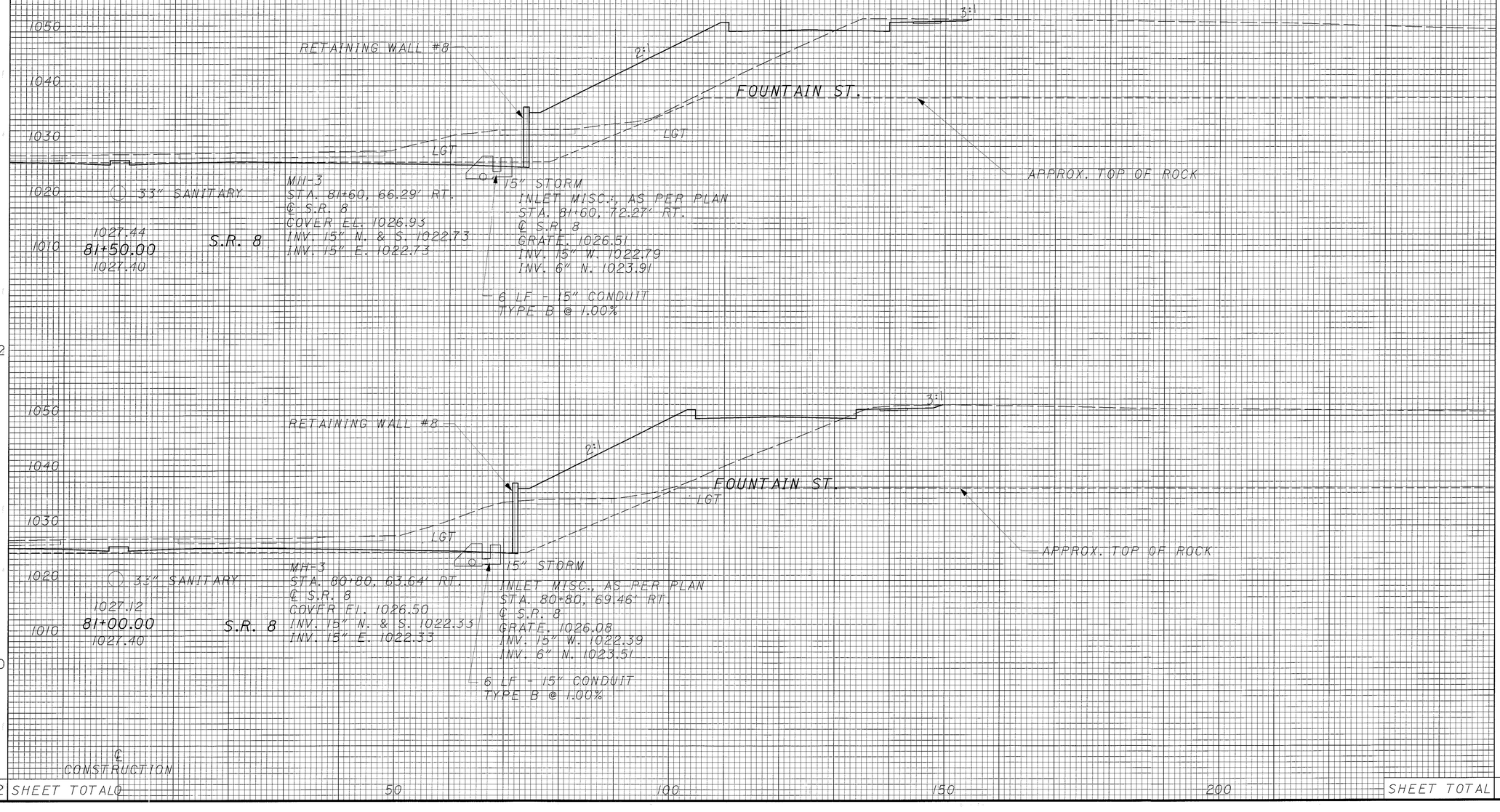

END AREA CUT	END AREA FILL	VOLUME CUT	VOLUME FILL
192	398		
		360	755
197	417		
		343	781
SHEET TOTAL		703	1536

CALCULATED JE
CHECKED KMM

CROSS SECTIONS - S.R. 8 RT.
STA. 81+00 TO STA. 81+50

SUM-8-0.63

402
1088

FOR EARTHWORK AND SEEDING & MULCHING SUBSUMMARY
SEE SHEET 169

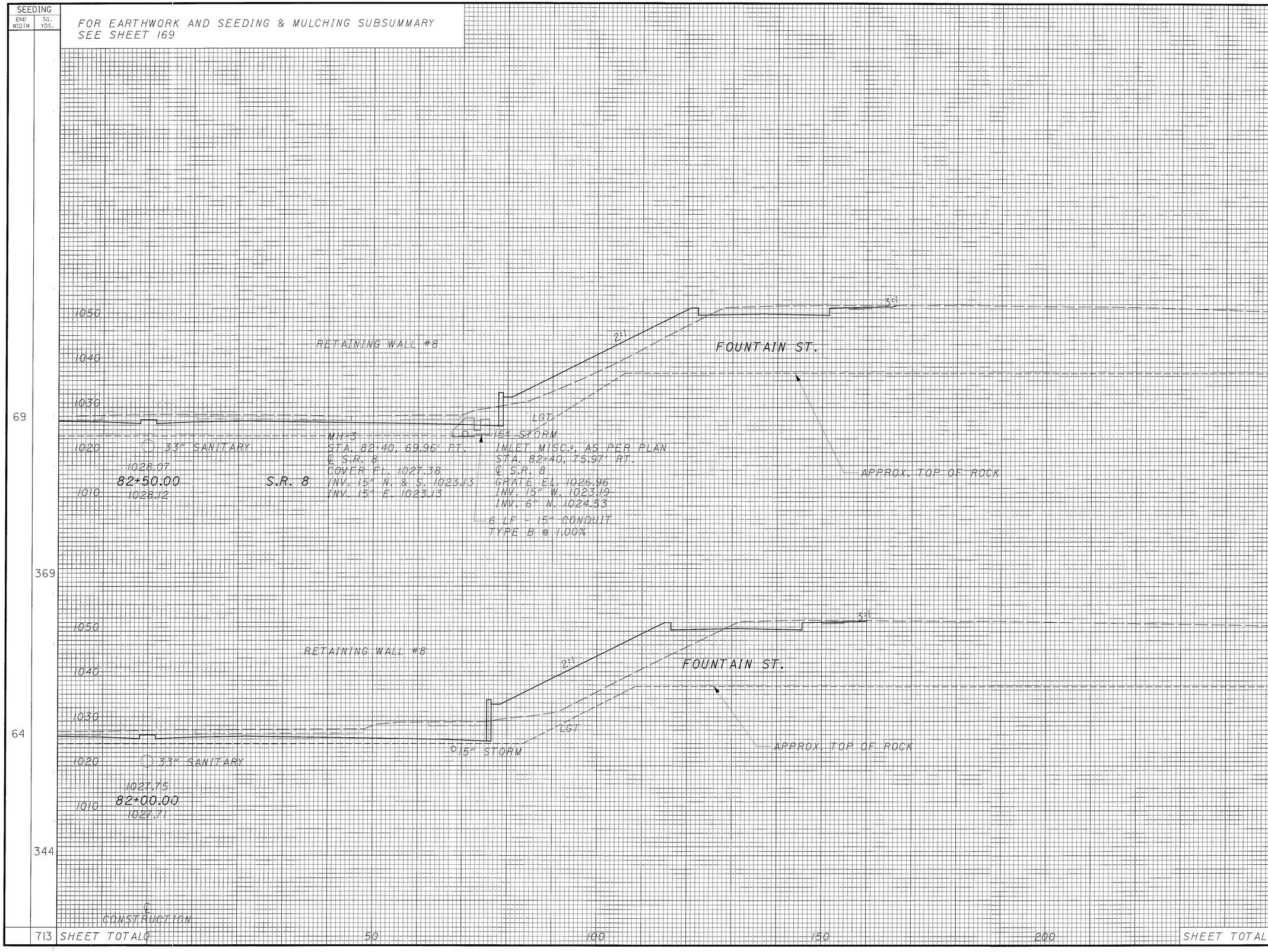

END AREA CUT	END AREA FILL	VOLUME CUT	VOLUME FILL
142	148		
		291	427
172	313		
		337	658
		628	1085

CALCULATED JE
CHECKED KMM

CROSS SECTIONS - S.R. 8 RT.
STA. 82+00 TO STA. 82+50

SUM-8-0.63

SEEDING	
END WIDTH	SQ. YDS.
70	
386	
69	
383	
769	SHEET TOTAL

FOR EARTHWORK AND SEEDING & MULCHING SUBSUMMARY
SEE SHEET 169

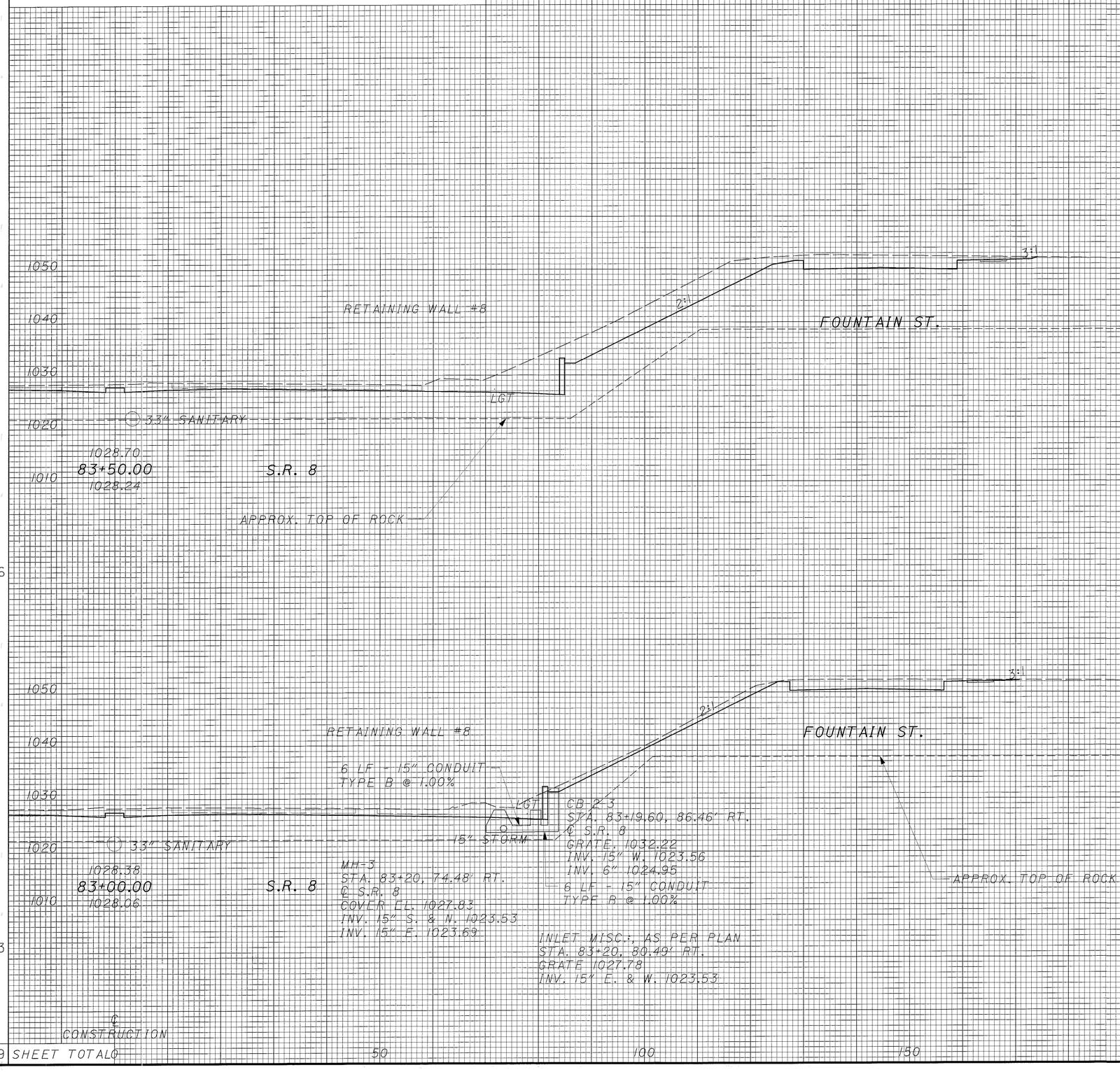

END AREA		VOLUME	
CUT	FILL	CUT	FILL
371	0		
		513	0
183	0		
		301	137
		814	137

SHEET TOTAL

CALCULATED JE
CHECKED KMM

CROSS SECTIONS - S.R. 8 RT.
STA. 83+00 TO STA. 83+50

SUM-8-0.63

404
1088

SEEDING	
END WIDTH	SQ. YDS.
0	
61	
169	
364	
533	SHEET TOTALS

FOR EARTHWORK AND SEEDING & MULCHING SUBSUMMARY SEE SHEET 169

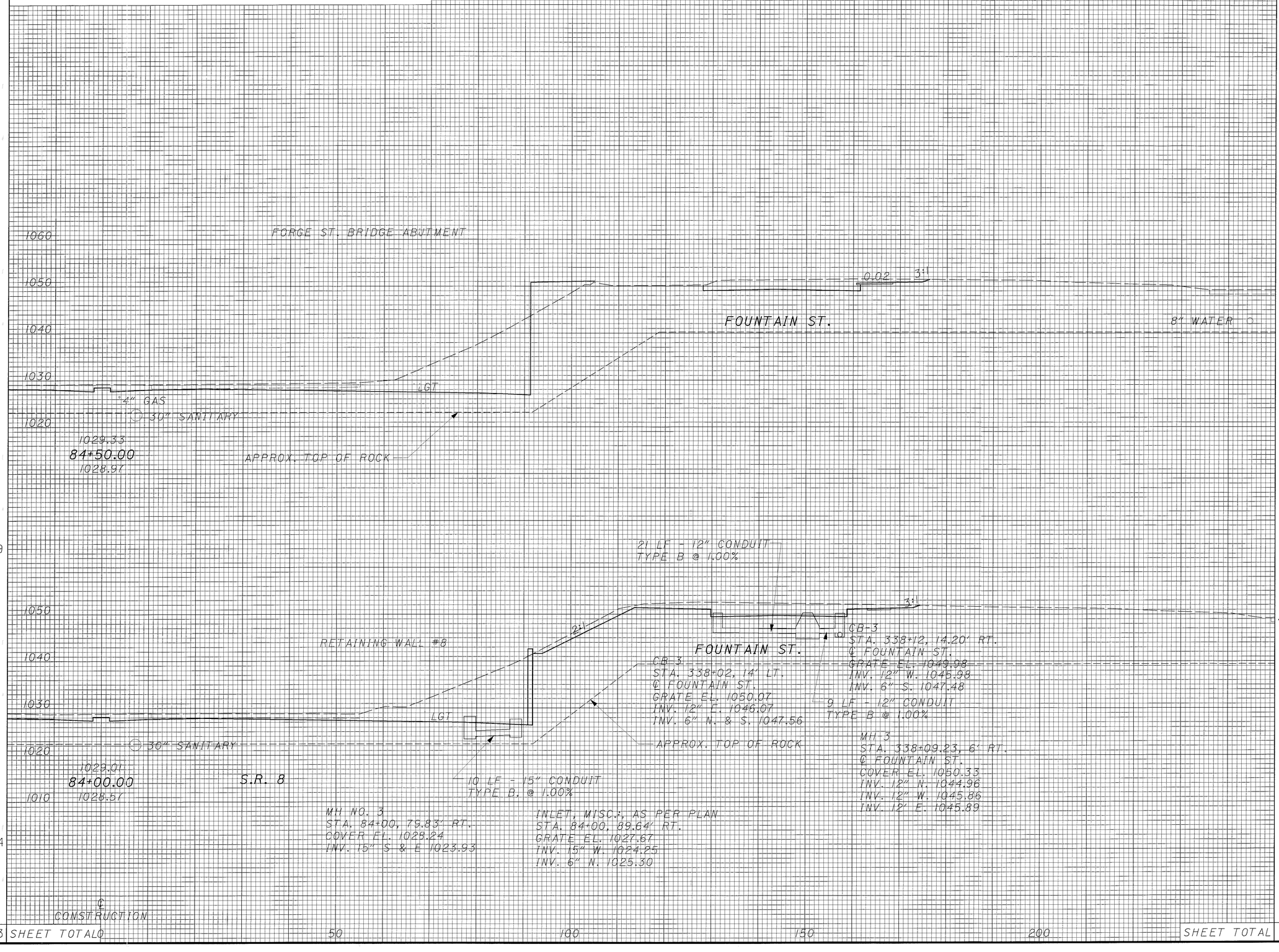

END AREA		VOLUME	
CUT	FILL	CUT	FILL
0	0		
		374	0
		404	0
		718	0
		1092	0

CALCULATED JE
CHECKED KMM

CROSS SECTIONS - S.R. 8 RT.
STA. 84+00 TO STA. 84+50

SUM-8-0.63

405
1088

SEEDING	
END WIDTH	SQ. YDS.
58	
0	
161	SHEET TOTAL

FOR EARTHWORK AND SEEDING & MULCHING SUBSUMMARY SEE SHEET 169

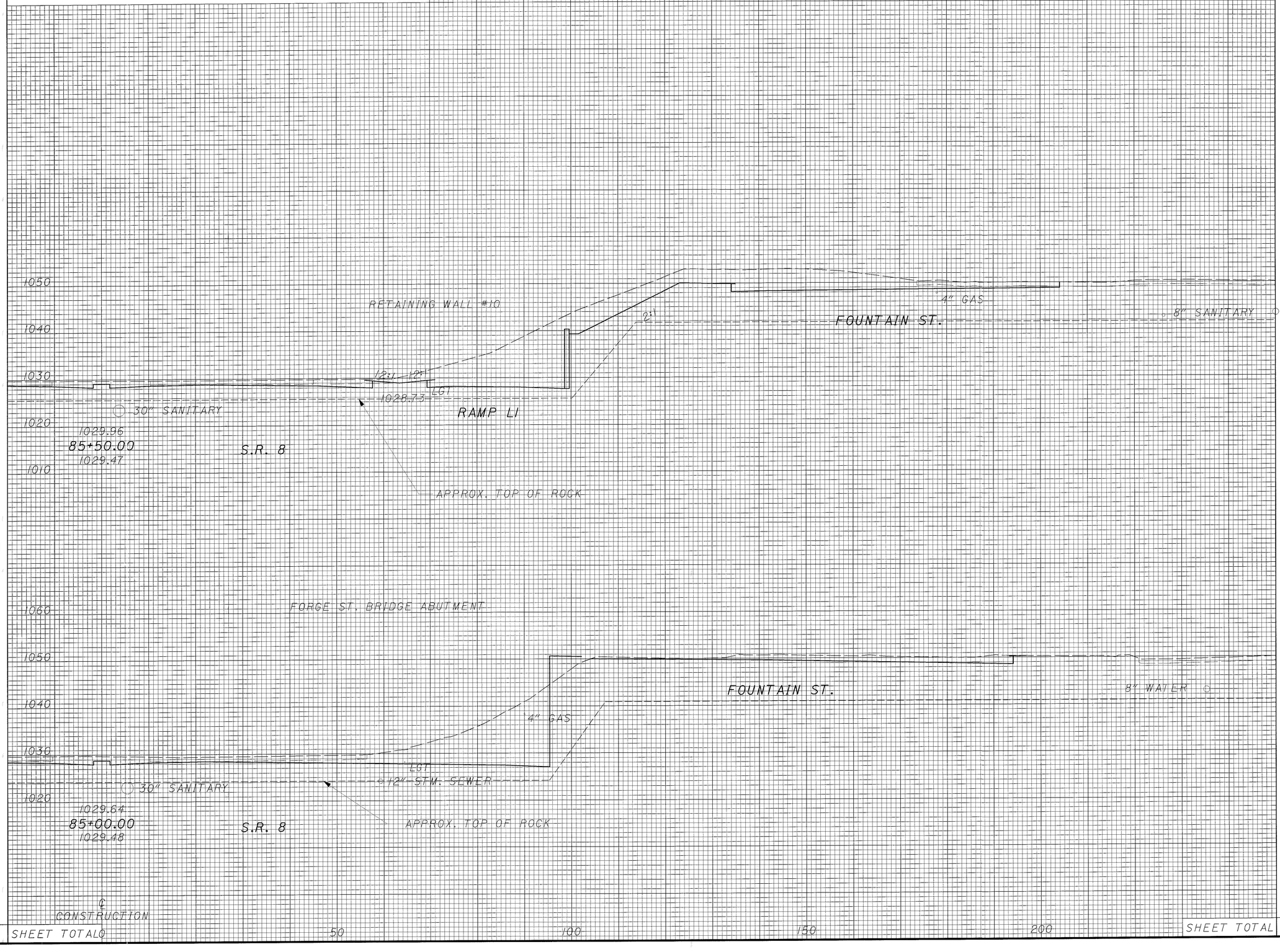

END AREA		VOLUME	
CUT	FILL	CUT	FILL
552	0		
511	0		
0	0		
0	0		
511	0		

CALCULATED JE

CHECKED KMM

CROSS SECTIONS - S.R. 8 RT. STA. 85+00 TO STA. 85+50

SUM-8-0.63

406
1088

SEEDING	
END WIDTH	SQ. YDS.
86	
492	
91	
414	
906	SHEET TOTALS

FOR EARTHWORK AND SEEDING & MULCHING SUBSUMMARY SEE SHEET 16S

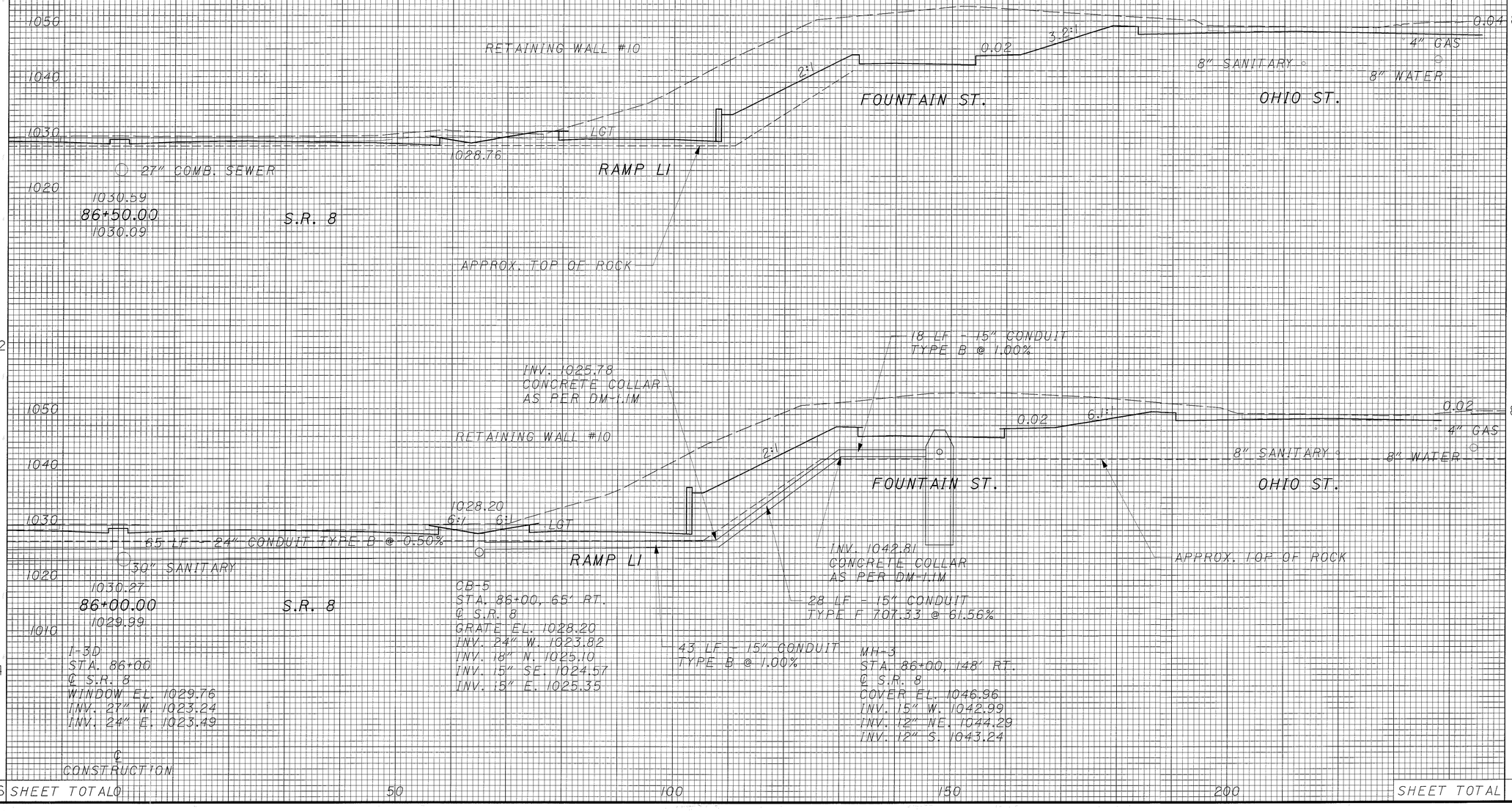

END AREA		VOLUME	
CUT	FILL	CUT	FILL
896	0		
		1592	0
823	0		
		1273	0
		2865	0
SHEET TOTAL			

CALCULATED JE
CHECKED KMM

CROSS SECTIONS - S.R. 8 RT.
STA. 86+00 TO STA. 86+50

SUM-8-0.63

407
1088

SEEDING	
END WIDTH	SQ. YDS.
116	
653	
119	
569	
1222	

FOR EARTHWORK AND SEEDING & MULCHING SUBSUMMARY SEE SHEET 169

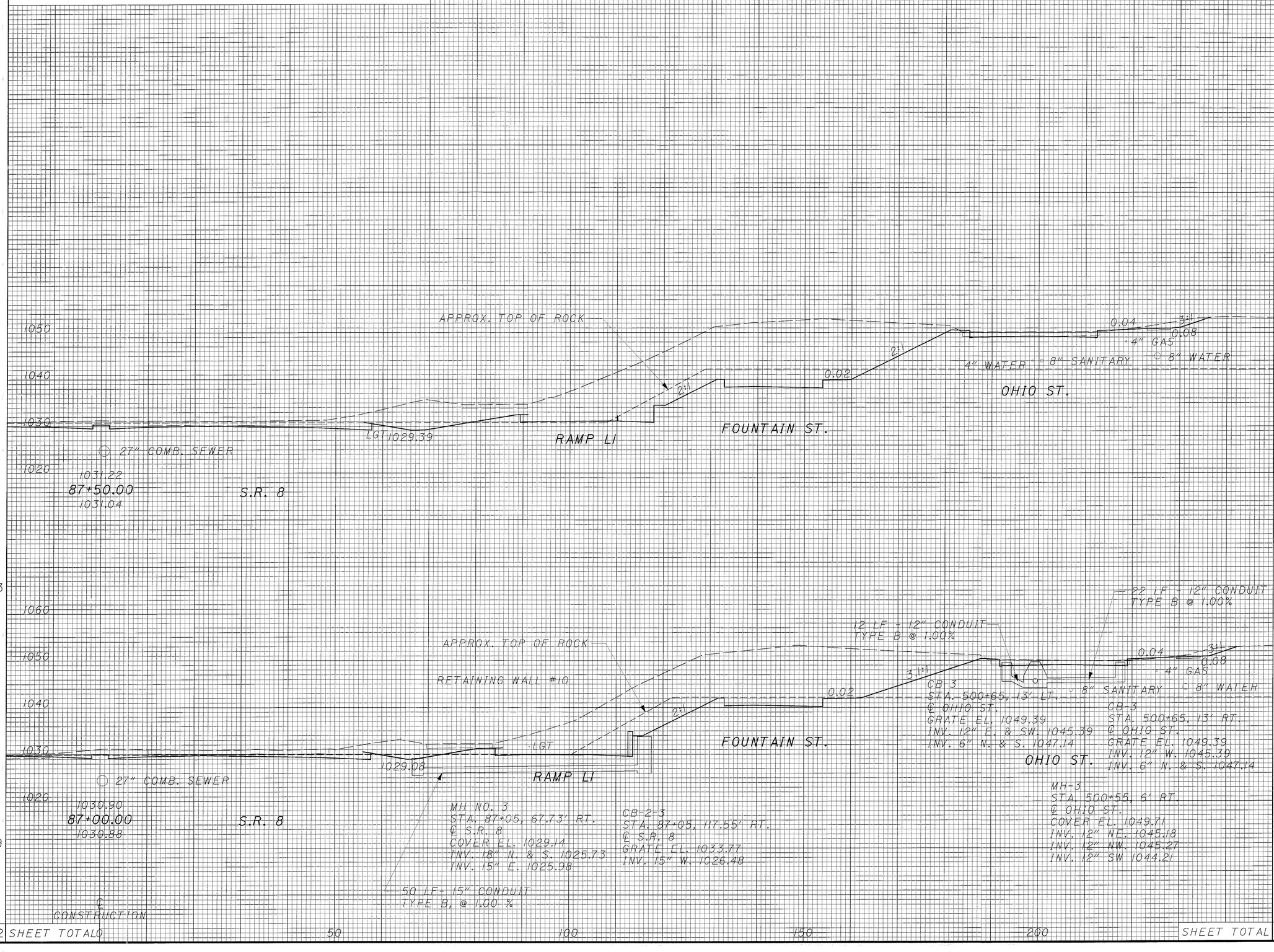

END AREA		VOLUME	
CUT	FILL	CUT	FILL
1107	2		
1974	5		
1025	3		
1779	3		
3753	8		

CALCULATED JE
CHECKED KMM

CROSS SECTIONS - S.R. 8 RT.
STA. 87+00 TO STA. 87+50

SUM-8-0.63

FOR EARTHWORK AND SEEDING & MULCHING SUBSUMMARY
SEE SHEET 169

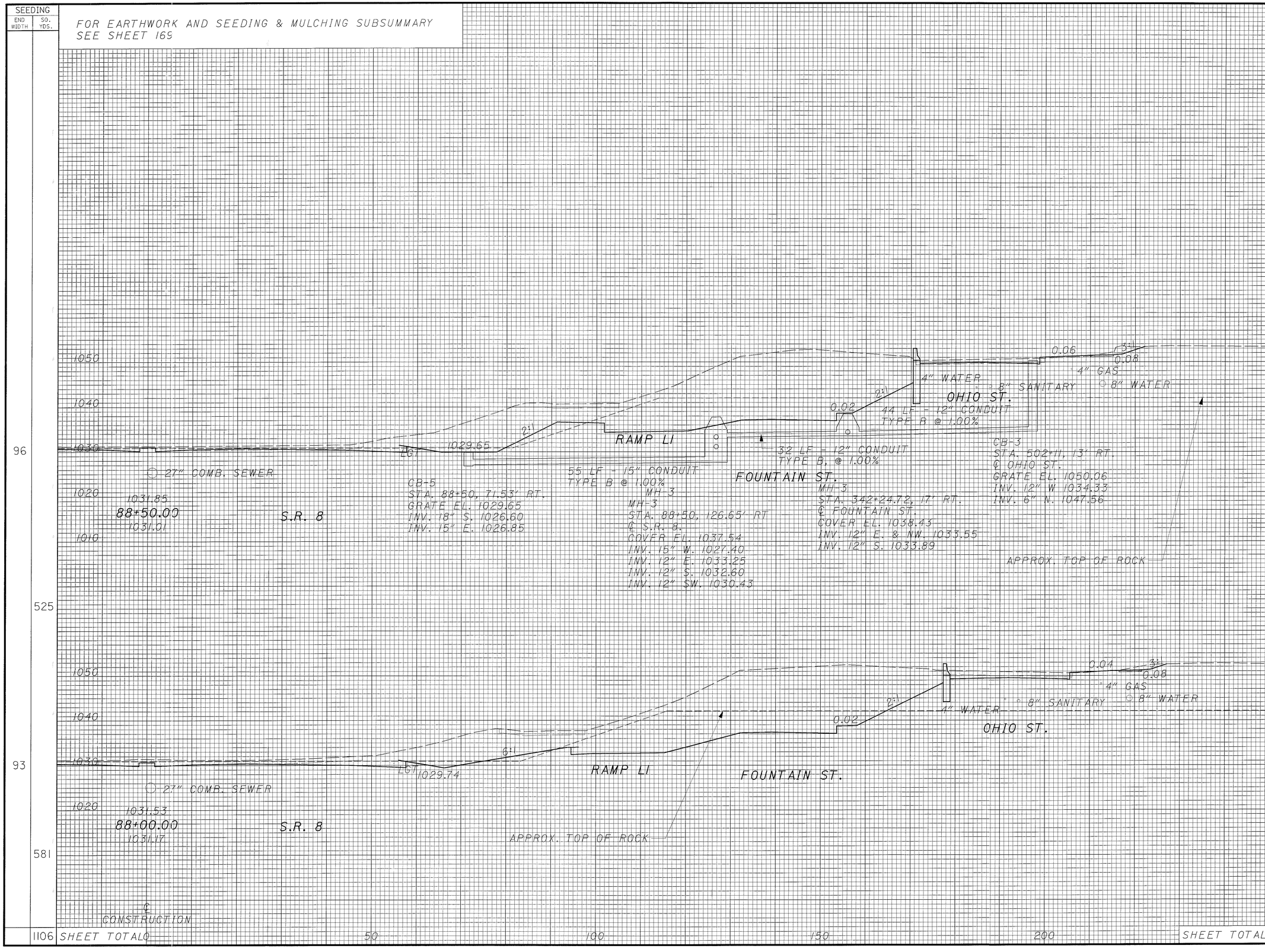

END AREA CUT	END AREA FILL	VOLUME CUT	VOLUME FILL
1086	3		
		2059	4
1138	1		
		2079	3
		4138	7

SHEET TOTAL

CALCULATED JE
CHECKED KMM

CROSS SECTIONS - S.R. 8 RT.
STA. 88+00 TO STA. 88+50

SUM-8-0.63

409
1088

SEEDING	
END WIDTH	SQ. YDS.
88	
	494
90	
	517
	1011

FOR EARTHWORK AND SEEDING & MULCHING SUBSUMMARY
SEE SHEET 169

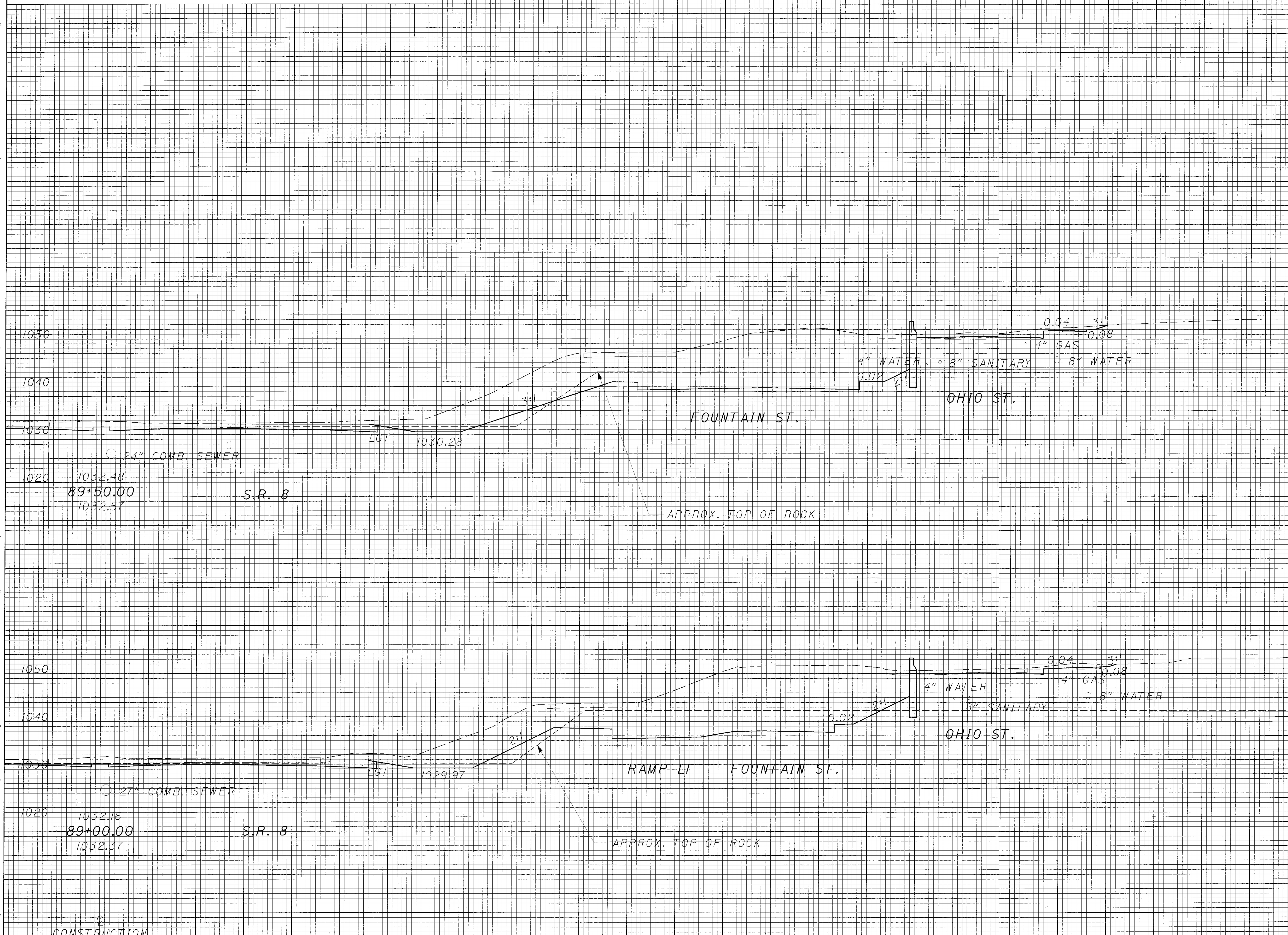

END AREA		VOLUME	
CUT	FILL	CUT	FILL
936	0		
		1795	0
1003	0		
		1934	3
SHEET TOTAL		3729	3

CALCULATED JE
CHECKED KMM

CROSS SECTIONS - S.R. 8 RT.
STA. 89+00 TO STA. 89+50

SUM-8-0.63

FOR EARTHWORK AND SEEDING & MULCHING SUBSUMMARY
SEE SHEET 169

SEEDING END WIDTH	SEEDING SQ. YDS.
80	481
93	508
90	494
	1483

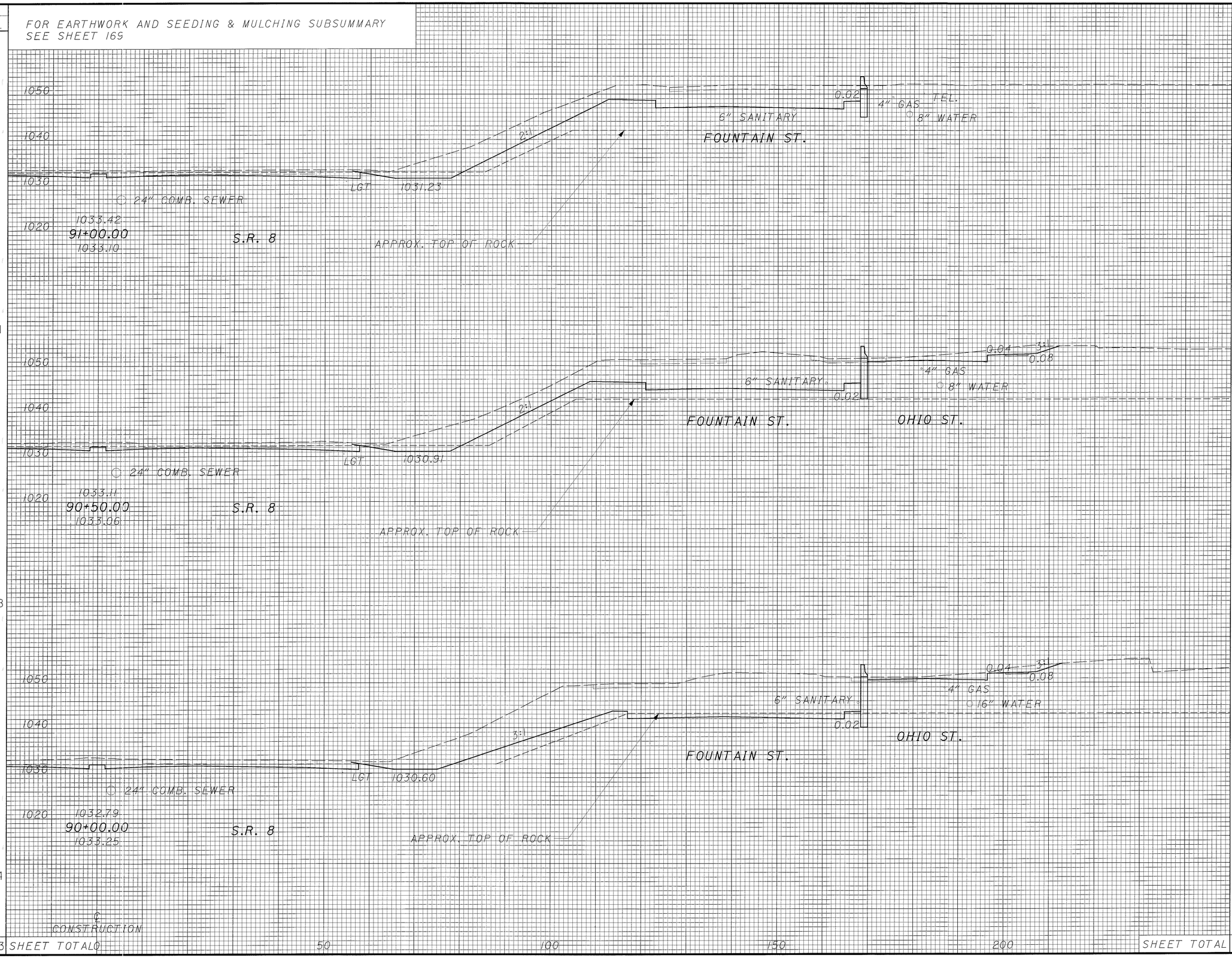

END AREA CUT	END AREA FILL	VOLUME CUT	VOLUME FILL
441	0		
		1002	0
641	0		
		1395	0
866	0		
		1669	0
		4066	0

SHEET TOTAL

50 100 150 200

CALCULATED JE
CHECKED KMM

CROSS SECTIONS - S.R. 8 RT.
STA. 90+00 TO STA. 91+00

SUM-8-0.63

411
1088

SEEDING	
END WIDTH	SQ. YDS.
93	539
101	503
1042	SHEET TOTAL

FOR EARTHWORK AND SEEDING & MULCHING SUBSUMMARY
SEE SHEET 169

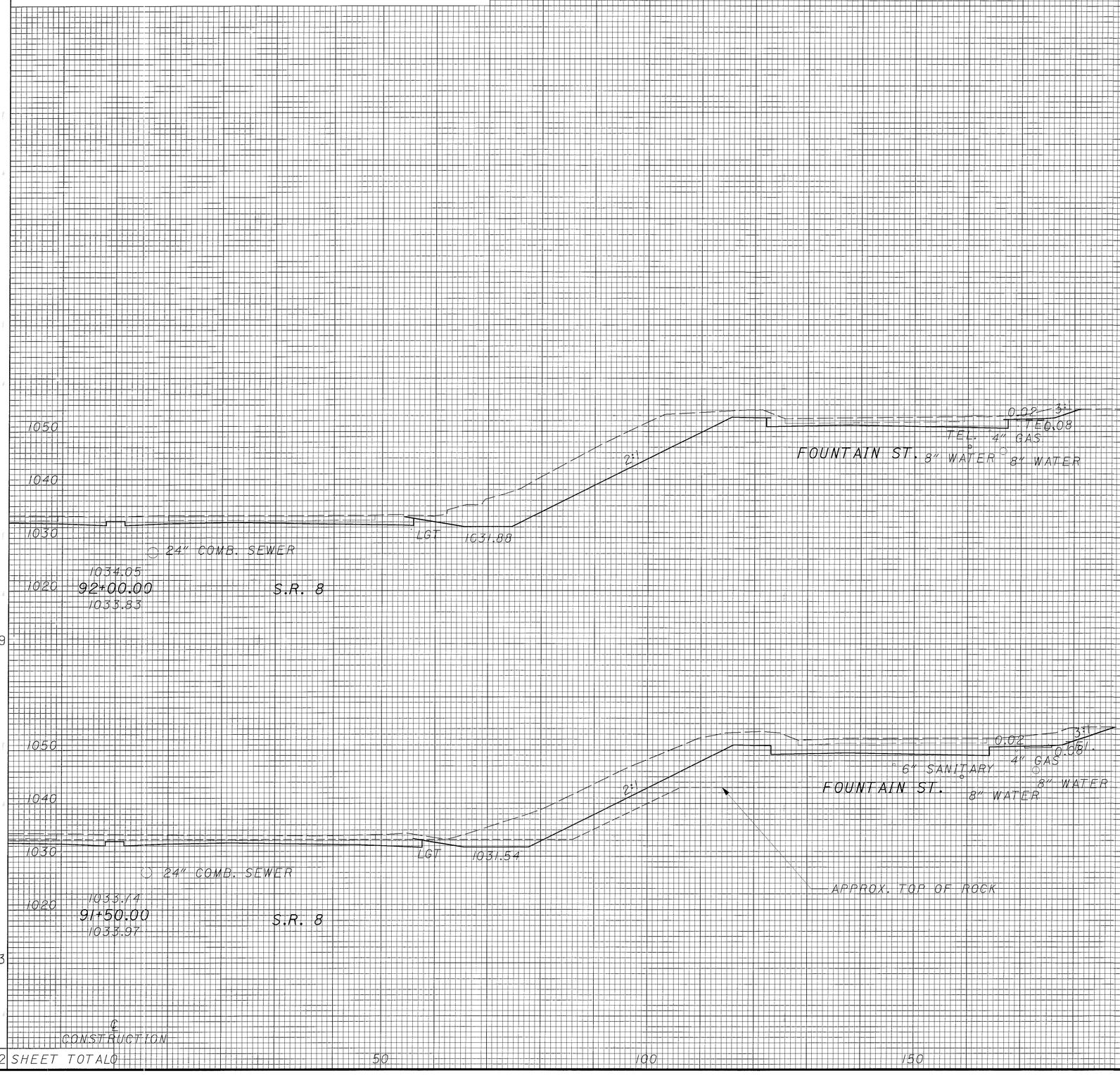

END AREA		VOLUME	
CUT	FILL	CUT	FILL
430	0		
476	0	839	0
		849	0
SHEET TOTAL		1688	0

CALCULATED JE
CHECKED KMM

CROSS SECTIONS - S.R. 8 RT.
STA. 91+50 TO STA. 92+00

SUM-8-0.63

412
1088

SEEDING	
END WIDTH	SQ. YDS.
17	
0	
47	
258	
305	SHEET TOTALS

FOR EARTHWORK AND SEEDING & MULCHING SUBSUMMARY SEE SHEET 169

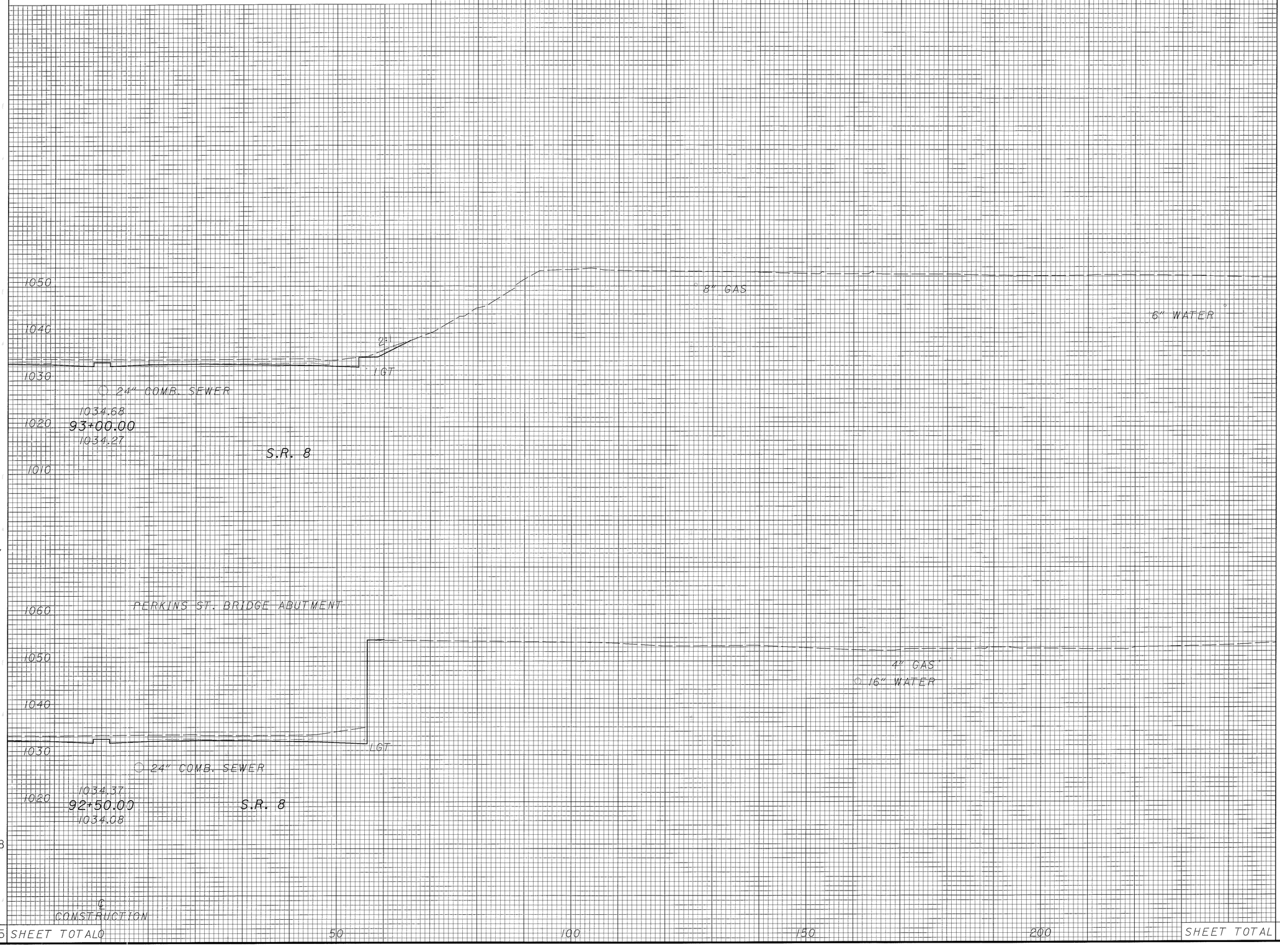

END AREA		VOLUME	
CUT	FILL	CUT	FILL
32	0		
		30	0
0	0		
		398	0
		428	0
SHEET TOTAL			

CALCULATED JE

CHECKED KMM

CROSS SECTIONS - S.R. 8 RT.
STA. 92+50 TO STA. 93+00

SUM-8-0.63

FOR EARTHWORK AND SEEDING & MULCHING SUBSUMMARY
SEE SHEET 169

SEEDING END WIDTH	SEEDING SQ. YDS.
88	486
87	494
91	300
	1280

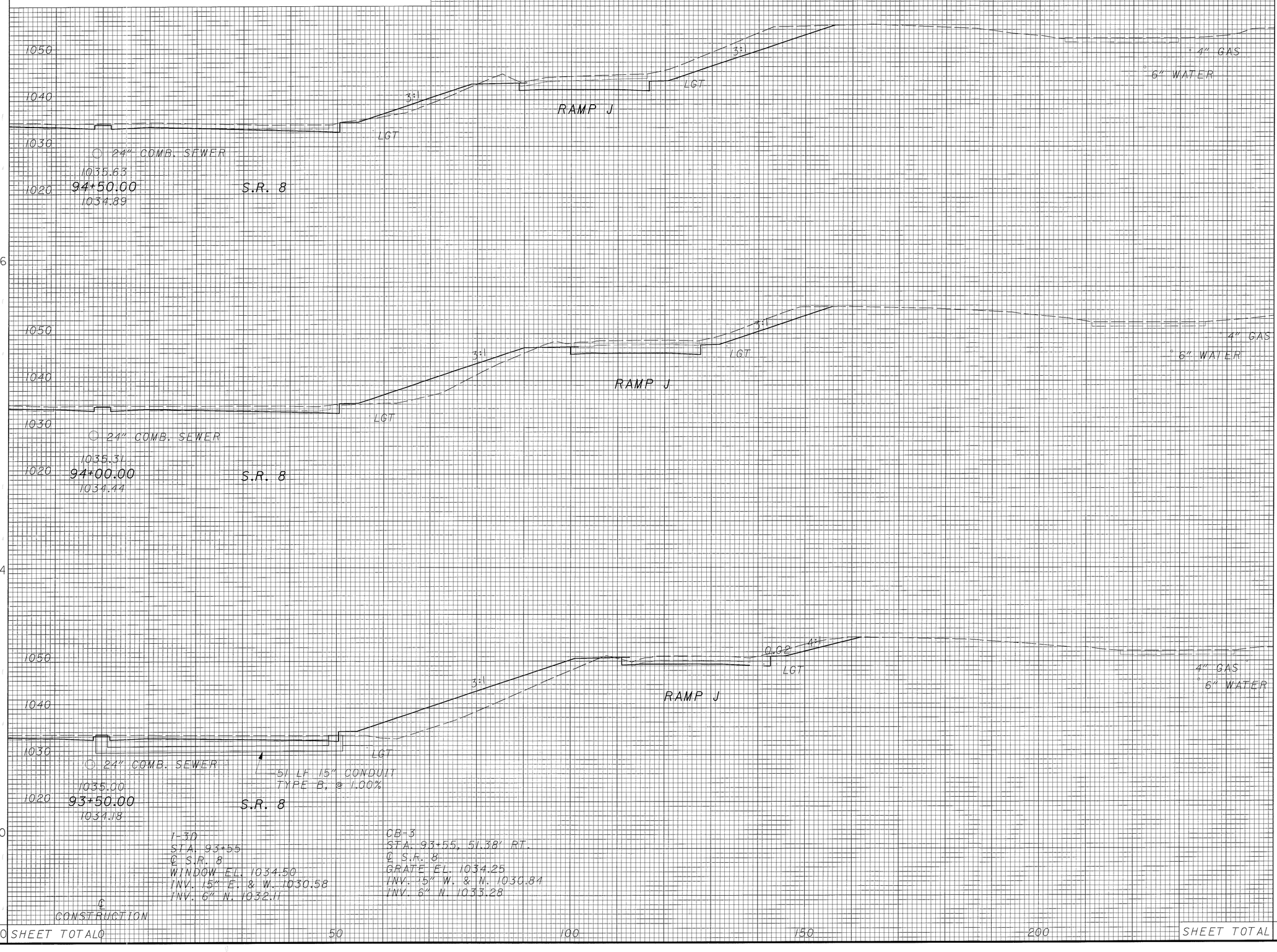

END AREA CUT	END AREA FILL	VOLUME CUT	VOLUME FILL
192	22		
		289	100
120	86		
		169	244
62	177		
		87	164
		545	508

SHEET TOTAL

CALCULATED JE
CHECKED KMM

CROSS SECTIONS - S.R. 8 RT.
STA. 93+50 TO STA. 94+50

SUM-8-0.63

414
1088

SEEDING	
END WIDTH	SQ. YDS.
69	394
73	447
	841

FOR EARTHWORK AND SEEDING & MULCHING SUBSUMMARY SEE SHEET 169

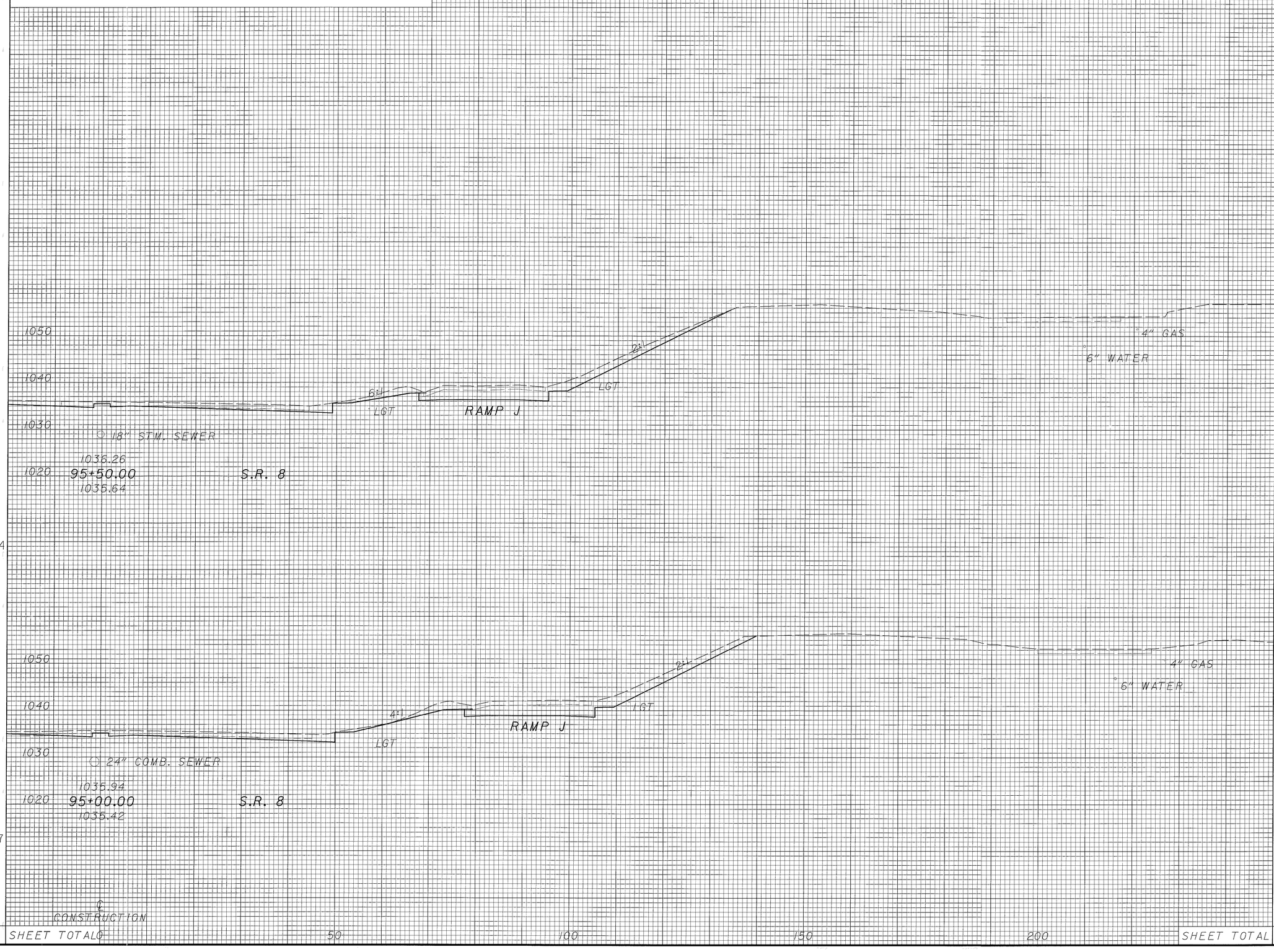

END AREA		VOLUME	
CUT	FILL	CUT	FILL
145	0		
		291	0
169	0		
		334	20
SHEET TOTAL		625	20

CALCULATED JE

CHECKED KMM

CROSS SECTIONS - S.R. 8 RT.
STA. 95+00 TO STA. 95+50

SUM-8-0.63

FOR EARTHWORK AND SEEDING & MULCHING SUBSUMMARY
SEE SHEET 169

SEEDING END WIDTH	SEEDING SQ. YDS.	END AREA CUT	END AREA FILL	VOLUME CUT	VOLUME FILL
		35	0		
9				82	0
	67	54	0		
15				136	0
	131	93	0		
32				220	0
	281				
	479			438	0

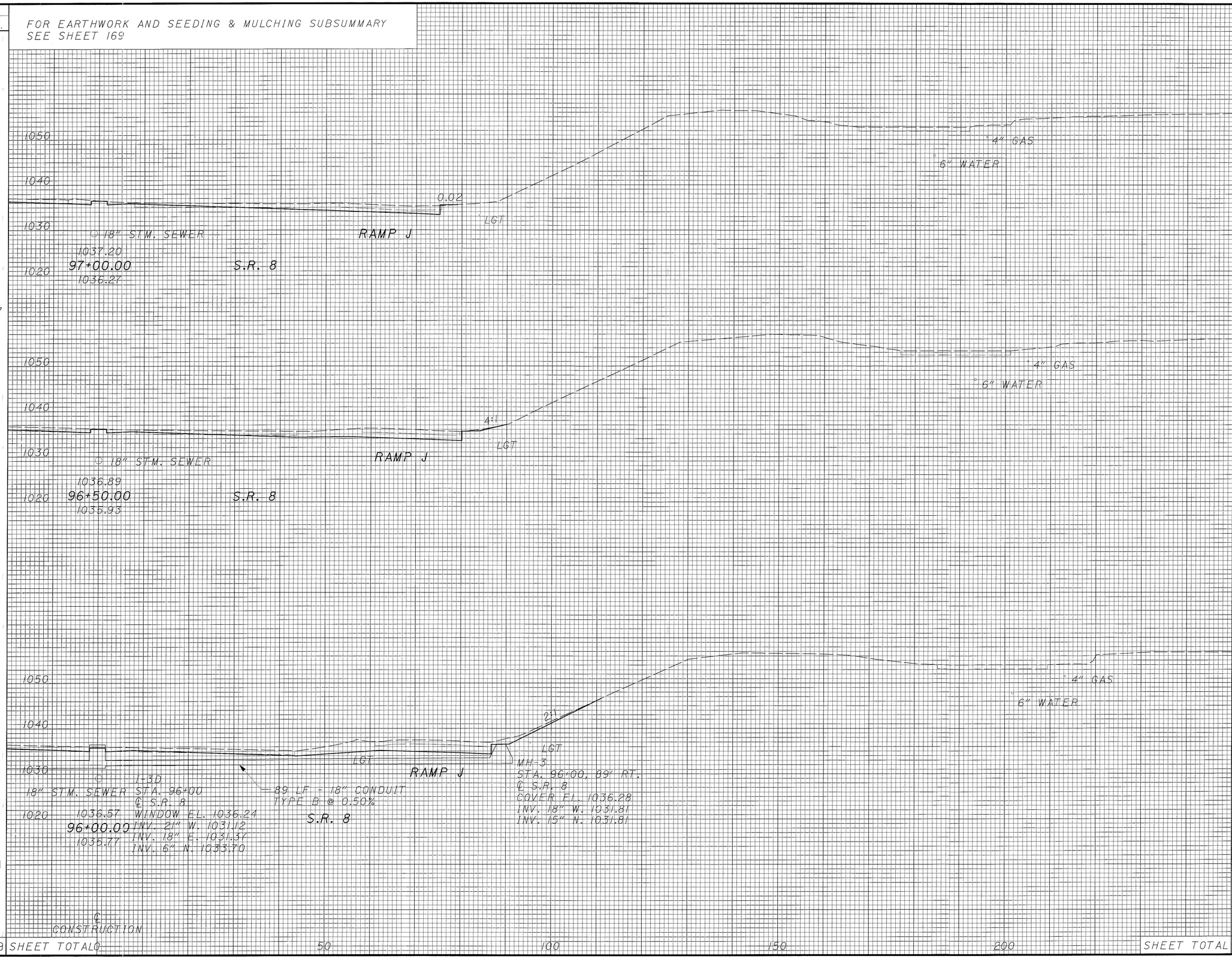

SHEET TOTALS

SHEET TOTAL

CALCULATED JF
CHECKED KMM

CROSS SECTIONS - S.R. 8 RT.
STA. 96+00 TO STA. 97+00

SUM-8-0.63

416
1088

SEEDING	
END WIDTH	SQ. YDS.
12	69
13	81
16	69
	219

FOR EARTHWORK AND SEEDING & MULCHING SUBSUMMARY
SEE SHEET 169

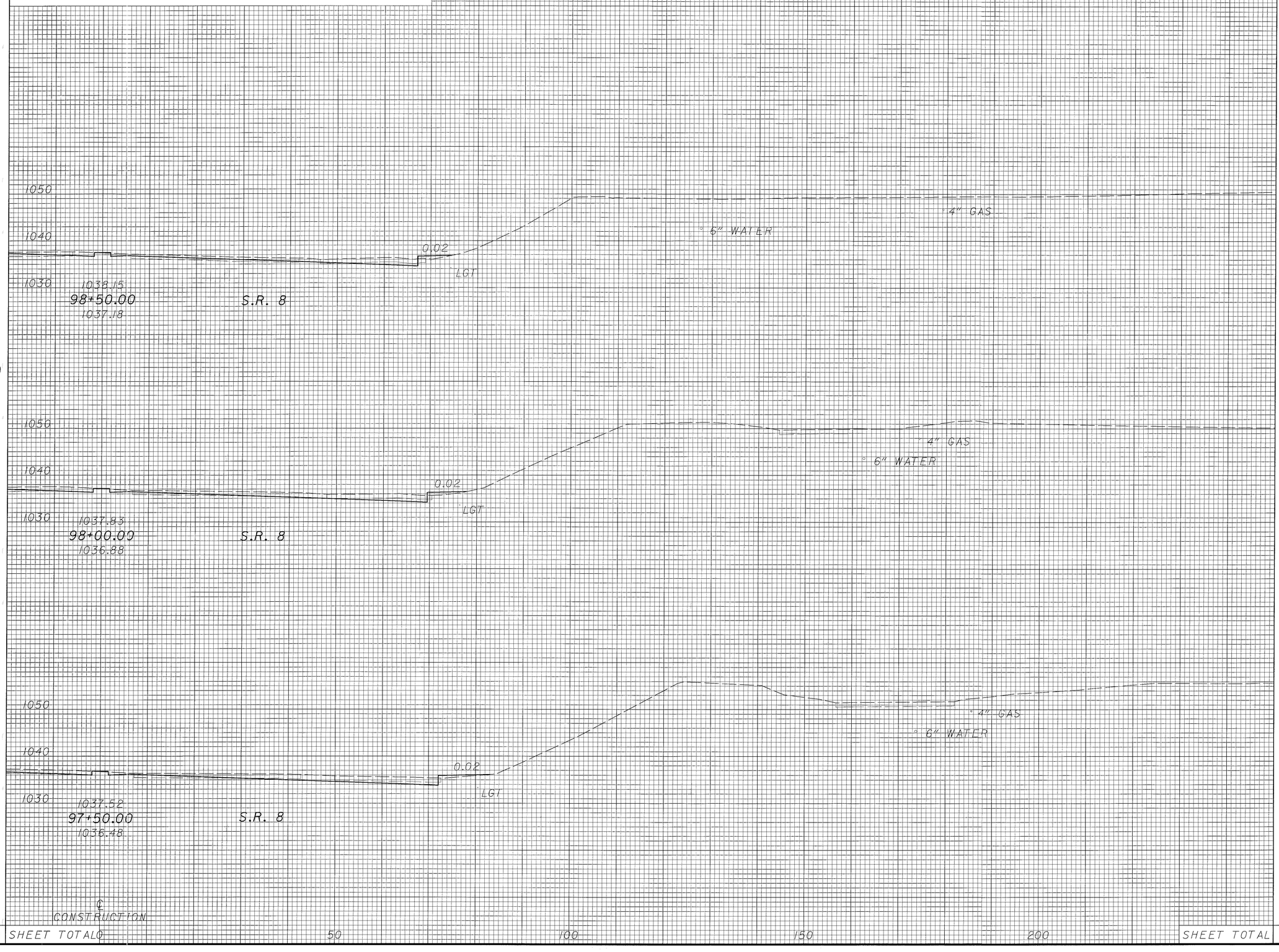

END AREA		VOLUME	
CUT	FILL	CUT	FILL
11	3		
		25	6
16	4		
		36	6
23	3		
		54	3
		115	15
SHEET TOTAL			

CALCULATED JE
CHECKED KMM

CROSS SECTIONS - S.R. 8 RT.
STA. 97+50 TO STA. 98+50

SUM-8-0.63

417
1088

FOR EARTHWORK AND SEEDING & MULCHING SUBSUMMARY
SEE SHEET 169

SEEDING END WIDTH	SEEDING SQ. YDS.	END AREA CUT	END AREA FILL	VOLUME CUT	VOLUME FILL
10		3	4		
				5	10
	61				
		2	7		
12					
				8	12
	67				
		7	6		
12					
				15	10
	69				
		9	5		
13					
				19	7
	69				
	266	SHEET TOTAL		47	39

1040 — 0.02 — LGT — 4" GAS — 6" WATER
1030 — 1038.68 — 100+50.00 — 1037.34 — S.R. 8

1040 — 0.02 — LGT — 4" GAS — 6" WATER
1030 — 1038.13 — 100+00.00 — 1037.41 — S.R. 8

1040 — 0.02 — LGT — 4" GAS — 6" WATER
1030 — 1038.65 — 99+50.00 — 1037.29 — S.R. 8

1050 — 1040 — 0.02 — LGT — 4" GAS — 6" WATER
1030 — 1038.45 — 99+00.00 — 1037.38 — S.R. 8

℄ CONSTRUCTION

50 100 150 200

CALCULATED JE
CHECKED KMM

CROSS SECTIONS - S.R. 8 RT.
STA. 99+00 TO STA. 100+50

SUM-8-0.63

418
1088

FOR EARTHWORK AND SEEDING & MULCHING SUBSUMMARY
SEE SHEET 169

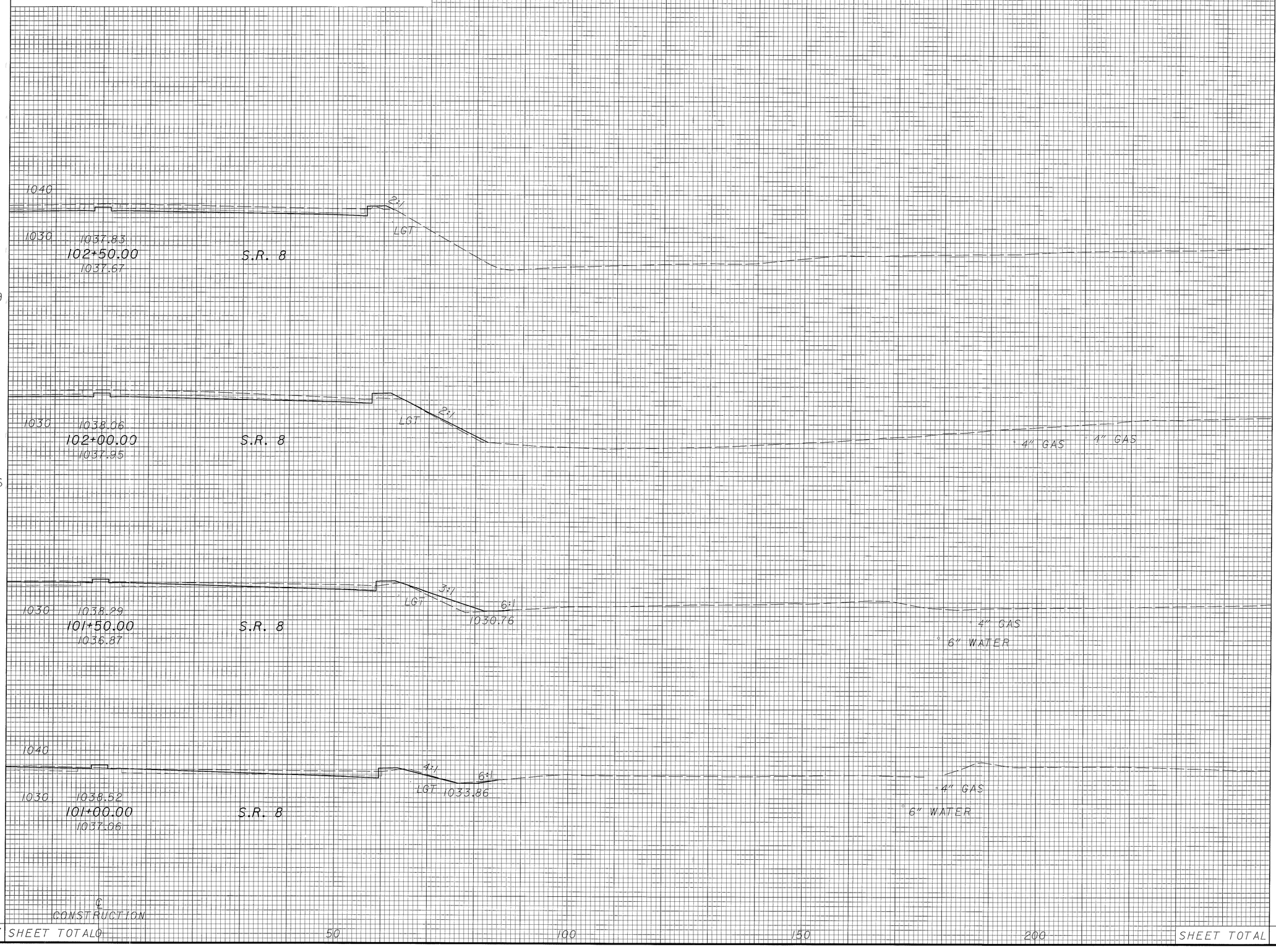

SEEDING END WIDTH	SEEDING SQ. YDS.	END AREA CUT	END AREA FILL	VOLUME CUT	VOLUME FILL
11					
	119	28	3	47	13
32					
	186	23	11	24	29
35					
	181	3	20	10	22
30					
	111	8	4	10	7
	597 SHEET TOTAL		SHEET TOTAL	91	71

50 100 150 200

CALCULATED JE
CHECKED KMM

CROSS SECTIONS - S.R. 8 RT.
STA. 101+00 TO STA. 102+50

SUM-8-0.63

419
1088

SEEDING	
END WIDTH	SQ. YDS.
0	
	0
0	
	23
14	
	28
	51

FOR EARTHWORK AND SEEDING & MULCHING SUBSUMMARY SEE SHEET 169

1030
103+50
1020

1030 103+00
LGT

END WORK STA. 102+96.00

1040
P.I.
LGT
1030

1037.74
1020 102+70.38
1037.56

S.R. 8

END PROJECT

℄
CONSTRUCTION

END AREA		VOLUME	
CUT	FILL	CUT	FILL
0	0		
		0	0
0	0		
		11	2
20	3		
		18	2
SHEET TOTAL		29	4

CALCULATED JE
CHECKED KMM

CROSS SECTIONS - S.R. 8 RT.
STA. 102+70.38 TO STA. 103+50

SUM-8-0.63

SEEDING	
END WIDTH	SQ. YDS.
9	
10	
0	
10	SHEET TOTAL

FOR EARTHWORK AND SEEDING & MULCHING SUBSUMMARY SEE SHEET 168

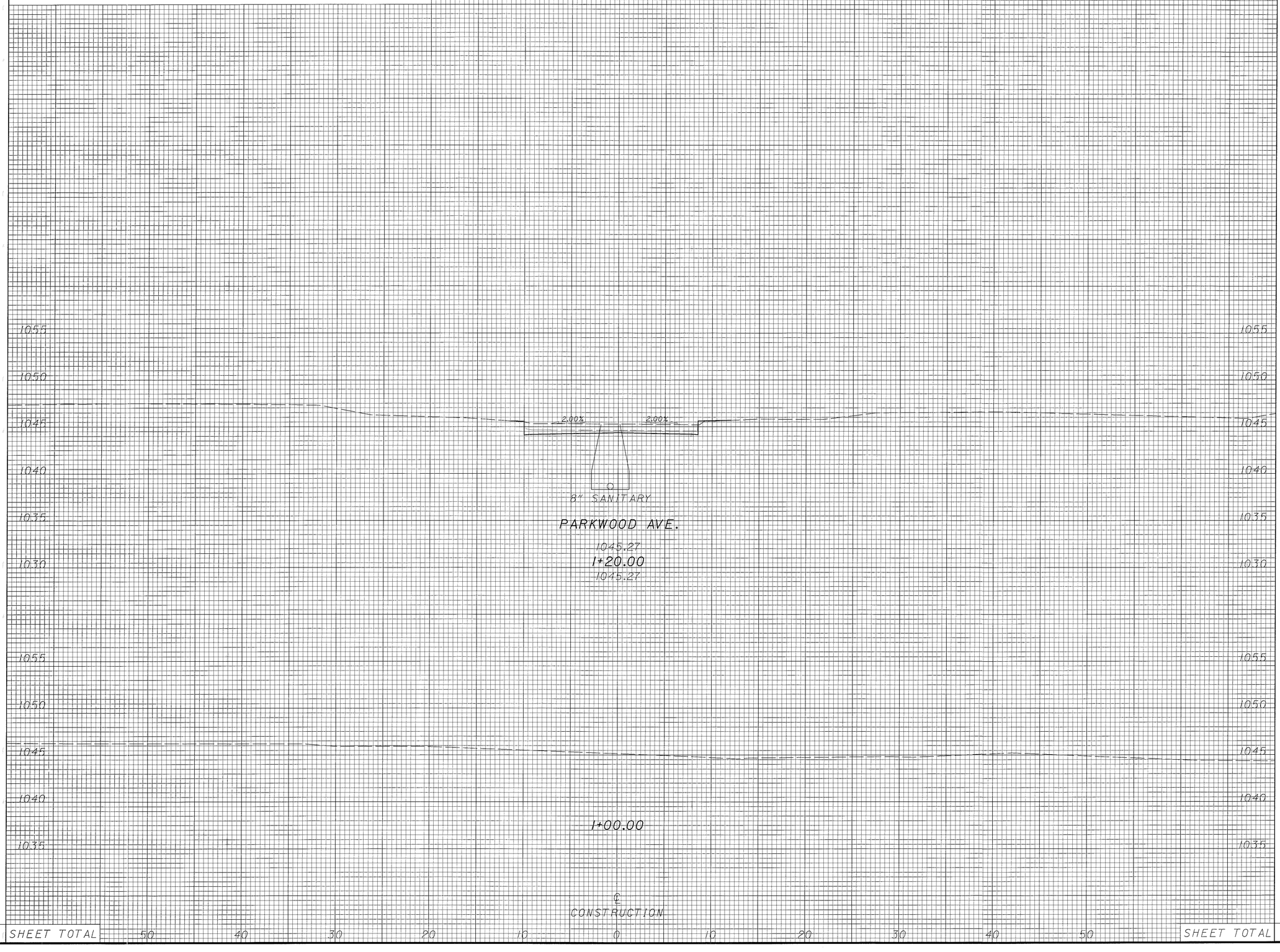

END AREA		VOLUME	
CUT	FILL	CUT	FILL
6	1		
		2	0
0	0		
SHEET TOTAL		2	0

CALCULATED JE

CHECKED

CROSS SECTIONS - PARKWOOD AVE.
STA. 1+00 TO STA. 1+20

SUM-8-0.63

421
1088

SEEDING	
END WIDTH	SQ. YDS.
12	
	24
10	
	21
	45

FOR EARTHWORK AND SEEDING & MULCHING SUBSUMMARY
SEE SHEET 168

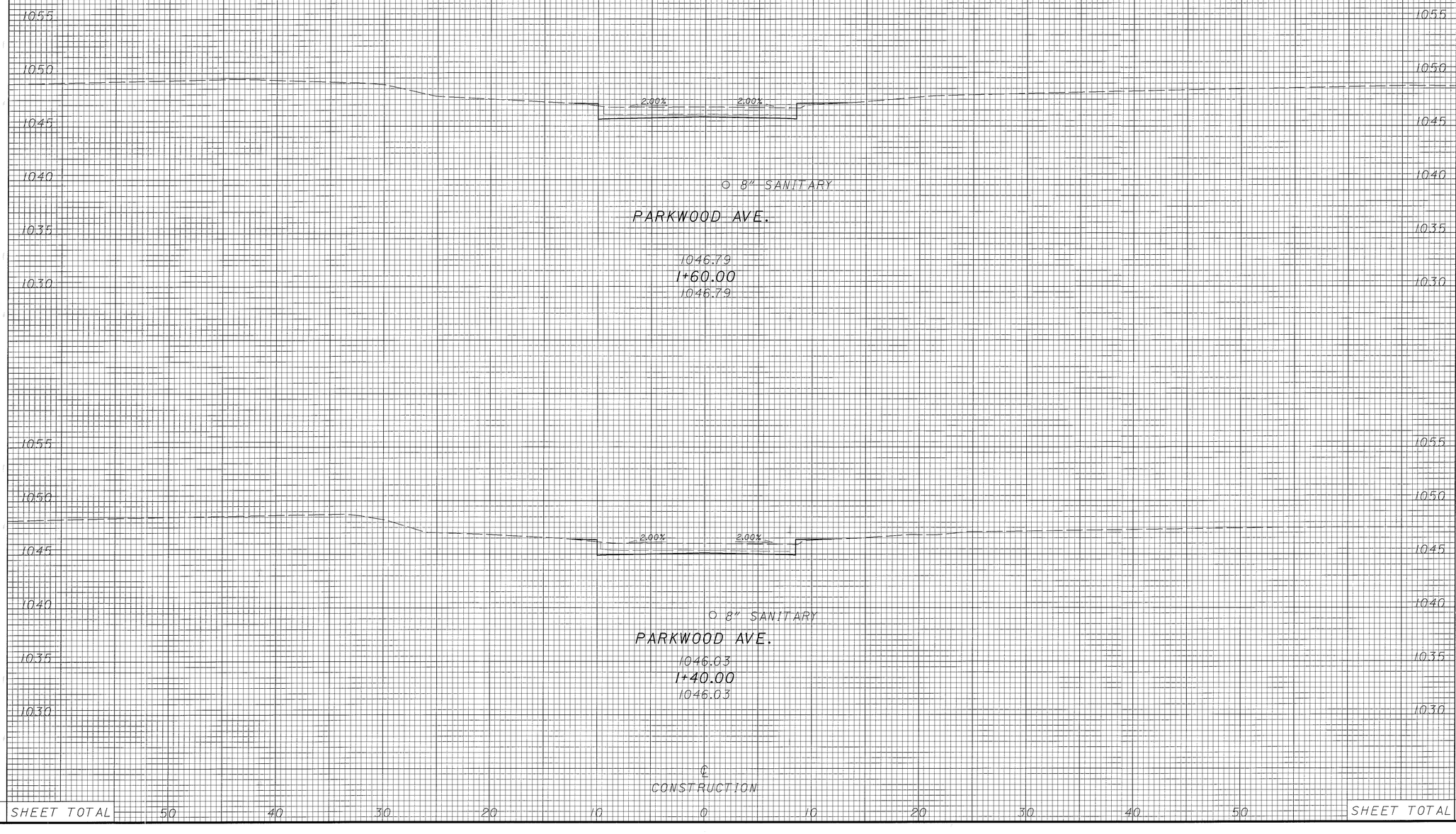

END AREA		VOLUME	
CUT	FILL	CUT	FILL
6	1		
		4	1
6	1		
		4	1
SHEET TOTAL		8	2

CALCULATED JE
CHECKED

CROSS SECTIONS - PARKWOOD AVE.
STA. 1+40 TO STA. 1+60

SUM-8-0.63

422
1088

FOR EARTHWORK AND SEEDING & MULCHING SUBSUMMARY
SEE SHEET 168

SEEDING END WIDTH	SEEDING SQ. YDS.	Station	END AREA CUT	END AREA FILL	VOLUME CUT	VOLUME FILL
16		1+95.00	9	1		
	24				6	1
13		1+80.00	7	1		
	28				5	1
SHEET TOTAL	52				11	2

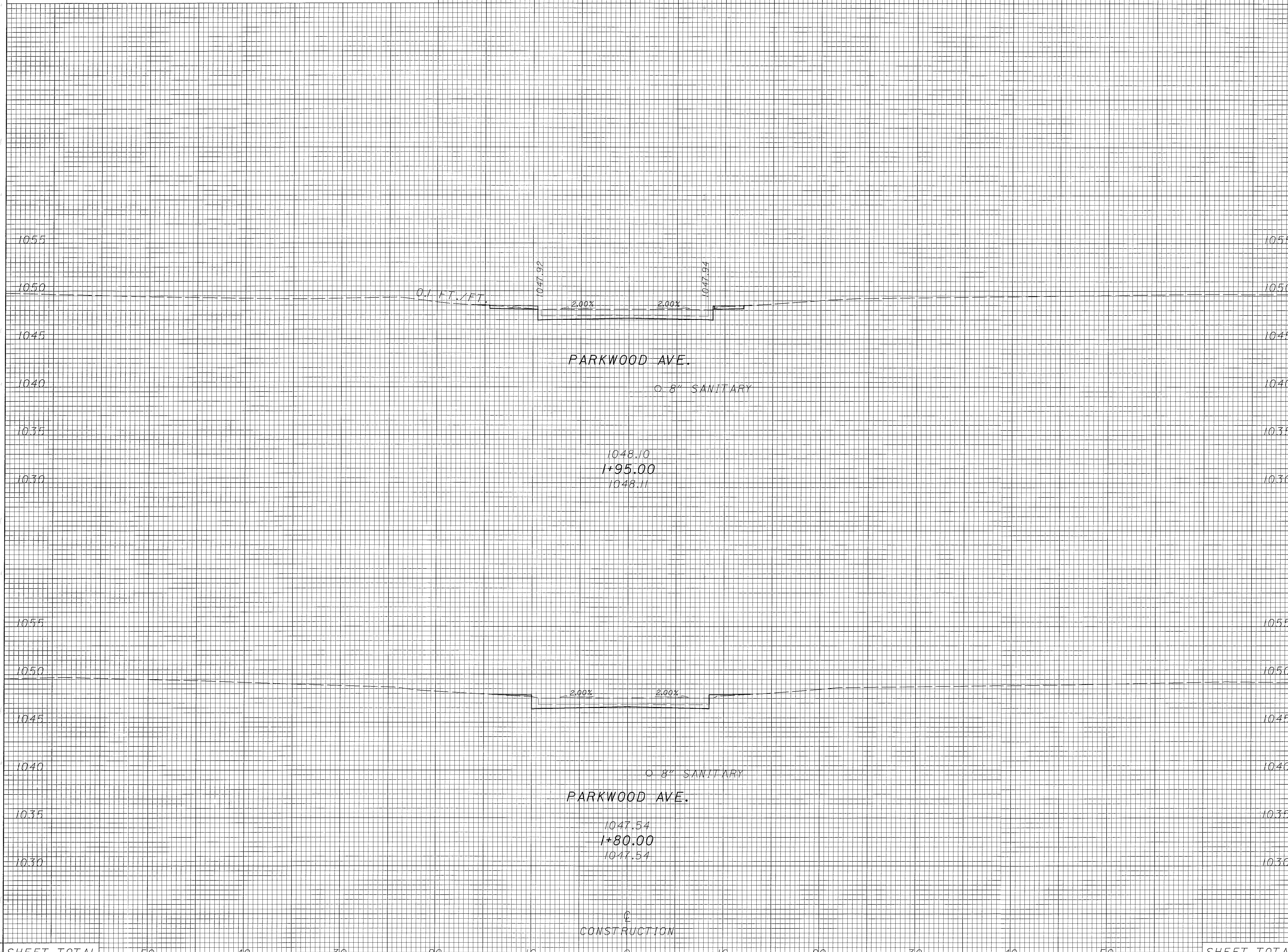

CALCULATED JE
CHECKED

CROSS SECTIONS - PARKWOOD AVE.
STA. 1+80 TO STA. 1+95

SUM-8-0.63

SEEDING	
END WIDTH	SQ. YDS.
22	
	37
11	
	8
45	SHEET TOTAL

FOR EARTHWORK AND SEEDING & MULCHING SUBSUMMARY SEE SHEET 168

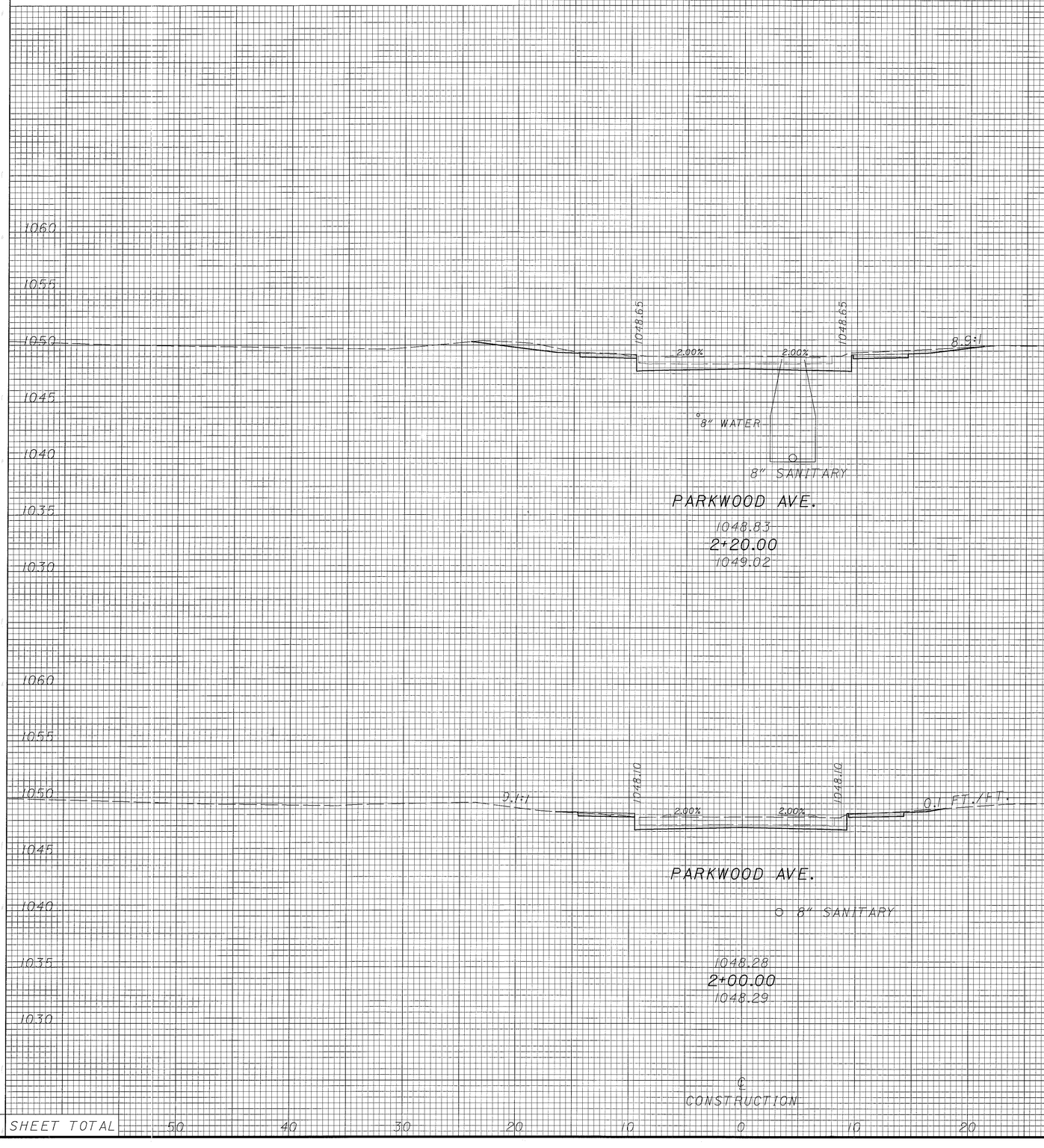

END AREA		VOLUME	
CUT	FILL	CUT	FILL
22	0		
		12	0
11	1		
		7	1
SHEET TOTAL		19	1

CALCULATED JE CHECKED

CROSS SECTIONS - PARKWOOD AVE.
STA. 2+00 TO STA., 2+20

SUM-8-0.63

424
1088

SEEDING	
END WIDTH	SQ. YDS.
22	49
22	49
	98

FOR EARTHWORK AND SEEDING & MULCHING SUBSUMMARY SEE SHEET 168

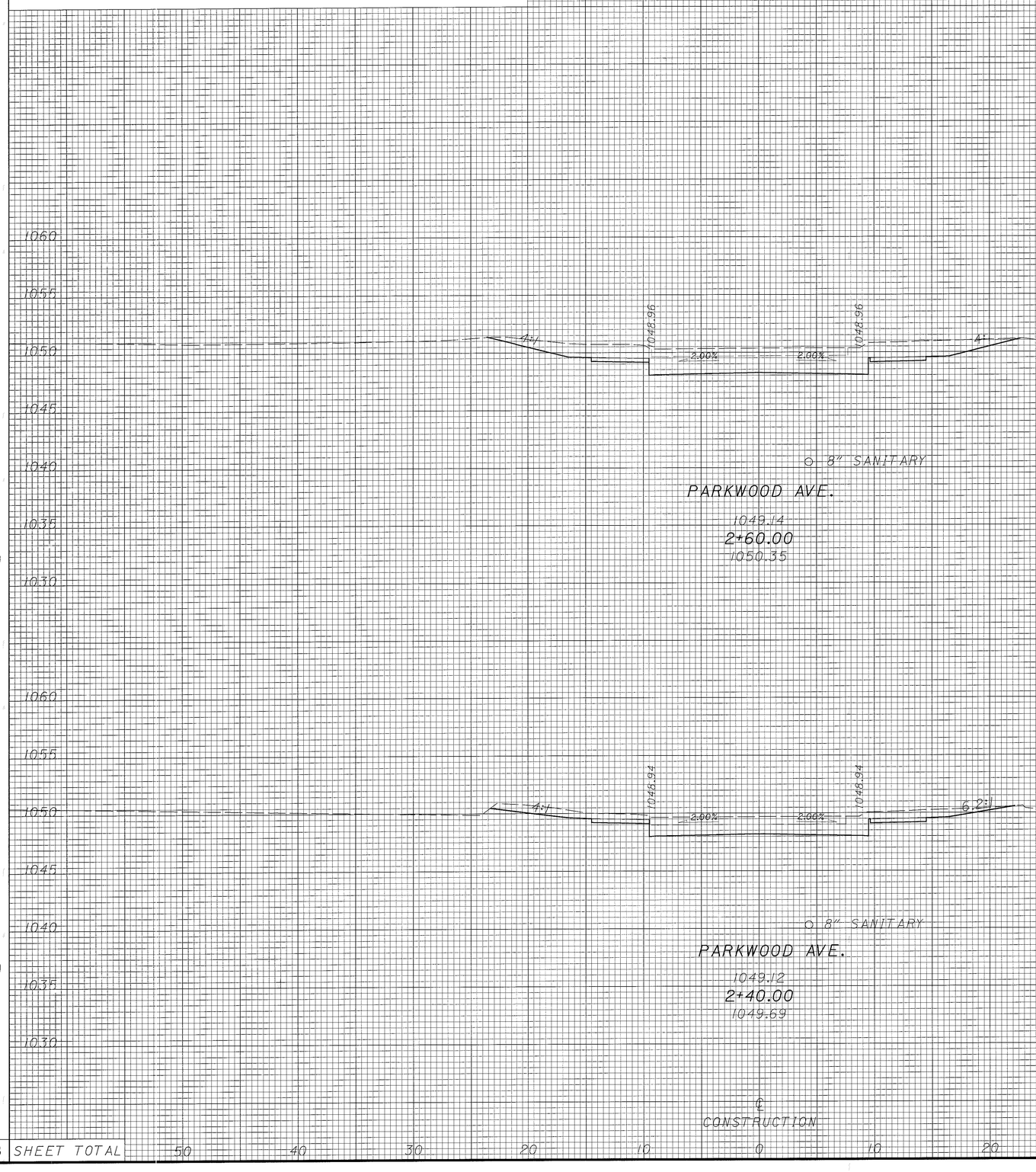

END AREA		VOLUME	
CUT	FILL	CUT	FILL
61	0		
		36	0
37	0		
		22	0
		58	0

SHEET TOTAL

SHEET TOTAL

CALCULATED JE

CHECKED

CROSS SECTIONS - PARKWOOD AVE. STA. 2+40 TO STA. 2+60

SUM-8-0.63

425
1088

SEEDING			END AREA		VOLUME	
END WIDTH	SQ. YDS.		CUT	FILL	CUT	FILL
		FOR EARTHWORK AND SEEDING & MULCHING SUBSUMMARY SEE SHEET 168				
		1060				
		1055				
36		1050	145	0		
		1045				
		1040				
		1035				
	69	1030			89	0
		1060				
		1055				
26		1050	95	0		
		1045				
		1040				
	53	1035			58	0
	122	SHEET TOTAL			146	0

PARKWOOD AVE.
8" WATER
8" SANITARY

1048.39
3+00.00
1051.26

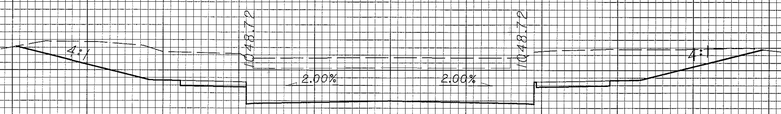

8" WATER
PARKWOOD AVE.
8" SANITARY

1048.90
2+80.00
1050.84

℄
CONSTRUCTION

50 40 30 20 10 0 10 20 30 40 50

CALCULATED JE
CHECKED

CROSS SECTIONS - PARKWOOD AVE.
STA. 2+80 TO STA. 3+00

SUM-8-0.63

426
1088

SEEDING	
END WIDTH	SQ. YDS.
51	
	104
43	
	88
	192

FOR EARTHWORK AND SEEDING & MULCHING SUBSUMMARY
SEE SHEET 168

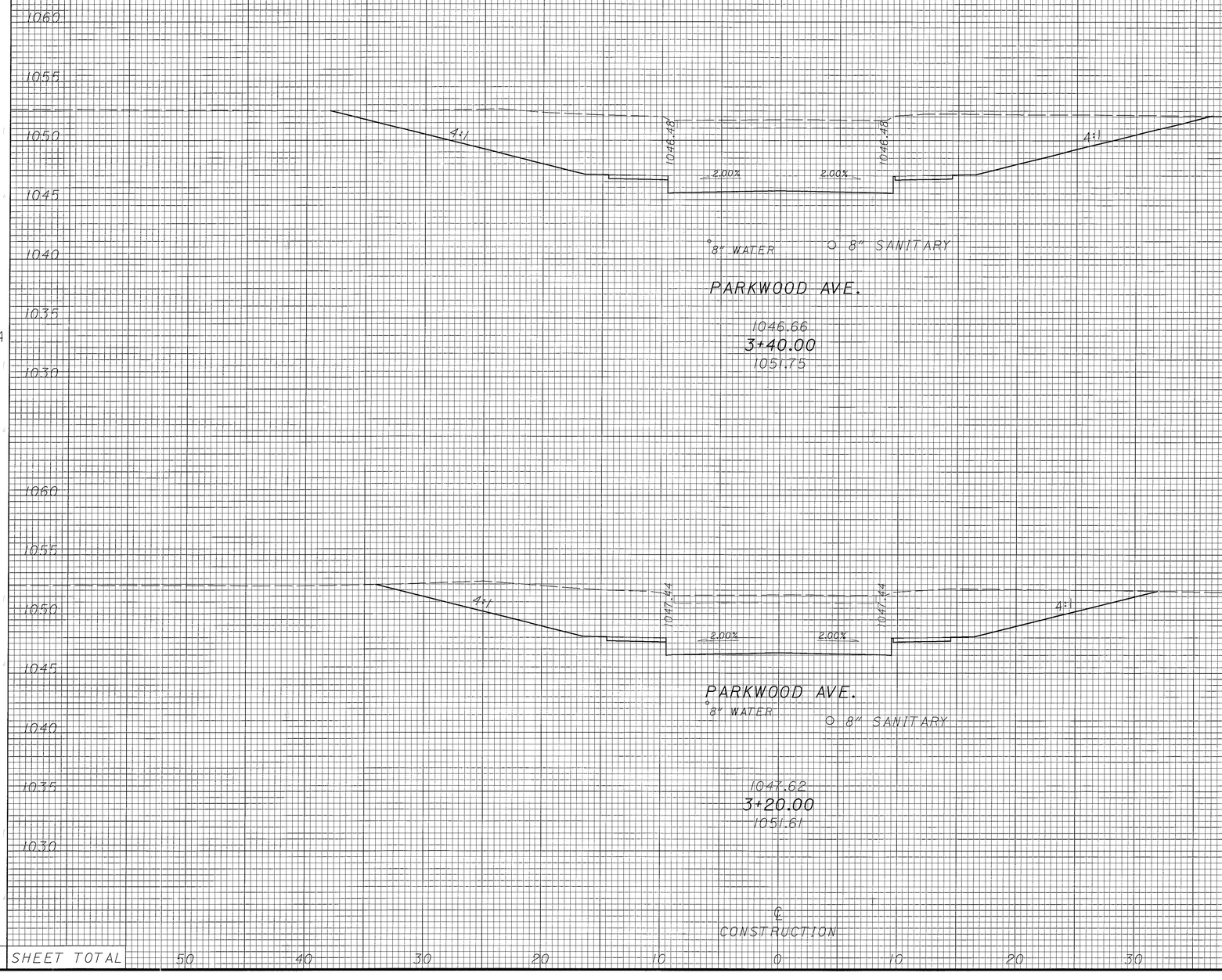

END AREA		VOLUME	
CUT	FILL	CUT	FILL
288	0		
		186	0
213	0		
		133	0
SHEET TOTAL		319	0

CALCULATED JE
CHECKED

CROSS SECTIONS - PARKWOOD AVE.
STA. 3+20 TO STA. 3+40

SUM-8-0.63

427
1088

SEEDING	
END WIDTH	SQ. YDS.
70	
144	
60	
123	
267	SHEET TOTAL

FOR EARTHWORK AND SEEDING & MULCHING SUBSUMMARY
SEE SHEET 168

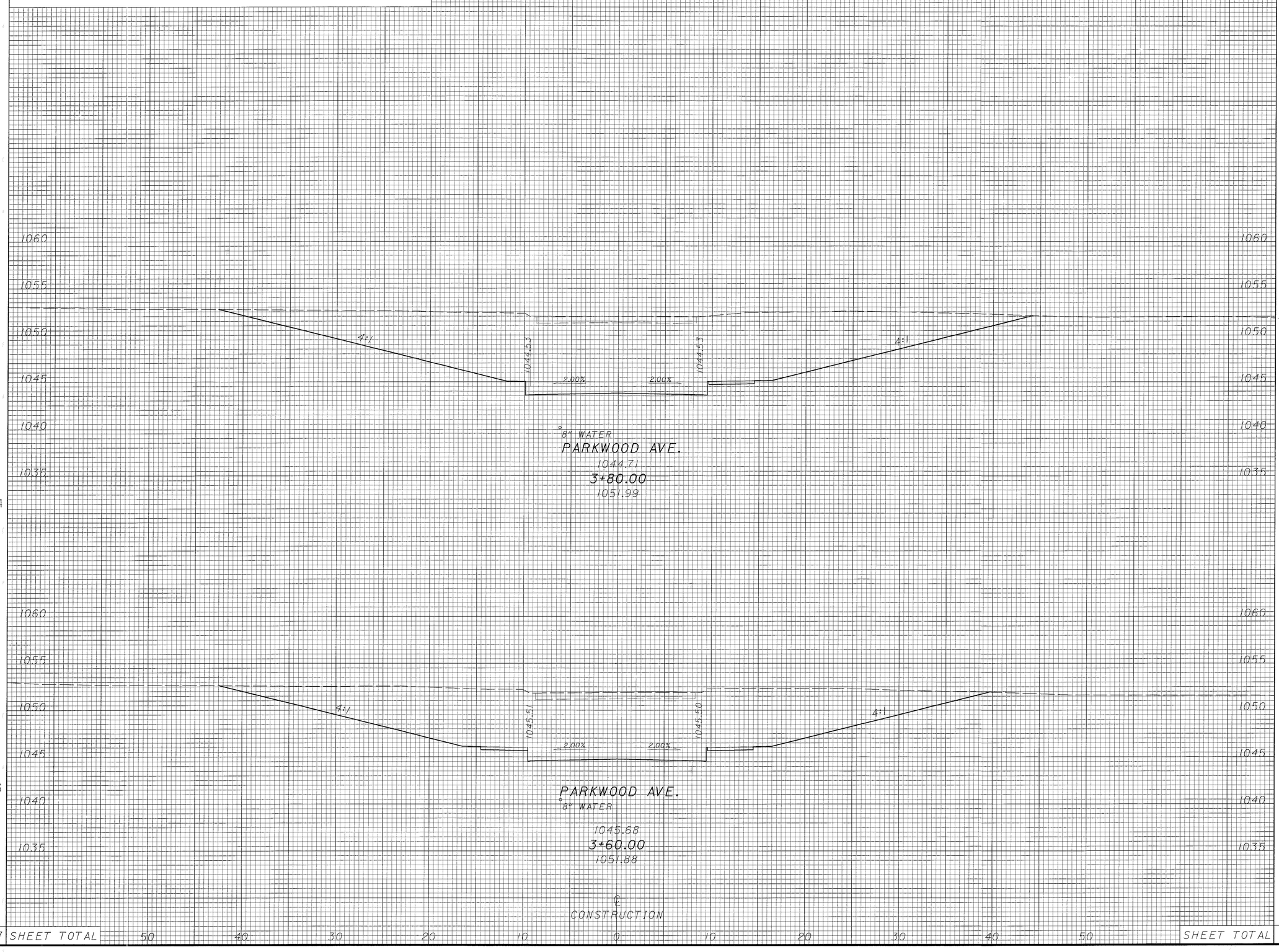

END AREA		VOLUME	
CUT	FILL	CUT	FILL
433	0		
745	0		
371	0		
610	0		
SHEET TOTAL		1355	0

CALCULATED JE
CHECKED

CROSS SECTIONS - PARKWOOD AVE.
STA. 3+60 TO STA. 3+80

SUM-8-0.63

428
1088

SEEDING END WIDTH	SEEDING SQ. YDS.
88	
	129
79	
	166
	295

FOR EARTHWORK AND SEEDING & MULCHING SUBSUMMARY
SEE SHEET 168

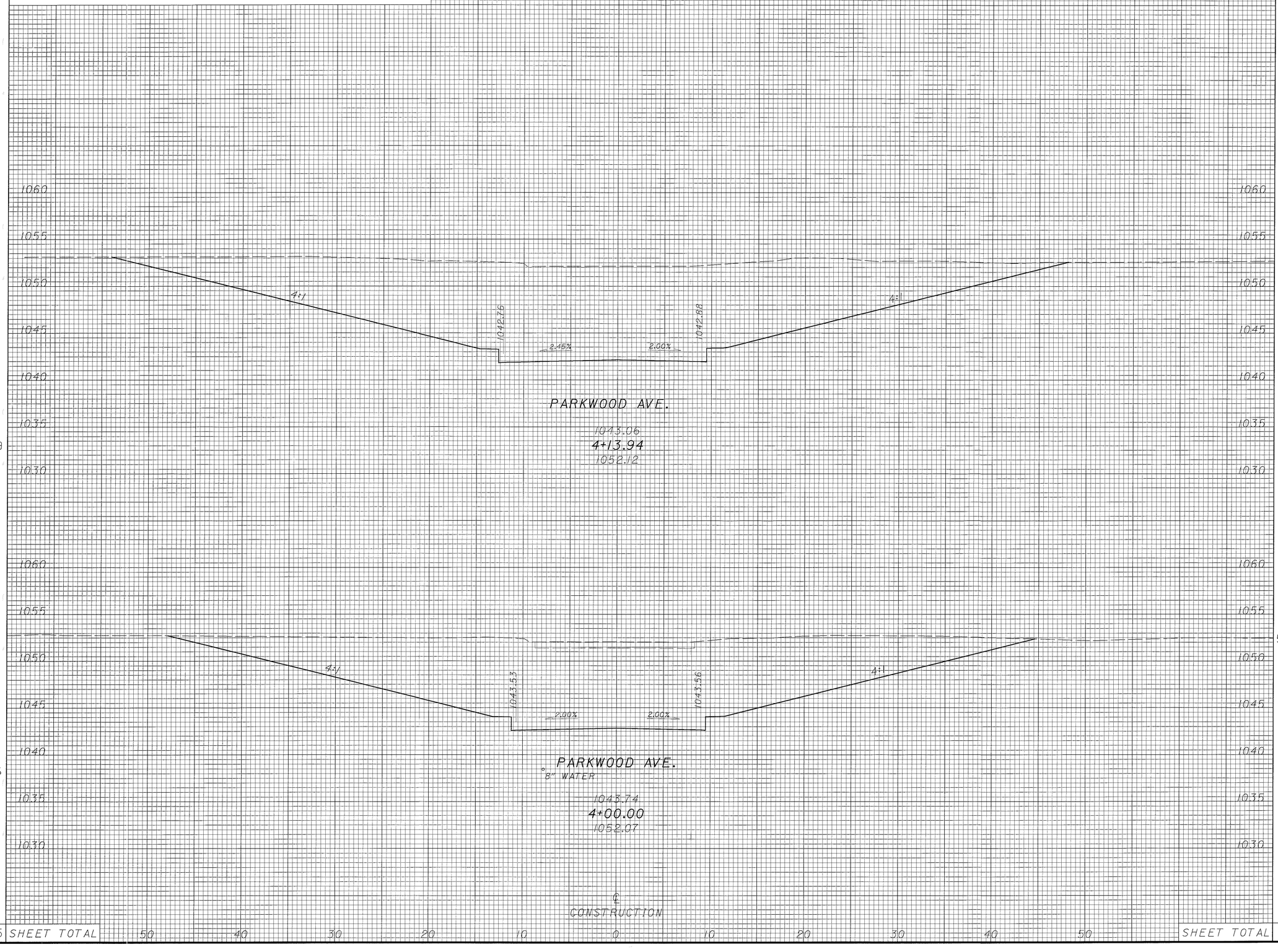

END AREA CUT	END AREA FILL	VOLUME CUT	VOLUME FILL
621	0		
		417	0
506	0		
		348	0
SHEET TOTAL		465	0

CALCULATED JE
CHECKED

CROSS SECTIONS - PARKWOOD AVE. STA. 4+00 TO STA. 4+13.94

SUM-8-0.63

SEEDING	
END WIDTH	SQ. YDS.

FOR EARTHWORK AND SEEDING & MULCHING SUBSUMMARY
SEE SHEET 168

END AREA		VOLUME	
CUT	FILL	CUT	FILL

CALCULATED JE
CHECKED

FOR SEEDING AND MULCHING QUANTITIES, SEE S.R. 8 CROSS SECTIONS

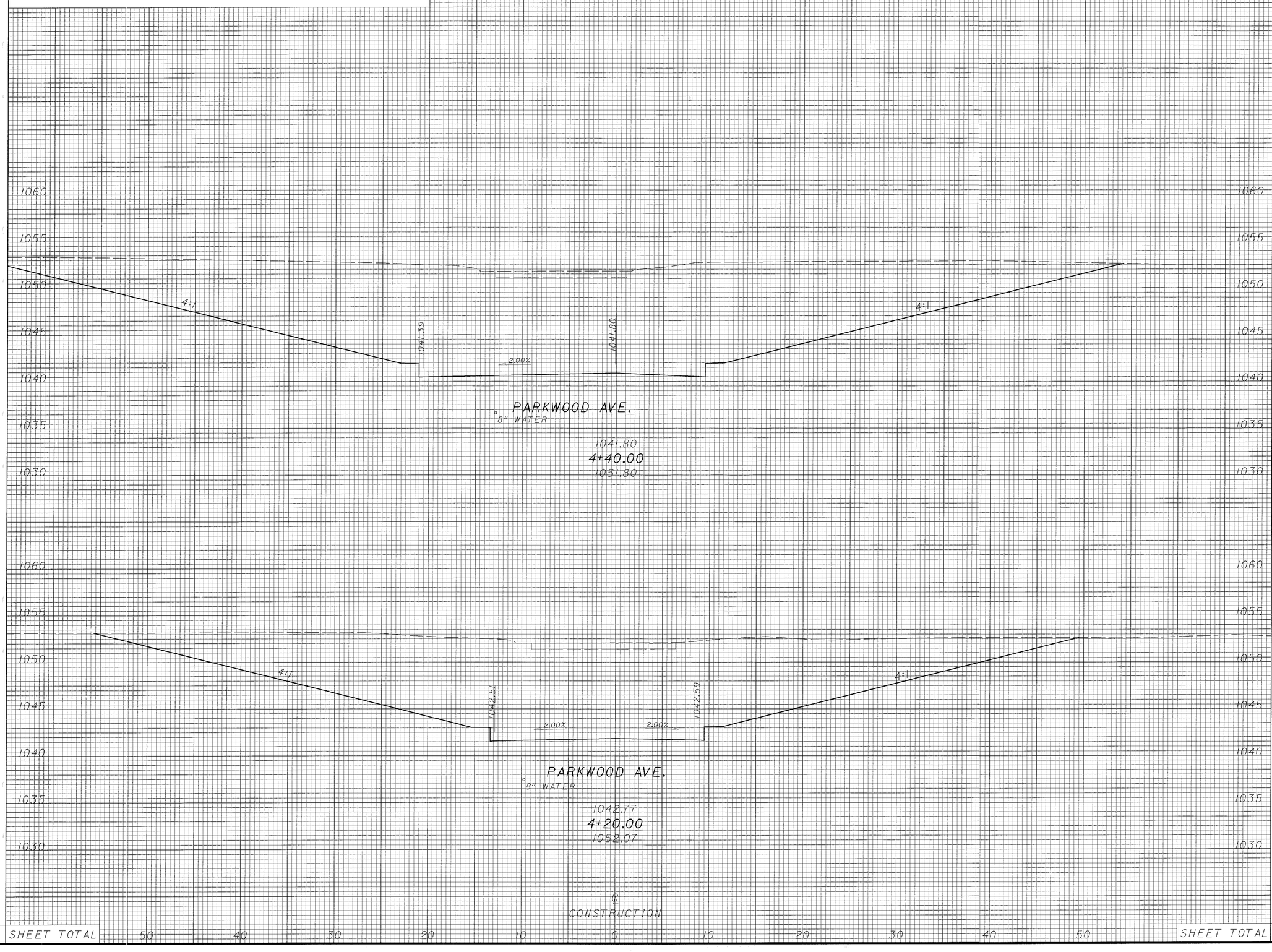

FOR EARTHWORK QUANTITIES, SEE S.R. 8 CROSS SECTIONS

SHEET TOTAL 50 40 30 20 10 0 10 20 30 40 50 SHEET TOTAL

CROSS SECTIONS - PARKWOOD AVE. STA. 4+20 TO STA. 4+40

SUM-8-0.63

430
1088

SEEDING	
END WIDTH	SQ. YDS.

FOR EARTHWORK AND SEEDING & MULCHING SUBSUMMARY SEE SHEET 168

FOR SEEDING AND MULCHING QUANTITIES, SEE S.R. 8 CROSS SECTIONS

END AREA		VOLUME	
CUT	FILL	CUT	FILL

FOR EARTHWORK QUANTITIES, SEE S.R. 8 CROSS SECTIONS

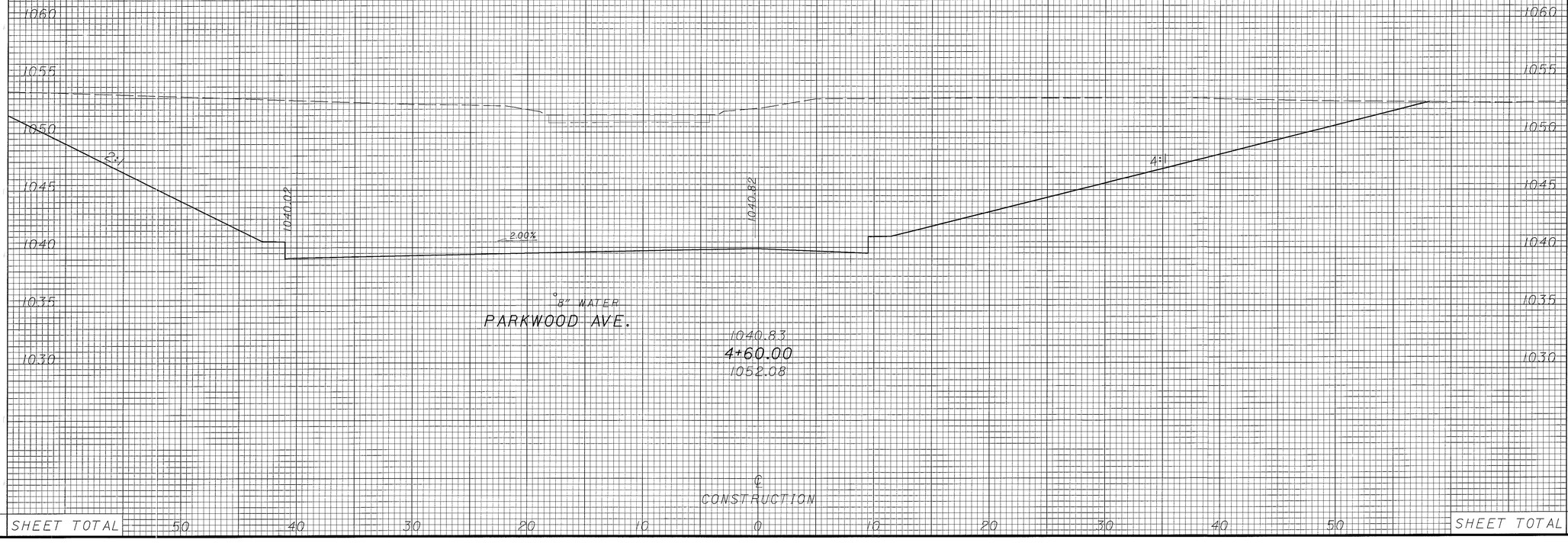

SHEET TOTAL

SHEET TOTAL

CALCULATED JE

CHECKED

CROSS SECTIONS - PARKWOOD AVE. STA. 4+60

SUM-8-0.63

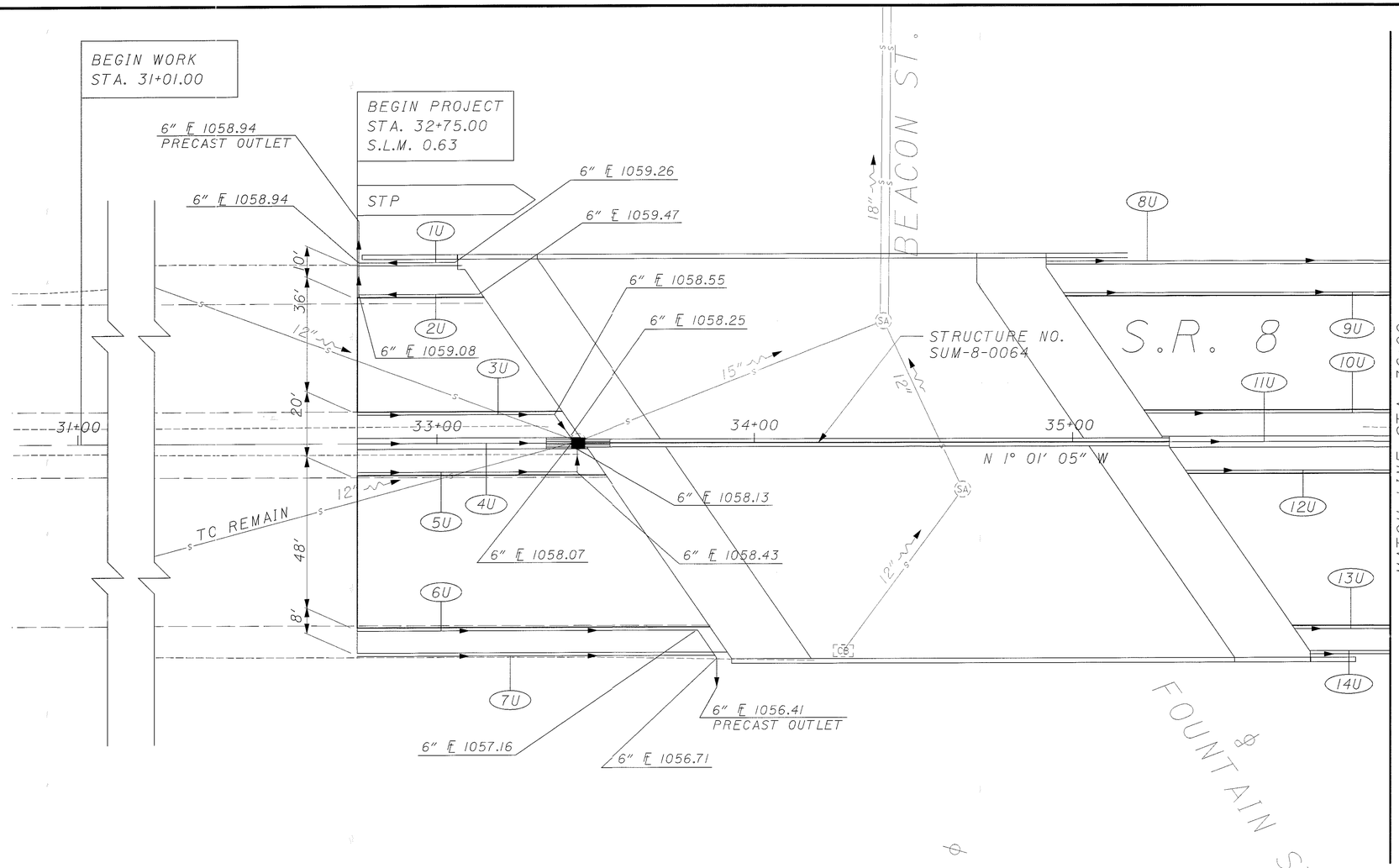

	CROSS REFERENCES
SHEET NO.	DESCRIPTION
143	CURB AND UNDERDRAIN SUBSUMMARY

N

HORIZONTAL SCALE IN FEET
0 10 20 40

CALCULATED | CHECKED

CURB & UNDERDRAIN PLAN - S.R. 8
STA. 32+00 TO STA. 36+00

SUM-8-0.63

i:\projects\9922100\civil\underdrains\sr8\dpl0\sr8.dgn

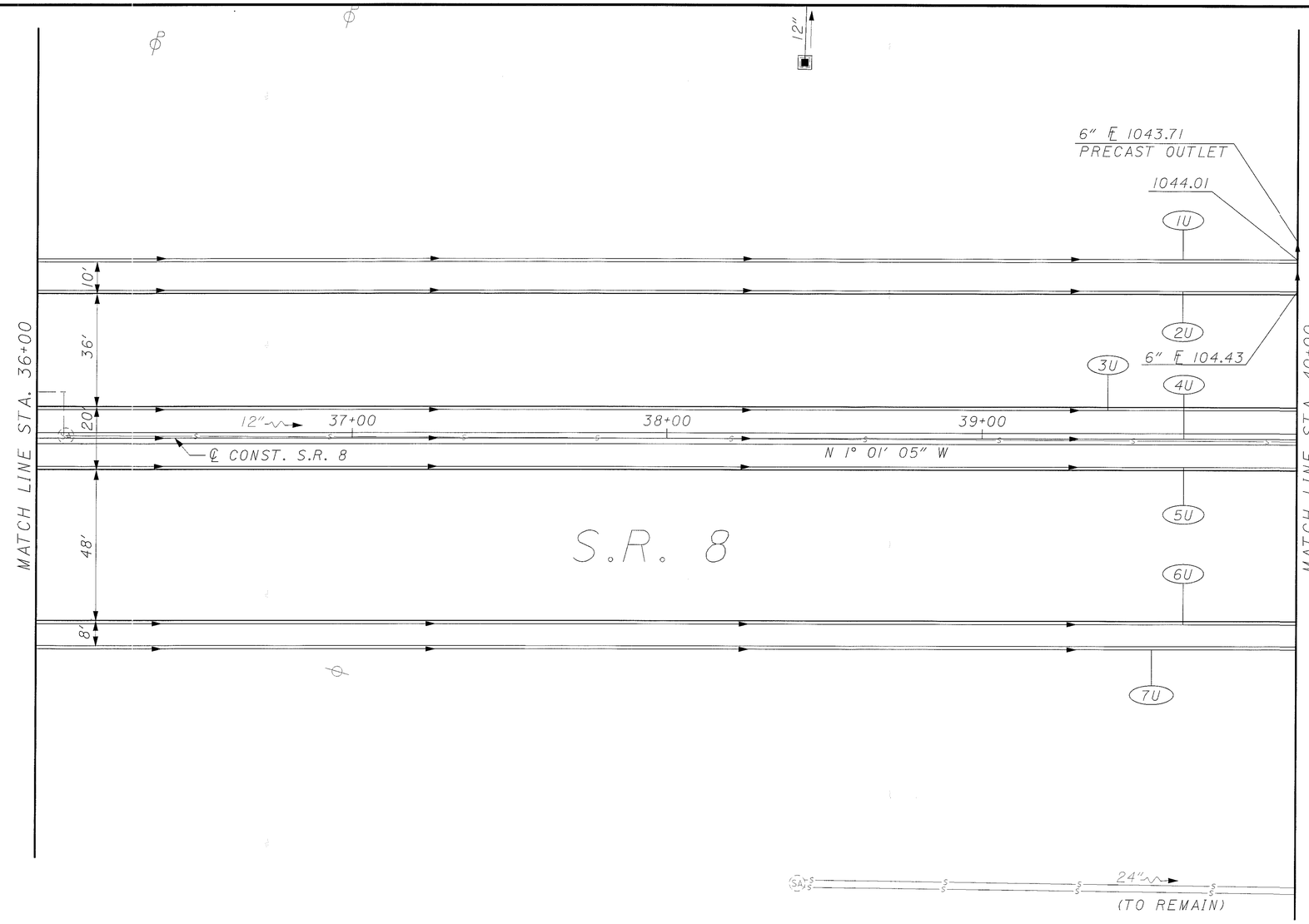

	CROSS REFERENCES
SHEET NO.	DESCRIPTION
143	CURB AND UNDERDRAIN SUBSUMMARY

N

HORIZONTAL SCALE IN FEET
0 10 20 40

CALCULATED | CHECKED

CURB & UNDERDRAIN PLAN - S.R. 8
STA. 36+00 TO STA. 40+00

SUM-8-0.63

433
1088

i:\projects\992100\civil\dwgs\pp3.dgn

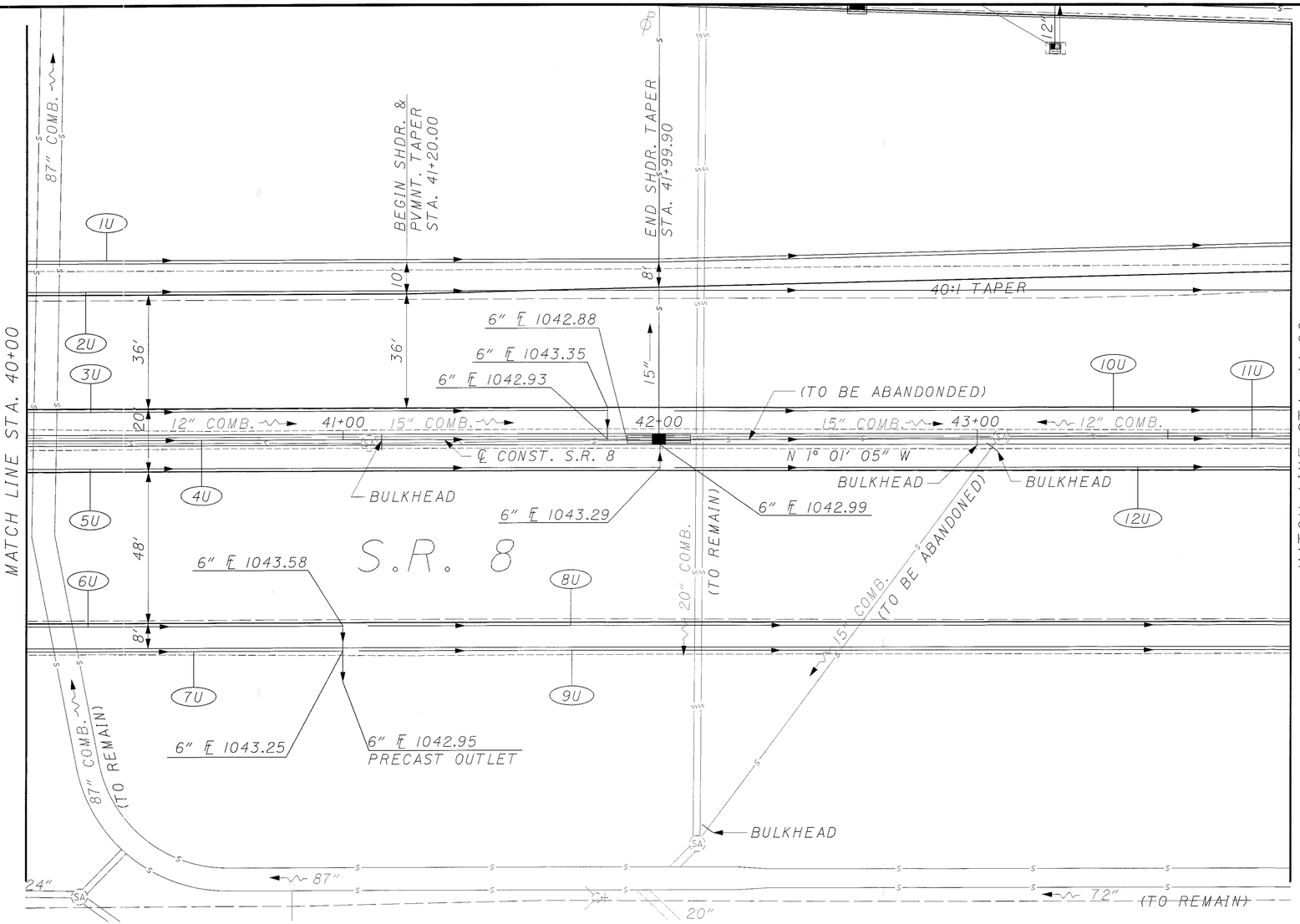

	CROSS REFERENCES
SHEET NO.	DESCRIPTION
143	CURB AND UNDERDRAIN SUBSUMMARY

N

0 10 20 40 HORIZONTAL SCALE IN FEET

CALCULATED

CHECKED

CURB & UNDERDRAIN PLAN - S.R. 8
STA. 40+00 TO STA. 44+00

SUM-8-0.63

434
1088

i:\projects\9922100\civil\dwgs\pp4.dgn

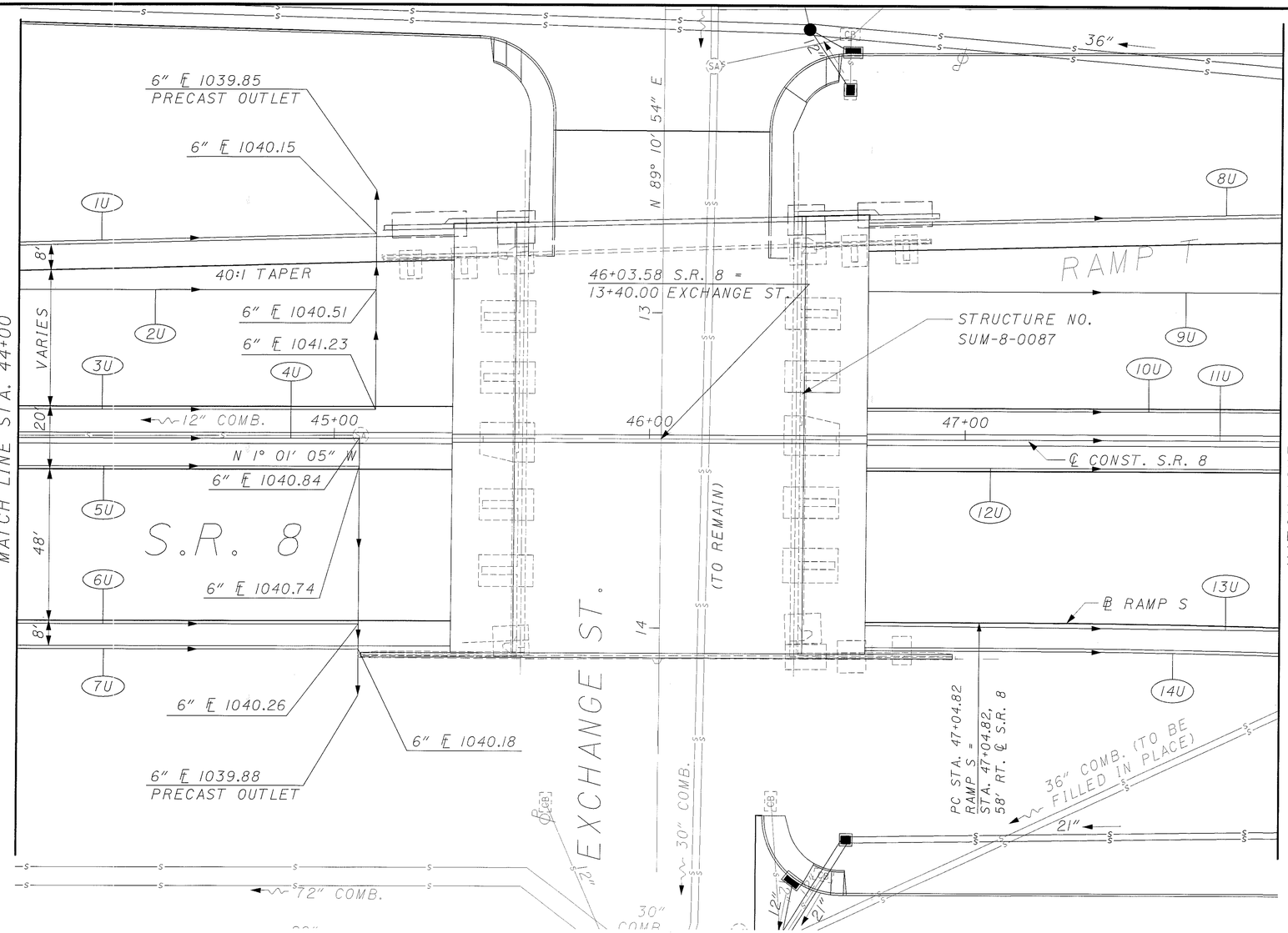

	CROSS REFERENCES
SHEET NO.	DESCRIPTION
143	CURB AND UNDERDRAIN SUBSUMMARY

N

HORIZONTAL SCALE IN FEET
0 10 20 40

CALCULATED

CHECKED

CURB & UNDERDRAIN PLAN - S.R. 8 STA. 44+00 TO STA. 48+00

SUM-8-0.63

435
1088

i:\projects\992100IN\civil\pp\gp005.dgn

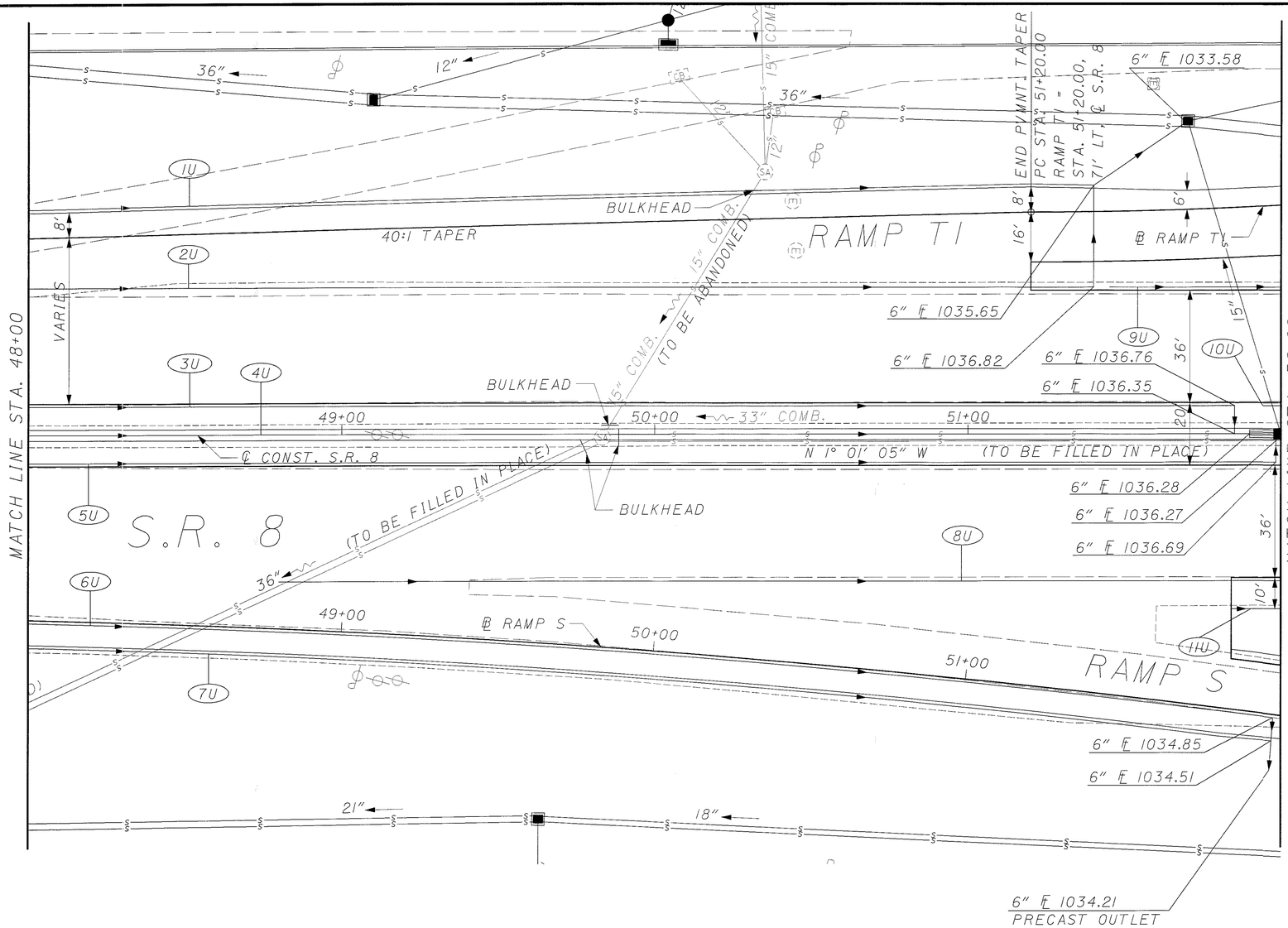

	CROSS REFERENCES
SHEET NO.	DESCRIPTION
144	CURB AND UNDERDRAIN SUBSUMMARY
478	CURB AND UNDERDRAIN PLAN RAMP TI
479,480	CURB AND UNDERDRAIN PLAN RAMP S

N

HORIZONTAL SCALE IN FEET
0 10 20 40

CALCULATED | CHECKED

CURB & UNDERDRAIN PLAN - S.R. 8
STA. 48+00 TO STA. 52+00

SUM-8-0.63

436
1088

i:\projects\9922100\civil\dwgs\pp6.dgn

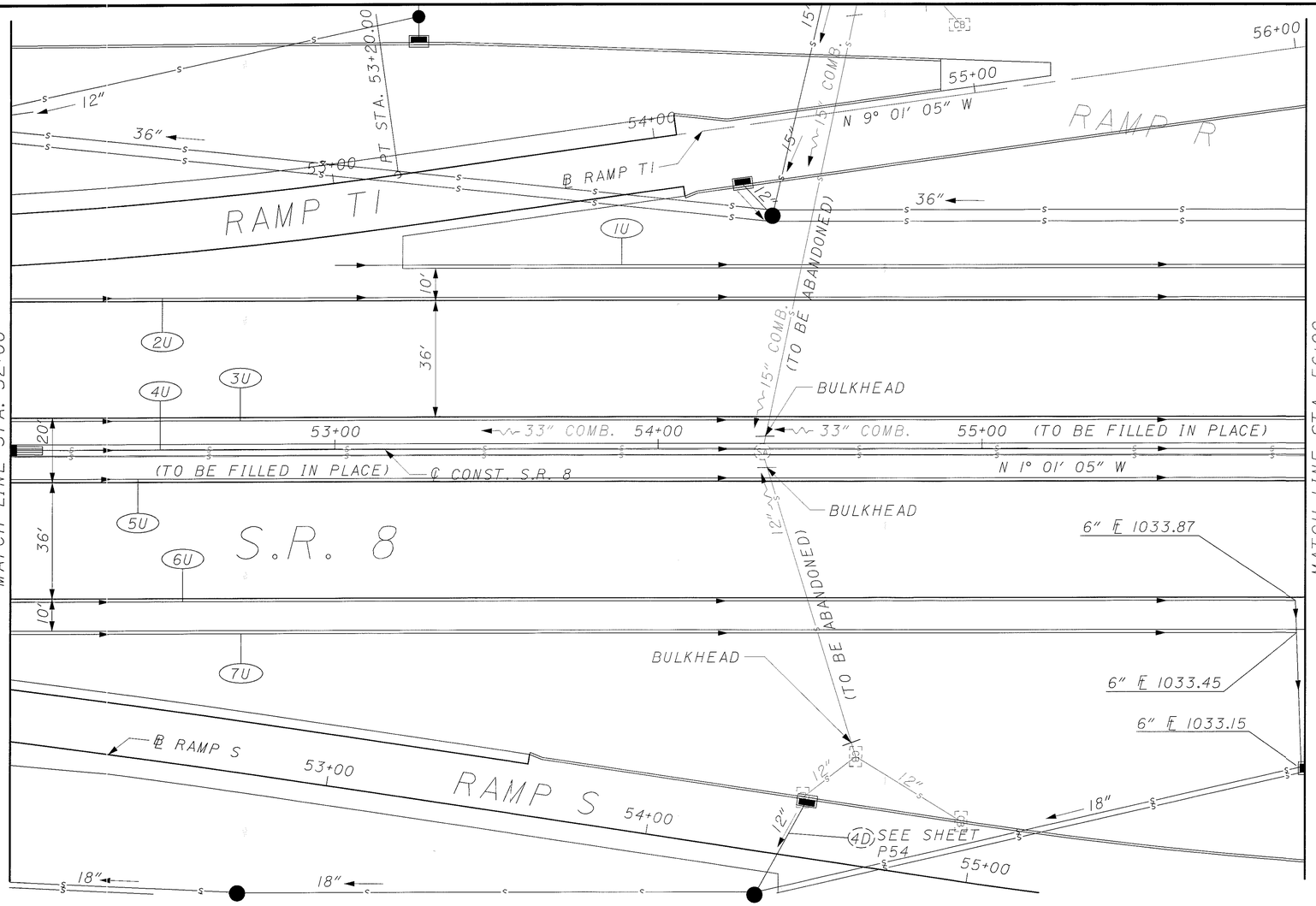

	CROSS REFERENCES
SHEET NO.	DESCRIPTION
144	CURB AND UNDERDRAIN SUBSUMMARY
454	CURB AND UNDERDRAIN PLAN - GOODKIRK ST.
478	CURB AND UNDERDRAIN PLAN - RAMP TI
481	CURB AND UNDERDRAIN PLAN - RAMP S

N

HORIZONTAL SCALE IN FEET
0 10 20 40

CALCULATED

CHECKED

CURB & UNDERDRAIN PLAN - S.R. 8
STA. 52+00 TO STA. 56+00

SUM-8-0.63

437
1088

i:\projects\9922100\civil\dwgs\pp7.dgn

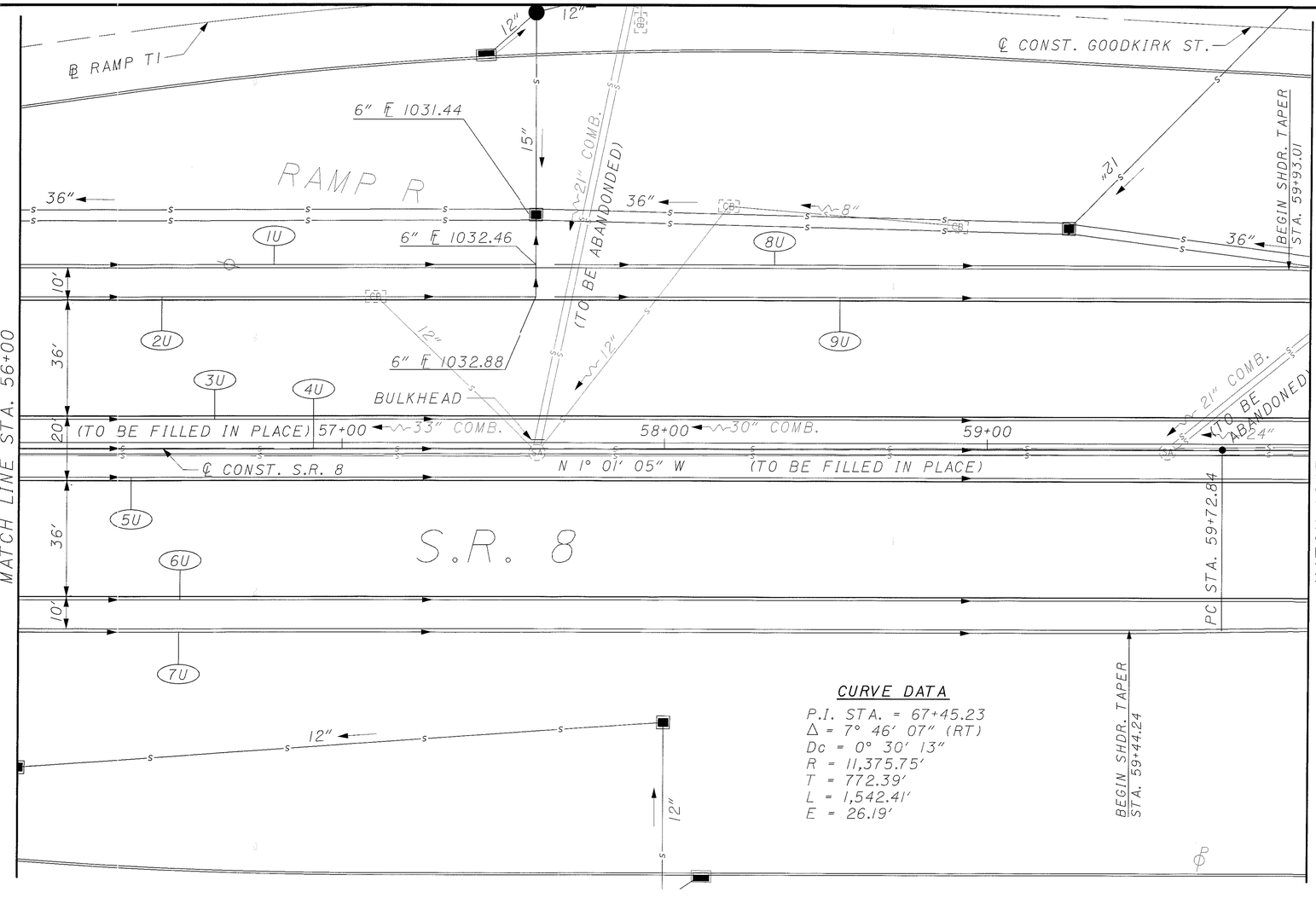

	CROSS REFERENCES
SHEET NO.	DESCRIPTION
144	CURB AND UNDERDRAIN SUBSUMMARY

N

HORIZONTAL SCALE IN FEET
0 10 20 40

CALCULATED

CHECKED

CURB & UNDERDRAIN PLAN - S.R. 8
STA. 56+00 TO STA. 60+00

SUM-8-0.63

438
1088

I:\projects\9922100\civil\dwgs\pp8.dgn

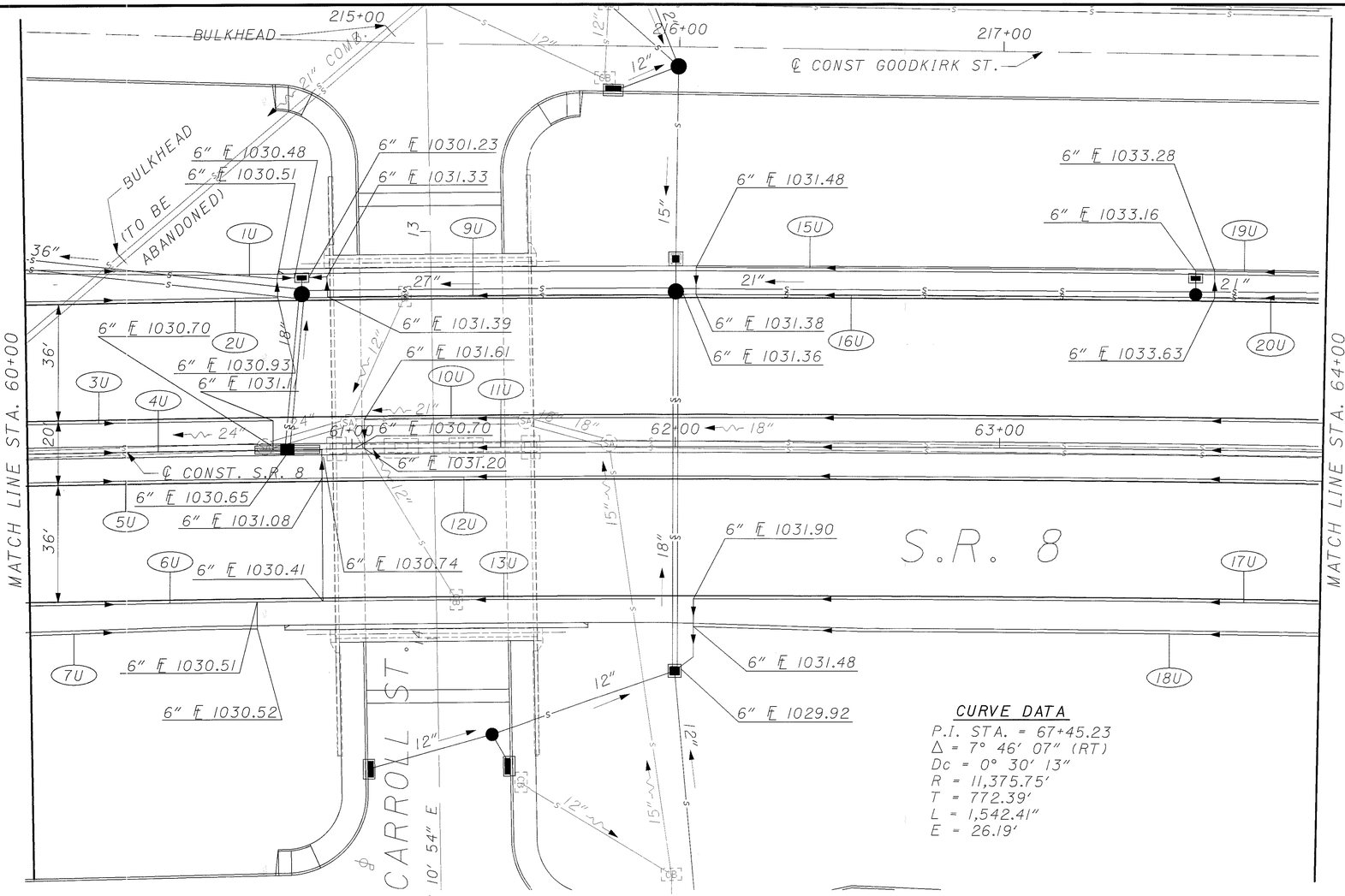

	CROSS REFERENCES
SHEET NO.	DESCRIPTION
144	CURB AND UNDERDRAIN SUBSUMMARY

N

0 10 20 40 HORIZONTAL SCALE IN FEET

CALCULATED

CHECKED

CURB & UNDERDRAIN PLAN - S.R. 8
STA. 60+00 TO STA. 64+00

SUM-8-0.63

439
1088

i:\projects\992100\civil\dwgs\pp8.dgn

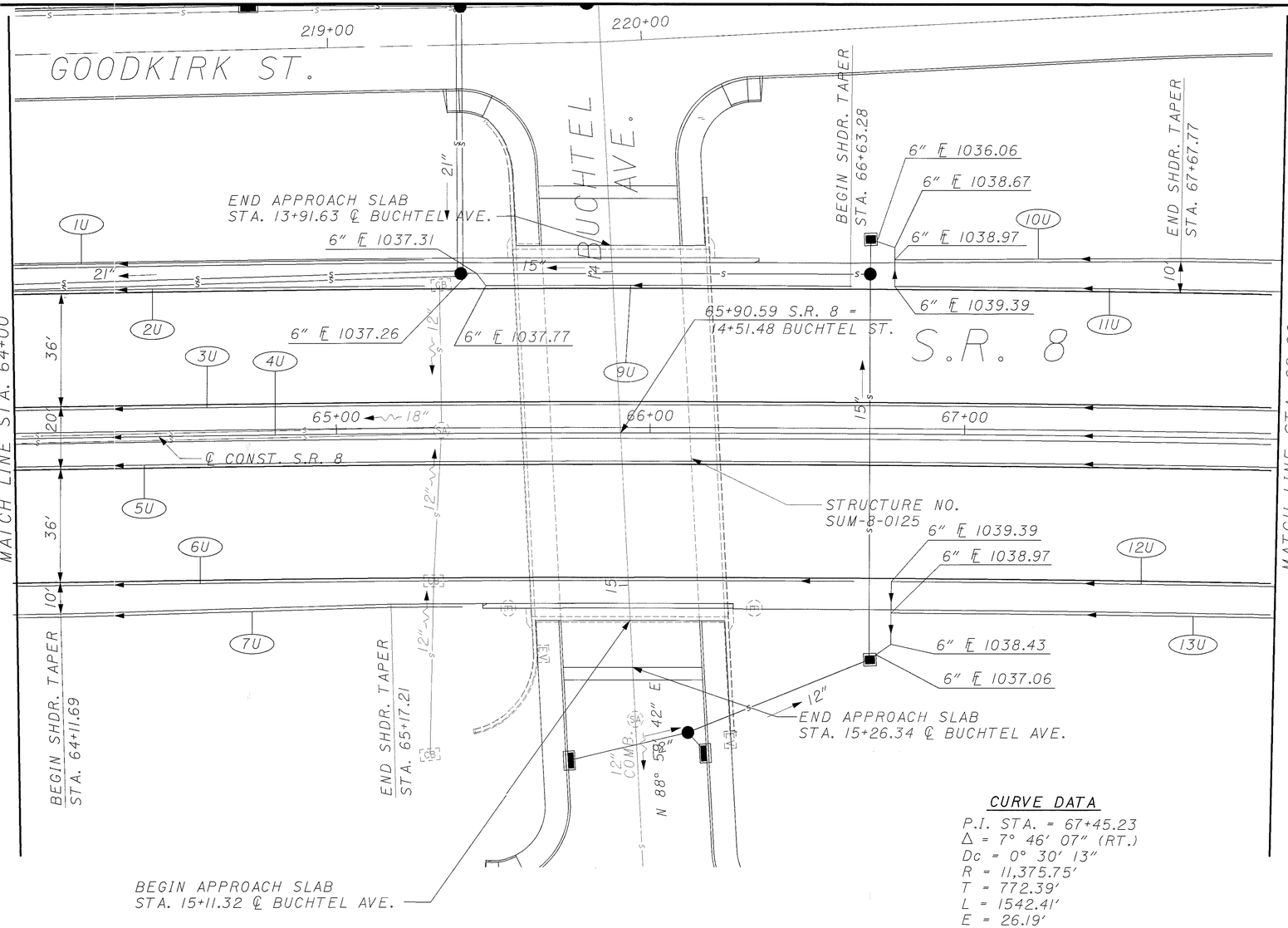

CURVE DATA

P.I. STA. = 67+45.23
Δ = 7° 46' 07" (RT.)
Dc = 0° 30' 13"
R = 11,375.75'
T = 772.39'
L = 1542.41'
E = 26.19'

	CROSS REFERENCES
SHEET NO.	DESCRIPTION
145	CURB AND UNDERDRAIN SUBSUMMARY

N

0 10 20 40
HORIZONTAL SCALE IN FEET

CALCULATED | CHECKED

CURB & UNDERDRAIN PLAN - S.R. 8
STA. 64+00 TO STA. 68+00

SUM-8-0.63

440
1088

i:\projects\9922100\civil\dwgs\ppl0.dgn

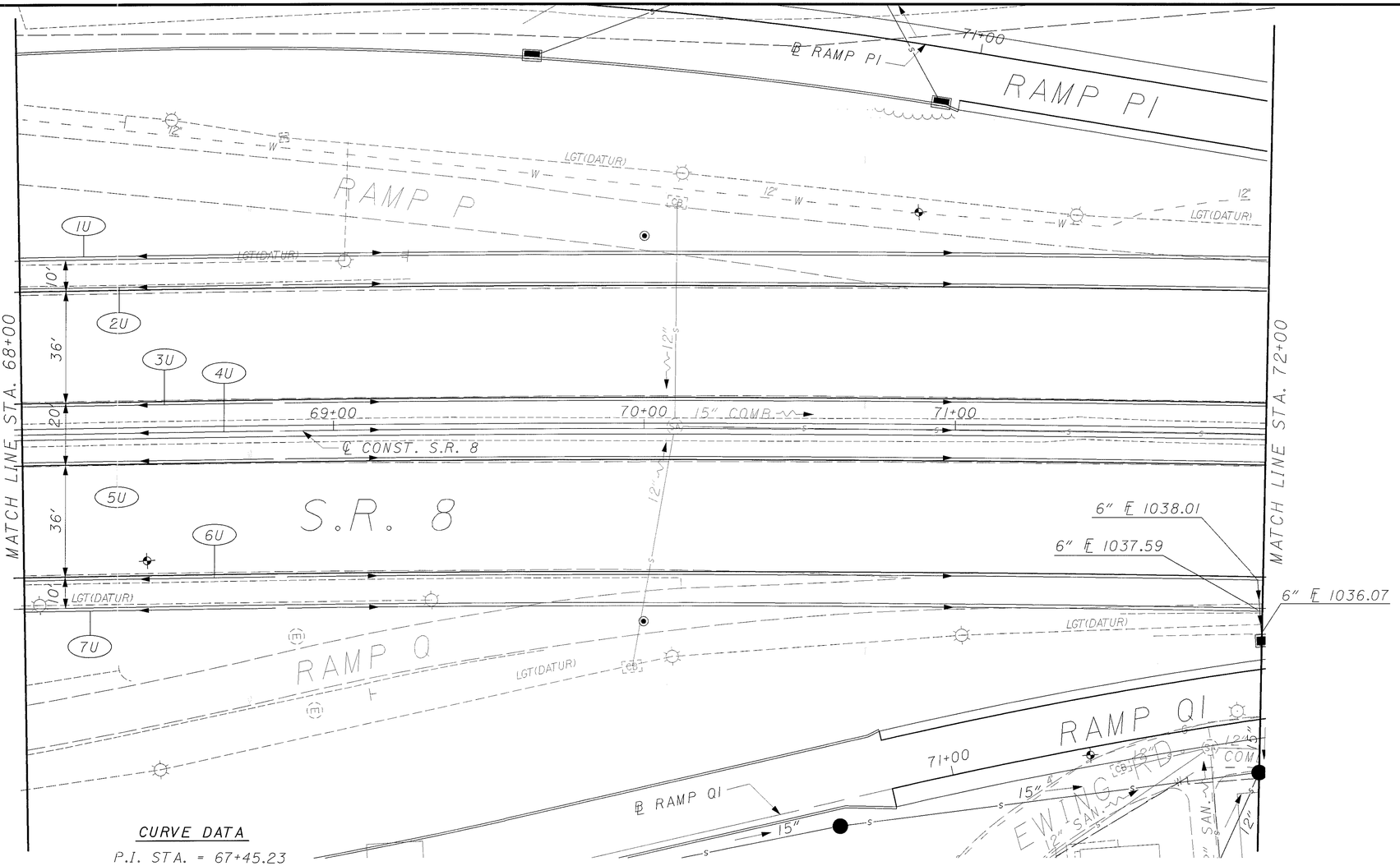

CURVE DATA

P.I. STA. = 67+45.23
Δ = 7° 46' 07" (RT)
Dc = 0° 30' 13"
R = 11,375.75'
T = 772.39'
L = 1,542.41'
E = 26.19'

	CROSS REFERENCES
SHEET NO.	DESCRIPTION
145	CURB AND UNDERDRAIN SUBSUMMARY
458	CURB AND UNDERDRAIN PLAN - GOODKIRK ST.
483	CURB AND UNDERDRAIN PLAN RAMP Q1

HORIZONTAL SCALE IN FEET
0 10 20 40

CALCULATED
CHECKED

CURB & UNDERDRAIN PLAN - S.R. 8
STA. 68+00 TO STA. 72+00

SUM-8-0.63

441
1088

i:\projects\9922100\civil\dwgs\pplt.dgn

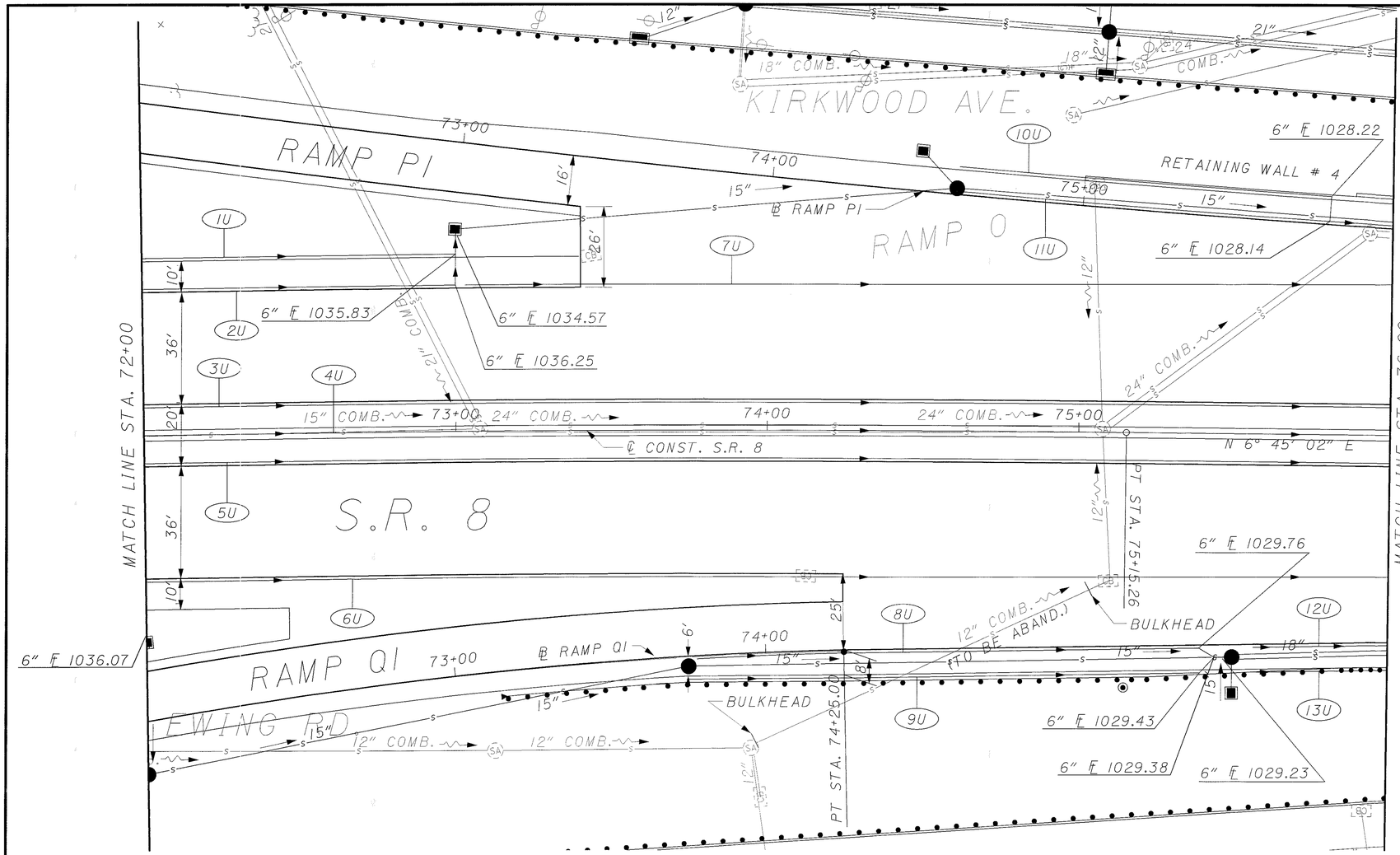

CURVE DATA

P.I. STA. = 67+45.23
Δ = 7° 46' 07" (RT)
Dc = 0° 30' 13"
R = 11,375.75'
T = 772.39'
L = 1,542.41'
E = 26.19'

CROSS REFERENCES

SHEET NO.	DESCRIPTION
145	CURB AND UNDERDRAIN SUBSUMMARY
481,482	CURB AND UNDERDRAIN PLAN - RAMP P1
483,484	CURB AND UNDERDRAIN PLAN - RAMP Q1

HORIZONTAL SCALE IN FEET
0 10 20 40

CALCULATED
CHECKED

CURB & UNDERDRAIN PLAN - S.R. 8
STA. 72+00 TO STA. 76+00

SUM-8-0.63

442
1088

i:\projects\9922100\civil\dwgs\ppl2.dgn

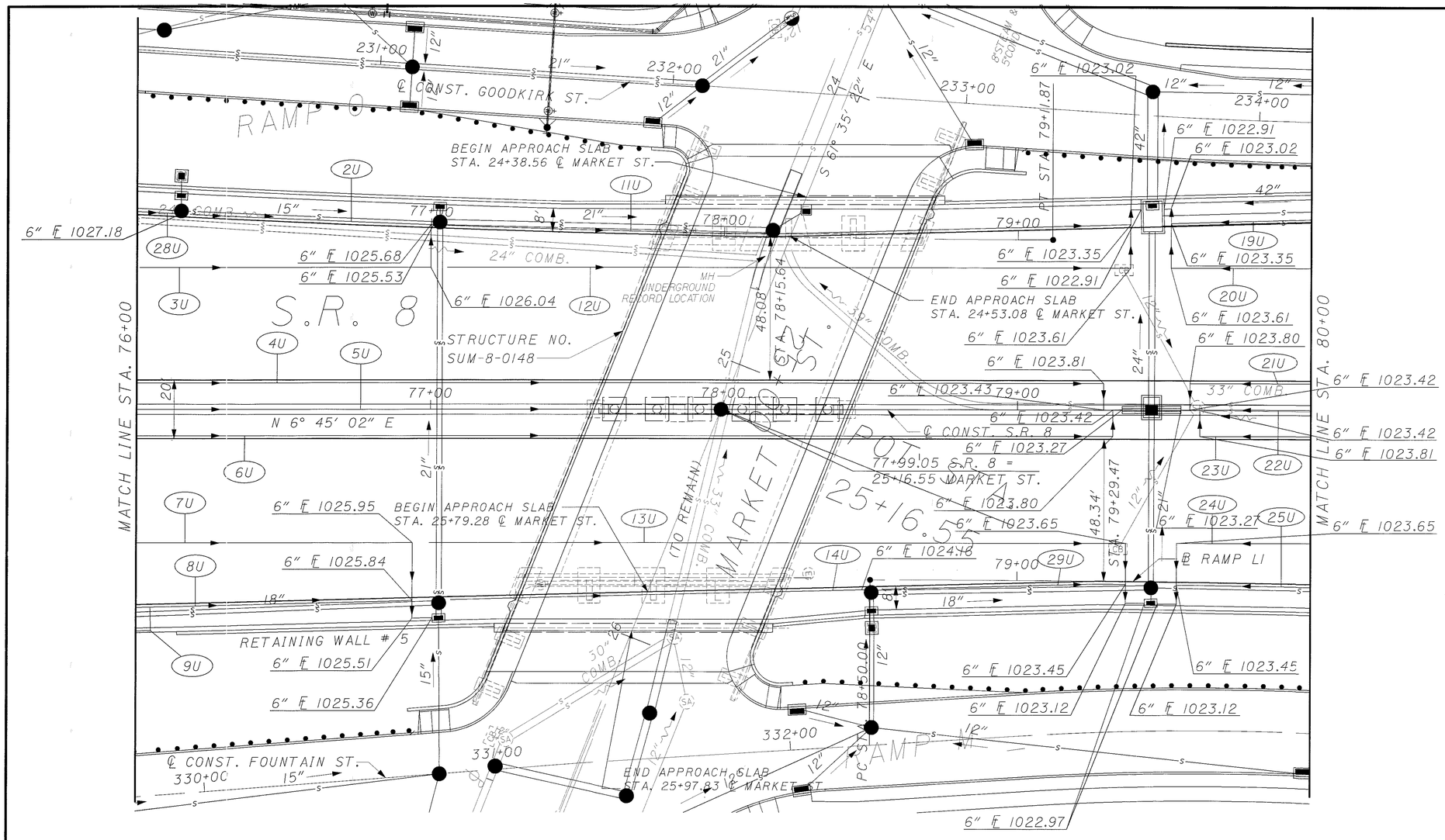

	CROSS REFERENCES
SHEET NO.	DESCRIPTION
145,146	CURB AND UNDERDRAIN SUBSUMMARY

HORIZONTAL SCALE IN FEET
0 10 20 40

CALCULATED

CHECKED

CURB & UNDERDRAIN PLAN - S.R. 8
STA. 76+00 TO STA. 80+00

SUM-8-0.63

443
1088

i:\projects\9922001\civil\dwgs\ppl3.dgn

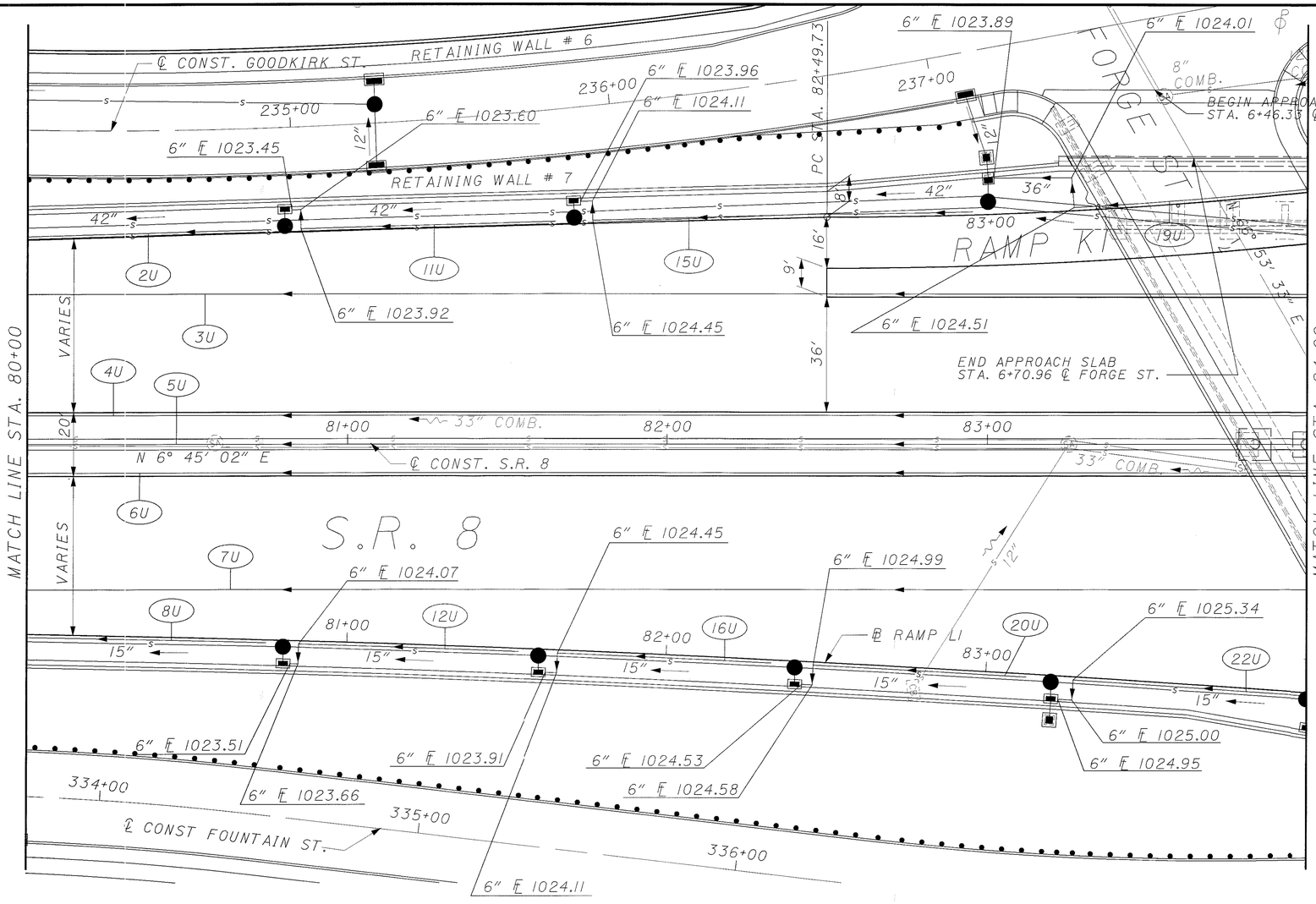

	CROSS REFERENCES
SHEET NO.	DESCRIPTION
146	CURB AND UNDERDRAIN SUBSUMMARY
485	CURB AND UNDERDRAIN PLAN - RAMP KI

HORIZONTAL SCALE IN FEET
0 10 20 40

CALCULATED

CHECKED

CURB & UNDERDRAIN PLAN - S.R. 8
STA. 80+00 TO STA. 84+00

SUM-8-0.63

444
1088

I:\projects\9922001\civil\dwgs\ppl4.dgn

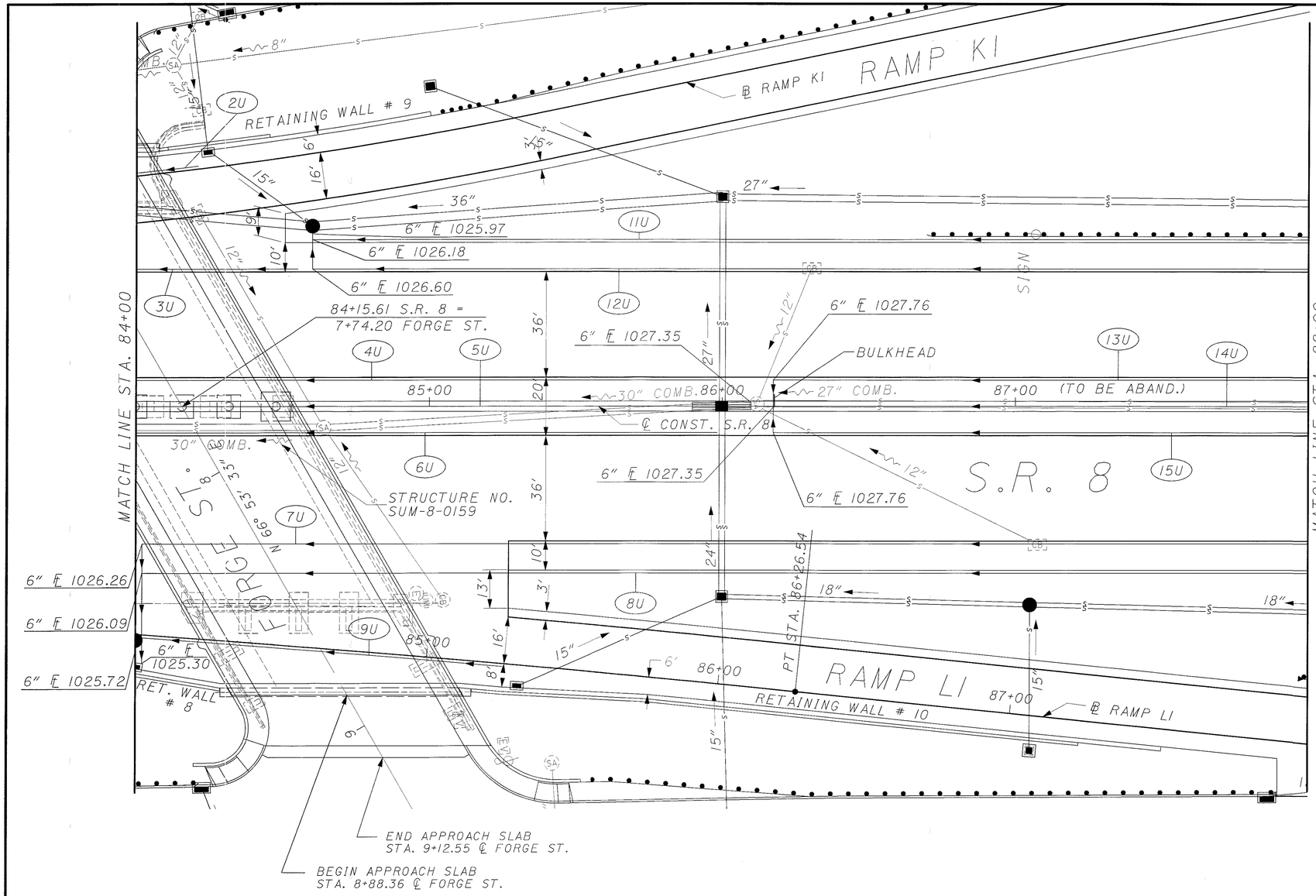

	CROSS REFERENCES
SHEET NO.	DESCRIPTION
146	CURB AND UNDERDRAIN SUBSUMMARY
485,486	CURB AND UNDERDRAIN PLAN - RAMP KI
487,488	CURB AND UNDERDRAIN PLAN - RAMP LI

HORIZONTAL SCALE IN FEET
0 10 20 40

CALCULATED | CHECKED

CURB & UNDERDRAIN PLAN - S.R. 8
STA. 84+00 TO STA. 88+00

SUM-8-0.63

445
1088

i:\projects\9922100\civil\dwgs\ppl5.dgn

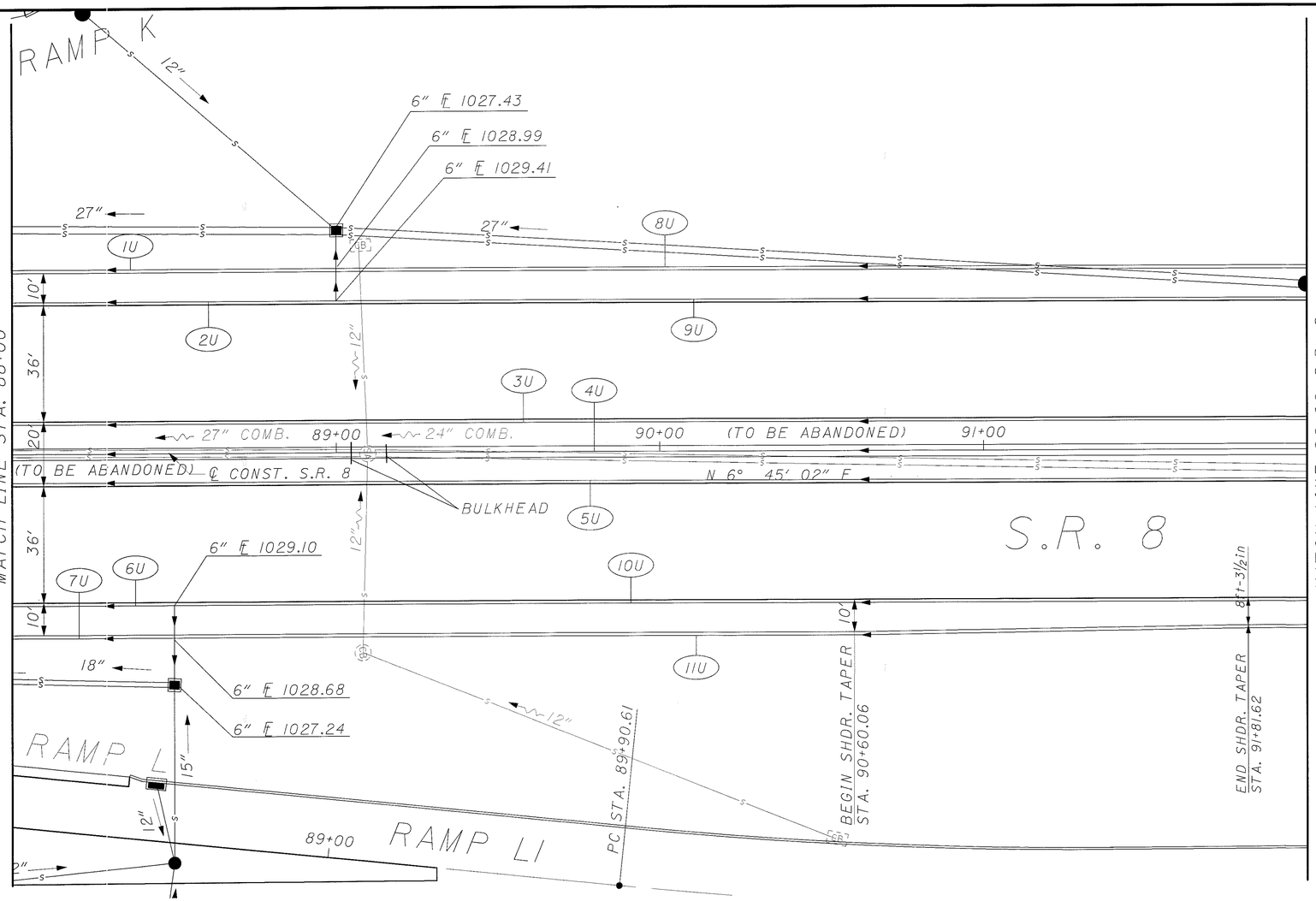

	CROSS REFERENCES
SHEET NO.	DESCRIPTION
147	CURB AND UNDERDRAIN SUBSUMMARY
488	CURB AND UNDERDRAIN PLAN - RAMP LI

N

HORIZONTAL SCALE IN FEET
0 10 20 40

CALCULATED

CHECKED

CURB & UNDERDRAIN PLAN - S.R. 8
STA. 88+00 TO STA. 92+00

SUM-8-0.63

446
1088

i:\projects\9922100\civil\dwgs\ppl6.dgn

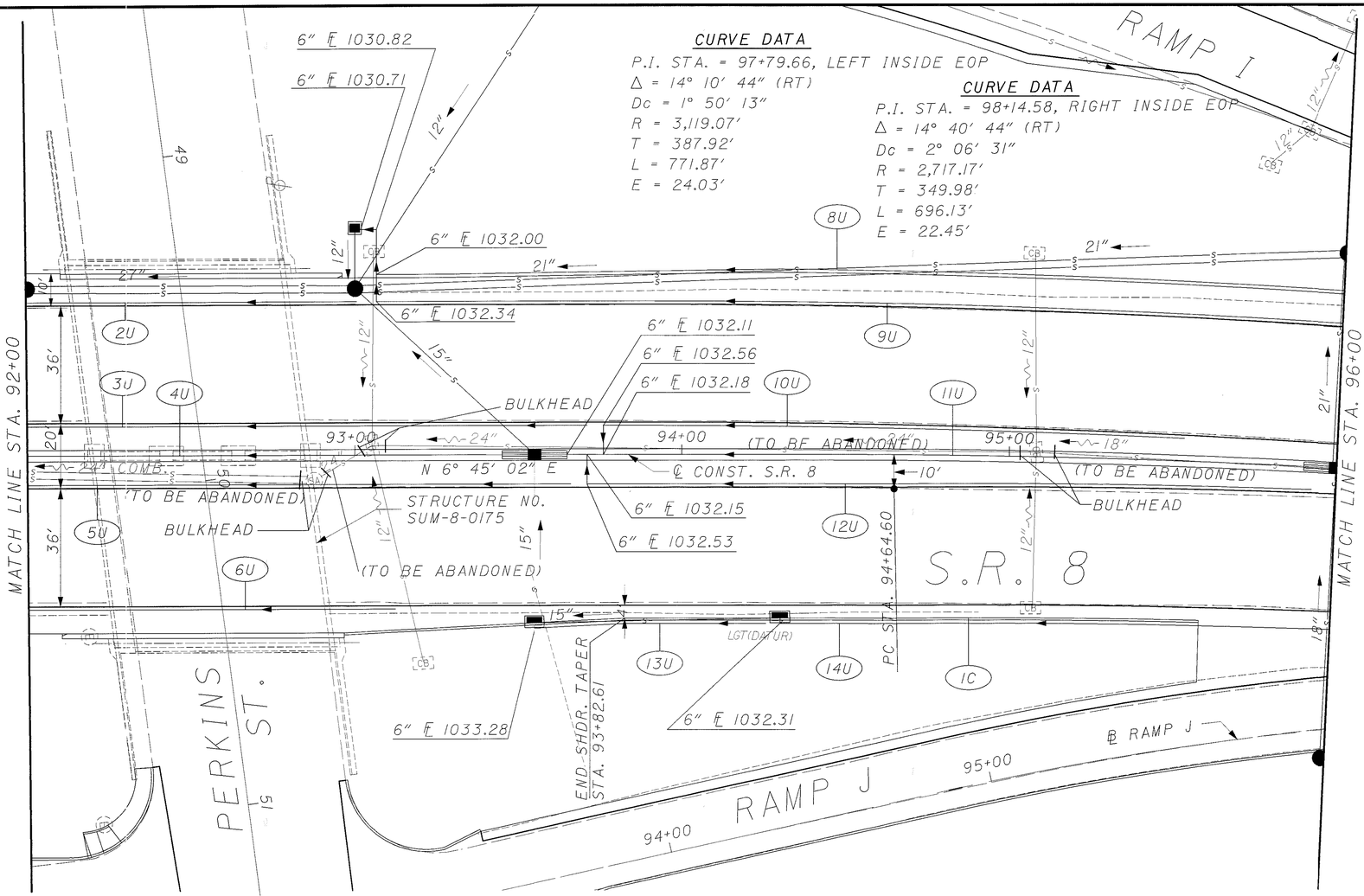

CURVE DATA
P.I. STA. = 98+02.91, ℄ CONST S.R. 8
Δ = 14° 10′ 44″ (RT)
Dc = 1° 57′ 48″
R = 2,918.12
T = 362.93′
L = 722.14′
E = 22.48′
e_{max} = 0.035 (NDC e_{max} = 0.045)
NO SPIRAL (NDC 325′ SPIRAL)

	CROSS REFERENCES
SHEET NO.	DESCRIPTION
147	CURB AND UNDERDRAIN SUBSUMMARY
490	CURB AND UNDERDRAIN PLAN - RAMP I
491	CURB AND UNDERDRAIN PLAN - RAMP J

HORIZONTAL SCALE IN FEET
0 10 20 40
CALCULATED
CHECKED

CURB & UNDERDRAIN PLAN - S.R. 8
STA. 92+00 TO STA. 96+00

SUM-8-0.63

447
1088

i:\projects\9922100\civil\dwgs\ppl7.dgn

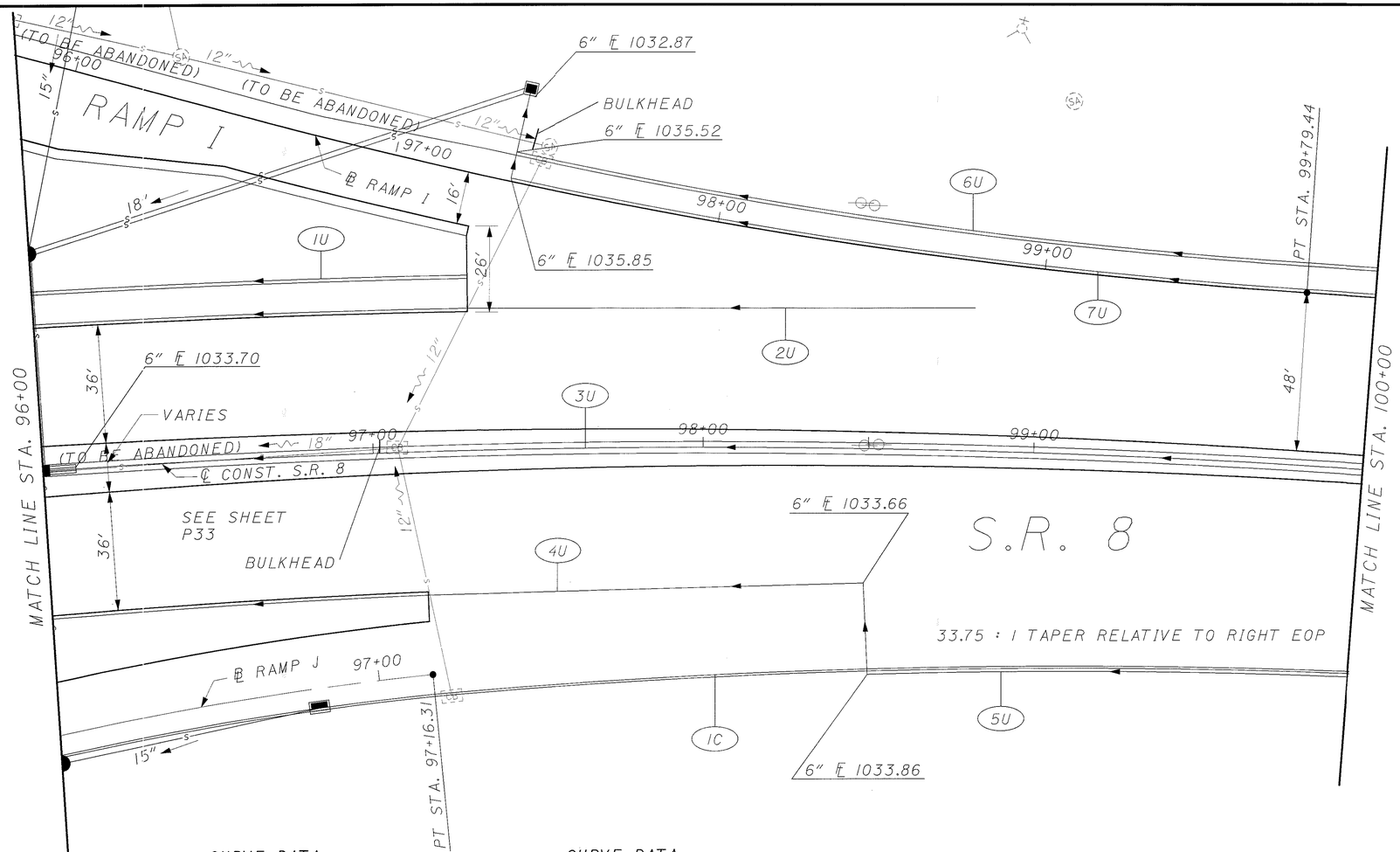

CURVE DATA

P.I. STA. = 97+79.66 (LEFT EOP)
Δ = 14° 10′ 44″ (RT)
Dc = 1° 50′ 13″
R = 3,119.07′
T = 387.92′
L = 771.87′
E = 24.03′

CURVE DATA

P.I. STA. = 98+02.91 (℄ S.R. 8)
Δ = 14° 10′ 44″ (RT)
Dc = 1° 57′ 48″
R = 2,918.12′
T = 362.93′
L = 722.14′
E = 22.48′
e_{max} = 0.035 (NDC e_{max} = 0.045)
NO SPIRAL (NDC 325′ SPIRAL)

CURVE DATA

P.I. STA. = 98+14.58 (RIGHT EOP)
Δ = 14° 40′ 44″ (RT)
Dc = 2° 06′ 31″
R = 2,717.17′
T = 349.98′
L = 696.13′
E = 22.45′

CROSS REFERENCES

SHEET NO.	DESCRIPTION
147	CURB AND UNDERDRAIN SUBSUMMARY
490	CURB AND UNDERDRAIN PLAN - RAMP I
492	CURB AND UNDERDRAIN PLAN - RAMP J

HORIZONTAL SCALE IN FEET
0 10 20 40
CALCULATED
CHECKED

CURB & UNDERDRAIN PLAN - S.R. 8
STA. 96+00 TO STA. 100+00

SUM-8-0.63

448
1088

H:\projects\9922100\civil\dwgs\pp18.dgn

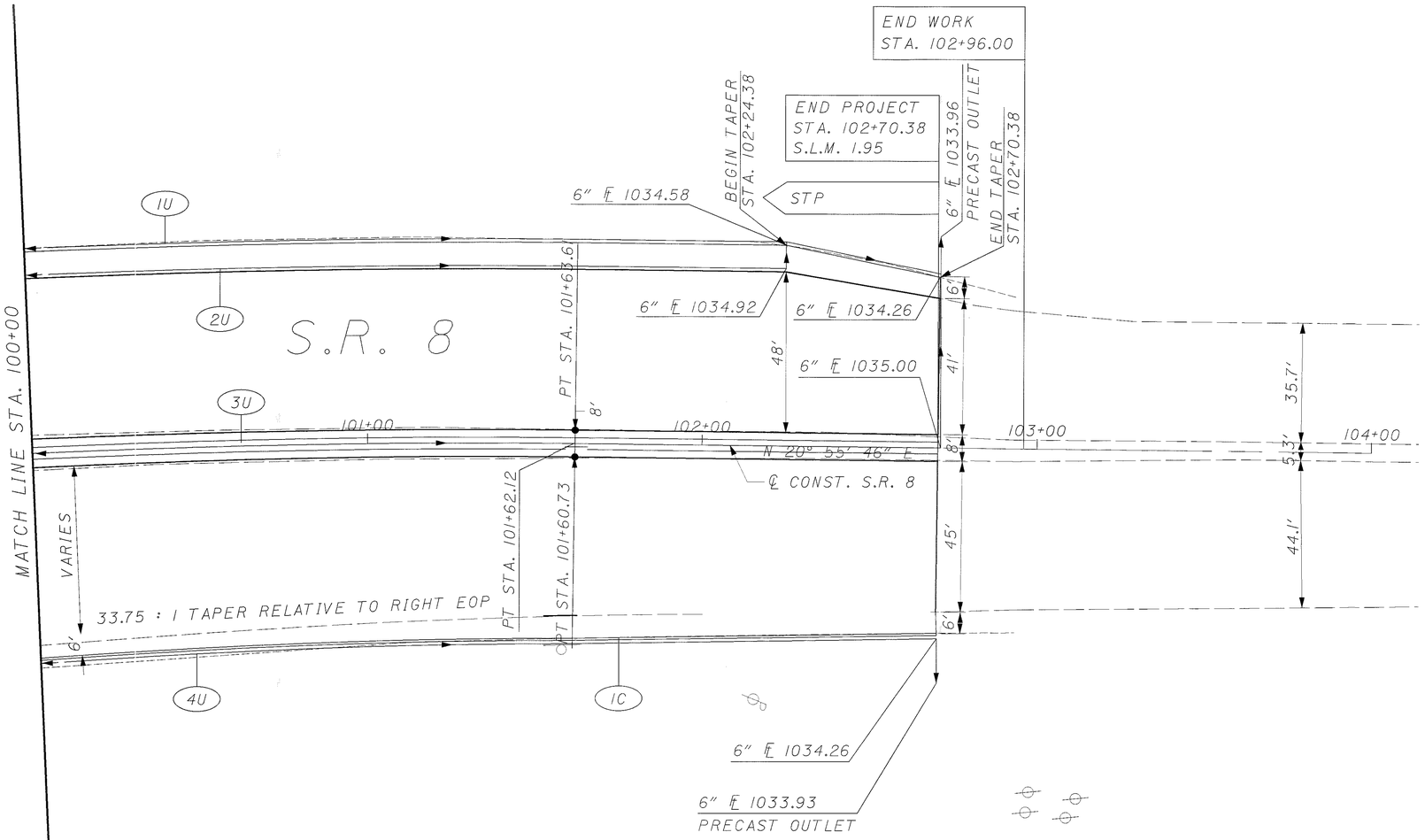

CURVE DATA

P.I. STA. = 98+14.58 (RIGHT EOP)
Δ = 14° 40′ 44″ (RT)
Dc = 2° 06′ 31″
R = 2,717.17′
T = 349.98′
L = 696.13′
E = 22.45′

CURVE DATA

P.I. STA. = 97+79.66 (LEFT EOP)
Δ = 14° 10′ 44″ (RT)
Dc = 1° 50′ 13″
R = 3,119.07′
T = 387.92′
L = 771.87′
E = 24.03′

CURVE DATA

P.I. STA. = 98+02.91 (℄ S.R. 8)
Δ = 14° 10′ 44″ (RT)
Dc = 1° 57′ 48″
R = 2,918.12′
T = 362.93′
L = 722.14′
E = 22.48′
e_{max} = 0.035 (NDC e_{max} = 0.045)
NO SPIRAL (NDC 325′ SPIRAL)

	CROSS REFERENCES
SHEET NO.	DESCRIPTION
147	CURB AND UNDERDRAIN SUBSUMMARY

N

0 10 20 40
HORIZONTAL SCALE IN FEET

CALCULATED | CHECKED

CURB & UNDERDRAIN PLAN - S.R. 8
STA. 100+00 TO STA. 104+00

SUM-8-0.63

449
1088

I:\projects\9922100\civil\dwgs\ppl9.dgn

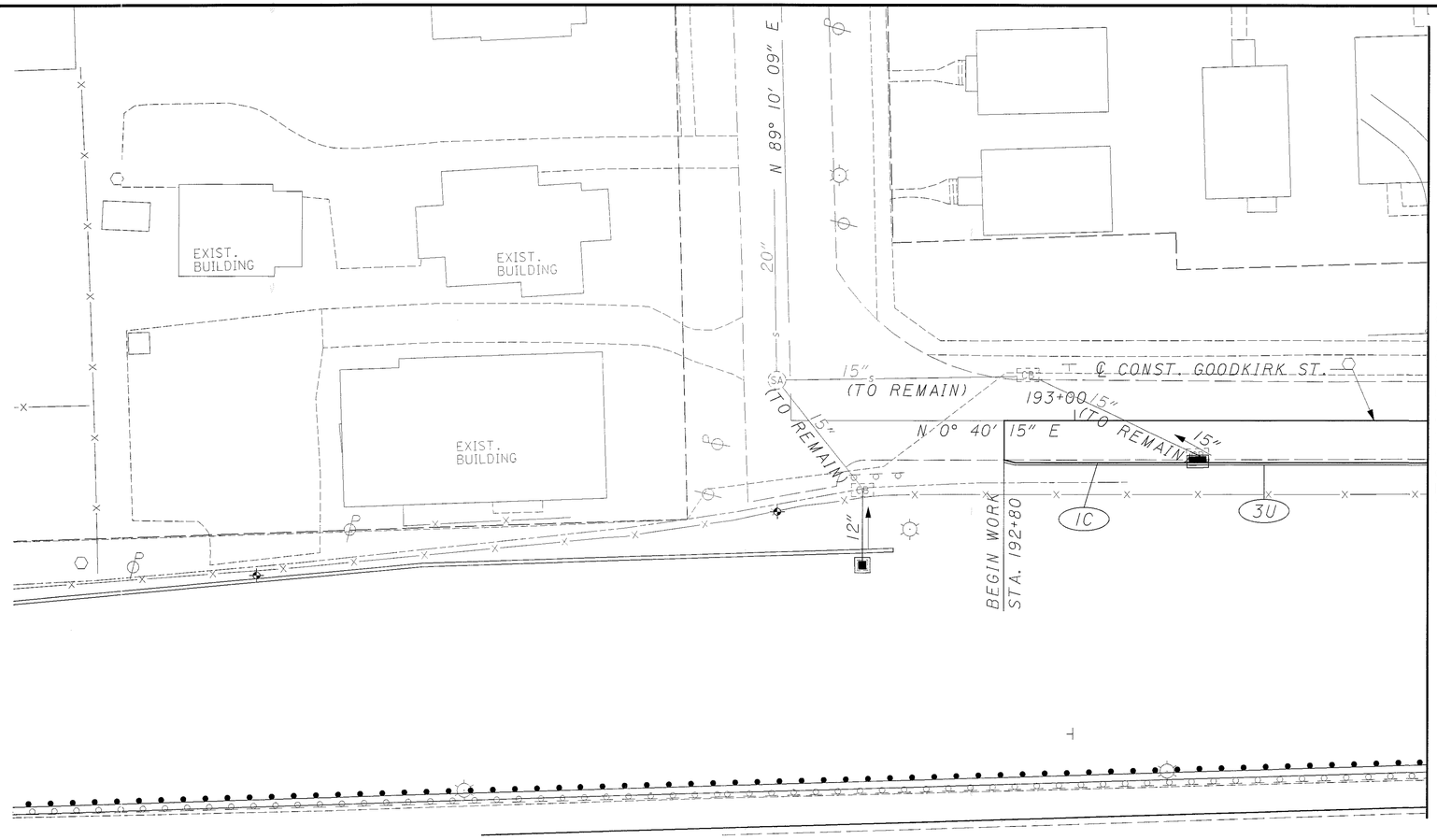

	CROSS REFERENCES
SHEET NO.	DESCRIPTION
147	CURB AND UNDERDRAIN SUBSUMMARY

N

0 10 20 40
HORIZONTAL SCALE IN FEET

CALCULATED | CHECKED

CURB & UNDERDRAIN PLAN - GOODKIRK ST.
STA. 190+00 TO STA. 194+00

SUM-8-0.63

450
1088

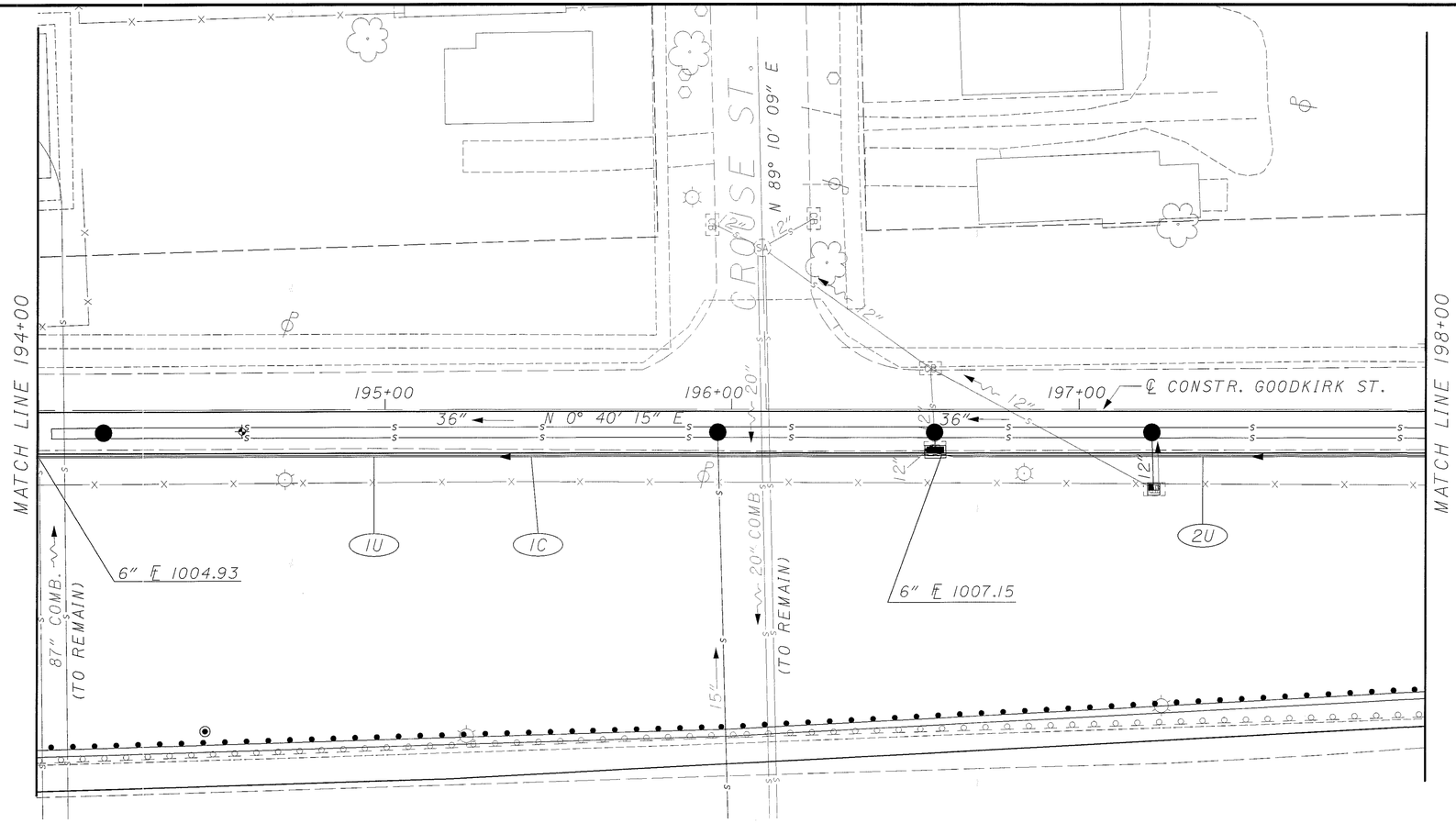

	CROSS REFERENCES
SHEET NO.	DESCRIPTION
147	CURB AND UNDERDRAIN SUBSUMMARY

N

0 10 20 40
HORIZONTAL SCALE IN FEET

CALCULATED | CHECKED

CURB & UNDERDRAIN PLAN - GOODKIRK ST.
STA. 194+00 TO STA. 198+00

SUM-8-0.63

451
1088

	CROSS REFERENCES
SHEET NO.	DESCRIPTION
147-148	CURB AND UNDERDRAIN SUBSUMMARY
503-504	PAVEMENT DETAILS

N

0 10 20 40
HORIZONTAL SCALE IN FEET

CALCULATED

CHECKED

CURB & UNDERDRAIN PLAN - GOODKIRK ST.
STA. 198+00 TO STA. 202+00

SUM-8-0.63

452
1088

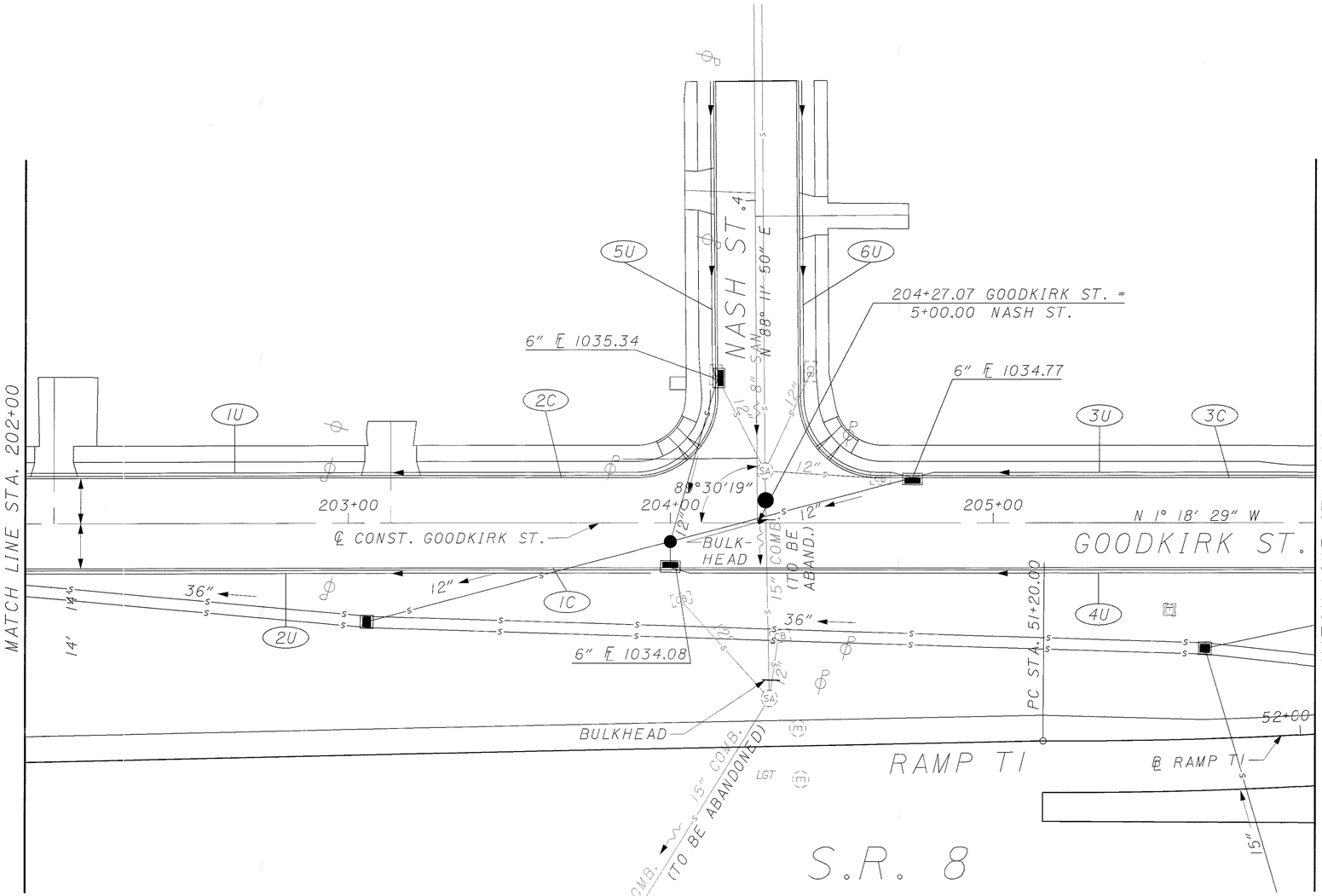

	CROSS REFERENCES
SHEET NO.	DESCRIPTION
148	CURB AND UNDERDRAIN SUBSUMMARY
505-506	PAVEMENT DETAILS

N

0 10 20 40
HORIZONTAL SCALE IN FEET

CALCULATED | CHECKED

CURB & UNDERDRAIN PLAN - GOODKIRK ST.
STA. 202+00 TO STA. 206+00

SUM-8-0.63

453
1088

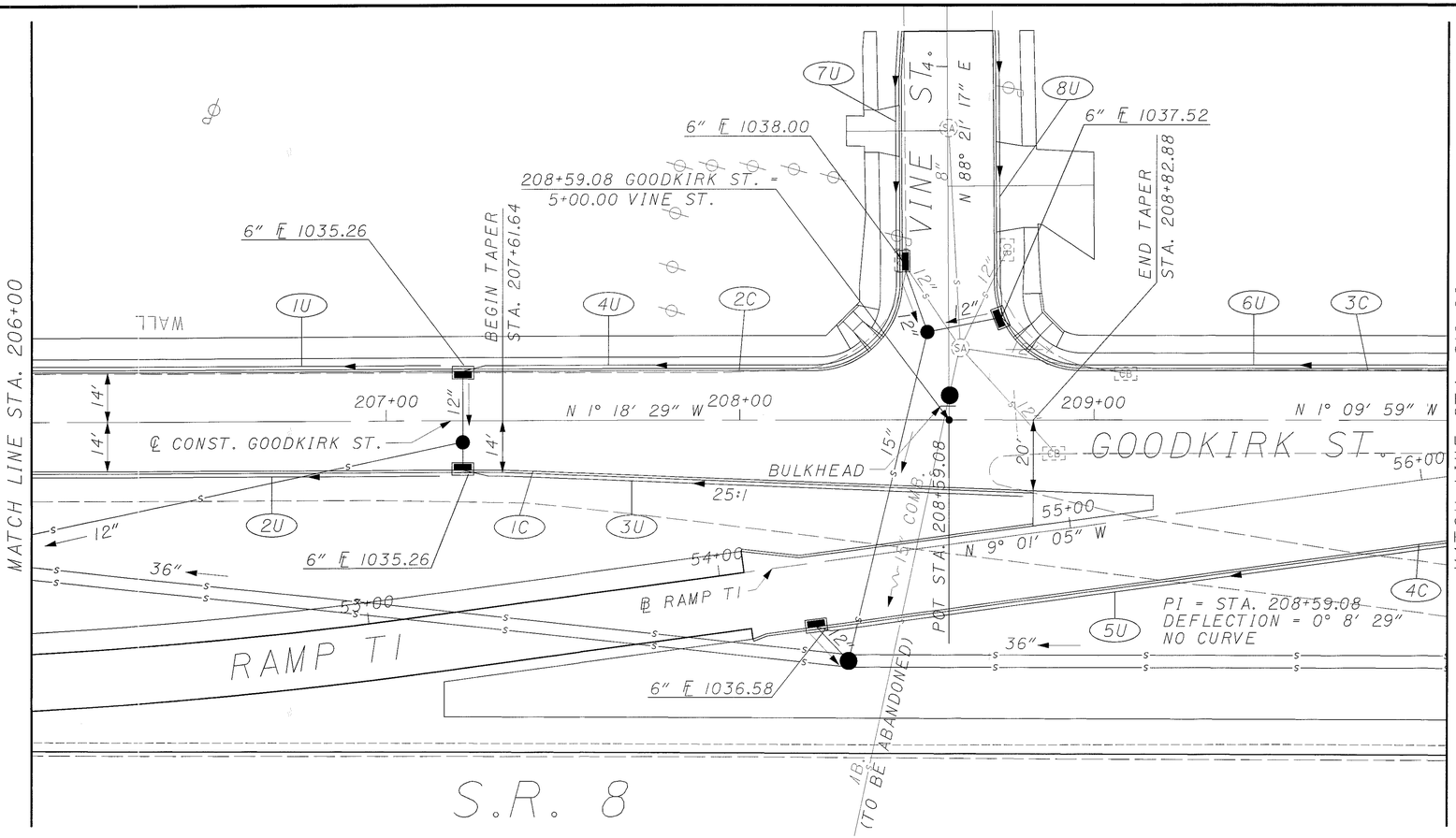

	CROSS REFERENCES
SHEET NO.	DESCRIPTION
148	CURB AND UNDERDRAIN SUBSUMMARY
478	CURB AND UNDERDRAIN PLAN - RAMP TI
507-508	PAVEMENT DETAILS

HORIZONTAL SCALE IN FEET

CALCULATED

CHECKED

CURB & UNDERDRAIN PLAN - GOODKIRK ST.
STA. 206+00 TO STA. 210+00

SUM-8-0.63

454
1088

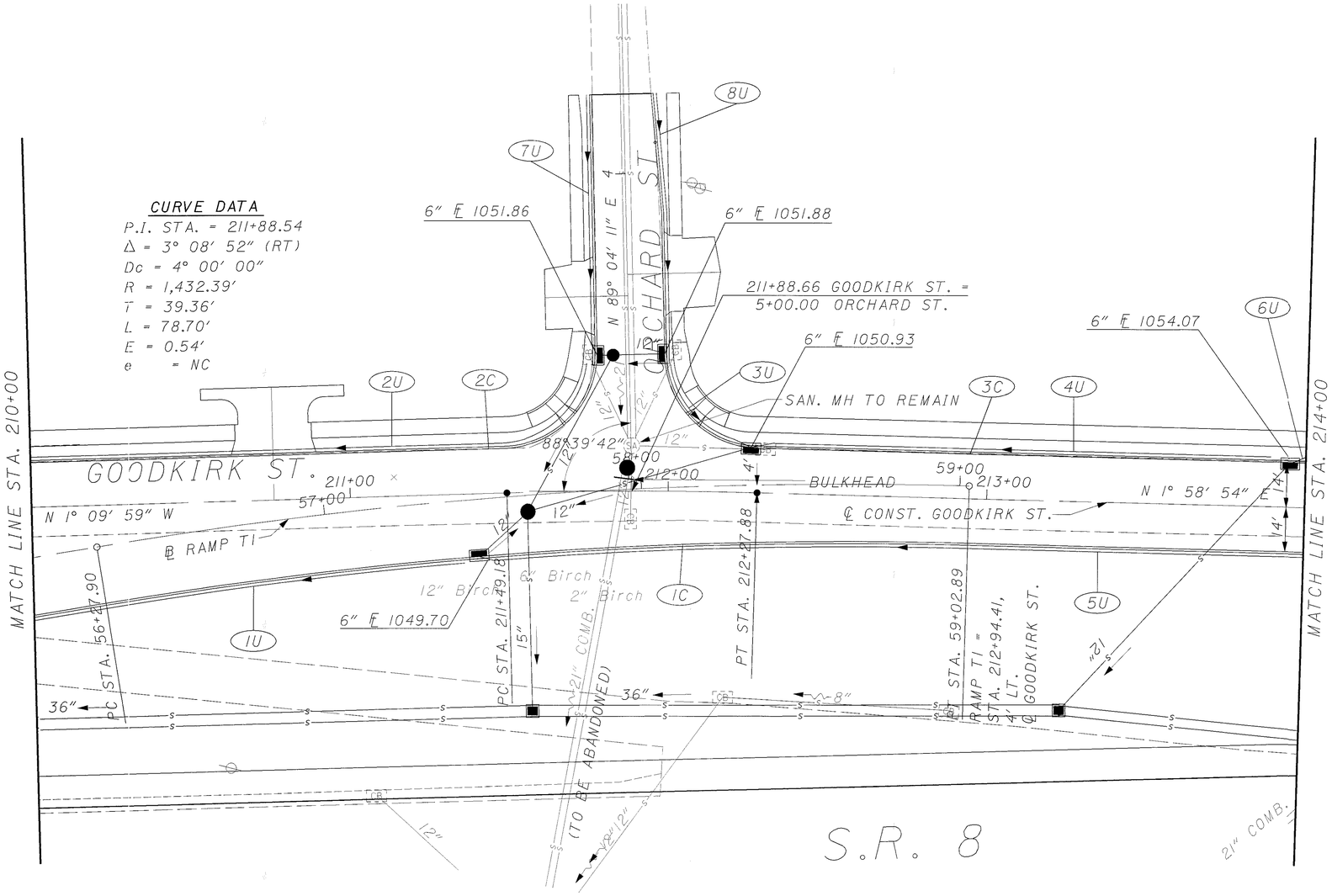

	CROSS REFERENCES
SHEET NO.	DESCRIPTION
148	CURB AND UNDERDRAIN SUBSUMMARY
509-510	PAVEMENT DETAILS

N

HORIZONTAL SCALE IN FEET
0 10 20 40

CALCULATED | CHECKED

CURB & UNDERDRAIN PLAN - GOODKIRK ST. STA. 210+00 TO STA. 214+00

SUM-8-0.63

455
1088

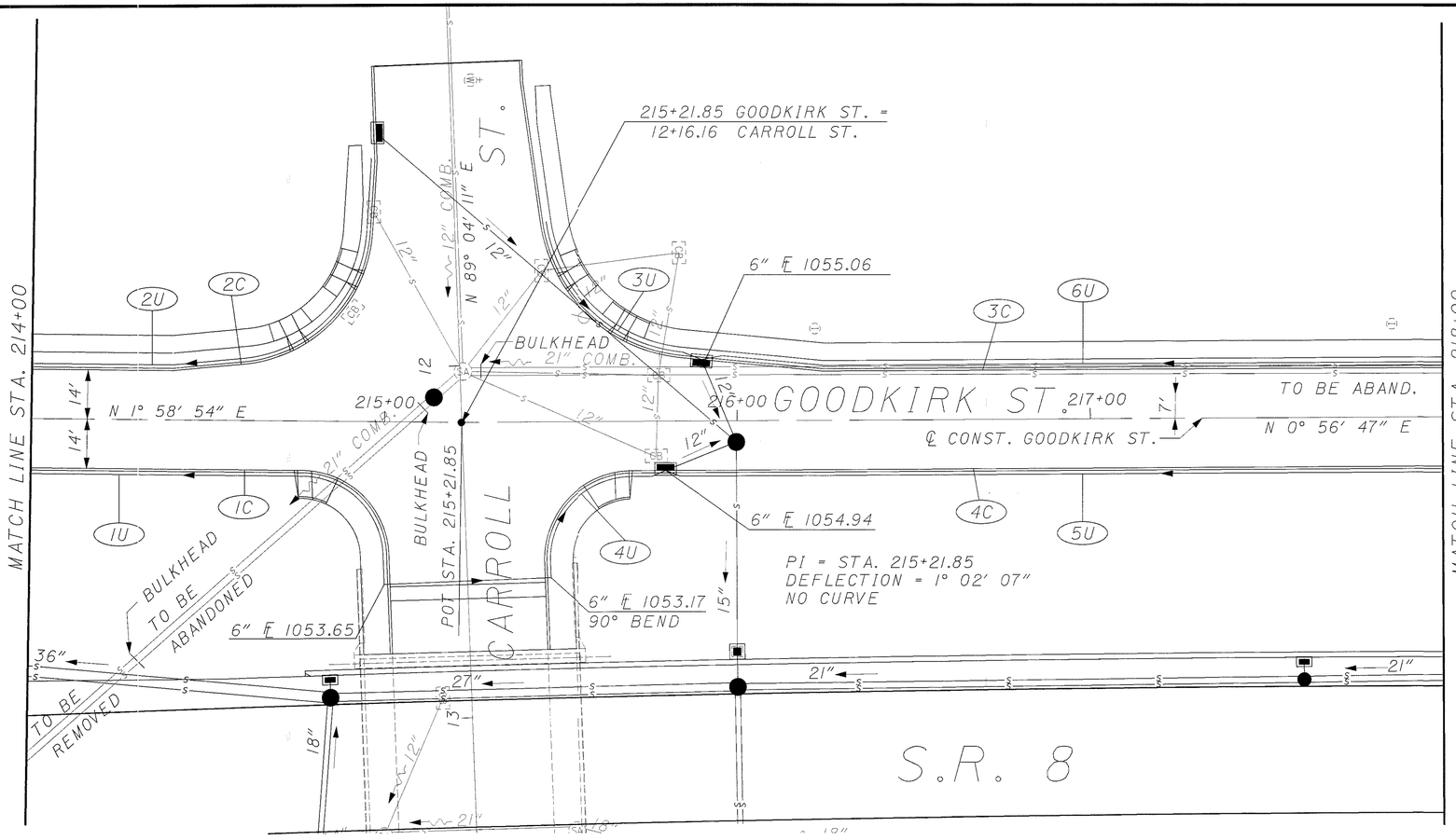

	CROSS REFERENCES
SHEET NO.	DESCRIPTION
148	CURB AND UNDERDRAIN SUBSUMMARY
509-512	PAVEMENT DETAILS

N

HORIZONTAL SCALE IN FEET
0 10 20 40

CALCULATED | CHECKED

CURB & UNDERDRAIN PLAN - GOODKIRK ST.
STA. 214+00 TO STA. 218+00

SUM-8-0.63

456
1088

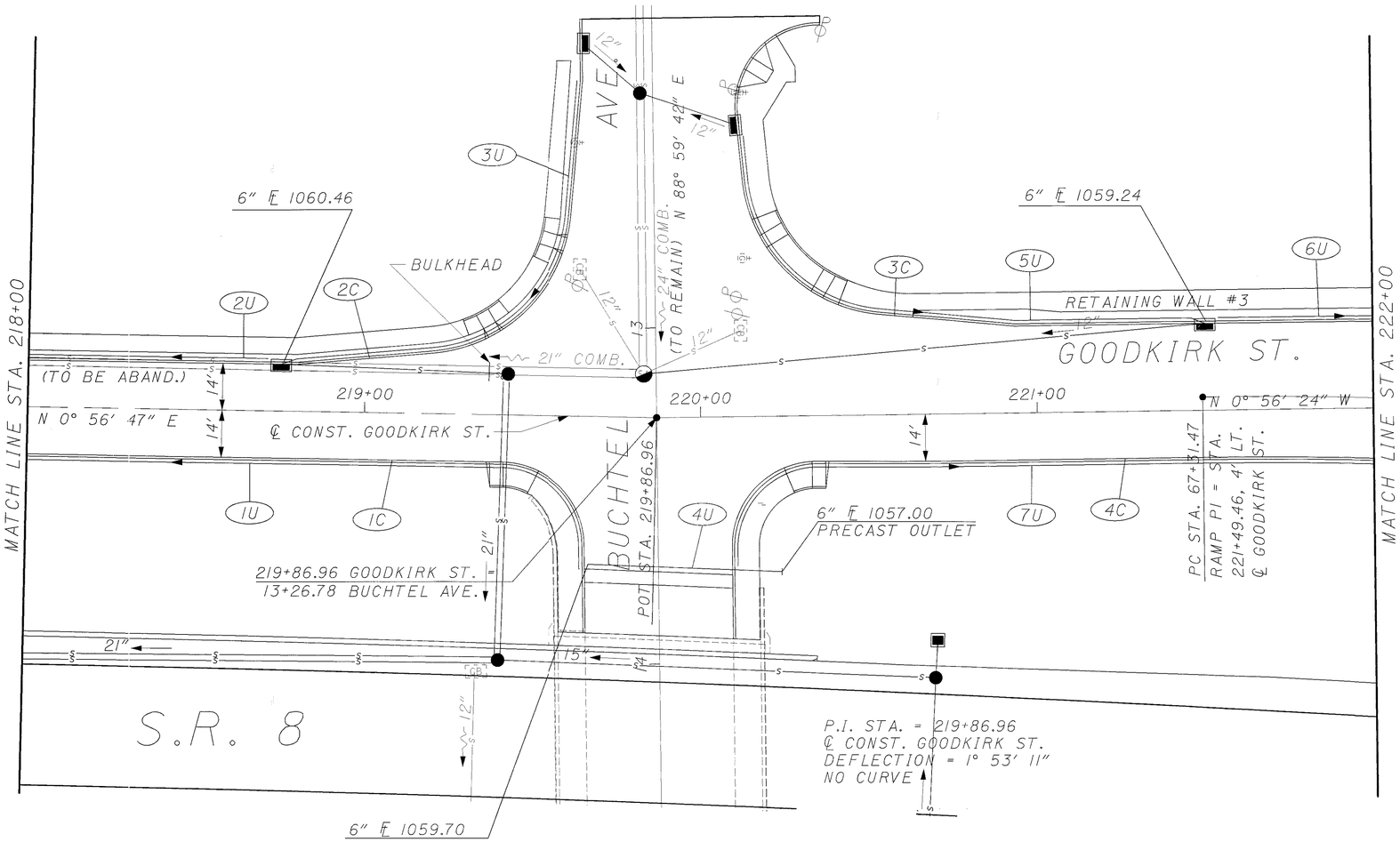

	CROSS REFERENCES
SHEET NO.	DESCRIPTION
148,149	CURB AND UNDERDRAIN SUBSUMMARY
511-512	PAVEMENT DETAILS

Sheet: 6
Angle: 90.0585
Chain: GK_S

HORIZONTAL SCALE IN FEET
0 10 20 40

CALCULATED | CHECKED

CURB & UNDERDRAIN PLAN - GOODKIRK ST.
STA. 218+00 TO STA. 222+00

SUM-8-0.63

457
1088

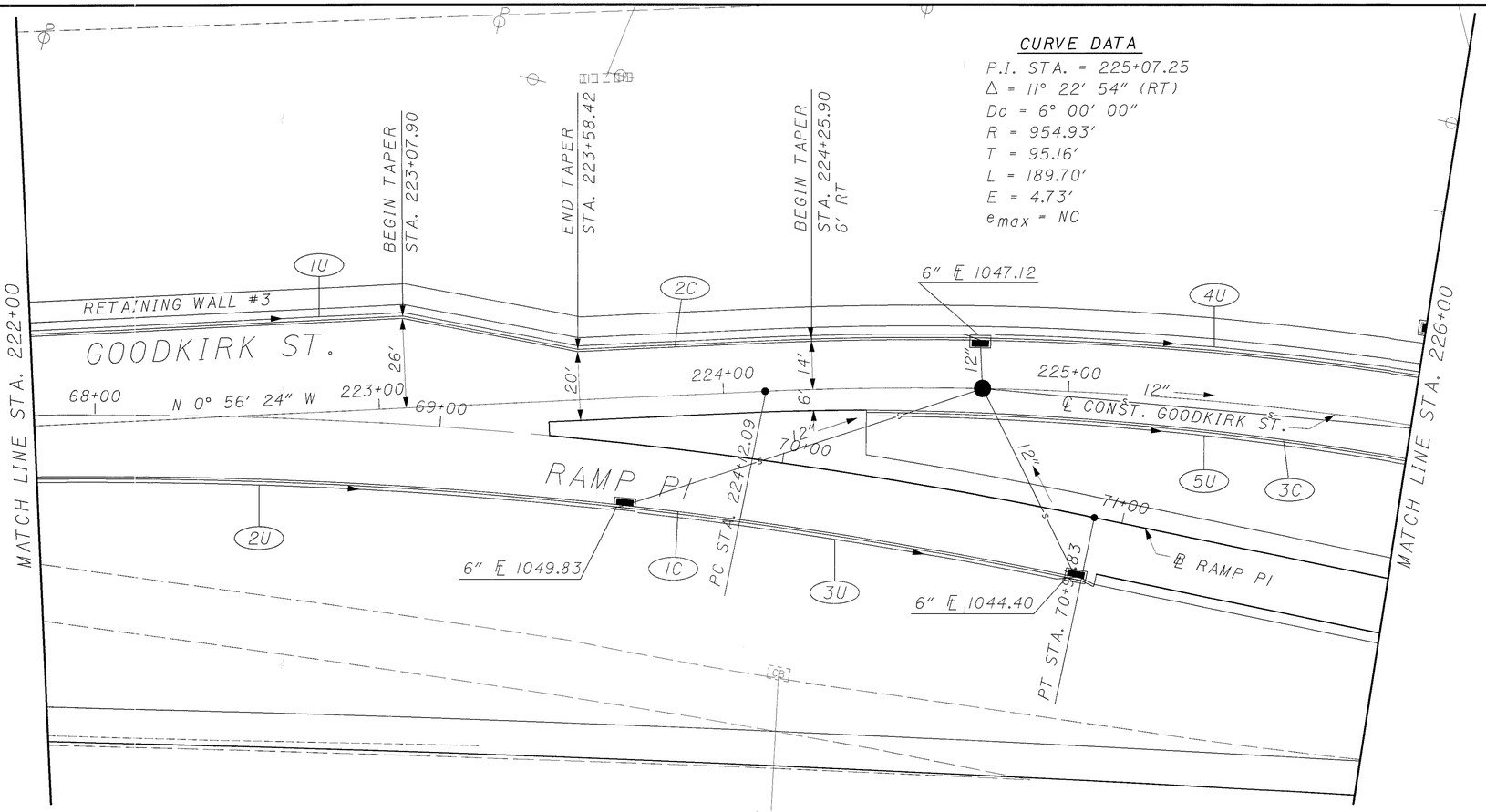

	CROSS REFERENCES
SHEET NO.	DESCRIPTION
149	CURB AND UNDERDRAIN SUBSUMMARY
481	CURB AND UNDERDRAIN PLAN - RAMP P1
513-514	PAVEMENT DETAILS

N

HORIZONTAL SCALE IN FEET
0 10 20 40

CALCULATED

CHECKED

CURB & UNDERDRAIN PLAN - GOODKIRK ST.
STA. 222+00 TO STA. 226+00

SUM-8-0.63

458
1088

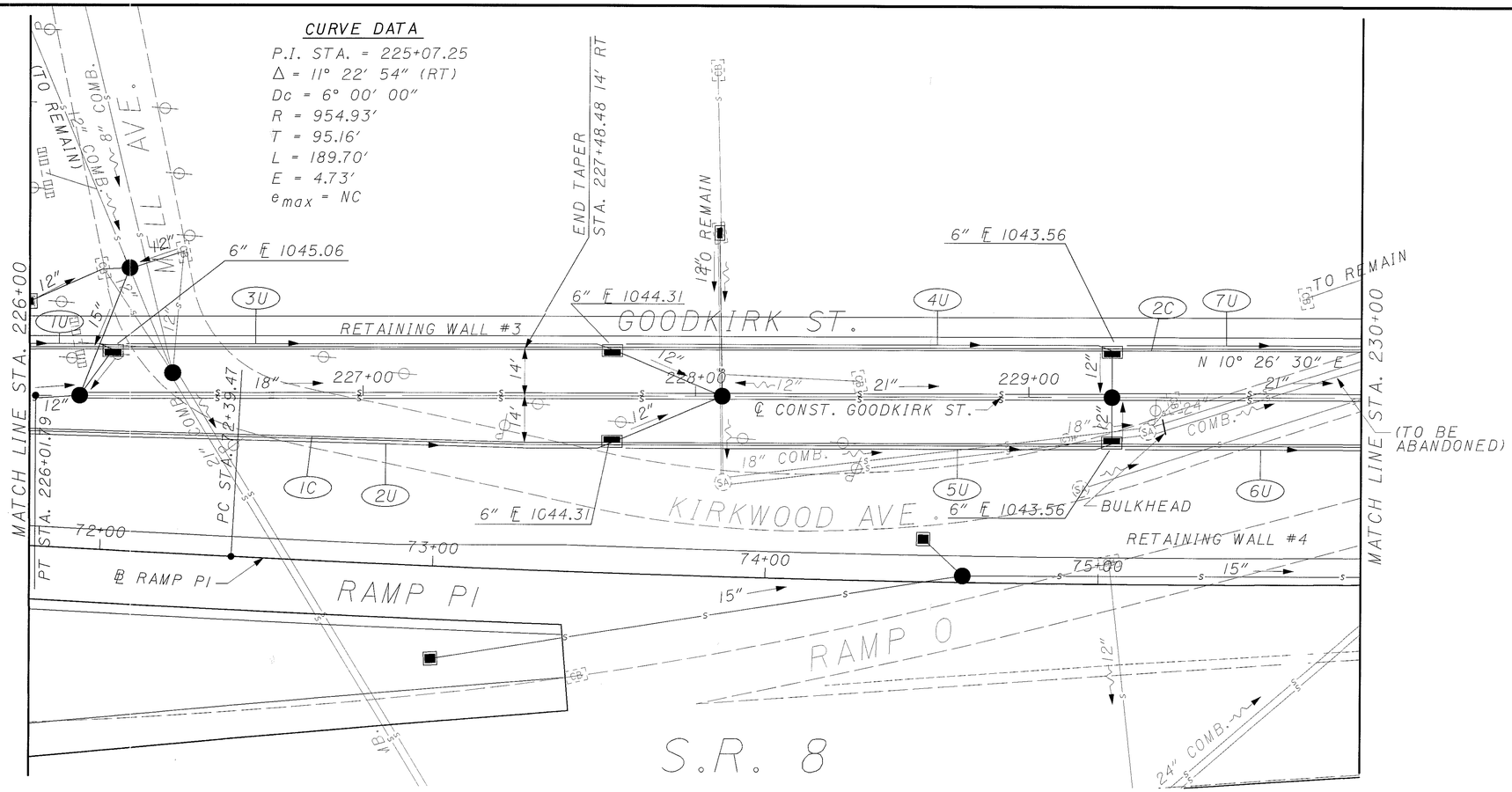

	CROSS REFERENCES
SHEET NO.	DESCRIPTION
149	CURB AND UNDERDRAIN SUBSUMMARY
481,482	CURB AND UNDERDRAIN PLAN RAMP - P1
515-516	PAVEMENT DETAILS

N

0 10 20 40
HORIZONTAL SCALE IN FEET

CALCULATED | CHECKED

CURB & UNDERDRAIN PLAN - GOODKIRK ST.
STA. 226+00 TO STA. 230+00

SUM-8-0.63

459
1088

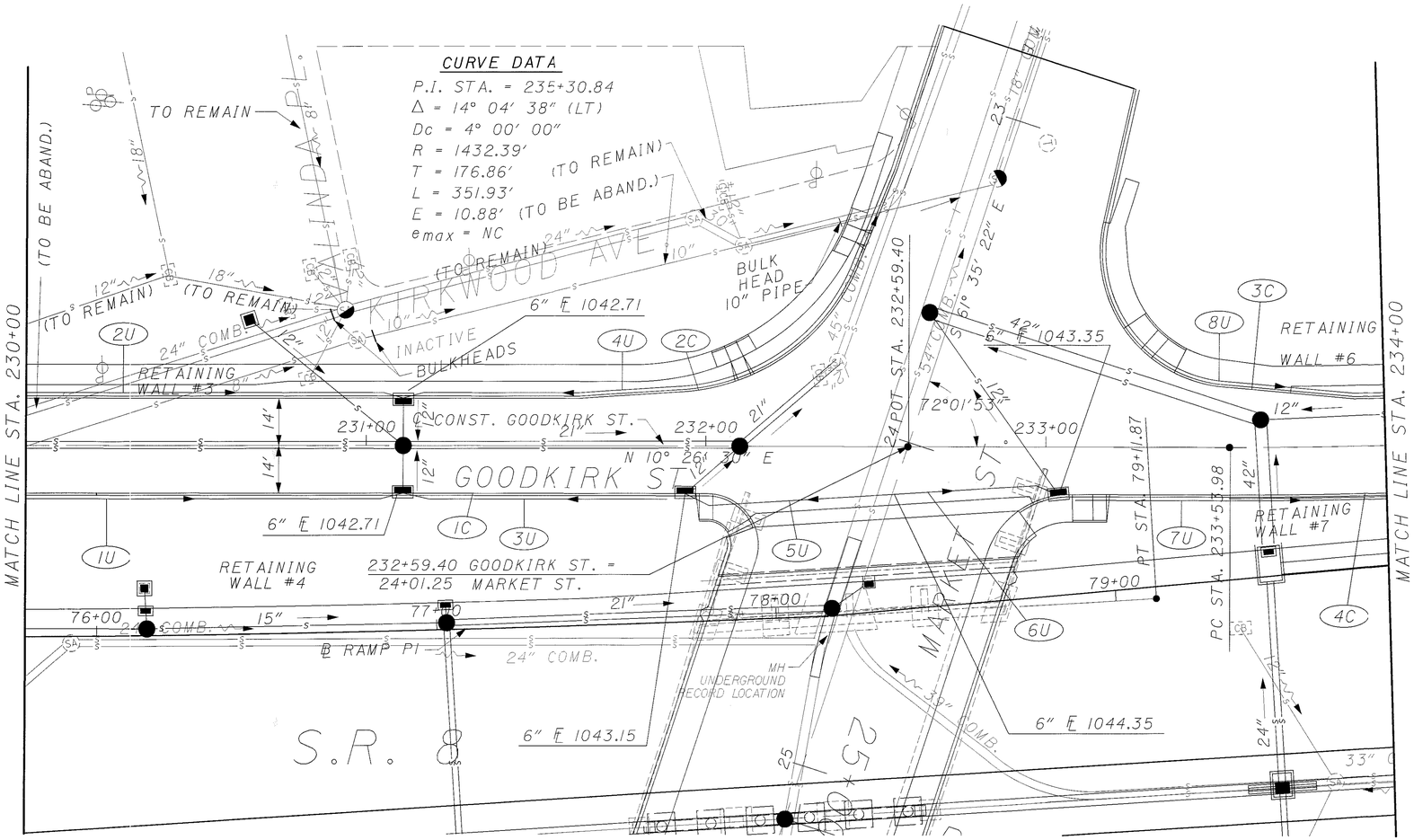

	CROSS REFERENCES
SHEET NO.	DESCRIPTION
149	CURB AND UNDERDRAIN SUBSUMMARY
517-518	PAVEMENT DETAILS

HORIZONTAL SCALE IN FEET
0 10 20 40

CALCULATED
CHECKED

CURB & UNDERDRAIN PLAN - GOODKIRK ST.
STA. 230+00 TO STA. 234+00

SUM-8-0.63

460
1088

	CROSS REFERENCES
SHEET NO.	DESCRIPTION
149	CURB AND UNDERDRAIN SUBSUMMARY
485	CURB AND UNDERDRAIN PLAN - RAMP KI
519-520	PAVEMENT DETAILS

HORIZONTAL SCALE IN FEET
0 10 20 40

CALCULATED
CHECKED

CURB & UNDERDRAIN PLAN - GOODKIRK ST.
STA. 234+00 TO STA. 238+00

SUM-8-0.63

461
1088

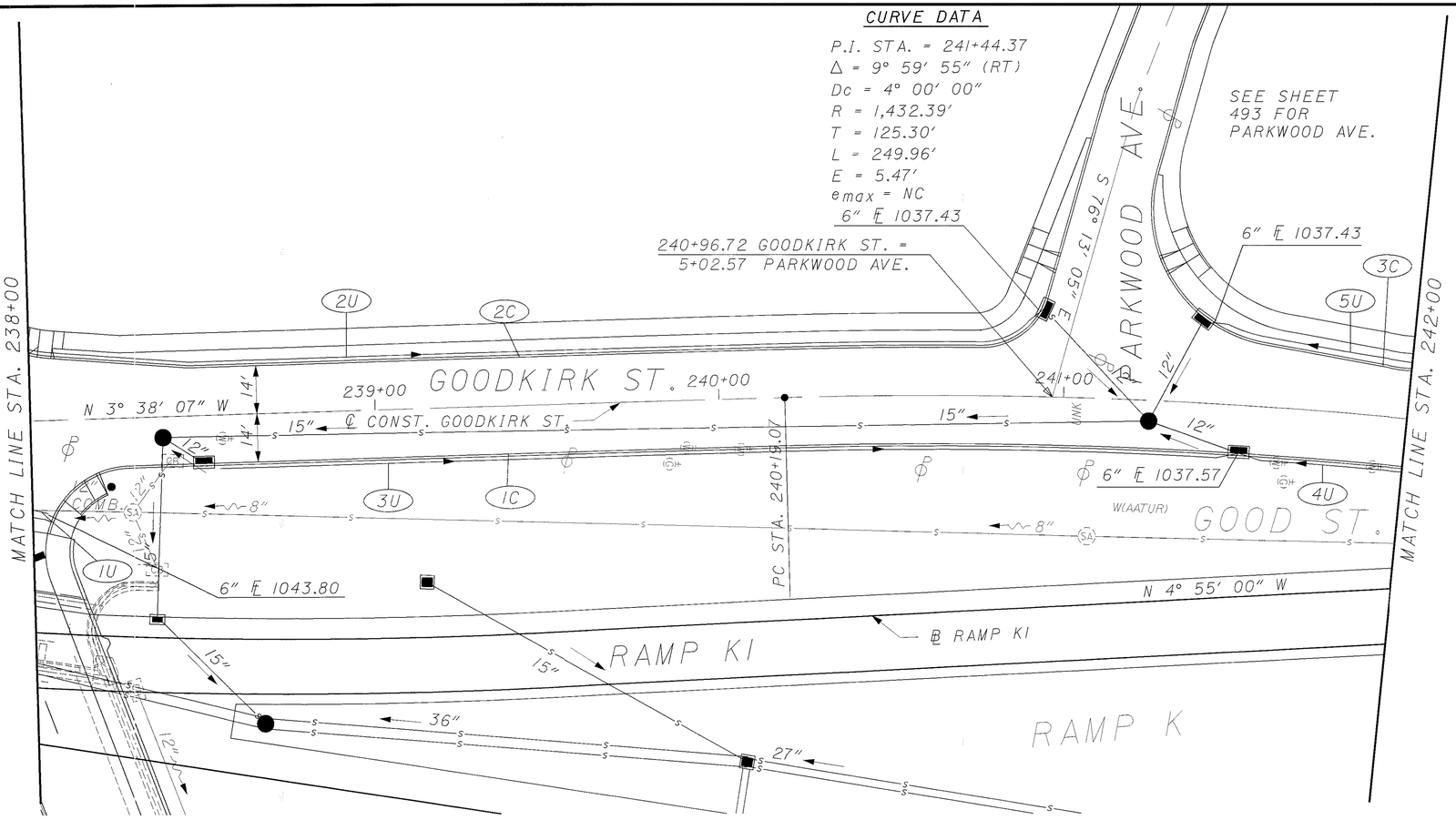

CROSS REFERENCES	
SHEET NO.	DESCRIPTION
150	CURB AND UNDERDRAIN SUBSUMMARY
485,486	CURB AND UNDERDRAIN PLAN - RAMP KI
519-522	PAVEMENT DETAILS

N

0 10 20 40
HORIZONTAL SCALE IN FEET

CALCULATED | CHECKED

CURB & UNDERDRAIN PLAN - GOODKIRK ST.
STA. 238+00 TO STA. 242+00

SUM-8-0.63

462
1088

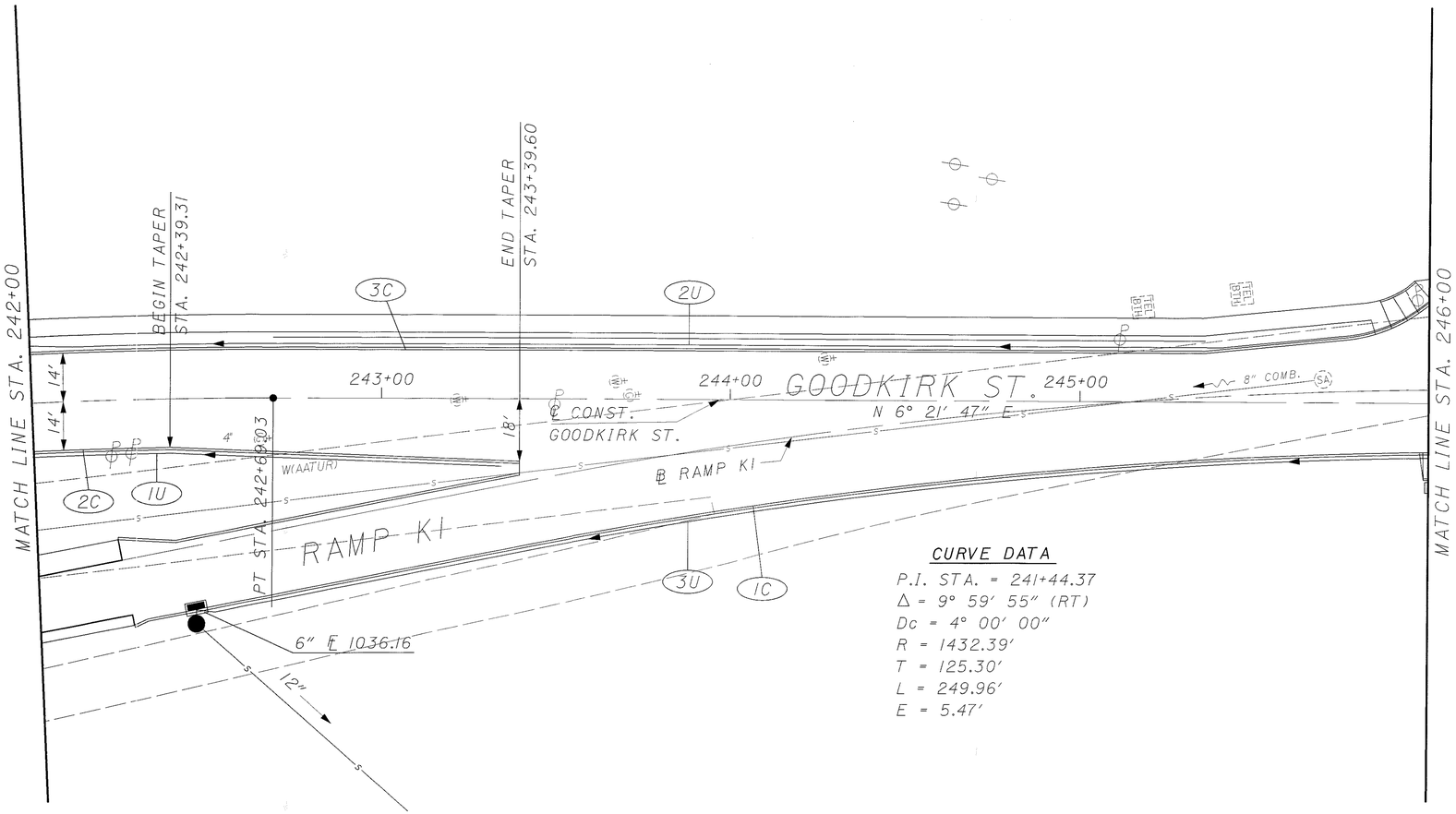

CURVE DATA

P.I. STA. = 241+44.37
Δ = 9° 59' 55" (RT)
Dc = 4° 00' 00"
R = 1432.39'
T = 125.30'
L = 249.96'
E = 5.47'

	CROSS REFERENCES
SHEET NO.	DESCRIPTION
150	CURB AND UNDERDRAIN SUBSUMMARY
486	CURB AND UNDERDRAIN PLAN - RAMP K1
521-524	PAVEMENT DETAILS

N

0 10 20 40
HORIZONTAL SCALE IN FEET

CALCULATED | CHECKED

CURB & UNDERDRAIN PLAN - GOODKIRK ST.
STA. 242+00 TO STA. 246+00

SUM-8-0.63

463
1088

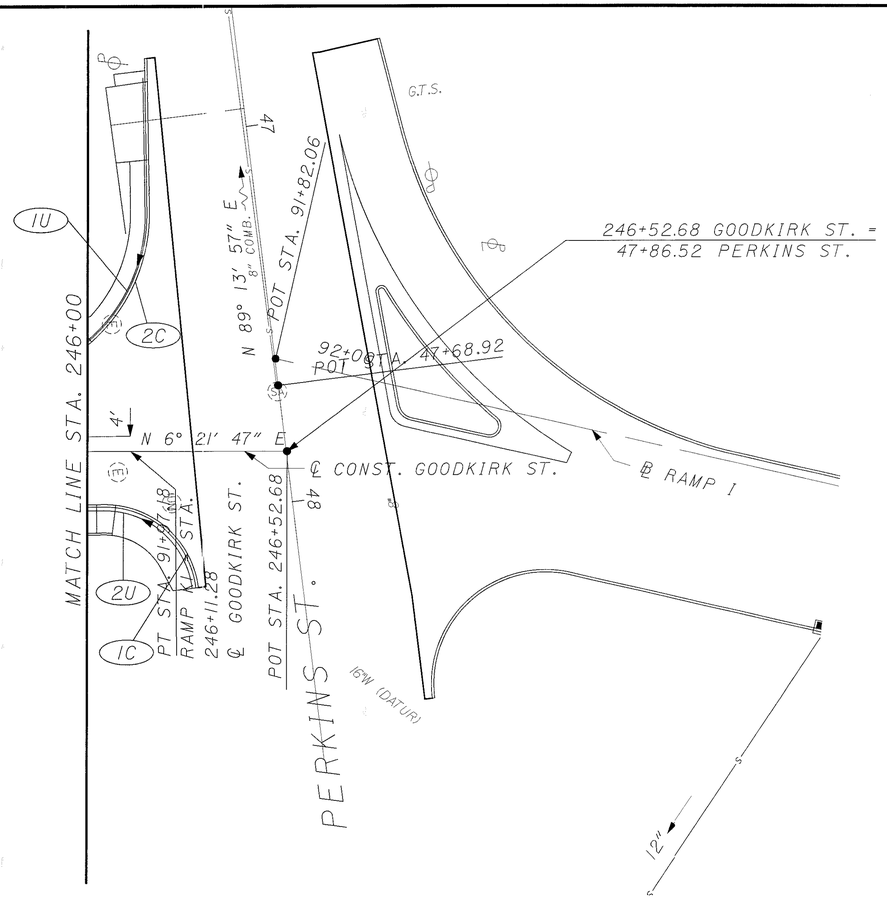

	CROSS REFERENCES
SHEET NO.	DESCRIPTION
150	CURB AND UNDERDRAIN SUBSUMMARY
489	CURB AND UNDERDRAIN PLAN - RAMP I
523-524	PAVEMENT DETAILS

N

0 10 20 40 HORIZONTAL SCALE IN FEET

CALCULATED | CHECKED

CURB & UNDERDRAIN PLAN - GOODKIRK ST.
STA. 246+00 TO STA. 246+52.68

SUM-8-0.63

464
1088

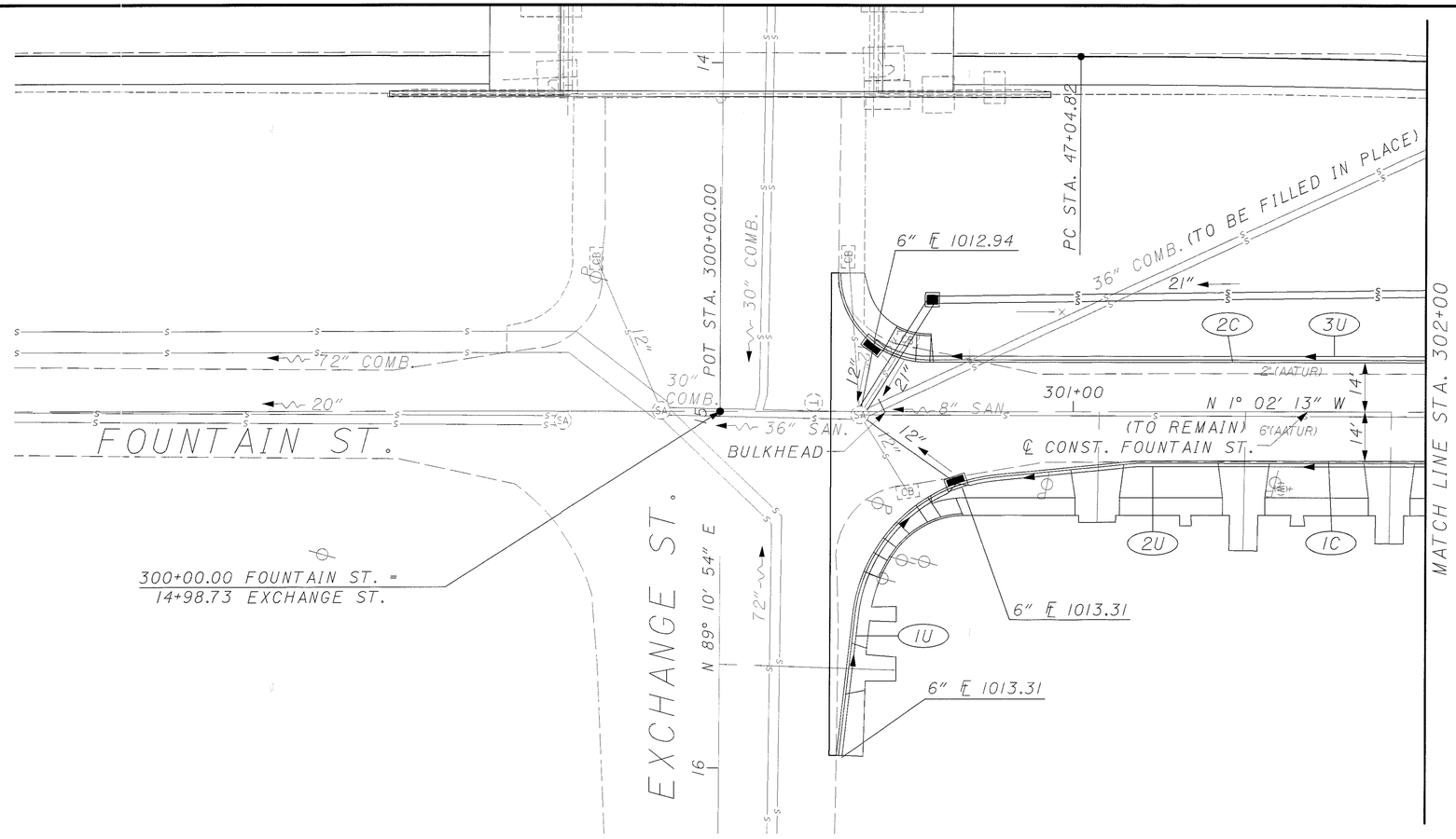

	CROSS REFERENCES
SHEET NO.	DESCRIPTION
150	CURB AND UNDERDRAIN SUBSUMMARY
525-526	PAVEMENT DETAILS

N

HORIZONTAL SCALE IN FEET
0 10 20 40

CALCULATED

CHECKED

CURB & UNDERDRAIN PLAN - FOUNTAIN ST.
STA. 298+00 TO STA. 302+00

SUM-8-0.63

465
1088

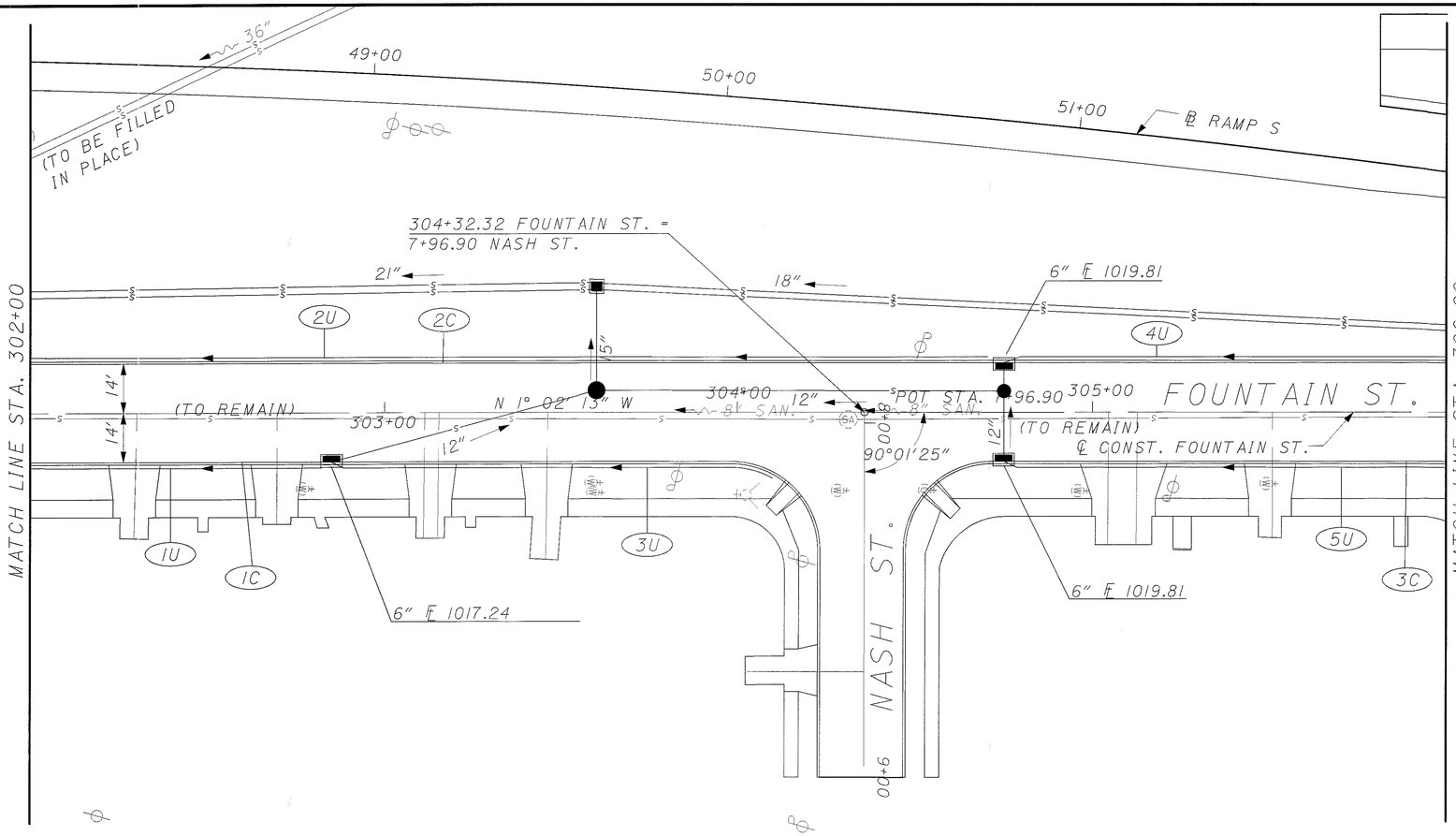

	CROSS REFERENCES
SHEET NO.	DESCRIPTION
150	CURB AND UNDERDRAIN SUBSUMMARY
527-528	PAVEMENT DETAILS

N

HORIZONTAL SCALE IN FEET
0 10 20 40

CALCULATED

CHECKED

CURB & UNDERDRAIN PLAN - FOUNTAIN ST.
STA. 302+00 TO STA. 306+00

SUM-8-0.63

466
1088

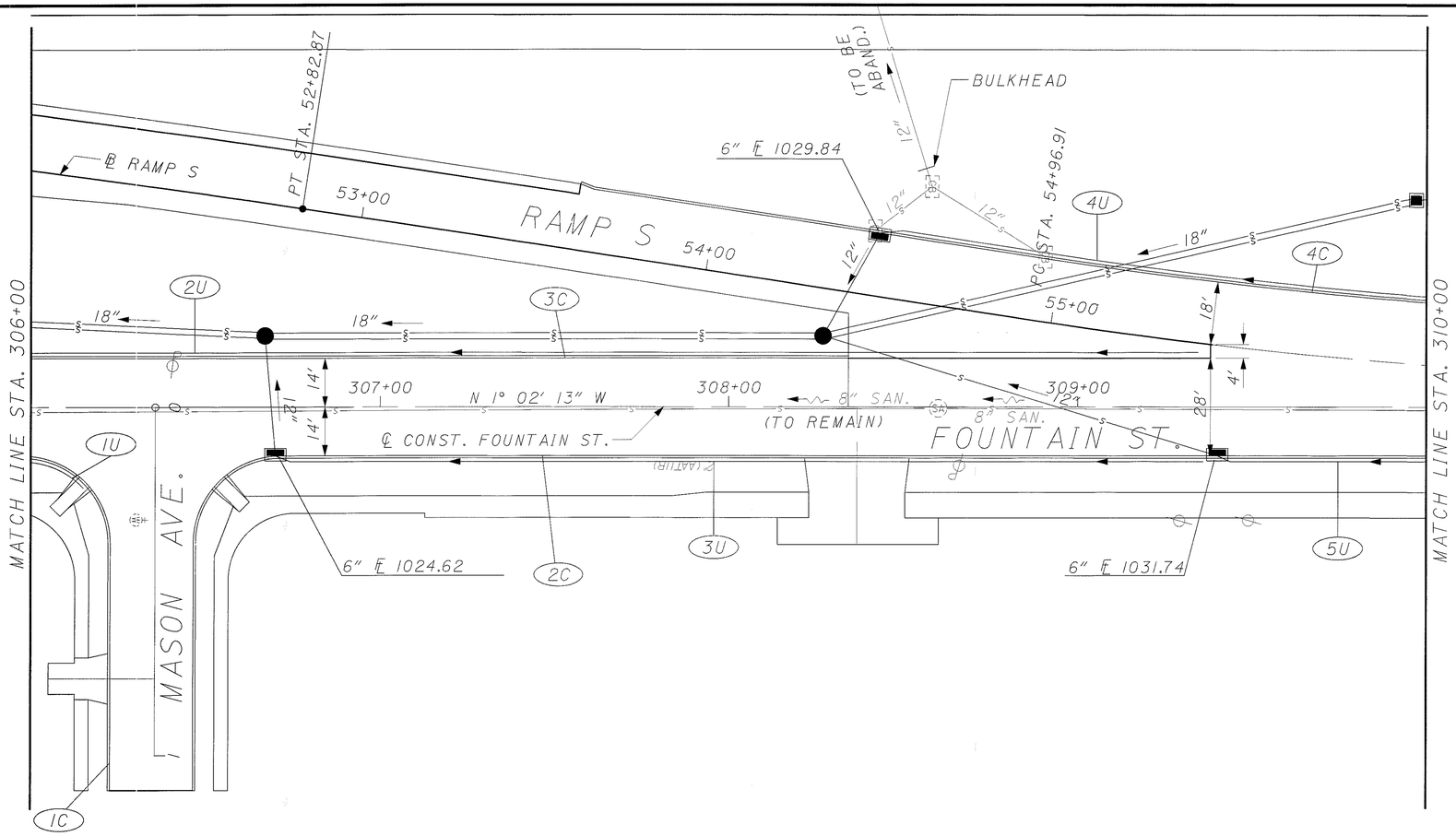

	CROSS REFERENCES
SHEET NO.	DESCRIPTION
150	CURB AND UNDERDRAIN SUBSUMMARY
479,480	CURB AND UNDERDRAIN PLAN - RAMP S
527-530	PAVEMENT DETAILS

N

HORIZONTAL SCALE IN FEET
0 10 20 40

CALCULATED | CHECKED

CURB & UNDERDRAIN PLAN - FOUNTAIN ST.
STA. 306+00 TO STA. 310+00

SUM-8-0.63

467
1088

	CROSS REFERENCES
SHEET NO.	DESCRIPTION
150,151	CURB AND UNDERDRAIN SUBSUMMARY
529-532	PAVEMENT DETAILS

N

0 10 20 40
HORIZONTAL SCALE IN FEET

CALCULATED | CHECKED

CURB & UNDERDRAIN PLAN - FOUNTAIN ST.
STA. 310+00 TO STA. 314+00

SUM-8-0.63

468
1088

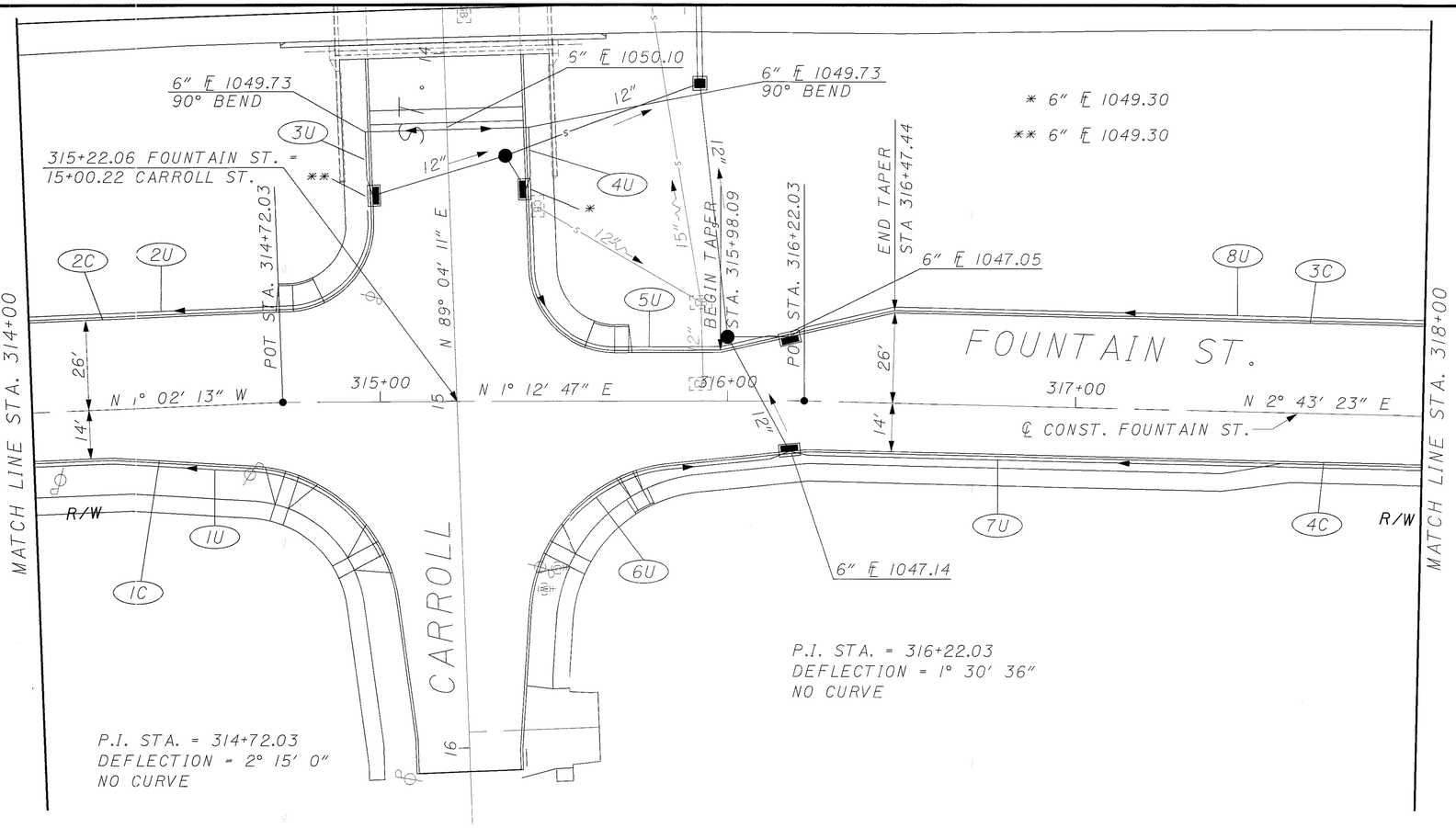

	CROSS REFERENCES
SHEET NO.	DESCRIPTION
151	CURB AND UNDERDRAIN SUBSUMMARY
531-532	PAVEMENT DETAILS

N

0 10 20 40
HORIZONTAL SCALE IN FEET

CALCULATED | CHECKED

CURB & UNDERDRAIN PLAN - FOUNTAIN ST.
STA. 314+00 TO STA. 318+00

SUM-8-0.63

469
1088

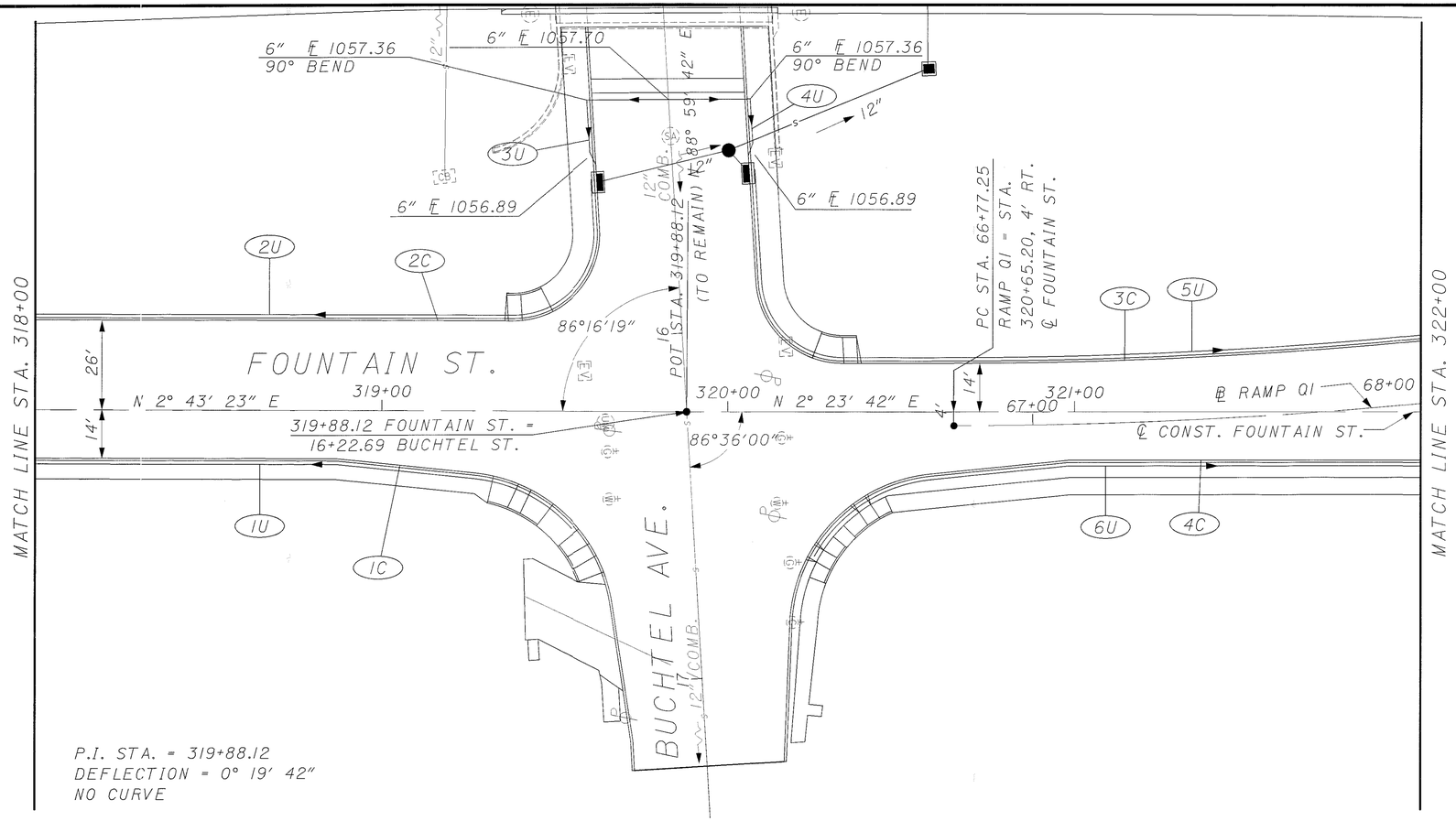

P.I. STA. = 319+88.12
DEFLECTION = 0° 19' 42"
NO CURVE

	CROSS REFERENCES
SHEET NO.	DESCRIPTION
151	CURB AND UNDERDRAIN SUBSUMMARY
533-534	PAVEMENT DETAILS

N

0 10 20 40 HORIZONTAL SCALE IN FEET

CALCULATED | CHECKED

CURB & UNDERDRAIN PLAN - FOUNTAIN ST. STA. 318+00 TO STA. 322+00

SUM-8-0.63

470
1088

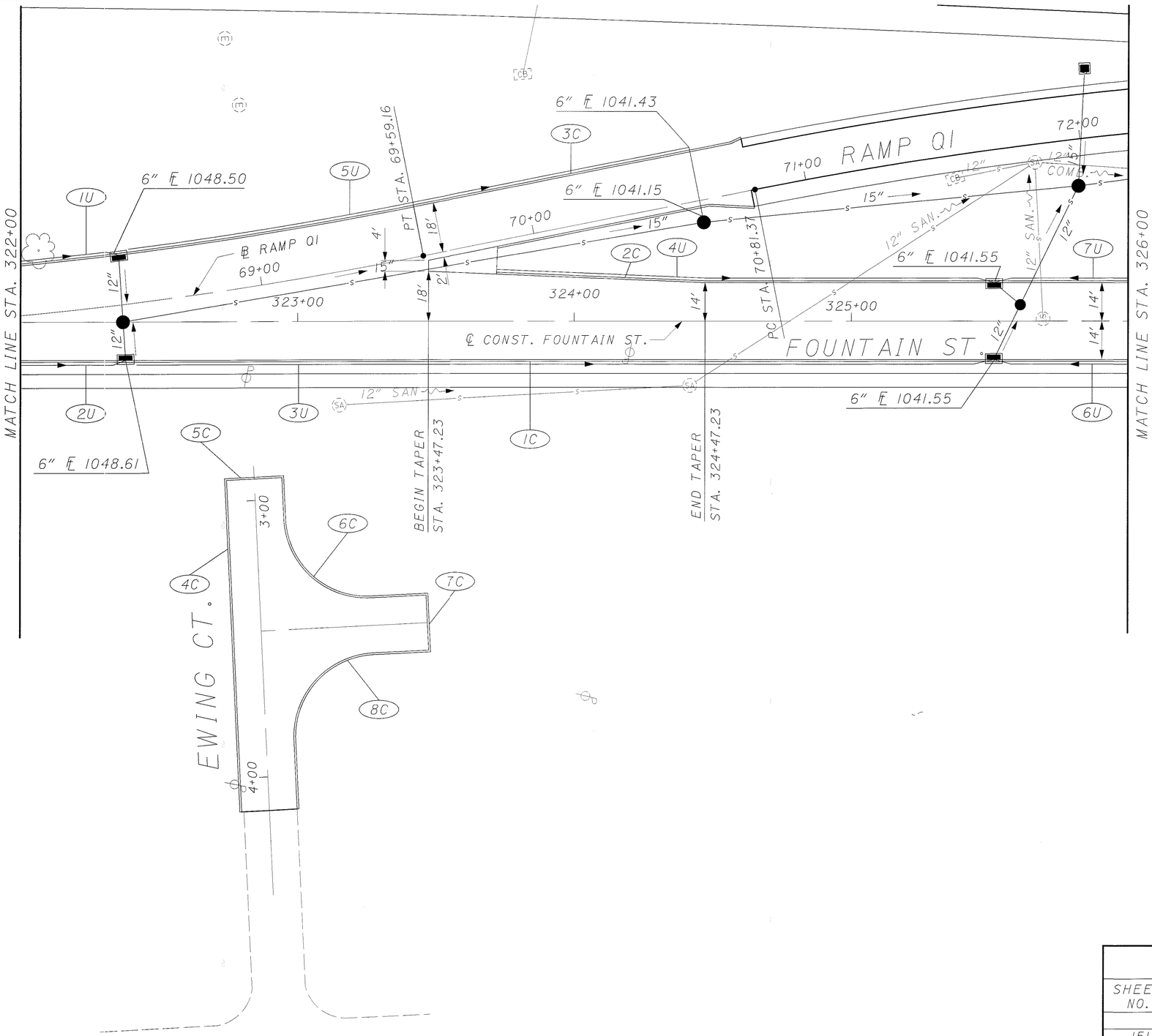

	CROSS REFERENCES
SHEET NO.	DESCRIPTION
151	CURB AND UNDERDRAIN SUBSUMMARY
483	CURB AND UNDERDRAIN PLAN - RAMP QI
535-536	PAVEMENT DETAILS
545	PAVEMENT DETAILS - EWING CT.

N

HORIZONTAL SCALE IN FEET
0 10 20 40

CALCULATED | CHECKED

CURB & UNDERDRAIN PLAN - FOUNTAIN ST.
STA. 322+00 TO STA. 326+00

SUM-8-0.63

471
1088

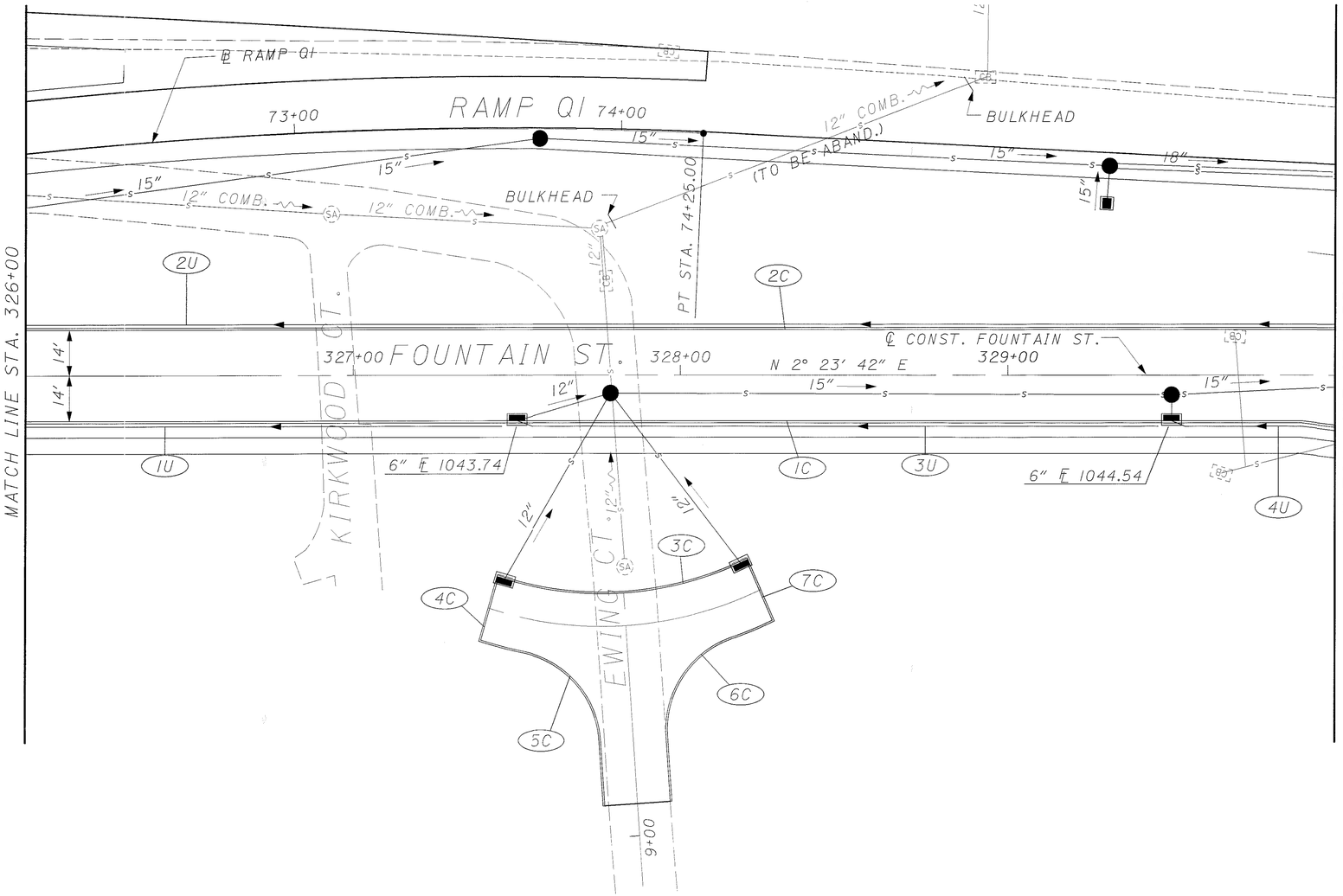

	CROSS REFERENCES
SHEET NO.	DESCRIPTION
151,152	CURB AND UNDERDRAIN SUBSUMMARY
483,484	CURB AND UNDERDRAIN PLAN - RAMP QI
545	PAVEMENT DETAILS - EWING CT.

N

HORIZONTAL SCALE IN FEET
0 10 20 40

CALCULATED | CHECKED

CURB & UNDERDRAIN PLAN - FOUNTAIN ST.
STA. 326+00 TO STA. 330+00

SUM-8-0.63

472
1088

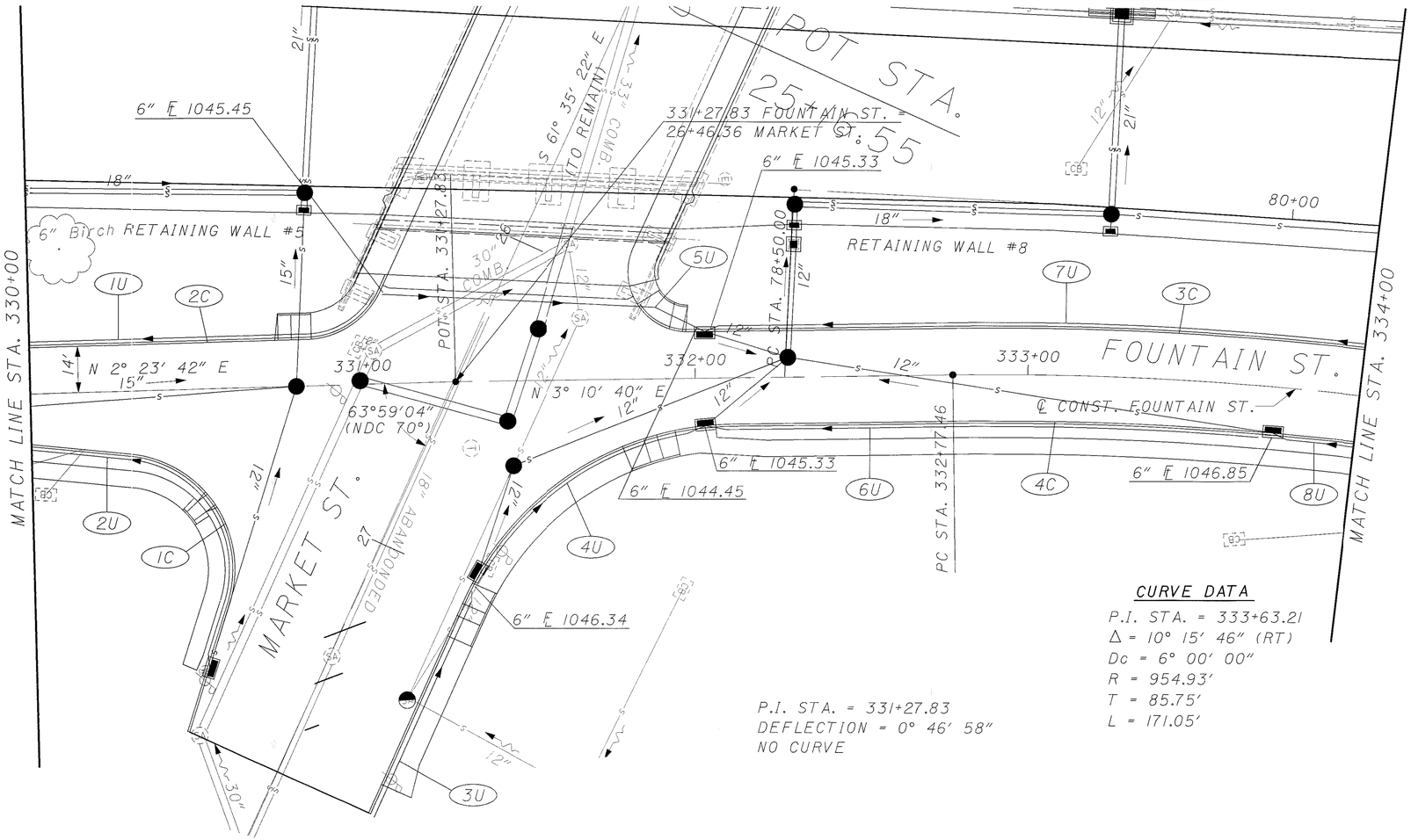

P.I. STA. = 331+27.83
DEFLECTION = 0° 46' 58"
NO CURVE

CURVE DATA

P.I. STA. = 333+63.21
Δ = 10° 15' 46" (RT)
Dc = 6° 00' 00"
R = 954.93'
T = 85.75'
L = 171.05'

	CROSS REFERENCES
SHEET NO.	DESCRIPTION
152	CURB AND UNDERDRAIN SUBSUMMARY
537-538	PAVEMENT DETAILS

HORIZONTAL SCALE IN FEET
0 10 20 40

CALCULATED
CHECKED

CURB & UNDERDRAIN PLAN - FOUNTAIN ST.
STA. 330+00 TO STA. 334+00

SUM-8-0.63

473
1088

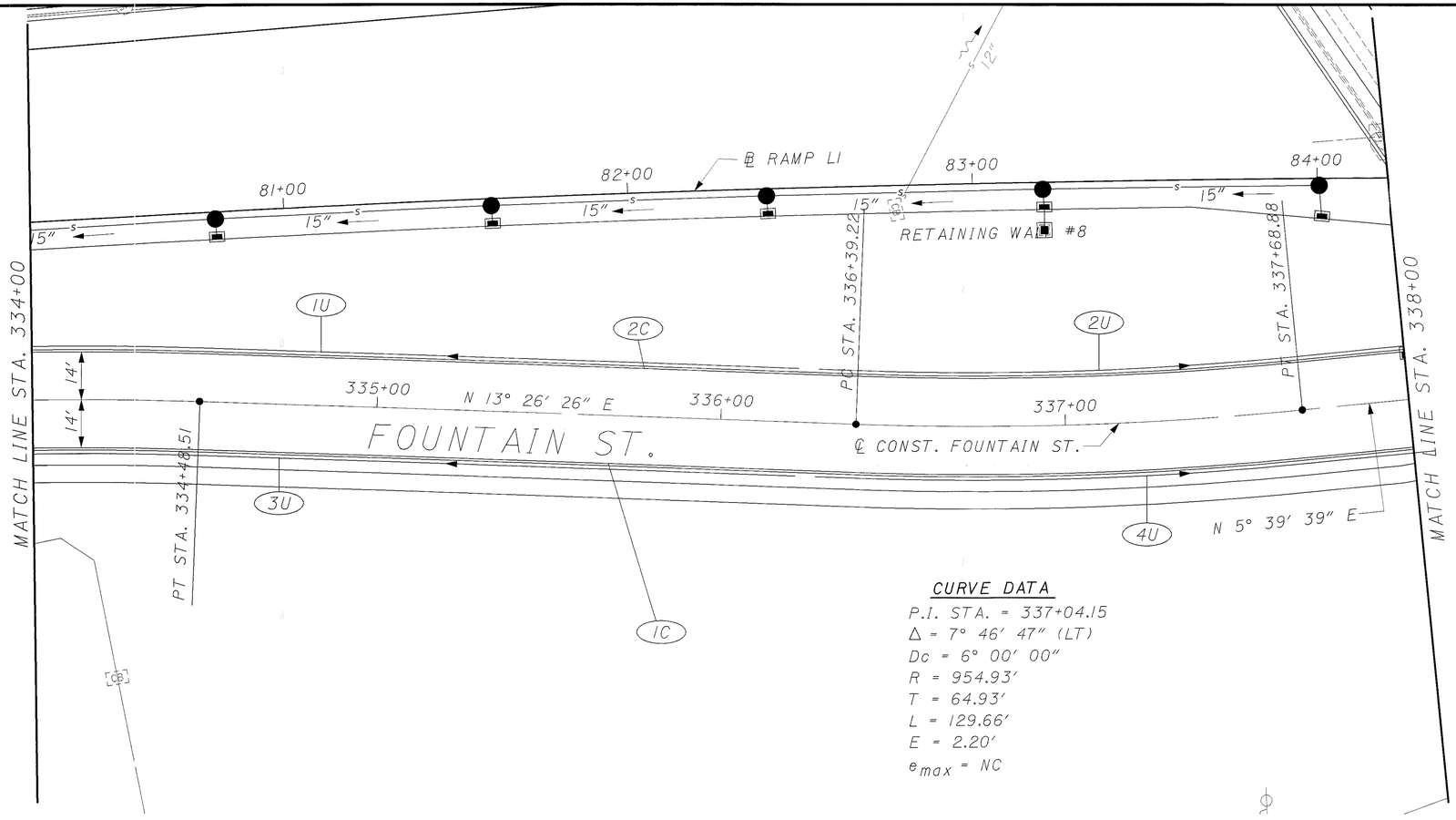

CURVE DATA

P.I. STA. = 337+04.15
Δ = 7° 46′ 47″ (LT)
Dc = 6° 00′ 00″
R = 954.93′
T = 64.93′
L = 129.66′
E = 2.20′
e_{max} = NC

	CROSS REFERENCES
SHEET NO.	DESCRIPTION
152	CURB AND UNDERDRAIN SUBSUMMARY

N

HORIZONTAL SCALE IN FEET
0 10 20 40

CALCULATED | CHECKED

CURB & UNDERDRAIN PLAN - FOUNTAIN ST.
STA. 334+00 TO STA. 338+00

SUM-8-0.63

474
1088

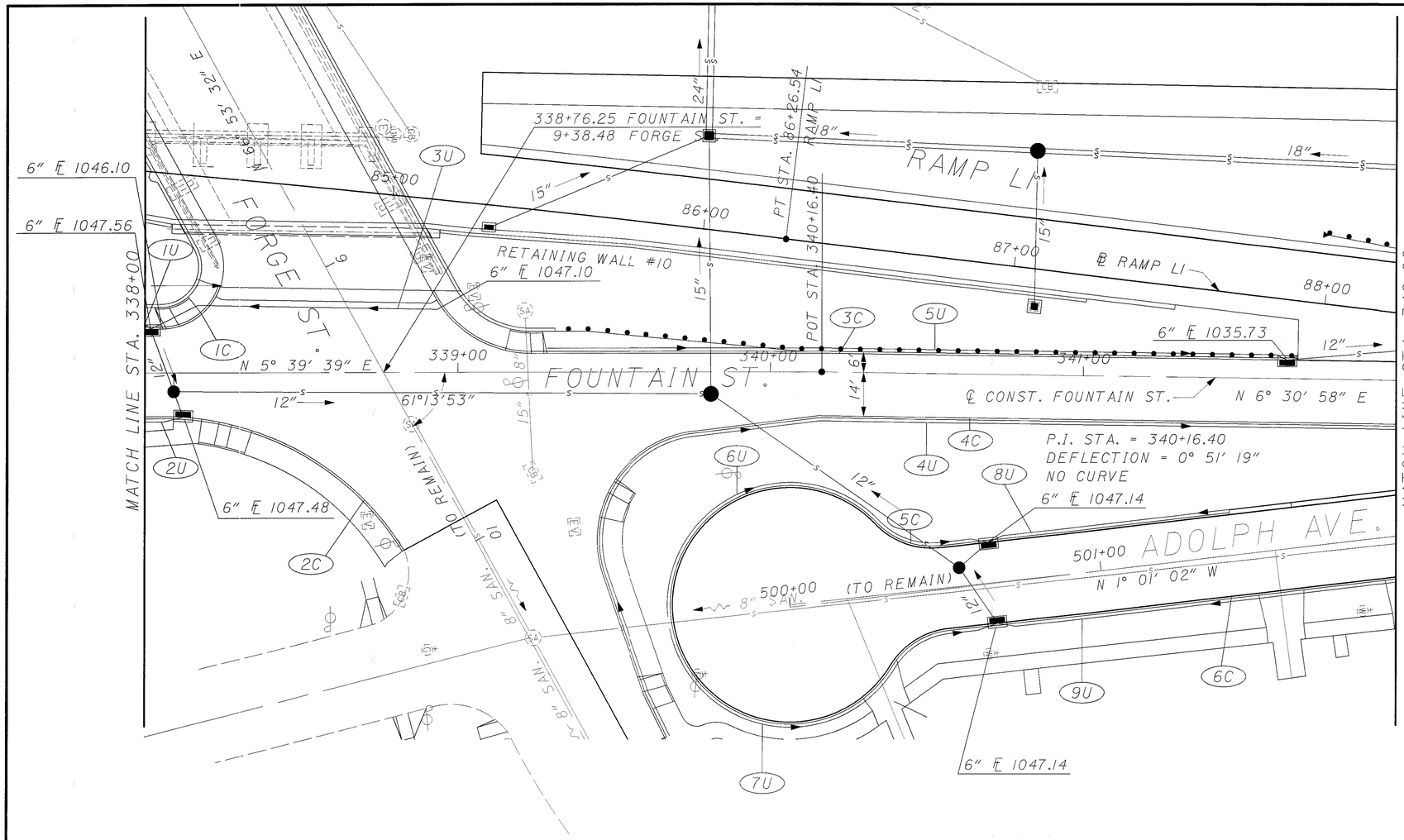

	CROSS REFERENCES
SHEET NO.	DESCRIPTION
152	CURB AND UNDERDRAIN SUBSUMMARY
487,488	CURB AND UNDERDRAIN PLAN - RAMP LI
539,540	PAVEMENT DETAILS

N

HORIZONTAL SCALE IN FEET
0 10 20 40

CALCULATED

CHECKED

CURB & UNDERDRAIN PLAN - FOUNTAIN ST.
STA. 338+00 TO STA. 342+00

SUM-8-0.63

475
1088

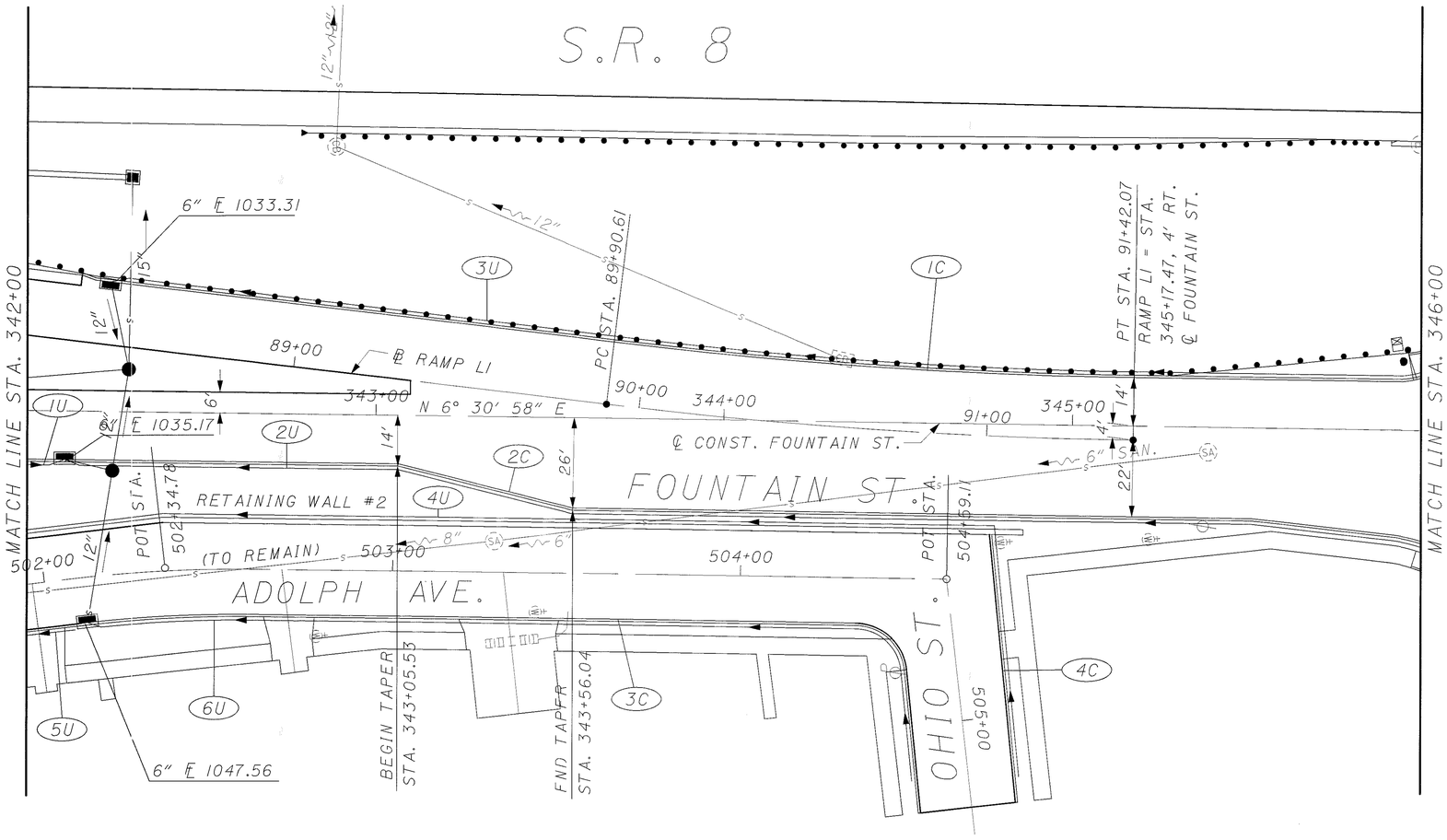

	CROSS REFERENCES
SHEET NO.	DESCRIPTION
152,153	CURB AND UNDERDRAIN SUBSUMMARY
488	CURB AND UNDERDRAIN PLAN - RAMP LI
541,542	PAVEMENT DETAILS

N

0 10 20 40
HORIZONTAL SCALE IN FEET

CALCULATED | CHECKED

CURB & UNDERDRAIN PLAN - FOUNTAIN ST.
STA. 342+00 TO STA. 346+00

SUM-8-0.63

476
1088

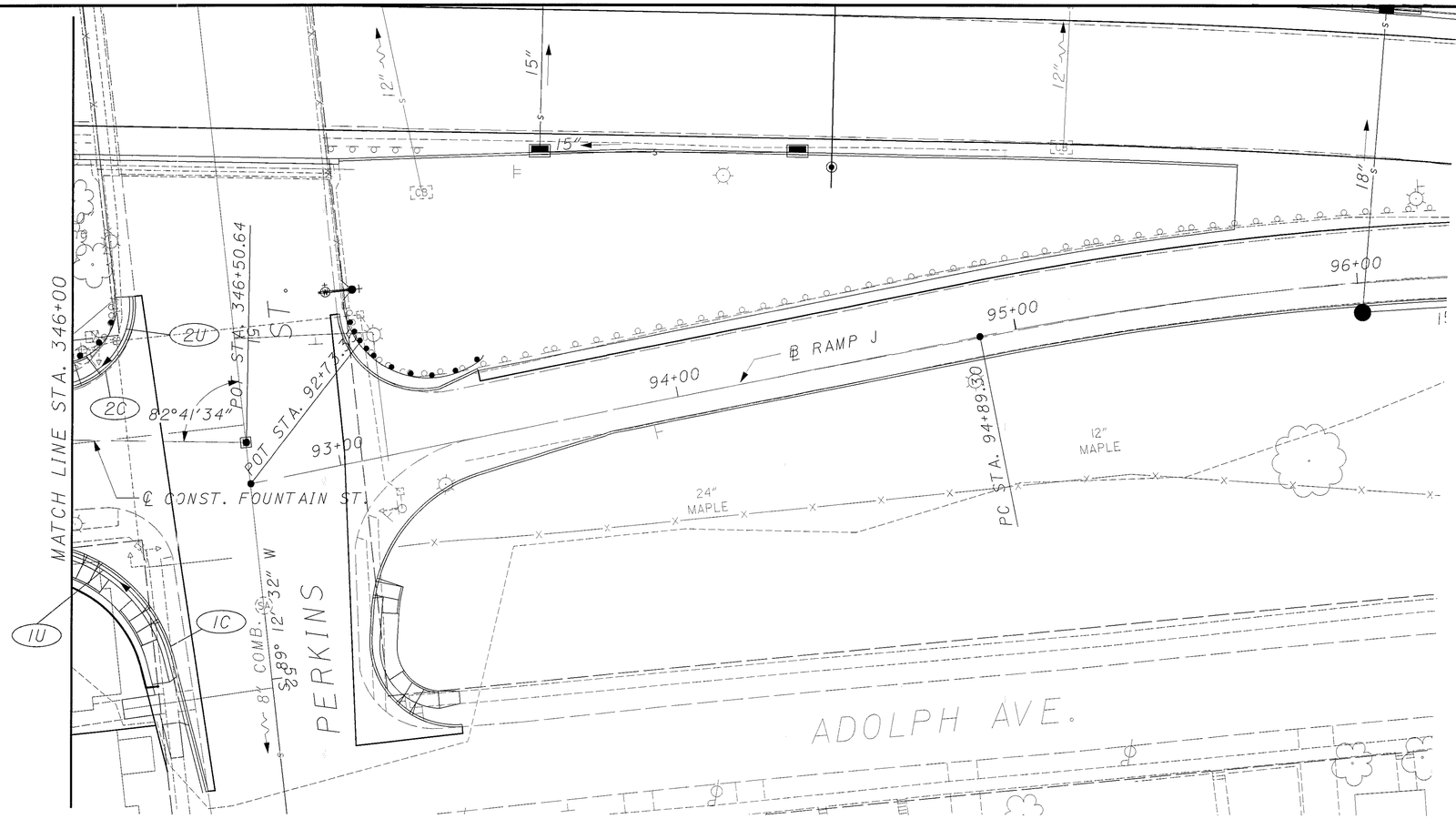

	CROSS REFERENCES
SHEET NO.	DESCRIPTION
153	CURB AND UNDERDRAIN SUBSUMMARY
491	CURB AND UNDERDRAIN PLAN - RAMP J
543,544	PAVEMENT DETAILS

N

0 10 20 40
HORIZONTAL SCALE IN FEET

CALCULATED | CHECKED

CURB & UNDERDRAIN PLAN - FOUNTAIN ST.
STA. 346+00 TO STA. 346+50.64

SUM-8-0.63

477
1088

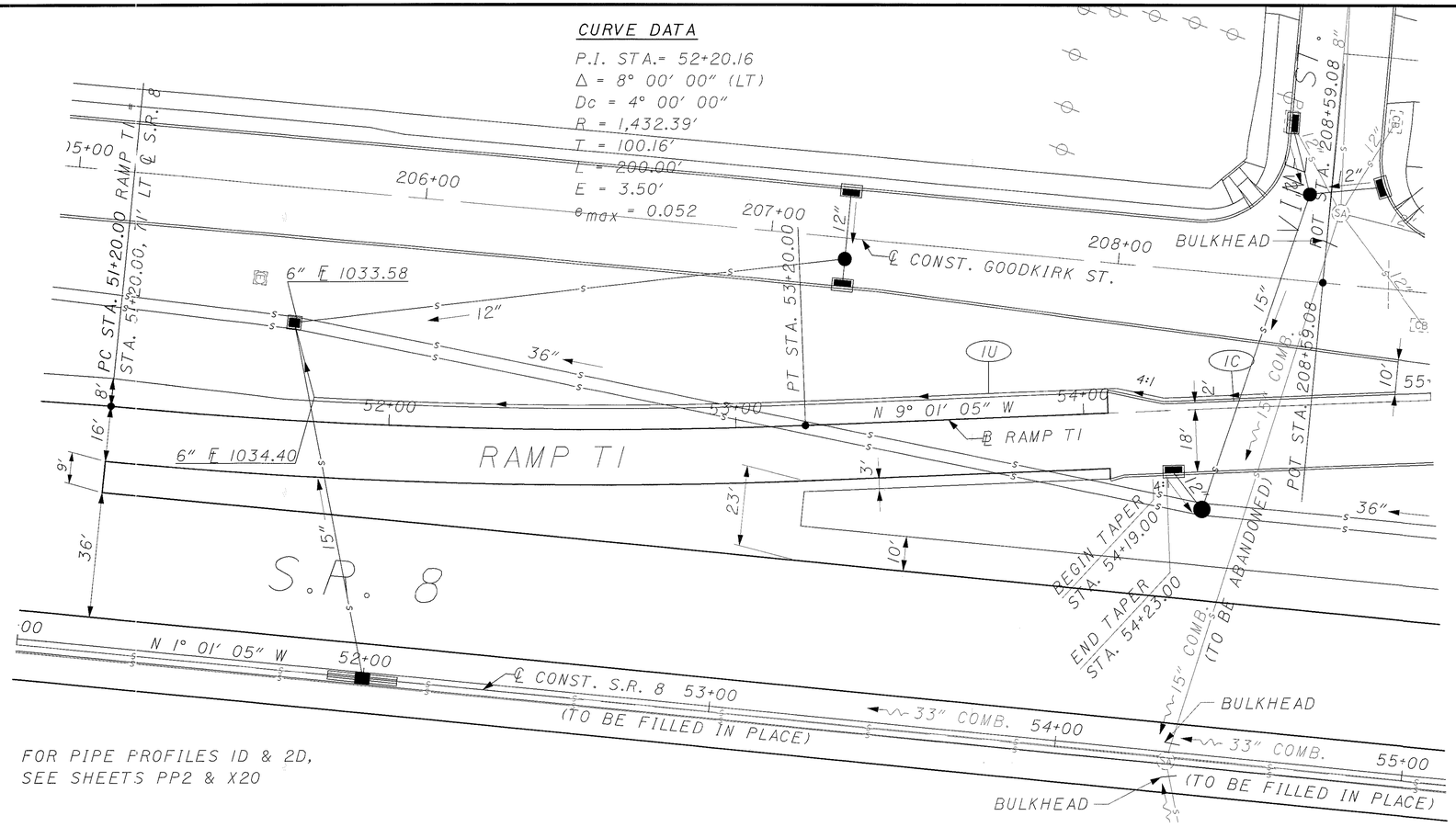

	CROSS REFERENCES
SHEET NO.	DESCRIPTION
153	CURB AND UNDERDRAIN SUBSUMMARY
497	PAVEMENT DETAILS

HORIZONTAL SCALE IN FEET
0 10 20 40

CALCULATED
CHECKED

CURB & UNDERDRAIN PLAN - RAMP T1
STA. 51+20 TO STA. 55+00

SUM-8-0.63

478
1088

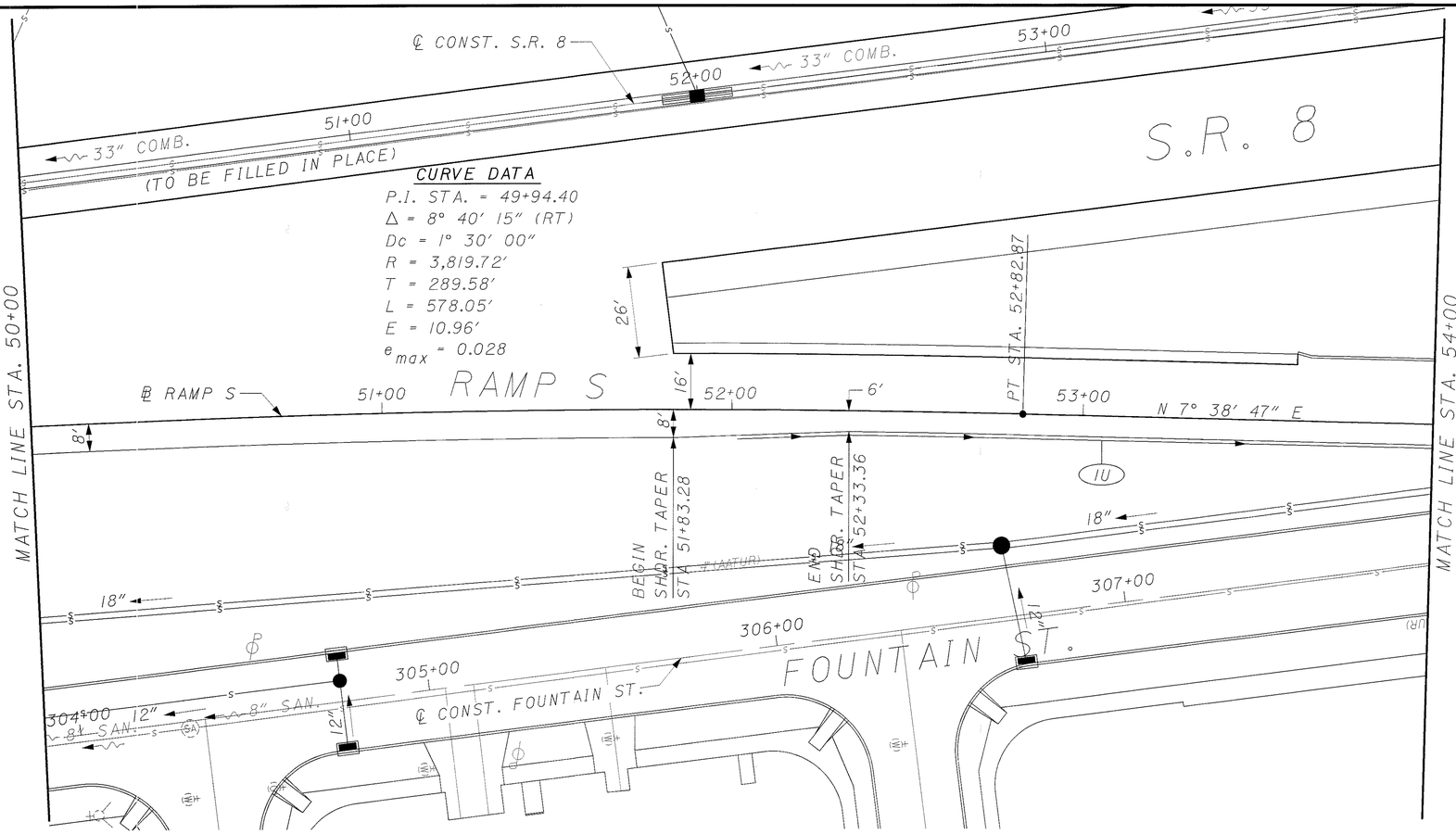

	CROSS REFERENCES
SHEET NO.	DESCRIPTION
153	CURB AND UNDERDRAIN SUBSUMMARY

N

HORIZONTAL SCALE IN FEET
0 10 20 40

CALCULATED | CHECKED

CURB & UNDERDRAIN PLAN - RAMP S
STA. 50+00 TO STA. 54+00

SUM-8-0.63

479
1088

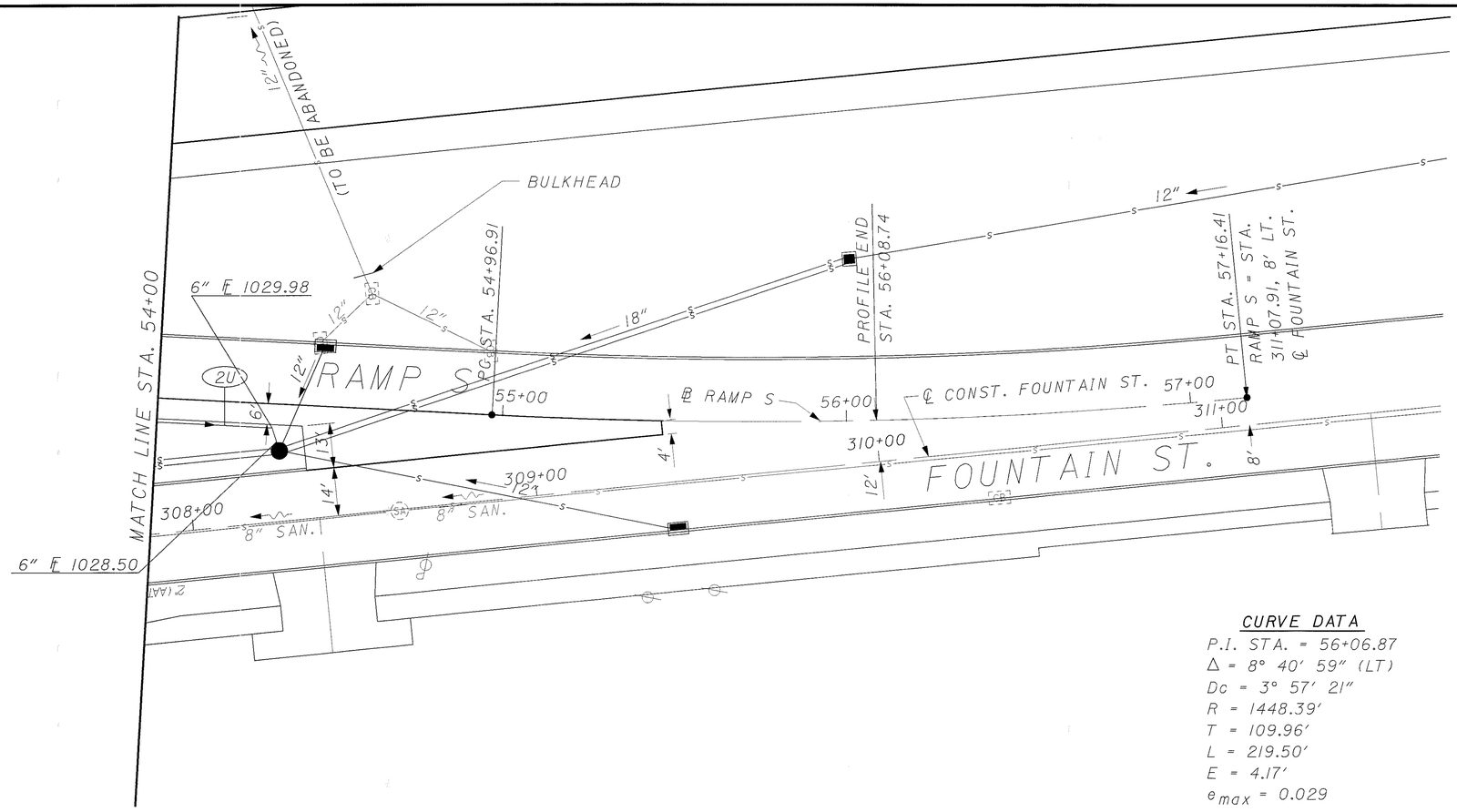

CURVE DATA

P.I. STA. = 56+06.87
Δ = 8° 40′ 59″ (LT)
Dc = 3° 57′ 21″
R = 1448.39′
T = 109.96′
L = 219.50′
E = 4.17′
e_{max} = 0.029

	CROSS REFERENCES
SHEET NO.	DESCRIPTION
153	CURB AND UNDERDRAIN SUBSUMMARY

N

0 10 20 40
HORIZONTAL SCALE IN FEET

CALCULATED | CHECKED

CURB & UNDERDRAIN PLAN - RAMP S
STA. 54+00 TO STA. 57+61.41

SUM-8-0.63

480
1088

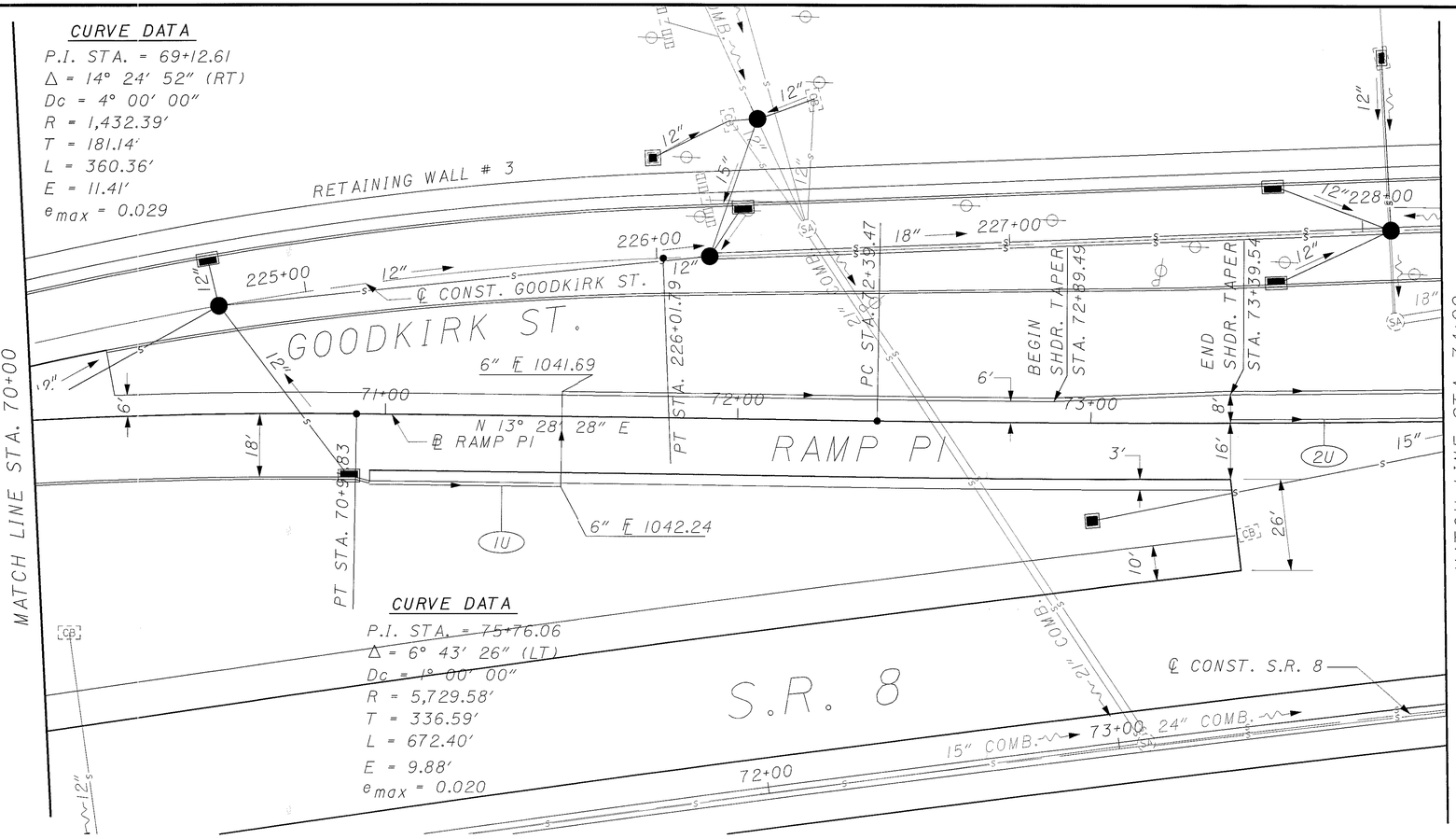

	CROSS REFERENCES
SHEET NO.	DESCRIPTION
153	CURB AND UNDERDRAIN SUBSUMMARY

HORIZONTAL SCALE IN FEET
0 10 20 40
CALCULATED
CHECKED

CURB & UNDERDRAIN PLAN - RAMP P1
STA. 70+00 TO STA. 74+00

SUM-8-0.63

481
1088

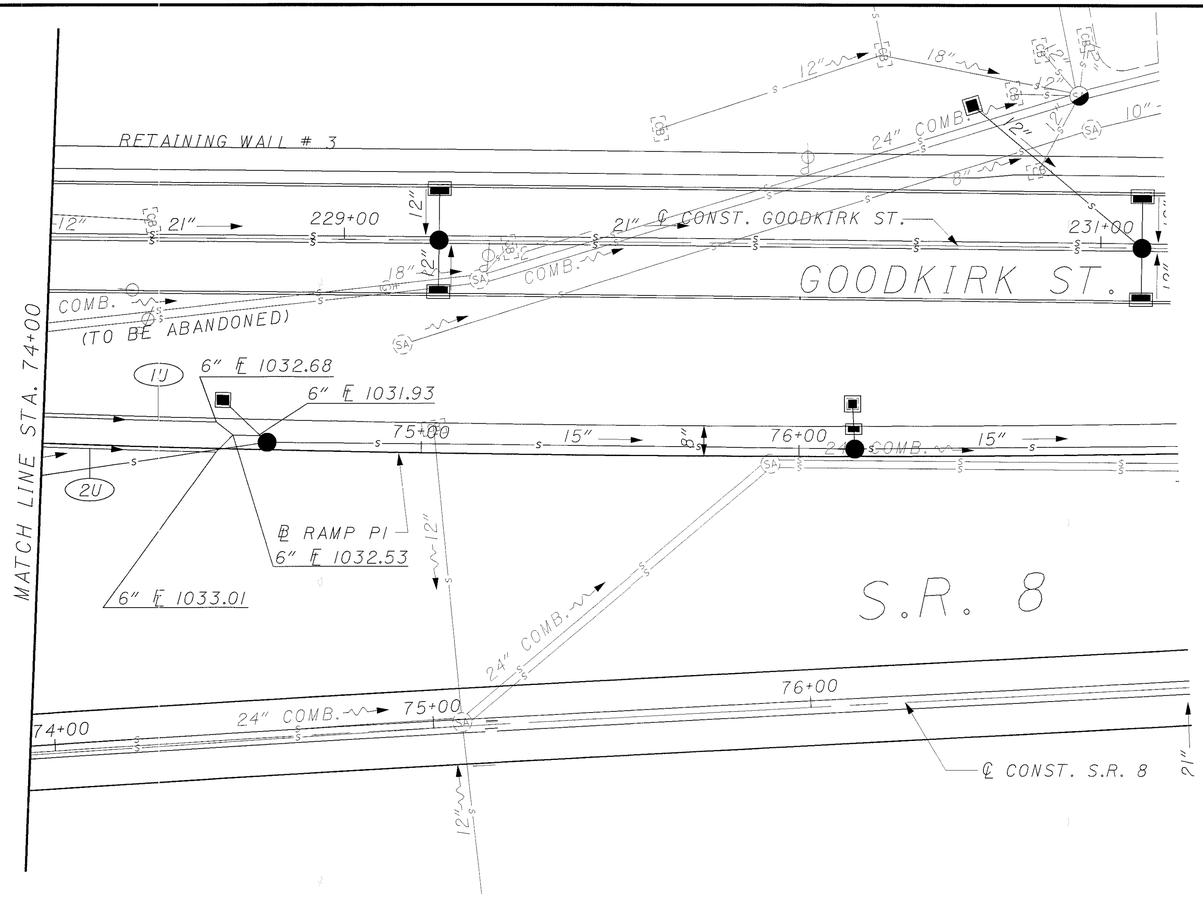

CURVE DATA

P.I. STA. = 75+76.06
Δ = 6° 43′ 26″ (LT)
Dc = 1° 00′ 00″
R = 5,729.58′
T = 336.59′
L = 672.40′
E = 9.88′
e_{max} = 0.020

	CROSS REFERENCES
SHEET NO.	DESCRIPTION
153	CURB AND UNDERDRAIN SUBSUMMARY

N

HORIZONTAL SCALE IN FEET
0 10 20 40

CALCULATED | CHECKED

CURB & UNDERDRAIN PLAN - RAMP P1
STA. 74+00 TO STA. 77+00

SUM-8-0.63

482
1088

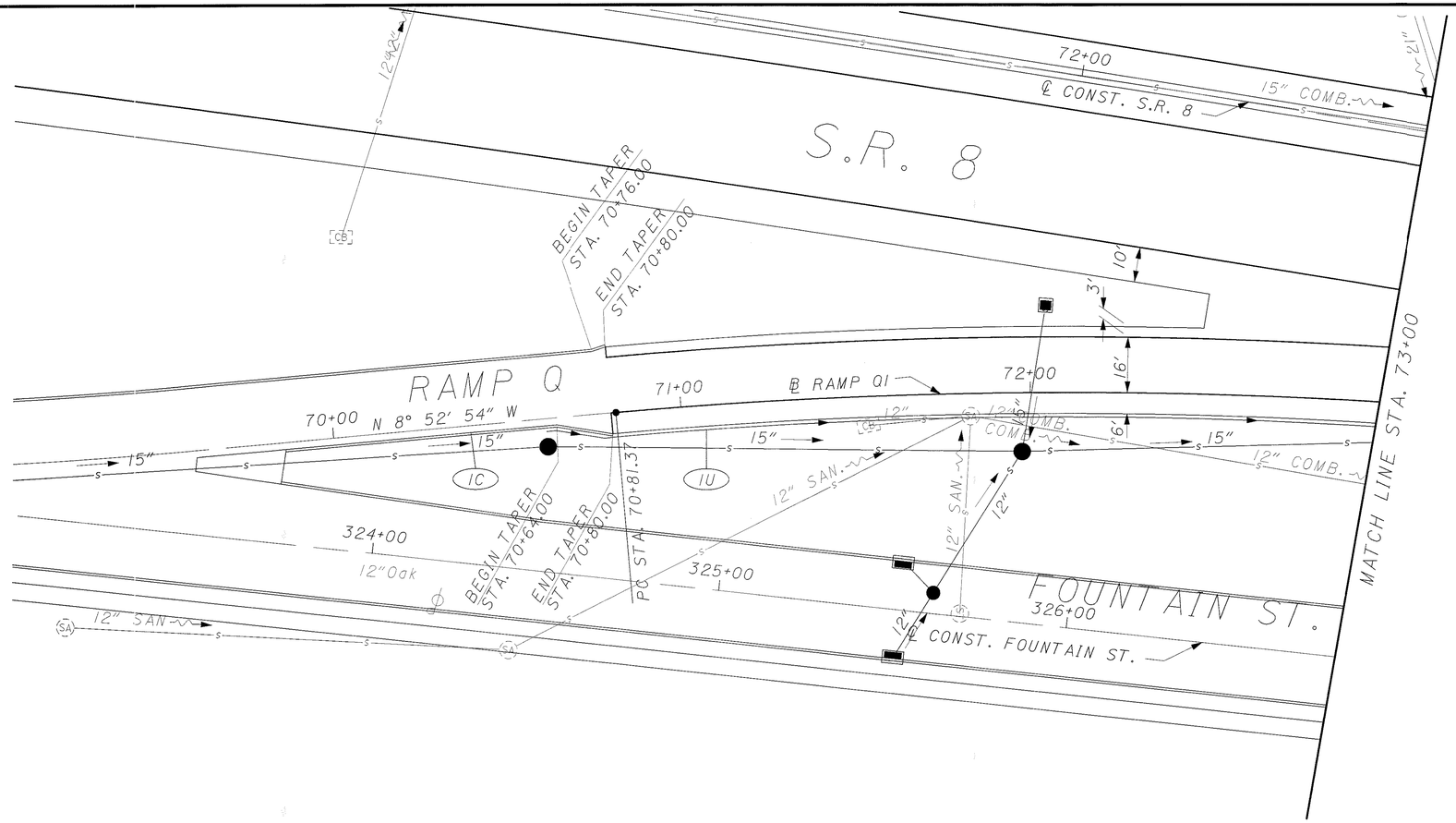

CURVE DATA

P.I. STA. = 72+54.01
Δ = 13° 44' 43" (RT)
Dc = 4° 00' 00"
R = 1,432.39'
T = 172.65'
L = 343.63'
E = 10.37'
e_{max} = 0.052

	CROSS REFERENCES
SHEET NO.	DESCRIPTION
153	CURB AND UNDERDRAIN SUBSUMMARY
471,472	CURB AND UNDERDRAIN PLAN - FOUNTAIN ST.

N

HORIZONTAL SCALE IN FEET
0 10 20 40

CALCULATED | CHECKED

CURB & UNDERDRAIN PLAN - RAMP Q1
STA. 70+00 TO STA. 73+00

SUM-8-0.63

483
1088

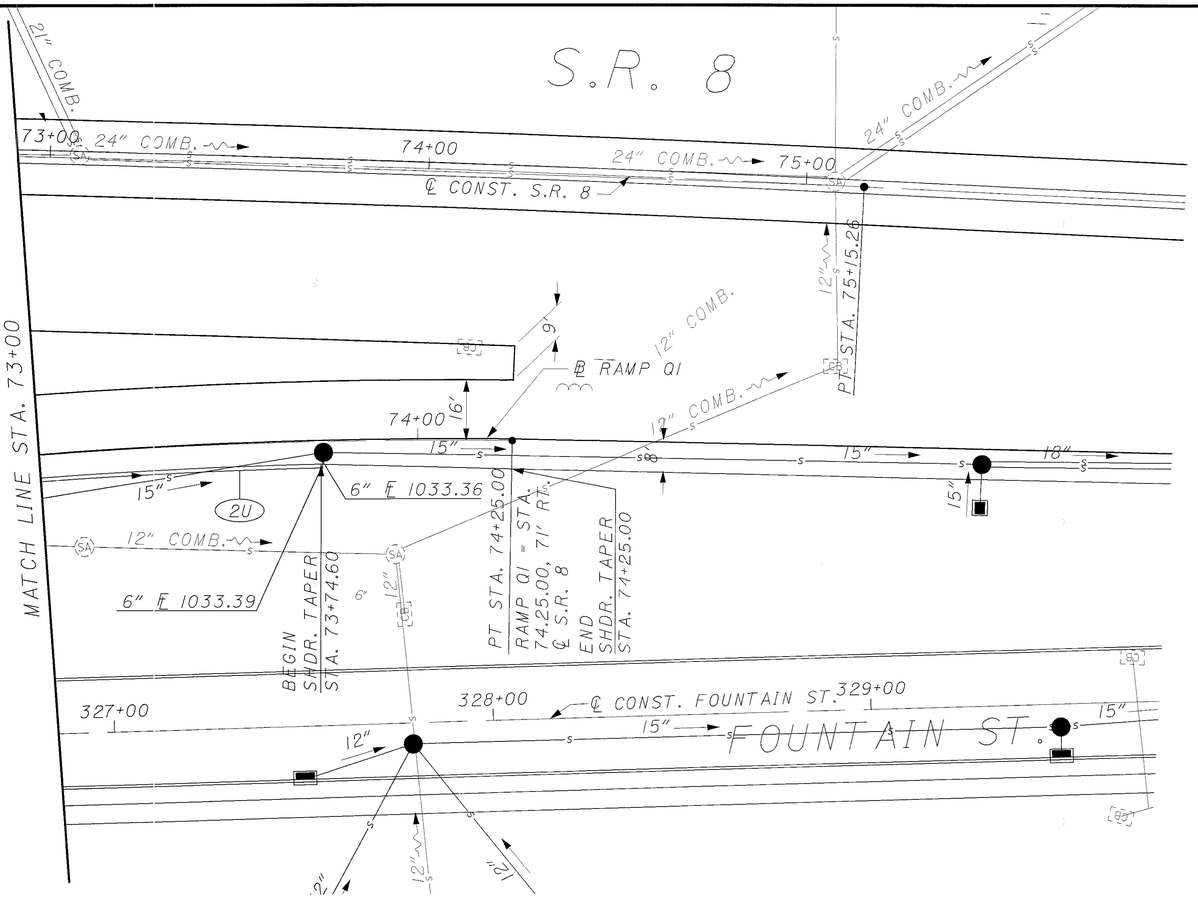

CURVE DATA

P.I. STA. = 72+54.01
Δ = 13° 44′ 43″ (RT)
Dc = 4° 00′ 00″
R = 1,432.39′
T = 172.65′
L = 343.63′
E = 10.37′
e_{max} = 0.052

	CROSS REFERENCES
SHEET NO.	DESCRIPTION
153	CURB AND UNDERDRAIN SUBSUMMARY

N

HORIZONTAL SCALE IN FEET
0 10 20 40

CALCULATED | CHECKED

CURB & UNDERDRAIN PLAN - RAMP Q1
STA. 73+00 TO STA. 76+00

SUM-8-0.63

484
1088

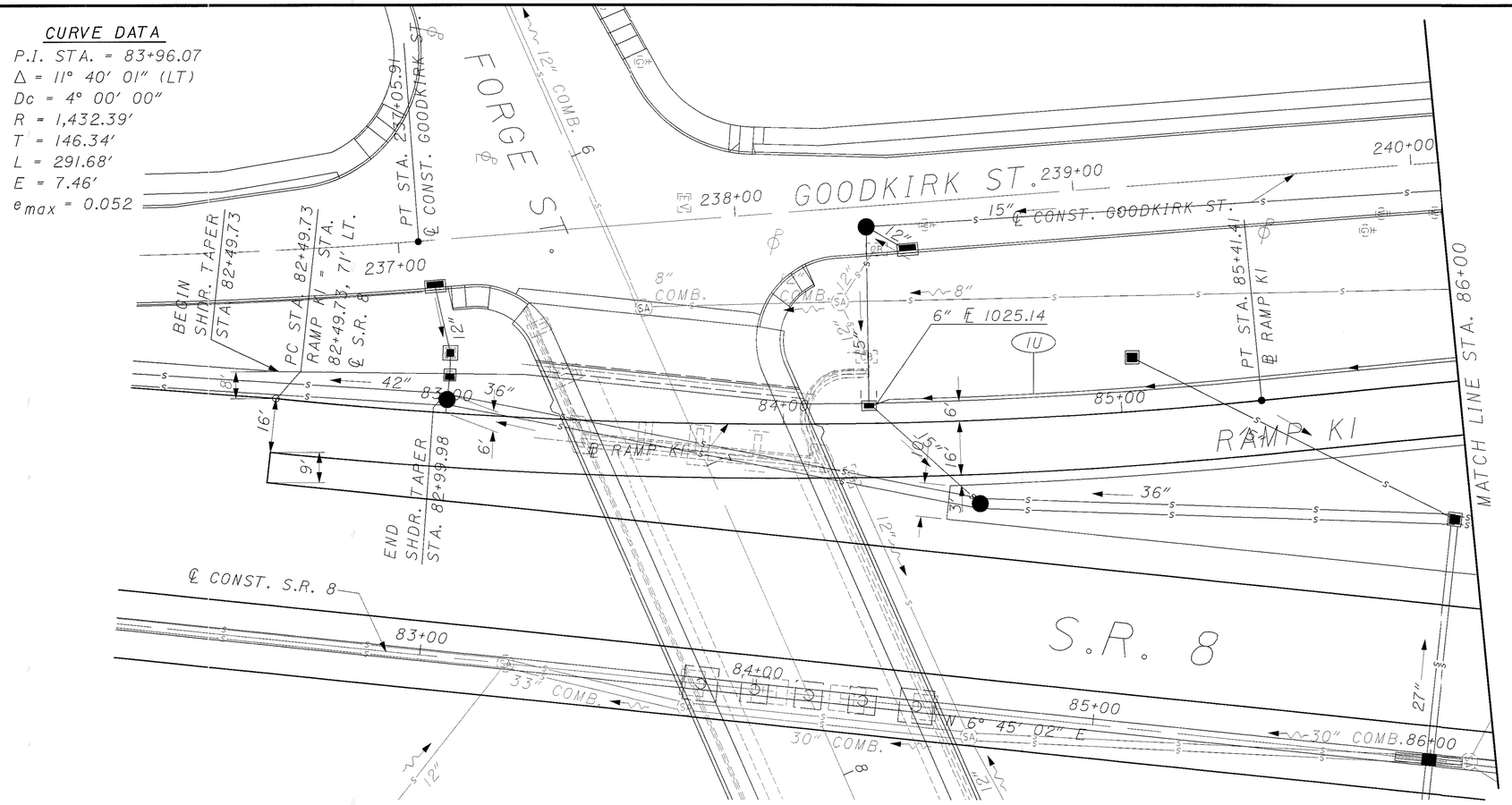

	CROSS REFERENCES
SHEET NO.	DESCRIPTION
153	CURB AND UNDERDRAIN SUBSUMMARY

HORIZONTAL SCALE IN FEET
0 10 20 40

CALCULATED | CHECKED

CURB & UNDERDRAIN PLAN - RAMP K1
STA. 82+49.73 TO STA. 86+00

SUM-8-0.63

485
1088

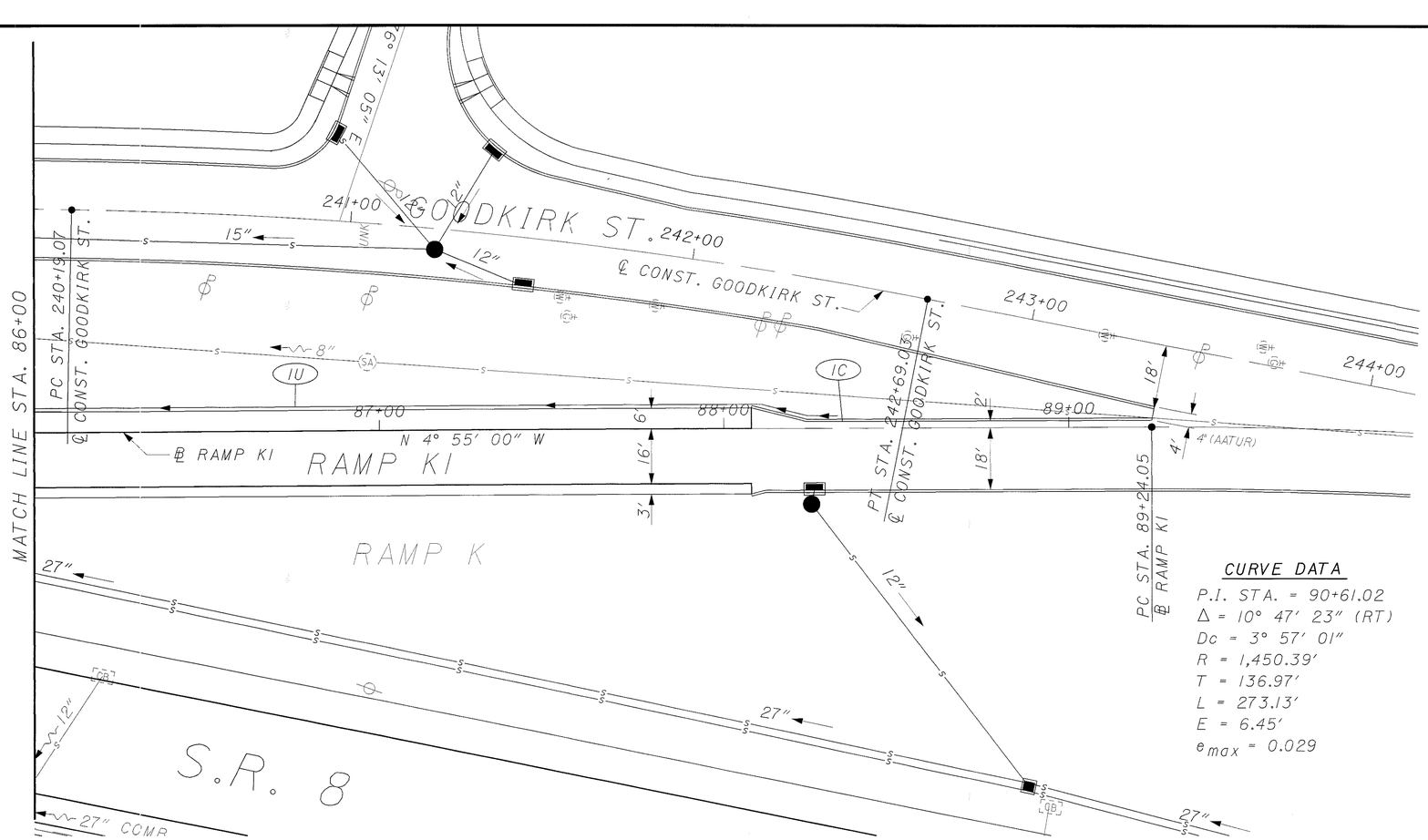

CURVE DATA

P.I. STA. = 90+61.02
Δ = 10° 47' 23" (RT)
Dc = 3° 57' 01"
R = 1,450.39'
T = 136.97'
L = 273.13'
E = 6.45'
e_{max} = 0.029

	CROSS REFERENCES
SHEET NO.	DESCRIPTION
153	CURB AND UNDERDRAIN SUBSUMMARY
462,463	CURB AND UNDERDRAIN PLAN - GOODKIRK ST.

N

0 10 20 40 HORIZONTAL SCALE IN FEET

CALCULATED

CHECKED

CURB & UNDERDRAIN PLAN - RAMP K1
STA. 86+00 TO STA. 90+00

SUM-8-0.63

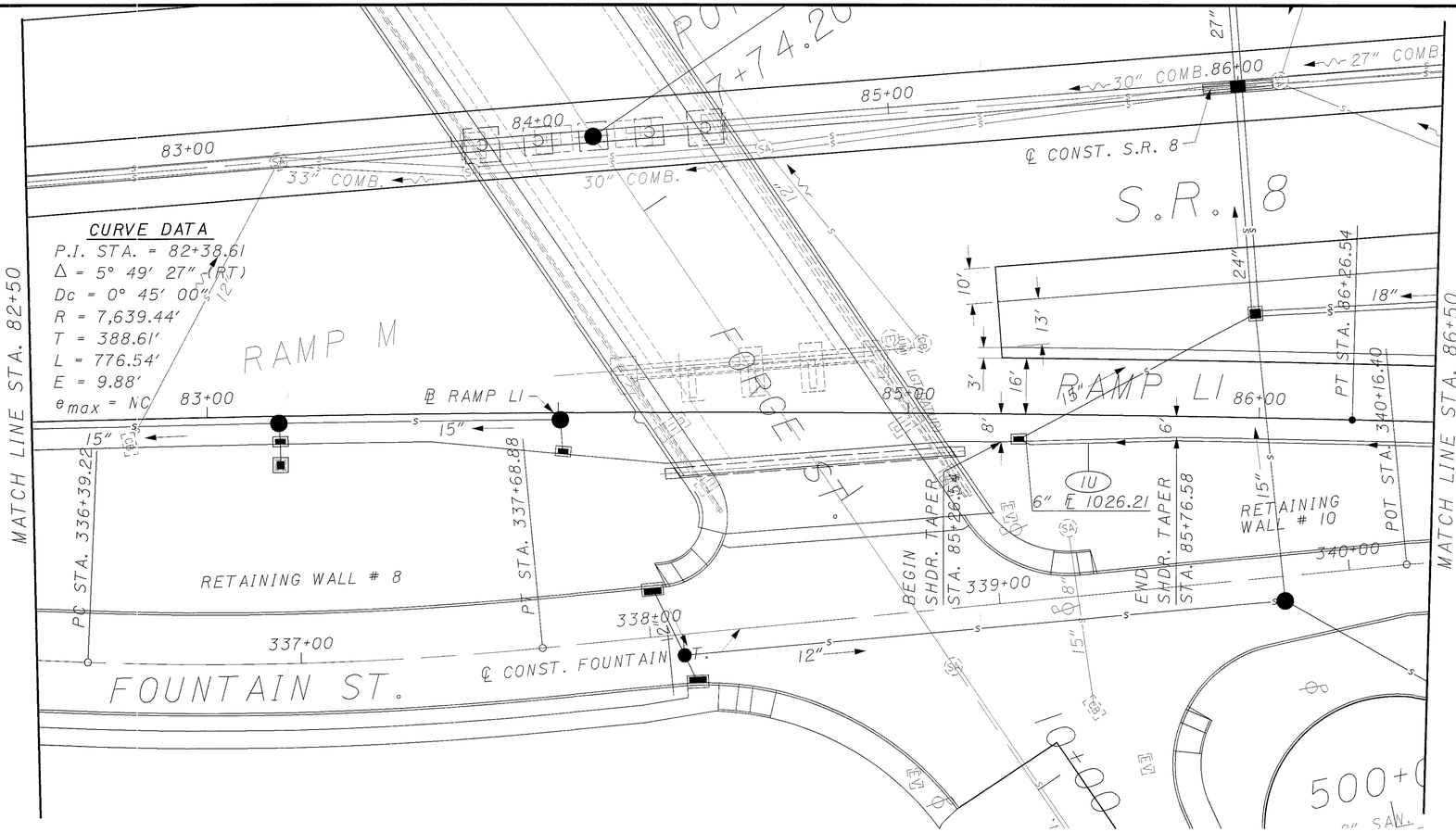

	CROSS REFERENCES
SHEET NO.	DESCRIPTION
154	CURB AND UNDERDRAIN SUBSUMMARY

HORIZONTAL SCALE IN FEET
0 10 20 40

CALCULATED | CHECKED

CURB & UNDERDRAIN PLAN - RAMP L1
STA. 82+50 TO STA. 86+50

SUM-8-0.63

487
1088

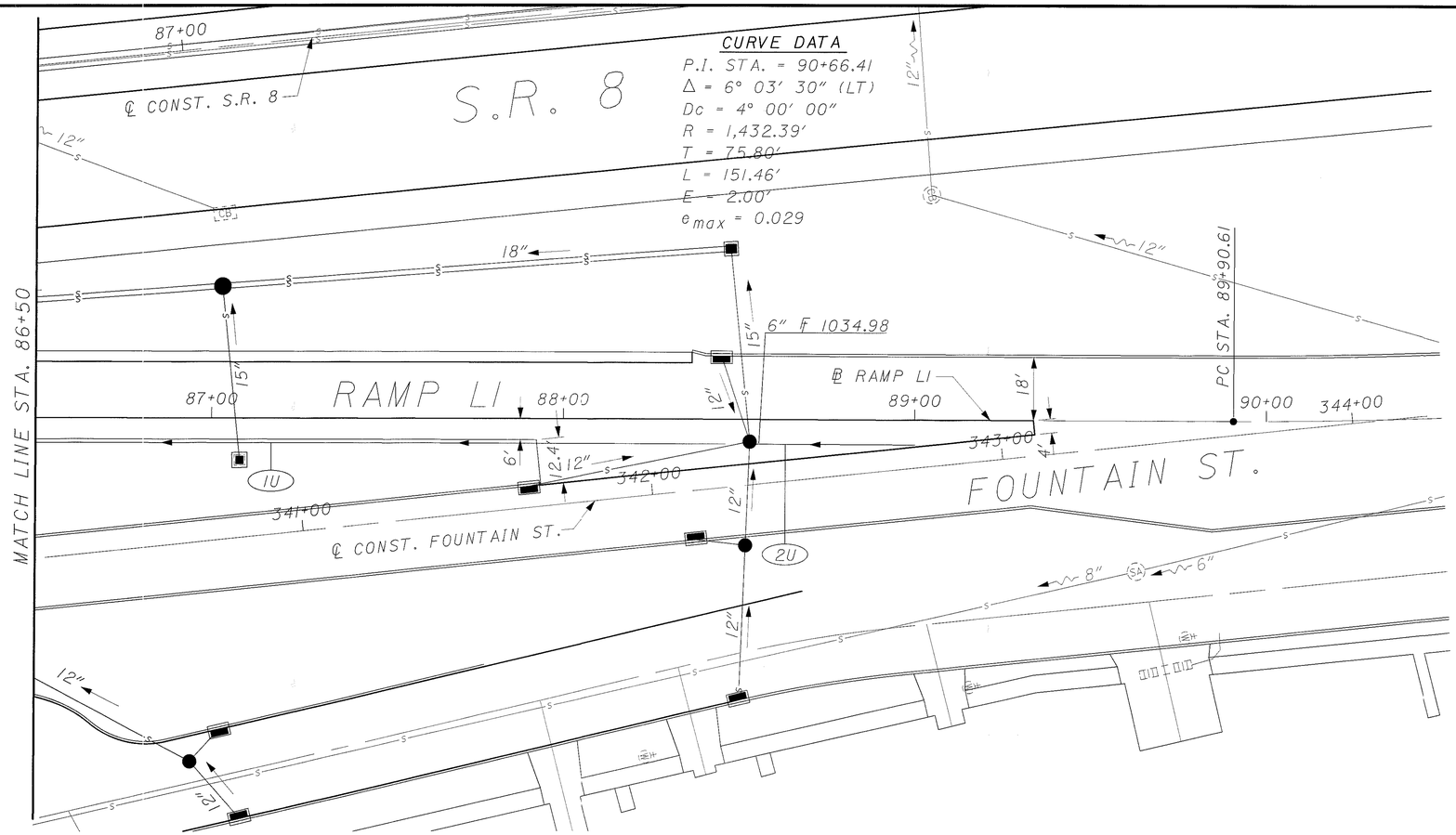

	CROSS REFERENCES
SHEET NO.	DESCRIPTION
154	CURB AND UNDERDRAIN SUBSUMMARY

N

HORIZONTAL SCALE IN FEET
0 10 20 40

CALCULATED | CHECKED

CURB & UNDERDRAIN PLAN - RAMP L1
STA. 86+50 TO STA. 90+50

SUM-8-0.63

488
1088

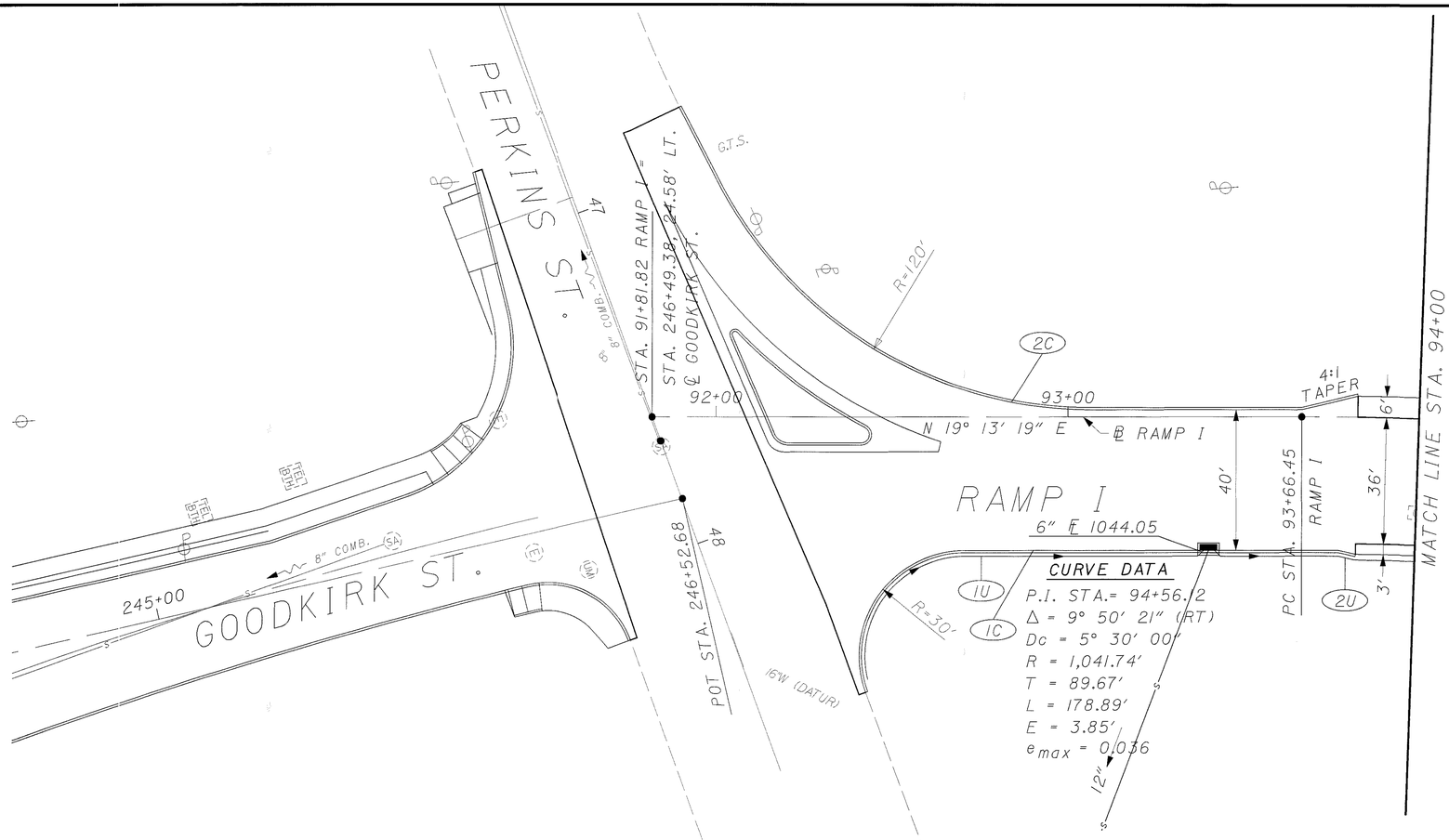

	CROSS REFERENCES
SHEET NO.	DESCRIPTION
154	CURB AND UNDERDRAIN SUBSUMMARY

N

0 10 20 40 HORIZONTAL SCALE IN FEET

CALCULATED | CHECKED

CURB & UNDERDRAIN PLAN - RAMP I
STA. 91+82.06 TO STA. 94+00

489
1088

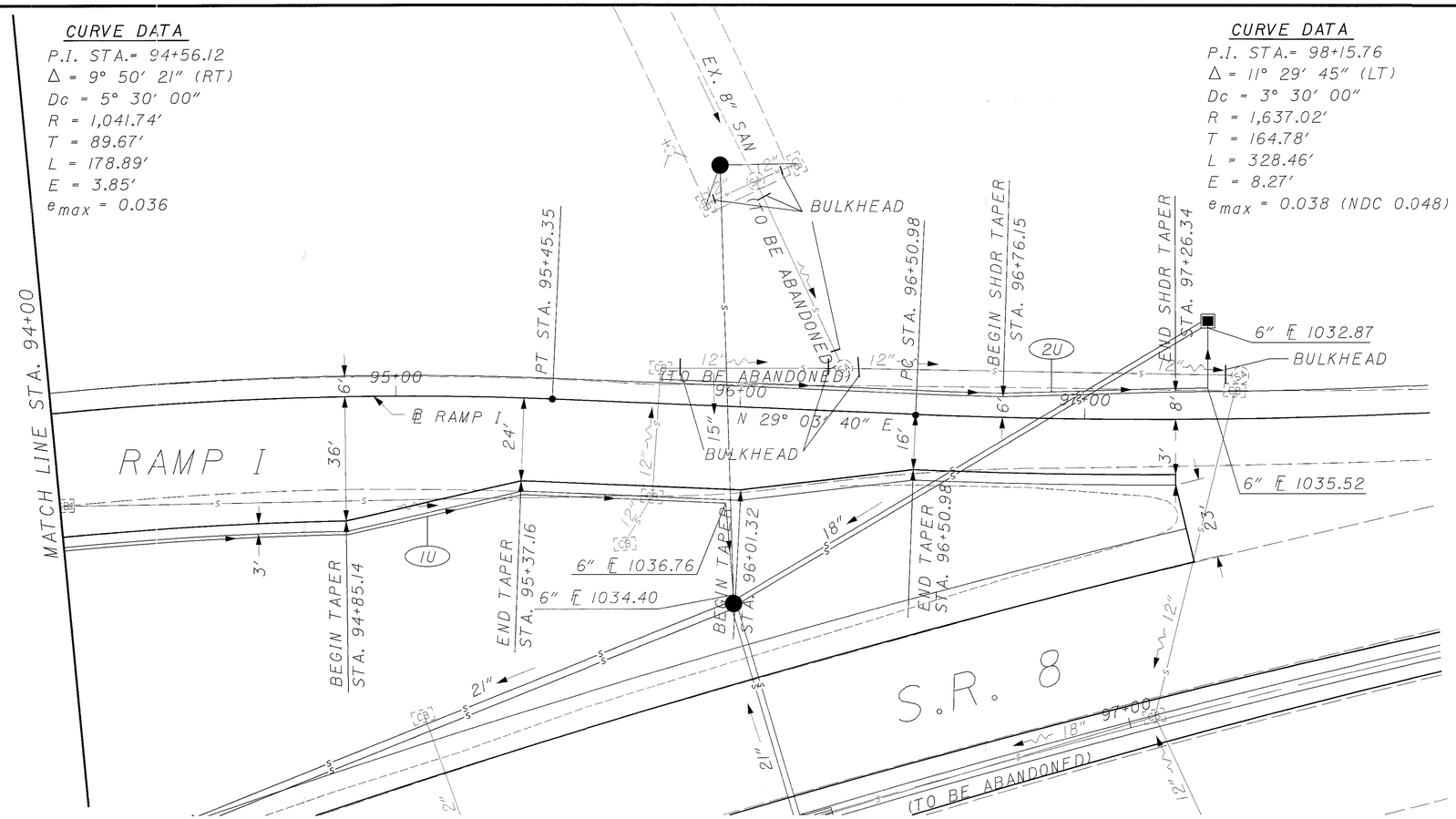

	CROSS REFERENCES
SHEET NO.	DESCRIPTION
154	CURB AND UNDERDRAIN SUBSUMMARY

N

HORIZONTAL SCALE IN FEET
0 10 20 40

CALCULATED

CHECKED

CURB & UNDERDRAIN PLAN - RAMP I
STA. 94+00 TO STA. 98+00

SUM-8-0.63

490
1088

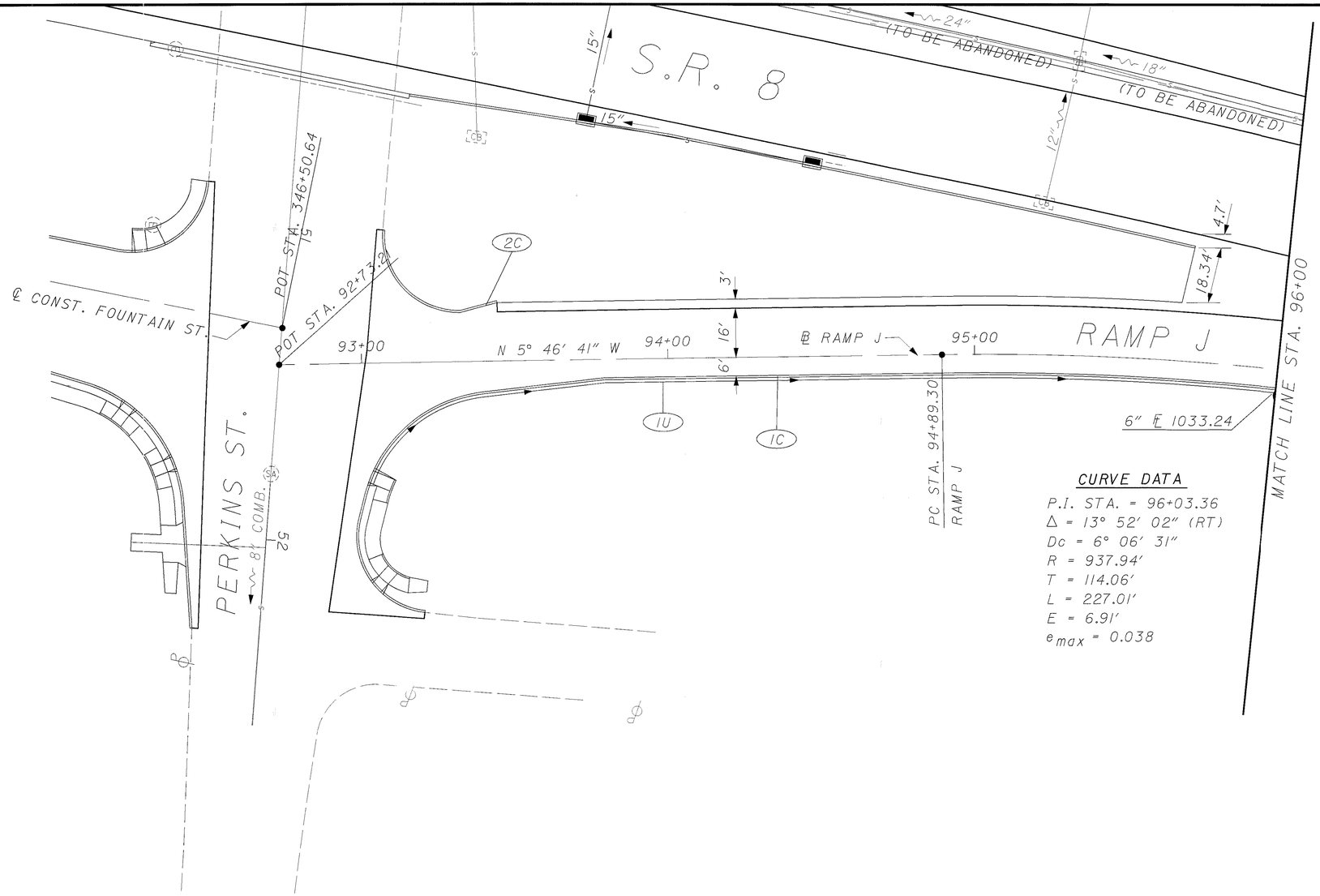

	CROSS REFERENCES
SHEET NO.	DESCRIPTION
154	CURB AND UNDERDRAIN SUBSUMMARY

N

HORIZONTAL SCALE IN FEET
0 10 20 40

CALCULATED | CHECKED

CURB & UNDERDRAIN PLAN - RAMP J
STA. 92+00 TO STA. 96+00

SUM-8-0.63

491
1088

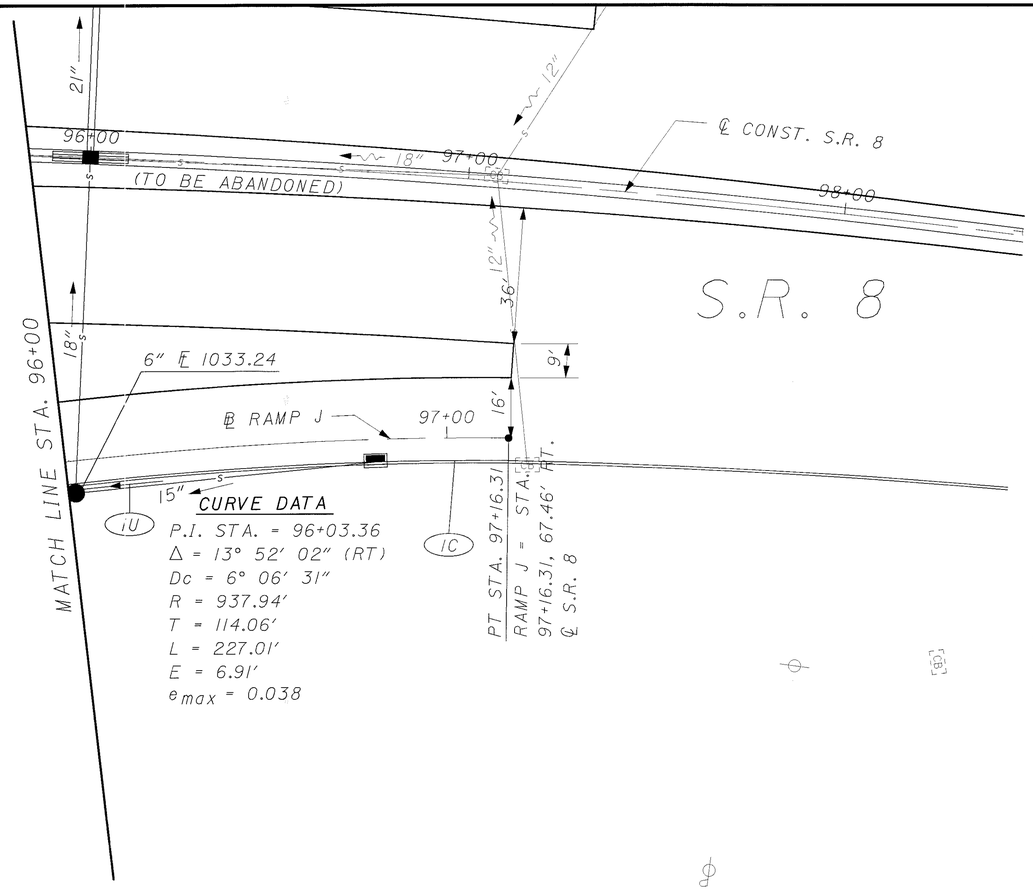

CROSS REFERENCES	
SHEET NO.	DESCRIPTION
154	CURB AND UNDERDRAIN SUBSUMMARY

N

0 10 20 40
HORIZONTAL SCALE IN FEET

CALCULATED | CHECKED

CURB & UNDERDRAIN PLAN - RAMP J
STA. 96+00 TO STA. 98+50

SUM-8-06.3

492
1088

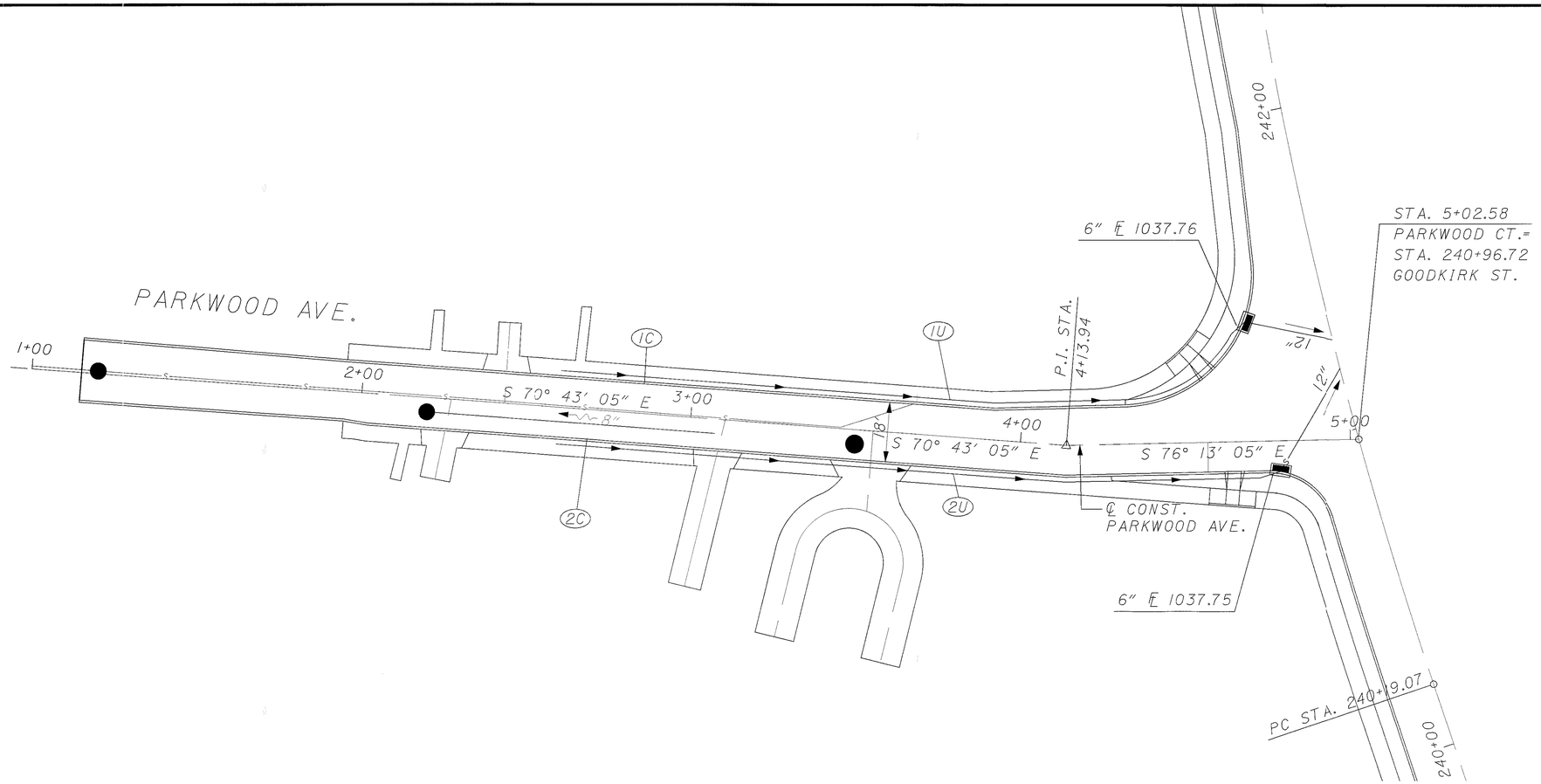

	CROSS REFERENCES
SHEET NO.	DESCRIPTION
154	CURB AND UNDERDRAIN SUBSUMMARY

N

0 10 20 40
HORIZONTAL SCALE IN FEET

CALCULATED | CHECKED

CURB AND UNDERDRAIN PLAN - PARKWOOD AVE.
STA. 1+00 TO STA. 5+02.58

SUM-8-0.63

493
1088

NOTES

ADD 1000' TO THE ELEVATION SHOWN FOR ACTUAL ELEVATION.

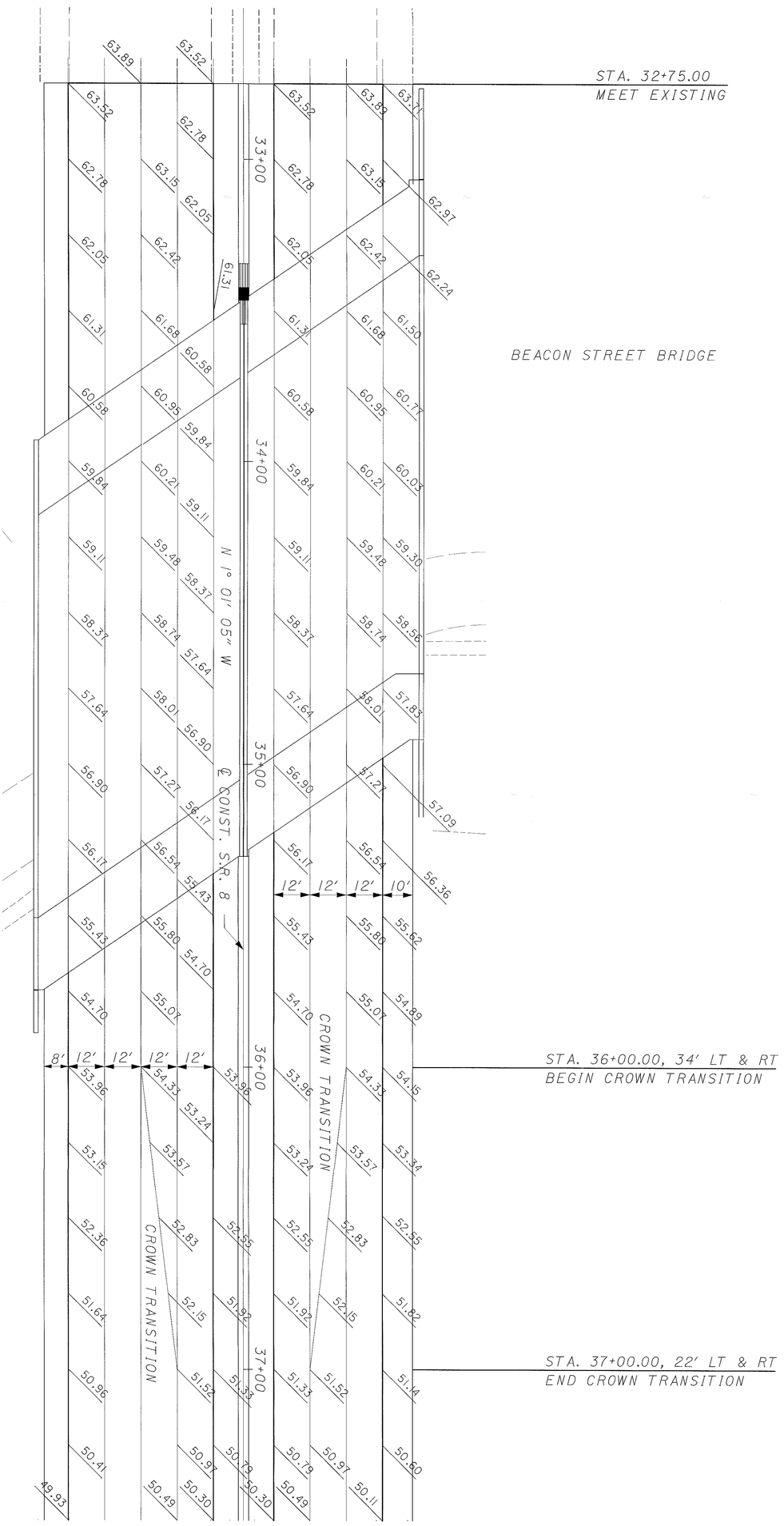

494 / 1088	SUM-8-0.63	PAVEMENT DETAILS S.R. 8 STA. 32+75 TO STA. 37+50	CALCULATED KME CHECKED BF	0 20 10 40 HORIZONTAL SCALE IN FEET

NOTES

ADD 1000' TO THE ELEVATION SHOWN FOR ACTUAL ELEVATION.

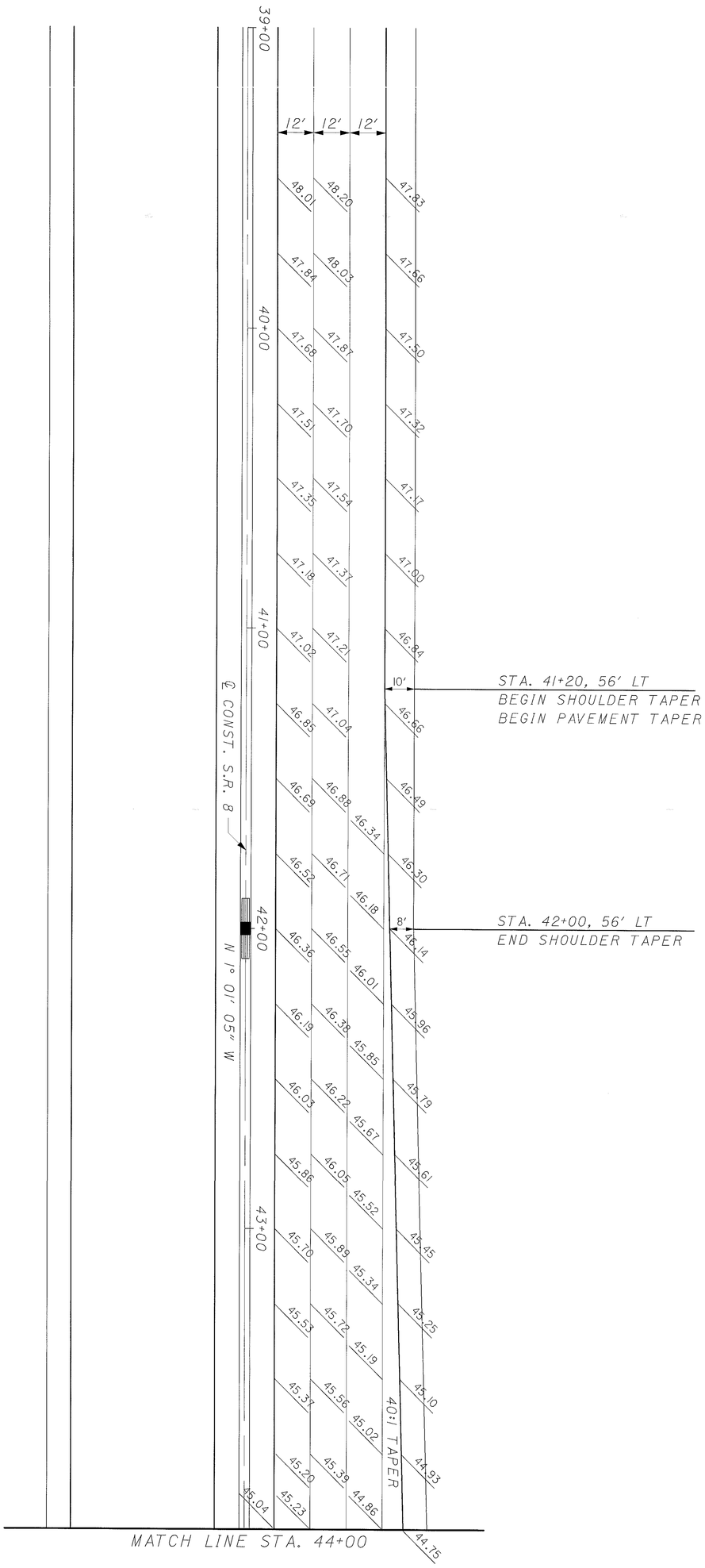

1088 495	SUM-8-0.63	PAVEMENT DETAILS S.R. 8 STA. 39+00 TO STA. 44+00	CALCULATED KME CHECKED BF	0 20 10 40 HORIZONTAL SCALE IN FEET

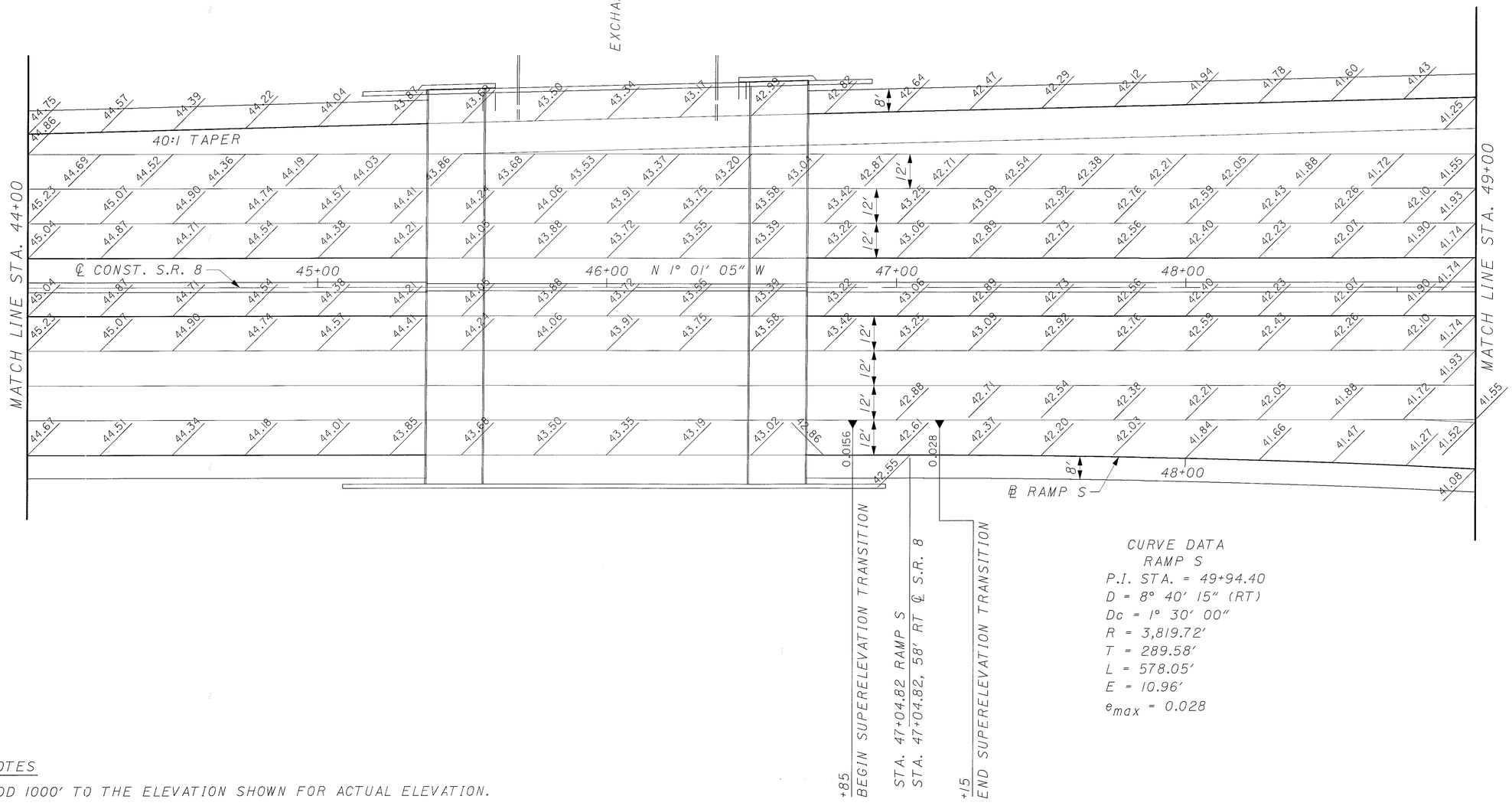

CURVE DATA
RAMP S
P.I. STA. = 49+94.40
D = 8° 40′ 15″ (RT)
Dc = 1° 30′ 00″
R = 3,819.72′
T = 289.58′
L = 578.05′
E = 10.96′
e_{max} = 0.028

NOTES

ADD 1000′ TO THE ELEVATION SHOWN FOR ACTUAL ELEVATION.

N

0 10 20 40
HORIZONTAL SCALE IN FEET

CALCULATED KME
CHECKED BF

PAVEMENT DETAILS S.R. 8
STA. 44+00 TO STA. 49+00

SUM-8-0.63

496
1088

NOTES

ADD 1000' TO THE ELEVATION SHOWN FOR ACTUAL ELEVATION.

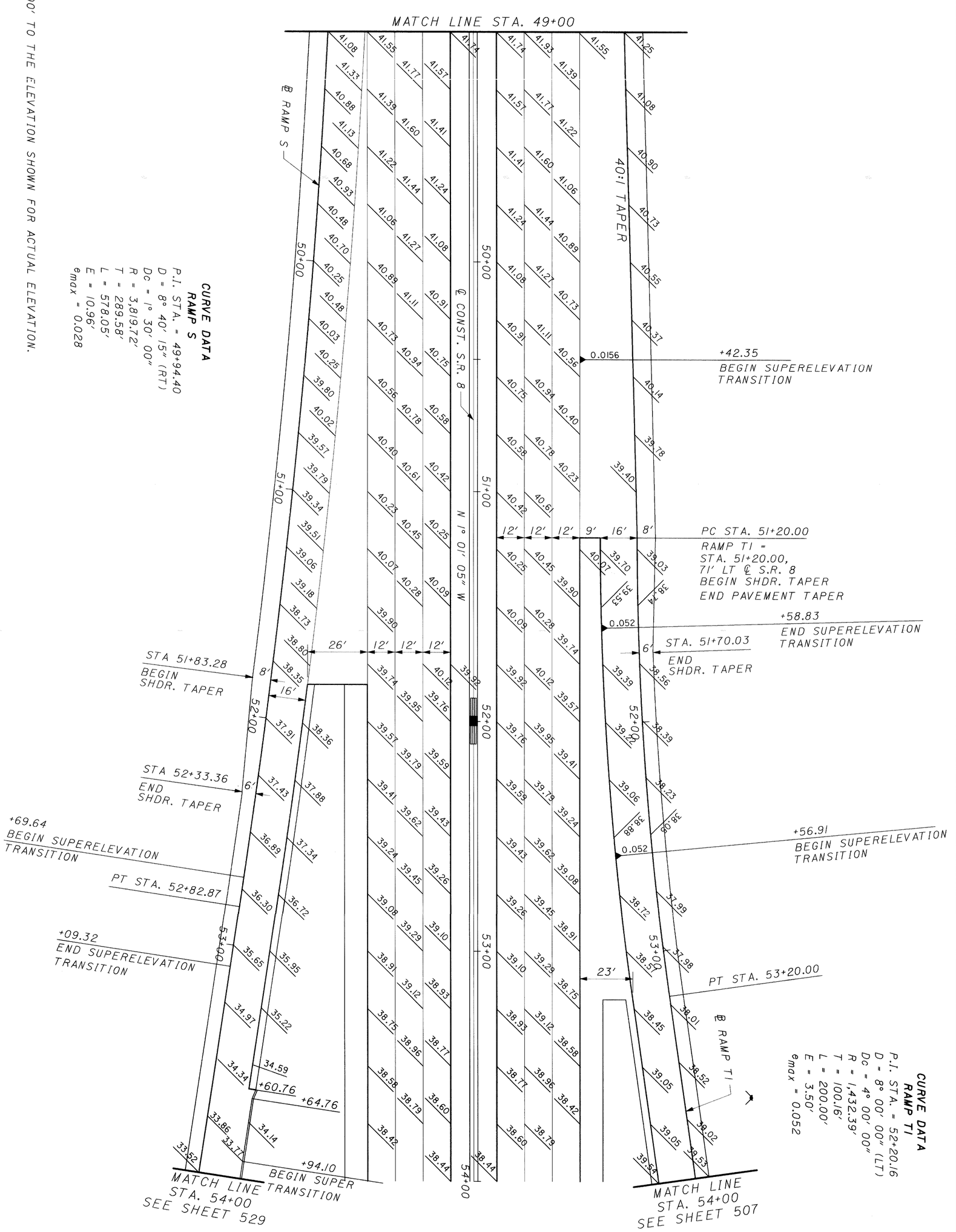

CURVE DATA
RAMP S

P.I. STA. = 49+94.40
D = 8° 40' 15" (RT)
Dc = 1° 30' 00"
R = 3,819.72'
T = 289.58'
L = 578.05'
E = 10.96'
e_{max} = 0.028

CURVE DATA
RAMP T1

P.I. STA. = 52+20.16
D = 8° 00' 00" (LT)
Dc = 4° 00' 00"
R = 1,432.39'
T = 100.16'
L = 200.00'
E = 3.50'
e_{max} = 0.052

REVISIONS: 05/15/2002 by MAM

497 / 1088	SUM-8-0.63	PAVEMENT DETAILS S.R. 8 STA. 49+00 TO STA. 54+00	CALCULATED KME CHECKED BF HORIZONTAL SCALE IN FEET 0 10 20 40

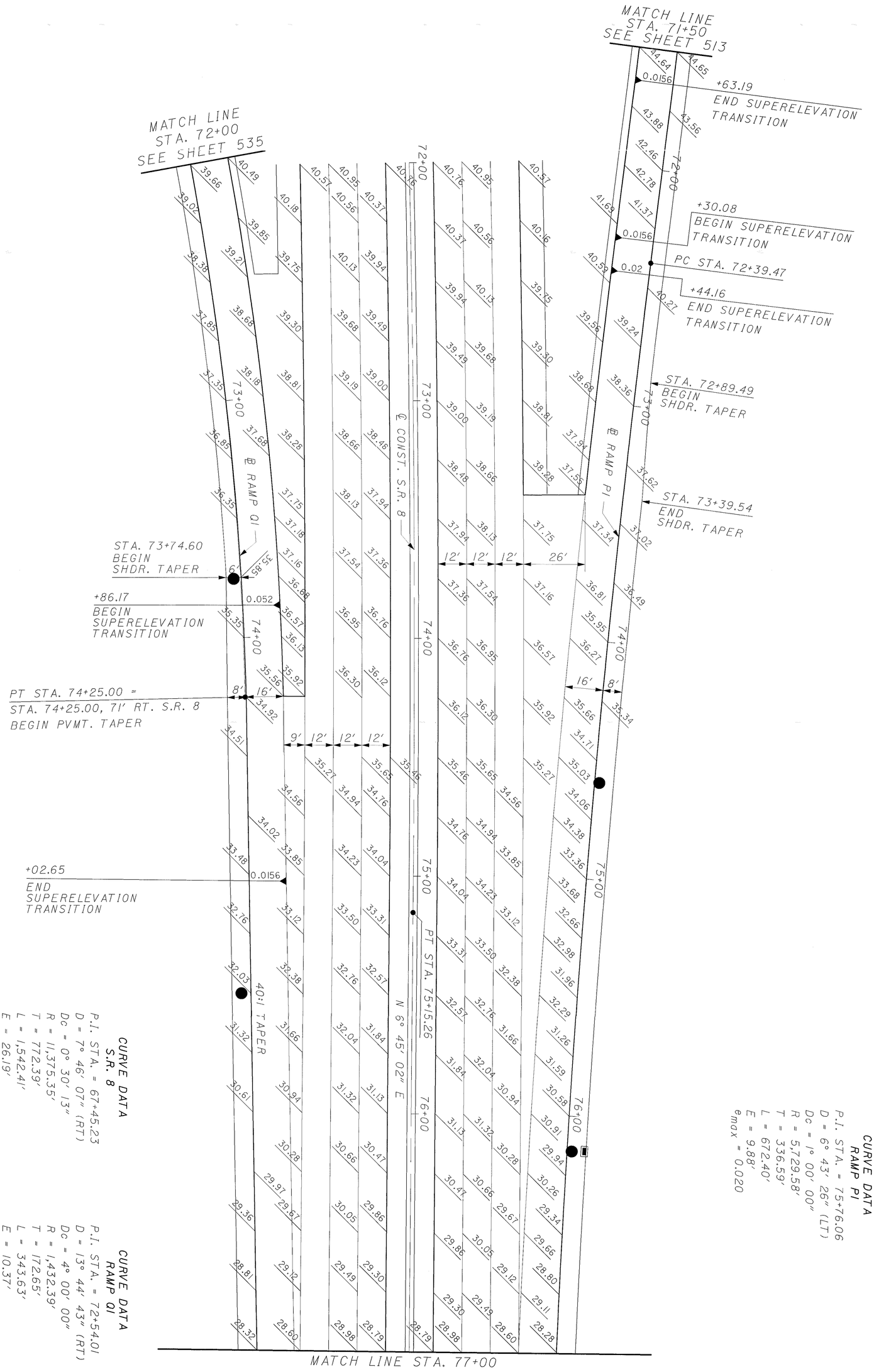

CURVE DATA
S.R. 8
P.I. STA. = 67+45.23
D = 7° 46' 07" (RT)
Dc = 0° 30' 13"
R = 11,375.35'
T = 772.39'
L = 1,542.41'
E = 26.19'
e_{max} = NONE

CURVE DATA
RAMP Q1
P.I. STA. = 72+54.01
D = 13° 44' 43" (RT)
Dc = 4° 00' 00"
R = 1,432.39'
T = 172.65'
L = 343.63'
E = 10.37'
e_{max} = 0.052

CURVE DATA
RAMP P1
P.I. STA. = 75+76.06
D = 6° 43' 26" (LT)
Dc = 1° 00' 00"
R = 5,729.58'
T = 336.59'
L = 672.40'
E = 9.88'
e_{max} = 0.020

498 / 1088	SUM-8-0.63	PAVEMENT DETAIL S.R. 8 STA. 72+00 TO STA. 77+00	CALCULATED KME CHECKED BF	0 20 10 40 HORIZONTAL SCALE IN FEET

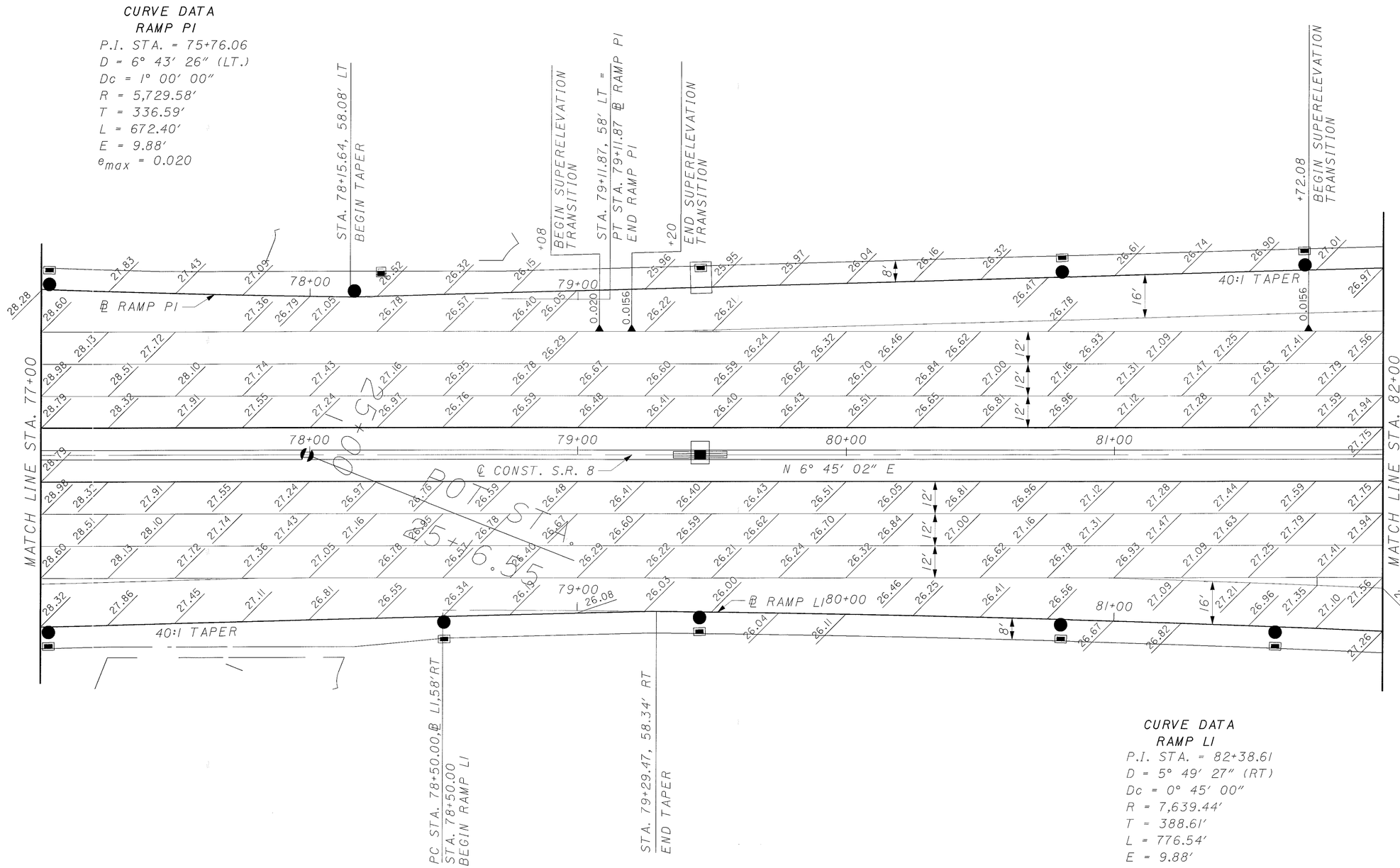

PAVEMENT DETAIL S.R. 8 STA. 77+00 TO STA. 82+00

SUM-8-0.63

HORIZONTAL SCALE IN FEET

CALCULATED KME

CHECKED BF

499
1088

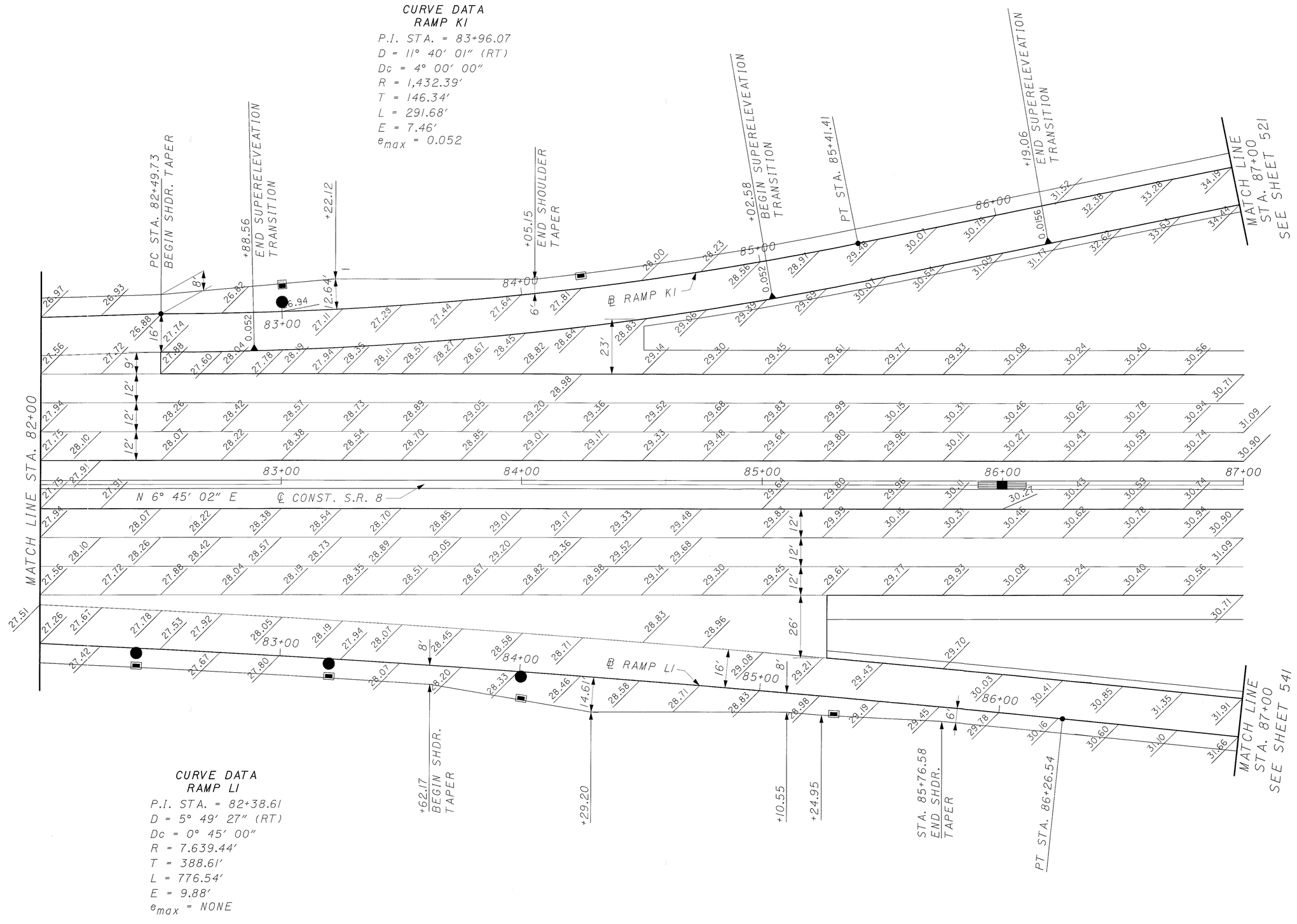

HORIZONTAL SCALE IN FEET

CALCULATED KME

CHECKED BF

PAVEMENT DETAILS S.R.8 STA. 82+00 TO STA. 87+00

SUM-8-0.63

500
1088

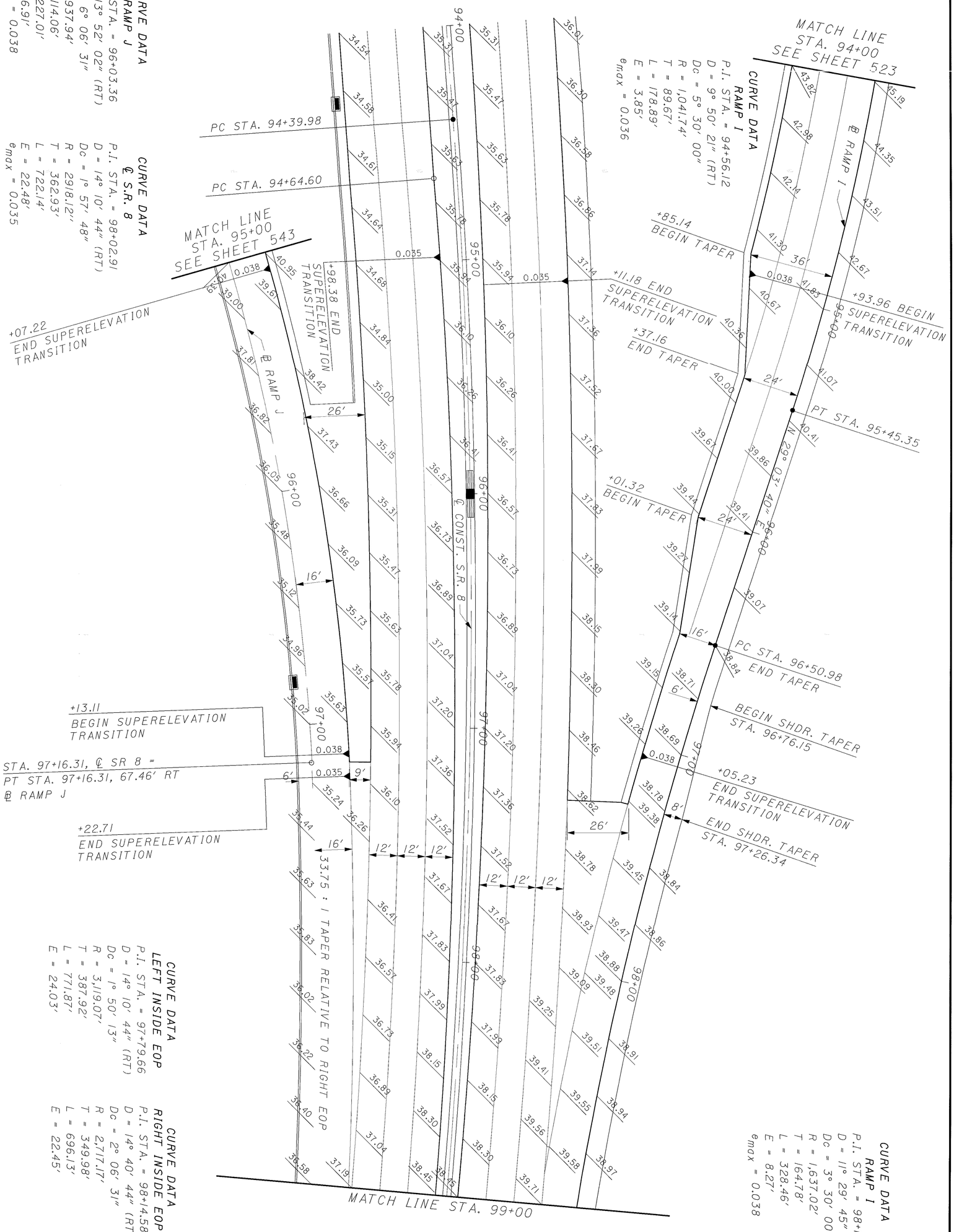

501 / 1088	SUM-8-0.63	PAVEMENT DETAILS S.R.8 STA. 94+00 TO STA. 99+00	CALCULATED KME CHECKED BF	0 10 HORIZONTAL SCALE IN FEET

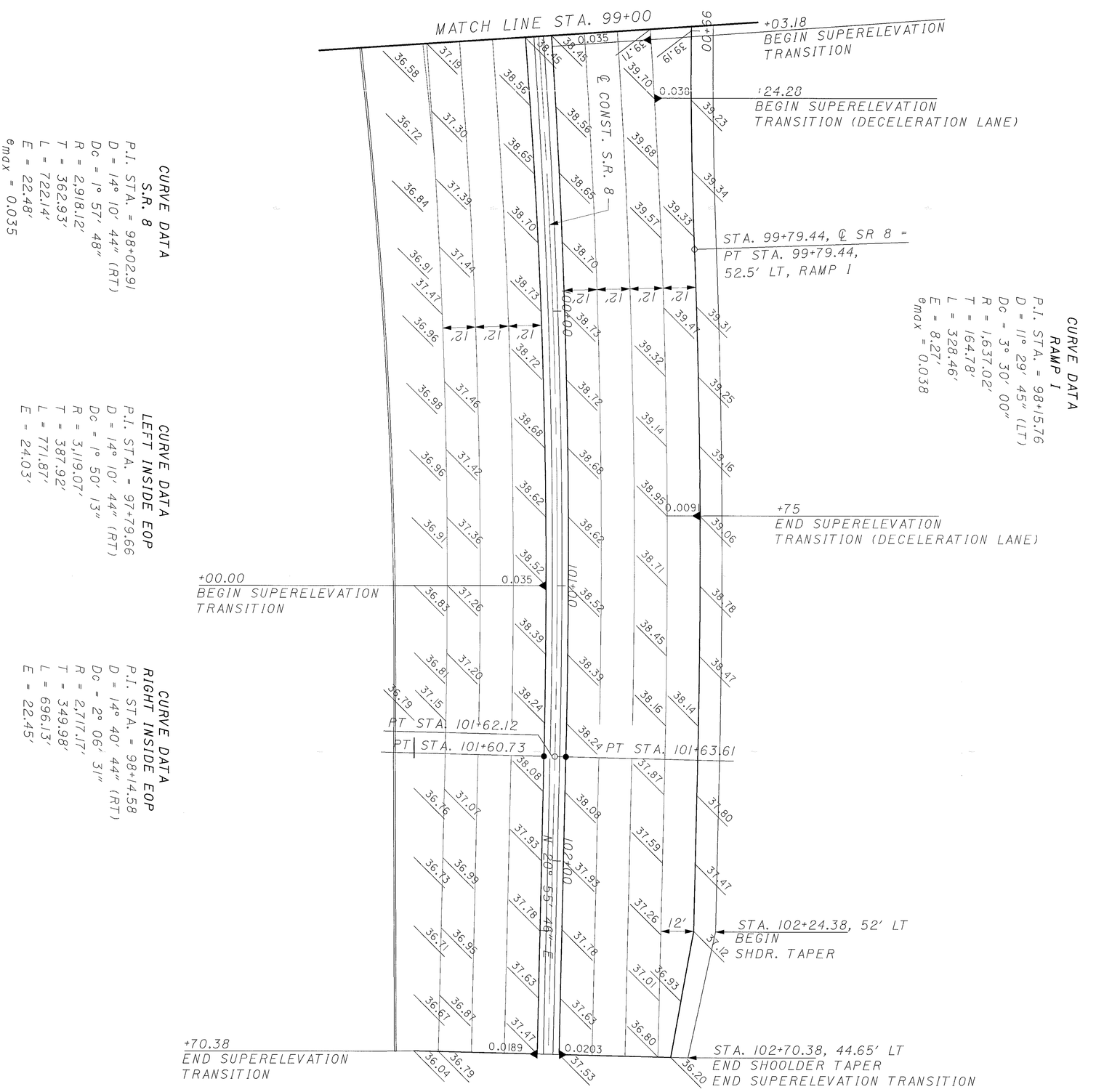

CURVE DATA
S.R. 8
P.I. STA. = 98+02.91
D = 14° 10' 44" (RT)
Dc = 1° 57' 48"
R = 2,918.12'
T = 362.93'
L = 722.14'
E = 22.48'
e_{max} = 0.035

CURVE DATA
RAMP I
P.I. STA. = 98+15.76
D = 11° 29' 45" (LT)
Dc = 3° 30' 00"
R = 1,637.02'
T = 164.78'
L = 328.46'
E = 8.27'
e_{max} = 0.038

CURVE DATA
LEFT INSIDE EOP
P.I. STA. = 97+79.66
D = 14° 10' 44" (RT)
Dc = 1° 50' 13"
R = 3,119.07'
T = 387.92'
L = 771.87'
E = 24.03'

CURVE DATA
RIGHT INSIDE EOP
P.I. STA. = 98+14.58
D = 14° 40' 44" (RT)
Dc = 2° 06' 31"
R = 2,717.17'
T = 349.98'
L = 696.13'
E = 22.45'

502 / 1088	**SUM-8-0.63**	**PAVEMENT DETAILS S.R.8** **STA. 99+00 TO STA. 102+70.38**	CALCULATED KME CHECKED BF	0 20 10 40 HORIZONTAL SCALE IN FEET

NOTES
ADD 1000' TO THE ELEVATION SHOWN FOR ACTUAL ELEVATION.

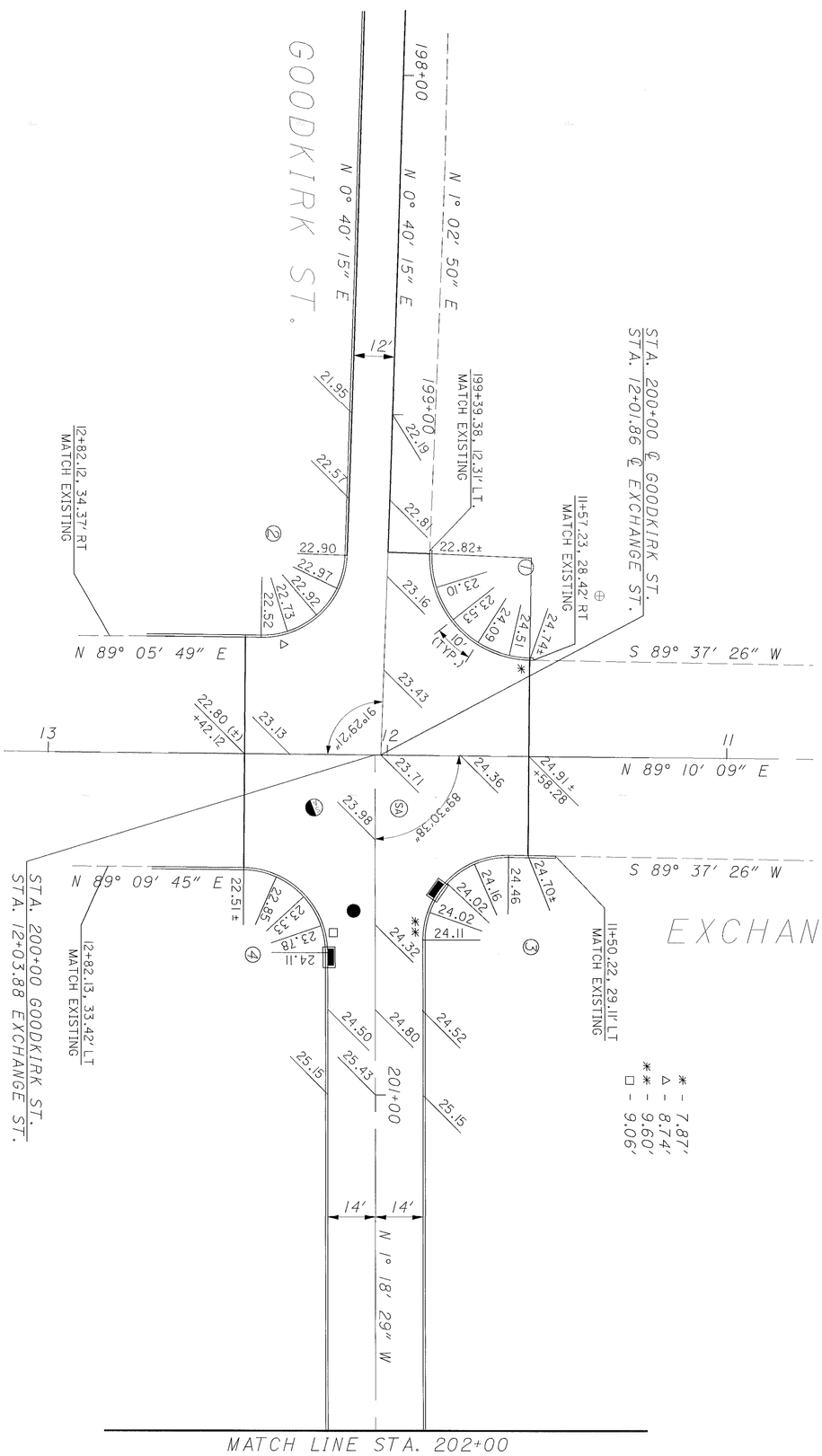

CURVE DATA						
NO.	PC STA.	PT STA.	RADIUS	DELTA	TAN.	LENGTH
1	199+40.38	11+58.55	30'	91° 25' 26"	30.76'	47.87'
2	199+41.76	12+37.45	25'	88° 47' 31"	24.48'	38.74'
3	11+64.63	200+54.44	25'	90° 46' 01"	25.34'	39.60'
4	12+42.39	200+58.21	25'	89° 31' 47"	24.80'	39.06'

503
1088

SUM-8-0.63

PAVEMENT DETAILS GOODKIRK ST.
STA. 198+00 TO STA. 202+00

CALCULATED BF
CHECKED KME

0 20
10 40
HORIZONTAL SCALE IN FEET

N

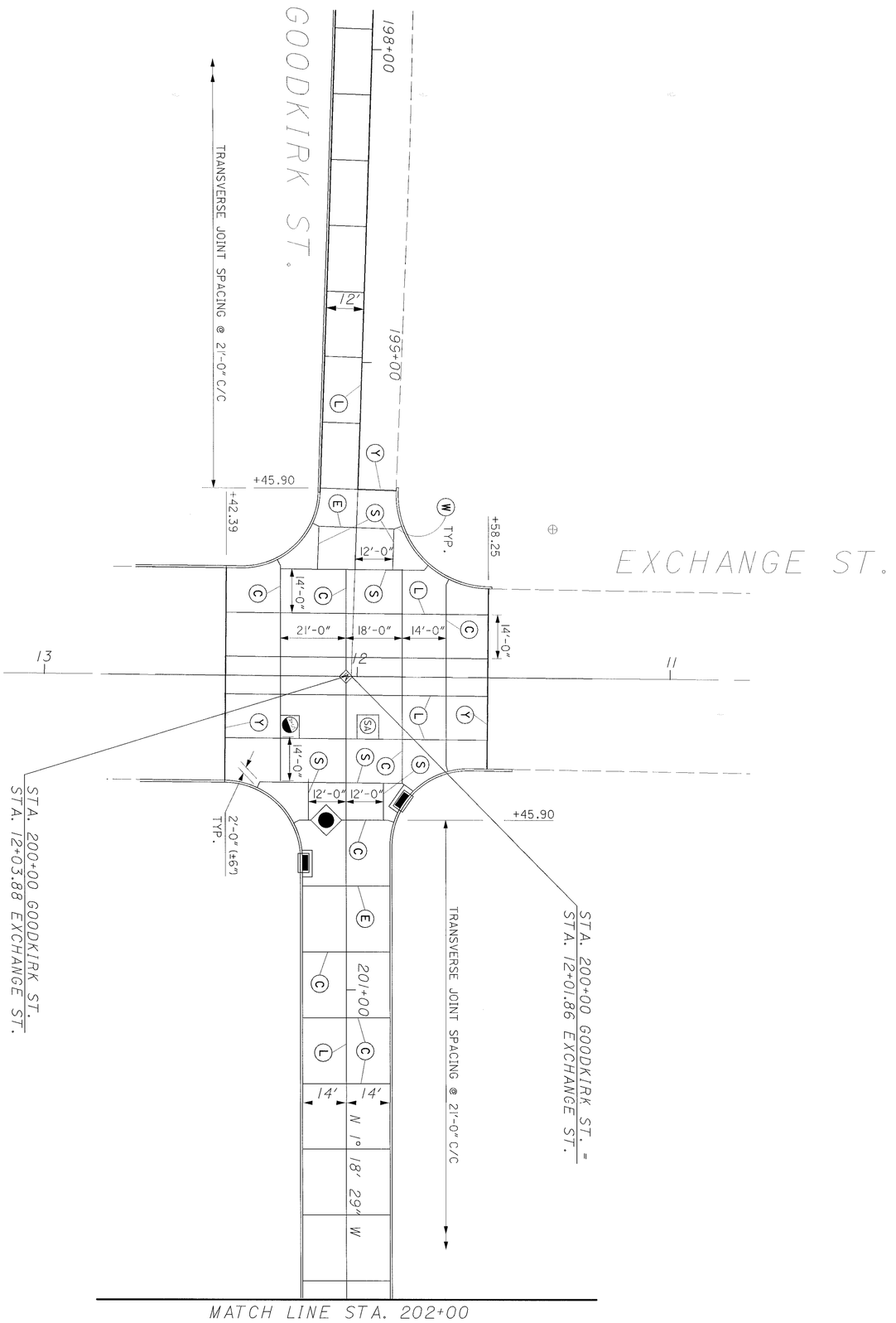

LEGEND

- (E) EXPANSION JOINT AS PER BP-2.2
- (W) EXPANSION JOINT AS PER BP-2.1 WITHOUT DOWEL BARS
- (L) STANDARD LONGITUDINAL JOINT AS PER BP-2.1
- (S) STANDARD LONGITUDINAL JOINT AS PER BP-2.1 WITHOUT TIE BARS
- (C) CONTRACTION JOINT AS PER BP-2.1
- (Y) BUTT JOINT

504
1088

SUM-8-0.63

PAVEMENT DETAILS GOODKIRK ST.
STA. 198+00 TO STA. 202+00

CALCULATED KME
CHECKED BF

0 20
10 40
HORIZONTAL SCALE IN FEET

N

CURVE DATA						
NO.	PC STA.	PT STA.	RADIUS	DELTA	TAN.	LENGTH
1	203+89.83	4+60.68	25′	90° 29′ 41″	25.21′	39.49′
2	4+61.33	204+64.61	25′	89° 30′ 19″	24.79′	39.05′

* - 9.49′
** - 9.05′

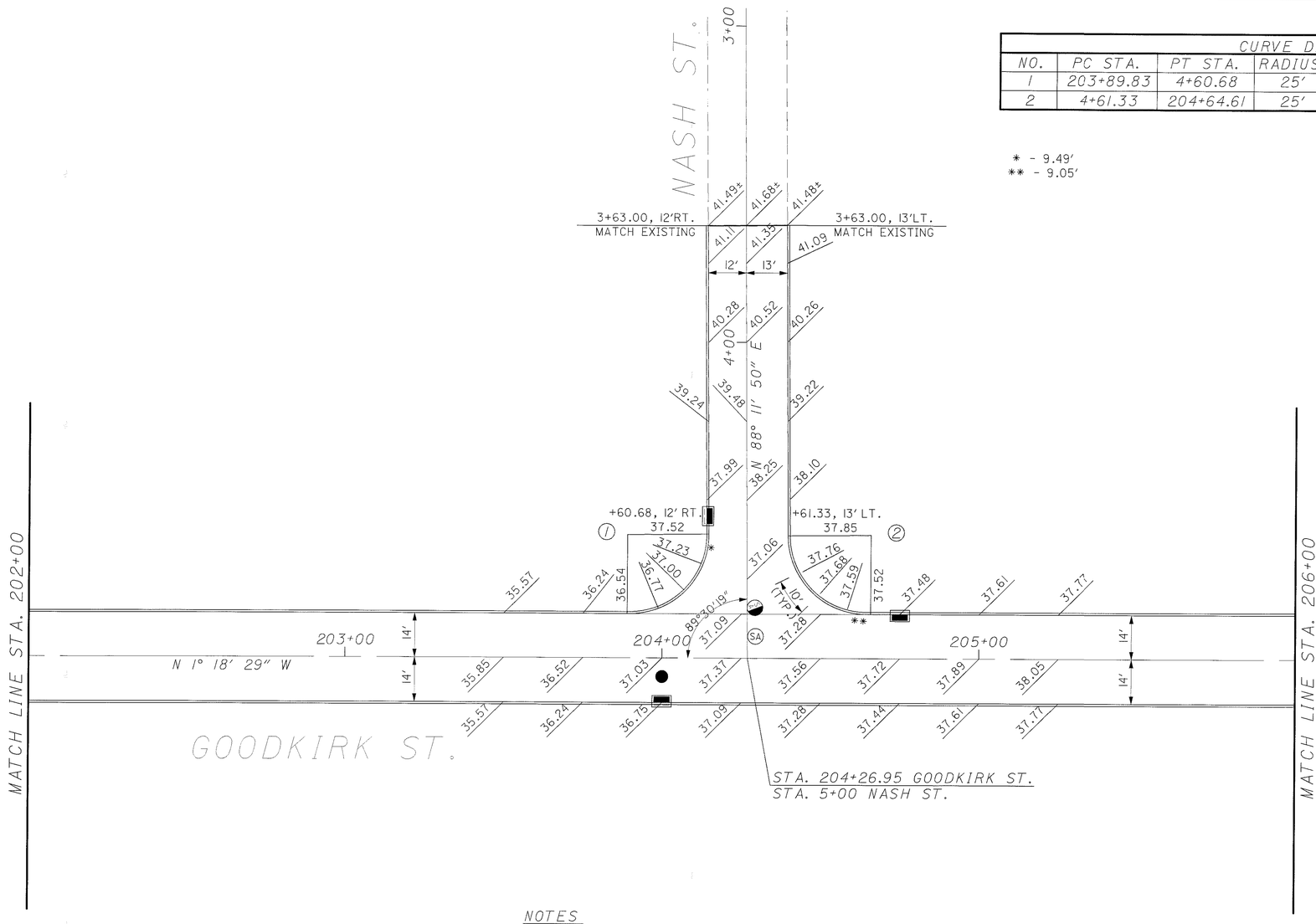

NOTES
ADD 1000′ TO THE ELEVATION SHOWN FOR ACTUAL ELEVATION.

HORIZONTAL SCALE IN FEET
0 10 20 40

CALCULATED KME
CHECKED BF

PAVEMENT DETAILS GOODKIRK ST.
STA. 202+00 TO STA. 206+00

SUM-8-0.63

505
1088

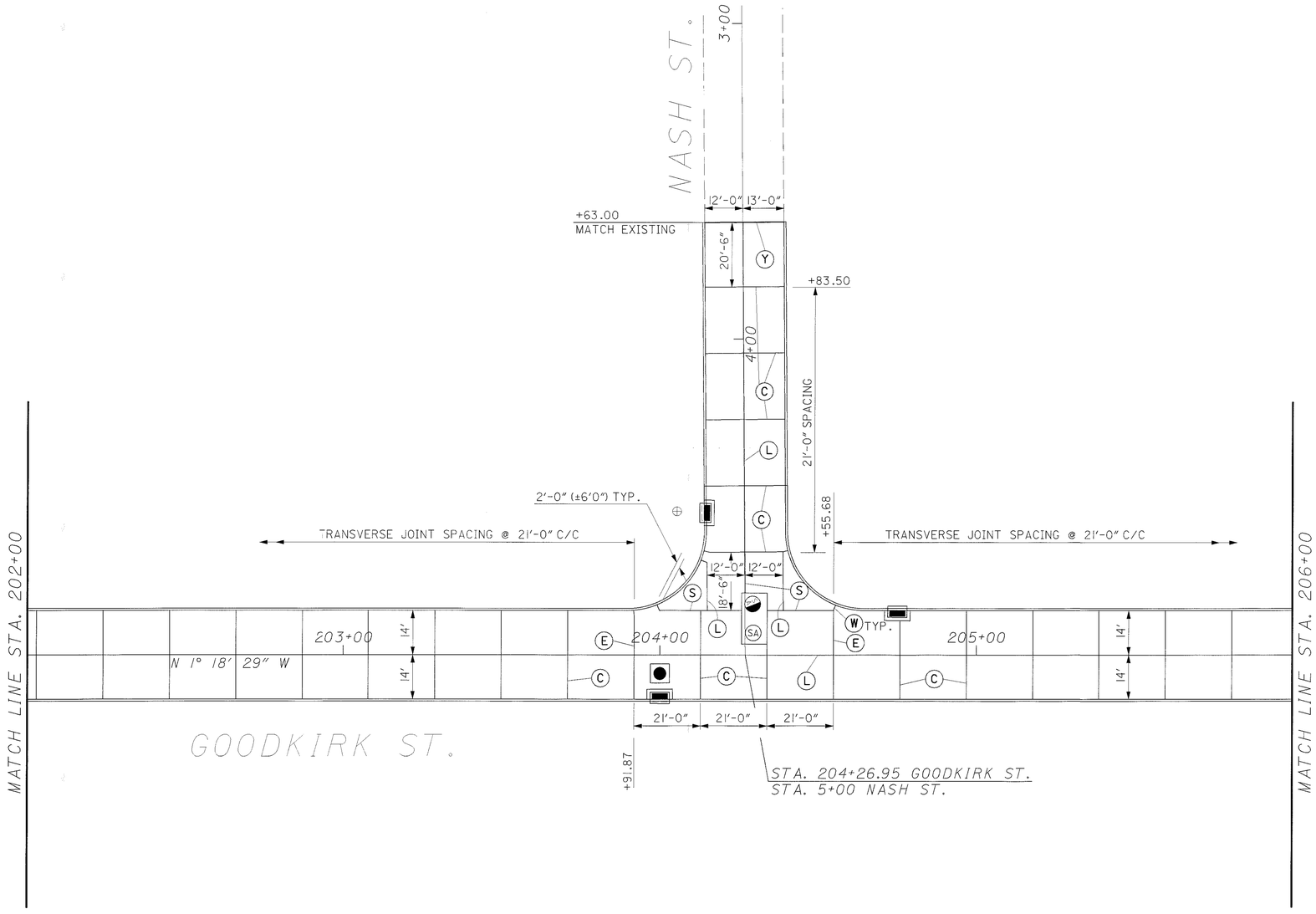

LEGEND

- (E) EXPANSION JOINT AS PER BP-2.2
- (W) EXPANSION JOINT AS PER BP-2.1 WITHOUT DOWEL BARS
- (L) STANDARD LONGITUDINAL JOINT AS PER BP-2.1
- (S) STANDARD LONGITUDINAL JOINT AS PER BP-2.1 WITHOUT TIE BARS
- (C) CONTRACTION JOINT AS PER BP-2.1
- (Y) BUTT JOINT

N

0 10 20 40
HORIZONTAL SCALE IN FEET

CALCULATED KME
CHECKED BF

PAVEMENT DETAILS GOODKIRK ST.
STA. 202+00 TO STA. 206+00

SUM-8-0.63

506
1088

CURVE DATA

NO.	PC STA.	PT STA.	R	DELTA	TANGENT	LENGTH
1	208+20.85	4+60.92	25′	90°20′14″	25.15′	39.42′
2	4+61.31	208+96.76	25′	89°31′14″	24.79′	39.06′

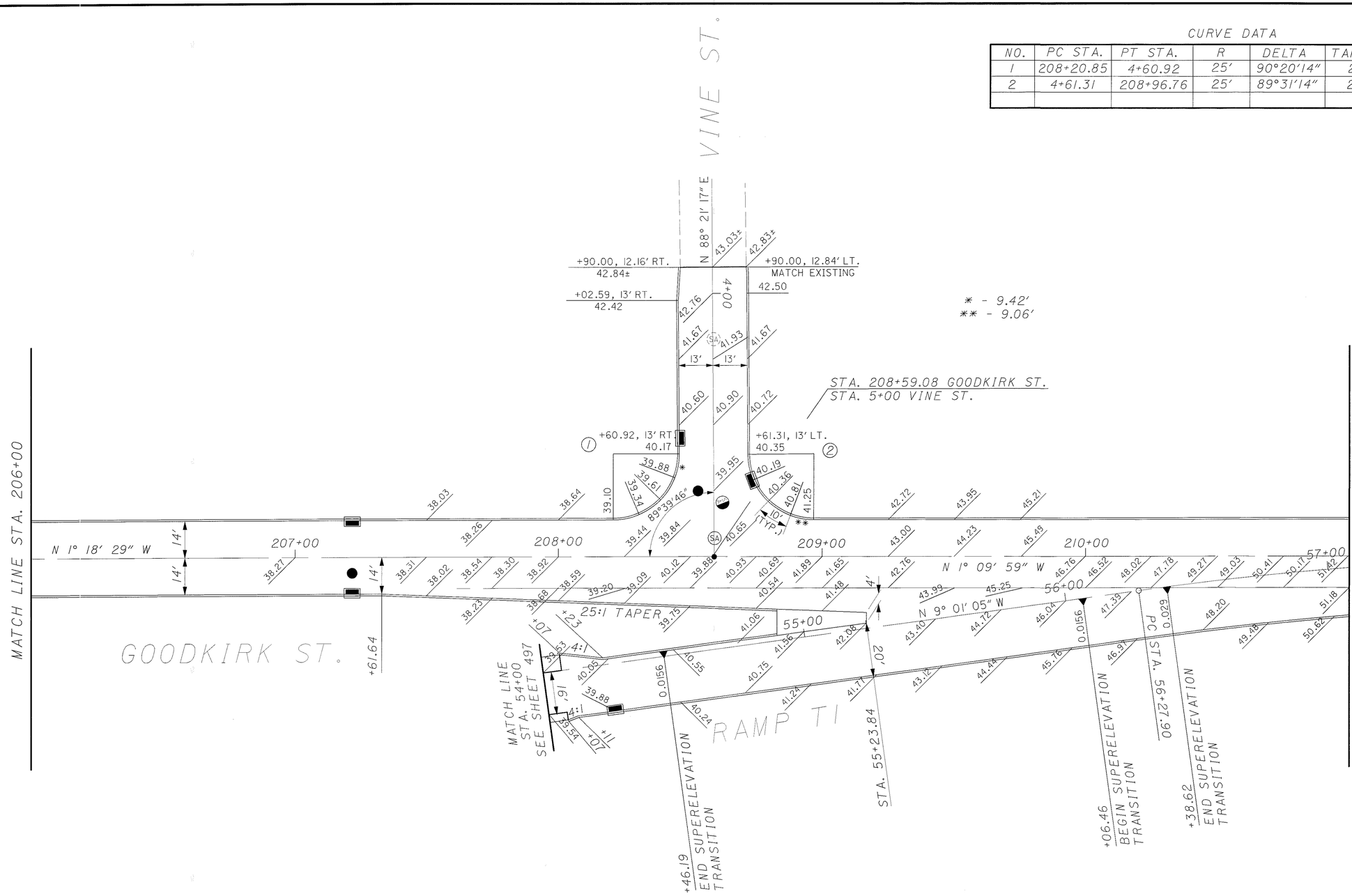

CURVE DATA

P.I. STA.= 52+20.16
Δ = 8° 00′ 00″ (LT)
Dc = 4° 00′ 00″
R = 1,432.39′
T = 100.16′
L = 200.00′
E = 3.50′
e_{max} = 0.052

CURVE DATA

P.I. STA.= 57+65.82
Δ = 10° 59′ 59″ (RT)
Dc = 4° 00′ 00″
R = 1,432.39′
T = 137.92′
L = 274.99′
E = 6.62′
e_{max} = 0.029

NOTES
ADD 1000′ TO THE ELEVATION SHOWN FOR ACTUAL ELEVATION.

HORIZONTAL SCALE IN FEET
0 10 20 40

CALCULATED KME
CHECKED BF

PAVEMENT DETAILS GOODKIRK ST.
STA. 206+00 TO STA. 211+00

SUM-8-0.63

507
1088

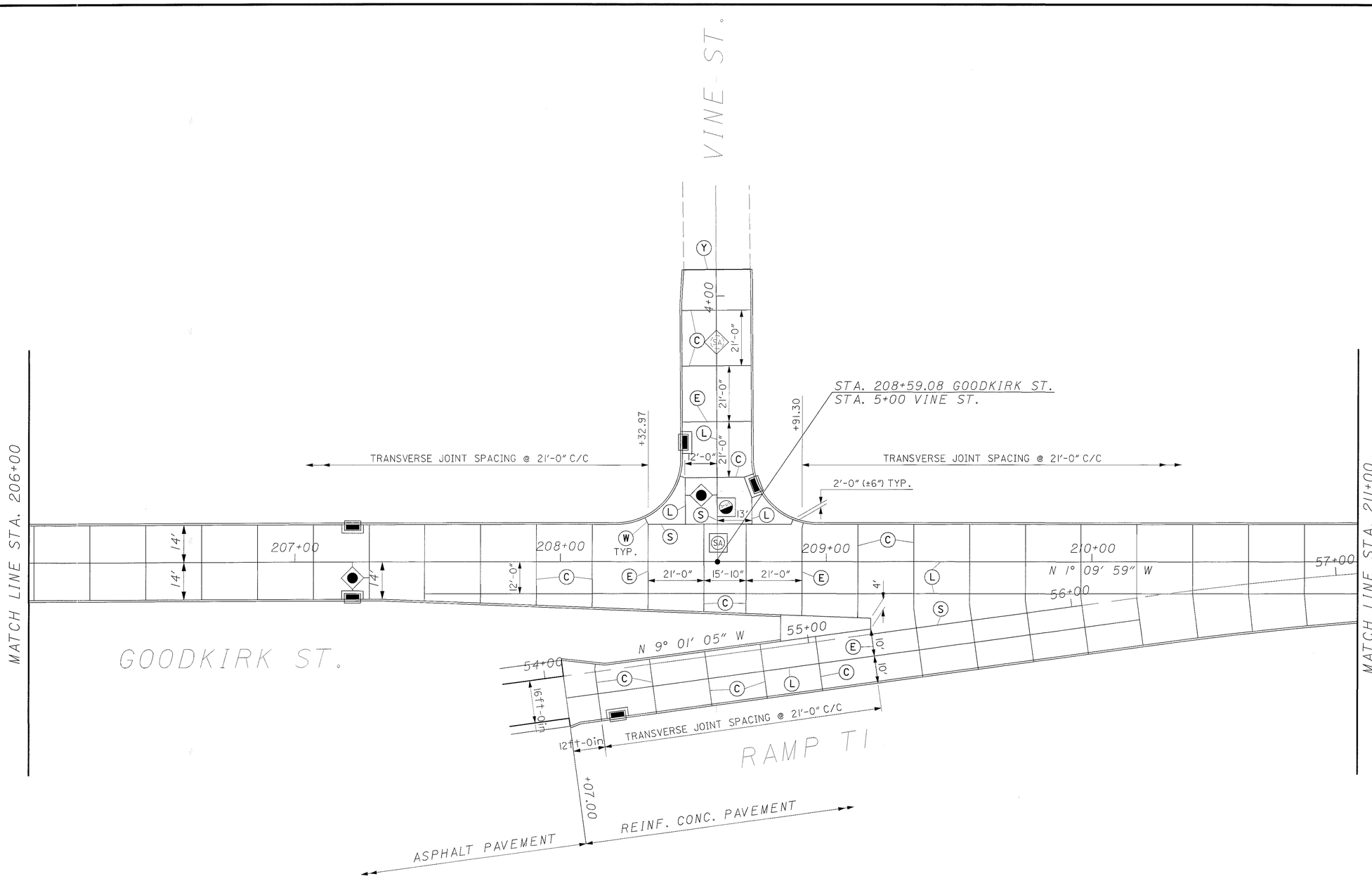

LEGEND

- (E) EXPANSION JOINT AS PER BP-2.2
- (W) EXPANSION JOINT AS PER BP-2.1 WITHOUT DOWEL BARS
- (L) STANDARD LONGITUDINAL JOINT AS PER BP-2.1
- (S) STANDARD LONGITUDINAL JOINT AS PER BP-2.1 WITHOUT TIE BARS
- (C) CONTRACTION JOINT AS PER BP-2.1
- (Y) BUTT JOINT

N

HORIZONTAL SCALE IN FEET
0 10 20 40

CALCULATED KME
CHECKED BF

PAVEMENT DETAILS GOODKIRK ST.
STA. 206+00 TO STA. 211+00

SUM-8-0.63

508
1088

NO.	PC STA.	PT STA.	R	DELTA	TANGENT	LENGTH
1	211+48.84	4+55.62	30′	89°45′52″	29.88′	47.00′
2	4+57.50	212+27.61	30′	87°05′15″	28.51′	45.60′
3	214+59.86	11+61.06	40′	81°29′28″	34.46′	56.89′
4	11+60.30	215+84.37	45′	76°25′22″	35.43′	60.02′
5	214+76.77	12+52.82	25′	87° 5′16″	23.76′	38.00′
6	12+55.90	215+70.15	25′	91°52′36″	25.83′	40.09′

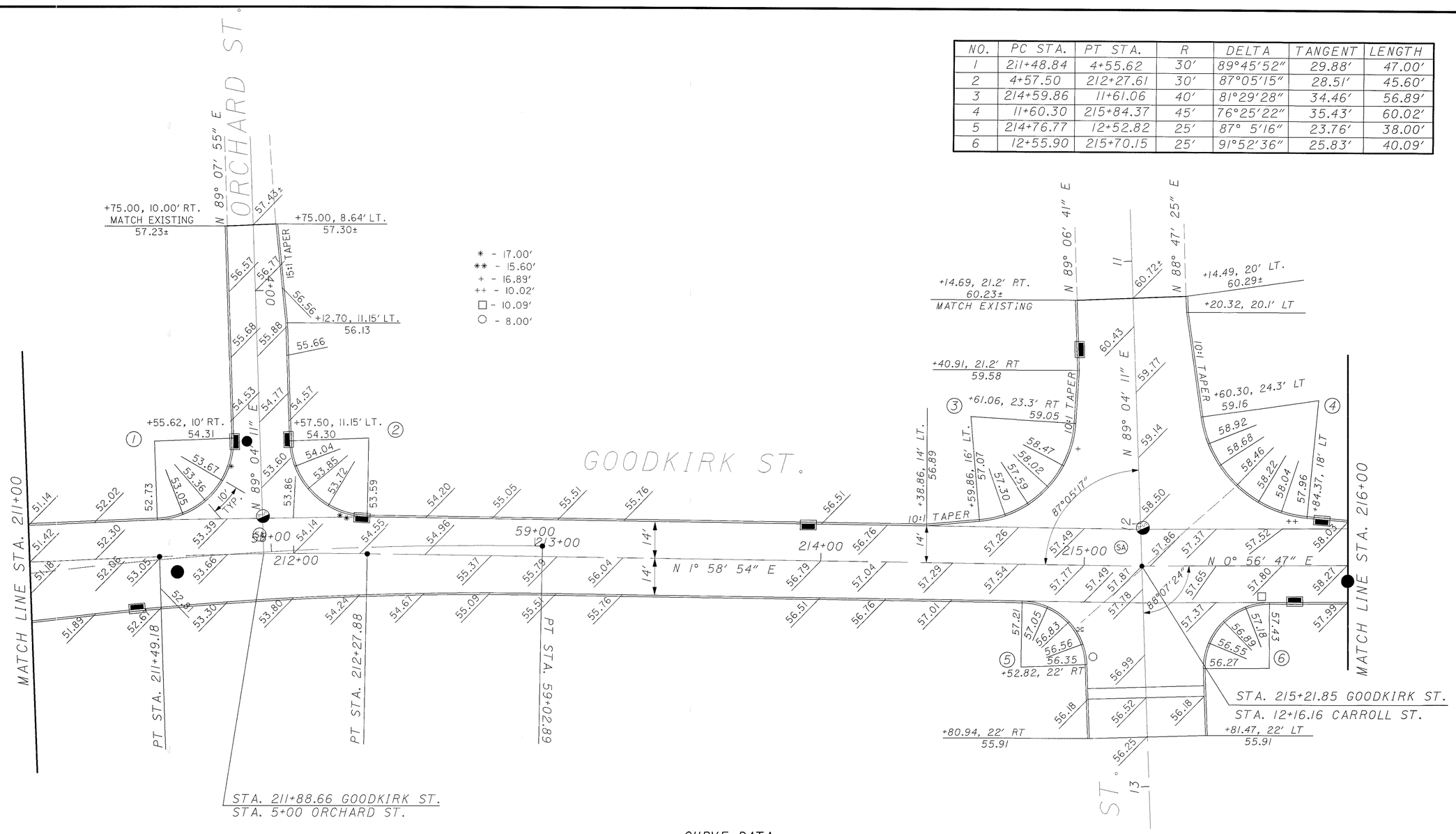

CURVE DATA

P.I. STA = 211+88.54
Δ = 3° 08′ 52″ (RT)
Dc = 4° 00′ 00″
R = 1,432.39′
T = 39.36′
L = 78.70′
E = 0.54′
e_{max} = NONE

NOTES
ADD 1000′ TO THE ELEVATION SHOWN FOR ACTUAL ELEVATION.

N

HORIZONTAL SCALE IN FEET
0 10 20 40

CALCULATED KME
CHECKED BF

PAVEMENT DETAILS GOODKIRK ST. STA. 211+00 TO STA. 216+00

SUM-8-0.63

509
1088

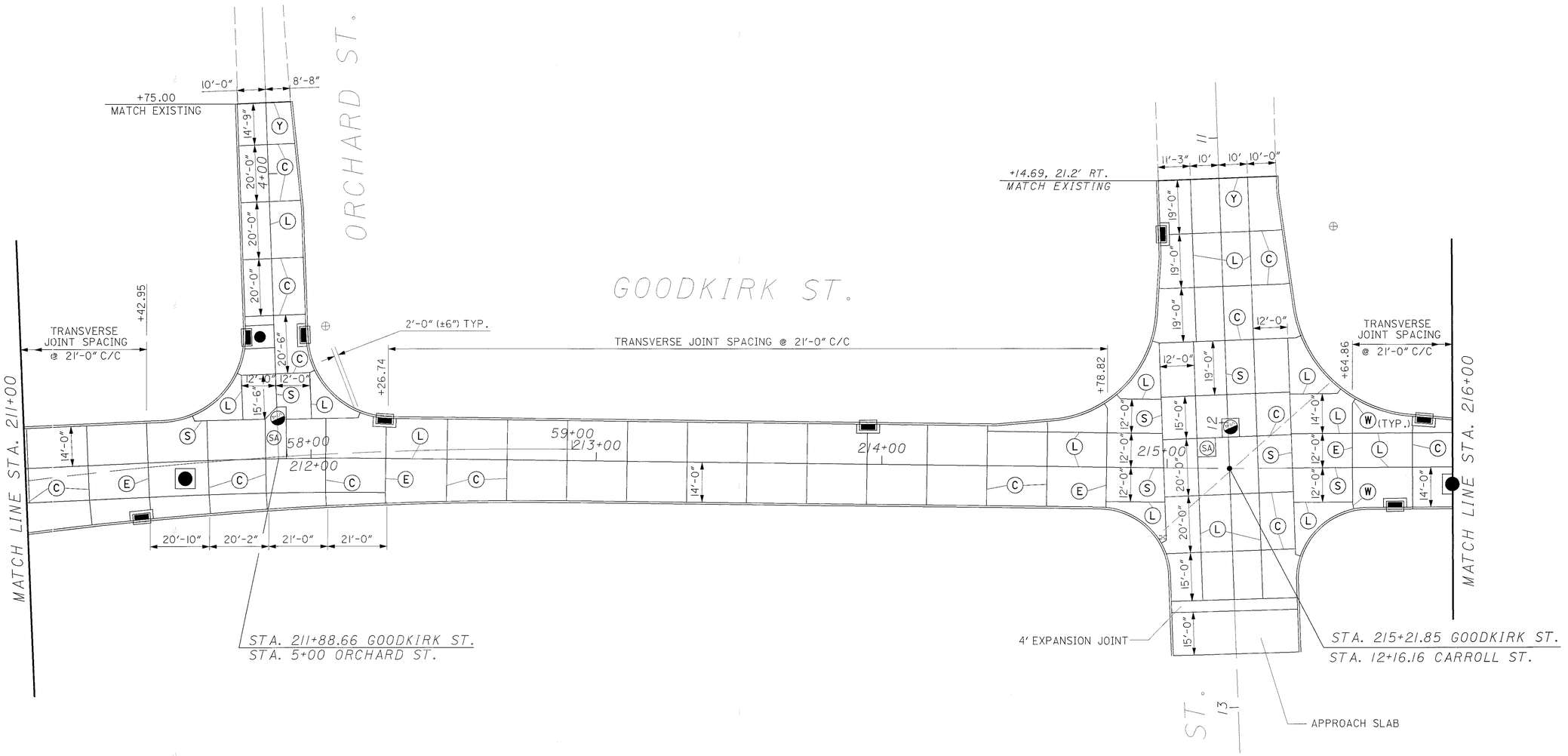

LEGEND

- (E) EXPANSION JOINT AS PER BP-2.2
- (W) EXPANSION JOINT AS PER BP-2.1 WITHOUT DOWEL BARS
- (L) STANDARD LONGITUDINAL JOINT AS PER BP-2.1
- (S) STANDARD LONGITUDINAL JOINT AS PER BP-2.1 WITHOUT TIE BARS
- (C) CONTRACTION JOINT AS PER BP-2.1
- (Y) BUTT JOINT

N

HORIZONTAL SCALE IN FEET
0 10 20 40

CALCULATED KME
CHECKED BF

PAVEMENT DETAILS GOODKIRK ST.
STA. 211+00 TO STA. 216+00

SUM-8-0.63

510
1088

NO.	PC STA.	PT STA.	R	DELTA	TANGENT	LENGTH
1	219+19.74	12+66.11	45'	80°29'37"	38.09'	63.22'
2	12+56.17	220+53.44	45'	79°00'42"	37.10'	62.06'
3	219+41.26	13+64.21	25'	88°02'55"	24.16'	38.42'
4	13+65.00	220+34.35	25'	90°51'45"	25.38'	39.65'
5	12+37.05	12+09.79	25'	96°10'36"	27.85'	41.96'

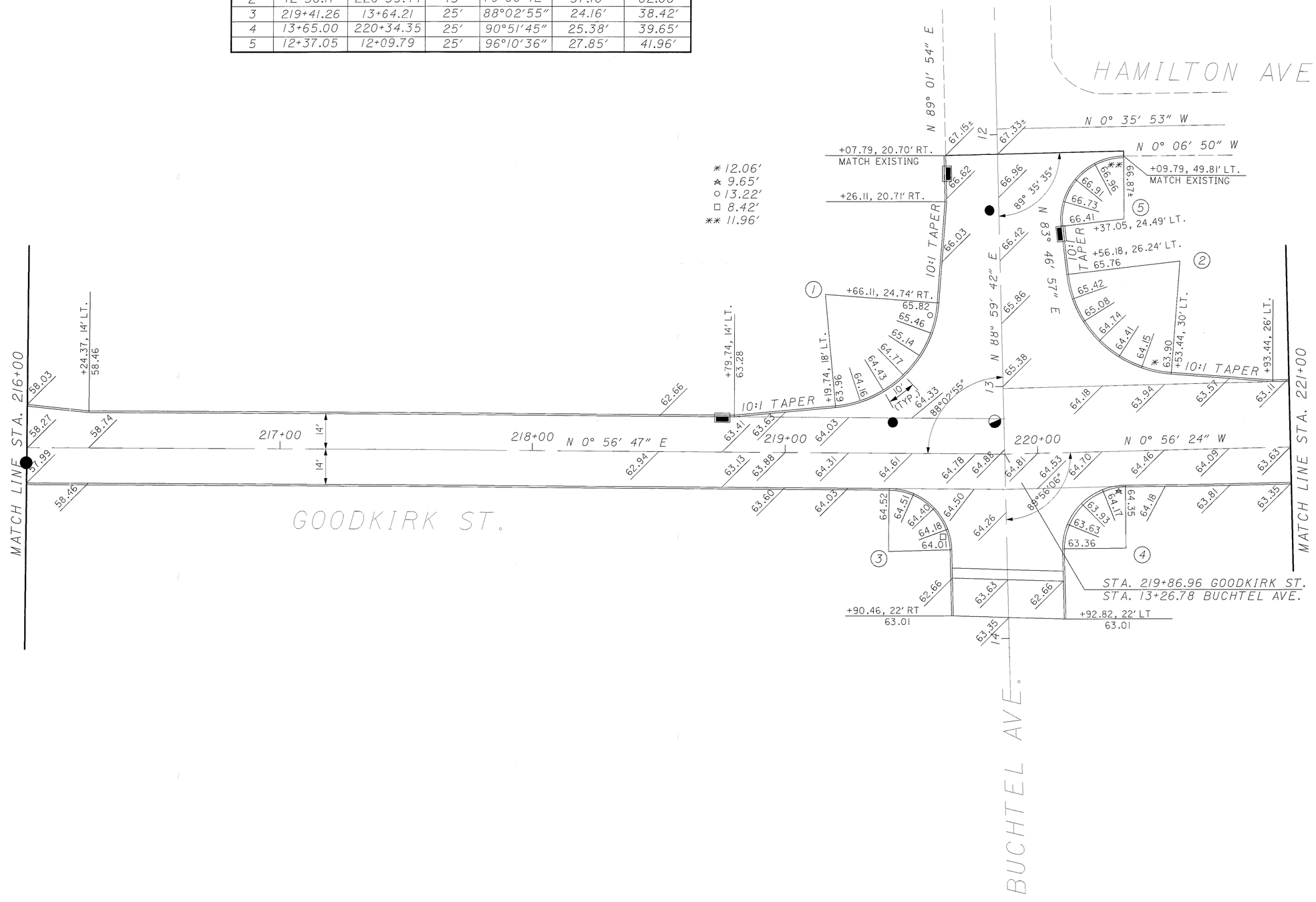

NOTES
ADD 1000' TO THE ELEVATION SHOWN FOR ACTUAL ELEVATION.

HORIZONTAL SCALE IN FEET
0 10 20 40

CALCULATED KME
CHECKED BF

PAVEMENT DETAILS GOODKIRK ST.
STA. 216+00 TO STA. 221+00

SUM-8-0.63

511
1088

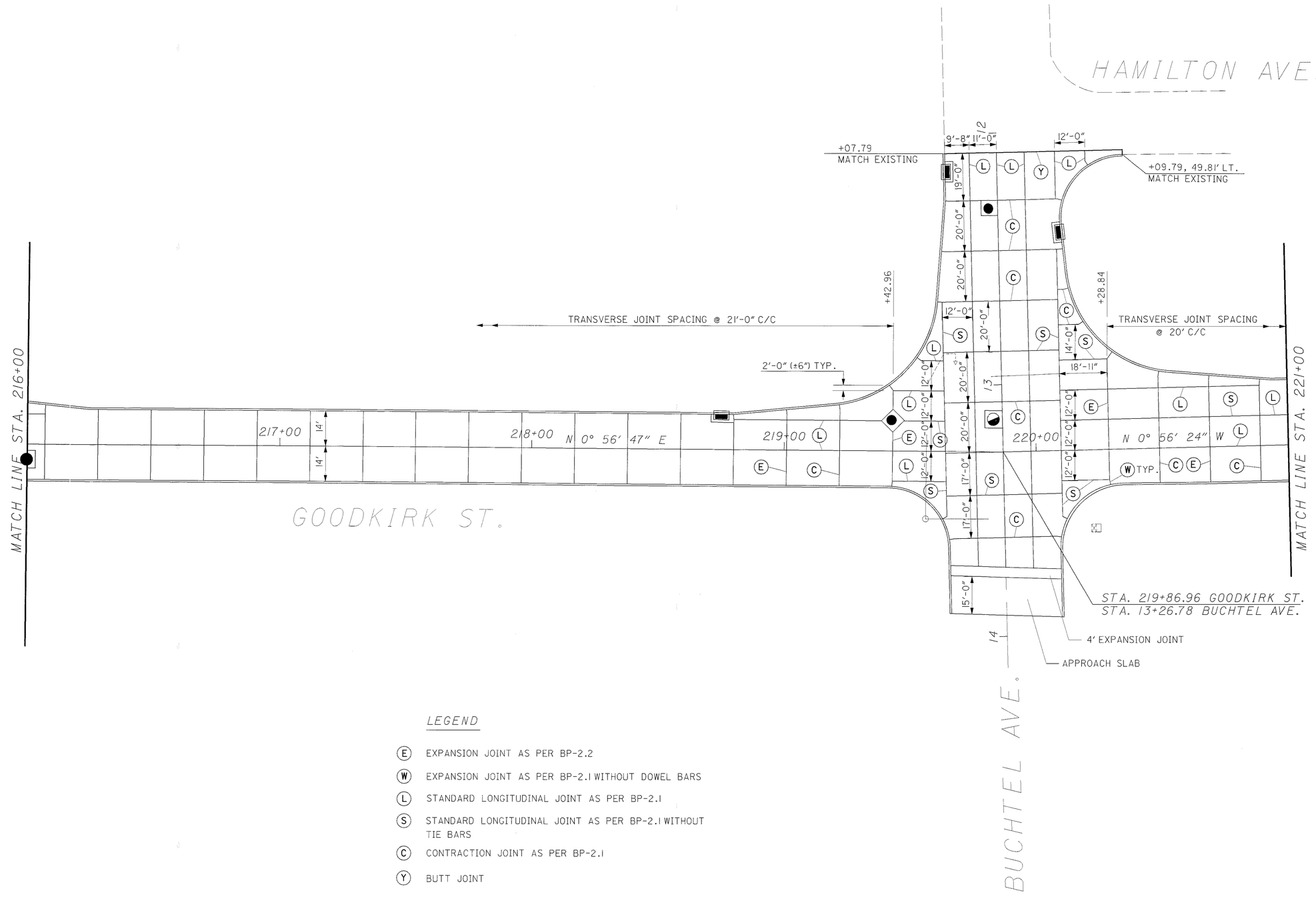

LEGEND

- (E) EXPANSION JOINT AS PER BP-2.2
- (W) EXPANSION JOINT AS PER BP-2.1 WITHOUT DOWEL BARS
- (L) STANDARD LONGITUDINAL JOINT AS PER BP-2.1
- (S) STANDARD LONGITUDINAL JOINT AS PER BP-2.1 WITHOUT TIE BARS
- (C) CONTRACTION JOINT AS PER BP-2.1
- (Y) BUTT JOINT

N

0 10 20 40
HORIZONTAL SCALE IN FEET

CALCULATED KME
CHECKED BF

PAVEMENT DETAILS GOODKIRK ST.
STA. 216+00 TO STA. 221+00

SUM-8-0.63

512
1088

CURVE DATA
P.I. STA = 225+07.25
D = 11° 22' 54" (RT)
Dc = 6° 00' 00"
R = 954.93'
T = 95.16'
L = 189.70'
E = 4.73'
e_{MAX} = NC

CURVE DATA
P.I. STA = 69+12.61
D = 14° 24' 52" (RT)
Dc = 4° 00' 00"
R = 1,432.39'
T = 181.14'
L = 360.36'
E = 11.41'
e_{MAX} = 0.029

NOTES
ADD 1000' TO THE ELEVATION SHOWN FOR ACTUAL ELEVATION.

HORIZONTAL SCALE IN FEET
0 10 20 40

CALCULATED KME
CHECKED BF

PAVEMENT DETAILS GOODKIRK ST.
STA. 221+00 TO STA. 225+00

SUM-8-0.63

513
1088

Sheet: 1
Angle: 90.3617
Chain: PR-SBSRV

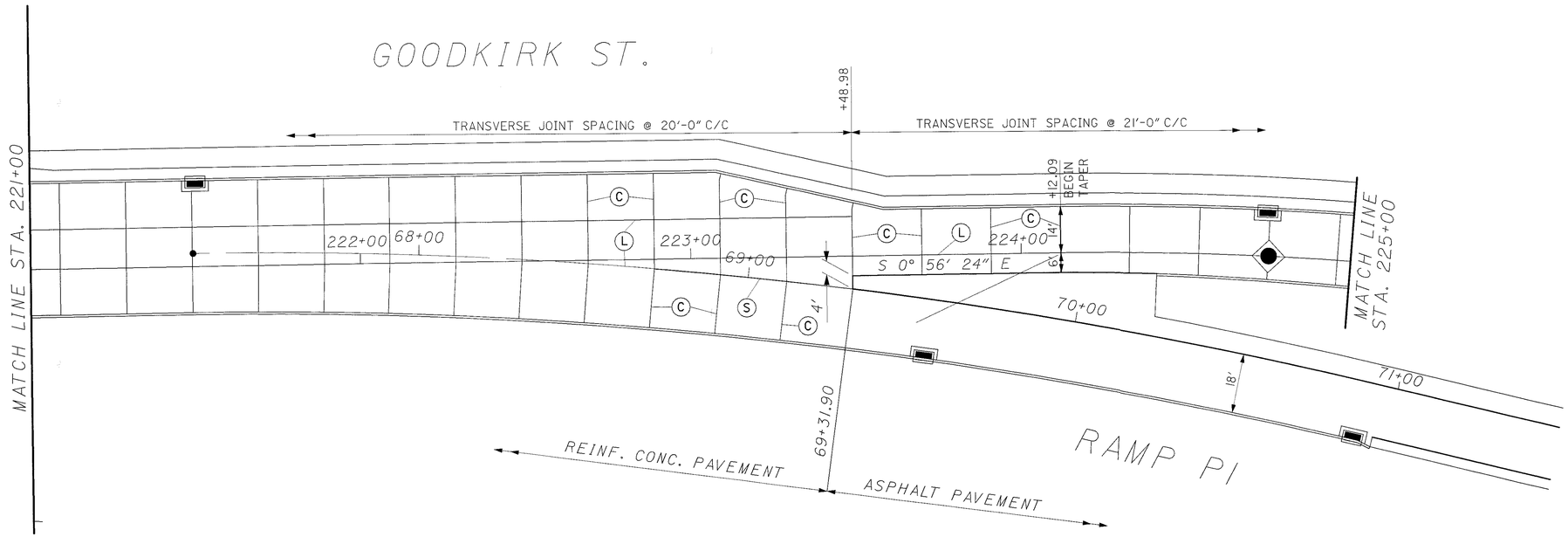

LEGEND

- (E) EXPANSION JOINT AS PER BP-2.2
- (W) EXPANSION JOINT AS PER BP-2.1 WITHOUT DOWEL BARS
- (L) STANDARD LONGITUDINAL JOINT AS PER BP-2.1
- (S) STANDARD LONGITUDINAL JOINT AS PER BP-2.1 WITHOUT TIE BARS
- (C) CONTRACTION JOINT AS PER BP-2.1
- (Y) BUTT JOINT

N

0 10 20 40 HORIZONTAL SCALE IN FEET

CALCULATED KME
CHECKED BF

PAVEMENT DETAILS GOODKIRK ST.
STA. 221+00 TO STA. 225+00

SUM-8-0.63

514
1088

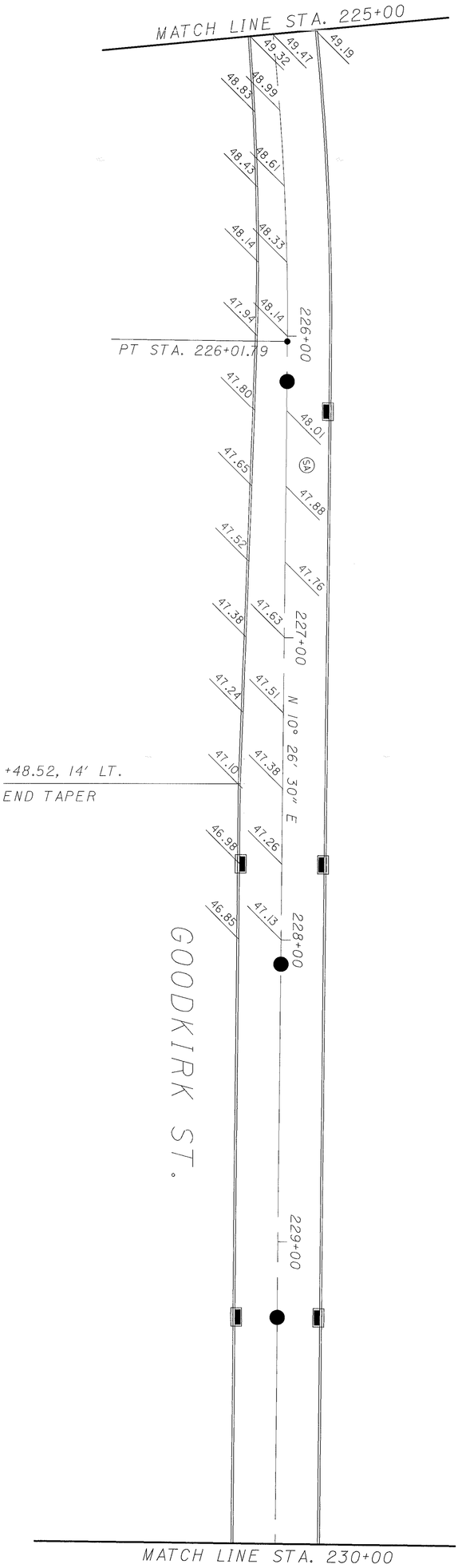

CURVE DATA

P.I. STA = 225+07.25
D = 11° 22' 54" (RT)
Dc = 6° 00' 00"
R = 954.93'
T = 95.16'
L = 189.70'
E = 4.73'
e_{MAX} = NC

NOTES
ADD 1000' TO THE ELEVATION SHOWN FOR ACTUAL ELEVATION.

515 / 1088	SUM-8-0.63	PAVEMENT DETAILS GOODKIRK ST. STA. 225+00 TO STA. 230+00	CALCULATED KME CHECKED BF	0 20 10 40 HORIZONTAL SCALE IN FEET

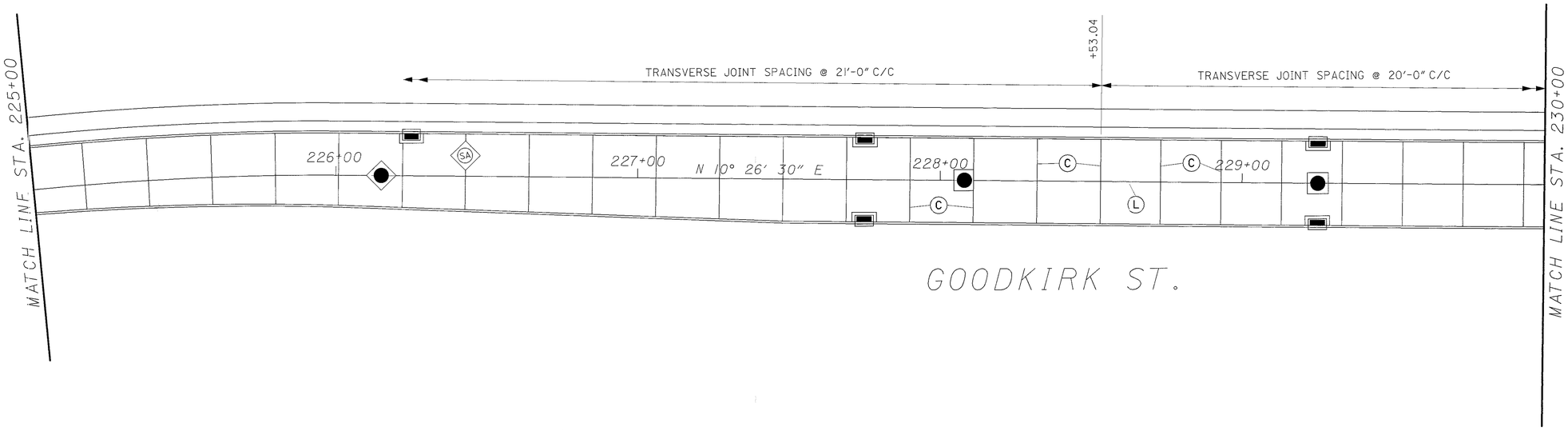

LEGEND

- (E) EXPANSION JOINT AS PER BP-2.2
- (W) EXPANSION JOINT AS PER BP-2.1 WITHOUT DOWEL BARS
- (L) STANDARD LONGITUDINAL JOINT AS PER BP-2.1
- (S) STANDARD LONGITUDINAL JOINT AS PER BP-2.1 WITHOUT TIE BARS
- (C) CONTRACTION JOINT AS PER BP-2.1
- (Y) BUTT JOINT

N

0 10 20 40
HORIZONTAL SCALE IN FEET

CALCULATED KME
CHECKED BF

PAVEMENT DETAILS GOODKIRK ST.
STA. 225+00 TO STA. 230+00

SUM-8-0.63

516
1088

NO.	PC STA.	PT STA.	R	DELTA	TANGENT	LENGTH
1	232+92.90	23+54.82	60′	64°24′12″	37.78′	67.44′
2	23+20.49	233+50.78	40′	95°26′42″	43.99′	66.63′
3	232+00.59	24+46.98	15′	107°58′06″	20.63′	28.27′
4	24+23.77	233+06.67	25′	72°01′53″	18.18′	31.43′

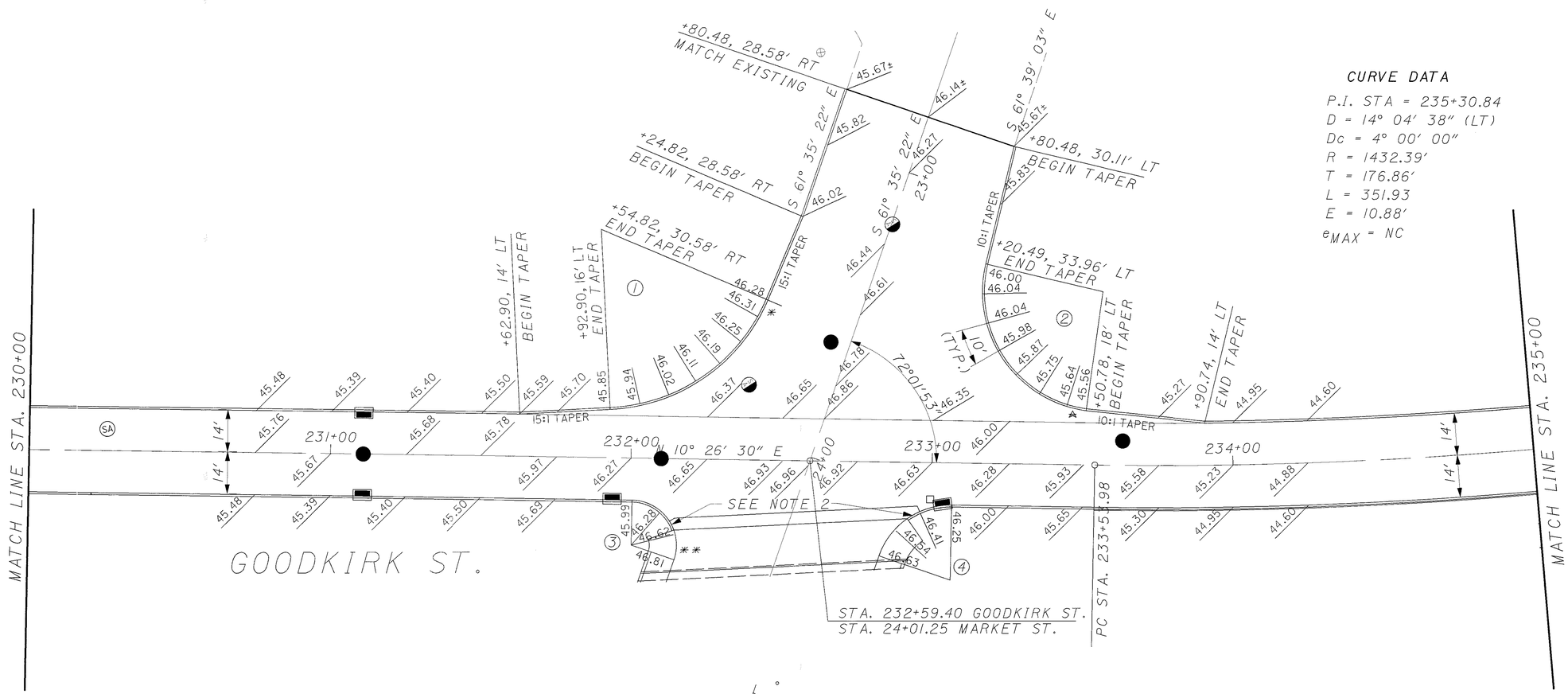

CURVE DATA

P.I. STA = 235+30.84
D = 14° 04′ 38″ (LT)
Dc = 4° 00′ 00″
R = 1432.39′
T = 176.86′
L = 351.93
E = 10.88′
e_{MAX} = NC

* - 7.44′
⁂ - 6.63′
** - 8.27′
□ - 11.43′

NOTES

1) ADD 1000′ TO THE ELEVATION SHOWN FOR ACTUAL ELEVATION.
2) TAPER CURB HEIGHT FROM 8″ TO 6″ OVER THE EXPANSION JOINT.

N

HORIZONTAL SCALE IN FEET
0 10 20 40

CALCULATED KME
CHECKED BF

PAVEMENT DETAILS GOODKIRK ST. STA. 230+00 TO STA. 235+00

SUM-8-0.63

517
1088

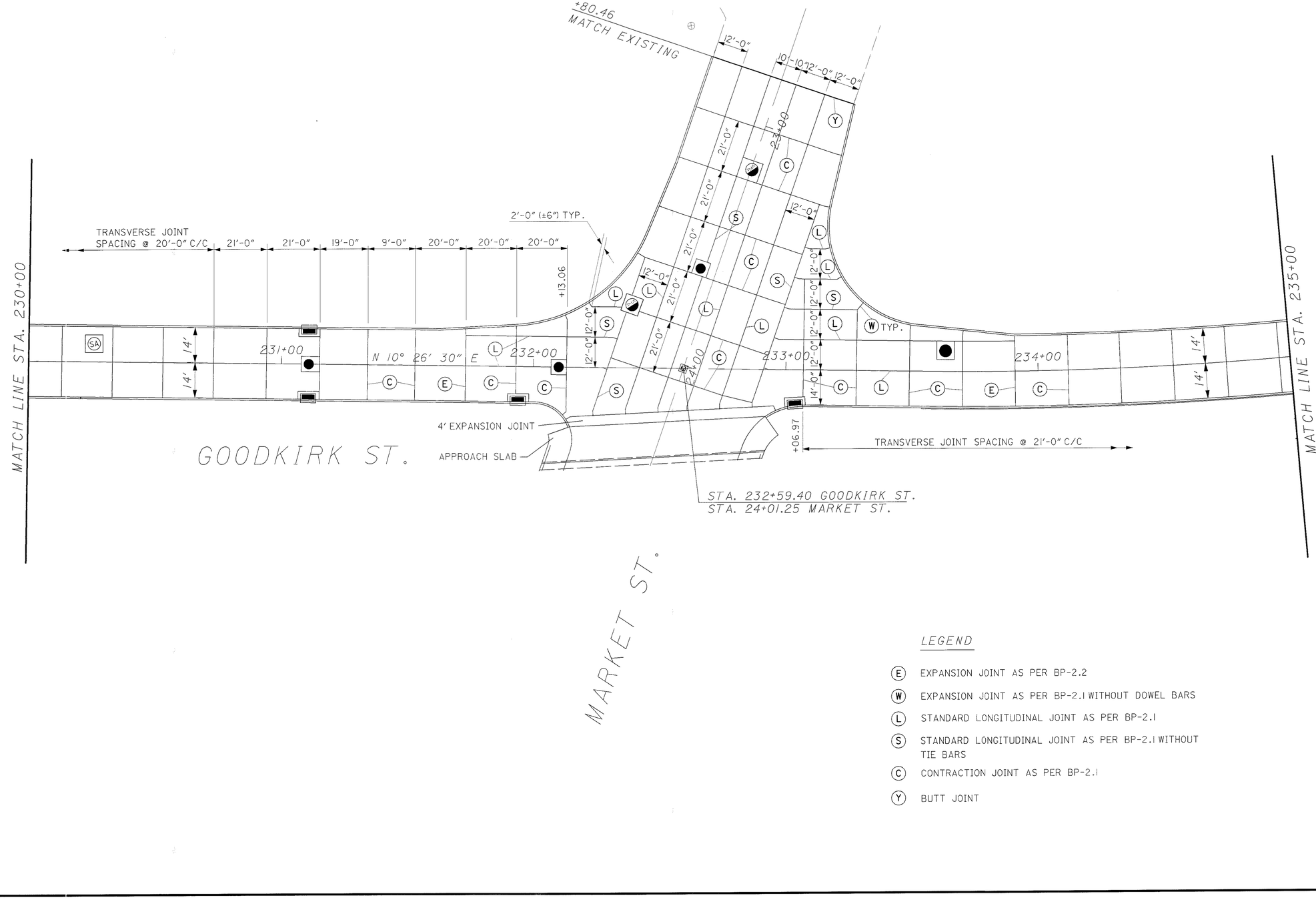

LEGEND

- (E) EXPANSION JOINT AS PER BP-2.2
- (W) EXPANSION JOINT AS PER BP-2.1 WITHOUT DOWEL BARS
- (L) STANDARD LONGITUDINAL JOINT AS PER BP-2.1
- (S) STANDARD LONGITUDINAL JOINT AS PER BP-2.1 WITHOUT TIE BARS
- (C) CONTRACTION JOINT AS PER BP-2.1
- (Y) BUTT JOINT

N

0 10 20 40
HORIZONTAL SCALE IN FEET

CALCULATED KME
CHECKED BF

PAVEMENT DETAILS GOODKIRK ST.
STA. 230+00 TO STA. 235+00

SUM-8-0.63

518
1088

NO.	PC STA.	PT STA.	R	DELTA	TANGENT	LENGTH
1	236+74.45	5+42.03	40′	98°15′48″	46.23′	68.60′
2	5+88.47	238+06.04	40′	59°22′16″	22.80′	41.45′
3	237+20.23	6+46.01	25′	70°31′40″	17.68′	30.77′
4	6+82.07	238+28.42	25′	109°28′20″	35.36′	47.77′

CURVE DATA

P.I. Sta = 235+30.84
Δ = 14° 04′ 38″ (LT)
Dc = 4° 00′ 00″
R = 1,432.39′
T = 176.86′
L = 351.93′
E = 10.88′
e_{max} = NC

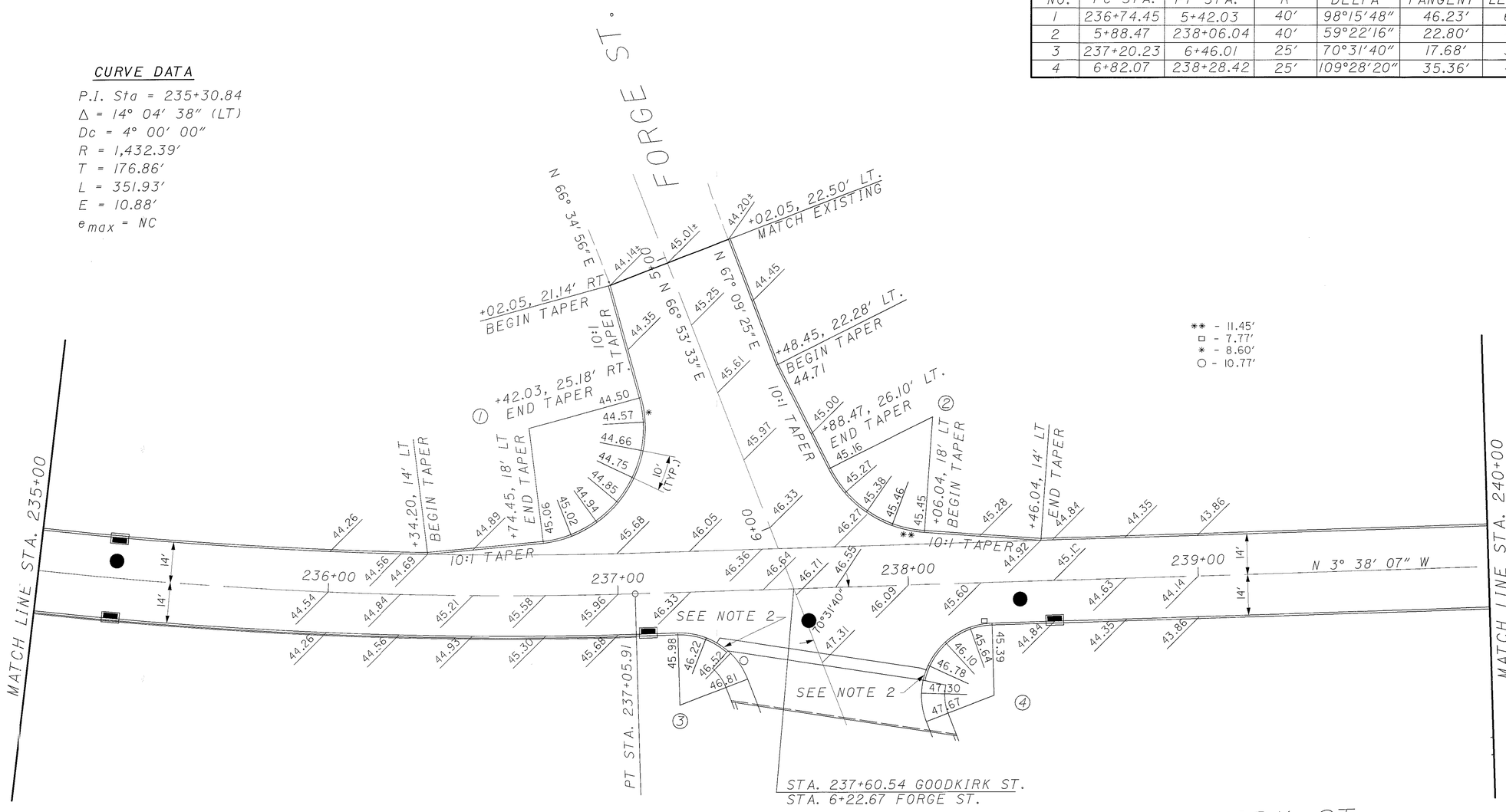

NOTES

1) ADD 1000′ TO THE ELEVATION SHOWN FOR ACTUAL ELEVATION.
2) TAPER CURB HEIGHT FROM 8″ TO 6″ OVER PRESSURE RELIEF JOINT.

N

HORIZONTAL SCALE IN FEET
0 10 20 40

CALCULATED KME
CHECKED BF

PAVEMENT DETAILS GOODKIRK ST.
STA. 235+00 TO STA. 240+00

SUM-8-0.63

519
1088

LEGEND

- (E) EXPANSION JOINT AS PER BP-2.2
- (W) EXPANSION JOINT AS PER BP-2.1 WITHOUT DOWEL BARS
- (L) STANDARD LONGITUDINAL JOINT AS PER BP-2.1
- (S) STANDARD LONGITUDINAL JOINT AS PER BP-2.1 WITHOUT TIE BARS
- (C) CONTRACTION JOINT AS PER BP-2.1
- (Y) BUTT JOINT

N

0 10 20 40
HORIZONTAL SCALE IN FEET

CALCULATED KME
CHECKED BF

PAVEMENT DETAILS GOODKIRK ST.
STA. 235+00 TO STA. 240+00

SUM-8-0.63

520
1088

NO.	PC STA.	PT STA.	R	DELTA	TANGENT	LENGTH
1	240+75.92	4+75.05	20'	74°51'23"	15.31'	26.13'
2	4+31.62	241+56.90	40'	95°01'03"	43.67'	66.33'

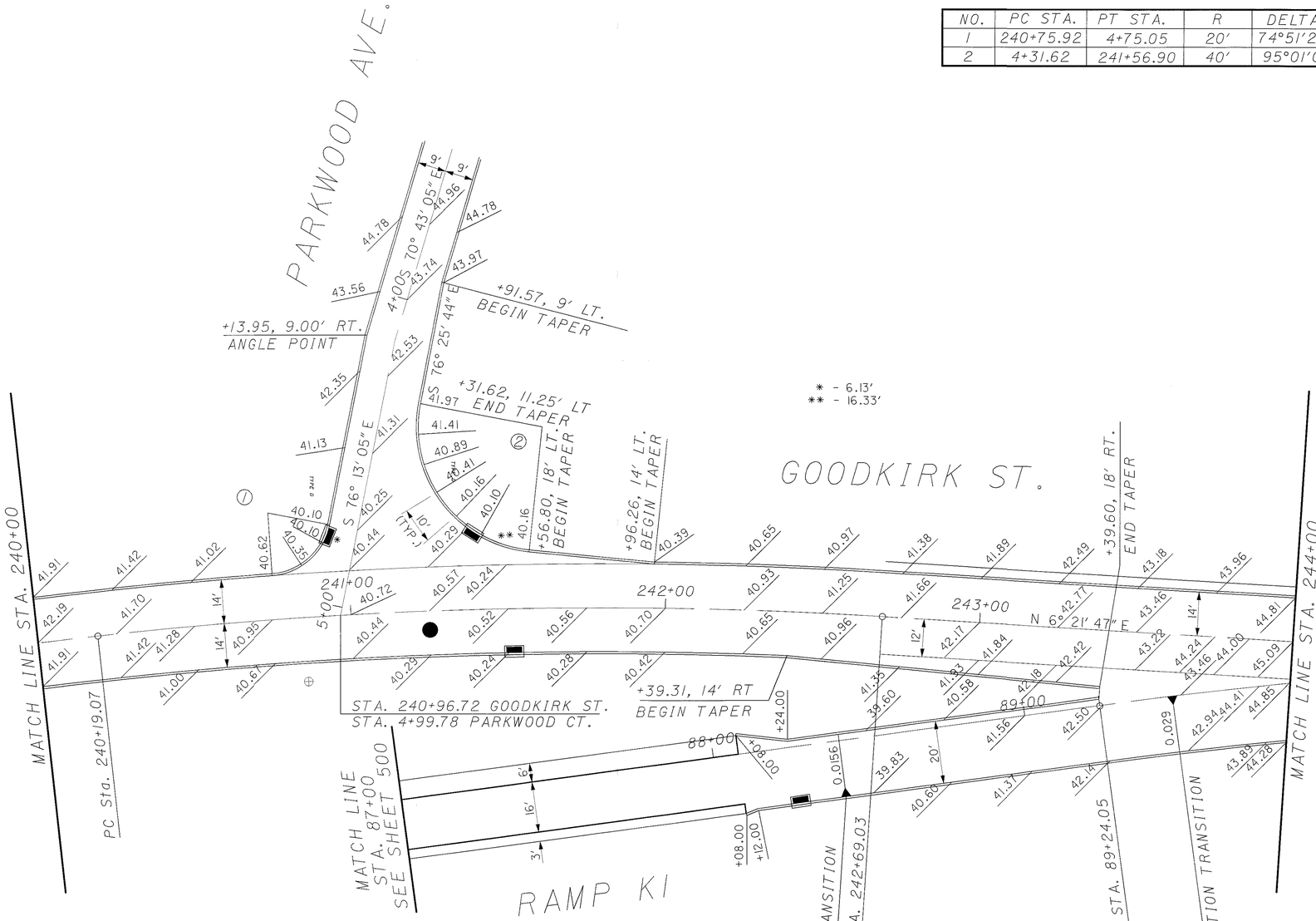

CURVE DATA

P.I. STA = 241+44.37
Δ = 9° 59' 55" (RT)
Dc = 4° 00' 00"
R = 1,432.39'
T = 125.30'
L = 249.96'
E = 5.47'
e_{max} = NC

NOTES
ADD 1000' TO THE ELEVATION SHOWN FOR ACTUAL ELEVATION.

N

HORIZONTAL SCALE IN FEET
0 10 20 40

CALCULATED KME
CHECKED BF

PAVEMENT DETAILS GOODKIRK ST.
STA. 240+00 TO STA. 244+00

SUM-8-0.63

521
1088

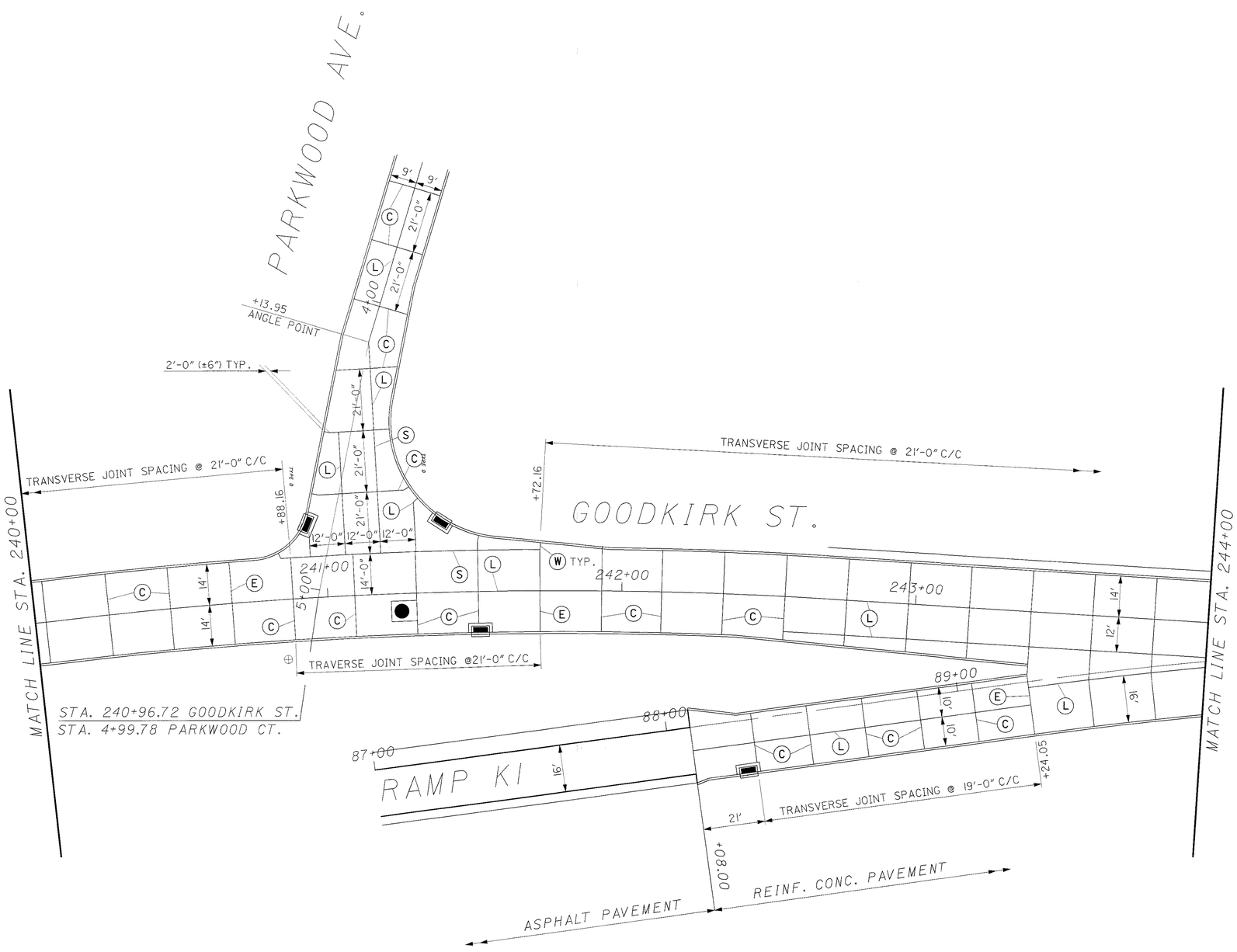

LEGEND

- (E) EXPANSION JOINT AS PER BP-2.2
- (W) EXPANSION JOINT AS PER BP-2.1 WITHOUT DOWEL BARS
- (L) STANDARD LONGITUDINAL JOINT AS PER BP-2.1
- (S) STANDARD LONGITUDINAL JOINT AS PER BP-2.1 WITHOUT TIE BARS
- (C) CONTRACTION JOINT AS PER BP-2.1
- (Y) BUTT JOINT

HORIZONTAL SCALE IN FEET
0 10 20 40

CALCULATED KME
CHECKED BF

PAVEMENT DETAILS GOODKIRK ST.
STA. 240+00 TO STA. 244+00

SUM-8-0.63

522
1088

TRAFFIC ISLAND INFORMATION					
NO.	PC STA.	PT STA.	OFFSET	R	LENGTH
A	92+03.98		6.98′	1.5′	4.17′
B		92+06.43	4.78′		
C	92+42.58		0.71′	3.0′	7.99′
D		92+41.20	2.44′		
E	92+20.60		2.44′	5.0′	5.82′
F		92+16.01	1.52′		

NO.	PC STA.	PT STA.	R	DELTA	TANGENT	LENGTH
1	245+75.72	47+18.89	45′	85°20′12″	41.48′	67.02′
2	47+03.44	93+06.61	120′	63°20′45″	74.04′	132.67′
3	246+04.21	48+19.39	25′	83°50′03″	22.44′	36.58′
4	48+56.19	92+70.76	30′	110°15′44″	43.05′	57.73′

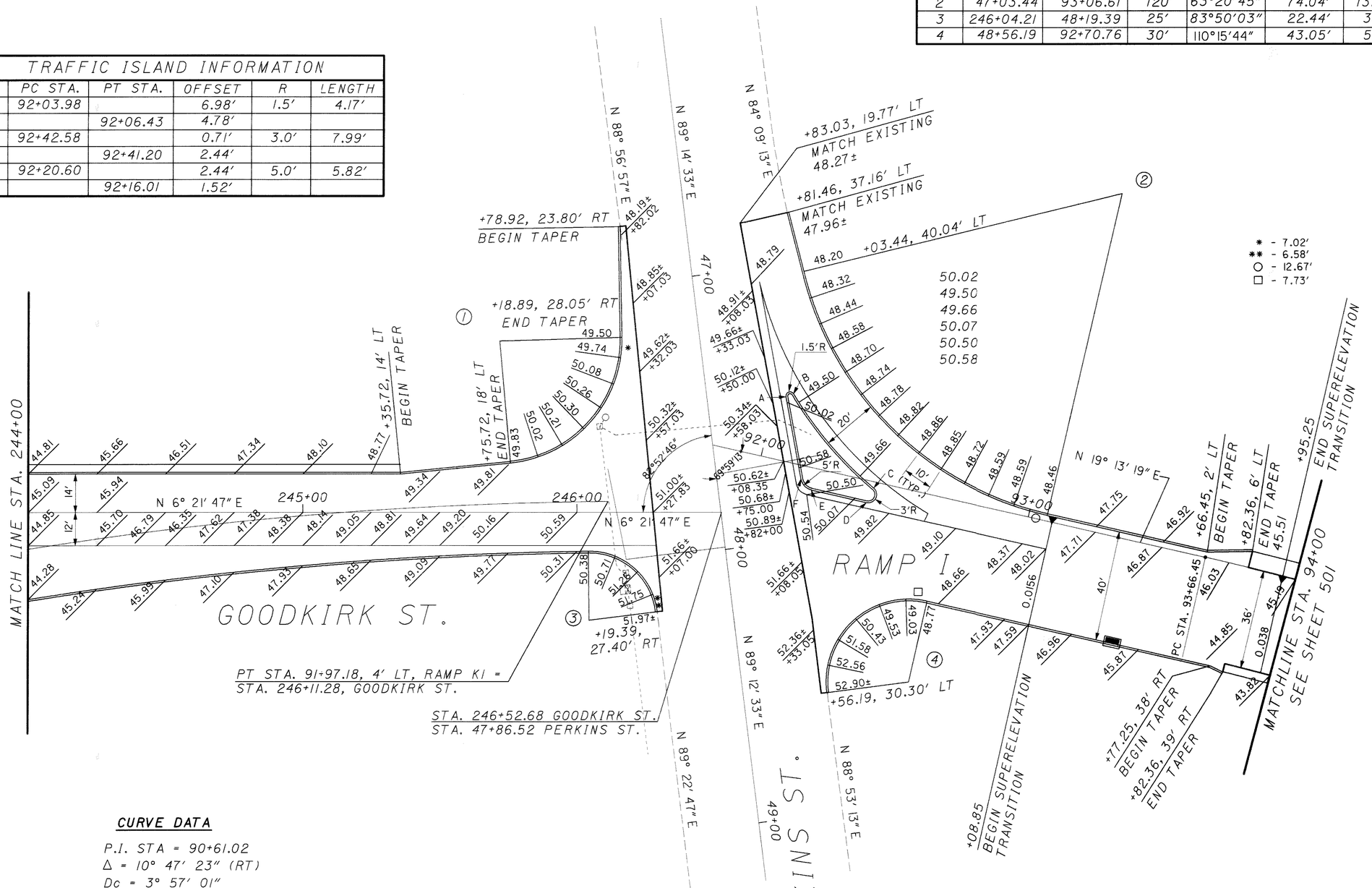

CURVE DATA

P.I. STA = 90+61.02
Δ = 10° 47′ 23″ (RT)
Dc = 3° 57′ 01″
R = 1,450.39′
L = 273.13′
E = 6.45′
e_{max} = 0.029

CURVE DATA

P.I. STA = 94+56.12
Δ = 9° 50′ 21″ (RT)
Dc = 5° 30′ 00″
R = 1,041.74′
T = 89.67′
L = 178.89′
E = 3.85′
e_{max} = 0.036

NOTES
ADD 1000′ TO THE ELEVATION SHOWN FOR ACTUAL ELEVATION.

N

HORIZONTAL SCALE IN FEET
0 10 20 40

CALCULATED KME
CHECKED BF

PAVEMENT DETAILS GOODKIRK ST. STA. 244+00 TO RAMP I

SUM-8-0.63

REVISIONS: 05/15/2002 by MAM

523
1088

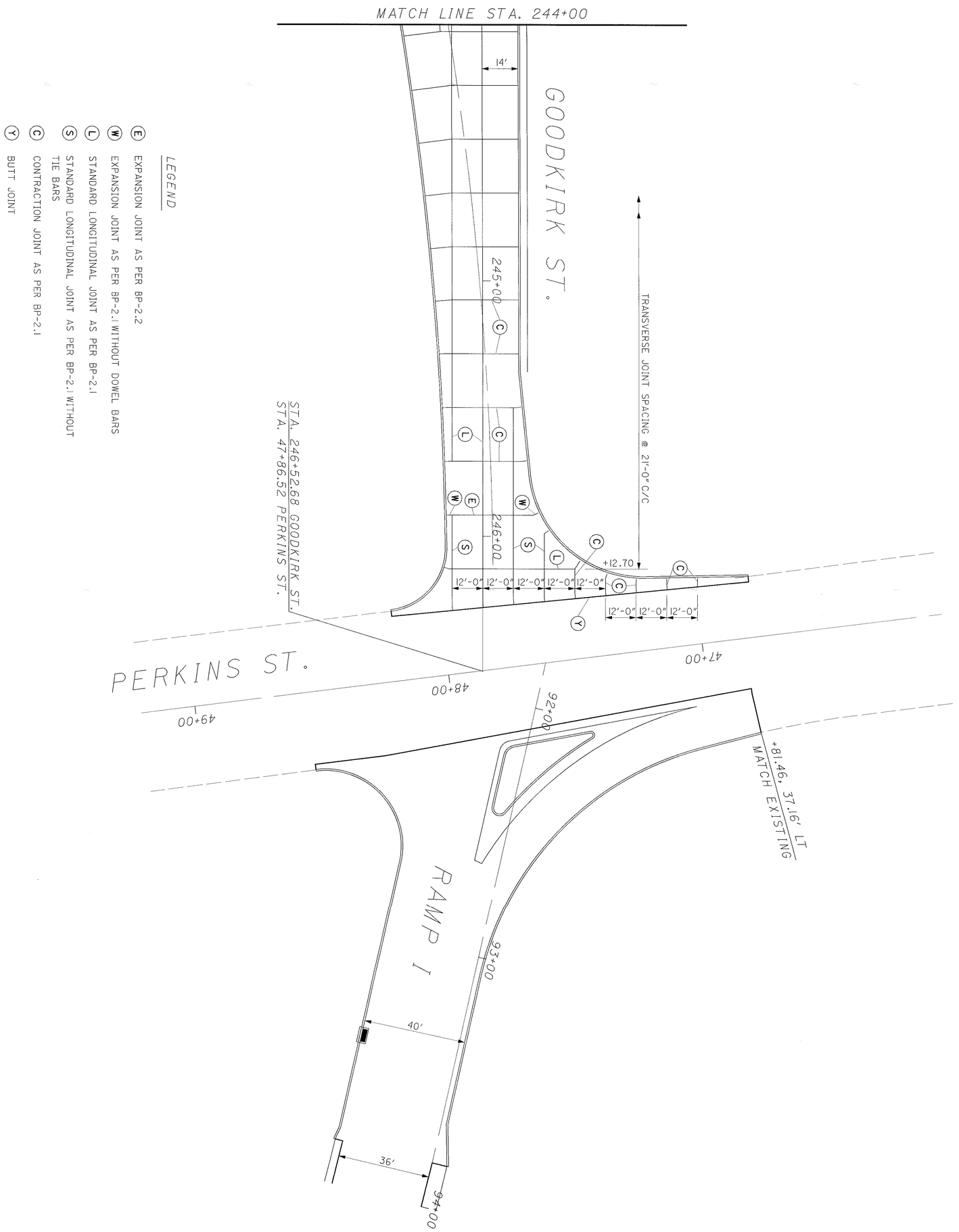

524 / 1088	SUM-8-0.63	PAVEMENT DETAILS GOODKIRK ST. STA. 244+00 TO RAMP I	CALCULATED KME / CHECKED BF	0 20 / 10 40 HORIZONTAL SCALE IN FEET	N

NO.	PC STA.	PT STA.	R	DELTA	TANGENT	LENGTH
1	14+59.34	300+58.39	25′	90°43′45″	25.32′	39.59′
2	15+56.06	300+77.90	45′	77°51′26″	36.45′	61.15′

NOTES
ADD 1000′ TO THE ELEVATION SHOWN FOR ACTUAL ELEVATION.

CALCULATED KME
CHECKED BF

PAVEMENT DETAILS FOUNTAIN ST.
EXCHANGE TO STA. 303+50

SUM-8-0.63

525
1088

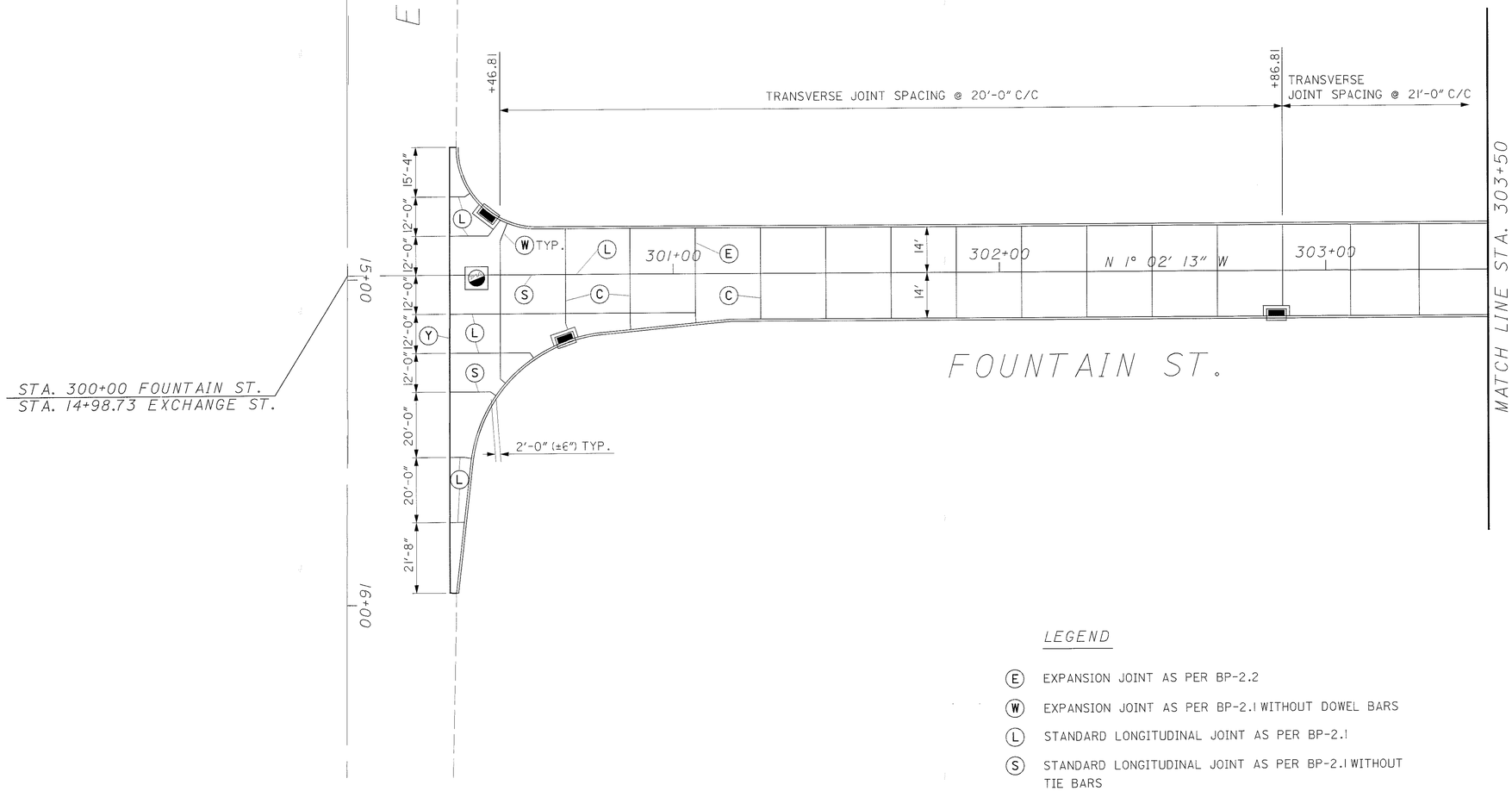

LEGEND

- (E) EXPANSION JOINT AS PER BP-2.2
- (W) EXPANSION JOINT AS PER BP-2.1 WITHOUT DOWEL BARS
- (L) STANDARD LONGITUDINAL JOINT AS PER BP-2.1
- (S) STANDARD LONGITUDINAL JOINT AS PER BP-2.1 WITHOUT TIE BARS
- (C) CONTRACTION JOINT AS PER BP-2.1
- (Y) BUTT JOINT

N

0 10 20 40
HORIZONTAL SCALE IN FEET

CALCULATED KME
CHECKED BF

PAVEMENT DETAILS FOUNTAIN ST. EXCHANGE TO STA. 303+50

SUM-8-0.63

526
1088

NO.	PC STA.	PT STA.	R	DELTA	TANGENT	LENGTH
1	303+98.11	8+35.92	25′	90°01′25″	25.01′	39.28′
2	8+35.89	304+71.60	25′	89°58′35″	26.23′	39.26′
3	305+97.79	0+39.02	25′	90°01′25″	25.01′	39.28′
4	0+38.99	306+71.54	25′	89°58′35″	26.23′	39.26′

* - 9.28′
** - 9.26′
□ - 9.28′
○ - 9.26′

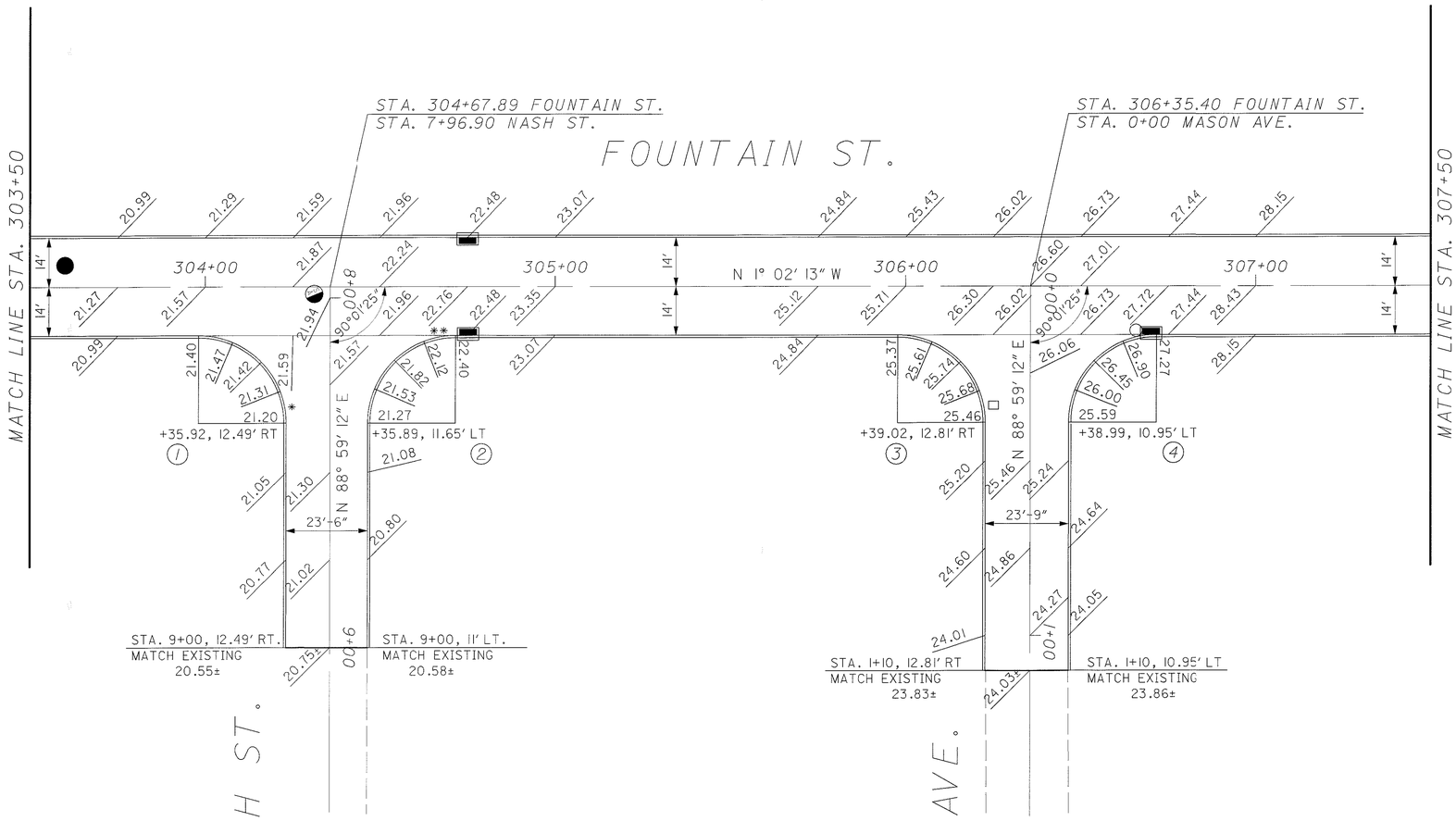

NOTES
ADD 1000′ TO THE ELEVATION SHOWN FOR ACTUAL ELEVATION.

N

0 10 20 40
HORIZONTAL SCALE IN FEET

CALCULATED KME
CHECKED BF

PAVEMENT DETAILS FOUNTAIN ST. STA. 303+50 TO STA. 307+50

SUM-8-0.63

527
1088

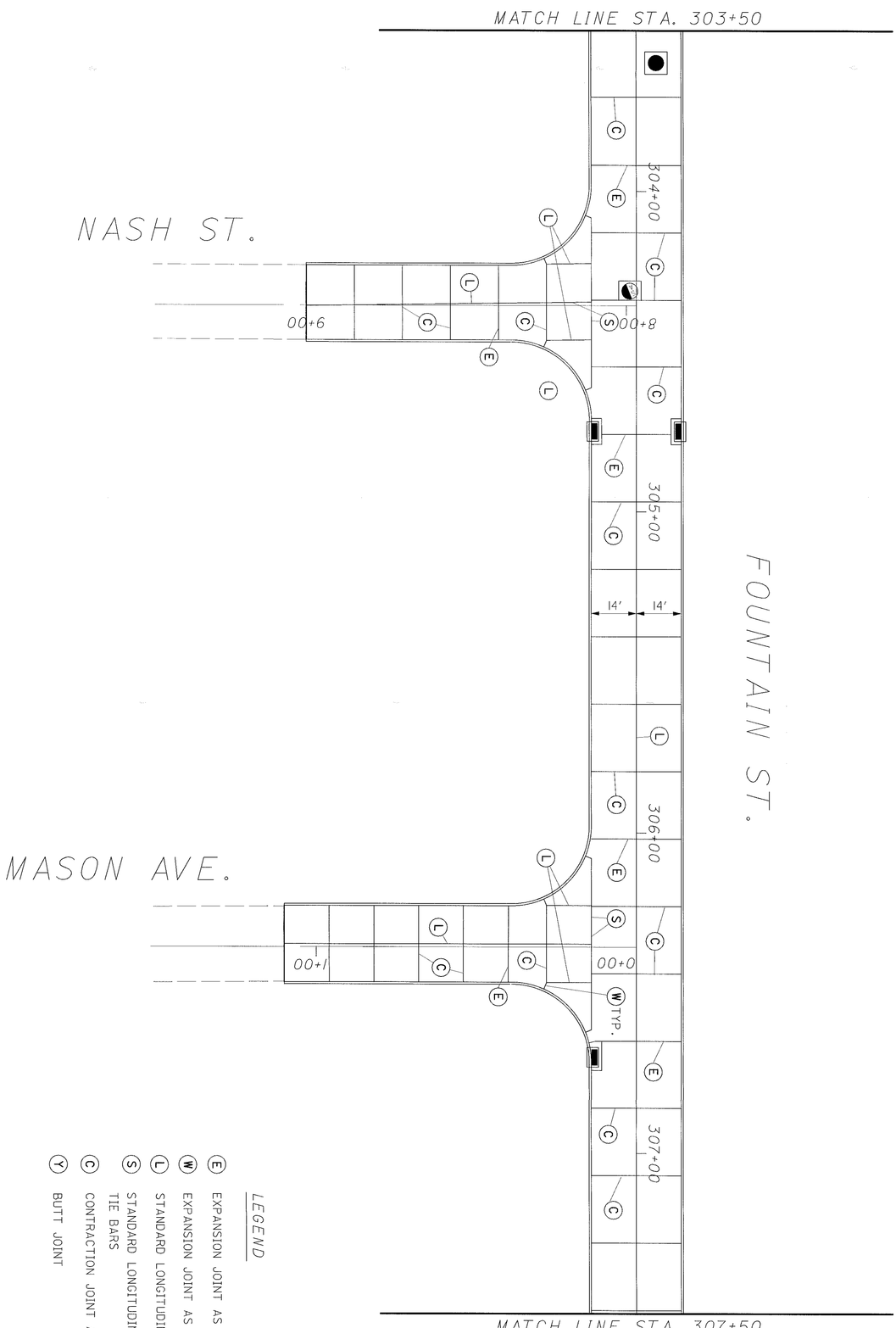

LEGEND

- (E) EXPANSION JOINT AS PER BP-2.2
- (W) EXPANSION JOINT AS PER BP-2.1 WITHOUT DOWEL BARS
- (L) STANDARD LONGITUDINAL JOINT AS PER BP-2.1
- (S) STANDARD LONGITUDINAL JOINT AS PER BP-2.1 WITHOUT TIE BARS
- (C) CONTRACTION JOINT AS PER BP-2.1
- (Y) BUTT JOINT

528 / 1088	SUM-8-0.63	PAVEMENT DETAILS FOUNTAIN ST. STA. 303+50 TO STA. 307+50	CALCULATED KME / CHECKED BF	0 10 20 40 HORIZONTAL SCALE IN FEET

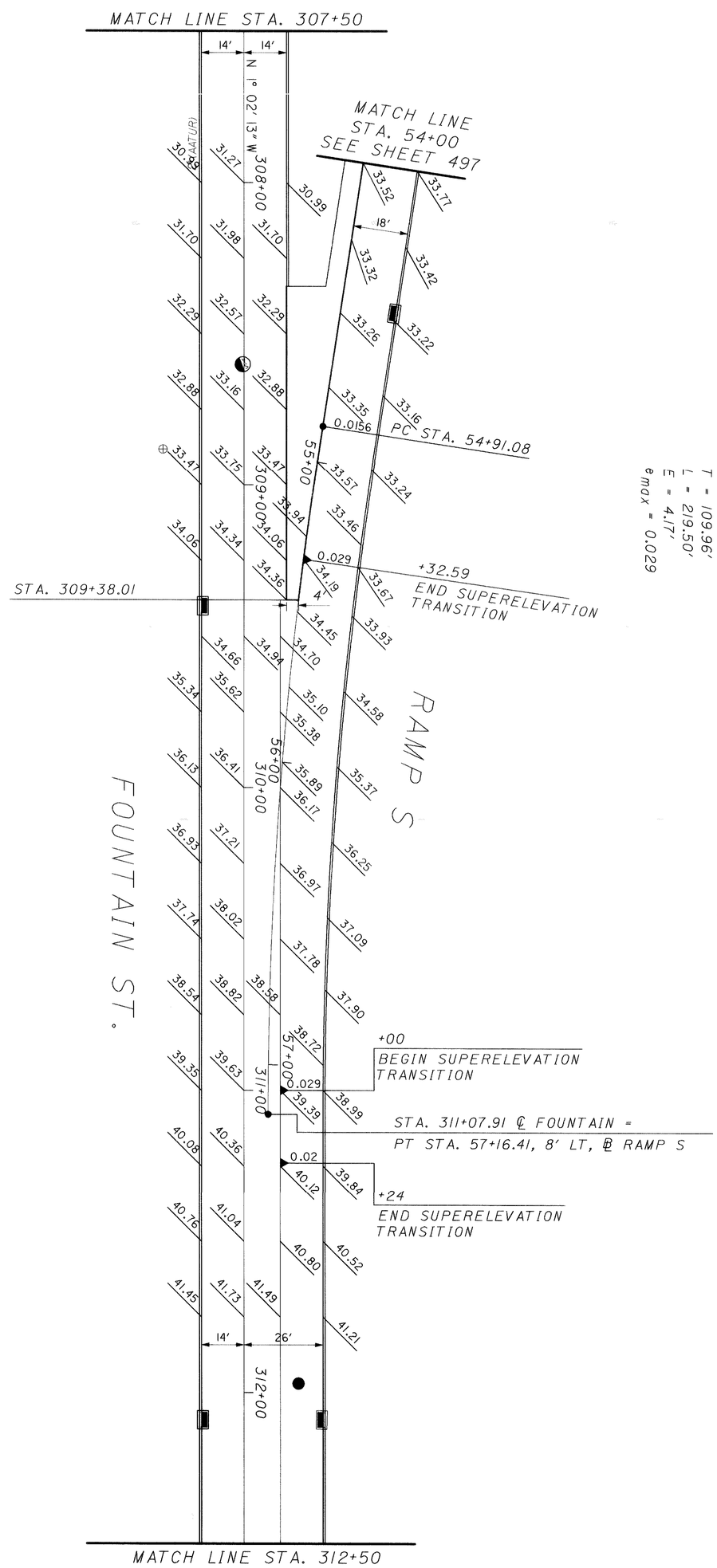

CURVE DATA

P.I. STA = 56+06.87
Δ = 8° 40' 59" (LT)
Dc = 3° 57' 21"
R = 1,448.39'
T = 109.96'
L = 219.50'
E = 4.17'
e max = 0.029

NOTES
ADD 1000' TO THE ELEVATION SHOWN FOR ACTUAL ELEVATION.

REVISIONS: 05/15/2002 by MAM

529
1088

SUM-8-0.63

PAVEMENT DETAILS FOUNTAIN ST.
STA. 307+50 TO STA. 312+50

CALCULATED KME
CHECKED BF

0 20
10 40
HORIZONTAL SCALE IN FEET

N

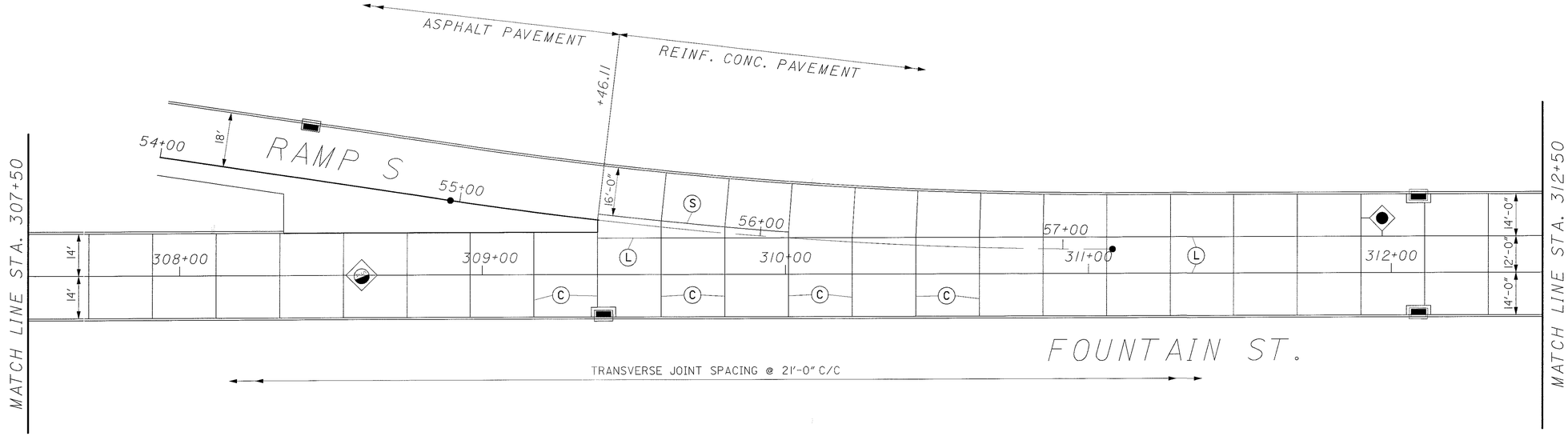

LEGEND

- (E) EXPANSION JOINT AS PER BP-2.2
- (W) EXPANSION JOINT AS PER BP-2.1 WITHOUT DOWEL BARS
- (L) STANDARD LONGITUDINAL JOINT AS PER BP-2.1
- (S) STANDARD LONGITUDINAL JOINT AS PER BP-2.1 WITHOUT TIE BARS
- (C) CONTRACTION JOINT AS PER BP-2.1
- (Y) BUTT JOINT

N

HORIZONTAL SCALE IN FEET
0 10 20 40

CALCULATED KME
CHECKED BF

PAVEMENT DETAILS FOUNTAIN ST.
STA. 307+50 TO STA. 312+50

SUM-8-0.63

530
1088

NO.	PC STA.	PT STA.	R	DELTA	TANGENT	LENGTH
1	314+74.10	14+47.35	25′	89°53′36″	24.95′	39.22′
2	14+62.96	315+67.63	25′	87°51′24″	24.08′	38.33′
3	314+62.81	15+56.58	45′	78°33′48″	36.81′	61.70′
4	15+61.00	315+83.28	45′	80°47′49″	38.30′	63.46′

NOTES
ADD 1000′ TO THE ELEVATION SHOWN FOR ACTUAL ELEVATION.

N

HORIZONTAL SCALE IN FEET
0 10 20 40

CALCULATED KME
CHECKED BF

PAVEMENT DETAILS
STA. 312+50 TO STA. 317+50

SUM-8-0.63

531
1088

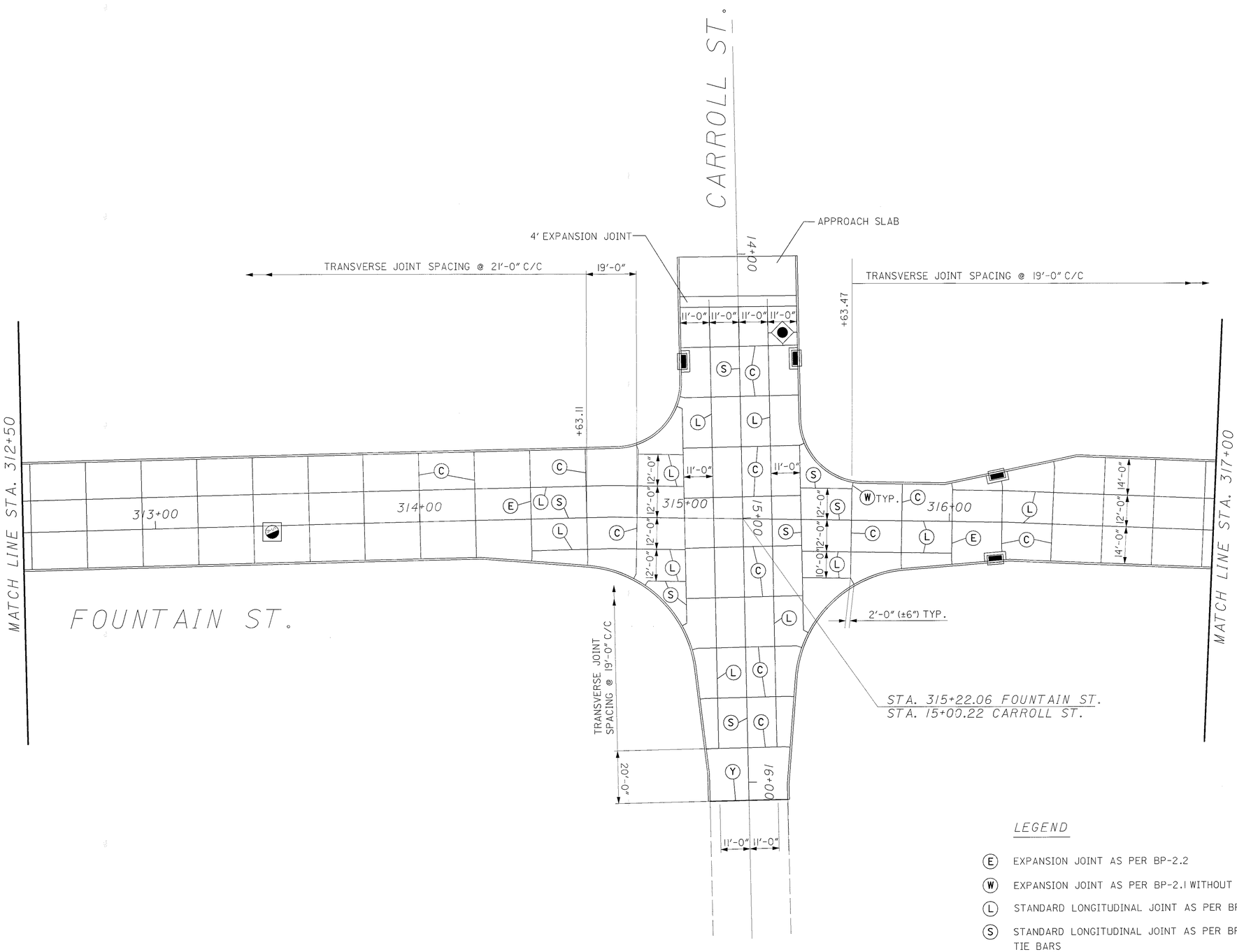

LEGEND

- (E) EXPANSION JOINT AS PER BP-2.2
- (W) EXPANSION JOINT AS PER BP-2.1 WITHOUT DOWEL BARS
- (L) STANDARD LONGITUDINAL JOINT AS PER BP-2.1
- (S) STANDARD LONGITUDINAL JOINT AS PER BP-2.1 WITHOUT TIE BARS
- (C) CONTRACTION JOINT AS PER BP-2.1
- (Y) BUTT JOINT

N

HORIZONTAL SCALE IN FEET
0 10 20 40

CALCULATED KME
CHECKED BF

PAVEMENT DETAILS FOUNTAIN ST. STA. 312+50 TO STA. 317+50

SUM-8-0.63

532
1088

NO.	PC STA.	PT STA.	R	DELTA	TANGENT	LENGTH
1	319+37.69	15+68.52	25′	93°43′41″	26.68′	40.90′
2	15+86.47	320+33.01	25′	86°28′27″	23.51′	37.73′
3	319+27.08	16+76.90	45′	75°14′16″	34.68′	59.09′
4	16+85.38	320+58.48	45′	82°03′31″	39.16′	64.45′

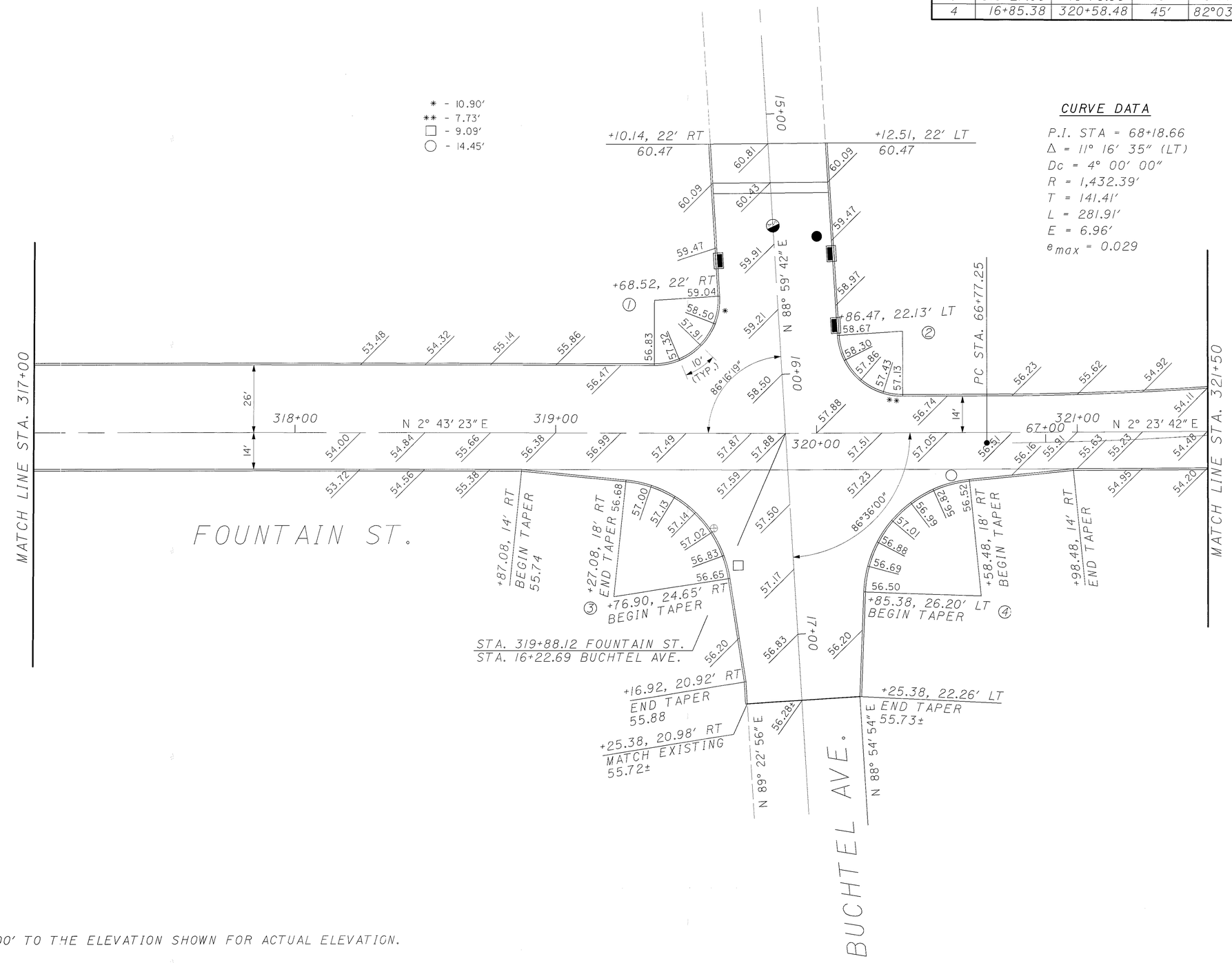

NOTES
ADD 1000′ TO THE ELEVATION SHOWN FOR ACTUAL ELEVATION.

N

HORIZONTAL SCALE IN FEET
0 10 20 40

CALCULATED KME
CHECKED BF

PAVEMENT DETAILS FOUNTAIN ST.
STA. 317+50 TO STA. 321+50

SUM-8-0.63

533
1088

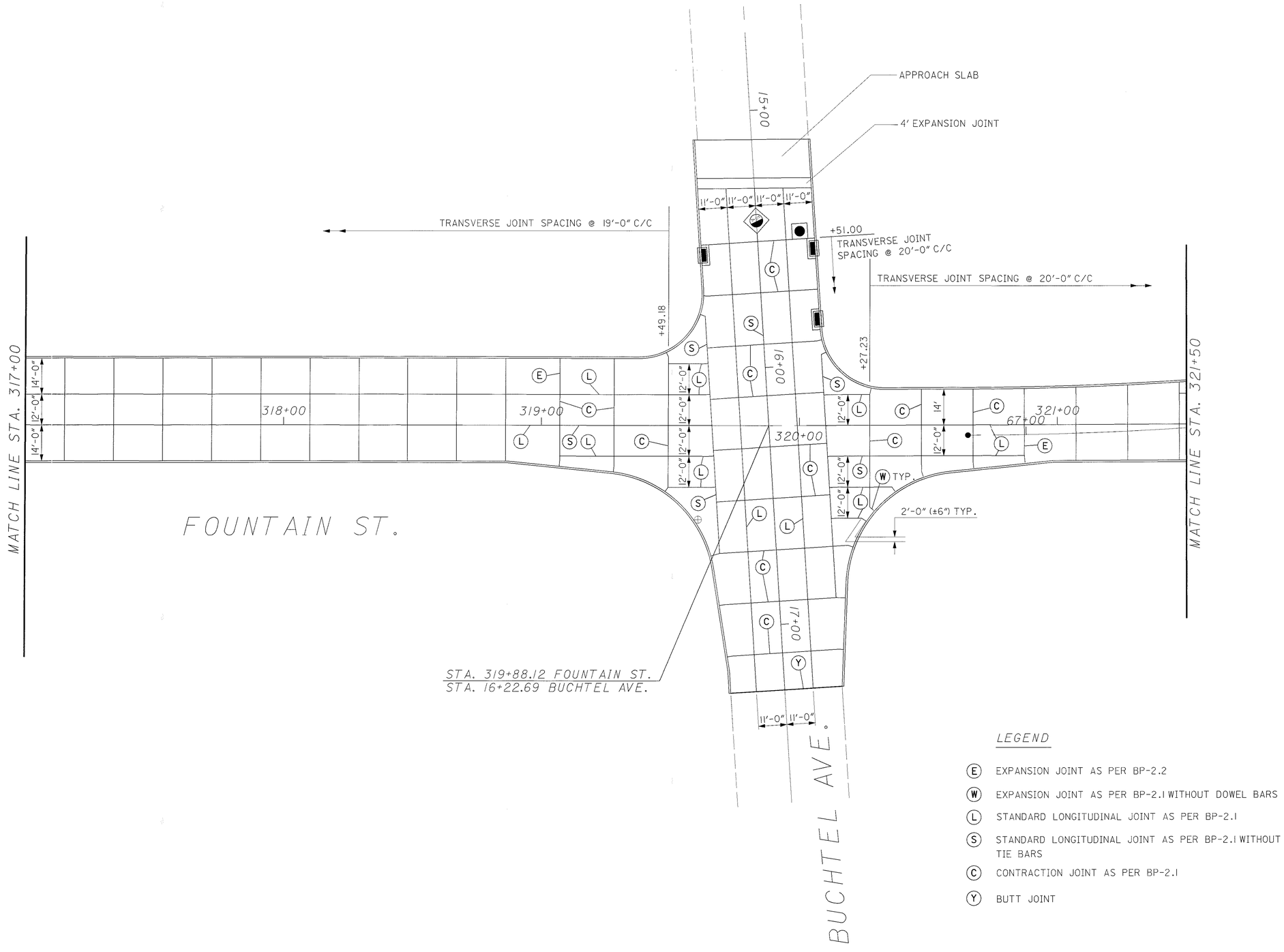

LEGEND

- (E) EXPANSION JOINT AS PER BP-2.2
- (W) EXPANSION JOINT AS PER BP-2.1 WITHOUT DOWEL BARS
- (L) STANDARD LONGITUDINAL JOINT AS PER BP-2.1
- (S) STANDARD LONGITUDINAL JOINT AS PER BP-2.1 WITHOUT TIE BARS
- (C) CONTRACTION JOINT AS PER BP-2.1
- (Y) BUTT JOINT

N

HORIZONTAL SCALE IN FEET
0 10 20 40

CALCULATED KME
CHECKED BF

PAVEMENT DETAILS FOUNTAIN ST.
STA. 317+50 TO STA. 321+50

SUM-8-0.63

534
1088

CURVE DATA

P.I. STA = 68+18.66
Δ = 11° 16′ 35″ (LT)
Dc = 4° 00′ 00″
R = 1,432.39′
T = 141.41′
L = 281.91′
E = 6.96′
e_{max} = 0.029

CURVE DATA

P.I. STA = 72+54.01
Δ = 13° 44′ 43″ (RT)
Dc = 4° 00′ 00″
R = 1,432.39′
T = 172.65′
L = 343.63′
E = 10.37′
e_{max} = 0.052

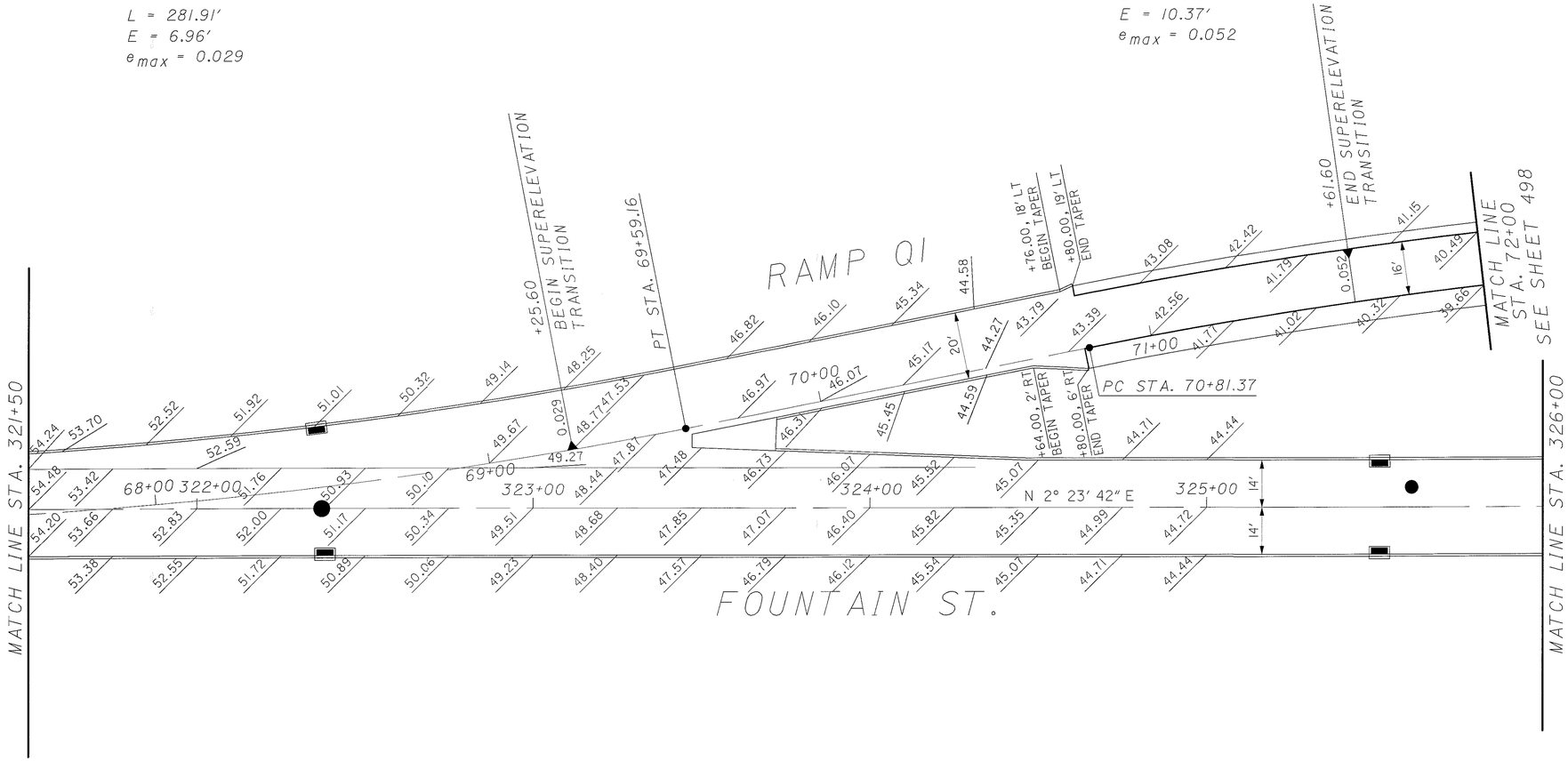

NOTES
ADD 1000′ TO THE ELEVATION SHOWN FOR ACTUAL ELEVATION.

N

HORIZONTAL SCALE IN FEET
0 10 20 40

CALCULATED KME
CHECKED BF

PAVEMENT DETAILS FOUNTAIN ST.
STA. 321+50 TO STA. 326+00

SUM-8-0.63

535
1088

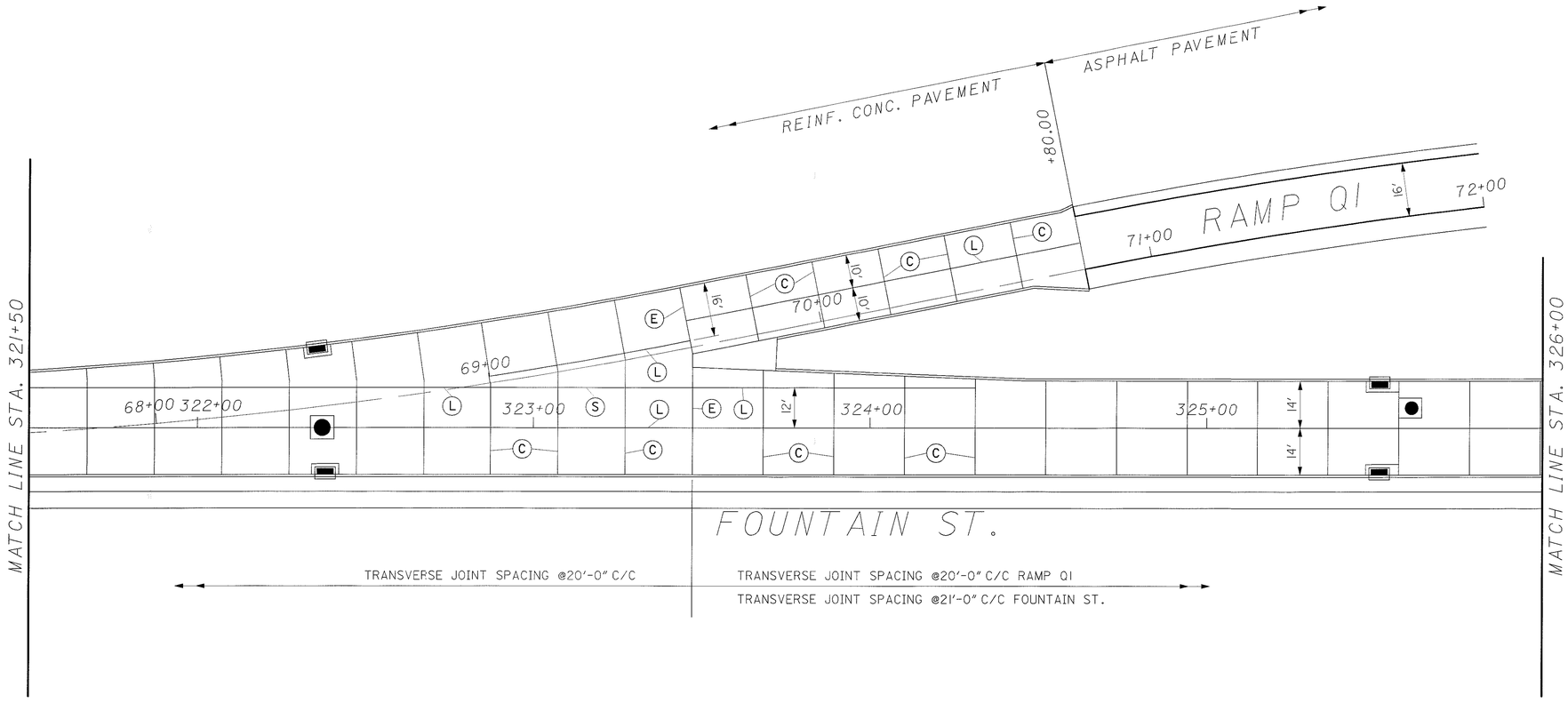

LEGEND

- (E) EXPANSION JOINT AS PER BP-2.2
- (W) EXPANSION JOINT AS PER BP-2.1 WITHOUT DOWEL BARS
- (L) STANDARD LONGITUDINAL JOINT AS PER BP-2.1
- (S) STANDARD LONGITUDINAL JOINT AS PER BP-2.1 WITHOUT TIE BARS
- (C) CONTRACTION JOINT AS PER BP-2.1
- (Y) BUTT JOINT

N

0 10 20 40
HORIZONTAL SCALE IN FEET

CALCULATED KME
CHECKED BF

PAVEMENT DETAILS FOUNTAIN ST.
STA. 321+50 TO STA. 326+00

SUM-8-0.63

536
1088

NO.	PC STA.	PT STA.	R	DELTA	TANGENT	LENGTH
1	330+83.44	26+30.78	25′	63°59′04″	15.62′	27.92′
2	25+87.42	331+98.19	18′	115°13′58″	28.38′	36.20′
3	330+29.53	27+35.23	35′	101°36′04″	42.92′	62.06′
4	27+05.56	332+11.19	90′	65°10′57″	57.54′	102.39′

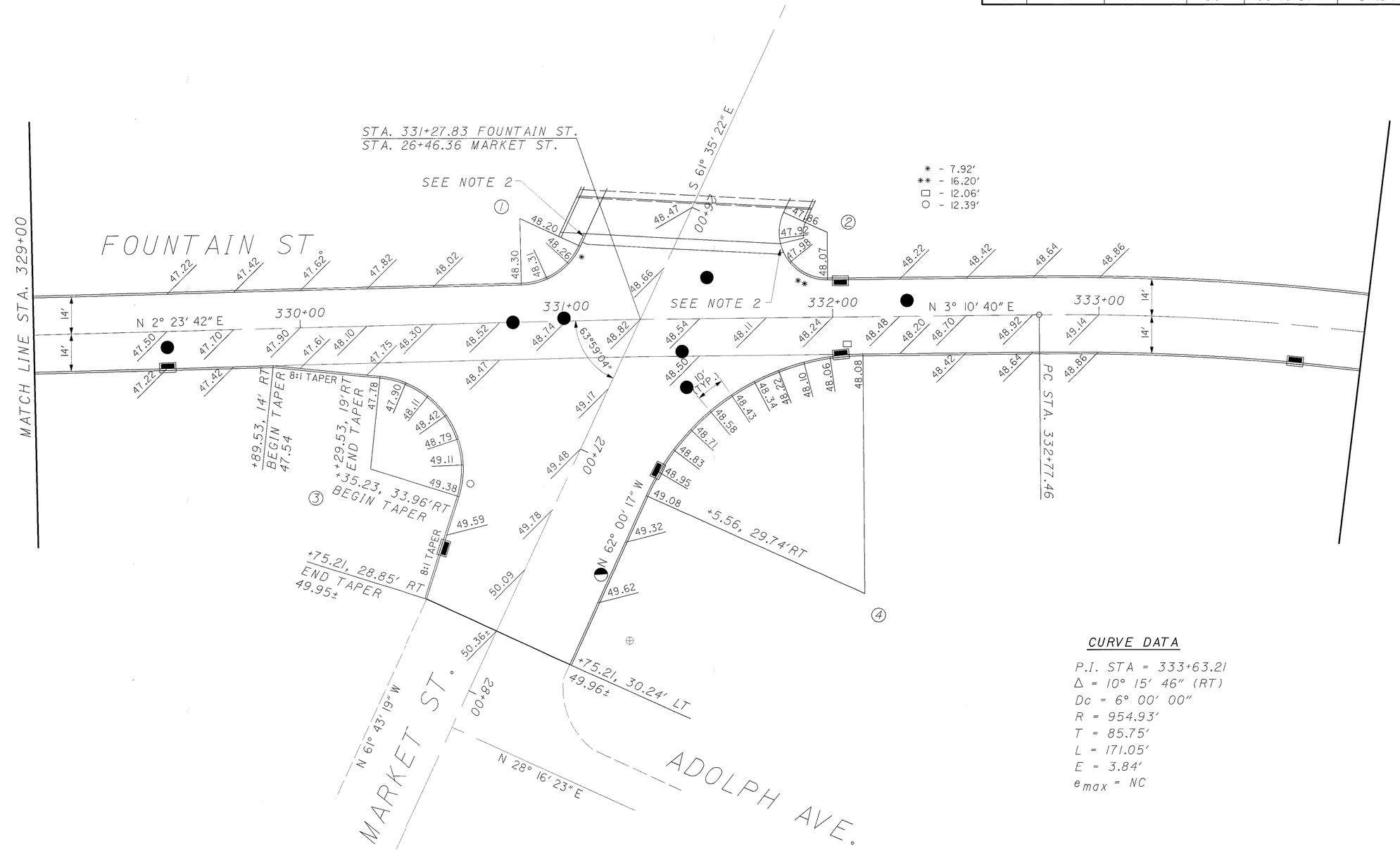

CURVE DATA

P.I. STA = 333+63.21
Δ = 10° 15′ 46″ (RT)
Dc = 6° 00′ 00″
R = 954.93′
T = 85.75′
L = 171.05′
E = 3.84′
e_{max} = NC

NOTES

1) ADD 1000′ TO THE ELEVATION SHOWN FOR ACTUAL ELEVATION.
2) TAPER CURB HEIGHT FROM 8″ TO 6″ OVER PRESSURE RELIEF JOINT.

HORIZONTAL SCALE IN FEET
0 10 20 40

CALCULATED KME
CHECKED BF

PAVEMENT DETAILS FOUNTAIN ST.
STA. 329+00 TO STA. 334+00

SUM-8-0.63

537
1088

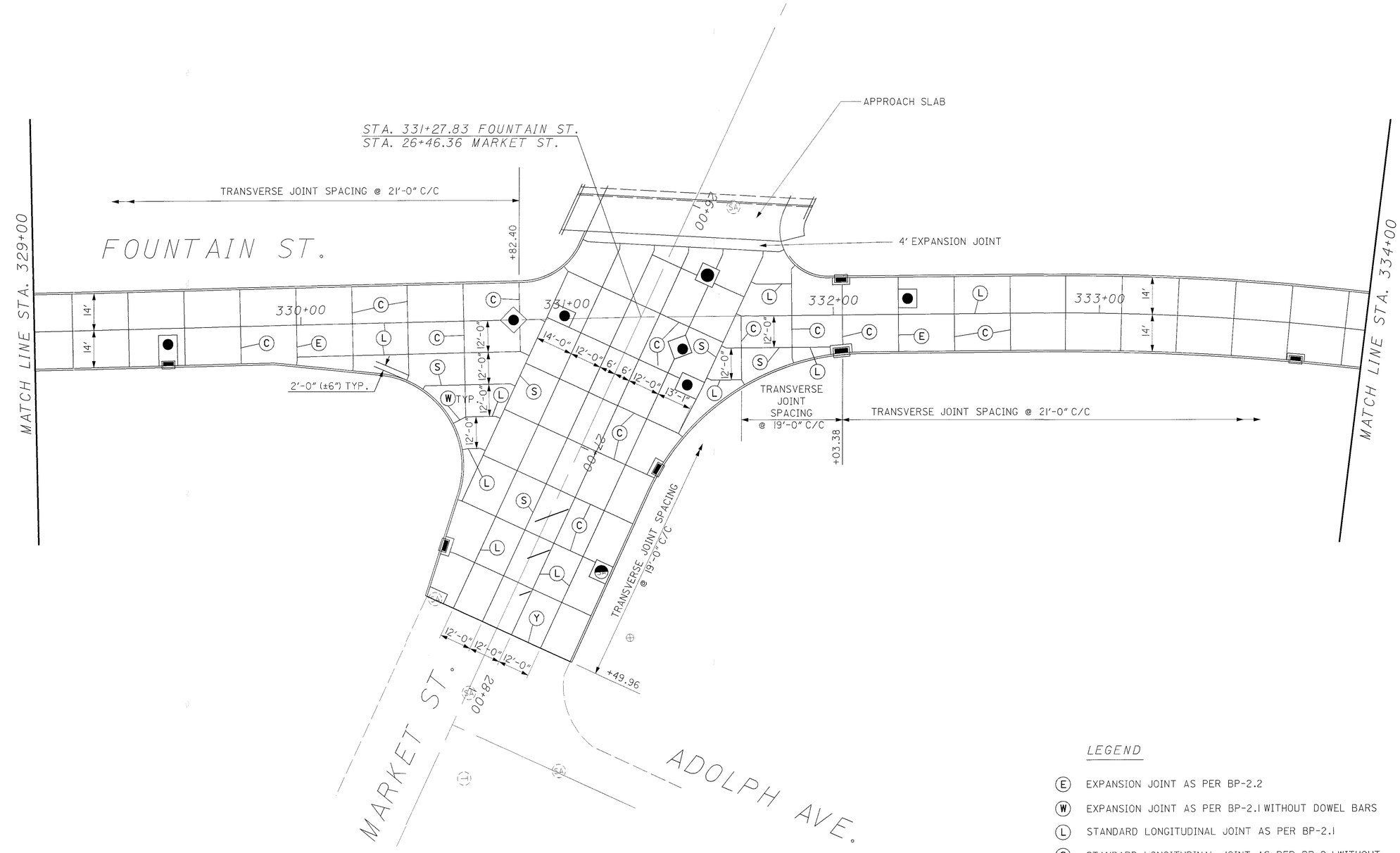

LEGEND

- (E) EXPANSION JOINT AS PER BP-2.2
- (W) EXPANSION JOINT AS PER BP-2.1 WITHOUT DOWEL BARS
- (L) STANDARD LONGITUDINAL JOINT AS PER BP-2.1
- (S) STANDARD LONGITUDINAL JOINT AS PER BP-2.1 WITHOUT TIE BARS
- (C) CONTRACTION JOINT AS PER BP-2.1
- (Y) BUTT JOINT

N

HORIZONTAL SCALE IN FEET
0 10 20 40

CALCULATED KME
CHECKED BF

PAVEMENT DETAILS FOUNTAIN ST.
STA. 329+00 TO STA. 334+00

SUM-8-0.63

538
1088

CURVE DATA

P.I. STA = 337+04.15
Δ = 7° 46′ 47″ (LT)
Dc = 6° 00′ 00″
R = 954.93′
T = 64.93′
L = 129.66′
E = 2.20′
e_{max} = NC

NO.	PC STA.	PT STA.	R	DELTA	TANGENT	LENGTH
1	338+05.10	8+74.44	20′	118°46′07″	33.80′	41.46′
2	9+25.20	339+23.33	35′	61°13′53″	20.71′	37.40′
3	338+06.20	9+91.54	90′	58°25′59″	50.33′	91.79′
4	10+29.45	339+75.25	35′	101°59′49″	43.22′	62.31′
5	500+29.77	500+49.62	25′	52°33′18″	12.34′	22.93′
6	500+29.77	500+49.62	25′	52°33′18″	12.34′	22.93′

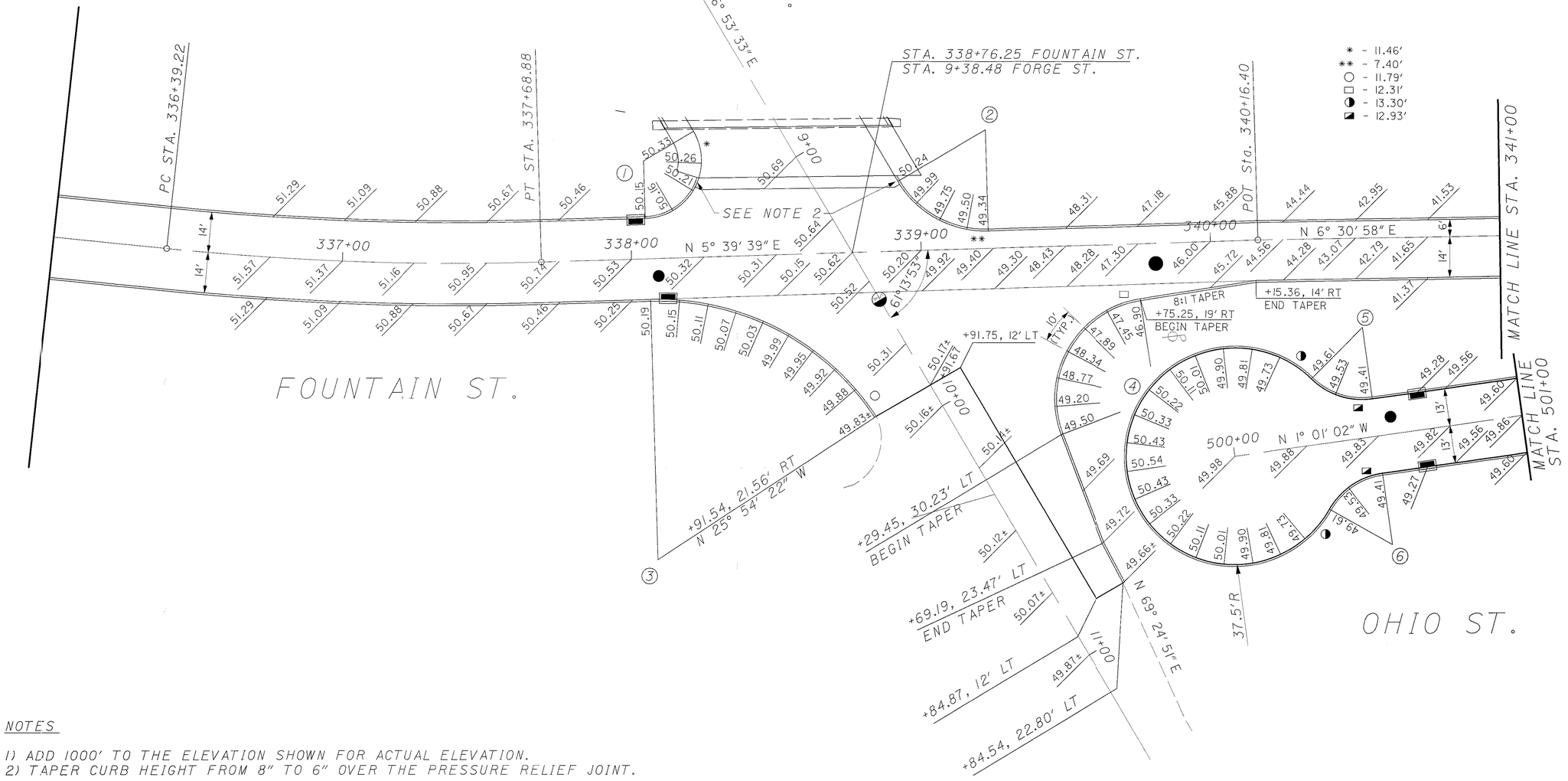

NOTES

1) ADD 1000′ TO THE ELEVATION SHOWN FOR ACTUAL ELEVATION.
2) TAPER CURB HEIGHT FROM 8″ TO 6″ OVER THE PRESSURE RELIEF JOINT.

HORIZONTAL SCALE IN FEET
0 10 20 40

CALCULATED KME
CHECKED BF

PAVEMENT DETAILS FOUNTAIN ST.
STA. 336+00 TO STA. 341+00

SUM-8-0.63

539
1088

LEGEND

- (E) EXPANSION JOINT AS PER BP-2.2
- (W) EXPANSION JOINT AS PER BP-2.1 WITHOUT DOWEL BARS
- (L) STANDARD LONGITUDINAL JOINT AS PER BP-2.1
- (S) STANDARD LONGITUDINAL JOINT AS PER BP-2.1 WITHOUT TIE BARS
- (C) CONTRACTION JOINT AS PER BP-2.1
- (Y) BUTT JOINT

N

0 10 20 40
HORIZONTAL SCALE IN FEET

CALCULATED KME
CHECKED BF

PAVEMENT DETAILS FOUNTAIN ST. STA. 336+00 TO STA. 341+00

SUM-8-0.63

540
1088

NO.	PC STA.	PT STA.	R	DELTA	TANGENT	LENGTH
1	504+33.11	504+83.69	15′	83°23′17″	13.36′	21.83′

CURVE DATA

P.I. STA = 90+66.41
Δ = 6° 03′ 30″ (LT)
Dc = 4° 00′ 00″
R = 1432.39′
T = 75.80′
L = 151.46′
E = 2.00′
e_{max} = 0.029

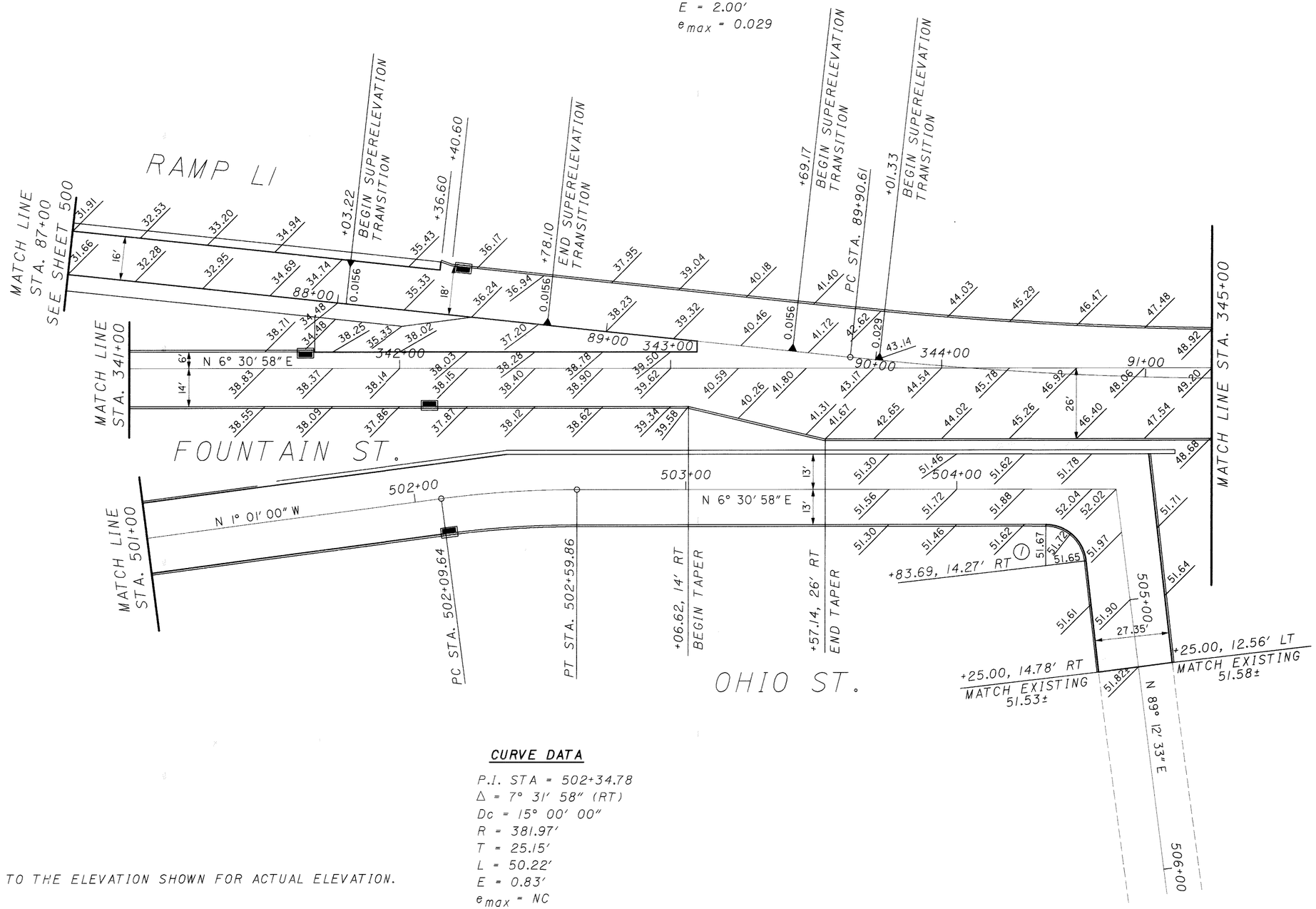

CURVE DATA

P.I. STA = 502+34.78
Δ = 7° 31′ 58″ (RT)
Dc = 15° 00′ 00″
R = 381.97′
T = 25.15′
L = 50.22′
E = 0.83′
e_{max} = NC

NOTES
ADD 1000′ TO THE ELEVATION SHOWN FOR ACTUAL ELEVATION.

REVISIONS: 05/15/2002 by MAM

HORIZONTAL SCALE IN FEET
0 10 20 40

CALCULATED KME
CHECKED BF

PAVEMENT DETAILS FOUNTAIN ST. STA. 341+00 TO STA. 345+00

SUM-8-0.63

541
1088

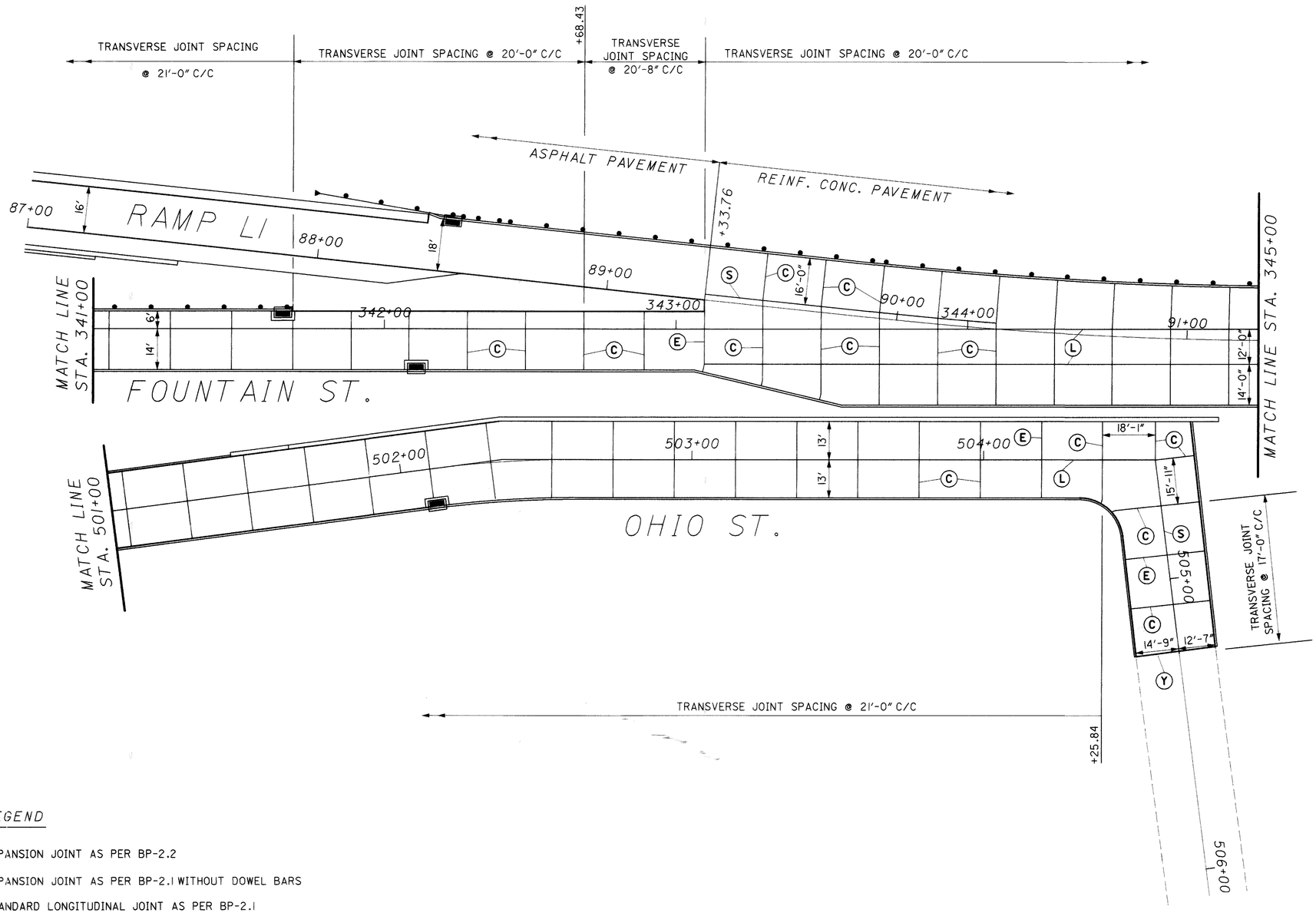

LEGEND

- (E) EXPANSION JOINT AS PER BP-2.2
- (W) EXPANSION JOINT AS PER BP-2.1 WITHOUT DOWEL BARS
- (L) STANDARD LONGITUDINAL JOINT AS PER BP-2.1
- (S) STANDARD LONGITUDINAL JOINT AS PER BP-2.1 WITHOUT TIE BARS
- (C) CONTRACTION JOINT AS PER BP-2.1
- (Y) BUTT JOINT

REVISIONS: 05/15/2002 by MAM

HORIZONTAL SCALE IN FEET 0 10 20 40

CALCULATED KME

CHECKED BF

PAVEMENT DETAILS FOUNTAIN ST. STA. 341+00 TO STA. 345+00

SUM-8-0.63

542
1088

NO.	PC STA.	PT STA.	R	DELTA	TANGENT	LENGTH
1	345+92.72	50+84.75	25′	97°12′26″	28.36′	42.41′
2	50+96.62	93+32.39	25′	95°26′15″	27.49′	41.64′
3	345+91.89	51+90.59	45′	68°56′49″	30.90′	54.15′
4	51+83.64	93+39.47	45′	69°35′52″	31.27′	54.66′
5	51+90.83	52+20.02	25′	97°39′44″	28.59′	42.61′

* - STA. 51+83.64, 30.88′ LT. BEGIN TAPER

** - STA. 51+90.83, 29.65′ LT. END TAPER

○ - 12.41′

◑ - 11.64′

□ - 14.15′

◪ - 14.66′

● - 12.61′

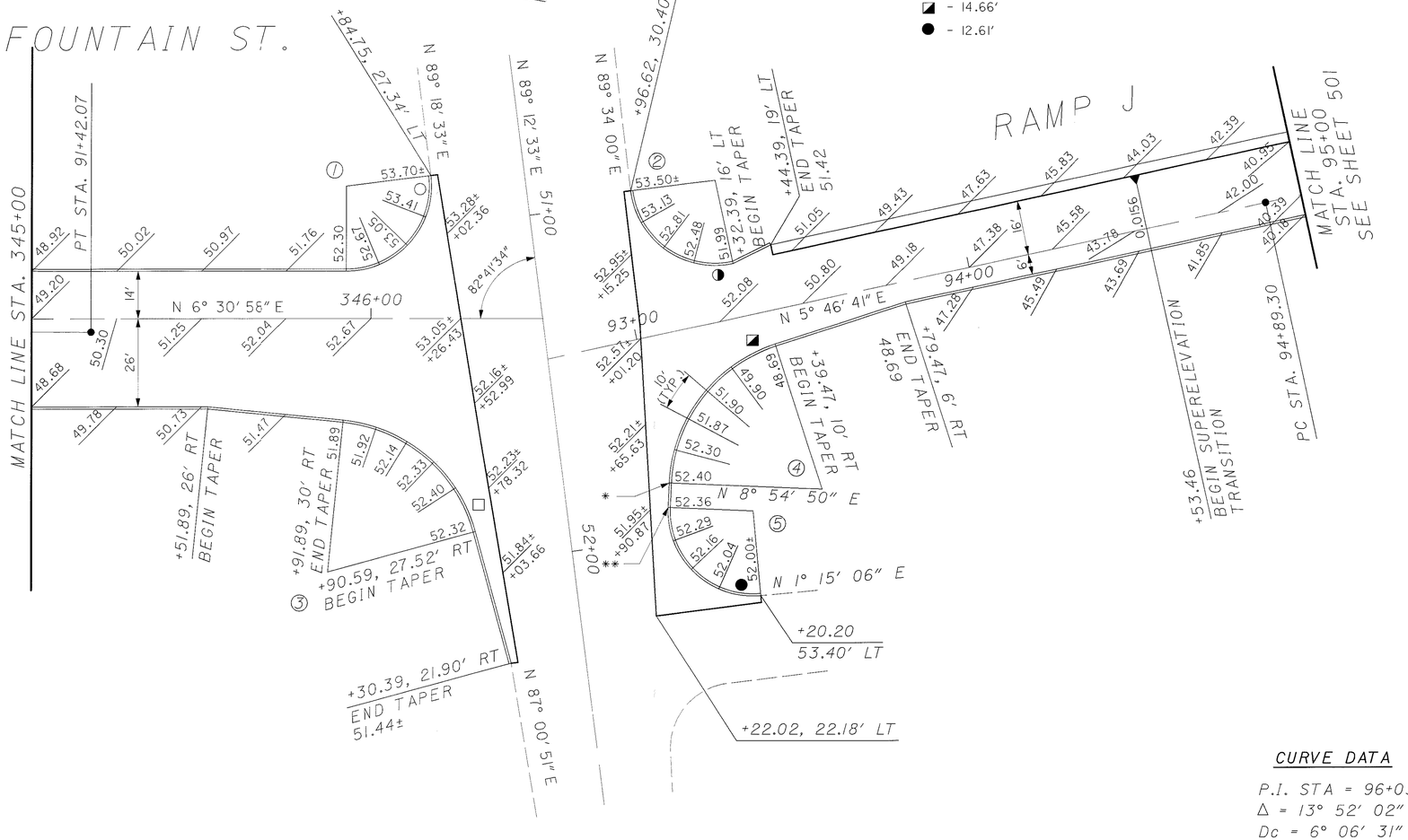

CURVE DATA

P.I. STA = 96+03.36
Δ = 13° 52′ 02″ (RT)
Dc = 6° 06′ 31″
R = 937.94′
T = 114.06′
L = 227.01′
E = 6.91′
e_{max} = 0.038

NOTES
ADD 1000′ TO THE ELEVATION SHOWN FOR ACTUAL ELEVATION.

N

0 10 20 40 HORIZONTAL SCALE IN FEET

CALCULATED KME
CHECKED BF

PAVEMENT DETAILS FOUNTAIN ST.
STA. 345+00 TO RAMP J

SUM-8-0.63

543
1088

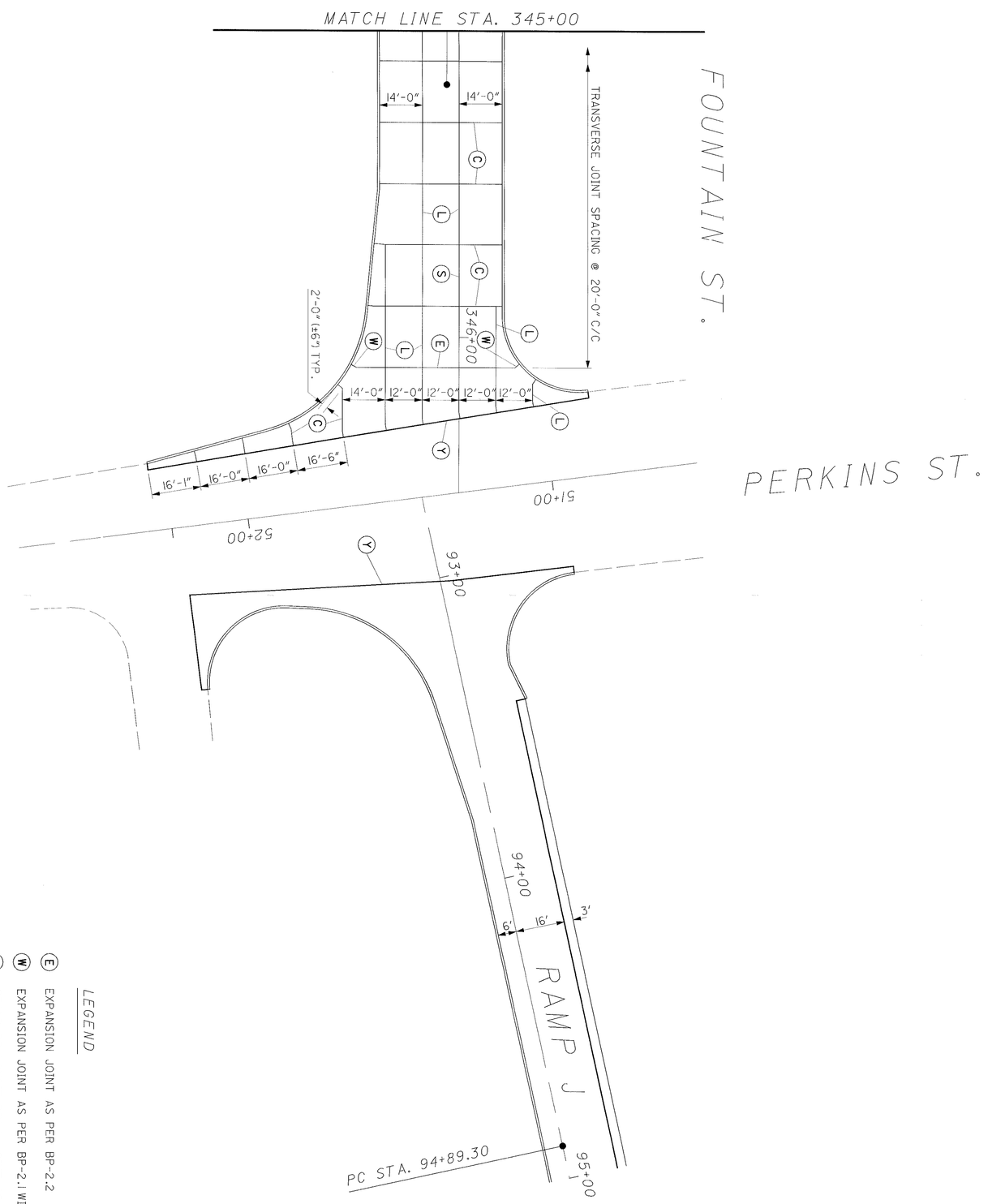

LEGEND

- (E) EXPANSION JOINT AS PER BP-2.2
- (W) EXPANSION JOINT AS PER BP-2.1 WITHOUT DOWEL BARS
- (L) STANDARD LONGITUDINAL JOINT AS PER BP-2.1
- (S) STANDARD LONGITUDINAL JOINT AS PER BP-2.1 WITHOUT TIE BARS
- (C) CONTRACTION JOINT AS PER BP-2.1
- (Y) BUTT JOINT

544 / 1088	SUM-8-0.63	PAVEMENT DETAILS FOUNTAIN ST. STA. 345+00 TO RAMP J	CALCULATED KME / CHECKED BF	0 20 10 40 HORIZONTAL SCALE IN FEET

NO.	PC STA.	PT STA.	R	DELTA	TANGENT	LENGTH
1	3+07.20	3+37.20	30′	90°00′00″	30′	47.12′
2	3+87.20	3+57.20	30′	90°00′00″	30′	47.12′
3	8+41.16	8+70.07	30′	74°32′02″	22.83′	39.03′
4	8+70.07	8+41.16	30′	74°32′02″	22.83′	39.03′
5	8+18.00	8+18.00	100′	44°40′03″	41.08′	77.96′

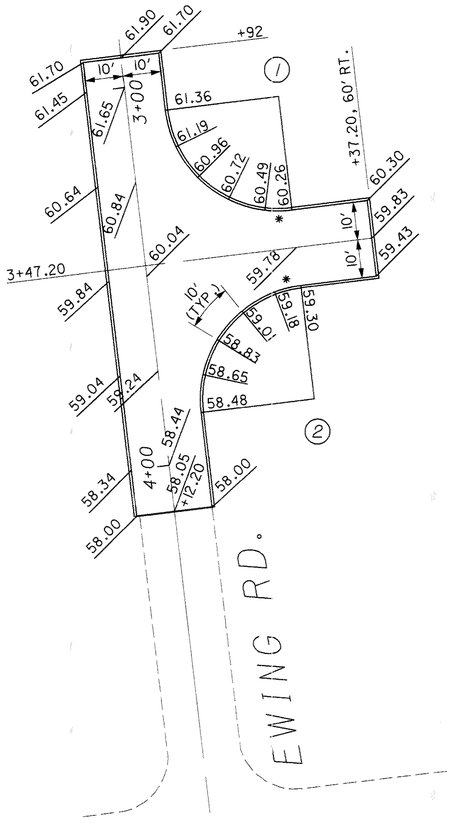

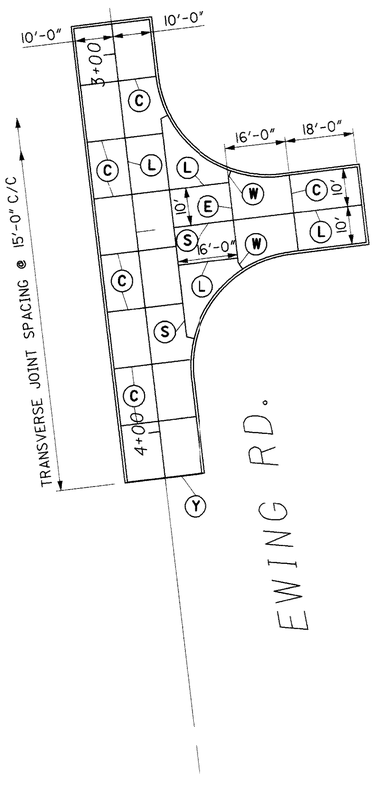

* - 7.12′
□ - 9.03′
○ - 7.96′

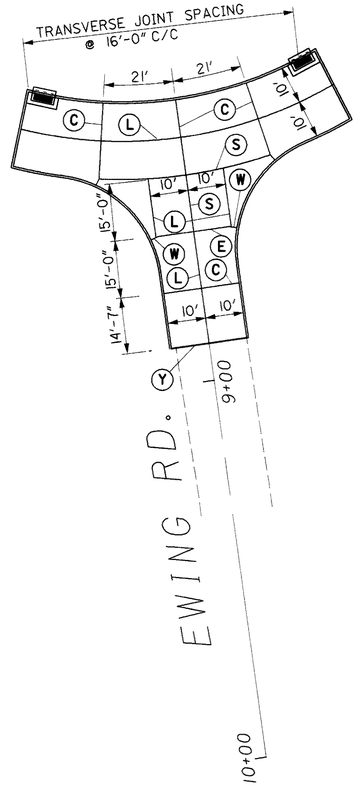

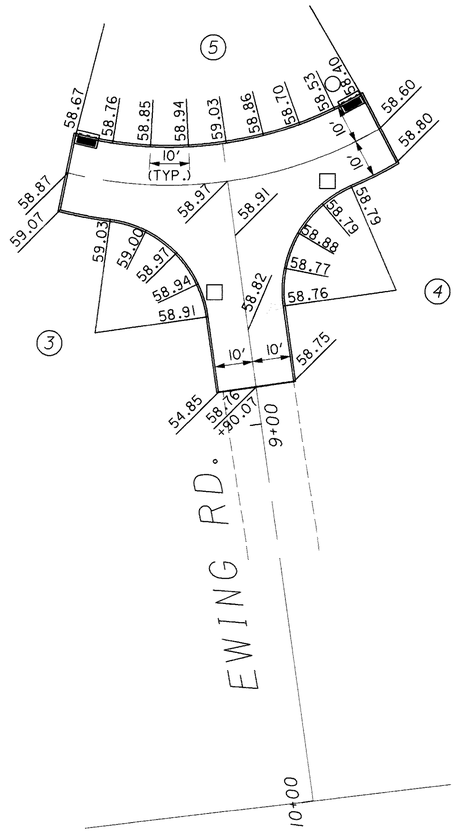

NOTES
ADD 1000′ TO THE ELEVATION SHOWN FOR ACTUAL ELEVATION.

LEGEND

- (E) EXPANSION JOINT AS PER BP-2.2
- (W) EXPANSION JOINT AS PER BP-2.1 WITHOUT DOWEL BARS
- (L) STANDARD LONGITUDINAL JOINT AS PER BP-2.1
- (S) STANDARD LONGITUDINAL JOINT AS PER BP-2.1 WITHOUT TIE BARS
- (C) CONTRACTION JOINT AS PER BP-2.1
- (Y) BUTT JOINT

HORIZONTAL SCALE IN FEET
0

CALCULATED KME
CHECKED BF

PAVEMENT DETAILS EWING RD.

SUM-8-0.63

545
1088

$TIME$
$DATE$
$FILE$

SUPERELEVATION TABLE

P.I. STA. 98+02.91 | DC = 1° 57′ 48″

REMARKS	LEFT SIDE S.B. EDGE ELEVATION	LEFT SIDE S.B. TRANSITION RATE	LEFT SIDE S.B. ELEVATION CORRECTION	LEFT SIDE S.B. CROSS SLOPE	LEFT SIDE S.B. WIDTH	LEFT SIDE S.B. CROWN ELEVATION (12' LT.)	CENTERLINE CONTROL STATION	CENTERLINE CONTROL PROFILE GRADE	RIGHT SIDE N.B. CROWN ELEVATION (12' RT)	RIGHT SIDE N.B. WIDTH	RIGHT SIDE N.B. CROSS SLOPE	RIGHT SIDE N.B. ELEVATION CORRECTION	RIGHT SIDE N.B. TRANSITION RATE	RIGHT SIDE N.B. EDGE ELEVATION	REMARKS
N.C.	1033.99		-0.19	-0.016	24	1034.37	92+20.78	1034.18							
	1034.04	200:1	-0.17	-0.0151	24	1034.40	92+25.00	1034.21	1034.40	24	-0.016	-0.19		1034.02	
	1034.32	200:1	-0.05	-0.0099	24	1034.56	92+50.00	1034.37	1034.56	24	-0.016	-0.19		1034.18	
	1034.60	200:1	0.08	-0.0047	24	1034.71	92+75.00	1034.52	1034.71	24	-0.016	-0.19		1034.33	
							92+84.78	1034.58	1034.77	24	-0.016	-0.19		1034.39	N.C.
L.S.	1034.86	200:1	0.19	0	24	1034.86	92+97.58	1034.67							
	1034.98	200:1	0.30	0.0047	24	1034.87	93+00.00	1034.68	1034.80	24	-0.016	-0.27		1034.41	
							93+23.18	1034.83	1034.83	24	-0.016	-0.38		1034.45	L.S.
	1035.27	200:1	0.43	0.0099	24	1035.03	93+25.00	1034.84	1034.83	24	-0.016	-0.39		1034.45	
	1035.54	200:1	0.55	0.0151	24	1035.18	93+50.00	1034.99	1034.86	24	-0.016	-0.52		1034.47	
							93+61.58	1035.06		36	-0.016	-0.58	200:1	1034.48	R.C.
R.C.	1035.73	200:1	0.58	0.016	36		93+74.38	1035.15							
	1035.73	200:1	0.58	0.0161	36		93+75.00	1035.15		36	-0.0179	-0.64	200:1	1034.51	
	1036.01	200:1	0.70	0.01955	36		94+00.00	1035.31		36	-0.0213	-0.77	200:1	1034.54	
	1036.30	200:1	0.83	0.0230	36		94+25.00	1035.47		36	-0.0248	-0.89	200:1	1034.58	
P.C.	1036.46	200:1	0.90	0.0251	36		94+39.98	1035.56		36	-0.0269	-0.97	200:1	1034.59	P.C.
	1036.58	200:1	0.95	0.02648	36		94+50.00	1035.63		36	-0.0283	-1.02	200:1	1034.61	
	1036.86	200:1	1.08	0.02993	36		94+75.00	1035.78		36	-0.0318	-1.14	200:1	1034.64	
							94+98.38	1035.93		36	-0.035	-1.26		1034.67	F.S.
	1037.14	200:1	1.20	0.03337	36		95+00.00	1035.94		36	-0.035	-1.26		1034.68	
F.S.	1037.27		1.26	0.035	36		95+11.18	1036.01		36	-0.035	-1.26		1034.75	
	1037.36		1.26	0.035	36		95+25.00	1036.10		36	-0.035	-1.26		1034.84	
	1037.52		1.26	0.035	36		95+50.00	1036.26		36	-0.035	-1.26		1035.00	
	1037.67		1.26	0.035	36		95+75.00	1036.41		36	-0.035	-1.26		1035.15	
	1037.83		1.26	0.035	36		96+00.00	1036.57		36	-0.035	-1.26		1035.31	
	1037.99		1.26	0.035	36		96+25.00	1036.73		36	-0.035	-1.26		1035.47	
	1038.15		1.26	0.035	36		96+50.00	1036.89		36	-0.035	-1.26		1035.63	
	1038.30		1.26	0.035	36		96+75.00	1037.04		36	-0.035	-1.26		1035.78	
	1038.46		1.26	0.035	36		97+00.00	1037.20		36	-0.035	-1.26		1035.94	
	1038.62		1.26	0.035	36		97+25.00	1037.36		36	-0.035	-1.26		1036.10	
	1038.78		1.26	0.035	36		97+50.00	1037.52		36	-0.035	-1.26		1036.26	
	1038.93		1.26	0.035	36		97+75.00	1037.67		36	-0.035	-1.26		1036.41	
	1039.09		1.26	0.035	36		98+00.00	1037.83		36	-0.035	-1.26		1036.57	
	1039.25		1.26	0.035	36		98+25.00	1037.99		36	-0.035	-1.26		1036.73	
	1039.41		1.26	0.035	36		98+50.00	1038.15		36	-0.035	-1.26		1036.89	
	1039.56		1.26	0.035	36		98+75.00	1038.30		36	-0.035	-1.26		1037.04	
	1039.71		1.26	0.035	36		99+00.00	1038.45		36	-0.035	-1.26		1037.19	
F.S.	1039.72	184:1	1.26	0.035	36		99+03.18	1038.46		36	-0.035	-1.26		1037.20	
	1039.70	184:1	1.14	0.0317	36		99+25.00	1038.56		36	-0.035	-1.26		1037.30	
	1038.68	184:1	1.03	0.0286	36		99+50.00	1038.65		36	-0.035	-1.26		1037.39	
	1039.57	184:1	0.87	0.02418	36		99+75.00	1038.70		36	-0.035	-1.26		1037.44	
	1039.47	184:1	0.74	0.02042	36		100+00.00	1038.73		36	-0.035	-1.26		1037.47	
	1039.32	184:1	0.60	0.0167	36		100+25.00	1038.72		36	-0.035	-1.26		1037.46	
	1039.14	184:1	0.46	0.01289	36		100+50.00	1038.68		36	-0.035	-1.26		1037.42	
	1038.95	184:1	0.33	0.00912	36		100+75.00	1038.62		36	-0.035	-1.26		1037.36	
	1038.71	184:1	0.19	0.0054	36		101+00.00	1038.52		36	-0.035	-1.26		1037.26	F.S.
	1038.45	184:1	0.06	0.00159	36		101+25.00	1038.39		36	-0.0331	-1.175	295:1	1037.20	
L.S.	1038.32	184:1	0.00	0.000	36		101+35.59	1038.32			-0.0316	-1.139			
	1038.16	184:1	-0.08	-0.00217	36		101+50.00	1038.24		36	-0.0303	-1.09	295:1	1037.15	
P.T.	1038.01	184:1	-0.14	-0.004	36		101+62.12	1038.16		36	-0.029	-1.049	295:1	1037.11	P.T.
	1037.87	184:1	-0.21	-0.00594	36		101+75.00	1038.08		36	-0.028	-1.005	295:1	1037.07	
	1037.59	184:1	-0.35	-0.0094	36		102+00.00	1037.93		36	-0.026	-0.9198	295:1	1036.99	
	1037.26	184:1	-0.48	-0.0144	36		102+25.00	1037.78		36	-0.023	-0.835	295:1	1036.95	

SUPERELEVATION TABLE

P.I. STA. 98+02.91 | DC = 1° 57′ 48″

REMARKS	LEFT SIDE S.B. EDGE ELEVATION	LEFT SIDE S.B. TRANSITION RATE	LEFT SIDE S.B. ELEVATION CORRECTION	LEFT SIDE S.B. CROSS SLOPE	LEFT SIDE S.B. WIDTH	CENTERLINE CONTROL STATION	CENTERLINE CONTROL PROFILE GRADE	RIGHT SIDE N.B. WIDTH	RIGHT SIDE N.B. CROSS SLOPE	RIGHT SIDE N.B. ELEVATION CORRECTION	RIGHT SIDE N.B. TRANSITION RATE	RIGHT SIDE N.B. EDGE ELEVATION	REMARKS
	1037.01	184:1	-0.62	-0.0172	36	102+50.00	1037.63	36	-0.021	-0.75	295:1	1036.87	
N.C.	1036.80		-0.73	-0.0203	36	102+70.38	1037.53						
							1037.47	36	-0.0189	-0.68		1036.79	

RATE OF TRANSITION = 184:1 (NDC 222:1)

CALCULATED KME | CHECKED

SUPERELEVATION TABLE

SUM-8-0.63

546
1088

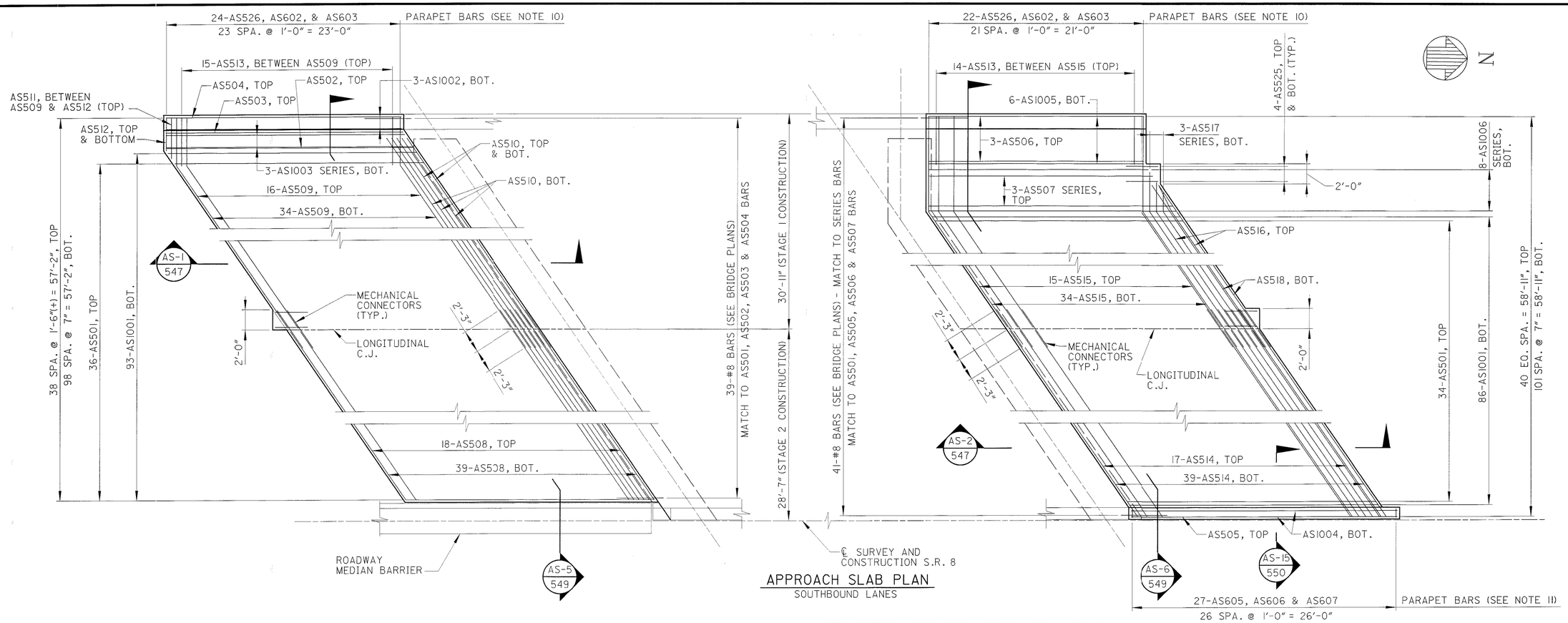

APPROACH SLAB PLAN
SOUTHBOUND LANES

NOTE: ADDITIONAL TOP BARS AS513 IN THE CANTILEVERED SECTION OF THE APPROACH SLAB NOT SHOWN. SEE PLAN VIEW.

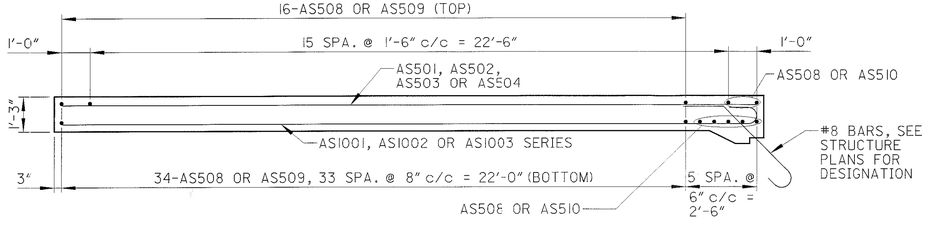

SECTION AS-1 / 547

NOTE: ADDITIONAL TOP BARS AS513 IN THE CANTILEVERED SECTION OF THE APPROACH SLAB NOT SHOWN. SEE PLAN VIEW.

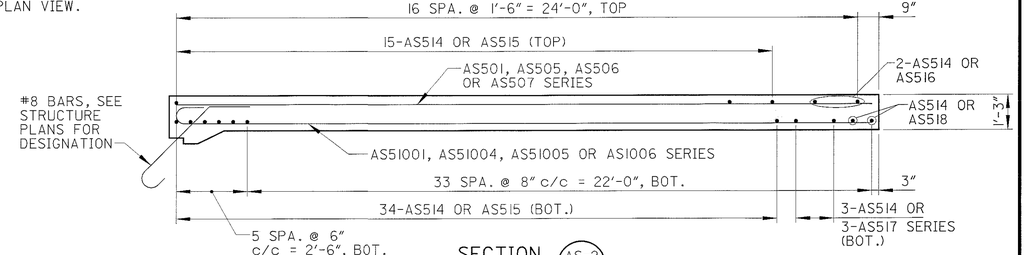

SECTION AS-2 / 547

NOTES:

1. **DESIGN SPECIFICATIONS:** THIS APPROACH SLAB CONFORMS TO "STANDARD SPECIFICATIONS FOR HIGHWAY BRIDGES" ADOPTED BY THE AMERICAN ASSOCIATION OF STATE HIGHWAY AND TRANSPORTATION OFFICIALS, 1996, INCLUDING THE 1997, 1998, AND 1999 INTERIM SPECIFICATIONS AND THE ODOT BRIDGE DESIGN MANUAL.
2. **DESIGN DATA**
   DESIGN LOADING: HS20 AND THE ALTERNATE MILITARY LOADING. HIGH PERFORMANCE CONCRETE, PER SS 844, COMPRESSIVE STRENGTH 4500 P.S.I.
3. **REINFORCING STEEL:** ASTM A615, A616 OR A617 - GRADE 60, MINIMUM YIELD STRENGTH OF 60,000 P.S.I. AND SHALL BE EPOXY COATED.
4. **PREFORMED EXPANSION JOINT FILLER AND SEALER** AT THE CORNERS AND SIDES OF THE APPROACH SLAB SHALL BE INCLUDED IN THE PRICE BID PER SQUARE YARD FOR THE APPROACH SLAB.
5. **PREFORMED ELASTOMERIC JOINT AND TYPE 'A' WATERPROOFING** SHOWN AT THE BRIDGE LIMIT END OF THE APPROACH SLAB SHALL BE INCLUDED IN THE PRICE BID PER SQUARE YARD FOR THE APPROACH SLAB. SEE DETAIL AS-9/548.
6. **CROWN** SHALL CONFORM TO THAT OF THE APPROACH PAVEMENT AND BRIDGE DECK. IF THE RATE OF CROWN OF THE BRIDGE DECK DIFFERS FROM THAT OF THE APPROACH PAVMENT, A SMOOTH TRANSITION SHALL BE PROVIDED WITHIN THE LIMITS OF THE APPROACH SLAB.
7. **SEALING OF CONCRETE SURFACES, EPOXY URETHANE,** IN ACCORDANCE WITH SS 864, ON THE TRANSITION PARAPET AND APPROACH SLAB SHALL BE INCLUDED WITH ITEM 611, APPROACH SLAB (T=15"), AS PER PLAN, FOR PAYMENT.
8. FOR ADDITIONAL NOTES, DETAILS, ESTIMATED QUANTITIES, AND REINFORCING STEEL LIST, SEE SHEET 548.
9. PARAPETS SHALL BE INCLUDED IN THE PRICE BID PER SQUARE YARD FOR THE APPROACH SLAB.
10. FOR MORE INFORMATION ON PARAPET REINFORCING ON THE APPROACH SLAB, INCLUDING LONGITUDINAL REINFORCING, SEE SECTION AS-11/550.
11. FOR MORE INFORMATION ON PARAPET REINFORCING ON THE APPROACH SLAB, INCLUDING LONGITUDINAL REINFORCING, SEE SECTION AS-15/550.

BRIDGE NO. SUM-8-0064
S.R. 8 OVER BEACON STREET

CALCULATED DJC CHECKED JWB

25'-0" APPROACH SLAB DETAILS - SOUTHBOUND LANES

SUM-8-0.63

547 / 1088

FILE:\\PROJECTS\9922000\bridge\dwg\beacon\app-slabs.dgn
DATE:14-Dec-00 15:09

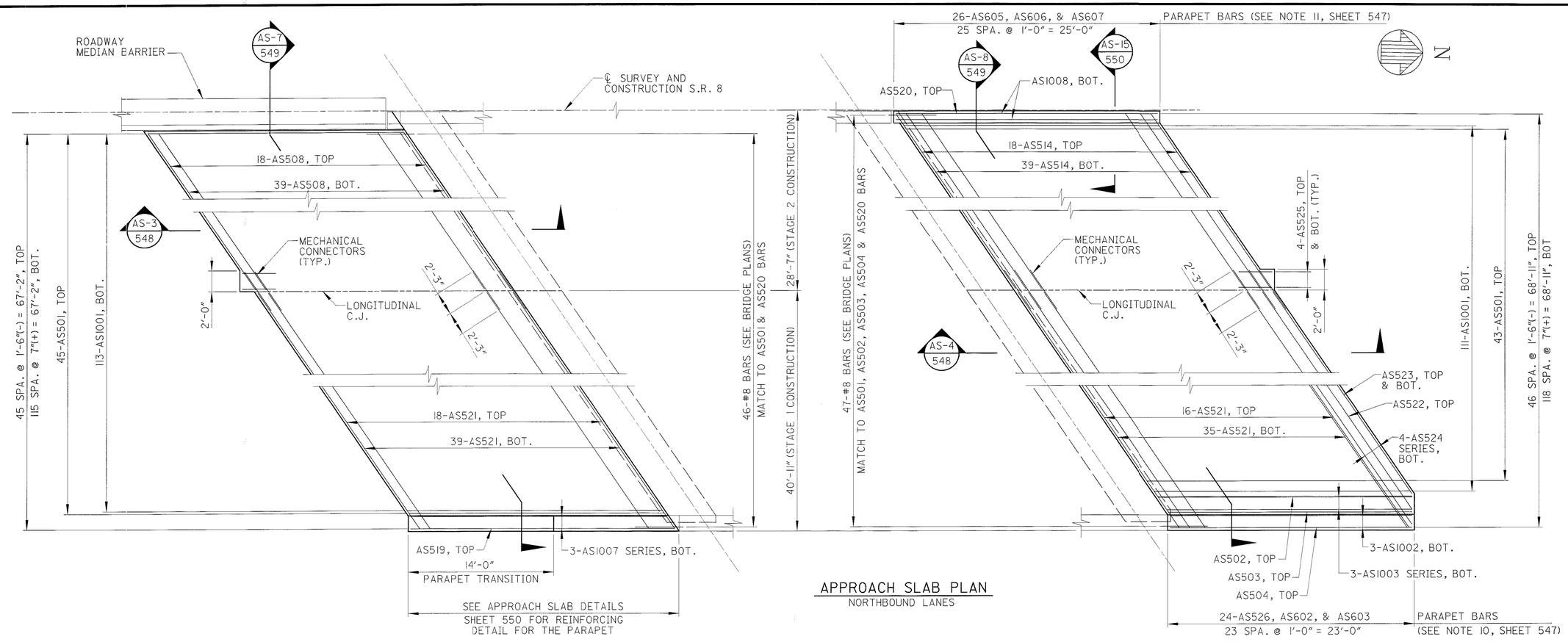

APPROACH SLAB PLAN
NORTHBOUND LANES

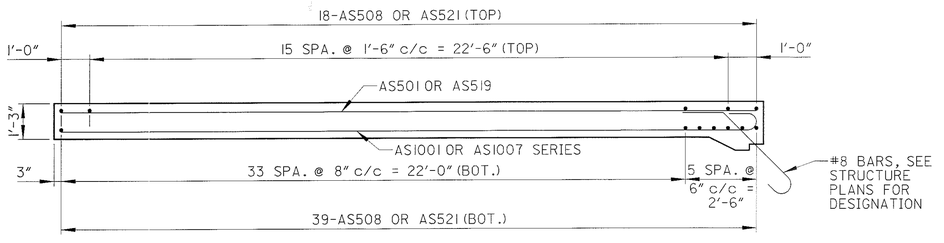

SECTION AS-3 / 548

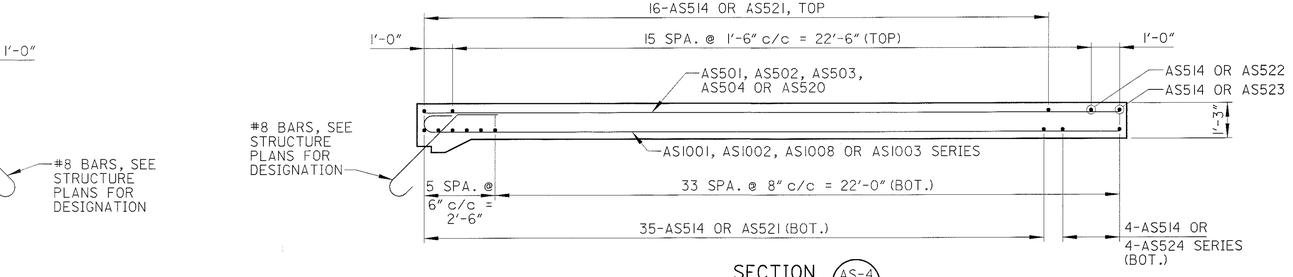

SECTION AS-4 / 548

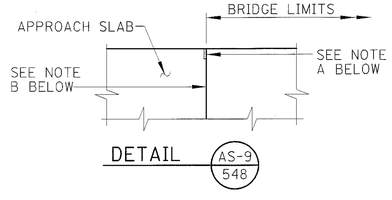

DETAIL AS-9 / 548

NOTES:

A. PREFORMED ELASTOMERIC JOINT SEALER 705.11 (1¼" FOR ½" JOINT) DEPRESSED ⅛" BELOW ROADWAY, PLACED IN ½" × 2¼" GROOVE.

B. TYPE 'A' WATERPROOFING SHALL NOT EXTEND ABOVE THE BOTTOM OF THE GROOVE INTO WHICH THE PREFORMED ELASTOMERIC JOINT SEALER IS TO BE PLACED. IT SHALL BE APPLIED TO THE ENTIRE AREA OF THE ABUTMENT OR SUPERSTRUCTURE WHICH COMES INTO CONTACT WITH THE APPROACH SLAB.

ESTIMATED QUANTITY				
ITEM	ITEM EXTENSION	TOTAL	UNIT	DESCRIPTION
203	50000	714	SQ YD	SUBGRADE COMPACTION
304	20000	119	CU YD	AGGREGATE BASE
611	25001	714	SQ YD	REINFORCED CONCRETE APPROACH SLAB (T=15"), AS PER PLAN

QUANTITIES CARRIED TO GENERAL SUMMARY

BRIDGE NO. SUM-8-0064
S.R. 8 OVER BEACON STREET

CALCULATED DJC
CHECKED JWB

25'-0" APPROACH SLAB DETAILS - NORTHBOUND LANES

SUM-8-0.63

548
1088

FILE: H:\PROJECTS\9922000\bridge\dwg\beacon\app-slabs.dgn
DATE: M-DEC-00 15:08

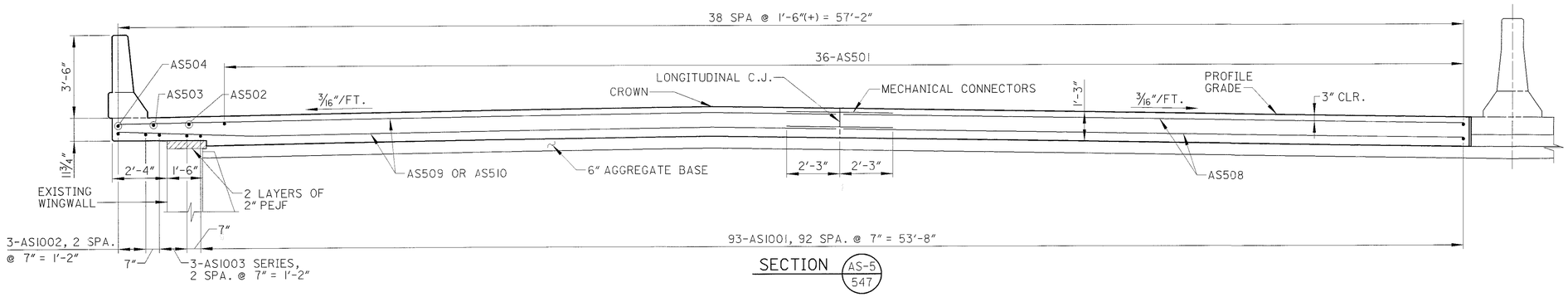

SECTION AS-5 / 547

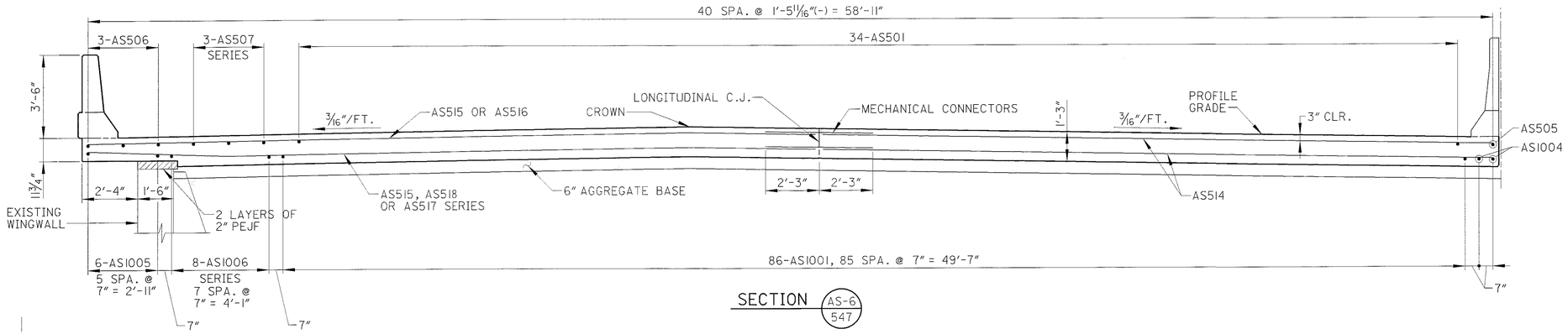

SECTION AS-6 / 547

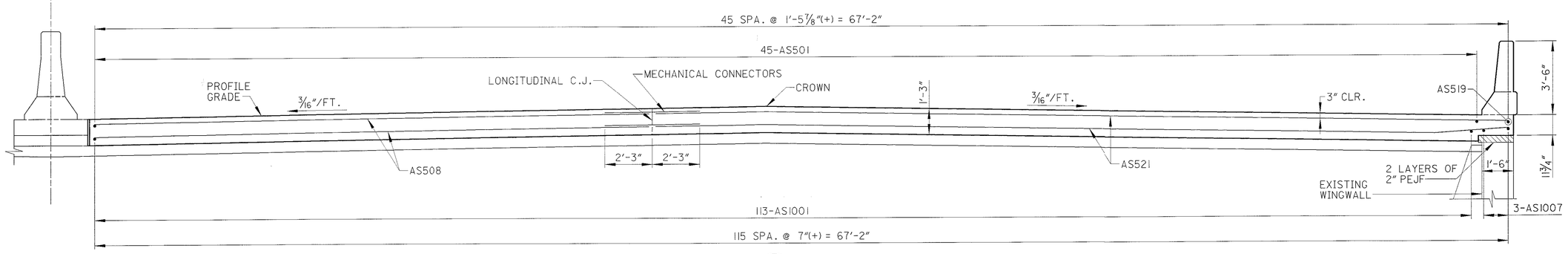

SECTION AS-7 / 548

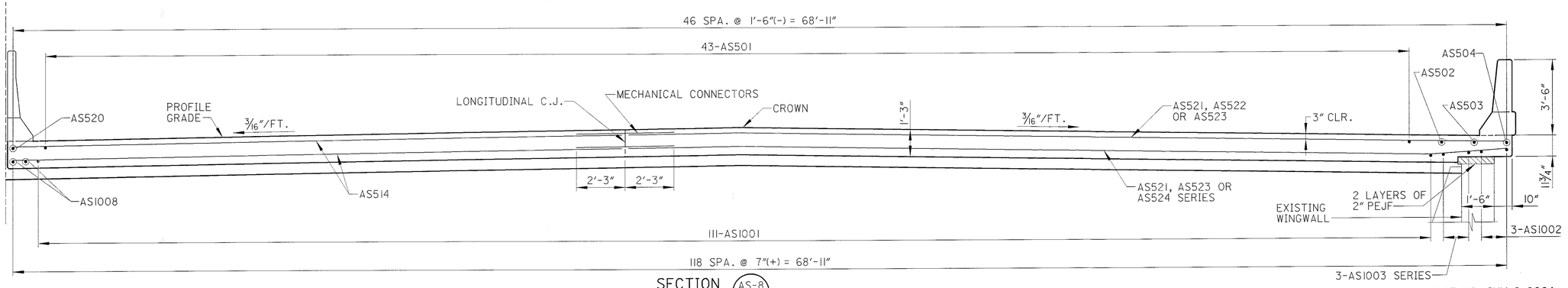

SECTION AS-8 / 548

BRIDGE NO. SUM-8-0064
S.R. 8 OVER BEACON STREET

CALCULATED DJC
CHECKED JWB

25'-0" APPROACH SLAB DETAILS

SUM-8-0.63

549 / 1088

FILE: I:\PROJECTS\992200\bridge\dwg\beacon\app-slabs.dgn
DATE: 4-Dec-00 15:08

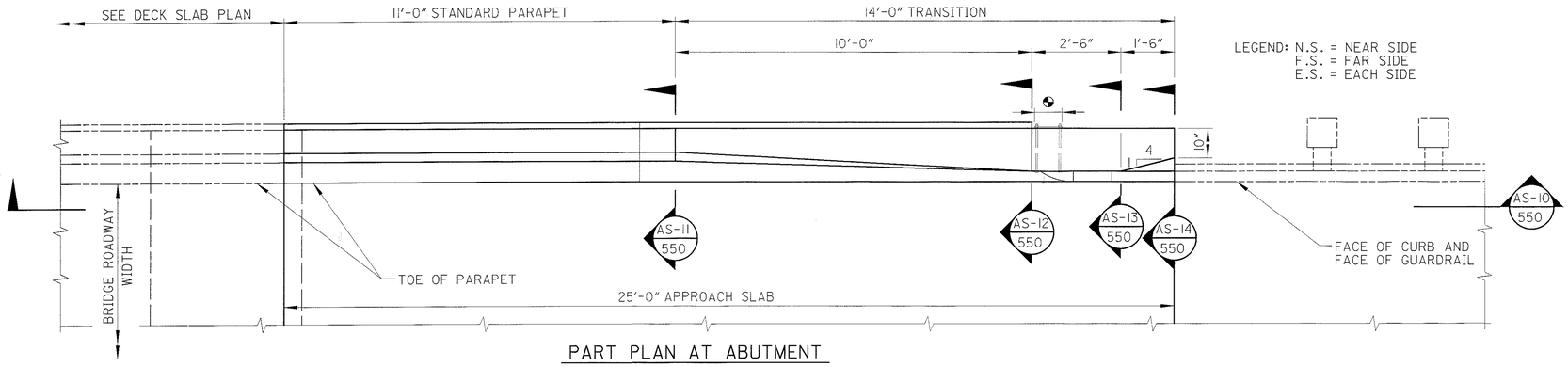

PART PLAN AT ABUTMENT

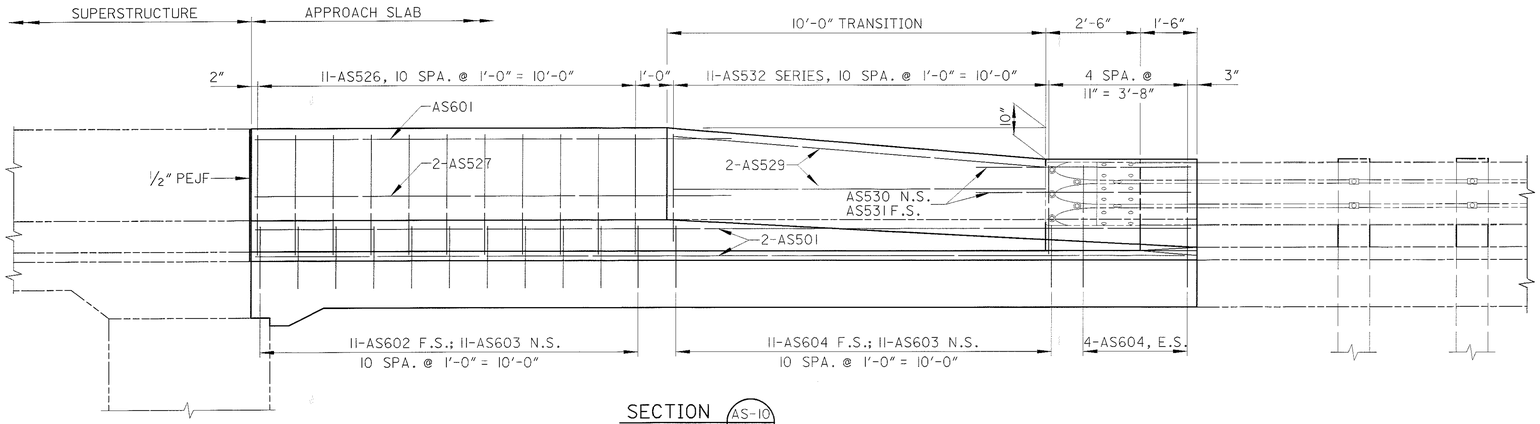

SECTION AS-10 / 550

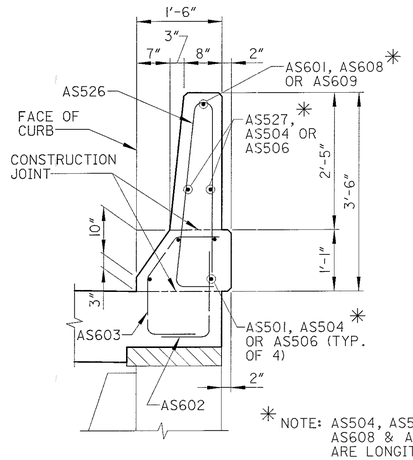

SECTION AS-11 / 550

* NOTE: AS504, AS506, AS608 & AS609 BARS ARE LONGITUDINAL PARAPET BARS IN THOSE PARAPETS ON THE APPROACH SLAB WITHOUT A TRANSITION.

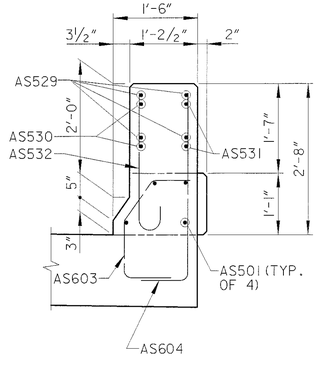

SECTION AS-12 / 550

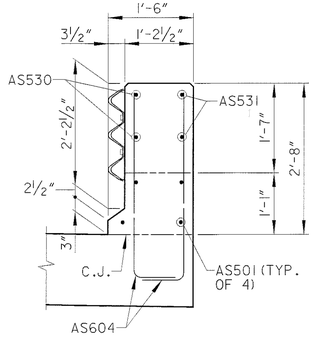

SECTION AS-13 / 550

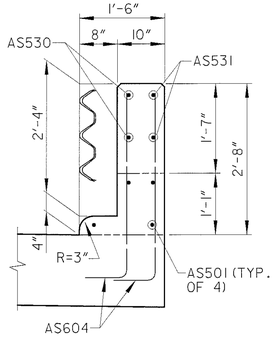

SECTION AS-14 / 550

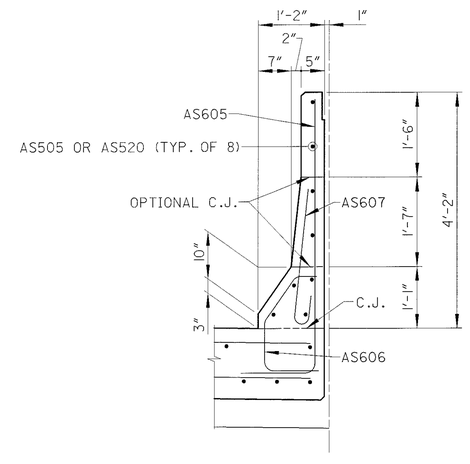

SECTION AS-15 / 547 AS-15 / 548

NOTES:

THIS DRAWING PROVIDES DETAILS TO SUPPLEMENT THE STANDARD APPROACH SLAB DRAWINGS. FOR DETAILS AND REINFORCING IN THE APPROACH SLAB NOT SHOWN, SEE APPROACH SLAB DETAIL SHEETS.

QUANTITIES OF CONCRETE, REINFORCING STEEL, PREFORMED EXPANSION JOINT FILLER, AND PARAPET TRANSITION SHALL BE INCLUDED FOR PAYMENT WITH ITEM 611 - REINFORCED CONCRETE APPROACH SLAB (T=15"), AS PER PLAN.

FOR BRIDGE TERMINAL ASSEMBLY SEE STANDARD CONSTRUCTION DRAWING GR-3.1M AND GR-3.2M.

◔ THE REAR SIDE OF THE PARAPET IN THIS AREA SHALL HAVE A VERTICAL FACE TO RECEIVE THE 1'-6 1/4" x 11" x 5/8" PLATE AS SHOWN IN THE STANDARD DRAWING GR-3.1M.

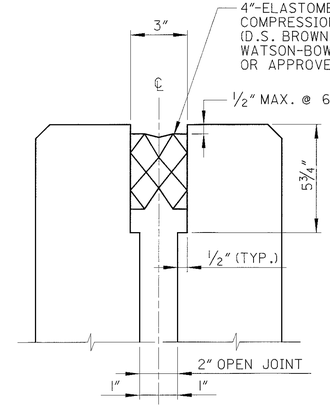

LONGITUDINAL JOINT DETAIL AT MEDIAN PARAPET

NOTE:

COMPRESSION SEAL TO BE PLACED BETWEEN THE FORWARD APPROACH SLABS ONLY. PAYMENT WILL BE INCLUDED WITH ITEM 611 - REINFORCED CONCRETE APPROACH SLAB (T=15"), AS PER PLAN

CALCULATED DJC
CHECKED JWB

25'-0" APPROACH SLAB DETAILS

SUM-8-0.63

550 / 1088

BRIDGE NO. SUM-8-0064
S.R. 8 OVER BEACON STREET

FILE: I:\PROJECTS\9922100\bridge\dwg\beacon\app-slabs.dgn
DATE: 14-Dec-00 15:08

APPROACH SLAB REINFORCING STEEL LIST

MARK	NUMBER	LENGTH	WEIGHT	TYPE	A	B	C	D	E	SER INC
AS501	162	24'-6"	4140	STR						
AS502	2	24'-4"	51	STR						
AS503	2	23'-4"	49	STR						
AS504	14	23'-2"	338	STR						
AS505	9	26'-3"	246	STR						
AS506	9	21'-2"	199	STR						
	1	22'-1"								
AS507	SER OF		72	STR						1'-0"
	3	24'-1"								
AS508	114	31'-11"	3795	STR						
AS509	50	35'-11"	1873	12	4'-9"	17'-8"	25'-9"			
AS510	7	34'-5"	251	STR						
AS511	1	4'-0"	4	STR						
AS512	2	3'-3"	7	STR						
AS513	29	4'-9"	144	STR						
AS514	113	34'-1"	4017	STR						
AS515	49	34'-11"	1784	12	9'-5"	14'-5"	21'-1"			
AS516	2	28'-5"	59	12	2'-11"	14'-5"	21'-1"			
	1	27'-4"			1'-10"					
AS517	SER OF		89	12		14'-5"	21'-1"			1'-0 1/2"
	3	29'-5"			3'-11"					
AS518	2	28'-10"	60	STR						
AS519	1	25'-4"	26	STR						
AS520	9	25'-1"	235	STR						
AS521	108	49'-1"	5529	STR						
AS522	1	46'-11"	49	STR						
AS523	1	45'-2"	47	STR						
	1	45'-2"								
AS524	SER OF		196	STR						1'-2"
	4	48'-8"								
AS525	40	3'-2"	132	STR						
AS526	70	7'-1"	517	22	3'-0"	3'-3"	8"			
AS527	2	12'-7"	26	STR						
AS528	NOT USED									
AS529	4	10'-0"	42	STR						
AS530	2	5'-8"	12	23	1'-10"	2'-5"	1'-5"	5"	1 1/2"	
AS531	2	5'-8"	12	STR						
	1	3'-0"			2'-5"					
AS532	SER OF		39	1						1"
	11	3'-10"			3'-3"					
AS601	1	12'-7"	19	STR						
AS602	81	2'-4"	284	3	11"	1'-7"				
AS603	92	3'-2"	438	21	9"	6"	8 1/2"	1'-0"	10 1/2"	
AS604	19	4'-1"	117	3	10"	3'-5"				
AS605	53	5'-10"	464	3	11"	4'-7"				
AS606	53	2'-3"	179	21	4"	6"	8 1/2"	10"	5"	
AS607	53	3'-2"	252	1	2'-6"					
AS608	2	23'-2"	70	STR						
AS609	1	21'-2"	32	STR						
AS1001	403	25'-11"	44942	1	24'-6"					
AS1002	6	24'-7"	635	1	23'-2"					
	2	24'-11"			23'-6"					
AS1003	SER OF		653	1						4 1/2"
	3	25'-8"			24'-3"					
AS1004	2	27'-8"	238	1	26'-3"					
AS1005	6	22'-7"	583	1	21'-2"					
	1	23'-1"			21'-8"					
AS1006	SER OF		842	1						4 11/16"
	8	25'-10"			24'-5"					
	1	26'-0"			24'-7"					
AS1007	SER OF		340	1						4 1/2"
	3	26'-9"			25'-4"					
AS1008	2	26'-6"	228	1	25'-1"					
AS1009	20	3'-2"	273	STR						
APPROACH SLAB TOTAL =			74629	LBS						

BENDING DIAGRAMS

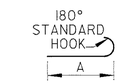

TYPE 1

TYPE 3

TYPE 12

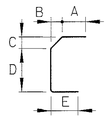

TYPE 21

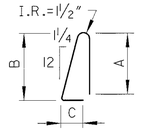

TYPE 22

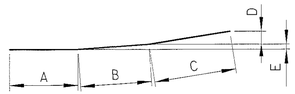

TYPE 23

BRIDGE NO. SUM-8-0064
S.R. 8 OVER BEACON STREET

CALCULATED DJC
CHECKED JWB

25'-0" APPROACH SLAB REINFORCING STEEL LIST

SUM-8-0.63

551
1088

FILE: i:\PROJECTS\992100\bridge\dwg\beacon\app-slabs.dgn
DATE: 02-Jan-01 13:08

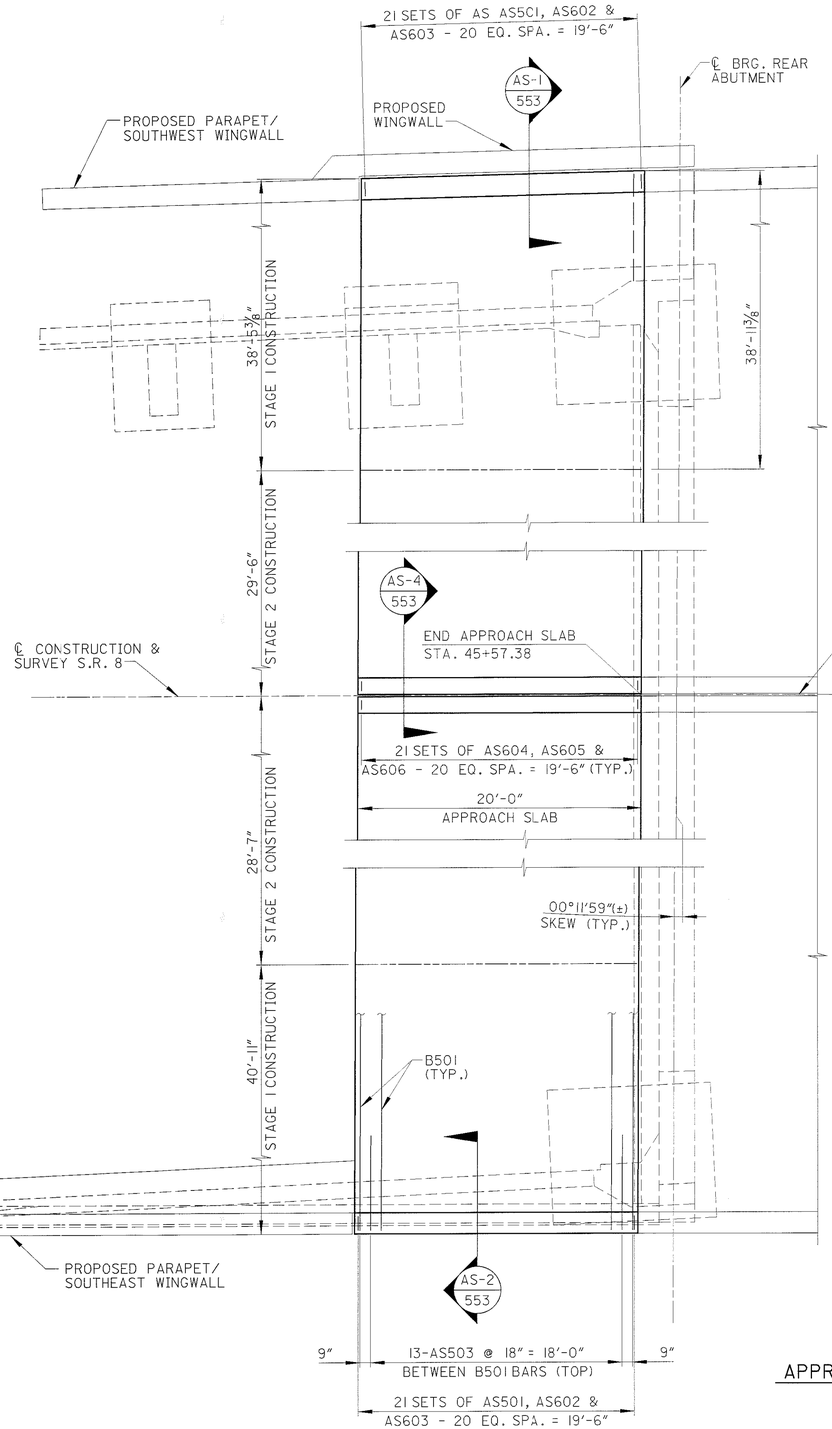

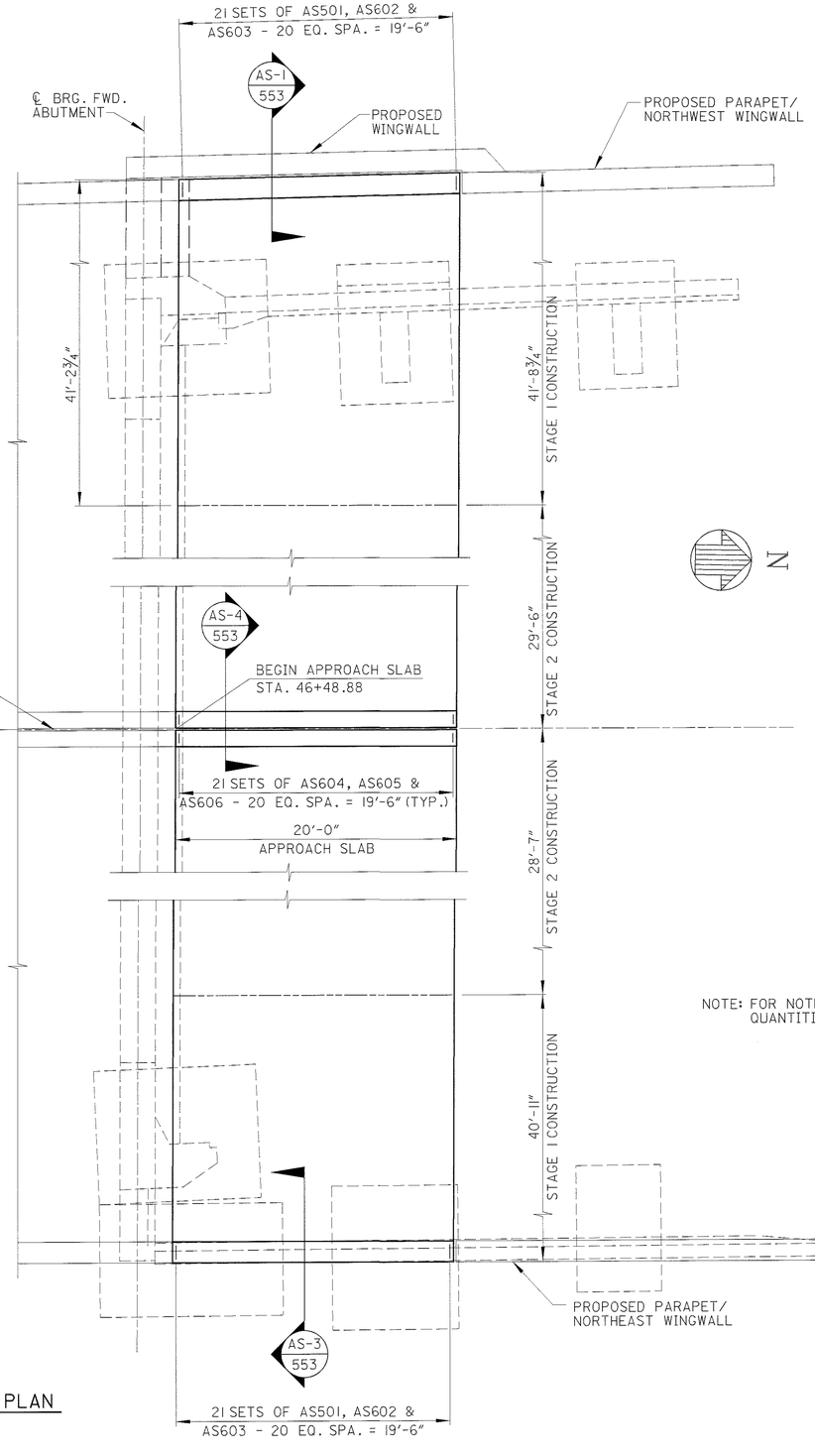

2" JOINT IN MEDIAN BARRIER WITH 4" COMPRESSION SEAL

APPROACH SLAB GENERAL PLAN

NOTE: FOR NOTES, DETAILS AND QUANTITIES, SEE SHEET 553.

BRIDGE NO. SUM-8-0064
S.R. 8 OVER EXCHANGE STREET

CALCULATED A.JM
CHECKED JWB

20'-0" APPROACH SLAB DETAILS - EXCHANGE ST.

SUM-8-0.63

552
1088

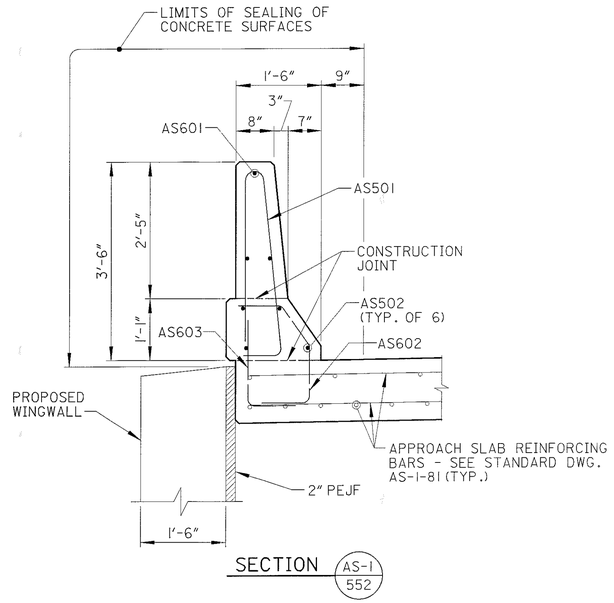

SECTION AS-1 / 552

APPROACH SLAB REINFORCING STEEL LIST										
MARK	NUMBER	LENGTH	WEIGHT	TYPE	A	B	C	D	E	SER INC
AS501	84	7'-1"	621	22	3'-0"	3'-3"	8"			
AS502	56	19'-6"	1139	STR						
AS503	13	6'-8"	91	STR						
AS601	4	19'-6"	117	STR						
AS602	84	3'-2"	400	21	9"	6"	8½"	1'-0"	10½"	
AS603	84	2'-4"	294	3	11"	1'-7"				
AS604	84	5'-7"	704	3	11"	4'-10"				
AS605	84	3'-2"	400	1	2'-6"					
AS606	84	2'-5"	305	21	4"	6"	8½"	1'-0"	5"	
APPROACH SLAB TOTAL =			4071	LBS						

BENDING DIAGRAMS

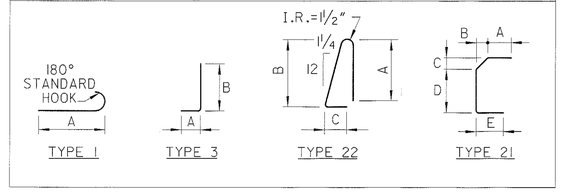

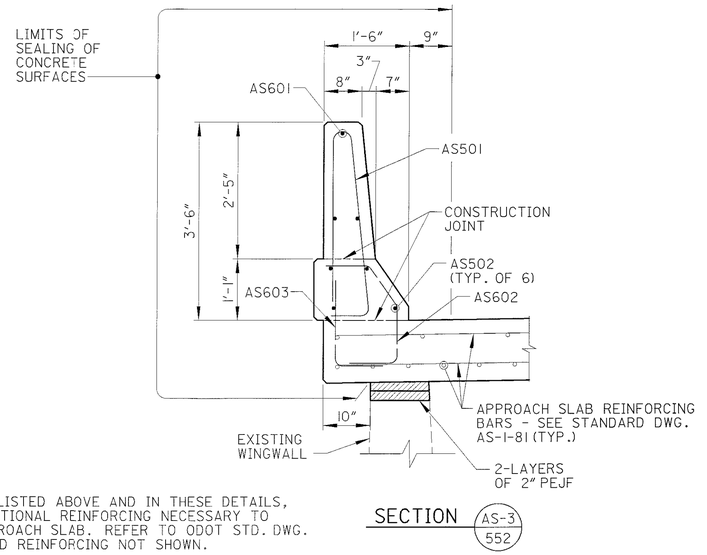

SECTION AS-3 / 552

NOTES:

1. REINFORCING STEEL LISTED ABOVE AND IN THESE DETAILS, REPRESENT THE ADDITIONAL REINFORCING NECESSARY TO CONSTRUCT THE APPROACH SLAB. REFER TO ODOT STD. DWG. AS-1-81 FOR STANDARD REINFORCING NOT SHOWN.
2. CONCRETE SHALL BE HIGH PERFORMANCE CONCRETE, PER SS 844, COMPRESSIVE STRENGTH 4500 psi.
3. PAYMENT SHALL BE AT THE UNIT PRICE BID FOR ITEM 611, APPROACH SLAB (T=13") AS PER PLAN, AND SHALL INCLUDE ALL MATERIALS, EQUIPMENT, LABOR, AND INCIDENTALS NECESSARY TO COMPLETE THE WORK IN ACCORDANCE WITH THE PLANS, STD. DWG. AS-1-81, AND TO THE SATISFACTION OF THE ENGINEER.
4. THE QUANTITY OF ITEM 611, APPROACH SLAB (T=13"), AS PER PLAN, IS LISTED IN THE GENERAL SUMMARY OF PROJECT QUANTITIES.
5. SEALING OF CONCRETE SURFACES, EPOXY-URETHANE (SEE PROPOSAL NOTE) ON THE PARAPETS SHALL BE INCLUDED FOR PAYMENT WITH ITEM 611, APPROACH SLAB (T=13"), AS PER PLAN.
6. FOR STRUCTURE DETAILS, REFER TO BRIDGE NO. SUM-8-0087 PLANS.

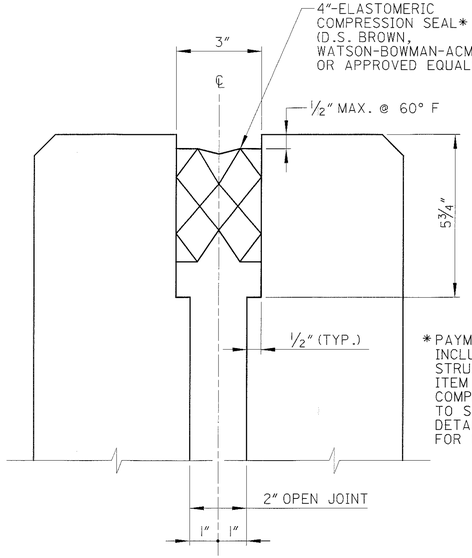

*PAYMENT WILL BE INCLUDED WITH THE STRUCTURE PLANS, ITEM 516, 4" ELASTOMERIC COMPRESSION SEAL. REFER TO SUPERSTRUCTURE DETAILS SHEET 934 FOR INSTALLATION NOTES.

LONGITUDINAL JOINT DETAIL AT MEDIAN PARAPET

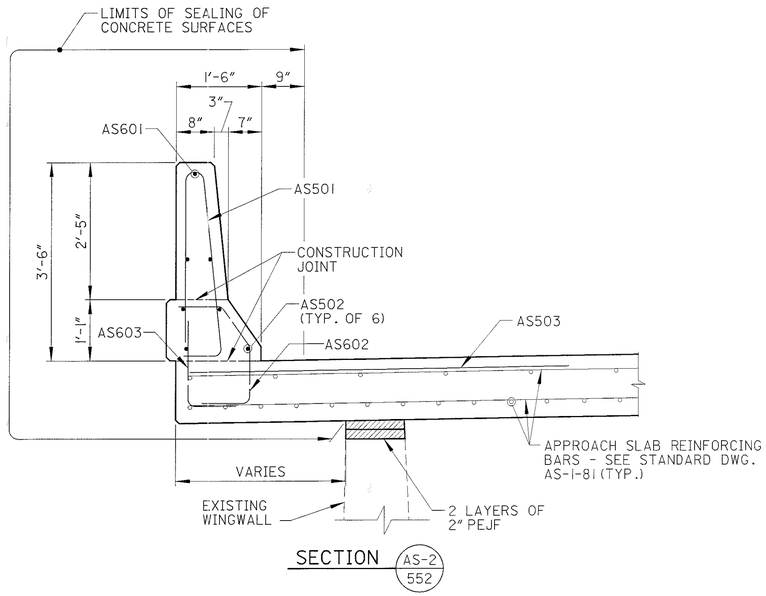

SECTION AS-2 / 552

ESTIMATED QUANTITY				
ITEM	ITEM EXTENSION	TOTAL	UNIT	DESCRIPTION
203	50000	611	SQ YD	SUBGRADE COMPACTION
304	20000	102	CU YD	AGGREGATE BASE
611	15001	611	SQ YD	REINFORCED CONCRETE APPROACH SLAB (T=13"), AS PER PLAN

QUANTITIES CARRIED TO GENERAL SUMMARY

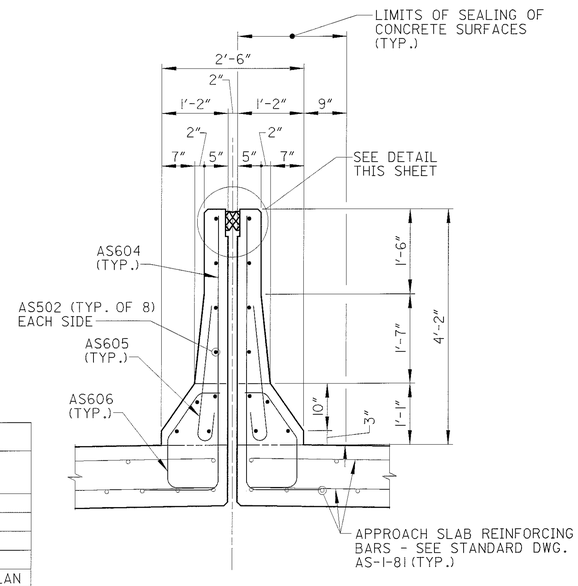

SECTION AS-4 / 552

BRIDGE NO. SUM-8-0064
S.R. 8 OVER EXCHANGE STREET

CALCULATED AJM
CHECKED JWB

20'-0" APPROACH SLAB DETAILS - EXCHANGE ST.

SUM-8-0.63

553 / 1088

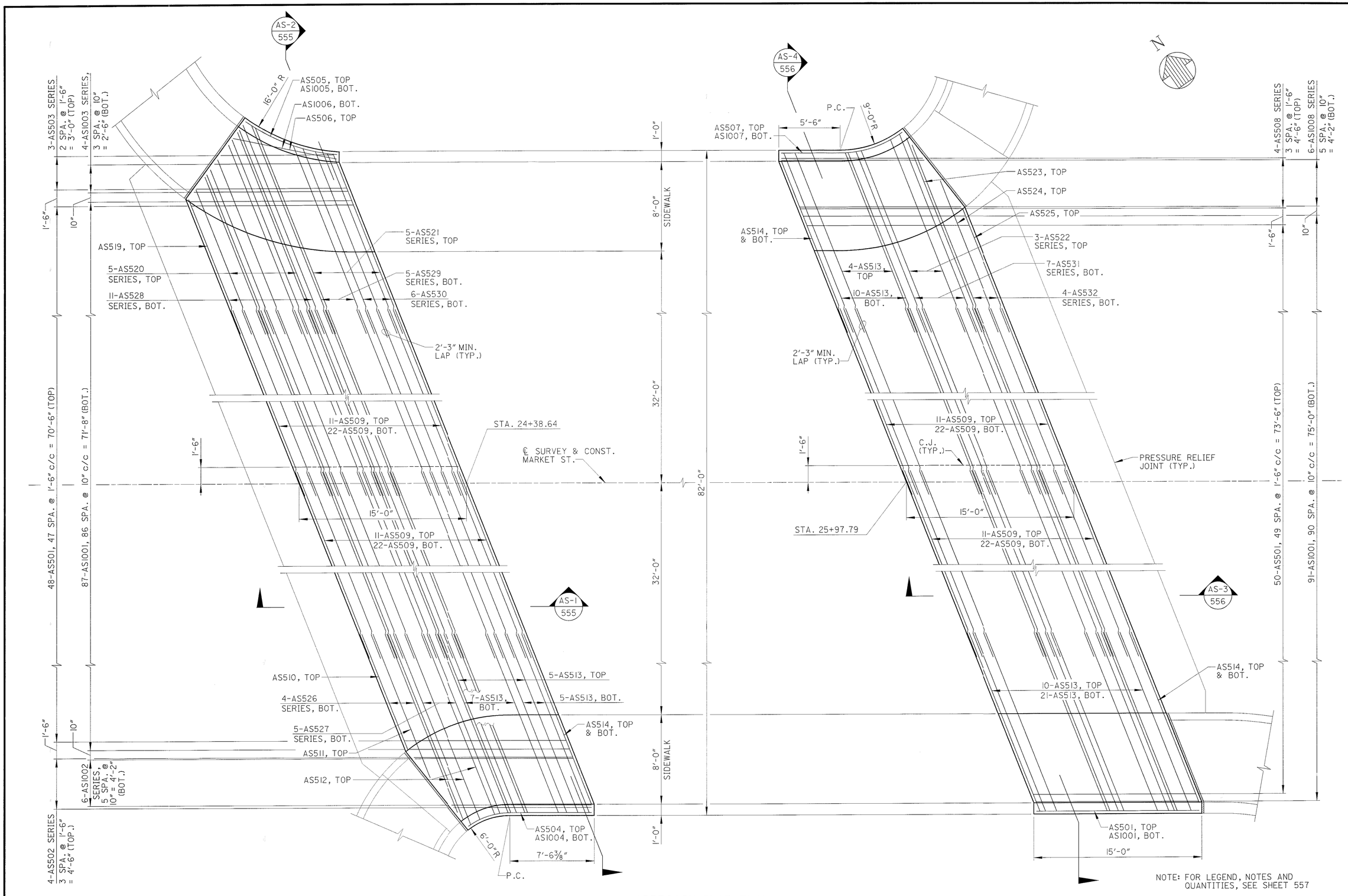

NOTE: FOR LEGEND, NOTES AND QUANTITIES, SEE SHEET 557

APPROACH SLAB PLAN

SEE SHEETS 555 & 556 FOR SIDEWALK SLAB REINFORCING ON THE APPROACH SLAB

BRIDGE NO. SUM-8-0148
MARKET ST. OVER S.R. 8

CALCULATED DJC
CHECKED AJM

15'-0" APPROACH SLAB DETAILS

SUM-8-0.63

554
1088

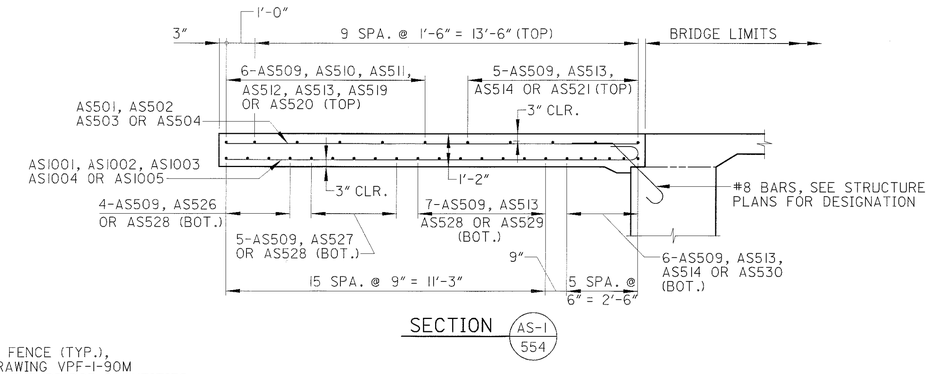

SECTION AS-1 / 554

NOTE: FOR LEGEND, NOTES AND QUANTITIES, SEE SHEET 557

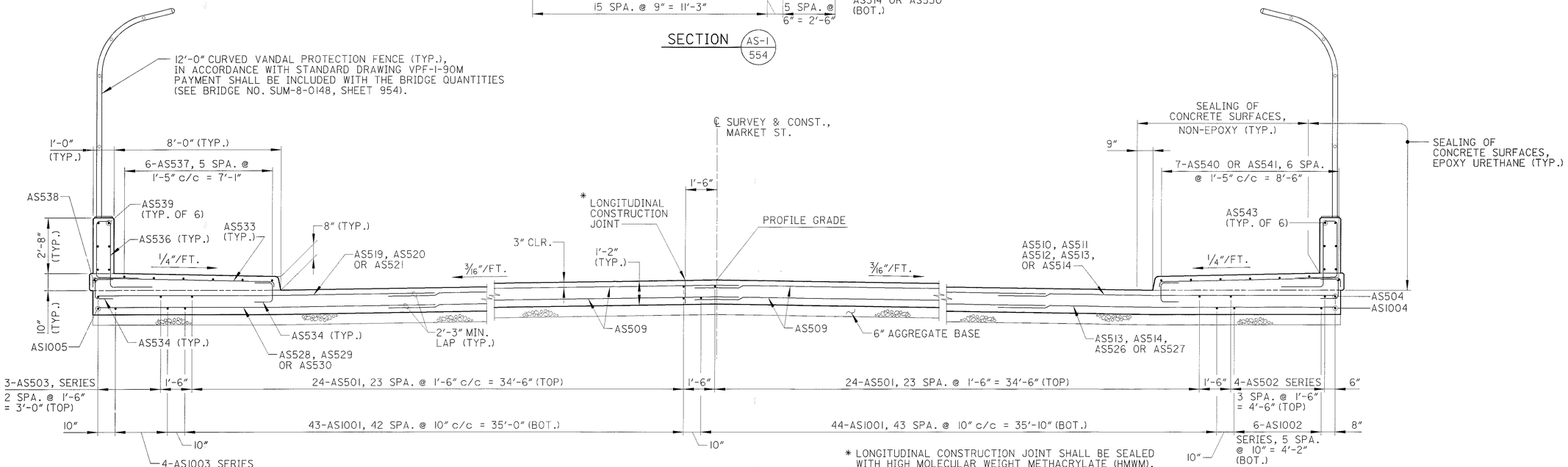

SECTION AS-2 / 554

* LONGITUDINAL CONSTRUCTION JOINT SHALL BE SEALED WITH HIGH MOLECULAR WEIGHT METHACRYLATE (HMWM). WIDTH OF SEALING SHALL BE TWO FEET (2') CENTERED OVER THE JOINT.

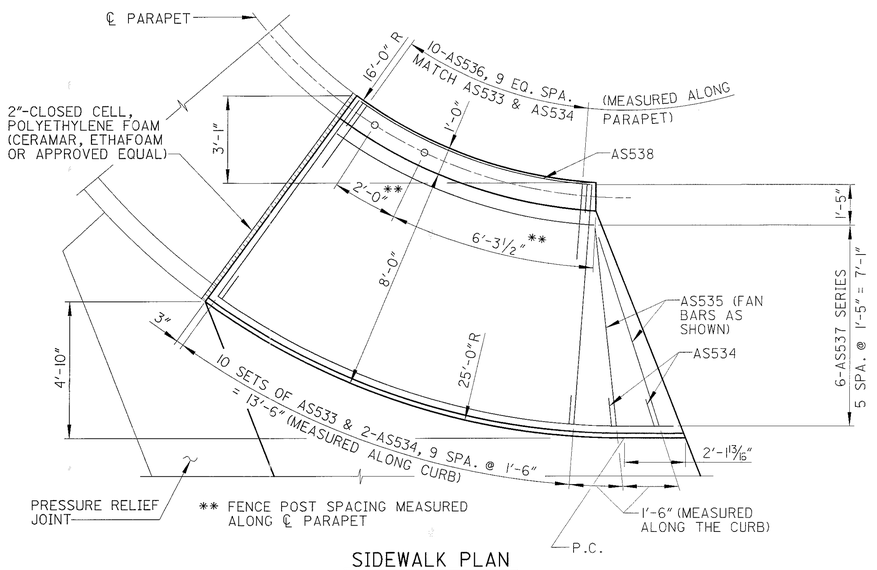

SIDEWALK PLAN (NORTHWEST)

NOTES:

1. SEE SECTION AS-2 THIS SHEET FOR PARAPET BARS.
2. 2"-CLOSED CELL FOAM SHALL BE INSTALLED WHERE SHOWN ON THE PLANS AND IN ACCORDANCE WITH MANUFACTURER'S SPECIFICATIONS. CLOSED CELL FOAM SHALL BE INSTALLED IN THE 2"-OPEN JOINT BETWEEN THE COMPLETED APPROACH SLAB SIDEWALK & PARAPET AND APPROACH BARRIER WALL. ALL COSTS ASSOCIATED WITH FURNISHING AND INSTALLING THE 2"-CLOSED CELL POLYETHYLENE FOAM SHALL BE INCLUDED FOR PAYMENT WITH ITEM 611, APPROACH SLAB, MISC.: REINFORCED CONCRETE (T=14"), HS-25 LOADING.

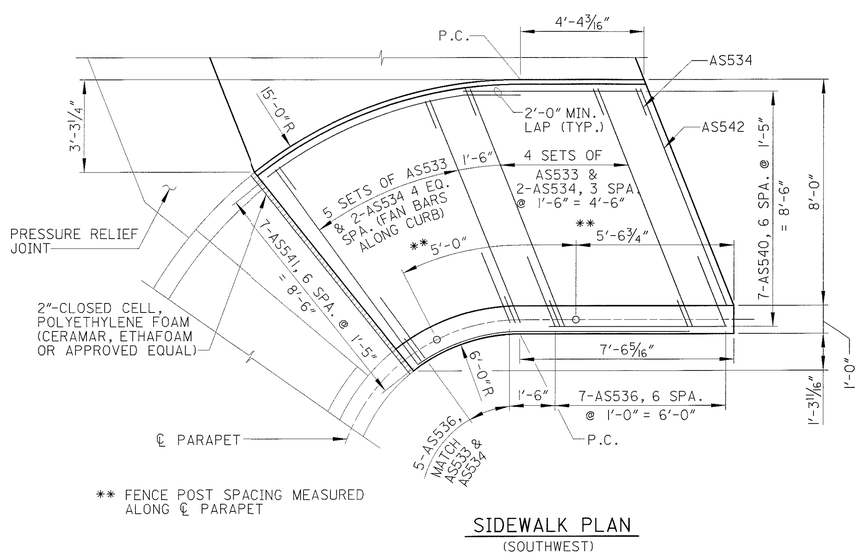

** FENCE POST SPACING MEASURED ALONG ℄ PARAPET

SIDEWALK PLAN (SOUTHWEST)

BRIDGE NO. SUM-8-0148
MARKET ST. OVER S.R. 8

CALCULATED DJC
CHECKED AJM

15'-0" APPROACH SLAB DETAILS

SUM-8-0.63

555 / 1088

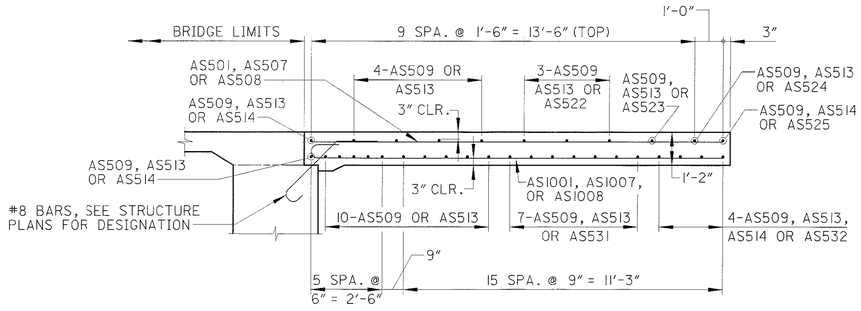

SECTION AS-3 554

NOTE: FOR LEGEND, NOTES AND QUANTITIES, SEE SHEET 557

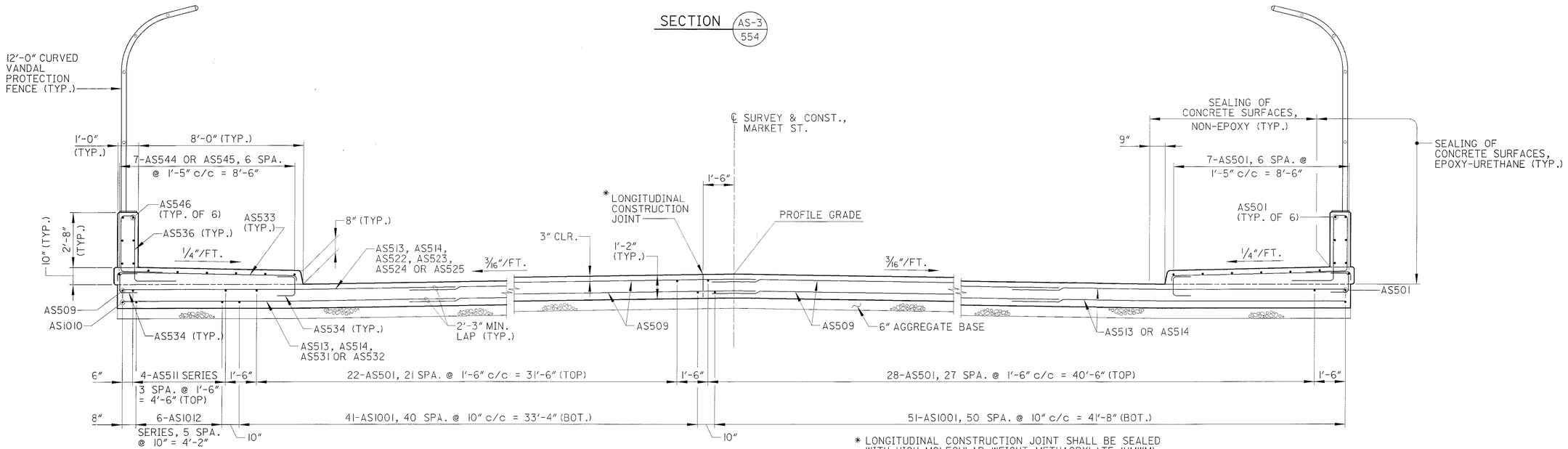

SECTION AS-4 554

* LONGITUDINAL CONSTRUCTION JOINT SHALL BE SEALED WITH HIGH MOLECULAR WEIGHT METHACRYLATE (HMWM). WIDTH OF SEALING SHALL BE TWO FEET (2') CENTERED OVER THE JOINT.

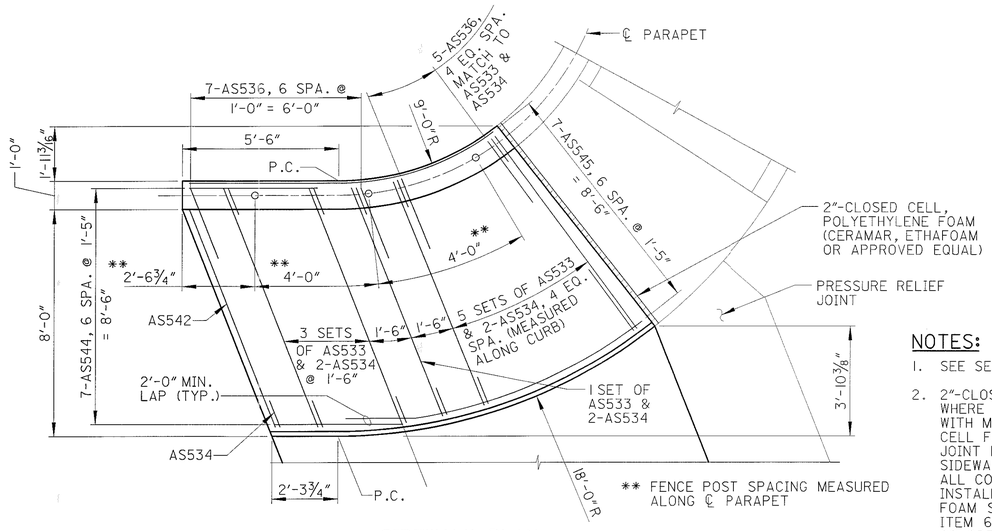

SIDEWALK PLAN
(NORTHEAST)

NOTES:

1. SEE SECTION AS-4 THIS SHEET FOR PARAPET BARS.
2. 2"-CLOSED CELL FOAM SHALL BE INSTALLED WHERE SHOWN ON THE PLANS AND IN ACCORDANCE WITH MANUFACTURER'S SPECIFICATIONS. CLOSED CELL FOAM SHALL BE INSTALLED IN THE 2"-OPEN JOINT BETWEEN THE COMPLETED APPROACH SLAB SIDEWALK & PARAPET AND APPROACH BARRIER WALL. ALL COSTS ASSOCIATED WITH FURNISHING AND INSTALLING THE 2"-CLOSED CELL POLYETHYLENE FOAM SHALL BE INCLUDED FOR PAYMENT WITH ITEM 611, APPROACH SLAB, MISC.: REINFORCED CONCRETE (T=14"), HS-25 LOADING.

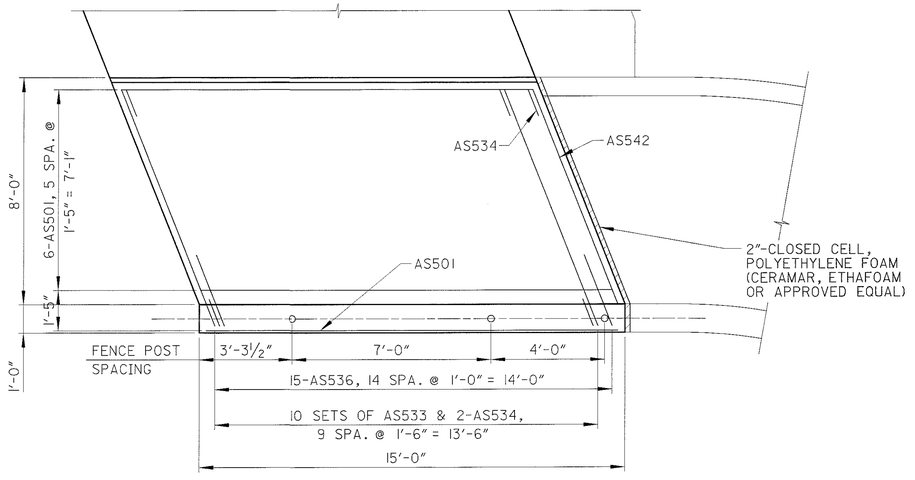

SIDEWALK PLAN
(SOUTHEAST)

BRIDGE NO. SUM-8-0148
MARKET ST. OVER S.R. 8

CALCULATED DJC
CHECKED AJM

15'-0" APPROACH SLAB DETAILS

SUM-8-0.63

556
1088

APPROACH SLAB REINFORCING STEEL LIST

MARK	NO.	LENGTH	WEIGHT (LBS.)	TYPE	DIMENSIONS A	B	C	D	E	SER INC.
AS501	116	14'-6"	1755	STR						
	1	12'-4"								
AS502	SER OF		55	STR						7 11/16"
	4	14'-3"								
	1	10'-1"								
AS503	SER OF		37	STR						1'-8"
	3	13'-5"								
AS504	1	11'-2"	12	32	7'-3"	3'-11"	6'-3"			
AS505	1	8'-10"	9	31	8'-10"	16'-3"				
AS506	1	10'-9"	11	STR						
AS507	1	11'-2"	12	32	5'-3"	5'-11"	9'-3"			
	1	12'-7"								
AS508	SER OF		57	STR						7 11/16"
	4	14'-6"								
AS509	132	30'-0"	4130	STR						
AS510	1	11'-2"	12	STR						
AS511	1	13'-10"	14	STR						
AS512	3	17'-10"	56	STR						
AS513	62	17'-3"	1116	STR						
AS514	6	16'-5"	103	STR						
AS515	NOT	USED								
AS516	NOT	USED								
AS517	NOT	USED								
AS518	NOT	USED								
AS519	1	12'-11"	13	STR						
	1	13'-11"								
AS520	SER OF		87	STR						1'-5"
	5	19'-7"								
	1	17'-3"								
AS521	SER OF		97	STR						7 3/4"
	5	19'-10"								
	1	17'-5"								
AS522	SER OF		56	STR						6 1/2"
	3	18'-6"								
AS523	1	18'-8"	19	STR						
AS524	1	14'-6"	15	STR						
AS525	1	11'-9"	12	STR						
	1	11'-2"								
AS526	SER OF		59	STR						2'-0"
	4	17'-2"								
	1	17'-3"								
AS527	SER OF		93	STR						3 1/4"
	5	18'-4"								
	1	12'-11"								
AS528	SER OF		189	STR						8 5/8"
	11	20'-1"								
	1	18'-1"								
AS529	SER OF		100	STR						6"
	5	20'-1"								
	1	17'-3"								
AS530	SER OF		110	STR						1 3/8"
	6	17'-10"								
	1	17'-4"								
AS531	SER OF		133	STR						3 5/16"
	7	19'-0"								
	1	11'-9"								
AS532	SER OF		62	STR						2'-1"
	4	18'-0"								
AS533	38	9'-1"	360	4	8'-8"	4"				
AS534	81	2'-11"	246	4	1'-2"	1'-0"				
AS535	2	7'-5"	15	4	7'-0"	4"				
AS536	49	10'-1"	515	25	3'-2"	8"	2'-10"	2'-0"		
	1	9'-9"			9'-9"					
AS537	SER OF		84	31		21'-0"				1'-5 3/8"
	6	17'-0"			17'-0"					
AS538	1	8'-8"	9	31	8'-8"	16'-1"				
AS539	6	8'-11"	56	31	8'-11"	16'-6"				
AS540	7	6'-3"	46	STR						
AS541	7	9'-8"	71	32	2'-0"	7'-8"	10'-6"			
AS542	3	8'-8"	27	4	8'-3"	4"				
AS543	6	11'-4"	71	32	7'-3"	4'-1"	6'-6"			
AS544	7	4'-6"	33	STR						
AS545	7	11'-2"	82	32	2'-0"	9'-2"	13'-6"			
AS546	6	11'-4"	71	32	5'-3"	6'-1"	9'-6"			

APPROACH SLAB REINFORCING STEEL LIST (CONT.)

MARK	NO.	LENGTH	WEIGHT (LBS.)	TYPE	DIMENSIONS A	B	C	D	E	SER INC.
AS1001	179	15'-11"	12260	1	14'-6"					
	1	13'-11"			12'-6"					
AS1002	SER OF		381	1						4"
	6	15'-7"			14'-2"					
	1	12'-4"			10'-11"					
AS1003	SER OF		237	1						11 5/16"
	4	15'-2"			13'-9"					
AS1004	1	11'-2"	48	32	7'-3"	3'-11"	6'-3"			
AS1005	1	8'-10"	38	31	8'-10"	16'-3"				
AS1006	1	10'-9"	47	1	9'-4"					
AS1007	1	11'-2"	48	32	5'-3"	5'-11"	9'-3"			
	1	14'-2"			12'-9"					
AS1008	SER OF		387	1						4"
	6	15'-10"			14'-5"					
APPROACH SLAB TOTAL =			23556							

ESTIMATED QUANTITY

ITEM	ITEM EXTENSION	TOTAL	UNIT	DESCRIPTION
203	50000	273	SQ YD	SUBGRADE COMPACTION
304	20000	46	CU YD	AGGREGATE BASE
611	98100	273	SQ YD	APPROACH SLAB, MISC: REINFORCED CONCRETE (T=14"), HS-25 LOADING

QUANTITIES CARRIED TO THE GENERAL SUMMARY

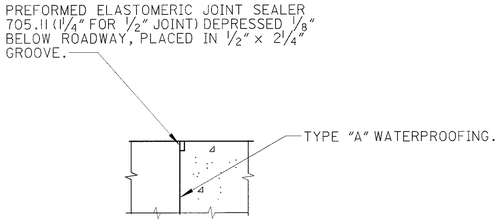

DETAIL B

LEGEND:

BOT.	BOTTOM
℄	CENTERLINE
C.J.	CONSTRUCTION JOINT
c/c	CENTER-TO-CENTER
CLR.	CLEAR
MIN.	MINIMUM
PEJF	PREFORMED EXPANSION JOINT FILLER
R	RADIUS
SPA.	SPACES
TYP.	TYPICAL

BENDING DIAGRAMS

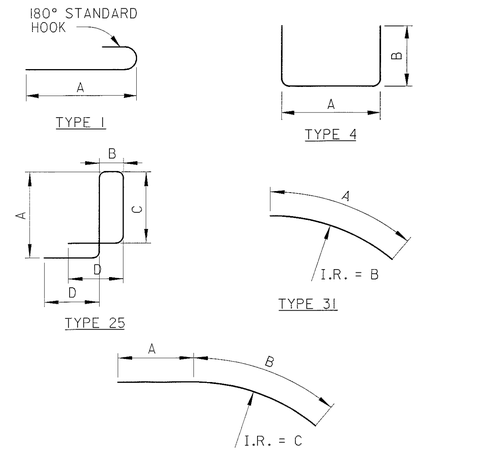

REINFORCING STEEL NOTES:

1. SERIES BARS - EACH BAR VARIES BY TABULATED AMOUNT.
2. ALL DIMENSIONS ARE OUT TO OUT.
3. TYPE 'STR' INDICATES A STRAIGHT BAR.
4. THE BAR SIZE NUMBER IS SPECIFIED IN THE 'MARK' COLUMN. THE FIRST DIGIT INDICATES THE BAR SIZE NUMBER. FOR EXAMPLE, AS501 IS A #5 BAR SIZE.
5. ALL BARS SHALL BE EPOXY COATED UNLESS NOTED OTHERWISE.
6. SUBTOTALS AND TOTAL WEIGHTS ARE FOR INFORMATIONAL PURPOSES ONLY. IF THE REINFORCING LIST PROVIDED IN THE PLANS IS USED IT SHALL BE VERIFIED BY THE CONTRACTOR. ANY REVISIONS IN THE REINFORCING STEEL LIST AS SHOWN IN THE PLANS WILL NOT BE REASON FOR ADJUSTMENT IN THE BID PRICE FOR STRUCTURAL CONCRETE.

NOTES:

1. **DESIGN SPECIFICATIONS:** THIS APPROACH SLAB CONFORMS TO "STANDARD SPECIFICATIONS FOR HIGHWAY BRIDGES" ADOPTED BY THE AMERICAN ASSOCIATION OF STATE HIGHWAY AND TRANSPORTATION OFFICIALS, 1996, INCLUDING THE 1997, 1998, AND 1999 INTERIM SPECIFICATIONS AND THE ODOT BRIDGE DESIGN MANUAL.
2. **DESIGN DATA**
   DESIGN LOADING: HS-25 AND THE ALTERNATE MILITARY LOADING. HIGH PERFOMANCE CONCRETE, SS 844: COMPRESSIVE STRENGTH 4500 psi.
3. **REINFORCING STEEL:** ASTM A615, A616 OR A617 - GRADE 60, MINIMUM YIELD STRENGTH OF 60,000 P.S.I. AND SHALL BE EPOXY COATED.
4. **PREFORMED ELASTOMERIC JOINT** SHOWN AT THE BRIDGE LIMIT END OF THE APPROACH SLAB SHALL BE INCLUDED IN THE PRICE BID PER SQUARE YARDS FOR THE APPROACH SLAB.
5. **CROWN** SHALL CONFORM TO THAT OF THE APPROACH PAVEMENT AND BRIDGE DECK. IF THE RATE OF CROWN OF THE BRIDGE DECK DIFFERS FROM THAT OF THE APPROACH PAVEMENT, A SMOOTH TRANSITION SHALL BE PROVIDED WITHIN THE LIMITS OF THE APPROACH SLAB.
6. **SEALING OF CONCRETE SURFACES, EPOXY URETHANE AND NON-EPOXY** ON THE PARAPET AND SIDEWALKS SHALL BE INCLUDED FOR PAYMENT WITH ITEM 611, APPROACH SLAB, MISC.: REINFORCED CONCRETE (T=14"), HS 25 LOADING.
7. **HMWM:** HIGH MOLECULAR WEIGHT METHACRYLATE SHALL BE APPLIED TO LOCATIONS SHOWN ON THE PLANS IN ACCORDANCE WITH SS 846. ALL COSTS SHALL BE INCLUDED IN THE PRICE BID PER SQUARE YARD FOR THE APPROACH SLAB.

BRIDGE NO. SUM-8-0148
MARKET ST. OVER S.R. 8

CALCULATED DJC
CHECKED AJM

15'-0" APPROACH SLAB DETAILS

SUM-8-0.63

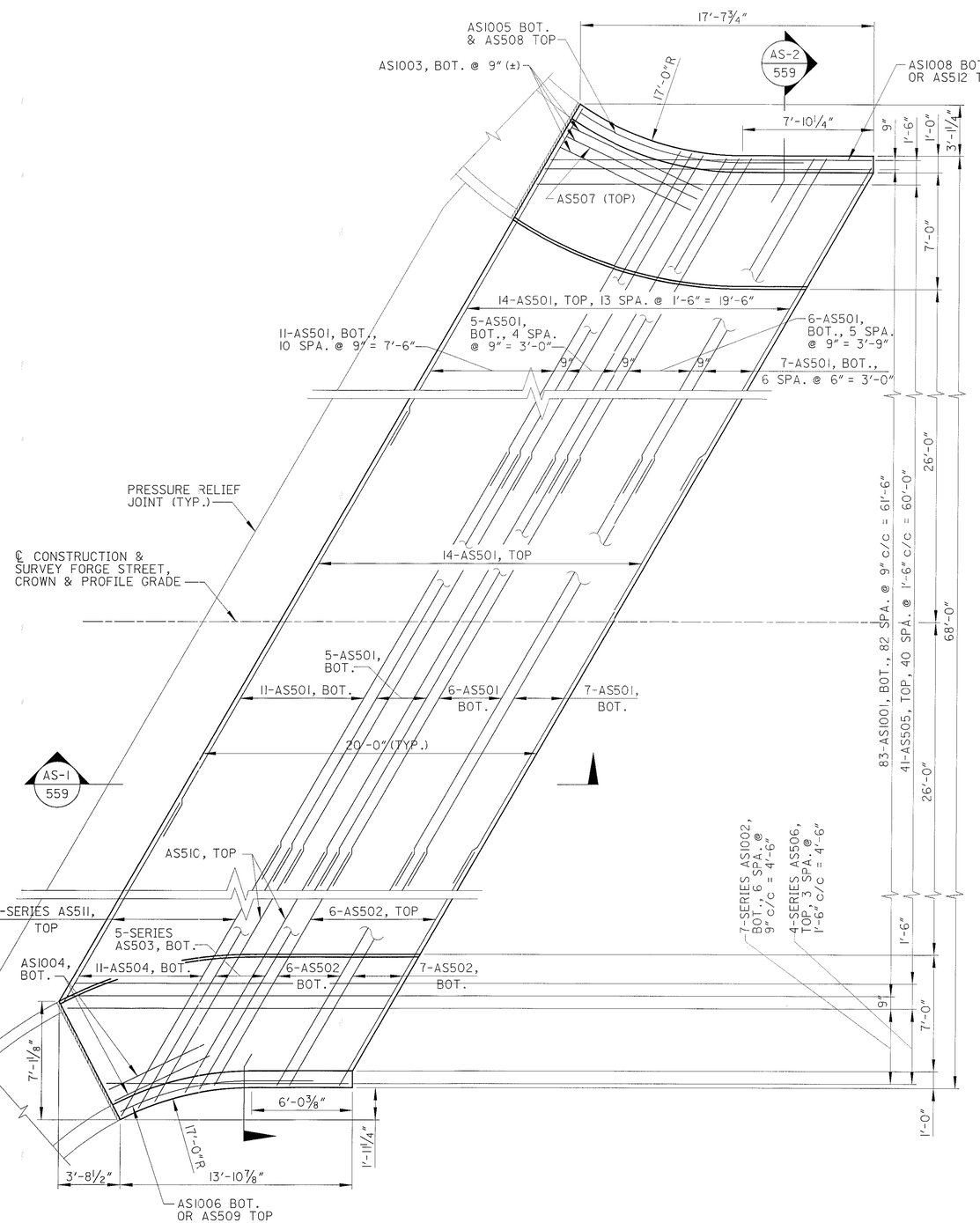

APPROACH SLAB PLAN

LEGEND

BOT.	- BOTTOM
℄	- CENTERLINE
c/c	- CONSTRUCTION JOINT
C.J.	- CENTER-TO-CENTER
CLR.	- CLEAR
MIN.	- MINIMUM
PEJF	- PREFORMED EXPANSION JOINT FILLER
R	- RADIUS
SPA.	- SPACES
TYP.	- TYPICAL

BRIDGE NO. SUM-8-0159
FORGE ST. OVER S.R. 8

CALCULATED DP
CHECKED JWB

20'-0" APPROACH SLAB DETAILS

SUM-8-0.63

558
1088

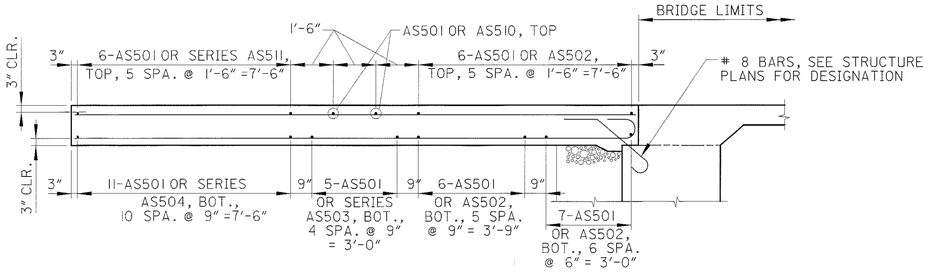

SECTION (AS-1 / 558)

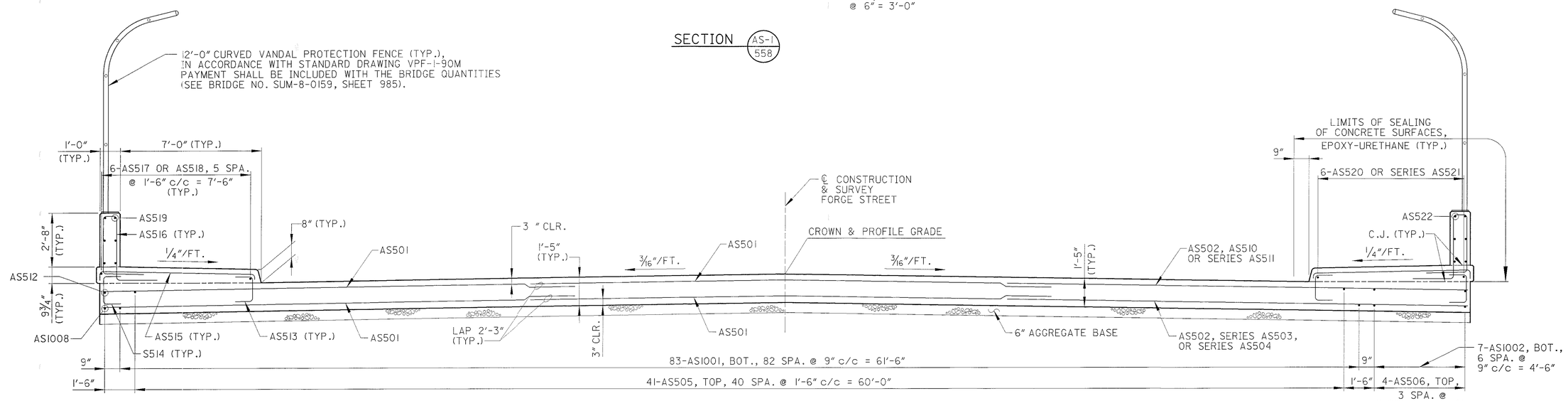

SECTION (AS-2 / 558)

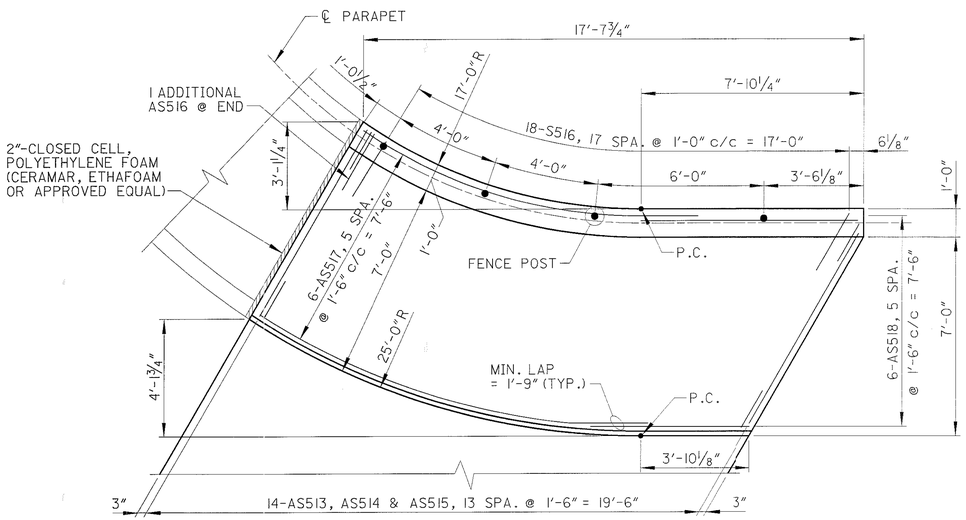

SIDEWALK PLAN
(NORTH WEST)

* FENCE POST SPACING & AS516 SPACING MEASURED ALONG ℄ PARAPET

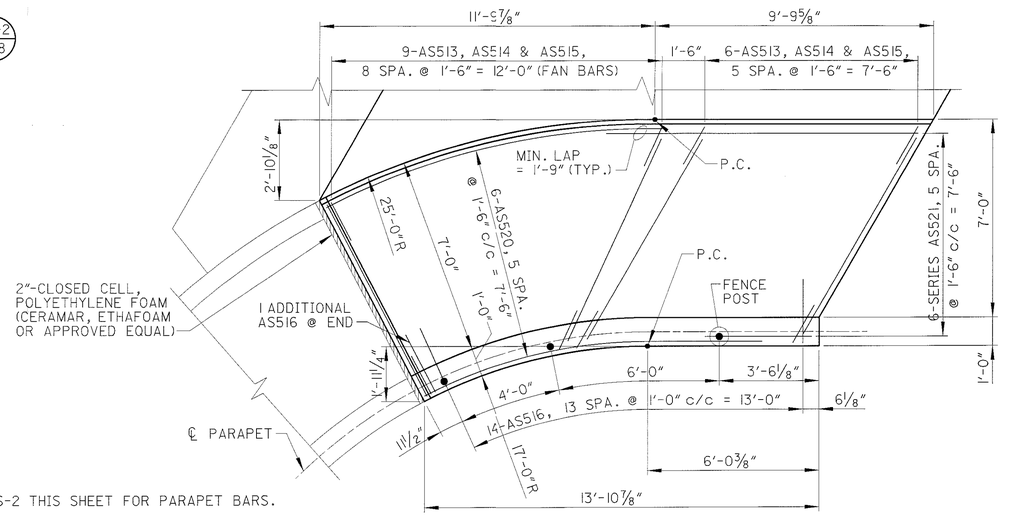

SIDEWALK PLAN
(SOUTH WEST)

* FENCE POST SPACING & AS516 SPACING MEASURED ALONG ℄ PARAPET

NOTES:

1. SEE SECTION AS-2 THIS SHEET FOR PARAPET BARS.
2. 2"-CLOSED CELL FOAM SHALL BE INSTALLED WHERE SHOWN ON THE PLANS AND IN ACCORDANCE WITH MANUFACTURER'S SPECIFICATIONS. CLOSED CELL FOAM SHALL BE INSTALLED IN THE 2"-OPEN JOINT BETWEEN THE COMPLETED APPROACH SLAB SIDEWALK & PARAPET AND APPROACH BARRIER WALL. ALL COSTS ASSOCIATED WITH FURNISHING AND INSTALLING THE 2"-CLOSED CELL POLYETHYLENE FOAM SHALL BE INCLUDED FOR PAYMENT WITH ITEM 611, APPROACH SLAB, MISC.: REINFORCED CONCRETE (T=17"), HS-25 LOADING.

FOR LEGEND, SEE SHEET 558

BRIDGE NO. SUM-8-0159
FORGE ST. OVER S.R. 8

CALCULATED DP
CHECKED JWB

20'-0" APPROACH SLAB DETAILS

SUM-8-0.63

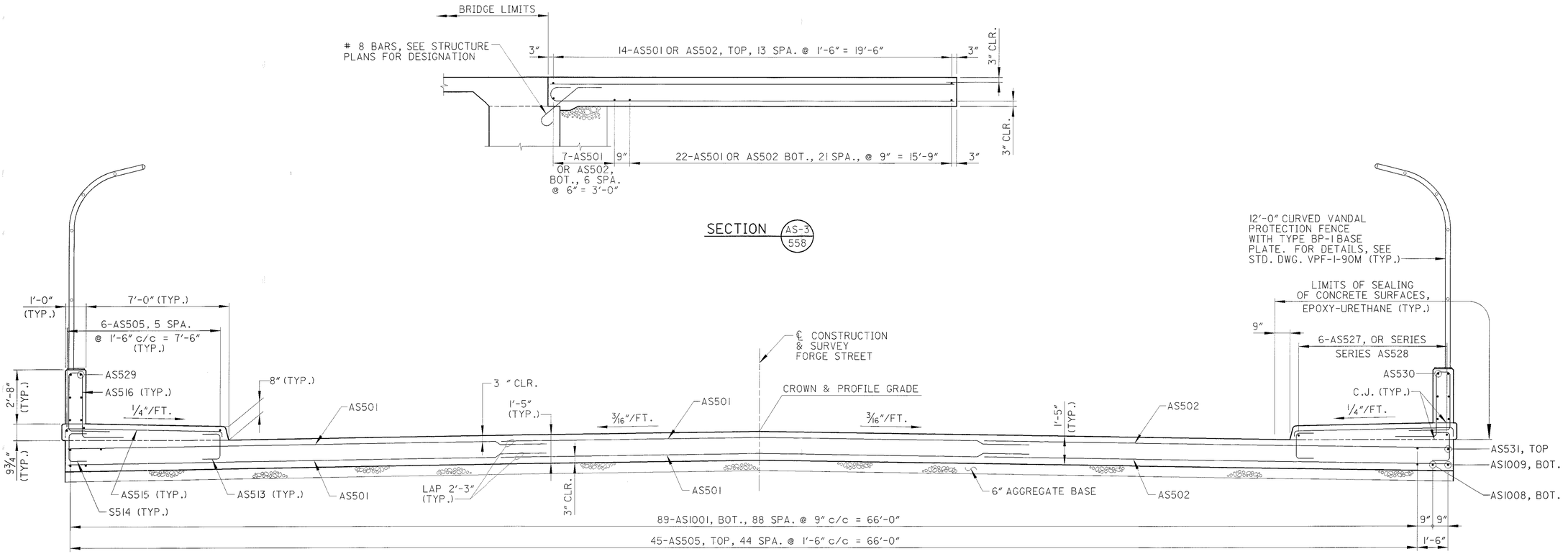

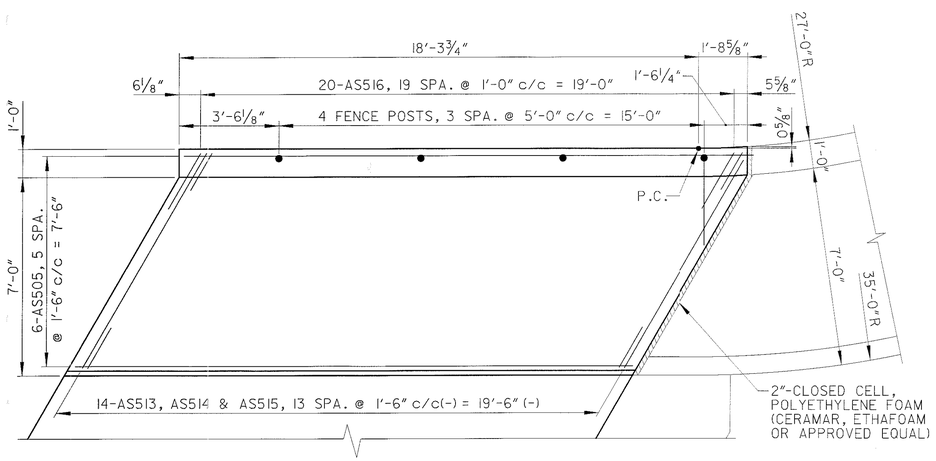

SIDEWALK PLAN
(NORTH EAST)

SECTION AS-4 558

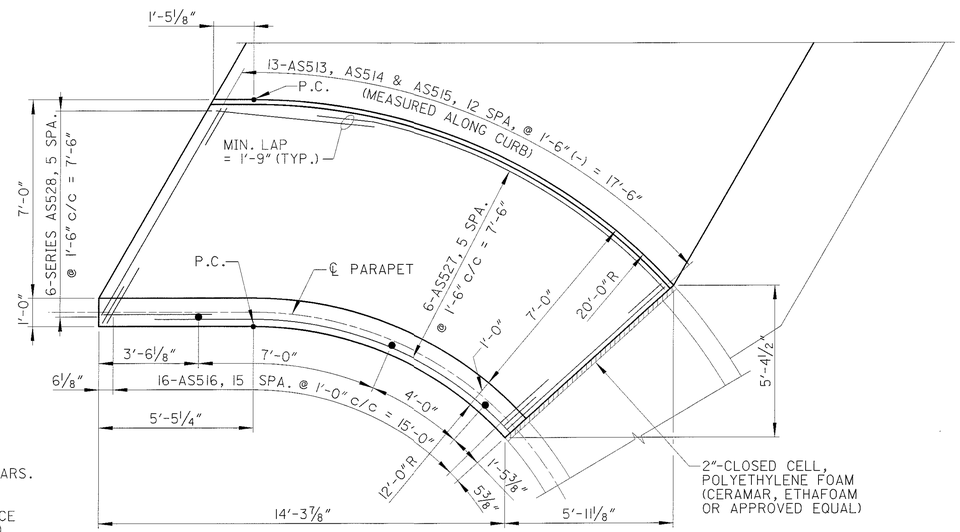

SIDEWALK PLAN
(SOUTH EAST)

* FENCE POST SPACING & AS516 SPACING MEASURED ALONG ℄ PARAPET

NOTES:

1. SEE SECTION AS-4 THIS SHEET FOR PARAPET BARS.
2. 2"-CLOSED CELL FOAM SHALL BE INSTALLED WHERE SHOWN ON THE PLANS AND IN ACCORDANCE WITH MANUFACTURER'S SPECIFICATIONS. CLOSED CELL FOAM SHALL BE INSTALLED IN THE 2"-OPEN JOINT BETWEEN THE COMPLETED APPROACH SLAB SIDEWALK & PARAPET AND APPROACH BARRIER WALL. ALL COSTS ASSOCIATED WITH FURNISHING AND INSTALLING THE 2"-CLOSED CELL POLYETHYLENE FOAM SHALL BE INCLUDED FOR PAYMENT WITH ITEM 611, APPROACH SLAB, MISC.: REINFORCED CONCRETE (T=17"), HS-25 LOADING.

FOR LEGEND, SEE SHEET 558

BRIDGE NO. SUM-8-0159
FORGE ST. OVER S.R. 8

CALCULATED DP
CHECKED JWB

20'-0" APPROACH SLAB DETAILS

SUM-8-0.63

NOTES:

1. **DESIGN SPECIFICATIONS:** THIS APPROACH SLAB CONFORMS TO "STANDARD SPECIFICATIONS FOR HIGHWAY BRIDGES" ADOPTED BY THE AMERICAN ASSOCIATION OF STATE HIGHWAY AND TRANSPORTATION OFFICIALS, 1996, INCLUDING THE 1997, 1998, AND 1999 INTERIM SPECIFICATIONS AND THE ODOT BRIDGE DESIGN MANUAL.

2. **DESIGN DATA**
   DESIGN LOADING: HS-25 AND THE ALTERNATE MILITARY LOADING
   HIGH PERFORMANCE CONCRETE PER SS 844: COMPRESSIVE STRENGTH 4500 P.S.I.

3. **REINFORCING STEEL:** ASTM A615, A616 OR A617 - GRADE 60, MINIMUM YIELD STRENGTH OF 60,000 P.S.I. AND SHALL BE EPOXY COATED.

4. **PREFORMED ELASTOMERIC JOINT** SHOWN AT THE BRIDGE LIMIT END OF THE APPROACH SLAB SHALL BE INCLUDED IN THE PRICE BID PER SQUARE YARDS FOR THE APPROACH SLAB.

5. **CROWN** SHALL CONFORM TO THAT OF THE APPROACH PAVEMENT AND BRIDGE DECK. IF THE RATE OF CROWN OF THE BRIDGE DECK DIFFERS FROM THAT OF THE APPROACH PAVEMENT, A SMOOTH TRANSITION SHALL BE PROVIDED WITHIN THE LIMITS OF THE APPROACH SLAB.

6. **SEALING OF CONCRETE SURFACES, EPOXY URETHANE,** PER SS 864, ON THE TRANSITION PARAPET AND APPROACH SHALL BE INCLUDED WITH THE UNIT PRICE BID FOR THE APPROACH SLAB FOR PAYMENT.

7. PARAPETS AND WALK SHALL BE INCLUDED IN THE PRICE BID PER SQUARE YARD FOR THE APPROACH SLAB.

APPROACH SLAB REINFORCING STEEL LIST

MARK	NO.	LENGTH	WEIGHT (LBS.)	TYPE	DIMENSIONS A	B	C	D	E	SER INC.
AS501	172	30'-0"	5382	STR						
AS502	62	22'-6"	1455	STR						
	1	22'-11"								
AS503	SER		123	STR						4"
	5	24'-3"								
	1	17'-3"								
AS504	SER		241	STR						9"
	11	24'-9"								
AS505	92	19'-5"	1863	STR						
	1	13'-10"								
AS506	SER		68	STR						10"
	4	18'-10"								
AS507	1	5'-0"	5	STR						
AS508	1	11'-9"	12	32	1'-6"	10'-3"	17'-3"			
AS509	1	9'-9"	10	32	1'-6"	8'-3"	17'-3"			
AS510	2	23'-9"	50	STR						
	1	17'-3"								
AS511	SER		131	STR						1'-6"
	6	24'-9"								
AS512	1	19'-1"	20	STR						
AS513	55	4'-2"	239	4	1'-5"	1'-6"				
AS514	55	4'-4"	249	4	1'-7"	1'-6"				
AS515	55	8'-1"	464	4	7'-8"	4"				
AS516	68	9'-1"	644	25	3'-1"	8"	2'-10"	1'-6"		
AS517	6	14'-3"	89	32	2'-0"	12'-3"	21'-0"			
AS518	6	5'-6"	34	STR						
AS519	6	18'-0"	113	32	7'-5"	10'-7"	17'-6"			
AS520	6	12'-0"	75	32	2'-3"	9'-9"	21'-0"			
	1	3'-11"								
AS521	SER		47	STR						1'-5"
	6	11'-0"								
AS522	6	13'-11"	87	32	5'-8"	8'-3"	17'-6"			
	1	3'-7"								
AS523	SER		47	STR						7"
	8	7'-8"								
AS524	3	7'-6"	23	STR						
	1	4'-0"								
AS525	SER		25	STR						1'-3"
	4	7'-9"								
AS526	1	11'-5"	12	32	1'-6"	9'-11"	12'-3"			
AS527	6	14'-0"	88	32	2'-0"	12'-0"	16'-0"			
	1	3'-10"								
AS528	SER		29	STR						4"
	6	5'-6"								
AS529	6	19'-7"	123	STR						
AS530	6	15'-3"	95	32	5'-3"	10'-0"	12'-6"			
AS531	1	18'-4"	19	STR						
AS1001	172	20'-10"	15419	1	19'-5"					
	1	13'-10"								
AS1002	SER		492	STR						10"
	7	18'-10"								
AS1003	3	8'-6"	110	STR						
AS1004	2	5'-3"	45	STR						
AS1005	1		60	32	3'-9"	10'-3"	17'-3"			
AS1006	1		52	32	3'-9"	8'-3"	17'-3"			
	1	6'-0"								
AS1007	SER		203	STR						9"
	6	9'-9"								
AS1008	2	19'-1"	164	STR						
AS1009	1	18'-4"	79	STR						
AS1010	1	13'-8"	59	32	3'-9"	9'-11"	12'-3"			
APPROACH SLAB	TOTAL =		28545							

ESTIMATED QUANTITY

ITEM	ITEM EXTENSION	TOTAL	UNIT	DESCRIPTION
203	50000	304	SQ YD	SUBGRADE COMPACTION
304	20000	51	CU YD	AGGREGATE BASE
611	98100	304	SQ YD	APPROACH SLAB, MISC: REINFORCED CONCRETE (T=17"), HS-25 LOADING

QUANTITIES CARRIED TO GENERAL SUMMARY

BENDING DIAGRAMS

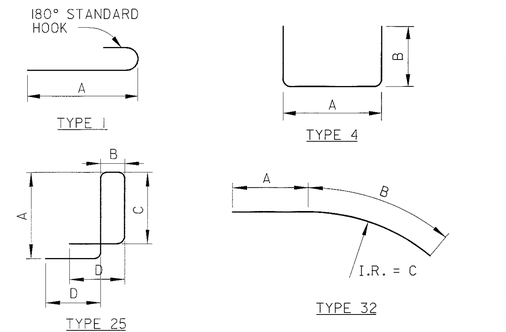

REINFORCING STEEL NOTES:

1. SERIES BARS - EACH BAR VARIES BY TABULATED AMOUNT.
2. ALL DIMENSIONS ARE OUT TO OUT.
3. TYPE 'STR' INDICATES A STRAIGHT BAR.
4. THE BAR SIZE NUMBER IS SPECIFIED IN THE 'MARK' COLUMN. THE FIRST DIGIT INDICATES THE BAR SIZE NUMBER. FOR EXAMPLE, AS501 IS A #5 BAR SIZE.
5. ALL BARS SHALL BE EPOXY COATED UNLESS NOTED OTHERWISE.
6. SUBTOTALS AND TOTAL WEIGHTS ARE FOR INFORMATIONAL PURPOSES ONLY. IF THE REINFORCING LIST PROVIDED IN THE PLANS IS USED IT SHALL BE VERIFIED BY THE CONTRACTOR. ANY REVISIONS IN THE REINFORCING STEEL LIST AS SHOWN IN THE PLANS WILL NOT BE REASON FOR ADJUSTMENT IN THE BID PRICE FOR STRUCTURAL CONCRETE.

CALCULATED DP
CHECKED JWB

20'-0" APPROACH SLAB DETAILS

SUM-8-0.63

BRIDGE NO. SUM-8-0159
FORGE ST. OVER S.R. 8

561
1088

SEEDING	
END WIDTH	SQ. YDS.

END AREA		VOLUME	
CUT	FILL	CUT	FILL

CALCULATED RW
CHECKED VLW

DRIVE PROFILES - GOODKIRK ST.
STA. 202+08.9 TO STA. 210+76.1

SUM-8-0.63

NOTE: ELEVATIONS AT FACE OF CURB ARE NORMAL GUTTER.

SHEET TOTAL

SHEET TOTAL

562
1088

SEEDING	
END WIDTH	SQ. YDS.

END AREA		VOLUME	
CUT	FILL	CUT	FILL

CALCULATED RW
CHECKED VLW

DRIVE PROFILES - FOUNTAIN ST.
STA. 301+07.4 TO STA. 303+15.3

SUM-8-0.63

563
1088

NOTE: ELEVATIONS AT FACE OF CURB ARE NORMAL GUTTER.

SHEET TOTAL

SHEET TOTAL

SEEDING	
END WIDTH	SQ. YDS.

END AREA		VOLUME	
CUT	FILL	CUT	FILL

CALCULATED RW

CHECKED VLW

PROFILES - FOUNTAIN ST.

DRIVE PR STA. 303

STA. 312+85.3 SUM-8-0.63

NOTE: ELEVATIONS AT FACE OF CURB ARE NORMAL GUTTER.

SHEET TOTAL

SHEET TOTAL

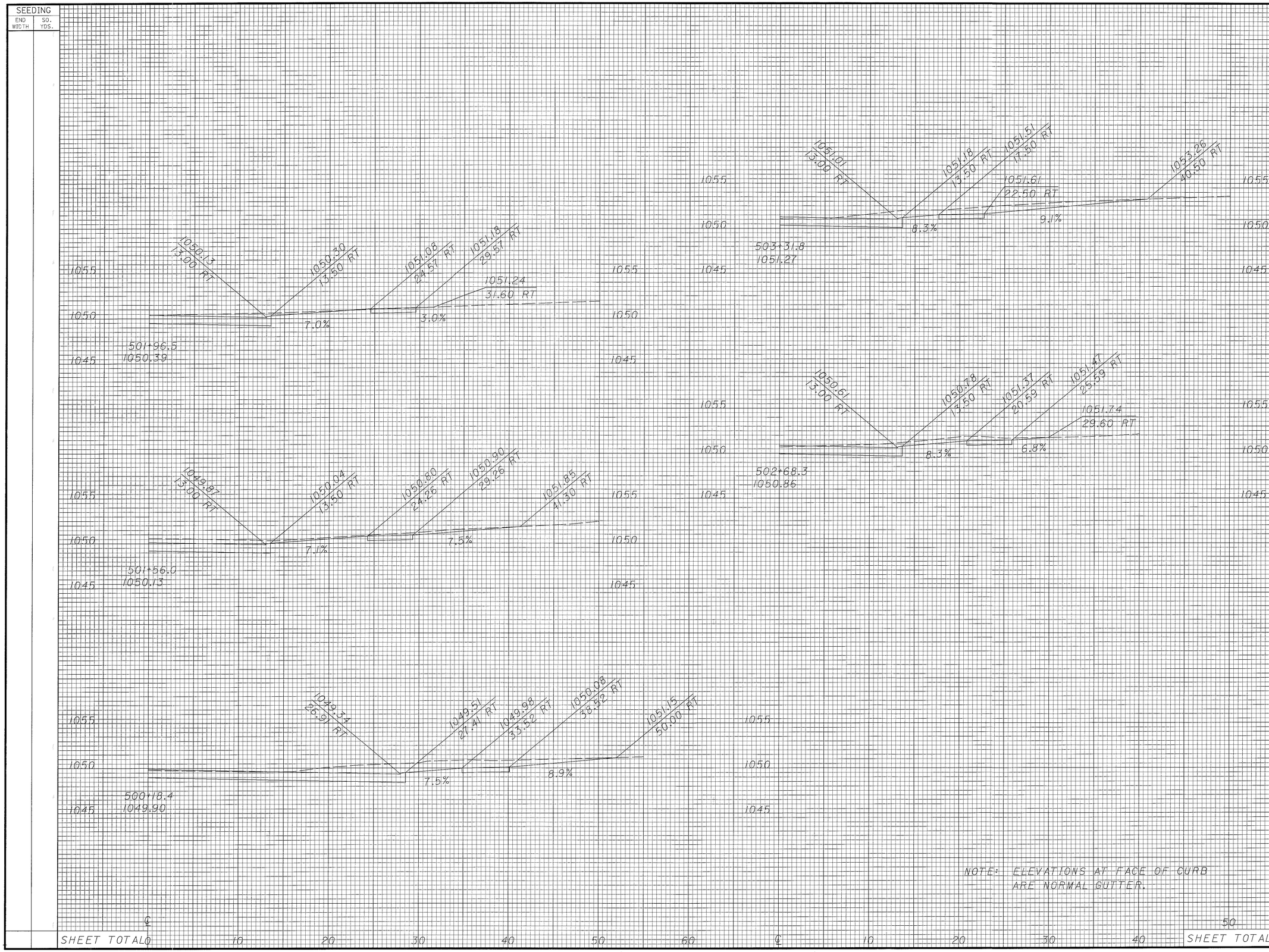

CALCULATED RW
CHECKED VLW

DRIVE PROFILES - OHIO ST.
STA. 500+18.4 TO STA. 503+31.8

SUM-8-0.63

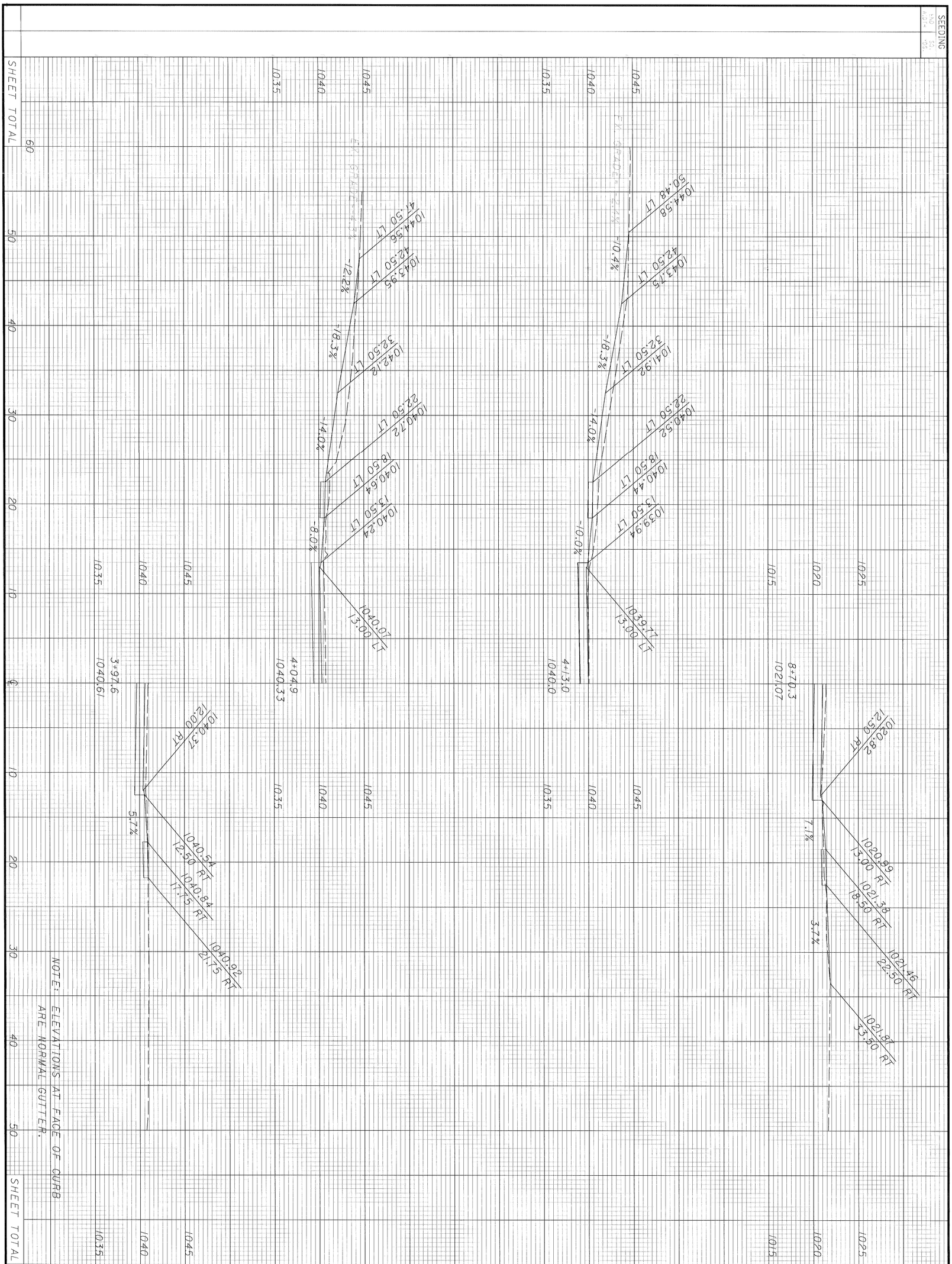

566 / 1088	SUM-8-0.63	DRIVE PROFILES - NASH ST. STA. 3+97.6 TO STA. 8+70.3	CALCULATED RW / CHECKED VLW

SEEDING	
END WIDTH	SQ. YDS.

END AREA		VOLUME	
CUT	FILL	CUT	FILL

CALCULATED RW
CHECKED VLW

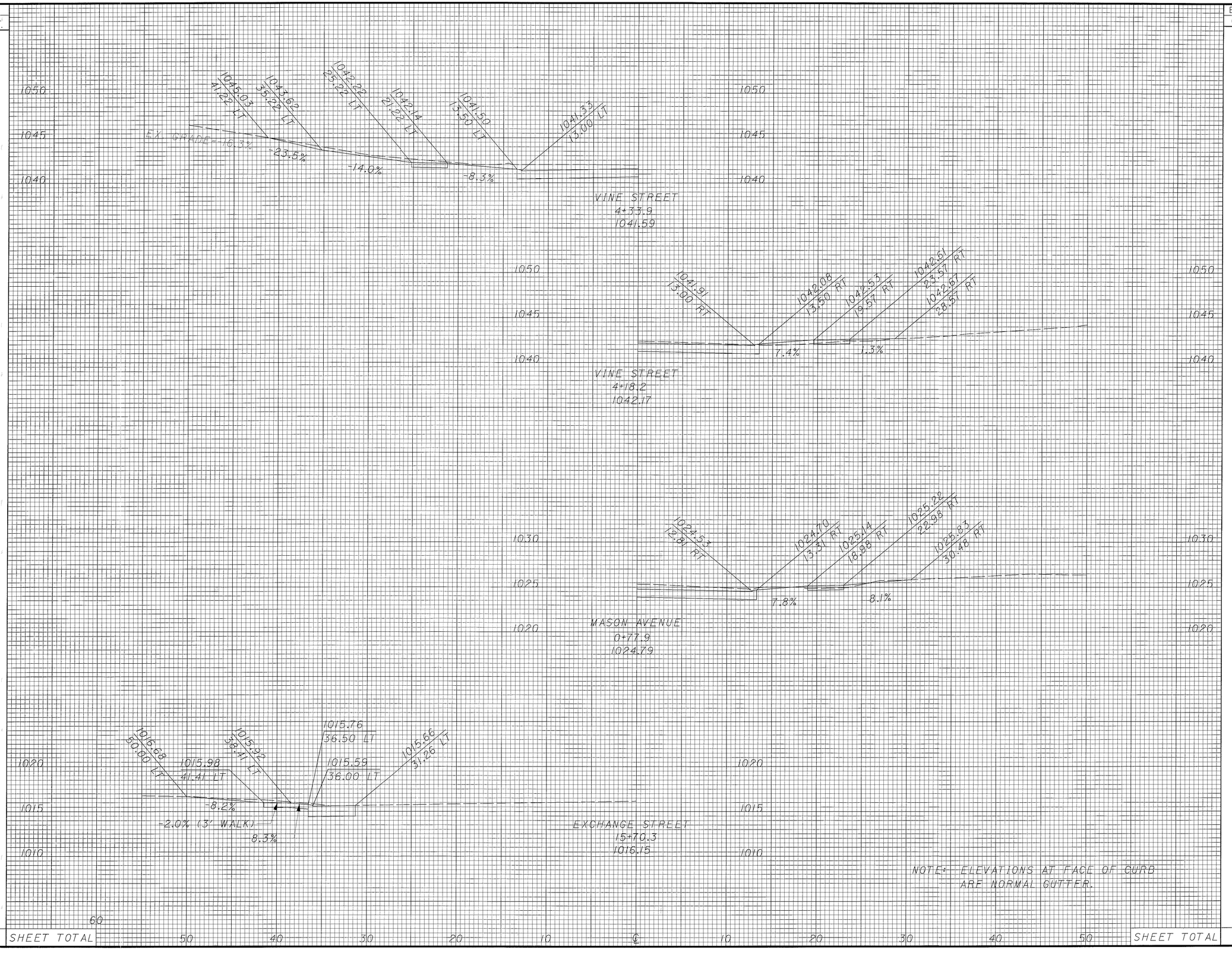

DRIVE PROFILES
ST. - MASON AVE. - VINE ST.
EXCHANGE ST.

SUM-8-0.63

SEEDING	
END WIDTH	SQ. YDS.

END AREA		VOLUME	
CUT	FILL	CUT	FILL

CALCULATED RW

CHECKED VLW

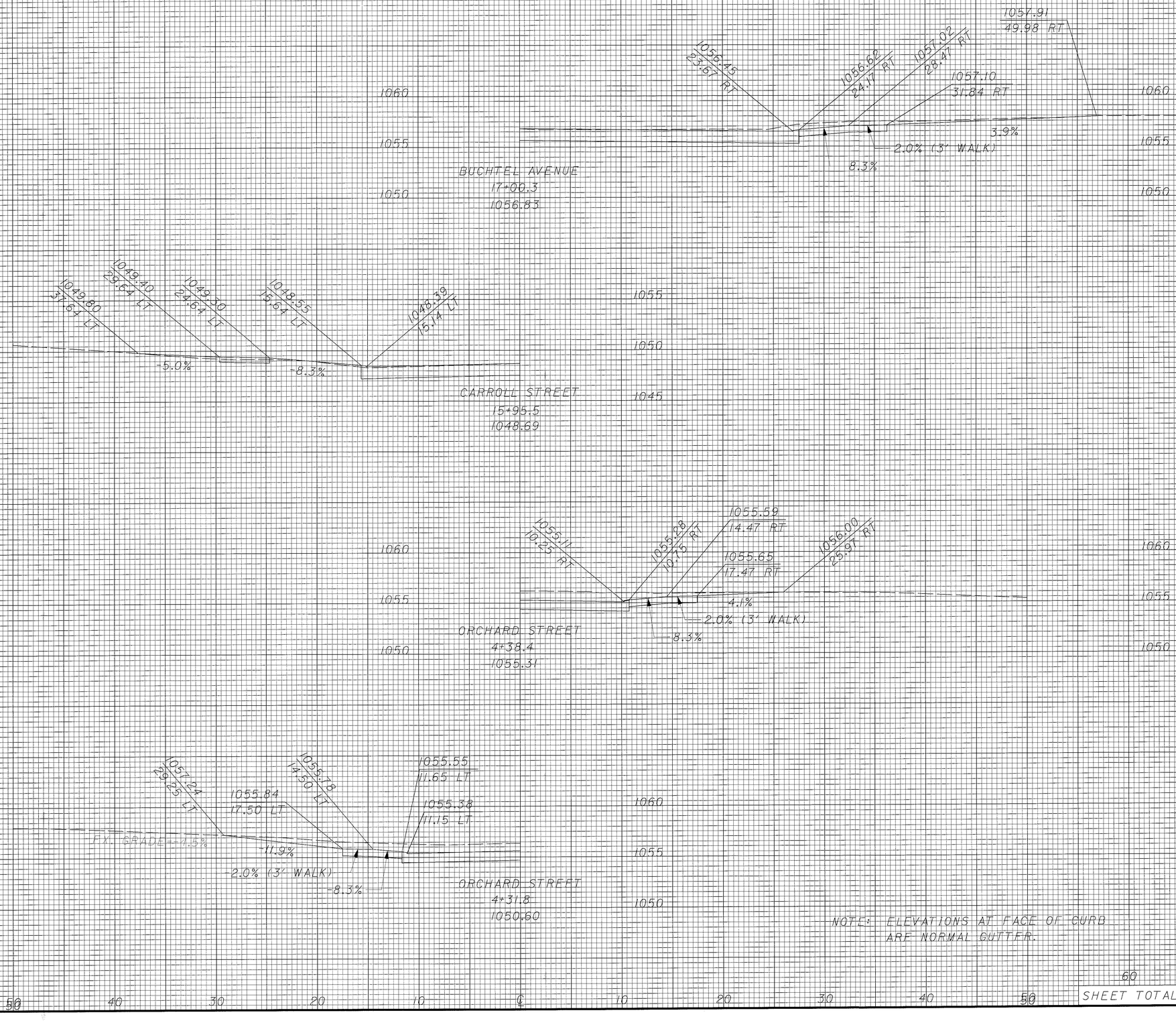

DRIVE PROFILES

ORCHARD ST. - CARROLL ST. - BUCHTEL AVE.

SUM-8-0.63

SEEDING	
END WIDTH	SQ. YDS.

END AREA		VOLUME	
CUT	FILL	CUT	FILL

CALCULATED RW
CHECKED VLW

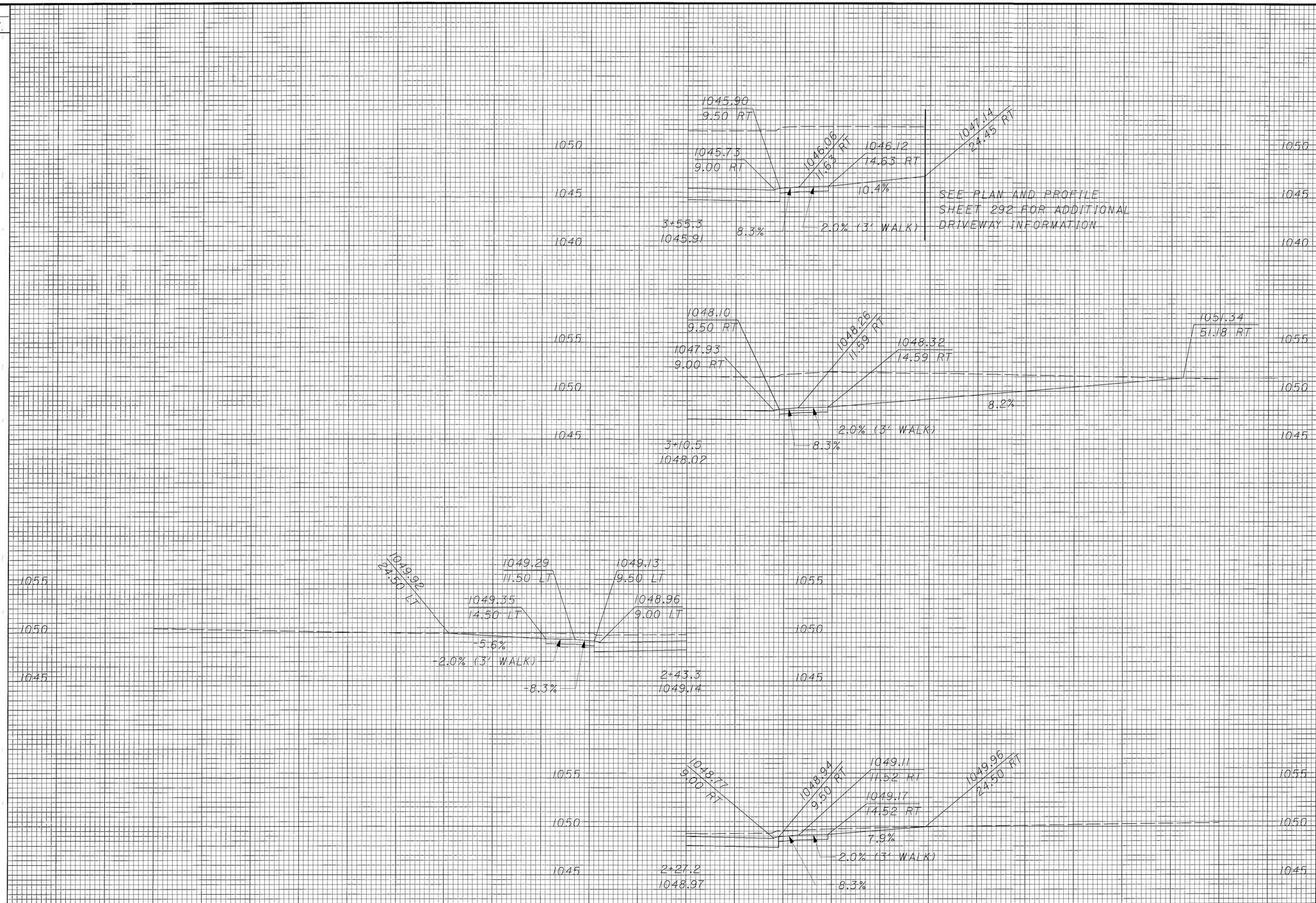

NOTE: ELEVATIONS AT FACE OF CURB ARE NORMAL GUTTER.

SHEET TOTAL 60 50 40 30 20 10 ℄ 10 20 30 40 50 SHEET TOTAL 60

DRIVE PROFILES - PARKWOOD AVE. STA. 2+27.2 TO STA. 3+55.3

SUM-8-0.63

569
1088

SEEDING	
END WIDTH	SQ. YDS.

END AREA		VOLUME	
CUT	FILL	CUT	FILL

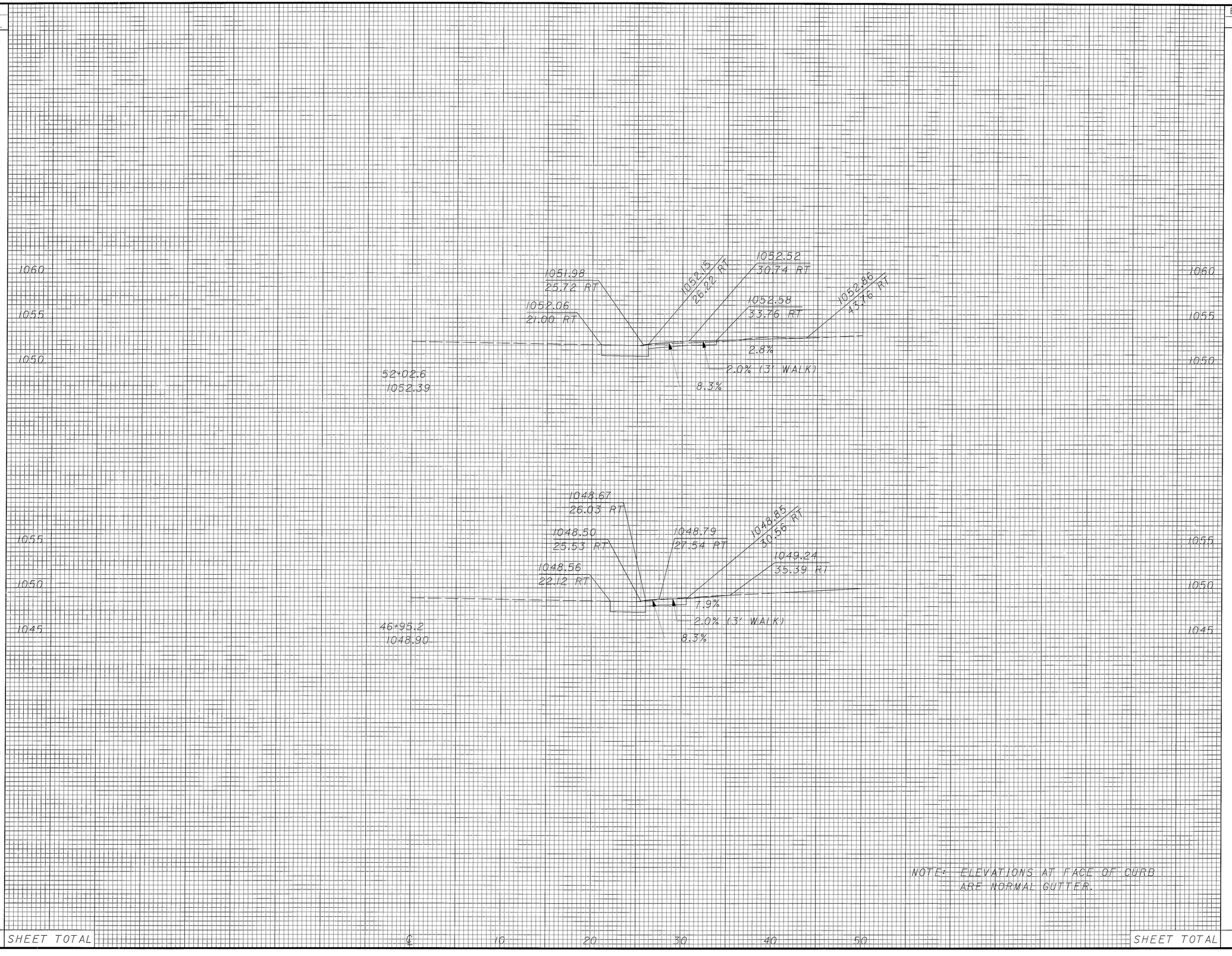

NOTE: ELEVATIONS AT FACE OF CURB ARE NORMAL GUTTER.

SHEET TOTAL ℄ 10 20 30 40 50 SHEET TOTAL

CALCULATED RW

CHECKED VLW

DRIVE PROFILES - PERKINS ST.
STA. 46+95.2 TO STA. 52+02.6

SUM-8-0.63

570
1088

SEEDING	
END WIDTH	SQ. YDS.

END AREA		VOLUME	
CUT	FILL	CUT	FILL

CALCULATED RW
CHECKED VLW

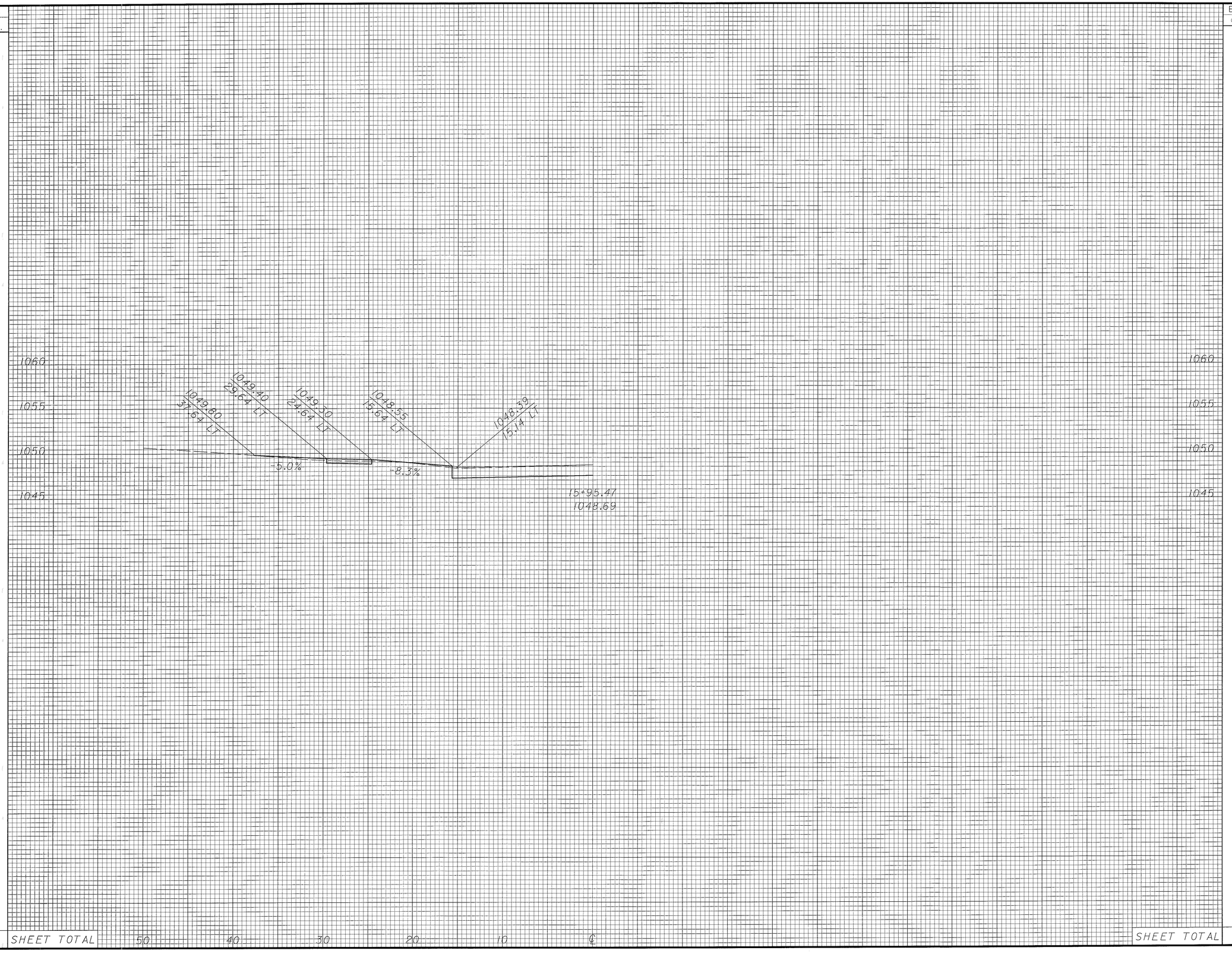

SHEET TOTAL 50 40 30 20 10 ℄ SHEET TOTAL

DRIVE PROFILE - CARROLL ST.
STA. 15+95.47

SUM-8-0.63

571
1088

SEEDING	
END WIDTH	SQ. YDS.

END AREA		VOLUME	
CUT	FILL	CUT	FILL

CALCULATED RW

CHECKED VLW

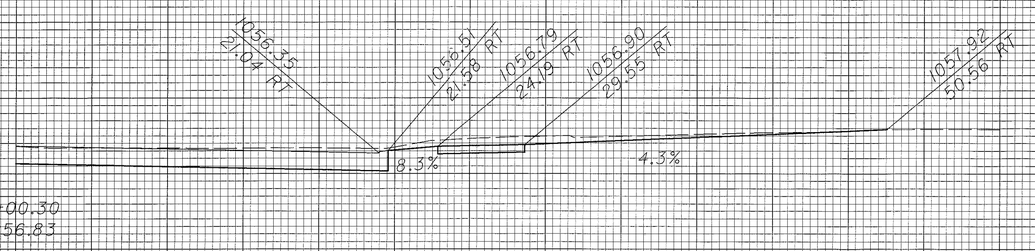

PROFILE - BUCHTEL AVE.
STA. 17+00.30

DRIVE

SUM-8-0.63

572
1088

SHEET TOTAL ℄ 10 20 30 40 50 60 70 SHEET TOTAL

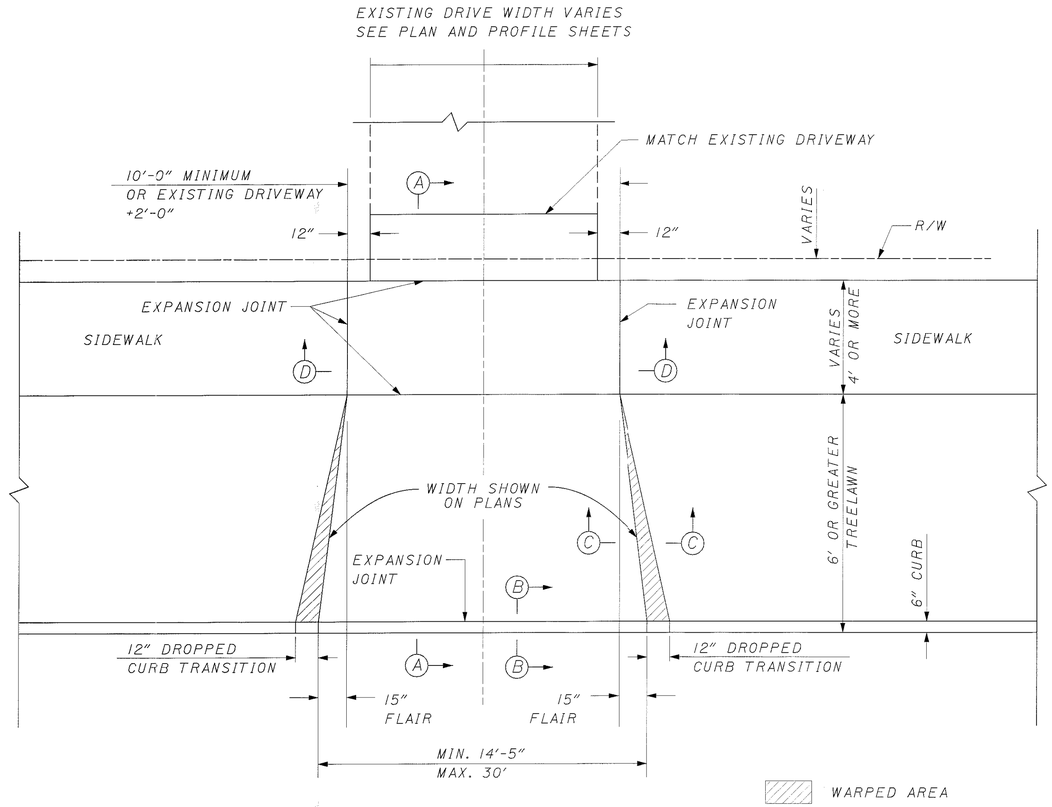

DRIVE DETAIL A

NOT TO SCALE

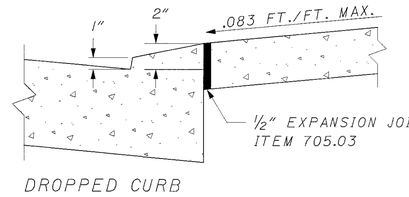

DROPPED CURB

SECTION B-B

NOT TO SCALE

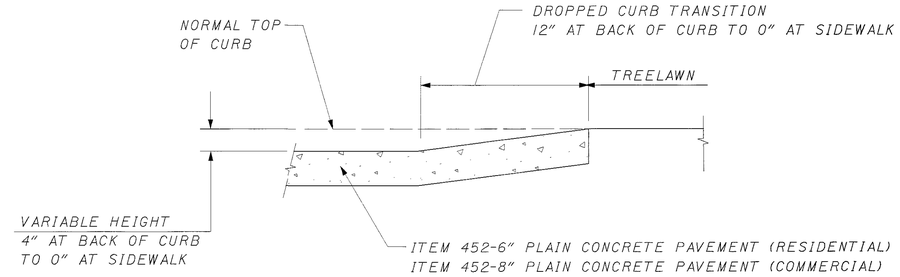

SECTION C-C

NOT TO SCALE

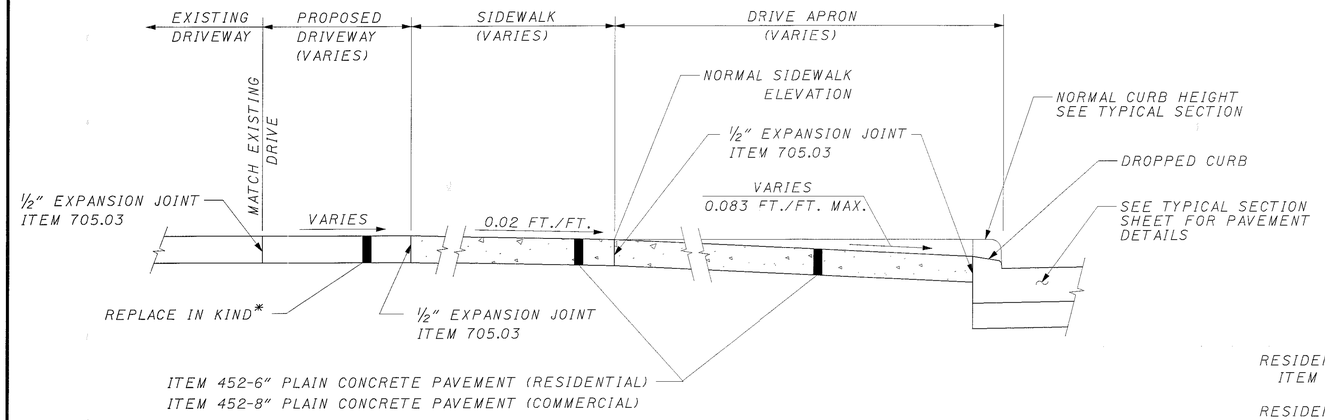

SECTION A-A

NOT TO SCALE

NOTES

SEE CITY OF AKRON STANDARD CONSTRUCTION DRAWING BP-5.1 FOR DETAILS NOT SHOWN

SEE ODOT STANDARD CONSTRUCTION DRAWING BP-4.1 FOR DETAILS NOT SHOWN

ALL DRIVE CENTERLINES AT 90° ANGLE TO ROADWAY CENTERLINE UNLESS OTHERWISE NOTED

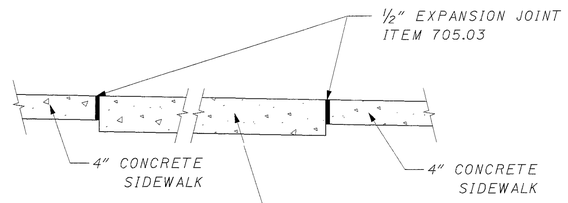

SECTION D-D

NOT TO SCALE

DRIVE PAVEMENT *

RESIDENTIAL CONCRETE DRIVE:
ITEM 452 - 6" PLAIN CONCRETE PAVEMENT

RESIDENTIAL ASPHALT DRIVE:
ITEM 448 - 1¼" ASPHALT CONCRETE SURFACE COURSE, TYPE 1, PG64-22 (DRIVEWAYS)
ITEM 301 - 3¾" BITUMINOUS AGGREGATE BASE, PG64-22 (DRIVEWAYS)

RESIDENTIAL AGGREGATE DRIVE:
ITEM 304 - 8" AGGREGATE BASE

COMMERCIAL CONCRETE DRIVE:
ITEM 452 - 8" PLAIN CONCRETE PAVEMENT

COMMERCIAL ASPHALT DRIVE:
ITEM 448 - 1¼" ASPHALT CONCRETE SURFACE COURSE, TYPE 1, PG64-22 (DRIVEWAYS)
ITEM 301 - 4¾" BITUMINOUS AGGREGATE BASE, PG64-22 (DRIVEWAYS)

COMMERCIAL AGGREGATE DRIVE:
ITEM 304 - 10" AGGREGATE BASE

EXISTING BRICK DRIVEWAYS SHALL BE REPLACED WITH CONCRETE DRIVEWAYS

CALCULATED RW
CHECKED KLM

DRIVEWAY DETAIL-A

SUM-8-0.63

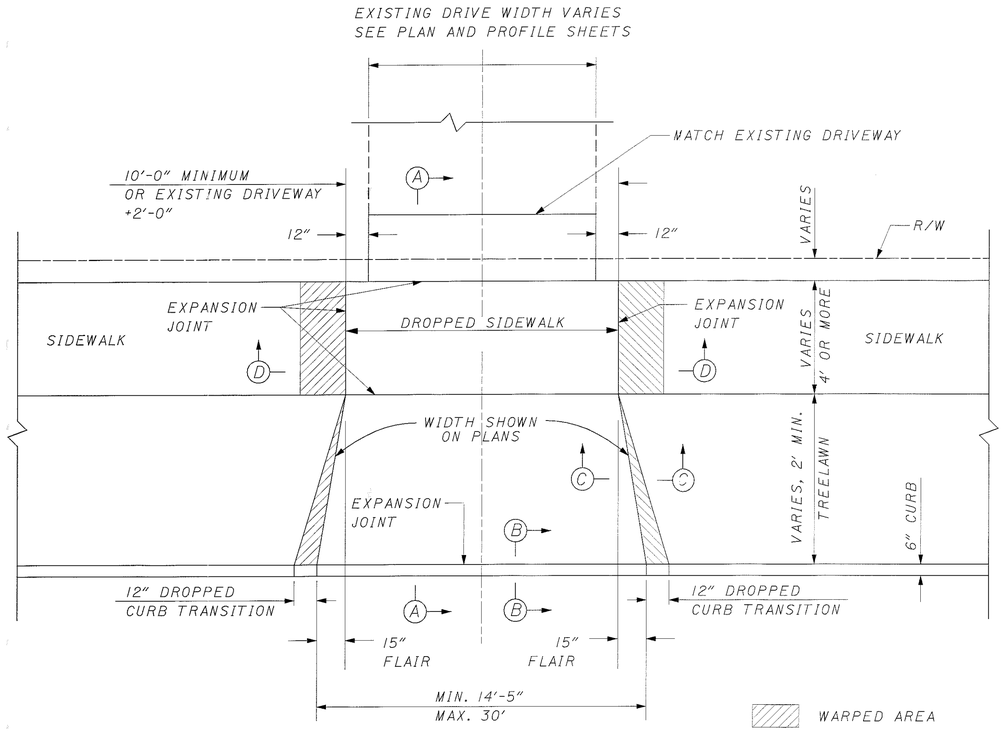

DRIVE DETAIL B

NOT TO SCALE

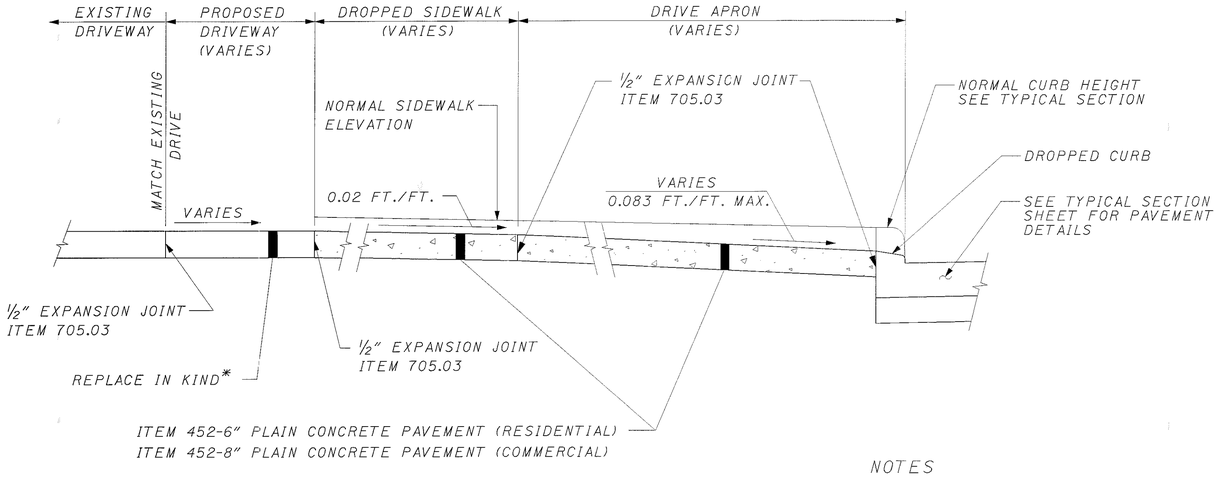

SECTION A-A

NOT TO SCALE

NOTES

SEE CITY OF AKRON STANDARD CONSTRUCTION DRAWING BP-5.1 FOR DETAILS NOT SHOWN

SEE ODOT STANDARD CONSTRUCTION DRAWING BP-4.1 FOR DETAILS NOT SHOWN

ALL DRIVE CENTERLINES AT 90° ANGLE TO ROADWAY CENTERLINE UNLESS OTHERWISE NOTED

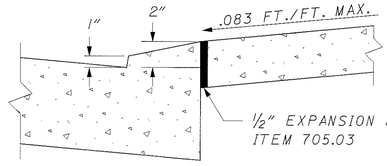

DROPPED CURB

SECTION B-B

NOT TO SCALE

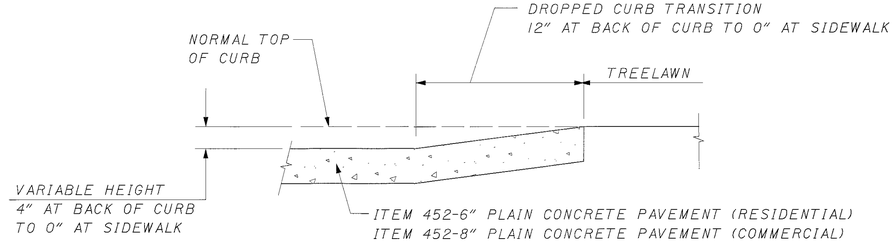

SECTION C-C

NOT TO SCALE

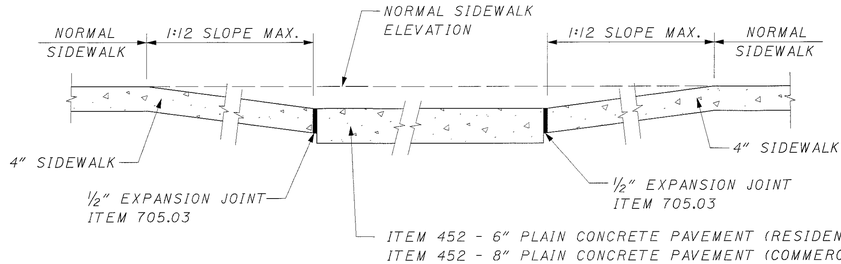

SECTION D-D

NOT TO SCALE

DRIVE PAVEMENT*

RESIDENTIAL CONCRETE DRIVE:
ITEM 452 - 6" PLAIN CONCRETE PAVEMENT

RESIDENTIAL ASPHALT DRIVE:
ITEM 448 - 1¼" ASPHALT CONCRETE SURFACE COURSE, TYPE 1, PG64-22 (DRIVEWAYS)
ITEM 301 - 3¾" BITUMINOUS AGGREGATE BASE, PG64-22 (DRIVEWAYS)

RESIDENTIAL AGGREGATE DRIVE:
ITEM 304 - 8" AGGREGATE BASE

COMMERCIAL CONCRETE DRIVE:
ITEM 452 - 8" PLAIN CONCRETE PAVEMENT

COMMERCIAL ASPHALT DRIVE:
ITEM 448 - 1¼" ASPHALT CONCRETE SURFACE COURSE, TYPE 1, PG64-22 (DRIVEWAYS)
ITEM 301 - 4¾" BITUMINOUS AGGREGATE BASE, PG64-22 (DRIVEWAYS)

COMMERCIAL AGGREGATE DRIVE:
ITEM 304 - 10" AGGREGATE BASE

EXISTING BRICK DRIVEWAYS SHALL BE REPLACED WITH CONCRETE DRIVEWAYS

CALCULATED RW
CHECKED KLM

DRIVEWAY DETAIL-B

SUM-8-0.63

574
1088

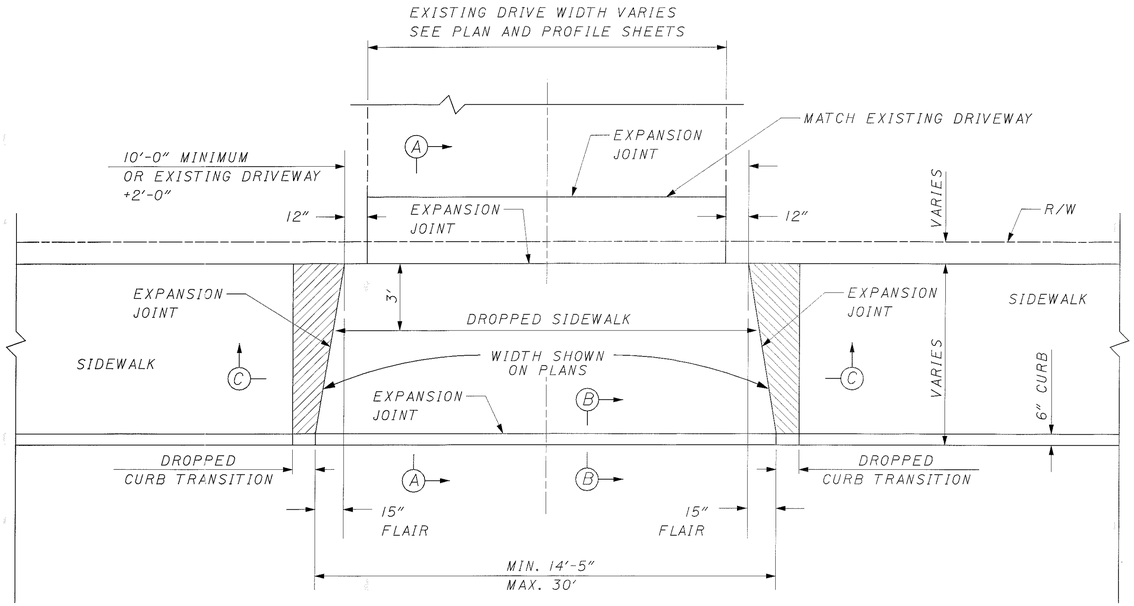

DRIVE DETAIL C

NOT TO SCALE

WARPED AREA

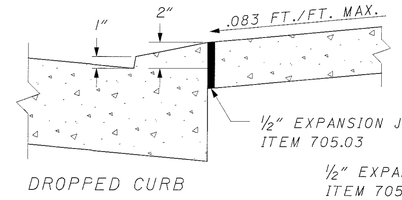

SECTION B-B

NOT TO SCALE

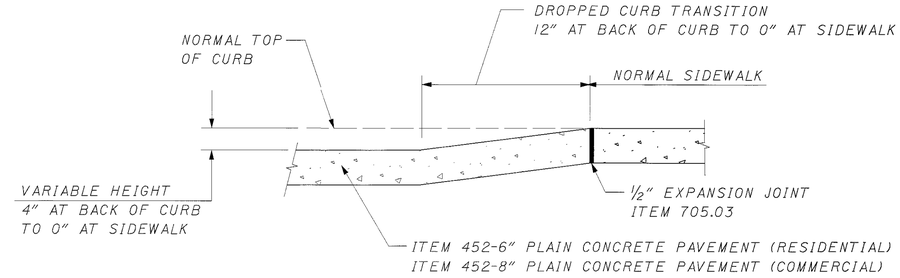

SECTION C-C

NOT TO SCALE

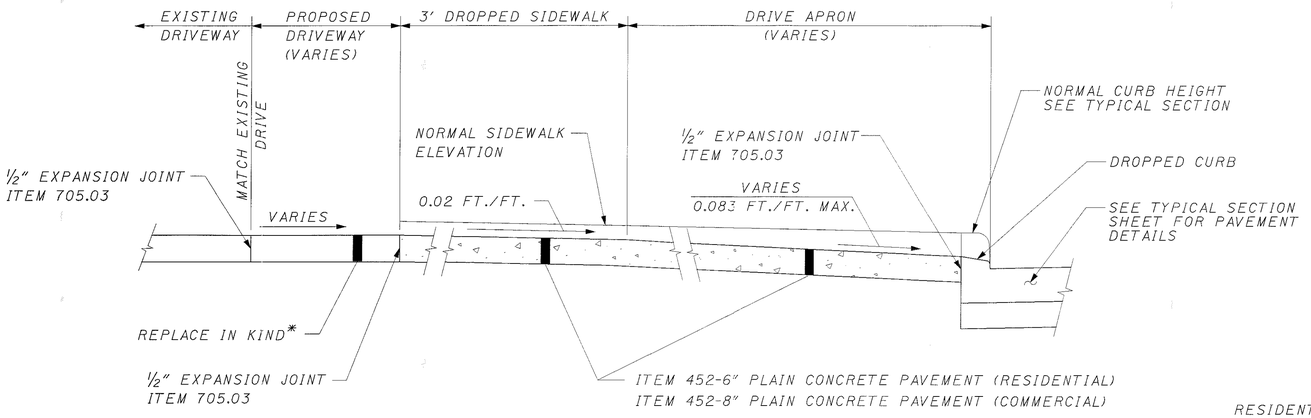

SECTION A-A

NOT TO SCALE

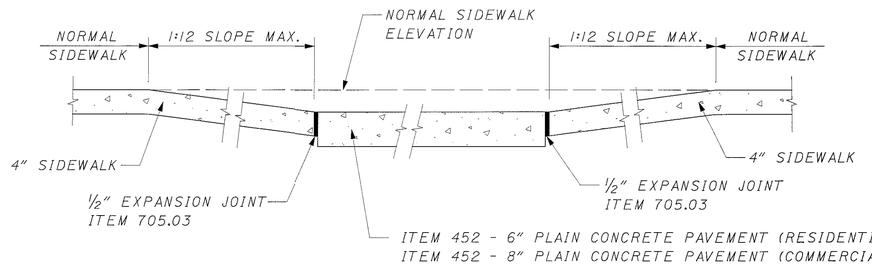

SECTION C-C

NOT TO SCALE

NOTES

SEE CITY OF AKRON STANDARD CONSTRUCTION DRAWING BP-5.1 FOR DETAILS NOT SHOWN

SEE ODOT STANDARD CONSTRUCTION DRAWING BP-4.1 FOR DETAILS NOT SHOWN

ALL DRIVE CENTERLINES AT 90° ANGLE TO ROADWAY CENTERLINE UNLESS OTHERWISE NOTED

DRIVE PAVEMENT*

RESIDENTIAL CONCRETE DRIVE:
- ITEM 452 - 6" PLAIN CONCRETE PAVEMENT

RESIDENTIAL ASPHALT DRIVE:
- ITEM 448 - 1¼" ASPHALT CONCRETE SURFACE COURSE, TYPE 1, PG64-22 (DRIVEWAYS)
- ITEM 301 - 3¾" BITUMINOUS AGGREGATE BASE, PG64-22 (DRIVEWAYS)

RESIDENTIAL AGGREGATE DRIVE:
- ITEM 304 - 8" AGGREGATE BASE

COMMERCIAL CONCRETE DRIVE:
- ITEM 452 - 8" PLAIN CONCRETE PAVEMENT

COMMERCIAL ASPHALT DRIVE:
- ITEM 448 - 1¼" ASPHALT CONCRETE SURFACE COURSE, TYPE 1, PG64-22 (DRIVEWAYS)
- ITEM 301 - 4¾" BITUMINOUS AGGREGATE BASE, PG64-22 (DRIVEWAYS)

COMMERCIAL AGGREGATE DRIVE:
- ITEM 304 - 10" AGGREGATE BASE

EXISTING BRICK DRIVEWAYS SHALL BE REPLACED WITH CONCRETE DRIVEWAYS

CALCULATED RW
CHECKED KLM

DRIVEWAY DETAIL-C

SUM-8-0.63

GENERAL NOTES FOR
SIDEWALKS, CURB RAMPS, AND DRIVEWAYS

GENERAL

1. ALL AREAS, ELEMENTS, AND FACILITIES FOR PEDESTRIAN ACCESS, CIRCULATION AND USE THAT ARE CONSTRUCTED, INSTALLED OR ALTERED IN THE PUBLIC RIGHT-OF-WAY AND WHICH ARE SUBJECT TO TITLE II OF THE AMERICANS WITH DISABILITIES ACT (ADA) SHALL COMPLY WITH ALL CURRENT FEDERAL REGULATIONS INCLUDING THE ADA ACCESSIBILITY GUIDELINES (ADAAG).
2. NEWLY CONSTRUCTED AND ALTERED STREETS OR PEDESTRIAN WALKWAYS MUST CONTAIN CURB RAMPS AT INTERSECTIONS. (28 CFR 35.151(d)) ALTERATIONS INCLUDE RESURFACING AND ANY WORK THAT IMPACTS THE MAJORITY OF THE STREET OR WALKWAY. THE ENTIRE INTERSECTION EFFECTED MUST BE BROUGHT INTO COMPLIANCE.
3. ALL MATERIALS SHALL CONFORM TO THE "CONSTRUCTION AND MATERIAL SPECIFICATIONS" OF THE CITY OF AKRON, DEPARTMENT OF PUBLIC SERVICE, AKRON ENGINEERING BUREAU, LATEST EDITION.
4. ALL SLOPES REFERRED TO ARE REFERENCED TO A HORIZONTAL PLANE.
5. FOR SIDEWALKS, CURB RAMPS, AND DRIVEWAYS THE "PREFERRED" DIMENSION SHALL BE THE NORMAL STANDARD TO BE MET, UNLESS EXISTING ROW WIDTH OR FEATURES MAKE COMPLIANCE INFEASABLE. IN THIS CASE THE "MINIMUM" STANDARD MUST BE MET.

PUBLIC SIDEWALKS

1. MINIMUM WIDTH OF NEW SIDEWALKS SHALL BE FIVE FEET.
2. PREFERRED CLEAR WIDTH OF A CONTINUOUS PASSAGE SHALL BE 48 INCHES; FOR ALTERATIONS TO EXISTING ROWS, WHERE THE PREFERRED CLEAR WIDTH CANNOT BE MET, THE MINIMUM CLEAR WIDTH OF A CONTINUOUS PASSAGE SHALL BE 36 INCHES.
3. SIDEWALK CROSS SLOPE SHALL NOT EXCEED 48:1 (2%).

CURB RAMPS

1. A TYPICAL CURB RAMP IS COMPOSED OF THE FOLLOWING ELEMENTS: RAMP, LANDING, SIDES, SURFACE, AND INTERSECTION WITH THE ROADWAY.
2. RAMP. THE CURB RAMP MUST HAVE A SLOPE OF NO GREATER THAN 12:1 IN THE DIRECTION OF TRAVEL AND A CROSS SLOPE OF NO MORE THAN 48:1. THE MINIMUM WIDTH FOR A RAMP IS 48-INCHES (NOT INCLUDING SIDES).
3. THE LANDING IS THE LEVEL AREA AT THE TOP OF A RAMP AND MUST NOT HAVE A SLOPE MORE THAN 48:1 IN ANY DIRECTION. THE LANDING AREA IS USED FOR TURNING AND MUST MAINTAIN A PREFERRED LENGTH AND WIDTH OF 60"x60" FOR ALTERATIONS IN EXISTING ROWS WHERE PREFERRED CLEAR WIDTH CANNOT BE MET, THE MINIMUM LENGTH AND WIDTH SHALL BE 48"x48". IN ALL CASES, THE TYPE 2 CURB RAMP (PARALLEL) MUST HAVE A LANDING LENGTH OF 60-INCHES.
4. SIDES. THE CURB RAMP SHALL BE FLARED WHEN PEDESTRIANS ARE TO CROSS THE RAMP, OR HAVE CURBING IF THE ADJACENT AREA IS A NON-PEDESTRIAN SURFACE SUCH AS A LAWN STRIP, BRICKWORK, OR OBSTACLE. MAXIMUM FLARE SLOPES ARE 12:1 OR AS DIRECTED BY THE ENGINEER. DIAGONAL CURB RAMPS MUST HAVE WELL DEFINED EDGES THAT ARE TO BE PARALLEL TO THE DIRECTION OF PEDESTRIAN FLOW. A DIAGONAL CURB RAMP MUST ALSO HAVE A MINIMUM 24-INCH SEGMENT OF FULL HEIGHT CURB ON EACH SIDE OF THE RAMP WHICH IS WITHIN THE CROSSWALK LINES OR PEDESTRIAN RIGHT-OF-WAY.
5. FLARE TREATMENTS. VARIOUS FLARE TREATMENT ARE SHOWN IN THE DRAWINGS. IN GENERAL A 12:1 FLARE INCLUDING CONCRETE TO EXTENDED SIDEWALK LINE IS PREFERRED OVER SHORT ROLLED CURBING WHERE POSSIBLE. THIS PROVIDES A CONCRETE WALKING SURFACE THE ENTIRE SIDEWALK WIDTH IN THE DIRECTION OF TRAVEL. ROLLED CURBING ON DIAGONAL CURB RAMPS IS INTENDED TO ACCOMMODATE OBSTACLES OTHER THAN GRASS OR BRICK STRIPS.
6. SURFACE. THE CURB RAMP SURFACE MUST BE STABLE, FIRM, AND SLIP-RESISTANT. CHANGE IN LEVEL UP TO 0.25-INCH MAY BE VERTICAL WITHOUT EDGE TREATMENT. CHANGES BETWEEN 0.25 AND 0.5-INCHES MUST BE BEVELED WITH A SLOPE OF NO GREATER THAN 12:1. CHANGES IN LEVEL ABOVE 0.5-INCH MUST BE ACCOMPLISHED BY A RAMP. THE FINAL SURFACE TEXTURE SHALL BE ROUGHER THAN THE ADJACENT WALK AND SHALL BE OBTAINED BY COARSE BROOMING OR OTHER METHODS APPROVED BY THE ENGINEER TO OBTAIN STRIATIONS TRANSVERSE TO THE RAMP SLOPE. BROOM FINISH TOOLED JOINTS WITHOUT FILLING-IN THE JOINT.
7. LIP. THE INTERSECTION OF THE RAMP WITH THE ROADWAY SHALL BE PERPENDICULAR AND EDGES SHALL BE FLUSH. THE COUNTER SLOPE FROM THE END OF RAMP UP THE CROSS SLOPE OF THE ROADWAY SHALL BE NO MORE THAN .20:1 FOR THE FIRST 24-INCHES.
8. NO OBSTACLES OR PROTRUSIONS SHALL BE PLACED WITHIN THE CURB RAMP AREA. EXISTING MANHOLE COVERS, VALVE BOXES SHALL BE FLUSH MOUNTED WITH WALKING SURFACE.
9. THE THICKNESS OF ALL NEW CURB RAMPS SHALL BE 6-INCHES.
10. TRANSITIONAL SECTIONS OF SIDEWALK SHALL BE INSTALLED TO CONNECT NEW OR REPLACED CURB RAMPS WITH EXISTING SIDEWALKS, THAT DO NOT MEET CURRENT STANDARDS AND SPECIFICATIONS. THESE TRANSITION SEGMENTS OF SIDEWALK SHALL PROVIDE A SMOOTH TRANSITION BETWEEN EXISTING AND NEW CONCRETE. MAXIMUM WARPING (ROTATION) RATE SHALL BE 1/8" VERTICAL CHANGE PER L.F. HORIZONTAL DISTANCE TRAVELLED AND MINIMUM DISTANCE SHALL BE ONE FULL SIDEWALK BLOCK.
11. FOR PARALLEL AND COMBINATION RAMPS WHERE A RAMP IS LOCATED WITHIN THE PUBLIC SIDEWALK, THE MINIMUM LENGTH FOR THE RAMPS SHALL BE ONE SIDEWALK BLOCK LENGTH; AND THE MAXIMUM LENGTH SHALL BE WHAT IS REQUIRED TO MAINTAIN A 12:1 SLOPE TO MEET EXISTING SIDEWALK GRADE. WHEN THIS IS DETERMINED UNFEASIBLE DUE TO STEEP PITCH OF EXISTING ROADWAY, IN NO CASE SHALL THE RAMP BE LESS THAN 15 FEET.
12. STEEP SLOPES. ALL RAMPS LOCATED ON STREETS WITH A RUNNING PROFILE GRADE GREATER THAN 5% MUST BE REVIEWED AND APPROVED BY THE ENGINEER.
13. SLOPE AND CROSS-SLOPE CONVERSION TABLE:

RATIO	PERCENT	INCH/FOOT	DEGREES	WHERE UTILIZED
1:12	8.3	1	4.8	MAXIMUM SLOPE FOR RAMPS AND FLARES
1:20	5.0	5/8	2.9	AT THE FOOT OF THE CURB RAMP, THE TRANSITION FROM THE RAMP TO THE GUTTER COUNTER SLOPE SHALL BE NO MORE THAN 1:20 FOR A MINIMUM DISTANCE OF 24-INCHES
1:48	2.0	1/4	1.1	MAXIMUM SLOPE FOR LANDING AND CROSS-SLOPE OF LANDINGS, RAMPS AND SIDEWALK

14. FOR CURB RAMP STANDARD DRAWINGS TYPICAL DIMENSIONS ARE USED BASED ON A FULL CURB HEIGHT OF 6-INCHES. ADJUSTMENTS MAY BE MADE TO LENGTH OF RAMPS AND FLARES BASED ON ACTUAL CURB REVEAL HEIGHT. REQUIRED SLOPES MUST BE MAINTAINED.
15. WHEN TWO RAMPS ARE USED AT A CORNER IF THE SPACE BETWEEN IS TO BE AN UNWALKABLE SURFACE IT MAY BE GRASSED IF GREATER THAN 20 S.F., OTHERWISE IT SHALL BE FILLED IN WITH BRICK PAVERS.
16. TYPES 2 & 3 RAMPS. WHEN BACK CURB HEIGHT IS 4" OR GREATER INSTALL SEPARATE 6"x18" CURB AT THE BACK OF WALK. IF LESS THAN 4" UTILIZE ROLLED INTEGRAL CURB. ROLLED CURB PAID AS 6" WALK.
17. DETECTABLE WARNING IS REQUIRED FOR ALL CURB RAMPS. TRUNCATED DOMES SHALL HAVE A DIAMETER OF 0.9 INCH AT THE BOTTOM, A DIAMETER OF 0.4 INCH AT THE TOP, A HEIGHT OF 0.2 INCH AND A CENTER-TO-CENTER SPACING OF 2.35 INCHES MEASURED ALONG ONE SIDE OF A SQUARE ARRANGEMENT.
18. DOME ALIGNMENT. DOMES SHALL BE ALIGNED ON A SQUARE GRID IN THE PREDOMINANT DIRECTION OF TRAVEL TO PERMIT WHEELS TO ROLL BETWEEN DOMES.
19. DRAINAGE. ALL CURB RAMPS SHALL BE DESIGNED AND CONSTRUCTED TO PROVIDE POSITIVE DRAINAGE SO AS TO PREVENT PONDING. PARTICULAR ATTENTION IS TO BE GIVEN TO RAMPS LOCATED IN EITHER FLAT OR STEEP AREAS, AND CURB RAMP TYPES 2 & 4 THAT HAVE LANDINGS AT STREET LEVEL.

DRIVEWAYS

1. DRIVEWAY LOCATIONS ARE GOVERNED BY CITY OF AKRON ORDINANCES.
2. THE SIDEWALK WIDTH AT TOP OF DRIVE SHALL BE PREFERRED WIDTH OF 48-INCHES; FOR ALTERATIONS TO EXISTING ROWS WHERE THE PREFERRED WIDTH CANNOT BE MET, THE MINIMUM WIDTH SHALL BE 36-INCHES.
3. LIP AT BOTTOM OF APRON SHALL BE 1-INCH TYPICAL.

DO NOT SCALE - USE DIMENSIONS ONLY

CITY OF AKRON BUREAU OF ENGINEERING	CONSTRUCTION STANDARD DWG. No. BP-5.0
Michael C. Madonia 1-15-02 MANAGER, DESIGN DIVISION 1.22.02 MANAGER, CONSTRUCTION DIVISION 1-22-02 CITY ENGINEER	SIDEWALKS, CURB RAMPS, AND DRIVEWAY APPROACHES AUTOCAD DRAWING - STD_BP-5.0.DWG January 11, 2002 REVISIONS:

CITY OF AKRON CURB RAMP DETAILS
GENERAL NOTES

SUM - 8 - 0.63

576
1088

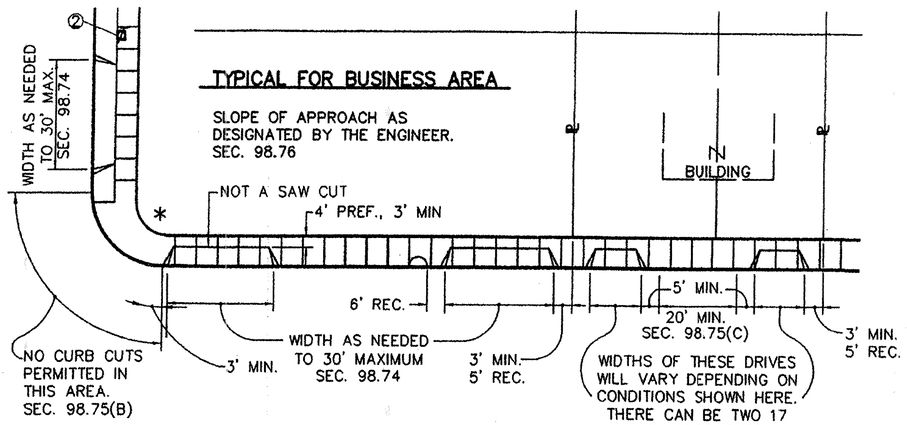

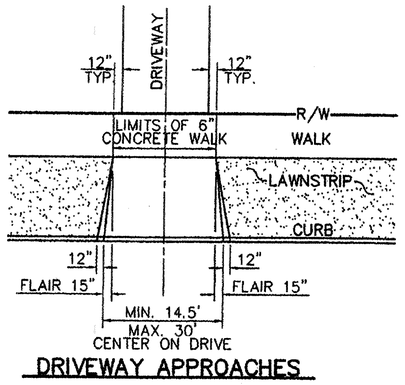

DRIVEWAY APPROACHES

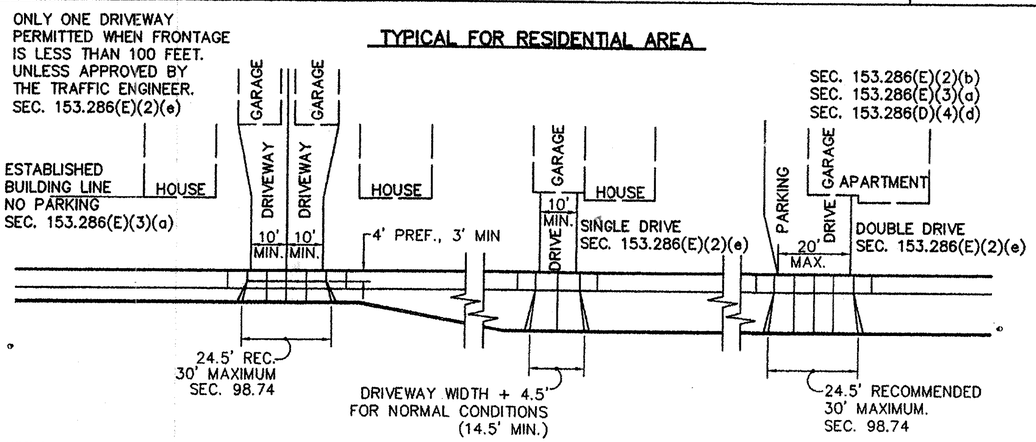

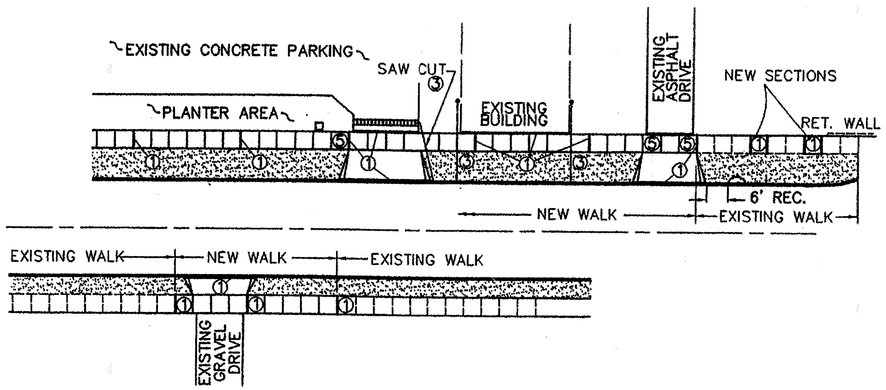

DRIVEWAY APPROACHES
EXPANSION JOINTS
HOUSE DRAINS

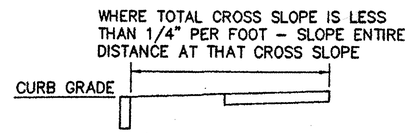

VARIABLE SIDEWALK CROSS SLOPE WITH LOW SIDEWALK

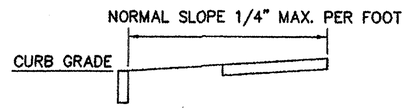

STANDARD SIDEWALK CROSS SLOPE

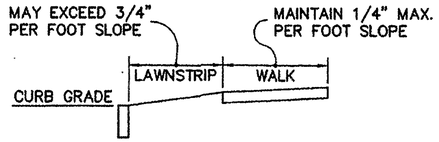

VARIABLE SIDEWALK CROSS SLOPE WITH HIGH SIDEWALK

① PROVIDE 1/2" PREFORMED EXPANSION JOINT FILLER THE FULL DEPTH OF THE WALK AS FOLLOWS:
AT 30' INTERVALS.
AGAINST ALL EXISTING CONCRETE CURBS, DRIVES, WALKS, AND INLETS.
AGAINST ALL BUILDING WALLS & OTHER FIXED OBJECTS.
AT THE CURB END OF EACH DRIVEWAY APPROACH.
WHERE DIRECTED BY THE ENGINEER.

② CONCRETE SURROUNDING POSTS, POLES, HYDRANTS, GRATES, CASTINGS, ETC. SHALL BE SEPARATED FROM THE REMAINING CONCRETE BY MEANS OF 1/2" PREFORMED EXPANSION JOINT FILLER ARRANGED IN SQUARES OR RECTANGLES PLACED APPROXIMATELY 6" FROM THESE ITEMS, AND EXTENDING THROUGH THE FULL DEPTH OF THE CONCRETE. CURB RAMP SIDE SLOPES MAY BE ALTERED TO MEET CONCRETE SURROUNDING POSTS.

③ HOUSE DRAINS MAY BE INSTALLED SKEWED, AS NECESSARY. A CONSTRUCTION JOINT SHALL BE MADE OVER EVERY HOUSEDRAIN WHEN ANY PORTION OF THE PIPE IS EMBEDDED IN THE CONCRETE WALK. A 1" DIAMETER CIRCLE SHALL BE CAST IN THE TOP OF THE WALK OVER EACH PIPE. TWO 1" DIAMETER CICLES (ONE ON EACH SIDE OF THE SIDEWALK) SHALL BE CAST IN THE TOP OF THE WALK OVER EACH SKEWED PIPE.

④ WHERE DIRECTED, THE WALK AT CORNERS MAY BE WIDENED BEYOND THE EXTENDED PROPERTY LINE. DEPTH OF WALK WITHIN THE INTERSECTION, INCLUDING RAMPS, SHALL BE 6".

⑤ WHERE PRACTICAL, ALIGN JOINTS IN WALK WITH OUTSIDE OF DRIVEWAY APPROACH.

⑥ SIDEWALKS IN COMMERCIAL AREAS AND/OR ABUTTING THE BACK OF CURB OR BRICKSTRIP SHALL BE 6" THICK UNLESS OTHERWISE DIRECTED BY THE ENGINEER.

NOTES:
ALL SEC. REFERENCES ARE FROM THE CITY OF AKRON "CODE OF ORDINANCES".

*SEE STANDARD DRAWINGS (BP-5.0 THRU 5.6) FOR SIDEWALKS, CURB RAMPS, AND DRIVEWAYS FOR ADDITIONAL REQUIREMENTS.

DO NOT SCALE – USE DIMENSIONS ONLY

CITY OF AKRON
BUREAU OF ENGINEERING

CONSTRUCTION STANDARD DWG. No. BP-5.1

Michael L. Madonis 1-15-02
MANAGER, DESIGN DIVISION

1-22-02
MANAGER, CONSTRUCTION DIVISION

1-22-02
CITY ENGINEER

SIDEWALKS
CURB RAMPS
DRIVEWAY APPROACHES

AUTOCAD DRAWING – STD_BP-5.DWG January 11, 2002
REVISIONS:

CITY OF AKRON CURB RAMP DETAILS
SIDEWALKS, CURB RAMPS, DRIVEWAY APPROACHES

SUM - 8 - 0.63

577
1088

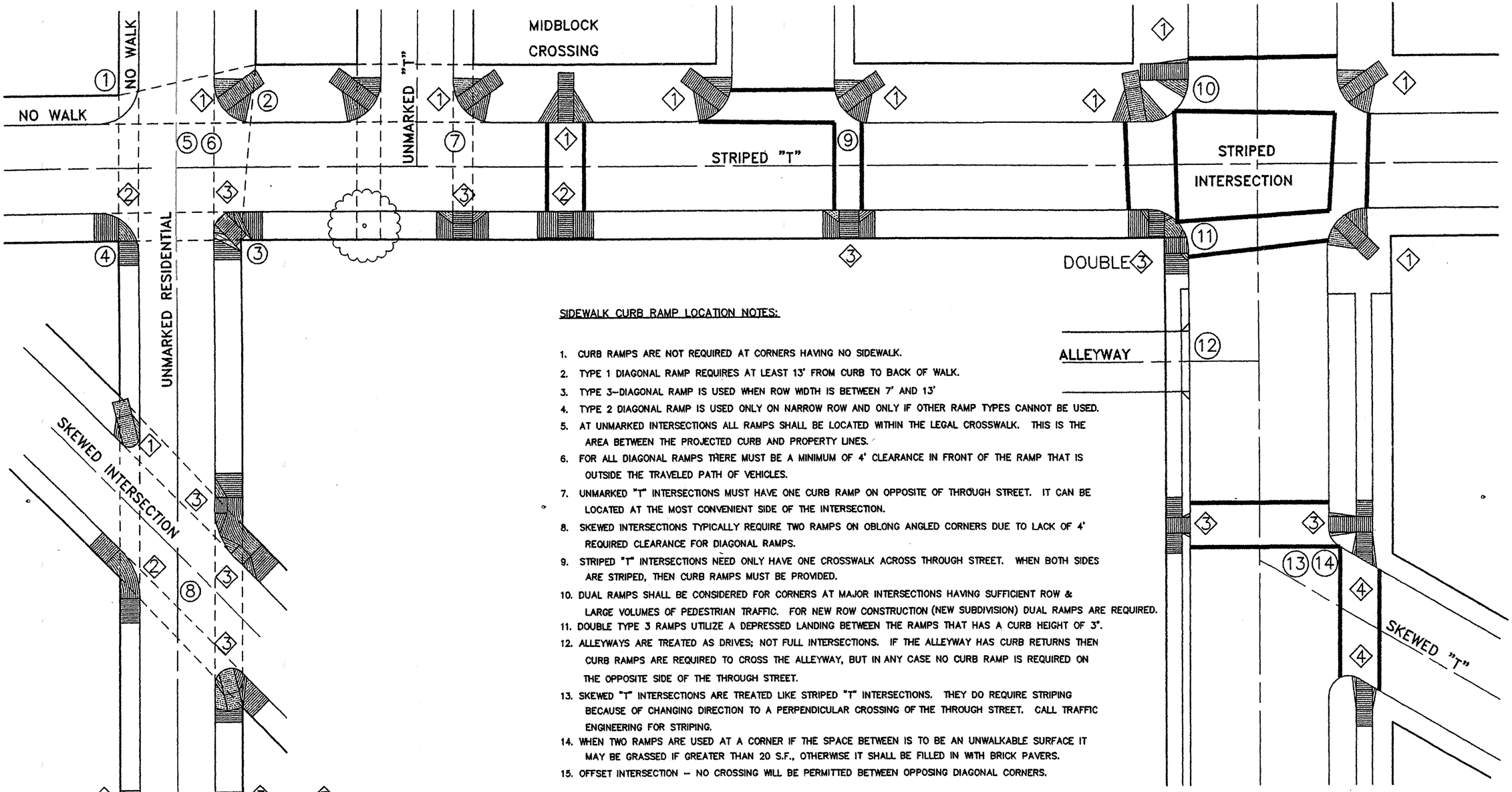

SIDEWALK CURB RAMP LOCATION NOTES:

1. CURB RAMPS ARE NOT REQUIRED AT CORNERS HAVING NO SIDEWALK.
2. TYPE 1 DIAGONAL RAMP REQUIRES AT LEAST 13' FROM CURB TO BACK OF WALK.
3. TYPE 3-DIAGONAL RAMP IS USED WHEN ROW WIDTH IS BETWEEN 7' AND 13'
4. TYPE 2 DIAGONAL RAMP IS USED ONLY ON NARROW ROW AND ONLY IF OTHER RAMP TYPES CANNOT BE USED.
5. AT UNMARKED INTERSECTIONS ALL RAMPS SHALL BE LOCATED WITHIN THE LEGAL CROSSWALK. THIS IS THE AREA BETWEEN THE PROJECTED CURB AND PROPERTY LINES.
6. FOR ALL DIAGONAL RAMPS THERE MUST BE A MINIMUM OF 4' CLEARANCE IN FRONT OF THE RAMP THAT IS OUTSIDE THE TRAVELED PATH OF VEHICLES.
7. UNMARKED "T" INTERSECTIONS MUST HAVE ONE CURB RAMP ON OPPOSITE OF THROUGH STREET. IT CAN BE LOCATED AT THE MOST CONVENIENT SIDE OF THE INTERSECTION.
8. SKEWED INTERSECTIONS TYPICALLY REQUIRE TWO RAMPS ON OBLONG ANGLED CORNERS DUE TO LACK OF 4' REQUIRED CLEARANCE FOR DIAGONAL RAMPS.
9. STRIPED "T" INTERSECTIONS NEED ONLY HAVE ONE CROSSWALK ACROSS THROUGH STREET. WHEN BOTH SIDES ARE STRIPED, THEN CURB RAMPS MUST BE PROVIDED.
10. DUAL RAMPS SHALL BE CONSIDERED FOR CORNERS AT MAJOR INTERSECTIONS HAVING SUFFICIENT ROW & LARGE VOLUMES OF PEDESTRIAN TRAFFIC. FOR NEW ROW CONSTRUCTION (NEW SUBDIVISION) DUAL RAMPS ARE REQUIRED.
11. DOUBLE TYPE 3 RAMPS UTILIZE A DEPRESSED LANDING BETWEEN THE RAMPS THAT HAS A CURB HEIGHT OF 3".
12. ALLEYWAYS ARE TREATED AS DRIVES; NOT FULL INTERSECTIONS. IF THE ALLEYWAY HAS CURB RETURNS THEN CURB RAMPS ARE REQUIRED TO CROSS THE ALLEYWAY, BUT IN ANY CASE NO CURB RAMP IS REQUIRED ON THE OPPOSITE SIDE OF THE THROUGH STREET.
13. SKEWED "T" INTERSECTIONS ARE TREATED LIKE STRIPED "T" INTERSECTIONS. THEY DO REQUIRE STRIPING BECAUSE OF CHANGING DIRECTION TO A PERPENDICULAR CROSSING OF THE THROUGH STREET. CALL TRAFFIC ENGINEERING FOR STRIPING.
14. WHEN TWO RAMPS ARE USED AT A CORNER IF THE SPACE BETWEEN IS TO BE AN UNWALKABLE SURFACE IT MAY BE GRASSED IF GREATER THAN 20 S.F., OTHERWISE IT SHALL BE FILLED IN WITH BRICK PAVERS.
15. OFFSET INTERSECTION – NO CROSSING WILL BE PERMITTED BETWEEN OPPOSING DIAGONAL CORNERS.

LEGEND

MARKED CROSSWALK

UNMARKED CROSSWALK

◇# CURB RAMP TYPE #

DO NOT SCALE – USE DIMENSIONS ONLY

CITY OF AKRON BUREAU OF ENGINEERING	CONSTRUCTION STANDARD DWG. No. BP-5.2
Michael L. Madonio 1-15-02 MANAGER, DESIGN DIVISION 1-22-02 MANAGER, CONSTRUCTION DIVISION 1-22-02 CITY ENGINEER	SIDEWALK CURB RAMPS LOCATIONS AUTOCAD DRAWING – STD_BP-5.2.DWG January 11, 2002 REVISIONS:

CITY OF AKRON CURB RAMP DETAILS
SIDEWALK CURB RAMP LOCATIONS

SUM - 8 - 0.63

578
1088

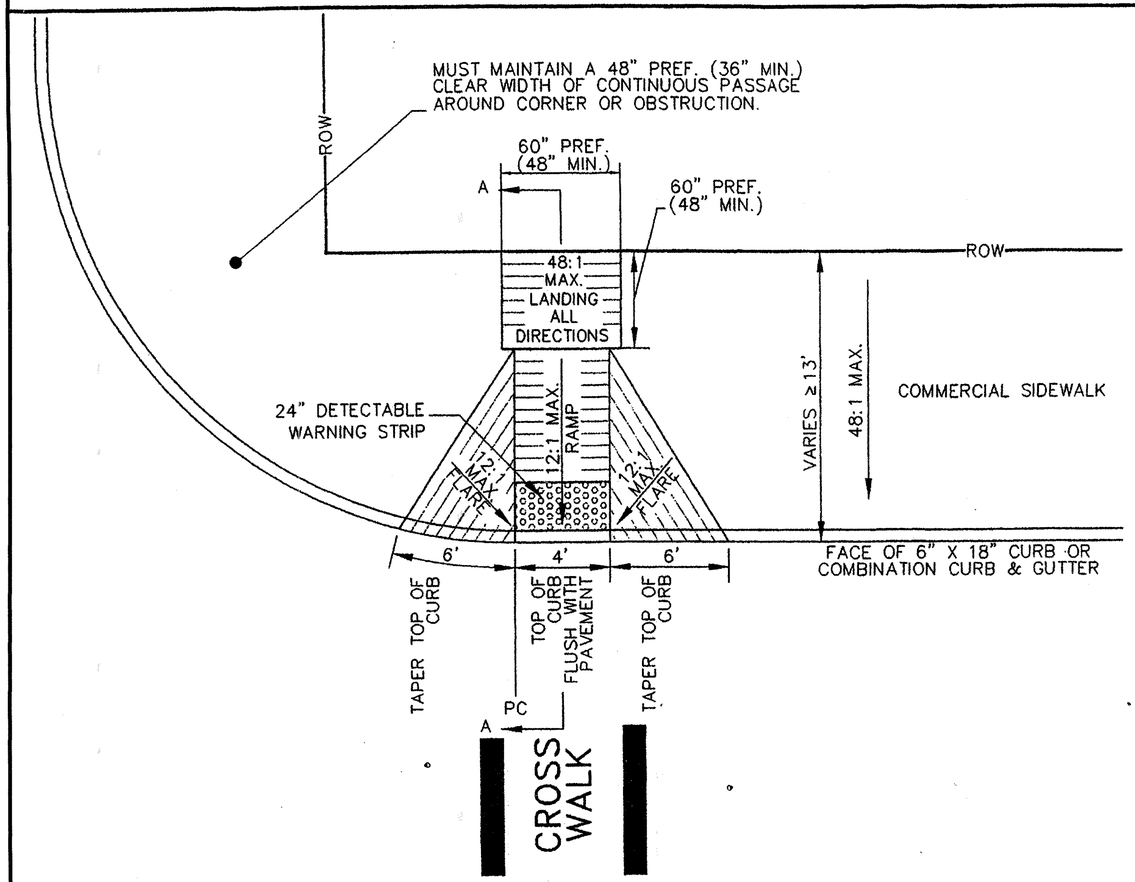

CURB RAMP TYPE 1

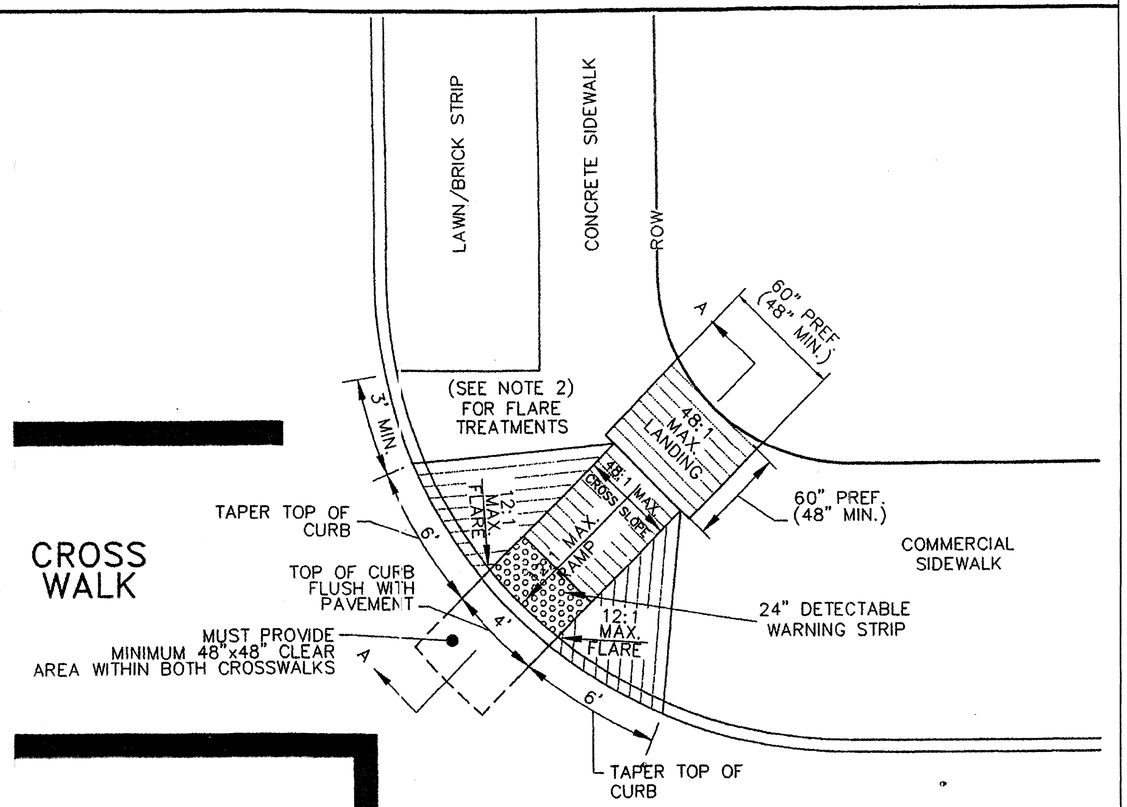

CURB RAMP TYPE 1 DIAGONAL

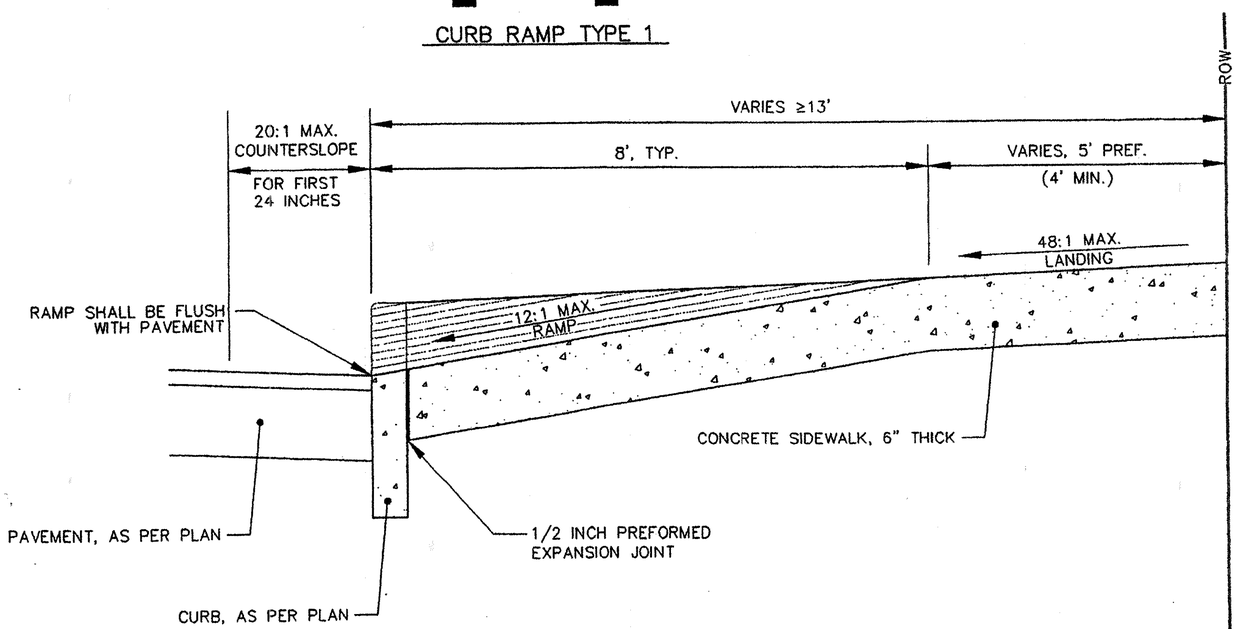

SECTION A–A

NOTES:
1. FLARE OF 6' TYPICAL. FOR 6" CURB REVEAL AND 12:1 SLOPE, MAY BE MORE OR LESS FOR EXISTING CURB REVEALS WHEN CURB REVEAL HEIGHT IS NOT BEING ALTERED.
2. ALTERNATE FLARE TREATMENTS MAY BE USED UPON APPROVAL BY THE ENGINEER, AS FOLLOWS:
   1) INTEGRAL ROLLED CURBING AT 6–INCHES WIDTH
   2) NO CURBING OR FLARE TREATMENT
   3) CORNER SIDE FLARE MAY BE 12:1 TO CONCRETE WALK; PROVIDE MIN.3' CONCRETE AT TOP OF FLARE TO EXTENDED SIDEWALK LINE.

DO NOT SCALE – USE DIMENSIONS ONLY

CITY OF AKRON BUREAU OF ENGINEERING	CONSTRUCTION STANDARD DWG. No. BP–5.3
Michael L. Madonis 1-15-02 MANAGER, DESIGN DIVISION James P. Welsh 1.22.02 MANAGER, CONSTRUCTION DIVISION David Nicklas 1.22.02 CITY ENGINEER	CURB RAMP TYPE 1 PERPENDICULAR AUTOCAD DRAWING – STD_BP-5.3.DWG January 11, 2002 REVISIONS:

CITY OF AKRON
CURB RAMP TYPE 1 PERPENDICULAR

SUM - 8 - 0.63

579
1088

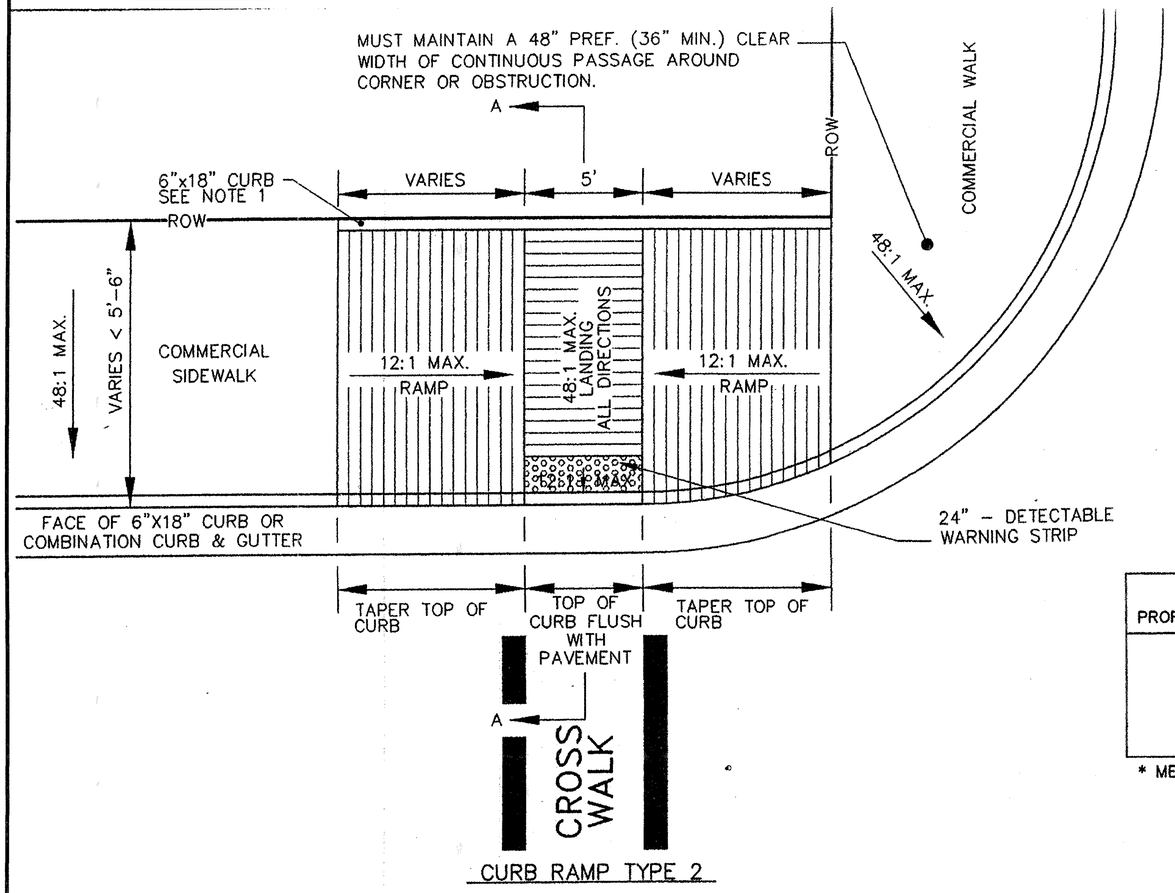

CURB RAMP TYPE 2

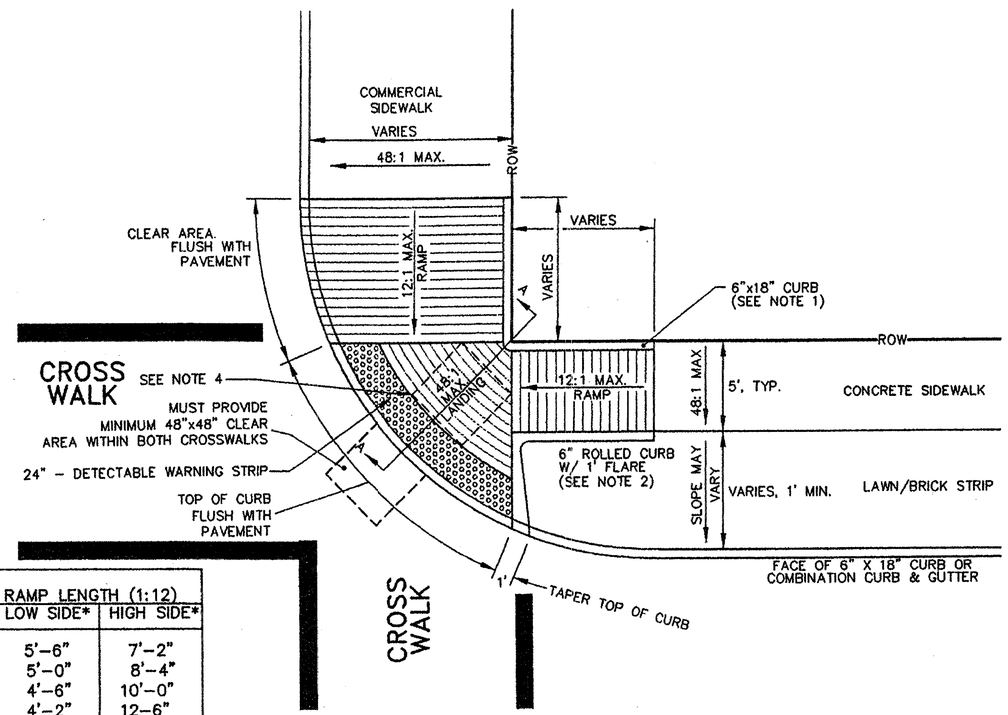

PROFILE GRADE	RAMP LENGTH (1:12) LOW SIDE*	RAMP LENGTH (1:12) HIGH SIDE*
1%	5'-6"	7'-2"
2%	5'-0"	8'-4"
3%	4'-6"	10'-0"
4%	4'-2"	12-6"
5%	3'-10"	16'-8"

* MEASURED ALONG THE BACK OF CURB

CURB RAMP TYPE 2 DIAGONAL

NOTES:

1. CURB AT BACK OF SIDEWALK IS FLUSH AT TOP OF SIDEWALK RAMPS. REVEAL GREATEST AT LANDING AND BASED ON RAMP'S EDGE SLOPES AND LENGTHS.
2. ALTERNATE FLARE TREATMENTS MAY BE USED UPON APPROVAL BY THE ENGINEER, AS FOLLOWS:
   1) INTEGRAL ROLLED CURBING AT 6-INCHES WIDTH
   2) NO CURBING OR FLARE TREATMENT
   3) CORNER SIDE FLARE MAY BE 12:1 TO CONCRETE WALK; PROVIDE MIN.3' CONCRETE AT TOP OF FLARE TO EXTENDED SIDEWALK LINE.
3. RAMP LENGTHS FOR STREET GRADES GREATER THAN 5% MUST BE REVIEWED AND APPROVED BY THE ENGINEER.
4. MAINTAIN A PREFERRED 5'x5' (4'X4' MIN.) LANDING PERPENDICULAR TO THE CURB. FOR TYPE 2, NOT IN DIAGONAL POSITION (TRANSITION RAMPS FACE EACH OTHER), A 5' MIN. LANDING LENGTH BETWEEN TRANSITION RAMPS MUST BE MAINTAINED.
5. WHEN ROW WIDTH IS 4'-6" OR LESS, THE SIDEWALK MAY BE INACCESSABLE AND CONSIDERATION SHOULD BE GIVEN TO OBTAINING ROW TO PROPERLY CONSTRUCT A CURB RAMP. ANY RAMPS LOCATED IN AREAS WITH 4'-6" ROW OR LESS MUST BE REVIEWED AND APPROVED BY THE ENGINEER.
6. 0"-24" BASED ON AVAILABLE ROW (LANDINGS < 5' WIDE WILL HAVE NO 12:1)

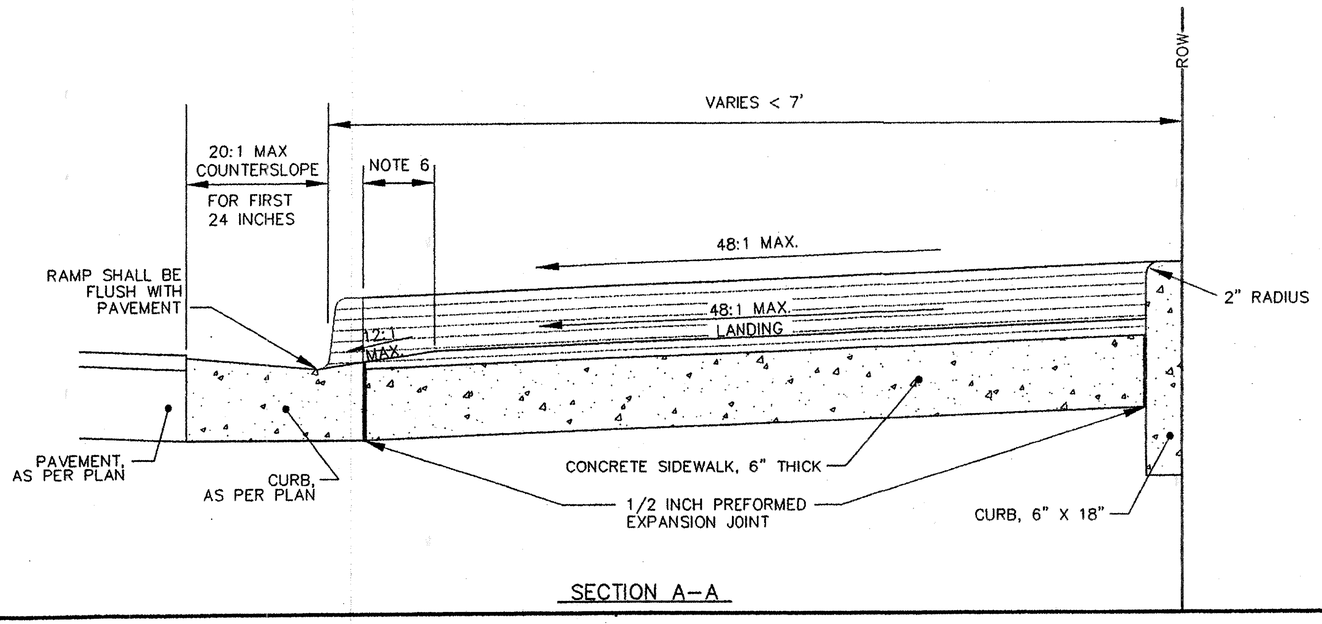

SECTION A-A

DO NOT SCALE - USE DIMENSIONS ONLY

CITY OF AKRON BUREAU OF ENGINEERING	CONSTRUCTION STANDARD DWG. No. BP-5.4
Michael L. Madonia 1-15-02 MANAGER, DESIGN DIVISION James P. Weber 1-22-02 MANAGER, CONSTRUCTION DIVISION David Yelich 1-22-02 CITY ENGINEER	CURB RAMP TYPE 2 PARALLEL AUTOCAD DRAWING - STD_BP-5.4.DWG January 11, 2002 REVISIONS:

CITY OF AKRON CURB RAMP DETAILS
CURB RAMP TYPE 2 PARALLEL

SUM - 8 - 0.63

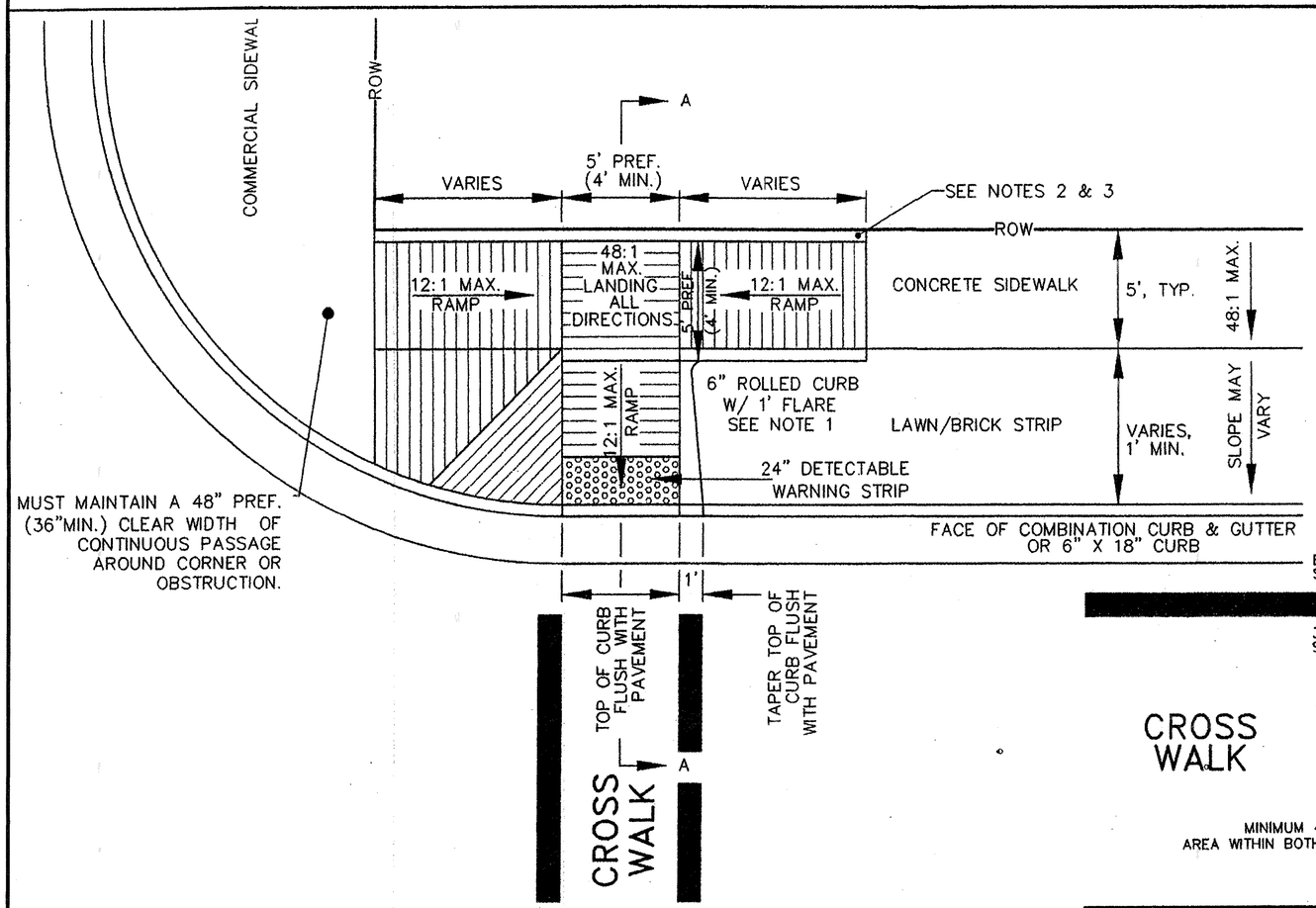

CURB RAMP TYPE 3

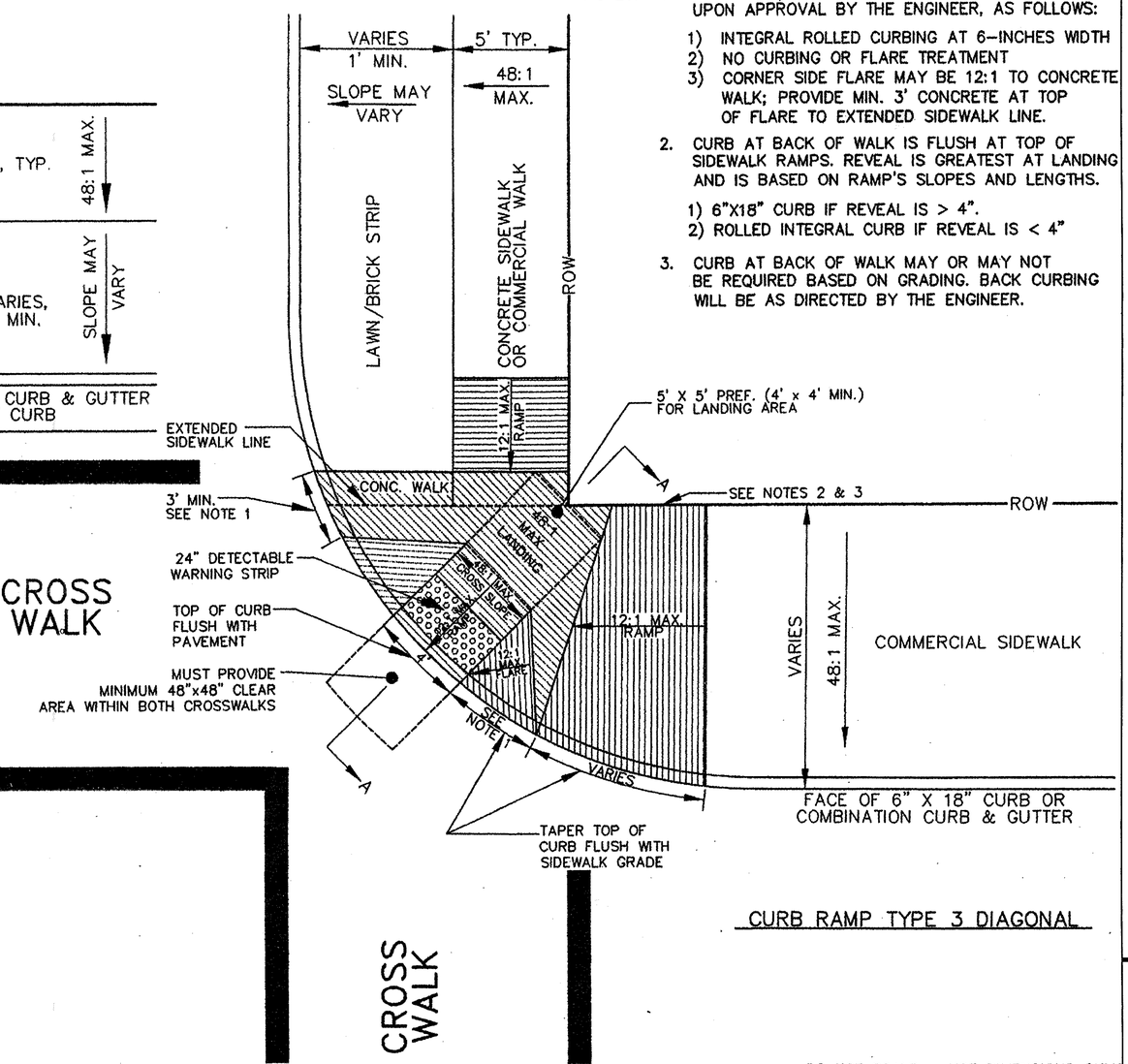

CURB RAMP TYPE 3 DIAGONAL

NOTES:

1. ALTERNATE FLARE TREATMENTS MAY BE USED UPON APPROVAL BY THE ENGINEER, AS FOLLOWS:
   1) INTEGRAL ROLLED CURBING AT 6-INCHES WIDTH
   2) NO CURBING OR FLARE TREATMENT
   3) CORNER SIDE FLARE MAY BE 12:1 TO CONCRETE WALK; PROVIDE MIN. 3' CONCRETE AT TOP OF FLARE TO EXTENDED SIDEWALK LINE.
2. CURB AT BACK OF WALK IS FLUSH AT TOP OF SIDEWALK RAMPS. REVEAL IS GREATEST AT LANDING AND IS BASED ON RAMP'S SLOPES AND LENGTHS.
   1) 6"X18" CURB IF REVEAL IS > 4".
   2) ROLLED INTEGRAL CURB IF REVEAL IS < 4"
3. CURB AT BACK OF WALK MAY OR MAY NOT BE REQUIRED BASED ON GRADING. BACK CURBING WILL BE AS DIRECTED BY THE ENGINEER.

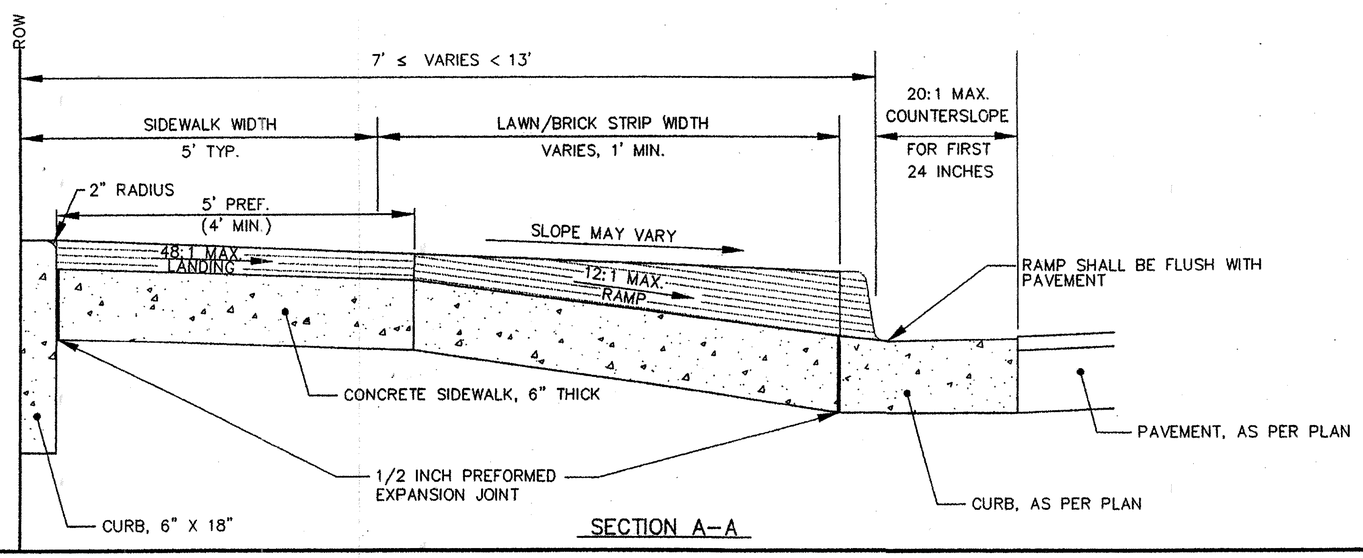

SECTION A-A

DO NOT SCALE – USE DIMENSIONS ONLY

CITY OF AKRON BUREAU OF ENGINEERING	CONSTRUCTION STANDARD DWG. No. BP-5.5
Michael L Madonio 1-15-02 MANAGER, DESIGN DIVISION James P Weber 1-22-02 MANAGER, CONSTRUCTION DIVISION David Jelik 1-22-02 CITY ENGINEER	CURB RAMP TYPE 3 COMBINATION AUTOCAD DRAWING – STD_BP-5.5.DWG January 11, 2002 REVISIONS:

CITY OF AKRON CURB RAMP DETAILS
CURB RAMP TYPE 3 COMBINATION

SUM - 8 - 0.63

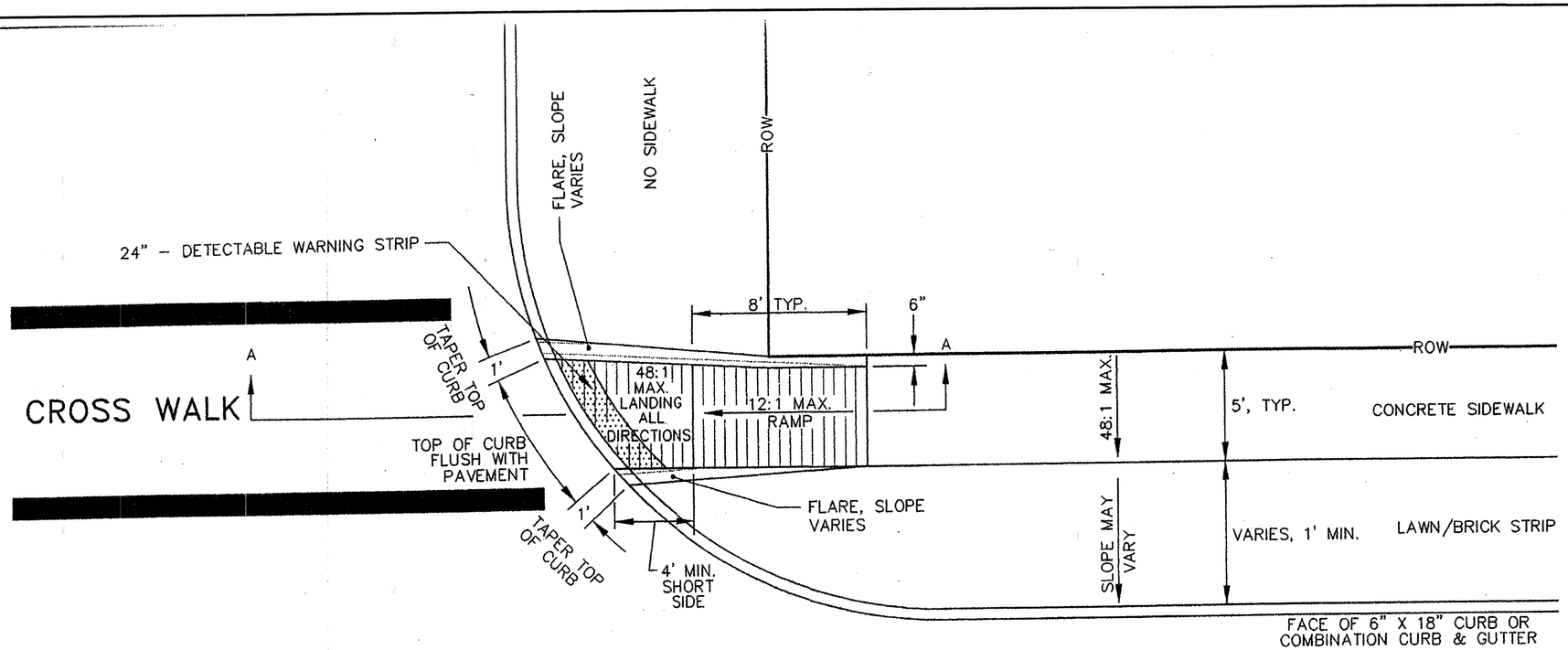

CURB RAMP TYPE 4

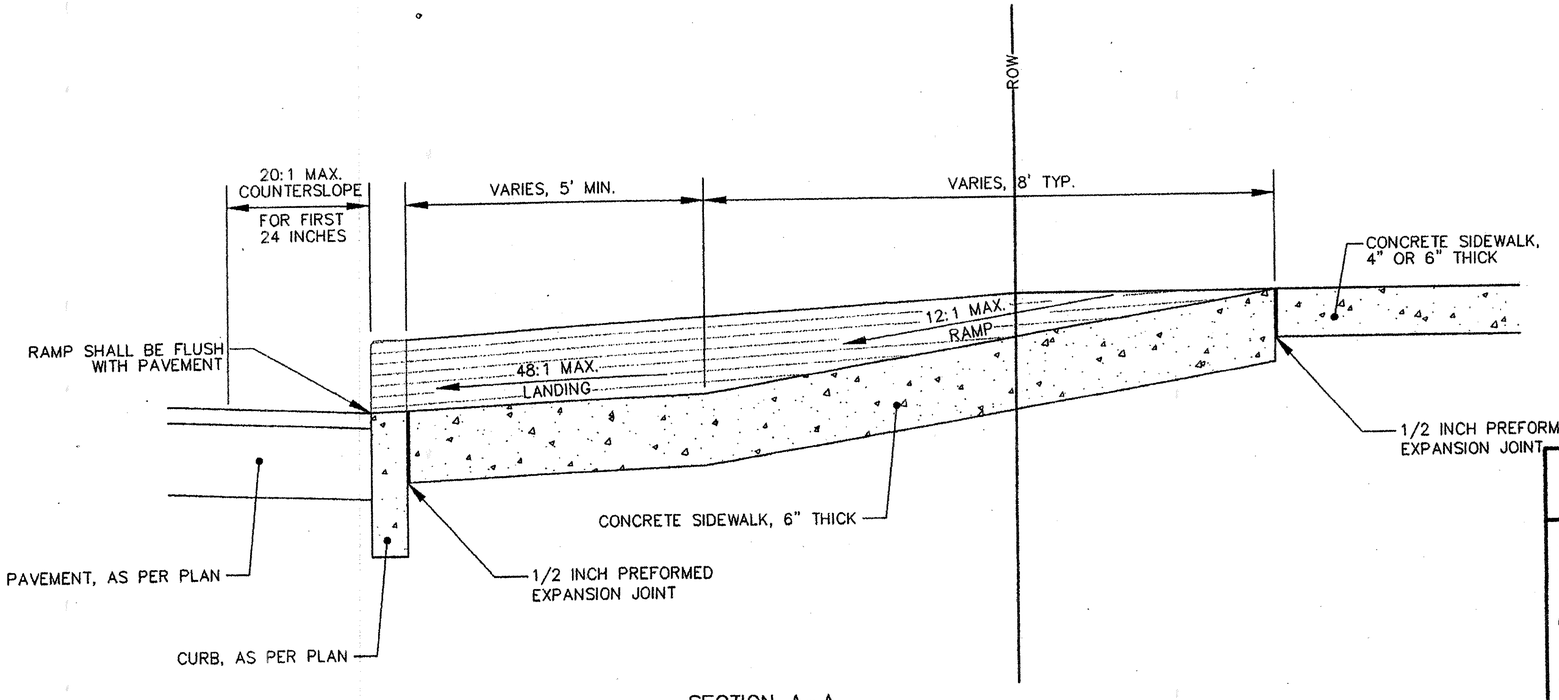

SECTION A–A

DO NOT SCALE – USE DIMENSIONS ONLY

CITY OF AKRON BUREAU OF ENGINEERING	CONSTRUCTION STANDARD DWG. No. BP–5.6
Michael L. Madonia 1-15-02 MANAGER, DESIGN DIVISION James P. Weber 1.22.02 MANAGER, CONSTRUCTION DIVISION David Yelich 1-22-02 CITY ENGINEER	CURB RAMP TYPE 4 IN-LINE AUTOCAD DRAWING – STD_BP–5.6.DWG January 11, 2002 REVISIONS:

CITY OF AKRON CURB RAMP DETAILS
CURB RAMP TYPE 4 IN-LINE

SUM - 8 - 0.63

582
1088

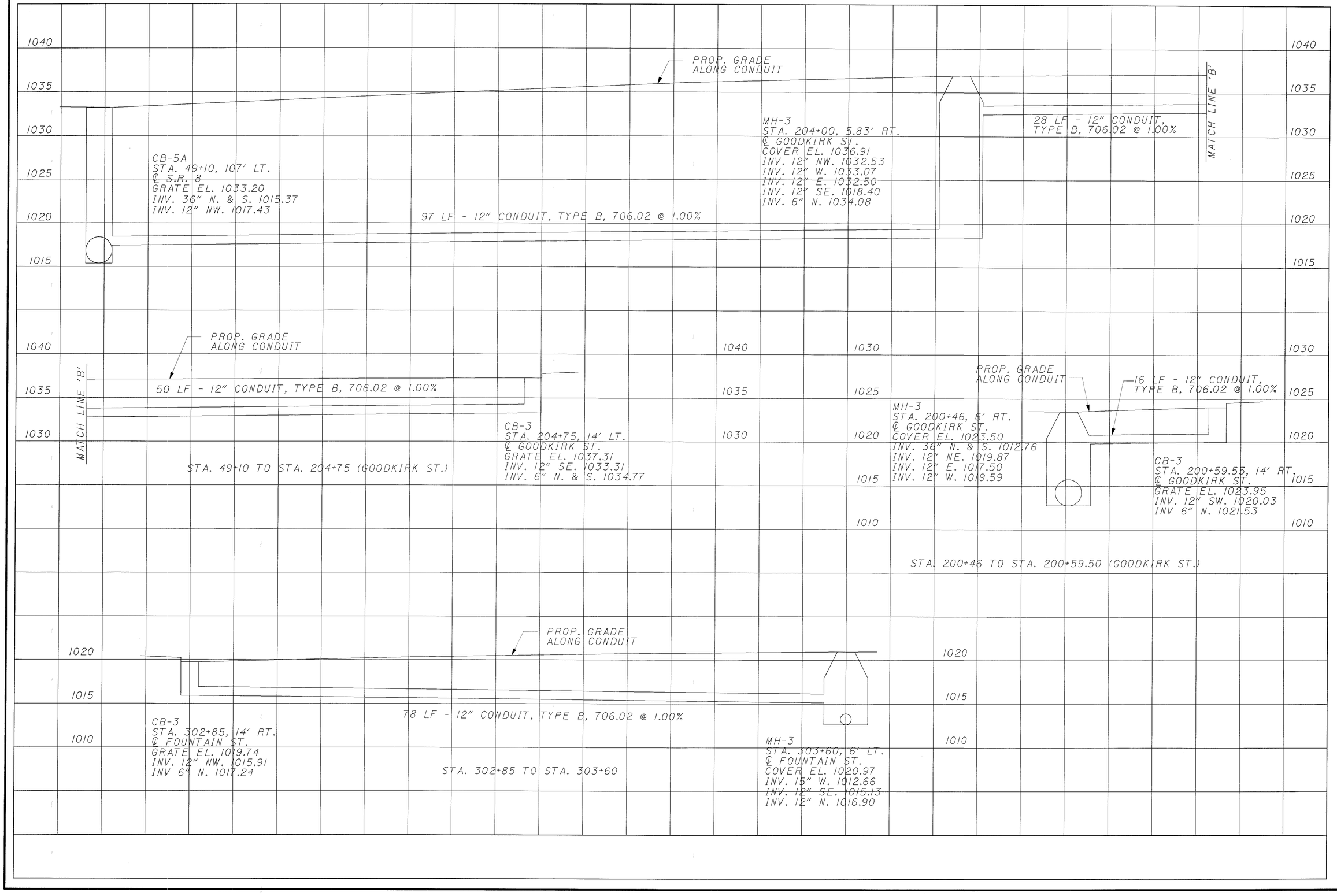

CALCULATED

CHECKED

PIPE PROFILES

SUM-8-0.63

583
1088

CALCULATED | CHECKED

PIPE PROFILES

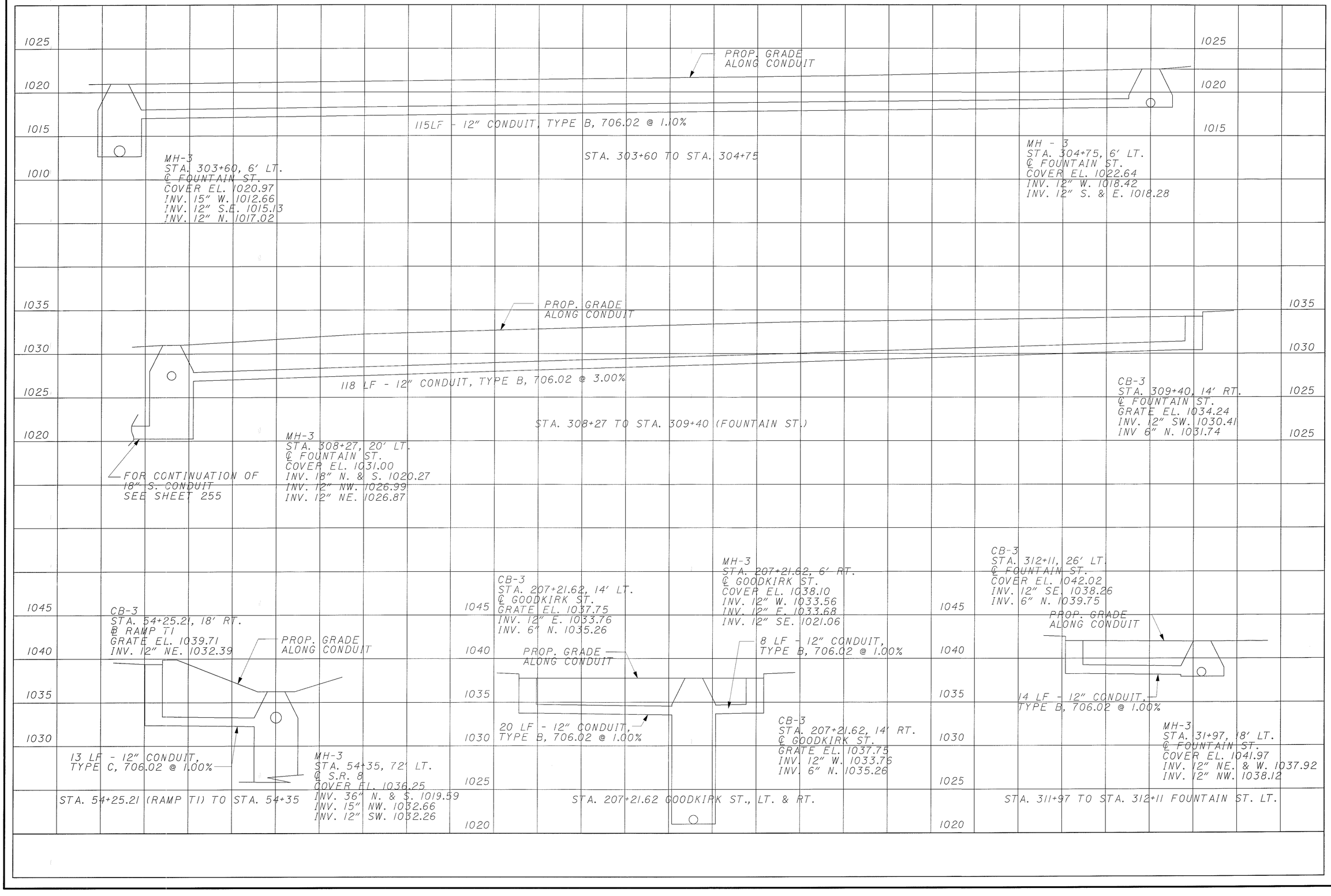

SUM-8-0.63

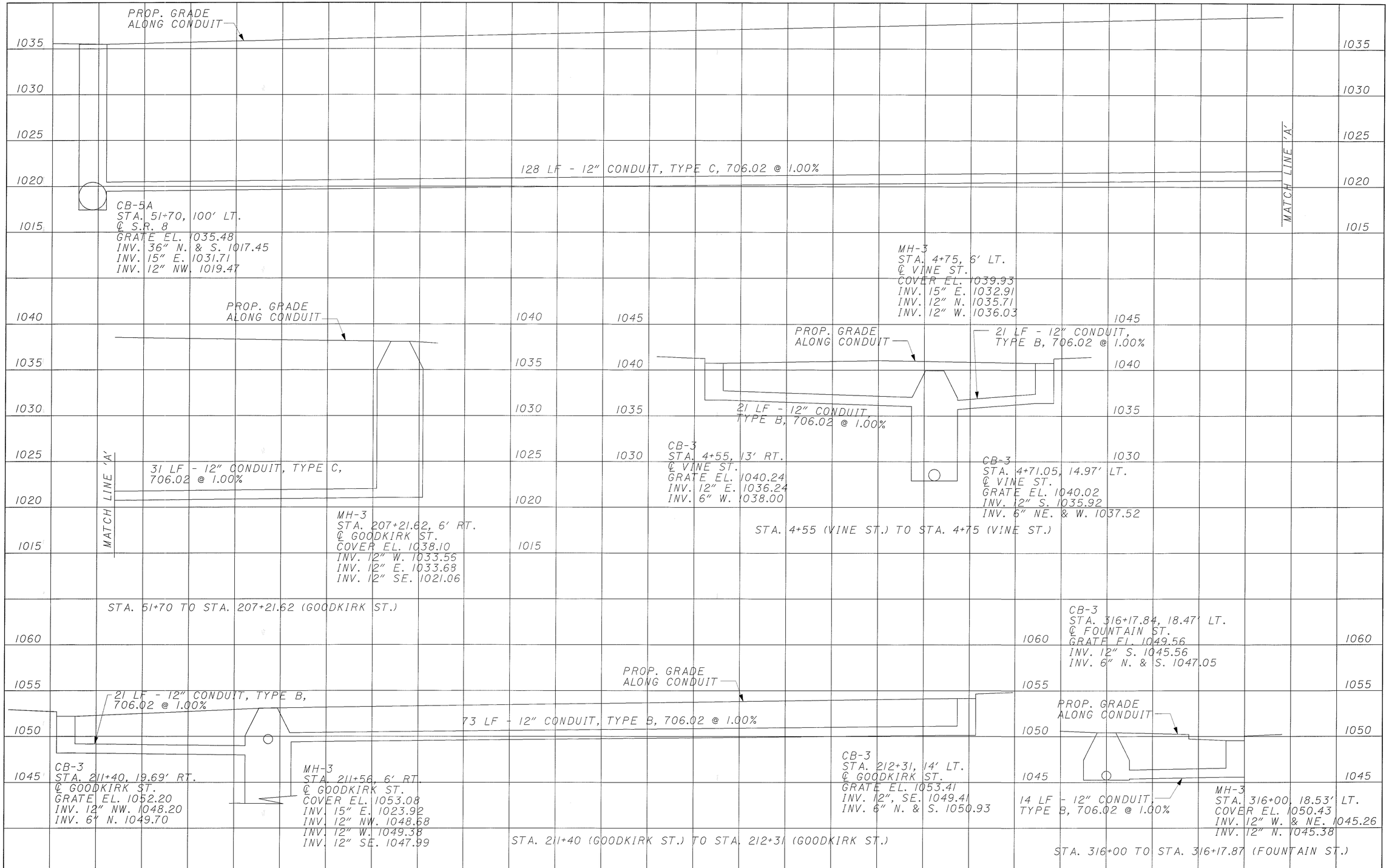

CALCULATED

CHECKED

PIPE PROFILES

SUM-8-0.63

585
1088

CALCULATED

CHECKED

PIPE PROFILES

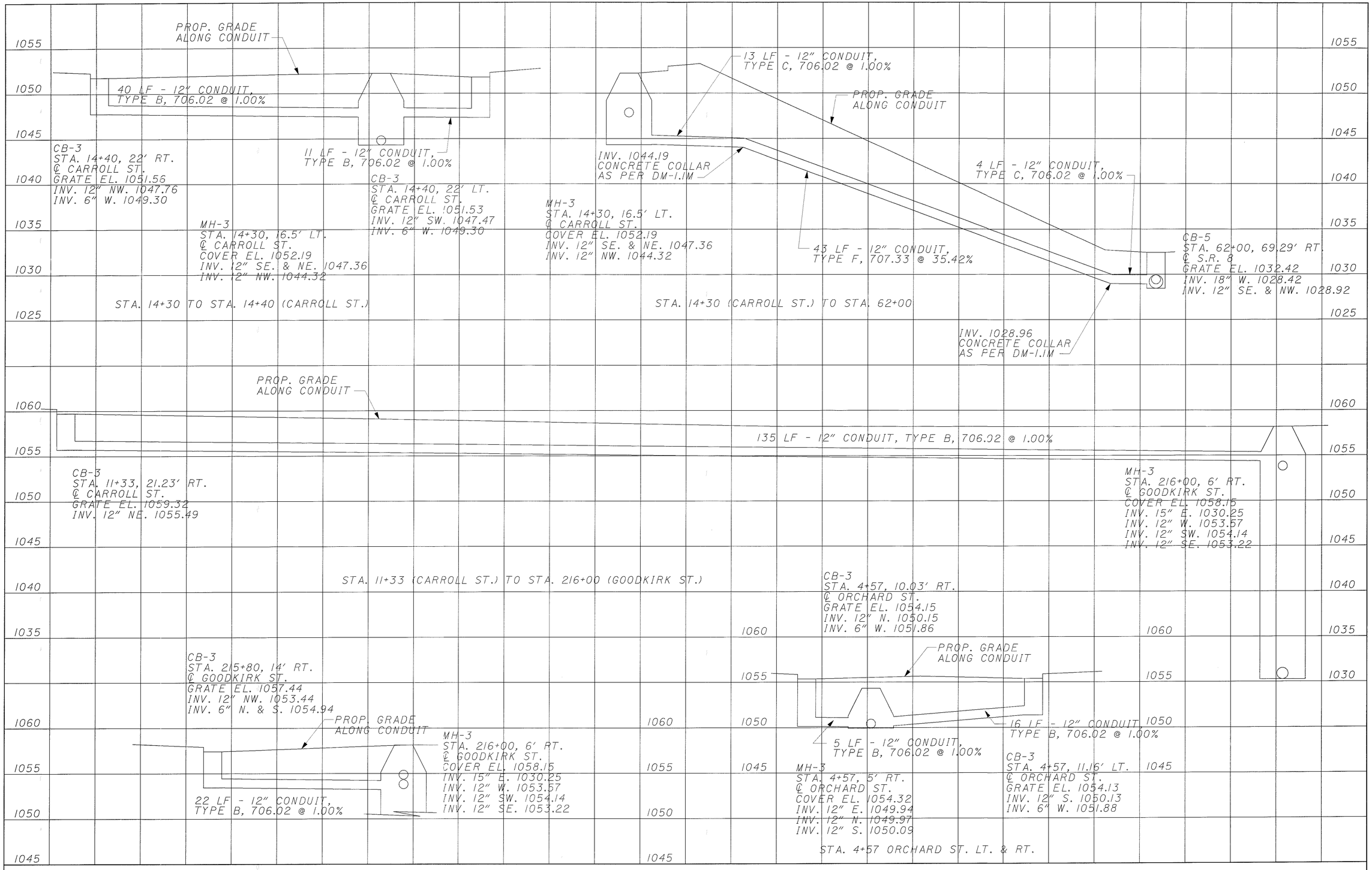

SUM-8-0.63

9 LF - 12" CONDUIT, TYPE B, 706.02 @ 1.00%

39 LF - 12" CONDUIT, TYPE B, 706.02 @ 1.00%

CB-3
STA. 15+55, 22' RT.
℄ BUCHTEL AVE.
GRATE EL. 1059.20
INV. 12" N. 1055.40
INV. 6" W. 1056.89

MH-3
STA. 15+48, 16.5' LT.
℄ BUCHTEL AVE.
GRATE EL. 1059.62
INV. 12" SE. & E. 1055.01
INV. 12" NW. 1052.40

CB-3
STA. 15+55, 22' LT.
℄ BUCHTEL AVE.
GRATE EL. 1059.20
INV. 12" W. 1055.10
INV. 6" W. 1056.89

STA. 15+50 (BUCHTEL AVE.) TO STA. 15+55 (BUCHTEL AVE.)

19 LF - 12" CONDUIT, TYPE C, 706.02 @ 1.00%

PROP. GRADE ALONG CONDUIT

MH-3
STA. 15+48, 16.5' LT.
℄ BUCHTEL AVE.
GRATE EL. 1059.62
INV. 12" SE. & E. 1055.01
INV. 12" NW. 1052.40

INV. 1052.21
CONCRETE COLLAR
AS PER DM-1.1M

42 LF - 12" CONDUIT
TYPE F, 707.33 @ 35.48%

6 LF - 12" CONDUIT, TYPE C, 706.02 @ 1.00%

INV. 1037.31
CONCRETE COLLAR
AS PER DM-1.1M

CB-5
STA. 66+70, 72' RT.
℄ S.R. 8
GRATE EL. 1039.89
INV. 15" W. 1037.00
INV. 12" SE. 1037.25

STA. 15+48 (BUCHTEL AVE.) TO STA. 66+70

PROP. GRADE ALONG CONDUIT

23 LF - 12" CONDUIT, TYPE B, 706.02 @ 1.00%

30 LF - 12" CONDUIT, TYPE B, 706.02 @ 1.00%

CB-3
STA. 12+15, 20.70' RT.
℄ BUCHTEL AVE.
GRATE EL. 1066.83
INV. 12" NE. 1063.00

MH-3
STA. 12+30, 3.77' RT.
℄ BUCHTEL AVE.
COVER EL. 1066.78
INV. 12" SW. 1062.77
INV. 12" NE. 1062.01
EX. INV. 24" E. & W. 1057.33±

CB-3
STA. 12+40, 24.76' LT.
℄ BUCHTEL AVE.
GRATE EL. 1066.14
INV. 12" SW. 1062.31

STA. 12+15 TO STA. 12+40

PROP. GRADE ALONG CONDUIT

67 LF - 12" CONDUIT, TYPE B, 706.02 @ 1.00%

CB-3
STA. 218+75, 14' LT.
℄ GOODKIRK ST.
GRATE EL. 1062.96
INV. 12" N. 1058.96
INV. 6" N. 1060.46

MH-3
STA. 219+42, 12.27' LT.
℄ GOODKIRK ST.
COVER EL. 1064.23
INV. 21" E. 1053.00
INV. 12" S. 1058.29
EX. INV. 21" N. 1053.58±

STA. 218+75 TO STA. 219+42 (GOODKIRK ST.)

109 LF - 12" CONDUIT, TYPE B, 706.02 @ 1.00%

CB-3
STA. 223+70, 31.34' RT.
℄ GOODKIRK ST.
GRATE EL. 1052.63
INV. 12" NW. 1047.17
INV. 6" S. 1049.83

STA. 223+70 TO STA. 224+75 (GOODKIRK ST.)

MH-3
STA. 224+75,
℄ GOODKIRK ST.
COVER EL. 1050.04
INV. 12" N. 1037.18
INV. 12" W. 1045.62
INV. 12" SE. 1046.08
INV. 12" NE. 1042.42

CALCULATED | CHECKED

PIPE PROFILES

SUM-8-0.63

587
1088

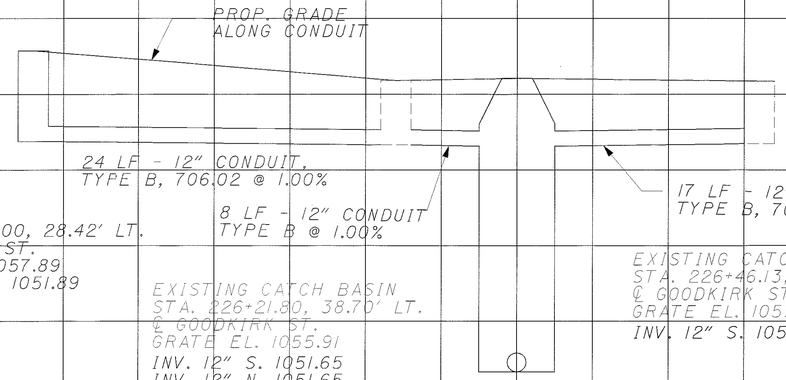

24 LF - 12" CONDUIT,
TYPE B, 706.02 @ 1.00%

CB-2-3
STA. 226+00.00, 28.42' LT.
℄ GOODKIRK ST.
GRATE EL. 1057.89
INV. 12" N.W. 1051.89

8 LF - 12" CONDUIT
TYPE B @ 1.00%

EXISTING CATCH BASIN
STA. 226+21.80, 38.70' LT.
℄ GOODKIRK ST.
GRATE EL. 1055.91
INV. 12" S. 1051.65
INV. 12" N. 1051.65

17 LF - 12" CONDUIT,
TYPE B, 706.02 @ 1.00%

EXISTING CATCH BASIN
STA. 226+46.13, 43.30' LT.
℄ GOODKIRK ST.
GRATE EL. 1055.85
INV. 12" S. 1051.73

MH-3
STA. 226+30, 38.50' LT.
℄ GOODKIRK ST.
COVER EL. 1056.05
INV. 15" SE. 1036.64
INV. 12" S. 1051.57
INV. 12" N. 1051.57
EXISTING INV. 12' W. 1051.01±

STA. 226+00 TO STA. 226+46 (GOODKIRK ST.)

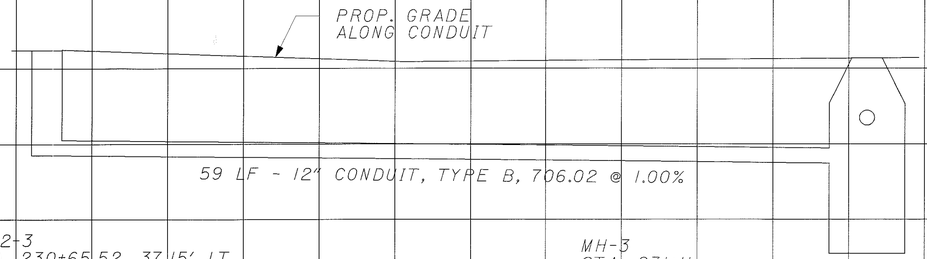

59 LF - 12" CONDUIT, TYPE B, 706.02 @ 1.00%

CB-2-3
STA. 230+65.52, 37.15' LT.
℄ GOODKIRK ST.
GRATE EL. 1046.25
INV. 12" NE. 1039.28
INV. 6" E. 1044.75

MH-3
STA. 231+11,
℄ GOODKIRK ST.
COVER EL. 1045.67
INV. 21" N. & S. 1032.75
INV. 12" E. & W. 1041.24
INV. 12" SW. 1038.69

STA. 230+60 TO STA. 231+11 (GOODKIRK ST.)

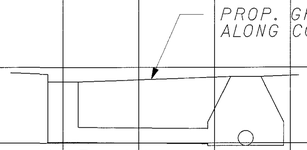

12 LF - 12" CONDUIT,
TYPE B, 706.02 @ 1.00%

CB-3
STA. 325+51.55, 14' LT.
℄ FOUNTAIN ST.
GRATE EL. 1044.05
INV. 12" NE. 1040.05
INV. 6" N. & S. 1041.55

MH-3
STA. 325+61, 6' LT.
℄ FOUNTAIN ST.
COVER EL. 1044.39
INV. 12" SE. & NW. 1039.83
INV. 12" SW. 1039.93

STA. 325+51.55 TO STA. 325+61 FOUNTAIN ST.

CALCULATED | CHECKED

PIPE PROFILES

SUM-8-0.63

588
1088

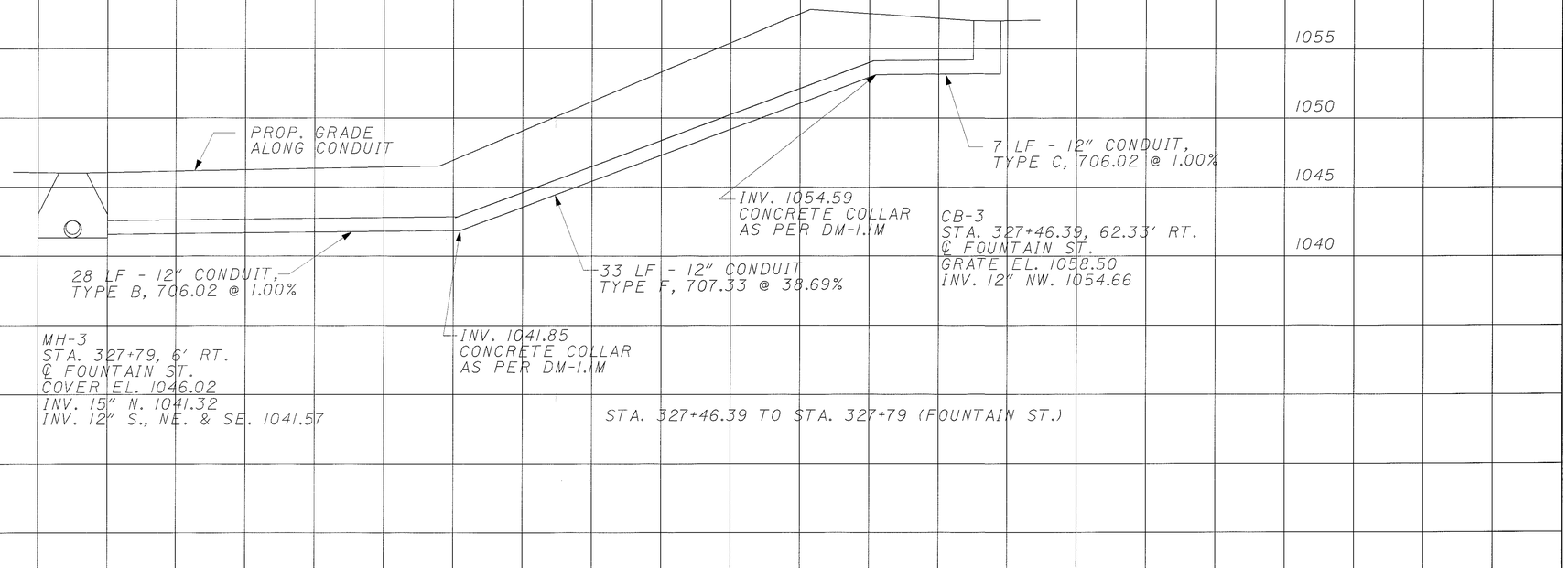

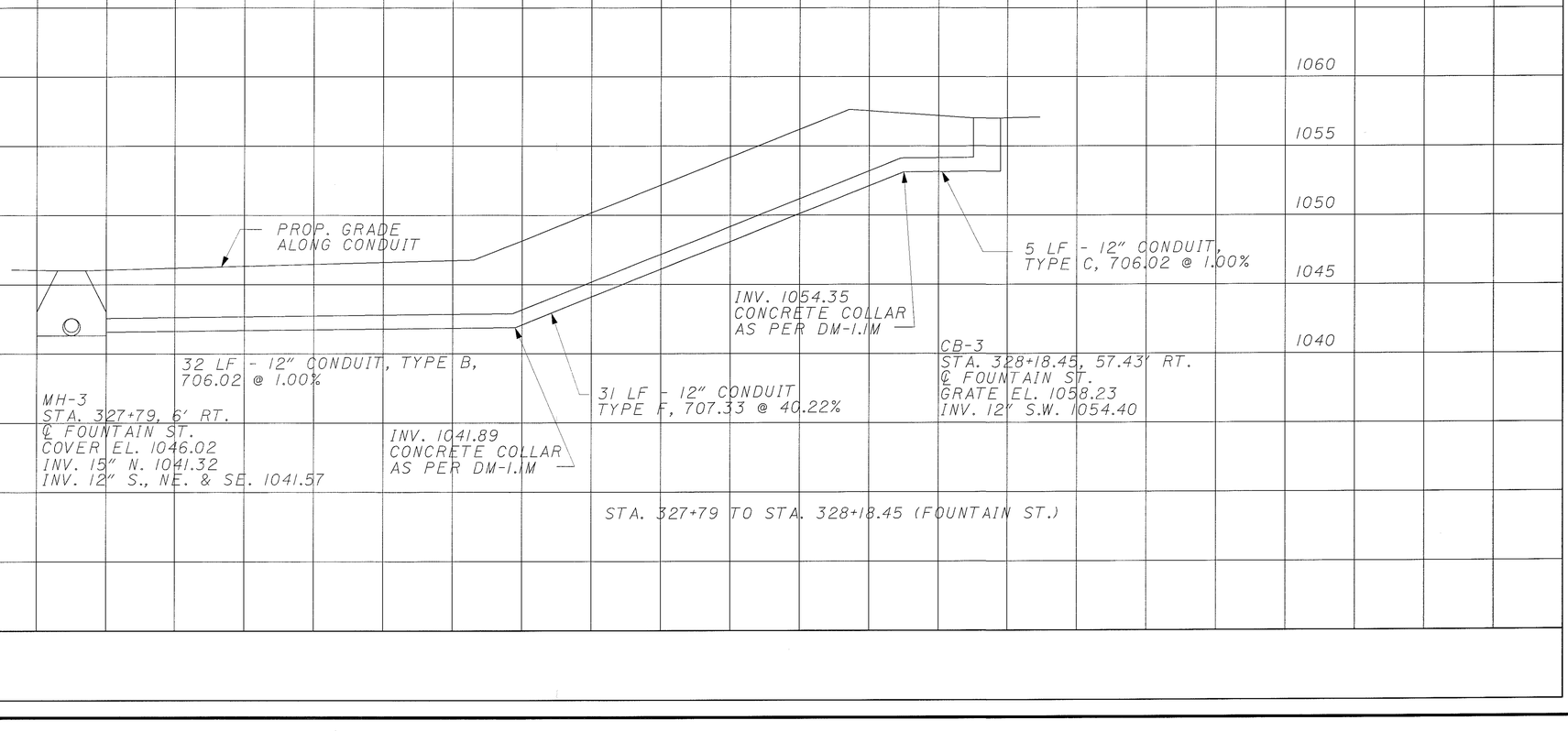

CALCULATED

CHECKED

PIPE PROFILES

SUM-8-0.63

589
1088

PIPE PROFILES

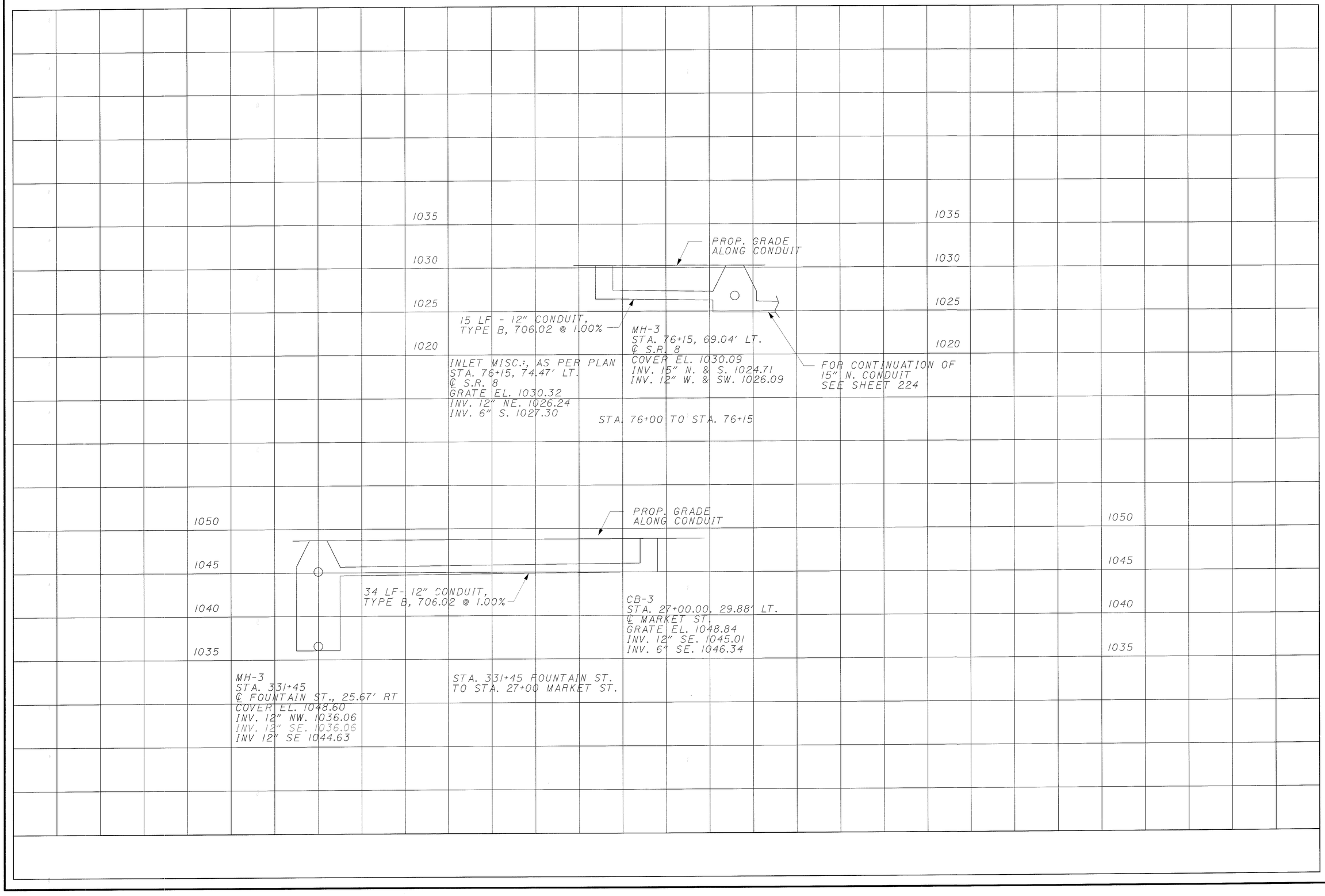

SUM-8-0.63

CALCULATED | CHECKED

PIPE PROFILES

CB-3
STA. 231+94, 14' RT.
℄ GOODKIRK ST.
GRATE EL. 1045.74
INV. 12" NW. 1041.74
INV. 6" N. 1043.15

PROP. GRADE ALONG CONDUIT

21 LF - 12" CONDUIT, TYPE B, 706.02 @ 1.00%

MH-3
STA. 232+10.
℄ GOODKIRK ST.
COVER EL. 1046.41
INV 21" S. & NW. 1032.06
INV. 12" SE. 1041.53

38 LF - 21" CONDUIT, TYPE B, 706.02 @ 0.70% D-1500

STA. 231+94 TO STA. 232+58

MH ADJUSTED TO GRADE
COVER EL. 1046.40
EXIST MH.
STA. 232+38.72, 24.98' LT.
RIM 1046.21
INV. 45" W. 1030.11
INV. 21" SE. 1031.80
INV. 12" SE. 1042.00 (TO BE REMOVED)

66 LF - 12" CONDUIT, TYPE B, 706.02 @ 2.00%

120" DIA PRECAST MANHOLE - TYPE I
STA. 232+65.66, 39.66' LT. ℄ GOODKIRK ST
COVER EL. 1046.57
INV. 54" NW 1016.11±
INV. 54" SE 1016.15
INV. 42" NE. 1017.97
INV. 12" NE. 1040.80

CB-3
STA. 233+04, 14.16' RT.
℄ GOODKIRK ST.
GRATE EL. 1046.12
INV. 12" SW 1042.12
INV. 6" S. 1043.35

FOR CONTINUATION OF 15" CONDUIT SEE SHEET 250

PROP. GRADE ALONG CONDUIT

28 LF - 12" CONDUIT, TYPE B, 706.02 @ 1.00%

MH-3
STA. 241+25, 6' RT.
℄ GOODKIRK ST.
COVER EL. 1040.45
INV 15" S 1035.71
INV. 12" NE. 1035.96
INV. 12" NW. 1036.42
INV. 12" SW. 1036.30

CB-3
STA. 241+50, 14' RT.
℄ GOODKIRK ST.
GRATE EL. 1040.07
INV. 12" SW. 1036.24
INV. 6" N. 1037.57

STA. 241+25 TO STA. 241+50

PROP. GRADE ALONG CONDUIT

14 LF - 12" CONDUIT, TYPE B, 706.02 @ 1.00%

CB-3
STA. 238+50, 14' RT.
℄ GOODKIRK ST.
GRATE EL. 1044.67
INV. 12" SW 1040.84

MH-3
STA. 238+38, 6' RT.
℄ GOODKIRK ST.
COVER EL. 1045.22
INV. 15" N. 1032.85
INV. 15" E. 1024.31
INV. 12" NE. 1040.70

CB-3
STA. 4+68.56 36.27' LT.
℄ PARKWOOD CT.
GRATE EL. 1039.92
INV. 12" SE. 1036.76
INV. 6" N. 1037.43

PROP. GRADE ALONG CONDUIT

45 LF - 12" CONDUIT, TYPE B, 706.02 @ 1.00%

34 LF - 12" CONDUIT, TYPE B, 706.02 @ 1.00%

CB-3
STA. 4+78.53, 9.31' RT.
℄ PARKWOOD CT.
GRATE EL. 1039.91
INV. 12" NE. 1036.75
INV. 6" SE. 1037.43

MH-3
STA. 241+25, 6' RT.
℄ GOODKIRK ST.
COVER EL. 1040.45
INV 15" S 1035.71
INV. 12" NE. 1035.96
INV. 12" NW. 1036.42
INV. 12" SW. 1036.30

STA. 238+38 TO STA. 238+50

STA. 4+69 TO STA. 4+79
PARKWOOD

SUM-8-0.63

CALCULATED | CHECKED

PIPE PROFILES

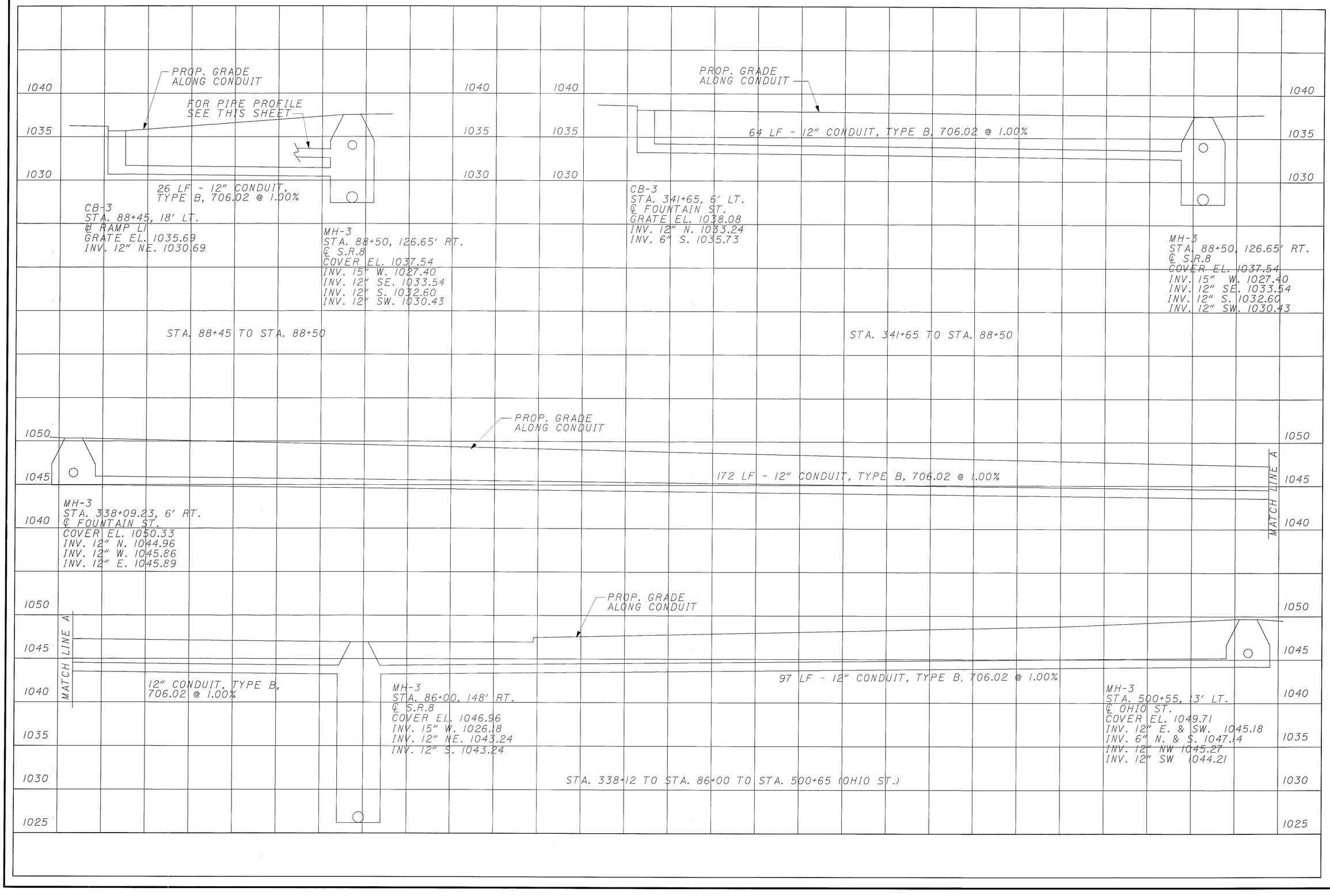

SUM-8-0.63

CALCULATED

CHECKED

PIPE PROFILES

1035
1030
1025
1020

PROP. GRADE ALONG CONDUIT

76 LF - 15" CONDUIT, TYPE B, 706.02 @ 0.50%

15 LF - 18" CONDUIT, TYPE C @ 0.60%

MATCH LINE 'A'

INLET MISC.:, AS PER PLAN
STA. 85+30, 96.17' RT. ℄ S.R. 8
GRATE EL. 1028.54
INV. 15" NW. 1024.95
INV. 6" E. 1027.49

CB-5
STA. 86+00, 65' RT. ℄ S.R. 8
GRATE EL. 1028.20
INV. 24" W. 1023.82
INV. 18" N. 1025.10
INV. 15" SE. 1024.57
INV. 15" E. 1025.35

STA. 85+30 TO STA. 86+00

1035
1030
1025
1020

MATCH LINE 'A'

PROP. GRADE ALONG CONDUIT

90 LF - 18" CONDUIT, TYPE C, 706.02 @ 0.60%

20 LF - 18" CONDUIT, TYPE C, 706.02 @ 0.60%

MATCH LINE 'B'

MH-3
STA. 87+05, 67.73' RT.
COVER EL. 1029.14
INV. 18" N. & S. 1025.73
INV. 15" E. 1025.98

1035
1030
1025
1020

MATCH LINE 'B'

PROP. GRADE ALONG CONDUIT

125 LF - 18" CONDUIT, TYPE C, 706.02 @ 0.60%

CB-5
STA. 88+50, 71.53' RT. ℄ S.R. 8
GRATE EL. 1029.65
INV. 18" S. 1026.60
INV. 15" E. 1026.85
INV. 6" W. 1027.24

STA. 86+00 TO STA. 88+50

SUM-8-0.63

593
1088

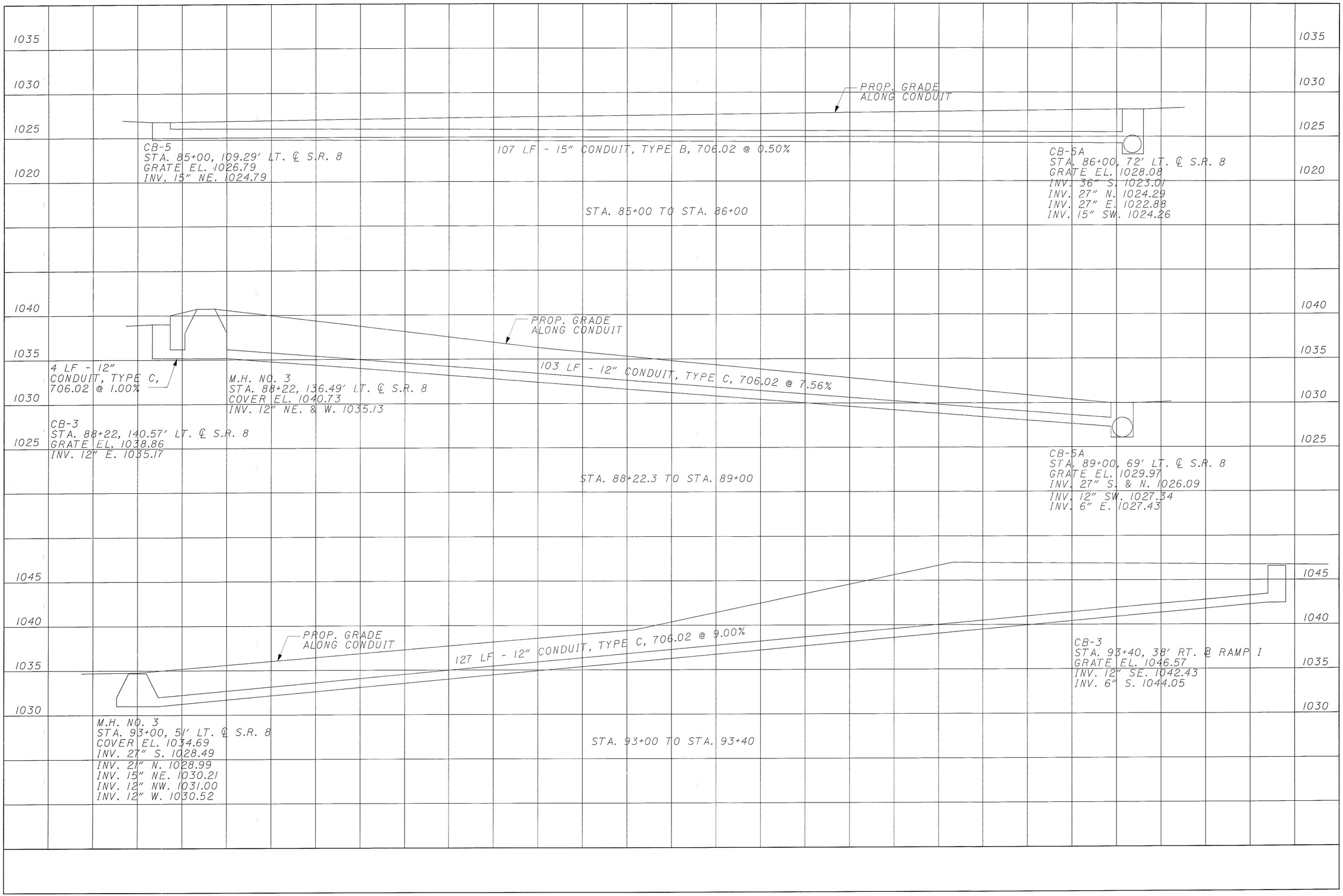

CALCULATED

CHECKED

PIPE PROFILES

SUM-8-0.63

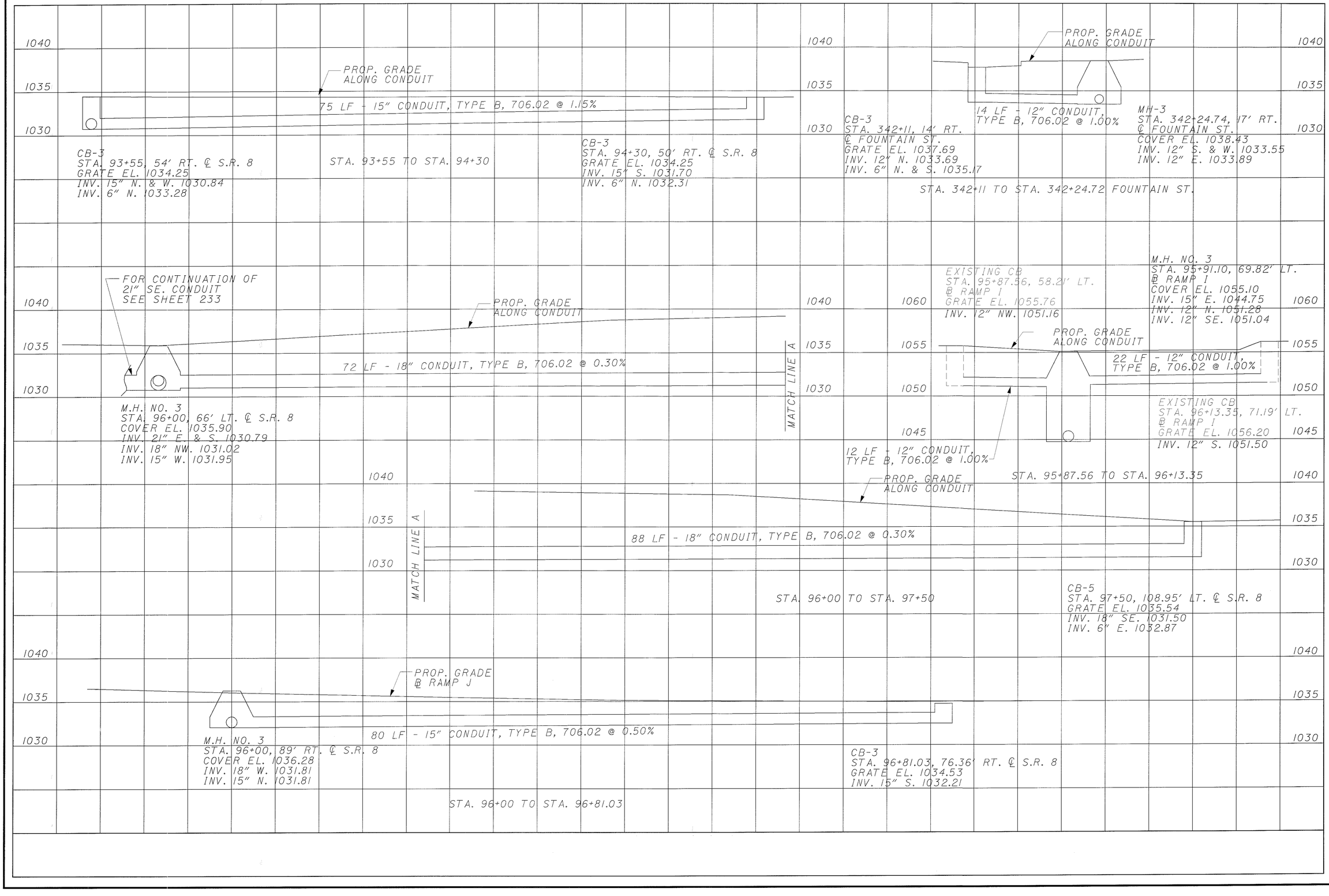

CALCULATED

CHECKED

PIPE PROFILES

SUM-8-0.63

595
1088

CALCULATED JDS
CHECKED EDS

EXIST MANHOLE
STA. 96+02±, 66' LT.
℄ RAMP 1
COVER 1056.01
INV. 12" N 1050.28
INV. 12" S 1050.29
INV. 12" E 1047.15
INV. 12" W 1049.08
INV. 8" N 1048.21 (PROPOSED)

EXIST. GRADE = PROPOSED GRADE

EXIST. MANHOLE
STA.99+03±, 52' LT.
℄ RAMP 1
COVER 1047.84
INV. 8" W 1039.14
INV. 8" S 1039.95 (PROPOSED)

292 L.F.-8" CONDUIT, TYPE B, 706.08 @ 2.83%

1055 1050 1045 1040

STA. 96+02± TO STA. 99+03±
SANITARY SEWER PROFILE - UNION PL. / ARCH ST.

STD SAN MH
(AKRON MH-2)
STA. 230+89', 61' LT.
COVER EL. 1048.66
INV. 8" W 1042.13±
INV. 8" E 1041.99

STD SAN DROP MH
(AKRON MH-9)
STA. 230+91, 23.6' LT.
COVER EL. 1046.10
INV. 8" SE 1036.75
INV. 8" NW 1036.72
INV. 8" W 1037.13 DROP

EX. 8"

37 L.F.-8" CONDUIT,
TYPE B, 706.08 @ 0.70%

1045 1040 1035 1030

60 40 20 0 20
STA. 230+88± TO STA 230+91± ℄ GOODKIRK
SANITARY SEWER PROFILE - VALINDA PL. / GOODKIRK ST.

STD SAN MH (AKRON MH-2)
STA. 330+99.2, 1.1' LT.
COVER EL. 1048.72
INV. 30" SE 1032.94±
INV. 30" NE 1032.82

STD SAN MH
(AKRON MH-2)
STA. 331+43.4, 12.2' RT.
COVER EL. 1048.62
INV. 30" SW 1032.36
INV. 30" NW 1032.25

16"W 16"W

46 L.F. 30" CONDUIT,
TYPE B, 706.03 @ 1.0%

1050 1045 1040 1035 1030 1025 1020 1015

60 40 20 0 20 40
STA. 330+99± TO STA 331+43±
SANITARY SEWER PROFILE - MARKET ST. / FOUNTAIN ST.

STD SAN MH
(AKRON MH-2)
STA. 331+43.4, 12.2' RT.
COVER EL. 1048.62
INV. 30" SW 1032.36
INV. 30" NW 1032.25

STD SAN DROP MH
(AKRON MH-9)
STA. 331+53.0, 15.0' LT.
COVER EL. 1048.48
INV. 30" S 1031.96
INV. 33" W 1018.39
INV. 15" 1019.98 DROP

EXIST. MH (TO BE REMOVED)
STA. 331+62.8, 41.0' LT.
COVER EL. 1048.04
INV. 30" S 1031.29
INV. 33" W 1018.14
INV. 12" E 1034.53
INV. 12" NE 1019.04
INV. 12" SE 1019.24
INV. 8" W 1025.24
INV. 6" NW 1037.00

29 L.F. 30" CONDUIT,
TYPE B, 706.03 @ 1.0%

PROP. BRIDGE ABUTMENT WALL

TYPICAL PIPE CONNECTION DETAIL
(SEE SHEET SD2)
STA. 331+62.64, 46.62' LT.
INV. 33" 1018.13±

33 L.F. 33" CONDUIT,
TYPE B, 706.03 @ 0.8%

1050 1045 1040 1035 1030 1025 1020 1015

20 0 20 40 60 80
STA. 331+43± TO STA 331+63±
SANITARY SEWER PROFILE - MARKET ST. / FOUNTAIN ST.

PIPE PROFILES

SUM-8-0.63

596
1088

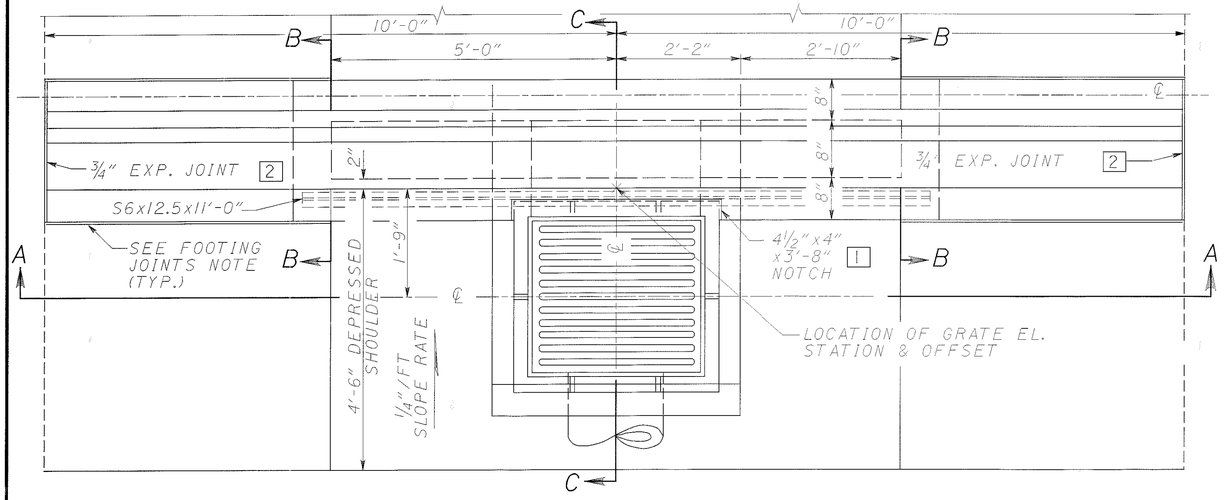

PLAN VIEW

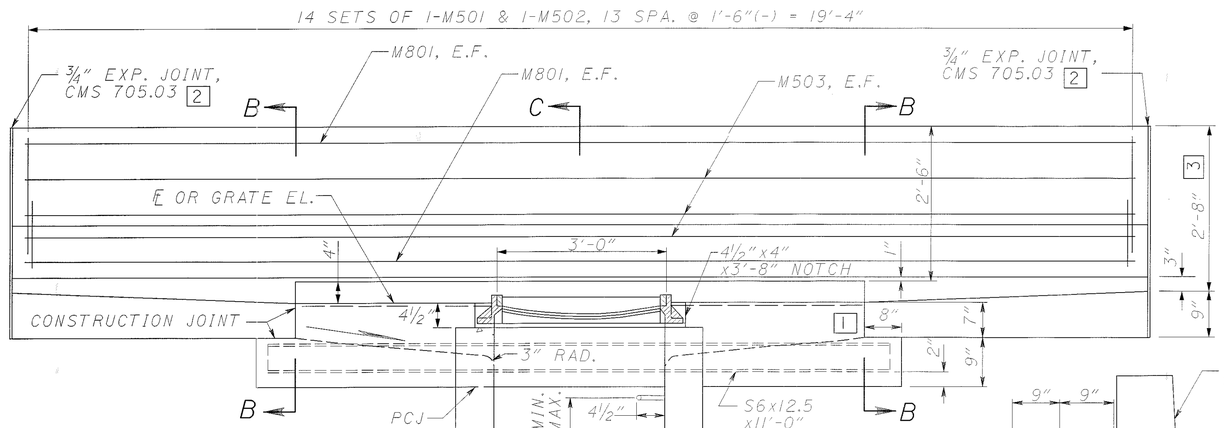

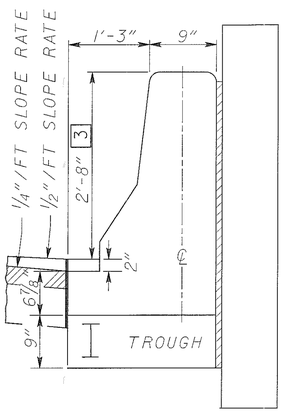

SECTION B-B

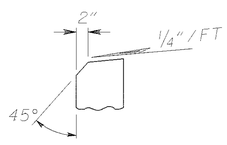

ALTERNATE SPILLWAY SHAPE

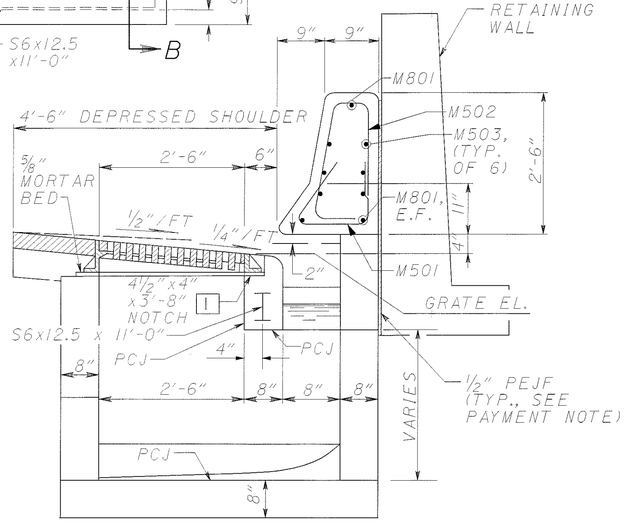

SECTION C-C

NOTES

GENERAL: FOR DETAILS OF CONCRETE BARRIERS, SEE SCD RM-4.3. MINIMUM MASS OF FRAME AND COVER SHALL BE 540 LB.

WALLS: THE WALLS BETWEEN THE BOTTOM SLAB AND THE UPPER PERMISSIBLE CONSTRUCTION JOINT MAY BE BUILT OF CAST-IN-PLACE CONCRETE, 8 IN. NOMINAL THICKNESS FOR DEPTHS OF 11.5 FT. OR LESS. FOR PRECAST THE WALLS SHALL HAVE A MINIMUM THICKNESS OF 6 IN. AND BE REINFORCED SUFFICIENTLY TO PERMIT SHIPPING AND HANDLING WITHOUT DAMAGE. THE UNIT ABOVE THE UPPER PERMISSIBLE CONSTRUCTION JOINT MAY BE PRECAST OR CAST-IN-PLACE.

CONCRETE: CAST-IN-PLACE CONCRETE IS TO BE CLASS C. ALL PRECAST CONCRETE SHALL MEET THE REQUIREMENTS OF CMS 706.13 WITH A MINIMUM OF 4% ENTRAINED AIR CONTENT IN THE HARDENED CONCRETE. REQUIRED MARKINGS SHALL INCLUDE THE INLET NUMBER. EXPOSED CONCRETE SURFACES OF THE BARRIER SHALL BE SEALED WITH AND APPROVED SEALER

REINFORCING STEEL: REINFORCING STEEL SHALL BE EPOXY COATED IN ACCORDANCE WITH CMS 509.10.

FOOTING JOINTS: THE VERTICAL WALLS BETWEEN THE BARRIER FOOTING AND A CONCRETE PAVEMENT OR CONCRETE BASE SHALL BE PROVIDED WITH A SEALED JOINT AS DETAILED ON SCD RM-4.3.

STEPS: STEPS SHALL BE ACCORDANCE WITH SCD MH-1.1.

OPENINGS: PIPE OPENINGS SHALL BE THE OUTSIDE DIAMETER OF THE PIPE BEING SUPPLIED PLUS 2 IN. WHEN FABRICATED OF FIELD CUT. THE INTERSTITIAL SPACE SHALL BE FILLED WITH GROUT PER CMS 601.

PAYMENT: ALL LABOR, EQUIPMENT AND MATERIALS INCLUDING ½IN. AND 2 IN. PEJF BETWEEN BARRIER INLET AND RETAINING WALL SHALL BE PAID FOR UNDER ITEM 604 - INLET, MISC.: BARRIER INLET, AS PER PLAN.

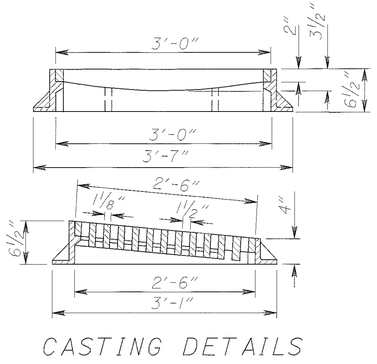

CASTING DETAILS

LEGEND

1 AFTER CASTING IS PLACED, FILL NOTCH WITH CLASS C CONCRETE

2 A 1½" MINIMUM EXP. JOINT SHALL BE PROVIDED IN CONCRETE PAVEMENT OR CONCRETE SHOULDERS.

3 BARRIER HEIGHT EQUALS 32".

PCJ = PERMISSIBLE CONSTRUCTION JOINT

REBAR BEND DIAGRAMS

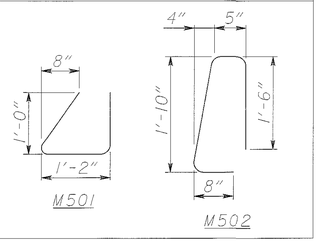

REINFORCING STEEL LIST *

MARK	NUMBER	LENGTH	WEIGHT
M501	14	3'-2"	46
M502	14	4'-1"	60
M503	6	19'-3"	122
M801	3	19'-3"	156
		TOTAL =	384

* NOTE: STEEL LIST INCLUDED FOR ESTIMATING PURPOSES ONLY. THE COST OF FURNISHING AND PLACING ALL REINFORCING STEEL SHALL BE INCLUDED WITH ITEM 604 FOR PAYMENT.

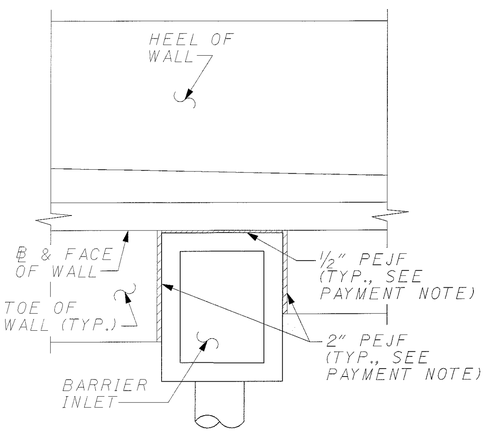

TYP. PLAN VIEW @ WALL FOOTING LEVEL

CALCULATED

CHECKED

DRAINAGE DETAILS

INLET, MISC.: BARRIER INLET, AS PER PLAN

SUM-8-0.63

597
1088

LEGEND

1. 1" RADIUS OR ¾" CHAMFER
2. PERMISSIBLE 10" RADIUS
3. PERMISSIBLE 2" RADIUS
4. No. 8 EPOXY COATED DEFORMED STEEL BARS, 12" LONG, SPACED 2' BETWEEN SUCCESSIVE BARS ON A STAGGERED PATTERN. DOWEL BARS SHALL BEGIN 4" FROM THE LEADING EDGE OF THE END TERMINAL. OMIT DOWELS WHEN THE TOP IS CONSTRUCTED INTEGRALLY WITH THE BASE.
5. EXPANSION JOINT, ¾" MIN. PREFORMED FILLER, CMS 705.03.

NOTES

TYPE B CONCRETE BARRIER SHALL BE CONSTRUCTED AS PER SCD RM-4.3M OR AS DETAILED IN THE PLANS.

FOR FURTHER DETAILS OF BARRIER TRANSITION, SEE SCD RM-4.4M.

FOR FURTHER DETAILS OF BARRIER INLET, SEE SCD I-2.2M.

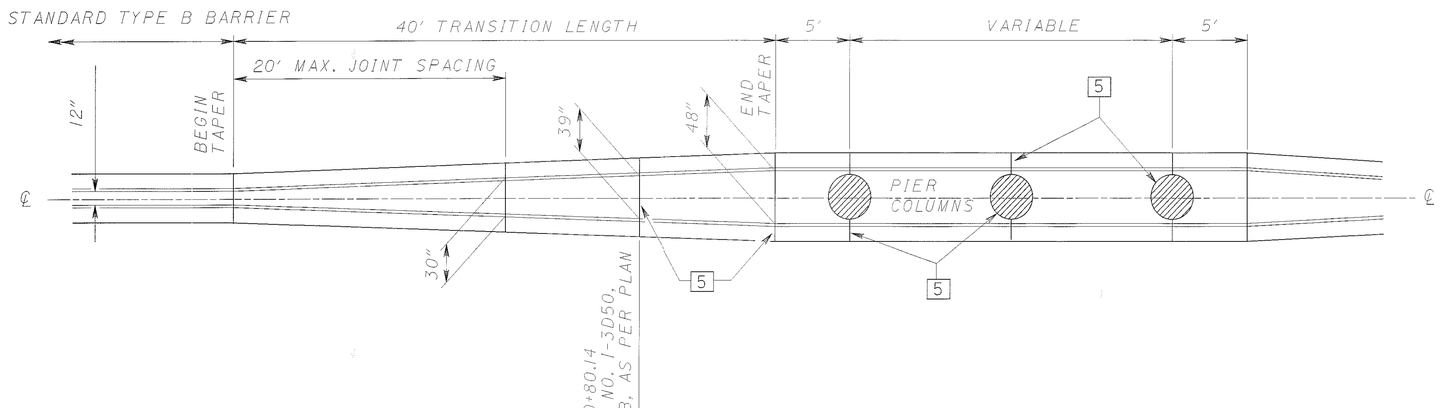

PLAN

BRIDGE PIER TRANSITION

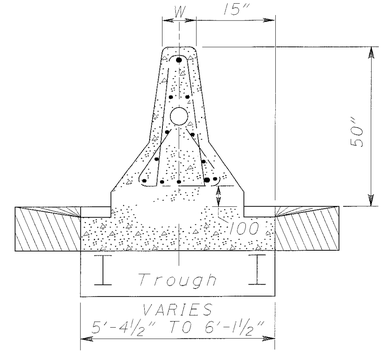

SECTION A-A AND B-B

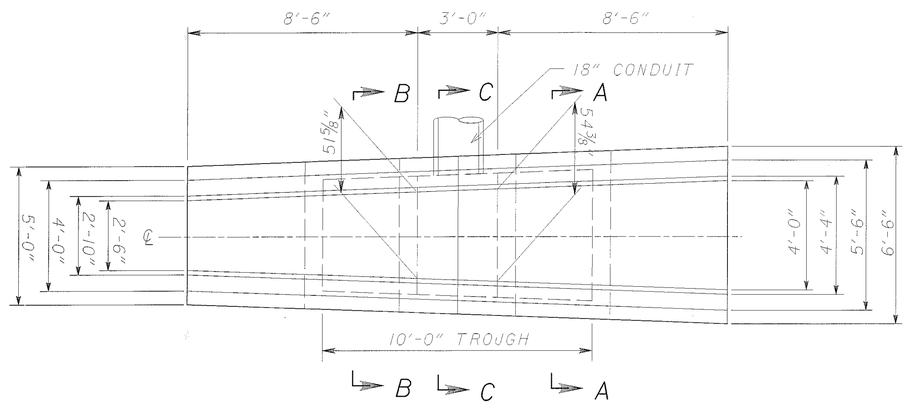

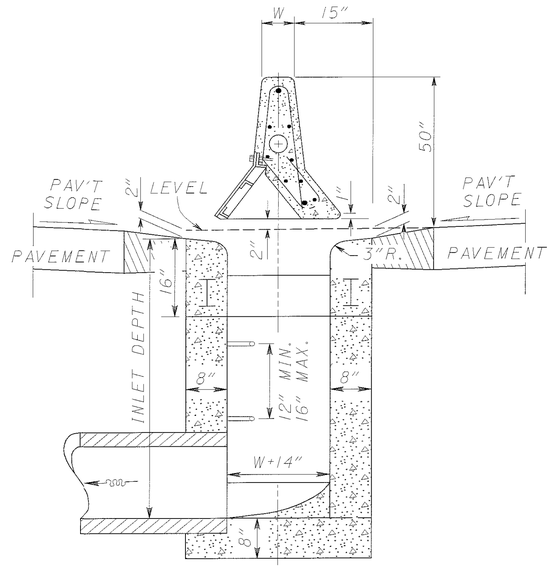

SECTION C-C

W - VARIES BETWEEN 37⅝" AND 40⅜"

CALCULATED
CHECKED

DRAINAGE DETAILS
INLET, NO. I-3D50, TYPE B, AS PER PLAN

SUM-8-0.63

598
1088

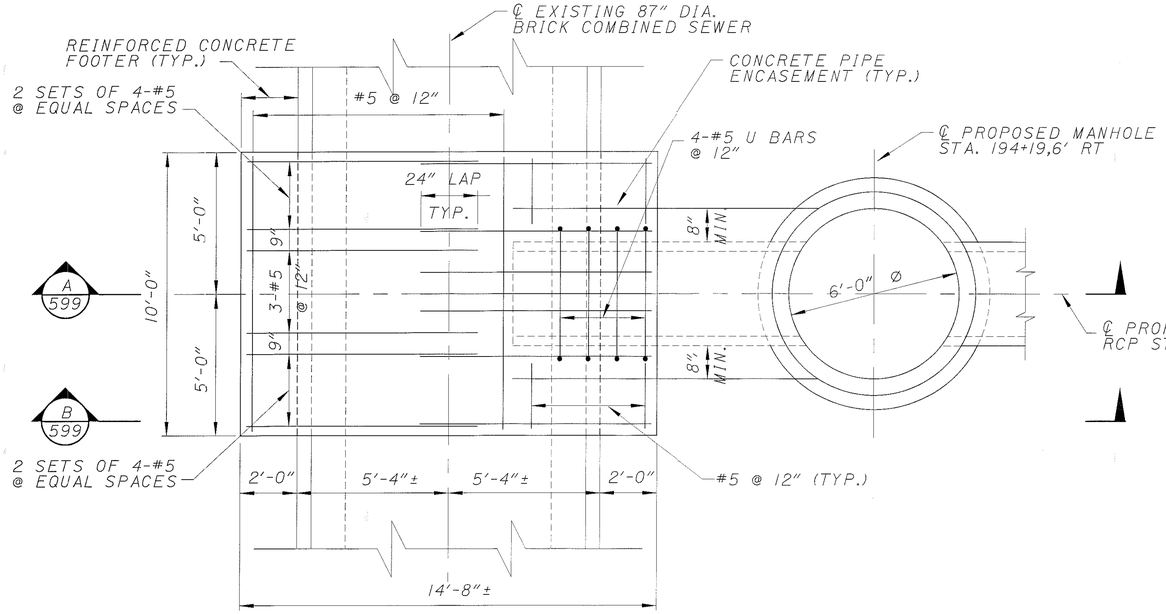

PLAN
3/8 " = 1'-0"

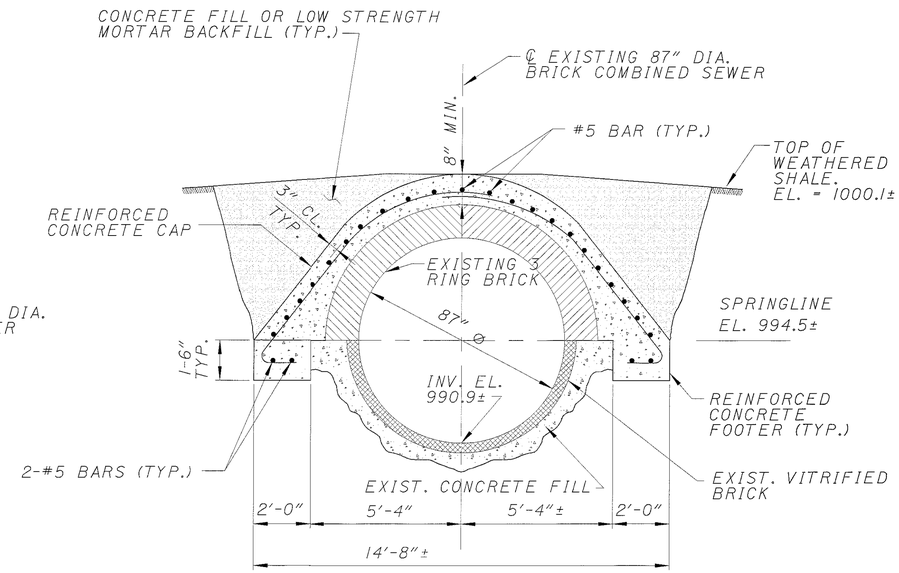

SECTION B / 599
3/8 " = 1'-0"

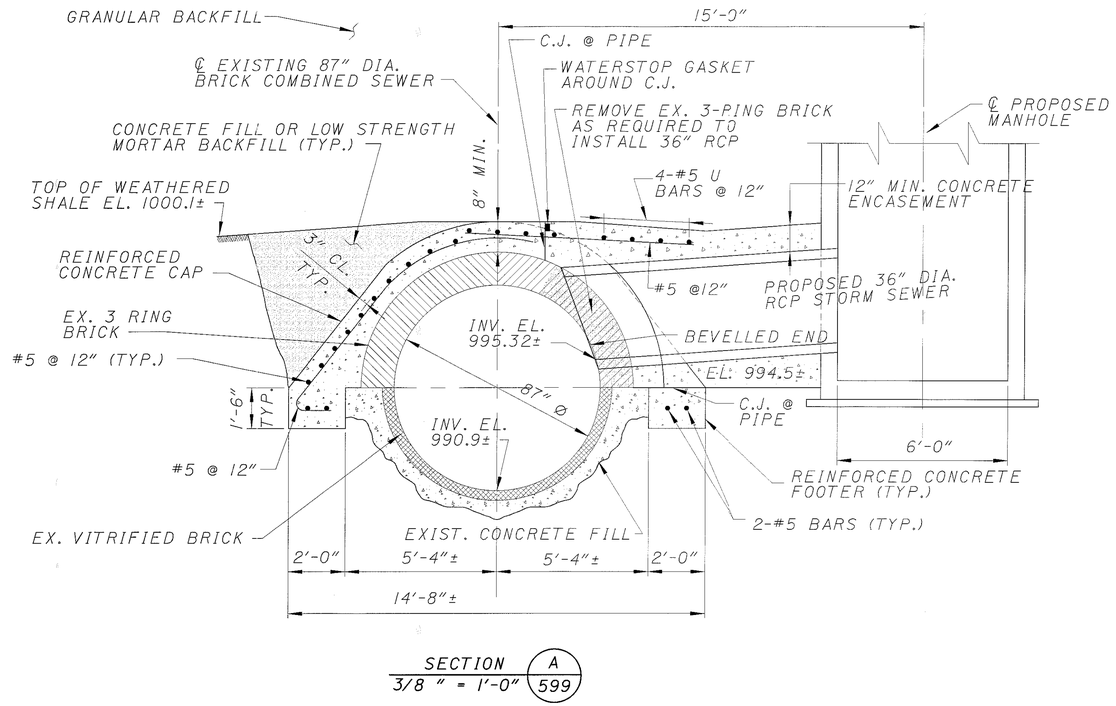

SECTION A / 599
3/8 " = 1'-0"

NOTES:

1. DESIGN DATA:

   STRUCTURAL CONCRETE: CLASS C, 4000 PSI 28 DAY COMPRESSIVE STRENGTH

   CONCRETE FILL: CLASS F, 3000 PSI 28 DAY COMPRESSIVE STRENGTH

   REINFORCING STEEL: ASTM A615, GRADE 60

   LOW STRENGTH MORTAR BACKFILL: COMPLY WITH THE REQUIREMENTS OF ODOT-CMS, ITEM 613

2. THE CONTRACTOR SHALL EXERCISE CAUTION WHEN EXCAVATING ADJACENT TO OR ON TOP OF THE EXISTING BRICK SEWER CONVEYS STORM AND SANITARY SEWAGE, AND WILL REMAIN ACTIVE DURING CONSTRUCTION.

3. THE TOP OF THE EXISTING BRICK SEWER IN CONTACT WITH THE PROPOSED CONCRETE CAP SHALL BE WATERBLASTED AND THOROUGHLY CLEANED PRIOR TO PLACING THE PROPOSED CONCRETE. THE CONTRACTOR SHALL NOT DAMAGE THE EXISTING SEWER DURING THE CLEANING OPERATION.

4. THE EXISTING BRICK SEWER REMOVAL SHALL NOT OCCUR UNTIL THE PROPOSED CONCRETE CAP IS CONSTRUCTED AND THE CONCRETE HAS ACHIEVED 3000 PSI COMPRESSIVE STRENGTH, DEBRIS FROM THE SEWER REMOVAL OPERATION SHALL BE REMOVED FROM THE EXISTING SEWER.

5. WATERSTOP GASKET SHALL BE VOLCLAY RX-101T AS MANUFACTURED BY AMERICAN COLLOID CO., OR APPROVED EQUAL.

SUGGESTED CONSTRUCTION SEQUENCE:

1. EXCAVATE AND EXPOSE EXISTING BRICK SEWER.
2. THOROUGHLY CLEAN SEWER IN CONTACT WITH PROPOSED CONCRETE CAP.
3. CONSTRUCT REINFORCED CONCRETE CAP WITH A FORMED OPENING FOR THE 36" RCP CONNECTION.
4. REMOVE EXISTING BRICK AT 36" RCP CONNECTION, AS REQUIRED.
5. INSTALL 36" RCP, WATERSTOP, AND CONSTRUCT PIPE ENCASEMENT, AS SHOWN.
6. PLACE BACKFILL, AS SHOWN.

CALCULATED | CHECKED

MISCELLANEOUS DETAILS
87-INCH DIA. BRICK SEWER JUNCTION DETAIL

SUM-8-0.63

599
1088

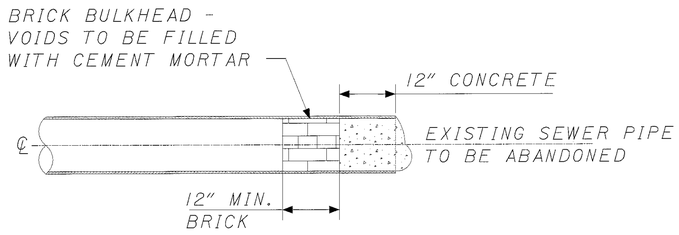

ABANDONED PIPE BULKHEAD DETAIL
NOT TO SCALE

CALCULATED

CHECKED

MISCELLANEOUS DRAINAGE DETAILS

SUM-8-0.63

600
1088

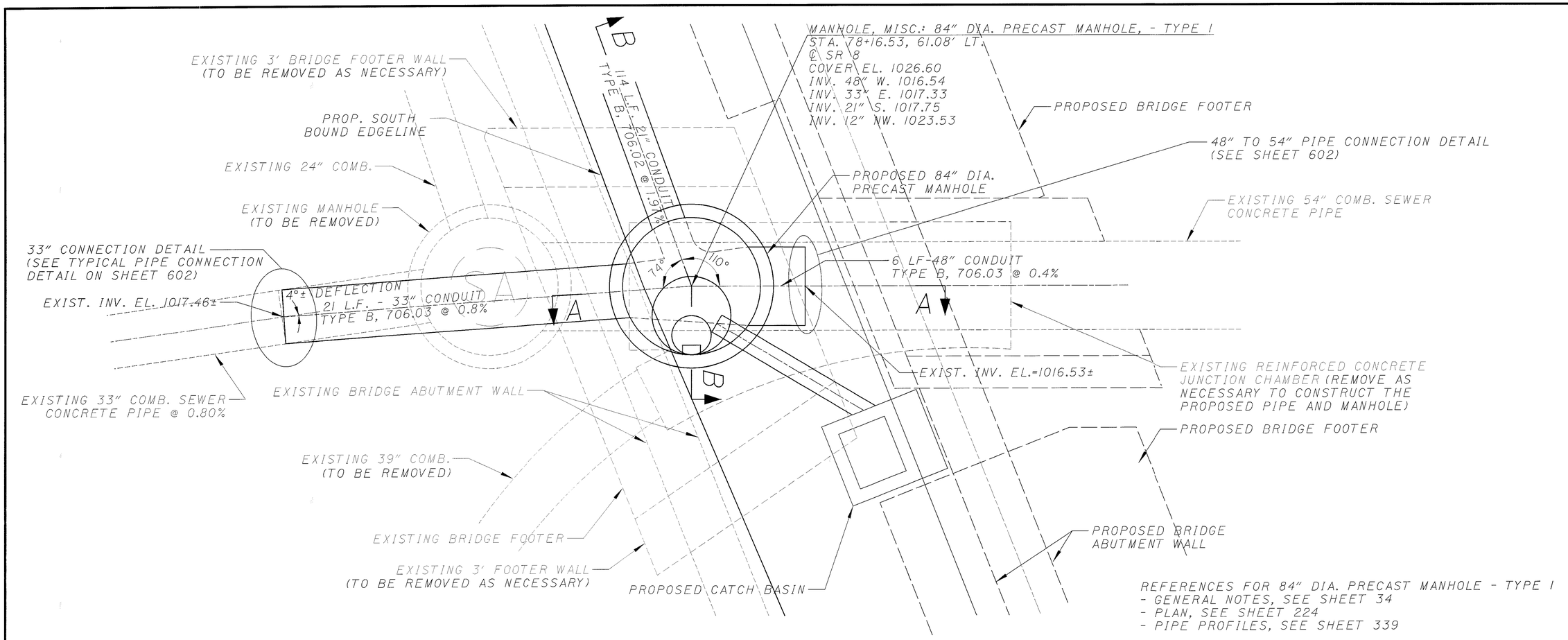

PLAN

REFERENCES FOR 84" DIA. PRECAST MANHOLE - TYPE I
- GENERAL NOTES, SEE SHEET 34
- PLAN, SEE SHEET 224
- PIPE PROFILES, SEE SHEET 339

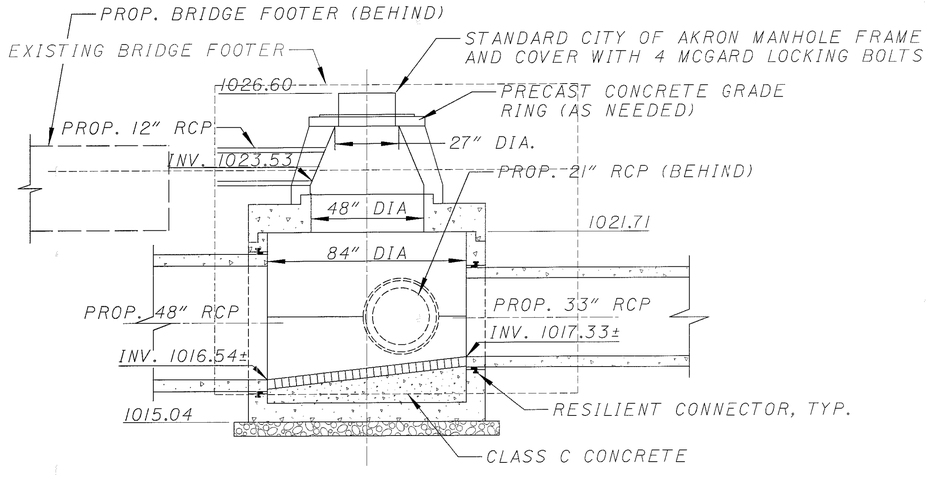

SECTION A-A
(EXISTING MANHOLE NOT SHOWN)

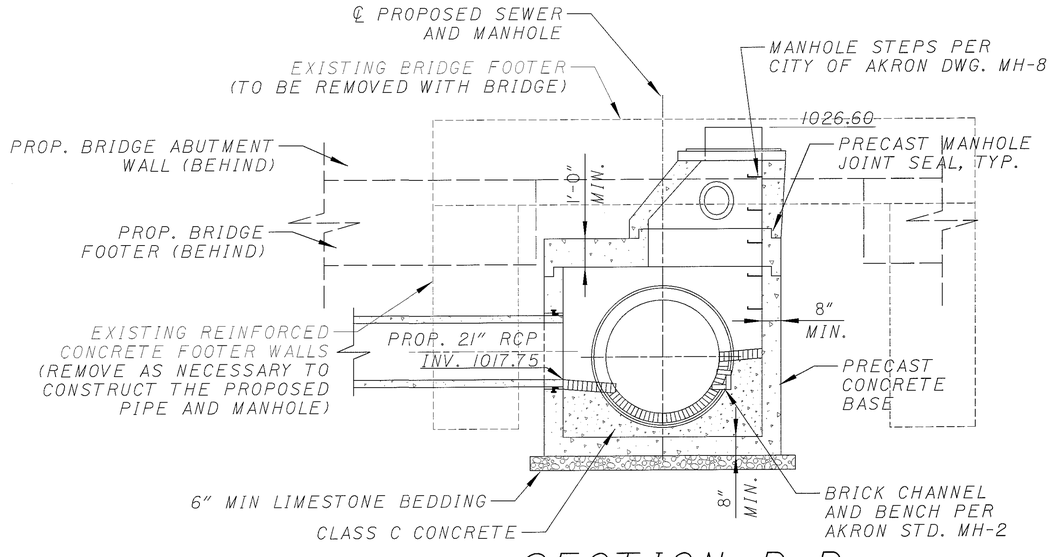

SECTION B-B

CALCULATED JDS
CHECKED EDS

MANHOLE, MISC.: 84" DIA. PRECAST MANHOLE, - TYPE 1

SUM-8-0.63

601
1088

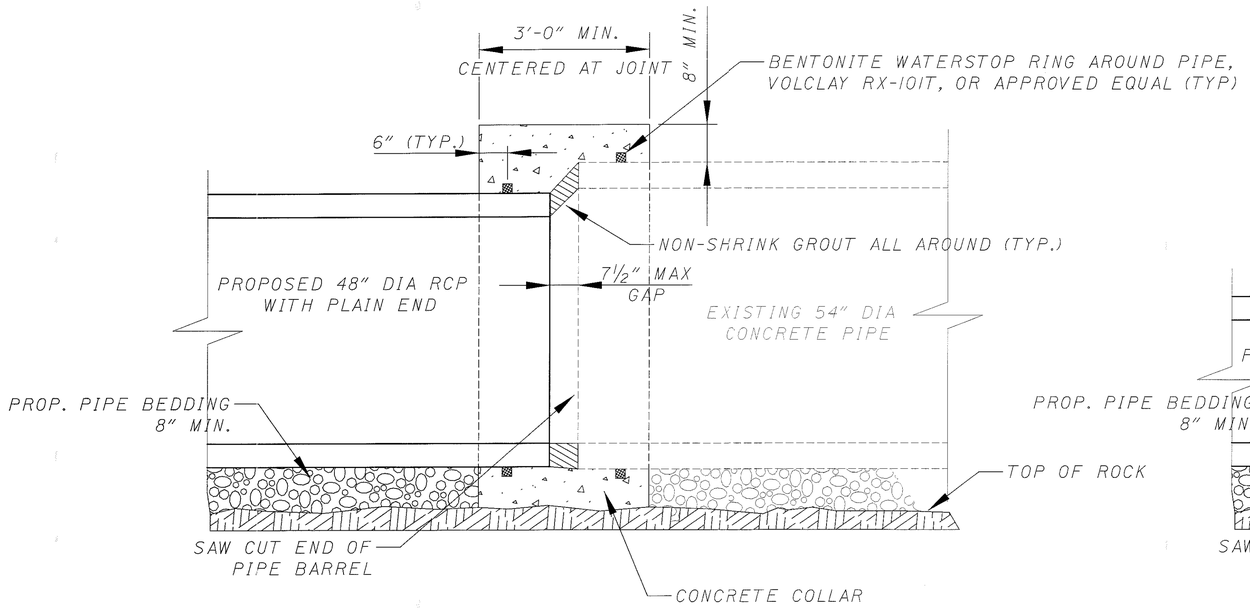

48" TO 54" PIPE CONNECTION DETAIL

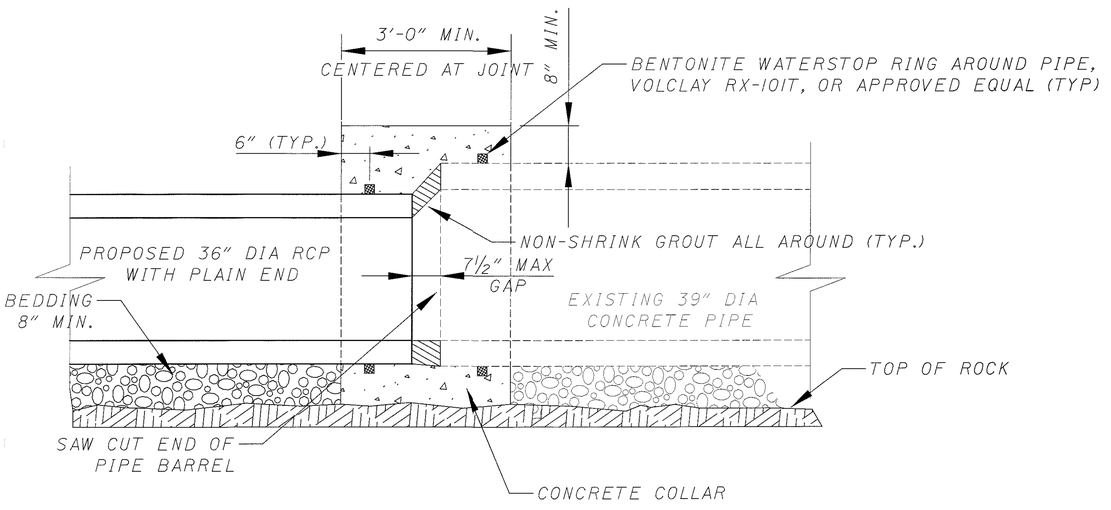

36" TO 39" PIPE CONNECTION DETAIL

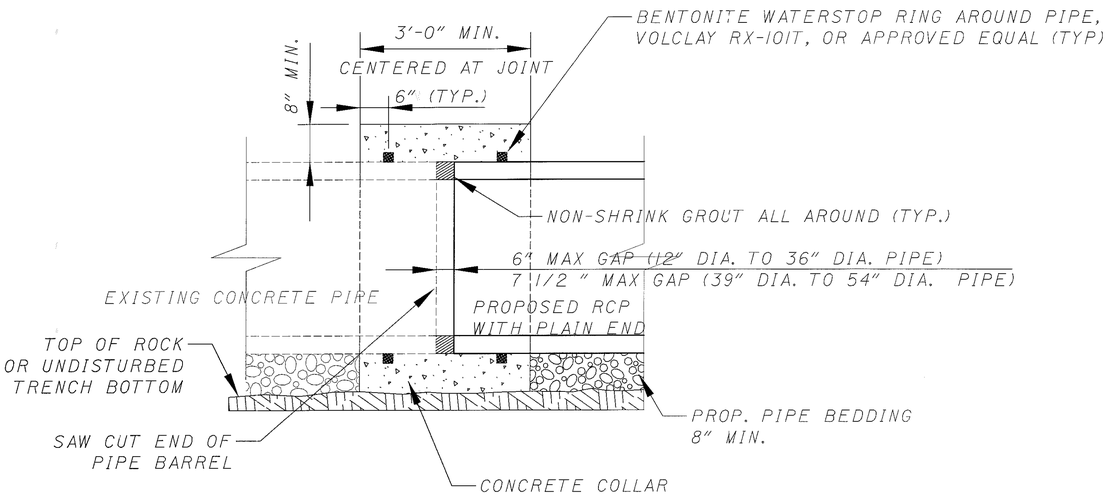

TYPICAL PIPE CONNECTION DETAIL

CALCULATED JDS
CHECKED TGH

PIPE CONNECTION DETAILS

SUM-8-0.63

602
1088

REFERENCES FOR 120" DIA. PRECAST MANHOLE - TYPE I
- GENERAL NOTES, SEE SHEET 34
- PLAN, SEE SHEET 248
- 12" PIPE PROFILE, SEE SHEET 591

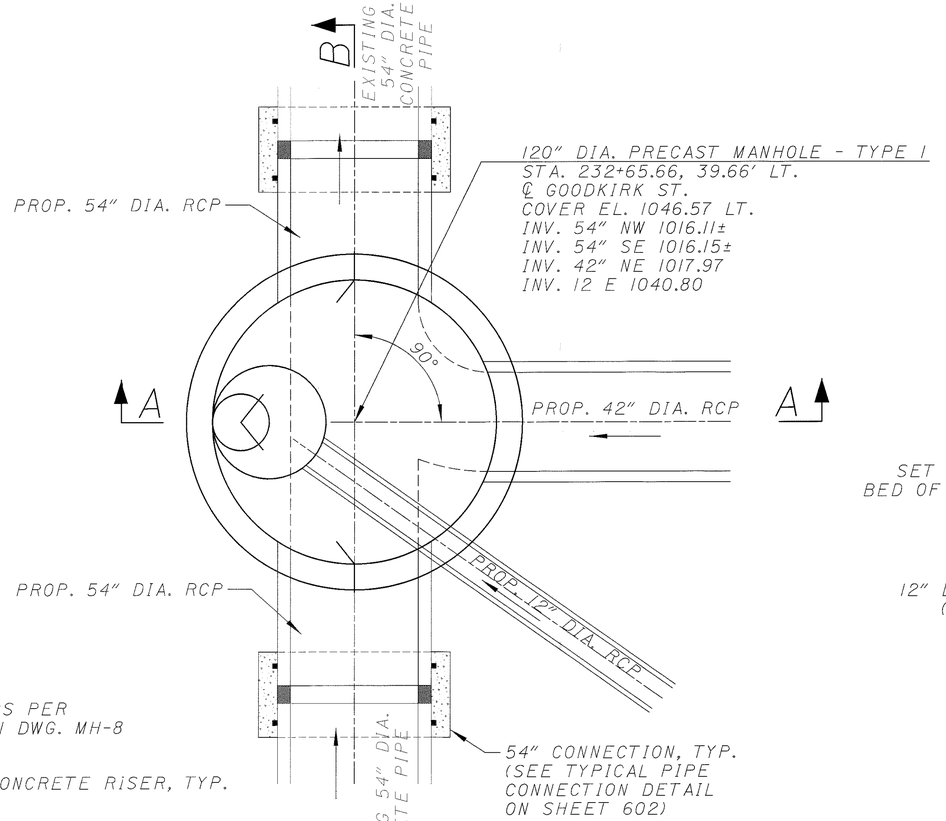

PLAN

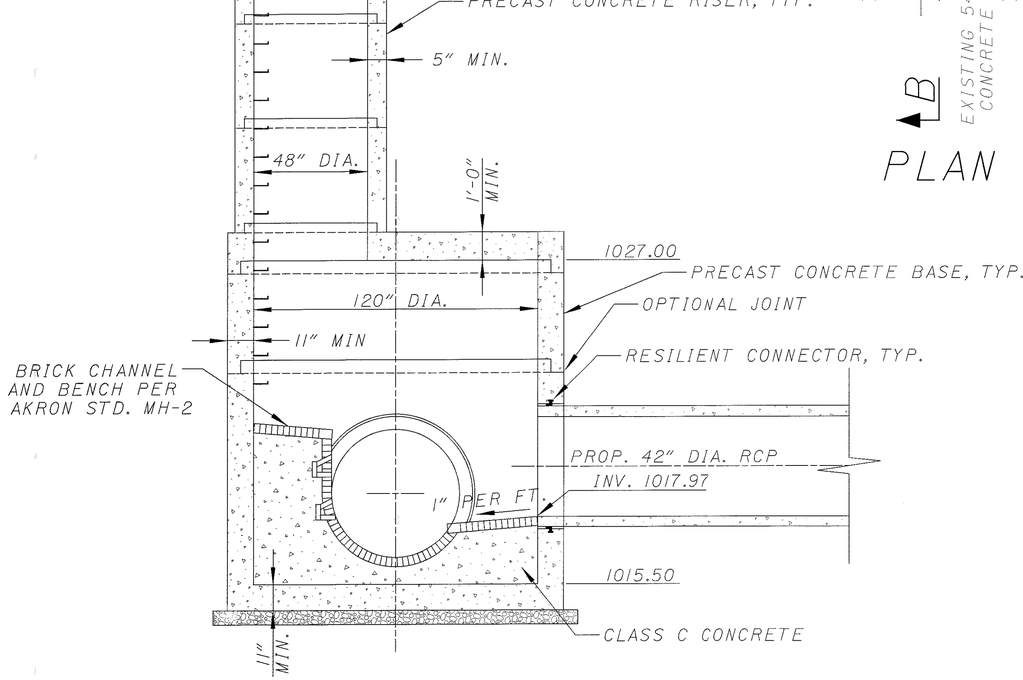

SECTION A-A

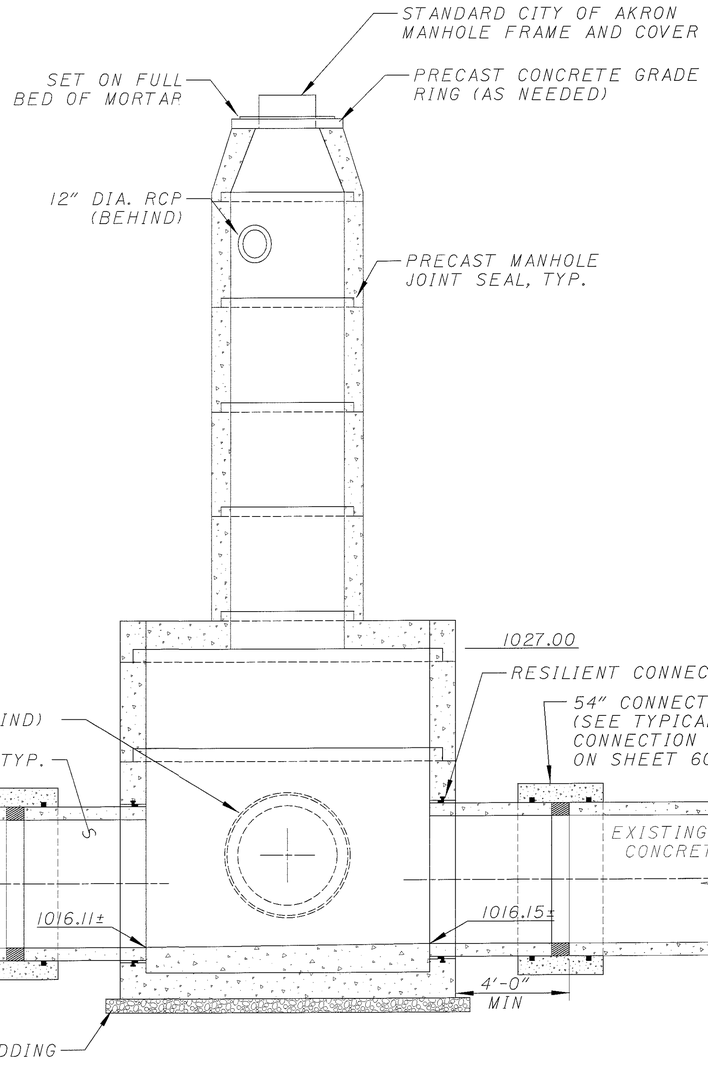

SECTION B-B

CALCULATED JDS
CHECKED EDS

120" DIA. PRECAST MANHOLE - TYPE 1

SUM-8-0.63

603
1088

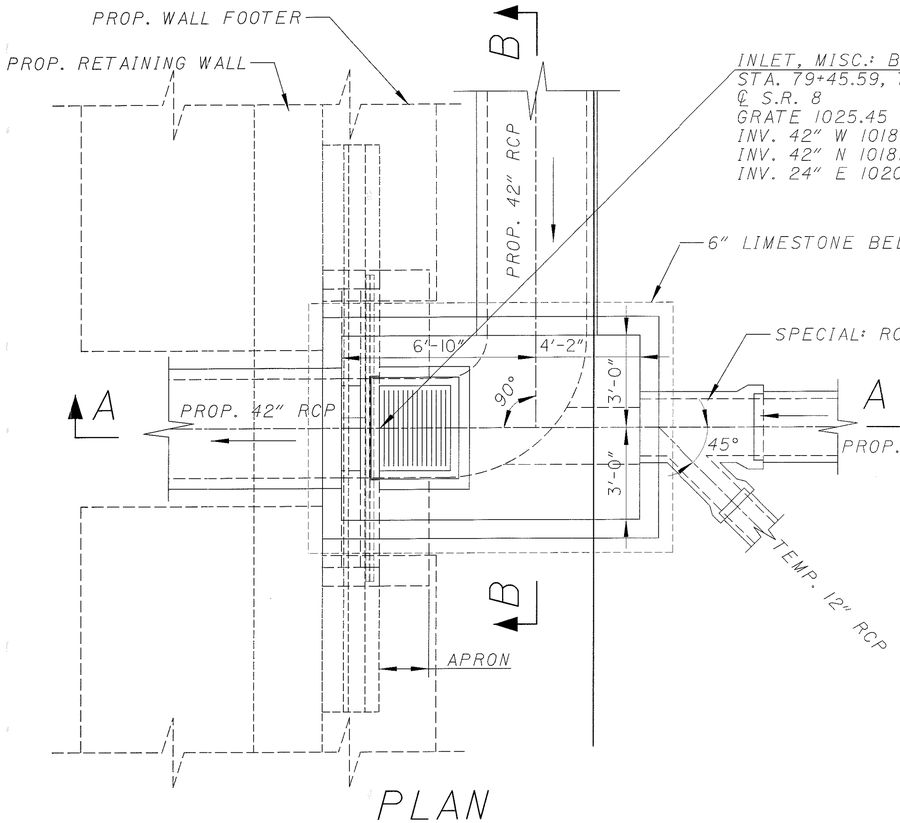

PLAN

NOTES:

GENERAL : FOR DETAILS OF CONCRETE BARRIERS, SEE SHEET DDI
THE PRECAST INLET CHAMBER SHALL BE DESIGNED FOR AASHTO HS-25 LOADING. THE CONTRACTOR SHALL SUBMIT SHOP DRAWINGS AND STRUCTURAL DESIGN CALCULATIONS PREPARED AND SEALED BY AN OHIO REGISTERED PROFESSIONAL ENGINEER.

CONCRETE: CAST-IN-PLACE CONCRETE IS TO BE CLASS C. ALL PRECAST CONCRETE SHALL MEET THE REQUIREMENTS OF CMS 706.13 AND SHALL HAVE A MINIMUM OF 4% ENTRAINED AIR CONTENT IN THE HARDENED CONCRETE.

REINFORCING STEEL: REINFORCING STEEL SHALL BE EPOXY COATED IN ACCORDANCE WITH CMS 509.10.

PLAN, SEE SHEET 224
42" (N) PIPE PROFILE, SEE SHEET 225
42" (W) AND 24" PIPE PROFILES, SEE SHEET 340

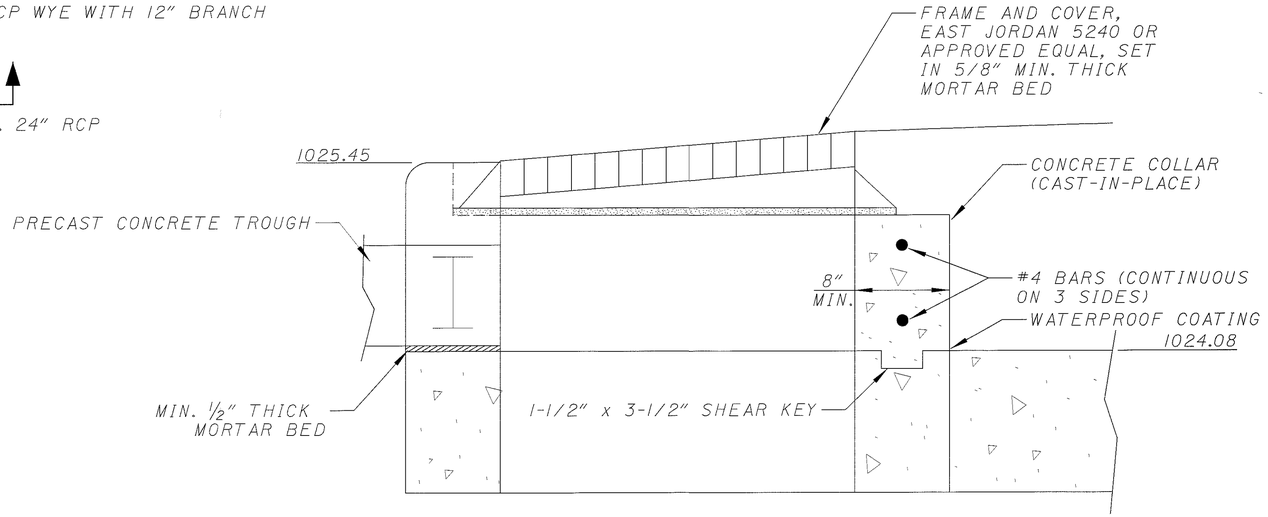

CONCRETE COLLAR DETAIL

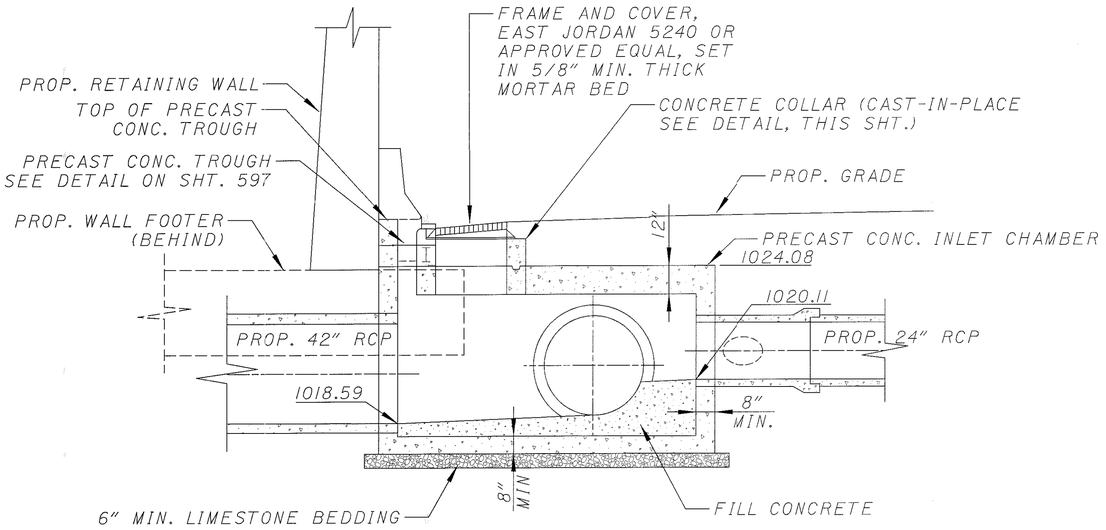

SECTION A-A

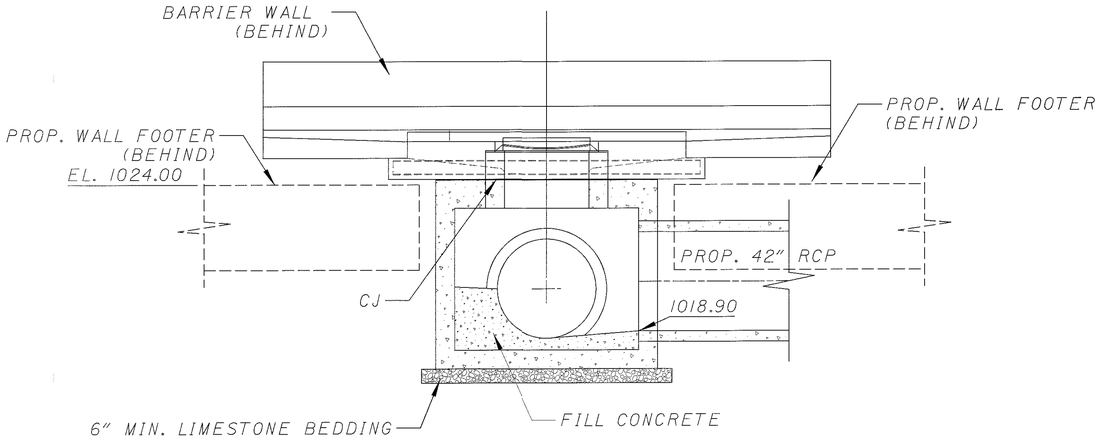

SECTION B-B

CALCULATED JDS
CHECKED EDS

INLET, MISC.: BARRIER INLET CHAMBER - TYPE A

SUM-8-0.63

604
1088

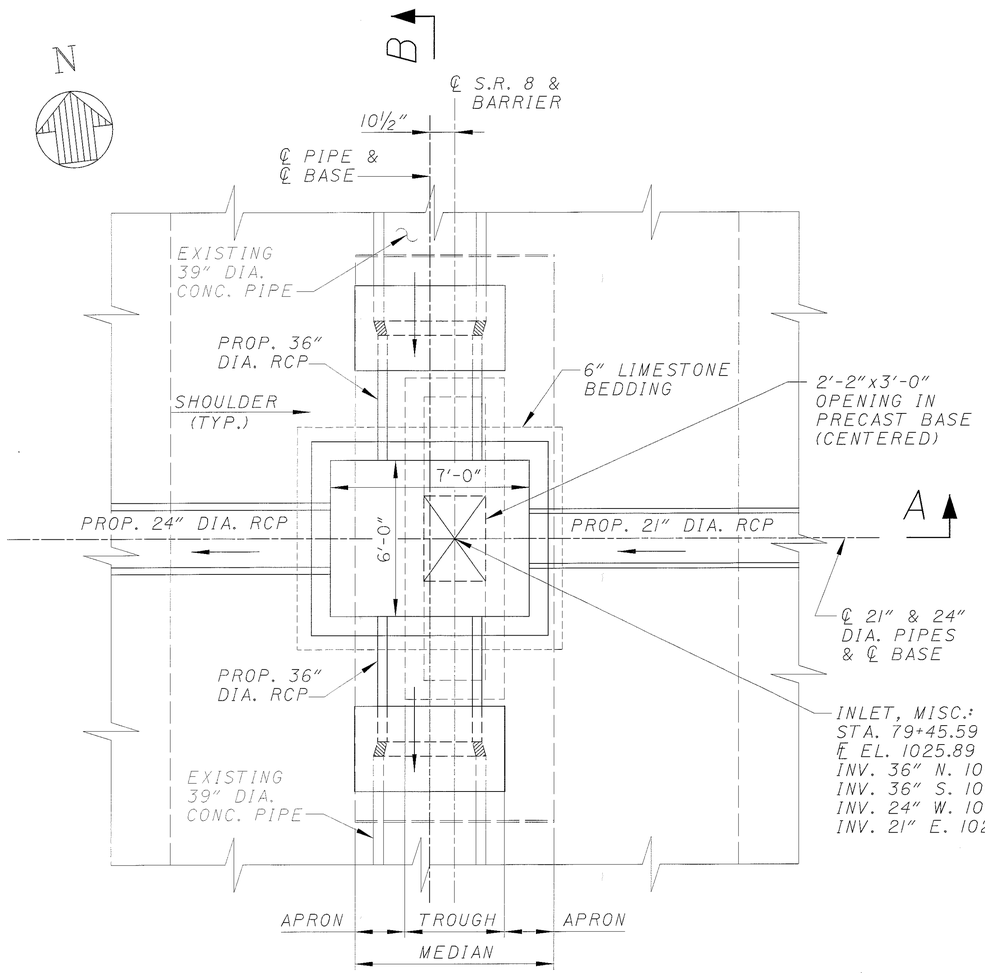

PLAN

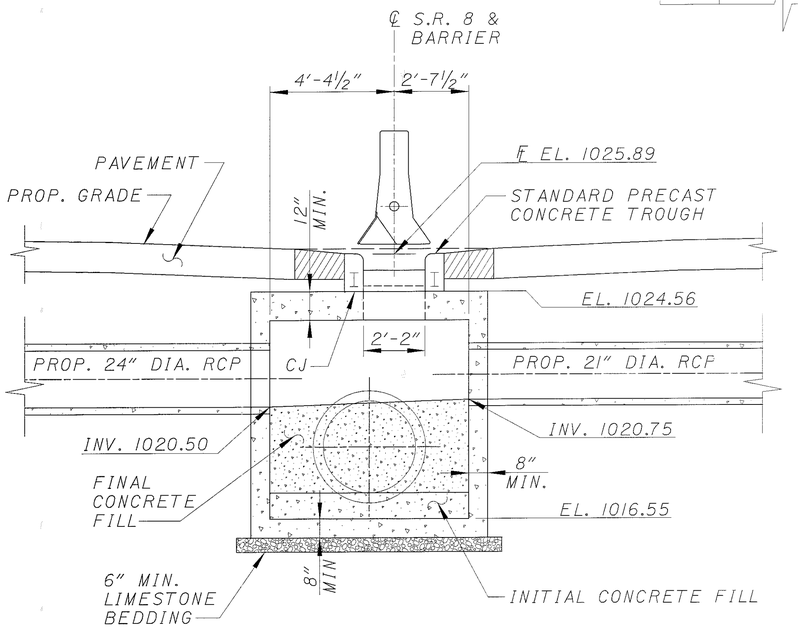

SECTION A-A

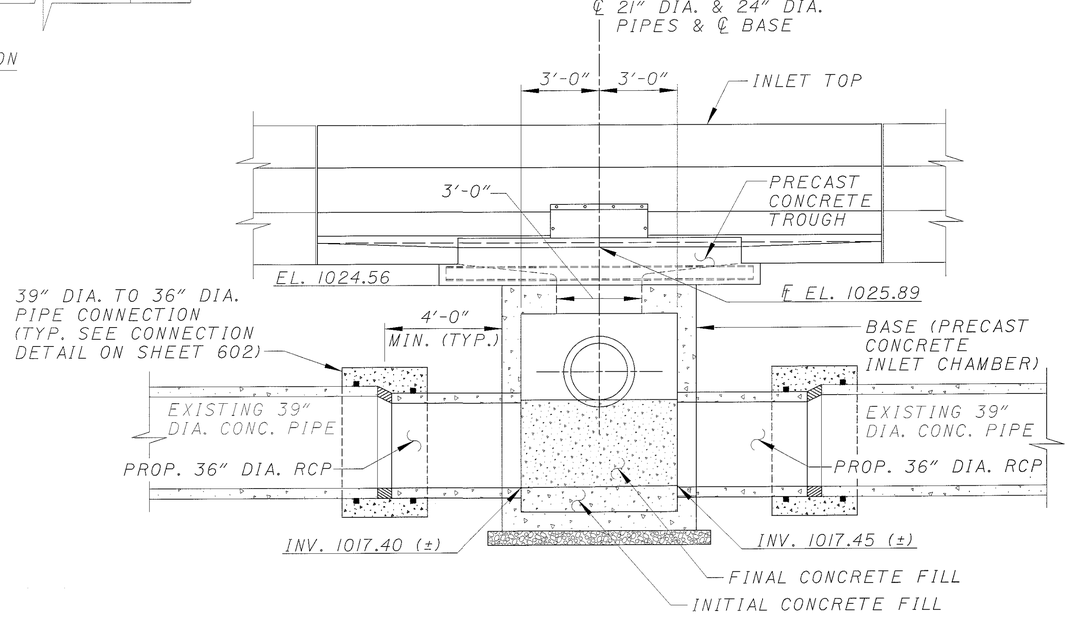

SECTION B-B

GENERAL:

PLAN, SEE SHEET 224
24" AND 21" PIPE PROFILES, SEE SHEETS 340 AND 400

FOR DETAILS OF CONCRETE BARRIER TYPE B1, SEE STANDARD CONSTRUCTION DRAWING RM-4.3M.

THE PRECAST INLET CHAMBER SHALL BE DESIGNED FOR AASHTO HS-25 LOADING. THE CONTRACTOR SHALL SUBMIT SHOP DRAWINGS AND STRUCTURAL DESIGN CALCULATIONS PREPARED AND SEALED BY AN OHIO REGISTERED PROFESSIONAL ENGINEER.

FOR TROUGH, INLET TOP & ADDITIONAL DETAILS SEE STANDARD CONSTRUCTION DRAWING I-2.2M.

THE CONTRACTOR SHALL FIELD VERIFY THE EXISTING PIPE SIZES AND INVERT ELEVATIONS PRIOR TO MANUFACTURING THE PRECAST BASE.

THE PROPOSED 36" DIA. RCP CONDUIT SHALL BE INCLUDED WITH THE STRUCTURE FOR PAYMENT

CONCRETE:

ALL PRECAST CONCRETE SHALL MEET THE REQUIREMENTS OF CMS 706.13 AND SHALL HAVE A MINIMUM OF 4% ENTRAINED AIR CONTENT IN THE HARDENED CONCRETE.

REINFORCING STEEL:

REINFORCING STEEL SHALL BE EPOXY COATED IN ACCORDANCE WITH CMS 509.10.

CJ = CONSTRUCTION JOINT

CALCULATED DP CHECKED EDS

INLET, MISC.: BARRIER INLET CHAMBER - TYPE B

SUM-8-0.63

605
1088

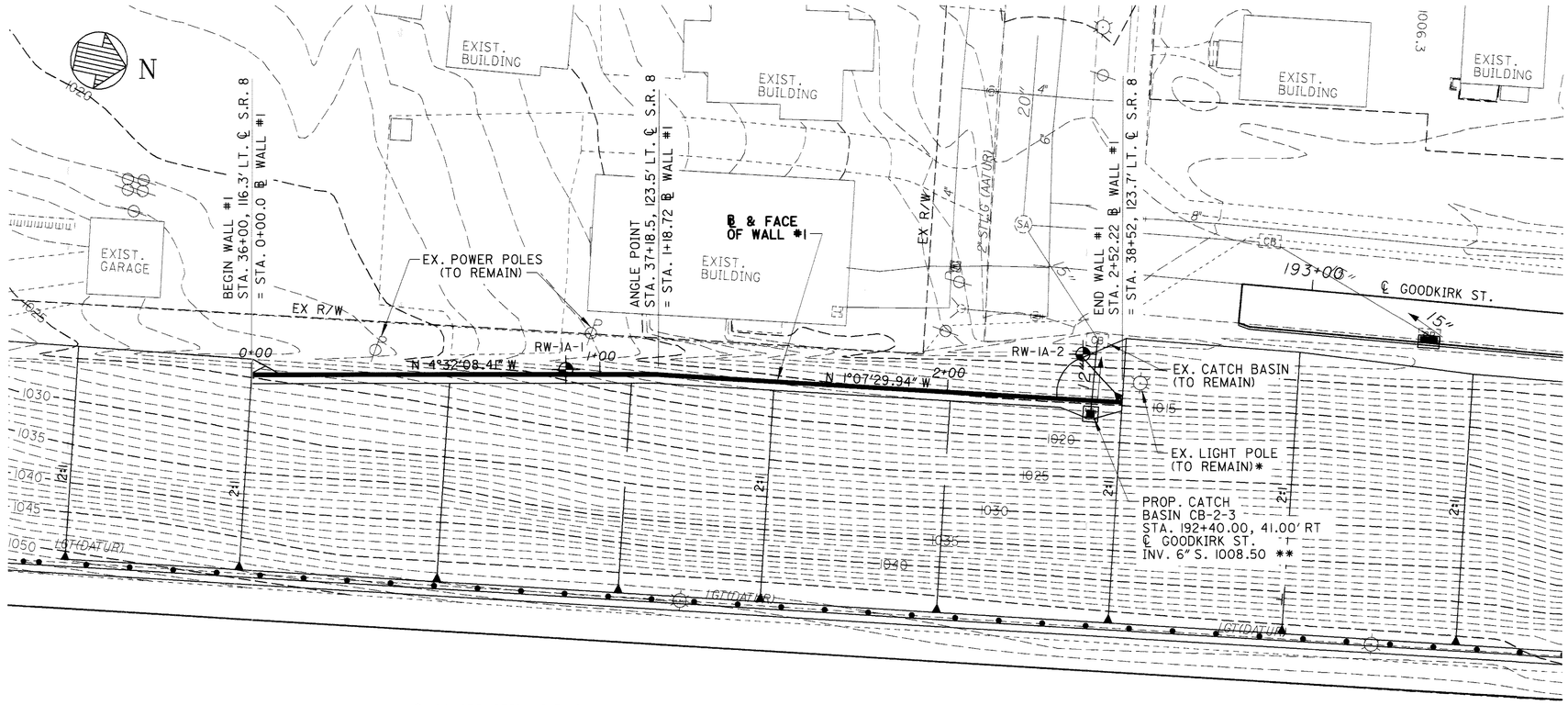

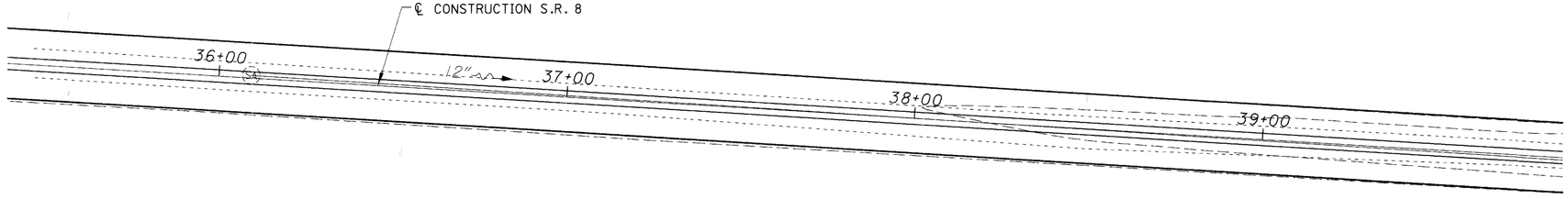

PARTIAL PLAN

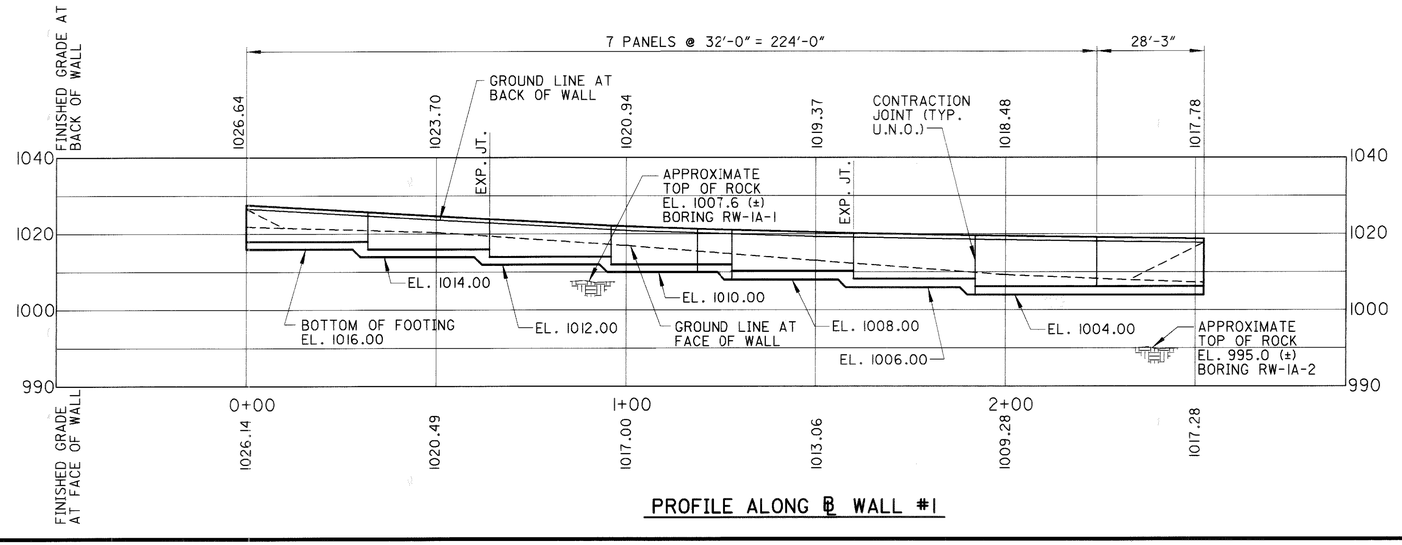

PROFILE ALONG ℬ WALL #1

NOTES

DESIGN SPECIFICATIONS

THIS STRUCTURE CONFORMS TO "STANDARD SPECIFICATIONS FOR HIGHWAY BRIDGES" ADOPTED BY THE AMERICAN ASSOCIATION OF STATE HIGHWAY AND TRANSPORTATION OFFICIALS, 1996, INCLUDING THE 1997, 1998 AND 1999 INTERIM SPECIFICATIONS AND THE ODOT BRIDGE DESIGN MANUAL.

DESIGN DATA

CONCRETE CLASS C - COMPRESSIVE STRENGTH 4000 psi.
REINFORCING STEEL - ASTM A615, A616, OR A617
GRADE 60, MINIMUM YIELD STRENGTH 60,000 psi.

FOUNDATION BEARING PRESSURE

RETAINING WALL #1 FOOTINGS, AS DESIGNED, PRODUCE A MAXIMUM BEARING PRESSURE OF 2380 psf. THE ALLOWABLE BEARING PRESSURE IS 2500 psf.

EARTHWORK NOTE:

EARTHWORK LIMITS ARE APPROXIMATE. ACTUAL SLOPES SHALL CONFORM TO PLAN CROSS-SECTIONS.

ITEM 864, SEALING OF CONCRETE SURFACES (EPOXY-URETHANE)

CONCRETE SURFACES AS DETAILED IN THE PLANS SHALL BE SEALED WITH AN EPOXY-URETHANE SEALER OF A COLOR CONFORMING TO FEDERAL COLOR No. 13522 - BUFF.

REFER TO DRAINAGE PLANS FOR CATCH BASIN AND DRAINAGE DETAILS

* CONTRACTOR SHALL SUPPORT LIGHT POLE IN PLACE DURING CONSTRUCTION AND COORDINATE ACTIVITIES WITH OHIO EDISON.

** CORRUGATED PLASTIC PIPE DRAINAGE SYSTEM FOR WALL TO BE CONNECTED TO PROPOSED CATCH BASIN. THE LAST 5 FEET OF PIPE SHALL BE NON-PERFORATED.

LEGEND

ℬ	BASELINE
℄	CENTERLINE
C.J.	CONSTRUCTION JOINT
CONST.	CONSTRUCTION
CONTR. JT.	CONTRACTION JOINT
DIA.	DIAMETER
E.F.	EACH FACE
EL.	ELEVATION
EX.	EXISTING
EXP. JT.	EXPANSION JOINT
F.F.	FAR FACE
INV.	INVERT
N.F.	NEAR FACE
NPCPP	NON-PERFORATED CORRUGATED PLASTIC PIPE
PCPP	PERFORATED CORRUGATED PLASTIC PIPE
PROP.	PROPOSED
SER	SERIES
⌖	SOIL BORING
SPA.	SPACES
STA.	STATION
ST.	STREET
TYP.	TYPICAL
U.N.O.	UNLESS NOTED OTHERWISE

ESTIMATED QUANTITIES

ITEM	ITEM EXTENSION	TOTAL	UNIT	DESCRIPTION	SHEET REF.
503	11100	LUMP	SUM	COFFERDAMS, CRIBS AND SHEETING	
503	21100	882	CU. YD.	UNCLASSIFIED EXCAVATION	
516	13600	29	SQ. FT.	1" PREFORMED EXPANSION JOINT FILLER	
518	21201	159	CU. YD.	POROUS BACKFILL WITH FILTER FABRIC, AS PER PLAN	2
518	40001	242	LIN. FT.	6" PERFORATED CORRUGATED PLASTIC PIPE, AS PER PLAN	2
518	40010	5	LIN. FT.	6" NON-PERFORATED CORRUGATED PLASTIC PIPE, INCLUDING SPECIALS	
SPECIAL	53013000	1643	SQ. FT.	FORM LINERS *	2
842	46001	129	CU. YD.	CLASS C CONCRETE, AS PER PLAN	2
842	46500	197	CU. YD.	CLASS C CONCRETE, FOOTING	
864	10100	255	SQ. YD.	SEALING OF CONCRETE SURFACES (EPOXY-URETHANE)	

* 100% LOCAL COST

BENCHMARK #11

CHISELED "+" ON NE BOLT OF DAIRY MART SIGN @ PARKING LOT ENTRANCE OFF EXCHANGE ST. 62.1' W OF ℄ GOODKIRK ST. & 48.0' S OF ℄ EXCHANGE ST.
STA. 50+09.17, 183.65' LT.
℄ S.R. 8

EL. 1028.70

BENCHMARK #12

CHISELED "□" IN NW CORNER OF 2.5' WIDE CONCRETE DIVIDING WALL @ NW CORNER OF PARKING LOT 588 E. EXCHANGE ST., 44.3' S OF ℄ EXCHANGE ST. & 89.3' NW OF BUILDING CORNER
STA. 45+59.36, 344.57 RT., ℄ S.R. 8

EL. 1016.01

REVISIONS: 05/15/2002 by AGW

DLZ
6000 ROCKEFELLER BLDG • 614 W. SUPERIOR AVE. • CLEVELAND, OH 44113

DESIGNED	DRAWN	REVIEWED	DATE
JWB	KME	GWM	4/30/01
CHECKED	REVISED	STRUCTURE FILE NUMBER	
PAT			

PLAN AND PROFILE
RETAINING WALL #1
ALONG S.R. 8, STA. 36+00 TO STA. 38+52

SUM-8-0.63

1/4

606
1088

04:08:08 PM
07/09/2002
u:\00-00SR-8\N\Civil\Walls\wall1.dgn

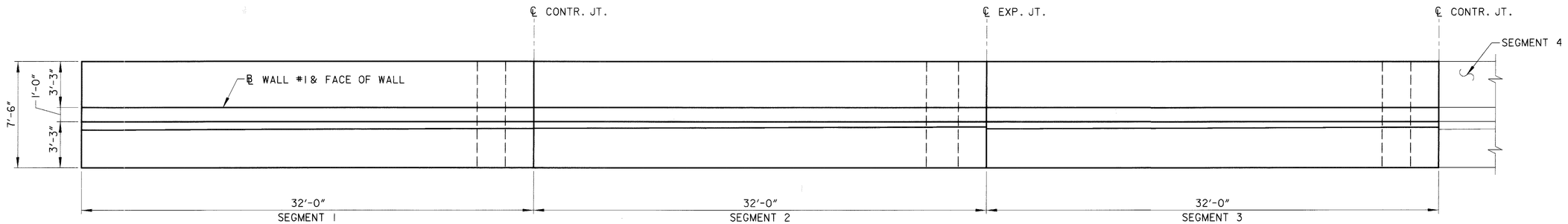

PLAN

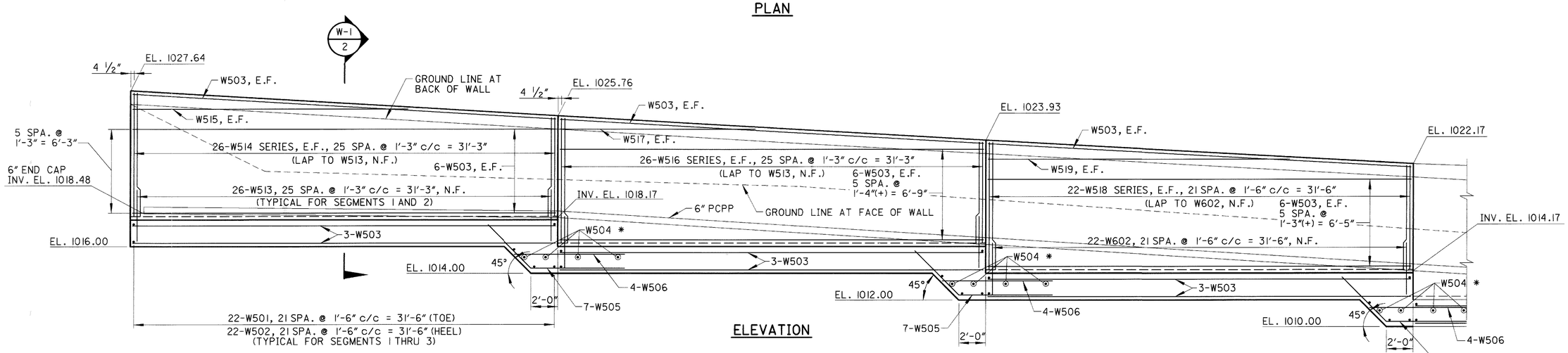

ELEVATION

* #5 bars @ 3'-0"(±) c/c TO SUPPORT ADDITIONAL LONGITUDINAL REINFORCEMENT AT JOINTS

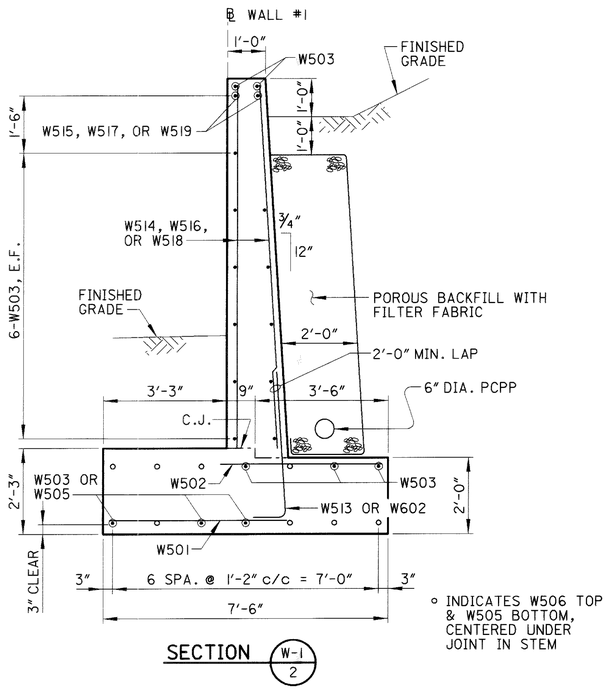

SECTION W-1 / 2

° INDICATES W506 TOP & W505 BOTTOM, CENTERED UNDER JOINT IN STEM

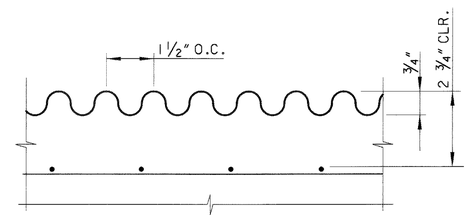

SECTION A-A

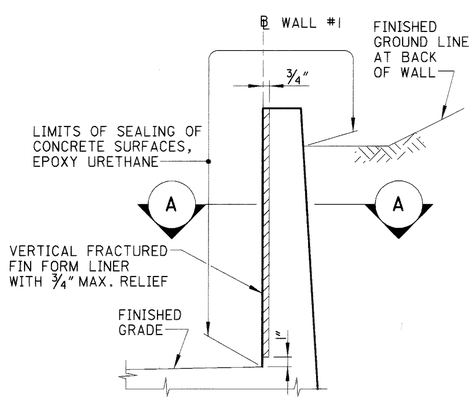

TYPICAL WALL TREATMENT

NOTES

1. POROUS BACKFILL WITH FILTER FABRIC, 2 FEET THICK, SHALL EXTEND UP TO 1 FOOT BELOW THE EMBANKMENT SURFACE AND LATERALLY FOR THE FULL LENGTH OF THE RETAINING WALL.
2. 6" PERFORATED CORRUGATED PLASTIC PIPE, AS PER PLAN, SHALL INCLUDE ONE 6" END CAP AS DETAILED IN THE PLANS.
3. FOR CONVERSION OF UNITS FROM METRIC STANDARD DRAWINGS, SEE SHEET 30.

ITEM SPECIAL - FORM LINER

A VERTICAL FRACTURED FIN FORM LINER SHALL BE PROVIDED WHERE INDICATED BY THE TYPICAL WALL TREATMENT DETAIL. THE COST OF THE FORM LINER, INCLUDING ALL LABOR, MATERIALS, EQUIPMENT AND INCIDENTALS SHALL BE INCLUDED WITH THE UNIT PRICE BID, PER SQUARE FOOT FOR ITEM SPECIAL, FORM LINER.

PVC WATERSTOP

A PVC WATERSTOP, NOMINAL DIMENSIONS 6" x ⅛" THICK AND CAPABLE OF PROVIDING 1½" MOVEMENT, SHALL BE PROVIDED AT CONTRACTION AND EXPANSION JOINTS.

THE WATERSTOP SHALL EXTEND FROM THE TOP OF FOOTING TO 1'-0" BELOW TOP OF WALL.

THE WATERSTOP SHALL BE SECURELY HELD IN PLACE DURING CONCRETE PLACEMENT.

INCLUDEWITH ITEM 842, CLASS C CONCRETE FOR PAYMENT.

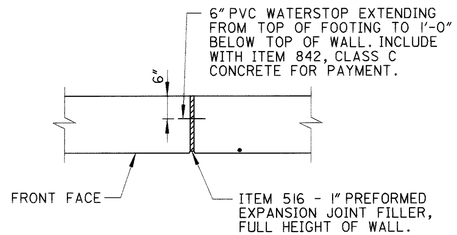

EXPANSION JOINT DETAIL

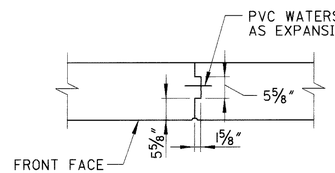

CONTRACTION JOINT DETAIL

REVISIONS: 05/15/2002 by AGW

DLZ
3000 ROCKEFELLER BLDG • 614 W SUPERIOR AVE • CLEVELAND, OH 44113

DESIGNED	DRAWN	REVIEWED	DATE
PAT	DJP	GWM	4/30/01

CHECKED JWB — REVISED — STRUCTURE FILE NUMBER

SEGMENTS 1 THRU 3
RETAINING WALL #1
ALONG S.R. 8 STA. 36+00 TO STA. 38+52

SUM-8-0.63

2/4

607
1088

02:24:40 PM
06/12/2002
U:\00-00\SR-8\N\Civil\Walls\wall-detail.dgn

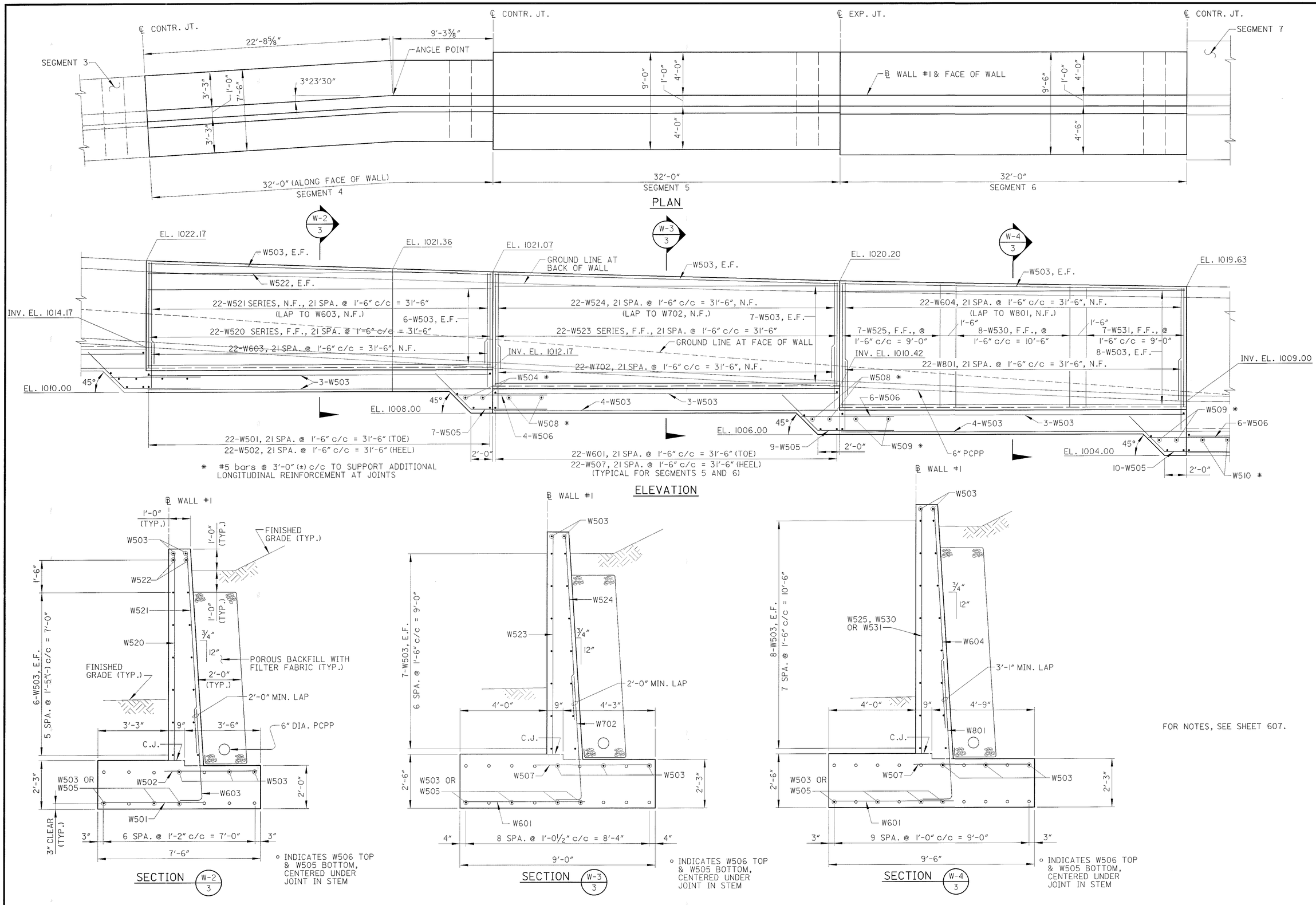

FOR NOTES, SEE SHEET 607.

DLZ
3000 ROCKEFELLER BLDG ★ 614 ★ SUPERIOR AVE ★ CLEVELAND, OH 44113

DESIGNED PAT | DRAWN DJP | REVIEWED GWM | DATE 4/30/01
CHECKED JWB | REVISED | STRUCTURE FILE NUMBER

SEGMENTS 4 THRU 6
RETAINING WALL #1
ALONG S.R. 8 STA. 36+00 TO STA. 38+52

SUM-8-0.63

3/4

608
1088

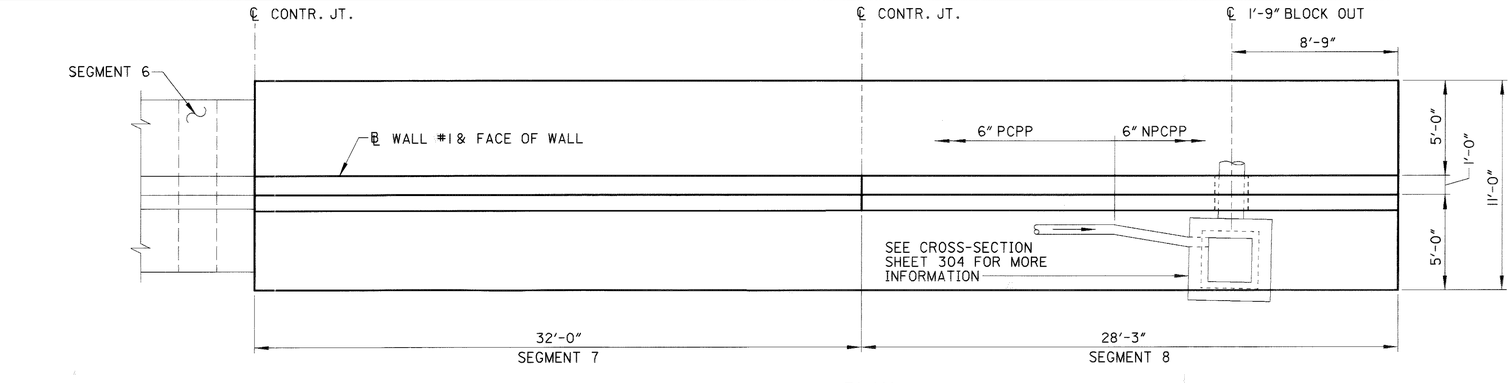

PLAN

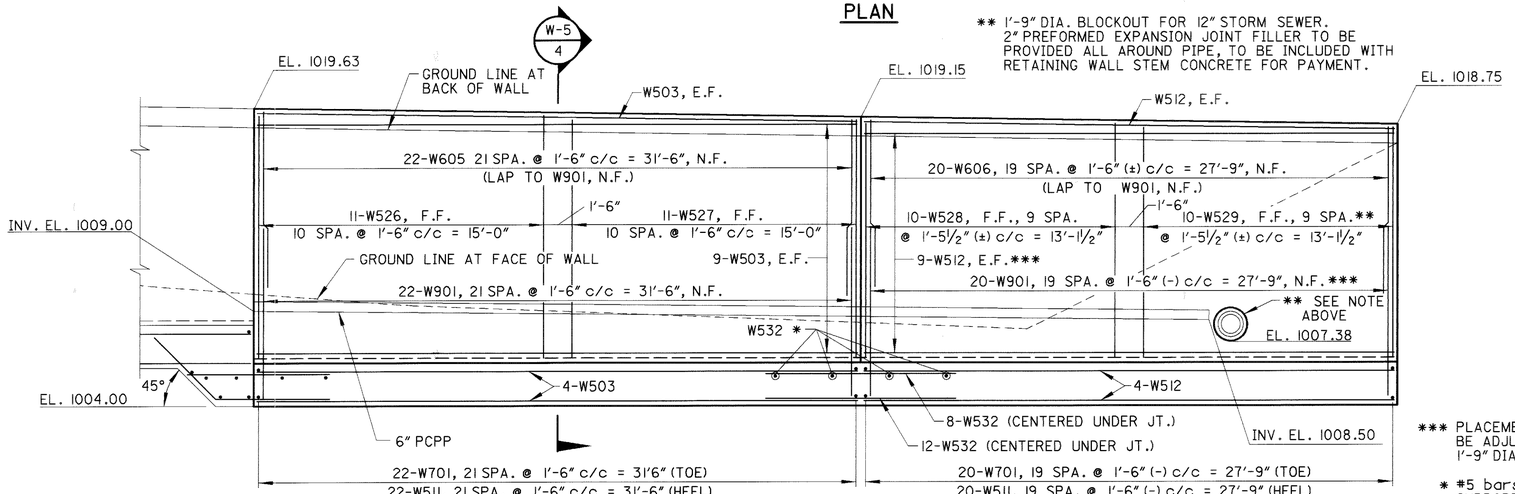

** 1'-9" DIA. BLOCKOUT FOR 12" STORM SEWER. 2" PREFORMED EXPANSION JOINT FILLER TO BE PROVIDED ALL AROUND PIPE, TO BE INCLUDED WITH RETAINING WALL STEM CONCRETE FOR PAYMENT.

*** PLACEMENT OF BARS SHALL BE ADJUSTED AROUND THE 1'-9" DIA. BLOCK OUT

* #5 bars @ 3'-0" (±) c/c TO SUPPORT ADDITIONAL LONGITUDINAL REINFORCEMENT AT JOINTS

ELEVATION

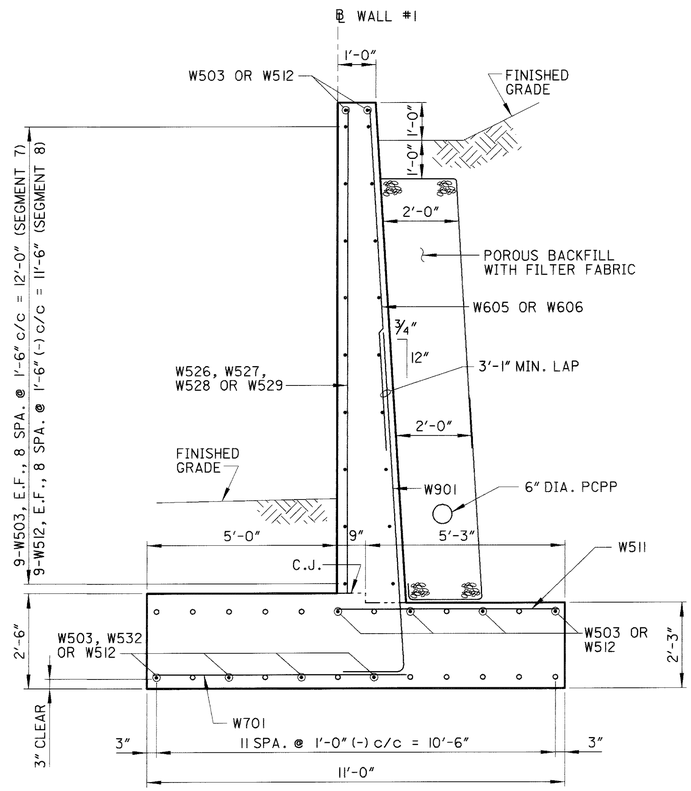

SECTION W-5 / 4

° INDICATES W532, TOP & BOTTOM, CENTERED UNDER JOINT IN STEM

FOR NOTES, SEE SHEET 607.

REINFORCING STEEL LIST

MARK	NUMBER	LENGTH	WEIGHT (LBS.)	TYPE	DIMENSIONS A	B	C	SER INC.
W501	88	4'-8"	428	STR				
W502	88	4'-3"	390	STR				
W503	156	31'-8"	5152	STR				
W504	14	7'-2"	105	STR				
W505	47	12'-1"	592	12	7'-0"	3'-6"	3'-6"	
W506	28	8'-3"	241	STR				
W507	44	5'-5"	249	STR				
W508	4	8'-8"	36	STR				
W509	4	9'-2"	38	STR				
W510	2	10'-8"	22	STR				
W511	42	5'-10"	256	STR				
W512	28	27'-11"	815	STR				
W513	52	4'-8"	253	11	10"	4'-0"	3"	
	2	7'-4"						
W514	SER		448	STR				⅞"
	26	9'-2"						
W515	2	20'-7"	43	STR				
	2	7'-6"						
W516	SER		457	STR				⅞"
	26	9'-4"						
W517	2	14'-7"	30	STR				
	2	7'-9"						
W518	SER		396	STR				1"
	22	9'-6"						
W519	2	22'-7"	47	STR				
	1	8'-7"						
W520	SER		209	STR				⅝"
	22	9'-8"						
	1	8'-4"						
W521	SER		204	STR				⅝"
	22	9'-5"						

REINFORCING STEEL LIST

MARK	NUMBER	LENGTH	WEIGHT (LBS.)	TYPE	DIMENSIONS A	B	C	SER INC.
W522	2	28'-7"	60	STR				
	1	9'-6"						
W523	SER		228	STR				½"
	22	10'-4"						
W524	22	8'-10"	203	STR				
W525	7	11'-4"	83	STR				
W526	11	12'-8"	145	STR				
W527	11	12'-5"	142	STR				
W528	10	12'-3"	128	STR				
W529	10	12'-1"	126	STR				
W530	8	11'-1"	92	STR				
W531	7	10'-11"	80	STR				
W532	24	10'-0"	250	STR				
W601	44	5'-7"	369	STR				
W602	22	4'-8"	154	11	10"	4'-0"	3"	
W603	22	5'-0"	165	11	10"	4'-4"	3"	
W604	22	10'-5"	344	STR				
W605	22	9'-3"	306	STR				
W606	20	8'-9"	263	STR				
W701	42	6'-8"	572	STR				
W702	22	8'-4"	375	11	1'-2"	5'-10"	4½"	
W801	22	7'-8"	450	11	1'-4"	6'-6"	5"	
W901	42	10'-5"	1488	11	1'-7"	9'-1"	7"	
		TOTAL =	16434	LBS				

BENDING DIAGRAMS

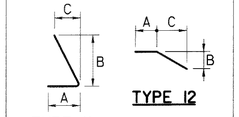

REINFORCING STEEL NOTES

1. SERIES BARS - EACH BAR VARIES BY TABULATED AMOUNT.
2. ALL DIMENSIONS ARE OUT TO OUT.
3. TYPE 'STR' INDICATES A STRAIGHT BAR.
4. THE BAR SIZE NUMBER IS SPECIFIED IN THE 'MARK' COLUMN. THE FIRST DIGIT INDICATES THE BAR SIZE NUMBER. FOR EXAMPLE, W501 IS A #5 BAR SIZE.
5. ALL BARS SHALL BE EPOXY COATED UNLESS NOTED OTHERWISE.
6. SUBTOTALS AND TOTAL WEIGHTS ARE FOR INFORMATIONAL PURPOSES ONLY. IF THE REINFORCING LIST PROVIDED IN THE PLANS IS USED IT SHALL BE VERIFIED BY THE CONTRACTOR. ANY REVISIONS IN THE REINFORCING STEEL LIST AS SHOWN IN THE PLANS WILL NOT BE REASON FOR ADJUSTMENT IN THE BID PRICE FOR STRUCTURAL CONCRETE.

REVISIONS: 05/15/2002 by AGW

DLZ
1000 ROCKEFELLER BLDG • 614 W SUPERIOR AVE • CLEVELAND, OH 44113

DESIGNED	DRAWN	REVIEWED	DATE
PAT	DJP	GWM	4/30/01
CHECKED	REVISED	STRUCTURE FILE NUMBER	
JWB			

SEGMENT 7 & 8
RETAINING WALL #1
ALONG S.R. 8 STA. 36+00 TO STA. 38+52

SUM-8-0.63

4/4

609
1088

02:25:03 PM
06/12/2002
U:\00-01\SR-8\N\Civil\Walls\wall-detail.dgn

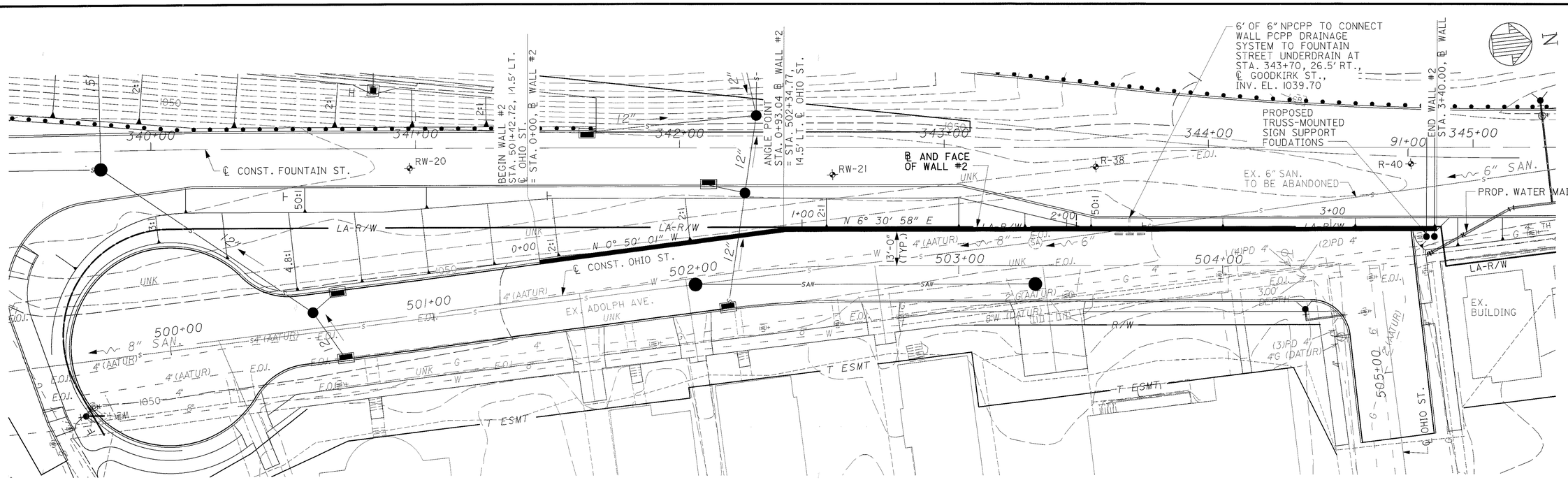

PARTIAL PLAN

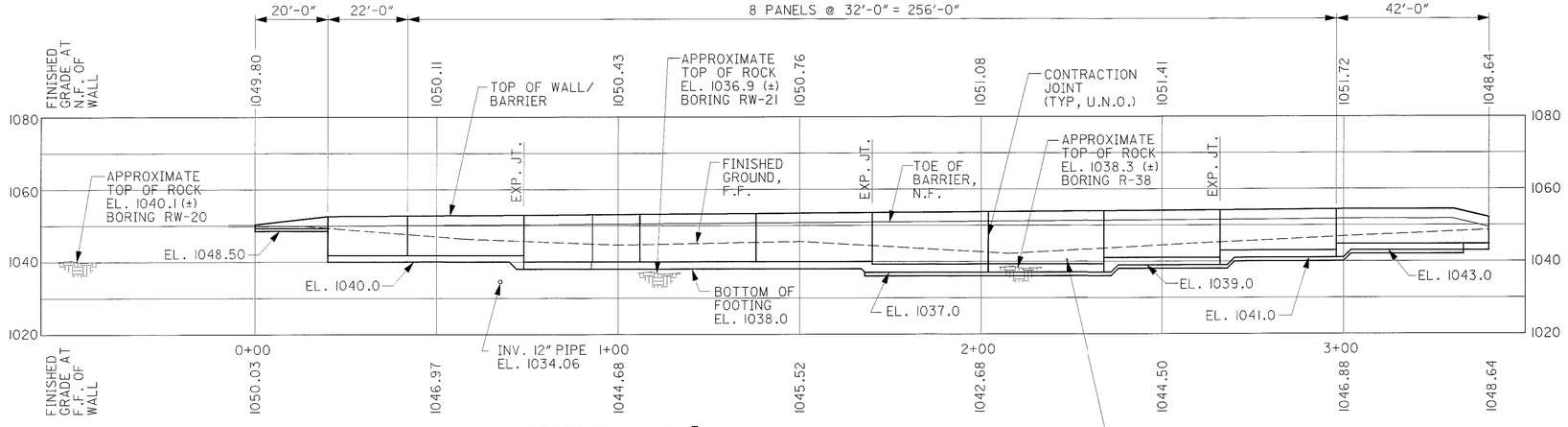

PROFILE ALONG ℬ WALL #2

6" TEE, INV. EL. 1040.20
WALL STA. 2+23.66
CONNECT WALL PCPP
TO NPCPP THROUGH WALL.

EARTHWORK NOTE:

EARTHWORK LIMITS ARE APPROXIMATE. ACTUAL SLOPES SHALL CONFORM TO PLAN CROSS SECTIONS.

NOTES

DESIGN SPECIFICATIONS

THIS STRUCTURE CONFORMS TO "STANDARD SPECIFICATIONS FOR HIGHWAY BRIDGES" ADOPTED BY THE AMERICAN ASSOCIATION OF STATE HIGHWAY AND TRANSPORTATION OFFICIALS, 1996, INCLUDING THE 1997, 1998 AND 1999 INTERIM SPECIFICATIONS AND THE ODOT BRIDGE DESIGN MANUAL.

DESIGN DATA

CONCRETE CLASS C - COMPRESSIVE STRENGTH 4000 psi.
REINFORCING STEEL - ASTM A615, A616, OR A617
GRADE 60, MINIMUM YIELD STRENGTH 60,000 psi.

FOUNDATION BEARING PRESSURE

RETAINING WALL #2 FOOTINGS, AS DESIGNED, PRODUCE A MAXIMUM BEARING PRESSURE OF 3250 psf. THE ALLOWABLE BEARING PRESSURE IS 5000 psf.

THE FOOTING KEY FOR SEGMENTS 6 THRU 10 SHALL BE PLACED IN A CAREFULLY MADE TRENCH AGAINST UNDISTURBED EARTH.

ITEM 864, SEALING OF CONCRETE SURFACES (EPOXY-URETHANE)

CONCRETE SURFACES AS DETAILED IN THE PLANS SHALL BE SEALED WITH AN EPOXY-URETHANE SEALER OF A COLOR CONFORMING TO FEDERAL COLOR No. 13522 - BUFF.

ESTIMATED QUANTITIES: FOR ESTIMATED QUANTITIES, SEE SHEET 617.

BENCHMARK #21

CHISELED "X" ON NW BOLT OF PARKING LOT LIGHT POLE @ SE CORNER OF FORGE AND ADOLPH STREETS
STA. 339+31.45, 165.49 RT. ℄ FOUNTAIN ST.

ELEV: 1051.28

BENCHMARK #22

CHISELED "□" IN SIDEWALK IN FRONT OF HOUSE AT 420 PERKINS ST. AT SE CORNER OF PERKINS AND ADOLPH STREETS.
STA. 346+43.35, 156.04 RT. ℄ FOUNTAIN ST.

ELEV: 1053.68

LEGEND

ℬ	BASELINE
BOT.	BOTTOM
℄	CENTERLINE
CONST.	CONSTRUCTION
C.J.	CONSTRUCTION JOINT
E.F.	EACH FACE
EL.	ELEVATION
EXP. JT.	EXPANSION JOINT
F.F.	FAR FACE
INV.	INVERT
MIN.	MINIMUM
N.F.	NEAR FACE
NPCPP	NON-PERFORATED CORRUGATED PLASTIC PIPE
PCPP	PERFORATED CORRUGATED PLASTIC PIPE
PROP.	PROPOSED
⌖	SOIL BORING
SPA.	SPACES
STA.	STATION
ST.	STREET
TYP.	TYPICAL
U.N.O.	UNLESS NOTED OTHERWISE

DLZ
1000 ROCKEFELLER BLDG • 614 • 1SUPERIOR AVE • CLEVELAND, OH 44113

DESIGNED	DRAWN	CHECKED	REVIEWED	DATE
JWB	KME	DP	GWM	5/31/01

REVISED | STRUCTURE FILE NUMBER

PLAN AND PROFILE
RETAINING WALL #2
ALONG OHIO ST. STA. 501+50 TO STA. 504+81

SUM-8-0.63

610
1088

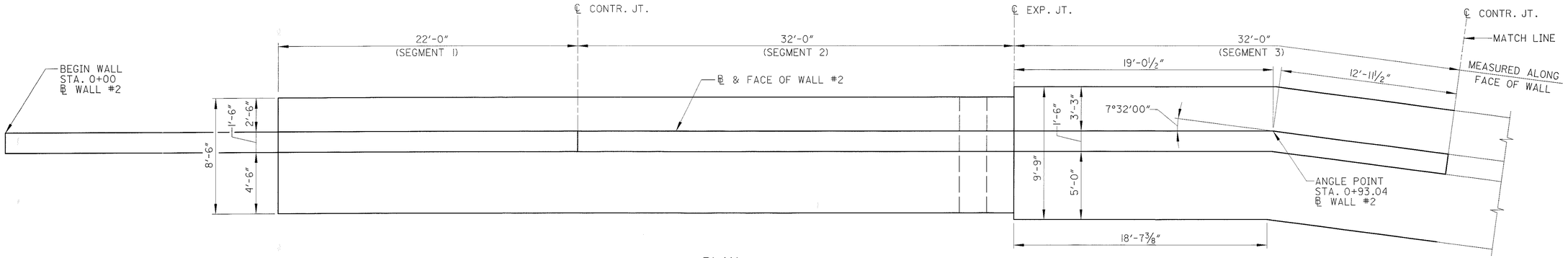

PLAN

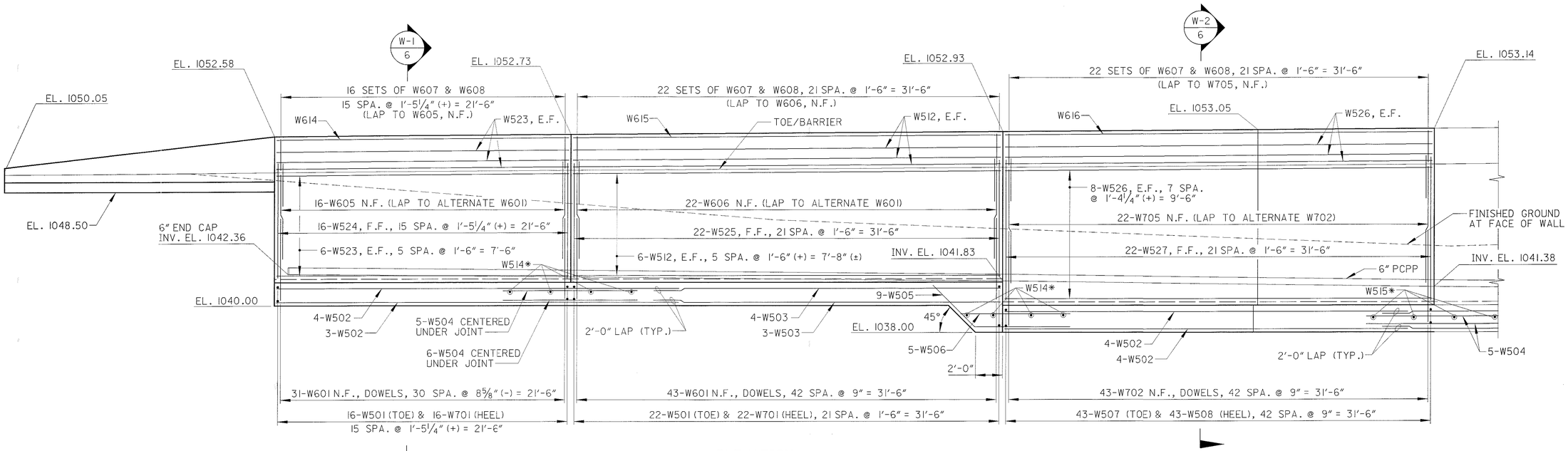

ELEVATION

* #5 bars @ 3'-0" (±) c/c TO SUPPORT ADDITIONAL LONGITUDINAL REINFORCEMENT AT JOINTS

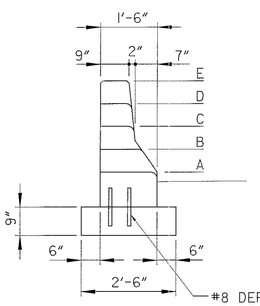

END VIEW

#8 DEFORMED STEEL BARS, 12" LONG, SPACED ON STAGGERED 4' CENTERS. SHORTER DOWELS ARE REQUIRED BETWEEN POINTS A AND B. DOWELS MAY BE OMITTED WHEN TOP IS CONSTRUCTED INTEGRAL WITH BASE.

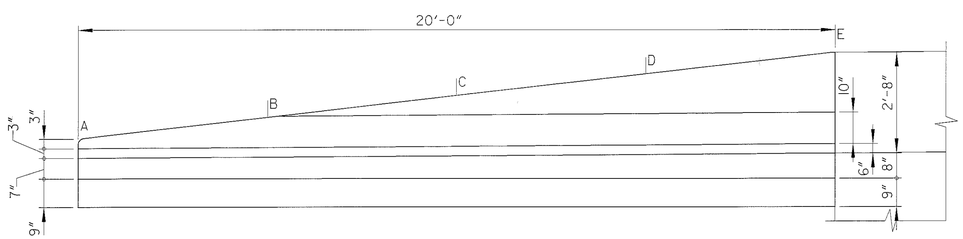

PROFILE VIEW

END TERMINAL DETAIL

NOTES

1. POROUS BACKFILL WITH FILTER FABRIC, 2 FEET THICK, SHALL EXTEND UP TO 1 FOOT BELOW THE EMBANKMENT SURFACE AND LATERALLY FROM SEGMENT 1 TO 7 FEET FROM END OF THE RETAINING WALL.
2. FOR DETAILS OF CONTRACTION JOINT AND EXPANSION JOINT, SEE SHEET 614.
3. 6" PERFORATED CORRUGATED PLASTIC PIPE, AS PER PLAN, SHALL INCLUDE TWO 6" END CAPS AS DETAILED IN THE PLANS.
4. FOR CONVERSION OF UNITS FROM METRIC STANDARD DRAWINGS, SEE SHEET 30.
5. 20'-0" BARRIER TRANSITION CONCRETE QUANTITY INCLUDED AS PART OF ITEM 842, CLASS C CONCRETE, AS PER PLAN.

DLZ
1000 ROCKEFELLER BLDG ● 614 W SUPERIOR AVE ● CLEVELAND, OH 44113

DESIGNED DP | DRAWN DP | REVIEWED GWM | DATE 5/31/01 | CHECKED JWB | REVISED | STRUCTURE FILE NUMBER

SEGMENTS 1 THRU 3
RETAINING WALL #2
ALONG OHIO STREET

SUM-8-0.63

2 / 8

611
1088

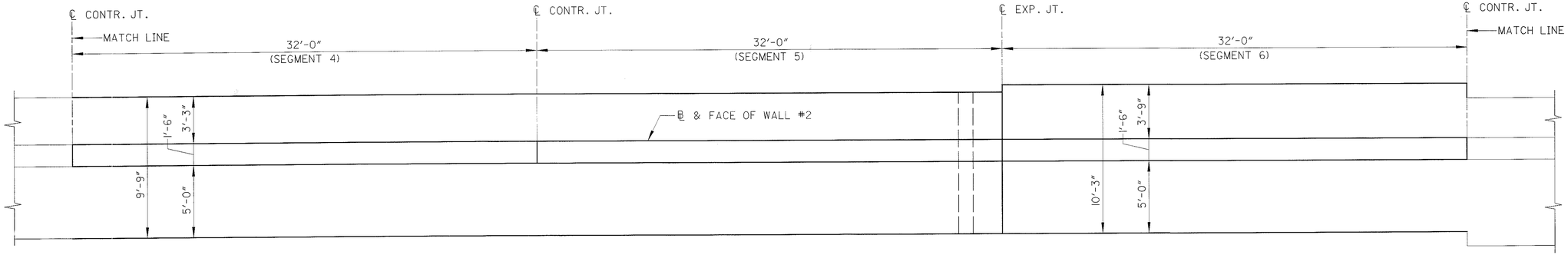

PLAN

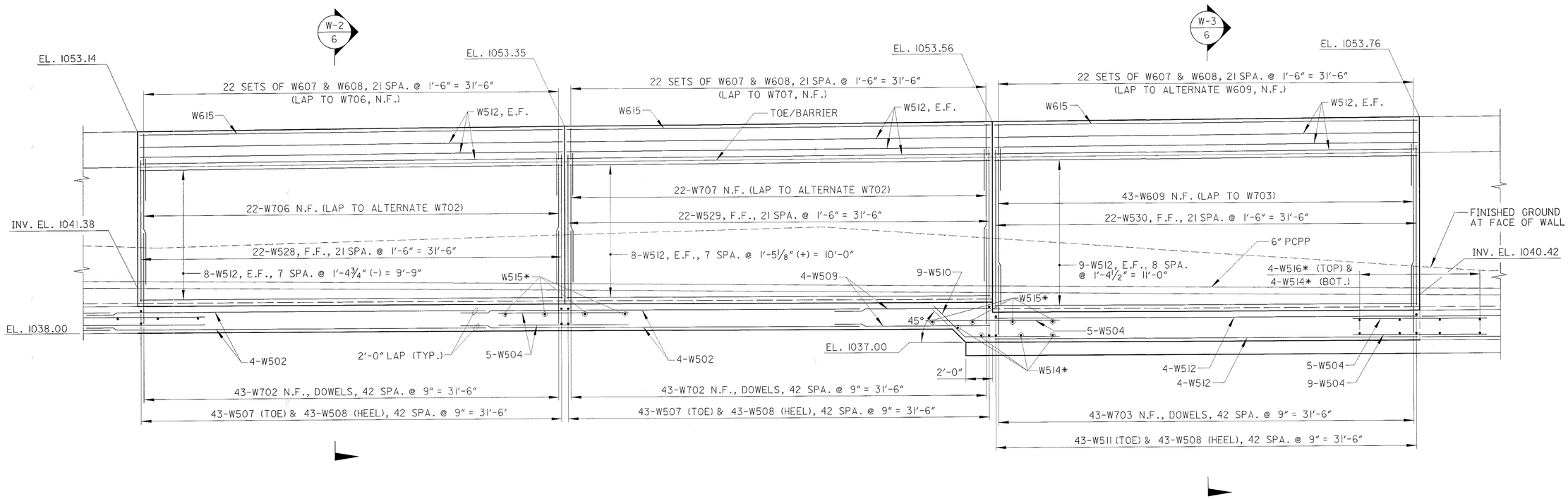

ELEVATION

* #5 bars @ 3'-0" (±) c/c TO SUPPORT ADDITIONAL LONGITUDINAL REINFORCEMENT AT JOINTS

FOR NOTES, SEE SHEET 611.

DLZ
1000 ROCKEFELLER BLDG ★ 614 W SUPERIOR AVE ★ CLEVELAND, OH 44113

DESIGNED DP
DRAWN DP
CHECKED JWB
REVIEWED GWM
DATE 5/31/01
REVISED
STRUCTURE FILE NUMBER

SEGMENTS 4 THRU 6
RETAINING WALL #2
ALONG OHIO STREET

SUM-8-0.63

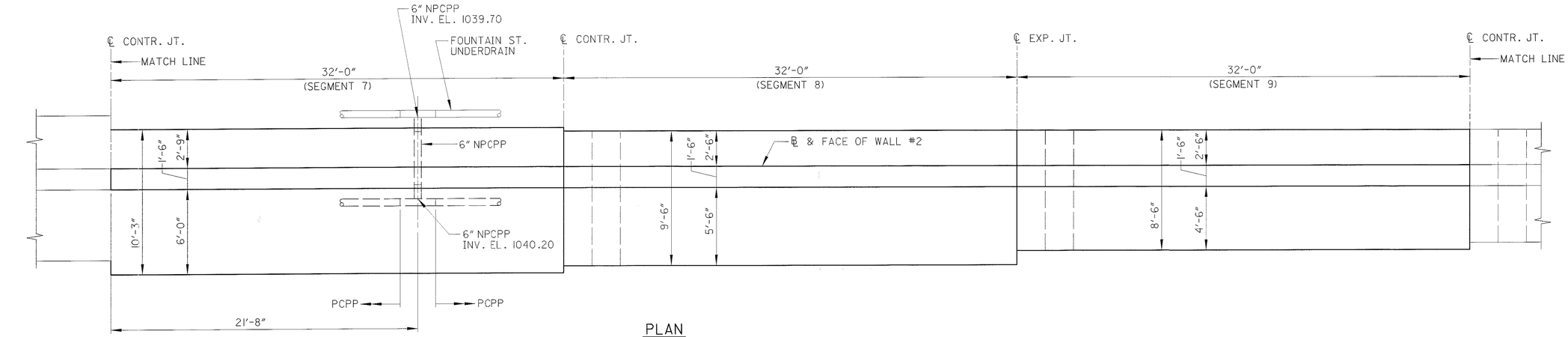

PLAN

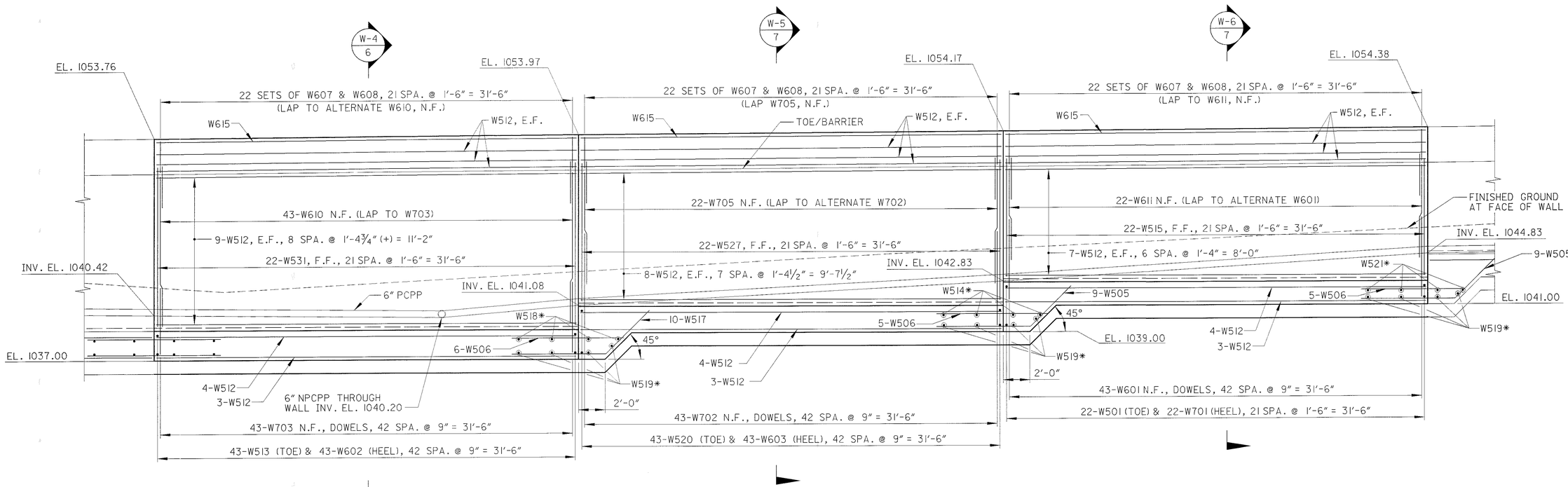

ELEVATION

* #5 bars @ 3'-0" (±) c/c TO SUPPORT ADDITIONAL LONGITUDINAL REINFORCEMENT AT JOINTS

FOR NOTES, SEE SHEET 611.

DLZ
3000 ROCKEFELLER BLDG • 614 W SUPERIOR AVE • CLEVELAND, OH 44113

DESIGNED	DRAWN	REVIEWED	DATE
DP	DP	GWM	5/31/01
CHECKED	REVISED	STRUCTURE FILE NUMBER	
JWB			

SEGMENTS 7 THRU 9
RETAINING WALL #2
ALONG OHIO STREET

SUM-8-0.63

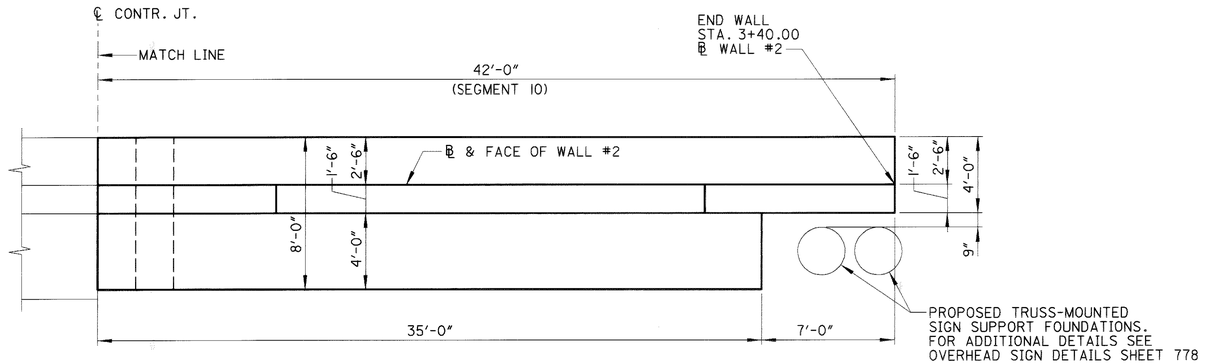

PLAN

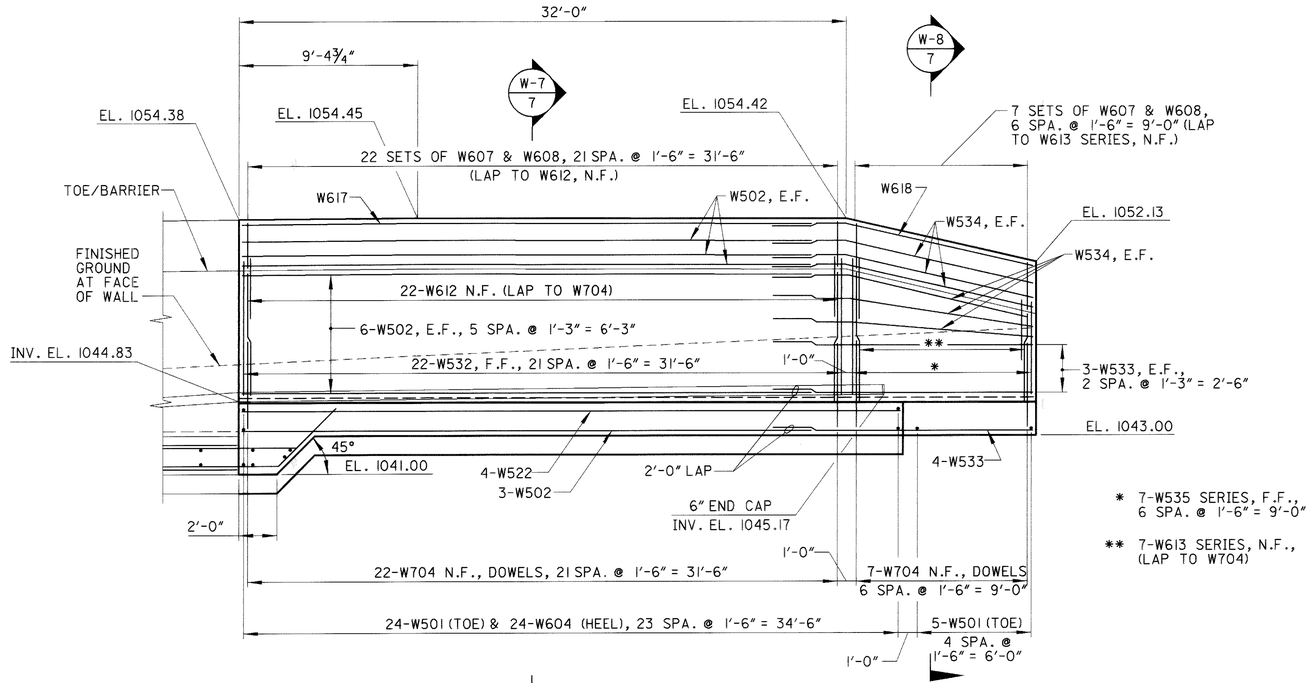

* 7-W535 SERIES, F.F.,
6 SPA. @ 1'-6" = 9'-0"

** 7-W613 SERIES, N.F.,
(LAP TO W704)

ELEVATION

ITEM SPECIAL - FORM LINER

A VERTICAL FRACTURED FIN FORM LINER SHALL BE PROVIDED WHERE INDICATED BY THE TYPICAL WALL TREATMENT DETAIL. THE COST OF THE FORM LINER, INCLUDING ALL LABOR, MATERIALS, EQUIPMENT AND INCIDENTALS SHALL BE INCLUDED WITH THE UNIT PRICE BID, PER SQUARE FOOT FOR ITEM SPECIAL, FORM LINER.

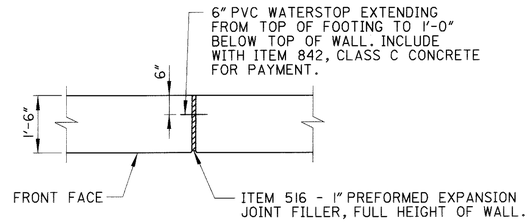

EXPANSION JOINT DETAIL

PVC WATERSTOP

A PVC WATERSTOP, NOMINAL DIMENSIONS 6" x 3/8" THICK AND CAPABLE OF PROVIDING 1 1/2" MOVEMENT, SHALL BE PROVIDED AT CONTRACTION AND EXPANSION JOINTS.

THE WATERSTOP SHALL EXTEND FROM THE TOP OF FOOTING TO 1'-0" BELOW TOP OF WALL.

THE WATERSTOP SHALL BE SECURELY HELD IN PLACE DURING CONCRETE PLACEMENT.

INCLUDE WITH ITEM 842, CLASS C CONCRETE FOR PAYMENT.

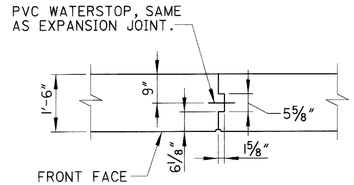

CONTRACTION JOINT DETAIL

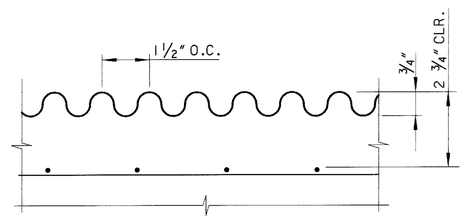

SECTION A-A

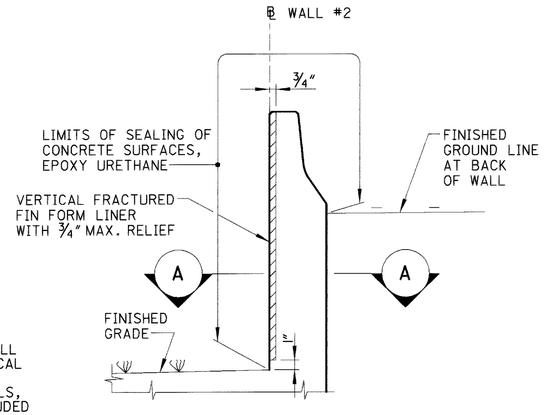

TYPICAL WALL TREATMENT

REVISIONS: 05/15/2002 by AGW

DLZ
1000 ROCKEFELLER BLDG • 614 W SUPERIOR AVE • CLEVELAND, OH 44113

DESIGNED	DRAWN	REVIEWED	DATE
DP	DP	GWM	5/31/01
CHECKED	REVISED	STRUCTURE FILE NUMBER	
JWB			

SEGMENT 10
RETAINING WALL #2
ALONG OHIO STREET

SUM-8-0.63

02:26:09 PM
06/12/2002
us\00-010sr-8\civil\walls\wall2-detail.dgn

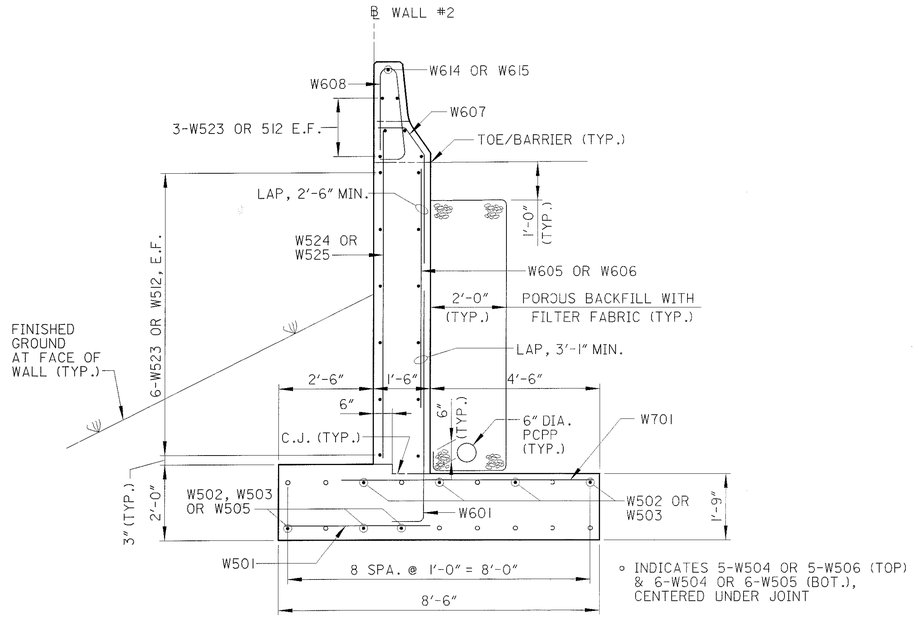

SECTION W-1 / 2

(SEGMENTS 1 & 2)

∘ INDICATES 5-W504 OR 5-W506 (TOP) & 6-W504 OR 6-W505 (BOT.), CENTERED UNDER JOINT

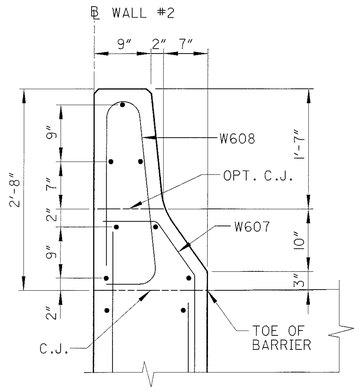

WALL/BARRIER DETAIL

(TYPICAL FOR WALL #2)

FOR NOTES, SEE SHEET 611.

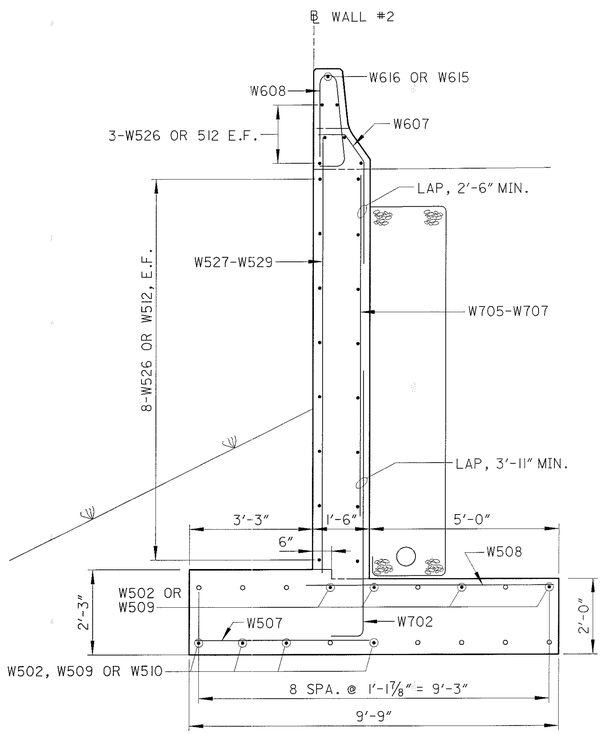

SECTION W-2 / 2,3

(SEGMENTS 3-5)

∘ INDICATES 5-W504 (TOP) & 5-W504 OR 5-W510 (BOT.), CENTERED UNDER JOINT

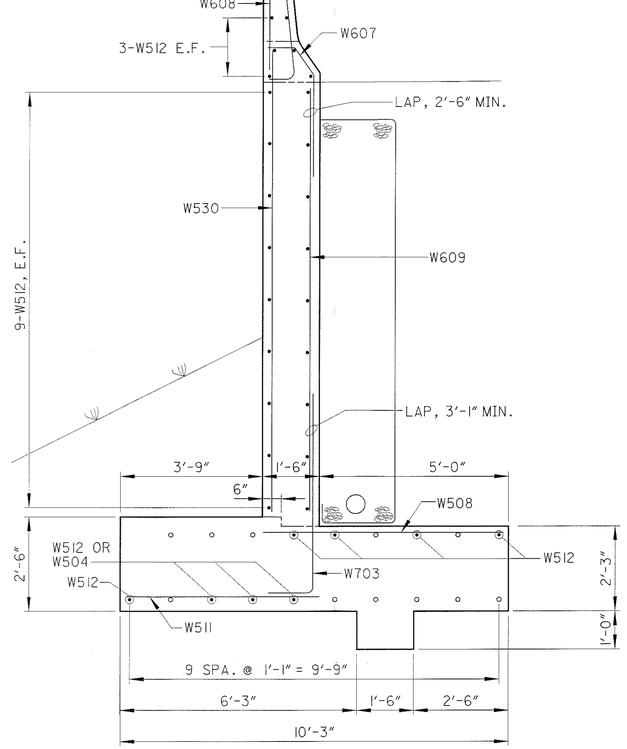

SECTION W-3 / 3

(SEGMENT 6)

∘ INDICATES 5-W504 (TOP) & 6-W504 (BOT.), CENTERED UNDER JOINT

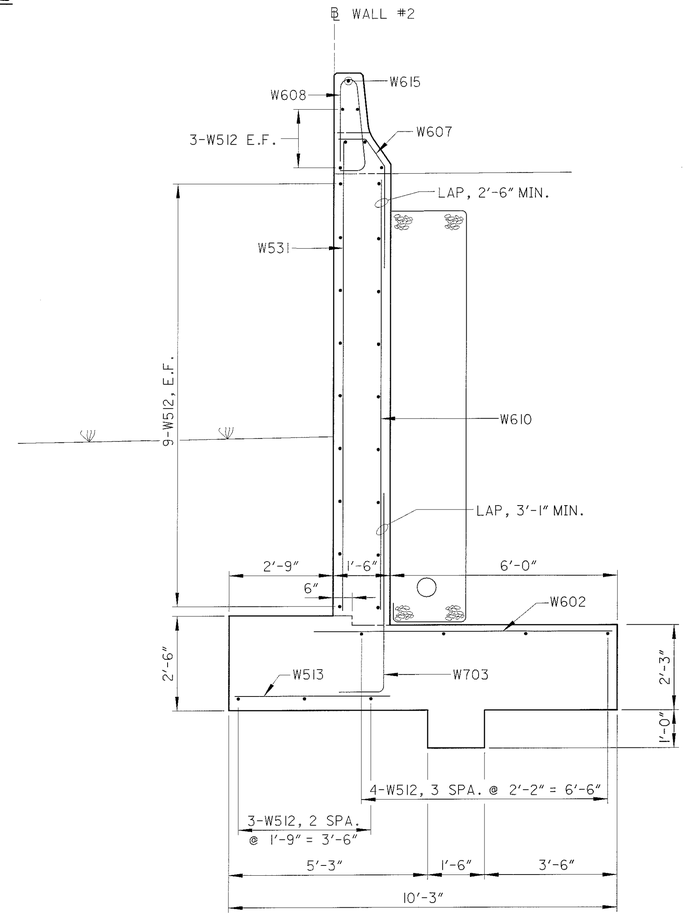

SECTION W-4 / 4

(SEGMENT 7)

NOTE: ADDITIONAL BARS CENTERED UNDER JOINT ARE SHOWN IN SECTION DETAILS OF SEGMENTS 6 & 8

DLZ

1000 ROCKEFELLER BLDG ★ 614 W SUPERIOR AVE ★ CLEVELAND, OH 44113

DESIGNED DP | DRAWN DP | REVIEWED GWM | DATE 5/31/01

CHECKED JWB | REVISED | STRUCTURE FILE NUMBER

WALL SECTIONS
RETAINING WALL #2
ALONG OHIO STREET

SUM-8-0.63

6 / 8

615 / 1088

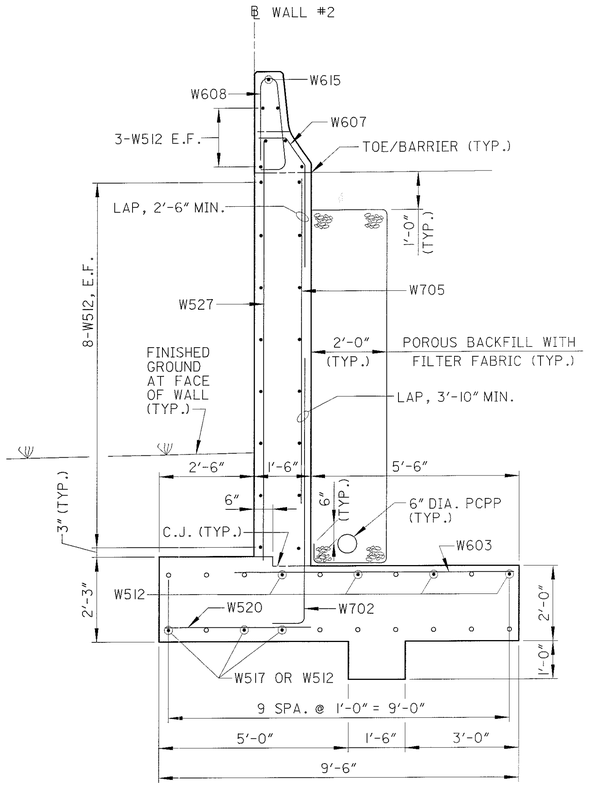

SECTION W-5 / 4

(SEGMENT 8)

∘ INDICATES 6-W506 (TOP) & 7-W517 (BOT.), CENTERED UNDER JOINT

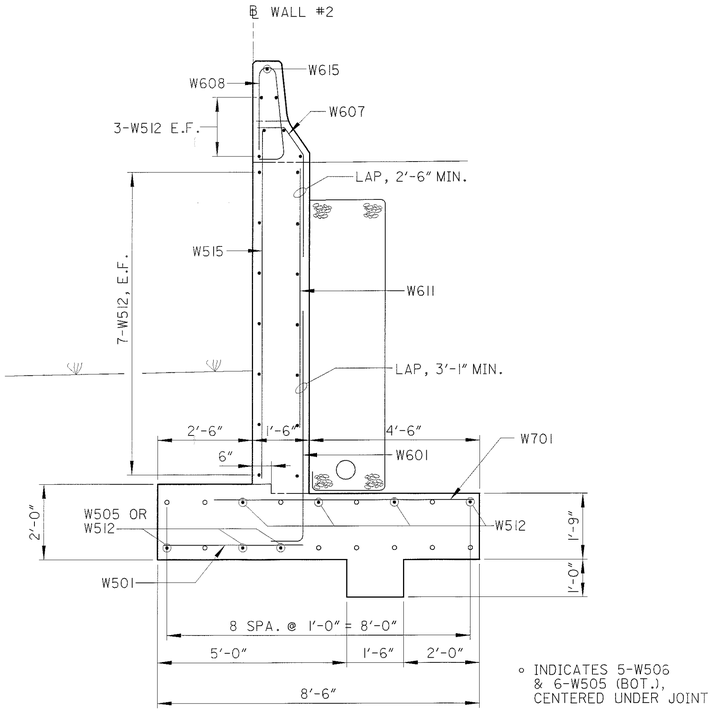

SECTION W-6 / 4

(SEGMENT 9)

∘ INDICATES 5-W506 & 6-W505 (BOT.), CENTERED UNDER JOINT

FOR NOTES, SEE SHEET 611.

FOR TYPICAL WALL/BARRIER DETAIL SEE SHEET 615.

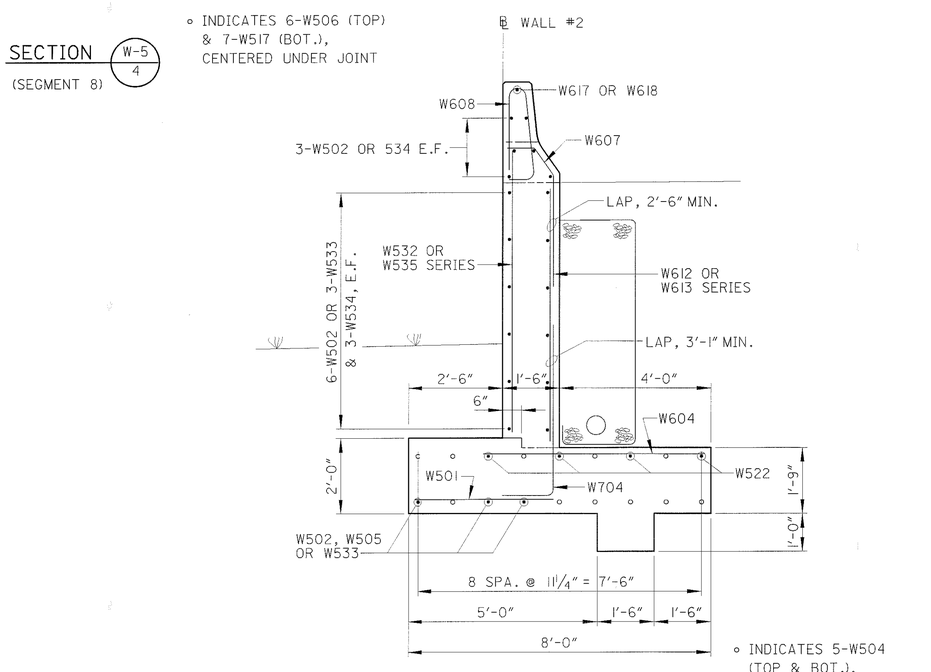

SECTION W-7 / 5

(FIRST 35'-0" OF SEGMENT 10)

∘ INDICATES 5-W504 (TOP & BOT.), CENTERED UNDER JOINT

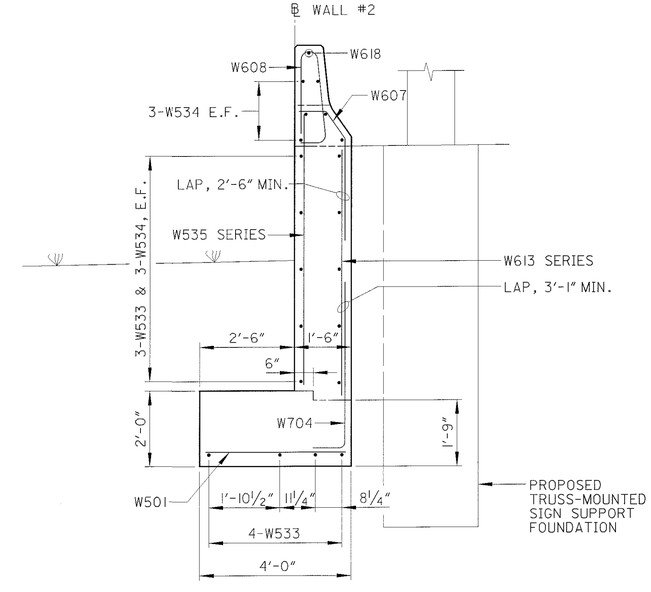

SECTION W-8 / 5

(LAST 7'-0" OF SEGMENT 10)

DLZ
8000 ROCKEFELLER BLDG • 614 W. SUPERIOR AVE • CLEVELAND, OH 44113

DESIGNED	DRAWN	REVIEWED	DATE
DP	DP	GWM	5/31/01
CHECKED	REVISED	STRUCTURE FILE NUMBER	
JWB			

WALL SECTIONS
RETAINING WALL #2
ALONG OHIO STREET

SUM-8-0.63

7 / 8

616
1088

REINFORCING STEEL LIST

MARK	NUMBER	LENGTH	WEIGHT (LBS.)	TYPE	DIMENSIONS A	B	C	D	SER INC.
W501	89	3'-8"	340	STR					
W502	52	30'-0"	1627	STR					
W503	7	25'-9"	188	STR					
W504	50	10'-0"	522	STR					
W505	27	11'-7"	326	12	7'-0"	3'-3"	3'-3"		
W506	21	8'-6"	186	STR					
W507	129	4'-7"	617	STR					
W508	172	6'-6"	1166	STR					
W509	8	11'-9"	98	STR					
W510	9	10'-6"	99	12	7'-0"	2'-6"	2'-6"		
W511	43	5'-1"	228	STR					
W512	181	31'-7"	5962	STR					
W513	43	4'-1"	183	STR					
W514	20	8'-0"	167	STR					
W515	34	9'-3"	328	STR					
W516	4	9'-9"	41	STR					
W517	10	11'-11"	124	12	7'-0"	3'-6"	3'-6"		
W518	4	9'-0"	38	STR					
W519	12	7'-0"	88	STR					
W520	43	4'-1"	183	STR					
W521	4	7'-6"	31	STR					
W522	4	34'-7"	144	STR					
W523	18	21'-7"	405	STR					
W524	16	8'-9"	146	STR					
W525	22	9'-0"	207	STR					
W526	22	31'-5"	721	12	18'-9"	1'-8"	12'-5"		
W527	44	10'-11"	501	STR					
W528	22	11'-2"	256	STR					
W529	22	11'-4"	260	STR					
W530	22	12'-4"	283	STR					
W531	22	12'-6"	287	STR					
W532	22	7'-7"	174	STR					
W533	10	13'-9"	143	STR					
W534	12	13'-11"	174	12	10'-1"	0'-10"	3'-9"		
	1	5'-4"							
W535	SER		47	STR					0'-4 5/16"
	7	7'-6"							
W601	117	7'-2"	1259	3	1'-0"	6'-4"			
W602	43	7'-10"	506	STR					
W603	43	7'-4"	474	STR					
W604	24	5'-10"	210	STR					
W605	16	6'-5"	154	STR					
W606	22	6'-8"	220	STR					
W607	221	4'-3"	1411	20	0'-7"	0'-6"	0'-8 1/2"	2'-10"	
W608	221	5'-5"	1798	22	2'-2"	2'-5"	0'-8"		
W609	43	11'-4"	732	STR					
W610	43	11'-6"	743	STR					
W611	22	7'-1"	234	STR					
W612	22	6'-10"	226	STR					
	1	4'-6"							
W613	SER		59	STR					0'-4 5/16"
	7	6'-8"							
W614	1	21'-7"	32	STR					
W615	7	31'-7"	332	STR					
W616	1	31'-6"	47	12	18'-9"	1'-8"	12'-7"		
W617	1	30'-0"	45	STR					
W618	1	13'-10"	21	12	10'-1"	3'-8"	0'-10"		
W701	60	6'-10"	838	STR					
W702	172	8'-3"	2900	3	1'-2"	7'-3"			
W703	86	6'-6"	1143	3	1'-2"	5'-6"			
W704	29	5'-9"	341	3	1'-2"	4'-9"			
W705	44	8'-8"	779	STR					
W706	22	8'-11"	401	STR					
W707	22	9'-1"	408	STR					
		TOTAL =	31603	LBS.					

BENDING DIAGRAMS

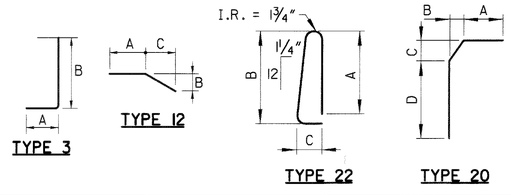

REINFORCING STEEL NOTES

1. SERIES BARS - EACH BAR VARIES BY TABULATED AMOUNT.
2. ALL DIMENSIONS ARE OUT TO OUT.
3. TYPE 'STR' INDICATES A STRAIGHT BAR.
4. THE BAR SIZE NUMBER IS SPECIFIED IN THE 'MARK' COLUMN. THE FIRST DIGIT INDICATES THE BAR SIZE NUMBER. FOR EXAMPLE, W501 IS A #5 BAR SIZE.
5. ALL BARS SHALL BE EPOXY COATED UNLESS NOTED OTHERWISE.
6. SUBTOTALS AND TOTAL WEIGHTS ARE FOR INFORMATIONAL PURPOSES ONLY. IF THE REINFORCING LIST PROVIDED IN THE PLANS IS USED IT SHALL BE VERIFIED BY THE CONTRACTOR. ANY REVISIONS IN THE REINFORCING STEEL LIST AS SHOWN IN THE PLANS WILL NOT BE REASON FOR ADJUSTMENT IN THE BID PRICE FOR STRUCTURAL CONCRETE.

ESTIMATED QUANTITIES

ITEM	ITEM EXTENSION	TOTAL	UNIT	DESCRIPTION	REF. SHEET
503	21100	1231	CU. YD.	UNCLASSIFIED EXCAVATION	
516	13600	57	SQ. FT.	1" PREFORMED EXPANSION JOINT FILLER	
518	21201	205	CU. YD.	POROUS BACKFILL WITH FILTER FABRIC, AS PER PLAN	2
518	40001	314	LIN. FT.	6" PERFORATED CORRUGATED PLASTIC PIPE, AS PER PLAN	2
518	40010	8	LIN. FT.	6" NON-PERFORATED CORRUGATED PLASTIC PIPE, INCLUDING SPECIALS	
SPECIAL	53013000	2600	SQ. FT.	FORM LINER *	5
842	46001	208	CU. YD.	CLASS C CONCRETE, AS PER PLAN	2 & 5
842	46500	243	CU. YD.	CLASS C CONCRETE, FOOTING	
864	10100	440	SQ. YD.	SEALING OF CONCRETE SURFACES (EPOXY-URETHANE)	

* 100% LOCAL COST

REVISIONS: 05/15/2002 by AGW

DLZ
000 ROCKEFELLER BLDG • 614 • SUPERIOR AVE. • CLEVELAND, OH 44115

DESIGNED	DRAWN	REVIEWED	DATE
DP	DP	GWM	5/31/01
CHECKED	REVISED	STRUCTURE FILE NUMBER	
JWB			

REINFORCING STEEL LIST
RETAINING WALL #2
ALONG GOODKIRK STREET

SUM-8-0.63

8 / 8

617
1088

04:00:09 PM
07/09/2002
u:\00-0105R-RV\Civil\Walls\wall2-rebarlist.dgn

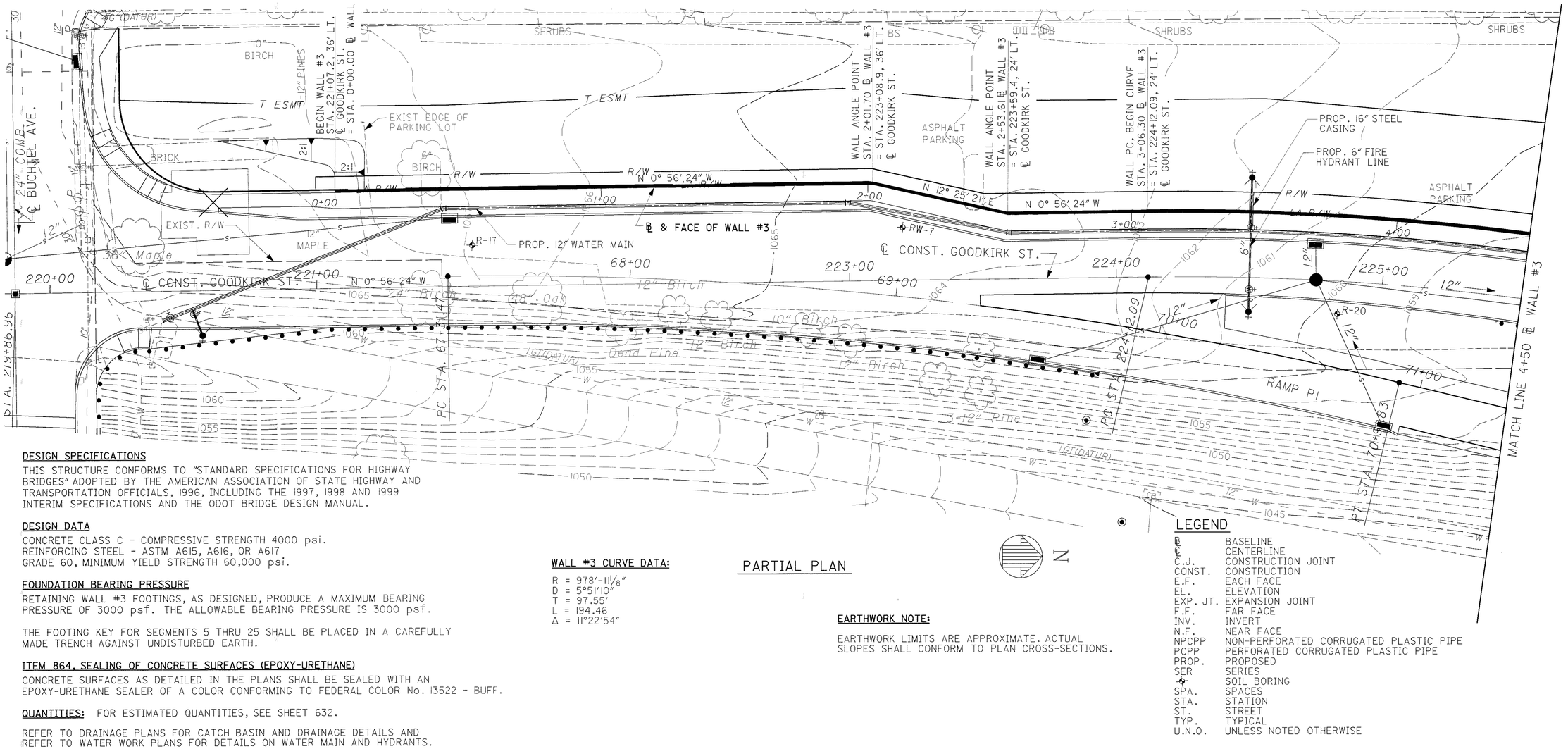

PARTIAL PLAN

DESIGN SPECIFICATIONS

THIS STRUCTURE CONFORMS TO "STANDARD SPECIFICATIONS FOR HIGHWAY BRIDGES" ADOPTED BY THE AMERICAN ASSOCIATION OF STATE HIGHWAY AND TRANSPORTATION OFFICIALS, 1996, INCLUDING THE 1997, 1998 AND 1999 INTERIM SPECIFICATIONS AND THE ODOT BRIDGE DESIGN MANUAL.

DESIGN DATA

CONCRETE CLASS C - COMPRESSIVE STRENGTH 4000 psi.
REINFORCING STEEL - ASTM A615, A616, OR A617
GRADE 60, MINIMUM YIELD STRENGTH 60,000 psi.

FOUNDATION BEARING PRESSURE

RETAINING WALL #3 FOOTINGS, AS DESIGNED, PRODUCE A MAXIMUM BEARING PRESSURE OF 3000 psf. THE ALLOWABLE BEARING PRESSURE IS 3000 psf.

THE FOOTING KEY FOR SEGMENTS 5 THRU 25 SHALL BE PLACED IN A CAREFULLY MADE TRENCH AGAINST UNDISTURBED EARTH.

ITEM 864, SEALING OF CONCRETE SURFACES (EPOXY-URETHANE)

CONCRETE SURFACES AS DETAILED IN THE PLANS SHALL BE SEALED WITH AN EPOXY-URETHANE SEALER OF A COLOR CONFORMING TO FEDERAL COLOR No. 13522 - BUFF.

QUANTITIES: FOR ESTIMATED QUANTITIES, SEE SHEET 632.

REFER TO DRAINAGE PLANS FOR CATCH BASIN AND DRAINAGE DETAILS AND REFER TO WATER WORK PLANS FOR DETAILS ON WATER MAIN AND HYDRANTS.

WALL #3 CURVE DATA:

R = 978'-11⅛"
D = 5°51'10"
T = 97.55'
L = 194.46
Δ = 11°22'54"

EARTHWORK NOTE:

EARTHWORK LIMITS ARE APPROXIMATE. ACTUAL SLOPES SHALL CONFORM TO PLAN CROSS-SECTIONS.

LEGEND

℄	BASELINE
℄	CENTERLINE
C.J.	CONSTRUCTION JOINT
CONST.	CONSTRUCTION
E.F.	EACH FACE
EL.	ELEVATION
EXP. JT.	EXPANSION JOINT
F.F.	FAR FACE
INV.	INVERT
N.F.	NEAR FACE
NPCPP	NON-PERFORATED CORRUGATED PLASTIC PIPE
PCPP	PERFORATED CORRUGATED PLASTIC PIPE
PROP.	PROPOSED
SER	SERIES
⊕	SOIL BORING
SPA.	SPACES
STA.	STATION
ST.	STREET
TYP.	TYPICAL
U.N.O.	UNLESS NOTED OTHERWISE

BENCHMARK #4

CHISELED "□" ON NE CORNER OF STEPS IN NW ENTRANCE OF BUILDING @ SW CORNER OF MARKET & KIRKWOOD.
STA. 232+60.59, 135.89' LT.
℄ GOODKIRK ST.
EL. 1046.85

BENCHMARK #5

CHISELED "□" ON S EDGE OF LIGHT POLE @ NE CORNER OF HAMILTON & MELL
STA. 226+53.10, 136.59 LT.
℄ GOODKIRK ST.
EL. 1059.56

BENCHMARK #6

CHISELED "□" ON SE CORNER OF 1.5' SQUARE CONCRETE PAD FOR SPEED LIMIT SIGN 41, W OF BRICK RD.
22.6' N OF ℄ BUCHTEL ST.
STA. 220+10.03, 170.15' LT.
℄ GOODKIRK ST.
EL. 1068.73

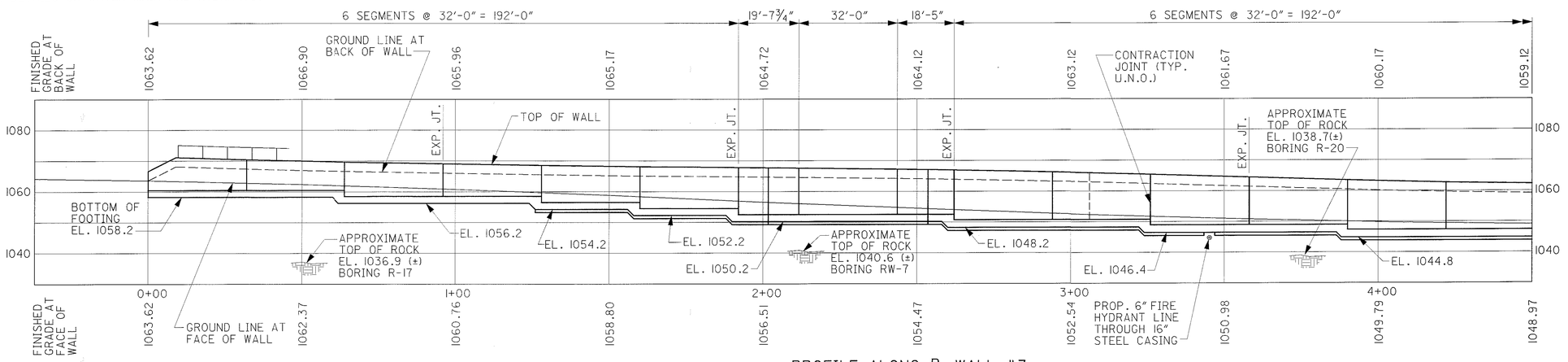

PROFILE ALONG ℄ WALL #3

DLZ
8000 ROCKEFELLER BLDG • 614 W SUPERIOR AVE • CLEVELAND, OH 44113

DESIGNED	DRAWN	REVIEWED	DATE
PAT	KME	GWM	5/04/01
CHECKED	REVISED	STRUCTURE FILE NUMBER	
JWB			

PLAN AND PROFILE
RETAINING WALL #3
ALONG GOODKIRK STREET

SUM-8-0.63

1 / 15

618
1088

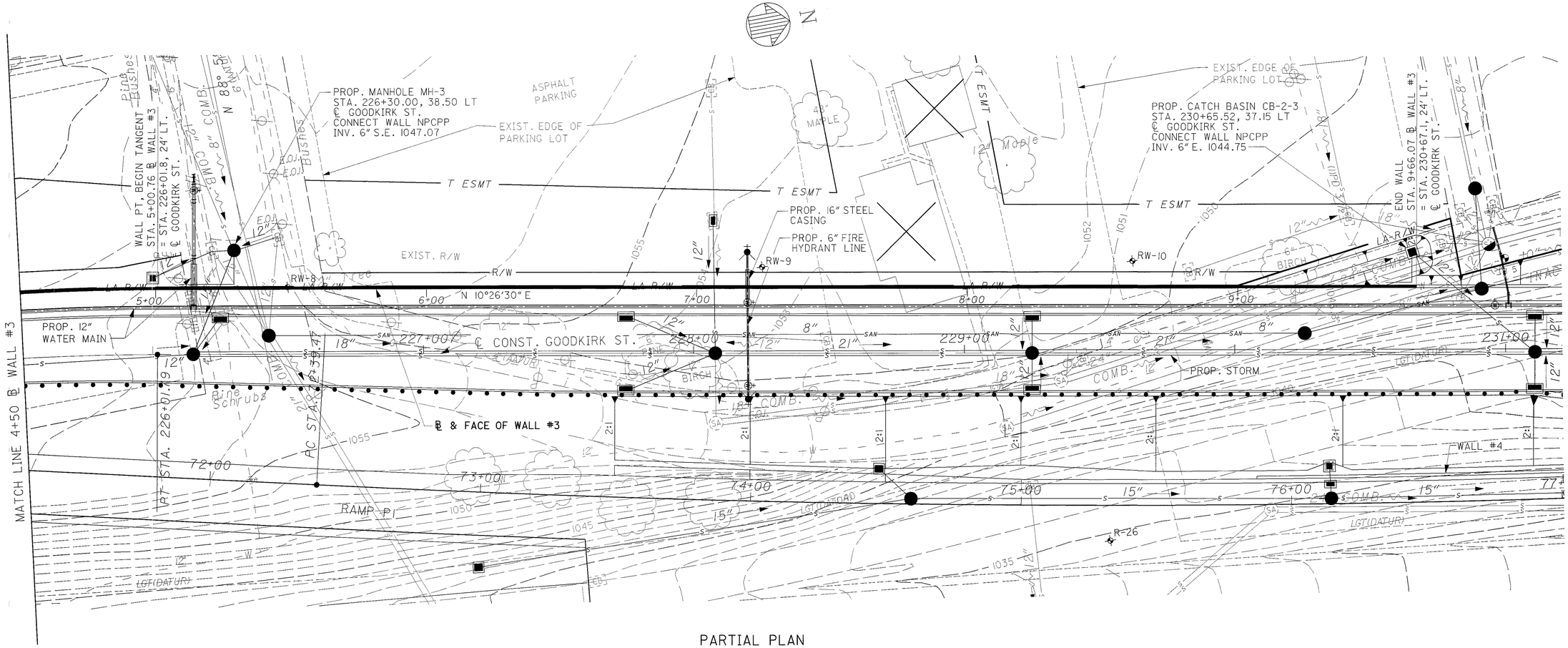

PARTIAL PLAN

SEE SHEET 1/15 FOR NOTES

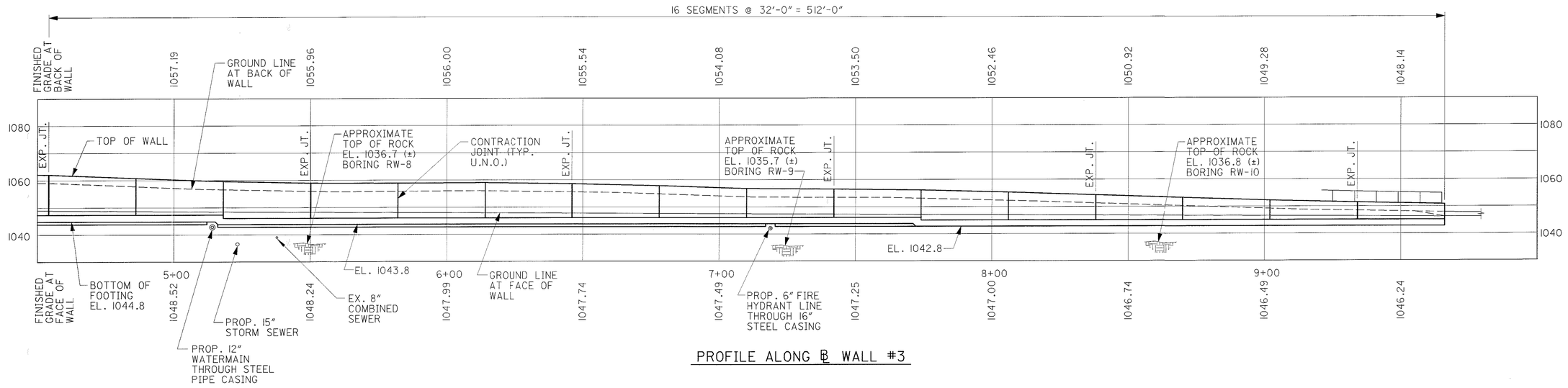

PROFILE ALONG ℄ WALL #3

DLZ
800 ROCKEFELLER BLDG • 614 W SUPERIOR AVE • CLEVELAND, OH 44113

DESIGNED	DRAWN	REVIEWED	DATE
PAT	KME	GWM	5/14/01
CHECKED	REVISED		STRUCTURE FILE NUMBER
JWB			

PLAN AND PROFILE
RETAINING WALL #3
ALONG GOODKIRK STREET

SUM-8-0.63

2 / 15

619
1088

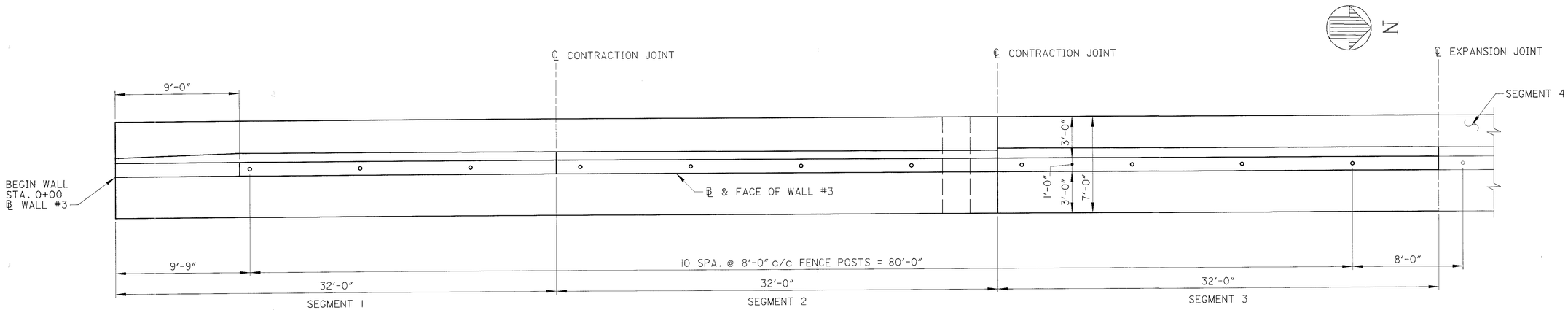

PLAN

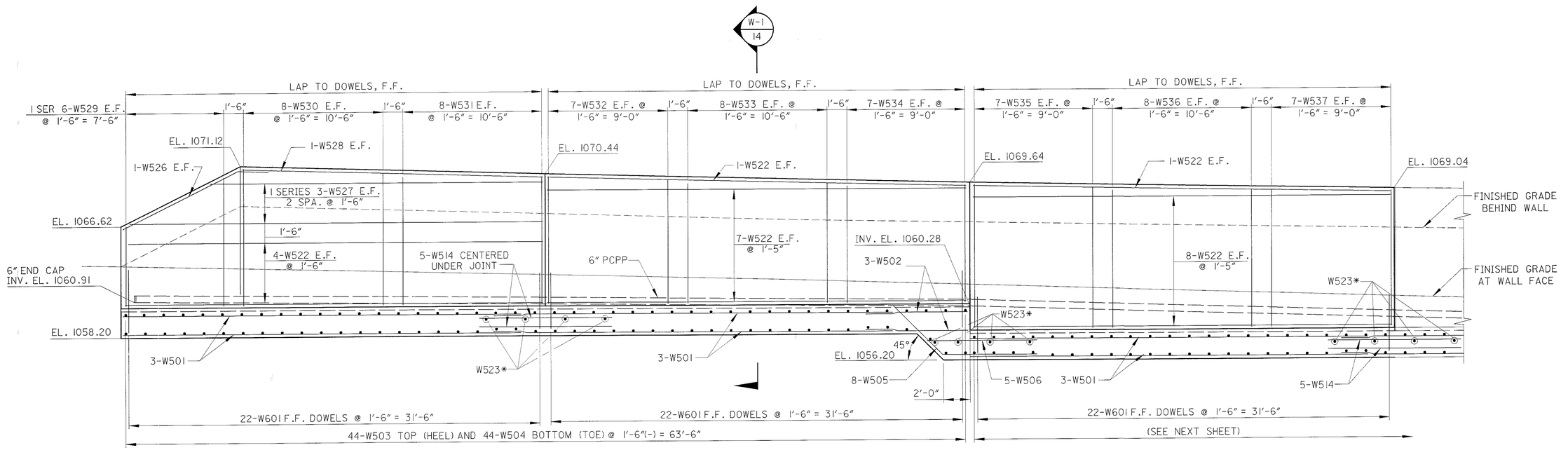

* #5 bars @ 3'-0" (±) c/c TO SUPPORT ADDITIONAL LONGITUDINAL REINFORCEMENT AT JOINTS

ELEVATION

NOTES

1. POROUS BACKFILL WITH FILTER FABRIC, 2 FEET THICK, SHALL EXTEND UP TO 1 FOOT BELOW THE EMBANKMENT SURFACE AND LATERALLY FOR THE FULL LENGTH OF THE RETAINING WALL.
2. FOR DETAILS OF CONTRACTION JOINT AND EXPANSION JOINT, SEE SHEET 630.
3. ITEM 607, FENCE, TYPE CL, MISC., AS PER PLAN (4' HIGH) THE FENCE POSTS SHALL HAVE BASEPLATES FABRICATED AND INSTALLED IN ACCORDANCE WITH ODOT STANDARD DRAWING VPF-1-90M. ALL COSTS ASSOCIATED WITH FURNISHING AND INSTALLING THE FENCE SHALL BE INCLUDED IN THE UNIT PRICE BID FOR ITEM 607.
4. 6" PERFORATED CORRUGATED PLASTIC PIPE, AS PER PLAN, SHALL INCLUDE TWO 6" END CAPS AS DETAILED IN THE PLANS.
5. FOR PAVING BEHIND WALLS SEE PLAN & PROFILE SHEETS ALONG ℄ GOODKIRK STREET.
6. FOR CONVERSION OF UNITS FROM METRIC STANDARD DRAWINGS, SEE SHEET 30.

DLZ
1000 ROCKEFELLER BLDG • 614 W SUPERIOR AVE • CLEVELAND, OH 44113

DESIGNED DP | DRAWN DJP | CHECKED JWB | REVISED | REVIEWED GWM | DATE 5/04/01 | STRUCTURE FILE NUMBER

SEGMENTS 1 THROUGH 3
RETAINING WALL #3
ALONG GOODKIRK STREET

SUM-8-0.63

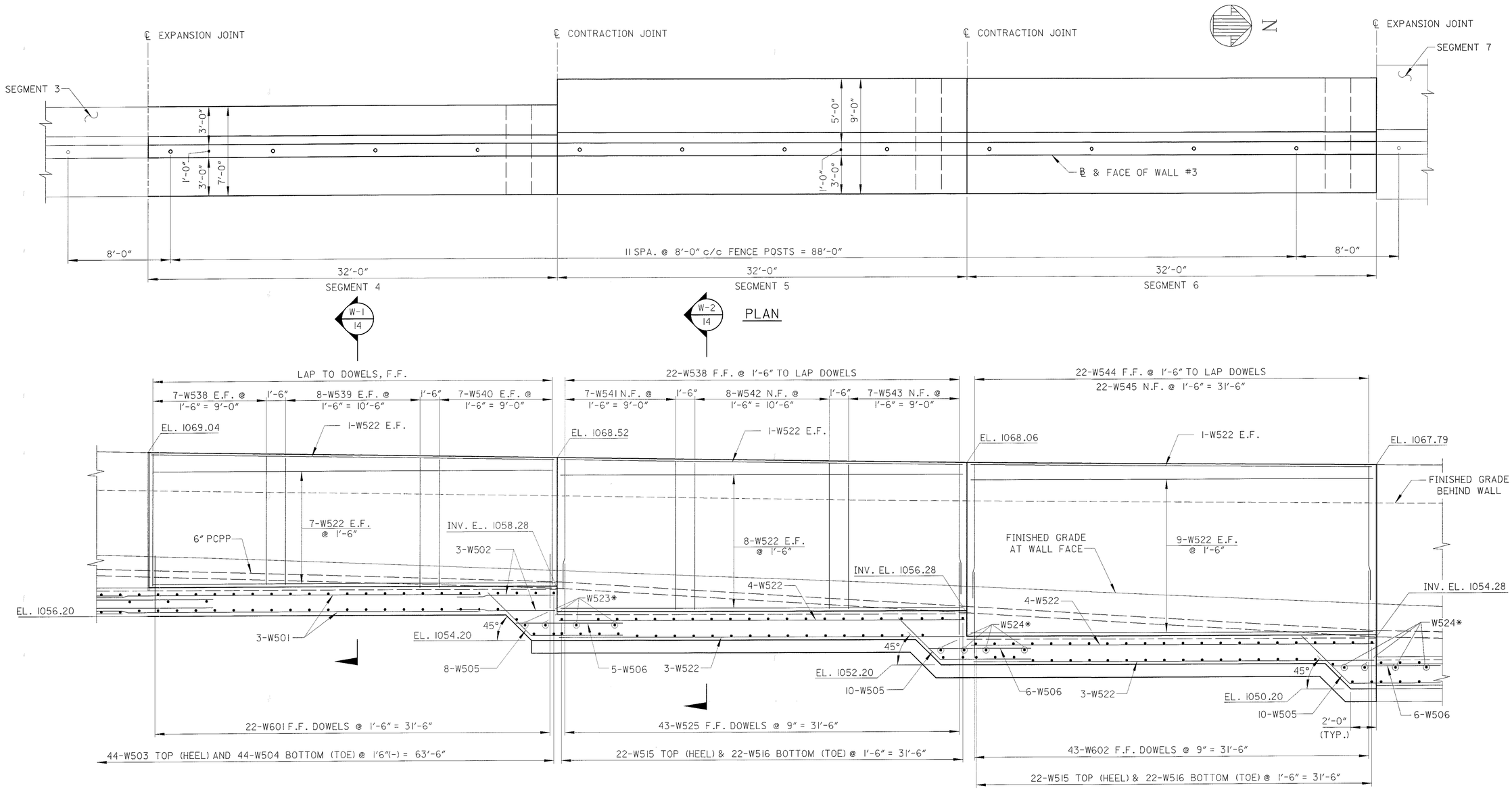

* #5 bars @ 3'-0" (±) c/c TO SUPPORT ADDITIONAL LONGITUDINAL REINFORCEMENT AT JOINTS

ELEVATION

FOR NOTES, SEE SHEET 620.

DLZ
800 ROCKEFELLER BLDG • 614 W SUPERIOR AVE • CLEVELAND, OH 44113

DESIGNED	DRAWN	REVIEWED	DATE
DP	DJP	GWM	5/04/01
CHECKED	REVISED	STRUCTURE FILE NUMBER	
JWB			

SEGMENTS 4 THROUGH 6
RETAINING WALL #3
ALONG GOODKIRK STREET

SUM-8-0.63

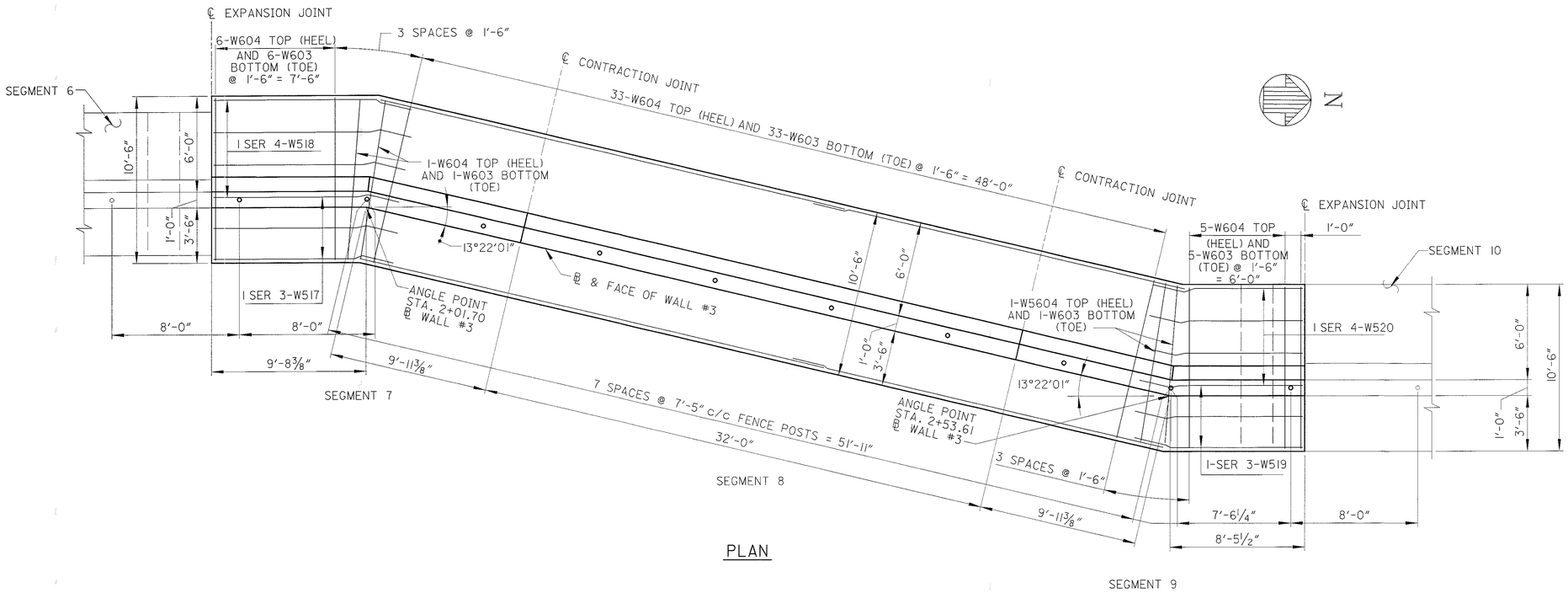

PLAN

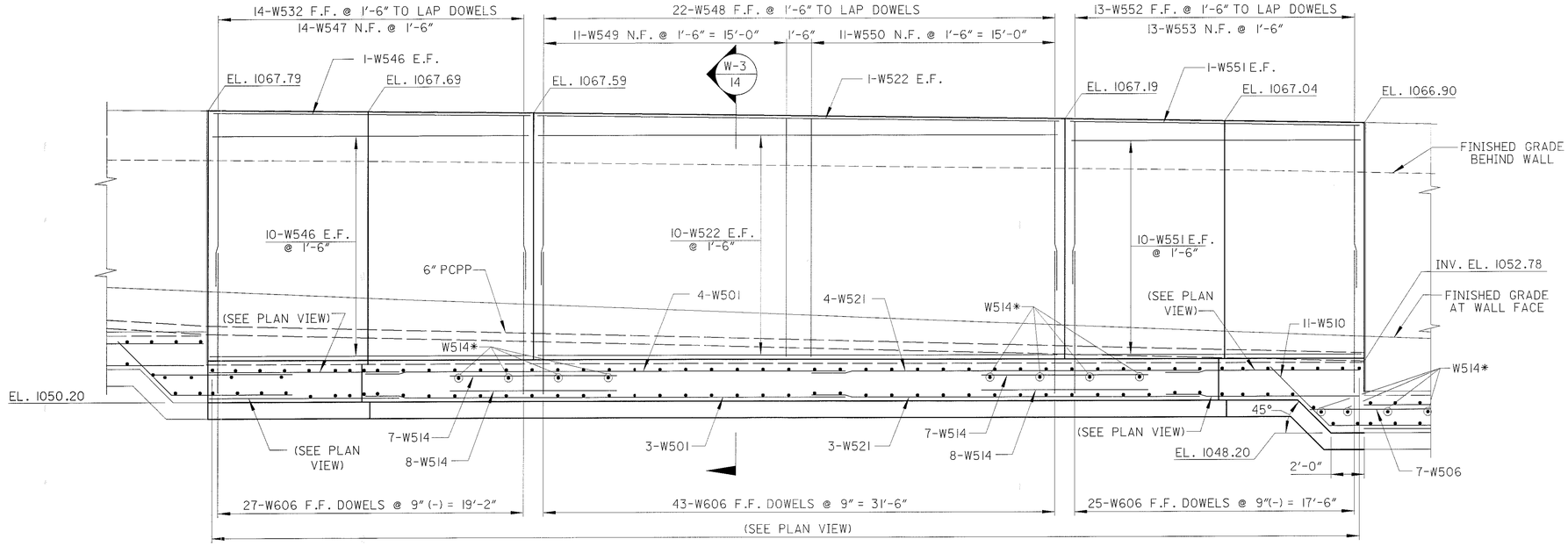

* #5 bars @ 3'-0" (±) c/c TO SUPPORT ADDITIONAL LONGITUDINAL REINFORCEMENT AT JOINTS

ELEVATION

FOR NOTES, SEE SHEET 620.

DLZ
8000 ROCKEFELLER BLDG ★ 614 W SUPERIOR AVE ★ CLEVELAND, OH 44113

DESIGNED	DRAWN	REVIEWED	DATE
DP	DJP	GWM	5/04/01
CHECKED	REVISED	STRUCTURE FILE NUMBER	
JWB			

SEGMENTS 7 THROUGH 9
RETAINING WALL #3
ALONG GOODKIRK STREET

SUM-8-0.63

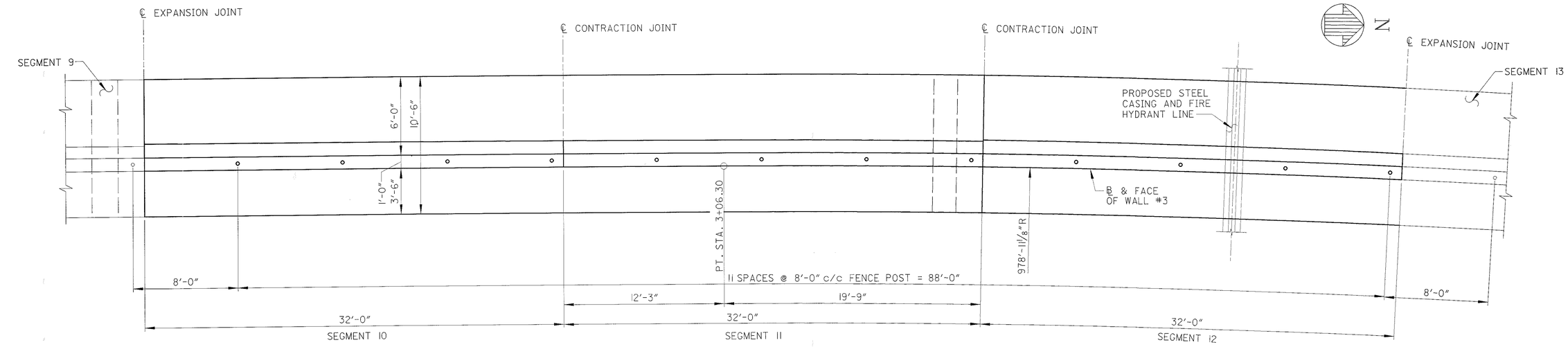

PLAN

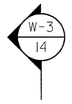

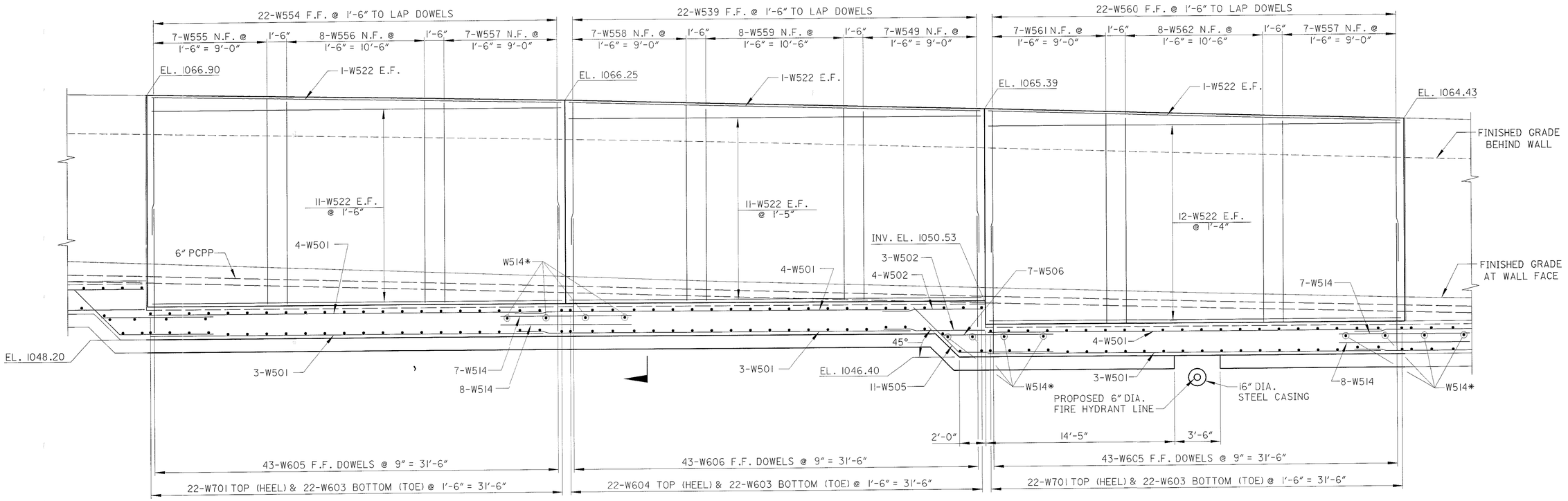

* #5 bars @ 3'-0" (±) c/c TO SUPPORT ADDITIONAL LONGITUDINAL REINFORCEMENT AT JOINTS

ELEVATION

FOR NOTES, SEE SHEET 620.

DLZ
1000 ROCKEFELLER BLDG • 614 W SUPERIOR AVE • CLEVELAND, OH 44113

DESIGNED DP
DRAWN DJP
CHECKED JWB
REVIEWED GWM
DATE 5/04/01
REVISED
STRUCTURE FILE NUMBER

SEGMENTS 10 THROUGH 12
RETAINING WALL #3
ALONG GOODKIRK STREET

SUM-8-0.63

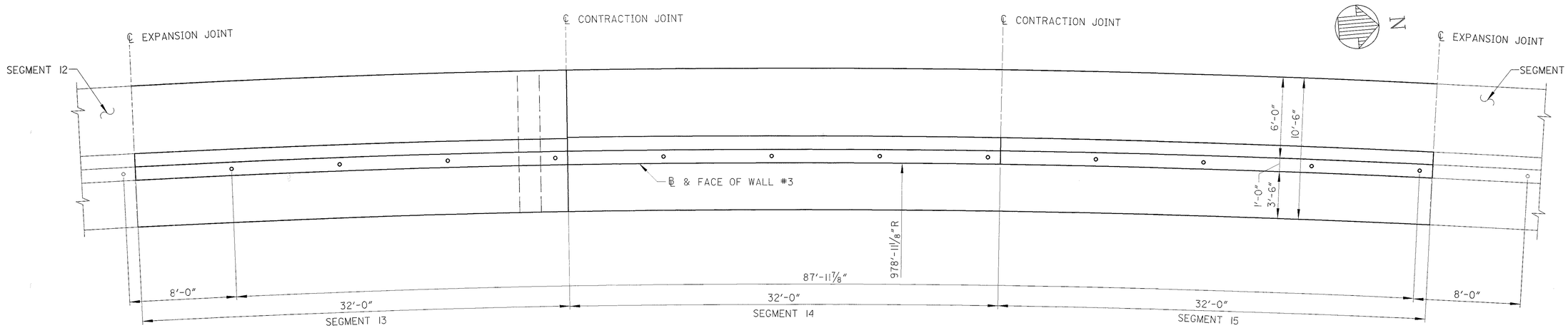

PLAN

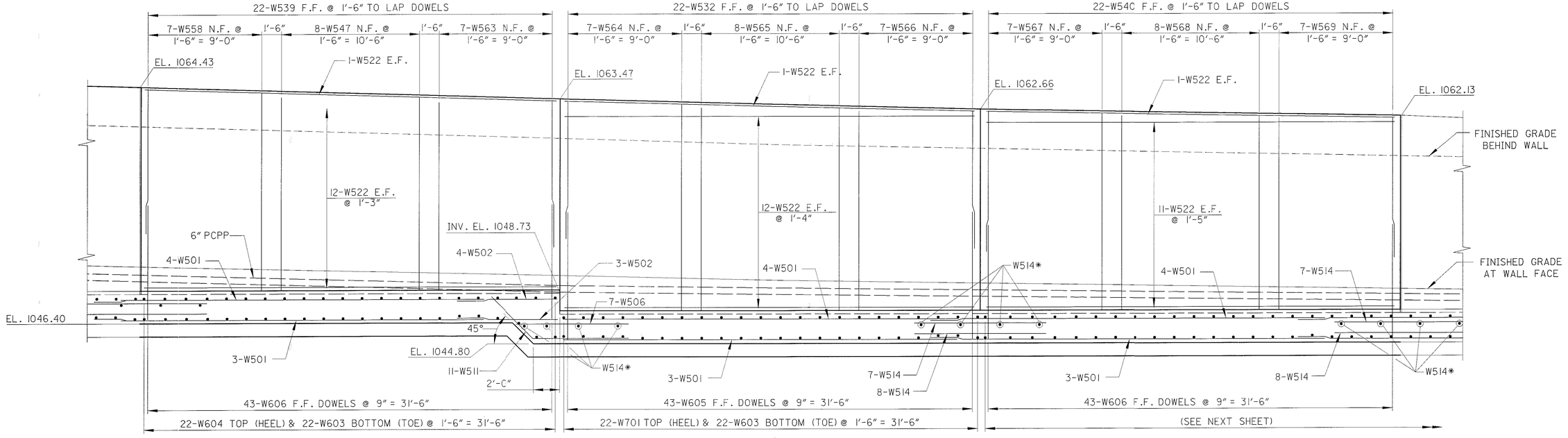

* #5 bars @ 3'-0" (±) c/c TO SUPPORT ADDITIONAL LONGITUDINAL REINFORCEMENT AT JOINTS

ELEVATION

FOR NOTES, SEE SHEET 620

DLZ
1000 ROCKEFELLER BLDG ★ 614 ★ SUPERIOR AVE ★ CLEVELAND, OH 44113

DESIGNED DP | DRAWN DJP | CHECKED JWB | REVIEWED GWM | DATE 5/04/01 | REVISED | STRUCTURE FILE NUMBER

SEGMENTS 13 THROUGH 15
RETAINING WALL #3
ALONG GOODKIRK STREET

SUM-8-0.63

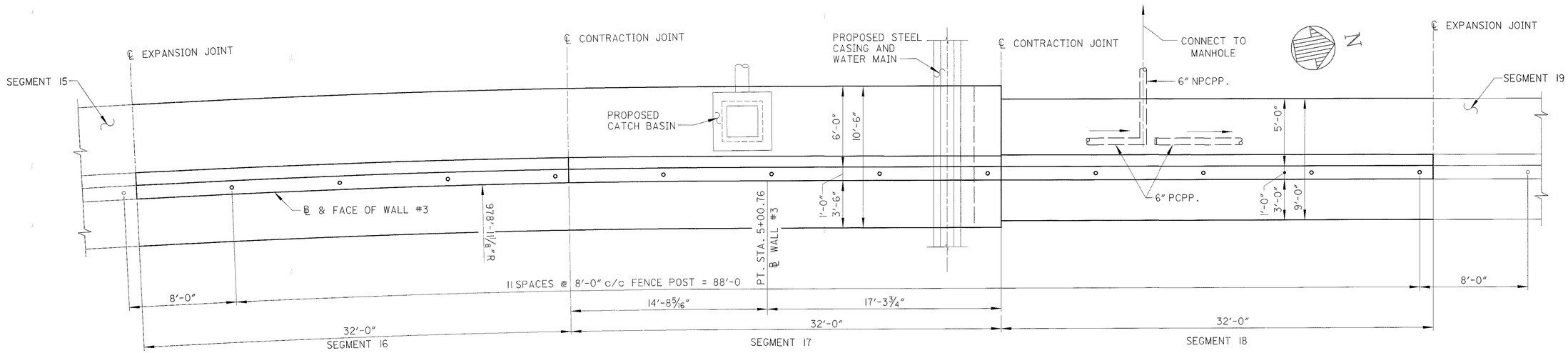

PLAN

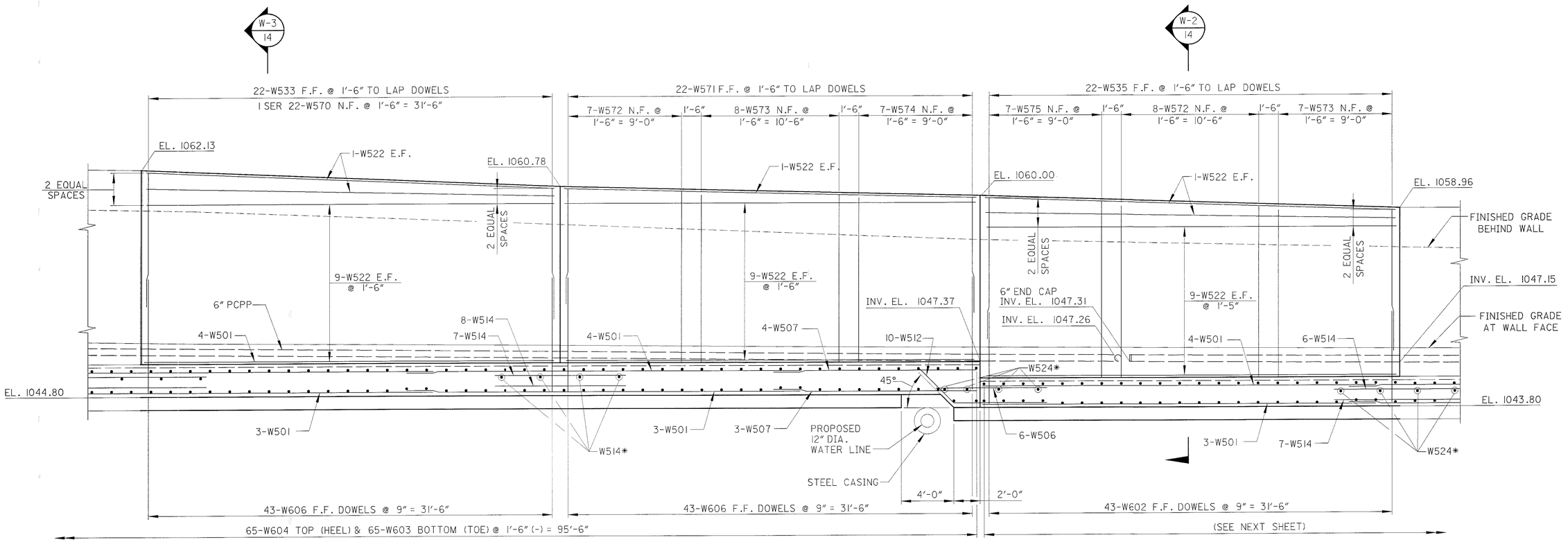

* #5 bars @ 3'-0" (±) c/c TO SUPPORT ADDITIONAL LONGITUDINAL REINFORCEMENT AT JOINTS

ELEVATION

FOR NOTES, SEE SHEET 620.

DLZ
1000 ROCKEFELLER BLDG ★ 614 W SUPERIOR AVE ★ CLEVELAND, OH 44113

DESIGNED DP
DRAWN DJP
REVIEWED GWM
DATE 5/04/01
CHECKED JWB
REVISED
STRUCTURE FILE NUMBER

SEGMENTS 16 THROUGH 18
RETAINING WALL #3
ALONG GOODKIRK STREET

SUM-8-0.63

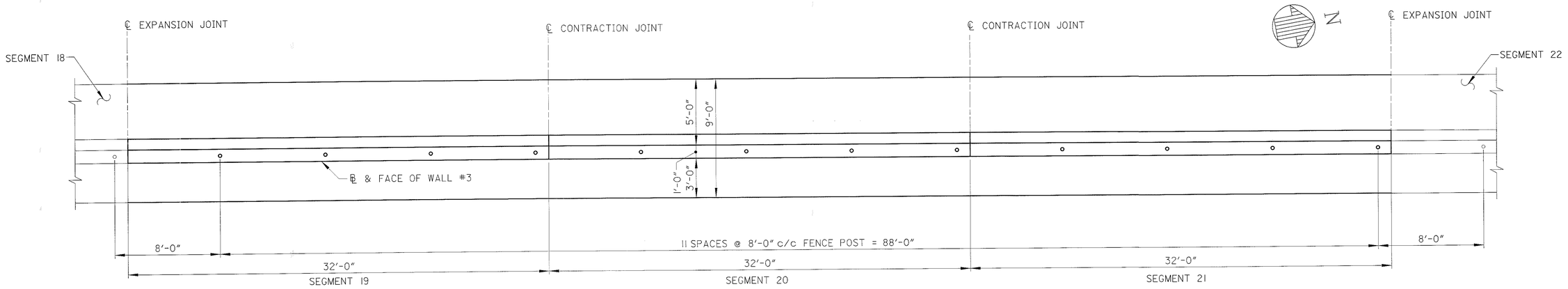

PLAN

W-2
14

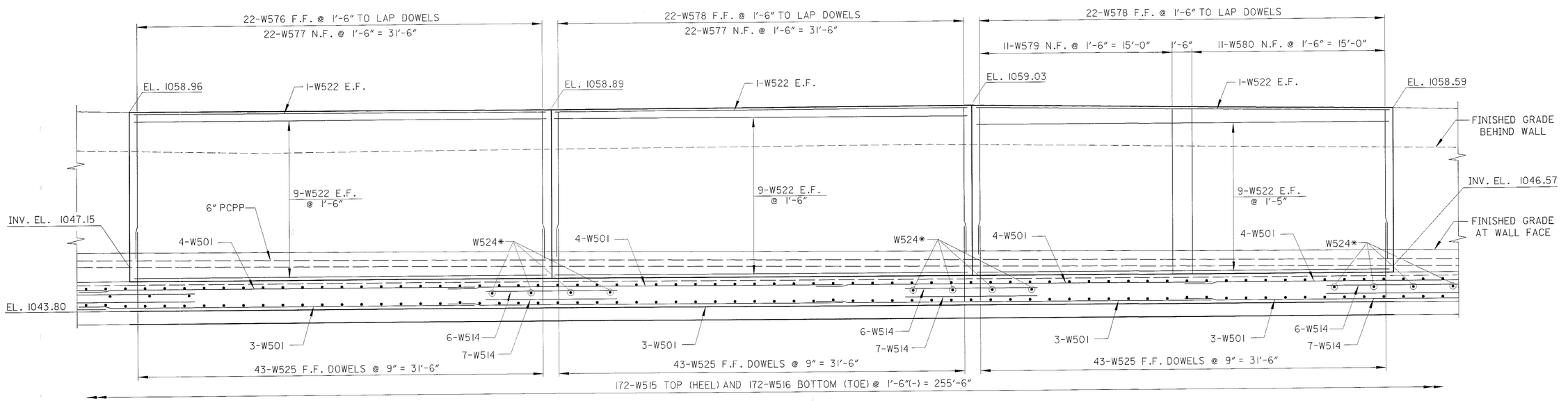

* #5 bars @ 3'-0" (±) c/c TO SUPPORT ADDITIONAL LONGITUDINAL REINFORCEMENT AT JOINTS

ELEVATION

FOR NOTES, SEE SHEET 620.

DLZ
1000 ROCKEFELLER BLDG • 614 W SUPERIOR AVE • CLEVELAND, OH 44113

DESIGNED	DRAWN	REVIEWED	DATE
DP	DJP	GWM	5/04/01
CHECKED	REVISED	STRUCTURE FILE NUMBER	
JWB			

SEGMENTS 19 THROUGH 21
RETAINING WALL #3
ALONG GOODKIRK STREET

SUM-8-0.63

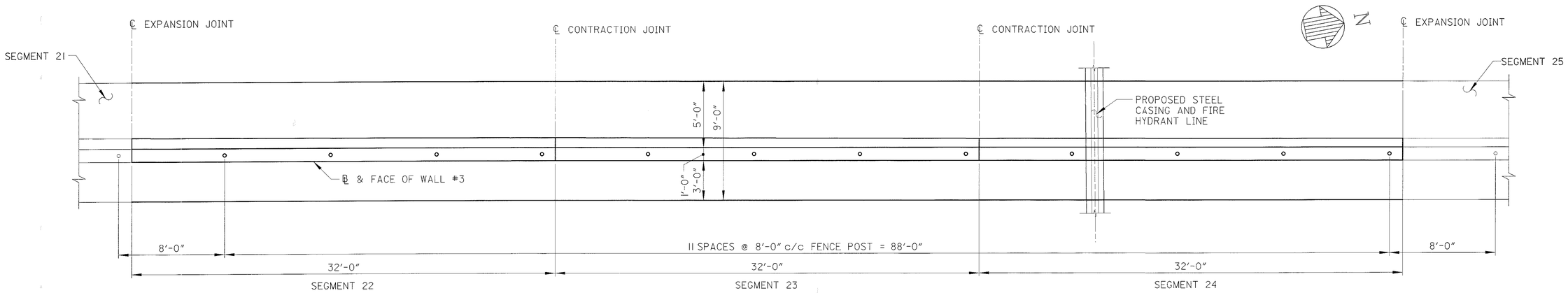

PLAN

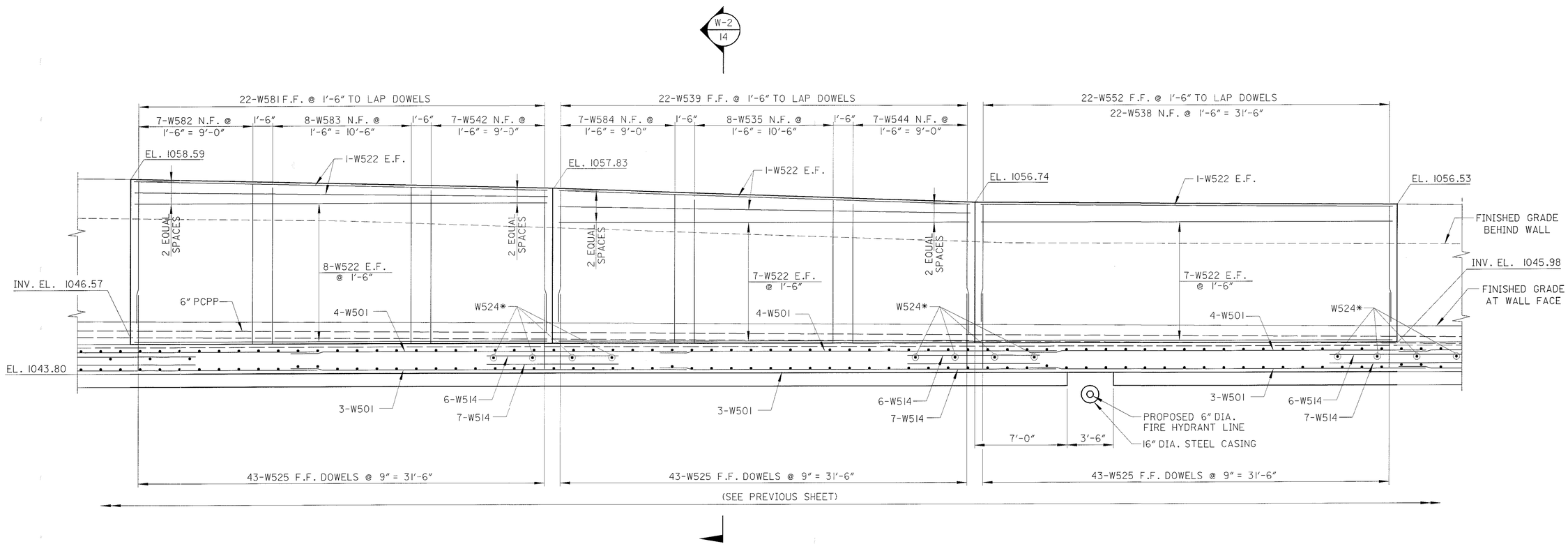

* #5 bars @ 3'-0" (±) c/c TO SUPPORT ADDITIONAL LONGITUDINAL REINFORCEMENT AT JOINTS

ELEVATION

FOR NOTES, SEE SHEET 620.

DLZ
800 ROCKEFELLER BLDG • 614 W SUPERIOR AVE • CLEVELAND, OH 44113

DESIGNED	DRAWN	REVIEWED	DATE
DP	DJP	GWM	5/04/01
CHECKED	REVISED	STRUCTURE FILE NUMBER	
JWB			

SEGMENTS 22 THROUGH 24
RETAINING WALL #3
ALONG GOODKIRK STREET

SUM-8-0.63

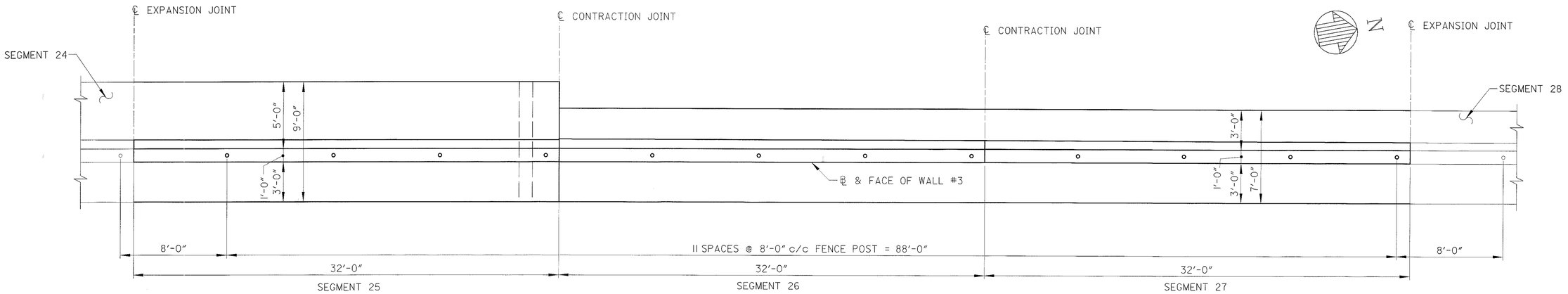

PLAN

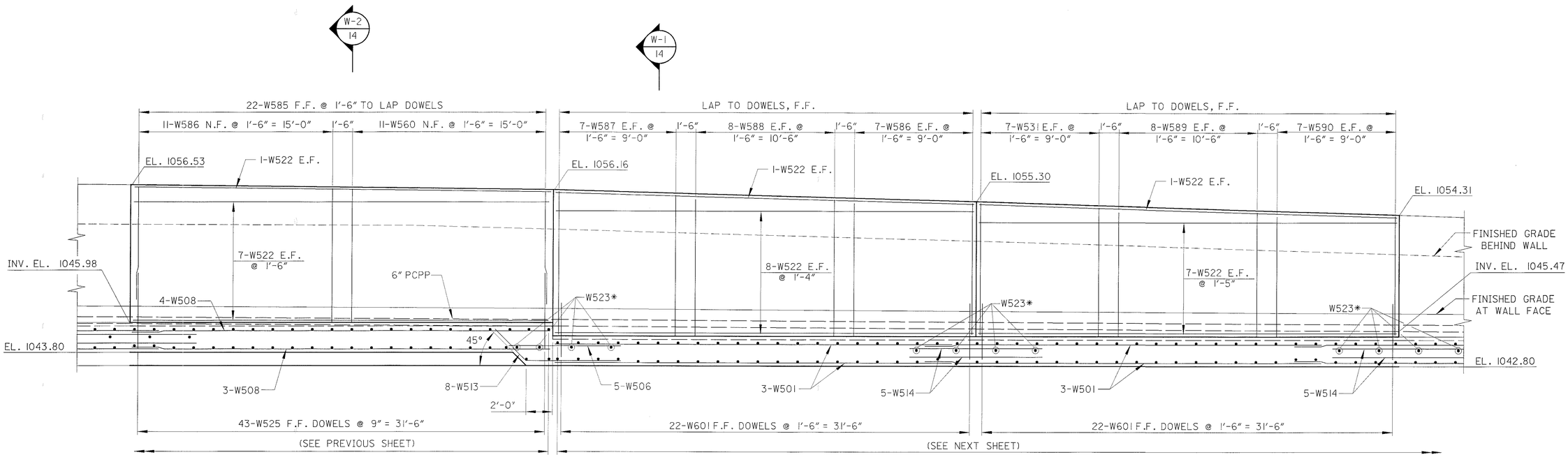

* #5 bars @ 3'-0" (±) c/c TO SUPPORT ADDITIONAL LONGITUDINAL REINFORCEMENT AT JOINTS

ELEVATION

FOR NOTES, SEE SHEET 620.

DLZ
600 ROCKEFELLER BLDG ★ 614 W SUPERIOR AVE ★ CLEVELAND, OH 44113

DESIGNED DP | DRAWN DJP | REVIEWED GWM | DATE 5/04/01
CHECKED JWB | REVISED | STRUCTURE FILE NUMBER

SEGMENTS 25 THROUGH 27
RETAINING WALL #3
ALONG GOODKIRK STREET

SUM-8-0.63

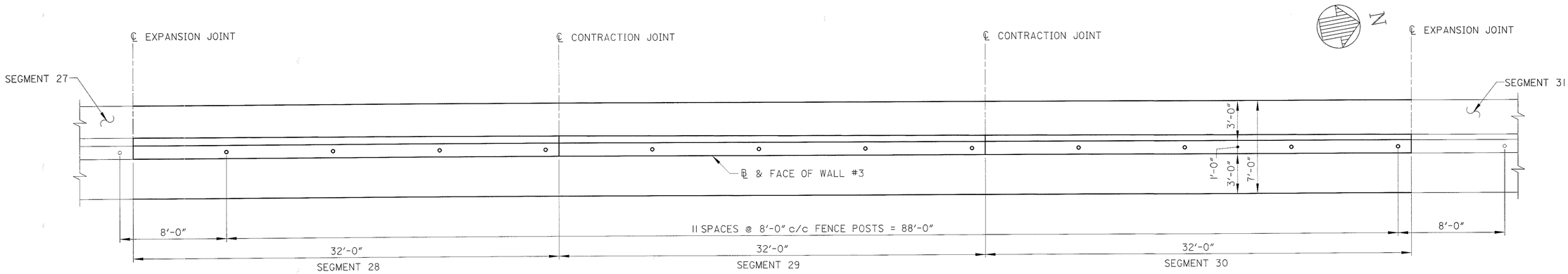

PLAN

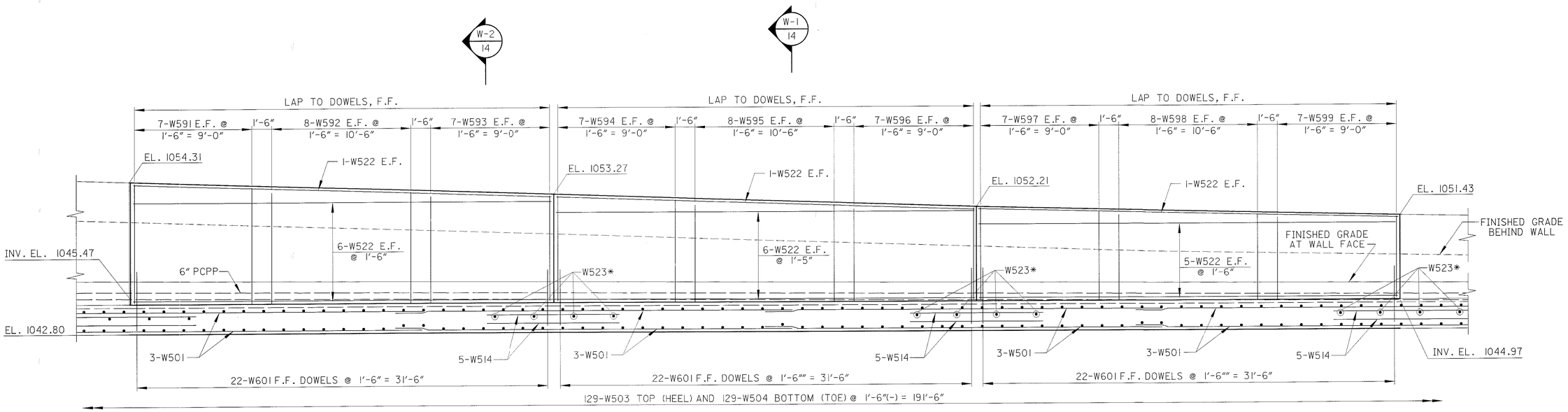

* #5 bars @ 3'-0" (±) c/c TO SUPPORT ADDITIONAL LONGITUDINAL REINFORCEMENT AT JOINTS

ELEVATION

FOR NOTES, SEE SHEET 620.

DLZ
1000 ROCKEFELLER BLDG ★ 614 W SUPERIOR AVE ★ CLEVELAND, OH 44113

DESIGNED DP | DRAWN DJP | REVIEWED GWM | DATE 5/04/01
CHECKED JWB | REVISED | STRUCTURE FILE NUMBER

SEGMENTS 28 THROUGH 30
RETAINING WALL #3
ALONG GOODKIRK STREET

SUM-8-0.63

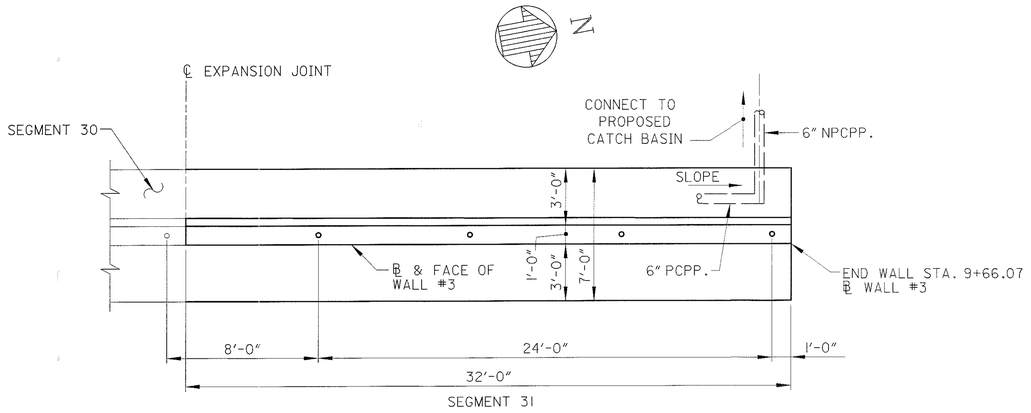

PLAN

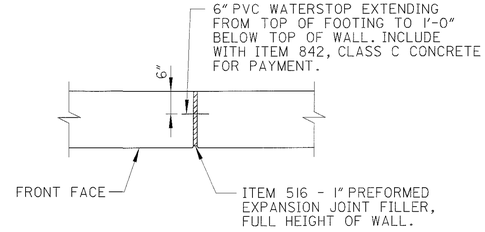

EXPANSION JOINT DETAIL

PVC WATERSTOP

A PVC WATERSTOP, NOMINAL DIMENSIONS 6" x 1/8" THICK AND CAPABLE OF PROVIDING 1 1/2" MOVEMENT, SHALL BE PROVIDED AT CONTRACTION AND EXPANSION JOINTS.

THE WATERSTOP SHALL EXTEND FROM THE TOP OF FOOTING TO 1'-0" BELOW TOP OF WALL.

THE WATERSTOP SHALL BE SECURELY HELD IN PLACE DURING CONCRETE PLACEMENT.

INCLUDE WITH ITEM 842, CLASS C CONCRETE FOR PAYMENT.

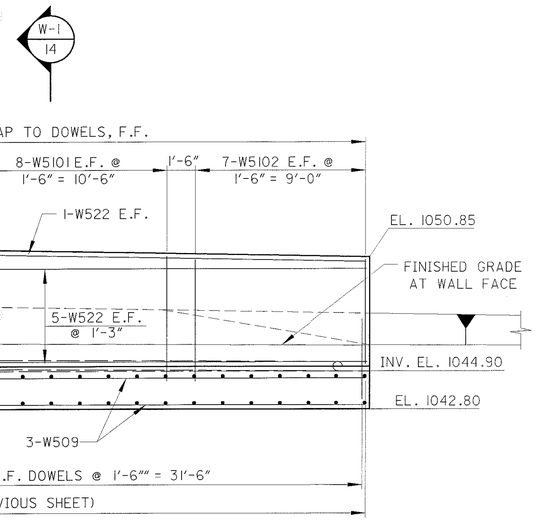

ELEVATION

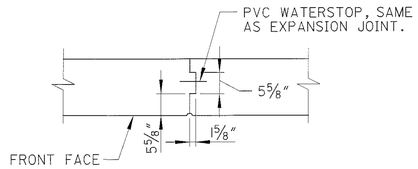

CONTRACTION JOINT DETAIL

FOR NOTES, SEE SHEET 620.

DLZ
800 ROCKEFELLER BLDG • 614 W SUPERIOR AVE • CLEVELAND, OH 44113

DESIGNED	DRAWN	REVIEWED	DATE
DP	DJP	GWM	5/04/01
CHECKED	REVISED		STRUCTURE FILE NUMBER
JWB			

SEGMENT 31
RETAINING WALL #3
ALONG GOODKIRK STREET

SUM-8-0.63

13 / 15

630
1088

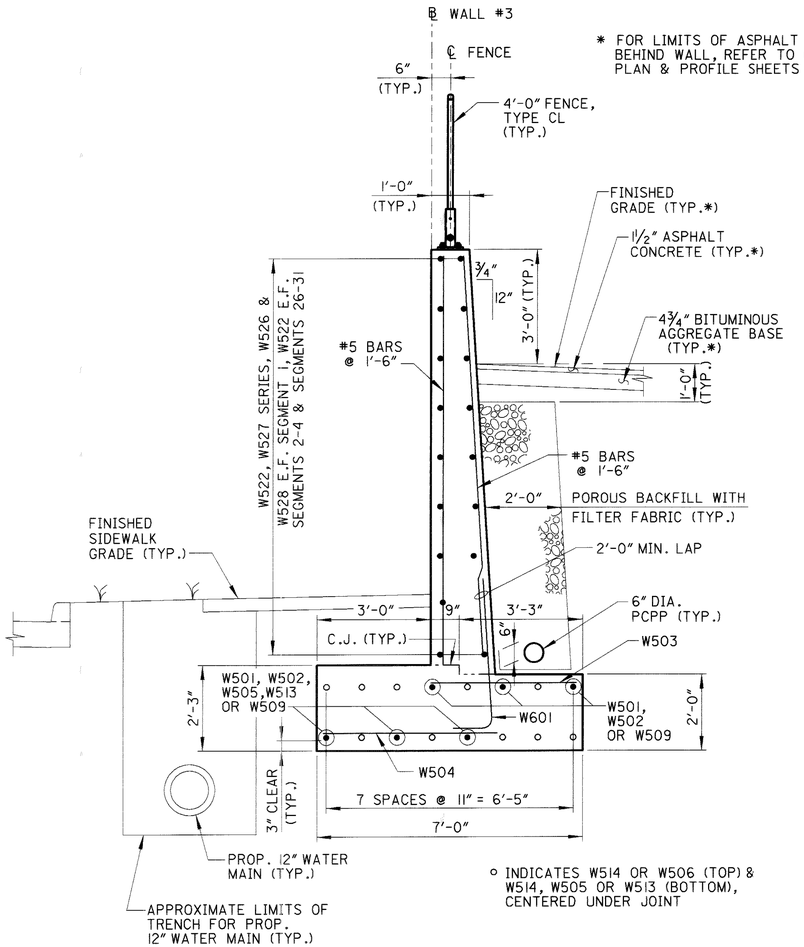

* FOR LIMITS OF ASPHALT PAVEMENT BEHIND WALL, REFER TO GOODKIRK PLAN & PROFILE SHEETS

○ INDICATES W514 OR W506 (TOP) & W514, W505 OR W513 (BOTTOM), CENTERED UNDER JOINT

SECTION W-1

SEGMENTS 1-4 AND 26-31

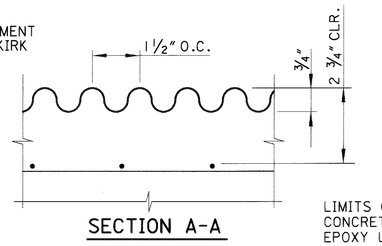

SECTION A-A

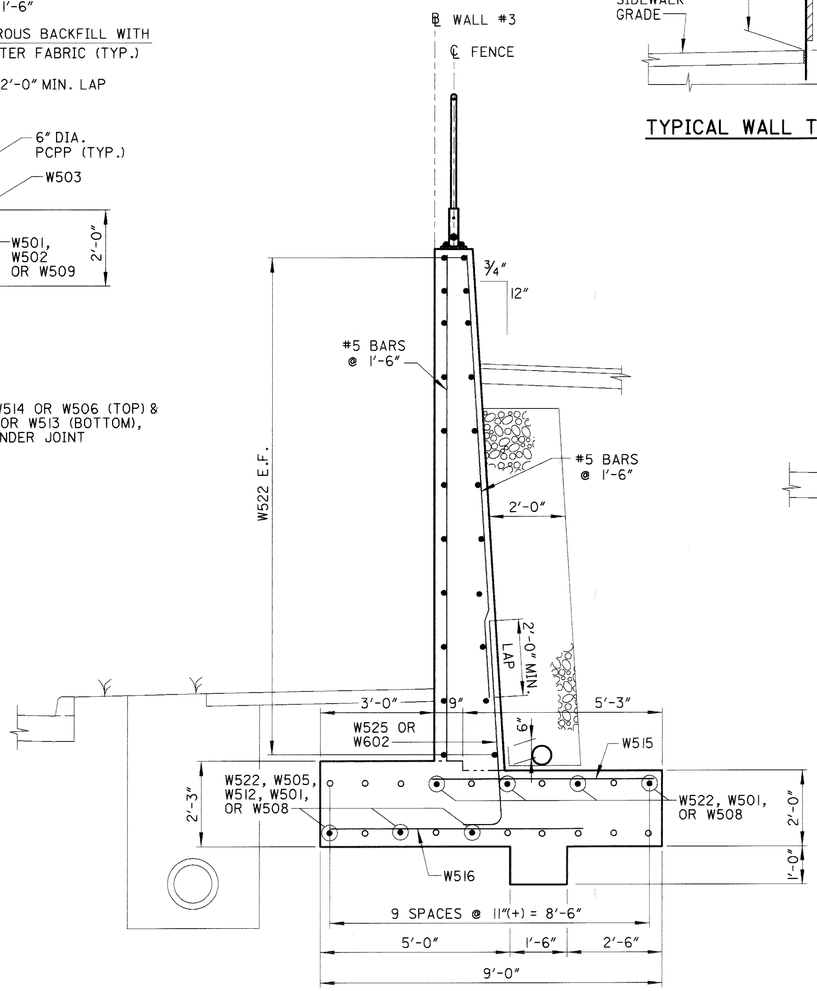

○ INDICATES W506 OR W514 (TOP) & W505, W512 OR W514 (BOTTOM), CENTERED UNDER JOINT

SECTION W-2

SEGMENTS 5-6 AND 18-25

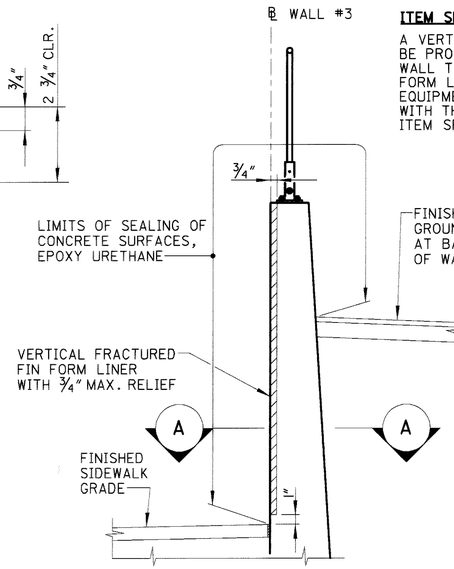

TYPICAL WALL TREATMENT

ITEM SPECIAL - FORM LINER

A VERTICAL FRACTURED FIN FORM LINER SHALL BE PROVIDED WHERE INDICATED BY THE TYPICAL WALL TREATMENT DETAIL. THE COST OF THE FORM LINER, INCLUDING ALL LABOR, MATERIALS, EQUIPMENT AND INCIDENTALS SHALL BE INCLUDED WITH THE UNIT PRICE BID, PER SQUARE FOOT FOR ITEM SPECIAL, FORM LINER.

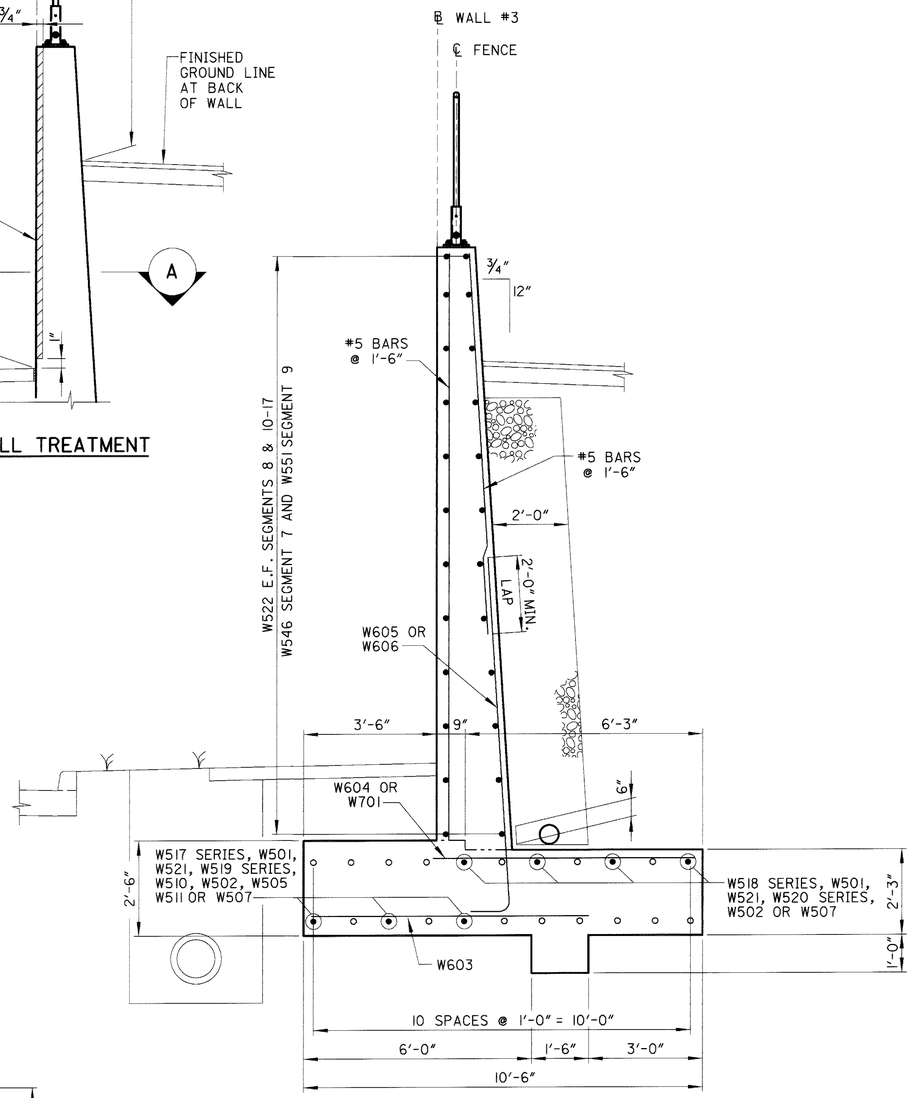

○ INDICATES W514, W506 (TOP) & W514, W510, W505, W511 (BOTTOM), CENTERED UNDER JOINT

SECTION W-3

SEGMENTS 7-17

FOR NOTES, SEE SHEET 620.

REVISIONS: 05/15/2002 by AGW

DLZ
6000 ROCKEFELLER BLDG • 614 W SUPERIOR AVE • CLEVELAND, OH 44113

DESIGNED	DRAWN	REVIEWED	DATE
DP	DJP	GWM	5/04/01
CHECKED	REVISED	STRUCTURE FILE NUMBER	
JWB			

WALL SECTIONS
RETAINING WALL #3
ALONG GOODKIRK STREET

SUM-8-0.63

14 / 15

631
1088

02:26:13 PM
06/12/2002
u:\00-010sr-8\civil\walls\wall3-detail.dgn

REINFORCING STEEL LIST

MARK	NUMBER	LENGTH	WEIGHT (LBS.)	TYPE	DIMENSIONS A	B	C	SER INC.
W501	179	30'-0"	5601	STR	A	A	A	A
W502	26	7'-9"	210	STR				
W503	217	3'-9"	849	STR				
W504	217	4'-5"	1000	STR				
W505	47	12'-1"	592	12	7'-0"	3'-7"	3'-7"	
W506	54	8'-4"	469	STR				
W507	7	15'-9"	115	STR				
W508	7	31'-9"	232	STR				
W509	6	23'-9"	149	STR				
W510	11	12'-5"	142	12	7'-0"	3'-10"	3'-10"	
W511	11	11'-10"	136	12	7'-0"	3'-5"	3'-5"	
W512	10	11'-0"	115	12	7'-0"	2'-10"	2'-10"	
W513	8	10'-8"	89	12	7'-0"	2'-7"	2'-7"	
W514	306	10'-0"	3192	STR				
W515	216	5'-10"	1314	STR				
W516	216	6'-8"	1502	STR				
	1	11'-2"			9'-2"			
W517	SER		35	12		5½"	1'-11⅜"	2"
	3	11'-6"			9'-6"			
	1	11'-6"			9'-6"			
W518	SER		49	12		5½"	1'-11⅜"	3"
	4	12'-2"			10'-3"			
	1	10'-2"			8'-2"			
W519	SER		32	12		5½"	1'-11⅜"	2"
	3	10'-7"			8'-6"			
	1	9'-5"			7'-5"			
W520	SER		41	12		5½"	1'-11⅜"	3"
	4	10'-2"			8'-2"			
W521	7	23'-11"	175	STR				
W522	562	31'-7"	18513	STR				
W523	40	6'-6"	271	STR				
W524	40	8'-6"	355	STR				
W525	344	6'-5"	2302	11	10"	5'-8"	4½"	
W526	2	12'-3"	26	12	10'-0"	1'-1"	2'-0"	
	2	24'-9"						
W527	SER		174	STR				3'-0"
	3	30'-9"						
W528	2	22'-8"	47	STR				
	2	6'-0"						
W529	SER		99	STR				9"
	6	9'-9"		STR				
W530	16	10'-2"	170	STR				
W531	30	9'-9"	305	STR				
W532	50	9'-7"	500	STR				
W533	38	9'-3"	367	STR				
W534	14	9'-0"	131	STR				
W535	44	10'-10"	497	STR				
W536	16	10'-7"	177	STR				
W537	14	10'-5"	152	STR				
W538	58	10'-3"	620	STR				
W539	82	10'-0"	855	STR				
W540	36	9'-10"	369	STR				
W541	7	11'-9"	86	STR				
W542	15	11'-7"	181	STR				
W543	7	11'-5"	83	STR				
W544	29	10'-6"	318	STR				
W545	22	13'-2"	302	STR				
W546	22	19'-4"	444	12	9'-7"	2'-3"	9'-6"	
W547	22	14'-8"	337	STR				
W548	22	9'-4"	214	STR				
W549	18	14'-6"	272	STR				
W550	11	14'-3"	163	STR				
W551	22	18'-0"	413	12	8'-3"	2'-3"	9'-6"	
W552	35	8'-11"	326	STR				
W553	13	14'-0"	190	STR				
W554	22	9'-8"	222	STR				
W555	7	15'-10"	116	STR				
W556	8	15'-7"	130	STR				
W557	14	15'-4"	224	STR				
W558	14	15'-1"	220	STR				
W559	8	14'-9"	123	STR				
W560	33	9'-11"	341	STR				
W561	7	16'-0"	117	STR				
W562	8	15'-8"	131	STR				
W563	7	14'-4"	105	STR				
W564	7	15'-9"	115	STR				
W565	8	15'-5"	129	STR				
W566	7	15'-2"	111	STR				
W567	7	15'-0"	110	STR				

REINFORCING STEEL LIST

MARK	NUMBER	LENGTH	WEIGHT (LBS.)	TYPE	DIMENSIONS A	B	C	SER INC.
W568	8	14'-10"	124	STR				
W569	7	14'-8"	107	STR				
	1	13'-3"						
W570	SER		319	STR				¾"
	22	14'-7"						
W571	22	7'-11"	182	STR				
W572	15	13'-1"	205	STR				
W573	15	12'-9"	199	STR				
W574	7	12'-6"	91	STR				
W575	7	13'-5"	98	STR				
W576	22	11'-1"	254	STR				
W577	44	12'-8"	581	STR				
W578	44	11'-2"	512	STR				
W579	11	12'-7"	144	STR				
W580	11	12'-4"	141	STR				
W581	22	10'-9"	247	STR				
W582	7	12'-1"	88	STR				
W583	8	11'-10"	99	STR				
W584	7	11'-3"	82	STR				
W585	22	8'-8"	199	STR				
W586	25	10'-1"	263	STR				
W587	14	10'-8"	156	STR				
W588	16	10'-4"	172	STR				
W589	16	9'-5"	157	STR				
W590	14	9'-1"	133	STR				
W591	14	8'-9"	128	STR				
W592	16	8'-4"	139	STR				
W593	14	8'-0"	117	STR				
W594	14	7'-9"	113	STR				
W595	16	7'-4"	122	STR				
W596	14	6'-11"	101	STR				
W597	14	6'-9"	99	STR				
W598	16	6'-5"	107	STR				
W599	14	6'-2"	90	STR				
W5100	14	6'-0"	88	STR				
W5101	16	5'-9"	96	STR				
W5102	14	5'-7"	82	STR				
W601	220	5'-3"	1735	11	1'-0"	4'-5"	3½"	
W602	86	7'-10"	1012	11	1'-0"	7'-0"	5½"	
W603	223	7'-4"	2456	STR				
W604	157	7'-0"	1651	STR				
W605	129	11'-6"	2228	11	1'-0"	10'-8"	8"	
W606	310	10'-6"	4889	11	1'-0"	9'-8"	8"	
W701	66	7'-6"	1012	STR				
		TOTAL =	67295	LBS.				

BENDING DIAGRAMS

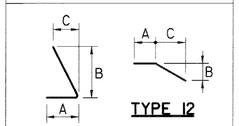

ESTIMATED QUANTITIES

ITEM	ITEM EXTENSION	TOTAL	UNIT	DESCRIPTION	REF. SHEET
503	21100	3530	CU. YD.	UNCLASSIFIED EXCAVATION	
516	13600	177	SQ. FT.	1" PREFORMED EXPANSION JOINT FILLER	
518	21201	595	CU. YD.	POROUS BACKFILL WITH FILTER FABRIC, AS PER PLAN	3
518	40001	964	LIN. FT.	6" PERFORATED CORRUGATED PLASTIC PIPE, AS PER PLAN	3
518	40010	24	LIN. FT.	6" NON-PERFORATED CORRUGATED PLASTIC PIPE,	
				INCLUDING SPECIALS	
SPECIAL	53013000	9671	SQ. FT.	FORM LINER *	14
607	20101	955	LIN. FT.	FENCE, TYPE CL, MISC., AS PER PLAN (4' HIGH)	3
842	46001	614	CU. YD.	CLASS C CONCRETE, AS PER PLAN	13
842	46500	750	CU. YD.	CLASS C CONCRETE, FOOTING	
864	10100	1546	SQ. YD.	SEALING OF CONCRETE SURFACES (EPOXY-URETHANE)	

* 100% LOCAL COST

REINFORCING STEEL NOTES

1. SERIES BARS - EACH BAR VARIES BY TABULATED AMOUNT.
2. ALL DIMENSIONS ARE OUT TO OUT.
3. TYPE 'STR' INDICATES A STRAIGHT BAR.
4. THE BAR SIZE NUMBER IS SPECIFIED IN THE 'MARK' COLUMN. THE FIRST DIGIT INDICATES THE BAR SIZE NUMBER. FOR EXAMPLE, W501 IS A #5 BAR SIZE.
5. ALL BARS SHALL BE EPOXY COATED UNLESS NOTED OTHERWISE.
6. SUBTOTALS AND TOTAL WEIGHTS ARE FOR INFORMATIONAL PURPOSES ONLY. IF THE REINFORCING LIST PROVIDED IN THE PLANS IS USED IT SHALL BE VERIFIED BY THE CONTRACTOR. ANY REVISIONS IN THE REINFORCING STEEL LIST AS SHOWN IN THE PLANS WILL NOT BE REASON FOR ADJUSTMENT IN THE BID PRICE FOR STRUCTURAL CONCRETE.

REVISIONS: 05/15/2002 by AGW

DLZ
1000 ROCKEFELLER BLDG. • 614 • SUPERIOR AVE. • CLEVELAND, OH 44113

DESIGNED	DRAWN	REVIEWED	DATE
DP	DJP	GWM	5/04/01
CHECKED	REVISED	STRUCTURE FILE NUMBER	
JWB			

REINFORCING STEEL LIST
RETAINING WALL #3
ALONG GOODKIRK STREET

SUM-8-0.63

15 / 15

632
1088

01:41:54 PM
07/10/2002
u:\00-0105R-RVN\Civil\Walls\wall3-rebarlist.dgn

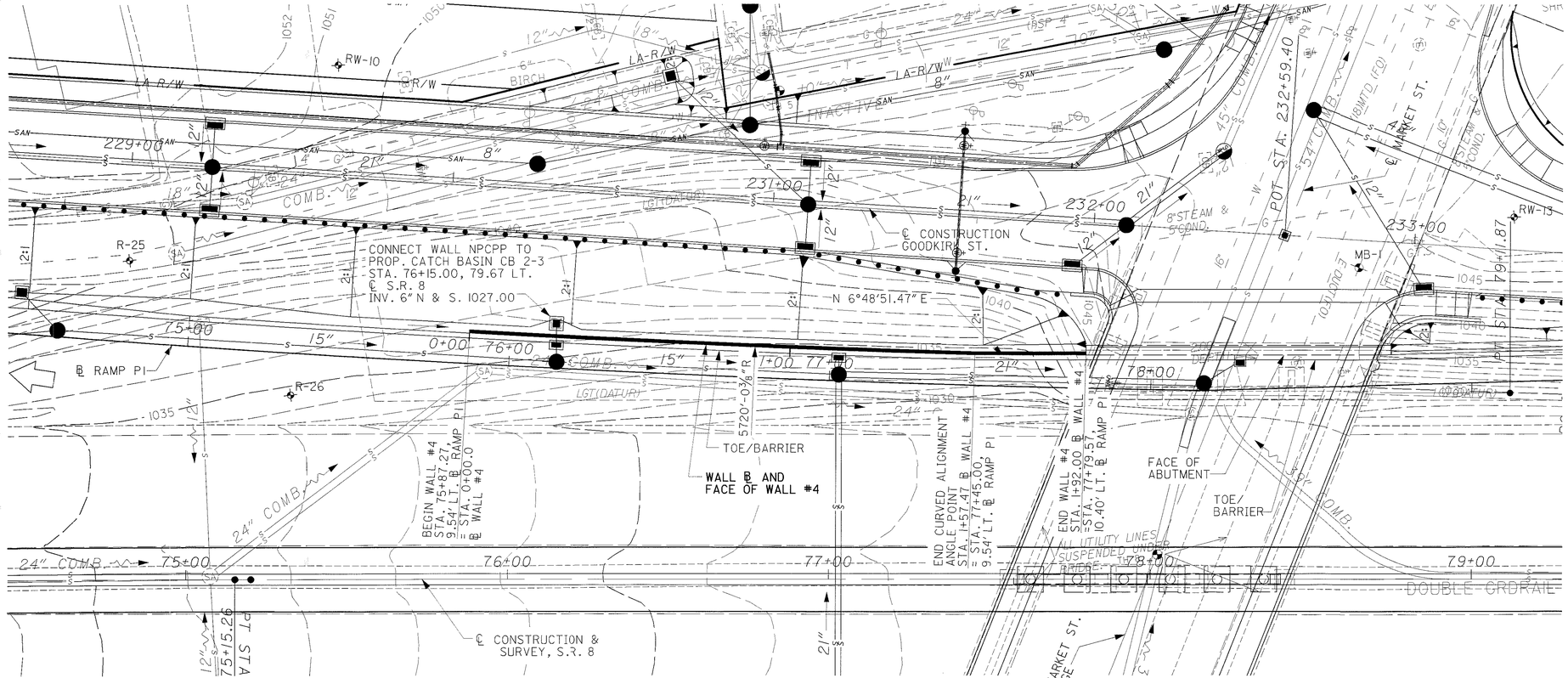

PLAN

EARTHWORK NOTE:

EARTHWORK LIMITS SHOWN ARE APPROXIMATE. ACTUAL SLOPES SHALL CONFORM TO PLAN CROSS SECTIONS.

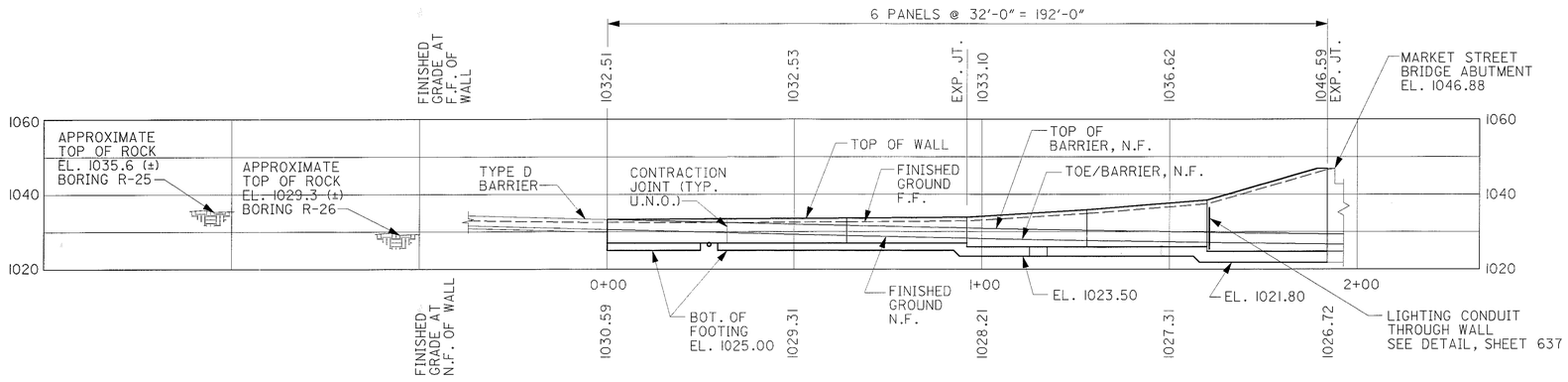

PROFILE ALONG ℄ WALL #4

BENCHMARK #3	BENCHMARK #4
CHISELED "X" ON CURB SIDE CORNER OF CONC. SIDEWALK ON N SIDE OF FORGE ST., 61.5' W OF INT. OF FORGE AND PARK, 23.9' N OF ℄ FORGE ST. STA. 237+11.37, 210.31' LT. ℄ GOODKIRK ST. EL.1044.09	CHISELED "□" ON NE CORNER OF STEPS IN NW ENTRANCE OF BUILDING @ SW CORNER OF MARKET & KIRKWOOD. STA. 232+60.59, 135.89' LT. ℄ GOODKIRK ST. EL. 1046.85

N

WALL #4 CURVE DATA:

R = 5720'-0⅜"
Dc = 1°34'38"
T = 78.74'
L = 157.47'
Δ = 1°00'06" (LT)

LEGEND

℄	BASELINE
BOT.	BOTTOM
℄	CENTERLINE
C.J.	CONSTRUCTION JOINT
E.F.	EACH FACE
EL.	ELEVATION
EXP. JT.	EXPANSION JOINT
F.F.	FAR FACE
INV.	INVERT
MIN.	MINIMUM
N.F.	NEAR FACE
NPCPP	NON-PERFORATED CORRUGATED PLASTIC PIPE
PCPP	PERFORATED CORRUGATED PLASTIC PIPE
PROP.	PROPOSED
⊕	SOIL BORING
SPA.	SPACES
STA.	STATION
ST.	STREET
TYP.	TYPICAL
U.N.O.	UNLESS NOTED OTHERWISE

NOTES

DESIGN SPECIFICATIONS

THIS STRUCTURE CONFORMS TO "STANDARD SPECIFICATIONS FOR HIGHWAY BRIDGES" ADOPTED BY THE AMERICAN ASSOCIATION OF STATE HIGHWAY AND TRANSPORTATION OFFICIALS, 1996, INCLUDING THE 1997, 1998 AND 1999 INTERIM SPECIFICATIONS AND THE ODOT BRIDGE DESIGN MANUAL.

DESIGN DATA

CONCRETE CLASS C - COMPRESSIVE STRENGTH 4000 psi.
REINFORCING STEEL - ASTM A615, A616, OR A617
GRADE 60, MINIMUM YIELD STRENGTH 60,000 psi.

FOUNDATION BEARING PRESSURE

RETAINING WALL #4 FOOTINGS, AS DESIGNED, PRODUCE A MAXIMUM BEARING PRESSURE OF 5760 psf. THE ALLOWABLE BEARING PRESSURE IS 20000 psf.

EARTHWORK NOTE:

EARTHWORK LIMITS ARE APPROXIMATE. ACTUAL SLOPES SHALL CONFORM TO PLAN CROSS-SECTIONS.

ITEM 864, SEALING OF CONCRETE SURFACES (EPOXY-URETHANE)

CONCRETE SURFACES AS DETAILED IN THE PLANS SHALL BE SEALED WITH AN EPOXY-URETHANE SEALER OF A COLOR CONFORMING TO FEDERAL COLOR No. 13522 - BUFF.

QUANTITIES: FOR ESTIMATED QUANTITIES, SEE SHEET 637.

FOR CONCRETE BARRIER DETAILS SEE ROADWAY TYPICAL SECTION SHEET 20.

REFER TO DRAINAGE PLANS FOR BARRIER INLET AND CATCH BASIN DETAILS.

FOR MARKET STREET BRIDGE ABUTMENT CONSTRUCTION DETAILS SEE STRUCTURE PLANS FOR BRIDGE NO. SUM-8-0148.

DLZ
1000 ROCKEFELLER BLDG • 614 • SUPERIOR AVE • CLEVELAND, OH 4-03

DESIGNED	DRAWN	REVIEWED	DATE
DP	KME	GWM	5/11/01
CHECKED	REVISED		STRUCTURE FILE NUMBER
JWB			

PLAN AND PROFILE
RETAINING WALL #4
ALONG S.R. 8, STA. 75+87.27 TO STA. 77+79.83

SUM-8-0.63

1/5

633
1088

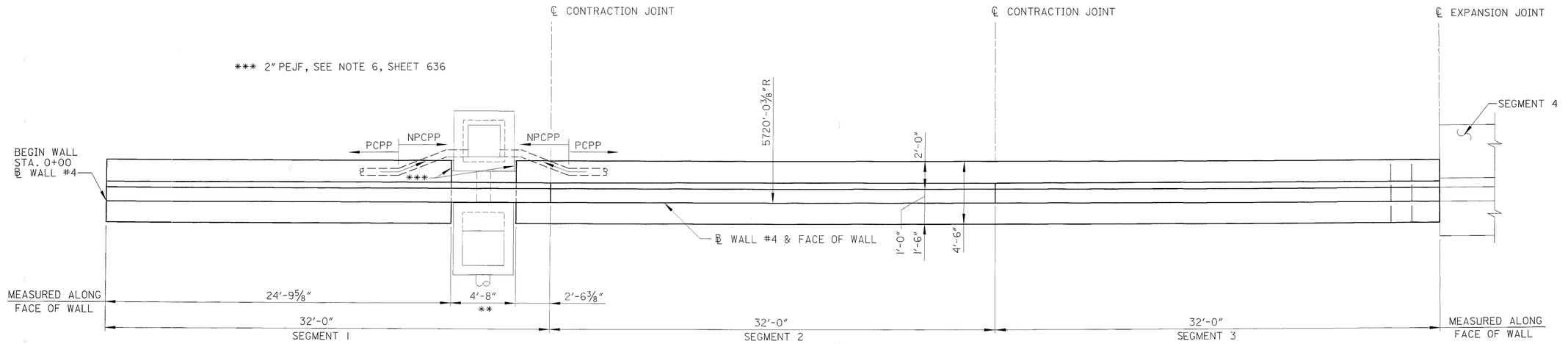

PLAN

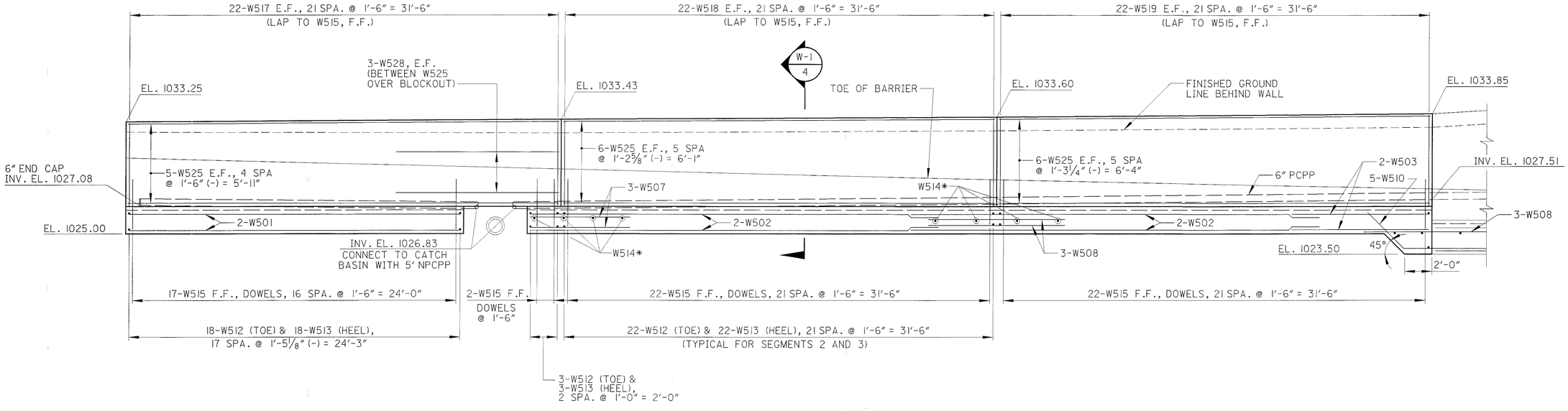

ELEVATION

#5 bars @ 3'-0" (±) c/c TO SUPPORT ADDITIONAL
LONGITUDINAL REINFORCEMENT AT JOINTS

FOR NOTES SEE SHEET 636.

DLZ
3000 ROCKEFELLER BLDG ■ 614 W SUPERIOR AVE ■ CLEVELAND, OH 44113

DESIGNED DP
DRAWN DJP
CHECKED JWB
REVIEWED GWM
DATE 5/18/01
REVISED
STRUCTURE FILE NUMBER

SEGMENTS 1 THRU 3
RETAINING WALL #4
ALONG GOODKIRK ST.

SUM-8-0.63

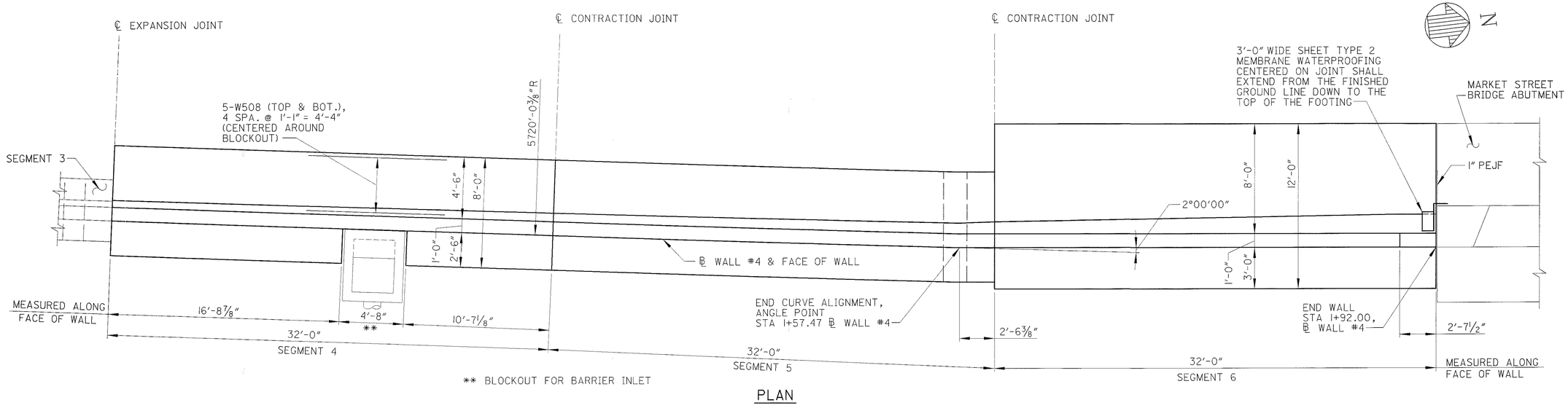

PLAN

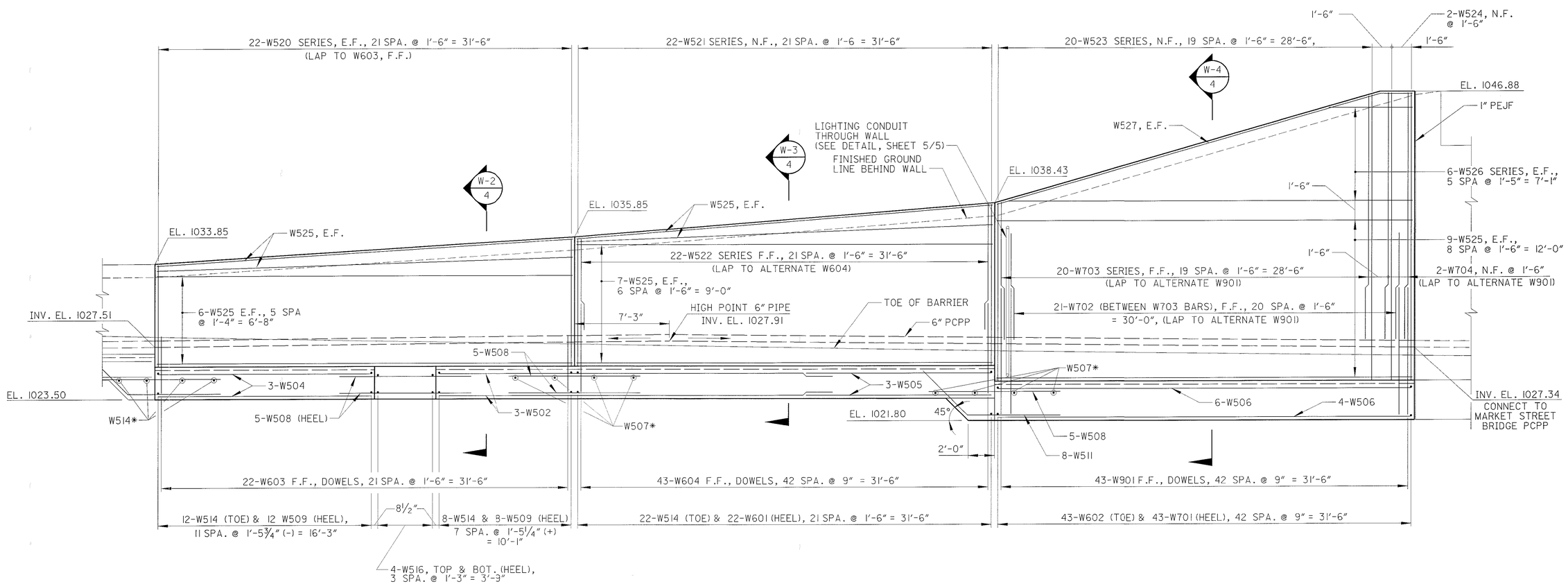

#5 bars @ 3'-0" (±) c/c TO SUPPORT ADDITIONAL LONGITUDINAL REINFORCEMENT AT JOINTS

ELEVATION

FOR NOTES SEE SHEET 636.

DLZ
8000 ROCKEFELLER BLDG • 614 W SUPERIOR AVE • CLEVELAND, OH 44113

DESIGNED DP
DRAWN DJP
CHECKED JWB
REVIEWED GWM
DATE 5/18/01
STRUCTURE FILE NUMBER
REVISED

SEGMENTS 4 THRU 6
RETAINING WALL #4
ALONG GOODKIRK ST.

SUM-8-0.63

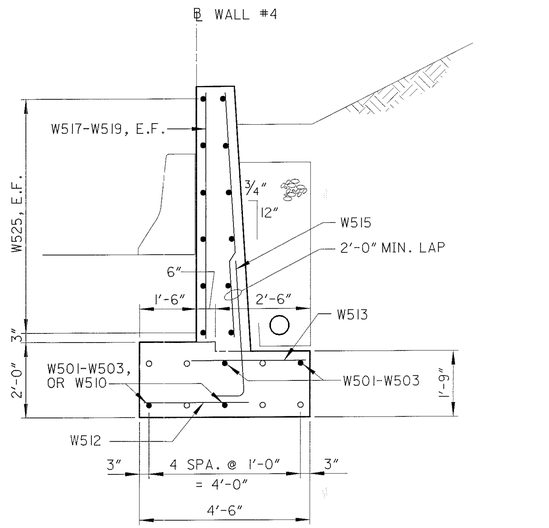

o INDICATES W507 OR W508 TOP & W507, W508, OR W510 BOT., CENTERED UNDER JOINT

SECTION W-1 / 2

SEGMENTS 1-3

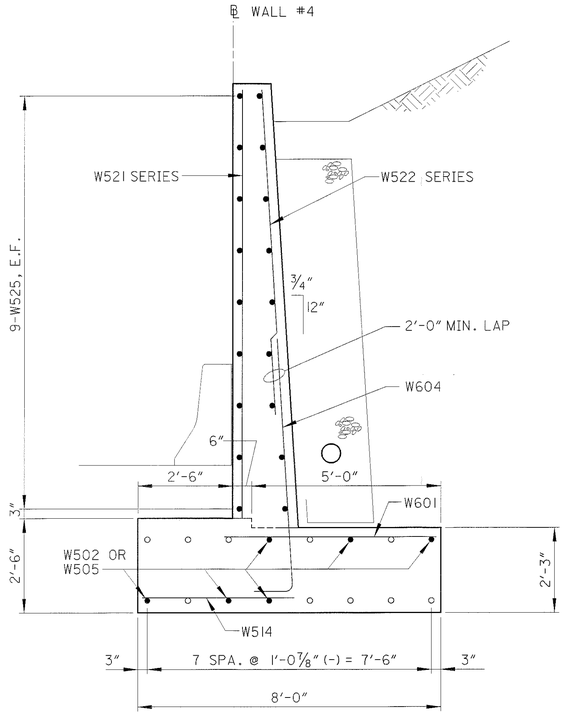

o INDICATES W508 TOP & W508 OR W511 BOT., CENTERED UNDER JOINT

SECTION W-3 / 3

SEGMENT 5

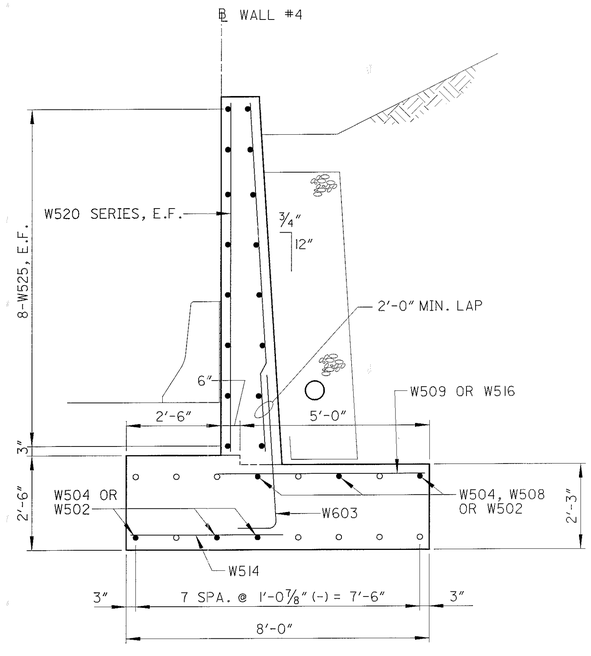

o INDICATES W508 TOP & BOT., CENTERED UNDER JOINT

SECTION W-2 / 3

SEGMENT 4

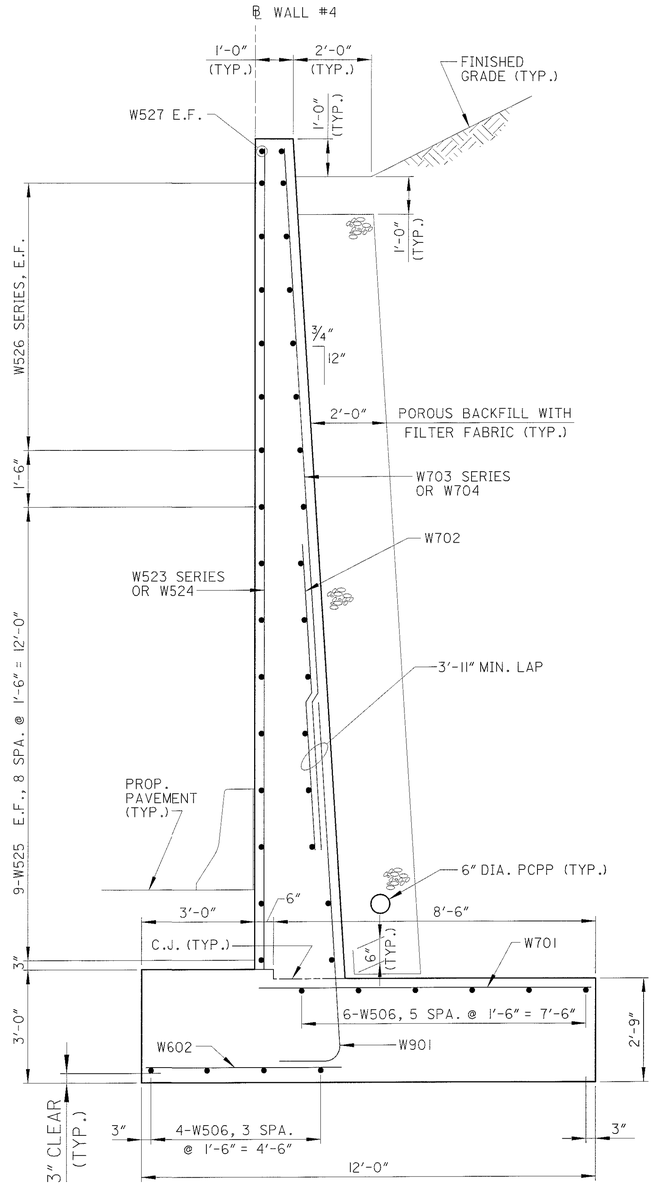

SECTION W-4 / 3

SEGMENT 6

NOTES

1. POROUS BACKFILL WITH FILTER FABRIC, 2 FEET THICK, SHALL EXTEND UP TO 1 FOOT BELOW THE EMBANKMENT SURFACE AND LATERALLY FOR THE FULL LENGTH OF THE RETAINING WALL.
2. FOR DETAILS OF CONTRACTION JOINT AND EXPANSION JOINT, SEE SHEET 637.
3. 6" PERFORATED CORRUGATED PLASTIC PIPE, AS PER PLAN, SHALL INCLUDE A 6" END CAP AS DETAILED IN THE PLANS.
4. FOR CONVERSION OF UNITS FROM METRIC STANDARD DRAWINGS, SEE SHEET 30.
5. MEMBRANE WATERPROOFING, TYPE 2, SHALL BE INSTALLED IN ACCORDANCE WITH ITEM 516. ALL COSTS SHALL BE INCLUDED FOR PAYMENT WITH ITEM 842, CLASS C CONCRETE, AS PER PLAN.
6. 2" PEJF BETWEEN WALL FOOTING AND CATCH BASIN(S) SHALL BE INCLUDED FOR PAYMENT WITH ITEM 842, CLASS C CONCRETE, FOOTING, AS PER PLAN. FOR DETAILS OF PEJF BETWEEN WALL AND BARRIER INLET, SEE DRAINAGE DETAILS SHEET 597.

DLZ
1000 ROCKEFELLER BLDG • 614 W SUPERIOR AVE • CLEVELAND, OH 44113

DESIGNED	DRAWN	REVIEWED	DATE
DP	MWD	GWM	5/18/01
CHECKED	REVISED	STRUCTURE FILE NUMBER	
JWB			

WALL SECTIONS
RETAINING WALL #4
ALONG GOODKIRK ST.

SUM-8-0.63

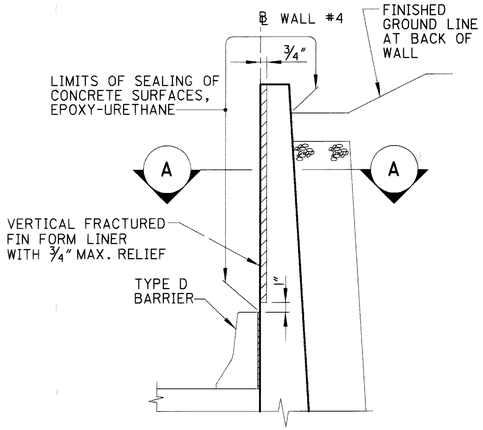

TYPICAL WALL TREATMENT

(FORM LINER TYPICAL FOR WALL SEGMENTS 2 THRU 6. WALL SEGMENT 1 HAS NO FORM LINER)

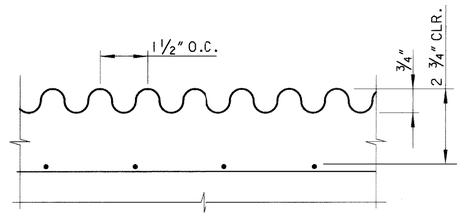

SECTION A-A

ITEM SPECIAL - FORM LINER

A VERTICAL FRACTURED FIN FORM LINER SHALL BE PROVIDED WHERE INDICATED BY THE TYPICAL WALL TREATMENT DETAIL. THE COST OF THE FORM LINER, INCLUDING ALL LABOR, MATERIALS, EQUIPMENT AND INCIDENTALS SHALL BE INCLUDED WITH THE UNIT PRICE BID, PER SQUARE FOOT FOR ITEM SPECIAL, FORM LINER.

BENDING DIAGRAMS

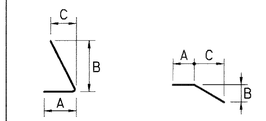

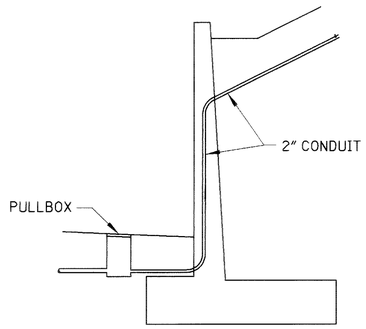

LIGHTING CONDUIT DETAIL

STATION 77+48, ℄ S.R. 8
(SEE LIGHTING PLANS FOR ADDITIONAL DETAILS)

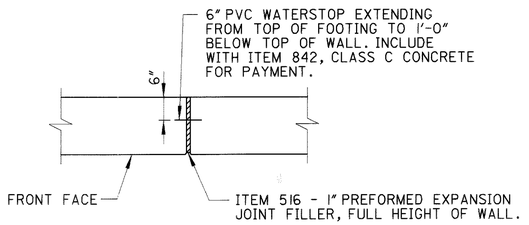

EXPANSION JOINT DETAIL

PVC WATERSTOP

A PVC WATERSTOP, NOMINAL DIMENSIONS 6" x 1 1/8" THICK AND CAPABLE OF PROVIDING 1 1/2" MOVEMENT, SHALL BE PROVIDED AT CONTRACTION AND EXPANSION JOINTS.

THE WATERSTOP SHALL EXTEND FROM THE TOP OF FOOTING TO 1'-0" BELOW TOP OF WALL.

THE WATERSTOP SHALL BE SECURELY HELD IN PLACE DURING CONCRETE PLACEMENT.

INCLUDE WITH ITEM 842, CLASS C CONCRETE FOR PAYMENT.

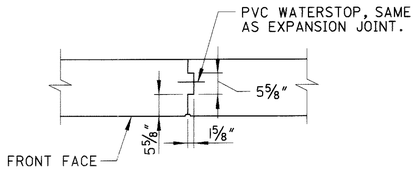

CONTRACTION JOINT DETAIL

REINFORCING STEEL NOTES

1. SERIES BARS - EACH BAR VARIES BY TABULATED AMOUNT.
2. ALL DIMENSIONS ARE OUT TO OUT.
3. TYPE 'STR' INDICATES A STRAIGHT BAR.
4. THE BAR SIZE NUMBER IS SPECIFIED IN THE 'MARK' COLUMN. THE FIRST DIGIT INDICATES THE BAR SIZE NUMBER. FOR EXAMPLE, W501 IS A #5 BAR SIZE.
5. ALL BARS SHALL BE EPOXY COATED UNLESS NOTED OTHERWISE.
6. SUBTOTALS AND TOTAL WEIGHTS ARE FOR INFORMATIONAL PURPOSES ONLY. IF THE REINFORCING LIST PROVIDED IN THE PLANS IS USED IT SHALL BE VERIFIED BY THE CONTRACTOR. ANY REVISIONS IN THE REINFORCING STEEL LIST AS SHOWN IN THE PLANS WILL NOT BE REASON FOR ADJUSTMENT IN THE BID PRICE FOR STRUCTURAL CONCRETE.

ESTIMATED QUANTITIES

ITEM	ITEM EXTENSION	TOTAL	UNIT	DESCRIPTION	SHEET REF.
503	21100	337	CU. YD.	UNCLASSIFIED EXCAVATION	
503	31100	230	CU. YD.	ROCK EXCAVATION	
516	13600	82	SQ. FT.	1" PREFORMED EXPANSION JOINT FILLER	
518	21201	108	CU. YD.	POROUS BACKFILL WITH FILTER FABRIC, AS PER PLAN	4
518	40001	179	LIN. FT.	6" PERFORATED CORRUGATED PLASTIC PIPE, AS PER PLAN	4
518	40010	10	LIN. FT.	6" NON-PERFORATED CORRUGATED PLASTIC PIPE, INCLUDING SPECIALS	
SPECIAL	53013000	897	SQ. FT.	FORM LINER *	5
842	46001	96	CU. YD.	CLASS C CONCRETE, AS PER PLAN	4 & 5
842	46501	114	CU. YD.	CLASS C CONCRETE, FOOTING, AS PER PLAN	4
864	10100	146	SQ. YD.	SEALING OF CONCRETE SUFACES (EPOXY-URETHANE)	

* 100% LOCAL COST

REINFORCING STEEL LIST

MARK	NUMBER	LENGTH	WEIGHT (LBS.)	TYPE	DIMENSIONS A	B	C	SER INC.
W501	4	24'-5"	102	STR				
W502	14	30'-0"	438	STR				
W503	4	10'-3"	43	STR				
W504	6	16'-4"	102	STR				
W505	6	14'-3"	89	STR				
W506	10	31'-8"	330	STR				
W507	14	7'-6"	110	STR				
W508	34	10'-0"	355	STR				
W509	20	5'-6"	115	STR				
W510	5	10'-10"	56	12	7'-1"	2'-8"	2'-8"	
W511	8	11'-9"	98	12	7'-1"	3'-4"	3'-4"	
W512	65	2'-9"	186	STR				
W513	65	3'-0"	203	STR				
W514	54	4'-0"	225	STR				
W515	63	4'-9"	312	11	10"	4'-0"	3"	
W516	8	5'-3"	44	STR				
W517	44	6'-1"	279	STR				
W518	44	6'-3"	287	STR				
W519	44	6'-5"	294	STR				
	2	7'-8"						
W520	SER		398	STR				1 1/8"
	22	9'-8"						
	1	9'-7"						
W521	SER		250	STR				1 1/2"
	22	12'-2 1/2"						
	1	7'-2"						
W522	SER		195	STR				1 1/2"
	22	9'-9 1/2"						
	1	13'-5"						
W523	SER		365	STR				5 1/8"
	20	21'-6"						
W524	2	21'-11"	46	STR				
W525	86	31'-7"	2833	STR				
	2	6'-2"						
W526	SER		231	STR				4'-11"
	6	30'-9"						
W527	2	32'-10"	68	12	30'-5"	8"	2'-4"	
W528	6	12'-0"	75	STR				
W601	22	5'-7"	184	STR				
W602	43	5'-2"	334	STR				
W603	22	5'-5"	179	11	1'-0"	4'-7"	3 1/2"	
W604	43	7'-8"	495	11	1'-0"	6'-10"	5"	
W701	43	8'-9"	769	STR				
W702	21	8'-1"	347	STR				
	1	10'-9"						
W703	SER		601	STR				5"
	20	18'-8"						
W704	2	18'-9"	77	STR				
W901	43	11'-2"	1633	11	1'-7"	9'-10"	7"	
		TOTAL =	12748	LBS.				

REVISIONS: 05/15/2002 by AGW

DLZ
800 ROCKEFELLER BLDG • 614 W SUPERIOR AVE • CLEVELAND, OH 44113

DESIGNED DP | DRAWN DJP | REVIEWED GWM | DATE 5/18/01 | CHECKED | REVISED | STRUCTURE FILE NUMBER

REINFORCING STEEL LIST AND QUANTITIES
RETAINING WALL #4
ALONG GOODKIRK ST.

SUM-8-0.63

5 / 5

637
1088

04:10:21 PM
07/09/2002
u:\00-0\0SR-8\N\Civil\Walls\wall4-detail.dgn

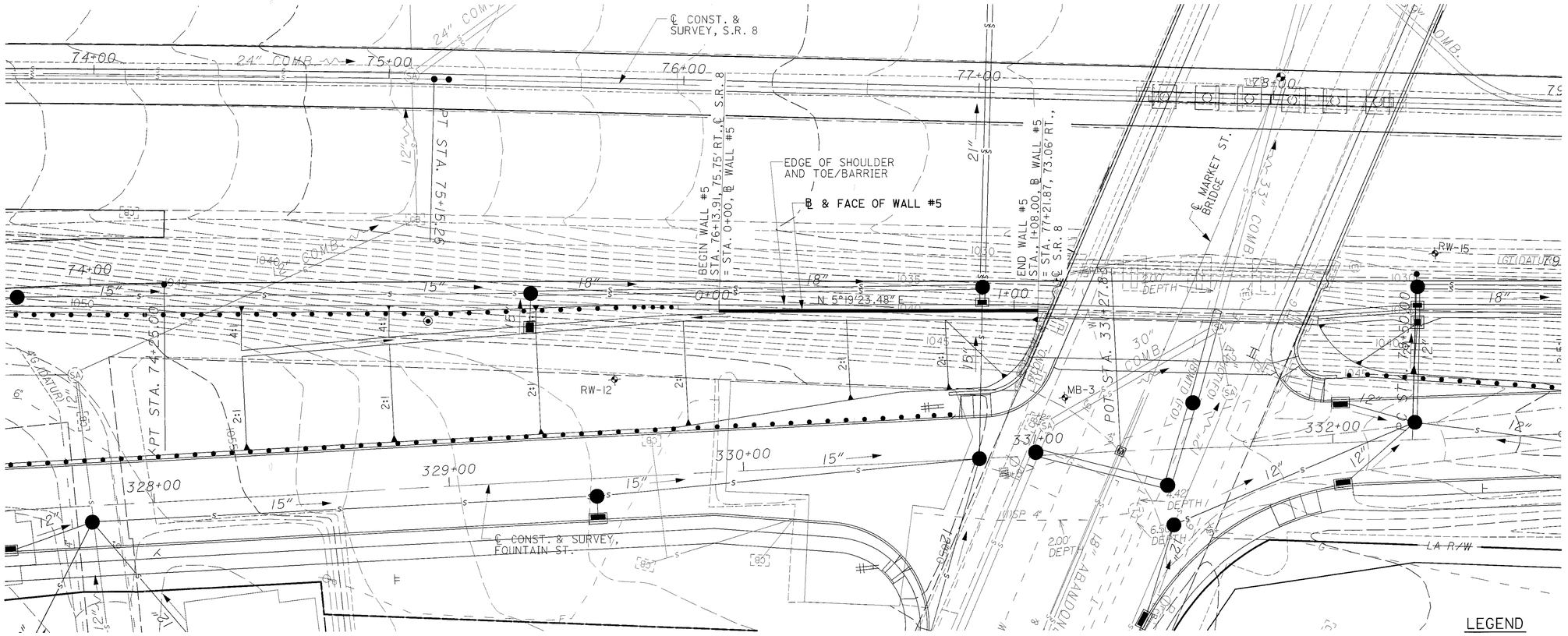

PLAN

EARTHWORK NOTE:

EARTHWORK LIMITS SHOWN ARE APPROXIMATE. ACTUAL SLOPES SHALL CONFORM TO PLAN CROSS SECTIONS.

LEGEND

ABUT.	ABUTMENT
ℬ	BASELINE
BOT.	BOTTOM
℄	CENTERLINE
C.J.	CONSTRUCTION JOINT
CONST.	CONSTRUCTION
E.F.	EACH FACE
EL.	ELEVATION
F.F.	FAR FACE
INV.	INVERT
MIN.	MINIMUM
N.F.	NEAR FACE
PCPP	PERFORATED CORRUGATED PLASTIC PIPE
PROP.	PROPOSED
✥	SOIL BORING
SPA.	SPACES
ST.	STREET
STA.	STATION
TYP.	TYPICAL
U.N.O.	UNLESS NOTED OTHERWISE

NOTES

DESIGN SPECIFICATIONS

THIS STRUCTURE CONFORMS TO "STANDARD SPECIFICATIONS FOR HIGHWAY BRIDGES" ADOPTED BY THE AMERICAN ASSOCIATION OF STATE HIGHWAY AND TRANSPORTATION OFFICIALS, 1996, INCLUDING THE 1997, 1998 AND 1999 INTERIM SPECIFICATIONS AND THE ODOT BRIDGE DESIGN MANUAL.

DESIGN DATA

CONCRETE CLASS C - COMPRESSIVE STRENGTH 4000 psi.
REINFORCING STEEL - ASTM A615, A616, OR A617 GRADE 60, MINIMUM YIELD STRENGTH 60,000 psi.

FOUNDATION BEARING PRESSURE

RETAINING WALL #5 FOOTINGS, AS DESIGNED, PRODUCE A MAXIMUM BEARING PRESSURE OF 6060 psf. THE ALLOWABLE BEARING PRESSURE IS 20000 psf.

ITEM 864, SEALING OF CONCRETE SURFACES (EPOXY-URETHANE)

CONCRETE SURFACES AS DETAILED IN THE PLANS SHALL BE SEALED WITH AN EPOXY-URETHANE SEALER OF A COLOR CONFORMING TO FEDERAL COLOR No. 13522 - BUFF.

ESTIMATED QUANTITIES: FOR ESTIMATED QUANTITIES, SEE SHEET 641.

FOR CONCRETE BARRIER DETAILS SEE ROADWAY TYPICAL SECTION SHEET 20.

REFER TO DRAINAGE PLANS FOR BARRIER INLET AND CATCH BASIN DETAILS.

FOR MARKET STREET BRIDGE ABUTMENT CONSTRUCTION DETAILS SEE STRUCTURE PLANS FOR BRIDGE NO. SUM-8-0148.

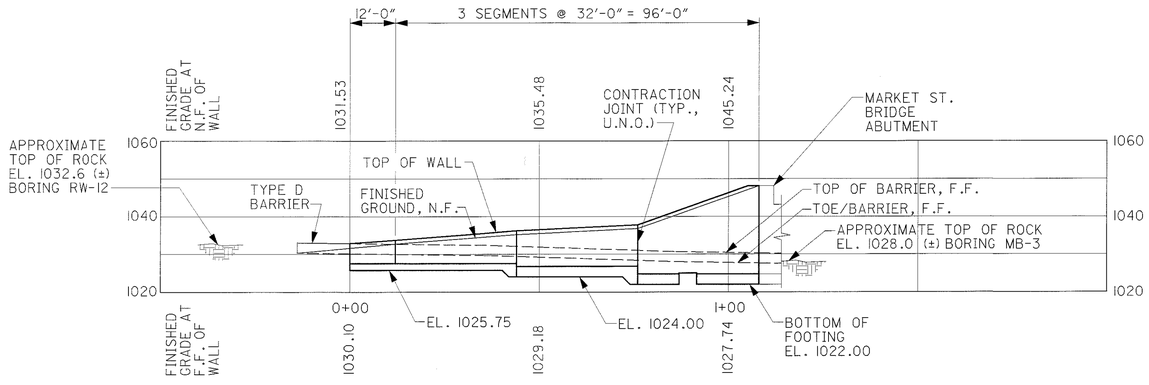

PROFILE ALONG ℬ WALL #5

BENCHMARK #18

CHISELED "□" ON SW CORNER OF STEP TO #69 ADOLPH @ NE CORNER OF ADOLPH & EWING.
STA. 323+10.01, 283.30' RT., ℄ FOUNTAIN ST.
ELEV: 1056.32

BENCHMARK #19

CHISELED "□" ON CONC. BASE FOR LIGHT POLE NORTH OF #27 ADOLPH @ SE CORNER OF ADOLPH & EWING STREETS.
STA. 327+76.06, 261.95' RT., ℄ FOUNTAIN ST.
ELEV: 1059.54

BENCHMARK #20

CHISELED "□" ON SE CORNER OF CURB FOR PARKING LOT #457 MARKET ST. @ NW CORNER OF MARKET AND ADOLPH STREETS.
STA. 331+21.17, 120.56' RT., ℄ FOUNTAIN ST.
ELEV: 1051.01

DLZ
1000 ROCKEFELLER BLDG • 614 W SUPERIOR AVE • CLEVELAND, OH 44113

DESIGNED	DRAWN	REVIEWED	DATE
DP	KME	GWM	6/5/01
CHECKED	REVISED	STRUCTURE FILE NUMBER	
JWB			

PLAN AND PROFILE
RETAINING WALL #5
ALONG S.R. 8, STA. 76+13.91 TO STA. 77+21.87

SUM-8-0.63

1 / 4

638
1088

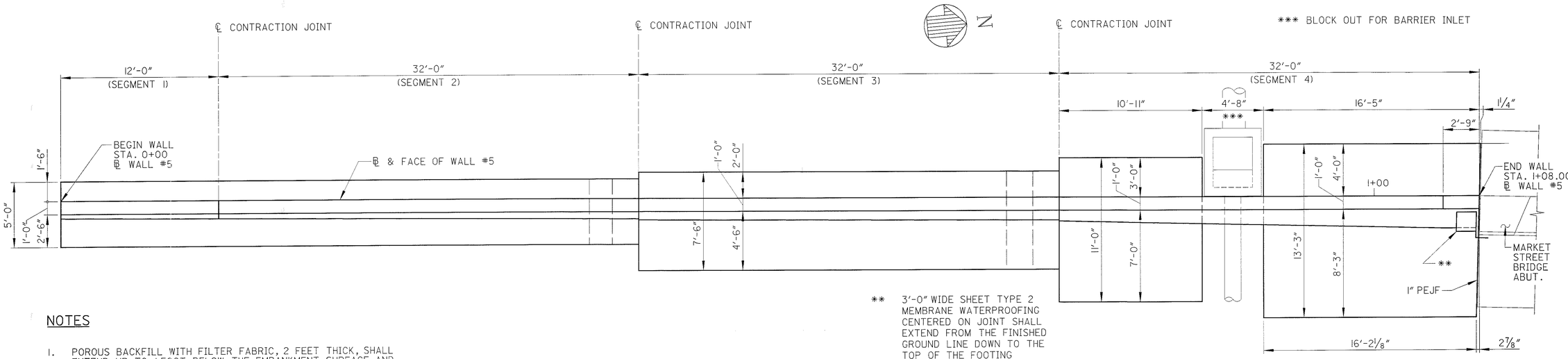

** 3'-0" WIDE SHEET TYPE 2 MEMBRANE WATERPROOFING CENTERED ON JOINT SHALL EXTEND FROM THE FINISHED GROUND LINE DOWN TO THE TOP OF THE FOOTING

NOTES

1. POROUS BACKFILL WITH FILTER FABRIC, 2 FEET THICK, SHALL EXTEND UP TO 1 FOOT BELOW THE EMBANKMENT SURFACE AND LATERALLY FOR THE FULL LENGTH OF THE RETAINING WALL. ,
2. 6" PERFORATED CORRUGATED PLASTIC PIPE, AS PER PLAN, SHALL INCLUDE A 6" END CAP AS DETAILED IN THE PLANS.
3. FOR DETAILS OF CONTRACTION JOINT, SEE SHEET 641.
4. MEMBRANE WATERPROOFING, TYPE 2, SHALL BE INSTALLED IN ACCORDANCE WITH ITEM 516. ALL COSTS SHALL BE INCLUDED FOR PAYMENT WITH ITEM 842, CLASS C CONCRETE, AS PER PLAN.
5. FOR DETAILS OF PEJF BETWEEN WALL AND BARRIER INLET, SEE DRAINAGE DETAILS SHEET 597.
6. FOR CONVERSION OF UNITS FROM METRIC STANDARD DRAWINGS, SEE SHEET 30.

PLAN

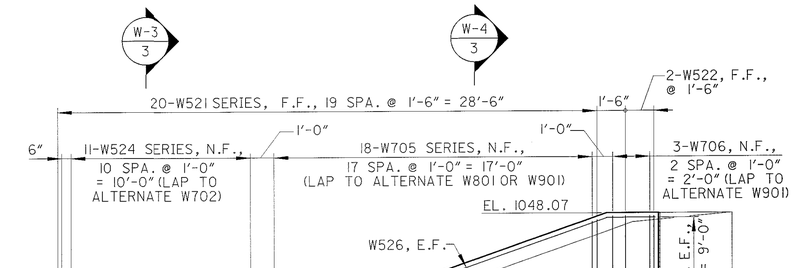

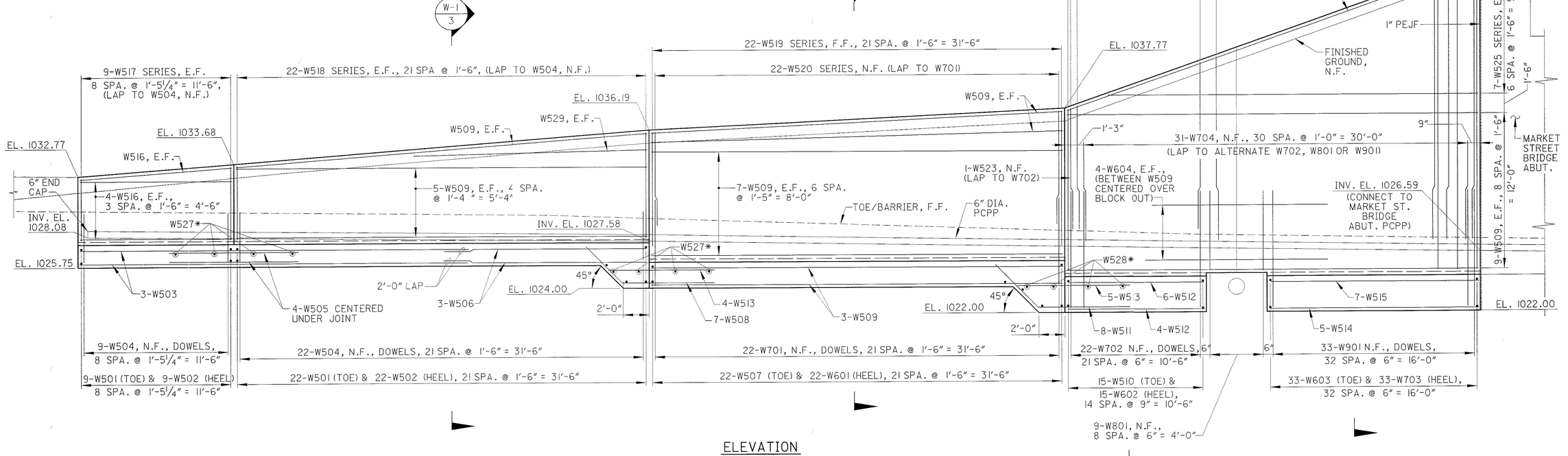

ELEVATION

#5 bars @ 3'-0" (±) c/c TO SUPPORT ADDITIONAL LONGITUDINAL REINFORCEMENT AT JOINTS

DLZ
1000 ROCKEFELLER BLDG • 614 W SUPERIOR AVE • CLEVELAND, OH 44113

DESIGNED DP | DRAWN MWD | CHECKED JWB | REVIEWED GWM | DATE 6/5/01
STRUCTURE FILE NUMBER | REVISED

SEGMENTS 1 THRU 4
RETAINING WALL #5
ALONG S.R. 8

SUM-8-0.63

2 / 4

639
1088

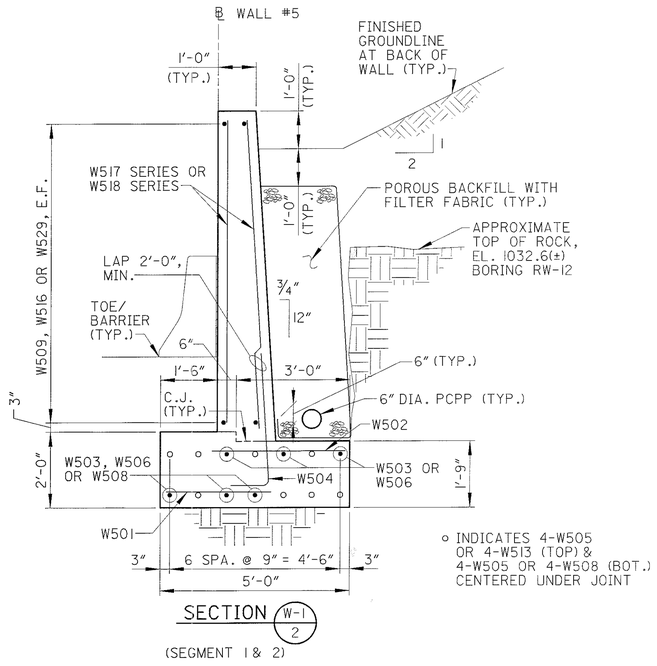

SECTION W-1 / 2

(SEGMENT 1 & 2)

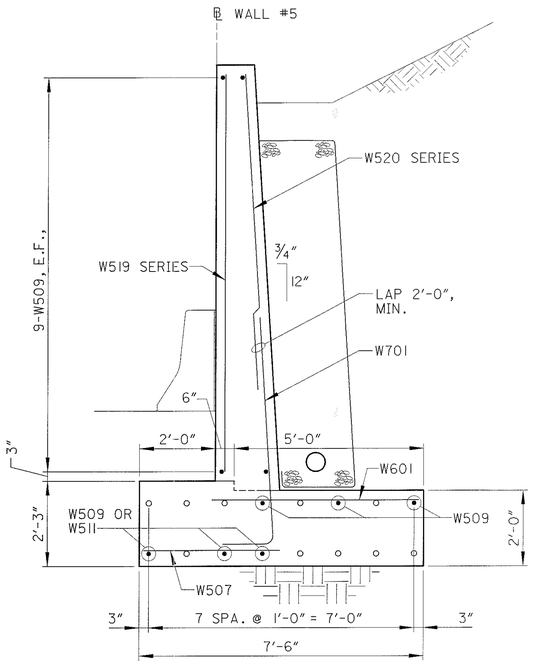

SECTION W-2 / 2

o INDICATES 5-W513 TOP & 5-W511 BOT. CENTERED UNDER JOINT BETWEEN SEGMENTS 3 & 4

(SEGMENT 3)

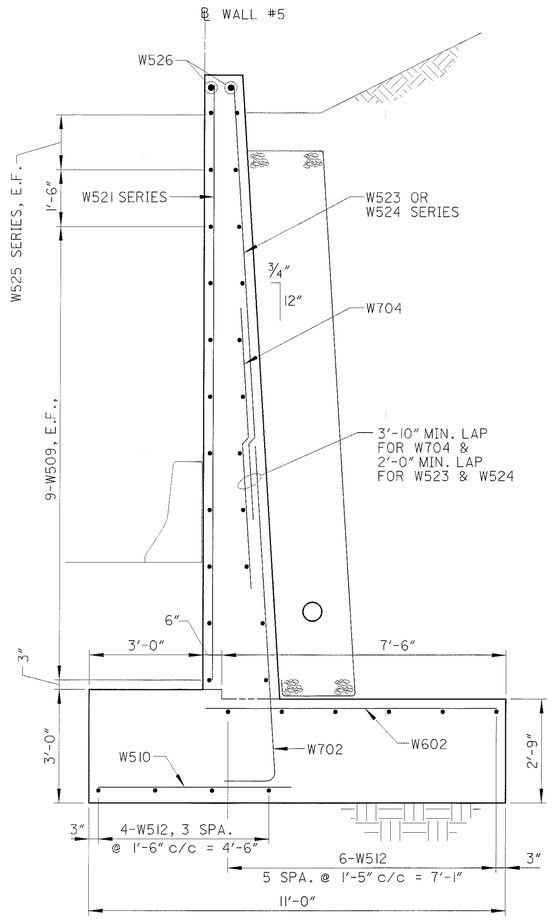

SECTION W-3 / 2

(SEGMENT 4 LEFT SIDE OF BLOCK OUT)

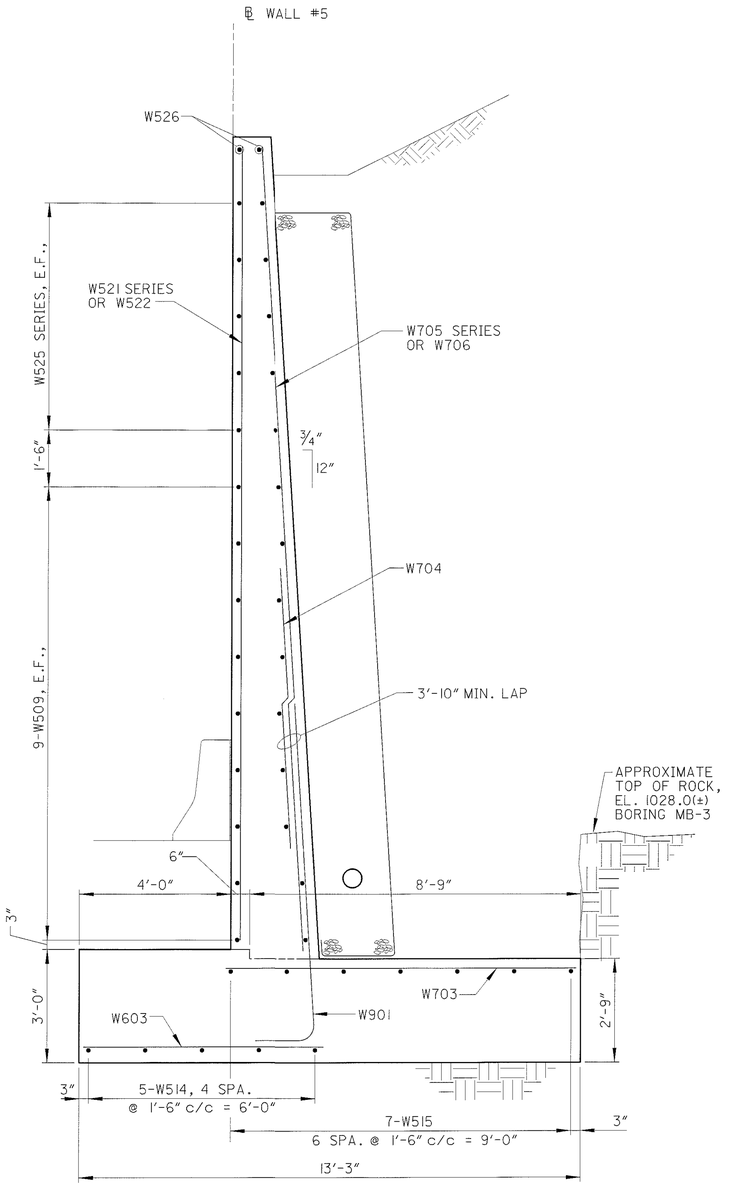

SECTION W-4 / 2

(SEGMENT 4 RIGHT SIDE OF BLOCK OUT)

FOR NOTES, SEE SHEET 639.

DLZ
8000 ROCKEFELLER BLDG • 614 W SUPERIOR AVE • CLEVELAND, OH 44113

DESIGNED	DRAWN	REVIEWED	DATE
DP	MWD	GWM	6/5/01
CHECKED	REVISED	STRUCTURE FILE NUMBER	
JWB			

WALL SECTIONS
RETAINING WALL #5
ALONG S.R. 8

SUM-8-0.63

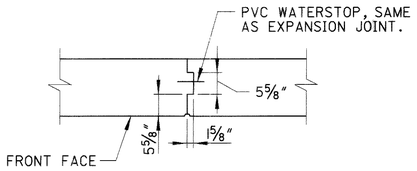

CONTRACTION JOINT DETAIL

PVC WATERSTOP

A PVC WATERSTOP, NOMINAL DIMENSIONS 6" x ⅜" THICK AND CAPABLE OF PROVIDING 1½" MOVEMENT, SHALL BE PROVIDED AT CONTRACTION AND EXPANSION JOINTS.

THE WATERSTOP SHALL EXTEND FROM THE TOP OF FOOTING TO 1'-0" BELOW TOP OF WALL.

THE WATERSTOP SHALL BE SECURELY HELD IN PLACE DURING CONCRETE PLACEMENT.

INCLUDE WITH ITEM 842, CLASS C CONCRETE, AS PER PLAN, FOR PAYMENT.

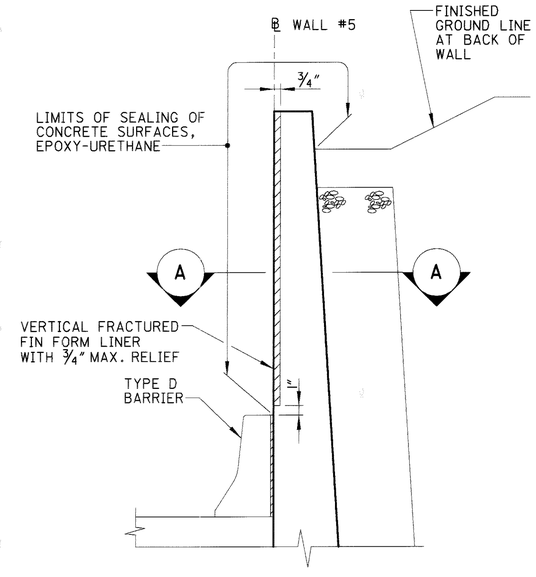

TYPICAL WALL TREATMENT

(FORM LINER TYPICAL FOR WALL SEGMENTS 2 THRU 4. WALL SEGMENT 1 HAS NO FORM LINER)

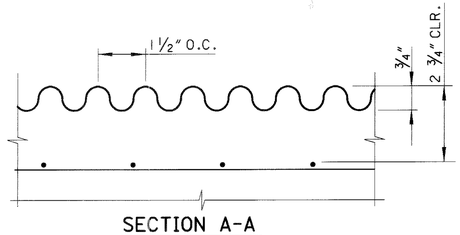

SECTION A-A

ITEM SPECIAL - FORM LINER

A VERTICAL FRACTURED FIN FORM LINER SHALL BE PROVIDED WHERE INDICATED BY THE TYPICAL WALL TREATMENT DETAIL. THE COST OF THE FORM LINER, INCLUDING ALL LABOR, MATERIALS, EQUIPMENT AND INCIDENTALS SHALL BE INCLUDED WITH THE UNIT PRICE BID, PER SQUARE FOOT FOR ITEM SPECIAL, FORM LINER.

REINFORCING STEEL LIST

MARK	NUMBER	LENGTH	WEIGHT (LBS.)	TYPE	DIMENSIONS A	B	C	D	SER INC.
W501	31	2'-9"	89	STR					
W502	31	3'-6"	113	STR					
W503	6	30'-0"	188	STR					
W504	31	4'-9"	154	11	0'-10"	4'-0"	0'-3"		
W505	8	10'-0"	83	STR					
W506	6	15'-9"	99	STR					
W507	22	3'-3"	75	STR					
W508	7	11'-3"	82	12	7'-0"	3'-0"	3'-0"		
W509	54	31'-7"	1779	STR					
W510	15	4'-11"	77	STR					
W511	8	11'-11"	99	12	7'-0"	3'-6"	3'-6"		
W512	10	10'-7"	110	STR					
W513	9	8'-6"	80	STR					
W514	5	16'-0"	83	STR					
W515	7	15'-10"	116	STR					
W516	10	11'-8"	122	STR					
	2	4'-8"							
W517	SER		96	STR					0'-1⅜"
	9	5'-7"							
	2	5'-7"							
W518	SER		314	STR					0'-1 7/16"
	22	8'-1"							
	1	9'-7"							
W519	SER		238	STR					0'-0⅞"
	22	11'-2"							
	1	7'-3"							
W520	SER		185	STR					0'-0⅞"
	22	8'-10"							
	1	12'-6"							
W521	SER		367	STR					0'-6 7/16"
	20	22'-8"							
W522	2	22'-9"	47	STR					
W523	1	8'-3"	9	STR					
	1	8'-6"							
W524	SER		118	STR					0'-4 3/16"
	11	12'-0"							
	2	2'-6"							
W525	SER		226	STR					4'-4"
	7	28'-6"							
W526	2	30'-9"	64	STR					
W527	8	4'-6"	38	STR					
W528	4	7'-0"	29	STR					
W529	2	18'-0"	38	STR					
W601	22	5'-8"	187	STR					
W602	15	7'-9"	175	STR					
W603	33	6'-3"	310	STR					
W604	8	14'-0"	168	STR					
W701	22	7'-7"	341	11	1'-2"	6'-7"	0'-5"		
W702	22	10'-1"	453	11	1'-2"	9'-1"	0'-7"		
W703	33	9'-2"	618	STR					
W704	31	7'-7"	481	STR					
	1	14'-3"							
W705	SER		635	STR					0'-4 1/4"
	18	20'-3"							
W706	3	20'-6"	126	STR					
W801	9	6'-1"	146	STR					
W901	33	10'-5"	1169	11	1'-7"	9'-1"	0'-7"		
		TOTAL =	9927	LBS.					

BENDING DIAGRAMS

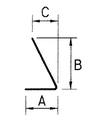

TYPE 11

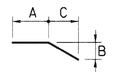

TYPE 12

REINFORCING STEEL NOTES

1. SERIES BARS - EACH BAR VARIES BY TABULATED AMOUNT.
2. ALL DIMENSIONS ARE OUT TO OUT.
3. TYPE 'STR' INDICATES A STRAIGHT BAR.
4. THE BAR SIZE NUMBER IS SPECIFIED IN THE 'MARK' COLUMN. THE FIRST DIGIT INDICATES THE BAR SIZE NUMBER. FOR EXAMPLE, W501 IS A #5 BAR SIZE.
5. ALL BARS SHALL BE EPOXY COATED UNLESS NOTED OTHERWISE.
6. SUBTOTALS AND TOTAL WEIGHTS ARE FOR INFORMATIONAL PURPOSES ONLY. IF THE REINFORCING LIST PROVIDED IN THE PLANS IS USED IT SHALL BE VERIFIED BY THE CONTRACTOR. ANY REVISIONS IN THE REINFORCING STEEL LIST AS SHOWN IN THE PLANS WILL NOT BE REASON FOR ADJUSTMENT IN THE BID PRICE FOR STRUCTURAL CONCRETE.

ESTIMATED QUANTITIES

ITEM	ITEM EXTENSION	TOTAL	UNIT	DESCRIPTION	REF. SHEET NO.
503	21100	214	CU. YD.	UNCLASSIFIED EXCAVATION	
503	31100	190	CU. YD.	ROCK EXCAVATION	
516	13600	76	SQ. FT.	1" PREFORMED EXPANSION JOINT FILLER	
518	21201	77	CU. YD.	POROUS BACKFILL WITH FILTER FABRIC, AS PER PLAN	2
518	40001	108	LIN. FT.	6" PERFORATED CORRUGATED PLASTIC PIPE, AS PER PLAN	2
SPECIAL	53013000	657	SQ. FT.	FORM LINER *	4
842	46001	67	CU. YD.	CLASS C CONCRETE, AS PER PLAN	4
842	46500	71	CU. YD.	CLASS C CONCRETE, FOOTING	
864	10100	99	SQ. YD.	SEALING OF CONCRETE SUFACES (EPOXY-URETHANE)	

* 100% LOCAL COST

REVISIONS: 05/15/2002 by AGW

DLZ
1000 ROCKEFELLER BLDG • 614 W SUPERIOR AVE • CLEVELAND, OH 44113

DESIGNED	DRAWN	REVIEWED	DATE
DP	DP	GWM	6/5/01
CHECKED	REVISED	STRUCTURE FILE NUMBER	
JWB			

REINFORCING STEEL LIST
RETAININ WALL #5
ALONG S.R. 8

SUM-8-0.63

4 / 4

641
1088

04:01:13 PM
07/09/2002
u:\00-0105R-8\1\Civil\Walls\wall5-rebarlist.dgn

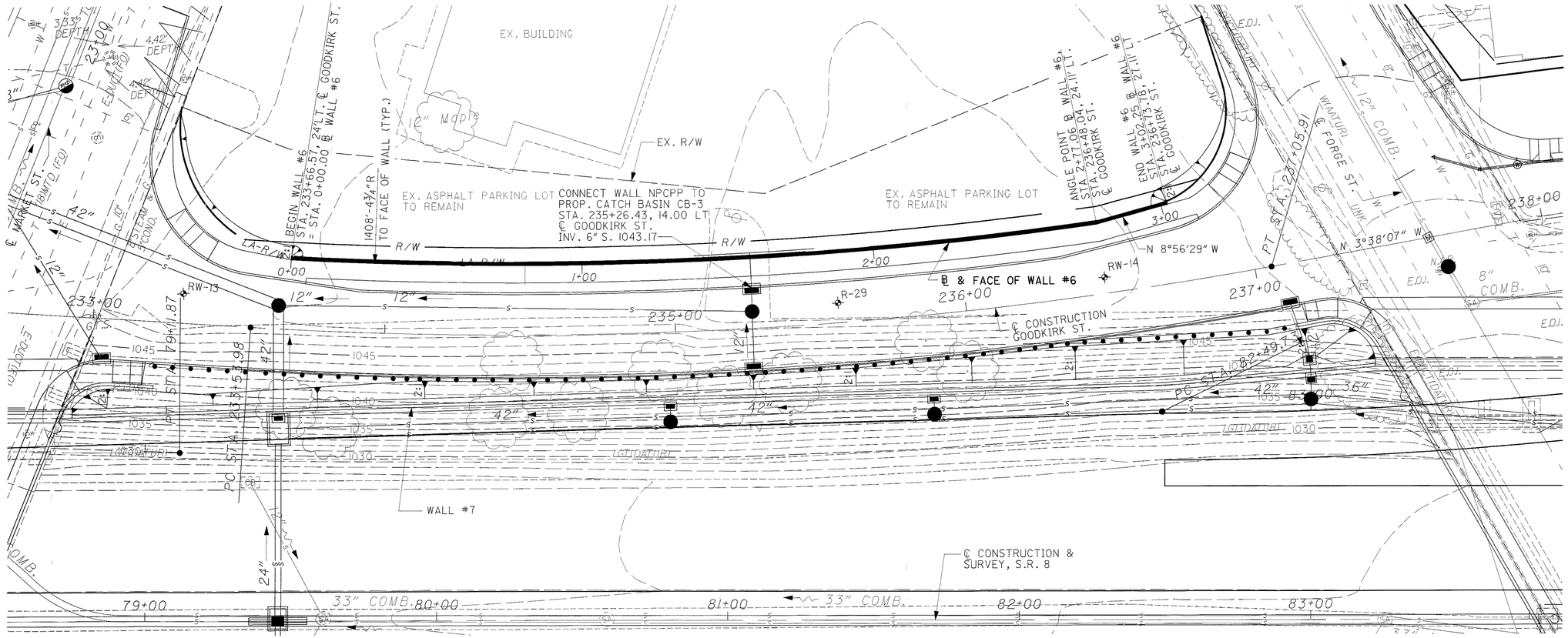

PARTIAL PLAN

EARTHWORK NOTE:

EARTHWORK LIMITS ARE APPROXIMATE. ACTUAL SLOPES SHALL CONFORM TO PLAN CROSS SECTIONS.

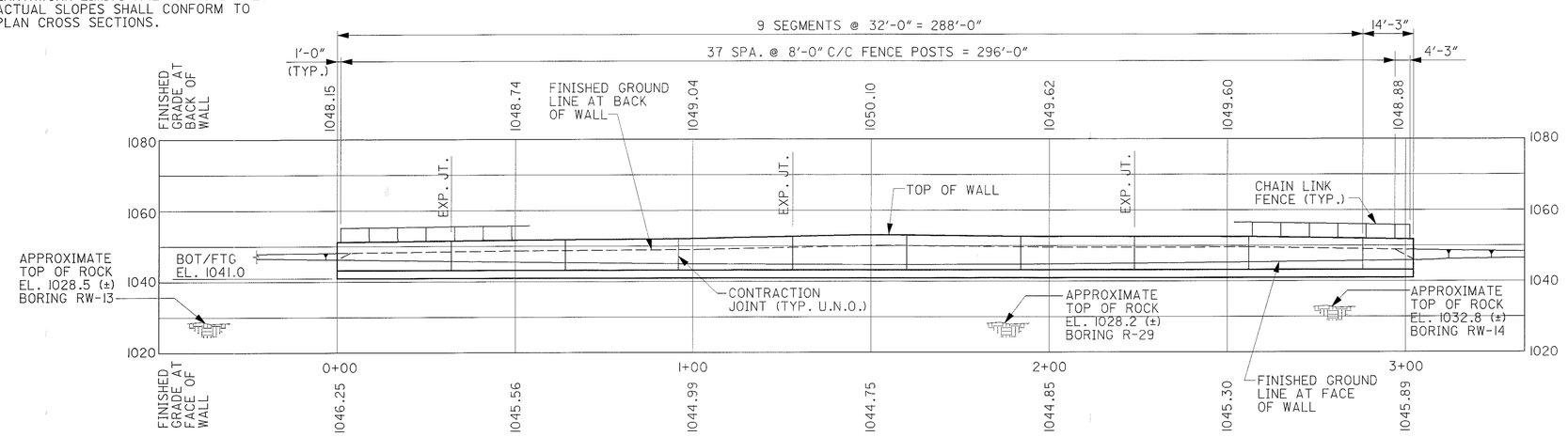

PROFILE ALONG ℄ WALL #6

BENCHMARK #3	BENCHMARK #4
CHISELED "X" ON CURB SIDE CORNER OF CONC. SIDEWALK ON N SIDE OF FORGE ST., 61.5' W OF INT. OF FORGE AND PARK, 23.9' N OF ℄ FORGE ST. STA. 237+11.37, 210.31' LT. ℄ GOODKIRK ST. EL.1044.09	CHISELED "□" ON NE CORNER OF STEPS IN NW ENTRANCE OF BUILDING @ SW CORNER OF MARKET & KIRKWOOD. STA. 232+60.59, 135.89' LT. ℄ GOODKIRK ST. EL. 1046.85

WALL #6 CURVE DATA:

R = 1408'-4¾"
Dc = 4°04'05"
T = 138.98'
L = 277.06'
Δ = 11°16'16" (LT)

℄ GOODKIRK CURVE DATA:

P.I. STA. = 235+30.84
Δ = 14° 04' 38" (LT)
Dc = 4° 00' 00"
R = 1,432.39'
T = 176.86'
L = 351.93'
E = 10.88'
e_{max} = NC

DESIGN SPECIFICATIONS

THIS STRUCTURE CONFORMS TO "STANDARD SPECIFICATIONS FOR HIGHWAY BRIDGES" ADOPTED BY THE AMERICAN ASSOCIATION OF STATE HIGHWAY AND TRANSPORTATION OFFICIALS, 1996, INCLUDING THE 1997, 1998 AND 1999 INTERIM SPECIFICATIONS AND THE ODOT BRIDGE DESIGN MANUAL.

DESIGN DATA

CONCRETE CLASS C - COMPRESSIVE STRENGTH 4000 psi.
REINFORCING STEEL - ASTM A615, A616, OR A617
GRADE 60, MINIMUM YIELD STRENGTH 60,000 psi.

FOUNDATION BEARING PRESSURE

RETAINING WALL #6 FOOTINGS, AS DESIGNED, PRODUCE A MAXIMUM BEARING PRESSURE OF 2020 psf. THE ALLOWABLE BEARING PRESSURE IS 3000 psf.

QUANTITIES: FOR ESTIMATED QUANTIES, SEE SHEET 647.

ITEM 864, SEALING OF CONCRETE SURFACES (EPOXY-URETHANE)

CONCRETE SURFACES AS DETAILED IN THE PLANS SHALL BE SEALED WITH AN EPOXY-URETHANE SEALER OF A COLOR CONFORMING TO FEDERAL COLOR No. 13522 - BUFF.

REFER TO DRAINAGE PLANS FOR CATCH BASIN AND DRAINAGE DETAILS

LEGEND

℄	BASELINE	PROP.	PROPOSED
BOT.	BOTTOM	⌖	SOIL BORING
℄	CENTERLINE	SPA.	SPACES
C.J.	CONSTRUCTION JOINT	STA.	STATION
E.F.	EACH FACE	ST.	STREET
EL.	ELEVATION	TYP.	TYPICAL
EXP. JT.	EXPANSION JOINT	U.N.O.	UNLESS NOTED OTHERWISE
F.F.	FAR FACE		
INV.	INVERT		
MIN.	MINIMUM		
N.F.	NEAR FACE		
NPCPP	NON-PERFORATED CORRUGATED PLASTIC PIPE		
PCPP	PERFORATED CORRUGATED PLASTIC PIPE		

DLZ
8000 ROCKEFELLER BLDG • 614 • SUPERIOR AVE • CLEVELAND, OH 44115

DESIGNED	DRAWN	REVIEWED	DATE
JWB	KME	GWM	5/15/01
CHECKED	REVISED	STRUCTURE FILE NUMBER	
DP			

PLAN AND PROFILE
RETAINING WALL #6
ALONG GOODKIRK ST., STA. 233+66.57 TO STA. 236+73.78

SUM-8-0.63

1 / 6

642
1088

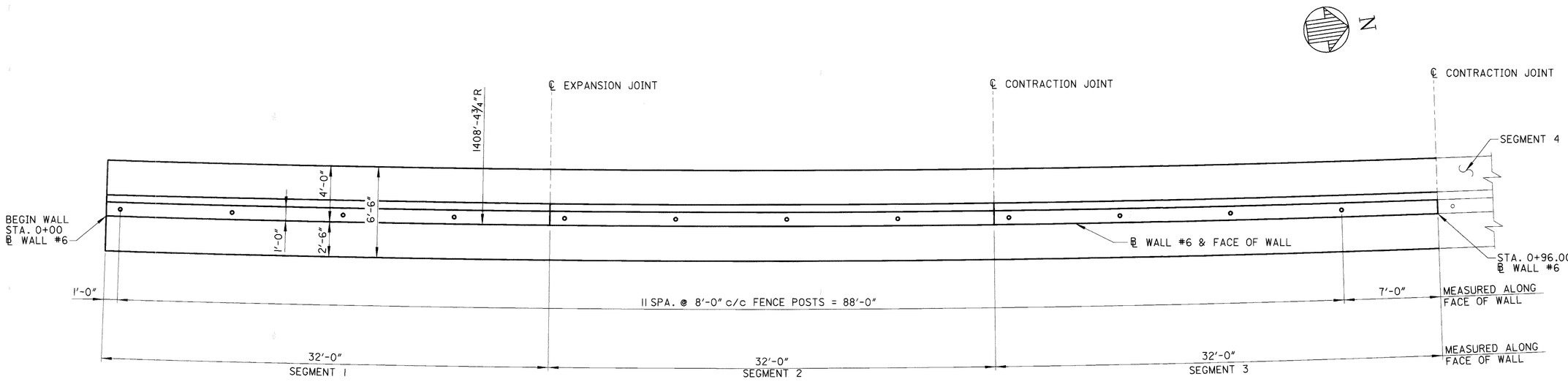

PLAN

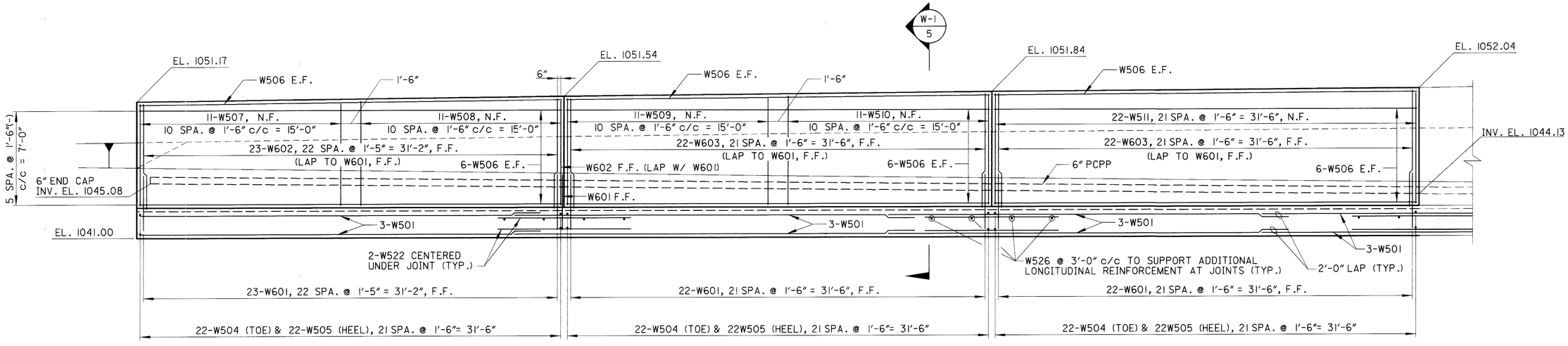

ELEVATION

NOTES

1. POROUS BACKFILL WITH FILTER FABRIC, 2 FEET THICK, SHALL EXTEND UP TO 1 FOOT BELOW THE EMBANKMENT SURFACE AND LATERALLY FOR THE FULL LENGTH OF THE RETAINING WALL.
2. FOR DETAILS OF CONTRACTION JOINT AND EXPANSION JOINT, SEE SHEET 646.
3. ITEM 607, FENCE, TYPE CL, MISC., AS PER PLAN (4' HIGH) THE FENCE POSTS SHALL HAVE BASEPLATES FABRICATED AND INSTALLED IN ACCORDANCE WITH ODOT STANDARD DRAWING VPF-1-90M. ALL COSTS ASSOCIATED WITH FURNISHING AND INSTALLING THE FENCE SHALL BE INCLUDED IN THE UNIT PRICE BID FOR ITEM 607.
4. 6" PERFORATED CORRUGATED PLASTIC PIPE, AS PER PLAN, SHALL INCLUDE TWO 6" END CAPS AS DETAILED IN THE PLANS.
5. FOR PAVING BEHIND WALLS SEE PLAN & PROFILE SHEETS ALONG ℄ GOODKIRK STREET.
6. FOR CONVERSION OF UNITS FROM METRIC STANDARD DRAWINGS, SEE SHEET 30.

REVISIONS: 05/15/2002 by AGW

DLZ
1000 ROCKEFELLER BLDG • 614 W SUPERIOR AVE • CLEVELAND, OH 44113

DESIGNED	DRAWN	REVIEWED	DATE
DP	DJP	GWM	5/15/01
CHECKED	REVISED	STRUCTURE FILE NUMBER	
JWB			

SEGMENTS 1 THROUGH 3
RETAINING WALL #6
ALONG GOODKIRK ST., STA 233+66.57 TO STA. 236+73.78

SUM-8-0.63

2 / 6

643
1088

02:26:16 PM
06/12/2002
u:\00-0105r-8\civil\walls\wall6-detail.dgn

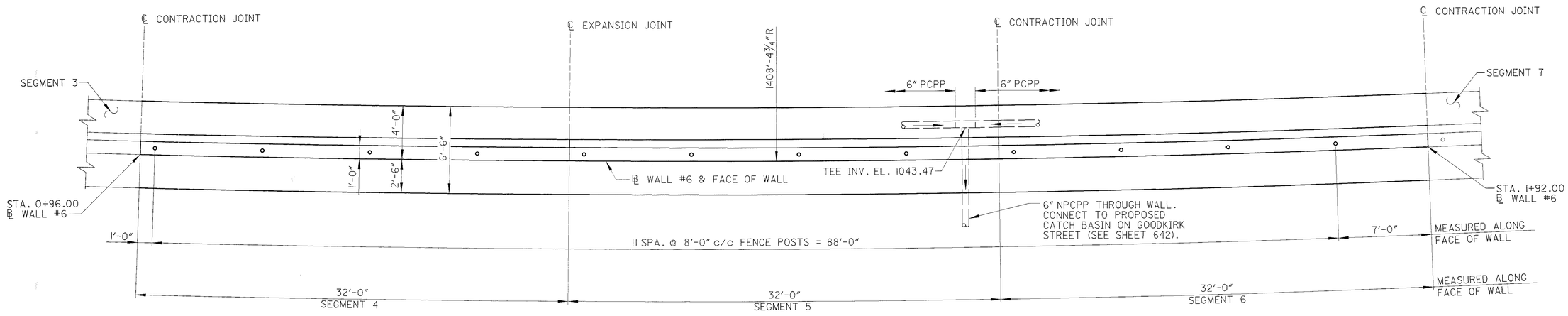

PLAN

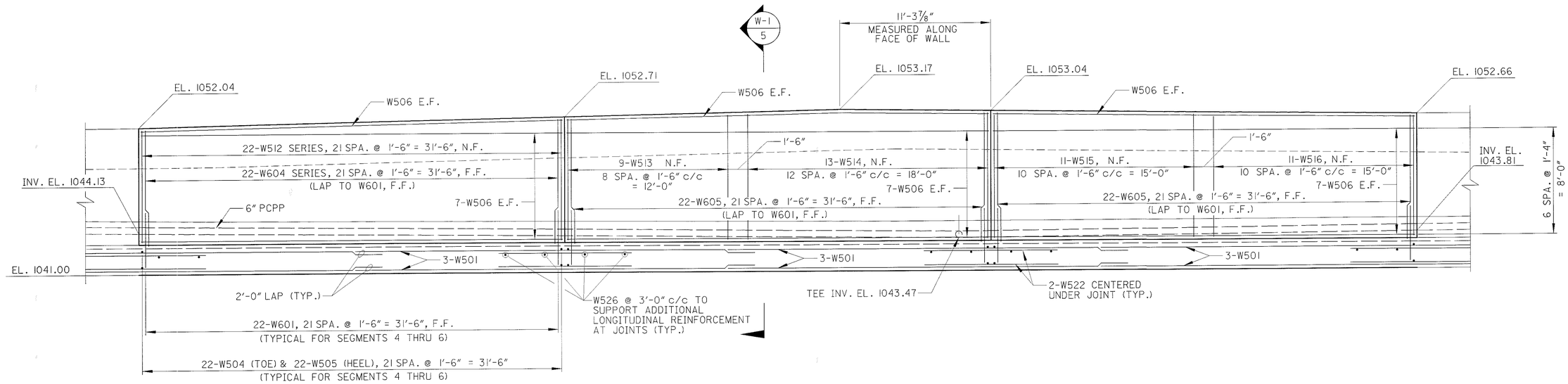

ELEVATION

FOR NOTES, SEE SHEET 643.

DLZ
6000 ROCKEFELLER BLDG • 614 W SUPERIOR AVE • CLEVELAND, OH 44113

DESIGNED DJP | DRAWN DJP | CHECKED JWB | REVIEWED GWM | DATE 5/15/01 | REVISED | STRUCTURE FILE NUMBER

SEGMENTS 4 THROUGH 6
RETAINING WALL #6
ALONG GOODKIRK ST., STA. 233+66.57 TO STA. 236+73.78

SUM-8-0.63

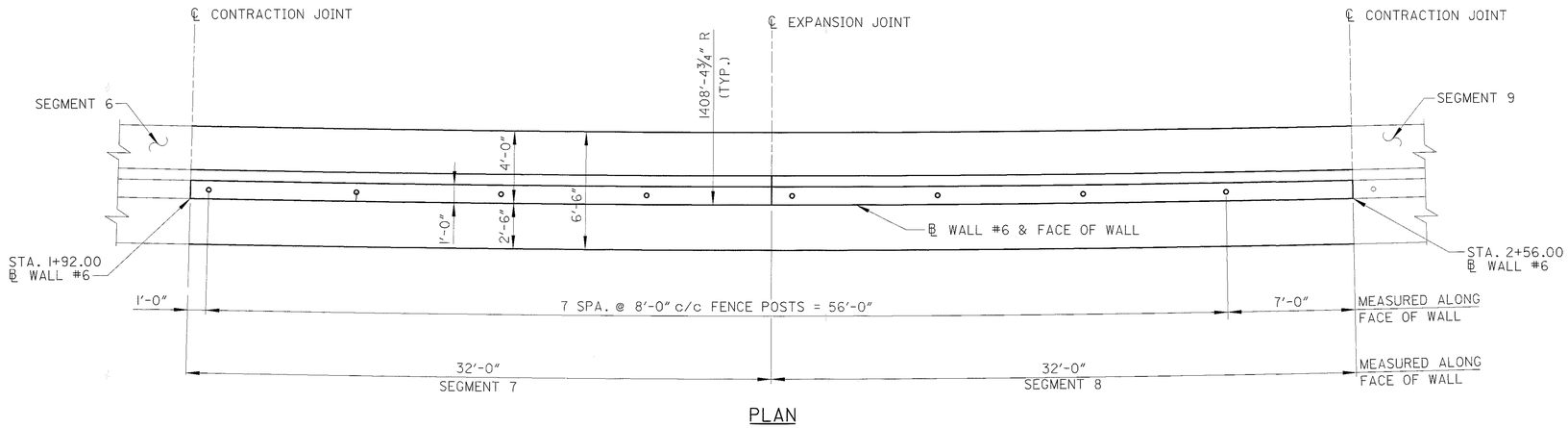

PLAN

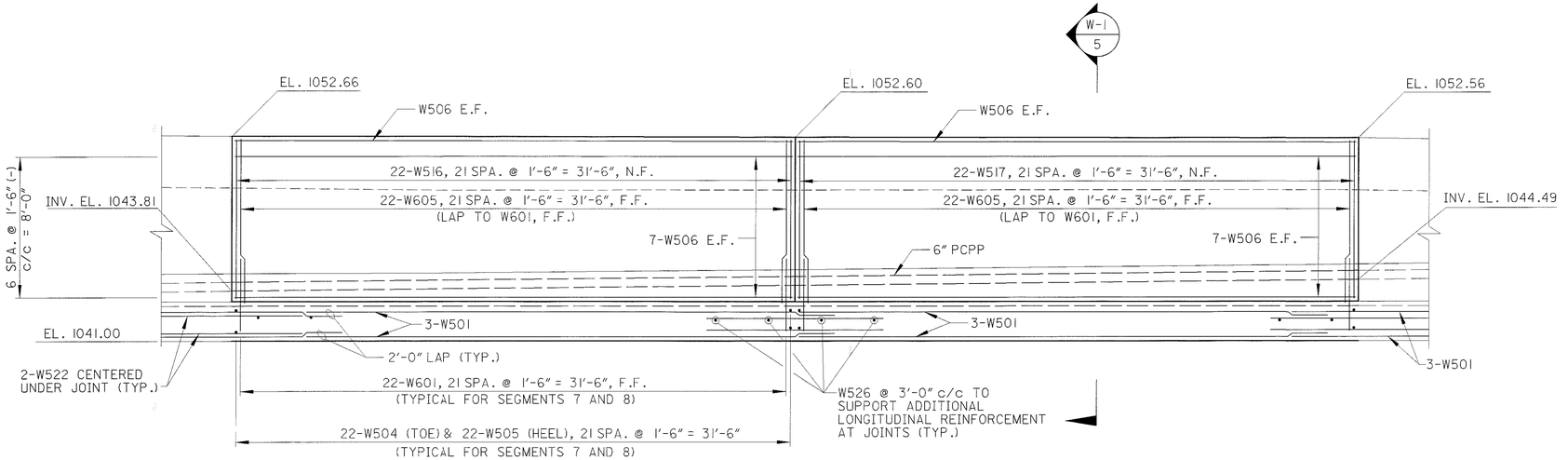

ELEVATION

FOR NOTES, SEE SHEET 643.

DLZ
1000 ROCKEFELLER BLDG • 614 W SUPERIOR AVE • CLEVELAND, OH 44113

DESIGNED	DRAWN	REVIEWED	DATE
DP	DJP	GWM	5/15/01
CHECKED	REVISED		STRUCTURE FILE NUMBER
JWB			

SEGMENTS 7 AND 8
RETAINING WALL #6
ALONG GOODKIRK ST., STA. 233+66.57 TO STA. 236+73.78

SUM-8-0.63

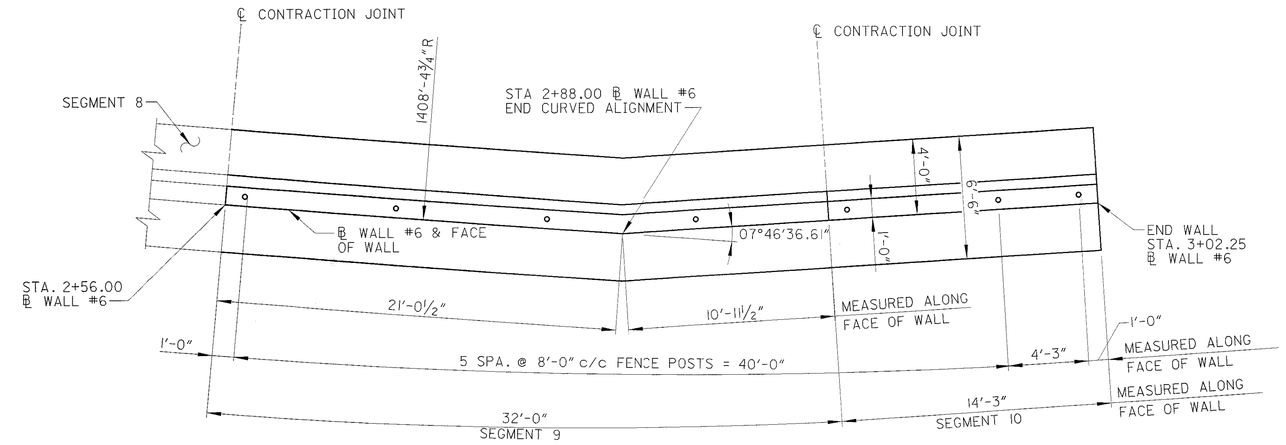

PLAN

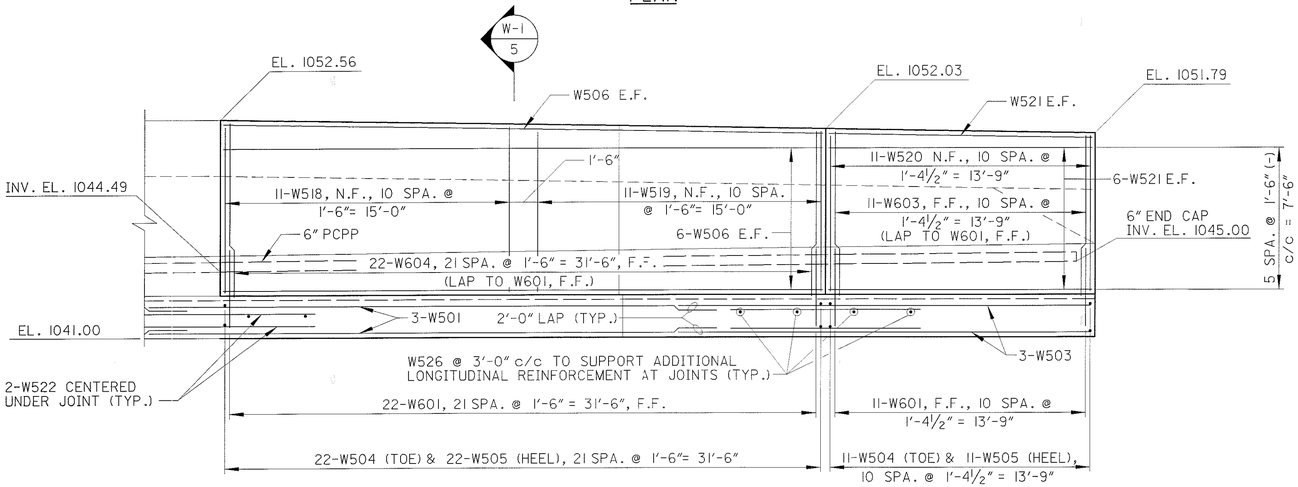

ELEVATION

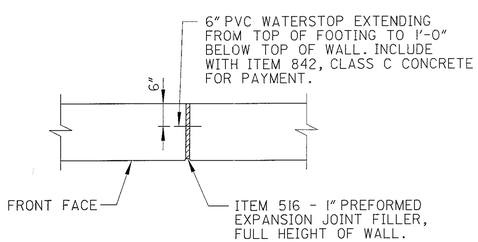

EXPANSION JOINT DETAIL

PVC WATERSTOP

A PVC WATERSTOP, NOMINAL DIMENSIONS 6" x ⅜" THICK AND CAPABLE OF PROVIDING 1½" MOVEMENT, SHALL BE PROVIDED AT CONTRACTION AND EXPANSION JOINTS.

THE WATERSTOP SHALL EXTEND FROM THE TOP OF FOOTING TO 1'-0" BELOW TOP OF WALL.

THE WATERSTOP SHALL BE SECURELY HELD IN PLACE DURING CONCRETE PLACEMENT.

INCLUDE WITH ITEM 842, CLASS C CONCRETE FOR PAYMENT.

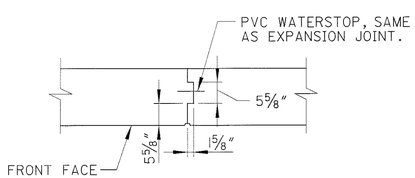

CONTRACTION JOINT DETAIL

N

FOR NOTES, SEE SHEET 643.

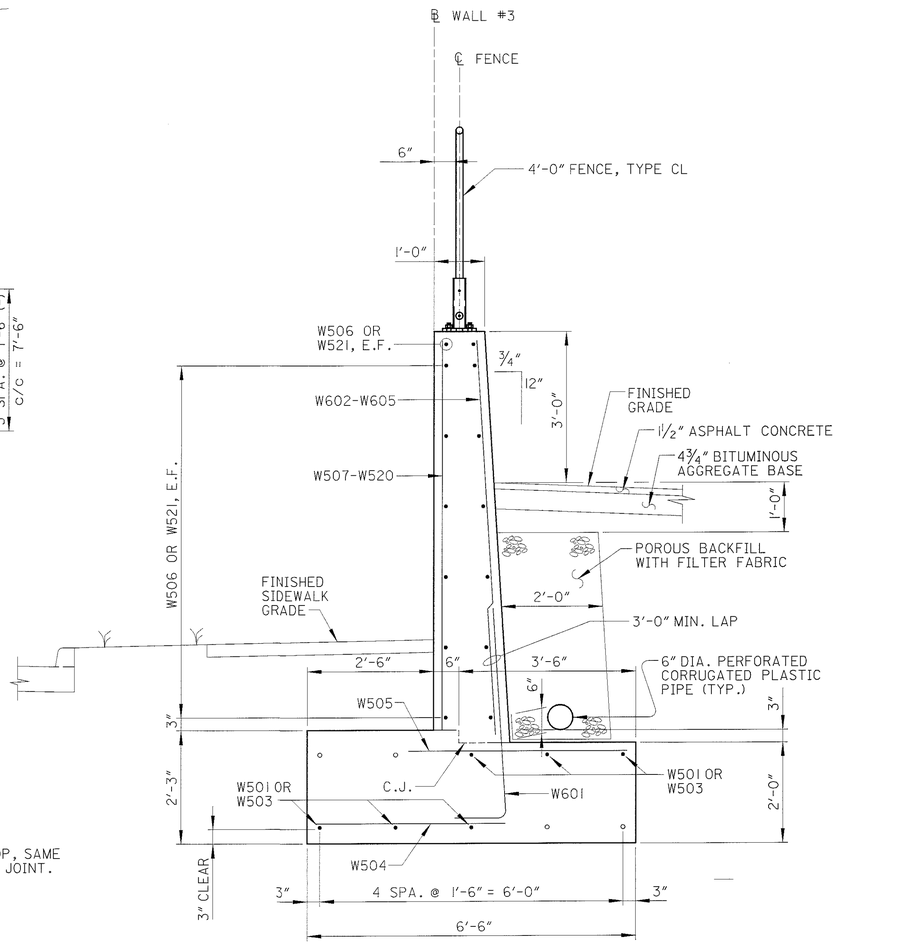

○ INDICATES W522 (TOP & BOT.), CENTERED UNDER JOINT

SECTION W-1 2-5

(TYPICAL FOR WALL #6)

DLZ
1000 ROCKEFELLER BLDG • 614 W. SUPERIOR AVE • CLEVELAND, OH 44113

DESIGNED	DRAWN	REVIEWED	DATE
DP	DJP	GWM	5/15/01
CHECKED	REVISED		STRUCTURE FILE NUMBER
JWB			

SEGMENTS 9 AND 10
RETAINING WALL #6
ALONG GOODKIRK ST., STA. 233+66.57 TO STA. 236+73.78

SUM-8-0.63

REINFORCING STEEL LIST								
MARK	NUMBER	LENGTH	WEIGHT (LBS.)	TYPE	DIMENSIONS A	B	C	SER INC.
W501	60	30'-0"	1877	STR				
W502	NOT	USED						
W503	6	22'-0"	138	STR				
W504	209	4'-0"	872	STR				
W505	209	4'-5"	963	STR				
W506	136	31'-7"	4480	STR				
W507	11	7'-8"	88	STR				
W508	11	7'-10"	90	STR				
W509	11	8'-0"	92	STR				
W510	11	8'-2"	94	STR				
W511	22	8'-4"	191	STR				
	1	8'-6"						
W512	SER		203	STR				3/8"
	22	9'-2"						
W513	9	9'-3"	87	STR				
W514	13	9'-6"	129	STR				
W515	11	9'-4"	107	STR				
W516	33	9'-1"	313	STR				
W517	22	9'-0"	207	STR				
W518	11	8'-10"	101	STR				
W519	11	8'-6"	98	STR				
W520	11	8'-3"	95	STR				
W521	14	13'-10"	202	STR				
W522	36	10'-0"	375	STR				
W523	NOT	USED						
W524	NOT	USED						
W525	NOT	USED						
W526	36	6'-0"	225	STR				
W601	211	6'-4"	2007	II	1'-0"	5'-6"	4"	
W602	24	7'-8"	276	STR				
W603	55	8'-3"	682	STR				
W604	44	8'-9"	578	STR				
W605	88	9'-4"	1234	STR				
		TOTAL =	15804	LBS.				

BENDING DIAGRAMS

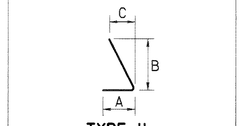

TYPE II

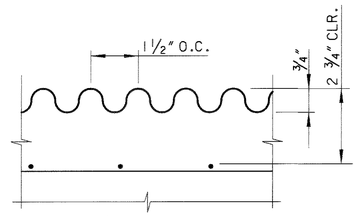

SECTION A-A

REINFORCING STEEL NOTES

1. SERIES BARS - EACH BAR VARIES BY TABULATED AMOUNT.
2. ALL DIMENSIONS ARE OUT TO OUT.
3. TYPE 'STR' INDICATES A STRAIGHT BAR.
4. THE BAR SIZE NUMBER IS SPECIFIED IN THE 'MARK' COLUMN. THE FIRST DIGIT INDICATES THE BAR SIZE NUMBER. FOR EXAMPLE, W501 IS A #5 BAR SIZE.
5. ALL BARS SHALL BE EPOXY COATED UNLESS NOTED OTHERWISE.
6. SUBTOTALS AND TOTAL WEIGHTS ARE FOR INFORMATIONAL PURPOSES ONLY. IF THE REINFORCING LIST PROVIDED IN THE PLANS IS USED IT SHALL BE VERIFIED BY THE CONTRACTOR. ANY REVISIONS IN THE REINFORCING STEEL LIST AS SHOWN IN THE PLANS WILL NOT BE REASON FOR ADJUSTMENT IN THE BID PRICE FOR STRUCTURAL CONCRETE.

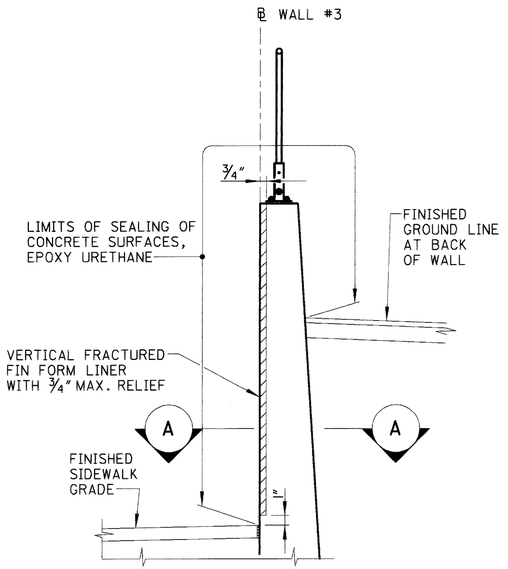

TYPICAL WALL TREATMENT

ITEM SPECIAL - FORM LINER

A VERTICAL FRACTURED FIN FORM LINER SHALL BE PROVIDED WHERE INDICATED BY THE TYPICAL WALL TREATMENT DETAIL. THE COST OF THE FORM LINER, INCLUDING ALL LABOR, MATERIALS, EQUIPMENT AND INCIDENTALS SHALL BE INCLUDED WITH THE UNIT PRICE BID, PER SQUARE FOOT FOR ITEM SPECIAL, FORM LINER.

ESTIMATED QUANTITIES					
ITEM	ITEM EXTENSION	TOTAL	UNIT	DESCRIPTION	SHEET REF.
503	21100	634	CU. YD.	UNCLASSIFIED EXCAVATION	
516	13600	36	SQ. FT.	1" PREFORMED EXPANSION JOINT FILLER	
518	21201	118	CU. YD.	POROUS BACKFILL WITH FILTER FABRIC, AS PER PLAN	2
518	40001	302	LIN. FT.	6" PERFORATED CORRUGATED PLASTIC PIPE, AS PER PLAN	2
518	40010	12	LIN. FT.	6" NON-PERFORATED CORRUGATED PLASTIC PIPE, INCLUDING SPECIALS	
SPECIAL	53013000	2100	SQ. FT.	FORM LINER *	6
607	20101	300	LIN. FT.	FENCE, TYPE CL, MISC., AS PER PLAN (4' HIGH)	2
842	46001	133	CU. YD.	CLASS C CONCRETE, AS PER PLAN	5
842	46500	154	CU. YD.	CLASS C CONCRETE, FOOTING	
864	10100	390	SQ. YD.	SEALING OF CONCRETE SURFACES (EPOXY-URETHANE)	

* 100% LOCAL COST

REVISIONS: 05/15/2002 by AGW

DLZ
600 ROCKEFELLER BLDG • 614 W. SUPERIOR AVE • CLEVELAND, OH 44113

DESIGNED	DRAWN	REVIEWED	DATE
DP	DJP	GWM	5/15/01
CHECKED	REVISED	STRUCTURE FILE NUMBER	
JWB			

REINFORCING STEEL LIST AND ESTIMATED QUANTITIES
RETAINING WALL #6
ALONG GOODKIRK ST., STA. 233+66.57 TO STA. 236+73.78

SUM-8-0.63

6 / 6

647
1088

04:05:05 PM
07/09/2002
u:\00-010SR-8\N\Civil\Walls\wall6-detail.dgn

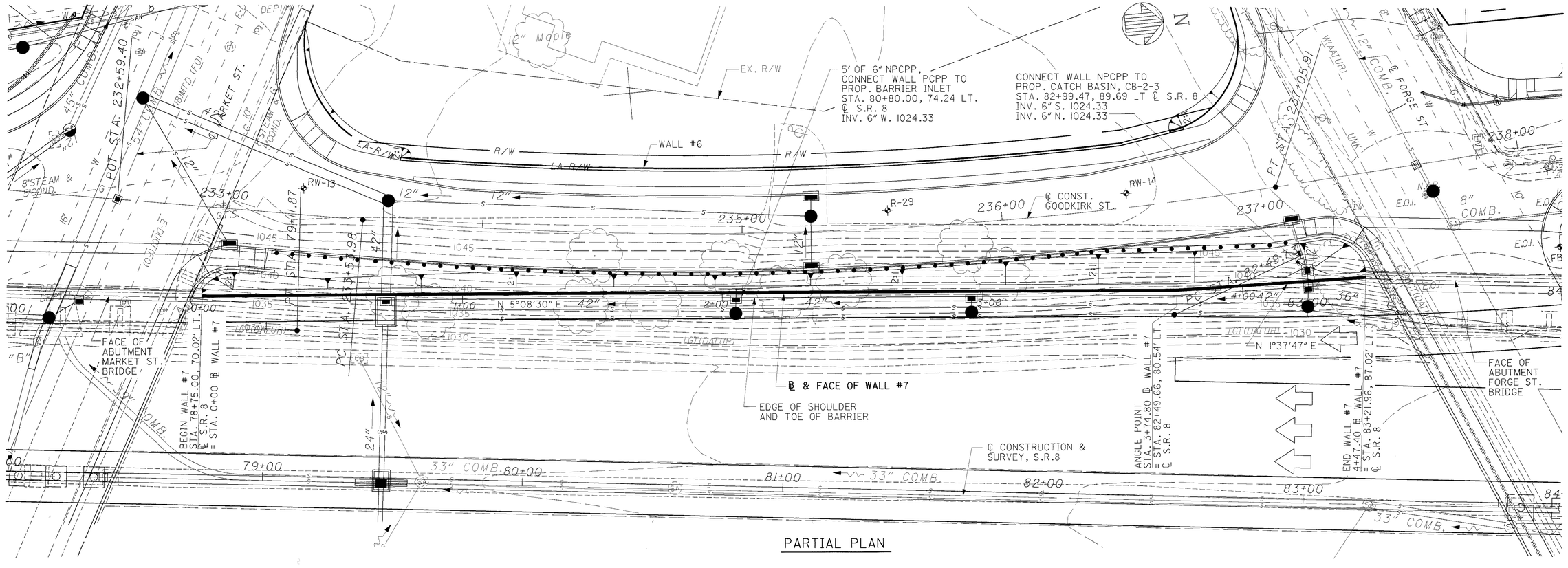

PARTIAL PLAN

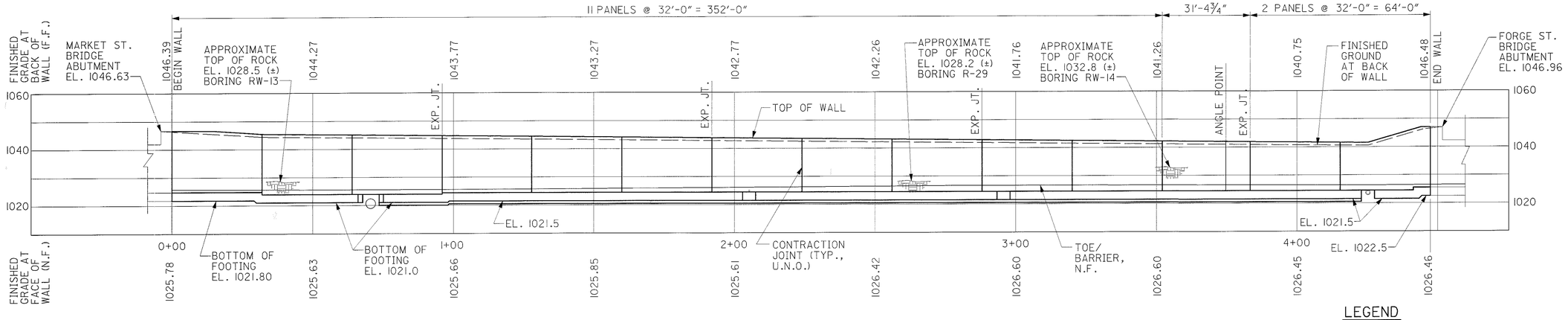

PROFILE ALONG ℄ WALL #7

BENCHMARK #3

CHISELED "X" ON CURB SIDE CORNER OF CONC. SIDEWALK ON N SIDE OF FORGE ST., 61.5' W OF INT. OF FORGE AND PARK, 23.9' N OF ℄ FORGE ST.
STA. 237+11.37, 210.31' LT. ℄ GOODKIRK ST.
EL. 1044.09

BENCHMARK #4

CHISELED "□" ON NE CORNER OF STEPS IN NW ENTRANCE OF BUILDING @ SW CORNER OF MARKET & KIRKWOOD.
STA. 232+60.59, 135.89' LT. ℄ GOODKIRK ST.
EL. 1046.85

DESIGN SPECIFICATIONS

THIS STRUCTURE CONFORMS TO "STANDARD SPECIFICATIONS FOR HIGHWAY BRIDGES" ADOPTED BY THE AMERICAN ASSOCIATION OF STATE HIGHWAY AND TRANSPORTATION OFFICIALS, 1996, INCLUDING THE 1997, 1998 AND 1999 INTERIM SPECIFICATIONS AND THE ODOT BRIDGE DESIGN MANUAL.

DESIGN DATA

CONCRETE CLASS C - COMPRESSIVE STRENGTH 4000 psi.
REINFORCING STEEL - ASTM A615, A616, OR A617 GRADE 60, MINIMUM YIELD STRENGTH 60,000 psi.

EARTHWORK NOTE:

EARTHWORK LIMITS ARE APPROXIMATE. ACTUAL SLOPES SHALL CONFORM TO PLAN CROSS-SECTIONS.

FOUNDATION BEARING PRESSURE

RETAINING WALL #7 FOOTINGS, AS DESIGNED, PRODUCE A MAXIMUM BEARING PRESSURE OF 5830 psf. THE ALLOWABLE BEARING PRESSURE IS 20000 psf.

THE FOOTING KEY FOR SEGMENTS 3 THRU 14 SHALL BE PLACED IN A CAREFULLY MADE TRENCH AGAINST UNDISTURBED ROCK.

ITEM 864, SEALING OF CONCRETE SURFACES (EPOXY-URETHANE)

CONCRETE SURFACES AS DETAILED IN THE PLANS SHALL BE SEALED WITH AN EPOXY-URETHANE SEALER OF A COLOR CONFORMING TO FEDERAL COLOR No. 13522 - BUFF.

QUANTITIES: FOR ESTIMATED QUANTITIES, SEE SHEET 655.

FOR CONCRETE BARRIER DETAILS SEE ROADWAY TYPICAL SECTION SHEET 20.

REFER TO DRAINAGE PLANS FOR BARRIER INLET AND CATCH BASIN DETAILS.

FOR MARKET STREET BRIDGE ABUTMENT CONSTRUCTION DETAILS SEE STRUCTURE PLANS FOR BRIDGE NO. SUM-8-0148.

FOR FORGE STREET BRIDGE ABUTMENT CONSTRUCTION DETAILS SEE STRUCTURE PLANS FOR BRIDGE NO. SUM-8-0159.

LEGEND

℄	BASELINE
BOT.	BOTTOM
℄	CENTERLINE
C.J.	CONSTRUCTION JOINT
CONST.	CONSTRUCTION
E.F.	EACH FACE
EL.	ELEVATION
EXP. JT.	EXPANSION JOINT
F.F.	FAR FACE
INV.	INVERT
MIN.	MINIMUM
N.F.	NEAR FACE
NPCPP	NON-PERFORATED CORRUGATEDPLASTIC PIPE
PCPP	PERFORATED CORRUGATED PLASTIC PIPE
PROP.	PROPOSED
⊕	SOIL BORING
SPA.	SPACES
STA.	STATION
TYP.	TYPICAL
U.N.O.	UNLESS NOTED OTHERWISE

DLZ
1000 ROCKEFELLER BLDG • 614 W SUPERIOR AVE • CLEVELAND, OH 44113

DESIGNED JWB | DRAWN KME | REVIEWED GWM | DATE 5/8/01
CHECKED DP | REVISED | STRUCTURE FILE NUMBER

PLAN AND PROFILE
RETAINING WALL #7
ALONG S.R. 8, STA. 78+75.00 TO STA. 83+21.96

SUM-8-0.63

1 / 8

648
1088

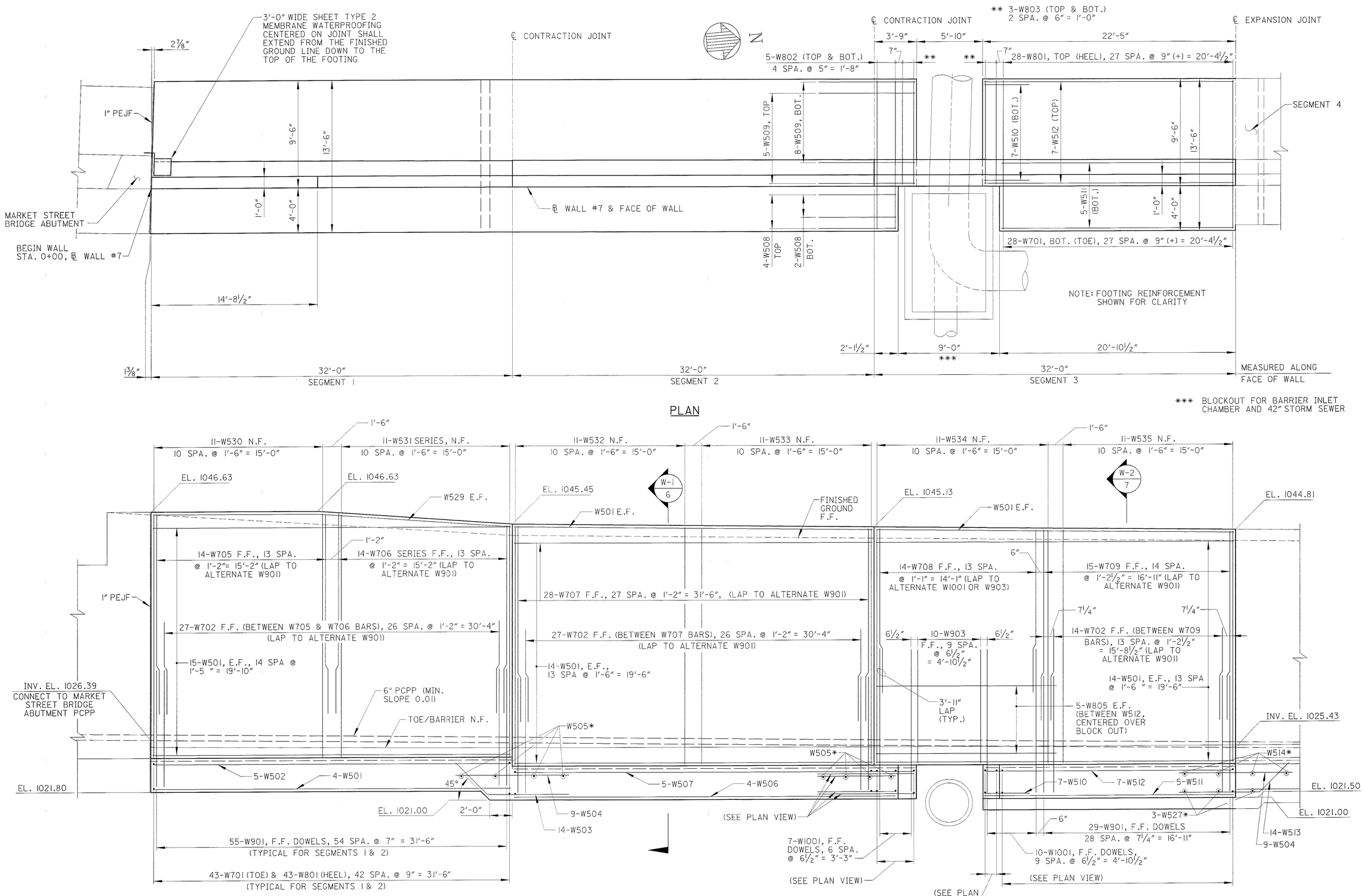

* #5 bars @ 3'-0" (±) c/c TO SUPPORT ADDITIONAL LONGITUDINAL REINFORCEMENT AT JOINTS

FOR NOTES, SEE SHEET 654.

DLZ
1000 ROCKEFELLER BLDG • 614 W SUPERIOR AVE • CLEVELAND, OH 44113

DESIGNED DP | DRAWN DJP | CHECKED JWB | REVIEWED GWM | DATE 5/08/01 | REVISED | STRUCTURE FILE NUMBER

SEGMENTS 1 THROUGH 3
RETAINING WALL #7
ALONG S.R. 8, STA. 78+75.00 TO STA. 83+21.96

SUM-8-0.63

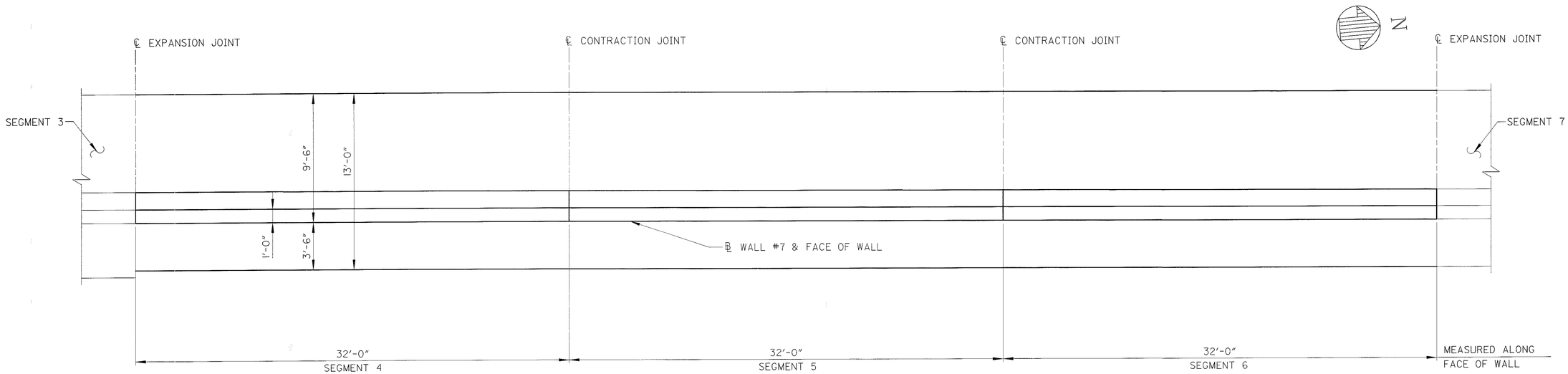

PLAN

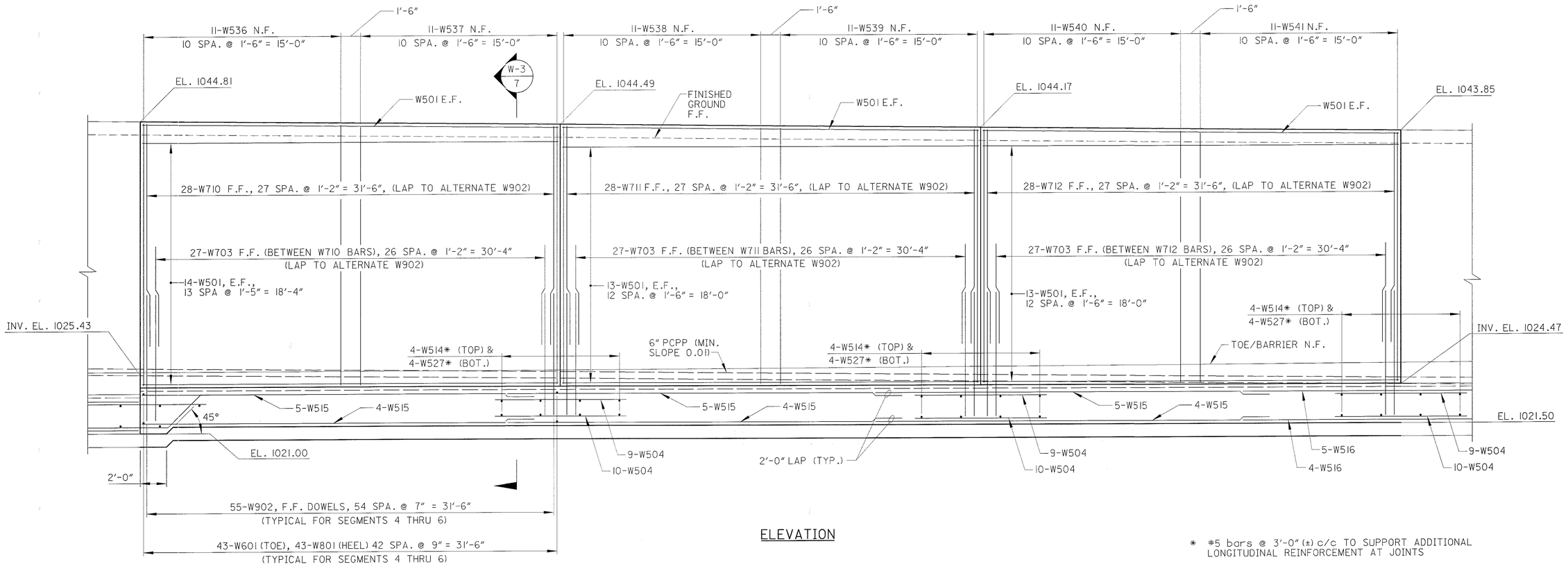

ELEVATION

* #5 bars @ 3'-0" (±) c/c TO SUPPORT ADDITIONAL LONGITUDINAL REINFORCEMENT AT JOINTS

FOR NOTES, SEE SHEET 654.

DLZ
1000 ROCKEFELLER BLDG ● 614 W SUPERIOR AVE ● CLEVELAND, OH 44113

DESIGNED DP | DRAWN DJP | CHECKED JWB | REVISED | REVIEWED GWM | DATE 5/08/01 | STRUCTURE FILE NUMBER

SEGMENTS 4 THROUGH 6
RETAINING WALL #7
ALONG S.R. 8, STA. 78+75.00 TO STA. 83+21.96

SUM-8-0.63

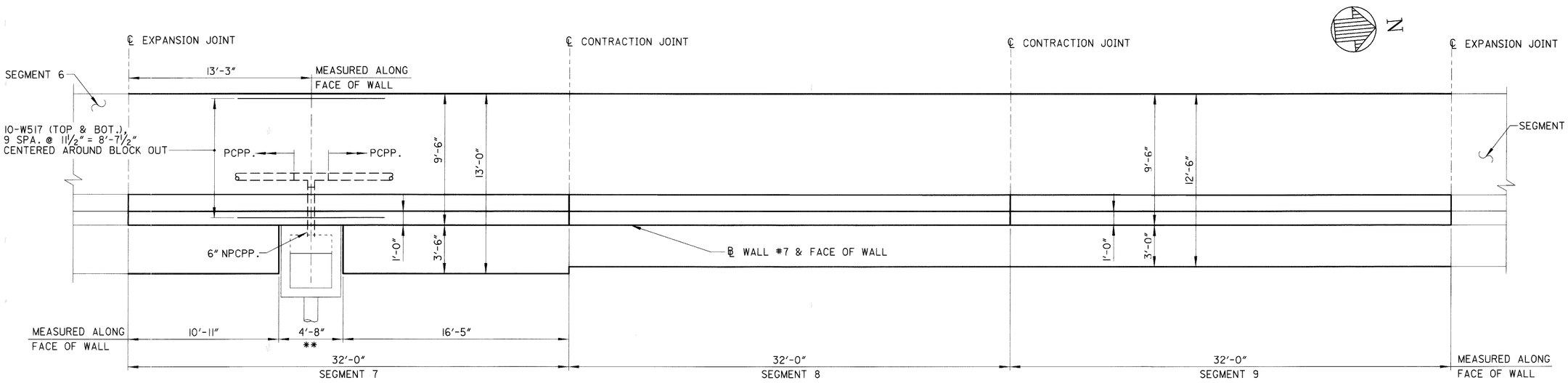

** BLOCK OUT FOR BARRIER INLET

PLAN

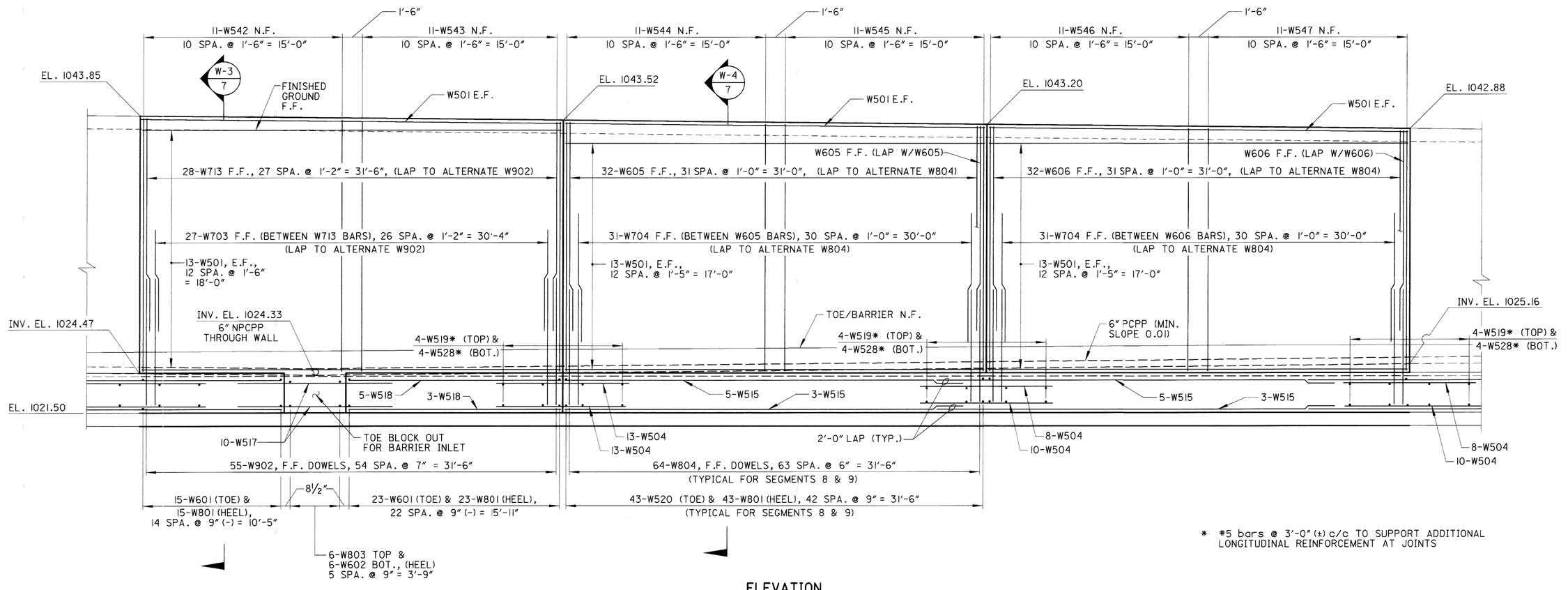

* #5 bars @ 3'-0" (±) c/c TO SUPPORT ADDITIONAL LONGITUDINAL REINFORCEMENT AT JOINTS

ELEVATION

FOR NOTES, SEE SHEET 654.

REVISIONS: 05/15/2002 by AGW

DLZ
1000 ROCKEFELLER BLDG • 614 W. SUPERIOR AVE. • CLEVELAND, OH 44113

DESIGNED	DRAWN	REVIEWED	DATE
DP	DJP	GWM	5/08/01
CHECKED	REVISED	STRUCTURE FILE NUMBER	
JWB			

SEGMENTS 7 THROUGH 9
RETAINING WALL #7
ALONG S.R. 8, STA. 78+75.00 TO STA. 83+21.96

SUM-8-0.63

02:26:17 PM
06/12/2002
us\00-010sr-8\civil\walls\wall7-detail.dgn

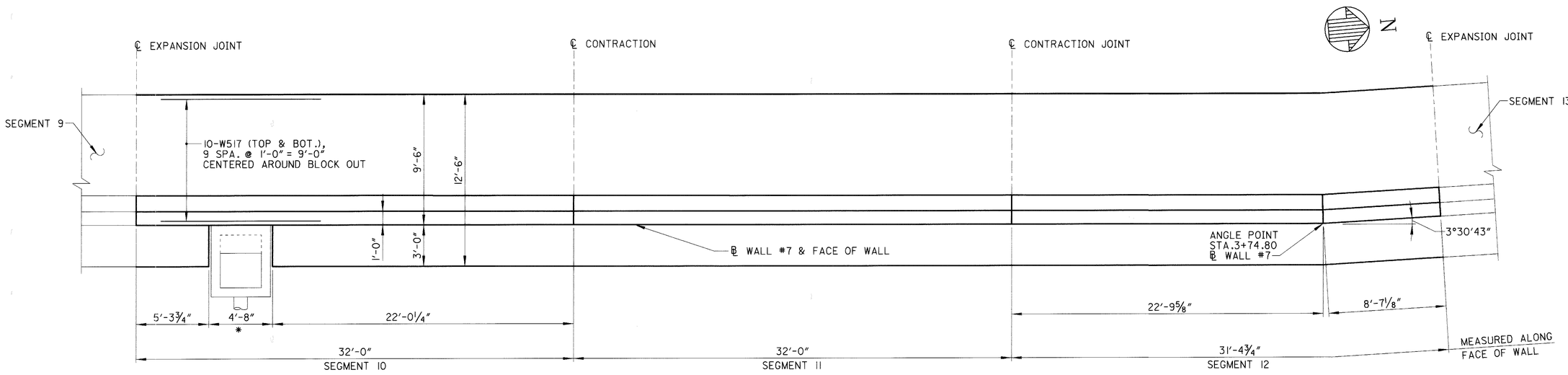

* BLOCK OUT FOR CATCH BASIN

PLAN

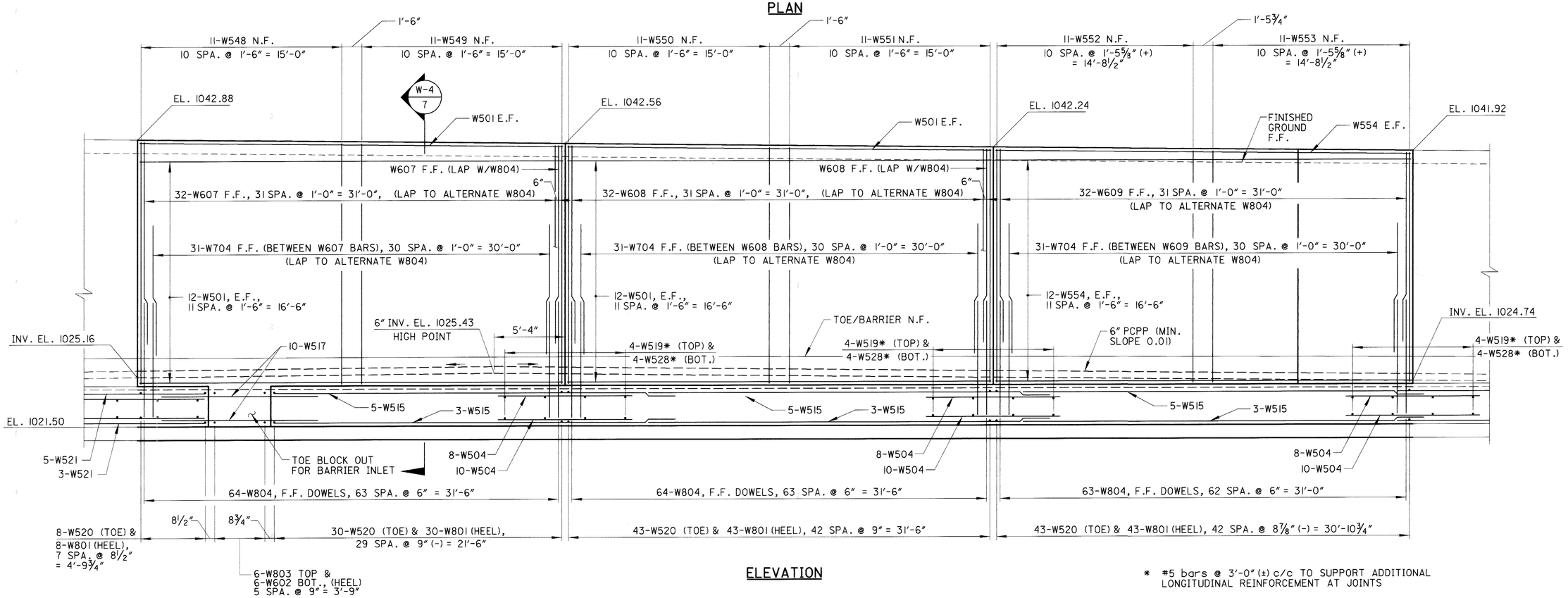

ELEVATION

* #5 bars @ 3'-0" (±) c/c TO SUPPORT ADDITIONAL LONGITUDINAL REINFORCEMENT AT JOINTS

FOR NOTES, SEE SHEET 654.

REVISIONS: 05/15/2002 by AGW

DLZ
1000 ROCKEFELLER BLDG • 614 W SUPERIOR AVE • CLEVELAND, OH 44113

DESIGNED	DRAWN	REVIEWED	DATE	STRUCTURE FILE NUMBER
DP	DJP	GWM	5/08/01	
CHECKED	REVISED			
JWB				

SEGMENTS 10 THROUGH 12
RETAINING WALL #7
ALONG S.R. 8, STA. 78+75.00 TO STA. 83+21.96

SUM-8-0.63

02:26:17 PM
06/12/2002
\\DLZ00-01\sr-8\n\civil\walls\wall7-detail.dgn

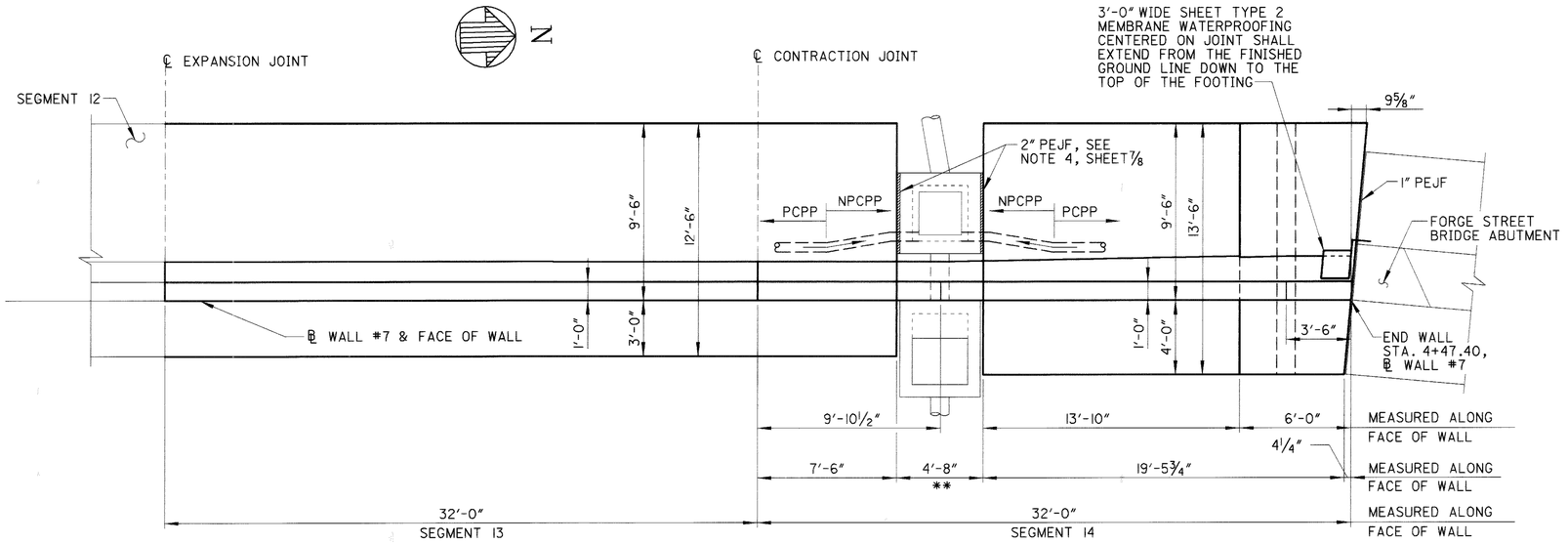

PLAN

** BLOCK OUT FOR CATCH BASIN CB-2-3 (F.F.) & BARRIER INLET (N.F.)

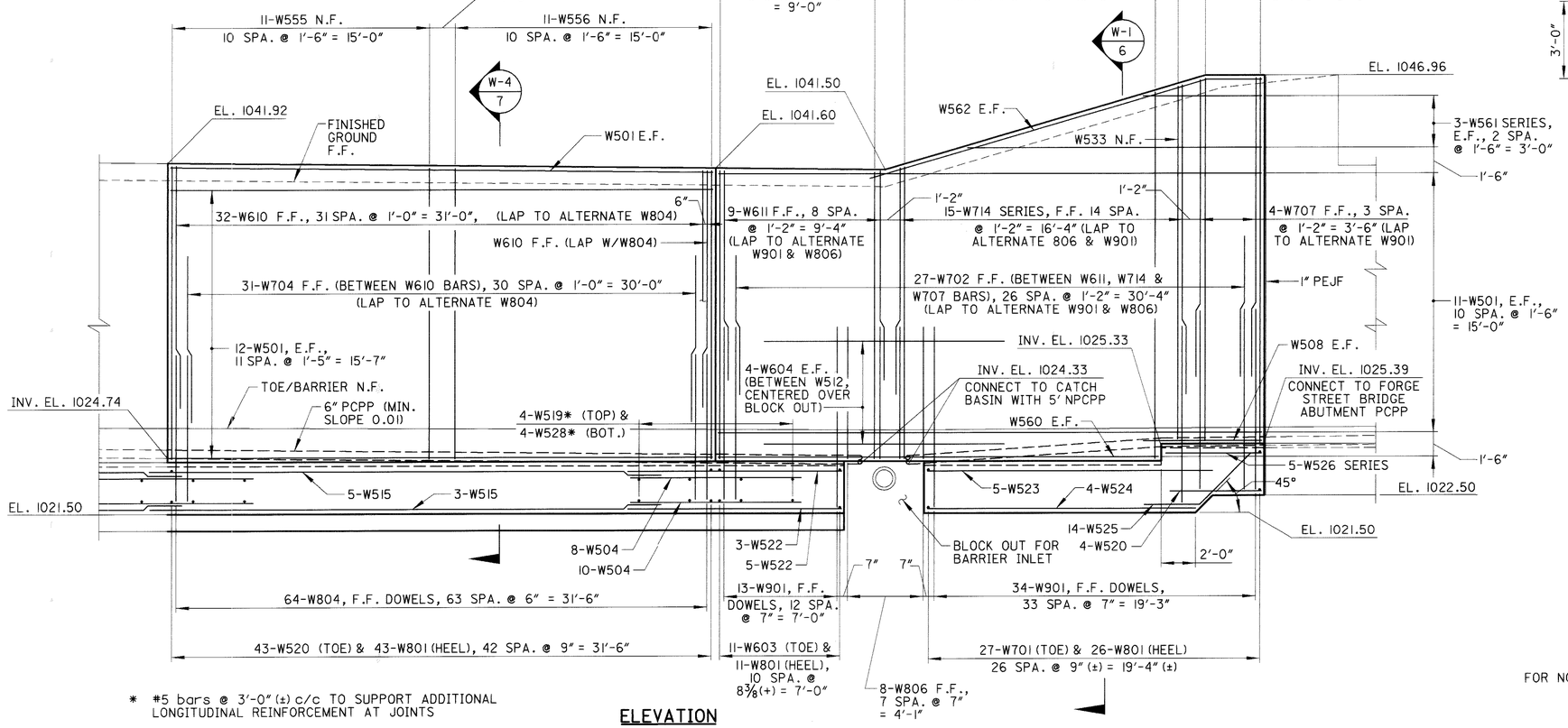

* #5 bars @ 3'-0" (±) c/c TO SUPPORT ADDITIONAL LONGITUDINAL REINFORCEMENT AT JOINTS

ELEVATION

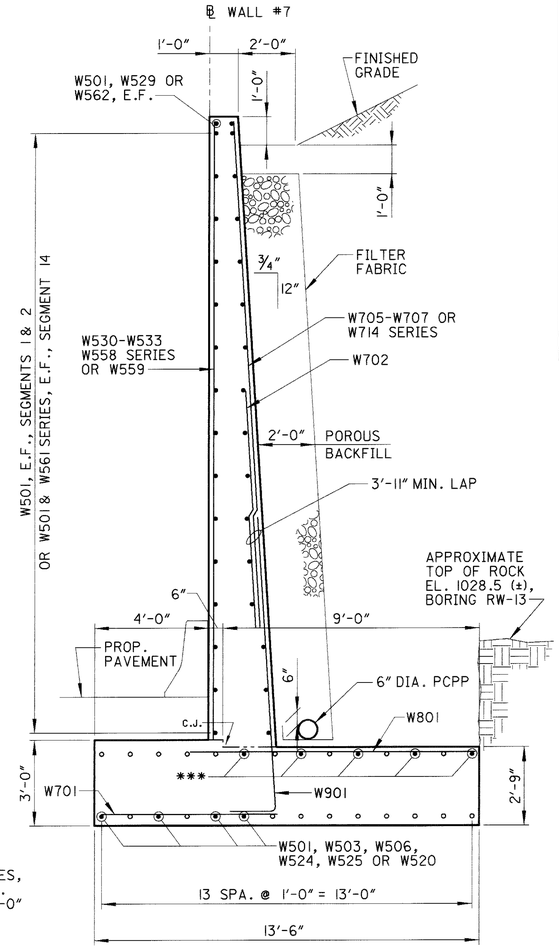

° INDICATES 9-W504 OR 4-W508 & 5-W509 (TOP) & 10-W503, 2-W508 & 8-W509 OR 10-W529 (BOT.), CENTERED UNDER JOINT

*** W502, W507, W523 OR W526 SERIES

SECTION W-1 / 2, 6

SEGMENTS 1, 2 & 14 RIGHT SIDE OF BLOCK OUT

FOR NOTES, SEE SHEET 654.

REVISIONS: 05/15/2002 by AGW

DLZ
1000 ROCKEFELLER BLDG • 614 W SUPERIOR AVE • CLEVELAND, OH 44113

DESIGNED	DRAWN	REVIEWED	DATE
DP	DJP	GWM	5/08/01
CHECKED	REVISED	STRUCTURE FILE NUMBER	
JWB			

SEGMENTS 13 AND 14
RETAINING WALL #7
ALONG S.R. 8, STA. 78+75.00 TO STA. 83+21.96

SUM-8-0.63

6 / 8

653 / 1088

02:26:17 PM
06/12/2002
\\DLZ00-010sr-8\1\civil\walls\wall7-detail.cgn

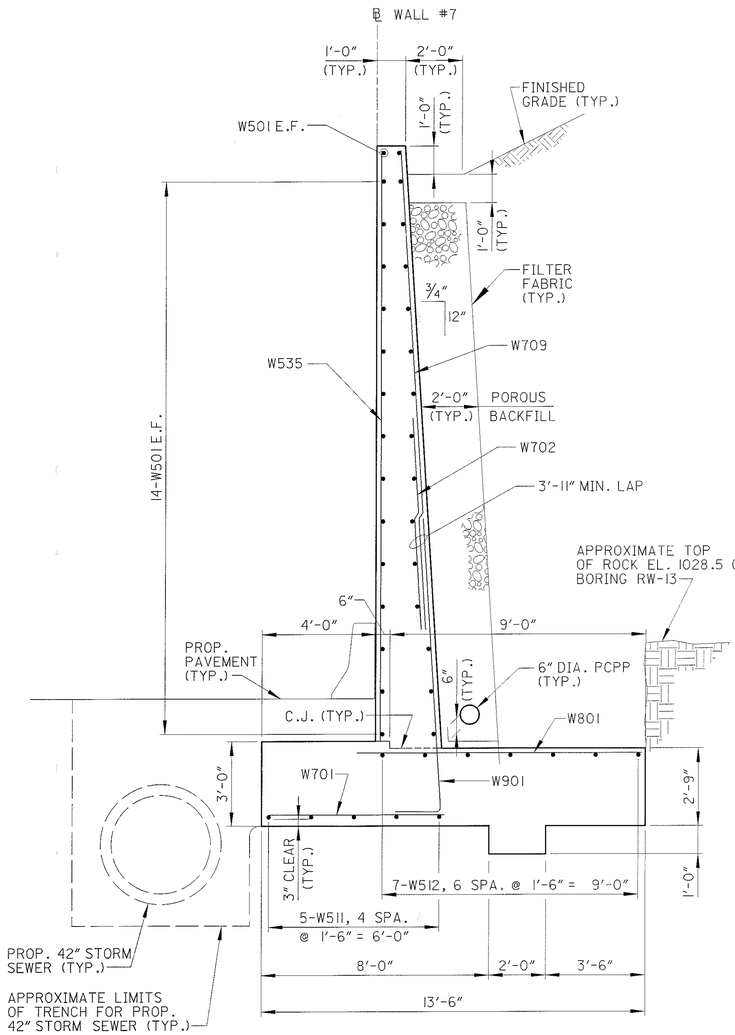

SECTION W-2 / 2

SEGMENT 3 (RIGHT SIDE OF BLOCK OUT)

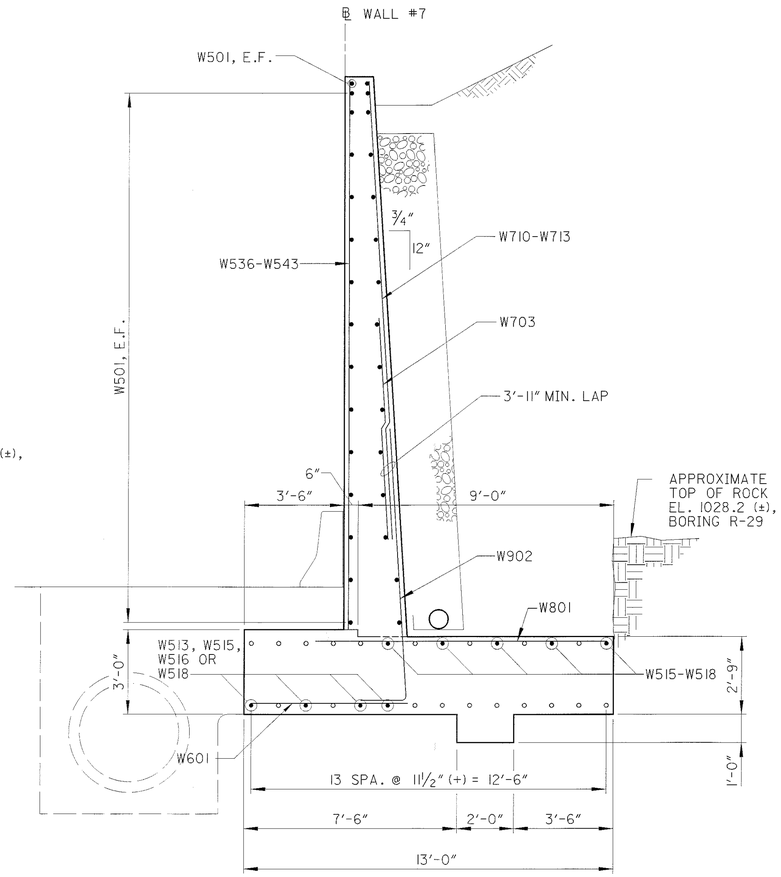

∘ INDICATES 9-W504 (TOP) & 10-W513 OR 10-W504 (BOT.), CENTER UNDER JOINT

SECTION W-3 / 3-4

SEGMENTS 4-7

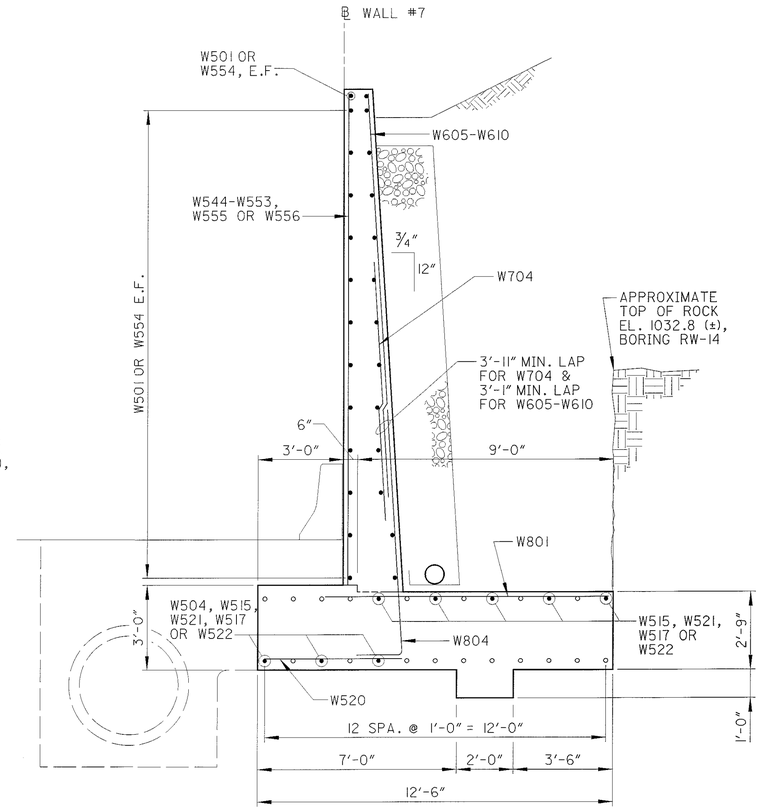

∘ INDICATES 8-W504, (TOP) & 10-W504, (BOT.), CENTERED UNDER JOINT

SECTION W-4 / 4-6

SEGMENTS 8-13

NOTES

1. POROUS BACKFILL WITH FILTER FABRIC, 2 FEET THICK, SHALL EXTEND UP TO 1 FOOT BELOW THE EMBANKMENT SURFACE AND LATERALLY FOR THE FULL LENGTH OF THE RETAINING WALL.
2. FOR DETAILS OF CONTRACTION JOINT AND EXPANSION JOINT, SEE SHEET 655.
3. MEMBRANE WATERPROOFING, TYPE 2, SHALL BE INSTALLED IN ACCORDANCE WITH ITEM 516. ALL COSTS SHALL BE INCLUDED FOR PAYMENT WITH ITEM 842, CLASS C CONCRETE, AS PER PLAN.
4. 2" PEJF BETWEEN WALL FOOTING AND CATCH BASIN(S) SHALL BE INCLUDED FOR PAYMENT WITH ITEM 842, CLASS C CONCRETE, FOOTING, AS PER PLAN. FOR DETAILS OF PEJF BETWEEN WALL AND BARRIER INLET, SEE DRAINAGE DETAILS SHEET 597.
5. FOR CONVERSION OF UNITS FROM METRIC STANDARD DRAWINGS, SEE SHEET 30.

DLZ
1000 ROCKEFELLER BLDG • 614 W SUPERIOR AVE • CLEVELAND, OH 44113

DESIGNED DP | DRAWN DJP | REVIEWED GWM | DATE 5/08/01
CHECKED JWB | REVISED | STRUCTURE FILE NUMBER

WALL SECTIONS

RETAINING WALL #7
ALONG S.R. 8, STA. 78+75.00 TO STA. 83+21.96

SUM-8-0.63

7 / 8

654 / 1088

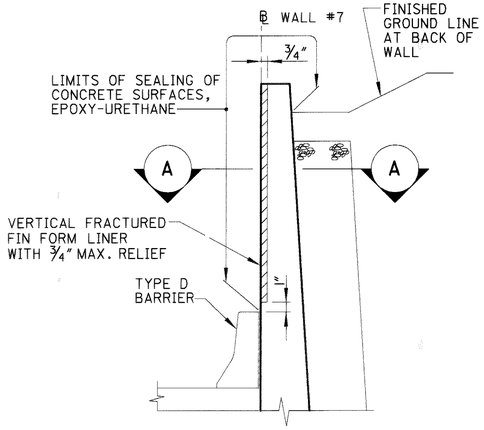

TYPICAL WALL TREATMENT

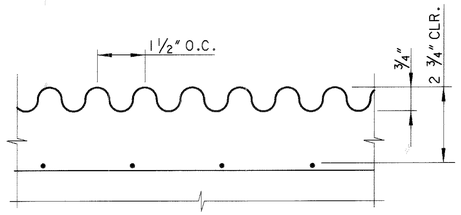

SECTION A-A

ITEM SPECIAL - FORM LINER

A VERTICAL FRACTURED FIN FORM LINER SHALL BE PROVIDED WHERE INDICATED BY THE TYPICAL WALL TREATMENT DETAIL. THE COST OF THE FORM LINER, INCLUDING ALL LABOR, MATERIALS, EQUIPMENT AND INCIDENTALS SHALL BE INCLUDED WITH THE UNIT PRICE BID, PER SQUARE FOOT FOR ITEM SPECIAL, FORM LINER.

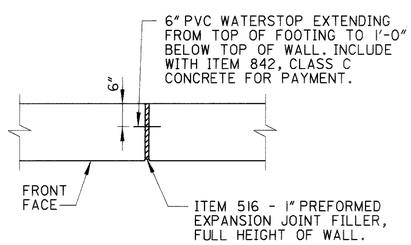

EXPANSION JOINT DETAIL

PVC WATERSTOP

A PVC WATERSTOP, NOMINAL DIMENSIONS 6" x 1/8" THICK AND CAPABLE OF PROVIDING 1 1/2" MOVEMENT, SHALL BE PROVIDED AT CONTRACTION AND EXPANSION JOINTS.

THE WATERSTOP SHALL EXTEND FROM THE TOP OF FOOTING TO 1'-0" BELOW TOP OF WALL.

THE WATERSTOP SHALL BE SECURELY HELD IN PLACE DURING CONCRETE PLACEMENT.

INCLUDE WITH ITEM 842, CLASS C CONCRETE FOR PAYMENT.

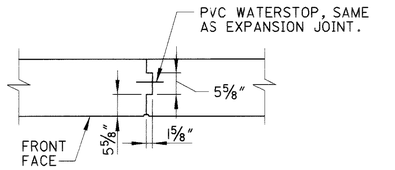

CONTRACTION JOINT DETAIL

ESTIMATED QUANTITIES

ITEM	ITEM EXTENSION	TOTAL	UNIT	DESCRIPTION	SHEET REF.
503	21100	1976	CU. YD.	UNCLASSIFIED EXCAVATION	
503	31100	1519	CU. YD.	ROCK EXCAVATION	
516	13600	267	SQ. FT.	1" PREFORMED EXPANSION JOINT FILLER	
518	21201	581	CU. YD.	POROUS BACKFILL WITH FILTER FABRIC, AS PER PLAN	7
518	40000	438	LIN. FT.	6" PERFORATED CORRUGATED PLASTIC PIPE	
518	40010	16	LIN. FT.	6" NON-PERFORATED CORRUGATED PLASTIC PIPE, INCLUDING SPECIALS	
SPECIAL	53013000	6637	SQ. FT.	FORM LINER *	8
842	46001	520	CU. YD.	CLASS C CONCRETE, AS PER PLAN	7 & 8
842	46501	613	CU. YD.	CLASS C CONCRETE, FOOTING, AS PER PLAN	7
864	10100	841	SQ. YD.	SEALING OF CONCRETE SUFACES (EPOXY-URETHANE)	

* 100% LOCAL COST

REINFORCING STEEL LIST

MARK	NUMBER	LENGTH	WEIGHT (LBS.)	TYPE	DIMENSIONS A	B	C	SER INC.
W501	364	31'-7"	11991	STR				
W502	5	31'-5"	164	STR				
W503	14	11'-3"	164	12	7'-0"	3'-0"	3'-0"	
W504	209	10'-0"	2180	STR				
W505	8	13'-0"	108	STR				
W506	4	33'-9"	141	STR				
W507	5	35'-5"	185	STR				
W508	8	6'-11"	58	STR				
W509	13	8'-7"	116	STR				
W510	7	3'-5"	25	STR				
W511	5	20'-7"	107	STR				
W512	7	22'-1"	161	STR				
W513	14	10'-10"	158	12	7'-0"	2'-9"	2'-9"	
W514	16	12'-6"	209	STR				
W515	75	30'-0"	2347	STR				
W516	9	22'-8"	213	STR				
W517	40	9'-8"	403	STR				
W518	8	16'-0"	134	STR				
W519	28	12'-0"	350	STR				
W520	257	5'-0"	1340	STR				
W521	8	13'-1"	109	STR				
W522	8	12'-9"	106	STR				
W523	5	16'-3"	85	STR				
W524	4	15'-2"	63	STR				
W525	14	9'-7"	140	12	5'-0"	3'-3"	3'-3"	
	1	5'-9"						
W526	SER		32	STR				0'-2"
	5	6'-5"						
W527	15	9'-3"	145	STR				
W528	28	8'-9"	256	STR				
W529	2	31'-8"	66	12	14'-6"	1'-2"	17'-2"	
W530	11	21'-7"	248	STR				
	1	20'-5"		STR				
W531	SER		240	STR				0'-1 1/4"
	11	21'-6"		STR				
W532	11	21'-1"	242	STR				
W533	12	20'-11"	262	STR				
W534	11	20'-10"	239	STR				
W535	11	20'-8"	237	STR				
W536	11	20'-0"	229	STR				
W537	11	19'-10"	228	STR				
W538	11	19'-8"	226	STR				
W539	11	19'-6"	224	STR				
W540	11	19'-4"	222	STR				
W541	11	19'-2"	220	STR				
W542	11	19'-0"	218	STR				
W543	11	18'-10"	216	STR				
W544	11	18'-8"	214	STR				
W545	11	18'-6"	212	STR				
W546	11	18'-4"	210	STR				
W547	11	18'-2"	208	STR				
W548	11	18'-0"	207	STR				
W549	11	17'-10"	205	STR				
W550	11	17'-8"	203	STR				
W551	11	17'-6"	201	STR				
W552	11	17'-5"	200	STR				
W553	11	17'-3"	198	STR				
W554	26	31'-0"	841	STR				
W555	11	17'-1"	196	STR				
W556	11	16'-11"	194	STR				
W557	7	16'-10"	123	STR				
	1	17'-1"		STR				
W558	SER		220	STR				0'-5"
	11	21'-3"		STR				
W559	3	21'-3"	66	STR				
W560	2	25'-7"	53	STR				
	2	7'-2"		STR				
W561	SER		77	STR				5'-2"
	3	17'-6"		STR				
W562	2	23'-5"	49	12	3'-2"	5'-8"	19'-6"	
W601	167	5'-11"	1484	STR				
W602	12	9'-1"	164	STR				
W603	11	5'-5"	89	STR				
W604	8	14'-0"	168	STR				
W605	33	15'-9"	781	STR				
W606	33	15'-6"	768	STR				

REINFORCING STEEL LIST

MARK	NUMBER	LENGTH	WEIGHT (LBS.)	TYPE	DIMENSIONS A	B	C	SER INC.
W607	33	15'-2"	752	STR				
W608	33	14'-10"	735	STR				
W609	32	14'-6"	697	STR				
W610	33	14'-2"	702	STR				
W611	9	13'-10"	187	STR				
W701	141	6'-5"	1849	STR				
W702	95	8'-3"	1602	STR				
W703	108	7'-9"	1711	STR				
W704	186	9'-1"	3453	STR				
W705	14	17'-9"	508	STR				
	1	16'-9"		STR				
W706	SER		495	STR				0'-1"
	14	17'-10"		STR				
W707	32	17'-5"	1139	STR				
W708	14	17'-1"	489	STR				
W709	15	16'-11"	519	STR				
W710	28	17'-0"	973	STR				
W711	28	16'-8"	954	STR				
W712	28	16'-4"	935	STR				
W713	28	16'-1"	920	STR				
	1	13'-1"		STR				
W714	SER		482	STR				0'-4 1/2"
	15	18'-4"		STR				
W801	571	10'-0"	15246	STR				
W802	10	13'-0"	347	STR				
W803	24	9'-1"	582	STR				
W804	383	10'-1"	10311	11	1'-4"	8'-11"	0'-7"	
W805	10	16'-0"	427	STR				
W806	8	7'-9"	166	STR				
W901	186	11'-11"	7536	11	1'-7"	10'-7"	0'-8"	
W902	220	11'-2"	8353	11	1'-7"	9'-10"	0'-8"	
W903	10	10'-3"	349	STR				
W1001	17	14'-6"	1061	11	1'-10"	13'-0"	0'-10"	
		TOTAL =	95618	LBS.				

BENDING DIAGRAMS

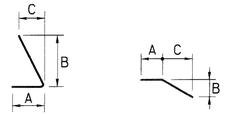

REINFORCING STEEL NOTES

1. SERIES BARS - EACH BAR VARIES BY TABULATED AMOUNT.
2. ALL DIMENSIONS ARE OUT TO OUT.
3. TYPE 'STR' INDICATES A STRAIGHT BAR.
4. THE BAR SIZE NUMBER IS SPECIFIED IN THE 'MARK' COLUMN. THE FIRST DIGIT INDICATES THE BAR SIZE NUMBER. FOR EXAMPLE, W501 IS A #5 BAR SIZE.
5. ALL BARS SHALL BE EPOXY COATED UNLESS NOTED OTHERWISE.
6. SUBTOTALS AND TOTAL WEIGHTS ARE FOR INFORMATIONAL PURPOSES ONLY. IF THE REINFORCING LIST PROVIDED IN THE PLANS IS USED IT SHALL BE VERIFIED BY THE CONTRACTOR. ANY REVISIONS IN THE REINFORCING STEEL LIST AS SHOWN IN THE PLANS WILL NOT BE REASON FOR ADJUSTMENT IN THE BID PRICE FOR STRUCTURAL CONCRETE.

REVISIONS: 05/15/2002 by AGW

DLZ
1000 ROCKEFELLER BLDG • 614 W SUPERIOR AVE • CLEVELAND, OH 44113

DESIGNED DP | DRAWN DJP | CHECKED JWB | REVIEWED GWM 5/08/01 | REVISED | STRUCTURE FILE NUMBER

REINFORCING STEEL LIST AND QUANTITIES
RETAINING WALL #7
ALONG S.R. 8, STA. 78+75.00 TO STA. 83+21.96

SUM-8-0.63

8 / 8

655
1088

04:06:16 PM
07/09/2002
u:\00-010SR-8\\Civil\Walls\wall7-detail.dgn

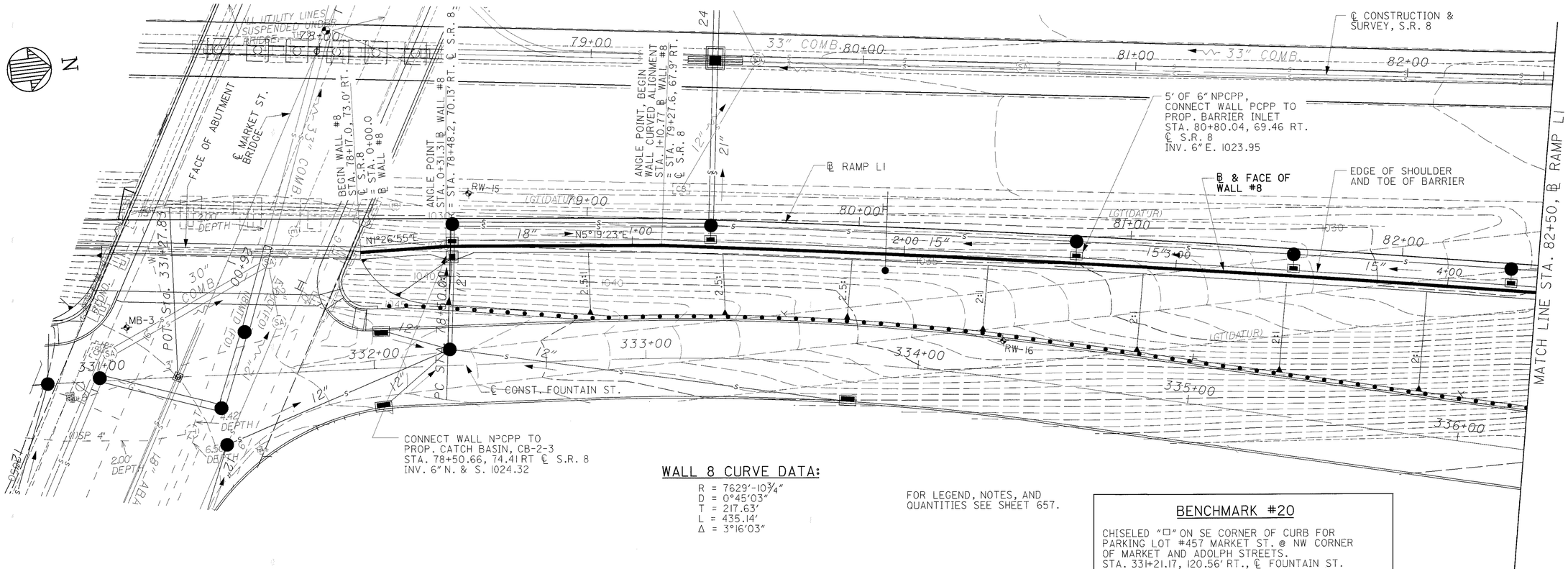

WALL 8 CURVE DATA:

R = 7629'-10¾"
D = 0°45'03"
T = 217.63'
L = 435.14'
Δ = 3°16'03"

FOR LEGEND, NOTES, AND QUANTITIES SEE SHEET 657.

BENCHMARK #20

CHISELED "□" ON SE CORNER OF CURB FOR PARKING LOT #457 MARKET ST. @ NW CORNER OF MARKET AND ADOLPH STREETS.
STA. 331+21.17, 120.56' RT., ℄ FOUNTAIN ST.

ELEV: 1051.01

BENCHMARK #21

CHISELED "X" ON NW BOLT OF PARKING LOT LIGHT POLE @ SE CORNER OF FORGE AND ADOLPH STREETS
STA. 339+31.45, 165.49 RT. ℄ FOUNTAIN ST.

ELEV: 1051.28

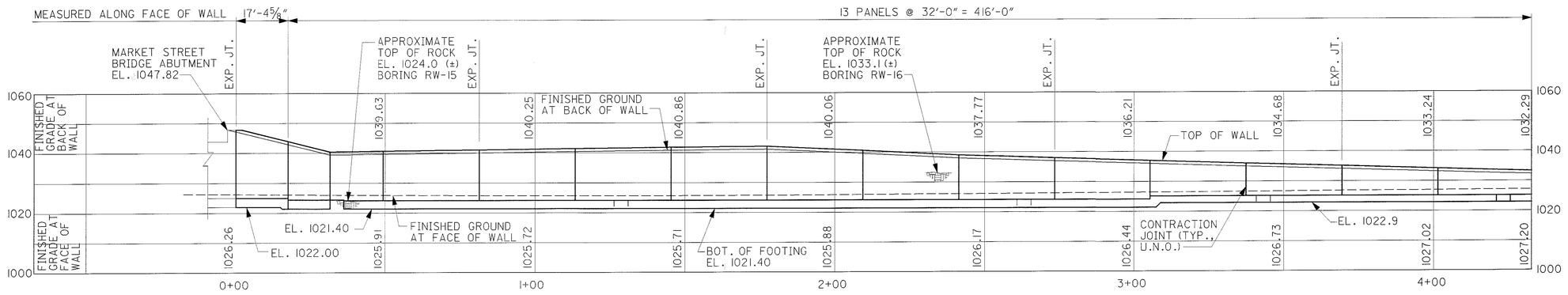

PROFILE ALONG ℄ WALL #8

DLZ
3000 ROCKEFELLER BLDG • 614 W SUPERIOR AVE • CLEVELAND, OH 44113

DESIGNED	DRAWN	REVIEWED	DATE
DP	KME	GWM	6/26/01
CHECKED	REVISED	STRUCTURE FILE NUMBER	
JWB			

PLAN AND PROFILE
RETAINING WALL #8
ALONG RAMP LI STA. 78+17 TO STA. 82+50

SUM-8-0.63

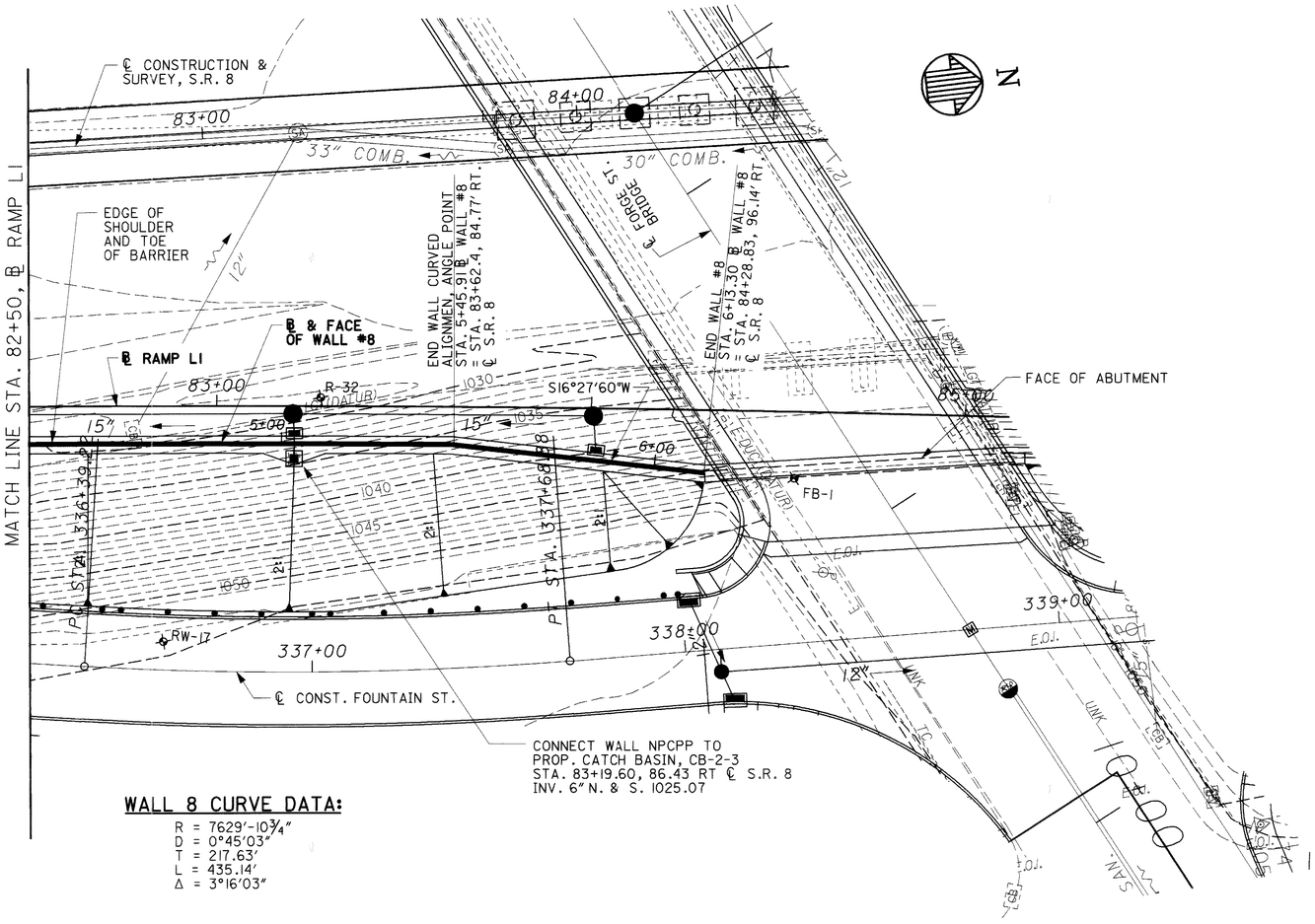

WALL 8 CURVE DATA:

R = 7629'-10¾"
D = 0°45'03"
T = 217.63'
L = 435.14'
Δ = 3°16'03"

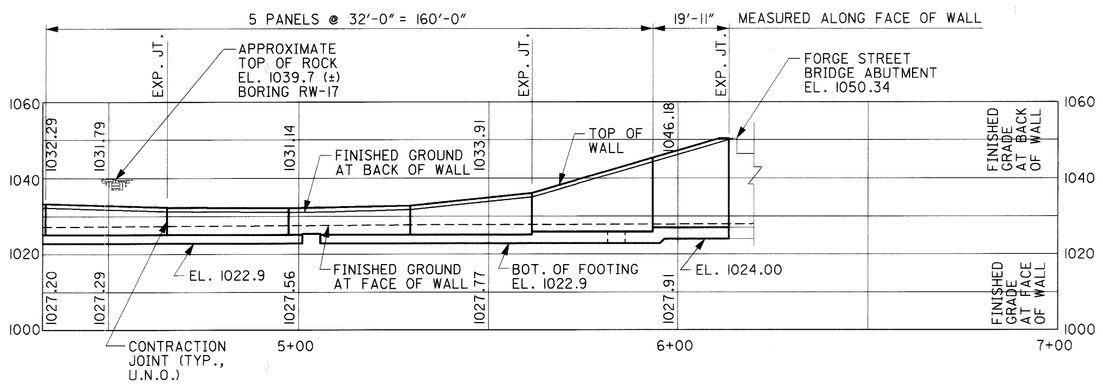

PROFILE ALONG ℄ WALL #8

NOTES

DESIGN SPECIFICATIONS

THIS STRUCTURE CONFORMS TO "STANDARD SPECIFICATIONS FOR HIGHWAY BRIDGES" ADOPTED BY THE AMERICAN ASSOCIATION OF STATE HIGHWAY AND TRANSPORTATION OFFICIALS, 1996, INCLUDING THE 1997, 1998 AND 1999 INTERIM SPECIFICATIONS AND THE ODOT BRIDGE DESIGN MANUAL.

DESIGN DATA

CONCRETE CLASS C - COMPRESSIVE STRENGTH 4000 psi.
REINFORCING STEEL - ASTM A615, A616, OR A617
GRADE 60, MINIMUM YIELD STRENGTH 60,000 psi.

FOUNDATION BEARING PRESSURE

RETAINING WALL #8 FOOTINGS, AS DESIGNED, PRODUCE A MAXIMUM BEARING PRESSURE OF 5750 psf. THE ALLOWABLE BEARING PRESSURE IS 20,000 psf.

FOR CONCRETE BARRIER DETAILS SEE ROADWAY TYPICAL SECTION SHEET 20.

REFER TO DRAINAGE PLANS FOR BARRIER INLET AND CATCH BASIN DETAILS.

FOR MARKET STREET BRIDGE ABUTMENT CONSTRUCTION DETAILS SEE STRUCTURE PLANS FOR BRIDGE NO. SUM-8-0148.

FOR FORGE STREET BRIDGE ABUTMENT CONSTRUCTION DETAILS SEE STRUCTURE PLANS FOR BRIDGE NO. SUM-8-0159.

ITEM 864, SEALING OF CONCRETE SURFACES (EPOXY-URETHANE)

CONCRETE SURFACES AS DETAILED IN THE PLANS SHALL BE SEALED WITH AN EPOXY-URETHANE SEALER OF A COLOR CONFORMING TO FEDERAL COLOR No. 13522 - BUFF.

EARTHWORK NOTE:

EARTHWORK LIMITS ARE APPROXIMATE. ACTUAL SLOPES SHALL CONFORM TO PLAN CROSS SECTIONS.

LEGEND

℄	BASELINE
BOT.	BOTTOM
℄	CENTERLINE
C.J.	CONSTRUCTION JOINT
CONST.	CONSTRUCTION
CONTR.	CONTRACTION JOINT
E.F.	EACH FACE
EL.	ELEVATION
EXP. JT.	EXPANSION JOINT
F.F.	FAR FACE
INV.	INVERT
MIN.	MINIMUM
N.F.	NEAR FACE
NPCPP	NON-PERFORATED CORRUGATED PLASTIC PIPE
PCPP	PERFORATED CORRUGATED PLASTIC PIPE
PROP.	PROPOSED
⊕	SOIL BORING
SPA.	SPACES
STA.	STATION
ST.	STREET
TYP.	TYPICAL
U.N.O.	UNLESS NOTED OTHERWISE

ESTIMATED QUANTITIES

ITEM	ITEM EXTENSION	TOTAL	UNIT	DESCRIPTION	REF. SHEET NO.
503	21100	665	CU. YD.	UNCLASSIFIED EXCAVATION	
503	31100	1708	CU. YD.	ROCK EXCAVATION	
516	13600	266	SQ. FT.	1" PREFORMED EXPANSION JOINT FILLER	
518	21201	532	CU. YD.	POROUS BACKFILL WITH FILTER FABRIC, AS PER PLAN	9
518	40000	588	LIN. FT.	6" PERFORATED CORRUGATED PLASTIC PIPE	
518	40010	29	LIN. FT.	6" NON-PERFORATED CORRUGATED PLASTIC PIPE, INCLUDING SPECIALS	
SPECIAL	53013000	5423	SQ. FT.	FORM LINER *	9
842	46001	456	CU. YD.	CLASS C CONCRETE, AS PER PLAN	9
842	46501	531	CU. YD.	CLASS C CONCRETE, FOOTING, AS PER PLAN	9
864	10100	745	SQ. YD.	SEALING OF CONCRETE SURFACES (EPOXY-URETHANE)	

* 100% LOCAL COST

REVISIONS: 05/15/2002 by AGW

DLZ
8000 ROCKEFELLER BLDG • 614 • SUPERIOR AVE • CLEVELAND, OH 44115

DESIGNED	DRAWN	REVIEWED	DATE
DP	KME	GWM	6/26/01
CHECKED	REVISED	STRUCTURE FILE NUMBER	
JWB			

PLAN AND PROFILE
RETAINING WALL #8
ALONG RAMP LI STA. 82+50 TO STA. 84+29

SUM-8-0.63

2 / 14

657
1088

04:10:20 PM
07/09/2002
u:\OD-00SR-8\N.Civil\Walls\wallBA.dgn

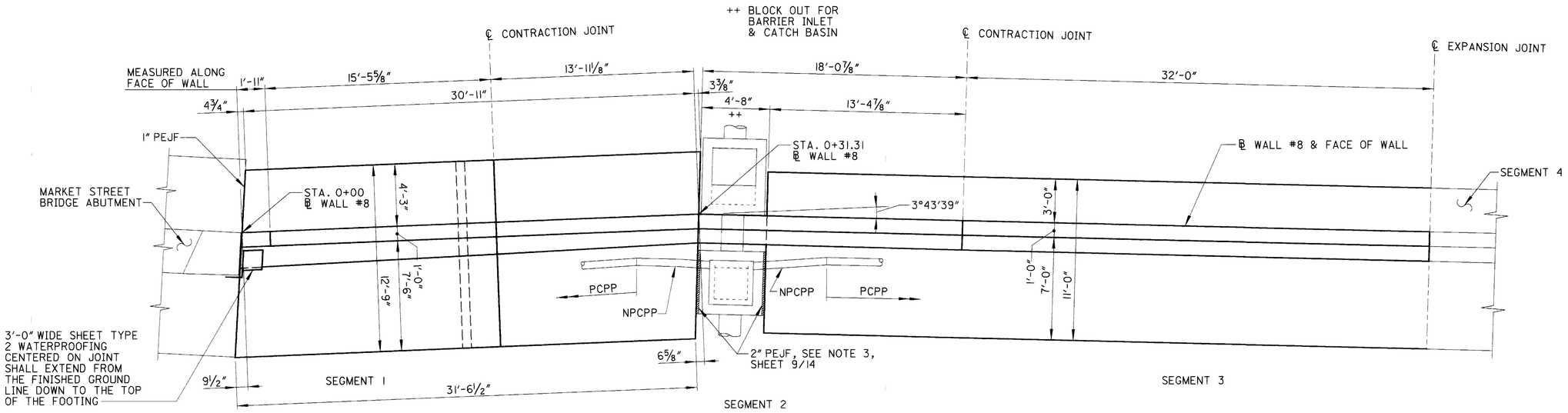

PLAN

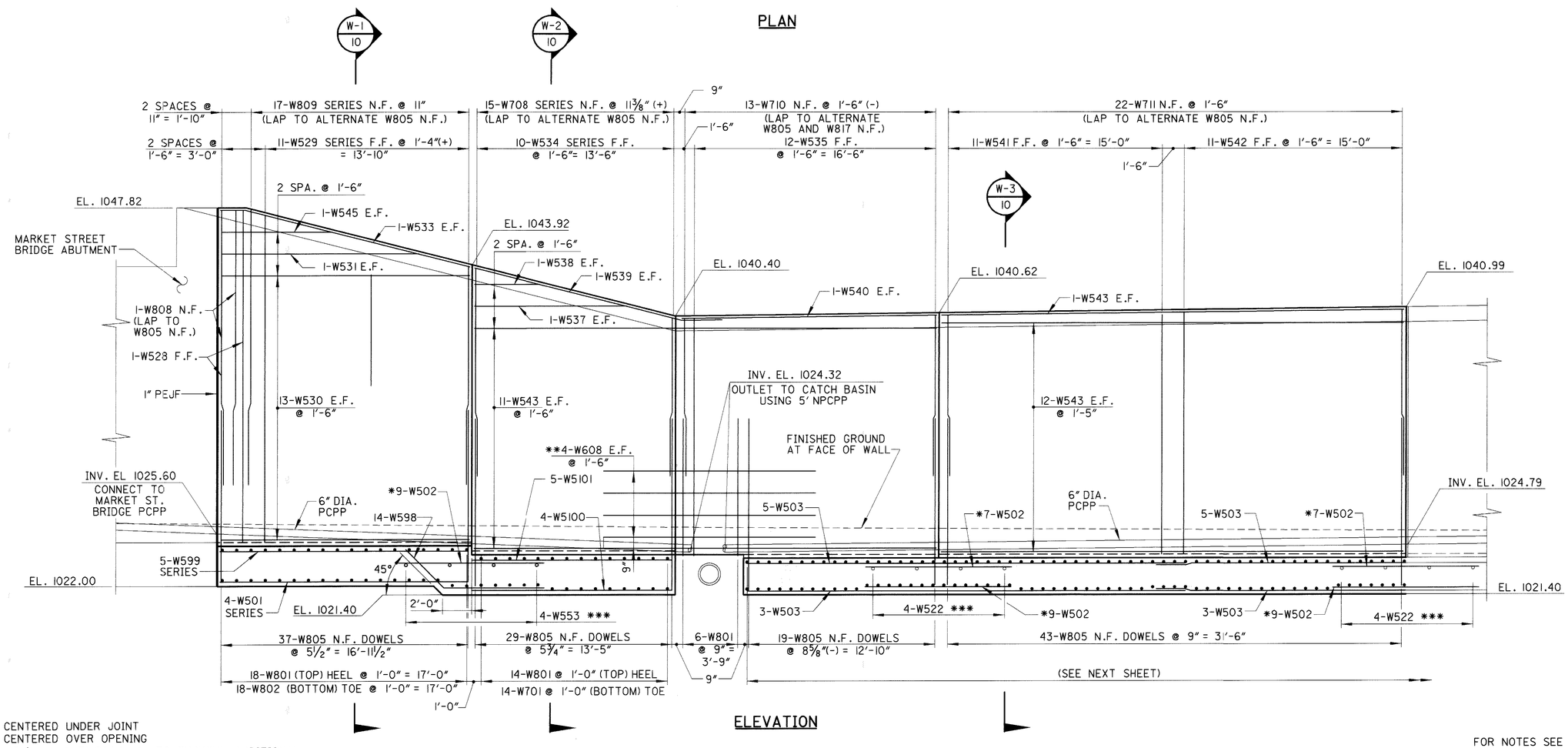

ELEVATION

* CENTERED UNDER JOINT
** CENTERED OVER OPENING
*** #5 bars @ 3'-0" (±) c/c TO SUPPORT ADDITIONAL LONGITUDINAL REINFORCEMENT AT JOINTS

FOR NOTES SEE SHEET 664.

REVISIONS: 05/15/2002 by AGW

DLZ
1000 ROCKEFELLER BLDG • 614 • SUPERIOR AVE • CLEVELAND, OH 44113

DESIGNED	DRAWN	REVIEWED	DATE
DP	RCK	GWM	6/26/01
CHECKED	REVISED	STRUCTURE FILE NUMBER	
JWB			

SEGMENTS 1 THROUGH 3
RETAINING WALL #8
ALONG RAMP L1

SUM-8-0.63

05:26:22 PM
06/13/2002
u:\00-010sr-8\civil\walls\wall8-detail.dgn

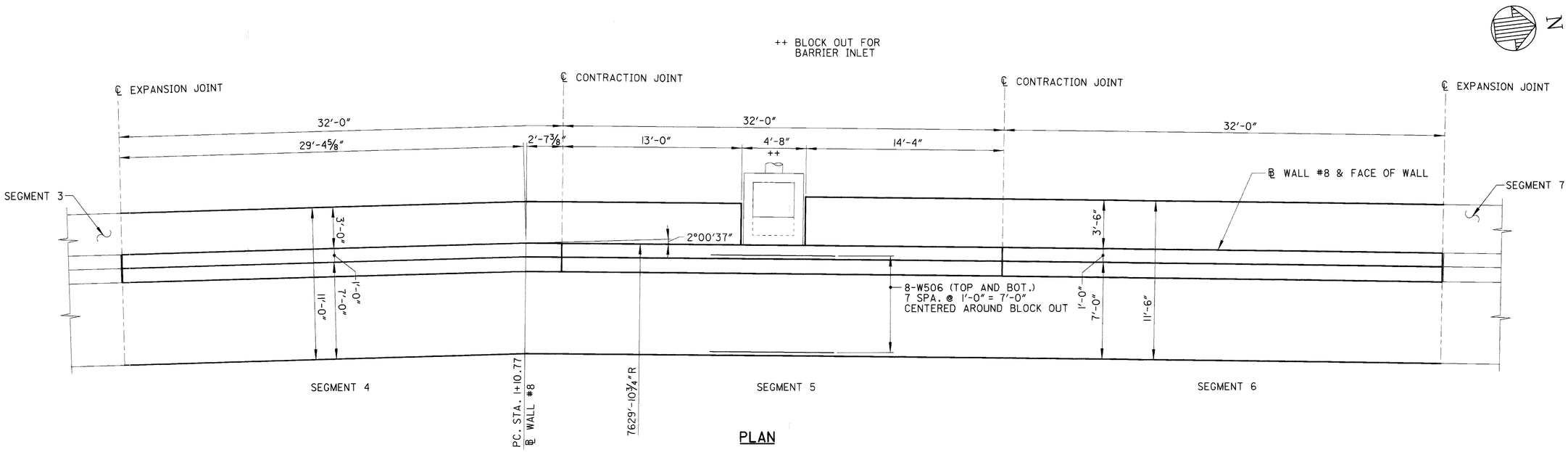

PLAN

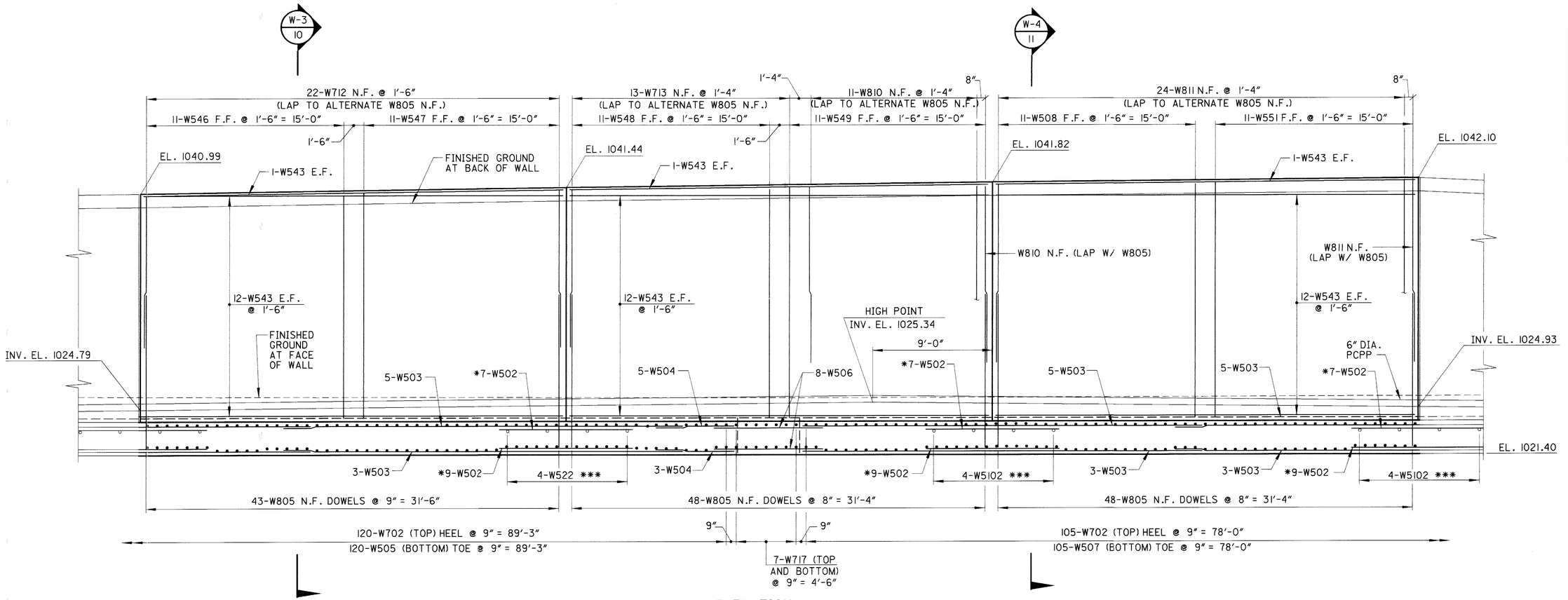

ELEVATION

* CENTERED UNDER JOINT
** CENTERED OVER OPENING
*** #5 bars @ 3'-0" (±) c/c TO SUPPORT ADDITIONAL LONGITUDINAL REINFORCEMENT AT JOINTS

FOR NOTES SEE SHEET 664.

REVISIONS: 05/15/2002 by AGW

DLZ
6000 ROCKEFELLER BLDG • 614 • SUPERIOR AVE • CLEVELAND, OH 44115

DESIGNED	DRAWN	REVIEWED	DATE
DP	RCK	GWM	6/26/01
CHECKED	REVISED	STRUCTURE FILE NUMBER	
JWB			

SEGMENTS 4 THROUGH 6
RETAINING WALL #8
ALONG RAMP L1

SUM-8-0.63

05:26:23 PM
06/13/2002
u:\00-010sr-8\civil\walls\wall8-detail.dgn

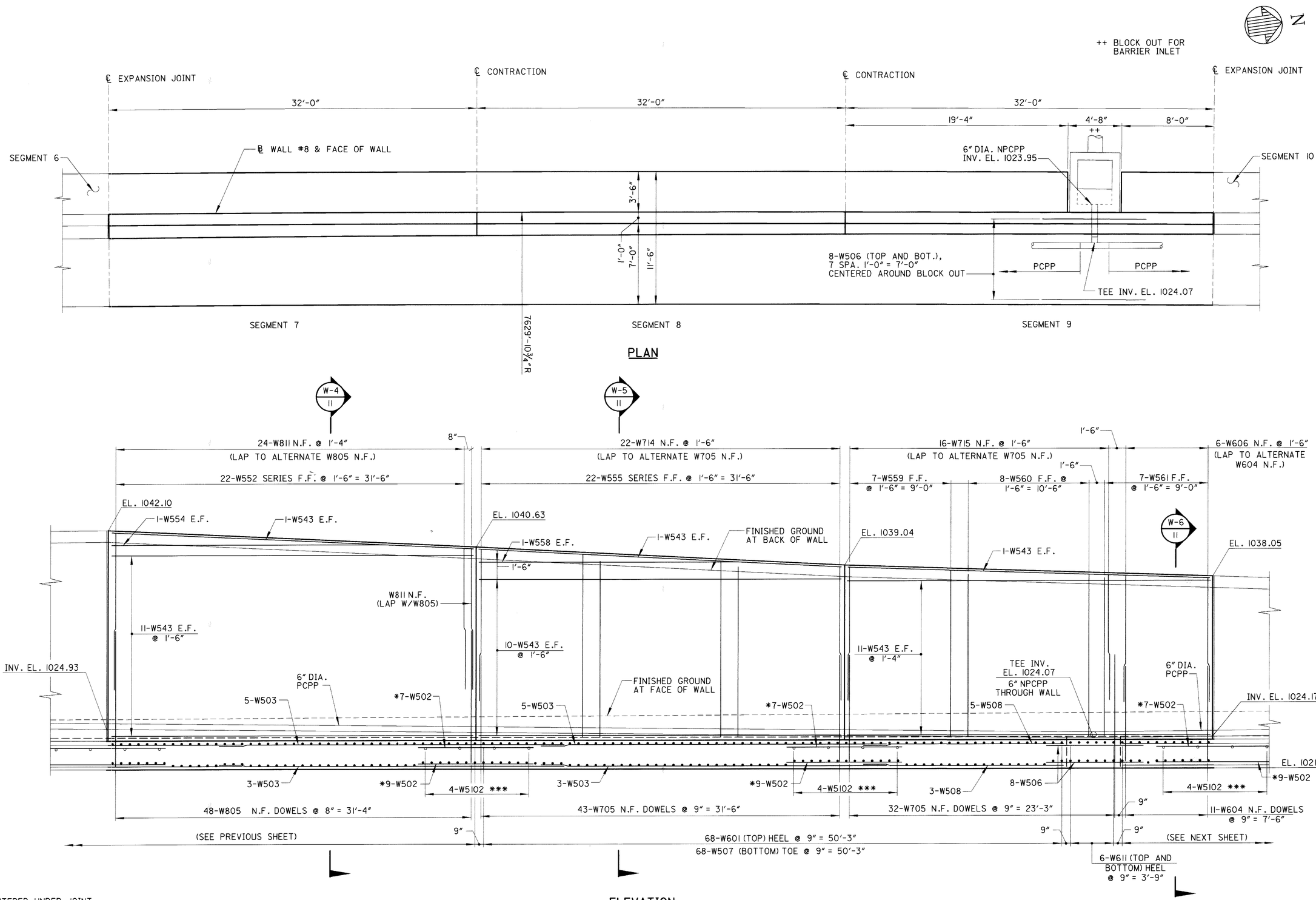

ELEVATION

* CENTERED UNDER JOINT
** CENTERED OVER OPENING
*** #5 bars @ 3'-0" (±) c/c TO SUPPORT ADDITIONAL LONGITUDINAL REINFORCEMENT AT JOINTS

FOR NOTES SEE SHEET 664.

REVISIONS: 05/15/2002 by AGW

DLZ
6000 ROCKEFELLER BLDG • 614 • SUPERIOR AVE • CLEVELAND, OH 44115

DESIGNED	DRAWN	REVIEWED	DATE
DP	RCK	GWM	6/26/01
CHECKED	REVISED	STRUCTURE FILE NUMBER	
JWB			

SEGMENTS 7 THROUGH 9
RETAINING WALL #8
ALONG RAMP L1

SUM-8-0.63

5 / 14

660
1088

05:26:23 PM
06/13/2002
u:\00-010sr-8\1\civil\walls\wall8-detail.dgn

++ BLOCK OUT FOR BARRIER INLET

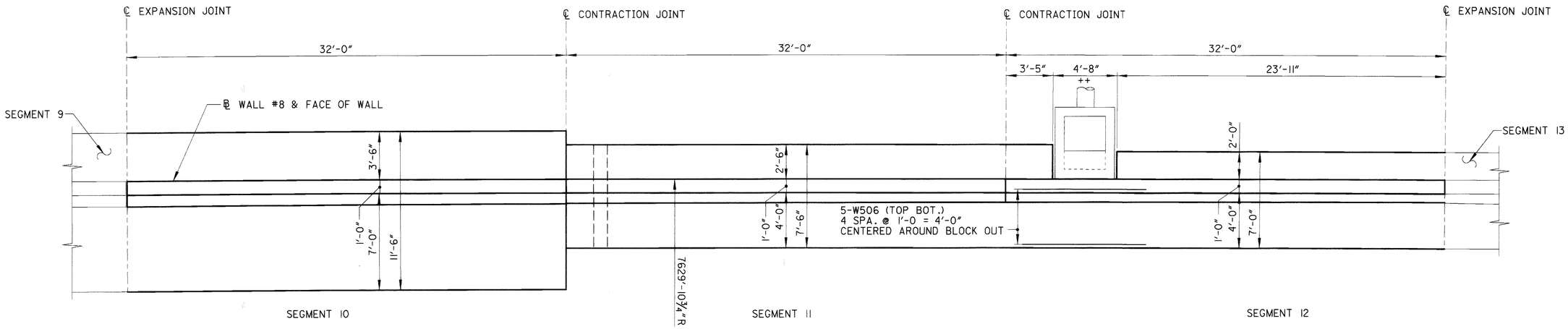

PLAN

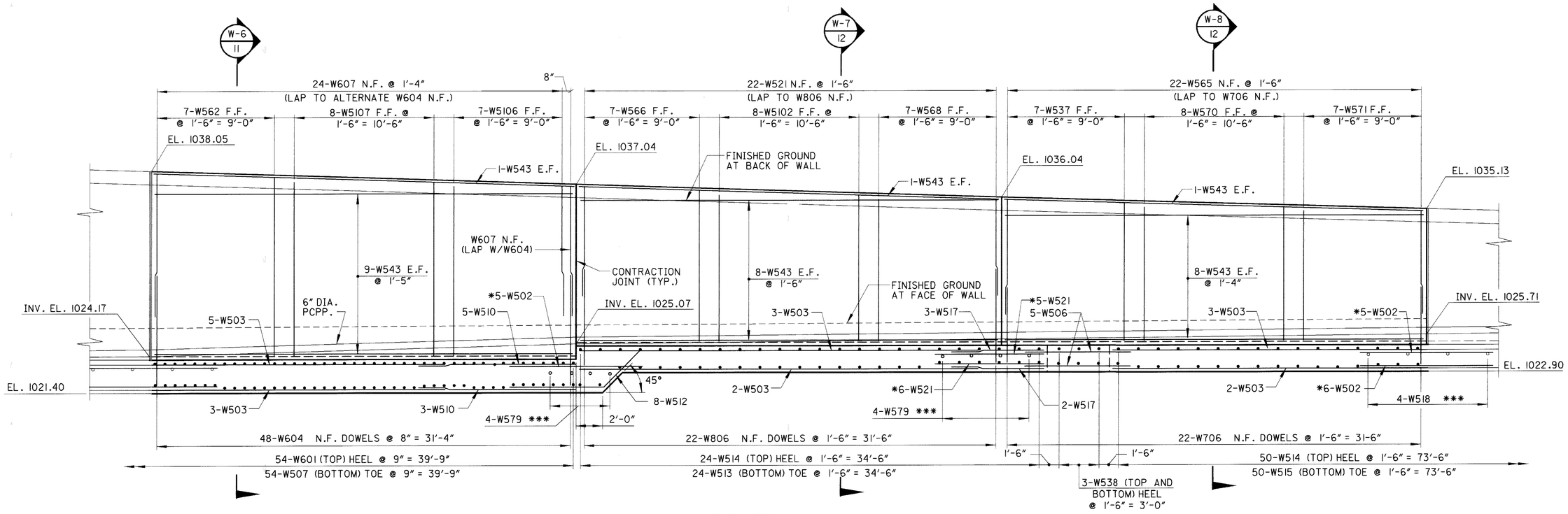

ELEVATION

* CENTERED UNDER JOINT
** CENTERED OVER OPENING
*** #5 bars @ 3'-0" (±) c/c TO SUPPORT ADDITIONAL LONGITUDINAL REINFORCEMENT AT JOINTS

FOR NOTES SEE SHEET 664.

REVISIONS: 05/15/2002 by AGW

DLZ
8000 ROCKEFELLER BLDG • 614 W SUPERIOR AVE • CLEVELAND, OH 44113

DESIGNED	DRAWN	REVIEWED	DATE
DP	RCK	GWM	6/26/01
CHECKED	REVISED	STRUCTURE FILE NUMBER	
JWB			

SEGMENTS 10 THROUGH 12
RETAINING WALL #8
ALONG RAMP L1

SUM-8-0.63

05:26:24 PM
06/13/2002
u:\00-010sr-8\l\c\d\l\walls\wall8-detail.dgn

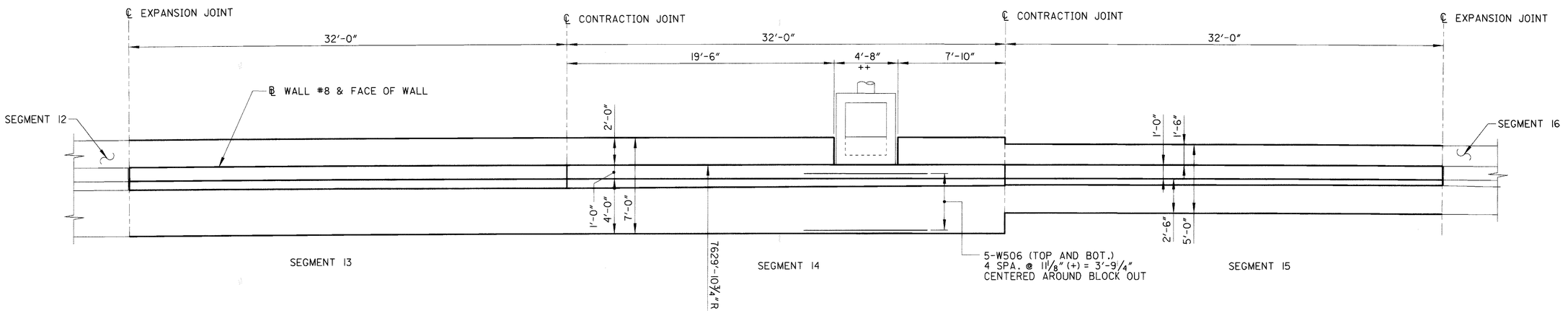

PLAN

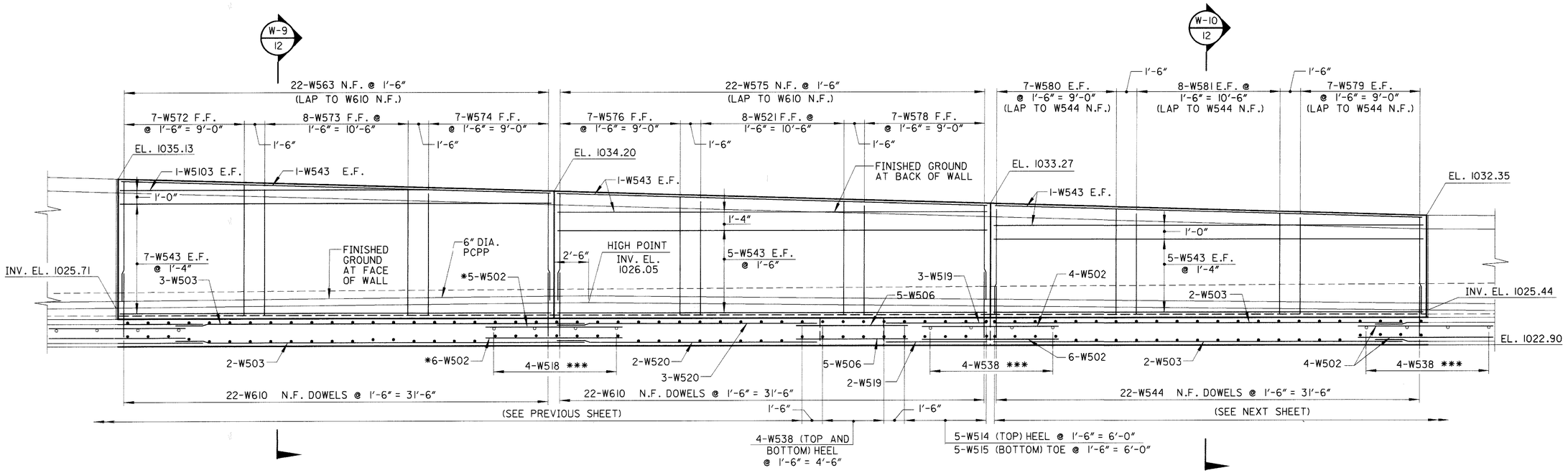

ELEVATION

* CENTERED UNDER JOINT
** CENTERED OVER OPENING
*** #5 bars @ 3'-0" (±) c/c TO SUPPORT ADDITIONAL LONGITUDINAL REINFORCEMENT AT JOINTS

FOR NOTES SEE SHEET 664.

$TIME$
$DATE$
$FILE$

DLZ
1000 ROCKEFELLER BLDG • 614 • SUPERIOR AVE • CLEVELAND, OH 44115

DESIGNED	DRAWN	REVIEWED	DATE
DP	RCK	GWM	6/26/01
CHECKED	REVISED	STRUCTURE FILE NUMBER	
JWB			

SEGMENTS 13 THROUGH 15
RETAINING WALL #8
ALONG RAMP L1

SUM-8-0.63

7 / 14

662
1088

++ BLOCK OUT FOR BARRIER INLET & CATCH BASIN

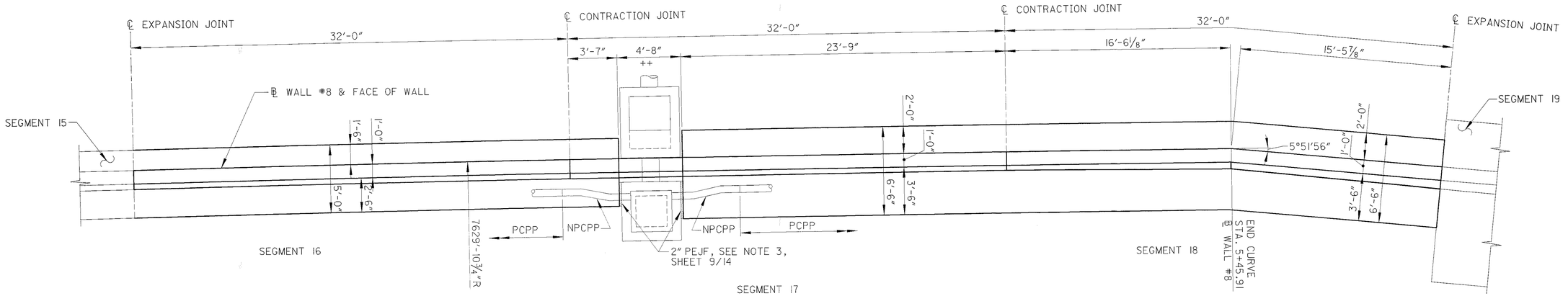

PLAN

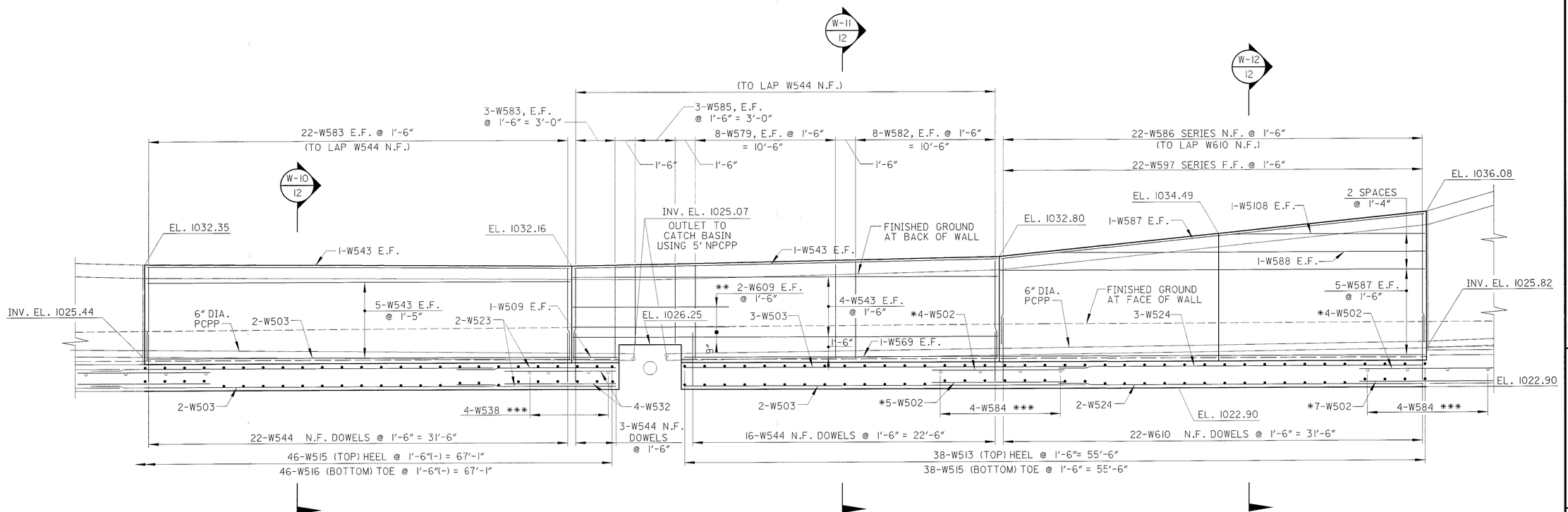

ELEVATION

* CENTERED UNDER JOINT
** CENTERED OVER OPENING
*** #5 bars @ 3'-0"(±) c/c TO SUPPORT ADDITIONAL LONGITUDINAL REINFORCEMENT AT JOINTS

FOR NOTES SEE SHEET 664.

DLZ
3000 ROCKEFELLER BLDG ■ 614 W SUPERIOR AVE ■ CLEVELAND, OH 44113

DESIGNED	DRAWN	REVIEWED	DATE
DP	RCK	GWM	6/26/01
CHECKED	REVISED		STRUCTURE FILE NUMBER
JWB			

SEGMENTS 16 THROUGH 18
RETAINING WALL #8
ALONG RAMP L1

SUM-8-0.63

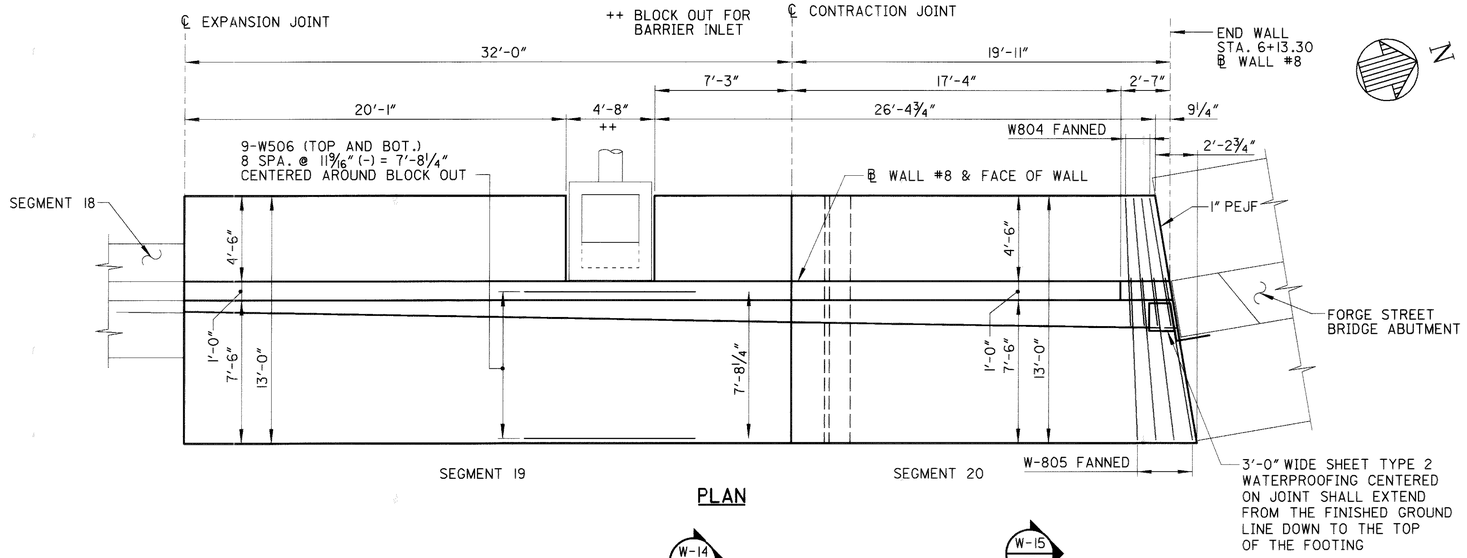

PLAN

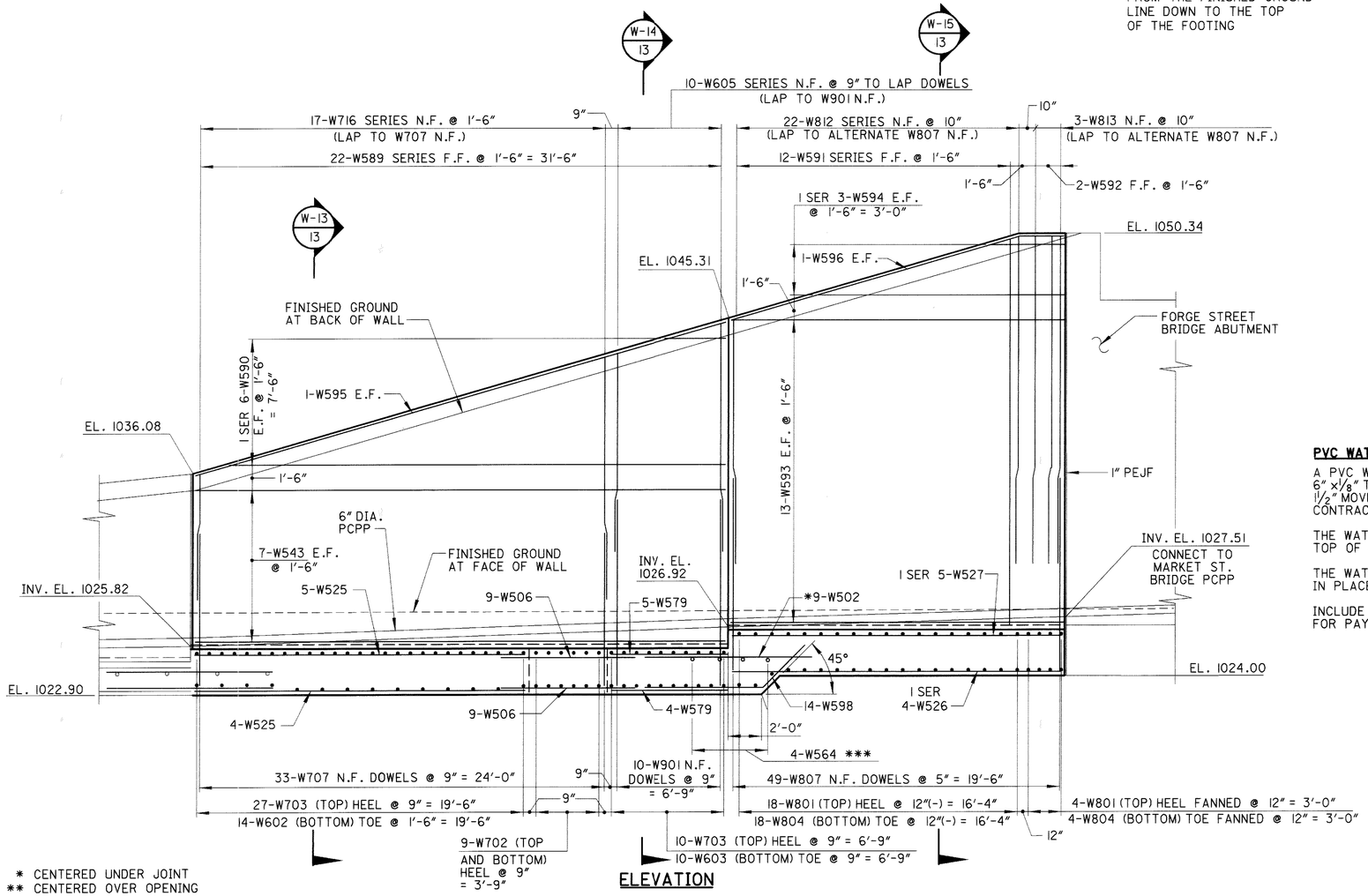

ELEVATION

* CENTERED UNDER JOINT
** CENTERED OVER OPENING
*** #5 bars @ 3'-0" (±) c/c TO SUPPORT ADDITIONAL LONGITUDINAL REINFORCEMENT AT JOINTS

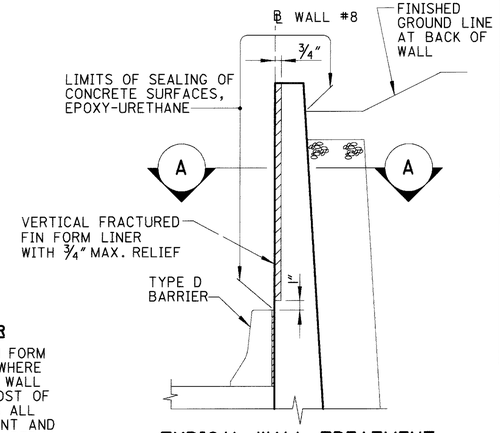

TYPICAL WALL TREATMENT

ITEM SPECIAL - FORM LINER

A VERTICAL FRACTURED FIN FORM LINER SHALL BE PROVIDED WHERE INDICATED BY THE TYPICAL WALL TREATMENT DETAIL. THE COST OF THE FORM LINER, INCLUDING ALL LABOR, MATERIALS, EQUIPMENT AND INCIDENTALS SHALL BE INCLUDED WITH THE UNIT PRICE BID, PER SQUARE FOOT FOR ITEM SPECIAL, FORM LINER.

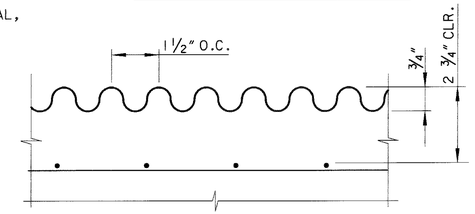

SECTION A-A

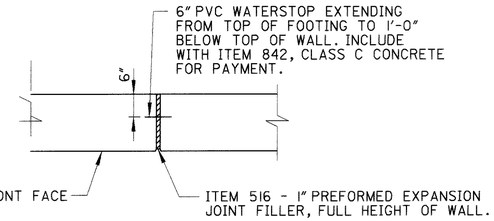

EXPANSION JOINT DETAIL

PVC WATERSTOP

A PVC WATERSTOP, NOMINAL DIMENSIONS 6" x 3/8" THICK AND CAPABLE OF PROVIDING 1½" MOVEMENT, SHALL BE PROVIDED AT CONTRACTION AND EXPANSION JOINTS.

THE WATERSTOP SHALL EXTEND FROM THE TOP OF FOOTING TO 1'-0" BELOW TOP OF WALL.

THE WATERSTOP SHALL BE SECURELY HELD IN PLACE DURING CONCRETE PLACEMENT.

INCLUDE WITH ITEM 842, CLASS C CONCRETE FOR PAYMENT.

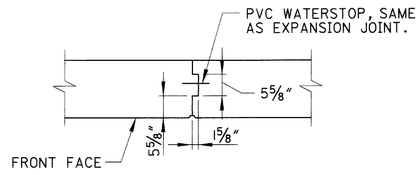

CONTRACTION JOINT DETAIL

NOTES

1. POROUS BACKFILL WITH FILTER FABRIC, 2 FEET THICK, SHALL EXTEND UP TO 1 FOOT BELOW THE EMBANKMENT SURFACE AND LATERALLY FOR THE FULL LENGTH OF THE RETAINING WALL.
2. MEMBRANE WATERPROOFING, TYPE 2, SHALL BE INSTALLED IN ACCORDANCE WITH ITEM 516. ALL COSTS SHALL BE INCLUDED FOR PAYMENT WITH ITEM 842, CLASS C CONCRETE, AS PER PLAN.
3. 2" PEJF BETWEEN WALL FOOTING AND CATCH BASIN(S) SHALL BE INCLUDED FOR PAYMENT WITH ITEM 842, CLASS C CONCRETE, FOOTING, AS PER PLAN. FOR DETAILS OF PEJF BETWEEN WALL AND BARRIER INLET, SEE DRAINAGE DETAILS SHEET 597.
4. FOR CONVERSION OF UNITS FROM METRIC STANDARD DRAWINGS, SEE SHEET 30.

REVISIONS: 05/15/2002 by AGW

DLZ
2000 ROCKEFELLER BLDG • 614 W SUPERIOR AVE • CLEVELAND, OH 44113

DESIGNED	DRAWN	REVIEWED	DATE
DP	RCK	GWM	6/26/01
CHECKED	REVISED	STRUCTURE FILE NUMBER	
JWB			

SEGMENTS 19 AND 20
RETAINING WALL #8
ALONG RAMP L1

SUM-8-0.63

9 / 14

664
1088

05:26:24 PM
06/13/2002
u:\00-01\sr-8\h\civil\walls\wall8-detail.dgn

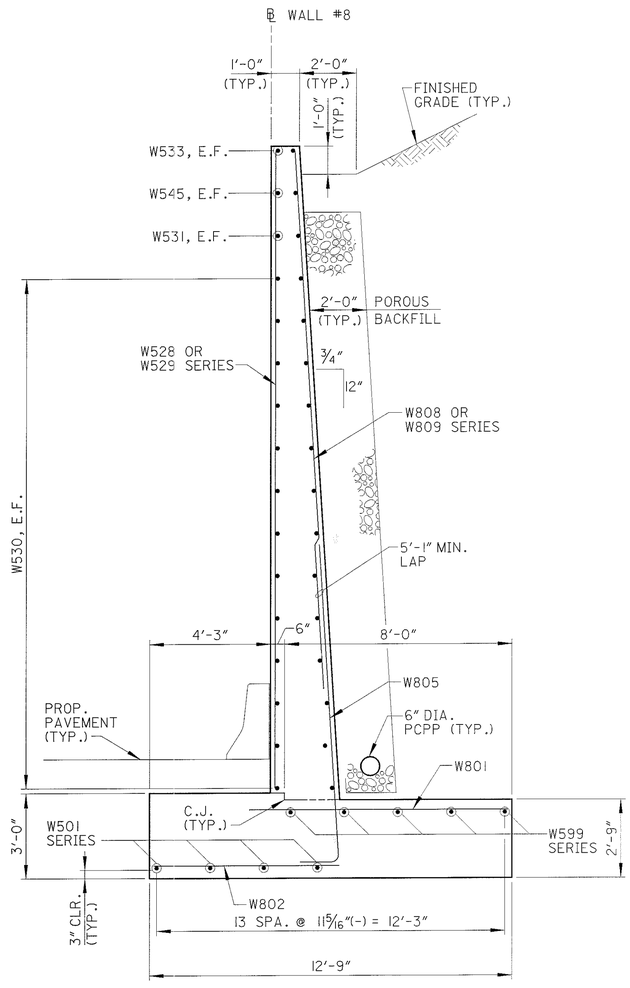

SECTION W-1 / 3

SEGMENT 1

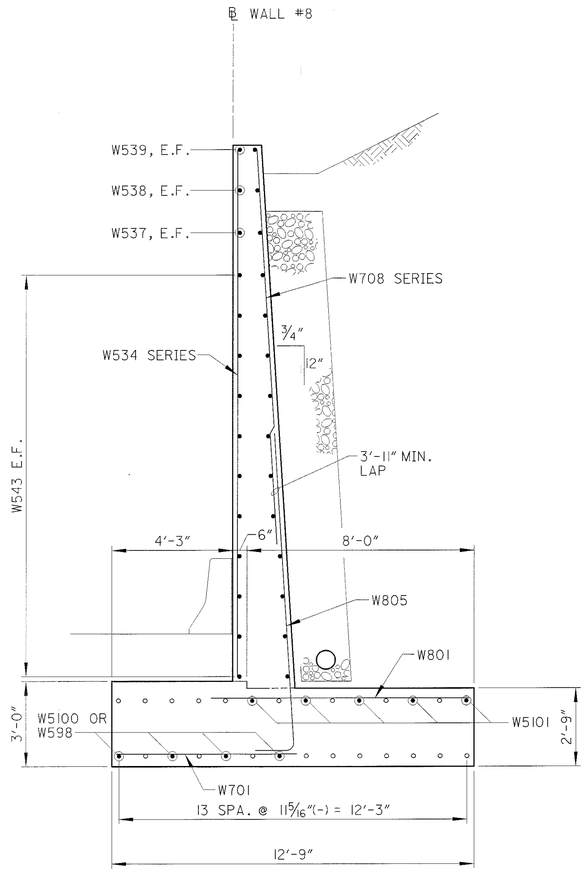

∘ INDICATES W502 (TOP) & W598 (BOT.), CENTERED UNDER JOINT

SECTION W-2 / 3

SEGMENT 2 (LEFT SIDE OF BLOCK OUT)

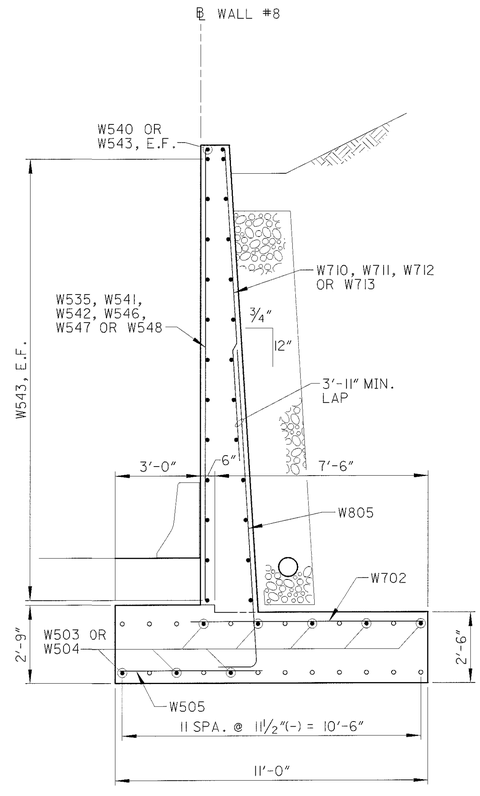

∘ INDICATES W502 (TOP & BOT.), CENTERED UNDER JOINT

SECTION W-3 / 3&4

SEGMENTS 2 (RIGHT SIDE OF BLOCK OUT), 3, 4, & 5 (LEFT SIDE OF BLOCK OUT)

FOR NOTES, SEE SHEET 664.

DLZ
1000 ROCKEFELLER BLDG • 614 W SUPERIOR AVE • CLEVELAND, OH 44113

DESIGNED	DRAWN	REVIEWED	DATE
DP	DJC	GWM	6/26/01
CHECKED	REVISED	STRUCTURE FILE NUMBER	
JWB			

WALL SECTIONS
RETAINING WALL #8
ALONG RAMP L1

SUM-8-0.63

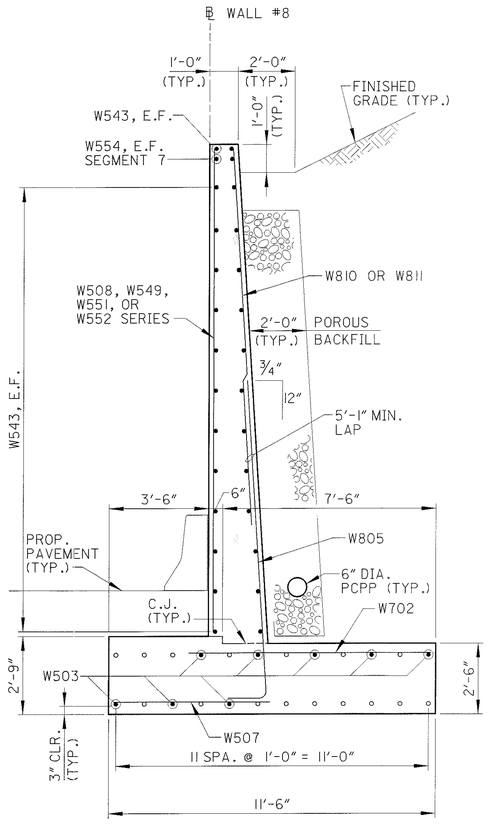

◦ INDICATES W502 (TOP & BOT.), CENTERED UNDER JOINT

SECTION W-4 / 4&5

SEGMENTS 5 (RIGHT SIDE OF BLOCK OUT), 6, & 7

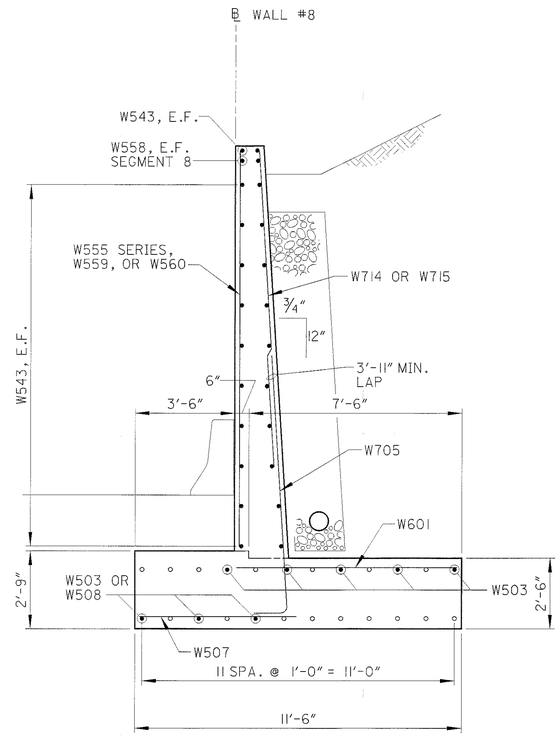

◦ INDICATES W502 (TOP & BOT.), CENTERED UNDER JOINT

SECTION W-5 / 5

SEGMENTS 8 & 9 (LEFT SIDE OF BLOCK OUT)

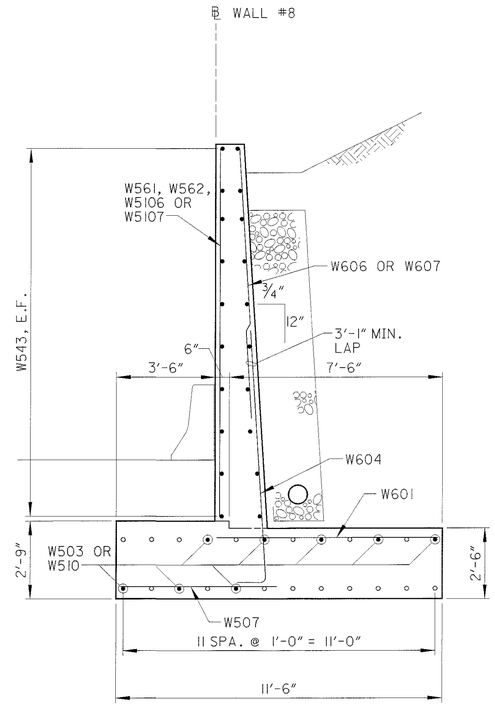

◦ INDICATES W502 (TOP & BOT.), CENTERED UNDER JOINT

SECTION W-6 / 5&6

SEGMENTS 9 (RIGHT SIDE OF BLOCK OUT) & 10

FOR NOTES, SEE SHEET 664.

DLZ
800 ROCKEFELLER BLDG • 614 W SUPERIOR AVE • CLEVELAND, OH 44113

DESIGNED DP
DRAWN DJC
CHECKED JWB
REVIEWED GWM
DATE 6/26/01
REVISED
STRUCTURE FILE NUMBER

WALL SECTIONS
RETAINING WALL #8
ALONG RAMP L1

SUM-8-0.63

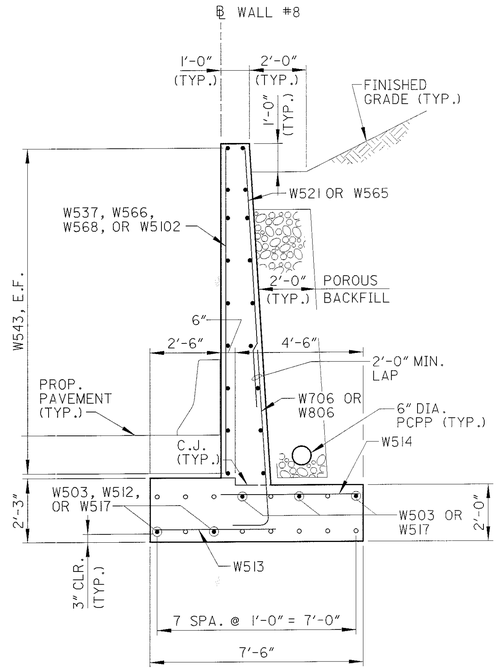

◦ INDICATES W502 (TOP), W512 (BOT.), OR W521(TOP & BOT.), CENTERED UNDER JOINT

SECTION W-7 / 6

SEGMENTS 11 & 12 LEFT SIDE OF BLOCK OUT)

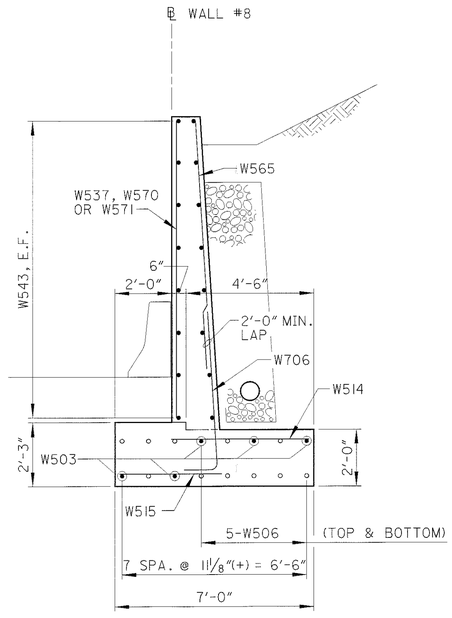

◦ INDICATES W502 (TOP & BOT.), CENTERED UNDER JOINT

SECTION W-8 / 6

SEGMENT 12 (RIGHT SIDE OF BLOCK OUT)

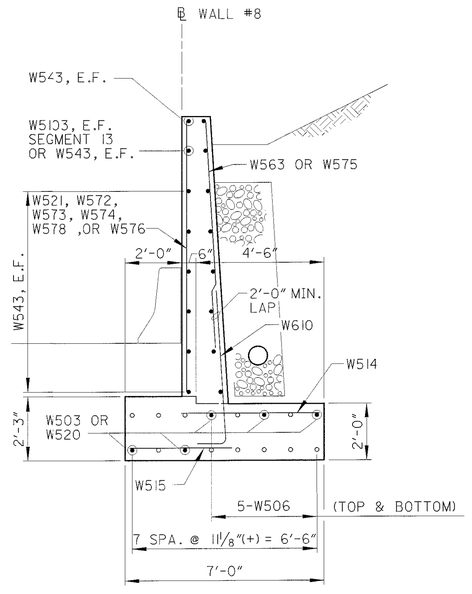

◦ INDICATES W502 (TOP & BOT.), CENTERED UNDER JOINT

SECTION W-9 / 7

SEGMENTS 13 & 14

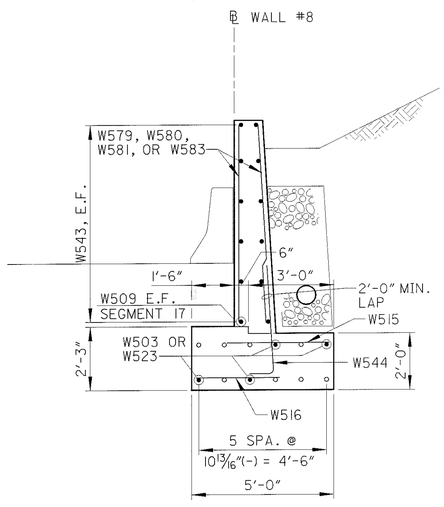

◦ INDICATES W502 OR W532 (TOP & BOT.), CENTERED UNDER JOINT

SECTION W-10 / 7&8

SEGMENTS 15, 16, & 17 (LEFT SIDE OF BLOCK OUT)

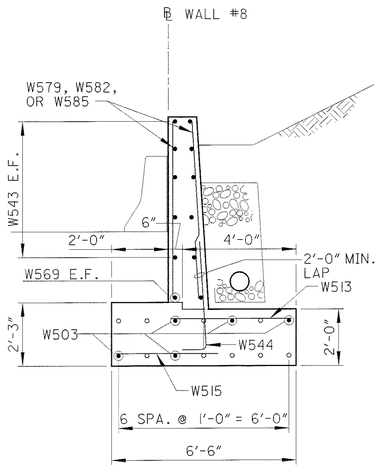

◦ INDICATES W502 (TOP & BOT.), CENTERED UNDER JOINT

SECTION W-11 / 8

SEGMENT 17 (RIGHT SIDE OF BLOCK OUT)

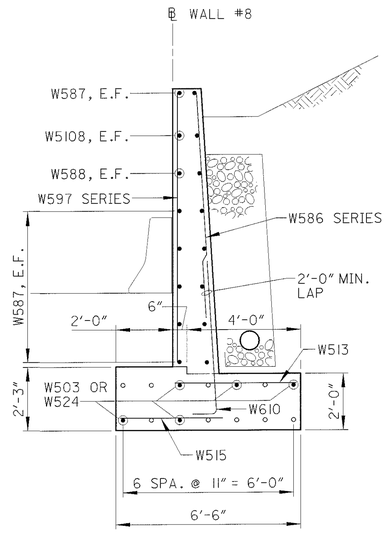

◦ INDICATES W502 (TOP & BOT.), CENTERED UNDER JOINT

SECTION W-12 / 8

SEGMENT 18

NOTE: BATTER BACK FACE OF WALL 3/4" : 12" (TYP. ALL SECTIONS)

FOR NOTES, SEE SHEET 664.

DLZ
4000 ROCKEFELLER BLDG • 614 W SUPERIOR AVE • CLEVELAND, OH 44113

DESIGNED	DRAWN	REVIEWED	DATE
DP	DJC	GWM	6/26/01
CHECKED	REVISED	STRUCTURE FILE NUMBER	
JWB			

WALL SECTIONS
RETAINING WALL #8
ALONG RAMP L1

SUM-8-0.63

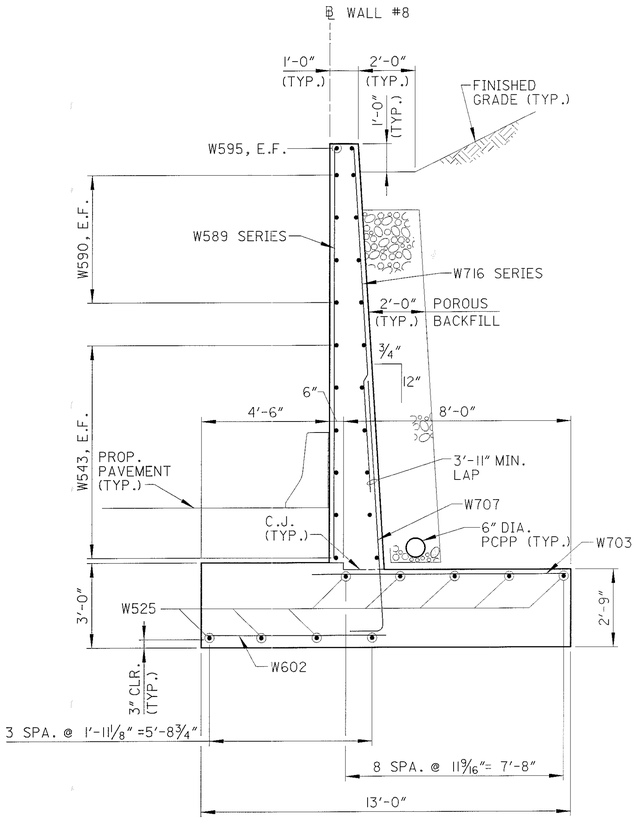

SECTION W-13 / 9

SEGMENT 19 (LEFT SIDE OF BLOCK OUT)

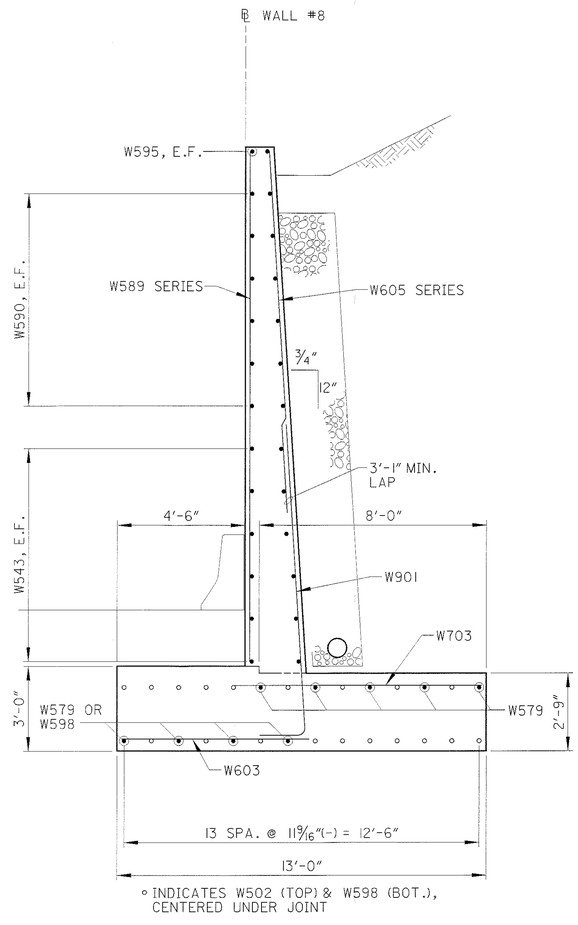

∘ INDICATES W502 (TOP) & W598 (BOT.), CENTERED UNDER JOINT

SECTION W-14 / 9

SEGMENT 19 (RIGHT SIDE OF BLOCK OUT)

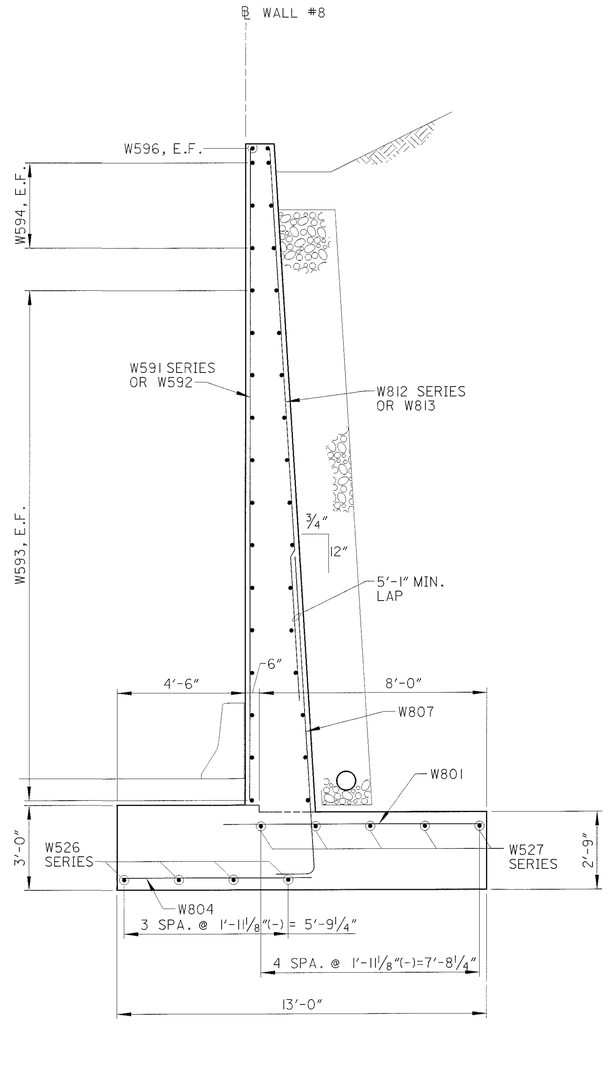

SECTION W-15 / 9

SEGMENT 20

FOR NOTES, SEE SHEET 664.

DLZ
1000 ROCKEFELLER BLDG • 614 W SUPERIOR AVE • CLEVELAND, OH 44113

DESIGNED	DRAWN	REVIEWED	DATE
DP	DJC	GWM	6/26/01
CHECKED	REVISED	STRUCTURE FILE NUMBER	
JWB			

WALL SECTIONS
RETAINING WALL #8
ALONG RAMP L1

SUM-8-0.63

REINFORCING STEEL LIST

MARK	NO.	LENGTH	WEIGHT (LBS.)	TYPE	DIMENSIONS A	B	C	D	E	SER INC.
WALL										
	1	16'-6"								
W501	SER		70	STR						0'-2"
	4	17'-0"								
W502	211	10'-0"	2201	STR						
W503	92	30'-0"	2879	STR						
W504	8	6'-2"	51	STR						
W505	120	5'-0"	511	STR						
W506	70	9'-0"	657	STR						
W507	227	5'-6"	1302	STR						
W508	19	17'-6"	347	STR						
W509	2	3'-2"	7	STR						
W510	8	11'-9"	98	STR						
W511	NOT	USED								
W512	8	11'-3"	94	12	7'-0"	3'-0"	3'-0"			
W513	62	4'-3"	275	STR						
W514	79	4'-10"	398	STR						
W515	139	3'-7"	520	STR						
W516	46	2'-11"	140	STR						
W517	5	7'-1"	37	STR						
W518	8	6'-6"	54	STR						
W519	5	7'-5"	39	STR						
W520	5	19'-1"	100	STR						
W521	41	8'-3"	353	STR						
W522	12	10'-6"	131	STR						
W523	4	11'-4"	47	STR						
W524	5	27'-7"	144	12	12'-2"	1'-6"	15'-4"			
W525	9	19'-9"	185	STR						
	1	18'-8"								
W526	SER		80	STR						0'-4"
	4	19'-8"								
	1	19'-6"								
W527	SER		105	STR						0'-4"
	5	20'-10"								
W528	2	22'-7"	47	STR						
	1	18'-9"								
W529	SER		235	STR						0'-4 3/16"
	11	22'-3"								
W530	26	17'-0"	461	STR						
W531	2	13'-6"	28	STR						
W532	4	8'-5"	35	STR						
W533	2	17'-6"	37	12	1'-9"	3'-10"	15'-3"			
	1	15'-11"								
W534	SER		183	STR						0'-4 7/16"
	10	19'-3"								
W535	12	16'-1"	201	STR						
W536	NOT	USED								
W537	9	10'-5"	98	STR						
W538	28	4'-6"	131	STR						
W539	2	17'-4"	36	12	2'-9"	3'-9"	14'-2"			
W540	2	17'-8"	37	STR						
W541	11	16'-3"	186	STR						
W542	11	16'-5"	188	STR						
W543	332	31'-7"	10937	STR						
W544	63	5'-1"	334	11	0'-10"	4'-4"	0'-3"			
W545	2	7'-7"	16	STR						
W546	11	16'-8"	191	STR						
W547	11	16'-10"	193	STR						
W548	11	17'-1"	196	STR						
W549	11	17'-3"	198	STR						
W550	NOT	USED								
W551	11	17'-7"	202	STR						
	1	16'-3"								
W552	SER		390	STR						0'-0 7/8"
	22	17'-9"								
W553	4	12'-3"	51	STR						
W554	2	24'-2"	50	STR						
	1	14'-8"								
W555	SER		355	STR						0'-0 7/8"
	22	16'-3"								
W556	NOT	USED								
W557	NOT	USED								
W558	2	22'-11"	48	STR						
W559	7	14'-5"	105	STR						
W560	8	14'-0"	117	STR						
W561	7	13'-8"	100	STR						
W562	7	13'-5"	98	STR						
W563	22	8'-9"	201	STR						

REINFORCING STEEL LIST

MARK	NO.	LENGTH	WEIGHT (LBS.)	TYPE	DIMENSIONS A	B	C	D	E	SER INC.
WALL										
W564	4	12'-6"	52	STR						
W565	22	8'-8"	199	STR						
W566	7	11'-5"	83	STR						
W567	NOT	USED								
W568	7	10'-8"	78	STR						
W569	2	23'-5"	49	STR						
W570	8	10'-1"	84	STR						
W571	7	9'-9"	71	STR						
W572	7	9'-6"	69	STR						
W573	8	9'-2"	76	STR						
W574	7	8'-10"	64	STR						
W575	22	7'-10"	180	STR						
W576	7	8'-7"	63	STR						
W577	NOT	USED								
W578	7	7'-11"	58	STR						
W579	31	7'-0"	226	STR						
W580	14	7'-8"	112	STR						
W581	16	7'-4"	122	STR						
W582	16	7'-3"	121	STR						
W583	50	6'-10"	356	STR						
W584	8	6'-0"	50	STR						
W585	6	5'-10"	37	STR						
	1	6'-5"								
W586	SER		185	STR						0'-1 7/8"
	22	9'-8"								
W587	12	31'-5"	393	12	16'-3"	1'-5"	15'-2"			
W588	2	27'-0"	56	12	11'-10"	1'-5"	15'-2"			
	1	10'-1"								
W589	SER		336	STR						0'-5 3/16"
	22	19'-2"								
	2	4'-4"								
W590	SER		213	STR						5'-0 13/16"
	6	29'-8"								
	1	18'-1"								
W591	SER		257	STR						0'-5 3/8"
	12	23'-0"								
W592	2	23'-2"	48	STR						
W593	26	19'-7"	531	STR						
	2	4'-1"								
W594	SER		58	STR						5'-2"
	3	14'-5"								
W595	2	32'-10"	68	STR						
W596	2	20'-3"	42	12	2'-5"	5'-0"	17'-2"			
	1	7'-6"								
W597	SER		209	STR						0'-1 7/8"
	22	10'-9"								
W598	28	11'-0"	321	12	7'-0"	2'-10"	2'-10"			
	1	17'-1"								
W599	SER		91	STR						0'-2"
	5	17'-9"								
W5100	4	13'-8"	57	STR						
W5101	5	13'-4"	70	STR						
W5102	28	11'-0"	321	STR						
W5103	2	23'-1"	48	STR						
W5104	NOT	USED								
W5105	NOT	USED								
W5106	7	12'-8"	92	STR						
W5107	8	13'-0"	108	STR						
W5108	2	14'-4"	30	STR						
W601	122	7'-9"	1420	STR						
W602	14	6'-4"	133	STR						
W603	10	6'-7"	99	STR						
W604	59	9'-5"	835	11	1'-0"	8'-7"	0'-6 7/16"			
	1	11'-10"								
W605	SER		192	STR						0'-2 7/16"
	10	13'-8"								
W606	6	11'-0"	99	STR						
W607	25	10'-9"	404	STR						
W608	8	14'-6"	174	STR						
W609	4	11'-6"	69	STR						
W610	66	5'-11"	587	11	1'-0"	5'-1"	0'-3 13/16"			
W611	12	7'-6"	135	STR						
W701	14	6'-4"	181	STR						
W702	243	8'-2"	4056	STR						
W703	37	8'-9"	662	STR						

REINFORCING STEEL LIST

MARK	NO.	LENGTH	WEIGHT (LBS.)	TYPE	DIMENSIONS A	B	C	D	E	SER INC.
WALL										
W704	NOT	USED								
W705	75	10'-7"	1622	11	1'-2"	9'-7"	0'-7 3/16"			
W706	22	7'-1"	319	11	1'-2"	6'-1"	0'-4 9/16"			
W707	33	10'-4"	697	11	1'-2"	9'-4"	0'-7"			
	1	10'-10"								
W708	SER		386	STR						0'-3"
	15	14'-4"								
W709	NOT	USED								
W710	13	11'-0"	292	STR						
W711	22	11'-4"	510	STR						
W712	22	11'-9"	528	STR						
W713	13	12'-1"	321	STR						
W714	22	13'-1"	588	STR						
W715	16	11'-7"	379	STR						
	1	7'-6"								
W716	SER		382	STR						0'-5 1/4"
	17	14'-6"								
W717	14	7'-6"	215	STR						
W801	60	9'-1"	1455	STR						
W802	18	6'-6"	312	STR						
W803	NOT	USED								
W804	22	6'-10"	401	STR						
W805	315	12'-11"	10866	11	1'-4"	11'-9"	0'-8 13/16"			
W806	22	8'-8"	509	11	1'-4"	7'-6"	0'-5 5/8"			
W807	49	12'-8"	1658	11	1'-4"	11'-6"	0'-8 5/8"			
W808	2	18'-10"	101	STR						
	1	14'-9"								
W809	SER		758	STR						0'-2 15/16"
	17	18'-8"								
W810	12	13'-4"	427	STR						
W811	50	13'-7"	1813	STR						
	1	14'-6"								
W812	SER		999	STR						0'-2 7/8"
	22	19'-6"								
W813	3	19'-6"	156	STR						
W901	10	12'-8"	431	11	1'-7"	11'-4"	0'-8 1/2"			
		TOTAL =	68793	LBS.						

BENDING DIAGRAMS

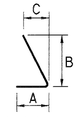

TYPE 11

TYPE 12

REINFORCING STEEL NOTES:

1. SERIES BARS - EACH BAR VARIES BY TABULATED AMOUNT.
2. ALL DIMENSIONS ARE OUT TO OUT.
3. TYPE 'STR' INDICATES A STRAIGHT BAR.
4. THE BAR SIZE NUMBER IS SPECIFIED IN THE 'MARK' COLUMN. THE FIRST DIGIT INDICATES THE BAR SIZE NUMBER. FOR EXAMPLE, W501 IS A #5 BAR SIZE.
5. ALL BARS SHALL BE EPOXY COATED UNLESS NOTED OTHERWISE.
6. SUBTOTALS AND TOTAL WEIGHTS ARE FOR INFORMATIONAL PURPOSES ONLY. IF THE REINFORCING LIST PROVIDED IN THE PLANS IS USED IT SHALL BE VERIFIED BY THE CONTRACTOR. ANY REVISIONS IN THE REINFORCING STEEL LIST AS SHOWN IN THE PLANS WILL NOT BE REASON FOR ADJUSTMENT IN THE BID PRICE FOR STRUCTURAL CONCRETE.

REVISIONS: 05/15/2002 by AGW

DLZ
DLZ OHIO, INC. 1000 ROCKEFELLER BLDG • 614 W SUPERIOR AVE • CLEVELAND, OH 44113

DESIGNED	DRAWN	REVIEWED	DATE
DJP	DJP	GWM	6/19/01

CHECKED JWB
REVISED
STRUCTURE FILE NUMBER

REINFORCING STEEL LIST
RETAINING WALL # 8
ALONG RAMP L1

SUM-8-0.63

14 / 14

669
1088

05:26:25 PM
06/13/2002
u:\00-00sr-8\1\civil\walls\wall8-rebarlist.dgn

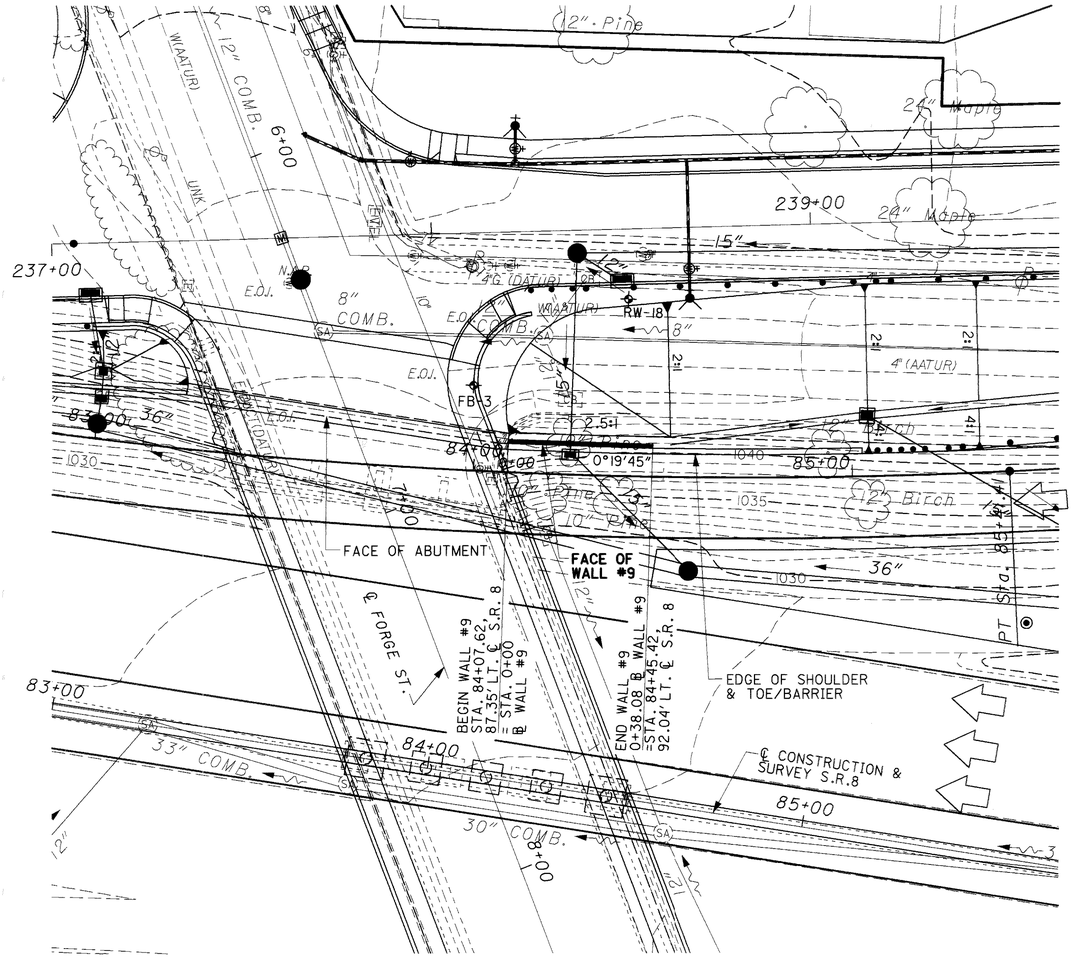

PARTIAL PLAN

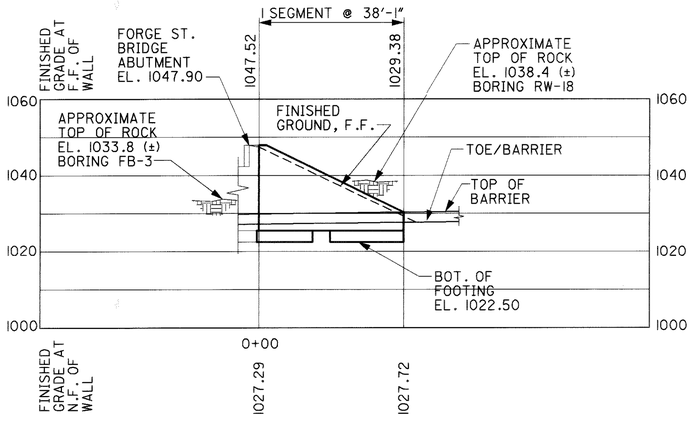

PROFILE ALONG FACE OF WALL #9

NOTES

DESIGN SPECIFICATIONS

THIS STRUCTURE CONFORMS TO "STANDARD SPECIFICATIONS FOR HIGHWAY BRIDGES" ADOPTED BY THE AMERICAN ASSOCIATION OF STATE HIGHWAY AND TRANSPORTATION OFFICIALS, 1996, INCLUDING THE 1997, 1998 AND 1999 INTERIM SPECIFICATIONS AND THE ODOT BRIDGE DESIGN MANUAL.

DESIGN DATA

CONCRETE CLASS C - COMPRESSIVE STRENGTH 4000 psi.
REINFORCING STEEL - ASTM A615, A616, OR A617
GRADE 60, MINIMUM YIELD STRENGTH 60,000 psi.

FOUNDATION BEARING PRESSURE

RETAINING WALL #9 FOOTINGS, AS DESIGNED, PRODUCE A MAXIMUM BEARING PRESSURE OF 5360 psf. THE ALLOWABLE BEARING PRESSURE IS 20000 psf.

ITEM 864, SEALING OF CONCRETE SURFACES (EPOXY-URETHANE)

CONCRETE SURFACES AS DETAILED IN THE PLANS SHALL BE SEALED WITH AN EPOXY-URETHANE SEALER OF A COLOR CONFORMING TO FEDERAL COLOR No. 13522 - BUFF.

EARTHWORK NOTE:

EARTHWORK LIMITS ARE APPROXIMATE. ACTUAL SLOPES SHALL CONFORM TO PLAN CROSS-SECTIONS.

FOR CONCRETE BARRIER DETAILS SEE ROADWAY TYPICAL SECTION SHEET 20.

REFER TO DRAINAGE PLANS FOR BARRIER INLET DETAILS.

FOR FORGE STREET BRIDGE ABUTMENT CONSTRUCTION DETAILS SEE STRUCTURE PLANS FOR BRIDGE NO. SUM-8-0159.

BENCHMARK #3

CHISELED "X" ON CURB SIDE CORNER OF CONC. SIDEWALK ON N SIDE OF FORGE ST., 61.5' W OF INT. OF FORGE AND PARK STREETS, 23.9' N OF ℄ FORGE ST.
STA 237+11.37, 210.31' LT., ℄ GOODKIRK ST.
ELEV: 1044.09

BENCHMARK #2

CHISELED "□" IN CONC. SIDEWALK IN FRONT OF HOUSE #98 GOODKIRK ST., JUST SOUTH OF PARKWOOD ST.
STA 240+85.29, 20.52' RT., ℄ GOODKIRK ST.
EL. 1050.07

ESTIMATED QUANTITIES

ITEM	ITEM EXTENSION	TOTAL	UNIT	DESCRIPTION	REF. SHEET NO.
503	21100	42	CU. YD.	UNCLASSIFIED EXCAVATION	
503	31100	146	CU. YD.	ROCK EXCAVATION	
516	13600	73	SQ. FT.	1" PREFORMED EXPANSION JOINT FILLER	
518	21201	38	CU. YD.	POROUS BACKFILL WITH FILTER FABRIC, AS PER PLAN	2
518	40001	37	LIN. FT.	6" PERFORATED CORRUGATED PLASTIC PIPE, AS PER PLAN	2
SPECIAL	53013000	358	SQ. FT.	FORM LINER *	2
842	46001	33	CU. YD.	CLASS C CONCRETE, AS PER PLAN	2
842	46500	38	CU. YD.	CLASS C CONCRETE, FOOTING	
864	10100	49	SQ. YD.	SEALING OF CONCRETE SURFACES (EPOXY-URETHANE)	

* 100% LOCAL COST

LEGEND

℄	BASELINE
BOT.	BOTTOM
℄	CENTERLINE
C.J.	CONSTRUCTION JOINT
E.F.	EACH FACE
EL.	ELEVATION
F.F.	FAR FACE
INV.	INVERT
MIN.	MINIMUM
N.F.	NEAR FACE
PCPP	PERFORATED CORRUGATED PLASTIC PIPE
⌖	SOIL BORING
SPA.	SPACES
STA.	STATION
ST.	STREET
TYP.	TYPICAL

REVISIONS: 05/15/2002 by AGW

DLZ
600 ROCKEFELLER BLDG • 614 W SUPERIOR AVE • CLEVELAND, OH 44113

DESIGNED	DRAWN	REVIEWED	DATE
DP	MWD	GWM	5/22/01
CHECKED	REVISED	STRUCTURE FILE NUMBER	
JWB			

PLAN AND PROFILE
RETAINING WALL #9
ALONG S.R. 8, STA. 84+07.62 TO STA. 84+45.42

SUM-8-0.63

1 / 3

670
1088

04:10:22 PM
07/09/2002
u:\00-010SR-8\Civil\Walls\wall9.dgn

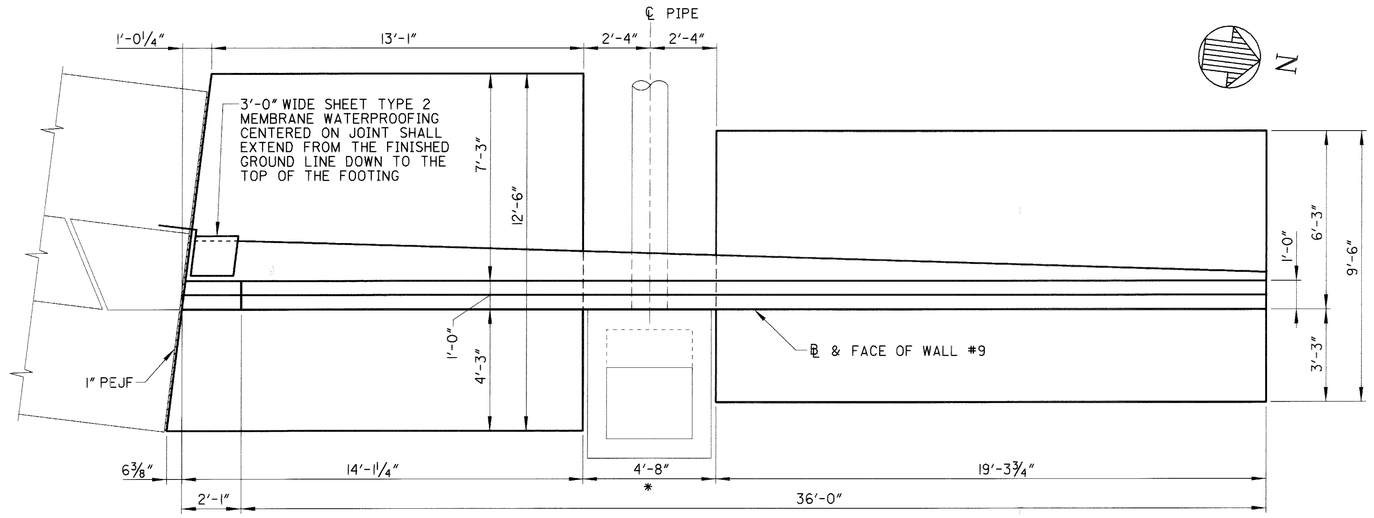

PLAN

* BLOCK OUT FOR BARRIER INLET

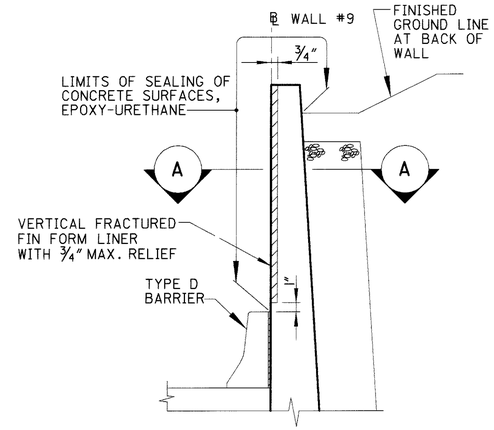

TYPICAL WALL TREATMENT

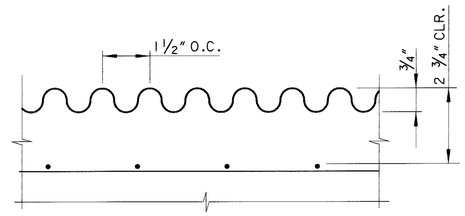

SECTION A-A

ITEM SPECIAL - FORM LINER

A VERTICAL FRACTURED FIN FORM LINER SHALL BE PROVIDED WHERE INDICATED BY THE TYPICAL WALL TREATMENT DETAIL. THE COST OF THE FORM LINER, INCLUDING ALL LABOR, MATERIALS, EQUIPMENT AND INCIDENTALS SHALL BE INCLUDED WITH THE UNIT PRICE BID, PER SQUARE FOOT FOR ITEM SPECIAL, FORM LINER.

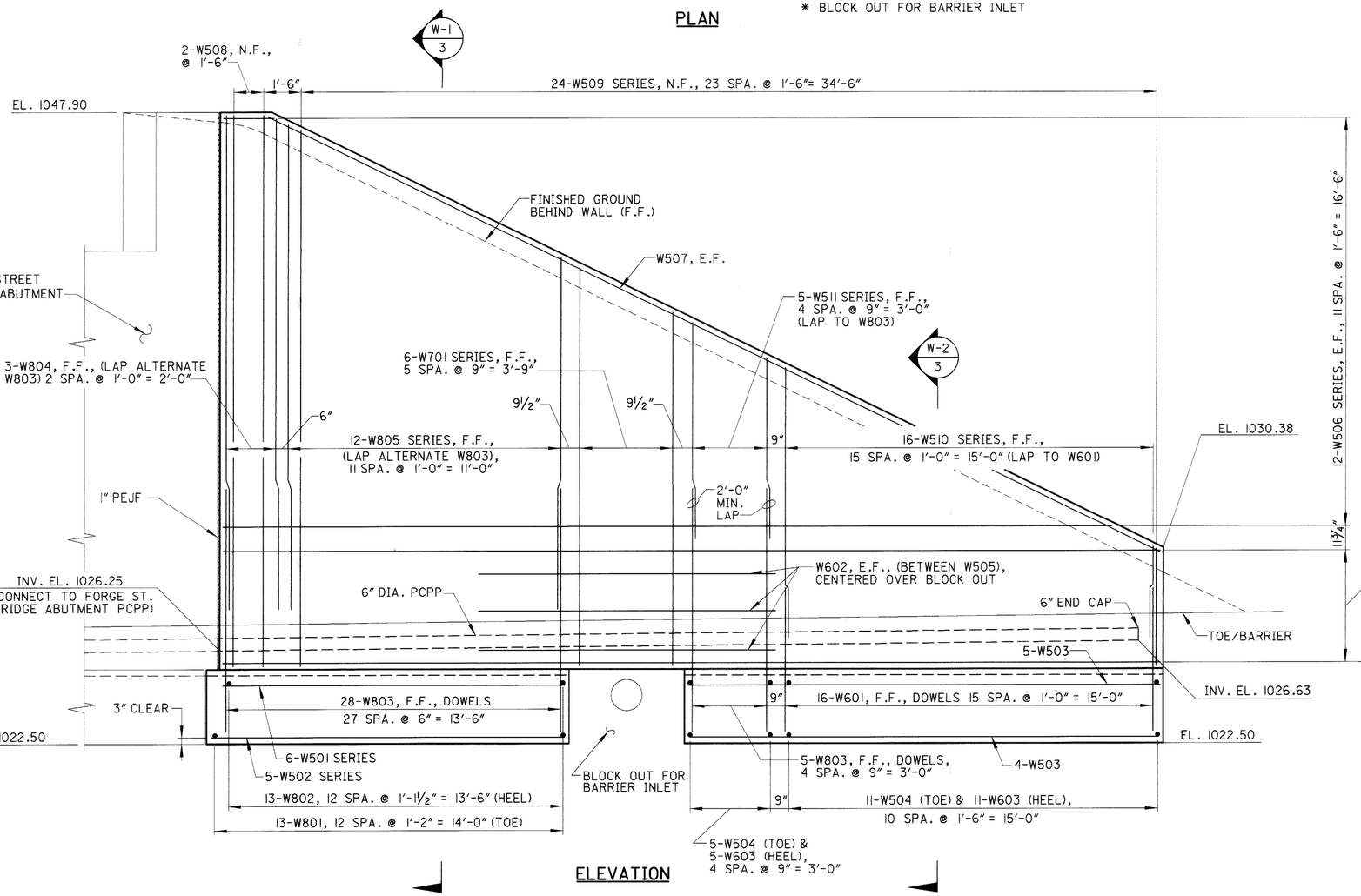

ELEVATION

NOTES

1. POROUS BACKFILL WITH FILTER FABRIC, 2 FEET THICK, SHALL EXTEND UP TO 1 FOOT BELOW THE EMBANKMENT SURFACE AND LATERALLY FOR THE FULL LENGTH OF THE RETAINING WALL.
2. 6" PERFORATED CORRUGATED PLASTIC PIPE, AS PER PLAN, SHALL INCLUDE A 6" END CAP AS DETAILED IN THE PLANS.
3. MEMBRANE WATERPROOFING, TYPE 2, SHALL BE INSTALLED IN ACCORDANCE WITH ITEM 516. ALL COSTS SHALL BE INCLUDED FOR PAYMENT WITH ITEM 842, CLASS C CONCRETE, AS PER PLAN.
4. FOR CONVERSION OF UNITS FROM METRIC STANDARD DRAWINGS, SEE SHEET 30.
5. FOR DETAILS OF PEJF BETWEEN WALL AND BARRIER INLET, SEE DRAINAGE DETAILS SHEET 597.

REVISIONS: 05/15/2002 by AGW

DLZ
1000 ROCKEFELLER BLDG • 614 W SUPERIOR AVE • CLEVELAND, OH 44113

DESIGNED	DRAWN	REVIEWED	DATE
DP	MWD	GWM	5/23/01
CHECKED	REVISED	STRUCTURE FILE NUMBER	
JWB			

PLAN & ELEVATION
RETAINING WALL #9
ALONG S.R. 8

SUM-8-0.63

2 / 3

671
1088

02:26:36 PM
06/12/2002
u:\00-010sr-8\civil\walls\wall9-det1dll.dgn

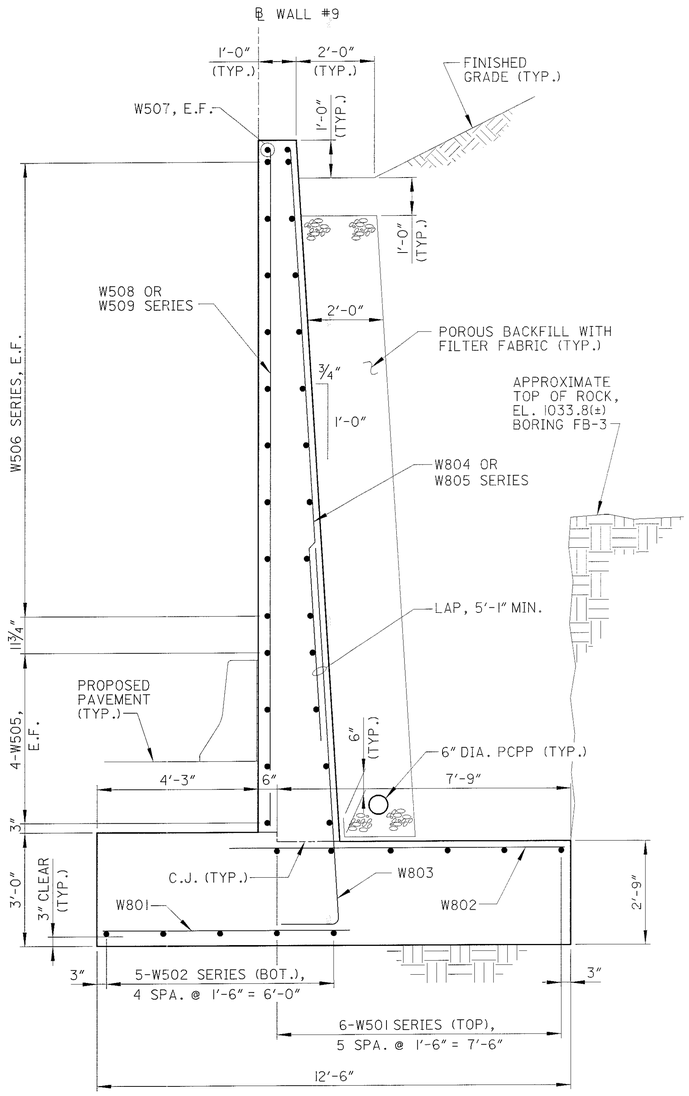

SECTION W-1 / 2

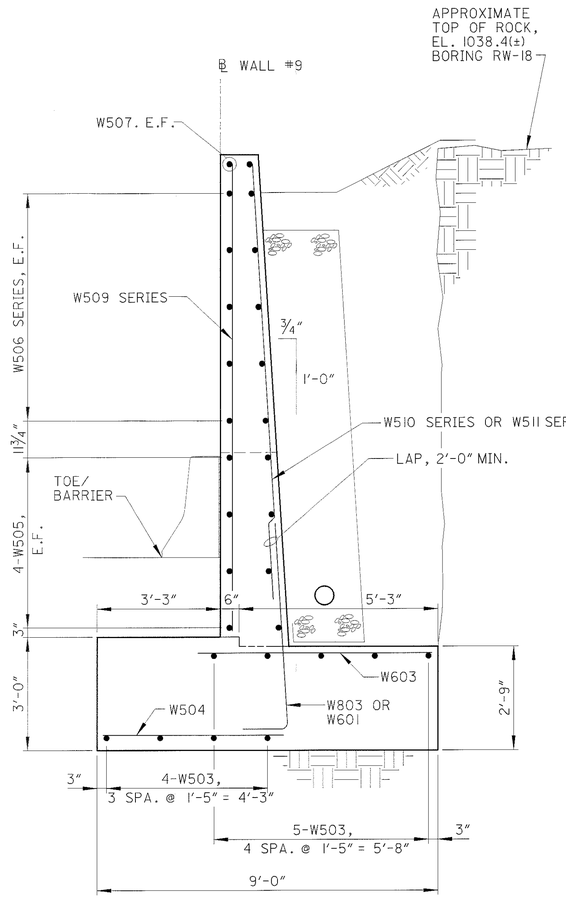

SECTION W-2 / 2

REINFORCING STEEL LIST

MARK	NUMBER	LENGTH	WEIGHT (LBS.)	TYPE	DIMENSIONS A	DIMENSIONS B	DIMENSIONS C	SER INC.
	1	12'-8"						A
W501	SER		82	STR				0'-2"
	6	13'-6"						
	1	13'-4"						
W502	SER		72	STR				0'-2 1/2"
	5	14'-2"						
W503	9	18'-11"	178	STR				
W504	16	4'-9"	79	STR				
W505	8	37'-7"	314	STR				
	2	1'-11"						
W506	SER		469	STR				3'-0 3/4"
	12	35'-7"						
W507	2	39'-10"	83	STR				
W508	2	22'-2"	46	STR				
	1	4'-9"						
W509	SER		329	STR				0'-8 3/4"
	24	21'-6"						
	1	3'-8"						
W510	SER		124	STR				0'-6"
	16	11'-2"						
	1	5'-1"						
W511	SER		30	STR				0-4 1/2"
	5	6'-7"						
W601	16	6'-8"	160	11	1'-0"	5'-10"	0'-4 3/8"	
W602	6	12'-0"	108	STR				
W603	16	5'-10"	140	STR				
	1	14'-1"						
W701	SER		183	STR				0-4 1/4"
	6	15'-10"						
W801	13	6'-6"	226	STR				
W802	13	8'-10"	307	STR				
W803	33	11'-2"	984	11	1'-4"	10'-0"	0'-7 1/2"	
W804	3	20'-1"	161	STR				
	1	14'-5"						
W805	SER		550	STR				0'-6"
	12	19'-11"						
		TOTAL =	4625	LBS.				

BENDING DIAGRAMS

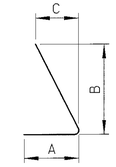

TYPE II

REINFORCING STEEL NOTES

1. SERIES BARS - EACH BAR VARIES BY TABULATED AMOUNT.
2. ALL DIMENSIONS ARE OUT TO OUT.
3. TYPE 'STR' INDICATES A STRAIGHT BAR.
4. THE BAR SIZE NUMBER IS SPECIFIED IN THE 'MARK' COLUMN. THE FIRST DIGIT INDICATES THE BAR SIZE NUMBER. FOR EXAMPLE, W501 IS A #5 BAR SIZE.
5. ALL BARS SHALL BE EPOXY COATED UNLESS NOTED OTHERWISE.
6. SUBTOTALS AND TOTAL WEIGHTS ARE FOR INFORMATIONAL PURPOSES ONLY. IF THE REINFORCING LIST PROVIDED IN THE PLANS IS USED IT SHALL BE VERIFIED BY THE CONTRACTOR. ANY REVISIONS IN THE REINFORCING STEEL LIST AS SHOWN IN THE PLANS WILL NOT BE REASON FOR ADJUSTMENT IN THE BID PRICE FOR STRUCTURAL CONCRETE.

DLZ
6000 ROCKEFELLER BLDG • 614 W SUPERIOR AVE • CLEVELAND, OH 44113

DESIGNED DP | DRAWN MWD | CHECKED JWB | REVIEWED GWM | DATE 5/23/01 | STRUCTURE TILE NUMBER | REVISED

WALL SECTIONS
RETAINING WALL #9
ALONG S.R. 8

SUM-8-0.63

3 / 3

672
1088

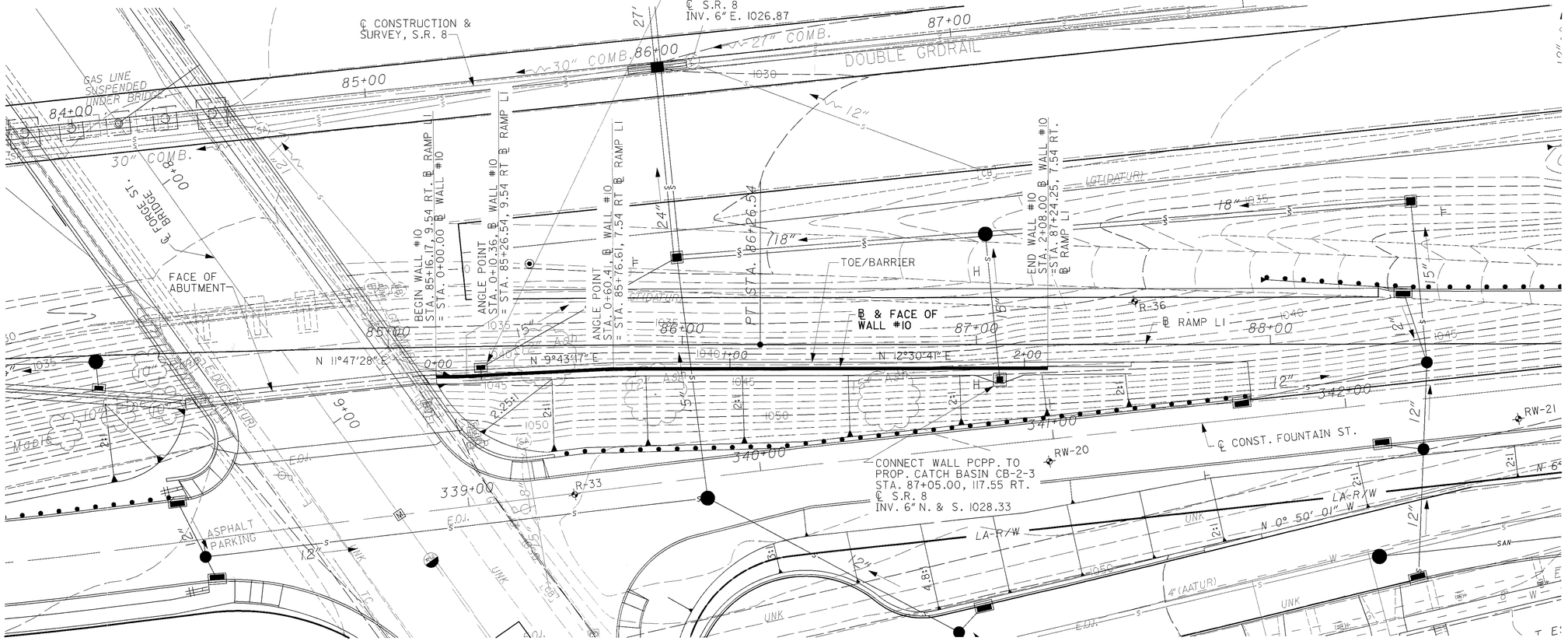

PARTIAL PLAN

EARTHWORK NOTE:

EARTHWORK LIMITS ARE APPROXIMATE. ACTUAL SLOPES SHALL CONFORM TO PLAN CROSS-SECTIONS.

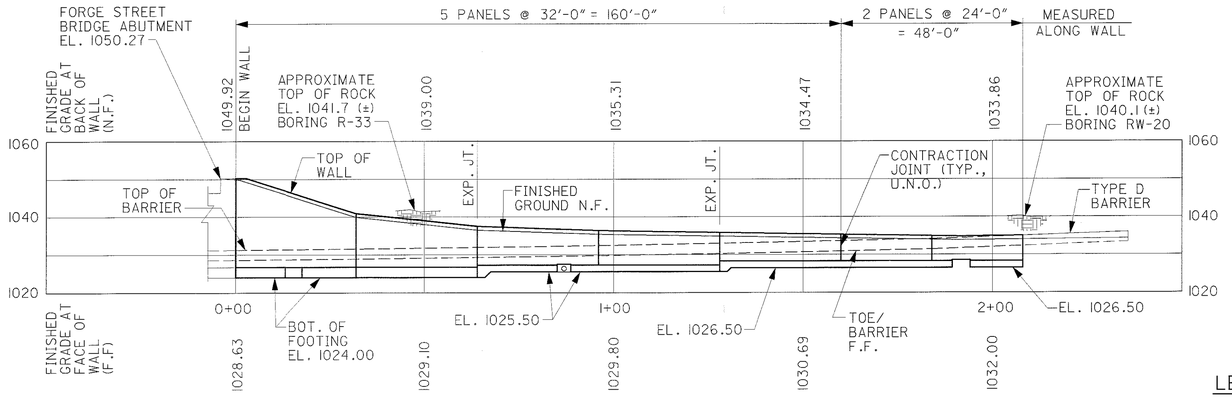

PROFILE ALONG ℄ WALL #10

BENCHMARK #21

CHISELED "X" ON NW BOLT OF PARKING LOT LIGHT POLE @ SE CORNER OF FORGE AND ADOLPH STREETS
STA. 339+31.45, 165.49 RT. ℄ FOUNTAIN ST.

ELEV: 1051.28

BENCHMARK #22

CHISELED "□" IN SIDEWALK IN FRONT OF HOUSE AT 420 PERKINS ST. AT SE CORNER OF PERKINS AND ADOLPH STREETS.
STA. 346+43.35, 156.04 RT. ℄ FOUNTAIN ST.

ELEV: 1053.68

DESIGN SPECIFICATIONS

THIS STRUCTURE CONFORMS TO "STANDARD SPECIFICATIONS FOR HIGHWAY BRIDGES" ADOPTED BY THE AMERICAN ASSOCIATION OF STATE HIGHWAY AND TRANSPORTATION OFFICIALS, 1996, INCLUDING THE 1997, 1998 AND 1999 INTERIM SPECIFICATIONS AND THE ODOT BRIDGE DESIGN MANUAL.

DESIGN DATA

CONCRETE CLASS C - COMPRESSIVE STRENGTH 4000 psi.
REINFORCING STEEL - ASTM A615, A616, OR A617
GRADE 60, MINIMUM YIELD STRENGTH 60,000 psi.

FOUNDATION BEARING PRESSURE

RETAINING WALL #10 FOOTINGS, AS DESIGNED, PRODUCE A MAXIMUM BEARING PRESSURE OF 6090 psf. THE ALLOWABLE BEARING PRESSURE IS 20000 psf.

ITEM 864, SEALING OF CONCRETE SURFACES (EPOXY-URETHANE)

CONCRETE SURFACES AS DETAILED IN THE PLANS SHALL BE SEALED WITH AN EPOXY-URETHANE SEALER OF A COLOR CONFORMING TO FEDERAL COLOR No. 13522 - BUFF.

QUANTITIES: FOR ESTIMATED QUANTITIES, SEE SHEET 678.

FOR CONCRETE BARRIER DETAILS, SEE ROADWAY TYPICAL SECTIONS SHEET 20.

REFER TO DRAINAGE PLANS FOR BARRIER INLET DETAILS.

FOR FORGE STREET BRIDGE ABUTMENT CONSTRUCTION DETAILS SEE STRUCTURE PLANS FOR BRIDGE NO. SUM-8-0159.

LEGEND

℄	BASELINE	N.F.	NEAR FACE
BOT.	BOTTOM	NPCPP	NON-PERFORATED CORRUGATED PLASTIC PIPE
℄	CENTERLINE		
CLR.	CLEAR	PCPP	PERFORATED CORRUGATED PLASTIC PIPE
CONST.	CONSTRUCTION		
CONTR.	CONTRACTION JOINT	PROP.	PROPOSED
E.F.	EACH FACE	⊕	SOIL BORING
EL.	ELEVATION	SPA.	SPACES
EXP. JT.	EXPANSION JOINT	TYP.	TYPICAL
F.F.	FAR FACE	U.N.O.	UNLESS NOTED OTHERWISE

DLZ
4000 ROCKEFELLER BLDG ◆ 614 W SUPERIOR AVE ◆ CLEVELAND, OH 44113

DESIGNED	DRAWN	REVIEWED	DATE
DP	DP	GWM	6/11/01
CHECKED	REVISED		STRUCTURE FILE NUMBER
JWB			

PLAN AND PROFILE
RETAINING WALL #10
ALONG RAMP LI, STA.85+16.17 TO STA. 87+24.25

SUM-8-0.63

1 / 6

673
1088

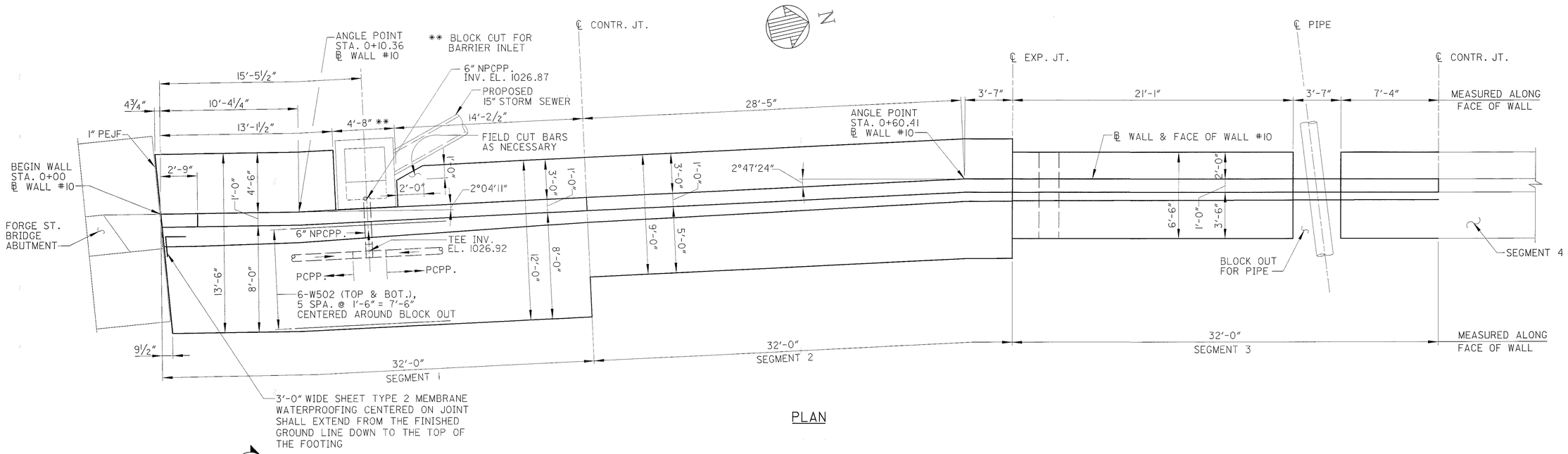

PLAN

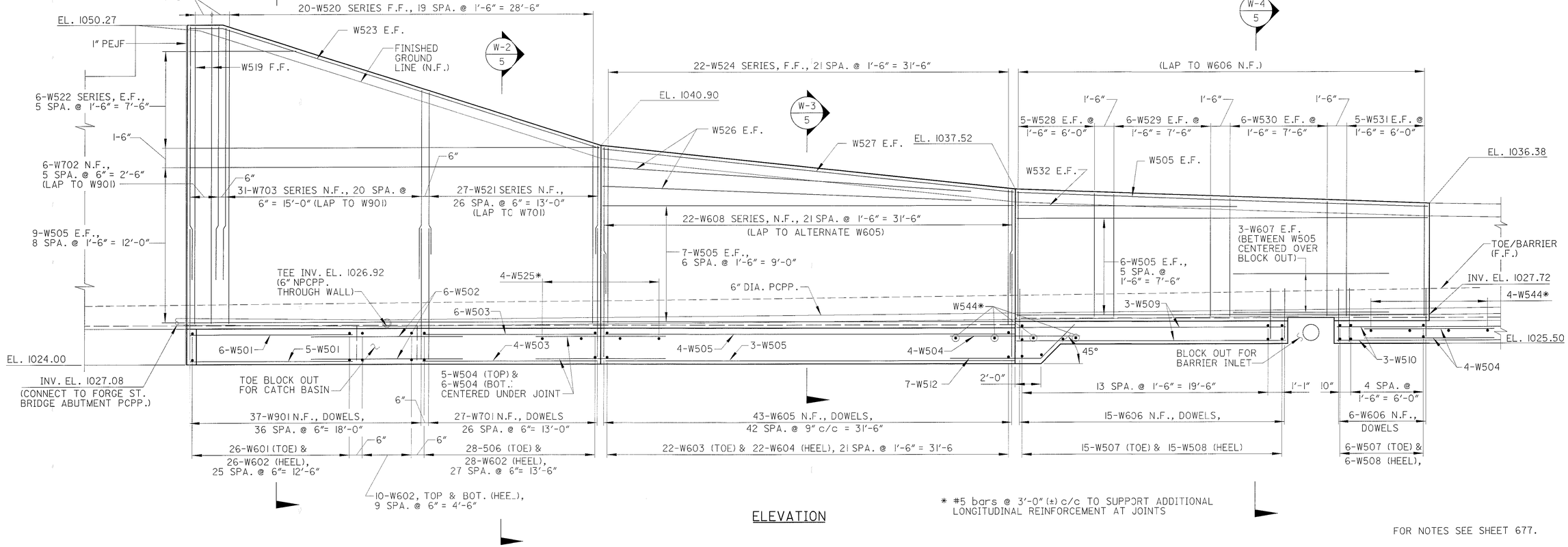

ELEVATION

* #5 bars @ 3'-0" (±) c/c TO SUPPORT ADDITIONAL LONGITUDINAL REINFORCEMENT AT JOINTS

FOR NOTES SEE SHEET 677.

DLZ
3000 ROCKEFELLER BLDG • 614 W SUPERIOR AVE • CLEVELAND, OH 44113

DESIGNED DP | DRAWN MWD | REVIEWED GWM | DATE 6/11/01
CHECKED JWB | REVISED | STRUCTURE FILE NUMBER

SEGMENTS 1 THROUGH 3
RETAINING WALL #10
ALONG RAMP L STA. 85+16.17 TO STA. 87+24.25

SUM-8-0.63

2/6

674
1088

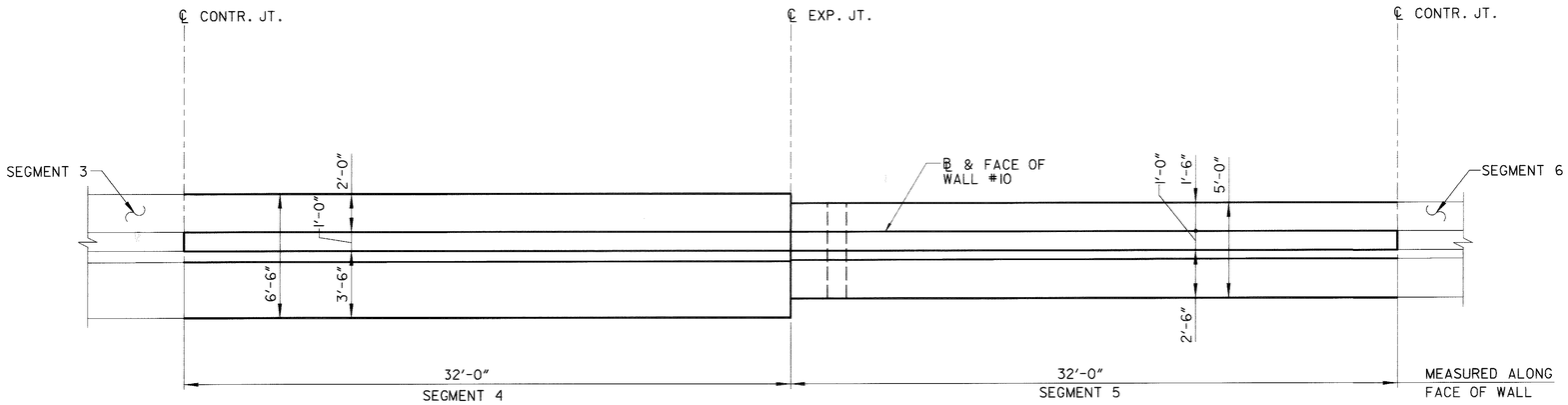

PLAN

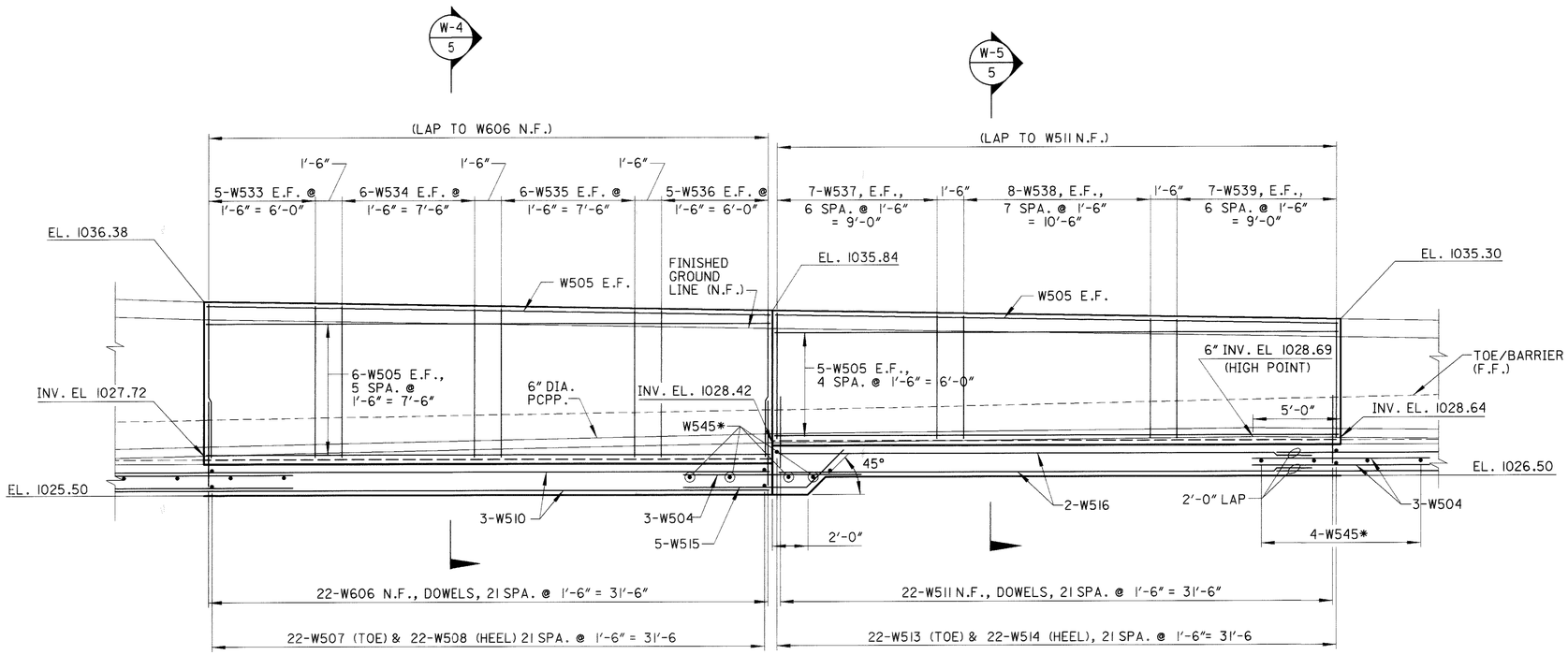

* #5 bars @ 3'-0" (±) c/c TO SUPPORT ADDITIONAL LONGITUDINAL REINFORCEMENT AT JOINTS

ELEVATION

FOR NOTES SEE SHEET 677.

N

REVISIONS: 05/15/2002 by AGW

DLZ
1000 ROCKEFELLER BLDG • 614 W SUPERIOR AVE • CLEVELAND, OH 44113

DESIGNED	DRAWN	REVIEWED	DATE
DP	MWD	GWM	6/11/01
CHECKED	REVISED	STRUCTURE FILE NUMBER	
JWB			

SEGMENTS 4 AND 5
RETAINING WALL #10
ALONG RAMP L1 STA. 85+16.17 TO STA. 87+24.25

SUM-8-0.63

02:26:37 PM
06/12/2002
u:\00-0l0sr-8\h.civil\walls\wall10-detail.dgn

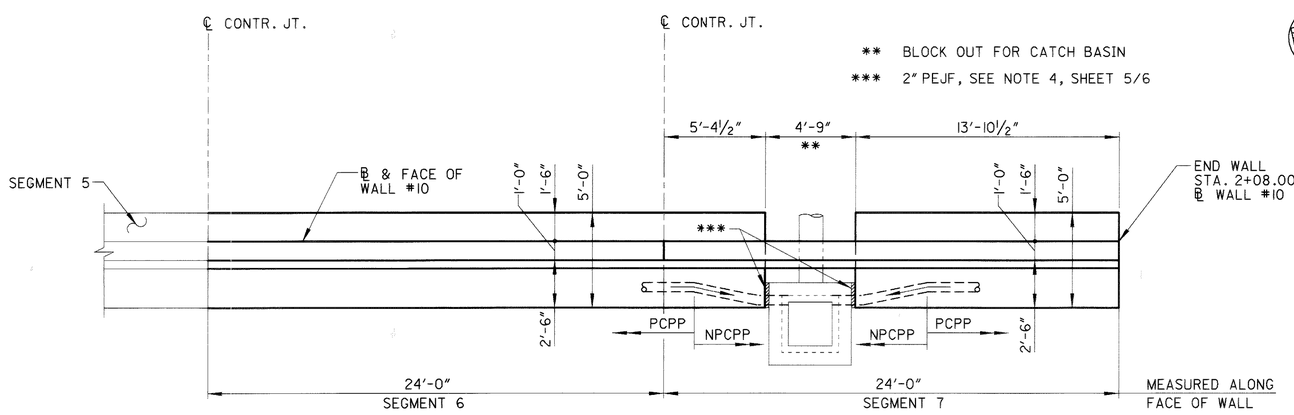

PLAN

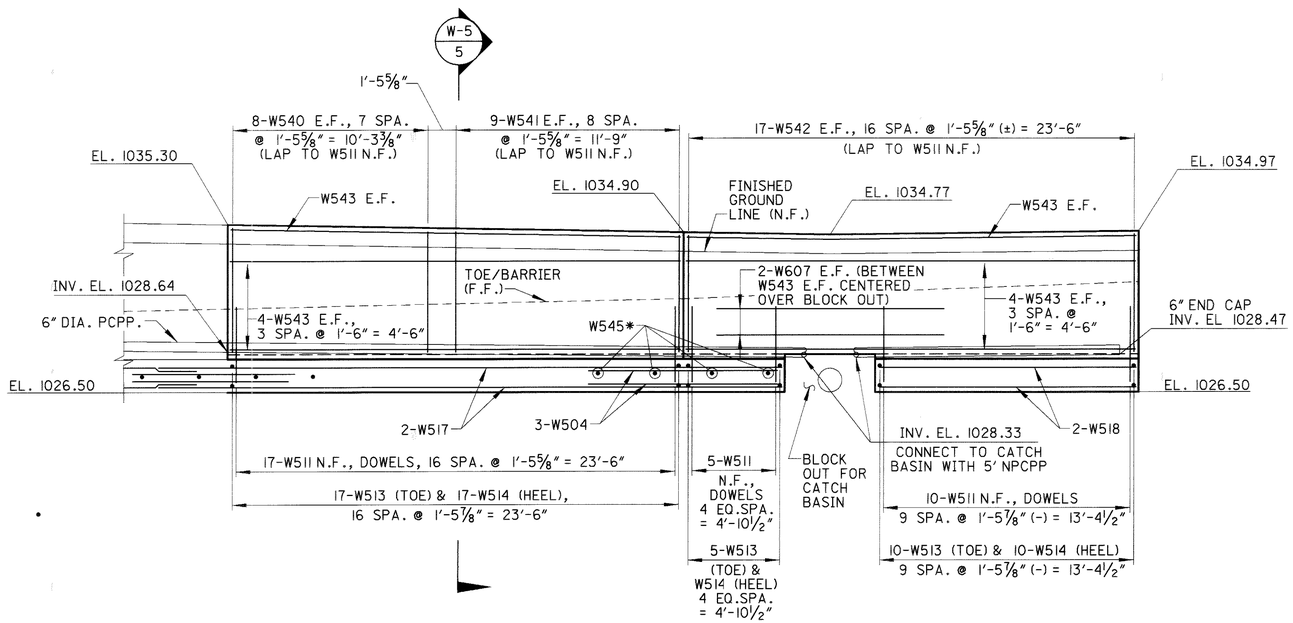

* #5 bars @ 3'-0" (±) c/c TO SUPPORT ADDITIONAL LONGITUDINAL REINFORCEMENT AT JOINTS

ELEVATION

FOR NOTES SEE SHEET 677.

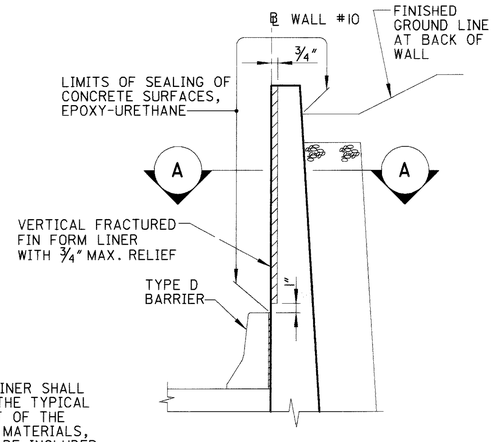

TYPICAL WALL TREATMENT

ITEM SPECIAL - FORM LINER

A VERTICAL FRACTURED FIN FORM LINER SHALL BE PROVIDED WHERE INDICATED BY THE TYPICAL WALL TREATMENT DETAIL. THE COST OF THE FORM LINER, INCLUDING ALL LABOR, MATERIALS, EQUIPMENT AND INCIDENTALS SHALL BE INCLUDED WITH THE UNIT PRICE BID, PER SQUARE FOOT FOR ITEM SPECIAL, FORM LINER.

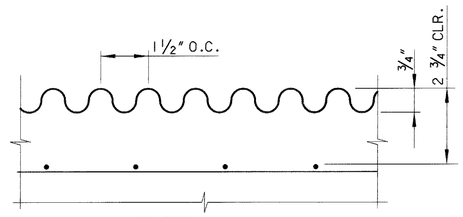

SECTION A-A

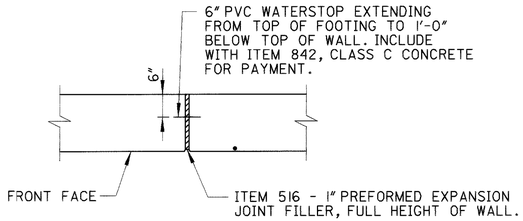

EXPANSION JOINT DETAIL

PVC WATERSTOP

A PVC WATERSTOP, NOMINAL DIMENSIONS 6" x⅛" THICK AND CAPABLE OF PROVIDING 1½" MOVEMENT, SHALL BE PROVIDED AT CONTRACTION AND EXPANSION JOINTS.

THE WATERSTOP SHALL EXTEND FROM THE TOP OF FOOTING TO 1'-0" BELOW TOP OF WALL.

THE WATERSTOP SHALL BE SECURELY HELD IN PLACE DURING CONCRETE PLACEMENT.

INCLUDE WITH ITEM 842, CLASS C CONCRETE FOR PAYMENT.

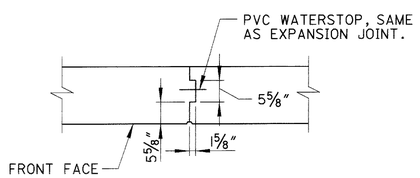

CONTRACTION JOINT DETAIL

REVISIONS: 05/15/2002 by AGW

DLZ
1000 ROCKEFELLER BLDG • 614 W SUPERIOR AVE • CLEVELAND, OH 44113

DESIGNED	DRAWN	REVIEWED	DATE
DP	DP	GWM	6/11/01
CHECKED	REVISED	STRUCTURE FILE NUMBER	
JWB			

SEGMENTS 6 AND 7
RETAINING WALL #10
ALONG RAMP L1 STA. 85+16.17 TO STA. 87+24.25

SUM-8-0.63

4 / 6

676
1088

02:26:37 PM
06/12/2002
u:\00-010sr-81\civil\walls\wall10-detail.dgn

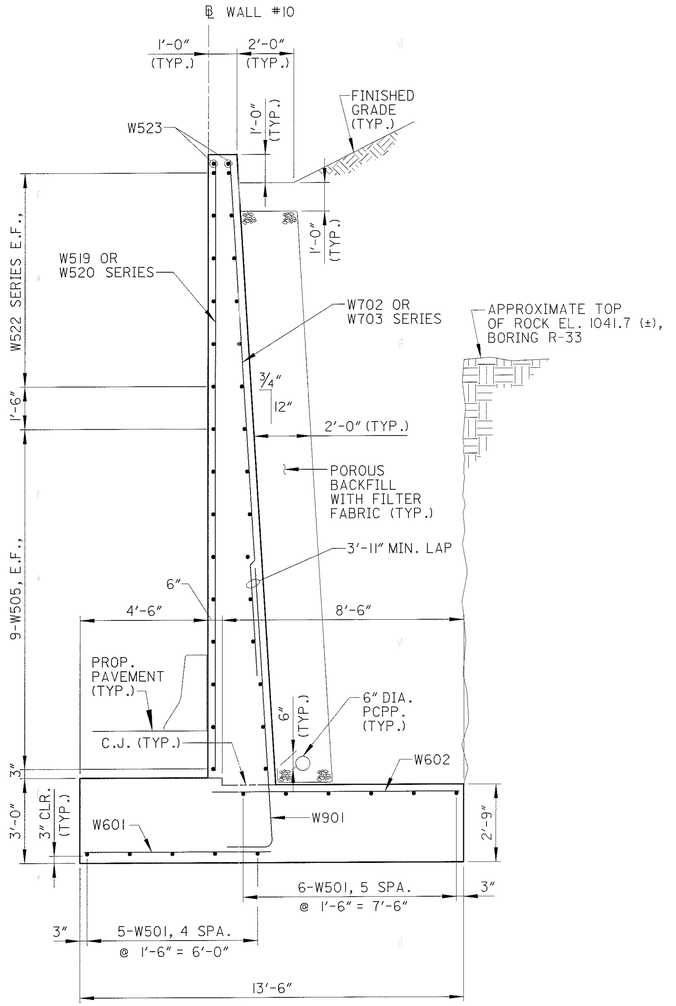

SECTION W-1 / 2

SEGMENT 1
LEFT SIDE OF BLOCK OUT

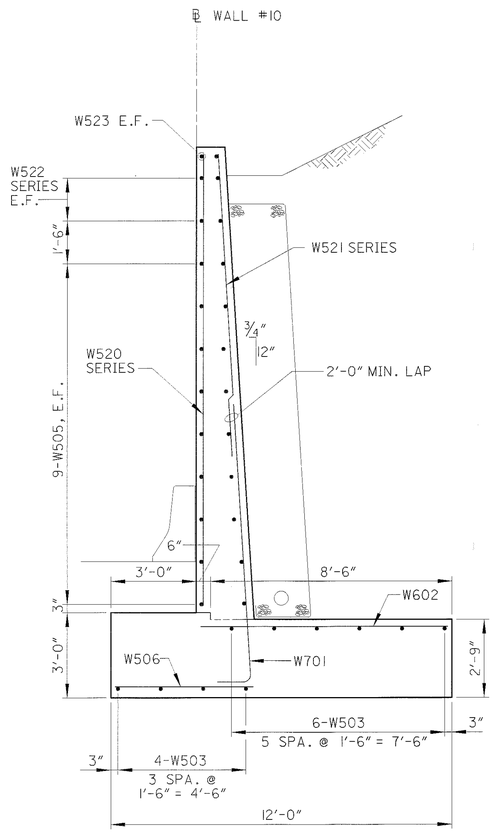

SECTION W-2 / 2

SEGMENT 1
RIGHT SIDE OF BLOCK OUT

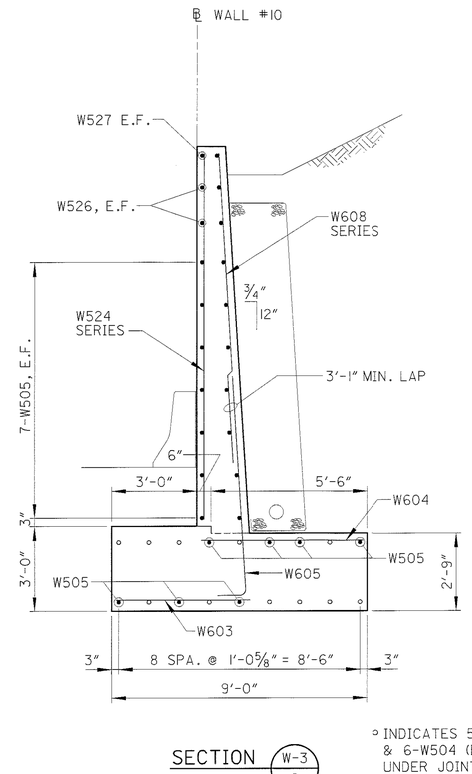

SECTION W-3 / 2

SEGMENT 2

° INDICATES 5-W504 (TOP) & 6-W504 (BOT.) CENTERED UNDER JOINT BETWEEN SEGMENTS 1 & 2

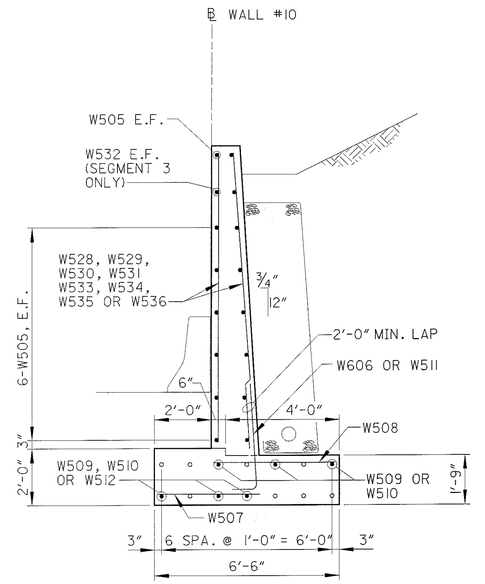

° INDICATES 4-W504 (TOP) & 4-W512 (BETWEEN SEGMENTS 2 & 3) OR 4-W504 (BETWEEN SEGMENTS 3 & 4) (TOP & BOT.) CENTERED UNDER JOINT

SECTION W-4 / 2-3

SEGMENTS 3 & 4

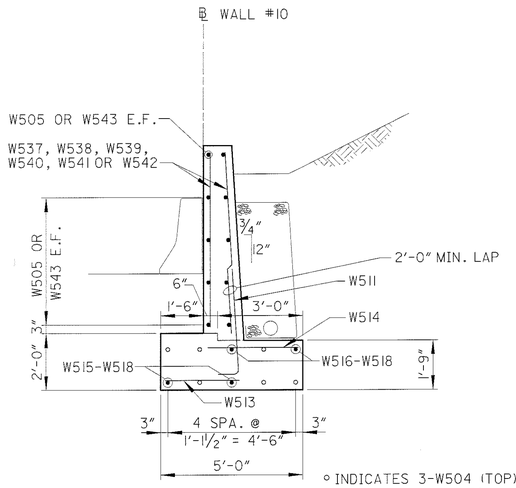

° INDICATES 3-W504 (TOP) & 3-W515 (BETWEEN SEGMENTS 4 & 5) OR 3-W504 (BETWEEN SEGMENTS 5 & 6 OR SEGMENTS 6 & 7) (TOP & BOT.) CENTERED UNDER JOINT

SECTION W-5 / 3-4

SEGMENTS 5-7

NOTES

1. POROUS BACKFILL WITH FILTER FABRIC, 2 FEET THICK, SHALL EXTEND UP TO 1 FOOT BELOW THE EMBANKMENT SURFACE AND LATERALLY FOR THE FULL LENGTH OF THE RETAINING WALL.
2. 6" PERFORATED CORRUGATED PLASTIC PIPE, AS PER PLAN, SHALL INCLUDE A 6" END CAP AS DETAILED IN THE PLANS.
3. MEMBRANE WATERPROOFING, TYPE 2, SHALL BE INSTALLED IN ACCORDANCE WITH ITEM 516. ALL COSTS SHALL BE INCLUDED FOR PAYMENT WITH ITEM 842, CLASS C CONCRETE, AS PER PLAN.
4. 2" PEJF BETWEEN WALL FOOTING AND CATCH BASIN(S) SHALL BE INCLUDED FOR PAYMENT WITH ITEM 842, CLASS C CONCRETE, FOOTING, AS PER PLAN. FOR DETAILS OF PEJF BETWEEN WALL AND BARRIER INLET, SEE DRAINAGE DETAILS SHEET 597.
5. FOR DETAILS OF CONTRACTION JOINT AND EXPANSION JOINT, SEE SHEET 676.
6. FOR CONVERSION OF UNITS FROM METRIC STANDARD DRAWINGS, SEE SHEET 30.

DLZ
1000 ROCKEFELLER BLDG • 614 W SUPERIOR AVE • CLEVELAND, OH 44113

DESIGNED	DRAWN	REVIEWED	DATE
DP	MWD	GWM	6/11/01
CHECKED	REVISED	STRUCTURE FILE NUMBER	
JWB			

WALL SECTIONS
RETAINING WALL #10
ALONG RAMP L1 STA. 85+16.17 TO STA. 87+24.25

SUM-8-0.63

ESTIMATED QUANTITIES

ITEM	ITEM EXTENSION	TOTAL	UNIT	DESCRIPTION	SHEET REF.
503	21100	61	CU. YD.	UNCLASSIFIED EXCAVATION	
503	31100	535	CU. YD.	ROCK EXCAVATION	
516	13600	102	SQ. FT.	1" PREFORMED EXPANSION JOINT FILLER	
518	21201	129	CU. YD.	POROUS BACKFILL WITH FILTER FABRIC, AS PER PLAN	5
518	40001	195	LIN. FT.	6" PERFORATED CORRUGATED PLASTIC PIPE, AS PER PLAN	5
518	40010	17	LIN. FT.	6" NON-PERFORATED CORRUGATED PLASTIC PIPE,	
				INCLUDING SPECIALS	
SPECIAL	53013000	1060	SQ. FT.	FORM LINER *	4
842	46001	111	CU. YD.	CLASS C CONCRETE, AS PER PLAN	5
842	46501	125	CU. YD.	CLASS C CONCRETE, FOOTING, AS PER PLAN	5
864	10100	167	SQ. YD.	SEALING OF CONCRETE SUFACES (EPOXY-URETHANE)	

* 100% LOCAL COST

REINFORCING STEEL LIST

MARK	NUMBER	LENGTH	WEIGHT (LBS.)	TYPE	DIMENSIONS A	DIMENSIONS B	DIMENSIONS C	SER INC.
W501	11	12'-9"	146	STR				
W502	12	11'-8"	146	STR				
W503	10	13'-10"	144	STR				
W504	38	10'-0"	396	STR				
W505	79	31'-7"	2602	STR				
W506	28	5'-0"	146	STR				
W507	43	3'-6"	157	STR				
W508	43	4'-3"	191	STR				
W509	6	20'-8"	129	STR				
W510	6	38'-11"	244	STR				
W511	54	4'-9"	268	11	0'-10"	4'-0"	0'-3"	
W512	7	10'-10"	79	12	7'-0"	2'-9"	2'-9"	
W513	54	2'-9"	155	STR				
W514	54	3'-3"	183	STR				
W515	5	10'-2"	53	12	7'-0"	2'-3"	2'-3"	
W516	4	30'-0"	125	STR				
W517	4	33'-2"	138	STR				
W518	4	13'-6"	56	STR				
W519	2	22'-10"	48	STR				
	1	13'-9"						
W520	SER		381	STR				0'-5 11/16"
	20	22'-9"						
	1	8'-5"						
W521	SER		298	STR				0'-2"
	27	12'-9"						
	2	8'-2"						
W522	SER		248	STR				4'-8"
	6	31'-6"						
W523	2	33'-1"	69	12	0'-9 1/4"	30'-6 3/4"	2'-5"	
	1	10'-4"						
W524	SER		275	STR				0'-1 7/8"
	22	13'-8"						
W525	4	8'-6"	35	STR				
W526	4	29'-0"	121	STR				
W527	2	31'-9"	66	STR				
W528	10	9'-7"	100	STR				
W529	12	9'-3"	116	STR				
W530	12	8'-11"	112	STR				
W531	10	8'-7"	90	STR				
W532	2	17'-0"	35	STR				
W533	10	8'-6"	89	STR				
W534	12	8'-4"	104	STR				
W535	12	8'-2"	102	STR				
W536	10	8'-0"	83	STR				
W537	14	6'-11"	101	STR				
W538	16	6'-8"	111	STR				
W539	14	6'-6"	95	STR				
W540	16	6'-4"	106	STR				
W541	18	6'-2"	116	STR				
W542	34	6'-0"	213	STR				
W543	20	23'-7"	492	STR				
W544	8	6'-0"	50	STR				
W545	12	4'-6"	56	STR				
W601	26	6'-7"	257	STR				
W602	74	8'-9"	973	STR				
W603	22	4'-9"	157	STR				
W604	22	6'-0"	198	STR				
W605	43	8'-11"	576	11	1'-0"	8'-1"	0'-6"	
W606	43	4'-10"	312	11	1'-0"	4'-0"	0'-3"	
W607	10	12'-0"	180	STR				
	1	8'-2"		STR				
W608	SER		328	STR				0'-2"
	22	11'-8"						
W701	27	11'-1"	612	11	1'-2"	10'-1"	0'-8"	
W702	6	19'-9"	242	STR				
	1	14'-9"						
W703	SER		1093	STR				0'-2"
	31	19'-9"						
W901	37	11'-5"	1436	11	1'-7"	10'-1"	0'-8"	
		TOTAL =	15434	LBS.				

BENDING DIAGRAMS

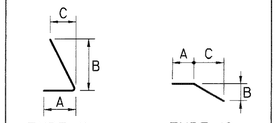

REINFORCING STEEL NOTES

1. SERIES BARS - EACH BAR VARIES BY TABULATED AMOUNT.
2. ALL DIMENSIONS ARE OUT TO OUT.
3. TYPE 'STR' INDICATES A STRAIGHT BAR.
4. THE BAR SIZE NUMBER IS SPECIFIED IN THE 'MARK' COLUMN. THE FIRST DIGIT INDICATES THE BAR SIZE NUMBER. FOR EXAMPLE, W501 IS A #5 BAR SIZE.
5. ALL BARS SHALL BE EPOXY COATED UNLESS NOTED OTHERWISE.
6. SUBTOTALS AND TOTAL WEIGHTS ARE FOR INFORMATIONAL PURPOSES ONLY. IF THE REINFORCING LIST PROVIDED IN THE PLANS IS USED IT SHALL BE VERIFIED BY THE CONTRACTOR. ANY REVISIONS IN THE REINFORCING STEEL LIST AS SHOWN IN THE PLANS WILL NOT BE REASON FOR ADJUSTMENT IN THE BID PRICE FOR STRUCTURAL CONCRETE.

REVISIONS: 05/15/2002 by AGW

DLZ
1000 ROCKEFELLER BLDG • 614 W SUPERIOR AVE • CLEVELAND, OH 44113

DESIGNED	DRAWN	REVIEWED	DATE
DP	DP	GWM	6/11/01
CHECKED	REVISED	STRUCTURE FILE NUMBER	
JWB			

REINFORCING STEEL LIST AND QUANTITIES
RETAINING WALL #10
ALONG RAMP L1 STA. 85+16.17 TO STA. 87+24.25

SUM-8-0.63

6 / 6

678
1088

04:10:25 PM
07/09/2002
u:\00-0\0SR-8\1\Civil\Walls\wall10-detail.dgn

CALCULATED JDS CHECKED EDS

GENERAL NOTES

SUM-8-0.63

679
1088

WATERWORK NOTES

GENERAL

UNLESS OTHERWISE SHOWN OR INDICATED, ALL WATER WORK SHALL BE CONSTRUCTED IN ACCORDANCE WITH THE CITY OF AKRON CONSTRUCTION AND MATERIAL SPECIFICATIONS (CMS), 1999 EDITION.

WATER MAIN PIPE SHALL BE CLASS 53 DUCTILE IRON PER AWWA C151 SPECIFICATIONS, WITH CEMENT-LINING PER AWWA C104. LABELED POLETHYENE ENCASEMENT PER AWWA C105 IS REQUIRED. PIPE AND FITTINGS SHALL HAVE MANUFACTURERS EXTERIOR BITUMASTIC COATING.

PIPE JOINTS SHALL BE PUSH-ON JOINTS (TYTON, BELL-TITE, ETC.) PER AWWA C151 SPECIFICATIONS, COMPLETE WITH GASKETS, LUBRICANTS, AND BRASS WEDGES (TWO PER JOINT FOR UP TO 8-INCH SIZE PIPE AND FOUR PER JOINT FOR LARGER PIPE). GASKETS SHALL CONFORM TO AWWA C111.

FITTINGS SHALL BE CLASS 350 DUCTILE IRON FULL WALL THICKNESS CASTING PER AWWA C110 (THIN WALL OR COMPACT FITTINGS PER AWWA C153 ARE NOT ACCEPTABLE). FITTINGS SHALL HAVE PUSH-ON OR MECHANICAL JOINT ENDS WITH DUCTILE FOLLOWER GLAND ENDS.

HYDRANTS SHALL COMPLY WITH CITY OF AKRON CMS ITEM 260, AND SHALL BE AKRON-STYLE MUELLER "CENTURIAN" MODEL A-423, AKRON-STYLE KENNEDY "GUARDIAN" MODEL K-81A, OR AKRON-STYLE AMERICAN FLOW CONTROL MODEL 6" B84B, WITH MECHANICAL OR TYTON INLETS WITH RESTRAINING GASKET. THREADS SHALL BE AKRON STYLE AS SHOWN ON F-3258 AND F-3440.

GATE VALVES, 4-INCH THROUGH 12-INCH, SHALL COMPLY WITH CITY OF AKRON CMS ITEM 715.06. VALVES SHALL BE RESILIENT SEAT WEDGE (RSW) VALVES WITH RESTRAINED MECHANICAL JOINTS. ALL VALVES SHALL HAVE NON-RISING STEMS AND SHALL OPEN TO THE RIGHT (CLOCKWISE).

BUTTERFLY VALVES, 16" AND LARGER, SHALL BE RESTRAINED MECHANICAL JOINT OR SHOULDERED (NOT GROOVED) VITAULIC ENDS WITH STYLE 44N COUPLINGS AND STAINLESS STEEL 316 BOLTS. RUBBER SEALS MUST BE REPLACEABLE. FLANGED ENDS OR WAFER STYLE VALVES ARE NOT ACCEPTABLE.

VALVE BOXES: ONLY BIBBY OR BINGHAM AND TAYLOR BRANDS ARE ACCEPTABLE FOR COMPATIBILITY.

MECHANICAL JOINT T-HEAD BOLTS; ALL MECHANICAL JOINTS SHALL BE MADE WITH CONSTRUCTION GRADE DUCTILE IRON, COR-TEN STEEL, OR PASSIVATED STAINLESS STEEL 316 BOLTS STAMPED "B8M".

RESTRAINED PIPING SYSTEMS SHALL BE PUSH-ON JOINT WITH FIELD LOCK (4"-12" ONLY) OR FAST GRIP GASKETS (4"-12" ONLY), OR MECHANICAL JOINTS WITH RESTRAINED FOLLOWER GLANDS AND ZINC ANODE CAPS ON EVERY OTHER BOLT. SUPER LOCK, TR FLEX, OR FLEX-RING SHALL BE REQUIRED FOR 16 INCH OR LARGER PIPE DIAMETERS.

RESTRAINED JOINTS SHALL BE INSTALLED FOR A MINIMUM LENGTH OF 30-FT. ON EACH SIDE OF A VALVE OR FITTING. ALL VALVES, BENDS, OFFSETS, HYDRANTS INLETS, CAPS, PLUGS, AND BRANCHES OF TEES AND WYES MUST BE RESTRAINED USING FIELD LOCK (4"-12" ONLY), OR FAST-GRIP (4"-12" ONLY) RESTRAINING GASKETS OR RESTAINED FOLLOWER GLANDS. CONRETE THRUST BLOCKING SHALL BE INSTALLED IN ADDITION TO RESTRAINING THE JOINTS.

ALL NEW WATER MAINS SHALL BE COMPLETELY WRAPPED WITH POLYETHYLENE ENCASEMENT AS SPECIFIED IN AWWA C105, LATEST EDITION. WRAPPING SHALL BE WITNESSED BY THE CITY OF AKRON.

WATER MAINS SHALL BE TAPPED AND COPPER SERVICE LINES SHALL BE INSTALLED IN ACCORDANCE WITH AKRON CMS ITEM 266. NO TAPS FOR WATER SERVICE SHALL BE MADE UNTIL AFTER THE WATER MAIN HAS BEEN PRESSURE TESTED AND STERILIZED.

BEFORE ACCEPTANCE, WATER MAINS SHALL BE PRESSURE TESTED IN ACCORDANCE WITH AWWA C600, LATEST EDITION, AND DISINFECTED IN ACCORDANCE WITH AWWA C651, LATEST EDITION.

THE CONTRACTOR SHALL SUPPLY A TEMPORARY, SAFE WATER SERVICE TO ALL USERS THAT WILL HAVE THEIR WATER SERVICE INTERRUPTED BY CONSTRUCTION.

THE USE OF CRUSHED AIR COOLED BLAST FURNACE SLAG FOR PIPE BEDDING. PIPE COVER, OR BACKFILL WILL NOT BE PERMITTED.

LOCATIONS AND DIMENSIONS OF EXISTING UTILITIES SHOWN ON THE DRAWINGS HAVE BEEN OBTAINED FROM EXISTING RECORDS AND FIELD SURVEYS, AND DO NOT NECESSARILY REPRESENT AS-BUILT CONDITIONS. THE CONTRACTOR SHALL BE RESPONSIBLE FOR FIELD LOCATING EXISTING MAINS AND UTILITIES IN ACCORDANCE WITH CITY OF AKRON CMS ITEM 251.24.

THE CONTRACTOR SHALL CONTACT MR. GREG WYSIN OF THE CITY OF AKRON WATER DEPARTMENT (1-330-375-2420) AT LEAST 48 HOURS IN ADVANCE OF BEGINNING ANY WATER WORK ON THIS PROJECT.

ALL CONNECTIONS TO EXISTING WATER MAINS SHALL BE SCHEDULED WITH THE CITY OF AKRON WATER DEPARTMENT AT LEAST 48 HOURS IN ADVANCE OF THE WORK. THE CITY MAY REQUIRE THAT THESE CONNECTIONS BE PERFORMED DURING OFF-PEAK HOURS SUCH AS NIGHTS, EARLY MORNINGS, AND/OR WEEKENDS. NO ADDITIONAL PAYMENT SHALL BE MADE TO THE CONTRACTOR FOR PERFORMING SUCH WORK DURING OFF-HOURS.

AFTER THE INSTALLATION OF THE PROPOSED WATER MAIN IS COMPLETE AND AFTER THE LINE HAS PASSED THE BACTERIA TEST AND PRESSURE TESTING, THE CONTRACTOR IS TO ASSIST PUBLIC UTILITIES IN THE TRANSFER OF WATER SERVICES FROM THE OLD WATER MAIN TO THE NEW MAIN. WHILE TRANSFERRING WATER SERVICES, THE CONTRACTOR IS RESPONSIBLE FOR THE EXCAVATION REQUIRED TO EXPOSE THE WATER SERVICE AT THE RIGHT-OF-WAY AND AT THE NEW MAIN WITH A TYPICAL 3'x5' TRENCH.

NO TAPS FOR WATER SERVICES SHALL BE MADE UNTIL AFTER THE MAINLINE HAS BEEN TESTED AND STERILIZED. ALL TAPS 2" AND SMALLER SHALL BE MADE BY THE CITY OF AKRON. THE CONTRACTOR SHALL BE RESPONSIBLE FOR ALL EXCAVATION TO ASSIST CITY OF AKRON PUBLIC UTILITIES IN THE INSTALLATION OF NEW AND RENEWED COPPER SERVICES ON EXISTING WATER MAINS.

ALL UNUSED OR REMOVED FITTINGS AND PIPE SHALL BE DELIVERED TO THE CITY OF AKRON, WATER DISTRIBUTION BUILDING AT 565 SOUTH JOHNSTON ST., AKRON, OHIO.

CLEARANCES

THE CONTRACTOR SHALL MAINTAIN A 12-INCH MINIMUM VERTICAL CLEARANCE FROM THE EDGE OF ALL WATER MAINS TO THE EDGE OF ALL STORM SEWER PIPES AND/OR INLET CONNECTION PIPES WHERE THEY CROSS.

THE CONTRACTOR SHALL MAINTAIN A 4-FOOT MINIMUM HORIZONTAL CLEARANCE FROM THE EDGE OF ALL WATER MAINS TO THE EDGE OF ALL STORM SEWER PIPES AND STORM SEWER MANHOLES.

THE CONTRACTOR SHALL MAINTAIN A 10-FOOT MINIMUM HORIZONTAL CLEARANCE FROM THE EDGE OF ALL WATER MAINS TO THE EDGE OF ALL SANITARY SEWERS AND/OR FORCE MAIN PIPES.

THE CONTRACTOR SHALL MAINTAIN AN 18-INCH MINIMUM VERTICAL CLEARANCE FROM THE EDGE OF ALL WATER MAINS AND/OR SERVICE LINES TO THE EDGE OF ALL SANITARY SEWER PIPES WHERE THEY CROSS.

THE CONTRACTOR SHALL MAINTAIN A 12-INCH MINIMUM VERTICAL CLEARANCE AND A 36-INCH MINIMUM HORIZONTAL CLEARANCE FROM THE EDGE OF ALL WATER MAIN PIPE TO THE EDGE OF ALL DIRECT BURIAL CONDUITS, CONCRETE ENCASED ELECTRICAL CONDUITS, LIGHT POLE BASES, AND HAND HOLE PULL BOXES.

THE CONTRACTOR SHALL MAINTAIN A 12-INCH MINIMUM VERTICAL CLEARANCE AND A 36-INCH MINIMUM HORIZONTAL CLEARANCE FROM THE EDGE OF ALL WATER MAINS TO THE EDGE OF ALL GAS MAINS AND SERVICES.

CONSTRUCTION SEQUENCE

THE WATER WORK SHALL BE CONSTRUCTED GENERALLY IN ACCORDANCE WITH THE FOLLOWING RECOMMENDED CONSTRUCTION SEQUENCES:

GOODKIRK ST. BETWEEN BUCHTEL AVE. AND MARKET ST.

DURING CONSTRUCTION OF THE PROPOSED 12" WATER MAIN BETWEEN BUCHTEL AVE. AND MARKET ST., BOTH VALINDA PLACE AND MELL AVE. WATER MAINS SHALL REMAIN IN SERVICE AT ALL TIMES. THE CONTRACTOR SHALL INSTALL AND MAINTAIN TEMPORARY WATER MAINS FROM MARKET ST. TO SERVE VALINDA PLACE AND MELL AVE.. THE GENERAL RECOMMENDED CONSTRUCTION SEQUENCE IS AS FOLLOWS:

1. EXISTING WATER MAIN ON KIRKWOOD MUST REMAIN IN SERVICE UNTIL REPLACEMENT WATER MAIN IS IN SERVICE (COMPLETION OF ITEM 4 BELOW).
2. CONSTRUCT PROPOSED WATER MAIN ON GOODKIRK STREET BETWEEN VALINDA PLACE AND MARKET STREET, INCLUDING 18 FEET SOUTH OF PROPOSED VALVE AT STATION 230+96, PROPOSED 12"-45° BEND @ STATION 232+36.5 AND PROPOSED 6" VALINDA CONNECTION BETWEEN 12" WATER MAIN AND 22.5 DEGREE BEND AT STATION 230+99.5, 29.3' LT. WITH TEMPORARY END CAPS/PLUGS, BUT DO NOT CONNECT TO THE EXISTING WATER MAINS
3. CONSTRUCT TEMPORARY 12" WATER MAIN WEST OF PROPOSED RETAINING WALL FROM THE END OF THE NEW 12 INCH WATER MAIN AT VALINDA PLACE AT STATION 230+77± TO MELL AVENUE WITH TEMPORARY END CAPS/PLUGS.
4. CONDUCT HYDROSTATIC PRESSURE TEST, DISINFECTION AND BACTERIA TESTING OF PROPOSED WATER MAIN BETWEEN VALINDA PLACE AND MARKET STREET AND TEMPORARY 12 INCH WATER MAIN BETWEEN VALINDA PLACE AND MELL AVENUE.
5. AFTER COMPLETION OF SUCCESSFUL TESTS, REMOVE TEMPORARY END CAPS/PLUGS AND MAKE SIMULTANEOUS CONNECTIONS TO EXISTING WATER MAIN AT VALINDA PLACE AND AT MARKET STREET, AND THE TEMPORARY CONNECTION AT MELL AVENUE.
6. INSTALL PROPOSED WATER MAIN BETWEEN BUCHTEL AVENUE INCLUDING 12" VALVES AT STATION 220+45 TO 12"x12" TEE AT MELL AVENUE (STATION 226+15) AND MELL AVENUE INCLUDING 12" WATER MAIN ALONG MELL AVENUE BETWEEN GOODKIRK STREET AND THE GATE VALVE AT STATION 0+87.3, 16.0 RT., BUT DO NOT CONNECT WATER MAIN IN BUCHTEL AVENUE OR IN MELL AVENUE, INSTALL TEMPORARY END CAPS/PLUGS ON EITHER END.
7. CLOSE 12" GATE VALVE AT STATION 0+87.3, 16.0' RT. CONDUCT HYDROSTATIC PRESSURE TEST AND DISINFECTION AND BACTERIA TESTING OF PROPOSED WATER MAIN BETWEEN BUCHTEL AVENUE AND MELL AVENUE AND AT BUCHTEL AVENUE, INCLUDING MELL AVENUE.
8. AFTER COMPLETION OF SUCCESSFUL TESTS, CONNECT PROPOSED WATER MAIN TO EXISTING WATER MAIN AT MELL AVENUE AND AT BUCHTEL AVENUE.
9. DISCONNECT AND REMOVE THE TEMPORARY 12 INCH WATER MAIN BETWEEN VALINDA PLACE AND MELL AVENUE.
10. CONSTRUCT WATER MAIN WITH TEMPORARY END CAPS/PLUGS ON GOODKIRK ST. BETWEEN VALINDA (STATION 230+77) AND MELL AVENUE (STATION 226+15).
11. CONDUCT HYDROSTATIC PRESSURE TESTING, DISINFECTION AND BACTERIA TESTING OF THE NEW WATER MAIN.
12. MAKE CONNECTION AT NORTH SIDE OF 12"x12" TEE AT MELL AVENUE (STATION 226+15.1)
13. RESTORE WATER FLOWS AND PLACE ENTIRE WATER MAIN INTO SERVICE.

CALCULATED JDS CHECKED EDS

CONSTRUCTION SEQUENCE (CONTINUED)

GOOD ST. BETWEEN FORGE ST. AND PERKINS ST.:

1. AFTER WATER SERVICE IS SHUT OFF ON GOOD ST. BETWEEN FORGE ST. AND PERKINS ST., CONSTRUCT PROPOSED WATER MAIN ALONG GOODKIRK ST. BETWEEN STATIONS 245+00 AND 245+94. REMOVE EXISTING WATER MAIN IN THIS SAME REACH.
2. CONSTRUCT TEMPORARY END CAP, CONDUCT HYDROSTATIC PRESSURE TEST, AND DISINFECT PROPOSED WATER MAIN BETWEEN STATIONS 245+00 AND 245+94.
3. PLACE PROPOSED WATER MAIN INTO SERVICE BETWEEN STATIONS 245+00 AND 245+94.
4. REMOVE AND/OR ABANDON EXISTING WATER MAIN ALONG GOOD ST. BETWEEN STATIONS 237+67.1 AND 245+00, AS SHOWN ON THE DRAWINGS.
5. AFTER WATER SHUT-OFF, INSTALL TEMPORARY END CAP AT PARKWOOD CT., STA. 2+90. RESTORE WATER SERVICE ON PARKWOOD CT. REMOVE AND/OR ABANDON EXISTING WATER MAIN ON PARKWOOD CT. BETWEEN STATIONS 2+90 AND 4+79.
6. CONSTRUCT PROPOSED WATER MAIN ON PARKWOOD CT. AND ALONG GOODKIRK ST. BETWEEN FORGE STREET AND STA. 245+00. DO NOT CONNECT TO EXISTING MAINS.
7. CONSTRUCT TEMPORARY END CAPS, CONDUCT HYDROSTATIC PRESSURE TEST, AND DISINFECT PROPOSED WATER MAIN.
8. AFTER WATER SHUT-OFF, MAKE CONNECTIONS AT FORGE ST. AND AT PARKWOOD CT.
9. RESTORE WATER FLOW AND PLACE PROPOSED MAIN INTO SERVICE.

FOUNTAIN ST. BETWEEN CARROLL ST. AND BUCHTEL AVE.

1. CONSTRUCT PROPOSED WATER MAIN ON CARROLL ST. BETWEEN STATIONS 15+18 AND 16+02. CONSTRUCT PROPOSED WATER MAIN ON FOUNTAIN ST. BETWEEN STATIONS 315+25.5 AND 315+60. DO NOT MAKE CONNECTIONS TO EXISTING WATER MAIN.
2. CONSTRUCT TEMPORARY END CAPS, CONDUCT HYDROSTATIC PRESSURE TEST, AND DISINFECT PROPOSED WATER MAIN SECTIONS CONSTRUCTED IN STEP 1.
3. AFTER WATER SHUT-OFF, MAKE CONNECTIONS TO EXISTING WATER MAIN ON CARROLL ST. (2 PLACES) AND CLOSE VALVE AT STA. 315+60.
4. RESTORE WATER FLOW AND PLACE PROPOSED MAIN CONSTRUCTED IN STEP 1 INTO SERVICE.
5. REMOVE AND/OR ABANDON EXISTING WATER MAIN ALONG FOUNTAIN ST., AS SHOWN ON THE DRAWINGS.
6. CONSTRUCT REMAINING WATER MAIN ON FOUNTAIN ST. AND ON BUCHTEL AVE. DO NOT CONNECT TO EXISTING MAIN.
7. CONSTRUCT TEMPORARY END CAPS, CONDUCT HYDROSTATIC PRESSURE TEST, AND DISINFECT PROPOSED WATER MAIN SECTIONS CONSTRUCTED IN STEP 6.
8. AFTER WATER SHUT-OFF, MAKE CONNECTIONS TO EXISTING WATER MAIN ON BUCHTEL AVE. AND PLACE PROPOSED WATER MAIN INTO SERVICE.

FOUNTAIN ST. BETWEEN OHIO ST. AND PERKINS ST.

1. CONSTRUCT PROPOSED WATER MAIN ON FOUNTAIN ST., EXCEPT FOR CONNECTIONS TO EXISTING MAIN NEAR OHIO ST. AND NEAR PERKINS ST.
2. CONSTRUCT TEMPORARY END CAPS, CONDUCT HYDROSTATIC PRESSURE TEST, AND DISINFECT PROPOSED WATER MAIN.
3. AFTER WATER SHUT-OFF, REMOVE TEMPORARY END CAPS AND MAKE CONNECTIONS TO EXISTING WATER MAIN.
4. RESTORE WATER FLOW AND PLACE PROPOSED MAIN INTO SERVICE.
5. REMOVE AND/OR ABANDON EXISTING WATER MAIN ON ALONG FOUNTAIN ST., AS SHOWN ON THE DRAWINGS.

MARKET ST. BRIDGE AREA

1. CONSTRUCT PROPOSED TEMPORARY WATER MAIN ON THE NORTH SIDE OF MARKET ST. DURING THE FIRST PHASE OF THE BRIDGE RECONSTRUCTION. CONSTRUCT ENTIRE MAIN, EXCEPT FOR CONNECTIONS TO EXISTING MAIN ON EACH SIDE OF THE BRIDGE.
2. CONSTRUCT TEMPORARY END CAPS, CONDUCT HYDROSTATIC PRESSURE TEST, AND DISINFECT PROPOSED TEMPORARY WATER MAIN.
3. AFTER WATER SHUT-OFF, REMOVE TEMPORARY END CAPS AND MAKE CONNECTIONS TO EXISTING WATER MAIN.
4. RESTORE WATER FLOW AND PLACE PROPOSED TEMPORARY WATER MAIN INTO SERVICE.
5. DURING THE SECOND PHASE OF THE BRIDGE RECONSTRUCTION, CONSTRUCT PROPOSED 16" WATER MAIN, EXCEPT FOR CONNECTIONS TO EXISTING WATER MAIN ON EACH SIDE OF THE BRIDGE.
6. CONSTRUCT TEMPORARY END CAPS, CONDUCT HYDROSTATIC PRESSURE TEST, AND DISINFECT PROPOSED 16" WATER MAIN
7. AFTER WATER SHUT-OFF REMOVE TEMPORARY END CAPS AND MAKE CONNECTIONS TO EXISTING WATER MAIN
8. REMOVE THE TEMPORARY WATER MAIN AS SHOWN ON THE DRAWINGS.

UNDERGROUND INSULATION

UNDERGROUND PIPE INSULATION AT THE MARKET ST. BRIDGE ABUTMENTS SHALL BE "DRITHERM" AS MANUFACTURED BY DRITHERM, INC., PARSIPPANY, NJ. INSULATION SHALL BE INSTALLED PER THE MANUFACTURER'S WRITTEN INSTRUCTIONS.

OPERATING VALVES

THE OPERATION OF ANY EXISTING WATER VALVE (OPENING OR CLOSING) SHALL BE PERFORMED ONLY BY THE CITY OF AKRON. THE CONTRACTOR SHALL PROVIDE THE CITY A MINIMUM 48 HOUR NOTIFICATION OF HIS REQUEST TO OPEN OR CLOSE A VALVE. SYSTEM OR SEASONAL DEMANDS MAY CONTROL THE TIME OF DAY, WEEK, MONTH, OR YEAR WHEN VALVES MAY BE OPENED OR CLOSED. NO ADDITIONAL PAYMENT SHALL BE MADE TO THE CONTRACTOR FOR DELAYS CAUSED BY SYSTEM DEMANDS RELATING TO THE OPERATION OF VALVES.

CONNECTING TO EXISTING WATER MAINS

CONNECTIONS TO EXISTING WATER MAINS SHALL BE PERFORMED IN ACCORDANCE WITH AKRON CMS ITEM 263.

EXISTING SERVICE CONNECTIONS

ALL ACTIVE SERVICE CONNECTIONS WITHIN THE WATER MAIN TRENCH SHALL BE SUPPORTED ACROSS THE TRENCH AND PROTECTED. IF THESE CONNECTIONS ARE DAMAGED, THEY SHALL BE REPLACED IN KIND. THE COST FOR SUPPORTING OR REPLACING THE SERVICE CONNECTIONS WITHIN THE WATER WORK LIMITS SHALL BE INCLUDED IN OTHER ITEMS OF WORK, AND NO SEPARATE MEASUREMENT OR PAYMENT SHALL BE MADE.

GENERAL NOTES

SUM-8-0.63

680
1088

ALL INACTIVE SERVICE CONNECTIONS SHALL BE ABANDONED IN PLACE OR REMOVED. THE ABANDONMENT OF INACTIVE SERVICE CONNECTIONS SHALL INCLUDE THE EXCAVATION, REMOVAL, AND DISPOSAL OF INACTIVE SERVICE BOXES.

ALL ACTIVE SERVICE CONNECTIONS THAT ARE TO BE REPLACED SHALL BE REMOVED DURING INSTALLATION OF THE PROPOSED SERVICE CONNECTIONS.

THE COST FOR ABANDONING OR REMOVING EXISTING SERVICE CONNECTIONS SHALL BE INCLUDED IN OTHER ITEMS OF WORK, AND NO SEPARATE MEASUREMENT OR PAYMENT SHALL BE MADE.

DEWATERING

THE CONTRACTOR SHALL, AT ALL TIMES DURING CONSTRUCTION, PROVIDE AND MAINTAIN AMPLE MEANS AND METHODS FOR REMOVING AND PROPERLY DISPOSING OF WATER ENTERING THE TRENCHES OR OTHER PARTS OF THE WORK. THE CONTRACTOR SHALL KEEP SAID EXCAVATIONS AS DRY AS POSSIBLE UNTIL WATER MAINS AND SERVICES HAVE BEEN INSTALLED, TESTED, AND DISINFECTED. ALL WATER PUMPED OR DRAINED FROM THE WORK SHALL BE DISPOSED OF IN A SUITABLE MANNER WITHOUT DAMAGE TO ADJACENT PROPERTY, SEWERS, UTILITIES, PAVEMENTS, ELECTRICAL CONDUITS, OR WATER MAINS. THE FULL COST OF REMOVING ALL WATER SHALL BE INCLUDED IN THE UNIT PRICES BID FOR THE VARIOUS ITEMS OF WORK, AND NO ADDITIONAL COMPENSATION SHALL BE MADE.

EXCAVATION AND PREPARATION OF TRENCH

UNLESS OTHERWISE PROVIDED, ALL EXCAVATION SHALL BE UNCLASSIFIED AND SHALL INCLUDE THE REMOVAL AND DISPOSAL OF ALL MATERIAL ENCOUNTERED IN THE EXCAVATION, INCLUDING ROCK, PAVEMENT SURFACE, PAVEMENT BASE, AND OTHER MATERIALS. IT SHALL ALSO INCLUDE THE PLACING AND REMOVAL OF SHEETING AND BRACING. ALL EXCAVATED MATERIALS SHALL BE STORED IN CONVENIENT PILES WITHIN THE CONSTRUCTION SITE, AND REMOVED FROM THE SITE OF THE WORK, UNLESS OTHERWISE SPECIFIED.

EXCAVATION AND TRENCHING SHALL BE PERFORMED IN ACCORDANCE WITH AKRON CMS ITEM 251.03. ALL TRENCHES SHALL BE EXCAVATED TO A DEPTH 6-INCHES BELOW THE BOTTOM OF THE PIPE. THE TRENCH BELOW THE BOTTOM OF THE PIPE SHALL BE BACKFILLED TO THE GRADE OF THE BOTTOM OF THE PIPE WITH PIPE BEDDING MATERIAL. HOLES SHALL BE RECESSED FOR PIPE BELLS. PIPE BEDDING MATERIAL SHALL BE COMPACTED IN ACCORDANCE WITH CITY OF AKRON CMS ITEMS 203.09 AND 203.12.

WHERE UNSTABLE OR UNSUITABLE MATERIAL IS ENCOUNTERED IN THE EXCAVATION OF THE WATER MAIN TRENCH BOTTOM, AS DETERMINED BY THE ENGINEER, SUCH MATERIAL SHALL BE REMOVED TO A DEPTH SPECIFIED BY THE ENGINEER. THE TRENCH SHALL BE REFILLED WITH CLASS B LIMESTONE BEDDING MATERIAL MEETING THE REQUIREMENTS OF AKRON CMS ITEM 551.05. HOLES SHALL BE RECESSED IN THE BEDDING MATERIAL FOR THE PIPE BELL. BEDDING MATERIAL SHALL BE COMPACTED IN ACCORDANCE WITH CITY OF AKRON CMS ITEMS 203.09 AND 203.12. SHOULD IT BE NECESSARY TO EXCAVATE MORE THAN 3 FT. BELOW THE ORIGINAL TRENCH BOTTOM, THE CONTRACTOR SHALL RECEIVE ADDITIONAL PAYMENT FOR THE EXCAVATION AND BACKFILL BELOW THE 3-FT. DEPTH.

NO BLASTING OF ROCK WILL BE PERMITTED FOR WATER MAIN CONSTRUCTION.

SHEETING AND BRACING FOR TRENCH EXCAVATION

THE CONTRACTOR SHALL FURNISH AND INSTALL SHEETING, BRACING AND/OR TRENCH BOXES AS REQUIRED TO PREVENT ANY CAVING OR SETTLING OF THE EXCAVATION OR TRENCH WALLS. THE TYPE AND AMOUNT OF SUCH PROTECTION SHALL BE CONSISTENT WITH THE MAGNITUDE OF THE WORK AND THE CHARACTER OF THE MATERIAL IN WHICH THE EXCAVATION IS MADE, AND SHALL BE IN ACCORDANCE WITH THE LATEST OSHA REGULATIONS.

WHEN THE BACKFILL IS HIGH ENOUGH TO REMOVE SHEETING, BRACING, AND/OR TRENCH BOXES WITH SAFETY, THE SHEETING AND/OR TRENCH BOXES SHALL BE REMOVED IN SUCH A MANNER AS TO PREVENT DAMAGE BY CAVING OF THE TRENCH WALLS OR UNDERMINING OF THE WATER PIPE.

WHENEVER SHEETING IS DRIVEN TO A DEPTH BELOW THE ELEVATION OF THE BOTTOM OF THE PIPE, THAT PORTION OF THE SHEETING BELOW THE TOP OF THE PIPE SHALL NOT BE DISTURBED OR REMOVED. PAYMENT FOR ALL SHEETING, BRACING, AND TRENCH BOXES SHALL BE INCLUDED IN THE UNIT PRICES BID FOR THE VARIOUS ITEMS OF WORK, AND NO ADDITIONAL COMPENSATION SHALL BE MADE.

REMOVAL OF EXCAVATED MATERIAL

ALL MATERIAL IN EXCESS OF THAT REQUIRED FOR BACKFILL AND ALL MATERIAL NOT SUITABLE OR NOT APPROVED BY THE ENGINEER FOR BACKFILL MUST BE REMOVED FROM THE SITE OF WORK AND DISPOSED OF AT OTHER LOCATIONS BY THE CONTRACTOR. THE CONTRACTOR SHALL OBTAIN PERMITS FOR SUCH DISPOSAL. THE COST OF REMOVING ALL EXCAVATED MATERIAL, INCLUDING EARTH, OLD PIPE, PAVING MATERIALS, CONCRETE, AND OTHER DEBRIS CREATED IN THE COURSE OF THE WORK SHALL BE INCLUDED IN THE UNIT PRICE BID FOR OTHER ITEMS OF WORK AND NO ADDITIONAL COMPENSATION SHALL BE MADE.

WATER MAIN INSTALLATION

WATER MAIN MATERIALS SHALL BE INSTALLED IN ACCORDANCE WITH CITY OF AKRON CMS ITEM 251.

THE SAND BEDDING AND BACKFILL UNDER, AROUND, AND TO A DEPTH OF 1-FT. ABOVE THE TOP OF THE PIPE SHALL BE FREE OF STONE OR OTHER OBJECTIONABLE MATERIAL. THE SAND SHALL BE THOROUGHLY TAMPED AND COMPACTED IN 6-INCH LAYERS SIMULTANEOUSLY ON EACH SIDE OF THE PIPE.

COMPACTED PREMIUM BACKFILL IS REQUIRED FOR UNDERGROUND CONSTRUCTION UNDER OR WITHIN THREE FEET OF ANY PROPOSED OR EXISTING SIDEWALK OR PAVEMENT. THE BACKFILLING SHALL CONFORM TO SECTION 551.09 OF THE CITY OF AKRON CONSTRUCTION AND MATERIAL SPECIFICATIONS, LATEST EDITION.

THE GROUND OVER THE WATER MAIN SHALL REMAIN FREE OF TRASH CONTAINERS, TREES, SHRUBS, AND OTHER VEGETATION (EXCLUDING GRASS). NO EARTH SHALL BE MOUNDED OVER THE WATER MAIN FOR AESTHETICS OR FOR REDUCING TRAFFIC NOISE.

USE EXTREME CAUTION WHEN EVACUATING IN THE AREA OF EXISTING WATER MAIN PIPES, VALVES, HYDRANTS, AND THRUT BLOCKS.

ALL WATER MAIN CONSTRUCTION SHALL BE INSPECTED BY THE CITY OF AKRON.

THE PROPOSED FACILITIES MUST MAINTAIN OF MINIMUM 35 PSI PRESSURE DELIVERED TO THE CURB STOP DURING NORMAL OPERATING CONDITIONS.

BOOSTER PUMPS ARE NOT PERMITTED ON SERVICE CONNECTIONS.

HYDROSTATIC LEAKAGE TEST

ALL WATER MAINS SHALL BE TESTED FOR LEAKAGE IN ACCORDANCE WITH CITY OF AKRON CMS ITEM 251.20. THE CONTRACTOR SHALL PROVIDE ALL NECESSARY ACCESS PITS FOR LEAKAGE TESTING, INCLUDING ALL NECESSARY EXCAVATION, SHEETING, SHORING, AND BACKFILL.

DISINFECTION

ALL WATER MAINS SHALL BE DISINFECTED IN ACCORDANCE WITH CITY OF AKRON CMS ITEM 251.19. THE CONTRACTOR SHALL PROVIDE ALL NECESSARY ACCESS PITS FOR DISINFECTION, INCLUDING ALL NECESSARY EXCAVATION, SHEETING, SHORING, AND BACKFILL.

DAMAGE TO EXISTING FACILITIES

THE CONTRACTOR SHALL USE EXTREME CAUTION WHEN EXCAVATING IN THE AREA OF EXISTING WATER MAIN PIPES, VALVES, HYDRANTS, THRUST BLOCKS, STORM SEWERS, UTILITY LINES, AND OTHER APPURTENANCES. DAMAGE AND REPAIR OF EXISTING ITEMS SHALL BE THE RESPONSIBILITY OF THE CONTRACTOR.

THE CONTRACTOR, AT HIS EXPENSE, SHALL REPAIR ALL EXISTING FACILITIES DAMAGED BY THE CONTRACTOR.

CALCULATED JDS | CHECKED EDS

GENERAL NOTES

SUM-8-0.63

681
1088

EXISTING FACILITIES REQUIRING REPLACEMENT, ADJUSTMENT, OR RELOCATION TO ACCOMMODATE NEW WATER MAIN CONSTRUCTION, SHALL BE REPLACED, ADJUSTED, AND/OR RELOCATED BY THE CONTRACTOR AT HIS EXPENSE. CONTACT RON LANCIANESE, WATER DISTRIBUTION SUPERVISOR, AT 1-330-375-2420 TO SCHEDULE THIS WORK. THE CITY OF AKRON RESERVES THE RIGHT TO MAKE SUCH REPAIRS, READJUSTMENTS, OR RELOCATIONS AND SUBMIT A BILL FOR PAYMENT TO THE CONTRACTOR AT THE COMPLETION OF SUCH SERVICES.

AREAS DISTURBED OR DAMAGED BY CONSTRUCTION SHALL BE RESTORED AS SPECIFIED IN THE CONTRACT DOCUMENTS, OR AS GOVERNED BY THE CITY OF AKRON CONSTRUCTION AND MATERIAL SPECIFICATIONS.

ITEM 202- PIPE REMOVED 24" AND UNDER

PAYMENT FOR THIS ITEM SHALL INCLUDE EXCAVATION, DISPOSAL, BACKFILL, AND THE REMOVAL OF WATER MAIN PIPING, FITTINGS, CONNECTIONS, CLOSURE PIECES, COUPLINGS, THRUST BLOCKS, AND VALVES.

ITEM 638-FIRE HYDRANT REMOVED AND DISPOSED OF, AS PER PLAN

ALL FIRE HYDRANTS AND VALVES REMOVED BY THE CONTRACTOR SHALL BE DELIVERED TO THE CITY OF AKRON, WATER DISTRIBUTION BUILDING AT 565 SOUTH JOHNSTON ST., AKRON, OHIO.

PAYMENT FOR THIS ITEM SHALL INCLUDE EXCAVATION, DISPOSAL, BACKFILL, AND REMOVAL AND DISPOSAL OF MATERIALS.

ITEM SPECIAL- 4",6",8",12",AND 16" WATER MAIN DUCTILE IRON PIPE, ANSI CLASS 53, PUSH-ON JOINTS AND MECHANICAL JOINT FITTINGS

PAYMENT FOR THESE ITEMS SHALL INCLUDE ALL EXCAVATION, DISPOSAL, SHEETING, BRACING, SHORING, PIPE MATERIALS, THRUST RESTRAINTS, TEMPORARY END CAPS, FITTINGS, COUPLINGS, CLOSURE PIECES, CONNECTIONS TO EXISTING PIPING, PIPE BEDDING, POLYETHYLENE WRAPPING, BACKFILL, TESTING, DISINFECTION, RESTORATION, AND APPURTENANCES. PAYMENT SHALL ALSO INCLUDE THE REMOVAL AND DISPOSAL OF EXISTING PIPE AS REQUIRED TO MAKE CONNECTIONS TO PROPOSED PIPING.

ITEM SPECIAL- 6", 8" AND 12" GATE VALVE WITH VALVE BOX, COMPLETE

PAYMENT FOR THESE ITEMS SHALL INCLUDE ALL EXCAVATION, DISPOSAL, SHEETING, BRACING, SHORING, VALVE MATERIALS, VALVE BOXES, VALVE BOX COVERS, THRUST RESTRAINTS, FITTINGS, COUPLINGS, CLOSURE PIECES, CONNECTIONS TO EXISTING PIPING, PIPE BEDDING, BACKFILL, POLYETHYLENE WRAPPING, TESTING, DISINFECTION, RESTORATION, AND APPURTENANCES.

ITEM SPECIAL- 16" BUTTERFLY VALVE WITH VALVE BOX, COMPLETE

PAYMENT FOR THIS ITEM SHALL INCLUDE ALL EXCAVATION, DISPOSAL, SHEETING, BRACING, SHORING, VALVE MATERIALS, VALVE BOXES, VALVE BOX COVERS, THRUST RESTRAINTS, FITTINGS, COUPLINGS, CLOSURE PIECES, CONNECTIONS TO EXISTING PIPING, PIPE BEDDING, BACKFILL, POLYETHYLENE WRAPPING, TESTING, DISINFECTION, RESTORATION, AND APPURTENANCES.

ITEM SPECIAL- FURNISHING AND SETTING 6" HYDRANT, COMPLETE

PAYMENT FOR THIS ITEM SHALL INCLUDE FURNISHING AND INSTALLING THE ENTIRE HYDRANT ASSEMBLY FROM THE WATER MAIN FITTING TO THE HYDRANT. SUCH PAYMENT SHALL INCLUDE ALL EXCAVATION, SHEETING, BRACING, SHORING, HYDRANT AND PIPE MATERIALS, VALVES, VALVE BOXES, VALVE BOX COVERS, THRUST RESTRAINTS, FITTINGS, COUPLINGS, CLOSURE PIECES, CONNECTIONS TO EXISTING PIPING, POLYETHYLENE WRAPPING, BACKFILL, TESTING, DISINFECTION, RESTORATION, AND APPURTENANCES.

FOR HYDRANTS THAT REQUIRE TAPPING SLEEVES AND VALVES, PAYMENT FOR THIS ITEM SHALL INCLUDE THE TAPPING SLEEVE, VALVE, VALVE BOX, AND VALVE BOX COVER. TAPPING SLEEVES AND VALVES SHALL CONFORM TO AKRON CMS, ITEM 715.21

FOR HYDRANTS THAT REQUIRE CUT-IN TEES, PAYMENT FOR THIS ITEM SHALL INCLUDE THE CUT-IN TEE, PIPE CONNECTORS, AND PIPE SEGMENTS REQUIRED FOR THE CONNECTION.

FOR HYDRANTS THAT REQUIRE PROTECTIVE BOLLARDS, PAYMENT FOR THIS ITEM SHALL INCLUDE THE BOLLARDS.

THE CITY OF AKRON SHALL APPROVE THE FINAL PLACEMENT AND NOZZLE ORIENTATION OF EACH FIRE HYDRANT ASSEMBLY PRIOR TO CONSTRUCTION.

ITEM SPECIAL- WATER WORK MISC.: 1" WATER SERVICE CONNECTION, COMPLETE

ALL TAPS FOR 2" AND SMALLER WATER SERVICE CONNECTIONS SHALL BE MADE BY THE CITY OF AKRON.

PAYMENT FOR THIS ITEM SHALL INCLUDE THE ENTIRE SERVICE CONNECTION ASSEMBLY, INCLUDING ALL EXCAVATION, DISPOSAL, SHEETING, BRACING, SHORING, PIPING MATERIALS, PRESSURE TAPS, SERVICE BOXES, CORPORATION STOPS, THRUST RESTRAINTS, FITTINGS, COUPLINGS, CLOSURE PIECES, CONNECTIONS TO EXISTING SERVICE CONNECTIONS, PIPE BEDDING, BACKFILL, TESTING, DISINFECTION, RESTORATION, AND APPURTENANCES.

ITEM SPECIAL- CUTTING AND PLUGGING EXISTING WATER MAIN AND BRANCHES

EXISTING WATER MAINS SHALL BE CUT IN ACCORDANCE WITH CITY OF AKRON CMS ITEM 251.09. BULKHEADS SHALL BE LOCATED AT THE PLUGGED LOCATIONS SHOWN ON THE PLANS. THE BULKHEADS SHALL CONSIST OF BRICK AND CONCRETE MASONRY WITH A MINIMUM THICKNESS OF 24-INCHES (SEE DETAIL ON SHEET 598).

PAYMENT FOR THIS ITEM SHALL INCLUDE ALL EXCAVATION, DISPOSAL, SHEETING, BRACING, SHORING, MATERIALS, BACKFILL, DISPOSAL, RESTORATION, AND APPURTENANCES.

ITEM SPECIAL- 24" STEEL CASING PIPE AND ITEM SPECIAL- WATER WORK MISC:, 16" STEEL CASING PIPE

THIS WORK SHALL CONSIST OF FURNISHING AND INSTALLING A STEEL CASING OF THE DIAMETER AND WALL THICKNESS INDICATED, CONFORMING TO ODOT ITEM 748.06.

THE CONTRACTOR SHALL MAKE NECESSARY EXCAVATION TO INSTALL THE STEEL CASING. THE METHOD OF ANY BORING OR JACKING OPERATION SHALL BE APPROVED BY THE ENGINEER. WHEN THE STEEL CASING IS PLACED IN AN OPEN-CUT TRENCH IT SHALL BE PLACED IN ACCORDANCE WITH ODOT ITEM 638.05 AND 638.08.

THE CASING PIPE SHALL BE JOINED TOGETHER WITH A FULL-CIRCUMFERENCE WELD MEETING ODOT ITEM 513.17.

CALCULATED JDS CHECKED EDS

GENERAL NOTES

SUM-8-0.63

682
1088

CALCULATED PAT CHECKED

GENERAL NOTES

ITEM SPECIAL - 16" WATER MAIN STEEL PIPE ASTM A-53, GRADE B

(A) STEEL PIPE SHALL BE MANUFACTURED IN ACCORDANCE WITH ASTM A-53 GRADE B AND AWWA C-200, WITH A MINIMUM WORKING PRESSURE OF 350 PSI. STEEL PIPE THICKNESS SHALL BE 0.375". NOMINAL DIAMETER SHALL BE 16". PIPE LENGTHS SHALL BE AS SHOWN ON THE PLANS. PIPE ENDS SHALL BE PLAIN OR FURNISHED WITH A BELL AS REQUIRED.

(B) THE INTERIOR OF ALL STEEL PIPE SHALL BE GIVEN A CEMENT MORTAR LINING AT THE POINT OF MANUFACTURE. THE LINING SHALL CONFORM TO THE AMERICAN NATIONAL STANDARD A21.4-1980 (AWWA C104-80) AND ALL SUBSEQUENT AMENDMENTS THERETO. THE NOMINAL THICKNESS OF THE LINING SHALL BE 5/16". LINING SHALL BE HELD BACK FROM THE BELL ENDS OF ALL PIPE BY 3 INCHES.

(C) THE EXTERIOR OF ALL STEEL PIPE SHALL BE COATED WITH COAL TAR ENAMEL PER AWWA C203, LIQUID EPOXY PER AWWA C210, OR POLYURETHANE PER AWWA C222. SHOP APPLIED COATING SHALL BE HELD BACK A MIMIMUM OF 3 INCHES FROM THE ENDS OF PIPE AND COMPLETED IN THE FIELD AFTER INSPECTION AND ACCEPTANCE OF FIELD WELDED SLIP CONNECTIONS.

SHOP DRAWINGS - STEEL PIPE ASTM A-53 GRADE B AND APPURTENANCES

(A) THE CONTRACTOR SHALL SUBMIT TO THE CITY THROUGH THE ENGINEER A MINIMUM OF SIX (6) SETS OF PRINTS OF ALL SHOP DRAWINGS GENERATED BY THE PIPE OR STRUCTURAL FABRICATOR OF ALL PIPE, FITTINGS, AND MISCELLANEOUS OR SPECIAL DETAILS OF PIPE AND FITTING JOINTS INCLUDING LINE AND ASSEMBLY LAYOUT, SLIP JOINT DETAILS, EXPANSION JOINTS, WELDING DETAILS, FACTORY APPLIED INSULATION, FIELD APPLIED INSULATION, JACKET, SLEEVE PACKING DETAILS, PIPE SUPPORT DETAILS INCLUDING CLAMP, SHIMS AND "LUBRITE" PLATE, AND ANY OTHER PIPE APPURTENANCES. THE LINE AND ASSEMBLY LAYOUT SHALL INCLUDE ALL PIPE AND FITTING DIMENSIONS, LOCATION OF ALL PIPE JOINTS AND TYPES, ALL PIPE SUPPORTS, ELEVATIONS OF PIPE AT SUPPORTS, EXPANSION JOINTS AND LOCATION OF ANY OTHER PIPE APPURTENANCES. NO WORK SHALL BE DONE IN THE SHOP UNTIL AFTER THE DRAWINGS HAVE BEEN APPROVED.

(B) THE APPROVAL OF THE DRAWINGS BY THE CITY SHALL NOT RELIEVE THE CONTRACTOR OF ANY OF HIS OBLIGATIONS IN CONNECTION WITH THIS CONTRACT.

JOINTS

(A) LAP-WELDED SLIP JOINTS

ALL FIELD CONNECTIONS OF STEEL PIPE, INCLUDING PIPE CONNECTIONS TO EXPANSION JOINT ASSEMBLIES, SHALL BE MADE USING LAP-WELDED SLIP JOINTS. PRIOR TO COMMENCING FIELD WELDING OF PIPE JOINTS, THE CONTRACTOR SHALL SUBMIT IN WRITING TO THE ENGINEER THE WELDING PROCEDURES HE PROPOSES TO FOLLOW, AND THE MATERIALS AND EQUIPMENT HE PROPOSES TO USE FOR APPROVAL. WELDING SHALL NOT BEGIN UNTIL THESE PROCEDURES HAVE BEEN APPROVED BY THE ENGINEER.

IN ACCORDANCE WITH ASME BOILER AND PRESSURE VESSEL CODE, SECTION IX, THE CONTRACTOR SHALL FURNISH A CERTIFIED PROCEDURE QUALIFICATION RECORD AND CERTIFIED RECORD OF PERFORMANCE QUALIFICATION TESTS FOR WELDERS AND WELDING OPERATORS. SUCH CERTIFICATION SHALL BE ADMINISTERED BY AN APPROVED INDEPENDENT TESTING LABORATORY. ALL FIELD WELDED JOINTS IN STEEL PIPE SHALL BE SUBJECTED TO QUALITY TESTING IN ADDITION TO THE FIELD HYDROSTATIC TESTING OF THE PIPELINE AS SPECIFIED ELSEWHERE IN THESE SPECIFICATIONS.

JOINTS (CONT.)

(ALL FIELD WELDS SHALL BE INSPECTED AND TESTED BY A CERTIFIED WELDING INSPECTOR EMPLOYED BY THE APPROVED INDEPENDENT TESTING LABORATORY AND SUCH INSPECTOR SHALL ALSO BE APPROVED BY THE ENGINEER. THE FIELD WELD TESTING SHALL BE BY THE DYE PENETRANT OR MAGNETIC PARTICLE METHOD IN ACCORDANCE WITH THE REQUIREMENTS FOR THE FIELD WELD TESTING AND INSPECTION AS DETERMINED BY THE APPROVED INDEPENDENT TESTING LABORATORY. INSPECTION OF THE WELDS BY THE REPRESENTATIVE OF THE INDEPENDENT TESTING LABORATORY SHALL NOT RELIEVE THE CONTRACTOR OF HIS RESPONSIBILITY FOR THE QUALITY OF ALL WELDING DONE OR FOR PERFORMING THE WORK AS SPECIFIED HEREIN.

ALL COSTS ASSOCIATED WITH THE TESTING OF FIELD WELDS, QUALIFICATION TEST AND RETESTING SHALL BE PAID FOR BY THE CONTRACTOR AND SHALL BE DEEMED TO BE INCLUDED IN THE PRICE BID PER LINEAL FOOT OF STEEL PIPE FURNISHED AND INSTALLED UNDER THIS ITEM.

WELDING SHALL NOT BE PERMITTED WHEN WEATHER CONDITIONS ARE UNSATISFACTORY AND WOULD IMPAIR THE QUALITY OF THE WELDS. NO WELDING SHALL BE PERFORMED DURING HIGH WINGS, SNOW, RAIN, DUST OR SAND STORMS, UNLESS AUTHORIZED BY THE ENGINEER.

THE CONTRACTOR SHALL BE RESPONSIBLE FOR THE QUALITY OF ALL WELDS. THE CONTRACTOR SHALL ALSO BE RESPONSIBLE FOR ESTABLISHING WELDING PROCEDURES AND FOR ASSURING THAT ONLY PROPERLY QUALIFIED WELDERS ARE USED ON THE WORK. ALL OF THE CONTRACTOR'S WORK SHALL MEET THE REQUIRMENTS OF ANSI/AWWA C206-91, EXCEPT AS OTHERWISE MAY BE REQUIRED HEREIN.

THE DETERMINATION OF THE QUALIFICATION OF THE WELDERS, AND THE REQUIREMENT FOR THE WELDING SHALL BE IN ACCORDANCE WITH THE APPLICABLE PORTIONS OF THE ABOVE REFERENCED CODE AND STANDARD AND QUALIFICATION TESTS SHALL BE IN ACCORDANCE WITH SECTION IX, ARTICLE III FOR THE ASME BOILER AND PRESSURE VESSEL CODE. THE CONTRACTOR SHALL FURNISH THE ENGINEER, FOR PRIOR REVIEW, PROCEDURE SPECIFICATIONS AND QUALIFICATION RECORDS OF WELDING PROCEDURES FOR ALL PIPE WELDING TO BE PERFORMED UNDER THIS SECTION, IN ACCORDANCE WITH SECTION IX, ARTICLE III OF THE ASME BOILER AND PRESSURE VESSEL CODE. ALL QUALIFICATION AND REQAULIFICATION TEST COSTS SHALL BE AT THE EXPENSE OF THE CONTRACTOR AND SHALL BE DEEMED TO BE INCLUDED IN THE PRICE BID PER LINEAL FOOT OF STEEL PIPE AND FITTINGS FURNISHED AND INSTALLED UNDER THIS ITEM.

PRIOR TO THE START OF THE WORK, THE CONTRACTOR SHALL SUBMIT A LIST OF THE WELDERS HE PROPOSES TO EMPLOY AND THE TYPE OF WELDING FOR WHICH EACH HAS BEEN QUALIFIED. EACH WELDER SHALL BE EXAMINED AT THE JOB SITE BY THE CONTRACTOR, IN THE PRESCENCE OF AN APPROVED INDEPENDENT TESTING LABORATORY REPRESENTATIVE, TO DETERMINE HIS ABILITY TO MEET THE REQUIRED QUALIFICATIONS. WELDERS SHALL BE TESTED FOR WELDING MATERIALS IN THE VARIOUS POSITIONS REQUIRED, INCLUDING WELDS WITH THE AXIS OF THE MATERIALS VERTICAL AND WITH THE AXIS HORIZONTAL WITHOUT ROLLING. EACH WELDER SHALL BE REQUIRED TO IDENTIFY HIS WORK WITH A CODE MARKING, AND A LISTING OF THE NAMES OF THE WELDERS WITH CORRESPONDING CODE MARKS SHALL BE FURNISHED TO THE ENGINEER. WELDERS MAKING DEFECTIVE WELDS DURING QUALIFICATION TESTS SHALL BE GIVEN A REQUALIFICATION TEST. THIS REQUALIFICATION TEST SHALL ALSO BE AT THE EXPENSE OF THE CONTRACTOR. WELDERS FAILING A REQUALIFICATION TEST SHALL NOT BE USED ON THIS PROJECT.

JOINTS (CONT.)

WHERE TACK WELDS ARE USED TO SECURE ALIGNMENT, THEY SHALL EITHER BE REMOVED COMPLETELY WHEN THEY HAVE SERVED THEIR PURPOSE, OR THEIR STOPPING AND STARTING ENDS SHALL BE PROPERLY PREPARED BY GRINDING OR OTHER SUITABLE MEANS SO THAT THEY MAY BE INCORPORATED INTO THE FINAL WELD. TACK WELDS, WHETHER REMOVED OR LEFT IN PLACE, SHALL BE MADE USING A WELD PROCEDURE QUALIFIED IN ACCORDANCE WITH THESE SPECIFICATIONS. TACK WELDS TO BE LEFT IN PLACE SHALL BE MADE BY WELDERS QUALIFIED IN ACCORDANCE WITH THESE SPECIFICATIONS AND SUCH WELD SHALL BE EXAMINED VISUALLY FOR DEFECTS, AND IF FOUND TO BE DEFECTIVE SHALL BE REMOVED.

THE WELDER SHALL DEMONSTRATE SAFE WELDING PRACTICES, WITH SPECIAL ATTENTION TO WELDING SCREEN, GRINDER AND GROUND CLAMP. AN ARC WELDING SCREEN SHALL BE USED AT ALL TIMES WHEN WELDING IN BUSINESS AND RESIDENTIAL AREAS. THE SCREEN SHALL BE OF SUFFICIENT SIZE (3 FEET TO 4 FEET BY 4 FEET) AND DENSITY TO SHIELD THE WELD ARC AND PREVENT POSSIBLE DAMAGE TO THE EYES OF PERSONS IN OR ABOUT THE WELDING AREAS.

A WELD MAY BE REJECTED AS A RESULT OF VISUAL INSPECTION DUE TO PROCEDURES, AS SPECIFIED IN THESE SPECIFICATIONS NOT COMPLIED WITH; WELD SHOWS EVIDENCE OF POOR WORKMANSHIP; WELD DOES NOT MEET THE REQUIREMENTS OF SECTION 6 OF THE LATEST ACCEPTED EDITION OF API STANDARD 1104, OR WITH THE APPLICABLE SECTIONS OF ANSI/AWWA STANDARD C206-91; WELD CONTAINS A CRACK; MATERIAL BEING WELDED CONTAINS VISIBLE DEFECTS SUCH AS LAMINATIONS, LAPS, OR DIMENSIONAL IRREGULARITIES; AN ARC BURN IS PRESENT; A DENT EXISTS; OR WELD WHOSE HISTORY CANNOT BE ESTABLISHED AND WHICH HAS NOT BEEN FIELD INSPECTED IN ACCORDANCE WITH THESE SPECIFICATIONS.

EACH WELD THAT IS UNACCEPTABLE MUST BE REMOVED OR REPAIRED ACCORDING TO THIS SECTION OR AS APPROVED BY THE ENGINEER. COSTS FOR REPAIR AND REMOVAL OF DEFECTS AND DEFECTIVE WELDS SHALL BE AT THE EXPENSE OF THE CONTRACTOR.

ALL WELDS CONTAINING CRACKS REGARDLESS OF LOCATION SHALL BE REJECTED AND CUT OUT FROM THE PIPELINE AS A CYLINDER. NO FIELD WELD REPAIR OF WELDS CONTAINING CRACKS SHALL BE PERMITTED. WHEN A LAMINATION, SPLIT END, OR CRACKED SEAM OCCURS IN A JOINT LENGTH, THE ENTIRE LENGTH SHALL BE REMOVED. WHEN PIPE DEFECTS ARE CUT OUT, THE DEFECTIVE SECTION SHALL HAVE A MINIMUM OF EIGHT (8) INCHES OF ACCEPTABLE METAL ON EACH SIDE OF THE DEFECT. WHEN PIPE DEFECTS OCCUR IN THE WELDING AREA, THE ENGINEER SHALL BE NOTIFIED. ALL ARC BURNS SHALL BE CUT OUT FROM THE PIPELINE AS A CYLINDER OR REPAIRED AS HEREIN SPECIFIED. ARC BURN REPAIRS SHALL NOT BE PERMITTED UNLESS THE RESULTING WALL THICKNESS AFTER REPAIR IS EQUAL TO OR GREATER THAN THE NOMINAL WALL THICKNESS. ALL DENTS 1/4" OR MORE IN DEPTH SHALL BE CUT OUT AS A CYLINDER. INSERT PATCHING AND POUNDING OUT OF DENTS IS PROHIBITED.

EACH WELD THAT IS TO BE REPAIRED SHALL HAVE THE DEFECT REMOVED DOWN TO CLEAN METAL. EACH WELD TO BE REPAIRED SHALL BE MADE WITH THE SAME WELDING PROCESS AS ORIGINALLY USED. NO REPAIR SHALL BE PERMITTED IN A PREVIOUSLY REPAIRED AREA. REPAIRED WELDS SHALL BE INSPECTED IN THE SAME MANNER AND BY THE SAME MEANS, AND TO THE SAME STANDARDS, AS THE ORIGINAL WELD.

SUM-8-0.63

CALCULATED PAT
CHECKED ---

GENERAL NOTES

JOINTS (CONT.)

(B) EXPANSION JOINT ASSEMBLY

THE CONTRACTOR SHALL PROVIDE SHOP DRAWINGS TO THE CITY THROUGH THE ENGINEER FOR APPROVAL OF THE EXPANSION JOINT ASSEMBLY.

THE EXPANSION JOINT ASSEMBLY SHALL BE "DRESSER STYLE 63, TYPE I" SLIP TYPE, OR APPROVED EQUAL, WITH MINIMUM ½" THICK BODY AND SLIP AND A 10-INCH TRAVERSE. THE EXPANSION JOINT ASSEMBLY SHALL INCLUDE ALL MATERIALS, BOLTS, NUTS AND WASHERS, AND GASKETS. ALL BOLTS AND NUTS SHALL BE MADE OF STAINLESS STEEL: ASTM A276-89A, TYPE 304, "SPECIFICATION FOR STAINLESS STEEL AND HEAT-RESISTING SHEET BARS AND SHAPES." THE EXTERIOR OF THE EXPANSION JOINT, EXCEPT FOR THE SLIP PIPE, SHALL RECEIVE THE SAME COATING AS THE ADJOINING PIPE. THE EXPANSION JOINT SHALL HAVE FIELD APPLIED INSULATION AS PER THE DETAILS ON THE CONTRACT DRAWINGS.

PIPE SUPPORT ASSEMBLIES

PIPE SUPPORT ASSEMBLIES SHALL BE FABRICATED AS DETAILED ON THE PLANS AND SHALL BE COMPLETE IN ALL RESPECTS INCLUDING ALL MATERIALS, CADMIUM PLATED SHOULDER AND CLAMP BOLTS, FASTENERS AND NUTS. THE SUPPORT ASSEMBLY CLAMP, SEAT PLATE ("LUBRITE" PLATE) AND SHIMS SHALL ALL BE HOT-DIPPED GALVANIZED AFTER FABRICATION PER ASTM A-123, LATEST REVISION THEREOF. NO FIELD WELDING OF GALVANIZED STEEL COMPONENTS WILL BE PERMITTED. THERE SHOULD BE A MIMIMUM OF TWO (2) PIPE SUPPORTS FOR EACH PIPE LENGTH.

INSULATION AND OUTER PROTECTIVE JACKET

STEEL PIPE SHALL BE INSULATED USING A CLOSED-CELL POLYURETHANE FOAM INSULATION WITH A FIBERGLASS JACKET. THE INSULATING SYSTEM SHALL BE RICWIL LO-TEMP HI-GARD, PERMA-PIPE POLY-THERM, OR AN APPROVED EQUAL. INSULATION FOR 16" DIAMETER PIPE SHALL BE THREE (3) INCHES THICK, AND THE FIBERGLASS JACKET SHALL BE 0.085 INCHES THICK.

PIPE JOINTS AND SUPPORT AREAS SHALL BE FIELD INSULATED WITH A POURED IN PLACE POLYURETHANE FOAM AND HEAT SHRINK SLEEVE SYSTEM TO BE SUPPLIED BY THE PIPE INSULATION MANUFACTURER. EXPANSION JOINTS SHALL BE FIELD INSULATED USING A PREFORMED POLYURETHANE FOAM SLEEVE AND JACKETED WITH GALVANIZED STEEL BANDED IN PLACE AND SIZED TO LAP THE ADJACENT JACKET. ALL FIELD APPLIED INSULATION SHALL BE INSTALLED TO FULLY FILL ANY VOIDS. FIELD PLACED INSULATION AT EXPANSION JOINTS SHALL BE REMOVABLE IN ORDER TO PERFORM MAINTENANCE OR MAKE ADJUSTMENTS TO THE PACKING GLAND OF THE EXPANSION JOINTS.

BURIED PIPE BEHIND THE BRIDGE ABUTMENTS HAVING LESS THAN FOUR (4) FEET OF COVER SHALL BE INSULATED WITH DRI-THERM WATER REPELLANT CALCIUM CARBONATE INSULATION NO LESS THAN EIGHT (8) INCHES THICK COMPLETELY AROUND THE PIPE.

THE VOID BETWEEN THE SLEEVE AND THE INSULATED STEEL WATER MAIN THROUGH EACH SUPERSTRUCTURE END DIAPHRAGM SHALL BE FILLED WITH JUTE PACKING AND SEALED AT BOTH ENDS WITH THREE (3) INCHES OF A PRECOMPRESSED FOAM JOINT SEALER AS SHOWN IN THE "PIPE SLEEVE DETAIL" ON THE PLANS.

MEASUREMENT

THE NUMBER OF LINEAR FEET OF STEEL PIPE TO BE PAID FOR SHALL BE THE ACTUAL NUMBER OF LINEAR FEET FURNISHED AND PLACED IN ACCORDANCE WITH THESE SPECIFICATIONS AS MEASURED ALONG THE AXIS OF THE PIPING.

PAYMENT

THE FOOTAGE MEASURED AS PROVIDED ABOVE SHALL BE PAID FOR AT THE CONTRACT PRICE BID PER LINEAR FOOT FOR "ITEM SPECIAL - 16" WATER MAIN STEEL PIPE ASTM A-53, GRADE B" CLASSIFIED AS TO SIZE AND TYPE, WHICH PRICE AND PAYMENT SHALL CONSTITUTE FULL COMPENSATION FOR FURNISHING, HAULING, PLACING, CUTTING INTO AND CONNECTING THE PIPE, INCLUDING ALL EXPANSION JOINTS, COUPLINGS, PIPE INSULATION, INSTALLING SUPPORT ASSEMBLIES AND OTHER PIPE APPURTENANCE, FURNISHING AND COMPLETING THE SLEEVE PACKING DETAIL, INCLUDING THE SEAL, AND FOR ALL LABOR, EQUIPMENT, TOOLS AND INCIDENTALS NECESSARY TO COMPLETE THIS ITEM EXCEPT FOR THE ITEMS SPECIFICALLY LISTED AS SEPARATE PAY ITEMS.

ITEM SPECIAL - WATER WORK, MISC.: TEMPORARY 12" WATER MAIN

THE TEMPORARY WATER SHALL BE CLASS 53 DUCTILE IRON PIPE PER AWWA C151 SPECIFICATIONS, WITH CEMENT-LINING PER AWWA C104. FITTINGS SHALL BE CLASS 350 DUCTILE IRON FULL WALL THICKNESS CASTING PER AWWA C110 (THIN WALL OR COMPACT FITTINGS PER AWWA C153 ARE NOT ACCEPTABLE). GASKETS SHALL CONFORM TO AWWA C111. UNLESS OTHERWISE SHOWN OR NOTED, THE WATER WORK SHALL COMPLY WITH THE NOTES AND SPECIFICATIONS SHOWN ON SHEETS 679, 680, AND 681.

ALL PIPE AND FITTINGS SHALL HAVE RESTRAINED JOINTS. THE RESTRAINED JOINTS SHALL BE PUSH-ON JOINTS WITH FIELD LOCK OR FAST GRIP GASKETS.

ALL EXPOSED ABOVED-GROUND PORTIONS OF THE TEMPORARY 12" WATER MAIN SHALL BE INSTALLED WITHIN A 20" DIAMETER STEEL CASING PIPE AS SHOWN ON SHEET 706. THE STEEL CASING PIPE MATERIAL SHALL CONFORM TO ODOT 748.06. THE CASING PIPE SHALL BE JOINED TOGETHER WITH FULL-CIRCUMFERENCE WELDS CONFORMING TO ODOT 513.17. THE CONTRACTOR SHALL INSTALL BULKHEADS AT THE ENDS OF THE CASING TO RETAIN THE SAND FILL.

BURIED PIPE BEHIND THE BRIDGE ABUTMENTS HAVING LASS THAN FOUR (4) FEET OF COVER SHALL BE INSULATED WITH DRI-THERM WATER REPELLANT CALCIUM CARBONATE INSULATION NO LESS THAN EIGHT (8) INCHES THICK COMPLETELY AROUND THE PIPE

UNDERGROUND PIPE SHALL BE INSTALLED AT A MINIMUM DEPTH OF 5 FEET BETWEEN THE GROUND SURFACE AND THE AXIS OF THE PIPE. THE CONTRACTOR SHALL MAINTAIN HORIZONTAL AND VERTICAL CLEARANCES BETWEEN THE WATER MAIN AND OTHER UTILITIES AS NOTED ON SHT. 679. THE CONTRACTOR SHALL INSTALL ALL FITTINGS, BENDS, OFFSETS, OR SPECIALS REQUIRED TO CLEAR UNDERGROUND UTILITIES.

THE EXPANSION JOINT ASSEMBLY SHALL BE "DRESSER STYLE 63, TYPE I" SLIP TYPE., OR APPROVED EQUAL, WITH A MINIMUM ½" THICK BODY AND A 10" TRAVERSE.

THE CONTRACTOR SHALL BE RESPONSIBLE FOR DESIGNING TEMPORARY THRUST RESTRAINTS AND PIPE SUPPORTS FOR THE TEMPORARY WATER MAIN. THE CONTRACTOR SHALL ALSO BE RESPONSIBLE FOR MAINTAINING THE TEMPORARY WATER MAIN IN SERVICE THROUGHOUT CONSTRUCTION.

ITEM SPECIAL - WATER WORK, MISC.: TEMPORARY 12" WATER MAIN (CONTINUED)

WHEN INSTALLATION OF THE PERMANENT WATER MAIN IS COMPLETE, THE CONTRACTOR SHALL REMOVE THE TEMPORARY WATER MAIN AND DELIVER ALL MATERIALS TO THE CITY OF AKRON, WATER DISTRIBUTION BUILDING AT 565 SOUTH JOHNSON ST., AKRON OHIO. THE REMOVALS SHALL INCLUDE ALL ABOVE GROUND AND BELOW GROUND PORTIONS OF THE WATER MAIN.

THE NUMBER OF LINEAR FEET OF TEMPORARY WATER MAIN TO BE PAID FOR SHALL BE THE ACTUAL NUMBER OF LINEAR FEET FURNISHED AND PLACED IN ACCORDANCE WITH THESE SPECIFICATIONS AS MEASURED ALONG THE AXIS OF THE PIPE.

PAYMENT FOR THIS ITEM SHALL INCLUDE ALL EXCAVATION, DISPOSAL, SHEETING, BRACING, SHORING, THRUST RESTRAINTS, STEEL CASING MATERIALS , SAND FILL, BULKHEADS, FITTINGS, COUPLINGS, EXPANSION JOINTS, CLOSURE PIECES, CONNECTIONS TO EXISTING PIPING, PIPE BEDDING, BACKFILL, TESTING, DISINFECTION, RESTORATION, AND APPURTENANCES.

SUM-8-0.63

SHEET NUMBER	PARTICIPATION		ITEM	ITEM EXT.	GRAND TOTAL	UNIT	DESCRIPTION	SEE SHEET NO.
689	100% CITY	PROJECT						
							WATER	
3595	-	3595	202	35100	3595	LIN. FT.	PIPE REMOVED, 24" AND UNDER	
19	2	17	202	75610	19	EACH	VALVE BOX REMOVED	
3	-	3	638	10300	3	EACH	FIRE HYDRANT EXTENDED AND ADJUSTED TO GRADE	
7	-	7	638	10701	7	EACH	FIRE HYDRANT REMOVED AND DISPOSED OF, AS PER PLAN	682
53	-	53	638	10800	53	EACH	VALVE BOX ADJUSTED TO GRADE	
309	14	295	SPECIAL	63850000	309	LIN. FT.	6" WATER MAIN DUCTILE IRON PIPE ANSI CLASS 53,	682
							PUSH-ON JOINTS AND MECHANICAL JOINT FITTINGS	
1590	187	1403	SPECIAL	63850100	1590	LIN. FT.	8" WATER MAIN DUCTILE IRON PIPE ANSI CLASS 53,	682
							PUSH-ON JOINTS AND MECHANICAL JOINT FITTINGS	
1278	-	1278	SPECIAL	63850120	1278	LIN. FT.	12" WATER MAIN DUCTILE IRON PIPE ANSI CLASS 53,	682
							PUSH-ON JOINTS AND MECHANICAL JOINT FITTINGS	
194	-	194	SPECIAL	63850150	194	LIN. FT.	16" WATER MAIN DUCTILE IRON PIPE ANSI CLASS 53,	682
							PUSH-ON JOINTS AND MECHANICAL JOINT FITTINGS	
170	-	170	SPECIAL	63851006	170	LIN. FT.	16" WATER MAIN STEEL PIPE ASTM A-53, GRADE B	682
								683
15	-	15	SPECIAL	63851046	15	LIN. FT.	24" STEEL CASING PIPE	682
1	-	1	SPECIAL	63851090	1	EACH	6" GATE VALVE WITH VALVE BOX, COMPLETE	682
4	2	2	SPECIAL	63851100	4	EACH	8" GATE VALVE WITH VALVE BOX, COMPLETE	682
3	-	3	SPECIAL	63851120	3	EACH	12" GATE VALVE WITH VALVE BOX, COMPLETE	682
1	1	-	SPECIAL	63851200	1	EACH	16" BUTTERFLY VALVE WITH VALVE BOX, COMPLETE	682
25	19	6	SPECIAL	63851400	25	EACH	FURNISHING AND SETTING 6" HYDRANT, COMPLETE	682
19	3	16	SPECIAL	63852000	19	EACH	CUTTING AND PLUGGING EXISTING WATER MAIN AND BRANCHES	682
262	18	244	SPECIAL	63898600	262	LIN. FT.	WATER WORK, MISC.: 1" WATER SERVICE CONNECTION, COMPLETE	682
345	-	345	SPECIAL	63898600	345	LIN. FT.	WATER WORK, MISC.: TEMP. 12" WATER MAIN	684
24	24	-	SPECIAL	63898600	24	LIN. FT.	WATER WORK MISC.: 16" STEEL CASING PIPE	682

CALCULATED BKM
CHECKED EDS

GENERAL SUMMARY

SUM-8-0.63

685
1088

05:21:39 PM
07/10/2002
u:\00-010SR-8\\Civil\gensummary\water.dgn

REF NO.	SHT NO.	STATION FROM	STATION TO	SIDE	202 PIPE REMOVED, 24" AND UNDER LIN. FT.	202 VALVE BOX REMOVED EACH	202 VALVE BOX REMOVED 100% CITY EACH	638 FIRE HYDRANT EXTENDED AND ADJUSTED TO GRADE EACH	638 FIRE HYDRANT REMOVED AND DISPOSED OF, AS PER PLAN EACH	638 VALVE BOX ADJUSTED TO GRADE EACH	SPECIAL 6" WATER MAIN DUCTILE IRON PIPE ANSI CLASS 53, PUSH-ON JOINTS AND MECHANICAL JOINT FITTINGS LIN. FT.	SPECIAL 6" WATER MAIN DUCTILE IRON PIPE ANSI CLASS 53, PUSH-ON JOINTS AND MECHANICAL JOINT FITTINGS 100% CITY LIN. FT.	SPECIAL 8" WATER MAIN DUCTILE IRON PIPE ANSI CLASS 53, PUSH-ON JOINTS AND MECHANICAL JOINT FITTINGS LIN. FT.	SPECIAL 8" WATER MAIN DUCTILE IRON PIPE ANSI CLASS 53, PUSH-ON JOINTS AND MECHANICAL JOINT FITTINGS 100% CITY LIN. FT.	SPECIAL 12" WATER MAIN DUCTILE IRON PIPE ANSI CLASS 53, PUSH-ON JOINTS AND MECHANICAL JOINT FITTINGS LIN. FT.	SPECIAL 16" WATER MAIN DUCTILE IRON PIPE ANSI CLASS 53, PUSH-ON JOINTS AND MECHANICAL JOINT FITTINGS LIN. FT.	SPECIAL 16" WATER MAIN STEEL PIPE ASTM A-53, GRADE B LIN. FT.	SPECIAL WATER WORK MISC.: 16" STEEL CASING PIPE 100% CITY LIN. FT.	SPECIAL 24" STEEL CASING PIPE LIN. FT.	SPECIAL 6" GATE VALVE WITH VALVE BOX, COMPLETE EACH	SPECIAL 8" GATE VALVE WITH VALVE BOX, COMPLETE 100% CITY EACH	SPECIAL 12" GATE VALVE WITH VALVE BOX, COMPLETE EACH	SPECIAL 16" BUTTERFLY VALVE WITH VALVE BOX, COMPLETE 100% CITY EACH	SPECIAL FURNISHING AND SETTING 6" HYDRANT, COMPLETE 100% CITY EACH	SPECIAL CUTTING AND PLUGGING EXISTING WATER MAIN AND BRANCHES 100% CITY EACH	SPECIAL WATER WORK MISC.: 1" COPPER SERVICE BRANCH, COMPLETE 100% CITY LIN. FT.	SPECIAL WATER WORK MISC.: TEMP. 12" WATER MAIN LIN. FT.
		GOODKIRK ST.																												
1W	240	199+86.0		LT						1																				
2W		199+98.3		LT						1																				
3W		200+06.3		LT						2																				
4W		200+80.3		RT																							1			
5W		201+65.9		LT						1																				
1W	241	204+79.3		LT						1																				
2W		204+84.4		RT																							1			
1W	242	207+59.2		RT																							1			
2W		209+26.4		LT						1																				
1W	243	211+00.4		RT																							1			
2W		211+96.5		LT						1																				
3W		212+36.0		LT						1																				
1W	244	214+57.7		LT						1																				
2W		214+67.8		RT																							1			
3W		11+19.1*		LT						1																				
4W		11+21.4*		RT						1																				
5W		11+52.1*		LT						1																				
1W	245	220+34.3		RT						1																				
2W		220+36.3		RT						1																				
1W	248	23+02.5**		RT						1																				
2W		23+37.8**		RT						1																				
3W		23+39.6**		RT						1																				
4W		23+45.9**		RT						1																				
1W	249	237+63.1		RT						1																				
1W	252	246+15.5		LT						1																				
2W		246+17.6		LT						1																				
3W		48+76.4#		LT																							1			
		FOUNTAIN ST.																												
1W	253	300+41.5		RT						1																				
2W		300+67.9		RT						1																				
1W	254	302+10.0		LT																							1			
2W		304+03.1		RT						1																				
SUBTOTALS THIS SHEET					-	-	-	-	-	25	-	-	-	-	-	-	-	-	-	-	-	-	-	-	-	-	7	-	-	-	-	-

CALCULATED BKM
CHECKED EDS

WATER SUBSUMMARY

SUM-8-0.63

686
1088

REF NO.	SHT NO.	STATION FROM	STATION TO	SIDE	202 PIPE REMOVED, 24" AND UNDER LIN. FT.	202 VALVE BOX REMOVED EACH	202 100% CITY EACH	638 FIRE HYDRANT EXTENDED AND ADJUSTED TO GRADE EACH	638 FIRE HYDRANT REMOVED AND DISPOSED OF, AS PER PLAN EACH	638 VAVLE BOX ADJUSTED TO GRADE EACH	SPECIAL 6" WATER MAIN DUCTILE IRON PIPE ANSI CLASS 53, PUSH-ON JOINTS AND MECHANICAL JOINT FITTINGS LIN. FT.	SPECIAL 100% CITY LIN. FT.	SPECIAL 8" WATER MAIN DUCTILE IRON PIPE ANSI CLASS 53, PUSH-ON JOINTS AND MECHANICAL JOINT FITTINGS LIN. FT.	SPECIAL 100% CITY LIN. FT.	SPECIAL 12" WATER MAIN DUCTILE IRON PIPE ANSI CLASS 53, PUSH-ON JOINTS AND MECHANICAL JOINT FITTINGS LIN. FT.	SPECIAL 16" WATER MAIN DUCTILE IRON PIPE ANSI CLASS 53, PUSH-ON JOINTS AND MECHANICAL JOINT FITTINGS LIN. FT.	SPECIAL 16" WATER MAIN STEEL PIPE ASTM A-53, GRADE B LIN. FT.	SPECIAL 100% CITY WATER WORK MISC.: 16" STEEL CASING PIPE LIN. FT.	SPECIAL 24" STEEL CASING PIPE LIN. FT.	SPECIAL 6" GATE VALVE WITH VALVE BOX, COMPLETE EACH	SPECIAL 8" GATE VALVE WITH VALVE BOX, COMPLETE EACH	SPECIAL 100% CITY EACH	SPECIAL 12" GATE VALVE WITH VALVE BOX, COMPLETE EACH	SPECIAL 16" BUTTERFLY VALVE WITH VALVE BOX, COMPLETE EACH	SPECIAL 100% CITY EACH	SPECIAL FURNISHING AND SETTING 6" HYDRANT, COMPLETE EACH	SPECIAL 100% CITY EACH	SPECIAL CUTTING AND PLUGGING EXISTING WATER MAIN AND BRANCHES EACH	SPECIAL 100% CITY EACH	SPECIAL WATER WORK MISC.: 1" COPPER SERVICE BRANCH, COMPLETE LIN. FT.	SPECIAL WATER WORK MISC.: TEMP. 12" WATER MAIN LIN. FT.
		FOUNTAIN ST.																														
3W	254	304+34.3		LT						1																						
4W		305+20.3		LT																								1				
1W	255	306+11.9		RT						1																						
2W		306+18.7		RT						1																						
3W		307+94.4		LT																								1				
4W		308+08.6		RT						1																						
5W		308+73.4		RT						1																						
1W	256	312+02.0		RT						1																						
2W		312+25.4		LT																								1				
3W		312+87.0		RT						1																						
1W	257	314+83.2		RT		1																										
2W		314+86.7		RT						1																						
1W	258	320+02.6		LT						1																						
2W		320+11.1		LT						1																						
1W	261	330+88.2		RT						1																						
1W	265	346+37.4		RT						1																						
2W		346+61.8		RT						1																						
3W		346+64.4		RT						1																						
4W		346+65.4		RT						1																						
1W	290	499+67.2*	499+74.2*	RT				1																								
2W		499+78.1*		RT						1																						
3W		500+61.6*		RT						1																						
4W		501+81.4*		RT						1																						
5W		502+24.3*		RT						1																						
6W		502+55.4*		RT						1																						
1W	291	503+99.0*		RT						1																						
2W		504+31.2*		RT				1		1																						
3W		504+56.0*		RT						1																						
1W	293	4+72.2**		LT						1																						
2W		4+73.0**		RT						1																						
3W		204+70.9		LT						1																						
1W	294	4+16.5***		LT						1																						
2W		4+76.8***		LT						1																						
1W	690	15+18.0#	16+02.2#	LT								7		82									1									
2W		315+25.5	318+00.0	RT									274									1					1					
3W		315+77.5		RT																							1					
4W		316+27.3		RT/LT																								1		1		
1R		15+21.0#		LT			1																									
2R		315+25.5	315+32.5	RT	7																								1			
SUBTOTALS THIS SHEET					7	1	1	2	-	28	-	7	274	82	-	-	-	-	-	-	1	1	-	-	1	4	1	1	-	-	-	

CALCULATED BKM
CHECKED EDS

WATER

SUM-8-0.63

687
1088

REF NO.	SHT NO.	STATION FROM	STATION TO	SIDE	202 PIPE REMOVED, 24" AND UNDER	202 VALVE BOX REMOVED	202 VALVE BOX REMOVED 100% CITY	638 FIRE HYDRANT EXTENDED AND ADJUSTED TO GRADE	638 FIRE HYDRANT REMOVED AND DISPOSED OF, AS PER PLAN	638 VAVLE BOX ADJUSTED TO GRADE	SPECIAL 6" WATER MAIN DUCTILE IRON PIPE ANSI CLASS 53, PUSH-ON JOINTS AND MECHANICAL JOINT FITTINGS	SPECIAL 6" WATER MAIN DUCTILE IRON PIPE ANSI CLASS 53, PUSH-ON JOINTS AND MECHANICAL JOINT FITTINGS 100% CITY	SPECIAL 8" WATER MAIN DUCTILE IRON PIPE ANSI CLASS 53, PUSH-ON JOINTS AND MECHANICAL JOINT FITTINGS	SPECIAL 8" WATER MAIN DUCTILE IRON PIPE ANSI CLASS 53, PUSH-ON JOINTS AND MECHANICAL JOINT FITTINGS 100% CITY	SPECIAL 12" WATER MAIN DUCTILE IRON PIPE ANSI CLASS 53, PUSH-ON JOINTS AND MECHANICAL JOINT FITTINGS	SPECIAL 16" WATER MAIN DUCTILE IRON PIPE ANSI CLASS 53, PUSH-ON JOINTS AND MECHANICAL JOINT FITTINGS	SPECIAL 16" WATER MAIN STEEL PIPE ASTM A-53, GRADE B	SPECIAL WATER WORK MISC.: 16" STEEL CASING PIPE 100% CITY	SPECIAL 24" STEEL CASING PIPE	SPECIAL 6" GATE VALVE WITH VALVE BOX, COMPLETE	SPECIAL 8" GATE VALVE WITH VALVE BOX, COMPLETE	SPECIAL 8" GATE VALVE WITH VALVE BOX, COMPLETE 100% CITY	SPECIAL 12" GATE VALVE WITH VALVE BOX, COMPLETE	SPECIAL 16" BUTTERFLY VALVE WITH VALVE BOX, COMPLETE 100% CITY	SPECIAL FURNISHING AND SETTING 6" HYDRANT, COMPLETE	SPECIAL FURNISHING AND SETTING 6" HYDRANT, COMPLETE 100% CITY	SPECIAL CUTTING AND PLUGGING EXISTING WATER MAIN AND BRANCHES	SPECIAL CUTTING AND PLUGGING EXISTING WATER MAIN AND BRANCHES 100% CITY	SPECIAL WATER WORK MISC.: 1" COPPER SERVICE BRANCH, COMPLETE 100% CITY	SPECIAL WATER WORK MISC.: TEMP. 12" WATER MAIN
		* CARROL ST. STATIONING ** BUCHTEL AVE. STATIONING # MELL AVE. STATIONING			LIN. FT.	EACH		EACH	EACH	EACH	LIN. FT.		LIN. FT.		LIN. FT.	LIN. FT.	LIN. FT.	LIN. FT.	LIN. FT.	EACH	EACH		EACH	EACH	EACH		EACH		LIN. FT.	LIN. FT.
		FOUNTAIN ST.																												
3R	690	16+02.2*		LT	5																							1		
4R		315+57.1		RT		1			1																					
5R		316+50.0	318+00.0	RT/LT	150																						1			
1W	691	318+00.0	319+78.2	RT/LT									178																	
2W		318+95.2		RT																						1				
3W		16+07.1**	17+12.5**	RT								7		105								1								
4W		16+98.8**		RT																									18	
1R		318+00.0	319+84.9	LT	191																									
2R		319+56.4	319+58.6	LT	8	1			1																					
3R		16+09.8**	16+12.3**	RT			1																							
4R		17+10.3**		RT	5																							1		
		GOODKIRK ST.																												
1W	692	220+42.2	222+00.0	LT/RT											166									1						
2W		220+57.1		LT																						1				
1R		220+42.2	220+58.6	RT	18																							1		
1W	693	222+00.0	226+00.0	LT											405															
2W		224+50.0		LT														13									1			
3W		224+50.0		RT																							1			
1R		225+39.0	226+00.0	RT	58																							1		
1W	694	226+00.0	230+00.0	LT											400															
2W		0+81.9#	1+29.7#	RT							5				45				15			1								
3W		228+20.0		LT														11									1			
4W		228+20.0		RT																							1			
1R		226+00.0	230+00.0	RT/LT	411																									
2R		226+15.0	226+40.0	LT/RT	143	1																								
3R		229+66.2	229+90.7	LT	35	1			1																					
1W	695	230+00.0	232+36.5	LT											262									1						
2W		230+95.3	231+01.1	LT							30																			
3W		232+06.6	232+29.7	LT																									35	
4W		231+58.0		LT																							1			
5W		231+58.0		RT																							1			
1R		230+00.0	230+40.2	LT	106																									
2R		230+95.3	230+98.7	LT	13																									
3R		231+00.4		LT																								1		
4R		232+32.3		LT																								1		
1W	696	237+67.2	238+00.0	LT									35									1								
1R		237+68.3		LT																								1		
2R		237+95.2		RT		1																								
1W	697	238+00.0	242+00.0	LT									402																	
2W		238+22.8	238+22.8	LT																						1				
3W		241+59.3		LT																						1				
SUBTOTALS THIS SHEET					1,143	5	1	-	3	-	35	7	615	105	1,278	-	-	24	15	-	1	1	3	-	4	6	6	2	35	18	-

CALCULATED BKM
CHECKED EDS

WATER SUBSUMMARY

SUM-8-0.63

688
1088

WATER SUBSUMMARY

CALCULATED BKM
CHECKED EDS

REF NO.	SHT NO.	STATION FROM	STATION TO	SIDE	202 PIPE REMOVED, 24" AND UNDER (LIN. FT.)	202 VALVE BOX REMOVED (EACH)	202 VALVE BOX REMOVED 100% CITY (EACH)	638 FIRE HYDRANT EXTENDED AND ADJUSTED TO GRADE (EACH)	638 FIRE HYDRANT REMOVED AND DISPOSED OF, AS PER PLAN (EACH)	638 VAVLE BOX ADJUSTED TO GRADE (EACH)	SPECIAL 6" WATER MAIN DUCTILE IRON PIPE ANSI CLASS 53, PUSH-ON JOINTS AND MECHANICAL JOINT FITTINGS (LIN. FT.)	SPECIAL 6" WATER MAIN DUCTILE IRON PIPE ANSI CLASS 53, PUSH-ON JOINTS AND MECHANICAL JOINT FITTINGS 100% CITY (LIN. FT.)	SPECIAL 8" WATER MAIN DUCTILE IRON PIPE ANSI CLASS 53, PUSH-ON JOINTS AND MECHANICAL JOINT FITTINGS (LIN. FT.)	SPECIAL 8" WATER MAIN DUCTILE IRON PIPE ANSI CLASS 53, PUSH-ON JOINTS AND MECHANICAL JOINT FITTINGS 100% CITY (LIN. FT.)	SPECIAL 12" WATER MAIN DUCTILE IRON PIPE ANSI CLASS 53, PUSH-ON JOINTS AND MECHANICAL JOINT FITTINGS (LIN. FT.)	SPECIAL 16" WATER MAIN DUCTILE IRON PIPE ANSI CLASS 53, PUSH-ON JOINTS AND MECHANICAL JOINT FITTINGS (LIN. FT.)	SPECIAL 16" WATER MAIN STEEL PIPE ASTM A-53, GRADE B (LIN. FT.)	SPECIAL WATER WORK MISC.: 16" STEEL CASING PIPE 100% CITY (LIN. FT.)	SPECIAL 24" STEEL CASING PIPE (LIN. FT.)	SPECIAL 6" GATE VALVE WITH VALVE BOX, COMPLETE (EACH)	SPECIAL 8" GATE VALVE WITH VALVE BOX, COMPLETE (EACH)	SPECIAL 8" GATE VALVE WITH VALVE BOX, COMPLETE 100% CITY (EACH)	SPECIAL 12" GATE VALVE WITH VALVE BOX, COMPLETE (EACH)	SPECIAL 16" BUTTERFLY VALVE WITH VALVE BOX, COMPLETE (EACH)	SPECIAL 16" BUTTERFLY VALVE WITH VALVE BOX, COMPLETE 100% CITY (EACH)	SPECIAL FURNISHING AND SETTING 6" HYDRANT, COMPLETE (EACH)	SPECIAL FURNISHING AND SETTING 6" HYDRANT, COMPLETE 100% CITY (EACH)	SPECIAL CUTTING AND PLUGGING EXISTING WATER MAIN AND BRANCHES (EACH)	SPECIAL CUTTING AND PLUGGING EXISTING WATER MAIN AND BRANCHES 100% CITY (EACH)	SPECIAL WATER WORK MISC.: 1" COPPER SERVICE BRANCH, COMPLETE (LIN. FT.)	SPECIAL WATER WORK MISC.: 1" COPPER SERVICE BRANCH, COMPLETE 100% CITY (LIN. FT.)	SPECIAL WATER WORK MISC.: TEMP. 12" WATER MAIN (LIN. FT.)
		* GOODKIRK ST. STATIONING ** FOUNTAIN ST. STATIONING *** PERKINS ST. STATIONING																														
		GOODKIRK ST.																														
1R	697	238+13.0	238+20.5	RT		1			1																							
2R		238+13.0	240+52.7	RT	240																											
3R		238+70.4	242+00.0	RT	328	3																							1			
4R		241+34.5	241+40.5	RT	12	1			1																							
5R		241+83.9	242+00.0	RT	16																											
1W	698	242+00.0	245+93.8	LT									396																			
2W		245+00.0	245+03.0	LT																											37	
3W		245+67.8		LT																								1				
1R		242+00.0	245+93.8	RT/LT	396																											
2R		242+00.0	244+83.6	RT	285																											
3R		245+31.1	245+36.9	LT	10	1			1																							
		PARKWOOD CT.																														
1W	699	2+20.4	4+79.0	LT							260									1												
2W		2+28.4		RT/LT																											21	
3W		2+35.2		LT																											9	
4W		2+72.6		LT																											25	
5W		2+82.6		RT/LT																											34	
6W		3+08.3		LT																											9	
7W		3+61.0		RT/LT																											74	
1R		2+26.2		LT																									1			
2R		2+90.0	241+19.7 *	LT	228	1																							1			
		FOUNTAIN ST.																														
1W	700	344+36.7	344+51.7	RT				1																								
2W		344+83.3	345+94.6	RT									118																			
3W		345+25.4		LT																								1				
4W		50+90.0***		LT																								1				
1R		344+88.5		RT																									1			
2R		345+89.4		RT																									1			
		MARKET ST.																														
1W	701	23+67.0	24+45.8	RT													89															
2W		24+45.8	26+10.5	RT														170														
3W		26+10.5	27+05.0	RT													105															
4W		27+00.0		RT																						1					345	
5W		23+67.5	26+71.6	LT/RT																												
1R		23+67.0	24+65.2	RT	106																											
2R		25+93.6	27+05.0	RT	118																											
		EWING ST.																														
1R	702	323+09.0 **		RT		1																							1			
2R		322+99.1 **	327+92.8 **	RT	606																								2			
3R		326+92.1 **	326+96.9 **	LT/RT	77	1																										
4R		327+48.5 **	327+48.5 **	LT	23	1			1																							
5R		328+02.0 **		RT		1																							1			
SUBTOTALS THIS SHEET					2445	11	-	1	4	-	260	-	514	-	-	194	170	-	-	1	-	-	-	1	1	2	9	-	209	-	345
SUBTOTALS FOR SHEET 688					1143	5	1	-	3	-	35	7	615	105	1278	-	-	24	15	-	1	1	3	-	4	6	6	2	35	18	-
SUBTOTALS FOR SHEET 687					7	1	1	2	-	28	-	7	274	82	-	-	-	-	-	-	1	1	-	-	1	4	1	1	-	-	-
SUBTOTALS FOR SHEET 686					-	-	-	-	-	25	-	-	-	-	-	-	-	-	-	-	-	-	-	-	-	7	-	-	-	-	-
TOTALS CARRIED TO GENERAL SUMMARY					3595	17	2	3	7	53	295	14	1403	187	1278	194	170	24	15	1	2	2	3	1	6	19	16	3	244	18	345

SUM-8-0.63

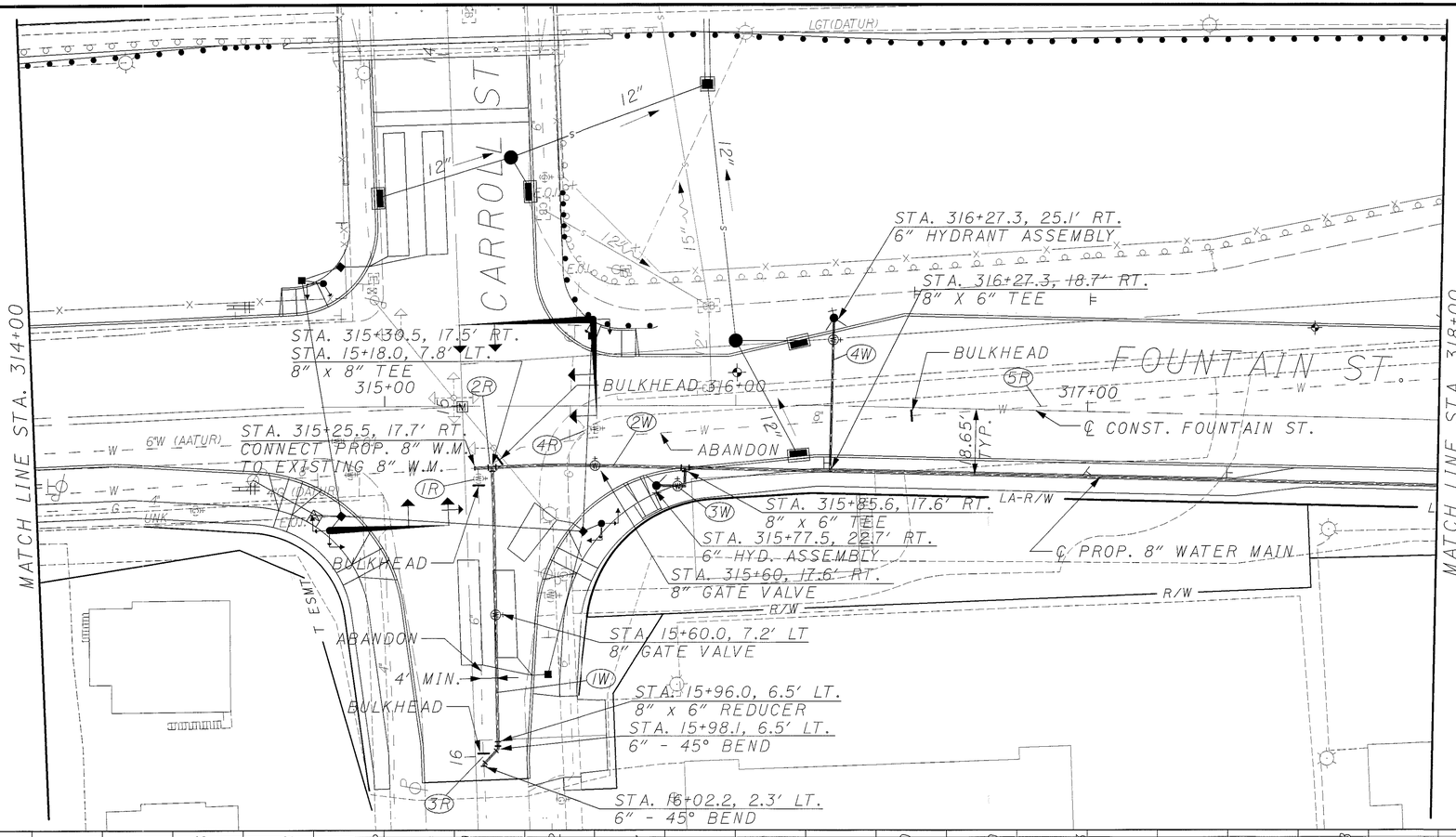

NOTE:
PROFILE FOR CARROLL STREET
IS ON SHEET 703.

* CARROLL STREET STATIONING

REF NO.	STATION FROM	STATION TO	SIDE	202 PIPE REMOVED 24" AND UNDER LIN. FT.	202 VALVE BOX REMOVED EACH	638 FIRE HYD. REMOVED & DISPOSED OF, AS PER PLAN EACH	SPECIAL 8" WATER MAIN DIP ANSI CL 53, JOINTS AND FITTINGS LIN. FT.	SPECIAL 6" WATER MAIN DIP ANSI CL 53, JOINTS AND FITTINGS LIN. FT.	SPECIAL 8" GATE VALVE W/ VALVE BOX COMPLETE EACH	SPECIAL FURNISHING & SETTING 6" HYDRANT COMPLETE EACH	SPECIAL CUTTING & PLUGGING EX. WATER MAIN & BRANCHES EACH
1W	15+18.0 *	16+02.2 *	LT				82		1		
2W	315+25.5	318+00.0	RT				274		1		
3W	315+77.5		RT							1	
4W	316+27.3		RT/LT		1					1	1
1R	15+21.0 *		LT								1
2R	315+25.5	315+32.5	RT	7							
3R	16+02.2 *		LT	5							
4R	315+57.1		RT		1	1					
5R	316+50.0	318+00.0	RT/LT	150				7			
TOTALS CARRIED TO SUBSUMMARY				162	2	1	356	7	2	2	4

HORIZONTAL SCALE IN FEET
0 10 20 40
CALCULATED JDS
CHECKED EDS

FOUNTAIN STREET - WATER MAIN RELOCATION
PLAN AND PROFILE STA. 314+00 TO STA. 318+00

SUM-8-0.63

690
1088

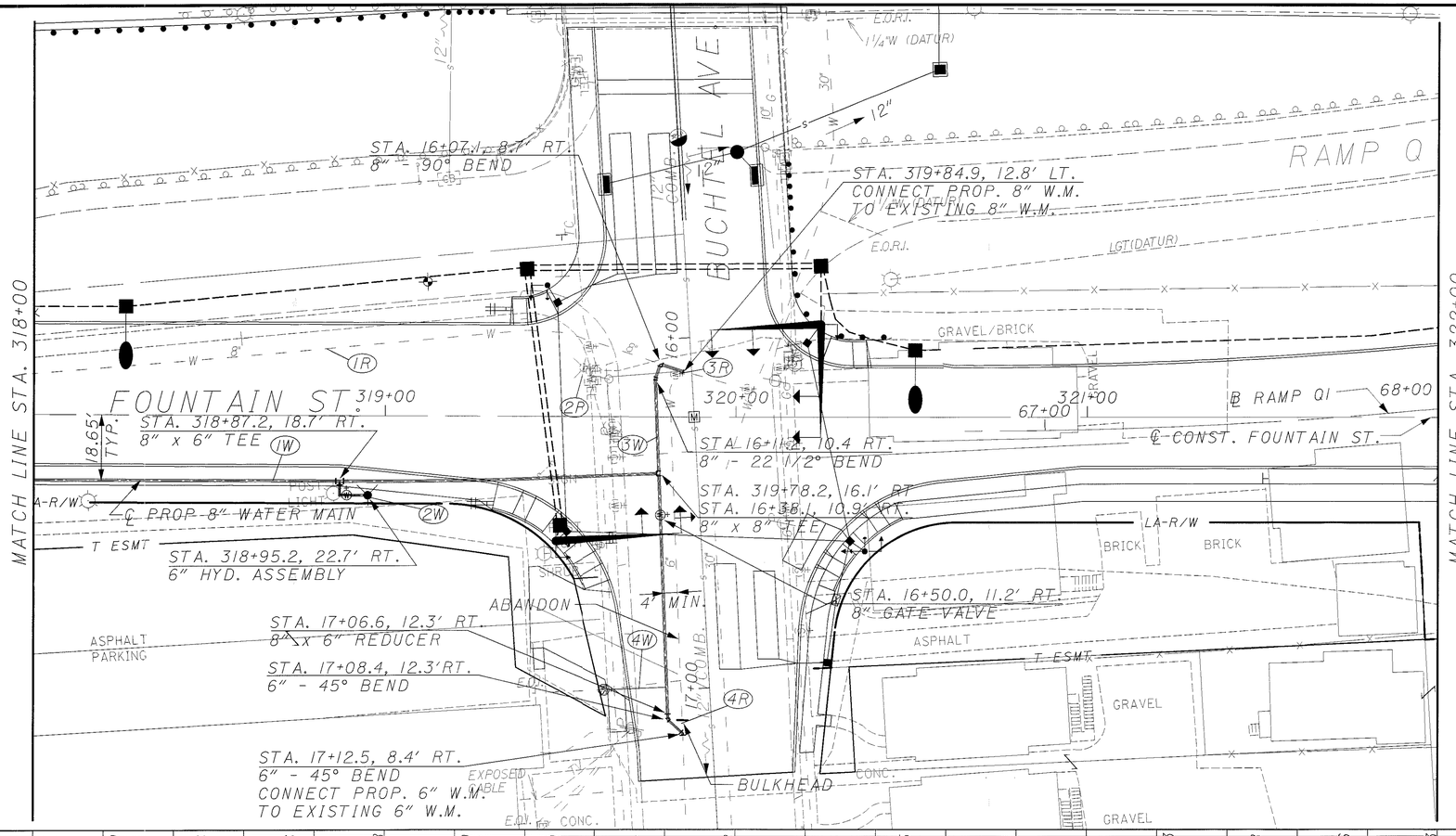

NOTE:
PROFILE FOR BUCHTEL AVENUE IS ON SHEET 703.

* BUCHTEL AVENUE STATIONING

REF NO.	STATION FROM	STATION TO	SIDE	638 SPECIAL FIRE HYD. REMOVED & DISPOSED OF, AS PER PLAN EACH	202 SPECIAL VALVE BOX REMOVED EACH	202 SPECIAL PIPE REMOVED 24" AND UNDER LIN. FT.	SPECIAL W.W. MISC.: 1" COPPER SERVICE BRANCH, COMPLETE LIN. FT.	SPECIAL CUTTING & PLUGGING EX. WATER MAIN & BRANCHES EACH	SPECIAL FURNISHING & SETTING 6" HYDRANT COMPLETE EACH	SPECIAL 8" GATE VALVE W/ VALVE BOX COMPLETE EACH	SPECIAL 8" WATER MAIN DIP ANSI CL 53, JOINTS AND FITTINGS LIN. FT.	SPECIAL 6" WATER MAIN DIP ANSI CL 53, JOINTS AND FITTINGS LIN. FT.
1W	318+00.0	319+78.2	RT/LT						1	1	178	
2W	318+95.2		RT									
3W	16+07.1 *	17+12.5 *	RT									
4W	16+98.8 *		RT									7
1R	318+00.0	319+84.9	LT			191					105	
2R	319+56.4	319+58.6	LT		1	8		1				
3R	16+09.8 *	16+12.3 *	RT	1	1							
4R	17+10.3 *		RT			5						
TOTALS CARRIED TO SUBSUMMARY				1	2	204	18	1	1	1	283	7

* BUCHTEL AVENUE STATIONING

HORIZONTAL SCALE IN FEET
0 10 20 40

CALCULATED JDS
CHECKED EDS

FOUNTAIN STREET - WATER MAIN RELOCATION
PLAN AND PROFILE STA. 318+00 TO STA. 322+00

SUM-8-0.63

691
1088

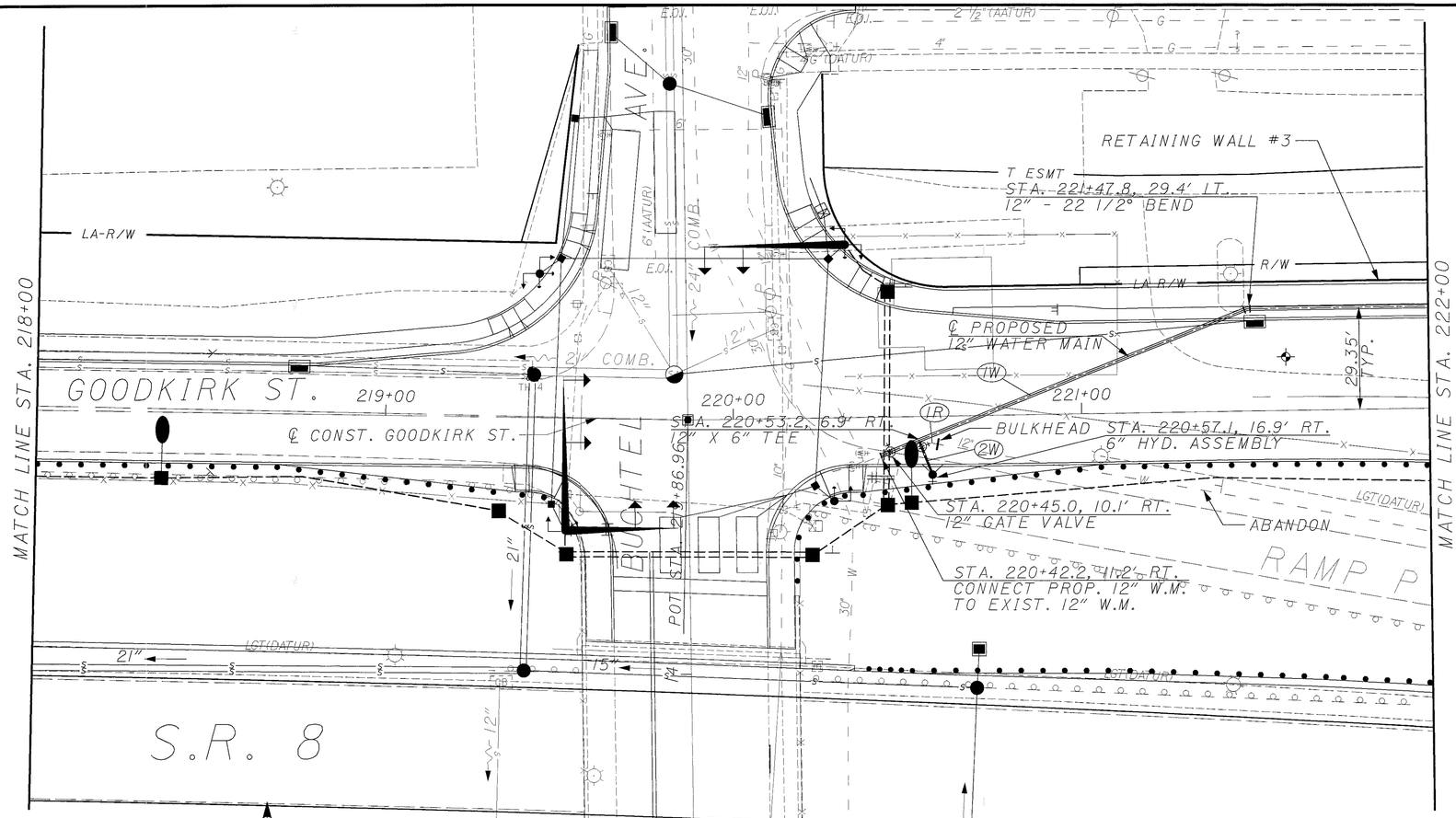

REF NO.	STATION FROM	STATION TO	SIDE					
1W	220+42.2	222+00.0	RT/LT	202	PIPE REMOVED 24" AND UNDER	LIN. FT.	18	18
2W	220+57.1		RT	SPECIAL	12" WATER MAIN DIP ANSI CL 53, JOINTS AND FITTINGS	LIN. FT.	166	166
1R	220+42.2	220+58.6	RT	SPECIAL	12" GATE VALVE W/ VALVE BOX COMPLETE	EACH	1	1
				SPECIAL	FURNISH & SETTING 6" HYD. ASSEMBLY, COMPLETE	EACH	1	1
				SPECIAL	CUTTING & PLUGGING EX. WATER MAIN & BRANCHES	EACH	1	1

TOTALS CARRIED TO SUBSUMMARY

CALCULATED JDS
CHECKED EDS

HORIZONTAL SCALE IN FEET
0 10 20 40

GOODKIRK STREET - WATER MAIN RELOCATION
PLAN AND PROFILE STA. 218+00 TO STA. 222+00

SUM-8-0.63

692
1088

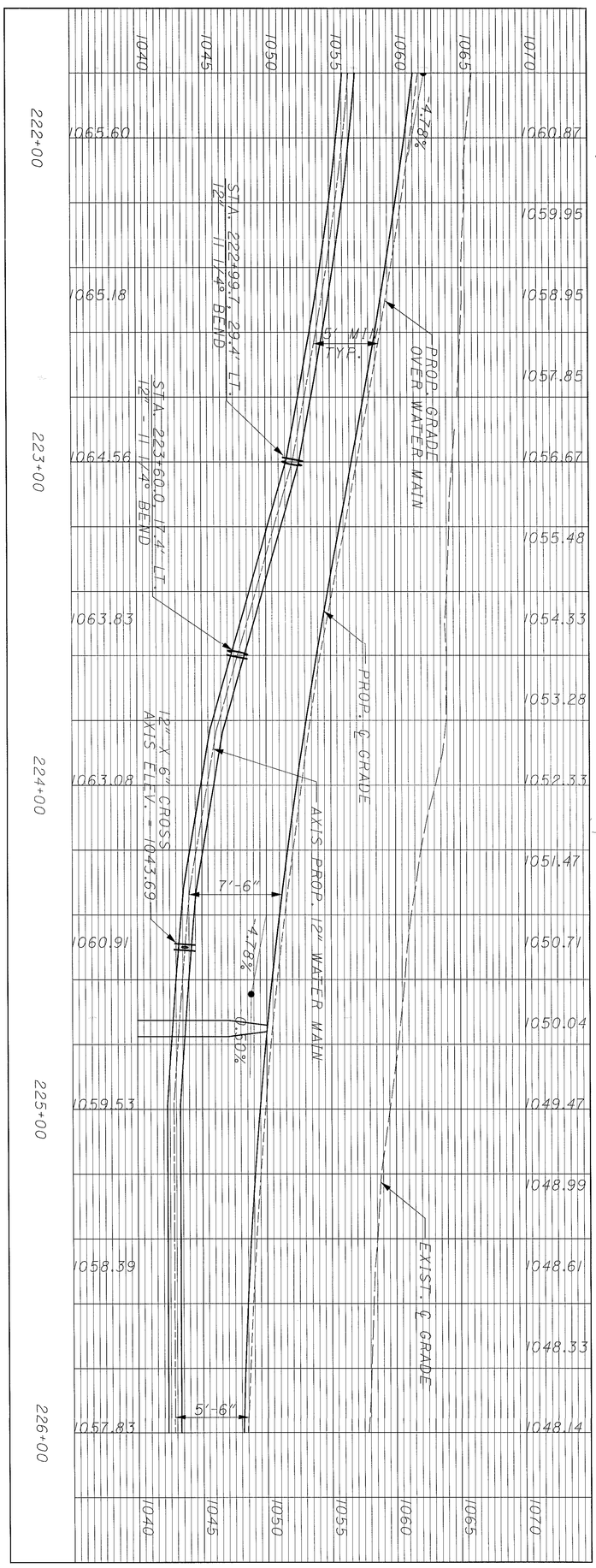

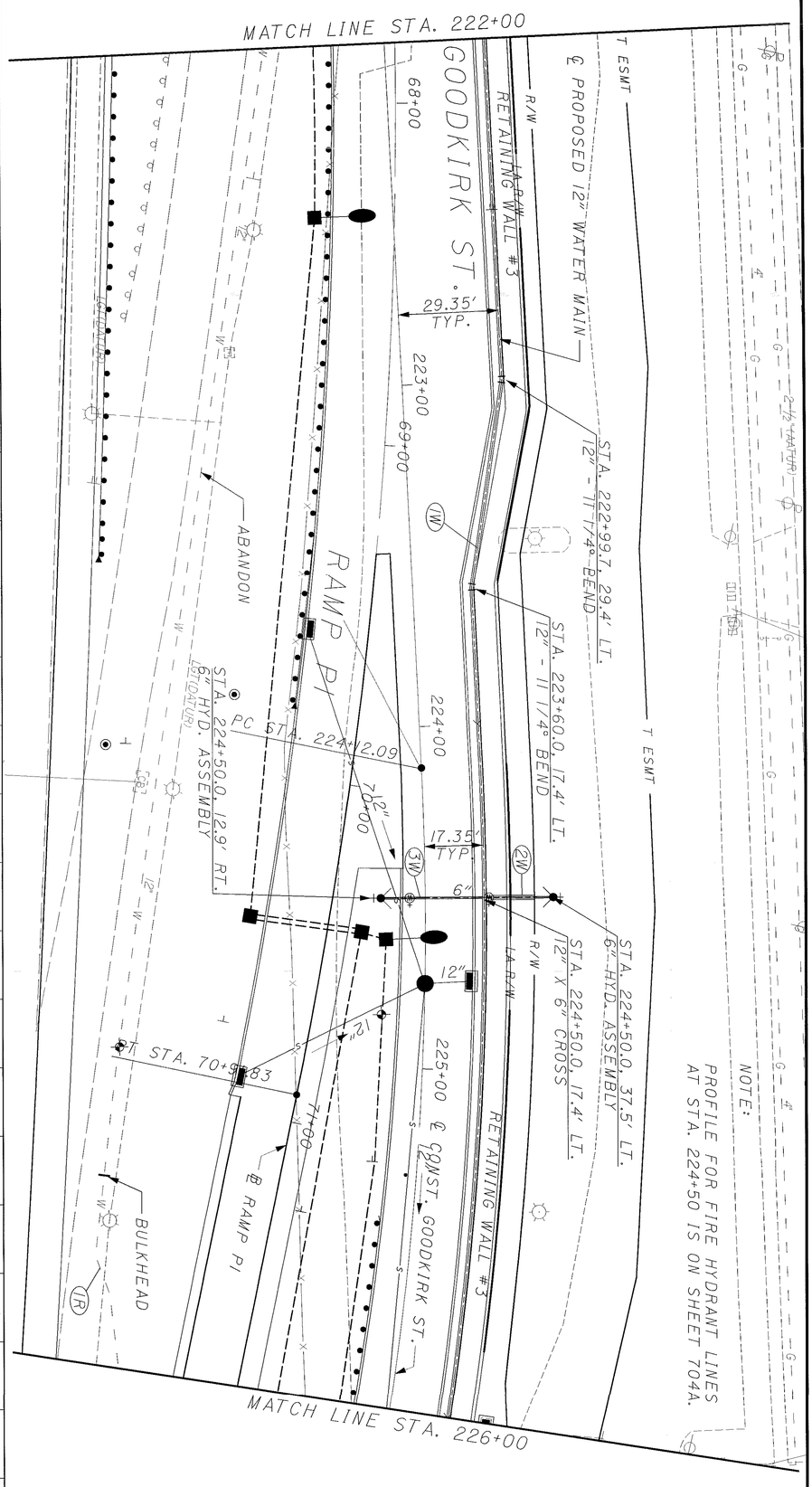

REF NO.	STATION FROM	STATION TO	SIDE	202 PIPE REMOVED 24" AND UNDER	SPECIAL 12" WATER MAIN DIP JOINTS AND FITTINGS	SPECIAL WATERWORK MISC.: 16" STEEL CASING PIPE	SPECIAL FURNISHING & SETTING 6" HYDRANT COMPLETE	SPECIAL CUTTING & PLUGGING EX. WATER MAIN & BRANCHES
				LIN. FT.	LIN. FT.	LIN. FT.	EACH	EACH
1W	222+00.0	226+00.0	LT		405			
2W	224+50.0		LT			13	1	
3W	224+50.0		RT				1	
1R	225+39.0	226+00.0	RT	58				1
TOTALS CARRIED TO SUBSUMMARY				58	405	13	2	1

693
1088

SUM-8-0.63

GOODKIRK STREET - WATER MAIN RELOCATION
PLAN AND PROFILE STA. 222+00 TO STA. 226+00

CALCULATED JDS
CHECKED EDS

0 20 10 40
HORIZONTAL SCALE IN FEET

N

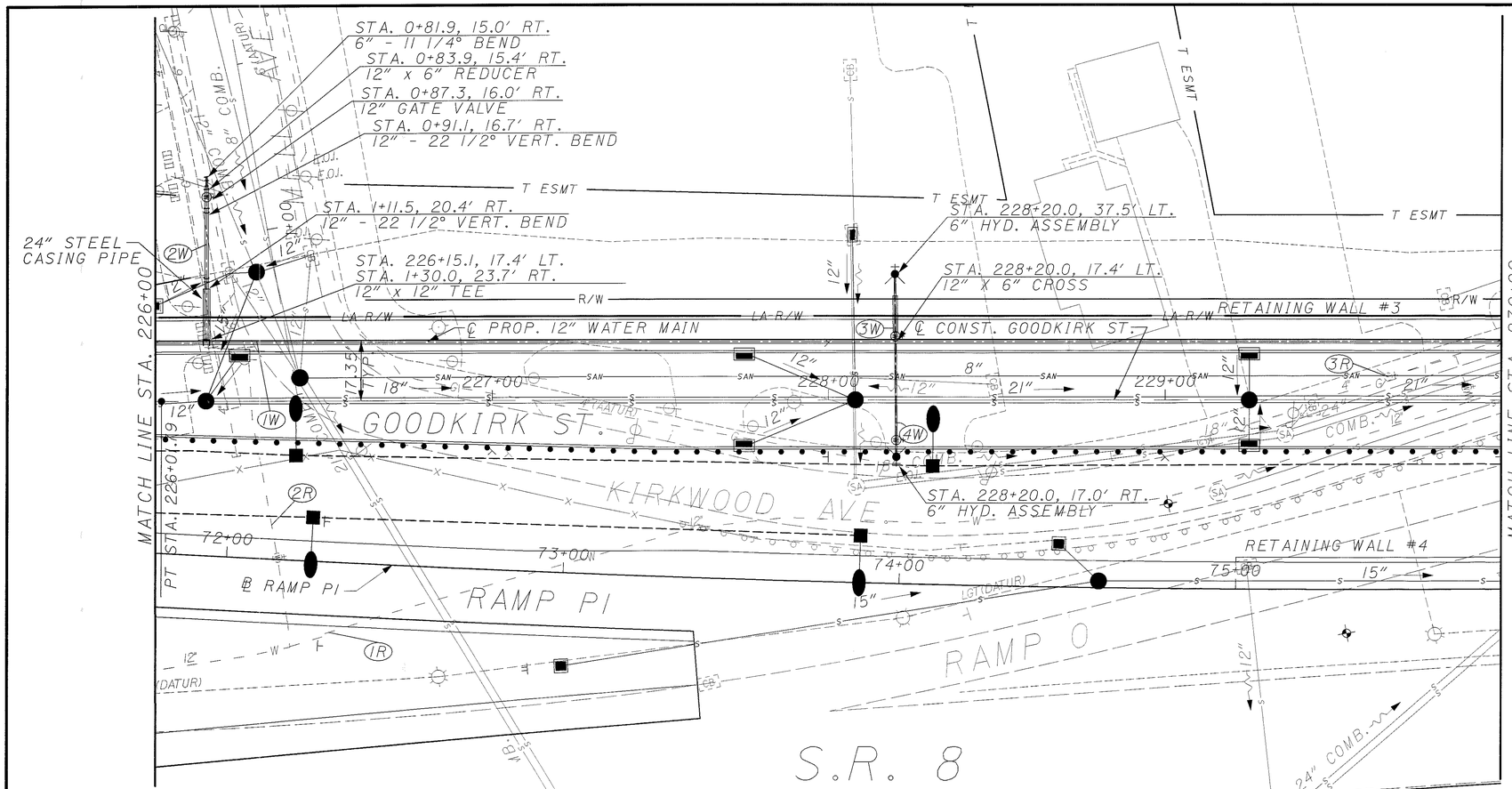

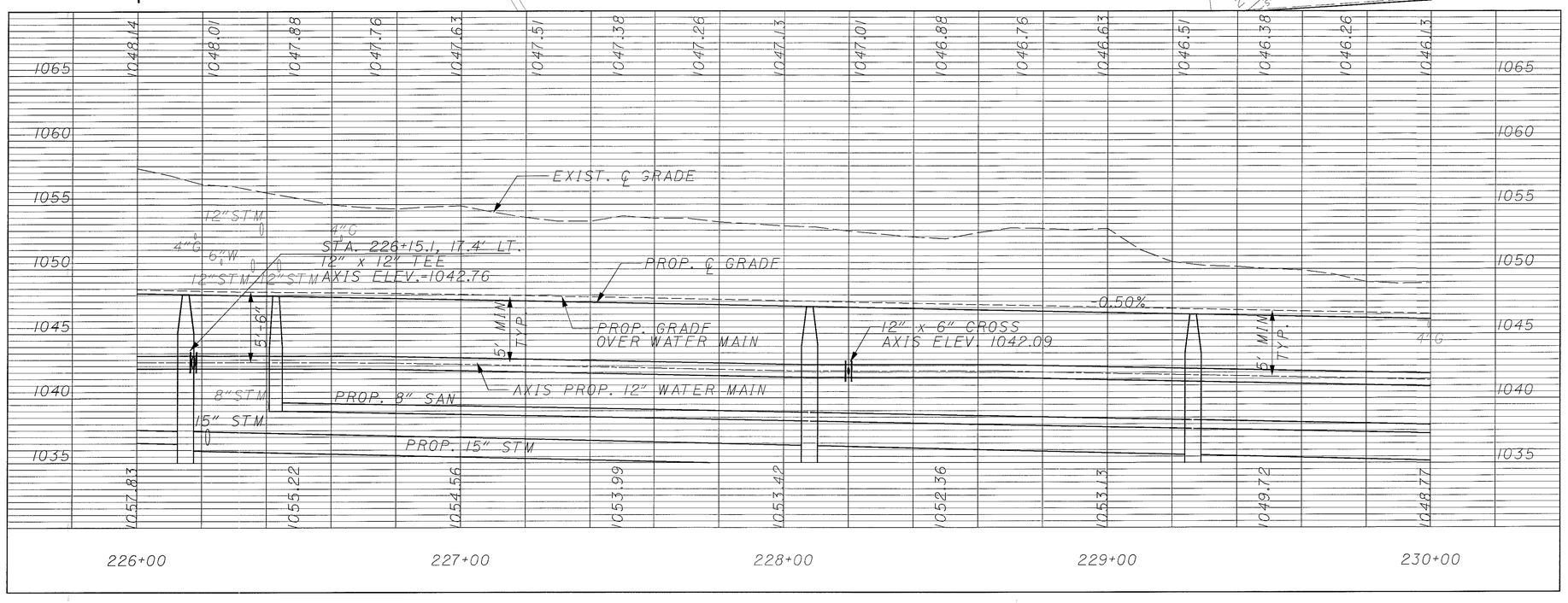

NOTE:
PROFILE FOR MELL AVENUEIS ON SHEET 704.

PROFILE FOR FIRE HYDRANT LINES AT STA. 228+20.0 IS ON SHEET 704A.

* MELL AVENUE STATIONING

REF NO.	STATION FROM	STATION TO	SIDE	202 PIPE REMOVED 24" AND UNDER LIN. FT.	202 VALVE BOX REMOVED EACH	638 FIRE HYD. REMOVED & DISPOSED OF, AS PER PLAN EACH	SPECIAL 12" WATER MAIN DIP ANSI CL 53, JOINTS AND FITTINGS LIN. FT.	SPECIAL 6" WATER MAIN DIP ANSI CL 53, JOINTS AND FITTINGS LIN. FT.	SPECIAL WATERWORK MISC.: 16" STEEL CASING PIPE LIN. FT.	SPECIAL FURNISHING & SETTING 6" HYDRANT COMPLETE EACH	SPECIAL 24" STEEL CASING PIPE LIN. FT.	SPECIAL 12" GATE VALVE W/ VALVE BOX COMPLETE EACH
1W	226+00.0	230+00.0	LT				400					
2W	0+81.9 *	1+29.7 *	RT				45	5	11	1	15	1
3W	228+20.0		LT							1		
4W	228+20.0		RT							1		
1R	226+00.0	230+00.0	RT/LT	411								
2R	226+15.0	226+40.0	LT/RT	143	1							
3R	229+66.2	229+90.7	LT	35	1	1						
			TOTALS CARRIED TO SUBSUMMARY	589	2	1	445	5	11	2	15	1

HORIZONTAL SCALE IN FEET
0 10 20 40

CALCULATED JDS
CHECKED EDS

GOODKIRK STREET - WATER MAIN RELOCATION
PLAN AND PROFILE STA. 226+00 TO STA. 230+00

SUM-8-0.63

694
1088

REF NO.	STATION FROM	STATION TO	SIDE	202 PIPE REMOVED 24" AND UNDER	SPECIAL 6" WATER MAIN DIP ANSI CL 53, JOINTS AND FITTINGS	SPECIAL 12" WATER MAIN DIP ANSI CL 53, JOINTS AND FITTINGS	SPECIAL 12" GATE VALVE W/ VALVE BOX, COMPLETE	SPECIAL FURNISHING & SETTING 6" HYDRANT COMPLETE	SPECIAL CUTTING & PLUGGING EX. WATER MAIN & BRANCHES	SPECIAL W.W. MISC.: 1" COPPER SERVICE BRANCH, COMPLETE			
				LIN. FT.	LIN. FT.	LIN. FT.	EACH	EACH	EACH	LIN. FT.			
1W	230+00.0	232+36.5	LT			262	1						
2W	230+95.3	231+01.1	LT		30								
3W	232+06.6	232+29.7	LT							35			
4W	231+58.0		LT					1					
5W	231+58.0		RT					1					
1R	230+00.0	230+40.2	LT	106									
2R	230+95.3	230+98.7	LT	13									
3R	231+00.4		LT						1				
4R	232+32.3		LT						1				
TOTALS CARRIED TO SUBSUMMARY				119	30	262	1	2	2	35			

NOTE:
PROFILE FOR VALINDA PLACE IS ON SHEET 704.

695
1088

SUM-8-0.63

GOODKIRK STREET - WATER MAIN RELOCATION
PLAN AND PROFILE STA. 230+00 TO STA. 234+00

CALCULATED JDS
CHECKED EDS

0 10 20 40
HORIZONTAL SCALE IN FEET

N

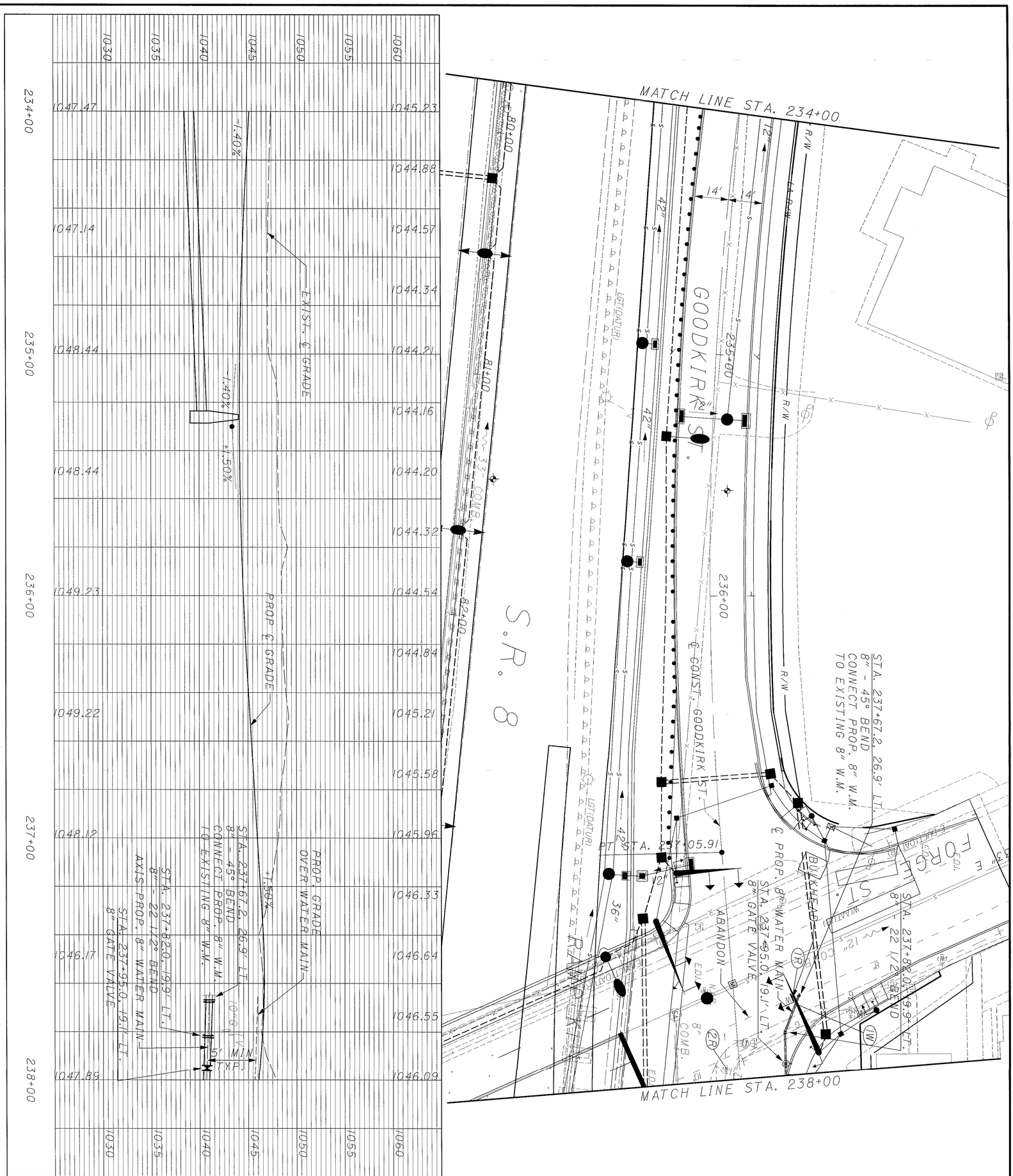

REF NO.	STATION FROM	STATION TO	SIDE	202 VALVE BOX REMOVED	SPECIAL 8" WATER MAIN DIP ANSI CL 53, JOINTS AND FITTINGS	SPECIAL 8" GATE VALVE W/ VALVE BOX COMPLETE	SPECIAL CUTTING & PLUGGING EX. WATER MAIN & BRANCHES
				EACH	LIN. FT.	EACH	EACH
IW	237+67.2	238+00.0	LT		35	1	
IR	237+68.3		LT				1
2R	237+95.2		RT	1			
TOTALS CARRIED TO SUBSUMMARY				1	35	1	1

696 / 1088	SUM-8-0.63	GOODKIRK STREET - WATER MAIN RELOCATION PLAN AND PROFILE STA. 234+00 TO STA. 238+00	CALCULATED JDS CHECKED EDS	0 20 40 HORIZONTAL SCALE IN FEET

NOTE:
PARKWOOD COURT PLAN AND PROFILE IS ON SHEET 699.

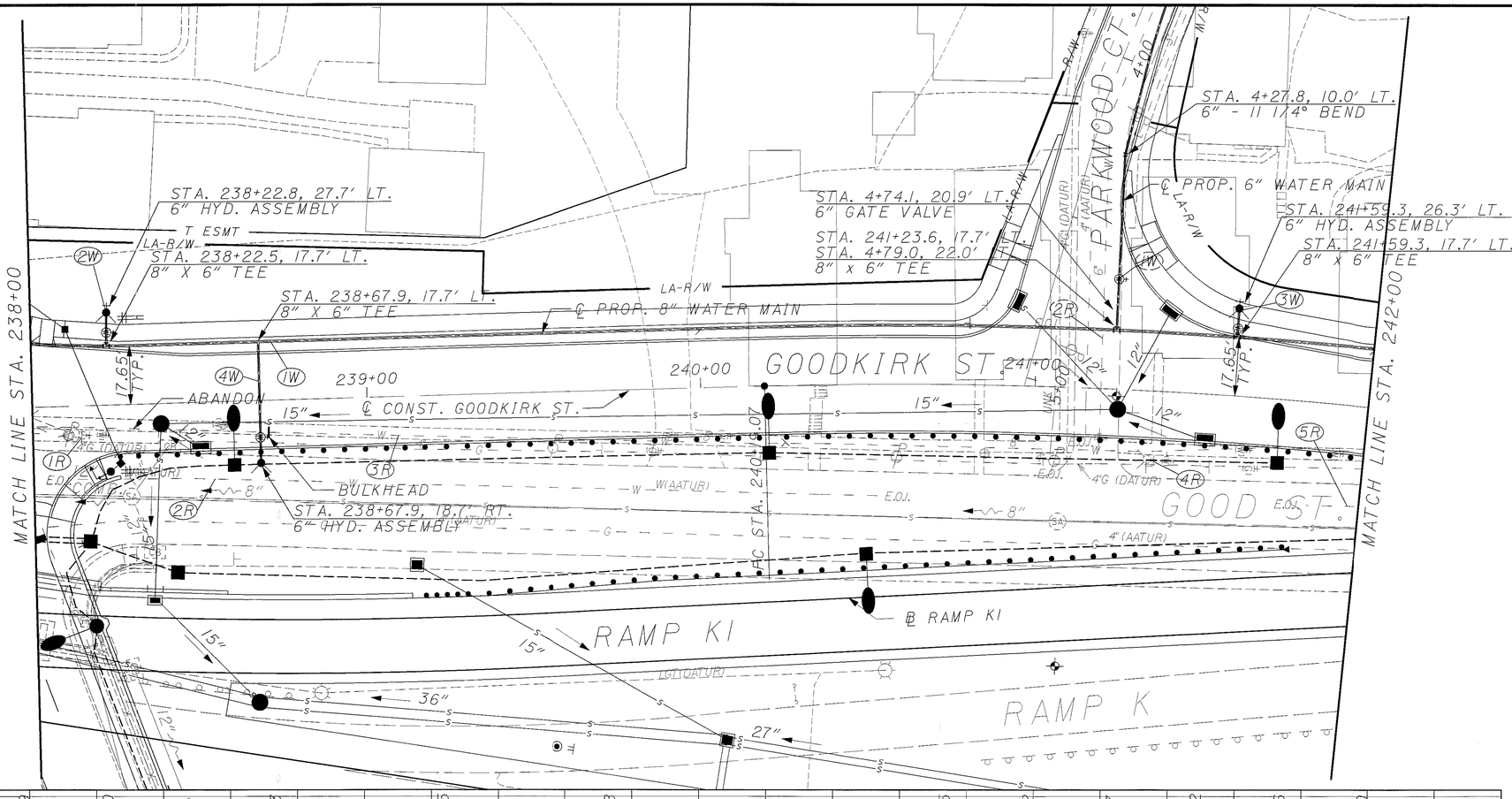

REF NO.	STATION FROM	STATION TO	SIDE		SPECIAL	SPECIAL	SPECIAL	638	202	202
					CUTTING & PLUGGING EX. WATER MAIN & BRANCHES	FURNISHING & SETTING 6" HYDRANT COMPLETE	8" WATER MAIN DIP ANSI CL 53, JOINTS AND FITTINGS	FIRE HYD. REMOVED & DISPOSED OF, AS PER PLAN	VALVE BOX REMOVED	PIPE REMOVED 24" AND UNDER
					EACH	EACH	LIN. FT.	EACH	EACH	LIN. FT.
							402			596
1W	238+00.0	242+00.0	LT							
2W	238+22.5	238+22.8	LT							
3W	241+59.3		LT							
4W	238+67.9		RT							
1R	238+13.0	238+20.5	RT					1	1	16
2R	238+13.0	240+52.7	RT				240			
3R	238+70.4	242+00.0	RT				328	3	1	12
4R	241+34.5	241+40.5	RT					1	1	
5R	241+83.9	242+00.0	RT							
TOTALS CARRIED TO SUBSUMMARY					1	3	402	2	5	596

HORIZONTAL SCALE IN FEET
0 10 20 40

CALCULATED JDS
CHECKED EDS

SUM-8-0.63

GOODKIRK STREET - WATER MAIN RELOCATION
PLAN AND PROFILE STA. 238+00 TO STA. 242+00

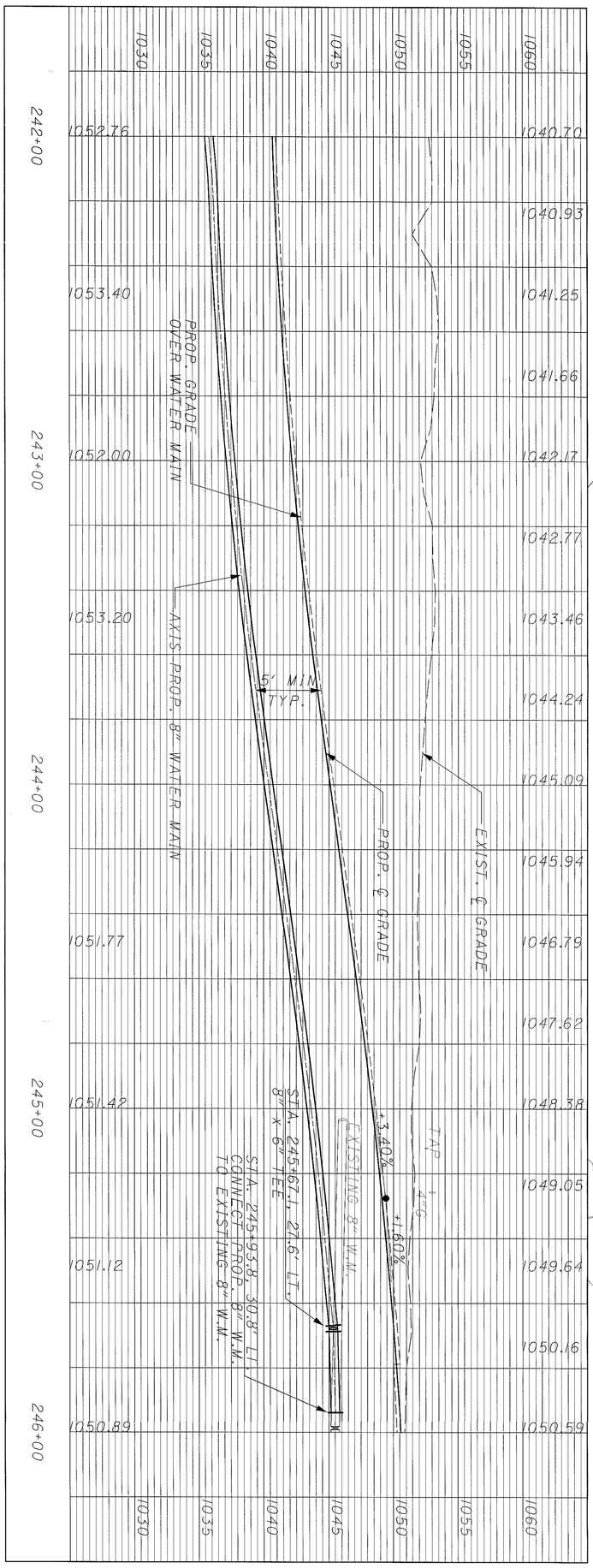

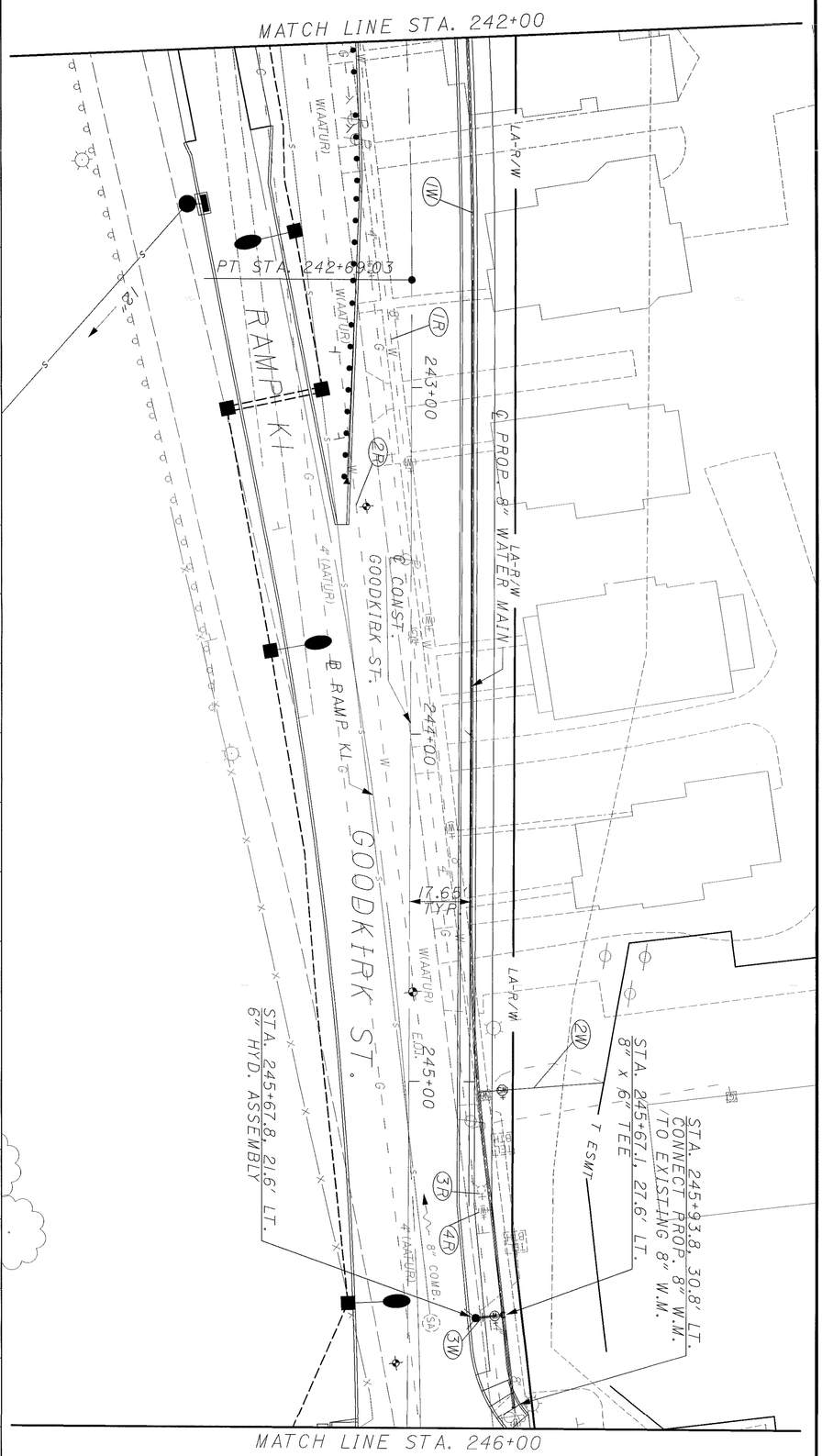

REF NO.	STATION FROM	STATION TO	SIDE	202 PIPE REMOVED 24" AND UNDER	202 VALVE BOX REMOVED	638 FIRE HYD. REMOVED & DISPOSED OF	SPECIAL 8" WATER MAIN DIP ANSI CL 53, JOINTS AND FITTINGS	SPECIAL FURNISHING & SETTING 6" HYDRANT COMPLETE	SPECIAL W.W. MISC.: 1" COPPER SERVICE BRANCH, COMPLETE
				LIN. FT.	EACH	EACH	LIN. FT.	EACH	LIN. FT.
1W	242+00.0	245+93.8	LT				396		
2W	245+00.0	245+03.0	LT						37
3W	245+67.8		LT					1	
1R	242+00.0	245+93.8	RT/LT	396					
2R	242+00.0	244+83.6	RT	285					
3R	245+31.1	245+36.9	LT	10	1	1			
TOTALS CARRIED TO SUBSUMMARY				691	1	1	396	1	37

698
1088

SUM-8-0.63

GOODKIRK STREET - WATER MAIN RELOCATION
PLAN AND PROFILE STA. 242+00 TO STA. 246+00

CALCULATED JDS
CHECKED EDS

0 20
10 40
HORIZONTAL SCALE IN FEET

N

NOTES:
GOODKIRK STREET PLAN AND PROFILE IS ON SHEET 697.

* GOODKIRK STEET STATIONING

REF NO.	STATION FROM	STATION TO	SIDE	202 PIPE REMOVED 24" AND UNDER (LIN. FT.)	202 VALVE BOX REMOVED (EACH)	SPECIAL 6" WATER MAIN DIP ANSI CL 53, JOINTS AND FITTINGS (LIN. FT.)	SPECIAL 6" GATE VALVE W/ VALVE BOX COMPLETE (EACH)	SPECIAL CUTTING & PLUGGING EX. WATER MAIN & BRANCHES (EACH)	SPECIAL W.W. MISC.: 1" COPPER SERVICE BRANCH, COMPLETE (LIN. FT.)				
1W	2+20.4	4+79.0	LT			260	1						
2W	2+28.4		RT/LT						21				
3W	2+35.2		LT						9				
4W	2+72.6		LT						25				
5W	2+82.6		RT/LT						34				
6W	3+08.3		LT						9				
7W	3+61.0		RT/LT						74				
1R	2+26.2		LT					1					
2R	2+90.0	241+19.7 *	LT	228	1			1					
TOTALS CARRIED TO SUBSUMMARY				228	1	260	1	2	172				

HORIZONTAL SCALE IN FEET 0 10 20 40

CALCULATED JDS
CHECKED EDS

PARKWOOD CT.- WATER MAIN RELOCATION STA. 1+00 TO STA. 5+00

SUM-8-0.63

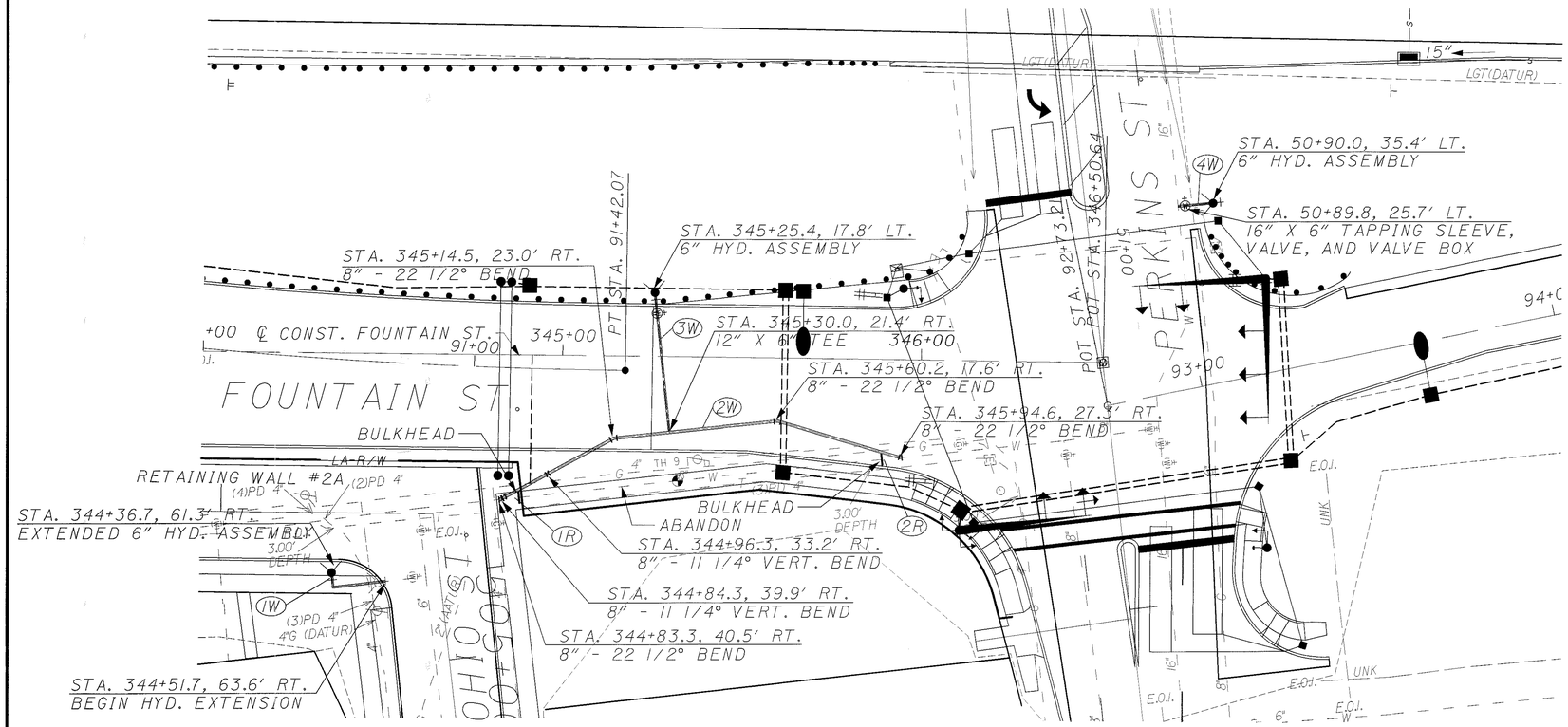

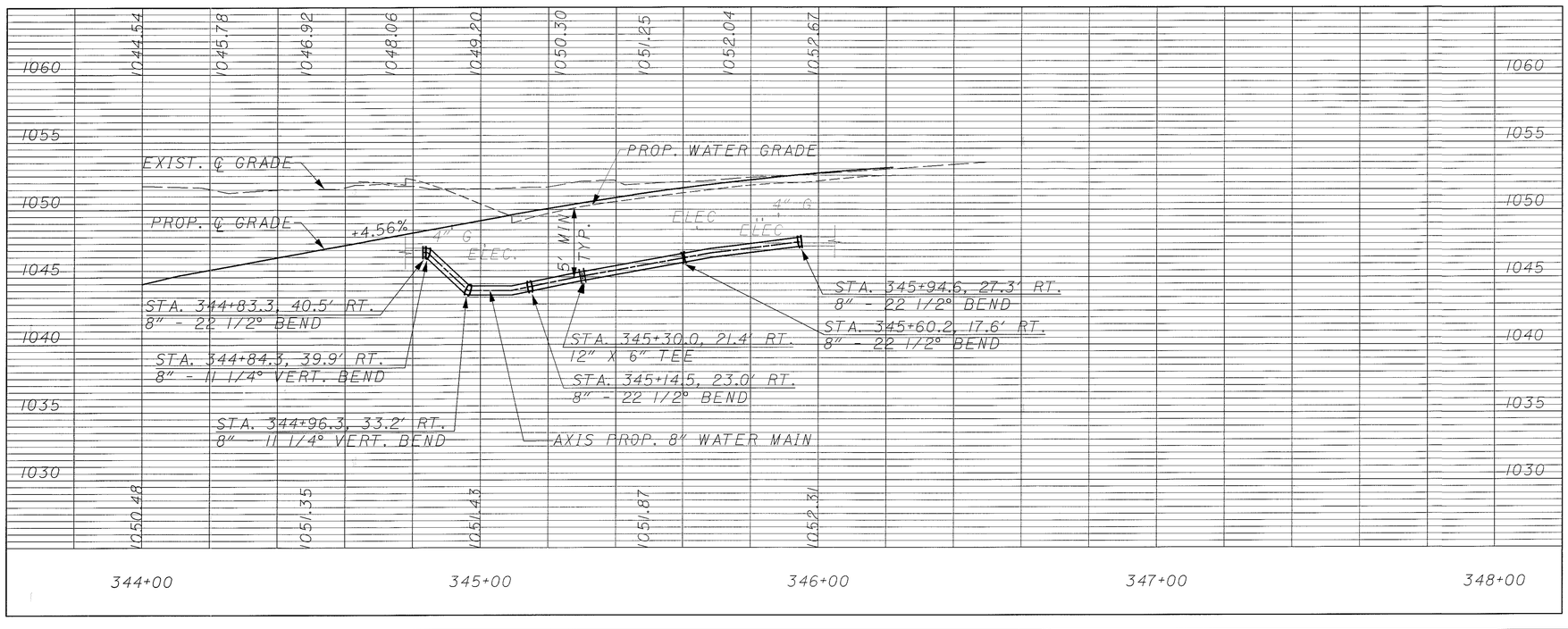

REF NO.	STATION FROM	STATION TO	SIDE	638 FIRE HYD. EXTENDED & ADJUSTED TO GRADE EACH	SPECIAL CUTTING & PLUGGING EX. WATER MAIN & BRANCHES EACH	SPECIAL FURNISHING & SETTING 6" HYDRANT COMPLETE EACH	SPECIAL 8" WATER MAIN DIP ANSI CL 53, JOINTS AND FITTINGS LIN. FT.
1W	344+36.7	344+51.7	RT	1			
2W	344+83.3	345+94.6	RT				118
3W	345+25.4		LT			1	
4W	*50+90.0		LT			1	
1R	344+88.5		RT				
2R	345+89.4		RT		1		
TOTALS CARRIED TO SUBSUMMARY				1	1	2	118

* PERKINS ST. STATIONING

N

0 10 20 40 HORIZONTAL SCALE IN FEET

CALCULATED JDS CHECKED EDS

PLAN AND PROFILE - FOUNTAIN ST. STA. 344+00 STA. 346+00

SUM-8-0.63

700
1088

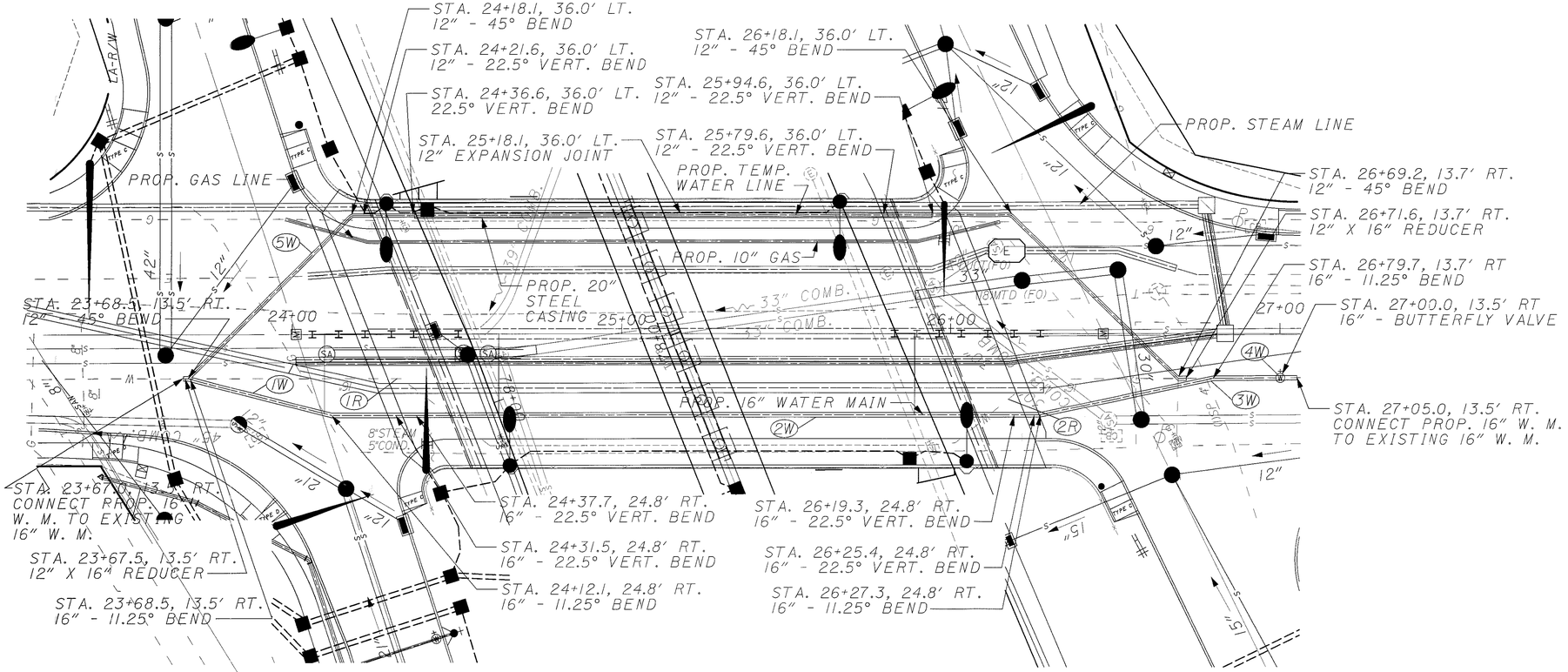

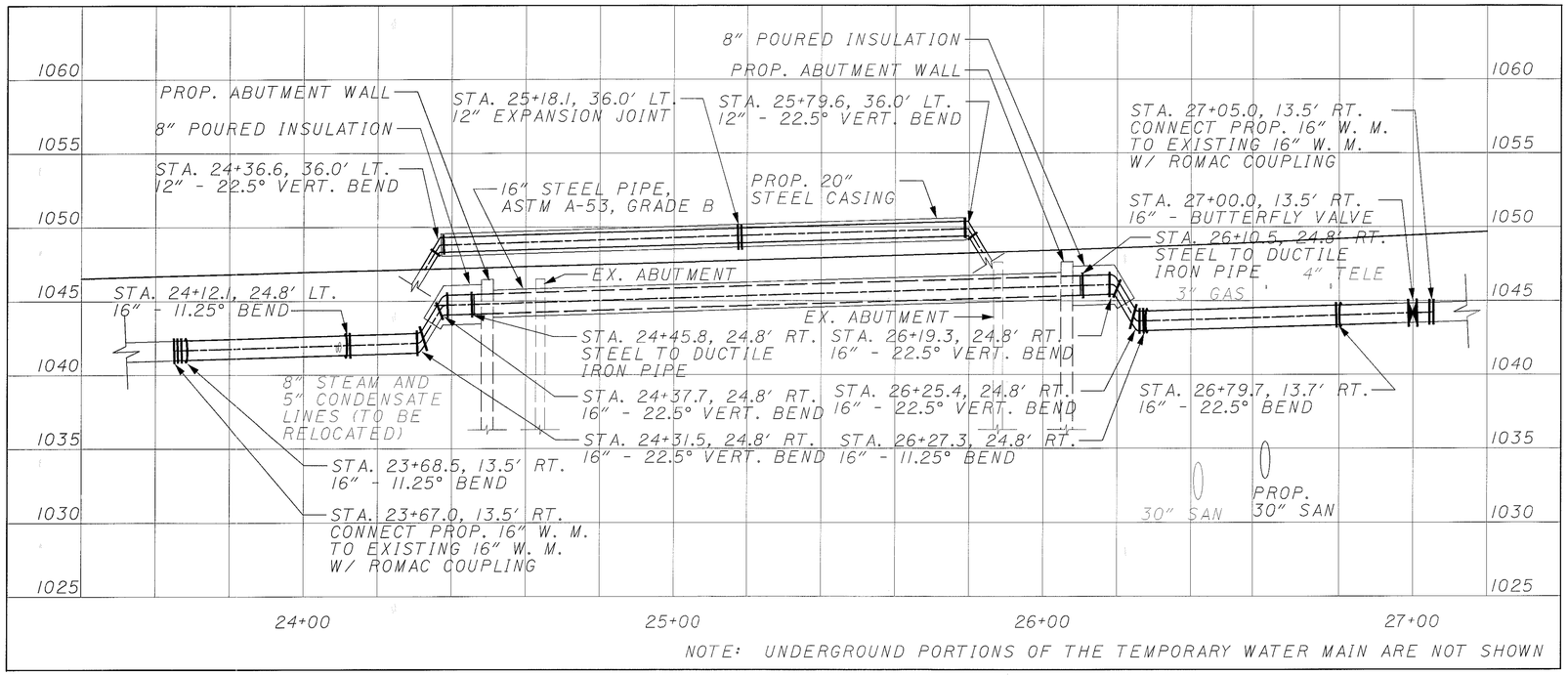

NOTE: UNDERGROUND PORTIONS OF THE TEMPORARY WATER MAIN ARE NOT SHOWN

NOTE:

FOR 16" STEEL PIPE DETAILS, SEE SHEET 707.

EXISTING 16" WATER LINE ACROSS EXISTING BRIDGE SHALL BE REMOVED. PAYMENT FOR THIS WORK SHALL BE INCLUDED WITH BRIDGE STRUCTURE REMOVAL.

REF NO.	STATION FROM	STATION TO	SIDE	202 PIPE REMOVED 24" AND UNDER LIN. FT.	SPECIAL 16" WATER MAIN DIP ANSI CL 53, JOINTS AND FITTINGS LIN. FT.	SPECIAL 16" WATER MAIN STEEL PIPE, ASTM A-53, GRADE B LIN. FT.	SPECIAL 16" BUTTERFLY VALVE WITH VALVE BOX, COMPLETE EACH	SPECIAL WATER WORK, MISC: TEMP. 12" WATER MAIN LIN. FT.
1W	23+67.0	24+45.8	RT		89			
2W	24+45.8	26+10.5	RT			170		
3W	26+10.5	27+05.0	RT		105			
4W	27+00.0		RT				1	345
5W	23+67.5	26+71.6	LT/RT					
1R	23+67.0	24+65.2	RT	106				
2R	25+93.6	27+05.0	RT	118				
				224	194	170	1	345

CALCULATED BKM CHECKED EDS

HORIZONTAL SCALE IN FEET 0 20 40

MARKET STREET - WATER MAIN RELOCATION PLAN AND PROFILE STA 23+80 TO STA 27+00

SUM-8-0.63

701
1088

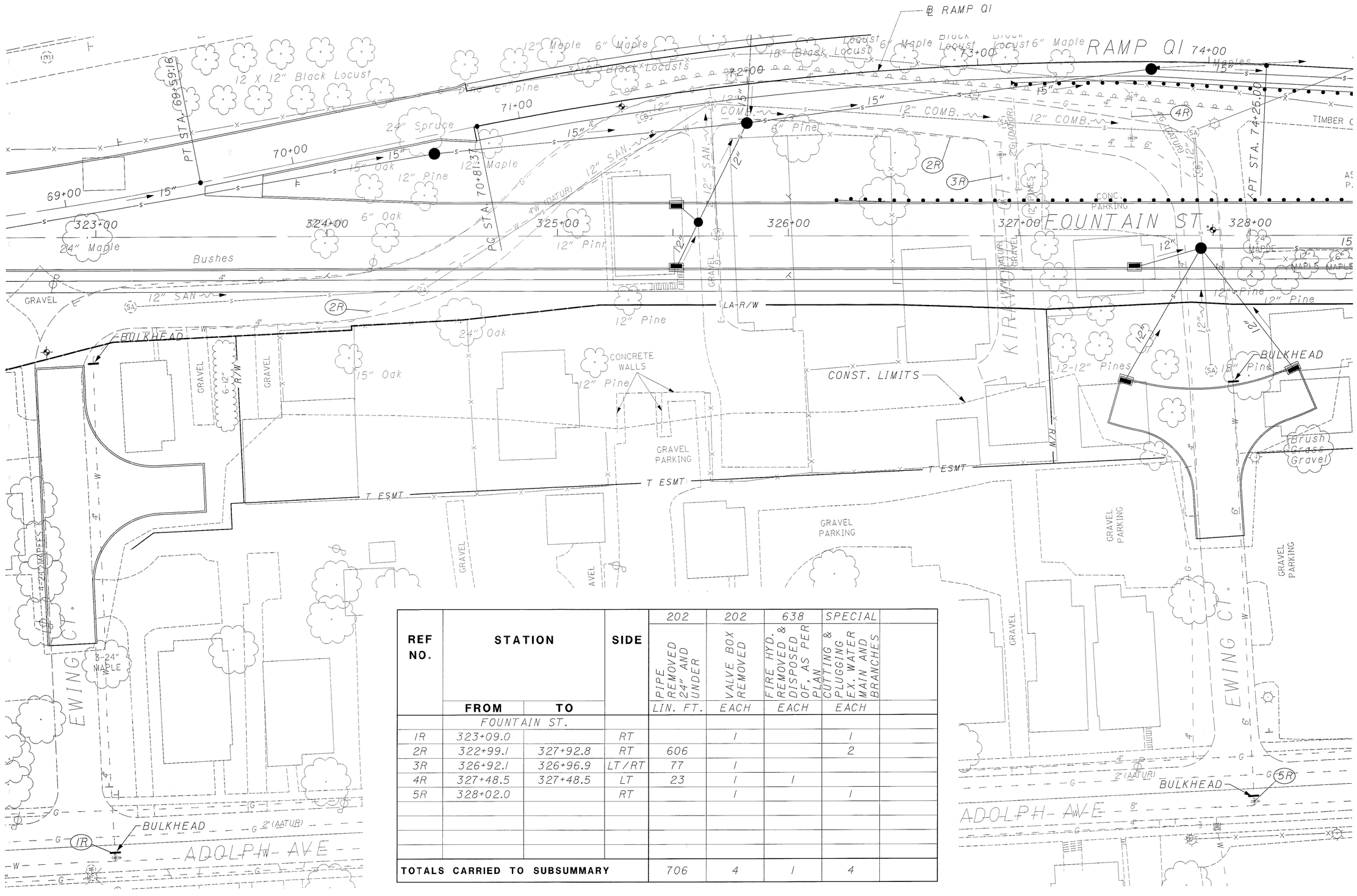

REF NO.	STATION FROM	STATION TO	SIDE	202 PIPE REMOVED 24" AND UNDER (LIN. FT.)	202 VALVE BOX REMOVED (EACH)	638 FIRE HYD. REMOVED & DISPOSED OF, AS PER PLAN (EACH)	SPECIAL CUTTING & PLUGGING EX. WATER MAIN AND BRANCHES (EACH)	
	FOUNTAIN ST.							
1R	323+09.0		RT		1		1	
2R	322+99.1	327+92.8	RT	606			2	
3R	326+92.1	326+96.9	LT/RT	77	1			
4R	327+48.5	327+48.5	LT	23	1	1		
5R	328+02.0		RT		1		1	
TOTALS CARRIED TO SUBSUMMARY				706	4	1	4	

N

HORIZONTAL SCALE IN FEET
0 10 20 40

CALCULATED JDS
CHECKED EDS

SUM-8-0.63

EWING COURT - WATER MAIN REMOVAL

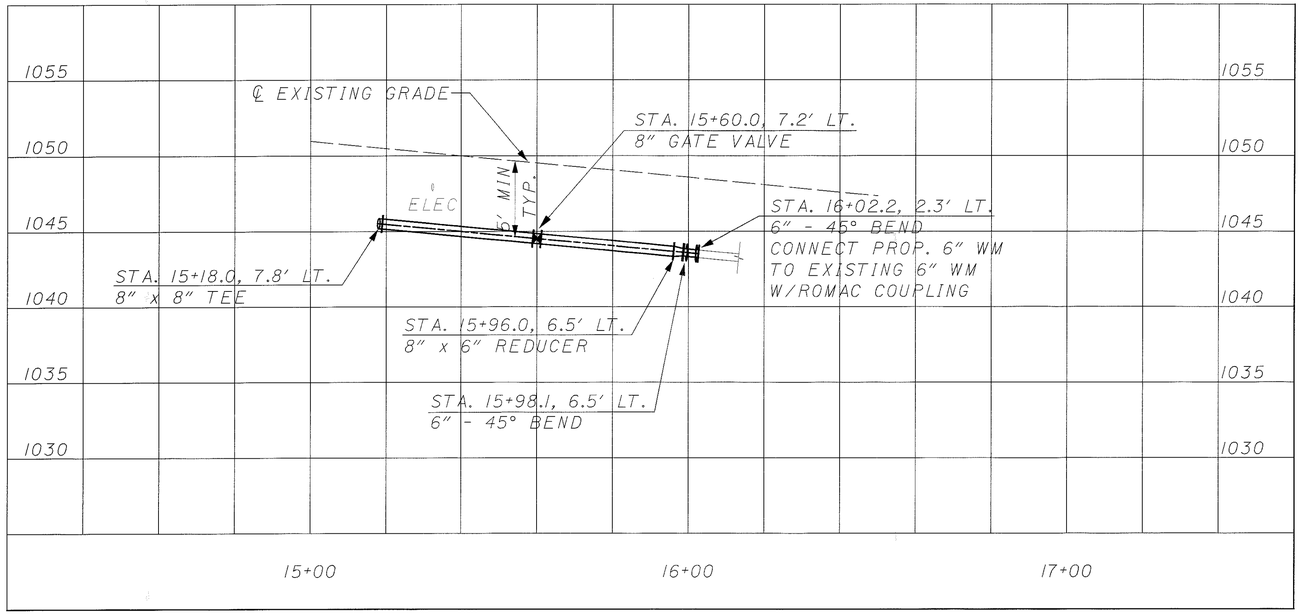

8" WATER MAIN, CARROLL ST.
STA. 15+00 TO 17+00

FOR CARROLL STREET
PAY ITEMS, SEE SHEET 690.

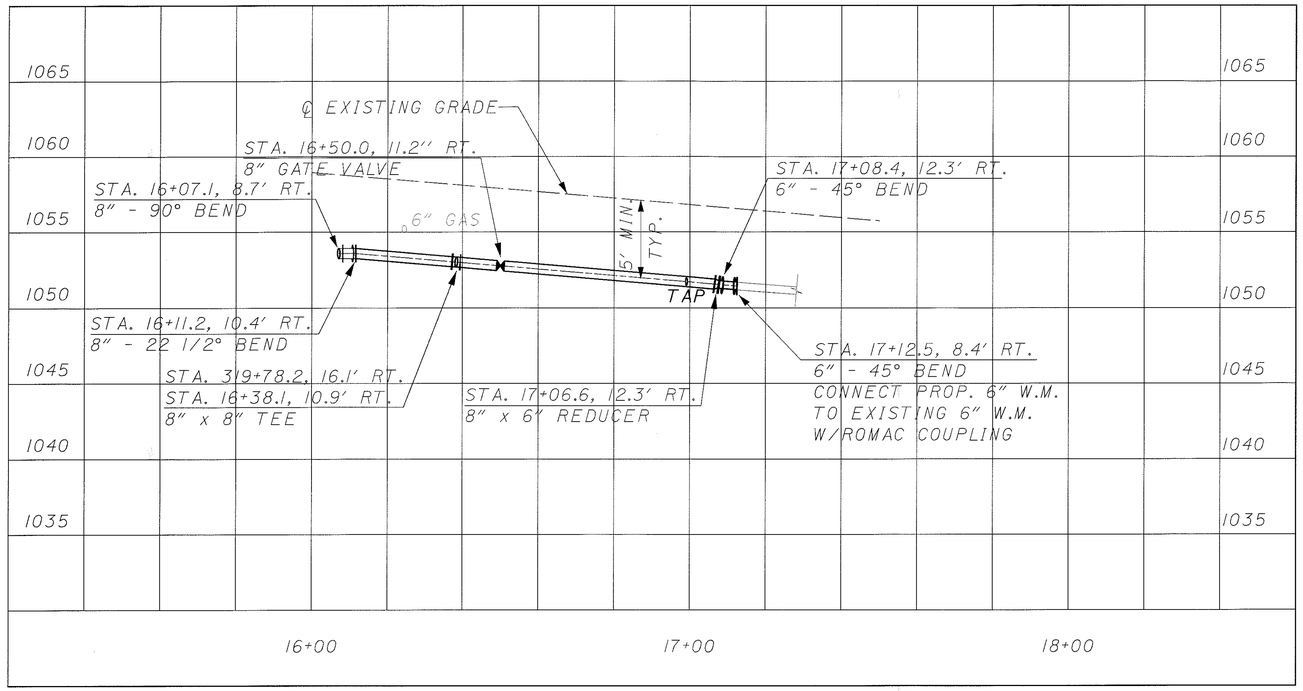

8" WATER MAIN, BUCHTEL AVE.
STA. 16+00 TO 18+00

FOR BUCHTEL AVENUE
PAY ITEMS, SEE SHEET 691.

HORIZONTAL SCALE IN FEET
0 10 20 40
CALCULATED JDS
CHECKED EDS

CARROLL ST.-PROFILE STA 15+00 TO STA 17+00
BUCHTEL AVE PROFILE STA. 16+00 TO STA. 18+00

SUM-8-0.63

703
1088

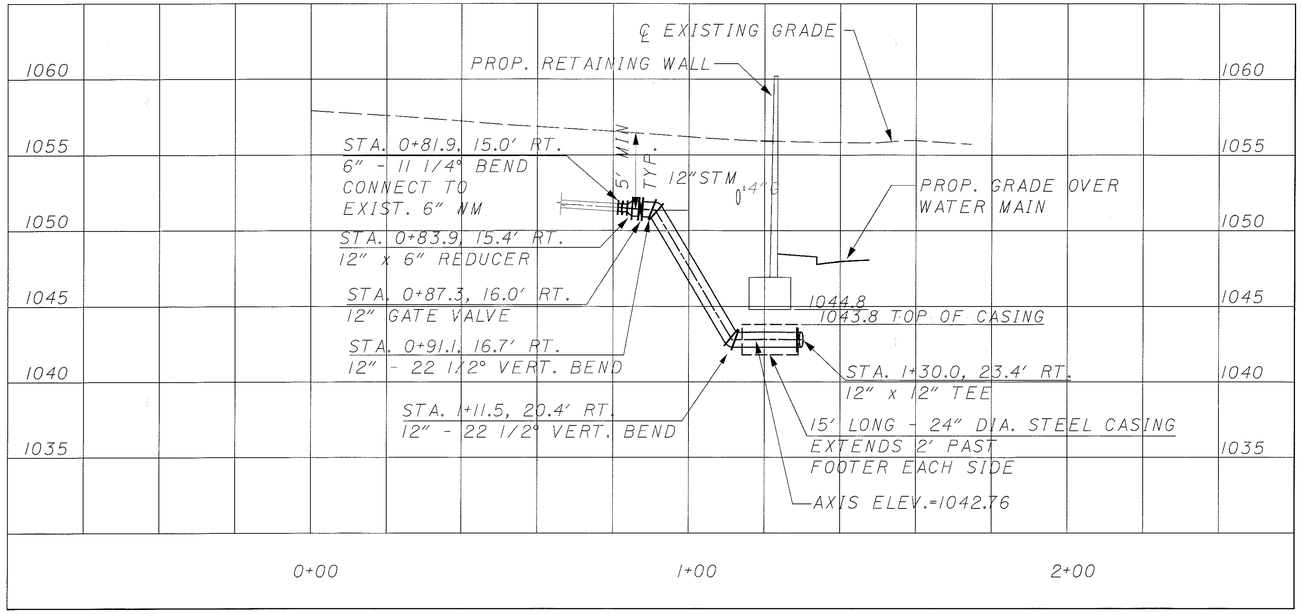

8" WATER MAIN, MELL AVE.
STA. 0+00 TO 2+00

FOR MELL AVENUE PAY
ITEMS, SEE SHEET 694.

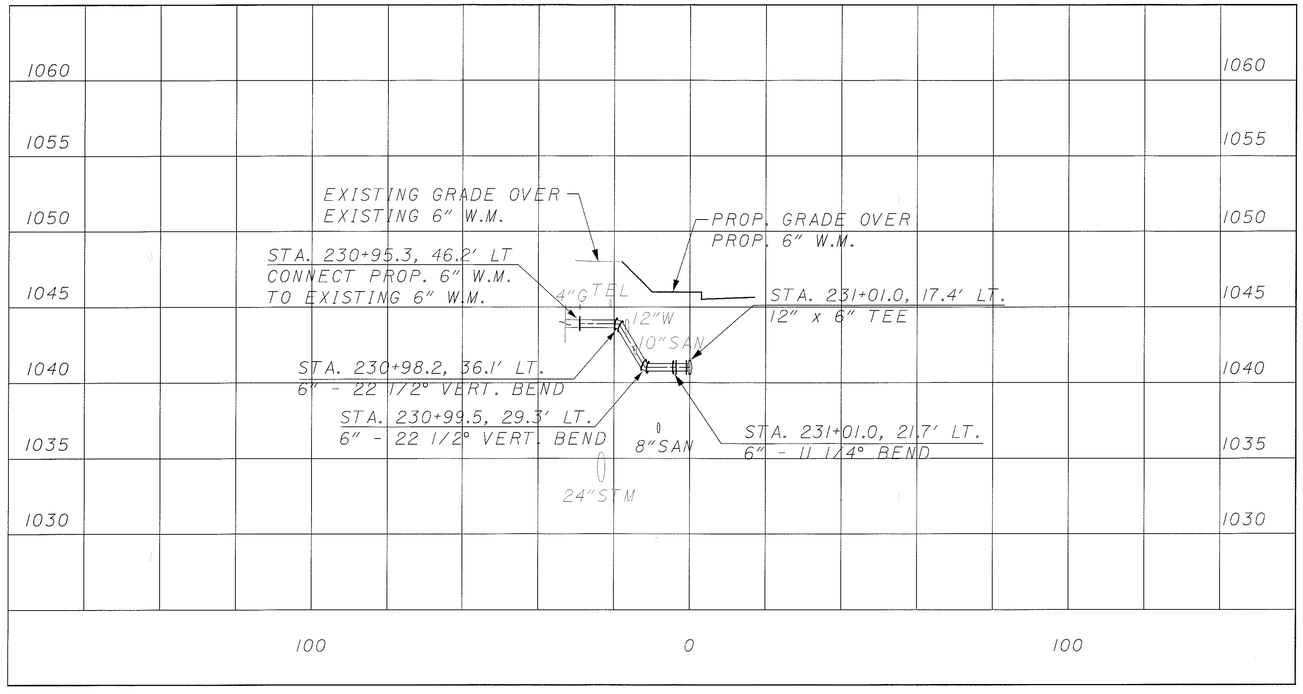

6" WATER MAIN, VALINDA PL.
STATIONING ALONG GOODKIRK ST.

FOR VALINDA PLACE
PAY ITEMS, SEE SHEET 695.

HORIZONTAL SCALE IN FEET
0 10 20 40

CALCULATED JDS
CHECKED EDS

MELL AVE. - PROFILE STA 0+00 TO STA 2+00
VALINDA PL. PROFILE STA 230+95 TO STA 231+01

SUM-8-0.63

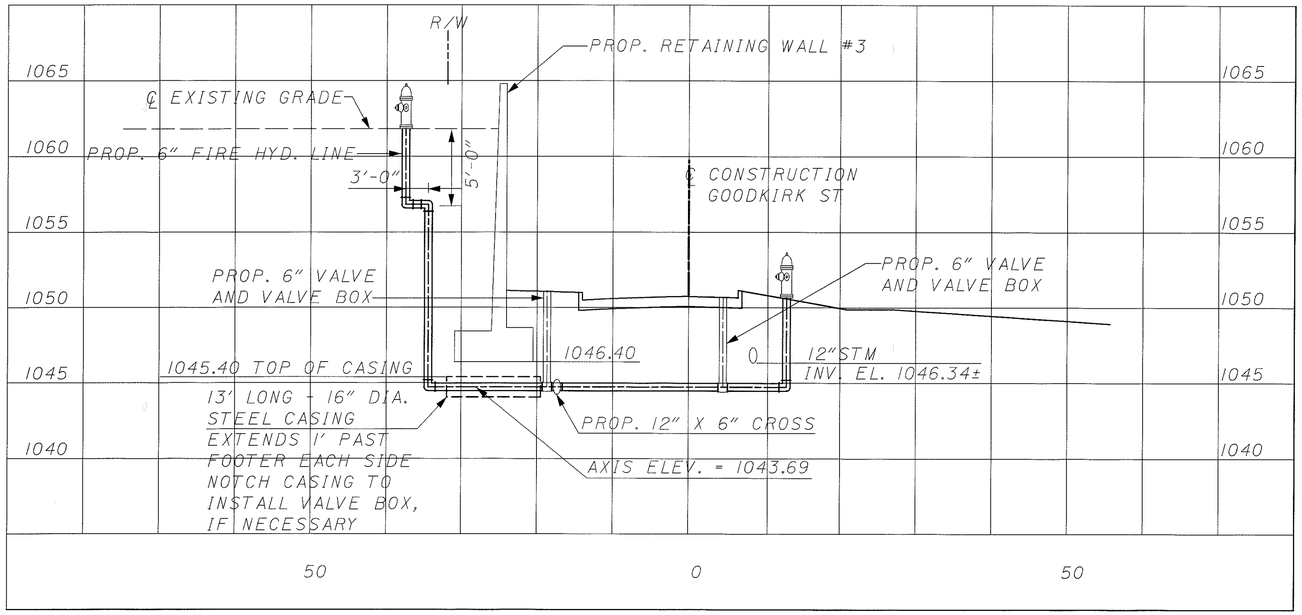

6" FIRE HYDRANT LINE
STA. 224+50

STATIONING ALONG GOODKIRK ST.

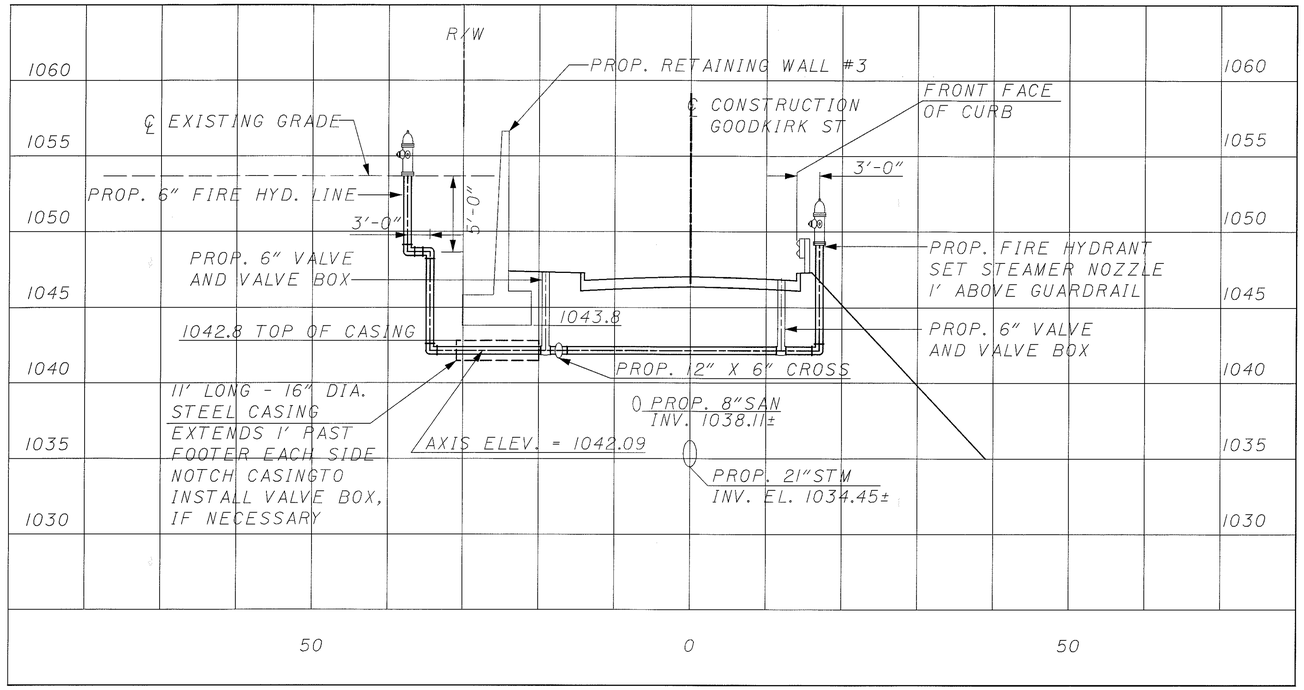

6" FIRE HYDRANT LINE
STA. 228+20

STATIONING ALONG GOODKIRK ST.

N

0 5 10 20
HORIZONTAL
SCALE IN FEET

CALCULATED RJG
CHECKED EDS

GOODKIRK STREET. - FIRE HYDRANT LINES

SUM-8-0.63

704A
1088

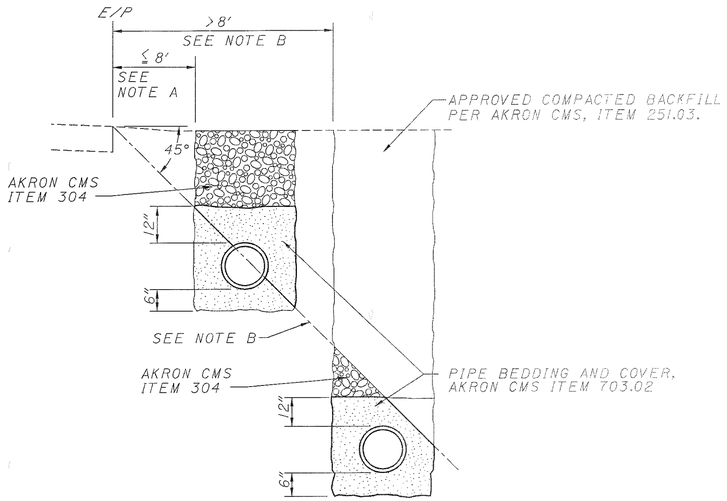

NOTES:

A BACKFILL REQUIREMENT FOR EXCAVATIONS BENEATH PAVEMENT OR WITHIN 8 FEET OF EDGE OF PAVEMENT = COMPACTED 304 LIMESTONE. (PREMIUM BACKFILL)

B BACKFILL REQUIREMENT FOR EXCAVATIONS GREATER THAN 8 FEET FROM EDGE OF PAVEMENT = 304 LIMESTONE BELOW A 45° ANGLE STARTING AT EDGE OF PAVEMENT.

C NO SLAG PIPE BEDDING, PIPE COVER OR BACKFILL WILL BE PERMITTED.

TYPICAL ROAD OPENING
BACKFILL AND RESTORATION REQUIREMENTS
N.T.S.

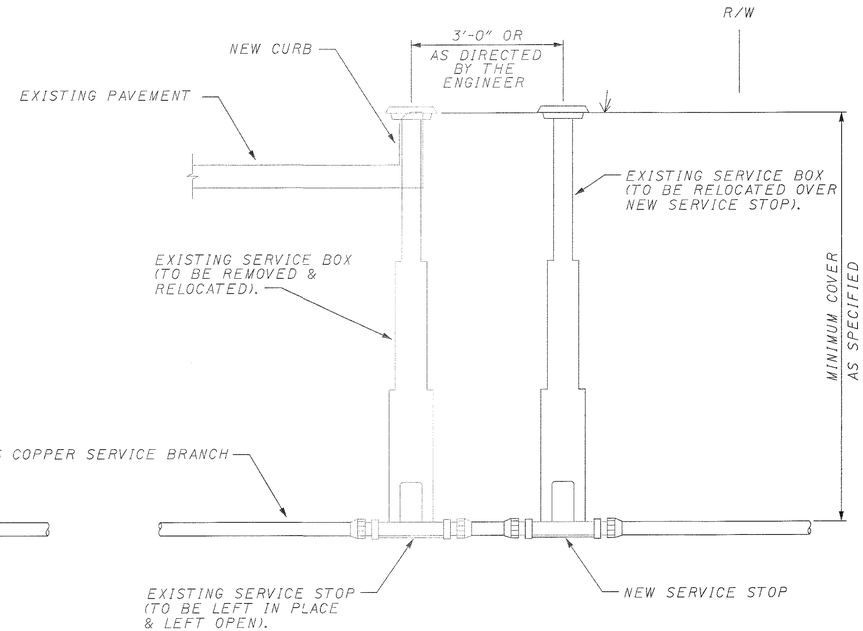

TYPICAL 2" OR LESS SERVICE CONNECTION
- NOT TO SCALE -

N

SCALE AS NOTED

CALCULATED JDS
CHECKED EDS

WATER MAIN IMPROVEMENTS
MISC. DETAILS

SUM-8-0.63

705
1088

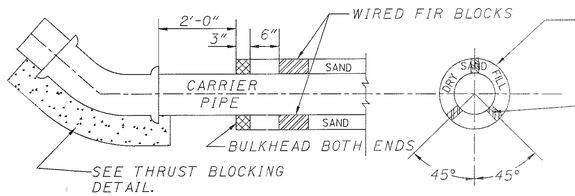

0.50" WALL STEEL CASING PIPE. 20" O.D. FOR 12" TEMP WATER MAIN AT MARKET ST.; 24" O.D. FOR 12" WATER MAIN AT MELL AVE.; 16" O.D. FOR 6" HYDRANT LINES

PRESSURE TREATED FIR BLOCKS SECURED WITH STAINLESS STEEL BANDS FOR LENGTH OF 12" DIA. CARRIER PIPE INSIDE STEEL SLEEVE.

NOTE: STEEL CASING SLEEVE SHALL BE INSTALLED TO PREVENT FORMATION OF A WATERWAY UNDER THE CHANNEL BED AND WITH AN EVEN BEARING THROUGHOUT ITS LENGTH AND SLOPE TO ONE END. THE CASING PIPE JOINTS ARE TO BE WELDED WATER TIGHT.

NOTES:

WATER MAIN TO BE CENTERED IN CASING PIPE AND DRY SAND TO BE BLOWN IN FROM BOTH WAYS

STEEL CASING PIPE, WOOD BLOCKS AND DRY SAND ARE TO BE INCLUDED IN UNIT PRICE BID

STEEL CASING DETAIL FOR WATER MAIN

N.T.S.

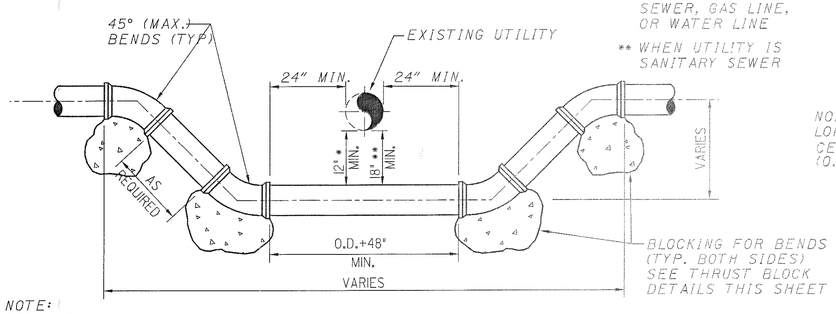

* WHEN UTILITY IS STORM SEWER, GAS LINE, OR WATER LINE

** WHEN UTILITY IS SANITARY SEWER

BLOCKING FOR BENDS (TYP. BOTH SIDES) SEE THRUST BLOCK DETAILS THIS SHEET

NOTE: CONTRACTOR SHALL INSTALL NECESSARY BENDS TO OFFSET ABOVE OR BELOW EXISTING UTILITIES WHERE REQUIRED.

OFFSET DETAIL

N.T.S.

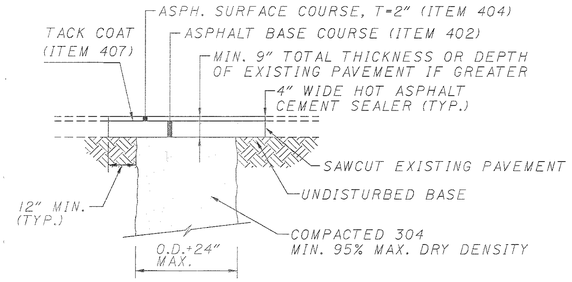

TYPICAL ASPHALT PAVEMENT REPLACEMENT

O.D.O.T. STDS. & SPECS. (N.T.S.)

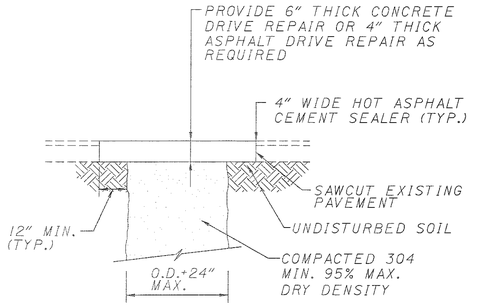

TYPICAL ASPHALT OR CONCRETE DRIVE REPAIR

N.T.S.

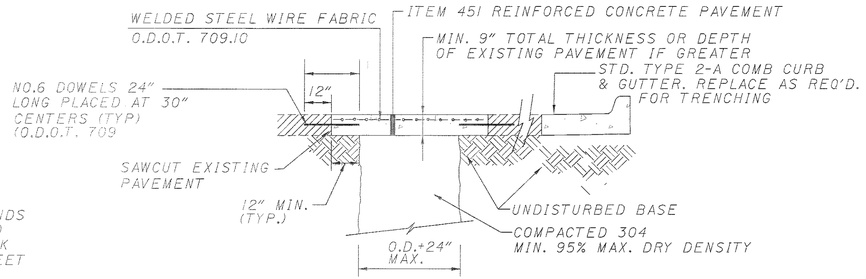

TYPICAL CONCRETE PAVEMENT REPLACEMENT

O.D.O.T. STDS. & SPECS. (N.T.S.)

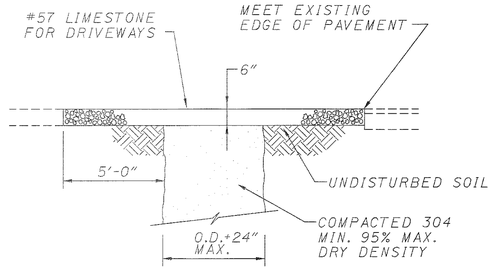

TYPICAL AGGREGATE OR FIELD DRIVE REPAIR

N.T.S.

"A" HORIZONTAL BENDS

	90°	45°	22 1/2°	TEE	PLUG
6"	17"	13"	9"	13"	14"
8"	23"	17"	12"	17"	19"
10"	28"	21"	15"	21"	24"
12"	34"	25"	18"	25"	29"
16"	45"	33"	24"	28"	38"

* 6" MINIMUM

MINIMUM VOLUME OF CONCRETE FOR TOP VERTICAL BENDS

6"	4 C.F.
8"	11 C.F.
10"	22 C.F.
12"	37 C.F.
16"	71 C.F.

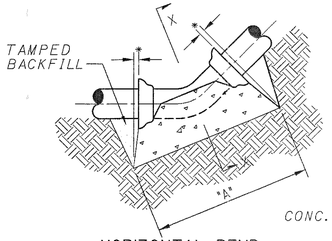

HORIZONTAL BEND VERTICAL BEND (UPWARD)

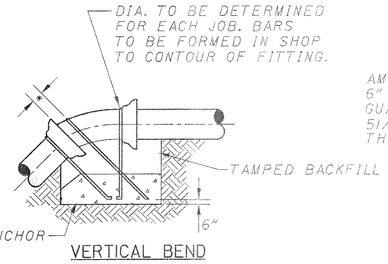

VERTICAL BEND (DOWNWARD)

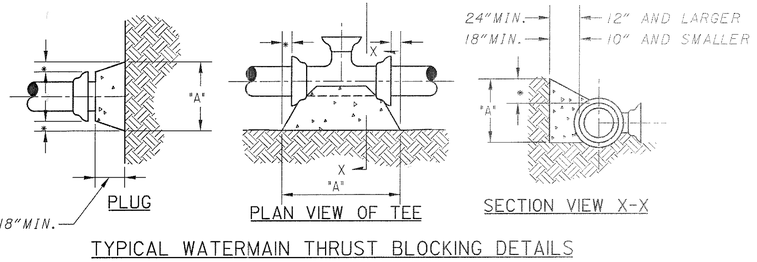

TYPICAL WATERMAIN THRUST BLOCKING DETAILS

N.T.S.

* ANY HYDRANT LOCATED WITHIN 10'-0" OF AN EXISTING SANITARY SEWER SHALL HAVE THE EXTERIOR WEEP HOLE THREADED AND FITTED WITH A 1/2 INCH COPPER DRAIN LINE. THE DRAIN LINE SHALL EXTEND TO A POINT A MINIMUM OF 10 FEET FROM THE SANITARY SEWER, WHERE THE LINE WILL DRAIN INTO A BED OF #57 WASHED GRAVEL. COST OF THIS WORK SHALL BE INCLUDED IN THE COST OF ITEM SPECIAL - FURNISHING AND SETTING 6" HYDRANT, COMPLETE.

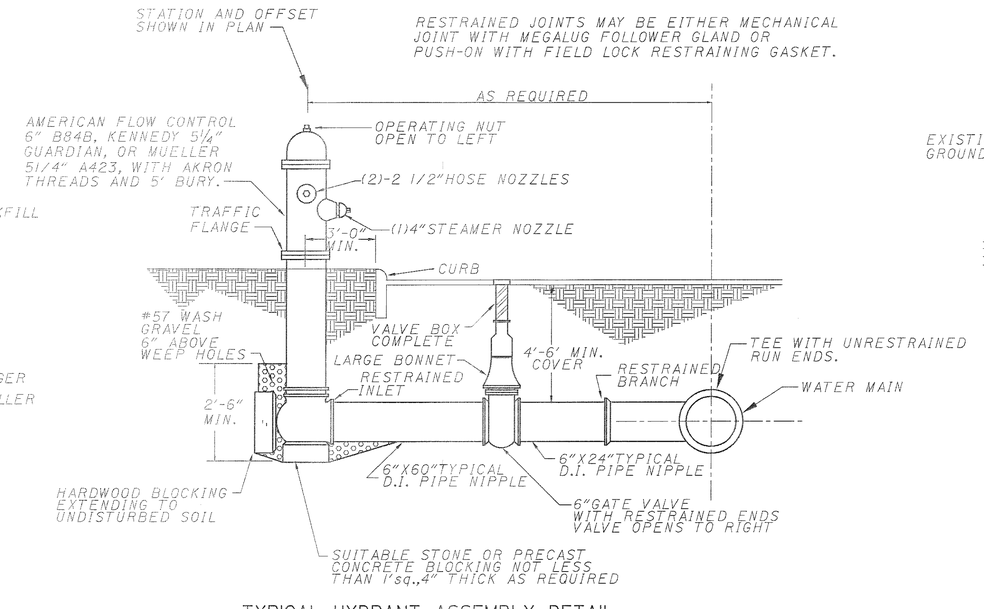

TYPICAL HYDRANT ASSEMBLY DETAIL

N.T.S.

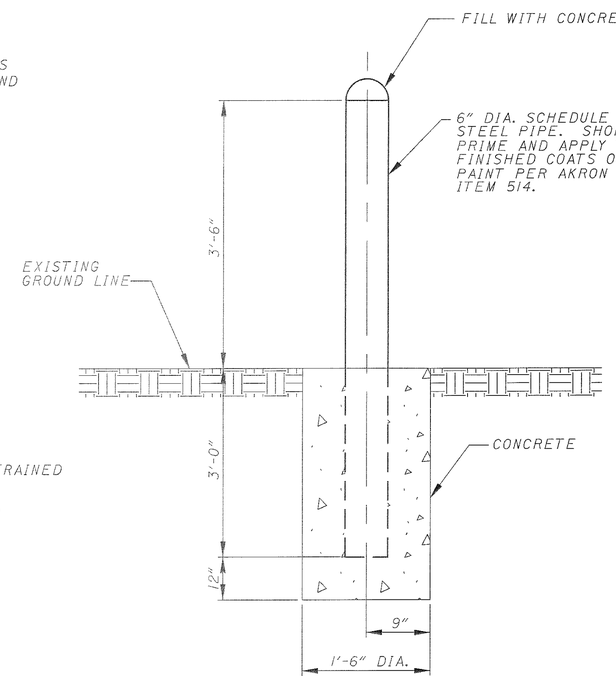

BOLLARD DETAIL

N.T.S.

(FOR HYDRANT AT FOUNTAIN ST., STA. 307+95.6)

N

SCALE AS NOTED

CALCULATED JDS CHECKED EDS

WATER MAIN IMPROVEMENTS MISC. DETAILS

SUM-8-0.63

706 1088

℄ BRG. REAR ABUT.
℄ BRG. PIER
℄ BRG. FWD. ABUT.
PIPE SUPPORT SPACING
9'-3"
2 SPA. @ 8'-0" c/c = 16'-0"
11 SPA. @ 9'-10" c/c = 108'-2"
2 SPA. @ 8'-0" c/c = 16'-0"
7'-7"
℄ FIELD SPLICE 1
℄ FIELD SPLICE 2
N
℄ SURVEY & CONSTRUCTION, MARKET STREET
PIPE SLEEVE THROUGH CONCRETE END DIAPHRAGM, SEE DETAIL ON THIS SHEET
16" WATER MAIN SUPPORT ASSEMBLY, SEE DETAIL SHEET __
24'-9"
PIPE INSULATION - SEE DETAIL SHEET __ CUT PIPE INSULATION AT PIPE SUPPORTS, COUPLINGS AND EXPANSION JOINT ASSEMBLIES SEE FIELD JOINT DETAIL, SHEET __
STEEL TO DUCTILE IRON PIPE CONNECTION, SEE DETAIL SHEET 708
℄ 16" WATER MAIN
PIPE SLEEVE THROUGH CONCRETE END DIAPHRAGM, SEE DETAIL ON THIS SHEET
STEEL TO DUCTILE IRON PIPE CONNECTION, SEE DETAIL SHEET 708
5'-11 11/16"
10'-10 5/16"
8"
1 PIPE LENGTH @ 22'-6"
5 PIPE LENGTHS @ 19'-8" = 98'-4"
1 PIPE LENGTH @ 22'-6"
8"
1 PIPE LENGTH @ 9'-0"
3'-5" EXPANSION JOINT ASSEMBLY
3'-5" EXPANSION JOINT ASSEMBLY
1 PIPE LENGTH @ 9'-0"
169'-6" - ITEM SPECIAL - 16" WATER MAIN STEEL PIPE ASTM A-53, GRADE B

WATER MAIN SUPPORT LOCATION AND PIPE LAYOUT

BRIDGE NO. SUM-8-0148
MARKET STREET OVER S.R. 8

PAY LIMIT FOR ITEM SPECIAL - 16" WATER MAIN STEEL PIPE ASTM A-53, GRADE B
STEEL TO DUCTILE IRON PIPE CONNECTION PIECE, SEE DETAIL SHEET 708
CONCRETE END DIAPHRAGM
4'-6"
3" *
3" *
JUTE PACKING
**
*PRECOMPRESSED FOAM JOINT SEALER, POLYTITE "N" BY POLYTITE MFG. CO., WILLSEAL BY ILLBRUCK SEALING SYSTEMS, INC., OR APPROVED EQUAL
STEEL WATER MAIN
PIPE INSULATION
25½" O.D. x ¼" THICK WALL SPLIT PIPE SLEEVE, 5'-0" LONG
1"
10⅝"
4'-0⅝"
**END OF PIPE INSULATION TO BE TREATED IN ACCORDANCE WITH THE MANUFACTURER'S SPECIFICATIONS
POURED INSULATION, MIN. 8" THICK ALL AROUND PIPE WHERE PIPE COVER IS LESS THAN 4'-0"
POLYURETHANE FOAM INSULATION WITH FIBERGLASS JACKET AND FIELD CLOSED JOINTS

PIPE SLEEVE DETAIL AT END DIAPHRAGM

PIPE LENGTH AS SHOWN IN PIPE LAYOUT PLAN
2½" (TYP.)
16"-0.375" WALL ASTM A53 GRADE B STEEL PIPE
5/16 TYP.
BELLED END (TYP.)

TYPICAL PIPE CONNECTION DETAIL

PIPE INSULATION NOT SHOWN

3'-5"
INSTALL 5" CLEAR OF STOP
5/16 TYP.
DRESSER STYLE #63 TYPE 1 EXPANSION JOINT WITH 10" TRAVERSE AND ½" SLIP

EXPANSION JOINT DETAIL

PIPE INSULATION NOT SHOWN

CALCULATED PAT
CHECKED JWB

WATERWORK DETAILS

SUM-8-0.63

707
1088

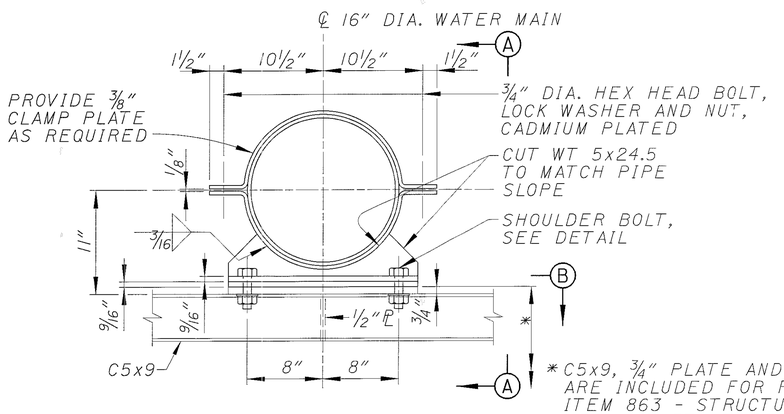

TYPICAL SECTION

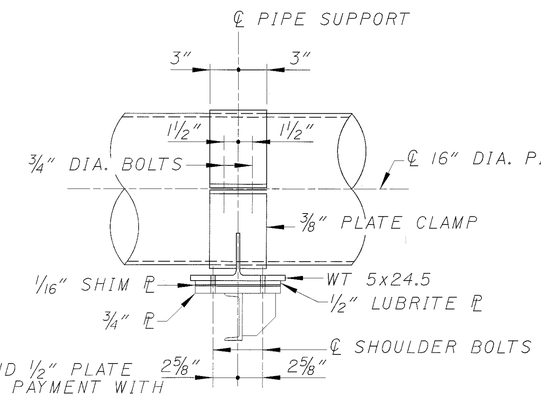

SECTION A-A

* C5x9, ¾" PLATE AND ½" PLATE ARE INCLUDED FOR PAYMENT WITH ITEM 863 - STRUCTURAL STEEL. SEE MARKET STREET STRUCTURE PLANS, SHEET 971 FOR UTILITY SUPPORT DETAILS NOT SHOWN.

WATER MAIN PIPE SUPPORT ASSEMBLY DETAILS

PIPE INSULATION NOT SHOWN - SEE DETAILS THIS SHEET

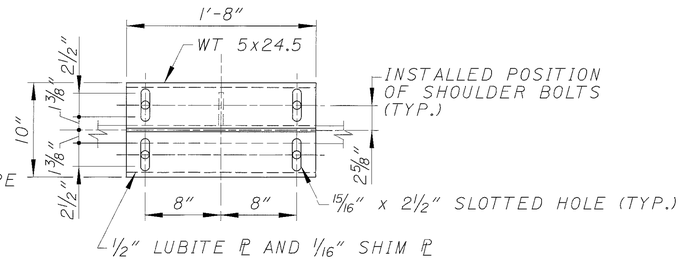

SECTION B-B

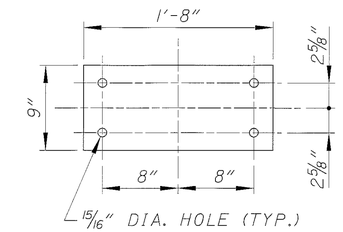

½" LUBRITE PLATE AND 1/16" STEEL SHIM PLATE

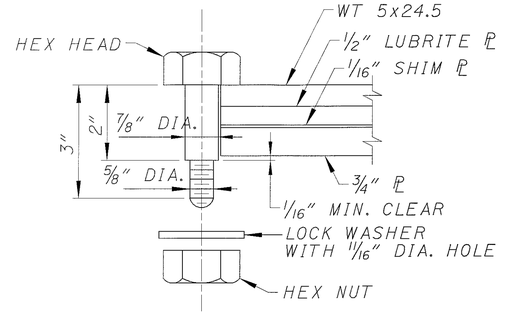

SHOULDER BOLT DETAIL

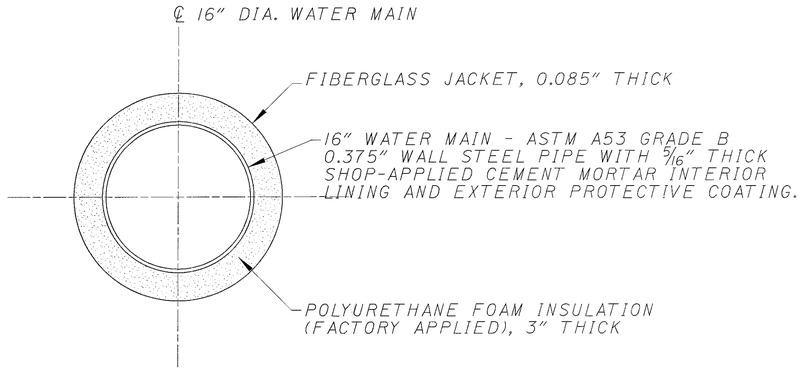

16" PIPE INSULATION DETAIL

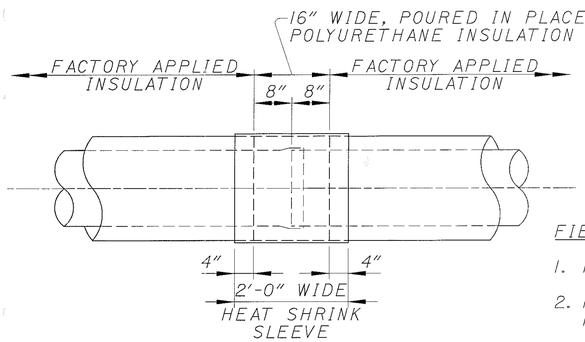

FIELD JOINT DETAIL

PIPE JOINT SHOWN, DETAIL AT PIPE SUPPORT AND EXPANSION JOINT SIMILAR EXCEPT DIMENSIONS SHOWN SHALL BE ADJUSTED FOR EXPANSION JOINT ASSEMBLY

FIELD JOINT SEQUENCE

1. MAKE PIPE SLIP JOINT, WELD, AND TEST.
2. POUR IN PLACE POLYURETHANE INSULATION USING MOLDS OR FORMS SUPPLIED BY MANUFACTURER
3. APPLY HEAT-SHRINK SLEEVE.

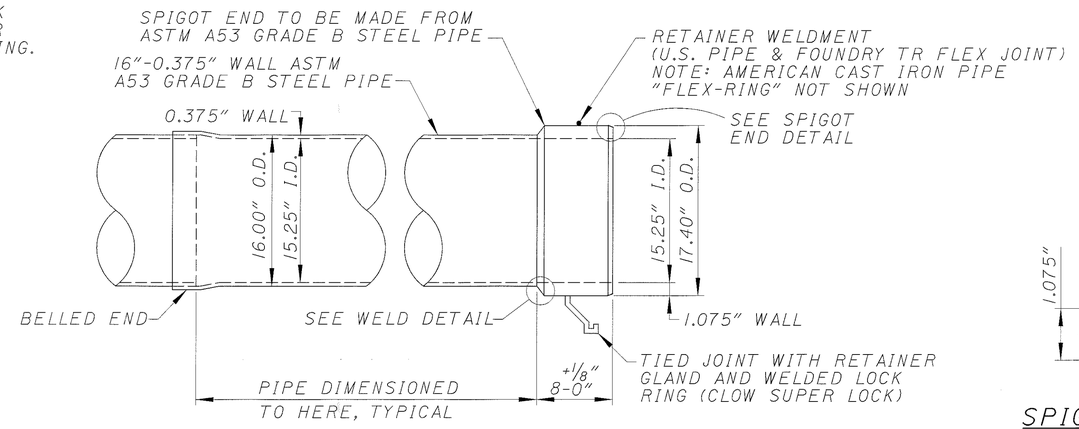

NOTE: CONNECTION PIECE SHALL BE DESIGNED TO BE COMPATIBLE WITH THE APPROVED DUCTILE IRON PIPE RESTRAINED JOINT SYSTEM.

STEEL TO DUCTILE IRON PIPE CONNECTION DETAIL

PIPE INSULATION NOT SHOWN

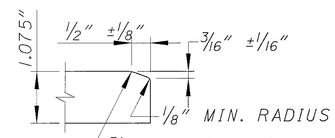

SPIGOT END DETAIL

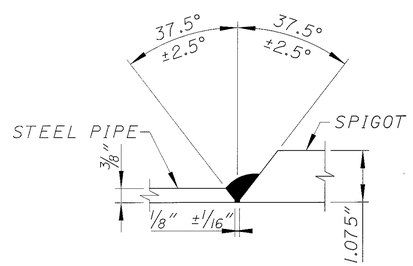

WELDING DETAIL

CALCULATED PAT
CHECKED JWB

WATER MAIN IMPROVEMENTS
MISC. DETAILS

SUM-8-0.63

708
1088

SHEET NUMBER								PARTICIPATION		ITEM	ITEM EXT.	GRAND TOTAL	UNIT	DESCRIPTION	SEE SHEET NO.
711B	715A	752	753	754	755	756	756A	PROJECT	100% LOCAL						
														SIGNING AND PAVEMENT MARKING	
	780							780		621	00100	780	EACH	RAISED PAVEMENT MARKER	
							2	2		625	01500	2	EACH	CABLE SPLICING KIT	
					15		1	16		625	32000	16	EACH	GROUND ROD	
		1946						1946		630	03100	1946	LIN. FT.	GROUND MOUNTED SUPPORT, NO. 3 POST	
		410						410		630	04100	410	LIN. FT.	GROUND MOUNTED SUPPORT, NO. 4 POST	
		117						117		630	06100	117	LIN. FT.	GROUND MOUNTED SUPPORT, NO. 6 POST	
		237						237		630	06400	237	LIN. FT.	GROUND MOUNTED SUPPORT, S4X7.7 BEAM	
		36						36		630	07000	36	LIN. FT.	GROUND MOUNTED SUPPORT, W8x18 BEAM	
		134						134		630	07600	134	LIN. FT.	GROUND MOUNTED SUPPORT, W10X12 BEAM	
		437						437		630	08004	437	LIN. FT.	ONE WAY SUPPORT, NO. 3 POST	
		8						8		630	08500	8	EACH	STREET NAME SIGN SUPPORT	
		32						32		630	09000	32	EACH	BREAKAWAY BEAM CONNECTION	
		1						1		630	20200	1	EACH	OVERHEAD SIGN SUPPORT, TYPE TC-12.30, DESIGN 2, 20' ARM	
														WITH LIGHT POLE EXTENSION	
		1						1		630	20400	1	EACH	OVERHEAD SIGN SUPPORT, TYPE TC-12.30, DESIGN 4, 16' ARM	
			2					2		630	20800	2	EACH	OVERHEAD SIGN SUPPORT, TYPE TC-12.30, DESIGN 8, 28' ARM	
			2					2		630	21000	2	EACH	OVERHEAD SIGN SUPPORT, TYPE TC-12.30, DESIGN 10, 30' ARM	
			1					1		630	35500	1	EACH	OVERHEAD SIGN SUPPORT, TYPE TC-7.65, DESIGN 6, SPAN 54'	
			3					3		630	35500	3	EACH	OVERHEAD SIGN SUPPORT, TYPE TC-7.65, DESIGN 6, SPAN 72'	
							1	1		630	35501	1	EACH	OVERHEAD SIGN SUPPORT, TYPE TC-7.65, DESIGN 6, AS PER PLAN	783A
			1					1		630	45500	1	EACH	OVERHEAD SIGN SUPPORT, TYPE TC-7.65, DESIGN 8, SPAN 80'	
			13					13		630	75000	13	EACH	SIGN ATTACHMENT ASSEMBLY	
			1					1		630	77000	1	EACH	OVERPASS STRUCTURE MOUNTED SIGN SUPPORT, TYPE TC-18.24	
			1					1		630	77300	1	EACH	OVERPASS STRUCTURE MOUNTED SIGN SUPPORT, TYPE TC-18.26, DESIGN 3	
			1					1		630	77600	1	EACH	OVERPASS STRUCTURE MOUNTED SIGN SUPPORT, TYPE TC-18.26, DESIGN 6	
12			32					44		630	79500	44	EACH	SIGN SUPPORT ASSEMBLY, POLE MOUNTED	
			10					10		630	79601	10	EACH	SIGN SUPPORT ASSEMBLY, BRIDGE MOUNTED, AS PER PLAN	788
			1596					1596		630	80102	1596	SQ. FT.	SIGN, FLATSHEET, TYPE G	
				2954				2954		630	80200	2954	SQ. FT.	SIGN, EXTRUSHEET	
							175.5	175.5		630	80204	175.5	SQ. FT.	SIGN EXTRUSHEET TYPE G	
			17					17		630	80506		EACH	SIGN DOUBLE FACED, STREET NAME, TYPE G	
14								14		630	81000	14	EACH	MAINLINE REFERENCE MARKER	
8								8		630	81010	8	EACH	RAMP REFERENCE MARKER	
4								4		630	81020	4	EACH	CONCRETE MEDIAN BARRIER SIGN BRACKET	
				30				30		630	84500	30	EACH	GROUND MOUNTED BEAM SUPPORT FOUNDATION	
				11			2	13		630	84510	13	EACH	RIGID OVERHEAD SIGN SUPPORT FOUNDATION	
				222				222		630	84900	222	EACH	REMOVAL OF GROUND MOUNTED SIGN AND DISPOSAL	
				21				21		630	85100	21	EACH	REMOVAL OF GROUND MOUNTED SIGN AND REERECTION	
				5				5		630	85400	5	EACH	REMOVAL OF GROUND MOUNTED MAJOR SIGN AND DISPOSAL	
				158				158		630	86002	158	EACH	REMOVAL OF GROUND MOUNTED POST SUPPORT AND DISPOSAL	
				14				14		630	86102	14	EACH	REMOVAL OF GROUND MOUNTED BEAM SUPPORT AND DISPOSAL	
				2				2		630	86310	2	EACH	REMOVAL OF STRUCTURE MOUNTED SIGN AND DISPOSAL	
				2				2		630	87100	2	EACH	REMOVAL OF OVERHEAD MOUNTED SIGN AND REERECTION	
				25			2	27		630	87400	27	EACH	REMOVAL OF OVERHEAD MOUNTED SIGN AND DISPOSAL	
				20				20		630	87500	20	EACH	REMOVAL OF POLE MOUNTED SIGN AND DISPOSAL	
				9			1	10		630	89702	10	EACH	REMOVAL OF OVERHEAD SIGN SUPPORT AND DISPOSAL	
					3			3		631	70000	3	EACH	BALLAST WIRING ENCLOSURE, TYPE A	
					3			3		631	71000	3	EACH	BALLAST WIRING ENCLOSURE MOUNTING BRACKET	
					9		1	10		631	84000	10	EACH	SIGN SERVICE	
					6			6		631	84001	6	EACH	SIGN SERVICE, AS PER PLAN	788
					16		2	18		631	84300	18	EACH	SIGN WIRED	
					12			12		631	84301	12	EACH	SIGN WIRED, AS PER PLAN	788

CALCULATED BF
CHECKED GLP

TRAFFIC CONTROL GENERAL SUMMARY

SUM-8-0.63

02:28:35 PM
07/29/2002
U:\00-0103R-8\N\Civil\S&Pm\general summary\GENERAL SUMMARY.dgn

SHEET NUMBER								PARTICIPATION		ITEM	ITEM EXT.	GRAND TOTAL	UNIT	DESCRIPTION	SEE SHEET NO.
715	715A	752	753	754	755	756	756A	PROJECT	100% LOCAL						
														SIGNING AND PAVEMENT MARKING (CONT.)	
					3			3		631	84400	3	EACH	SIGN WIRED, OVERPASS STRUCTURE MOUNTED	
					15		1	16		631	85100	16	EACH	DISCONNECT SWITCH WITH ENCLOSURE, TYPE X	
					3			3		631	85500	3	EACH	SWITCH ENCLOSURE MOUNTING BRACKET ASSEMBLY	
					8			8		631	87102	8	EACH	BALLAST, TYPE CMRI 100-480, INTEGRAL	
					5			5		631	87200	5	EACH	BALLAST, TYPE CMRI 175-480, REMOTE	
					27		3	30		631	87202	30	EACH	BALLAST, TYPE CMRI 175-480, INTEGRAL	
					4			4		631	87302	4	EACH	BALLAST, TYPE CMRI 250-480, INTEGRAL	
						8		8		631	89100	8	EACH	MERCURY VAPOR LUMINAIRE, TYPE TC-31.21 WITH 100 WATT LAMP	
						30	3	33		631	89200	33	EACH	MERCURY VAPOR LUMINAIRE, TYPE TC-31.21 WITH 175 WATT LAMP	
						4		4		631	89300	4	EACH	MERCURY VAPOR LUMINAIRE, TYPE TC-31.21 WITH 250 WATT LAMP	
						24	4	28		631	94200	28	EACH	REMOVAL OF LUMINAIRE AND DISPOSAL	
							1	1		631	94304	1	EACH	REMOVAL OF DISCONNECT SWITCH AND DISPOSAL	
						24	4	28		631	94404	28	EACH	REMOVAL OF BALLAST AND DISPOSAL	
						12		12		631	94406	12	EACH	REMOVAL OF SIGNS WIRED	
							2	2		631	94408	2	EACH	REMOVAL OF SIGN WIRING AND DISPOSAL	
						6	1	7		631	94412	7	EACH	REMOVAL OF SIGN SERVICE AND DISPOSAL	
6.31								6.31		642	00102	6.31	MILE	EDGE LINE, TYPE 2	
7.48								7.48		642	00202	7.48	MILE	LANE LINE, TYPE 2	
0.54								0.54		642	00302	0.54	MILE	CENTER LINE, TYPE 2	
9696								9696		642	00402	9696	LIN. FT.	CHANNELIZING LINE, TYPE 2	
1277								1277		642	00502	1277	LIN. FT.	STOP LINE, TYPE 2	
3648								3648		642	00602	3648	LIN. FT.	CROSSWALK LINE, TYPE 2	
3611								3611		642	00702	3611	LIN. FT.	TRANSVERSE LINE, TYPE 2	
115								115		642	00902	115	SQ. FT.	ISLAND MARKING, TYPE 2	
53								53		642	01302	53	EACH	LANE ARROW, TYPE 2	
20								20		642	01402	20	EACH	WORD ON PAVEMENT, 72", TYPE 2	
1100								1100		642	01502	1100	LIN. FT.	DOTTED LINE, 4", TYPE 2	
794	795	796	797	798	799			PROJECT	100% LOCAL						
														SIGNALIZATION	
2								2		625	01500	2	EACH	CABLE SPLICING KIT	
			24						24	625	25303	24	LIN. FT.	CONDUIT, 1½", 713.07, AS PER PLAN	790
473			234					473	234	625	25402	707	LIN. FT.	CONDUIT, 2", 713.07	
320								320		625	25501	320	LIN. FT.	CONDUIT, 3", 713.04, AS PER PLAN	790
10269			795					10269	795	625	25502	11064	LIN. FT.	CONDUIT, 3", 713.07	
3522			828					3522	828	625	25802	4350	LIN. FT.	CONDUIT, CONCRETE ENCASED, 3"	
11952			1514					11952	1514	625	29002	13466	LIN. FT.	TRENCH, 24" DEEP	
437			61					437	61	625	29500	498	LIN. FT.	TRENCH IN PAVED AREA, TYPE A	
236			160					236	160	625	29600	396	LIN. FT.	TRENCH IN PAVED AREA, TYPE B	
10			10					10	10	625	30701	20	EACH	PULL BOX, 713.08, 18", AS PER PLAN	789
97			18					97	18	625	30707	115	EACH	PULL BOX, 713.08, 24", AS PER PLAN	789
12			1					12	1	625	31600	13	EACH	PULL BOX, MISC: 713.08, 24"x36"x36", AS PER PLAN	790
151			45					151	45	625	32000	196	EACH	GROUND ROD	
8			3					8	3	625	32001	11	EACH	GROUND ROD, AS PER PLAN	790
12575			1705					12575	1705	SPECIAL	62536000	14280	LIN. FT.	PLASTIC CAUTION TAPE	
23			13					23	13	630	79100	36	EACH	SIGN HANGER ASSEMBLY, MAST ARM	
174			82					174	82	630	80102	256	SQ. FT.	SIGN, FLAT SHEET, TYPE G	
43			18					43	18	632	00302	61	EACH	VEHICULAR SIGNAL HEAD, 3 SECTION, 12" LENS, 1-WAY, POLYCARBONATE	
	2		1					2	1	632	00402	3	EACH	VEHICULAR SIGNAL HEAD, 4 SECTION, 12" LENS, 1-WAY, POLYCARBONATE	
	6			1				6	1	632	00502	7	EACH	VEHICULAR SIGNAL HEAD, 5 SECTION, 12" LENS, 1-WAY, POLYCARBONATE	

CALCULATED CRP
CHECKED BF

TRAFFIC CONTROL GENERAL SUMMARY

SUM-8-0.63

SHEET NUMBER								PARTICIPATION		ITEM	ITEM EXT.	GRAND TOTAL	UNIT	DESCRIPTION	SEE SHEET NO.
794	795	796	797	798	799			PROJECT	100% LOCAL						
														SIGNALIZATION (CONT.)	
	42			20				42	20	632	20601	62	EACH	PEDESTRIAN SIGNAL HEAD, TYPE D2, AS PER PLAN	791
	51			20				51	20	632	25000	71	EACH	COVERING OF VEHICULAR SIGNAL HEAD	
	42			20				42	20	632	25010	62	EACH	COVERING OF PEDESTRIAN SIGNAL HEAD	
	42			20				42	20	632	26000	62	EACH	PEDESTRIAN PUSHBUTTON	
	43			43				43	43	632	26500	86	EACH	DETECTOR LOOP	
	43			43				43	43	632	27008	86	EACH	LOOP DETECTOR UNIT, DELAY AND EXTENSION TYPE	
	12485			6047				12485	6047	632	40700	18532	LIN. FT.	SIGNAL CABLE, 7 CONDUCTOR, NO. 14 AWG	
	994							994		632	62810	994	LIN. FT.	INTERCONNECT CABLE, MISC.: 12 CONDUCTOR, NO. 14 AWG	
				1108					1108	632	62810	1108	LIN. FT.	INTERCONNECT CABLE, MISC.: DROP CABLE, 6 FIBER-6 SM, AS PER PLAN	793D
				13723					13723	632	62810	13723	LIN. FT.	INTERCONNECT CABLE, MISC.: FIBER OPTIC TRUNK CABLE, 48 FIBER--48 SM, AS PER PLAN	793C
				12					12	632	62820	12	EACH	INTERCONNECT MISC.: SPLICE ENCLOSURE (UNDER GRADE & AERIAL), APP	793E
				48					48	632	62820	48	EACH	INTERCONNECT MISC.: OPTICAL SPLICING, AS PER PLAN	793E
				12					12	632	62820	12	EACH	INTERCONNECT MISC.: FIBER OPTIC MODEM, SM, AS PER PLAN	793E
				12					12	632	62820	12	EACH	INTERCONNECT MISC.: FIBER OPTIC DROP KIT, AS PER PLAN	793E
				12					12	632	62820	12	EACH	INTERCONNECT MISC.: FIBER OPTIC FAN-OUT KIT, 6 FIBER, APP	793E
				48					48	632	62820	48	EACH	INTERCONNECT MISC.: FIBER OPTIC SPLICE EQUIPMENT, FIBER OPTIC CONNECTOR, SM, APP	793E
				12					12	632	62820	12	EACH	INTERCONNECT MISC.: SPLICE TRAY, AS PER PLAN	793F
					12				12	632	62820	12	EACH	INTERCONNECT MISC.: WALL MOUNT INTERCONNECT CENTER, APP	793F
					LUMP				LUMP	632	62830	LUMP	LUMP	INTERCONNECT MISC.: FIBER OPTIC CABLE TESTING, OTDR, APP	793F
	20				9			20	9	632	64010	29	EACH	SIGNAL SUPPORT FOUNDATION	
	14				10			14	10	632	64020	24	EACH	PEDESTAL FOUNDATION	
	12014				13769			12014	13769	632	65200	25783	LIN. FT.	LOOP DETECTOR LEAD-IN CABLE	
	416				200			416	200	632	68200	616	LIN. FT.	POWER CABLE, 2 CONDUCTOR, NO. 6 AWG	
	8				3			8	3	632	70001	11	EACH	POWER SERVICE, AS PER PLAN	790
					1				1	632	70300	1	EACH	CONDUIT RISER, 1½" DIAMETER	
	2							2		632	70600	2	EACH	CONDUIT RISER, 3" DIAMETER	
	1				1			1	1	632	77050	2	EACH	COMBINATION SIGNAL SUPPORT, TYPE TC-81.20 DESIGN 4 POLE, WITH MAST ARMS TC-81.20 DESIGN 3 AND DESIGN 3	
		1						1		632	77110	1	EACH	COMBINATION SIGNAL SUPPORT, TYPE TC-81.20 DESIGN 12 POLE, WITH MAST ARMS TC-81.20 DESIGN 11 AND DESIGN 3	
		1						1		632	77190	1	EACH	COMBINATION SIGNAL SUPPORT, TYPE TC-12.30 DESIGN 6 POLE, WITH MAST ARMS TC-81.20 DESIGN 12 AND DESIGN 11	
		5			4			5	4	632	80300	9	EACH	SIGNAL SUPPORT, TYPE TC-81.20 DESIGN 3	
		1						1		632	80500	1	EACH	SIGNAL SUPPORT, TYPE TC-81.20 DESIGN 11	
		5			2			5	2	632	81300	7	EACH	COMBINATION SIGNAL SUPPORT, TYPE TC-81.20 DESIGN 3	
		2						2		632	81500	2	EACH	COMBINATION SIGNAL SUPPORT, TYPE TC-81.20 DESIGN 11	
					1				1	632	81600	1	EACH	COMBINATION SIGNAL SUPPORT, TYPE TC-81.20 DESIGN 12	
		1			1			1	1	632	81700	2	EACH	COMBINATION SIGNAL SUPPORT, MISC.: TYPE TC-12.30, DESIGN 1 AND SIGN SUPPORT, TYPE TC-12.30, DESIGN 1	
		1						1		632	81700	1	EACH	COMBINATION SIGNAL SUPPORT, MISC.: TYPE TC-12.30, DESIGN 2 AND SIGN SUPPORT, TYPE TC-12.30, DESIGN 2 AND SIGNAL SUPPORT, TYPE TC-81.20, DESIGN 11	
		1						1		632	81700	1	EACH	COMBINATION SIGNAL SUPPORT, MISC.: TYPE TC-12.30, DESIGN 2 AND SIGN SUPPORT, TYPE TC-12.30, DESIGN 2 WITH LIGHT POLE EXTENSION	
		2						2		632	81700	2	EACH	COMBINATION SIGNAL SUPPORT, MISC.: TYPE TC-12.30, DESIGN 6 AND SIGN SUPPORT, TYPE TC-12.30, DESIGN 6 AND SIGNAL SUPPORT, TYPE TC-81.20, DESIGN 11 WITH LIGHT POLE EXTENSION	
		14			10			14	10	632	89600	24	EACH	PEDESTAL, 8'	
		8			3			8	3	632	90101	11	EACH	REMOVAL OF TRAFFIC SIGNAL INSTALLATION, AS PER PLAN	790
		1			3			1	3	632	90400	4	EACH	SIGNALIZATION, MISC: MICROWAVE DETECTOR UNIT	

CALCULATED CRP
CHECKED HJC

TRAFFIC CONTROL GENERAL SUMMARY

SUM-8-0.63

SHEET NUMBER								PARTICIPATION		ITEM	ITEM EXT.	GRAND TOTAL	UNIT	DESCRIPTION	SEE SHEET NO.
794	795	796	797	798	799			PROJECT	100% LOCAL						
														SIGNALIZATION (CONT.)	
		8			3			8	3	633	38000	11	EACH	CONTROLLER, ACTUATED, 8 PHASE, SOLID STATE DIGITAL MICROPROCESSOR	
					1				1	633	39001	1	EACH	CONTROLLER, MASTER, TRAFFIC RESPONSIVE, AS PER PLAN	
		9.2			4.2			9.2	4.2	633	70001	13.4	CU. YD.	CONCRETE FOR CABINET FOUNDATION, AS PER PLAN	828
		50			15			50	15	633	70500	65	SQ. FT.	CONTROLLER WORK PAD	
														ALTERNATE BID	
		8			3			8	3	633	99000	11	EACH	CONTROLLER ITEM, MISC.: ECONOLITE CONTROLLER	793

CALCULATED CRP
CHECKED HJC

TRAFFIC CONTROL GENERAL SUMMARY

SUM-8-0.63

711A
1088

REFERENCE MARKER SUBSUMMARY

CALCULATED DM
CHECKED MCR

SHEET NO.	REFERENCE NO.	LOCATION	STATION	SIDE	TYPE OF INSTALLATION	630 MAINLINE REFERENCE MARKER EA	630 RAMP REFERENCE MARKER EA	630 CONCRETE MEDIAN BARRIER SIGN BRACKET EA	630 SIGN SUPPORT ASSEMBLY, POLE MOUNTED EA
757		SR 8	31+41	LT	DUAL	1			1
757			31+41	RT	DUAL	1			1
758			41+88	LT&RT	BACK TO BACK	2		1	
759			52+54	LT&RT	BACK TO BACK	2			1
759			53+05	LT	RAMP		1		1
759			53+95	RT	RAMP		1		1
760			63+00	LT&RT	BACK TO BACK	2		1	
761			72+25	LT	RAMP		1		1
761			72+50	RT	RAMP		1		1
761			73+46	RT&LT	BACK TO BACK	2			1
762			83+72	RT	DUAL	1		1	
762			84+56	LT	DUAL	1		1	
762			86+39	LT	RAMP		1		1
762			86+39	RT	RAMP		1		1
763			95+00	RT	RAMP		1		1
763			95+24	LT&RT	BACK TO BACK	2			1
763			95+40	LT	RAMP		1		1
					TOTALS CARRIED TO SHEET 709	14	8	4	12

SUM-8-0.63

711B
1088

02:28:40 PM
07/29/2002
U:\00-010SR-8\N\Civil\S&P\m\Sr 8\summary.dgn

SHEET NO.	REFERENCE NO.	LOCATION	STATION FROM	STATION TO	SIDE	642 EDGELINE, TYPE 2 (WHITE) LIN.FT.	642 EDGELINE, TYPE 2 (YELLOW) LIN.FT.	642 LANELINE, TYPE 2 LIN.FT.	642 CENTERLINE, DOUBLE SOLID TYPE 2 LIN.FT.	642 CENTERLINE, SOLID AND BROKEN TYPE 2 LIN.FT.	642 CHANNELIZING LINE, TYPE 2 LIN.FT.	642 STOP LINE, TYPE 2 LIN.FT.		642 CROSSWALK LINE, TYPE 2 LIN.FT.	642 TRANSVERSE LINE, TYPE 2 LIN.FT.	642 ISLAND MARKING, TYPE 2 SQ. FT.	642 LANE ARROW, TYPE 2 EACH	642 WORD ON PAVEMENT, 72", TYPE 2 EACH	642 DOTTED LINE, 4" (WHITE), TYPE 2 LIN.FT.	642 DOTTED LINE, 4" (YELLOW), TYPE 2 LIN.FT.		
757		S.R. 8	32+75	37+00	RT			425														
			32+75	38+00	RT/LT	1050	1050	2100														
			37+00	38+00	RT						100											
758		S.R. 8	38+00	48+00	RT/LT	2000	2000	4000			1000											
			47+60	48+00	RT			40														
759		S.R. 8	48+00	58+00	RT/LT		2000	4000														
			48+00	50+00	LT			200														
			48+00	54+05	LT	605																
			50+00	54+20	LT		120				300											
			50+00	58+00	LT	800																
			48+00	51+84	RT						384											
			48+81	51+84	RT						303				559							
			48+00	55+53	RT	753																
			51+84	53+60	RT		176															
			51+84	58+00	RT	616																
760		S.R. 8	58+00	68+00	RT/LT	2000	2000	4000														
761		S.R. 8	68+00	78+00	RT/LT		2000	4000														
			68+00	73+40	LT	540																
			68+00	75+42	RT	742																
			69+42	78+00	LT	858																
			70+82	78+00	RT	718																
			70+96	73+40	LT		244															
			70+65	72+46	RT		181															
			72+46	75+42	RT						296											
			75+42	78+00	RT														258			
			73+40	76+97	LT						714				656							
			76+97	78+00	LT														103			
762		S.R. 8	78+00	88+00	RT/LT	2000	2000	4000														
			78+00	81+44	LT														344			
			78+00	80+98	RT														298			
			81+44	84+51	LT						307											
			84+51	88+00	LT		349															
			81+44	88+00	LT	656																
			80+98	85+26	RT		274				860				783							
			85+26	88+00	RT	274																
763		S.R. 8	88+00	98+00	RT/LT		2000	4000														
			88+00	97+30	LT	930																
			88+00	97+81	RT	981																
			97+30	98+00	LT						140				141							
		RAMP J	93+32	96+93	RT		361															
			96+93	97+81	RT						88											
			94+91	98+00	RT	309																
		RAMP I	95+00	98+00	LT	300																
			94+91	96+94	LT		203															
764		S.R. 8	98+00	102+70	RT/LT	940	940	1880														
			98+00	98+88	LT						176				76							
			98+88	100+56	LT			168														
			98+00	99+56	RT			156														
TOTALS CARRIED TO SHEET 715						17072	15898	28969			4668				2215				1003			

CALCULATED KMM
CHECKED KME

PAVEMENT MARKING SUBSUMMARY

SUM-8-0.63

PAVEMENT MARKING SUBSUMMARY

CALCULATED KMM | CHECKED KME

SUM-8-0.63

713
1088

SHEET NO.	REFERENCE NO.	LOCATION	STATION FROM	STATION TO	SIDE	642 EDGELINE, TYPE 2 (WHITE) LIN.FT.	642 EDGELINE, TYPE 2 (YELLOW) LIN.FT.	642 LANELINE, TYPE 2 LIN.FT.	642 CENTERLINE, DOUBLE SOLID TYPE 2 LIN.FT.	642 CENTERLINE, SOLID AND BROKEN TYPE 2 LIN.FT.	642 CHANNELIZING LINE, TYPE 2 LIN.FT.	642 STOP LINE, TYPE 2 LIN.FT.		642 CROSSWALK LINE, TYPE 2 LIN.FT.	642 TRANSVERSE LINE, TYPE 2 LIN.FT.	642 ISLAND MARKING, TYPE 2 SQ. FT.	642 LANE ARROW, TYPE 2 EACH	642 WORD ON PAVEMENT, 72", TYPE 2 EACH	642 DOTTED LINE, 4" (WHITE), TYPE 2 LIN.FT.	642 DOTTED LINE, 4" (YELLOW), TYPE 2 LIN.FT.		
765		GOODKIRK ST.	194+00.00	199+41.00	RT				541			12										
			199+45.00	199+51.00	RT/LT									52								
		EXCHANGE ST.	11+00.00	11+58.00	RT/LT			116	116			26				10						
			11+62.00	11+68.00	RT/LT									118								
			12+43.00	13+75.00	RT/LT			264	132		62	40					1	1				
		GOODKIRK ST.	200+51.00	200+57.00	RT/LT									58								
			200+61.00	205+00.00	RT/LT			200			239	28					5	1				
		NASH ST.	4+59.00		RT							12										
			4+63.00	4+69.00	RT/LT									53								
766		GOODKIRK ST.	205+00.00	213+00.00	℄			800														
		VINE ST.	4+57.00		RT							13										
			4+61.00	4+67.00	RT/LT									54								
		GOODKIRK ST.	208+04.00	209+78.00	RT						174											
			208+83.00	209+78.00	RT						96				107							
		ORCHARD ST.	4+60.00		RT							12										
			4+64.00	4+70.00	RT/LT									50								
767		GOODKIRK ST.	213+00.00	214+74.00	℄			174														
			214+74.00	214+80.00	LT/RT									72								
		CARROLL ST.	11+14.00	11+69.00	RT/LT			110	55			25										
			11+73.00	11+79.00	RT/LT									117								
			12+56.00	13+75.00	RT/LT			238	119			22										
		GOODKIRK ST.	215+64.00	215+70.00	RT/LT									78								
			215+74.00	219+36.00	RT/LT			362				35										
			219+36.00	219+42.00	RT/LT									78								
		BUCHTEL AVE.	12+08.00	12+68.00	RT				60		60	26					1	1				
			12+08.00	12+72.00	LT			64														
			12+72.00	12+78.00	LT/RT									120								
			12+68.00	13+65.00	RT																	
			13+65.00	14+91.00	LT/RT			126	126		60	34					1	1		97		
		GOODKIRK ST.	220+28.00	220+34.00	LT/RT									100								
			220+38.00	222+00.00	LT/RT			162			162	47					4	1				
768		GOODKIRK ST.	222+00.00	222+64.00	℄			64														
			222+00.00	222+90.00	LT			90														
			222+64.00	226+01.00	RT						524				341							
			226+01.00	231+00.00	℄			499														
769		GOODKIRK ST.	231+00.00	232+02.00	℄			102														
			232+02.00	232+08.00	RT/LT									74								
		MARKET ST.	22+80.00	23+50.00	RT/LT			124		118		26		167		57						
			24+34.00	25+43.00	RT/LT			220	110		39	38					1					
		GOODKIRK ST.	233+18.00	233+24.00	RT/LT									89								
			233+28.00	237+08.00	RT/LT			380				40										
			237+08.00	237+14.00	RT/LT									98								
TOTALS CARRIED TO SHEET 715								4105	1259	118	1416	436		1378	448	67	13	5		97		

SHEET NO.	REFERENCE NO.	LOCATION	STATION FROM	STATION TO	SIDE	642 EDGELINE, TYPE 2 (WHITE) LIN.FT.	642 EDGELINE, TYPE 2 (YELLOW) LIN.FT.	642 LANELINE, TYPE 2 LIN.FT.	642 CENTERLINE, DOUBLE SOLID TYPE 2 LIN.FT.	642 CENTERLINE, SOLID AND BROKEN TYPE 2 LIN.FT.	642 CHANNELIZING LINE, TYPE 2 LIN.FT.	642 STOP LINE, TYPE 2 LIN.FT.		642 CROSSWALK LINE, TYPE 2 LIN.FT.	642 TRANSVERSE LINE, TYPE 2 LIN.FT.	642 ISLAND MARKING, TYPE 2 SQ. FT.	642 LANE ARROW, TYPE 2 EACH	642 WORD ON PAVEMENT, 72", TYPE 2 EACH	642 DOTTED LINE, 4" (WHITE), TYPE 2 LIN.FT.	642 DOTTED LINE, 4" (YELLOW), TYPE 2 LIN.FT.		
769		FORGE ST.	5+02.00	5+76.00	LT/RT			124	62			34		134								
			6+74.00	8+00.00	LT/RT			232	126		30	28					1					
		GOODKIRK ST.	238+08.00	238+14.00	LT/RT									76								
			238+18.00	241+00.00	LT/RT			282				34										
770		GOODKIRK ST.	241+00.00	245+96.00	℄			496														
			242+51.00	243+96.00	℄						202				71							
		PARKWOOD CT.	4+62.38		LT/RT									61								
		RAMP K1	88+00.00	88+08.00	LT	8																
			88+00.00	88+20.00	RT		20															
		GOODKIRK ST.	245+96.00	246+02.00	RT/LT									79								
		PERKINS ST.	46+00.00	47+39.00	RT/LT			278	139			34										
			48+44.00	49+75.00	RT/LT			262	131		126	36					2	1				
		RAMP I	92+40.00	96+00.00	RT/LT	135	126	135			450	38					6	2				
771		FOUNTAIN ST.	299+39.00		RT							20										
			299+53.00	299+59.00	RT/LT									109								
		EXCHANGE ST.	13+75.00	14+57.00	RT/LT			164	82		62	41					1	1				
			15+37.00	15+43.00	RT/LT									170								
			15+48.00	16+53.00	RT/LT			210	105		105	46					1	1				
		FOUNTAIN ST.	300+54.00	300+60.00	RT/LT									81								
			300+60.00	305+00.00	℄			440														
		NASH ST.	8+28.00	8+34.00	RT/LT									51								
			8+38.00		LT							12										
772		FOUNTAIN ST.	305+00.00	306+80.00	℄			180														
		MASON AVE.	0+31.00	0+37.00	LT/RT									51								
			0+41.00		LT							11										
		FOUNTAIN ST.	307+00.00	309+94.00	LT						462				419							
			310+00.00	312+40.00	LT			240														
			312+40.00	314+00.00	LT						160						4	1				
			310+00.00	314+00.00	℄			400														
773		FOUNTAIN ST.	314+00.00	314+67.00	RT/LT			67			67	45					2					
			314+71.00	314+77.00	RT/LT									94								
		CARROLL ST.	13+72.00	14+42.00	RT						71	23					1	1				
			13+75.00	14+42.00	LT			67	67													
			15+40.00	15+46.00	RT/LT									97								
			15+50.00	16+07.00	RT/LT			57	57			28										
		FOUNTAIN ST.	315+67.00	315+73.00	RT/LT									71								
			315+73.00	319+33.00	RT/LT			360			258	46					10	2				
			319+37.00	319+43.00	RT/LT									97								
		BUCHTEL AVE.	14+91.00	15+67.00	RT/LT			76	76		55	23					1	1				
			16+60.00	16+66.00	RT/LT									127								
			16+70.00	17+25.00	RT/LT			110	55			31										
		FOUNTAIN ST.	320+33.00	320+39.00	RT/LT									81								
			320+39.00	324+00.00	℄			361														
			322+79.00	324+00.00	LT						122				152							
		RAMP Q1	68+92.00	70+15.00	℄						124											
TOTALS CARRIED TO SHEET 715						143	146	4541	900		2294	530		1379	642		29	10				

CALCULATED KMM
CHECKED KME

PAVEMENT MARKING SUBSUMMARY

SUM-8-0.63

PAVEMENT MARKING SUBSUMMARY

CALCULATED KMM | CHECKED KME

SHEET NO.	REFERENCE NO.	LOCATION	STATION FROM	STATION TO	SIDE	642 EDGELINE, TYPE 2 (WHITE) LIN.FT.	642 EDGELINE, TYPE 2 (YELLOW) LIN.FT.	642 LANELINE, TYPE 2 LIN.FT.	642 CENTERLINE, DOUBLE SOLID TYPE 2 LIN.FT.	642 CENTERLINE, SOLID AND BROKEN TYPE 2 LIN.FT.	642 CHANNELIZING LINE, TYPE 2 LIN.FT.	642 STOP LINE, TYPE 2 LIN.FT.		642 CROSSWALK LINE, TYPE 2 LIN.FT.	642 TRANSVERSE LINE, TYPE 2 LIN.FT.	642 ISLAND MARKING, TYPE 2 SQ. FT.	642 LANE ARROW, TYPE 2 EACH	642 WORD ON PAVEMENT, 72", TYPE 2 EACH	642 DOTTED LINE, 4" (WHITE), TYPE 2 LIN.FT.	642 DOTTED LINE, 4" (YELLOW), TYPE 2 LIN.FT.		
774		FOUNTAIN ST.	324+00.00	330+61.00	℄			661			47	47										
			330+65.00	330+71.00	RT/LT									103								
		MARKET ST.	25+43.00	26+03.00	RT/LT			120	60		41	38					1					
			27+00.00	27+75.00	RT/LT			127		127		31		154		48						
		FOUNTAIN ST.	331+87.00	331+93.00	RT/LT									68								
			331+93.00	334+00.00	RT/LT			207														
775		FOUNTAIN ST.	334+00.00	338+09.00	RT/LT			250			159	33					2	1				
			338+13.00	338+19.00	RT/LT									71								
		FORGE ST.	8+00.00	8+72.00	RT/LT			72	72		72	27					1	1				
			10+58.00	10+64.00	RT/LT									93								
			10+68.00	11+00.00	RT/LT			32	32			24										
		FOUNTAIN ST.	339+25.00	339+31.00	RT/LT									99								
		ADOLPH AVE.	418+43	418+43	RT							14										
			418+47	418+53	RT/LT									63								
776		FOUNTAIN ST.	341+00.00	344+00.00	LT						447				236							
		RAMP L1	88+00.00	88+37.00	LT		37															
			88+00.00	90+25.00	RT						225											
		FOUNTAIN ST.	343+77.00	345+96.00	RT/LT			187			219	46					6	2				
			346+00.00	345+96.00	RT/LT									102								
		PERKINS ST.	49+75.00	50+88.00	RT/LT			113	209		108	24			70		1	1				
			51+74.00	51+80.00	RT/LT									136								
			51+80.00	52+36.00	RT/LT			104	84			27										
		SUBTOTAL THIS SHEET					37	1873	457	127	1318	311		891	306	48	11	5				
		SUBTOTAL FROM 712				17072	15898	28969			4668				2215				1003			
		SUBTOTAL FROM 713						4105	1259	118	1416	436		1378	448	67	13	5		97		
		SUBTOTAL FROM 714				143	146	4541	900		2294	530		1379	642		29	10				
						17215	16081		2616	245												
					SUBTOTAL (LIN. FT.)	33296		39488	2861		9696	1277		3648	3611	115	53	20	1100			
					SUBTOTAL (MILE)	6.31		7.49	0.54													
TOTALS CARRIED TO GENERAL SUMMARY						6.31		7.48	0.54		9696	1277		3648	3611	115	53	20	1100			

SUM-8-0.63

STATION FROM	STATION TO	SIDE	TOTAL LENGTH (FEET)	621 RPM, LANE LINE, ONE WAY (WHITE) EACH	621 RPM, EDGE LINE, ONE WAY (WHITE) EACH	621 RPM, EDGE LINE, ONE WAY (YELLOW) EACH	621 RPM, EDGE LINE, TWO WAY (YELLOW/RED) EACH	621 RPM, CHANNELIZING LINE, TWO WAY (WHITE/RED) EACH
S.R. 8								
32+75	102+70	LT/RT	6995	236		176		
32+75	37+00	RT	425	4	6			
32+75	47+60	LT	1485		19			
37+00	48+81	RT	1181		15			30
47+60	50+00	LT	240	3	4			
48+81	51+84	RT	303					8
51+84	72+46	RT	2062	26				
53+21	73+40	LT	2019	26				
73+40	76+97	LT	357					9
75+42	80+98	RT	556		7			
76+97	81+44	LT	447		5			
80+98	85+26	RT	428					11
84+51	97+30	LT	1279		16			
85+26	95+60	RT	1034		13			
97+30	98+88	LT	158					4
97+81	102+70	RT	489					7
98+88	102+70	LT	382		5			
RAMP S								
48+81	51+84	LT/RT	303		4			8
51+84	53+60.75	LT	177		3		3	
RAMP TI								
50+00	51+20	LT/RT	120		2			4
51+20	53+21	LT/RT	201		3		3	
53+21	54+07	LT/RT	86		2		2	
RAMP QI								
70+80	72+46	LT/RT	166		3		3	
72+46	74+25	LT/RT	179		3		3	
75+25	75+42	LT/RT	117		2			3
RAMP PI								
70+96	73+40	LT/RT	244		4		4	
73+40	76+97	LT/RT	357		5			9
RAMP L								
80+98	85+26	LT/RT	428		6			11
85+26	88+37	LT/RT	311		4		4	
RAMP KI								
81+44	82+50	LT/RT	106		2			3
82+50	84+51	LT/RT	201		3		3	
84+51	88+08	LT/RT	357		5		5	
		SUB-TOTALS		295	141	176	30	107
		TOTALS CARRIED TO SHEET 709			749			

STATION FROM	STATION TO	SIDE	TOTAL LENGTH (FEET)	621 RPM, LANE LINE, ONE WAY (WHITE) EACH	621 RPM, EDGE LINE, ONE WAY (WHITE) EACH	621 RPM, EDGE LINE, ONE WAY (YELLOW) EACH	621 RPM, EDGE LINE, TWO WAY (YELLOW/RED) EACH	621 RPM, CHANNELIZING LINE, TWO WAY (WHITE/RED) EACH
RAMP I								
93+84	97+30	LT/RT	346		5		5	
97+30	98+88	LT/RT	158		2			4
RAMP J								
93+44	95+60	LT/RT	216		3		3	
95+60	97+15	LT/RT	155		2			4
97+15	97+81	LT/RT	66		1		2	
		SUB-TOTALS			13		10	8
		TOTALS CARRIED TO SHEET 709			31			

CALCULATED GLP
CHECKED BF

RPM SUBSUMMARY

SUM-8-0.63

715A
1088

SHEET NO.	REFERENCE NO.	LOCATION	STATION	SIDE	CODE	SIZE (INCHES)	630 GROUND MOUNTED SUPPORT, NO. 3 POST LIN.FT.	630 GROUND MOUNTED SUPPORT, NO. 4 POST LIN.FT.	630 GROUND MOUNTED SUPPORT, NO. 6 POST LIN.FT.	630 GROUND MOUNTED SUPPORT, S4X7.7 BEAM LIN.FT.		630 GROUND MOUNTED SUPPORT, W10X12 BEAM LIN.FT.	630 GROUND MOUNTED SUPPORT, W8X18 BEAM LIN.FT.	630 ONE WAY SUPPORT, NO. 3 POST LIN.FT.	630 STREET NAME SIGN SUPPORT EACH	630 BREAKAWAY BEAM CONNECTION EACH		630 OVERHEAD SIGN SUPPORT, TYPE TC-12.30, DESIGN 2, 20' ARM (WITH LIGHTPOLE EXTENSION) EACH	630 OVERHEAD SIGN SUPPORT, TYPE TC-12.30, DESIGN 4, 20' ARM EACH	
757		S.R. 8	36+94.87	RT																
	777		37+00	RT	GE-II	168x126														
758		S.R. 8	39+00	LT	R-7B-48	48x96			39											
			40+00	RT	W-68-48	48x48		29												
			40+25	RT																
	784		42+00	RT	GC-II	192x60							36			2				
			45+52	LT																
			47+23	LT																
			48+00	LT	W-68-48	48x48		29												
759	777	S.R. 8	49+00	RT	GE-II	168x126														
				RT	GG-II	192x72														
				RT	GB-II	144x102														
			49+15	LT																
			49+91	LT																
			50+46	LT																
			50+67	LT																
			51+76	RT																
	784		52+50	RT	GF-II	72x60				27						2				
		RAMP S	53+50	RT	W-50L-36	36x36		16												
		RAMP S	54+20	RT	R-41A-36	36x24	14													
		S.R. 8	54+20	LT	W-49R-48	48x48		29												
		RAMP S	54+20	RT	W-47-36	36x36		16												
			54+20	LT	R-11A-24	24x30		15												
					R-41A-36	36x24														
					R-15C-24	24x12														
			54+52	RT																
		RAMP T1	54+60	LT	R-15B-30	30x18	13													
		S.R. 8	56+00	LT																
	778		56+75	LT	GB-II	156x126														
			57+83	LT																
760		S.R. 8	61+04	RT	D-11-18	84x18														
			61+46	LT	D-11-18	84x18														
			61+69	LT																
			65+71	RT	D-11-18	84x18														
			66+11	LT	D-11-18	84x18														
			67+50	LT																
761		S.R. 8	68+33	LT																
	784		69+00	RT	GC-II	192x84						27				2				
			69+12	RT																
			69+24	LT																
			70+00	LT	R-7B-48	48x96			39											
		RAMP Q1	70+00	RT	M-45-42	42x60	33													
		RAMP P1	70+75	LT	W-50L-36	36x36		16												
			71+25	LT	R-11A-24	24x30		15												
		S.R. 8	71+25	RT	W-49R-48	48x48		29												
TOTALS CARRIED TO SHEET 752							60	194	78	27		27	36			6				

CALCULATED BF
CHECKED VLW

SIGNING SUBSUMMARY

SUM-8-0.63

716
1088

SHEET NO.	REFERENCE NO.	LOCATION	STATION	SIDE	CODE	SIZE (INCHES)	630 OVERHEAD SIGN SUPPORT, TYPE TC-12.30, DESIGN 8, 28' ARM EACH	630 OVERHEAD SIGN SUPPORT, TYPE TC-12.30, DESIGN 10, 30' ARM EACH	630 OVERHEAD SIGN SUPPORT, TYPE TC-7.65, DESIGN 6, SPAN 54' EACH	630 OVERHEAD SIGN SUPPORT, TYPE TC-7.65, DESIGN 6, SPAN 72' EACH	630 OVERHEAD SIGN SUPPORT, TYPE TC-7.65, DESIGN 8, SPAN 80' EACH	630 OVERPASS STRUCTURE MOUNTED SIGN SUPPORT, TC-18.24 EACH	630 OVERPASS STRUCTURE MOUNTED SIGN SUPPORT, TC-18.26, DESIGN 3 EACH	630 OVERPASS STRUCTURE MOUNTED SIGN SUPPORT, TC-18.26, DESIGN 6 EACH	630 SIGN SUPPORT ASSEMBLY, POLE MOUNTED EACH	630 SIGN SUPPORT ASSEMBLY, BRIDGE MOUNTED, AS PER PLAN EACH	630 SIGN ATTACHMENT ASSEMBLY EACH	630 SIGN, DOUBLE FACED, STREET NAME, TYPE G EACH	630 SIGN FLATSHEET, TYPE G SQ. FT.
757		S.R. 8	36+94.87	RT															
	777		37+00	RT	GE-II	168x126	1												
758		S.R. 8	39+00	LT	R-7B-48	48x96													32
			40+00	RT	W-68-48	48x48													16
			40+25	RT															
	784		42+00	RT	GC-II	192x60													
			45+52	LT															
			47+23	LT															
			48+00	LT	W-68-48	48x48													16
759	777	S.R. 8	49+00	RT	GE-II	168x126					1								
				RT	GG-II	192x72											1		
				RT	GB-II	144x102											1		
			49+15	LT															
			49+91	LT															
			50+46	LT															
			50+67	LT															
			51+76	RT															
	784		52+50	RT	GF-II	72x60													
		RAMP S	53+50	RT	W-50L-36	36x36													9
		RAMP S	54+20	RT	R-41A-36	36x24													6
		S.R. 8	54+20	LT	W-49R-48	48x48													16
		RAMP S	54+20	RT	W-47-36	36x36													5
			54+20	LT	R-11A-24	24x30													9
					R-41A-36	36x24													6
					R-15C-24	24x12													2
			54+52	RT															
		RAMP T1	54+60	LT	R-15B-30	30x18													4
		S.R. 8	56+00	LT															
	778		56+75	LT	GB-II	156x126	1										1		
			57+83	LT															
760		S.R. 8	61+04	RT	D-11-18	84x18													
			61+46	LT	D-11-18	84x18										1			11
			61+69	LT												1			11
			65+71	RT	D-11-18	84x18													
			66+11	LT	D-11-18	84x18										1			11
			67+50	LT												1			11
761		S.R. 8	68+33	LT															
	784		69+00	RT	GC-II	192x84													
			69+12	RT															
			69+24	LT															
			70+00	LT	R-7B-48	48x96													32
		RAMP Q1	70+00	RT	M-45-42	42x60													18
		RAMP P1	70+75	LT	W-50L-36	36x36													9
			71+25	LT	R-11A-24	24x30													5
		S.R. 8	71+25	RT	W-49R-48	48x48													16
TOTALS CARRIED TO SHEET 753							2				1					4	3		245

CALCULATED BF
CHECKED VLW

SIGNING SUBSUMMARY

SUM-8-0.63

717
1088

SHEET NO.	REFERENCE NO.	LOCATION	STATION	SIDE	CODE	SIZE (INCHES)	630 SIGN, EXTRUSHEET SQ. FT.		630 GROUND MOUNTED BEAM SUPPORT FOUNDATION EACH	630 RIGID OVERHEAD SIGN SUPPORT FOUNDATION EACH	630 REMOVAL OF GROUND MOUNTED SIGN AND DISPOSAL EACH	630 REMOVAL OF GROUND MOUNTED SIGN AND REERECTION EACH	630 REMOVAL OF GROUND MOUNTED MAJOR SIGN AND DISPOSAL EACH	630 REMOVAL OF GROUND MOUNTED POST SUPPORT AND DISPOSAL EACH	630 REMOVAL OF GROUND MOUNTED BEAM SUPPORT AND DISPOSAL EACH	630 REMOVAL OF STRUCTURE MOUNTED SIGN AND DISPOSAL EACH	630 REMOVAL OF OVERHEAD MOUNTED SIGN AND REERECTION EACH	630 REMOVAL OF OVERHEAD MOUNTED SIGN AND DISPOSAL EACH	630 REMOVAL OF POLE MOUNTED SIGN AND DISPOSAL EACH	630 REMOVAL OF OVERHEAD SIGN SUPPORT AND DISPOSAL EACH
757		S.R. 8	36+94.87	RT														1		1
	777		37+00	RT	GE-II	168x126	147			1										
758		S.R. 8	39+00	LT	P-7B-48	48x96														
			40+00	RT	W-68-48	48x48														
			40+25	RT															1	
	784		42+00	RT	GC-II	192x60	80													
			45+52	LT															1	
			47+23	LT							1			1						
			48+00	LT	W-68-48	48x48														
759	777	S.R. 8	49+00	RT	GE-II	168x126	147			2								1		1
				RT	GG-II	192x72											1			
				RT	GB-II	144x102	102											1		
			49+15	LT							1			1						
			49+91	LT															1	
			50+46	LT							1			1						
			50+67	LT							1			1						
			51+76	RT							3			2						
	784		52+50	RT	GF-II	72x60	30		2											
		RAMP S	53+50	RT	W-50L-36	36x36														
		RAMP S	54+20	RT	R-41A-36	36x24														
		S.R. 8	54+20	LT	W-49R-48	48x48														
		RAMP S	54+20	RT	W-47-36	36x36														
			54+20	LT	R-11A-24	24x30														
					R-41A-36	36x24														
					R-15C-24	24x12														
											2			1						
			54+52	RT							2			1						
		RAMP T1	54+60	LT	R-15B-30	30x18														
		S.R. 8	56+00	LT							2			1						
	778		56+75	LT	GB-II	156x126				1							1			1
			57+83	LT							3			2						
760		S.R. 8	61+04	RT	D-11-18	84x18														
			61+46	LT	D-11-18	84x18														
			61+69	LT																
			65+71	RT	D-11-18	84x18							1		2					
			66+11	LT	D-11-18	84x18														
			67+50	LT																
													1		2					
761		S.R. 8	68+33	LT							1			1						
	784		69+00	RT	GC-II	192x84	112		2											
			69+12	RT							1			1						
			69+24	LT							3			2						
			70+00	LT	R-7B-48	48x96														
		RAMP Q1	70+00	RT	M-45-42	42x60														
		RAMP P1	70+75	LT	W-50L-36	36x36														
			71+25	LT	R-11A-24	24x30														
		S.R. 8	71+25	RT	W-49R-48	48x48														
TOTALS CARRIED TO SHEET 754							618		4	4	21		2	15	4		2	3	3	3

CALCULATED BF
CHECKED VLW

SIGNING SUBSUMMARY

SUM-8-0.63

SHEET NO.	REFERENCE NO.	LOCATION	STATION	SIDE	CODE	SIZE (INCHES)	630 GROUND MOUNTED SUPPORT, NO. 3 POST LIN.FT.	630 GROUND MOUNTED SUPPORT, NO. 4 POST LIN.FT.	630 GROUND MOUNTED SUPPORT, NO. 6 POST LIN.FT.	630 GROUND MOUNTED SUPPORT, S4x7.7 BEAM LIN.FT.		630 GROUND MOUNTED SUPPORT, W10x12 BEAM LIN.FT.	630 GROUND MOUNTED SUPPORT, W8x18 BEAM LIN.FT.	630 ONE WAY SUPPORT, NO. 3 POST LIN.FT.	630 STREET NAME SIGN SUPPORT EACH	630 BREAKAWAY BEAM CONNECTION EACH		630 OVERHEAD SIGN SUPPORT, TYPE TC-12.30, DESIGN 2, 20' ARM (WITH LIGHTPOLE EXTENSION) EACH	630 OVERHEAD SIGN SUPPORT, TYPE TC-12.30, DESIGN 4, 20' ARM EACH	
761		RAMP P1	72+20	LT	R-41A-36	36x24	14													
				RT	R-41A-36	36x24	14													
				RT	R-15C-24	24x12														
	784		72+90	RT	GF-11	72x60				26						2				
			74+23	LT																
		S.R. 8	76+43	RT																
	778		77+28.70	RT	GE-11	144x102														
					N-29-24	24x24														
			77+45	RT	D-11-18	84x18														
762		S.R. 8	78+55	LT	D-11-18	84x18														
	779		78+69.35	LT	GF-11	192x114														
			79+00	RT																
			79+10	LT																
	779		80+10	RT	GE-11	144x102														
			81+06	LT																
			82+27	RT																
			83+92	RT	D-11-18	72x18														
			84+11	RT																
			84+39	LT	D-11-18	72x18														
			85+50	LT	W-49R-48	48x48		29												
	784		85+85	RT	GF-11	72x60	4			26						2				
					N-18H-18	18x18														
			86+92	RT																
	780		87+00	LT	GH-11	192x114														
			87+06	LT																
			87+51	RT																
		RAMP L1	87+00	LT	W-47-36	36x36		16												
				RT	R-41A-36	36x24														
				RT	R-15B-30	30x18														
	785	S.R. 8	87+50	LT	GC-11	192x60						34				2				
763	785	S.R. 8	88+60	RT						23						2				
			88+50	LT	R-36L-36	36x48		29												
			90+25	RT	R-7B-48	48x96			39											
			92+29.5	RT	D-11-18	84x18														
			92+86.3	LT	D-11-18	84x18														
			93+50	RT	R-36L-36	36x48		24												
			95+00	RT	W-49R-48	48x48		29												
				RT	R-15B-30	30x18														
	787	RAMP I	95+00	LT	GE-IV	120x66						23				2				
		S.R. 8	96+14	RT																
		RAMP I	96+50	LT	M-8-24	24x12	16													
					M-2-24-2	24x24														
					M-26-21	21X15														
			96+50	LT	M-40-24	24x12	16													
					M-2-24-2	24x24														
					M-24-21	21x15														
	784	S.R. 8	97+00	LT	GF-11	72x60	4			25						2				
					N-18H-18															
			97+06	LT																
TOTALS CARRIED TO SHEET 752							68	127	39	100		57				12				

CALCULATED BF CHECKED VLW

SIGNING SUBSUMMARY

SUM-8-0.63

719
1088

C:\TEMP\summary.dgn 04-SEP-2002 7:45AM mbarker

SHEET NO.	REFERENCE NO.	LOCATION	STATION	SIDE	CODE	SIZE (INCHES)	630 OVERHEAD SIGN SUPPORT, TYPE TC-12.30, DESIGN 8, 28' ARM EACH	630 OVERHEAD SIGN SUPPORT, TYPE TC-12.30, DESIGN 10, 30' ARM EACH	630 OVERHEAD SIGN SUPPORT, TYPE TC-7.65, DESIGN 6, SPAN 54' EACH	630 OVERHEAD SIGN SUPPORT, TYPE TC-7.65, DESIGN 6, SPAN 72' EACH	630 OVERHEAD SIGN SUPPORT, TYPE TC-7.65, DESIGN 8, SPAN 80' EACH	630 OVERPASS STRUCTURE MOUNTED SIGN SUPPORT, TC-18.24 EACH	630 OVERPASS STRUCTURE MOUNTED SIGN SUPPORT, TC-18.26, DESIGN 3 EACH	630 OVERPASS STRUCTURE MOUNTED SIGN SUPPORT, TC-18.26, DESIGN 6 EACH	630 SIGN SUPPORT ASSEMBLY, POLE MOUNTED EACH	630 SIGN SUPPORT ASSEMBLY, BRIDGE MOUNTED, AS PER PLAN EACH	630 SIGN ATTACHMENT ASSEMBLY EACH	630 SIGN, DOUBLE FACED, STREET NAME, TYPE G EACH	630 SIGN FLATSHEET, TYPE G SQ. FT.
761		RAMP P1	72+20	LT	R-41A-36	36x24													6
				RT	R-41A-36	36x24													6
				RT	R-15C-24	24x12													2
	784		72+90	RT	GF-II	72x60													
			74+23	LT															
		S.R. 8	76+43	RT															
	778		77+28.70	RT	GE-II	144x102								1					
					N-29-24	24x24													4
			77+45	RT	D-11-18	84x18										1			11
762		S.R. 8	78+55	LT	D-11-18	84x18										1			11
	779		78+69.35	LT	GF-II	192x114							1						
			79+00	RT															
			79+10	LT															
	779		80+10	RT	GC-II	144x102		1											
			81+06	LT															
			82+27	RT															
			83+92	RT	D-11-18	72x18										1			9
			84+11	RT															
			84+39	LT	D-11-18	72x18										1			9
			85+50	LT	W-49R-48	48x48													16
	784		85+85	RT	GF-II	72x60													
					N-18H-18	18x18													2
			86+92	RT															
	780		87+00	LT	GH-II	192x114		1											
			87+06	LT															
			87+51	RT															
		RAMP L1	87+00	LT	W-47-36	36x36													9
				RT	R-41A-36	36x24													6
				RT	R-15B-30	30x18													4
	785	S.R. 8	87+50	LT	GC-II	192x60													
763	785	S.R. 8	88+60	RT															
			88+50	LT	R-36L-36	36x48													12
			90+25	RT	R-7B-48	48x96													32
			92+29.5	RT	D-11-18	84x18										1			11
			92+86.3	LT	D-11-18	84x18										1			11
			93+50	RT	R-36L-36	36x48													12
			95+00	RT	W-49R-48	48x48													16
				RT	R-15B-30	30x18													4
	787	RAMP I	95+00	LT	GE-IV	120x66													
		S.R. 8	96+14	RT															
		RAMP I	96+50	LT	M-8-24	24x12													2
					M-2-24-2	24x24													4
					M-26-21	21X15													2
			96+50	LT	M-40-24	24x12													2
					M-2-24-2	24x24													4
					M-24-21	21x15													2
	784	S.R. 8	97+00	LT	GF-II	72x60													
					N-18H-18	18x18													2
			97+06	LT															
TOTALS CARRIED TO SHEET 753								2					1	1		6			211

CALCULATED BF
CHECKED VLW

SIGNING SUBSUMMARY

SUM-8-0.63

720
1088

SHEET NO.	REFERENCE NO.	LOCATION	STATION	SIDE	CODE	SIZE (INCHES)	630 SIGN, EXTRUSHEET SQ. FT.		630 GROUND MOUNTED BEAM SUPPORT FOUNDATION EACH	630 RIGID OVERHEAD SIGN SUPPORT FOUNDATION EACH	630 REMOVAL OF GROUND MOUNTED SIGN AND DISPOSAL EACH	630 REMOVAL OF GROUND MOUNTED SIGN AND REERECTION EACH	630 REMOVAL OF GROUND MOUNTED MAJOR SIGN AND DISPOSAL EACH	630 REMOVAL OF GROUND MOUNTED POST SUPPORT AND DISPOSAL EACH	630 REMOVAL OF GROUND MOUNTED BEAM SUPPORT AND DISPOSAL EACH	630 REMOVAL OF STRUCTURE MOUNTED SIGN AND DISPOSAL EACH	630 REMOVAL OF OVERHEAD MOUNTED SIGN AND REERECTION EACH	630 REMOVAL OF OVERHEAD MOUNTED SIGN AND DISPOSAL EACH	630 REMOVAL OF POLE MOUNTED SIGN AND DISPOSAL EACH	630 REMOVAL OF OVERHEAD SIGN SUPPORT AND DISPOSAL EACH
761		RAMP P1	72+20	LT	R-41A-36	36x24														
				RT	R-41A-36	36x24														
				RT	R-15C-24	24x12														
	784		72+90	RT	GF-II	72x60	30		2											
			74+23	LT							1			1						
		S.R. 8	76+43	RT							5		1		2					
	778		77+28.70	RT	GE-II	144x102	102													
					N-29-24	24x24														
			77+45	RT	D-11-18	84x18														
762		S.R. 8	78+55	LT	D-11-18	84x18														
	779		78+69.35	LT	GF-II	192x114	152													
			79+00	RT							1			1						
			79+10	LT							1			1						
	779		80+10	RT	GC-II	144x102	102			1										
			81+06	LT															1	
			82+27	RT							1			1						
			83+92	RT	D-11-18	72x18														
			84+11	RT							1			2						
			84+39	LT	D-11-18	72x18														
			85+50	LT	W-49R-48	48x48														
	784		85+85	RT	GF-II	72x60	30		2											
					N-18H-18	18x18														
			86+92	RT							5		1		2					
	780		87+00	LT	GH-II	192x114	152			1										
			87+06	LT														1		1
			87+51	RT								1			2					
		RAMP L1	87+00	LT	W-47-36	36x36														
				RT	R-41A-36	36x24														
				RT	R-15B-30	30x18														
	785	S.R. 8	87+50	LT	GC-II	192x60	80		2											
763	785	S.R. 8	88+60	RT					2											
			88+50	LT	R-36L-36	36x48					1			2						
			90+25	RT	P-7B-48	48x96					1			1						
			92+29.5	RT	D-11-18	84x18														
			92+86.3	LT	D-11-18	84x18														
			93+50	RT	R-36L-36	36x48					1			2						
			95+00	RT	W-49R-48	48x48														
				RT	R-15B-30	30x18														
	787	RAMP I	95+00	LT	GE-IV	120x86	55		2											
		S.R. 8	96+14	RT							1			2						
		RAMP I	96+50	LT	M-8-24	24x12														
					M-2-24-2	24x24														
					M-26-21	21X15														
			96+50	LT	M-40-24	24x12					1			1						
					M-2-24-2	24x24														
					M-24-21	21x15														
	784	S.R. 8	97+00	LT	GF-II	72x60	30		2											
					N-18H-18															
			97+06	LT							2		1		2					
TOTALS CARRIED TO SHEET 754							733		12	2	22	1	3	14	8			1	1	1

CALCULATED BF
CHECKED VLW

SIGNING SUBSUMMARY

SUM-8-0.63

721
1088

SHEET NO.	REFERENCE NO.	LOCATION	STATION	SIDE	CODE	SIZE (INCHES)	630 GROUND MOUNTED SUPPORT, NO. 3 POST LIN.FT.	630 GROUND MOUNTED SUPPORT, NO. 4 POST LIN.FT.	630 GROUND MOUNTED SUPPORT, NO. 6 POST LIN.FT.	630 GROUND MOUNTED SUPPORT, S4X7.7 BEAM LIN.FT.		630 GROUND MOUNTED SUPPORT, W10X12 BEAM LIN.FT.	630 GROUND MOUNTED SUPPORT, W8X18 BEAM LIN.FT.	630 ONE WAY SUPPORT, NO. 3 POST LIN.FT.	630 STREET NAME SIGN SUPPORT EACH	630 BREAKAWAY BEAM CONNECTION EACH		630 OVERHEAD SIGN SUPPORT, TYPE TC-12.30, DESIGN 2, 20' ARM (WITH LIGHTPOLE EXTENSION) EACH	630 OVERHEAD SIGN SUPPORT, TYPE TC-12.30, DESIGN 4, 20' ARM EACH	
764		S.R. 8	98+48.76	LT																
	780		99+00	LT	GB-II	192x114														
				LT	GF-II	96x102														
				LT	GB-II	156x102														
					N-29-24	24x24	4													
	785		100+50	LT	GC-II	192x84						24				2				
			101+50	RT	W-68-48	48x48		29												
			S.L.M. 2.28	LT	GE-II	144x102														
			S.L.M. 3.20	LT	GF-II	144x102														
765		GOODKIRK	199+41	RT	W-81-30	30x30	13													
			199+43	RT																
			199+52	LT	D-14-8	48x8														
				LT	D-14-8	48x8														
			199+56	RT																
			199+56	RT	R-72-12D	12x18														
		EXCHANGE	12+45	LT	W-81-30	30x30	13													
			12+46	LT																
	782		12+70	RT	GH-III	96x66														
		GOODKIRK	200+40	RT																
			200+47.95	LT																
			200+50	RT	R-72-12D	12x18														
			200+60	LT	R-41B-30	30x30								13						
					W-81-30	30x30														
					R-43L-36	36x12														
					R-43R-36	36x12														
			200+60	RT	R-41B-30	30x30								13						
					W-81-30	30x30														
					R-43L-36	36x12														
					R-43R-36	36x12														
			200+80	LT	R-31A-36	36x30	26													
			201+75	RT	R-32L-30	30x30	13													
			202+50	LT	P-55-12	12x18	12													
			203+00	LT	R-31A-36	36x30	26													
			203+00	RT	P-55-12	12x18	12													
		NASH	4+59	RT	R-1-30	30x30	15													
			4+67	RT	R-121-24	24x24														
TOTALS CARRIED TO SHEET 752							134	29				24		26		2				

CALCULATED BF
CHECKED VLW

SIGNING SUBSUMMARY

SUM-8-0.63

SHEET NO.	REFERENCE NO.	LOCATION	STATION	SIDE	CODE	SIZE (INCHES)	630 OVERHEAD SIGN SUPPORT, TYPE TC-12.30, DESIGN 8, 28' ARM EACH	630 OVERHEAD SIGN SUPPORT, TYPE TC-12.30, DESIGN 10, 30' ARM EACH	630 OVERHEAD SIGN SUPPORT, TYPE TC-7.65, DESIGN 6, SPAN 54' EACH	630 OVERHEAD SIGN SUPPORT, TYPE TC-7.65, DESIGN 6, SPAN 72' EACH	630 OVERHEAD SIGN SUPPORT, TYPE TC-7.65, DESIGN 8, SPAN 80' EACH	630 OVERPASS STRUCTURE MOUNTED SIGN SUPPORT, TC-18.24 EACH	630 OVERPASS STRUCTURE MOUNTED SIGN SUPPORT, TC-18.26, DESIGN 3 EACH	630 OVERPASS STRUCTURE MOUNTED SIGN SUPPORT, TC-18.26, DESIGN 6 EACH	630 SIGN SUPPORT ASSEMBLY, POLE MOUNTED EACH	630 SIGN SUPPORT ASSEMBLY, BRIDGE MOUNTED, AS PER PLAN EACH	630 SIGN ATTACHMENT ASSEMBLY EACH	630 SIGN, DOUBLE FACED, STREET NAME, TYPE G EACH	630 SIGN FLATSHEET, TYPE G SQ. FT.
764		S.R. 8	98+48.76	LT															
	780		99+00	LT	GB-II	192x114				1							2		
				LT	GF-II	96x102				1							2		
				LT	GB-II	156x102				1							2		
					N-29-24	24x24													4
	785		100+50	LT	GC-II	192x84													
			101+50	RT	W-68-48	48x48													16
			S.L.M. 2.28	LT	GE-II	144x102											2		
			S.L.M. 3.20	LT	GF-II	144x102											2		
765		GOODKIRK	199+41	RT	W-81-30	30x30													6
			199+43	RT															
			199+52	LT	D-14-8	48x8									1			1	
				LT	D-14-8	48x8									1			1	
			199+56	RT															
			199+56	RT	R-72-12D	12x18									1				2
		EXCHANGE	12+45	LT	W-81-30	30x30													6
			12+46	LT															
	782		12+70	RT	GH-III	96x66						1							
		GOODKIRK	200+40	RT															
			200+47.95	LT															
			200+50	RT	R-72-12D	12x18									1				2
			200+60	LT	R-41B-30	30x30													6
					W-81-30	30x30													6
					R-43L-36	36x12													3
					R-43R-36	36x12													3
			200+60	RT	R-41B-30	30x30													6
					W-81-30	30x30													6
					R-43L-36	36x12													3
					R-43R-36	36x12													3
			200+80	LT	R-31A-36	36x30													8
			201+75	RT	R-32L-30	30x30													6
			202+50	LT	P-55-12	12x18													2
			203+00	LT	R-31A-36	36x30													8
			203+00	RT	P-55-12	12x18													2
		NASH	4+59	RT	R-1-30	30x30													6
			4+67	RT	R-121-24	24x24													4
TOTALS CARRIED TO SHEET 753										3		1			4		10	2	108

CALCULATED BF
CHECKED VLW

SIGNING SUBSUMMARY

SUM-8-0.63

SHEET NO.	REFERENCE NO.	LOCATION	STATION	SIDE	CODE	SIZE (INCHES)	630 SIGN, EXTRUSHEET SQ. FT.		630 GROUND MOUNTED BEAM SUPPORT FOUNDATION EACH	630 RIGID OVERHEAD SIGN SUPPORT FOUNDATION EACH	630 REMOVAL OF GROUND MOUNTED SIGN AND DISPOSAL EACH	630 REMOVAL OF GROUND MOUNTED SIGN AND REERECTION EACH	630 REMOVAL OF GROUND MOUNTED MAJOR SIGN AND DISPOSAL EACH	630 REMOVAL OF GROUND MOUNTED POST SUPPORT AND DISPOSAL EACH	630 REMOVAL OF GROUND MOUNTED BEAM SUPPORT AND DISPOSAL EACH	630 REMOVAL OF STRUCTURE MOUNTED SIGN AND DISPOSAL EACH	630 REMOVAL OF OVERHEAD MOUNTED SIGN AND REERECTION EACH	630 REMOVAL OF OVERHEAD MOUNTED SIGN AND DISPOSAL EACH	630 REMOVAL OF POLE MOUNTED SIGN AND DISPOSAL EACH	630 REMOVAL OF OVERHEAD SIGN SUPPORT AND DISPOSAL EACH
764		S.R. 8	98+48.76	LT														2		1
	780		99+00	LT	GB-II	192x114	152													
				LT	GF-II	96x102	68													
				LT	GB-II	156x102	111			2										
					N-29-24	24x24							1		2					
	785		100+50	LT	GC-II	192x84	112		2		1			2						
			101+50	RT	W-68-48	48x48					1			2						
			S.L.M. 2.28	LT	GE-II	144x102	102											1		
			S.L.M. 3.20	LT	GF-II	144x102	102											1		
765		GOODKIRK	199+41	RT	W-81-30	30x30														
			199+43	RT							2			1						
			199+52	LT	D-14-8	48x8														
				LT	D-14-8	48x8														
			199+56	RT							2			1						
			199+56	RT	R-72-12D	12x18														
		EXCHANGE	12+45	LT	W-81-30	30x30														
			12+46	LT							1			1						
	782		12+70	RT	GH-111	96x66	44									2				
		GOODKIRK	200+40	RT							3			2						
			200+47.95	LT							5			2						
			200+50	RT	R-72-12D	12x18														
			200+60	LT	R-41B-30	30x30														
					W-81-30	30x30														
					R-43L-36	36x12														
					R-43R-36	36x12														
			200+60	RT	R-41B-30	30x30														
					W-81-30	30x30														
					R-43L-36	36x12														
					R-43R-36	36x12														
			200+80	LT	R-31A-36	36x30														
			201+75	RT	R-32L-30	30x30														
			202+50	LT	R-55-12	12x18														
			203+00	LT	R-31A-36	36x30														
			203+00	RT	R-55-12	12x18														
		NASH	4+59	RT	R-1-30	30x30														
			4+67	RT	R-121-24	24x24														
											1			1						
TOTALS CARRIED TO SHEET 754							691		2	2	16			12	2	2		4		1

CALCULATED BF
CHECKED VLW

SIGNING SUBSUMMARY

SUM-8-0.63

724
1088

SHEET NO.	REFERENCE NO.	LOCATION	STATION	SIDE	CODE	SIZE (INCHES)	630 GROUND MOUNTED SUPPORT, NO. 3 POST LIN.FT.	630 GROUND MOUNTED SUPPORT, NO. 4 POST LIN.FT.	630 GROUND MOUNTED SUPPORT, NO. 6 POST LIN.FT.	630 GROUND MOUNTED SUPPORT, S4x7.7 BEAM LIN.FT.		630 GROUND MOUNTED SUPPORT, W10x12 BEAM LIN.FT.	630 GROUND MOUNTED SUPPORT, W8x18 BEAM LIN.FT.	630 ONE WAY SUPPORT, NO. 3 POST LIN.FT.	630 STREET NAME SIGN SUPPORT EACH	630 BREAKAWAY BEAM CONNECTION EACH		630 OVERHEAD SIGN SUPPORT, TYPE TC-12.30, DESIGN 2, 20' ARM (WITH LIGHTPOLE EXTENSION) EACH	630 OVERHEAD SIGN SUPPORT, TYPE TC-12.30, DESIGN 4, 16' ARM EACH	
765		GOODKIRK	204+20	RT																
			204+25	RT	R-43R-36	36x12	12													
			204+44	LT																
			204+55	LT	D-14-8	48x8									1					
				LT	D-14-8	36x8														
			205+00	RT	R-55-12	12x18	12													
766		GOODKIRK	206+00	LT	R-55-12	12x18	12													
			207+00	RT	R-55-12	12x18	12													
			208+35	LT																
		VINE	4+67	RT	R-1-30	30x30	15													
				RT	P-121-24	24x24														
			4+72																	
		GOODKIRK	208+50	RT	R-43R-36	36x12	12													
			208+75	RT																
			208+75	RT	M-45-42	42x60	34													
			208+80	LT	D-14-8	48x8									1					
				LT	D-14-8	36x8														
			208+81	RT																
			208+87	RT																
			209+15	LT																
			209+15	RT																
			210+25	LT	P-55-12	12x18	12													
			211+50	LT																
			211+50	RT																
			211+90	RT																
			211+90	RT	R-43R-36	36x12	12													
		ORCHARD	4+60	RT	R-1-30	30x30		15												
					R-121-24	24x24														
			4+60	RT																
		GOODKIRK	212+12	LT																
			212+15	LT	D-14-8	48x8									1					
					D-14-8	48x8														
			213+00	RT	R-55-12	12x18	12													
767		GOODKIRK	213+50	LT	R-55-12	12x18	12													
	781		214+00	LT	P-10-24	24x30														
					GB-III	96x66													1	
			214+86	RT	R-72-12D	12x18														
		CARROLL	11+39	RT	M-38-24	24x12	15													
					M-2-24-2	24x24														
					M-24-21	21x15														
			11+45	RT																
			12+45	LT																
			12+56	LT	R-120-24	24x24	13													
					R-4L-24	24x36														
					M-38-24	24x12	15													
					M-2-24-2	24x24														
					M-24-21	21x15														
TOTALS CARRIED TO SHEET 752							200	15							3				1	

CALCULATED BF
CHECKED VLW

SIGNING SUBSUMMARY

SUM-8-0.63

SHEET NO.	REFERENCE NO.	LOCATION	STATION	SIDE	CODE	SIZE (INCHES)	630 OVERHEAD SIGN SUPPORT, TYPE TC-12.30, DESIGN 8, 28' ARM EACH	630 OVERHEAD SIGN SUPPORT, TYPE TC-12.30, DESIGN 10, 30' ARM EACH	630 OVERHEAD SIGN SUPPORT, TYPE TC-7.65, DESIGN 6, SPAN 54' EACH	630 OVERHEAD SIGN SUPPORT, TYPE TC-7.65, DESIGN 6, SPAN 72' EACH	630 OVERHEAD SIGN SUPPORT, TYPE TC-7.65, DESIGN 8, SPAN 80' EACH	630 OVERPASS STRUCTURE MOUNTED SIGN SUPPORT, TC-18.24 EACH	630 OVERPASS STRUCTURE MOUNTED SIGN SUPPORT, TC-18.26, DESIGN 3 EACH	630 OVERPASS STRUCTURE MOUNTED SIGN SUPPORT, TC-18.26, DESIGN 6 EACH	630 SIGN SUPPORT ASSEMBLY, POLE MOUNTED EACH	630 SIGN SUPPORT ASSEMBLY, BRIDGE MOUNTED, AS PER PLAN EACH	630 SIGN ATTACHMENT ASSEMBLY EACH	630 SIGN, DOUBLE FACED, STREET NAME, TYPE G EACH	630 SIGN FLATSHEET, TYPE G SQ. FT.
765		GOODKIRK	204+20	RT															
			204+25	RT	R-43R-36	36x12													3
			204+44	LT															
			204+55	LT	D-14-8	48x8												1	
				LT	D-14-8	36x8												1	
			205+00	RT	R-55-12	12x18													2
766		GOODKIRK	206+00	LT	R-55-12	12x18													2
			207+00	RT	R-55-12	12x18													2
			208+35	LT															
		VINE	4+67	RT	R-1-30	30x30													6
					R-121-24	24x24													4
			4+72	RT															
		GOODKIRK	208+50	RT	R-43R-36	36x12													3
			208+75	RT															
			208+75	RT	M-45-42	42x60													18
			208+80	LT	D-14-8	48x8												1	
				LT	D-14-8	36x8												1	
			208+81	RT															
			208+87	RT															
			209+15	LT															
			209+15	RT															
			210+25	LT	P-55-12	12x18													2
			211+50	LT															
			211+50	RT															
			211+90	RT															
		GOODKIRK	211+90	RT	R-43R-36	36x12													3
		ORCHARD	4+60	RT	R-1-30	30x30													6
					R-121-24	24x24													4
			4+60	RT															
																		1	
		GOODKIRK	212+12	LT															
			212+15	LT	D-14-8	48x8												1	
					D-14-8	48x8												1	
			213+00	RT	R-55-12	12x18													2
767		GOODKIRK	213+50	LT	R-55-12	12x18													2
	781		214+00	LT	P-10-24	24x30									1				5
					GB-III	96x66													
			214+86	RT	R-72-12D	12x18									1				2
		CARROLL	11+39	RT	M-38-24	24x12													2
					M-2-24-2	24x24													4
					M-24-21	21x15													2
			11+45	RT															
			12+45	LT															
			12+56	LT	R-120-24	24x24													4
					R-4L-24	24x36													6
					M-38-24	24x12													2
					M-2-24-2	24x24													4
					M-24-21	21x15													2
TOTALS CARRIED TO SHEET 753															2			7	92

CALCULATED BF
CHECKED VLW

SIGNING SUBSUMMARY

SUM-8-0.63

SHEET NO.	REFERENCE NO.	LOCATION	STATION	SIDE	CODE	SIZE (INCHES)	630 SIGN, EXTRUSHEET SQ. FT.		630 GROUND MOUNTED BEAM SUPPORT FOUNDATION EACH	630 RIGID OVERHEAD SIGN SUPPORT FOUNDATION EACH	630 REMOVAL OF GROUND MOUNTED SIGN AND DISPOSAL EACH	630 REMOVAL OF GROUND MOUNTED SIGN AND REERECTION EACH	630 REMOVAL OF GROUND MOUNTED MAJOR SIGN AND DISPOSAL EACH	630 REMOVAL OF GROUND MOUNTED POST SUPPORT AND DISPOSAL EACH	630 REMOVAL OF GROUND MOUNTED BEAM SUPPORT AND DISPOSAL EACH	630 REMOVAL OF STRUCTURE MOUNTED SIGN AND DISPOSAL EACH	630 REMOVAL OF OVERHEAD MOUNTED SIGN AND REERECTION EACH	630 REMOVAL OF OVERHEAD MOUNTED SIGN AND DISPOSAL EACH	630 REMOVAL OF POLE MOUNTED SIGN AND DISPOSAL EACH	630 REMOVAL OF OVERHEAD SIGN SUPPORT AND DISPOSAL EACH
765		GOODKIRK	204+20	RT							1			1						
			204+25	RT	R-43R-36	36x12														
			204+44	LT							2			1						
			204+55	LT	D-14-8	48x8														
				LT	D-14-8	36x8														
			205+00	RT	R-55-12	12x18														
766		GOODKIRK	206+00	LT	R-55-12	12x18														
			207+00	RT	R-55-12	12x18														
			208+35	LT							2			1						
		VINE	4+67	RT	R-1-30	30x30														
				RT	R-121-24	24x24														
			4+72	RT							1			1						
		GOODKIRK	208+50	RT	R-43R-36	36x12														
			208+75	RT							1			1						
			208+75	RT	M-45-42	42x60														
			208+80	LT	D-14-8	48x8														
				LT	D-14-8	36x8														
			208+81	RT							1			1						
			208+87	RT							1			1						
			209+15	LT							2			1						
			209+15	RT							2			1						
			210+25	LT	R-55-12	12x18														
			211+50	LT							1			1						
			211+50	RT							1			1						
			211+90	RT							1			1						
		GOODKIRK	211+90	RT	R-43R-36	36x12														
		ORCHARD	4+60	RT	R-1-30	30x30														
					R-121-24	24x24														
			4+60	RT							1			1						
		GOODKIRK	212+12	LT							2			1						
			212+15	LT	D-14-8	48x8														
					D-14-8	48x8														
			213+00	RT	R-55-12	12x18														
767		GOODKIRK	213+50	LT	R-55-12	12x18														
	781		214+00	LT	R-10-24	24x30														
					GB-III	96x66	44			1										
			214+86	RT	R-72-12D	12x18														
		CARROLL	11+39	RT	M-38-24	24x12														
					M-2-24-2	24x24														
					M-24-21	21x15														
			11+45	RT							1			1						
			12+45	LT							1			1						
			12+56	LT	R-120-24	24x24														
					P-4L-24	24x36														
					M-38-24	24x12														
					M-2-24-2	24x24														
					M-24-21	21x15														
TOTALS CARRIED TO SHEET 754							44			1	22			16						

CALCULATED BF
CHECKED VLW

SIGNING SUBSUMMARY

SUM-8-0.63

727
1088

SHEET NO.	REFERENCE NO.	LOCATION	STATION	SIDE	CODE	SIZE (INCHES)	630 GROUND MOUNTED SUPPORT, NO. 3 POST LIN.FT.	630 GROUND MOUNTED SUPPORT, NO. 4 POST LIN.FT.	630 GROUND MOUNTED SUPPORT, NO. 6 POST LIN.FT.	630 GROUND MOUNTED SUPPORT, S4X7.7 BEAM LIN.FT.		630 GROUND MOUNTED SUPPORT, W10X12 BEAM LIN.FT.	630 GROUND MOUNTED SUPPORT, W8X18 BEAM LIN.FT.	630 ONE WAY SUPPORT, NO. 3 POST LIN.FT.	630 STREET NAME SIGN SUPPORT EACH	630 BREAKAWAY BEAM CONNECTION EACH		630 OVERHEAD SIGN SUPPORT, TYPE TC-12.30, DESIGN 2, 20' ARM (WITH LIGHTPOLE EXTENSION) EACH	630 OVERHEAD SIGN SUPPORT, TYPE TC-12.30, DESIGN 4, 16' ARM EACH	
767		GOODKIRK	215+50	RT			14													
			215+59	RT	R-72D-12	12x18														
			215+64	LT																
			215+65	LT																
			215+65	RT																
			215+80	LT	R-41B-30	30x30								13						
					R-43R-36	36x12														
					R-43L-36	36x12														
			215+80	RT	R-41B-30	30x30								13						
					R-43R-36	36x12														
					R-43L-36	36x12														
			216+50	RT	R-55-12	12x18	12													
			216+50	LT	R-55-12	12x18	12													
			217+50	RT	M-38-24	24x12	15													
					M-2-24-2	24x24														
					M-26-21	21x15														
			218+00	LT	R-10-24	24x30	13													
			218+50	LT	R-55-12	12x18	12													
			218+50	RT	R-55-12	12x18	12													
			219+40	LT																
		GOODKIRK	219+50	RT	R-72D-12	12x18														
			219+50	LT																
			219+52	RT	N-29-24	24x24														
					N-15-24	24x6														
	783		219+52	RT	GH-III	96x66														
					M-52B-120	120x54														
		BUCHTEL																		
			12+68	RT	R-121-24	24x24	13													
			12+72	RT			13													
			12+93	RT																
			13+65	LT	R-4L-24	24x6	13													
			220+29	RT	R-72D-12	12x18														
			220+48	LT	R-41B-30	30x30								13						
					R-43R-36	36x12														
					R-43L-36	36x12														
			220+42	RT	R-41B-30	30x30														
					R-31D-48	48x30								26						
					R-43R-36	36x12														
					R-43L-36	36x12														
			220+46	LT																
			220+93	LT	N-29-24	24x24	28													
					R-31D-48	48x30														
					N-15-24	24x6														
768		GOODKIRK	222+50	LT	R-31D-48	48x30	26													
			224+00	LT	R-55-12	12x18	12													
			225+25	RT	W-50L-30	30x30	14													
			226+00	LT	R-55-12	12x18	12													
TOTALS CARRIED TO SHEET 752							221							65						

CALCULATED BF
CHECKED VLW

SIGNING SUBSUMMARY

SUM-8-0.63

728
1088

SHEET NO.	REFERENCE NO.	LOCATION	STATION	SIDE	CODE	SIZE (INCHES)	630 OVERHEAD SIGN SUPPORT, TYPE TC-12.30, DESIGN 8, 28' ARM EACH	630 OVERHEAD SIGN SUPPORT, TYPE TC-12.30, DESIGN 10, 30' ARM EACH	630 OVERHEAD SIGN SUPPORT, TYPE TC-7.65, DESIGN 6, SPAN 54' EACH	630 OVERHEAD SIGN SUPPORT, TYPE TC-7.65, DESIGN 6, SPAN 72' EACH	630 OVERHEAD SIGN SUPPORT, TYPE TC-7.65, DESIGN 8, SPAN 80' EACH	630 OVERPASS STRUCTURE MOUNTED SIGN SUPPORT, TC-18.24 EACH	630 OVERPASS STRUCTURE MOUNTED SIGN SUPPORT, TC-18.26, DESIGN 3 EACH	630 OVERPASS STRUCTURE MOUNTED SIGN SUPPORT, TC-18.26, DESIGN 6 EACH	630 SIGN SUPPORT ASSEMBLY, POLE MOUNTED EACH	630 SIGN SUPPORT ASSEMBLY, BRIDGE MOUNTED, AS PER PLAN EACH	630 SIGN ATTACHMENT ASSEMBLY EACH	630 SIGN, DOUBLE FACED, STREET NAME, TYPE G EACH	630 SIGN FLATSHEET, TYPE G SQ. FT.
767		GOODKIRK	215+50	RT															
			215+59	RT	R-72D-12	12x18									1				2
			215+64	LT															
			215+65	LT															
			215+65	RT															
			215+80	LT	R-41B-30	30x30													6
					R-43R-36	36x12													3
					R-43L-36	36x12													3
			215+80	RT	R-41B-30	30x30													6
					R-43R-36	36x12													3
					R-43L-36	36x12													3
			216+50	RT	R-55-12	12x18													2
			216+50	LT	R-55-12	12x18													2
			217+50	RT	M-38-24	24x12													2
					M-2-24-2	24x24													4
					M-26-21	21x15													2
			218+00	LT	R-10-24	24x30													5
			218+50	LT	R-55-12	12x18													2
			218+50	RT	R-55-12	12x18													2
			219+40	LT															
		GOODKIRK	219+50	RT	R-72D-12	12x18									1				2
			219+50	LT															
			219+52	RT	N-29-24	24x24									1				4
					N-15-24	24x6									1				1
	783		219+52	RT	SH-III	96x66													
					M-52B-120	120x54													
		BUCHTEL																	
			12+68	RT	R-121-24	24x24													4
			12+72	RT															
			12+93	RT															
			13+65	LT	R-4L-24	24x6													6
			220+29	RT	R-72D-12	12x18									1				2
			220+48	LT	R-41B-30	30x30													6
					R-43R-36	36x12													3
					R-43L-36	36x12													3
			220+42	RT	R-41B-30	30x30													6
					R-31D-48	48x30													10
					R-43R-36	36x12													3
					R-43L-36	36x12													3
			220+46	LT															
			220+93	LT	N-29-24	24x24													4
					R-31D-48	48x30													10
					N-15-24	24x6													1
768		GOODKIRK	222+50	LT	R-31D-48	48x30													10
			224+00	LT	R-55-12	12x18													2
			225+25	RT	W-50L-30	30x30													6
			226+00	LT	R-55-12	12x18													2
TOTALS CARRIED TO SHEET 753															5				137

CALCULATED BF
CHECKED VLW

SIGNING SUBSUMMARY

SUM-8-0.63

729
1088

SHEET NO.	REFERENCE NO.	LOCATION	STATION	SIDE	CODE	SIZE (INCHES)	630 SIGN, EXTRUSHEET SQ. FT.		630 GROUND MOUNTED BEAM SUPPORT FOUNDATION EACH	630 RIGID OVERHEAD SIGN SUPPORT FOUNDATION EACH	630 REMOVAL OF GROUND MOUNTED SIGN AND DISPOSAL EACH	630 REMOVAL OF GROUND MOUNTED SIGN AND REERECTION EACH	630 REMOVAL OF GROUND MOUNTED MAJOR SIGN AND DISPOSAL EACH	630 REMOVAL OF GROUND MOUNTED POST SUPPORT AND DISPOSAL EACH	630 REMOVAL OF GROUND MOUNTED BEAM SUPPORT AND DISPOSAL EACH	630 REMOVAL OF STRUCTURE MOUNTED SIGN AND DISPOSAL EACH	630 REMOVAL OF OVERHEAD MOUNTED SIGN AND REERECTION EACH	630 REMOVAL OF OVERHEAD MOUNTED SIGN AND DISPOSAL EACH	630 REMOVAL OF POLE MOUNTED SIGN AND DISPOSAL EACH	630 REMOVAL OF OVERHEAD SIGN SUPPORT AND DISPOSAL EACH
767		GOODKIRK	215+50	RT								2		1						
			215+59	RT	R-72-12D	12x18														
			215+64	LT							3			1						
			215+65	LT							1			1						
			215+65	RT							3			1						
			215+80	LT	R-41B-30	30x30														
					R-43R-36	36x12														
					R-43L-36	36x12														
			215+80	RT	R-41B-30	30x30														
					R-43R-36	36x12														
					R-43L-36	36x12														
			216+50	RT	R-55-12	12x18														
			216+50	LT	R-55-12	12x18														
			217+50	RT	M-38-24	24x12														
					M-2-24-2	24x24														
					M-26-21	21x15														
			218+00	LT	R-10-24	24x30														
			218+50	LT	R-55-12	12x18														
			218+50	RT	R-55-12	12x18														
			219+40	LT							1									
		GOODKIRK	219+50	RT	R-72D-12	12x18														
			219+50	LT							2			1						
			219+52	RT	N-29-24	24x24														
					N-15-24	24x6														
	783		219+52	RT	GH-III	96x66	44													
					M-52B-120	120x54	45													
		BUCHTEL																		
			12+68	RT	R-12I-24	24x24														
			12+72	RT								1								
			12+93	RT							1			1						
			13+65	LT	P-4L-24	24x6														
			220+29	RT	R-72D-12	12x18														
			220+48	LT	R-41B-30	30x30														
					R-43R-36	36x12														
					R-43L-36	36x12														
			220+42	RT	R-41B-30	30x30														
					R-31D-48	48x30														
					R-43R-36	36x12														
					R-43L-36	36x12														
			220+46	LT							1	1								
			220+93	LT	N-29-24	24x24														
					R-31D-48	48x30														
					N-15-24	24x6														
768		GOODKIRK	222+50	LT	R-31D-48	48x30														
			224+00	LT	P-55-12	12x18														
			225+25	RT	W-50L-30	30x30														
			226+00	LT	P-55-12	12x18														
TOTALS CARRIED TO SHEET 754							89				12	4		6						

CALCULATED BF
CHECKED VLW

SIGNING SUBSUMMARY

SUM-8-0.63

SHEET NO.	REFERENCE NO.	LOCATION	STATION	SIDE	CODE	SIZE (INCHES)	630 GROUND MOUNTED SUPPORT, NO. 3 POST LIN.FT.	630 GROUND MOUNTED SUPPORT, NO. 4 POST LIN.FT.	630 GROUND MOUNTED SUPPORT, NO. 6 POST LIN.FT.	630 GROUND MOUNTED SUPPORT, S4x7.7 BEAM LIN.FT.		630 GROUND MOUNTED SUPPORT, W10x12 BEAM LIN.FT.	630 GROUND MOUNTED SUPPORT, W8x18 BEAM LIN.FT.	630 ONE WAY SUPPORT, NO. 3 POST LIN.FT.	630 STREET NAME SIGN SUPPORT EACH	630 BREAKAWAY BEAM CONNECTION EACH		630 OVERHEAD SIGN SUPPORT, TYPE TC-12.30, DESIGN 2, 20' ARM (WITH LIGHTPOLE EXTENSION) EACH	630 OVERHEAD SIGN SUPPORT, TYPE TC-12.30, DESIGN 4, 20' ARM EACH	
768		GOODKIRK	226+20	LT																
			226+20	LT																
			227+00	RT	R-55-12	12x18	12													
			227+05	RT																
			228+00	LT	R-55-12	12x18	12													
			228+00	RT	W-60L-36	36x36	15													
			228+40	RT																
			229+00	RT	R-55-12	12x18	12													
			230+00	LT	R-55-12	12x18	12													
			230+00	RT	W-52-36	36x36	15													
			230+96	LT																
			231+00	RT	R-55-12	12x18	12													
769		GOODKIRK	231+00	LT	R-10-24	24x30	13													
		MARKET	23+08	LT/RT																
			24+76	RT																
			25+00	RT																
	783	GOODKIRK	232+08	RT	R-72D-12	12x18														
				RT	M-52B-120	120x54														
					GH-III	96x66														
			232+12	LT																
			232+27	LT																
			232+47	LT																
			232+57	LT																
			233+20	RT	R-72D-12	12x18														
			233+40	LT	R-41B-30	30x30								13						
					R-43R-36	36x12														
					R-43L-36	36x12														
			233+40	RT	R-41B-30	30x30								13						
					R-43L-36	36x12														
					R-43R-36	36x12														
	785		234+00	RT	N-29-24	24x24	5													
					N-15-24	24x6														
					M-52A-108	108x30						26				2				
					M-52A-108	108x30														
			235+00	LT	R-55-12	12x18	12													
			235+00	RT	R-55-12	12x18	12													
			236+00	LT	R-10-24	24x30	13													
			237+08	LT																
			237+13	RT	R-72D-12	12x18														
		FORGE	5+02	RT	M-38-24	24x12	15													
					M-2-24-2	24x24														
					M-24-21	21x15														
			5+13	LT																
TOTALS CARRIED TO SHEET 752							160					26		26		2				

CALCULATED BF CHECKED VLW

SIGNING SUBSUMMARY

SUM-8-0.63

731
1088

SIGNING SUBSUMMARY

CALCULATED BF
CHECKED VLW

SHEET NO.	REFERENCE NO.	LOCATION	STATION	SIDE	CODE	SIZE (INCHES)	630 OVERHEAD SIGN SUPPORT, TYPE TC-12.30, DESIGN 8, 28' ARM EACH	630 OVERHEAD SIGN SUPPORT, TYPE TC-12.30, DESIGN 10, 30' ARM EACH	630 OVERHEAD SIGN SUPPORT, TYPE TC-7.65, DESIGN 6, SPAN 54' EACH	630 OVERHEAD SIGN SUPPORT, TYPE TC-7.65, DESIGN 6, SPAN 72' EACH	630 OVERHEAD SIGN SUPPORT, TYPE TC-7.65, DESIGN 8, SPAN 80' EACH	630 OVERPASS STRUCTURE MOUNTED SIGN SUPPORT, TC-18.24 EACH	630 OVERPASS STRUCTURE MOUNTED SIGN SUPPORT, TC-18.26, DESIGN 3 EACH	630 OVERPASS STRUCTURE MOUNTED SIGN SUPPORT, TC-18.26, DESIGN 6 EACH	630 SIGN SUPPORT ASSEMBLY, POLE MOUNTED EACH	630 SIGN SUPPORT ASSEMBLY, BRIDGE MOUNTED, AS PER PLAN EACH	630 SIGN ATTACHMENT ASSEMBLY EACH	630 SIGN, DOUBLE FACED, STREET NAME, TYPE G EACH	630 SIGN FLATSHEET, TYPE G SQ. FT.
768		GOODKIRK	226+20	LT															
			226+20	LT															
			227+00	RT	R-55-12	12x18													2
			227+05	RT															
			228+00	LT	R-55-12	12x18													2
			228+00	RT	W-60L-36	36x36													9
			228+40	RT															
			229+00	RT	P-55-12	12x18													2
			230+00	LT	P-55-12	12x18													2
			230+00	RT	W-52-36	36x36													9
			230+96	LT															
			231+00	RT	P-55-12	12x18													2
769		GOODKIRK	231+00	LT	P-10-24	24x30													5
		MARKET	23+08	LT/RT															
			24+76	RT															
			25+00	RT															
	783	GOODKIRK	232+08	RT	R-72D-12	12x18									1				2
				RT	M-52B-120	120x54													
					GH-III	96x66													
			232+12	LT															
			232+27	LT															
			232+47	LT															
			232+57	LT															
			233+20	RT	R-72D-12	12x18									1				2
			233+40	LT	R-41B-30	30x30													6
					R-43R-36	36x12													3
					R-43L-36	36x12													3
			233+40	RT	R-41B-30	30x30													6
					R-43L-36	36x12													3
					R-43R-36	36x12													3
	785		234+00	RT	N-29-24	24x24													4
					N-15-24	24x6													1
					M-52A-108	108x30													
					M-52A-108	108x30													
			235+00	LT	R-55-12	12x18													1
			235+00	RT	R-55-12	12x18													1
			236+00	LT	R-10-24	24x30													5
			237+08	LT															
			237+13	RT	R-72D-12	12x18									1				2
		FORGE	5+02	RT	M-38-24	24x12													2
					M-2-24-2	24x24													4
					M-24-21	21x15													2
			5+13	LT															
TOTALS CARRIED TO SHEET 753															3				83

SUM-8-0.63

SHEET NO.	REFERENCE NO.	LOCATION	STATION	SIDE	CODE	SIZE (INCHES)	630 SIGN, EXTRUSHEET		630 GROUND MOUNTED BEAM SUPPORT FOUNDATION	630 RIGID OVERHEAD SIGN SUPPORT FOUNDATION	630 REMOVAL OF GROUND MOUNTED SIGN AND DISPOSAL	630 REMOVAL OF GROUND MOUNTED SIGN AND REERECTION	630 REMOVAL OF GROUND MOUNTED MAJOR SIGN AND DISPOSAL	630 REMOVAL OF GROUND MOUNTED POST SUPPORT AND DISPOSAL	630 REMOVAL OF GROUND MOUNTED BEAM SUPPORT AND DISPOSAL	630 REMOVAL OF STRUCTURE MOUNTED SIGN AND DISPOSAL	630 REMOVAL OF OVERHEAD MOUNTED SIGN AND REERECTION	630 REMOVAL OF OVERHEAD MOUNTED SIGN AND DISPOSAL	630 REMOVAL OF POLE MOUNTED SIGN AND DISPOSAL	630 REMOVAL OF OVERHEAD SIGN SUPPORT AND DISPOSAL
							SQ. FT.		EACH	EACH	EACH	EACH	EACH	EACH	EACH	EACH	EACH	EACH	EACH	EACH
768		GOODKIRK	226+20	LT							1			1						
			226+20	LT							1			1						
			227+00	RT	R-55-12	12x18														
			227+05	RT							1			1						
			228+00	LT	R-55-12	12x18														
			228+00	RT	W-60L-36	36x36														
			228+40	RT							1			1						
			229+00	RT	R-55-12	12x18														
			230+00	LT	R-55-12	12x18														
			230+00	RT	W-52-36	36x36														
			230+96	LT							3			1						
			231+00	RT	R-55-12	12x18														
769		GOODKIRK	231+00	LT	R-10-24	24x30														
		MARKET	23+08	LT/RT														2		1
			24+76	RT							1			1						
			25+00	RT							1			1						
	783	GOODKIRK	232+08	RT	R-72D-12	12x18														
				RT	M-52B-120	120x54	45													
					SH-III	96x66	44													
			232+12	LT							2			1						
			232+27	LT							1			1						
			232+47	LT							1			1						
			232+57	LT															2	
			233+20	RT	R-72D-12	12x18														
			233+40	LT	R-41B-30	30x30														
					R-43R-36	36x12														
					R-43L-36	36x12														
			233+40	RT	R-41B-30	30x30														
					R-43L-36	36x12														
					R-43R-36	36x12														
	785		234+00	RT	N-29-24	24x24														
					N-15-24	24x6														
					M-52A-108	108x30	23		2											
					M-52A-108	108x30	23													
			235+00	LT	R-55-12	12x18														
			235+00	RT	R-55-12	12x18														
			236+00	LT	P-10-24	24x30														
			237+08	LT							1			1						
			237+13	RT	R-72D-12	12x18														
		FORGE	5+02	RT	M-38-24	24x12														
					M-2-24-2	24x24														
					M-24-21	21x15														
			5+13	LT							1			1						
TOTALS CARRIED TO SHEET 754							135		2		15			12				2	2	1

CALCULATED BF
CHECKED VLW

SIGNING SUBSUMMARY

SUM-8-0.63

733
1088

SHEET NO.	REFERENCE NO.	LOCATION	STATION	SIDE	CODE	SIZE (INCHES)	630 GROUND MOUNTED SUPPORT, NO. 3 POST LIN.FT.	630 GROUND MOUNTED SUPPORT, NO. 4 POST LIN.FT.	630 GROUND MOUNTED SUPPORT, NO. 6 POST LIN.FT.	630 GROUND MOUNTED SUPPORT, S4x7.7 BEAM LIN.FT.		630 GROUND MOUNTED SUPPORT, W10x12 BEAM LIN.FT.	630 GROUND MOUNTED SUPPORT, W8x18 BEAM LIN.FT.	630 ONE WAY SUPPORT, NO. 3 POST LIN.FT.	630 STREET NAME SIGN SUPPORT EACH	630 BREAKAWAY BEAM CONNECTION EACH		630 OVERHEAD SIGN SUPPORT, TYPE TC-12.30, DESIGN 2, 20' ARM (WITH LIGHTPOLE EXTENSION) EACH	630 OVERHEAD SIGN SUPPORT, TYPE TC-12.30, DESIGN 4, 20' ARM EACH	
769		FORGE	5+93	LT																
			6+80	LT	M-38-24	24x12	15													
					M-2-24-2	24x24														
					M-24-21	21x15														
		GOODKIRK	237+93	LT																
			238+00	RT																
			238+15	RT																
			238+23	RT	R-72D-12	12x18														
			238+30	LT	R-41B-30	30x30								13						
					R-43R-36	36x12														
					R-43L-36	36x12														
			238+30	RT	R-41B-30	30x30								13						
					R-43R-36	36x12														
					R-43L-36	36x12														
			238+30	RT																
			238+59	RT																
			239+70	RT																
			240+00	LT	R-55-12	12x18	12													
			240+25	RT	R-55-12	12x18	12													
			240+80	LT	D-14-8	60x8									1					
					D-14-8	60x8														
					R-43R-36	36x12														
			240+85	LT																
770		GOODKIRK	241+00	RT																
			241+30	RT																
			241+35	RT																
			241+50	RT																
			242+00	LT	R-55-12	12x18	12													
			242+15	RT																
			242+25	RT	R-55-12	12x18	12													
			242+90	RT	M-45-42	42x60	34													
			243+40	RT																
			244+00	LT	R-55-12	12x18	12													
		RAMP KI	89+00	RT	R-15B-30	30x18	12													
		GOODKIRK	244+85	LT																
			245+00	LT	R-10-24	24x30	13													
			245+45	LT																
			246+10	RT																
			246+10	LT																
	783		246+13	RT	SH-III	96x66														
					M-52B-120	120x54														
			246+18	RT																
			246+18	RT																
		PERKINS	48+47	LT	R-72D-12	12x18	12													
			48+48	RT																
TOTALS CARRIED TO SHEET 752							146							26	1					

CALCULATED BF
CHECKED VLW

SIGNING SUBSUMMARY

SUM-8-0.63

SHEET NO.	REFERENCE NO.	LOCATION	STATION	SIDE	CODE	SIZE (INCHES)	630 OVERHEAD SIGN SUPPORT, TYPE TC-12.30, DESIGN 8, 28' ARM EACH	630 OVERHEAD SIGN SUPPORT, TYPE TC-12.30, DESIGN 10, 30' ARM EACH	630 OVERHEAD SIGN SUPPORT, TYPE TC-7.65, DESIGN 6, SPAN 54' EACH	630 OVERHEAD SIGN SUPPORT, TYPE TC-7.65, DESIGN 6, SPAN 72' EACH	630 OVERHEAD SIGN SUPPORT, TYPE TC-7.65, DESIGN 8, SPAN 80' EACH	630 OVERPASS STRUCTURE MOUNTED SIGN SUPPORT, TC-18.24 EACH	630 OVERPASS STRUCTURE MOUNTED SIGN SUPPORT, TC-18.26, DESIGN 3 EACH	630 OVERPASS STRUCTURE MOUNTED SIGN SUPPORT, TC-18.26, DESIGN 6 EACH	630 SIGN SUPPORT ASSEMBLY, POLE MOUNTED EACH	630 SIGN SUPPORT ASSEMBLY, BRIDGE MOUNTED, AS PER PLAN EACH	630 SIGN ATTACHMENT ASSEMBLY EACH	630 SIGN, DOUBLE FACED, STREET NAME, TYPE G EACH	630 SIGN FLATSHEET, TYPE G SQ. FT.
769		FORGE	5+93	LT															
			6+80	LT	M-38-24	24x12													2
					M-2-24-2	24x24													4
					M-24-21	21x15													2
		GOODKIRK	237+93	LT															
			238+00	RT															
			238+15	RT															
			238+23	RT	R-72D-12	12x18									1				2
			238+30	LT	R-41B-30	30x30													6
					R-43R-36	36x12													3
					R-43L-36	36x12													3
			238+30	RT	R-41B-30	30x30													6
					R-43R-36	36x12													3
					R-43L-36	36x12													3
			238+30	RT															
			238+59	RT															
			239+70	RT															
			240+00	LT	R-55-12	12x18													2
			240+25	RT	R-55-12	12x18													2
			240+80	LT	D-14-8	60x8												1	
					D-14-8	60x8												1	
					R-43R-36	36x12													3
			240+85	LT															
770		GOODKIRK	241+00	RT															
			241+30	RT															
			241+35	RT															
			241+50	RT															
			242+00	LT	R-55-12	12x18													2
			242+15	RT															
			242+25	RT	R-55-12	12x18													2
			242+90	RT	M-45-42	42x60													18
			243+40	RT															
			244+00	LT	R-55-12	12x18													2
		RAMP KI	89+00	RT	R-15B-30	30x18													4
		GOODKIRK	244+85	LT															
			245+00	LT	P-10-24	24x30													5
			245+45	LT															
			246+10	RT															
			246+10	LT															
	783		246+13	RT	GH-III	96x66													
					M-52B-120	120x54													
			246+18	RT															
			246+18	RT															
		PERKINS	48+47	LT	R-72D-12	12x18									1				
			48+48	RT															
TOTALS CARRIED TO SHEET 753															2			2	74

CALCULATED BF
CHECKED VLW

SIGNING SUBSUMMARY

SUM-8-0.63

735
1088

SHEET NO.	REFERENCE NO.	LOCATION	STATION	SIDE	CODE	SIZE (INCHES)	630 SIGN, EXTRUSHEET		630 GROUND MOUNTED BEAM SUPPORT FOUNDATION	630 RIGID OVERHEAD SIGN SUPPORT FOUNDATION	630 REMOVAL OF GROUND MOUNTED SIGN AND DISPOSAL	630 REMOVAL OF GROUND MOUNTED SIGN AND REERECTION	630 REMOVAL OF GROUND MOUNTED MAJOR SIGN AND DISPOSAL	630 REMOVAL OF GROUND MOUNTED POST SUPPORT AND DISPOSAL	630 REMOVAL OF GROUND MOUNTED BEAM SUPPORT AND DISPOSAL	630 REMOVAL OF STRUCTURE MOUNTED SIGN AND DISPOSAL	630 REMOVAL OF OVERHEAD MOUNTED SIGN AND REERECTION	630 REMOVAL OF OVERHEAD MOUNTED SIGN AND DISPOSAL	630 REMOVAL OF POLE MOUNTED SIGN AND DISPOSAL	630 REMOVAL OF OVERHEAD SIGN SUPPORT AND DISPOSAL
							SQ. FT.		EACH	EACH	EACH	EACH	EACH	EACH	EACH	EACH	EACH	EACH	EACH	EACH
769		FORGE	5+93	LT							1			1						
			6+80	LT	M-38-24	24x12														
					M-2-24-2	24x24														
					M-24-21	21x15														
		GOODKIRK	237+93	LT							2			1						
			238+00	RT							1			1						
			238+15	RT							1			1						
			238+23	RT	R-72D-12	12x18														
			238+30	LT	R-41B-30	30x30														
					R-43R-36	36x12														
					R-43L-36	36x12														
			238+30	RT	R-41B-30	30x30														
					R-43R-36	36x12														
					R-43L-36	36x12														
			238+30	RT							1			1						
			238+59	RT							1			1						
			239+70	RT							1			1						
			240+00	LT	P-55-12	12x18														
			240+25	RT	P-55-12	12x18														
			240+80	LT	D-14-8	60x8														
					D-14-8	60x8														
					R-43R-36	36x12														
			240+85	LT							2			1						
770		GOODKIRK	241+00	RT							1			1						
			241+30	RT							3			1						
			241+35	RT							3			1						
			241+50	RT							1			1						
			242+00	LT	P-55-12	12x18														
			242+15	RT							1			1						
			242+25	RT	P-55-12	12x18														
			242+90	RT	M-45-42	42x60														
			243+40	RT							3			1						
			244+00	LT	R-55-12	12x18														
		RAMP KI	89+00	RT	R-15B-30	30x18					1			1						
																			1	
		GOODKIRK	244+85	LT																
			245+00	LT	P-10-24	24x30														
			245+45	LT							3			1						
			246+10	RT							1			1						
			246+10	LT							2			1						
	783		246+13	RT	GH-III	96x66	44													
					M-52B-120	120x54	45													
			246+18	RT														2		
			246+18	RT							2									
		PERKINS	48+47	LT	R-72D-12	12x18														
			48+48	RT							1			1						
TOTALS CARRIED TO SHEET 754							89				32			19				2	1	

CALCULATED BF
CHECKED VLW

SIGNING SUBSUMMARY

SUM-8-0.63

736
1088

SHEET NO.	REFERENCE NO.	LOCATION	STATION	SIDE	CODE	SIZE (INCHES)	630 GROUND MOUNTED SUPPORT, NO. 3 POST LIN.FT.	630 GROUND MOUNTED SUPPORT, NO. 4 POST LIN.FT.	630 GROUND MOUNTED SUPPORT, NO. 6 POST LIN.FT.	630 GROUND MOUNTED SUPPORT, S4X7.7 BEAM LIN.FT.		630 GROUND MOUNTED SUPPORT, W10X12 BEAM LIN.FT.	630 GROUND MOUNTED SUPPORT, W8X18 BEAM LIN.FT.	630 ONE WAY SUPPORT, NO. 3 POST LIN.FT.	630 STREET NAME SIGN SUPPORT EACH	630 BREAKAWAY BEAM CONNECTION EACH		630 OVERHEAD SIGN SUPPORT, TYPE TC-12.30, DESIGN 2, 20' ARM (WITH LIGHTPOLE EXTENSION) EACH	630 OVERHEAD SIGN SUPPORT, TYPE TC-12.30, DESIGN 4, 20' ARM EACH	
770		RAMP I	92+18	LT	R-72D-12	12x18														
			92+25	LT																
			92+25	LT	R-41B-30	30x30								26						
					R-43R-36	36x12														
					R-43L-36	36x12														
					R-31M-48	48x30														
			92+25	LT			15													
			92+25	LT			15													
			92+45	RT																
			92+55	RT	R-41B-30	30x30								26						
					R-43R-36	36x12														
					R-43L-36	36x12														
					R-31M-48	48x30														
			92+85	LT			15													
			94+00	LT	N-29-24	24x24	14													
					M-26-21	21x15														
			94+45	RT																
			94+65	LT	R-31M-48	48x30	28													
					R-41A-36	36x24														
			94+65	RT	R-31M-48	48x30	28													
					R-41A-36	36x24														
			94+65	LT																
771		EXCHANGE	14+59	LT																
	781		14+60	LT	GB-III	96x66												1		
		FOUNTAIN	300+45	RT																
			300+60	RT	R-43R-36	36x12	12													
					R-43L-36	36x12														
			300+60	LT	R-43R-36	36x12	12													
					R-43L-36	36x12														
			301+75	RT	R-10-24	24x30	13													
			301+75	LT																
			302+00	LT	R-55-12	12x18	12													
			302+50	RT	R-55-12	12x18	12													
			303+00	RT	W-52L-36	36x36	15													
			304+00	LT																
			304+00	LT	R-55-12	12x18	12													
			304+10	RT	D-14-8	48x8									1					
					D-14-8	36x8														
			304+35	LT	R-43R-36	36x12	12													
			304+53	LT																
TOTALS CARRIED TO SHEET 752							215							52	1			1		

CALCULATED BF
CHECKED VLW

SIGNING SUBSUMMARY

SUM-8-0.63

SIGNING SUBSUMMARY

CALCULATED BF
CHECKED VLW

SHEET NO.	REFERENCE NO.	LOCATION	STATION	SIDE	CODE	SIZE (INCHES)	630 OVERHEAD SIGN SUPPORT, TYPE TC-12.30, DESIGN 8, 28' ARM EACH	630 OVERHEAD SIGN SUPPORT, TYPE TC-12.30, DESIGN 10, 30' ARM EACH	630 OVERHEAD SIGN SUPPORT, TYPE TC-7.65, DESIGN 6, SPAN 54' EACH	630 OVERHEAD SIGN SUPPORT, TYPE TC-7.65, DESIGN 6, SPAN 72' EACH	630 OVERHEAD SIGN SUPPORT, TYPE TC-7.65, DESIGN 8, SPAN 80' EACH	630 OVERPASS STRUCTURE MOUNTED SIGN SUPPORT, TC-18.24 EACH	630 OVERPASS STRUCTURE MOUNTED SIGN SUPPORT, TC-18.26, DESIGN 3 EACH	630 OVERPASS STRUCTURE MOUNTED SIGN SUPPORT, TC-18.26, DESIGN 6 EACH	630 SIGN SUPPORT ASSEMBLY, POLE MOUNTED EACH	630 SIGN SUPPORT ASSEMBLY, BRIDGE MOUNTED, AS PER PLAN EACH	630 SIGN ATTACHMENT ASSEMBLY EACH	630 SIGN, DOUBLE FACED, STREET NAME, TYPE G EACH	630 SIGN FLATSHEET, TYPE G SQ. FT.
770		RAMP I	92+18	LT	R-72D-12	12x18									1				2
			92+25	LT															
			92+25	LT	R-41B-30	30x30													6
					R-43R-36	36x12													3
					R-43L-36	36x12													3
					R-31M-48	48x30													10
			92+25	LT															
			92+25	LT															
			92+45	RT															
			92+55	RT	R-41B-30	30x30													6
					R-43R-36	36x12													3
					R-43L-36	36x12													3
					R-31M-48	48x30													10
			92+85	LT															
			94+00	LT	N-29-24	24x24													4
					M-26-21	21x15													2
			94+45	RT															
			94+65	LT	R-31M-48	48x30													10
					R-41A-36	36x24													6
			94+65	RT	R-31M-48	48x30													10
					R-41A-36	36x24													6
			94+65	LT															
771		EXCHANGE	14+59	LT															
	781		14+60	LT	GB-III	96x66													
		FOUNTAIN	300+45	RT															
			300+60	RT	R-43R-36	36x12													3
					R-43L-36	36x12													3
			300+60	LT	R-43R-36	36x12													3
					R-43L-36	36x12													3
			301+75	RT	R-10-24	24x30													5
			301+75	LT															
			302+00	LT	R-55-12	12x18													2
			302+50	RT	R-55-12	12x18													2
			303+00	RT	W-52L-36	36x36													9
			304+00	LT															
			304+00	LT	P-55-12	12x18													2
			304+10	RT	D-14-8	48x8												1	
					D-14-8	36x8												1	
			304+35	LT	R-43R-36	36x12													3
			304+53	LT															
TOTALS CARRIED TO SHEET 753															1			2	119

SUM-8-0.63

SHEET NO.	REFERENCE NO.	LOCATION	STATION	SIDE	CODE	SIZE (INCHES)	630 SIGN, EXTRUSHEET		630 GROUND MOUNTED BEAM SUPPORT FOUNDATION	630 RIGID OVERHEAD SIGN SUPPORT FOUNDATION	630 REMOVAL OF GROUND MOUNTED SIGN AND DISPOSAL	630 REMOVAL OF GROUND MOUNTED SIGN AND REERECTION	630 REMOVAL OF GROUND MOUNTED MAJOR SIGN AND DISPOSAL	630 REMOVAL OF GROUND MOUNTED POST SUPPORT AND DISPOSAL	630 REMOVAL OF GROUND MOUNTED BEAM SUPPORT AND DISPOSAL	630 REMOVAL OF STRUCTURE MOUNTED SIGN AND DISPOSAL	630 REMOVAL OF OVERHEAD MOUNTED SIGN AND REERECTION	630 REMOVAL OF OVERHEAD MOUNTED SIGN AND DISPOSAL	630 REMOVAL OF POLE MOUNTED SIGN AND DISPOSAL	630 REMOVAL OF OVERHEAD SIGN SUPPORT AND DISPOSAL
							SQ. FT.		EACH	EACH	EACH	EACH	EACH	EACH	EACH	EACH	EACH	EACH	EACH	EACH
770		RAMP I	92+18	LT	R-72-12D	12x18														
			92+25	LT							2			1						
			92+25	LT	R-41B-30	30x30														
					R-43R-36	36x12														
					R-43L-36	36x12														
					R-31M-48	48x30														
			92+25	LT							1	2		1						
			92+25	LT								2		1						
			92+45	RT							3			1						
			92+55	RT	R-41B-30	30x30														
					R-43R-36	36x12														
					R-43L-36	36x12														
					R-31M-48	48x30														
			92+85	LT								3		1						
			94+00	LT	N-29-24	24x24														
					M-26-21	21x15														
			94+45	RT							5			1						
			94+65	LT	R-31M-48	48x30														
					R-41A-36	36x24														
			94+65	RT	R-31M-48	48x30														
					R-41A-36	36x24														
			94+65	LT							2			1						
771		EXCHANGE	14+59	LT															1	
	781		14+60	LT	GB-111	96x66	44													
		FOUNTAIN	300+45								2			1						
			300+60	RT	R-43R-36	36x12														
					R-43L-36	36x12														
			300+60	LT	R-43R-36	36x12														
					R-43L-36	36x12														
			301+75	RT	R-10-24	24x30					1			1						
			301+75	LT							1			1						
			302+00	LT	R-55-12	12x18														
			302+50	RT	R-55-12	12x18														
			303+00	RT	W-52L-36	36x36														
			304+00	LT							1			1						
			304+00	LT	R-55-12	12x18														
			304+10	RT	D-14-8	48x8														
					D-14-8	36x8														
			304+35	LT	R-43R-36	36x12					1			1						
			304+53	LT							2			1						
TOTALS CARRIED TO SHEET 754							44				21	7		13					1	

CALCULATED BF
CHECKED VLW

SIGNING SUBSUMMARY

SUM-8-0.63

739
1088

SHEET NO.	REFERENCE NO.	LOCATION	STATION	SIDE	CODE	SIZE (INCHES)	630 GROUND MOUNTED SUPPORT, NO. 3 POST LIN.FT.	630 GROUND MOUNTED SUPPORT, NO. 4 POST LIN.FT.	630 GROUND MOUNTED SUPPORT, NO. 6 POST LIN.FT.	630 GROUND MOUNTED SUPPORT, S4X7.7 BEAM LIN.FT.		630 GROUND MOUNTED SUPPORT, W10X12 BEAM LIN.FT.	630 GROUND MOUNTED SUPPORT, W8X18 BEAM LIN.FT.	630 ONE WAY SUPPORT, NO. 3 POST LIN.FT.	630 STREET NAME SIGN SUPPORT EACH	630 BREAKAWAY BEAM CONNECTION EACH		630 OVERHEAD SIGN SUPPORT, TYPE TC-12.30, DESIGN 2, 20' ARM (WITH LIGHTPOLE EXTENSION) EACH	630 OVERHEAD SIGN SUPPORT, TYPE TC-12.30, DESIGN 4, 20' ARM EACH	
771		NASH	8+30	LT																
			8+38	LT	R-1-30	30x30	15													
					R-121-24	24x24														
		FOUNTAIN	304+75	RT	R-55-12	12x18	12													
			304+90	LT	W-60L-36	36x36	15													
			304+90	RT	W-60L-36	36x36	15													
772		FOUNTAIN	305+90	RT																
			306+00	LT	R-55-12	12x18	12													
			306+10	RT																
			306+10	RT	D-14-8	48x8									1					
					D-14-8	48x8														
			306+33	LT	R-43R-36	36x12	12													
		MASON																		
			0+30	LT	R-1-30	30x30	15													
					R-121-24	24x24														
			0+33	LT																
		FOUNTAIN	306+51	RT																
			307+00	RT	R-55-12	12x18	12													
			308+00	LT	R-55-12	12x18	12													
			308+55	LT																
			308+89	LT																
			309+00	RT	W-50L-30	30x30	14													
			310+00	RT	R-55-12	12x18	12													
	787		311+00	LT	D-11A-18	108x18				17						2				
			311+40	LT																
			311+75	RT																
			312+00	RT	R-55-12	12x18	12													
			312+35	LT																
			312+50	LT	R-55-12	12x18	12													
			312+50	RT	R-31X-54	54x30	26													
			312+50	LT	R-31X-54	54x30	26													
			312+90	LT	R-43R-36	36x12	12													
			312+93	RT																
			312+93	RT	R-1-30	30x30	15													
				RT	P-121-24	24x24														
			312+94	RT																
			312+94	RT	D-14-8	48x8									1					
				RT	D-14-8	48x8														
			313+13	RT																
			313+30	LT																
			313+40	RT	N-29-24	24x24	13													
					N-15-24	24x6														
			313+60	RT																
			313+60	LT/RT																
			313+65	RT																
773		FOUNTAIN	314+00	RT	M-37-24	24x12	15													
					M-2-24-2	24x24														
					M-26-21	21x15														
			314+03	RT																
			314+60	LT																
			314+60	LT	R-31X-54	54x30								27						
					R-41B-30	30x30														
					R-43L-36	36x12														
					R-43R-36	36x12														
TOTALS CARRIED TO SHEET 752							277			17				27	2	2				

CALCULATED BF
CHECKED VLW

SIGNING SUBSUMMARY

SUM-8-0.63

740
1088

SHEET NO.	REFERENCE NO.	LOCATION	STATION	SIDE	CODE	SIZE (INCHES)	630 OVERHEAD SIGN SUPPORT, TYPE TC-12.30, DESIGN 8, 28' ARM EACH	630 OVERHEAD SIGN SUPPORT, TYPE TC-12.30, DESIGN 10, 30' ARM EACH	630 OVERHEAD SIGN SUPPORT, TYPE TC-7.65, DESIGN 6, SPAN 54' EACH	630 OVERHEAD SIGN SUPPORT, TYPE TC-7.65, DESIGN 6, SPAN 72' EACH	630 OVERHEAD SIGN SUPPORT, TYPE TC-7.65, DESIGN 8, SPAN 80' EACH	630 OVERPASS STRUCTURE MOUNTED SIGN SUPPORT, TC-18.24 EACH	630 OVERPASS STRUCTURE MOUNTED SIGN SUPPORT, TC-18.26, DESIGN 3 EACH	630 OVERPASS STRUCTURE MOUNTED SIGN SUPPORT, TC-18.26, DESIGN 6 EACH	630 SIGN SUPPORT ASSEMBLY, POLE MOUNTED EACH	630 SIGN SUPPORT ASSEMBLY, BRIDGE MOUNTED, AS PER PLAN EACH	630 SIGN ATTACHMENT ASSEMBLY EACH	630 SIGN, DOUBLE FACED, STREET NAME, TYPE G EACH	630 SIGN FLATSHEET, TYPE G SQ.3FT.
771		NASH	8+30	LT															
			8+38	LT	R-1-30	30x30													6
					R-121-24	24x24													4
		FOUNTAIN	304+75	RT	R-55-12	12x18													2
			304+90	LT	W-60L-36	36x36													9
			304+90	RT	W-60L-36	36x36													9
772		FOUNTAIN	305+90	RT															
			306+00	LT	R-55-12	12x18													2
			306+10	RT															
			306+10	RT	D-14-8	48x8												1	
					D-14-8	48x8												1	
			306+33	LT	R-43R-36	36x12													3
		MASON																	
			0+30	LT	R-1-30	30x30													6
					R-121-24	24x24													4
			0+33	LT															
		FOUNTAIN	306+51	RT															
			307+00	RT	R-55-12	12x18													2
			308+00	LT	R-55-12	12x18													2
			308+55	LT															
			308+89	LT															
			309+00	RT	W-50L-30	30x30													6
			310+00	RT	R-55-12	12x18													2
	787		311+00	LT	D-11A-18	108x18													
			311+40	LT															
			311+75	RT															
			312+00	RT	R-55-12	12x18													2
			312+35	LT															
			312+50	LT	R-55-12	12x18													2
			312+50	RT	R-31X-54	54x30													11
			312+50	LT	R-31X-54	54x30													11
			312+90	LT	R-43R-36	36x12													3
			312+93	RT															
			312+93	RT	R-1-30	30x30													6
				RT	R-121-24	24x24													4
			312+94	RT															
			312+94	RT	D-14-8	48x8												1	
				RT	D-14-8	48x8												1	
			313+13	RT															
			313+30	LT															
			313+40	RT	N-29-24	24x24													4
					N-15-24	24x6													1
			313+60	RT															
			313+60	LT/RT															
			313+65	RT															
773		FOUNTAIN	314+00	RT	M-37-24	24x12													2
					M-2-24-2	24x24													4
					M-26-21	21x15													2
			314+03	RT															
			314+60	LT															
			314+60	LT	R-31X-54	54x30													11
					R-41B-30	30x30													6
					R-43L-36	36x12													3
					R-43R-36	36x12													3
TOTALS CARRIED TO SHEET 753																		4	132

CALCULATED BF
CHECKED VLW

SIGNING SUBSUMMARY

SUM-8-0.63

SHEET NO.	REFERENCE NO.	LOCATION	STATION	SIDE	CODE	SIZE (INCHES)	630 SIGN, EXTRUSHEET SQ. FT.		630 GROUND MOUNTED BEAM SUPPORT FOUNDATION EACH	630 RIGID OVERHEAD SIGN SUPPORT FOUNDATION EACH	630 REMOVAL OF GROUND MOUNTED SIGN AND DISPOSAL EACH	630 REMOVAL OF GROUND MOUNTED SIGN AND REERECTION EACH	630 REMOVAL OF GROUND MOUNTED MAJOR SIGN AND DISPOSAL EACH	630 REMOVAL OF GROUND MOUNTED POST SUPPORT AND DISPOSAL EACH	630 REMOVAL OF GROUND MOUNTED BEAM SUPPORT AND DISPOSAL EACH	630 REMOVAL OF STRUCTURE MOUNTED SIGN AND DISPOSAL EACH	630 REMOVAL OF OVERHEAD MOUNTED SIGN AND REERECTION EACH	630 REMOVAL OF OVERHEAD MOUNTED SIGN AND DISPOSAL EACH	630 REMOVAL OF POLE MOUNTED SIGN AND DISPOSAL EACH	630 REMOVAL OF OVERHEAD SIGN SUPPORT AND DISPOSAL EACH
771		NASH	8+30	LT							1			1						
			8+38	LT	R-1-30	30x30														
					R-121-24	24x24														
		FOUNTAIN	304+75	RT	R-55-12	12x18														
			304+90	LT	W-60L-36	36x36														
			304+90	RT	W-60L-36	36x36														
772		FOUNTAIN	305+90	RT							1			1						
			306+00	LT	R-55-12	12x18														
			306+10	RT							1			1						
			306+10	RT	D-14-8	48x8														
					D-14-8	48x8														
			306+33	LT	R-43R-36	36x12														
		MASON																		
			0+30	LT	R-1-30	30x30														
					R-121-24	24x24														
			0+33	LT							1			1						
		FOUNTAIN	306+51	RT							2			1						
			307+00	RT	R-55-12	12x18														
			308+00	LT	R-55-12	12x18														
			308+55	LT							1			1						
			308+89	LT							1			1						
			309+00	RT	W-50L-30	30x30														
			310+00	RT	R-55-12	12x18														
	787		311+00	LT	D-11A-18	108x18	14		2											
			311+40	LT							1			1						
			311+75	RT															1	
			312+00	RT	R-55-12	12x18														
			312+35	LT							1			1						
			312+50	LT	R-55-12	12x18														
			312+50	RT	R-31X-54	54x30														
			312+50	LT	R-31X-54	54x30														
			312+90	LT	R-43R-36	36x12														
			312+93	RT							1			1						
			312+93	RT	R-1-30	30x30														
				RT	R-121-24	24x24														
			312+94	RT							2			1						
			312+94	RT	D-14-8	48x8														
			312+94	RT	D-14-8	48x8														
			313+13	RT							3			1						
			313+30	LT							1			1						
			313+40	RT	N-29-24	24x24														
					N-15-24	24x6														
			313+60	RT															1	
			313+60	LT/RT														3		2
			313+65	RT															1	
773		FOUNTAIN	314+00	RT	M-37-24	24x12														
					M-2-24-2	24x24														
					M-26-21	21x15														
			314+03	RT							1			1						
			314+60	LT							1			1						
			314+60	LT	R-31X-54	54x30														
					R-41B-30	30x30														
					R-43L-36	36x12														
					R-43R-36	36x12														
TOTALS CARRIED TO SHEET 754							14		2		19			15				3	3	2

CALCULATED BF
CHECKED VLW

SIGNING SUBSUMMARY

SUM-8-0.63

742
1088

SHEET NO.	REFERENCE NO.	LOCATION	STATION	SIDE	CODE	SIZE (INCHES)	630 GROUND MOUNTED SUPPORT, NO. 3 POST LIN.FT.	630 GROUND MOUNTED SUPPORT, NO. 4 POST LIN.FT.	630 GROUND MOUNTED SUPPORT, NO. 6 POST LIN.FT.	630 GROUND MOUNTED SUPPORT, S4X7.7 BEAM LIN.FT.		630 GROUND MOUNTED SUPPORT, W10X12 BEAM LIN.FT.	630 GROUND MOUNTED SUPPORT, W8X18 BEAM LIN.FT.	630 ONE WAY SUPPORT, NO. 3 POST LIN.FT.	630 STREET NAME SIGN SUPPORT EACH	630 BREAKAWAY BEAM CONNECTION EACH		630 OVERHEAD SIGN, SUPPORT, TYPE TC-12.30, DESIGN 2, 20' ARM (WITH LIGHTPOLE EXTENSION) EACH	630 OVERHEAD SIGN SUPPORT, TYPE TC-12.30, DESIGN 4, 20' ARM EACH	
773		FOUNTAIN	314+60	RT	R-31X-54	54x30								27						
					R-41B-30	30x30														
					R-43L-36	36x12														
					R-43R-36	36x12														
			314+80	RT																
			314+83	LT	R-72D-12	12x18														
			314+90	LT																
		CARROLL	14+04	RT	M-37-24	24x12														
					M-2-24-2	24x24														
					M-24-21	21x15														
			14+45	RT	R-31Q-30	30x30	13													
			14+64	RT																
			14+69	RT																
	786		16+20	LT	M-52A-108	108x30				19						2				
		FOUNTAIN	315+45	RT																
			315+54	LT																
			315+60	LT	R-72D-12	12x18														
			316+25	RT	R-10-24	24x30	13													
			316+50	LT	R-31C-48	48x30	26													
	786		317+00	LT	D-11A-18	108x18				17						2				
			317+00	RT	R-55-12	12x18	12													
			317+35	LT																
			317+40	RT	M-37-24	24x12		16												
					M-2-24-2	24x24														
					SPECIAL	24x18														
			318+00	LT	R-55-12	12x18	13													
			318+60	LT																
			319+10	LT																
			319+26	RT	R-31C-48	48x30								26						
					R-41B-30	30x30														
					R-43R-36	36x12														
					R-43L-36	36x12														
			319+32	LT	R-31C-48	48x30								26						
					R-41B-30	30x30														
					R-43R-36	36x12														
					R-43L-36	36x12														
			319+40	LT																
			319+45.5	RT																
			319+46	LT	R-72D-12	12x18														
	783		319+49	RT	GH-111	96x66														
					M-52B-120	120x54														
			319+50	LT																
		BUCHTEL	15+46	RT																
			15+70	RT	R-31Q-30	30x30	13													
TOTALS CARRIED TO SHEET 752							90	16		36				79		4				

CALCULATED BF CHECKED VLW

SIGNING SUBSUMMARY

SUM-8-0.63

SHEET NO.	REFERENCE NO.	LOCATION	STATION	SIDE	CODE	SIZE (INCHES)	630 OVERHEAD SIGN SUPPORT, TYPE TC-12.30, DESIGN 8, 28' ARM EACH	630 OVERHEAD SIGN SUPPORT, TYPE TC-12.30, DESIGN 10, 30' ARM EACH	630 OVERHEAD SIGN SUPPORT, TYPE TC-7.65, DESIGN 6, SPAN 54' EACH	630 OVERHEAD SIGN SUPPORT, TYPE TC-7.65, DESIGN 6, SPAN 72' EACH	630 OVERHEAD SIGN SUPPORT, TYPE TC-7.65, DESIGN 8, SPAN 80' EACH	630 OVERPASS STRUCTURE MOUNTED SIGN SUPPORT, TC-18.24 EACH	630 OVERPASS STRUCTURE MOUNTED SIGN SUPPORT, TC-18.26, DESIGN 3 EACH	630 OVERPASS STRUCTURE MOUNTED SIGN SUPPORT, TC-18.26, DESIGN 6 EACH	630 SIGN SUPPORT ASSEMBLY, POLE MOUNTED EACH	630 SIGN SUPPORT ASSEMBLY, BRIDGE MOUNTED, AS PER PLAN EACH	630 SIGN ATTACHMENT ASSEMBLY EACH	630 SIGN, DOUBLE FACED, STREET NAME, TYPE G EACH	630 SIGN FLATSHEET, TYPE G SQ. FT.
773		FOUNTAIN	314+60	RT	R-31X-54	54x30													11
					R-41B-30	30x30													6
					R-43L-36	36x12													3
					R-43R-36	36x12													3
			314+80	RT															
			314+83	LT	R-72D-12	12x18									1				2
			314+90	LT															
		CARROLL	14+04	RT	M-37-24	24x12									3				2
					M-2-24-2	24x24													4
					M-24-21	21x15													2
			14+45	RT	R-31Q-30	30x30													6
			14+64	RT															
			14+69	RT															
	786		16+20	LT	M-52A-108	108x30													
		FOUNTAIN	315+45	RT															
			315+54	LT															
			315+60	LT	R-72D-12	12x18									1				2
			316+25	RT	R-10-24	24x30													5
			316+50	LT	R-31C-48	48x30													10
	786		317+00	LT	D-11A-18	108x18													
			317+00	RT	R-55-12	12x18													2
			317+35	LT															
			317+40	RT	M-37-24	24x12													2
					M-2-24-2	24x24													4
					SPECIAL	24x18													2
			318+00	LT	R-55-12	12x18													2
			318+60	LT															
			319+10	LT															
			319+26	RT	R-31C-48	48x30													10
					R-41B-30	30x30													6
					R-43R-36	36x12													3
					R-43L-36	36x12													3
			319+32	LT	R-31C-48	48x30													10
					R-41B-30	30x30													6
					R-43R-36	36x12													3
					R-43L-36	36x12													3
			319+40	LT															
			319+45.5	RT															
			319+46	LT	R-72D-12	12x18									1				2
	783		319+49	RT	GH-III	96x66													
					M-52B-120	120x54													
			319+50	LT															
		BUCHTEL	15+46	RT															
			15+70	RT	R-31Q-30	30x30													6
TOTALS CARRIED TO SHEET 753															6				120

CALCULATED BF
CHECKED VLW

SIGNING SUBSUMMARY

SUM-8-0.63

SHEET NO.	REFERENCE NO.	LOCATION	STATION	SIDE	CODE	SIZE (INCHES)	630 SIGN, EXTRUSHEET SQ. FT.		630 GROUND MOUNTED BEAM SUPPORT FOUNDATION EACH	630 RIGID OVERHEAD SIGN SUPPORT FOUNDATION EACH	630 REMOVAL OF GROUND MOUNTED SIGN AND DISPOSAL EACH	630 REMOVAL OF GROUND MOUNTED SIGN AND REERECTION EACH	630 REMOVAL OF GROUND MOUNTED MAJOR SIGN AND DISPOSAL EACH	630 REMOVAL OF GROUND MOUNTED POST SUPPORT AND DISPOSAL EACH	630 REMOVAL OF GROUND MOUNTED BEAM SUPPORT AND DISPOSAL EACH	630 REMOVAL OF STRUCTURE MOUNTED SIGN AND DISPOSAL EACH	630 REMOVAL OF OVERHEAD MOUNTED SIGN AND REERECTION EACH	630 REMOVAL OF OVERHEAD MOUNTED SIGN AND DISPOSAL EACH	630 REMOVAL OF POLE MOUNTED SIGN AND DISPOSAL EACH	630 REMOVAL OF OVERHEAD SIGN SUPPORT AND DISPOSAL EACH
773		FOUNTAIN	314+60	RT	P-31X-54	54x30														
					P-41B-30	30x30														
					R-43L-36	36x12														
					R-43R-36	36x12														
			314+80	RT							2			1						
			314+83	LT	P-72D-12	12x18														
			314+90	LT							1			1						
		CARROLL	14+04	RT	M-37-24	24x12														
					M-2-24-2	24x24														
					M-24-21	21x15														
			14+45	RT	R-31Q-30	30x30														
			14+64	RT							1			1						
			14+69	RT							1			1						
	786		16+20	LT	M-52A-108	108x30	23		2											
		FOUNTAIN	315+45	RT							1			1						
			315+54	LT							1			1						
			315+60	LT	R-72D-12	12x18														
			316+25	RT	R-10-24	24x30														
			316+50	LT	P-31C-48	48x30														
	786		317+00	LT	D-11A-18	108x18	14		2											
			317+00	RT	R-55-12	12x18														
			317+35	LT							1			1						
			317+40	RT	M-37-24	24x12														
					M-2-24-2	24x24														
					SPECIAL	24x18														
			318+00	LT	R-55-12	12x18														
			318+60	LT							2			1						
			319+10	LT							1			2						
			319+26	RT	R-31C-48	48x30														
					R-41B-30	30x30														
					R-43R-36	36x12														
					R-43L-36	36x12														
			319+32	LT	R-31C-48	48x30														
					R-41B-30	30x30														
					R-43R-36	36x12														
					R-43L-36	36x12														
			319+40	LT							1			1						
			319+45.5	RT															2	
			319+46	LT	R-72D-12	12x18														
	783		319+49	RT	GH-111	96x66	44													
					M-52B-120	120x54	45													
			319+50	LT							1			1						
		BUCHTEL	15+46	RT							2			1						
			15+70	RT	R-31Q-30	30x30														
TOTALS CARRIED TO SHEET 754							126		4		15			13					2	

CALCULATED BF
CHECKED VLW

SIGNING SUBSUMMARY

SUM-8-0.63

SHEET NO.	REFERENCE NO.	LOCATION	STATION	SIDE	CODE	SIZE (INCHES)	630 GROUND MOUNTED SUPPORT, NO. 3 POST LIN.FT.	630 GROUND MOUNTED SUPPORT, NO. 4 POST LIN.FT.	630 GROUND MOUNTED SUPPORT, NO. 6 POST LIN.FT.	630 GROUND MOUNTED SUPPORT, S4X7.7 BEAM LIN.FT.		630 GROUND MOUNTED SUPPORT, W10X12 BEAM LIN.FT.	630 GROUND MOUNTED SUPPORT, W8X18 BEAM LIN.FT.	630 ONE WAY SUPPORT, NO. 3 POST LIN.FT.	630 STREET NAME SIGN SUPPORT EACH	630 BREAKAWAY BEAM CONNECTION EACH		630 OVERHEAD SIGN, SUPPORT, TYPE TC-12.30, DESIGN 2, 20' ARM (WITH LIGHTPOLE EXTENSION) EACH	630 OVERHEAD SIGN SUPPORT, TYPE TC-12.30, DESIGN 4, 20' ARM EACH	
773		FOUNTAIN	320+24	LT	R-72D-12	12x18														
			321+50	RT	R-10-24	24x30	13													
			322+00	RT	R-55-12	12x18	12													
			323+07.5	RT	W-69-30	30x30	15													
		RAMP QI	69+27	LT	R-15B-30	30x18	12													
		FOUNTAIN	323+90	RT	R-55-12	12x18	12													
774		FOUNTAIN	326+00	LT	R-55-12	12x18	12													
			326+00	RT	R-55-12	12x18	12													
			328+00	LT	R-55-12	12x18	12													
			328+00	RT	R-55-12	12x18	12													
			328+11.5	RT	W-69-30	30x30	15													
	786		328+80	RT	M-52A-108	108x30				19						2				
			330+60	RT	P-31W-36	36x30								28						
					R-41B-36	36x36														
					R-43R-36	36x12														
					R-43L-36	36x12														
775			330+85	LT	R-41B-36	36x36								14						
					R-43R-36	36x12														
					R-43L-36	36x12														
			330+86	LT	M-72D-12	12x18														
			331+15	LT																
		MARKET	26+65	RT																
			26+67	LT																
			26+68	LT																
TOTALS CARRIED TO SHEET 752							127			19				42		2				

CALCULATED BF CHECKED VLW

SIGNING SUBSUMMARY

SUM-8-0.63

SHEET NO.	REFERENCE NO.	LOCATION	STATION	SIDE	CODE	SIZE (INCHES)	630 OVERHEAD SIGN SUPPORT, TYPE TC-12.30, DESIGN 8, 28' ARM EACH	630 OVERHEAD SIGN SUPPORT, TYPE TC-12.30, DESIGN 10, 30' ARM EACH	630 OVERHEAD SIGN SUPPORT, TYPE TC-7.65, DESIGN 6, SPAN 54' EACH	630 OVERHEAD SIGN SUPPORT, TYPE TC-7.65, DESIGN 6, SPAN 72' EACH	630 OVERHEAD SIGN SUPPORT, TYPE TC-7.65, DESIGN 8, SPAN 80' EACH	630 OVERPASS STRUCTURE MOUNTED SIGN SUPPORT, TC-18.24 EACH	630 OVERPASS STRUCTURE MOUNTED SIGN SUPPORT, TC-18.26, DESIGN 3 EACH	630 OVERPASS STRUCTURE MOUNTED SIGN SUPPORT, TC-18.26, DESIGN 6 EACH	630 SIGN SUPPORT ASSEMBLY, POLE MOUNTED EACH	630 SIGN SUPPORT ASSEMBLY, BRIDGE MOUNTED, AS PER PLAN EACH	630 SIGN ATTACHMENT ASSEMBLY EACH	630 SIGN, DOUBLE FACED, STREET NAME, TYPE G EACH	630 SIGN FLATSHEET, TYPE G SQ. FT.
773		FOUNTAIN	320+24	LT	P-72D-12	12x18									1				2
			321+50	RT	R-10-24	24x30													5
			322+00	RT	R-55-12	12x18													2
			323+07.5	RT	W-69-30	30x30													6
		RAMP QI	69+27	LT	R-15B-30	30x18													4
		FOUNTAIN	323+90	RT	R-55-12	12x18													2
774		FOUNTAIN	326+00	LT	R-55-12	12x18													2
			326+00	RT	R-55-12	12x18													2
			328+00	LT	R-55-12	12x18													2
			328+00	RT	R-55-12	12x18													2
			328+11.5	RT	W-69-30	30x30													6
	786		328+80	RT	M-52A-108	108x30													
			330+60	RT	R-31W-36	36x30													8
					R-41B-36	36x36													9
					R-43R-36	36x12													3
					R-43L-36	36x12													3
			330+85	LT	R-41B-36	36x36													9
					R-43R-36	36x12													3
					R-43L-36	36x12													3
			330+86	LT	M-72-12D	12x18									1				2
			331+15	LT															
		MARKET	26+65	RT															
			26+67	LT															
			26+68	LT															
TOTALS CARRIED TO SHEET 753															2				75

CALCULATED BF
CHECKED VLW

SIGNING SUBSUMMARY

SUM-8-0.63

747
1088

SIGNING SUBSUMMARY

CALCULATED BF
CHECKED VLW

SHEET NO.	REFERENCE NO.	LOCATION	STATION	SIDE	CODE	SIZE (INCHES)	630 SIGN, EXTRUSHEET SQ. FT.		630 GROUND MOUNTED BEAM SUPPORT FOUNDATION EACH	630 RIGID OVERHEAD SIGN SUPPORT FOUNDATION EACH	630 REMOVAL OF GROUND MOUNTED SIGN AND DISPOSAL EACH	630 REMOVAL OF GROUND MOUNTED SIGN AND REERECTION EACH	630 REMOVAL OF GROUND MOUNTED MAJOR SIGN AND DISPOSAL EACH	630 REMOVAL OF GROUND MOUNTED POST SUPPORT AND DISPOSAL EACH	630 REMOVAL OF GROUND MOUNTED BEAM SUPPORT AND DISPOSAL EACH	630 REMOVAL OF STRUCTURE MOUNTED SIGN AND DISPOSAL EACH	630 REMOVAL OF OVERHEAD MOUNTED SIGN AND REERECTION EACH	630 REMOVAL OF OVERHEAD MOUNTED SIGN AND DISPOSAL EACH	630 REMOVAL OF POLE MOUNTED SIGN AND DISPOSAL EACH	630 REMOVAL OF OVERHEAD SIGN SUPPORT AND DISPOSAL EACH
773		FOUNTAIN	320+24	LT	R-72D-12	12x18														
			321+50	RT	R-10-24	24x30														
			322+00	RT	R-55-12	12x18														
			323+07.5	RT	W-69-30	30x30														
		RAMP QI	69+27	LT	P-15B-30	30x18														
		FOUNTAIN	323+90	RT	R-55-12	12x18														
774		FOUNTAIN	326+00	LT	R-55-12	12x18														
			326+00	RT	R-55-12	12x18														
			328+00	LT	R-55-12	12x18														
			328+00	RT	R-55-12	12x18														
			328+11.5	RT	W-69-30	30x30														
	786		328+80	RT	M-52A-108	108x30	23		2											
			330+60	RT	R-31W-36	36x30														
					P-41B-36	36x36														
					R-43R-36	36x12														
					R-43L-36	36x12														
			330+85	LT	R-41B-36	36x36														
					R-43R-36	36x12														
					R-43L-36	36x12														
			330+86	LT	M-72D-12	12x18														
			331+15	LT							1			1						
		MARKET	26+65	RT														2		
			26+67	LT														2		
			26+68	LT															3	
TOTALS CARRIED TO SHEET 754							23		2		1			1				4	3	

SUM-8-0.63

CALCULATED BF | CHECKED VLW

SIGNING SUBSUMMARY

SHEET NO.	REFERENCE NO.	LOCATION	STATION	SIDE	CODE	SIZE (INCHES)	630 GROUND MOUNTED SUPPORT, NO. 3 POST LIN.FT.	630 GROUND MOUNTED SUPPORT, NO. 4 POST LIN.FT.	630 GROUND MOUNTED SUPPORT, NO. 6 POST LIN.FT.	630 GROUND MOUNTED SUPPORT, S4X7.7 BEAM LIN.FT.		630 GROUND MOUNTED SUPPORT, W10X12 BEAM LIN.FT.	630 GROUND MOUNTED SUPPORT, W8X18 BEAM LIN.FT.	630 ONE WAY SUPPORT, NO. 3 POST LIN.FT.	630 STREET NAME SIGN SUPPORT EACH	630 BREAKAWAY BEAM CONNECTION EACH		630 OVERHEAD SIGN SUPPORT, TYPE TC-12.30, DESIGN 2, 20' ARM (WITH LIGHTPOLE EXTENSION) EACH	630 OVERHEAD SIGN SUPPORT, TYPE TC-12.30, DESIGN 4, 20' ARM EACH	
	783	FOUNTAIN	331+84	LT	GH-III	96x66														
					M-52B-120	120x54														
				LT	M-72D-12	12x18														
			332+50	RT	R-10-24	24x30	13													
			333+00	RT	R-55-12	12x18	12													
			333+36	LT																
			333+36	RT																
			333+50	LT	R-55-12	12x18	12													
775		FOUNTAIN	335+00	LT	R-32L-30	30x30	13													
			335+00	RT	R-55-12	12x18	12													
			336+00	LT	R-55-12	12x18	12													
			336+50	RT	M-37-24	24x12	15													
					M-2-24-2	24x24														
					M-26-21	21x15														
			337+00	RT	R-55-12	12x18	12													
			338+00	LT	R-41B-36	36x36								14						
					R-43R-36	36x12														
					R-43L-36	36x12														
			338+03	LT	R-72D-12	12x18														
			338+15	RT	R-31A-36	36x30								28						
					R-41B-36	36x36														
					R-43R-36	36x12														
					R-43L-36	36x12														
		FORGE	9+57	LT																
			10+33	LT																
			10+42.5	RT																
			10+62	RT																
	786		10+80	LT	M-52A-108	108x30				19						2				
		FOUNTAIN	339+15	LT	R-72D-12	12x18														
			340+50	RT	R-10-24	24x30	13													
		OHIO	500+48	LT																
			500+59	RT																
776		OHIO	501+35	LT																
		FOUNTAIN	341+00	LT	W-50L-30	30x30	15													
			341+50	RT	R-3-36	36x36	13													
			343+75	RT	R-31P-48	48x30	26													
			343+75	LT	R-31P-48	48x30	26													
		OHIO	503+72	RT																
			504+09	LT																
		FOUNTAIN	344+33	RT																
		OHIO	504+43	RT																
		FOUNTAIN	344+65	RT																
		OHIO	504+64	LT																
776	782	FOUNTAIN	344+84	RT	N-29-24	24x24														
					N-15-24	24x6														
					GH-III	108x78														
					GH-III	108x78														
TOTALS CARRIED TO SHEET 752							194			19				42		2				

SUM-8-0.63

SHEET NO.	REFERENCE NO.	LOCATION	STATION	SIDE	CODE	SIZE (INCHES)	630 OVERHEAD SIGN SUPPORT, TYPE TC-12.30, DESIGN 8, 28' ARM EACH	630 OVERHEAD SIGN SUPPORT, TYPE TC-12.30, DESIGN 10, 30' ARM EACH	630 OVERHEAD SIGN SUPPORT, TYPE TC-7.65, DESIGN 6, SPAN 54' EACH	630 OVERHEAD SIGN SUPPORT, TYPE TC-7.65, DESIGN 6, SPAN 72' EACH	630 OVERHEAD SIGN SUPPORT, TYPE TC-7.65, DESIGN 8, SPAN 80' EACH	630 OVERPASS STRUCTURE MOUNTED SIGN SUPPORT, TC-18.24 EACH	630 OVERPASS STRUCTURE MOUNTED SIGN SUPPORT, TC-18.26, DESIGN 3 EACH	630 OVERPASS STRUCTURE MOUNTED SIGN SUPPORT, TC-18.26, DESIGN 6 EACH	630 SIGN SUPPORT ASSEMBLY, POLE MOUNTED EACH	630 SIGN SUPPORT ASSEMBLY, BRIDGE MOUNTED, AS PER PLAN EACH	630 SIGN ATTACHMENT ASSEMBLY EACH	630 SIGN, DOUBLE FACED, STREET NAME, TYPE G EACH	630 SIGN FLATSHEET, TYPE G SQ. FT.
	783	FOUNTAIN	331+84	LT	GH-III	96x66													2
					M-52B-120	120x54													5
				LT	M-72D-12	12x18													2
		FOUNTAIN	332+50	RT	R-10-24	24x30									1				2
			333+00	RT	R-55-12	12x18													5
			333+36	LT															2
			333+36	RT															
			333+50	LT	R-55-12	12x18													2
775		FOUNTAIN	335+00	LT	R-32L-30	30x30													6
			335+00	RT	R-55-12	12x18													2
			336+00	LT	R-55-12	12x18													2
			336+50	RT	M-37-24	24x12													2
					M-2-24-2	24x24													4
					M-26-21	21x15													2
			337+00	RT	R-55-12	12x18													2
			338+00	LT	R-41B-36	36x36													9
					R-43R-36	36x12													3
					R-43L-36	36x12													3
			338+03	LT	R-72-12D	12x18									1				2
			338+15	RT	R-31A-36	36x30													8
					R-41B-36	36x36													9
					R-43R-36	36x12													3
					R-43L-36	36x12													3
		FORGE	9+57	LT															
			10+33	LT															
			10+42	RT															
			10+62	RT															
	786		10+80	LT	M-52A-108	108x30													
		FOUNTAIN	339+15	LT	R-72D-12	12x18									1				2
			340+50	RT	R-10-24	24x30													5
		OHIO	500+48	LT															
			500+59	RT															
776		OHIO	501+35	LT															
		FOUNTAIN	341+00	LT	W-50L-30	30x30													6
			341+50	RT	R-3-36	36x36													4
			343+75	RT	R-31P-48	48x30													10
			343+75	LT	R-31P-48	48x30													10
		OHIO	503+72	RT															
			504+09	LT															
		FOUNTAIN	344+33	RT															
		OHIO	504+43	RT															
		FOUNTAIN	344+65	RT															
		OHIO	504+64	LT															
776	782	FOUNTAIN	344+84	RT	N-29-24	24x24									1				4
					N-15-24	24x6									1				1
					GG-III	108x78			1										
					GG-III	108x78													
TOTALS CARRIED TO SHEET 753									1						5				113

CALCULATED BF
CHECKED VLW

SIGNING SUBSUMMARY

SUM-8-0.63

SHEET NO.	REFERENCE NO.	LOCATION	STATION	SIDE	CODE	SIZE (INCHES)	630 SIGN, EXTRUSHEET SQ. FT.		630 GROUND MOUNTED BEAM SUPPORT FOUNDATION EACH	630 RIGID OVERHEAD SIGN SUPPORT FOUNDATION EACH	630 REMOVAL OF GROUND MOUNTED SIGN AND DISPOSAL EACH	630 REMOVAL OF GROUND MOUNTED SIGN AND REERECTION EACH	630 REMOVAL OF GROUND MOUNTED MAJOR SIGN AND DISPOSAL EACH	630 REMOVAL OF GROUND MOUNTED POST SUPPORT AND DISPOSAL EACH	630 REMOVAL OF GROUND MOUNTED BEAM SUPPORT AND DISPOSAL EACH	630 REMOVAL OF STRUCTURE MOUNTED SIGN AND DISPOSAL EACH	630 REMOVAL OF OVERHEAD MOUNTED SIGN AND REERECTION EACH	630 REMOVAL OF OVERHEAD MOUNTED SIGN AND DISPOSAL EACH	630 REMOVAL OF POLE MOUNTED SIGN AND DISPOSAL EACH	630 REMOVAL OF OVERHEAD SIGN SUPPORT AND DISPOSAL EACH
	783	FOUNTAIN	331+84	RT	GH-III	96x66	44													
					M-52B-120	120x54	45													
				LT	M-72-12D	12x18														
		FOUNTAIN	332+50	RT	R-10-24	24x30														
			333+00	RT	R-55-12	12x18														
			333+36	LT							1			1						
			333+36	RT							1			1						
			333+50	LT	R-55-12	12x18														
775		FOUNTAIN	335+00	LT	R-32L-30	30x30														
			335+00	RT	R-55-12	12x18														
			336+00	LT	R-55-12	12x18														
			336+50	RT	M-37-24	24x12														
					M-2-24-2	24x24														
					M-26-21	21x15														
			337+00	RT	R-55-12	12x18														
			338+00	LT	P-41B-36	36x36														
					R-43R-36	36x12														
					R-43L-36	36x12														
			338+03	LT	R-72-12D	12x18														
			338+15	RT	P-31A-36	36x30														
					P-41B-36	36x36														
					R-43R-36	36x12														
					R-43L-36	36x12														
		FORGE	9+57	LT							1			1						
			10+33	LT							2			1						
			10+42.5	RT								1								
			10+62	RT								1								
	786		10+80	LT	M-52A-108	108x30	23		2											
		FOUNTAIN	339+15	LT	R-72-12D	12x18														
			340+50	RT	R-10-24	24x30														
		OHIO	500+48	LT							1			1						
			500+59	RT							1			1						
776		OHIO	501+35	LT							1			1						
		FOUNTAIN	341+00	LT	W-50L-30	30x30														
			341+50	RT	R-3-36	36x36														
			343+75	RT	R-31P-48	48x30														
			343+75	LT	R-31P-48	48x30														
		OHIO	503+72	RT							1			1						
			504+09	LT							1			1						
		FOUNTAIN	344+33	RT							1			1						
		OHIO	504+43	RT							1			1						
		FOUNTAIN	344+65	RT							1			1						
		OHIO	504+64	LT							4			1						
776	782	FOUNTAIN	344+84	RT	N-29-24	24x24														
					N-15-24	24x6														
					GH-III	108x78	59			2										
					GH-III	108x78	59													
TOTALS CARRIED TO SHEET 754							230		2	2	17	2		13						

CALCULATED BF
CHECKED VLW

SIGNING SUBSUMMARY

SUM-8-0.63

SHEET NO.	REFERENCE NO.	LOCATION	STATION	SIDE	CODE	SIZE (INCHES)	630 GROUND MOUNTED SUPPORT, NO. 3 POST LIN.FT.	630 GROUND MOUNTED SUPPORT, NO. 4 POST LIN.FT.	630 GROUND MOUNTED SUPPORT, NO. 6 POST LIN.FT.	630 GROUND MOUNTED SUPPORT, S4X7.7 BEAM LIN.FT.		630 GROUND MOUNTED SUPPORT, W10X12 BEAM LIN.FT.	630 GROUND MOUNTED SUPPORT, W8X18 BEAM LIN.FT.	630 ONE WAY SUPPORT, NO. 3 POST LIN.FT.	630 STREET NAME SIGN SUPPORT EACH	630 BREAKAWAY BEAM CONNECTION EACH		630 OVERHEAD SIGN SUPPORT, TYPE TC-12.30, DESIGN 2, 20' ARM (WITH LIGHTPOLE EXTENSION) EACH	630 OVERHEAD SIGN SUPPORT, TYPE TC-12.30, DESIGN 4, 16' ARM EACH	
776		FOUNTAIN	345+20	LT			14													
			345+37	RT																
			345+50	LT			15													
			345+85	LT	P-31P-48	48x30								26						
					P-41B-30	30x30														
					R-43R-36	36x12														
					R-43L-36	36x12														
			346+00	RT	P-31P-48	48x30								26						
					P-41B-30	30x30														
					R-43R-36	36x12														
					R-43L-36	36x12														
			346+02	LT																
			346+14	LT																
			346+25	RT																
		PERKINS	52+80	LT	M-50-66	66x24		29												
					M-50-66	66x24														
		ARCH ST.	505+60.5	LT	W-69-30	30x30				19										
		RAMP J	93+05	RT											1					
			93+09	RT																
			93+10	RT			13													
			93+13	RT																
			93+16	LT																
			93+18	LT																
			93+18	LT	N-60-36	36x36														
			93+23	LT	R-72D-12	12x18														
	783		93+23	LT	GH-III	108x78														
				LT	GH-III	108x78														
			93+25	RT	R-15B-30	30x18	12													
					TOTAL THIS SHEET		54	29		19				52	1					
					TOTAL SHEET 716		60	194	78	27		27	36			6				
					TOTAL SHEET 719		68	127	39	100		57				12				
					TOTAL SHEET 722		134	29				24		26		2				
					TOTAL SHEET 725		200	15							3					1
					TOTAL SHEET 728		221							65						
					TOTAL SHEET 731		160					26		26		2				
					TOTAL SHEET 734		146							26	1					
					TOTAL SHEET 737		215							52	1				1	
					TOTAL SHEET 740		277			17				27	2	2				
					TOTAL SHEET 743		90	16		36				79		4				
					TOTAL SHEET 746		127			19				42		2				
					TOTAL SHEET 749		194			19				42		2				
TOTALS CARRIED TO TRAFFIC CONTROL GENERAL SUMMARY							1946	410	117	237		134	36	437	8	32		1	1	

CALCULATED BF
CHECKED VLW

SIGNING SUBSUMMARY

SUM-8-0.63

752
1088

SIGNING SUBSUMMARY

CALCULATED BF CHECKED VLW

SHEET NO.	REFERENCE NO.	LOCATION	STATION	SIDE	CODE	SIZE (INCHES)	630 OVERHEAD SIGN SUPPORT, TYPE TC-12.30, DESIGN 8, 28' ARM EACH	630 OVERHEAD SIGN SUPPORT, TYPE TC-12.30, DESIGN 10, 30' ARM EACH	630 OVERHEAD SIGN SUPPORT, TYPE TC-7.65, DESIGN 6, SPAN 54' EACH	630 OVERHEAD SIGN SUPPORT, TYPE TC-7.65, DESIGN 6, SPAN 72' EACH	630 OVERHEAD SIGN SUPPORT, TYPE TC-7.65, DESIGN 8, SPAN 80' EACH	630 OVERPASS STRUCTURE MOUNTED SIGN SUPPORT, TC-18.24 EACH	630 OVERPASS STRUCTURE MOUNTED SIGN SUPPORT, TC-18.26, DESIGN 3 EACH	630 OVERPASS STRUCTURE MOUNTED SIGN SUPPORT, TC-18.26, DESIGN 6 EACH	630 SIGN SUPPORT ASSEMBLY, POLE MOUNTED EACH	630 SIGN SUPPORT ASSEMBLY, BRIDGE MOUNTED, AS PER PLAN EACH	630 SIGN ATTACHMENT ASSEMBLY EACH	630 SIGN, DOUBLE FACED, STREET NAME, TYPE G EACH	630 SIGN FLATSHEET, TYPE G SQ. FT.
776		FOUNTAIN	345+20	LT															
			345+37	RT															
			345+50	LT															
			345+85	LT	R-31P-48	48x30													10
					R-41B-30	30x30													6
					R-43R-36	36x12													3
					R-43L-36	36x12													3
			346+00	RT	R-31P-48	48x30													10
					R-41B-30	30x30													6
					R-43R-36	36x12													3
					R-43L-36	36x12													3
			346+02	LT															
			346+14	LT															
			346+25	RT															
		PERKINS	52+80	LT	M-50-66	66x24													11
					M-50-66	66x24													11
		ARCH ST.	505+60.5	LT	W-69-30	30x30													6
		RAMP J	93+05	RT															
			93+09	RT															
			93+10	RT															
			93+13	RT															
			93+16	LT															
			93+18	LT															
			93+18	LT	N-60-36	36x36									1				9
			93+23	LT	R-72D-12	12x18									1				2
	783		93+23	LT	GH-111	108x78													
				LT	GH-111	108x78													
			93+25	RT	R-15B-30	30x18													4
					TOTAL THIS SHEET										2				87
					TOTAL SHEET 717		2				1					4	3		245
					TOTAL SHEET 720			2					1	1		6			211
					TOTAL SHEET 723					3		1			4		10	2	108
					TOTAL SHEET 726										2			7	92
					TOTAL SHEET 729										5				137
					TOTAL SHEET 732										3				83
					TOTAL SHEET 735										2			2	74
					TOTAL SHEET 738										1			2	119
					TOTAL SHEET 741													4	132
					TOTAL SHEET 744										6				120
					TOTAL SHEET 747										2				75
					TOTAL SHEET 750				1						5				113
TOTALS CARRIED TO TRAFFIC CONTROL GENERAL SUMMARY							2	2	1	3	1	1	1	1	32	10	13	17	1596

SUM-8-0.63

753
1088

CALCULATED BF CHECKED VLW

SIGNING SUBSUMMARY

SHEET NO.	REFERENCE NO.	LOCATION	STATION	SIDE	CODE	SIZE (INCHES)	630 SIGN, EXTRUSHEET SQ. FT.		630 GROUND MOUNTED BEAM SUPPORT FOUNDATION EACH	630 RIGID OVERHEAD SIGN SUPPORT FOUNDATION EACH	630 REMOVAL OF GROUND MOUNTED SIGN AND DISPOSAL EACH	630 REMOVAL OF GROUND MOUNTED SIGN AND REERECTION EACH	630 REMOVAL OF GROUND MOUNTED MAJOR SIGN AND DISPOSAL EACH	630 REMOVAL OF GROUND MOUNTED POST SUPPORT AND DISPOSAL EACH	630 REMOVAL OF GROUND MOUNTED BEAM SUPPORT AND DISPOSAL EACH	630 REMOVAL OF STRUCTURE MOUNTED SIGN AND DISPOSAL EACH	630 REMOVAL OF OVERHEAD MOUNTED SIGN AND REERECTION EACH	630 REMOVAL OF OVERHEAD MOUNTED SIGN AND DISPOSAL EACH	630 REMOVAL OF POLE MOUNTED SIGN AND DISPOSAL EACH	630 REMOVAL OF OVERHEAD SIGN SUPPORT AND DISPOSAL EACH
776		FOUNTAIN	345+20	LT								3		1						
			345+37	RT														3	2	1
			345+50	LT							1	1		1						
			345+85	LT	R-31P-48	48x30														
					R-41B-30	30x30														
					R-43R-36	36x12														
					R-43L-36	36x12														
			346+00	RT	R-31P-48	48x30														
					R-41B-30	30x30														
					R-43R-36	36x12														
					R-43L-36	36x12														
			346+02	LT							1			1					3	
			346+14	LT							1			1						
			346+25	RT																
		PERKINS	52+80	LT	M-50-66	66x24														
					M-50-66	66x24														
		ARCH ST.	505+60.5	LT	W-69-30	30x30														
		RAMP J	93+05	RT								2		1						
			93+09	RT							1			1						
			93+10	RT								1		1						
			93+13	RT							2			1						
			93+16	LT														2		
			93+18	LT							3			1						
			93+18	LT	N-60-36	36x36														
			93+23	LT	R-72D-12	12x18														
	783		93+23	LT	GH-III	108x78	59													
				LT	GH-III	108x78	59													
			93+25	RT	R-15B-30	30x18														
					TOTAL THIS SHEET		118				9	7		9				5	5	1
					TOTAL SHEET 718		618		4	4	21		2	15	4		2	3	3	3
					TOTAL SHEET 721		733		12	2	22	1	3	14	8			1	1	1
					TOTAL SHEET 724		691		2	2	16			12	2	2		4		1
					TOTAL SHEET 727		44			1	22			16						
					TOTAL SHEET 730		89				12	4		6						
					TOTAL SHEET 733		135		2		15			12				2	2	1
					TOTAL SHEET 736		89				32			19				2	1	
					TOTAL SHEET 739		44				21	7		13				1		
					TOTAL SHEET 742		14		2		19			15				3	3	2
					TOTAL SHEET 745		126		4		15			13					2	
					TOTAL SHEET 748		23		2		1			1				4	3	
					TOTAL SHEET 751		230		2	2	17	2		13						
TOTALS CARRIED TO TRAFFIC CONTROL GENERAL SUMMARY							2954		30	11	222	21	5	158	14	2	2	25	20	9

SUM-8-0.63

SHEET NO.	REFERENCE NO.	LOCATION	STATION	SIDE	CODE	SIZE (INCHES)	625 GROUND ROD EACH	631 BALLAST WIRING ENCLOSURE, TYPE A EACH	631 BALLAST WIRING ENCLOSURE MOUNTING BRACKET EACH	631 SIGN SERVICE EACH	631 SIGN SERVICE, AS PER PLAN EACH	631 SIGN WIRED EACH	631 SIGN WIRED, AS PER PLAN EACH	631 SIGN WIRED, OVER-PASS STRUCTURE MOUNTED EACH	631 DISCONNECT SWITCH WITH ENCLOSURE, TYPE X EACH	631 SWITCH ENCLOSURE MOUNTING BRACKET ASSEMBLY EACH	631 BALLAST, TYPE CMRI 100-480 INTEGRAL EACH	631 BALLAST, TYPE CWRI 175-480 REMOTE EACH	631 BALLAST, TYPE CMRI 175-480 INTEGRAL EACH	631 BALLAST, TYPE CMRI 250-480 INTEGRAL EACH
757		SR-8	36+94.87	RT																
	777		37+00.00	RT	GE-II	168x126	1			1		1			1					2
759	777	SR-8	49+00.00	RT	GE-II	168x126	1			1		1			1					2
					GB-II	144x102						1					2			
					GG-II	192x78						1							2	
	778		56+75.00	LT	GB-II	156x126	1			1		1			1				2	
761	778	SR-8	77+28.70	RT	GE-II	144x102		1	1					1		1		2		
762	779	SR-8	78+69.35	LT	GC-II	192x114		1	1					1		1		2		
	779		80+10.00	RT	GE-II	144x102	1			1		1			1				2	
762	780	SR-8	87+00.00	LT	GH-II	192x114	1			1		1			1				2	
764		SR-8	98+48.76	LT																
	780		99+00.00	LT	GB-II	156x102	1			1		1			1				1	
					GB-II	192x114						1							2	
					GF-II	96x102						1							2	
		SR-8	SLM 2.28	LT	GE-II	144x102						1							2	
		SR-8	SLM 3.20	LT	GF-II	144x102						1							2	
765	782	EXCHANGE	12+70.00	RT	GH-III	96x66		1	1					1		1		1		
767	781	GOODKIRK	214+00.00	LT	GB-III	96x66	1			1		1			1				1	
	783		219+52.00	RT	GH-III	96x66	1				1		1		1				1	
					M-52B-120	120x54							1				1			
769	783	GOODKIRK	232+08.00	RT	GH-III	96x66	1				1		1		1				1	
					M-52B-120	120x54							1				1			
770	783	GOODKIRK	246+13.00	RT	GH-III	96x66	1				1		1		1				1	
					M-52B-120	120x54							1				1			
			246+18.00	RT																
771	781	EXCHANGE	14+60.00	LT	GB-III	96x66	1			1		1			1				1	
773	783	FOUNTAIN	319+49.00	RT	GH-III	96x66	1				1		1		1				1	
					M-52B-120	120x54							1				1			
774	783	FOUNTAIN	331+84.00	LT	GH-III	96x66	1				1		1		1				1	
					M-52B-120	120x54							1				1			
776	782	FOUNTAIN	344+84.00	LT/RT	GH-III	108x78	1			1		1			1				1	
					GH-III	108x78						1							1	
		RAMP J	93+16.00	LT																
	783	RAMP J	93+23.00	LT	GH-III	96x66	1				1		1		1				1	
					GH-III	96x66							1				1			
TOTALS CARRIED TO TRAFFIC CONTROL GENERAL SUMMARY							15	3	3	9	6	16	12	3	15	3	8	5	27	4

CALCULATED BF CHECKED GLP

SIGN LIGHTING SUBSUMMARY

SUM-8-0.63

SHEET NO.	REFERENCE NO.	LOCATION	STATION	SIDE	CODE	SIZE (INCHES)	631 MERCURY VAPOR LUMINAIRE, TYPE TC-31.21 WITH 100 WATT LAMP EACH	631 MERCURY VAPOR LUMINAIRE, TYPE TC-31.21 WITH 175 WATT LAMP EACH	631 MERCURY VAPOR LUMINAIRE, TYPE TC-31.21 WITH 250 WATT LAMP EACH		631 REMOVAL OF LUMINAIRE AND DISPOSAL EACH	631 REMOVAL OF BALLST AND DISPOSAL EACH	631 REMOVAL OF SIGN WIRED EACH	631 REMOVAL OF SIGN SERVICE AND DISPOSAL EACH					
757		SR-8	36+94.87	RT							2	2	1	1					
	777		37+00.00	RT	GE-II	168x126			2										
759	777	SR-8	49+00.00	RT	GE-II	168x126			2		2	2	1						
					GB-II	144x102	2												
					GG-II	192x78		2			2	2	1						
	778		56+75.00	LT	GB-II	156x126		2			2	2	1	1					
761	778	SR-8	77+28.70	RT	GE-II	144x102		2											
762	779	SR-8	78+69.35	LT	GC-II	192x114													
	779		80+10.00	RT	GE-II	144x102		2											
762	780	SR-8	87+00.00	LT	GH-II	192x114		2			2	2	1	1					
764		SR-8	98+48.76	LT							6	6	3	1					
	780		99+00.00	LT	GB-II	156x102		1											
					GB-II	192x114		2											
					GF-II	96x102		2											
		SR-8	SLM 2.28	LT	GE-II	144x102		2			2	2	1						
		SR-8	SLM 3.20	LT	GF-II	144x102		2			2	2	1						
765	782	EXCHANGE	12+70.00	RT	GH-III	96x66		1											
767	781	GOODKIRK	214+00.00	LT	GB-III	96x66		1											
	783		219+52.00	RT	GH-III	96x66		1											
					M-52B-120	120x54	1												
769	783	GOODKIRK	232+08.00	RT	GH-III	96x66		1											
					M-52B-120	120x54	1												
770	783	GOODKIRK	246+13.00	RT	GH-III	96x66		1											
					M-52B-120	120x54	1												
			246+18.00	RT							2	2	1	1					
771	781	EXCHANGE	14+60.00	LT	GB-III	96x66		1											
773	783	FOUNTAIN	319+49.00	RT	GH-III	96x66		1											
					M-52B-120	120x54	1												
774	783	FOUNTAIN	331+84.00	LT	GH-III	96x66		1											
					M-52B-120	120x54	1												
776	782	FOUNTAIN	344+84.00	LT/RT	GH-III	108x78		1											
					GH-III	108x78		1											
		RAMP J	93+16.00	LT							2	2	1	1					
	783	RAMP J	93+23.00	LT	GH-III	96x66		1											
					GH-III	96x66	1												
TOTALS CARRIED TO TRAFFIC CONTROL GENERAL SUMMARY							8	30	4		24	24	12	6					

CALCULATED BF CHECKED GLP

SIGN LIGHTING SUBSUMMARY

SUM-8-0.63

SHEET NO.	LOCATION	SIDE	SIGN CODE AND SIZE (FEET)	ITEM 625			ITEM 631																				
				CABLE SPLICING KIT	GROUND ROD		SIGN SERVICE	SIGN WIRED	DISCONNECT SWITCH WITH ENCLOSURE TYPE X	BALLAST INTEGRAL TYPE CMRI-175-480	MERCURY VAPOR LUMINAIRE, TYPE TC-31.21 WITH 175 WATT LAMP		REMOVAL OF LUMINAIRE AND DISPOSAL	REMOVAL OF DISCONNECT SWITCH AND DISPOSAL	REMOVAL OF BALLAST AND DISPOSAL	REMOVAL OF SIGN WIRING AND DISPOSAL	REMOVAL OF SIGN SERVICE AND DISPOSAL									
				EACH	EACH		EACH	EACH	EACH	EACH	EACH		EACH	EACH	EACH	EACH	EACH										
	6+55	RT/LT	GE-9 X 6.5	2	1		1	1	1	1	1		4	1	4	2	1										
			GE-18 X 6.5					1		2	2																
TOTALS CARRIED TO GENERAL SUMMARY				2	1		1	2	1	3	3		4	1	4	2	1										

NOTE:
FOR CROSS SECTIONS SEE SHEET 783A.

SHEET NO.	REFERENCE NO.	LOCATION	STATION	SIDE	CODE	SIZE (FEET)	ITEM 630																				
							RIGID OVERHEAD SIGN SUPPORT FOUNDATION	SIGN EXTRUSHEET TYPE G	OVERHEAD SIGN SUPPORT, TYPE TC-7.65, DES.6 AS PER PLAN		REMOVAL OF OVER-HEAD MOUNTED SIGN AND DISPOSAL	REMOVAL OF OVER-HEAD SIGN SUPPORT AND DISPOSAL													
							EACH	SQ.FT.	EACH		EACH	EACH															
		SR 8	6+55	RT/LT	GE-2	9 X 6.5	2	58.5	1		2	1															
					GE-2	18 X 6.5		117																			
TOTALS CARRIED TO GENERAL SUMMARY							2	175.5	1		2	1															

CALCULATED KAG
CHECKED LJ

LIGHTING & SIGNING SUBSUMMARY

SUM-8-0.96

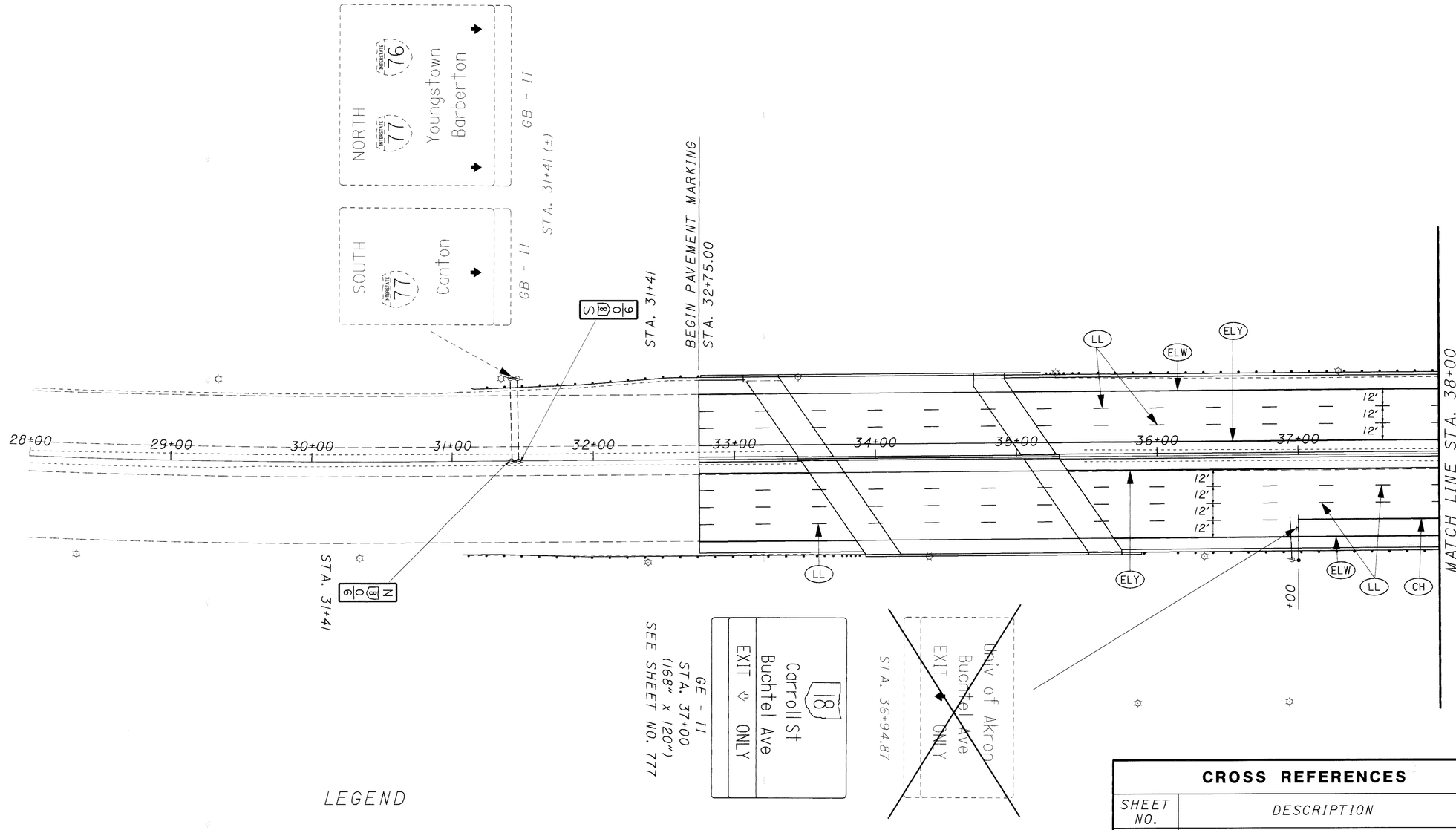

LEGEND

- EXISTING SIGN TO REMAIN
- EXISTING SIGN TO BE REMOVED
- NEW SIGN
- EXISTING SIGN - REMOVE AND REERECT (REMOVE & REERECT)

- (CH) CHANNELIZING LINE
- (CLS) CENTER LINE - DOUBLE SOLID
- (CW) CROSS WALK
- (ELW) EDGE LINE (WHITE)
- (ELY) EDGE LINE (YELLOW)
- (IM) ISLAND MARKING
- (LA) LANE ARROW
- (LL) LANE LINE
- (SL) STOP LINE
- (TLW) TRANSVERSE LINE (WHITE)
- (WP) WORD ON PAVEMENT

CROSS REFERENCES

SHEET NO.	DESCRIPTION
716-718	FOR SIGNING SUBSUMMARY
712	FOR PAVEMENT MARKING SUBSUMMARY
755-756	FOR SIGN LIGHTING SUBSUMMARY

HORIZONTAL SCALE IN FEET
0 20 40 80

CALCULATED
CHECKED

SIGNING AND PAVEMENT MARKING PLAN
S.R. 8 - STA. 28+00 TO STA. 38+00

SUM-8-0.63

757
1088

02:33:48 PM
06/13/2002
ut\00-010sr-8\civil\s&pm\sr 8\fpl00sr8.dgn

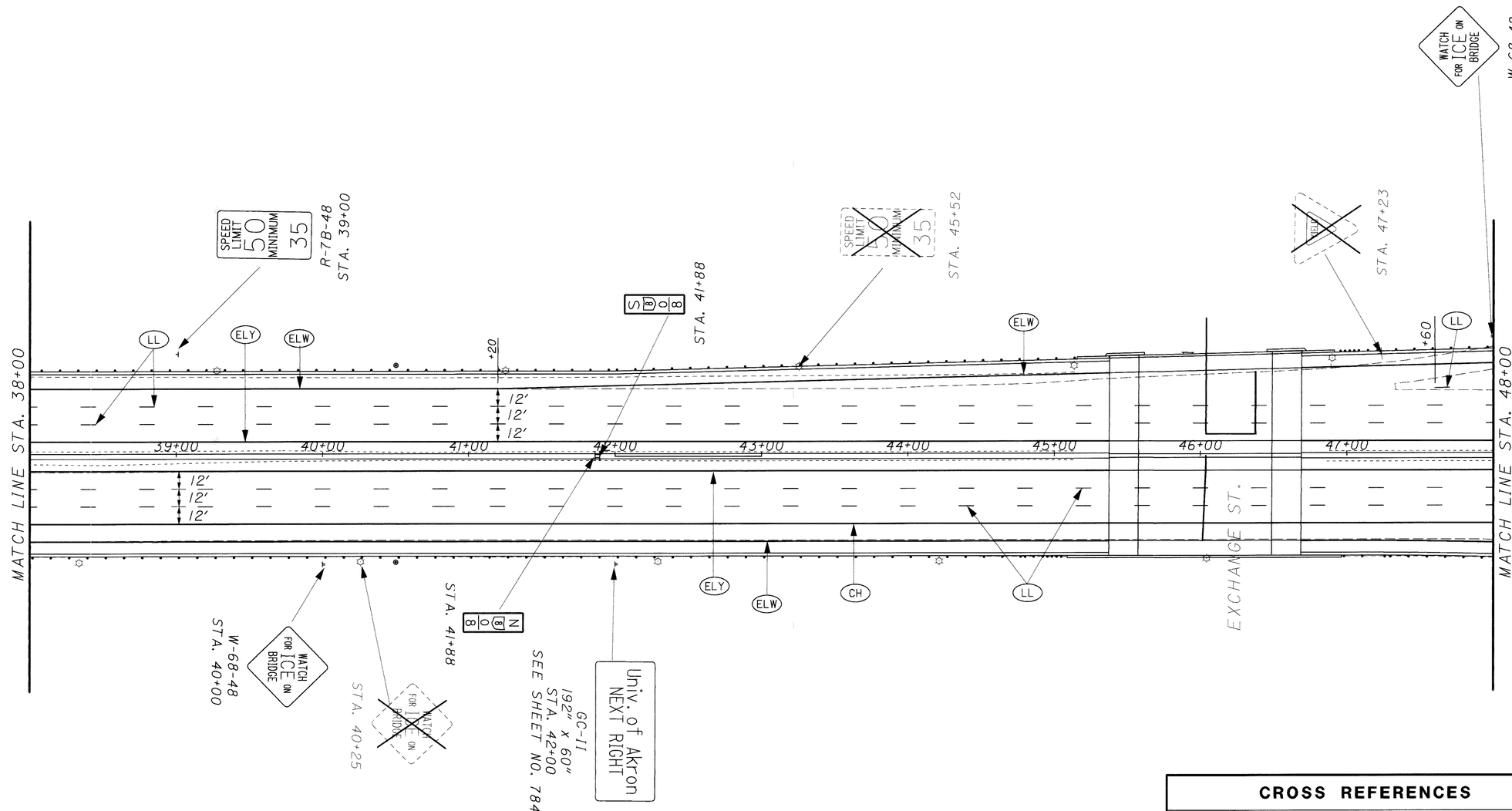

LEGEND

- EXISTING SIGN TO REMAIN
- EXISTING SIGN TO BE REMOVED
- NEW SIGN
- EXISTING SIGN - REMOVE AND REERECT (REMOVE & REERECT)

- (CH) CHANNELIZING LINE
- (CLS) CENTER LINE - DOUBLE SOLID
- (CW) CROSS WALK
- (ELW) EDGE LINE (WHITE)
- (ELY) EDGE LINE (YELLOW)
- (IM) ISLAND MARKING
- (LA) LANE ARROW
- (LL) LANE LINE
- (SL) STOP LINE
- (TLW) TRANSVERSE LINE (WHITE)
- (WP) WORD ON PAVEMENT

CROSS REFERENCES

SHEET NO.	DESCRIPTION
716-718	FOR SIGNING SUBSUMMARY
712	FOR PAVEMENT MARKING SUBSUMMARY

N

0 20 40 80 HORIZONTAL SCALE IN FEET

CALCULATED | CHECKED

SIGNING AND PAVEMENT MARKING PLAN
S.R. 8 - STA. 38+00 TO STA. 48+00

SUM-8-0.63

758
1088

02:33:49 PM
06/13/2002
\\tt\V00-010sr-8\1\civil\s&pm\sr 8\tpl01sr8.dgn

LEGEND

- EXISTING SIGN TO REMAIN
- EXISTING SIGN TO BE REMOVED
- NEW SIGN
- EXISTING SIGN - REMOVE AND REERECT (REMOVE & REERECT)

- (CH) CHANNELIZING LINE
- (CLS) CENTER LINE - DOUBLE SOLID
- (CW) CROSS WALK
- (ELW) EDGE LINE (WHITE)
- (ELY) EDGE LINE (YELLOW)
- (IM) ISLAND MARKING
- (LA) LANE ARROW
- (LL) LANE LINE
- (SL) STOP LINE
- (TLW) TRANSVERSE LINE (WHITE)
- (WP) WORD ON PAVEMENT

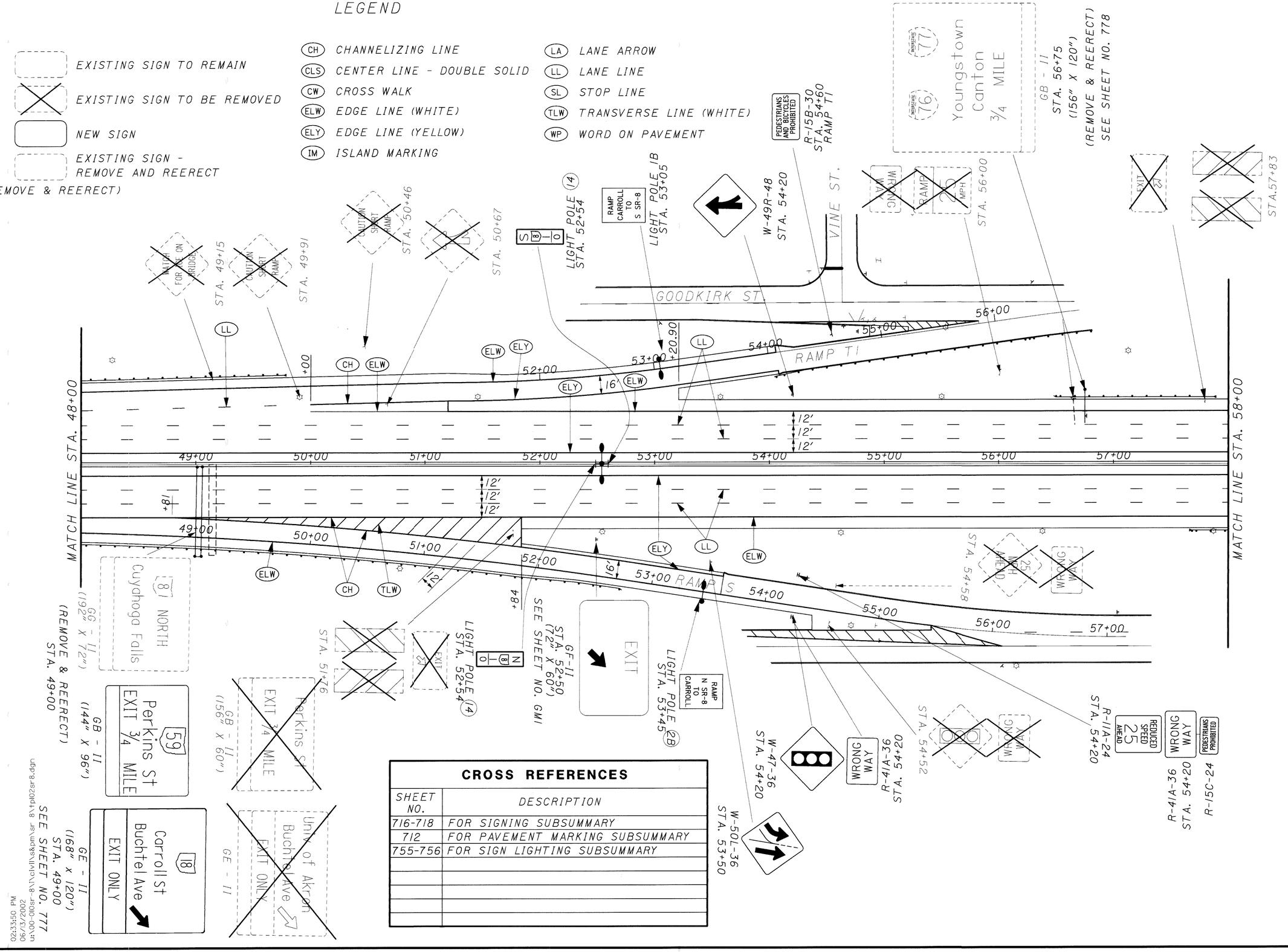

CROSS REFERENCES

SHEET NO.	DESCRIPTION
716-718	FOR SIGNING SUBSUMMARY
712	FOR PAVEMENT MARKING SUBSUMMARY
755-756	FOR SIGN LIGHTING SUBSUMMARY

HORIZONTAL SCALE IN FEET
0 20 40 80

CALCULATED
CHECKED

SIGNING AND PAVEMENT MARKING PLAN
S.R. 8 - STA. 48+00 TO STA. 58+00

SUM-8-0.63

759
1088

02:33:50 PM
06/13/2002
u:\00-0l0sr-8\l\clvlls&pm\sr 8\tpl02sr8.dgn

02:33:51 PM
06/13/2002
u:\00-010sr-8\i\civil\s&pm\sr_8\tpl03sr8.dgn

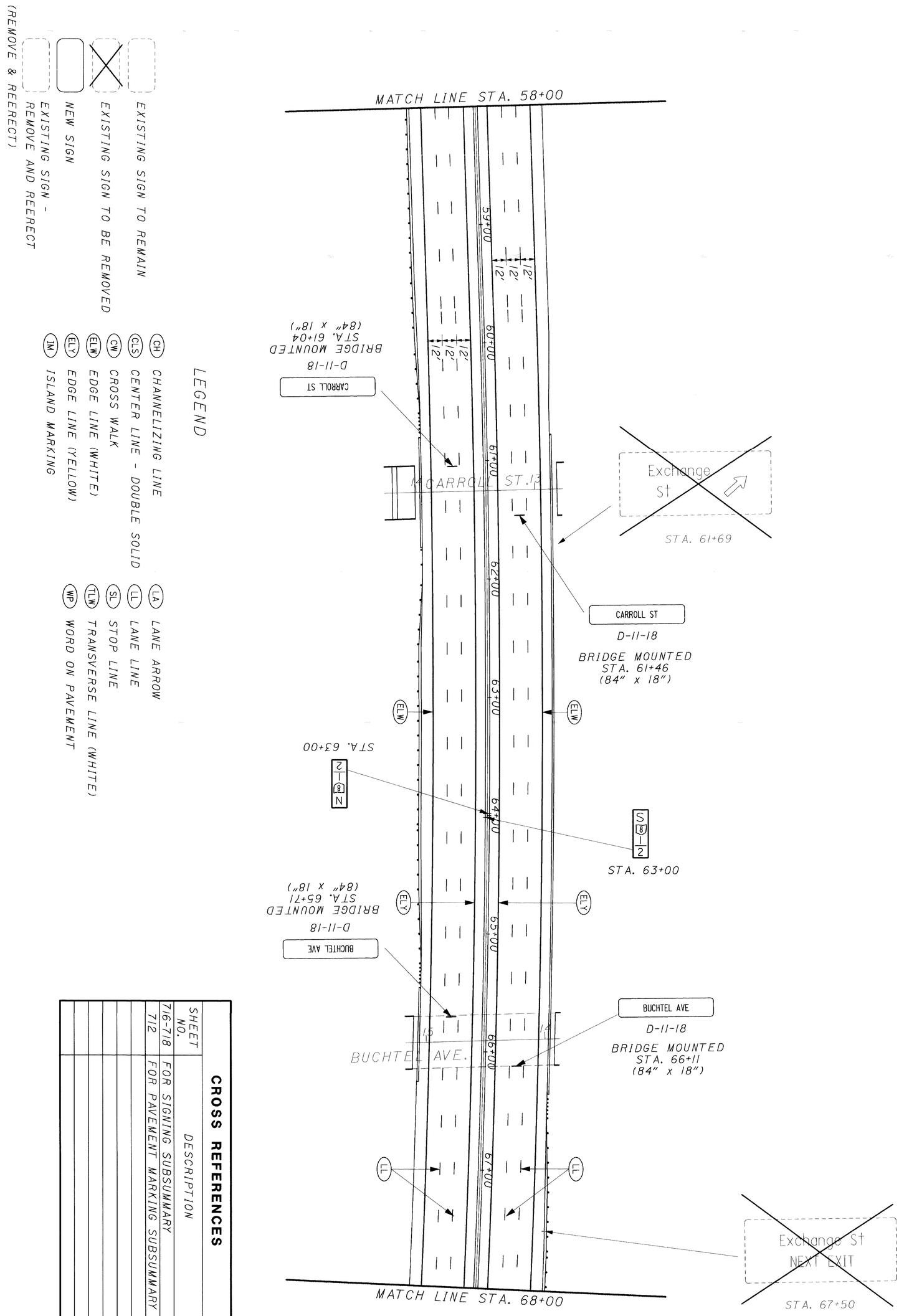

LEGEND

- CH — CHANNELIZING LINE
- CLS — CENTER LINE - DOUBLE SOLID
- CW — CROSS WALK
- ELW — EDGE LINE (WHITE)
- ELY — EDGE LINE (YELLOW)
- IM — ISLAND MARKING
- LA — LANE ARROW
- LL — LANE LINE
- SL — STOP LINE
- TLW — TRANSVERSE LINE (WHITE)
- WP — WORD ON PAVEMENT

EXISTING SIGN TO REMAIN

EXISTING SIGN TO BE REMOVED

NEW SIGN

EXISTING SIGN - REMOVE AND REERECT (REMOVE & REERECT)

CROSS REFERENCES

SHEET NO.	DESCRIPTION
716-718	FOR SIGNING SUBSUMMARY
712	FOR PAVEMENT MARKING SUBSUMMARY

760
1088

SUM-8-0.63

SIGNING AND PAVEMENT MARKING PLAN
S.R. 8 - STA. 58+00 TO STA. 68+00

CALCULATED
CHECKED

0 20 40 80
HORIZONTAL SCALE IN FEET

N

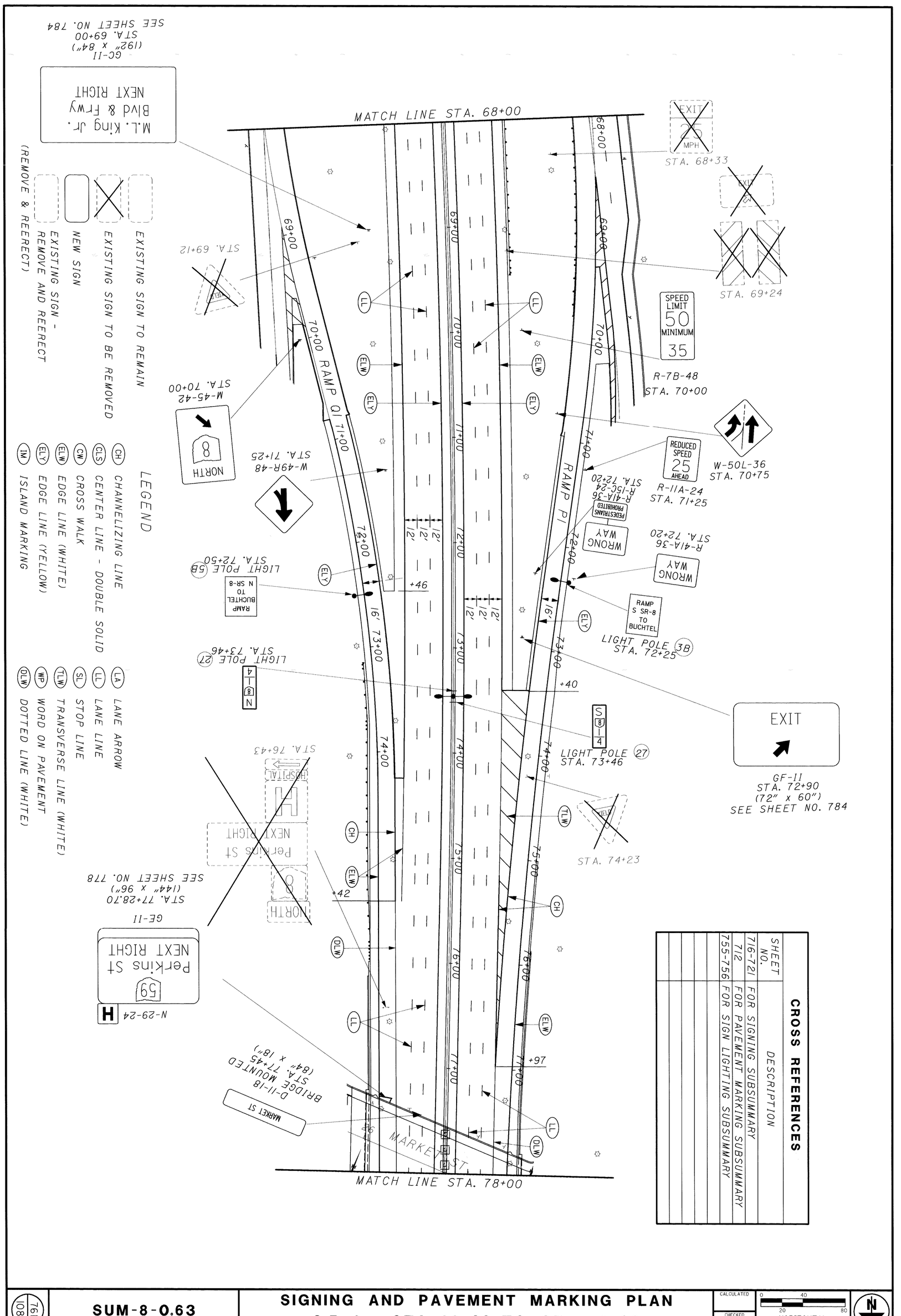

CROSS REFERENCES

SHEET NO.	DESCRIPTION
716-721	FOR SIGNING SUBSUMMARY
712	FOR PAVEMENT MARKING SUBSUMMARY
755-756	FOR SIGN LIGHTING SUBSUMMARY

761 (1088)	SUM-8-0.63	SIGNING AND PAVEMENT MARKING PLAN S.R. 8 - STA. 68+00 TO STA. 78+00	CALCULATED / CHECKED	0 20 40 80 HORIZONTAL SCALE IN FEET

02:33:55 PM
06/13/2002
u:\00-0l0sr-8\i\civil\s&pm\sr 8\tpl05sr8.dgn

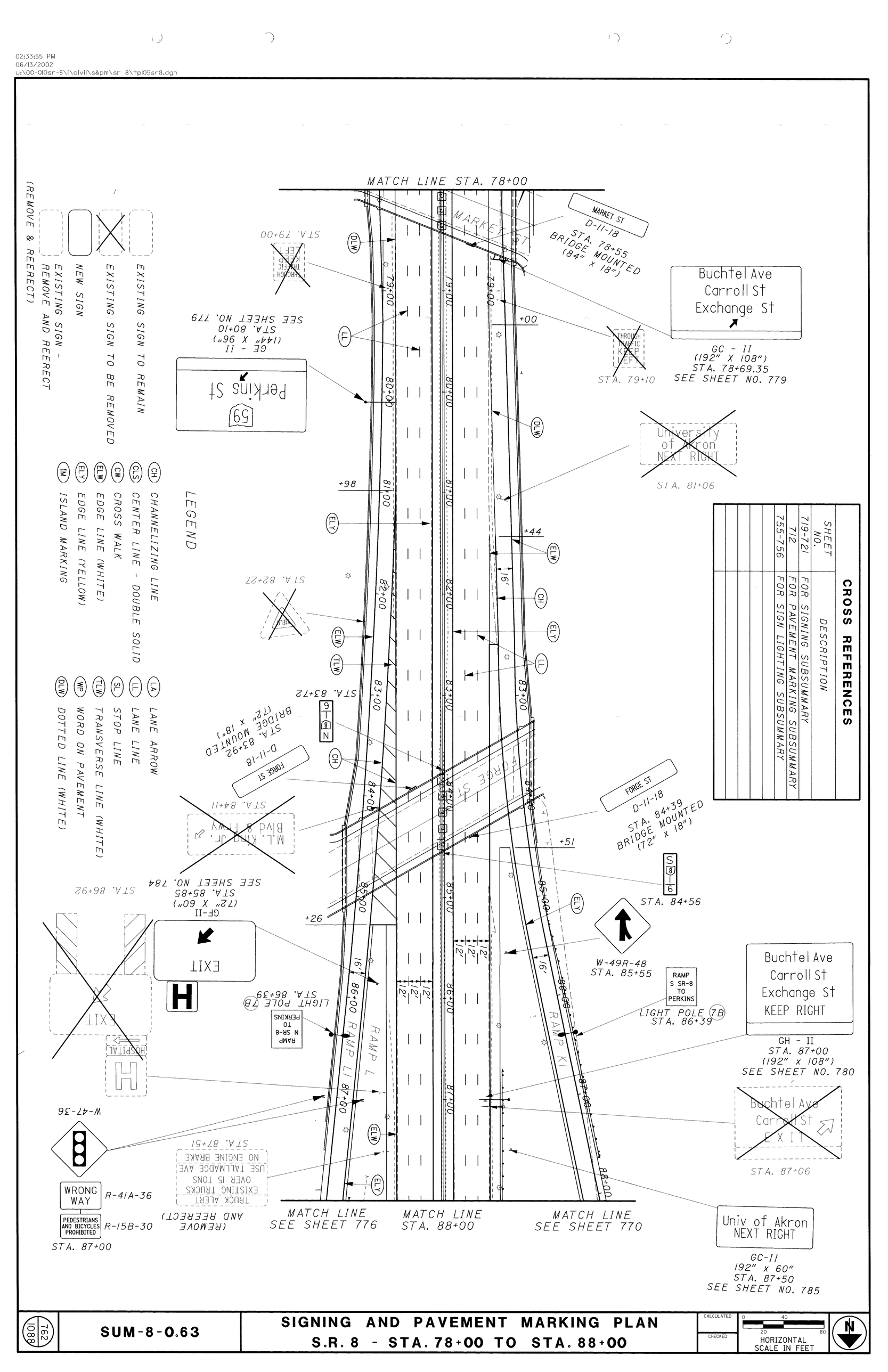

(REMOVE & REERECT)

EXISTING SIGN TO REMAIN

EXISTING SIGN TO BE REMOVED

NEW SIGN

EXISTING SIGN - REMOVE AND REERECT

LEGEND

CH	CHANNELIZING LINE
CLS	CENTER LINE - DOUBLE SOLID
CW	CROSS WALK
ELW	EDGE LINE (WHITE)
ELY	EDGE LINE (YELLOW)
IM	ISLAND MARKING
LA	LANE ARROW
LL	LANE LINE
SL	STOP LINE
TLW	TRANSVERSE LINE (WHITE)
WP	WORD ON PAVEMENT
DLW	DOTTED LINE (WHITE)

CROSS REFERENCES

SHEET NO.	DESCRIPTION
719-721	FOR SIGNING SUBSUMMARY
712	FOR PAVEMENT MARKING SUBSUMMARY
755-756	FOR SIGN LIGHTING SUBSUMMARY

762
1088

SUM-8-0.63

SIGNING AND PAVEMENT MARKING PLAN
S.R. 8 - STA. 78+00 TO STA. 88+00

CALCULATED
CHECKED

0 20 40 80
HORIZONTAL SCALE IN FEET

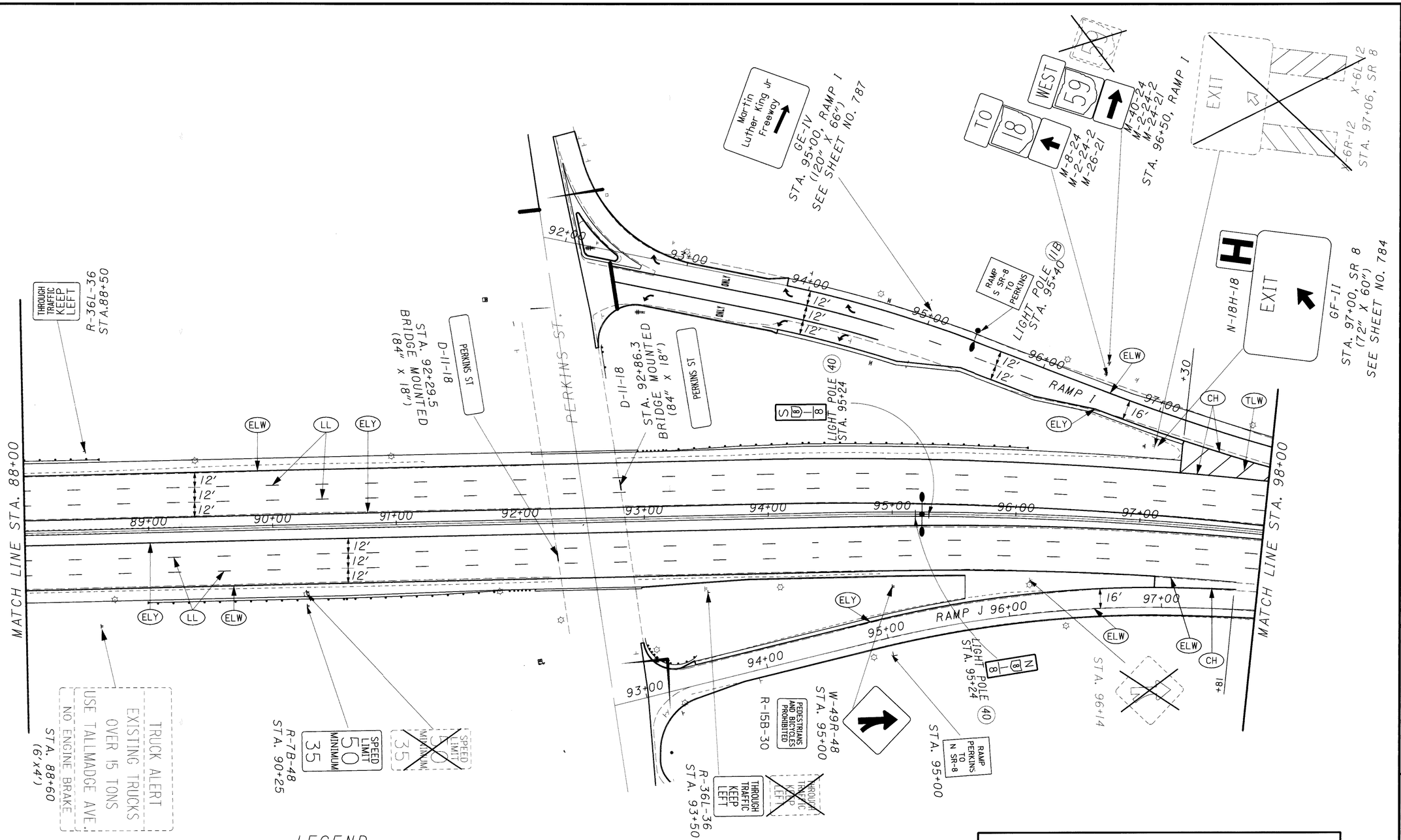

LEGEND

- EXISTING SIGN TO REMAIN
- EXISTING SIGN TO BE REMOVED
- NEW SIGN
- EXISTING SIGN - REMOVE AND REERECT (REMOVE & REERECT)

- CH CHANNELIZING LINE
- CLS CENTER LINE - DOUBLE SOLID
- CW CROSS WALK
- ELW EDGE LINE (WHITE)
- ELY EDGE LINE (YELLOW)
- IM ISLAND MARKING
- LA LANE ARROW
- LL LANE LINE
- SL STOP LINE
- TLW TRANSVERSE LINE (WHITE)
- WP WORD ON PAVEMENT

CROSS REFERENCES

SHEET NO.	DESCRIPTION
719-721	FOR SIGNING SUBSUMMARY
712	FOR PAVEMENT MARKING SUBSUMMARY
755-756	FOR SIGN LIGHTING SUBSUMMARY

HORIZONTAL SCALE IN FEET 0 20 40 80

CALCULATED

CHECKED

SIGNING AND PAVEMENT MARKING PLAN
S.R. 8 - STA. 88+00 TO STA. 98+00

SUM-8-0.63

02:33:56 PM
06/13/2002
u:\00-010sr-8\1\civil\s&pm\sr 8\tpl06sr8.dgn

LEGEND

- EXISTING SIGN TO REMAIN
- EXISTING SIGN TO BE REMOVED
- NEW SIGN
- EXISTING SIGN - REMOVE AND REERECT (REMOVE & REERECT)

- (CH) CHANNELIZING LINE
- (CLS) CENTER LINE - DOUBLE SOLID
- (CW) CROSS WALK
- (ELW) EDGE LINE (WHITE)
- (ELY) EDGE LINE (YELLOW)
- (IM) ISLAND MARKING
- (LA) LANE ARROW
- (LL) LANE LINE
- (SL) STOP LINE
- (TLW) TRANSVERSE LINE (WHITE)
- (WP) WORD ON PAVEMENT

CROSS REFERENCES

SHEET NO.	DESCRIPTION
722-724	FOR SIGNING SUBSUMMARY
712	FOR PAVEMENT MARKING SUBSUMMARY
755-756	FOR SIGN LIGHTING SUBSUMMARY

N

HORIZONTAL SCALE IN FEET
0 20 40 80

CALCULATED | CHECKED

SIGNING AND PAVEMENT MARKING PLAN
S.R. 8 - STA. 98+00 TO STA. 108+00

SUM-8-0.63

764
1088

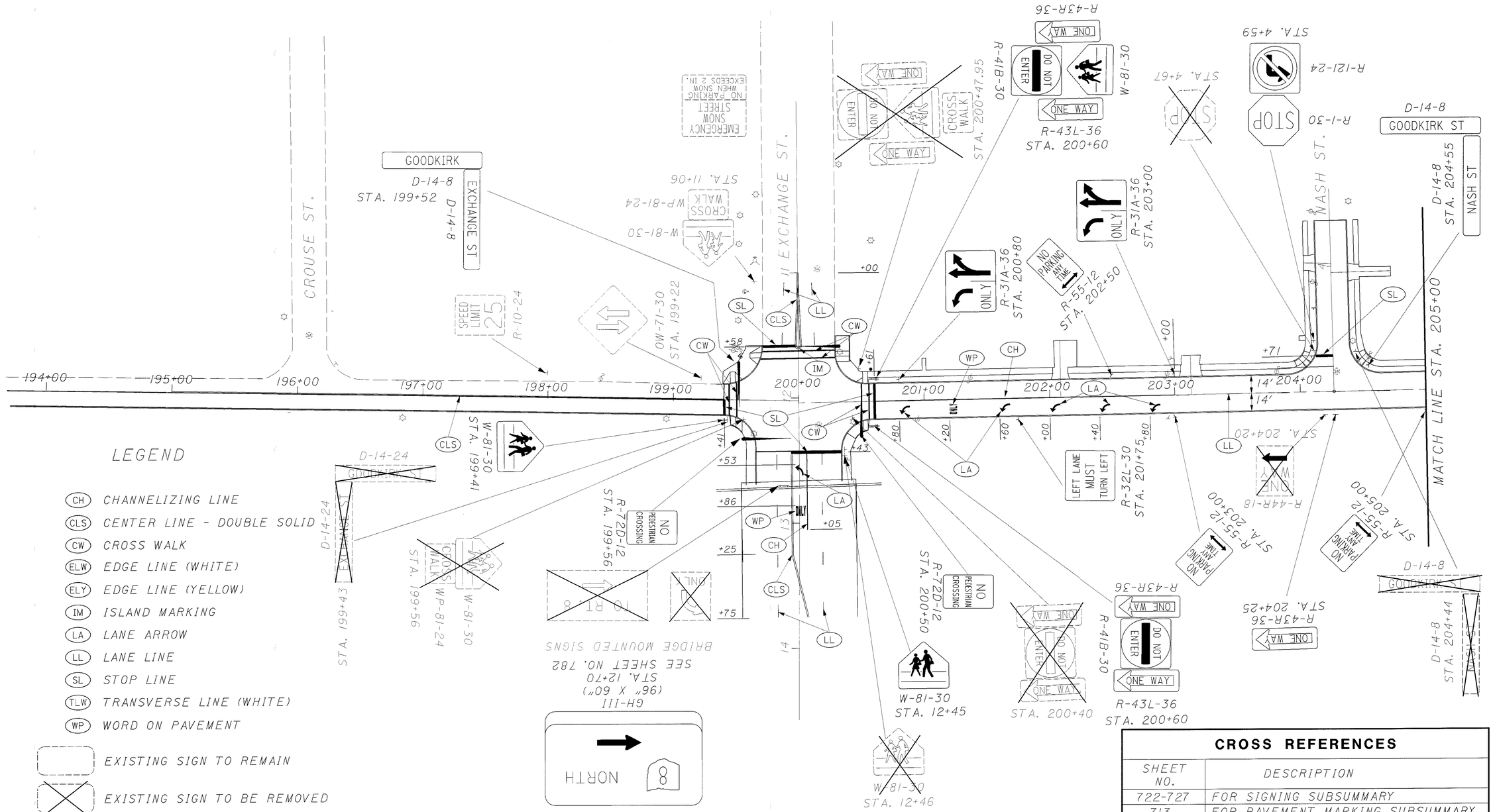

LEGEND

- (CH) CHANNELIZING LINE
- (CLS) CENTER LINE - DOUBLE SOLID
- (CW) CROSS WALK
- (ELW) EDGE LINE (WHITE)
- (ELY) EDGE LINE (YELLOW)
- (IM) ISLAND MARKING
- (LA) LANE ARROW
- (LL) LANE LINE
- (SL) STOP LINE
- (TLW) TRANSVERSE LINE (WHITE)
- (WP) WORD ON PAVEMENT

- EXISTING SIGN TO REMAIN
- EXISTING SIGN TO BE REMOVED
- NEW SIGN
- EXISTING SIGN - REMOVE AND REERECT (REMOVE & REERECT)

CROSS REFERENCES

SHEET NO.	DESCRIPTION
722-727	FOR SIGNING SUBSUMMARY
713	FOR PAVEMENT MARKING SUBSUMMARY
755-756	FOR SIGN LIGHTING SUBSUMMARY

N

HORIZONTAL SCALE IN FEET
0 20 40 80

CALCULATED | CHECKED

SIGNING AND PAVEMENT MARKING PLAN
GOODKIRK ST. - STA. 195+00 TO STA. 205+00

SUM-8-0.63

765
1088

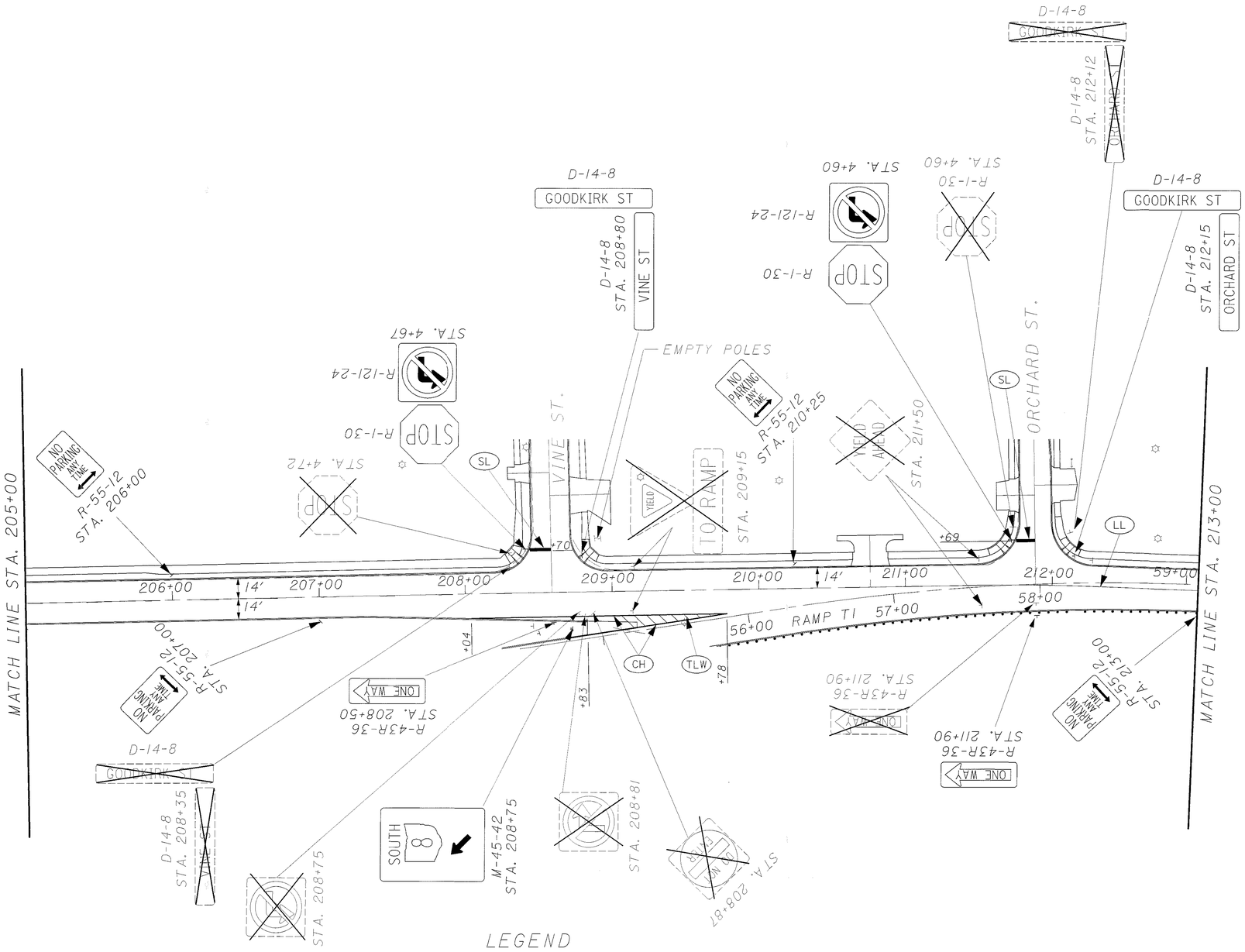

LEGEND

- EXISTING SIGN TO REMAIN
- EXISTING SIGN TO BE REMOVED
- NEW SIGN
- EXISTING SIGN - REMOVE AND REERECT (REMOVE & REERECT)

- (CH) CHANNELIZING LINE
- (CLS) CENTER LINE - DOUBLE SOLID
- (CW) CROSS WALK
- (ELW) EDGE LINE (WHITE)
- (ELY) EDGE LINE (YELLOW)
- (IM) ISLAND MARKING
- (LA) LANE ARROW
- (LL) LANE LINE
- (SL) STOP LINE
- (TLW) TRANSVERSE LINE (WHITE)
- (WP) WORD ON PAVEMENT

CROSS REFERENCES

SHEET NO.	DESCRIPTION
725-727	FOR SIGNING SUBSUMMARY
713	FOR PAVEMENT MARKING SUBSUMMARY

N

0 20 40 60
HORIZONTAL SCALE IN FEET

CALCULATED

CHECKED

SIGNING AND PAVEMENT MARKING PLAN
GOODKIRK ST. - STA. 205+00 TO STA. 213+00

SUM-8-0.63

766
1088

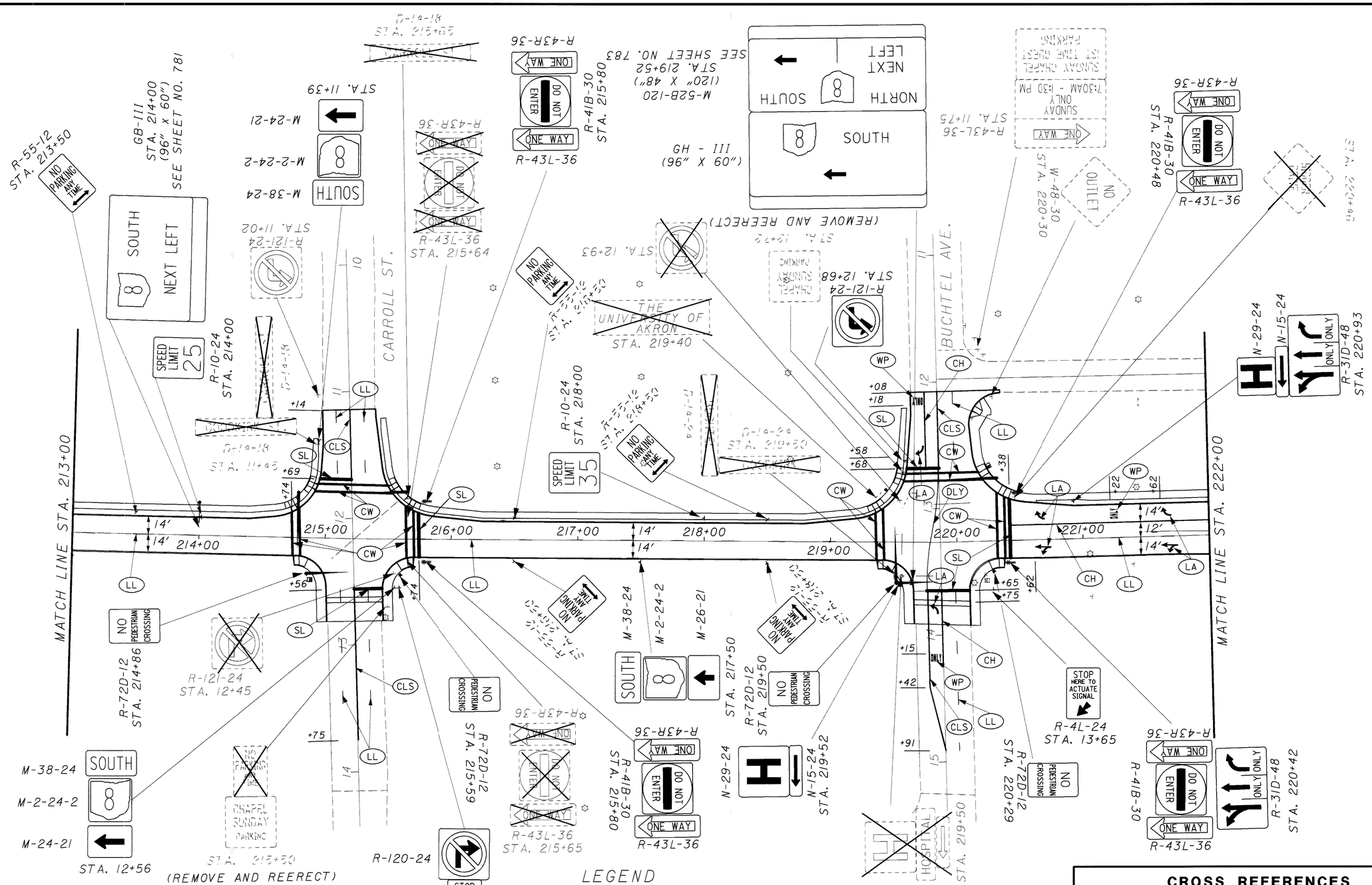

EXISTING SIGN TO REMAIN

EXISTING SIGN TO BE REMOVED

NEW SIGN

EXISTING SIGN - REMOVE AND REERECT (REMOVE & REERECT)

LEGEND

(CH)	CHANNELIZING LINE	(LA)	LANE ARROW
(CLS)	CENTER LINE - DOUBLE SOLID	(LL)	LANE LINE
(CW)	CROSS WALK	(SL)	STOP LINE
(ELW)	EDGE LINE (WHITE)	(TLW)	TRANSVERSE LINE (WHITE)
(ELY)	EDGE LINE (YELLOW)	(WP)	WORD ON PAVEMENT
(IM)	ISLAND MARKING	(DLY)	DOTTED LINE (YELLOW)

CROSS REFERENCES

SHEET NO.	DESCRIPTION
725-730	FOR SIGNING SUBSUMMARY
713	FOR PAVEMENT MARKING SUBSUMMARY
755-756	FOR SIGN LIGHTING SUBSUMMARY

REVISIONS: 05/15/2002 by MAM

CALCULATED

CHECKED

HORIZONTAL SCALE IN FEET

0 20 40 80

SIGNING AND PAVEMENT MARKING PLAN
GOODKIRK ST. - STA. 213+00 TO STA. 222+00

SUM-8-0.63

767
1088

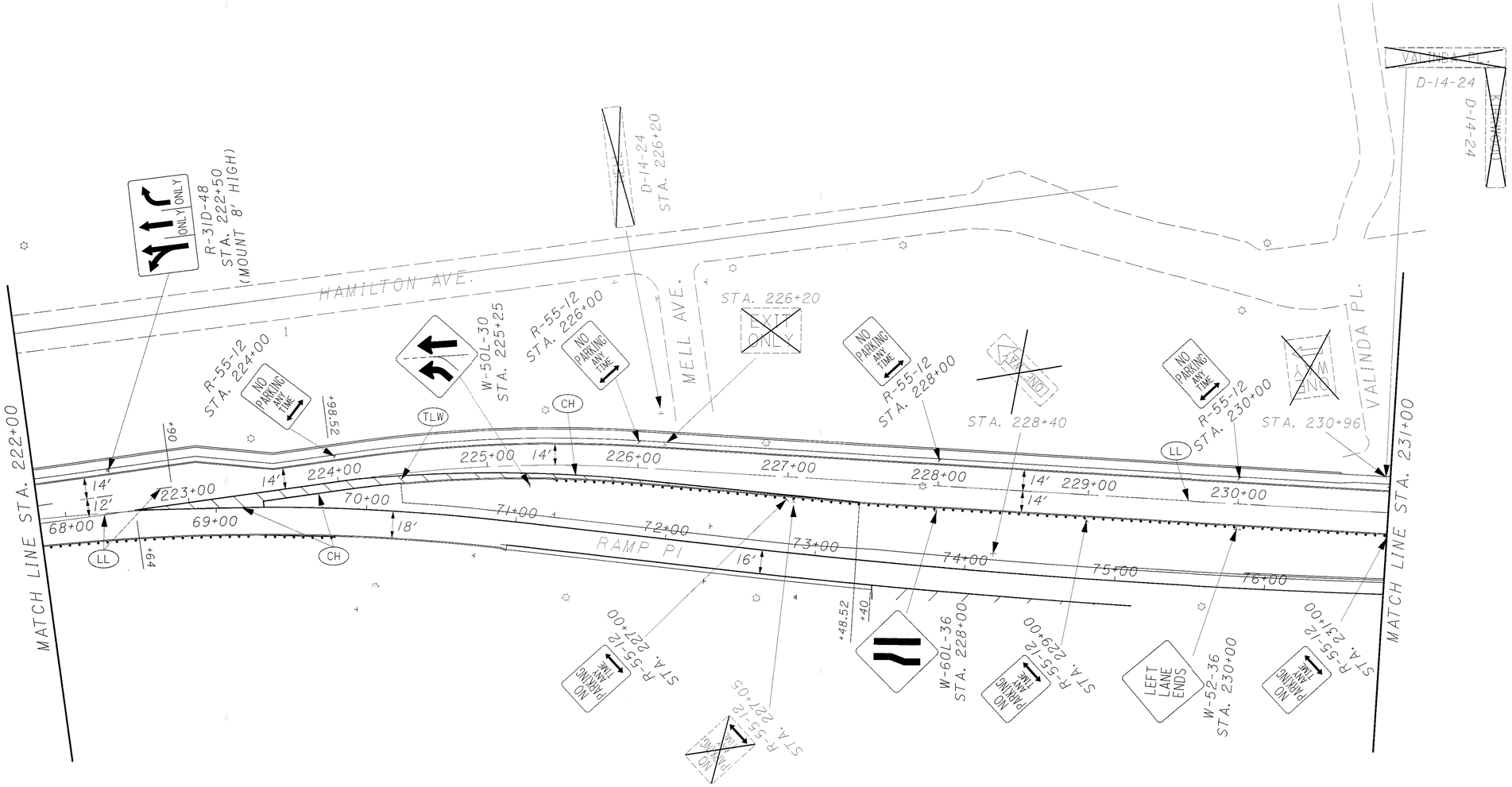

LEGEND

- EXISTING SIGN TO REMAIN
- EXISTING SIGN TO BE REMOVED
- NEW SIGN
- EXISTING SIGN - REMOVE AND REERECT (REMOVE & REERECT)

- (CH) CHANNELIZING LINE
- (CLS) CENTER LINE - DOUBLE SOLID
- (CW) CROSS WALK
- (ELW) EDGE LINE (WHITE)
- (ELY) EDGE LINE (YELLOW)
- (IM) ISLAND MARKING
- (LA) LANE ARROW
- (LL) LANE LINE
- (SL) STOP LINE
- (TLW) TRANSVERSE LINE (WHITE)
- (WP) WORD ON PAVEMENT

CROSS REFERENCES

SHEET NO.	DESCRIPTION
728-733	FOR SIGNING SUBSUMMARY
713	FOR PAVEMENT MARKING SUBSUMMARY

N

HORIZONTAL SCALE IN FEET
0 20 40 80

CALCULATED | CHECKED

SIGNING AND PAVEMENT MARKING PLAN
GOODKIRK ST. - STA. 222+00 TO STA. 231+00

SUM-8-0.63

768
1088

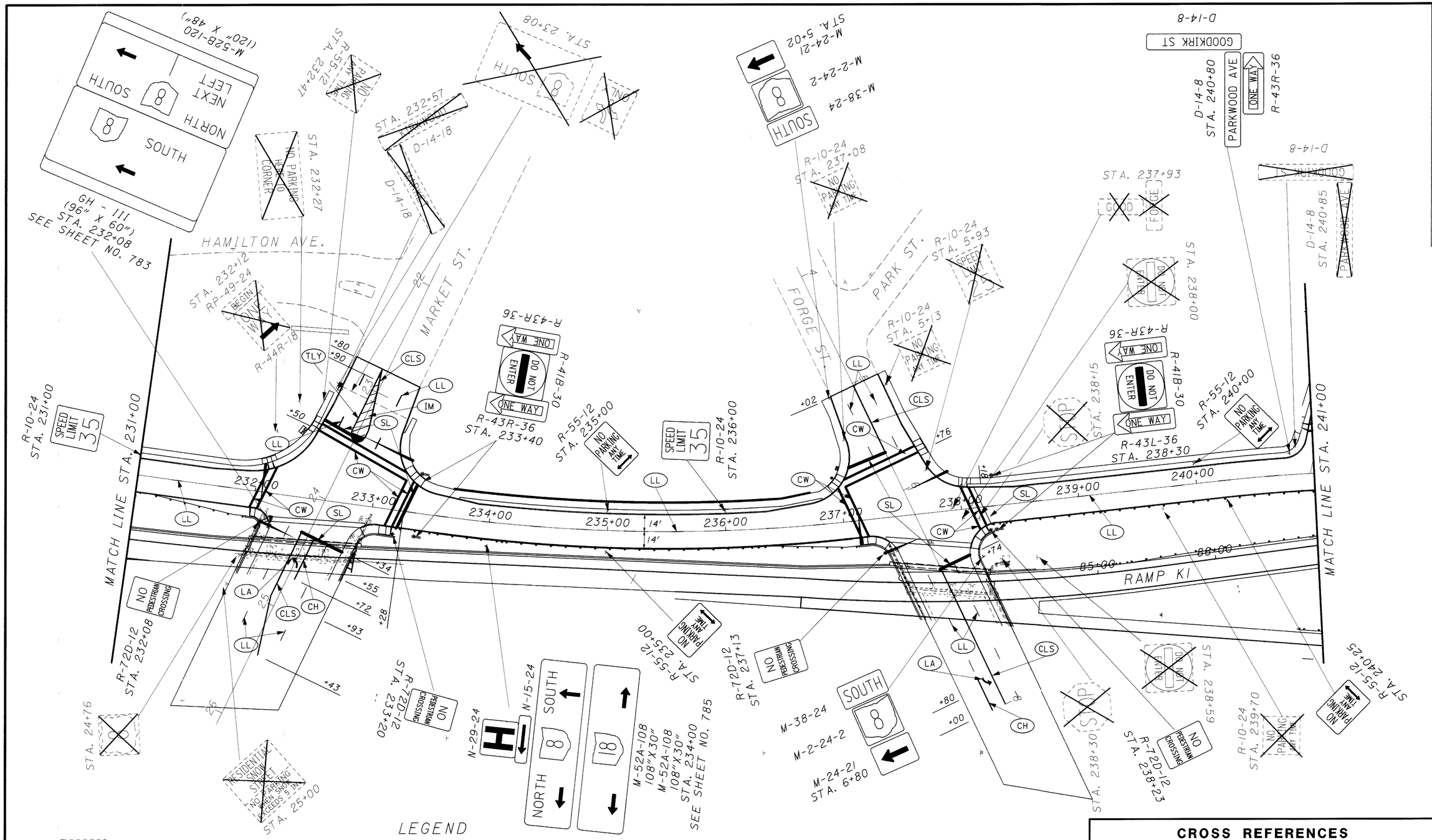

LEGEND

- EXISTING SIGN TO REMAIN
- EXISTING SIGN TO BE REMOVED
- NEW SIGN
- EXISTING SIGN - REMOVE AND REERECT (REMOVE & REERECT)

- (CH) CHANNELIZING LINE
- (CLB) CENTER LINE - SOLID & BROKEN
- (CLS) CENTER LINE - DOUBLE SOLID
- (CW) CROSS WALK
- (ELW) EDGE LINE (WHITE)
- (ELY) EDGE LINE (YELLOW)
- (IM) ISLAND MARKING
- (LA) LANE ARROW
- (LL) LANE LINE
- (SL) STOP LINE
- (TLW) TRANSVERSE LINE (WHITE)
- (TLY) TRANSVERSE LINE (YELLOW)
- (WP) WORD ON PAVEMENT

CROSS REFERENCES

SHEET NO.	DESCRIPTION
731-736	FOR SIGNING SUBSUMMARY
713-714	FOR PAVEMENT MARKING SUBSUMMARY
755-756	FOR SIGN LIGHTING SUBSUMMARY

REVISIONS: 05/15/2002 by MAM

CALCULATED | CHECKED

HORIZONTAL SCALE IN FEET
0 20 40 80

N

SIGNING AND PAVEMENT MARKING
GOODKIRK ST. - STA. 231+00 TO STA. 241+00

SUM-8-0.63

769
1088

LEGEND

- EXISTING SIGN TO REMAIN
- EXISTING SIGN TO BE REMOVED
- NEW SIGN
- EXISTING SIGN - REMOVE AND REERECT (REMOVE & REERECT)

- (CH) CHANNELIZING LINE
- (CLS) CENTER LINE - DOUBLE SOLID
- (CW) CROSS WALK
- (ELW) EDGE LINE (WHITE)
- (ELY) EDGE LINE (YELLOW)
- (IM) ISLAND MARKING
- (LA) LANE ARROW
- (LL) LANE LINE
- (SL) STOP LINE
- (TLW) TRANSVERSE LINE (WHITE)
- (WP) WORD ON PAVEMENT

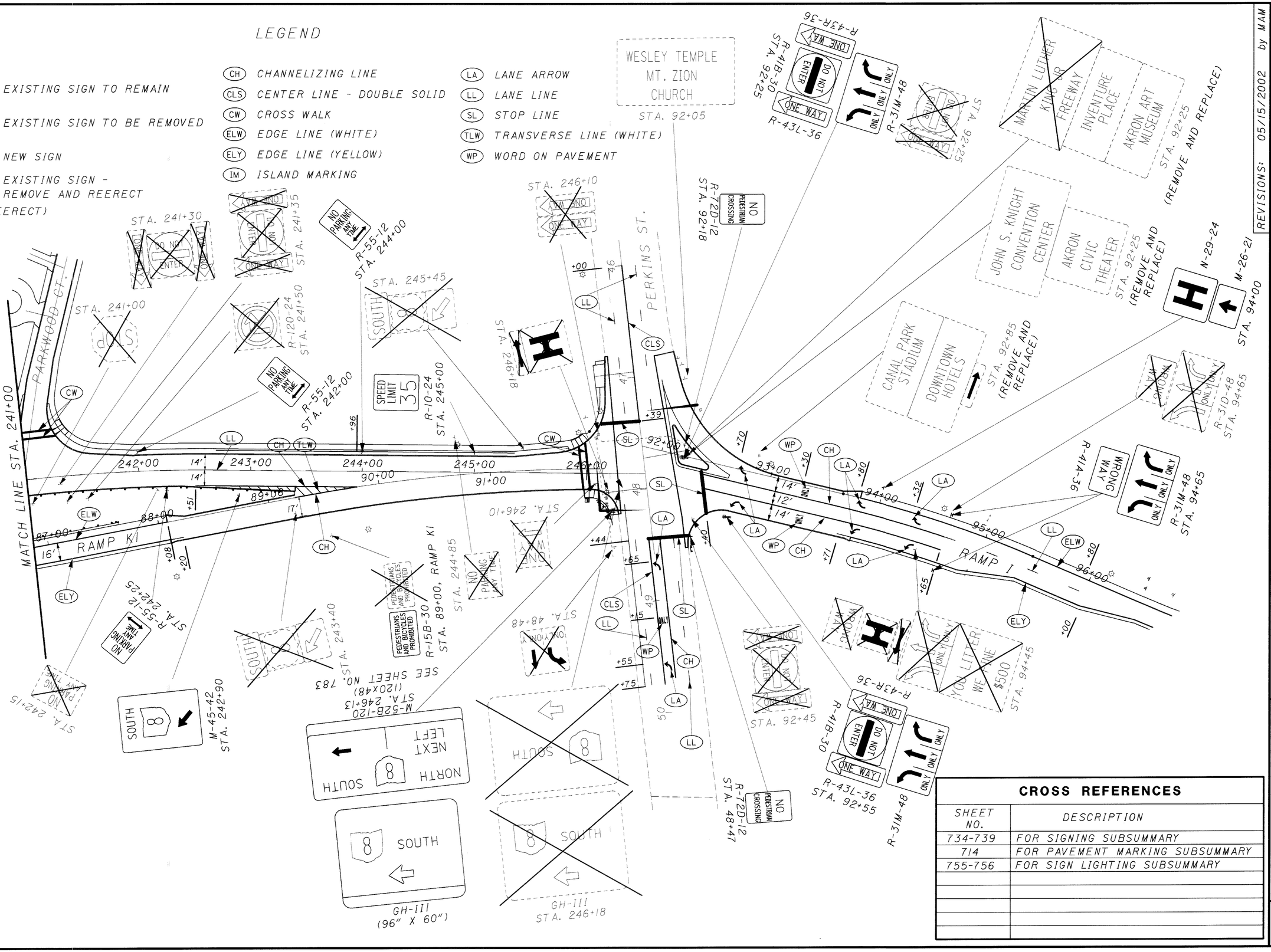

CROSS REFERENCES

SHEET NO.	DESCRIPTION
734-739	FOR SIGNING SUBSUMMARY
714	FOR PAVEMENT MARKING SUBSUMMARY
755-756	FOR SIGN LIGHTING SUBSUMMARY

REVISIONS: 05/15/2002 by MAM

CALCULATED | CHECKED

HORIZONTAL SCALE IN FEET 0 20 40 80

SIGNING AND PAVEMENT MARKING PLAN
GOODKIRK ST. - STA. 241+00 TO STA. 246+52.68

SUM-8-0.63

770
1088

LEGEND

- EXISTING SIGN TO REMAIN
- EXISTING SIGN TO BE REMOVED
- NEW SIGN
- EXISTING SIGN - REMOVE AND REERECT (REMOVE & REERECT)

- (CH) CHANNELIZING LINE
- (CLS) CENTER LINE - DOUBLE SOLID
- (CW) CROSS WALK
- (ELW) EDGE LINE (WHITE)
- (ELY) EDGE LINE (YELLOW)
- (IM) ISLAND MARKING
- (LA) LANE ARROW
- (LL) LANE LINE
- (SL) STOP LINE
- (TLW) TRANSVERSE LINE (WHITE)
- (WP) WORD ON PAVEMENT

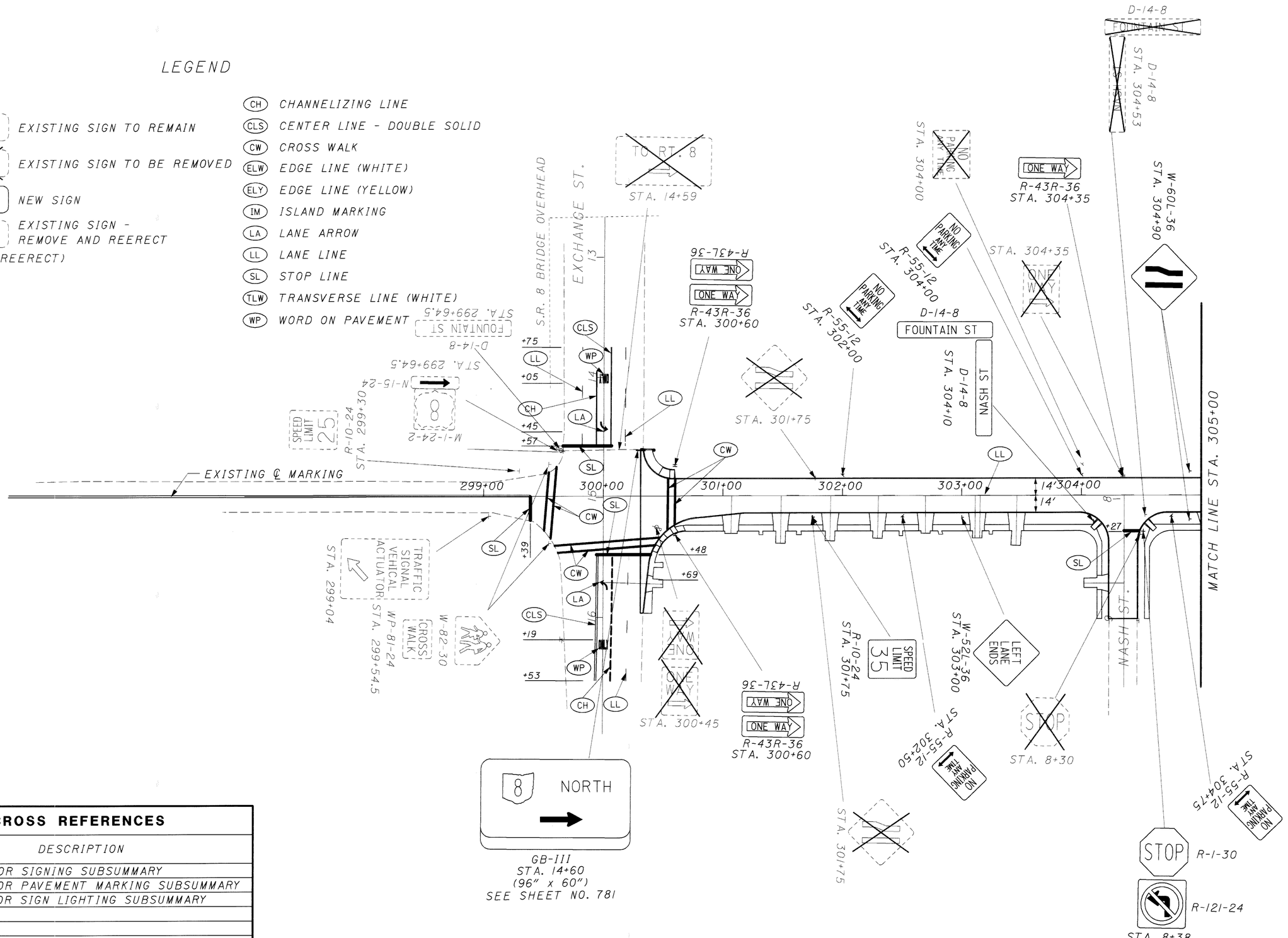

CROSS REFERENCES

SHEET NO.	DESCRIPTION
737-742	FOR SIGNING SUBSUMMARY
714	FOR PAVEMENT MARKING SUBSUMMARY
755-756	FOR SIGN LIGHTING SUBSUMMARY

REVISIONS: 05/15/2002 by MAM

HORIZONTAL SCALE IN FEET 0 20 40 80

CALCULATED | CHECKED

SIGNING AND PAVEMENT MARKING PLAN
FOUNTAIN ST. - STA. 295+00 TO STA. 305+00

SUM-8-0.63

771
1088

LEGEND

- EXISTING SIGN TO REMAIN
- EXISTING SIGN TO BE REMOVED
- NEW SIGN
- EXISTING SIGN - REMOVE AND REERECT (REMOVE & REERECT)

- (CH) CHANNELIZING LINE
- (CLS) CENTER LINE - DOUBLE SOLID
- (CW) CROSS WALK
- (ELW) EDGE LINE (WHITE)
- (ELY) EDGE LINE (YELLOW)
- (IM) ISLAND MARKING
- (LA) LANE ARROW
- (LL) LANE LINE
- (SL) STOP LINE
- (TLW) TRANSVERSE LINE (WHITE)
- (WP) WORD ON PAVEMENT

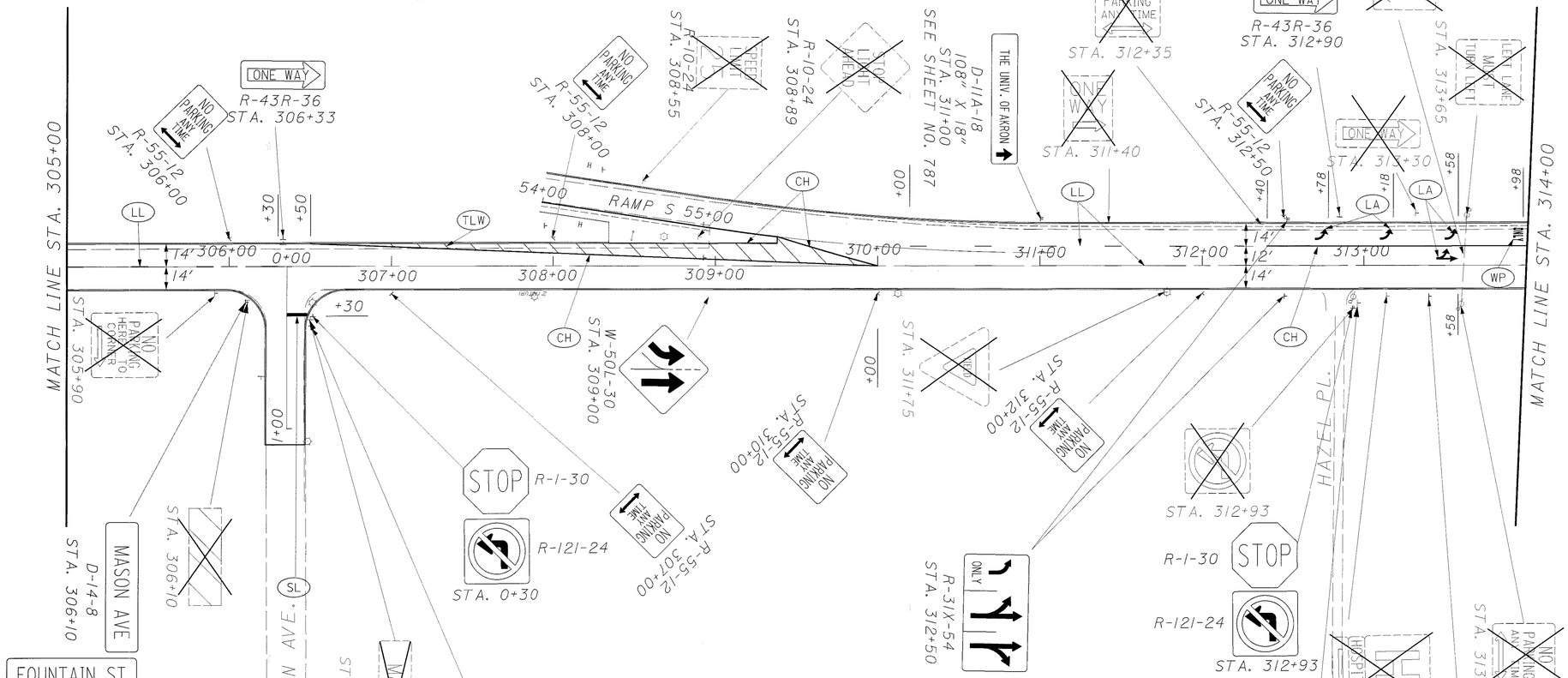

CROSS REFERENCES

SHEET NO.	DESCRIPTION
740-742	FOR SIGNING SUBSUMMARY
714	FOR PAVEMENT MARKING SUBSUMMARY

N

HORIZONTAL SCALE IN FEET
0 20 40 80

CALCULATED | CHECKED

SIGNING AND PAVEMENT MARKING PLAN
FOUNTAIN ST. STA. 305+00 TO STA. 314+00

SUM-8-0.63

772
1088

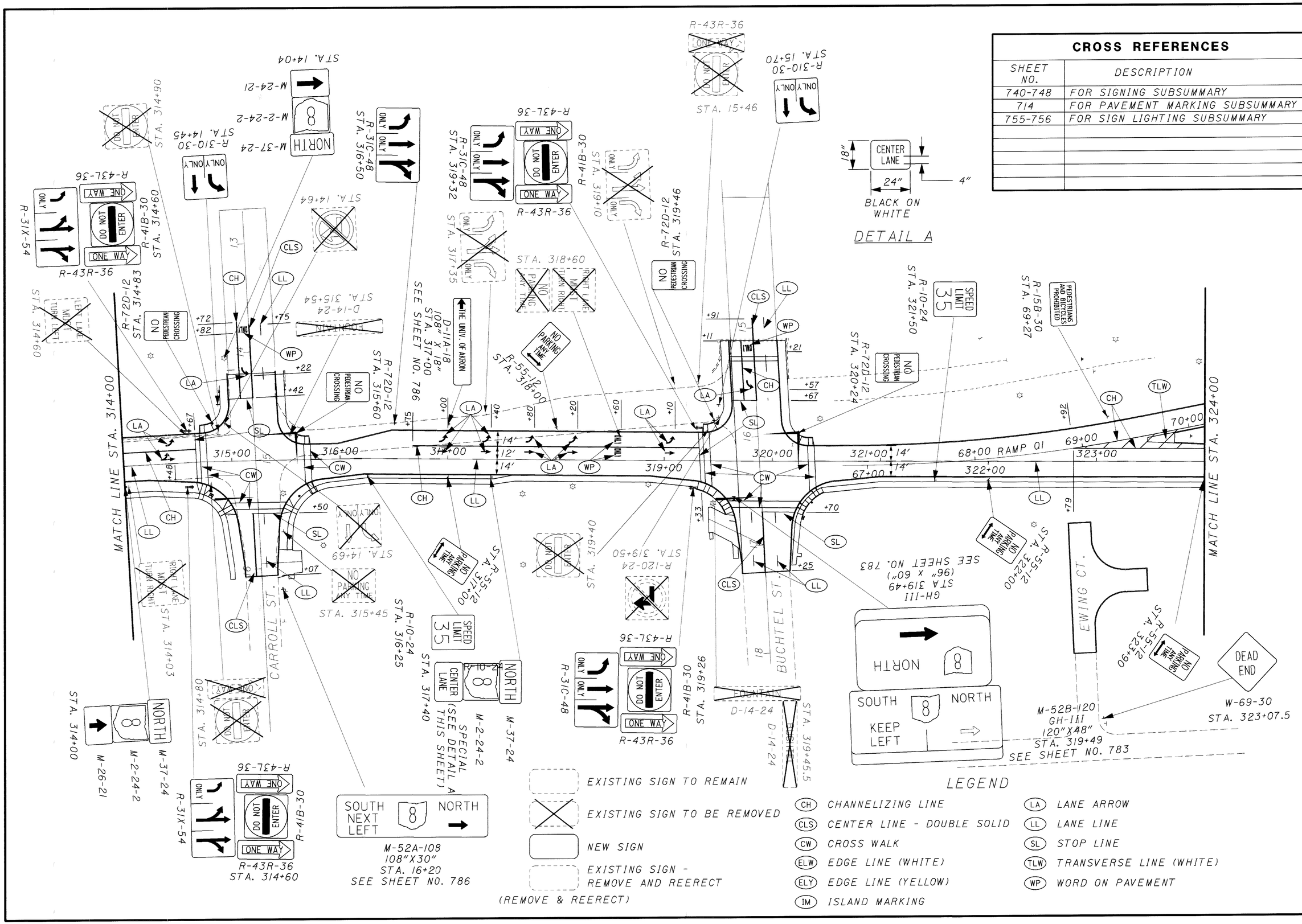

CROSS REFERENCES

SHEET NO.	DESCRIPTION
740-748	FOR SIGNING SUBSUMMARY
714	FOR PAVEMENT MARKING SUBSUMMARY
755-756	FOR SIGN LIGHTING SUBSUMMARY

HORIZONTAL SCALE IN FEET 0 20 40 80

CALCULATED

CHECKED

SIGNING AND PAVEMENT MARKING PLAN
FOUNTAIN ST. - STA. 314+00 TO STA. 324+00

REVISIONS: 05/15/2002 by MAM

SUM-8-0.63

773/1088

LEGEND

- EXISTING SIGN TO REMAIN
- EXISTING SIGN TO BE REMOVED
- NEW SIGN
- EXISTING SIGN - REMOVE AND REERECT (REMOVE & REERECT)

- (CH) CHANNELIZING LINE
- (CLS) CENTER LINE - DOUBLE SOLID
- (CLB) CENTER LINE - SOLID & BROKEN
- (CW) CROSS WALK
- (ELW) EDGE LINE (WHITE)
- (ELY) EDGE LINE (YELLOW)
- (IM) ISLAND MARKING
- (LA) LANE ARROW
- (LL) LANE LINE
- (SL) STOP LINE
- (TLW) TRANSVERSE LINE (WHITE)
- (TLY) TRANSVERSE LINE (YELLOW)
- (WP) WORD ON PAVEMENT

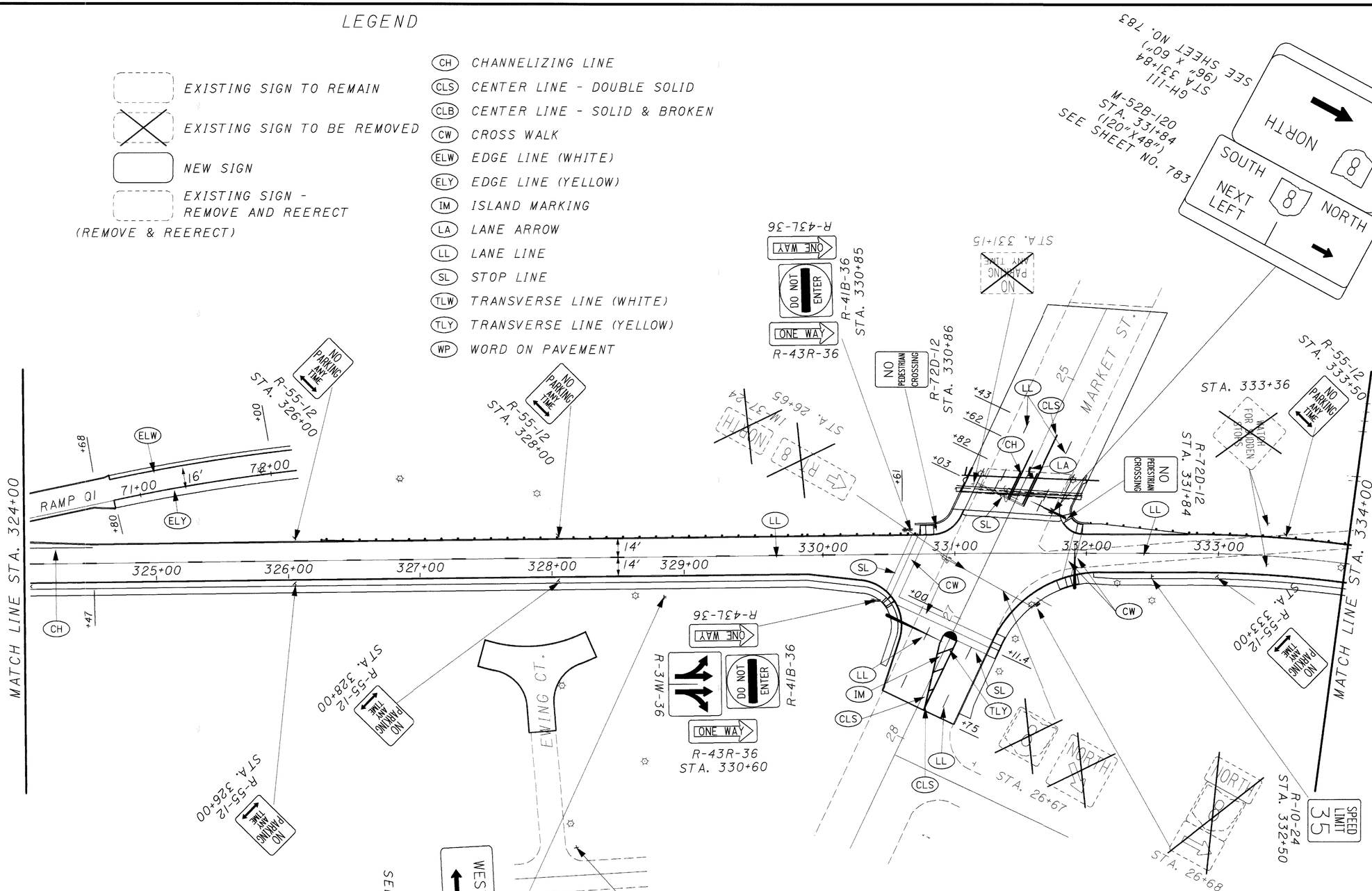

CROSS REFERENCES

SHEET NO.	DESCRIPTION
746-751	FOR SIGNING SUBSUMMARY
715	FOR PAVEMENT MARKING SUBSUMMARY
755-756	FOR SIGN LIGHTING SUBSUMMARY

REVISIONS: 05/15/2002 by MAM

HORIZONTAL SCALE IN FEET
0 20 40 80

CALCULATED
CHECKED

SIGNING AND PAVEMENT MARKING PLAN
FOUNTAIN ST. - STA. 324+00 TO STA. 334+00

SUM-8-0.63

774
1088

LEGEND

- EXISTING SIGN TO REMAIN
- EXISTING SIGN TO BE REMOVED
- NEW SIGN
- EXISTING SIGN - REMOVE AND REERECT (REMOVE & REERECT)

- (CH) CHANNELIZING LINE
- (CLS) CENTER LINE - DOUBLE SOLID
- (CW) CROSS WALK
- (ELW) EDGE LINE (WHITE)
- (ELY) EDGE LINE (YELLOW)
- (IM) ISLAND MARKING
- (LA) LANE ARROW
- (LL) LANE LINE
- (SL) STOP LINE
- (TLW) TRANSVERSE LINE (WHITE)
- (WP) WORD ON PAVEMENT

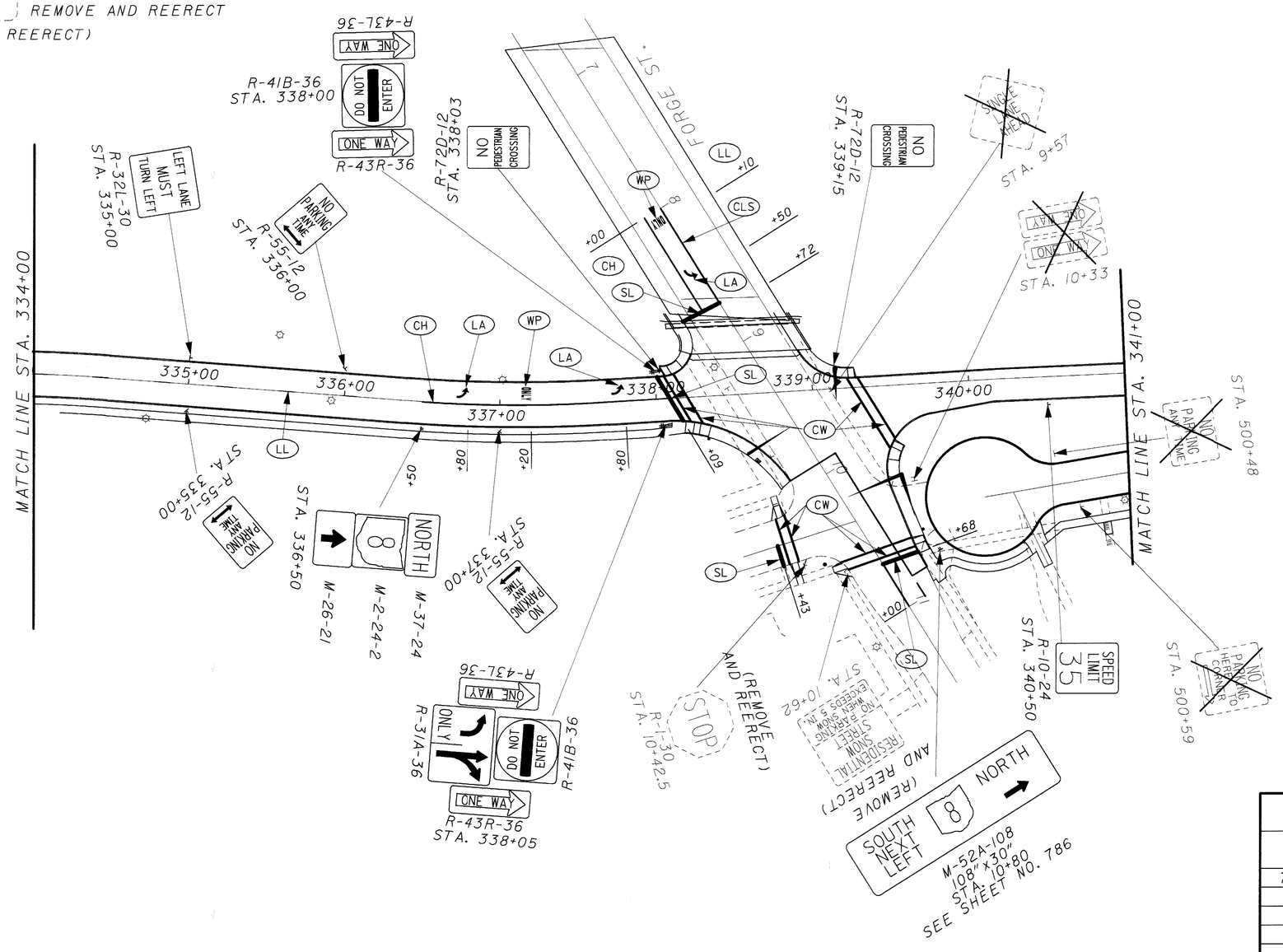

CROSS REFERENCES

SHEET NO.	DESCRIPTION
749-751	FOR SIGNING SUBSUMMARY
715	FOR PAVEMENT MARKING SUBSUMMARY

REVISIONS: 05/15/2002 by MAM

HORIZONTAL SCALE IN FEET
0 20 40 80

CALCULATED | CHECKED

SIGNING AND PAVEMENT MARKING PLAN
FOUNTAIN ST. - STA. 334+00 TO STA. 341+00

SUM-8-0.63

775
1088

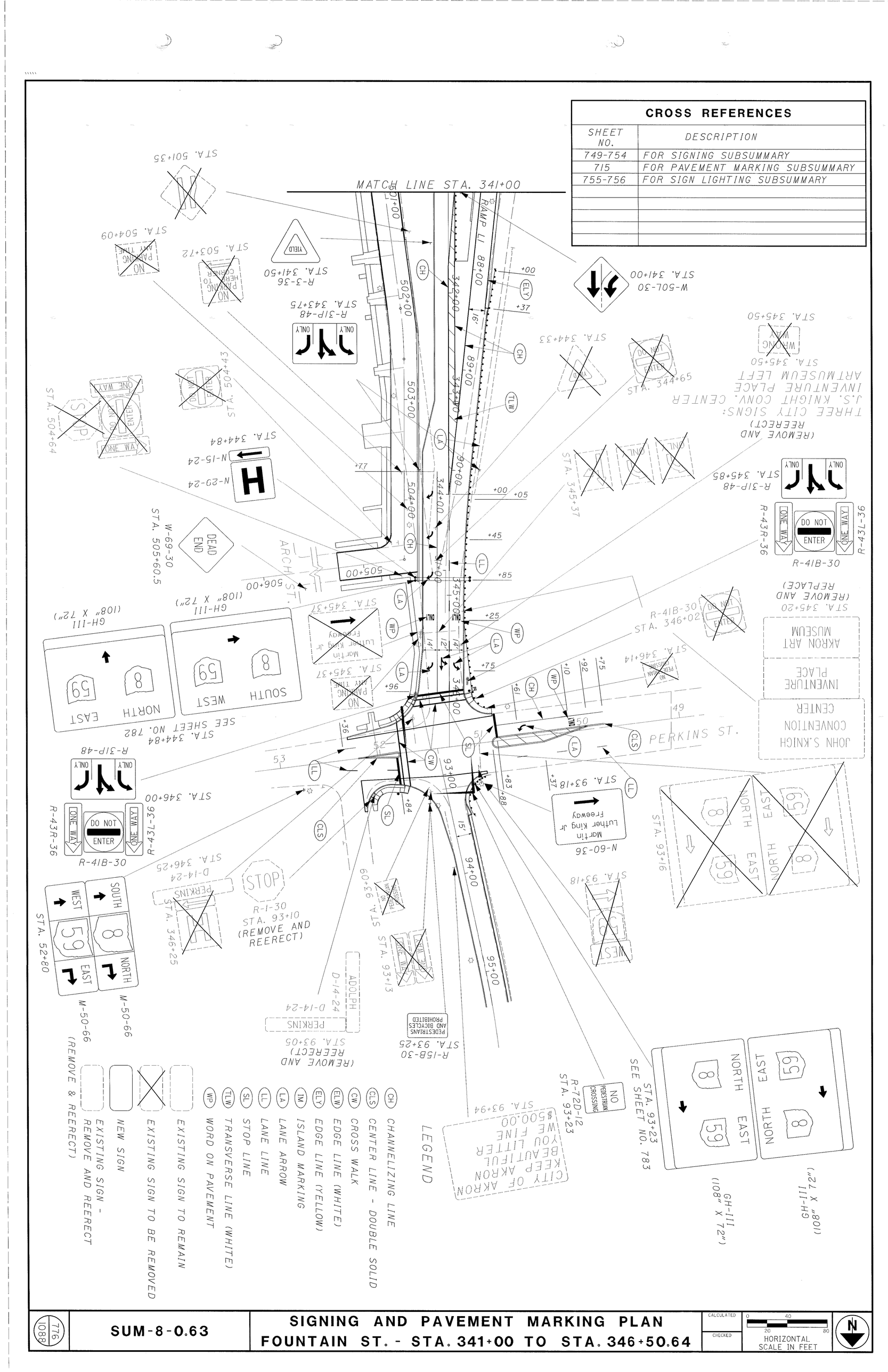
CROSS REFERENCES
SHEET NO.
DESCRIPTION
749-754
FOR SIGNING SUBSUMMARY
715
FOR PAVEMENT MARKING SUBSUMMARY
755-756
FOR SIGN LIGHTING SUBSUMMARY
MATCH LINE STA. 341+00
RAMP LL
PERKINS ST.
ARCH ST.
JOHN S. KNIGH CONVENTION CENTER
INVENTURE PLACE
AKRON ART MUSEUM
THREE CITY SIGNS: J.S. KNIGHT CONV. CENTER INVENTURE PLACE ART MUSEUM LEFT
(REMOVE AND REERECT)
SEE STA. 93+23 SHEET NO. 783
SEE SHEET NO. 782
CITY OF AKRON KEEP AKRON BEAUTIFUL YOU LITTER WE FINE $500.00
LEGEND
CHANNELIZING LINE
CENTER LINE - DOUBLE SOLID
CROSS WALK
EDGE LINE (WHITE)
EDGE LINE (YELLOW)
ISLAND MARKING
LANE ARROW
LANE LINE
STOP LINE
TRANSVERSE LINE (WHITE)
WORD ON PAVEMENT
EXISTING SIGN TO REMAIN
EXISTING SIGN TO BE REMOVED
NEW SIGN
EXISTING SIGN - REMOVE AND REERECT
(REMOVE & REERECT)
776
1088
SUM-8-0.63
SIGNING AND PAVEMENT MARKING PLAN
FOUNTAIN ST. - STA. 341+00 TO STA. 346+50.64
CALCULATED
CHECKED
0 40
20 80
HORIZONTAL SCALE IN FEET
N

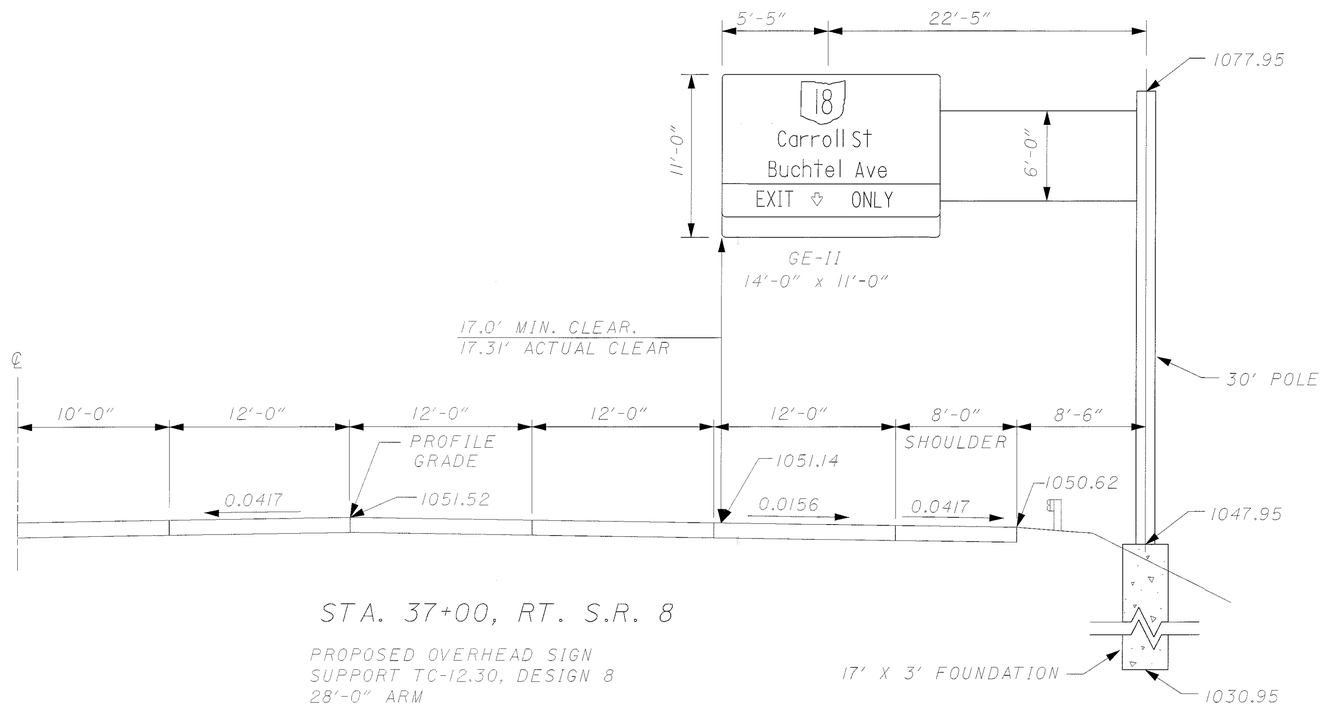

CALCULATED RGS
CHECKED KME

OVERHEAD SIGN DETAILS

SUM-8-0.63

777
1088

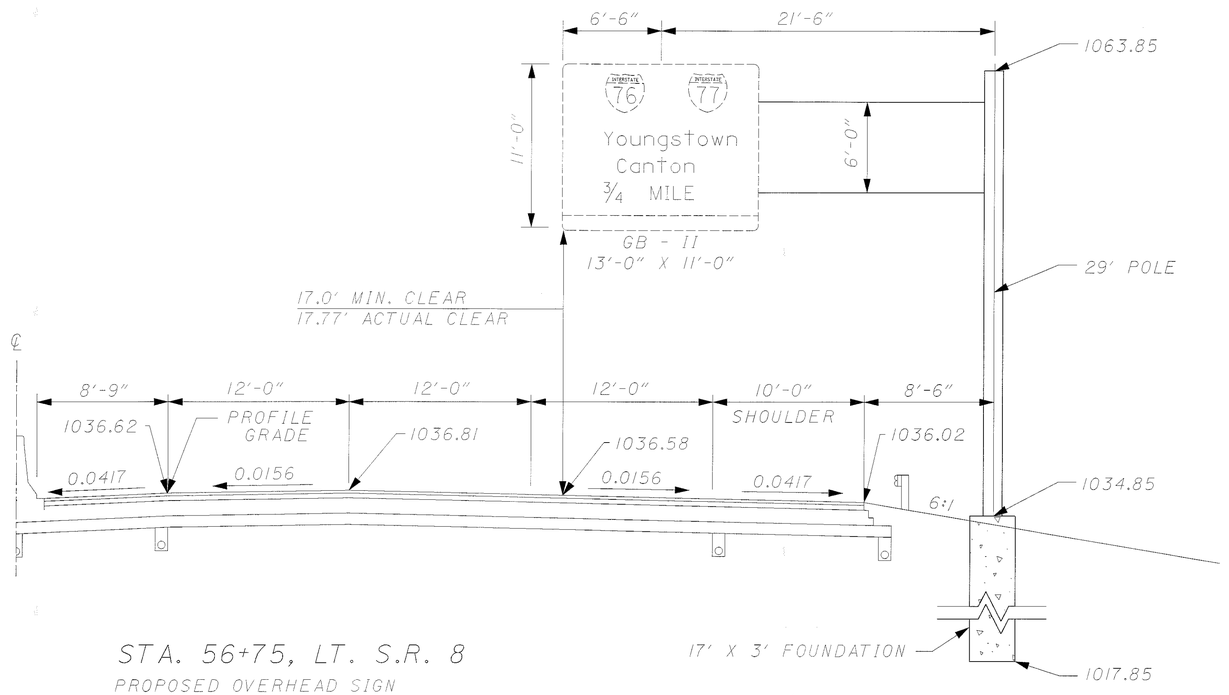

STA. 56+75, LT. S.R. 8

PROPOSED OVERHEAD SIGN
SUPPORT TC-12.30, DESIGN 8
28'-0" ARM

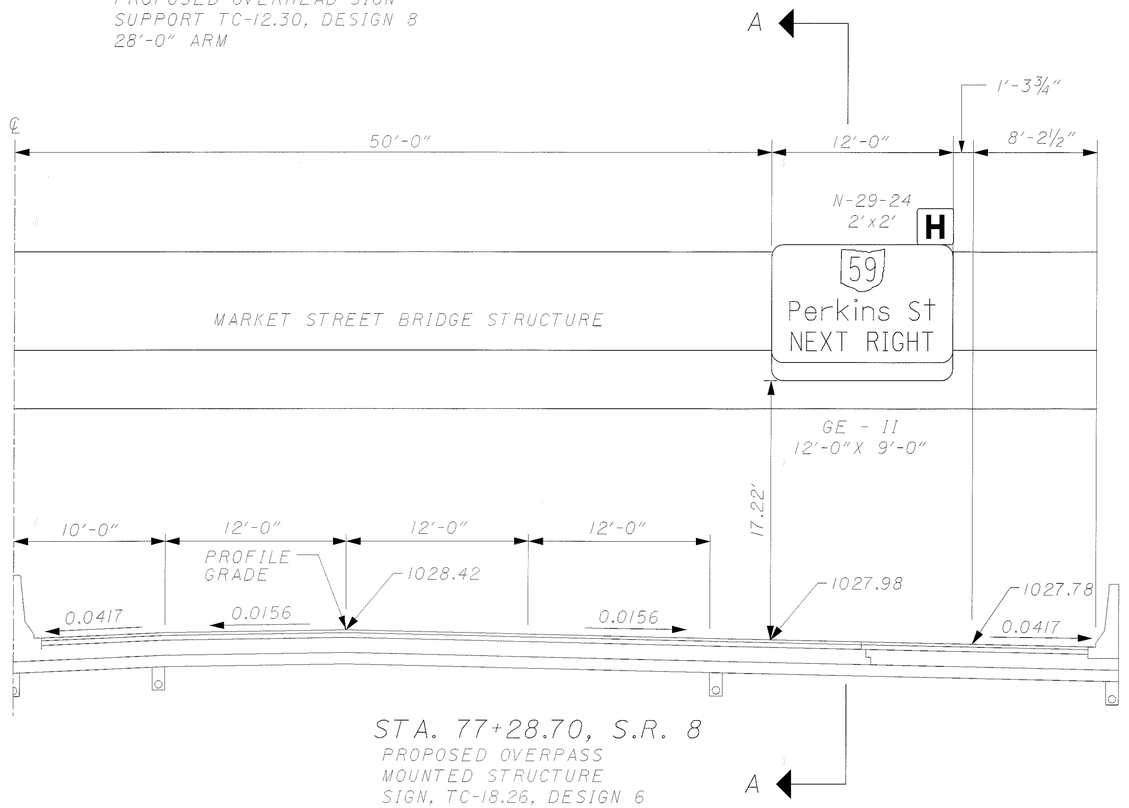

STA. 77+28.70, S.R. 8

PROPOSED OVERPASS
MOUNTED STRUCTURE
SIGN, TC-18.26, DESIGN 6

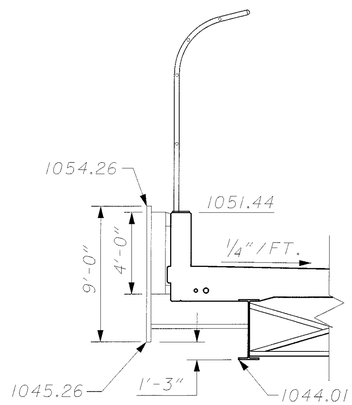

SECTION A-A

CALCULATED RGS
CHECKED KME

OVERHEAD SIGN DETAILS

SUM-8-0.63

778
1088

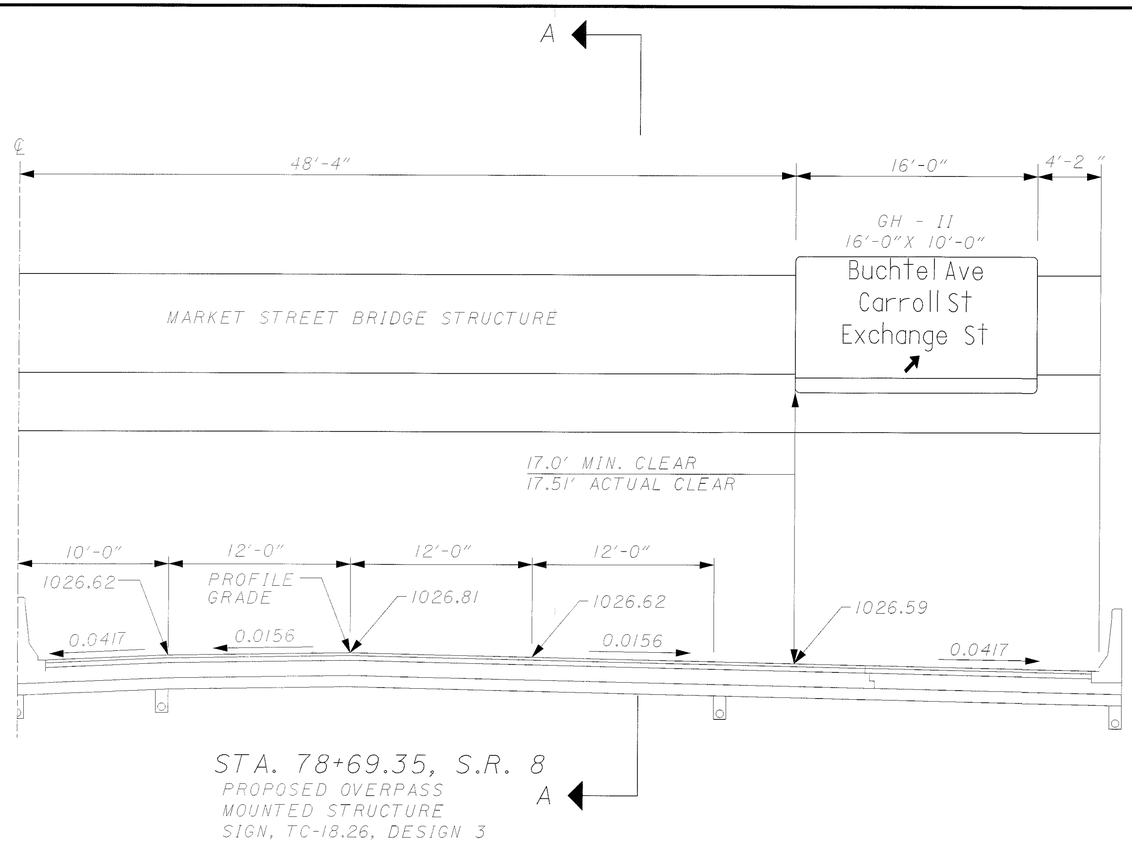

STA. 78+69.35, S.R. 8
PROPOSED OVERPASS MOUNTED STRUCTURE SIGN, TC-18.26, DESIGN 3

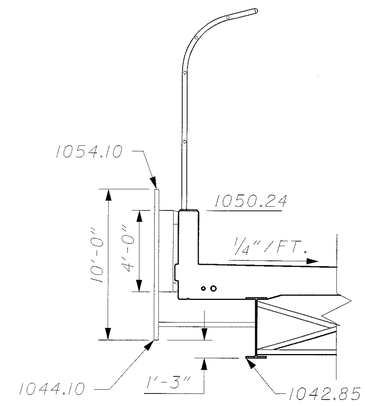

SECTION A-A

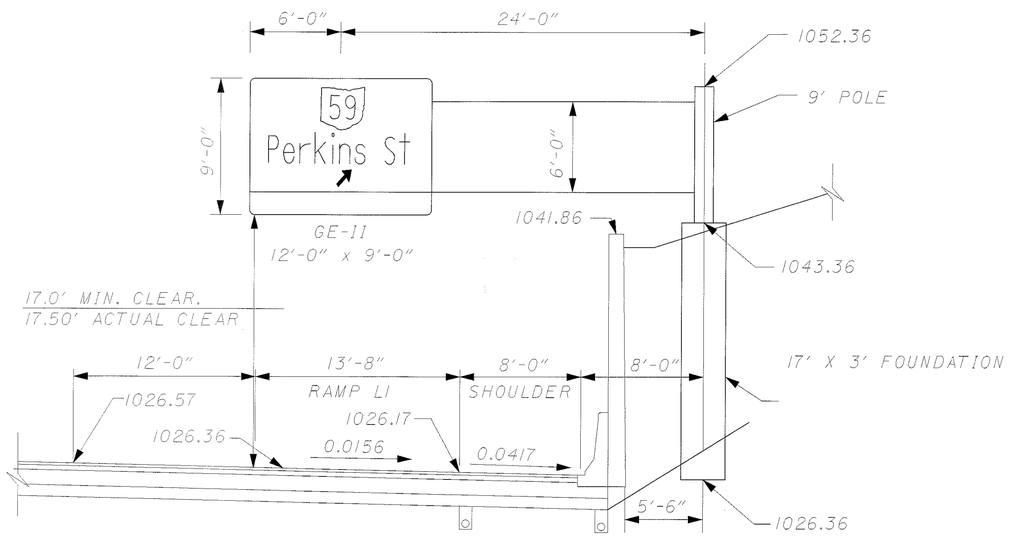

STA. 80+10, RT. S.R. 8
PROPOSED OVERHEAD SIGN SUPPORT TC-12.30, DESIGN 10
30'-0" ARM

CALCULATED
CHECKED

OVERHEAD SIGN DETAILS

SUM-8-0.63

779
1088

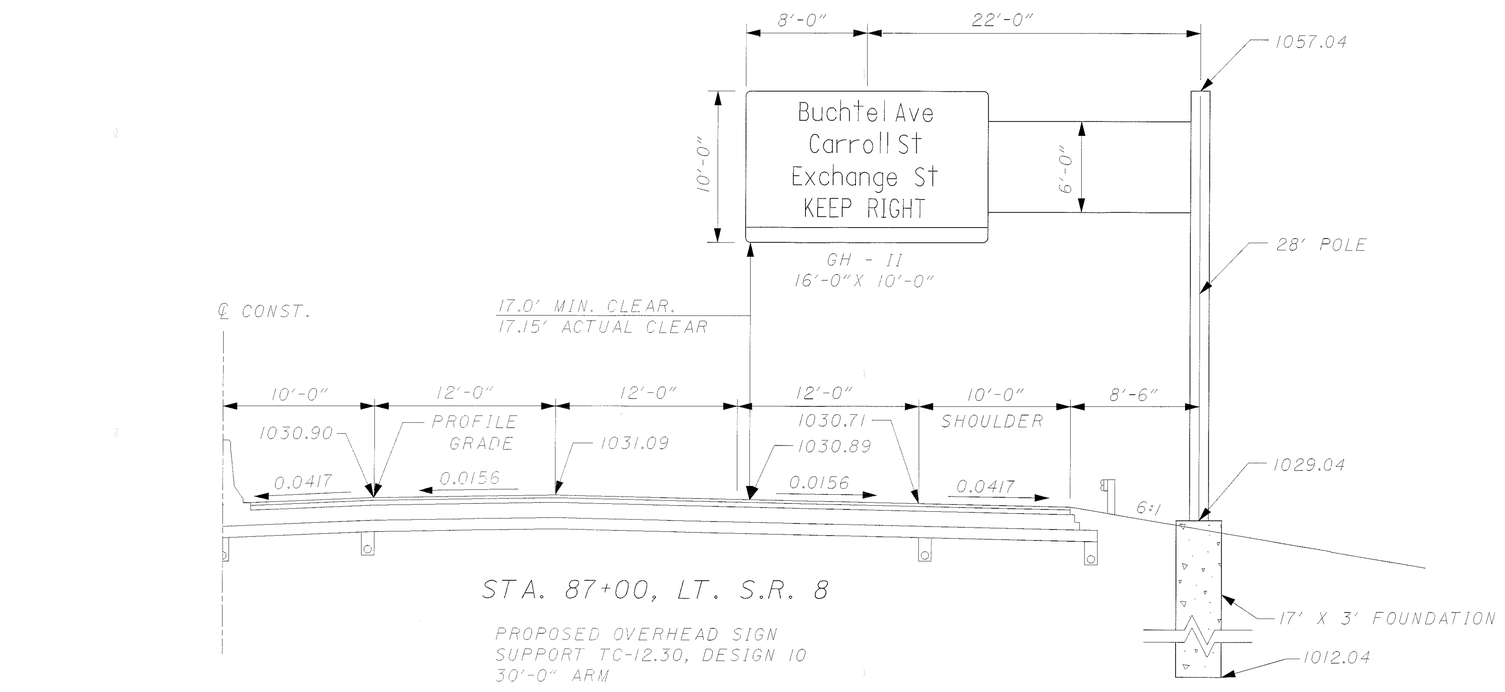

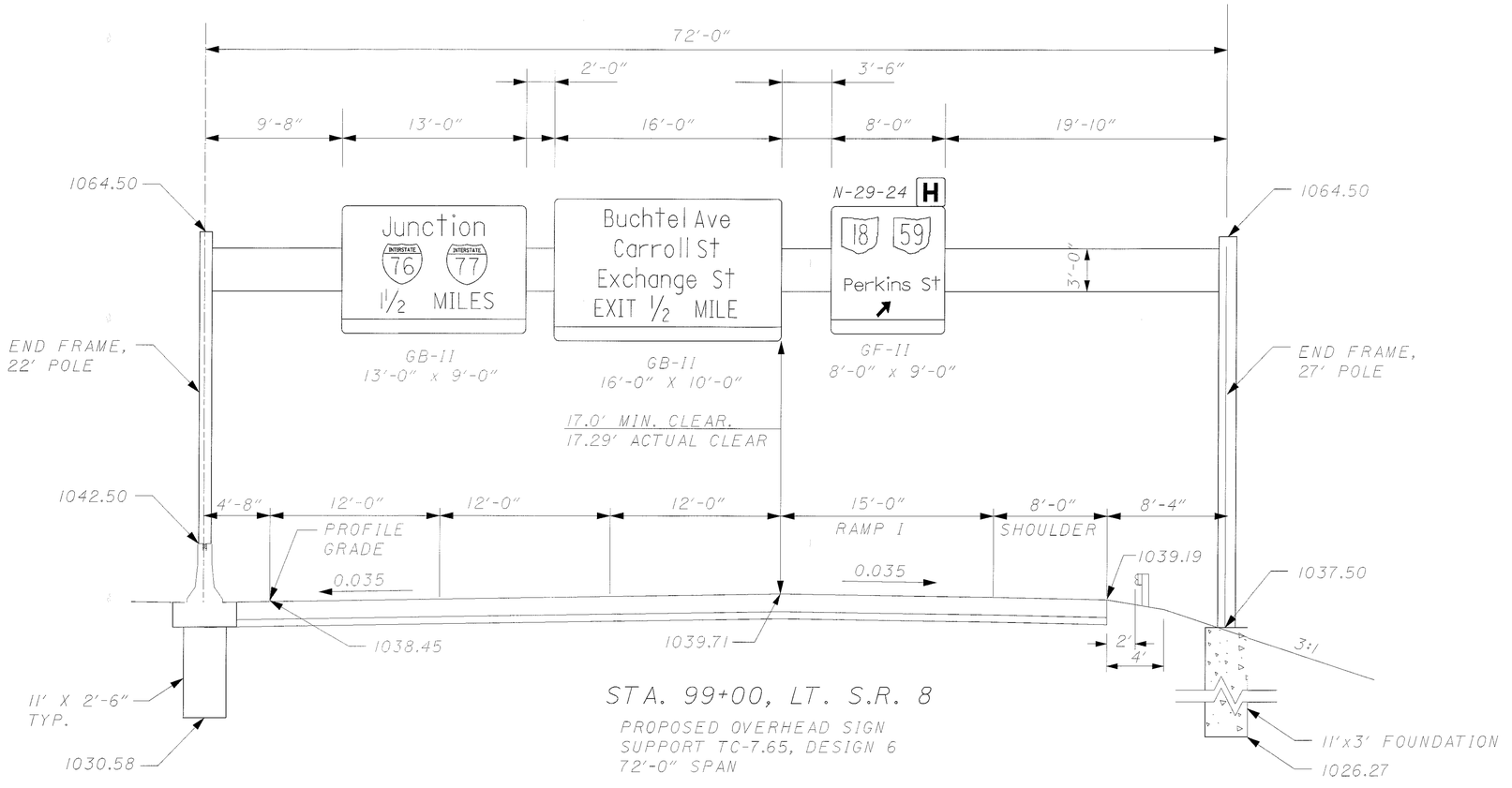

CALCULATED

CHECKED

OVERHEAD SIGN DETAILS

SUM-8-0.63

780
1088

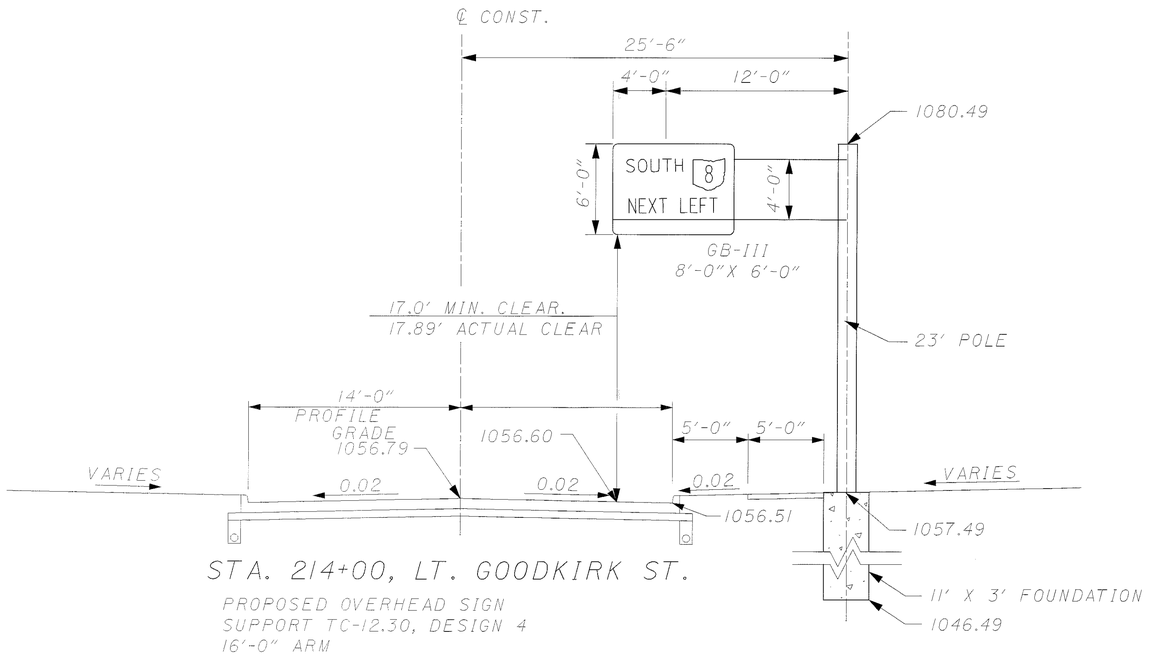

STA. 214+00, LT. GOODKIRK ST.

PROPOSED OVERHEAD SIGN
SUPPORT TC-12.30, DESIGN 4
16'-0" ARM

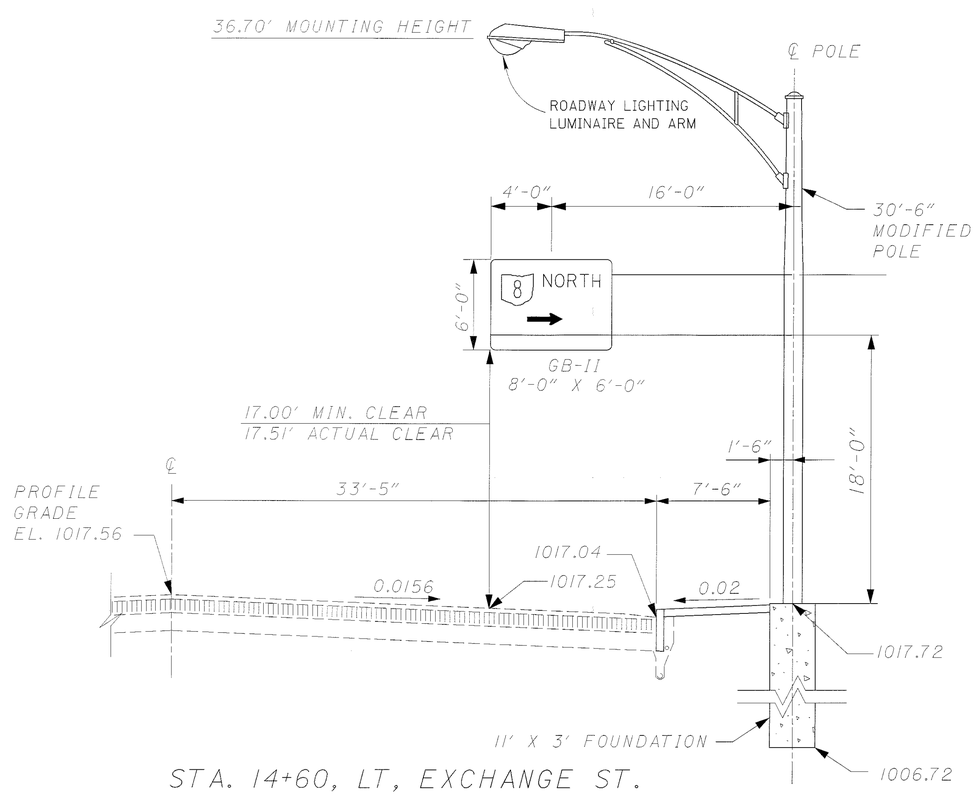

STA. 14+60, LT, EXCHANGE ST.

PROPOSED OVERHEAD SIGN SUPPORT
TC-12.30, DESIGN 2, (WITH LIGHT POLE EXTENSION)
20'-0" ARM

CALCULATED | CHECKED

OVERHEAD SIGN DETAILS

SUM-8-0.63

781
1088

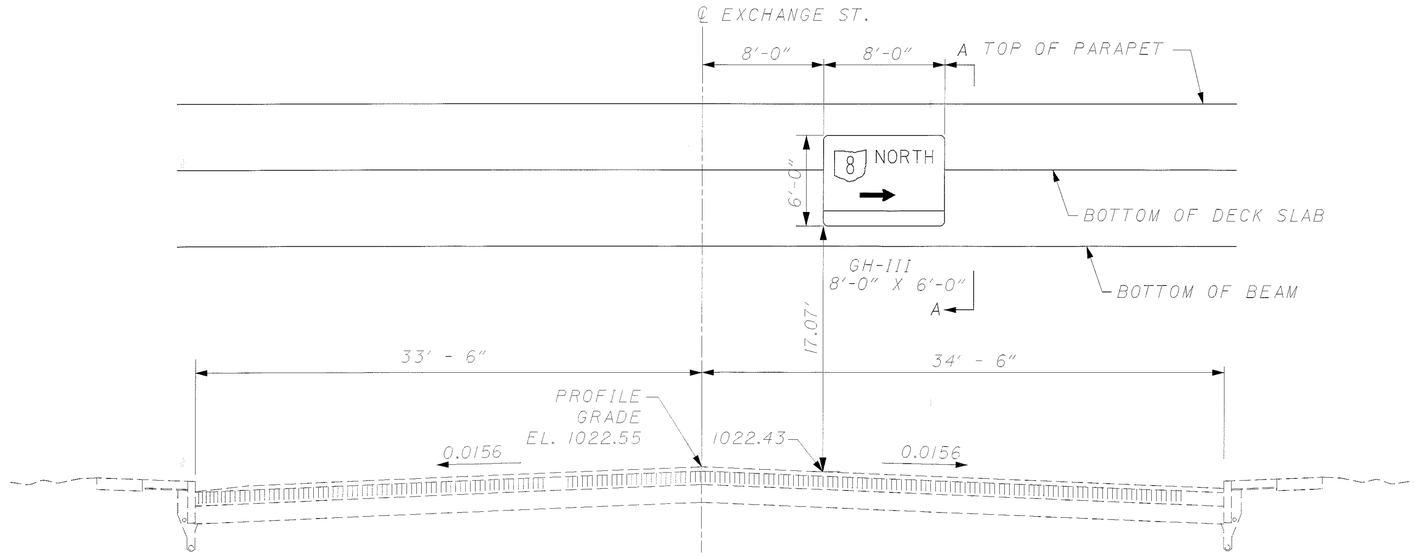

STA. 12+70 RT., EXCHANGE ST.

PROPOSED OVERPASS MOUNTED
STRUCTURE SIGN, TC-18.24

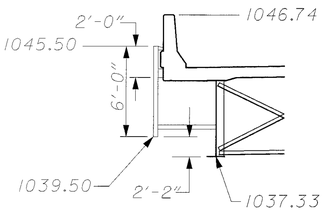

SECTION A-A

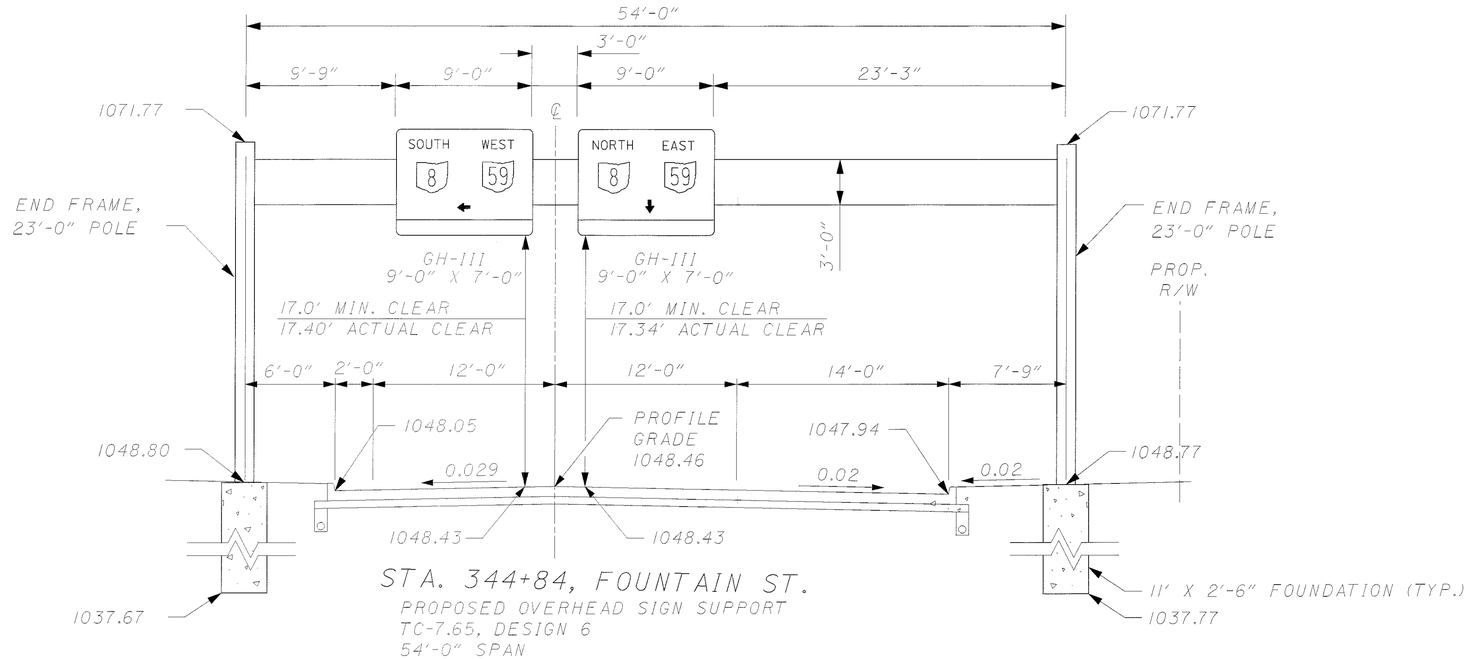

STA. 344+84, FOUNTAIN ST.

PROPOSED OVERHEAD SIGN SUPPORT
TC-7.65, DESIGN 6
54'-0" SPAN

CALCULATED

CHECKED

OVERHEAD SIGN DETAILS

SUM-8-0.63

782
1088

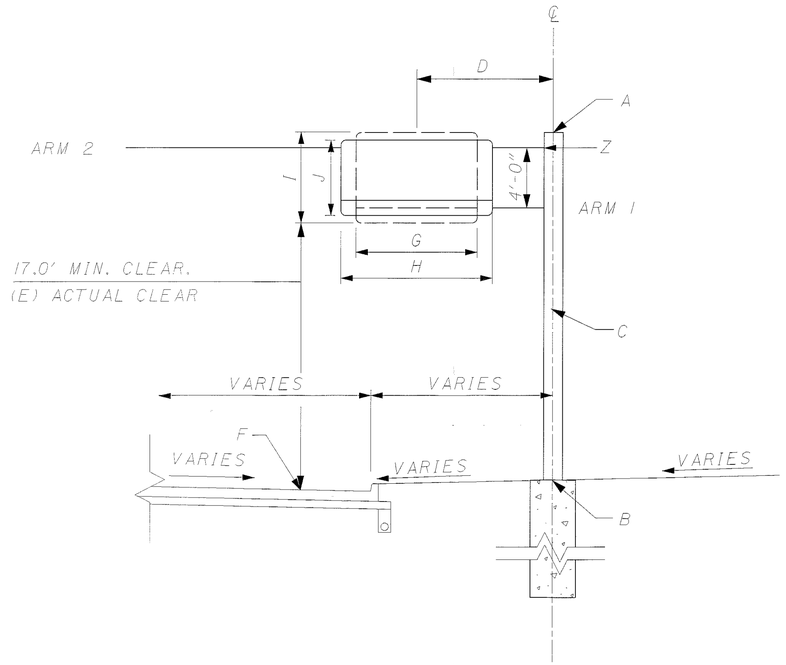

PROPOSED OVERHEAD SIGN

SUPPORT TC-12.30

LOCATION	STATION	SIDE	CODE	DESIGN	ARM 1 (FEET)	ARM 2 (FEET)	A	B	C (FT.)	D (FT.)	E (FT.)	F (FT.)	G (FT.)	H (FT.)	I (FT.)	J (FT.)	Z
GOODKIRK	219+52	RT	GH-III M-52B-120	6	14.00	32.00	1087.50	1064.50	23.00	9.00	17.29	1064.19	8'-0"	10'-0"	6'-0"	5'-0"	1086.48
GOODKIRK	232+08	RT	GH-III M-52B-120	1	14.00	30.00	1074.23	1047.23	23.00	9.00	17.38	1046.84	8'-0"	10'-0"	6'-0"	5'-0"	1069.22
GOODKIRK	246+13	RT	GH-III M-52B-120	6	19.00	40.00	1074.30	1051.30	23.00	14.00	17.00	1051.88	8'-0"	10'-0"	6'-0"	5'-0"	1073.88
FOUNTAIN	319+49	RT	GH-III M-52B-120	2	19.00	36.00	1080.80	1057.80	23.00	14.00	17.78	1057.15	8'-0"	10'-0"	6'-0"	5'-0"	1079.93
FOUNTAIN	331+84	RT	GH-III M-52B-120	1	13.00	28.00	1070.52	1048.52	23.00	8.00	17.37	1048.08	8'-0"	10'-0"	6'-0"	5'-0"	1070.45
RAMP J	93+23	LT	GH-III GH-III	2	19.00	39.00	1076.60	1052.60	24.00	14.00	17.14	1052.96	9'-0"	9'-0"	7'-0"	7'-0"	1075.60

CALCULATED

CHECKED

OVERHEAD SIGN DETAILS

SUM-8-0.63

783
1088

CALCULATED KAG
CHECKED LJ

SIGN PLACEMENT

THE EXACT LOCATION OF SIGNS ARE TO BE STAKED. THE LOCATIONS SHALL BE CHECKED BY THE ENGINEER PRIOR TO PLACEMENT TO INSURE CLEARANCE OF DRIVES, ROADWAYS AND OTHER OBSTACLES. IF THERE ARE ANY CONFLICTS, THEY ARE TO BE ADJUSTED BY THE ENGINEER. PAYMENT IS INCIDENTAL TO ALL 630 ITEMS.

LANE CLOSURES

LENGTH AND DURATION OF LANE CLOSURES AND RESTRICTIONS SHALL BE AT THE APPROVAL OF THE ENGINEER. IT IS THE INTENT TO MINIMIZE THE IMPACT TO THE TRAVELING PUBLIC. LANE CLOSURES OR RESTRICTIONS OVER SEGMENTS OF THE PROJECT IN WHICH NO WORK IS ANTICIPATED WITHIN A REASONABLE TIME FRAME, AS DETERMINED BY THE ENGINEER, SHALL NOT BE PERMITTED. THE LEVEL OF UTILIZATION OF MAINTENANCE OF TRAFFIC DEVICES SHALL BE COMMENSURATE WITH THE WORK IN PROGRESS.

ITEM 630 OVERHEAD SIGN SUPPORT, TYPE TC-7.65, DESIGN 6, AS PER PLAN

IN ADDITION TO THE REQUIREMENTS OF ITEM 630.06, THE END FRAME HEIGHTS SHALL BE AS SHOWN IN THE CROSS SECTION.

NOTE:
LIGHTING SHALL BE MOUNTED ON TOP OF SIGNS.

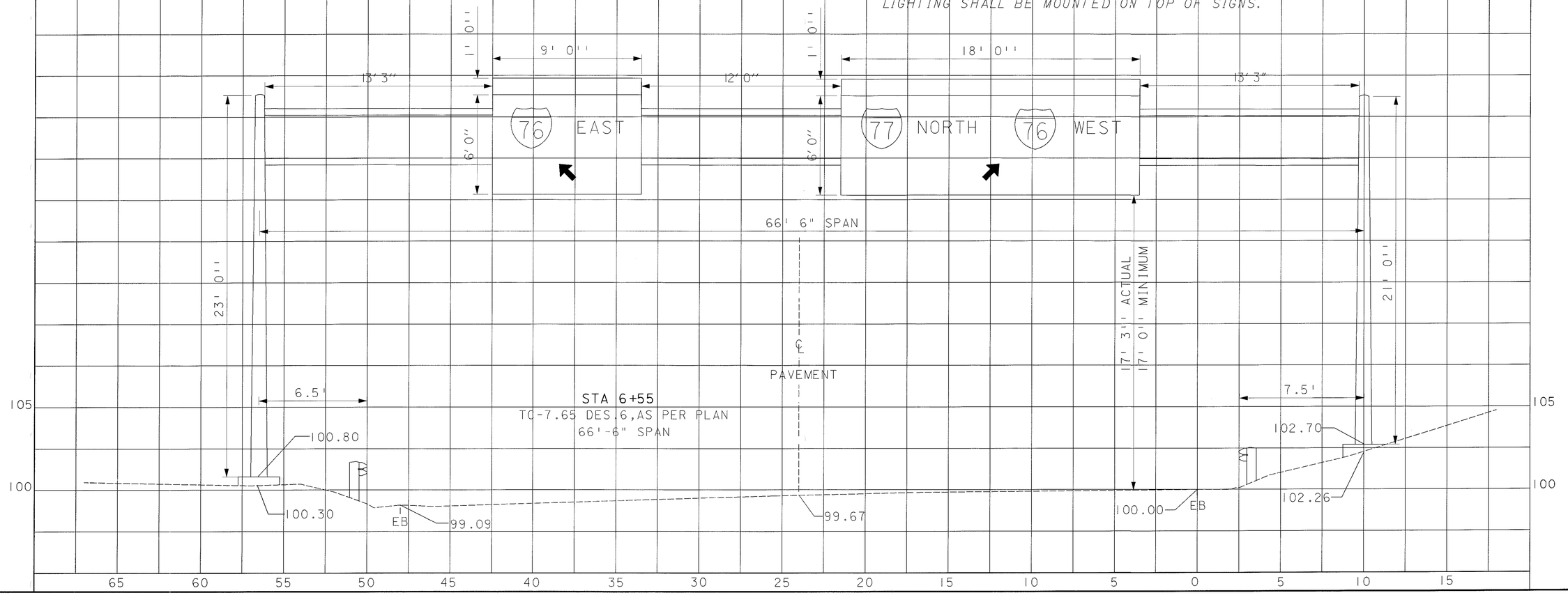

CROSS SECTIONS

SUM-8-0.96

783A
1088

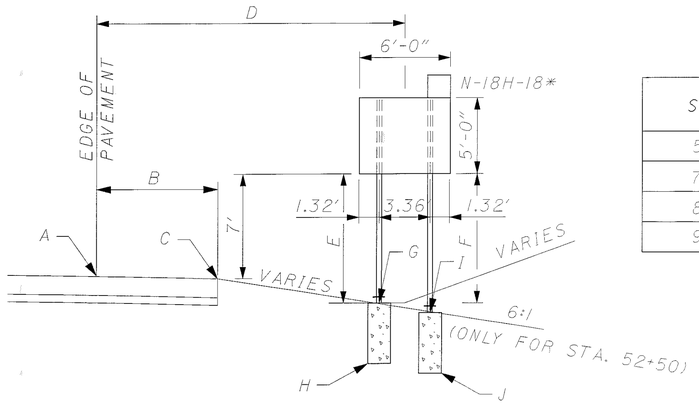

S.R. 8
GF-II
S4x7.7 BEAMS

STATION	SIDE	A	B	C	D	E	F	G	H	I	J
52+50	RT	1039.24	10.00'	1038.82	19.00'	8.22'	8.78'	1037.60	1033.60	1037.60	1033.60
72+90	LT	1039.00	10.00'	1038.58	17.91'	7.82'	7.82'	1037.76	1033.76	1037.76	1033.76
85+85	RT	1029.99	10.00'	1029.57	18.32'	7.89'	7.89'	1028.71	1024.71	1028.71	1024.71
97+00	LT	1038.46	10.00'	1038.11	15.70'	7.45'	7.45'	1037.69	1033.69	1037.69	1033.69

*N-18H-18 MOUNTED ONLY ON SIGNS AT STA. 85+85 AND STA. 97+00

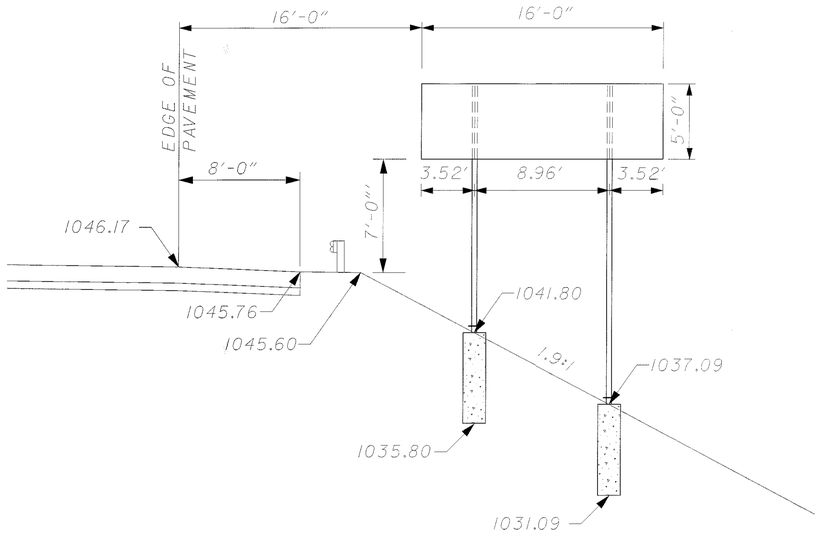

STA. 42+00, RT S.R. 8
GC-II
W8x18

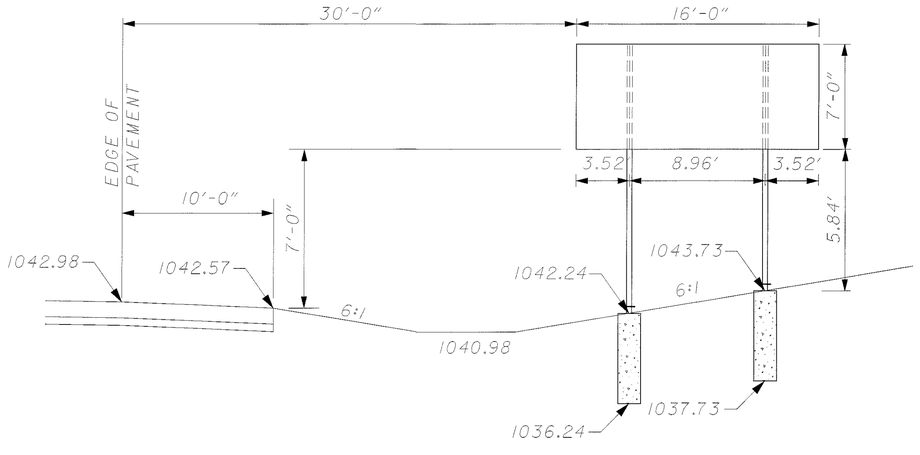

STA. 69+00, RT S.R. 8
GC-II
W10x12

CALCULATED | CHECKED

GROUND MOUNTED SIGN DETAILS

SUM-8-0.63

784
1088

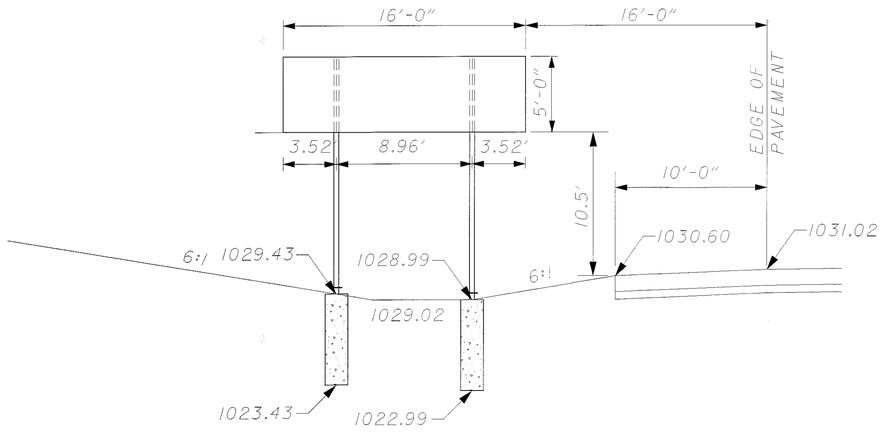

STA. 87+50, LT S.R. 8

GC-II
W10x12

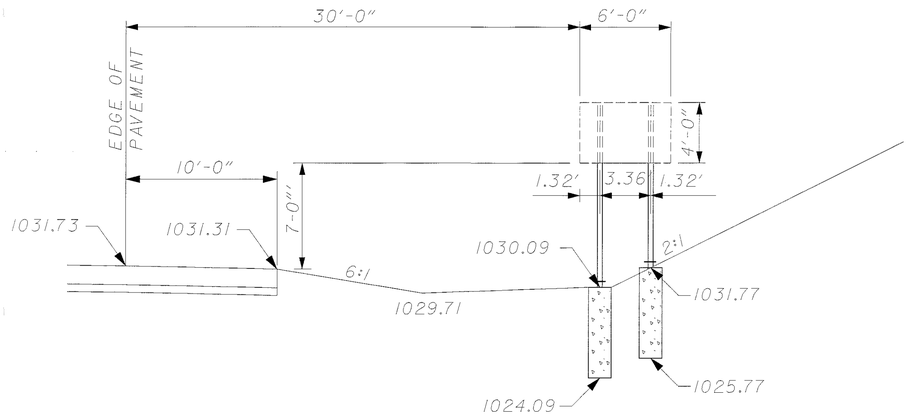

STA. 88+60.00 RT. S.R. 8

S4x7.7

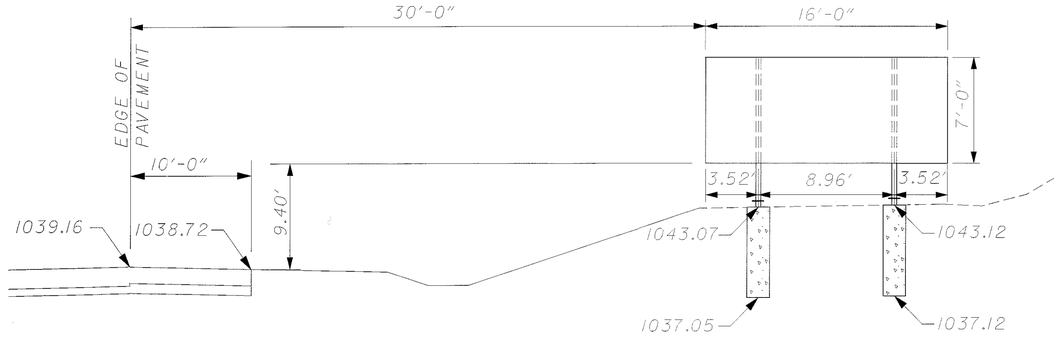

STA. 100+50, LT S.R. 8

GC-II
W10x12

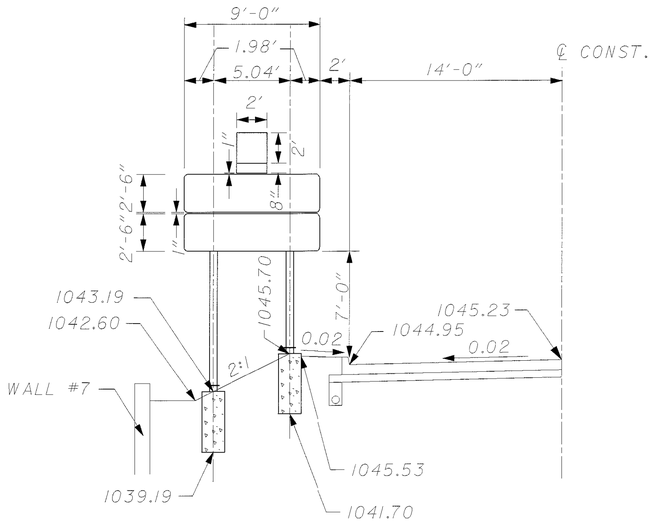

STA. 234+00 RT. GOODKIRK ST.

M-52A-108 & M-52A-108
W10x12

CALCULATED | CHECKED

GROUND MOUNTED SIGN DETAILS

SUM-8-0.63

785
1088

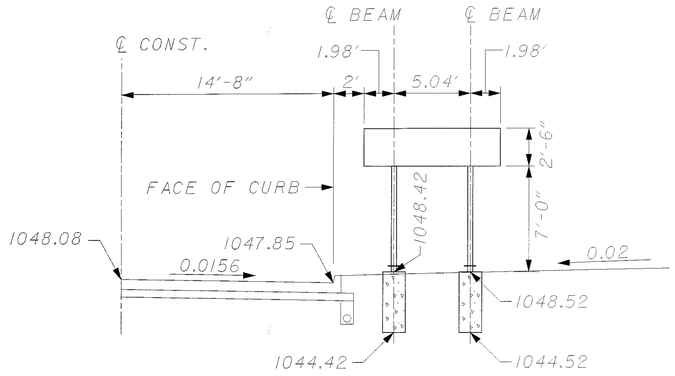

STA. 16+20 LT. CARROLL ST.

M-52A-108
S4x7.7

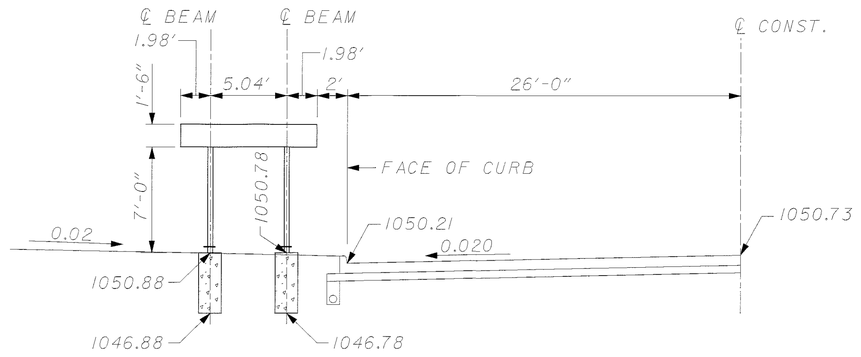

STA. 317+00 LT. FOUNTAIN ST.

D-11A-18
S4x7.7

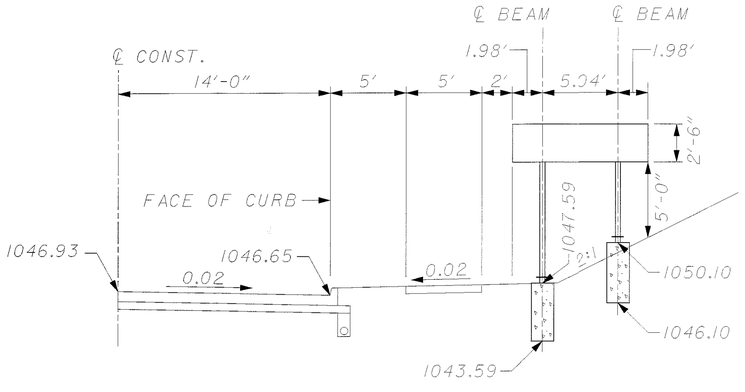

STA. 328+80 RT. FOUNTAIN ST.

M-52A-108
S4x7.7

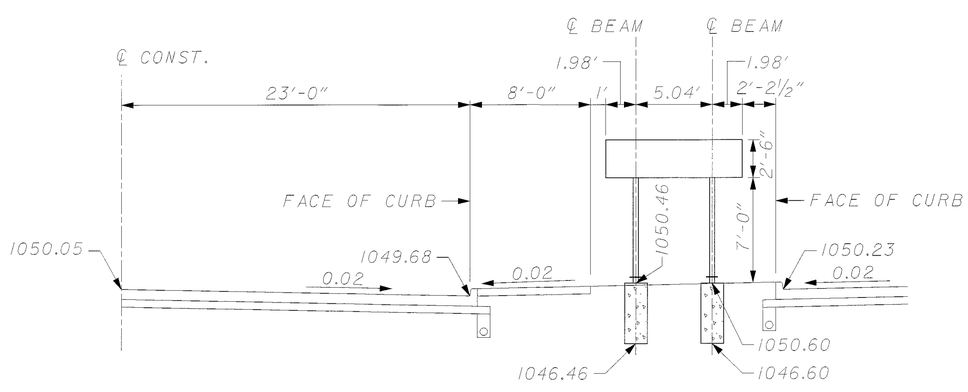

STA. 10+80 LT. FORGE ST.

M-52A-108
S4x7.7

CALCULATED | CHECKED

GROUND MOUNTED SIGN DETAILS

SUM-8-0.63

786
1088

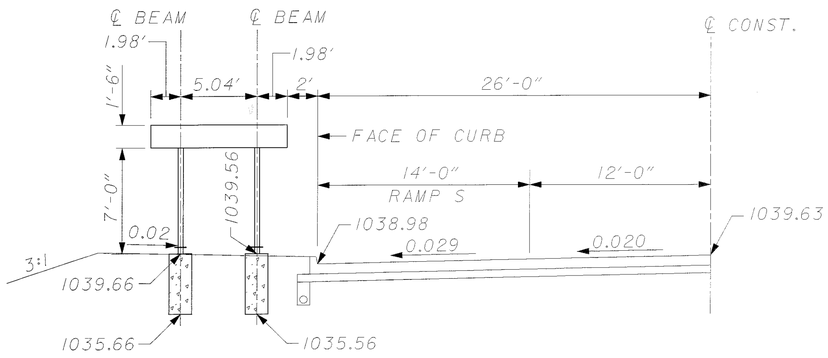

STA. 311+00 LT. FOUNTAIN ST.

D-11A-18
S4x7.7

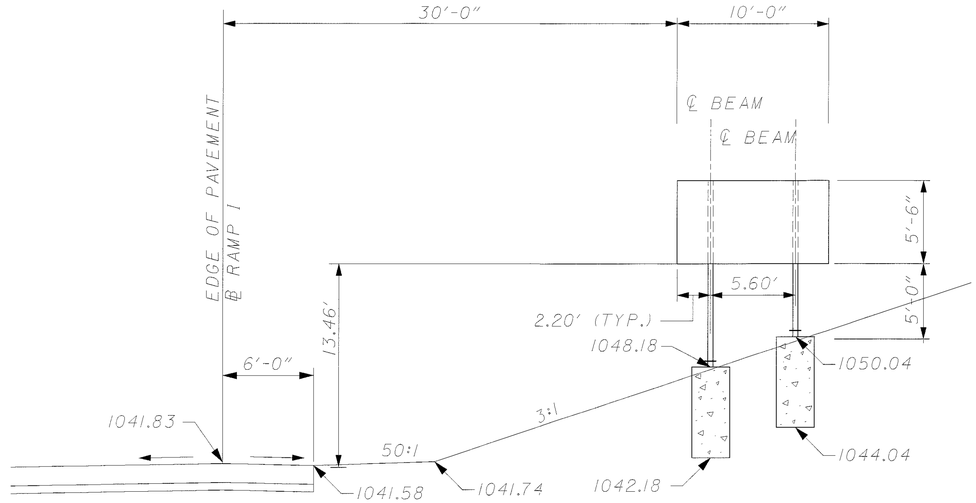

STA. 95+00 LT. RAMP I

GE-IV
W10x12

CALCULATED | CHECKED

GROUND MOUNTED SIGN DETAILS

SUM-8-0.63

787
1088

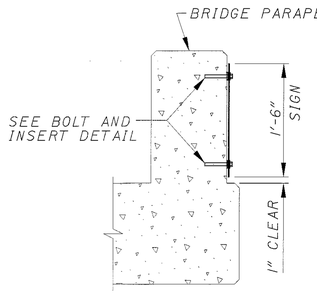

SECTION A-A

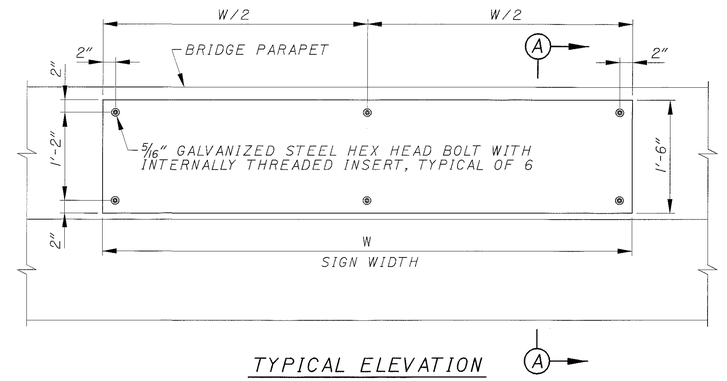

TYPICAL ELEVATION

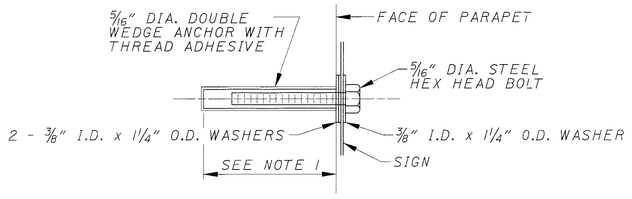

SIGN FASTENER DETAIL

NOTES

1. DRILL ANCHOR INTO EXISTING CONCRETE AS RECOMMENDED BY THE FASTENER MANUFACTURER. ANCHORS SHALL BE APPROVED BY THE ENGINEER.
2. TO ENSURE PROPER ALIGNMENT OF SIGN FASTENERS, A JIG OR TEMPLATE SHALL BE USED TO LOCATE AND MARK AND/OR DRILL HOLES.
3. ON BRIDGE PARAPETS TO RECEIVE CONCRETE SEALING, SIGNS SHALL NOT BE INSTALLED UNTIL SEALING HAS BEEN COMPLETED.

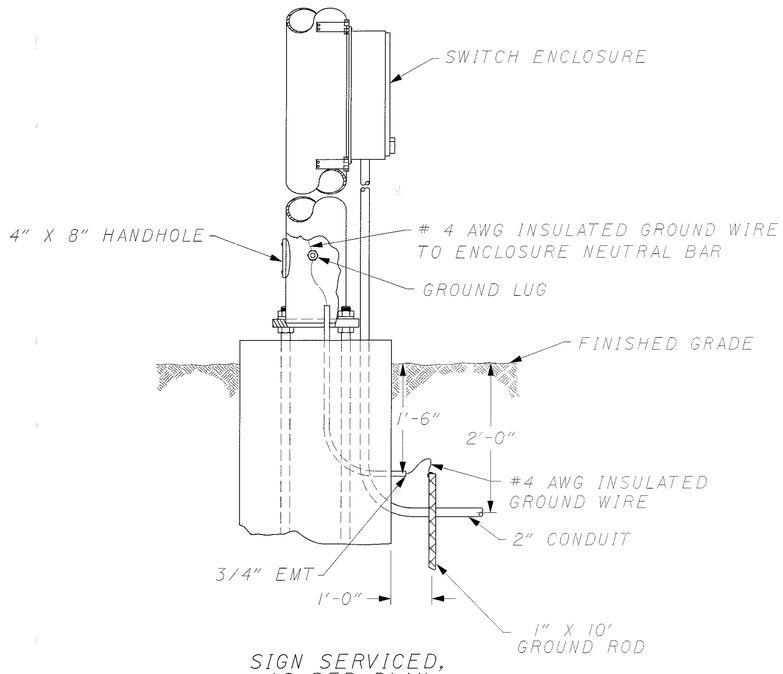

SIGN SERVICED, AS PER PLAN

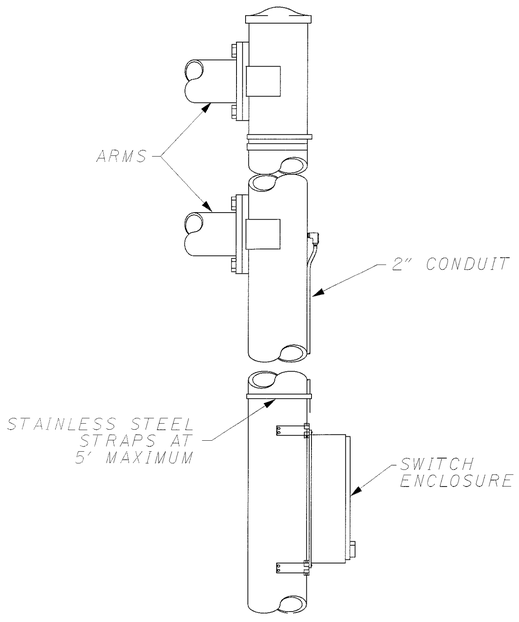

SIGN WIRED, AS PER PLAN

NOTES

1. FOR ADDITIONAL DETAILS, SEE STANDARD CONSTRUCTION DRAWINGS TC-32.10M AND TC-32.11M

CALCULATED | CHECKED

TRAFFIC CONTROL DETAILS

SUM-8-0.63

788
1088

ITEM 630 MAINLINE REFERENCE MARKERS

REFERENCE MARKERS SHALL BE LOCATED AND INSTALLED AS INDICATED ON THESE PLANS.

THE CONTRACTOR SHALL LAYOUT ALL REFERENCE MARKER LOCATIONS TO ASSURE PROPER PLACEMENT. THE LAYOUT SHALL BE APPROVED BY THE ENGINEER BEFORE INSTALLATIONS ARE STARTED.

THE WHOLE DIGIT REFERENCE MARKERS, E.G. 16.0, SHALL BE PLACED AT THE SAME STATION AS THE MILE MARKER.

MAINLINE REFERENCE MARKERS SHALL BE INSTALLED IN THE MEDIAN AS INDICATED ON SHEET 2. ON RAMPS, THE REFERENCE MARKERS SHALL BE INSTALLED ON THE RIGHT SIDE. FOR DIRECTIONAL MAINLINE SEGMENTS, THE MARKER SHALL BE PLACED ON THE LEFT SIDE.

THE HEIGHT OF THE REFERENCE MARKERS SHALL BE SUCH THAT A UNIFORM APPEARANCE IS PRESENTED TO THE MOTORIST.

WHEN A REFERENCE MARKER IS OBSTRUCTED BY A SIGN TRUSS, BRIDGE, PIER OR THE LIKE, THE REFERENCE MARKER SHALL BE RELOCATED ± 50 FEET FROM THE LAYOUT LOCATION OR NOT INSTALLED WITH THE APPROVAL OF THE ENGINEER.

IF ANY MILE MARKERS ARE MISSING, A PRECISE LOCATION WILL BE PROVIDED BY THE DEPARTMENT. THE CONTRACTOR SHALL NOTIFY THE ENGINEER AT LEAST 30 DAYS IN ADVANCE OF THE PLANNED REFERENCE MARKER INSTALLATION. THE ENGINEER WILL CONTACT THE OFFICE OF TECHNICAL SERVICES WHICH WILL LOCATE THE LONGITUDINAL POSITION OF MISSING MILE MARKERS BY MEANS OF A POINT MARK ON THE PAVEMENT EDGE.

PAYMENT SHALL BE MADE AT THE UNIT BID PRICE PER EACH FOR 630 MAINLINE REFERENCE MARKER AND SHALL INCLUDE ALL LABOR AND MATERIAL FOR INSTALLATION. THE SUMMARY TOTAL IS FOR ESTIMATING ONLY. PAYMENT WILL BE FOR THE ACTUAL NUMBER INSTALLED.

ITEM 630 RAMP REFERENCE MARKERS

ANY RAMP LESS THAN 1056 FEET IN LENGTH SHALL HAVE ONLY ONE RAMP REFERENCE MARKER PLACED AT THE MIDPOINT OF THE LENGTH OF THE RAMP. ANY RAMP OVER 1056 FEET IN LENGTH SHALL HAVE TWO RAMP MARKERS. THE FIRST RAMP MARKER SHALL, WHEN POSSIBLE, BE PLACED 500 FEET DOWNSTREAM FROM THE BEGINNING OF THE RAMP. THE SECOND RAMP MARKER SHALL BE PLACED 500 FEET UPSTREAM FROM THE BEGINNING OF THE RAMP. FOR SYSTEM-TO-SYSTEM INTERCHANGES WHEN RAMPS MAY SPLIT BEYOND THE MAINLINE, OR COLLECT BEFORE THE MAINLINE, A RAMP MARKER SHALL BE PLACED AT THE MIDPOINT OF THE DISTANCE BETWEEN THE MAINLINE AND THE RAMP SPLIT. ALL RAMP MARKERS SHALL BE PLACED ON THE RIGHT.

ADJUSTMENTS MAY BE MADE FOR BRIDGES AND OTHER OBSTRUCTIONS. AT THE DISCRETION OF THE ENGINEER, ADDITIONAL RAMP MARKERS MAY BE PLACED DUE TO RAMP LENGTH AND SIGHT DISTANCE CONDITIONS.

FINAL ADJUSTMENTS AND DETERMINATION OF NEED SHALL BE AT THE DISCRETION OF THE ENGINEER.

FOR INTERSTATE ROUTE REFERENCES ON RAMP MARKERS THE NUMERICAL DESIGNATION ONLY SHALL BE USED IN THE DESCRIPTION. FOR US AND STATE ROUTES, THE PREFIXES OF "US" AND "SR", AS APPROPRIATE, SHALL BE USED WITH THE NUMERICAL ROUTE DESIGNATION. THE DIRECTIONAL ORDINATE (N, S, E, W) SHALL PRECEDE THE ROUTE DESIGNATION.

PAYMENT SHALL BE MADE AT THE UNIT BID PRICE PER EACH FOR 630 RAMP REFERENCE MARKER AND SHALL INCLUDE ALL LABOR AND MATERIAL FOR INSTALLATION. THE SUMMARY TOTAL IS FOR ESTIMATING ONLY. PAYMENT WILL BE FOR THE ACTUAL NUMBER INSTALLED.

LIGHT POLE MOUNTING

WHERE LIGHT POLES EXIST IN THE MEDIAN, THE REFERENCE MARKERS SHALL BE INSTALLED ON THE LIGHT POLE IF THE LAYOUT LOCATION IS WITHIN ± 50 FEET OF THE LIGHT POLE. NO REFERENCE MARKERS SHALL BE ATTACHED TO LIGHT POLES EQUIPPED WITH LOWERING DEVICES.

ITEM 630 CONCRETE MEDIAN BARRIER SIGN BRACKET

THIS ITEM SHALL CONSIST OF FURNISHING AND INSTALLING THE CONCRETE MEDIAN BARRIER SIGN BRACKET DETAILED ON SHEET 3.

PAYMENT SHALL BE AT THE UNIT PRICE BID PER EACH FOR 630 CONCRETE MEDIAN BARRIER SIGN BRACKET. THIS PRICE WILL BE FULL COMPENSATION FOR ALL NECESSARY MATERIALS (INCLUDING THE POST), LABOR, TOOLS, EQUIPMENT AND OTHER INCIDENTALS NECESSARY FOR EACH BRACKET FURNISHED, IN PLACE, COMPLETE AND ACCEPTED.

4-04-02

GENERAL NOTES

OFFICE OF TRAFFIC ENGINEERING

URBAN FREEWAY REFERENCE MARKERS

788A
1088

Typical Reference Marker Placement

Median

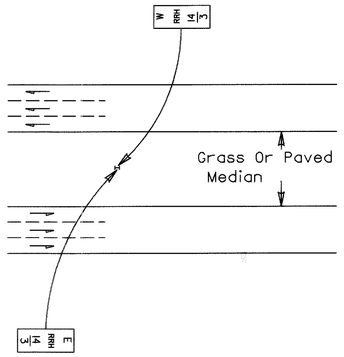

Double Concrete Barrier Median

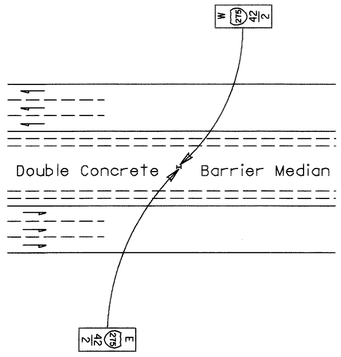

Single Concrete Barrier Median

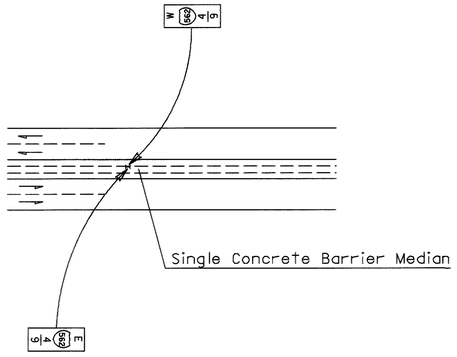

No Median Single Direction Traffic

Note: See Separate Sheet For Ramp Marker Installation.

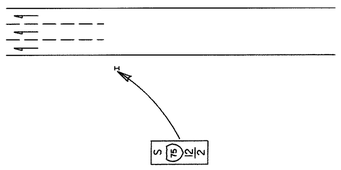

NOTE: Placement other than those depicted here may apply.

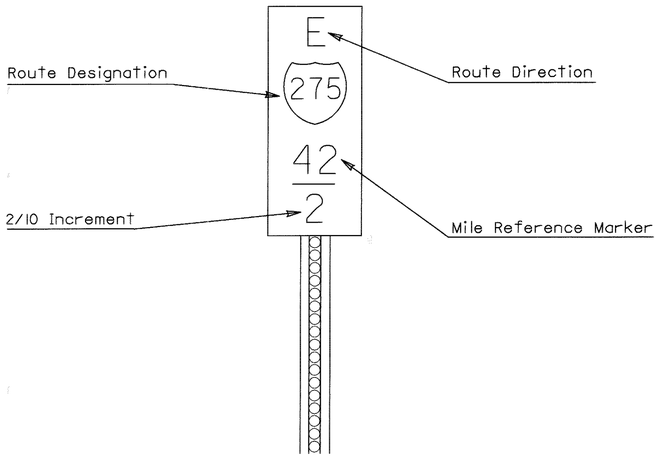

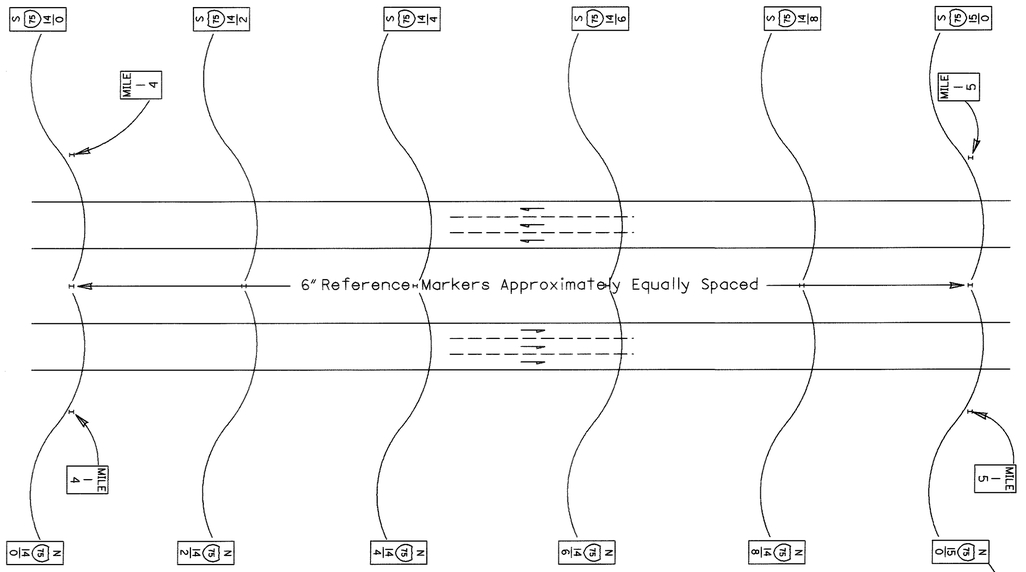

Reference Marker (Zero)
Placed At Same Station
As Northbound or Eastbound
Mile Marker.

4-04-02

TYPICAL REFERENCE MARKER PLACEMENT

OFFICE OF TRAFFIC ENGINEERING

URBAN FREEWAY REFERENCE MARKERS

788B
1088

Typical Mainline Reference Marker Installation Plans

Single Median Barrier

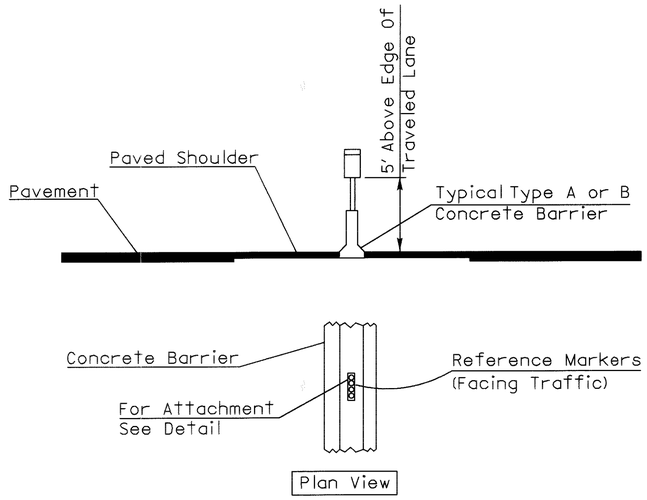

Note:

1. Typical installed height is 2' from top of barrier wall to bottom of sign.

Barrier Mounting Bracket

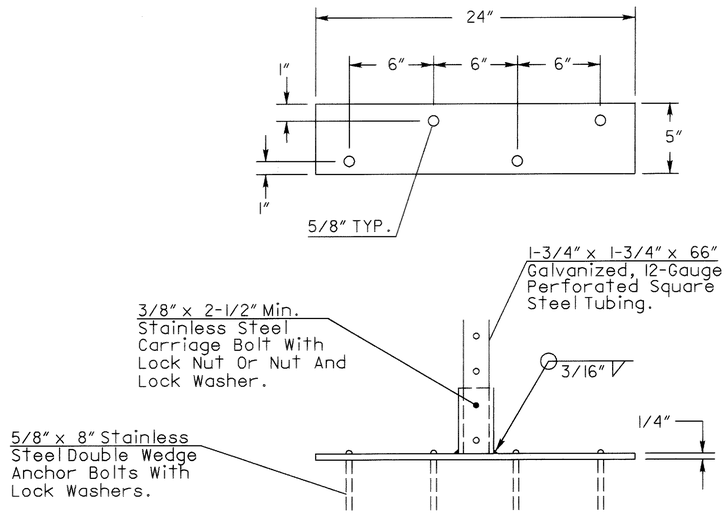

Note:

1. All Hardware Shall Be Galvanized Steel Or Stainless Steel As Specified.
2. All Work And Materials Shall Be In Accordance With Standard Specification.

Light Poles

See TC-41.40 For Attachment

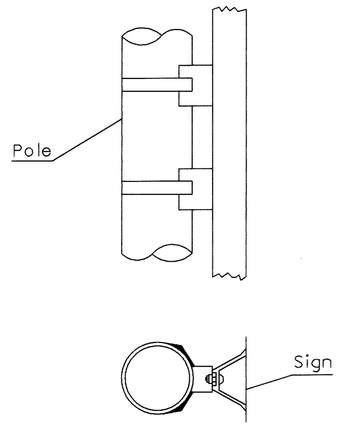

Median

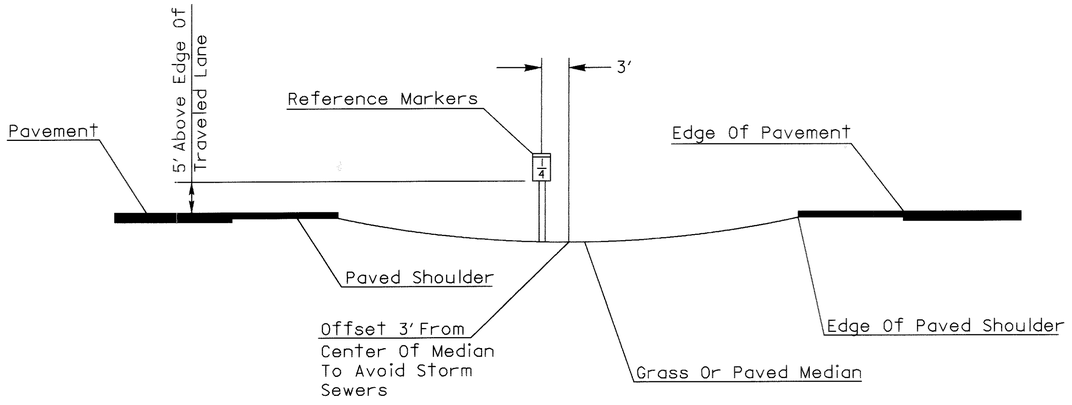

Double Median Barrier

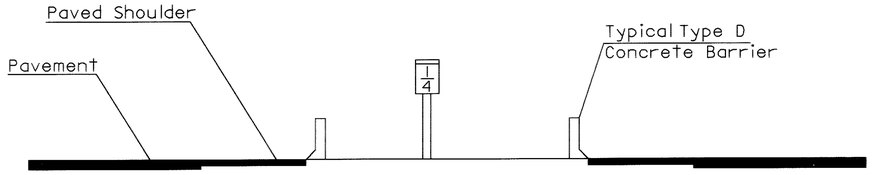

Note:

1. Typical installed height on a raised median is 4' from top of median to bottom of sign.

4-04-02

REFERENCE MARKER INSTALLATION PLANS

OFFICE OF TRAFFIC ENGINEERING

URBAN FREEWAY REFERENCE MARKERS

7880
1088

Typical Ramp Marker Installation

4-04-02

TYPICAL RAMP MARKER INSTALLATION

OFFICE OF TRAFFIC ENGINEERING

URBAN FREEWAY REFERENCE MARKERS

788D
1088

Typical Reference Markers

Typical Ramp Reference Marker

Color: White On Blue
Series C

Type G sheeting

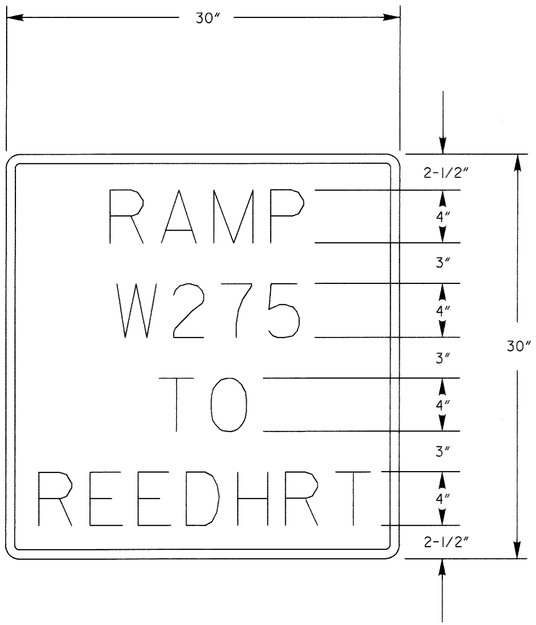

Note:
1. See Ramp Marker Installation Detail Sheets For Placement.
2. No Marker Installation On Bridges.
3. Stroke Width = 3/4″
4. Border is white, width = 3/4″

Note:
1. See Detail Sheets For Placement And Installation.
2. See Quantities For Specific Ramp Marker Lettering.

Typical Mainline Reference Marker

Color: White On Blue
Series C

Type G sheeting

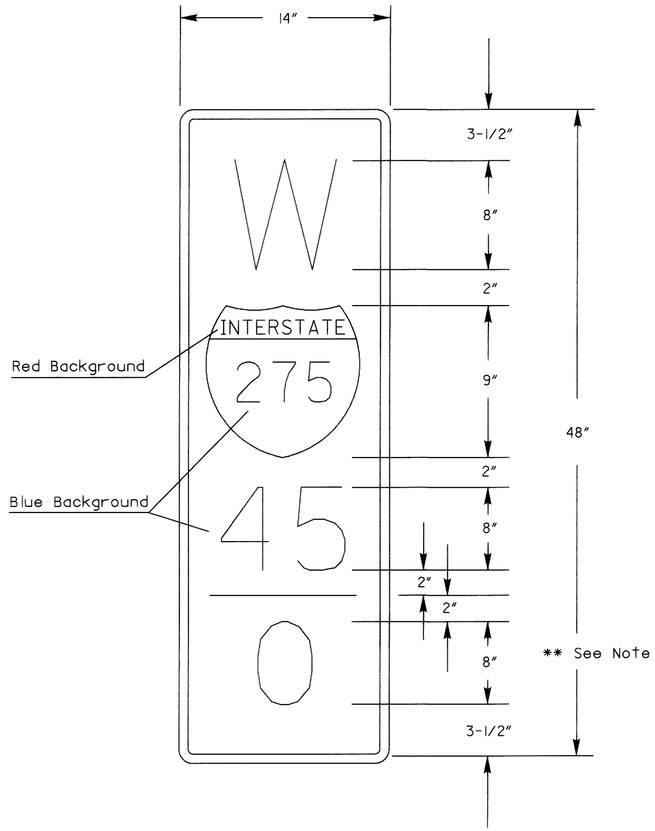

** Note:
Divider Line Thinckness = 1″
Divider Line Length = Width of Numbers above Line
Stroke Width = 1.60″
Border is white, width = 3/4″
Width of dual route marker shall be 24″

4-04-02

TYPICAL REFERENCE MARKERS

OFFICE OF TRAFFIC ENGINEERING

URBAN FREEWAY REFERENCE MARKERS

788E
1088

TRAFFIC CONTROL WORK SCOPE

THE TRAFFIC CONTROL PORTION OF THIS PROJECT REQUIRES THE INSTALLATION OF NEW SIGNAL INSTALLATIONS AT ELEVEN (11) INTERSECTIONS, AS WELL AS NEW SIGNS AND PAVEMENT MARKINGS. THIS PROJECT ALSO INCLUDES SPLICING INTO AN EXISTING INTERCONNECT AT TWO (2) INTERSECTIONS AND CONSTRUCTING CONDUIT FOR AN INTERCONNECT BETWEEN ALL THE INTERSECTIONS. TRAFFIC SIGNAL INSTALLATION SHALL INCLUDE MAST ARMS, CONTROLLERS, SIGNAL HEADS, PEDESTRIAN SIGNAL HEADS, PUSHBUTTONS, WIRING, VEHICULAR DETECTORS, AND ALL OTHER INCIDENTALS NECESSARY FOR A COMPLETE TRAFFIC CONTROL SYSTEM.

THESE NOTES AND SPECIFICATIONS SUPPLEMENT THE STATE OF OHIO DEPARTMENT OF TRANSPORTATION CONSTRUCTION AND MATERIALS SPECIFICATIONS. THE WORK TO BE PERFORMED BY THE CONTRACTOR IN CONNECTION WITH FURNISHING LABOR, SUPPLIES, EQUIPMENT, MATERIALS, AND PERFORMING ALL OPERATIONS NECESSARY FOR THE ACCEPTABLE INSTALLATION OF THE TRAFFIC CONTROL DEVICES SHALL BE IN STRICT ACCORDANCE WITH THESE PLANS, NOTES, AND SPECIFICATIONS. THESE NOTES, DETAILS, AND DRAWINGS ARE INTENDED TO PROVIDE FOR ALL MATERIALS AND LABOR REQUIRED TO FURNISH AND INSTALL A COMPLETE TRAFFIC CONTROL SYSTEM.

MAINTENANCE OF TRAFFIC SIGNAL INSTALLATION

THE CONTRACTOR SHALL BE RESPONSIBLE FOR MAINTAINING THE TRAFFIC SIGNAL INSTALLATIONS WITHIN THE PROJECT.

THE CONTRACTOR SHALL CORRECT AS QUICKLY AS POSSIBLE, ALL OUTAGES OR MALFUNCTIONS. HE SHALL PROVIDE THE CITY AND THE ENGINEER SUCH ADDRESSES AND PHONE NUMBERS WHERE HIS MAINTENANCE FORCES CAN BE CONTACTED. THE CONTRACTOR SHALL PROVIDE ONE OR MORE PERSONS TO RECEIVE ALL CALLS AND DISPATCH THE NECESSARY MAINTENANCE FORCES TO CORRECT OUTAGES. SUCH A PERSON OR PERSONS MAY BE USED TO PERFORM OTHER DUTIES AS LONG AS PROMPT ATTENTION IS GIVEN TO THESE CALLS AND A PERSON IS READILY AVAILABLE CONTINUOUSLY 24 HOURS A DAY, SEVEN DAYS A WEEK. ALL LAMP OUTAGES, CABLE OUTAGES, ELECTRIC FAILURES, EQUIPMENT MALFUNCTIONS AND MISALIGED SIGNAL HEADS SHALL BE CORRECTED TO THE SATISFACTION OF THE ENGINEER WITH THE SIGNAL BACK IN SERVICE WITH FOUR HOURS AFTER THE CONTRACTOR HAS BEEN NOTIFIED OF THE OUTAGES.

IN THE EVENT NEW SIGNALS ARE DAMAGED PRIOR TO ACCEPTANCE, ALL DAMAGED EQUIPMENT EXCEPT POLES AND CONTROL EQUIPMENT, SHALL BE REPLACED BY THE CONTRACTOR TO THE SATISFACTION OF THE ENGINEER WITH THE SIGNAL BACK IN SERVICE EIGHT HOURS AFTER THE CONTRACTOR'S NOTIFICATION OF THE OUTAGE.

IF POLES AND/OR CONTROL EQUIPMENT ARE DAMAGED AND MUST BE REPLACED, THE CONTRACTOR SHALL MAKE TEMPORARY REPAIRS AS NECESSARY TO BRING THE SIGNAL BACK INTO FULL OPERATION WITH THE ALLOWED EIGHT HOUR PERIOD AND SHALL MAKE PERMANENT REPAIRS OR REPLACEMENT AS SOON THEREAFTER AS POSSIBLE. NONE OF THE ABOVE SHALL BE CONSTRUED AS COLLECTIVE OF CONSECUTIVE OUTAGE TIME PERIODS AT ANY ONE LOCATION. THE ALLOTTED TIME LIMIT SHALL BE FOR THE WORST SINGLE OUTAGE.

WHERE OUTAGES ARE THE DIRECT RESULT OF A VEHICLE ACCIDENT, THE RESPONSE OF THE CONTRACTOR SHALL BE OUTLINED ABOVE. THE CONTRACTOR SHALL BE RESPONSIBLE FOR COLLECTION OF ANY COMPENSATION FOR THIS WORK FROM THOSE PARTIES RESPONSIBLE FOR THE DAMAGE.

WHERE THE CONTRACTOR HAS FAILED TO OR CANNOT RESPOND TO AN OUTAGE OR SIGNAL EQUIPMENT MALFUNCTION, AT THESE LOCATIONS WITHIN HIS RESPONSIBILITY, WITHIN THE PERIOD AS SPECIFIED ABOVE, THE ENGINEER MAY INVOKE THE PROVISIONS OF SECTION 105.15 AND ANY SUBSEQUENT BILLINGS TO THE CITY OF AKRON FOR POLICE SERVICES AND MAINTENANCE SERVICES BY CITY FORCES SHALL BE DEDUCTED FROM MONIES DUE OR TO BECOME DUE THE CONTRACTOR IN ACCORDANCE WITH PROVISIONS OF SECTION 105.15.

THE CONTRACTOR SHALL PROVIDE THE MAINTENANCE SERVICE ENTIRELY WITH HIS FORCES OR HE MAY CHOOSE TO ENTER INTO A COOPERATIVE UNDERSTANDING WITH THE LOCAL MAINTAINING AGENCY TO PROVIDE THE MAINTENANCE METHOD SELECTED. IF THE MAINTAINING AGENCY WILL PROVIDE THE MAINTENANCE SERVICE, THE CONTRACTOR SHOULD NOTIFY THE ENGINEER AND PROVIDE A 24 HOUR PHONE NUMBER WHERE THE MAINTAINING AGENCY CAN BE REACHED.

ANY VEHICULAR TRAFFIC SIGNAL HEAD, EITHER NEW OR EXISTING WHICH WILL BE OUT OF OPERATION SHALL BE COVERED IN THE MANNER DESCRIBED IN 632.24.

ALL COST RESULTING FROM THE ABOVE REQUIREMENTS SHALL BE CONSIDERED TO BE INCLUDED IN THE LUMP SUM PRICE BID FOR ITEM 614 MAINTAINING TRAFFIC.

GUARANTEE

THE CONTRACTOR SHALL GUARANTEE THAT THE TRAFFIC CONTROL SYSTEM INSTALLED AS PART OF THIS CONTRACT SHALL OPERATE SATISFACTORY FOR A PERIOD OF 90 DAYS FOLLOWING COMPLETION OF THE 10-DAY PERFORMANCE TEST. IN THE EVENT OF UNSATISFACTORY OPERATION, THE CONTRACTOR SHALL CORRECT FAULTY INSTALLATION, MAKE REPAIRS AND REPLACE DEFECTIVE PARTS WITH NEW PARTS OF EQUAL OR BETTER QUALITY. EQUIPMENT, MATERIAL AND LABOR COSTS INCURRED IN CORRECTION AN UNSATISFACTORY OPERATION SHALL BE BORNE BY THE CONTRACTOR.

THE GUARANTEE SHALL COVER THE FOLLOWING ITEMS OF THE TRAFFIC CONTROL SYSTEM: CONTROLLERS AND ASSOCIATED EQUIPMENT, DETECTOR UNITS, INTERCONNECTION ITEMS AND MASTER CONTROL EQUIPMENT.

CUSTOMARY MANUFACTURER'S GUARANTEES FOR THE FOREGOING ITEMS SHALL BE TURNED OVER TO THE CITY OF AKRON FOLLOWING ACCEPTANCE OF THE EQUIPMENT.

THE COST OF GUARANTEEING THE TRAFFIC CONTROL SYSTEM WILL BE INCIDENTAL TO AND INCLUDED IN THE CONTRACT UNIT PRICE OF THE VARIOUS ITEMS MAKING UP THE SYSTEM.

"STOP-AND-GO" ACTUATION

THE CONTRACTOR SHALL GIVE THE CITY OF AKRON TRAFFIC ENGINEERING DIVISION, (330) 375-2851 EXT. 4780, 10 WORKING DAYS NOTICE PRIOR TO THE SIGNAL BEING PLACED IN THE "FLASH" MODE.

THE SIGNAL INSTALLATION SHALL BE INSPECTED BY CITY OF AKRON PERSONNEL PRIOR TO BEING PLACED IN THE "STOP-AND-GO" MODE. ALL DEFICIENCIES OF AN OPERATIONALLY CRITICAL NATURE SHALL BE CORRECTED AND APPROVED BY THE TRAFFIC OFFICE BEFORE PLACING THE SIGNAL IN THE "STOP-AND-GO" MODE.

THIS NOTE SHALL APPLY TO THE FOLLOWING FOUR (4) INTERSECTIONS: FOUNTAIN AND MARKET, FOUNTAIN AND FORGE, GOODKIRK AND MARKET, AND GOODKIRK AND FORGE.

THE MAINTENANCE OF TRAFFIC DETAILS SHALL BE CARRIED OUT AS PER STANDARD DRAWING MT-120.00. THIS SHALL INCLUDE THE INSTALLATION OF TYPE B WARNING LIGHT. PAYMENT SHALL BE INCLUDED IN THE LUMP SUM PRICE BID FOR ITEM 614 MAINTAINING TRAFFIC.

ITEM 625 - GROUND ROD, AS PER PLAN

IN ADDITION TO ITEM 625.10, THIS ITEM SHALL CONSIST OF FURNISHING AND RUNNING OF A SEVEN (7) STRAND #4 COPPER WIRE FROM THE TOP OF THE GROUND ROD AND ATTACHING IT TO THE NEUTRAL BAR IN THE CABINET.

PAYMENT WILL BE MADE AT CONTRACT UNIT PRICE PER EACH.

ITEM 625 - CONDUIT, CONCRETE ENCASED, 3"

ALL CONDUIT INSTALLED UNDER PAVEMENT IN THIS PROJECT, FOR TRAFFIC SIGNALS OR THE CLOSED LOOP INTERCONNECT SYSTEM, SHALL BE CONCRETE ENCASED. CONDUIT SHALL BE SCHEDULE 40 AND CONFORM WITH OHIO DEPARTMENT OF TRANSPORTATION'S SPECIFICATION 713.07.

ITEM 625 - CONDUIT, 1½", 713.07, AS PER PLAN

THIS ITEM SHALL CONSIST OF FURNISHING AND INSTALLING CONDUIT TO BE ATTACHED TO A PROPOSED FENCE POST. IN ADDITION TO THE REQUIREMENTS OF 625, THE ITEM SHALL INCLUDE THE FOLLOWING:

1. FURNISHING AND INSTALLING ALL CONNECTIONS AND CONDUIT EXPANSION FITTINGS, INCLUDING CONNECTIONS TO PULL BOXES.

2. FURNISHING AND INSTALLING STEEL ANGLES, STEEL BANDING AND OTHER HARDWARE FOR ATTACHMENT OF NEW CONDUIT TO PROPOSED FENCE POST AS PER DETAIL SHOWN ON SHEET 828.

PAYMENT FOR THIS ITEM SHALL INCLUDE ALL MATERIALS, LABOR, EQUIPMENT AND TOOLS NECESSARY TO COMPLETE THE INSTALLATION OF THE NEW CONDUIT AS SPECIFIED IN THE PLANS.

CALCULATED CRP
CHECKED TS

TRAFFIC SIGNAL AND INTERCONNECT GENERAL NOTES

SUM-8-0.63

789
1088

ITEM 625 - CONDUIT, 3", 713.04, AS PER PLAN

THIS ITEM SHALL CONSIST OF FURNISHING AND INSTALLING CONDUIT TO BE CARRIED THROUGH THE SUPERSTRUCTURE OF EXISTING BRIDGES. IN ADDITION TO THE REQUIREMENTS OF 625, THE ITEM SHALL INCLUDE THE FOLLOWING:

1. FURNISHING AND INSTALLING ALL CONNECTIONS AND CONDUIT EXPANSION FITTINGS, INCLUDING CONNECTIONS TO PULL BOXES.

2. FURNISHING AND INSTALLING STEEL ANGLES, U-BOLTS AND OTHER HARDWARE FOR ATTACHMENT OF NEW CONDUIT TO THE EXISTING SUPERSTRUCTURE PER THE DETAILS SHOWN IN THE PLANS.

3. CORING HOLES THROUGH EXISTING ABUTMENT BACKWALLS TO ACCOMMODATE PASSAGE OF THE NEW CONDUIT, AND SEALING THE OPENING AROUND THE NEW CONDUIT WITH CEMENT GROUT.

PAYMENT FOR THIS ITEM SHALL INCLUDE ALL MATERIALS, LABOR, EQUIPMENT AND TOOLS NECESSARY TO COMPLETE THE INSTALLATION OF THE NEW CONDUIT AS SPECIFIED IN THE PLANS.

ITEM 625 - PULL BOX, 713.08, 18" AND 24", AS PER PLAN

BOX SIZE: 18" OR 24" DIAMETER
18" DEEP (NOMINAL)

COVER SIZE: 20¼" OR 26¼" DIAMETER X 2½" OVERALL HEIGHT

LOAD CAPACITY: 15,000 LBS., ON A 10" X 10" AREA TESTED IN ACCORDANCE WITH WESTERN UNDERGROUND COMMITTEE GUIDE 3.6. COVER DEFLECTION TO BE LESS THAN ½" AT DESIGN LOAD AND SHOW NO SIGN OF DAMAGE AFTER 10 CYCLES AT DESIGN LOAD.

CONCRETE PULL BOXES SHALL BE FURNISHED AND INSTALLED WHERE INDICATED ON THE PLANS. SIZE, MANUFACTURING DETAILS, AND COVER MATERIAL SHALL BE AS DETAILED ON SHEET 828. PULL BOXES SHALL DISPLAY THE NOTE "TFC. SIG" FORMED ON THE SURFACE OR DISPLAYED ON AN ATTACHED METAL PLATE, IN ACCORDANCE WITH 713.09.

PAYMENT WILL BE AT THE CONTRACT UNIT PRICE FOR EACH CONCRETE PULL BOX, BY SIZE, FURNISHED AND INSTALLED, INCLUDING AGGREGATE.

ITEM 625 - PULLBOX, MISC.: PULLBOX, 713.08, 24" X 36" X 36", AS PER PLAN

IN ADDITION TO ODOT ITEM 625.11 AND ODOT STANDARD CONSTRUCTION DRAWING HL-30.1LM (3/31/95), THE CONTRACTOR SHALL FURNISH AND INSTALL A PULLBOX WITH MINIMUM OPENING DIMENSIONS OF 24 INCHES X 36 INCHES AS MANUFACTURED BY SYNERTECH, OR APPROVED EQUAL. INSIDE DIMENSIONS SHALL BE 15% GREATER THAN THE MINIMUM OPENING DIMENSIONS TO ALLOW THE LARGEST BEND RADII OF FUTURE FIBER CABLE POSSIBLE AND TO ACCOMMODATE FUTURE FIBER OPTIC SPLICE ENCLOSURES. THE PULLBOX INSIDE DIMENSIONS (VERSUS THE OPENING DIMENSIONS) SHALL GOVERN WHERE THE OPENING DIMENSIONS EQUAL THE INSIDE DIMENSIONS.

THE MATERIAL OF THE BOX SHALL BE POLYMER CONCRETE SUFFICIENT TO WITHSTAND IMPACTS GREATER THAN 65 FT. - LBS. (PER ASTM D-2999 USING A "C" TUP). THE FOOTPRINT OF THE BOX ALSO, SHOULD BE SUFFICIENT TO SUPPORT THE INCIDENTAL LOADING SPECIFIED WITHOUT THE STRUCTURE SINKING BELOW GRADE.

THE PROPOSED PULLBOX AND COVER SHALL BE ABLE TO SUPPORT VERTICAL LOADING OF 20,000 LBS MINIMUM WITHOUT PERMANENT DAMAGE OR DEFLECTION TO THE UNIT. THE WORDS "TRAFFIC" SHALL BE INTEGRALLY CAST AS PART OF THE COVER OR SECURELY FASTENED WITH CORROSION RESISTANT HARDWARE. STANDARD HEX HEAD BOLTS SHALL BE FURNISHED TO SECURE THE COVER TO THE UNIT. THIS ITEM SHALL INCLUDE BUT IS NOT LIMITED TO THE DISPOSAL OF SURPLUS MATERIAL AND THE RESTORATION OF DISTURBED FACILITIES AND SURFACES.

PAYMENT FOR THE PULLBOX WILL BE MADE AT THE CONTRACT UNIT PRICE BID PER EACH OF ITEM 625 PULLBOX, MISC.: PULLBOX, 713.08, 24" X 36" X 36", AS PER PLAN, COMPLETE.

ITEM SPECIAL - PLASTIC CAUTION TAPE

THE LOCATION OF UNDERGROUND CONDUIT AND BURIED ELECTRICAL CABLES SHALL BE MARKED BY THE USE OF A CONTINUOUS IDENTIFYING TAPE BURIED IN THE TRENCH ABOVE THE LINE. THE IDENTIFYING TAPE SHALL BE AN INERT MATERIAL, APPROXIMATELY 6 INCHES WIDE COMPOSED OF POLYETHYLENE PLASTIC, HIGHLY RESISTANT TO ALKALIS, ACIDS, OR OTHER CHEMICAL COMPONENTS LIKELY TO BE ENCOUNTERED IN SOILS. THE TAPE SHALL BE BRIGHT RED WITH IDENTIFYING PRINTING "ELECTRIC" IN BLACK LETTERS, ONE SIDE ONLY. TAPE SHALL BE SUPPLIED IN CONTINUOUS ROLLS WITH THE IDENTIFYING LETTERING REPEATED CONTINUOUSLY THE FULL LENGTH OF THE TAPE. IDENTIFYING TAPE SHALL BE BURIED ON THE ELECTRIC LINE TRENCH WITH ONE STRIP APPROXIMATELY 6 TO 10 INCHES BELOW THE FINAL FINISHED GRADE. THE TAPE SHALL BE PLACED IN THE TRENCH WITH THE PRINTED SIDE UP AND SHALL BE ESSENTIALLY PARALLEL WITH THE FINISHED SURFACE. THE CONTRACTOR SHALL TAKE NECESSARY PRECAUTIONS TO INSURE THAT THE TAPE IS NOT PULLED, DISTORTED, OR OTHERWISE MISPLACED IN COMPLETING THE TRENCH BACKFILL. THE TAPE SHALL BE PAID FOR PER LINEAR FOOT OF ITEM SPECIAL - "PLASTIC CAUTION TAPE" COMPLETE AND IN PLACE.

CERTIFICATION AND APPROVAL OF TRAFFIC CONTROL ITEMS

SUBMISSIONS BY THE CONTRACTOR TO THE ENGINEER FOR APPROVAL SHALL CONFORM WITH 632.02 AND 633.03 AS APPROPRIATE.

ITEM 632 - REMOVAL OF TRAFFIC SIGNAL INSTALLATION, AS PER PLAN

TRAFFIC SIGNAL INSTALLATION, INCLUDING SIGNAL HEADS, CABLE, MESSENGER WIRE, STRAIN POLES, MAST ARMS, CABINET, CONTROLLER, PULL BOXES, SIGNS ON MESSENGER WIRE AND EXISTING MAST ARMS, ETC., SHALL BE REMOVED IN ACCORDANCE WITH 632.25.

REMOVED ITEMS SHALL BE DELIVERED TO THE CITY OF AKRON. ITEMS TO BE DELIVERED SHALL INCLUDE TRAFFIC SIGNAL HEADS, CONTROLLERS, PEDESTRIAN PUSHBUTTONS, PEDESTRIAN SIGNAL HEADS, MAST ARMS, STRAIN POLES, SIGNAL SUPPORTS AND CABINETS, INCLUDING ALL EQUIPMENT PRESENT AT THE BEGINNING OF THE PROJECT.

ITEM 632 - DETECTOR LOOP

IN ADDITION TO THE REQUIREMENTS OF 632.10, IF THE CONTRACTOR ELECTS TO USE DRY BLADE CUTTING,THE CONTRACTOR SHALL PROVIDE A POSITIVE AND EFFECTIVE MEANS FOR REMOVAL OF SOLID RESIDUE RESULTING FROM THE DRY BLADE CUTTING OF LOOP DETECTOR SLOTS IN THE PAVEMENT. THE RESIDUE SHALL BE REMOVED BY VACUUM OR OTHER EFFECTIVE MEANS, BEFORE IT IS BLOWN BY TRAFFIC ACTION OR WIND.

PAYMENT WILL BE MADE AT CONTRACT UNIT PRICE PER EACH.

ITEM 632 - POWER SERVICE, AS PER PLAN

POWER SERVICE SHALL BE AS PER SPECIFICATION 632.23 AND STANDARD CONSTRUCTION DRAWING TC-83.10 WITH THE FOLLOWING EXCEPTIONS:
NO METER OR DISCONNECT SWITCH SHALL BE INSTALLED.

ELECTRIC POWER SHALL BE OBTAINED FROM OHIO EDISON AT THE LOCATIONS INDICATED ON THE PLANS. THE CONTRACTOR WILL BE RESPONSIBLE FOR REQUESTING AND SCHEDULING ANY INSPECTIONS THE POWER COMPANY MAY REQUIRE FOR THE POWER SERVICE HOOK UP. THE CONTRACTOR SHALL BE RESPONSIBLE TO CONTACT THE POWER COMPANY FOR THE ELECTRICAL SERVICE CONNECTION. UNDER NO CIRCUMSTANCES SHALL THE CONTRACTOR SPLICE POWER CABLE INTO THE POWER COMPANY'S CIRCUITS. THE VOLTAGE SUPPLIED SHALL BE NOMINALLY 120 VOLTS. THE CONTRACTOR IS RESPONSIBLE FOR OBTAINING ANY NECESSARY PERMITS AND THE PAYING OF ALL FEES. THE CONTRACTOR SHALL PAY ALL POWER CHARGES UNTIL THE SIGNAL IS ACCEPTED BY THE MAINTAINING AGENCY.

CALCULATED CRP CHECKED TS

TRAFFIC SIGNAL AND INTERCONNECT GENERAL NOTES

SUM-8-0.63

790
1088

ITEM 632 - SIGNAL SUPPORT, TYPE TC-81.20; SIGNAL SUPPORT, TYPE TC-12.30 AND PEDESTAL

THIS ITEM SHALL BE AS PER 632.14, 632.18, 732.11 AND 732.15 EXCEPT THE POLE, MAST ARMS AND BASE SHALL BE STEEL AND SHALL HAVE A 'MATTE' BLACK FINISH. THE ITEM SHALL BE TREATED AND PAINTED BLACK BY THE MANUFACTURER AS DESCRIBED BELOW:

PAINTING SHALL BE A FOUR PART PROCESS TO INCLUDE SURFACE PREPARATION FOLLOWED BY A THREE-STEP COATING SYSTEM. THIS THREE-STEP COATING SYSTEM SHALL CONSIST OF AN EPOXY-PRIME COAT, AND EPOXY INTERMEDIATE COAT AND A URETHANE TOP COAT. ALL THREE COATS SHALL BE MANUFACTURED BY THE SAME COMPANY TO INSURE COMPATIBILITY AMONG COATS. THE PURPOSE OF THIS COATING IS TO PROVIDE PROTECTION FOR NEW UNWEATHERED, GALVANIZED STEEL FROM CORROSIVE ELEMENTS IN THE ATMOSPHERE. COATING AND SURFACE PREPARATION OF NEW GALVANIZED SUPPORT SECTIONS SHALL BE THE RESPONSIBILITY OF THE SUPPORT MANUFACTURER. FIELD PAINTING IS NOT PERMITTED.

NEW, UNWEATHERED GALVANIZED SUPPORTS SHALL BE PREPARED FOR COATING BY SSPC (STEEL STRUCTURES PAINTING COUNCIL) - SPI FOLLOWED BY SSPC-SP7 (SOLVENT CLEANING FOLLOWED BY BRUSH BLASTING).

IMMEDIATELY FOLLOWING THE ABOVE TREATMENT, THE PRIME COAT SHALL BE APPLIED. THE PRIME COAT SHALL DEFINITELY BE APPLIED THE SAME DAY AS THE SURFACE IS TREATED. THE PRIME COAT SHALL BE A POLYAMIDE-CURED EPOXY AS LISTED BELOW OR AN APPROVED EQUAL:

AMERON:	AMERCOAT 71
GLIDDEN:	GLID-GUARD EPOXY CHROMATE METAL PRIMER
PORTER PAINTS:	MCR 4300
POLY-CARB:	MARK-60 (ULTRAPOX)
SHERWIN WILLIAMS:	TILE-CLAD II HI-BUILD PRIMER

THE PRIME COAT SHALL BE APPLIED FOLLOWING ALL OF THE MANUFACTURER'S INSTRUCTIONS AND RECOMMENDATIONS INVOLVING APPLICATION AND FINAL THICKNESS.

AT LEAST 24 HOURS, BUT NO MORE THAN THREE (3) DAYS AFTER THE APPLICATION OF THE PRIME COAT, THE INTERMEDIATE COAT SHALL BE APPLIED. THE INTERMEDIATE COAT SHALL BE APPLIED. THE INTERMEDIATE COAT SHALL BE A POLYAMIDE-CURED EPOXY AS LISTED BELOW OR AN APPROVED EQUAL:

AMERON:	AMERLOCK 400
GLIDDEN:	GLID-GUARD EPOXY CHEMICAL RESISTANT FINISH No. 5240 SERIES
PORTER PAINTS:	MARK-60 (ULTRAPOX)
POLY-CARB:	MARK-60 (ULTRAPOX)
SHERWIN WILLIAMS:	HI-SOLIDS CATALYZED EPOXY

THE INTERMEDIATE COAT SHALL BE APPLIED FOLLOWING ALL OF THE MANUFACTURER'S INSTRUCTIONS AND RECOMMENDATIONS INVOLVING APPLICATION AND FINAL THICKNESS.

AT LEAST 24 HOURS, BUT NO MORE THAN THREE (3) DAYS AFTER THE APPLICATION OF THE INTERMEDIATE COAT, THE TOP COAT SHALL BE APPLIED. THE TOP COAT SHALL BE AN ALIPHATIC POLYURETHANE AS LISTED BELOW OR AN APPROVED EQUAL:

AMERON:	AMERCOAT 450 GL
GLIDDEN:	GLID-THANE ONE ALIPHATIC POLYURETHANE COATING No. 6100 SERIES
PORTER PAINTS:	HYPERTHANE SUPER
POLY-CARB:	MARK-73 (ULTRA-KOTE)
SHERWIN WILLIAMS:	HI-BID ALIPHATIC POLYURETHANE ENAMEL

THE TOP COAT SHALL BE APPLIED FOLLOWING ALL OF THE MANUFACTURER'S INSTRUCTIONS AND RECOMMENDATIONS INVOLVING APPLICATION AND FINAL THICKNESS.

THE PRIME, INTERMEDIATE AND TOP COATS SHALL BE APPROPRIATE COLORS TO PRODUCE AN END RESULT THAT IS A 'MATTE' BLACK FINISH.

ALL FINISH PAINTED POLES SHALL BE SHIPPED IN A MANNER TO MINIMIZE DAMAGE IN TRANSIT. POLE SURFACE WILL BE PROTECTED BY FOAM PADDING, BY CARDBOARD WRAPPING, BY SPIRAL WRAPPING WITH WAXED PAPER, BY SPIRAL WRAPPING WITH WAXED PAPER, BY CRATING, OR BY A COMBINATION OF THESE. THE METHOD USED SHALL BE SELECTED BY THE SUPPORT MANUFACTURER AS MOST APPROPRIATE FOR THE PROJECT BASED ON POLE SIZES, QUANTITIES, CONFIGURATIONS AND METHOD OF TRANSPORTATION.

ITEM 632 - VEHICULAR SIGNAL HEAD, BY TYPE, 1 WAY

SECTION 732.01 OF OHIO DEPARTMENT OF TRANSPORTATION'S SPECIFICATIONS IS MODIFIED FOR THIS PROJECT AS FOLLOWS:

A.) SIGNAL HEADS AND VISORS SHALL BE CONSTRUCTED OF INJECTION MOLDED, UV STABILIZED, POLYCARBONATE PLASTIC AND MEET ITE SPECIFICATIONS.

B.) PLASTIC LENSES SHALL BE USED.

C.) PIPE, SPACERS AND FITTINGS CONSTRUCTED OF POLYCARBONATE PLASTIC MAY BE USED IN LIEU OF GALVANIZED STEEL OR ALUMINUM.

D.) PROPER EXTERIOR COLORS SHALL BE FEDERAL YELLOW AND BE OBTAINED BY USE OF COLORED PLASTIC MATERIAL RATHER THAN PAINTING.

E.) TRAFFIC SIGNALS SHALL BE MOUNTED WITH CENTERLINE OF MAST ARM MATCHING CENTERLINE OF RED LENS. ASTROBRACS TYPE MOUNTING SHALL BE USED.

F.) TUNNEL TYPE VISORS SHALL BE PROVIDED ON ALL SIGNAL HEADS.

ITEM 632 - PEDESTRIAN SIGNAL HEAD, TYPE D2, AS PER PLAN

SECTION 732.05 OF OHIO DEPARTMENT OF TRANSPORTATION'S SPECIFICATIONS IS MODIFIED FOR THIS PROJECT AS FOLLOWS:

A.) SIGNAL HEADS AND VISORS SHALL BE CONSTRUCTED OF POLYCARBONATE PLASTIC AND MEET ITE SPECIFICATIONS.

B.) PLASTIC LENSES SHALL BE USED.

C.) PIPE, SPACERS AND FITTINGS CONSTRUCTED OF POLYCARBONATE PLASTIC MAY BE USED IN LIEU OF GALVANIZED STEEL OR ALUMINUM.

D.) INSTALLATION SHALL BE PER ODOT STANDARD CONSTRUCTION DRAWING TC-85.10, EXCEPT A TWO PIECE HINGED TYPE (CLAM SHELL) BRACKET SHALL BE USED.

E.) THE WALK AND DON'T WALK SYMBOL SHALL BE USED.

F.) STAINLESS STEEL BANDS SHALL BE USED TO MOUNT SIGNALS ON POLES. POLE HUB PLATES WILL NOT BE ACCEPTED.

ITEM 632 - LOOP DETECTOR UNITS, DELAY AND EXTENSION TYPE

IN ADDITION TO THE REQUIREMENTS OF 632 AND 732.07 OR 732.08, LOOP DETECTOR UNITS SHALL HAVE THE FOLLOWING REQUIREMENTS OR FEATURES:

THE OUTPUT DEVICE SHALL BE A RELAY, AND ALL CONTACTS SHALL BE INCLUDED IN THE WIRING HARNESS.

THE UNIT SHALL BE SELF TUNING.

THE UNIT SHALL HAVE ONE CHANNEL.

THE UNIT'S ELECTRICAL CONNECTION PLUGS OR WIRING HARNESS SHALL ALLOW READY PLACEMENT WITH A SINGLE CHANNEL AMPLIFIER AS DESCRIBED IN THE FINAL PARAGRAPH OF 732.07.

EACH UNIT SHALL BE LABELED TO CORRESPOND TO ITS PHASE AND DIRECTION.

DELAY INHIBIT SHALL BE CONNECTED ON ALL DETECTOR HARNESSES FOR THEIR RESPECTIVE PHASE GREENS.

CALCULATED CRP CHECKED TS

TRAFFIC SIGNAL AND INTERCONNECT GENERAL NOTES

SUM-8-0.63

CALCULATED CRP CHECKED TS

TRAFFIC SIGNAL AND INTERCONNECT GENERAL NOTES

ITEM 632 - SIGNALIZATION, MISC: MICROWAVE DETECTOR UNIT

MICROWAVE DETECTORS SHALL BE SPECIFICALLY DESIGNED AND CONSTRUCTED FOR PRESENCE DETECTION OF VEHICLES IN AN OUTDOOR ENVIRONMENT. THE DETECTORS SHALL BE CAPABLE OF SATISFACTORY OPERATION AT A RANGE OF NOT LESS THAN 50 FEET AND UP TO 200 FEET. EACH DETECTOR SHALL BE CAPABLE OF FOCUSING ON ONE LANE OR MULTIPLE LANES AS NEEDED. THE DETECTION UNIT SHALL BE CAPABLE OF EITHER SIDE MOUNTING ON TRAFFIC SIGNAL POLES OR PEDESTALS OR OVERHEAD MOUNTING ON MAST ARMS. THE DETECTION UNITS SHALL HAVE AN ADJUSTABLE DETECTION PATTERN AND SHALL BE CAPABLE OF CONTINUOUS PRESENCE DETECTION. EACH DETECTOR UNIT SHALL BE FURNISHED COMPLETE WITH ALL REQUIRED MOUNTING HARDWARE, CABLE CONNECTORS, RELAYS, WIRING, AND WIRING HARNESSES NECESSARY FOR A COMPLETE AND FUNCTIONING INSTALLATION WITH THE TRAFFIC CONTROLLER USED TO OPERATE THE TRAFFIC SIGNALS. UNITS SHALL BE PROPERLY WIRED TO THE COMPANION UNIT IN THE CONTROL HEAD WITH AN APPROVED THREE-CONDUCTOR WIRE. UNITS SHALL OPERATE ON 12 OR 18 VOLT AC OPERATION.

DETECTORS INSTALLED ON MAST ARMS SHALL BE ATTACHED TO THE ARM USING STAINLESS STEEL BANDS AND POLE HUB CLAMPS. THE DETECTOR LEAD IN CABLE MAY UTILIZE THE WIRE OUTLET HOLE OF THE NEAREST VEHICULAR SIGNAL, OR A WIRE OUTLET HOLE PROVIDED EXPRESSLY FOR THE DETECTOR.

DETECTORS MOUNTED ON POLES OR PEDESTALS SHALL BE ATTACHED TO THE POLE OR PEDESTAL AT THE HEIGHT SPECIFIED ON THE PLANS, USING STAINLESS STEEL BANDS AND POLE HUB CLAMPS. THE DETECTOR LEAD IN CABLE SHALL UTILIZE A WIRE OUTLET PROVIDED EXPRESSLY FOR THE DETECTOR THROUGH THE POLE HUB CLAMP.

DETECTORS SHALL BE AIMED BY THE CONTRACTOR FOR MAXIMUM PRESENCE COVERAGE OF THE REQUIRED LANE(S) AND MINIMUM SPILLOVER INTO ADJACENT UN-DETECTED LANES, TO THE SATISFACTION OF THE ENGINEER.

PAYMENT FOR "ITEM 632 - SIGNALIZATION, MISC: MICROWAVE DETECTOR UNIT SHALL BE MADE AT THE CONTRACT UNIT PRICE BID FOR EACH. PAYMENT SHALL BE FULL COMPENSATION FOR ALL LABOR, MATERIALS, MOUNTING BRACKETS, TOOLS, EQUIPMENT, TESTING, CERTIFICATIONS, AND OTHER INCIDENTALS NECESSARY TO FURNISH THE DETECTOR, COMPLETE IN PLACE, INCLUDING ALL CONNECTIONS MADE AND WIRING COMPLETE, TESTED, AND ACCEPTED.

ITEM 632 - COMBINATION SIGNAL SUPPORT, MISC.: COMBINATION SIGNAL SUPPORT, TYPE TC-12.30, DESIGN 2 AND SIGN SUPPORT, TYPE TC-12.30, DESIGN 2

THIS SUPPORT LOCATED AT THE INTERSECTION OF FOUNTAIN ST. AND PERKINS ST., SHALL CONSIST OF A TC-12.30 DESIGN 2 POLE WITH A TC-12.30 DESIGN 2 SIGNAL ARM, 36 FEET AND A TC- 12.30 DESIGN 2 SIGN SUPPORT ARM, 19 FEET WITH ADDITIONAL SIGNAL SUPPORT ARM, TYPE TC-81.20, DESIGN II, 39 FEET. ALL SIGNAL SUPPORT ITEMS REQUIRED BY 632 AND ALL SIGN SUPPORT ITEMS REQUIRED BY 630 SHALL BE INCLUDED AS PART OF THIS SUPPORT.

PAYMENT WILL BE AT THE CONTRACT UNIT PRICE BID FOR EACH AND WILL BE FULL COMPENSATION FOR ALL LABOR, MATERIALS, TOOLS, EQUIPMENT AND OTHER INCIDENTALS NECESSARY FOR EACH SUPPORT FURNISHED, IN PLACE, COMPLETE AND ACCEPTED.

ITEM 632 - COMBINATION SIGNAL SUPPORT, MISC.: COMBINATION SIGNAL SUPPORT, TYPE TC-12.30, DESIGN 1 AND SIGN SUPPORT, TYPE TC-12.30, DESIGN 1 WITH LIGHT POLE EXTENSION

ONE SUPPORT SHALL BE LOCATED AT THE INTERSECTION OF FOUNTAIN ST. AND MARKET ST., AND SHALL CONSIST OF A TC-12.30 DESIGN 1 POLE WITH A TC-12.30 DESIGN 1 SIGNAL ARM, 28 FEET AND A TC- 12.30 DESIGN 1 SIGN SUPPORT ARM, 13 FEET WITH LIGHT POLE EXTENSION. ANOTHER SUPPORT SHALL BE LOCATED THE INTERSECTION OF GOODKIRK ST. AND MARKET ST. AND SHALL CONSIST OF A TC-12.30 DESIGN 1 POLE WITH A TC-12.30 DESIGN 1 SIGNAL ARM, 30 FEET AND A TC-12.30 DESIGN 1 SIGN SUPPORT ARM, 14 FEET WITH A LIGHT POLE EXTENSION. ALL SIGNAL SUPPORT ITEMS REQUIRED BY 632 AND ALL SIGN SUPPORT ITEMS REQUIRED BY 630 SHALL BE INCLUDED AS PART OF THIS SUPPORT.

PAYMENT WILL BE AT THE CONTRACT UNIT PRICE BID FOR EACH AND WILL BE FULL COMPENSATION FOR ALL LABOR, MATERIALS, TOOLS, EQUIPMENT, AND OTHER INCIDENTALS NECESSARY FOR EACH SUPPORT FURNISHED, IN PLACE, COMPLETE AND ACCEPTED.

ITEM 632 - COMBINATION SIGNAL SUPPORT, MISC.: COMBINATION SIGNAL SUPPORT, TYPE TC-12.30, DESIGN 2 AND SIGN SUPPORT, TYPE TC-12.30, DESIGN 2 WITH LIGHT POLE EXTENSION

THIS SUPPORT, LOCATED AT THE INTERSECTION OF FOUNTAIN ST. AND BUCHTEL AVE., SHALL CONSIST OF A TC-12.30 DESIGN 2 POLE WITH A TC-12.30 DESIGN 2 SIGNAL ARM, 36 FEET AND A TC-12.30 DESIGN 2 SIGN SUPPORT ARM, 19 FEET WITH LIGHT POLE EXTENSION. ALL SIGNAL SUPPORT ITEMS REQUIRED BY 632 AND ALL SIGN SUPPORT ITEMS REQUIRED BY 630 SHALL BE INCLUDED AS PART OF THIS SUPPORT.

PAYMENT WILL BE AT THE CONTRACT UNIT PRICE BID FOR EACH AND WILL BE FULL COMPENSATION FOR ALL LABOR, MATERIALS, TOOLS, EQUIPMENT, AND OTHER INCIDENTALS NECESSARY FOR EACH SUPPORT FURNISHED, IN PLACE, COMPLETE AND ACCEPTED.

ITEM 632 - COMBINATION SIGNAL SUPPORT, MISC.: COMBINATION SIGNAL SUPPORT, TYPE TC-12.30, DESIGN 6, AND SIGN SUPPORT, TYPE TC-12.30, DESIGN 6, AND SIGNAL SUPPORT TYPE TC-81.20, DESIGN II, WITH LIGHT POLE EXTENSION

ONE SUPPORT SHALL BE LOCATED AT THE INTERSECTION OF GOODKIRK ST. AND BUCHTEL AVE., AND SHALL CONSIST OF A TC-12.30 DESIGN 6 POLE WITH A TC-12.30 DESIGN 6 SIGNAL ARM, 32 FEET AND A TC-12.30 DESIGN 6 SIGN SUPPORT ARM, 14 FEET AND ADDITIONAL SIGNAL SUPPORT ARM TYPE TC-81.20, DESIGN II, 43 FEET WITH LIGHT POLE EXTENSION. ANOTHER SUPPORT SHALL BE LOCATED AT THE INTERSECTION OF GOODKIRK ST. AND PERKINS ST. AND SHALL CONSIST OF A TC-12.30 DESIGN 6 POLE WITH A TC-12.30 DESIGN 6 SIGNAL ARM, 40 FEET AND A TC-12.30 DESIGN 6 SIGN SUPPORT ARM, 19 FEET AND SIGNAL SUPPORT ARM TYPE TC-81.20, DESIGN II, 42 FEET WITH LIGHT POLE EXTENSION. ALL SIGNAL SUPPORT ITEMS REQUIRED BY 632 AND ALL SIGN SUPPORT ITEMS REQUIRED BY 630 SHALL BE INCLUDED AS PART OF THIS SUPPORT.

PAYMENT WILL BE AT THE CONTRACT UNIT PRICE BID FOR EACH AND WILL BE FULL COMPENSATION FOR ALL LABOR, MATERIALS, TOOLS, EQUIPMENT, AND OTHER INCIDENTALS NECESSARY FOR EACH SUPPORT FURNISHED, IN PLACE, COMPLETE AND ACCEPTED.

ITEM 632 - INTERCONNECT

AN AERIAL INTERCONNECT EXISTS ALONG THE NORTH SIDE OF MARKET STREET. THE CONTRACTOR WILL BE EXPECTED TO SPLICE INTO THIS INTERCONNECT AS SHOWN ON THE PLANS AND AS DESCRIBED IN SPECIFICATION 632.22. SPLICES SHALL BE MADE AT APPROVED LOCATIONS ONLY. THE REMAINDER OF THE INTERCONNECT IS TO BE CONSTRUCTED AS SHOWN IN THE PLANS AND SPECIFIED IN THESE NOTES.

POWER SUPPLY FOR SIGN LIGHTING

ELECTRIC POWER SHALL BE OBTAINED FROM OHIO EDISON AT THE LOCATION INDICATED ON THE LIGHTING PLANS. POWER SUPPLIED SHALL BE 480 VOLTS.

PEDESTRIAN PUSHBUTTON WIRING

ALL PEDESTRIAN PUSHBUTTONS SHALL BE WIRED WITH TWO (2) CONDUCTOR LOOP DETECTOR LEAD-IN CABLE.

ITEM 633 - CONTROLLER, ACTUATED, 8-PHASE, SOLID STATE DIGITAL, MICROPROCESSOR

THE OVERLAP PROGRAMMING SHALL BE BY USE OF AN INTERCHANGEABLE PLUG IN PRINTED CIRCUIT BOARD ASSEMBLY AS DESCRIBED IN PART 14 OF TS-1-1989. ALL CONTROLLER MEMORIES SHALL BE NON-VOLATILE AND SHALL NOT REQUIRE BATTERIES OR OTHER SOURCES OF ENERGY TO RETAIN DATA WHILE POWER IS REMOVED FROM THE CONTROLLER.

IN ADDITION TO NEMA REQUIREMENTS, THE CONFLICT MONITOR SHALL ALSO HAVE EXTENDED MONITORING OPERATIONAL FOR EACH LOAD SWITCH IN USE (IN ACCORDANCE WITH 733.04 PART 3B). THE MONITOR SHALL MONITOR EACH LOAD SWITCH SEPARATELY, AS SHOWN IN THE LOAD SWITCH HOOK-UP DIAGRAM. THE DESIGN OF THE MONITOR SHALL USE MICROPROCESSOR ARCHITECTURE AND LIQUID CRYSTAL DISPLAYS. THE CONFLICT MONITOR SHALL HAVE AN EVENT LOGGING MEMORY. A MINIMUM OF NINE (9) EVENTS SHALL BE LOGGED. EXAMPLES OF EVENTS INCLUDE: POWER OUTAGES, CONFLICTS, ETC. EVENTS SHALL BE DISPLAYED ON THE CONFLICT MONITOR'S LIQUID CRYSTAL DISPLAY, WHEN INTERROGATED.

THE MINIMUM NUMBER OF LOAD SWITCH SOCKETS IN THE CABINET FOR 5, 6, 7 AND 8 PHASE CONTROLLERS SHALL BE 16.

ALL SIGNAL CABLE AND LOOP DETECTOR LEAD-IN CABLE TERMINATIONS IN THE CABINET SHALL HAVE NO MORE THAN FOUR (4) INCHES OF THE OUTER INSULATING JACKET REMOVED.

THE CONTROLLER CABINET SHALL BE KEYED TO THE CITY OF AKRON MASTER. THE CONTROLLER CABINET SHALL NOT BE PAINTED. CONTROLLER CABINET SIZE SHALL COMPLY TO THE REQUIREMENTS OF NEMA TS-1 SECTION 14. PRINTED BOARD TYPE BACK PANELS OF THE CONTROLLER CABINET WILL NOT BE ACCEPTABLE. SOLDERED CONNECTIONS WILL BE PERMITTED FOR WIRING ON THE BACK SIDE OF THE BACK PANEL. TELEPHONE KNIFE TYPE CONNECTORS WILL NOT BE PERMITTED.

THE FOUNDATION SHALL BE ORIENTED WITH RESPECT TO THE INTERSECTION IN A MANNER THAT WILL PROVIDE MAINTENANCE PERSONNEL WITH A VIEW OF THE INTERSECTION WHILE WORKING ON THE CONTROLLER. THE CONTROLLER FOUNDATION SHALL BE CONSTRUCTED AS PER THE DETAIL ON SHEET 828.

PAYMENT FOR ITEM 633 CONTROLLER, BY PHASE, SOLID STATE DIGITAL MICROPROCESSOR, AS PER PLAN WILL BE AT THE CONTRACT BID PRICE PER EACH COMPLETE AND IN PLACE INCLUDING ALL CONNECTIONS TESTED AND ACCEPTED.

ITEM 633 - ALTERNATE BID: CONTROLLER MISC.: ECONOLITE CONTROLLER

THE CITY OF AKRON IS REQUESTING THAT ALTERNATE BIDS BE PROVIDED FOR ECONOLITE BRAND CONTROLLERS, MODEL NUMBER ASC/2-2100 CLOSED LOOP MODEL, AT ALL INTERSECTIONS. ALL CONTROLLERS AND CABINETS ARE TO BE WIRED FOR FIBER OPTIC SYSTEM OPERATION. ALL SPECIFICATIONS AND MODIFICATIONS TO ODOT SPECIFICATIONS, AS WELL AS PAYMENT METHODS CONTAINED WITHIN THIS PLAN SET ARE STILL PERTINENT AND SHOULD BE CONSIDERED DURING BIDDING.

ITEM 633 - CONTROLLER, MASTER, TRAFFIC RESPONSIVE, AS PER PLAN

THE CABINET AT MARKER STREET AND GOODKIRK STREET SHALL CONTAIN A MENU STYLE MASTER (ECONOLITE ASC/2M-1000, FIBER OPTIC READY) AND PHONE MODEM. THE MASTER AND ITS ASSOCIATED ITEMS SHALL BE COMPLETELY WIRED IN PLACE.

ITEM 632 - INTERCONNECT CABLE, MISC.: GENERAL FIBER OPTIC CABLE REQUIREMENTS, AS PER PLAN

THIS SPECIFICATION RECOGNIZES THE FOLLOWING ACCEPTED DESIGNS FOR THIS PROJECT.

* OUTSIDE PLANT CABLE (OSP): DUCT, DIELECTRIC, ARMORED, LOOSE TUBE, MDPE JACKETED IN AN UNDERGROUND CONDUIT CONFIGURATION.

* OUTSIDE PLANT CABLE (OSP): AERIAL DIELECTRIC, ARMORED, LOOSE TUBE, MDPE JACKETED IN A FIGURE 8 OR LASHED CONFIGURATION.

* INSIDE PLANT CABLE (IP): TIGHT BUFFERED RISER RATED, TIGHT BUFFERED PLENUM RATED, AND FAN-OUT OR BREAKOUT CABLE BOTH RISER AND PLENUM.

THE FOLLOWING STANDARDS ARE THE MINIMUM REQUIRED FOR BOTH OUTSIDE PLANT (OSP) AND INSIDE PLANT (IP) FIBER OPTIC CABLE TO BE USED ON THIS PROJECT. ANY VARIANCE FROM THESE SPECIFICATIONS MUST HAVE APPROVAL FROM THE ENGINEER BEFORE AN UNSPECIFIED PRODUCT CAN BE UTILIZED ON ANY PORTION OF THIS PROJECT.

THE SPECIFIC FIBER COUNTS REQUIRED ON THIS PROJECT ARE NOTED ON THE PROJECT'S PLANS, DRAWINGS, PROJECT SPECIFICATIONS, CONSTRUCTION DRAWINGS FOR SPECIFIC CABLE AND OPTICAL FIBER CONFIGURATIONS.

1. OPTICAL FIBER CHARACTERISTICS
THE FOLLOWING OPTICAL FIBER CHARACTERISTICS SHALL BE APPLY TO BOTH OSP AND IP CABLE:

DISPERSION-UNSHIFTED SINGLE-MODE FIBER, EIA 4920BA000, CLASS 4A OR MULTIMODE FIBERS WITH CORE/CLAD DIAMETERS OF 62.5/125 MICRON, EIA CLASS 492AAAA-1989-1A.

EACH OPTICAL FIBER SHALL CONSIST OF A DOPED SILICA CORE SURROUNDED BY A CONCENTRIC SILICA CLADDING. THE FIBER SHALL BE MATCH-CLAD DESIGN. ALL FIBERS IN THE CABLE SHALL BE USABLE FIBERS AND SHALL BE SUFFICIENTLY FREE OF SURFACE IMPERFECTIONS AND INCLUSIONS TO MEET THE OPTICAL, MECHANICAL AND ENVIRONMENTAL REQUIREMENTS OF THESE SPECIFICATIONS.

ALL FIBERS SHALL HAVE A TENSILE STRENGTH OF 0.7 GPA. THE COATING SHALL BE DUAL LAYERED, UV CURED ACRYLATE. THE COATING SHALL BE IN PHYSICAL CONTACT WITH THE CLADDING SURFACE AND SHALL BE MECHANICALLY OR CHEMICALLY STRIPPABLE WITHOUT DAMAGING THE FIBER.

THE REQUIRED FIBER GRADE SHALL REFLECT THE MAXIMUM INDIVIDUAL FIBER ATTENUATION TO GUARANTEE THE REQUIRED PERFORMANCE OF EVERY FIBER IN THE CABLE.

THE FIBER SHALL COMPLY WITH ALL OPTICAL AND MECHANICAL REQUIREMENTS OVER AN OPERATING TEMPERATURE RANGE OF -40 DEGREES C TO +70 DEGREES C.

THE OPTICAL FIBER SHALL BE PRODUCED BY AT&T, CORNING OR U.S. MANUFACTURED EQUAL. IF A CABLE MANUFACTURER CHOOSES TO UTILIZE OPTICAL FIBER OTHER THAN AT&T OR CORNING, SAID MANUFACTURER OF CABLE SHALL SUBMIT ITS OPTICAL FIBER FOR PRE-APPROVAL. THIS APPROVAL WILL CONSIST OF SPLICE COMPATIBILITY BETWEEN SAID U.S. MANUFACTURER AND AT&T AND CORNING. THESE TESTS AND THEIR DATA SHALL BE PERFORMED AND COMPLIED BY AN ENGINEER-APPROVED INDEPENDENT LABORATORY, SUCH AS BELLCORE, THAN CAN DEMONSTRATE A THREE-YEAR HISTORY OF THE PERFORMANCE OF SUCH TESTS. TESTING WILL BE AT THE EXPENSE OF THE CONTRACTOR.

2. OPTICAL FIBER SPECIFICATION TABLE

PARAMETERS	SINGLE-MODE	MULTIMODE
TYPE	STEP INDEX	GRADED
INDEX		
CORE DIAMETER	8.3 UM (NOMINAL)	62.5 UM + 3.0 UM
CORE TO CLADDING OFFSET	125 UM + 1.0 UM	125 UM
COATING DIAMETER	245 UM + 10 UM	245 UM+10 UM
CLADDING NON-CIRCULARITY	<1.0%	<1.0%
PROOF TENSILE TEST	0.7 GPA	0.7 GPA
ATTENUATION		
@ 850 nm (MM)	N/A	<3.5 dB/KM
@ 1300 nm (MM)	N/A	<1.0 dB/KM
@ 1310 nm (SM)	<0.4 DB/KM	N/A
@ 1550 nm (SM)	<0.3 DB/KM	N/A
BANDWITH		
@ 850 nm (MM)	N/A	160 MHZ*KM
@ 1300 nm (MM)	N/A	500 MHZ*KM
CHROMATIC DISPERSION		
ZERO DISPERSION	1310+10 nm (CENTERED AROUND A NOMINAL OPERATING WAVE LENGTH OF 1310)	N/A
ZERO DISPERSION SLOPE	<0.092 PS/(nm2*KM)	N/A
MAXIMUM DISPERSION	<2.8 PS/NM-KM) AT 1285-1330 nm, MEAN VALUE IS TYPICALLY 2.5 PS/nm-KM	
CUT-OFF WAVELENGTH	1260 nm	N/A
NUMERICAL APERTURE	N/A	N/A

(EIA 455-47)

3. COLOR CODING
BUFFER TUBES AND INDIVIDUAL OPTICAL FIBERS WITHIN THOSE BUFFER TUBES SHALL ADHERE TO EIA-TIA-598, "CODING OF FIBER OPTIC CABLE".

1 = BLUE	5 = SLATE	9 = YELLOW
2 = ORANGE	6 = WHITE	10 = VIOLET
3 = GREEN	7 = RED	11 = ROSE
4 = BROWN	8 = BLACK	12 = AQUA

THE COLORING MATERIAL SHALL BE STABLE OVER THE TEMPERATURE RANGE OF THE CABLE, SHALL NOT BE SUSCEPTIBLE TO MIGRATION, AND SHALL NOT AFFECT THE TRANSMISSION CHARACTERISTICS OF THE OPTICAL FIBERS. COLOR-CODED BUFFERED FIBERS SHALL NOT ADHERE TO ONE ANOTHER.

4. PACKING AND SHIPPING (OSP & IP CABLE)

THE CABLE SHALL BE PACKAGED WOUND ON SPOOLS OR REELS. THE DIAMETER OF THE DRUM SHALL BE AT LEAST 20 TIMES THE DIAMETER OF THE CABLE. EACH PACKAGE SHALL CONTAIN ONLY ONE CONTINUOUS LENGTH OF CABLE. THE PACKAGING SHALL BE CONSTRUCTED SO AS TO PREVENT DAMAGE TO THE CABLE DURING SHIPPING AND HANDLING. LABELS SHALL BE ATTACHED TO THE REEL SHOWING LENGTH, CABLE IDENTIFICATION (NAME AND NUMBER), DATE OF MANUFACTURE, AND UL LABELS.

WHEN THE LENGTH (WITH THE WEIGHT EXCEEDING 1760 KG) OF AN ORDER REQUIRES A LARGE WOODEN REEL, THE REEL SHALL BE LAGGED WITH WOODEN STAVES.

THE CABLE SHALL BE COVERED WITH A THERMAL WRAP. THE OUTER END OF THE CABLE SHALL BE SECURELY FASTENED TO THE REEL HEAD SO AS TO PREVENT THE CABLE FROM BECOMING LOOSE IN TRANSIT. THE INNER END OF THE CABLE SHALL PROJECT A MINIMUM OF TWO (2) METERS INTO A SLOT IN THE SIDE OF THE REEL OR MANNER TO MAKE IT AVAILABLE FOR TESTING. AN ARBOR HOLE OF 1 * INCH (40MM) MINIMUM IS REQUIRED.

TEST TAILS SHALL BE AT LEAST 2 METERS LONG. THE INNER END SHALL BE FASTENED SO AS TO PREVENT THE CABLE FROM BECOMING LOOSE DURING SHIPPING AND INSTALLATION. END SEALS SHALL BE APPLIED TO EACH END OF THE CABLE TO PREVENT MOISTURE FROM ENTERING THE CABLE. REELS SHALL BE PERMANENTLY MARKED WITH AN IDENTIFICATION NUMBER THAT CAN BE USED BY THE MANUFACTURER TO TRACE THE MANUFACTURING HISTORY OF THE CABLE AND THE FIBER.

DOCUMENTATION SHALL ACCOMPANY EACH REEL. THE DOCUMENTATION SHALL INDICATE THE ATTENUATION OF EACH CABLE FIBER IN dB/KM. THE ATTENUATION SHALL BE MEASURED AT 850 nm AND 1300 nm FOR MULTIMODE AND 1310 nm AND 1550 nm FOR SINGLE-MODE.

THE FOLLOWING STANDARDS ARE THE MINIMUM REQUIRED FOR OSP FIBER OPTIC CABLE IN ADDITION TO THE GENERAL REQUIREMENTS DEFINED ABOVE.

EACH OSP CABLE SHALL BE ALL-DIELECTRIC, ARMORED, DRY CORE (WATER-BLOC TAPE) LOOSE TUBE, CONFORMING TO PE-90 OUTSIDE PLANT CABLE. ARMORED CABLE SHALL BE REQUIRED FOR ALL OSP TRUNK CABLE TYPES ON THIS PROJECT.

ALL FIBER OPTIC CABLE ON THIS PROJECT SHALL BE FROM A MANUFACTURER WHO IS REGULARLY ENGAGED IN THE PRODUCTION OF THIS MATERIAL. ALL OSP LOOSE TUBE FIBER OPTIC CABLE AND ALL OSP LOOSE-TUBE DROP CABLES USED ON THIS PROJECT SHALL BE FROM THE SAME MANUFACTURER.

1. CABLE MARKING CHARACTERISTICS (OSP)
CABLE MARKINGS ARE INDENT PRINTING WITH WHITE CHARACTERS ON THE OUTER JACKETS. THE CHARACTERS SHALL BE APPROXIMATELY 1/8 INCH (3MM) IN HEIGHT AND SPACED TO PRODUCE GOOD LEGIBILITY. THE CABLE SHALL BE SEQUENTIALLY RUN THROUGH ZERO ON ANY LENGTH OF CABLE. THE LENGTH MARKINGS ARE IN METERS. THE MAXIMUM VARIANCE
BETWEEN THE ACTUAL CABLE LENGTH AND MARKED CABLE LENGTH IS -1%, +1%.

EACH LENGTH OF CABLE IS MARKED WITH THE FOLLOWING LEGEND:
"(MFG. NAME) OPTICAL CABLE (YEAR OF MFG.) (CABLE DESCRIPTION)"

2. GENERAL CABLE PERFORMANCE SPECIFICATIONS (OSP CABLE)
THE OSP FIBER OPTIC CABLE SHALL WITHSTAND WATER PENETRATION WHEN FACTORY TESTED WITH A ONE-METER STATIC HEAD OR EQUIVALENT CONTINUOUS PRESSURE APPLIED AT ONE END OF A ONE-METER LENGTH OF FILLED CABLE FOR ONE HOUR. NO WATER SHALL LEAK THROUGH THE OPEN CABLE END. TESTING SHALL BE DONE IN ACCORDANCE WITH EIA-455-82, "FUND PENETRATION TEST FOR FLUID-BLOCKED FIBER OPTIC CABLE".

A REPRESENTATIVE SAMPLE OF CABLE SHALL BE FACTORY TESTED IN ACCORDANCE WITH EIA-4355-81A, "COMPOUND FLOW (DRIP) TEST FOR FILLED FIBER OPTIC CABLE". THE TEST SAMPLE SHALL EXHIBIT NO FLOW (DRIP OR LEAK) AT 65 DEGREES C AS DEFINED IN THE TEST METHOD.

CRUSH RESISTANCE OF THE FINISHED FIBER OPTIC CABLES SHALL BE 220 N/CM APPLIED UNIFORMLY OVER THE LENGTH OF THE CABLE WITHOUT SHOWING EVIDENCE OF CRACKING OR SPLITTING WHEN TESTED IN ACCORDANCE WITH EIA-455-41, FACTORY TEST. THE MAXIMUM INCREASE IN ATTENUATION FOR THE FIBERS SHALL BE <0.20 dB AT 1300 nm (MULTIMODE) AND <0.10 dB AT 1550 nm (SINGLE MODE) FOR A CABLE SUBJECTED TO THIS LOAD. THE CABLE SHALL NOT EXHIBIT ANY MEASURABLE INCREASE IN ATTENUATION AFTER REMOVAL OF LOAD. TEST SHALL BE IN ACCORDANCE WITH EIA-344-41, "COMPRESSIVE LOADING RESISTANCE OF FIBER OPTIC CABLE" EXCEPT THAT LOAD SHALL BE APPLIED AT THE RATE OF 3MM TO 20MM PER MINUTE AND MAINTAINED FOR 10 MINUTES.

THE CABLE SHALL WITHSTAND 25 CYCLES OF MECHANICAL FLEXING AT A RATE OF 30+/- 1 CYCLES/MINUTE, FACTORY TEST. THE MAXIMUM INCREASE IN ATTENUATION FOR THE FIBERS SHALL BE <0.20 DB AT 1300 nm (MULTIMODE) AND <0.10 dB AT 1550 nm (SINGLE MODE) AT THE COMPLETION OF THE TEST. OUTER CABLE JACKED CRACKING OR SPLITTING OBSERVED UNDER 5-TIMES MAGNIFICATION SHALL CONSTITUTE FAILURE. THE TEST SHALL BE CONDUCTED IN ACCORDANCE WITH EIA-445-104, "FIBER OPTIC CABLE CYCLIC FLEXING TEST", WITH THE MANDREL DIAMETER A MAXIMUM OF 20-TIMES THE OUTSIDE DIAMETER OF THE CABLE. THE CABLE SHALL BE TESTED IN ACCORDANCE WITH FACTORY TEST CONDITIONS I AND III OF EIA-455-104.

CALCULATED SJ | CHECKED CRP

TRAFFIC SIGNAL AND INTERCONNECT GENERAL NOTES

SUM-8-0.63

793A
1088

THE CABLE SHALL WITHSTAND 25 CYCLES OF MECHANICAL FLEXING AT A RATE OF 30+_/- 1 CYCLES/MINUTE, FACTORY TEST. THE MAXIMUM INCREASE IN ATTENUATION FOR THE FIBERS SHALL BE <0.20 DB AT 1300 nm (MULTIMODE) AND <0.10 dB AT 1550 nm (SINGLE MODE) AT THE COMPLETION OF THE TEST. OUTER CABLE JACKET CRACKING OR SPLITTING OBSERVED UNDER 5-TIMES MAGNIFICATION SHALL CONSTITUTE FAILURE. THE TEST SHALL BE CONDUCTED IN ACCORDANCE WITH EIA-445-104, "FIBER OPTIC CABLE CYCLIC FLEXING TEST", WITH THE MANDREL DIAMETER A MAXIMUM OF 20-TIMES THE OUTSIDE DIAMETER OF THE CABLE. THE CABLE SHALL BE TESTED IN ACCORDANCE WITH FACTORY TEST CONDITIONS I AND III OF EIA-455-104.

THE CABLE SHALL WITHSTAND 25 IMPACT CYCLES. THE MAXIMUM INCREASE IN ATTENUATION FOR THE FIBERS SHALL BE <0.40 dB AT 1300 nm (MULTIMODE) AND <0.20 dB AT 1550 nm (SINGLE MODE). THE CABLE JACKET SHALL NOT EXHIBIT EVIDENCE OF CRACKING OR SPLITTING AT 5-TIMES MAGNIFICATION. THE FACTORY TEST SHALL BE CONDUCTED IN ACCORDANCE WITH EIA-455-25A, "IMPACT TESTING OF FIBER OPTIC CABLES AND CABLE ASSEMBLIES". THE FINISHED CABLE SHALL WITHSTAND A TENSILE LOAD OF 2700N WITHOUT EXHIBITING AN INCREASE IN ATTENUATION OF GREATER THAN 0.20 dB (MULTIMODE) AND 0.10 dB (SINGLE MODE). THE FACTORY TEST SHALL BE CONDUCTED IN ACCORDANCE WITH EIA-455-33A, "FIBER OPTIC CABLE TENSILE LOADING AND BENDING TEST". THE LOAD SHALL BE APPLIED FOR ONE HOUR IN TEST CONDITION ii OF THE EIA-455-33A PROCEDURE. NO SHEATH CRACKING OR SPLITTING AT 5-TIMES MAGNIFICATION WILL BE PERMITTED.

THESE TEST RESULTS SHALL BE SUBMITTED TO THE ENGINEER BEFORE ACCEPTANCE OF THE CABLE.

3. QUALITY ASSURANCE PROVISIONS (OSP CABLE)
ALL OPTICAL FIBERS SHALL BE USABLE AND SHALL BE 100% ATTENUATION TESTED BY THE MANUFACTURER. THE ATTENUATION OF EACH FIBER SHALL BE PROVIDED WITH EACH CABLE REEL. DOCUMENTATION OF FACTORY TEST RESULTS SHALL BE PROVIDED TO THE ENGINEER PRIOR TO SHIPPING.

AT THE REQUEST OF THE ENGINEER, THE CONTRACTOR SHALL HAVE THE CABLE MANUFACTURER PROVIDE INSTALLATION PROCEDURES AND TECHNICAL SUPPORT CONCERNING THE ITEMS CONTAINED IN THESE SPECIFICATIONS.

THE COST OF MEETING ALL REQUIREMENTS OF THIS SECTION SHALL BE INCIDENTAL TO THE PROJECT AND INCLUDED IN THE UNIT COST OF THE FIBER OPTIC TRUNK AND DROP CABLES.

ITEM 632 - INTERCONNECT, MISC.: FIBER OPTIC CABLE INSTALLATION, AS PER PLAN

1. CABLE INSTALLATION
THE FIBER OPTIC TRUNK, SUB-TRUNK AND DROP CABLE SHALL BE INSTALLED TO FOLLOW THE PATH AS SHOWN ON THE CONSTRUCTION PLAN SET. THE CONTRACTOR SHALL NOTIFY THE ENGINEER 48 HOURS PRIOR TO ALL FIBER OPTIC CABLE INSTALLATION.

(A) AERIAL INSTALLATION (IF ANY)
THE CONTRACTOR SHALL REMOVE EXISTING COPPER CABLE PRIOR TO INSTALLING FIBER OPTIC CABLE. WHERE EXISTING MESSENGER CLAMPS ARE NOT REUSABLE OR WHERE THEY DO NOT EXIST, THE CONTRACTOR SHALL INSTALL NEW MESSENGER CLAMPS OF SIMILAR TYPE TO GRIP THE MESSENGER CABLE. THE CONTRACTOR SHALL COORDINATE WITH THE APPROPRIATE UTILITY COMPANY PRIOR TO INSTALLING FIBER OPTIC CABLE ON EXISTING WOOD POLES.

(B) UNDERGROUND INSTALLATION
WHERE EXISTING CONDUIT IS ABLE TO PROVIDE A CONTINUOUS, UNOBSTRUCTED PATH FOR NEW CABLE AND INNERDUCT THE CONTRACTOR SHALL INSTALL FIBER OPTIC CABLE WITHIN 25-MM INNERDUCT. A DETECTABLE TAPE SYSTEM IS NOT REQUIRED WHEN INSTALLING FIBER OPTIC CABLE IN EXISTING CONDUIT, HOWEVER, A TONE WIRE MUST BE INSTALLED IN THE CONDUIT TO PROVIDE A METHOD OF LOCATING FIBER/CONDUIT BETWEEN PULLBOXES. THE TONE WIRE SHALL HAVE SUFFICIENT LENGTH STORED WITHIN PULLBOXES TO PROVIDE FOR THE ATTACHMENT OF ELECTRONIC EQUIPMENT IF CONTRACTOR REMOVES COPPER CABLE IN CONDUIT AFTER FIBER TESTING, FIBER AND TONE WIRE MUST BE TESTED AGAIN FOR APPROVAL BY THE ENGINEER. THE MAXIMUM PULLING TENSION ON THE EXISTING FIBER OPTIC CABLE SHALL NOT BE EXCEEDED AS REQUIRED BY ITEM #2 BELOW.

DUE CARE SHALL BE TAKEN BY THE CONTRACTOR TO PREVENT MICRO BENDING OF THE FIBER OPTIC CABLE IN CONDUITS SHARED BY MULTIPLE CABLES. THE CONTRACTOR SHALL INSTALL FIBER OPTIC CABLE AT THE SAME TIME OR AFTER THE INSTALLATION OF OTHER CABLES IN THE SAME CONDUIT. THE PULLING OF SIGNAL OR INTERCONNECT CABLES IN CONDUITS WITH FIBER OPTIC CABLE PRESENT IS NOT PERMITTED.

THE CONTRACTOR SHALL SUBMIT FOR APPROVAL A DETAILED CONSTRUCTION AND INSTALLATION PROCEDURE (SOP) COVERING ALL ASPECTS OF THE CONSTRUCTION AND INSTALLATION PROCESS FOR EACH SPECIFIC CABLE TYPE TO BE USED ON THIS PROJECT. THE CONTRACTOR SHALL SECURE FROM
HE CABLE MANUFACTURER THE CONSTRUCTION AND INSTALLATION PROCEDURES TO BE USED ON THE PROJECT. THE SOP WILL BE REVIEWED AND APPROVED BY THE ENGINEER PRIOR TO COMMENCEMENT OF ANY WORK ON THE PROJECT.

(C) BRIDGE INSTALLATION
WHERE EXISTING CONDUIT IS ABLE TO ACCOMMODATE FIBER OPTIC CABLE AND INNERDUCT, CONTRACTOR SHALL INSTALL FIBER OPTIC CABLE WITHIN 25-M INNERDUCT IN BRIDGE STRUCTURE. WHERE EXISTING CONDUIT IS NOT AVAILABLE, CONTRACTOR SHALL INSTALL NEW CONDUIT ACCORDING
THE SPECIFICATIONS AND TYPICAL DRAWINGS IN PLANS OR AS DIRECTED BY THE ENGINEER.

THE CONTRACTOR SHALL SUBMIT FOR APPROVAL A DETAILED CONSTRUCTION AND INSTALLATION PROCEDURE (SOP) COVERING ALL ASPECTS OF THE CONSTRUCTION AND INSTALLATION PROCESS FOR EACH AND ALL SPECIFIC CABLE TO BE USED ON THIS PROJECT. THE CONTRACTOR SHALL SECURE FROM THE CABLE MANUFACTURER THE CONSTRUCTION AND INSTALLATION PROCEDURES TO BE USED ON THE PROJECT. THE SOP WILL BE REVIEWED AND APPROVED BY THE ENGINEER PRIOR TO COMMENCEMENT OF ANY WORK ON THE PROJECT.

2. PULLING FIBER OPTIC CABLE
CONTRACTOR MUST USE A TENSION-CONTROLLING DEVICE WHEN MECHANICALLY PULLING FIBER OPTIC CABLE TO GUARANTEE PULLING TENSIONS LESS THAN SPECIFIED.

MAXIMUM PULLING TENSION: LOOSE TUBE (OSP CABLE)

2 FIBER DURING INSTALLATION (SHORT TERM)	2700 N
INSTALLED (LONG TERM)	890 N
12 FIBER DURING INSTALLATION (SHORT TERM)	2700 N
INSTALLED (LONG TERM)	890 N
24 FIBER DURING INSTALLATION (SHORT TERM)	2700 N
INSTALLED (LONG TERM)	890 N
36 FIBER DURING INSTALLATION (SHORT TERM)	2700 N
INSTALLED (LONG TERM)	890 N

MAXIMUM PULLING TENSION: TIGHT BUFFERED (IP CABLE)

2 FIBER DURING INSTALLATION (SHORT TERM)	800 N
INSTALLED (LONG TERM)	200 N
12 FIBER DURING INSTALLATION (SHORT TERM)	1800 N
INSTALLED (LONG TERM)	600 N
24 FIBER DURING INSTALLATION (SHORT TERM)	2500 N
INSTALLED (LONG TERM)	1000 N

3. MINIMUM BEND RADIUS
ALL CABLES ON THIS PROJECT UP TO 0.90-INCH (23-MM) NOMINAL CABLE DIAMETER MAY BE INSTALLED USING A 20-INCH (500-MM) DIAMETER WHEEL. THE CABLE MANUFACTURER SHALL PROVIDE COMPLETE MINIMUM BEND RADIUS INFORMATION.

A TYPICAL MINIMUM BEND RADIUS IS 10-TIMES THE DIAMETER OF THE CABLE, HOWEVER THIS MAY RESULT IN MINOR, COSMETIC WRINKLING OF THE OUTER SHEATH OF ARMORED CABLES. THIS WRINKLING WILL NOT EFFECT PERFORMANCE; HOWEVER, IT WILL NOT BE ACCEPTABLE TO THE ENGINEER.
TO AVOID THIS WRINKLING, USE A BEND RADIUS OF 20-TIMES THE CABLE DIAMETER.

4. SPLICING PROCEDURES
THE PROCEDURE TO BE USED FOR THE SPLICING OF ALL CABLES ON THIS PROJECT SHALL BE SUBMITTED TO THE ENGINEER FOR APPROVAL. WITHIN THE SUBMITTAL, DOCUMENTS SHALL BE THE PROPOSED PROCESS, THE CLASS OF CLEAVE TOOL (WITH END ANGLE DOCUMENTATION), THE SPECIFIC
FUSION SPLICER AND TYPE OF MECHANICAL SPLICE TO BE USED. UPON APPROVAL BY THE ENGINEER, THIS DOCUMENTATION WILL BE THE BASIS FOR INSPECTION AS DEFINED IN ITEM 632 INTERCONNECT, MISC.: FIBER OPTIC CONNECTOR, SM, AS PER PLAN.

CALCULATED SJ
CHECKED CRP

TRAFFIC SIGNAL AND INTERCONNECT GENERAL NOTES

SUM-8-0.63

793B
1088

CABLE SPLICING SHALL BE HELD TO A MINIMUM AND THE SPLICE LOCATIONS WILL BE PRE-APPROVED BY THE ENGINEER. THE CONTRACTOR SHALL MAINTAIN A MINIMUM DISTANCE OF 3300 FEET (1.0 KM) BETWEEN ENTIRE-CABLE SPLICE LOCATIONS. CABLE SPLICES OF ONLY THE REQUIRED BUFFER TUBES WILL BE ALLOWED ONLY AT FIBER OPTIC DROP LOCATIONS. FIBERS THAT HAVE A DEFINED USE OR ARE DESIGNATED AS SPARES IN THE SPLICE CHART SHALL BE CONNECTED AND SPLICED. NO SPLICES BETWEEN INTERSECTIONS WILL BE ALLOWED.

THE CONTRACTOR SHALL LOG THE NEAREST CABLE LENGTH MARKING OF THE CABLE ENTRANCE AND EXIT TO THE SPLICE CLOSURE AT EACH SPLICE LOCATION. THESE RECORDS WILL BE USED BY THE CITY TO DETERMINE THE LOCATION OF FAILURES WHILE MAINTAINING THE SYSTEM.

5. FUSION SPLICING
FUSION SPLICING CONSISTS OF ALIGNING THE CORES OF TWO CLEAN (STRIPPED OF COATING), CLEAVED FIBERS AND FUSING THE ENDS TOGETHER WITH AN ELECTRIC ARC. THE FIBER ENDS ARE POSITIONED UNDER A MICROSCOPE OR A HIGH-RESOLUTION VIDEO MONITOR AND THEN ALIGNED USING VARIOUS PRECISION MOVEMENT MICRO-POSITIONERS (COMMONLY STEPPING MOTORS OR PIEZOELECTRIC DEVICES). HIGH-VOLTAGE ELECTRODES CONTAINED IN THE SPLICER CONDUCT AN ARC ACROSS THE FIBER ENDS AS THE FIBERS ARE MOVED TOGETHER, THIS FUSING THE FIBERS TOGETHER. MAXIMUM CORE ALIGNMENT SHALL BE VERIFIED PRIOR TO SPLICING AND SPLICE ESTIMATED LOSS MEASURED AFTER THE FUSION PROCESS BY THE USE OF LOCAL INJECTION AND DETECTOR DEVICES AND/OR PROFILE ALIGNMENT ALGORITHMS. FUSION SPLICERS MUST AUTOMATICALLY ALIGN FIBERS, DETERMINE CLEAVE QUALITY, FUSE THE FIBERS AND PROVIDE THE OPERATOR WITH REFERENCE ESTIMATED SPLICE LOSS MEASUREMENTS. FUSION SPLICING SHALL BE PERFORMED USING SIECOR M90 MICRO-PROCESSOR CONTROLLED FUSION SPLICER OR EQUAL.

FUSION SPLICING SHALL BE THE STANDARD FOR THIS PROJECT.
(A) SPLICE LOSS (FUSION SPLICING). A MAXIMUM SPLICE LOSS OF 0.20 dB IS ALLOWED WITH A FUSION SPLICE.

(B) SPLICE PROTECTION. FUSION SPLICES REQUIRE ADEQUATE SPLICE PROTECTION. WHEN SPLICING OUTDOORS, THE SPLICED AND STRIPPED CABLE SHALL BE PROTECTED BY A SPLICE ENCLOSURE. ALL FIBER SPLICES ARE HOUSED IN SPLICE TRAYS OR ORGANIZERS INSIDE AN ENCLOSURE. THE PROPER SPLICE TRAY SHALL BE SELECTED BASED ON THE TYPE PF PROTECTION AND STRAIN RELIEF, WHICH CAN BE PROVIDED BY GLASS CAPILLARIES, HEAT SHRINK TUBING, OR SILICONE SEALANT (COMMONLY REFERRED TO AS RTV).

WHEN SPLICING INSIDE A BUILDING, A SPLICE CENTER SHALL BE USED WHEN RACK OR WALL SPACE IS AVAILABLE. ADDITIONALLY, MOST TERMINATION PATCH PANELS HAVE BUILT-IN OR ACCOMPANYING SPLICE CENTERS THAT ALLOW FIBER TERMINATION AND THROUGH SPLICING WHEN REQUIRED

6. MECHANICAL SPLICING
MECHANICAL SPLICING IS ALLOWED ON THIS PROJECT ONLY AS A TEMPORARY CONNECTION. PERMANENT SPLICES SHALL BE FUSED TOGETHER.
(A) SPLICE LOSS (MECHANICAL SPLICING). A MAXIMUM SPLICE LOSS OF 0.30 DB IS ALLOWED FOR SINGLE-MODE AND MULTIMODE FIBER CONNECTIONS.

(B) SPLICE PROTECTION. WHEN MECHANICAL SPLICES REQUIRE STORING. A MECHANICAL SPLICE TRAY ORGANIZER SHALL BE USED.

7. LAB SPLICING
A LAB SPLICING IS A MECHANICAL FIBER OPTIC SPLICE UTILIZED WHEN A TEMPORARY JOINING OF TWO FIBERS IS REQUIRED SUCH AS IN THE TESTING OF NON-TERMINATED FIBER. THESE SPLICES SHALL BE USABLE ON SINGLE-MODE OR MULTIMODE OPTICAL FIBER. THE LAB SPLICE SHALL BE RE-USABLE FOR UP TO 50 MATINGS. THE LAB SPLICE SHALL ACCOMMODATE OPTICAL FIBERS WITH CLADDING DIAMETERS BETWEEN 120 AND 145 UM.

INSERTION LOSS:	MULTIMODE	< .30 dB
	SINGLE MODE	< .30 dB
OPERATING TEMPERATURE:		+25 * DEGREES C

8. INSPECTING, STORING AND SECURING CABLE
BEFORE THE INSTALLATION BEGINS, CAREFULLY INSPECT THE CABLE REELS FOR IMPERFECTIONS SUCH AS NAILS AND BROKEN FINGERS WHICH MIGHT CAUSE DAMAGE TO THE CABLE AS IT IS UNREELED.

PRECAUTIONS SHOULD BE TAKEN TO PROTECT REELED CABLE FROM VANDALS OR OTHER SOURCES OF POSSIBLE DAMAGE WHILE UNATTENDED. SECTIONS OF PIG TAIL TYPE CABLE ARE PRODUCED TO MEET SPECIFIC LENGTH REQUIREMENTS; ANY DAMAGE TO THE CABLE SECTIONS MAY REQUIRE REPLACEMENT OF THE ENTIRE SECTION.

WHENEVER UNREELED CABLE IS PLACED ON THE PAVEMENT OR SURFACE ABOVE A MANHOLE, PROVIDE BARRICADES OR OTHER MEANS OF PREVENTING VEHICULAR OR PEDESTRIAN TRAFFIC THROUGH THE AREA.

A "FIGURE-EIGHT" CONFIGURATION SHOULD BE USED TO PREVENT KINKING OR TWISTING WHEN THE CABLE MUST BE UNREELED OR BACK FED. FIBER OPTIC CABLE SHOULD NOT BE COILED IN A CONTINUOUS DIRECTION EXCEPT FOR LENGTHS OF 30 M OR LESS. THE PREFERRED SIZE FOR THE "FIGURE-EIGHT" IS ABOUT 4.5 M IN LENGTH, WITH EACH LOOP 1.5 M TO 2.4 M IN DIAMETER. TRAFFIC CONES SPACED 3 METERS APART ARE USEFUL AS GUIDES DURING "FIGURE-EIGHTING". WHEN "FIGURE-EIGHTING" LONG LENGTHS OF CABLE, CARE SHOULD BE TAKEN TO RELIEVE PRESSURE ON THE CABLE AT THE CROSSOVER OF THE EIGHT. THIS CAN BE DONE BY PLACING CARDBOARD SHIMS AT THE CROSSOVER OR BY FORMING A SECOND "FIGURE-EIGHT". THE "FIGURE-EIGHT" MAY NEED TO BE FLIPPED OVER TO OBTAIN THE PULLING EYE, THIS CAN BE EASILY ACCOMPLISHED BY THREE PEOPLE, ONE AT EACH END AND ONE IN THE CENTER. THE CABLE CAN THEN BE PULLED OFF THE "FIGURE-EIGHT" THE REMAINING DISTANCE.

9. DESIGNATED CABLE SLACK
AT SPECIFIC LOCATIONS THROUGHOUT THE CABLE PLANT THE CONTRACTOR SHALL BE REQUIRED TO PULL & NEATLY STORE EXCESS CABLE. THESE LOCATIONS AND THE STORAGE REQUIRED AT EACH POINT ARE LISTED BELOW. THE FOLLOWING LENGTHS OF SLACK CABLE ARE MINIMUM:

(A) 24" X 36" X 36" (WITH SPLICE ENCLOSURE)	50 FEET
(B) 24 INCH PULL BOX	15 FEET
(C) TRAFFIC SIGNAL CONTROLLER	15 FEET

10. SLACK STORAGE
PROPER STORAGE OF SLACK CABLE, BOTH LONG TERM AND SHORT TERM WILL BE REQUIRED. THE CONTRACTOR SHALL NOT LEAVE SLACK CABLE LYING FREE ON THE GROUND, BOTTOM OF A PULL BOX, OR FLOOR OF A BUILDING EXCEPT DURING THE ACTUAL PULLING PROCESS. AT ALL OTHER TIMES, THE CABLE SHALL BE NEATLY MOUNTED, ADHERING TO THE BEND RADIUS REQUIREMENTS, ON RACKS OR BAYS. THE CONTRACTOR SHALL SUBMIT FOR APPROVAL BY THE ENGINEER SHOP DRAWINGS OF THE MATERIALS AND INSTALLATION OF THE ANCHORED MOUNTING CHANNELS TO BE INSTALLED IN PULL BOXES.

THE COST OF MEETING ALL REQUIREMENTS OF THIS SECTION SHALL BE INCIDENTAL TO THE PROJECT AND INCLUDED IN THE UNIT COST OF EACH ITEM.

ITEM 632 - INTERCONNECT CABLE, MISC.: FIBER OPTIC TRUNK CABLE,

(BY SIZE) AS PER PLAN

TRUNK AND SUB-TRUNK CABLE ON THIS PROJECT IS OSP CABLE AND INCLUDES CABLES THAT ARE SPLICED TO CONNECT TO EACH OTHER AND SPLICED TO INCORPORATE DROP CABLES INTO THE SYSTEM.

THIS SPECIFICATION PROVIDES THE DESIGN AND CONSTRUCTION REQUIREMENTS FOR ARMORED, ALL-DIELECTRIC, AERIAL AND UNDERGROUND OPTICAL FIBER CABLES. SPECIFICATIONS SET FORTH IN ITEM 632 INTERCONNECT CABLE, MISC.: GENERAL FIBER OPTICAL CABLE REQUIREMENTS, AS PER PLAN FOR OSP CABLES APPLY TO THE TRUNK AND SUB-TRUNK CABLE.

1. CENTRAL MEMBER
THE CENTRAL MEMBER FUNCTIONS AS AN ANTI-BUCKLING ELEMENT. IT IS A GLASS/EPOXY COMPOSITE (DIELECTRIC) ROD. A LINEAR LOW-DENSITY POLYETHYLENE (LLDPE) OVERCOAT MAY BE APPLIED TO THE CENTRAL MEMBER TO ACHIEVE THE OPTIMUM DIAMETER TO PROVIDE THE PROPER SPACING BETWEEN BUFFER TUBES DURING STRANDING.

2. LOOSE TUBE CONSTRUCTION
THE LOOSE BUFFER TUBES SHALL BE GEL FILLED OR WRAPPED WITH A WATER BLOCKING TAPE AND CONTAIN INDIVIDUAL FIBERS FROM TWO TO TWELVE PER TUBE. ALL SINGLE MODE SHALL BE CONTAINED IN FIRST LOOSE TUBES, I.E. 1/BLUE, 2/ORANGE, ETC.. AS SHOWN IN TYPICAL DRAWING. BALANCE OF LOOSE TUBES SHALL CONTAIN MULTIMODE IF SPECIFIED.

CALCULATED SJ
CHECKED CRP

TRAFFIC SIGNAL AND INTERCONNECT GENERAL NOTES

SUM-8-0.63

7930
1088

THE BUFFER TUBES SHALL PERMIT AND BE DEMONSTRATED TO ALLOW FOR A SAFE INTENTIONAL "SCORING" AND BREAKOUT ENTRY WITHOUT JEOPARDIZING THE INTERNAL FIBERS. THIS IS REFERRED TO AS AN ACCEPTABLE "SCORE AND SNAP" AND "SAFE ENTRY" WILL BE FINAL AND WILL BE DETERMINED VIA GENERAL OBSERVATION OF THE PRODUCTION SAMPLE AS SUBMITTED FOR APPROVAL.

3. ROD FILLERS
EACH ROD FILLER SHALL CONSIST OF A CENTRAL DIELECTRIC STRENGTH MEMBER SURROUNDED BY AN EXTRUDED ELASTOMERIC POLYMER COATING.

4. RIPCORD
THE CABLE SHALL CONTAIN A NON-WICKING POLYESTER YARN BENEATH THE CABLE JACKED TO SERVE AS A RIPCORD FOR JACKET REMOVAL.

5. STRENGTH MEMBER
A LAYER OF U.S. MANUFACTURED ARAMID YARNS, ALONG WITH AT LEAST ONE RIPCORD, SHALL BE APPLIED OVER THE BUFFER TUBE BUNDLE, THE CABLE CORE INTERSTICES SHALL BE SURROUNDED BY A WATER (BLOCK) SWELLABLE TAPE AND A LAYER OF HIGH STRENGTH GLASS YARNS SHALL SURROUND THE TAPE. AND THE CABLE SHALL BE JACKETED WITH MEDIUM DENSITY POLYETHYLENE (MDPE) BEFORE INSTALLING ARMOR.

6. ARMOR
THE ARMOR SHALL BE COMPOSED OF A CORRUGATED STEEL TAPE, PLASTIC-COATED ON BOTH SIDES FOR CORROSION RESISTANCE, AND SHALL BE APPLIED WITH AN OVERLAPPING SEAM WITH THE CORRUGATIONS IN REGISTER. ALL ARMOR SPLICES SHALL BE GROUNDED AND RE-COATED WITH PLASTIC
TO MAINTAIN THE ARMOR'S CORROSION RESISTANCE. THE OUTER JACKET SHALL BE APPLIED OVER THE CORRUGATED STEEL TAPE ARMOR.

7. OUTER JACKET
THE OUTER SHEATH JACKET SHALL BE COMPOSED OF MDPE. THE OUTER JACKET MATERIAL USED IN CONSTRUCTION OF THIS CABLE SHALL BE FUNGUS INERT AS DESCRIBED IN REQUIREMENT 4 OF MIL-STD-454. THE OUTER JACKET MATERIAL SHALL BE SUITABLE FOR LONG-TERM EXPOSURE TO S
LIGHT AND WEATHER, WITH A LIFE EXPECTANCY IN EXCESS OF 20 YEARS. SUITABILITY SHALL BE DETERMINED IN ACCORDANCE WITH MIL-STD-810, METHOD 505. THE OUTER JACKET SHALL BE SMOOTH AND BE FREE FROM HOLES, SPLITS, BLISTERS, AND OTHER SURFACE FLAWS.

8. SUPPORT MESSENGER (IF ANY)
INTEGRAL MESSENGER TYPE OPTICAL INTERCONNECT CABLE WITH 6MM MESSENGER MEETING THE REQUIREMENTS OF 732.18. UNDER THIS METHOD ANY SECTIONS OF CABLE SHOWN IN THE PLANS TO BE CONTAINED IN CONTROLLERS, CABINETS, POLES, CONDUITS OR SUPPORTED ON MESSENGER WIRE INSTALLED OF OTHER PURPOSES SHALL HAVE THE SUPPORTING MESSENGER AND JACKET WEB NEATLY REMOVED BY THE USE OF A TOOL SPECIFICALLY DESIGNED AND SIZED FOR THIS PURPOSE. DEVIATIONS FROM THE CABLE ROUTING SHOWN IN THE PLAN, FOR THE SOLE PURPOSE OF REDUCING THE AMOUNT OF MESSENGER TO BE REMOVED, WILL NOT BE PERMITTED. THE CABLE SHALL BE INSTALLED WITH APPROXIMATELY ONE TWIST FOR EACH 4.5 METER OF SPAN LENGTH.

THE CONTRACTOR WILL BE PERMITTED TO USE EITHER OF TWO TYPES OF INTERCONNECT CABLE CONSTRUCTION AND INSTALLATION FOR AERIAL CABLE RUNS (IF ANY) AS SHOWN ON THE PLANS:

(A) INTEGRAL MESSENGER TYPE OPTICAL INTERCONNECT CABLE WITH * INCH (6MM) MESSENGER MEETING THE REQUIREMENTS OF 732.18. UNDER THIS METHOD ANY SECTIONS OF CABLE SHOWN IN THE PLANS TO BE CONTAINED IN CONTROLLERS, CABINETS, POLES CONDUITS OR SUPPORTED ON MESSENGER WIRE INSTALLED FOR OTHER PURPOSES SHALL HAVE THE SUPPORTING MESSENGER AND JACKET WEB NEATLY REMOVED BY THE USE OF A TOOL SPECIFICALLY DESIGNED AND SIZED FOR THIS PURPOSE. DEVIATIONS FROM THE CABLE ROUTING SHOWN IN THE PLAN, FOR THE SOLE PURPOSE OF REDUCING THE AMOUNT OF MESSENGER TO BE REMOVED, WILL NOT BE PERMITTED. THE CABLE SHALL BE INSTALLED WITH APPROXIMATELY ONE TWIST FOR EACH 4.5 METER OF SPAN LENGTH.

(B) SEPARATE OPTICAL INTERCONNECT CABLE PLUS A 3/8 INCH (9MM) MESSENGER WIRE AND LASHING MEETING THE REQUIREMENTS OF 732.18. UNDER THIS METHOD THE CONTRACTOR WILL INSTALL A SEPARATE 3/8 INCH (9MM) MESSENGER TO SUPPORT THE SPANS OF INTERCONNECT CABLES IN ALL LOCATIONS WHERE THE PLANS SHOW INTERCONNECT CABLE WHICH IS NOT OTHERWISE SUPPORTED IN CONDUIT OR OTHER SUITABLE SUPPORT. UTILIZATION OF EXISTING MESSENGER WIRE, NOT PROVIDED BY THE PROJECT OR DESIGNATED THEREIN AS AVAILABLE FOR USE, IS PROHIBITED. SPAN WIRE MESSENGER WHICH SUPPORTS SIGNAL HEADS AND/OR OVERHEAD SIGNS SHALL NOT BE USED TO SUPPORT FIBER OPTICAL CABLE. DEVIATION FROM THE CABLE ROUTING SHOWN IN THE PLANS, FOR THE PURPOSE OF REDUCING THE NEED FOR SEPARATE MESSENGER WIRE, WILL NOT BE PERMITTED.

IN EITHER CASE, THE NUMBER OF SPLICE LOCATIONS SHALL BE KEPT A MINIMUM AND MESSENGER SHALL BE GROUNDED AT SPLICE LOCATIONS SUCH THAT MAXIMUM SAFETY IS CONSIDERED.

THE COST OF SUPPORT MESSENGER SHOULD BE INCLUDED IN THE AERIAL CABLE PRICE. NO SEPARATE PAYMENT WILL BE PROVIDED FOR ANY SEPARATE MESSENGER WIRE USED TO SUPPORT INTERCONNECT CABLES.

9. CABLE CONSTRUCTION
BEGINNING FROM THE CENTRAL MBMBER TO THE OUTER SHEATH:
BUFFER TUBES ARE STRANDED OVER A CENTRAL ANTI-BUCKLING MEMBER IN A PROCESS KNOWN AS REVERSE OSCILLATED STRANDING OR "SZ" STRANDING. A LAYER OF U.S. MANUFACTURED ARAMID YARNS, ALONG With A LEAST ONE RIPCORD, SHALL BE APPLIED OVER THE BUFFER TUBE BUNDLE. CABLE CORE INTERSTICES SHALL BE SURROUNDED BY A WATER (BLOCK) SWELLABLE TAPE AND A LAYER OF HIGH STRENGTH GLASS YARNS SHALL SURROUND THE TAPE. AN MDPE INNER JACKET SHALL SURROUND THE ARAMID YARNS THEN ARMOR ADDED AND THE CABLE WILL BE JACKETED WITH MEDIUM DENSITY POLYETHYLENE (MDPE).

WHERE A FIGURE 8 TYPE CABLE IS SELECTED, THE INTEGRAL MESSENGER SHALL BE INCLUDED WITHIN THE OUTER JACKET.

THIS ITEM SHALL ALSO INCLUDE CABLE-MOUNTING ACCESSORIES SUCH AS POLE CLAMPS TO INSTALL AERIAL CABLE ON EXISTING POLES. CONTRACTOR SHALL FOLLOW CABLE MANUFACTURER'S RECOMMENDED INSTALLATION PROCEDURES AND THE RECOMMENDATIONS IN ITEM 632 INTERCONNECT, MISC: FIBER OT@PTIC CABLE INSTALLATION, (BY TYPE). WHENEVER THERE PROCEDURES CONFLICT, THE CONTRACTOR SHALL FOLLOW MANUFACTURER'S RECOMMENDATIONS.

ITEM 632 - INTERCONNECT CABLE, MISC.: DROP CABLE, 6 FIBER-SM, AS PER PLAN

1. GENERAL
DROP CABLES ON THIS PROJECT INCLUDE 6 SM FIBER DROPS. THE FOLLOWING WILL BE SPECIFICATION FOR CABLES EXPRESSLY USED FOR CABLE RUNS. MAXIMUM PULLING TENSION FOR THESE DROP CABLES SHALL BE 660 KG (300 LB). SPECIFICATIONS SET FORTH IN ITEM 632 INTERCONNECT CABLE, MISC.: GENERAL FIBER OPTIC CABLE REQUIREMENTS, AS PER PLAN FOR OSP CABLES APPLY TO DROP CABLES.

DROP CABLES SHALL BE CONTINUOUS BETWEEN THE SPLICE ENCLOSURE AND THE WALL MOUNT INTERCONNECT CENTER. DROP CABLE SHALL FOLLOW A CONDUIT PATH.

2. QUALITY ASSURANCE PROVISION
THE FIBER OPTIC CABLE SHALL MEET OR EXCEED THE REQUIREMENTS OF THIS SPECIFICATION WHEN MEASURED IN ACCORDANCE WITH THE METHODS OF THE INDIVIDUAL REQUIREMENTS OR THE FOLLOWING METHODS AS DEFINED IN EIA-STD-RS-455:

(a) FIBER DIMENSIONS
(b) ATTENUATION
(c) BANDWITH
(d) NUMBERICAL APERTURE
(e) FIBER PROOF TEST
(f) CABLE BENDING
(g) TENSILE LOAD
(h) IMPACT RESISTANCE
(i) CRUSH RESISTANCE
(j) ATTENUATION VS. TEMPERATURE

MANUFACTURER SHALL PROVIDE ISO 9001 CERTIFICATION.

3. DROP CABLE (6F - 6 SM)
THE FIBER OPTIC DROP CABLE SHALL CONTAIN SIX SINGLE MODE OPTICAL FIBERS. SPECIAL MARKINGS ON THIS CABLE SHALL BE AS FOLLOWS: 6F/SM OPTICAL DROP CABLE PLUS LENGTH MARKINGS.

CALCULATED SJ
CHECKED CRP

TRAFFIC SIGNAL AND INTERCONNECT GENERAL NOTES

SUM-8-0.63

793D
1088

ITEM 632 - INTERCONNECT, MISC.: OPTICAL SPLICING, AS PER PLAN

SPLICING OF FIBER OPTIC CABLE WILL NOT BE PERMITTED EXCEPT IN EMERGENCY CONDITIONS OR AS SPECIFIED ON THE PLANS. FIBER OPTIC CABLE RUNS AND REQUIRED LOOPING OF THE CABLE SHALL BE PROVIDED IN ONE CONTINUOUS LENGTH. SPLICING SHALL BE BY TRAINED, AUTHORIZED PERSONS ONLY.

ANY ALLOWED SPLICING OF FIBER OPTIC CABLE SHALL BE BY FUSION SPLICE ONLY; NO MECHANICAL SPLICES ARE ALLOWED.

ALL FUSION SPLICING EQUIPMENT SHALL BE IN GOOD WORKING ORDER, PROPERLY CALIBRATED, AND MEET INDUSTRY STANDARDS AND SAFETY REGULATIONS. CABLE PREPARATION, CLOSURE INSTALLATION AND SPLICING SHALL BE ACCOMPLISHED IN ACCORDANCE WITH ACCEPTED AND APPROVED INDUSTRY STANDARDS.

THE AVERAGE SPLICE LOSS SHALL BE 0.2 dB OR LESS PER MULTIMODE FIBER SPLICE AND 0.1 dB OR LESS PER SINGLE MODE FIBER SPLICE. THE AVERAGE SPLICE LOSS IS DEFINED AS THE SUMMATION OF THE LOSS AS MEASURED IN BOTH DIRECTIONS USING AN OPTICAL TIME DOMAIN REFLECTOMETER (OTDR) THROUGH THE FUSION SPLICE, DIVIDED BY TWO. NO INDIVIDUAL SPLICE LOSS MEASURED IN A SINGLE DIRECTION SHALL EXCEED 0.25 dB FOR MULTIMODE FIBER OR 0.15 dB FOR SINGLE MODE FIBER.

ITEM 632 - INTERCONNECT, MISC.: FIBER OPTIC CONNECTOR, SM AND MM, AS PER PLAN

FIBER OPTIC CONNECTORS SHALL BE FIELD INSTALLABLE ST* AND ST COMPATIBLE, CERAMIC FERRULE, WITH THE FIBER PERMANENTLY SECURED WITHIN THE FERRULE WITH EPOXY, (HEAT SET OR AIR-DRIED), AS SPECIFIED BY THE CONNECTOR AND/OR THE EPOXY MANUFACTURER. WHEN CONNECTORS ARE INSTALLED OUTSIDE OF A CONTROLLED ENVIRONMENTAL LOCATION, THE CONNECTOR OPERATING TEMPERATURE SHALL BE BETWEEN -40 DEGREES C TO +70 DEGREES C. FOR THOSE APPLICATIONS WITHIN A CONTROLLED ENVIRONMENTAL LOCATION, THE OPERATING TEMPERATURE SHALL BE MINIMUM -20 DEGREES C TO +60 DEGREES C.

FC-PC WILL BE ALLOWED WHERE NECESSARY FOR CONNECTIVITY BETWEEN HARDWARE AND TEST EQUIPMENT; HOWEVER, ALL DISTRIBUTION PANELS/SHELVES WITHIN THE NETWORK SHALL ONLY ACCEPT ST*/ST COMPATIBLE AND THEREFORE SHALL REQUIRE CONNECTIVITY VIA ST/FC-PC HYBRID PATCH CARDS AS SPECIFIED.

EACH CONNECTOR LISTED BELOW SHALL NOT EXCEED THE MAXIMUM INSERTION LOSS OR RETURN LOSS FOR THAT CONNECTOR.

CONNECTOR TYPE INSTALLATION	MAXIMUM LOSS		RETURN LOSS
ST & FC (MM) FIELD	0.30 dB		N/A
ST & FC (SM) FIELD	0.30 dB	>	0.35 dB
ST & FC (MM) FACTORY	0.25 dB		N/A
ST & FC (SM) FACTORY	0.25 dB	>	0.45 dB

THE PROCEDURE FOR THE TERMINATION OF ST CONNECTORS USED ON THIS PROJECT SHALL MEET THAT PROCESS SET OUT IN THE CONNECTOR MANUFACTURER'S STANDARD OPERATING PROCEDURE (SOP) FOR FIELD INSTALLATION. THIS SOP SHALL BE SUBMITTED FOR APPROVAL TO THE ENGINEER. THE APPROVED SOP WILL BE THE BASIS FOR INSPECTION.

PAYMENT SHALL BE MADE AT THE CONTRACT UNIT PRICE BID PER EACH OF ITEM 632, INTERCONNECT, MISC.: FIBER OPTIC CONNECTOR, SM AND MM, AS PER PLAN.

ITEM 632 - INTERCONNECT, MISC.: FAN-OUT KIT (OSP), 6 AND 12 FIBER, AS PER PLAN

A FAN-OUT KIT IS REQUIRED FOR ALL LOOSE TUBE AND CENTRAL CORE FIBER OPTIC CABLE TERMINAL ENDS AND SHALL BE FITTED WITH CONNECTORS. THE FAN-OUT KIT CAN BE AN INDIVIDUAL BUFFER TUBE KIT, A MULTIPLE BUFFER TUBE KIT, OR SPIDER DESIGN KIT. ALL FAN-OUT KITS
ALL HAVE A MINIMUM OF 24 INCH (610MM) OF TUBING COVERING EACH FIBER WHEN INSTALLATION IS COMPLETE.

PRIOR TO ANY WORK THE CONTRACTOR SHALL SUBMIT FOR APPROVAL; CATALOG CUT SHEETS, GENERAL SPECIFICATIONS, AND STANDARD OPERATING PROCEDURES FOR THE KIT THAT IS TO BE UTILIZED ON THE PROJECT. ONLY ONE MANUFACTURER OF FAN-OUT KITS MAY BE USED THROUGHOUT THE PROJECT.

ITEM 632 - INTERCONNECT, MISC.: FIBER OPTIC DROP KIT, AS PER PLAN

A FIBER OPTIC DROP KIT SHALL INCLUDE EQUIPMENT AND LABOR TO INSTALL THE FOLLOWING ITEMS REQUIRED FOR THE CONNECTION OF A DEVICE TO THE FIBER NETWORK VIA A FUSION SPLICE OF DROP CABLE TO A TRUNK OR SUB-TRUNK CABLE. THE DROP KIT IS AN AGGREGATION OF MISCELLANEOUS PARTS AND LABOR NEEDED FOR THIS CONNECTION INCLUDING, BUT NOT LIMITED TO THE FOLLOWING:

* GROUNDING MECHANISM
* DEVICES NECESSARY TO STORE EXCESS CABLE SLACK,
* AERIAL OR UNDERGROUND MOUNTING
* CONNECTING CONTROL DEVICE TO FIBER OPTIC NETWORK
* STORING CABLE SLACK

THE DROP CABLE, FIBER OPTIC CONNECTORS, TERMINATING AND/OR SPLICING THE DROP CABLE TO THE TRUNK CABLE, SPLICE ENCLOSURES AND SPLICE TRAYS AND THE LABOR INVOLVED ARE SEPARATE BID ITEMS AND ARE LISTED SEPARATELY.

PAYMENT SHALL BE MADE AT THE CONTRACT UNIT PRICE BID PER EACH OF ITEM 632, INTERCONNECT, MISC.: FIBER OPTIC DROP KIT, AS PER PLAN.

ITEM 632 - INTERCONNECT, MISC.: FIBER OPTIC SPLICE ENCLOSURE (UNDER GRADE & AERIAL), AS PER PLAN

(A) USE LOCATION: SPLICE ENCLOSURES SHALL BE PLACED IN AN UNDERGROUND VAULT, MANHOLE, HUB BUILDING, OR THE INTERIOR OF A BUILDING. THE SPECIFIED CLOSURES, SUCH AS SIECOR SCN-CAN OR EQUAL, CAN ALSO BE USED IN AERIAL APPLICATION WITH THE PROPER MOUNTING HARDWARE.

(B) SPLICE CASE REQUIREMENTS: SPLICE CASES SHALL BE DESIGNED FOR USE UNDER THE MOST SEVERE CONDITIONS: MOISTURE, VIBRATION, IMPACT, CABLE STRESS & FLEX TEMPERATURE EXTREMES AS DEMONSTRATED BY SUCCESSFULLY PASSING THE FACTORY TEST PROCEDURES AND/OR MINIMUM SPECIFICATIONS LISTED BELOW.

(1) THE SPLICE CASE SHALL HANDLE UP TO FOUR CABLES IN BUTT CONFIGURATION. A BUTT ADAPTER, IF APPLICABLE, MAY BE USED TO INCREASE CAPACITY TO SIX CABLES.

(2) WATER PENETRATION TEST: THE SPLICE CASE SHALL PREVENT WATER INFUSION WITH NO ENCAPSULATE OR FILLING NECESSARY. THE SPLICE CASE SHALL ALLOW RE-ENTRY WITHOUT SPECIAL TOOLS. THE CLOSURE SHALL BE CAPABLE OF PREVENTING A 10-FOOT (3-METER) HEAD OF WATER FROM INTRUDING INTO THE SPLICE COMPARTMENT FOR A PERIOD OF 7 DAYS. TESTING OF THE SPLICE ENCLOSURE SHALL BE ACCOMPLISHED BY PLACING THE CLOSURE INTO A PRESSURE VESSEL AND FILLING THE VESSEL WITH TAP WATER TO COVER THE CLOSURE. CONTINUOUS PRESSURE SHALL BE APPLIED TO THE VESSEL TO MAINTAIN A HYDROSTATIC HEAD EQUIVALENT TO 10 FEET (3 METERS) ON THE CLOSURE AND CABLE. THIS PROCESS SHALL BE CONTINUED FOR 7 DAYS. AT THE END OF THE 7 DAY TEST PERIOD, THE ENCLOSURE SHALL BE OPENED TO CHECK FOR THE PRESENCE OF WATER. ANY INTRUSION OF WATER IN THE COMPARTMENT CONTAINING THE SPLICES CONSTITUTES A FAILURE. IT IS THE RESPONSIBILITY OF THE CONTRACTOR TO ENSURE THAT THE MANUFACTURER, BELLCORE, OR AN INDEPENDENT TESTING LABORATORY HAS PERFORMED THE WATER IMMERSION TEST, AND THE APPROPRIATE DOCUMENTATION HAS BEEN SUBMITTED TO THE ENGINEER.

(3) THE SPLICE ENCLOSURE SHALL BE UL RATED.

(4) CLOSURE RE-ENTRY AND SUBSEQUENT RE-ASSEMBLY SHALL NOT REQUIRE SPECIALIZED TOOLS, EQUIPMENT OR THE USE OF ADDITIONAL PARTS.

(5) THE SPLICE ENCLOSURE SHALL HAVE PROVISIONS FOR CONTROLLING THE FIBER BEND RADIUS TO A MINIMUM OF 1 * - INCH (38MM).

(6) FACTORY COMPRESSION TEST: THE CLOSURE SHALL NOT DEFORM MORE THAN 10% IN ITS LARGEST CROSS-SECTIONAL DIMENSION WHEN SUBJECTED TO A UNIFORMLY DISTRIBUTED LOAD OF 1760 N AT -18 DEGREES C AND 38 DEGREES C. THE TEST SHALL BE PERFORMED AFTER STABILIZING THE ENCLOSURE AT THE REQUIRED TEMPERATURE FOR A MINIMUM OF TWO HOURS. IT SHALL CONSIST OF PLACING AN ASSEMBLED CLOSURE BETWEEN TWO FLAT PARALLEL SURFACES, WITH THE LONG DIMENSION OF THE ENCLOSURE PARALLEL TO THE SURFACES. THE WEIGHT SHALL BE PLACED ON THE UPPER SURFACE FOR A MINIMUM OF 15 MINUTES THE DEFORMATION MEASUREMENT SHALL BE TAKEN WITH WEIGHT IN PLACE.

CALCULATED SJ
CHECKED CRP

TRAFFIC SIGNAL AND INTERCONNECT GENERAL NOTES

SUM-8-0.63

793E
1088

(7) CABLE GRIPPING AND SEALING TESTING: THE CABLE GRIPPING AND SEALING HARDWARE SHALL NOT CAUSE AN INCREASE IN FIBER ATTENUATION IN EXCESS OF 0.05 dB/FIBER WHEN ATTACHED TO THE CABLES AND THE CLOSURE ASSEMBLY. THE TEST SHALL CONSIST OF MEASUREMENTS FROM SIX FIBERS, ONE FROM EACH BUFFER TUBE OR CHANNEL, OR, IN THE CASE OF A SINGLE FIBER BUNDLE, RANDOMLY SELECTED. THE MEASUREMENTS SHALL BE TAKEN FROM THE TEST FIBERS, BEFORE AND AFTER ASSEMBLY TO DETERMINE THE EFFECT OF THE CABLE GRIPPING AND SEALING HARDWARE ON THE OPTICAL TRANSMISSION OF FIBERS. THE DIFFERENCE MAY NOT EXCEED 0.05 dB/FIBER WHEN MEASURED AT 1550 nm. IT IS THE RESPONSIBILITY OF THE CONTRACTOR TO ENSURE THAT THE MANUFACTURER, BELLCORE, OR AN INDEPENDENT TESTING LABORATORY HAS PERFORMED THIS TEST, AND THE APPROPRIATE DOCUMENTATION HAS BEEN SUBMITTED TO THE ENGINEER.

(8) VIBRATION TEST: THE SPLICE ORGANIZERS SHALL SECURELY HOLD THE FIBER SPLICES AND STORE THE EXCESS FIBER. THE FIBER SPLICE ORGANIZERS AND SPLICE RETAINING HARDWARE SHALL BE TESTED PER EIA STANDARD FOTP-11, TEST CONDITION I. THE INDIVIDUAL FIBERS SHALL NOT SHOW AN INCREASE IN ATTENUATION IN EXCESS OF 0.1 dB/FIBER. IT IS THE RESPONSIBILITY OF THE CONTRACTOR TO ENSURE THAT THE MANUFACTURER, BELLCORE, OR AN INDEPENDENT TESTING LABORATORY HAS PERFORMED THIS TEST, AND THE APPROPRIATE DOCUMENTATION HAS BEEN SUBMITTED TO THE ENGINEER.

(9) SPLICE TRAYS: THE ENCLOSURE SHALL BE CAPABLE OF ACCOMMODATING SPLICE TRAYS THAT ACCEPT ALL TYPES OF FIBER OPTIC SPLICES (MECHANICAL, FUSION, AND MULTI-FIBER ARRAY). THE SPLICE CLOSURE SHALL HAVE PROVISIONS FOR STORING FIBER SPLICES IN AN ORDERLY MANNER, MOUNTINGS FOR SPLICE OEGANIZER ASSEMBLIES, AND SPACE FOR EXCESS OR UNSPLICED FIBER. SPLICE TRAYS SHALL BE RE-ENTERABLE. THE SPLICE ENCLOSURE SHALL HOLD A MINIUMU OF 2 SPLICE TRAYS TO A MAXIMUM OF 12 SPLICE TRAYS WITH EACH TRAY HOUSING 12 FUSION SPLICES. PAYMENT FOR SPLICE TRAYS SHALL BE INCLUDED AS PART OF ITEM 632 INTERCONNECT, MISC.: SPLICE TRAY, AS PER PLAN.

(C) SPLICE ENCLOUSRE (AERIAL ONLY): THE AERIAL ENCLOSURE SHALL BE DESIGNED IN SUCH A WAY AS TO ALLOW COMPLETE SPLICING ACCESS AFTER ENCLOSURE PLACEMENT, WITHOUT REMOVAL OF THE ENCLOSURE OR ELCTRICAL BONDS FROM THE CABLE. THE ENCLOSURE SHALL BE SUITABLE FOR STRAIGHT, BUTT OR BRANCH SPLICES. THERE SHALL BE PROVISIONS FOR STRAIN RELIEF, BOTH AROUND THE CABLE JACKET AND TO INTERNAL CABLE STRENGHT MEMBERS. THE DESIGN SHALL BE SUCH TO ELIMINATE THE NEED FOR DRIP COLLARS AND SEALING COLLARS. THE CLOSURE SHALL BE PACKAGED WITH ALL NECESSARY HARDWARE FOR AERIAL MOUNTING.

AERIAL ENCLOSURES SHALL MEET THESE MINIMUM REQUIREMENTS:

(1) SHALL BE ABLE TO ACCOMMODATE UP TO 144 FIBERS USING TWELVE (12) FIBER CAPACITY TRAYS. ONLY THE SPLICE TRAYS NECESSARY TO COMPLETE EACH INDICIATED SPLICE POINT SHALL BE REQUIRED.

(2) SHALL BE OF PROPER SIZE TO ALLOW FOR THE STORAGE OF A MAXIMUM OF TWELVE UNOPENED BUFFER TUBES AND/OR FIBER RIBBONS

(3) SHALL BE FREE BREATHING SPLICE PROTECTION (NO ENCAPSULATE).

(4) SHALL BE A FULLY ASSEMBLED WEATHER TIGHT ENCLOSURE DESIGN.

(5) FLEXIBLE THERMOPLASTIC RUBBER END SEALS WITH PRE-TEMPLATE CABLE PARTS.

(6) SHALL HAVE A DOUBLE WALL HIGH-DENSITY POLYETHYLENE BODY.

(7) SHADED HINGE POSITIONED AT BOTTOM SIDE FOR OPTIMUM UV PROTECTION.

(8) THE ENCLOSURE SHALL HAVE CORROSION RESISTANT ALUMINUM AND STAINLESS STEEL HARDWARE.

PAYMENT SHALL BE MADE AT THE CONTRACT UNIT PRICE BID PER EACH OF ITEM 632 INTERCONNECT, MISC.: FIBER OPTIC SPLICE ENCLOSURE (UNDER GRADE & AERIAL), AS PER PLAN.

ITEM 632 - INTERCONNECT, MISC.: SPLICE TRAY, AS PER PLAN

SPLICE TRAY SHALL ACCEPT ALL TYPES OF FIBER OPTIC SPLICES (MECHANICAL, FUSION, OR MULTI-FIBER ARRAY). THE SPLICE TRAY SHALL HAVE PROVISIONS FOR STORING FIBER SPLICES IN AN ORDERLY MANNER, MOUNTING FOR SPLICE ORGANIZER ASSEMBLIES, AND SPACE FOR EXCESS OR SPLICED FIBER. SPLICE TRAYS SHALL BE RE-ENTERABLE. EACH TRAY SHALL HOUSE 12 FUSION SPLICES. ONLY THE SPLICE TRAYS NECESSARY TO COMPLETE EACH INDIVIDUAL SPLICE POINT SHALL BE REQUIRED.

PAYMENT SHALL BE MADE AT THE CONTRACT UNIT PRICE BID PER EACH OF ITEM 632 INTERCONNECT, MISC.: SPLICE TRAY, AS PER PLAN.

ITEM 632 - INTERCONNECT, MISC.: WALL MOUNT INTERCONNECT CENTER AS PER PLAN

TERMINATION ENCLOSURES SHALL BE PLACED IN SIGNAL CABINETS. THE ENCLOSURES ARE SPECIFIED BELOW:

SIGNAL CABINETS	CORNING (SIECOR) DO-RUGG, OR APPROVED EQUAL

ENCLOSURES ARE TO INCLUDE APPROPRIATE CONNECTOR PANELS, GROUNDING KITS AND FITTINGS

PAYMENT SHALL BE MADE AT THE CONTRACT UNIT PRICE BID PER EACH OF ITEM 632 INTERCONNECT, MISC.: WALL MOUNT INTERCONNECT CENTER.

ITEM 632 - INTERCONNECT, MISC.: FIBER OPTIC MODEM, SM, AS PER PLAN

COMMUNICATIONS BETWEEN THE LOCAL CONTROLLERS AND THE SYSTEM MASTER SHALL BE BY THE USE OF FIBER OPTIC MODEMS, CAPABLE OF COMMUNICATIONS WITH NEMA TRAFFIC SIGNAL CONTROLLERS IN A COORDINATED CLOSED LOOP SYSTEM. MODEMS SHALL BE ACTIVE DEVICES PROVIDING DUAL MODE, FULL-DUPLEX COMMUNICATIONS FOR SINGLE MODE OPERATION VI A RS-232 CONNECTOR AND SUPPORTING WIRING. THE MODEM SHALL BE A TRAFFIC FIBER SYSTEMS MODEL F0512SM OR APPROVED EQUAL MEETING THE FOLLOWING SPECIFICATIONS:

ALUMINUM HOUSING CAPABLE OF SHELF OR SIDE MOUNTING.

TWO SETS OF FRONT MOUNTED FIBER-OPTIC RECEPTACLES TO MATE TO ST TYPE CONNECTORS.

LED INDICATORS ON FRONT PANEL - TWO FOR EACH CHANNEL TO INDICATE TRANSMIT AND RECEIVE, ONE FOR AC POWER, AND ONE FOR ANTI-STREAMING.

A PRIMARY PORT ON THE REAR OF THE UNIT TO PROVIDE ELECTRICAL INTERFACE TO ANY RS-232 PORT. AN EXTERNAL CABLE (INCLUDED) IS REQUIRED TO COMPLETE INTERFACE TO THE HOST UNIT.

CAPABLE OF OPERATING IN ONE OF TWO MODES - MASTER OR LOCAL - CHOSEN BY A SWITCH AVAILABLE WITHOUT REMOVING THE HOUSING.

LIGHT SOURCE - LED WITH WAVE LENGTH 1310 nm WITH A PEAK MA OF 165 AND A RANGE OF 16 KM.

POWER LOSS BUDGET OF 15 dB MINIMUM.

ITEM - 632 SIGNALIZATION, MISC.: FIBER OPTIC CABLE TESTING, AS PER PLAN

1. PRE-INSTALLATION TESTING
PRIOR TO ANY WORK THAT CONTRACTOR SHALL CERTIFY TO THE ENGINEER THAT ANY AND ALL FIBER OPTIC CABLE THAT SHALL BE USED ON THIS PROJECT HAS BEEN DELIVERED TO THE WORK SITE AND/OR THE CONTRACTOR'S STORAGE FACILITY WITHIN THIS SECTION'S SPECIFICATIONS. COMPLIANCE WITH THIS REQUIREMENT MAY BE ACCOMPLISHED IN ONE OF THE TWO WAYS.

(a) THE CONTRACTOR IS REQUIRED TO TEST A REPRESENTATIVE SAMPLE (1 FIBER PER EACH RIBBON OR LOOSE TUBE MINIMUM) ON EACH REEL OF CABLE PRIOR TO INSTALLATION ACCORDING TO THE TESTING PROCEDURE OUTLINED BELOW UNDER "CONTINUITY TESTING".

CALCULATED SJ | CHECKED CRP

TRAFFIC SIGNAL AND INTERCONNECT GENERAL NOTES

SUM-8-0.63

793F
1088

UPON COMPLETION OF THESE TEST PROCEDURES THE CONTRACTOR SHALL ISSUE TO THE ENGINEER ALL TEST DATA AS SPECIFIED AND A "LETTER OF QUALITY ASSURANCE" FROM THE CONTRACTOR STATING THAT THE FIBER CABLE HAS BEEN DELIVERED TO THE CONSTRUCTION SITE AND/OR THE CONTRACTOR'S STORAGE FACILITY WITH THE SPECIFICATIONS REQUIRED BY THESE SPECIFICATIONS. UPON RECEIPT OF THE LETTER OF QUALITY ASSURANCE AND THE ENGINEER'S ACKNOWLEDGEMENT OF SAID RECEIPT THE CONTRACTOR MAY COMMENCE INSTALLATION OF SAID CABLE AT THE CONTRACTOR'S RISK.

(b) THE CONTRACTOR MAY CERTIFY TO THE ENGINEER THAT THE FIBER CABLE HAS BEEN DELIVERED TO THE SITE AND/OR HIS STORAGE FACILITY WITHIN THIS SECTION'S SPECIFICATION, IF THE CONTRACTOR SUPPLIES TO THE ENGINEER THE COMPLETE FACTORY TEST RESULTS, ACCOMPANIED BY A "LETTER OF QUALITY ASSURANCE" FROM THE CONTRACTOR. UPON RECEIPT OF THE LETTER OF QUALITY ASSURANCE, AND THE CONTRACTOR MAY COMMENCE INSTALLATION OF SAID CABLE AT THE CONTRACTOR'S RISK.

2. TESTING AFTER TERMINATION AND/OR SPLICING
UPON COMPLETION OF THE PULLS, ALL SPLICES, AND AFTER THE COMPLETION OF TERMINATION OF CABLE ENDS, EACH AND ALL FIBERS WITHIN EACH SECTION OF THE CABLE PULL SHALL BE TESTED FOR CONTINUITY, EVENTS ABOVE 0.30 dB, IF ANY EVENT IS DEFECTED ABOVE THE MAXIMUM LEVEL, THE CONTRACTOR SHALL REPLACE OR REPAIR THAT EVENT POINT TO THE SATISFACTION OF THE ENGINEER. THE TOTAL dB LOSS OF THIS TRACE, LESS EVENTS, SHALL NOT EXCEED THE MANUFACTURER'S PRODUCTION SPECIFICATIONS AS FOLLOWS:

FIBER ATTENUATION (dB/KM)	WAVELENGTH (nm)	MAXIMUM (dB)
MULTIMODE	850	3.5
	1300	1.0
SINGLE MODE	1310	0.5
	1550	0.4

IF THE TOTAL LOSS EXCEEDS THESE SPECIFICATIONS, THE CONTRACTOR SHALL REPLACE OR REPAIR THAT CABLE RUN AT THE CONTRACTOR'S EXPENSE, BOTH LABOR AND MATERIALS. ELEVATED ATTENUATION DUE TO EXCEEDING THE PULLING TENSION DURING INSTALLATION WILL REQUIRE THE REPLACEMENT OF THE CABLE RUN AT THE CONTRACTOR'S EXPENSE, BOTH LABOR AND MATERIALS.

UPON COMPLETION THE CONTRACTOR SHALL ISSUE TO THE ENGINEER ALL TRACES AND LOSS/LENGTH PRINT OUTS AND COMPUTER FILES (ASCII FORMAT) FOR APPROVAL

NOTE: AT THE CONTRACTOR'S OPTION, THE ENGINEER WILL ALLOW THE "DIRECTIONAL/AVERAGING" PROCESS OF OTDR TESTING, PARTICULARLY WHEN SPLICE LOSSES ARE BEING UNFAVORABLY IMPACTED BY "MODE FIELD DIAMETER MISALIGNMENT", "CORE OFFSET" OR "CORE MISALIGNMENT".

3. CONTINUITY TESTING
THIS TEST IS FOR CONTINUITY AND ATTENUATION PER KILOMETER, ALONG WITH A GRAPHIC REPRESENTATION OF THE OPTICAL FIBER, "TRACE." THE TEST SHALL BE CONDUCTED ON THE 850 NM MULTIMODE, 1300 NM MULTIMODE AND 1550 NM SINGLE-MODE (AS CALLED FOR IN THE PLANS) WITH AN OPTICAL TIME DOMAIN REFLECTOMETER (OTDR) BY A QUALIFIED TECHNICIAN.

THE METHOD OF CONNECTIVITY BETWEEN THE OTDR AND THE CABLE SHALL BE A FACTORY PATCH CORD OF A LENGTH EQUAL TO THE "DEAD ZONE" OF THE OTDR WITH THE SPLICE TO THE PREPARED END OF THE FACTORY FIBER VIA "LAB SPLICE" OR THE CONTRACTOR CAN USE A FACTORY "FIBER BOX" OF 100 METERS MINIMUM WITH NO SPLICES WITHIN THE BOX. IF A PATCH CORD IS UTILIZED, THE LENGTH OF PATCH CORD SHALL BE STORED ON A FIBER STORAGE BOBBIN WITH A MINIMUM DIAMETER OF 10 CM.

THE FIBER "TRACES" CREATED BY THE OTDR SHALL DEMONSTRATE THAT THE CABLE HAS PERFORMANCE CAPABILITIES WITHIN -3% TO +3% OF The FACTORY TEST DOCUMENTATION THAT CAME WITH THAT REEL OF FIBER OF 1% OF THE CABLE'S PUBLISHED PRODUCTION dB LOSS PER KM PLUS THE MAXIMUM OTDR ERROR LEVEL AS NOTED BY THE MANUFACTURER OF THE OTDR (TYPICALLY +2%).

EACH TRACE SHALL INCLUDE THE FOLLOWING DATA:

(1) THE TRACE WITH A LAUNCH TRANSITION NOT TO EXCEED 6 dB.

(2) MEASUREMENT RESULTS: CURSOR, MARKER AND DISTANCE BETWEEN CURSOR AND MARKER, TOTAL LOSS BETWEEN LAUNCH POINT AND END OF FIBER, ATTENUATION CALCULATION IN dB/KM.

(3) CABLE INFORMATION; FIBER ID (IF NOT THE FILENAME), CABLE ID (REEL NUMBER AND MANUFACTURER'S ID REEL NUMBER), OTDR LOCATION, END OF FIBER LOCATION, OPERATOR ID, DATE SHOT, TIME SHOT.

(4) THE SET UP PARAMETERS: WAVELENGTH, PULSE WIDTH, REFRACTORY INDEX, RANGE, AND HORIZONTAL SCALE.

EACH TRACE SHALL BE PRINTED (HARD COPY) AND SAVED ON DISK FOR FUTURE REFERENCE.

4. EQUIPMENT.
AN OPTICAL TIME DOMAIN REFLECTOMETER (OTDR) SHALL BE CAPABLE OF TESTING SINGLE-MODE AND MULTI-MODE FIBERS AS REQUIRED AS PART OF THIS SECTION. THE OTDR SHALL PROVIDE IMMEDIATE REPORT DISPLAYS AND THE ABILITY TO GRAPH, PRINT AND MAGNETICALLY STORE TEST DATA. THIS ITEM INCLUDES ALL EQUIPMENT NECESSARY TO OPERATE THE OTDR IN LABORATORY AND FIELD CONDITIONS.

CALCULATED SJ
CHECKED CRP

TRAFFIC SIGNAL AND INTERCONNECT GENERAL NOTES

SUM-8-0.63

7936
1088

TRAFFIC SIGNAL SUBSUMMARY

CALCULATED CRP | CHECKED HJC

SHEET NO.	LOCATION	STATION FROM	STATION TO	SIDE	ITEM 625 CABLE SPLICING KIT EACH	ITEM 625 CONDUIT, 2", 713.07 LIN. FT.	ITEM 625 CONDUIT, 3", 713.04, AS PER PLAN LIN. FT.	ITEM 625 CONDUIT, 3", 713.07 LIN. FT.	ITEM 625 CONDUIT, CONCRETE ENCASED, 3" LIN. FT.	ITEM 625 TRENCH, 24" DEEP LIN. FT.	ITEM 625 TRENCH IN PAVED AREA, TYPE A LIN. FT.	ITEM 625 TRENCH IN PAVED AREA, TYPE B LIN. FT.	ITEM 625 PULL BOX, 713.08, 18", AS PER PLAN EACH	ITEM 625 PULL BOX, 713.08, 24", AS PER PLAN EACH	ITEM 625 PULL BOX, MISC.: 713.08, 24"x36"x36" EACH	ITEM 625 GROUND ROD EACH	ITEM 625 GROUND ROD, AS PER PLAN EACH	SPECIAL PLASTIC CAUTION TAPE LIN. FT.	ITEM 630 SIGN HANGER ASSEMBLY, MAST ARM EACH	ITEM 630 SIGN, FLAT SHEET, TYPE G SQ. FT.	ITEM 632 VEHICULAR SIGNAL HEAD, 3 SECTION, 12" LENS, 1-WAY, POLYCARBONATE EACH
801	FOUNTAIN ST. & CARROLL ST.	315+22.06		LT&RT		66		45	262	314			1	5		10	1	314	3	23	5
803	FOUNTAIN ST. & BUCHTEL AVE.	319+88.12		LT&RT		29		55	204	312			1	3	1	9	1	312	3	23	5
805	FOUNTAIN ST. & MARKET ST.	331+27.83		LT&RT		77		172	194	424			1	5	1	11	1	424	3	22	5
809	FOUNTAIN ST. & PERKINS ST.	346+49.44		LT&RT		69		80	213	255		109	1	5		10	1	364	1	7	5
811	GOODKIRK ST. & EXCHANGE ST.	200+00.11		LT&RT		61		125	235	391	25		2	5		12	1	416	4	31	8
813	GOODKIRK ST. & CARROLL ST.	215+21.85		LT&RT		31		143	156	321			1	6		11	1	321	3	23	5
815	GOODKIRK ST. & BUCHTEL AVE.	219+86.96		LT&RT		55		52	290	324			1	3	1	9	1	307	3	23	5
821	GOODKIRK ST. & PERKINS ST.	246+52.68		LT&RT		85		103	223	313		57	2	5		10	1	338	3	22	5
822	FOUNTAIN STREET	300+00.00	307+00.00	LT&RT				1279	402	1392	219	70		10	2	12		1680			
	GOODKIRK STREET	200+00.00	207+00.00	LT&RT																	
823	FOUNTAIN STREET	307+00.00	317+00.00	LT&RT			160	1968	258	2226				14	2	16		2226			
	GOODKIRK STREET	207+00.00	217+00.00	LT&RT																	
824	FOUNTAIN STREET	317+00.00	326+00.00	LT&RT			160	1714	402	1804				13	1	14		1804			
	GOODKIRK STREET	217+00.00	226+00.00	LT&RT																	
825	FOUNTAIN STREET	326+00.00	334+00.00	LT&RT	2			1885	285	1396	193			8	1	9		1589			
	GOODKIRK STREET	226+00.00	234+00.00	LT&RT																	
826	FOUNTAIN STREET	334+00.00	343+00.00	LT&RT				1933	348	1715				10	1	11		1715			
	GOODKIRK STREET	234+00.00	243+00.00	LT&RT																	
827	FOUNTAIN STREET	343+00.00	346+49.44	LT&RT				715	50	765				5	2	7		765			
	GOODKIRK STREET	243+00.00	246+52.68	LT&RT																	
TOTALS CARRIED TO GENERAL SUMMARY					2	473	320	10269	3522	11952	437	236	10	97	12	151	8	12575	23	174	43

SUM-8-0.63

794
1088

SHEET NO.	LOCATION	STATION FROM	STATION TO	SIDE	ITEM 632 VEHICULAR SIGNAL HEAD, 4 SECTION, 12" LENS, 1-WAY, POLYCARBONATE EACH	VEHICULAR SIGNAL HEAD, 5 SECTION, 12" LENS, 1-WAY, POLYCARBONATE EACH	PEDESTRIAN SIGNAL HEAD, TYPE D2, AS PER PLAN EACH	COVERING OF VEHICULAR SIGNAL HEAD EACH	COVERING OF PEDESTRIAN SIGNAL HEAD EACH	PEDESTRIAN PUSHBUTTON EACH	DETECTOR LOOP EACH	LOOP DETECTOR UNIT, DELAY AND EXTENSION TYPE EACH	SIGNAL CABLE, 7 CONDUCTOR, NO. 14 AWG LIN. FT.	INTERCONNECT CABLE, 12 CONDUCTOR, NO. 14 AWG LIN. FT.	SIGNAL SUPPORT FOUNDATION EACH	PEDESTAL FOUNDATION EACH	LOOP DETECTOR LEAD-IN CABLE LIN. FT.	POWER CABLE, 2 CONDUCTOR, 6 AWG LIN. FT.	POWER SERVICE, AS PER PLAN EACH	CONDUIT RISER, 3" DIAMETER EACH	COMBINATION SIGNAL SUPPORT, TYPE TC-81.20 DESIGN 4 POLE, WITH MAST ARMS TC-81.20 DESIGN 3 AND DESIGN 3 EACH
801	FOUNTAIN ST. & CARROLL ST.	315+22.06		LT&RT		1	6	6	6	6	5	5	1326		2	2	1280	71	1		
803	FOUNTAIN ST. & BUCHTEL AVE.	319+88.12		LT&RT		1	6	6	6	6	5	5	1492		2	2	1218	56	1		1
805	FOUNTAIN ST. & MARKET ST.	331+27.83		LT&RT		1	6	6	6	6	3	3	2013		3	3	1626	72	1		
809	FOUNTAIN ST. & PERKINS ST.	346+49.44		LT&RT	1	1	4	7	4	4	4	4	1304		2	2	1081	24	1		
811	GOODKIRK ST. & EXCHANGE ST.	200+00.11		LT&RT			6	8	6	6	8	8	2213		4	1	2552	54	1		
813	GOODKIRK ST. & CARROLL ST.	215+21.85		LT&RT		1	6	6	6	6	5	5	1722		3	1	1508	57	1		
815	GOODKIRK ST. & BUCHTEL AVE.	219+86.96		LT&RT	1		6	6	6	6	5	5	1423		2	2	1352	57	1		
821	GOODKIRK ST. & PERKINS ST.	246+52.68		LT&RT		1	2	6	2	2	8	8	992		2	1	1397	25	1		
822	FOUNTAIN STREET	300+00.00	307+00.00	LT&RT																	
	GOODKIRK STREET	200+00.00	207+00.00	LT&RT																	
823	FOUNTAIN STREET	307+00.00	317+00.00	LT&RT																	
	GOODKIRK STREET	207+00.00	217+00.00	LT&RT																	
824	FOUNTAIN STREET	317+00.00	326+00.00	LT&RT																	
	GOODKIRK STREET	217+00.00	226+00.00	LT&RT																	
825	FOUNTAIN STREET	326+00.00	334+00.00	LT&RT										994						2	
	GOODKIRK STREET	226+00.00	234+00.00	LT&RT																	
826	FOUNTAIN STREET	334+00.00	343+00.00	LT&RT																	
	GOODKIRK STREET	234+00.00	243+00.00	LT&RT																	
827	FOUNTAIN STREET	343+00.00	346+49.44	LT&RT																	
	GOODKIRK STREET	243+00.00	246+52.68	LT&RT																	
TOTALS CARRIED TO GENERAL SUMMARY					2	6	42	51	42	42	43	43	12485	994	20	14	12014	416	8	2	1

CALCULATED CRP
CHECKED HJC

TRAFFIC SIGNAL SUBSUMMARY

SUM-8-0.63

795
1088

SHEET NO.	LOCATION	STATION FROM	STATION TO	SIDE	ITEM 632													ITEM 633			
					COMBINATION SIGNAL SUPPORT, TYPE TC-81.20 DESIGN 12 POLE, WITH MAST ARMS TC-81.20 DESIGN 11 AND DESIGN 3	COMBINATION SIGNAL SUPPORT, TYPE TC-12.30 DESIGN 6 POLE, WITH MAST ARMS TC-81.20 DESIGN 12 AND DESIGN 11	SIGNAL SUPPORT, TYPE TC-81.20, DESIGN 3	SIGNAL SUPPORT, TYPE TC-81.20, DESIGN 11	COMBINATION SIGNAL SUPPORT, TYPE TC-81.20, DESIGN 3	COMBINATION SIGNAL SUPPORT, TYPE TC-81.20, DESIGN 11	COMBINATION SIGNAL SUPPORT, TYPE TC-12.30, DESIGN 1 AND SIGN SUPPORT, TYPE TC-12.30, DESIGN 1	COMBINATION SIGNAL SUPPORT, TYPE TC-12.30, DESIGN 2 AND SIGN SUPPORT, TYPE TC-12.30, DESIGN 2 AND SIGNAL SUPPORT TC-81.20, DESIGN 11	COMBINATION SIGNAL SUPPORT, TYPE TC-12.30, DESIGN 2 AND SIGN SUPPORT, TYPE TC-12.30, DESIGN 2 WITH LIGHT POLE EXTENSION	COMBINATION SIGNAL SUPPORT, TYPE TC-12.30, DESIGN 6 AND SIGN SUPPORT TYPE TC-12.30, DESIGN 6 AND SIGNAL SUPPORT, TYPE TC-81.20, DESIGN 11 WITH LIGHT POLE EXTENSION	PEDESTAL, 8'	REMOVAL OF TRAFFIC SIGNAL INSTALLATION, AS PER PLAN	SIGNALIZATION, MISC: MICROWAVE DETECTION UNIT	CONTROLLER, ACTUATED, 8 PHASE, SOLID STATE DIGITAL MICROPROCESSOR	CONCRETE FOR CABINET FOUNDATION, AS PER PLAN	CONTROLLER WORK PAD	ALTERNATE BID: CONTROLLER MISC.; ECONOLITE CONTROLLER
					EACH	EACH	EACH	EACH	EACH	EACH	EACH	EACH	EACH	EACH	EACH	EACH	EACH	EACH	CU. YD.	SQ. FT.	EACH
801	FOUNTAIN ST. & CARROLL ST.	315+22.06		LT&RT	1				1						2	1		1	1.15	9	1
803	FOUNTAIN ST. & BUCHTEL AVE.	319+88.12		LT&RT									1		2	1		1	1.15		1
805	FOUNTAIN ST. & MARKET ST.	331+27.83		LT&RT			1			1	1				3	1	1	1	1.15		1
809	FOUNTAIN ST. & PERKINS ST.	346+49.44		LT&RT					1			1			2	1		1	1.15	9	1
811	GOODKIRK ST. & EXCHANGE ST.	200+00.11		LT&RT			3		1						1	1		1	1.15	5	1
813	GOODKIRK ST. & CARROLL ST.	215+21.85		LT&RT			1	1	1						1	1		1	1.15	9	1
815	GOODKIRK ST. & BUCHTEL AVE.	219+86.96		LT&RT						1				1	2	1		1	1.15	9	1
821	GOODKIRK ST. & PERKINS ST.	246+52.68		LT&RT		1			1					1	1	1		1	1.15	9	1
822	FOUNTAIN STREET	300+00.00	307+00.00	LT&RT																	
	GOODKIRK STREET	200+00.00	207+00.00	LT&RT																	
823	FOUNTAIN STREET	307+00.00	317+00.00	LT&RT																	
	GOODKIRK STREET	207+00.00	217+00.00	LT&RT																	
824	FOUNTAIN STREET	317+00.00	326+00.00	LT&RT																	
	GOODKIRK STREET	217+00.00	226+00.00	LT&RT																	
825	FOUNTAIN STREET	326+00.00	334+00.00	LT&RT																	
	GOODKIRK STREET	226+00.00	234+00.00	LT&RT																	
826	FOUNTAIN STREET	334+00.00	343+00.00	LT&RT																	
	GOODKIRK STREET	234+00.00	243+00.00	LT&RT																	
827	FOUNTAIN STREET	343+00.00	346+49.44	LT&RT																	
	GOODKIRK STREET	243+00.00	246+52.68	LT&RT																	
TOTALS CARRIED TO GENERAL SUMMARY					1	1	5	1	5	2	1	1	1	2	14	8	1	8	9.20	50	8

CALCULATED CRP
CHECKED HJC

TRAFFIC SIGNAL SUBSUMMARY

SUM-8-0.63

796
1088

SHEET NO.	LOCATION	STATION FROM	STATION TO	SIDE	ITEM 625 100% LOCAL: CONDUIT, 1½", 713.07, AS PER PLAN (LIN. FT.)	CONDUIT, 2", 713.07 (LIN. FT.)	CONDUIT, 3", 713.07 (LIN. FT.)	CONDUIT, CONCRETE ENCASED, 3" (LIN. FT.)	TRENCH, 24" DEEP (LIN. FT.)	TRENCH IN PAVED AREA, TYPE A (LIN. FT.)	TRENCH IN PAVED AREA, TYPE B (LIN. FT.)	PULL BOX, 713.08, 18", AS PER PLAN (EACH)	PULL BOX, 713.08, 24", AS PER PLAN (EACH)	PULL BOX, MISC.: 713.08, 24"x36"x36" (EACH)	GROUND ROD (EACH)	GROUND ROD, AS PER PLAN (EACH)	SPECIAL 100% LOCAL: PLASTIC CAUTION TAPE (LIN. FT.)	ITEM 630 100% LOCAL: SIGN HANGER ASSEMBLY, MAST ARM (EACH)	SIGN, FLAT SHEET, TYPE G (SQ. FT.)	ITEM 632 100% LOCAL: VEHICULAR SIGNAL HEAD, 3 SECTION, 12" LENS, 1-WAY, POLYCARBONATE (EACH)	VEHICULAR SIGNAL HEAD, 4 SECTION, 12" LENS, 1-WAY, POLYCARBONATE (EACH)
803	FOUNTAIN ST. & BUCHTEL AVE.	319+88.12		LT&RT																		
805	FOUNTAIN ST. & MARKET ST.	331+27.83		LT&RT																		
807	FOUNTAIN ST. & FORGE ST.	338+76.25		LT&RT	24	93	255	232	411	44	87	2	9		18	1	542	7	39	7	1
817	GOODKIRK ST. & MARKET ST.	232+59.40		LT&RT		49	100	278	342			1	5		10	1	337	3	22	5	
819	GOODKIRK ST. & FORGE ST.	237+60.54		LT&RT		92	142	245	404			2	4	1	12	1	379	3	21	6	
822	FOUNTAIN STREET	300+00.00	307+00.00	LT&RT																	
	GOODKIRK STREET	200+00.00	207+00.00	LT&RT																	
823	FOUNTAIN STREET	307+00.00	317+00.00	LT&RT					20								20				
	GOODKIRK STREET	207+00.00	217+00.00	LT&RT																	
824	FOUNTAIN STREET	317+00.00	326+00.00	LT&RT					14								14				
	GOODKIRK STREET	217+00.00	226+00.00	LT&RT																	
825	FOUNTAIN STREET	326+00.00	334+00.00	LT&RT			105		122			2			2		122				
	GOODKIRK STREET	226+00.00	234+00.00	LT&RT																	
826	FOUNTAIN STREET	334+00.00	343+00.00	LT&RT					7								7				
	GOODKIRK STREET	234+00.00	243+00.00	LT&RT																	
827	FOUNTAIN STREET	343+00.00	346+49.44	LT&RT			193	73	194	17	73	3			3		284				
	GOODKIRK STREET	243+00.00	246+52.68	LT&RT																	
827A	FOUNTAIN STREET	300+00.00	346+49.44	LT&RT																	
	GOODKIRK STREET	200+00.00	246+52.68																		
TOTALS CARRIED TO GENERAL SUMMARY					24	234	795	828	1514	61	160	10	18	1	45	3	1705	13	82	18	1

CALCULATED CRP CHECKED HJC

TRAFFIC SIGNAL SUBSUMMARY

SUM-8-0.63

797
1088

SHEET NO.	LOCATION	STATION FROM	STATION TO	SIDE	ITEM 632 100% LOCAL: VEHICULAR SIGNAL HEAD, 5 SECTION, 12" LENS, 1-WAY, POLYCARBONATE (EACH)	PEDESTRIAN SIGNAL HEAD, TYPE D2, AS PER PLAN (EACH)	COVERING OF VEHICULAR SIGNAL HEAD (EACH)	COVERING OF PEDESTRIAN SIGNAL HEAD (EACH)	PEDESTRIAN PUSHBUTTON (EACH)	DETECTOR LOOP (EACH)	LOOP DETECTOR UNIT, DELAY AND EXTENSION TYPE (EACH)	SIGNAL CABLE, 7 CONDUCTOR, NO. 14 AWG (LIN. FT.)	INTERCONNECT CABLE, MISC.: DROP CABLE, 6 FIBER - 6 SM, AS PER PLAN (LIN. FT.)	INTERCONNECT CABLE, MISC.: FIBER OPTIC TRUNK CABLE, 48 FIBER - 48 SM, AS PER PLAN (LIN. FT.)	INTERCONNECT, MISC.: SPLICE ENCLOSURE (UNDER GRADE & AERIAL), AS PER PLAN (EACH)	INTERCONNECT, MISC.: OPTICAL SPLICING, AS PER PLAN (EACH)	INTERCONNECT, MISC.: FIBER OPTIC MODEM, SM, AS PER PLAN (EACH)	INTERCONNECT, MISC.: FIBER OPTIC DROP KIT, AS PER PLAN (EACH)	INTERCONNECT, MISC.: FIBER OPTIC FAN-OUT KIT, 6 FIBER, AS PER PLAN (EACH)	INTERCONNECT, MISC.: FIBER OPTIC SPLICE EQUIPMENT, FIBER OPTIC CONNECTOR, SM, AS PER PLAN (EACH)	INTERCONNECT, MISC.: SPLICE TRAY, AS PER PLAN (EACH)
803	FOUNTAIN ST. & BUCHTEL AVE.	319+88.12		LT&RT											1						
805	FOUNTAIN ST. & MARKET ST.	331+27.83		LT&RT											1						
807	FOUNTAIN ST. & FORGE ST.	338+76.25		LT&RT		8	8	8	8	3	3	2764									
817	GOODKIRK ST. & MARKET ST.	232+59.40		LT&RT	1	6	6	6	6	3	3	1645									
819	GOODKIRK ST. & FORGE ST.	237+60.54		LT&RT		6	6	6	6	3	3	1638			1						
822	FOUNTAIN STREET	300+00.00	307+00.00	LT&RT											2						
	GOODKIRK STREET	200+00.00	207+00.00	LT&RT																	
823	FOUNTAIN STREET	307+00.00	317+00.00	LT&RT						5	5				2						
	GOODKIRK STREET	207+00.00	217+00.00	LT&RT																	
824	FOUNTAIN STREET	317+00.00	326+00.00	LT&RT						5	5				1						
	GOODKIRK STREET	217+00.00	226+00.00	LT&RT																	
825	FOUNTAIN STREET	326+00.00	334+00.00	LT&RT						10	10				1						
	GOODKIRK STREET	226+00.00	234+00.00	LT&RT																	
826	FOUNTAIN STREET	334+00.00	343+00.00	LT&RT						2	2				1						
	GOODKIRK STREET	234+00.00	243+00.00	LT&RT																	
827	FOUNTAIN STREET	343+00.00	346+49.44	LT&RT						12	12				2						
	GOODKIRK STREET	243+00.00	246+52.68	LT&RT																	
827A	FOUNTAIN STREET	300+00.00	346+49.44	LT&RT									1108	13723		48	12	12	12	48	12
	GOODKIRK STREET	200+00.00	246+52.68	LT&RT																	
TOTALS CARRIED TO GENERAL SUMMARY					1	20	20	20	20	43	43	6047	1108	13723	12	48	12	12	12	48	12

CALCULATED CRP
CHECKED HJC

TRAFFIC SIGNAL SUBSUMMARY

SUM-8-0.63

798
1088

SHEET NO.	LOCATION	STATION FROM	STATION TO	SIDE	ITEM 632 100% LOCAL: INTERCONNECT MISC.: WALL MOUNT INTERCONNECT CENTER, AS PER PLAN — EACH	ITEM 632 100% LOCAL: INTERCONNECT MISC.: FIBER OPTIC CABLE TESTING, OTDR, AS PER PLAN — LUMP	ITEM 632 100% LOCAL: SIGNAL SUPPORT FOUNDATION — EACH	ITEM 632 100% LOCAL: PEDESTAL FOUNDATION — EACH	ITEM 632 100% LOCAL: LOOP DETECTOR LEAD-IN CABLE — LIN. FT.	ITEM 632 100% LOCAL: POWER CABLE, 2 CONDUCTOR, 6 AWG — LIN. FT.	ITEM 632 100% LOCAL: POWER SERVICE, AS PER PLAN — EACH	ITEM 632 100% LOCAL: CONDUIT RISER, 1½" DIAMETER — EACH	ITEM 632 100% LOCAL: COMBINATION SIGNAL SUPPORT, TYPE TC-81.20 DESIGN 4 POLE, WITH MAST ARMS TC-81.20 DESIGN 3 AND DESIGN 3 — EACH	ITEM 632 100% LOCAL: SIGNAL SUPPORT, TYPE TC-81.20, DESIGN 3 — EACH	ITEM 632 100% LOCAL: COMBINATION SIGNAL SUPPORT, TYPE TC-81.20, DESIGN 3 — EACH	ITEM 632 100% LOCAL: COMBINATION SIGNAL SUPPORT, TYPE TC-81.20, DESIGN 12 — EACH	ITEM 632 100% LOCAL: COMBINATION SIGNAL SUPPORT, MISC: TYPE TC-12.30, DESIGN 1 AND SIGN SUPPORT, TYPE TC-12.30, DESIGN 1 — EACH	ITEM 632 100% LOCAL: PEDESTAL, 8' — EACH	ITEM 632 100% LOCAL: REMOVAL OF TRAFFIC SIGNAL INSTALLATION, AS PER PLAN — EACH	ITEM 632 100% LOCAL: SIGNALIZATION, MISC: MICROWAVE DETECTION UNIT — EACH	ITEM 633 100% LOCAL: CONTROLLER, ACTUATED, 8 PHASE, SOLID STATE DIGITAL MICROPROCESSOR — EACH	ITEM 633 100% LOCAL: CONTROLLER, MASTER, TRAFFIC RESPONSIVE, AS PER PLAN — EACH	ITEM 633 100% LOCAL: CONCRETE FOR CABINET FOUNDATION, AS PER PLAN — CU. YD.	ITEM 633 100% LOCAL: CONTROLLER WORK PAD — SQ. FT.	ITEM 633 100% LOCAL: ALTERNATE BID: CONTROLLER MISC.; ECONOLITE CONTROLLER — EACH
803	FOUNTAIN ST. & BUCHTEL AVE.	319+88.12		LT&RT									1	2												
805	FOUNTAIN ST. & MARKET ST.	331+27.83		LT&RT										1												
807	FOUNTAIN ST. & FORGE ST.	338+76.25		LT/RT			3	5	2300	65	1	1		1				5	1	1	1		1.15		1
817	GOODKIRK ST. & MARKET ST.	232+59.40		LT/RT			3	2	1203	70	1					1	1	2	1	1	1	1	1.85	11	1
819	GOODKIRK ST. & FORGE ST.	237+60.54		LT/RT			3	3	857	65	1				2			3	1	1	1		1.15	4	1
822	FOUNTAIN STREET	300+00.00	307+00.00	LT&RT																					
	GOODKIRK STREET	200+00.00	207+00.00	LT&RT																					
823	FOUNTAIN STREET	307+00.00	317+00.00	LT&RT					1929																
	GOODKIRK STREET	207+00.00	217+00.00	LT&RT																					
824	FOUNTAIN STREET	317+00.00	326+00.00	LT&RT					1204																
	GOODKIRK STREET	217+00.00	226+00.00	LT&RT																					
825	FOUNTAIN STREET	326+00.00	334+00.00	LT&RT					2720																
	GOODKIRK STREET	226+00.00	234+00.00	LT&RT																					
826	FOUNTAIN STREET	334+00.00	343+00.00	LT&RT					400																
	GOODKIRK STREET	234+00.00	243+00.00	LT&RT																					
827	FOUNTAIN STREET	343+00.00	346+49.44	LT&RT					3156																
	GOODKIRK STREET	243+00.00	246+52.68	LT&RT																					
827A	FOUNTAIN STREET	300+00.00	346+49.44	LT&RT	12	LUMP																			
	GOODKIRK STREET	200+00.00	246+52.68	LT&RT																					
TOTALS CARRIED TO GENERAL SUMMARY					12	LUMP	9	10	13769	200	3	1	1	4	2	1	1	10	3	3	3	1	4.2	15	3

CALCULATED CRP
CHECKED HJC

TRAFFIC SIGNAL SUBSUMMARY

SUM-8-0.63

799
1088

ALL PROPOSED TRAFFIC EQUIPMENT WEST OF THE EXISTING FOUNTAIN STREET RIGHT-OF-WAY ARE WITHIN THE ROUTE 8 RIGHT-OF-WAY LIMITS.

PUSHBUTTON SIGNS
(FOR MOUNTING, SEE TC-85.10)

QTY.=4
TO CROSS FOUNTAIN ST PUSH BUTTON WAIT FOR WALK SIGNAL
R-73A-9 (9X12)

QTY.=2
TO CROSS CARROLL ST PUSH BUTTON WAIT FOR WALK SIGNAL
R-73A-9 (9X12)

POWER SOURCE
STA. 314+62, 20' RT.
TO BE RELOCATED BY OTHERS

CONTROLLER W/CONCRETE WORK PAD
STA. 314+81, 31' RT.

COMB. SIGNAL SUPPORT NO. 1
TC-81.20 DESIGN 3, 34' ARM
STA. 314+84, 35' RT.

PULL BOX NO. 1, 24"
STA. 314+88, 31' RT.

PULL BOX NO. 2, 24"
STA. 314+76, 36' LT.

SIGNAL SUPPORT NO. 2
8' FLANGE MOUNT PEDESTAL
STA. 314+83, 35' LT.

PULL BOX NO. 3, 24"
STA. 314+87, 40' LT.

PULL BOX NO. 6, 18"
STA. 315+46, 76' RT.

PULL BOX NO. 5, 24"
STA. 315+57, 36' RT.

SIGNAL SUPPORT NO. 4
8' FLANGE MOUNT PEDESTAL
STA. 315+62, 33' RT.

COMB. SIGNAL SUPPORT NO. 3
TC-81.20 DESIGN 12 W/
TC-81.20 DESIGN 11, 39' ARM AND
TC-81.20 DESIGN 3, 28' ARM
STA. 315+60, 25' LT.

PULL BOX NO. 4, 24"
STA. 315+59, 20' LT.

12" LENSES
SIGNAL HEADS

C — R Y G

A, B, D, E, F — R Y G

X-X, Y-Y, Z-Z — STYLE D2

800 1088	SUM-8-0.63	TRAFFIC SIGNAL PLAN FOUNTAIN ST. AND CARROLL ST.	CALCULATED CRP / CHECKED TS	HORIZONTAL SCALE IN FEET

SIGNAL DISPLAY CHART

SIGNAL HEAD	Ø2				Ø4&Ø7				Ø4&Ø8				FLASH
	R/W		CLEAR		R/W		CLEAR		R/W		CLEAR		
A	G	G	Y	R	R	R	R	R	R	R	R	R	Y
B	G	G	Y	R	R	R	R	R	R	R	R	R	Y
C	R	R	R	R	G/G	G/G	G/Y	G	G	G	Y	R	R
D	R	R	R	R	G	G	G	G	G	G	Y	R	R
E	R	R	R	R	R	R	R	R	G	G	Y	R	R
F	R	R	R	R	R	R	R	R	G	G	Y	R	R
X-X	W	FDW	DW	DW	DW	DW	DW	DW	DW	DW	DW	DW	OUT
Y-Y	DW	DW	DW	DW	DW	DW	DW	DW	W	FDW	DW	DW	OUT
Z-Z	DW	DW	DW	DW	DW	DW	DW	DW	W	FDW	DW	DW	OUT

COORDINATION TIMING

CYC_E/OFFSET	PHASE			DESCRIPTION
	Ø2	Ø4&Ø7	Ø4&Ø8	
80/20	45	11	24	M-F, 9 AM-4 PM & 6 PM-6 AM, SAT. & SUN.
100/45	48	17	29	M-F, 6 AM-9 AM & 4 PM-6 PM

TRAFFIC CONTROL QUANTITIES

ITEM	EXT.	QTY.	UNITS	DESCRIPTION
625	25402	66	LF	CONDUIT, 2", 713.07
625	25502	45	LF	CONDUIT, 3", 713.07
625	25802	262	LF	CONDUIT, CONCRETE ENCASED, 3"
625	29002	314	LF	TRENCH, 24" DEEP
625	30700	1	EACH	PULL BOX, 713.08, 18" AS PER PLAN
625	30707	5	EACH	PULL BOX, 713.08, 24" AS PER PLAN
625	32000	10	EACH	GROUND ROD
625	32001	1	EACH	GROUND ROD, AS PER PLAN
SPECIAL	36000	314	LF	PLASTIC CAUTION TAPE
630	79100	3	EACH	SIGN HANGER ASSEMBLY, MAST ARM
630	80102	23	SF	SIGN, FLAT SHEET, TYPE G
632	00302	5	EACH	VEHICULAR SIGNAL HEAD, 3 SECTION 12" LENS, 1-WAY, POLYCARBONATE
632	00502	1	EACH	VEHICULAR SIGNAL HEAD, 5-SECTION, 12" LENS, 1-WAY, POLYCARBONATE
632	20601	6	EACH	PEDESTRIAN SIGNAL HEAD, TYPE D2, AS PER PLAN
632	25000	6	EACH	COVERING OF VEHICULAR SIGNAL HEAD
632	25010	6	EACH	COVERING OF PEDESTRIAN SIGNAL HEAD
632	26000	6	EACH	PEDESTRIAN PUSHBUTTON
632	26500	5	EACH	DETECTOR LOOP
632	27008	5	EACH	LOOP DETECTOR UNIT, DELAY AND EXTENSION TYPE
632	40700	1326	LF	SIGNAL CABLE, 7 CONDUCTOR, NO. 14 AWG
632	64010	2	EACH	SIGNAL SUPPORT FOUNDATION
632	64020	2	EACH	PEDESTAL FOUNDATION
632	65200	1280	LF	LOOP DETECTOR LEAD-IN CABLE
632	68200	71	LF	POWER CABLE, 2 CONDUCTOR, 6 AWG
632	70001	1	EACH	POWER SERVICE, AS PER PLAN
632	77110	1	EACH	COMBINATION SIGNAL SUPPORT, TYPE TC-81.20 DESIGN 12 POLE, WITH MAST ARMS TC-81.20 DESIGN 11 AND DESIGN 3
632	81300	1	EACH	COMBINATION SIGNAL SUPPORT, TYPE TC-81.20, DESIGN 3
632	89600	2	EACH	PEDESTAL, 8'
632	90101	1	EACH	REMOVAL OF TRAFFIC SIGNAL INSTALLATION, AS PER PLAN
633	38000	1	EACH	CONTROLLER, ACTUATED, 8 PHASE, SOLID STATE DIGITAL MICROPROCESSOR
633	70001	1.15	CY	CONCRETE FOR CABINET FOUNDATION, AS PER PLAN
633	70500	9	SF	CONTROLLER WORK PAD
633	99000	1	EACH	ALTERNATE BID: CONTROLLER MISC.; ECONOLITE CONTROLLER

CONTROLLER TIMING DATA

CYCLE LENGTH	80			100		
	Ø2	Ø4&Ø7	Ø4&Ø8	Ø2	Ø4&Ø7	Ø4&Ø8
MOVEMENT	NB	EB/EBL	EB/WB	NB	EB/EBL	EB/WB
GREEN TIME	39	5	18	48	11	23
YELLOW TIME	3.0	3.0	3.0	3.0	3.0	3.0
ALL RED	3.0	3.0	3.0	3.0	3.0	3.0
MINIMUM INITIAL	10	5	7	10	5	7
VEHICULAR EXTENSION	-	3	3	-	3	3
WALK	7	-	7	7	-	7
FLASH DON'T WALK	11	-	11	11	-	11
MEMORY	OFF	OFF	OFF	OFF	OFF	OFF
RECALL	MIN	NONE	NONE	MIN	NONE	NONE

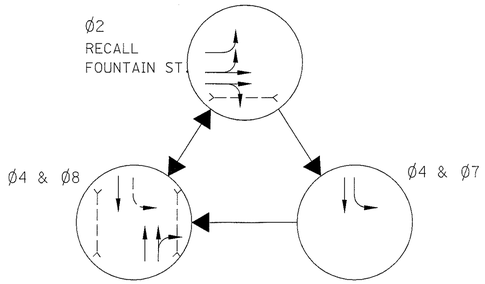

PHASING DIAGRAM

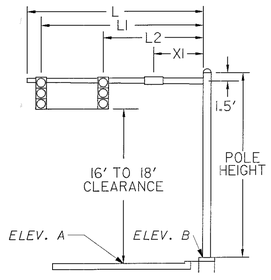

MAST ARM DETAIL

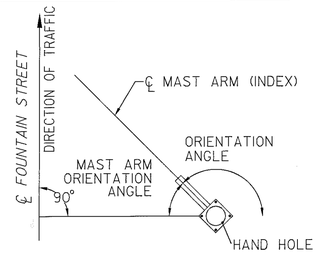

NOTES:
1. ALL ANGLES MEASURED CLOCKWISE
2. BASE PLATE IS ORIENTED SQUARE TO MAST ARM A.
3. POLE STATIONING AND ORIENTATION FROM FOUNTAIN ST. ℄.

ORIENTATION ANGLES

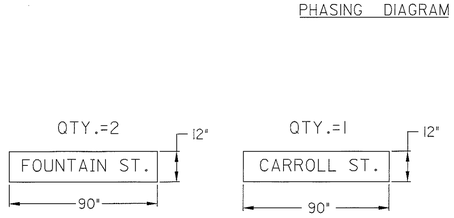

STREET NAME SIGNS

(MAST ARM MOUNTED, SEE SHEET 830)

SIGNAL SUPPORT											ELEVATION		MAST ARM ANGLE (A)	MAST ARM ANGLE (B)	ORIENTATION ANGLES FROM MAST ARM		
POLE NO.	DESIGN NO.	POLE HEIGHT (FT)	FOUNDATION		L	L1	L2	L3	L4	X1	A	B			PEDESTRIAN SIGNALS	PEDESTRIAN PUSH BUTTONS	HANDHOLE
			STATION	OFFSET	FT.	FT.	FT.	FT.	FT.	FT.	FT.	FT.					
1	3	24	314+84	35' RT.	34	33	21			11	1050.1	1050.4	90		90/180	90/180	180
2	PED	8	314+83	35' LT.											88	88	
3	12	24	315+60	25' LT.	39	38	28			15	1051.3	1051.0	85		180	275	180
					28	27	15			7	1050.4	1051.0		275			
4	PED	8	315+62	33' RT.											90/180	90/180	

LOOP DETECTORS

DESIGNATION	SIZE	# OF TURNS	PULSE OR PRESENCE	DELAY	ASSOCIATED CONTROLLER PHASE	STATION 1st FRONT CORNER	STATION 2nd FRONT CORNER
L-1	6 x 35	2	PRESENCE	0	4	315+01, 43' LT.	315+07, 43' LT.
L-2	6 x 35	2	PRESENCE	0	7	315+12, 43' LT.	315+18, 43' LT.
L-3	6 x 25	2	PRESENCE	7	8	315+31, 47' RT.	315+37, 47' RT.
L-4	6 x 30	2	PRESENCE	0	8	315+21, 44' RT.	315+27, 44' RT.
L-5	6 x 8 x 15	2	PRESENCE	7	8	315+43, 28' RT.	315+49, 32' RT.
SL-3*	6 x 6	3	PRESENCE	0	-	310+03, 21' LT.	310+12, 21' LT.
SL-4*	6 x 6	3	PRESENCE	0	-	310+03, 7' LT.	310+12, 7' LT.
SL-5*	6 x 6	3	PRESENCE	0	-	310+03, 7' RT.	310+12, 7' RT.

* SL DENOTES A SYSTEM LOOP DETECTOR. ALL SYSTEM LOOP DETECTOR QUANTITIES ARE SHOWN ON SHEET 823.

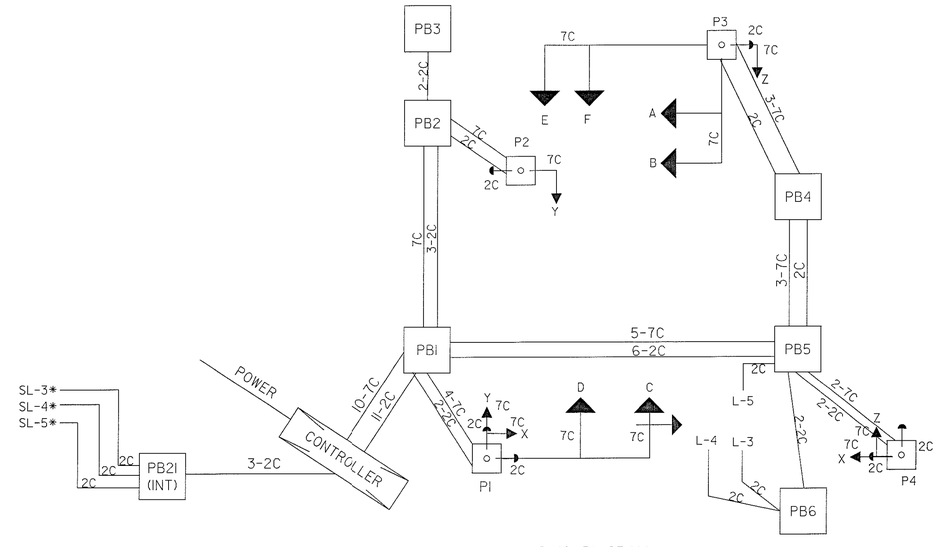

WIRING DIAGRAM

(INT) = INTERCONNECT

CALCULATED CRP
CHECKED TS

TRAFFIC SIGNAL PLAN DETAILS
FOUNTAIN ST. AND CARROLL ST.

SUM-8-0.63

801
1088

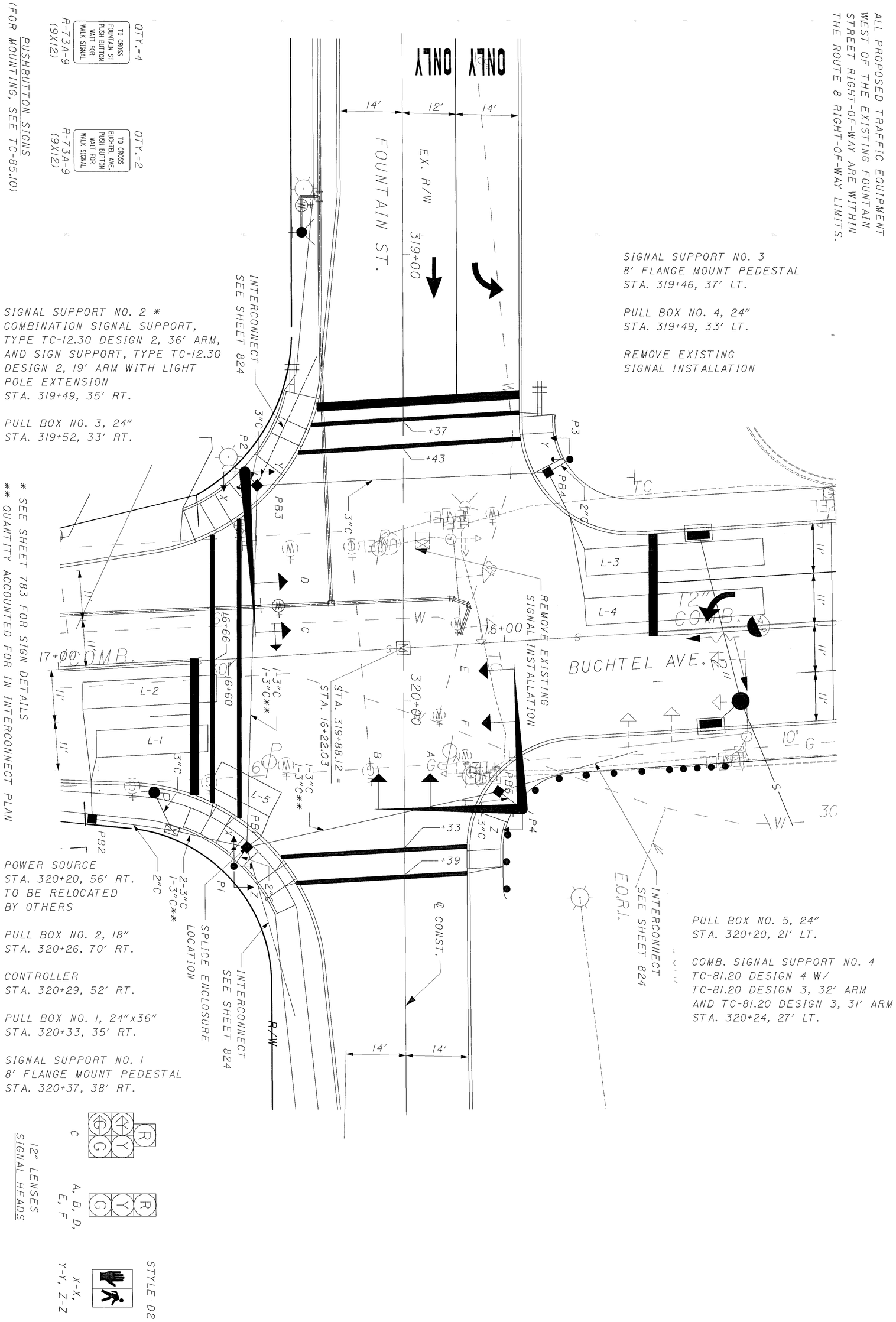

802 1088	SUM-8-0.63	TRAFFIC SIGNAL PLAN FOUNTAIN ST. AND BUCHTEL AVE.	CALCULATED CRP / CHECKED TS	0 10 5 20 HORIZONTAL SCALE IN FEET

SIGNAL DISPLAY CHART

SIGNAL HEAD	Ø2				Ø4&Ø7				Ø4&Ø8				FLASH
	R/W		CLEAR		R/W		CLEAR		R/W		CLEAR		
A	G	G	Y	R	R	R	R	R	R	R	R	R	Y
B	G	G	Y	R	R	R	R	R	R	R	R	R	Y
C	R	R	R	R	G/~~G~~	G/~~G~~	G/~~Y~~	G	G	G	Y	R	R
D	R	R	R	R	G	G	G	G	G	G	Y	R	R
E	R	R	R	R	R	R	R	R	G	G	Y	R	R
F	R	R	R	R	R	R	R	R	G	G	Y	R	R
X-X	W	FDW	DW	DW	DW	DW	DW	DW	DW	DW	DW	DW	OUT
Y-Y	DW	DW	DW	DW	DW	DW	DW	DW	W	FDW	DW	DW	OUT
Z-Z	DW	DW	DW	DW	DW	DW	DW	DW	W	FDW	DW	DW	OUT

COORDINATION TIMING

CYCLE/OFFSET	PHASE			DESCRIPTION
	Ø2	Ø4&Ø7	Ø4&Ø8	
80/32	35	19	26	M-F, 9 AM-4 PM & 6 PM-6 AM, SAT. & SUN.
100/65	41	20	27	M-F, 6 AM-9 AM & 4 PM-6 PM

CONTROLLER TIMING DATA

CYCLE LENGTH	80			100		
	Ø2	Ø4&Ø7	Ø4&Ø8	Ø2	Ø4&Ø7	Ø4&Ø8
MOVEMENT	NB	EB/EBL	EB/WB	NB	EB/EBL	EB/WB
GREEN TIME	29	13	20	35	20	27
YELLOW TIME	3.0	3.0	3.0	3.0	3.0	3.0
ALL RED	3.0	3.0	3.0	3.0	3.0	3.0
MINIMUM INITIAL	10	5	7	10	5	7
VEHICULAR EXTENSION	-	3	3	-	3	3
WALK	7	-	7	7	-	7
FLASH DON'T WALK	15	-	11	15	-	11
MEMORY	OFF	OFF	OFF	OFF	OFF	OFF
RECALL	MIN	NONE	NONE	MIN	NONE	NONE

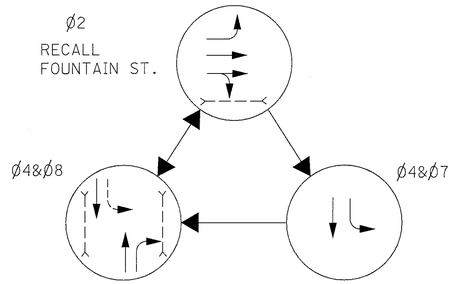

PHASING DIAGRAM

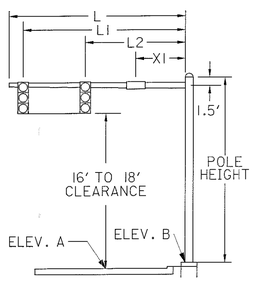

MAST ARM DETAIL

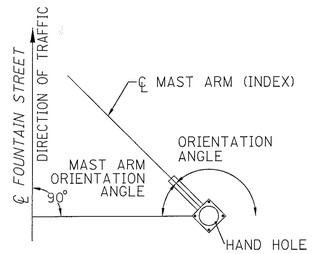

NOTES:
1. ALL ANGLES MEASURED CLOCKWISE
2. BASE PLATE IS ORIENTED SQUARE TO MAST ARM A.
3. POLE STATIONING AND ORIENTATION FROM FOUNTAIN STREET ℄.

ORIENTATION ANGLES

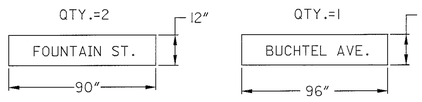

STREET NAME SIGNS

(MAST ARM MOUNTED, SEE SHEET 830)

SIGNAL SUPPORT											ELEVATION		MAST ARM ANGLE (A)	MAST ARM ANGLE (B)	ORIENTATION ANGLES FROM MAST ARM		
POLE NO.	DESIGN NO.	POLE HEIGHT (FT)	FOUNDATION		L	L1	L2	L3	L4	X1	A	B			PEDESTRIAN SIGNALS	PEDESTRIAN PUSH BUTTONS	HANDHOLE
			STATION	OFFSET	FT.	FT.	FT.	FT.	FT.	FT.	FT.	FT.					
1	PED	8	320+37	38' RT											90/270	0/270	
2	12	24	319+49	35' RT	36	35	24			29	1057.4	1057.8	90		90/270	24/270	180
3	PED	8	319+46	37' LT											90	0	
4	4	24	320+24	27' LT	32	31	19			11	1057.5	1058.5	0		270	0	180
					31	30	18			10	1058.6	1058.5		90			

LOOP DETECTORS

DESIGNATION	SIZE	# OF TURNS	PULSE OR PRESENCE	DELAY	ASSOCIATED CONTROLLER PHASE	STATION 1st FRONT CORNER	STATION 2nd FRONT CORNER
L-1	6 x 25	2	PRESENCE	7	8	320+04, 44' RT.	320+11, 44' RT.
L-2	6 x 30	2	PRESENCE	0	8	319+94, 42' RT.	320+00, 42' RT.
L-3	6 x 40	2	PRESENCE	0	4	319+66, 41' LT.	319+72, 41' LT.
L-4	6 x 40	2	PRESENCE	0	7	319+77, 41' LT.	319+83, 41' LT.
L-5	6 x 15	2	PRESENCE	7	8	320+20, 28' RT.	320+26, 30' LT.
SL-9*	6 x 6	3	PRESENCE	0	-	321+03, 7' LT.	321+11, 7' RT.
SL-10*	6 x 6	3	PRESENCE	0	-	321+03, 7' RT.	321+11, 7' LT.

*SL DENOTES A SYSTEM LOOP DETECTOR. ALL SYSTEM LOOP DETECTOR QUANTITIES ARE SHOWN ON SHEET 824.

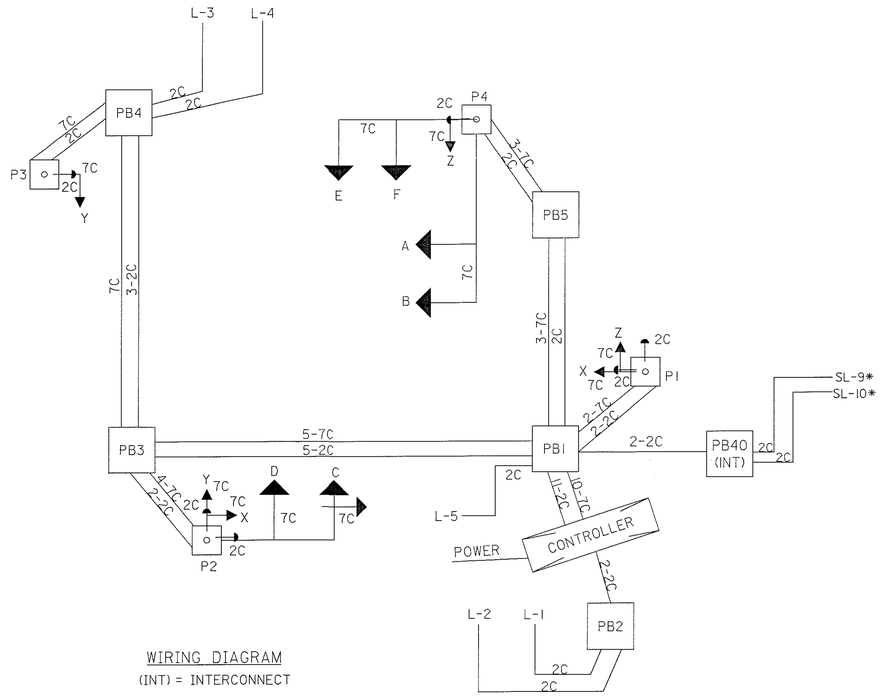

WIRING DIAGRAM

(INT) = INTERCONNECT

TRAFFIC CONTROL QUANTITIES

ITEM	EXT.	QTY.	UNITS	DESCRIPTION
625	25402	29	LF	CONDUIT, 2", 713.07
625	25502	55	LF	CONDUIT, 3", 713.07
625	25802	204	LF	CONDUIT, CONCRETE ENCASED, 3"
625	29002	312	LF	TRENCH, 24" DEEP
625	30700	1	EACH	PULL BOX, 713.08, 18" AS PER PLAN
625	30707	3	EACH	PULL BOX, 713.08, 24" AS PER PLAN
625	31600	1	EACH	PULL BOX, MISC.: 713.08, 24"x36"x36", AS PER PLAN
625	32000	9	EACH	GROUND ROD
625	32001	1	EACH	GROUND ROD, AS PER PLAN
SPECIAL	36000	312	LF	PLASTIC CAUTION TAPE
630	79100	3	EACH	SIGN HANGER ASSEMBLY, MAST ARM
630	80102	23	SF	SIGN, FLAT SHEET, TYPE G
632	00302	5	EACH	VEHICULAR SIGNAL HEAD, 3 SECTION 12" LENS, 1-WAY, POLYCARBONATE
632	00502	1	EACH	VEHICULAR SIGNAL HEAD, 5-SECTION, 12" LENS, 1-WAY, POLYCARBONATE
632	20601	6	EACH	PEDESTRIAN SIGNAL HEAD, TYPE D2, AS PER PLAN
632	25000	6	EACH	COVERING OF VEHICULAR SIGNAL HEAD
632	25010	6	EACH	COVERING OF PEDESTRIAN SIGNAL HEAD
632	26000	6	EACH	PEDESTRIAN PUSHBUTTON
632	26500	5	EACH	DETECTOR LOOP
632	27008	5	EACH	LOOP DETECTOR UNIT, DELAY AND EXTENSION TYPE
632	40700	1492	LF	SIGNAL CABLE, 7 CONDUCTOR, NO. 14 AWG
632	64010	2	EACH	SIGNAL SUPPORT FOUNDATION
632	64020	2	EACH	PEDESTAL FOUNDATION
632	65200	1218	LF	LOOP DETECTOR LEAD-IN CABLE
632	68200	56	LF	POWER CABLE, 2 CONDUCTOR, 6 AWG
632	70001	1	EACH	POWER SERVICE, AS PER PLAN
632	77050	1	EACH	COMBINATION SIGNAL SUPPORT, TYPE TC-81.20 DESIGN 4 POLE, WITH MAST ARMS TC-81.20 DESIGN 3 AND DESIGN 3
632	81700	1	EACH	COMBINATION SIGNAL SUPPORT, MISC.: TYPE TC-12.30, DESIGN 2 AND SIGN SUPPORT, TYPE TC-12.30, DESIGN 2 WITH LIGHT POLE EXTENSION
632	89600	2	EACH	PEDESTAL, 8'
632	90101	1	EACH	REMOVAL OF TRAFFIC SIGNAL INSTALLATION, AS PER PLAN
633	38000	1	EACH	CONTROLLER, ACTUATED, 8 PHASE, SOLID STATE DIGITAL MICROPROCESSOR
633	70001	1.15	CY	CONCRETE FOR CABINET FOUNDATION, AS PER PLAN
633	70500	0	SF	CONTROLLER WORK PAD
633	99000	1	EACH	ALTERNATE BID: CONTROLLER MISC.; ECONOLITE CONTROLLER
				100% LOCAL
632	62820	1	EACH	INTERCONNECT MISC.: SPLICE ENCLOSURE (UNDER GRADE & AERIAL), AS PER PLAN

CALCULATED CRP
CHECKED TS

TRAFFIC SIGNAL PLAN DETAILS
FOUNTAIN ST. AND BUCHTEL AVE.

SUM-8-0.63

803
1088

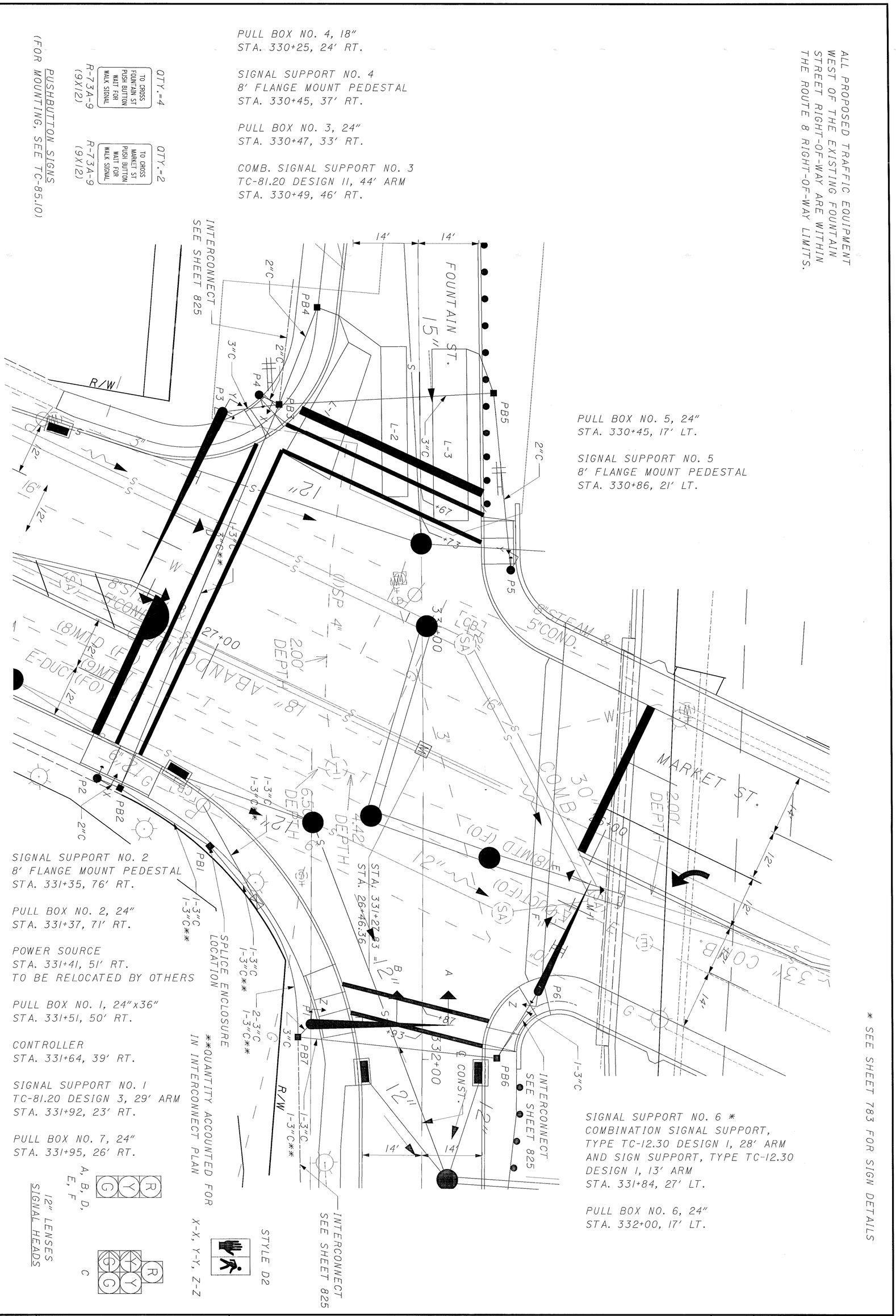

804
1088

SUM-8-0.63

TRAFFIC SIGNAL PLAN
FOUNTAIN ST. AND MARKET ST.

CALCULATED CRP
CHECKED TS

HORIZONTAL SCALE IN FEET
0 5 10 20

N

SIGNAL DISPLAY CHART

SIGNAL HEAD	Ø2&Ø5				Ø2&Ø6				Ø8				FLASH
	R/W		CLEAR		R/W		CLEAR		R/W		CLEAR		
A	R	R	R	R	R	R	R	R	G	G	Y	R	R
B	R	R	R	R	R	R	R	R	G	G	Y	R	R
C	G/~~G~~	G/~~G~~	G/~~A~~	G	G	G	Y	R	R	R	R	R	Y
D	G	G	G	G	G	G	Y	R	R	R	R	R	Y
E	R	R	R	R	G	G	Y	R	R	R	R	R	Y
F	R	R	R	R	G	G	Y	R	R	R	R	R	Y
X-X	DW	DW	DW	DW	DW	DW	DW	DW	W	FDW	DW	DW	
Y-Y	DW	DW	DW	DW	W	FDW	DW	DW	DW	DW	DW	DW	OUT
Z-Z	DW	DW	DW	DW	W	FDW	DW	DW	DW	DW	DW	DW	OUT

COORDINATION TIMING

CYCLE/OFFSET	PHASE			DESCRIPTION
	Ø2&Ø5	Ø2&Ø6	Ø8	
80/78	11	38	31	M-F, 9 AM-4 PM & 6 PM-6 AM, SAT. & SUN.
100/37	14	52	34	M-F, 6 AM-9 AM & 4 PM-6 PM

CONTROLLER TIMING DATA

CYCLE LENGTH	80			100		
	Ø2&Ø5	Ø2&Ø6	Ø8	Ø2&Ø5	Ø2&Ø6	Ø8
MOVEMENT	EB/EBL	EB/WB	NB	EB/EBL	EB/WB	NB
GREEN TIME	5	32	25	8	46	28
YELLOW TIME	3.0	3.0	3.0	3.0	3.0	3.0
ALL RED	3.0	3.0	3.0	3.0	3.0	3.0
MINIMUM INITIAL	5	10	7	5	10	7
VEHICULAR EXTENSION	3	-	3	3	-	3
WALK	-	7	7	-	7	7
FLASH DON'T WALK	-	12	18	-	12	18
MEMORY	OFF	OFF	OFF	OFF	OFF	OFF
RECALL	NONE	MIN	NONE	NONE	MIN	NONE

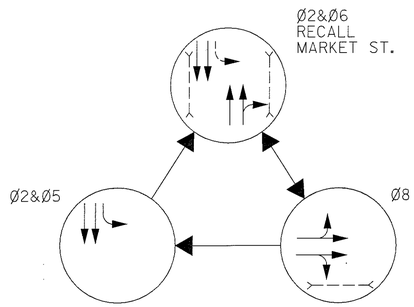

PHASING DIAGRAM

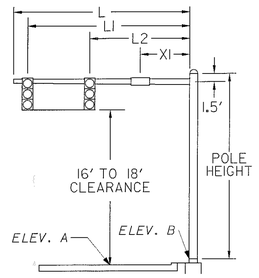

MAST ARM DETAIL

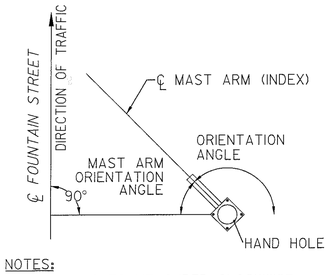

NOTES:
1. ALL ANGLES MEASURED CLOCKWISE
2. BASE PLATE IS ORIENTED SQUARE TO MAST ARM A.
3. POLE STATIONING AND ORIENTATION FROM ℄ OF FOUNTAIN STREET.

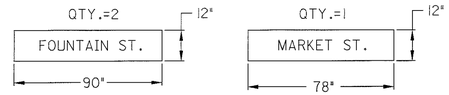

STREET NAME SIGNS

(MAST ARM MOUNTED, SEE SHEET 830)

ORIENTATION ANGLES

SIGNAL SUPPORT											ELEVATION		MAST ARM ANGLE (A)	MAST ARM ANGLE (B)	ORIENTATION ANGLES FROM MAST ARM		
POLE NO.	DESIGN NO.	POLE HEIGHT (FT)	FOUNDATION		L	LI	L2	L3	L4	XI	A	B			PEDESTRIAN SIGNALS	PEDESTRIAN PUSH BUTTONS	HANDHOLE
			STATION	OFFSET	FT.	FT.	FT.	FT.	FT.	FT.	FT.	FT.					
1	3	23	331+92	23' RT	29	28	16			8	1048.1	1048.7	0		275	270	180
2	PED	8	330+86	76' RT											30	293	
3	11	24	330+49	46' RT	39	37	25			15	1049.7	1050.2	116		180	270	180
4	PED	8	330+45	37' RT											25	72	
5	PED	8	330+86	21' LT											100	90	
6	11	24	331+64	27' LT	28	27	15			21	1048.5	1048.5	115		163	180	180

LOOP & MICROWAVE DETECTORS

DESIGNATION	SIZE	# OF TURNS	PULSE OR PRESENCE	DELAY	ASSOCIATED CONTROLLER PHASE	STATION 1st FRONT CORNER	STATION 2nd FRONT CORNER
L-1	12 x 6 x 30	2	PRESENCE	7	8	330+65, 21' RT	330+59, 32' RT
L-2	6 x 35	2	PRESENCE	0	8	330+69, 3' RT	330+69, 9' RT
L-3	8 x 40	2	PRESENCE	0	8	330+75, 3' LT	330+75, 11' RT
M-1	MICROWAVE	-	PRESENCE	0	5	ON P6 MASTARM	
SL-15*	6 x 6	3	PRESENCE	0	-	† 27+63, 23' RT	† 27+71, 23' RT
SL-16*	6 x 6	3	PRESENCE	0	-	† 27+63, 8' RT	† 27+71, 8' RT
SL-17*	6 x 6	3	PRESENCE	0	-	† 27+63, 10' LT	† 27+71, 10' LT
SL-18*	6 x 6	3	PRESENCE	0	-	† 27+63, 24' LT	† 27+71, 24' LT
SL-19*	6 x 6	3	PRESENCE	0	-	333+89, 7' LT	333+97, 7' LT
SL-20*	6 x 6	3	PRESENCE	0	-	333+89, 7' RT	333+97, 7' RT

† ℄ MARKET ST.

* SL DENOTES A SYSTEM LOOP DETECTOR. ALL SYSTEM LOOP DETECTOR QUANTITIES ARE SHOWN ON SHEET 825.

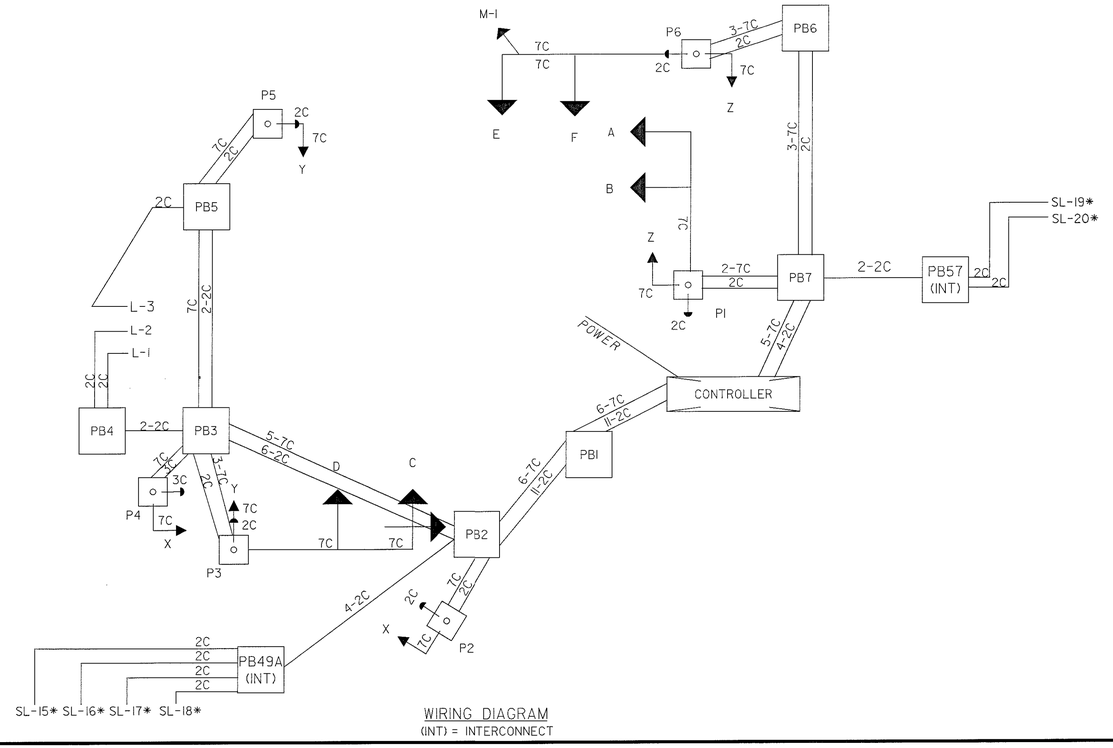

WIRING DIAGRAM
(INT) = INTERCONNECT

TRAFFIC CONTROL QUANTITIES

ITEM	EXT.	QTY.	UNITS	DESCRIPTION
625	25402	77	LF	CONDUIT, 2", 713.07
625	25502	172	LF	CONDUIT, 3", 713.07
625	25802	194	LF	CONDUIT, CONCRETE ENCASED, 3"
625	29002	424	LF	TRENCH, 24" DEEP
625	30700	1	EACH	PULL BOX, 713.08, 18" AS PER PLAN
625	30707	5	EACH	PULL BOX, 713.08, 24" AS PER PLAN
625	31600	1	EACH	PULL BOX, MISC.: 713.08, 24"x36"x36", AS PER PLAN
625	32000	11	EACH	GROUND ROD
625	32001	1	EACH	GROUND ROD, AS PER PLAN
SPECIAL	36000	424	LF	PLASTIC CAUTION TAPE
630	79100	3	EACH	SIGN HANGER ASSEMBLY, MAST ARM
630	80102	22	SF	SIGN, FLAT SHEET, TYPE G
632	00302	5	EACH	VEHICULAR SIGNAL HEAD, 3 SECTION 12" LENS, 1-WAY, POLYCARBONATE
632	00502	1	EACH	VEHICULAR SIGNAL HEAD, 5-SECTION, 12" LENS, 1-WAY, POLYCARBONATE
632	20601	6	EACH	PEDESTRIAN SIGNAL HEAD, TYPE D2, AS PER PLAN
632	25000	6	EACH	COVERING OF VEHICULAR SIGNAL HEAD
632	25010	6	EACH	COVERING OF PEDESTRIAN SIGNAL HEAD
632	26000	6	EACH	PEDESTRIAN PUSHBUTTON
632	26500	3	EACH	DETECTOR LOOP
632	27008	3	EACH	LOOP DETECTOR UNIT, DELAY AND EXTENSION TYPE
632	40700	2013	LF	SIGNAL CABLE, 7 CONDUCTOR, NO. 14 AWG
632	64010	3	EACH	SIGNAL SUPPORT FOUNDATION
632	64020	3	EACH	PEDESTAL FOUNDATION
632	65200	1626	LF	LOOP DETECTOR LEAD-IN CABLE
632	68200	72	LF	POWER CABLE, 2 CONDUCTOR, 6 AWG
632	70001	1	EACH	POWER SERVICE, AS PER PLAN
632	80300	1	EACH	SIGNAL SUPPORT, TYPE TC-81.20, DESIGN 3
632	81500	1	EACH	COMBINATION SIGNAL SUPPORT, TYPE TC-81.20, DESIGN 11
632	81700	1	EACH	COMBINATION SIGNAL SUPPORT, MISC.: TYPE TC-12.30, DESIGN 1 AND SIGN SUPPORT, TYPE TC-12.30, DESIGN 1
632	89600	3	EACH	PEDESTAL, 8'
632	90101	1	EACH	REMOVAL OF TRAFFIC SIGNAL INSTALLATION, AS PER PLAN
632	90400	1	EACH	SIGNALIZATION, MISC.: MICROWAVE DETECTOR UNIT
633	38000	1	EACH	CONTROLLER, ACTUATED, 8 PHASE, SOLID STATE DIGITAL MICROPROCESSOR
633	70001	1.15	CY	CONCRETE FOR CABINET FOUNDATION, AS PER PLAN
633	70500	0	SF	CONTROLLER WORK PAD
633	99000	1	EACH	ALTERNATE BID: CONTROLLER MISC.; ECONOLITE CONTROLLER
				100% LOCAL
632	62820	1	EACH	INTERCONNECT MISC.: SPLICE ENCLOSURE (UNDER GRADE & AERIAL), AS PER PLAN

CALCULATED CRP
CHECKED TS

TRAFFIC SIGNAL PLAN DETAILS
FOUNTAIN ST. AND MARKET ST.

SUM-8-0.63

805
1088

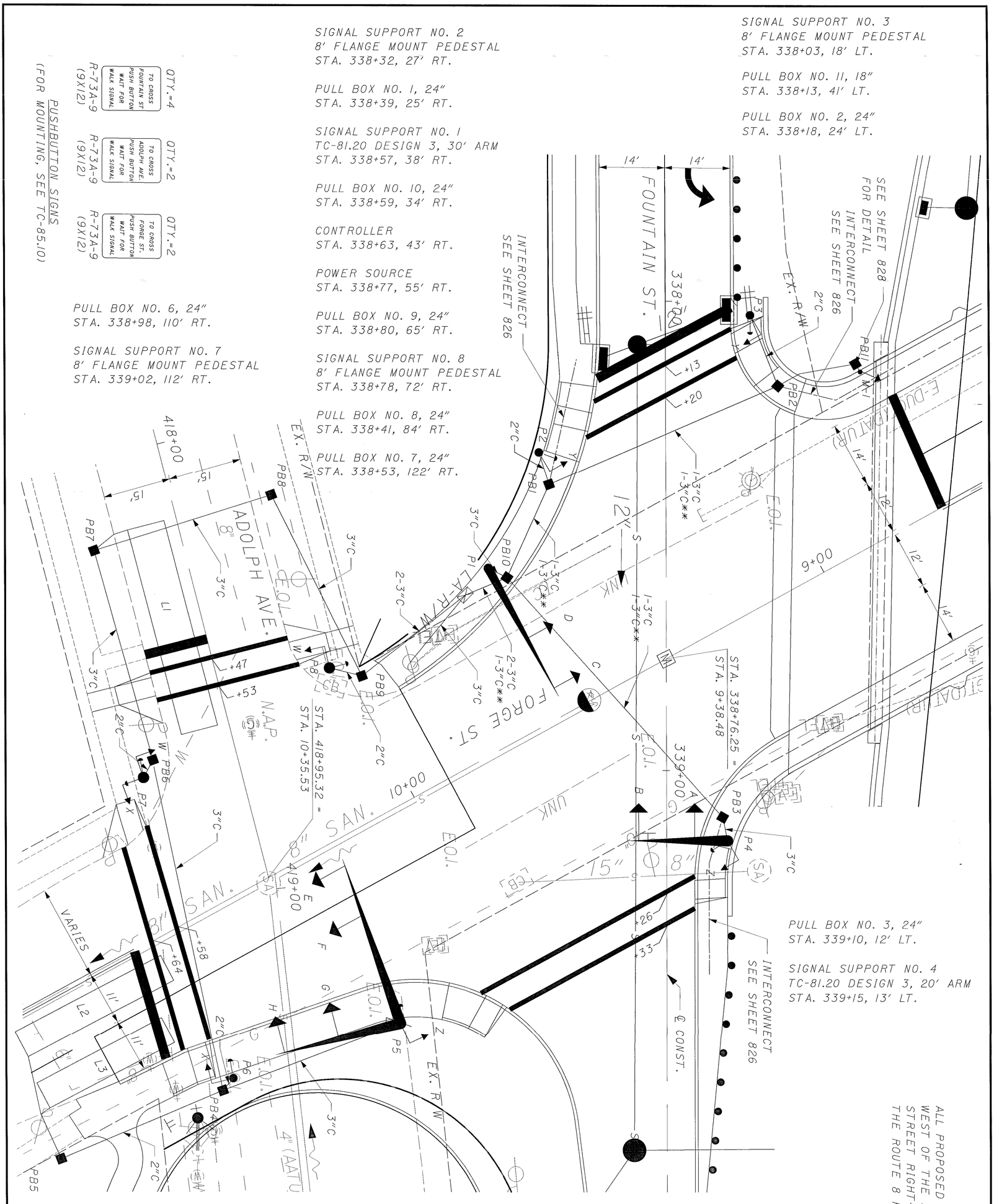

806 1088	SUM-8-0.63	TRAFFIC SIGNAL PLAN FOUNTAIN ST. AND FORGE ST.	CALCULATED CRP CHECKED TS	HORIZONTAL SCALE IN FEET

SIGNAL DISPLAY CHART

SIGNAL HEAD	Ø2				Ø6				Ø4&Ø8				FLASH
	R/W		CLEAR		R/W		CLEAR		R/W		CLEAR		
A	G	~~G~~	Y	R	R	R	R	R	R	R	R	R	R
B	G	G	Y	R	R	R	R	R	R	R	R	R	R
C	R	R	R	R	R	R	R	R	G	G	Y	R	Y
D	R	R	R	R	R	R	R	R	G	G	Y	R	Y
E	R	R	R	R	R	R	R	R	G	G	Y	R	Y
F	R	R	R	R	R	R	R	R	G	G	Y	R	Y
G	R	R	R	R	G	G	Y	R	R	R	R	R	R
H	R	R	R	R	G	G	Y	R	R	R	R	R	R
W-W	DW	DW	DW	DW	DW	DW	DW	DW	W	FDW	DW	DW	OUT
X-X	DW	DW	DW	DW	W	FDW	DW	DW	DW	DW	DW	DW	OUT
Y-Y	DW	DW	DW	DW	DW	DW	DW	DW	W	FDW	DW	DW	OUT
Z-Z	DW	DW	DW	DW	DW	DW	DW	DW	W	FDW	DW	DW	OUT

COORDINATION TIMING

CYCLE/OFFSET	PHASE			DESCRIPTION
	Ø2	Ø6	Ø4&Ø8	
80/60	16	26	38	M-F, 9 AM-4 PM & 6 PM-6 AM, SAT. & SUN.
100/19	21	31	48	M-F, 6 AM-9 AM & 4 PM-6 PM

CONTROLLER TIMING DATA

CYCLE LENGTH	80			100		
	Ø2	Ø6	Ø4&Ø8	Ø2	Ø6	Ø4&Ø8
MOVEMENT	NB	2	EB/WB	NB	2	EB/WB
GREEN TIME	9	19	32	14	24	42
YELLOW TIME	3.0	3.0	3.0	3.0	3.0	3.0
ALL RED	4	4	3.0	4	4	3
MINIMUM INITIAL	8	8	10	8	8	10
VEHICULAR EXTENSION	-	3	3	-	3	3
WALK	-	7	7	-	7	7
FLASH DON'T WALK	-	11	12	-	11	12
MEMORY	OFF	OFF	OFF	OFF	OFF	OFF
RECALL	MIN	NONE	NONE	MIN	NONE	NONE

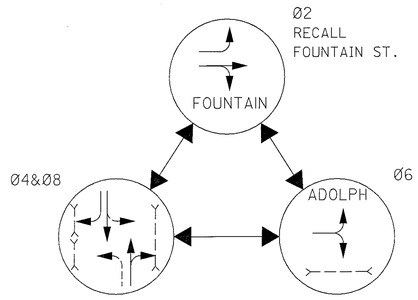

PHASING DIAGRAM

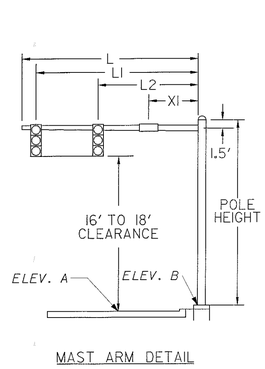

MAST ARM DETAIL

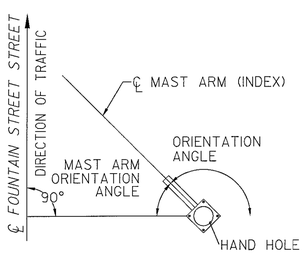

NOTES:
1. ALL ANGLES MEASURED CLOCKWISE
2. BASE PLATE IS ORIENTED SQUARE TO MAST ARM A.
3. POLE STATIONING AND ORIENTATION FROM FOUNTAIN STREET ℄.

ORIENTATION ANGLES

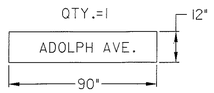

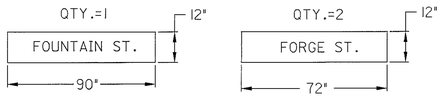

STREET NAME SIGNS

(MAST ARM MOUNTED, SEE SHEET 830)

SIGNAL SUPPORT										ELEVATION		MAST ARM ANGLE (A)	MAST ARM ANGLE (B)	ORIENTATION ANGLES FROM MAST ARM		
POLE NO.	DESIGN NO.	POLE HEIGHT (FT)	FOUNDATION		L	LI	L2	L3	L4	XI	A	B			PEDESTRIAN SIGNALS	PEDESTRIAN PUSH BUTTONS	HANDHOLE
			STATION	OFFSET	FT.	FT.	FT.	FT.	FT.	FT.	FT.	FT.					
1	3	23	338+57	38' RT	30	28	16			6	1050.4	1051.0	60				180
2	PED	8	338+32	27' RT											60	20	
3	PED	8	338+03	18' LT											240	270	
4	3	23	339+15	13' LT	20	18	6			11	1049.6	1050.1	0		240	315	180
5	4	23	339+54	57' RT	36	34	23			11	1050.1	1050.6	250		174	10	180
					26	24	12			7	1050.0	1050.6		270			
6	PED	8	339+66	93' RT											166	260	
7	PED	8	339+02	112' RT											160/250	160/260	
8	PED	8	338+78	72' RT											257	346	

LOOP DETECTORS

DESIGNATION	SIZE	# OF TURNS	PULSE OR PRESENCE	DELAY	ASSOCIATED CONTROLLER PHASE	STATION 1st FRONT CORNER	STATION 2nd FRONT CORNER
L-1	8 x 45	2	PRESENCE	7	6	338+91, 96' RT.	338+93, 104' RT.
L-2	6 x 35	2	PRESENCE	0	8	339+40, 108' RT.	339+45, 108' RT.
L-3	6 x 30	2	PRESENCE	0	8	339+53, 108' RT.	339+58, 105' RT.
M-1	MICROWAVE	-	PRESENCE	0	4		

TRAFFIC CONTROL QUANTITIES

ITEM	EXT.	QTY.	UNITS	DESCRIPTION
				100% LOCAL
625	25303	24	LF	CONDUIT, 1½", 713.07, AS PER PLAN
625	25402	93	LF	CONDUIT, 2", 713.07
625	25502	255	LF	CONDUIT, 3", 713.07
625	25802	232	LF	CONDUIT, CONCRETE ENCASED, 3"
625	29002	411	LF	TRENCH, 24" DEEP
625	29500	44	LF	TRENCH IN PAVED AREA, TYPE A
625	29600	87	LF	TRENCH IN PAVED AREA, TYPE B
625	30700	2	EACH	PULL BOX, 713.08, 18" AS PER PLAN
625	30707	9	EACH	PULL BOX, 713.08, 24" AS PER PLAN
625	32000	18	EACH	GROUND ROD
625	32001	1	EACH	GROUND ROD, AS PER PLAN
SPECIAL	36000	542	LF	PLASTIC CAUTION TAPE
630	79100	7	EACH	SIGN HANGER ASSEMBLY, MAST ARM
630	80102	39	SF	SIGN, FLAT SHEET, TYPE G
632	00302	7	EACH	VEHICULAR SIGNAL HEAD, 3 SECTION 12" LENS, 1-WAY, POLYCARBONATE
632	00402	1	EACH	VEHICULAR SIGNAL HEAD, 4 SECTION, 12" LENS, 1WAY, POLYCARBONATE
632	20601	8	EACH	PEDESTRIAN SIGNAL HEAD, TYPE D2, AS PER PLAN
632	25000	8	EACH	COVERING OF VEHICULAR SIGNAL HEAD
632	25010	8	EACH	COVERING OF PEDESTRIAN SIGNAL HEAD
632	26000	8	EACH	PEDESTRIAN PUSHBUTTON
632	26500	3	EACH	DETECTOR LOOP
632	27008	3	EACH	LOOP DETECTOR UNIT, DELAY AND EXTENSION TYPE
632	40700	2764	LF	SIGNAL CABLE, 7 CONDUCTOR, NO. 14 AWG
632	64010	3	EACH	SIGNAL SUPPORT FOUNDATION
632	64020	5	EACH	PEDESTAL FOUNDATION
632	65200	2300	LF	LOOP DETECTOR LEAD-IN CABLE
632	68200	65	LF	POWER CABLE, 2 CONDUCTOR, 6 AWG
632	70001	1	EACH	POWER SERVICE, AS PER PLAN
632	70300	1	EACH	CONDUIT RISER, 1½" DIAMETER
632	77050	1	EACH	COMBINATION SIGNAL SUPPORT, TYPE TC-81.20 DESIGN 4 POLE, WITH MAST ARMS TC-81.20 DESIGN 3 AND DESIGN 3
632	80300	2	EACH	SIGNAL SUPPORT, TYPE TC-81.20, DESIGN 3
632	89600	5	EACH	PEDESTAL, 8'
632	90101	1	EACH	REMOVAL OF TRAFFIC SIGNAL INSTALLATION, AS PER PLAN
632	90400	1	EACH	SIGNALIZATION, MISC: MICROWAVE DETECTOR UNIT
633	38000	1	EACH	CONTROLLER, ACTUATED, 8 PHASE, SOLID STATE DIGITAL MICROPROCESSOR
633	70001	1.15	CY	CONCRETE FOR CABINET FOUNDATION, AS PER PLAN
633	70500	0	SF	CONTROLLER WORK PAD
633	99000	1	EACH	ALTERNATE BID: CONTROLLER MISC.; ECONOLITE CONTROLLER

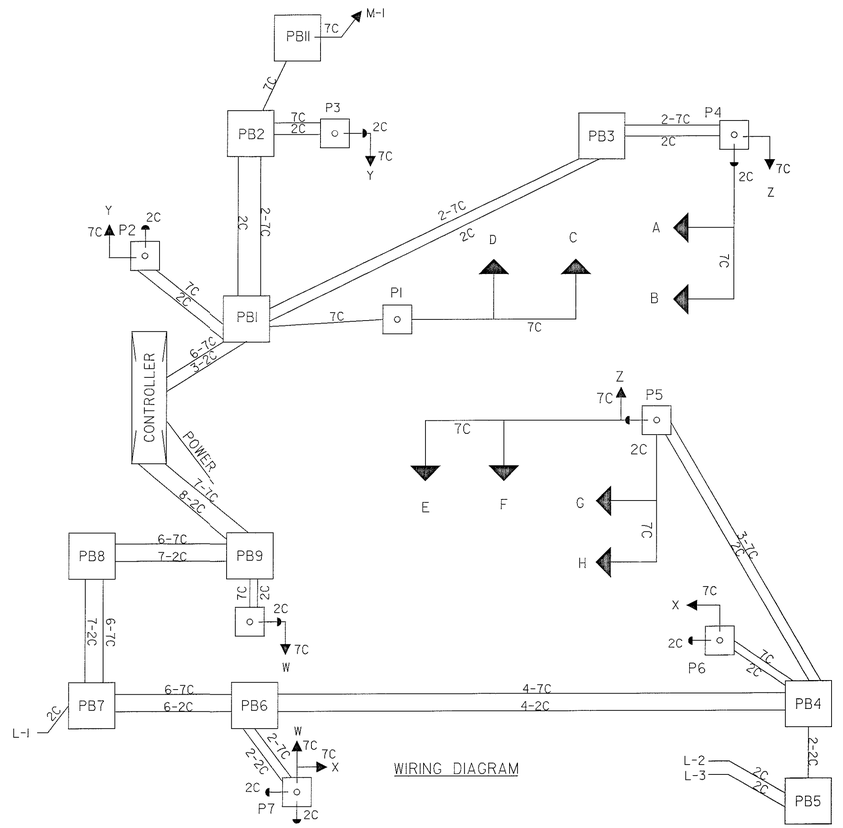

WIRING DIAGRAM

CALCULATED CRP CHECKED TS

TRAFFIC SIGNAL PLAN DETAILS FOUNTAIN ST. AND FORGE ST.

SUM-8-0.63

807
1088

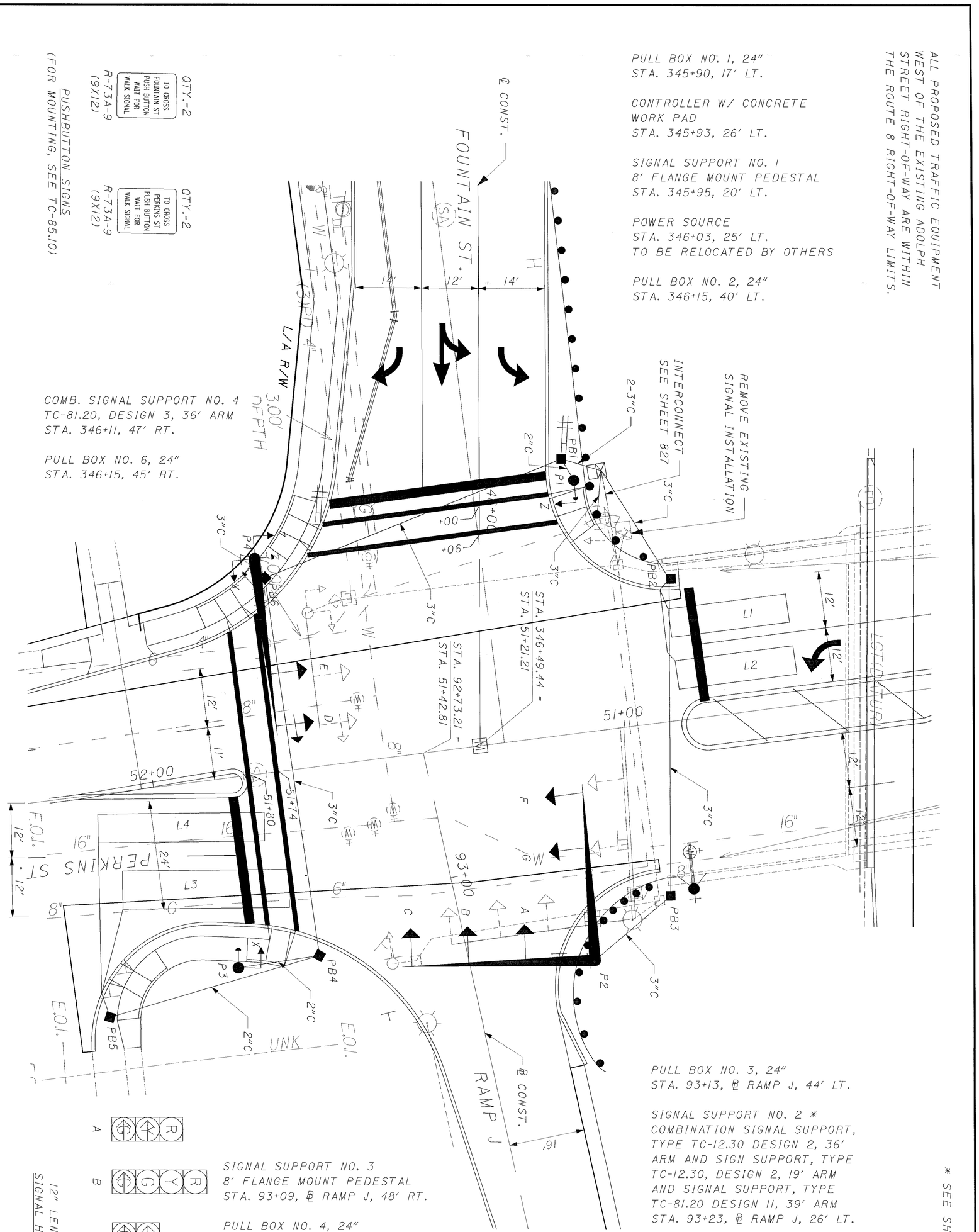

* SEE SHEET 783 FOR SIGN DETAILS

808 1088	SUM-8-0.63	TRAFFIC SIGNAL PLAN FOUNTAIN ST. AND PERKINS ST.	CALCULATED CRP / CHECKED TS	0 10 5 20 HORIZONTAL SCALE IN FEET

SIGNAL DISPLAY CHART

SIGNAL HEAD	Ø2				Ø4&Ø7				Ø4&Ø8				FLASH
	R/W		CLEAR		R/W		CLEAR		R/W		CLEAR		
A	~~G~~	~~G~~	~~Y~~	R	R	R	R	R	R	R	R	R	R
B	~~G~~	~~G~~	Y	R	R	R	R	R	R	R	R	R	R
C	G	G	Y	R	R	R	R	R	R	R	R	R	R
D	R	R	R	R	~~G~~	~~G~~	~~Y~~	G	G	G	Y	R	Y
E	R	R	R	R	G	G	G	G	G	G	Y	R	Y
F	R	R	R	R	R	R	R	R	G	G	Y	R	Y
G	R	R	R	R	R	R	R	R	G	G	Y	R	Y
X-X	W	FDW	DW	DW	DW	DW	DW	DW	DW	DW	DW	DW	OUT
Z-Z	DW	DW	DW	DW	DW	DW	DW	DW	W	FDW	DW	DW	OUT

COORDINATION TIMING

CYCLE/OFFSET	PHASE			DESCRIPTION
	Ø2	Ø4&Ø7	Ø4&Ø8	
80/22	29	26	25	M-F, 9 AM-4 PM & 6 PM-6 AM, SAT. & SUN.
100/76	31	32	19	M-F, 6 AM-9 AM & 4 PM-6 PM

CONTROLLER TIMING DATA

CYCLE LENGTH	80			100		
	Ø2	Ø4&Ø7	Ø4&Ø8	Ø2	Ø4&Ø7	Ø4&Ø8
MOVEMENT	NB	EB/EBL	EB/WB	NB	EB/EBL	EB/WB
GREEN TIME	23	20	19	31	32	19
YELLOW TIME	3.0	3.0	3.0	3.0	3.0	3.0
ALL RED	3.0	3.0	3.0	3.0	3.0	3.0
MINIMUM INITIAL	10	10	7	10	10	7
VEHICULAR EXTENSION	-	3.0	3.0	-	3	3
WALK	7	-	7	7	-	7
FLASH DON'T WALK	15	-	12	15	-	12
MEMORY	OFF	OFF	OFF	OFF	OFF	OFF
RECALL	MIN	NONE	NONE	MIN	NONE	NONE

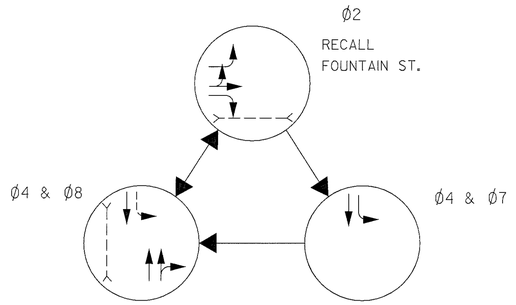

PHASING DIAGRAM

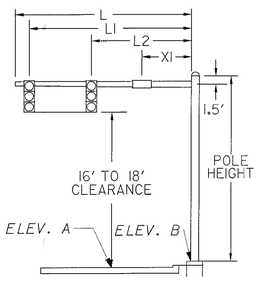

MAST ARM DETAIL

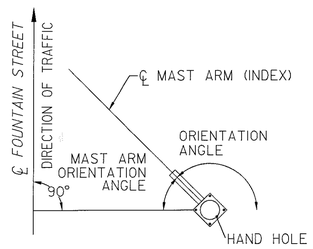

NOTES:
1. ALL ANGLES MEASURED CLOCKWISE
2. BASE PLATE IS ORIENTED SQUARE TO MAST ARM A.
3. POLE STATIONING AND ORIENTATION FROM FOUNTAIN ST. ℄.

STREET NAME SIGNS

(MAST ARM MOUNTED, SEE SHEET 830)

ORIENTATION ANGLES

POLE NO.	DESIGN NO.	POLE HEIGHT (FT)	FOUNDATION STATION	FOUNDATION OFFSET	L FT.	LI FT.	L2 FT.	L3 FT.	L4 FT.	XI FT.	ELEVATION A FT.	ELEVATION B FT.	MAST ARM ANGLE (A)	MAST ARM ANGLE (B)	ORIENTATION ANGLES FROM MAST ARM: PEDESTRIAN SIGNALS	PEDESTRIAN PUSH BUTTONS	HANDHOLE
1	PED	8	345+95	20' LT.							1053.5	1052.6		90	270	270	
2	4	24	†93+23	26' LT.	36	34	23				1052.4	1052.6	10				180
					39	37	25	13		6	1052.4	1052.6	10				
3	PED	8	†93+09	48' RT.											0	270	
4	2	25	346+11	47' RT.	36	34	23				1052.6	1052.5	80		90/270	0/270	180

† ℄ RAMP J

LOOP DETECTORS

DESIGNATION	SIZE	# OF TURNS	PULSE OR PRESENCE	DELAY	ASSOCIATED CONTROLLER PHASE	STATION 1st FRONT CORNER	STATION 2nd FRONT CORNER
L-1	6 x 25	2	PRESENCE	0	4	346+22, 40' LT.	346+28, 40' LT.
L-2	6 x 25	2	PRESENCE	0	7	346+33, 41' LT.	346+39, 42' LT.
L-3	8 x 35	2	PRESENCE	7	8	† 92+78, 35' RT.	† 92+99, 35' RT.
L-4	6 x 35	2	PRESENCE	0	8	† 92+91, 33' RT.	† 92+84, 37' RT.
SL-32*	6 x 6	3	PRESENCE	0	-	343+48, 14' LT	343+56, 14' LT
SL-33*	6 x 10	3	PRESENCE	0	-	343+51, 0' RT	343+51, 10' RT
SL-34*	6 x 10	3	PRESENCE	0	-	† 93+64, 0' LT	† 93+64, 10' LT

† ℄ RAMP J

*SL DENOTES A SYSTEM LOOP DETECTOR. ALL SYSTEM LOOP DETECTOR QUANTITIES ARE SHOWN ON SHEET 827.

TRAFFIC CONTROL QUANTITIES

ITEM	EXT.	QTY.	UNITS	DESCRIPTION
625	25402	69	LF	CONDUIT, 2", 713.07
625	25502	80	LF	CONDUIT, 3", 713.07
625	25802	213	LF	CONDUIT, CONCRETE ENCASED, 3"
625	29002	255	LF	TRENCH, 24" DEEP
625	29600	109	LF	TRENCH IN PAVED AREA, TYPE B
625	30700	1	EACH	PULL BOX, 713.08, 18" AS PER PLAN
625	30707	5	EACH	PULL BOX, 713.08, 24" AS PER PLAN
625	32000	10	EACH	GROUND ROD
625	32001	1	EACH	GROUND ROD, AS PER PLAN
SPECIAL	36000	364	LF	PLASTIC CAUTION TAPE
630	79100	1	EACH	SIGN HANGER ASSEMBLY, MAST ARM
630	80102	7	SF	SIGN, FLAT SHEET, TYPE G
632	00302	5	EACH	VEHICULAR SIGNAL HEAD, 3 SECTION 12" LENS, 1-WAY, POLYCARBONATE
632	00402	1	EACH	VEHICULAR SIGNAL HEAD, 4 SECTION, 12" LENS, 1 WAY, POLYCARBONATE
632	00502	1	EACH	VEHICULAR SIGNAL HEAD, 5-SECTION, 12" LENS, 1-WAY, POLYCARBONATE
632	20601	4	EACH	PEDESTRIAN SIGNAL HEAD, TYPE D2, AS PER PLAN
632	25000	7	EACH	COVERING OF VEHICULAR SIGNAL HEAD
632	25010	4	EACH	COVERING OF PEDESTRIAN SIGNAL HEAD
632	26000	4	EACH	PEDESTRIAN PUSHBUTTON
632	26500	4	EACH	DETECTOR LOOP
632	27008	4	EACH	LOOP DETECTOR UNIT, DELAY AND EXTENSION TYPE
632	40700	1304	LF	SIGNAL CABLE, 7 CONDUCTOR, NO. 14 AWG
632	64010	2	EACH	SIGNAL SUPPORT FOUNDATION
632	64020	2	EACH	PEDESTAL FOUNDATION
632	65200	1081	LF	LOOP DETECTOR LEAD-IN CABLE
632	68200	24	LF	POWER CABLE, 2 CONDUCTOR, 6 AWG
632	70001	1	EACH	POWER SERVICE, AS PER PLAN
632	81300	1	EACH	COMBINATION SIGNAL SUPPORT, TYPE TC-81.20, DESIGN 3
632	81700	1	EACH	COMBINATION SIGNAL SUPPORT, MISC.: TYPE TC-12.30, DESIGN 2 AND SIGN SUPPORT, TYPE TC-12.30, DESIGN 2 AND SIGNAL SUPPORT, TYPE TC-81.20, DESIGN II
632	89600	2	EACH	PEDESTAL, 8'
632	90101	1	EACH	REMOVAL OF TRAFFIC SIGNAL INSTALLATION, AS PER PLAN
633	38000	1	EACH	CONTROLLER, ACTUATED, 8 PHASE, SOLID STATE DIGITAL MICROPROCESSOR
633	70001	1.15	CY	CONCRETE FOR CABINET FOUNDATION, AS PER PLAN
633	70500	9	SF	CONTROLLER WORK PAD
633	99000	1	EACH	ALTERNATE BID: CONTROLLER MISC.; ECONOLITE CONTROLLER

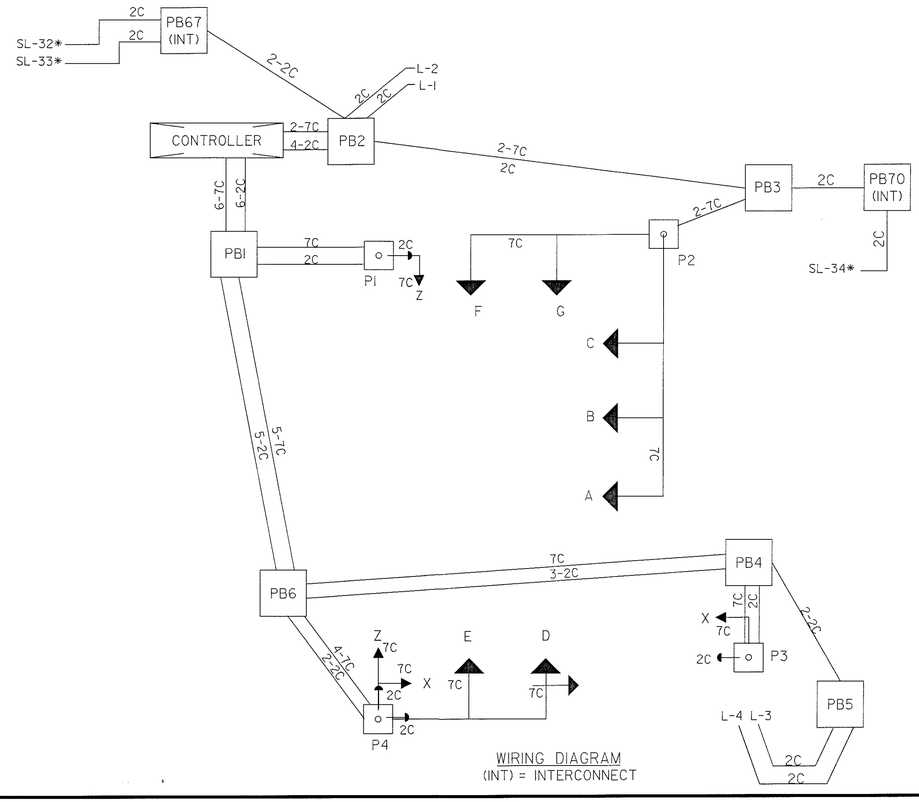

WIRING DIAGRAM
(INT) = INTERCONNECT

CALCULATED CRP CHECKED TS

TRAFFIC SIGNAL PLAN DETAILS
FOUNTAIN ST. AND PERKINS ST.

SUM-8-0.63

809
1088

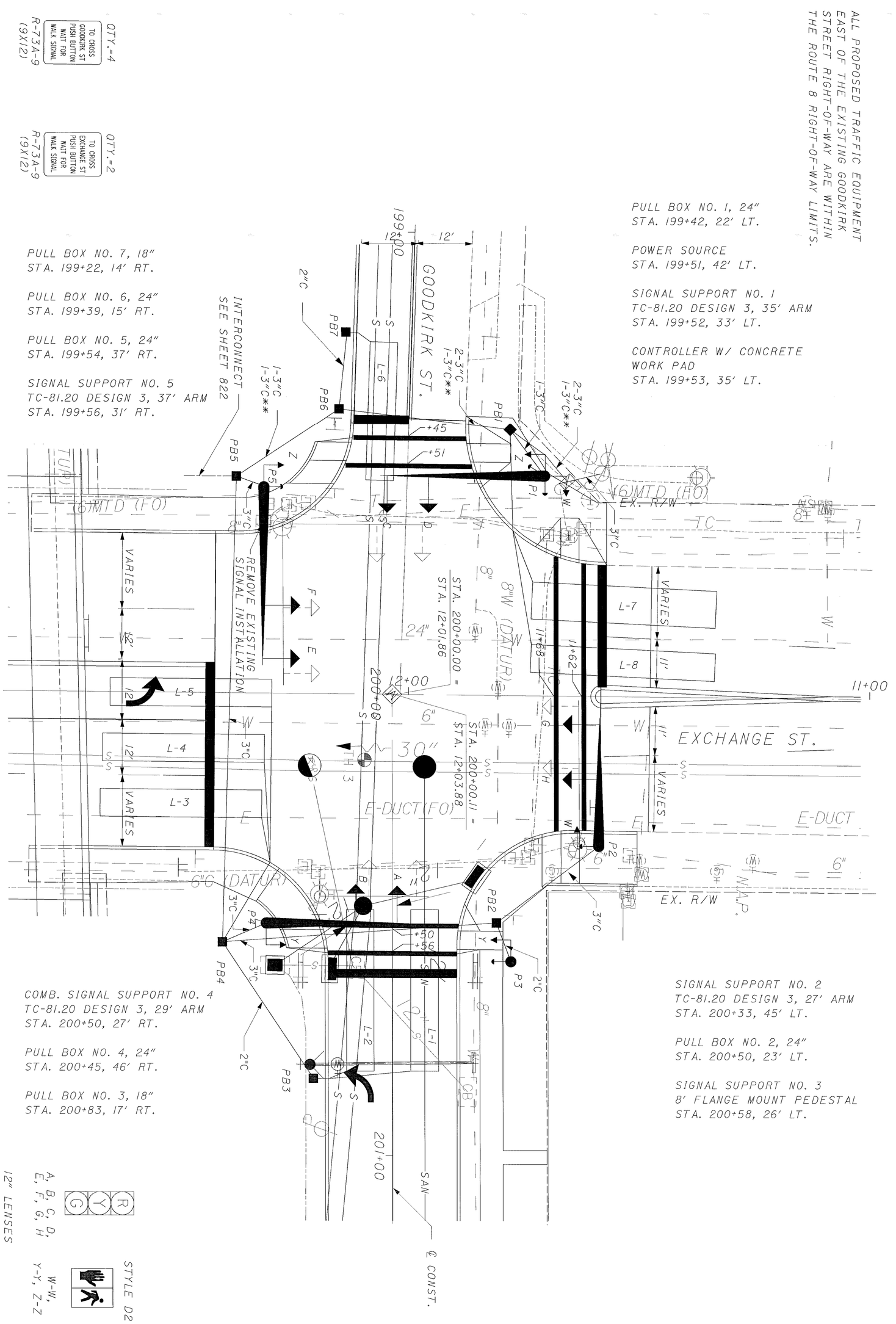

810 (1088)	SUM-8-0.63	TRAFFIC SIGNAL PLAN GOODKIRK ST. AND EXCHANGE ST.	CALCULATED CRP CHECKED TS	0 10 5 20 HORIZONTAL SCALE IN FEET

SIGNAL DISPLAY CHART

SIGNAL HEAD	Ø4 & Ø8				Ø2 & Ø6				FLASH
	R/W		CLEAR		R/W		CLEAR		
A	R	R	R	R	G	G	Y	R	R
B	R	R	R	R	G	G	Y	R	R
C	R	R	R	R	G	G	Y	R	R
D	R	R	R	R	G	G	Y	R	R
E	G	G	Y	R	R	R	R	R	Y
F	G	G	Y	R	R	R	R	R	Y
G	G	G	Y	R	R	R	R	R	Y
H	G	G	Y	R	R	R	R	R	Y
W-W	DW	DW	DW	DW	W	FDW	DW	DW	OUT
Y-Y	W	FDW	DW	DW	DW	DW	DW	DW	OUT
Z-Z	W	FDW	DW	DW	DW	DW	DW	DW	OUT

COORDINATION TIMING

CYCLE/OFFSET	PHASE		DESCRIPTION
	Ø4&Ø8	Ø2&Ø6	
80/12	43	37	M-F, 9 AM-4 PM & 6 PM-6 AM, SAT. & SUN.
100/77	54	46	M-F, 6 AM-9 AM & 4 PM-6 PM

TRAFFIC CONTROL QUANTITIES

ITEM	EXT.	QTY.	UNITS	DESCRIPTION
625	25402	61	LF	CONDUIT, 2", 713.07
625	25502	125	LF	CONDUIT, 3", 713.07
625	25802	235	LF	CONDUIT, CONCRETE ENCASED, 3"
625	29002	391	LF	TRENCH, 24" DEEP
625	29500	25	LF	TRENCH IN PAVED AREA, TYPE A
625	30700	2	EACH	PULL BOX, 713.08, 18" AS PER PLAN
625	30707	5	EACH	PULL BOX, 713.08, 24" AS PER PLAN
625	32000	12	EACH	GROUND ROD
625	32001	1	EACH	GROUND ROD, AS PER PLAN
SPECIAL	36000	416	LF	PLASTIC CAUTION TAPE
630	79100	4	EACH	SIGN HANGER ASSEMBLY, MAST ARM
630	80102	31	SF	SIGN, FLAT SHEET, TYPE G
632	00302	8	EACH	VEHICULAR SIGNAL HEAD, 3 SECTION 12" LENS, 1-WAY, POLYCARBONATE
632	20601	6	EACH	PEDESTRIAN SIGNAL HEAD, TYPE D2, AS PER PLAN
632	25000	8	EACH	COVERING OF VEHICULAR SIGNAL HEAD
632	25010	6	EACH	COVERING OF PEDESTRIAN SIGNAL HEAD
632	26000	6	EACH	PEDESTRIAN PUSHBUTTON
632	26500	8	EACH	DETECTOR LOOP
632	27008	8	EACH	LOOP DETECTOR UNIT, DELAY AND EXTENSION TYPE
632	40700	2213	LF	SIGNAL CABLE, 7 CONDUCTOR, NO. 14 AWG
632	64010	4	EACH	SIGNAL SUPPORT FOUNDATION
632	64020	1	EACH	PEDESTAL FOUNDATION
632	65200	2552	LF	LOOP DETECTOR LEAD-IN CABLE
632	68200	54	LF	POWER CABLE, 2 CONDUCTOR, 6 AWG
632	70001	1	EACH	POWER SERVICE, AS PER PLAN
632	80300	3	EACH	SIGNAL SUPPORT, TYPE TC-81.20, DESIGN 3
632	81300	1	EACH	COMBINATION SIGNAL SUPPORT, TYPE TC-81.20, DESIGN 3
632	89600	1	EACH	PEDESTAL, 8'
632	90101	1	EACH	REMOVAL OF TRAFFIC SIGNAL INSTALLATION, AS PER PLAN
633	38000	1	EACH	CONTROLLER, ACTUATED, 8 PHASE, SOLID STATE DIGITAL MICROPROCESSOR
633	70001	1.15	CY	CONCRETE FOR CABINET FOUNDATION, AS PER PLAN
633	70500	5	SF	CONTROLLER WORK PAD
633	99000	1	EACH	ALTERNATE BID: CONTROLLER MISC.; ECONOLITE CONTROLLER

CONTROLLER TIMING DATA

CYCLE LENGTH	80		100	
	Ø4&Ø8	Ø2&Ø6	Ø4&Ø8	Ø2&Ø6
MOVEMENT	EB/WB	NB/SB	EB/WB	NB/SB
GREEN TIME	37	31	48	40
YELLOW TIME	3.0	3.0	3.0	3.0
ALL RED	3.0	3.0	3.0	3.0
MINIMUM INITIAL	10.0	8.0	10.0	8.0
VEHICULAR EXTENSION	3.0	3.0	3.0	3.0
WALK	7	7	7	7
FLASH DON'T WALK	8	14	8	14
MEMORY	OFF	OFF	OFF	OFF
RECALL	MIN	NONE	MIN	NONE

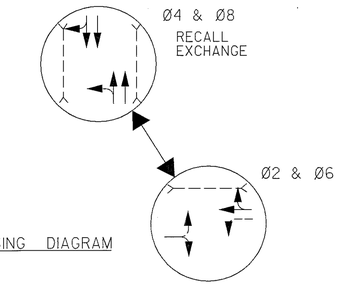

PHASING DIAGRAM

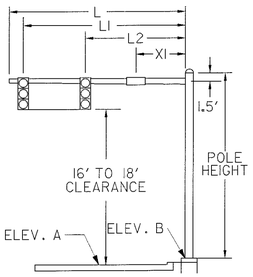

MAST ARM DETAIL

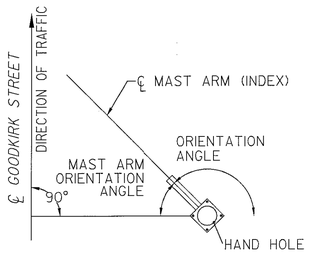

NOTES:
1. ALL ANGLES MEASURED CLOCKWISE
2. BASE PLATE IS ORIENTED SQUARE TO MAST ARM A.
3. POLE STATIONING AND ORIENTATION FROM GOODKIRK ST. ℄.

ORIENTATION ANGLES

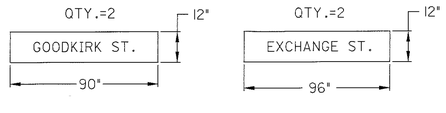

STREET NAME SIGNS

(MAST ARM MOUNTED, SEE SHEET 830)

SIGNAL SUPPORT											ELEVATION		MAST ARM ANGLE (A)	MAST ARM ANGLE (B)	ORIENTATION ANGLES FROM MAST ARM		
POLE NO.	DESIGN NO.	POLE HEIGHT (FT)	FOUNDATION		L	LI	L2	L3	L4	XI	A	B			PEDESTRIAN SIGNALS	PEDESTRIAN PUSH BUTTONS	HANDHOLE
			STATION	OFFSET	FT.	FT.	FT.	FT.	FT.	FT.	FT.	FT.					
1	3	23	199+52	30' LT.	35	33	24			14	1023.1	1024.2	0		90/270	0/270	180
2	3	24	200+33	45' LT.	27	25	13			7	1025.3	1025.1	90		270	270	180
3	PED	8	200+58	26' LT.											90	0	
4	3	25	200+50	27' RT.	29	27	18			10	1024.3	1023.0	0		90	0	180
5	3	24	199+56	31' RT.	37	36	24			12	1023.1	1022.8	90		180	270	180

LOOP DETECTORS

DESIGNATION	SIZE	# OF TURNS	PULSE OR PRESENCE	DELAY	ASSOCIATED CONTROLLER PHASE	STATION 1st FRONT CORNER	STATION 2nd FRONT CORNER
L-1	6 x 35	2	PRESENCE	7	2 & 6	200+47, 4' LT.	200+47, 10' LT.
L-2	6 x 35	2	PRESENCE	0	2 & 6	200+47, 4' RT.	200+47, 10' RT.
L-3	6 x 35	2	PRESENCE	0	4 & 8	200+21, 28' RT.	200+27, 28' RT.
L-4	6 x 35	2	PRESENCE	0	4 & 8	200+09, 28' RT.	200+15, 28' RT.
L-5	6 x 35	2	PRESENCE	0	4 & 8	199+98, 28' RT.	200+03, 26' RT.
L-6	6 x 30	2	PRESENCE	7	2 & 6	199+54, 3' RT.	199+54, 9' RT.
L-7	8 x 40	2	PRESENCE	7	4 & 8	199+75, 28' LT.	199+83, 28' LT.
L-8	6 x 40	2	PRESENCE	0	4 & 8	199+88, 28' LT.	199+94, 28' LT.

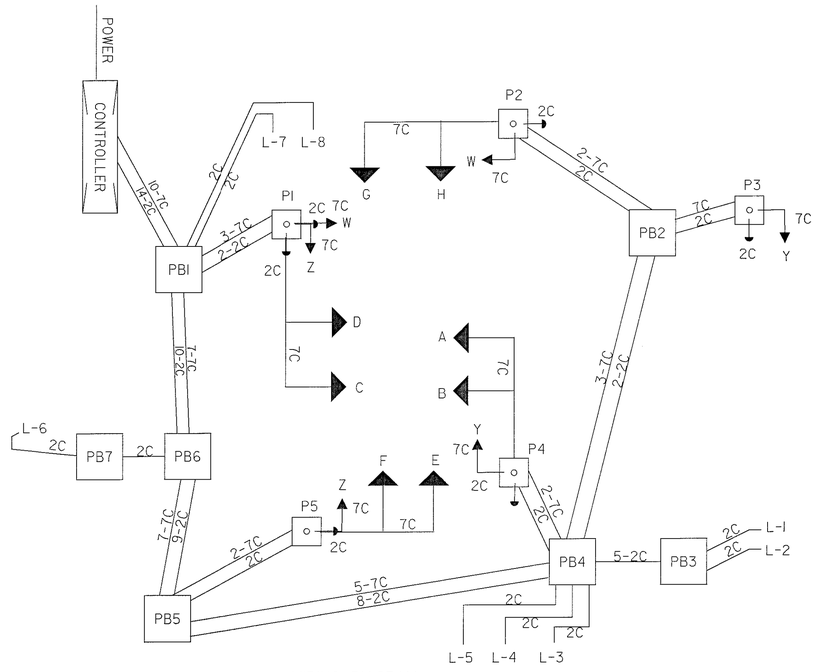

WIRING DIAGRAM

CALCULATED CRP
CHECKED TS

TRAFFIC SIGNAL PLAN DETAILS
GOODKIRK ST. AND EXCHANGE ST.

SUM-8-0.63

811
1088

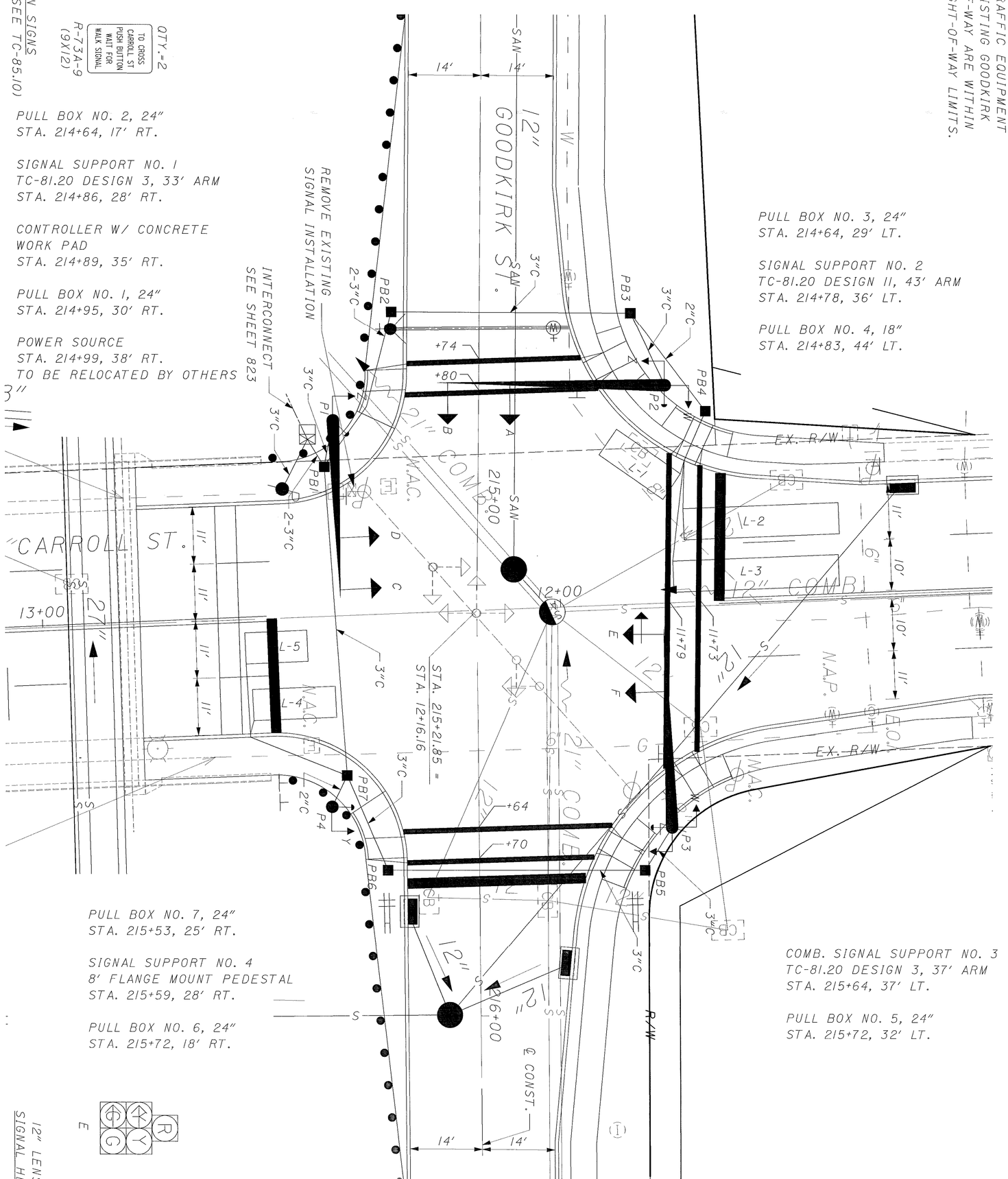

812 / 1088	SUM-8-0.63	TRAFFIC SIGNAL PLAN GOODKIRK ST. AND CARROLL ST.	CALCULATED CRP CHECKED TS	0 5 10 20 HORIZONTAL SCALE IN FEET

SIGNAL DISPLAY CHART

SIGNAL HEAD	Ø3 & Ø8				Ø4 & Ø8				Ø6				FLASH
	R/W		CLEAR		R/W		CLEAR		R/W		CLEAR		
A	R	R	R	R	R	R	R	R	G	G	Y	R	R
B	R	R	R	R	R	R	R	R	G	G	Y	R	R
C	R	R	R	R	G	G	Y	R	R	R	R	R	R
D	R	R	R	R	G	G	Y	R	R	R	R	R	R
E	G/~~G~~	G/~~G~~	G/~~Y~~	G	G	G	Y	R	R	R	R	R	R
F	G	G	G	G	G	G	Y	R	R	R	R	R	R
W-W	DW	DW	DW	DW	DW	DW	DW	DW	W	FDW	DW	DW	OUT
Y-Y	DW	DW	DW	DW	W	FDW	DW	DW	DW	DW	DW	DW	OUT
Z-Z	DW	DW	DW	DW	W	FDW	DW	DW	DW	DW	DW	DW	OUT

COORDINATION TIMING

CYCLE/OFFSET	PHASE			DESCRIPTION
	Ø3&Ø8	Ø4&Ø8	Ø6	
80/40	II	29	40	M-F, 9 AM-4 PM & 6 PM-6 AM, SAT. & SUN.
100/68	II	40	49	M-F, 6 AM-9 AM & 4 PM-6 PM

CONTROLLER TIMING DATA

CYCLE LENGTH	80			100		
	Ø3&Ø8	Ø4&Ø8	Ø6	Ø3&Ø8	Ø4&Ø8	Ø6
MOVEMENT	WB/WBL	EB/WB	SB	WB/WBL	EB/WB	SB
GREEN TIME	5	23	34	5	34	43
YELLOW TIME	3.0	3.0	3.0	3.0	3.0	3.0
ALL RED	3.0	3.0	3.0	3.0	3.0	3.0
MINIMUM INITIAL	5	7	10	5	7	10
VEHICULAR EXTENSION	3.0	3.0	-	3.0	3.0	-
WALK	-	7	7	-	7	7
FLASH DON'T WALK	-	9	14	-	9	14
MEMORY	OFF	OFF	OFF	OFF	OFF	OFF
RECALL	NONE	NONE	MIN	NONE	NONE	MIN

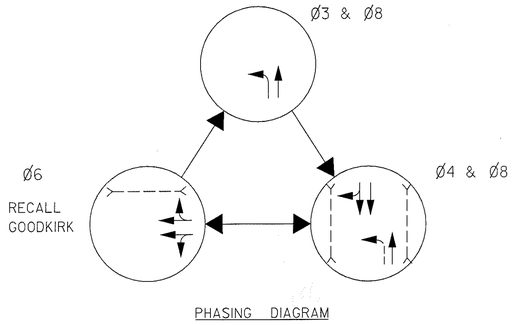

PHASING DIAGRAM

TRAFFIC CONTROL QUANTITIES

ITEM	EXT.	QTY.	UNITS	DESCRIPTION
625	25402	31	LF	CONDUIT, 2", 713.07
625	25502	143	LF	CONDUIT, 3", 713.07
625	25802	156	LF	CONDUIT, CONCRETE ENCASED, 3"
625	29002	321	LF	TRENCH, 24" DEEP
625	30700	1	EACH	PULL BOX, 713.08, 18" AS PER PLAN
625	30707	6	EACH	PULL BOX, 713.08, 24" AS PER PLAN
625	32000	11	EACH	GROUND ROD
625	32001	1	EACH	GROUND ROD, AS PER PLAN
SPECIAL	36000	321	LF	PLASTIC CAUTION TAPE
630	79100	3	EACH	SIGN HANGER ASSEMBLY, MAST ARM
630	80102	23	SF	SIGN, FLAT SHEET, TYPE G
632	00302	5	EACH	VEHICULAR SIGNAL HEAD, 3 SECTION 12" LENS, 1-WAY, POLYCARBONATE
632	00502	1	EACH	VEHICULAR SIGNAL HEAD, 5-SECTION, 12" LENS, 1-WAY, POLYCARBONATE
632	20601	6	EACH	PEDESTRIAN SIGNAL HEAD, TYPE D2, AS PER PLAN
632	25000	6	EACH	COVERING OF VEHICULAR SIGNAL HEAD
632	25010	6	EACH	COVERING OF PEDESTRIAN SIGNAL HEAD
632	26000	6	EACH	PEDESTRIAN PUSHBUTTON
632	26500	5	EACH	DETECTOR LOOP
632	27008	5	EACH	LOOP DETECTOR UNIT, DELAY AND EXTENSION TYPE
632	40700	1722	LF	SIGNAL CABLE, 7 CONDUCTOR, NO. 14 AWG
632	64010	3	EACH	SIGNAL SUPPORT FOUNDATION
632	64020	1	EACH	PEDESTAL FOUNDATION
632	65200	1508	LF	LOOP DETECTOR LEAD-IN CABLE
632	68200	57	LF	POWER CABLE, 2 CONDUCTOR, 6 AWG
632	70001	1	EACH	POWER SERVICE, AS PER PLAN
632	80300	1	EACH	SIGNAL SUPPORT, TYPE TC-81.20, DESIGN 3
632	80500	1	EACH	SIGNAL SUPPORT, TYPE TC-81.20 DESIGN 11
632	81300	1	EACH	COMBINATION SIGNAL SUPPORT, TYPE TC-81.20, DESIGN 3
632	89600	1	EACH	PEDESTAL, 8'
632	90101	1	EACH	REMOVAL OF TRAFFIC SIGNAL INSTALLATION, AS PER PLAN
633	38000	1	EACH	CONTROLLER, ACTUATED, 8 PHASE, SOLID STATE DIGITAL MICROPROCESSOR
633	70001	1.15	CY	CONCRETE FOR CABINET FOUNDATION, AS PER PLAN
633	70500	9	SF	CONTROLLER WORK PAD
633	99000	1	EACH	ALTERNATE BID: CONTROLLER MISC.; ECONOLITE CONTROLLER

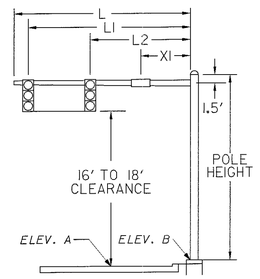

MAST ARM DETAIL

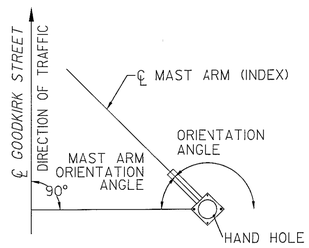

NOTES:
1. ALL ANGLES MEASURED CLOCKWISE
2. BASE PLATE IS ORIENTED SQUARE TO MAST ARM A.
3. POLE STATIONING AND ORIENTATION FROM GOODKIRK ST. ℄.

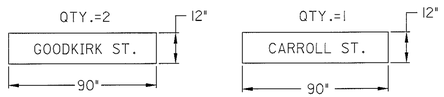

STREET NAME SIGNS

(MAST ARM MOUNTED, SEE SIGNING SHEET 830)

ORIENTATION ANGLES

SIGNAL SUPPORT											ELEVATION		MAST ARM ANGLE (A)	MAST ARM ANGLE (B)	ORIENTATION ANGLES FROM MAST ARM		
POLE NO.	DESIGN NO.	POLE HEIGHT (FT)	FOUNDATION		L	LI	L2	L3	L4	XI	A	B			PEDESTRIAN SIGNALS	PEDESTRIAN PUSH BUTTONS	HANDHOLE
			STATION	OFFSET	FT.	FT.	FT.	FT.	FT.	FT.	FT.	FT.					
1	3	23	214+86	28' RT.	33	31	21			13	1057.2	1057.8	90		180	315	180
2	11	23	214+78	36' LT.	43	41	29			16	1057.6	1058.9	0		90/180	0/270	180
3	3	24	215+64	32' LT.	37	36	25			13	1058.9	1059.8	90		180/270	0/270	180
4	PED	8	215+59	28' RT.											90	0	

LOOP DETECTORS

DESIGNATION	SIZE	# OF TURNS	PULSE OR PRESENCE	DELAY	ASSOCIATED CONTROLLER PHASE	STATION 1st FRONT CORNER	STATION 2nd FRONT CORNER
L-1	6 x 15	2	PRESENCE	7	4	214+87, 27' LT.	214+92, 23' LT.
L-2	6 x 30	2	PRESENCE	7	4	215+02, 40' LT.	215+08, 40' LT.
L-3	6 x 32	2	PRESENCE	0	4	215+12, 38' LT.	215+18, 38' LT.
L-4	6 x 16	2	PRESENCE	7	8	215+36, 28' RT.	215+42, 27' RT.
L-5	6 x 12	3	PRESENCE	0	3 & 8	215+25, 33' RT.	215+31, 33' RT.
SL-1*	6 x 6	3	PRESENCE	0	-	213+03, 7' LT.	213+11, 7' LT.
SL-2*	6 x 6	3	PRESENCE	0	-	213+03, 7' RT.	213+11, 7' RT.

* SL DENOTES A SYSTEM LOOP DETECTOR. ALL SYSTEM LOOP DETECTOR QUANTITIES ARE SHOWN ON SHEET 823.

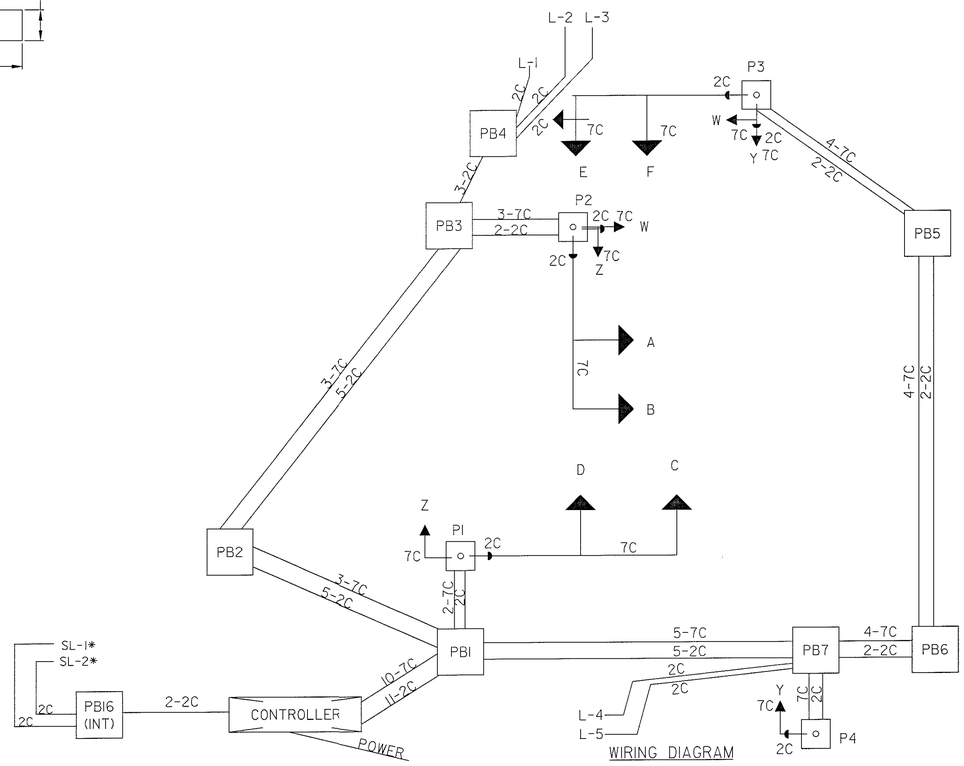

WIRING DIAGRAM

CALCULATED CRP
CHECKED TS

TRAFFIC SIGNAL PLAN DETAILS
GOODKIRK ST. AND CARROLL ST.

SUM-8-0.63

813
1088

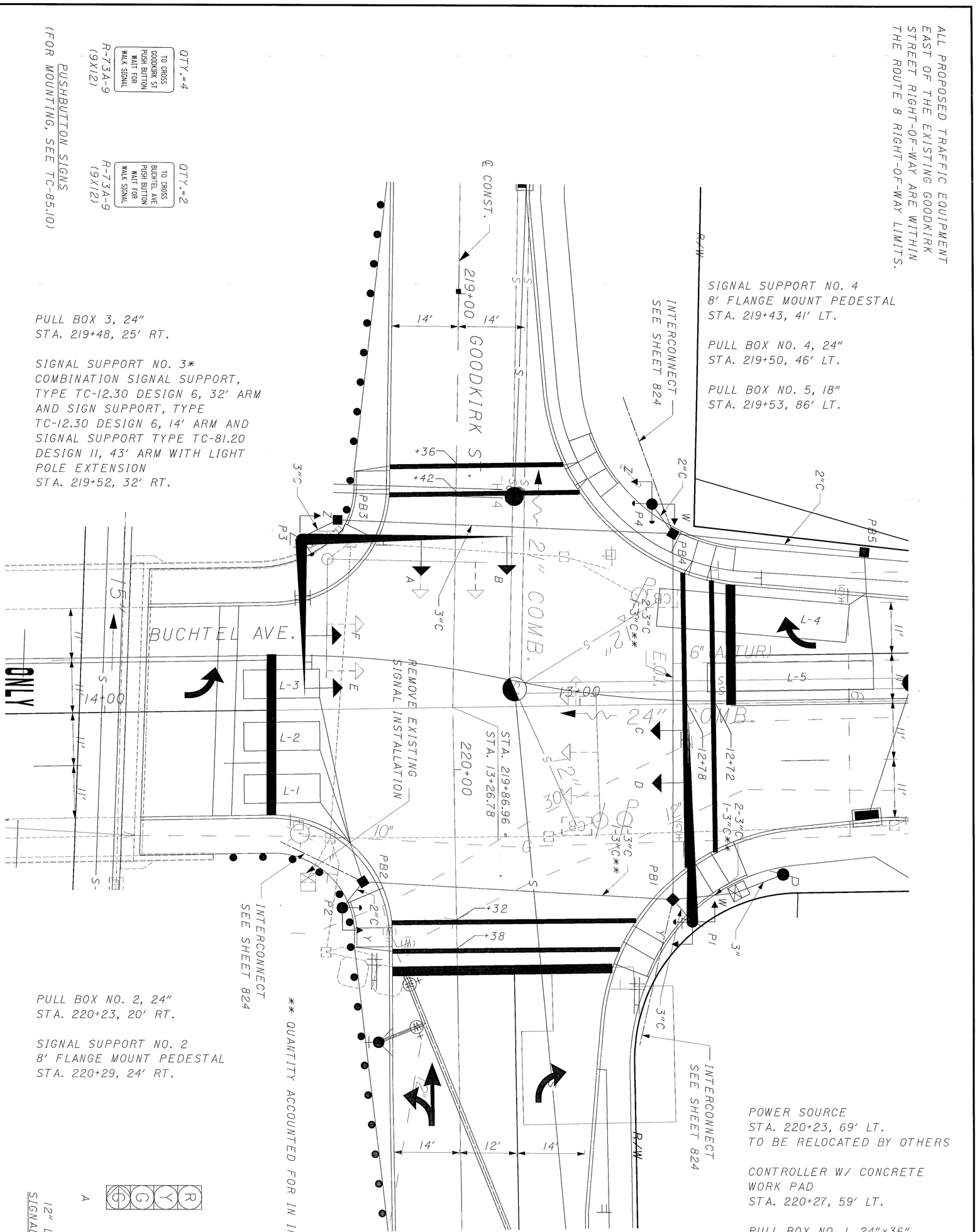

814 / 1088	SUM-8-0.63	TRAFFIC SIGNAL PLAN GOODKIRK ST. AND BUCHTEL AVE.	CALCULATED CRP / CHECKED TS	HORIZONTAL SCALE IN FEET (0, 10, 5, 20)

SIGNAL DISPLAY CHART

SIGNAL HEAD	Ø4 & Ø8				Ø6				
	R/W		CLEAR		R/W		CLEAR		FLASH
A	R	R	R	R	G/~~G~~	G/~~G~~	Y	R	R
B	R	R	R	R	G	G	Y	R	R
C	G	G	Y	R	R	R	R	R	R
D	G	G	Y	R	R	R	R	R	R
E	G	G	Y	R	R	R	R	R	R
F	G	G	Y	R	R	R	R	R	R
W-W	DW	DW	DW	DW	W	FDW	DW	DW	OUT
Y-Y	W	FDW	DW	DW	DW	DW	DW	DW	OUT
Z-Z	W	FDW	DW	DW	DW	DW	DW	DW	OUT

COORDINATION TIMING

CYCLE/OFFSET	PHASE		DESCRIPTION
	Ø4&Ø8	Ø6	
80/40	42	38	M-F, 9 AM-4 PM & 6 PM-6 AM, SAT. & SUN.
100/65	52	48	M-F, 6 AM-9 AM & 4 PM-6 PM

CONTROLLER TIMING DATA

CYCLE LENGTH	80		100	
	Ø4&Ø8	Ø6	Ø4&Ø8	Ø6
MOVEMENT	EB/WB	SB	EB/WB	SB
GREEN TIME	36	32	46	42
YELLOW TIME	3.0	3.0	3.0	3.0
ALL RED	3.0	3.0	3.0	3.0
MINIMUM INITIAL	7.0	10.0	7	10
VEHICULAR EXTENSION	3.0	-	3.0	-
WALK	7	7	7	7
FLASH DON'T WALK	11	14	11	14
MEMORY	OFF	OFF	OFF	OFF
RECALL	NONE	MIN	NONE	MIN

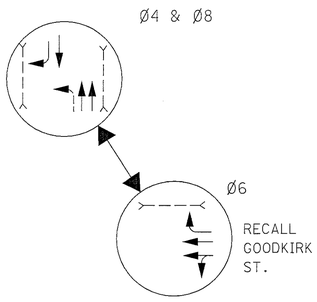

PHASING DIAGRAM

TRAFFIC CONTROL QUANTITIES

ITEM	EXT.	QTY.	UNITS	DESCRIPTION
625	25402	55	LF	CONDUIT, 2", 713.07
625	25502	52	LF	CONDUIT, 3", 713.07
625	25802	290	LF	CONDUIT, CONCRETE ENCASED, 3"
625	29002	324	LF	TRENCH, 24" DEEP
625	30700	1	EACH	PULL BOX, 713.08, 18" AS PER PLAN
625	30707	3	EACH	PULL BOX, 713.08, 24" AS PER PLAN
625	31600	1	EACH	PULL BOX, MISC.: 713.08, 24"x36"x36", AS PER PLAN
625	32000	9	EACH	GROUND ROD
625	32001	1	EACH	GROUND ROD, AS PER PLAN
SPECIAL	36000	307	LF	PLASTIC CAUTION TAPE
630	79100	3	EACH	SIGN HANGER ASSEMBLY, MAST ARM
630	80102	23	SF	SIGN, FLAT SHEET, TYPE G
632	00302	5	EACH	VEHICULAR SIGNAL HEAD, 3 SECTION 12" LENS, 1-WAY, POLYCARBONATE
632	00402	1	EACH	VEHICULAR SIGNAL HEAD, 4 SECTION, 12" LENS, 1 WAY, POLYCARBONATE
632	20601	6	EACH	PEDESTRIAN SIGNAL HEAD, TYPE D2, AS PER PLAN
632	25000	6	EACH	COVERING OF VEHICULAR SIGNAL HEAD
632	25010	6	EACH	COVERING OF PEDESTRIAN SIGNAL HEAD
632	26000	6	EACH	PEDESTRIAN PUSHBUTTON
632	26500	5	EACH	DETECTOR LOOP
632	27008	5	EACH	LOOP DETECTOR UNIT, DELAY AND EXTENSION TYPE
632	40700	1423	LF	SIGNAL CABLE, 7 CONDUCTOR, NO. 14 AWG
632	64010	2	EACH	SIGNAL SUPPORT FOUNDATION
632	64020	2	EACH	PEDESTAL FOUNDATION
632	65200	1352	LF	LOOP DETECTOR LEAD-IN CABLE
632	68200	57	LF	POWER CABLE, 2 CONDUCTOR, 6 AWG
632	70001	1	EACH	POWER SERVICE, AS PER PLAN
632	81500	1	EACH	COMBINATION SIGNAL SUPPORT, TYPE TC-81.20, DESIGN II
632	81700	1	EACH	COMBINATION SIGNAL SUPPORT, MISC.: TYPE TC-12.30, DESIGN 6 AND SIGN SUPPORT, TYPE TC-12.30, DESIGN 6 AND SIGNAL SUPPORT, TYPE TC-81.20, DESIGN II WITH LIGHT POLE EXTENSION
632	89600	2	EACH	PEDESTAL, 8'
632	90101	1	EACH	REMOVAL OF TRAFFIC SIGNAL INSTALLATION, AS PER PLAN
633	38000	1	EACH	CONTROLLER, ACTUATED, 8 PHASE, SOLID STATE DIGITAL MICROPROCESSOR
633	70001	1.15	CY	CONCRETE FOR CABINET FOUNDATION, AS PER PLAN
633	70500	9	SF	CONTROLLER WORK PAD
633	99000	1	EACH	ALTERNATE BID: CONTROLLER MISC.; ECONOLITE CONTROLLER

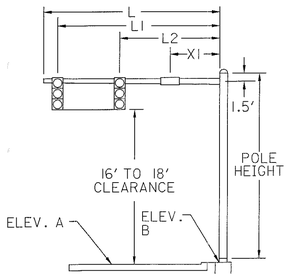

MAST ARM DETAIL

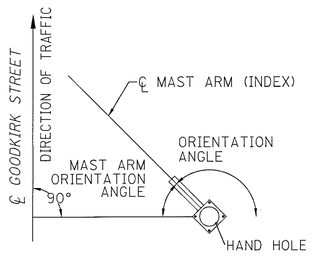

NOTES:
1. ALL ANGLES MEASURED CLOCKWISE
2. BASE PLATE IS ORIENTED SQUARE TO MAST ARM A.
3. POLE STATIONING AND ORIENTATION FROM GOODKIRK ℄.

ORIENTATION ANGLES

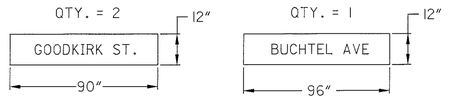

STREET NAME SIGNS

(MAST ARM MOUNTED, SEE SHEET 830)

SIGNAL SUPPORT											ELEVATION		MAST ARM ANGLE (A)	MAST ARM ANGLE (B)	ORIENTATION ANGLES FROM MAST ARM		
POLE NO.	DESIGN NO.	POLE HEIGHT (FT)	FOUNDATION		L	L1	L2	L3	L4	X1	A	B			PEDESTRIAN SIGNALS	PEDESTRIAN PUSH BUTTONS	HANDHOLE
			STATION	OFFSET	FT.	FT.	FT.	FT.	FT.	FT.	FT.	FT.					
1	11	24	220+33	50' LT.	41	39	28			30/14	1065.8	1066.0	90		90/180	0/270	180
2	PED	8	220+26	22' RT.											90	0	
3	6	24	219+52	32' RT.	43	42	24			16	1064.7	1064.5	0		270	45	180
					32	30	19			24	1064.3	1064.5		90			
4	PED	8	219+43	41' LT.											90/180	0/270	

LOOP DETECTORS

DESIGNATION	SIZE	# OF TURNS	PULSE OR PRESENCE	DELAY	ASSOCIATED CONTROLLER PHASE	STATION 1st FRONT CORNER	STATION 2nd FRONT CORNER
L-1	6 x 16	2	PRESENCE	0	8	220+00, 28' LT.	220+06, 28' RT.
L-2	6 x 16	2	PRESENCE	0	8	219+89, 28' LT.	219+95, 28' RT.
L-3	6 x 16	2	PRESENCE	0	8	219+79, 28' RT.	219+85, 28' RT.
L-4	8 x 40	2	PRESENCE	7	4	219+61, 43' LT.	219+69, 43' LT.
L-5	6 x 35	2	PRESENCE	0	4	219+77, 53' LT.	219+83, 54' LT.
SL-6*	6 x 6	3	PRESENCE	0	-	222+95, 21' LT	223+03, 21' LT
SL-7*	6 x 6	3	PRESENCE	0	-	222+95, 7' LT	223+03, 7' LT
SL-8*	6 x 6	3	PRESENCE	0	-	222+95, 12' RT	223+03, 14' RT

* SL DENOTES A SYSTEM LOOP DETECTOR. ALL SYSTEM LOOP DETECTOR QUANTITIES ARE SHOWN ON SHEET 824.

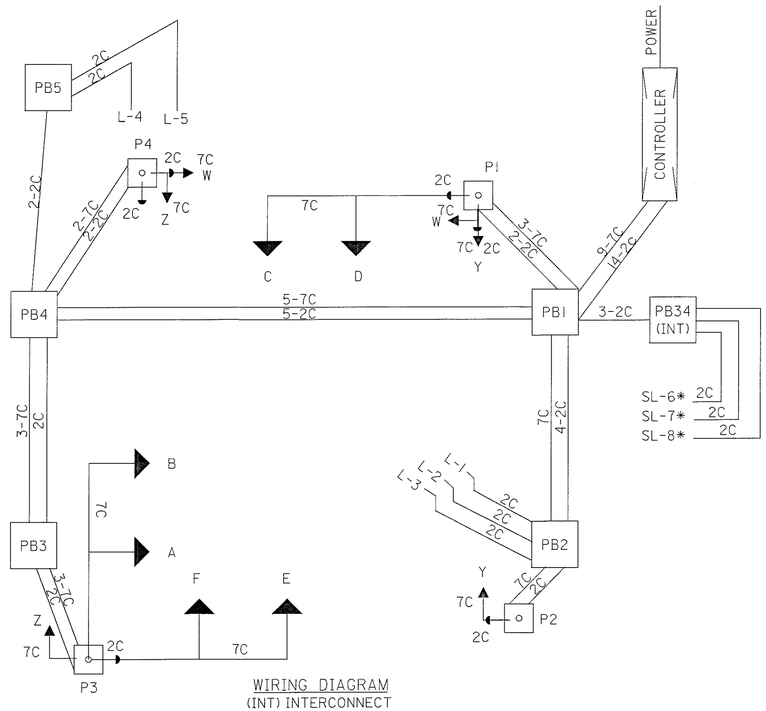

WIRING DIAGRAM

(INT) INTERCONNECT

CALCULATED CRP
CHECKED TS

TRAFFIC SIGNAL PLAN DETAILS
GOODKIRK ST. AND BUCHTEL AVE.

SUM-8-0.63

815
1088

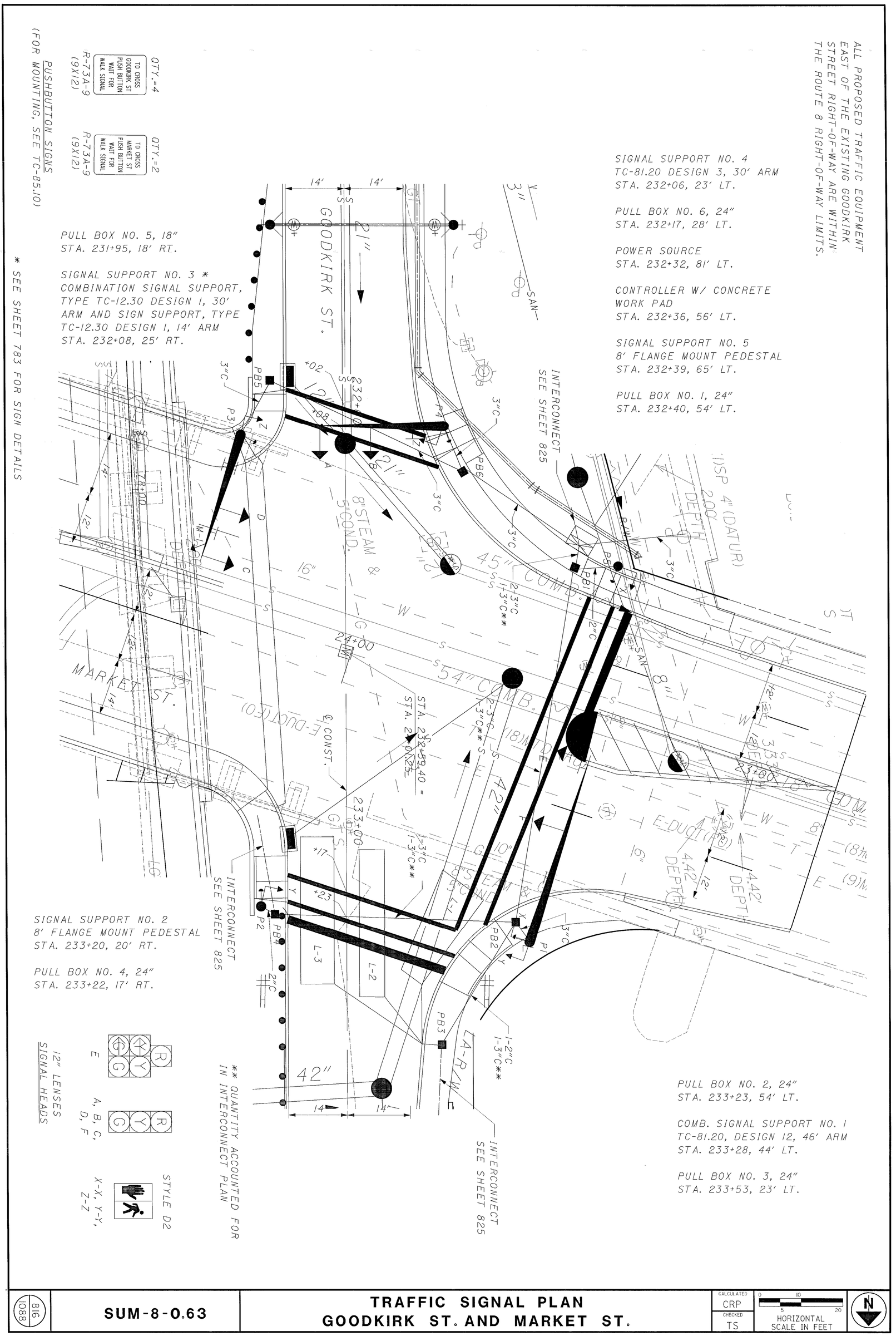

816
1088

SUM-8-0.63

TRAFFIC SIGNAL PLAN
GOODKIRK ST. AND MARKET ST.

CALCULATED CRP
CHECKED TS

HORIZONTAL SCALE IN FEET
0 10
5 20

N

SIGNAL DISPLAY CHART

SIGNAL HEAD	Ø1 & Ø6				Ø2 & Ø6				Ø4				FLASH
	R/W		CLEAR		R/W		CLEAR		R/W		CLEAR		
A	R	R	R	R	R	R	R	R	G	G	Y	R	R
B	R	R	R	R	R	R	R	R	G	G	Y	R	R
C	R	R	R	R	G	G	Y	R	R	R	R	R	Y
D	R	R	R	R	G	G	Y	R	R	R	R	Y	Y
E	~~G/G~~	~~G/G~~	~~G/Y~~	G	G	G	Y	R	R	R	R	R	Y
F	G	G	G	G	G	G	Y	R	R	R	R	R	Y
X-X	DW	DW	DW	DW	DW	DW	DW	DW	W	FDW	DW	DW	OUT
Y-Y	DW	DW	DW	DW	W	FDW	DW	DW	DW	DW	DW	DW	OUT
Z-Z	DW	DW	DW	DW	W	FDW	DW	DW	DW	DW	DW	DW	OUT

COORDINATION TIMING

CYCLE/OFFSET	PHASE			DESCRIPTION
	Ø1&Ø6	Ø2&Ø6	Ø4	
80/8	13	33	34	M-F, 9 AM-4 PM & 6 PM-6 AM, SAT. & SUN.
100/34	16	50	34	M-F, 6 AM-9 AM & 4 PM-6 PM

CONTROLLER TIMING DATA

CYCLE LENGTH	80			100		
	Ø1&Ø6	Ø2&Ø6	Ø4	Ø1&Ø6	Ø2&Ø6	Ø4
MOVEMENT	WB	EB/WB	SB	WB	EB/WB	SB
GREEN TIME	7	27	28	10	44	28
YELLOW TIME	3.0	3.0	3.0	3.0	3.0	3.0
ALL RED	3.0	3.0	3.0	3.0	3.0	3.0
MINIMUM INITIAL	7.0	10.0	5.0	7.0	10.0	5.0
VEHICULAR EXTENSION	3.0	-	3.0	3.0	-	3.0
WALK	-	7	7	-	7	7
FLASH DON'T WALK	-	10	21	-	10	21
MEMORY	OFF	ON	OFF	OFF	ON	OFF
RECALL	NONE	MIN	NONE	NONE	MIN	NONE

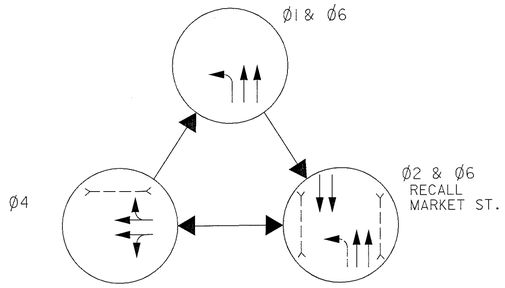

PHASING DIAGRAM

TRAFFIC CONTROL QUANTITIES

ITEM	EXT.	QTY.	UNITS	DESCRIPTION
				100% LOCAL
625	25402	49	LF	CONDUIT, 2", 713.07
625	25502	100	LF	CONDUIT, 3", 713.07
625	25802	278	LF	CONDUIT, CONCRETE ENCASED, 3"
625	29002	342	LF	TRENCH, 24" DEEP
625	30700	1	EACH	PULL BOX, 713.08, 18" AS PER PLAN
625	30707	5	EACH	PULL BOX, 713.08, 24" AS PER PLAN
625	32000	10	EACH	GROUND ROD
625	32001	1	EACH	GROUND ROD, AS PER PLAN
SPECIAL	36000	337	LF	PLASTIC CAUTION TAPE
630	79100	3	EACH	SIGN HANGER ASSEMBLY, MAST ARM
630	80102	22	SF	SIGN, FLAT SHEET, TYPE G
632	00302	5	EACH	VEHICULAR SIGNAL HEAD, 3 SECTION 12" LENS, 1-WAY, POLYCARBONATE
632	00502	1	EACH	VEHICULAR SIGNAL HEAD, 5-SECTION, 12" LENS, 1-WAY, POLYCARBONATE
632	20601	6	EACH	PEDESTRIAN SIGNAL HEAD, TYPE D2, AS PER PLAN
632	25000	6	EACH	COVERING OF VEHICULAR SIGNAL HEAD
632	25010	6	EACH	COVERING OF PEDESTRIAN SIGNAL HEAD
632	26000	6	EACH	PEDESTRIAN PUSHBUTTON
632	26500	3	EACH	DETECTOR LOOP
632	27008	3	EACH	LOOP DETECTOR UNIT, DELAY AND EXTENSION TYPE
632	40700	1645	LF	SIGNAL CABLE, 7 CONDUCTOR, NO. 14 AWG
632	64010	3	EACH	SIGNAL SUPPORT FOUNDATION
632	64020	2	EACH	PEDESTAL FOUNDATION
632	65200	1203	LF	LOOP DETECTOR LEAD-IN CABLE
632	68200	70	LF	POWER CABLE, 2 CONDUCTOR, 6 AWG
632	70001	1	EACH	POWER SERVICE, AS PER PLAN
632	80300	1	EACH	SIGNAL SUPPORT, TYPE TC-81.20, DESIGN 3
632	81600	1	EACH	COMBINATION SIGNAL SUPPORT, TYPE TC-81.20, DESIGN 12
632	81700	1	EACH	COMBINATION SIGNAL SUPPORT, MISC.: TYPE TC-12.30, DESIGN 1 AND SIGN SUPPORT, TYPE TC-12.30, DESIGN 1
632	89600	2	EACH	PEDESTAL, 8'
632	90101	1	EACH	REMOVAL OF TRAFFIC SIGNAL INSTALLATION, AS PER PLAN
632	90400	1	EACH	SIGNALIZATION, MISC.: MICROWAVE DETECTION UNIT.
633	38000	1	EACH	CONTROLLER, ACTUATED, 8 PHASE, SOLID STATE DIGITAL MICROPROCESSOR
633	39001	1	EACH	CONTROLLER, MASTER, TRAFFIC RESPONSIVE, AS PER PLAN
633	70000	1.85	CY	CONCRETE FOR CABINET FOUNDATION
633	70500	11	SF	CONTROLLER WORK PAD
633	99000	1	EACH	ALTERNATE BID: CONTROLLER MISC.: ECONOLITE CONTROLLER

MAST ARM DETAIL

NOTES:
1. ALL ANGLES MEASURED CLOCKWISE
2. BASE PLATE IS ORIENTED SQUARE TO MAST ARM A.
3. POLE STATIONING AND ORIENTATION FROM GOODKIRK ST. ℄.

ORIENTATION ANGLES

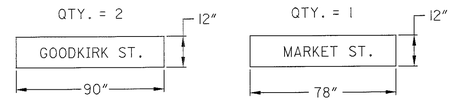

STREET NAME SIGNS

(MAST ARM MOUNTED, SEE SHEET 830)

SIGNAL SUPPORT										ELEVATION		MAST ARM ANGLE (A)	MAST ARM ANGLE (D)	ORIENTATION ANGLES FROM MAST ARM		
POLE NO.	DESIGN NO.	POLE HEIGHT (FT)	FOUNDATION		L	L1	L2	L3	L4	X1	A	B			PEDESTRIAN SIGNALS	PEDESTRIAN PUSH BUTTONS	HANDHOLE
			STATION	OFFSET	FT.	FT.	FT.	FT.	FT.	FT.	FT.	FT.					
1	12	24	233+28	44' LT.	46	44	27			15	1046.6	1046.6	108		180/270	270/0	180
2	PED	8	233+20	20' RT.											285	270	
3	11	24	232+08	25' RT.	30	29	17			23	1047.2	1047.2	108		175	280	180
4	3	24	232+06	23' LT.	30	28	16			6	1046.3	1046.6	0		290	250	180
5	PED	8	232+39	65' LT.											200	250	

LOOP DETECTORS

DESIGNATION	SIZE	# OF TURNS	PULSE OR PRESENCE	DELAY	ASSOCIATED CONTROLLER PHASE	STATION 1st† FRONT CORNER	STATION 2nd FRONT CORNER
L-1	12 x 6 x 25	2	PRESENCE	7	4	233+11, 23' LT.	233+18, 33' LT.
L-2	6 x 35	2	PRESENCE	0	4	233+06, 9' LT.	233+06, 3' LT.
L-3	8 x 35	2	PRESENCE	0	4	233+03, 3' RT.	233+03, 11' RT.
M-1	MICROWAVE	-	PRESENCE	0	1	ON MAST ARM P3	
SL-11*	6 x 6	3	PRESENCE	0	-	† 22+91, 23' RT	† 22+83, 23' RT
SL-12*	6 x 6	3	PRESENCE	0	-	† 22+91, 9' RT	† 22+83, 9' RT
SL-13*	6 x 6	3	PRESENCE	0	-	† 22+91, 10' LT	† 22+83, 10' LT
SL-14*	6 x 6	3	PRESENCE	0	-	† 22+91, 25' LT	† 22+83, 25' LT

† ℄ MARKET ST.

* SL DENOTES A SYSTEM LOOP DETECTOR. ALL SYSTEM LOOP DETECTOR QUANTITIES ARE SHOWN ON SHEET 825.

WIRING DIAGRAM
(INT) = INTERCONNECT

CALCULATED CRP
CHECKED TS

TRAFFIC SIGNAL PLAN DETAILS GOODKIRK ST. AND MARKET ST.

SUM-8-0.63

817
1088

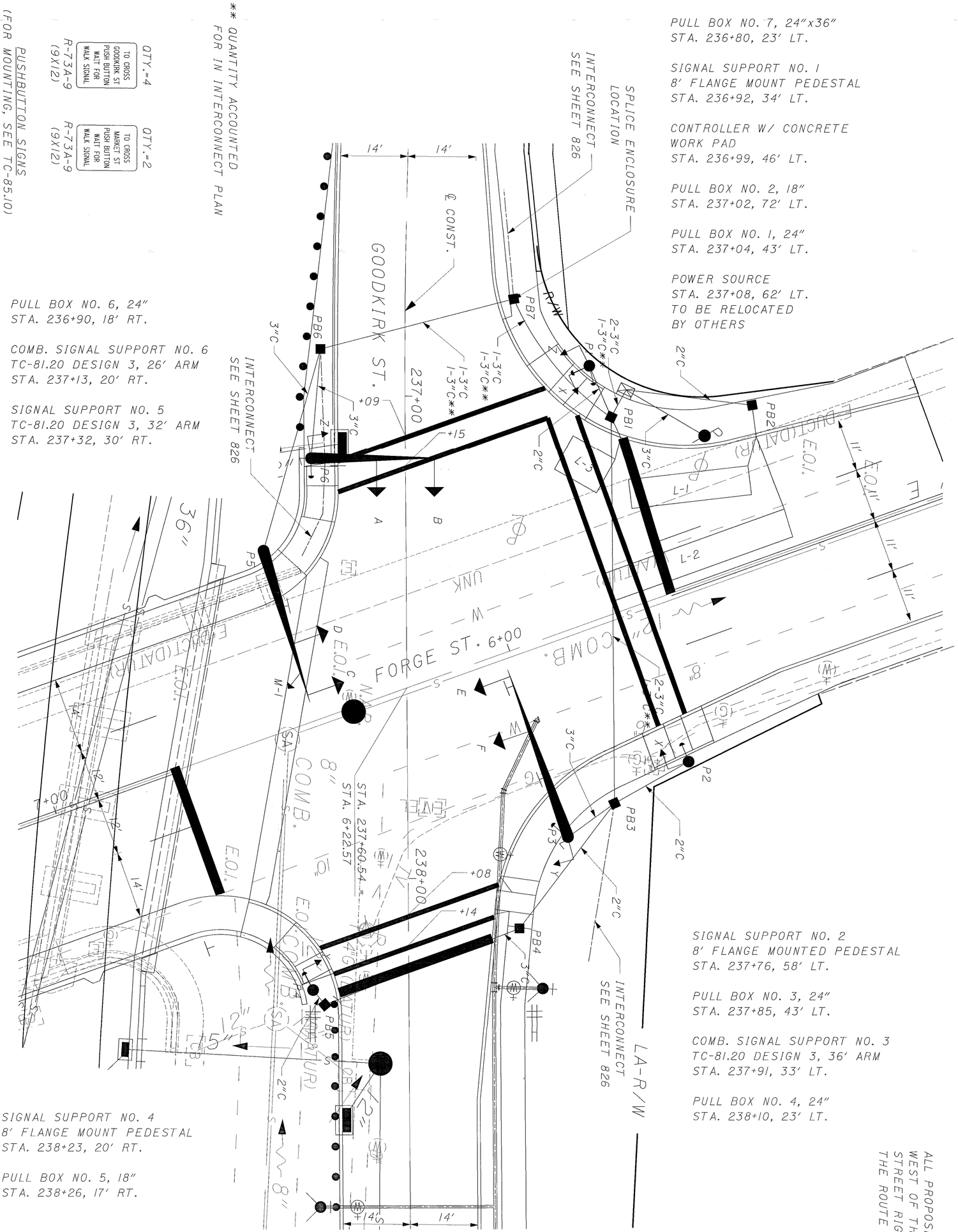

818
1088

SUM-8-0.63

TRAFFIC SIGNAL PLAN
GOODKIRK ST. AND FORGE ST.

CALCULATED CRP
CHECKED TS

0 10
5 20
HORIZONTAL SCALE IN FEET

N

SIGNAL DISPLAY CHART

SIGNAL HEAD	Ø4 & Ø8				Ø6				FLASH
	R/W		CLEAR		R/W		CLEAR		
A	R	R	R	R	G	G	Y	R	R
B	R	R	R	R	G	G	Y	R	R
C	G	G	Y	R	R	R	R	R	R
D	G	G	Y	R	R	R	R	R	R
E	G	G	Y	R	R	R	R	R	R
F	G	G	Y	R	R	R	R	R	R
X-X	DW	DW	DW	DW	W	FDW	DW	DW	
Y-Y	W	FDW	DW	DW	DW	DW	DW	DW	OUT
Z-Z	W	FDW	DW	DW	DW	DW	DW	DW	OUT

COORDINATION TIMING

CYCLE/OFFSET	PHASE		DESCRIPTION
	Ø4&Ø8	Ø6	
80/50	38	42	M-F, 9 AM-4 PM & 6 PM-6 AM, SAT. & SUN.
100/11	48	52	M-F, 6 AM-9 AM & 4 PM-6 PM

TRAFFIC CONTROL QUANTITIES

ITEM	EXT.	QTY.	UNITS	DESCRIPTION
				100% LOCAL
625	25402	92	LF	CONDUIT, 2", 713.07
625	25502	142	LF	CONDUIT, 3", 713.07
625	25802	245	LF	CONDUIT, CONCRETE ENCASED, 3"
625	29002	404	LF	TRENCH, 24" DEEP
625	30700	2	EACH	PULL BOX, 713.08, 18" AS PER PLAN
625	30707	4	EACH	PULL BOX, 713.08, 24" AS PER PLAN
625	31600	1	EACH	PULL BOX, MISC.: 713.08, 24"x36"x36", AS PER PLAN
625	32000	12	EACH	GROUND ROD
625	32001	1	EACH	GROUND ROD, AS PER PLAN
SPECIAL	36000	379	LF	PLASTIC CAUTION TAPE
630	79100	3	EACH	SIGN HANGER ASSEMBLY, MAST ARM
630	80102	21	SF	SIGN, FLAT SHEET, TYPE G
632	00302	6	EACH	VEHICULAR SIGNAL HEAD, 3 SECTION 12" LENS, 1-WAY, POLYCARBONATE
632	20601	6	EACH	PEDESTRIAN SIGNAL HEAD, TYPE D2, AS PER PLAN
632	25000	6	EACH	COVERING OF VEHICULAR SIGNAL HEAD
632	25010	6	EACH	COVERING OF PEDESTRIAN SIGNAL HEAD
632	26000	6	EACH	PEDESTRIAN PUSHBUTTON
632	26500	3	EACH	DETECTOR LOOP
632	27008	3	EACH	LOOP DETECTOR UNIT, DELAY AND EXTENSION TYPE
632	40700	1638	LF	SIGNAL CABLE, 7 CONDUCTOR, NO. 14 AWG
632	62820	1	EACH	INTERCONNECT MISC.: SPLICE ENCLOSURE (UNDER GRADE & AERIAL), AS PER PLAN
632	64010	3	EACH	SIGNAL SUPPORT FOUNDATION
632	64020	3	EACH	PEDESTAL FOUNDATION
632	65200	857	LF	LOOP DETECTOR LEAD-IN CABLE
632	68200	65	LF	POWER CABLE, 2 CONDUCTOR, 6 AWG
632	70001	1	EACH	POWER SERVICE, AS PER PLAN
632	80300	1	EACH	SIGNAL SUPPORT, TYPE TC-81.20, DESIGN 3
632	81300	2	EACH	COMBINATION SIGNAL SUPPORT, TYPE TC-81.20, DESIGN 3
632	89600	3	EACH	PEDESTAL, 8'
632	90101	1	EACH	REMOVAL OF TRAFFIC SIGNAL INSTALLATION, AS PER PLAN
632	90400	1	EACH	SIGNALIZATION, MISC: MICROWAVE DETECTOR UNIT
633	38000	1	EACH	CONTROLLER, ACTUATED, 8 PHASE, SOLID STATE DIGITAL MICROPROCESSOR
633	70001	1.15	CY	CONCRETE FOR CABINET FOUNDATION, AS PER PLAN
633	70500	4	SF	CONTROLLER WORK PAD
633	99000	1	EACH	ALTERNATE BID: CONTROLLER MISC.; ECONOLITE CONTROLLER

CONTROLLER TIMING DATA

CYCLE LENGTH	80		100	
	Ø4&Ø8	Ø6	Ø4&Ø8	Ø6
MOVEMENT	**EB/WB**	**SB**	**EB/WB**	**SB**
GREEN TIME	32	36	42	46
YELLOW TIME	3.0	3.0	3.0	3.0
ALL RED	3.0	3.0	3.0	3.0
MINIMUM INITIAL	10	7	10	7
VEHICULAR EXTENSION	3.0	-	3.0	-
WALK	7	7	7	7
FLASH DON'T WALK	11	17	11	17
MEMORY	OFF	OFF	OFF	OFF
RECALL	NONE	MIN	NONE	MIN

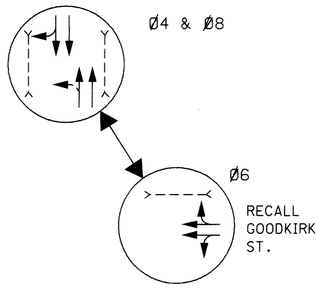

PHASING DIAGRAM

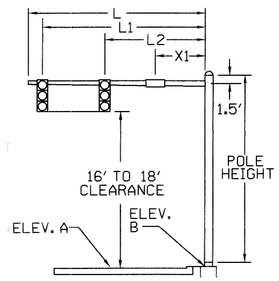

MAST ARM DETAIL

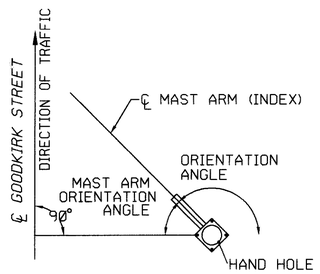

NOTES:
1. ALL ANGLES MEASURED CLOCKWISE
2. BASE PLATE IS ORIENTED SQUARE TO MAST ARM A.
3. POLE STATIONING AND ORIENTATION FROM GOODKIRK ST.℄C.

ORIENTATION ANGLES

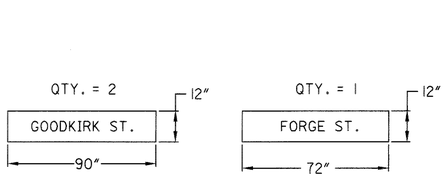

STREET NAME SIGNS

(MAST ARM MOUNTED, SEE SHEET 830)

SIGNAL SUPPORT											ELEVATION		MAST ARM ANGLE (A)	MAST ARM ANGLE (B)	ORIENTATION ANGLES FROM MAST ARM		
POLE NO.	DESIGN NO.	POLE HEIGHT (FT)	FOUNDATION		L	L1	L2	L3	L4	X1	A	B			PEDESTRIAN SIGNALS	PEDESTRIAN PUSH BUTTONS	HANDHOLE
			STATION	OFFSET	FT.	FT.	FT.	FT.	FT.	FT.	FT.	FT.					
1	PED	8	236+95	56' LT.											63/335	257/335	
2	PED	8	237+76	58' LT.											340	69	
3	3	24	237+91	33' LT.	36	34	22			12	1046.4	1046.5	0		185	331	180
4	PED	8	238+23	20' RT.											240	240	
5	3	26	237+32	30' RT.	32	30	19	27†		11	1047.1	1045.4	73				180
6	3	23	237+13	20' RT.	26	24	12			4	1046.2	1046.7	0		262	90	180

† MICROWAVE DETECTOR

LOOP & MICROWAVE DETECTORS

DESIGNATION	SIZE	# OF TURNS	PULSE OR PRESENCE	DELAY	ASSOCIATED CONTROLLER PHASE	STATION 1st FRONT CORNER	STATION 2nd FRONT CORNER
L-1	6 x 25	2	PRESENCE	7	4	237+18, 46' LT.	237+24, 47' LT.
L-2	6 x 40	2	PRESENCE	0	4	237+37, 41' LT.	237+43, 43' LT.
L-3	8 x 10	3	PRESENCE	7	4	237+08, 35' LT.	237+15, 31' LT.
M-1	MICROWAVE	-	PRESENCE	0	8	ON MAST ARM P4	
SL-21*	6 x 6	3	PRESENCE	0	-	235+39, 7' LT.	235+47, 7' LT.
SL-22*	6 x 6	3	PRESENCE	0	-	235+39, 7' RT.	235+47, 7' RT.

* SL DENOTES A SYSTEM LOOP DETECTOR. ALL SYSTEM LOOP DETECTOR QUANTITIES ARE SHOWN ON SHEET 826.

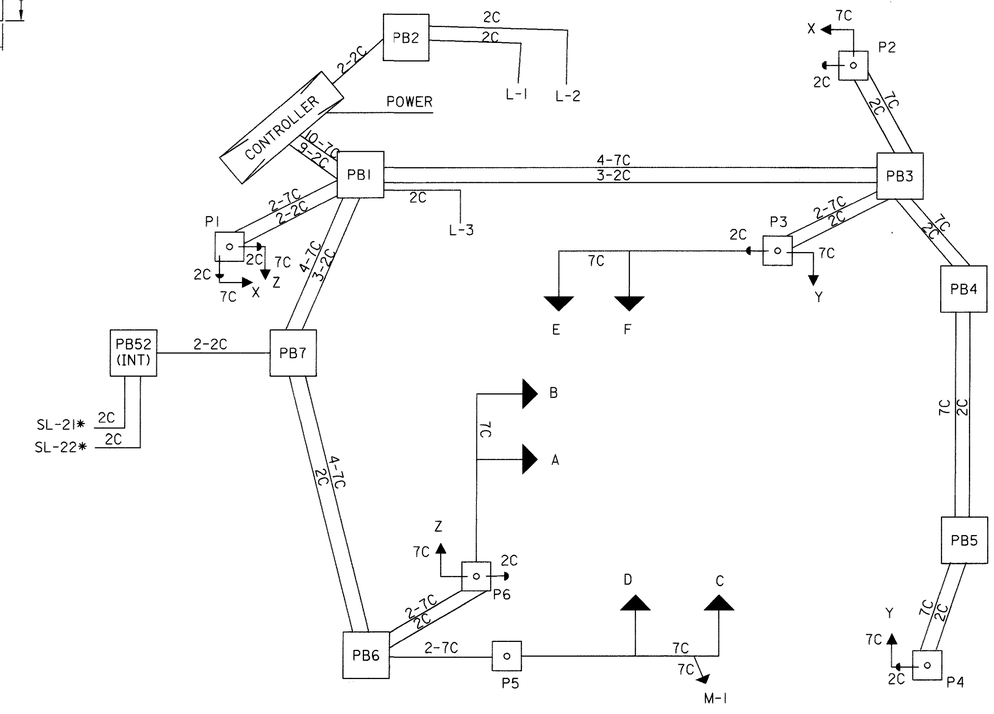

WIRING DIAGRAM
(INT) = INTERCONNECT

CALCULATED CRP
CHECKED TS

TRAFFIC SIGNAL PLAN DETAILS
GOODKIRK ST. AND FORGE ST.

SUM-8-0.63

819
1088

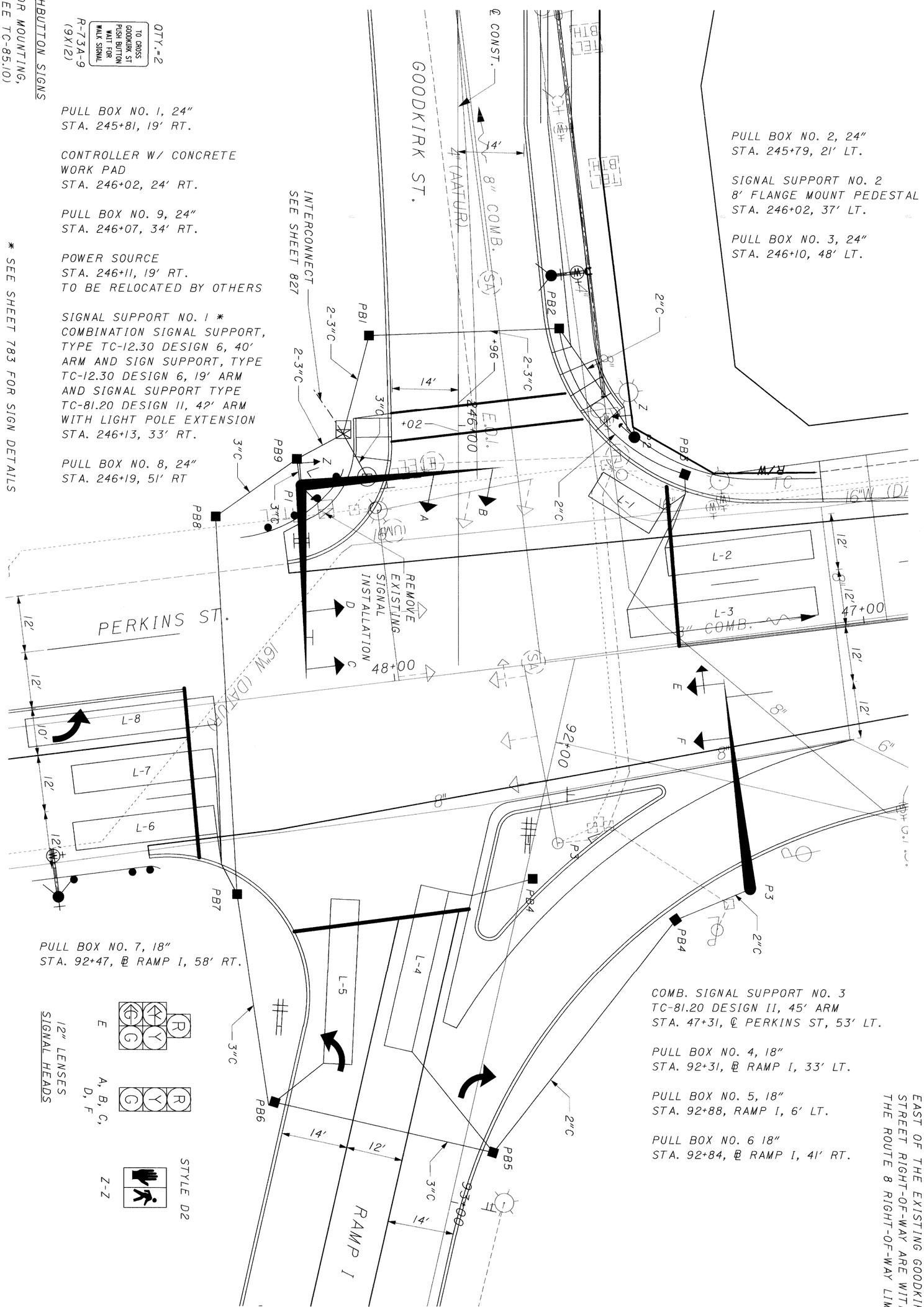

REVISIONS: 05/15/2002 by MAM

820 (1088)

SUM-8-0.63

TRAFFIC SIGNAL PLAN
GOODKIRK ST. AND PERKINS ST.

CALCULATED CRP
CHECKED TS

0 5 10 20
HORIZONTAL SCALE IN FEET

N

SIGNAL DISPLAY CHART

SIGNAL HEAD	Ø3 & Ø8				Ø4 & Ø8				Ø6					
	R/W		CLEAR		R/W		CLEAR		R/W		CLEAR		FLASH	DWELL
A	R	R	R	R	R	R	R	R	G	G	Y	R	R	-
B	R	R	R	R	R	R	R	R	G	G	Y	R	R	-
C	R	R	R	R	G	G	Y	R	R	R	R	R	Y	-
D	R	R	R	R	G	G	Y	R	R	R	R	R	Y	-
E	G/G	G/G	G/A	G	G	G	Y	R	R	R	R	R	Y	-
F	G	G	G	G	G	G	Y	R	R	R	R	R	Y	-
Z-Z	DW	DW	DW	DW	W	FDW	DW	DW	DW	DW	DW	DW	OUT	-

CONTROLLER TIMING DATA

CYCLE LENGTH	80			100		
	Ø3&Ø8	Ø4&Ø8	Ø6	Ø3&Ø8	Ø4&Ø8	Ø6
MOVEMENT	**WB**	**EB/WB**	**SB**	**WB**	**EB/WB**	**SB**
GREEN TIME	5	46	11	7	64	11
YELLOW TIME	3.0	3.0	3.0	3.0	3.0	3.0
ALL RED	3.0	3.0	3.0	3.0	3.0	3.0
MINIMUM INITIAL	5.0	10.0	10.0	5.0	10.0	10.0
VEHICULAR EXTENSION	3.0	3.0	3.0	X.X	X.X	X.X
WALK	-	7	-	-	7	-
FLASH DON'T WALK	-	9	-	-	9	-
MEMORY	OFF	OFF	OFF	OFF	OFF	OFF
RECALL	NONE	NONE	MIN	NONE	NONE	MIN

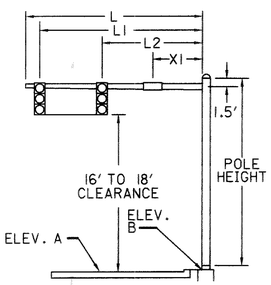

MAST ARM DETAIL

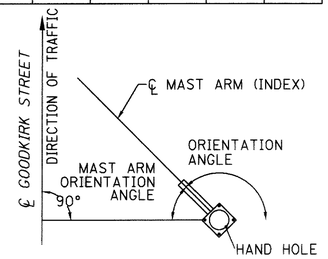

NOTES:
1. ALL ANGLES MEASURED CLOCKWISE
2. BASE PLATE IS ORIENTED SQUARE TO MAST ARM A.
3. POLE STATIONING AND ORIENTATION FROM GOODKIRK ST. ℄.

ORIENTATION ANGLES

POLE NO.	DESIGN NO.	POLE HEIGHT (FT)	FOUNDATION STATION	FOUNDATION OFFSET	L FT.	L1 FT.	L2 FT.	L3 FT.	L4 FT.	X1 FT.	ELEVATION A FT.	ELEVATION B FT.	MAST ARM ANGLE (A)	MAST ARM ANGLE (B)	ORIENTATION ANGLES FROM MAST ARM: PEDESTRIAN SIGNALS	PEDESTRIAN PUSH BUTTONS	HANDHOLE
1	7	25	246+13	33' RT.	42	40	27			17	1050.8	1051.3	355		270	45	180
					40	38	26			31	1052.3	1051.3		94			
2	PED	8	246+02	37' LT.											85	42	
3	3	25	†92+18	9' LT.	30	28	16			8	1051.0	1050.2	76				180

† ℄ RAMP I

LOOP DETECTORS

DESIGNATION	SIZE	# OF TURNS	PULSE OR PRESENCE	DELAY	ASSOCIATED CONTROLLER PHASE	STATION 1st FRONT CORNER	STATION 2nd FRONT CORNER
L-1	6 x 15	2	PRESENCE	7	4	246+10, 31' LT.	246+15, 27' LT.
L-2	6 x 31	2	PRESENCE	7	4	246+26, 44' LT.	246+32, 44' LT.
L-3	6 x 40	2	PRESENCE	0	4	246+39, 36' LT.	246+45, 36' LT.
L-4	6 x 35	2	PRESENCE	0	6	†92+36, 15' RT.	†92+36, 21' RT.
L-5	6 x 35	2	PRESENCE	0	6	†92+42, 33' RT.	†92+43, 39' RT.
L-6	6 x 30	2	PRESENCE	0	8	†92+29, 67' RT.	†92+35, 65' RT.
L-7	6 x 30	2	PRESENCE	0	8	†92+18, 70' RT.	†92+23, 68' RT.
L-8	6 x 40	2	PRESENCE	0	3	†92+07, 73' RT.	†92+12, 71' RT.
SL-23*	6 x 6	3	PRESENCE	0	-	244+72, 7' LT	244+80, 7' LT.
SL-24*	6 x 6	3	PRESENCE	0	-	244+72, 8' RT.	244+80, 6' RT.
SL-25*	6 x 6	3	PRESENCE	0	-	△46+59, 18' RT.	△46+67, 18' RT.
SL-26*	6 x 6	3	PRESENCE	0	-	△46+59, 6' RT.	△46+67, 6' RT.
SL-27*	6 x 6	3	PRESENCE	0	-	△46+59, 7' LT.	△46+67, 7' LT.
SL-28*	6 x 6	3	PRESENCE	0	-	△46+59, 19' LT.	△46+67, 19' LT.
SL-29*	6 x 6	3	PRESENCE	0	-	†93+69, 4' RT.	†93+78, 4' RT.
SL-30*	6 x 6	3	PRESENCE	0	-	†93+69, 18' RT.	†93+78, 18' RT.
SL-31*	6 x 6	3	PRESENCE	0	-	†93+69, 31' RT.	†93+78, 31' RT.

† ℄ RAMP I △ ℄ PERKINS ST.

* SL DENOTES A SYSTEM LOOP DETECTOR. ALL SYSTEM LOOP DETECTOR QUANTITIES ARE SHOWN ON SHEET 827.

COORDINATION TIMING

CYCLE/OFFSET	PHASE Ø3&Ø8	PHASE Ø4&Ø8	PHASE Ø8	DESCRIPTION
80/19	11	52	17	M-F, 9 AM-4 PM & 6 PM-6 AM, SAT. & SUN.
100/59	13	70	17	M-F, 6 AM-9 AM & 4 PM-6 PM

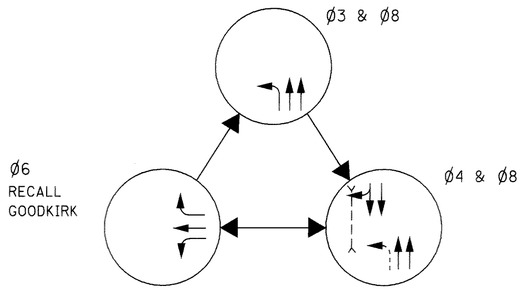

PHASING DIAGRAM

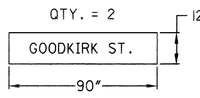

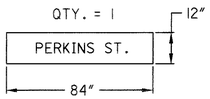

STREET NAME SIGNS

(MAST ARM MOUNTED, SEE SHEET 830)

TRAFFIC CONTROL QUANTITIES

ITEM	EXT.	QTY.	UNITS	DESCRIPTION
625	25402	85	LF	CONDUIT, 2",713.07
625	25502	103	LF	CONDUIT, 3", 713.07
625	25802	223	LF	CONDUIT, CONCRETE ENCASED, 3"
625	29002	313	LF	TRENCH, 24" DEEP
625	29500	0	LF	TRENCH IN PAVED AREA, TYPE A
625	29600	57	LF	TRENCH IN PAVED AREA, TYPE B
625	30700	2	EACH	PULL BOX, 713.08, 18" AS PER PLAN
625	30707	5	EACH	PULL BOX, 713.08, 24" AS PER PLAN
625	32000	10	EACH	GROUND ROD
625	32001	1	EACH	GROUND ROD, AS PER PLAN
SPECIAL	36000	338	LF	PLASTIC CAUTION TAPE
630	79100	3	EACH	SIGN HANGER ASSEMBLY, MAST ARM
630	80102	22	SF	SIGN, FLAT SHEET, TYPE G
632	00302	5	EACH	VEHICULAR SIGNAL HEAD, 3 SECTION 12" LENS, 1-WAY, POLYCARBONATE
632	00502	1	EACH	VEHICULAR SIGNAL HEAD, 5-SECTION, 12" LENS, 1-WAY, POLYCARBONATE
632	20601	2	EACH	PEDESTRIAN SIGNAL HEAD, TYPE D2, AS PER PLAN
632	25000	6	EACH	COVERING OF VEHICULAR SIGNAL HEAD
632	25010	2	EACH	COVERING OF PEDESTRIAN SIGNAL HEAD
632	26000	2	EACH	PEDESTRIAN PUSHBUTTON
632	26500	8	EACH	DETECTOR LOOP
632	27008	8	EACH	LOOP DETECTOR UNIT, DELAY AND EXTENSION TYPE
632	40700	992	LF	SIGNAL CABLE, 7 CONDUCTOR, NO. 14 AWG
632	64010	2	EACH	SIGNAL SUPPORT FOUNDATION
632	64020	1	EACH	PEDESTAL FOUNDATION
632	65200	1397	LF	LOOP DETECTOR LEAD-IN CABLE
632	68200	25	LF	POWER CABLE, 2 CONDUCTOR, 6 AWG
632	70001	1	EACH	POWER SERVICE, AS PER PLAN
632	81300	1	EACH	COMBINATION SIGNAL SUPPORT, TYPE TC-81.20, DESIGN 3
632	81700	1	EACH	COMBINATION SIGNAL SUPPORT, MISC.: TYPE TC-12.30, DESIGN 6 AND SIGN SUPPORT, TYPE TC-12.30, DESIGN 6 AND SIGNAL SUPPORT, TYPE TC-81.20, DESIGN 11, WITH LIGHT POLE EXTENSION
632	89600	1	EACH	PEDESTAL, 8'
632	90101	1	EACH	REMOVAL OF TRAFFIC SIGNAL INSTALLATION, AS PER PLAN
633	38000	1	EACH	CONTROLLER, ACTUATED, 8 PHASE, SOLID STATE DIGITAL MICROPROCESSOR
633	70001	1.15	CY	CONCRETE FOR CABINET FOUNDATION, AS PER PLAN
633	70500	9	SF	CONTROLLER WORK PAD
633	99000	1	EACH	ALTERNATE BID: CONTROLLER MISC.; ECONOLITE CONTROLLER

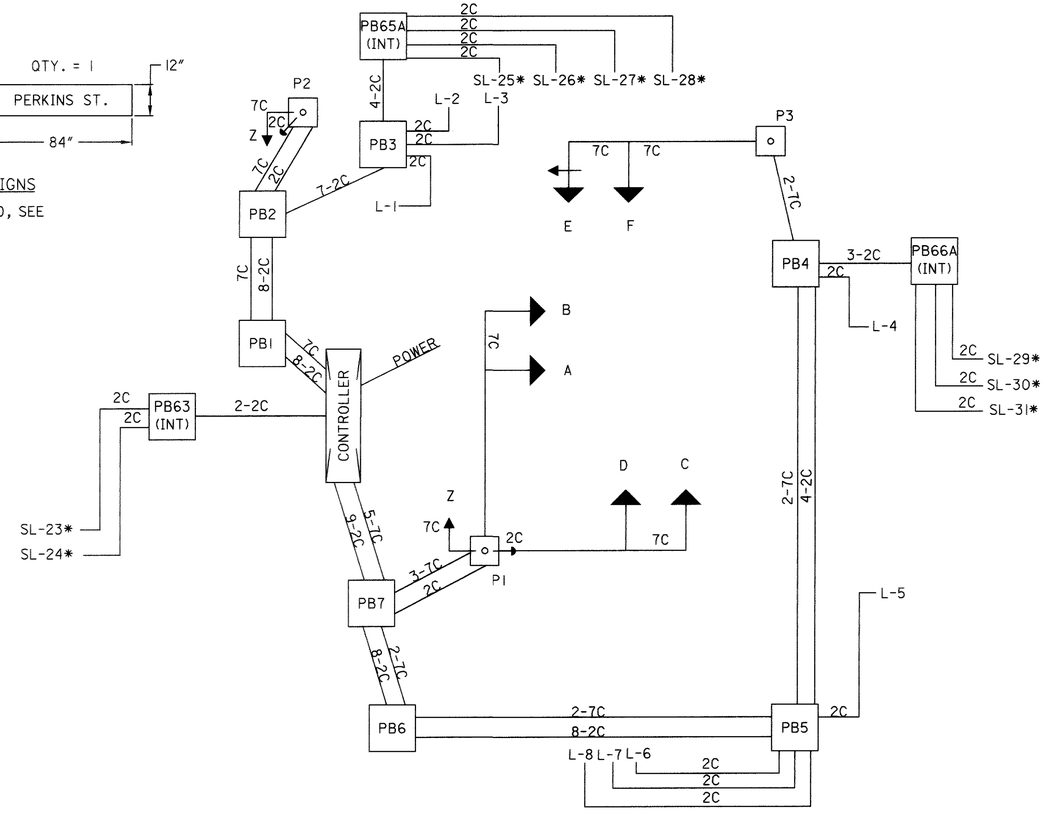

WIRING DIAGRAM
(INT) = INTERCONNECT

CALCULATED CRP
CHECKED TS

TRAFFIC SIGNAL PLAN DETAILS
GOODKIRK ST. AND PERKINS ST.

SUM-8-0.63

821
1088

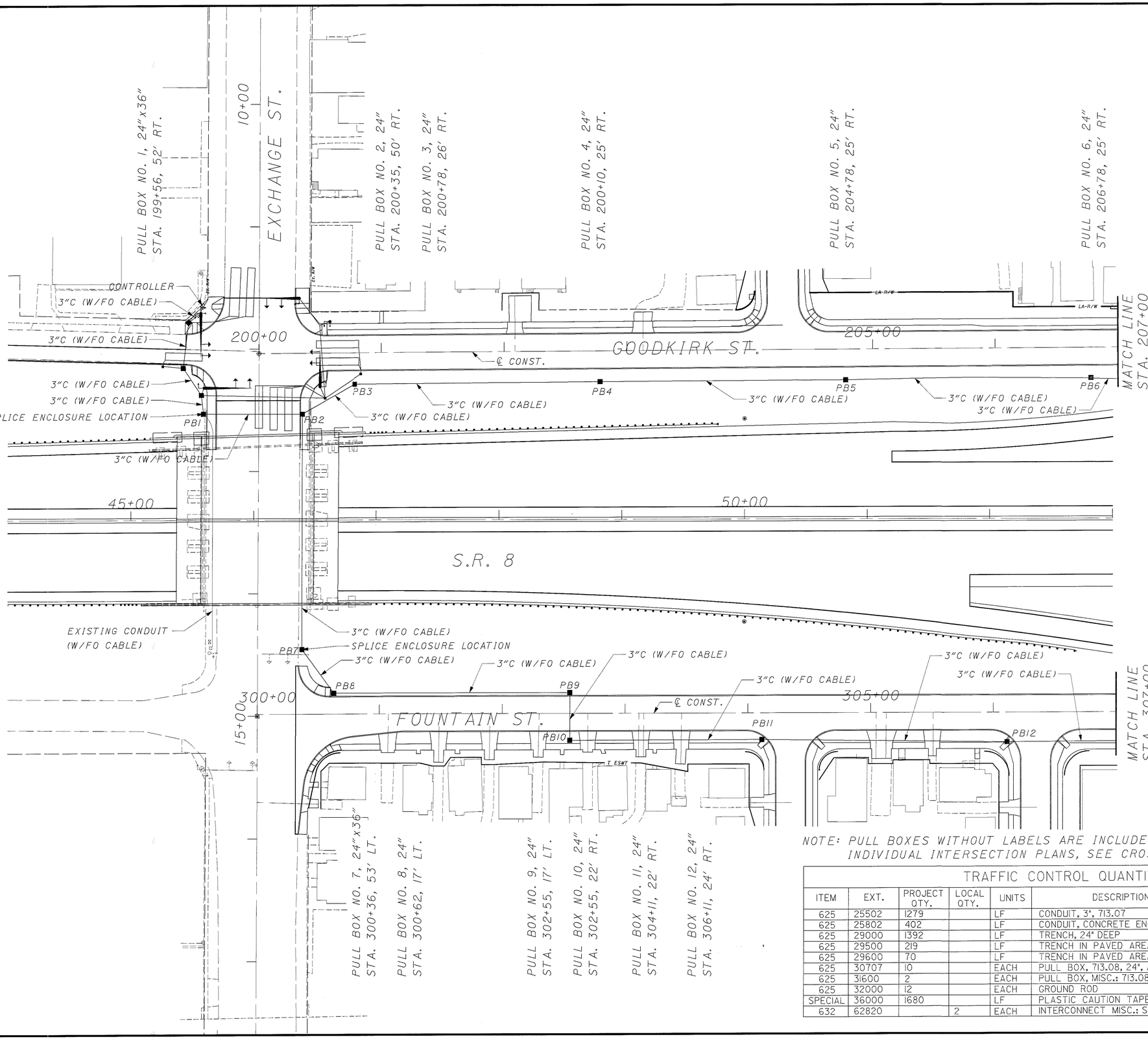

NOTE: PULL BOXES WITHOUT LABELS ARE INCLUDED WITH INDIVIDUAL INTERSECTION PLANS, SEE CROSS REFERENCES.

TRAFFIC CONTROL QUANTITIES

ITEM	EXT.	PROJECT QTY.	LOCAL QTY.	UNITS	DESCRIPTION
625	25502	1279		LF	CONDUIT, 3", 713.07
625	25802	402		LF	CONDUIT, CONCRETE ENCASED, 3"
625	29000	1392		LF	TRENCH, 24" DEEP
625	29500	219		LF	TRENCH IN PAVED AREA, TYPE A
625	29600	70		LF	TRENCH IN PAVED AREA, TYPE B
625	30707	10		EACH	PULL BOX, 713.08, 24", AS PER PLAN
625	31600	2		EACH	PULL BOX, MISC.: 713.08, 24"x36"x36", AS PER PLAN
625	32000	12		EACH	GROUND ROD
SPECIAL	36000	1680		LF	PLASTIC CAUTION TAPE
632	62820		2	EACH	INTERCONNECT MISC.: SPLICE ENCLOSURE, AS PER PLAN

CROSS REFERENCES

SHEET NO.	DESCRIPTION
810-811	TRAFFIC SIGNAL PLANS
827A	INTERCONNECT PLAN

N

0 20 40 80
HORIZONTAL SCALE IN FEET

CALCULATED CRP
CHECKED HJC

TRAFFIC SIGNAL INTERCONNECT PLAN

SUM-8-0.63

822
1088

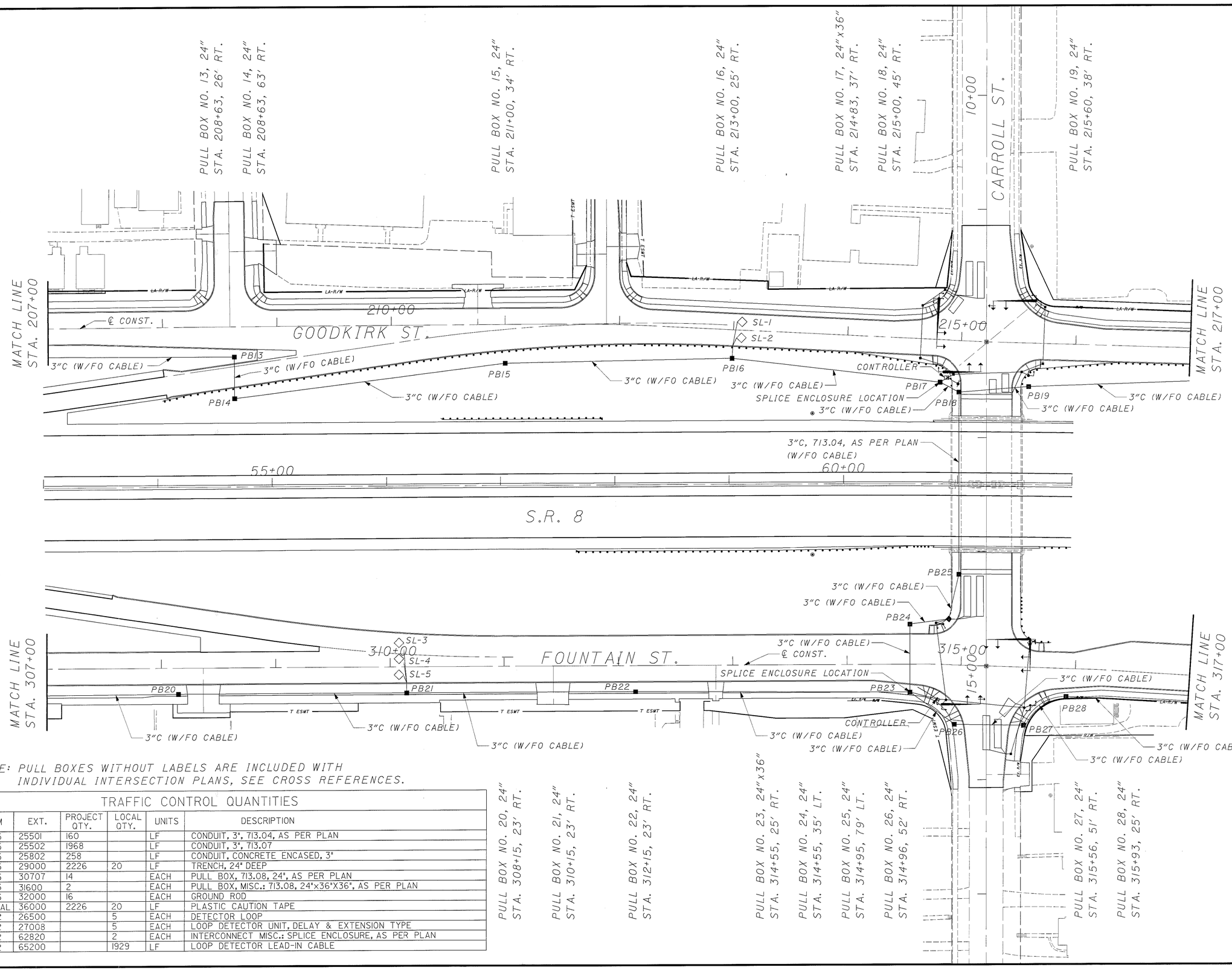

NOTE: PULL BOXES WITHOUT LABELS ARE INCLUDED WITH INDIVIDUAL INTERSECTION PLANS, SEE CROSS REFERENCES.

TRAFFIC CONTROL QUANTITIES					
ITEM	EXT.	PROJECT QTY.	LOCAL QTY.	UNITS	DESCRIPTION
625	25501	160		LF	CONDUIT, 3", 713.04, AS PER PLAN
625	25502	1968		LF	CONDUIT, 3", 713.07
625	25802	258		LF	CONDUIT, CONCRETE ENCASED, 3"
625	29000	2226	20	LF	TRENCH, 24" DEEP
625	30707	14		EACH	PULL BOX, 713.08, 24", AS PER PLAN
625	31600	2		EACH	PULL BOX, MISC.: 713.08, 24"x36"X36", AS PER PLAN
625	32000	16		EACH	GROUND ROD
SPECIAL	36000	2226	20	LF	PLASTIC CAUTION TAPE
632	26500		5	EACH	DETECTOR LOOP
632	27008		5	EACH	LOOP DETECTOR UNIT, DELAY & EXTENSION TYPE
632	62820		2	EACH	INTERCONNECT MISC.: SPLICE ENCLOSURE, AS PER PLAN
632	65200		1929	LF	LOOP DETECTOR LEAD-IN CABLE

PULL BOX NO. 20, 24"
STA. 308+15, 23' RT.

PULL BOX NO. 21, 24"
STA. 310+15, 23' RT.

PULL BOX NO. 22, 24"
STA. 312+15, 23' RT.

PULL BOX NO. 23, 24"x36"
STA. 314+55, 25' RT.

PULL BOX NO. 24, 24"
STA. 314+55, 35' LT.

PULL BOX NO. 25, 24"
STA. 314+95, 79' LT.

PULL BOX NO. 26, 24"
STA. 314+96, 52' RT.

PULL BOX NO. 27, 24"
STA. 315+56, 51' RT.

PULL BOX NO. 28, 24"
STA. 315+93, 25' RT.

CROSS REFERENCES

SHEET NO.	DESCRIPTION
800-801, 812-813	TRAFFIC SIGNAL PLANS
827A	INTERCONNECT PLAN

CALCULATED CRP
CHECKED HJC

0 20 40 80
HORIZONTAL SCALE IN FEET

TRAFFIC SIGNAL INTERCONNECT PLAN

SUM-8-0.63

823
1088

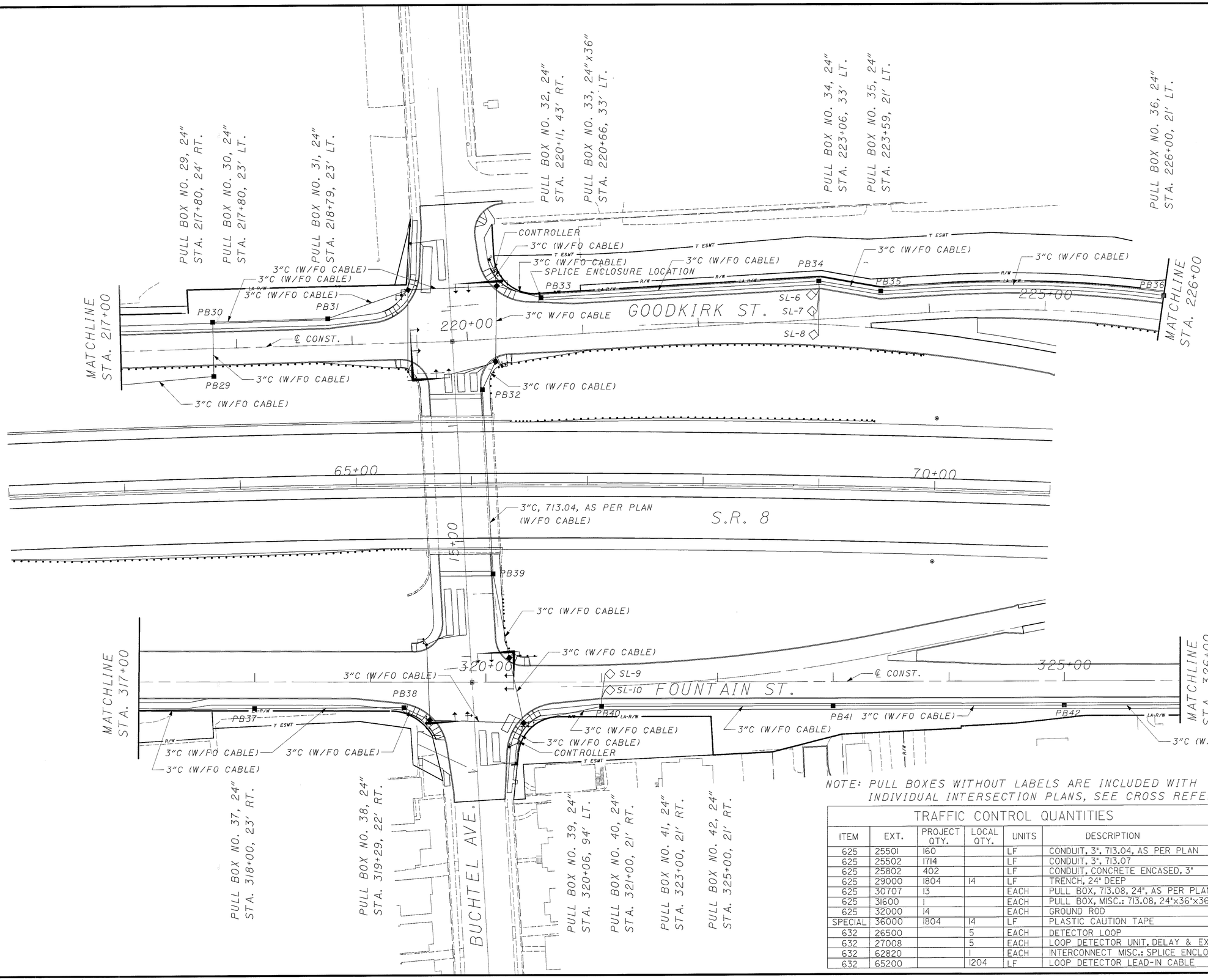

CROSS REFERENCES

SHEET NO.	DESCRIPTION
802-803, 814-815	TRAFFIC SIGNAL PLANS
827A	INTERCONNECT PLAN

NOTE: PULL BOXES WITHOUT LABELS ARE INCLUDED WITH INDIVIDUAL INTERSECTION PLANS, SEE CROSS REFERENCES.

TRAFFIC CONTROL QUANTITIES

ITEM	EXT.	PROJECT QTY.	LOCAL QTY.	UNITS	DESCRIPTION
625	25501	160		LF	CONDUIT, 3", 713.04, AS PER PLAN
625	25502	1714		LF	CONDUIT, 3", 713.07
625	25802	402		LF	CONDUIT, CONCRETE ENCASED, 3"
625	29000	1804	14	LF	TRENCH, 24" DEEP
625	30707	13		EACH	PULL BOX, 713.08, 24", AS PER PLAN
625	31600	1		EACH	PULL BOX, MISC.: 713.08, 24"x36"x36", AS PER PLAN
625	32000	14		EACH	GROUND ROD
SPECIAL	36000	1804	14	LF	PLASTIC CAUTION TAPE
632	26500		5	EACH	DETECTOR LOOP
632	27008		5	EACH	LOOP DETECTOR UNIT, DELAY & EXTENSION TYPE
632	62820		1	EACH	INTERCONNECT MISC.: SPLICE ENCLOSURE, AS PER PLAN
632	65200		1204	LF	LOOP DETECTOR LEAD-IN CABLE

N

0 20 40 80
HORIZONTAL
SCALE IN FEET

CALCULATED CRP
CHECKED HJC

TRAFFIC SIGNAL INTERCONNECT PLAN

SUM-8-0.63

824
1088

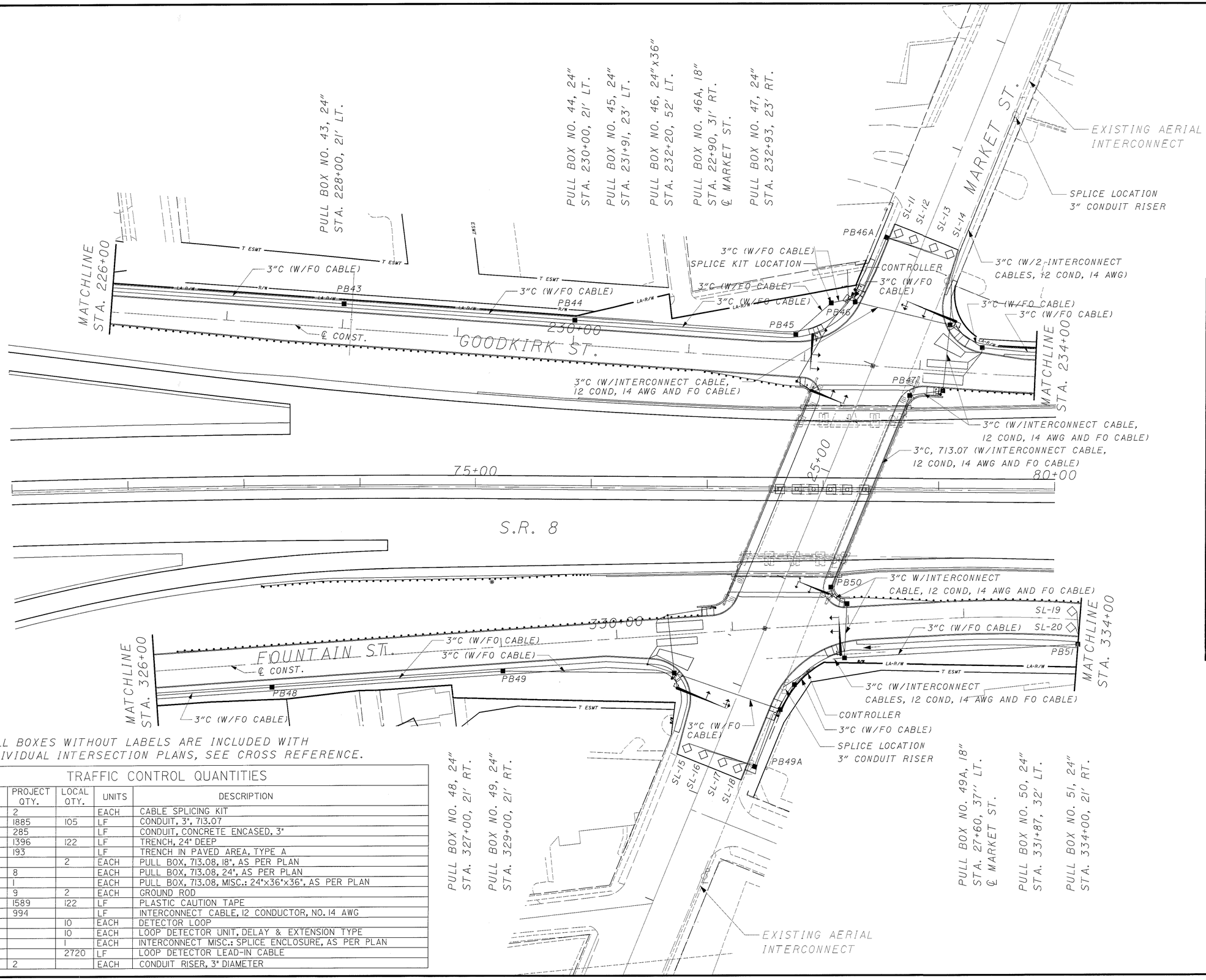

NOTE: PULL BOXES WITHOUT LABELS ARE INCLUDED WITH INDIVIDUAL INTERSECTION PLANS, SEE CROSS REFERENCE.

TRAFFIC CONTROL QUANTITIES

ITEM	EXT.	PROJECT QTY.	LOCAL QTY.	UNITS	DESCRIPTION
625	01500	2		EACH	CABLE SPLICING KIT
625	25502	1885	105	LF	CONDUIT, 3", 713.07
625	25802	285		LF	CONDUIT, CONCRETE ENCASED, 3"
625	29000	1396	122	LF	TRENCH, 24" DEEP
625	29500	193		LF	TRENCH IN PAVED AREA, TYPE A
625	30700		2	EACH	PULL BOX, 713.08, 18", AS PER PLAN
625	30707	8		EACH	PULL BOX, 713.08, 24', AS PER PLAN
625	31600	1		EACH	PULL BOX, 713.08, MISC.: 24"x36"x36", AS PER PLAN
625	32000	9	2	EACH	GROUND ROD
SPECIAL	36000	1589	122	LF	PLASTIC CAUTION TAPE
632	51200	994		LF	INTERCONNECT CABLE, 12 CONDUCTOR, NO. 14 AWG
632	26500		10	EACH	DETECTOR LOOP
632	27008		10	EACH	LOOP DETECTOR UNIT, DELAY & EXTENSION TYPE
632	62820		1	EACH	INTERCONNECT MISC.: SPLICE ENCLOSURE, AS PER PLAN
632	65200		2720	LF	LOOP DETECTOR LEAD-IN CABLE
632	70400	2		EACH	CONDUIT RISER, 3" DIAMETER

CROSS REFERENCES

SHEET NO.	DESCRIPTION
804-805, 816-817	TRAFFIC SIGNAL PLANS
827A	INTERCONNECT PLAN

HORIZONTAL SCALE IN FEET: 0, 20, 40, 80

CALCULATED CRP

CHECKED HJC

TRAFFIC SIGNAL INTERCONNECT PLAN

SUM-8-0.63

825
1088

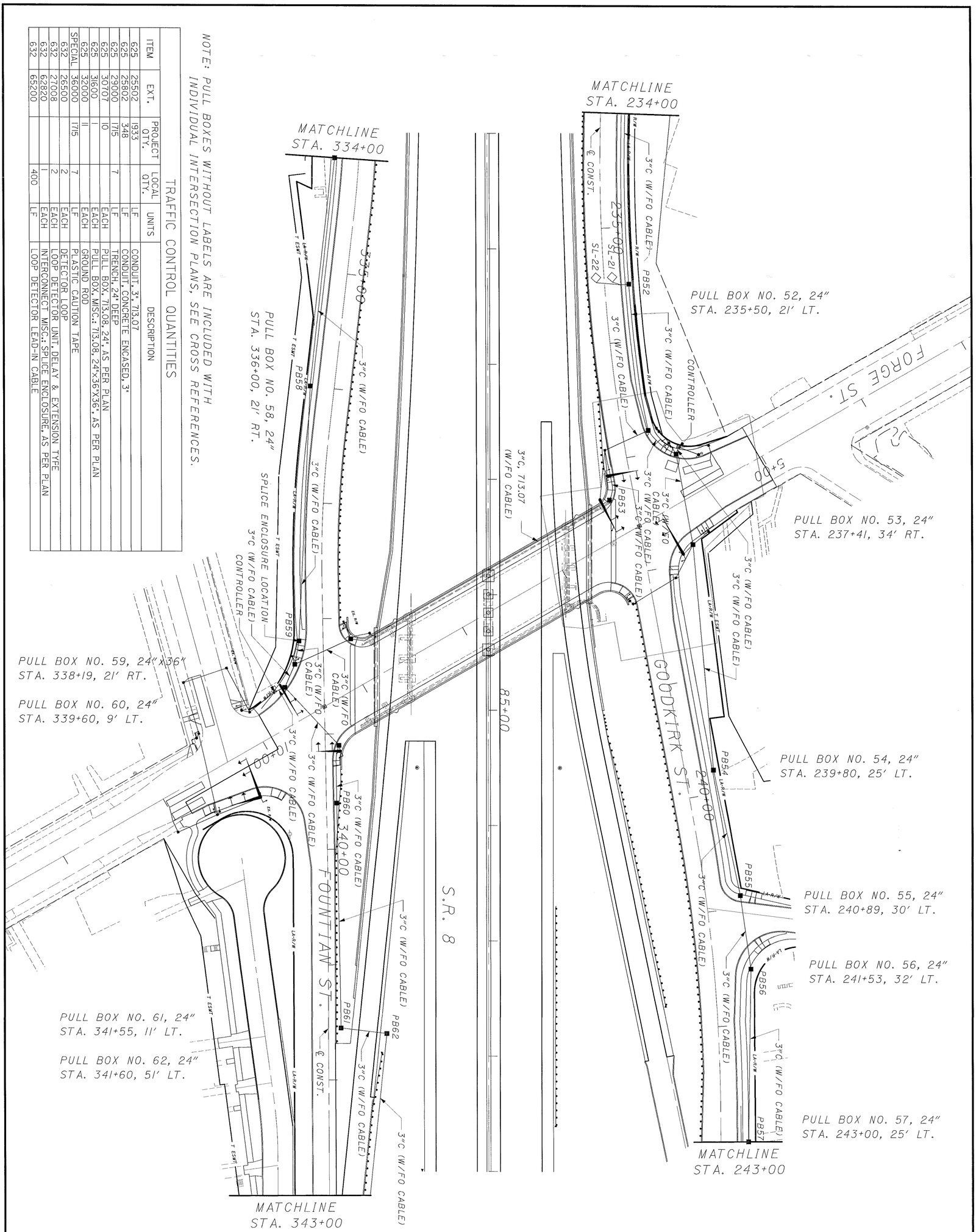

NOTE: PULL BOXES WITHOUT LABELS ARE INCLUDED WITH INDIVIDUAL INTERSECTION PLANS, SEE CROSS REFERENCES.

TRAFFIC CONTROL QUANTITIES

ITEM	EXT.	PROJECT QTY.	LOCAL QTY.	UNITS	DESCRIPTION
625	25502	1933		LF	CONDUIT, 3", 713.07
625	25802	348		LF	CONDUIT, CONCRETE ENCASED, 3"
625	29000	1715	7	LF	TRENCH, 24" DEEP
625	30707	10		EACH	PULL BOX, 713.08, 24", AS PER PLAN
625	31600	1		EACH	PULL BOX, MISC.; 713.08, 24"X36"X36", AS PER PLAN
625	32000	11		EACH	GROUND ROD
SPECIAL	36000	1715	7	LF	PLASTIC CAUTION TAPE
632	26500		2	EACH	DETECTOR LOOP
632	27008		2	EACH	LOOP DETECTOR UNIT, DELAY & EXTENSION TYPE
632	62820		1	EACH	INTERCONNECT MISC.; SPLICE ENCLOSURE, AS PER PLAN
632	65200		400	LF	LOOP DETECTOR LEAD-IN CABLE

CROSS REFERENCES

SHEET NO.	DESCRIPTION
806-807, 818-819	TRAFFIC SIGNAL PLANS
827A	INTERCONNECT PLAN

826
1088

SUM-8-0.63

TRAFFIC SIGNAL INTERCONNECT PLAN

CALCULATED CRP
CHECKED HJC

0 40
20 80
HORIZONTAL SCALE IN FEET

N

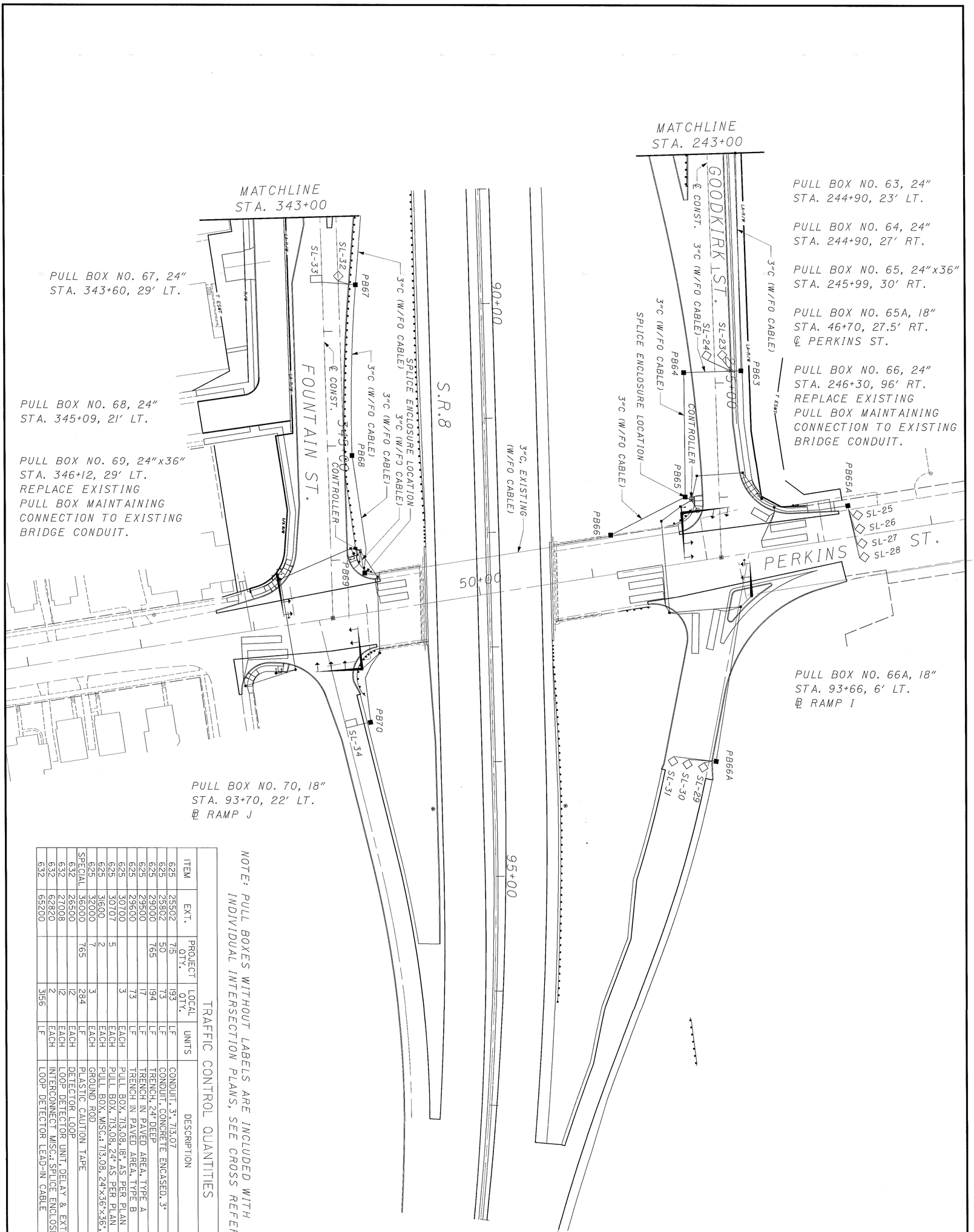

NOTE: PULL BOXES WITHOUT LABELS ARE INCLUDED WITH INDIVIDUAL INTERSECTION PLANS, SEE CROSS REFERENCES.

TRAFFIC CONTROL QUANTITIES

ITEM	EXT.	PROJECT QTY.	LOCAL QTY.	UNITS	DESCRIPTION
625	25502	775	193	LF	CONDUIT, 3", 713.07
625	25802	50	73	LF	CONDUIT, CONCRETE ENCASED, 3"
625	29000	765	194	LF	TRENCH, 24" DEEP
625	29500		17	LF	TRENCH IN PAVED AREA, TYPE A
625	29600		73	LF	TRENCH IN PAVED AREA, TYPE B
625	30700	5	3	EACH	PULL BOX, 713.08, 18", AS PER PLAN
625	30707			EACH	PULL BOX, 713.08, 24", AS PER PLAN
625	31600	2		EACH	PULL BOX, MISC., 713.08, 24"x36"x36", AS PER PLAN
625	32000	7	2	EACH	GROUND ROD
SPECIAL	36000	765	284	LF	PLASTIC CAUTION TAPE
632	26500		12	EACH	DETECTOR LOOP
632	27008		12	EACH	LOOP DETECTOR UNIT, DELAY & EXTENSION TYPE
632	62820		2	EACH	INTERCONNECT MISC., SPLICE ENCLOSURE, AS PER PLAN
632	65200		356	LF	LOOP DETECTOR LEAD-IN CABLE

CROSS REFERENCES	
SHEET NO.	DESCRIPTION
808-809, 820-821	TRAFFIC SIGNAL PLANS
827A	INTERCONNECT PLAN

827
1088

SUM-8-0.63

TRAFFIC SIGNAL INTERCONNECT PLAN

CALCULATED CRP
CHECKED HJC

0 40
20 80
HORIZONTAL SCALE IN FEET

N

FIBER CABLE ROUTING

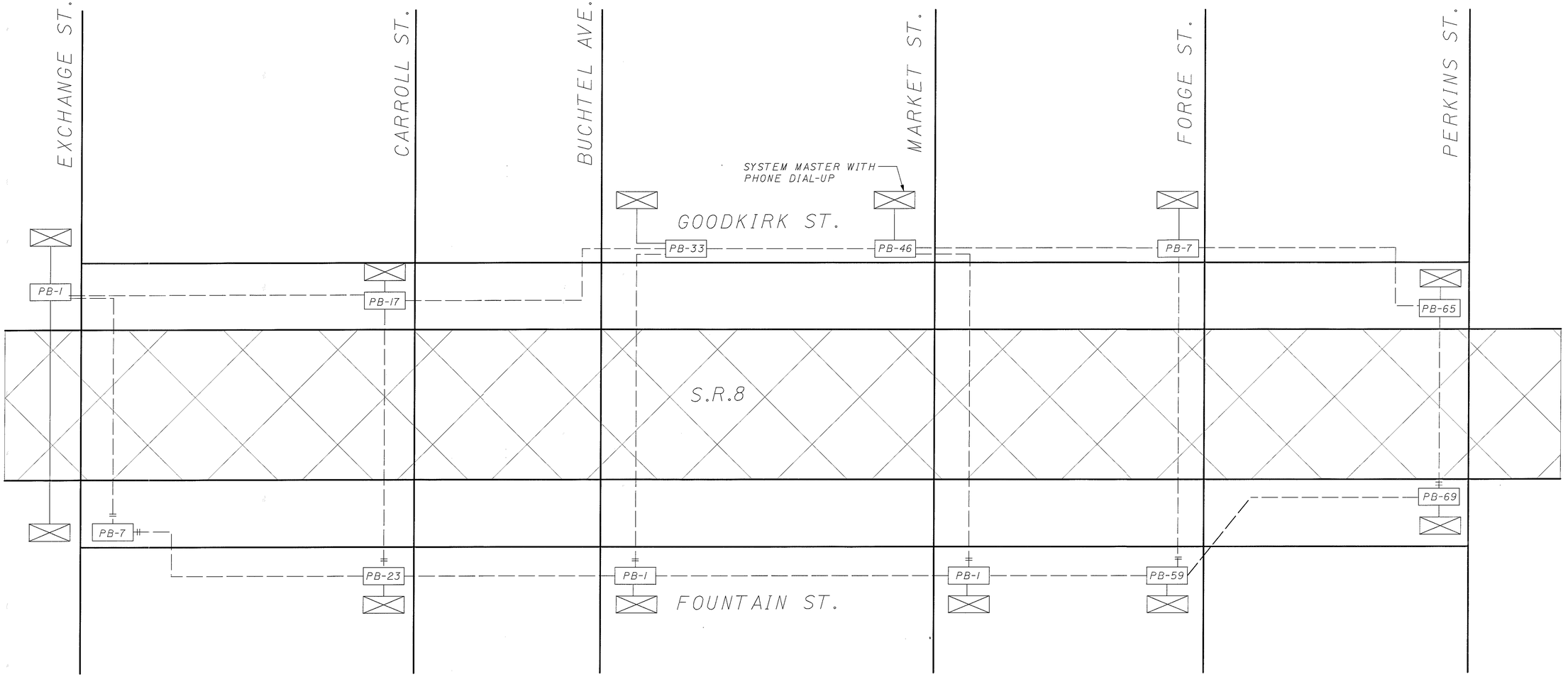

LEGEND

⊠ = CONTROLLER CABINET

PB-# = PULL BOX W/SPLICE ENCLOSURE AND 50 FT. OF COILED FIBER CABLE.

—‖— = FIBER CABLE INTO PULL BOX AND PROPERLY TERMINATED FOR FUTURE USE/EMERGENCY

– – – = FIBER OPTIC TRUNK CABLE

——— = FIBER OPTIC DROP CABLE

TRAFFIC CONTROL QUANTITIES				
ITEM	EXT.	LOCAL QTY.	UNITS	DESCRIPTION
632	62810	1108	LF	INTERCONNECT CABLE, MISC.: DROP CABLE, 6 FIBER-6 SM, AS PER PLAN
632	62810	13723	LF	INTERCONNECT CABLE, MISC.: FIBER OPTIC TRUNK CABLE, 48 FIBER-48 SM, AS PER PLAN
632	62820	48	EACH	INTERCONNECT MISC.: CPTICAL SPLICING, AS PER PLAN
632	62820	12	EACH	INTERCONNECT MISC.: FIBER OPTIC MODEM, SM, AS PER PLAN
632	62820	12	EACH	INTERCONNECT MISC.: FIBER OPTIC DROP KIT, AS PER PLAN
632	62820	12	EACH	INTERCONNECT MISC.: FIBER OPTIC FAN-OUT KIT, 6 FIBER, AS PER PLAN
632	62820	48	EACH	INTERCONNECT MISC.: FIBER OPTIC SPLICE EQUIPMENT, FIBER OPTIC CONNECTOR, SM, AS PER PLAN
632	62820	12	EACH	INTERCONNECT MISC.: SPLICE TRAY, AS PER PLAN
632	62820	12	EACH	INTERCONNECT MISC.: WALL MOUNT INTERCONNECT CENTER, AS PER PLAN
632	62830	LUMP	LUMP	INTERCONNECT MISC.: FIBER OPTIC CABLE TESTING, OTDR, AS PER PLAN

N

NOT TO SCALE

CALCULATED CRP

CHECKED SJ

TRAFFIC SIGNAL INTERCONNECT PLAN

SUM-8-0.63

827A
1088

DROP CABLE CONSTRUCTION DETAIL
DIRECT BURIED/DUCT/AERIAL
LOOSE TUBE ARMORED CABLE

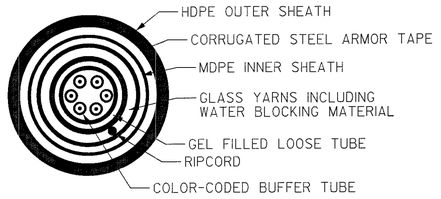

24 SM
FIBER OPTIC CABLE
DIELECTRIC CENTRAL MEMBER
ARMORED

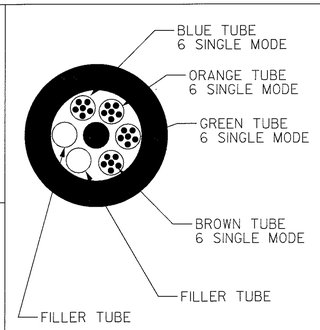

24 @ SINGLE MODE FIBER
8.3/125/250nm FIBER

ATTENUATION @ 1310/1550 nm
.4/.3 dB/km

NUMBER OF FIBERS	24
NUMBER OF WORKING TUBES	4
NOMINAL WEIGHT (kg/km)	185 kg (124 lbs/1000')
DIAMETER (mm)	13.0 mm (0.51 in)
TEMPERATURE RANGE (C)	
STORAGE	-40 C TO +70 C
OPERATING INSTALLED	-40 C TO +70 C
MAX. TENSILE RATING	
DURING INSTALLATION	2700 N (600 lbs)
LONG TERM INSTALLED	600 N (135 lbs)
MIN. BEND RADII	
DURING INSTALLATION	22.5 cm (8.9 in)
FREE-BEND INSTALLED	15.0 cm (5.9 in)

48 SM
FIBER OPTIC CABLE
DIELECTRIC CENTRAL MEMBER
ARMORED

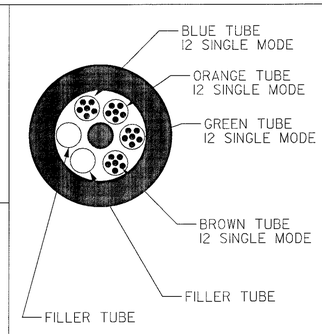

48 @ SINGLE MODE FIBER
8.3/125/250nm FIBER

ATTENUATION @ 1310/1550 nm
.4/.3 dB/km

NUMBER OF FIBERS	48
NUMBER OF WORKING TUBES	4
NOMINAL WEIGHT (kg/km)	214 kg (144 lbs/1000')
DIAMETER (mm)	14.0 mm (0.55 in)
TEMPERATURE RANGE (C)	
STORAGE	-40 C TO +70 C
OPERATING INSTALLED	-40 C TO +70 C
MAX. TENSILE RATING	
DURING INSTALLATION	2700 N (600 lbs)
LONG TERM INSTALLED	600 N (135 lbs)
MIN. BEND RADII	
DURING INSTALLATION	22.5 cm (8.9 in)
FREE-BEND INSTALLED	15.0 cm (5.9 in)

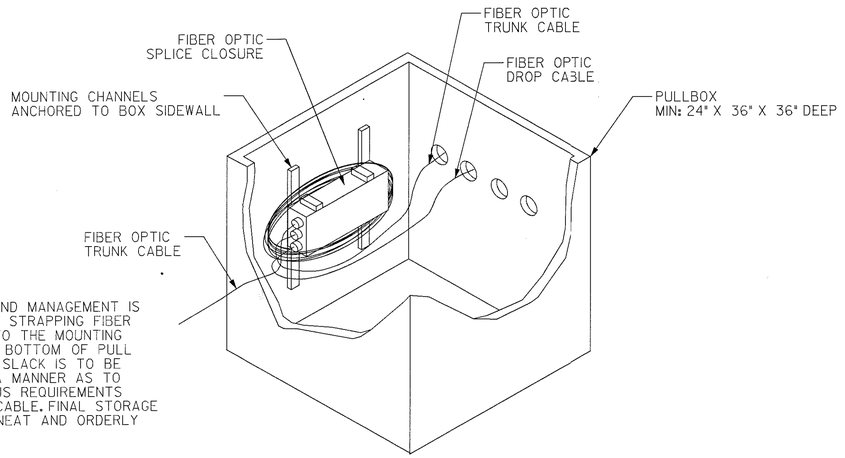

NOTE:
CABLE STORAGE AND MANAGEMENT IS TO BE PERFORMED BY STRAPPING FIBER OPTIC CABLE SLACK TO THE MOUNTING CHANNELS OR LAID IN BOTTOM OF PULL BOX. ALL STORING OF SLACK IS TO BE PERFORMED IN SUCH A MANNER AS TO MEET THE BEND RADIUS REQUIREMENTS OF THE FIBER OPTIC CABLE. FINAL STORAGE OF CABLE SHALL BE NEAT AND ORDERLY IN APPEARANCE.

TYPICAL INSTALLATION OF FIBER OPTIC SPLICE CLOSURE
UNDER GRADE, IN PULL BOX, MANHOLE, OR COMMUNICATION BOX

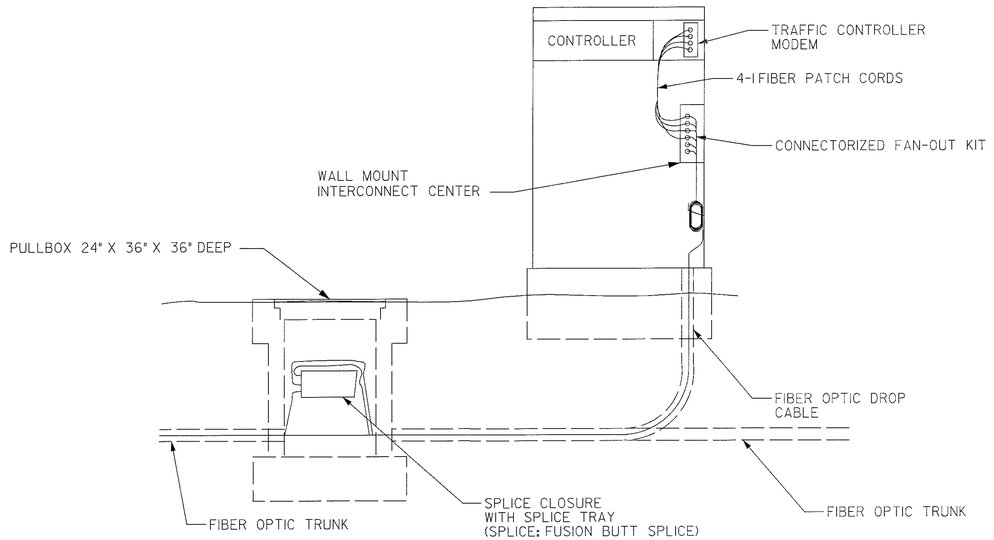

NOTE:

1. CONDUIT BENDS SHALL NOT EXCEED MINIMUM BENDING RADII OF FIBER OPTIC CABLE.

TYPICAL DUCT APPLICATION

CALCULATED | CHECKED

TRAFFIC SIGNAL
INTERCONNECT PLAN DETAILS

SUM-8-0.63

827B
1088

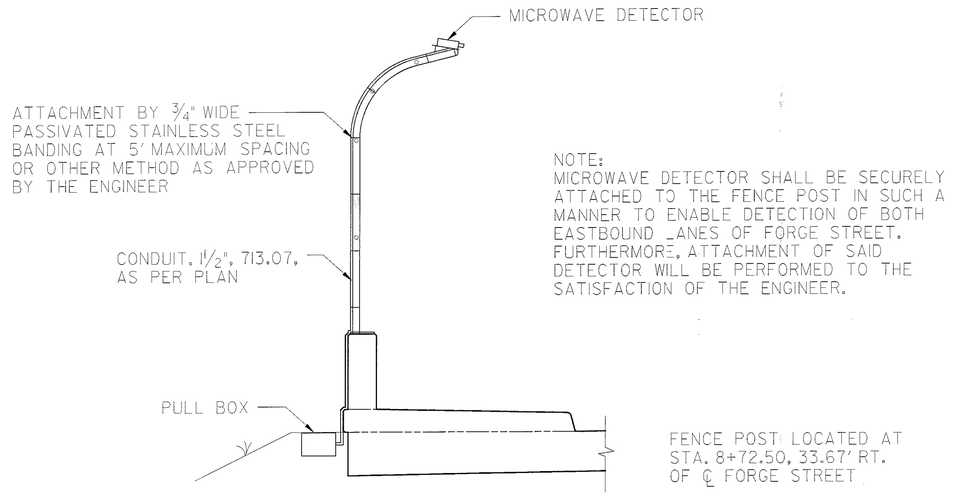

MICROWAVE DETECTOR DETAIL

FORGE ST. AND FOUNTAIN ST.

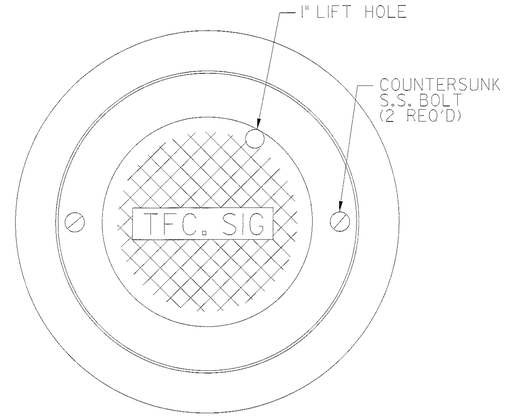

TOP VIEW
PULLBOX LID DETAIL

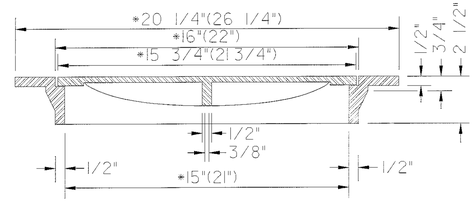

SIDE VIEW
PULLBOX LID DETAIL

* VALUES IN PARENTHESIS REPRESENT 24" PULLBOX

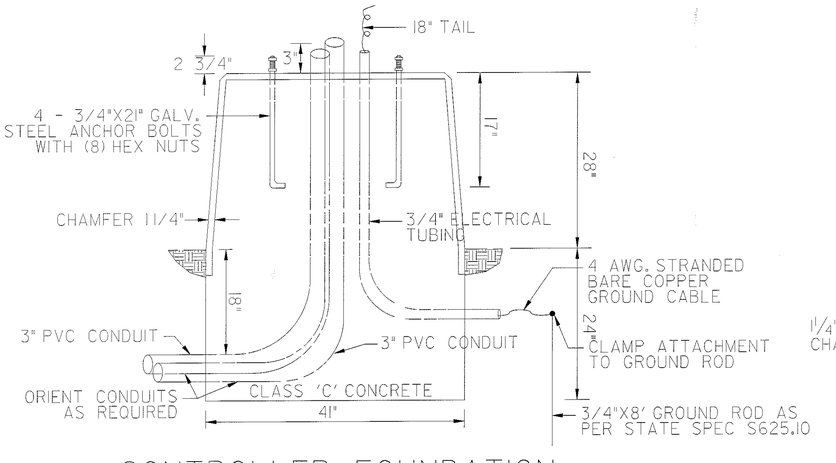

CONTROLLER FOUNDATION

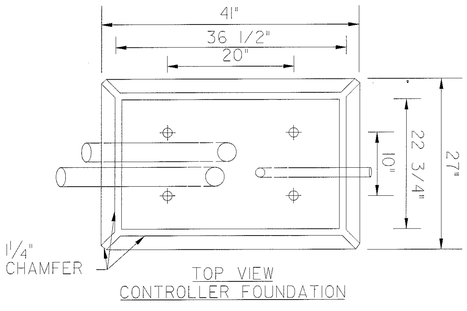

TOP VIEW
CONTROLLER FOUNDATION

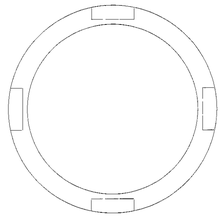

TOP VIEW
PULLBOX DETAIL

* VALUES IN PARENTHESIS REPRESENT 24" PULLBOX

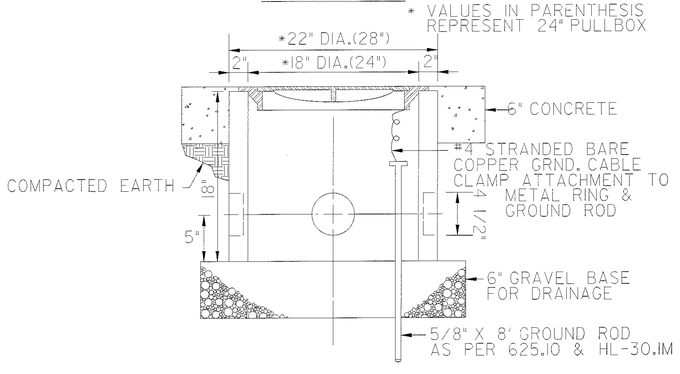

PULLBOX DETAIL

CALCULATED | CHECKED

TRAFFIC CONTROL DETAILS - SIGNALS

SUM-8-0.63

828
1088

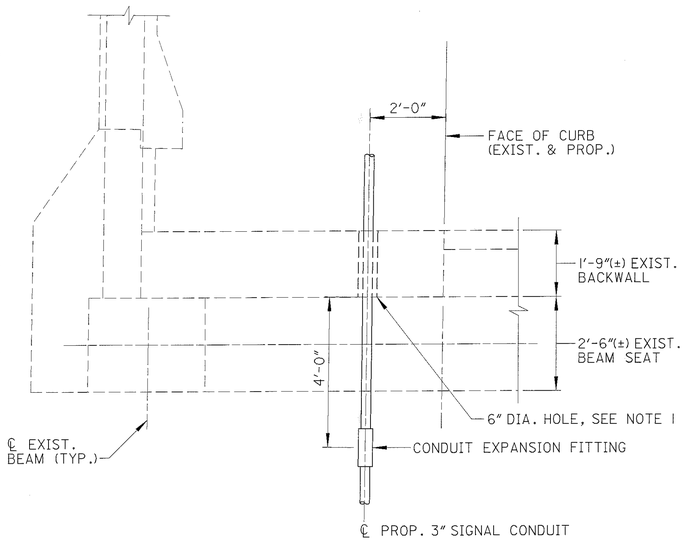

PARTIAL PLAN

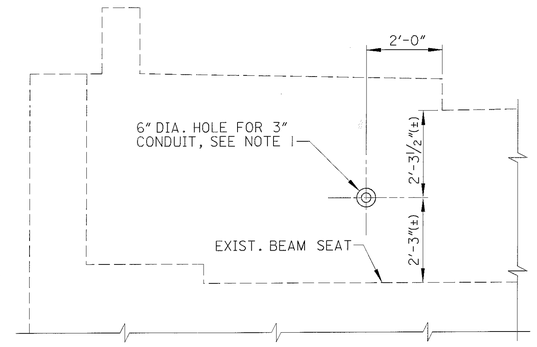

PARTIAL ELEVATION

DETAIL AT ABUTMENTS - CARROLL ST. BRIDGE

FORWARD ABUTMENT SHOWN, REAR ABUTMENT OPPOSITE HAND

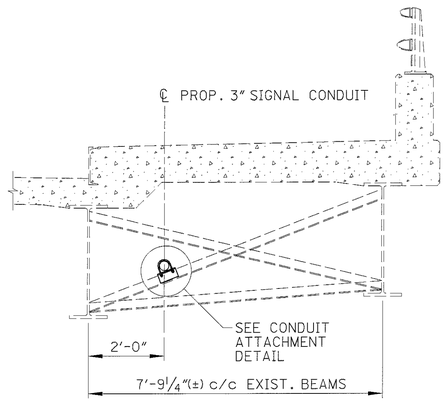

SECTION THROUGH SOUTH SIDEWALK
CARROLL ST. BRIDGE

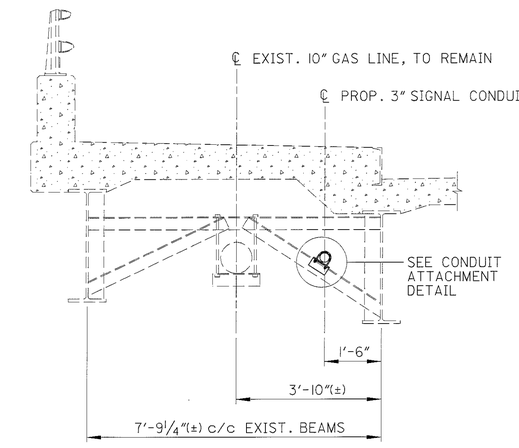

SECTION THROUGH NORTH SIDEWALK
BUCHTEL AVE. BRIDGE

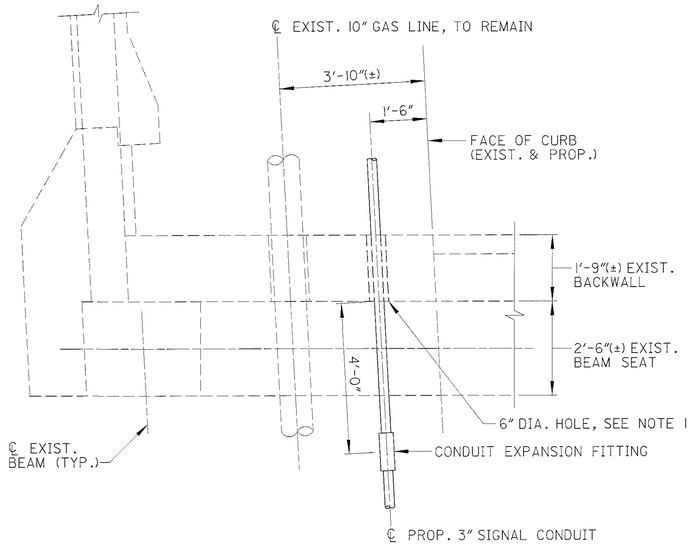

PARTIAL PLAN

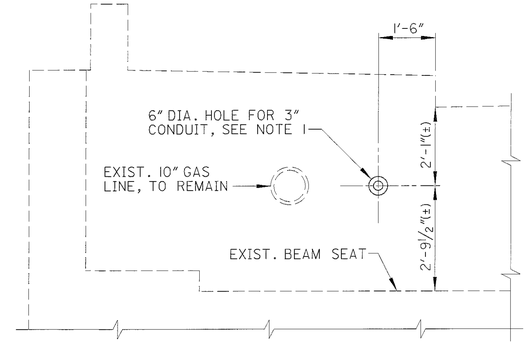

PARTIAL ELEVATION

DETAIL AT ABUTMENTS - BUCHTEL AVE. BRIDGE

FORWARD ABUTMENT SHOWN, REAR ABUTMENT OPPOSITE HAND

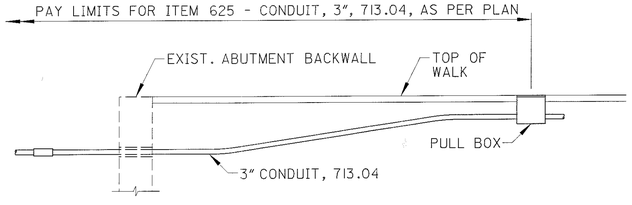

CONDUIT TRANSITION
AT BRIDGE APPROACHS

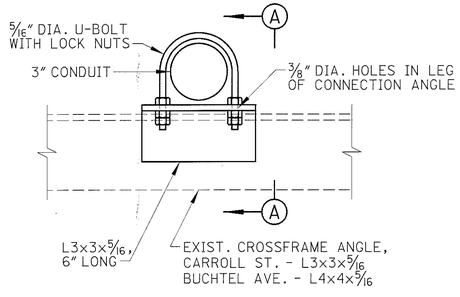

CONDUIT ATTACHMENT DETAIL

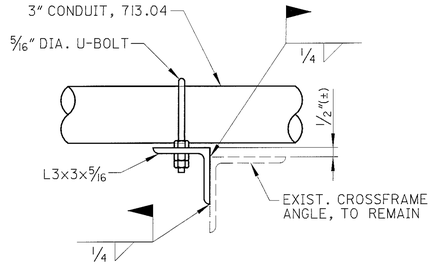

SECTION A-A

NOTES

1. TO ACCOMODATE THE NEW CONDUIT, A 6" DIAMETER HOLE SHALL BE CORED THROUGH THE EXISTING ABUTMENT BACKWALL. AFTER THE CONDUIT THROUGH THE BACKWALL HAS BEEN INSTALLED THE GAP SURROUNDING IT SHALL BE SEALED WITH CEMENT GROUT. COST FOR THIS WORK SHALL BE INCLUDED IN THE UNIT PRICE BID FOR ITEM 625 - CONDUIT, 3", 713.04, AS PER PLAN
2. CONDUIT SHALL BE SECURELY FASTENED TO ALL CROSSFRAMES PER THE DETAILS SHOWN ON THIS SHEET. WELDING OF NEW CONNECTION ANGLES TO EXISTING STEEL CROSSFRAMES SHALL BE COMPLETED PRIOR TO PAINTING EXISTING STEEL.
3. STEEL FOR CONNECTION ANGLES SHALL BE ASTM A-36.
4. 1/4" WEEP HOLES TO BE PROVIDED EVERY 25' BETWEEN EXPANSION FITTINGS AND AT ANY PLACE WHERE THERE IS A SAG IN THE CONDUIT ALIGNMENT.

DESIGNED PAT
CHECKED CRP

SIGNAL CONDUIT DETAILS AT EXISTING BRIDGES

SUM-8-0.63

829
1088

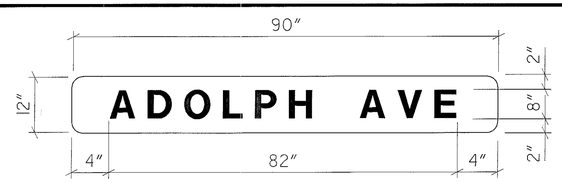

MOUNTING	OVERHEAD
BACKGROUND	TYPE: REFLECTIVE
	COLOR: GREEN
LEGEND/BORDER	TYPE: REFLECTIVE
	COLOR: WHITE

DIMENSIONS ARE IN INCHES. TENTHS

LETTER LOCATIONS ARE PANEL EDGE TO LOWER LEFT CORNER

LETER POSITIONS (X)																LENGTH	SERIES/SIZE
A	D	O	L	P	H		A	V	E								
4.0	13.6	21.7	30.3	37.9	46.3	52.7	62.7	71.2	80.1							82″	E8

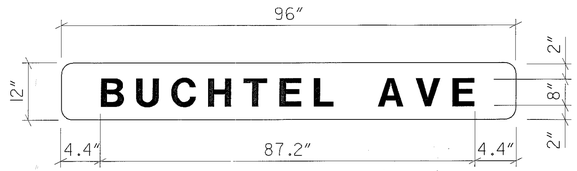

MOUNTING	OVERHEAD
BACKGROUND	TYPE: REFLECTIVE
	COLOR: GREEN
LEGEND/BORDER	TYPE: REFLECTIVE
	COLOR: WHITE

DIMENSIONS ARE IN INCHES. TENTHS

LETTER LOCATIONS ARE PANEL EDGE TO LOWER LEFT CORNER

LETER POSITIONS (X)																LENGTH	SERIES/SIZE
B	U	C	H	T	E	L		A	V	E							
4.4	12.8	21.3	29.3	37.3	44.9	52.4	58.3	68.3	76.8	85.7						87.2″	E8

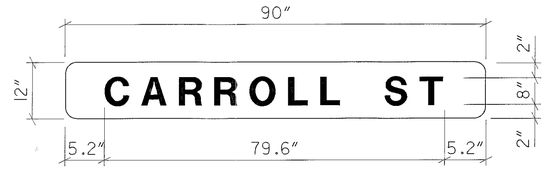

MOUNTING	OVERHEAD
BACKGROUND	TYPE: REFLECTIVE
	COLOR: GREEN
LEGEND/BORDER	TYPE: REFLECTIVE
	COLOR: WHITE

DIMENSIONS ARE IN INCHES. TENTHS

LETTER LOCATIONS ARE PANEL EDGE TO LOWER LEFT CORNER

LETER POSITIONS (X)																LENGTH	SERIES/SIZE
C	A	R	R	O	L	L		S	T								
5.2	12.7	22.3	30.8	38.8	47.5	55.0	60.9	70.9	78.9							79.6″	E8

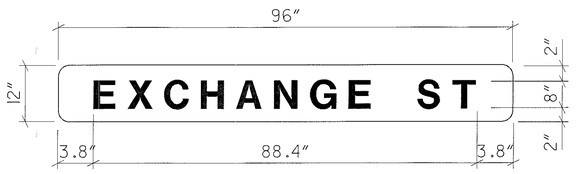

MOUNTING	OVERHEAD
BACKGROUND	TYPE: REFLECTIVE
	COLOR: GREEN
LEGEND/BORDER	TYPE: REFLECTIVE
	COLOR: WHITE

DIMENSIONS ARE IN INCHES. TENTHS

LETTER LOCATIONS ARE PANEL EDGE TO LOWER LEFT CORNER

LETER POSITIONS (X)																LENGTH	SERIES/SIZE
E	X	C	H	A	N	G	E		S	T							
3.8	11.3	19.9	27.9	35.9	45.6	54.0	62.4	68.3	78.3	86.3						88.4″	E8

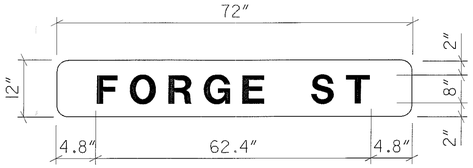

MOUNTING	OVERHEAD
BACKGROUND	TYPE: REFLECTIVE
	COLOR: GREEN
LEGEND/BORDER	TYPE: REFLECTIVE
	COLOR: WHITE

DIMENSIONS ARE IN INCHES, TENTHS

LETTER LOCATIONS ARE PANEL EDGE TO LOWER LEFT CORNER

LETER POSITIONS (X)																LENGTH	SERIES/SIZE
F	O	R	G	E		S	T										
4.8	12.3	21.0	29.0	37.4	43.3	53.3	61.3									62.4″	E8

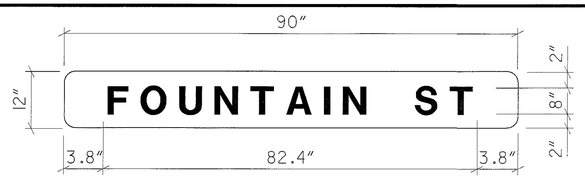

MOUNTING	OVERHEAD
BACKGROUND	TYPE: REFLECTIVE
	COLOR: GREEN
LEGEND/BORDER	TYPE: REFLECTIVE
	COLOR: WHITE

DIMENSIONS ARE IN INCHES. TENTHS

LETTER LOCATIONS ARE PANEL EDGE TO LOWER LEFT CORNER

LETER POSITIONS (X)																LENGTH	SERIES/SIZE
F	O	U	N	T	A	I	N		S	T							
3.8	11.3	20.0	28.4	36.4	42.9	52.5	55.9	63.3	73.3	80.4						82.4″	E8

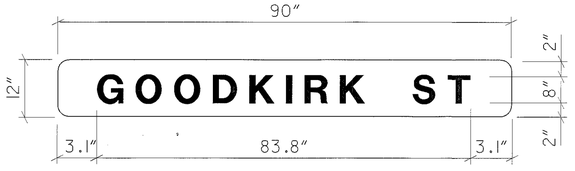

MOUNTING	OVERHEAD
BACKGROUND	TYPE: REFLECTIVE
	COLOR: GREEN
LEGEND/BORDER	TYPE: REFLECTIVE
	COLOR: WHITE

DIMENSIONS ARE IN INCHES. TENTHS

LETTER LOCATIONS ARE PANEL EDGE TO LOWER LEFT CORNER

LETER POSITIONS (X)																LENGTH	SERIES/SIZE
G	O	O	D	K	I	R	K		S	T							
3.1	11.1	19.4	28.1	36.5	44.7	48.1	56.5	63.0	73.0	81.0						83.8″	E8

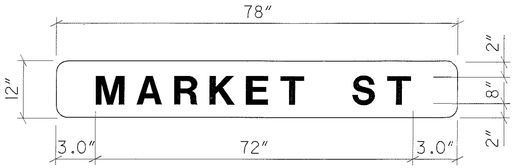

MOUNTING	OVERHEAD
BACKGROUND	TYPE: REFLECTIVE
	COLOR: GREEN
LEGEND/BORDER	TYPE: REFLECTIVE
	COLOR: WHITE

DIMENSIONS ARE IN INCHES. TENTHS

LETTER LOCATIONS ARE PANEL EDGE TO LOWER LEFT CORNER

LETER POSITIONS (X)																LENGTH	SERIES/SIZE
M	A	R	K	E	T		S	T									
3.0	12.0	21.7	30.1	38.3	45.2	51.1	61.1	69.1								72″	E8

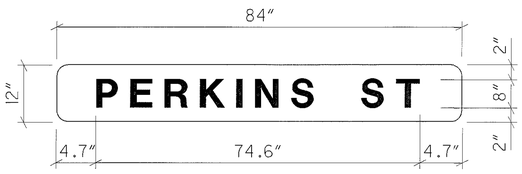

MOUNTING	OVERHEAD
BACKGROUND	TYPE: REFLECTIVE
	COLOR: GREEN
LEGEND/BORDER	TYPE: REFLECTIVE
	COLOR: WHITE

DIMENSIONS ARE IN INCHES. TENTHS

LETTER LOCATIONS ARE PANEL EDGE TO LOWER LEFT CORNER

LETER POSITIONS (X)																LENGTH	SERIES/SIZE
P	E	R	K	I	N	S		S	T								
4.7	13.1	20.6	29.0	37.2	40.6	49.1	55.4	65.4	73.5							74.6″	E8

CALCULATED VG

CHECKED CRP

STREET NAME SIGN DETAILS

SUM-8-0.63

830
1088

LEGEND

- LUMINAIRE, TYPE POLE-STAR, SUMMETRICAL, TYPE V I-400W HPS, 480V (53' MOUNTING HEIGHT)
- LUMINAIRE, TYPE II, I-200W HPS, 480V 35' MOUNTING HEIGHT, 8' ARM (FOR RAMP)
- LUMINAIRE, TYPE II, I-200W HPS, 480V 35' MOUNTING HEIGHT, 8' ARM FOR SERVICE ROADS
- LUMINAIRE, TYPE II, I-200W HPS, 480V 35' MOUNTING HEIGHT 6' ARM FOR SERVICE ROADS ON STRUCTURE
- UNDERPASS LUMINAIRE WALL MOUNT 70W, OR AS INDICATED, HPS, 480V
- ▲ PROPOSED POWER SERVICE, 480V, 2W, 60 AMP.
- ---- PROPOSED DISTRIBUTION CABLE, (#4 AWG) (INSIDE 4" CONCRETE BARRIER RACEWAY) OR 1½" DUCT CABLE (#4 AWG) ALONG SERVICE ROADS AND RAMPS
- ==== PROPOSED 3" CONDUIT, 713.04
- ■ PROPOSED PULL BOX/JUNCTION BOX
- SL — TRAFFIC SIGNAL POLE WITH LUMINAIRE TYPE II, I-200W HPS, 480V, 35' MOUNTING HEIGHT, 12' ARM
- S — INDICATES SIGN
- L — INDICATES LIGHT FIXTURE
- PROPOSED SIGN LIGHTING
- PROPOSED SIGN LIGHTING
- (1) POLE NUMBER

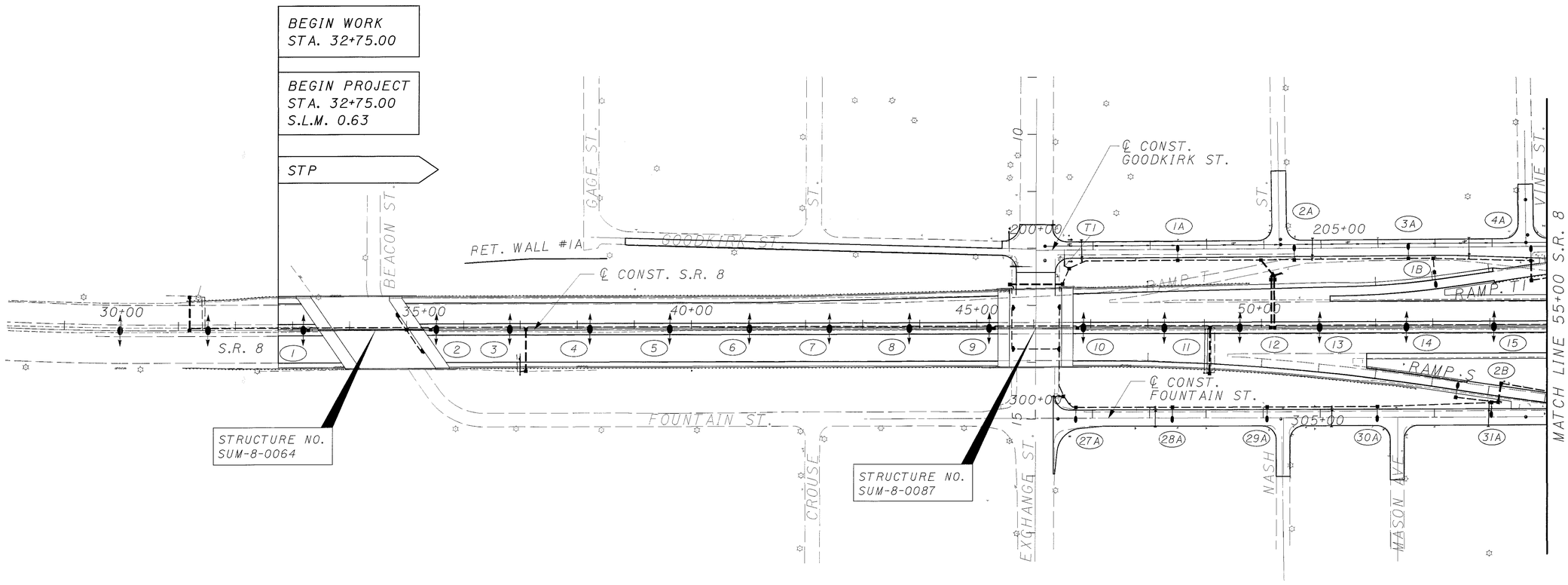

DESIGN DESIGNATIONS

S.R. 8
(BEGIN PROJECT TO RAMPS TI & S)

CURRENT ADT (2004)	115160
DESIGN YEAR ADT (2024)	123380
DESIGN HOURLY VOLUME	11104
DIRECTIONAL DISTRIBUTION	62%
TRUCKS (24 HOUR)	6.5%
DESIGN SPEED	60 MPH
LEGAL SPEED	50 MPH

DESIGN FUNCTIONAL CLASSIFICATION - URBAN EXPRESSWAY

GOODKIRK STREET
(SOUTH OF RAMPS TI & S)

CURRENT ADT (2004)	5020
DESIGN YEAR ADT (2024)	5190
DESIGN HOURLY VOLUME	467
TRUCKS (24 HOUR)	3%
DESIGN SPEED	35 MPH
LEGAL SPEED	35 MPH

DESIGN FUNCTIONAL CLASSIFICATION - URBAN COLLECTOR

FOUNTAIN STREET
(SOUTH OF RAMPS TI & S)

CURRENT ADT (2004)	3920
DESIGN YEAR ADT (2024)	4060
DESIGN HOURLY VOLUME	365
TRUCKS (24 HOUR)	3%
DESIGN SPEED	35 MPH
LEGAL SPEED	35 MPH

DESIGN FUNCTIONAL CLASSIFICATION - URBAN COLLECTOR

N

0 50 100 200 HORIZONTAL SCALE IN FEET

LIGHTING SCHEMATIC PLAN

SUM-8-0.63

831
1088

i:\Projects\B992210018\civil\dsc1.dgn

LEGEND

- LUMINAIRE, TYPE POLE-STAR, SUMMETRICAL, TYPE V I-400W HPS, 480V (53' MOUNTING HEIGHT)
- LUMINAIRE, TYPE II, I-200W HPS, 480V 35' MOUNTING HEIGHT, 8' ARM (FOR RAMP)
- LUMINAIRE, TYPE II, I-200W HPS, 480V 35' MOUNTING HEIGHT, 8' ARM FOR SERVICE ROADS
- LUMINAIRE, TYPE II, I-200W HPS, 480V 35' MOUNTING HEIGHT 6' ARM FOR SERVICE ROADS ON STRUCTURE
- UNDERPASS LUMINAIRE WALL MOUNT 70W, OR AS INDICATED, HPS, 480V
- ▲ PROPOSED POWER SERVICE, 480V, 2W, 60 AMP.
- ---- PROPOSED DISTRIBUTION CABLE, (#4 AWG) (INSIDE 4" CONCRETE BARRIER RACEWAY) OR 1½" DUCT CABLE (#4 AWG) ALONG SERVICE ROADS AND RAMPS
- ==== PROPOSED 3" CONDUIT, 713.04
- ■ PROPOSED PULL BOX/JUNCTION BOX
- SL TRAFFIC SIGNAL POLE WITH LUMINAIRE TYPE II, I-200W HPS, 480V, 35' MOUNTING HEIGHT, 12' ARM
- S — INDICATES SIGN
- L — INDICATES LIGHT FIXTURE
- PROPOSED SIGN LIGHTING
- PROPOSED SIGN LIGHTING
- (1) POLE NUMBER

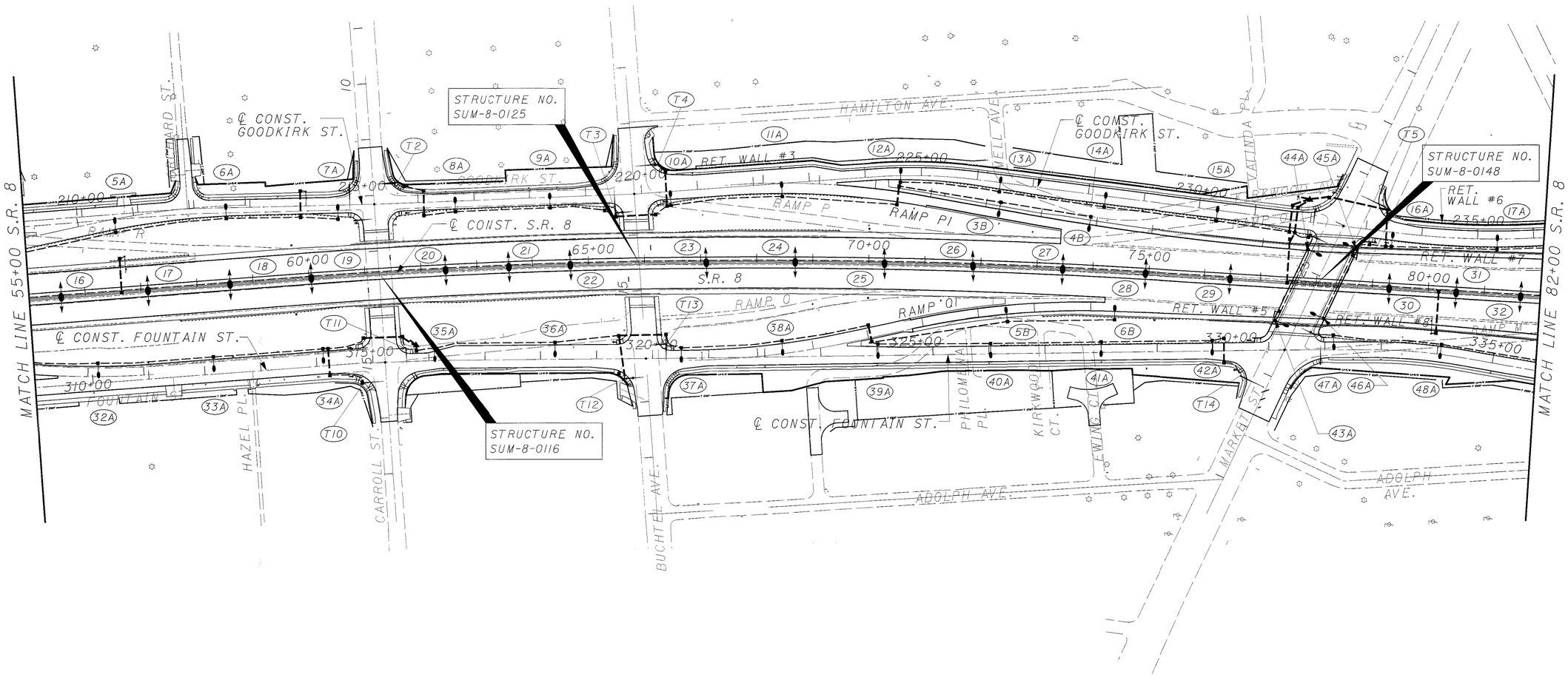

DESIGN DESIGNATIONS

S.R. 8
(RAMPS T1 & S TO PERKINS ST.)

CURRENT ADT (2004)	106700
DESIGN YEAR ADT (2024)	114630
DESIGN HOURLY VOLUME	10317

GOODKIRK STREET
(RAMPS T1 & S TO MARKET ST.)

CURRENT ADT (2004)	17140
DESIGN YEAR ADT (2024)	17720
DESIGN HOURLY VOLUME	1595

FOUNTAIN STREET
(RAMPS T1 & S TO MARKET ST.)

CURRENT ADT (2004)	16450
DESIGN YEAR ADT (2024)	17020
DESIGN HOURLY VOLUME	1532

N

HORIZONTAL SCALE IN FEET
0 50 100 200

LIGHTING SCHEMATIC PLAN

SUM-8-0.63

832
1088

i:\projects\992100\civildsc2.dgn

LEGEND

- LUMINAIRE, TYPE POLE-STAR, SUMMETRICAL, TYPE V I-400W HPS, 480V (53' MOUNTING HEIGHT)
- LUMINAIRE, TYPE II, I-200W HPS, 480V 35' MOUNTING HEIGHT, 8' ARM (FOR RAMP)
- LUMINAIRE, TYPE II, I-200W HPS, 480V 35' MOUNTING HEIGHT, 8' ARM FOR SERVICE ROADS
- LUMINAIRE, TYPE II, I-200W HPS, 480V 35' MOUNTING HEIGHT 6' ARM FOR SERVICE ROADS ON STRUCTURE
- UNDERPASS LUMINAIRE WALL MOUNT 70W, OR AS INDICATED, HPS, 480V
- PROPOSED POWER SERVICE, 480V, 2W, 60 AMP.
- PROPOSED DISTRIBUTION CABLE, (#4 AWG) (INSIDE 4" CONCRETE BARRIER RACEWAY) OR 1½" DUCT CABLE (#4 AWG) ALONG SERVICE ROADS AND RAMPS
- PROPOSED 3" CONDUIT, 713.04
- PROPOSED PULL BOX/JUNCTION BOX
- (1) POLE NUMBER
- SL TRAFFIC SIGNAL POLE WITH LUMINAIRE TYPE II, I-200W HPS, 480V, 35' MOUNTING HEIGHT, 12' ARM
- S — INDICATES SIGN
- L — INDICATES LIGHT FIXTURE
- PROPOSED SIGN LIGHTING
- PROPOSED SIGN LIGHTING

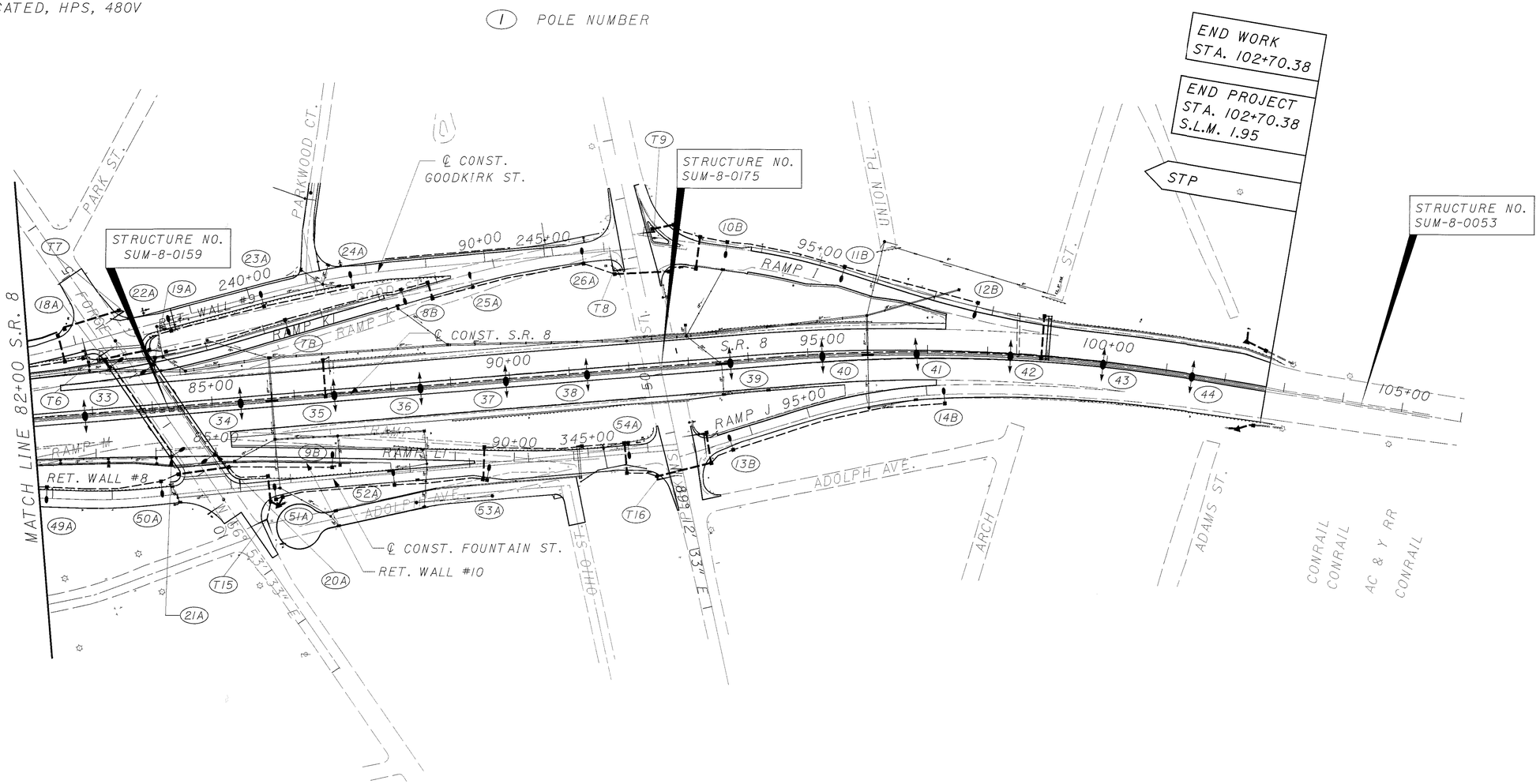

DESIGN DESIGNATIONS

S.R. 8 (NORTH OF RAMPS I & J)		GOODKIRK STREET (MARKET ST. TO PERKINS ST.)		FOUNTAIN STREET (MARKET ST. TO PERKINS ST.)	
CURRENT ADT (2004)	118930	CURRENT ADT (2004)	6040	CURRENT ADT (2004)	9770
DESIGN YEAR ADT (2024)	127290	DESIGN YEAR ADT (2024)	6250	DESIGN YEAR ADT (2024)	10130
DESIGN HOURLY VOLUME	11456	DESIGN HOURLY VOLUME	563	DESIGN HOURLY VOLUME	912

HORIZONTAL SCALE IN FEET 0 50 100 200

LIGHTING SCHEMATIC PLAN

SUM-8-0.63

833
1088

i:\projects\992100\civil\dsc3.dgn

GENERAL NOTES

LIGHTING

POWER SERVICE

THE POWER SUPPLYING AGENCY FOR THIS PROJECT IS:

OHIO EDISON
1910 WEST MARKET STREET
BUILDING 1
AKRON, OHIO 44313

SUPPLIED POWER SHALL BE 480 VOLT, 1 , 2 WIRE GROUND NEUTRAL.

ELECTRICAL ENERGY POWER SERVICES SHALL CONTINUE TO BE CHARGED TO THE MAINTAINING AGENCY. THE CONTRACTOR SHALL PAY ELECTRICAL ENERGY CHARGES FOR NEW POWER SERVICES ESTABLISHED BY THIS PROJECT. UPON COMPLETION OF THIS PROJECT, POWER SERVICE ELECTRICAL ENERGY ACCOUNTS SHALL BE TRANSFERRED TO THE MAINTAINING AGENCIES NOTED IN THE PLANS. THIS SHALL INCLUDE NEW POWER SERVICE ESTABLISHED BY THIS PROJECT AS WELL AS REASSIGNMENT OF EXISTING SERVICE DUE TO WORK PERFORMED BY THIS PROJECT.

ITEM 202 - REMOVAL, MISCELLANEOUS: LIGHT POLE FOUNDATION REMOVAL

THIS ITEM OF WORK SHALL CONSIST OF REMOVING AN EXISTING LIGHT POLE FOUNDATION TO A MINIMUM OF ONE FOOT BELOW UNFINISHED GRADE.

ITEM 202 - PULL BOX REMOVED

THIS ITEM OF WORK SHALL CONSIST OF REMOVING AN EXISTING PULL BOX WHICH SHALL THEN BE PROPERLY DISPOSED OF OFF THE PROJECT SITE. THE RESULTANT OPENING SHALL THEN BE BACKFILLED TO GRADE WITH SUITABLE COMPACTED SOIL AND RESTORED TO MATCH THE SURROUNDING AREA.

ITEM 202 - POWER SERVICE REMOVED

THIS ITEM OF WORK SHALL INCLUDE THE REMOVAL OF ALL SWITCHES, BOXES, CONDUIT, CABLE AND ANY INCIDENTALS ATTACHED TO THE EXISTING POWER SERVICE.

ITEM 603 - UNDERDRAINS FOR PULL BOXES

REFERENCE IS MADE TO STANDARD DRAWING HL-30.11M FOR DETAILS OF DRAINING PULL BOXES. UNDERDRAINS FOR PULL BOXES SHALL BE USED AS DIRECTED BY THE ENGINEER AND SHALL BE PROVIDED WHEREVER POSSIBLE. THE FOLLOWING ESTIMATED QUANTITY HAS BEEN INCLUDED IN THE GENERAL SUMMARY TO BE USED AS OUTLINED ABOVE TO DRAIN BOTH EXISTING AND PROPOSED PULL BOXES.

ITEM 603 - 4" CONDUIT, TYPE E 810 L.F.

ITEM 625 - PORTABLE POWER UNIT

THE CONTRACTOR SHALL SUPPLY A PORTABLE POWER UNIT AS SPECIFIED IN THE ODOT CONSTRUCTION AND MATERIAL SPECIFICATIONS. A QUANTITY OF 1 EACH OF ITEM 625 - PORTABLE POWER UNIT, IS INCLUDED IN THE GENERAL SUMMARY FOR THIS PURPOSE.

ITEM 625.07 - 713.11 LUMINAIRES

STYLE II A LUMINAIRES FOR RAMPS AND SERVICE ROADS SHALL HAVE SINGLE RATED 480 VOLT, 200 WATT, INTEGRAL REGULATION BALLAST FOR USE WITH HIGH PRESSURE SODIUM LAMPS AND SHALL BE AS FOLLOWS:

GE M-400, 1014.IES 200-400W HPS TYPE II
COOPER LIGHTING "OVD" - OVD2S2F.IES 766503 200-250W HPS TYPE II
AMERICAN ELECTRIC SERIES 125/126 AE38491.PHT 200-400W HPS TYPE II

STYLE III LUMINAIRES FOR MEDIAN LIGHT POLES SHALL HAVE SINGLE RATED 480 VOLT, 400 WATT, INTEGRAL REGULATOR BALLASTS AND SHALL BE AS FOLLOWS:

GE "HMA" 6312.IES 400 HPS TYPE V (SYMMETRICAL)
HOLOPHANE "HMST" 36383IES 400 HPS TYPE V (SYMMETRICAL)
COOPER LIGHTING HMX4SDW.IES 766061I 400W HPS TYPE V (SYMMETRICAL)

ITEM 625.07 - 713.13 UNDERPASS LUMINAIRES

UNDERPASS LUMINAIRES SHALL BE:

GE 70W OR 100W, 480V VERSAFLOOD II, 8578.IES
WALLIGHTER (70-400W HPS)

COOPER LIGHTING 70W OR 100W, 480V WPK 155 XX, WALL LIGHT - LOW BEAM
(70-150 W HPS)

AMERICAN ELECTRIC 70W OR 100W, 480V, AE2081I "SIDELITE SERIES" 582
(50-150 W HPS)

UNDERPASS LUMINAIRE SHALL BE FURNISHED WITH AN INTEGRAL FUSE HOLDER AND 10-AMPERE FUSE. THE INTEGRAL HIGH PRESSURE SODIUM BALLAST SHALL BE OF A REGULATOR TYPE RATED FOR 480V.

ELECTRICAL SERVICE FOR ILLUMINATED SIGNS

THE PAY ITEMS IN THE LIGHTING GENERAL SUMMARY INCLUDE THE PULL BOX OR JUNCTION BOX ADJACENT TO EACH LIGHTED SIGN AND THE ELECTRICAL SERVICE CONNECTIONS LEADING INTO THE BOX. INCLUDING SPLICES OR CONNECTOR KITS IN THE PULL BOX OR JUNCTION BOX. QUANTITIES FOR ELECTRICAL SERVICE FROM THE CONNECTION IN THE PULL BOX OR JUNCTION BOX TO THE SIGN ARE INCLUDED IN THE TRAFFIC CONTROL GENERAL SUMMARY.

QUANTITIES FOR ELECTRICAL SERVICE FROM THE CONNECTOR KITS TO LUIMINAIRES MOUNTED ON COMBINATION-TYPE SIGNAL SUPPORTS, INCLUDING DISTRIBUTION CABLE, POLE AND BRACKET CABLE, LUMINAIRE SUPPORT ARM, LUMINAIRE, ETC. EXCLUSIVELY REQUIRED TO SERVICE THE ROADWAY LIGHTING UNIT, ARE INCLUDED IN THE LIGHTING GENERAL SUMMARY.

ITEM 625 - SERVICE TO UNDERPASS LIGHTING, BRIDGE NO. SUM-8-0064 (BEACON ST.), AS PER PLAN

THIS ITEM SHALL CONSIST OF PROVIDING COMPLETE ELECTRICAL SERVICE, EXCEPT FOR LUMINAIRES AND STRUCTURE GROUNDING, FOR AN UNDERPASS LIGHTING SYSTEM ON BRIDGE OVER BEACON ST. THE INSTALLATION WORK SHALL INCLUDE CONDUITS, CONDUIT GROUNDING, MOUNTINGS, FITTINGS, JUNCTION BOXES, CABLES, AND ALL INCIDENTALS NECESSARY TO COMPLETE, READY FOR USE, THE SERVICE AS DETAILED ON SHEET 871. THE LUMP SUM PRICE BID FOR "ITEM 625-SERVICE TO UNDERPASS LIGHTING" SHALL INCLUDE PAYMENT FOR ALL EQUIPMENT, LABOR, AND MATERIALS NECESSARY TO COMPLETE THE WORK AS SPECIFIED. COMPONENT PARTS NOT SPECIFICALLY MENTIONED BUT REQUIRED FOR SATISFACTORY OPERATION OF THIS ITEM SHALL BE FURNISHED AND CONSIDERED PAID FOR AS PART OF THE ITEM.

ITEM 625 - SERVICE TO UNDERPASS LIGHTING, BRIDGE NO. SUM-8-0064 (EXCHANGE ST.), AS PER PLAN

THIS ITEM SHALL CONSIST OF PROVIDING COMPLETE ELECTRICAL SERVICE, EXCEPT FOR LUMINAIRES AND STRUCTURE GROUNDING, FOR AN UNDERPASS LIGHTING SYSTEM ON BRIDGE OVER EXCHANGE ST. THE INSTALLATION WORK SHALL INCLUDE CONDUITS, CONDUIT GROUNDING, MOUNTINGS, FITTINGS, JUNCTION BOXES, CABLES, AND ALL INCIDENTALS NECESSARY TO COMPLETE, READY FOR USE, THE SERVICE AS DETAILED ON SHEET 872. THE LUMP SUM PRICE BID FOR "ITEM 625-SERVICE TO UNDERPASS LIGHTING" SHALL INCLUDE PAYMENT FOR ALL EQUIPMENT, LABOR, AND MATERIALS NECESSARY TO COMPLETE THE WORK AS SPECIFIED. COMPONENT PARTS NOT SPECIFICALLY MENTIONED BUT REQUIRED FOR SATISFACTORY OPERATION OF THIS ITEM SHALL BE FURNISHED AND CONSIDERED PAID FOR AS PART OF THE ITEM.

CALCULATED TRB CHECKED JBJ

LIGHTING GENERAL NOTES

SUM-8-0.63

834
1088

CONVERSION OF STANDARD CONSTRUCTION DRAWINGS

TTHE METRIC STAND DRAWINGS REFERENCED IN THIS PLAN SHALL BE CONVERTED TO ENGLISH UNITS USING THE SI (METRIC) TO ENGLISH CONVERSION FACTORS PROVIDED IN SECTION 109.011 OF THE 1997 CONSTRUCTION AND MATERIALS SPECIFICATIONS. THE APPENDIX OF ASTM E 380 SHALL BE UTILIZED FOR ANY ADDITIONAL CONVERSION FACTORS REQUIRED. CONVERSIONS SHALL BE APPROPRIATELY PRECISE AND SHALL REFLECT STANDARD INDUSTRY ENGLISH VALUES WHERE SUITABLE.

ITEM SPECIAL - PLASTIC CAUTION TAPE

THE LOCATION OF UNDERGROUND CONDUIT AND BURIED ELECTRICAL CABLES SHALL BE MARKED BY THE USE OF A CONTINUOUS IDENTIFYING TAPE BURIED IN THE TRENCH ABOVE THE LINE. THE IDENTIFYING TAPE SHALL BE AN INERT MATERIAL, APPROXIMATELY 6 INCHES WIDE COMPOSED OF POLYETHYLENE PLASTIC, HIGHLY RESISTANT TO ALKALIS, ACIDS, OR OTHER CHEMICAL COMPONENTS LIKELY TO BE ENCOUNTERED IN SOILS. THE TAPE SHALL BE BRIGHT RED WITH IDENTIFYING PRINTING "ELECTRIC" IN BLACK LETTERS, ONE SIDE ONLY. TAPE SHALL BE SUPPLIED IN CONTINUOUS ROLLS WITH THE IDENTIFYING LETTERING REPEATED CONTINUOUSLY THE FULL LENGTH OF THE TAPE. IDENTIFYING TAPE SHALL BE BURIED ON THE ELECTRIC LINE TRENCH WITH ONE STRIP APPROXIMATELY 6 TO 10 INCHES BELOW THE FINAL FINISHED GRADE. THE TAPE SHALL BE PLACED IN THE TRENCH WITH THE PRINTED SIDE UP AND SHALL BE ESSENTIALLY PARALLEL WITH THE FINISHED SURFACE. THE CONTRACTOR SHALL TAKE NECESSARY PRECAUTIONS TO INSURE THAT THE TAPE IS NOT PULLED, DISTORTED, OR OTHERWISE MISPLACED IN COMPLETING THE TRENCH BACKFILL. THE TAPE SHALL BE PAID FOR PER LINEAR FOOT OF ITEM SPECIAL - "PLASTIC CAUTION TAPE" COMPLETE AND IN PLACE.

ITEM 625 - TEMPORARY LIGHTING

THIS ITEM SHALL CONSIST OF MAINTAINING EXISTING LIGHTING OR PROVIDING LIGHTING FOR TEMPORARY ROADWAYS AS FURTHER DESCRIBED BELOW:

EXISTING LIGHTING ON ALL EXISTING ROADWAYS REMAINING OPEN TO TRAFFIC THROUGH THE PROJECT AREA SHALL BE MAINTAINED. SHOULD THE CONTRACTOR REQUIRE THE REMOVAL OF LIGHTING FROM AN EXISTING ROADWAY, THE CONTRACTOR SHALL THEN BE RESPONSIBLE FOR ADEQUATE TEMPORARY LIGHTING OF THAT PORTION OF THE EXISTING ROADWAY AFFECTED BY THE REMOVAL OF THE EXISTING LIGHTING.

ON PERMANENT NEW ROADWAYS OPENED TO TRAFFIC, EITHER THE PERMANENT NEW LIGHTING SHALL BE INSTALLED BEFORE OPENING, OR TEMPORARY LIGHTING PROVIDING AN AVERAGE INITIAL INTENSITY OF 1.0 TO 1.2 FOOTCANDLES FOR S.R. 8 HIGHWAY AND RAMPS, 0.8 FOOTCANDLES FOR SERVICE ROADS SHALL BE INSTALLED BEFORE OPENING.

WHERE TEMPORARY LIGHTING IS TO BE INSTALLED, AND DETAILED LAYOUT IS NOT SHOWN IN THE PLANS, THE CONTRACTOR SHALL SUBMIT FOUR (4) SETS OF THE PROPOSED DETAILED PLANS TO THE ENGINEER FOR REVIEW AND APPROVAL. THESE PLANS SHALL SHOW LOCATION OF POLES, LENGTH OF BRACKET ARMS, STYLE OF LUMINAIRES, MOUNTING HEIGHT, AND OTHER PERTINENT INFORMATION.

WOOD POLES WITH OVERHEAD WIRING MAY BE USED. ALL MATEPIALS NECESSARY TO COMPLETE THE TEMPORARY LIGHTING SHALL BE FURNISHED BY THE CONTRACTOR AND THE TEMPORARY LIGHTING INSTALLATIONS SHALL BE REMOVED AND DISPOSED OF BY THE CONTRACTOR WHEN NO LONGER NEEDED.

RECONDITIONED OR APPROVED USED MATERIALS MAY BE FURNISHED FOR TEMPORARY LIGHTING. TEMPORARY OVERHEAD CONSTRUCTION SHALL NOT BE LESS THAN GRADE A FOR STRENGTH REQUIREMENT AS DEFINED BY THE NATIONAL ELECTRIC SAFETY CODE. MOUNTING HEIGHT FOR TEMPORARY LUMINAIRES SHALL NOT BE LESS THAN 27 FEET AND MINIMUM OVERHEAD CONDUCTOR CLEARANCE SHALL BE 20 FEET.

THE CITY OF AKRON WILL PAY FOR ELECTRICAL ENERGY AND MAINTENENCE FOR UNDISTURBED LIGHTING ON EXISTING ROADWAYS AND FOR PERMANENT LIGHTING PLACED IN OPERATION. THE CONTRACTOR WILL PAY FOR ELECTRICAL ENERGY, INSTALLATION, REMOVAL, AND MAINTENANCE OF ANY TEMPORARY LIGHTING REQUIRED.

THE LUMP SUM BID PRICE FOR "ITEM 625 - TEMPORARY LIGHTING" SHALL INCLUDE PAYMENT FOR ALL LABOR, EQUIPMENT, MATERIALS, AND INCIDENTALS NECESSARY TO PROVIDE THE TEMPORARY LIGHTING AS SPECIFIED.

CALCULATED TRB
CHECKED JBJ

LIGHTING GENERAL NOTES

SUM-8-0.63

835
1088

SHEET NUMBER																				PARTICIPATION		ITEM	ITEM EXT.	GRAND TOTAL	UNIT	DESCRIPTION	SEE SHEET NO.
834/835	837	838	839	840	841	842	843	844	845	846	847	848	849	850	851	852	853	854	855	100% CITY	PROJECT						
	6																				6	202	75300	6	EACH	PULL BOX REMOVED	
	127																				127	202	75402	127	EACH	LIGHT POLE REMOVED FOR STORAGE	
	127																				127	202	75500	127	EACH	LIGHT POLE FOUNDATION REMOVED	
	10																				10	202	75504	10	EACH	LUMINAIRE REMOVED FOR STORAGE	
	6																				6	202	75510	6	EACH	POWER SERVICE REMOVED	
	LUMP																				LUMP	202	75700		LUMP	CONTROL CENTER REMOVED	
	6																				6	202	75800	6	EACH	DISCONNECT EXISTING CIRCUIT	
810																					810	603	00400	810	LIN. FT.	4" CONDUIT, TYPE "E"	
		14		14		14		15		13		16		16		17		9			128	625	00500	128	EACH	CONNECTOR KIT, TYPE II	
		14		14		14		15		13		16		16		17		9			128	625	00600	128	EACH	CONNECTOR KIT, TYPE III	
		12								2											14	625	01000	14	EACH	CONNECTOR KIT, TYPE VII-A	
		6		2								4		2				2			16	625	01004	16	EACH	CONNECTOR KIT, TYPE VII-B	
		12		14		30		20		16		16		22		22		26			178	625	01500	178	EACH	CABLE SPLICING KIT	
												4		4							8	625	04000	8	EACH	LIGHT POLE, DESIGN AT6B34.2	
				8		11		5		8		7		7		9		5			60	625	04100	60	EACH	LIGHT POLE, DESIGN AT8B34.2	
		12		5				6		5		3		3		5		3			42	625	10500	42	EACH	LIGHT POLE, MISC.: LOW MAST LIGHT POLE, DESIGN AON50	
		2																			2	625	10500	2	EACH	LIGHT POLE, MISC.: LOW MAST LIGHT POLE, DESIGN AON50, AS PER PLAN	859
												16		16							32	625	10614	32	EACH	LIGHT POLE ANCHOR BOLTS ON STRUCTURE	
				8		11		5		8		7		7		9		5			60	625	14000	60	EACH	LIGHT POLE FOUNDATION 24"x6' DEEP	
		14		5				6		5		3		3		5		3			44	625	14306	44	EACH	MEDIAN LIGHT POLE FOUNDATION, 10' DEEP	
				1		3		4				2		2		3		1			16	625	18100	16	EACH	BRACKET ARM, 12'	
1																					1	625	20000	1	EACH	PORTABLE POWER UNIT	
		5864		2140		946		2662		2274		2190		3056		2840		1938			23910	625	23200	23910	LIN. FT.	NO. 4 AWG 5000 VOLT DISTRIBUTION CABLE	
		1680		1373		1214		1517		1280		1449		1449		1644		878			12484	625	23400	12484	LIN. FT.	NO. 10 AWG POLE AND BRACKET CABLE	
				1791		2022		1273		1735		1216		1343		2117		851			12348	625	24100	12348	LIN. FT.	1½" DUCT CABLE WITH TWO NO. 4 AWG 5000 VOLT CABLES	
		386				15				47		334		419		12		45			1258	625	25400	1258	LIN. FT.	CONDUIT, 2", 713.04	
		383		200		323		325		252		324		356		343		379			2885	625	25500	2885	LIN. FT.	CONDUIT, 3", 713.04	
				9		14		9		8		13		13		12		6			84	625	26250	84	EACH	LUMINAIRE, CONVENTIONAL, 200W HPS	
			16		5				6		5		3		3		5		3		46	625	26270	46	EACH	LUMINAIRE, LOW MAST, 400W HPS	
			4																		4	625	27500	4	EACH	LUMINAIRE, UNDERPASS, 70W HPS	
			2																		2	625	27500	2	EACH	LUMINAIRE, UNDERPASS, 100W HPS	
			40		1561		1887		1143		1798		1161		1247		1984		916		11737	625	29002	11737	LIN. FT.	TRENCH, 24" DEEP	
			383		170		283		325		126		289		326		308		269		2479	625	29400	2479	LIN. FT.	TRENCH IN PAVED AREA	
			4																		4	625	29910	4	EACH	TRANSITION JUNCTION BOX	
			1										2								3	625	29920	3	EACH	STRUCTURE JUNCTION BOX	
			5		7		15		10		8		8		10		11		11		85	625	30700	85	EACH	PULL BOX, 713.08, 18"	
															1						1	625	30706	1	EACH	PULL BOX, 713.08, 24"	
			5		1						1		1		1				1		10	625	31500	10	EACH	MEDIAN PULL BOX	
			17		14		15		15		14		12		12		18		11		128	625	32000	128	EACH	GROUND ROD	
													1		1						2	625	33000	2	EACH	STRUCTURE GROUNDING SYSTEM	
			1				1				1						1		2		6	625	34000	6	EACH	POWER SERVICE	
			1				1				1						1		2		6	625	34450	6	EACH	CONTROL CENTER CABINET, COMPLETE	
			423		1731		2170		1468		1924		1450		1573		2292		1185		14216	SPECIAL	62536000	14216	LIN. FT.	PLASTIC CAUTION TAPE	835
			LUMP																		LUMP	625	37001	LUMP		SERVICE TO UNDERPASS LIGHTING BRIDGE NO. SUM-8-0064 (BEACON ST.), AS PER PLAN	834
			LUMP																		LUMP	625	37001	LUMP		SERVICE TO UNDERPASS LIGHTING BRIDGE NO. SUM-8-0087 (EXCHANGE ST.), AS PER PLAN	834
LUMP																					LUMP	625	38000	LUMP		HIGH VOLTAGE TEST	
LUMP																					LUMP	625	39000	LUMP		TEMPORARY LIGHTING	

CALCULATED JBJ
CHECKED TRB

GENERAL SUMMARY

SUM-8-0.63

836
1088

05:05:23 PM
07/10/2002
\\RN00-0105R-BV\Civil\Lighting\general summary\lighting.dgn

CALCULATED JBJ
CHECKED TRB

LIGHTING SUBSUMMARY

LINE NO.	SHEET No.	SIDE	ROADWAY	STATION TO STATION	202 PULL BOX REMOVED	202 LIGHT POLE REMOVED FOR STORAGE	202 LIGHT POLE FOUNDATION REMOVED	202 LUMINAIRE REMOVED FOR STORAGE	202 POWER SERVICE REMOVED	202	202 CONTROL CENTER REMOVED	202 DISCONNECT EXISTING CIRCUIT
					EACH	EACH	EACH	EACH	EACH		LUMP	EACH
1	856	LT	S.R. 8	33+00 TO 45+60		7	7					
2		RT	S.R. 8	33+00 TO 45+60	1	6	6					1
3		LT	S.R. 8	45+60 TO 55+00		3	3					
4		RT	S.R. 8	45+60 TO 55+00	1	3	3					1
5		LT	RAMP T	46+00 TO 55+00		2	2		1		LUMP	
6		RT	RAMP T	46+00 TO 55+00		1	1					
7		RT	RAMP S	45+60 TO 55+00		2	2					
8		RT	BEACON	33+00 TO 36+00				2				
9		LT	GOODKIRK	49+00 TO 51+00		1	1					
10		LT	EXCHANGE	45+00 TO 47+00				4				
11		RT	EXCHANGE	45+60 TO 55+00		1	1	4				
12		RT	FOUNTAIN	45+60 TO 55+00		4	4					
13												
14	TOTALS SHEET 856				2	30	30	10	1		LUMP	2
15												
16	857	LT	S.R. 8	55+00 TO 82+00	2	13	13		1		LUMP	2
17		RT	S.R. 8	55+00 TO 82+00		18	18					
18		LT	RAMP R	55+00 TO 60+00		3	3					
19		LT	RAMP P	66+00 TO 72+00		5	5					
20		LT	RAMP Q	66+72 TO 78+00		4	4					
21		RT	GOODKIRK	65+00 TO 67+00		1	1					
22		LT	KIRKWOOD	72+00 TO 79+00		2	2					
23		RT	RAMP M	70+00 TO 82+00		3	3					
24		LT	FOUNTAIN	65+00 TO 66+00					1		LUMP	
25		RT	FOUNTAIN	55+00 TO 67+00		3	3					
26		LT	EWING	71+00 TO 75+00		4	4					
27		RT	MARKET	78+00 TO 79+00		1	1					
28		LT	RAMP QI			3	3					
29	TOTALS SHEET 857				2	60	60	——	2		LUMP	2
30												
31	858	LT	S.R. 8	82+00 TO 102+70	2	7	7		1		LUMP	2
32		RT	S.R. 8	82+00 TO 102+70		7	7		1		LUMP	
33		LT	RAMP K	82+00 TO 93+00		3	3					
34		RT	RAMP K	82+00 TO 93+00		3	3					
35		LT	RAMP I	92+00 TO 100+00		5	5					
36		RT	RAMP M	82+00 TO 85+00		3	3					
37		RT	RAMP L	85+00 TO 92+00		2	2					
38		RT	RAMP J	92+00 TO 100+00		5	5					
39		LT	ADOLPH	84+00 TO 91+00					1		LUMP	
40		RT	ADOLPH	84+00 TO 91+00		1	1					
41		RT	FORGE			1	1					
42	TOTALS SHEET 858				2	37	37	——	3		LUMP	2
43												
44												
45												
46												
47												
48												
49												
50												
51												
52												
53												
54												
TOTALS CARRIED TO GENERAL SUMMARY					6	127	127	10	6		LUMP	6

SUM-8-0.63

837
1088

625

LINE NO.	SHEET NO.	POLE NO.	SIDE	ROADWAY	STATION TO STATION	CONNECTOR KIT: TYPE II	CONNECTOR KIT: TYPE III	CONNECTOR KIT: TYPE VII A	CONNECTOR KIT: TYPE VII B	CONNECTOR KIT	CABLE SPLICING KIT			LIGHT POLE, MISC.: LOW MAST LIGHT POLE, DESIGN A0N50	LIGHT POLE, MISC.: LOW MAST LIGHT POLE, DESIGN A0N50, AS PER PLAN			MEDIAN LIGHT POLE FOUNDATION, 10' DEEP	BRACKET ARM, 12'	NO. 10 AWG POLE & BRACKET CABLE	NO. 4 AWG 5000 VOLT DIST. CABLE		CONDUIT 2" 713.04	CONDUIT, 3", 713.04	
						EA.	EA.	EA.	EA.		EA.			EACH	EACH			EACH	EACH	LIN. FT.	LIN. FT.		LIN. FT.	LIN. FT.	
1	859		℄	S.R. 8	31+31 TO 31+31						4										136			58	
2			℄	S.R. 8	31+31 TO 31+52																62				
3			℄	S.R. 8	31+52 TO 33+19																354				
4		1	℄	S.R. 8	33+19	1	1								1			1		120					
5			℄	S.R. 8	33+19 TO 35+00			2													402		173		
6			℄	BEACON	35+00				2																
7			℄	S.R. 8	35+00 TO 35+52			2													144		42		
8		2	℄	S.R. 8	35+52	1	1								1			1		120					
9			℄	S.R. 8	35+52 TO 36+00																96				
10																									
11	TOTALS SHEET 859					2	2	4	2		4				2			2		240	1194		215	58	
12																									
13	860		℄	S.R. 8	36+00 TO 36+82																184				
14		3	℄	S.R. 8	36+82	1	1							1				1		120					
15			℄	S.R. 8	36+82 TO 37+10				2												76				
16			℄&RT	S.R. 8	37+10 TO 37+10						2										170			75	
17			℄	S.R. 8	37+10 TO 38+22																244				
18		4	℄	S.R. 8	38+22	1	1							1				1		120					
19			℄	S.R. 8	38+22 TO 39+62																300				
20		5	℄	S.R. 8	39+62	1	1							1				1		120					
21			℄	S.R. 8	39+62 TO 41+02																300				
22		6	℄	S.R. 8	41+02	1	1							1				1		120					
23			℄	S.R. 8	41+02 TO 42+42																300				
24		7	℄	S.R. 8	42+42	1	1							1				1		120					
25			℄	S.R. 8	42+42 TO 43+82																300				
26		8	℄	S.R. 8	43+82	1	1							1				1		120					
27			℄	S.R. 8	43+82 TO 44+00																36				
28																									
29																									
30	TOTALS SHEET 860					6	6	—	2		2			6	—			6		720	1910		—	75	
31																									
32	861		℄	S.R. 8	44+00 TO 45+22																264				
33		9	℄	S.R. 8	45+22	1	1							1				1		120					
34			℄	S.R. 8	45+22 TO 46+88			4													392		151		
35		10	℄	S.R. 8	46+88	1	1							1				1		120					
36			℄	S.R. 8	46+88 TO 48+30																304				
37		11	℄	S.R. 8	48+30	1	1							1				1		120					
38			℄	S.R. 8	48+30 TO 49+10				2												180				
39			℄&RT	S.R. 8	49+10 TO 49+10						2										180			80	
40			℄	S.R. 8	49+10 TO 49+62																124				
41		12	℄	S.R. 8	49+62	1	1							1				1		120					
42			℄	S.R. 8	49+62 TO 50+17			2													130				
43			℄&LT	S.R. 8	50+17 TO 50+17						2										190			85	
44			LT	S.R. 8	50+17 TO 50+20																40				
45			℄&LT	S.R. 8	50+22 TO 50+23			2			2										190			85	
46			LT	S.R. 8	50+20 TO S. POLE																130		20		
47			LT	S.R. 8	50+23 TO 50+20																40				
48			℄	S.R. 8	50+22 TO 51+02																180				
49		13	℄	S.R. 8	51+02	1	1							1				1		120					
50			℄	S.R. 8	51+02 TO 52+54																324				
51		14	℄	S.R. 8	52+54	1	1							1				1		120					
52			℄	S.R. 8	52+54 TO 53+00																92				
53			LT,RT	EXCHANGE	45+62 TO 46+47																				
54	TOTALS SHEET 861					6	6	8	2		6			6	—			6		720	2760		171	250	
TOTALS CARRIED TO GENERAL SUMMARY						14	14	12	6		12			12	2			14		1680	5864		386	383	

CALCULATED JBJ
CHECKED TRB

LIGHTING SUBSUMMARY

SUM-8-0.63

838
1088

LIGHTING SUBSUMMARY

CALCULATED JBJ
CHECKED TRB

LINE NO.	SHEET No.	POLE NO.	SIDE	ROADWAY	STATION TO STATION	625 LUMINAIRE, LOW MAST 400W HPS (EACH)	LUMINAIRE, UNDERPASS 70W HPS (EACH)	LUMINAIRE, UNDERPASS, 100W HPS (EACH)	TRENCH, 24" DEEP (LIN. FT.)	TRENCH IN PAVED AREA (LIN. FT.)	TRANSITION JUNCTION BOX (EACH)	STRUCTURE JUNCTION BOX (EACH)	PULL BOX, 713.09, 18" (EACH)		MEDIAN PULL BOX (EACH)	GROUND ROD (EACH)		PLASTIC CAUTION TAPE (LIN. FT.)	POWER SERVICE (EACH)	CONTROL CENTER CABINET, COMPLETE (EACH)	SERVICE TO UNDERPASS LIGHTING (BEACON ST.) (LUMP)	SERVICE TO UNDERPASS LIGHTING (EXCHANGE ST.) (LUMP)
1	859		℄	S.R. 8	31+31 TO 31+31					58			1		1			58				
2			℄	S.R. 8	31+31 TO 31+52																	
3			℄	S.R. 8	31+52 TO 33+19																	
4		1	℄	S.R. 8	33+19	2										1						
5			℄	S.R. 8	33+19 TO 35+00						1											
6			℄	BEACON	35+00			2				1				1					LUMP	
7			℄	S.R. 8	35+00 TO 35+52						1											
8		2	℄	S.R. 8	35+52	2										1						
9			℄	S.R. 8	35+52 TO 36+00																	
10																						
11	TOTALS SHEET 859					4	——	2	——	58	2	1	1		1	3		58	——	——	LUMP	
12																						
13	860		℄	S.R. 8	36+00 TO 36+82																	
14		3	℄	S.R. 8	36+82	1										1						
15			℄	S.R. 8	36+82 TO 37+10										1							
16			℄&RT	S.R. 8	37+10 TO 37+10					75			1					75				
17			℄	S.R. 8	37+10 TO 38+22																	
18		4	℄	S.R. 8	38+22	1										1						
19			℄	S.R. 8	38+22 TO 39+62																	
20		5	℄	S.R. 8	39+62	1										1						
21			℄	S.R. 8	39+62 TO 41+02																	
22		6	℄	S.R. 8	41+02	1										1						
23			℄	S.R. 8	41+02 TO 42+42																	
24		7	℄	S.R. 8	42+42	1										1						
25			℄	S.R. 8	42+42 TO 43+82																	
26		8	℄	S.R. 8	43+82	1										1						
27			℄	S.R. 8	43+82 TO 44+00																	
28																						
29																						
30	TOTALS SHEET 860					6	——	——	——	75	——	——	1		1	6		75	——	——	——	——
31																						
32	861		℄	S.R. 8	44+00 TO 45+22																	
33		9	℄	S.R. 8	45+22	1										1						
34			℄	S.R. 8	45+22 TO 46+88						2											
35		10	℄	S.R. 8	46+88	1										1						
36			℄	S.R. 8	46+88 TO 48+30																	
37		11	℄	S.R. 8	48+30	1										1						
38			℄	S.R. 8	48+30 TO 49+10										1							
39			℄&RT	S.R. 8	49+10 TO 49+10					80			1					80				
40			℄	S.R. 8	49+10 TO 49+62																	
41		12	℄	S.R. 8	49+62	1										1						
42			℄	S.R. 8	49+62 TO 50+17										1							
43			℄&LT	S.R. 8	50+17 TO 50+17					85			1					85				
44			LT	S.R. 8	50+17 TO 50+20				10							1		10		1		
45			℄&LT	S.R. 8	50+22 TO 50+23					85			1		1			85				
46			LT	S.R. 8	50+20 TO S. POLE				20									20	1			
47			LT	S.R. 8	50+23 TO 50+20				10									10				
48			℄	S.R. 8	50+22 TO 51+02																	
49		13	℄	S.R. 8	51+02	1										1						
50			℄	S.R. 8	51+02 TO 52+54																	
51		14	℄	S.R. 8	52+54	1										1						
52			℄	S.R. 8	52+54 TO 53+00																	
53			LT,RT	EXCHANGE	45+62 TO 46+47		4									1						LUMP
54	TOTALS SHEET 861					6	4	——	40	250	2	1	3		3	8		290	1	1	——	LUMP
TOTALS CARRIED TO GENERAL SUMMARY						16	4	2	40	383	4	1	5		5	17		423	1	1	LUMP	LUMP

SUM-8-0.63

839
1088

LIGHTING SUBSUMMARY

CALCULATED JBJ
CHECKED TRB

625

LINE NO.	SHEET No.	POLE NO.	SIDE	ROADWAY	STATION TO STATION	CONNECTOR KIT: TYPE II	CONNECTOR KIT: TYPE III	CONNECTOR KIT:	CONNECTOR KIT: TYPE VII B	CONNECTOR KIT:	CABLE SPLICING KIT		LIGHT POLE, DESIGN AT8B34.2	LIGHT POLE, MISC.: LOW MAST LIGHT POLE, DESIGN A0N50			LIGHT POLE FOUNDATION, 24"x6' DEEP	MEDIAN LIGHT POLE FOUNDATION, 10' DEEP	BRACKET ARM, 12'	NO. 10 AWG POLE & BRACKET CABLE	NO. 4 AWG 5000 VOLT DIST. CABLE	1-1/2" DUCT CABLE WITH TWO NO. 4 AWG 5000 VOLT CABLES		CONDUIT, 3", 713.04	LUMINAIRE, CONVENTIONAL 200W HPS
						EA.	EA.		EA.		EA.		EACH	EACH			EACH	EACH	EACH	LIN. FT.	LIN. FT.	LIN. FT.		LIN. FT.	EACH
1																									
2	861		RT	GOODKIRK	200+59 TO 200+50																	20			
3		T1	RT	GOODKIRK	200+50	1	1												1	93					1
4			RT	GOODKIRK	200+59						2														
5			RT	GOODKIRK	200+59 TO 12+62																	40			
6																									
7																									
8																									
9	861		RT	EXCHANGE	12+62						2														
10			LT&RT	EXCHANGE	12+62 TO 12+62						2											120		110	
11			RT	GOODKIRK	200+59 TO 202+49																	205			
12		1A	RT	GOODKIRK	202+49	1	1						1				1			85					1
13			RT	GOODKIRK	202+49 TO 203+95						2											156			
14			RT	GOODKIRK	203+95 TO 50+20																80			30	
15			RT	GOODKIRK	203+95 TO 204+53																	68			
16		2A	RT	GOODKIRK	204+53	1	1						1				1			85					1
17			RT	GOODKIRK	204+53 TO 206+53																	210			
18		3A	RT	GOODKIRK	206+53	1	1						1				1			85					1
19			RT	GOODKIRK	206+53 TO 206+97						2											54			
20																									
21																									
22	861		LT	FOUNTAIN	300+49 TO 300+71						2											40			
23		27A	LT	FOUNTAIN	300+71	1	1						1				1			85					1
24			LT	FOUNTAIN	300+71 TO 302+41																	180			
25		28A	LT	FOUNTAIN	302+41	1	1						1				1			85					1
26			LT	FOUNTAIN	302+41 TO 304+07																	176			
27		29A	LT	FOUNTAIN	304+07	1	1						1				1			85					1
28			LT	FOUNTAIN	304+07 TO 306+00																	203			
29		30A	LT	FOUNTAIN	306+00	1	1						1				1			85					1
30			LT	FOUNTAIN	306+00 TO 307+00																	110			
31																									
32	TOTALS SHEET 861					8	8		—		12		7	—			7	—	1	688	80	1582		140	8
33																									
34	862		℄	S.R. 8	53+00 TO 54+07																234				
35		15	℄	S.R. 8	54+07	1	1							1				1		120					
36			℄	S.R. 8	54+07 TO 55+57																320				
37		16	℄	S.R. 8	55+57	1	1							1				1		120					
38			℄	S.R. 8	55+57 TO 56+65				2												236				
39			℄&LT	S.R. 8	56+65 TO 56+65						2										140			60	
40			℄	S.R. 8	56+65 TO 57+09																108				
41		17	℄	S.R. 8	57+09	1	1							1				1		120					
42			℄	S.R. 8	57+09 TO 58+59																320				
43		18	℄	S.R. 8	58+59	1	1							1				1		120					
44			℄	S.R. 8	58+59 TO 60+04																310				
45		19	℄	S.R. 8	60+04	1	1							1				1		120					
46			℄	S.R. 8	60+04 TO 62+00																392				
47																									
48			RT	GOODKIRK	206+97 TO 53+05																	28			
49		1B	RT	RAMP T1	53+05	1	1						1				1			85					1
50																									
51			RT	GOODKIRK	206+97 TO 208+68																	181			
52																									
53																									
54	TOTALS SHEET 862					6	6		2		2		1	5			1	5	—	685	2060	209		60	1
TOTALS CARRIED TO GENERAL SUMMARY						14	14		2		14		8	5			8	5	1	1373	2140	1791		200	9

SUM-8-0.63

840
1088

LINE NO.	SHEET No.	POLE NO.	SIDE	ROADWAY	STATION TO STATION	625 LUMINAIRE, LOW MAST 400W HPS (EACH)			TRENCH, 24" DEEP (LIN. FT.)	TRENCH IN PAVED AREA (LIN. FT.)			PULL BOX, 713.09, 18" (EACH)		MEDIAN PULL BOX (EACH)	GROUND ROD (EACH)		PLASTIC CAUTION TAPE (LIN. FT.)				
1																						
2	861		RT	GOODKIRK	200+59 TO 200+50				10									10				
3		T1	RT	GOODKIRK	200+50											1						
4			RT	GOODKIRK	200+59								1									
5			RT	GOODKIRK	200+59 TO 12+62				30									30				
6																						
7																						
8																						
9	861		RT	EXCHANGE	12+62								1									
10			LT&RT	EXCHANGE	12+62 TO 12+62					110			1					110				
11			RT	GOODKIRK	200+59 TO 202+49				195									195				
12		1A	RT	GOODKIRK	202+49											1						
13			RT	GOODKIRK	202+49 TO 203+95				146				1					146				
14			RT	GOODKIRK	203+95 TO 50+20				30									30				
15			RT	GOODKIRK	203+95 TO 204+53				58									58				
16		2A	RT	GOODKIRK	204+53											1						
17			RT	GOODKIRK	204+53 TO 206+53				200									200				
18		3A	RT	GOODKIRK	206+53											1						
19			RT	GOODKIRK	206+53 TO 206+97				44				1					44				
20																						
21																						
22	861		LT	FOUNTAIN	300+49 TO 300+71				30				1					30				
23		27A	LT	FOUNTAIN	300+71											1						
24			LT	FOUNTAIN	300+71 TO 302+41				170									170				
25		28A	LT	FOUNTAIN	302+41											1						
26			LT	FOUNTAIN	302+41 TO 304+07				166									166				
27		29A	LT	FOUNTAIN	304+07											1						
28			LT	FOUNTAIN	304+07 TO 306+00				193									193				
29		30A	LT	FOUNTAIN	306+00											1						
30			LT	FOUNTAIN	306+00 TO 307+00				100									100				
31																						
32	TOTALS SHEET 861					——			1372	110			6		——	8		1482				
33																						
34	862		℄	S.R. 8	53+00 TO 54+07																	
35		15	℄	S.R. 8	54+07	1										1						
36			℄	S.R. 8	54+07 TO 55+57																	
37		16	℄	S.R. 8	55+57	1										1						
38			℄	S.R. 8	55+57 TO 56+65										1							
39			℄&LT	S.R. 8	56+65 TO 56+65					60			1					60				
40			℄	S.R. 8	56+65 TO 57+09																	
41		17	℄	S.R. 8	57+09	1										1						
42			℄	S.R. 8	57+09 TO 58+59																	
43		18	℄	S.R. 8	58+59	1										1						
44			℄	S.R. 8	58+59 TO 60+04																	
45		19	℄	S.R. 8	60+04	1										1						
46			℄	S.R. 8	60+04 TO 62+00																	
47																						
48			RT	GOODKIRK	206+97 TO 53+05				18									18				
49		1B	RT	RAMP T1	53+05											1						
50																						
51			RT	GOODKIRK	206+97 TO 208+68				171									171				
52																						
53																						
54	TOTALS SHEET 862					5			189	60			1		1	6		249				
TOTALS CARRIED TO GENERAL SUMMARY						5			1561	170			7		1	14		1731				

CALCULATED JBJ
CHECKED TRB

LIGHTING SUBSUMMARY

SUM-8-0.63

625

LINE NO.	SHEET No.	POLE NO.	SIDE	ROADWAY	STATION TO STATION	CONNECTOR KIT TYPE II	CONNECTOR KIT TYPE III				CABLE SPLICING KIT		LIGHT POLE, DESIGN AT8B34.2				LIGHT POLE FOUNDATION, 24"x6' DEEP		BRACKET ARM, 12'	NO. 10 AWG POLE & BRACKET CABLE	NO. 4 AWG 5000 VOLT DIST. CABLE	1-1/2" DUCT CABLE WITH TWO NO. 4 AWG 5000 VOLT CABLES	CONDUIT 2" 713.04	CONDUIT, 3", 713.04	LUMINAIRE, CONVENTIONAL 200W HPS
						EA.	EA.				EA.		EACH				EACH		EACH	LIN. FT.	LIN. FT.	LIN. FT.	LIN. FT.	LIN. FT.	EACH
1																									
2	862	4A	RT	GOODKIRK	208+68	1	1						1				1			85					1
3			RT	GOODKIRK	208+68 TO 54+78						4										112			36	
4			RT	GOODKIRK	54+78 TO 210+58																	203			
5		5A	RT	GOODKIRK	210+58	1	1						1				1			85					1
6			RT	GOODKIRK	210+58 TO 212+57																	210			
7		6A	RT	GOODKIRK	212+57	1	1						1				1			85					1
8			RT	GOODKIRK	212+57 TO 213+90																	143			
9			LT&RT	GOODKIRK	213+90 TO 213+90						2										120			50	
10			RT	GOODKIRK	213+90 TO 214+57						2											80			
11		7A	RT	GOODKIRK	214+57	1	1						1				1			85					1
12																									
13																									
14		T2	LT	GOODKIRK	215+64	1	1												1	93					1
15			LT	GOODKIRK	215+64 TO 215+76						2											30			
16			LT	GOODKIRK	215+76 TO 216+10						2											50			
17			LT&RT	GOODKIRK	216+10 TO 216+10						2										110			45	
18			RT	GOODKIRK	216+10 TO 216+66																	68			
19		8A	RT	GOODKIRK	216+66	1	1						1				1			85					1
20			RT	GOODKIRK	216+66 TO 217+00																	34			
21																									
22																									
23			LT	FOUNTAIN	307+00 TO 308+00																	110			
24		31A	LT	FOUNTAIN	308+00	1	1						1				1			85					1
25			LT	FOUNTAIN	308+00 TO 54+20						2											25			
26			LT&RT	RAMP S	54+20 TO 54+20						2										90			35	
27			RT	RAMP S	54+20 TO 53+45																	85			
28		2B	RT	RAMP S	53+45	1	1						1				1			85					1
29			LT	RAMP S	54+20 TO 310+11																	208			
30																									
31		32A	LT	FOUNTAIN	310+11	1	1						1				1			85					1
32			LT	FOUNTAIN	310+11 TO 312+17																	216			
33		33A	LT	FOUNTAIN	312+17	1	1						1				1			85					1
34			LT	FOUNTAIN	312+17 TO 314+13																	206			
35		34A	LT	FOUNTAIN	314+13	1	1						1				1			85					1
36			LT	FOUNTAIN	314+13 TO 314+22						2											19			
37			LT&RT	FOUNTAIN	314+22 TO 314+22						2										114			47	
38			RT	FOUNTAIN	314+22 TO 314+79						2											70			
39			RT	FOUNTAIN	314+79 TO 314+84																	17			
40		T10	RT	FOUNTAIN	314+84	1	1												1	93					1
41																									
42			LT	FOUNTAIN	314+22 TO 314+85						2											80			
43			LT	FOUNTAIN	314+85 TO 315+54						2										160			70	
44			LT	FOUNTAIN	314+54 TO 315+60																	35			
45		T11	LT	FOUNTAIN	315+60	1	1												1	93					1
46			LT	FOUNTAIN	315+54 TO 315+75																80			30	
47			LT	FOUNTAIN	315+75 TO S. POLE																120		15		
48			LT	FOUNTAIN	315+75 TO 315+80						2										40			10	
49			LT	FOUNTAIN	315+80 TO 316+11																	43			
50		35A	LT	FOUNTAIN	316+11	1	1						1				1			85					1
51			LT	FOUNTAIN	316+11 TO 317+00																	90			
52																									
53																									
54	TOTALS SHEET 862					14	14				30		11				11		3	1214	946	2022	15	323	14
TOTALS CARRIED TO GENERAL SUMMARY						14	14				30		11				11		3	1214	946	2022	15	323	14

CALCULATED JBJ
CHECKED TRB

LIGHTING SUBSUMMARY

SUM-8-0.63

842
1088

LINE NO.	SHEET No.	POLE NO.	SIDE	ROADWAY	STATION TO STATION	625																	
									TRENCH, 24" DEEP	TRENCH IN PAVED AREA			PULL BOX, 713.09, 18"			GROUND ROD		PLASTIC CAUTION TAPE	POWER SERVICE	CONTROL CENTER CABINET, COMPLETE		
									LIN. FT.	LIN. FT.			EACH			EACH		LIN. FT.	EACH	EACH		
1																							
2	862	4A	RT	GOODKIRK	208+68											1							
3			RT	GOODKIRK	208+68 TO 54+78					36			2					36					
4			RT	GOODKIRK	54+78 TO 210+58				193									193					
5		5A	RT	GOODKIRK	210+58											1							
6			RT	GOODKIRK	210+75 TO 212+57				200									200					
7		6A	RT	GOODKIRK	212+57											1							
8			RT	GOODKIRK	212+57 TO 213+90				133				1					133					
9			RT&LT	GOODKIRK	213+90 TO 213+90					50			1					50					
10			RT	GOODKIRK	213+90 TO 214+57				70									70					
11		7A	RT	GOODKIRK	214+57											1							
12																							
13																							
14		T2	LT	GOODKIRK	215+64											1							
15			LT	GOODKIRK	215+64 TO 215+76				20				1					20					
16			LT	GOODKIRK	215+75 TO 216+10				40				1					40					
17			LT&RT	GOODKIRK	216+10 TO 216+10					45			1					45					
18			RT	GOODKIRK	216+10 TO 216+66				58									58					
19		8A	RT	GOODKIRK	216+66											1							
20			RT	GOODKIRK	216+66 TO 217+00				34									34					
21																							
22																							
23			LT	FOUNTAIN	307+00 TO 308+00				100									100					
24		31A	LT	FOUNTAIN	308+00											1							
25			LT	FOUNTAIN	308+00 TO 54+20				15				1					15					
26			RT&LT	RAMPS	54+20 TO 54+20					35			1					35					
27			RT	RAMP S	54+20 TO 53+45				75									75					
28		2B	RT	RAMP S	53+45											1							
29			LT	RAMP S	54+20 TO 310+11				198									198					
30																							
31		32A	LT	FOUNTAIN	310+11											1							
32			LT	FOUNTAIN	310+11 TO 312+17				206									206					
33		33A	LT	FOUNTAIN	312+17											1							
34			LT	FOUNTAIN	312+17 TO 314+13				196									196					
35		34A	LT	FOUNTAIN	314+13											1							
36			LT	FOUNTAIN	314+13 TO 314+22				9				1					9					
37			LT&RT	FOUNTAIN	314+22 TO 314+22					47			1					47					
38			RT	FOUNTAIN	314+22 TO 314+79				60				1					60					
39			RT	FOUNTAIN	314+79 TO 314+84				7									7					
40		T10	RT	FOUNTAIN	314+84											1							
41																							
42			LT	FOUNTAIN	314+22 TO 314+85				70				1					70					
43			LT	FOUNTAIN	314+85 TO 315+54					70			1					70					
44			LT	FOUNTAIN	314+54 TO 315+60				25									25					
45		T11	LT	FOUNTAIN	315+60											1							
46			LT	FOUNTAIN	315+54 TO 315+75				30							1		30		1			
47			LT	FOUNTAIN	315+75 TO S. POLE				15									15	1				
48			LT	FOUNTAIN	315+75 TO 315+80				10				1					10					
49			LT	FOUNTAIN	315+80 TO 316+11				33									33					
50		35A	LT	FOUNTAIN	316+11											1							
51			LT	FOUNTAIN	316+11 TO 317+00				90									90					
52																							
53																							
54	TOTALS SHEET 862								1887	283			15			15		2170	1	1			
TOTALS CARRIED TO GENERAL SUMMARY									1887	283			15			15		2170	1	1			

CALCULATED JBJ
CHECKED TRB

LIGHTING SUBSUMMARY

SUM-8-0.63

843
1088

625

LINE NO.	SHEET No.	POLE NO.	SIDE	ROADWAY	STATION TO STATION	CONNECTOR KIT TYPE II EA.	CONNECTOR KIT TYPE III EA.	CONNECTOR KIT			CABLE SPLICING KIT EA.		LIGHT POLE, DESIGN AT8B34.2 EACH	LIGHT POLE, MISC.: LOW MAST LIGHT POLE, DESIGN A0N50 EACH			LIGHT POLE FOUNDATION, 24"X6' DEEP EACH	MEDIAN LIGHT POLE FOUNDATION, 10' DEEP EACH	BRACKET ARM, 12' EACH	NO. 10 AWG POLE & BRACKET CABLE LIN. FT.	NO. 4 AWG 5000 VOLT DIST. CABLE LIN. FT.	1-1/2" DUCT CABLE WITH TWO NO. 4 AWG 5000 VOLT CABLES LIN. FT.		CONDUIT, 3", 713.04 LIN. FT.	LUMINAIRE, CONVENTIONAL 200W HPS EACH
1																									
2																									
3																									
4	863		℄	S.R. 8	62+00 TO 62+44																108				
5		20	℄	S.R. 8	62+44	1	1							1				1		120					
6			℄	S.R. 8	62+44 TO 63+58																248				
7		21	℄	S.R. 8	63+58	1	1							1				1		120					
8			℄	S.R. 8	63+58 TO 64+68																240				
9		22	℄	S.R. 8	64+68	1	1							1				1		120					
10			℄	S.R. 8	64+68 TO 67+10																504				
11		23	℄	S.R. 8	67+10	1	1							1				1		120					
12			℄	S.R. 8	67+10 TO 68+69																338				
13		24	℄	S.R. 8	68+69	1	1							1				1		120					
14			℄	S.R. 8	68+69 TO 70+28																338				
15		25	℄	S.R. 8	70+28	1	1							1				1		120					
16			℄	S.R. 8	70+28 TO 71+00																144				
17			RT	GOODKIRK	217+00 TO 218+36																	146			
18		9A	RT	GOODKIRK	218+36	1	1						1				1			85					1
19			RT	GOODKIRK	218+36 TO 219+33						2											110			
20			RT	GOODKIRK	219+33 TO 219+53						2											35			
21			RT	GOODKIRK	219+53 TO 219+52																	20			
22		T3	RT	GOODKIRK	219+52	1	1												1	93					1
23			RT	GOODKIRK	219+53 TO 220+22						2										164			72	
24			RT	GOODKIRK	220+22 TO 220+44						2											35			
25			RT&LT	GOODKIRK	220+44 TO 220+45						2										144			62	
26			LT	GOODKIRK	220+45 TO 220+33																	31			
27																									
28		T4	LT	GOODKIRK	220+33	1	1												1	93					1
29																									
30																									
31			RT	GOODKIRK	220+44 TO 220+51																	17			
32		10A	RT	GOODKIRK	220+51	1	1						1				1			85					1
33			RT	GOODKIRK	220+51 TO 222+50																	209			
34		11A	RT	GOODKIRK	222+50	1	1						1				1			85					1
35			RT	GOODKIRK	220+50 TO 70+43						2											215			
36			RT	RAMP P1	70+43 TO 70+42						2										86			33	
37			LT	RAMP P1	70+42 TO 224+60																	18			
38																									
39																									
40		12A	RT	GOODKIRK	224+60	1	1						1				1			85					1
41			RT	GOODKIRK	224+60 TO 226+00																	140			
42																									
43			LT	FOUNTAIN	317+00 TO 318+26																	136			
44		36A	LT	FOUNTAIN	318+26	1	1						1				1			85					1
45			LT	FOUNTAIN	318+26 TO 319+40						2											125			
46			LT&RT	FOUNTAIN	319+40 TO 319+50						2										160			74	
47			LT	FOUNTAIN	319+50 TO 319+49																	4			
48		T12	RT	FOUNTAIN	319+49	1	1												1	93					1
49																									
50			LT	FOUNTAIN	319+40 TO 320+24						2										188			84	
51			LT	FOUNTAIN	320+24 TO 320+24																	32			
52		T13	LT	FOUNTAIN	320+24	1	1												1	93					1
53																									
54	TOTALS SHEET 863					15	15				20		5	6			5	6	4	1517	2662	1273		325	9
TOTALS CARRIED TO GENERAL SUMMARY						15	15				20		5	6			5	6	4	1517	2662	1273		325	9

CALCULATED JBJ
CHECKED TRB

LIGHTING SUBSUMMARY

SUM-8-0.63

844
1088

LINE NO.	SHEET No.	POLE NO.	SIDE	ROADWAY	STATION TO STATION	625 LUMINAIRE, LOW MAST 400W HPS			625 TRENCH, 24" DEEP	625 TRENCH IN PAVED AREA			625 PULL BOX, 713.09, 18"	625 PULL BOX, 713.09, 24"	625 MEDIAN PULL BOX	625 GROUND ROD	625 STRUCTURE GROUNDING SYSTEM	625 PLASTIC CAUTION TAPE				
						EACH			LIN. FT.	LIN. FT.			EACH	EACH	EACH	EACH	EACH	LIN. FT.				
1																						
2																						
3																						
4	863		℄	S.R. 8	62+00 TO 62+44																	
5		20	℄	S.R. 8	62+44	1										1						
6			℄	S.R. 8	62+44 TO 63+58																	
7		21	℄	S.R. 8	63+58	1										1						
8			℄	S.R. 8	63+58 TO 64+68																	
9		22	℄	S.R. 8	64+68	1										1						
10			℄	S.R. 8	64+68 TO 67+10																	
11		23	℄	S.R. 8	67+10	1										1						
12			℄	S.R. 8	67+10 TO 68+69																	
13		24	℄	S.R. 8	68+69	1										1						
14			℄	S.R. 8	68+69 TO 70+28																	
15		25	℄	S.R. 8	70+28	1										1						
16			℄	S.R. 8	70+28 TO 71+00																	
17			RT	GOODKIRK	217+00 TO 218+36				136									136				
18		9A	RT	GOODKIRK	218+36											1						
19			RT	GOODKIRK	218+36 TO 219+33				100				1					100				
20			RT	GOODKIRK	219+33 TO 219+53				25				1					25				
21			RT	GOODKIRK	219+53 TO 219+52				10									10				
22		T3	RT	GOODKIRK	219+52											1						
23			RT	GOODKIRK	219+53 TO 220+22					72			1					72				
24			RT	GOODKIRK	220+22 TO 220+44				25				1					25				
25			RT&LT	GOODKIRK	220+44 TO 220+45					62			1					62				
26			LT	GOODKIRK	220+45 TO 220+33				21									21				
27																						
28		T4	LT	GOODKIRK	220+33											1						
29																						
30																						
31			RT	GOODKIRK	220+44 TO 220+51				7									7				
32		10A	RT	GOODKIRK	220+51											1						
33			RT	GOODKIRK	220+51 TO 222+50				199									199				
34		11A	RT	GOODKIRK	222+50											1						
35			RT	GOODKIRK	220+50 TO 70+43				205				1					205				
36			RT	RAMP P1	70+43 TO 70+42					33			1					33				
37			LT	RAMP P1	70+42TO 224+60				8									8				
38																						
39																						
40		12A	RT	GOODKIRK	224+60											1						
41			RT	GOODKIRK	224+60 TO 226+00				140									140				
42																						
43			LT	FOUNTAIN	317+00 TO 318+26				126									126				
44		36A	LT	FOUNTAIN	318+26											1						
45			LT	FOUNTAIN	318+26 TO 319+40				115				1					115				
46			LT&RT	FOUNTAIN	319+40 TO 319+50					74			1					74				
47			LT	FOUNTAIN	319+50 TO 319+49				4									4				
48		T12	RT	FOUNTAIN	319+49											1						
49																						
50			LT	FOUNTAIN	319+40 TO 320+24					84			1					84				
51			LT	FOUNTAIN	320+24 TO 320+24				22									22				
52		T13	LT	FOUNTAIN	320+24											1						
53																						
54	TOTALS SHEET 863					6			1143	325			10			15		1468				
						6			1143	325			10			15		1468				

CALCULATED JBJ
CHECKED TRB

LIGHTING SUBSUMMARY

SUM-8-0.63

845
1088

625

LINE NO.	SHEET No.	POLE NO.	SIDE	ROADWAY	STATION TO STATION	CONNECTOR KIT: TYPE II	CONNECTOR KIT: TYPE III	CONNECTOR KIT: TYPE VII A	CONNECTOR KIT:	CONNECTOR KIT:	CABLE SPLICING KIT		LIGHT POLE, DESIGN AT8B34.2	LIGHT POLE, MISC.: LOW MAST LIGHT POLE, DESIGN A0N50			LIGHT POLE FOUNDATION, 24"x6' DEEP	MEDIAN LIGHT POLE FOUNDATION, 10' DEEP		NO. 10 AWG POLE & BRACKET CABLE	NO. 4 AWG 5000 VOLT DIST. CABLE	1-1/2" DUCT CABLE WITH TWO NO. 4 AWG 5000 VOLT CABLES	CONDUIT 2" 713.04	CONDUIT, 3", 713.04	LUMINAIRE, CONVENTIONAL 200W HPS
						EA.	EA.	EA.			EA.		EACH	EACH			EACH	EACH		LIN. FT.	LIN. FT.	LIN. FT.	LIN. FT.	LIN. FT.	EACH
1																								
2																								
3	863		LT	FOUNTAIN	320+24 TO 320+51																	50		
4		37A	LT	FOUNTAIN	320+51	1	1						1				1			85				1
5			LT	FOUNTAIN	320+51 TO 322+34																	193		
6		38A	LT	FOUNTAIN	322+34	1	1						1				1			85				1
7			LT	FOUNTAIN	322+24 TO 70+04						2											170		
8																								
9			LT&RT	RAMP Q1	70+04 TO 70+04						2										80		30	
10			RT	RAMP Q1	70+04 TO 71+00																	96		
11			LT	FOUNTAIN	70+04 TO 324+02																	22		
12		39A	LT	FOUNTAIN	324+02	1	1						1				1			85				1
13			LT	FOUNTAIN	324+02 TO 326+00																	198		
14																								
15	TOTALS SHEET 863					3	3	—			4		3	—			3	—		255	80	729	—	30	3
16																								
17																								
18	864		℄	S.R. 8	71+00 TO 71+86																192			
19		26	℄	S.R. 8	71+86	1	1							1				1		120				
20			℄	S.R. 8	71+86 TO 73+46																340			
21		27	℄	S.R. 8	73+46	1	1							1				1		120				
22			℄	S.R. 8	73+46 TO 74+94																316			
23		28	℄	S.R. 8	74+94	1	1							1				1		120				
24			℄	S.R. 8	74+94 TO 76+46																324			
25		29	℄	S.R. 8	76+46	1	1							1				1		120				
26																								
27																								
28			℄&LT	S.R. 8	77+48 TO 77+48						2										152		66	
29			LT	S.R. 8	77+48 TO 231+75						2										74		27	
30																								
31			℄	S.R. 8	77+48			2																
32			℄	S.R. 8	77+48 TO 79+30																192			
33		30	℄	S.R. 8	79+30	1	1							1				1		120				
34			℄	S.R. 8	79+30 TO 80+00																140			
35			LT	RAMP P1	70+42 TO 72+25																	193		
36		3B	LT	RAMP P1	72+25	1	1						1				1			85				1
37			LT	RAMP P1	72+25 TO 73+88																	173		
38		4B	LT	RAMP P1	73+88	1	1						1				1			85				1
39																								
40			RT	GOODKIRK	226+00 TO 226+42																	52		
41		13A	RT	GOODKIRK	226+42	1	1						1				1			85				1
42			RT	GOODKIRK	226+42 TO 228+31																	199		
43		14A	RT	GOODKIRK	228+31	1	1						1				1			85				1
44			RT	GOODKIRK	228+31 TO 230+33																	212		
45		15A	RT	GOODKIRK	230+33	1	1						1				1			85				1
46			RT	GOODKIRK	230+33 TO 231+65						2											142		
47			RT&LT	GOODKIRK	231+65 TO 231+65						2										116		48	
48			LT	GOODKIRK	231+65 TO 231+94																90		35	
49			LT	GOODKIRK	231+94 TO S. POLE																130		20	
50			RT&LT	GOODKIRK	231+75 TO 231+75						2										58		48	
51			LT	GOODKIRK	231+75 TO 231+94																70		25	
52			RT	GOODKIRK	231+75 TO 232+01						2											35		
53																								
54	TOTALS SHEET 864					10	10	2			12		5	5			5	5		1025	2194	1006	47	222	5
	TOTALS CARRIED TO GENERAL SUMMARY					13	13	2			16		8	5			8	5		1280	2274	1735	47	252	8

CALCULATED JBJ
CHECKED TRB

LIGHTING SUBSUMMARY

SUM-8-0.63

846
1088

LINE NO.	SHEET No.	POLE NO.	SIDE	ROADWAY	STATION TO STATION	625 LUMINAIRE, 10W MAST 400W HPS			625 TRENCH, 24" DEEP	625 TRENCH IN PAVED AREA			625 PULL BOX, 713.09, 18"		625 MEDIAN PULL BOX	625 GROUND ROD		625 PLASTIC CAUTION TAPE	625 POWER SERVICE	625 CONTROL CENTER CABINET, COMPLETE		
						EACH			LIN. FT.	LIN. FT.			EACH		EACH	EACH		LIN. FT.	EACH	EACH		
1																						
2																						
3	863		LT	FOUNTAIN	320+24 TO 320+51				40									40				
4		37A	LT	FOUNTAIN	320+51											1						
5			LT	FOUNTAIN	320+51 TO 322+34				183									183				
6		38A	LT	FOUNTAIN	322+34											1						
7			LT	FOUNTAIN	322+24 TO 70+04				160				1					160				
8																						
9			LT&RT	RAMP QI	70+04 TO 70+04					30			1					30				
10			RT	RAMP QI	70+04 TO 71+00				96									96				
11			LT	FOUNTAIN	70+04 TO 324+02				12									12				
12		39A	LT	FOUNTAIN	324+02											1						
13			LT	FOUNTAIN	324+02 TO 326+00				198									198				
14																						
15	TOTALS SHEET 863					——			689	30			2		——	3		719	——	——		
16																						
17																						
18	864		℄	S.R. 8	71+00 TO 71+86																	
19		26	℄	S.R. 8	71+86	1										1						
20			℄	S.R. 8	71+86 TO 73+46																	
21		27	℄	S.R. 8	73+46	1										1						
22			℄	S.R. 8	73+46 TO 74+94																	
23		28	℄	S.R. 8	74+94	1										1						
24			℄	S.R. 8	74+94 TO 76+46																	
25		29	℄	S.R. 8	76+46	1										1						
26																						
27																						
28			℄&LT	S.R. 8	77+48 TO 77+48				66				1					66				
29			LT	S.R. 8	77+48 TO 231+75				27				1					27				
30																						
31			℄	S.R. 8	77+48										1							
32			℄	S.R. 8	77+48																	
33		30	℄	S.R. 8	79+30	1										1						
34			℄	S.R. 8	79+30 TO 80+01																	
35			LT	RAMP PI	70+42 TO 72+25				183									183				
36		3B	LT	RAMP PI	72+25											1						
37			LT	RAMP PI	72+25 TO 73+88				163									163				
38		4B	LT	RAMP PI	73+88											1						
39																						
40			RT	GOODKIRK	226+00 TO 226+42				42									42				
41		13A	RT	GOODKIRK	226+42											1						
42			RT	GOODKIRK	226+42 TO 228+31				189									189				
43		14A	RT	GOODKIRK	228+31											1						
44			RT	GOODKIRK	228+31 TO 230+33				202									202				
45		15A	RT	GOODKIRK	230+33											1						
46			RT	GOODKIRK	230+33 TO 231+65				132				1					132				
47			RT&LT	GOODKIRK	231+65 TO 231+65					48			1					48				
48			LT	GOODKIRK	231+65 TO 231+94				35							1		35		1		
49			LT	GOODKIRK	231+94 TO S. POLE				20									20	1			
50			RT&LT	GOODKIRK	231+75 TO 231+75					48			1					48				
51			LT	GOODKIRK	231+75 TO 231+94				25									25				
52			RT	GOODKIRK	231+75 TO 232+01				25				1					25				
53																						
54	TOTALS SHEET 864					5			1109	96			6		1	11		1205	1	1		
TOTALS CARRIED TO GENERAL SUMMARY						5			1798	126			8		1	14		1924	1	1		

CALCULATED JBJ
CHECKED TRB

LIGHTING SUBSUMMARY

SUM-8-0.63

847
1088

LIGHTING SUBSUMMARY

CALCULATED JBJ | CHECKED TRB

625

LINE NO.	SHEET No.	POLE NO.	SIDE	ROADWAY	STATION TO STATION	CONNECTOR KIT TYPE II EA.	CONNECTOR KIT TYPE III EA.		CONNECTOR KIT TYPE VII B EA.		CABLE SPLICING KIT EA.	LIGHT POLE, DESIGN AT6B34.2 STYLE 11A EACH	LIGHT POLE, DESIGN AT8B34.2 STYLE 11A EACH	LOW MAST LIGHT POLE, DESIGN AT0N51.7 STYLE 111 EACH		LIGHT POLE, ANCHOR BOLTS ON STRUCTURE EACH	LIGHT POLE FOUNDATION, 24"x6' DEEP EACH	MEDIAN LIGHT POLE FOUNDATION, 10' DEEP EACH	BRACKET ARM, 12' EACH	NO. 10 AWG POLE & BRACKET CABLE LIN. FT.	NO. 4 AWG 5000 VOLT DIST. CABLE LIN. FT.	1-1/2" DUCT CABLE WITH TWO NO. 4 AWG 5000 VOLT CABLES LIN. FT.	CONDUIT 2" 713.04 LIN. FT.	CONDUIT, 3", 713.04 LIN. FT.	LUMINAIRE, CONVENTIONAL 200W HPS EACH
1																									
2	864		LT	GOODKIRK	231+94 TO 232+28						2											90			35	
3			LT	GOODKIRK	232+28 TO 233+33						2											232			106	
4			LT	GOODKIRK	233+33 TO 233+28																		20			
5		T5	LT	GOODKIRK	233+28	1	1													1	93					1
6			LT&RT	GOODKIRK	233+33 TO 233+39						2											150			65	
7			RT	GOODKIRK	233+39 TO 233+10						2												39			
8			RT	GOODKIRK	233+10 TO 24+28.5																	92		36		
9			RT	GOODKIRK	24+28.5 TO 24+33																	30		5		
10		45A	LT	MARKET	24+28.5	1	1					1				4					77					1
11			LT	MARKET	24+33 TO 25+67																	288		134		
12		46A	LT	MARKET	25+67	1	1					1				4					77					1
13			RT	MARKET	232+01 TO 24+66																	70		25		
14		44A	RT	MARKET	24+66	1	1					1				4					77					1
15			RT	MARKET	24+66 TO 26+00				2													308		134		
16		43A	RT	MARKET	26+00	1	1					1				4					77					1
17			RT	GOODKIRK	233+39 TO 233+49																		20			
18		16A	RT	GOODKIRK	233+49	1	1						1				1				85					1
19			RT	GOODKIRK	233+49 TO 234+00																		51			
20																										
21			RT	RAMP Q1	71+00 TO 72+50																		160			
22		5B	RT	RAMP Q1	72+50	1	1						1				1				85					1
23			RT	RAMP Q1	72+50 TO 74+43																		203			
24		6B	RT	RAMP Q1	74+43	1	1						1				1				85					1
25																										
26			LT	FOUNTAIN	326+00 TO 326+03																		13			
27		40A	LT	FOUNTAIN	326+03	1	1						1				1				85					1
28			LT	FOUNTAIN	326+03 TO 328+00																		207			
29		41A	LT	FOUNTAIN	328+00	1	1						1				1				85					1
30			LT	FOUNTAIN	328+00 TO 329+99																		209			
31		42A	LT	FOUNTAIN	329+99	1	1						1				1				85					1
32			LT	FOUNTAIN	329+99 TO 330+20						2												31			
33			LT&RT	FOUNTAIN	330+20 TO 330+20						2											106			43	
34			RT	FOUNTAIN	330+20 TO 330+49																		48			
35																										
36		T14	RT	FOUNTAIN	330+49	1	1													1	93					1
37			LT	FOUNTAIN	331+95 TO 332+15						2												30			
38		47A	LT	FOUNTAIN	332+15	1	1						1				1				85					1
39			LT	FOUNTAIN	332+15 TO 334+00																		185			
40																										
41	TOTALS SHEET 864					13	13		2		14	4	7	—		16	7	—	2	1089	1366	1216	334	249	13
42																										
43																										
44	865		℄	S.R. 8	80+00 TO 80+20				2													60				
45			℄&RT	S.R. 8	80+20 TO 80+20						2											170			75	
46			℄	S.R. 8	80+20 TO 80+50																	80				
47		31	℄	S.R. 8	80+50	1	1							1				1			120					
48			℄	S.R. 8	80+50 TO 81+65																	250				
49		32	℄	S.R. 8	81+65	1	1							1				1			120					
50			℄	S.R. 8	81+65 TO 82+87																	264				
51		33	℄	S.R. 8	82+87	1	1							1				1			120					
52																										
53																										
54	TOTALS SHEET 865					3	3		2		2	—	—	3		—	—	3	—	360	824	—	—	75	—
TOTALS CARRIED TO GENERAL SUMMARY						16	16		4		16	4	7	3		16	7	3	2	1449	2190	1216	334	324	13

SUM-8-0.63

848
1088

LIGHTING SUBSUMMARY

CALCULATED JBJ | CHECKED TRB

LINE NO.	SHEET No.	POLE NO.	SIDE	ROADWAY	STATION TO STATION	625 LUMINAIRE, LOW MAST 400W HPS			625 TRENCH, 24" DEEP	625 TRENCH IN PAVED AREA		625 STRUCTURE JUNCTION BOX	625 PULL BOX, 713.09, 18"		625 MEDIAN PULL BOX	GROUND ROD	STRUCTURE GROUNDING SYSTEM	PLASTIC CAUTION TAPE				
						EACH			LIN. FT.	LIN. FT.		EACH	EACH		EACH	EACH	EACH	LIN. FT.				
1																						
2	864		LT	GOODKIRK	231+94 TO 232+28				35				1					35				
3			LT	GOODKIRK	232+28 TO 233+33					106			1					106				
4			LT	GOODKIRK	233+33 TO 233+28				10									10				
5		T5	LT	GOODKIRK	233+28											1						
6			LT&RT	GOODKIRK	233+33 TO 233+39					65			1					65				
7			RT	GOODKIRK	233+39 TO 233+10				29				1					29				
8			RT	GOODKIRK	233+10 TO 24+28.5				20									20				
9			RT	GOODKIRK	24+28.5 to 24+33							1										
10		45A	LT	MARKET	24+28.5												1					
11			LT	MARKET	24+33 TO 25+67																	
12		46A	LT	MARKET	25+67																	
13			RT	MARKET	232+01 TO 24+66																	
14		44A	RT	MARKET	24+66																	
15			RT	MARKET	24+66 TO 26+00							1										
16		43A	RT	MARKET	26+00																	
17			RT	GOODKIRK	233+39 TO 233+49				10									10				
18		16A	RT	GOODKIRK	233+49											1						
19			RT	GOODKIRK	233+49 TO 234+00				51									51				
20																						
21			RT	RAMP QI	71+00 TO 72+50				150									150				
22		5B	RT	RAMP QI	72+50											1						
23			RT	RAMP QI	72+50 TO 74+43				193									193				
24		6B	RT	RAMP QI	74+43											1						
25																						
26			LT	FOUNTAIN	326+00 TO 326+03				3									3				
27		40A	LT	FOUNTAIN	326+03											1						
28			LT	FOUNTAIN	326+03 TO 328+00				197									197				
29		41A	LT	FOUNTAIN	328+00											1						
30			LT	FOUNTAIN	328+00 TO 329+99				199									199				
31		42A	LT	FOUNTAIN	329+99											1						
32			LT	FOUNTAIN	329+99 TO 330+20				21				1					21				
33			LT&RT	FOUNTAIN	330+20 TO 330+20					43			1					43				
34			RT	FOUNTAIN	330+20 TO 330+49				38									38				
35																						
36		T14	RT	FOUNTAIN	330+49											1						
37			LT	FOUNTAIN	331+95 TO 332+15				20				1					20				
38		47A	LT	FOUNTAIN	332+15											1						
39			LT	FOUNTAIN	332+15 TO 334+00				185									185				
40																						
41	TOTALS SHEET 864					——			1161	214		2	7		——	9	1	1375				
42																						
43																						
44	865		℄	S.R. 8	80+00 TO 80+20										1							
45			℄&RT	S.R. 8	80+20 TO 80+20					75			1					75				
46			℄	S.R. 8	80+20 TO 80+50																	
47		31	℄	S.R. 8	80+50	1										1						
48			℄	S.R. 8	80+50 TO 81+65																	
49		32	℄	S.R. 8	81+65	1										1						
50			℄	S.R. 8	81+65 TO 82+87																	
51		33	℄	S.R. 8	82+87	1										1						
52																						
53																						
54	TOTALS SHEET 865					3			——	75		——	1		1	3	——	75				
	TOTALS CARRIED TO GENERAL SUMMARY					3			1161	289		2	8		1	12	1	1450				

SUM-8-0.63

849
1088

CALCULATED JBJ | CHECKED TRB

LIGHTING SUBSUMMARY

625

LINE NO.	SHEET No.	POLE NO.	SIDE	ROADWAY	STATION TO STATION	CONNECTOR KIT TYPE II	CONNECTOR KIT TYPE III	CONNECTOR KIT	CONNECTOR KIT TYPE VII B	CONNECTOR KIT	CABLE SPLICING KIT	LIGHT POLE, DESIGN AT6B34.2 STYLE IIA	LIGHT POLE, DESIGN AT8B34.2 STYLE IIA	LOW MAST LIGHT POLE, DESIGN AT0N51.7 STYLE III		LIGHT POLE, ANCHOR BOLTS ON STRUCTURE	LIGHT POLE FOUNDATION, 24"X6' DEEP	MEDIAN LIGHT POLE FOUNDATION, 10' DEEP	BRACKET ARM, 12'	NO. 10 AWG POLE & BRACKET CABLE	NO. 4 AWG 5000 VOLT DIST. CABLE	1-1/2" DUCT CABLE WITH TWO NO. 4 AWG 5000 VOLT CABLES	CONDUIT 2" 713.04	CONDUIT, 3", 713.04	LUMINAIRE, CONVENTIONAL 200W HPS
						EA.	EA.		EA.		EA.	EACH	EACH	EACH		EACH	EACH	EACH	EACH	LIN. FT.	LIN. FT.	LIN. FT.	LIN. FT.	LIN. FT.	EACH
1	865		℄	S.R. 8	82+87 TO 85+48																542				
2		34	℄	S.R. 8	85+48	1	1							1				1		120					
3			℄	S.R. 8	85+48 TO 86+90				2												304				
4			℄&LT	S.R. 8	86+90 TO 86+90						2										140			60	
5			℄	S.R. 8	86+90 TO 87+05																50				
6		35	℄	S.R. 8	87+05	1	1							1				1		120					
7			℄	S.R. 8	87+05 TO 88+49																308				
8		36	℄	S.R. 8	88+49	1	1							1				1		120					
9			℄	S.R. 8	88+49 TO 89+00																102				
10																									
11			RT	GOODKIRK	234+00 TO 235+35																	145			
12		17A	RT	GOODKIRK	235+35	1	1						1				1			85					1
13			RT	GOODKIRK	235+35 TO 236+76						2											151			
14			RT&LT	GOODKIRK	236+76 TO 236+75						2										116			48	
15			RT	GOODKIRK	236+75 TO 236+88						2											26			
16			LT	GOODKIRK	236+88 TO 237+84						2										220			100	
17																									
18			LT	GOODKIRK	237+84 TO 237+91																	20			
19		T7	LT	GOODKIRK	237+91	1	1												1	93					1
20																									
21			RT	GOODKIRK	236+76 TO 237+06						2											40			
22			RT	GOODKIRK	237+06 TO 237+13																	20			
23		T6	RT	GOODKIRK	237+13	1	1												1	93					1
24			RT	GOODKIRK	237+06 TO 237+30						2											34			
25			RT	GOODKIRK	237+30 TO 238+17						2										200			90	
26			RT	GOODKIRK	238+17 TO 7+04																80		30		
27		19A	LT	FORGE	7+04	1	1					1				4				77					1
28			LT	FORGE	7+04 TO 8+86																384		182		
29		20A	LT	FORGE	8+86	1	1					1				4				77					1
30			LT	FORGE	237+30 TO 6+66																70		25		
31		18A	RT	FORGE	6+66	1	1					1				4				77					1
32			RT	FORGE	6+66 TO 8+48																384		182		
33		21A	RT	FORGE	8+48	1	1					1				4				77					1
34																									
35			RT	GOODKIRK	238+17 TO 238+42						2										80			30	
36			LT	RAMP KI	238+42 TO 86+39																	216			
37		7B	LT	RAMP KI	86+39	1	1						1				1			85					1
38			LT	RAMP KI	86+39 TO 88+39																	210			
39		8B	LT	RAMP KI	88+39	1	1						1				1			85					1
40			LT	RAMP KI	88+39 TO 88+85						2											60			
41			LT&RT	RAMP KI	88+85 TO 88+86						2										76			28	
42																									
43			RT	GOODKIRK	238+17 TO 238+60																	75			
44		22A	RT	GOODKIRK	238+60	1	1						1				1			85					1
45			RT	GOODKIRK	238+60 TO 240+20																	170			
46		23A	RT	GOODKIRK	240+20	1	1						1				1			85					1
47			RT	GOODKIRK	240+20 TO 241+70																	160			
48		24A	RT	GOODKIRK	241+70	1	1						1				1			85					1
49																									
50																									
51			LT	FOUNTAIN	334+00 TO 334+06																	16			
52		48A	LT	FOUNTAIN	334+06	1	1						1				1			85					1
53																									
54	TOTALS SHEET 865					16	16		2		22	4	7	3		16	7	3	2	1449	3056	1343	419	356	13
TOTALS CARRIED TO GENERAL SUMMARY						16	16		2		22	4	7	3		16	7	3	2	1449	3056	1343	419	356	13

SUM-8-0.63

850
1088

LINE NO.	SHEET No.	POLE NO.	SIDE	ROADWAY	STATION TO STATION	625																
						LUMINAIRE, LOW MAST 400W HPS			TRENCH, 24" DEEP	TRENCH IN PAVED AREA	TRANSITION JUNCTION BOX	STRUCTURE JUNCTION BOX	PULL BOX, 713.09, 18"	PULL BOX, 713.09, 24"	MEDIAN PULL BOX	GROUND ROD	STRUCTURE GROUNDING SYSTEM	PLASTIC CAUTION TAPE				
						EACH			LIN. FT.	LIN. FT.	EACH	EACH	EACH	EACH	EACH	EACH	EACH	LIN. FT.				
1	865		℄	S.R. 8	82+87 TO 85+48																	
2		34	℄	S.R. 8	85+48	1										1						
3			℄	S.R. 8	85+48 TO 86+90										1							
4			℄&LT	S.R. 8	86+90 TO 86+90					60			1					60				
5			℄	S.R. 8	86+90 TO 87+05																	
6		35	℄	S.R. 8	87+05	1										1						
7			℄	S.R. 8	87+05 TO 88+49																	
8		36	℄	S.R. 8	88+49	1										1						
9			℄	S.R. 8	88+49 TO 89+00																	
10																						
11			RT	GOODKIRK	234+00 TO 235+35				135									135				
12		17A	RT	GOODKIRK	235+35											1						
13			RT	GOODKIRK	235+35 TO 236+76				141				1					141				
14			RT&LT	GOODKIRK	236+76 TO 236+75					48			1					48				
15			RT	GOODKIRK	236+75 TO 236+88				16				1					16				
16			LT	GOODKIRK	236+88 TO 237+84					100			1					100				
17																						
18			LT	GOODKIRK	237+84 TO 237+91				10									10				
19		T7	LT	GOODKIRK	237+91											1						
20																						
21			RT	GOODKIRK	236+76 TO 237+06				30				1					30				
22			RT	GOODKIRK	237+06 TO 237+31				10									10				
23		T6	RT	GOODKIRK	237+31											1						
24			RT	GOODKIRK	237+06 TO 237+30				24				1					24				
25			RT	GOODKIRK	237+30 TO 238+17					90				1				90				
26			RT	GOODKIRK	238+17 TO 7+04				8									8				
27		19A	LT	FORGE	7+04																	
28			LT	FORGE	7+04 TO 8+86												1					
29		20A	LT	FORGE	8+86																	
30			LT	FORGE	237+30 TO 6+66				6									6				
31		18A	RT	FORGE	6+66																	
32			RT	FORGE	6+66 TO 8+48																	
33		21A	RT	FORGE	8+48																	
34																						
35			RT	GOODKIRK	238+17 TO 238+42				30				1					30				
36			LT	RAMP K1	238+42 TO 86+39				206									206				
37		7B	LT	RAMP K1	86+39											1						
38			LT	RAMP K1	86+39 TO 88+39				200									200				
39		8B	LT	RAMP K1	88+39											1						
40			LT	RAMP K1	88+39 TO 88+85				50				1					50				
41			LT&RT	RAMP K1	88+85 TO 88+86					28			1					28				
42																						
43			RT	GOODKIRK	238+17 TO 238+60				65									65				
44		22A	RT	GOODKIRK	238+60											1						
45			RT	GOODKIRK	238+60 TO 240+20				160									160				
46		23A	RT	GOODKIRK	240+20											1						
47			RT	GOODKIRK	240+20 TO 241+70				150									150				
48		24A	RT	GOODKIRK	241+70											1						
49																						
50																						
51			LT	FOUNTAIN	334+00 TO 334+06				6									6				
52		48A	LT	FOUNTAIN	334+06											1						
53																						
54	TOTALS SHEET 865					3			1247	326			10	1	1	12	1	1573				
TOTALS CARRIED TO GENERAL SUMMARY						3			1247	326			10	1	1	12	1	1573				

CALCULATED JBJ
CHECKED TRB

LIGHTING SUBSUMMARY

SUM-8-0.63

851
1088

625

LINE NO.	SHEET No.	POLE NO.	SIDE	ROADWAY	STATION TO STATION	CONNECTOR KIT TYPE II	CONNECTOR KIT TYPE III	CONNECTOR KIT	CONNECTOR KIT	CONNECTOR KIT	CABLE SPLICING KIT		LIGHT POLE, DESIGN AT8B34.2 STYLE IIA	LOW MAST LIGHT POLE, DESIGN AT0N51.7 STYLE III			LIGHT POLE FOUNDATION, 24"x6' DEEP	MEDIAN LIGHT POLE FOUNDATION, 10' DEEP	BRACKET ARM, 12'	NO. 10 AWG POLE & BRACKET CABLE	NO. 4 AWG 5000 VOLT DIST. CABLE	I-1/2" DUCT CABLE WITH TWO NO. 4 AWG 5000 VOLT CABLES	CONDUIT 2" 713.04	CONDUIT, 3", 713.04	LUMINAIRE, CONVENTIONAL 200W HPS
						EA.	EA.				EA.		EACH	EACH			EACH	EACH	EACH	LIN. FT.	LIN. FT.	LIN. FT.	LIN. FT.	LIN. FT.	EACH
1	865		LT	FOUNTAIN	334+06 TO 335+90																	194			
2		49A	LT	FOUNTAIN	335+90	1	1						1				1			85					1
3			LT	FOUNTAIN	335+90 TO 337+84																	205			
4		50A	LT	FOUNTAIN	337+84	1	1						1				1			85					1
5			LT	FOUNTAIN	337+84 TO 8+78						2											43			
6			LT	FOUNTAIN	8+78 TO 9+17						2										190			85	
7			LT	FOUNTAIN	9+17 TO 339+62						2											85			
8			LT	FOUNTAIN	339+62 TO 339+62						2										110			45	
9			RT	FOUNTAIN	339+62 TO 339+54																	45			
10																									
11		T15	RT	FOUNTAIN	339+54	1	1												1	93					1
12			RT	FOUNTAIN	339+62 TO 339+61																50			15	
13			RT	FOUNTAIN	339+61 TO S. POLE																114		12		
14			RT	RAMP L1	9+17 TO 86+95																	185			
15		9B	RT	RAMP L1	86+95	1	1						1				1			85					1
16		51A	RT	FOUNTAIN	339+72	1	1						1				1			85					1
17			RT	FOUNTAIN	339+72 TO 339+85						2											23			
18			RT	FOUNTAIN	339+85 TO 339+61																60			20	
19			RT	FOUNTAIN	339+85 TO 341+72																	198			
20		52A	RT	FOUNTAIN	341+72	1	1						1				1			85					1
21			RT	FOUNTAIN	341+72 TO 343+00																	128			
22																									
23	TOTALS SHEET 865					6	6				10		5	——			5	——	1	518	524	1106	12	165	6
24	866		℄	S.R. 8	89+00 TO 89+94																208				
25		37	℄	S.R. 8	89+94	1	1							1				1		120					
26			℄	S.R. 8	89+94 TO 91+29																290				
27		38	℄	S.R. 8	91+29	1	1							1				1		120					
28			℄	S.R. 8	91+29 TO 93+69																500				
29		39	℄	S.R. 8	93+69	1	1							1				1		120					
30			℄	S.R. 8	93+69 TO 95+24																330				
31		40	℄	S.R. 8	95+24	1	1							1				1		120					
32			℄	S.R. 8	95+24 TO 96+82																336				
33		41	℄	S.R. 8	96+82	1	1							1				1		120					
34			℄	S.R. 8	96+82 TO 98+00																236				
35			RT	RAMP K1	88+86 TO 89+57																	81			
36		25A	RT	RAMP K1	89+57	1	1						1				1			85					1
37			RT	RAMP K1	89+57 TO 91+49																	202			
38		26A	RT	RAMP K1	91+49	1	1						1				1			85					1
39			RT	RAMP K1	91+49 TO 246+15						2											66			
40			RT	RAMP K1	246+15 TO 92+48						2										210			95	
41			RT	RAMP I	92+48 TO 92+95						2											60			
42			RT&LT	RAMP I	92+95 TO 92+95						2										130			55	
43			RT	RAMP K1	246+15 TO 246+13																	17			
44		T8	RT	RAMP K1	246+13	1	1												1	93					1
45		T9	LT	RAMP I	92+18	1	1												1	93					1
46			LT	RAMP I	92+18 TO 92+17						2											17			
47			LT	RAMP I	92+17 TO 92+49						2										76			28	
48			LT	RAMP I	92+49 TO 92+95																	60			
49			LT	RAMP I	92+95 TO 93+41																	56			
50		10B	LT	RAMP I	93+41	1	1						1				1			85					1
51			LT	RAMP I	93+41 TO 95+40																	209			
52		11B	LT	RAMP I	95+40	1	1						1				1			85					1
53			LT	RAMP I	95+40 TO 97+73																	243			
54	TOTALS SHEET 866					11	11				12		4	5			4	5	2	1126	2316	1011	——	178	6
TOTALS CARRIED TO GENERAL SUMMARY						17	17				22		9	5			9	5	3	1644	2840	2117	12	343	12

CALCULATED JBJ
CHECKED TRB

LIGHTING SUBSUMMARY

SUM-8-0.63

852
1088

LINE NO.	SHEET No.	POLE NO.	SIDE	ROADWAY	STATION TO STATION	625																
						LUMINAIRE, LOW MAST 400W HPS			TRENCH, 24" DEEP	TRENCH IN PAVED AREA			PULL BOX, 713.09, 18"			GROUND ROD		PLASTIC CAUTION TAPE	POWER SERVICE	CONTROL CENTER CABINET, COMPLETE		
						EACH			LIN. FT.	LIN. FT.			EACH			EACH		LIN. FT.	EACH	EACH		
1	865		LT	FOUNTAIN	334+06 TO 335+90				184									184				
2		49A	LT	FOUNTAIN	335+90											1						
3			LT	FOUNTAIN	335+90 TO 337+84				195									195				
4		50A	LT	FOUNTAIN	337+84											1						
5			LT	FOUNTAIN	337+84 TO 8+78				33				1					33				
6			LT	FOUNTAIN	8+78 TO 9+17					85			1					85				
7			LT	FOUNTAIN	9+17 TO 339+62				75				1					75				
8			LT	FOUNTAIN	339+62 TO 339+62					45			1					45				
9			RT	FOUNTAIN	339+62 TO 339+54				35									35				
10																						
11		T15	RT	FOUNTAIN	339+54											1						
12			RT	FOUNTAIN	339+62 TO 339+61				15							1		15		1		
13			RT	FOUNTAIN	339+61 TO S. POLE				12									12	1			
14			RT	RAMP L1	9+17 TO 86+95				175									175				
15		9B	RT	RAMP L1	86+95											1						
16		51A	RT	FOUNTAIN	339+72											1						
17			RT	FOUNTAIN	339+72 TO 339+85				13				1					13				
18			RT	FOUNTAIN	339+85 TO 339+61				20									20				
19			RT	FOUNTAIN	339+85 TO 341+72				188									188				
20		52A	RT	FOUNTAIN	341+72											1						
21			RT	FOUNTAIN	341+72 TO 343+00				128									128				
22																						
23	TOTALS SHEET 865					——			1073	130			5			7		1203	1	1		
24	866		℄	S.R. 8	89+00 TO 89+94																	
25		37	℄	S.R. 8	89+94	1										1						
26			℄	S.R. 8	89+94 TO 91+29																	
27		38	℄	S.R. 8	91+29	1										1						
28			℄	S.R. 8	91+29 TO 93+69																	
29		39	℄	S.R. 8	93+69	1										1						
30			℄	S.R. 8	93+69 TO 95+24																	
31		40	℄	S.R. 8	95+24	1										1						
32			℄	S.R. 8	95+24 TO 96+82																	
33		41	℄	S.R. 8	96+82	1										1						
34			℄	S.R. 8	96+82 TO 98+00																	
35			RT	RAMP K1	88+86 TO 89+57				71									71				
36		25A	RT	RAMP K1	89+57											1						
37			RT	RAMP K1	89+57 TO 91+49				192									192				
38		26A	RT	RAMP K1	91+49											1						
39			RT	RAMP K1	91+49 TO 246+13				56				1					56				
40			RT	RAMP K1	246+15 TO 92+48					95			1					95				
41			RT	RAMP I	92+48 TO 92+95				50				1					50				
42			RT&LT	RAMP I	92+95 TO 92+95					55			1					55				
43			RT	RAMP K1	246+15 TO 246+13				7									7				
44		T8	RT	RAMP K1	246+13											1						
45		T9	LT	RAMP I	92+18											1						
46			LT	RAMP I	92+18 TO 92+17				7				1					7				
47			LT	RAMP I	92+17 TO 92+49					28			1					28				
48			LT	RAMP I	92+49 TO 92+95				50									50				
49			LT	RAMP I	92+95 TO 93+41				46									46				
50		10B	LT	RAMP I	93+41											1						
51			LT	RAMP I	93+41 TO 95+40				199									199				
52		11B	LT	RAMP I	95+40											1						
53			LT	RAMP I	95+40 TO 97+73				233									233				
54	TOTALS SHEET 866					5			911	178			6			11		1089	——	——		
TOTALS CARRIED TO GENERAL SUMMARY						5			1984	308			11			18		2292	1	1		

CALCULATED JBJ
CHECKED TRB

LIGHTING SUBSUMMARY

SUM-8-0.63

LIGHTING SUBSUMMARY

CALCULATED JBJ
CHECKED TRB

625

LINE NO.	SHEET No.	POLE NO.	SIDE	ROADWAY	STATION TO STATION	CONNECTOR KIT TYPE II	CONNECTOR KIT TYPE III	CONNECTOR KIT TYPE VII A	CONNECTOR KIT TYPE VII B	CONNECTOR KIT	CABLE SPLICING KIT	LIGHT POLE, DESIGN AT6B34.2 STYLE 11A	LIGHT POLE, DESIGN AT8B34.2 STYLE 11A	LOW MAST LIGHT POLE, DESIGN AT0N51.7 STYLE 111			LIGHT POLE FOUNDATION, 24"x6' DEEP	MEDIAN LIGHT POLE FOUNDATION, 10' DEEP	BRACKET ARM, 12'	NO. 10 AWG POLE & BRACKET CABLE	NO. 4 AWG 5000 VOLT DIST. CABLE	1-1/2" DUCT CABLE WITH TWO NO. 4 AWG 5000 VOLT CABLES	CONDUIT 2" 713.04	CONDUIT, 3", 713.04	LUMINAIRE, CONVENTIONAL 200W HPS
						EA.	EA.	EA.	EA.		EA.	EACH	EACH	EACH			EACH	EACH	EACH	LIN. FT.	LIN. FT.	LIN. FT.	LIN. FT.	LIN. FT.	EACH
1	866	12B	LT	RAMP I	97+73	1	1						1				1			85					1
2																									
3																									
4																									
5			RT	FOUNTAIN	343+00 TO 343+22						2											33			
6			RT	FOUNTAIN	343+22 TO 343+29																	26			
7		53A	RT	FOUNTAIN	343+29	1	1						1				1			85					1
8			RT&LT	FOUNTAIN	343+22 TO 343+27						2										130			55	
9																									
10			LT	FOUNTAIN	343+27 TO 344+94						2											177			
11			RT	FOUNTAIN	344+94 TO 345+62						2											78			
12			RT&LT	FOUNTAIN	345+62 TO 345+67																	15			
13		54A	RT	FOUNTAIN	345+67	1	1						1				1			85					1
14			RT	FOUNTAIN	345+62 TO 345+62						2										124			52	
15			RT	FOUNTAIN	345+62 TO 346+07						2											70			
16			RT	FOUNTAIN	346+07 TO 93+20						2										200			90	
17			RT&LT	RAMP J	93+20 TO 93+35						2										120			50	
18			RT	FOUNTAIN	346+07 TO 346+15																	18			
19		T16	RT	FOUNTAIN	346+15	1	1												1	93					1
20																									
21																									
22			RT	RAMP J	93+20 TO 93+62																	57			
23		13B	RT	RAMP J	93+62	1	1						1				1			85					1
24			RT	RAMP J	93+62 TO 97+29																	377			
25		14B	RT	RAMP J	97+29	1	1						1				1			85					1
26																									
27	TOTALS SHEET 866					6	6		—		16		5	—			5	—	1	518	574	851	—	247	6
28																									
29																									
30	867		℄	S.R. 8	98+00 TO 98+38																96				
31		42	℄	S.R. 8	98+38	1	1							1				1		120					
32			℄	S.R. 8	98+38 TO 98+90				2												124				
33			℄&LT	S.R. 8	98+90 TO 98+90						2										164			72	
34			℄	S.R. 8	98+90 TO 99+94																228				
35		43	℄	S.R. 8	99+94	1	1							1				1		120					
36			℄	S.R. 8	99+94 TO 101+45																322				
37		44	℄	S.R. 8	101+45	1	1							1				1		120					
38			LT	S.R. 8	102+26																				
39			LT	S.R. 8	102+26 TO S. POLE						2										140		25		
40			LT	S.R. 8	102+26 TO 102+60						2										90			35	
41			RT	S.R. 8	102+35																				
42			RT	S.R. 8	102+35 TO S. POLE						2										130		20		
43			RT	S.R. 8	102+35 TO 102+60						2										70			25	
44																									
45																									
46																									
47																									
48																									
49																									
50	TOTALS SHEET 867					3	3		2		10		—	3			—	3	—	360	1364	—	45	132	—
51																									
52																									
53																									
54																									
TOTALS CARRIED TO GENERAL SUMMARY						9	9		2		26		5	3			5	3	1	878	1938	851	45	379	6

SUM-8-0.63

854
1088

LIGHTING SUBSUMMARY

CALCULATED JBJ | CHECKED TRB

625

LINE NO.	SHEET No.	POLE NO.	SIDE	ROADWAY	STATION TO STATION	LUMINAIRE, 10W MAST 400W HPS	LUMINAIRE, UNDERPASS 70W HPS	LUMINAIRE, UNDERPASS, 100W HPS	TRENCH, 24" DEEP	TRENCH IN PAVED AREA	TRANSITION JUNCTION BOX	STRUCTURE JUNCTION BOX	PULL BOX, 713.09, 18"	PULL BOX, 713.09, 24"	MEDIAN PULL BOX	GROUND ROD	STRUCTURE GROUNDING SYSTEM	PLASTIC CAUTION TAPE	POWER SERVICE	CONTROL CENTER CABINET, COMPLETE	SERVICE TO UNDERPASS LIGHTING (BEACON ST.)	SERVICE TO UNDERPASS LIGHTING (EXCHANGE ST.)
						EACH	EACH	EACH	LIN. FT.	LIN. FT.	EACH	EACH	EACH	EACH	EACH	EACH	EACH	LIN. FT.	EACH	EACH	LUMP	LUMP
1	866	12B	LT	RAMP I	97+73											1						
2																						
3																						
4																						
5			RT	FOUNTAIN	343+00 TO 343+22				23				1					23				
6			RT	FOUNTAIN	343+22 TO 343+38				16									16				
7		53A	RT	FOUNTAIN	343+38											1						
8			RT&LT	FOUNTAIN	343+22 TO 343+27					55			1					55				
9																						
10			RT	FOUNTAIN	343+27 TO 344+94				167				1					167				
11			RT	FOUNTAIN	344+94 TO 345+62				68				1					68				
12			RT&LT	FOUNTAIN	345+62 TO 345+67				5									5				
13		54A	RT	FOUNTAIN	345+67											1						
14			RT	FOUNTAIN	345+62 TO 345+62					52			1					52				
15			RT	FOUNTAIN	345+62 TO 346+07				60				1					60				
16			RT	FOUNTAIN	346+07 TO 93+20					90			1					90				
17			RT&LT	RAMP J	93+20 TO 93+35				50				1					50				
18			RT	FOUNTAIN	346+07 TO 346+15				8									8				
19		T16	RT	FOUNTAIN	346+11											1						
20																						
21																						
22			LT	RAMP J	93+20 TO 93+62				47									47				
23		13B	LT	RAMP J	93+62											1						
24			LT	RAMP J	93+62 TO 97+29				367									367				
25		14B	LT	RAMP J	97+29											1						
26																						
27	TOTALS SHEET 866								811	197			8			6		1008				
28																						
29																						
30	867		℄	S.R. 8	98+00 TO 98+38																	
31		42	℄	S.R. 8	98+38	1										1						
32			℄	S.R. 8	98+38 TO 98+90										1							
33			RT&LT	S.R. 8	98+90 TO 98+90					72			1					72				
34			℄	S.R. 8	98+90 TO 99+94																	
35		43	℄	S.R. 8	99+94	1										1						
36			℄	S.R. 8	99+94 TO 101+45																	
37		44	℄	S.R. 8	101+45	1										1						
38			LT	S.R. 8	102+26															1		
39			LT	S.R. 8	102+26 TO S. POLE				25							1		25	1			
40			LT	S.R. 8	102+26 TO 102+60				35				1					35				
41			RT	S.R. 8	102+35											1				1		
42			RT	S.R. 8	102+35 TO S. POLE				20									20	1			
43			RT	S.R. 8	102+35 TO 102+60				25				1					25				
44																						
45																						
46																						
47																						
48																						
49																						
50	TOTALS SHEET 867					3			105	72			3		1	5		177	2	2		
51																						
52																						
53																						
54																						
TOTALS CARRIED TO GENERAL SUMMARY						3			916	269			11		1	11		1185	2	2		

SUM-8-0.63

855
1088

BEGIN WORK
STA. 32+75.00

BEGIN PROJECT
STA. 32+75.00
S.L.M. 0.63

STP

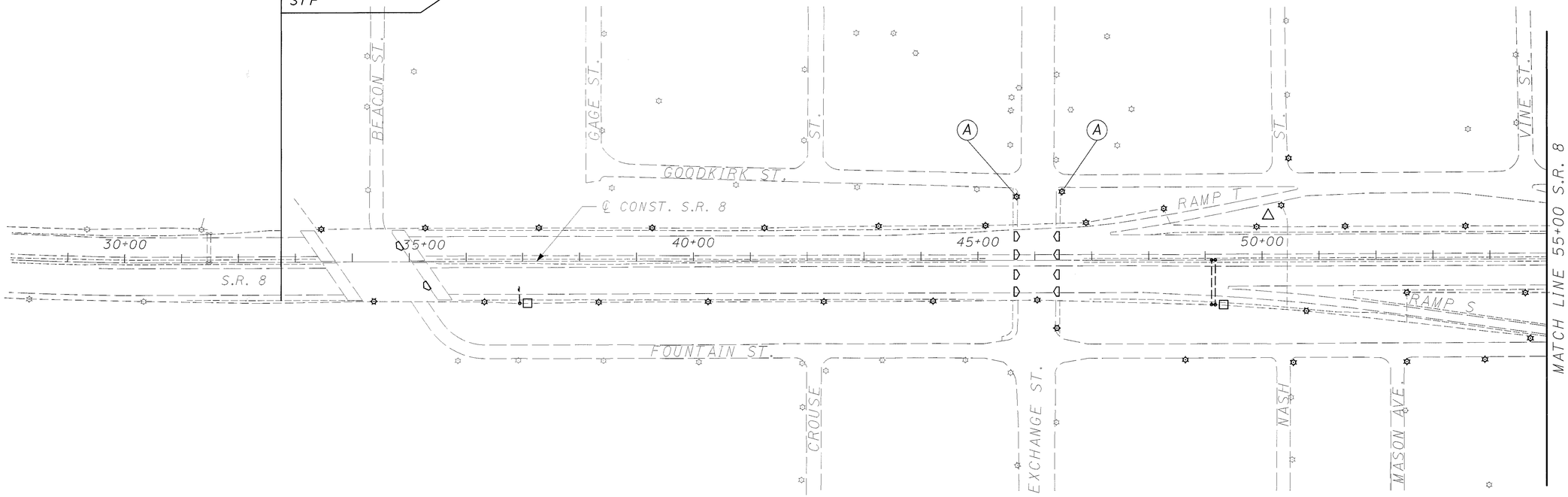

LEGEND

△ EXISTING POWER SERVICE, 480V, 2W, 60 AMP. TO BE REMOVED

– – – – EXISTING CIRCUIT

LUMINAIRE WITH POLE TO BE REMOVED

UNDERPASS LUMINAIRE WALL MOUNT TO BE REMOVED

PULL BOX TO BE REMOVED

EXISTING SIGN LIGHTING TO BE REMOVED

EXISTING SIGN LIGHTING TO BE REMOVED

CODED NOTES

(A) REMOVAL OF TRAFFIC POLE WITH LUMINARE ARM SHOWN ON TRAFFIC SIGNAL PLANS

N

0 50 100 200
HORIZONTAL SCALE IN FEET

LIGHTING REMOVAL PLAN
STA. 28+00 TO STA. 55+00

SUM-8-0.63

856
1088

i:\Projects\8992100\civil\dsc1.dgn

i:\projects\9922100i\civildsc2.dgn

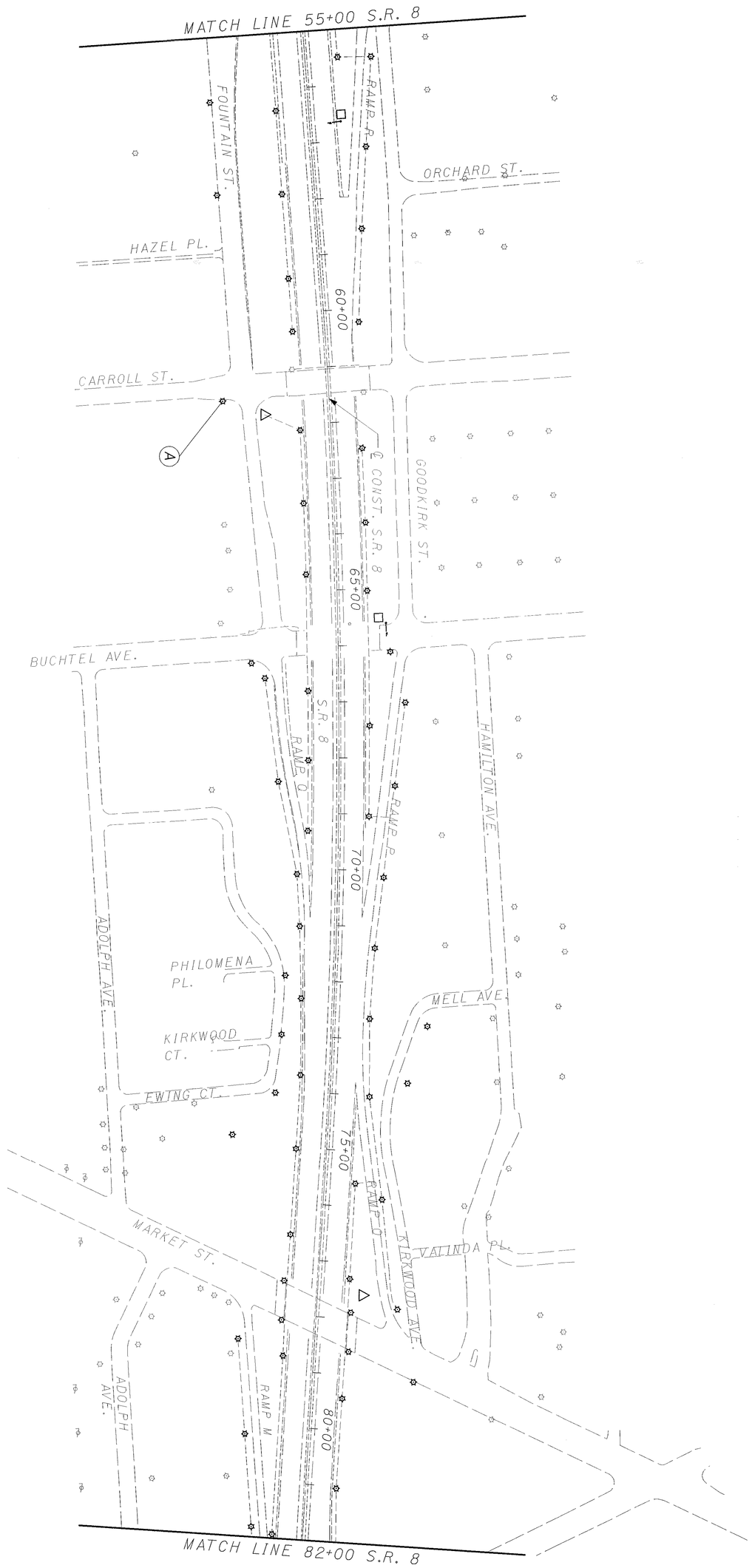

LEGEND

- △ EXISTING POWER SERVICE, 480V, 2W, 60 AMP. TO BE REMOVED
- ---- EXISTING CIRCUIT
- ✲ LUMINAIRE WITH POLE TO BE REMOVED
- D UNDERPASS LUMINAIRE WALL MOUNT TO BE REMOVED
- □ PULL BOX TO BE REMOVED
- ⊷ EXISTING SIGN LIGHTING TO BE REMOVED
- ⊷ EXISTING SIGN LIGHTING TO BE REMOVED

CODED NOTES

(A) REMOVAL OF TRAFFIC POLE WITH LUMINARE ARM SHOWN ON TRAFFIC SIGNAL PLANS

857
1088

SUM-8-0.63

LIGHTING REMOVAL PLAN
STA. 55+00 TO STA. 82+00

0 100
50 200
HORIZONTAL SCALE IN FEET

N

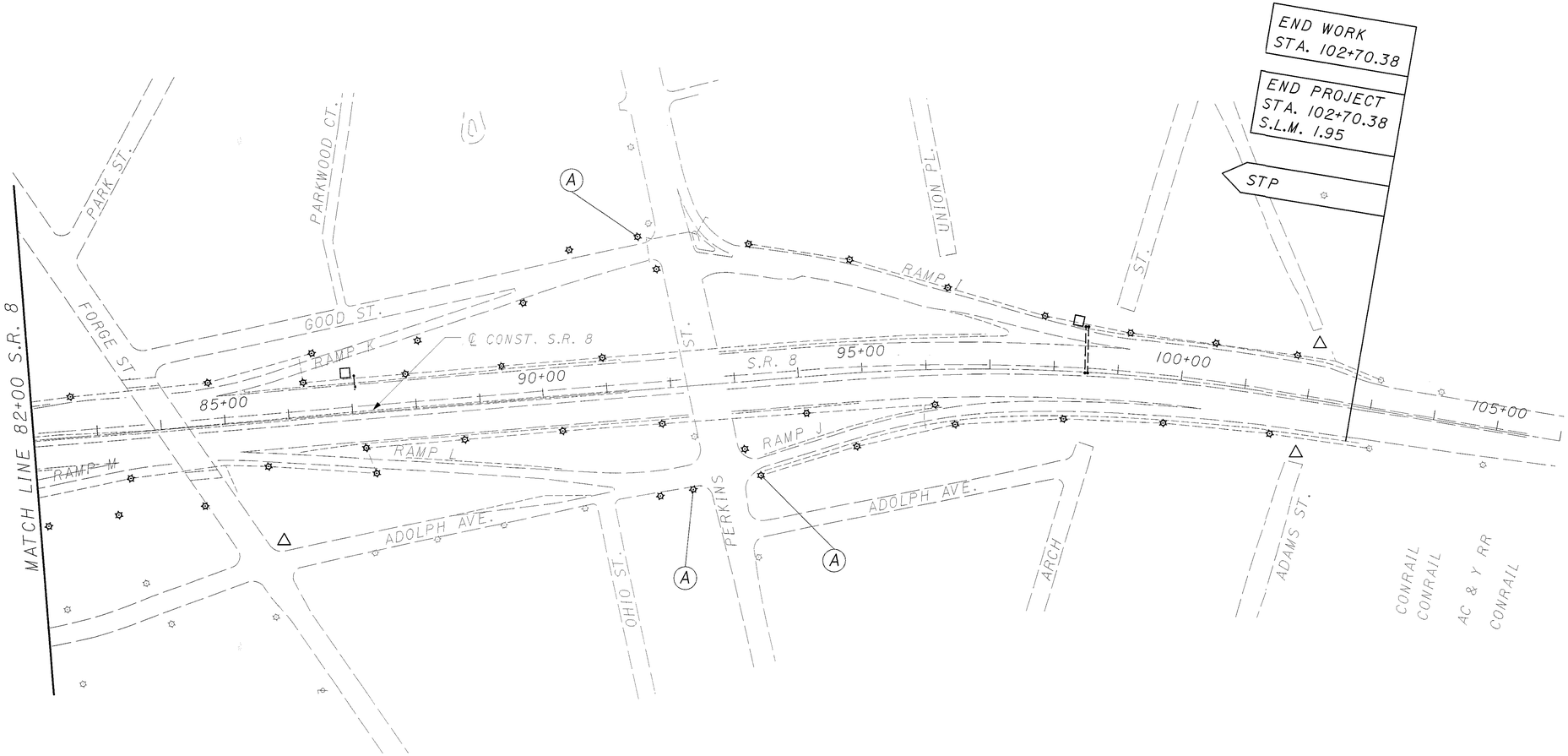

LEGEND

- △ EXISTING POWER SERVICE, 480V, 2W, 60 AMP. TO BE REMOVED
- ---- EXISTING CIRCUIT
- ✡ LUMINAIRE WITH POLE TO BE REMOVED
- D UNDERPASS LUMINAIRE WALL MOUNT TO BE REMOVED
- □ PULL BOX TO BE REMOVED
- EXISTING SIGN LIGHTING TO BE REMOVED
- EXISTING SIGN LIGHTING TO BE REMOVED

CODED NOTES

(A) REMOVAL OF TRAFFIC POLE WITH LUMINARE ARM SHOWN ON TRAFFIC SIGNAL PLANS

N

0 50 100 200
HORIZONTAL SCALE IN FEET

LIGHTING REMOVAL PLAN
STA. 82+00 TO STA. 106+00

SUM-8-0.63

858
1088

i:\projects\9922100\civildsc3.dgn

LIGHTING CRITERIA

HIGHWAY LIGHTING

INITIAL LIGHT ITENSITY: 1.0 TO 1.2 FC
UNIFORMITY RATIO: AVE/MIN.: 3:1
MAX./MIN.: 10:1

SERVICE ROAD AND UNDERPASS LIGHTING

INITIAL LIGHT ITENSITY: 0.8 FC
UNIFORMITY RATIO: AVE/MIN.: 4:1
MAX./MIN.: 10:1

NOTES:

1. POLE NUMBERS ARE ASSIGNED AS FOLLOWS:
   a. MEDIAN LIGHTING POLES: 1-44
   b. RAMP LIGHTING POLES: 1B-14B
   c. SERVICE ROAD LIGHTING POLES: 1A-54A
   d. TRAFFIC SIGNAL POLE WITH LIGHT T1-T16
2. POLE NO. 1 AND 2 HAVE LUMINAIRES, 400W HPS, 480V, BACK TO BACK (53' MOUNTING HEIGHT).
3. POLE OFFSET DISTANCE IS TAKEN FROM CENTER OR BASE LINE.

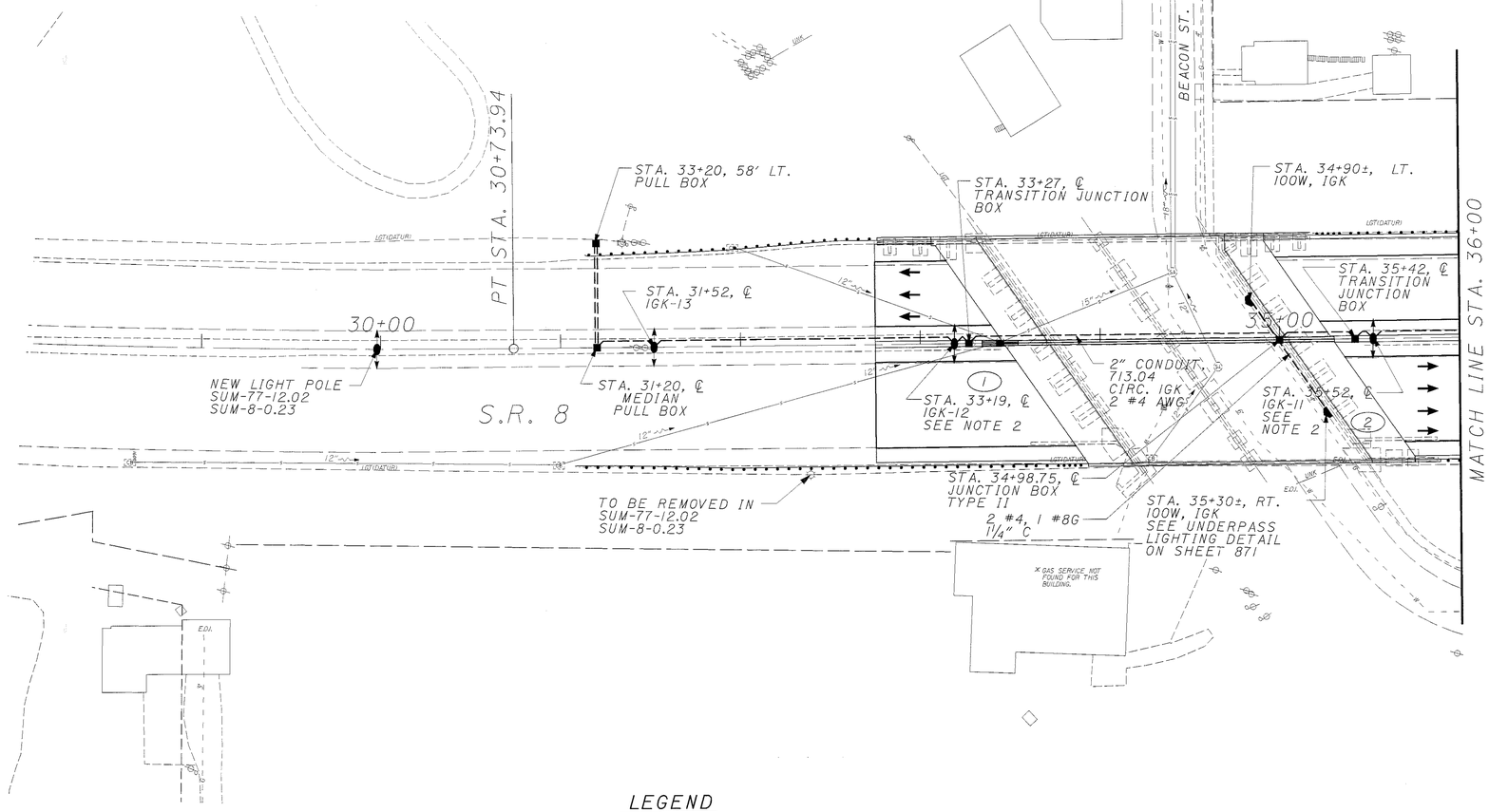

LEGEND

- LUMINAIRE, TYPE POLE-STAR, SYMMETRICAL, TYPE V I-400W HPS, 480V (53' MOUNTING HEIGHT)
- LUMINAIRE, TYPE II, I-200W HPS, 480V 35' MOUNTING HEIGHT, 8' ARM (FOR RAMP)
- LUMINAIRE, TYPE II, I-200W HPS, 480V 35' MOUNTING HEIGHT, 8' ARM FOR SERVICE ROADS
- LUMINAIRE, TYPE II, I-200W HPS, 480V 35' MOUNTING HEIGHT 6' ARM FOR SERVICE ROADS ON STRUCTURE
- UNDERPASS LUMINAIRE WALL MOUNT 70W, OR AS INDICATED, HPS, 480V
- ▲ PROPOSED POWER SERVICE, 480V, 2W, 60 AMP.
- ---- PROPOSED DISTRIBUTION CABLE, (#4 AWG) (INSIDE 4" CONCRETE BARRIER RACEWAY) OR 1½" DUCT CABLE (#4 AWG) ALONG SERVICE ROADS AND RAMPS
- ==== PROPOSED 3" CONDUIT, 713.04
- ■ PROPOSED PULL BOX/JUNCTION BOX
- ☼ EXISTING LIGHT POLE
- SL TRAFFIC SIGNAL POLE WITH LUMINAIRE TYPE II, I-200W HPS, 480V, 35' MOUNTING HEIGHT, 12' ARM
- S — INDICATES SIGN
- L — INDICATES LIGHT FIXTURE
- PROPOSED SIGN LIGHTING
- PROPOSED SIGN LIGHTING
- (1) POLE NUMBER

N

0 20 40 80 HORIZONTAL SCALE IN FEET

CALCULATED TRB CHECKED JBJ

LIGHTING PLAN
STA. 28+00 TO STA. 36+00

SUM-8-0.63

859
1088

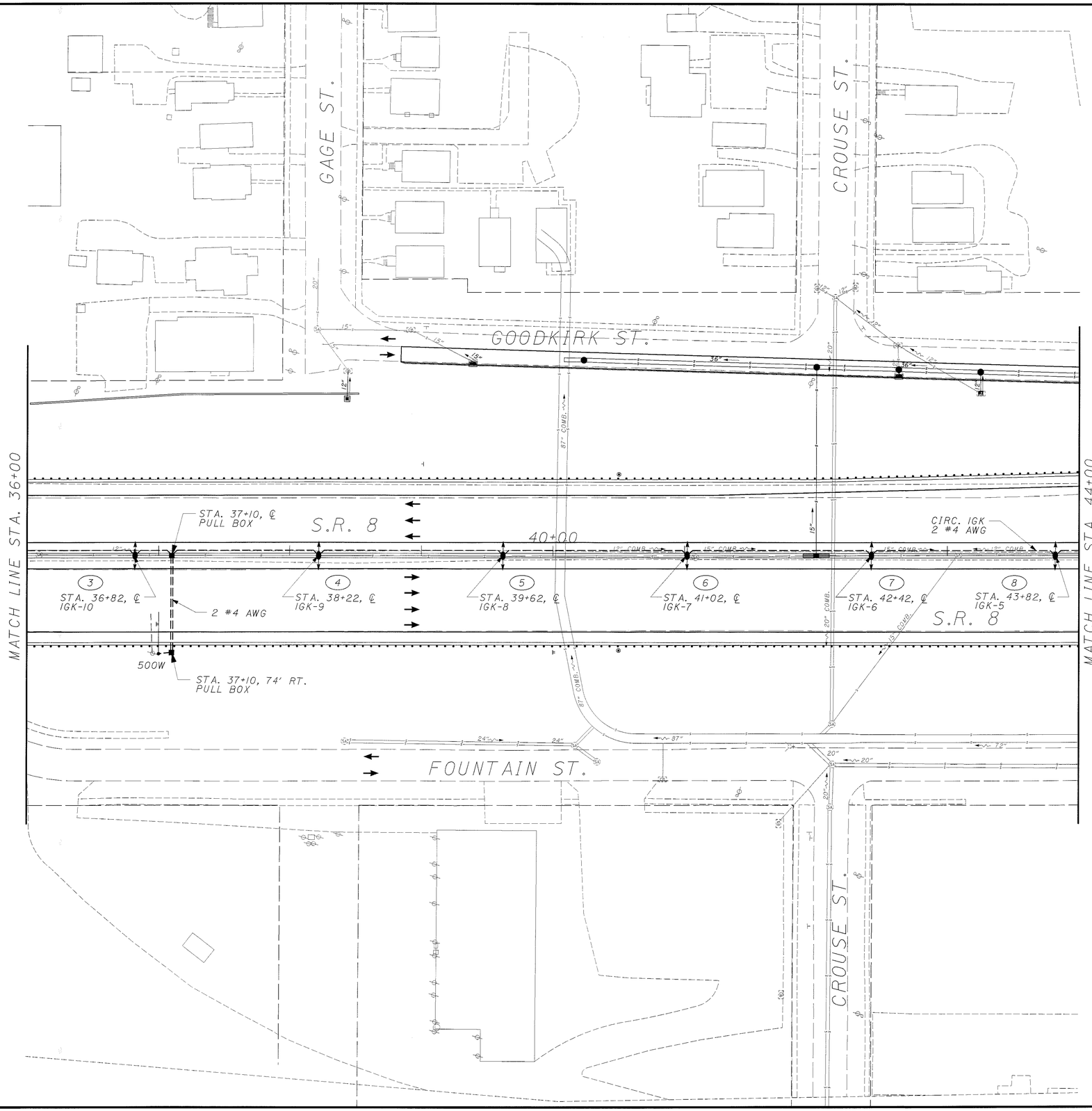

FOR LEGEND, SEE SHEET 859

HORIZONTAL SCALE IN FEET
0 20 40 80

CALCULATED TRB
CHECKED JBJ

LIGHTING PLAN
STA. 36+00 TO STA. 44+00

SUM-8-0.63

860
1088

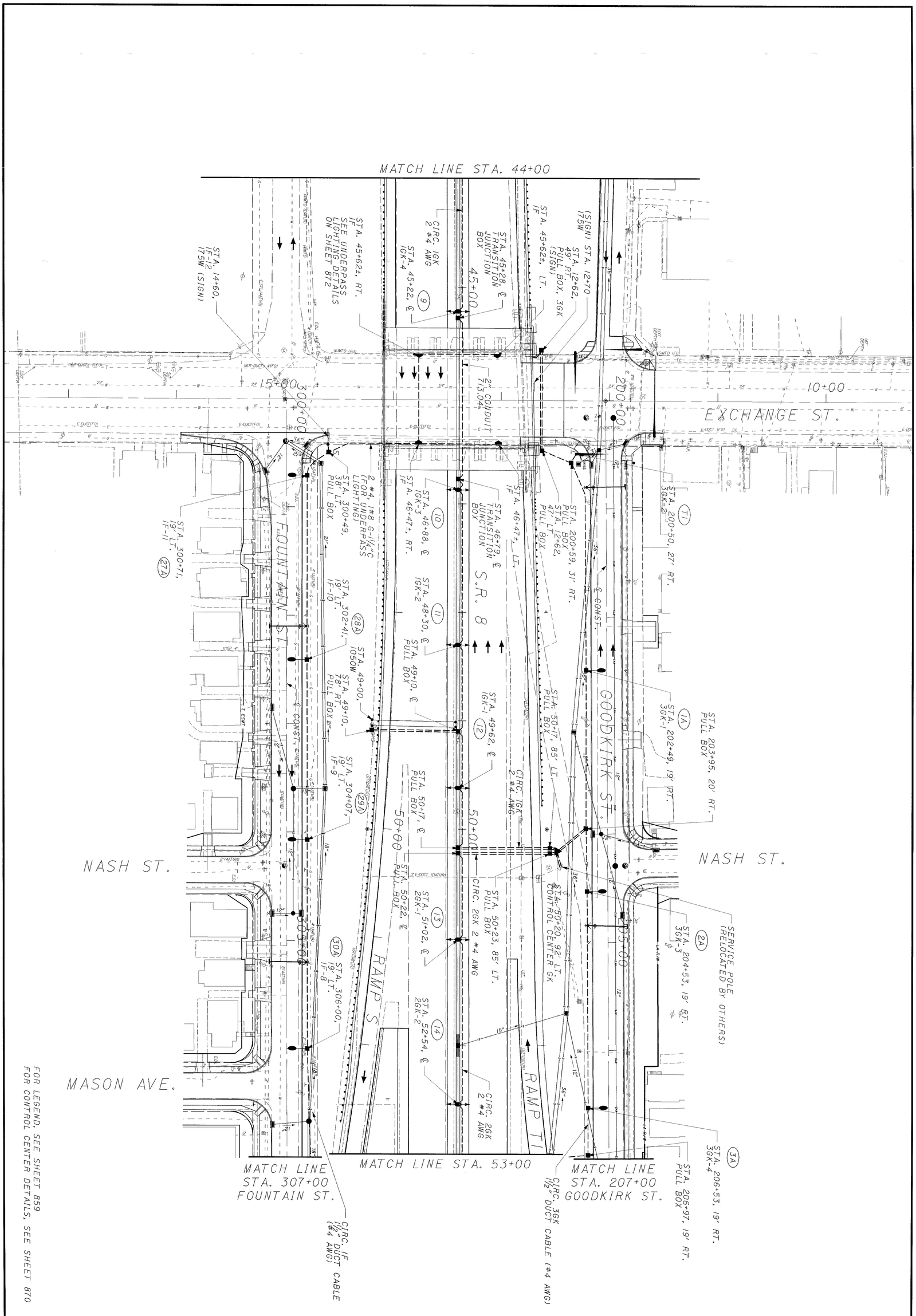

FOR LEGEND, SEE SHEET 859
FOR CONTROL CENTER DETAILS, SEE SHEET 870

861 / 1088	SUM-8-0.63	LIGHTING PLAN STA. 44+00 TO STA. 53+00	CALCULATED TRB / CHECKED JBJ	0 40 20 80 HORIZONTAL SCALE IN FEET

LIGHTING PLAN
STA. 53+00 TO STA. 62+00

HORIZONTAL SCALE IN FEET
0 20 40 80

CALCULATED TRB
CHECKED JBJ

SUM-8-0.63

862
1088

FOR LEGEND, SEE SHEET 859

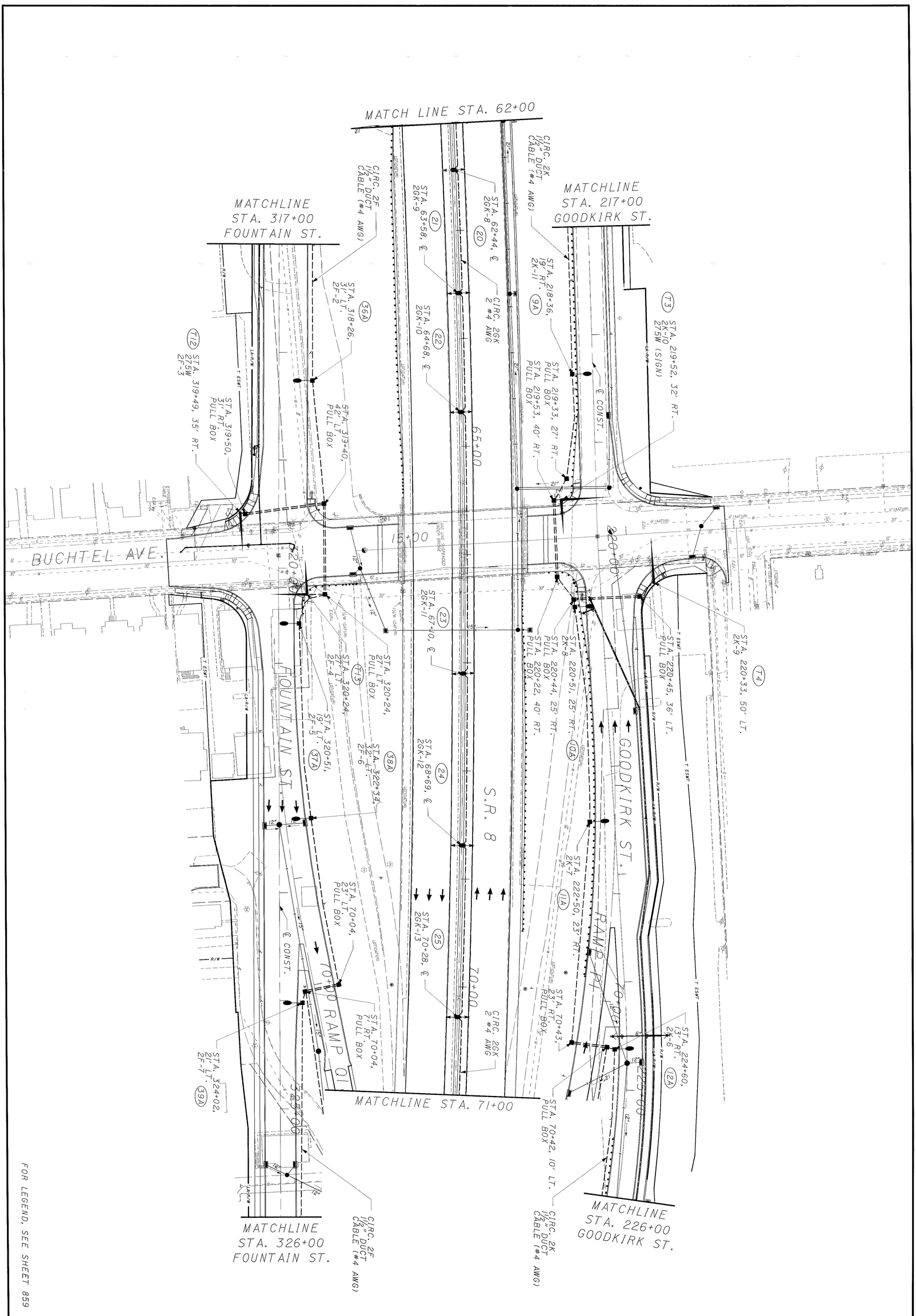

863 / 1088	SUM-8-0.63	LIGHTING PLAN STA. 62+00 TO STA. 71+00	CALCULATED TRB / CHECKED JBJ	HORIZONTAL SCALE IN FEET (0, 20, 40, 80)

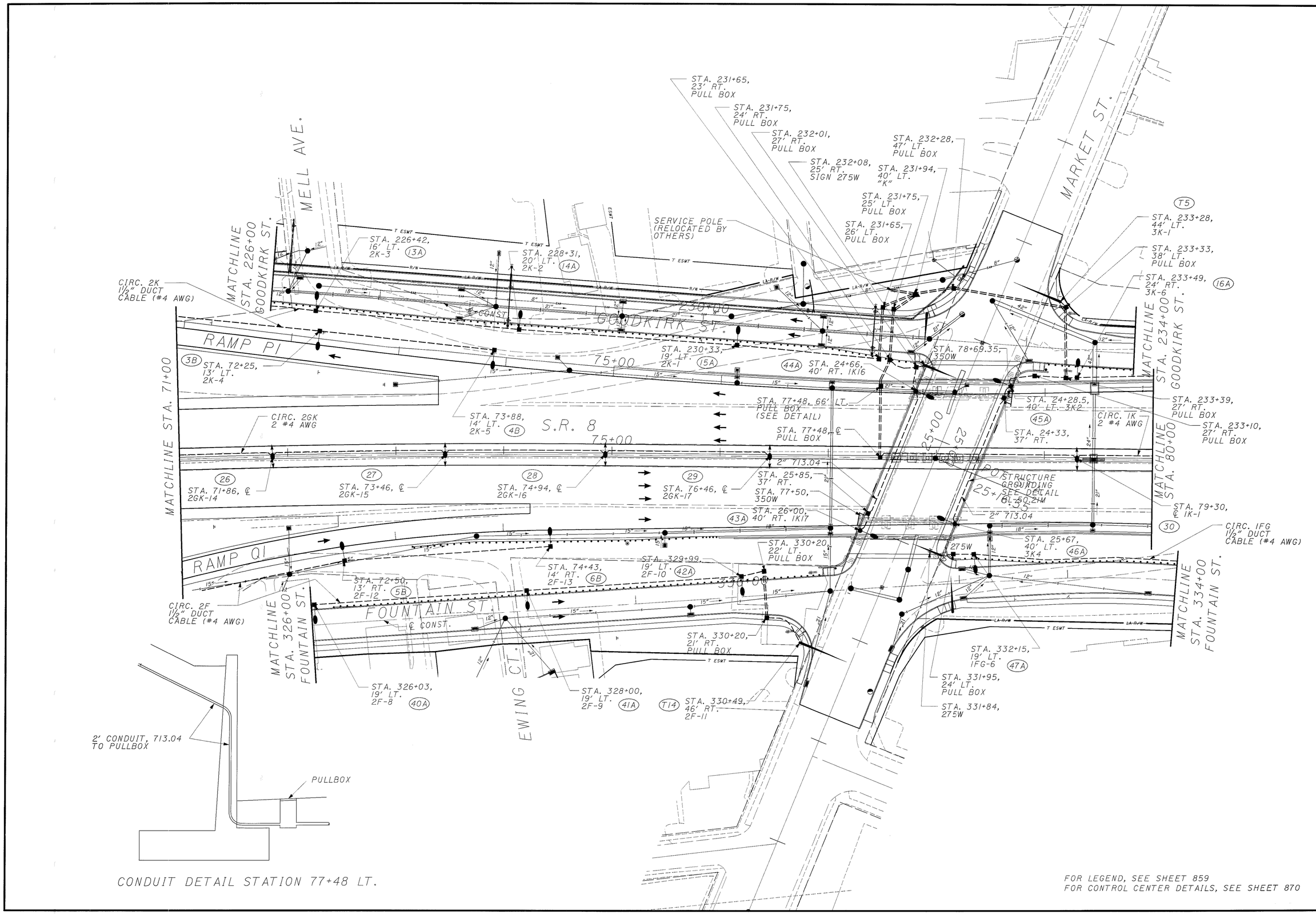

CONDUIT DETAIL STATION 77+48 LT.

FOR LEGEND, SEE SHEET 859
FOR CONTROL CENTER DETAILS, SEE SHEET 870

HORIZONTAL SCALE IN FEET 0 20 40 80

CALCULATED TRB
CHECKED JBJ

LIGHTING PLAN
STA. 71+00 TO STA. 80+00

SUM-8-0.63

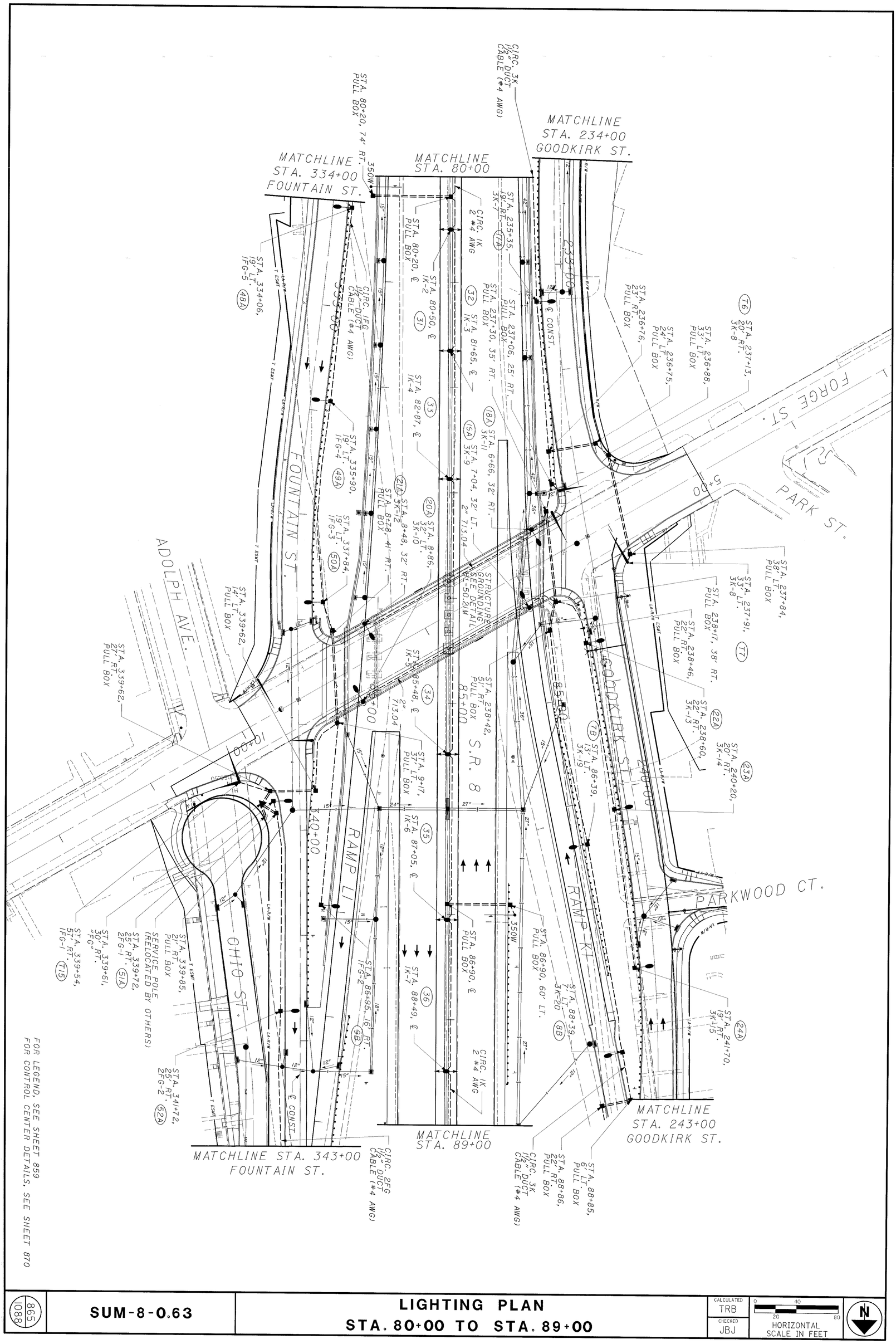

FOR LEGEND, SEE SHEET 859
FOR CONTROL CENTER DETAILS, SEE SHEET 870

865
1088

SUM-8-0.63

LIGHTING PLAN
STA. 80+00 TO STA. 89+00

CALCULATED TRB
CHECKED JBJ

0 40
20 80
HORIZONTAL SCALE IN FEET

N

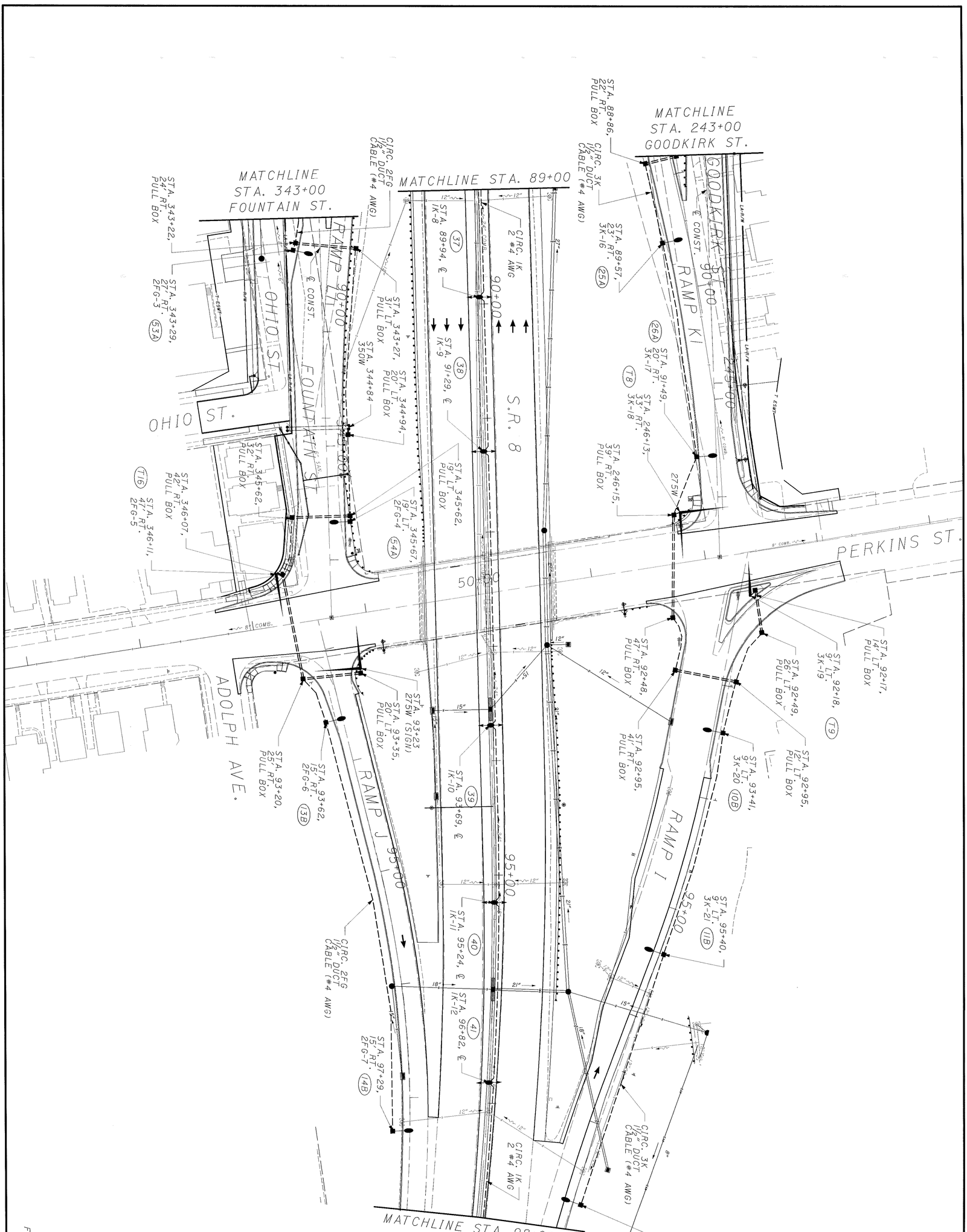

FOR LEGEND, SEE SHEET 859

888 / 1088	SUM-8-0.63	LIGHTING PLAN STA. 89+00 TO STA. 98+00	CALCULATED TRB / CHECKED JBJ	0 40 20 80 HORIZONTAL SCALE IN FEET

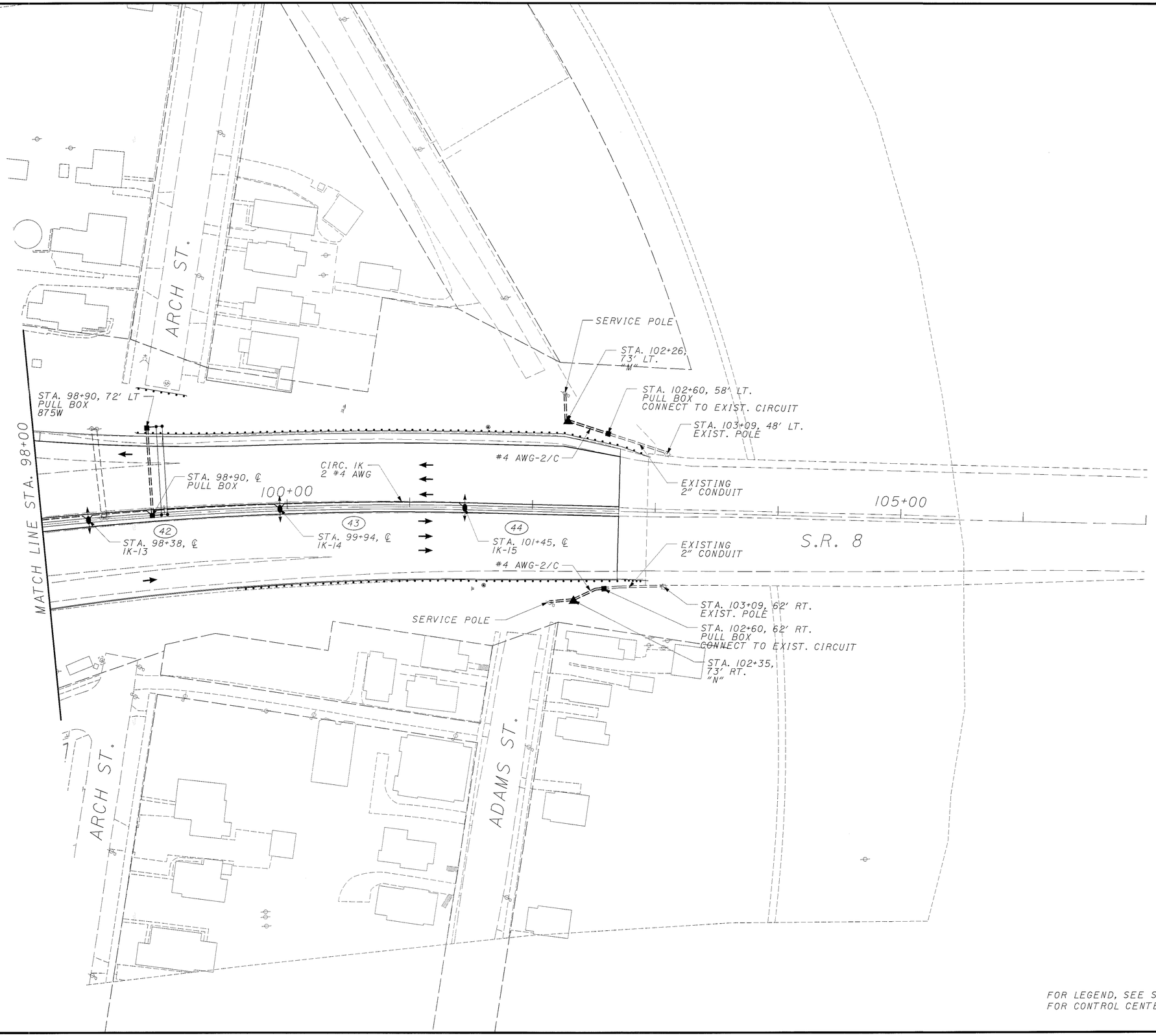

FOR LEGEND, SEE SHEET 859
FOR CONTROL CENTER DETAILS, SEE SHEET 870

N

0 20 40 80
HORIZONTAL SCALE IN FEET

CALCULATED TRB
CHECKED JBJ

LIGHTING PLAN
STA. 98+00 TO STA. 107+00

SUM-8-0.63

867
1088

CIRCUIT 1GK
15 - 400W LUMINAIRES 2 - 100W LUMINAIRES 3 - SIGNS (2075W) LOAD - 8275W MAX % VOLTAGE DROP = 2.73

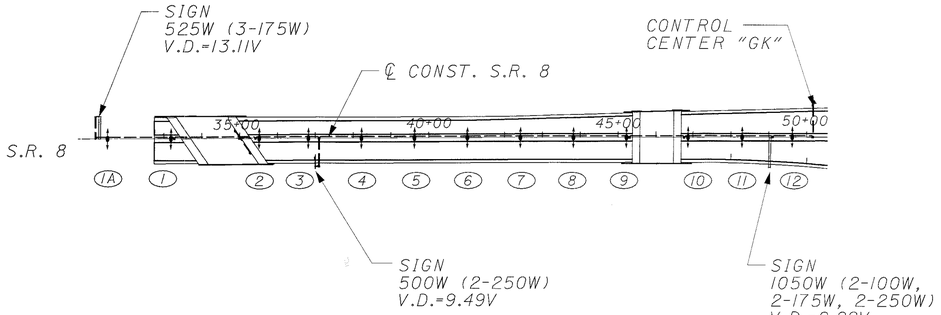

CIRCUIT 2GK
17 - 400W LUMINAIRES 1 - SIGN (350W) LOAD - 7150W MAX % VOLTAGE DROP = 2.95

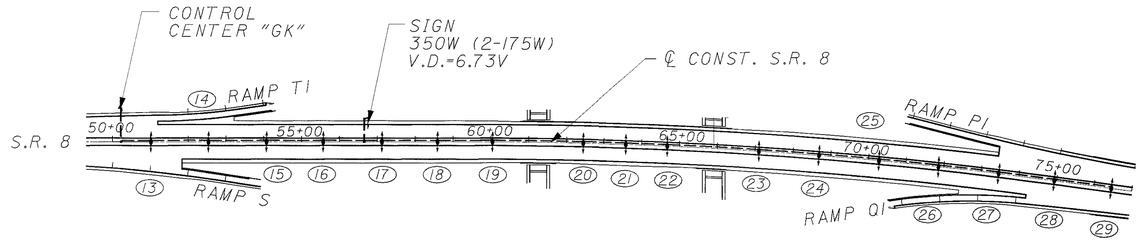

CIRCUIT 3GK
9 - 200W LUMINAIRES 2 - SIGNS (350W) LOAD - 2150W MAX % VOLTAGE DROP = 0.32

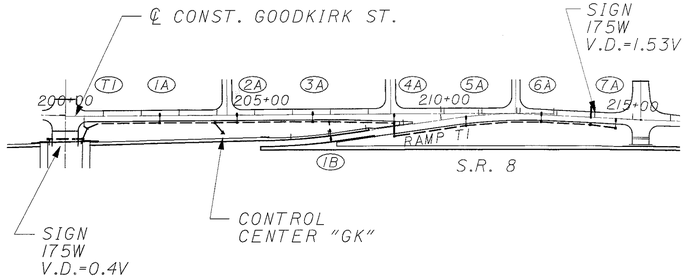

CIRCUIT 1F
11 - 200W LUMINAIRES 1 - SIGN (175W) 4 - UNDERPASS (280W) LOAD - 2655W MAX % VOLTAGE DROP = 0.84

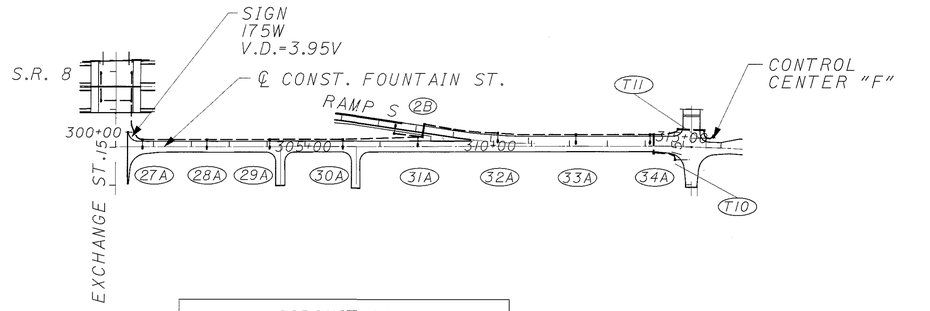

CIRCUIT 2F
13 - 200W LUMINAIRES 1 - SIGN (275W) LOAD - 2875W MAX % VOLTAGE DROP = 0.73

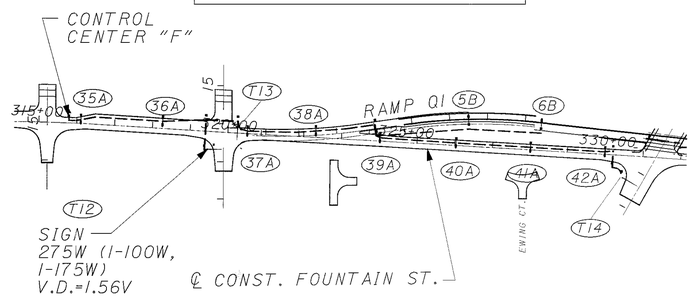

CIRCUIT 1K
2 - 200W LUMINAIRES 15 - 400W LUMINAIRES 5 - SIGNS (2200W) LOAD - 8600W MAX % VOLTAGE DROP = 3.38

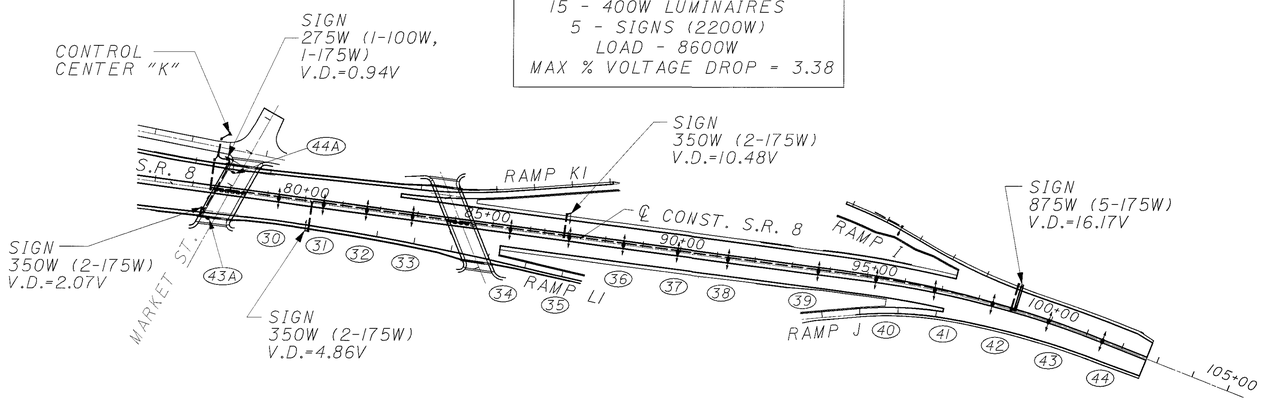

N

HORIZONTAL SCALE IN FEET
0 100 200 400

CALCULATED TRB
CHECKED JBJ

CIRCUIT SCHEMATIC PLAN

SUM-8-0.63

868
1088

CIRCUIT 2K
13 - 200W LUMINAIRES 1 - SIGN (275W) LOAD - 2875W MAX % VOLTAGE DROP = 0.98

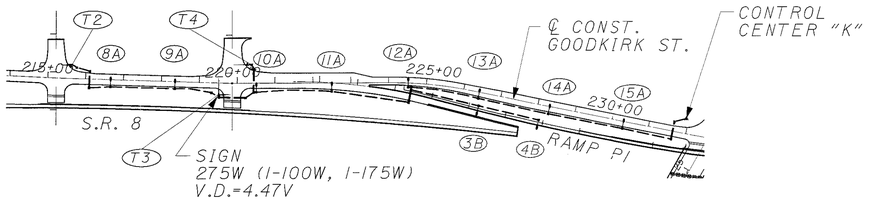

CIRCUIT 3K
23 - 200W LUMINAIRES 2 - SIGN (625W) LOAD - 5225W MAX % VOLTAGE DROP = 1.42

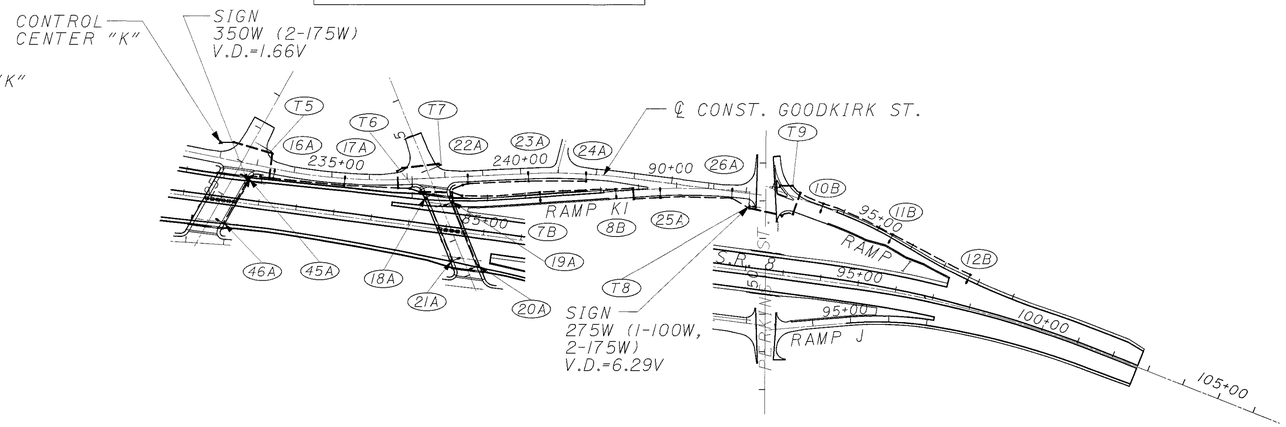

CIRCUIT 1FG
6 - 200W LUMINAIRES 1 - SIGN (275W) LOAD - 1475W MAX % VOLTAGE DROP = 0.23

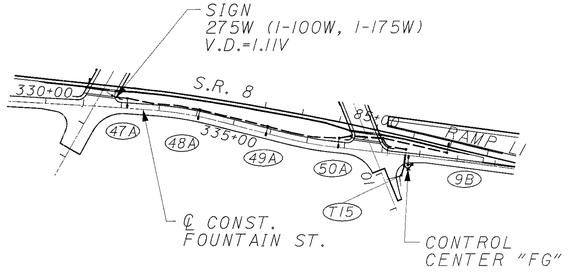

CIRCUIT 2FG
7 - 200W LUMINAIRES 2 - SIGN (625W) LOAD - 2025W MAX % VOLTAGE DROP = 0.40

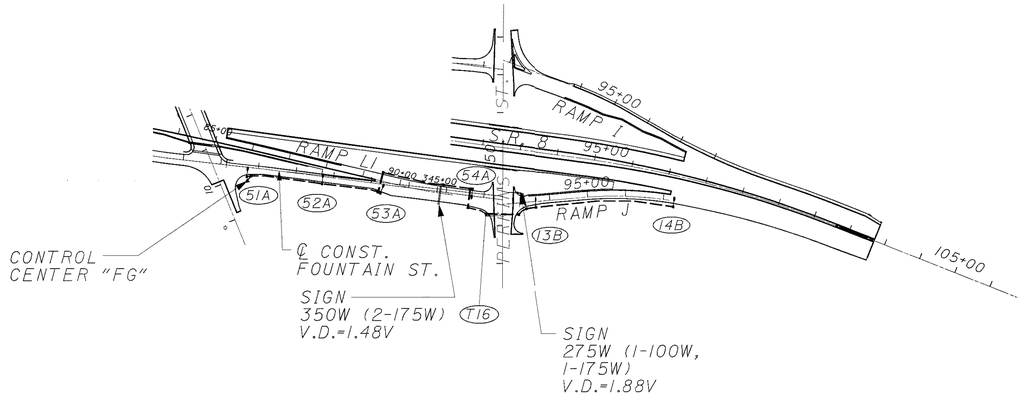

N

HORIZONTAL SCALE IN FEET
0 100 200 400

CALCULATED TRB
CHECKED JBJ

CIRCUIT SCHEMATIC PLAN

SUM-8-0.63

869
1088

LIGHTING DETAILS

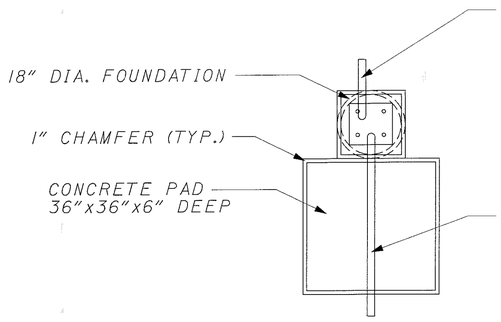

PLAN

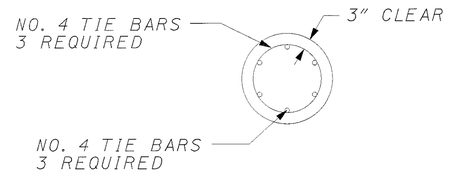

SECTION THRU FOUNDATION

CONTROL CENTER	LOAD KVA	CIRCUIT		
		IDENTIFICATION	LOAD AMPS	FUSE AMPS
GK	21.0	1 GK 2 GK 3 GK	21.52 18.00 5.77	30A 30A 15A
K	20.4	1 K 2 K 3 K	22.1 7.7 14.5	30A 15A 20A
F	6.9	1 F 2 F	7.53 7.7	15A 15A
FG	4.3	1 FG 2 FG	3.98 5.51	15A 15A

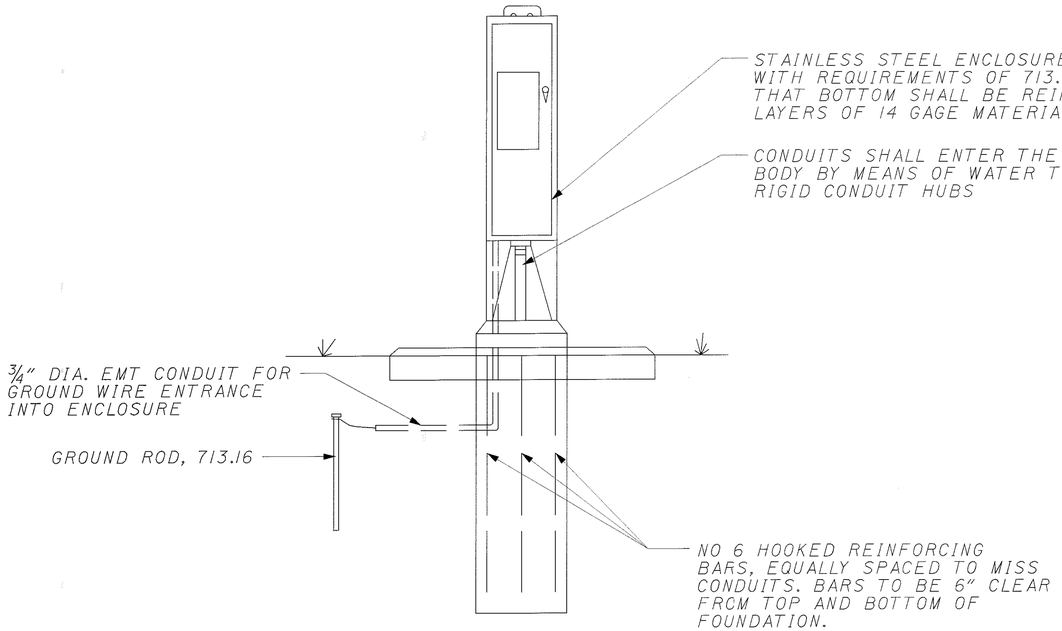

FRONT VIEW
SINGLE ENCLOSURE

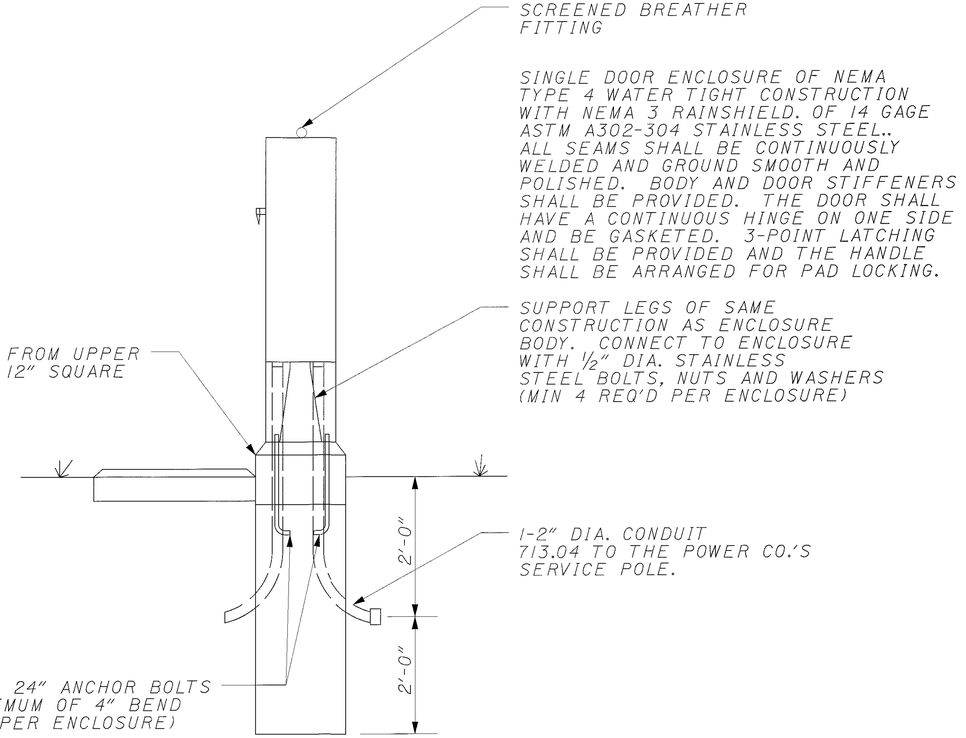

SIDE VIEW

GROUND MOUNTED CONTROL CENTER DETAILS

CALCULATED TRB
CHECKED JBJ

LIGHTING SPECIAL DETAILS

SUM-8-0.63

870
1088

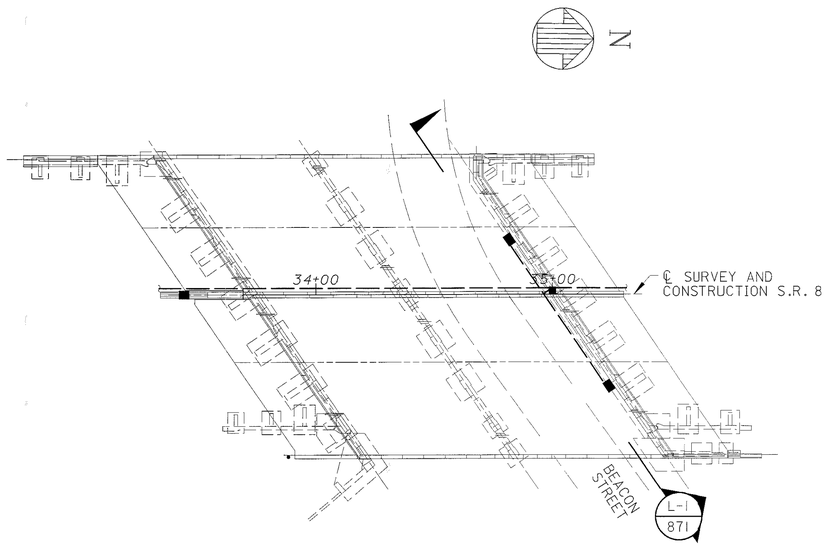

SCHEMATIC PLAN

BRIDGE NO. SUM-8-0064
S.R. 8 OVER BEACON STREET

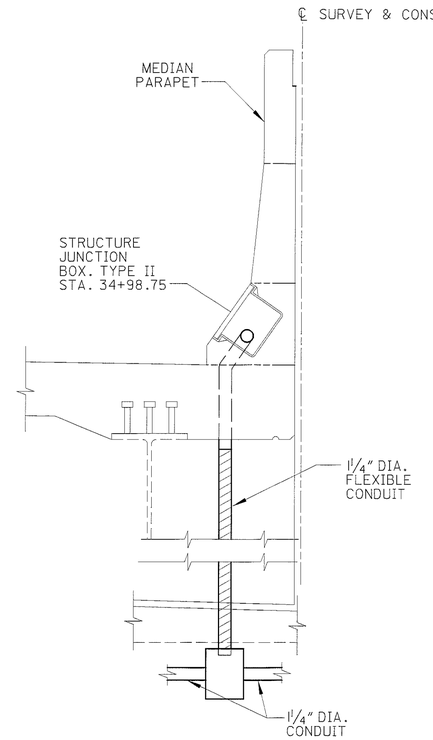

MEDIAN PARAPET PULLBOX DETAIL
SOUTHBOUND ONLY

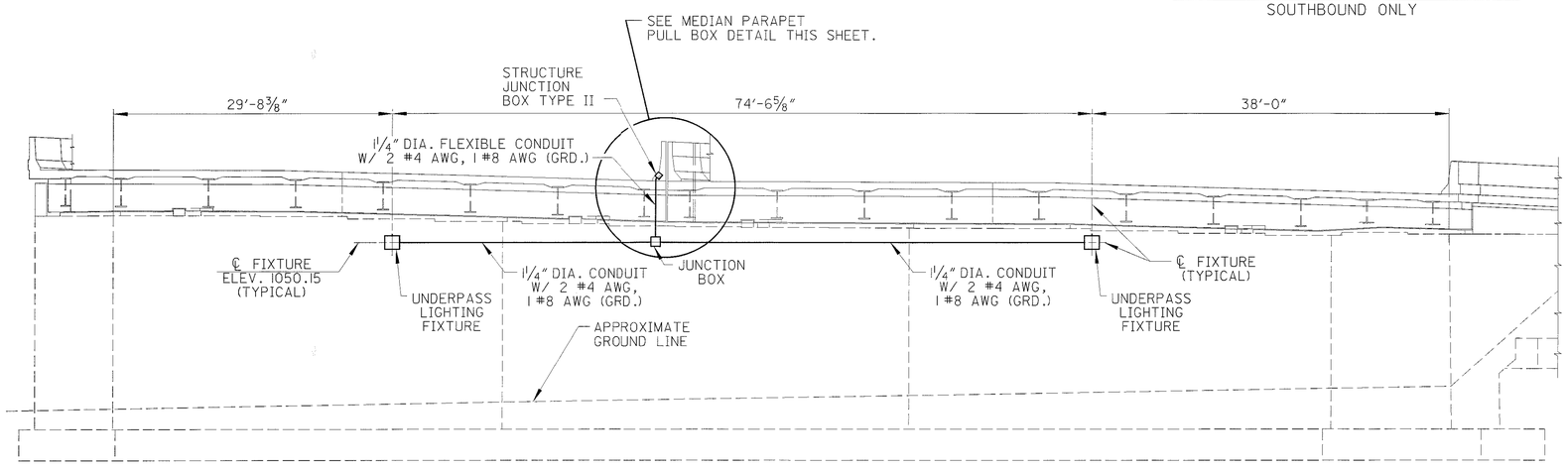

SECTION L-1 / 871

FORWARD ABUTMENT ELEVATION

DIMENSIONS MEASURED ALONG FRONT FACE OF ABUTMENT BREASTWALL

UNDERPASS LIGHTING NOTES

UNDERPASS LIGHTING - ITEM 625 INCLUDING INSTALLATION OF ALL ELECTRICAL EQUIPTMENT ON THE BRIDGE TO THE ADJACENT ROADWAY PULLBOX (SEE LIGHTING GENERAL NOTES FOR PAY ITEM DESCRIPTION).

ANCHORAGE - THE JUNCTION BOXES SHALL BE ATTACHED TO THE CONCRETE WITH 1/4" FLAT HEAD DRIVE PINS.

QUANTITIES - FOR DETAIL LISTING OF QUANTITIES SEE GENERAL LIGHTING SUMMARY, SHEET 836.

ALL RIGID CONDUIT SHALL CONFORM TO CMS 713.04.

CALCULATED JBJ
CHECKED TRB

LIGHTING SPECIAL DETAILS

SUM-8-0.63

871
1088

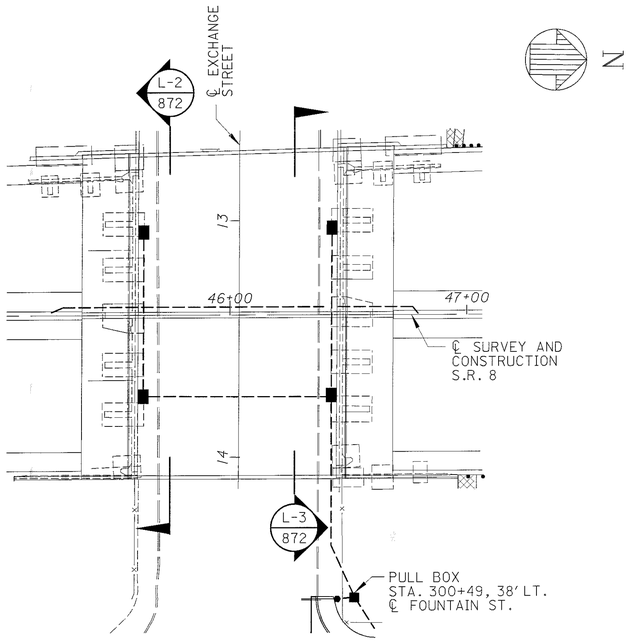

N

SCHEMATIC PLAN

BRIDGE NO. SUM-8-0087
S.R. 8 OVER EXCHANGE STREET

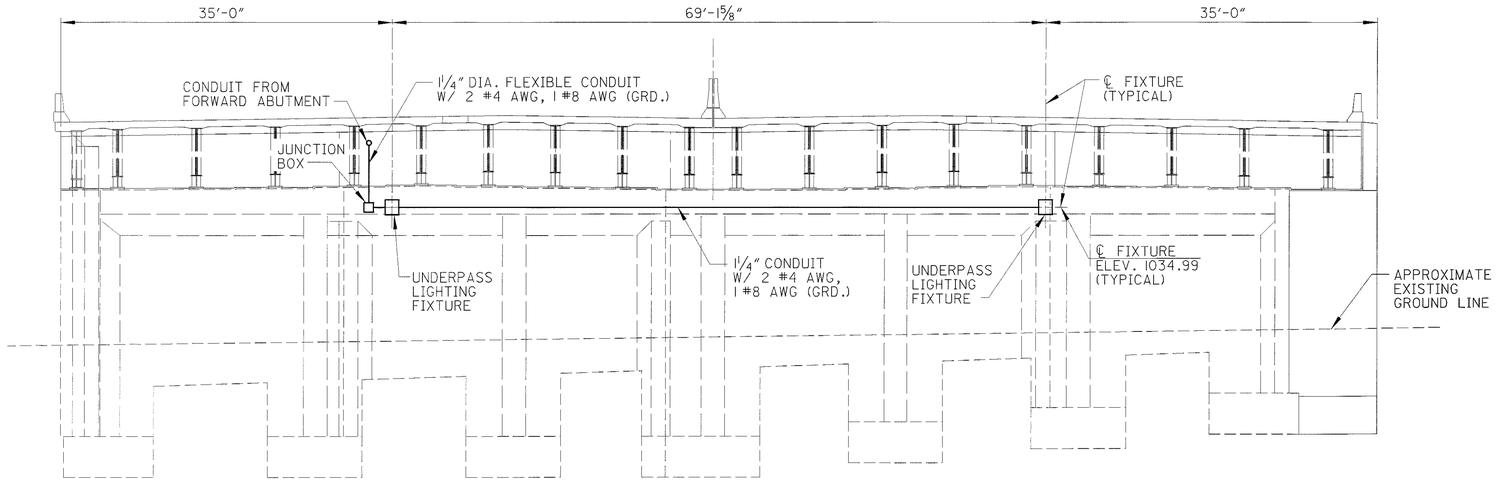

SECTION L-2 / 872

REAR ABUTMENT ELEVATION

DIMENSIONS MEASURED ALONG FRONT FACE OF BREASTWALL

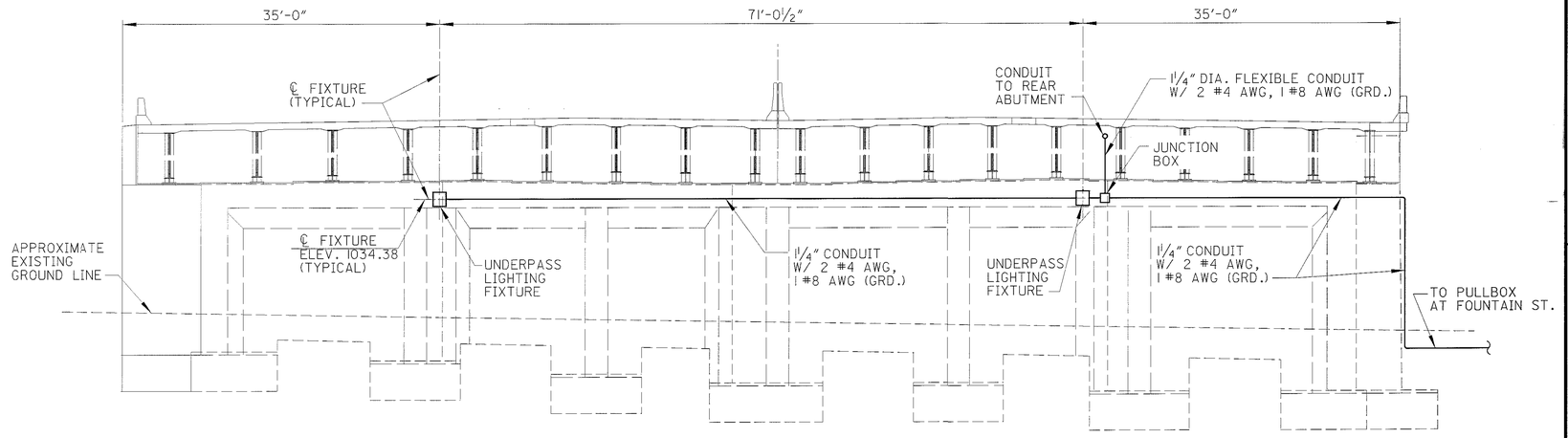

SECTION L-3 / 872

FORWARD ABUTMENT ELEVATION

DIMENSIONS MEASURED ALONG FRONT FACE OF BREASTWALL

FOR UNDERPASS LIGHTING NOTES, SEE SHEET 871

CALCULATED JBJ
CHECKED TRB

LIGHTING SPECIAL DETAILS

SUM-8-0.63

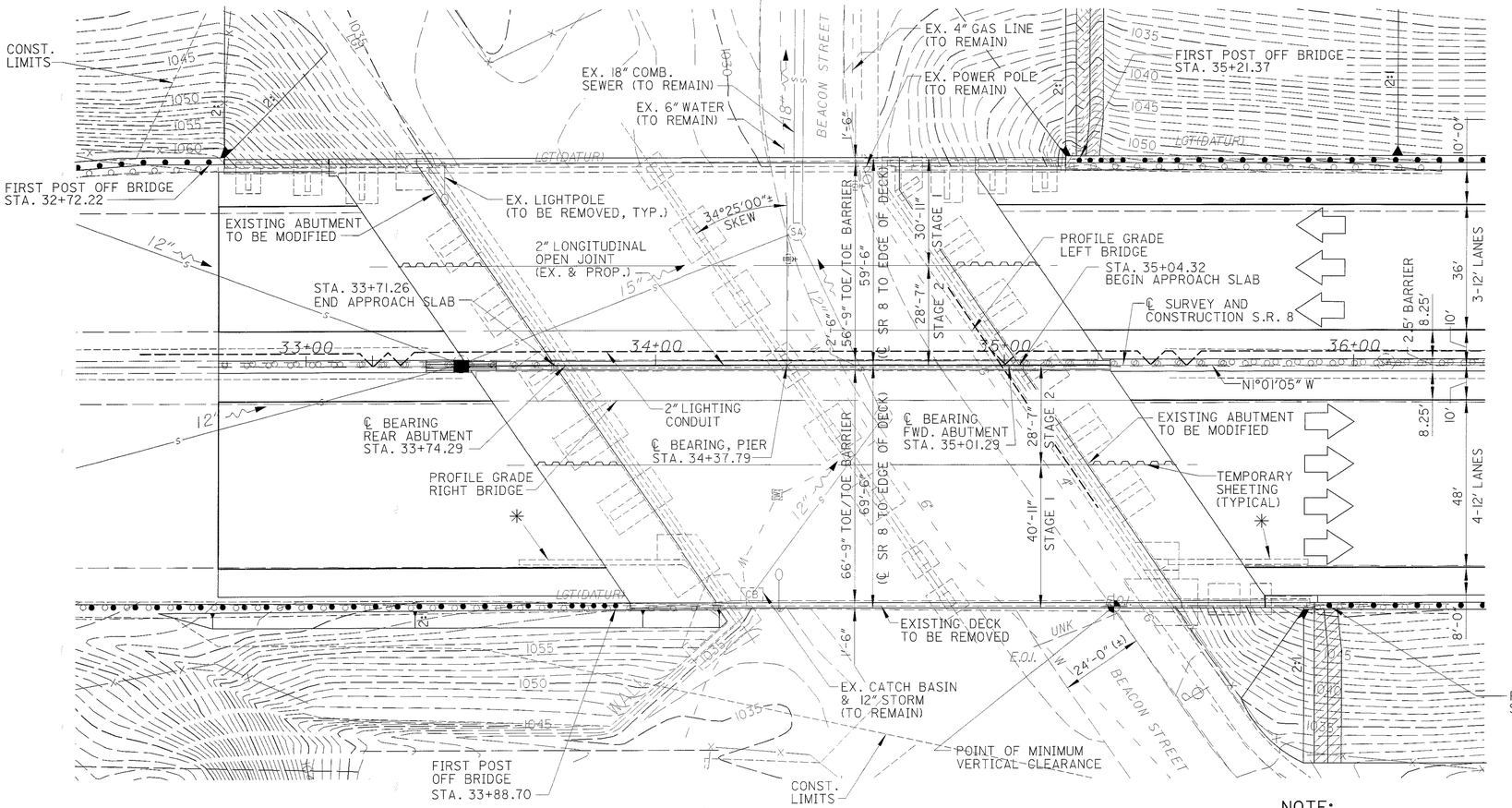

PLAN

✳ NOTE: PORTIONS OF ORIGINAL WINGWALL ABANDONED 3'(±) BELOW GRADE (TO REMAIN)

NOTE:

EARTHWORK LIMITS ARE APPROXIMATE. ACTUAL SLOPES SHALL CONFORM TO PLAN CROSS SECTIONS.

LEGEND:

▨ REINFORCED SODDING, PER STD. DWG DM-4.1M. FOR QUANTITIES, REFER TO EARTHWORK SUBSUMMARY SHEET NO. 169

✳✳ VERTICAL CLEARANCE:
EXISTING: 18'-0" (±)
PROPOSED: EXISTING
REQUIRED: 14'-6"

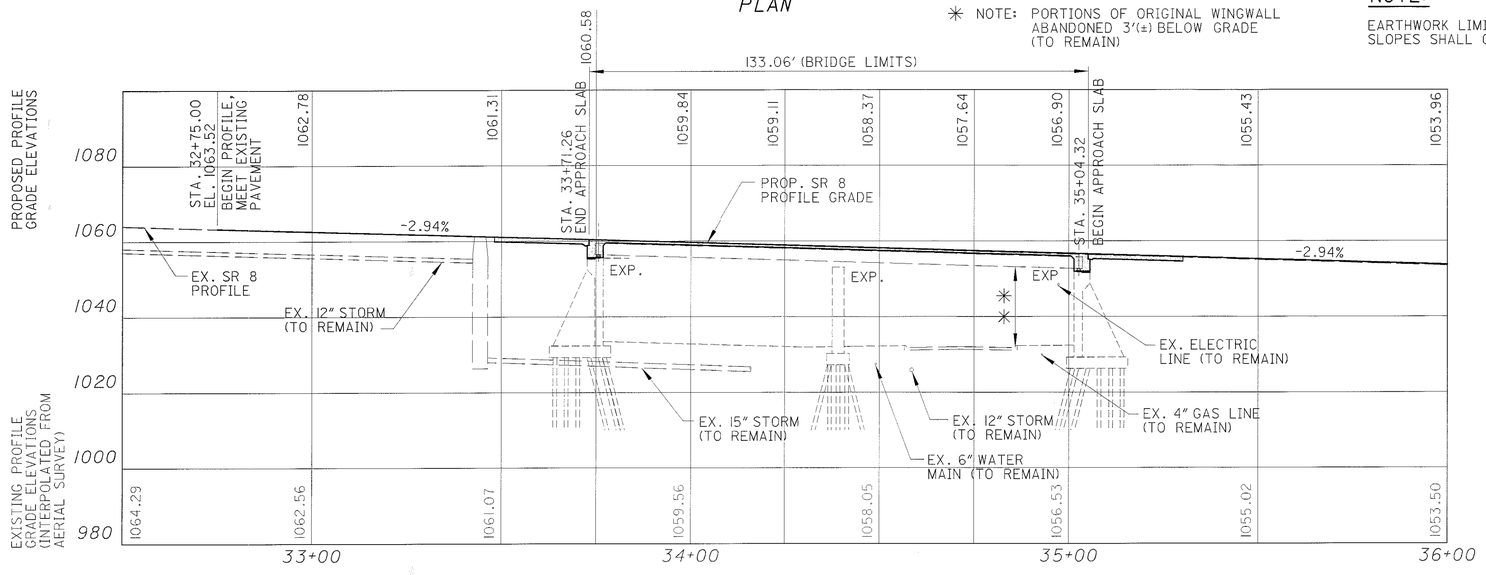

PROFILE ALONG S.R. 8 PROFILE GRADE

NOTE: PROFILE VIEW IS SHOWN AS CUT ON ℄ OF S.R. 8. PROFILE ELEVATIONS SHOWN ARE ON EDGE OF PAVEMENT, 10.00 FEET LEFT OR RIGHT. SEE TRANSVERSE SECTION SHEET 20/38.

LEGEND

℄	CENTERLINE
COMB.	COMBINED
CONST.	CONSTRUCTION
EX.	EXISTING
FWD.	FORWARD
PROP.	PROPOSED
TC	TRAFFIC CONTROL
STORM	STORM SEWER

BENCHMARK #11

CHISELED "□" ON SW CORNER OF CONC. BASE FOR TRAFFIC POLE @ NE CORNER OF EXCHANGE & GOODKIRK STREETS

ELEV: 1023.87

TRAFFIC DATA

S.R. 8

CURRENT ADT (2004) = 115,160
CURRENT ADTT (2004) = 7,485
DESIGN ADT (2024) = 123,380
DESIGN ADTT (2024) = 8,020

EXISTING STRUCTURE

TYPE: CONTINUOUS STEEL BEAM WITH REINFORCED CONCRETE DECK AND SUBSTRUCTURE
SPANS: 2 @ 63'6"(±), C/C BEARINGS
ROADWAY:
54'-5"(±) FACE/FACE BARRIER (LEFT)
56'-10"(±) OUT/OUT DECK (LEFT)
65'-10"(±) FACE/FACE BARRIER (RIGHT)
68'-10"(±) OUT/OUT DECK (RIGHT)
SKEW: 34° 25' (±) RIGHT FORWARD
ALIGNMENT: TANGENT
LOADING: HS 20-44 (CASE I) AND THE ALTERNATE MILITARY LOADING
WEARING SURFACE: 1¼" LATEX MODIFIED CONCRETE
APPROACH SLABS: AS-1-72, 25'
CROWN: 3/16"/FT. (±)
DATE BUILT: c.1954 MAJOR REHABILITATION: c.1982
STRUCTURE FILE NUMBER: 7700091

PROPOSED STRUCTURE

PROPOSED WORK: NEW COMPOSITE CONCRETE DECK. MODIFY ABUTMENTS TO SEMI-INTEGRAL TYPE WITH NEW APPROACH SLABS, PAINT EXISTING SUPERSTRUCTURE (SYSTEM OZEU), REHABILITATE EXISTING SUBSTRUCTURE

TYPE: CONTINUOUS STEEL BEAM WITH COMPOSITE CONCRETE DECK AND REINFORCED CONCRETE SUBSTRUCTURE

SPANS: EXISTING
ROADWAY: 56'-9" TOE/TOE BARRIER (LEFT)
59'-5" OUT/OUT DECK (LEFT)
66'-9" TOE/TOE BARRIER (RIGHT)
69'-5" OUT/OUT DECK (RIGHT)

SKEW: EXISTING
ALIGNMENT: EXISTING
LOADING: HS 20-44 (CASE I) AND THE ALTERNATE MILITARY LOADING
WEARING SURFACE: MONOLITHIC CONCRETE
APPROACH SLABS: AS-1-81, 25' LONG
CROWN: 3/16" / FT.
LATITUDE: N 41°05'00"
LONGITUDE: W 81°30'12"

DLZ
1000 ROCKEFELLER BLDG • 614 W SUPERIOR AVE • CLEVELAND, OH 44113

DESIGNED JWB | DRAWN JWB | CHECKED PAT | REVIEWED GWM | DATE 6/12/01 | REVISED | STRUCTURE FILE NUMBER 7700091

SUMMIT COUNTY
STA.33+71.26
STA. 35+04.32

SITE PLAN
BRIDGE NO. SUM-8-0064
S.R. 8 OVER BEACON STREET

SUM-8-0.63

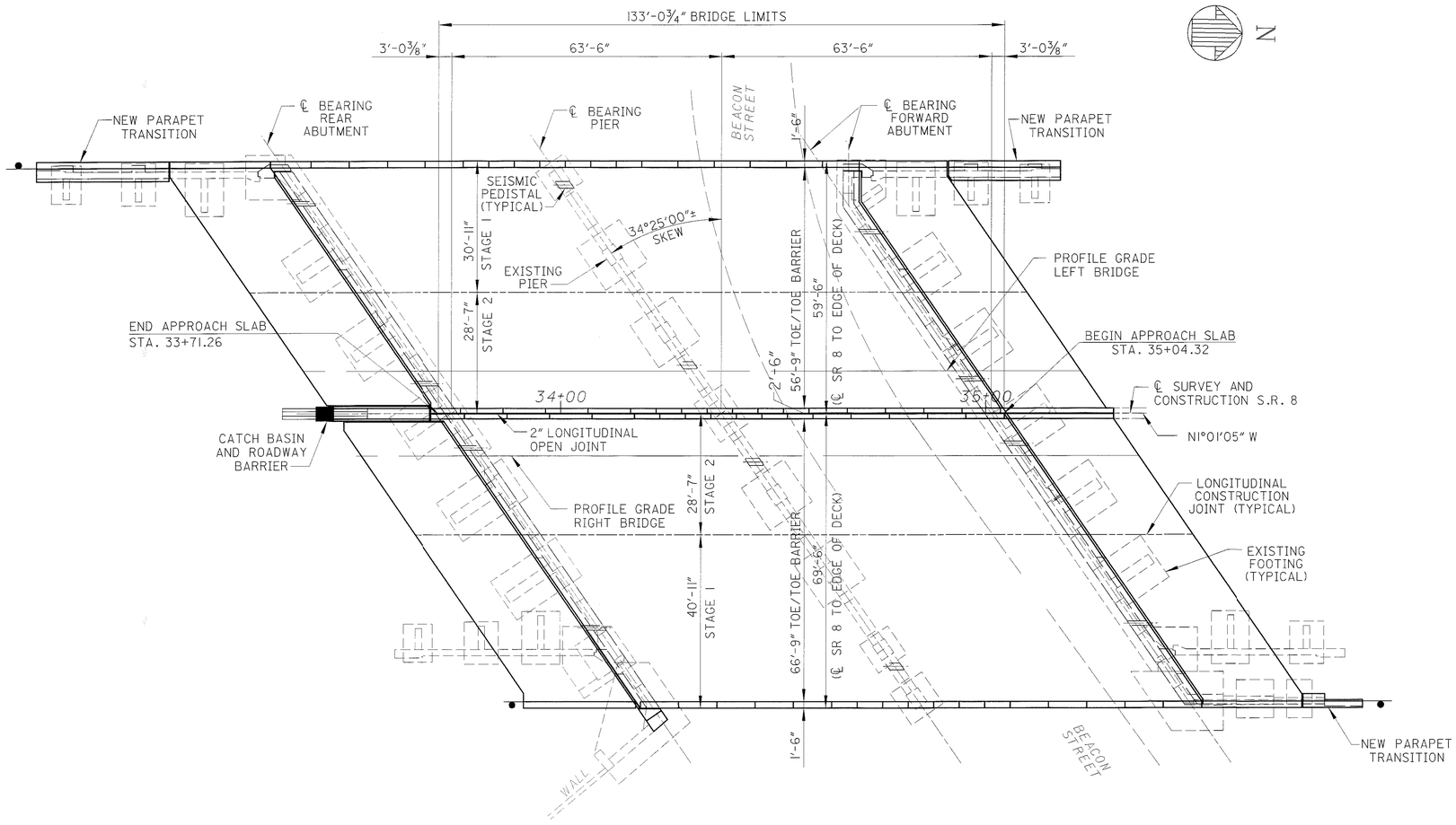

GENERAL PLAN

NOTE: FOR PARAPET AND MEDIAN BARRIER SAW CUT JOINT SPACINGS, SEE SHEETS 23 & 24/38.

DLZ
1000 ROCKEFELLER BLDG • 614 W SUPERIOR AVE • CLEVELAND, OH 44113

DESIGNED	DRAWN	REVIEWED	DATE
JWB	RCK	GWM	6/12/01
CHECKED	REVISED	STRUCTURE FILE NUMBER	
AJM		7700091	

GENERAL PLAN
BRIDGE NO. SUM-8-0064
S.R. 8 OVER BEACON STREET

SUM-8-0.63

2 / 38

874
1088

REFERENCE SHALL BE MADE TO STANDARD DRAWINGS:

AS-1-81	DATED	4/20/01
BR-1	DATED	1/6/99
PCB-91	DATED	7/6/99
SICD-1-96	DATED	4/20/01

AND TO THE SUPPLEMENTAL SPECIFICATIONS:

815	DATED	2/22/00	864	DATED	7/11/00
842	DATED	1/6/99	899	DATED	10/21/98
843	DATED	5/5/98	905	DATED	4/1/98
844	DATED	1/6/99	907	DATED	10/21/98
846	DATED	9/9/97	910	DATED	7/11/00
849	DATED	6/14/95	954	DATED	9/9/97

DESIGN SPECIFICATIONS
THIS STRUCTURE CONFORMS TO "STANDARD SPECIFICATIONS FOR HIGHWAY BRIDGES" ADOPTED BY THE AMERICAN ASSOCIATION OF STATE HIGHWAY AND TRANSPORTATION OFFICIALS, 1996, INCLUDING THE 1997, 1998 AND 1999 INTERIM SPECIFICATIONS AND THE ODOT BRIDGE DESIGN MANUAL.

DESIGN LOADING
HS20-44, CASE I, AND THE ALTERNATE MILITARY LOADING.
FUTURE WEARING SURFACE OF 60 psf

DESIGN STRESSES
HIGH PERFORMANCE
CONCRETE HPC SS 844
FOR SUPERSTRUCTURE - COMPRESSIVE STRENGTH 4500 psi (SUPERSTRUCTURE)
CONCRETE CLASS C - COMPRESSIVE STRENGTH 4000 psi (SUBSTRUCTURE)
REINFORCING STEEL - ASTM A615, A616, OR A617
GRADE 60 MINIMUM YIELD STRENGTH 60,000 psi.

DECK PROTECTION METHOD
EPOXY COATED REINFORCING STEEL
2-1/2" CONCRETE COVER

MONOLITHIC WEARING SURFACE IS ASSUMED, FOR DESIGN PURPOSES, TO BE 1" THICK.

EXISTING STRUCTURE VERIFICATION:

DETAILS AND DIMENSIONS SHOWN ON THESE PLANS PERTAINING TO THE EXISTING STRUCTURE HAVE BEEN OBTAINED FROM PLANS OF THE EXISTING STRUCTURE AND FROM FIELD OBSERVATIONS AND MEASUREMENTS. CONSEQUENTLY, THEY ARE INDICATIVE OF THE EXISTING STRUCTURE AND THE PROPOSED WORK BUT THEY SHALL BE CONSIDERED TENTATIVE AND APPROXIMATE. THE CONTRACTOR IS REFERRED TO CMS SECTIONS 102.05, 105.02, AND 513.02.

CONTRACT BID PRICES SHALL BE BASED UPON A RECOGNITION OF UNCERTAINTIES DESCRIBED ABOVE AND UPON A PREBID EXAMINATION OF THE EXISTING STRUCTURE BY THE CONTRACTOR. HOWEVER, ALL PROJECT WORK SHALL BE BASED UPON ACTUAL DETAILS AND DIMENSIONS WHICH HAVE BEEN VERIFIED BY THE CONTRACTOR IN THE FIELD.

PLANS OF EXISTING BRIDGE

PLANS OF EXISTING BRIDGE MAY BE EXAMINED AT THE DISTRICT 4 OFFICE OF THE OHIO DEPARTMENT OF TRANSPORTATION, 705 OAKWOOD STREET, REVENNA, OHIO 44266.

ITEM 202, PORTIONS OF STRUCTURE REMOVED, OVER 20' SPAN, AS PER PLAN:

DESCRIPTION: WORK TO BE PAID FOR UNDER THIS ITEM SHALL INCLUDE THE REMOVAL OF EXISTING STRUCTURE COMPONENTS AS DETAILED IN THE PLANS AND AS DIRECTED BY THE ENGINEER. THE REMOVALS SHALL INCLUDE BUT NOT NECESSARILY BE LIMITED TO THE FOLLOWING:

1. EXISTING BRIDGE DECK, INCLUDING CURBS, PARAPETS, AND RAILING.
2. EXISTING ABUTMENT BACKWALLS AND PORTIONS OF EXISTING WINGWALLS AS DETAILED IN THE PLANS.
3. EXISTING STEEL END DAMS AND END CROSSFRAMES.
4. DRILLING HOLES THROUGH THE ENDS OF THE EXISTING STEEL BEAMS TO ACCOMODATE REINFORCING STEEL FOR THE CONCRETE END DIAPHRAGM.
5. EXISTING STEEL ROCKERS AND BOLSTERS.
6. EXISTING UNDERDECK LIGHT SUPPORT ANGLES.
7. MISCELLANEOUS ITEMS THAT ARE NOT SHOWN TO BE INCORPORATED INTO THE FINAL CONSTRUCTION AND ARE DIRECTED TO BE REMOVED BY THE ENGINEER.

CARE SHALL BE TAKEN DURING DECK REMOVAL TO PROTECT PORTIONS OF STEEL SUPPORT SYSTEMS THAT ARE TO BE SALVAGED AND INCORPORATED INTO THE PROPOSED STRUCTURE. IN THIS RESPECT, THE USE OF EXPLOSIVES, HEADACHE BALLS AND/OR HOE RAM TYPE OF EQUIPMENT IS PROHIBITED.

ITEM 202, PORTIONS OF STRUCTURE REMOVED, OVER 20' SPAN, AS PER PLAN (CONT.):

PROTECTION OF TRAFFIC: THE CONTRACTOR SHALL PROVIDE ALL NECESSARY TEMPORARY SUPPORTS UNDER THE STRUCTURE DURING REMOVAL, RECONSTRUCTION AND CONSTRUCTION OPERATIONS AS REQUIRED TO MAINTAIN A COMPLETELY STABLE STRUCTURE AT ALL TIMES. IF IN THE OPINION OF THE ENGINEER, ADDITIONAL SUPPORTS ARE REQUIRED, THEY SHALL BE PROVIDED BY THE CONTRACTOR ENTIRELY AT HIS EXPENSE. NO FULL DEPTH BRIDGE REPAIR SHALL BE PERFORMED OVER AN OPEN LANE.

IN ORDER TO PROTECT VEHICULAR TRAFFIC AND PAVEMENT AGAINST DAMAGE FROM FALLING MATERIAL, DEBRIS AND OTHER DEMOLITION OPERATIONS, WHILE SUPERSTRUCTURE CONCRETE IS BEING REMOVED OR WHILE THE CONTRACTOR IS WORKING OVERHEAD, THE CONTRACTOR SHALL FURNISH AND ERECT A TEMPORARY PROTECTIVE STRUCTURE UNDER THE SPANS THAT ARE DIRECTLY OVER THE ROADWAY AND SHOULDER AREAS PLUS ENOUGH ADDITIONAL COVERAGE IN THE AREA TO PREVENT ANY FALLING MATERIAL FROM ANY SPAN FROM REACHING THESE AREAS.

IN ADDITION TO THE TEMPORARY PROTECTIVE STRUCTURE, THE CONTRACTOR SHALL PROVIDE PLASTIC SHEETING OR OTHER APPROVED METHODS TO CONTROL WATER USED IN THE SAW CUTTING OPERATION FROM FALLING ON VEHICULAR TRAFFIC.

THE PROTECTIVE STRUCTURE(S) SHALL MEET THE APPROVAL OF THE ENGINEER. THE FLOORING AND SIDING OF THE STRUCTURE(S) SHALL HAVE NO CRACKS OR OPENINGS THROUGH WHICH MATERIAL PARTICLES MAY FALL. AS A MINIMUM, TWO LAYERS OF ¾INCH PLYWOOD WITH LAPPED JOINTS OR AN EQUIVALENT DESIGN SHALL BE PLACED BETWEEN THE LOWER FLANGES OF THE STRUCTURAL STEEL BEAMS ABOVE THE PAVEMENT AND SHOULDERS OF ROADWAYS ON WHICH VEHICULAR TRAFFIC IS BEING MAINTAINED ON THE EXISTING LANES OR BY PARTIAL LANE CLOSURES. THE PROTECTION IN ALL CASES SHALL EXTEND BEYOND THE EXISTING AND/OR NEW EXTERIOR STRUCTURAL BEAMS A SUFFICIENT DISTANCE TO PROTECT UNDER THE EXISTING AND PROPOSED PARAPETS AND SHALL HAVE SIDEWALLS EXTENDING UP TO 4 FEET MINIMUM. SIDEWALLS SHALL BE BRACED SUBSTANTIALLY TO RESIST WIND LOADS. DURING SAW CUTTING AND DECK REMOVAL OPERATIONS, TEMPORARY SHIELDS ATTACHED TO THE SIDEWALLS AND EXTENDING 1 FOOT ABOVE THE TOP OF THE PARAPET SHALL BE INSTALLED TO LIMITS AS DIRECTED BY THE ENGINEER. TEMPORARY SHIELDS SHALL BE REMOVED IMMEDIATELY AFTER THEY HAVE SERVED THEIR PURPOSE. DEBRIS SHALL NOT BE PERMITTED TO COLLECT ON THEIR PROTECTED STRUCTURES.

WHEN SUPPORTING THE PROTECTIVE STRUCTURE(S) FROM THE STEEL WORK OF THE BRIDGE, ALL CONNECTIONS THERETO SHALL BE MADE BY MEANS OF APPROVED CLAMPS ON BOTH SIDES OF THE BEAM FLANGE. THE DRILLING OF HOLES IN THE STEEL WORK OR WELDING THERETO, FOR THIS PURPOSE WILL NOT BE PERMITTED. NO PORTION OF THE TEMPORARY SUPPORT SYSTEM AND/OR PROTECTIVE STRUCTURE(S) (INCLUDING CONNECTION DEVICES) SHALL EXTEND MORE THAN 10 INCHES BELOW THE BOTTOM FLANGE OF THE STEEL STRINGERS OR COVER PLATES THAT IS OVER THE TRAVELED WAY (PAVEMENT, SHOULDERS) OF A HIGHWAY ON WHICH TRAFFIC IS BEING MAINTAINED. HOWEVER, IN NO INSTANCE SHALL THE UNDERCLEARANCE BE LESS THAN 14 FEET. DISTRICT PUBLIC RELATIONS OFFICE (EXT. 209 OR 211) SHALL BE NOTIFIED 18 DAYS IN ADVANCE OF RESTRICTION.

AFTER THE FALSEWORK, TEMPORARY BRACING AND PROTECTIVE STRUCTURE(S) HAVE SERVED THEIR PURPOSE AND WHEN SO DIRECTED BY THE ENGINEER, THEY SHALL BE REMOVED. PROTECTIVE STRUCTURE(S), INCLUDING SIDEWALLS SHALL NOT BE REMOVED UNTIL THE PARAPETS ARE COMPLETED. ALL MATERIAL SHALL BECOME THE PROPERTY OF THE CONTRACTOR AND SHALL BE REMOVED FROM THE JOB SITE AND DISPOSED OF BY THE CONTRACTOR AT HIS OWN EXPENSE.

THE CONTRACTOR SHALL SUBMIT IN QUADRUPLET A DEMOLITION PLAN AND DETAILS OF THE FALSEWORK, TEMPORARY BRACING AND PROTECTIVE STRUCTURES FOR CATCHING BROKEN CONCRETE AND OTHER MATERIALS. THESE PLANS AND DETAILS SHALL BE SUBMITTED 18 DAYS PRIOR TO COMMENCING ANY DEMOLITION TO THE DIRECTOR FOR APPROVAL. THE DETAILS SHALL INCLUDE THE EXISTING AND PROPOSED TEMPORARY UNDERCLEARANCES TO THE TRAVELED WAY.

PROTECTION OF STEEL SUPPORT SYSTEMS: BEFORE DECK SLAB CUTTING IS PERMITTED, THE OUTLINE OF PRIMARY STEEL MEMBERS IN CONTACT WITH THE BOTTOM OF THE DECK SHALL BE DRAWN ON THE SURFACE OF DECK. SMALL DIAMETER PILOT HOLES SHALL BE DRILLED TWO (2) INCHES OUTSIDE THESE LINES TO CONFIRM THE LOCATION OF FLANGE EDGES. DECK CUTS OVER OR WITHIN 2 INCHES OF FLANGE EDGES SHALL NOT EXTEND LOWER THAN THE BOTTOM LAYER OF DECK SLAB REINFORCING STEEL. CUTS MADE OUTSIDE 2 INCHES OF FLANGE EDGES MAY EXTEND THE FULL DEPTH OF THE DECK. DURING CUTTING OF THE DECK SLAB, CARE SHALL BE TAKEN NOT TO DAMAGE STEEL MEMBERS THAT ARE TO BE INCORPORATED INTO THE PROPOSED STRUCTURE.

REMOVAL METHODS: CONCRETE MAY BE REMOVED BY CUTTING AND BY MEANS OF HAND OPERATED PNEUMATIC HAMMERS EMPLOYING POINTED OR BLUNTED CHISEL TYPE TOOLS. FOR REMOVALS ABOVE STEEL MEMBERS, A HAMMER HEAVIER THAN 35 POUNDS BUT NOT TO EXCEED 90 POUNDS MAY BE USED AT THE APPROVAL OF THE ENGINEER. REMOVAL METHODS OVER BRIDGE MEMBERS SHALL ENSURE ADEQUATE DEPTH CONTROL AND PREVENT NICKING OR GOUGING OF THE PRIMARY STEEL MEMBERS.

DECK REMOVALS: DUE TO THE POSSIBLE PRESENCE OF WELDED ATTACHMENTS TO EXISTING STRUCTURAL STEEL (FINISHING MACHINE, SCUPPER AND FORM SUPPORTS, ETC.) CARE SHALL BE TAKEN DURING DECK REMOVAL TO AVOID DAMAGING STRINGERS WHICH ARE TO REMAIN. STRINGERS DAMAGED BY THE CONTRACTOR'S REMOVAL OPERATIONS SHALL, AT NO COST TO THE PROJECT, BE REPLACED OR REPAIRED. PROPOSED REPAIRS, DEVELOPED BY AN OHIO REGISTERED PROFESSIONAL ENGINEER, SHALL BE SUBMITTED IN WRITING FOR REVIEW AND APPROVAL BY THE DIRECTOR.

EXTRANEOUS MEMBERS: EXISITING EXTRANEOUS MEMBERS (i.e., FINISHING MACHINE AND FORM SUPPORTS, ETC., AND THE SUPPORT FOR SCUPPERS AND BULB ANGLES WHICH ARE TO BE REMOVED) ATTACHED BY WELDED CONNECTION TO THE DESIGNATED "TENSION" PORTIONS OF THE EXISTING BEAM FLANGES SHALL BE REMOVED AND THE FLANGE SURFACES GROUND SMOOTH. GRINDING SHALL BE CAREFULLY DONE AND PARALLEL TO THE FLANGES.

ITEM 202, PORTIONS OF STRUCTURE REMOVED, OVER 20' SPAN, AS PER PLAN (CONT.):

LOADING LIMITATIONS: NO PART OF THE STRUCTURE SHALL BE SUBJECTED TO UNIT STRESSES THAT EXCEED 136.5% OF THE ALLOWABLE UNIT STRESSES GIVEN IN THE AASHTO STANDARD SPECIFICATIONS FOR HIGHWAY BRIDGES DUE EITHER TO DEMOLITON, ERECTION OR CONSTRUCTION METHODS, OR TO THE USE OR MOVEMENT OF DEMOLITION OR ERECTION EQUIPMENT ON OR ACROSS THE STRUCTURE. STRUCTURAL ANALYSIS COMPUTATIONS, BY AN OHIO REGISTERED PROFESSIONAL ENGINEER, SHOWING THE ALLOWABLE STRESSES AND MAXIMUM STRESSES PRODUCED BY THE CONTRACTOR'S METHODS OR EQUIPMENT SHALL BE SUBMITTED TO THE DIRECTOR FOR REVIEW AND APPROVAL AT LEAST TWO WEEKS PRIOR TO THE START OF THE WORK.

CUTLINE CONSTRUCTION JOINT PREPARATION: SAW CUT BOUNDARIES OF PROPOSED CONCRETE REMOVALS 1" DEEP. REMOVE CONCRETE TO A ROUGH SURFACE. THE EXISTING REINFORCING STEEL, IF REQUIRED IN THE PLANS, SHALL BE LEFT IN PLACE. INSTALL DOWELS BARS IF SPECIFIED. PRIOR TO CONCRETE PLACEMENT, ABRASIVELY CLEAN JOINT SURFACES AND EXISTING EXPOSED REINFORCEMENT TO REMOVE LOOSE AND DISINTEGRATED CONCRETE AND LOOSE RUST. THE JOINT SURFACE AND EXPOSED REINFORCEMENT SHALL BE THOROUGHLY CLEANED OF ALL DIRT, DUST, OR OTHER FOREIGN MATERIAL BY THE USE OF WATER, AIR UNDER PRESSURE OR OTHER METHODS THAT PRODUCE SATISFACTORY RESULTS. EXISTING REINFORCING STEEL DOES NOT HAVE TO HAVE A BRIGHT STEEL FINISH BUT ALL PACK AND LOOSE RUST SHALL BE REMOVED. EXISTING CONCRETE SURFACES WHICH NEW CONCRETE WILL BE PLACED AGAINST SHALL BE WET, BUT WITHOUT FREE WATER, AT THE TIME OF CONCRETE PLACEMENT.

ABUTMENT CONCRETE REMOVAL SHALL BE BY MEANS OF APPROVED PNEUMATIC HAMMERS EMPLOYING POINTED OR BLUNT CHISEL TOOLS. HYDRAULIC HOE-RAM TYPE HAMMERS WILL NOT BE PERMITTED. THE WEIGHT OF THE HAMMER SHALL NOT BE MORE THAN 35 POUNDS FOR REMOVAL WITHIN 18-INCHES OF PORTIONS TO BE PRESERVED. OUTSIDE THE 18-INCH LIMIT, HAMMERS NOT EXCEEDING 90 POUNDS, MAY BE USED AT THE APPROVAL OF THE ENGINEER. PNEUMATIC HAMMERS SHALL NOT BE PLACED IN DIRECT CONTACT WITH REINFORCING STEEL THAT IS TO BE RETAINED IN THE REBUILT STRUCTURE.

PAYMENT: THIS WORK WILL BE PAID FOR AT THE CONTRACT LUMP SUM PRICE BID, WHICH PRICE AND PAYMENT SHALL BE FULL COMPENSATION FOR ALL LABOR, EQUIPMENT, MATERIALS AND INCIDENTALS NECESSARY TO COMPLETE THE WORK IN CONFORMANCE WITH THESE REQUIREMENTS, WITH PERTINENT PROVISIONS OF 202, AND TO THE SATISFACTION OF THE ENGINEER.

ASBESTOS NOTIFICATION:

AN ASBESTOS SURVEY OF THE S.R. 8 BRIDGE OVER BEACON STREET SCHEDULED FOR REHABILITATION WAS CONDUCTED BY A CERTIFIED ASBESTOS HAZARD EVALUATION SPECIALIST. THE SURVEY DETERMINED THAT NO ASBESTOS IS PRESENT ON THE BRIDGE.

A COPY OF THE OHIO ENVIRONMENTAL PROTECTION AGENCY (OEPA) NOTIFICATION OF THE DEMOLITION AND RENOVATION FORM, PARTIALLY COMPLETED AND SIGNED BY THE BRIDGE OWNER, WILL BE PROVIDED TO THE SUCCESSFUL BIDDER. THE CONTRACTOR SHALL COMPLETE THE FORM AND SUBMIT IT TO:

AKRON REGIONAL AIR QUALITY MANAGEMENT DISTRICT
146 S. HIGH STREET, SUITE 904
AKRON, OHIO 44308
LYNN M. MALCOLM, ADMINISTRATOR
PHONE: (330) 375-2480
FAX: (330) 375-2402

AT LEAST TEN (10) WORKING DAYS PRIOR TO START OF THE BRIDGE DEMOLITION WORK. THE CONTRACTOR SHALL PROVIDE A COPY OF THE COMPLETED FORM TO THE ENGINEER.

INFORMATION REQUIRED ON THE FORM WILL INCLUDE: THE CONTRACTOR'S NAME AND ADDRESS, THE SCHEDULED DATES FOR THE START AND COMPLETION OF THE BRIDGE REMOVAL OR RENOVATION AND A DESCRIPTION OF THE PLANNED DEMOLITION OR RENOVATION WORK AND THE METHOD(S) TO BE USED. A COPY OF THE OEPA FORM IS AVAILABLE FOR INSPECTION AT THE ODOT DISTRICT 4 OFFICE, 705 OAKWOOD STREET, RAVENNA, OHIO 44266.

BASIS FOR PAYMENT: THE CONTRACTOR SHALL FURNISH ALL FEES, LABOR, AND MATERIAL NECESSARY TO COMPLETE AND SUBMIT THE OEPA NOTIFICATION FORM. PAYMENT FOR THIS WORK SHALL BE INCLUDED IN ITEM 202 - PORTIONS OF STRUCTURE REMOVED, OVER 20' SPAN, AS PER PLAN.

ITEM 503, UNCLASSIFIED EXCAVATION, AS PER PLAN
UNCLASSIFIED EXCAVATION SHALL BE IN ACCORDANCE WITH 503 EXCEPT THAT THE BACKFILL MATERIAL FOR THE ABUTMENTS SHALL BE 304 GRANULAR MATERIAL PLACED IN 6" LIFTS AND COMPACTED IN ACCORDANCE WITH 304.05.

MAINTENANCE OF TRAFFIC:
MAINTENANCE OF TRAFFIC FOR THE STRUCTURE WORK SHALL BE COORDINATED WITH THE OVERALL PROJECT. REFER TO MAINTENANCE OF TRAFFIC NOTES AND DETAILS ELSEWHERE IN THE PLANS.

ITEM 509, REINFORCING STEEL, REPLACEMENT OF EXISTING REINFORCING STEEL, AS PER PLAN:
ANY EXISTING REINFORCING BARS DEEMED BY THE ENGINEER TO BE UNUSABLE BECAUSE OF CORROSION SHALL BE REPLACED WITH NEW REINFORCING STEEL. ANY EXISTING REINFORCING STEEL BARS WHICH ARE INCORPORATED INTO THE NEW WORK AND ARE MADE UNUSABLE BY CONCRETE REMOVAL OPERATIONS SHALL BE REPLACED WITH NEW EPOXY COATED REINFORCING STEEL OF THE SAME SIZE AT THE CONTRACTOR'S COST. ALL WORK SHALL BE TO THE SATISFACTION OF THE ENGINEER.

THE NUMBER OF POUNDS OF REINFORCING STEEL PAID FOR AT CONTRACT PRICES SHALL BE THE ACTUAL POUNDS OF REPLACEMENT REINFORCING STEEL SPECIFIED BY THE ENGINEER DUE TO CORROSION AND SHALL INCLUDE PLACEMENT, DOWELING, BENDING, SUPPORTING, TIE WIRES AND TYING OF THAT SPECIFIED REINFORCING STEEL.

DLZ
1100 ROCKEFELLER BLDG • 614 W SUPERIOR AVE • CLEVELAND, OH 44113

DESIGNED AJM | DRAWN RCK | REVIEWED GWM | DATE 6/12/01
CHECKED JWB | REVISED | STRUCTURE FILE NUMBER 7700091

STRUCTURE GENERAL NOTES
BRIDGE NO. SUM-8-0064
S.R. 8 OVER BEACON STREET

SUM-8-0.63

875
1088

$TIME$
$DATE$
$FILE$

ITEM 516, JACKING AND TEMPORARY SUPPORT OF SUPERSTRUCTURE, AS PER PLAN:

THIS ITEM SHALL CONSIST OF FURNISHING ALL NECESSARY LABOR, MATERIALS, AND EQUIPMENT TO RAISE THE EXISTING BEAMS FOR THE PURPOSE OF REPLACING THE BEARINGS AT THE ABUTMENTS AND PIERS.

THE CONTRACTOR SHALL BE RESPONSIBLE FOR THE DESIGN, INSTALLATION AND OPERATION OF AN ADEQUATE JACKING SYSTEM, INCLUDING ANY TEMPORARY OR PERMANENT SUPPORTS NECESSARY TO PERFORM THE WORK DESCRIBED IN THE PROJECT PLANS. THREE (3) SETS OF JACKING PLANS, WHICH INCLUDE THE INFORMATION DESCRIBED IN THIS NOTE, SHALL BE SUBMITTED TO THE DIRECTOR FOR APPROVAL AT LEAST THIRTY (30) DAYS BEFORE ACTUAL WORK IS TO BEGIN. THE PLANS SHALL BE PREPARED AND STAMPED BY AN OHIO REGISTERED PROFESSIONAL ENGINEER.

JACKING SUBMITTALS SHALL INCLUDE AT LEAST THE FOLLOWING:

1. THE SIGNATURE AND NUMBER, OR PROFESSIONAL SEAL, OF THE OHIO REGISTERED PROFESSIONAL ENGINEER WHO PREPARED THE SUBMITTAL.
2. CALCULATIONS AND ANALYSIS OF THE STRUCTURE TO DETERMINE AND DEFINE THE ACTUAL LOADING APPLIED AT THE CONTRACTOR'S SELECTED JACKING POINTS.
3. A DRAWING SHOWING THE PHYSICAL AND DIMENSIONAL POSITION OF THE JACKS WITH RESPECT TO THE STRUCTURE INCLUDING CLEARANCES AND CENTER OF LIFT.
4. A SCHEMATIC LAYOUT OF JACKS, CHECK VALVES, PUMPS WITH 3 WAY RETRACTOR VALVE, PRESSURE GAGES, FLOW CONTROL VALVES, ETC. IN ACCORDANCE WITH MANUFACTURER'S RECOMMENDATIONS. ALL JACKS FOR EACH ABUTMENT OR PIER SHALL BE CONNECTED TOGETHER AND SHALL BE THE SAME SIZE.
5. ANALYSIS AND CALCULATIONS OF THE STRESSES INDUCED OR CREATED IN THE STRUCTURE AND ANY TEMPORARY/PERMANENT SUPPORTS. DESIGN CALCULATIONS FOR ANY TEMPORARY OR PERMANENT SUPPORTS.
6. PHYSICAL DIMENSIONS, MATERIALS, AND FABRICATION DETAILS OF ANY TEMPORARY OR PERMANENT SUPPORTS. HORIZONTAL AND VERTICAL MOVEMENT RESTRAINT SHALL BE PROVIDED.
7. A STEP-BY-STEP PROCEDURE DETAILING ALL STEPS IN THE JACKING OPERATION.
8. METHOD OF ATTACHMENT TO STRUCTURAL MEMBERS. WELDING TO TENSION AREAS WILL NOT BE PERMITTED.

THE ENTIRE SYSTEM INCLUDING JACKS SHALL HAVE 20% MORE CAPACITY THAN REQUIRED BASED ON CALCULATED LOADS.

FOR LIFTS GREATER THAN 1", JACKS SHALL HAVE LOCKING NUTS TO POSITIVELY LOCK AND SUPPORT THE STRUCTURE DURING THE LIFT.

JACKS SHALL HAVE A SWIVEL LOAD CAP, A DOMED PISTON HEAD OR SOME OTHER DEVICE TO PROTECT AGAINST THE EFFECTS OF SIDE LOAD ON THE JACK.

JACKS ALONE SHALL NOT BE USED TO SUPPORT LOADS EXCEPT DURING THE ACTUAL JACKING OPERATION. TEMPORARY SUPPORTS, BLOCKING OR OTHER METHODS APPROVED BY THE ENGINEER SHALL BE USED.

SINGLE ACTING RAMS WITH NO OVER-TRAVEL PROTECTION SYSTEM SHALL NOT BE USED.

SPARE EQUIPMENT SHALL BE AVAILABLE ON SITE FOR REQUIRED STRUCTURE RAISING TO PROCEED IN THE EVENT OF A BREAKDOWN. A LIST OF SPARE EQUIPMENT SHALL BE PROVIDED TO THE ENGINEER.

JACKING OPERATIONS SHALL BE LIMITED TO EXISTING BEAMS AFTER REMOVAL OF THE EXISTING DECK AND ABUTMENT BACKWALL AND BEFORE CONSTRUCTION OF THE NEW DECK, IN ACCORDANCE WITH THE CURRENT STAGE OF CONSTRUCTION. THE CONTRACTOR MAY CHOOSE TO JACK ALL AVAILABLE BEAMS AT ANY ONE ABUTMENT SIMULTANEOUSLY, OR INDIVIDUALLY. THE MAXIMUM DIFFERENTIAL JACKING HEIGHT BETWEEN ADJACENT BEAMS SHALL NOT EXCEED 1/4 INCH. MAXIMUM DIFFERENTIAL JACKING HEIGHT BETWEEN ANY ABUTMENT AND ADJACENT PIERS SHALL BE 1" OR LESS. THIS HEIGHT MAY BE MODIFIED IF CALCULATIONS, BY THE CONTRACTOR'S OHIO REGISTERED PROFESSIONAL ENGINEER, SHOW THE SUPERSTRUCTURE COMPONENTS WILL NOT BE TEMPORARILY STRESSED BEYOND ALLOWABLE STRESSES FOR THOSE COMPONENTS AND THAT NO PERMANENT STRESSES WILL BE INDUCED IN THE COMPONENTS AFTER THEY OBTAIN THEIR FINAL POSITION.

THE CONTRACTOR SHALL DEMONSTRATE TO THE ENGINEER THAT THE BRIDGE BEARINGS ARE FULLY SEATED BETWEEN ALL CONTACT AREAS. IF FULL SEATING IS NOT ATTAINED, SUITABLE MEANS OF REPAIR, SUBJECT TO THE APPROVAL OF THE ENGINEER, WILL BE REQUIRED AT THE CONTRACTOR'S EXPENSE.

PAYMENT SHALL BE MADE AT THE LUMP SUM PRICE BID FOR ITEM 516, JACKING AND TEMPORARY SUPPORT OF SUPERSTRUCTURE, AS PER PLAN. THIS SHALL INCLUDE ALL NECESSARY TOOLS, LABOR, EQUIPMENT, AND MATERIALS NECESSARY TO COMPLETE THIS ITEM OF WORK.

INSPECTION OF STRUCTURAL STEEL:

THE ENGINEER WILL VISUALLY INSPECT ALL EXISTING BUTT-WELDED SPLICES AND/OR TOP FLANGE COVER PLATE FILLET WELDS TO ENSURE THE WELDS, PLATES AND BEAMS OR GIRDERS ARE FREE OF DEFECTS AND CRACKS. IF THE DECK SLAB HAUCH FORMS IMMEDIATELY ADJACENT TO SUCH WELDS INTERFERE WITH THE ENGINEER'S INSPECTION THEY SHALL BE REMOVED OR NOT BE ERECTED UNTIL AFTER THE INSPECTION. THE INSPECTION SHALL NOT TAKE PLACE UNTIL AFTER THE TOP FLANGES ARE CLEANED AS SPECIFIED IN SS 842.08, BUT IT SHALL BE DONE BEFORE THE DECK SLAB REINFORCEMENT IS INSTALLED. THE COST ASSOCIATED WITH THIS INSPECTION SHALL BE INCLUDED WITH ITEM SS 842, SUPERSTRUCTURE CONCRETE, FOR PAYMENT. ANY CRACKS FOUND SHOULD BE REPORTED TO THE OFFICE OF STRUCTURAL ENGINEERING, BRIDGE CONSTRUCTION SPECIALIST, ALONG WITH SPECIFIC INFORMATION ON LOCATION OF CRACKS, LENGTH, AND DEPTH SO AN EVALUATION AND REPAIR OR REPLACEMENT RECOMMENDATION CAN BE MADE.

ITEM 864, SEALING OF CONCRETE SURFACES (EPOXY-URETHANE)

CONCRETE SURFACES INCLUDING PARAPETS, ABUTMENTS, WINGWALLS, PIERS, AND END DIAPHRAGMS AS DETAILED IN THE PLANS SHALL BE SEALED WITH AN EPOXY-URETHANE SEALER OF A COLOR CONFORMING TO FEDERAL COLOR No. 13522 - "BUFF".

ITEM 815 FIELD PAINTING OF EXISTING STEEL, FINISH COAT, SYSTEM OZEU

ALL SURFACES OF EXPOSED STEEL SHALL BE COATED WITH "BROWN" PAINT, FEDERAL COLOR NO. 10080

CONCRETE PARAPETS:

AS SOON AS A CONCRETE SAW CAN BE OPERATED WITHOUT DAMAGING THE FRESHLY PLACED CONCRETE, 1 1/4" DEEP CONTROL JOINTS SHALL BE SAWED INTO THE PERIMETER OF THE CONCRETE PARAPET. THE SAW CUT SHALL BE MADE IN THE COMPLETE CIRCUMFERENCE OF THE PARAPET, STARTING AND ENDING AT THE ELEVATION OF THE CONCRETE DECK. THE SAWCUTS SHALL BE PLACED AT A MINIMUM OF 6 FEET AND A MAXIMUM OF 10 FEET CENTERS. THE USE OF AN EDGE GUIDE, FENCE, OR JIG IS REQUIRED TO INSURE THAT THE CUT JOINT IS STRAIGHT, TRUE, AND ALIGNED ON ALL FACES OF THE PARAPET. THE JOINT WIDTH SHALL BE THE WIDTH OF THE SAW BLADE, A NOMINAL WIDTH OF 1/4". THE PERIMETER OF THE DEFLECTION CONTROL JOINT SHALL BE SEALED WITH A CAULKING MATERIAL CONFORMING TO FEDERAL SPEFICATION TT-S-00227E TO A MINIMUM DEPTH OF 1 INCH. THE BOTTOM 1/2 INCH OF THE INSIDE AND OUTSIDE FACE SHALL BE LEFT UNSEALED TO ALLOW WATER TO ESCAPE.

CLEANING STEEL IN PATCHES:

ALL SURFACES TO BE PATCHED AND THE EXPOSED REINFORCING STEEL WITHIN SHALL BE THOROUGHLY CLEANED BY ABRASIVE BLASTING PRIOR TO CLEANING SPECIFIED BY 519.04. CLEANING SHALL PRECEDE APPLICATION OF THE PATCHING MATERIAL OR ERECTION OF THE FORMS BY NOT MORE THAN 24 HOURS.

SUGGESTED CONSTRUCTION PROCEDURE:

STAGE 1 CONSTRUCTION

1. IMPLEMENT STAGE I CONSTRUCTION (PHASE 2 S.R. 8 MAINTENANCE OF TRAFFIC). MAINTAIN TWO LANES OF TRAFFIC IN EACH DIRECTION FOR S.R. 8 USING THE INSIDE PORTIONS OF THE EXISTING BRIDGE DECKS.
2. REMOVE OUTSIDE PORTIONS OF EXISTING NORTHBOUND AND SOUTHBOUND BRIDGE DECKS AND APPROACH SLABS.
3. REMOVE PORTIONS OF EXISTING WINGWALLS AND OUTSIDE PORTIONS OF ABUTMENT BACKWALLS.
4. JACK AND TEMPORARILY SUPPORT BEAMS FOR PORTION WITH DECK REMOVED IN ORDER TO REMOVE EXISTING BEARINGS AND REPLACE WITH NEW ELASTOMERIC BEARINGS AT ABUTMENTS AND PIER.
5. CONSTRUCT SEISMIC PEDESTALS AND NEW BACKWALLS FOR OUTSIDE PORTIONS OF ABUTMENTS . CONSTRUCT NEW PARAPETS ON WINGWALLS.
6. CONSTRUCT SEISMIC PEDESTALS FOR THE OUTSIDE PORTIONS OF THE PIER.
7. CONSTRUCT NEW OUTSIDE PORTIONS OF THE SUPERSTRUCTURE INCLUDING END DIAPHRAGMS FOR SEMI-INTEGRAL ABUTMENTS.
8. CONSTRUCT NEW APPROACH SLABS AND APPROACH PAVEMENT FOR OUTSIDE LANES.
9. STRIPE AND SIGN NEW OUTSIDE LANES TO MAINTAIN TWO LANES OF TRAFFIC IN EACH DIRECTION FOR STAGE 2 CONSTRUCTION (PHASE 3 S.R. 8 MAINTENANCE OF TRAFFIC).

STAGE 2 CONSTRUCTION

1. TRANSFER TRAFFIC TO NEW OUTSIDE PORTIONS OF BRIDGE DECKS IN CONJUNCTION WITH S.R. 8 PHASE 3 MAINTENANCE OF TRAFFIC.
2. REMOVE REMAINING INSIDE PORTIONS OF EXISTING BRIDGE DECKS AND APPROACH SLABS.
3. REMOVE REMAINING PORTIONS OF EXISTING ABUTMENT BACKWALLS.
4. REPEAT STAGE 1 OPERATIONS 4 - 8 FOR INSIDE PORTIONS OF SUPERSTRUCTURE AND ROADWAY
5. PATCH SPALLED AREAS ON ABUTMENTS AND PIER PER ITEM 519 OR 843, AS SPECIFIED.
6. PAINT EXISTING STEEL SUPERSTRUCTURE.
7. SEAL PARAPETS AND SUBSTRUCTURE.
8. INSTALL COMPRESSION SEAL IN TOP OF MEDIAN BARRIER ON BRIDGE AND APPROACH SLABS.

THE ABOVE IS A SUGGESTED CONSTRUCTION PROCEDURE. THE CONTRACTOR SHALL SUBMIT HIS PROPOSED CONSTRUCTION PROCEDURE AND SCHEDULE TO THE DIRECTOR FOR APPROVAL BEFORE BEGINNING CONSTRUCTION. NO CONSTRUCTION OPERATIONS WILL BE PERMITTED WITHOUT PRIOR APPROVAL.

ITEM 842, CLASS C CONCRETE, ABUTMENT, AS PER PLAN

INSTALL A 3-FOOT WIDE STRIP, 3/32" THICK, GENERAL PURPOSE, HEAVY DUTY NEOPRENE SHEET WITH NYLON FABRIC REINFORCEMENT AT LOCATIONS SHOWN IN THE PLANS. SECURE THE 3-FOOT WIDE NEOPRENE SHEETING TO THE CONCRETE WITH 1 1/4" x #10 GAGE (LENGTH x SHANK DIAMETER) GALVANIZED BLTTON HEAD SPIKES THROUGH A 1 INCH OUTSIDE DIAMETER, #10 GAGE GALVANIZED WASHER. MAXIMUM FASTENER SPACING IS 9 INCHES. OTHER SIMILAR GALVANIZED DEVICES WHICH WILL NOT DAMAGE EITHER THE NEOPRENE OR THE CONCRETE MAY BE USED SUBJECT TO THE APPROVAL OF THE ENGINEER.

CENTER THE NEOPRENE STRIPS ON ALL JOINTS. FOR HORIZONTAL JOINTS, SECURE THE HORIZONTAL NEOPRENE STRIP BY USING A SINGLE LINE OF FASTENERS, STARTING AT 6 INCHES, +/-, FROM THE TOP OF THE NEOPRENE STRIP. FOR THE VERTICAL JOINTS SECURE THE VERTICAL NEOPRENE STRIP BY USING A SINGLE VERTICAL LINE OF FASTENERS, STARTING AT 6 INCHES, +/-, FROM THE VERTICAL EDGE OF THE NEOPRENE STRIP NEAREST TO THE CENTERLINE OF ROADWAY. FOR VERTICAL JOINTS, INSTALL 2 ADDITIONAL FASTENERS AT 6 INCHES, CENTER TO CENTER, ACROSS THE TOP OF THE NEOPRENE STRIP ON THE SAME SIDE OF THE VERTICAL JOINT AS THE SINGLE VERTICAL ROW OF FASTENERS IS LOCATED.

THE VERTICAL NEOPRENE STRIPS SHOULD COMPLETELY OVERLAP THE HORIZONTAL STRIPS. LAPS IN THE LENGTH OF THE HORIZONTAL STRIPS DUE TO MATERIAL MANUFACTURING SHALL BE AT LEAST 1 FOOT IN LENGTH, IF NOT VULCANIZED OR ADHESIVE BONDED, OR 6 INCHES IN LENGTH IF THE LAP IS VULCANIZED OR ADHESIVE BONDED. NO LAPS ARE ACCEPTABLE IN VERTICALLY INSTALLED NEOPRENE STRIPS.

THE NEOPRENE SHEETING SHALL BE 3/32" THICK GENERAL PURPOSE, HEAVY DUTY NEOPRENE SHEET WIT NYLON FABRIC REINFORCEMENT. THE SHEETING SHALL BE "FAIRPRENE NUMBER NN-0003", BY E.I. DUPONT DE NEMOURS AND COMPANY, INC., "WINGPRENE" BY THE GOODYEAR TIRE AND RUBBER COMPANY, OR AN APPROVED ALTERNATE. THE NEOPRENE SHEETING SHALL CONFORM TO THE FOLLOWING:

DESCRIPTION OF TEST	ASTM METHOD	REQUIREMENT
THICKNESS, INCHES	D 751	0.094" +/- 0.01
BREAKING STRENGTH, GRAB WXF, LBS, MINIMUM	D 751	700 x 700
ADHESIVE 1" STRIP, 2" MINIMUM, LBS, MINIMUM	D 751	9
BURST STRENGTH (MULLEN) PSI, MINIMUM	D 751	1400
HEAT AGING 70 HOURS T 212°F, 180 BEND WITHOUT CRACKING	D 2136	NO CRACKING OF COATING
LOW TEMPERATURE BRITTLENESS 1 HOUR AT -40°F, BEND AROUND 1/4" MANDREL	D 2136	NO CRACKING OF COATING

IN LIEU OF THE NEOPRENE SHEETING THE CONTRACTOR MAY CHOOSE TO SUPPLY TYPE 3 MEMBRANE, 711.29.

PAYMENT FOR LABOR, MATERIALS AND INSTALLATION OF THESE ITEMS SHALL BE INCLUDED IN ITEM 842, CLASS C CONCRETE, ABUTMENT, AS PER PLAN.

PLAN ABBREVIATIONS:

ABUT.	ABUTMENT
BRG.	BEARING
c/c	CENTER-TO-CENTER
C.J.	CONSTRUCTION JOINT
CL.	CLEAR COVER
CONC.	CONCRETE
DIA.	DIAMETER
EXIST.	EXISTING
ES	EACH SIDE
FA	FORWARD ABUTMENT
FF	FAR FACE
FWD.	FORWARD
HMWM	HIGH MOLECULAR WEIGHT METHACRYLATE
N.P.C.P.P.	NON-PERFORATED CORRUGATED PLASTIC PIPE
NF	NEAR FACE
MAX.	MAXIMUM
MIN.	MINIMUM
P.C.P.P.	PERFORATED CORRUGATED PLASTIC PIPE
PEJF	PREFORMED EXPANSION JOINT FILLER
PROP.	PROPOSED
RA	REAR ABUTMENT
SPA.	SPACE, SPACES
REINF.	REINFORCING, REINFORCED
TYP.	TYPICAL

DLZ
1000 ROCKEFELLER BLDG • 614 W SUPERIOR AVE • CLEVELAND, OH 44113

DESIGNED AJM | DRAWN RCK | CHECKED JWB | REVIEWED GWM | DATE 6/12/01 | REVISED | STRUCTURE FILE NUMBER 7700091

STRUCTURE GENERAL NOTES

BRIDGE NO. SUM-8-0064
S.R. 8 OVER BEACON STREET

SUM-8-0.63

876
1088

ESTIMATED QUANTITIES

CALCULATED BY: AJM 12/19/00
CHECKED BY: DJC 12/22/00

ITEM	ITEM EXTENSION	TOTAL	UNIT	DESCRIPTION	REAR ABUTMENT	FORWARD ABUTMENT	PIER	SUPER.	GENERAL	REFERENCE SHEET NO.	AS-BUILT
202	11203	LUMP	SUM	PORTIONS OF STRUCTURE REMOVED, OVER 20' SPAN, AS PER PLAN					LUMP SUM	3	
503	11100	LUMP	SUM	COFFERDAMS, CRIBS, AND SHEETING					LUMP SUM		
503	21101	341	CU. YD.	UNCLASSIFIED EXCAVATION, AS PER PLAN	178	163				3, 9	
509	20001	300*	LB	REINFORCING STEEL, REPLACEMENT OF EXISTING REINFORCING STEEL, AS PER PLAN*					300	3	
516	10900	143.27	LIN. FT.	4" ELASTOMERIC COMPRESSION SEAL				143.27			
516	13600	589	SQ. FT.	1" PREFORMED EXPANSION JOINT FILLER	297	292					
516	13900	224	SQ. FT.	2" PREFORMED EXPANSION JOINT FILLER	89	135					
516	44001	36	EACH	ELASTOMERIC BEARING WITH INTERNAL LAMINATES AND LOAD PLATE	18	18				32	
				(NEOPRENE 1 7/16" x 9" x 1'-2", LOAD PLATE 2 5/8" x 11" x 1'-3"), AS PER PLAN							
516	44200	16	EACH	ELASTOMERIC BEARING WITH INTERNAL LAMINATES AND LOAD PLATE			16				
				(NEOPRENE 3 3/8" x 1'-0" x 1'-7", LOAD PLATE 2 5/8" x 1'-1" x 1'-8")							
516	44201	2	EACH	ELASTOMERIC BEARING WITH INTERNAL LAMINATES AND LOAD PLATE			2				
				(NEOPRENE 3 3/8" x 1'-0" x 1'-7", LOAD PLATE 2 1/2" x 1'-1" x 1'-8"), AS PER PLAN						33	
516	47001	LUMP	SUM	JACKING AND TEMPORARY SUPPORT OF SUPERSTRUCTURE, AS PER PLAN					LUMP SUM	4	
518	21201	139	CU. YD.	POROUS BACKFILL WITH FILTER FABRIC, AS PER PLAN	70	69				27	
520	11101	3349	SQ. FT.	PNEUMATICALLY PLACED MORTAR, AS PER PLAN	1571	1778					
815	00100	LUMP	SUM	SURFACE PREPARATION OF EXISTING STEEL, SYSTEM OZEU				LUMP SUM			
815	00200	LUMP	SUM	FIELD PAINTING OF EXISTING STEEL, PRIME COAT, SYSTEM OZEU				LUMP SUM			
815	00300	LUMP	SUM	FIELD PAINTING OF EXISTING STEEL, INTERMEDIATE COAT, SYSTEM OZEU				LUMP SUM			
815	00400	LUMP	SUM	FIELD PAINTING OF EXISTING STEEL, FINISH COAT, SYSTEM OZEU				LUMP SUM			
842	43200	1	CU. YD.	CLASS C CONCRETE, PIER			1			19	
842	45701	48	CU. YD.	CLASS C CONCRETE, ABUTMENT, AS PER PLAN	24	24				4	
843	50000	140	SQ. FT.	PATCHING CONCRETE STRUCTURES WITH TROWELABLE MORTAR			140				
844	48001	715	CU. YD.	HIGH PERFORMANCE CONCRETE SUPERSTRUCTURE (DECK), AS PER PLAN				715		23	
844	49000	LUMP	SUM	HIGH PERFORMANCE CONCRETE TRIAL MIX					LUMP SUM		
844	49010	LUMP	SUM	HIGH PERFORMANCE CONCRETE TESTING					LUMP SUM		
846	73000	59	SQ. YD.	TREATING CONCRETE BRIDGE DECKS WITH HMWM RESIN				59		25	
863	20000	4656	EACH	WELDED STUD SHEAR CONNECTORS				4656			
864	10100	2019	SQ. YD.	SEALING OF CONCRETE SURFACES (EPOXY-URETHANE)	575	485	422	537			

* INDICATES ITEMS TO BE USED AS DIRECTED BY THE ENGINEER

DLZ
1000 ROCKEFELLER BLDG • 614 W SUPERIOR AVE • CLEVELAND, OH 44113

DESIGNED AJM | DRAWN JWB | CHECKED DJC | REVIEWED GWM | REVISED | DATE 6/12/01 | STRUCTURE FILE NUMBER 7700091

ESTIMATED QUANTITIES
BRIDGE NO. SUM-8-0064
S.R. 8 OVER BEACON STREET

SUM-8-0.63

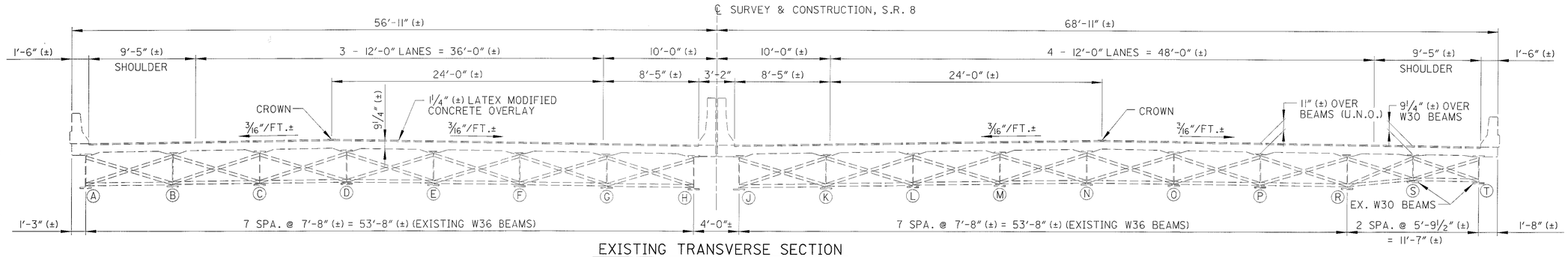

EXISTING TRANSVERSE SECTION

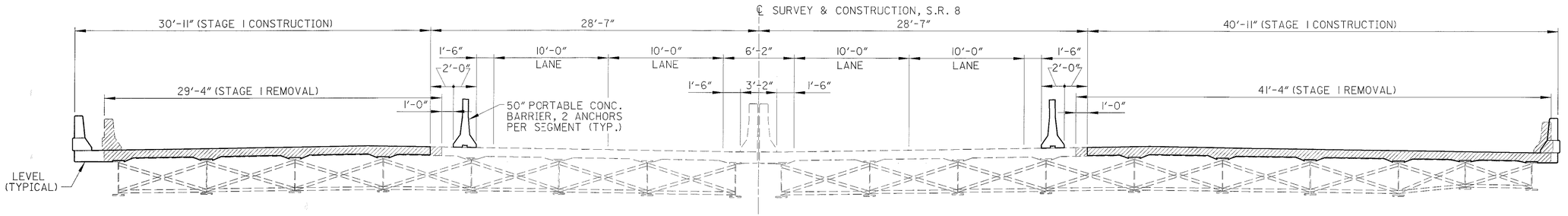

STAGE ONE CONSTRUCTION

(PHASE 2 - S.R. 8 MAINTENANCE OF TRAFFIC)

NOTE: SHEAR CONNECTORS NOT SHOWN IN STAGE CONSTRUCTION FOR CLARITY.

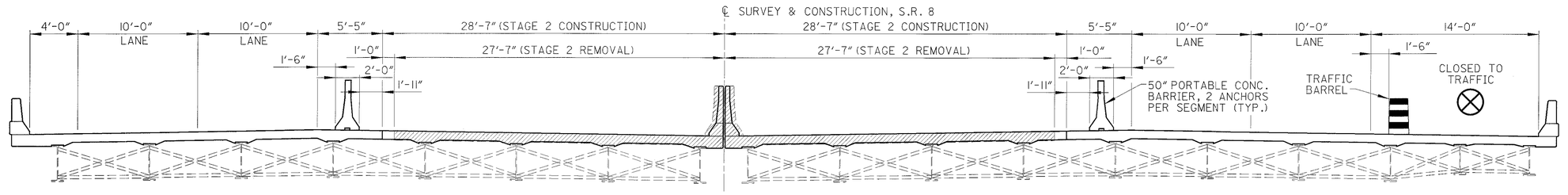

STAGE TWO CONSTRUCTION

(PHASE 3 - S.R. 8 MAINTENANCE OF TRAFFIC)

NOTE: SHEAR CONNECTORS NOT SHOWN IN STAGE CONSTRUCTION FOR CLARITY.

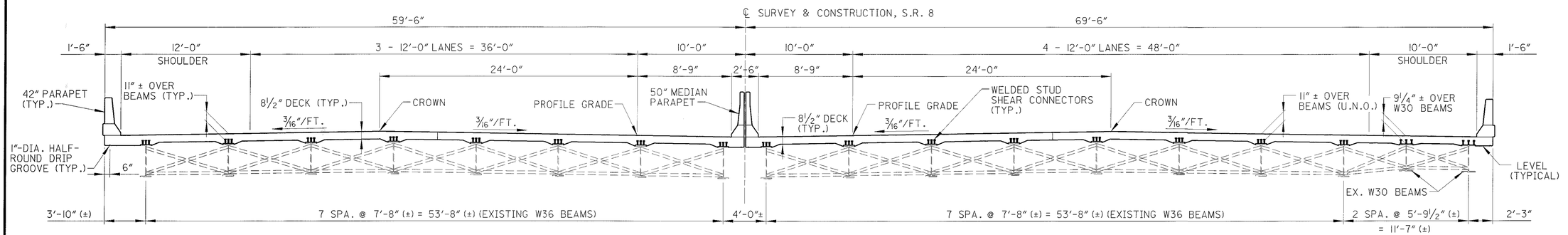

PROPOSED TRANSVERSE SECTION

LEGEND

CONC.	CONCRETE		PORTIONS OF STRUCTURE TO BE REMOVED
DIA.	DIAMETER		
EX.	EXISTING	(A)	BEAM DESIGNATION
TYP.	TYPICAL		
U.N.O.	UNLESS NOTED OTHERWISE		

DLZ
1000 ROCKEFELLER BLDG • 614 W SUPERIOR AVE • CLEVELAND, OH 44113

DESIGNED JWB | DRAWN JWB | CHECKED PAT | REVIEWED GWM | DATE 6/12/01 | REVISED | STRUCTURE FILE NUMBER 7700091

PHASED CONSTRUCTION DETAILS
BRIDGE NO. SUM-8-0064
S.R. 8 OVER BEACON STREET

SUM-8-0.63

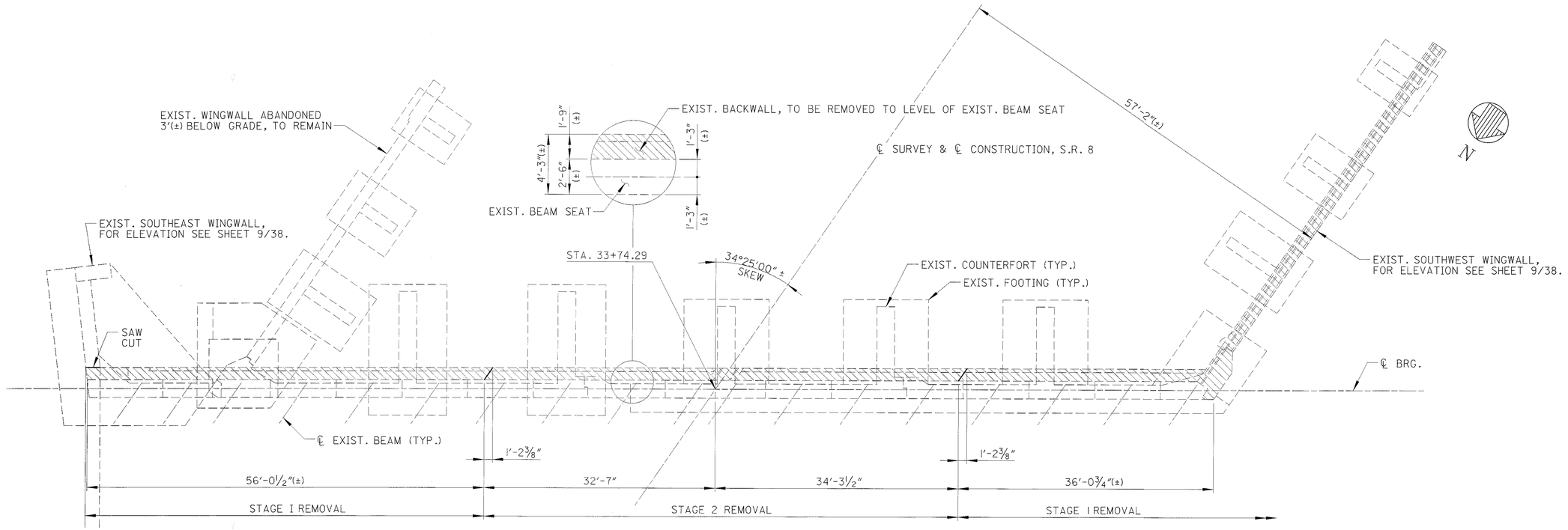

DLZ
1000 ROCKEFELLER BLDG • 614 W SUPERIOR AVE • CLEVELAND, OH 44113

DESIGNED	DRAWN	REVIEWED	DATE
PAT	PAT	GWM	6/12/01
CHECKED	REVISED	STRUCTURE FILE NUMBER	
AJM		7700091	

REMOVAL AT REAR ABUTMENT
BRIDGE NO. SUM-8-0064
S.R. 8 OVER BEACON STREET

SUM-8-0.63

7 / 38

879
1088

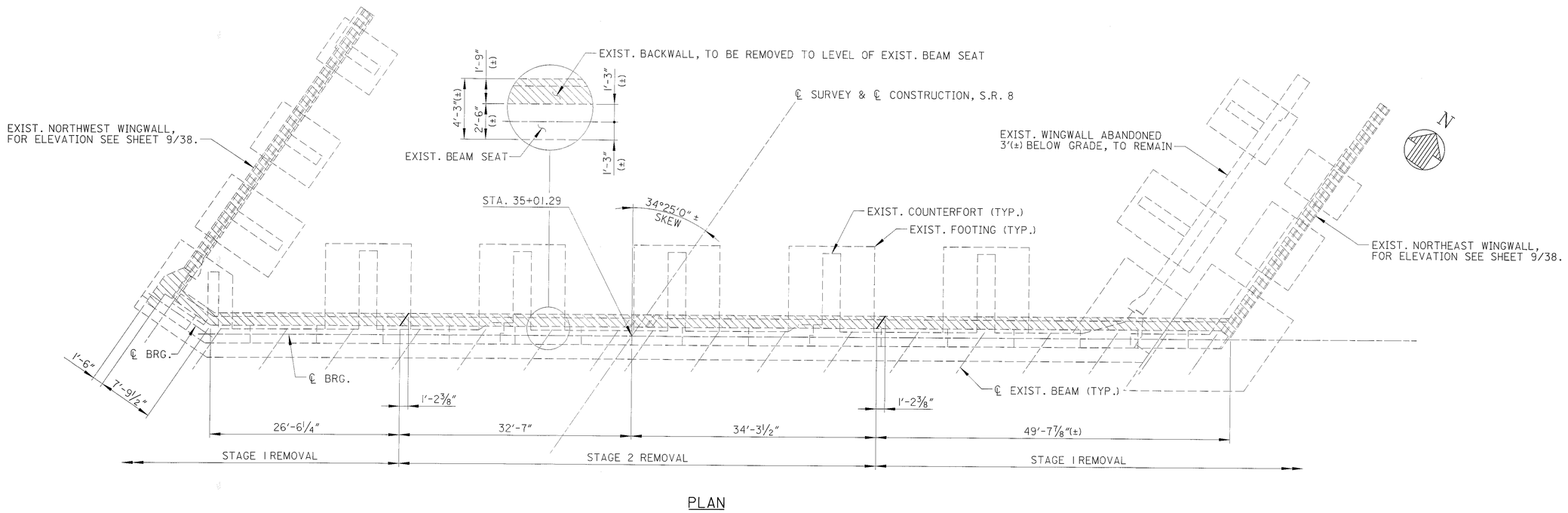

PLAN

R-1
9

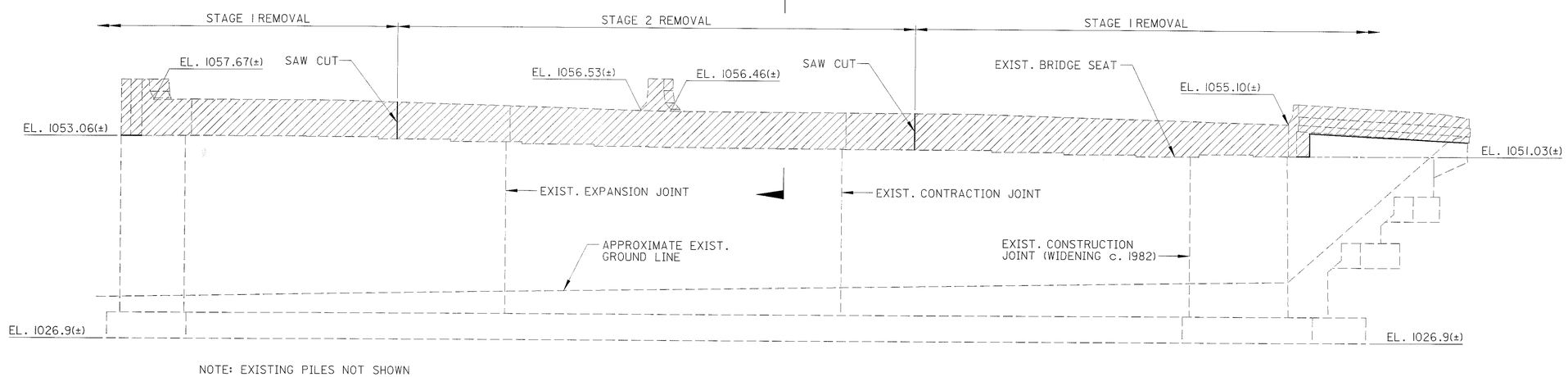

NOTE: EXISTING PILES NOT SHOWN

ELEVATION

LEGEND

PORTIONS OF EXISTING STRUCTURE TO BE REMOVED PER ITEM 202.

DLZ
3000 ROCKEFELLER BLDG ● 614 W SUPERIOR AVE ● CLEVELAND, OH 44113

DESIGNED PAT
DRAWN PAT
CHECKED AJM
REVIEWED GWM
DATE 6/12/01
REVISED
STRUCTURE FILE NUMBER 7700091

REMOVAL AT FORWARD ABUTMENT
BRIDGE NO. SUM-8-0064
S.R. 8 OVER BEACON STREET

SUM-8-0.63

8 / 38

880
1088

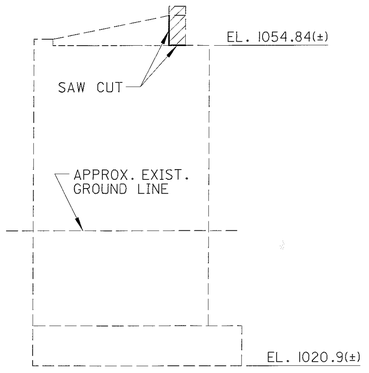

ELEVATION - SOUTHEAST WINGWALL

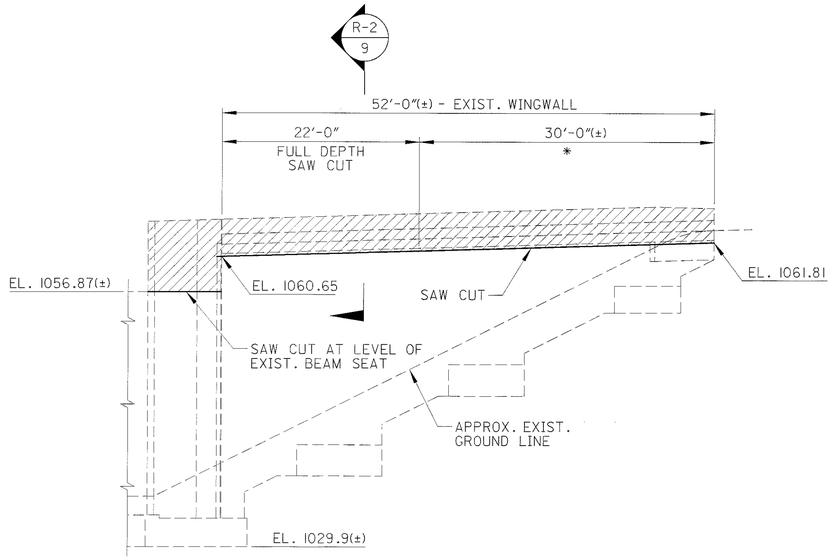

ELEVATION - SOUTHWEST WINGWALL

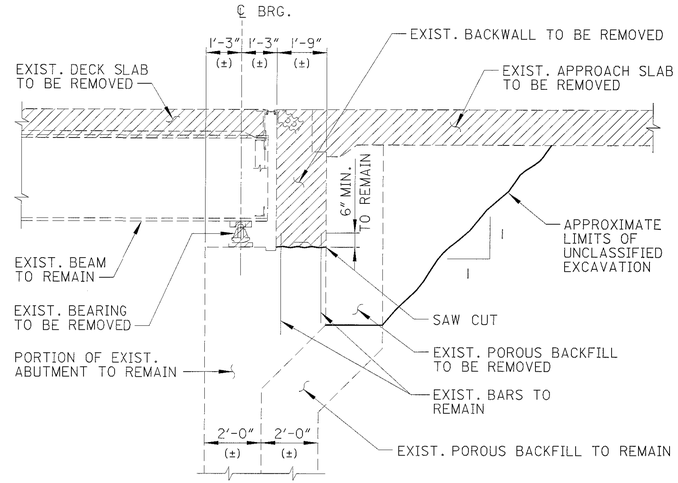

SECTION R-1 / 7,8

* SAW CUT FACE OF WALL A MINIMUM OF 1" DEEP. PRESERVE ALL EXISTING VERTICAL REINFORCING BARS.

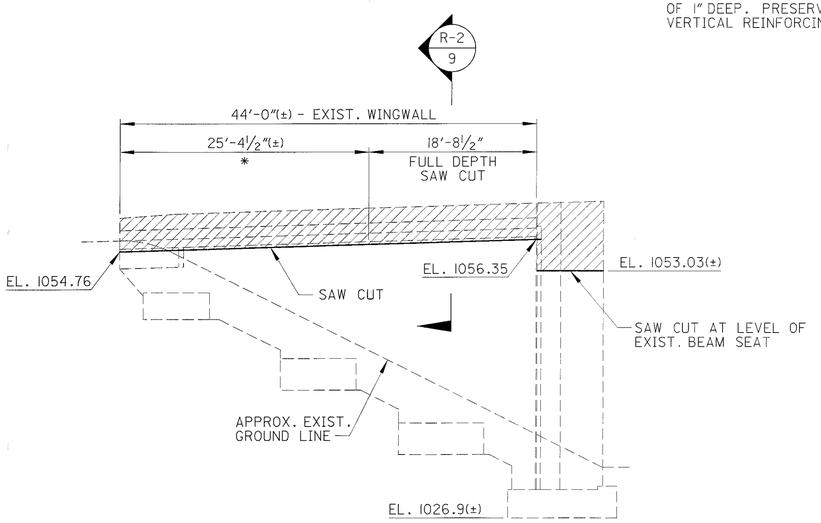

ELEVATION - NORTHWEST WINGWALL

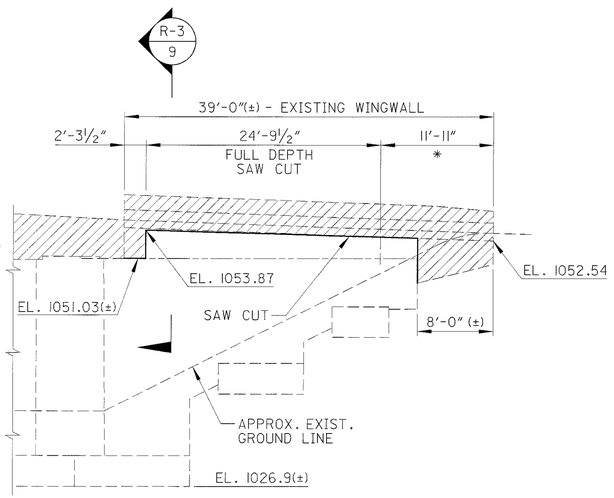

ELEVATION - NORTHEAST WINGWALL

LEGEND

PORTIONS OF EXISTING STRUCTURE TO BE REMOVED PER ITEM 202.

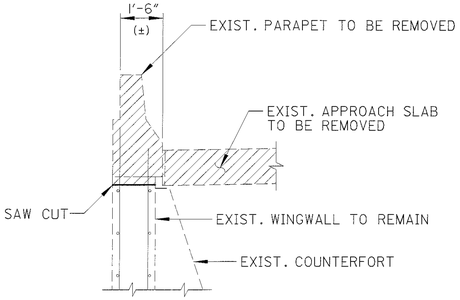

SECTION R-2 / 9

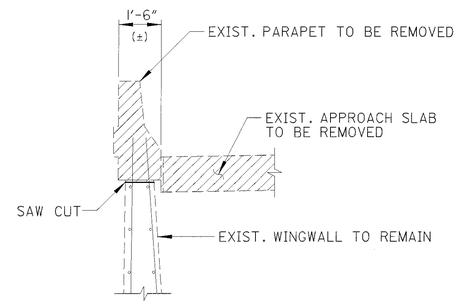

SECTION R-3 / 9

DLZ
8000 ROCKEFELLER BLDG • 614 • SUPERIOR AVE • CLEVELAND, OH 44115

DESIGNED	DRAWN	REVIEWED	DATE
PAT	PAT	GWM	6/12/01
CHECKED	REVISED	STRUCTURE FILE NUMBER	
AJM		7700091	

WINGWALL REMOVAL
BRIDGE NO. SUM-8-0064
S.R. 8 OVER BEACON STREET

SUM-8-0.63

9 / 38

881 / 1088

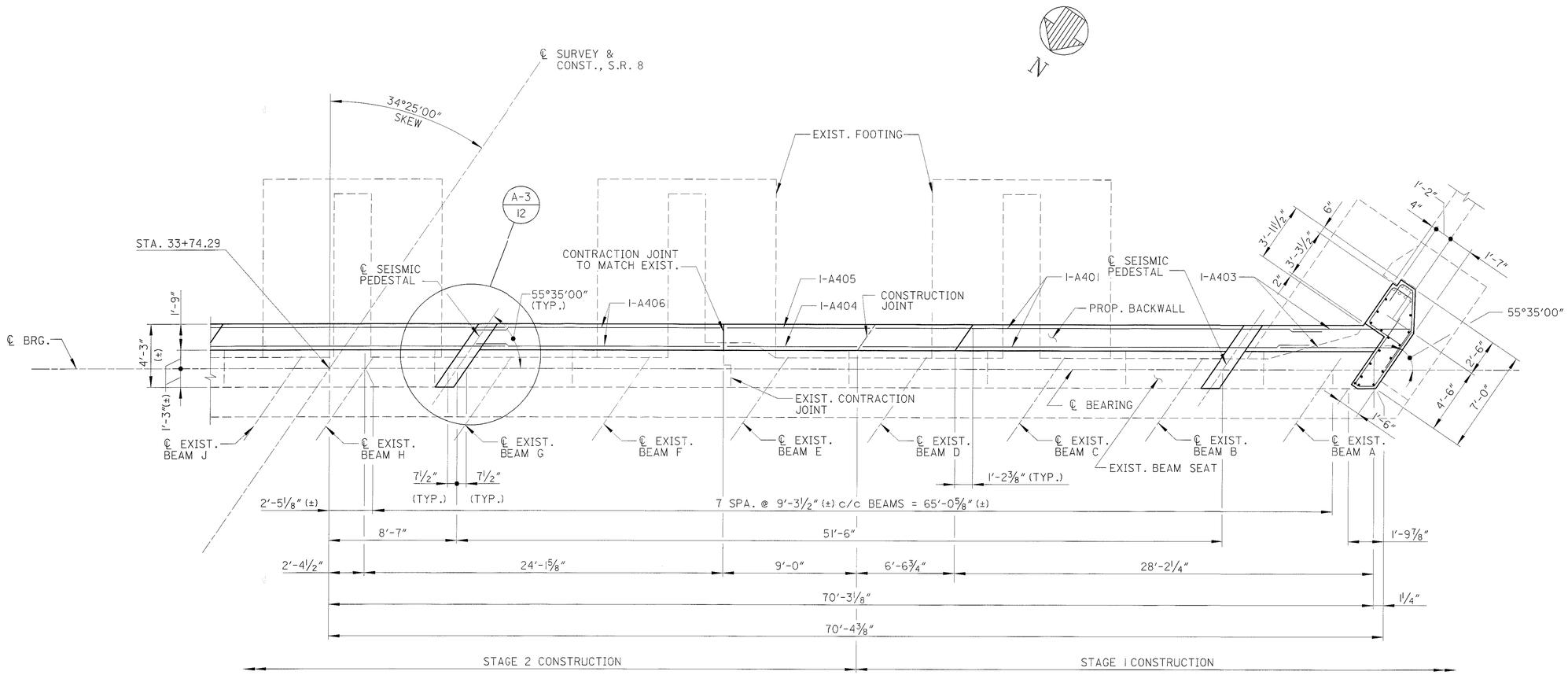

PART PLAN

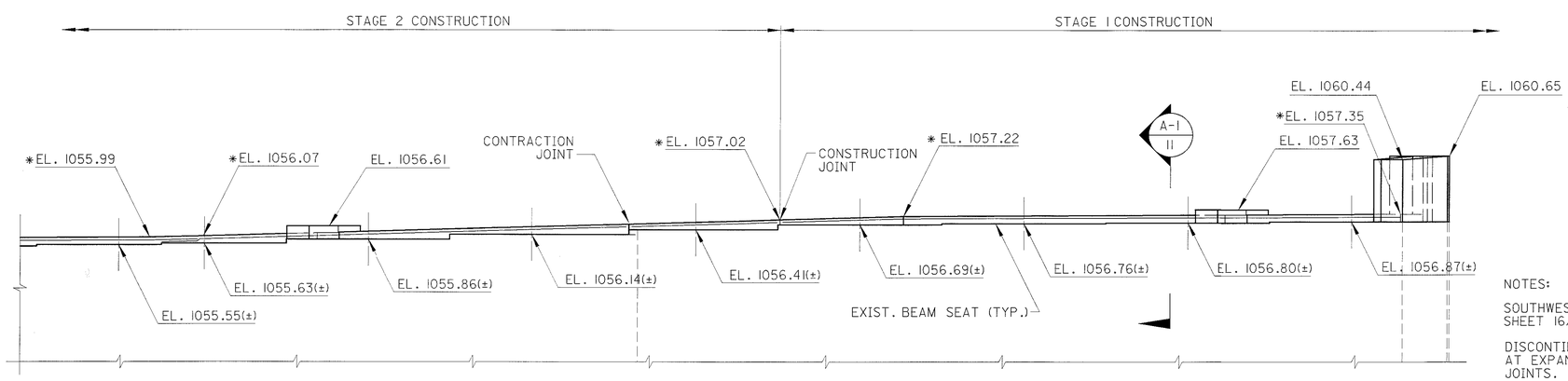

PART ELEVATION

* BACKWALL ELEVATIONS, GIVEN ALONG FRONT EDGE

NOTES:

SOUTHWEST WINGWALL NOT SHOWN, SEE SHEET 16/38 FOR PLAN AND ELEVATION

DISCONTINUE REINFORCEMENT AT EXPANSION AND CONTRACTION JOINTS.

LAP LENGTH FOR #4 BARS IS 2'-0".

DLZ
8000 ROCKEFELLER BLDG • 614 W SUPERIOR AVE • CLEVELAND, OH 44113

DESIGNED	DRAWN	REVIEWED	DATE
PAT	PAT	GWM	6/12/01
CHECKED	REVISED	STRUCTURE FILE NUMBER	
DJC		7700091	

REAR ABUTMENT PLAN & ELEVATION

BRIDGE NO. SUM-8-0064
S.R. 8 OVER BEACON STREET

SUM-8-0.63

10/38

882
1088

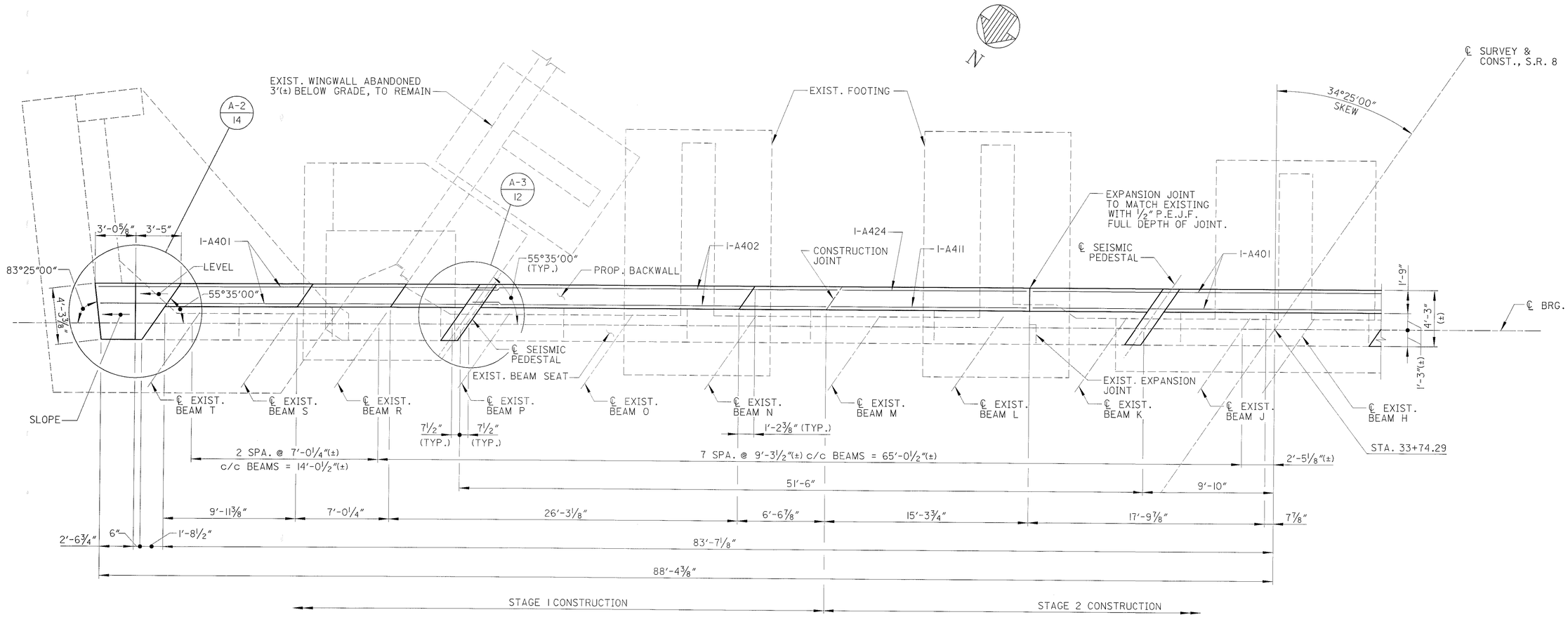

PART PLAN

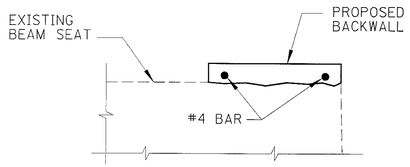

SECTION A-1 / 10-13

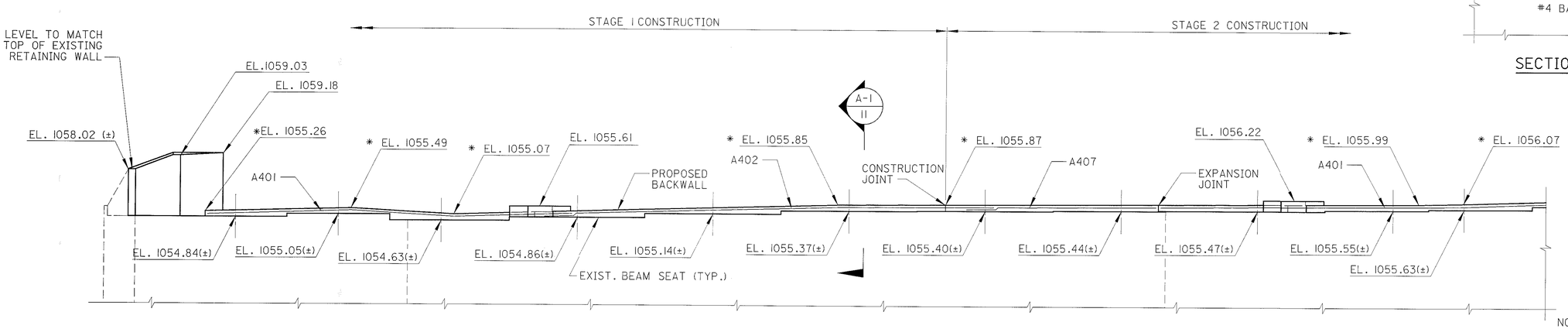

PART ELEVATION

* BACKWALL ELEVATIONS,
GIVEN ALONG FRONT EDGE

NOTE:

DISCONTINUE REINFORCEMENT AT EXPANSION AND CONTRACTION JOINTS.

LAP LENGTH FOR #4 BARS IS 2'-0".

DLZ
1000 ROCKEFELLER BLDG • 614 W SUPERIOR AVE • CLEVELAND, OH 44113

DESIGNED	DRAWN	REVIEWED	DATE
PAT	PAT	GWM	6/12/01
CHECKED	REVISED	STRUCTURE FILE NUMBER	
DJC		7700091	

REAR ABUTMENT PLAN & ELEVATION

BRIDGE NO. SUM-8-0064
S.R. 8 OVER BEACON STREET

SUM-8-0.63

11 / 38

883
1088

NOTE: NORTHWEST WINGWALL NOT SHOWN, SEE SHEET 15/38 FOR PLAN AND ELEVATION

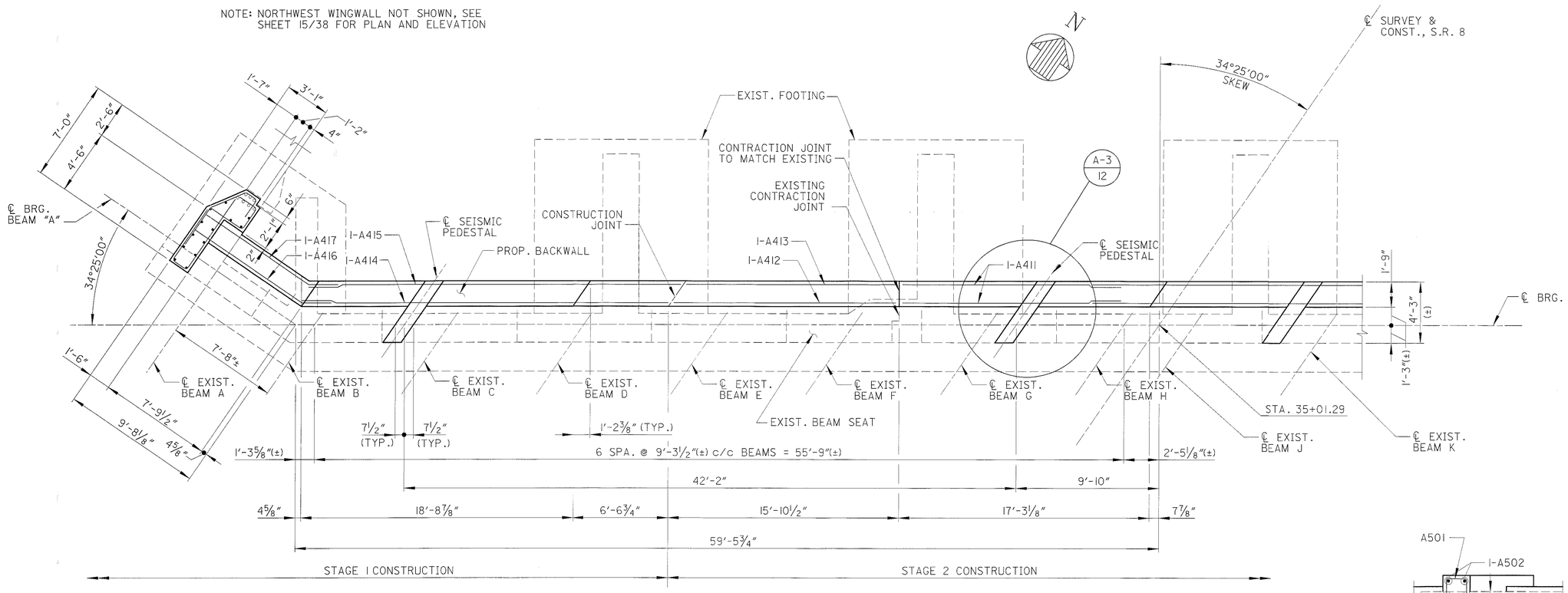

PART PLAN

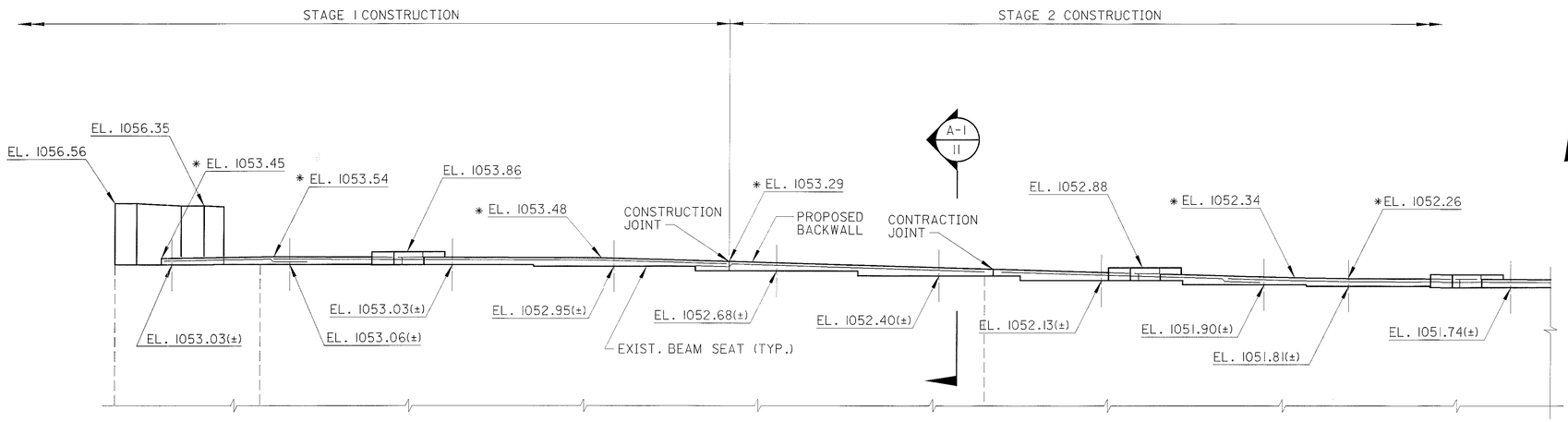

PART ELEVATION

* BACKWALL ELEVATIONS, GIVEN ALONG FRONT EDGE

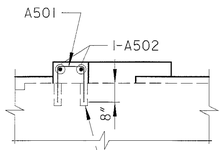

SECTION A-4 / 12

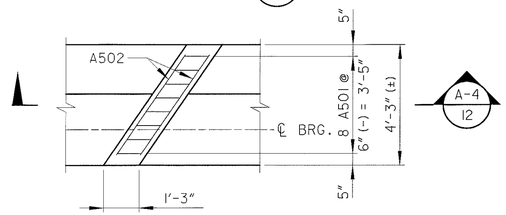

DETAIL (8 TOTAL) A-3 / 10-13

SEISMIC PEDESTAL

NOTE:

DISCONTINUE REINFORCEMENT AT EXPANSION AND CONTRACTION JOINTS.

LAP LENGTH FOR #4 BARS IS 2'-0".

DLZ
3000 ROCKEFELLER BLDG • 614 W SUPERIOR AVE • CLEVELAND, OH 44113

DESIGNED	DRAWN	REVIEWED	DATE
PAT	PAT	GWM	6/12/01
CHECKED	REVISED	STRUCTURE FILE NUMBER	
DJC		7700091	

FORWARD ABUTMENT PLAN & ELEVATION
BRIDGE NO. SUM-8-0064
S.R. 8 OVER BEACON STEET

SUM-8-0.63

12 / 38

884 / 1088

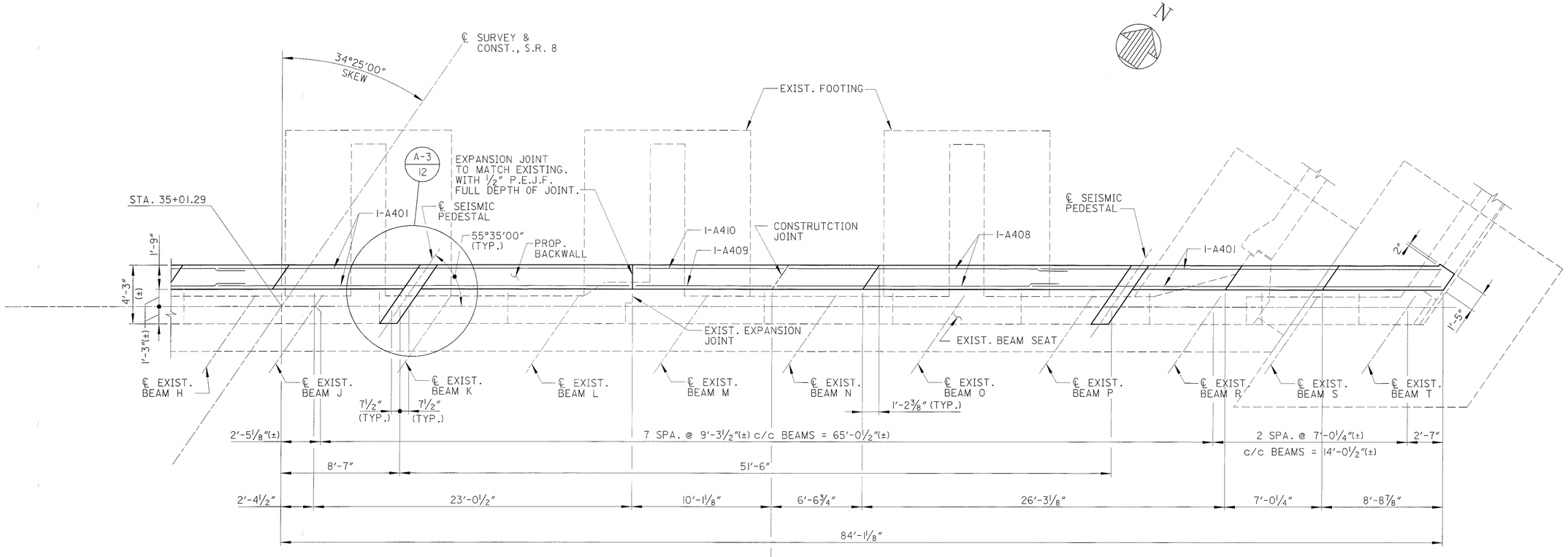

PART PLAN

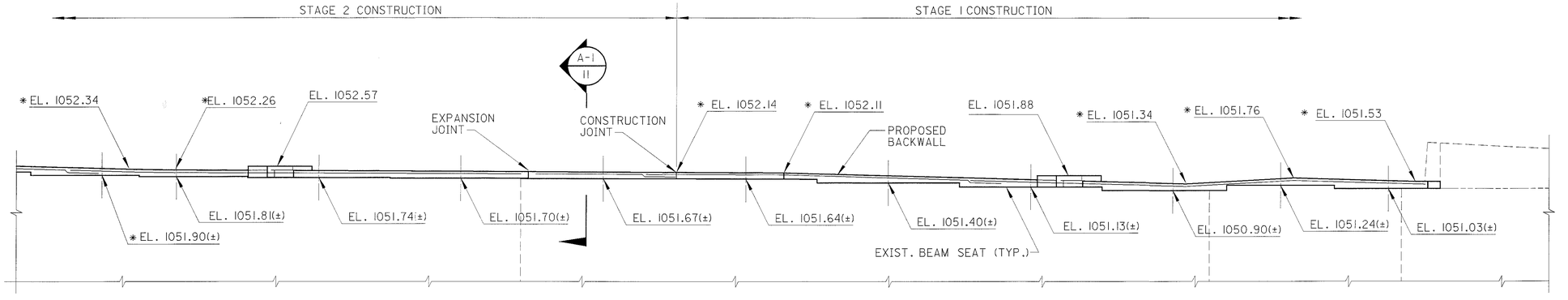

PART ELEVATION

* BACKWALL ELEVATIONS, GIVEN ALONG FRONT EDGE

NOTES:

NORTHEAST WINGWALL NOT SHOWN, SEE SHEET 18/38 FOR PLAN AND ELEVATION.

DISCONTINUE REINFORCEMENT AT EXPANSION AND CONTRACTION JOINTS.

LAP LENGTH FOR #4 BARS IS 2'-0".

DLZ
8000 ROCKEFELLER BLDG • 614 ★ SUPERIOR AVE • CLEVELAND, OH 44115

DESIGNED PAT | DRAWN PAT | REVIEWED GWM | DATE 6/12/01
CHECKED DJC | REVISED | STRUCTURE FILE NUMBER 7700091

FORWARD ABUTMENT PLAN & ELEVATION
BRIDGE NO. SUM-8-0064
S.R. 8 OVER BEACON STREET

SUM-8-0.63

13/38

885/1088

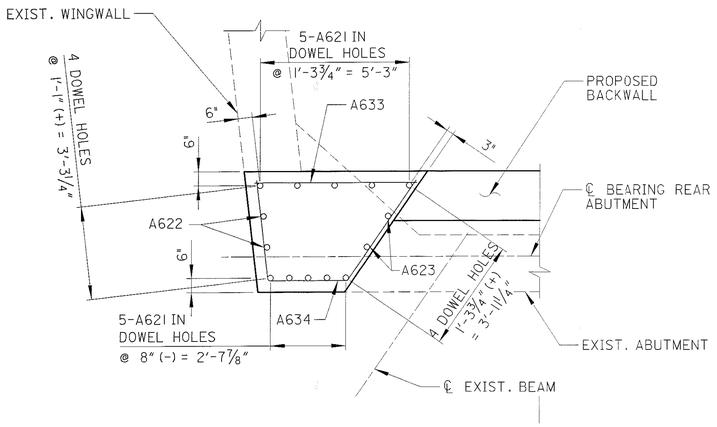

SECTION A-5 / 14

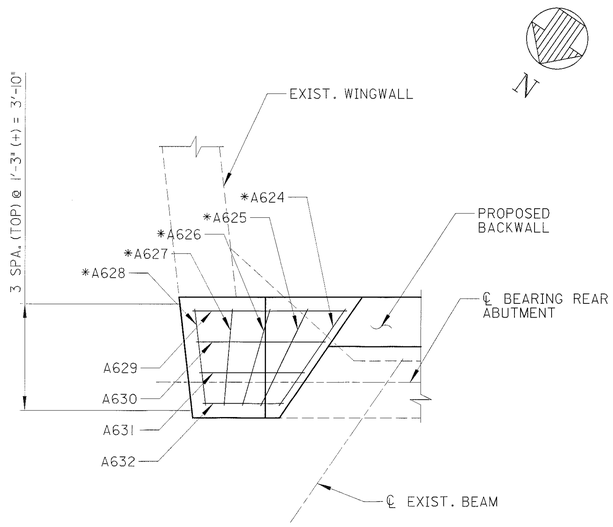

PLAN

* LAP DOWELS

DETAIL A-2 / 11

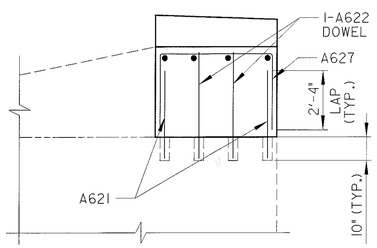

VIEW A-4 / 14

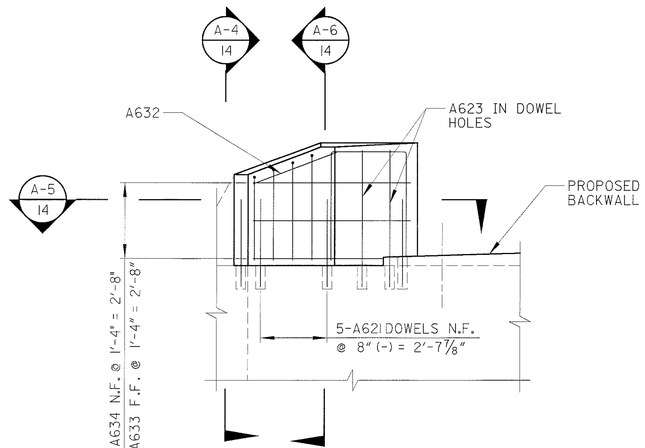

ELEVATION

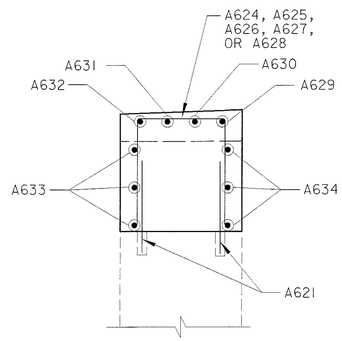

SECTION A-6 / 14

NOTE:

DOWEL HOLES SHALL BE DRILLED AND GROUTED WITH WITH NON-SHRINK, NON-METALLIC GROUT IN ACCORDANCE WITH ITEM 510. COSTS SHALL BE INCLUDED WITH ITEM 842, CLASS C CONCRETE, ABUTMENT, AS PER PLAN, FOR PAYMENT. (TYP.)

DLZ
1000 ROCKEFELLER BLDG • 614 W. SUPERIOR AVE • CLEVELAND, OH 44113

DESIGNED	DRAWN	CHECKED	REVISED	REVIEWED	DATE
AJM	DJP	JWB		GWM	6/12/01

STRUCTURE FILE NUMBER 7700091

REAR ABUTMENT DETAILS

BRIDGE NO. SUM-8-0064
S.R. 8 OVER BEACON STREET

SUM-8-0.63

14 / 38

886 / 1088

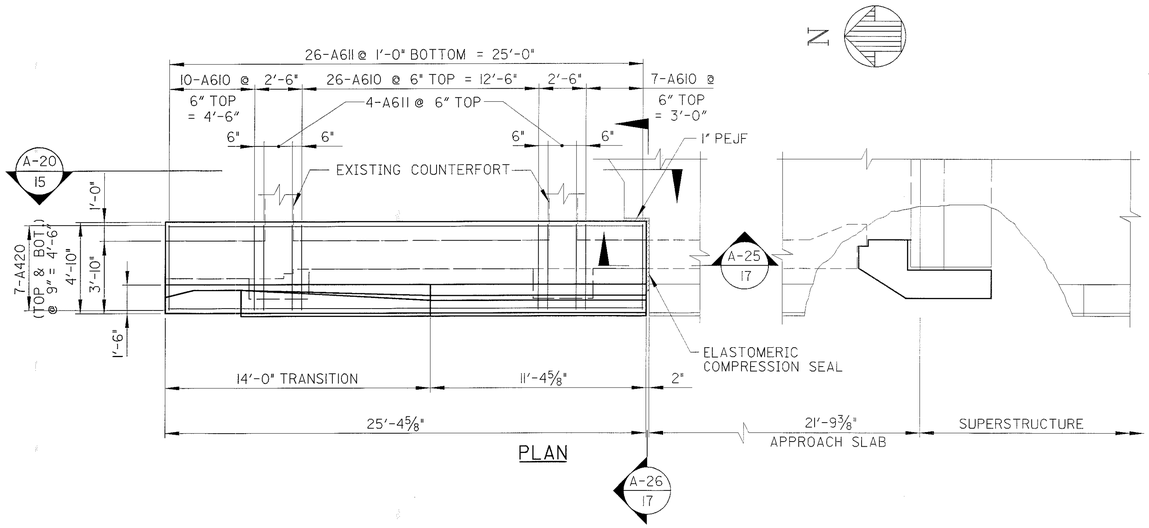

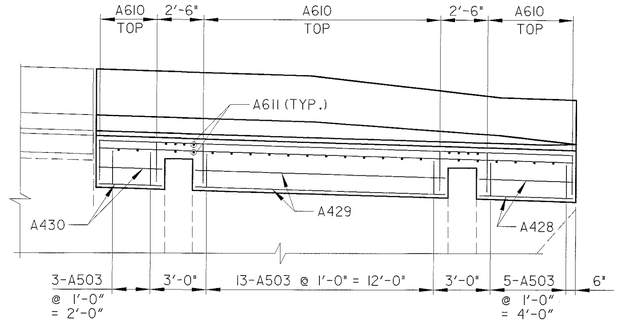

VIEW A-20 / 15

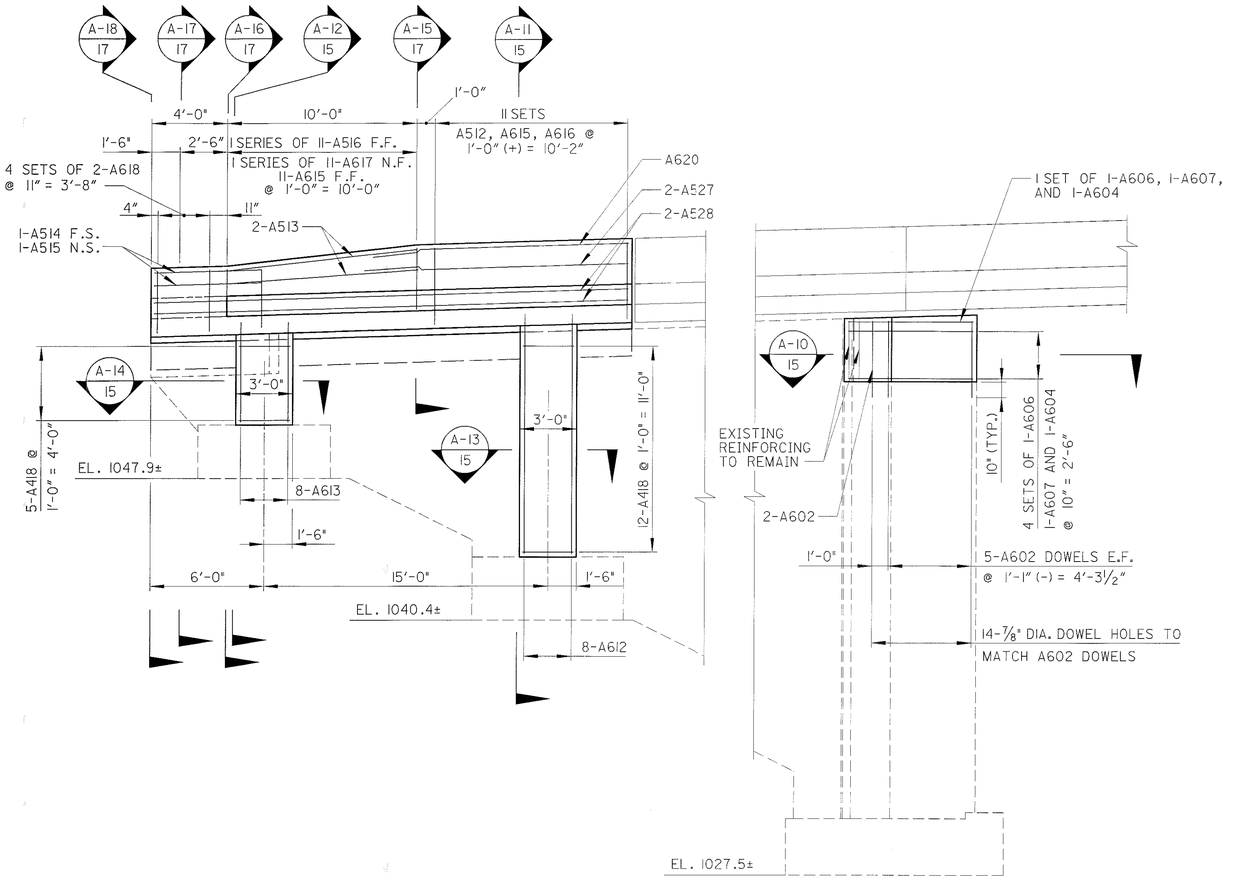

ELEVATION

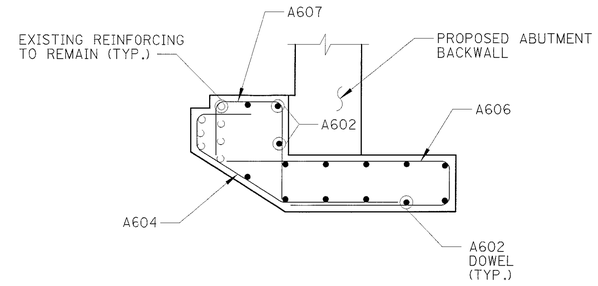

SECTION A-10 / 15

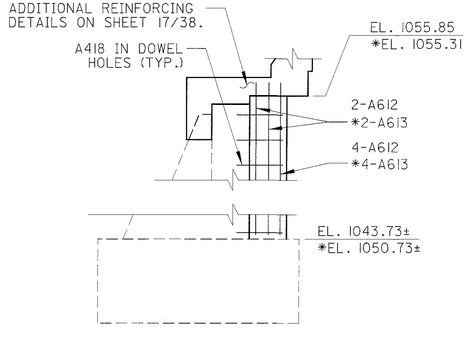

SECTION A-11 / 15 — A-12 / 15

* SECTION A-12 AS NOTED

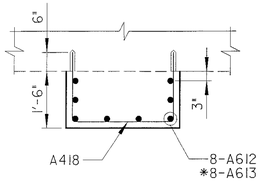

SECTION A-13 / 15 — A-14 / 15

* SECTION A-14 AS NOTED

NOTE:

DOWEL HOLES SHALL BE DRILLED AND GROUTED WITH WITH NON-SHRINK, NON-METALLIC GROUT IN ACCORDANCE WITH ITEM 510. COSTS SHALL BE INCLUDED WITH ITEM 842, CLASS C CONCRETE, ABUTMENT, AS PER PLAN, FOR PAYMENT. (TYP.)

REINFORCEMENT LAP LENGTHS:
#5 BARS 2'-0"
#6 BARS 2'-11"

DLZ
4000 ROCKEFELLER BLDG • 614 W SUPERIOR AVE • CLEVELAND, OH 44113

DESIGNED AJM | DRAWN DJP | CHECKED JWB | REVIEWED GWM | DATE 6/12/01
REVISED | STRUCTURE FILE NUMBER 7700091

NORTHWEST WINGWALL
BRIDGE NO. SUM-8-0064
S.R. 8 OVER BEACON STREET

SUM-8-0.63

15 / 38

887 / 1088

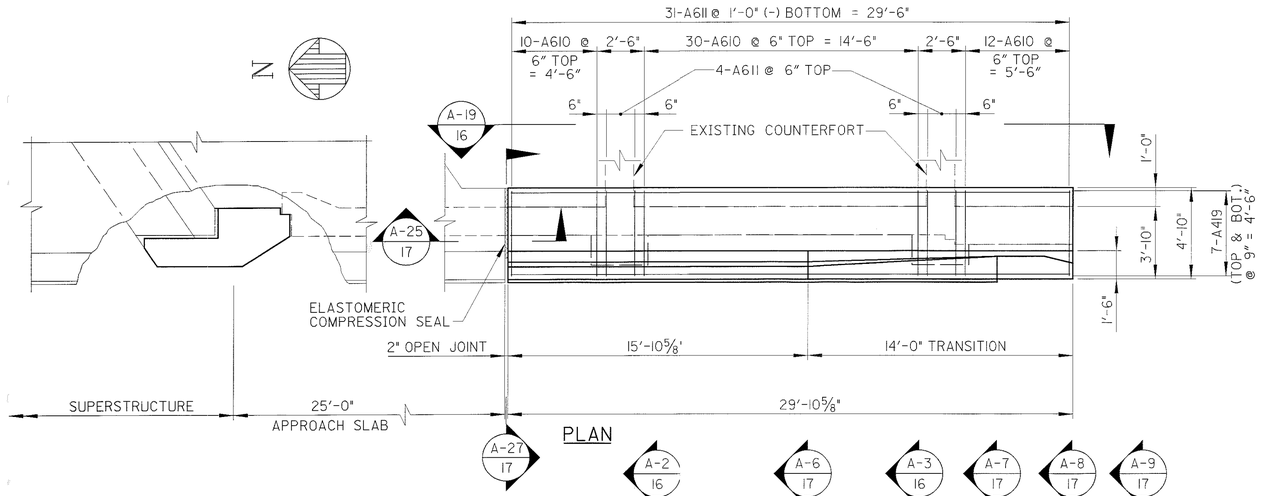

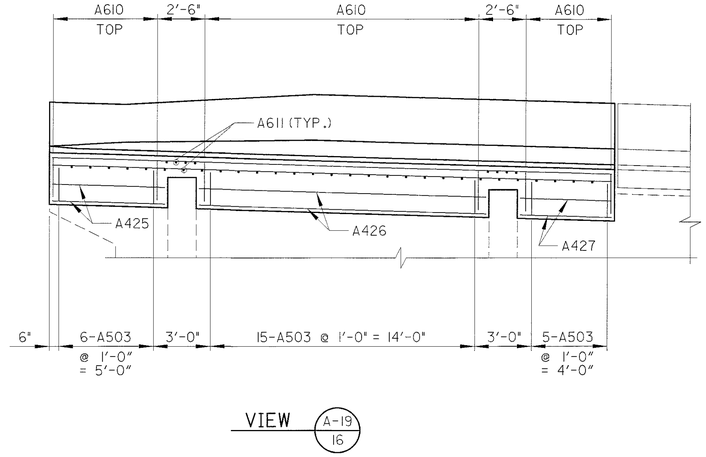

VIEW A-19 / 16

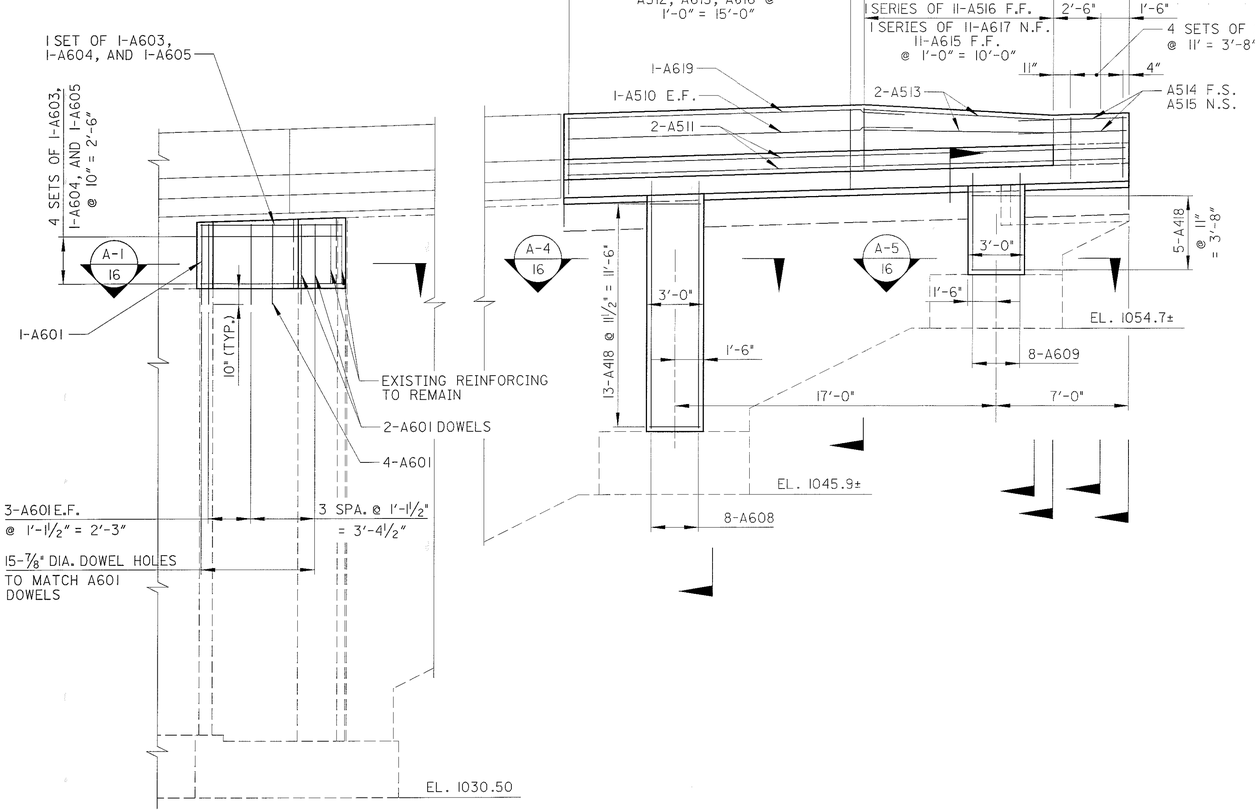

ELEVATION

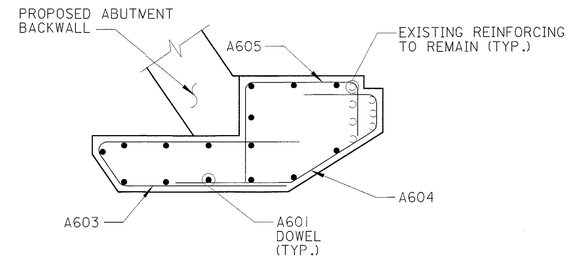

SECTION A-1 / 16

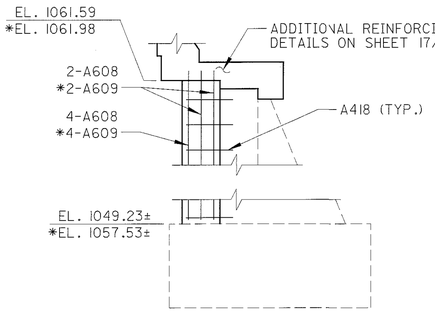

SECTION A-2 / 16 A-3 / 16

* SECTION A-3 AS NOTED

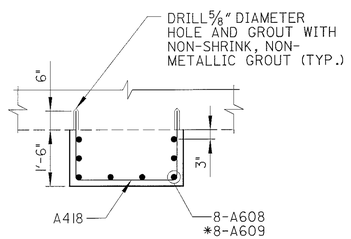

SECTION A-4 / 16 A-5 / 16

* SECTION A-5 AS NOTED

NOTE:

DOWEL HOLES SHALL BE DRILLED AND GROUTED WITH WITH NON-SHRINK, NON-METALLIC GROUT IN ACCORDANCE WITH ITEM 510. COSTS SHALL BE INCLUDED WITH ITEM 842, CLASS C CONCRETE, ABUTMENT, AS PER PLAN, FOR PAYMENT. (TYP.)

REINFORCEMENT LAP LENGTHS:

#5 BARS	2'-0"
#6 BARS	2'-11"

DLZ
8000 ROCKEFELLER BLDG • 614 W SUPERIOR AVE • CLEVELAND, OH 44113

DESIGNED AJM | DRAWN DJP | REVIEWED GWM | DATE 6/12/01
CHECKED JWB | REVISED | STRUCTURE FILE NUMBER 7700091

SOUTHWEST WINGWALL
BRIDGE NO. SUM-8-0064
S.R. 8 OVER BEACON STREET

SUM-8-0.63

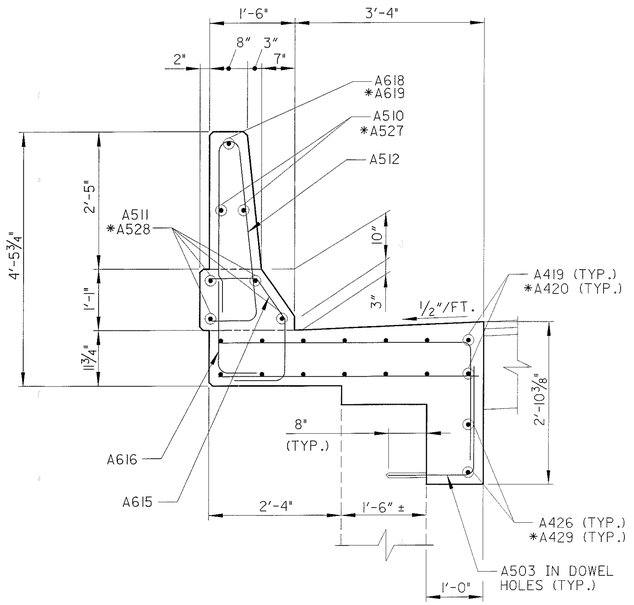

SECTION A-6 / 16

SECTION A-15 / 15

(SHOWN OPPOSITE HAND)

* SECTION A-15 AS NOTED

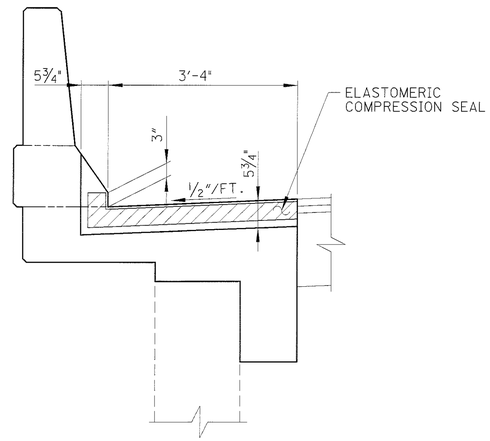

SECTION A-26 / 15

SECTION A-27 / 16

(SHOWN OPPOSITE HAND)

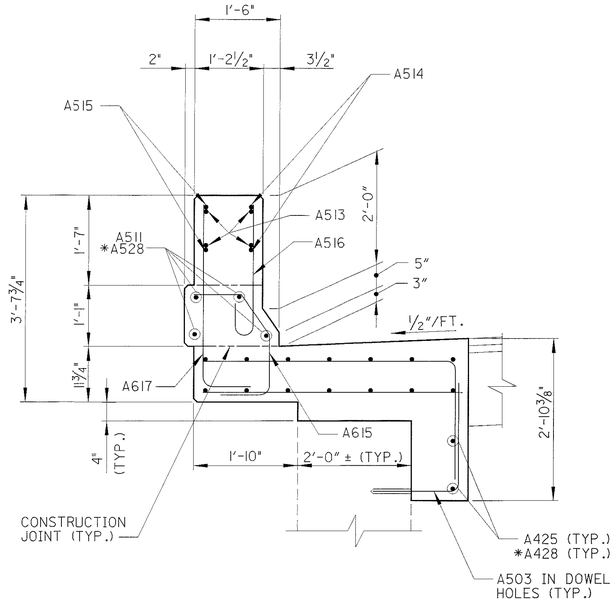

SECTION A-7 / 16

SECTION A-16 / 15

(SHOWN OPPOSITE HAND)

* SECTION A-16 AS NOTED

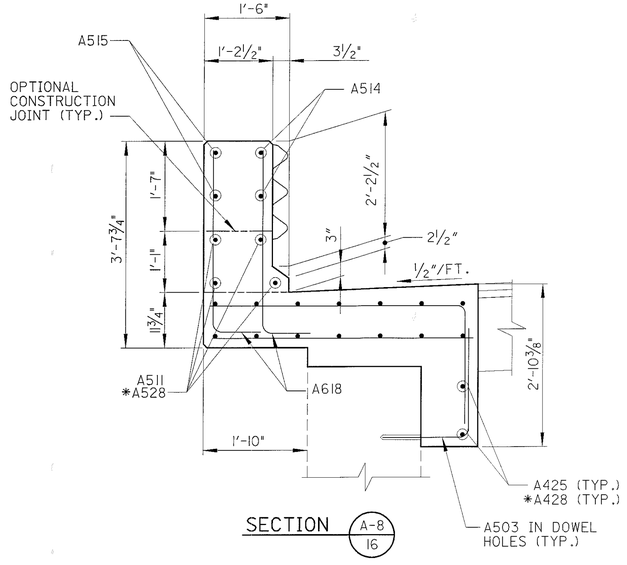

SECTION A-8 / 16

SECTION A-17 / 15

(SHOWN OPPOSITE HAND)

* SECTION A-17 AS NOTED

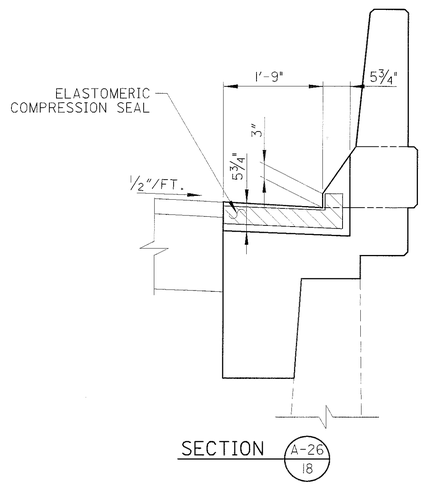

SECTION A-26 / 18

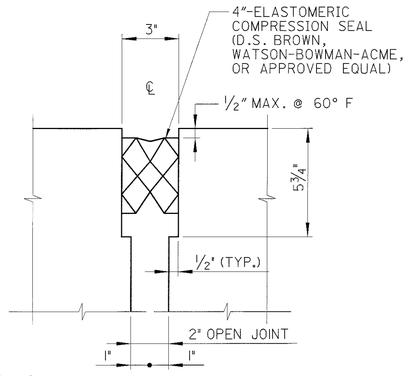

SECTION A-25 / 15-16

SECTION A-27 / 18

NOTE:

DOWEL HOLES SHALL BE DRILLED AND GROUTED WITH WITH NON-SHRINK, NON-METALLIC GROUT IN ACCORDANCE WITH ITEM 510. COSTS SHALL BE INCLUDED WITH ITEM 842, CLASS C CONCRETE, ABUTMENT, AS PER PLAN, FOR PAYMENT. (TYP.)

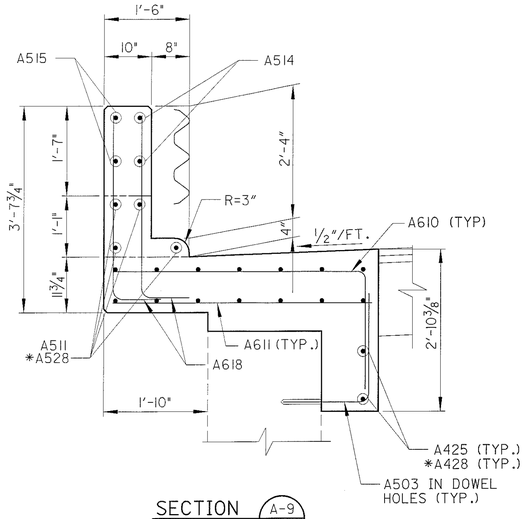

SECTION A-9 / 16

SECTION A-18 / 15

(SHOWN OPPOSITE HAND)

* SECTION A-18 AS NOTED

DLZ
1000 ROCKEFELLER BLDG • 614 W SUPERIOR AVE • CLEVELAND, OH 44113

DESIGNED	DRAWN	CHECKED	REVIEWED	DATE
AJM	DJP	JWB	GWM	6/12/01

REVISED

STRUCTURE FILE NUMBER
7700091

SOUTHWEST & NORTHWEST WINGWALL DETAILS
BRIDGE NO. SUM-8-0064
S.R. OVER BEACON STREET

SUM-8-0.63

17 / 38

889
1088

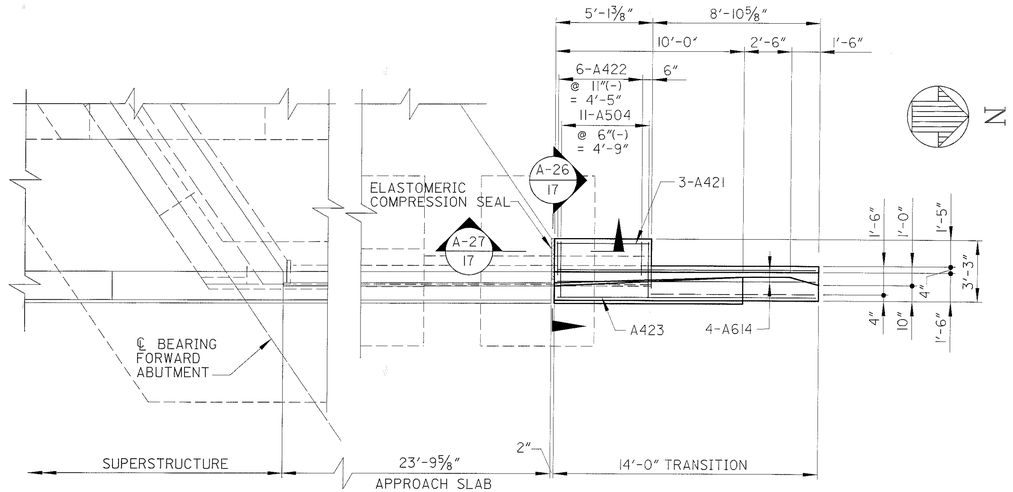

PLAN

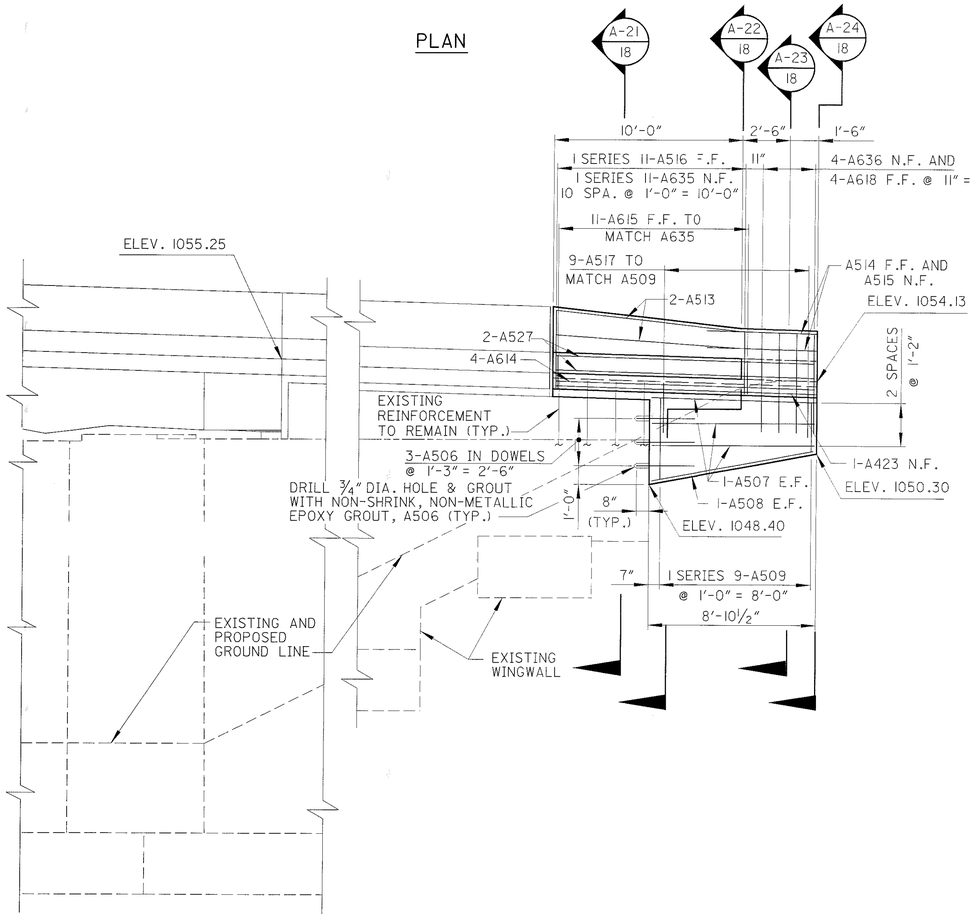

ELEVATION

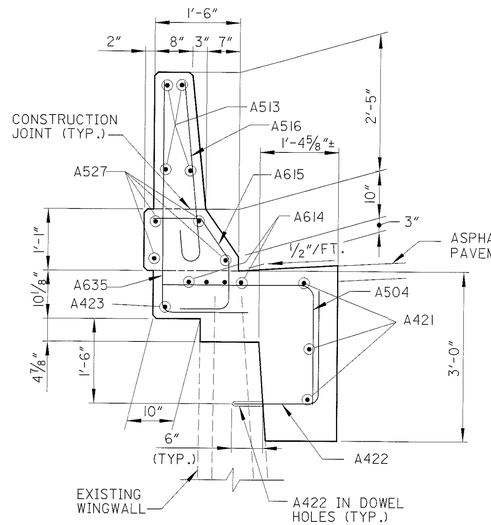

SECTION A-21 / 18

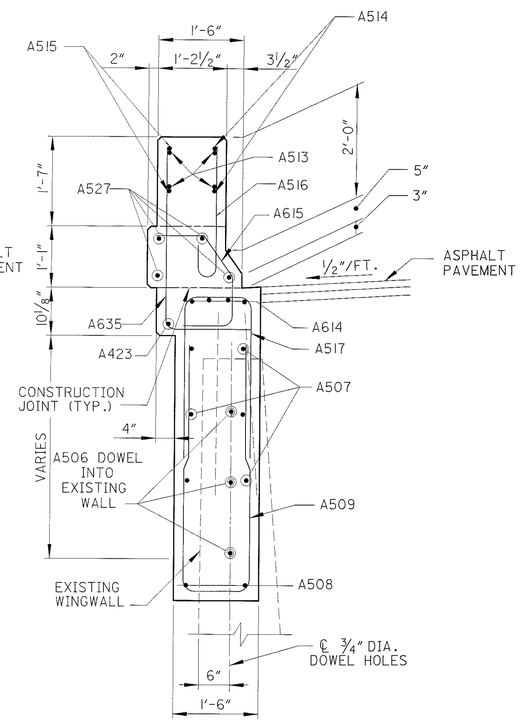

SECTION A-22 / 18

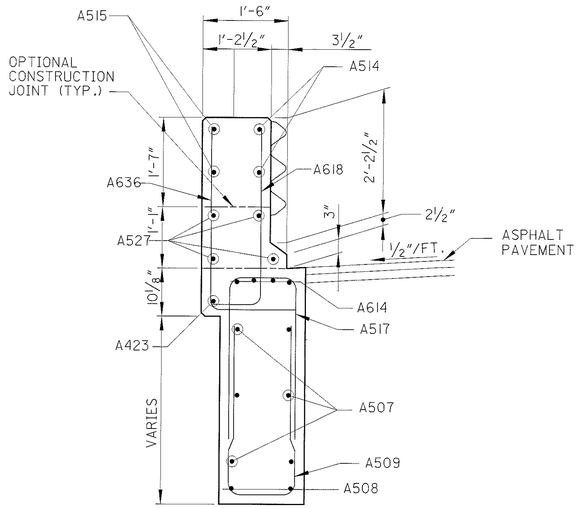

SECTION A-23 / 18

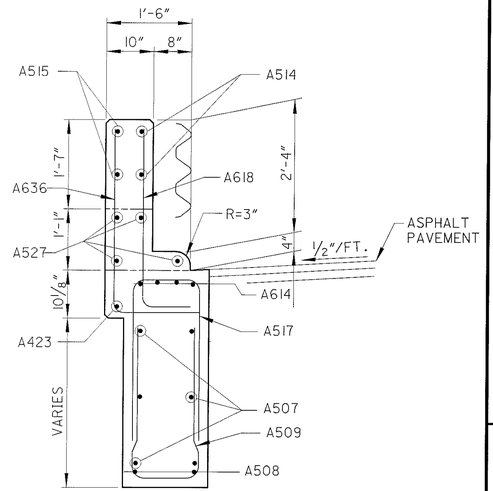

SECTION A-24 / 18

DLZ
2000 ROCKEFELLER BLDG • 614 W SUPERIOR AVE • CLEVELAND, OH 44113

DESIGNED	DRAWN	REVIEWED	DATE
AJM	RCK	GWM	6/12/01
CHECKED	REVISED	STRUCTURE TIE NUMBER	
JWB		7700091	

NORTHEAST WINGWALL
BRIDGE NO. SUM-8-0064
S.R. 8 OVER BEACON STREET

SUM-8-0.63

18 / 38

890
1088

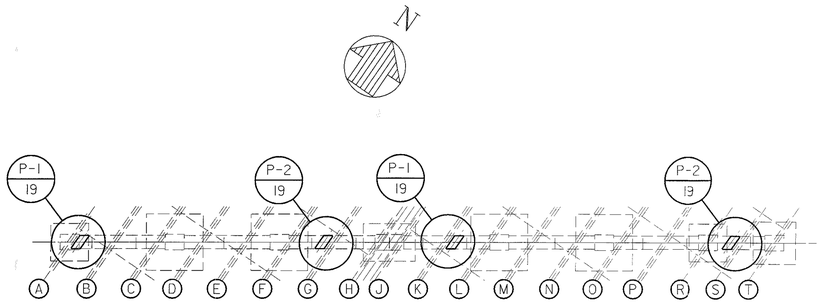

KEY PLAN - PIER
SEISMIC PEDISTAL LOCATION

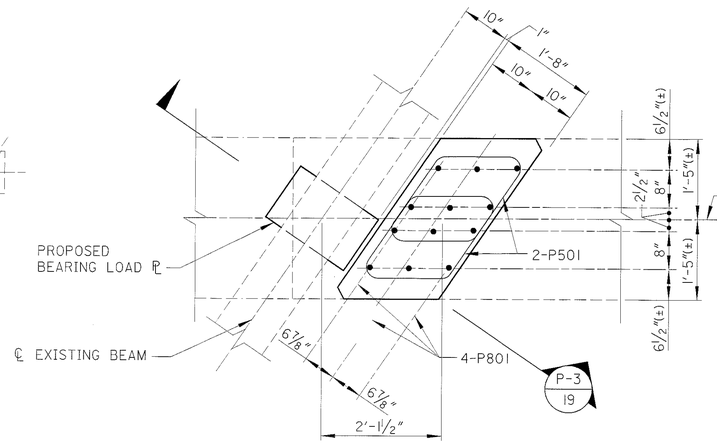

DETAIL P-1 / 19

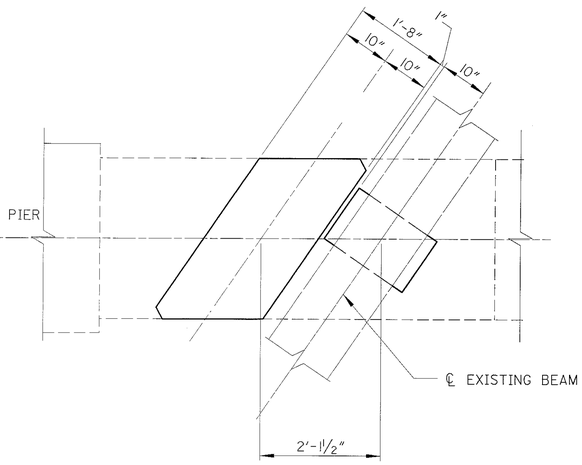

DETAIL P-2 / 19

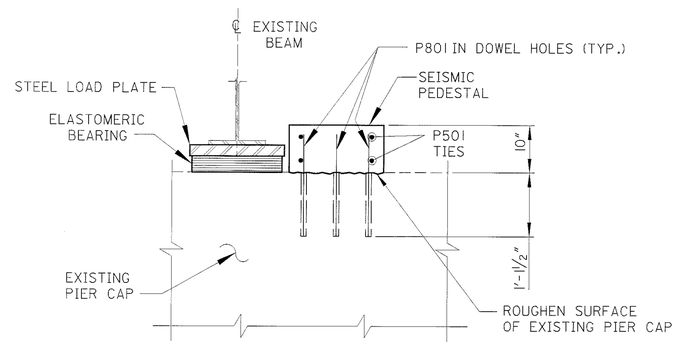

SECTION P-3 / 19

NOTE:

DOWEL HOLES SHALL BE DRILLED AND GROUTED WITH NON-SHRINK, NON-METALLIC GROUT IN ACCORDANCE WITH ITEM 510. COSTS SHALL BE SHALL BE INCLUDED WITH ITEM 842 - CLASS C CONCRETE, PIER, AS PER PLAN, FOR PAYMENT.

DLZ
600 ROCKEFELLER BLDG • 614 W SUPERIOR AVE • CLEVELAND, OH 44113

DESIGNED AJM | DRAWN RCK | CHECKED JWB | REVISED | REVIEWED GWM 6/12/01 | STRUCTURE FILE NUMBER 7700091

PIER - SEISMIC PEDESTAL DETAIL
BRIDGE NO. SUM-8-0064
S.R. 8 OVER BEACON STREET

SUM-8-0.63

19 / 38

891 / 1088

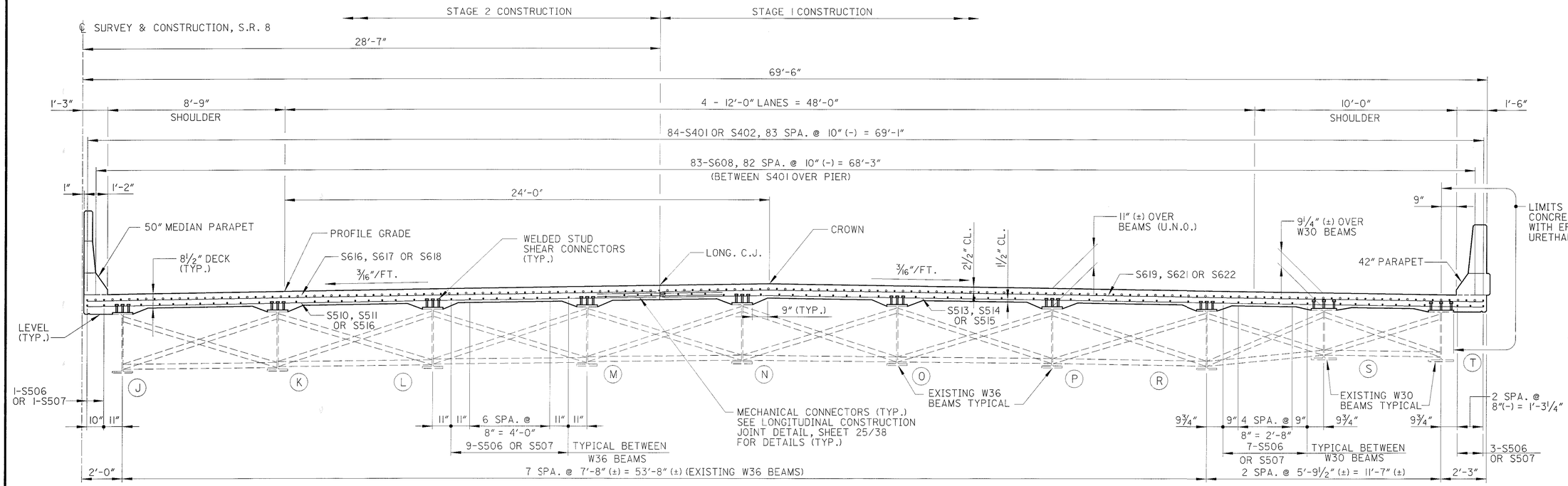

NOTE: EACH RUN OF LONGITUDINAL DECK REINFORCING SHALL BE COMPRISED OF THE FOLLOWING:
TOP BARS: 4-S401 & 1-S402, LAP 2'-0" MIN.
BOTTOM BARS: 4-S506 & 1-S507, LAP 2'-0" MIN.

TRANSVERSE SECTION - NORTHBOUND

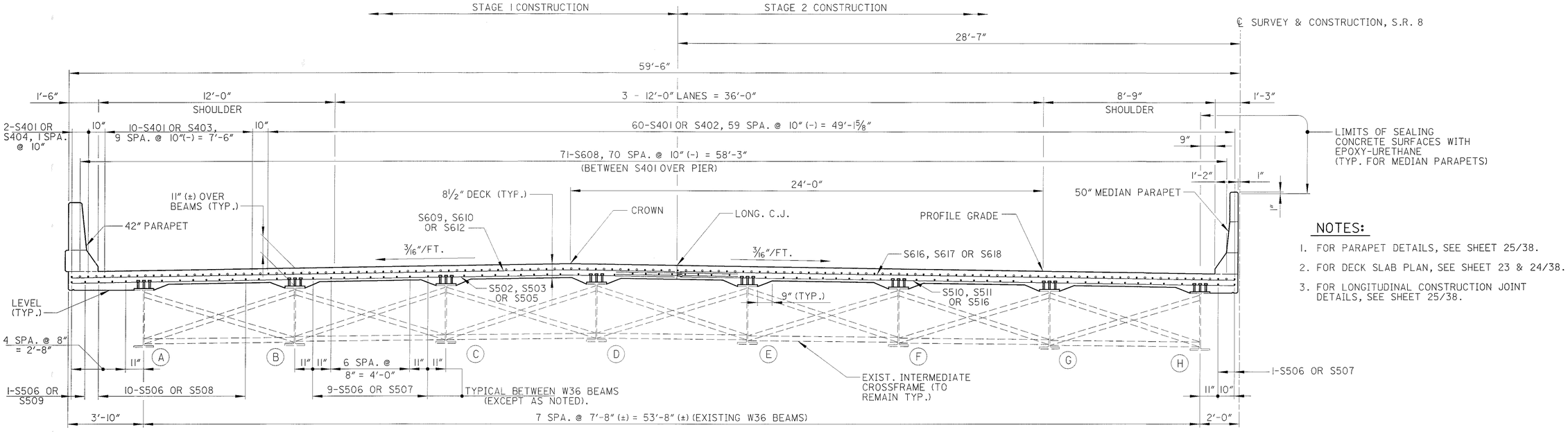

NOTE: EACH RUN OF LONGITUDINAL DECK REINFORCING SHALL BE COMPRISED OF THE FOLLOWING:
TOP BARS: 4-S401 & 1-402, 1-403, OR 1-404, LAP 2'-0" MIN.
BOTTOM BARS: 4-S506 & 1-507, 1-508, OR 1-509, LAP 2'-0" MIN.

TRANSVERSE SECTION - SOUTHBOUND

NOTES:

1. FOR PARAPET DETAILS, SEE SHEET 25/38.
2. FOR DECK SLAB PLAN, SEE SHEET 23 & 24/38.
3. FOR LONGITUDINAL CONSTRUCTION JOINT DETAILS, SEE SHEET 25/38.

DLZ
8000 ROCKEFELLER BLDG • 614 W. SUPERIOR AVE • CLEVELAND, OH 44113

DESIGNED PAT | DRAWN DJP | CHECKED AJM | REVIEWED GWM | DATE 6/12/01 | REVISED | STRUCTURE FILE NUMBER 7700091

TRANSVERSE SECTION
BRIDGE NO. SUM-8-0064
S.R. 8 OVER BEACON STREET

SUM-8-0.63

℄ BRG. REAR ABUT

℄ BRG. PIER

℄ BRG. FWD. ABUT.

℄ BRG. FWD. ABUT. (BEAM A ONLY)

4'-6 3/16"(±)

6'-7 1/8"(±)

1'-3 5/8"(±)

EXIST. INTERMEDIATE CROSSFRAME (TYP.)

EXIST. END CROSSFRAME TO BE REMOVED (TYP. ALL BAYS, BOTH SIDES)

EXISTING UNDERDECK LIGHTING (TO BE REMOVED) REFER TO LIGHTING PLANS

EXISTING UNDERDECK LIGHTING SUPPORT ANGLES (TO BE REMOVED)

34°25'00"(±) SKEW

15'-0"(±) (TYP.)

STA. 35+01.29

℄ SURVEY & ℄ CONSTRUCTION, S.R. 8

STAGE 1 CONSTRUCTION

28'-7"

STAGE 2 CONSTRUCTION

STA. 33+74.29

STA. 34+37.79

EXIST. 36 WF 150

EXIST. 36 WF 182

EXIST. 36 WF 182

EXIST. 36 WF 182

EXIST. 36 WF 182

EXIST. 36 WF 182

EXIST. 36 WF 150

EXIST. 36 WF 150

EXIST. 36 WF 182

EXIST. 36 WF 182

EXIST. 36 WF 182

EXIST. 36 WF 182

EXIST. 36 WF 182

EXIST. 36 WF 150

EXIST. W30x173

EXIST. W30x173

℄ EXIST. SPLICE

EXIST. INTERMEDIATE CROSSFRAME (TYP.)

15'-0"(±) (TYP.)

EXISTING UNDERDECK LIGHTING (TO BE REMOVED) REFER TO LIGHTING PLANS

EXISTING UNDERDECK LIGHTING SUPPORT ANGLES (TO BE REMOVED)

EXIST. END CROSSFRAME TO BE REMOVED (TYP. ALL BAYS, BOTH SIDES)

16'-0"(±)

63'-6"± SPAN 1

63'-6"± SPAN 2

N

LEGEND

(X) - BEAM LINE DESIGNATION

NOTES

1. EXISTING FRAMING TO REMAIN UNLESS NOTED OTHERWISE.
2. FOR EXISTING BEAM ELEVATIONS, SEE SHEET 22/38.

FRAMING PLAN

DLZ
1000 ROCKEFELLER BLDG ● 614 W SUPERIOR AVE ● CLEVELAND, OH 44113

DESIGNED	DRAWN	REVIEWED	DATE
PAT	PAT	GWM	6/12/01
CHECKED	REVISED	STRUCTURE FILE NUMBER	
AJM		7700091	

FRAMING PLAN
BRIDGE NO. SUM-8-0064
S.R. 8 OVER BEACON STREET

SUM-8-0.63

21 / 38

893
1088

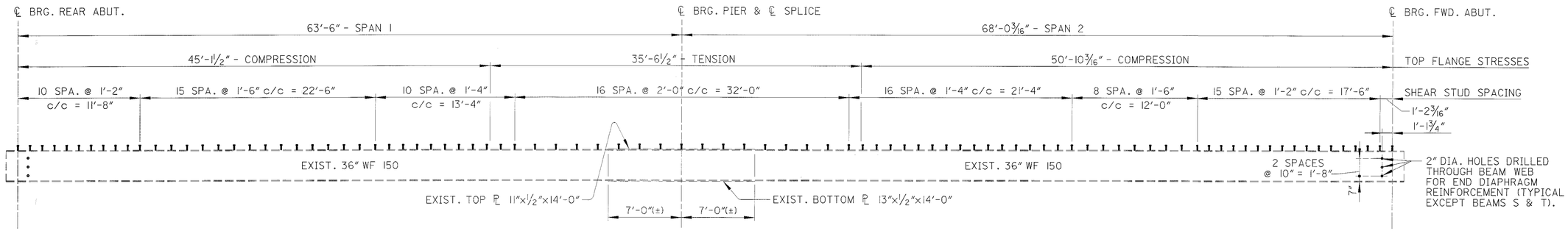

ELEVATION - BEAM A

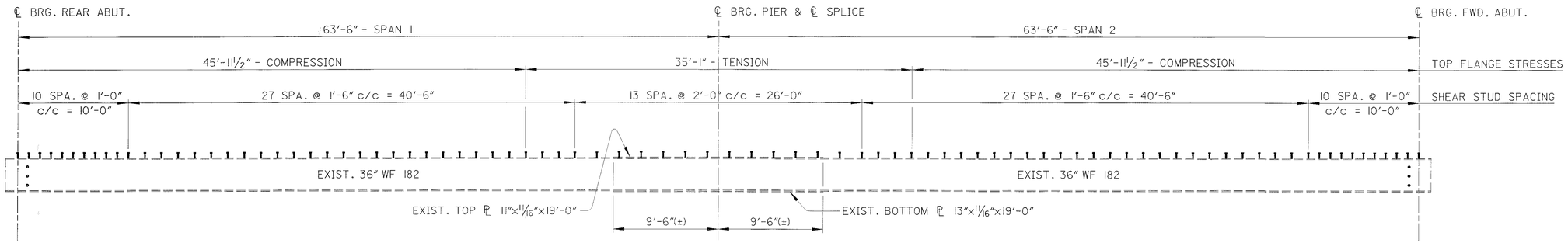

ELEVATION - BEAMS B, C, D, E, F, G, K, L, M, N, O & P

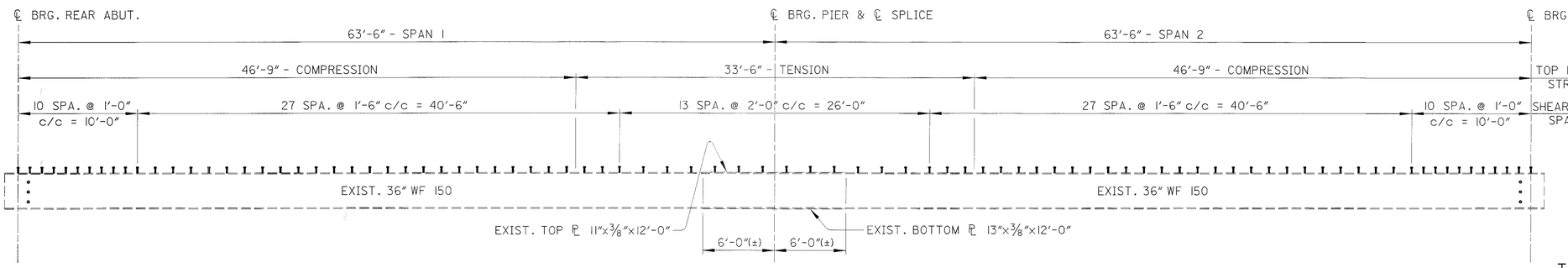

ELEVATION - BEAMS H, J & R

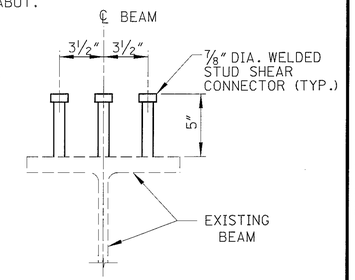

TYPICAL SHEAR CONNECTOR DETAIL

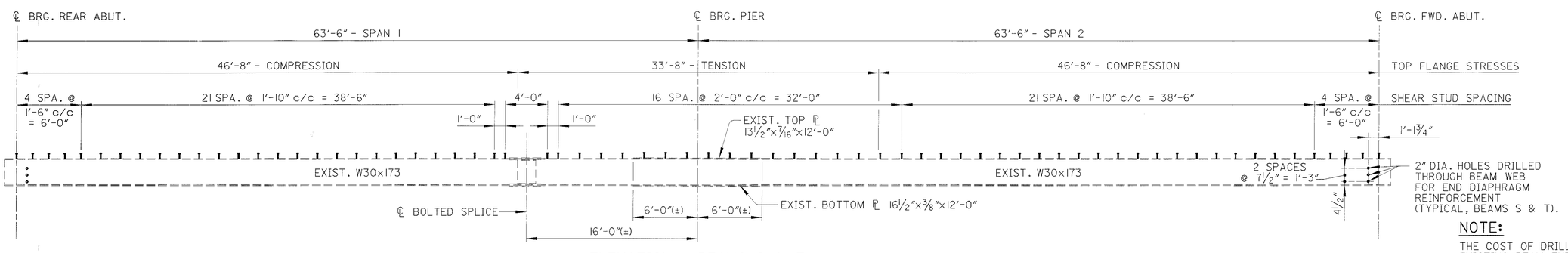

ELEVATION - BEAMS S & T

NOTE:

THE COST OF DRILLING HOLES IN EXISTING BEAM ENDS IN INCLUDED IN ITEM 202 - PORTIONS OF STRUCTURE REMOVED, OVER 20' SPAN, AS PER PLAN.

DLZ
8000 ROCKEFELLER BLDG • 614 W SUPERIOR AVE • CLEVELAND, OH 44113

DESIGNED	DRAWN	REVIEWED	DATE
PAT	PAT	GWM	6/12/01
CHECKED	REVISED	STRUCTURE FILE NUMBER	
DJC		7700091	

EXISTING BEAM ELEVATIONS
BRIDGE NO. SUM-8-0064
S.R. 8 OVER BEACON STREET

SUM-8-0.63

22/38

894
1088

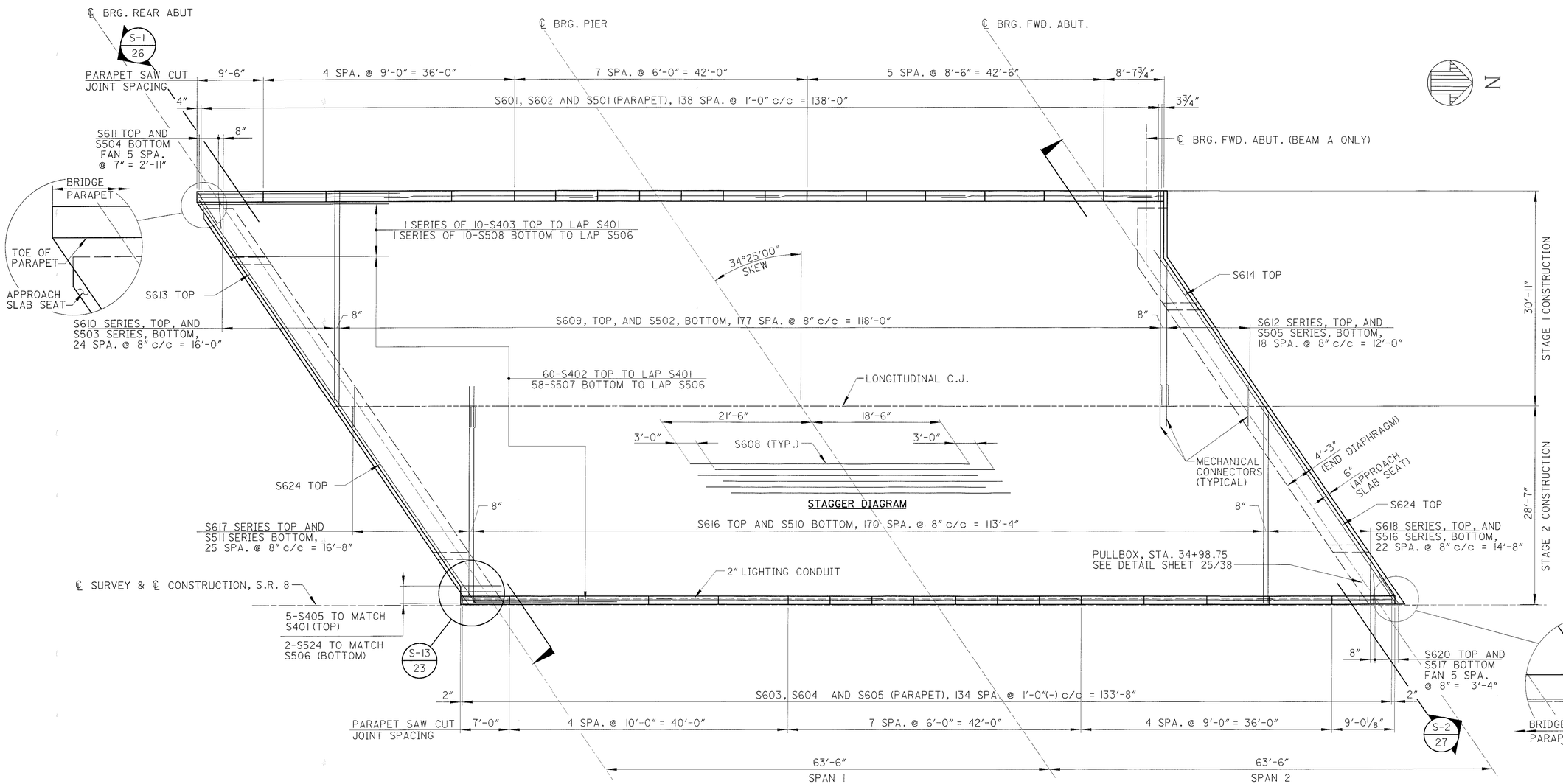

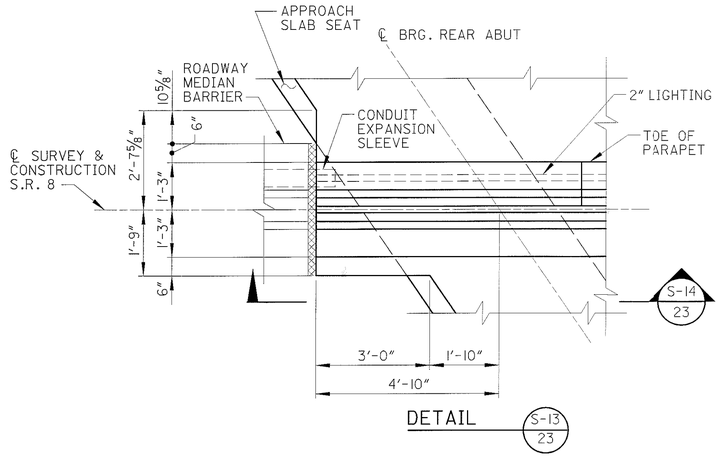

DETAIL (S-13 / 23)

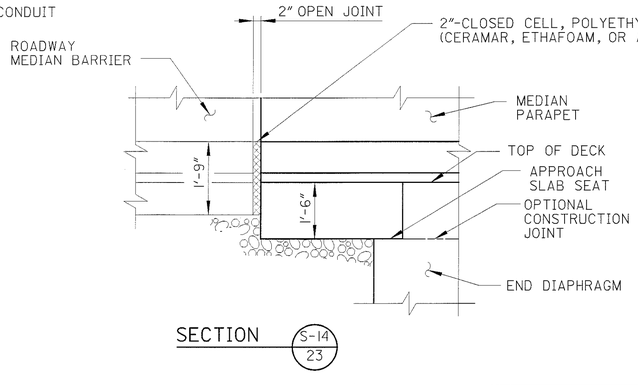

SECTION (S-14 / 23)

DECK SLAB PLAN - SOUTHBOUND BRIDGE

NOTES:

1. FOR LONGITUDINAL DECK REINFORCEMENT SEE TRANSVERSE SECTION SHEET 20/38.
2. FOR LONGITUDINAL PARAPET REINFORCEMENT, SEE SUPERSTRUCTURE DETAILS SHEET 25/38.
3. FOR DETAILS OF MECHANICAL CONNECTORS AND PARAPETS SEE SHEET 25/38.
4. 2"-CLOSED CELL FOAM SHALL BE INSTALLED WHERE SHOWN ON THE PLANS AND IN ACCORDANCE WITH MANUFACTURER'S SPECIFICATIONS. CLOSED CELL FOAM SHALL BE INSTALLED IN THE 2"-OPEN JOINT BETWEEN THE COMPLETED SUPERSTRUCTURE PARAPET AND APPROACH ROADWAY MEDIAN BARRIER. THE FOAM SHALL BE CUT TO FIT THE PROFILE OF THE MEDIAN BARRIER. ALL COSTS ASSOCIATED WITH FURNISHING AND INSTALLING THE 2"-CLOSED CELL POLYETHYLENE FOAM SHALL BE INCLUDED FOR PAYMENT WITH ITEM 842, CLASS S CONCRETE, SUPERSTRUCTURE, AS PER PLAN.
5. MEDIAN PARAPET DEFLECTION JOINTS SHALL BE SAWCUT ALONG THE ENTIRE PERIMETER OF THE FIRST PARAPET CONSTRUCTED AND SAWCUT ALONG THE EXPOSED PERIMETER OF THE SECOND PARAPET CONSTRUCTED.
6. REINFORCEMENT LAP LENGTHS:
   #4 BARS 2'-0"
   #5 BARS 2'-0"

DLZ
1000 ROCKEFELLER BLDG ★ 614 ★ SUPERIOR AVE ★ CLEVELAND, OH 44113

DESIGNED	DRAWN	REVIEWED	DATE
PAT	RCK	GWM	6/12/01
CHECKED	REVISED	STRUCTURE FILE NUMBER	
AJM		7700091	

DECK SLAB PLAN - SOUTHBOUND
BRIDGE NO. SUM-8-0064
S.R. 8 OVER BEACON STREET

SUM-8-0.63

23 / 38

895 / 1088

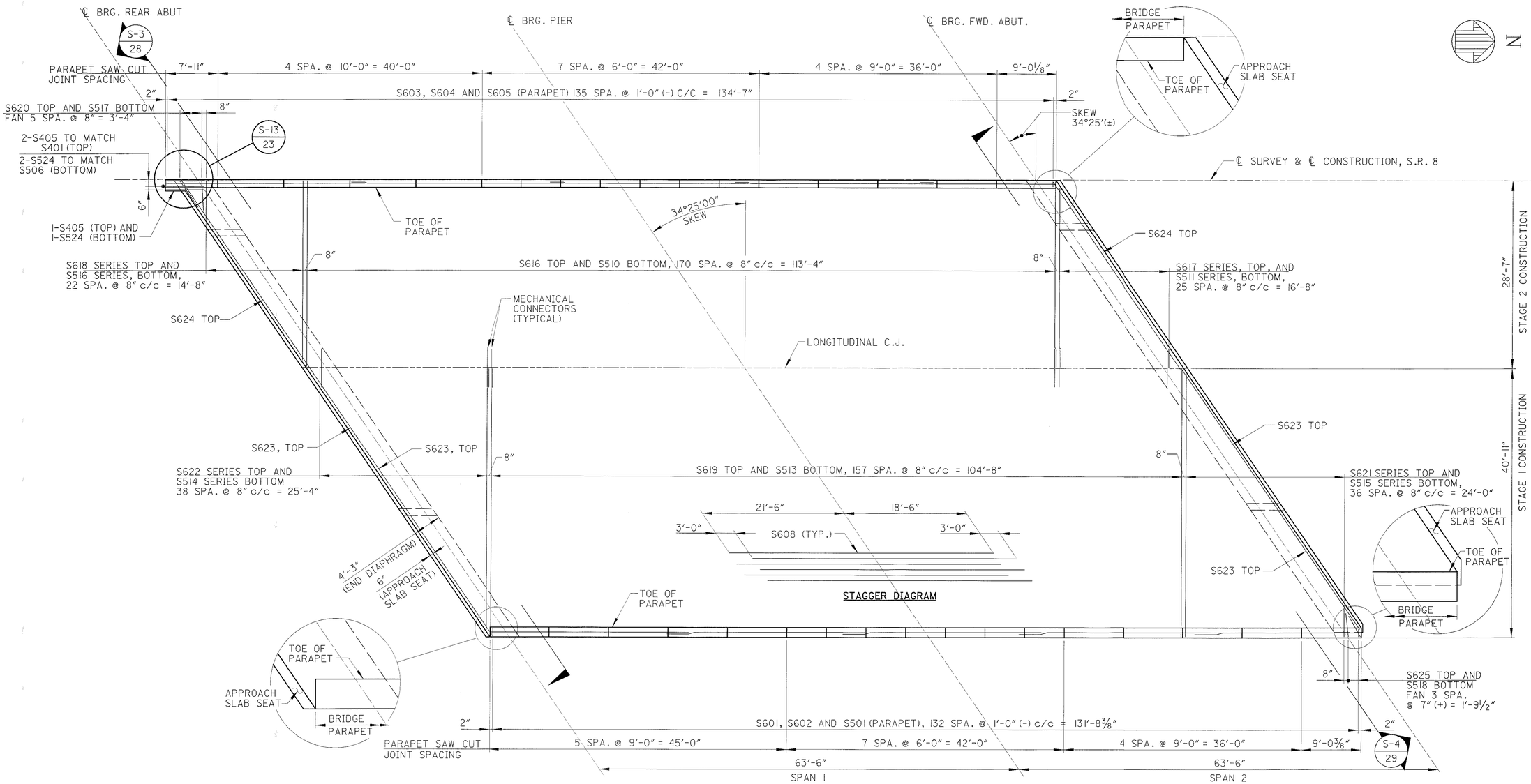

DECK SLAB PLAN - NORTHBOUND BRIDGE

NOTES:

1. FOR LONGITUDINAL DECK REINFORCEMENT SEE TRANSVERSE SECTION SHEET 20/38.
2. FOR LONGITUDINAL PARAPET REINFORCEMENT, SEE SUPERSTRUCTURE DETAILS SHEET 25/38.
3. FOR DETAILS OF MECHANICAL CONNECTORS AND PARAPETS SEE SHEET 25/38.
4. REINFORCEMENT LAP LENGTHS:
   #4 BARS 2'-0"
   #5 BARS 2'-0"

DLZ
1000 ROCKEFELLER BLDG • 614 • SUPERIOR AVE • CLEVELAND, OH 44113

DESIGNED PAT
DRAWN RCK
CHECKED AJM
REVIEWED GWM
DATE 6/12/01
STRUCTURE FILE NUMBER 7700091
REVISED

DECK SLAB PLAN - NORTHBOUND
BRIDGE NO. SUM-8-0064
S.R. 8 OVER BEACON STREET

SUM-8-0.63

24 / 38

896
1088

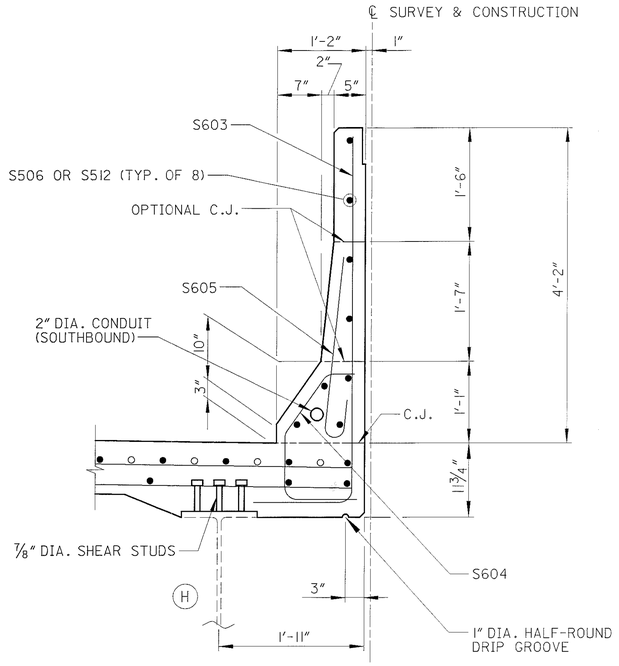

NOTE: EACH RUN OF LONGITUDINAL PARAPET REINFORCING SHALL BE COMPRISED OF THE FOLLOWING:

4-S506 & 1-S512 (TYP. OF 8), LAP 2'-0" MIN.

MEDIAN PARAPET DETAIL

SOUTHBOUND SHOWN
NORTHBOUND OPP. HAND

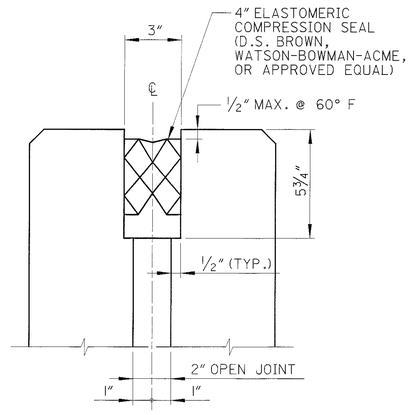

LONGITUDINAL JOINT DETAIL AT MEDIAN PARAPET

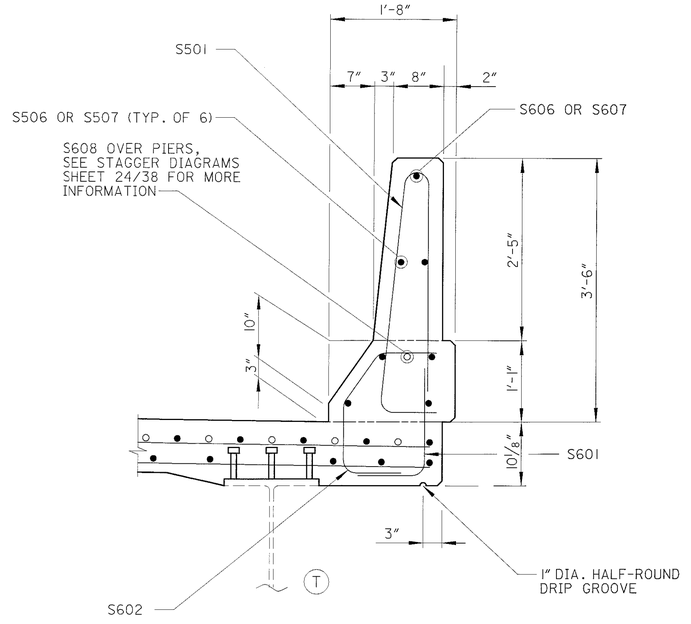

NOTE: EACH RUN OF LONGITUDINAL PARAPET REINFORCING SHALL BE COMPRISED OF THE FOLLOWING:

4-S506 & 1-S507 (TYP. OF 6), LAP 2'-0" MIN.
5-S606 & 1-S607 (TOP OF PARAPET), LAP 3'-4" MINIMUM.

OUTSIDE PARAPET DETAIL

NORTHBOUND

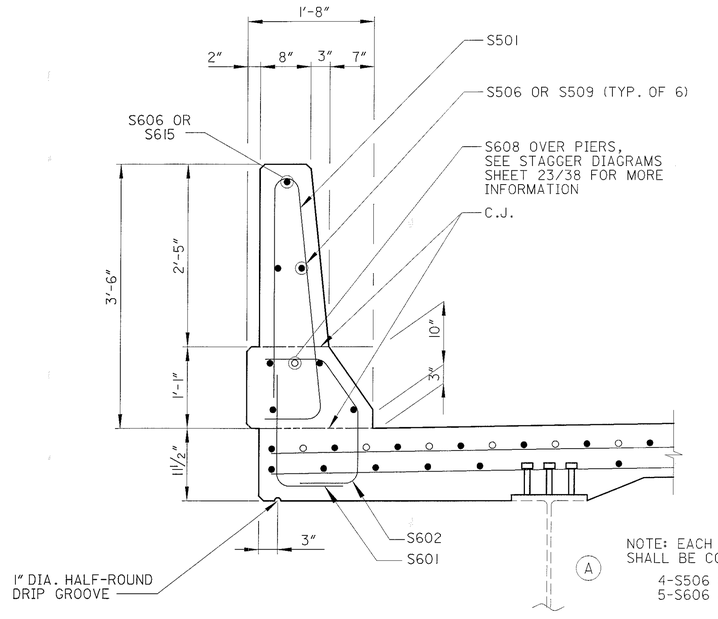

NOTE: EACH RUN OF LONGITUDINAL PARAPET REINFORCING SHALL BE COMPRISED OF THE FOLLOWING:

4-S506 & 1-S509 (TYP. OF 6), LAP 2'-0" MIN.
5-S606 & 1-S615, LAP 3'-4" MIN.

OUTSIDE PARAPET DETAIL

SOUTHBOUND

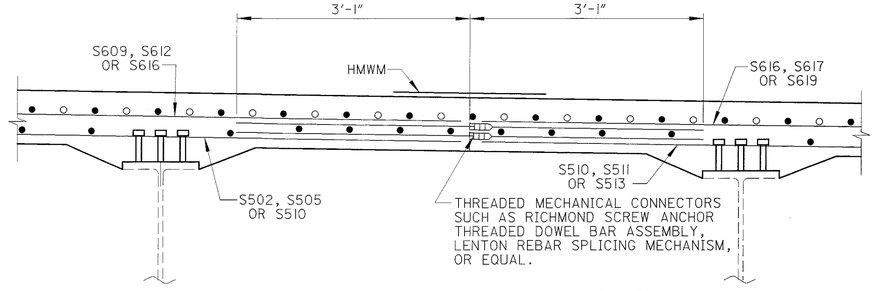

LONGITUDINAL CONSTRUCTION JOINT DETAIL

LEGEND

(A) - BEAM LINE DESIGNATION
C.J. - CONSTRUCTION JOINT

NOTES

1. LONGITUDINAL OR TRANSVERSE CONSTRUCTION JOINTS SHALL NOT BE PERMITTED IN THE DECK SLAB EXCEPT AS SHOWN ON THE PLANS.
2. THE LONGITUDINAL CONSTRUCTION JOINT SHALL BE SEALED WITH HIGH MOLECULAR WEIGHT METHACRYLATE. THE WIDTH OF SEALING SHALL BE 2', CENTERED OVER THE JOINT.

DLZ
1000 ROCKEFELLER BLDG • 614 W SUPERIOR AVE • CLEVELAND, OH 44113

DESIGNED PAT | DRAWN DJP | CHECKED AJM | REVIEWED GWM | DATE 6/12/01 | REVISED | STRUCTURE FILE NUMBER 7700091

SUPERSTRUCTURE DETAILS
BRIDGE NO. SUM-8-0064
S.R. 8 OVER BEACON STREET

SUM-8-0.63

25 / 38

897 / 1088

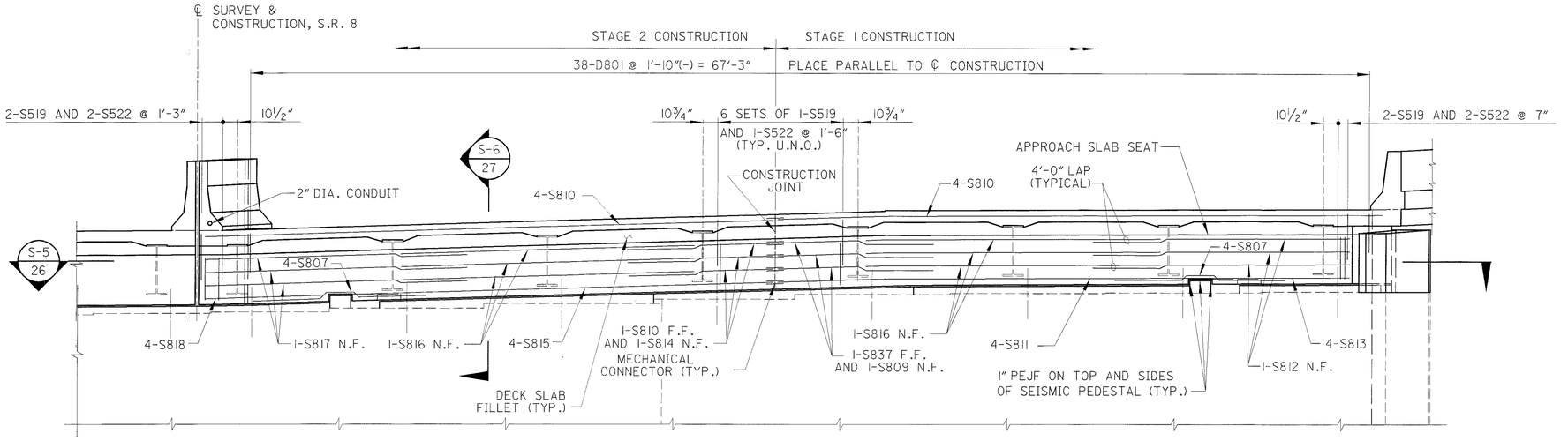

SECTION S-1 / 23

(SOUTH BOUND REAR
DECK SLAB END DIAPHRAGM)

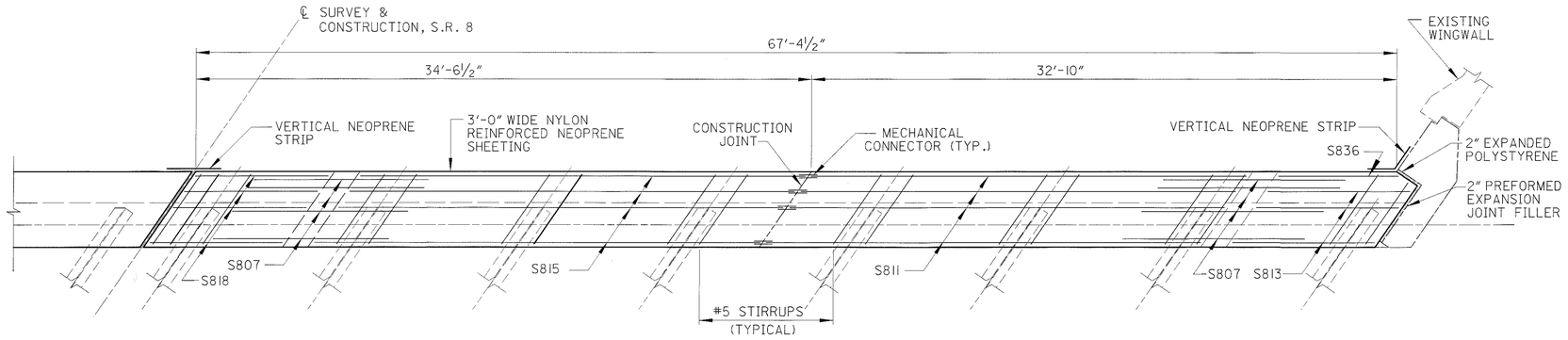

SECTION S-5 / 26

NOTE: FOR NOTES, SEE SHEET 27/38.

DLZ
8000 ROCKEFELLER BLDG • 614 W SUPERIOR AVE • CLEVELAND, OH 44113

DESIGNED	DRAWN	REVIEWED	DATE
AJM	RCK	GWM	6/12/01
CHECKED	REVISED	STRUCTURE FILE NUMBER	
JWB		7700091	

SUPERSTRUCTURE DETAILS
BRIDGE NO. SUM-8-0064
S.R. 8 OVER BEACON STREET

SUM-8-0.63

26 / 38

898
1088

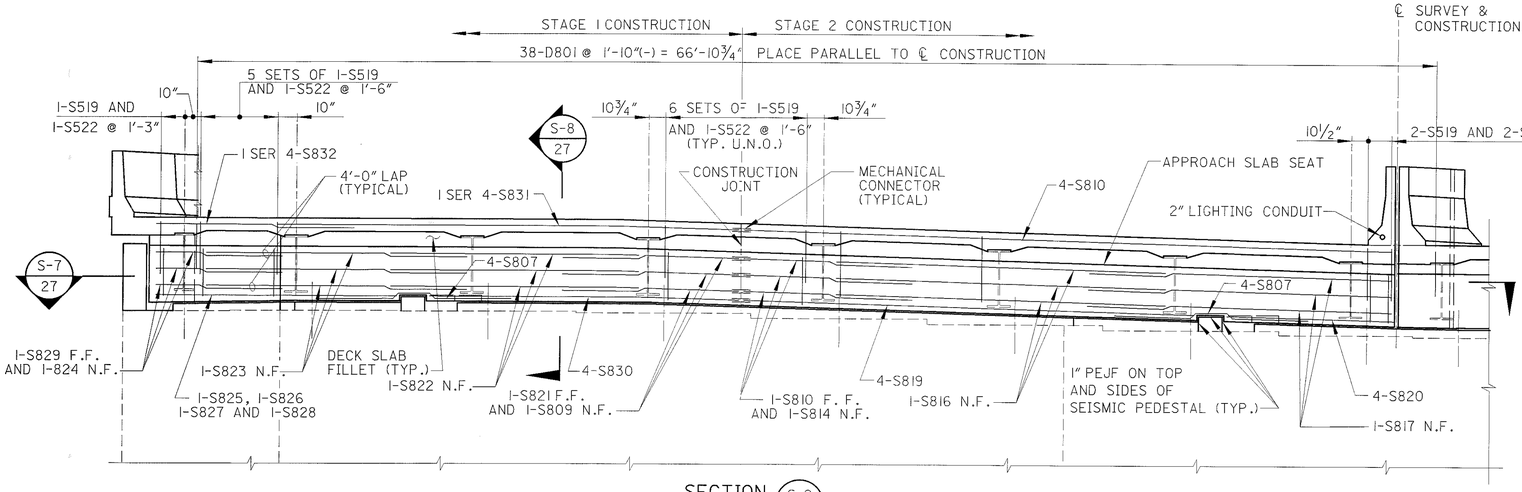

SECTION S-2 / 23

(SOUTH BOUND FORWARD DECK SLAB END DIAPHRAGM)

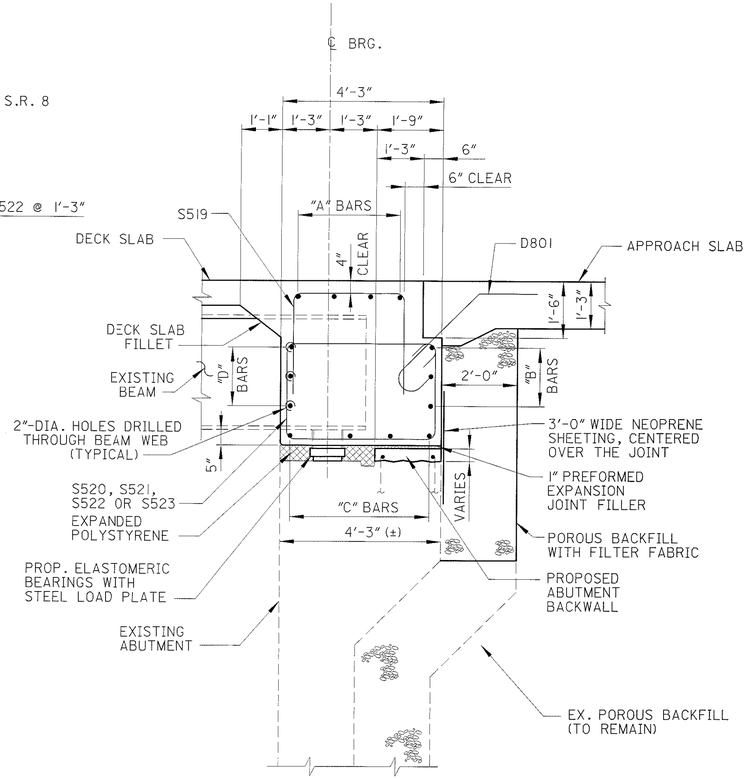

SECTION S-6 / 26, S-8 / 27, S-10 / 28, S-12 / 29

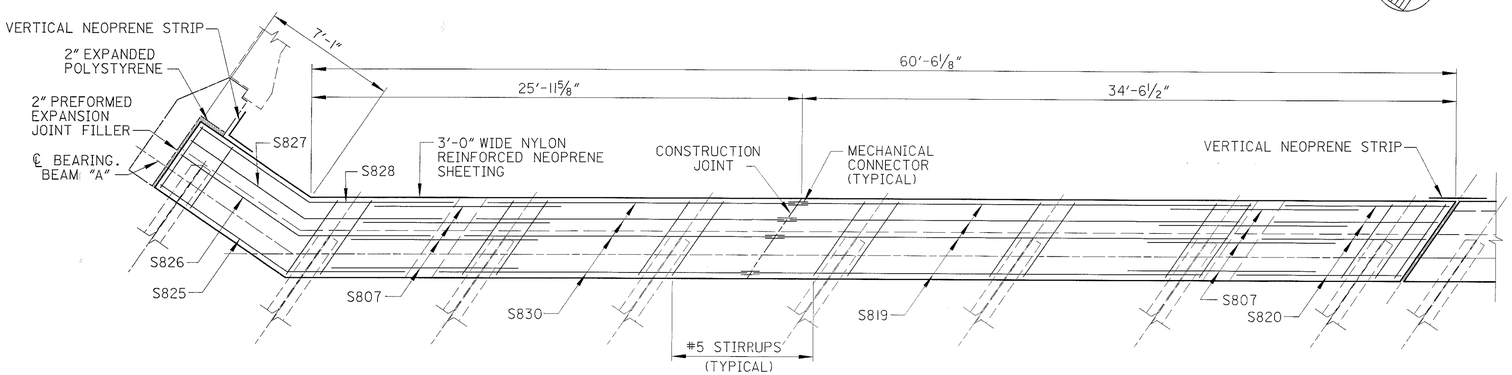

SECTION S-9 / 27

LONGITUDINAL REINFORCEMENT				
SECTION	"A" BARS	"B" BARS	"C" BARS	"D" BARS
S-6	S810	S810 OR S837	S807, S811, S813, S815, S818, OR S836	S809, S812, S814 S816, OR S817
S-8	S810, S831, OR S832	S810, S821, OR S829	S807, S819, S820, S825, S826, S827, S828 OR S830	S809, S814, S816, S817, S822, S823, OR S824
S-10	S801, S802, OR S810	S801, S802, OR S810	S804, S806, S807, S808, S819 OR S820	S803, S805, S809, S814, S816 OR S817
S-12	S801, S802, OR S810	S801, S802, OR S810	S807, S811, S818, S833, S834 OR S835	S803, S805, S809, S814, S816 OR S817

NOTES:

1. DECK REINFORCEMENT NOT SHOWN FOR CLARITY. SEE SLAB PLAN SHEET 23/38 AND TRANSVERSE SECTION, SHEET 20/38.
2. FOR TOP OF DECK ELEVATIONS SEE SHEET 30/38.
3. EXPANDED POLYSTYRENE (OR REMOVABLE FORMS SHALL BE CONSIDERED INCIDENTAL TO AND INCLUDED FOR PAYMENT WITH ITEM 842, CLASS S CONCRETE, SUPERSTRUCTURE, AS PER PLAN.
4. FOR NEOPRENE SHEETING SPECIFICATIONS/ PLACEMENT REQIREMENTS AND MISCELLANEOUS SEMI-INTEGRAL CONSTRUCTION DETAILS, REFER TO ODOT STD. DWG. SICD-1-96.
5. POROUS BACKFILL WITH FILTER FABRIC, 2'-0", THICK SHALL EXTEND UP TO THE BOTTOM OF THE APPROACH SLAB AND AS SHOWN. GEOTEXTILE FABRIC SHALL CONFORM WITH 712.09, TYPE A.
6. END DIAPHRAGM CONCRETE SHALL BE PLACED SIMULTANEOUSLY WITH THE STAGED DECK PLACEMENTS.

DLZ
1000 ROCKEFELLER BLDG • 614 W SUPERIOR AVE • CLEVELAND, OH 44113

DESIGNED AJM | DRAWN RCK | CHECKED JWB | REVISED | REVIEWED GWM 6/12/01 | DATE | STRUCTURE FILE NUMBER 7700091

SUPERSTRUCTURE DETAILS
BRIDGE NO. SUM-8-0064
S.R. 8 OVER BEACON STREET

SUM-8-0.63

27 / 38

899 / 1088

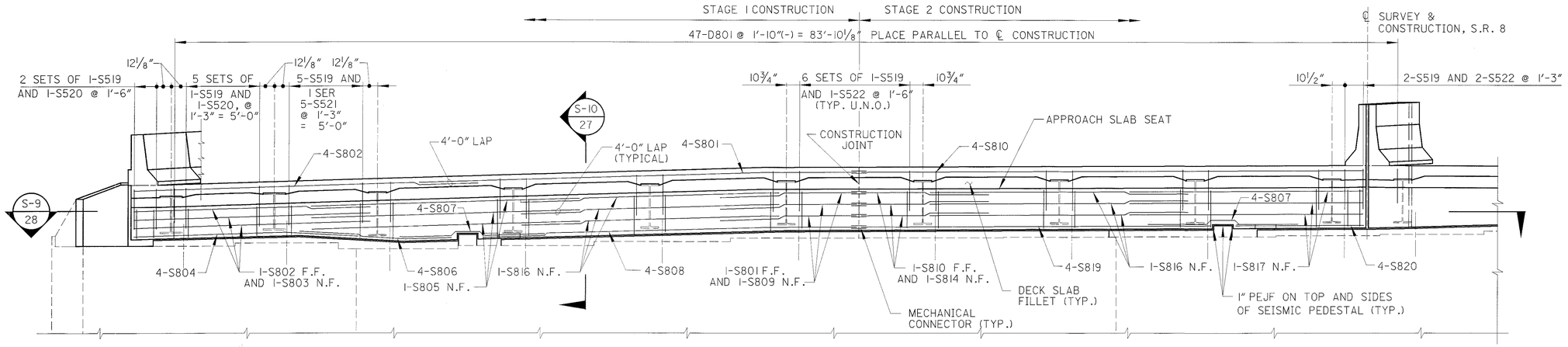

SECTION S-3 / 24

(NORTH BOUND REAR DECK SLAB END DIAPHRAGM)

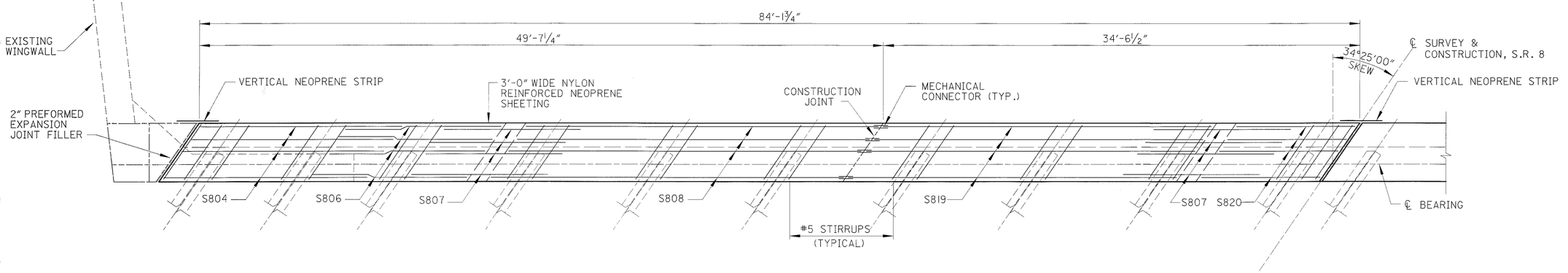

SECTION S-7 / 28

NOTE: FOR NOTES, SEE SHEET 27/38.

DLZ
1000 ROCKEFELLER BLDG • 614 W SUPERIOR AVE • CLEVELAND, OH 44113

DESIGNED	DRAWN	CHECKED	REVIEWED	DATE
AJM	RCK	JWB	GWM	6/12/01

REVISED

STRUCTURE FILE NUMBER 7700091

SUPERSTRUCTURE DETAILS
BRIDGE NO. SUM-8-0064
S.R. 8 OVER BEACON STREET

SUM-8-0.63

28 / 38

900 / 1088

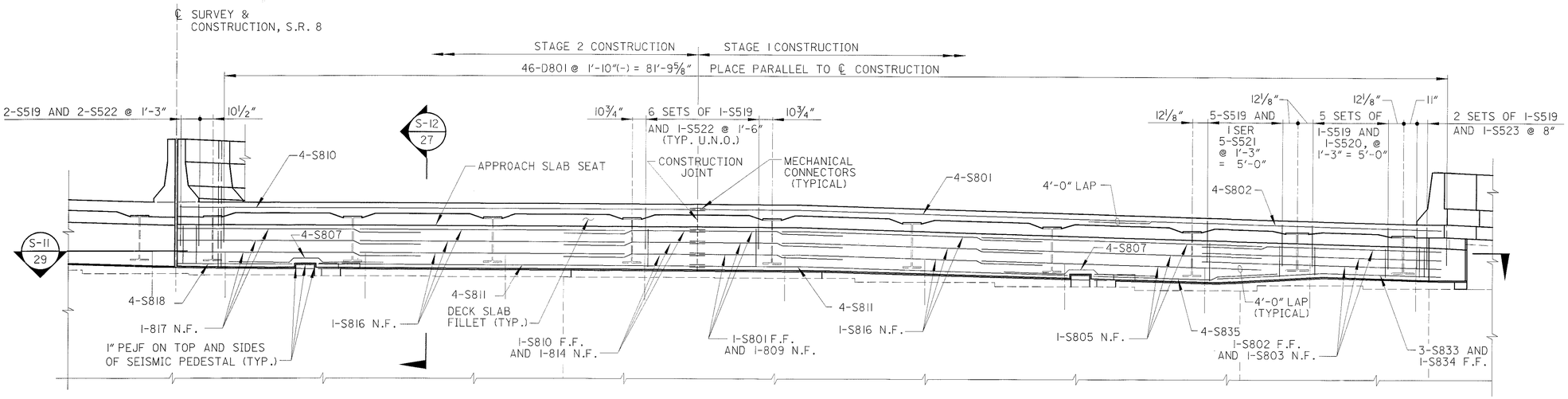

SECTION S-4 / 24

(NORTH BOUND FORWARD DECK SLAB END DIAPHRAGM)

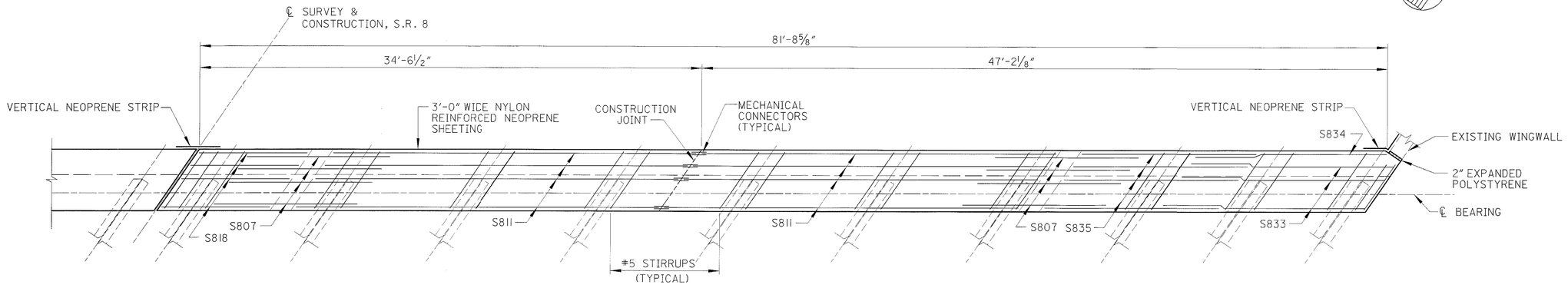

SECTION S-11 / 29

NOTE: FOR NOTES, SEE SHEET 27/38.

DLZ
1000 ROCKEFELLER BLDG • 614 W SUPERIOR AVE • CLEVELAND, OH 44113

DESIGNED	DRAWN	REVIEWED	DATE
AJM	RCK	GWM	6/12/01
CHECKED	REVISED	STRUCTURE FILE NUMBER	
JWB		7700091	

SUPERSTRUCTURE DETAILS
BRIDGE NO. SUM-8-0064
S.R. 8 OVER BEACON STREET

SUM-8-0.63

29 / 38

901
1088

DECK SCREED ELEVATION TABLE - SOUTHBOUND DECK

ELEVATION LOCATION		SPAN 1				SPAN 2				
		℄ BRG. R.A.	0.25	0.50	0.75	℄ PIER	0.25	0.50	0.75	℄ BRG. F.A.
LEFT TOE/PARAPET FINAL TOP DECK ELEV.		1061.76	1061.30	1060.83	1060.36	1059.90	1059.43	1058.96	1058.50	1058.03
LEFT TOE/PARAPET DECK SCREED ELEV.		1061.76				1059.90				1058.03
BEAM A	* ELEV. AFTER DECK REMOVAL	———				———				———
	* ELEV. BEFORE DECK REMOVAL	———				———				———
	** SURVEYED REBOUND	———				———				———
	*** ADJUSTED REBOUND	———				———				———
	FINAL TOP DECK ELEV.	1061.75	1061.29	1060.82	1060.35	1059.89	1059.42	1058.95	1058.49	1058.02
	**** DECK SCREED ELEV.	1061.75				1059.89				1058.02
BEAM B	* ELEV. AFTER DECK REMOVAL	———				———				———
	* ELEV. BEFORE DECK REMOVAL	———				———				———
	** SURVEYED REBOUND	———				———				———
	*** ADJUSTED REBOUND	———				———				———
	FINAL TOP DECK ELEV.	1061.72	1061.25	1060.79	1060.32	1059.85	1059.39	1058.92	1058.45	1057.98
	**** DECK SCREED ELEV.	1061.72				1059.85				1057.98
BEAM C	* ELEV. AFTER DECK REMOVAL	———				———				———
	* ELEV. BEFORE DECK REMOVAL	———				———				———
	** SURVEYED REBOUND	———				———				———
	*** ADJUSTED REBOUND	———				———				———
	FINAL TOP DECK ELEV.	1061.68	1061.22	1060.75	1060.28	1059.82	1059.35	1058.88	1058.42	1057.95
	**** DECK SCREED ELEV.	1061.68				1059.82				1057.95
CROWN	FINAL TOP DECK ELEV.	1061.66	1061.19	1060.72	1060.26	1059.79	1059.32	1058.85	1058.39	1057.92
	**** DECK SCREED ELEV.	1061.66				1059.79				1057.92
BEAM D	* ELEV. AFTER DECK REMOVAL	———				———				———
	* ELEV. BEFORE DECK REMOVAL	———				———				———
	** SURVEYED REBOUND	———				———				———
	*** ADJUSTED REBOUND	———				———				———
	FINAL TOP DECK ELEV.	1061.61	1061.14	1060.67	1060.21	1059.74	1059.27	1058.81	1058.34	1057.87
	**** DECK SCREED ELEV.	1061.61				1059.74				1057.87
LONG. C.J.	FINAL TOP DECK ELEV.	1061.46	1061.00	1060.53	1060.06	1059.59	1059.13	1058.66	1058.19	1057.73
	**** DECK SCREED ELEV.	1061.46				1059.59				1057.73
BEAM E	* ELEV. AFTER DECK REMOVAL	———				———				———
	* ELEV. BEFORE DECK REMOVAL	———				———				———
	** SURVEYED REBOUND	———				———				———
	*** ADJUSTED REBOUND	———				———				———
	FINAL TOP DECK ELEV.	1061.33	1060.87	1060.40	1059.93	1059.47	1059.00	1058.53	1058.07	1057.60
	**** DECK SCREED ELEV.	1061.33				1059.47				1057.60
BEAM F	* ELEV. AFTER DECK REMOVAL	———				———				———
	* ELEV. BEFORE DECK REMOVAL	———				———				———
	** SURVEYED REBOUND	———				———				———
	*** ADJUSTED REBOUND	———				———				———
	FINAL TOP DECK ELEV.	1061.06	1060.59	1060.13	1059.66	1059.19	1058.73	1058.26	1057.79	1057.33
	**** DECK SCREED ELEV.	1061.06				1059.19				1057.33
PROFILE GRADE	FINAL TOP DECK ELEV.	1060.80	1060.33	1059.86	1059.40	1058.93	1058.46	1058.00	1057.53	1057.06
	**** DECK SCREED ELEV.	1060.80				1058.93				1057.06
BEAM G	* ELEV. AFTER DECK REMOVAL	———				———				———
	* ELEV. BEFORE DECK REMOVAL	———				———				———
	** SURVEYED REBOUND	———				———				———
	*** ADJUSTED REBOUND	———				———				———
	FINAL TOP DECK ELEV.	1060.79	1060.32	1059.85	1059.39	1058.92	1058.45	1057.99	1057.52	1057.05
	**** DECK SCREED ELEV.	1060.79				1058.92				1057.05
BEAM H	* ELEV. AFTER DECK REMOVAL	———				———				———
	* ELEV. BEFORE DECK REMOVAL	———				———				———
	** SURVEYED REBOUND	———				———				———
	*** ADJUSTED REBOUND	———				———				———
	FINAL TOP DECK ELEV.	1060.51	1060.04	1059.58	1059.11	1058.64	1058.18	1057.71	1057.24	1056.78
	**** DECK SCREED ELEV.	1060.51				1058.64				1056.78
RIGHT TOE/PARAPET FINAL TOP DECK ELEV.		1060.48	1060.02	1059.55	1059.08	1058.62	1058.15	1057.68	1057.22	1056.75
RIGHT TOE/PARAPET DECK SCREED ELEV.		1060.48				1058.62				1056.75

* - BOTTOM OF GIRDER ELEVATION SURVEYED DURING CONSTRUCTION

** - SURVEYED REBOUND - GIRDER ELEVATION BEFORE DECK REMOVAL MINUS GIRDER ELEVATION AFTER DECK REMOVAL

*** - ADJUSTED REBOUND - RATIO OF PROPOSED DEAD LOAD TO EXISTING DEAD LOAD (PROVIDED BY THE DESIGNER) MULTIPLIED TIMES THE SURVEYED REBOUND

**** - DECK SCREED ELEV. = ADJUSTED REBOUND ADDED TO THE FINAL TOP OF DECK ELEVATION.

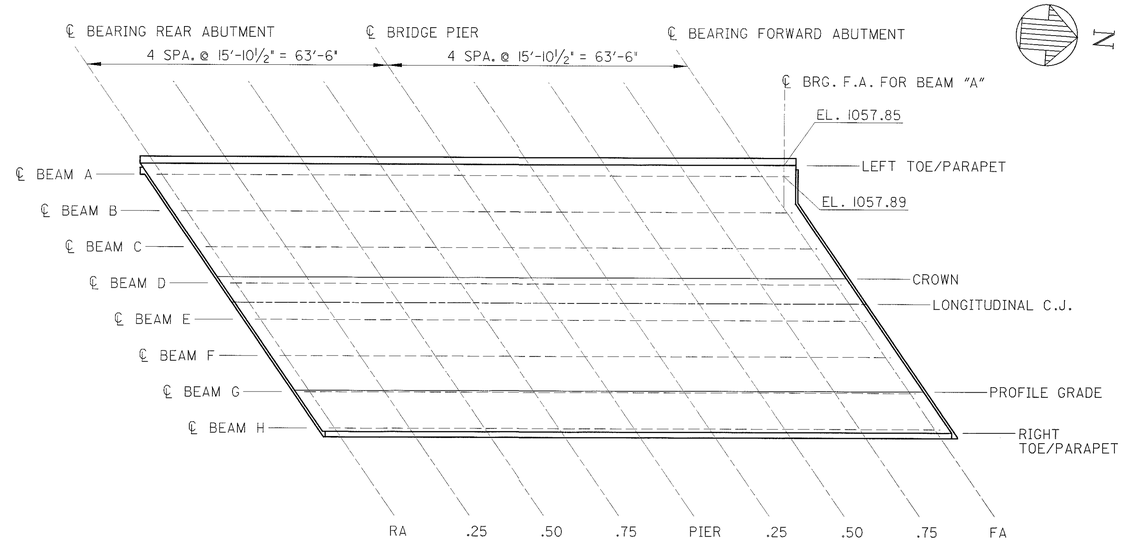

SCREED ELEVATION LOCATIONS

ELEVATIONS SHOWN AT ℄ BRG. FORWARD ABUTMENT EXTENDED. SEE DIAGRAM ABOVE FOR ELEVATIONS AT THE ℄ BRG. OF BEAM "A"

DEAD LOAD DEFLECTIONS

BEAM	SPAN 1			SPAN 2		
	0.25	0.50	0.75	0.25	0.50	0.75
A	0.04′	0.05′	0.02′	0.04′	0.08′	0.08′
B-G	0.02′	0.03′	0.01′	0.01′	0.03′	0.02′
H	0.04′	0.04′	0.02′	0.02′	0.04′	0.04′

$$\frac{\text{PROPOSED DEAD LOAD}}{\text{EXISTING DEAD LOAD}} = 1.03$$

SCREED ELEVATIONS:

FIELD PROCEDURES DURING STAGE CONSTRUCTION OF DECKS WITHOUT CLOSURE POURS:

1. SURVEY BOTTOM OF EXISTING BEAMS IN STAGE I AT THE LOCATIONS SHOWN IN THE TABLE PRIOR TO STAGE I DECK REMOVAL AND AFTER STAGE I DECK REMOVAL.
2. COMPUTE THE AMOUNT OF SURVEYED REBOUND FOR THESE BEAMS BY SUBTRACTING THE ELEVATIONS AFTER REMOVAL FROM THE ELEVATIONS BEFORE REMOVAL.
3. COMPUTE THE ADJUSTED REBOUND FOR THESE BEAMS BY MUTIPLYING THE SURVEYED REBOUND BY THE RATIO OF THE PROPOSED DEAD LOAD TO EXISTING DEAD LOAD.
4. ADD THE AMOUNT OF ADJUSTED REBOUND TO THE FINAL TOP OF DECK ELEVATIONS TO OBTAIN THE DECK SCREED ELEVATIONS. USE REBOUND OF CLOSEST BEAM TO DETERMINE TOE OF PARAPET AND PROFILE GRADE DECK SCREED ELEVATIONS.
5. AFTER STAGE I DECK PLACEMENT, REPEAT STEPS I THRU 4 FOR REMAINING BEAMS PRIOR TO AND AFTER STAGE 2 DECK REMOVAL.

NOTES:

1. DECK SLAB DEPTH FOR CONCRETE QUANTITY: THE DIMENSION SHOWN FROM THE TOP OF THE CONCRETE DECK TO THE TOP OF THE FLANGE, MINUS THE DESIGN HAUNCH THICKNESS OF 2½ INCHES, HAS BEEN USED FOR COMPUTING THE DECK CONCRETE QUANTITIES. CONCRETE REQUIRED TO FILL THE HAUNCHES, INCLUDING ADDITIONAL OR LESS MATERIAL REQUIRED DUE TO HAUNCH CONSTRUCTION TOLERANCES, SHALL BE CONSIDERED AS INCIDENTAL AND WILL NOT BE INCLUDED IN THE QUANTITY CALCULATIONS FOR PAYMENT.
2. THE COST OF SURVEYING IS CONSIDERED INCIDENTAL TO DECK CONSTRUCTION AND SHALL BE INCLUDED WITH ITEM 842, CLASS S CONCRETE, SUPERSTRUCTURE, AS PER PLAN FOR PAYMENT.
3. FOR STAGE CONSTRUCTION DETAILS, SEE SHEET 6/38.

LEGEND:

BRG. - BEARING
F.S. - FIELD SPLICE
F.A. - FORWARD ABUTMENT
R.A. - REAR ABUTMENT
C.J. - CONSTRUCTION JOINT.

DLZ
1000 ROCKEFELLER BLDG • 614 W SUPERIOR AVE • CLEVELAND, OH 44113

DESIGNED AJM | DRAWN DJP | CHECKED PAT | REVISED | REVIEWED GWM | DATE 6/12/01 | STRUCTURE FILE NUMBER 7700091

SUPERSTRUCTURE DETAILS
BRIDGE NO. SUM-8-0064
S.R. 8 OVER BEACON STREET

SUM-8-0.63

30/38

902
1088

DECK SCREED ELEVATION TABLE - NORTHBOUND DECK

ELEVATION LOCATION		SPAN 1					SPAN 2			
		℄ BRG. R.A.	0.25	0.50	0.75	℄ PIER	0.25	0.50	0.75	℄ BRG. F.A.
LEFT TOE/PARAPET FINAL TOP DECK ELEV.		1060.43	1059.97	1059.50	1059.03	1058.57	1058.10	1057.63	1057.17	1056.70
LEFT TOE/PARAPET DECK SCREED ELEV.		1060.43				1058.57				1056.70
BEAM J	* ELEV. AFTER DECK REMOVAL	———				———				———
	* ELEV. BEFORE DECK REMOVAL	———				———				———
	** SURVEYED REBOUND	———				———				———
	*** ADJUSTED REBOUND	———				———				———
	FINAL TOP DECK ELEV.	1060.43	1059.96	1059.50	1059.03	1058.56	1058.10	1057.63	1057.16	1056.70
	**** DECK SCREED ELEV.	1060.43				1058.56				1056.70
BEAM K	* ELEV. AFTER DECK REMOVAL	———				———				———
	* ELEV. BEFORE DECK REMOVAL	———				———				———
	** SURVEYED REBOUND	———				———				———
	*** ADJUSTED REBOUND	———				———				———
	FINAL TOP DECK ELEV.	1060.40	1059.93	1059.46	1059.00	1058.53	1058.06	1057.60	1057.13	1056.66
	**** DECK SCREED ELEV.	1060.40				1058.53				1056.66
PROFILE GRADE	FINAL TOP DECK ELEV.	1060.39	1059.93	1059.46	1058.99	1058.53	1058.06	1057.59	1057.13	1056.66
	**** DECK SCREED ELEV.	1060.39				1058.53				1056.66
BEAM L	* ELEV. AFTER DECK REMOVAL	———				———				———
	* ELEV. BEFORE DECK REMOVAL	———				———				———
	** SURVEYED REBOUND	———				———				———
	*** ADJUSTED REBOUND	———				———				———
	FINAL TOP DECK ELEV.	1060.36	1059.89	1059.43	1058.96	1058.49	1058.03	1057.56	1057.09	1056.63
	**** DECK SCREED ELEV.	1060.36				1058.49				1056.63
BEAM M	* ELEV. AFTER DECK REMOVAL	———				———				———
	* ELEV. BEFORE DECK REMOVAL	———				———				———
	** SURVEYED REBOUND	———				———				———
	*** ADJUSTED REBOUND	———				———				———
	FINAL TOP DECK ELEV.	1060.33	1059.86	1059.39	1058.93	1058.46	1057.99	1057.53	1057.06	1056.59
	**** DECK SCREED ELEV.	1060.33				1058.46				1056.59
LONG. C.J.	FINAL TOP DECK ELEV.	1060.31	1059.84	1059.38	1058.91	1058.44	1057.98	1057.51	1057.04	1056.58
	**** DECK SCREED ELEV.	1060.31				1058.44				1056.58
BEAM N	* ELEV. AFTER DECK REMOVAL	———				———				———
	* ELEV. BEFORE DECK REMOVAL	———				———				———
	** SURVEYED REBOUND	———				———				———
	*** ADJUSTED REBOUND	———				———				———
	FINAL TOP DECK ELEV.	1060.29	1059.82	1059.36	1058.89	1058.42	1057.96	1057.49	1057.02	1056.56
	**** DECK SCREED ELEV.	1060.29				1058.42				1056.56
CROWN	FINAL TOP DECK ELEV.	1060.29	1059.82	1059.35	1058.89	1058.42	1057.95	1057.49	1057.02	1056.55
	**** DECK SCREED ELEV.	1060.29				1058.42				1056.55
BEAM O	* ELEV. AFTER DECK REMOVAL	———				———				———
	* ELEV. BEFORE DECK REMOVAL	———				———				———
	** SURVEYED REBOUND	———				———				———
	*** ADJUSTED REBOUND	———				———				———
	FINAL TOP DECK ELEV.	1060.06	1059.59	1059.13	1058.66	1058.19	1057.73	1057.26	1056.79	1056.33
	**** DECK SCREED ELEV.	1060.06				1058.19				1056.33
BEAM P	* ELEV. AFTER DECK REMOVAL	———				———				———
	* ELEV. BEFORE DECK REMOVAL	———				———				———
	** SURVEYED REBOUND	———				———				———
	*** ADJUSTED REBOUND	———				———				———
	FINAL TOP DECK ELEV.	1059.79	1059.32	1058.85	1058.38	1057.92	1057.45	1056.98	1056.52	1056.05
	**** DECK SCREED ELEV.	1059.79				1057.92				1056.05
BEAM R	* ELEV. AFTER DECK REMOVAL	———				———				———
	* ELEV. BEFORE DECK REMOVAL	———				———				———
	** SURVEYED REBOUND	———				———				———
	*** ADJUSTED REBOUND	———				———				———
	FINAL TOP DECK ELEV.	1059.51	1059.04	1058.58	1058.11	1057.64	1057.18	1056.71	1056.24	1055.78
	**** DECK SCREED ELEV.	1059.51				1057.64				1055.78
BEAM S	* ELEV. AFTER DECK REMOVAL	———				———				———
	* ELEV. BEFORE DECK REMOVAL	———				———				———
	** SURVEYED REBOUND	———				———				———
	*** ADJUSTED REBOUND	———				———				———
	FINAL TOP DECK ELEV.	1059.30	1058.84	1058.37	1057.90	1057.44	1056.97	1056.50	1056.04	1055.57
	**** DECK SCREED ELEV.	1059.30				1057.44				1055.57
BEAM T	* ELEV. AFTER DECK REMOVAL	———				———				———
	* ELEV. BEFORE DECK REMOVAL	———				———				———
	** SURVEYED REBOUND	———				———				———
	*** ADJUSTED REBOUND	———				———				———
	FINAL TOP DECK ELEV.	1059.10	1058.63	1058.16	1057.70	1057.23	1056.76	1056.30	1055.83	1055.36
	**** DECK SCREED ELEV.	1059.10				1057.23				1055.36
RIGHT TOE/PARAPET FINAL TOP DECK ELEV.		1059.07	1058.60	1058.14	1057.67	1057.20	1056.74	1056.27	1055.80	1055.34
RIGHT TOE/PARAPET DECK SCREED ELEV.		1059.07				1057.20				1055.34

* - BOTTOM OF GIRDER ELEVATION SURVEYED DURING CONSTRUCTION

** - SURVEYED REBOUND - GIRDER ELEVATION BEFORE DECK REMOVAL MINUS GIRDER ELEVATION AFTER DECK REMOVAL

*** - ADJUSTED REBOUND - RATIO OF PROPOSED DEAD LOAD TO EXISTING DEAD LOAD (PROVIDED BY THE DESIGNER) MULTIPLIED TIMES THE SURVEYED REBOUND

**** - DECK SCREED ELEV. = ADJUSTED REBOUND ADDED TO THE FINAL TOP OF DECK ELEVATION.

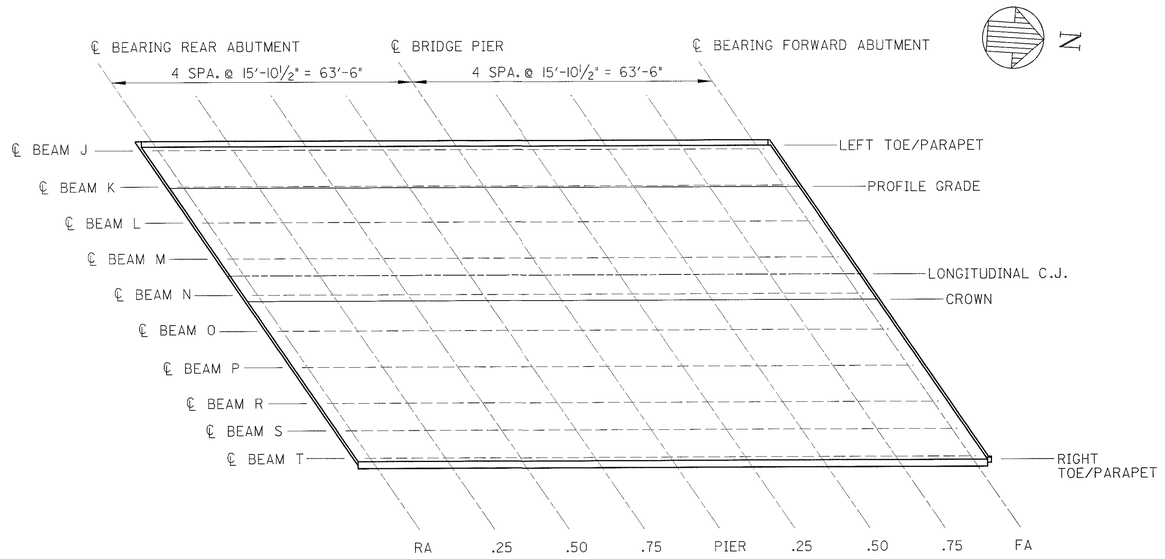

SCREED ELEVATION LOCATIONS

DEAD LOAD DEFLECTIONS

BEAM	SPAN 1			SPAN 2		
	0.25	0.50	0.75	0.25	0.50	0.75
J	0.04'	0.04'	0.02'	0.02'	0.04'	0.04'
K - P	0.02'	0.03'	0.01'	0.01'	0.03'	0.02'
R	0.03'	0.03'	0.01'	0.01'	0.03'	0.03'
S	0.03'	0.03'	0.01'	0.01'	0.03'	0.03'
T	0.04'	0.05'	0.02'	0.02'	0.05'	0.04'

$$\frac{\text{PROPOSED DEAD LOAD}}{\text{EXISTING DEAD LOAD}} = 0.94$$

SCREED ELEVATIONS:

FIELD PROCEDURES DURING STAGE CONSTRUCTION OF DECKS WITHOUT CLOSURE POURS:

1. SURVEY BOTTOM OF EXISTING BEAMS IN STAGE I AT THE LOCATIONS SHOWN IN THE TABLE PRIOR TO STAGE I DECK REMOVAL AND AFTER STAGE I DECK REMOVAL.
2. COMPUTE THE AMOUNT OF SURVEYED REBOUND FOR THESE BEAMS BY SUBTRACTING THE ELEVATIONS AFTER REMOVAL FROM THE ELEVATIONS BEFORE REMOVAL.
3. COMPUTE THE ADJUSTED REBOUND FOR THESE BEAMS BY MUTIPLYING THE SURVEYED REBOUND BY THE RATIO OF THE PROPOSED DEAD LOAD TO EXISTING DEAD LOAD.
4. ADD THE AMOUNT OF ADJUSTED REBOUND TO THE FINAL TOP OF DECK ELEVATIONS TO OBTAIN THE DECK SCREED ELEVATIONS. USE REBOUND OF CLOSEST BEAM TO DETERMINE TOE OF PARAPET AND PROFILE GRADE DECK SCREED ELEVATIONS.
5. AFTER STAGE I DECK PLACEMENT, REPEAT STEPS I THRU 4 FOR REMAINING BEAMS PRIOR TO AND AFTER STAGE 2 DECK REMOVAL.

NOTES:

1. DECK SLAB DEPTH FOR CONCRETE QUANTITY: THE DIMENSION SHOWN FROM THE TOP OF THE CONCRETE DECK TO THE TOP OF THE FLANGE, MINUS THE DESIGN HAUNCH THICKNESS OF 2½ INCHES, HAS BEEN USED FOR COMPUTING THE DECK CONCRETE QUANTITIES. CONCRETE REQUIRED TO FILL THE HAUNCHES, INCLUDING ADDITIONAL OR LESS MATERIAL REQUIRED DUE TO HAUNCH CONSTRUCTION TOLERANCES, SHALL BE CONSIDERED AS INCIDENTAL AND WILL NOT BE INCLUDED IN THE QUANTITY CALCULATIONS FOR PAYMENT.
2. THE COST OF SURVEYING IS CONSIDERED INCIDENTAL TO DECK CONSTRUCTION AND SHALL BE INCLUDED WITH ITEM 842, CLASS S CONCRETE, SUPERSTRUCTURE, AS PER PLAN FOR PAYMENT.
3. FOR STAGE CONSTRUCTION DETAILS, SEE SHEET 6/38.

LEGEND:

BRG. - BEARING
F.S. - FIELD SPLICE
F.A. - FORWARD ABUTMENT
R.A. - REAR ABUTMENT
C.J. - CONSTRUCTION JOINT.

DLZ
1000 ROCKEFELLER BLDG • 614 W SUPERIOR AVE • CLEVELAND, OH 44113

DESIGNED AJM | DRAWN DJP | REVIEWED GWM | DATE 6/12/01 | CHECKED PAT | REVISED | STRUCTURE FILE NUMBER 7700091

SUPERSTRUCTURE DETAILS
BRIDGE NO. SUM-8-0064
S.R. 8 OVER BEACON STREET

SUM-8-0.63

903
1088

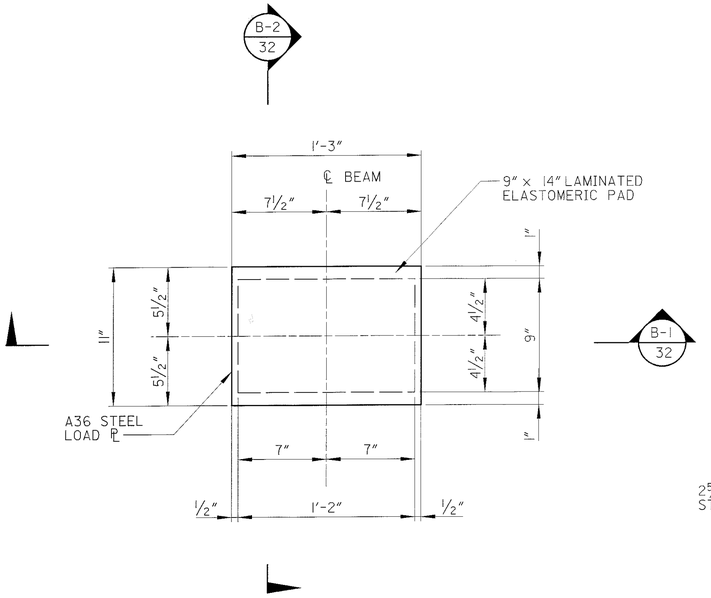

PLAN
(BEAM NOT SHOWN)

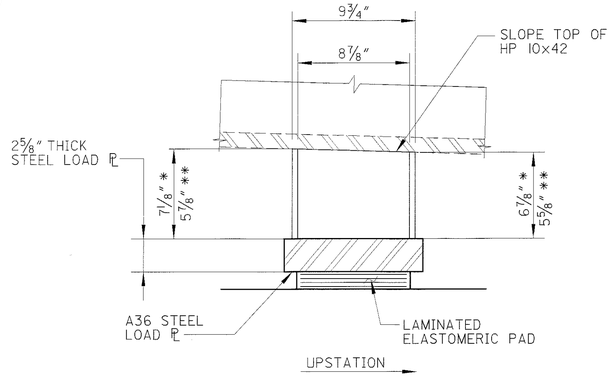

* BEAMS A-R (W36 BEAMS)
** BEAMS S & T (W30 BEAMS)

SECTION B-2 / 32

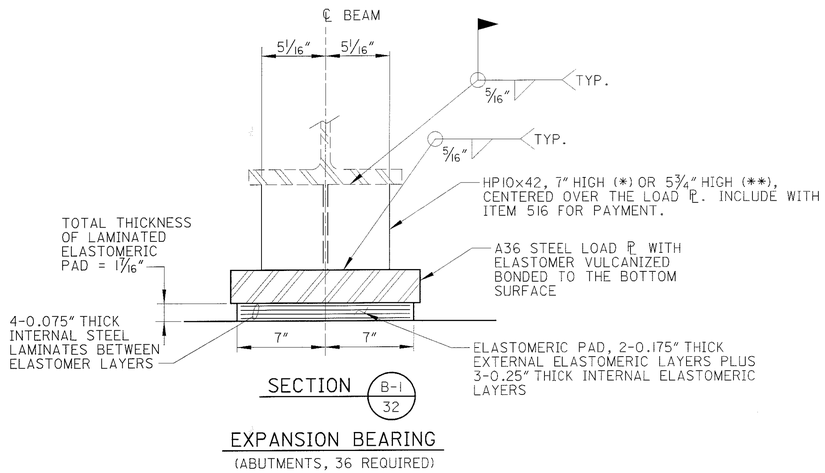

EXPANSION BEARING
(ABUTMENTS, 36 REQUIRED)

NOTES

1. BEARING DESIGN LOADS:

	EXPANSION BEARING (PIER)	EXPANSION BEARING (ABUTMENT)
DEAD LOADS	170.0 K	84.0 K
LIVE LOADS (NO IMPACT)	49.8 K	38.9 K
TOTAL DESIGN LOAD	219.8 K	122.9 K

2. A36 STEEL LOAD PLATES SHALL BE USED FOR ALL BEARINGS. THE LOAD PLATE SHALL BE VULCANIZED BONDED TO THE LAMINATED ELASTOMERIC PAD DURING THE MOLDING THE PROCESS.

3. WELDING OF THE LOAD PLATE TO THE SUPERSTRUCTURE SHALL BE CONTROLLED SO THAT THE PLATE TEMPERATURE AT THE ELASTOMER BONDED SURFACE DOES NOT EXCEED 300°F AS DETERMINED BY USE OF PYROMETRIC STICKS OR OTHER TEMPERATURE MONITORING DEVICES.

4. BEARING REPOSITIONING: IF THE STEEL IS ERECTED AT AN AMBIENT TEMPERATURE HIGHER THAN 80°F OR LOWER THAN 40°F AND THE BEARING SHEAR DEFLECTION EXCEEDS 1/6 OF THE BEARING HEIGHT AT 60°F (±) 10°F, THE BEAMS OR GIRDERS SHALL BE RAISED TO ALLOW THE BEARINGS TO RETURN TO THEIR UNDEFORMED SHAPE AT 60°F (±) 10°F.

5. BASIS OF PAYMENT: THE UNIT PRICE BID SHALL INCLUDE ALL MATERIALS, LABOR AND INCIDENTALS NECESSARY TO FURNISH AND INSTALL THE LAMINATED ELASTOMERIC BEARINGS, STEEL LOAD PLATES AND HP SHAPES. PAYMENT WILL BE MADE AT THE CONTRACT PRICE FOR ITEM 516 - ELASTOMERIC BEARING WITH INTERNAL LAMINATES AND LOAD PLATE (NEOPRENE), AS PER PLAN.

6. ELASTOMERIC BEARINGS SHALL COMPLY WITH ITEM 516 AND AASHTO STANDARD SPECIFICATION FOR HIGHWAY BRIDGES, SECTION 18, BEARING DEVICES, DIVISION II, CONSTRUCTION, ARTICLES 18.4.5.1 AND 18.5.6.2. BEARINGS SHALL BE GRADE 3, 50 DUROMETER ELASTOMER, AND SHALL BE SUBJECTED TO THE LOAD TESTING REQUIREMENTS DEFINED IN ARTICLE 18.7.4.5 OF THE AASHTO DOCUMENT LISTED ABOVE. BEARINGS WERE DESIGNED UNDER SECTION 14.6.6 OF SECTION 14, BEARINGS, DIVISION I, DESIGN. TESTING SHALL BE INCLUDED IN THE UNIT PRICE BID FOR THE BEARINGS, EACH.

DLZ
800 ROCKEFELLER BLDG • 614 W SUPERIOR AVE • CLEVELAND, OH 44113

DESIGNED PAT | DRAWN DJP | REVIEWED GWM | DATE 6/12/01
CHECKED DJC | REVISED | STRUCTURE FILE NUMBER 7700091

SUPERSTRUCTURE DETAILS
BRIDGE NO. SUM-8-0064
S.R.8 OVER BEACON STREET

SUM-8-0.63

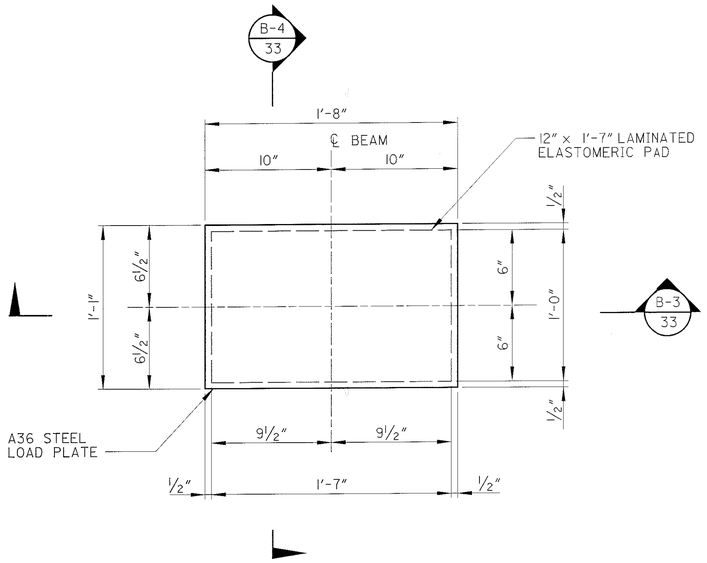

PLAN
(BEAM NOT SHOWN)

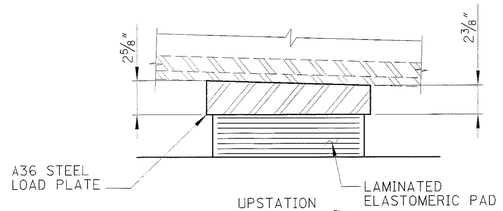

SECTION B-4 33

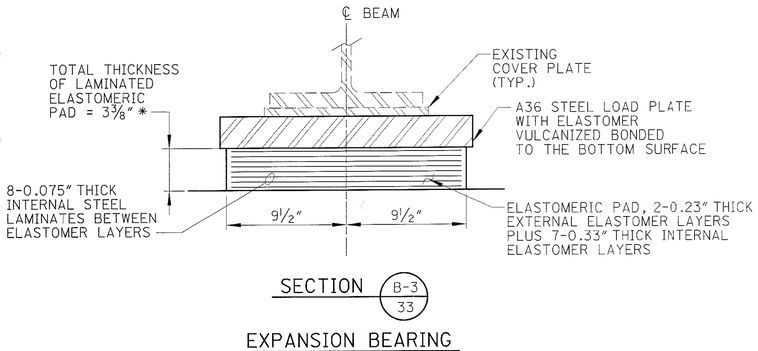

SECTION B-3 33

EXPANSION BEARING
(PIER, 16 REQUIRED, W36 BEAMS)

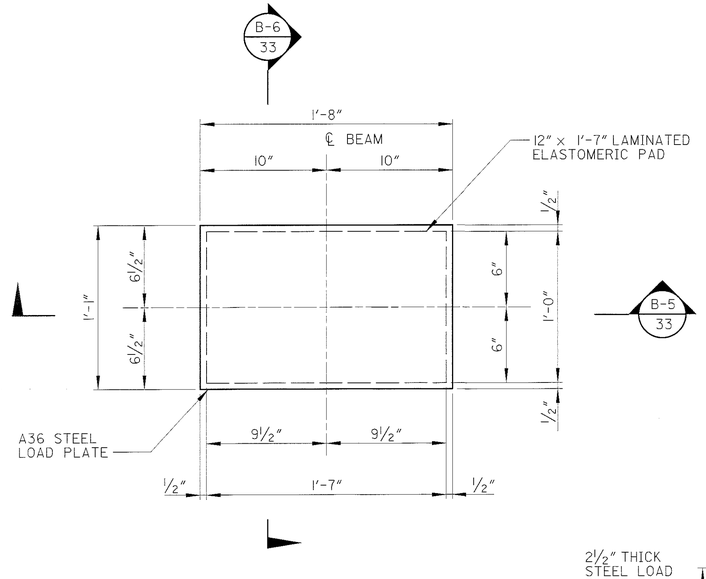

PLAN
(BEAM NOT SHOWN)

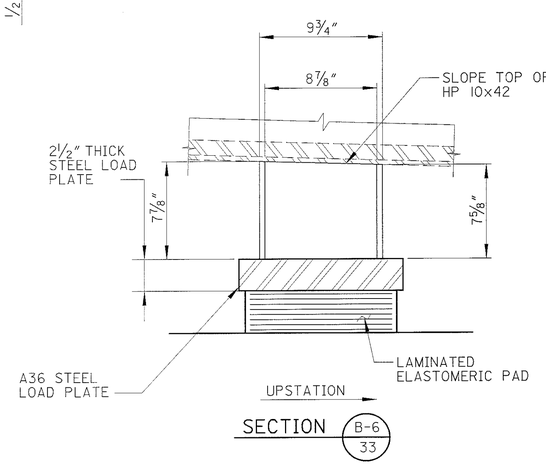

SECTION B-6 33

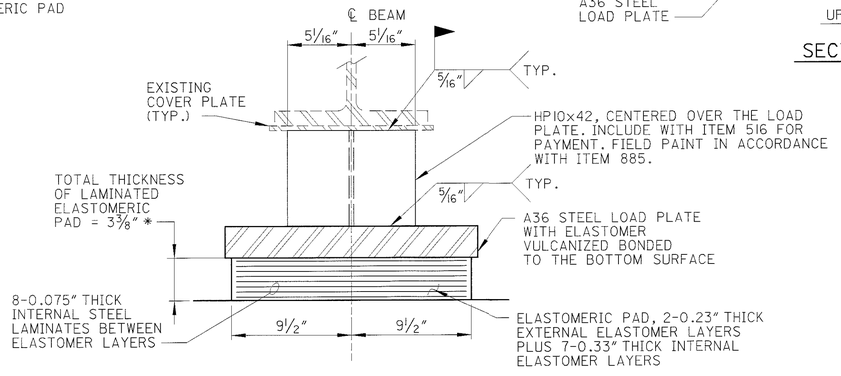

SECTION B-5 33

EXPANSION BEARING
(PIER, 2 REQUIRED, W30 BEAMS)

* NOTE: THE TOTAL BEARING HEIGHT CONTAINS AN ALLOWANCE FOR A COMPRESSIVE DEFLECTION OF 1/8" UNDER DEAD LOAD.

DLZ
1000 ROCKEFELLER BLDG • 614 W SUPERIOR AVE • CLEVELAND, OH 44113

DESIGNED	DRAWN	REVIEWED	DATE
PAT	DJP	GWM	6/12/01
CHECKED	REVISED	STRUCTURE FILE NUMBER	
DJC		7700091	

SUPERSTRUCTURE DETAILS
BRIDGE NO. SUM-8-0064
S.R.8 OVER BEACON STREET

SUM-8-0.63

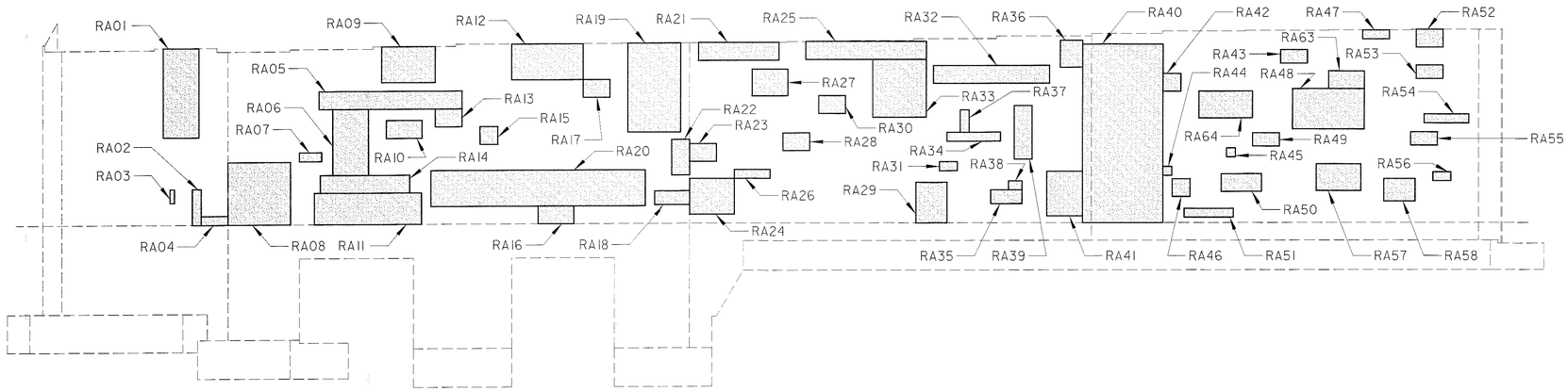

ELEVATION

NORTH FACE - LOOKING SOUTH

LEGEND

INDICATES AREA TO BE PATCHED PER ITEM 520, PNEUMATICALLY PLACED MORTAR, AS PER PLAN

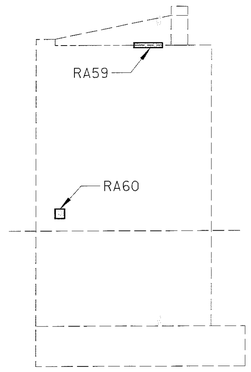

ELEVATION - SOUTHEAST WINGWALL

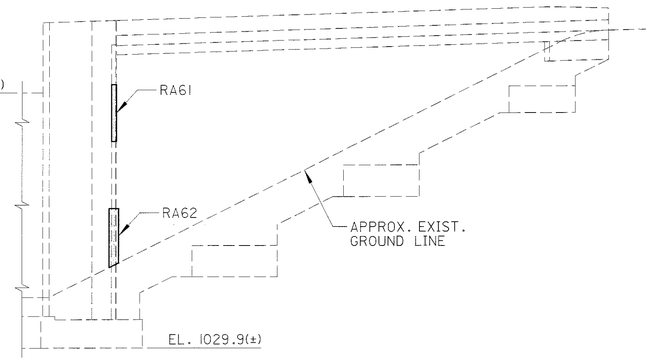

ELEVATION - SOUTHWEST WINGWALL

NOTES

1. CONTRACTOR SHALL PROVIDE RUSTICATION GROOVES IN AREAS WHICH ARE TO BE REPAIRED. SIZE AND PATTERN OF GROOVES SHALL MATCH EXISTING.

2. ESTIMATED QUANTITIES AS SHOWN ON THESE PLANS HAVE BEEN INCREASED BY 50% OVER MEASURED QUANTITIES TO ALLOW FOR ADDITIONAL DETERIORATION. EXACT DIMENSIONS AND LOCATIONS OF PATCHES SHALL BE DETERMAINED BY THE ENGINEER IN THE FIELD FOR FINAL PAY QUANTITIES.

REPAIR QUANTITIES - ITEM 520				
REF. NUM.	DIMENSIONS			AREA SQ. FT.
RA01	4'-0"	x	10'-0"	40.00
RA02	1'-0"	x	4'-0"	4.00
RA03	0'-6"	x	1'-6"	0.75
RA04	3'-0"	x	1'-0"	3.00
RA05	16'-0"	x	2'-0"	32.00
RA06	4'-0"	x	7'-0"	28.00
RA07	2'-6"	x	1'-0"	2.50
RA08	7'-0"	x	7'-0"	49.00
RA09	6'-0"	x	4'-0"	24.00
RA10	4'-0"	x	2'-0"	8.00
RA11	12'-0"	x	3'-6"	42.00
RA12	8'-0"	x	4'-0"	32.00
RA13	3'-0"	x	2'-0"	6.00
RA14	10'-0"	x	2'-0"	20.00
RA15	2'-0"	x	2'-0"	4.00
RA16	4'-0"	x	2'-0"	8.00
RA17	3'-0"	x	2'-0"	6.00
RA18	4'-0"	x	1'-6"	6.00
RA19	6'-0"	x	10'-0"	60.00
RA20	24'-0"	x	4'-0"	96.00
RA21	9'-0"	x	2'-0"	18.00
RA22	2'-0"	x	4'-0"	8.00
RA23	3'-0"	x	2'-0"	6.00
RA24	5'-0"	x	4'-0"	20.00
RA25	13'-6"	x	2'-0"	27.00
RA26	4'-0"	x	1'-0"	4.00
RA27	4'-0"	x	3'-0"	12.00
RA28	3'-0"	x	2'-0"	6.00
RA29	3'-6"	x	4'-6"	15.75
RA30	3'-0"	x	2'-0"	6.00
RA31	2'-0"	x	1'-0"	2.00
RA32	13'-0"	x	2'-0"	26.00
RA33	6'-0"	x	6'-6"	39.00
RA34	6'-0"	x	1'-0"	6.00
RA35	3'-6"	x	1'-6"	5.25
RA36	2'-6"	x	3'-0"	7.50
RA37	1'-0"	x	2'-6"	2.50
RA38	1'-6"	x	1'-0"	1.50
RA39	2'-0"	x	6'-0"	12.00
RA40	9'-0"	x	20'-0"	180.00
RA41	4'-0"	x	5'-0"	20.00
RA42	2'-0"	x	2'-0"	4.00
RA43	3'-0"	x	1'-6"	4.50
RA44	1'-0"	x	1'-0"	1.00
RA45	1'-0"	x	1'-0"	1.00
RA46	2'-0"	x	2'-0"	4.00
RA47	3'-0"	x	1'-0"	3.00
RA48	4'-0"	x	8'-0"	32.00
RA49	3'-0"	x	1'-6"	4.50
RA50	4'-6"	x	2'-0"	9.00
RA51	5'-6"	x	1'-0"	5.50
RA52	3'-0"	x	2'-0"	6.00
RA53	3'-0"	x	1'-6"	4.50
RA54	5'-0"	x	1'-0"	5.00
RA55	3'-0"	x	1'-6"	4.50
RA56	2'-0"	x	1'-0"	2.00
RA57	5'-0"	x	3'-0"	15.00
RA58	3'-6"	x	2'-6"	8.75
RA59	3'-0"	x	0'-6"	1.50
RA60	1'-0"	x	1'-0"	1.00
RA61	0'-6"	x	6'-0"	3.00
RA62	1'-0"	x	6'-0"	6.00
RA63	2'-0"	x	4'-0"	8.00
RA64	3'-0"	x	6'-0"	18.00
SUBTOTAL, REAR ABUT.				1047.50
ESTIMATION FACTOR				1.5
TOTAL CARRIED TO QUANTITIES				1571

DLZ
3000 ROCKEFELLER BLDG • 614 W. SUPERIOR AVE • CLEVELAND, OH 44113

DESIGNED AJM | DRAWN DJP | CHECKED DJP | REVISED | REVIEWED GWM | DATE 6/12/01 | STRUCTURE FILE NUMBER 7700091

CONCRETE PATCHING AT REAR ABUTMENT
BRIDGE NO. SUM-8-0064
S.R. 8 OVER BEACON STREET

SUM-8-0.63

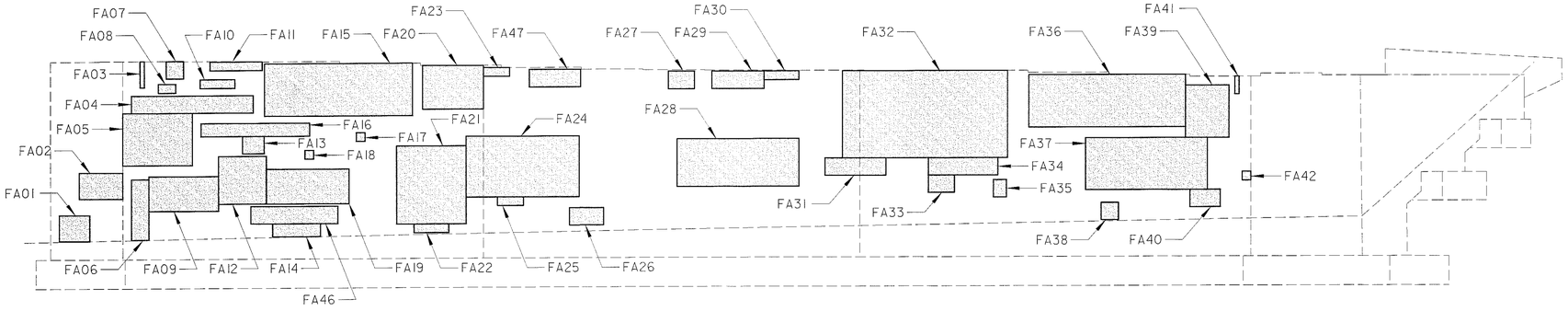

ELEVATION

SOUTH FACE - LOOKING NORTH

LEGEND

INDICATES AREA TO BE PATCHED PER ITEM 520, PNEUMATICALLY PLACED MORTAR, AS PER PLAN.

REPAIR QUANTITIES - ITEM 520				
REF. NUM.	DIMENSIONS			AREA SQ. FT.
FA01	3'-6"	x	3'-0"	10.50
FA02	5'-0"	x	3'-0"	15.00
FA03	0'-6"	x	3'-0"	1.50
FA04	14'-0"	x	2'-0"	28.00
FA05	8'-0"	x	6'-0"	48.00
FA06	2'-0"	x	7'-0"	14.00
FA07	2'-0"	x	2'-0"	4.00
FA08	2'-0"	x	1'-0"	2.00
FA09	8'-0"	x	4'-0"	32.00
FA10	4'-0"	x	1'-0"	4.00
FA11	6'-0"	x	1'-0"	6.00
FA12	5'-6"	x	5'-6"	30.25
FA13	2'-6"	x	2'-0"	5.00
FA14	5'-6"	x	1'-6"	8.25
FA15	17'-0"	x	6'-0"	102.00
FA16	12'-6"	x	1'-6"	18.75
FA17	1'-0"	x	1'-0"	1.00
FA18	1'-0"	x	1'-0"	1.00
FA19	9'-6"	x	4'-0"	38.00
FA20	7'-0"	x	5'-0"	35.00
FA21	8'-0"	x	9'-0"	72.00
FA22	4'-0"	x	1'-0"	4.00
FA23	3'-0"	x	1'-0"	3.00
FA24	13'-0"	x	7'-0"	91.00
FA25	3'-0"	x	1'-0"	3.00
FA26	4'-0"	x	2'-0"	8.00
FA27	3'-0"	x	2'-0"	6.00
FA28	14'-0"	x	5'-6"	77.00
FA29	6'-0"	x	2'-0"	12.00
FA30	4'-0"	x	1'-0"	4.00
FA31	7'-0"	x	2'-0"	14.00
FA32	19'-0"	x	10'-0"	190.00
FA33	3'-0"	x	2'-0"	6.00
FA34	8'-0"	x	2'-0"	16.00
FA35	1'-6"	x	2'-0"	3.00
FA36	18'-0"	x	6'-0"	108.00
FA37	14'-0"	x	6'-0"	84.00
FA38	2'-0"	x	2'-0"	4.00
FA39	5'-0"	x	6'-0"	30.00
FA40	3'-6"	x	2'-0"	7.00
FA41	0'-6"	x	2'-0"	1.00
FA42	1'-0"	x	1'-0"	1.00
FA43	0'-6"	x	6'-0"	3.00
FA44	1'-6"	x	0'-6"	0.75
FA45	1'-0"	x	1'-0"	1.00
FA46	10'-0"	x	2'-0"	20.00
FA47	6'-0"	x	2'-0"	12.00
SUBTOTAL, FWD. ABUT.				1185.00
ESTIMATION FACTOR				1.5
TOTAL CARRIED TO QUANTITIES				1778

SEE NOTES ON SHEET 34/38

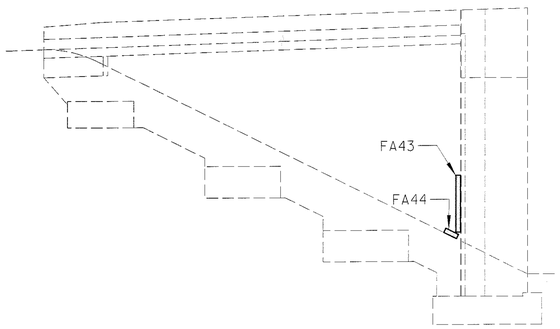

ELEVATION - NORTHWEST WINGWALL

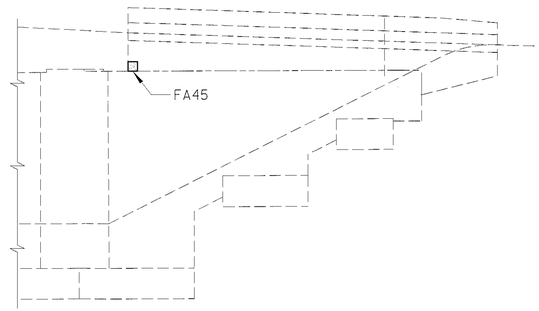

ELEVATION - NORTHEAST WINGWALL

DLZ
800 ROCKEFELLER BLDG • 614 W SUPERIOR AVE • CLEVELAND, OH 44113

DESIGNED AJM | DRAWN DJP | CHECKED JWB | REVIEWED GWM | DATE 6/12/01 | REVISED

STRUCTURE FILE NUMBER 7700091

CONCRETE PATCHING AT FORWARD ABUTMENT

BRIDGE NO. SUM-8-0064

S.R. 8 OVER BEACON STREET

SUM-8-0.63

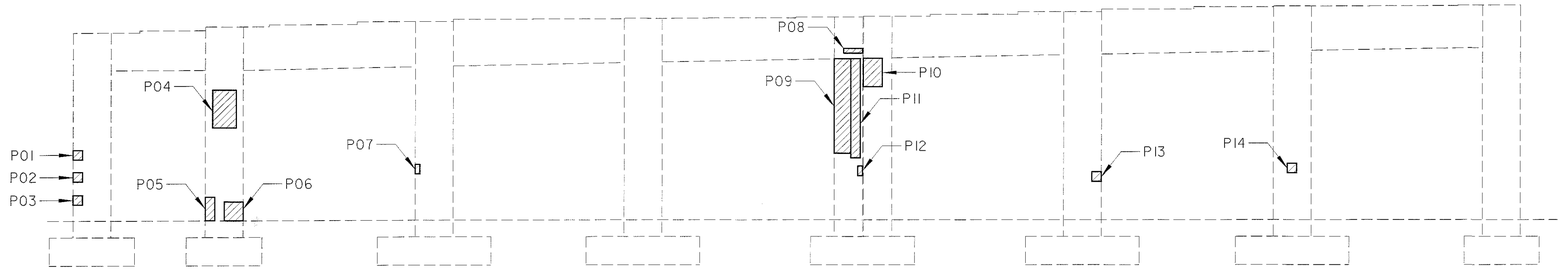

ELEVATION

NORTH FACE - LOOKING SOUTH

REPAIR QUANTITIES - ITEM 843				
REF. NUM.	DIMENSIONS			AREA SQ. FT.
P01	1'-0"	x	1'-0"	1.00
P02	1'-0"	x	1'-0"	1.00
P03	1'-0"	x	1'-0"	1.00
P04	2'-6"	x	4'-0"	10.00
P05	1'-0"	x	2'-6"	2.50
P06	2'-0"	x	2'-0"	4.00
P07	0'-6"	x	1'-0"	0.50
P08	2'-0"	x	0'-6"	1.00
P09	2'-0"	x	10'-0"	20.00
P10	2'-0"	x	3'-0"	6.00
P11	1'-0"	x	10'-6"	10.50
P12	0'-6"	x	1'-0"	0.50
P13	1'-0"	x	1'-0"	1.00
P14	1'-0"	x	1'-0"	1.00
P15	1'-0"	x	3'-0"	3.00
P16	1'-6"	x	3'-0"	4.50
P17	1'-0"	x	1'-0"	1.00
P18	1'-0"	x	1'-0"	1.00
P19	1'-0"	x	1'-0"	1.00
P20	2'-0"	x	3'-0"	6.00
P21	1'-0"	x	1'-0"	1.00
P22	3'-0"	x	4'-0"	12.00
P23	0'-6"	x	4'-0"	2.00
P24	1'-0"	x	1'-0"	1.00
P25	0'-6"	x	2'-0"	1.00
SUBTOTAL, PIER				93.50
ESTIMATION FACTOR				1.5
TOTAL CARRIED TO QUANTITIES				140

SEE NOTES ON SHEET 34/38

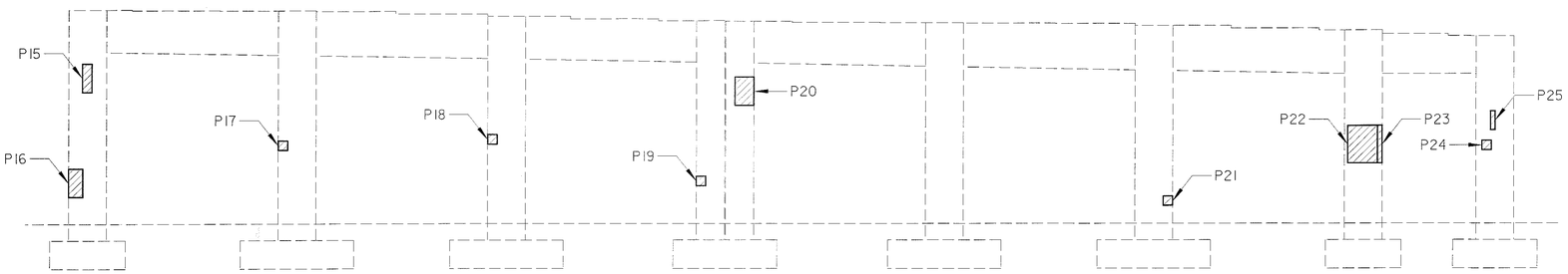

ELEVATION

SOUTH FACE - LOOKING NORTH

LEGEND

INDICATES AREA TO BE PATCHED PER ITEM 843, PATCHING CONCRETE STRUCTURES WITH TROWELABLE MORTAR.

DLZ
3000 ROCKEFELLER BLDG • 614 W SUPERIOR AVE • CLEVELAND, OH 44113

DESIGNED AJM
DRAWN DJP
CHECKED JWB
REVISED
REVIEWED GWM
DATE 6/12/01
STRUCTURE FILE NUMBER 7700091

CONCRETE PATCHING AT PIER
BRIDGE NO. SUM-8-0064
S.R. 8 OVER BEACON STREET

SUM-8-0.63

908
1088

REINFORCING STEEL LIST

MARK	NUMBER REAR	NUMBER FWD.	NUMBER TOTAL	LENGTH	WEIGHT (LBS.)	TYPE	DIMENSIONS A	B	C	D	E	SER INC.
ABUTMENTS												
A401	6	4	10	30'-0"	200	STR						
A402	2		2	27'-9"	37	STR						
A403	2		2	8'-3"	11	STR						
A404	1		1	8'-8"	6	STR						
A405	1		1	9'-8"	6	STR						
A406	2		2	16'-8"	22	STR						
A407	NOT USED											
A408		2	2	20'-5"	27	STR						
A409		1	1	9'-9"	6	STR						
A410		1	1	10'-9"	7	STR						
A411	1	2	3	15'-0"	90	STR						
A412		1	1	15'-6"	10	STR						
A413		1	1	14'-6"	10	STR						
A414		1	1	25'-2"	17	STR						
A415		1	1	25'-7"	17	STR						
A416		1	1	11'-8"	8	12	9'-1"	1'-5 1/2"	2'-2"			
A417		1	1	11'-2"	8	12	8'-4"	1'-5 1/2"	2'-2"			
A418	18	17	35	6'-2"	144	4	2'-8"	1'-10"				
A419	14		14	29'-5"	275	STR						
A420		14	14	25'-0"	234	STR						
A421		3	3	4'-9"	10	STR						
A422		6	6	3'-5"	14	3	1'-8"	1'-10"				
A423		1	1	13'-8"	9	STR						
A424	1		1	14'-0"	9	STR						
A425	2		2	5'-11"	8	STR						
A426	2		2	15'-2"	20	STR						
A427	2		2	4'-9"	6	STR						
A428		2	2	4'-11"	7	STR						
A429		2	2	13'-2"	18	STR						
A430		2	2	3'-3"	4	STR						
A501	32	32	64	3'-1"	206	4	10"	1'-3"				
A502	8	8	16	4'-9"	79	STR						
A503	26	21	47	3'-4"	163	3	1'-6"	1'-11"				
A504		11	11	4'-8"	54	3	1'-10"	2'-11"				
A505	NOT USED											
A506		3	3	2'-1"	7	STR						
A507		6	6	8'-6"	53	STR						
A508		2	2	8'-9"	18	STR						
		1	1	10'-7"				4'-10"				
A509		SER OF	SER OF		81	4	1'-2"					3"
		9	9	6'-7"				2'-10"				
A510	2		2	18'-3"	38	STR						
A511	4		4	29'-5"	123	STR						
A512	16	11	27	7'-1"	199	22	3'-0"	3'-3"	8"			
A513	4	8	12	10'-0"	125	STR						
A514	2	4	6	5'-8"	34	23	1'-10"	2'-5"	1'-5"	5"	1 1/2"	
A515	2	4	6	5'-8"	34	STR						
	1	2	3	3'-10"		1	3'-3"					
A516	SER OF	SER OF	SER OF		118							1"
	11	11	11	3'-0"		1	2'-5"					
A517		9	9	6'-3"	59	4	1'-2"	2'-8"				
A527		6	6	13'-10"	87	STR						
A528		4	4	25'-0"	104	STR						
A529		4	4	13'-8"	57	STR						
A518 - A526 NOT USED												

REINFORCING STEEL LIST

MARK	NUMBER REAR	NUMBER FWD.	NUMBER TOTAL	LENGTH	WEIGHT (LBS.)	TYPE	DIMENSIONS A	B	C	D	E	SER INC.
ABUTMENTS												
A601	15		15	4'-2"	94	STR						
A602		14	14	3'-11"	82	STR						
A603	5		5	11'-3"	84	17	1'-2"	5'-6"	10"	4'-6"		
A604	5	5	10	8'-3"	124	21	2'-11"	2'-3"	1'-5"	11"	1'-11"	
A605	5		5	7'-2"	54	5	2'-11"	2'-9"	1'-9"			
A606		5	5	11'-0"	83	5	1'-2"	5'-10"	4'-4"			
A607		5	5	5'-11"	44	5	1'-9"	2'-9"	1'-9"			
A608	8		8	12'-10"	154	STR						
A609	8		8	4'-11"	59	STR						
A610	52	43	95	6'-5"	916	3	2'-1"	4'-6"				
A611	39	34	73	4'-6"	493	STR						
A612		8	8	12'-8"	152	STR						
A613		8	8	5'-1"	61	STR						
A614		4	4	13'-8"	82	STR						
A615	27	32	59	3'-3"	288	21	9"	6"	8 1/2"	11 1/2"	10 1/2"	
A616	16	12	28	2'-6"	105	3	11"	1'-9"				
	1	1	2	4'-0"		3	11"	3'-3"				
A617	SER OF	SER OF	SER OF		146							1"
	11	11	11	4'-10"		3	11"	4'-1"				
A618	8	12	20	4'-0"	120	3	11"	3'-3"				
A619	1		1	17'-10"	27	STR						
A620		1	1	13'-6"	20	STR						
A621	10		10	3'-2"	48	STR						
A622	2		2	3'-10"	12	STR						
A623	2		2	4'-10"	15	STR						
A624	1		1	11'-4"	17	4	4'-0"	3'-10"				
A625	1		1	10'-8"	16	4	3'-8"	3'-8"				
A626	1		1	9'-11"	15	4	3'-5"	3'-5"				
A627	1		1	9'-6"	14	4	3'-4"	3'-3"				
A628	1		1	9'-0"	14	4	3'-4"	3'-0"				
A629	1		1	5'-9"	9	12	1'-1"	10"	4'-7"			
A630	1		1	4'-11"	7	12	11"	10"	3'-11"			
A631	1		1	4'-0"	6	12	9"	10"	3'-2"			
A632	1		1	3'-2"	5	12	6"	10"	2'-6"			
A633	3		3	5'-9"	26	STR						
A634	3		3	10'-8"	48	16	3'-8"	5"	2'-9"	2'-6"	3'-8"	
		1	1	5'-5"				4'-1"				
A635		SER OF	SER OF		83	3	1'-6"					1"
		11	11	4'-7"				3'-3"				
A636		4	4	4'-7"	28	3	1'-6"	3'-3"				
	SUBTOTAL (THIS SHEET) =				6,430	LBS						

BENDING DIAGRAMS

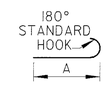

TYPE 1

TYPE 3

TYPE 4

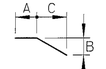

TYPE 12

TYPE 5

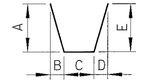

TYPE 16

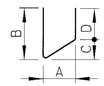

TYPE 17

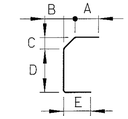

TYPE 21

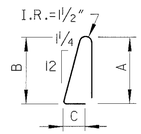

TYPE 22

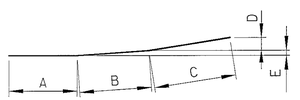

TYPE 23

REINFORCING STEEL NOTES:

1. SERIES BARS - EACH BAR VARIES BY TABULATED AMOUNT.
2. ALL DIMENSIONS ARE OUT TO OUT.
3. TYPE 'STR' INDICATES A STRAIGHT BAR.
4. THE BAR SIZE NUMBER IS SPECIFIED IN THE 'MARK' COLUMN. THE FIRST DIGIT INDICATES THE BAR SIZE NUMBER. FOR EXAMPLE, A501 IS A #5 BAR SIZE.
5. ALL BARS SHALL BE EPOXY COATED UNLESS NOTED OTHERWISE.
6. SUBTOTALS AND TOTAL WEIGHTS ARE FOR INFORMATIONAL PURPOSES ONLY. IF THE REINFORCING LIST PROVIDED IN THE PLANS IS USED IT SHALL BE VERIFIED BY THE CONTRACTOR. ANY REVISIONS IN THE REINFORCING STEEL LIST AS SHOWN IN THE PLANS WILL NOT BE REASON FOR ADJUSTMENT IN THE BID PRICE FOR STRUCTURAL CONCRETE.

DLZ
8000 ROCKEFELLER BLDG • 614 W SUPERIOR AVE • CLEVELAND, OH 44113

DESIGNED AJM | DRAWN DJP | CHECKED JWB | REVIEWED GWM | DATE 6/12/01 | REVISED | STRUCTURE FILE NUMBER 7700091

REINFORCING STEEL LIST
BRIDGE NO. SUM-8-0064
S.R. 8 OVER BEACON STREET

SUM-8-0.63

REINFORCING STEEL LIST

MARK	NUMBER REAR	NUMBER FWD.	NUMBER TOTAL	LENGTH	WEIGHT (LBS.)	TYPE	DIMENSIONS A	B	C	D	E	SER INC.
SUPERSTRUCTURE												
S401			624	30'-0"	12505	STR						
S402			144	20'-9"	1996	STR						
			1	21'-0"								
S403			SER OF		158	STR						6 3/4"
			10	26'-1"								
S404			2	26'-4"	36	STR						
S501			272	7'-0"	1986	22	3'-0"	3'-3"	8"			
S502			178	30'-7"	5678	STR						
			1	6'-6"								
S503			SER OF		474	STR						11 11/16"
			25	29'-10"								
S504			6	5'-2"	33	STR						
			1	2'-8"								
S505			SER OF		227							11 11/16"
			19	20'-2"								
S506			720	30'-0"	22529	STR						
S507			140	20'-8"	3018	STR						
			1	21'-0"								
S508			SER OF		247	STR						7 1/8"
			10	26'-4"								
S509			8	26'-4"	220	STR						
S510			342	28'-3"	10077	STR						
			2	2'-10"								
S511			SER OF		814	STR						11 11/16"
			26	27'-2"								
S512			16	20'-0"	334	STR						
S513			158	40'-7"	6688	STR						
			1	2'-7"								
S514			SER OF		858	STR						11 11/16"
			39	39'-7"								
			1	4'-10"								
S515			SER OF		862	STR						11 11/16
			37	39'-10"								
			2	5'-9"								
S516			SER OF		790	STR						11 11/16"
			23	27'-2"								
S517			12	4'-10"	61	STR						
S518			4	3'-7"	15	STR						
S519			202	9'-6"	2002	4	3'-9"	3'-0"				
S520			12	13'-10"	174	7	4'-9"	1'-11"				
			2	14'-0"				2'-0"				
S521			SER OF		151	7	4'-9"					1 5/8"
			5	14'-10"				2'-5"				
S522			178	15'-0"	2785	7	4'-9"	2'-6"				
S523			2	11'-9"	25	7	3'-9"	1'-11"				
S524			7	8'-8"	64	4	3'-5"	2'-9"				
S601			272	2'-3"	920	3	11"	1'-6"				
S602			272	2'-8"	1090	21	9"	6"	8 1/2"	10"	5"	
S603			266	5'-4"	2131	3	11"	4'-7"				
S604			266	2'-3"	899	21	4"	6"	8 1/2"	10"	5"	
S605			266	3'-2"	1266	1	2'-6"					
S606			9	30'-0"	406	STR						
S607			1	25'-0"	38	STR						
S608			156	40'-0"	9373	STR						
S609			178	30'-7"	8177	STR						
			1	6'-6"								
S610			SER OF		683	STR						11 11/16"
			25	29'-10"								
S611			6	5'-2"	47	STR						
			1	2'-8"								
S612			SER OF		326	STR						11 11/16"
			19	20'-2"								
S613			1	37'-1"	56	STR						
S614			1	27'-5"	42	STR						
S615			1	5'-0"	8	STR						
S616			340	28'-2"	14385	STR						

REINFORCING STEEL LIST

MARK	NUMBER REAR	NUMBER FWD.	NUMBER TOTAL	LENGTH	WEIGHT (LBS.)	TYPE	DIMENSIONS A	B	C	D	E	SER INC.
SUPERSTRUCTURE												
			2	2'-10"								
S617			SER OF		1172	STR						11 11/16"
			26	27'-2"								
			2	5'-9"								
S618			SER OF		1138	STR						11 11/16"
			23	27'-2"								
S619			158	40'-7"	9631	STR						
S620			12	4'-10"	88	STR						
			1	4'-10"								
S621			SER OF		1242	STR						11 11/16"
			37	39'-10"								
			1	2'-7"								
S622			SER OF		1235							11 11/16"
			39	39'-7"								
S623			4	25'-4"	153	STR						
S624			4	34'-3"	206	STR						
S625			4	3'-7"	22	STR						
S801			14	30'-0"	1122	STR						
S802			14	23'-5"	876	STR						
S803			6	16'-1"	258	STR						
S804			4	15'-1"	161	12	9'-7"	5"	5'-6"			
S805			6	18'-4"	294	STR						
S806			4	10'-10"	116	12	5'-4"	5"	5'-6"			
S807			32	10'-9"	919	15	4'-0"	6"	6"	1'-9"		
S808			4	25'-8"	275	STR						
S809			12	9'-6"	305	STR						
S810			35	34'-5"	3217	STR						
S811			12	24'-4"	780	STR						
S812			3	15'-2"	122	STR						
S813			4	7'-11"	85	STR						
S814			12	8'-11"	286	STR						
S815			4	25'-0"	267	STR						
S816			21	17'-7"	986	STR						
S817			12	15'-11"	510	STR						
S818			8	7'-3"	155	STR						
S819			8	23'-9"	508	STR						
S820			8	8'-6"	182	STR						
S821			3	25'-9"	207	STR						
S822			3	13'-4"	107	STR						
S823			3	13'-9"	110	12	9'-9"	3'-4"	2'-3"			
S824			3	8'-1"	65	STR						
S825			1	14'-3"	38	12	6'-2"	4'-7"	6'-9"			
S826			1	14'-6"	39	12	6'-10"	4'-4"	6'-4"			
S827			1	14'-5"	39	12	7'-2"	4'-2"	6'-0"			
S828			1	14'-3"	38	12	7'-7"	3'-11"	5'-9"			
S829			3	10'-11"	87	12	4'-0"	3'-11"	5'-9"			
S830			4	16'-4"	174	STR						
			1	24'-6"								
S831			SER OF		267	STR						4"
			4	25'-6"								
			1	11'-2"			7'-2"					
S832			SER OF		125	12		2'-3"	3'-4"			4"
			4	12'-2"			8'-2"					
S833			3	15'-6"	124	12	8'-6"	5"	7'-0"			
S834			1	14'-6"	39	12	7'-6"	5"	7'-0"			
S835			4	10'-4"	110	12	6'-4"	3"	4'-0"			
D801			168	6'-6"	2916	10	3'-7"	1'-0"	1'-0"			
PIER												
P501			16	6'-7"	110	30	1'-5 3/8"	1'-7"	11 7/8"			
P801			48	1'-11"	246	STR						
SUBTOTAL (THIS SHEET) =					145,806	LBS						
SUBTOTAL (PREVIOUS SHEET) =					6,430	LBS						
TOTAL =					152,236	LBS						

BENDING DIAGRAMS

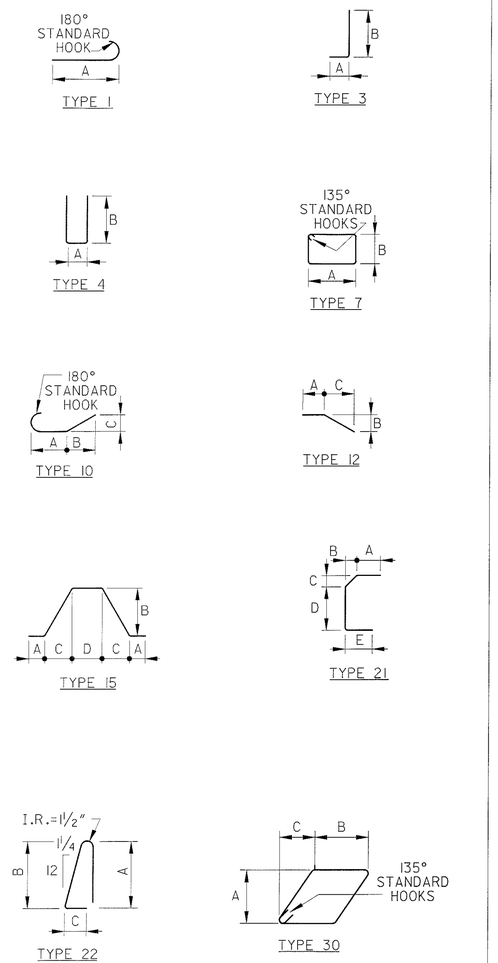

REINFORCING STEEL NOTES:

1. SERIES BARS - EACH BAR VARIES BY TABULATED AMOUNT.
2. ALL DIMENSIONS ARE OUT TO OUT.
3. TYPE 'STR' INDICATES A STRAIGHT BAR.
4. THE BAR SIZE NUMBER IS SPECIFIED IN THE 'MARK' COLUMN. THE FIRST DIGIT INDICATES THE BAR SIZE NUMBER. FOR EXAMPLE, S501 IS A #5 BAR SIZE.
5. ALL BARS SHALL BE EPOXY COATED UNLESS NOTED OTHERWISE.
6. SUBTOTALS AND TOTAL WEIGHTS ARE FOR INFORMATIONAL PURPOSES ONLY. IF THE REINFORCING LIST PROVIDED IN THE PLANS IS USED IT SHALL BE VERIFIED BY THE CONTRACTOR. ANY REVISIONS IN THE REINFORCING STEEL LIST AS SHOWN IN THE PLANS WILL NOT BE REASON FOR ADJUSTMENT IN THE BID PRICE FOR STRUCTURAL CONCRETE.

DLZ
8000 ROCKEFELLER BLDG • 614 W SUPERIOR AVE • CLEVELAND, OH 44113

DESIGNED AJM | DRAWN DJP | CHECKED JWB | REVISED | REVIEWED GWM | DATE 6/12/01 | STRUCTURE FILE NUMBER 7700091

REINFORCING STEEL LIST
BRIDGE NO. SUM-8-0064
S.R. 8 OVER BEACON STREET

SUM-8-0.63

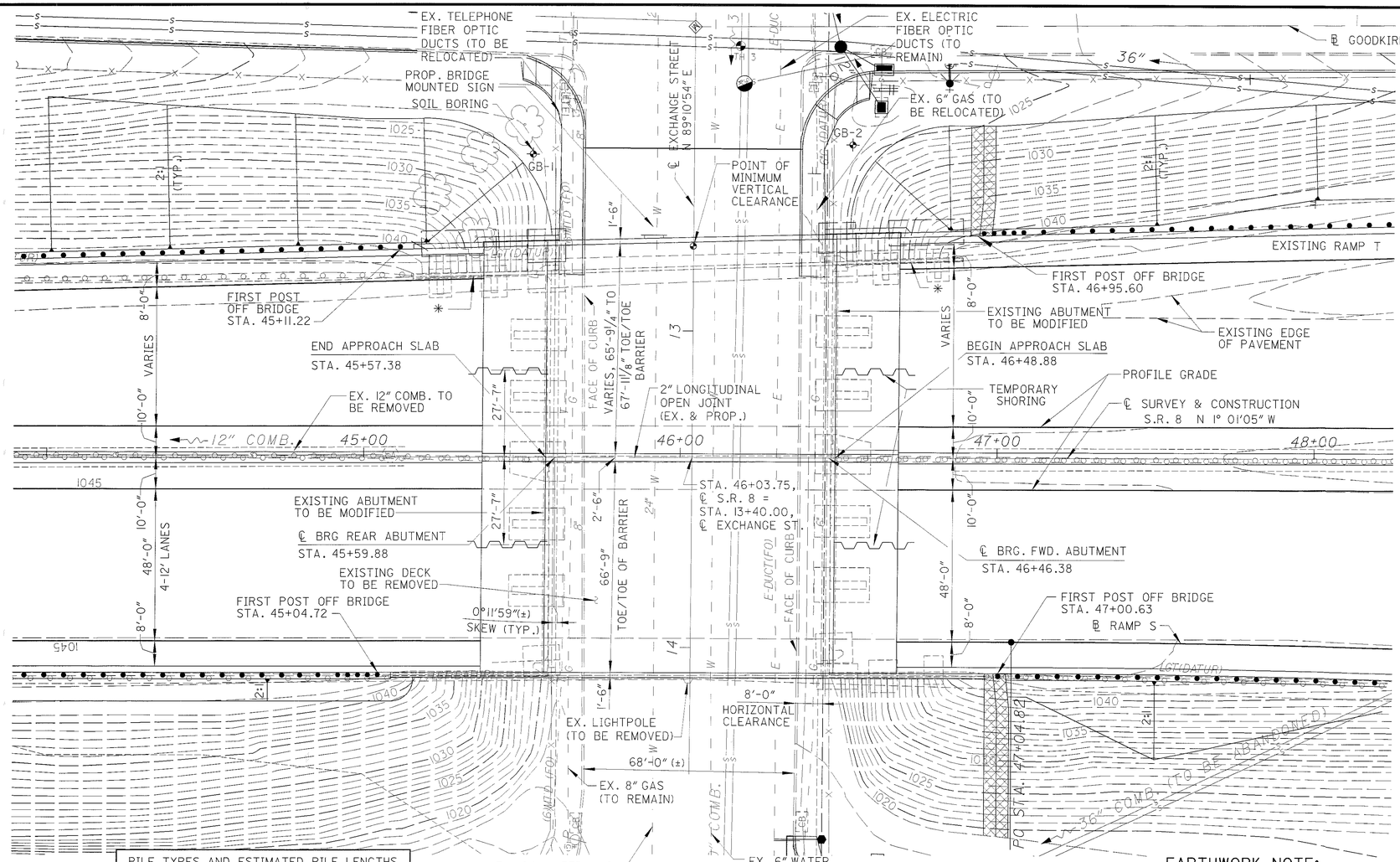

PILE TYPES AND ESTIMATED PILE LENGTHS		
SUBSTRUCTURE	PILE TYPE	PILE LENGTH
REAR. ABUT.	HP 10×42	25 FEET
FWD. ABUT.	HP 10×42	20 FEET

* PORTIONS OF EXISTING WINGWALL TO BE REMOVED 3' BELOW GRADE

REINFORCED SODDING, PER STD. DWG DM-4.IM

EARTHWORK NOTE:

EARTHWORK LIMITS ARE APPROXIMATE. ACTUAL SLOPES SHALL CONFORM TO PLAN CROSS SECTIONS.

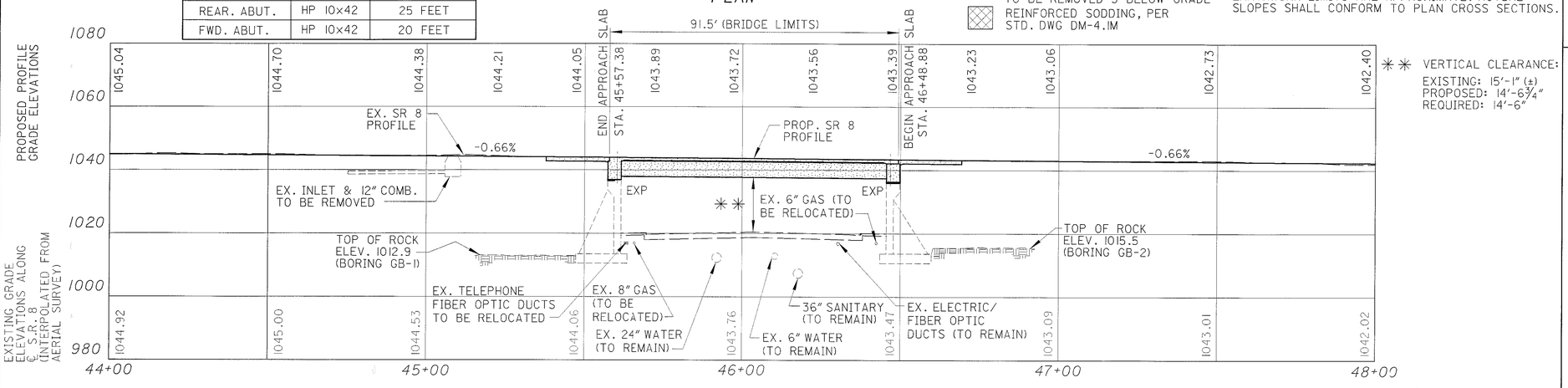

PROFILE ALONG S.R. 8 PROFILE GRADE

** VERTICAL CLEARANCE:
EXISTING: 15'-1" (±)
PROPOSED: 14'-6¾"
REQUIRED: 14'-6"

NOTE: PROFILE VIEW IS SHOWN AS CUT ON ℄ OF S.R. 8. PROFILE ELEVATIONS SHOWN ARE ON EDGE OF PAVEMENT, 10.00 FEET LEFT OR RIGHT. SEE TRANSVERSE SECTION SHEET 16/29.

N

LEGEND

℄	CENTERLINE
COMB.	COMBINED
EX.	EXISTING
FWD.	FORWARD
PROP.	PROPOSED
TC	TRAFFIC CONTROL
STORM	STORM SEWER
⌖	SOIL BORING

BENCHMARK #11

CHISELED "□" ON SW CORNER OF CONC. BASE FOR TRAFFIC POLE @ NE CORNER OF EXCHANGE & GOODKIRK STREETS

ELEV: 1023.87, STA. 45+56.86, 202.00' LT.

BENCHMARK #12

CHISELED "□" IN NW CORNER OF 2.5'-WIDE CONCRETE DIVIDING WALL @ NW CORNER OF PARKING LOT, 588 E. EXCHANGE ST., 44.3' S OF ℄ EXCHANGE, 89.3' FROM NW CORNER OF BUILDING.

ELEV: 1016.01, STA. 45+59.36, 344.57' RT.

TRAFFIC DATA

S.R. 8
CURRENT ADT (2004) = 115,160
CURRENT ADTT (2004) = 7,485
DESIGN ADT (2024) = 123,380
DESIGN ADTT (2024) = 8,020

EXISTING STRUCTURE

TYPE: SINGLE SPAN STEEL GIRDER WITH REINFORCED CONCRETE DECK AND SUBSTRUCTURE

SPAN: 86'-6"(±), C/C BEARINGS

ROADWAY: VARIES FROM 54'-4"(±) FACE/FACE BARRIER AT REAR ABUTMENT (LEFT) TO 57'-3½"(±) FACE/FACE BARRIER AT FDW. ABUTMENT (LEFT) 67'-5"(±) FACE/FACE BARRIER (RIGHT)

SKEW: 0°11'59"(±) LEFT FORWARD

ALIGNMENT: TANGENT

LOADING: HS 20-44 (CASE II) AND THE ALTERNATE MILITARY LOADING

WEARING SURFACE: 1¼" LATEX MODIFIED CONC. (N.B.) 1¼" ASPHALTIC CONC. (S.B.)

APPROACH SLABS: AS-1-72, (20'-0"(±) N.B.), (15'-0"(±) S.B.)

CROWN: 3/16"/FT. (±)

DATE BUILT: c.1954 MAJOR REHABILITATION: c.1982

STRUCTURE FILE NUMBER: 7700156

PROPOSED STRUCTURE

PROPOSED WORK: NEW CONCRETE DECK. WIDEN SOUTHBOUND DECK WITH ONE ADDITIONAL GIRDER, WIDEN AND MODIFY ABUTMENTS TO SEMI-INTEGRAL TYPE WITH NEW APPROACH SLABS, PAINT EXISTING SUPERSTRUCTURE (SYSTEM OZEU), REHABILITATE EXISTING SUBSTRUCTURE.

TYPE: SINGLE SPAN NON-COMPOSITE STEEL GIRDER WITH REINFORCED CONCRETE DECK AND SUBSTRUCTURE.

SPAN: EXISTING

ROADWAY: VARIES FROM 65'-9¼"(±) TOE/TOE BARRIER AT REAR ABUTMENT (LEFT) TO 67'-11⅛"(±) TOE/TOE BARRIER AT FDW. ABUTMENT (LEFT) 66'-9" TOE/TOE BARRIER (RIGHT)

SKEW: EXISTING

ALIGNMENT: EXISTING

LOADING: HS 20-44 (CASE I) AND THE ALTERNATE MILITARY LOADING

WEARING SURFACE: MONOLITHIC CONCRETE

APPROACH SLABS: AS-1-81, 20' LONG

CROWN: 3/16"/FT.

LATITUDE: N 41°04'18"

LONGITUDE: W 81°30'18"

DLZ
1000 ROCKEFELLER BLDG • 614 W SUPERIOR AVE • CLEVELAND, OH 44113

DESIGNED JWB | DRAWN RCK | CHECKED DP | REVIEWED GWM | DATE 6/20/01 | REVISED | STRUCTURE FILE NUMBER 7700156

SUMMIT COUNTY
STA. 45+57.38
STA. 46+48.88

SITE PLAN
BRIDGE NO. SUM-8-0087
S.R. 8 OVER EXCHANGE STREET

SUM-8-0.63

1 / 29

911
1088

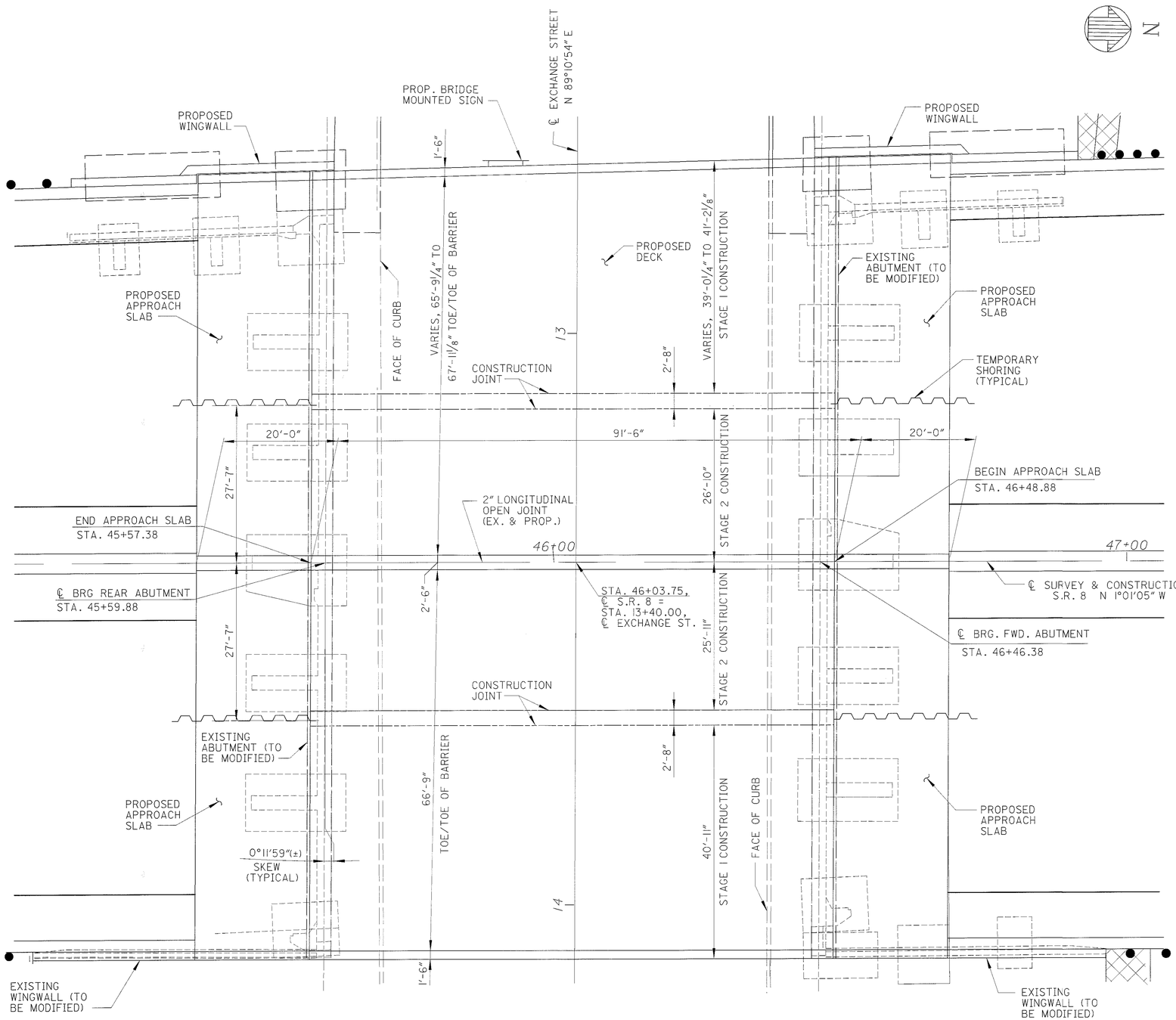

GENERAL PLAN

DLZ
1000 ROCKEFELLER BLDG • 614 W SUPERIOR AVE • CLEVELAND, OH 44113

DESIGNED	DRAWN	REVIEWED	DATE
JWB	RCK	GWM	6/20/01
CHECKED	REVISED	STRUCTURE FILE NUMBER	
AJM		7700156	

GENERAL PLAN
BRIDGE NO. SUM-8-0087
S.R. 8 OVER EXCHANGE STREET

SUM-8-0.63

912/1088

REFERENCE SHALL BE MADE TO STANDARD DRAWINGS:

AS-1-81	DATED	4/20/01
BR-1	DATED	1/6/99
GSD-1-96	DATED	4/20/01
PCB-91	DATED	7/6/99
SICD-1-96	DATED	4/20/01

AND TO THE SUPPLEMENTAL SPECIFICATIONS:

842	DATED	1/6/99	899	DATED	10/21/98
844	DATED	1/6/99	905	DATED	4/1/98
849	DATED	6/14/95	907	DATED	10/21/98
863	DATED	10/12/99	910	DATED	7/11/00
816	DATED	4/21/97	954	DATED	9/9/97

DESIGN SPECIFICATIONS
THIS STRUCTURE CONFORMS TO "STANDARD SPECIFICATIONS FOR HIGHWAY BRIDGES" ADOPTED BY THE AMERICAN ASSOCIATION OF STATE HIGHWAY AND TRANSPORTATION OFFICIALS, 1996, INCLUDING THE 1997, 1998 AND 1999 INTERIM SPECIFICATIONS AND THE ODOT BRIDGE DESIGN MANUAL.

DESIGN LOADING
HS20-44, CASE I, AND THE ALTERNATE MILITARY LOADING.
FUTURE WEARING SURFACE OF 60 psf

DESIGN STRESSES
CONCRETE CLASS C - COMPRESSIVE STRENGTH 4000 psi (SUBSTRUCTURE)
HIGH PERFORMANCE CONCRETE HPC SS 844
FOR SUPERSTRUCTURE - COMPRESSIVE STRENGTH 4500 psi
REINFORCING STEEL - ASTM A615, A616, OR A617
GRADE 60 MINIMUM YIELD STRENGTH 60,000 psi.
STRUCTURAL STEEL
NEW STEEL GIRDER - A572/A709 GRADE 50 - YIELD STRENGTH 50,000 psi.
BEARING ASSEMBLIES - A36/A709 GRADE 36 - YIELD STRENGTH 36,000 psi.
(CROSSFRAMES AND CROSSFRAME STIFFENERS MAY BE A36/A709 GRADE 36 STEEL)

DECK PROTECTION METHOD
EPOXY COATED REINFORCING STEEL
2-1/2" CONCRETE COVER

MONOLITHIC WEARING SURFACE IS ASSUMED, FOR DESIGN PURPOSES, TO BE 1" THICK.

EXISTING STRUCTURE VERIFICATION:

DETAILS AND DIMENSIONS SHOWN ON THESE PLANS PERTAINING TO THE EXISTING STRUCTURE HAVE BEEN OBTAINED FROM PLANS OF THE EXISTING STRUCTURE AND FROM FIELD OBSERVATIONS AND MEASUREMENTS. CONSEQUENTLY, THEY ARE INDICATIVE OF THE EXISTING STRUCTURE AND THE PROPOSED WORK BUT THEY SHALL BE CONSIDERED TENTATIVE AND APPROXIMATE. THE CONTRACTOR IS REFERRED TO CMS SECTIONS 102.05, 105.02, AND 513.02.

CONTRACT BID PRICES SHALL BE BASED UPON A RECOGNITION OF UNCERTAINTIES DESCRIBED ABOVE AND UPON A PREBID EXAMINATION OF THE EXISTING STRUCTURE BY THE CONTRACTOR. HOWEVER, ALL PROJECT WORK SHALL BE BASED UPON ACTUAL DETAILS AND DIMENSIONS WHICH HAVE BEEN VERIFIED BY THE CONTRACTOR IN THE FIELD.

ITEM 202, PORTIONS OF STRUCTURE REMOVED, OVER 20' SPAN, AS PER PLAN:

DESCRIPTION: WORK TO BE PAID FOR UNDER THIS ITEM SHALL INCLUDE THE REMOVAL OF EXISTING STRUCTURE COMPONENTS AS DETAILED IN THE PLANS AND AS DIRECTED BY THE ENGINEER. THE REMOVALS SHALL INCLUDE BUT NOT NECESSARILY BE LIMITED TO THE FOLLOWING:

1. EXISTING BRIDGE DECK, INCLUDING CURBS, PARAPETS, AND RAILING.
2. EXISTING ABUTMENT BACKWALLS, PORTIONS OF EXISTING WINGWALLS AND PORTIONS OF EXISTING POROUS BACKFILL AS DETAILED IN THE PLANS.
3. EXISTING STEEL END DAMS AND END CROSSFRAMES.
4. DRILLING HOLES THROUGH THE ENDS OF THE EXISTING STEEL GIRDERS TO ACCOMODATE REINFORCING STEEL FOR THE CONCRETE END DIAPHRAGM.
5. EXISTING STEEL ROCKERS AND BOLSTERS.
6. MISCELLANEOUS ITEMS THAT ARE NOT SHOWN TO BE INCORPORATED INTO THE FINAL CONSTRUCTION AND ARE DIRECTED TO BE REMOVED BY THE ENGINEER.

CARE SHALL BE TAKEN DURING DECK REMOVALS TO PROTECT PORTIONS OF SUCH SYSTEMS THAT ARE TO BE SALVAGED AND INCORPORATED INTO THE PROPOSED STRUCTURE. IN THIS RESPECT, THE USE OF EXPLOSIVES, HEADACHE BALLS AND/OR HOE RAM TYPE OF EQUIPMENT IS PROHIBITED.

PLANS OF EXISTING BRIDGE:

PLANS OF THE EXISTING BRIDGE MAY BE EXAMINED AT THE DISTRICT 4 OFFICE OF THE OHIO DEPARTMENT OF TRANSPORTATION, 705 OAKWOOD STREET, RAVENNA, OHIO, 44266.

ITEM 202, PORTIONS OF STRUCTURE REMOVED, OVER 20' SPAN, AS PER PLAN (CONT.):

PROTECTION OF TRAFFIC: THE CONTRACTOR SHALL PROVIDE ALL NECESSARY TEMPORARY SUPPORTS UNDER THE STRUCTURE DURING REMOVAL, RECONSTRUCTION AND CONSTRUCTION OPERATIONS AS REQUIRED TO MAINTAIN A COMPLETELY STABLE STRUCTURE AT ALL TIMES. IF IN THE OPINION OF THE ENGINEER, ADDITIONAL SUPPORTS ARE REQUIRED, THEY SHALL BE PROVIDED BY THE CONTRACTOR ENTIRELY AT HIS EXPENSE. NO FULL DEPTH BRIDGE REPAIR SHALL BE PERFORMED OVER AN OPEN LANE.

IN ORDER TO PROTECT VEHICULAR TRAFFIC AND PAVEMENT AGAINST DAMAGE FROM FALLING MATERIAL, DEBRIS AND OTHER DEMOLITION OPERATIONS, WHILE SUPERSTRUCTURE CONCRETE IS BEING REMOVED OR WHILE THE CONTRACTOR IS WORKING OVERHEAD, THE CONTRACTOR SHALL FURNISH AND ERECT A TEMPORARY PROTECTIVE STRUCTURE UNDER THE SPANS THAT ARE DIRECTLY OVER THE ROADWAY AND SHOULDER AREAS PLUS ENOUGH ADDITIONAL COVERAGE IN THE AREA TO PREVENT ANY FALLING MATERIAL FROM ANY SPAN FROM REACHING THESE AREAS.

IN ADDITION TO THE TEMPORARY PROTECTIVE STRUCTURE, THE CONTRACTOR SHALL PROVIDE PLASTIC SHEETING OR OTHER APPROVED METHODS TO CONTROL WATER USED IN THE SAW CUTTING OPERATION FROM FALLING ON VEHICULAR TRAFFIC.

THE PROTECTIVE STRUCTURE(S) SHALL MEET THE APPROVAL OF THE ENGINEER. THE FLOORING AND SIDING OF THE STRUCTURE(S) SHALL HAVE NO CRACKS OR OPENINGS THROUGH WHICH MATERIAL PARTICLES MAY FALL. AS A MINIMUM, TWO LAYERS OF ¾ INCH PLYWOOD WITH LAPPED JOINTS OR AN EQUIVALENT DESIGN SHALL BE PLACED BETWEEN THE LOWER FLANGES OF THE STRUCTURAL STEEL BEAMS ABOVE THE PAVEMENT AND SHOULDERS OF ROADWAYS ON WHICH VEHICULAR TRAFFIC IS BEING MAINTAINED ON THE EXISTING LANES OR BY PARTIAL LANE CLOSURES. THE PROTECTION IN ALL CASES SHALL EXTEND BEYOND THE EXISTING AND/OR NEW EXTERIOR STRUCTURAL BEAMS A SUFFICIENT DISTANCE TO PROTECT UNDER THE EXISTING AND PROPOSED PARAPETS AND SHALL HAVE SIDEWALLS EXTENDING UP TO 4 FEET MINIMUM. SIDEWALLS SHALL BE BRACED SUBSTANTIALLY TO RESIST WIND LOADS. DURING SAW CUTTING AND DECK REMOVAL OPERATIONS, TEMPORARY SHIELDS ATTACHED TO THE SIDEWALLS AND EXTENDING 1 FOOT ABOVE THE TOP OF THE PARAPET SHALL BE INSTALLED TO LIMITS AS DIRECTED BY THE ENGINEER. TEMPORARY SHIELDS SHALL BE REMOVED IMMEDIATELY AFTER THEY HAVE SERVED THEIR PURPOSE. DEBRIS SHALL NOT BE PERMITTED TO COLLECT ON THEIR PROTECTED STRUCTURES.

WHEN SUPPORTING THE PROTECTIVE STRUCTURE(S) FROM THE STEEL WORK OF THE BRIDGE, ALL CONNECTIONS THERETO SHALL BE MADE BY MEANS OF APPROVED CLAMPS ON BOTH SIDES OF THE BEAM FLANGE. THE DRILLING OF HOLES IN THE STEEL WORK OR WELDING THERETO, FOR THIS PURPOSE WILL NOT BE PERMITTED. NO PORTION OF THE TEMPORARY SUPPORT SYSTEM AND/OR PROTECTIVE STRUCTURE(S) (INCLUDING CONNECTION DEVICES) SHALL EXTEND MORE THAN 10 INCHES BELOW THE BOTTOM FLANGE OF THE STEEL STRINGERS OR COVER PLATES THAT IS OVER THE TRAVELED WAY (PAVEMENT, SHOULDERS) OF A HIGHWAY ON WHICH TRAFFIC IS BEING MAINTAINED. HOWEVER, IN NO INSTANCE SHALL THE UNDERCLEARANCE BE LESS THAN 14 FEET. DISTRICT PUBLIC RELATIONS OFFICE (EXT. 209 OR 211) SHALL BE NOTIFIED 18 DAYS IN ADVANCE OF RESTRICTION.

AFTER THE FALSEWORK, TEMPORARY BRACING AND PROTECTIVE STRUCTURE(S) HAVE SERVED THEIR PURPOSE AND WHEN SO DIRECTED BY THE ENGINEER, THEY SHALL BE REMOVED. PROTECTIVE STRUCTURE(S), INCLUDING SIDEWALLS SHALL NOT BE REMOVED UNTIL THE PARAPETS ARE COMPLETED. ALL MATERIAL SHALL BECOME THE PROPERTY OF THE CONTRACTOR AND SHALL BE REMOVED FROM THE JOB SITE AND DISPOSED OF BY THE CONTRACTOR AT HIS OWN EXPENSE.

THE CONTRACTOR SHALL SUBMIT IN QUADRUPLET A DEMOLITION PLAN AND DETAILS OF THE FALSEWORK, TEMPORARY BRACING AND PROTECTIVE STRUCTURES FOR CATCHING BROKEN CONCRETE AND OTHER MATERIALS. THESE PLANS AND DETAILS SHALL BE SUBMITTED 18 DAYS PRIOR TO COMMENCING ANY DEMOLITION TO THE DIRECTOR FOR APPROVAL. THE DETAILS SHALL INCLUDE THE EXISTING AND PROPOSED TEMPORARY UNDERCLEARANCES TO THE TRAVELED WAY.

PROTECTION OF STEEL SUPPORT SYSTEMS: BEFORE DECK SLAB CUTTING IS PERMITTED, THE OUTLINE OF PRIMARY STEEL MEMBERS IN CONTACT WITH THE BOTTOM OF THE DECK SHALL BE DRAWN ON THE SURFACE OF DECK. SMALL DIAMETER PILOT HOLES SHALL BE DRILLED TWO (2) INCHES OUTSIDE THESE LINES TO CONFIRM THE LOCATION OF FLANGE EDGES. DECK CUTS OVER OR WITHIN 2 INCHES OF FLANGE EDGES SHALL NOT EXTEND LOWER THAN THE BOTTOM LAYER OF DECK SLAB REINFORCING STEEL. CUTS MADE OUTSIDE 2 INCHES OF FLANGE EDGES MAY EXTEND THE FULL DEPTH OF THE DECK. DURING CUTTING OF THE DECK SLAB, CARE SHALL BE TAKEN NOT TO DAMAGE STEEL MEMBERS THAT ARE TO BE INCORPORATED INTO THE PROPOSED STRUCTURE.

REMOVAL METHODS: CONCRETE MAY BE REMOVED BY CUTTING AND BY MEANS OF HAND OPERATED PNEUMATIC HAMMERS EMPLOYING POINTED OR BLUNTED CHISEL TYPE TOOLS. FOR REMOVALS ABOVE STEEL MEMBERS, A HAMMER HEAVIER THAN 35 POUNDS BUT NOT TO EXCEED 90 POUNDS MAY BE USED AT THE APPROVAL OF THE ENGINEER. REMOVAL METHODS OVER BRIDGE MEMBERS SHALL ENSURE ADEQUATE DEPTH CONTROL AND PREVENT NICKING OR GOUGING OF THE PRIMARY STEEL MEMBERS.

DECK REMOVALS: DUE TO THE POSSIBLE PRESENCE OF WELDED ATTACHMENTS TO EXISTING STRUCTURAL STEEL (FINISHING MACHINE, SCUPPER AND FORM SUPPORTS, ETC.) CARE SHALL BE TAKEN DURING DECK REMOVAL TO AVOID DAMAGING STRINGERS WHICH ARE TO REMAIN. STRINGERS DAMAGED BY THE CONTRACTOR'S REMOVAL OPERATIONS SHALL, AT NO COST TO THE PROJECT, BE REPLACED OR REPAIRED. PROPOSED REPAIRS, DEVELOPED BY AN OHIO REGISTERED PROFESSIONAL ENGINEER, SHALL BE SUBMITTED IN WRITING FOR REVIEW AND APPROVAL BY THE DIRECTOR.

EXTRANEOUS MEMBERS: EXISITING EXTRANEOUS MEMBERS (i.e., FINISHING MACHINE AND FORM SUPPORTS, ETC., AND THE SUPPORT FOR SCUPPERS AND BULB ANGLES WHICH ARE TO BE REMOVED) ATTACHED BY WELDED CONNECTION TO THE DESIGNATED "TENSION" PORTIONS OF THE EXISTING BEAM FLANGES SHALL BE REMOVED AND THE FLANGE SURFACES GROUND SMOOTH. GRINDING SHALL BE CAREFULLY DONE AND PARALLEL TO THE FLANGES.

ITEM 202, PORTIONS OF STRUCTURE REMOVED, OVER 20' SPAN, AS PER PLAN (CONT.):

LOADING LIMITATIONS: NO PART OF THE STRUCTURE SHALL BE SUBJECTED TO UNIT STRESSES THAT EXCEED 136.5% OF THE ALLOWABLE UNIT STRESSES GIVEN IN THE AASHTO STANDARD SPECIFICATIONS FOR HIGHWAY BRIDGES DUE EITHER TO DEMOLITON, ERECTION OR CONSTRUCTION METHODS, OR TO THE USE OR MOVEMENT OF DEMOLITION OR ERECTION EQUIPMENT ON OR ACROSS THE STRUCTURE. STRUCTURAL ANALYSIS COMPUTATIONS, BY AN OHIO REGISTERED PROFESSIONAL ENGINEER, SHOWING THE ALLOWABLE STRESSES AND MAXIMUM STRESSES PRODUCED BY THE CONTRACTOR'S METHODS OR EQUIPMENT SHALL BE SUBMITTED TO THE DIRECTOR FOR REVIEW AND APPROVAL AT LEAST TWO WEEKS PRIOR TO THE START OF THE WORK.

CUTLINE CONSTRUCTION JOINT PREPARATION: SAW CUT BOUNDARIES OF PROPOSED CONCRETE REMOVALS 1" DEEP. REMOVE CONCRETE TO A ROUGH SURFACE. THE EXISTING REINFORCING STEEL, IF REQUIRED IN THE PLANS, SHALL BE LEFT IN PLACE. INSTALL DOWELS BARS IF SPECIFIED. PRIOR TO CONCRETE PLACEMENT, ABRASIVELY CLEAN JOINT SURFACES AND EXISTING EXPOSED REINFORCEMENT TO REMOVE LOOSE AND DISINTEGRATED CONCRETE AND LOOSE RUST. THE JOINT SURFACE AND EXPOSED REINFORCEMENT SHALL BE THOROUGHLY CLEANED OF ALL DIRT, DUST, OR OTHER FOREIGN MATERIAL BY THE USE OF WATER, AIR UNDER PRESSURE OR OTHER METHODS THAT PRODUCE SATISFACTORY RESULTS. EXISTING REINFORCING STEEL DOES NOT HAVE TO HAVE A BRIGHT STEEL FINISH BUT ALL PACK AND LOOSE RUST SHALL BE REMOVED. EXISTING CONCRETE SURFACES WHICH NEW CONCRETE WILL BE PLACED AGAINST SHALL BE WET, BUT WITHOUT FREE WATER, AT THE TIME OF CONCRETE PLACEMENT.

ABUTMENT CONCRETE REMOVAL SHALL BE BY MEANS OF APPROVED PNEUMATIC HAMMERS EMPLOYING POINTED OR BLUNT CHISEL TOOLS. HYDRAULIC HOE-RAM TYPE HAMMERS WILL NOT BE PERMITTED. THE WEIGHT OF THE HAMMER SHALL NOT BE MORE THAN 35 POUNDS FOR REMOVAL WITHIN 18-INCHES OF PORTIONS TO BE PRESERVED. OUTSIDE THE 18-INCH LIMIT, HAMMERS NOT EXCEEDING 90 POUNDS, MAY BE USED AT THE APPROVAL OF THE ENGINEER. PNEUMATIC HAMMERS SHALL NOT BE PLACED IN DIRECT CONTACT WITH REINFORCING STEEL THAT IS TO BE RETAINED IN THE REBUILT STRUCTURE.

PAYMENT: THIS WORK WILL BE PAID FOR AT THE CONTRACT LUMP SUM PRICE BID, WHICH PRICE AND PAYMENT SHALL BE FULL COMPENSATION FOR ALL LABOR, EQUIPMENT, MATERIALS AND INCIDENTALS NECESSARY TO COMPLETE THE WORK IN CONFORMANCE WITH THESE REQUIREMENTS, WITH PERTINENT PROVISIONS OF 202, AND TO THE SATISFACTION OF THE ENGINEER.

ASBESTOS NOTIFICATION:

AN ASBESTOS SURVEY OF THE S.R. 8 BRIDGE OVER EXCHANGE STREET SCHEDULED FOR REHABILITATION WAS CONDUCTED BY A CERTIFIED ASBESTOS HAZARD EVALUATION SPECIALIST. THE SURVEY DETERMINED THAT NO ASBESTOS IS PRESENT ON THE BRIDGE.

A COPY OF THE OHIO ENVIRONMENTAL PROTECTION AGENCY (OEPA) NOTIFICATION OF THE DEMOLITION AND RENOVATION FORM, PARTIALLY COMPLETED AND SIGNED BY THE BRIDGE OWNER, WILL BE PROVIDED TO THE SUCCESSFUL BIDDER. THE CONTRACTOR SHALL COMPLETE THE FORM AND SUBMIT IT TO:

AKRON REGIONAL AIR QUALITY MANAGEMENT DISTRICT
146 S. HIGH ST., SUITE 904
AKRON, OH 44308
ATTN: LYNN M. MALCOLM, ADMIN.
PHONE: (330) 375-2480
FAX: (330) 375-2402

AT LEAST TEN (10) WORKING DAYS PRIOR TO START OF THE BRIDGE DEMOLITION WORK. THE CONTRACTOR SHALL PROVIDE A COPY OF THE COMPLETED FORM TO THE ENGINEER.

INFORMATION REQUIRED ON THE FORM WILL INCLUDE: THE CONTRACTOR'S NAME AND ADDRESS, THE SCHEDULED DATES FOR THE START AND COMPLETION OF THE BRIDGE REMOVAL OR RENOVATION AND A DESCRIPTION OF THE PLANNED DEMOLITION OR RENOVATION WORK AND THE METHOD(S) TO BE USED. A COPY OF THE OEPA FORM IS AVAILABLE FOR INSPECTION AT THE ODOT DISTRICT 4 OFFICE, 705 OAKWOOD STREET, RAVENNA, OHIO 44266.

BASIS FOR PAYMENT: THE CONTRACTOR SHALL FURNISH ALL FEES, LABOR, AND MATERIAL NECESSARY TO COMPLETE AND SUBMIT THE OEPA NOTIFICATION FORM. PAYMENT FOR THIS WORK SHALL BE INCLUDED IN ITEM 202 - PORTIONS OF STRUCTURE REMOVED, OVER 20' SPAN, AS PER PLAN.

ITEM 503, UNCLASSIFIED EXCAVATION, AS PER PLAN
UNCLASSIFIED EXCAVATION SHALL BE IN ACCORDANCE WITH 503 EXCEPT THAT THE BACKFILL MATERIAL FOR THE ABUTMENTS SHALL BE 304 GRANULAR MATERIAL PLACED IN 6" LIFTS AND COMPACTED IN ACCORDANCE WITH 304.05.

MAINTENANCE OF TRAFFIC:
MAINTENANCE OF TRAFFIC FOR THE STRUCTURE WORK SHALL BE COORDINATED WITH THE OVERALL PROJECT. REFER TO MAINTENANCE OF TRAFFIC NOTES AND DETAILS ELSEWHERE IN THE PLANS.

ITEM 509, REINFORCING STEEL, REPLACEMENT OF EXISTING REINFORCING STEEL, AS PER PLAN:
ANY EXISTING REINFORCING BARS DEEMED BY THE ENGINEER TO BE UNUSABLE BECAUSE OF CORROSION SHALL BE REPLACED WITH NEW REINFORCING STEEL. ANY EXISTING REINFORCING STEEL BARS WHICH ARE INCORPORATED INTO THE NEW WORK AND ARE MADE UNUSABLE BY CONCRETE REMOVAL OPERATIONS SHALL BE REPLACED WITH NEW EPOXY COATED REINFORCING STEEL OF THE SAME SIZE AT THE CONTRACTOR'S COST. ALL WORK SHALL BE TO THE SATISFACTION OF THE ENGINEER.

THE NUMBER OF POUNDS OF REINFORCING STEEL PAID FOR AT CONTRACT PRICES SHALL BE THE ACTUAL POUNDS OF REPLACEMENT REINFORCING STEEL SPECIFIED BY THE ENGINEER DUE TO CORROSION AND SHALL INCLUDE PLACEMENT, DOWELING, BENDING, SUPPORTING, TIE WIRES AND TYING OF THAT SPECIFIED REINFORCING STEEL.

DLZ
1000 ROCKEFELLER BLDG • 614 W SUPERIOR AVE • CLEVELAND, OH 44113

DESIGNED AJM | DRAWN RCK | REVIEWED GWM | DATE 6/20/01
CHECKED JWB | REVISED | STRUCTURE FILE NUMBER 7700156

STRUCTURE GENERAL NOTES
BRIDGE NO. SUM-8-0087
S.R. 8 OVER EXCHANGE STREET

SUM-8-0.63

3 / 29

913
1088

SPREAD FOOTINGS:

FOOTINGS SHALL EXTEND A MINIMUM OF 3" INTO BEDROCK OR TO THE ELEVATION SHOWN IN THE PLANS, WHICHEVER IS LOWER.

FOUNDATION BEARING PRESSURE, ABUTMENT EXTENSIONS:

FOOTINGS FOR ABUTMENT EXTENSIONS, AS DESIGNED, PRODUCE A MAXIMUM BEARING PRESSURE OF 3 TONS PER SQUARE FOOT. THE ALLOWABLE BEARING PRESSURE IS 10 TONS PER SQUARE FOOT.

EMBANKMENT CONSTRUCTION:

ALL EMBANKMENT MATERIAL FOR FILLING THE VOID CREATED BY EXCAVATING FOR THE ABUTMENT FOOTINGS SHALL BE 203 EMBANKMENT MATERIAL. AFTER THE FOOTING AND THE BREASTWALL HAVE BEEN CONSTRUCTED, THE VOID BEHIND EACH ABUTMENT SHALL BE FILLED UP TO THE BEAM SEAT ELEVATION AND FROM THE BEAM SEAT UP ON A 1:1 SLOPE TO THE SUBGRADE ELEVATION PRIOR TO SETTING THE NEW GIRDER.

ITEM 516, JACKING AND TEMPORARY SUPPORT OF SUPERSTRUCTURE, AS PER PLAN:

THIS ITEM SHALL CONSIST OF FURNISHING ALL NECESSARY LABOR, MATERIALS, AND EQUIPMENT TO RAISE THE EXISTING GIRDERS FOR THE PURPOSE OF REPLACING THE BEARINGS AT THE ABUTMENTS AND LOWER THE EXISTING SUPERSTRUCTURE.

THE CONTRACTOR SHALL BE RESPONSIBLE FOR THE DESIGN, INSTALLATION AND OPERATION OF AN ADEQUATE JACKING SYSTEM, INCLUDING ANY TEMPORARY OR PERMANENT SUPPORTS NECESSARY TO PERFORM THE WORK DESCRIBED IN THE PROJECT PLANS. THREE (3) SETS OF JACKING PLANS, WHICH INCLUDE THE INFORMATION DESCRIBED IN THIS NOTE, SHALL BE SUBMITTED TO THE DIRECTOR FOR APPROVAL AT LEAST THIRTY (30) DAYS BEFORE ACTUAL WORK IS TO BEGIN. THE PLANS SHALL BE PREPARED AND STAMPED BY AN OHIO REGISTERED PROFESSIONAL ENGINEER.

JACKING SUBMITTALS SHALL INCLUDE AT LEAST THE FOLLOWING:

1. THE SIGNATURE AND NUMBER, OR PROFESSIONAL SEAL, OF THE OHIO REGISTERED PROFESSIONAL ENGINEER WHO PREPARED THE SUBMITTAL.
2. CALCULATIONS AND ANALYSIS OF THE STRUCTURE TO DETERMINE AND DEFINE THE ACTUAL LOADING APPLIED AT THE CONTRACTOR'S SELECTED JACKING POINTS.
3. A DRAWING SHOWING THE PHYSICAL AND DIMENSIONAL POSITION OF THE JACKS WITH RESPECT TO THE STRUCTURE INCLUDING CLEARANCES AND CENTER OF LIFT.
4. A SCHEMATIC LAYOUT OF JACKS, CHECK VALVES, PUMPS WITH 3 WAY RETRACTOR VALVE, PRESSURE GAGES, FLOW CONTROL VALVES, ETC. IN ACCORDANCE WITH MANUFACTURER'S RECOMMENDATIONS. ALL JACKS FOR EACH ABUTMENT OR PIER SHALL BE CONNECTED TOGETHER AND SHALL BE THE SAME SIZE.
5. ANALYSIS AND CALCULATIONS OF THE STRESSES INDUCED OR CREATED IN THE STRUCTURE AND ANY TEMPORARY/PERMANENT SUPPORTS. DESIGN CALCULATIONS FOR ANY TEMPORARY OR PERMANENT SUPPORTS.
6. PHYSICAL DIMENSIONS, MATERIALS, AND FABRICATION DETAILS OF ANY TEMPORARY OR PERMANENT SUPPORTS. HORIZONTAL AND VERTICAL MOVEMENT RESTRAINT SHALL BE PROVIDED.
7. A STEP-BY-STEP PROCEDURE DETAILING ALL STEPS IN THE JACKING OPERATION.
8. METHOD OF ATTACHMENT TO STRUCTURAL MEMBERS. WELDING TO TENSION AREAS WILL NOT BE PERMITTED.

THE ENTIRE SYSTEM INCLUDING JACKS SHALL HAVE 20% MORE CAPACITY THAN REQUIRED BASED ON CALCULATED LOADS.

FOR LIFTS GREATER THAN 1", JACKS SHALL HAVE LOCKING NUTS TO POSITIVELY LOCK AND SUPPORT THE STRUCTURE DURING THE LIFT.

JACKS SHALL HAVE A SWIVEL LOAD CAP, A DOMED PISTON HEAD OR SOME OTHER DEVICE TO PROTECT AGAINST THE EFFECTS OF SIDE LOAD ON THE JACK.

JACKS ALONE SHALL NOT BE USED TO SUPPORT LOADS EXCEPT DURING THE ACTUAL JACKING OPERATION. TEMPORARY SUPPORTS, BLOCKING OR OTHER METHODS APPROVED BY THE ENGINEER SHALL BE USED.

SINGLE ACTING RAMS WITH NO OVER-TRAVEL PROTECTION SYSTEM SHALL NOT BE USED.

SPARE EQUIPMENT SHALL BE AVAILABLE ON SITE FOR REQUIRED STRUCTURE RAISING TO PROCEED IN THE EVENT OF A BREAKDOWN. A LIST OF SPARE EQUIPMENT SHALL BE PROVIDED TO THE ENGINEER.

JACKING OPERATIONS SHALL BE LIMITED TO EXISTING GIRDERS AFTER REMOVAL OF THE EXISTING DECK AND ABUTMENT BACKWALL AND BEFORE CONSTRUCTION OF THE NEW DECK, IN ACCORDANCE WITH THE CURRENT STAGE OF CONSTRUCTION. THE CONTRACTOR SHALL JACK ALL AVAILABLE GIRDERS AT ANY ONE ABUTMENT SIMULTANEOUSLY. THE MAXIMUM DIFFERENTIAL JACKING HEIGHT BETWEEN ABUTMENTS SHALL BE 1" OR LESS. THIS HEIGHT MAY BE MODIFIED IF CALCULATION'S BY THE CONTRACTOR'S OHIO REGISTERED PROFESSIONAL ENGINEER SHOW THE SUPERSTRUCTURE COMPONENTS WILL NOT BE TEMPORARILY STRESSED BEYOND ALLOWABLE STRESSES FOR THOSE COMPONENTS AND THAT NO PERMANENT STRESSES WILL BE INDUCED IN THE COMPONENTS AFTER THEY OBTAIN THEIR FINAL POSITION.

THE CONTRACTOR SHALL DEMONSTRATE TO THE ENGINEER THAT THE BRIDGE BEARINGS ARE FULLY SEATED BETWEEN ALL CONTACT AREAS. IF FULL SEATING IS NOT ATTAINED, SUITABLE MEANS OF REPAIR, SUBJECT TO THE APPROVAL OF THE ENGINEER, WILL BE REQUIRED AT THE CONTRACTOR'S EXPENSE.

PAYMENT SHALL BE MADE AT THE LUMP SUM PRICE BID FOR ITEM 516, JACKING AND TEMPORARY SUPPORT OF SUPERSTRUCTURE, AS PER PLAN. THIS SHALL INCLUDE ALL NECESSARY TOOLS, LABOR, EQUIPMENT, AND MATERIALS NECESSARY TO COMPLETE THIS ITEM OF WORK.

UTILITY LINES:

ALL EXPENSES INVOLVED IN REINSTALLING THE AFFECTED UTILITY LINES SHALL BE BORNE BY THE UTILITIES. THE CONTRACTOR AND UTILITIES ARE TO COOPERATE BY ARRANGING THEIR WORK IN SUCH A MANNER THAT INCONVENIENCE TO EITHER WILL BE HELD TO A MINIMUM.

INSPECTION OF EXISTING STRUCTURAL STEEL:

THE ENGINEER WILL VISUALLY INSPECT ALL EXISTING BUTT-WELDED SPLICES AND/OR TOP FLANGE COVER PLATE FILLET WELDS TO ENSURE THE WELDS, PLATES AND GIRDERS OR GIRDERS ARE FREE OF DEFECTS AND CRACKS. IF THE DECK SLAB HAUCH FORMS IMMEDIATELY ADJACENT TO SUCH WELDS INTERFERE WITH THE ENGINEER'S INSPECTION THEY SHALL BE REMOVED OR NOT BE ERECTED UNTIL AFTER THE INSPECTION. THE INSPECTION SHALL NOT TAKE PLACE UNTIL AFTER THE TOP FLANGES ARE CLEANED AS SPECIFIED IN SS 842.08, BUT IT SHALL BE DONE BEFORE THE DECK SLAB REINFORCEMENT IS INSTALLED. THE COST ASSOCIATED WITH THIS INSPECTION SHALL BE INCLUDED WITH ITEM SS 842, SUPERSTRUCTURE CONCRETE, FOR PAYMENT. ANY CRACKS FOUND SHOULD BE REPORTED TO THE OFFICE OF STRUCTURAL ENGINEERING, BRIDGE CONSTRUCTION SPECIALIST, ALONG WITH SPECIFIC INFORMATION ON LOCATION OF CRACKS, LENGTH, AND DEPTH SO AN EVALUATION AND REPAIR OR REPLACEMENT RECOMMENDATION CAN BE MADE.

ITEM 864, SEALING OF CONCRETE SURFACES (EPOXY-URETHANE)

CONCRETE SURFACES INCLUDING PARAPETS, ABUTMENTS, WINGWALLS, PIERS, AND END DIAPHRAGMS AS DETAILED IN THE PLANS SHALL BE SEALED WITH AN EPOXY-URETHANE SEALER OF A COLOR CONFORMING TO FEDERAL COLOR No. 13522 - "BUFF".

ITEM 815, FIELD PAINTING OF EXISTING STEEL, FINISH COAT, SYSTEM OZEU
ITEM 816, FIELD PAINTING OF NEW STEEL, INTERMEDIATE AND FINISH COAT, SYSTEM IZEU

ALL SURFACES OF EXPOSED STEEL SHALL BE RECIEVE A FINSIH COAT OF "BROWN" PAINT, FEDERAL COLOR NO. 10080.

CONCRETE PARAPETS:

AS SOON AS A CONCRETE SAW CAN BE OPERATED WITHOUT DAMAGING THE FRESHLY PLACED CONCRETE, 1¼" DEEP CONTROL JOINTS SHALL BE SAWED INTO THE PERIMETER OF THE CONCRETE PARAPET. THE SAW CUT SHALL BE MADE IN THE COMPLETE CIRCUMFERENCE OF THE PARAPET, STARTING AND ENDING AT THE ELEVATION OF THE CONCRETE DECK. THE SAWCUTS SHALL BE PLACED AT A MINIMUM OF 6 FEET AND A MAXIMUM OF 10 FEET CENTERS. THE USE OF AN EDGE GUIDE, FENCE, OR JIG IS REQUIRED TO INSURE THAT THE CUT JOINT IS STRAIGHT, TRUE, AND ALIGNED ON ALL FACES OF THE PARAPET. THE JOINT WIDTH SHALL BE THE WIDTH OF THE SAW BLADE, A NOMINAL WIDTH OF ¼". THE PERIMETER OF THE DEFLECTION CONTROL JOINT SHALL BE SEALED WITH A CAULKING MATERIAL CONFORMING TO FEDERAL SPEFICATION TT-S-00227E TO A MINIMUM DEPTH OF 1 INCH. THE BOTTOM ½ INCH OF THE INSIDE AND OUTSIDE FACE SHALL BE LEFT UNSEALED TO ALLOW WATER TO ESCAPE.

CLEANING STEEL IN PATCHES:

ALL SURFACES TO BE PATCHED AND THE EXPOSED REINFORCING STEEL WITHIN SHALL BE THOROUGHLY CLEANED BY ABRASIVE BLASTING PRIOR TO CLEANING SPECIFIED BY 519.04. CLEANING SHALL PRECEDE APPLICATION OF THE PATCHING MATERIAL OR ERECTION OF THE FORMS BY NOT MORE THAN 24 HOURS.

ITEM 844, HIGH PERFORMANCE CONCRETE SUPERSTRUCTURE (DECK), AS PER PLAN

THIS ITEM SHALL INCLUDE ALL SUPERSTRUCTURE CONCRETE IN THE END DIAPHRAGMS, DECK SLABS, AND PARAPETS.

SUGGESTED CONSTRUCTION PROCEDURE:

STAGE 1 CONSTRUCTION

1. IMPLEMENT STAGE 1 CONSTRUCTION (PHASE 2 S.R. 8 MAINTENANCE OF TRAFFIC). MAINTAIN TWO LANES OF TRAFFIC IN EACH DIRECTION FOR S.R. 8 USING THE INSIDE PORTIONS OF THE EXISTING BRIDGE DECKS.
2. REMOVE CROSSFRAMES IN GIRDER BAYS BETWEEN STAGE 1 AND STAGE 2 CONSTRUCTION.
3. REMOVE OUTSIDE PORTIONS OF EXISTING NORTHBOUND AND SOUTHBOUND BRIDGE DECKS AND APPROACH SLABS.
4. REMOVE PORTIONS OF EXISTING WINGWALLS AND OUTSIDE PORTIONS OF ABUTMENT BACKWALLS.
5. CONSTRUCT ABUTMENT EXTENSIONS AND WINGWALLS TO WEST SIDE OF REAR AND FORWARD ABUTMENTS.
6. CONSTRUCT SEISMIC PEDESTALS FOR OUTSIDE PORTIONS OF ABUTMENTS. CONSTRUCT NEW PARAPETS ON WINGWALLS.
7. JACK AND TEMPORARILY SUPPORT GIRDERS FOR PORTION WITH DECK REMOVED IN ORDER TO REMOVE EXISTING BEARINGS AND REPLACE WITH NEW (SHORTER) ELASTOMERIC BEARINGS.
8. INSTALL NEW GIRDER AND CONNECT TO ADJACENT EXISTING GIRDER WITH NEW CROSSFRAMES.
9. CONSTRUCT NEW OUTSIDE PORTIONS OF THE SUPERSTRUCTURE INCLUDING END DIAPHRAGMS, DECKS, AND PARAPETS.
10. CONSTRUCT NEW APPROACH SLABS AND APPROACH PAVEMENT FOR OUTSIDE LANES.

SUGGESTED CONSTRUCTION PROCEDURE (CONT.):

STAGE 2 CONSTRUCTION

1. STRIPE AND SIGN NEW OUTSIDE LANES TO MAINTAIN TWO LANES OF TRAFFIC IN EACH DIRECTION FOR STAGE 2 CONSTRUCTION (PHASE 3 S.R. 8 MAINTENANCE OF TRAFFIC).
2. TRANSFER TRAFFIC TO NEW OUTSIDE PORTIONS OF BRIDGE DECKS IN CONJUNCTION WITH S.R. 8 PHASE 3 MAINTENANCE OF TRAFFIC.
3. REMOVE REMAINING INSIDE PORTIONS OF EXISTING BRIDGE DECKS AND APPROACH SLABS.
4. REMOVE REMAINING PORTIONS OF EXISTING ABUTMENT BACKWALLS.
5. JACK AND TEMPORARILY SUPPORT GIRDERS FOR PORTION WITH DECK REMOVED IN ORDER TO REMOVE EXISTING BEARINGS AND REPLACE WITH NEW (SHORTER) ELASTOMERIC BEARINGS.
6. CONSTRUCT NEW INSIDE PORTIONS OF THE SUPERSTRUCTURE INCLUDING END DIAPHRAGMS AND DECKS WITH THE EXCEPTION OF THE CLOSURE POUR.
7. INSTALL PROPOSED CROSSFRAMES BETWEEN STAGE 1 AND STAGE 2 SUPERSTRUCTURE. (CROSSFRAMES MAY BE INSTALLED BEFORE THE STAGE 2 DECK POUR BUT MUST BE TIGHTENED (WELDED) AFTER THE STAGE 2 DECK POUR AND BEFORE THE CLOSURE POUR.
8. CONSTRUCT CLOSURE POUR SECTIONS OF SUPERSTRUCTURE INCLUDING END DIAPHRAGMS AND DECK.
9. CONSTRUCT NEW APPROACH SLABS AND APPROACH PAVEMENT FOR INSIDE LANES.
10. PATCH SPALLED AREAS ON ABUTMENTS PER ITEM 519 OR 843, AS SPECIFIED.
11. PAINT EXISTING AND NEW STEEL SUPERSTRUCTURE.
12. SEAL PARAPETS AND SUBSTRUCTURE.
13. INSTALL COMPRESSION SEAL IN TOP OF MEDIAN BARRIER ON BRIDGE AND APPROACH SLABS.

THE ABOVE IS A SUGGESTED CONSTRUCTION PROCEDURE. THE CONTRACTOR SHALL SUBMIT HIS PROPOSED CONSTRUCTION PROCEDURE AND SCHEDULE TO THE DIRECTOR FOR APPROVAL BEFORE BEGINNING CONSTRUCTION. NO CONSTRUCTION OPERATIONS WILL BE PERMITTED WITHOUT PRIOR APPROVAL.

ITEM 842, CLASS C CONCRETE, ABUTMENT NOT INCLUDING FOOTING, AS PER PLAN

INSTALL A 3-FOOT WIDE STRIP, 3/32" THICK, GENERAL PURPOSE, HEAVY DUTY NEOPRENE SHEET WITH NYLON FABRIC REINFORCEMENT AT LOCATIONS SHOWN IN THE PLANS. SECURE THE 3-FOOT WIDE NEOPRENE SHEETING TO THE CONCRETE WITH 1¼" x #10 GAGE (LENGTH x SHANK DIAMETER) GALVANIZED BUTTON HEAD SPIKES THROUGH A 1 INCH OUTSIDE DIAMETER, #10 GAGE GALVANIZED WASHER. MAXIMUM FASTENER SPACING IS 9 INCHES. OTHER SIMILAR GALVANIZED DEVICES WHICH WILL NOT DAMAGE EITHER THE NEOPRENE OR THE CONCRETE MAY BE USED SUBJECT TO THE APPROVAL OF THE ENGINEER.

CENTER THE NEOPRENE STRIPS ON ALL JOINTS. FOR HORIZONTAL JOINTS, SECURE THE HORIZONTAL NEOPRENE STRIP BY USING A SINGLE LINE OF FASTENERS, STARTING AT 6 INCHES, +/-, FROM THE TOP OF THE NEOPRENE STRIP. FOR THE VERTICAL JOINTS SECURE THE VERTICAL NEOPRENE STRIP BY USING A SINGLE VERTICAL LINE OF FASTENERS, STARTING AT 6 INCHES, +/-, FROM THE VERTICAL EDGE OF THE NEOPRENE STRIP NEAREST TO THE CENTERLINE OF ROADWAY. FOR VERTICAL JOINTS, INSTALL 2 ADDITIONAL FASTENERS AT 6 INCHES, CENTER TO CENTER, ACROSS THE TOP OF THE NEOPRENE STRIP ON THE SAME SIDE OF THE VERTICAL JOINT AS THE SINGLE VERTICAL ROW OF FASTENERS IS LOCATED.

THE VERTICAL NEOPRENE STRIPS SHOULD COMPLETELY OVERLAP THE HORIZONTAL STRIPS. LAPS IN THE LENGTH OF THE HORIZONTAL STRIPS DUE TO MATERIAL MANUFACTURING SHALL BE AT LEAST 1 FOOT IN LENGTH, IF NOT VULCANIZED OR ADHESIVE BONDED, OR 6 INCHES IN LENGTH IF THE LAP IS VULCANIZED OR ADHESIVE BONDED. NO LAPS ARE ACCEPTABLE IN VERTICALLY INSTALLED NEOPRENE STRIPS.

THE NEOPRENE SHEETING SHALL BE 3/32" THICK GENERAL PURPOSE, HEAVY DUTY NEOPRENE SHEET WIT NYLON FABRIC REINFORCEMENT. THE SHEETING SHALL BE "FAIRPRENE NUMBER NN-0003", BY E.I. DUPONT DE NEMOURS AND COMPANY, INC., "WINGPRENE" BY THE GOODYEAR TIRE AND RUBBER COMPANY, OR AN APPROVED ALTERNATE. THE NEOPRENE SHEETING SHALL CONFORM TO THE FOLLOWING:

DESCRIPTION OF TEST	ASTM METHOD	REQUIREMENT
THICKNESS, INCHES	D 751	0.094" +/- 0.01
BREAKING STRENGTH, GRAB WXF, LBS, MINIMUM	D 751	700 x 700
ADHESIVE 1" STRIP, 2" MINIMUM, LBS, MINIMUM	D 751	9
BURST STRENGTH (MULLEN) PSI, MINIMUM	D 751	1400
HEAT AGING 70 HOURS T 212°F, 180 BEND WITHOUT CRACKING	D 2136	NO CRACKING OF COATING
LOW TEMPERATURE BRITTLENESS 1 HOUR AT -40°F, BEND AROUND ¼" MANDREL	D 2136	NO CRACKING OF COATING

IN LIEU OF THE NEOPRENE SHEETING THE CONTRACTOR MAY CHOOSE TO SUPPLY TYPE 3 MEMBRANE, 711.29.

PAYMENT FOR LABOR, MATERIALS AND INSTALLATION OF THESE ITEMS SHALL BE INCLUDED IN ITEM 842, CLASS C CONCRETE, ABUTMENT NOT INCLUDING FOOTING, AS PER PLAN.

DLZ
1000 ROCKEFELLER BLDG • 614 W SUPERIOR AVE • CLEVELAND, OH 44113

DESIGNED AJM | DRAWN RCK | CHECKED JWB | REVISED | REVIEWED GWM | DATE 6/20/01

STRUCTURE FILE NUMBER 7700156

STRUCTURE GENERAL NOTES
BRIDGE NO. SUM-8-0087
S.R. 8 OVER EXCHANGE STREET

SUM-8-0.63

914
1088

ESTIMATED QUANTITIES

CALCULATED BY: AJM 12/19/00
CHECKED BY: DJC 6/12/01

ITEM	ITEM EXTENSION	TOTAL	UNIT	DESCRIPTION	REAR ABUTMENT	FORWARD ABUTMENT	SUPER.	GENERAL	REFERENCE SHEET NO.	AS-BUILT
202	11203	LUMP	SUM	PORTIONS OF STRUCTURE REMOVED, OVER 20' SPAN, AS PER PLAN				LUMP SUM	3	
503	11100	LUMP	SUM	COFFERDAMS, CRIBS, AND SHEETING				LUMP SUM		
503	21101	795	CU. YD.	UNCLASSIFIED EXCAVATION, AS PER PLAN	403	392			3	
505	11100	LUMP	SUM	PILE DRIVING EQUIPMENT MOBILIZATION				LUMP SUM		
507	00100	270	LIN. FT.	STEEL PILES HP 10 x 42, FURNISHED	150	120				
507	00150	210	LIN. FT.	STEEL PILES HP 10 x 42, DRIVEN	120	90				
507	50500	6	EACH	STEEL PILE SPLICES	3	3				
507	93301	12	EACH	STEEL POINT (OR SHOE), AS PER PLAN	6	6				
509	20001	300*	LB	REINFORCING STEEL, REPLACEMENT OF EXISTING REINFORCING STEEL, AS PER PLAN*				300	3	
516	10900	97	LIN. FT.	4" ELASTOMERIC COMPRESSION SEAL	5		92			
516	13900	58	SQ. FT.	2" PREFORMED EXPANSION JOINT FILLER	29	29				
516	44001	38	EACH	ELASTOMERIC BEARING WITH INTERNAL LAMINATES AND LOAD PLATE	19	19			27	
				(NEOPRENE $1\frac{11}{16}$" x $10\frac{1}{2}$" x 1'-5", LOAD PLATE $1\frac{1}{2}$" x 1'-0" x 1'-6"), AS PER PLAN						
516	47000	LUMP	SUM	JACKING AND TEMPORARY SUPPORT OF SUPERSTRUCTURE				LUMP SUM	4	
518	21201	257	CU. YD.	POROUS BACKFILL WITH FILTER FABRIC, AS PER PLAN	128	129			12, 13	
518	40000	70	LIN. FT.	6" PERFORATED CORRUGATED PLASTIC PIPE	35	35				
518	40010	20	LIN. FT.	6" NON-PERFORATED CORRUGATED PLASTIC PIPE, INCLUDING SPECIALS	10	10				
520	11101	489	SQ. FT.	PNEUMATICALLY PLACED MORTAR, AS PER PLAN	312	177			7, 8	
815	00100	LUMP	SUM	SURFACE PREPARATION OF EXISTING STEEL, SYSTEM OZEU			LUMP SUM			
815	00200	LUMP	SUM	FIELD PAINTING OF EXISTING STEEL, PRIME COAT, SYSTEM OZEU			LUMP SUM			
815	00300	LUMP	SUM	FIELD PAINTING OF EXISTING STEEL, INTERMEDIATE COAT, SYSTEM OZEU			LUMP SUM			
815	00400	LUMP	SUM	FIELD PAINTING OF EXISTING STEEL, FINISH COAT, SYSTEM OZEU			LUMP SUM			
816	00600	LUMP	SUM	FIELD PAINTING OF NEW STEEL, INTERMEDIATE AND FINISH COAT, SYSTEM IZEU			LUMP SUM			
842	44101	144	CU. YD.	CLASS C CONCRETE, ABUTMENT NOT INCLUDING FOOTING, AS PER PLAN	76	68			4	
842	46500	64	CU. YD.	CLASS C CONCRETE, FOOTING	33	31				
844	48001	662	CU. YD.	HIGH PERFORMANCE CONCRETE SUPERSTRUCTURE (DECK), AS PER PLAN			662		4, 23, 25-26	
844	49000	LUMP	SUM	HIGH PERFORMANCE CONCRETE TRIAL MIX			LUMP SUM			
844	49010	LUMP	SUM	HIGH PERFORMANCE CONCRETE TESTING			LUMP SUM			
846	73000	82	SQ. YD.	TREATING CONCRETE BRIDGE DECKS WITH HMWM RESIN			82			
863	10080	LUMP	SUM	STRUCTURAL STEEL MEMBERS, LEVEL 4 FABRICATION			LUMP SUM			
864	10100	1314	SQ. YD.	SEALING OF CONCRETE SURFACES (EPOXY-URETHANE)	383	374	557			

* INDICATES ITEMS TO BE USED AS DIRECTED BY THE ENGINEER

PILES DRIVEN TO BEDROCK:

PILES SHALL BE DRIVEN TO REFUSAL ON BEDROCK. REFUSAL SHALL BE CONSIDERED AS OBTAINED BY PENETRATING SOFT BEDROCK FOR SEVERAL INCHES WITH A MINIMUM RESISTANCE OF 20 BLOWS PER INCH OR REFUSAL SHALL BE CONSIDERED AS OBTAINED AFTER THE PILE HAS CONTACTED HARD BEDROCK AND THE PILE HAS THEN RECEIVED AT LEAST 20 BLOWS. THE CONTRACTOR IS RESPONSIBLE FOR SELECTING THE HAMMER SIZE TO ACHIEVE THE REQUIRED DEPTH TO BEDROCK AND REFUSAL.

THE ULTIMATE BEARING VALUE IS 68 TONS PER PILE FOR THE ABUTMENT PILES.

REAR ABUTMENT
- 6 PILES OF 25 FEET LONG, ESTIMATED LENGTH
- 6 PILES OF ORDER LENGTH 25 FEET
- 3 SPLICES

FORWARD ABUTMENT
- 6 PILES OF 20 FEET LONG, ESTIMATED LENGTH
- 6 PILES OF ORDER LENGTH 20 FEET
- 3 SPLICES

ITEM 507, STEEL POINTS, AS PER PLAN:

STEEL PILE POINTS SHALL BE USED TO PROTECT THE TIPS OF THE PROPOSED STEEL "H" PILING. THE STEEL POINTS SHALL BE FURNISHED BY ASSOCIATED PILE AND FITTING. CORPORATION, 262 RUTHERFORD BLVD., CLIFTON, NEW JERSEY 07014; INTERNATIONAL CONSTRUCTION EQUIPMENT, INC., 301 WAREHOUSE DRIVE, MATTHEWS, NORTH CAROLINA 28104; DOUGHERTY FOUNDATION PRODUCTS, INC., P.O. BOX 688, FRANKLIN LAKES, NEW JERSEY 07417; VERSA STEEL INC., 3601 NW YEON AVE., P.O. BOX 10559, PORTLAND, OREGON 97210; PILING ACCESSORIES, INC., 3467 GRIBBLE ROAD, MATTHEWS, NORTH CAROLINA 28105; OR BY A MANUFACTURER THAT CAN FURNISH A STEEL POINT THAT IS ACCEPTABLE TO DIRECTOR. THE MATERIAL USED FOR THE MANUFACTURING OF PILE POINTS SHALL CONFORM TO ASTM A27/A27M 65/35 [450/240] - CLASS 2 - HEAT TREATED OR AASHTO M103/M103M 65/35 [450/240] - HEAT TREATED. WELDING OF THE PILE POINTS TO THE PILE SHALL BE IN ACCORDANCE WITH AWS D1.5 OR THE MANUFACTURER'S WRITTEN WELDING PROCEDURE SUPPLIED TO THE ENGINEER BEFORE THE WELDING IS PERFORMED. A NOTARIZED COPY OF THE MILL TEST REPORT SHALL BE SUBMITTED TO THE ENGINEER.

PLAN ABBREVIATIONS:

ABUT.	ABUTMENT
BRG.	BEARING
c/c	CENTER-TO-CENTER
C.J.	CONSTRUCTION JOINT
CL.	CLEAR COVER
CONC.	CONCRETE
DIA.	DIAMETER
E.F.	EACH FACE
EXIST.	EXISTING
FA	FORWARD ABUTMENT
F.F.	FAR FACE
FWD.	FORWARD
HMWM	HIGH MOLECULAR WEIGHT METHACRYLATE
N.P.C.P.P.	NON-PERFORATED CORRUGATED PLASTIC PIPE
N.F.	NEAR FACE
MAX.	MAXIMUM
MIN.	MINIMUM
P.C.P.P.	PERFORATED CORRUGATED PLASTIC PIPE
PEJF	PREFORMED EXPANSION JOINT FILLER
PROP.	PROPOSED
RA	REAR ABUTMENT
SPA.	SPACE, SPACES
REINF.	REINFORCING, REINFORCED
TYP.	TYPICAL
U.N.O.	UNLESS NOTED OTHERWISE

DLZ
1000 ROCKEFELLER BLDG • 614 W SUPERIOR AVE • CLEVELAND, OH 44113

DESIGNED AJM | DRAWN JWB | CHECKED DJC | REVISED
REVIEWED GWM | DATE 6/20/01 | STRUCTURE FILE NUMBER 7700156

ESTIMATED QUANTITIES
BRIDGE NO. SUM-8-0087
S.R. 8 OVER EXCHANGE STREET

SUM-8-0.63

915
1088

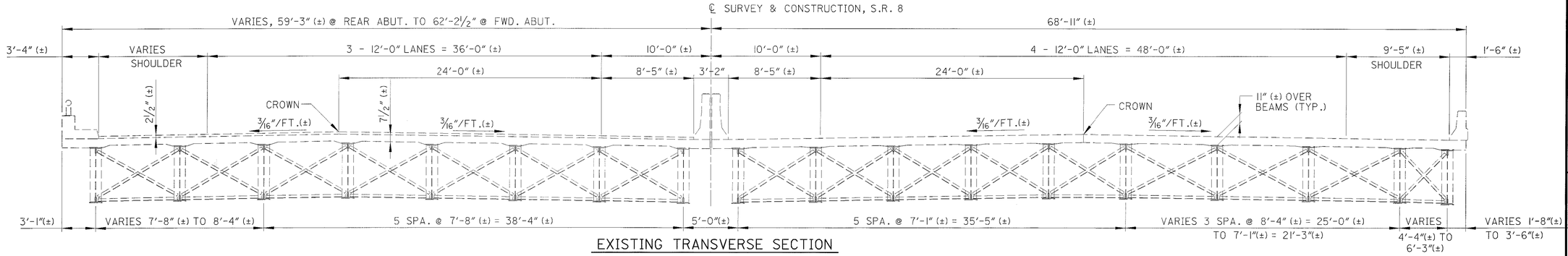

EXISTING TRANSVERSE SECTION

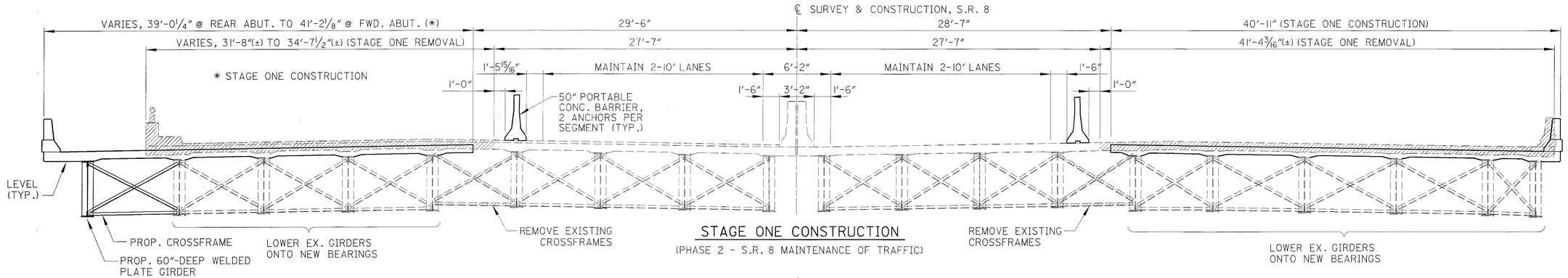

STAGE ONE CONSTRUCTION

(PHASE 2 - S.R. 8 MAINTENANCE OF TRAFFIC)

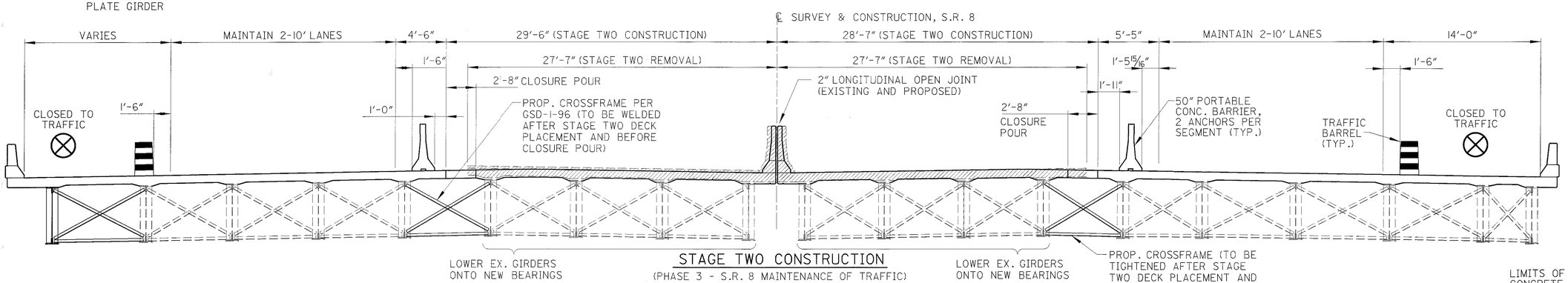

STAGE TWO CONSTRUCTION

(PHASE 3 - S.R. 8 MAINTENANCE OF TRAFFIC)

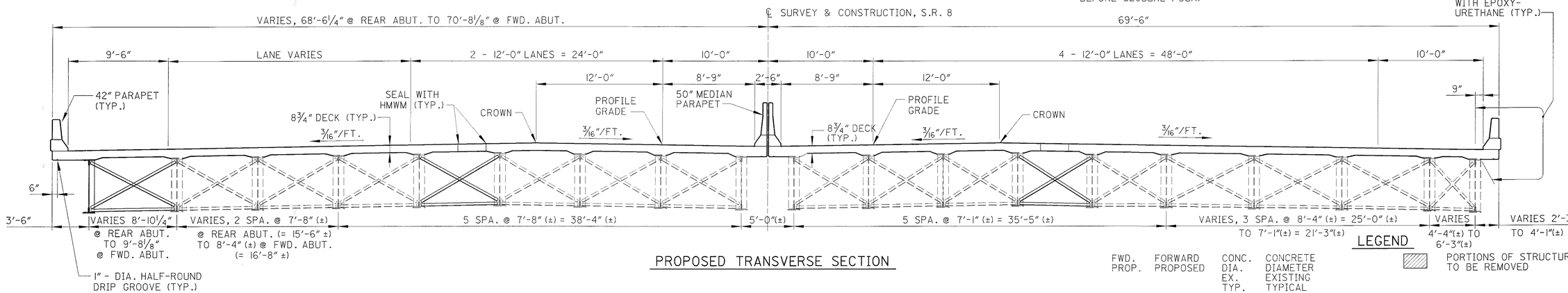

PROPOSED TRANSVERSE SECTION

LEGEND

▨ PORTIONS OF STRUCTURE TO BE REMOVED

FWD.	FORWARD	CONC.	CONCRETE
PROP.	PROPOSED	DIA.	DIAMETER
		EX.	EXISTING
		TYP.	TYPICAL

DLZ
6000 ROCKEFELLER BLDG • 614 W SUPERIOR AVE • CLEVELAND, OH 44113

DESIGNED JWB | DRAWN DJP | CHECKED DP | REVIEWED GWM | DATE 6/20/01 | REVISED | STRUCTURE FILE NUMBER 7700156

EXISTING AND PROPOSED TRANSVERSE SECTION

SUM-8-0.63

BRIDGE NO. SUM-8-0087
S.R. 8 OVER EXCHANGE STREET

6 / 29

916
1088

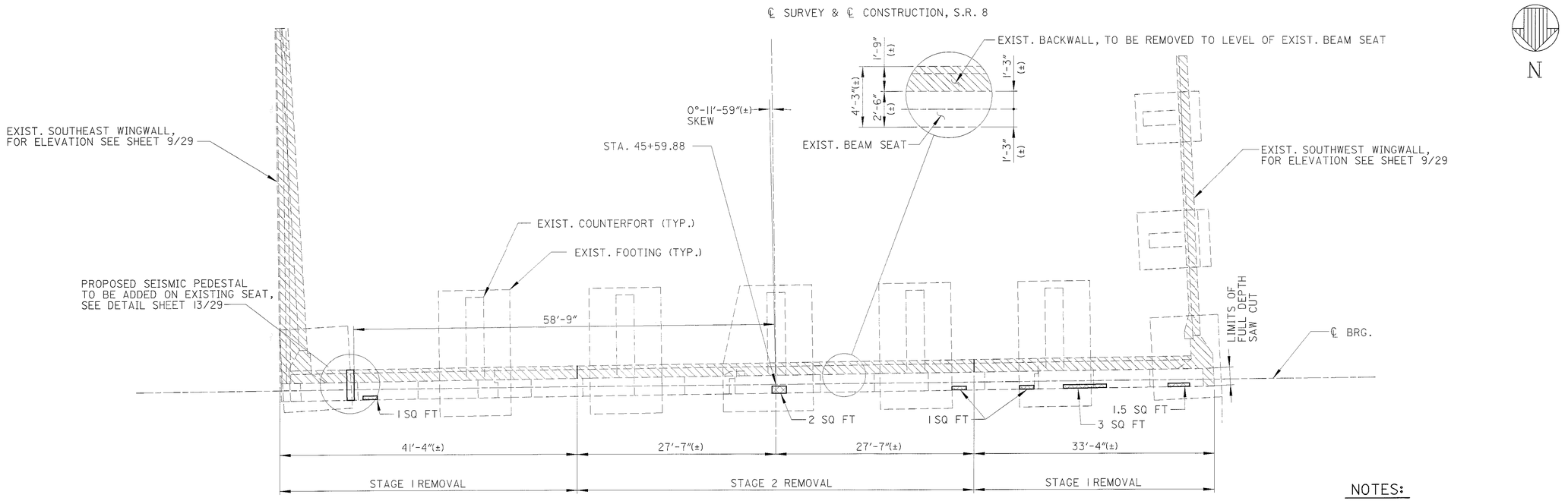

PLAN

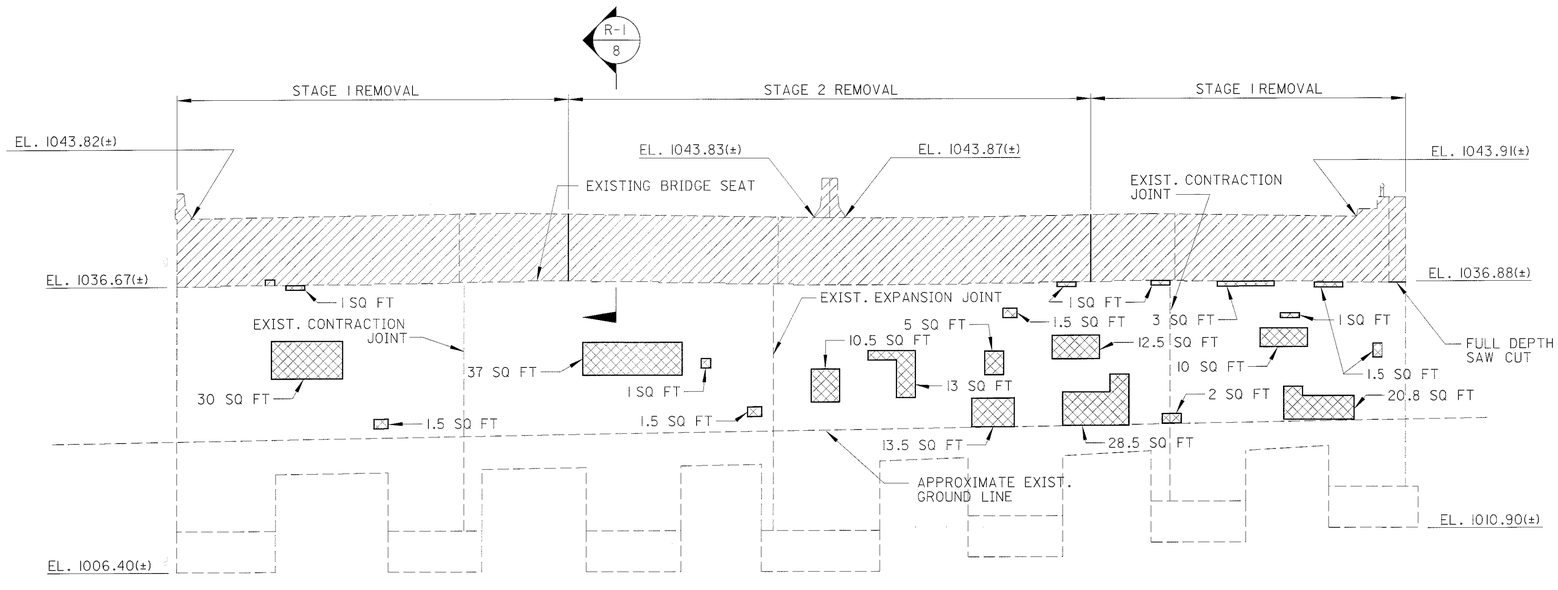

ELEVATION

NOTES:

1. ESTIMATED QUANTITIES HAVE BEEN INCREASED BY 50% OVER MEASURED QUANTITIES TO ALLOW FOR ADDITIONAL DETERIORATION. EXACT DIMENSIONS AND LOCATIONS OF PATCHES SHALL BE DETERMINED BY THE ENGINEER IN THE FIELD FOR FINAL PAY QUANTITY. FOR SUMMARY OF REPAIR QUANTITIES, SEE SHEET 8/29.
2. CONTRACTOR SHALL MAINTAIN RUSTICATION GROOVES IN AREAS WHICH ARE TO BE REPAIRED. SIZE AND PATTERN OF GROOVES SHALL MATCH EXISTING.

LEGEND:

PORTIONS OF STRUCTURE REMOVED

ITEM 520 - PNEUMATICALLY PLACED MORTAR, AS PER PLAN

DLZ
1000 ROCKEFELLER BLDG • 614 W SUPERIOR AVE • CLEVELAND, OH 44113

DESIGNED	DRAWN	REVIEWED	DATE
AJM	MWD	GWM	6/20/01
CHECKED	REVISED	STRUCTURE FILE NUMBER	
JWB		7700156	

REMOVAL AT REAR ABUTMENT
BRIDGE NO. SUM 8-0087
S.R. 8 OVER EXCHANGE STREET

SUM-8-0.63

7/29

917/1088

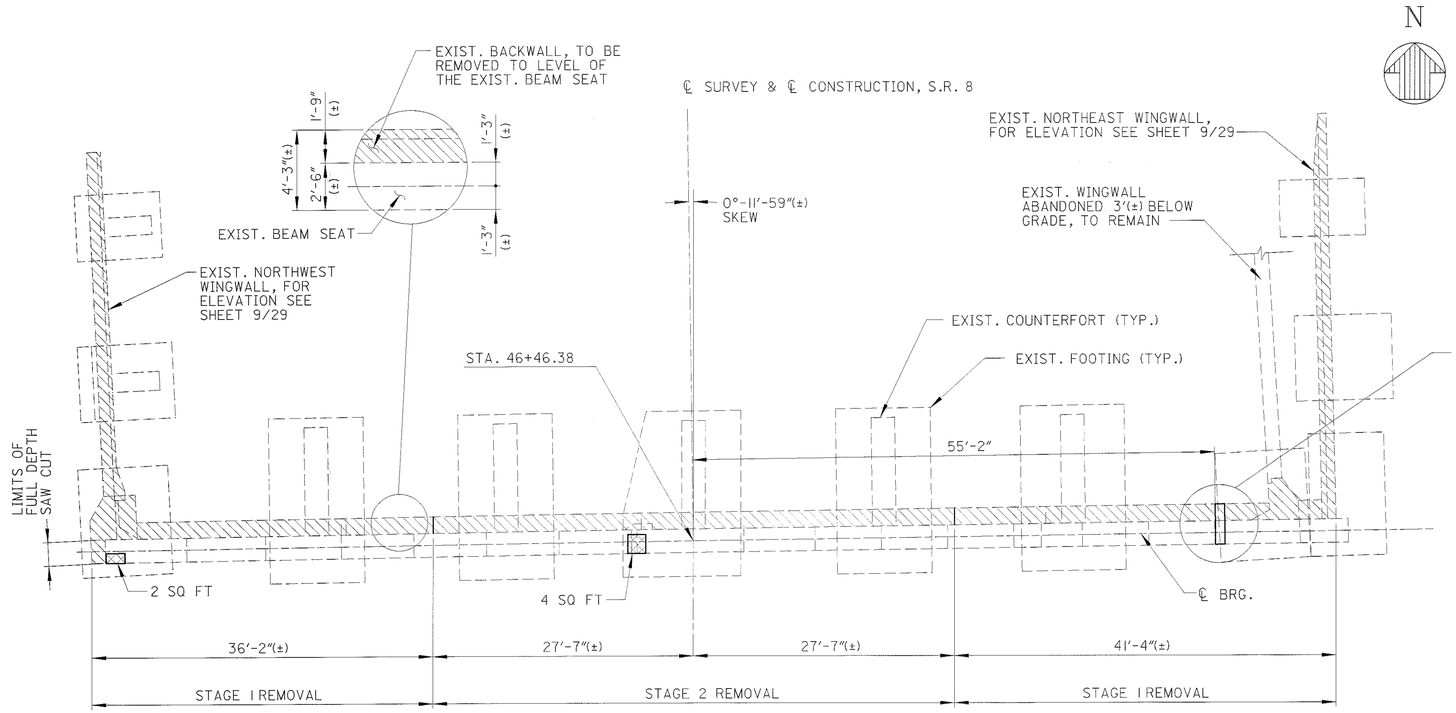

PLAN

SUMMARY OF REPAIR QUANTITIES			
		QUANTITY	
LOCATION	UNIT	MEASURED	ESTIMATED*
REAR ABUTMENT	SQ. FT.	208	312
FORWARD ABUTMENT	SQ. FT.	118	177

*SEE NOTE 1

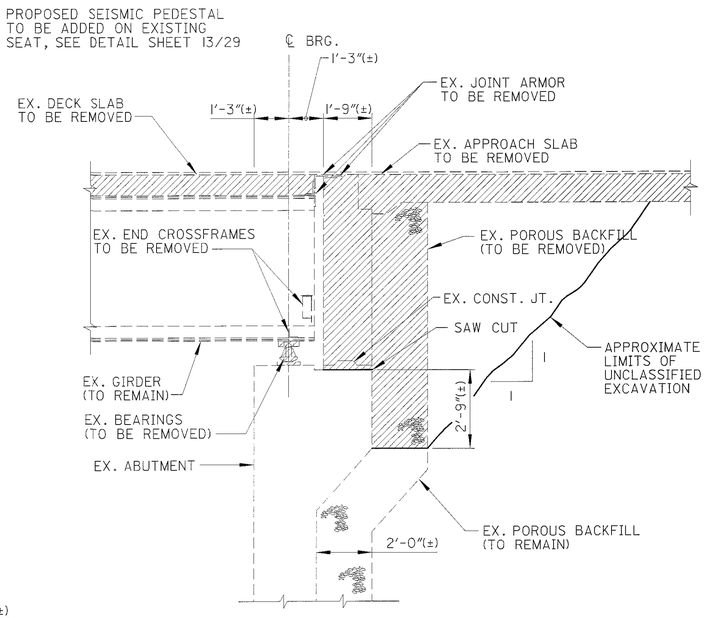

SECTION R-1 7,8

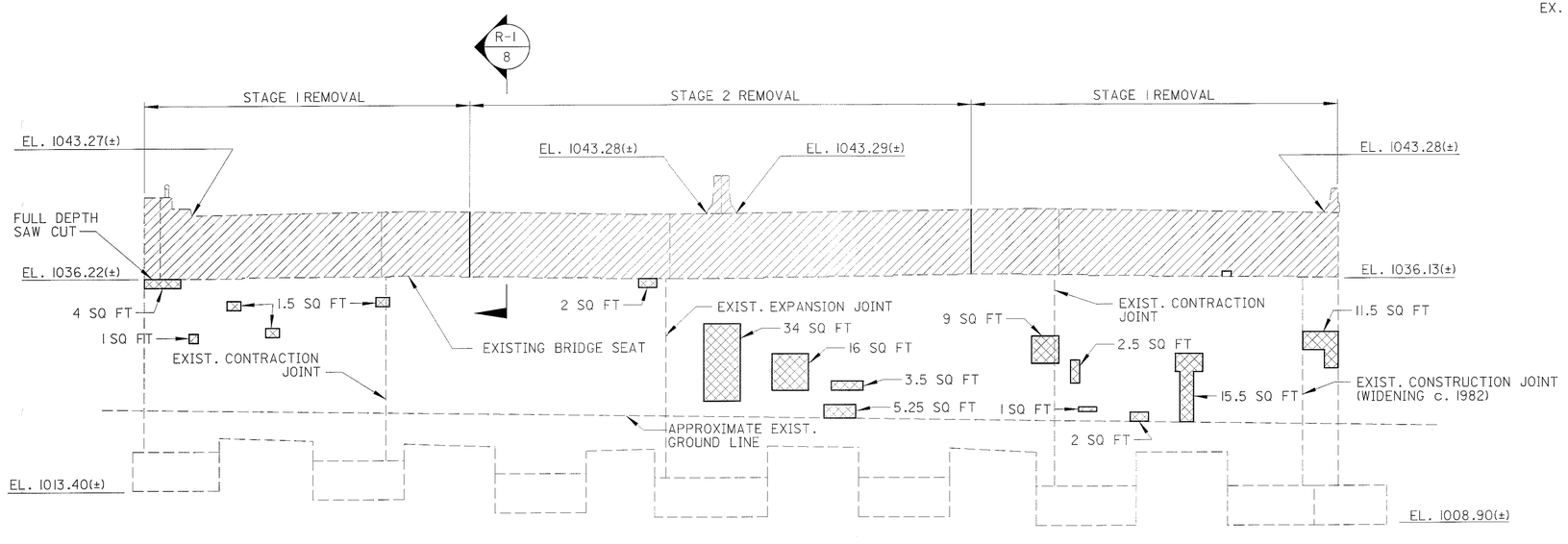

ELEVATION

LEGEND:

PORTIONS OF STRUCTURE REMOVED

ITEM 520 - PNEUMATICALLY PLACED MORTAR, AS PER PLAN

NOTES:

1. ESTIMATED QUANTITIES HAVE BEEN INCREASED BY 50% OVER MEASURED QUANTITIES TO ALLOW FOR ADDITIONAL DETERIORATION. EXACT DIMENSIONS AND LOCATIONS OF PATCHES SHALL BE DETERMINED BY THE ENGINEER IN THE FIELD FOR FINAL PAY QUANTITY. REFER TO SUMMARY OF REPAIR QUANTITIES TABLE THIS SHEET.
2. CONTRACTOR SHALL PROVIDE RUSTICATION GROOVES IN AREAS WHICH ARE TO BE REPAIRED. SIZE AND PATTERN OF GROOVES SHALL MATCH EXISTING.

DLZ
3300 ROCKEFELLER BLDG • 614 W SUPERIOR AVE • CLEVELAND, OH 44113

DESIGNED AJM | DRAWN MWD | CHECKED JWB | REVIEWED GWM | DATE 6/20/01 | REVISED | STRUCTURE FILE NUMBER 7700156

REMOVAL AT FORWARD ABUTMENT

BRIDGE NO. SUM-8-0087
S.R. 8 OVER EXCHANGE STREET

SUM-8-0.63

918/1088

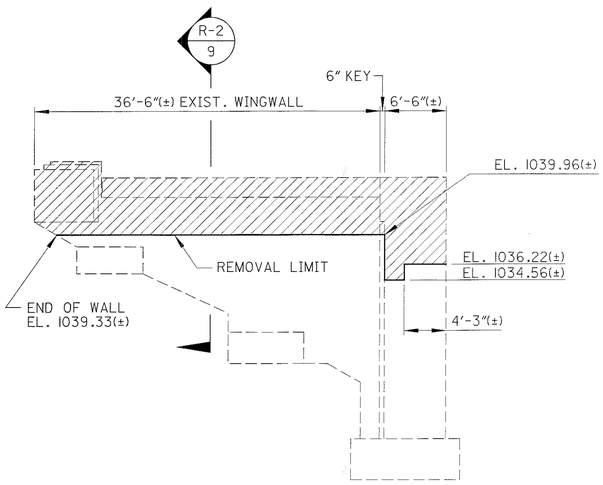

ELEVATION - NORTHWEST WINGWALL

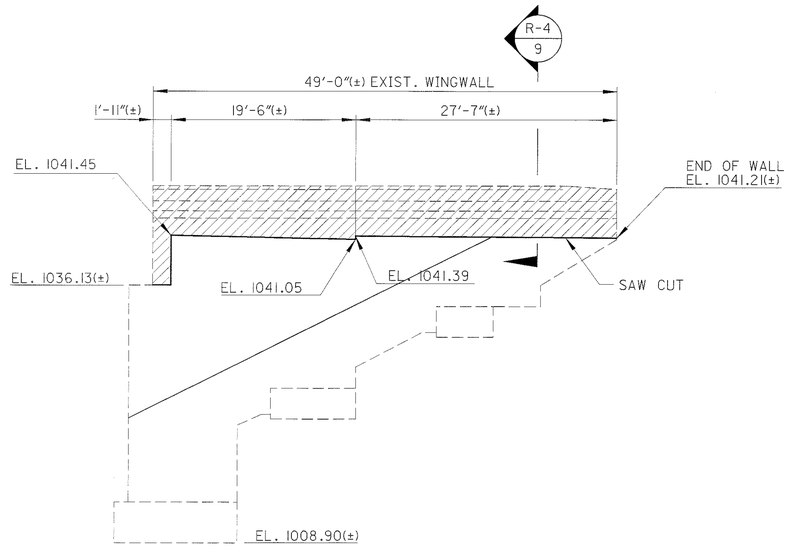

ELEVATION - NORTHEAST WINGWALL

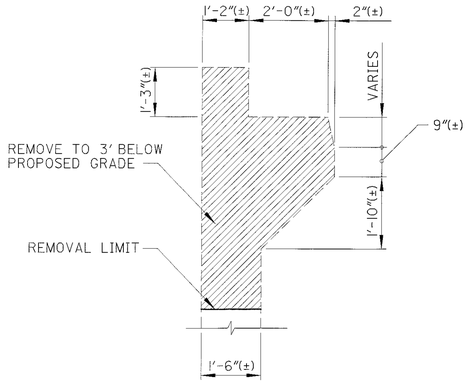

SECTION R-2 / 9

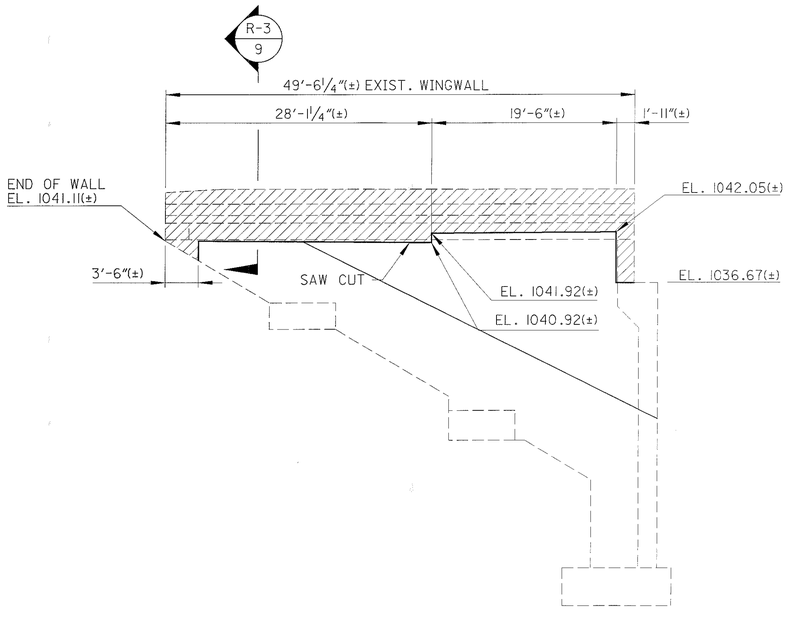

ELEVATION - SOUTHEAST WINGWALL

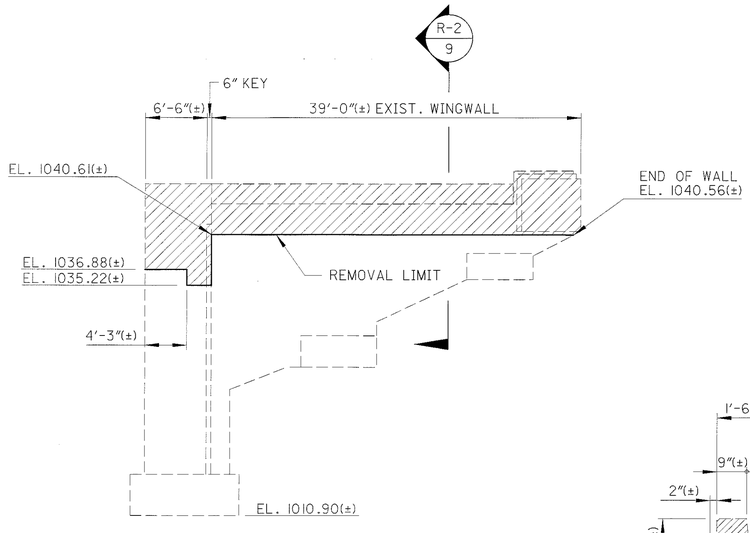

ELEVATION - SOUTHWEST WINGWALL

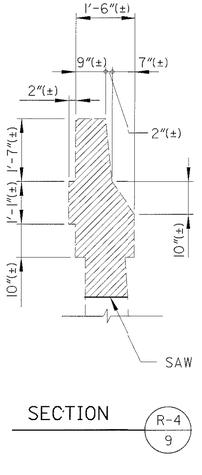

SECTION R-4 / 9

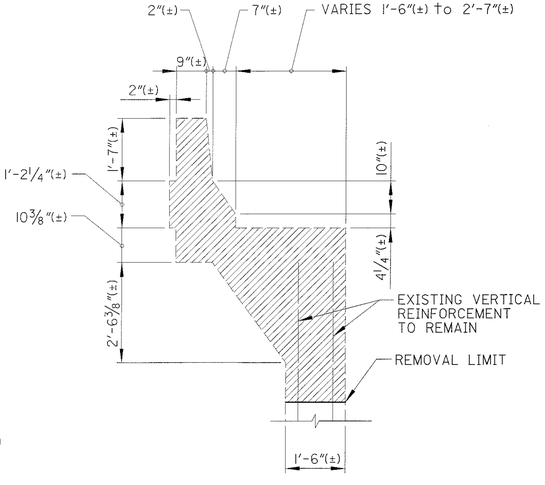

SECTION R-3 / 9

DLZ
1000 ROCKEFELLER BLDG • 614 W SUPERIOR AVE • CLEVELAND, OH 44113

DESIGNED	DRAWN	REVISED	CHECKED	REVIEWED	DATE
AJM	MWD		JWB	GWM	6/20/01

STRUCTURE FILE NUMBER 7700156

WINGWALL REMOVAL DETAILS
BRIDGE NO. SUM-8-0087
S.R. 8 OVER EXCHANGE STREET

SUM-8-0.63

9 / 29

919
1088

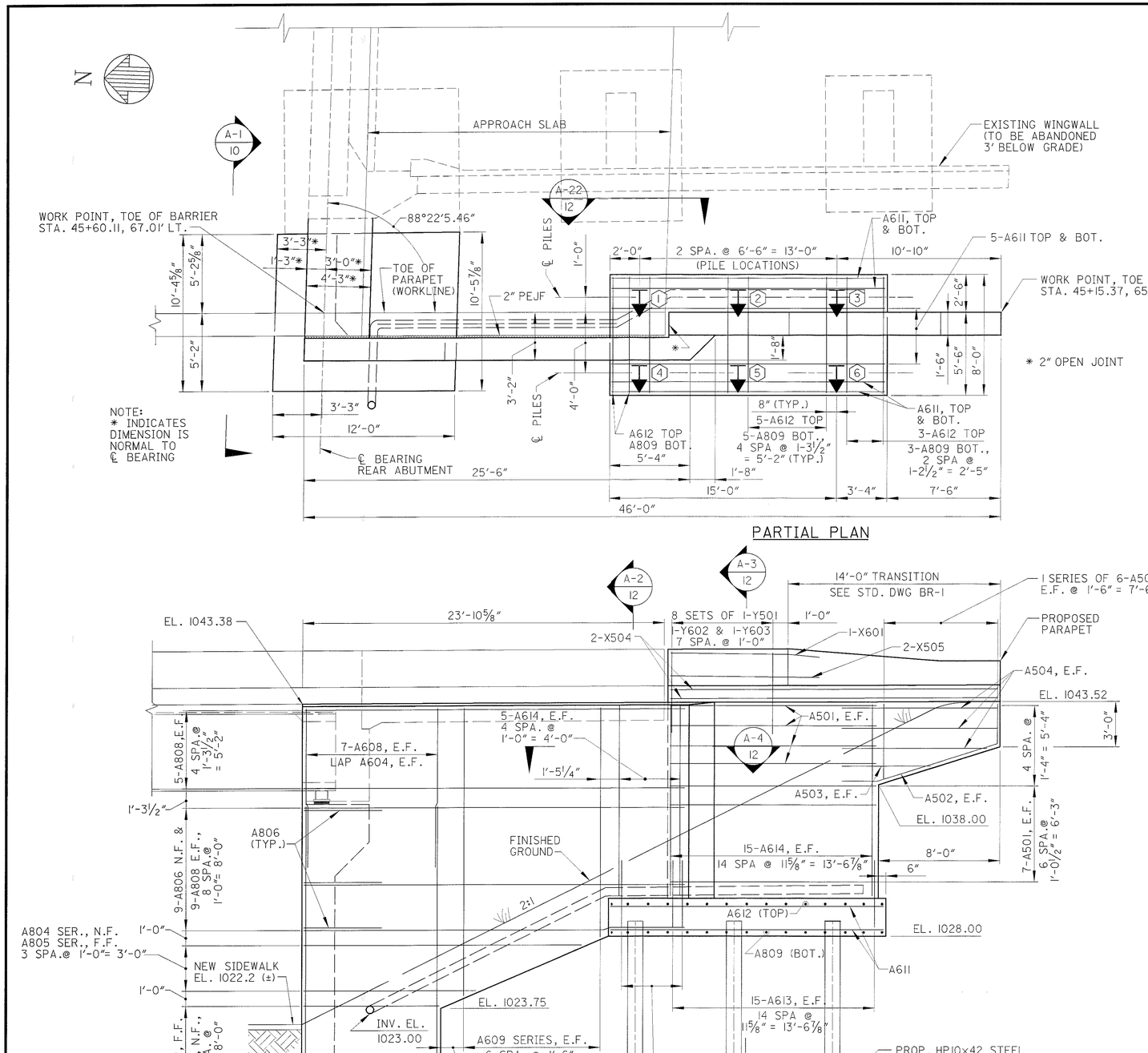

PARTIAL PLAN

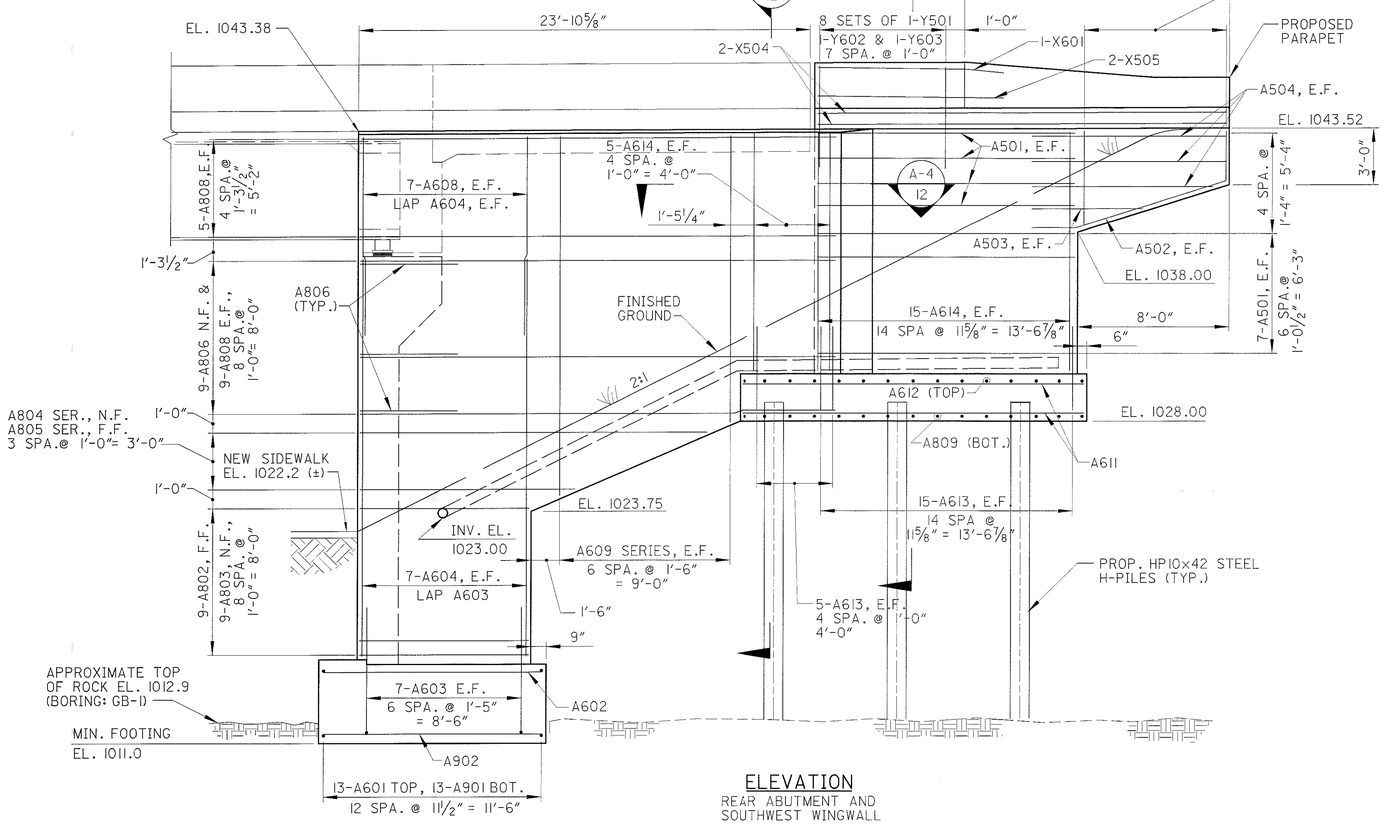

ELEVATION

REAR ABUTMENT AND
SOUTHWEST WINGWALL

NOTE:

PILE LOCATIONS ARE GIVEN ALONG A WORK LINE DEFINED AS A STRAIGHT LINE BETWEEN TWO WORK POINTS, THE INTERSECTION OF THE TOE OF BARRIER AT THE CENTERLINE OF ABUTMENT BEARING AND THE TOE OF BARRIER AT THE END OF THE PROPOSED WINGWALL. ALL DIMENSIONS IN THE PARTIAL PLAN AND ELEVATION VIEWS ARE GIVEN WITH RESPECT TO THE WORK LINE UNLESS NOTED OTHERWISE.

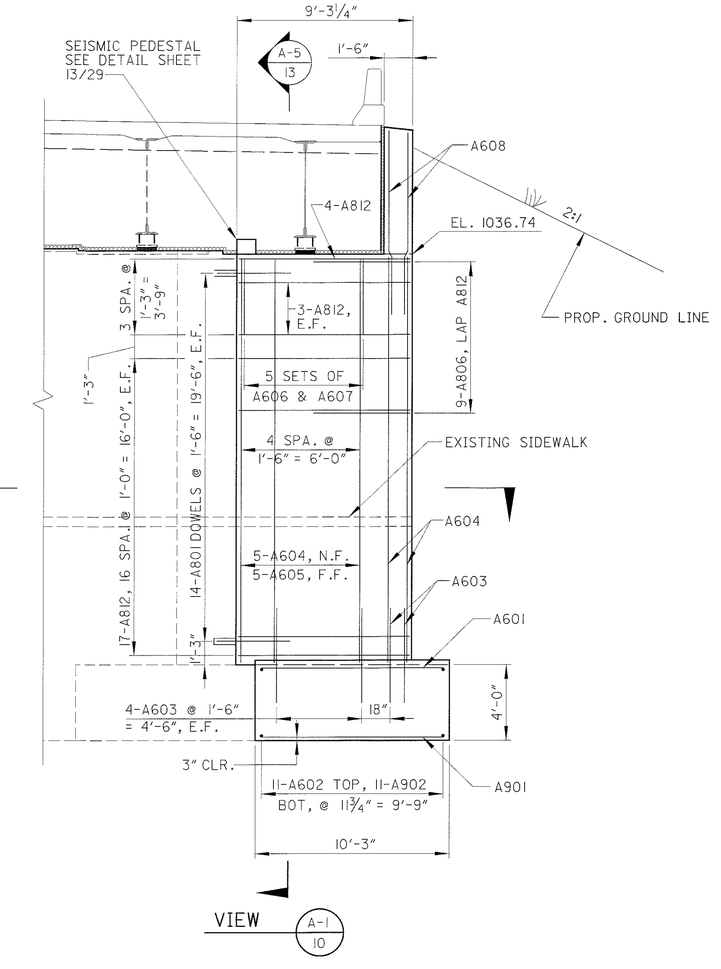

VIEW A-1/10

NOTES:

1. FOR PARAPET DETAILS, SEE STD. DWG. BR-1-98.
2. REINFORCEMENT LAP LENGTHS:
   #5 2'-0" #8 4'-0"
   #6 2'-11"

LEGEND

E.F.	EACH FACE
EL.	ELEVATION
EX.	EXISTING
F.F.	FAR FACE
MIN.	MINIMUM
N.F.	NEAR FACE
PEJF	PREFORMED EXPANSION JOINT FILLER
PROP.	PROPOSED
TYP.	TYPICAL
(#)	PILE NUMBER

DLZ
1000 ROCKEFELLER BLDG • 614 W. SUPERIOR AVE. • CLEVELAND, OH 44113

DESIGNED	DRAWN	REVIEWED	DATE
AJM	MWD	GWM	6/20/01
CHECKED	REVISED	STRUCTURE FILE NUMBER	
JWB		7700156	

REAR ABUTMENT
BRIDGE NO. SUM-8-0087
S.R. 8 OVER EXCHANGE STREET

SUM-8-0.63

10/29

920/1088

NOTE:

PILE LOCATIONS ARE GIVEN ALONG A WORK LINE DEFINED AS A STRAIGHT LINE BETWEEN TWO WORK POINTS, THE INTERSECTION OF THE TOE OF BARRIER AT THE CENTERLINE OF ABUTMENT BEARING AND THE TOE OF BARRIER AT THE END OF THE PROPOSED WINGWALL. ALL DIMENSIONS IN THE PARTIAL PLAN AND ELEVATION VIEWS ARE GIVEN WITH RESPECT TO THE WORK LINE UNLESS NOTED OTHERWISE.

LEGEND

E.F.	EACH FACE
EL.	ELEVATION
EX.	EXISTING
F.F.	FAR FACE
MIN.	MINIMUM
N.F.	NEAR FACE
PEJF	PREFORMED EXPANSION JOINT FILLER
PROP.	PROPOSED
TYP.	TYPICAL
(#)	PILE NUMBER

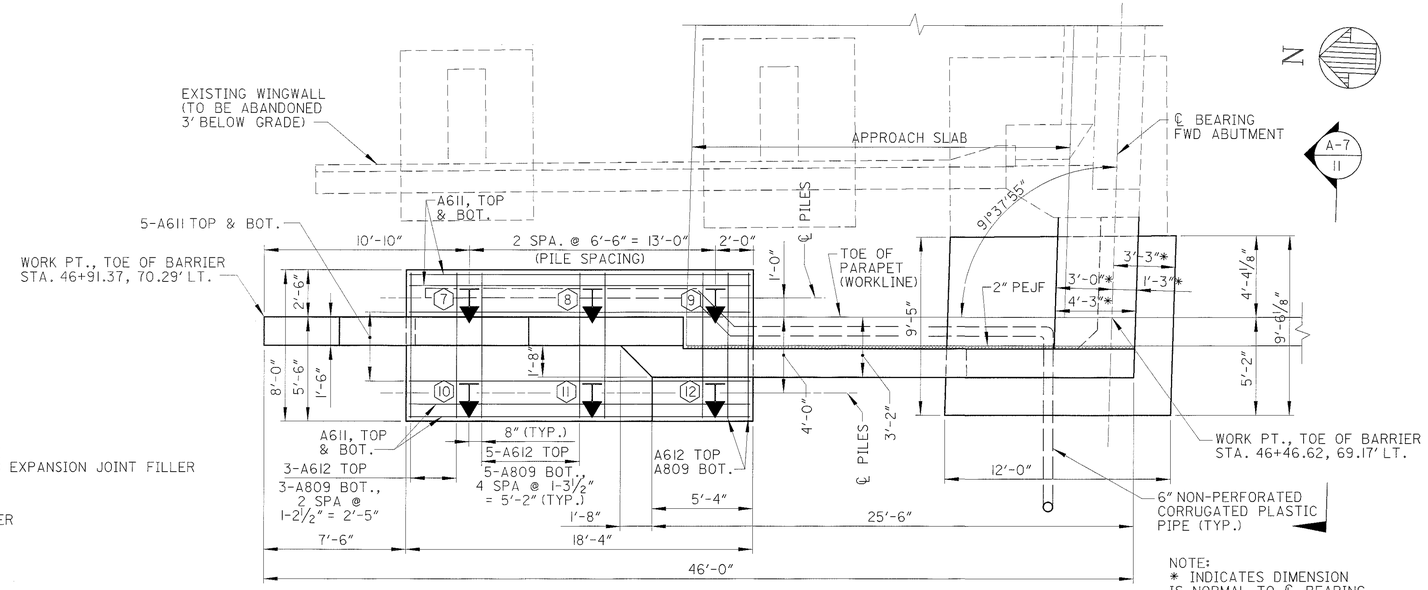

PARTIAL PLAN

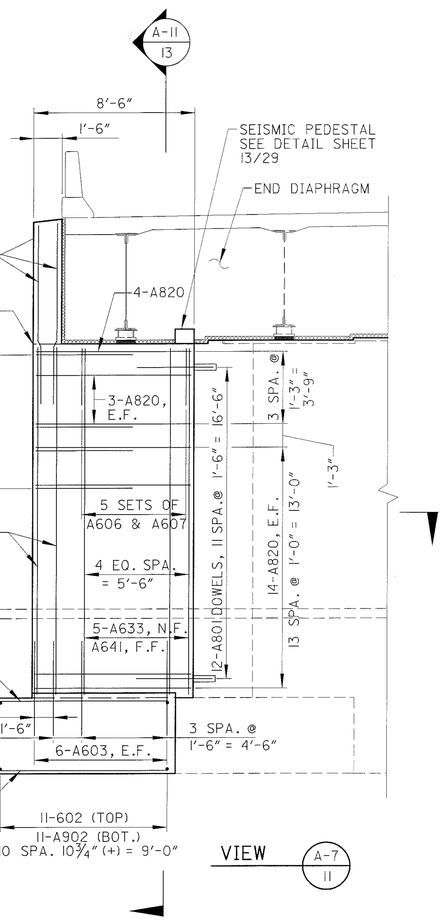

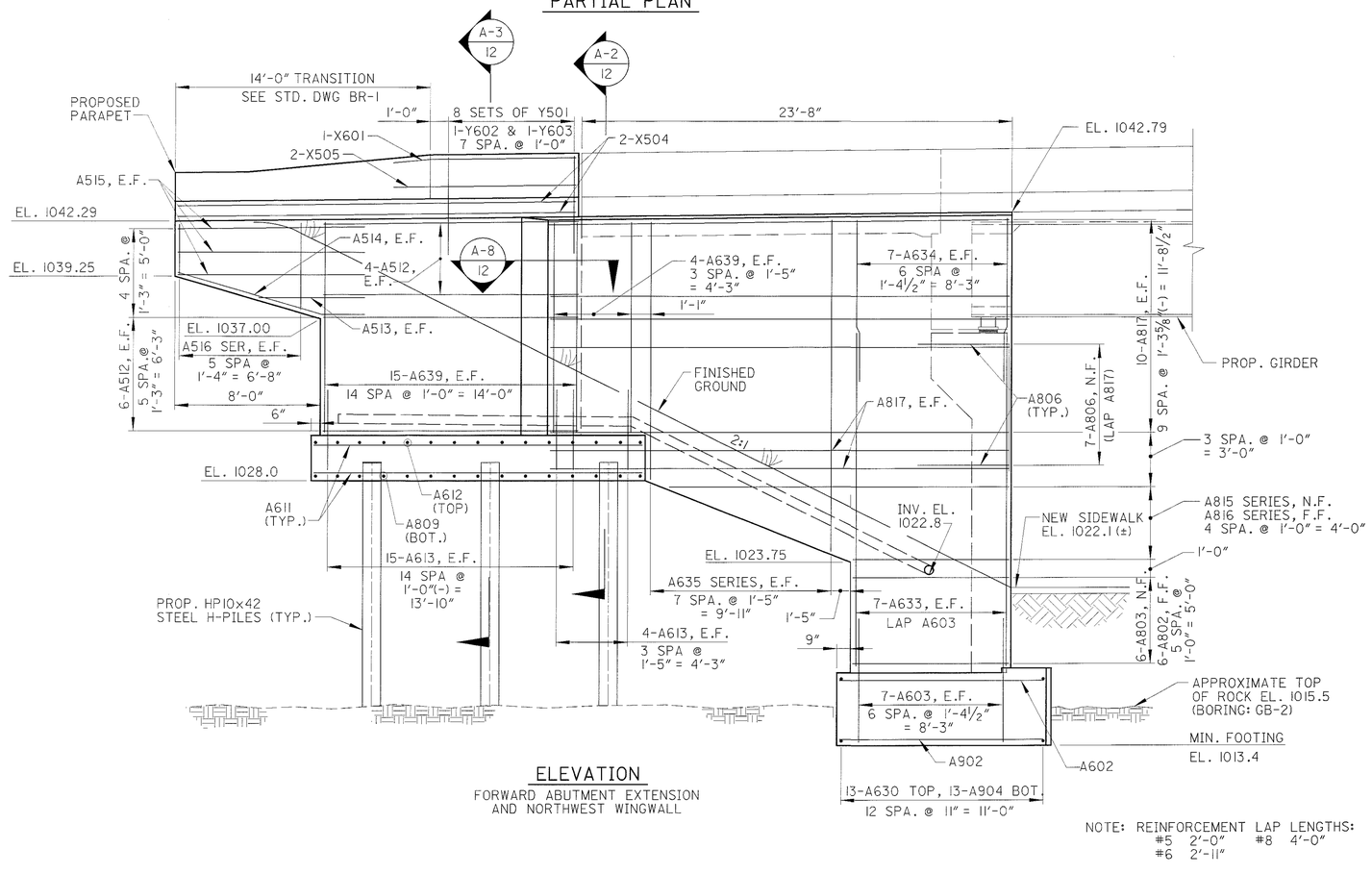

ELEVATION

FORWARD ABUTMENT EXTENSION AND NORTHWEST WINGWALL

NOTE: REINFORCEMENT LAP LENGTHS:
#5 2'-0" #8 4'-0"
#6 2'-11"

DLZ
3000 ROCKEFELLER BLDG • 614 W SUPERIOR AVE • CLEVELAND, OH 44113

DESIGNED	DRAWN	CHECKED	REVIEWED	DATE
AJM	MWD	JWB	GWM	6/20/01

REVISED

STRUCTURE FILE NUMBER 7700156

FORWARD ABUTMENT
BRIDGE NO. SUM-8-0087
S.R. 8 OVER EXCHANGE STREET

SUM-8-0.63

11 / 29

921 / 1088

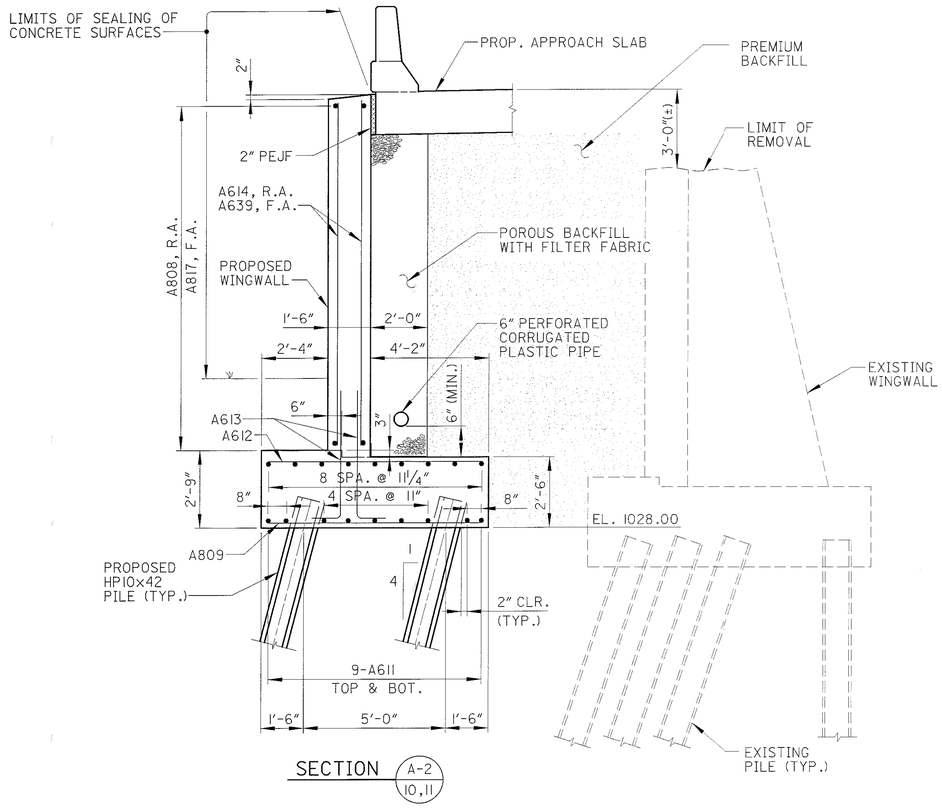

SECTION A-2 / 10,11

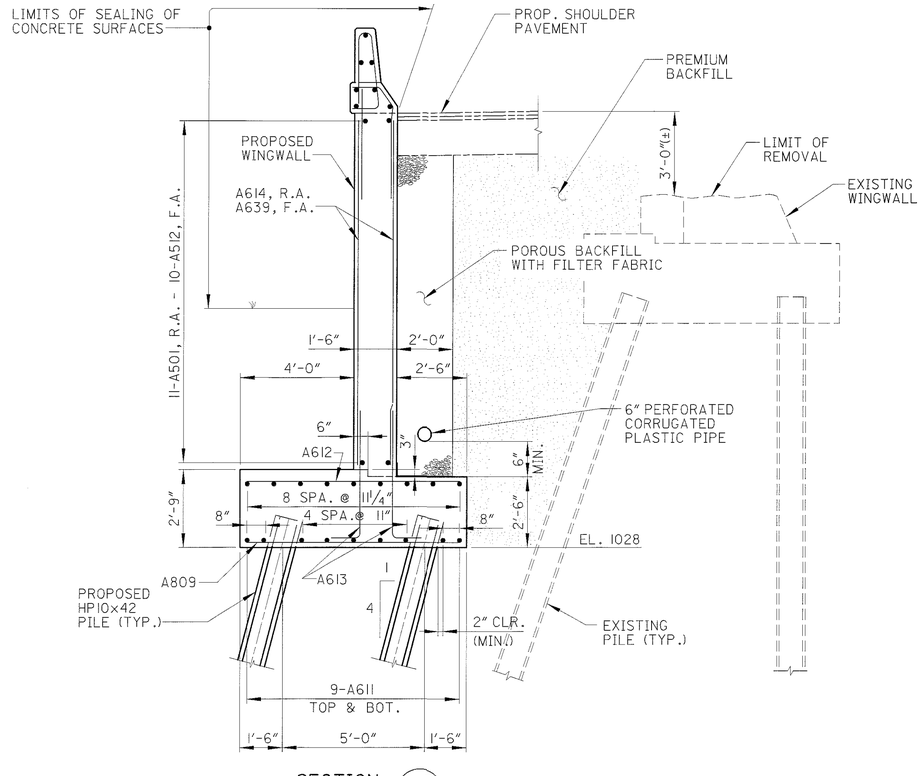

SECTION A-3 / 10,11

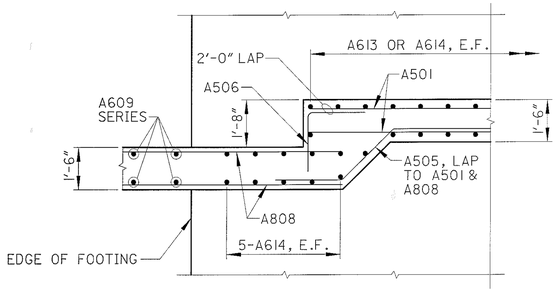

SECTION A-4 / 10

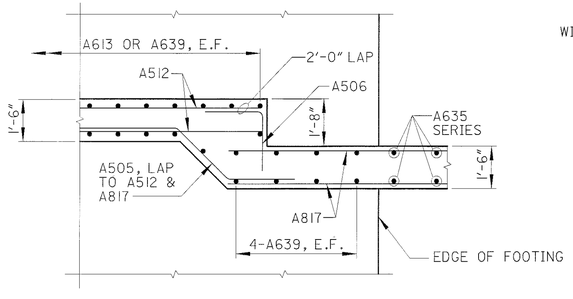

SECTION A-8 / 11

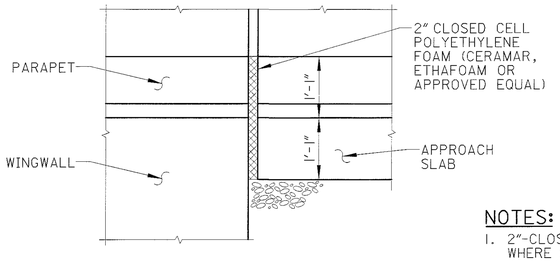

SECTION A-22 / 10

NOTES:

1. 2"-CLOSED CELL FOAM SHALL BE INSTALLED WHERE SHOWN ON THE PLANS AND IN ACCORDANCE WITH MANUFACTURER'S SPECIFICATIONS. CLOSED CELL FOAM SHALL BE INSTALLED IN THE 2"-OPEN JOINT BETWEEN THE COMPLETED APPROACH SLAB PARAPET AND WINGWALL PARAPET. THE FOAM SHALL BE CUT TO FIT THE PROFILE OF THE PARAPET. ALL COSTS ASSOCIATED WITH FURNISHING AND INSTALLING THE 2"-CLOSED CELL POLYETHYLENE FOAM SHALL BE INCLUDED FOR PAYMENT WITH ITEM 842, CLASS C CONCRETE, ABUTMENT NOT INCLUDING FOOTING, AS PER PLAN.
2. FILTER FABRIC SHALL BE TURNED UP 6" AT BACK OF ABUTMENT OR WINGWALL.

LEGEND

E.F.	EACH FACE
EL.	ELEVATION
EX.	EXISTING
MIN.	MINIMUM
PEJF	PREFORMED EXPANSION JOINT FILLER
PROP.	PROPOSED
TYP.	TYPICAL

DLZ
8000 ROCKEFELLER BLDG • 614 W. SUPERIOR AVE • CLEVELAND, OH 44113

DESIGNED	DRAWN	REVIEWED	DATE
AJM	MWD	GWM	6/20/01
CHECKED	REVISED	STRUCTURE FILE NUMBER	
JWB		7700156	

ABUTMENT DETAILS
BRIDGE NO. SUM-8-0087
S.R. 8 OVER EXCHANGE STREET

SUM-8-0.63

12 / 29

922
1088

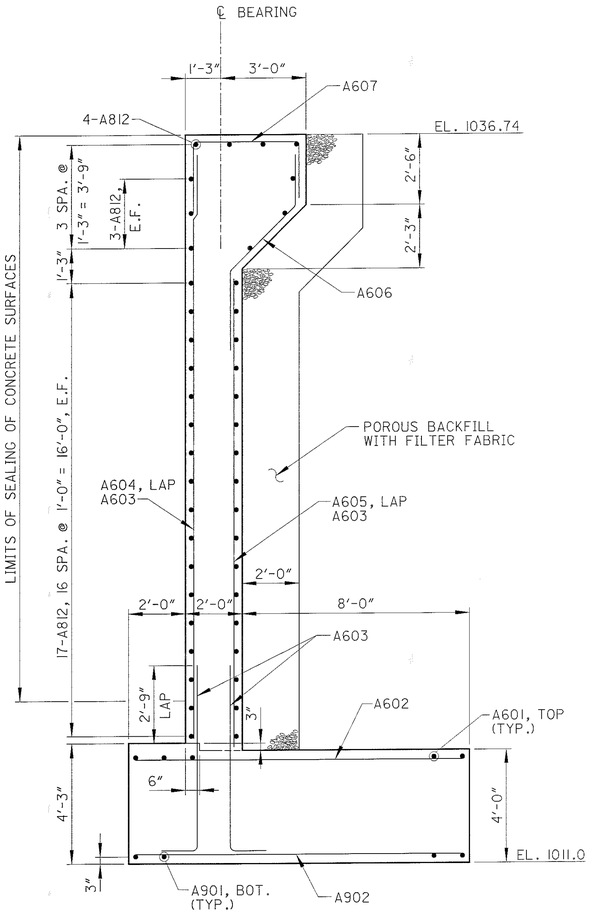

SECTION A-5 / 10

REAR ABUTMENT EXTENSION SECTION

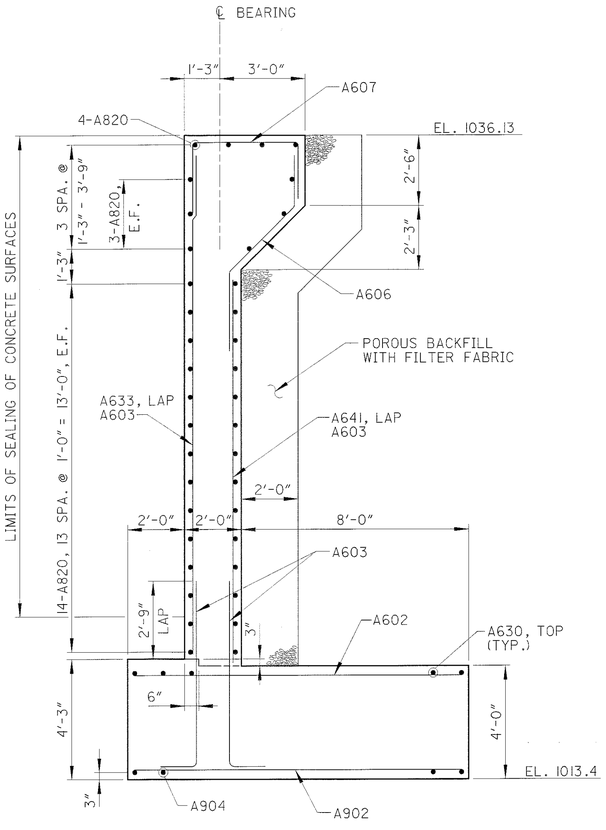

SECTION A-11 / 11

FWD. ABUTMENT EXTENSION SECTION

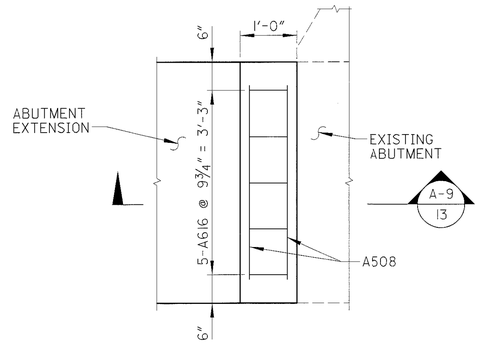

SEISMIC PEDESTAL DETAILS

TYPICAL @ ABUTMENT EXTENSIONS

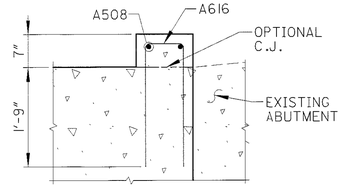

SECTION A-9 / 13

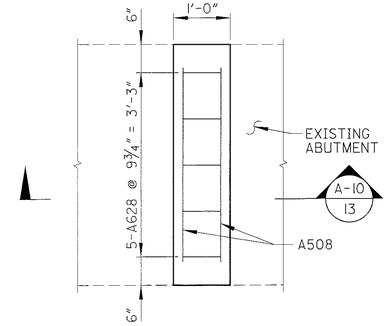

SEISMIC PEDESTAL DETAILS

TYPICAL, EAST SIDE OF EXISTING ABUTMENTS

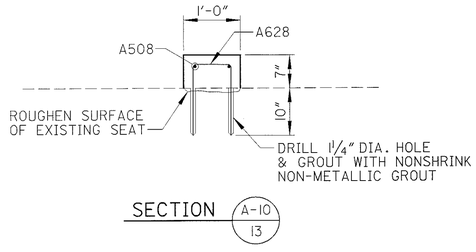

SECTION A-10 / 13

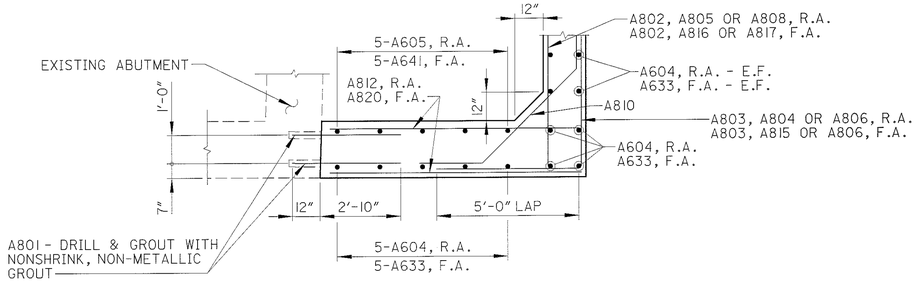

SECTION A-6 / 10,11

OPPOSITE HAND AT FORWARD ABUT.

NOTES:

1. DOWEL HOLES SHALL BE DRILLED AND GROUTED WITH NON-SHRINK, NON-METALLIC GROUT IN ACCORDANCE WITH ITEM 510. COSTS SHALL BE INCLUDED WITH ITEM 842 - CLASS C CONCRETE, ABUTMENT NOT INCLUDING FOOTING, AS PER PLAN, FOR PAYMENT (TYP.)
2. FILTER FABRIC SHALL BE TURNED UP 6" AT BACK OF ABUTMENT OR WINGWALL.

LEGEND

E.F.	EACH FACE
EL.	ELEVATION
EX.	EXISTING
MIN.	MINIMUM
PEJF	PREFORMED EXPANSION JOINT FILLER
PROP.	PROPOSED
TYP.	TYPICAL

DLZ
1000 ROCKEFELLER BLDG • 614 W SUPERIOR AVE • CLEVELAND, OH 44113

DESIGNED AJM | DRAWN MWD | CHECKED JWB | REVIEWED GWM | DATE 6/20/01 | REVISED | STRUCTURE FILE NUMBER 7700156

ABUTMENT DETAILS
BRIDGE NO. SUM-8-0087
S.R. 8 OVER EXCHANGE STREET

SUM-8-0.63

13 / 29

923 / 1088

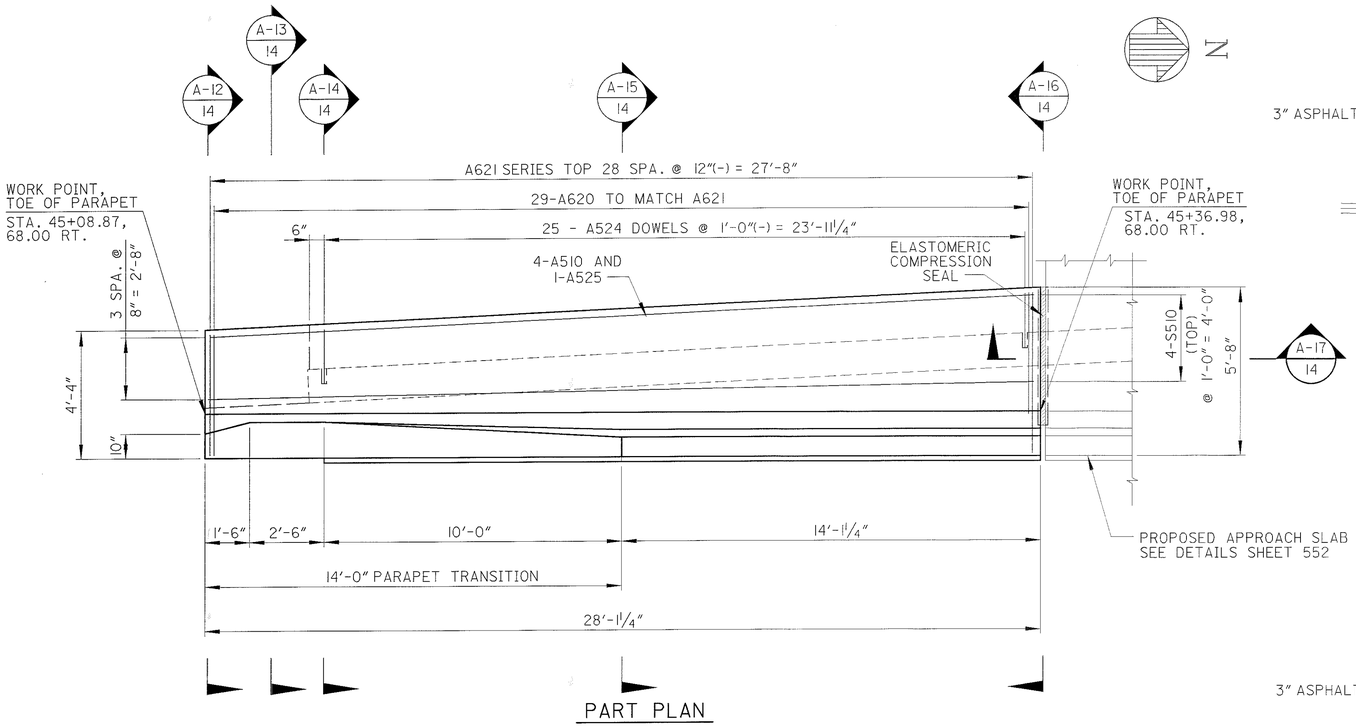

PART PLAN

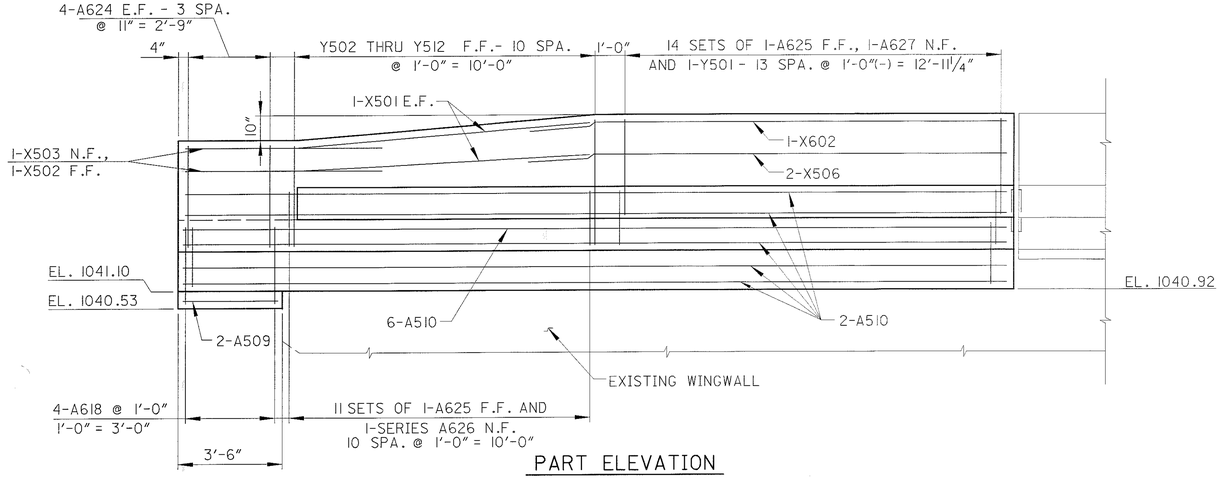

PART ELEVATION

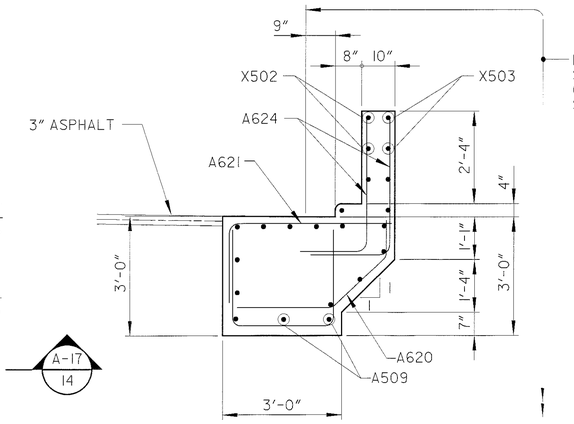

SECTION A-12 14

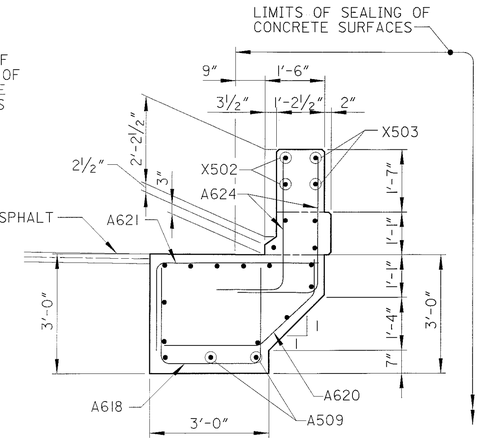

SECTION A-13 14

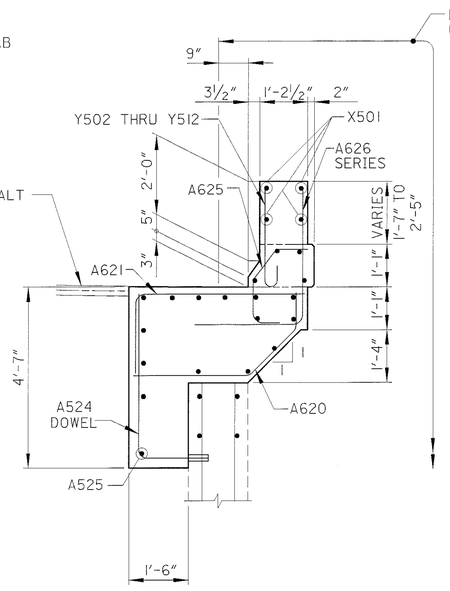

SECTION A-14 14

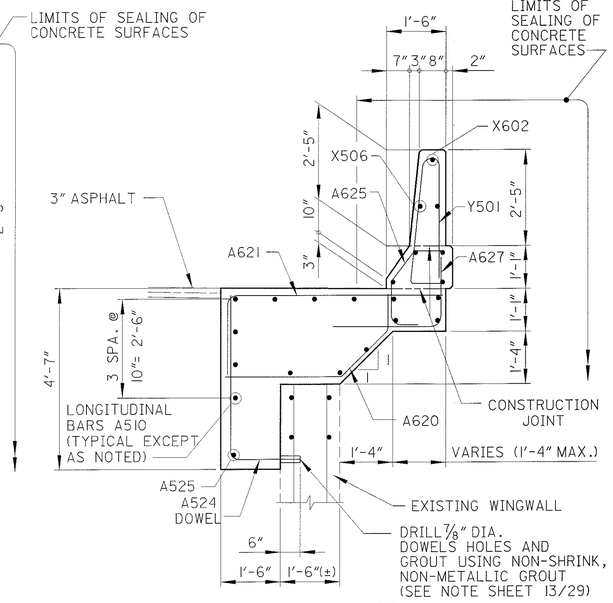

SECTION A-15 14

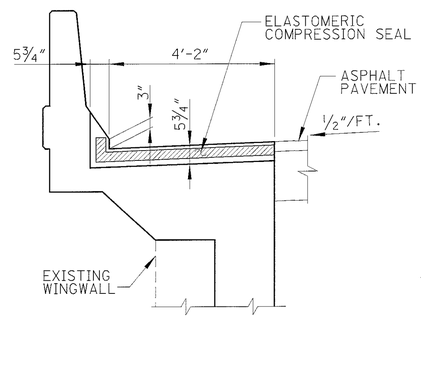

SECTION A-16 14

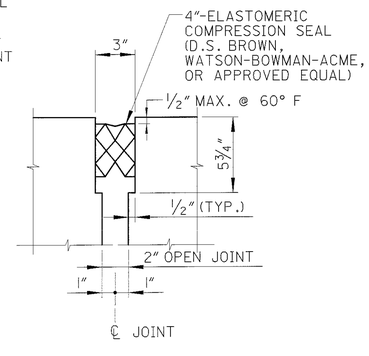

SECTION A-17 14

DLZ
3000 ROCKEFELLER BLDG • 614 W SUPERIOR AVE • CLEVELAND, OH 44113

DESIGNED	DRAWN	REVIEWED	DATE
AJM	MWD	GWM	6/20/01
CHECKED	REVISED	STRUCTURE FILE NUMBER	
JWB			

SOUTHEAST WINGWALL
BR. NO. SUM-8-0087
S.R. 8 OVER EXCHANGE STREET

SUM-8-0.63

14/29

924/1088

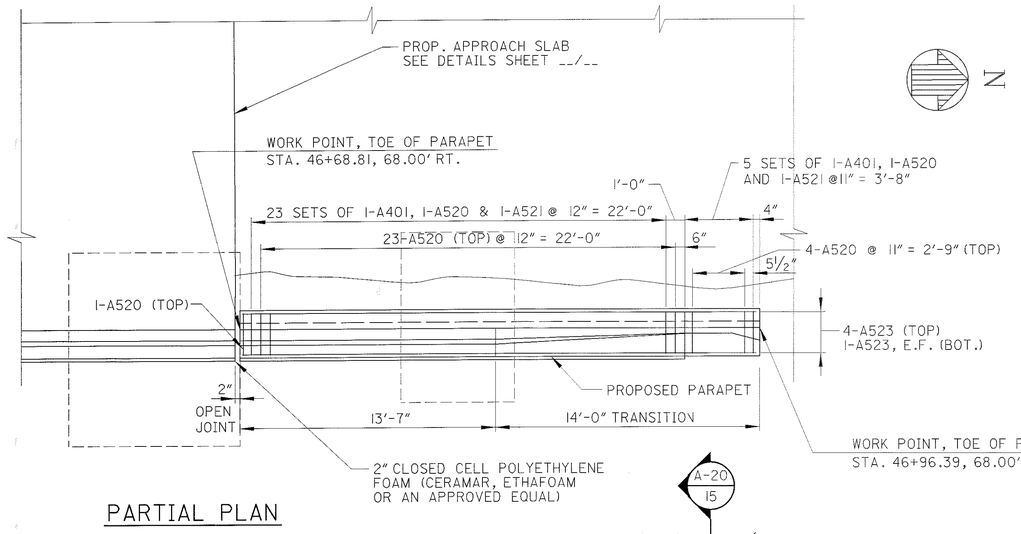

PARTIAL PLAN

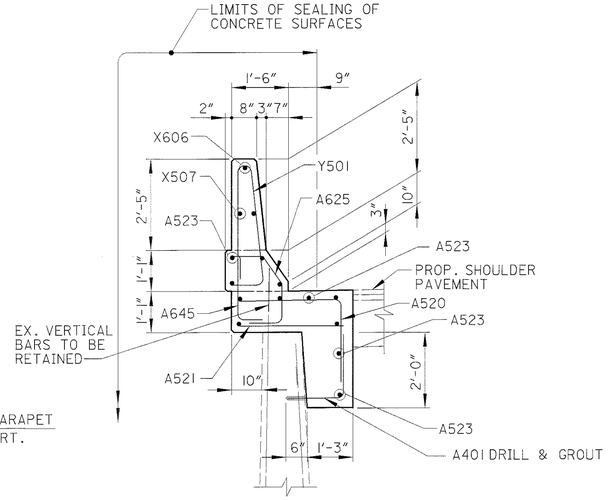

SECTION A-18 / 15

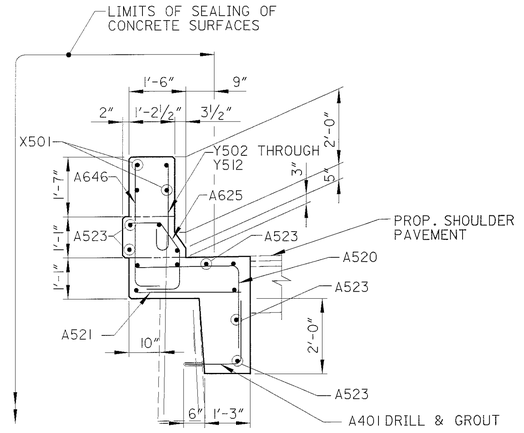

SECTION A-19 / 15

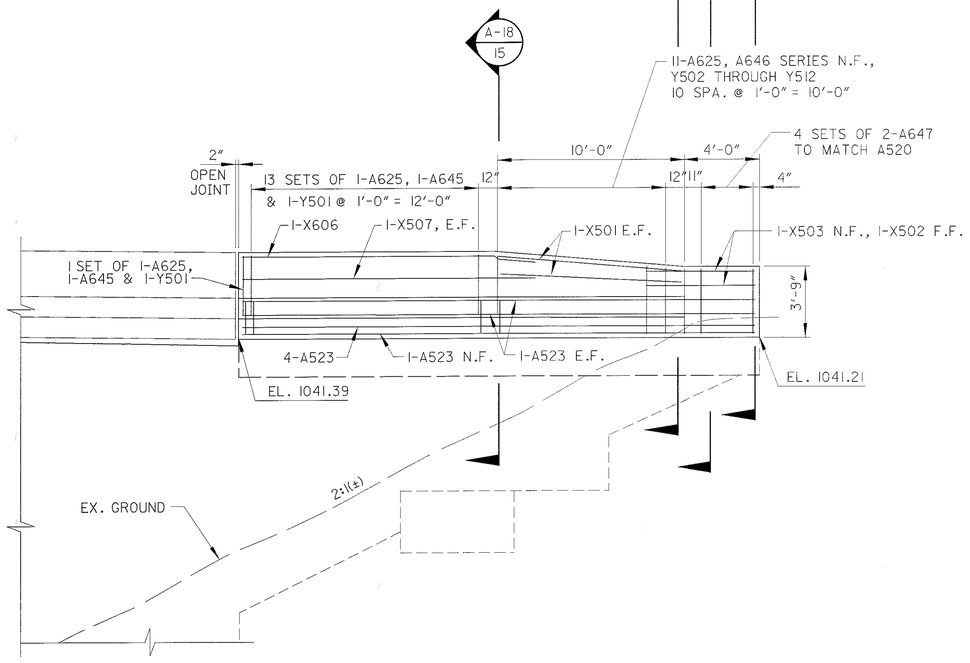

PART ELEVATION

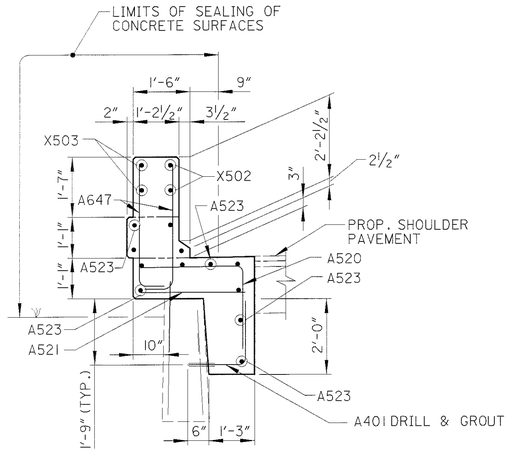

SECTION A-20 / 15

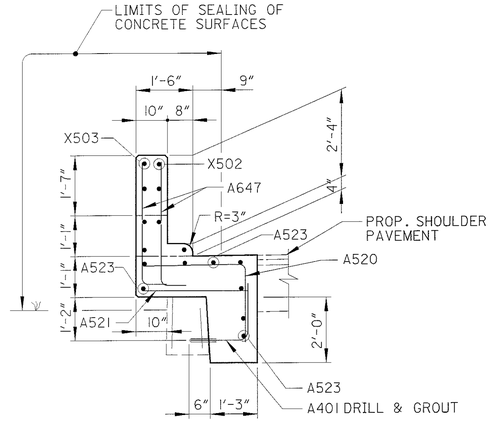

SECTION A-21 / 15

NOTES:

DOWEL HOLES SHALL BE DRILLED AND GROUTED WITH NON-SHRINK, NON-METALLIC GROUT IN ACCORDANCE WITH ITEM 510. COSTS SHALL BE INCLUDED WITH ITEM 842, CLASS C CONCRETE, ABUTMENT NOT INCLUDING FOOTING, AS PER PLAN, FOR PAYMENT (TYP.)

DLZ
1100 ROCKEFELLER BLDG • 614 W SUPERIOR AVE • CLEVELAND, OH 44113

DESIGNED	DRAWN	REVIEWED	DATE
AJM	MWD	GWM	6/20/01
CHECKED	REVISED	STRUCTURE FILE NUMBER	
JWB		7700156	

NORTHEAST WINGWALL
BRIDGE NO. SUM-8-0087
S.R. 8 OVER EXCHANGE STREET

SUM-8-0.63

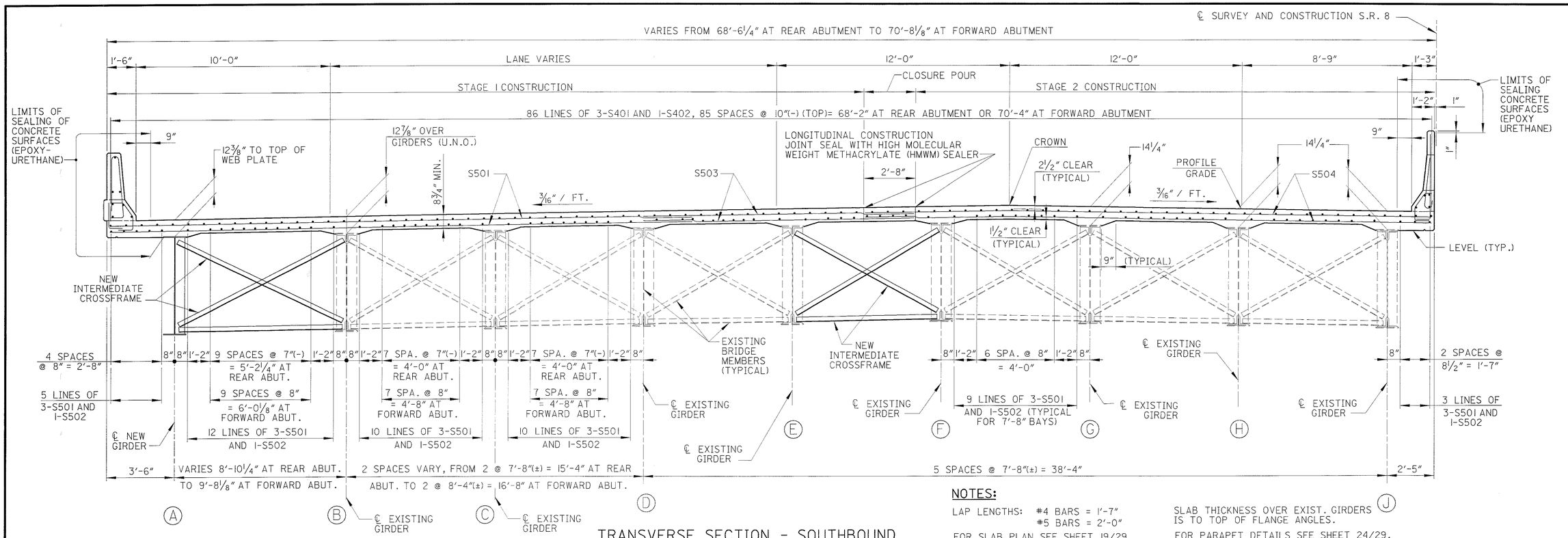

TRANSVERSE SECTION - SOUTHBOUND

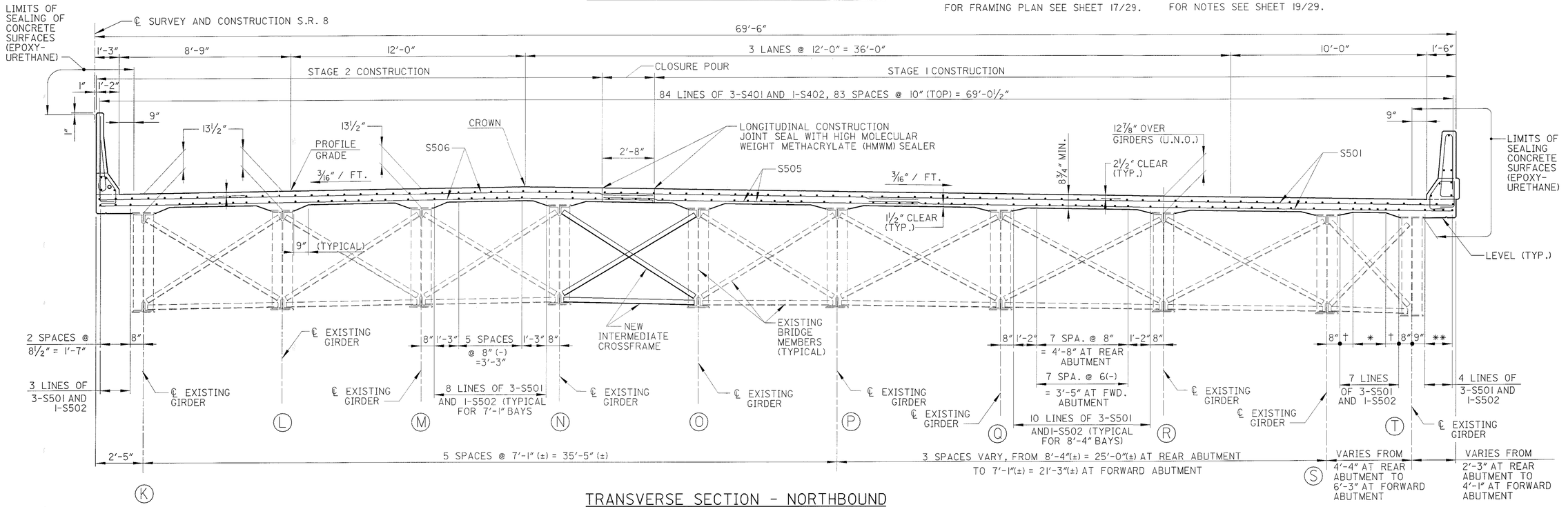

TRANSVERSE SECTION - NORTHBOUND

† 8" REAR ABUT. 1-1 1/2" FORWARD ABUT.

* 4 SPACES @ 5" = 1'-8" AT REAR ABUT. 4 SPACES @ 8" = 2'-8" AT FORWARD ABUT.

** 3 SPACES @ 5" = 1'-3" AT REAR ABUT. 3 SPACES @ 12" = 3'-0" AT FORWARD ABUT.

NOTES:

LAP LENGTHS: #4 BARS = 1'-7"
#5 BARS = 2'-0"

FOR SLAB PLAN SEE SHEET 19/29.

FOR FRAMING PLAN SEE SHEET 17/29.

SLAB THICKNESS OVER EXIST. GIRDERS IS TO TOP OF FLANGE ANGLES.

FOR PARAPET DETAILS SEE SHEET 24/29.

FOR NOTES SEE SHEET 19/29.

DLZ
800 ROCKEFELLER BLDG • 614 W SUPERIOR AVE • CLEVELAND, OH 44113

DESIGNED AJM | DRAWN RCK | CHECKED JWB | REVIEWED GWM | DATE 6/20/01 | REVISED | STRUCTURE FILE NUMBER 7700156

TRANSVERSE SECTION
BRIDGE NO. SUM-8-0087
S.R. 8 OVER EXCHANGE STREET

SUM-8-0.63

16/29

926/1088

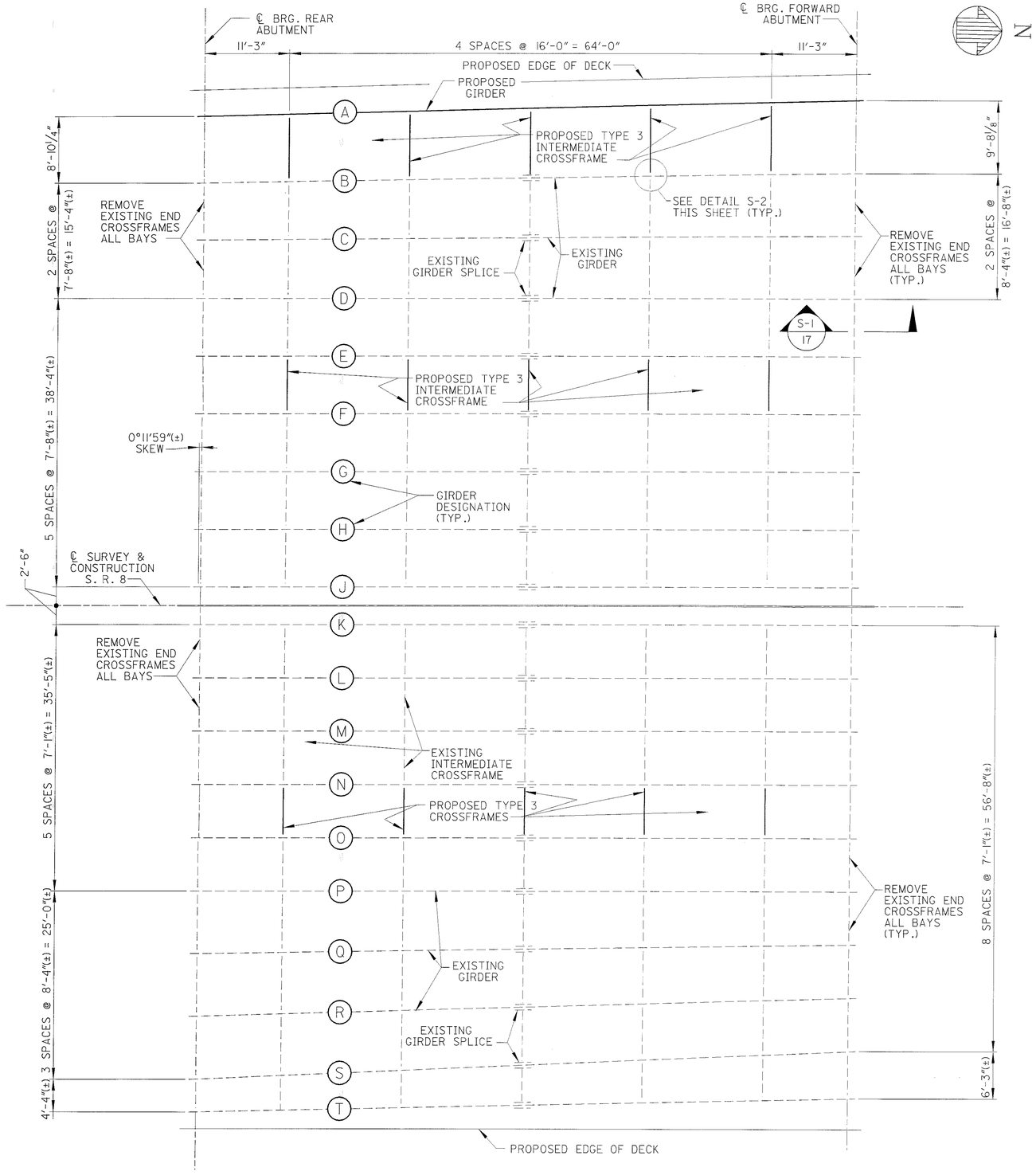

FRAMING PLAN

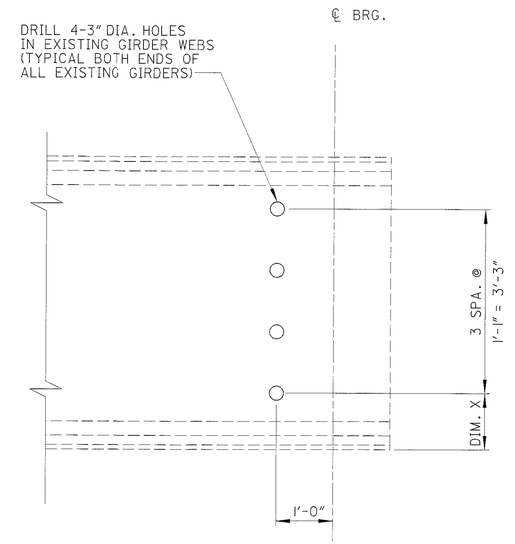

SECTION S-1 / 17

GIRDER	DIM. X
B	1'-2¾"
C	1'-2¾"
D	1'-2¾"
E	1'-2¾"
F	1'-2¾"
G	1'-4⅛"
H	1'-4⅛"
J	1-4⅛"
K	1'-3⅜"
L	1'-3⅜"
M	1'-3⅜"
N	1'-2¾"
O	1'-2¾"
P	1'-2¾"
Q	1'-2¾"
R	1'-2¾"
S	1'-2¾"
T	1'-2¾"

* DIM. X TYP. FOR REAR AND FORWARD ABUTMENTS

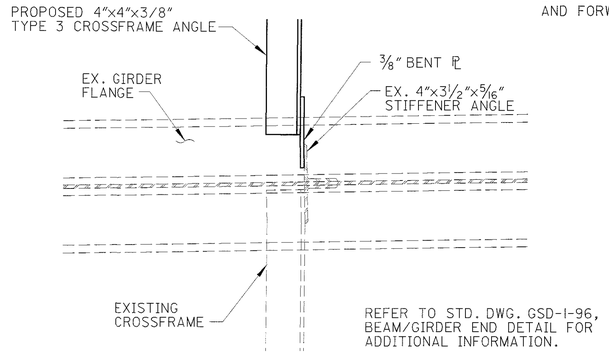

SECTION S-2 / 17
SECTION THROUGH GIRDER AT CROSSFRAMES

NOTES:

1. FOR TYPE 3 CROSSFRAME DETAILS, SEE STD. DWG. GSD-1-96
2. FOR TRANSVERSE SECTION SEE SHEET 16/29.
3. FOR GIRDER DETAILS SEE SHEET 18/29.
4. CROSSFRAME LOCATIONS FOR PROPOSED GIRDER ARE BASED ON PLAN DATA. THE CONTRACTOR SHALL FIELD VERIFY SPACING OF EXISTING STIFFENER ANGLES.
5. THE COST OF DRILLING HOLES IN THE WEBS OF EXISTING GIRDERS IS INCLUDED IN ITEM 202 - PORTIONS OF STRUCTURE REMOVED, OVER 20' SPAN, AS PER PLAN.

DLZ
2000 ROCKEFELLER BLDG • 614 W SUPERIOR AVE • CLEVELAND, OH 44113

DESIGNED AJM | DRAWN RCK | CHECKED JWB | REVIEWED GWM | DATE 6/20/01 | STRUCTURE FILE NUMBER 7700156

FRAMING PLAN
BRIDGE NO. SUM-8-0087
S.R. 8 OVER EXCHANGE STREET

SUM-8-0.63

17/29

927/1088

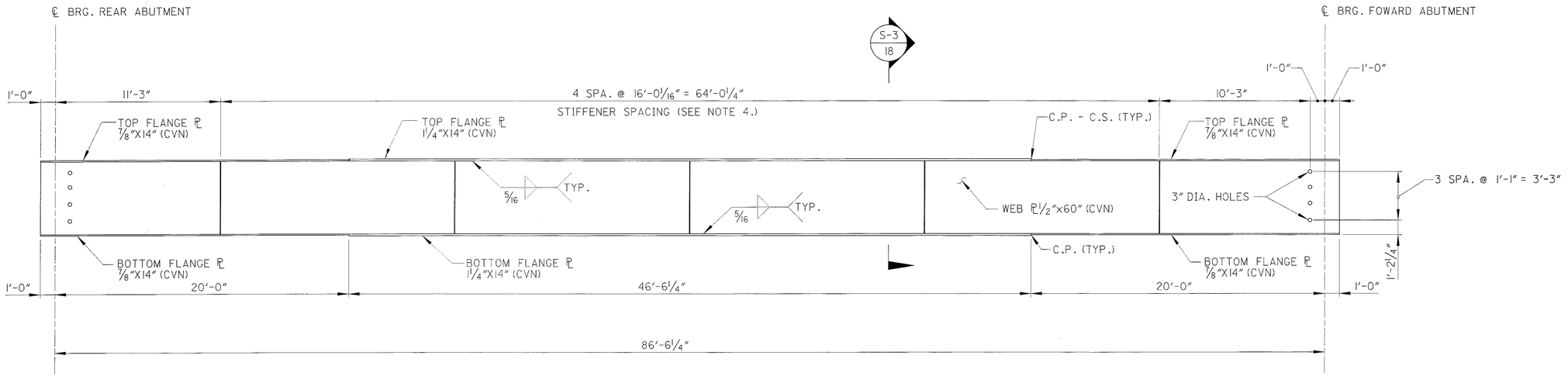

GIRDER A ELEVATION

NOTES:

1. CVN: WHERE A SHAPE OR PLATE IS DESIGNATED (CVN) THE MATERIAL SHALL MEET SPECIFIED MINIMUM NOTCH TOUGHNESS REQUIREMENTS AS SPECIFIED IN 711.01.
2. FOR FRAMING PLAN SEE SHEET 17/29.
3. FOR ADDITIONAL DETAILS FOR STIFFENERS SEE STD. DWG. GSD-1-96
4. ACTUAL STIFFENER LOCATIONS SHALL BE FIELD VERIFIED BY CONTRACTOR FOR PROPER FIT-UP OF CROSSFRAMES TO EXISTING GIRDER (SEE FRAMING PLAN SHEET 17/29).

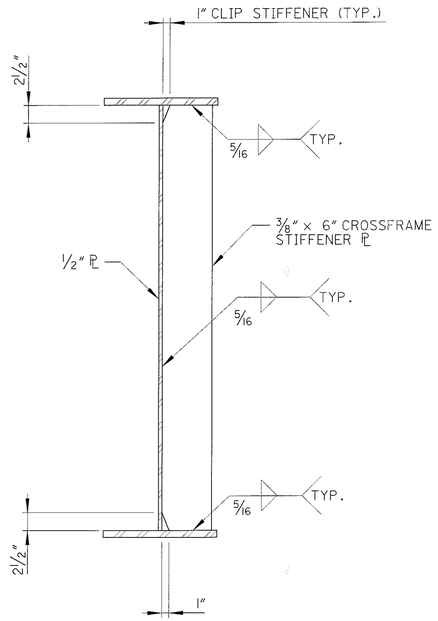

SECTION S-3 / 18

DEFLECTION AND CAMBER				
GIRDER	CAMBER DESCRIPTION	LOCATION		
		1/4	1/2	3/4
A	DEFLECTION DUE TO WEIGHT OF STEEL	3/16	1/4	3/16
	DEFLECTION DUE TO REMAINING DEAD LOAD	7/8	1 3/16	7/8
	REQUIRED SHOP CAMBER	1 1/16	1 7/16	1 1/16

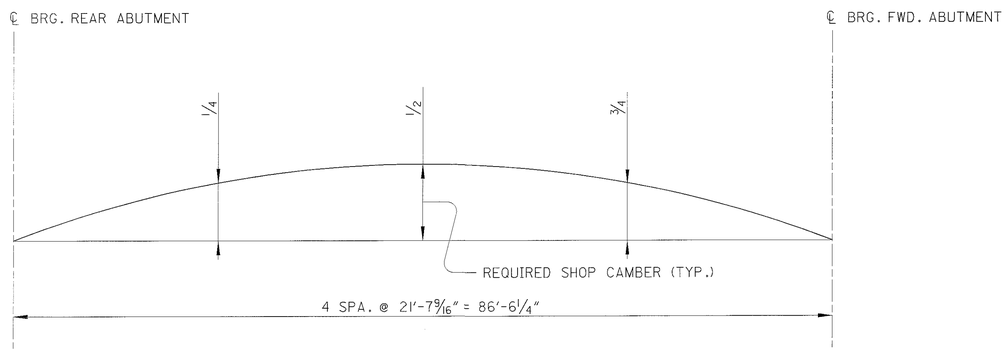

CAMBER DIAGRAM

DLZ
1000 ROCKEFELLER BLDG • 614 W SUPERIOR AVE • CLEVELAND, OH 44113

DESIGNED	DRAWN	REVIEWED	DATE
AJM	MWD	GWM	6/20/01
CHECKED	REVISED	STRUCTURE FILE NUMBER	
JWB		7700156	

GIRDER DETAILS
BRIDGE NO. SUM-8-0087
S.R. 8 OVER EXCHANGE STREET

SUM-8-0.63

18 / 29

928 / 1088

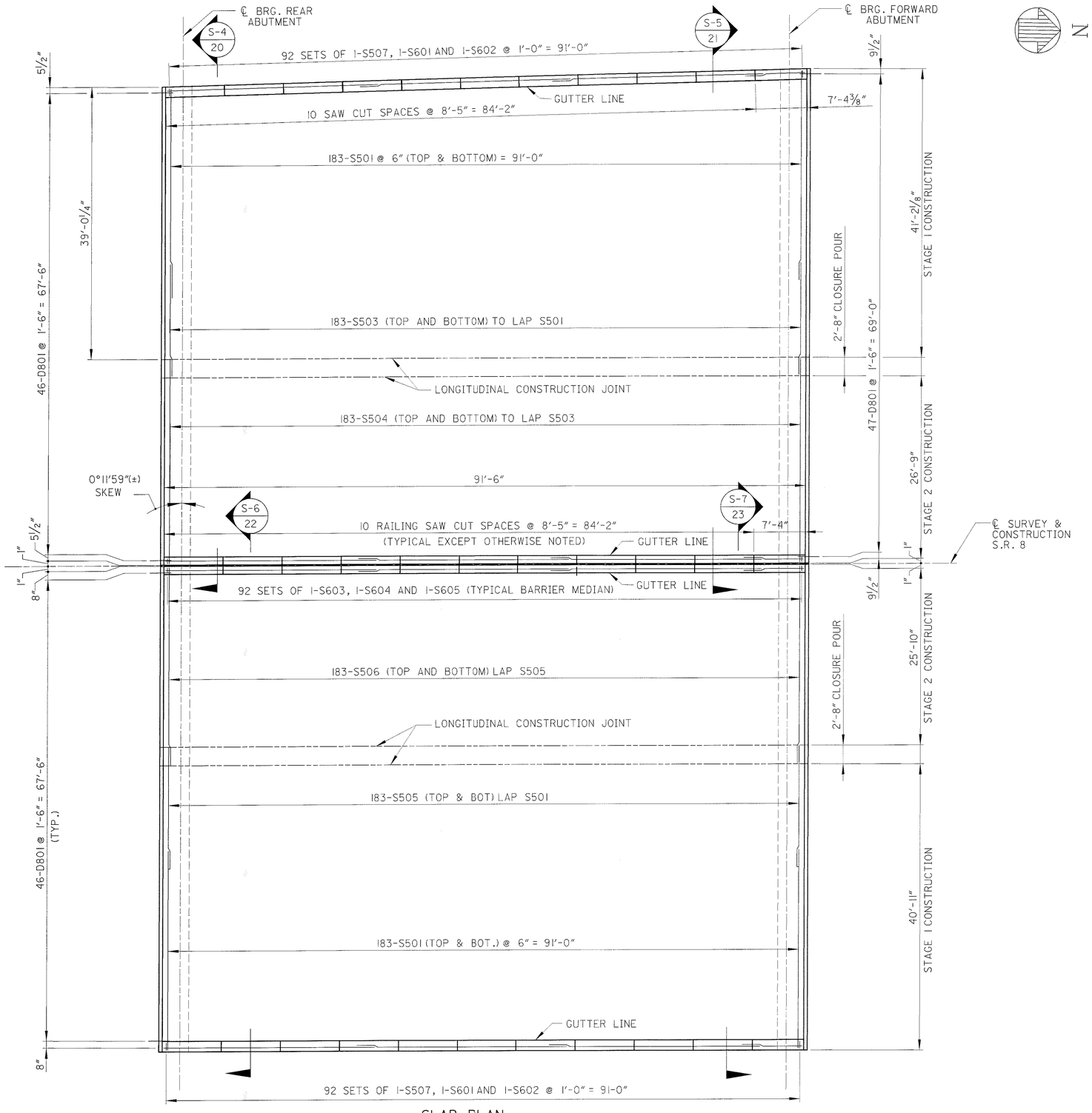

SLAB PLAN

NOTES:

1. DECK SLAB DEPTH FOR CONCRETE QUANTITY: THE DIMENSION SHOWN FROM THE TOP OF THE CONCRETE DECK TO THE TOP OF THE FLANGE, MINUS THE VARIABLE HAUNCH THICKNESS, HAS BEEN USED FOR COMPUTING THE DECK CONCRETE QUANTITIES. CONCRETE REQUIRED TO FILL THE HAUNCHES, INCLUDING ADDITIONAL OR LESS MATERIAL REQUIRED DUE TO HAUNCH CONSTRUCTION TOLERANCES, SHALL BE CONSIDERED AS INCIDENTAL AND WILL NOT BE INCLUDED IN THE QUANTITY CALCULATIONS FOR PAYMENT.
2. A HAUNCH WIDTH OF 9 INCHES SHALL BE USED. HOWEVER THE HAUNCH WIDTH MAY VARY BETWEEN 6 AND 12 INCHES.
3. FOR TRANSVERSE SECTION, SEE SHEET 16/29.
4. FOR PARAPET DETAILS, SEE SHEET 24/29.
5. FOR END DIAPHRAGM DETAILS, SEE SHEETS 20-23/29.
6. FOR SCREED ELEVATIONS, SEE SHEETS 25-26/29.
7. MEDIAN PARAPET DEFLECTION JOINTS SHALL BE SAWCUT ALONG THE ENTIRE PERIMETER OF THE FIRST PARAPET CONSTRUCTED AND SAWCUT ALONG THE EXPOSED PERIMETER OF THE SECOND PARAPET CONSTRUCTED.
8. LAP LENGTH FOR #5 REINFORCING BARS IS 2'-0".

DLZ
1000 ROCKEFELLER BLDG • 614 W SUPERIOR AVE • CLEVELAND, OH 44113

DESIGNED	DRAWN	REVIEWED	DATE
JWB	RCK	GWM	6/20/01
CHECKED	REVISED	STRUCTURE FILE NUMBER	
AJM		770056	

SLAB PLAN
BRIDGE NO. SUM-8-0087
S.R. 8 OVER EXCHANGE STREET

SUM-8-0.63

929
1088

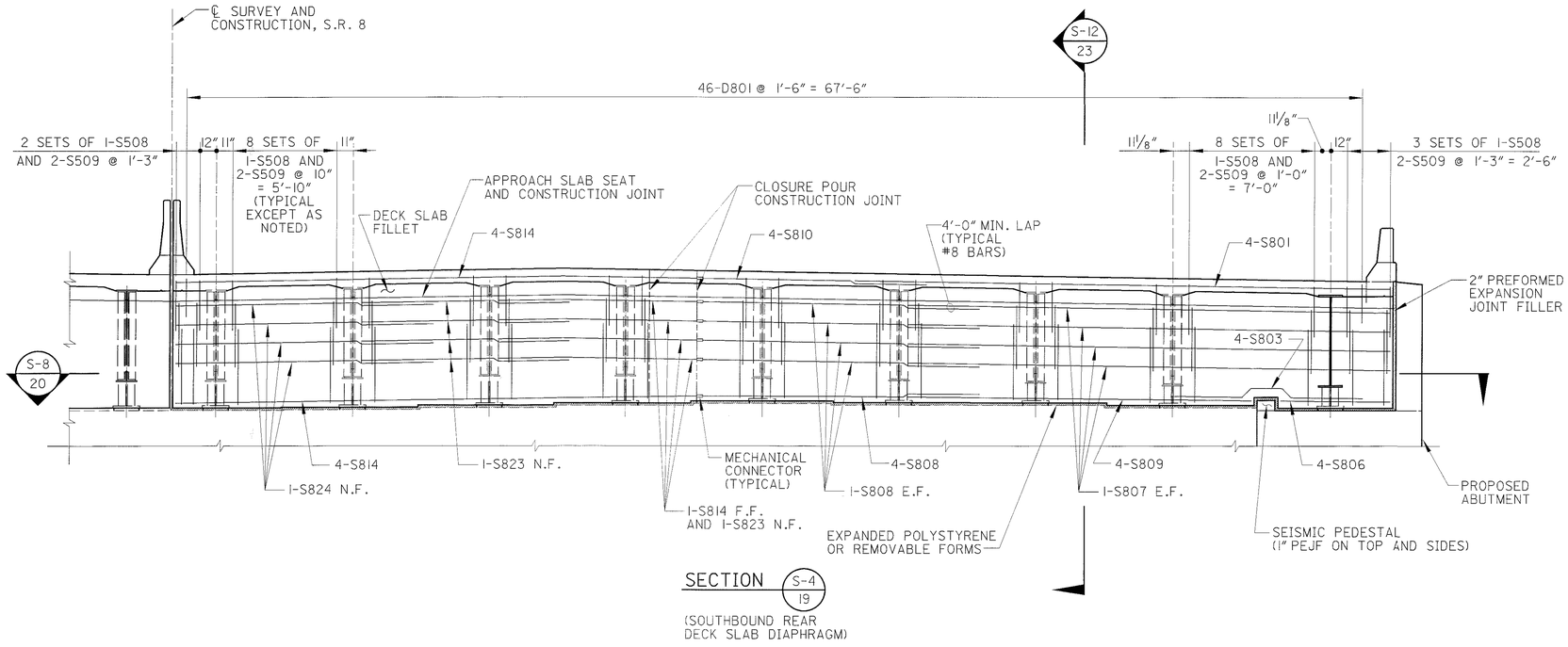

SECTION S-4 19

(SOUTHBOUND REAR DECK SLAB DIAPHRAGM)

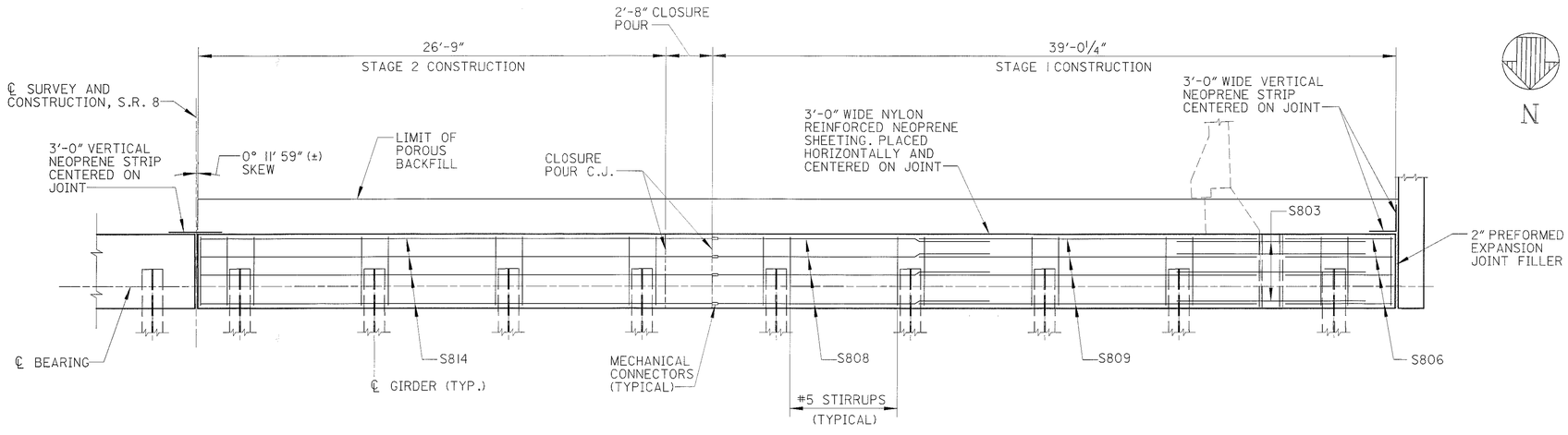

SECTION S-8 20

FOR NOTES, REFER TO SHEET 23/29.

DLZ
1000 ROCKEFELLER BLDG • 614 W SUPERIOR AVE • CLEVELAND, OH 44113

DESIGNED	DRAWN	REVIEWED	DATE
AJM	RCK	GWM	6/20/01
CHECKED	REVISED	STRUCTURE FILE NUMBER	
JWB		7700156	

SUPERSTRUCTURE DETAILS
BRIDGE NO. SUM-8-0087
S.R. 8 OVER EXCHANGE STREET

SUM-8-0.63

20/29

930
1088

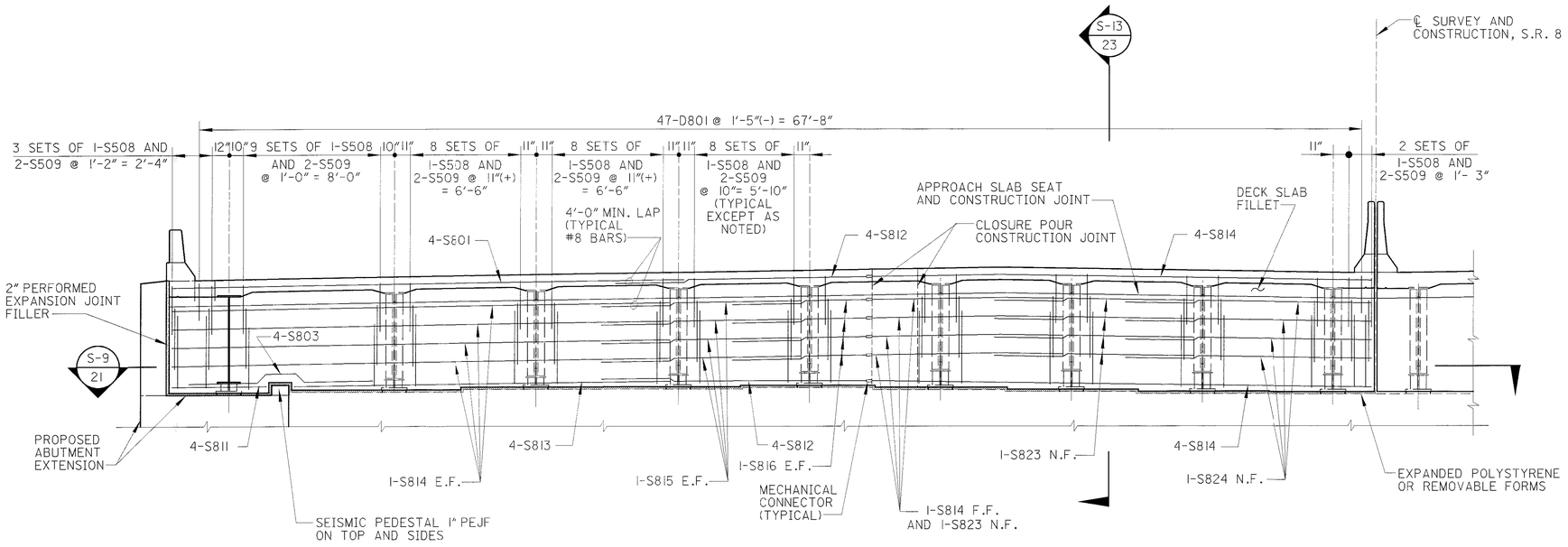

SECTION S-5 19

(SOUTHBOUND FORWARD DECK SLAB DIAPHRAGM)

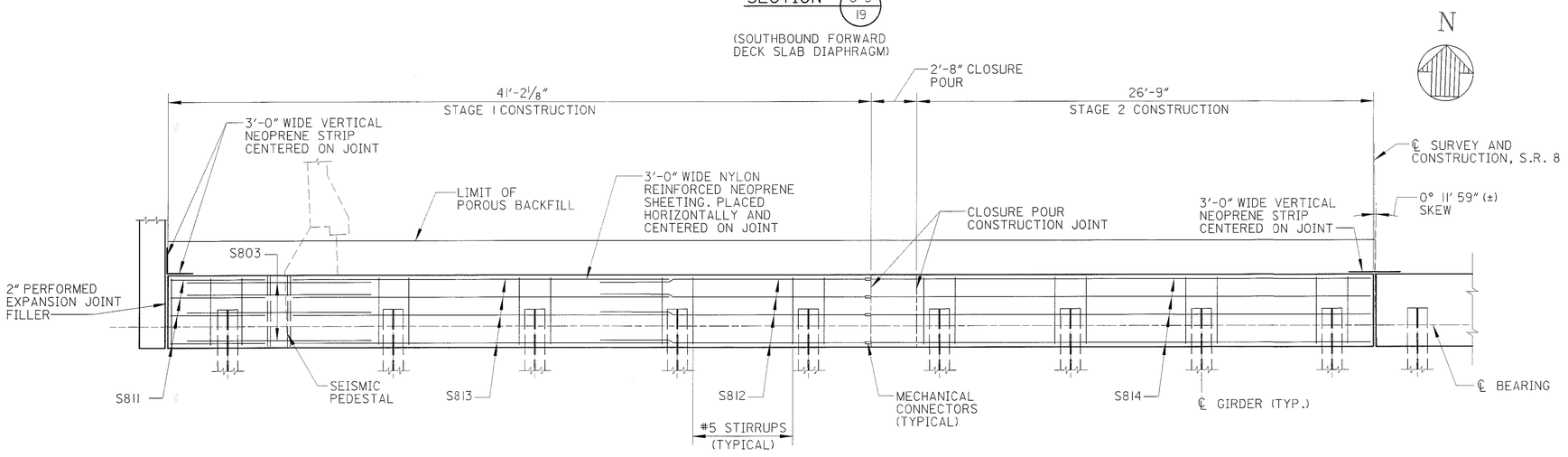

SECTION S-9 21

FOR NOTES, REFER TO SHEET 23/29.

DLZ
1005 ROCKEFELLER BLDG • 614 • SUPERIOR AVE • CLEVELAND, OH 44113

DESIGNED	DRAWN	REVIEWED	DATE
AJM	RCK	GWM	6/20/01
CHECKED	REVISED	STRUCTURE FILE NUMBER	
JWB		7700156	

SUPERSTRUCTURE DETAILS
BRIDGE NO. SUM-8-0087
S.R. 8 OVER EXCHANGE STREET

SUM-8-0.63

21/29

931/1088

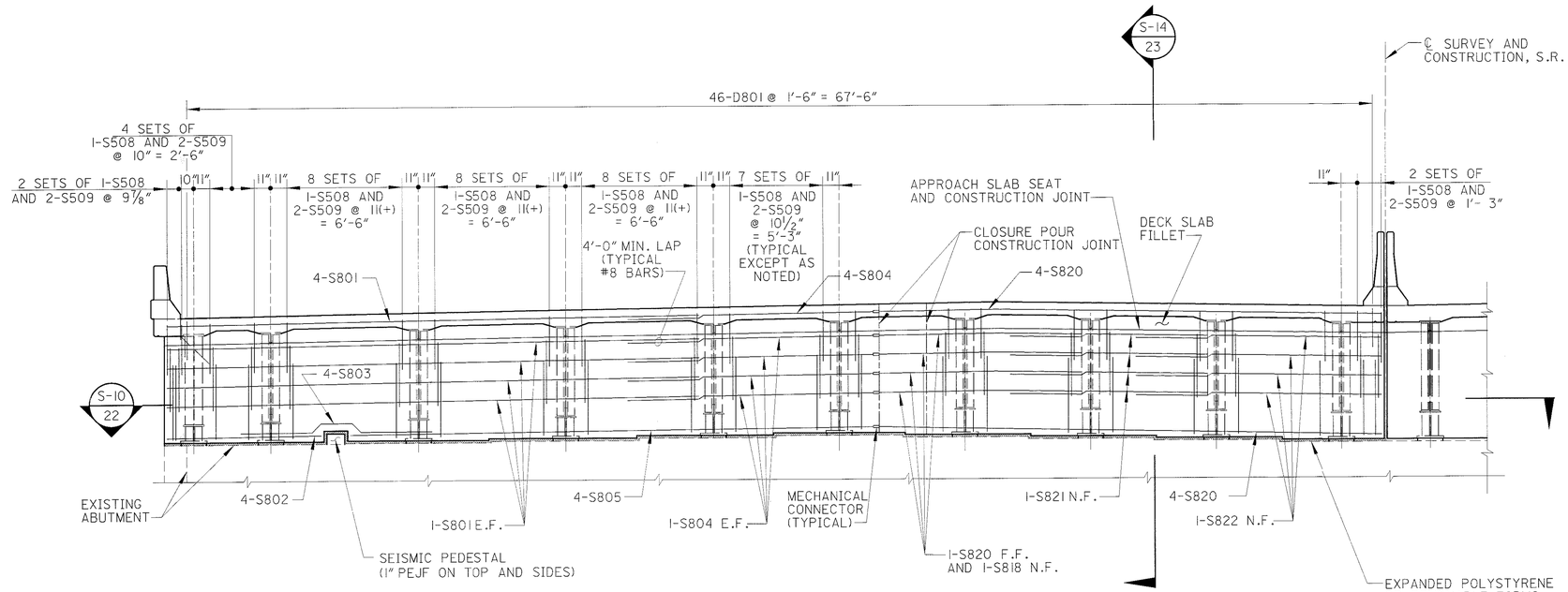

SECTION S-6 / 19

(NORTHBOUND REAR END DIAPHRAGM)

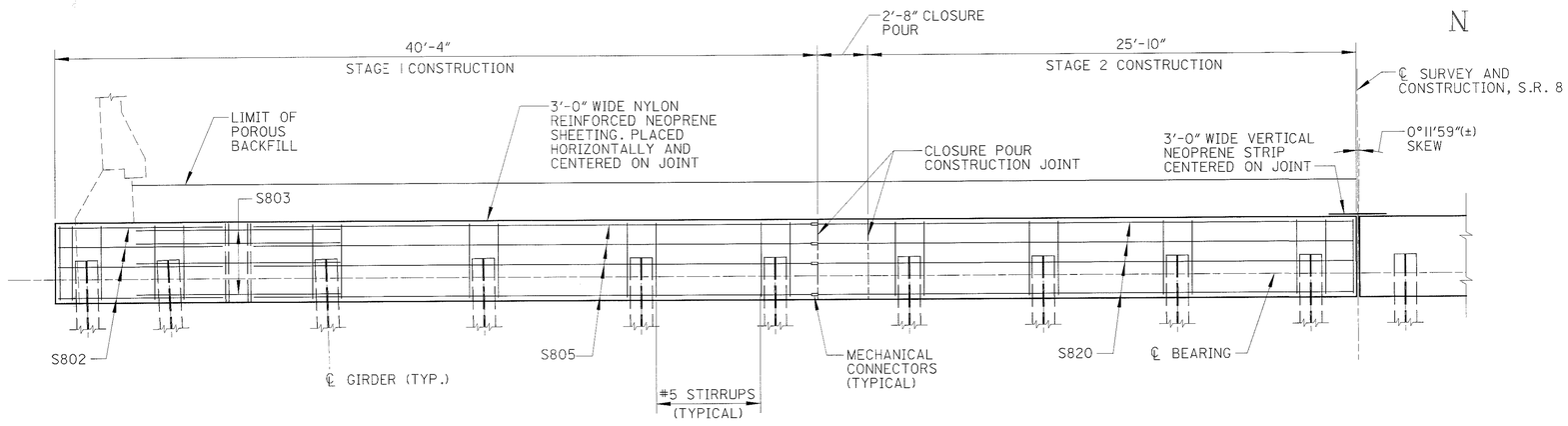

SECTION S-10 / 22

N

FOR NOTES, REFER TO SHEET 23/29.

DLZ
1000 ROCKEFELLER BLDG • 614 W SUPERIOR AVE • CLEVELAND, OH 44113

DESIGNED	DRAWN	REVIEWED	DATE
AJM	RCK	GWM	6/20/01
CHECKED	REVISED	STRUCTURE FILE NUMBER	
JWB		7700156	

SUPERSTRUCTURE DETAILS
BRIDGE NO. SUM-8-0087
S.R. 8 OVER EXCHANGE STREET

SUM-8-0.63

22/29

932/1088

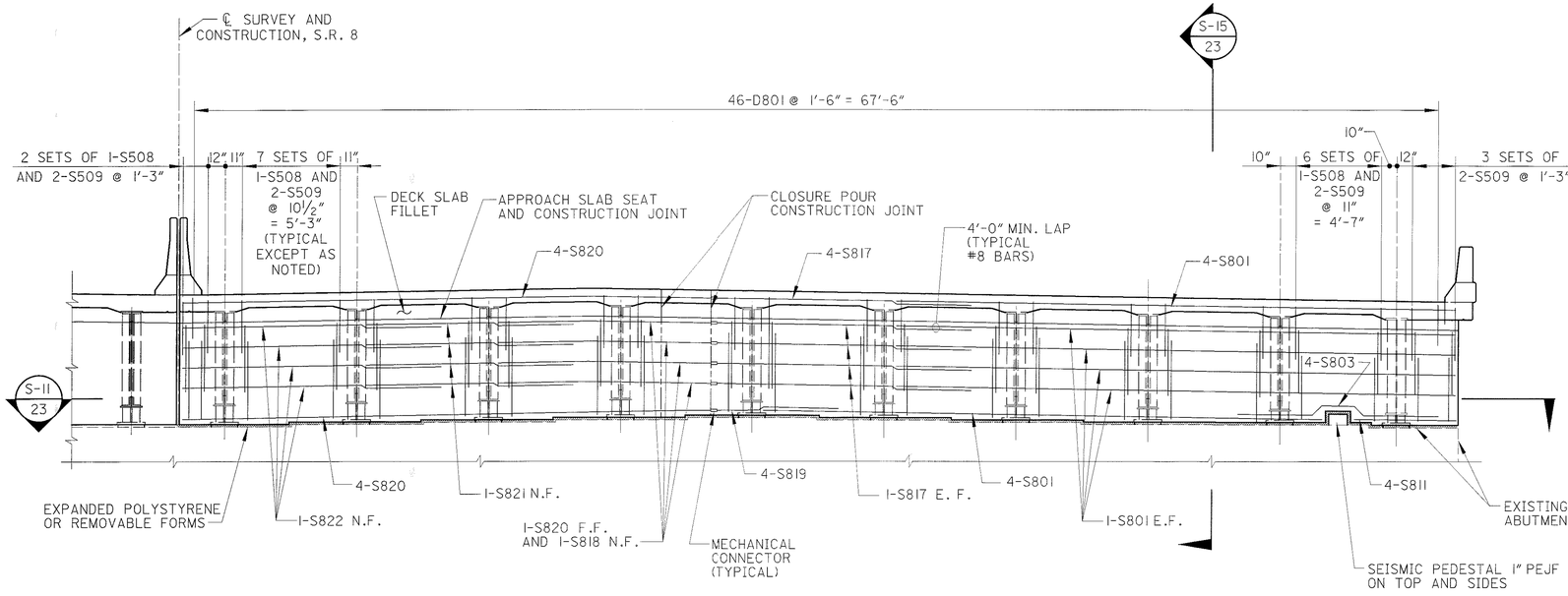

SECTION S-7 / 19

(NORTHBOUND FORWARD DECK SLAB DIAPHRAGM)

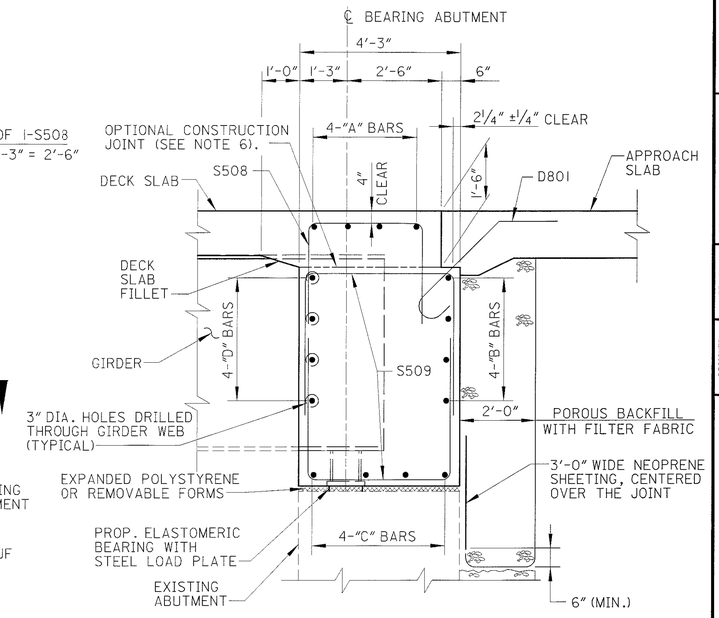

SECTION S-12 / 20 S-13 / 21 S-14 / 22 S-15 / 23

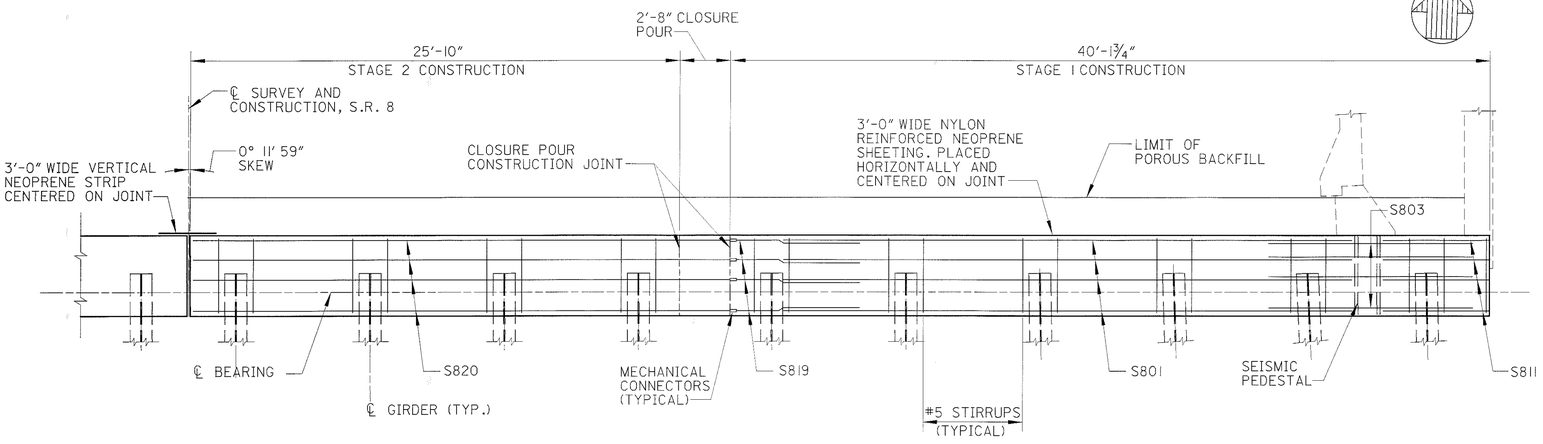

SECTION S-11 / 23

LONGITUDINAL REINFORCEMENT				
SECTION	"A" BARS	"B" BARS	"C" BARS	"D" BARS
S-12	S801, S810, OR S814	S807, S808 OR S814	S806, S808, S809, OR S814	S807, S808, S823 OR S824
S-13	S801, S812, OR S814	S814, S815, OR S816	S811, S812, S813 OR S814	S814, S815, S816, S823 OR S824
S-14	S801, S804, OR S820	S801, S804, OR S820	S802, S805, OR S820	S801, S804, S818, S821 OR S822
S-15	S801, S817, OR S820	S801, S817, OR S820	S801, S811, S819 OR S820	S801, S817, S818, S821 OR S822

NOTES:

1. DECK REINFORCEMENT NOT SHOWN FOR CLARITY. SEE SLAB PLAN SHEET 19/29 AND TRANSVERSE SECTION, SHEET 16/29.
2. FOR TOP OF DECK ELEVATIONS SEE SHEET 26/29.
3. EXPANDED POLYSTYRENE (OR REMOVABLE FORMS AND 1" PEJF AROUND SEISMIC PEDESTAL SHALL BE CONSIDERED INCIDENTAL TO AND INCLUDED FOR PAYMENT WITH ITEM 844, HIGH PERFORMANCE CONCRETE SUPERSTRUCTURE (DECK), AS PER PLAN.
4. FOR NEOPRENE SHEETING SPECIFICATIONS/ PLACEMENT REQIREMENTS AND MISCELLANEOUS SEMI-INTEGRAL CONSTRUCTION DETAILS, REFER TO ODOT STD. DWG. SICD-1-96M
5. POROUS BACKFILL WITH FILTER FABRIC, 2'-0", THICK SHALL EXTEND UP TO THE BOTTOM OF THE APPROACH SLAB AND AS SHOWN. GEOTEXTILE FABRIC SHALL CONFORM WITH 712.09, TYPE A.
6. CONCRETE FOR THE END DIAPHRAGMS MAY BE PLACED SEPARATE OF OR WITH THE DECK CONCRETE OF THAT PHASE OF CONSTRUCTION. IF THE CONTRACTOR CHOOSES TO PLACE THE DIAPHRAGM CONCRETE SEPARATELY, THE CONCRETE SHALL HAVE AT LEAST 48 HOURS OF SET TIME BEFORE DECK CONCRETE CAN BE PLACED.

DLZ
800 ROCKEFELLER BLDG • 614 W SUPERIOR AVE • CLEVELAND, OH 44113

DESIGNED AJM
DRAWN RCK
CHECKED JWB
REVIEWED GWM
DATE 6/20/01
REVISED
STRUCTURE FILE NUMBER 7700156

SUPERSTRUCTURE DETAILS
BRIDGE NO. SUM-8-0087
S.R. 8 OVER EXCHANGE STREET

SUM-8-0.63

23/29

933/1088

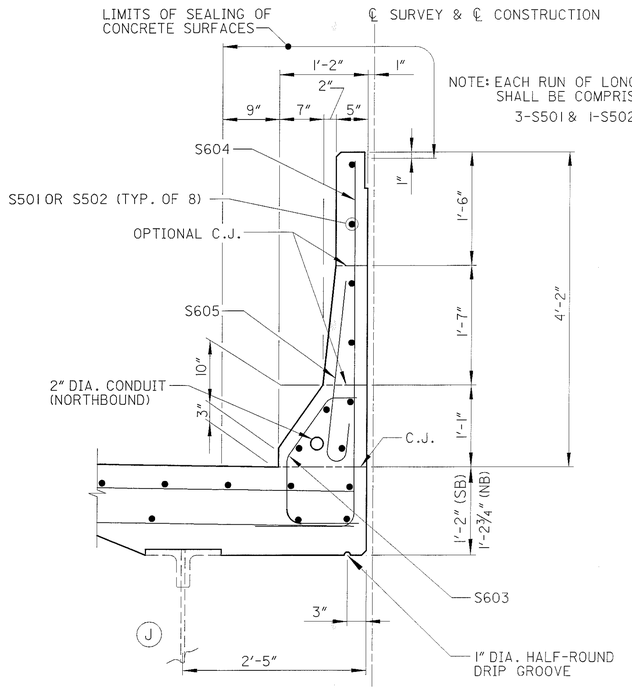

MEDIAN PARAPET DETAIL

SOUTHBOUND SHOWN
NORTHBOUND OPP. HAND

NOTE: EACH RUN OF LONGITUDINAL PARAPET REINFORCING SHALL BE COMPRISED OF THE FOLLOWING:
3-S501 & 1-S502 (TYP. OF 8), LAP 2'-0" MIN.

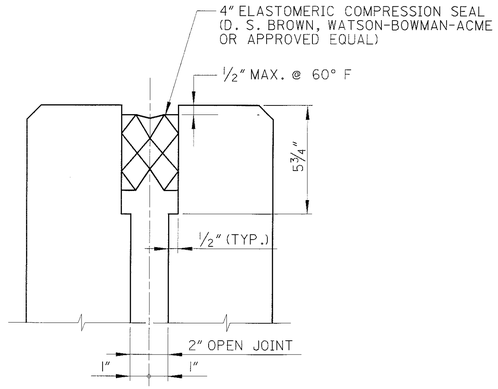

LONGITUDINAL JOINT DETAIL AT MEDIAN PARAPET

NOTE: THE COMPRESSION SEAL SHALL BE FURNISHED IN ONE PIECE OF COMPLETE LENGTH NECESSARY TO PLACE THE SEAL FROM END-TO-END OF THE STRUCTURE, INCLUDING THE APPROACH SLABS. THE SEAL SHALL BE INSTALLED OVER THE FULL LENGTH OF THE STRUCTURE INCLUDING APPROACH SLABS, IN ONE CONTINUOUS OPERATION AND IN ACCORDANCE WITH THE MANUFACTURERS SPECIFICATIONS, ITEM 516, AND TO THE SATISFACTION OF THE ENGINEER.

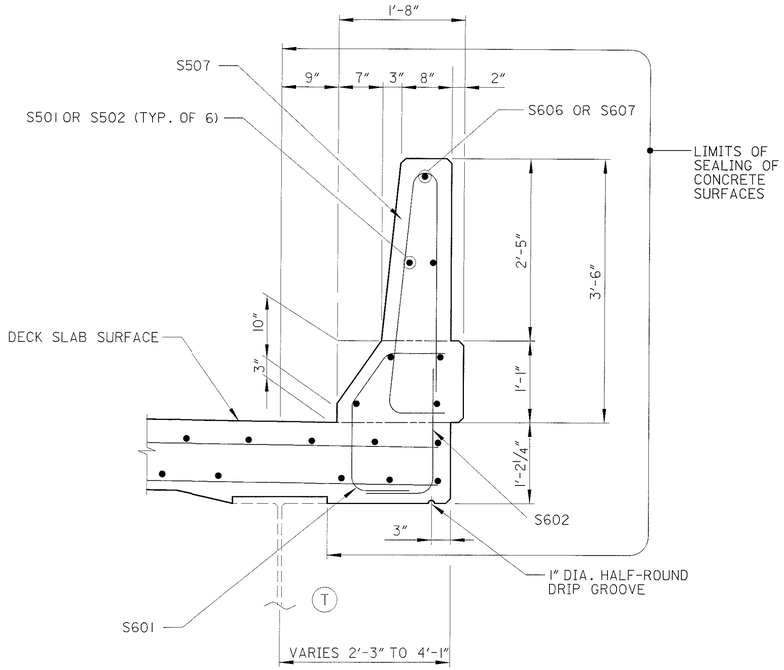

OUTSIDE PARAPET DETAIL

NORTHBOUND

NOTE: EACH RUN OF LONGITUDINAL PARAPET REINFORCING SHALL BE COMPRISED OF THE FOLLOWING:
3-S501 & 1-S502 (TYP. OF 6), LAP 2'-0" MIN.
3-S606 & 1-S607 (TOP OF PARAPET), LAP 3'-4" MIN.

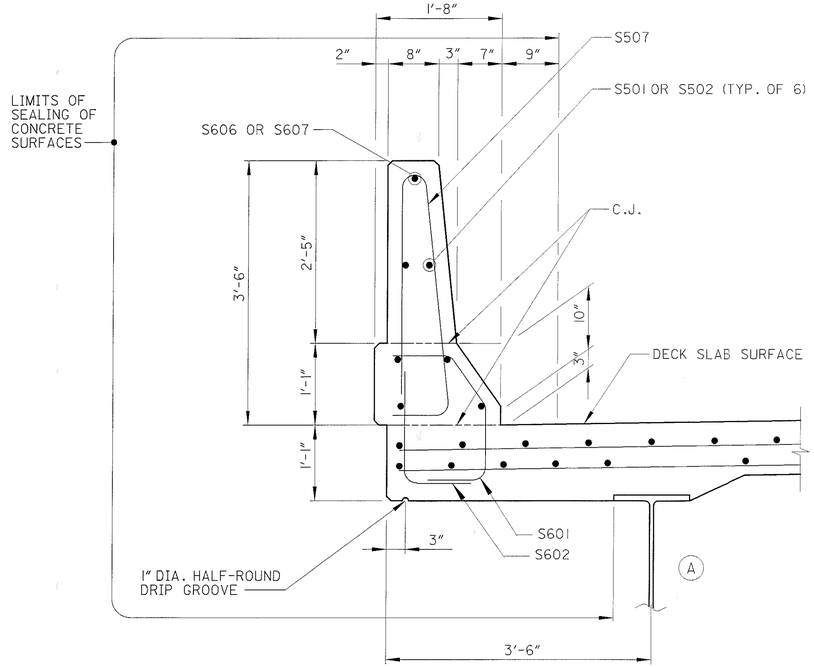

OUTSIDE PARAPET DETAIL

SOUTHBOUND

NOTE: EACH RUN OF LONGITUDINAL PARAPET REINFORCING SHALL BE COMPRISED OF THE FOLLOWING:
3-S501 & 1-S502 (TYP. OF 6), LAP 2'-0" MIN.
3-S606 & 1-S607 (TOP OF PARAPET), LAP 3'-4" MIN.

LEGEND

(A) - BEAM LINE DESIGNATION
C.J. - CONSTRUCTION JOINT
SB - SOUTHBOUND
NB - NORTHBOUND

NOTE:

DRIP GROOVES SHALL TERMINATE 2'-0" FROM THE FACE OF THE ABUTMENT.

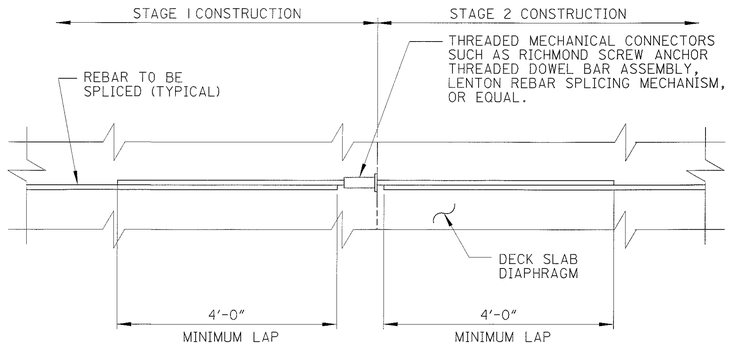

MECHANICAL CONNECTOR DETAIL

DLZ
1000 ROCKEFELLER BLDG • 614 W SUPERIOR AVE • CLEVELAND, OH 44113

DESIGNED	DRAWN	REVIEWED	DATE
PAT	DJP	GWM	6/20/01
CHECKED	REVISED	STRUCTURE FILE NUMBER	
AJM		7700156	

SUPERSTRUCTURE DETAILS
BRIDGE NO. SUM-8-0087
S.R. 8 OVER EXCHANGE STREET

SUM-8-0.63

24 / 29

934
1088

DECK SCREED ELEVATION TABLE - SOUTHBOUND BRIDGE

ELEVATION LOCATION		SPAN 1				
		℄ BRG. R.A.	0.25	0.50	0.75	℄ BRG. F.A.
LEFT TOE/PARAPET FINAL TOP DECK ELEV.		1043.47	1043.32	1043.17	1043.01	1042.86
LEFT TOE/PARAPET DECK SCREED ELEV.		1043.47	1043.39	1043.27	1043.08	1042.86
GIRDER A	FINAL TOP DECK ELEV.	1043.50	1043.35	1043.20	1043.05	1042.89
	DECK SCREED ELEV.	1043.50	1043.42	1043.30	1043.12	1042.89
GIRDER B	* ELEV. AFTER DECK REMOVAL	———				———
	* ELEV. BEFORE DECK REMOVAL	———				———
	** SURVEYED REBOUND	———				———
	*** ADJUSTED REBOUND	———				———
	FINAL TOP DECK ELEV.	1043.64	1043.49	1043.34	1043.19	1043.05
	**** DECK SCREED ELEV.	1043.64				1043.05
GIRDER C	* ELEV. AFTER DECK REMOVAL	———				———
	* ELEV. BEFORE DECK REMOVAL	———				———
	** SURVEYED REBOUND	———				———
	*** ADJUSTED REBOUND	———				———
	FINAL TOP DECK ELEV.	1043.76	1043.61	1043.47	1043.32	1043.18
	**** DECK SCREED ELEV.	1043.76				1043.18
GIRDER D	* ELEV. AFTER DECK REMOVAL	———				———
	* ELEV. BEFORE DECK REMOVAL	———				———
	** SURVEYED REBOUND	———				———
	*** ADJUSTED REBOUND	———				———
	FINAL TOP DECK ELEV.	1043.88	1043.73	1043.59	1043.45	1043.31
	**** DECK SCREED ELEV.	1043.88				1043.31
GIRDER E	* ELEV. AFTER DECK REMOVAL	———				———
	* ELEV. BEFORE DECK REMOVAL	———				———
	** SURVEYED REBOUND	———				———
	*** ADJUSTED REBOUND	———				———
	FINAL TOP DECK ELEV.	1044.00	1043.85	1043.71	1043.57	1043.43
	**** DECK SCREED ELEV.	1044.00				1043.43
LONG. C.J.	FINAL TOP DECK ELEV.	1044.05	1043.91	1043.77	1043.63	1043.48
	**** DECK SCREED ELEV.	1044.05				1043.48
LONG. C.J.	FINAL TOP DECK ELEV.	1044.10	1043.95	1043.81	1043.67	1043.52
	**** DECK SCREED ELEV.	1044.10				1043.52
GIRDER F	* ELEV. AFTER DECK REMOVAL	———				———
	* ELEV. BEFORE DECK REMOVAL	———				———
	** SURVEYED REBOUND	———				———
	*** ADJUSTED REBOUND	———				———
	FINAL TOP DECK ELEV.	1044.12	1043.97	1043.83	1043.69	1043.55
	**** DECK SCREED ELEV.	1044.12				1043.55
CROWN	FINAL TOP DECK ELEV.	1044.17	1044.03	1043.89	1043.74	1043.60
	**** DECK SCREED ELEV.	1044.17				1043.60
GIRDER G	* ELEV. AFTER DECK REMOVAL	———				———
	* ELEV. BEFORE DECK REMOVAL	———				———
	** SURVEYED REBOUND	———				———
	*** ADJUSTED REBOUND	———				———
	FINAL TOP DECK ELEV.	1044.11	1043.96	1043.82	1043.68	1043.54
	**** DECK SCREED ELEV.	1044.11				1043.54
GIRDER H AND PROFILE GRADE	* ELEV. AFTER DECK REMOVAL	———				———
	* ELEV. BEFORE DECK REMOVAL	———				———
	** SURVEYED REBOUND	———				———
	*** ADJUSTED REBOUND	———				———
	FINAL TOP DECK ELEV.	1043.99	1043.84	1043.70	1043.56	1043.42
	**** DECK SCREED ELEV.	1043.99				1043.42
GIRDER J	* ELEV. AFTER DECK REMOVAL	———				———
	* ELEV. BEFORE DECK REMOVAL	———				———
	** SURVEYED REBOUND	———				———
	*** ADJUSTED REBOUND	———				———
	FINAL TOP DECK ELEV.	1043.87	1043.72	1043.58	1043.44	1043.30
	**** DECK SCREED ELEV.	1043.87				1043.30
RIGHT TOE/PARAPET FINAL TOP DECK ELEV.		1043.85	1043.71	1043.56	1043.42	1043.28
RIGHT TOE/PARAPET DECK SCREED ELEV.		1043.85				1043.28

* - BOTTOM OF GIRDER ELEVATION SURVEYED DURING CONSTRUCTION
** - SURVEYED REBOUND - GIRDER ELEVATION BEFORE DECK REMOVAL MINUS GIRDER ELEVATION AFTER DECK REMOVAL
*** - ADJUSTED REBOUND - RATIO OF PROPOSED DEAD LOAD TO EXISTING DEAD LOAD (PROVIDED BY THE DESIGNER) MULTIPLIED TIMES THE SURVEYED REBOUND
**** - DECK SCREED ELEV. = ADJUSTED REBOUND ADDED TO THE FINAL TOP OF DECK ELEVATION.

$\frac{\text{PROPOSED DEAD LOAD}}{\text{EXISTING DEAD LOAD}} = 0.92$

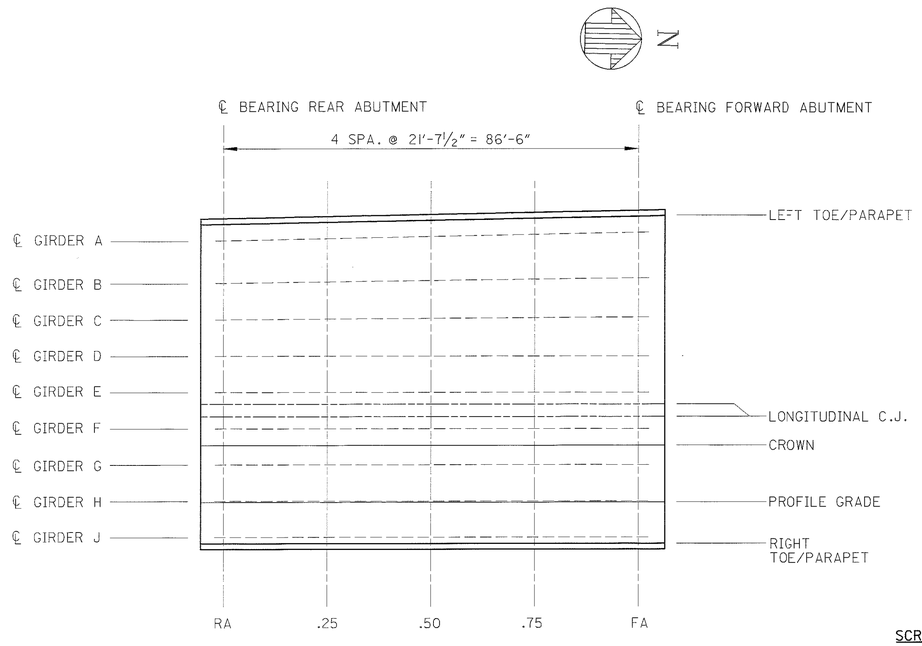

SCREED ELEVATION LOCATIONS
SOUTHBOUND

DEAD LOAD DEFLECTIONS (EXISTING GIRDERS)

SPAN LOCATION	¼L	½L	¾L
DEFLECTION*	½"	1/16"	½"

* ANTICIPATED DEAD LOAD DEFLECTIONS DUE TO SLAB AND PARAPET WEIGHT

SCREED ELEVATIONS:

FIELD PROCEDURES DURING STAGE CONSTRUCTION OF DECKS WITH CLOSURE POURS:

1. REMOVE CROSSFRAMES BETWEEN GIRDERS AT THE CONSTRUCTION PHASE LINE
2. SURVEY BOTTOM OF EXISTING GIRDERS IN STAGE I AT THE LOCATIONS SHOWN IN THE TABLE PRIOR TO STAGE I DECK REMOVAL AND AFTER STAGE I DECK REMOVAL.
3. COMPUTE THE AMOUNT OF SURVEYED REBOUND FOR THESE GIRDERS BY SUBTRACTING THE ELEVATIONS AFTER REMOVAL FROM THE ELEVATIONS BEFORE REMOVAL.
4. COMPUTE THE ADJUSTED REBOUND FOR THESE GIRDERS BY MUTIPLYING THE SURVEYED REBOUND BY THE RATIO OF THE PROPOSED DEAD LOAD TO EXISTING DEAD LOAD.
5. ADD THE AMOUNT OF ADJUSTED REBOUND TO THE FINAL TOP OF DECK ELEVATIONS TO OBTAIN THE DECK SCREED ELEVATIONS. USE REBOUND OF CLOSEST GIRDER TO DETERMINE TOE OF PARAPET AND PROFILE GRADE DECK SCREED ELEVATIONS.
6. AFTER STAGE I DECK PLACEMENT, REPEAT STEPS I THRU 4 FOR REMAINING GIRDERS PRIOR TO AND AFTER STAGE 2 DECK REMOVAL.

NOTES:

1. THE COST OF SURVEYING IS CONSIDERED INCIDENTAL TO DECK CONSTRUCTION AND SHALL BE INCLUDED FOR PAYMENT WITH ITEM 844 HIGH PERFORMANCE CONCRETE, SUPERSTRUCTURE (DECK), AS PER PLAN.
2. FOR STAGE CONSTRUCTION DETAILS, SEE SHEET 6/29.

LEGEND:

BRG. - BEARING
F.S. - FIELD SPLICE
F.A. - FORWARD ABUTMENT
R.A. - REAR ABUTMENT
C.J. - CONSTRUCTION JOINT.

DLZ
1000 ROCKEFELLER BLDG • 614 W SUPERIOR AVE • CLEVELAND, OH 44113

DESIGNED AJM | DRAWN MWD | REVIEWED GWM 6/20/01 | CHECKED JWB | REVISED | STRUCTURE FILE NUMBER 7700156

SUPERSTRUCTURE DETAILS
BRIDGE NO. SUM-8-0087
S.R. 8 OVER EXCHANGE STREET

SUM-8-0.63

DECK SCREED ELEVATION TABLE - NORTHBOUND BRIDGE

ELEVATION LOCATION		SPAN I				
		℄ BRG. R.A.	0.25	0.50	0.75	℄ BRG. F.A.
LEFT TOE/PARAPET FINAL TOP DECK ELEV.		1043.85	1043.71	1043.56	1043.42	1043.28
LEFT TOE/PARAPET DECK SCREED ELEV.		1043.85				1043.28
GIRDER K	* ELEV. AFTER DECK REMOVAL	———				———
	* ELEV. BEFORE DECK REMOVAL	———				———
	** SURVEYED REBOUND	———				———
	*** ADJUSTED REBOUND	———				———
	FINAL TOP DECK ELEV.	1043.87	1043.72	1043.58	1043.44	1043.30
	**** DECK SCREED ELEV.	1043.87				1043.30
GIRDER L	* ELEV. AFTER DECK REMOVAL	———				———
	* ELEV. BEFORE DECK REMOVAL	———				———
	** SURVEYED REBOUND	———				———
	*** ADJUSTED REBOUND	———				———
	FINAL TOP DECK ELEV.	1043.98	1043.84	1043.69	1043.55	1043.41
	**** DECK SCREED ELEV.	1043.98				1043.41
PROFILE GRADE	FINAL TOP DECK ELEV.	1043.98	1043.84	1043.70	1043.56	1043.41
	**** DECK SCREED ELEV.	1043.98				1043.41
GIRDER M	* ELEV. AFTER DECK REMOVAL	———				———
	* ELEV. BEFORE DECK REMOVAL	———				———
	** SURVEYED REBOUND	———				———
	*** ADJUSTED REBOUND	———				———
	FINAL TOP DECK ELEV.	1044.09	1043.95	1043.80	1043.66	1043.52
	**** DECK SCREED ELEV.	1044.09				1043.52
CROWN	FINAL TOP DECK ELEV.	1044.17	1044.03	1043.89	1043.74	1043.60
	**** DECK SCREED ELEV.	1044.17				1043.60
GIRDER N	* ELEV. AFTER DECK REMOVAL	———				———
	* ELEV. BEFORE DECK REMOVAL	———				———
	** SURVEYED REBOUND	———				———
	*** ADJUSTED REBOUND	———				———
	FINAL TOP DECK ELEV.	1044.14	1044.00	1043.86	1043.72	1043.57
	**** DECK SCREED ELEV.	1044.14				1043.57
LONG. C.J.	FINAL TOP DECK ELEV.	1044.11	1043.97	1043.83	1043.68	1043.54
	**** DECK SCREED ELEV.	1044.11				1043.54
LONG. C.J.	FINAL TOP DECK ELEV.	1044.07	1043.93	1043.78	1043.64	1043.50
	**** DECK SCREED ELEV.	1044.07				1043.50
GIRDER O	* ELEV. AFTER DECK REMOVAL	———				———
	* ELEV. BEFORE DECK REMOVAL	———				———
	** SURVEYED REBOUND	———				———
	*** ADJUSTED REBOUND	———				———
	FINAL TOP DECK ELEV.	1044.03	1043.89	1043.75	1043.61	1043.46
	**** DECK SCREED ELEV.	1044.03				1043.46
GIRDER P	* ELEV. AFTER DECK REMOVAL	———				———
	* ELEV. BEFORE DECK REMOVAL	———				———
	** SURVEYED REBOUND	———				———
	*** ADJUSTED REBOUND	———				———
	FINAL TOP DECK ELEV.	1043.92	1043.78	1043.64	1043.50	1043.35
	**** DECK SCREED ELEV.	1043.92				1043.35
GIRDER Q	* ELEV. AFTER DECK REMOVAL	———				———
	* ELEV. BEFORE DECK REMOVAL	———				———
	** SURVEYED REBOUND	———				———
	*** ADJUSTED REBOUND	———				———
	FINAL TOP DECK ELEV.	1043.79	1043.66	1043.52	1043.38	1043.24
	**** DECK SCREED ELEV.	1043.79				1043 24
GIRDER R	* ELEV. AFTER DECK REMOVAL	———				———
	* ELEV. BEFORE DECK REMOVAL	———				———
	** SURVEYED REBOUND	———				———
	*** ADJUSTED REBOUND	———				———
	FINAL TOP DECK ELEV.	1043.66	1043.53	1043.40	1043.27	1043.13
	**** DECK SCREED ELEV.	1043.66				1043.13
GIRDER S	* ELEV. AFTER DECK REMOVAL	———				———
	* ELEV. BEFORE DECK REMOVAL	———				———
	** SURVEYED REBOUND	———				———
	*** ADJUSTED REBOUND	———				———
	FINAL TOP DECK ELEV.	1043.53	1043.41	1043.28	1043.15	1043.03
	**** DECK SCREED ELEV.	1043.53				1043.03
GIRDER T	* ELEV. AFTER DECK REMOVAL	———				———
	* ELEV. BEFORE DECK REMOVAL	———				———
	** SURVEYED REBOUND	———				———
	*** ADJUSTED REBOUND	———				———
	FINAL TOP DECK ELEV.	1043.47	1043.33	1043.20	1043.06	1042.93
	**** DECK SCREED ELEV.	1043.47				1042.93
RIGHT TOE/PARAPET FINAL TOP DECK ELEV.		1043.46	1043.31	1043.17	1043.03	1042.89
RIGHT TOE/PARAPET DECK SCREED ELEV.		1043.46				1042.89

* - BOTTOM OF GIRDER ELEVATION SURVEYED DURING CONSTRUCTION

** - SURVEYED REBOUND - GIRDER ELEVATION BEFORE DECK REMOVAL MINUS GIRDER ELEVATION AFTER DECK REMOVAL

*** - ADJUSTED REBOUND - RATIO OF PROPOSED DEAD LOAD TO EXISTING DEAD LOAD (PROVIDED BY THE DESIGNER) MULTIPLIED TIMES THE SURVEYED REBOUND

**** - DECK SCREED ELEV. = ADJUSTED REBOUND ADDED TO THE FINAL TOP OF DECK ELEVATION.

$\frac{\text{PROPOSED DEAD LOAD}}{\text{EXISTING DEAD LOAD}} = 1.02$

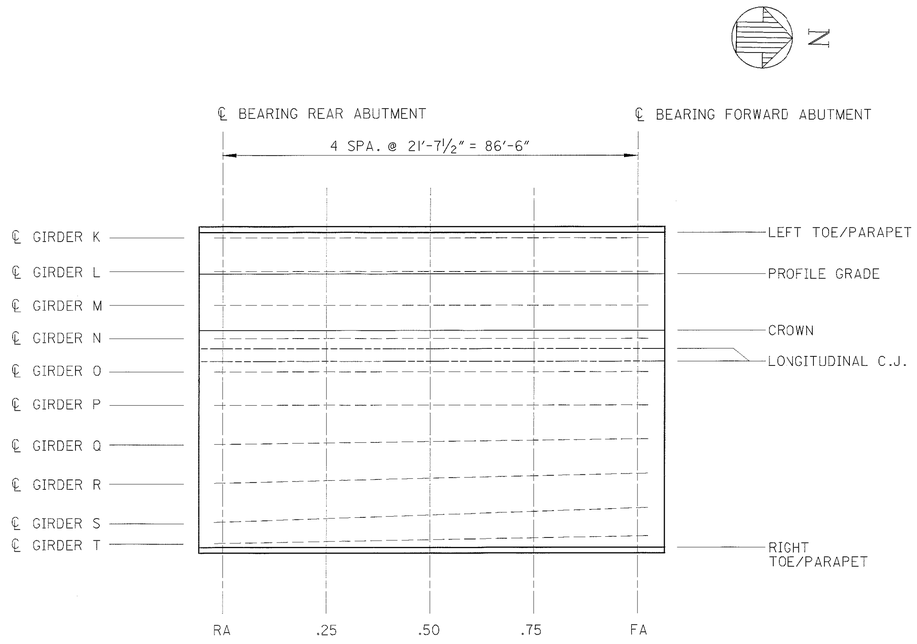

SCREED ELEVATION LOCATIONS
NORTHBOUND

DEAD LOAD DEFLECTIONS (EXISTING GIRDERS)

SPAN LOCATION	¼L	½L	¾L
DEFLECTION*	½"	1 1/16"	½"

* ANTICIPATED DEAD LOAD DEFLECTIONS DUE TO SLAB AND PARAPET WEIGHT

SCREED ELEVATIONS:

FIELD PROCEDURES DURING STAGE CONSTRUCTION OF DECKS WITH CLOSURE POURS:

1. REMOVE CROSSFRAMES BETWEEN GIRDERS AT THE CONSTRUCTION PHASE LINE
2. SURVEY BOTTOM OF EXISTING GIRDERS IN STAGE I AT THE LOCATIONS SHOWN IN THE TABLE PRIOR TO STAGE I DECK REMOVAL AND AFTER STAGE I DECK REMOVAL.
3. COMPUTE THE AMOUNT OF SURVEYED REBOUND FOR THESE GIRDERS BY SUBTRACTING THE ELEVATIONS AFTER REMOVAL FROM THE ELEVATIONS BEFORE REMOVAL.
4. COMPUTE THE ADJUSTED REBOUND FOR THESE GIRDERS BY MUTIPLYING THE SURVEYED REBOUND BY THE RATIO OF THE PROPOSED DEAD LOAD TO EXISTING DEAD LOAD.
5. ADD THE AMOUNT OF ADJUSTED REBOUND TO THE FINAL TOP OF DECK ELEVATIONS TO OBTAIN THE DECK SCREED ELEVATIONS. USE REBOUND OF CLOSEST GIRDER TO DETERMINE TOE OF PARAPET AND PROFILE GRADE DECK SCREED ELEVATIONS.
6. AFTER STAGE I DECK PLACEMENT, REPEAT STEPS I THRU 4 FOR REMAINING GIRDERS PRIOR TO AND AFTER STAGE 2 DECK REMOVAL.

NOTES:

1. THE COST OF SURVEYING IS CONSIDERED INCIDENTAL TO DECK CONSTRUCTION AND SHALL BE INCLUDED FOR PAYMENT WITH ITEM 844 HIGH PERFORMANCE CONCRETE SUPERSTRUCTURE (DECK), AS PER PLAN.
2. FOR STAGE CONSTRUCTION DETAILS, SEE SHEET 6/29.

LEGEND:

BRG. - BEARING
F.S. - FIELD SPLICE
F.A. - FORWARD ABUTMENT
R.A. - REAR ABUTMENT
C.J. - CONSTRUCTION JOINT.

DLZ
1000 ROCKEFELLER BLDG • 614 W SUPERIOR AVE • CLEVELAND, OH 44113

DESIGNED AJM | DRAWN MWD | CHECKED JWB | REVIEWED GWM | DATE 6/20/01 | REVISED | STRUCTURE FILE NUMBER 7700156

SUPERSTRUCTURE DETAILS
BRIDGE NO. SUM-8-0087
S.R. 8 OVER EXCHANGE STREET

SUM-8-0.63

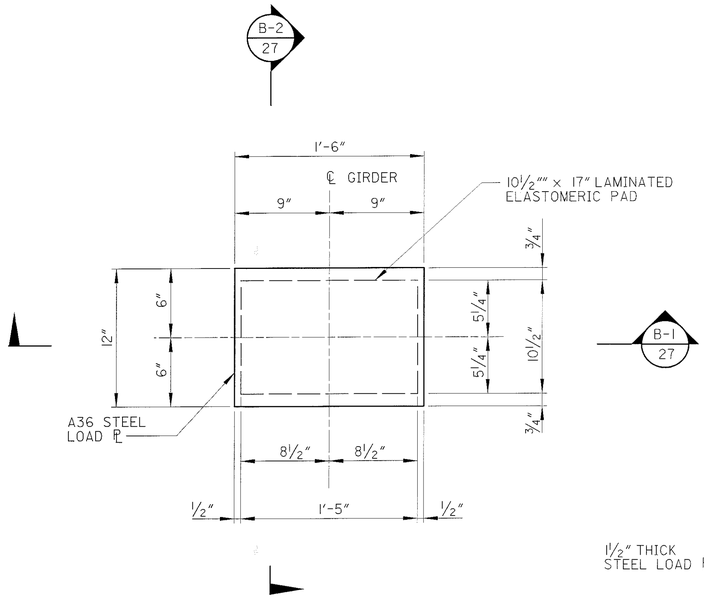

PLAN
(GIRDER NOT SHOWN)

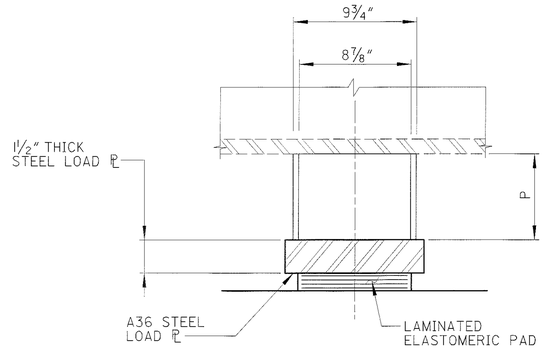

SECTION B-2 / 27

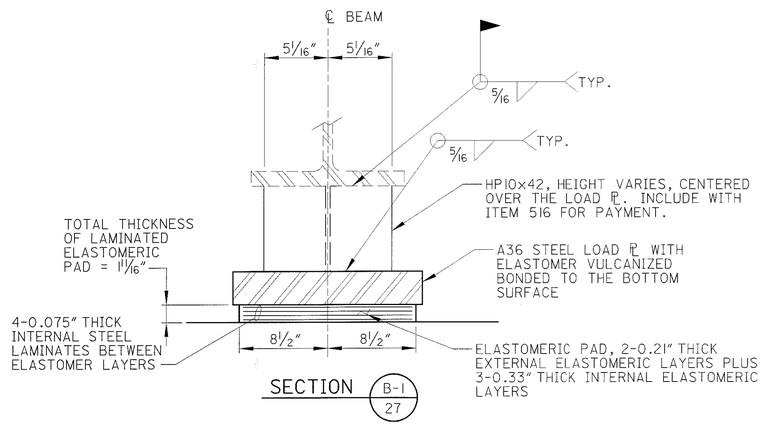

SECTION B-1 / 27

EXPANSION BEARING
(ABUTMENTS, 38 REQUIRED)

GIRDER	PEDESTAL HEIGHT (P)	
	@ REAR ABUT.	@ FWD. ABUT.
A	4½"	4½"
B	4⅝"	5⅜"
C	4¾"	5¼"
D	5 13/16"	6 9/16"
E	5 15/16"	6 9/16"
F	9 1/16"	9 1/16"
G	9 7/16"	9 13/16"
H	8⅞"	9 11/16"
J	7⅛"	8⅛"
K	7⅛"	8 9/16"
L	7⅜"	8 5/16"
M	7½"	8 5/16"
N	7⅛"	8 9/16"
O	4⅝"	6 3/16"
P	4¾"	6 3/16"
Q	4⅞"	6 5/16"
R	5⅛"	5 15/16"
S	4 1/16"	5"
T	4¼"	4⅛"

NOTES

1. BEARING DESIGN LOADS:

	EXPANSION BEARING (ABUTMENT)
DEAD LOADS	110 K
LIVE LOADS (NO IMPACT)	50 K
TOTAL DESIGN LOAD	160 K

2. A36 STEEL LOAD PLATES SHALL BE USED FOR ALL BEARINGS. THE LOAD PLATE SHALL BE VULCANIZED BONDED TO THE LAMINATED ELASTOMERIC PAD DURING THE MOLDING THE PROCESS.

3. WELDING OF THE HP SECTION TO THE LOAD PLATE AND THE HP SECTION TO THE SUPERSTRUCTURE SHALL BE CONTROLLED SO THAT THE PLATE TEMPERATURE AT THE ELASTOMER BONDED SURFACE DOES NOT EXCEED 300°F AS DETERMINED BY USE OF PYROMETRIC STICKS OR OTHER TEMPERATURE MONITORING DEVICES.

4. BEARING REPOSITIONING: IF THE STEEL IS ERECTED AT AN AMBIENT TEMPERATURE HIGHER THAN 80°F OR LOWER THAN 40°F AND THE BEARING SHEAR DEFLECTION EXCEEDS 1/6 OF THE BEARING HEIGHT AT 60°F (±) 10°F, THE BEAMS OR GIRDERS SHALL BE RAISED TO ALLOW THE BEARINGS TO RETURN TO THEIR UNDEFORMED SHAPE AT 60°F (±) 10°F.

5. BASIS OF PAYMENT: THE UNIT PRICE BID SHALL INCLUDE ALL MATERIALS, LABOR AND INCIDENTALS NECESSARY TO FURNISH AND INSTALL THE LAMINATED ELASTOMERIC BEARINGS, STEEL LOAD PLATES AND HP SHAPES. PAYMENT WILL BE MADE AT THE CONTRACT PRICE FOR ITEM 516 - ELASTOMERIC BEARING WITH INTERNAL LAMINATES AND LOAD PLATE (NEOPRENE), AS PER PLAN.

6. ELASTOMERIC BEARINGS SHALL COMPLY WITH ITEM 516 AND AASHTO STANDARD SPECIFICATION FOR HIGHWAY BRIDGES, SECTION 18, BEARING DEVICES, DIVISION II, CONSTRUCTION, ARTICLES 18.4.5.1 AND 18.5.6.2. BEARINGS SHALL BE GRADE 3, 50 DUROMETER ELASTOMER, AND SHALL BE SUBJECTED TO THE LOAD TESTING REQUIREMENTS DEFINED IN ARTICLE 18.7.4.5 OF THE AASHTO DOCUMENT LISTED ABOVE. BEARINGS WERE DESIGNED UNDER SECTION 14.6.6 OF SECTION 14, BEARINGS, DIVISION I, DESIGN. TESTING SHALL BE INCLUDED IN THE UNIT PRICE BID FOR THE BEARINGS, EACH.

DLZ
3000 ROCKEFELLER BLDG • 614 W SUPERIOR AVE • CLEVELAND, OH 44113

DESIGNED AJM | DRAWN MWD | CHECKED DJC | REVISED | REVIEWED GWM | DATE 6/20/01

STRUCTURE FILE NUMBER 770156

SUPERSTRUCTURE DETAILS
BRIDGE NO. SUM-8-0087
S.R.8 OVER EXCHANGE STREET

SUM-8-0.63

REINFORCING STEEL LIST

MARK	NUMBER REAR	NUMBER FWD.	NUMBER TOTAL	LENGTH	WEIGHT (LBS.)	TYPE	DIMENSIONS A	B	C	D	E	SER INC.
ABUTMENTS												
A401		28	28	3'-3"	61	3	1'-7"	1'-10"				
A501	22		22	13'-9"	316	STR						
A502	2		2	10'-7"	22	12	2'-4"	2'-6"	7'-11"			
A503	2		2	6'-3"	13	STR						
A504	6		6	10'-0"	63	STR						
A505	11	11	22	6'-4"	145	29	2'-0"	1'-8"	2'-0"	1'-8"		
A506	11	11	22	4'-8"	107	3	2'-0"	2'-0"				
	2		2	2'-10"								
A507	SER OF		SER OF		50	STR						5 5/8"
	6		6	5'-2"								
A508	4	4	8	3'-11"	33	STR						
A509	2		2	3'-2"	7	STR						
A510	18		18	27'-7"	518	STR						
A511	NOT	USED										
A512		20	20	13'-10"	289	STR						
A513		2	2	5'-10"	12	STR						
A514		2	2	10'-7"	22	12	2'-4"	2'-4"	7'-11"			
A515		6	6	10'-3"	64	STR						
		2	2	2'-9"								
A516		SER OF	SER OF		47	STR						4 13/16"
		6	6	4'-9"								
A520		28	28	5'-4"	156	3	2'-10"	2'-8"				
A521		28	28	2'-10"	83	STR						
A522	NOT	USED										
A523		11	11	27'-1"	311	STR						
A524	25		25	5'-11"	154	3	1'-10"	4'-3"				
A601	13		13	9'-9"	191	STR						
A602	11	11	22	11'-6"	380	STR						
A603	22	24	46	7'-7"	524	3	1'-0"	6'-9"				
A604	19		19	21'-7"	616	STR						
A605	5		5	16'-10"	127	STR						
A606	5	5	10	8'-4"	126	29	3'-0"	2'-3"	2'-3"	2'-3"		
A607	5	5	10	8'-1"	122	4	3'-11"	2'-3"				
A608	14		14	8'-10"	186	STR						
	2		2	15'-2"								
A609	SER OF		SER OF		359	STR						7 11/16"
	7		7	19'-0"								
A610	4		4	14'-11"	90	STR						
A611	18	18	36	17'-10"	964	STR						
A612	15	15	30	7'-6"	338	STR						
A613	40	38	78	6'-1"	713	3	1'-0"	5'-3"				
A614	39		39	12'-6"	732	STR						
A615	NOT	USED										
A616	5	5	10	4'-8"	70	4	8"	2'-2"				
A617	NOT	USED										
A618	4		4	4'-4"	26	4	2'-8"	2'-8"				
A619	NOT	USED										
A620	29		29	3'-9"	164	20	2'-8"	1'-4"	1'-4"	9"		
	1		1	5'-10"				4'-0"				
A621	SER OF		SER OF		284	3	2'-0"			"B" VARIES BY		0 1/2"
	29		29	7'-2"				5'-4"				
A622-A623	NOT	USED										
A624	8		8	4'-9"	57	3	1'-6"	3'-5"				
A625	25	24	49	3'-3"	239	21	9"	6"	8 1/2"	1'-1"	10 1/2"	
	1		1	4'-10"				3'-6"				
A626	SER OF		SER OF		86	3	1'-6"			"B" VARIES BY		1"
	11		11	5'-7"				4'-3"				
A627	14		14	3'-6"	74	3	1'-10"	1'-10"				
A628	5	5	10	2'-10"	43	4	8"	1'-3"				
A630		13	13	8'-11"	174	STR						
A631-A632	NOT	USED										
A633		19	19	18'-1"	516	STR						
A634		14	14	9'-4"	196	STR						
		2	2	14'-3"								
A635		SER OF	SER OF		391	STR						
		8	8	18'-3"								
A636-A638	NOT	USED										
A639		38	38	11'-6"	656	STR						
A640	NOT	USED										
A641		5	5	13'-7"	102	STR						
A645		13	13	2'-3"	44	3	8"	1'-9"				
		1	1	3'-9"				3'-3"				
A646		SER OF	SER OF		69	3	8"					
		11	11	4'-7"				4'-1"				
A647		8	8	3'-10"	46	3	8"	3'-4"				

REINFORCING STEEL LIST

MARK	NUMBER REAR	NUMBER FWD.	NUMBER TOTAL	LENGTH	WEIGHT (LBS.)	TYPE	DIMENSIONS A	B	C	D	E	SER INC.
ABUTMENTS												
A801	28	24	52	3'-10"	532	STR						
A802	55	6	61	8'-11"	1452	STR						
A803	9	6	15	13'-9"	551	3	5'-0"	8'-11"				
	1		1	15'-0"				10'-2"				
A804	SER OF		SER OF		192	3	5'-0"					2'-0"
	4		4	21'-0"				16'-2"				
	1		1	10'-2"								
A805	SER OF		SER OF		141	STR						2'-0"
	4		4	16'-2"								
A806	9	7	16	9'-10"	420	3	5'-0"	5'-0"				
A807	6		6	22'-8"	363	STR						
A808	28		28	25'-5"	1900	STR						
A809	15	15	30	7'-6"	601	STR						
A810	17	18	35	9'-0"	841	20	2'-0"	3'-6"	3'-6"	2'-0"		
A811-A814	NOT	USED										
		1	1	13'-3"				8'-6"				
A815		SER OF	SER OF		245	3	5'-0"			"B" VARIES BY		2'-6 1/2"
		5	5	23'-5"				18'-8"				
		1	1	8'-6"								
A816		SER OF	SER OF		181	STR						
		5	5	18'-8"								
A817		24	24	25'-2"	1613	STR						
A820		38	38	7'-0"	710	STR						
A901	13		13	9'-9"	431	STR						
A902	11	11	22	11'-6"	860	STR						
A904		13	13	9'-2"	405	STR						
		ABUTMENT SUBTOTAL =			22616							
ABUTMENT PARAPET												
X501	8	8	16	10'-0"	167	STR						
X502	4	4	8	5'-8"	48	23	1'-10"	2'-5"	1'-5"	5"	1 1/2"	
X503	4	4	8	5'-8"	48	STR						
X504	4	4	8	21'-9"	181	STR						
X505	2	2	4	9'-10"	41	STR						
X506	2		2	15'-10"	33	STR						
X507		2	2	15'-5"	32	STR						
Y501	22	22	44	7'-1"	325	22	3'-0"	3'-3"	8"			
Y502	2	2	4	3'-10"	16	1	3'-3"					
Y503	2	2	4	3'-9"	16	1	3'-2"					
Y504	2	2	4	3'-8"	16	1	3'-1"					
Y505	2	2	4	3'-7"	15	1	3'-0"					
Y506	2	2	4	3'-6"	15	1	2'-11"					
Y507	2	2	4	3'-5"	15	1	2'-10"					
Y508	2	2	4	3'-4"	14	1	2'-9"					
Y509	2	2	4	3'-3"	14	1	2'-8"					
Y510	2	2	4	3'-2"	14	1	2'-7"					
Y511	2	2	4	3'-1"	13	1	2'-6"					
Y512	2	2	4	3'-0"	13	1	2'-5"					
X601	1	1	2	10'-5"	32	STR						
X602	1		1	16'-4"	25	STR						
X604		1	1	15'-3"	23	STR						
Y601	NOT	USED										
Y602	8	8	16	3'-8"	88	20	8"	6"	8 1/2"	2'-3"		
Y603	8	8	16	4'-6"	108	STR						
Y604	NOT	USED										
Y605	8	8	16	2'-10"	68	STR						
		ABUTMENT PARAPET SUBTOTAL =			1380							
		ABUTMENT TOTAL =			23770							

BENDING DIAGRAMS

TYPE 1

TYPE 3

TYPE 4

TYPE 12

TYPE 5

TYPE 12

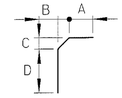

TYPE 20

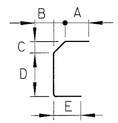

TYPE 21

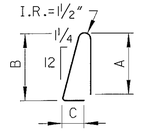

TYPE 22

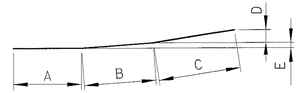

TYPE 23

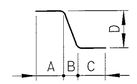

TYPE 29

REINFORCING STEEL NOTES:

1. SERIES BARS - EACH BAR VARIES BY TABULATED AMOUNT.
2. ALL DIMENSIONS ARE OUT TO OUT.
3. TYPE 'STR' INDICATES A STRAIGHT BAR.
4. THE BAR SIZE NUMBER IS SPECIFIED IN THE 'MARK' COLUMN. THE FIRST DIGIT INDICATES THE BAR SIZE NUMBER. FOR EXAMPLE, A501 IS A #5 BAR SIZE.
5. ALL BARS SHALL BE EPOXY COATED UNLESS NOTED OTHERWISE.
6. SUBTOTALS AND TOTAL WEIGHTS ARE FOR INFORMATIONAL PURPOSES ONLY. IF THE REINFORCING LIST PROVIDED IN THE PLANS IS USED IT SHALL BE VERIFIED BY THE CONTRACTOR. ANY REVISIONS IN THE REINFORCING STEEL LIST AS SHOWN IN THE PLANS WILL NOT BE REASON FOR ADJUSTMENT IN THE BID PRICE FOR STRUCTURAL CONCRETE.

DLZ
1000 ROCKEFELLER BLDG • 614 W SUPERIOR AVE • CLEVELAND, OH 44113

DESIGNED AJM | DRAWN DJP | CHECKED JWB | REVIEWED GWM | DATE 6/20/01 | REVISED | STRUCTURE FILE NUMBER 770056

REINFORCING STEEL LIST
BRIDGE NO. SUM-8-0087
S.R. 8 OVER EXCHANGE STREET

SUM-8-0.63

REINFORCING STEEL LIST

MARK	NO.	LENGTH	WEIGHT (LBS.)	TYPE	DIMENSIONS A	B	C	D	E	SER INC.
SUPERSTRUCTURE										
S401	510	30'-0"	10220	STR						
S402	170	5'-11"	672	STR						
S501	1323	30'-0"	41397	STR						
S502	197	7'-2"	1473	STR						
S503	366	15'-4"	5853	STR						
S504	366	28'-11"	11039	STR						
S505	366	15-1"	5758	STR						
S506	366	28-0"	10689	STR						
S507	184	7'-1"	1359	22	3'-0"	3'-3"	8"			
S508	546	11'-2"	6359	4	3'-11"	3'-9"				
S509	273	8'-1"	2302	4	3'-1"	2'-8"				
S601	184	2'-7"	714	21	9"	6"	8"	9"	5"	
S602	184	2'-2"	599	3	11"	1'-5"				
S603	184	2'-3"	622	21	5"	6"	8"	9"	5"	
S604	184	5'-3"	1451	3	11"	4'-6"				
S605	184	3'-0"	829	1	2'-4"					
S606	6	30'-0"	270	STR						
S607	2	11'-2"	34	STR						
S608	138	28'-5"	5890	STR						
S801	36	30'-0"	2884	STR						
S802	4	8'-8"	93	STR						
S803	16	11'-0"	470	15	4'-0"	6"	6"	1'-9"		
S804	12	14'-2"	454	STR						
S805	4	29'-10	319	STR						
S806	4	6'-1"	65	STR						
S807	8	27'-0"	577	STR						
S808	12	15'-10	507	STR						
S809	4	20'-3"	216	STR						
S810	4	12'-10	137	STR						
S811	8	5'-4"	114	STR						
S812	8	15'-0"	320	STR						
S813	4	23'-0"	246	STR						
S814	32	29'-2"	2492	STR						
S815	8	11'-8"	249	STR						
S816	8	8'-2"	174	STR						
S817	12	14'-0"	449	STR						
S818	8	11'-6"	246	STR						
S819	4	7'-8"	82	STR						
S820	24	28'-4"	1816	STR						
S821	8	11'-0"	235	STR						
S822	8	13'-10	295	STR						
S823	12	11'-4"	363	STR						
S824	8	14'-5"	308	STR						
D801	185	5'-3"	2593	10	2'-11"	1'-0"	1'-0"			
SUPERSTRUCTURE TOTAL =			123234							

REINFORCING STEEL LIST

MARK	NUMBER REAR	FWD.	TOTAL	LENGTH	WEIGHT (LBS.)	TYPE	DIMENSIONS A	B	C	D	E	SER INC.
SUPERSTRUCTURE												

BENDING DIAGRAMS

TYPE 1

TYPE 3

TYPE 4

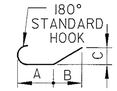

TYPE 10

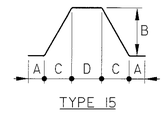

TYPE 15

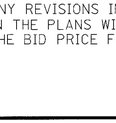

TYPE 21

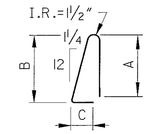

TYPE 22

REINFORCING STEEL NOTES:

1. SERIES BARS - EACH BAR VARIES BY TABULATED AMOUNT.
2. ALL DIMENSIONS ARE OUT TO OUT.
3. TYPE 'STR' INDICATES A STRAIGHT BAR.
4. THE BAR SIZE NUMBER IS SPECIFIED IN THE 'MARK' COLUMN. THE FIRST DIGIT INDICATES THE BAR SIZE NUMBER. FOR EXAMPLE, S501 IS A #5 BAR SIZE.
5. ALL BARS SHALL BE EPOXY COATED UNLESS NOTED OTHERWISE.
6. SUBTOTALS AND TOTAL WEIGHTS ARE FOR INFORMATIONAL PURPOSES ONLY. IF THE REINFORCING LIST PROVIDED IN THE PLANS IS USED IT SHALL BE VERIFIED BY THE CONTRACTOR. ANY REVISIONS IN THE REINFORCING STEEL LIST AS SHOWN IN THE PLANS WILL NOT BE REASON FOR ADJUSTMENT IN THE BID PRICE FOR STRUCTURAL CONCRETE.

DLZ
1000 ROCKEFELLER BLDG • 614 W SUPERIOR AVE • CLEVELAND, OH 44113

DESIGNED AJM | DRAWN DJP | CHECKED JWB | REVIEWED GWM | DATE 6/20/01 | REVISED | STRUCTURE FILE NUMBER 7700156

REINFORCING STEEL LIST
BRIDGE NO. SUM-8-0087
S.R. 8 OVER EXCHANGE STREET

SUM-8-0.63

29/29

939
1088

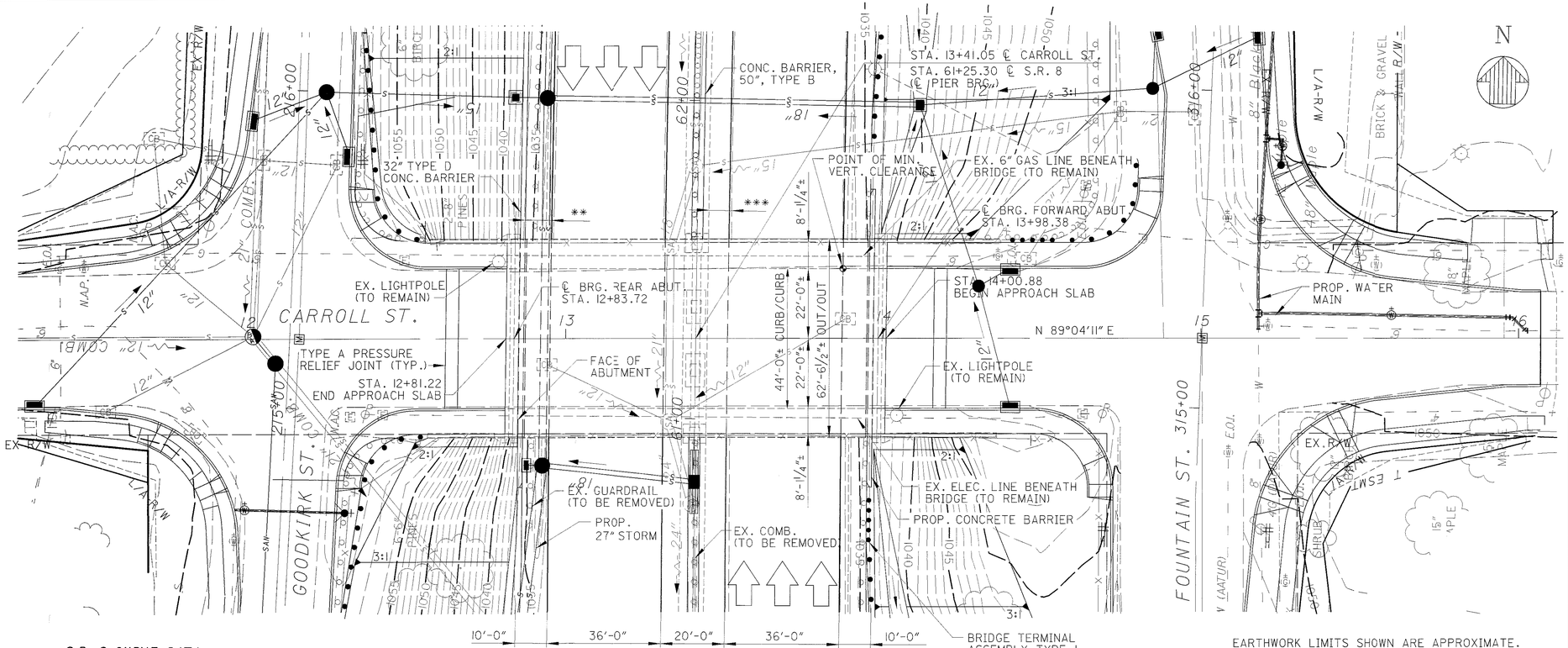

PLAN

EARTHWORK LIMITS SHOWN ARE APPROXIMATE. ACTUAL SLOPES SHALL CONFORM TO PLAN CROSS-SECTIONS

S.R. 8 CURVE DATA

P.I. STA. = 67+45.23
△ = 7° 46' 07" (RT)
Dc = 0° 30' 13"
R = 11,375.75'
T = 772.39'
L = 1,542.41"
E = 26.19'

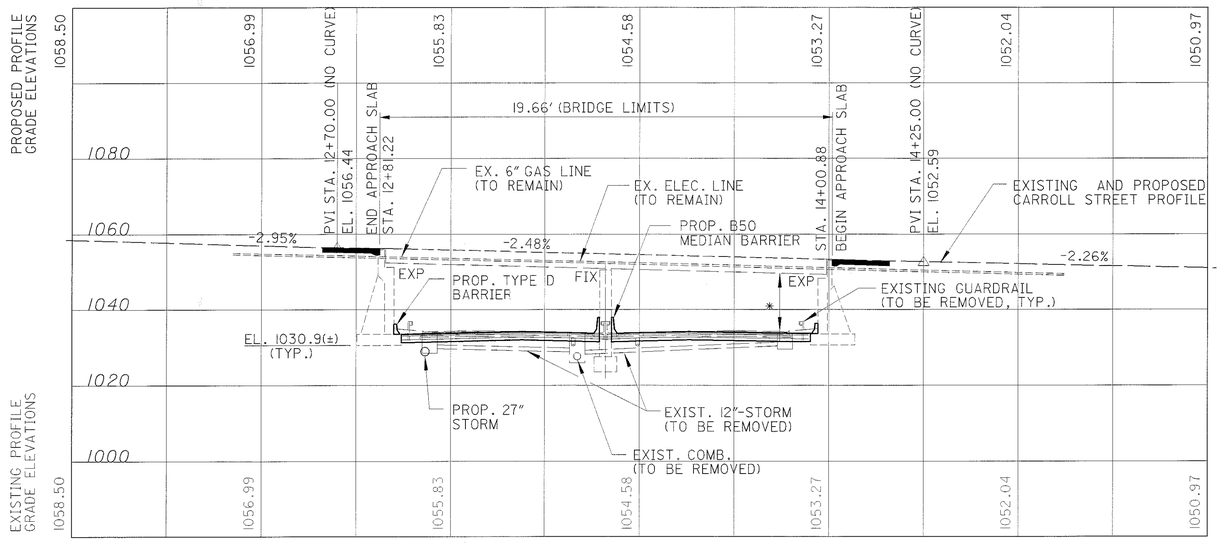

PROFILE ALONG ℄ CARROLL STREET

* VERTICAL CLEARANCE:
EXISTING: 15'-3"
PROPOSED: 15'-3"
REQUIRED: 14'-6"

** HORIZONTAL CLEARANCE: (OUTSIDE SHOULDERS)
EXISTING: 5'-0"± (TO FACE OF GUARDRAIL)
PROPOSED: 8'-3½" (TO TOE OF BARRIER)
REQUIRED: 10'-0" (TO TOE OF BARRIER)

*** HORIZONTAL CLEARANCE: (MEDIAN SHOULDERS)
EXISTING: 6'-3"± (TO FACE OF CURB)
PROPOSED: 7'-2 " (TO TOE OF BARRIER)
REQUIRED: 10'-0" (TO TOE OF BARRIER)

BENCHMARK #7

CHISELED "□" ON SW CORNER OF CONCRETE PAD FOR FLOOD LIGHT @ UNIV. OF AKRON SIGN, 40' N OF ℄ CARROLL ST. & 83' W OF ℄ GOODKIRK ST.
ELEV: 1062.68

BENCHMARK #16

CHISELED "□" ON SE CORNER OF CONCRETE ENTRANCE PAD FOR 525 NASH ST. (BELLA DORA APTS.), 56.1' N OF ℄ CARROLL ST. & 10.1' SE OF THE SW CORNER OF BLDG.
ELEV: 1051.48

TRAFFIC DATA

CARROLL STREET
CURRENT ADT (2004) = 10,510
DESIGN ADT (2024) = 10,870
DESIGN ADTT = 326

EXISTING STRUCTURE

TYPE: CONTINUOUS STEEL BEAM WITH REINFORCED CONCRETE DECK AND SUBSTRUCTURE
SPANS: 57-4"(±), 57'-4"(±), CENTER-TO-CENTER OF BEARINGS
ROADWAY: 44'-0"(±) FACE TO FACE OF CURBS WITH 8'-1¼"(±) SIDEWALKS EACH SIDE, 62'-6½"(±) OUT TO OUT OF DECK.
SKEW: 0° 42' 32" (LEFT FORWARD)
ALIGNMENT: TANGENT
LOADING: HS 20-44 (CASE II) AND THE ALTERNATE MILITARY LOADING
WEARING SURFACE: 1¼" LATEX MODIFIED CONCRETE
APPROACH SLABS: 15'
CROWN: 3/16"/FT.(±)
DATE BUILT: c.1954 MAJOR REHABILITATION: c.1984
STRUCTURE FILE NUMBER: 7700180

PROPOSED STRUCTURE

PROPOSED WORK: NEW APPROACH SLABS, REPLACE STRIP SEAL GLANDS, REPLACE APPROACH SIDEWALKS, UPGRADE VANDAL PROTECTION FENCE, REHABILITATE EXISTING SUBSTRUCTURE
TYPE: EXISTING
SPANS: EXISTING
ROADWAY: EXISTING
SKEW: EXISTING
ALIGNMENT: EXISTING
LOADING: EXISTING
WEARING SURFACE: EXISTING
APPROACH SLABS: AS-1-81, 15' LONG
CROWN: EXISTING
LATITUDE: N 41°4'30"
LONGITUDE: W 81°30'20"

DLZ
1000 ROCKEFELLER BLDG • 614 W SUPERIOR AVE • CLEVELAND, OH 44113

DESIGNED	DRAWN	REVIEWED	DATE
JWB	JWB	GWM	03/21/00
CHECKED	REVISED	STRUCTURE FILE NUMBER	
PAT		7700180	

SUMMIT COUNTY
STA.12+81.22
STA. 14+00.88

SITE PLAN
BRIDGE NO. SUM-8-0116
CARROLL STREET OVER S.R. 8

SUM-8-0.63

REFERENCE SHALL BE MADE TO STANDARD DRAWINGS:

AS-1-81	DATED	4/20/01
EXJ-4-87	DATED	4/20/01
VPF-1-90M	DATED	3/20/95

AND TO THE SUPPLEMENTAL SPECIFICATIONS:

843	DATED	5/5/98
846	DATED	9/9/97
863	DATED	10/12/99
864	DATED	7/11/00
954	DATED	9/9/97

DESIGN SPECIFICATIONS
NOT APPLICABLE

DESIGN LOADING
NOT APPLICABLE

DESIGN STRESSES
NOT APPLICABLE

EXISTING STRUCTURE VERIFICATION:

DETAILS AND DIMENSIONS SHOWN ON THESE PLANS PERTAINING TO THE EXISTING STRUCTURE HAVE BEEN OBTAINED FROM PLANS OF THE EXISTING STRUCTURE AND FROM FIELD OBSERVATIONS AND MEASUREMENTS. CONSEQUENTLY, THEY ARE INDICATIVE OF THE EXISTING STRUCTURE AND THE PROPOSED WORK BUT THEY SHALL BE CONSIDERED TENTATIVE AND APPROXIMATE. THE CONTRACTOR IS REFERRED TO CMS SECTIONS 102.05 AND 105.02.

CONTRACT BID PRICES SHALL BE BASED UPON A RECOGNITION OF UNCERTAINTIES DESCRIBED ABOVE AND UPON A PREBID EXAMINATION OF THE EXISTING STRUCTURE BY THE CONTRACTOR. HOWEVER, ALL PROJECT WORK SHALL BE BASED UPON ACTUAL DETAILS AND DIMENSIONS WHICH HAVE BEEN VERIFIED BY THE CONTRACTOR IN THE FIELD.

DESCRIPTION OF WORK:
THE WORK PERFORMED SHALL INCLUDE BUT NOT NECESSARILY BE LIMITED TO THE FOLLOWING:

1. REMOVE EXISTING APPPOACH SLABS AND CURB GRADE BEAMS. CUT-OFF AND ABANDON PILES SUPPORTING GRADE BEAM.
2. INSTALL NEW 15' APPROACH SLABS PER STD. DWG AS-1-81 WITH INTEGRAL CURB AND TYPE A PRESSURE RELIEF JOINTS. INSTALL NEW APPROACH SIDEWALKS. REFER TO ROADWAY PLANS FOR DETAILS.
3. RETROFIT EXISTING VANDAL PROTECTION FENCE TO PROVIDE STAINLESS STEEL CLOSURE PLATES.
4. REPLACE ELASTOMERIC STRIP SEAL GLANDS.
5. PATCH EXISTING SUBSTRUCTURE UNITS.
6. SEAL CONCRETE SURFACES.

MAINTENANCE OF TRAFFIC:
MAINTENANCE OF TRAFFIC FOR THE STRUCTURE WORK SHALL BE COORDINATED WITH THE OVERALL PROJECT. REFER TO MAINTENANCE OF TRAFFIC NOTES AND DETAILS ELSEWHERE IN THE PLANS.

ROADWAY ITEMS:

COSTS FOR REMOVAL OF EXISTING APPROACH SLABS AND SIDEWALK AND INSTALLATION OF NEW APPROACH SLABS, SIDEWALK AND PRESSURE RELIEF JOINTS ARE INCLUDED WITH ROADWAY ITEMS.

ITEM 202, PORTIONS OF STRUCTURE REMOVED, AS PER PLAN:

DESCRIPTION: WORK TO BE PAID FOR UNDER THIS ITEM SHALL INCLUDE THE REMOVAL OF EXISTING STRUCTURE COMPONENTS AS DETAILED IN THE PLANS AND AS DIRECTED BY THE ENGINEER. THE REMOVALS SHALL INCLUDE BUT NOT NECESSARILY BE LIMITED TO THE FOLLOWING:

1. REMOVAL OF EXISTING APPROACH CURB GRADE BEAMS AND PILE CUTOFFS.
2. MISCELLANEOUS ITEMS THAT ARE NOT SHOWN TO BE INCORPORATED INTO THE FINAL CONSTRUCTION AND ARE DIRECTED TO BE REMOVED BY THE ENGINEER.

COSTS FOR REMOVAL OF EXISTING APPROACH SLABS AND SIDEWALK AND INSTALLATION OF NEW APPROACH SLABS, SIDEWALK AND PRESSURE RELIEF JOINTS ARE INCLUDED WITH ROADWAY ITEMS.

ANY EXCAVATION AND BACKFILL REQUIRED AS PART OF THIS REMOVAL ITEM SHALL BE PERFORMED IN ACCORDANCE WITH ITEM 503 BUT CONSIDERED INCIDENTAL AND INCLUDED FOR PAYMENT WITH ITEM 202.

PAYMENT: THIS WORK WILL BE PAID FOR AT THE CONTRACT LUMP SUM PRICE BID, WHICH PRICE AND PAYMENT SHALL BE FULL COMPENSATION FOR ALL LABOR, EQUIPMENT, MATERIALS AND INCIDENTALS NECESSARY TO COMPLETE THE WORK IN CONFORMANCE WITH THESE REQUIREMENTS, WITH PERTINENT PROVISIONS OF 202, AND TO THE SATISFACTION OF THE ENGINEER.

ITEM 864, SEALING OF CONCRETE SURFACES (EPOXY-URETHANE):

CONCRETE SURFACES AS DETAILED IN THE PLANS SHALL BE SEALED WITH FEDERAL COLOR NO. 13522, "BUFF".

ITEM 516, ELASTOMERIC STRIP SEAL WITHOUT STEEL EXTRUSIONS, AS PER PLAN:

THIS ITEM SHALL INCLUDE REMOVAL AND REPLACEMENT OF THE EXISTING 3" STRIP SEAL GLANDS FROM FACE-TO-FACE OF CURB. THE CONSTRUCTION PLANS INDICATE THAT THE ELASTOMERIC SEAL WAS INSTALLED WITH AN ADHESIVE. UPON REMOVAL OF THE SEAL, THE CONTRACTOR SHALL ATTEMPT TO MATCH THE REPLACEMENT SEAL AS CLOSELY AS POSSIBLE WITH THE EXISTING SO AS TO PROVIDE A SNUG, WATERTIGHT SEAL. THE STRIP SEAL AND INSTALLATION SHALL MEET THE REQUIREMENTS OF STANDARD DRAWING EXJ-4-87.

THIS WORK WILL BE PAID FOR AT THE CONTRACT PRICE BID, PER LINEAL FOOT, WHICH PRICE AND PAYMENT SHALL BE FULL COMPENSATION FOR ALL LABOR, EQUIPMENT, MATERIALS AND INCIDENTALS NECESSARY TO COMPLETE THE WORK IN CONFORMANCE WITH THESE REQUIREMENTS, WITH THE PERTINENT PROVISIONS OF 516, AND TO THE SATISFACTION OF THE ENGINEER.

ITEM 863, STRUCTURAL STEEL, MISCELLANEOUS LEVEL FABRICATION, AS PER PLAN:

THIS ITEM SHALL INCLUDE THE FABRICATION AND INSTALLATION OF STAINLESS STEEL FENCE CLOSURE PLATES, IN ACCORDANCE WITH STANDARD DRAWING VPF-1-90M, FOR THE EXISTING VANDAL PROTECTION FENCE. THE CONTRACTOR SHALL FIELD MEASURE THE EXISTING BRIDGE RAILING AND FENCE POST SPACINGS BEFORE FABRICATING THE CLOSURE PLATES.

THIS WORK WILL BE PAID FOR AT THE CONTRACT LUMP SUM PRICE BID, WHICH PRICE AND PAYMENT SHALL BE FULL COMPENSATION FOR ALL LABOR, EQUIPMENT, MATERIALS AND INCIDENTALS NECESSARY TO COMPLETE THE WORK IN CONFORMANCE WITH THESE REQUIREMENTS, WITH PERTINENT PROVISIONS OF 863, AND TO THE SATISFACTION OF THE ENGINEER.

ITEM 846, TREATING CONCRETE BRIDGE DECKS WITH HMWM RESIN:

A 1'-0" STRIP OF THE DECK, ADJACENT TO THE CURBS AND THE FULL LENGTH OF THE BRIDGE BETWEEN EXPANSION JOINTS, SHALL SEALED WITH HMWM RESIN. CARE SHALL BE TAKEN TO FILL THE JOINT AT THE FACE OF CURB.

TOUCH UP OF EXISTING PAINTING:

ANY PAINTED STEEL SURFACES DAMAGED DURING CONSTRUCTION OF S.R. 8 SHALL BE SPOT PAINTED IN ACCORDANCE WITH ITEM 815 AT THE CONTRACTOR'S EXPENSE.

CONVERSION OF STANDARD BRIDGE DRAWINGS:

SOME OF THE STANDARD BRIDGE DRAWINGS REFERENCED IN THIS PLAN ARE METRIC. ANY CONVERSIONS OF DIMENSIONS REQUIRED TO CONSTRUCT THE ITEMS SHOWN ON THE STANDARDS SHALL BE THE RESPONSIBILITY OF THE CONTRACTOR. CONVERSIONS SHALL BE MADE USING SI (METRIC) TO ENGLISH CONVERSION FACTORS PROVIDED IN SECTION 109.011 OF THE 1997 CONSTRUCTION AND MATERIALS SPECIFICATIONS. THE APPENDIX OF ASTM E380 SHALL BE UTILIZED FOR ANY ADDITIONAL CONVERSION FACTORS REQUIRED. CONVERSIONS SHALL BE APPROPRIATELY PRECISE AND SHALL REFLECT INDUSTRY ENGLISH VALUES WHERE SUITABLE.

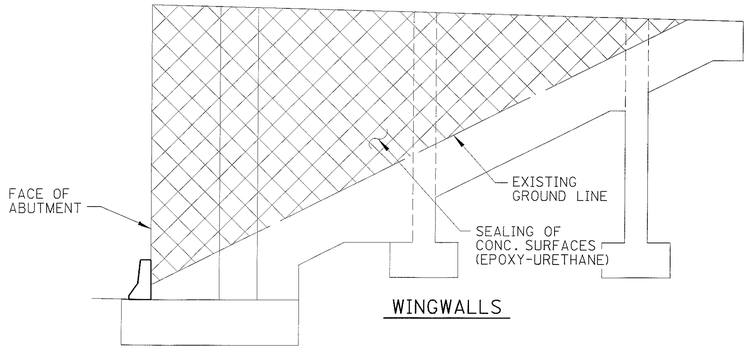

WINGWALLS

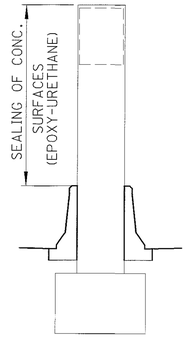

PIER

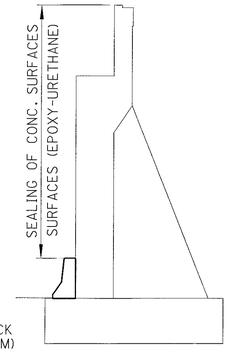

ABUTMENT

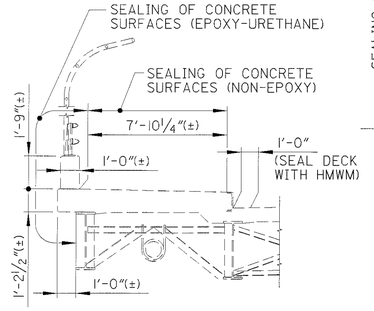

DECK/PARAPETS

CONCRETE SEALING DETAILS

ESTIMATED QUANTITIES

CALCULATED BY: JWB 12/08/00
CHECKED BY: DJC 12/12/00

ITEM	ITEM EXTENSION	TOTAL	UNIT	DESCRIPTION	REAR ABUTMENT	FORWARD ABUTMENT	PIERS	SUPER.	GENERAL	AS PER PLAN SHEET REF.
202	11201	LUMP	SUM	PORTIONS OF STRUCTURE REMOVED, AS PER PLAN					LUMP	2
516	01301	92	LIN. FT.	ELASTOMERIC STRIP SEAL WITHOUT STEEL EXTRUSIONS, AS PER PLAN				92		2
516	13200	8	SQ FT	½" PREFORMED EXPANSION JOINT FILLER	5	3				
516	13600	50	SQ FT	1" PREFORMED EXPANSION JOINT FILLER	30	20				
519	11100	1035	SQ FT	PATCHING CONCRETE STRUCTURES			1035			
					23	71	150			
843	50000	244	SQ FT	PATCHING CONCRETE STRUCTURES WITH TROWELABLE MORTAR						
846	73000	27	SQ YD	TREATING CONCRETE BRIDGE DECKS WITH HMWM RESIN				27		
863	10001	LUMP	SUM	STRUCTURAL STEEL MEMBERS, MISCELLANEOUS LEVEL FABRICATION, AS PER PLAN					LUMP	2
864	10050	392	SQ YD	SEALING OF CONCRETE SURFACES (NON-EPOXY)				392		
864	10100	859	SQ YD	SEALING OF CONCRETE SURFACES (EPOXY-URETHANE)	278	234	164	183		

DLZ
1000 ROCKEFELLER BLDG • 614 W. SUPERIOR AVE • CLEVELAND, OH 44113

DESIGNED JWB | DRAWN JWB | CHECKED PAT | REVISED | REVIEWED GWM 6/29/01 | DATE | STRUCTURE FILE NUMBER 7700180

STRUCTURE GENERAL NOTES
BRIDGE NO. SUM-8-0116
CARROLL STREET OVER S.R. 8

SUM-8-0.63

2 / 6

941
1088

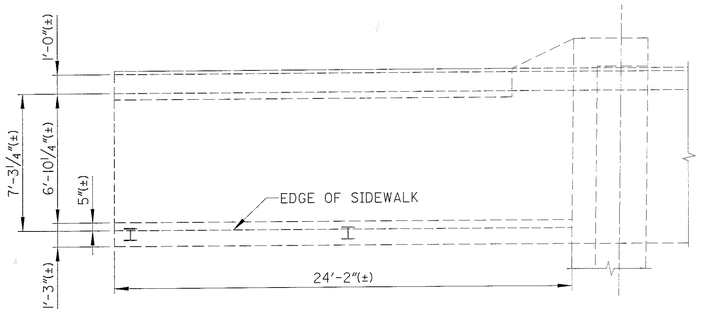

NORTHWEST APPROACH SIDEWALK

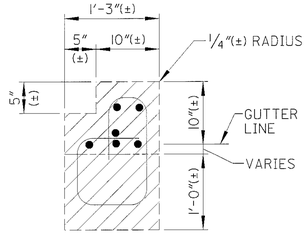

TYPICAL CURB SECTION
AT ABUTMENT

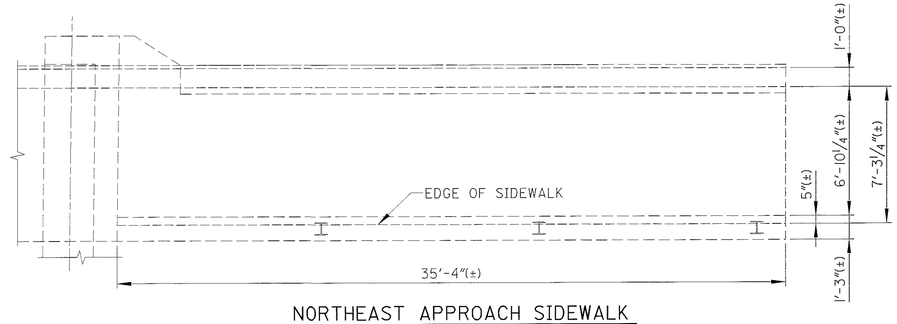

NORTHEAST APPROACH SIDEWALK

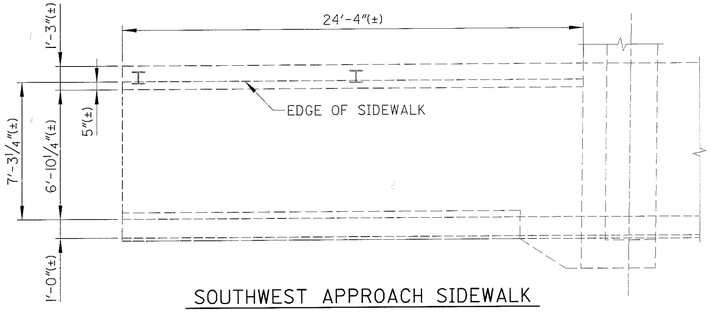

SOUTHWEST APPROACH SIDEWALK

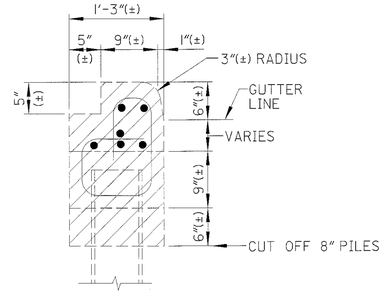

TYPICAL CURB SECTION
AT APPROACH SIDEWALK

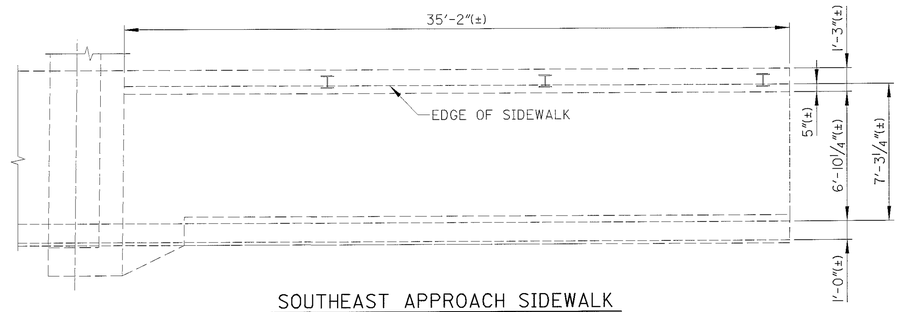

SOUTHEAST APPROACH SIDEWALK

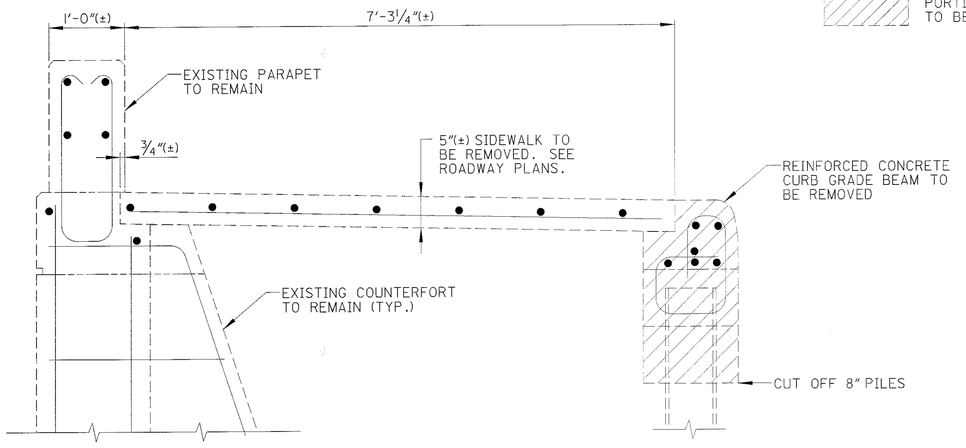

TYPICAL SECTION
EXISTING APPROACH SIDEWALK

HATCHED AREAS REPRESENT PORTIONS OF STRUCTURE TO BE REMOVED.

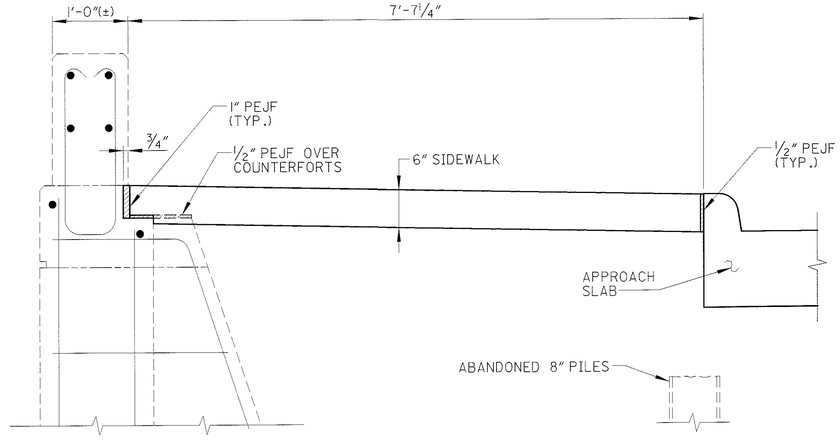

TYPICAL SECTION
PROPOSED APPROACH SIDEWALK

NOTE: EXISTING SIDEWALK REMOVAL AND THE PROPOSED SIDEWALK SHALL BE INCLUDED FOR PAYMENT WITH THE ROADWAY QUANTITIES. SEE ROADWAY SHEETS FOR MORE INFORMATION.

DLZ
1000 ROCKEFELLER BLDG • 614 W SUPERIOR AVE • CLEVELAND, OH 44113

DESIGNED JWB
DRAWN DJC
CHECKED PAT
REVIEWED GWM
DATE 6/29/01
REVISED
STRUCTURE FILE NUMBER 770180

SIDEWALK DETAILS
BRIDGE NO. SUM-8-0116
CARROLL STREET OVER S.R. 8

SUM-8-0.63

3 / 6

942
1088

PLAN

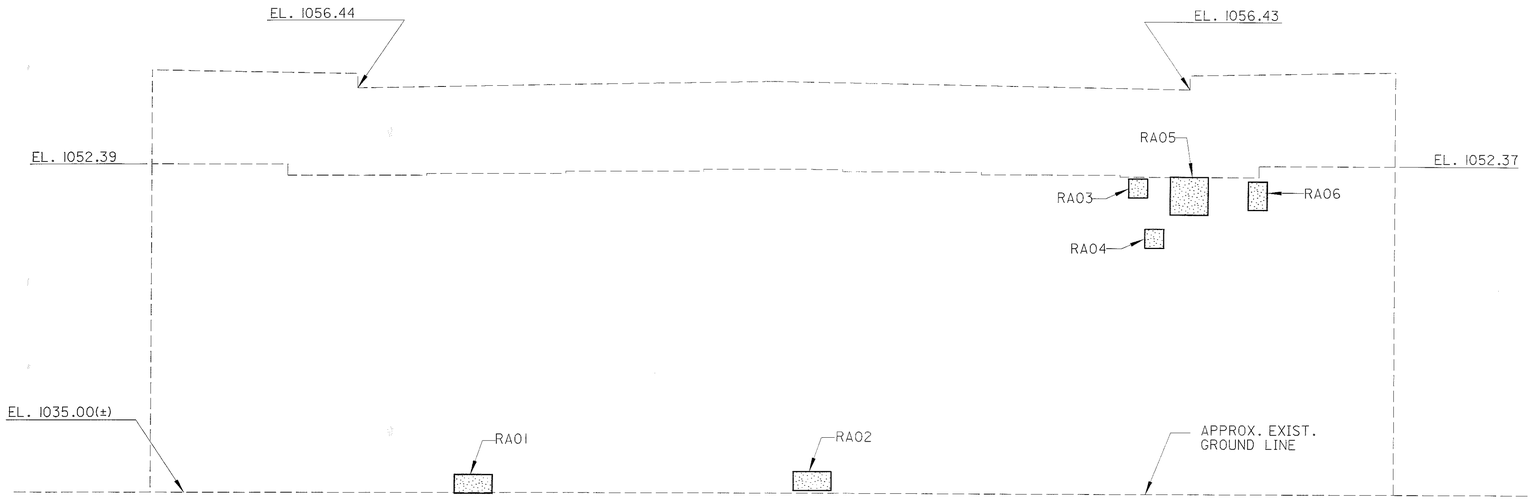

ELEVATION

EAST FACE - LOOKING WEST

REPAIR QUANTITIES				ITEM 843
REF. NUM.	DIMENSIONS			AREA SQ. FT.
RA01	1'-0"	×	2'-0"	2.00
RA02	1'-0"	×	2'-0"	2.00
RA03	1'-0"	×	1'-0"	1.00
RA04	1'-0"	×	1'-0"	1.00
RA05	2'-0"	×	2'-0"	4.00
RA06	1'-0"	×	1'-6"	1.50
RA07	0'-8"	×	3'-0"	2.00
RA08	1'-6"	×	0'-3"	0.38
RA09	0'-8"	×	2'-0"	1.25
SUBTOTAL, PIER				15.13
ESTIMATION FACTOR				1.5
TOTAL CARRIED TO QUANTITIES				23

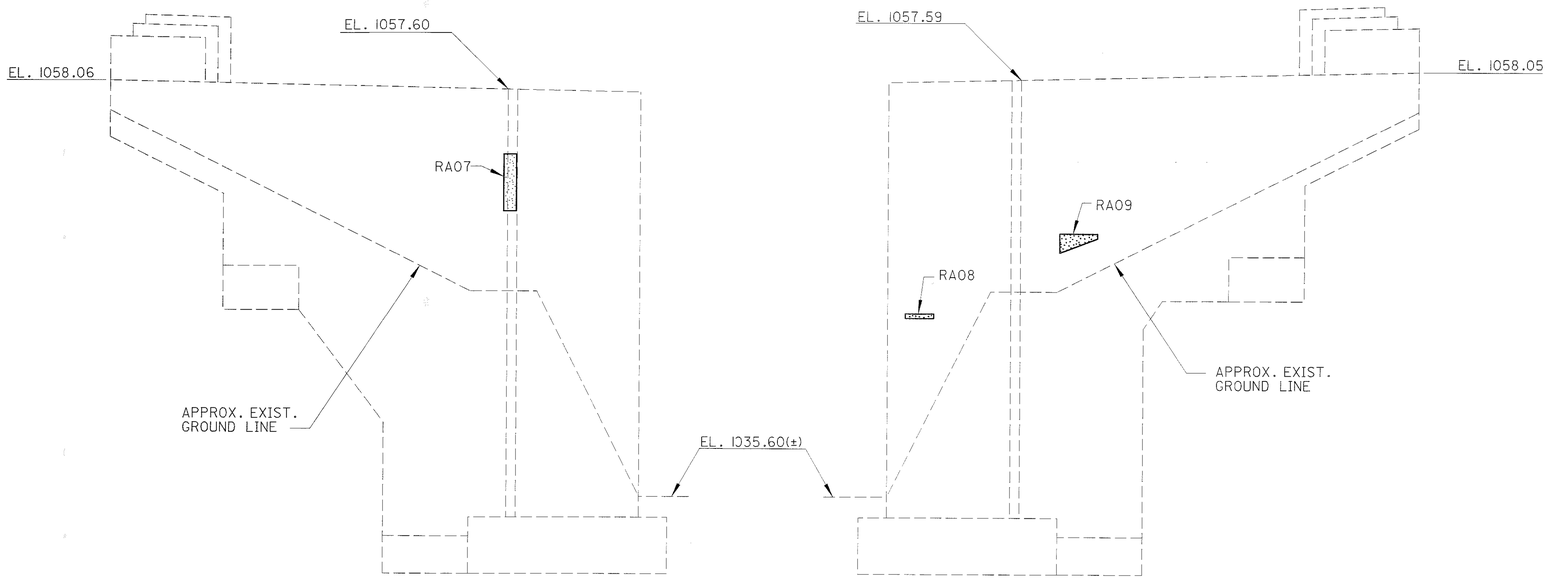

ELEVATION - SOUTHWEST WINGWALL

SOUTH FACE - LOOKING NORTH

ELEVATION - NORTHWEST WINGWALL

NORTH FACE - LOOKING SOUTH

DLZ
1000 ROCKEFELLER BLDG ● 614 ● SUPERIOR AVE ● CLEVELAND, OH 44113

DESIGNED RCK
DRAWN RCK
CHECKED JWB
REVISED
REVIEWED GWM
DATE 6/29/01
STRUCTURE FILE NUMBER 7700180

CONCRETE PATCHING AT REAR ABUTMENT
BRIDGE NO. SUM-8-0116
CARROLL ST. OVER S.R. 8

SUM-8-0.63

4 / 6

943
1088

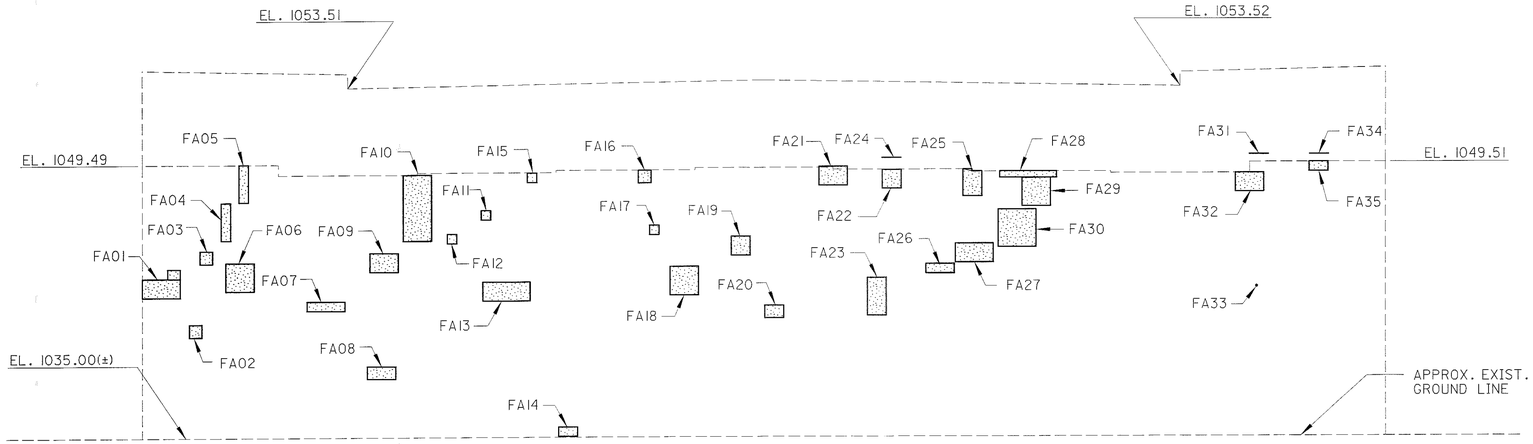

ELEVATION

WEST FACE - LOOKING EAST

REPAIR QUANTITIES				ITEM 843
REF. NUM.	DIMENSIONS			AREA SQ. FT.
FA01	0'-6"	x	0'-8"	0.34
	1'-0"	x	2'-0"	2.00
FA02	0'-8"	x	0'-8"	0.45
FA03	0'-6"	x	2'-0"	1.00
FA04	0'-6"	x	2'-0"	1.00
FA05	0'-6"	x	2'-0"	1.00
FA06	1'-6"	x	1'-6"	2.25
FA07	2'-0"	x	0'-6"	1.00
FA08	1'-6"	x	0'-8"	1.01
FA09	1'-6"	x	1'-0"	1.50
FA10	1'-6"	x	3'-6"	5.25
FA11	0'-6"	x	0'-6"	0.25
FA12	0'-6"	x	0'-6"	0.25
FA13	2'-6"	x	1'-0"	2.50
FA14	1'-0"	x	0'-6"	0.50
FA15	0'-6"	x	0'-6"	0.25
FA16	0'-8"	x	0'-8"	0.45
FA17	0'-6"	x	0'-6"	0.25
FA18	1'-6"	x	1'-6"	2.25
FA19	1'-0"	x	1'-0"	1.00
FA20	1'-0"	x	0'-8"	0.67
FA21	1'-6"	x	1'-0"	1.50
FA22	1'-0"	x	1'-0"	1.00
FA23	1'-0"	x	2'-0"	2.00
FA24	1'-0"	x	1'-0"	1.00
FA25	1'-0"	x	1'-6"	1.50
FA26	1'-6"	x	0'-6"	0.75
FA27	2'-0"	x	1'-0"	2.00
FA28	3'-0"	x	0'-4"	0.99
FA29	1'-6"	x	1'-6"	2.25
FA30	2'-0"	x	2'-0"	4.00
FA31	1'-0"	x	1'-0"	1.00
FA32	1'-6"	x	1'-0"	1.50
FA33	0'-1"	x	0'-1"	0.01
FA34	1'-0"	x	1'-0"	1.00
FA35	1'-0"	x	0'-6"	0.50
FA36	1'-0"	x	1'-0"	1.00
FA37	0'-8"	x	0'-8"	0.45
SUBTOTAL, FORWARD ABUT.				47.60
ESTIMATION FACTOR				1.5
TOTAL CARRIED TO QUANTITIES				71

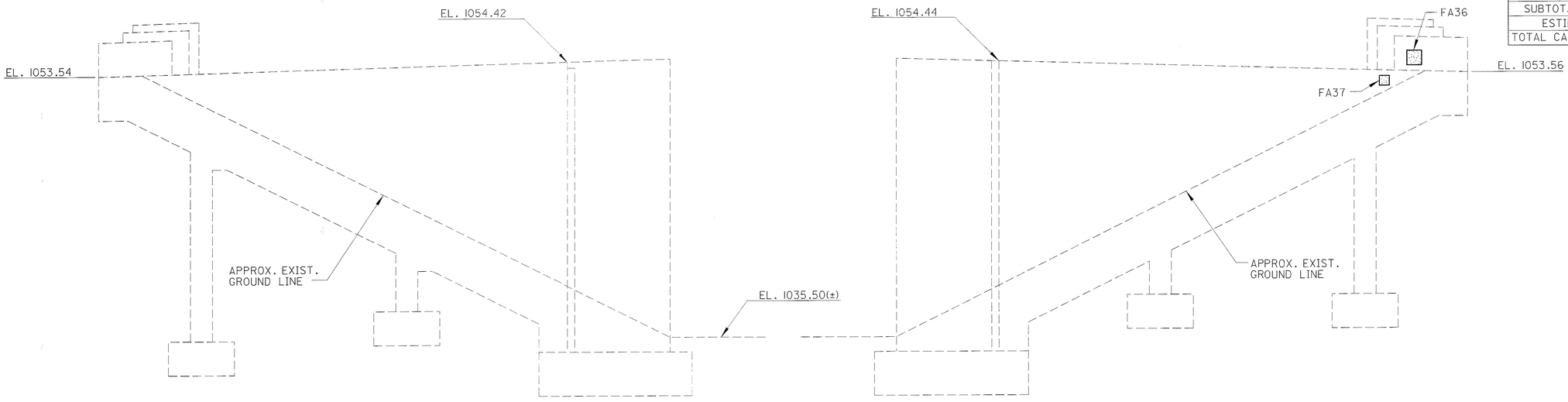

ELEVATION - NORTHEAST WINGWALL

NORTH FACE - LOOKING SOUTH

ELEVATION - SOUTHEAST WINGWALL

SOUTH FACE - LOOKING NORTH

DLZ
600 ROCKEFELLER BLDG • 614 W SUPERIOR AVE • CLEVELAND, OH 4413

DESIGNED RCK
DRAWN RCK
CHECKED JWB
REVIEWED GWM
DATE 6/29/01
REVISED
STRUCTURE FILE NUMBER 7700180

CONCRETE PATCHING AT FORWARD ABUTMENT
BRIDGE NO. SUM-8-0116
CARROLL ST. OVER S.R. 8

SUM-8-0.63

5/6

944
1088

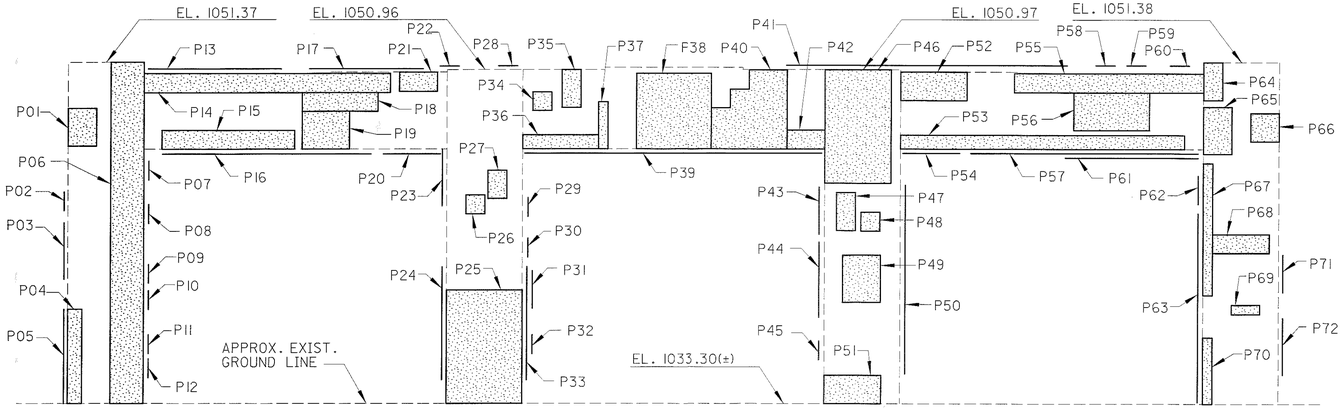

ELEVATION

WEST FACE - LCOKING EAST

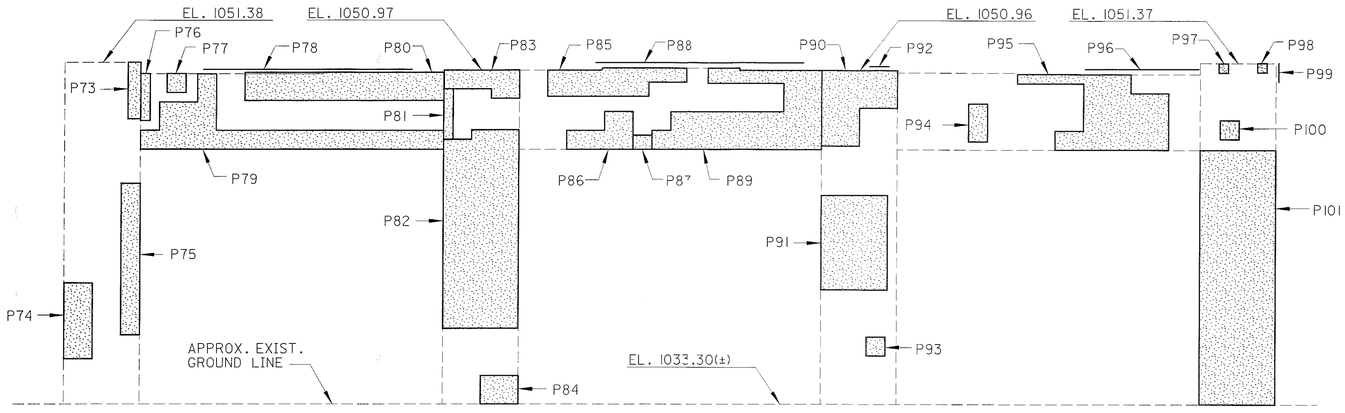

ELEVATION

EAST FACE - LOOKING WEST

REPAIR QUANTITIES				ITEM 519	ITEM 843
REF. NUM.	DIMENSIONS			AREA SQ. FT.	AREA SQ. FT.
P01	2′-0″	x	1′-6″		3.00
P02	3′-0″	x	1′-0″		3.00
P03	1′-0″	x	3′-0″		3.00
P04	0′-9″	x	5′-0″	3.75	
P05	1′-0″	x	5′-0″	5.00	
P06	1′-9″	x	18′-0″	31.50	
P07	1′-0″	x	1′-0″		1.00
P08	1′-0″	x	1′-0″		1.00
P09	1′-0″	x	1′-0″		1.00
P10	1′-0″	x	1′-0″		1.00
P11	1′-0″	x	1′-0″		1.00
P12	1′-0″	x	1′-0″		1.00
P13	1′-0″	x	7′-0″	7.00	
P14	1′-0″	x	13′-0″	13.00	
P15	1′-0″	x	7′-0″	7.00	
P16	1′-0″	x	11′-0″	11.00	
P17	2′-0″	x	6′-0″	12.00	
P18	1′-0″	x	4′-0″	4.00	
P19	2′-0″	x	2′-6″	5.00	
P20	2′-0″	x	3′-0″		6.00
P21	1′-0″	x	2′-0″	2.00	
P22	1′-0″	x	1′-0″	1.00	
P23	3′-0″	x	3′-6″		10.50
P24	3′-4″	x	6′-0″	19.80	
P25	4′-0″	x	6′-0″	24.00	
P26	1′-0″	x	1′-0″		1.00
P27	1′-6″	x	1′-0″		1.50
P28	2′-0″	x	1′-0″		2.00
P29	1′-0″	x	2′-6″		2.50
P30	1′-0″	x	2′-6″		2.50
P31	2′-0″	x	4′-0″		8.00
P32	1′-0″	x	2′-0″		2.00
P33	1′-0″	x	6′-0″	6.00	
P34	1′-0″	x	1′-0″		1.00
P35	1′-0″	x	2′-0″		2.00
P36	0′-9″	x	4′-0″	3.00	
P37	0′-6″	x	2′-6″	1.25	
P38	4′-0″	x	4′-0″	16.00	
P39	0′-9″	x	16′-0″	12.00	
P40	2′-0″	x	1′-0″	2.00	
	2′-0″	x	1′-0″	2.00	
	2′-0″	x	1′-0″	2.00	
P41	1′-6″	x	14′-0″	21.00	
P42	2′-0″	x	1′-0″	2.00	
P43	2′-0″	x	2′-6″	5.00	
P44	3′-0″	x	1′-6″	4.50	
P45	1′-0″	x	1′-0″		1.00
P46	3′-6″	x	6′-0″	21.00	
P47	1′-0″	x	2′-0″		2.00
P48	1′-0″	x	1′-0″		1.00
P49	2′-0″	x	2′-6″	5.00	
P50	3′-0″	x	10′-0″	30.00	
P51	3′-0″	x	1′-6″	4.50	
P52	1′-6″	x	3′-6″	5.25	
P53	0′-9″	x	15′-0″	11.25	
P54	2′-0″	x	3′-0″	6.00	
P55	1′-0″	x	10′-0″	10.00	
P56	4′-0″	x	2′-0″	8.00	
P57	1′-6″	x	12′-0″	18.00	
P58	1′-0″	x	1′-0″	1.00	
P59	1′-0″	x	2′-0″	2.00	
P60	1′-0″	x	1′-0″	1.00	
P61	2′-6″	x	7′-0″	17.50	
P62	0′-6″	x	1′-6″		0.75
P63	3′-0″	x	10′-0″	30.00	
P64	1′-0″	x	2′-0″		2.00
P65	1′-6″	x	2′-6″		3.75
P66	1′-6″	x	′-6″		2.25

REPAIR QUANTITIES				ITEM 519	ITEM 843
REF. NUM.	DIMENSIONS			AREA SQ. FT.	AREA SQ. FT.
P67	0′-6″	x	7′-0″		3.50
P68	1′-0″	x	3′-0″		3.00
P69	1′-6″	x	0′-6″		0.75
P70	0′-6″	x	3′-6″		1.75
P71	1′-0″	x	2′-0″		2.00
P72	2′-6″	x	3′-0″		7.50
P73	0′-6″	x	2′-0″		1.00
P74	1′-6″	x	4′-0″	6.00	
P75	1′-0″	x	8′-0″	8.00	
P76	0′-6″	x	2′-6″		1.25
P77	1′-0″	x	1′-0″		1.00
P78	2′-0″	x	11′-0″	22.00	
P79	1′-0″	x	4′-0″	4.00	
	2′-0″	x	2′-6″	5.00	
	1′-0″	x	1′-0″	1.00	
	1′-0″	x	12′-0″	12.00	
P80	1′-6″	x	10′-6″	15.75	
P81	0′-6″	x	3′-0″	1.50	
P82	0′-6″	x	2′-6″	1.25	
	4′-0″	x	10′-2″	40.68	
P83	0′-6″	x	2′-6″		1.25
	1′-6″	x	1′-6″		2.25
P84	2′-0″	x	1′-6″		3.00
P85	1′-6″	x	9′-0″	13.50	
	0′-9″	x	2′-0″	1.50	
P86	1′-0″	x	2′-0″	2.00	
	1′-6″	x	2′-0″	3.00	
P87	0′-9″	x	1′-0″	0.75	
P88	2′-0″	x	11′-0″	22.00	
P89	1′-0″	x	1′-0″	1.00	
	2′-0″	x	6′-0″	12.00	
	0′-6″	x	4′-0″	2.00	
	2′-0″	x	4′-0″	8.00	
P90	2′-0″	x	4′-0″	8.00	
	2′-0″	x	2′-0″	4.00	
P91	3′-6″	x	5′-0″	17.50	
P92	1′-0″	x	1′-0″	1.00	
P93	1′-0″	x	1′-0″		1.00
P94	1′-0″	x	2′-0″		2.00
P95	0′-6″	x	3′-0″	1.50	
	1′-6″	x	1′-0″	1.50	
	2′-6″	x	4′-0″	10.00	
	2′-0″	x	3′-0″	6.00	
P96	1′-0″	x	6′-0″	6.00	
P97	0′-6″	x	0′-6″		0.25
P98	0′-6″	x	0′-6″		0.25
P99	0′-3″	x	1′-0″		0.25
P100	1′-0″	x	1′-0″		1.00
P101	4′-0″	x	14′-7″	58.32	
				ITEM 519	ITEM 843
SUBTOTAL, PIER				690.05	99.75
ESTIMATION FACTOR				1.5	1.5
TOTAL CARRIED TO QUANTITIES				1035	150

DLZ

3000 ROCKEFELLER BLDG • 614 W SUPERIOR AVE • CLEVELAND, OH 44113

DESIGNED RCK | DRAWN RCK | CHECKED JWB | REVISED | REVIEWED GWM | DATE 6/29/01

STRUCTURE FILE NUMBER 7700180

CONCRETE PATCHING AT PIER

BRIDGE NO. SUM-8-0116

CARROLL ST. OVER S.R. 8

SUM-8-0.63

6 / 6

945
1088

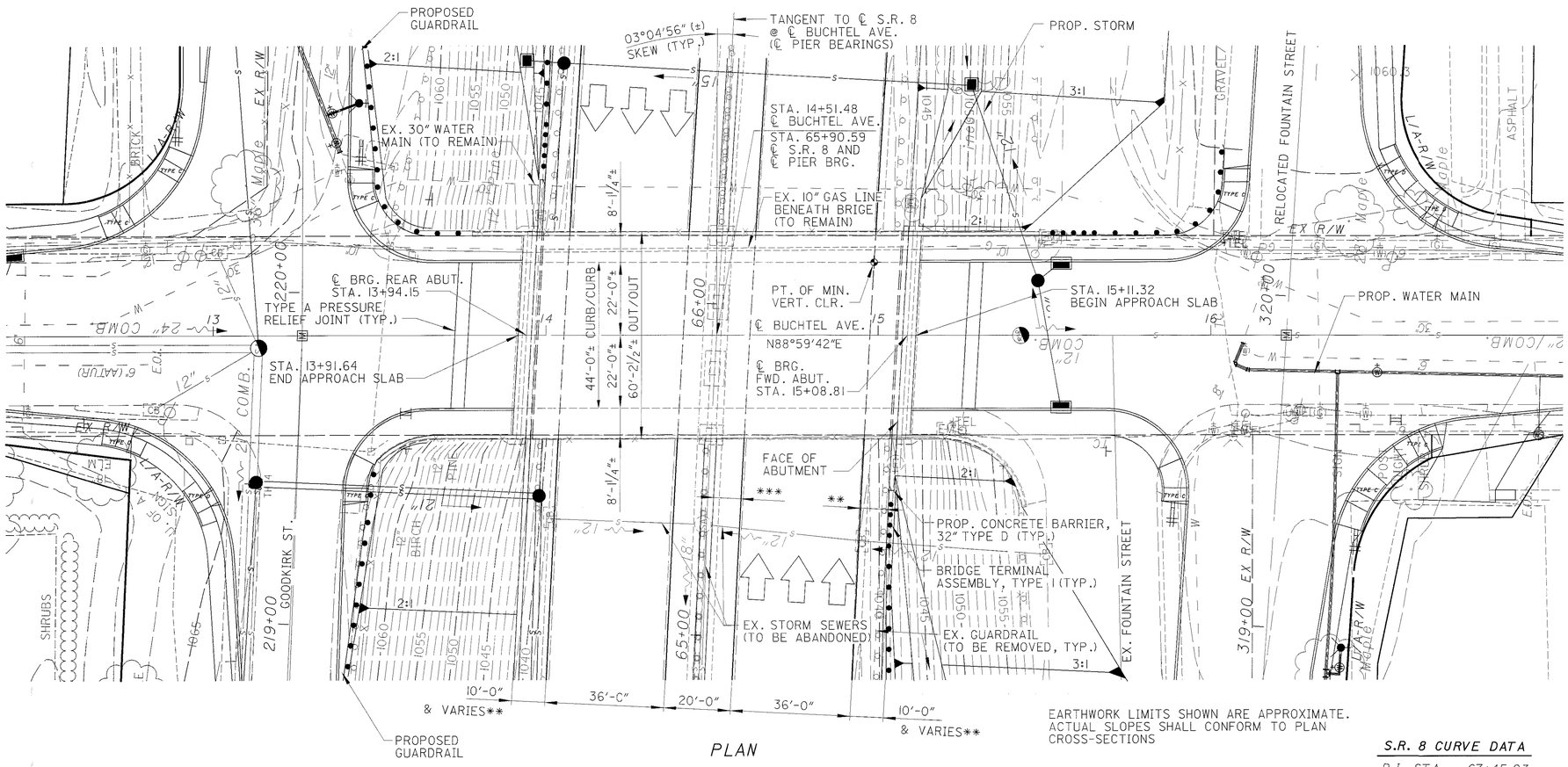

EARTHWORK LIMITS SHOWN ARE APPROXIMATE. ACTUAL SLOPES SHALL CONFORM TO PLAN CROSS-SECTIONS

S.R. 8 CURVE DATA

P.I. STA. = 67+45.23
Δ = 7° 46' 07" (RT)
Dc = 0° 30' 13"
R = 11,375.75'
T = 772.39'
L = 1,542.41"
E = 26.19'

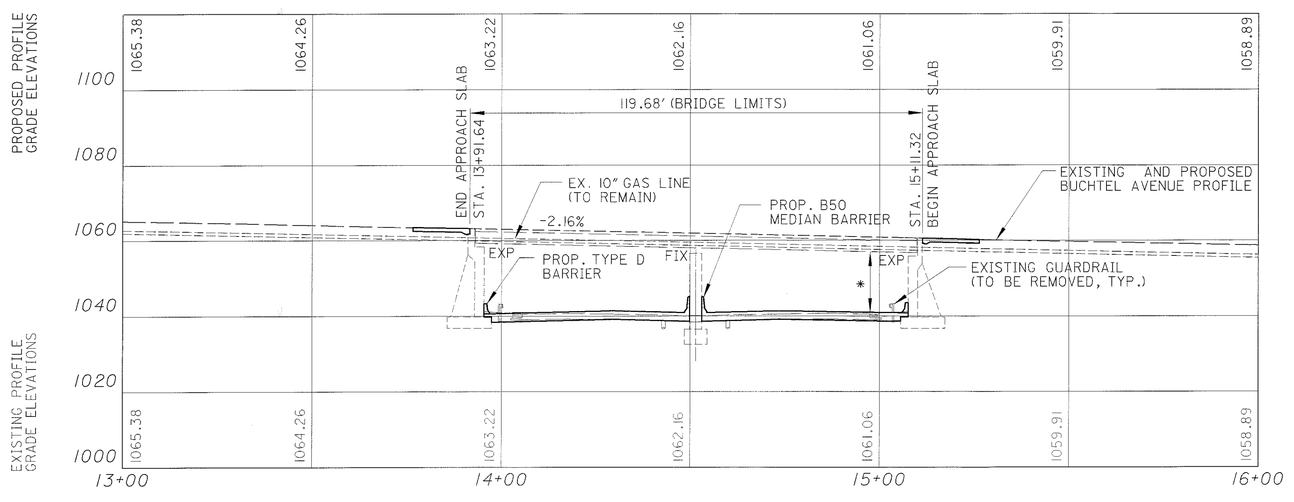

PROFILE ALONG ℄ BUCHTEL STREET

* VERTICAL CLEARANCE:
EXISTING: 15'-5¾"
PROPOSED: 15'-5⅓"
REQUIRED: 14'-6"

** HORIZONTAL CLEARANCE: (OUTSIDE SHOULDERS)
EXISTING: 5'-0"± (TO FACE OF GUARDRAIL)
PROPOSED: 8'-3½" (TO TOE OF BARRIER)
REQUIRED: 10'-0" (TO TOE OF BARRIER)

*** HORIZONTAL CLEARANCE: (MEDIAN SHOULDERS)
EXISTING: 6'-3"± (TO FACE OF CURB)
PROPOSED: 7'-2 " (TO TOE OF BARRIER)
REQUIRED: 10'-0" (TO TOE OF BARRIER)

BENCHMARK #6

CHISELED "□" IN SE CORNER OF 1.5' SQUARE CONCRETE PAD FOR SPEED LIMIT SIGN., 41' WEST OF BRICK RD. & 22.6' NORTH OF ℄ BUCHTEL

STA. 220+10.03, 107.15' LT.

ELEV: 1068.73

BENCHMARK #17

CHISELED "□" IN SIDEWALK, 5' WEST OF CORNER OF ASPHALT PARKING LOT FOR FOUNTAINVIEW APARTMENTS.

STA. 319+60.83, 36.51' RT.

ELEV: 1058.06

TRAFFIC DATA

BUCHTEL AVENUE

CURRENT ADT (2004) = 11,240
DESIGN ADT (2024) = 11,620
ADTT = 349

EXISTING STRUCTURE

TYPE: CONTINUOUS STEEL BEAM WITH REINFORCED CONCRETE DECK AND SUBSTRUCTURE
SPANS: 57-4"(±), 57'-4"(±), CENTER-TO-CENTER OF BEARINGS
ROADWAY: 44'-0"(±) FACE TO FACE OF CURBS WITH 8'-1¼"(±) SIDEWALKS EACH SIDE, 62'-6½"(±) OUT TO OUT OF DECK.
SKEW: 3° 04' 56" (±) LEFT FORWARD
ALIGNMENT: TANGENT
LOADING: HS 20-44 (CASE II) AND THE ALTERNATE MILITARY LOADING
WEARING SURFACE: 1" MONOLITHIC CONCRETE
APPROACH SLABS: 15'
CROWN: 3/16"/FT.(±)
DATE BUILT: c.1954 MAJOR REHABILITATION: c.1988
STRUCTURE FILE NUMBER: 7700210

PROPOSED STRUCTURE

PROPOSED WORK: NEW APPROACH SLABS, PAINT EXISTING SUPERSTRUCTURE (SYSTEM OZEU), REPLACE STRIP SEAL GLANDS, REPLACE APPROACH SIDEWALKS, REHABILITATE EXISTING SUBSTRUCTURE
TYPE: EXISTING
SPANS: EXISTING
ROADWAY: EXISTING
SKEW: EXISTING
ALIGNMENT: EXISTING
LOADING: EXISTING
WEARING SURFACE: EXISTING
APPROACH SLABS: AS-1-81, 15' LONG
CROWN: EXISTING
LATITUDE: N 41°04'36"
LONGITUDE: W 81°30'20"

DLZ
8000 ROCKEFELLER BLDG • 614 W SUPERIOR AVE • CLEVELAND, OH 44113

DESIGNED	DRAWN	REVIEWED	DATE
JWB	JWB	GWM	03/25/00

CHECKED	REVISED	STRUCTURE FILE NUMBER
PAT		7700210

SUMMIT COUNTY
STA. 13+91.64
STA. 15+11.32

SITE PLAN
BRIDGE NO. SUM-8-0125
BUCHTEL AVENUE OVER S.R. 8

SUM-8-0.63

1 / 5

946
1088

REFERENCE SHALL BE MADE TO STANDARD DRAWINGS:

AS-1-81	DATED	4/20/01
EXJ-4-87	DATED	4/20/01
VPF-1-90M	DATED	3/20/95

AND TO THE SUPPLEMENTAL SPECIFICATIONS:

815	DATED	5/30/96
843	DATED	5/5/98
846	DATED	9/9/97
863	DATED	10/12/99
864	DATED	7/11/00
954	DATED	9/9/97

DESIGN SPECIFICATIONS
NOT APPLICABLE

DESIGN LOADING
NOT APPLICABLE

DESIGN STRESSES
NOT APPLICABLE

EXISTING STRUCTURE VERIFICATION:

DETAILS AND DIMENSIONS SHOWN ON THESE PLANS PERTAINING TO THE EXISTING STRUCTURE HAVE BEEN OBTAINED FROM PLANS OF THE EXISTING STRUCTURE AND FROM FIELD OBSERVATIONS AND MEASUREMENTS. CONSEQUENTLY, THEY ARE INDICATIVE OF THE EXISTING STRUCTURE AND THE PROPOSED WORK BUT THEY SHALL BE CONSIDERED TENTATIVE AND APPROXIMATE. THE CONTRACTOR IS REFERRED TO CMS SECTIONS 102.05 AND 105.02.

CONTRACT BID PRICES SHALL BE BASED UPON A RECOGNITION OF UNCERTAINTIES DESCRIBED ABOVE AND UPON A PREBID EXAMINATION OF THE EXISTING STRUCTURE BY THE CONTRACTOR. HOWEVER, ALL PROJECT WORK SHALL BE BASED UPON ACTUAL DETAILS AND DIMENSIONS WHICH HAVE BEEN VERIFIED BY THE CONTRACTOR IN THE FIELD.

DESCRIPTION OF WORK:

THE WORK PERFORMED SHALL INCLUDE BUT NOT NECESSARILY BE LIMITED TO THE FOLLOWING:

1. INSTALL NEW 15' APPROACH SLABS PER STD. DWG AS-1-81 WITH INTEGRAL CURB AND TYPE A PRESSURE RELIEF JOINTS. INSTALL NEW APPROACH SIDEWALKS. REFER TO ROADWAY PLANS FOR DETAILS.
2. REPLACE ELASTOMERIC STRIP SEAL GLANDS.
3. RETROFIT EXISTING VANDAL PROTECTION FENCE TO PROVIDE STAINLESS STEEL CLOSURE PLATES.
4. PATCH EXISTING SUBSTRUCTURE UNITS.
5. PAINT STRUCTURAL STEEL.
6. SEAL CONCRETE SURFACES.

MAINTENANCE OF TRAFFIC:

MAINTENANCE OF TRAFFIC FOR THE STRUCTURE WORK SHALL BE COORDINATED WITH THE OVERALL PROJECT. REFER TO MAINTENANCE OF TRAFFIC NOTES AND DETAILS ELSEWHERE IN THE PLANS.

ITEM 864, SEALING OF CONCRETE SURFACES (EPOXY-URETHANE):

CONCRETE SURFACES AS DETAILED IN THE PLANS SHALL BE SEALED WITH NEUTRAL FEDERAL COLOR NO. 13522, "BUFF".

ITEM 516, ELASTOMERIC STRIP SEAL WITHOUT STEEL EXTRUSIONS, AS PER PLAN:

THIS ITEM SHALL INCLUDE REMOVAL AND REPLACEMENT OF THE EXISTING 3" STRIP SEAL GLANDS FROM FACE-TO-FACE OF CURB. THE CONSTRUCTION PLANS INDICATE THAT THE ELASTOMERIC SEAL WAS INSTALLED WITH AN ADHESIVE. UPON REMOVAL OF THE SEAL, THE CONTRACTOR SHALL ATTEMPT TO MATCH THE REPLACEMENT SEAL AS CLOSELY AS POSSIBLE WITH THE EXISTING SO AS TO PROVIDE A SNUG, WATERTIGHT SEAL. THE STRIP SEAL AND INSTALLATION SHALL MEET THE REQUIREMENTS OF STANDARD DRAWING EXJ-4-87.

THIS WORK WILL BE PAID FOR AT THE CONTRACT PRICE BID, PER LINEAL FOOT, WHICH PRICE AND PAYMENT SHALL BE FULL COMPENSATION FOR ALL LABOR, EQUIPMENT, MATERIALS AND INCIDENTALS NECESSARY TO COMPLETE THE WORK IN CONFORMANCE WITH THESE REQUIREMENTS, WITH THE PERTINENT PROVISIONS OF 516, AND TO THE SATISFACTION OF THE ENGINEER.

ITEM 815, FIELD PAINTING OF EXISTING STEEL, FINISH COAT, SYSTEM OZEU:

ALL EXPOSED STEEL SURFACES SHALL BE COATED WITH BLUE PAINT, FEDERAL COLOR NO. 15056

ITEM 846, TREATING CONCRETE BRIDGE DECKS WITH HMWM RESIN:

A 1'-0" STRIP OF THE DECK, ADJACENT TO THE CURBS AND THE FULL LENGTH OF THE BRIDGE BETWEEN EXPANSION JOINTS, SHALL SEALED WITH HMWM RESIN. CARE SHALL BE TAKEN TO FILL THE JOINT AT THE FACE OF CURB.

ITEM 863, STRUCTURAL STEEL, MISCELLANEOUS LEVEL FABRICATION, AS PER PLAN:

THIS ITEM SHALL INCLUDE THE FABRICATION AND INSTALLATION OF STAINLESS STEEL FENCE CLOSURE PLATES, IN ACCORDANCE WITH STANDARD DRAWING VPF-1-90M, TO THE EXISTING VANDAL PROTECTION FENCE, AS SHOWN ON STD. DWG. SHEET 7/7. THE CONTRACTOR SHALL FIELD MEASURE THE EXISTING BRIDGE RAILING AND FENCE POST SPACINGS BEFORE FABRICATING THE CLOSURE PLATES.

THIS WORK WILL BE PAID FOR AT THE CONTRACT LUMP SUM PRICE BID, WHICH PRICE AND PAYMENT SHALL BE FULL COMPENSATION FOR ALL LABOR, EQUIPMENT, MATERIALS AND INCIDENTALS NECESSARY TO COMPLETE THE WORK IN CONFORMANCE WITH THESE REQUIREMENTS, WITH PERTINENT PROVISIONS OF 863, AND TO THE SATISFACTION OF THE ENGINEER.

ROADWAY ITEMS:

COSTS FOR REMOVAL OF EXISTING APPROACH SLABS AND SIDEWALK AND INSTALLATION OF NEW APPROACH SLABS, SIDEWALK AND PRESSURE RELIEF JOINTS ARE INCLUDED WITH ROADWAY ITEMS.

CONVERSION OF STANDARD BRIDGE DRAWINGS:

SOME OF THE STANDARD BRIDGE DRAWINGS REFERENCED IN THIS PLAN ARE METRIC. ANY CONVERSIONS OF DIMENSIONS REQUIRED TO CONSTRUCT THE ITEMS SHOWN ON THE STANDARDS SHALL BE THE RESPONSIBILITY OF THE CONTRACTOR. CONVERSIONS SHALL BE MADE USING SI (METRIC) TO ENGLISH CONVERSION FACTORS PROVIDED IN SECTION 109.011 OF THE 1997 CONSTRUCTION AND MATERIALS SPECIFICATIONS. THE APPENDIX OF ASTM E380 SHALL BE UTILIZED FOR ANY ADDITIONAL CONVERSION FACTORS REQUIRED. CONVERSIONS SHALL BE APPROPRIATELY PRECISE AND SHALL REFLECT INDUSTRY ENGLISH VALUES WHERE SUITABLE.

ASBESTOS NOTIFICATION:

SEE NOTE SHEET 34

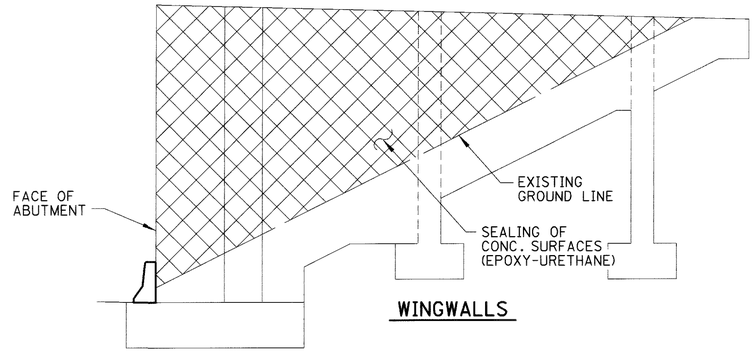

WINGWALLS

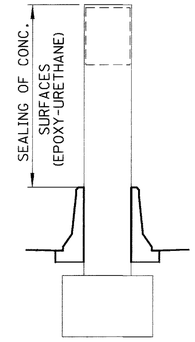

PIER

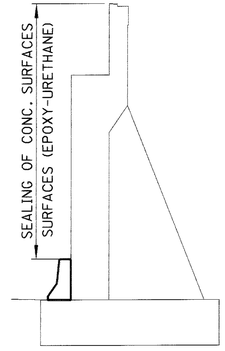

ABUTMENT

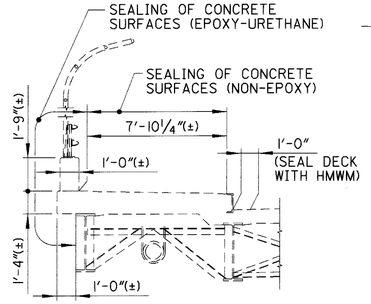

DECK/PARAPETS

CONCRETE SEALING DETAILS

ESTIMATED QUANTITIES

CALCULATED BY: JWB 12/08/00
CHECKED BY: DJC 12/12/00

ITEM	ITEM EXTENSION	TOTAL	UNIT	DESCRIPTION	REAR ABUTMENT	FORWARD ABUTMENT	PIERS	SUPER.	GENERAL	AS PER PLAN SHEET REF.
516	01301	92	LIN. FT.	ELASTOMERIC STRIP SEAL WITHOUT STEEL EXTRUSIONS, AS PER PLAN				92		2
519	11100	931	SQ. FT.	PATCHING CONCRETE SURFACES			931			
815	00100	LUMP	SUM	SURFACE PREPARATION OF EXISTING STEEL, SYSTEM OZEU					LUMP	
815	00200	LUMP	SUM	FIELD PAINTING OF EXISTING STEEL, PRIME COAT, SYSTEM OZEU					LUMP	
815	00300	LUMP	SUM	FIELD PAINTING OF EXISTING STEEL, INTERMEDIATE COAT, SYSTEM OZEU					LUMP	
815	00400	LUMP	SUM	FIELD PAINTING OF EXISTING STEEL, FINISH COAT, SYSTEM OZEU					LUMP	
843	50000	261	SQ FT	PATCHING CONCRETE STRUCTURES WITH TROWELABLE MORTAR	24	103	134			
846	73000	27	SQ YD	TREATING CONCRETE BRIDGE DECKS WITH HMWM RESIN				27		
863	10001	LUMP	SUM	STRUCTURAL STEEL MEMBERS, MISCELLANEOUS LEVEL FABRICATION, AS PER PLAN					LUMP	2
864	10050	395	SQ YD	SEALING OF CONCRETE SURFACES (NON-EPOXY)				395		
864	10100	998	SQ YD	SEALING OF CONCRETE SURFACES (EPOXY-URETHANE)	332	308	172	186		

DLZ
8000 ROCKEFELLER BLDG • 614 W SUPERIOR AVE • CLEVELAND, OH 44113

DESIGNED JWB | DRAWN JWB | CHECKED DJC | REVIEWED GWM | DATE 06/29/01 | REVISED | STRUCTURE FILE NUMBER 7700210

STRUCTURE GENERAL NOTES
BRIDGE NO. SUM-8-0125
BUCHTEL AVENUE OVER S.R. 8

SUM-8-0.63

2 / 5

947
1088

$TIME$
$DATE$
$FILE$

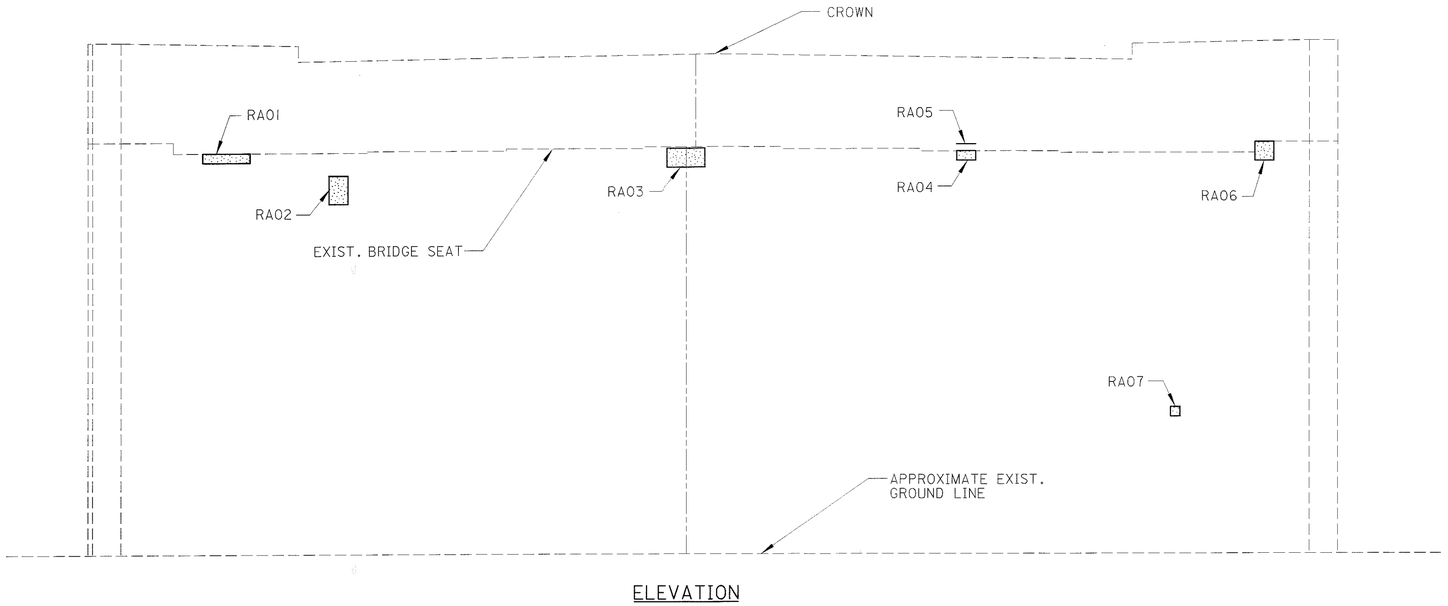

ELEVATION

REPAIR QUANTITIES				ITEM 843
REF. NUM.	DIMENSIONS			AREA SQ. FT.
RA01	0'-6"	x	2'-6"	1.25
RA02	1'-0"	x	1'-6"	1.50
RA03	1'-0"	x	2'-0"	2.00
RA04	0'-6"	x	1'-0"	0.50
RA05	0'-6"	x	1'-0"	0.50
RA06	1'-0"	x	1'-0"	1.00
RA07	0'-6"	x	0'-6"	0.25
RA08	1'-0"	x	1'-6"	1.50
RA09	1'-0"	x	1'-0"	1.00
RA10	1'-0"	x	1'-0"	1.00
RA11	0'-6"	x	0'-6"	0.25
RA12	1'-0"	x	1'-0"	1.00
RA13	2'-0"	x	2'-0"	4.00
SUBTOTAL, PIER				15.75
ESTIMATION FACTOR				1.5
TOTAL CARRIED TO QUANTITIES				24

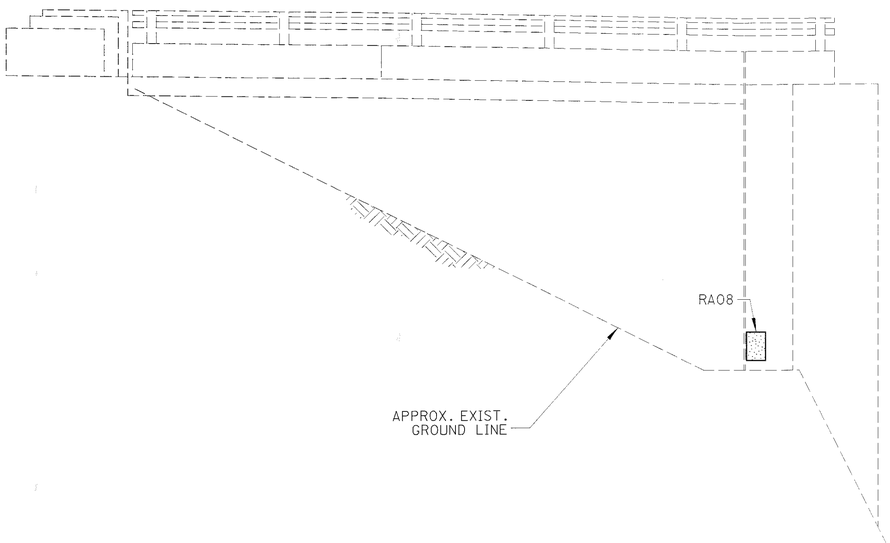

ELEVATION - SOUTHWEST WINGWALL

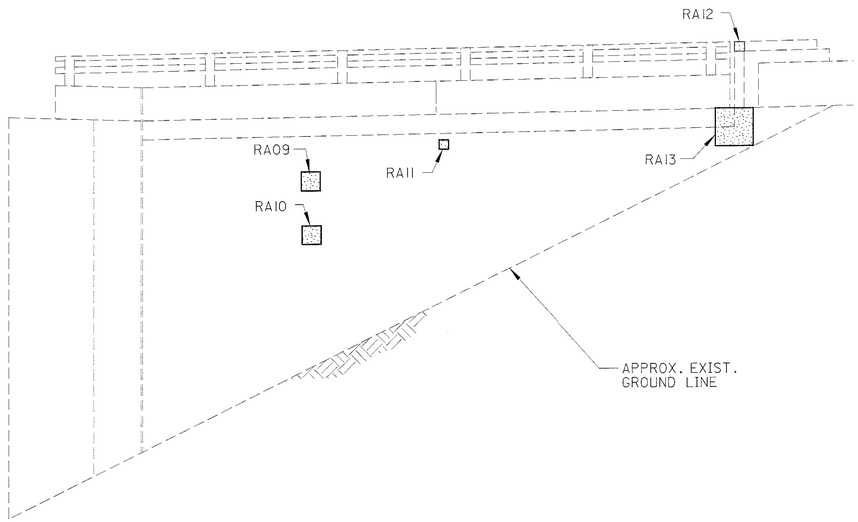

ELEVATION - NORTHWEST WINGWALL

DLZ
1000 ROCKEFELLER BLDG ● 614 W SUPERIOR AVE ● CLEVELAND, OH 44113

DESIGNED RCK | DRAWN RCK | CHECKED JWB | REVISED

REVIEWED GWM | DATE 6/29/01 | STRUCTURE FILE NUMBER 7700334

CONCRETE PATCH AT REAR ABUTMENT
BRIDGE NO. SUM-8-0125
BUCHTEL AVENUE OVER S.R. 8

SUM-8-0.63

3 / 5

948
1088

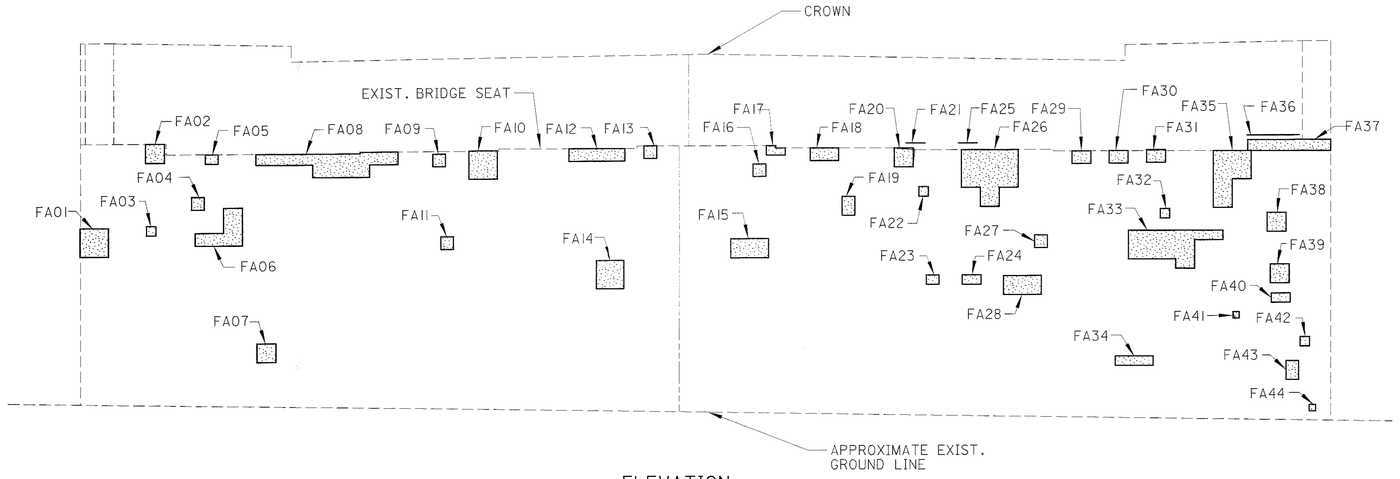

ELEVATION

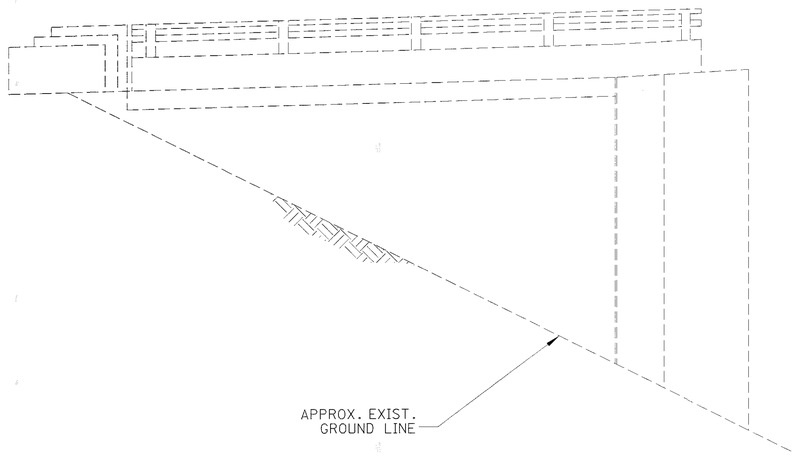

ELEVATION - NORTHEAST WINGWALL

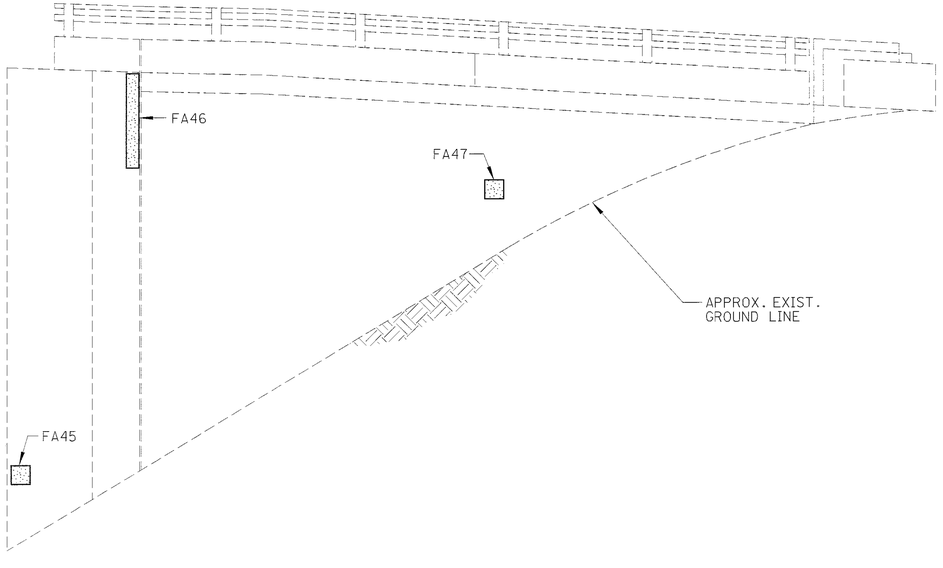

ELEVATION - SOUTHEAST WINGWALL

REPAIR QUANTITIES				ITEM 843
REF. NUM.	DIMENSIONS			AREA SQ. FT.
FA01	1'-6"	×	1'-6"	2.25
FA02	1'-0"	×	1'-0"	1.00
FA03	0'-6"	×	0'-6"	0.25
FA04	0'-8"	×	0'-8"	0.45
FA05	0'-8"	×	0'-6"	0.34
FA06	1'-6"	×	0'-8"	1.01
	1'-0"	×	2'-0"	2.00
FA07	1'-0"	×	1'-0"	1.00
FA08	0'-6"	×	3'-0"	1.50
	1'-2"	×	3'-0"	3.51
	0'-8"	×	1'-6"	1.01
FA09	0'-8"	×	0'-8"	0.45
FA10	1'-6"	×	1'-6"	2.25
FA11	0'-8"	×	0'-8"	0.45
FA12	0'-8"	×	3'-0"	2.01
FA13	0'-8"	×	0'-8"	0.45
FA14	1'-6"	×	1'-6"	2.25
FA15	1'-0"	×	2'-0"	2.00
FA16	0'-8"	×	0'-8"	0.45
FA17	0'-6"	×	1'-0"	0.50
FA18	0'-8"	×	1'-6"	1.01
FA19	0'-8"	×	1'-0"	0.67
FA20	1'-0"	×	1'-0"	1.00
FA21	1'-0"	×	1'-0"	1.00
FA22	0'-6"	×	0'-6"	0.25
FA23	0'-6"	×	0'-8"	0.34
FA24	1'-0"	×	0'-6"	0.50
FA25	1'-0"	×	1'-0"	1.00
FA26	2'-0"	×	1'-0"	2.00
	1'-0"	×	3'-0"	3.00
	1'-0"	×	2'-0"	2.00
FA27	0'-8"	×	0'-8"	0.45
FA28	2'-0"	×	1'-0"	2.00
FA29	1'-0"	×	0'-8"	0.67
FA30	1'-0"	×	0'-8"	0.67
FA31	1'-0"	×	0'-8"	0.67
FA32	0'-6"	×	0'-6"	0.25
FA33	1'-6"	×	2'-6"	3.75
	2'-0"	×	1'-0"	2.00
	1'-6"	×	0'-6"	0.75
FA34	2'-0"	×	0'-6"	1.00
FA35	1'-0"	×	3'-0"	3.00
	1'-0"	×	1'-6"	1.50
FA36	1'-0"	×	2'-10"	2.83
FA37	0'-7"	×	4'-4"	2.53
FA38	1'-0"	×	1'-0"	1.00
FA39	1'-0"	×	1'-0"	1.00
FA40	1'-0"	×	0'-6"	0.50
FA41	0'-4"	×	0'-4"	0.11
FA42	0'-6"	×	0'-6"	0.25
FA43	0'-8"	×	1'-0"	0.67
FA44	0'-4"	×	0'-4"	0.11
FA45	1'-0"	×	1'-0"	1.00
FA46	0'-8"	×	5'-0"	3.35
FA47	1'-0"	×	1'-0"	1.00
SUBTOTAL, PIER				68.92
ESTIMATION FACTOR				1.5
TOTAL CARRIED TO QUANTITIES				103

DLZ
1000 ROCKEFELLER BLDG • 614 W SUPERIOR AVE • CLEVELAND, OH 44113

DESIGNED RCK | DRAWN RCK | REVIEWED GWM | DATE 6/29/01
CHECKED JWB | REVISED | STRUCTURE FILE NUMBER 7700334

CONCRETE PATCHING AT FORWARD ABUTMENT
BRIDGE NO. SUM-8-0125
BUCHTEL AVENUE OVER S.R. 8

SUM-8-0.63

949
1088

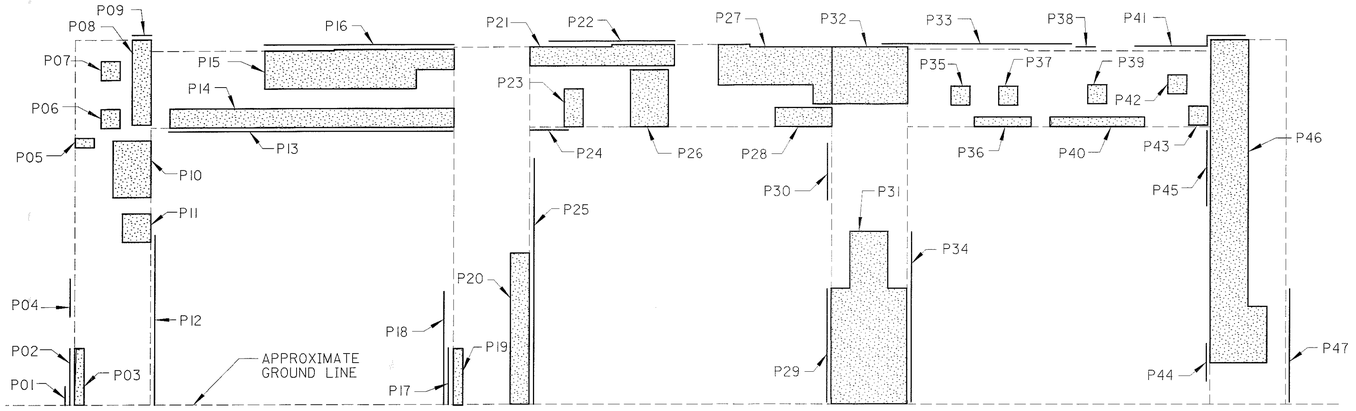

ELEVATION

EAST FACE - LOOKING WEST

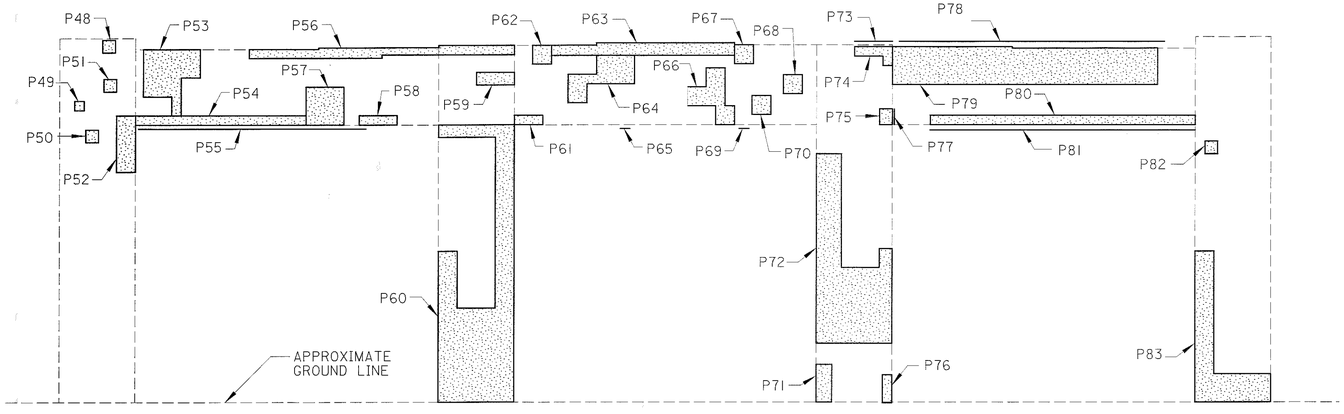

ELEVATION

WEST FACE - LOOKING EAST

REPAIR QUANTITIES				ITEM 519	ITEM 843
REF. NUM.	DIMENSIONS			AREA SQ. FT.	AREA SQ. FT.
P01	0′-6″	×	1′-0″		0.50
P02	1′-0″	×	3′-0″		3.00
P03	1′-0″	×	3′-0″		3.00
P04	2′-0″	×	2′-0″		4.00
P05	0′-6″	×	2′-0″		1.00
P06	1′-0″	×	1′-0″		1.00
P07	1′-0″	×	1′-0″		1.00
P08	1′-0″	×	5′-0″		5.00
P09	1′-0″	×	1′-0″	1.00	
P10	2′-0″	×	3′-0″	6.00	
P11	1′-6″	×	1′-6″		2.25
P12	1′-0″	×	9′-0″	9.00	
	1′-0″	×	5′-0″	5.00	
	1′-0″	×	3′-0″	3.00	
P13	4′-0″	×	15′-0″	60.00	
P14	1′-0″	×	15′-0″	15.00	
P15	1′-0″	×	8′-0″	8.00	
	1′-0″	×	10′-0″	10.00	
P16	2′-0″	×	10′-0″	20.00	
P17	0′-6″	×	3′-0″		1.50
P18	0′-6″	×	6′-0″		3.00
P19	0′-6″	×	3′-0″		1.50
P20	1′-0″	×	8′-0″	8.00	
P21	1′-0″	×	10′-0″	10.00	
P22	2′-0″	×	9′-0″	18.00	
P23	1′-0″	×	2′-0″		2.00
P24	2′-0″	×	2′-0″		4.00
P25	4′-0″	×	10′-0″	40.00	
P26	2′-0″	×	3′-0″		6.00
P27	2′-0″	×	10′-0″	20.00	
	1′-0″	×	1′-0″	1.00	
P28	1′-0″	×	3′-0″	3.00	
P29	3′-0″	×	6′-0″	18.00	
P30	1′-0″	×	3′-0″		3.00
P31	1′-0″	×	6′-0″	6.00	
	2′-0″	×	9′-0″	18.00	
	1′-0″	×	6′-0″	6.00	
P32	3′-0″	×	4′-0″	12.00	
P33	2′-0″	×	10′-0″	20.00	
P34	1′-0″	×	6′-0″	6.00	
	0′-6″	×	3′-0″	1.50	
P35	1′-0″	×	1′-0″		1.00
P36	0′-6″	×	3′-0″		1.50
P37	1′-0″	×	1′-0″		1.00
P38	1′-0″	×	1′-0″	1.00	
P39	1′-0″	×	1′-0″		1.00
P40	0′-6″	×	5′-0″		2.50
P41	2′-0″	×	6′-0″	12.00	
P42	1′-0″	×	1′-0″		1.00
P43	1′-0″	×	1′-0″		1.00
P44	2′-0″	×	2′-0″		4.00
P45	3′-0″	×	3′-0″		9.00
	1′-0″	×	1′-0″		1.00

REPAIR QUANTITIES				ITEM 519	ITEM 843
REF. NUM.	DIMENSIONS			AREA SQ. FT.	AREA SQ. FT.
P46	2′-0″	×	17′-0″	34.00	
	1′-0″	×	3′-0″	3.00	
P47	1′-0″	×	6′-0″	6.00	
	2′-0″	×	3′-0″	6.00	
	1′-0″	×	5′-0″	5.00	
P48	0′-8″	×	0′-8″		0.45
P49	0′-6″	×	0′-6″		0.25
P50	0′-8″	×	0′-8″		0.45
P51	0′-8″	×	0′-8″		0.45
P52	1′-0″	×	3′-0″		3.00
P53	1′-6″	×	2′-6″	3.75	
	0′-6″	×	3′-0″	1.50	
	1′-0″	×	1′-6″	1.50	
P54	0′-6″	×	9′-0″	4.50	
P55	2′-0″	×	12′-0″	24.00	
P56	0′-8″	×	7′-0″	4.69	
	0′-6″	×	7′-0″	3.50	
P57	2′-0″	×	2′-0″	4.00	
P58	0′-6″	×	2′-0″	1.00	
P59	0′-8″	×	2′-0″		1.34
P60	0′-8″	×	3′-0″	2.01	
	1′-0″	×	8′-0″	8.00	
	2′-0″	×	5′-0″	10.00	
	1′-0″	×	14′-8″	14.67	
P61	0′-6″	×	1′-6″		0.75
P62	1′-0″	×	1′-0″		1.00
P63	0′-6″	×	10′-0″		5.00
P64	1′-0″	×	1′-6″		1.50
	0′-6″	×	0′-6″		0.25
	2′-0″	×	1′-6″		3.00
P65	0′-6″	×	3′-0″		1.50
P66	1′-0″	×	1′-0″		1.00
	1′-0″	×	2′-0″		2.00
	1′-0″	×	1′-0″		1.00
P67	1′-0″	×	1′-0″		1.00
P68	1′-0″	×	1′-0″		1.00
P69	0′-6″	×	3′-0″		1.50
P70	1′-0″	×	1′-0″		1.00
P71	0′-10″	×	2′-0″		1.66
P72	1′-4″	×	10′-0″	13.30	
	2′-0″	×	4′-0″	8.00	
	0′-8″	×	5′-0″	3.35	
P73	0′-6″	×	2′-0″	1.00	
P74	0′-6″	×	2′-0″	1.00	
	0′-6″	×	0′-6″	0.25	
P75	0′-8″	×	0′-10″		0.56
P76	0′-6″	×	1′-6″		0.75
P77	0′-4″	×	0′-10″		0.27
P78	1′-0″	×	14′-0″	14.00	
P79	2′-0″	×	14′-0″	28.00	
P80	0′-6″	×	14′-0″	7.00	
P81	4′-0″	×	14′-0″	56.00	
P82	0′-8″	×	0′-8″		0.45
P83	1′-0″	×	8′-0″	8.00	
	1′-6″	×	2′-6″	3.75	
SUBTOTAL, PIER				620.97	89.43
ESTIMATION FACTOR				1.5	1.5
TOTAL CARRIED TO QUANTITIES				931	134

DLZ
600 ROCKEFELLER BLDG • 614 W SUPERIOR AVE • CLEVELAND, OH 44113

DESIGNED	DRAWN	REVIEWED	DATE
RCK	RCK	GWM	6/29/01
CHECKED	REVISED	STRUCTURE FILE NUMBER	
JWB		7700334	

CONCRETE PATCHING AT PIER
BRIDGE NO. SUM-8-0125
BUCHTEL AVENUE OVER S.R. 8

SUM-8-0.63

5/5

950
1088

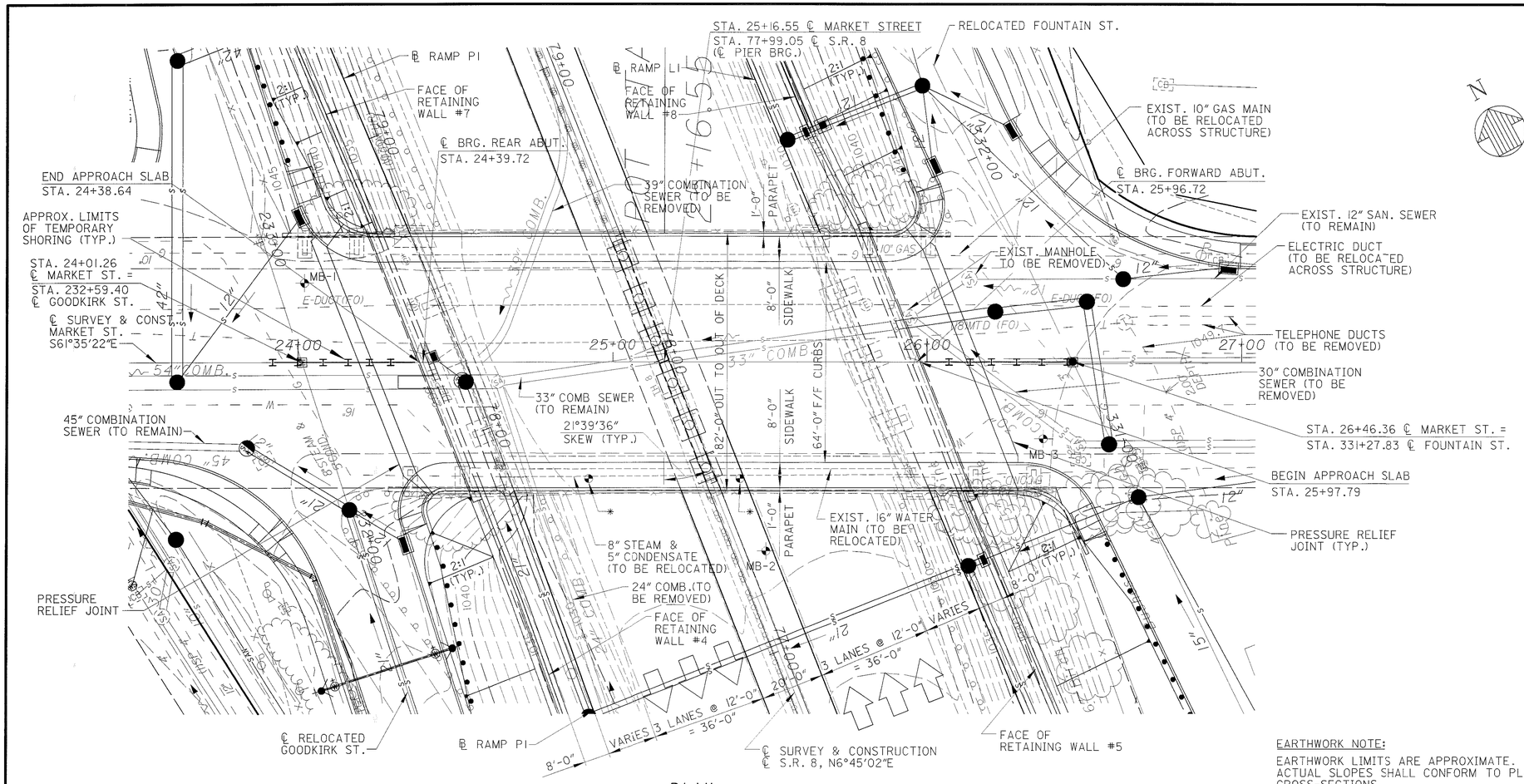

PLAN

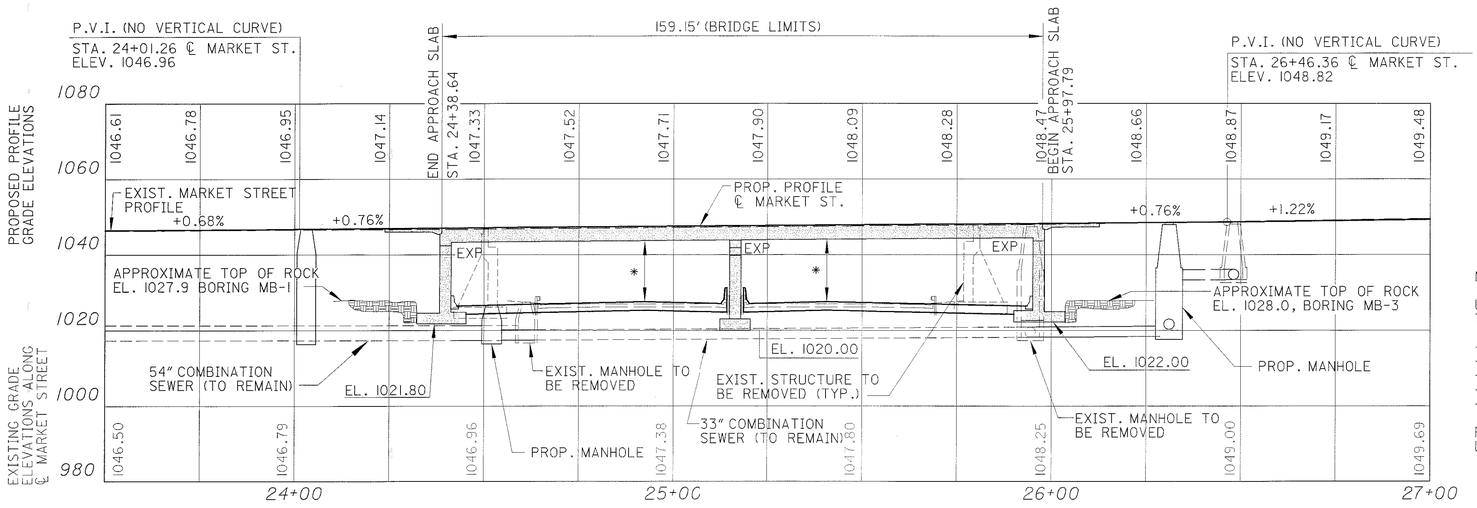

PROFILE ALONG ℄ MARKET ST.

EARTHWORK NOTE:

EARTHWORK LIMITS ARE APPROXIMATE. ACTUAL SLOPES SHALL CONFORM TO PLAN CROSS-SECTIONS.

* VERTICAL CLEARANCE:

EXISTING: 15'-7½" (±)
PROPOSED: 15'-6" (S.B. LANES)
15'-7⅞" (N.B. LANES)
REQUIRED: 15'-6"

HORIZONTAL CLEARANCE: (OUTSIDE SHOULDERS)

EXISTING: 5'-0"(±) (TO FACE OF GUARDRAIL)
PROPOSED: 8'-0" (TO TOE OF BARRIER)
REQUIRED: 8'-0" (TO TOE OF BARRIER)

HORIZONTAL CLEARANCE: (MEDIAN SHOULDERS)

EXISTING: 6'-3"(±) TO FACE OF CURB
PROPOSED: 7'-3" (TO TOE OF BARRIER)
REQUIRED: 10'-0" (TO TOE OF BARRIER)

NOTE:

UTILITIES CURRENTLY CARRIED ON THE SUPERSTRUCTURE INCLUDE:

- EAST OHIO GAS 10" MAIN
- OHIO EDISON ELECTRICAL DUCT
- AMERITECH TELEPHONE DUCT
- 16" WATER MAIN
- 8" STEAM & 5" CONDENSATE LINES

REFER TO GENERAL PLAN FOR UTILITY LOCATIONS.

LEGEND

EXP	EXPANSION JOINT
F/F	FACE TO FACE
SAN.	SANITARY
✣	SOIL BORING

BENCHMARK #18

CHISELED "□" ON SW CORNER OF STEP TO #69 ADOLPH @ NE CORNER OF ADOLPH & EWING. STA. 323+10.01, 283.30' RT., ℄ FOUNTAIN ST.

ELEV: 1056.32

BENCHMARK #19

CHISELED "□" ON CONC. BASE FOR LIGHT POLE NORTH OF #27 ADOLPH @ SE CORNER OF ADOLPH & EWING. STA. 327+76.06, 261.95' RT., ℄ FOUNTAIN ST.

ELEV: 1059.54

BENCHMARK #20

CHISELED "□" ON SE CORNER OF CURB FOR PARKING LOT #457 MARKET ST. @ NW CORNER OF MARKET AND ADOLPH. STA. 331+21.17, 120.56' RT., ℄ FOUNTAIN ST.

ELEV: 1051.01

TRAFFIC DATA

MARKET STREET

CURRENT ADT (2004) = 25670
CURRENT ADTT (2004) = 770
DESIGN ADT (2024) = 26550
DESIGN ADTT (2024) = 797

EXISTING STRUCTURE

TYPE: CONTINUOUS STEEL BEAM WITH REINFORCED CONCRETE DECK AND SUBSTRUCTURE
SPANS: 2 @ 61'-8"(±), C/C BEARINGS
ROADWAY: 60'-0" FACE/FACE OF CURBS
82'-6½"(±) OUT/OUT DECK
SIDEWALKS: 2 @ 10'-1¼"(±)
SKEW: 21°39'36"(±) RIGHT FORWARD
ALIGNMENT: TANGENT
LOADING: HS 20-44 (CASE II) AND THE ALTERNATE MILITARY LOADING
WEARING SURFACE: 1¼" LATEX MODIFIED CONCRETE
APPROACH SLABS: AS-1-81, 15'-0"(±) LONG
CROWN: 3/16"/FT. (±)
DATE BUILT: c.1954 MAJOR REHABILITATION: c.1983
STRUCTURE FILE NUMBER: 7708289

PROPOSED STRUCTURE

PROPOSED WORK: REMOVE EXISTING STRUCTURE. CONSTRUCT NEW BRIDGE USING PART-WIDTH CONSTRUCTION. CONSTRUCT NEW SEMI-INTEGRAL TYPE ABUTMENTS WITH NEW APPROACH SLABS AND TYPE A PRESSURE RELIEF JOINTS. CONSTRUCT NEW PIER.
TYPE: ASTM A709 GRADE 50, CONTINUOUS STEEL BEAM WITH COMPOSITE REINFORCED CONCRETE DECK AND SEMI-INTEGRAL TYPE ABUTMENTS.
SPANS: 2 SPANS: 76'-10" AND 80'-2" C/C BEARINGS
ROADWAY: 64'-0" FACE/FACE CURBS WITH TWO 8'-0" SIDEWALKS
SKEW: 21°39'36" RIGHT FORWARD
ALIGNMENT: TANGENT
LOADING: HS 25 (CASE II) AND THE ALTERNATE MILITARY LOADING
WEARING SURFACE: MONOLITHIC CONCRETE
APPROACH SLABS: 15'-0" LONG, AS PER PLAN
CROWN: 3/16" PER FT.
LATITUDE: N 41°04'48"
LONGITUDE: W 81°30'12"

DLZ
1000 ROCKEFELLER BLDG • 614 W SUPERIOR AVE • CLEVELAND, OH 44113

DESIGNED JWB | DRAWN RCK | REVIEWED GWM | DATE 1/29/02
CHECKED DJC | REVISED | STRUCTURE FILE NUMBER 7708297

SUMMIT COUNTY
STA. 24+38.64
STA. 25+97.79

SITE PLAN
BRIDGE NO. SUM-8-0148
MARKET STREET OVER S.R. 8

SUM-8-0.63

1 / 31

951
1088

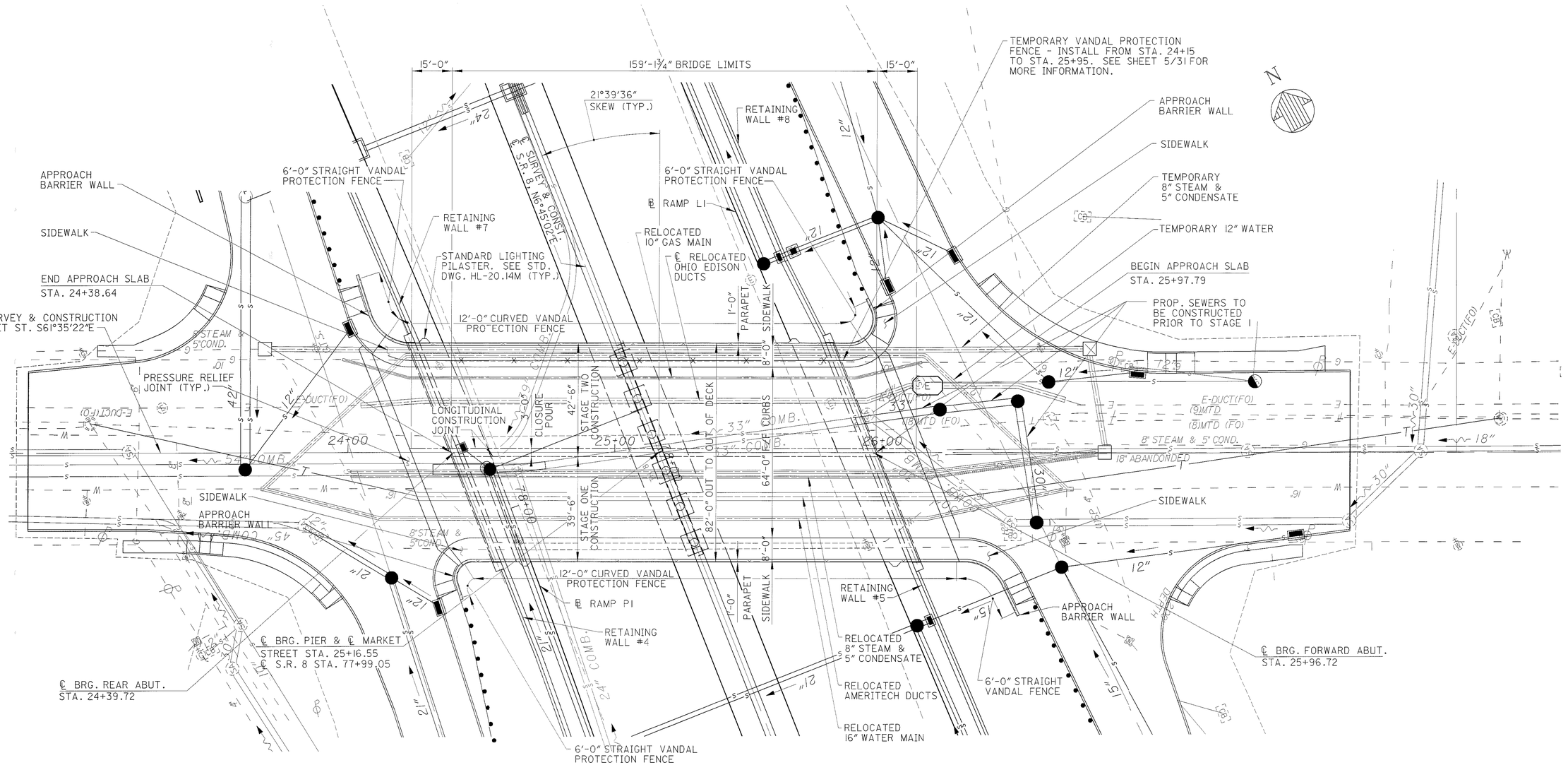

PLAN

LEGEND

- PROP. STORM/SANITARY MANHOLE
- PROP. STEAM VAULT
- E — PROP. ELECTRICAL MANHOLE
- PROP. CATCH BASIN

DLZ
8000 ROCKEFELLER BLDG • 614 • SUPERIOR AVE • CLEVELAND, OH 44115

DESIGNED	DRAWN	REVIEWED	DATE
JWB	DJP	GWM	1/29/02
CHECKED	REVISED	STRUCTURE FILE NUMBER	
DJC		7708297	

GENERAL PLAN
BRIDGE NO. SUM-8-0148
MARKET STREET OVER S.R. 8

SUM-8-0.63

2 / 31

952
1088

REFERENCE SHALL BE MADE TO STANDARD DRAWINGS:

GSD-1-96	DATED	4/20/01
PCB-91	DATED	7/06/99
SICD-1-96	DATED	4/20/01
VPF-1-90M	DATED	3/20/95

AND TO THE SUPPLEMENTAL SPECIFICATIONS:

816	DATED	4/21/97	905	DATED	4/01/98
842	DATED	1/6/99	907	DATED	10/21/98
844	DATED	1/6/99	910	DATED	7/11/00
863	DATED	10/12/99	911	DATED	7/10/97
864	DATED	7/11/00	954	DATED	9/09/97
899	DATED	10/21/98			

DESIGN SPECIFICATIONS

THIS STRUCTURE CONFORMS TO "STANDARD SPECIFICATIONS FOR HIGHWAY BRIDGES" ADOPTED BY THE AMERICAN ASSOCIATION OF STATE HIGHWAY AND TRANSPORTATION OFFICIALS, 1996, INCLUDING THE 1997, 1998 AND 1999 INTERIM SPECIFICATIONS AND THE ODOT BRIDGE DESIGN MANUAL.

DESIGN LOADING

HS25, CASE II, AND THE ALTERNATE MILITARY LOADING.
FUTURE WEARING SURFACE OF 60 psf

DESIGN STRESSES

CONCRETE CLASS C - COMPRESSIVE STRENGTH 4000 psi (SUBSTRUCTURE)
HIGH PERFORMANCE CONCRETE HPC 844 - COMPRESSIVE STRENGTH 4500 psi (SUPERSTRUCTURE)
STRUCTURAL STEEL - ASTM A572/A709 GRADE 50 - YIELD STRENGTH 50,000 psi
STRUCTURAL STEEL FOR BEARING LOAD PLATES AND HP SUPPORT POSTS - ASTM A36/A709, GRADE 36 - YIELD STRENGTH 36,000 psi.
REINFORCING STEEL - ASTM A615, A616, OR A617, GRADE 60, MINIMUM YIELD STRENGTH 60,000 psi. SPIRAL REINFORCEMENT MAY BE PLAIN BARS, ASTM A82 OR A615

DECK PROTECTION METHOD

EPOXY COATED REINFORCING STEEL
2-1/2" CONCRETE COVER

MONOLITHIC WEARING SURFACE IS ASSUMED, FOR DESIGN PURPOSES, TO BE 1" THICK.

EXISTING STRUCTURE VERIFICATION

DETAILS AND DIMENSIONS SHOWN ON THESE PLANS PERTAINING TO THE EXISTING STRUCTURE HAVE BEEN OBTAINED FROM PLANS OF THE EXISTING STRUCTURE AND FROM FIELD OBSERVATIONS AND MEASUREMENTS. CONSEQUENTLY, THEY ARE INDICATIVE OF THE EXISTING STRUCTURE AND THE PROPOSED WORK BUT THEY SHALL BE CONSIDERED TENTATIVE AND APPROXIMATE. THE CONTRACTOR IS REFERRED TO CMS SECTIONS 102.05, 105.02, AND 513.02.

CONTRACT BID PRICES SHALL BE BASED UPON A RECOGNITION OF UNCERTAINTIES DESCRIBED ABOVE AND UPON A PREBID EXAMINATION OF THE EXISTING STRUCTURE BY THE CONTRACTOR. HOWEVER, ALL PROJECT WORK SHALL BE BASED UPON ACTUAL DETAILS AND DIMENSIONS WHICH HAVE BEEN VERIFIED BY THE CONTRACTOR IN THE FIELD.

EXISTING STRUCTURE PLANS

PLANS OF THE EXISTING BRIDGE MAY BE EXAMINED AT THE DISTRICT 4 OFFICE OF THE OHIO DEPARTMENT OF TRANSPORTATION, 705 OAKWOOD STREET, RAVENNA, OHIO 44266.

ITEM 202, STRUCTURE REMOVED, OVER 20' SPAN, AS PER PLAN

DESCRIPTION: WORK TO BE PAID FOR UNDER THIS ITEM SHALL INCLUDE THE REMOVAL OF THE EXISTING STRUCTURE IN TWO STAGES AS DETAILED IN THE PLANS AND AS DIRECTED BY THE ENGINEER.

THE USE OF EXPLOSIVES AND/OR HEADACHE BALLS WILL NOT BE PERMITTED. FOR STAGE ONE REMOVALS, UNLESS OTHERWISE PERMITTED BY THE ENGINEER, THE USE OF HYDRAULIC HOE-RAM TYPE HAMMERS SHALL NOT BE PERMITTED WITHIN THREE (3) FEET OF THE REMOVAL LIMIT SHOWN ON THE PLANS, SO AS TO AVOID DAMAGE TO THE PORTIONS OF THE EXISTING STRUCTURE TO TEMPORARILY REMAIN. FOR STAGE TWO REMOVALS, HYDRAULIC HOE-RAM TYPE HAMMERS MAY BE USED WITHOUT RESTRICTION.

EXTREME CARE SHALL BE TAKEN DURING ALL REMOVAL OPERATIONS NOT TO DAMAGE OR DISTURB NEWLY CONSTRUCTED PORTIONS OF THE PROPOSED STRUCTURE. ANY DAMAGE TO THE NEW STRUCTURE RESULTING FROM THE CONTRACTOR'S REMOVAL OPERATIONS SHALL BE REPAIRED AT THE CONTRACTOR'S EXPENSE AND TO THE APPROVAL OF THE ENGINEER.

PROTECTION OF TRAFFIC: THE CONTRACTOR SHALL PROVIDE ALL NECESSARY TEMPORARY SUPPORTS UNDER THE STRUCTURE DURING REMOVAL, RECONSTRUCTION AND CONSTRUCTION OPERATIONS AS REQUIRED TO MAINTAIN A COMPLETELY STABLE STRUCTURE AT ALL TIMES. IF IN THE OPINION OF THE ENGINEER, ADDITIONAL SUPPORTS ARE REQUIRED, THEY SHALL BE PROVIDED BY THE CONTRACTOR ENTIRELY AT HIS EXPENSE. NO FULL DEPTH BRIDGE REPAIR SHALL BE PERFORMED OVER AN OPEN LANE.

IN ORDER TO PROTECT VEHICULAR TRAFFIC AND PAVEMENT AGAINST DAMAGE FROM FALLING MATERIAL, DEBRIS AND OTHER DEMOLITION OPERATIONS, WHILE SUPERSTRUCTURE CONCRETE IS BEING REMOVED OR WHILE THE CONTRACTOR IS WORKING OVERHEAD, THE CONTRACTOR SHALL FURNISH AND ERECT A TEMPORARY PROTECTIVE STRUCTURE UNDER THE SPANS THAT ARE DIRECTLY OVER THE ROADWAY AND SHOULDER AREAS PLUS ENOUGH ADDITIONAL COVERAGE IN THE AREA TO PREVENT ANY FALLING MATERIAL FROM ANY SPAN FROM REACHING THESE AREAS.

ITEM 202, STRUCTURE REMOVED, OVER 20' SPAN, AS PER PLAN (CONT.):

IN ADDITION TO THE TEMPORARY PROTECTIVE STRUCTURE, THE CONTRACTOR SHALL PROVIDE PLASTIC SHEETING OR OTHER APPROVED METHODS TO CONTROL WATER USED IN THE SAW CUTTING OPERATION FROM FALLING ON VEHICULAR TRAFFIC.

THE PROTECTIVE STRUCTURE(S) SHALL MEET THE APPROVAL OF THE ENGINEER. THE FLOORING AND SIDING OF THE STRUCTURE(S) SHALL HAVE NO CRACKS OR OPENINGS THROUGH WHICH MATERIAL PARTICLES MAY FALL. AS A MINIMUM, TWO LAYERS OF ¾INCH PLYWOOD WITH LAPPED JOINTS OR AN EQUIVALENT DESIGN SHALL BE PLACED BETWEEN THE LOWER FLANGES OF THE STRUCTURAL STEEL BEAMS ABOVE THE PAVEMENT AND SHOULDERS OF ROADWAYS ON WHICH VEHICULAR TRAFFIC IS BEING MAINTAINED ON THE EXISTING LANES OR BY PARTIAL LANE CLOSURES. THE PROTECTION IN ALL CASES SHALL EXTEND BEYOND THE EXISTING AND/OR NEW EXTERIOR STRUCTURAL BEAMS A SUFFICIENT DISTANCE TO PROTECT UNDER THE EXISTING AND PROPOSED PARAPETS AND SHALL HAVE SIDEWALLS EXTENDING UP TO 4 FEET MINIMUM. SIDEWALLS SHALL BE BRACED SUBSTANTIALLY TO RESIST WIND LOADS. DURING SAW CUTTING AND DECK REMOVAL OPERATIONS, TEMPORARY SHIELDS ATTACHED TO THE SIDEWALLS AND EXTENDING 1FOOT ABOVE THE TOP OF THE PARAPET SHALL BE INSTALLED TO LIMITS AS DIRECTED BY THE ENGINEER. TEMPORARY SHIELDS SHALL BE REMOVED IMMEDIATELY AFTER THEY HAVE SERVED THEIR PURPOSE. DEBRIS SHALL NOT BE PERMITTED TO COLLECT ON THEIR PROTECTED STRUCTURES.

WHEN SUPPORTING THE PROTECTIVE STRUCTURE(S) FROM THE STEEL WORK OF THE BRIDGE, ALL CONNECTIONS THERETO SHALL BE MADE BY MEANS OF APPROVED CLAMPS ON BOTH SIDES OF THE BEAM FLANGE. THE DRILLING OF HOLES IN THE STEEL WORK OR WELDING THERETO, FOR THIS PURPOSE WILL NOT BE PERMITTED. NO PORTION OF THE TEMPORARY SUPPORT SYSTEM AND/OR PROTECTIVE STRUCTURE(S) (INCLUDING CONNECTION DEVICES) SHALL EXTEND MORE THAN 10 INCHES BELOW THE BOTTOM FLANGE OF THE STEEL STRINGERS OR COVER PLATES THAT IS OVER THE TRAVELED WAY (PAVEMENT, SHOULDERS) OF A HIGHWAY ON WHICH TRAFFIC IS BEING MAINTAINED. HOWEVER, IN NO INSTANCE SHALL THE UNDERCLEARANCE BE LESS THAN 14 FEET. DISTRICT PUBLIC RELATIONS OFFICE (EXT. 209 OR 211) SHALL BE NOTIFIED 18 DAYS IN ADVANCE OF RESTRICTION.

AFTER THE FALSEWORK, TEMPORARY BRACING AND PROTECTIVE STRUCTURE(S) HAVE SERVED THEIR PURPOSE AND WHEN SO DIRECTED BY THE ENGINEER, THEY SHALL BE REMOVED. PROTECTIVE STRUCTURE(S), INCLUDING SIDEWALLS SHALL NOT BE REMOVED UNTIL THE PARAPETS ARE COMPLETED. ALL MATERIAL SHALL BECOME THE PROPERTY OF THE CONTRACTOR AND SHALL BE REMOVED FROM THE JOB SITE AND DISPOSED OF BY THE CONTRACTOR AT HIS OWN EXPENSE.

THE CONTRACTOR SHALL SUBMIT IN QUADRUPLET A DEMOLITION PLAN AND DETAILS OF THE FALSEWORK, TEMPORARY BRACING AND PROTECTIVE STRUCTURES FOR CATCHING BROKEN CONCRETE AND OTHER MATERIALS. THESE PLANS AND DETAILS SHALL BE SUBMITTED 18 DAYS PRIOR TO COMMENCING ANY DEMOLITION TO THE DIRECTOR FOR APPROVAL. THE DETAILS SHALL INCLUDE THE EXISTING AND PROPOSED TEMPORARY UNDERCLEARANCES TO THE TRAVELED WAY.

PROTECTION OF STEEL SUPPORT SYSTEMS: BEFORE DECK SLAB CUTTING IS PERMITTED, THE OUTLINE OF PRIMARY STEEL MEMBERS IN CONTACT WITH THE BOTTOM OF THE DECK SHALL BE DRAWN ON THE SURFACE OF DECK. SMALL DIAMETER PILOT HOLES SHALL BE DRILLED TWO (2) INCHES OUTSIDE THESE LINES TO CONFIRM THE LOCATION OF FLANGE EDGES. DECK CUTS OVER OR WITHIN 2 INCHES OF FLANGE EDGES SHALL NOT EXTEND LOWER THAN THE BOTTOM LAYER OF DECK SLAB REINFORCING STEEL. CUTS MADE OUTSIDE 2 INCHES OF FLANGE EDGES MAY EXTEND THE FULL DEPTH OF THE DECK. DURING CUTTING OF THE DECK SLAB, CARE SHALL BE TAKEN NOT TO DAMAGE STEEL MEMBERS THAT ARE TO BE INCORPORATED INTO THE PROPOSED STRUCTURE.

REMOVAL METHODS: CONCRETE MAY BE REMOVED BY CUTTING AND BY MEANS OF HAND OPERATED PNEUMATIC HAMMERS EMPLOYING POINTED OR BLUNTED CHISEL TYPE TOOLS. FOR REMOVALS ABOVE STEEL MEMBERS, A HAMMER HEAVIER THAN 35 POUNDS BUT NOT TO EXCEED 90 POUNDS MAY BE USED AT THE APPROVAL OF THE ENGINEER. REMOVAL METHODS OVER BRIDGE MEMBERS SHALL ENSURE ADEQUATE DEPTH CONTROL AND PREVENT NICKING OR GOUGING OF THE PRIMARY STEEL MEMBERS.

DECK REMOVALS: DUE TO THE POSSIBLE PRESENCE OF WELDED ATTACHMENTS TO EXISTING STRUCTURAL STEEL (FINISHING MACHINE, SCUPPER AND FORM SUPPORTS, ETC.) CARE SHALL BE TAKEN DURING DECK REMOVAL TO AVOID DAMAGING STRINGERS WHICH ARE TO REMAIN. STRINGERS DAMAGED BY THE CONTRACTOR'S REMOVAL OPERATIONS SHALL, AT NO COST TO THE PROJECT, BE REPLACED OR REPAIRED. PROPOSED REPAIRS, DEVELOPED BY AN OHIO REGISTERED PROFESSIONAL ENGINEER, SHALL BE SUBMITTED IN WRITING FOR REVIEW AND APPROVAL BY THE DIRECTOR.

EXTRANEOUS MEMBERS: EXISITING EXTRANEOUS MEMBERS (i.e., FINISHING MACHINE AND FORM SUPPORTS, ETC., AND THE SUPPORT FOR SCUPPERS AND BULB ANGLES WHICH ARE TO BE REMOVED) ATTACHED BY WELDED CONNECTION TO THE DESIGNATED "TENSION" PORTIONS OF THE EXISTING BEAM FLANGES SHALL BE REMOVED AND THE FLANGE SURFACES GROUND SMOOTH. GRINDING SHALL BE CAREFULLY DONE AND PARALLEL TO THE FLANGES.

LOADING LIMITATIONS: NO PART OF THE STRUCTURE SHALL BE SUBJECTED TO UNIT STRESSES THAT EXCEED 136.5% OF THE ALLOWABLE UNIT STRESSES GIVEN IN THE AASHTO STANDARD SPECIFICATIONS FOR HIGHWAY BRIDGES DUE EITHER TO DEMOLITON, ERECTION OR CONSTRUCTION METHODS, OR TO THE USE OR MOVEMENT OF DEMOLITION OR ERECTION EQUIPMENT ON OR ACROSS THE STRUCTURE. STRUCTURAL ANALYSIS COMPUTATIONS, BY AN OHIO REGISTERED PROFESSIONAL ENGINEER, SHOWING THE ALLOWABLE STRESSES AND MAXIMUM STRESSES PRODUCED BY THE CONTRACTOR'S METHODS OR EQUIPMENT SHALL BE SUBMITTED TO THE DIRECTOR FOR REVIEW AND APPROVAL AT LEAST TWO WEEKS PRIOR TO THE START OF THE WORK.

ITEM 202, STRUCTURE REMOVED, OVER 20' SPAN, AS PER PLAN (CONT.):

CUTLINE CONSTRUCTION JOINT PREPARATION: SAW CUT BOUNDARIES OF PROPOSED CONCRETE REMOVALS 1" DEEP. REMOVE CONCRETE TO A ROUGH SURFACE. THE EXISTING REINFORCING STEEL, IF REQUIRED IN THE PLANS, SHALL BE LEFT IN PLACE. INSTALL DOWELS BARS IF SPECIFIED. PRIOR TO CONCRETE PLACEMENT, ABRASIVELY CLEAN JOINT SURFACES AND EXISTING EXPOSED REINFORCEMENT TO REMOVE LOOSE AND DISINTEGRATED CONCRETE AND LOOSE RUST. THE JOINT SURFACE AND EXPOSED REINFORCEMENT SHALL BE THOROUGHLY CLEANED OF ALL DIRT, DUST, OR OTHER FOREIGN MATERIAL BY THE USE OF WATER, AIR UNDER PRESSURE OR OTHER METHODS THAT PRODUCE SATISFACTORY RESULTS. EXISTING REINFORCING STEEL DOES NOT HAVE TO HAVE A BRIGHT STEEL FINISH BUT ALL PACK AND LOOSE RUST SHALL BE REMOVED. EXISTING CONCRETE SURFACES WHICH NEW CONCRETE WILL BE PLACED AGAINST SHALL BE WET, BUT WITHOUT FREE WATER, AT THE TIME OF CONCRETE PLACEMENT.

ABUTMENT CONCRETE REMOVAL SHALL BE BY MEANS OF APPROVED PNEUMATIC HAMMERS EMPLOYING POINTED OR BLUNT CHISEL TOOLS. HYDRAULIC HOE-RAM TYPE HAMMERS WILL NOT BE PERMITTED. THE WEIGHT OF THE HAMMER SHALL NOT BE MORE THAN 35 POUNDS FOR REMOVAL WITHIN 18-INCHES OF PORTIONS TO BE PRESERVED. OUTSIDE THE 18-INCH LIMIT, HAMMERS NOT EXCEEDING 90 POUNDS, MAY BE USED AT THE APPROVAL OF THE ENGINEER. PNEUMATIC HAMMERS SHALL NOT BE PLACED IN DIRECT CONTACT WITH REINFORCING STEEL THAT IS TO BE RETAINED IN THE REBUILT STRUCTURE.

PAYMENT: THIS WORK WILL BE PAID FOR AT THE CONTRACT LUMP SUM PRICE BID, WHICH PRICE AND PAYMENT SHALL BE FULL COMPENSATION FOR ALL LABOR, EQUIPMENT, MATERIALS AND INCIDENTALS NECESSARY TO COMPLETE THE WORK IN CONFORMANCE WITH THESE REQUIREMENTS, WITH PERTINENT PROVISIONS OF 202, AND TO THE SATISFACTION OF THE ENGINEER.

ASBESTOS NOTIFICATION: SEE SHEET 34 FOR ASBESTOS NOTIFICATION NOTE

AN ASBESTOS SURVEY OF THE MARKET STREET BRIDGE OVER S.R. 8 SCHEDULED FOR REPLACEMENT WAS CONDUCTED BY A CERTIFIED ASBESTOS HAZARD EVALUATION SPECIALIST. THE SURVEY DETERMINED THAT ASBESTOS-CONTAINING MATERIALS EXIST IN TWO UTILITY FACILITIES: 8 OHIO EDISON TRANSITE DUCTS AND 18 AMERITECH TRANSITE DUCTS IN THE SUPERSTRUCTURE. THE REMOVAL AND DISPOSAL OF THE ASBESTOS CONTAINING MATERIAL MUST COMPLY WITH THE OHIO ADMINISTRATIVE CODE, THE OCCUPATIONAL SAFETY AND HEALTH ADMINISTRATIVE (OSHA) REGULATIONS AND THE NATIONAL EMISSION STANDARD FOR HAZARDOUS AIR POLLUTANTS (NESHAP) STANDARD FOR ASBESTOS. THE ASBESTOS CONTAINING MATERIAL WILL BE REMOVED BY THE CONTRACTOR IN CONJUNCTION WITH THE BRIDGE DECK REMOVAL. THE CONTRACTOR SHALL COORDINATE REMOVAL WITH THE RESPECTIVE UTILITY COMPANIES.

A COPY OF THE OHIO ENVIRONMENTAL PROTECTION AGENCY (OEPA) NOTIFICATION OF THE DEMOLITION AND RENOVATION FORM, PARTIALLY COMPLETED AND SIGNED BY THE BRIDGE OWNER, WILL BE PROVIDED TO THE SUCCESSFUL BIDDER. THE CONTRACTOR SHALL COMPLETE THE FORM AND SUBMIT IT TO:

AKRON REGIONAL AIR QUALITY MANAGEMENT DISTRICT
146 S. HIGH ST., SUITE 904
AKRON, OH 44308
ATTN: LYNN M. MALCOLM, ADMIN.
PHONE: 330-375-2480
FAX: 330-375-2402

AT LEAST TEN (10) WORKING DAYS PRIOR TO START OF THE BRIDGE DEMOLITION WORK. THE CONTRACTOR SHALL PROVIDE A COPY OF THE COMPLETED FORM TO THE ENGINEER.

INFORMATION REQUIRED ON THE FORM WILL INCLUDE: THE CONTRACTOR'S NAME AND ADDRESS, THE SCHEDULED DATES FOR THE START AND COMPLETION OF THE BRIDGE REMOVAL OR RENOVATION AND A DESCRIPTION OF THE PLANNED DEMOLITION OR RENOVATION WORK AND THE METHOD(S) TO BE USED. A COPY OF THE OEPA FORM IS AVAILABLE FOR INSPECTION AT THE ODOT DISTRICT 4 OFFICE, 705 OAKWOOD STREET, RAVENNA, OHIO 44266.

BASIS FOR PAYMENT: THE CONTRACTOR SHALL FURNISH ALL FEES, LABOR, AND MATERIAL NECESSARY TO COMPLETE AND SUBMIT THE OEPA NOTIFICATION FORM. THIS WORK SHALL BE PAID FOR WITH THE CONTRACT LUMP SUM PRICE BID FOR ITEM SPECIAL - ASBESTOS ABATEMENT (OHIO EDISON FACILITY) OR ITEM SPECIAL - ASBESTOS ABATEMENT (AMERITECH FACILITY).

ITEM 503, UNCLASSIFIED EXCAVATION, AS PER PLAN
ITEM 503, ROCK EXCAVATION, AS PER PLAN

UNCLASSIFIED EXCAVATION AND ROCK EXCAVATION SHALL BE IN ACCORDANCE WITH 503 EXCEPT THAT THE BACKFILL MATERIAL FOR THE ABUTMENTS SHALL BE 304 GRANULAR MATERIAL PLACED IN 6" LIFTS AND COMPACTED IN ACCORDANCE WITH 304.05.

MAINTENANCE OF TRAFFIC:

MAINTENANCE OF TRAFFIC FOR THE STRUCTURE WORK SHALL BE COORDINATED WITH THE OVERALL PROJECT. REFER TO MAINTENANCE OF TRAFFIC NOTES AND DETAILS ELSEWHERE IN THE PLANS.

CONSTRUCTION CONSTRAINTS:

AFTER THE FOOTING AND THE BREASTWALL HAVE BEEN CONSTRUCTED, THE VOID BEHIND EACH ABUTMENT SHALL BE FILLED UP TO WITHIN THREE FEET FROM BEAM SEAT ELEVATION AND ON A 1:1 SLOPE TO THE SUBGRADE ELEVATION PRIOR TO SETTING THE BEAMS ON THE ABUTMENT.

FOUNDATION BEARING PRESSURE:

ABUTMENT FOOTINGS, AS DESIGNED, PRODUCE A MAXIMUM BEARING PRESSURE OF 5.6 tsf (TONS PER SQUARE FOOT). PIER FOOTINGS, AS DESIGNED, PRODUCE A MAXIMUM BEARING PRESSURE OF 8.5 tsf. THE ALLOWABLE BEARING PRESSURE IS 10 tsf.

FOOTINGS: SHALL EXTEND A MINIMUM OF 3 INCHES INTO BEDROCK OR TO THE ELEVATION SHOWN, WHICHEVER IS LOWER.

DLZ
8000 ROCKEFELLER BLDG • 614 W SUPERIOR AVE • CLEVELAND, OH 44113

DESIGNED PAT | DRAWN PAT | REVIEWED GWM | DATE 1/29/02 | CHECKED AJM | REVISED | STRUCTURE FILE NUMBER 7708297

STRUCTURE GENERAL NOTES
BRIDGE NO. SUM-8-0148
MARKET ST. OVER S.R. 8

SUM-8-0.63

953
1088

UTILITY LINES:
ALL EXPENSES INVOLVED IN RELOCATING AND/OR INSTALLING AND/OR TEMPORARILY SUPPORTING THE AFFECTED UTILITY LINES NOT SEPERATELY ITEMIZED IN THE PLANS, SHALL BE BORNE BY THE UTILITIES. THE CONTRACTOR AND UTILITIES ARE TO COOPERATE BY ARRANGING THEIR WORK IN SUCH A MANNER THAT INCONVENIENCE TO EITHER WILL BE HELD TO A MINIMUM.

ITEM 864, SEALING OF CONCRETE SURFACES (EPOXY-URETHANE)

CONCRETE SURFACES INCLUDING PARAPETS, ABUTMENTS, WINGWALLS, PIERS, AND END DIAPHRAGMS AS DETAILED IN THE PLANS SHALL BE SEALED WITH AN EPOXY-URETHANE SEALER OF A COLOR CONFORMING TO FEDERAL COLOR No. 13522 - BUFF.

ITEM 816, FIELD PAINTING OF NEW STEEL, INTERMEDIATE AND FINISH COAT, SYSTEM IZEU

ALL SURFACES OF EXPOSED STEEL SHALL BE COATED WITH "BROWN" PAINT, FEDERAL COLOR NO. 10080.

CONCRETE PARAPETS:

AS SOON AS A CONCRETE SAW CAN BE OPERATED WITHOUT DAMAGING THE FRESHLY PLACED CONCRETE, 1¼" DEEP CONTROL JOINTS SHALL BE SAWED INTO THE PERIMETER OF THE CONCRETE PARAPET. THE SAW CUT SHALL BE MADE IN THE COMPLETE CIRCUMFERENCE OF THE PARAPET, STARTING AND ENDING AT THE ELEVATION OF THE CONCRETE DECK. THE SAWCUTS SHALL BE PLACED AT A MINIMUM OF 6 FEET AND A MAXIMUM OF 10 FEET CENTERS. THE USE OF AN EDGE GUIDE, FENCE, OR JIG IS REQUIRED TO INSURE THAT THE CUT JOINT IS STRAIGHT, TRUE, AND ALIGNED ON ALL FACES OF THE PARAPET. THE JOINT WIDTH SHALL BE THE WIDTH OF THE SAW BLADE, A NOMINAL WIDTH OF ¼". THE PERIMETER OF THE DEFLECTION CONTROL JOINT SHALL BE SEALED WITH A CAULKING MATERIAL CONFORMING TO FEDERAL SPECIFICATION TT-S-00227E TO A MINIMUM DEPTH OF 1 INCH. THE BOTTOM ½ INCH OF THE INSIDE AND OUTSIDE FACE SHALL BE LEFT UNSEALED TO ALLOW WATER TO ESCAPE.

CONVERSION OF STANDARD BRIDGE DRAWINGS:

SOME OF THE STANDARD BRIDGE DRAWINGS REFERENCED IN THIS PLAN ARE METRIC. ANY CONVERSIONS OF DIMENSIONS REQUIRED TO CONSTRUCT THE ITEMS SHOWN ON THE STANDARDS SHALL BE THE RESPONSIBILITY OF THE CONTRACTOR. CONVERSIONS SHALL BE MADE USING SI (METRIC) TO ENGLISH CONVERSION FACTORS PROVIDED IN SECTION 109.011 OF THE 1997 CONSTRUCTION AND MATERIALS SPECIFICATIONS. THE APPENDIX OF ASTM E380 SHALL BE UTILIZED FOR ANY ADDITIONAL CONVERSION FACTORS REQUIRED. CONVERSIONS SHALL BE APPROPRIATELY PRECISE AND SHALL REFLECT INDUSTRY ENGLISH VALUES WHERE SUITABLE.

ITEM 844, HIGH PERFORMANCE CONCRETE SUPERSTRUCTURE (DECK), AS PER PLAN

THIS ITEM SHALL INCLUDE ALL SUPERSTRUCTURE CONCRETE IN THE DECK, END DIAPHRAGMS, SIDEWALKS, AND PARAPETS.

ITEM 842, CLASS C CONCRETE, ABUTMENT NOT INCLUDING FOOTING, AS PER PLAN

INSTALL A 3-FOOT WIDE STRIP, 3/32" THICK, GENERAL PURPOSE, HEAVY DUTY NEOPRENE SHEET WITH NYLON FABRIC REINFORCEMENT AT LOCATIONS SHOWN IN THE PLANS. SECURE THE 3-FOOT WIDE NEOPRENE SHEETING TO THE CONCRETE WITH 1¼" x #10 GAGE (LENGTH x SHANK DIAMETER) GALVANIZED BUTTON HEAD SPIKES THROUGH A 1 INCH OUTSIDE DIAMETER, #10 GAGE GALVANIZED WASHER. MAXIMUM FASTENER SPACING IS 9 INCHES. OTHER SIMILAR GALVANIZED DEVICES WHICH WILL NOT DAMAGE EITHER THE NEOPRENE OR THE CONCRETE MAY BE USED SUBJECT TO THE APPROVAL OF THE ENGINEER.

CENTER THE NEOPRENE STRIPS ON ALL JOINTS. FOR HORIZONTAL JOINTS, SECURE THE HORIZONTAL NEOPRENE STRIP BY USING A SINGLE LINE OF FASTENERS, STARTING AT 6 INCHES, +/-, FROM THE TOP OF THE NEOPRENE STRIP. FOR THE VERTICAL JOINTS SECURE THE VERTICAL NEOPRENE STRIP BY USING A SINGLE VERTICAL LINE OF FASTENERS, STARTING AT 6 INCHES, +/-, FROM THE VERTICAL EDGE OF THE NEOPRENE STRIP NEAREST TO THE CENTERLINE OF ROADWAY. FOR VERTICAL JOINTS, INSTALL 2 ADDITIONAL FASTENERS AT 6 INCHES, CENTER TO CENTER, ACROSS THE TOP OF THE NEOPRENE STRIP ON THE SAME SIDE OF THE VERTICAL JOINT AS THE SINGLE VERTICAL ROW OF FASTENERS IS LOCATED.

THE VERTICAL NEOPRENE STRIPS SHOULD COMPLETELY OVERLAP THE HORIZONTAL STRIPS. LAPS IN THE LENGTH OF THE HORIZONTAL STRIPS DUE TO MATERIAL MANUFACTURING SHALL BE AT LEAST 1 FOOT IN LENGTH, IF NOT VULCANIZED OR ADHESIVE BONDED, OR 6 INCHES IN LENGTH IF THE LAP IS VULCANIZED OR ADHESIVE BONDED. NO LAPS ARE ACCEPTABLE IN VERTICALLY INSTALLED NEOPRENE STRIPS.

THE NEOPRENE SHEETING SHALL BE 3/32" THICK GENERAL PURPOSE, HEAVY DUTY NEOPRENE SHEET WITH NYLON FABRIC REINFORCEMENT. THE SHEETING SHALL BE "FAIRPRENE NUMBER NN-0003", BY E.I. DUPONT DE NEMOURS AND COMPANY, INC., "WINGPRENE" BY THE GOODYEAR TIRE AND RUBBER COMPANY, OR AN APPROVED ALTERNATE. THE NEOPRENE SHEETING SHALL CONFORM TO THE FOLLOWING:

DESCRIPTION OF TEST	ASTM METHOD	REQUIREMENT
THICKNESS, INCHES	D 751	0.094" +/- 0.01
BREAKING STRENGTH, GRAB WXF, LBS, MINIMUM	D 751	700 x 700
ADHESIVE 1" STRIP, 2" MINIMUM, LBS, MINIMUM	D 751	9
BURST STRENGTH (MULLEN) PSI, MINIMUM	D 751	1400
HEAT AGING 70 HOURS T 212°F, 180 BEND WITHOUT CRACKING	D 2136	NO CRACKING OF COATING
LOW TEMPERATURE BRITTLENESS 1 HOUR AT -40°F, BEND AROUND 1/4" MANDREL	D 2136	NO CRACKING OF COATING

IN LIEU OF THE NEOPRENE SHEETING THE CONTRACTOR MAY CHOOSE TO SUPPLY TYPE 3 MEMBRANE, 711.29.

PAYMENT FOR LABOR, MATERIALS AND INSTALLATION OF THESE ITEMS SHALL BE INCLUDED IN ITEM 842, CLASS C CONCRETE, ABUTMENT NOT INCLUDING FOOTING, AS PER PLAN.

ITEM SPECIAL - STRUCTURE MISC.: TEMPORARY SUPPORT

THIS ITEM SHALL INCLUDE DESIGN, INSTALLATION, MAINTENANCE, AND REMOVAL OF A TEMPORARY SUPPORT FOR THE EXISTING PIER CAP WHERE DETAILED IN THE PLANS. THE TEMPORARY SUPPORT IS REQUIRED TO SUPPORT A LOAD OF 130 KIPS FROM THE EXISTING PIER CAP DURING STAGE 1 CONSTRUCTION. THE TEMPORARY SUPPORT SHALL BE INSTALLED PRIOR TO STAGE 1 REMOVAL OF THE EXISTING PIER CAP. THE CONTRACTOR SHALL DEMONSTRATE TO THE ENGINEER THAT THE TEMPORARY SUPPORT IS SNUG TO THE EXISTING PIER CAP.

THREE SETS OF TEMPORARY SUPPORT PLANS SHALL BE SUBMITTED TO THE DIRECTOR FOR APPROVAL AT LEAST 30 DAYS BEFORE THE TEMPORARY SUPPORT MAY BE INSTALLED. THE TEMPORARY SUPPORT DESIGN SHALL BE PREPARED AND STAMPED BY AN OHIO REGISTERED PROFESSIONAL ENGINEER.

PAYMENT FOR ALL MATERIALS, EQUIPMENT, LABOR, AND INCIDENTALS REQUIRED TO DESIGN, INSTALL, MAINTAIN, AND REMOVE A TEMPORARY SUPPORT AS DETAILED ABOVE AND IN THE PLANS SHALL BE INCLUDED WITH THE LUMP SUM PRICE BID FOR ITEM SPECIAL - STRUCTURE MISC.: TEMPORARY SUPPORT.

ITEM 842 - CLASS C CONCRETE, FOOTING, AS PER PLAN

INSTALL RESIN BONDED ROCK ANCHORS WHERE DETAILED IN THE PLANS. THE ANCHORS SHALL BE 1"-DIAMETER, GRADE 75, ALL-THREAD REBAR CONFORMING TO ASTM A615. THE RESIN SHALL BE AS RECOMMENDED BY THE MANUFACTURER TO DEVELOP THE ULTIMATE STRENGTH OF THE BARS. INSTALLATION SHALL BE IN ACCORDANCE WITH MANUFACTURER SPECIFICATIONS. THREAD BARS AND RESIN SHALL BE SUPPLIED BY WILLIAMS FORM ENGINEERING CORP., DYWIDAG-SYSTEMS INTERNATIONAL, OR APPROVED EQUAL. AFTER THE FOOTING CONCRETE HAS BEEN PLACED AND CURED FOR A MINIMUM OF 7 DAYS, THE CONTRACTOR SHALL TENSION EACH ANCHOR TO A LOAD OF 10 KIPS. PAYMENT FOR ALL MATERIALS, EQUIPMENT, LABOR, AND INCIDENTALS REQUIRED TO FURNISH AND INSTALL THE RESIN BONDED ROCK ANCHORS AS DETAILED ABOVE AND IN THE PLANS SHALL BE INCLUDED IN THE UNIT PRICE BID, PER CUBIC YARD, FOR ITEM 842, CLASS C CONCRETE, FOOTING, AS PER PLAN.

ITEM SPECIAL - UTILITY RELOCATION: AMERITECH FACILITY

WORK PERFORMED UNDER THIS ITEM SHALL INCLUDE THE CONSTRUCTION OF NEW UTILITY SUPPORT STRUCTURES AND FACILITIES AS DETAILED IN THE PLANS. THE WORK SHALL INCLUDE, BUT NOT NECESSARILY BE LIMITED TO, FURNISHING AND INSTALLING CONDUITS AND SUPPORTS ACROSS THE STRUCTURE AND APPROXIMATELY 25' BEYOND THE BRIDGE LIMITS, AS DETAILED ON SHEETS 26C AND 26D/31.

PAYMENT FOR WORK AS LISTED ABOVE AND DETAILED IN THE PLANS SHALL BE INCLUDED IN THE LUMP SUM PRICE BID FOR ITEM SPECIAL - UTILITY RELOCATION: AMERITECH FACILITY, AND SHALL INCLUDE ALL LABOR, EQUIPMENT, MATERIALS AND INCIDENTALS NECESSARY TO COMPLETE THE WORK IN CONFORMANCE WITH THESE REQUIREMENTS, AND TO THE SATISFACTION OF THE ENGINEER AND AMERITECH.

ITEM SPECIAL - UTILITY RELOCATION: OHIO EDISON FACILITY

WORK PERFORMED UNDER THIS ITEM SHALL INCLUDE THE REMOVAL OF EXISTING UTILITITY SUPPORT STRUCTURES AND FACILITIES. THE WORK SHALL INCLUDE, BUT NOT NECESSARILY BE LIMITED TO, REMOVAL AND/OR ABANDON TWO EXISTING MANHOLES. IF ABANDONED, REMOVAL SHALL INCLUDE THE LID, WALLS DOWN TO 3' BELOW GRADE, AND THE FLOOR BROKEN INTO PIECES NO LARGER THAN 1' SQUARE. THE BACKFILL USED IN THESE LOCATIONS SHALL BE 304 GRANULAR MATERIAL COMPACTED IN 6" LIFTS. IF ANY REPLACEMENT PAVEMENT IS REQUIRED, THIS SHALL BE INCLUDED IN THE LUMP SUM PRICE BID FOR ITEM SPECIAL - UTILITY RELOCATION: OHIO EDISON FACILITY.

WORK PERFORMED UNDER THIS ITEM SHALL INCLUDE THE CONSTRUCTION OF NEW UTILITY SUPPORT STRUCTURES AND FACILITIES AS DETAILED IN THE PLANS. THE WORK SHALL INCLUDE, BUT NOT NECESSARILY BE LIMITED TO, CONDUIT AND SUPPORTS ACROSS THE STRUCTURE, CONDUIT INSTALLATION AND CONNECTION TO THE EXISTING CONDUITS BEYOND THE BRIDGE LIMITS, AND THE ADDITION OF ONE NEW MANHOLE, AS DETAILED ON SHEETS 26A AND 26B/31.

PAYMENT FOR WORK AS LISTED ABOVE AND DETAILED IN THE PLANS SHALL BE INCLUDED IN THE LUMP SUM PRICE BID FOR ITEM SPECIAL - UTILITY RELOCATION: OHIO EDISON FACILITY, AND SHALL INCLUDE ALL LABOR, EQUIPMENT, MATERIALS AND INCIDENTALS NECESSARY TO COMPLETE THE WORK IN CONFORMANCE WITH THESE REQUIREMENTS, AND TO THE SATISFACTION OF THE ENGINEER AND OHIO EDISON.

ITEM SPECIAL - UTILITY RELOCATION: DOMINION EAST OHIO FACILITY

WORK PERFORMED UNDER THIS ITEM SHALL INCLUDE THE CONSTRUCTION OF NEW UTILITY SUPPORT STRUCTURES AND FACILITIES AS DETAILED IN THE PLANS. THE WORK SHALL INCLUDE, BUT NOT NECESSARILY BE LIMITED TO, FURNISHING AND INSTALLING PIPE SLEEVES THROUGH THE ABUTMENTS AND SUPPORTS ACROSS THE STRUCTURE, AS DETAILED ON SHEETS 20 AND 26E/31.

PAYMENT FOR WORK AS LISTED ABOVE AND DETAILED IN THE PLANS SHALL BE INCLUDED IN THE LUMP SUM PRICE BID FOR ITEM SPECIAL - UTILITY RELOCATION: DOMINION EAST OHIO FACILITY, AND SHALL INCLUDE ALL LABOR, EQUIPMENT, MATERIALS AND INCIDENTALS NECESSARY TO COMPLETE THE WORK IN CONFORMANCE WITH THESE REQUIREMENTS, AND TO THE SATISFACTION OF THE ENGINEER AND DOMINION EAST OHIO.

ITEM SPECIAL - UTILITY RELOCATION: AKRON THERMAL FACILITY

WORK PERFORMED UNDER THIS ITEM SHALL INCLUDE THE CONSTRUCTION OF NEW UTILITY SUPPORT STRUCTURES AND FACILITIES AS DETAILED IN THE PLANS. THE WORK SHALL INCLUDE, BUT NOT NECESSARILY BE LIMITED TO, FURNISHING AND INSTALLING PIPE SLEEVES THROUGH THE ABUTMENTS AND SUPPORTS ACROSS THE STRUCTURE, AS DETAILED ON SHEETS 20, 26D AND 26E/31.

PAYMENT FOR WORK AS LISTED ABOVE AND DETAILED IN THE PLANS SHALL BE INCLUDED IN THE LUMP SUM PRICE BID FOR ITEM SPECIAL - UTILITY RELOCATION: AKRON THERMAL FACILITY, AND SHALL INCLUDE ALL LABOR, EQUIPMENT, MATERIALS AND INCIDENTALS NECESSARY TO COMPLETE THE WORK IN CONFORMANCE WITH THESE REQUIREMENTS, AND TO THE SATISFACTION OF THE ENGINEER AND AKRON THERMAL.

SUGGESTED CONSTRUCTION PROCEDURE

PRELIMINARY CONSTRUCTION

OHIO EDISON WILL TEMPORARILY RELOCATE ELECTRIC FACILITIES OVERHEAD.

INSTALL TEMPORARY VANDAL PROTECTION FENCE AS SHOWN AND DESCRIBED ON SHEETS 2 & 5/31.

AKRON THERMAL WILL INSTALL TEMPORARY STEAM AND CONDENSATE LINES ACROSS THE NORTH SIDEWALK OF THE EXISTING BRIDGE.

RECONSTRUCT PORTIONS OF THE 30" AND 33" COMBINED SEWERS IN MARKET ST. EAST OF S.R. 8 (MARKET ST. & PROPOSED FOUNTAIN ST. INTERSECTION).

INSTALL A TEMPORARY 12" WATER MAIN ACROSS THE NORTH SIDEWALK OF THE EXISTING BRIDGE. REFER TO WATER PLANS FOR DETAILS.

STAGE 1 CONSTRUCTION

1. CONSTRUCT THE TEMPORARY SUPPORT FOR PORTIONS OF THE EXISTING PIER TO REMAIN IN STAGE 1.
2. IMPLEMENT STAGE 1 MAINTENANCE OF TRAFFIC. MAINTAIN ONE LANE OF TRAFFIC IN EACH DIRECTION FOR MARKET USING THE LEFT HALF OF THE EXISTING BRIDGE DECK.
3. REMOVE THE RIGHT PORTION OF THE EXISTING BRIDGE DECK, SUPERSTRUCTURE AND APPROACH SLABS TO THE LIMITS SHOWN ON THE PLANS.
4. REMOVE THE RIGHT PORTIONS OF THE EXISTING PIERS AND ABUTMENTS TO THE LIMITS SHOWN ON THE PLANS. TWO LANES OF TRAFFIC IN EACH DIRECTION SHALL BE MAINTAINED ON S.R. 8 AT ALL TIMES IN ACCORDANCE WITH THE PROJECT MAINTENANCE OF TRAFFIC PLANS. INSTALL TEMPORARY SHEETING TO SUPPORT THE EXISTING ROADWAY AND APPROACH SLABS AS EXCAVATION PROCEEDS
5. CONSTRUCT RIGHT PORTIONS OF NEW ABUTMENTS AND PIER AS DETAILED IN THE PLANS.
6. CONSTRUCT RIGHT PORTION OF NEW SUPERSTRUCTURE INCLUDING END DIAPHRAGMS FOR SEMI-INTEGRAL ABUTMENTS.
7. UPON COMPLETION OF THE SUPERSTRUCTURE STEEL ERECTION, THE CONTRACTOR SHALL INSTALL AMERITECH CONDUITS AND THE NEW 16" WATER MAIN AS DETAILED IN THE PLANS. PRIORITY SHALL BE GIVEN TO THE INSTALLATION OF THE AMERITECH CONDUITS. THE CONTRACTOR SHALL COORDINATE WITH AKRON THERMAL AND/OR THEIR REPRESENTATIVE TO ALLOW FOR THE INSTALLATION OF STEAM AND CONDENSATE LINES. THE CONTRACTOR SHALL IMPLEMENT PHASE IA-(UTILITY) MAINTENANCE OF TRAFFIC AS DETAILED IN THE PLANS TO ALLOW AMERITECH TO COMPLETE SPLICING OF THEIR LINES BEFORE STAGE 2 CONSTRUCTION.
8. CONSTRUCT APPROACH SLABS AND APPROACH ROADWAY WORK.
9. PRIOR TO SWITCHING TO STAGE 2 CONSTRUCTION, THE CONTRACTOR SHALL:

   COMPLETE THE INSTALLATION OF AND PUT IN SERVICE THE 16" WATER MAIN.

   ENSURE THAT AKRON THERMAL HAS THE PERMANENT STEAM AND CONDENSATE LINES IN PLACE AND IN SERVICE.

   ENSURE THAT AMERITECH HAS COMPLETED INSTALLATION AND SPLICING OF THEIR FACILITIES.

STAGE 2 CONSTRUCTION

1. TRANSFER TRAFFIC TO THE NEW (RIGHT) PORTION OF THE BRIDGE DECK.
2. REMOVE REMAINING LEFT PORTION OF BRIDGE DECK, SUPERSTRUCTURE, APPROACH SLABS.
3. REMOVE REMAINING PORTIONS OF PIER, INCLUDING THE TEMPORARY SUPPORT, AND PORTIONS OF ABUTMENTS, INCLUDING JUNCTION CHAMBER BELOW THE REAR ABUTMENT.
4. MAKE NECESSARY MODIFICATIONS TO STORM SEWER AT REAR ABUTMENT.
5. CONSTRUCT LEFT PORTION OF NEW SUPERSTRUCTURE INCLUDING END DIAPHRAGMS FOR SEMI-INTEGRAL ABUTMENTS.
6. UPON COMPLETION OF THE SUPERSTRUCTURE STEEL ERECTION, THE CONTRACTOR SHALL INSTALL OHIO EDISON CONDUITS AS DETAILED IN THE PLANS. THE CONTRACTOR SHALL COORDINATE WITH DOMINION EAST OHIO FOR INSTALLATION OF THE NEW 10" GAS MAIN BY DOMINION EAST OHIO OR THEIR REPRESENTATIVE.
7. ATTACH CROSSFRAMES BETWEEN TWO HALVES OF SUPERSTRUCTURE AND MAKE CLOSURE POUR.
8. CONSTRUCT NEW APPROACH SLABS AND PAVEMENT FOR REMAINING PORTION OF ROADWAY.
9. PAINT NEW STEEL SUPERSTRUCTURE.
10. SEAL PARAPETS AND SUBSTRUCTURE.

THE ABOVE IS A SUGGESTED CONSTRUCTION PROCEDURE. THE CONTRACTOR SHALL SUBMIT HIS PROPOSED CONSTRUCTION PROCEDURE AND SCHEDULE TO THE DIRECTOR FOR APPROVAL BEFORE BEGINNING CONSTRUCTION. NO CONSTRUCTION OPERATIONS WILL BE PERMITTED WITHOUT PRIOR APPROVAL.

DLZ
800 ROCKEFELLER BLDG • 614 W SUPERIOR AVE • CLEVELAND, OH 44113

DESIGNED AJM | DRAWN DJP | CHECKED JWB | REVIEWED GWM | DATE 1/29/02 | REVISED | STRUCTURE FILE NUMBER 7708297

STRUCTURE GENERAL NOTES
BRIDGE NO. SUM-8-0148
MARKET ST. OVER S.R. 8

SUM-8-0.63

953A
1088

ESTIMATED QUANTITIES

CALCULATED BY: DJC 5/23/01
CHECKED BY: RCK 5/23/01

ITEM	ITEM EXTENSION	TOTAL	UNIT	DESCRIPTION	ABUTMENTS R.A.	ABUTMENTS F.A.	PIER	SUPER.	GENERAL	REF. SHEET NO.	AS-BUILT
202	11003	LUMP		STRUCTURE REMOVED, OVER 20' SPAN, AS PER PLAN					LUMP	5, 6	
503	11101	LUMP		COFFERDAMS, CRIBS AND SHEETING, AS PER PLAN					LUMP	9	
503	21101	1293	CU YD	UNCLASSIFIED EXCAVATION, AS PER PLAN	629	634	30			3	
503	31101	538	CU YD	ROCK EXCAVATION, AS PER PLAN	235	239	64			3	
516	13600	46	SQ FT	1" PREFORMED EXPANSION JOINT FILLER	23	23					
516	13900	135	SQ FT	2" PREFORMED EXPANSION JOINT FILLER	104	31					
516	44101	10	EACH	ELASTOMERIC BEARING WITH INTERNAL LAMINATES AND LOAD PLATE (NEOPRENE 2.125"x1'-7"x1'-2"), (LOAD PLATE 2 1/4"x1'-8"x1'-3"), AS PER PLAN)			10			27	
516	44101	20	EACH	ELASTOMERIC BEARING WITH INTERNAL LAMINATES AND LOAD PLATE (NEOPRENE 2.125"x1'-2"x1'-0"), (LOAD PLATE 1 1/2"x1'-3"x1'-1"), AS PER PLAN)	10	10				27	
518	21201	307	CU YD	POROUS BACKFILL WITH FILTER FABRIC, AS PER PLAN	150	157				15, 16	
518	40000	190	LIN FT	6" PERFORATED CORRUGATED PLASTIC PIPE	95	95					
SPECIAL	53000200	LUMP		STRUCTURE, MISC.: TEMPORARY SUPPORT					LUMP	3A	
SPECIAL	53013000	2572	SQ. FT.	FORM LINER Δ	1263	1309				16	
SPECIAL	60739900	92	LIN FT	VANDAL PROTECTION FENCE, 6' STRAIGHT, COATED FABRIC					92		
SPECIAL	60739930	366	LIN FT	VANDAL PROTECTION FENCE, 12' CURVED, COATED FABRIC				318	48		
SPECIAL	69020030	LUMP		UTILITY RELOCATION: AMERITECH FACILITY *					LUMP	3A	
SPECIAL	69020030	LUMP		UTILITY RELOCATION: OHIO EDISON FACILITY **					LUMP	3A	
SPECIAL	69020030	LUMP		UTILITY RELOCATION: DOMINION EAST OHIO FACILITY ***					LUMP	3A	
SPECIAL	69020030	LUMP		UTILITY RELOCATION: AKRON THERMAL FACILITY ****					LUMP	3A	
SPECIAL	69071000	LUMP		ASBESTOS ABATEMENT: AMERITECH FACILITY *					LUMP	3	
SPECIAL	69071000	LUMP		ASBESTOS ABATEMENT: OHIO EDISON FACILITY **					LUMP	3	
816	00600	LUMP		FIELD PAINTING OF NEW STEEL, INTERMEDIATE AND FINISH COAT, SYSTEM IZEU				LUMP			
842	41000	65	CU YD	CLASS C CONCRETE, PIER ABOVE FOOTINGS			65				
842	44101	390	CU YD	CLASS C CONCRETE, ABUTMENT NOT INCLUDING FOOTING, AS PER PLAN	190	200				3	
842	46201	19	CU YD	CLASS C CONCRETE, AS PER PLAN					19	29	
842	46501	313	CU YD	CLASS C CONCRETE, FOOTING, AS PER PLAN	145	125	43			3A	
844	48001	529	CU YD	HIGH PERFORMANCE CONCRETE SUPERSTRUCTURE (DECK), AS PER PLAN				529		3	
844	49000	LUMP		HIGH PERFORMANCE CONCRETE TRIAL MIX				LUMP			
844	49010	LUMP		HIGH PERFORMANCE CONCRETE TESTING				LUMP			
863	10040	LUMP		STRUCTURAL STEEL MEMBERS, LEVEL TWO (2) FABRICATION				LUMP			
863	20000	4080	EA.	WELDED STUD SHEAR CONNECTORS				4080			
864	10050	333	SQ YD	SEALING OF CONCRETE SURFACES (NON-EPOXY)				333			
864	10100	932	SQ YD	SEALING OF CONCRETE SURFACES (EPOXY-URETHANE)	144	158	153	477			

* ITEMS TO BE REIMBURSED TO THE STATE OF OHIO BY AMERITECH
** ITEMS TO BE REIMBURSED TO THE STATE OF OHIO BY OHIO EDISON
*** ITEMS TO BE REIMBURSED TO THE STATE OF OHIO BY DOMINION EAST OHIO
**** ITEMS TO BE REIMBURSED TO THE STATE OF OHIO BY AKRON THERMAL
Δ 100% LOCAL COST

PLAN ABBREVIATIONS:

ABUT.	ABUTMENT
BOT.	BOTTOM
BRG.	BEARING
℄	CENTERLINE
c/c	CENTER-TO-CENTER
C.J.	CONSTRUCTION JOINT
CLR.	CLEAR COVER
COL.	COLUMN
CONC.	CONCRETE
DIA.	DIAMETER
EXIST.	EXISTING
E.F.	EACH FACE
EL.	ELEVATION
EQ.	EQUAL
F.A.	FORWARD ABUTMENT
F.F.	FAR FACE
FWD.	FORWARD
GALV.	GALVANIZED
HMWM	HIGH MOLECULAR WEIGHT METHACRYLATE
INV.	INVERT
N.P.C.P.P.	NON-PERFORATED CORRUGATED PLASTIC PIPE
N.F.	NEAR FACE
O.D.	OUTSIDE DIAMETER
MAX.	MAXIMUM
MIN.	MINIMUM
P.C.P.P.	PERFORATED CORRUGATED PLASTIC PIPE
ℙ	PLATE
PEJF	PREFORMED EXPANSION JOINT FILLER
PROP.	PROPOSED
R.A.	REAR ABUTMENT
SER.	SERIES
SPA.	SPACE, SPACES
STA.	STATION
REINF.	REINFORCING, REINFORCED
TYP.	TYPICAL
U.N.O.	UNLESS NOTED OTHERWISE
W.P.	WORK POINT

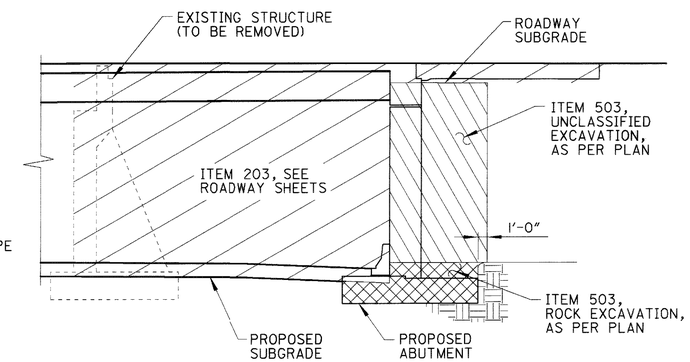

EXCAVATION DIAGRAM

DIAGRAM SHOWING LIMITS OF STRUCTURE EXCAVATION FOR DETERMINING ESTIMATED QUANTITIES.

REVISIONS: 05/15/2002 by AGW

DLZ
1000 ROCKEFELLER BLDG • 614 W SUPERIOR AVE • CLEVELAND, OH 44113

DESIGNED DJC | DRAWN PAT | CHECKED JWB | REVIEWED GWM | DATE 1/29/02 | REVISED | STRUCTURE FILE NUMBER 7708297

ESTIMATED QUANTITIES
BRIDGE NO. SUM-8-0148
MARKET STREET OVER S.R. 8

SUM-8-0.63

4 / 31

954
1088

04:0:27 PM
07/09/2002
u:\00-0105R-8\\bridge\dwg\market\0148eq01.dgn

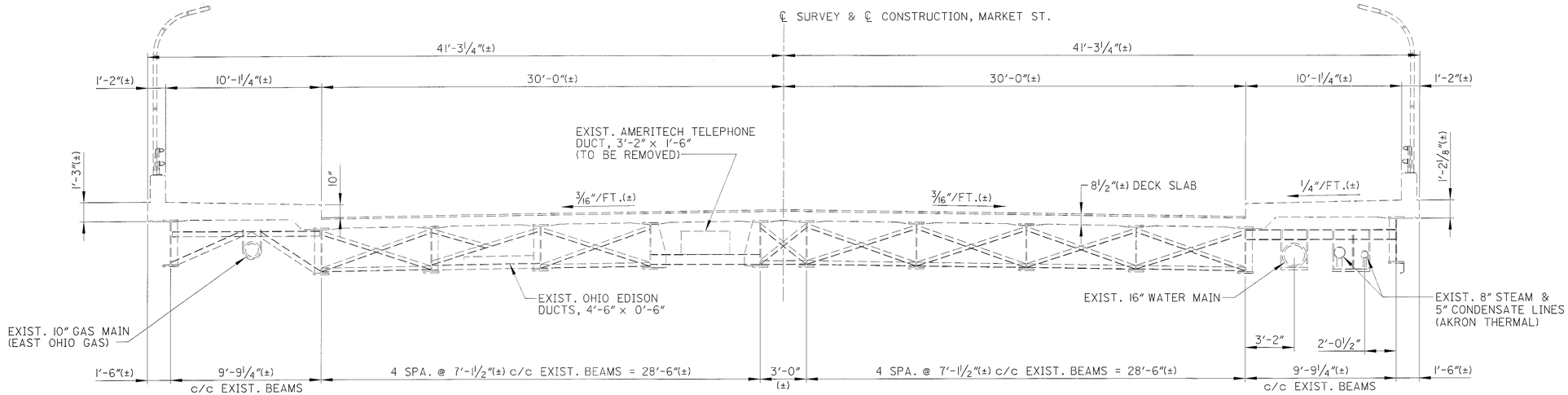

EXISTING TRANSVERSE SECTION

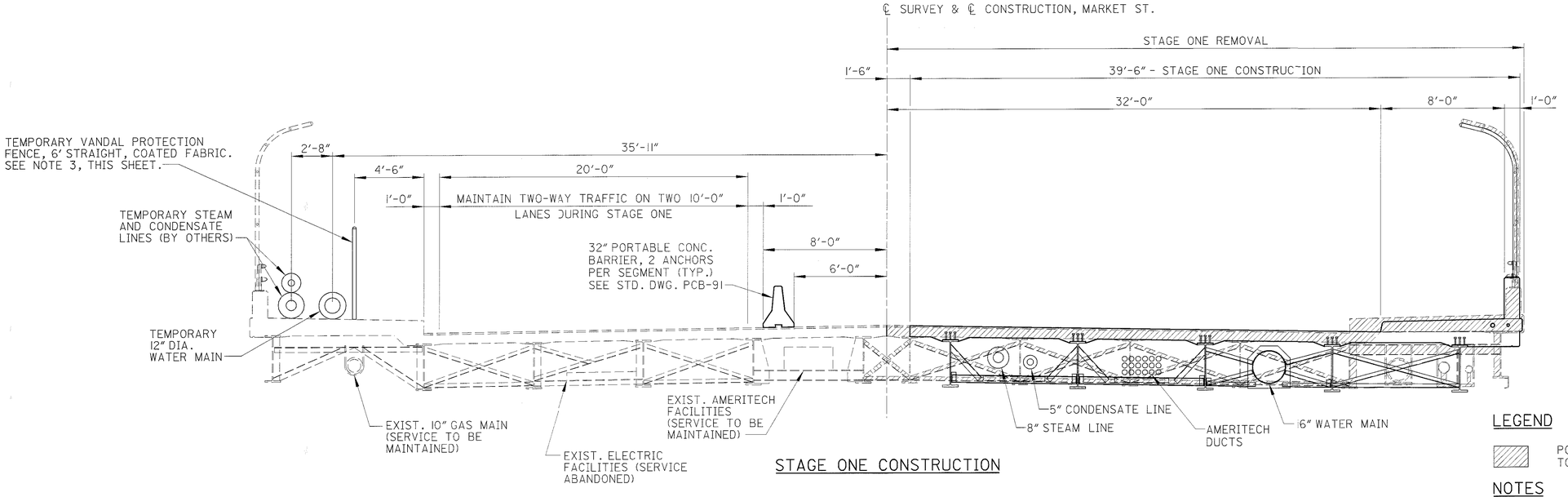

STAGE ONE CONSTRUCTION

NOTE: AT THE OPTION OF THE CONTRACTOR, HOLES FOR PORTABLE CONCRETE BARRIER ANCHORS MAY BE PRE-FORMED IN THE NEW CONCRETE DECK. AFTER REMOVAL OF THE BARRIER, ALL ANCHOR HOLE LOCATIONS SHALL BE FILLED AS PRESCRIBED ON STD. DWG. PCB-91 AND SEALED WITH HIGH MOLECULAR WEIGHT METHACRYLATE (HMWM). PAYMENT SHALL BE INCLUDED WITH ITEM 844.

LEGEND

PORTIONS OF STRUCTURE TO BE REMOVED

NOTES

1. FOR REAR ABUTMENT REMOVAL, SEE SHEET 7/31.
2. FOR PIER REMOVAL, SEE SHEET 10/31.
3. TEMPORARY VANDAL PROTECTION FENCE, 6' STRAIGHT, COATED FABRIC, SHALL BE ATTACHED TO THE EXISTING SIDEWALK WITH TYPE BP-5 BASE PLATES AND ANCHORS AS SHOWN IN STANDARD DWG. VPF-1-90M. PAYMENT FOR ALL LABOR, EQUIPMENT, AND MATERIALS REQUIRED FOR INSTALLATION AND SUBSEQUENT REMOVAL OF THE FENCE SHALL BE INCLUDED WITH ITEM SPECIAL - UTILITY RELOCATION: AKRON THERMAL FACILITY. SEE SHEET 2/31 FOR LIMITS OF FENCE INSTALLATION.

DLZ
8000 ROCKEFELLER BLDG • 614 W SUPERIOR AVE • CLEVELAND, OH 44113

DESIGNED JWB | DRAWN DJP | REVIEWED GWM | DATE 1/29/02
CHECKED DJC | REVISED | STRUCTURE FILE NUMBER 7708297

STAGE CONSTRUCTION DETAILS

BRIDGE NO. SUM-8-0148
MARKET STREET BRIDGE

SUM-8-0.63

5 / 31

955
1088

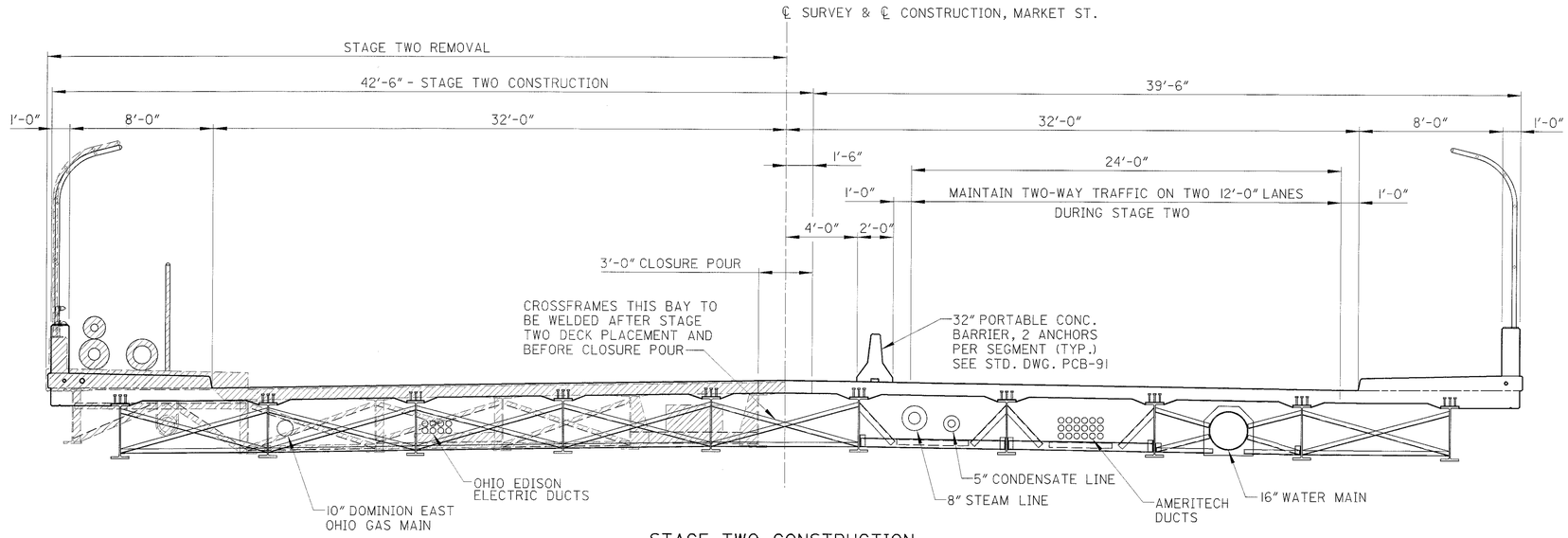

STAGE TWO CONSTRUCTION

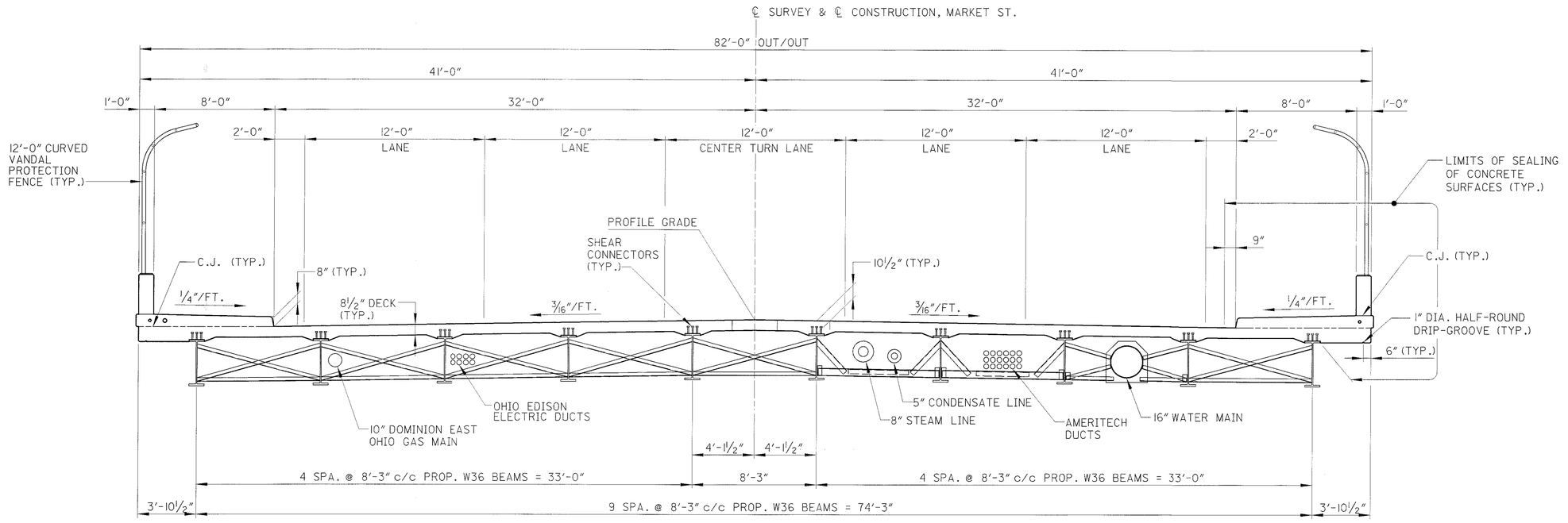

PROPOSED TRANSVERSE SECTION

NOTE: AT THE OPTION OF THE CONTRACTOR, HOLES FOR PORTABLE CONCRETE BARRIER ANCHORS MAY BE PRE-FORMED IN THE NEW CONCRETE DECK. AFTER REMOVAL OF THE BARRIER, ALL ANCHOR HOLE LOCATIONS SHALL BE FILLED AS PRESCRIBED ON STD. DWG. PCB-91 AND SEALED WITH HIGH MOLECULAR WEIGHT METHACRYLATE (HMWM). PAYMENT SHALL BE INCLUDED WITH ITEM 844.

LEGEND

PORTIONS OF STRUCTURE TO BE REMOVED

NOTES

1. FOR REAR ABUTMENT REMOVAL, SEE SHEET 7/31.
2. FOR PIER REMOVAL, SEE SHEET 10/31.

DLZ
1000 ROCKEFELLER BLDG. • 614 W. SUPERIOR AVE. • CLEVELAND, OH 44113

DESIGNED JWB
DRAWN DJP
CHECKED DJC
REVIEWED GWM
DATE 1/29/02
REVISED
STRUCTURE FILE NUMBER 7708297

STAGE CONSTRUCTION DETAILS

BRIDGE NO. SUM-8-0148
MARKET STREET BRIDGE

SUM-8-0.63

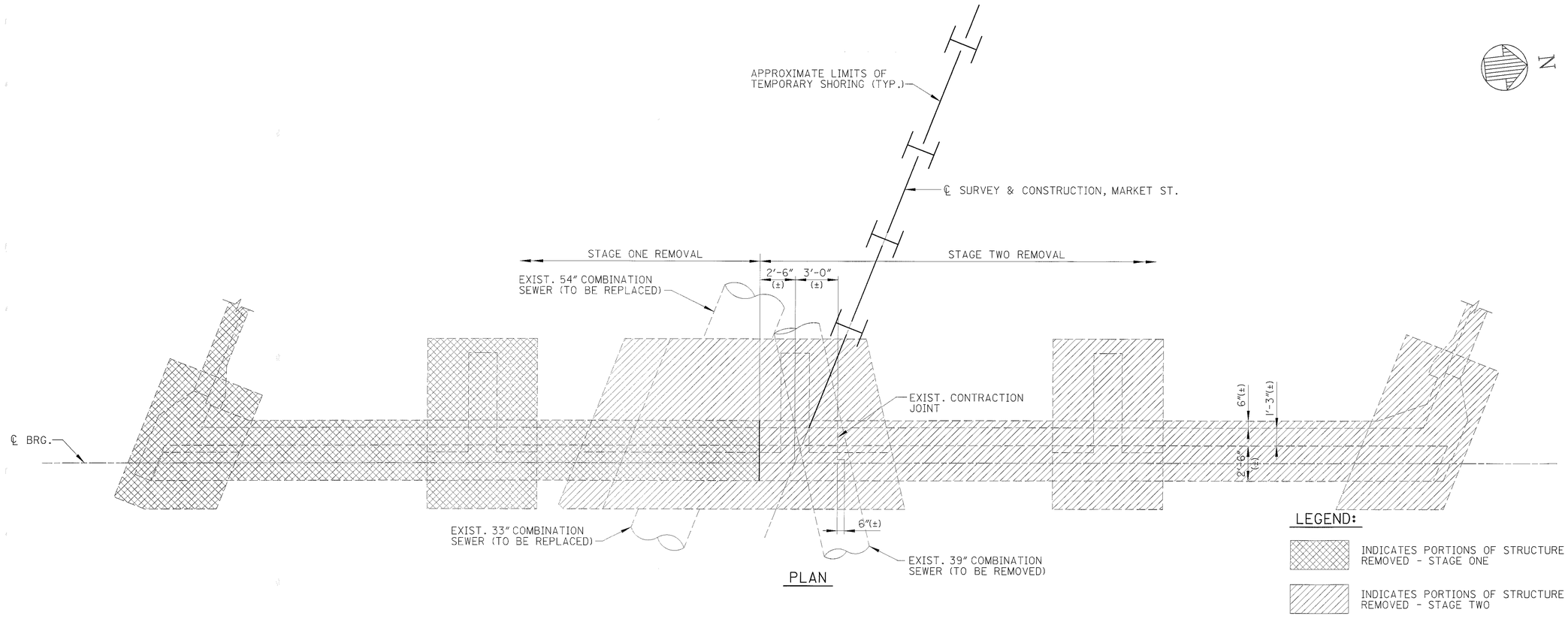

NOTES

1. FOR SUPERSTRUCTURE REMOVAL, SEE SHEETS 5/31 & 6/31.
2. FOR TEMPORARY SHORING, SEE SHEET 9/31.

DLZ
800 ROCKEFELLER BLDG • 614 W SUPERIOR AVE • CLEVELAND, OH 44113

DESIGNED	DRAWN	REVIEWED	DATE
AJM	DJC	GWM	1/29/02
CHECKED	REVISED	STRUCTURE FILE NUMBER	
JWB		7708297	

REAR ABUTMENT REMOVAL DETAILS
BRIDGE NO. SUM-8-0148
MARKET STREET OVER S.R. 8

SUM-8-0.63

7 / 31

957
1088

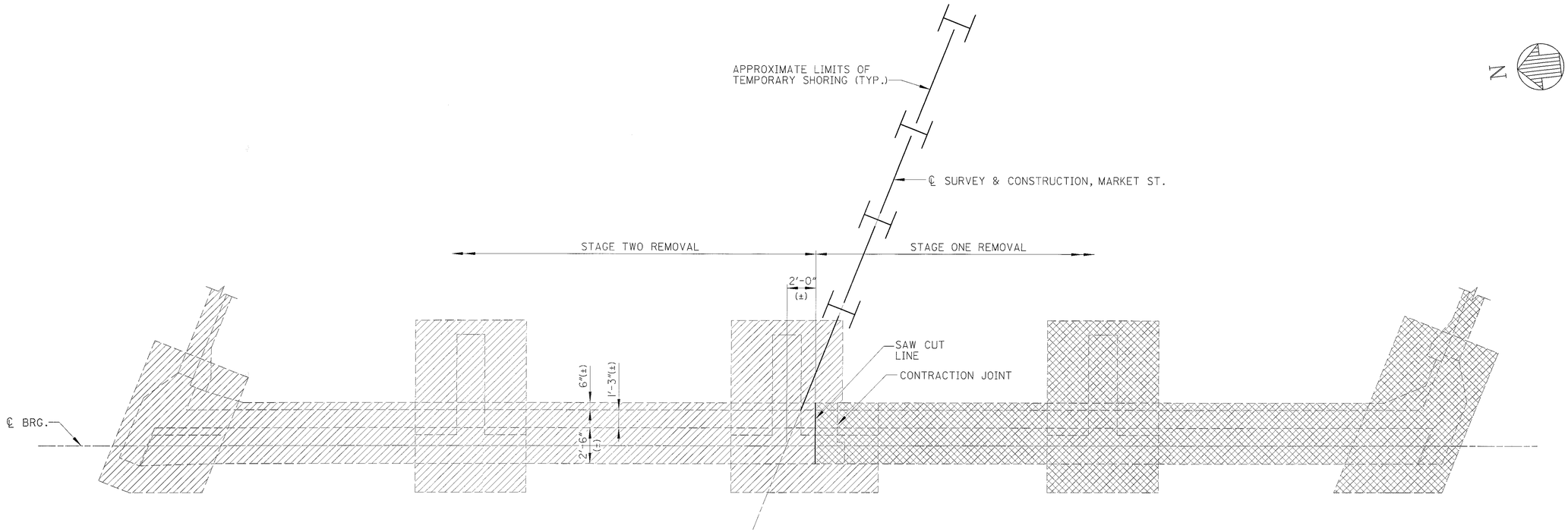

PLAN

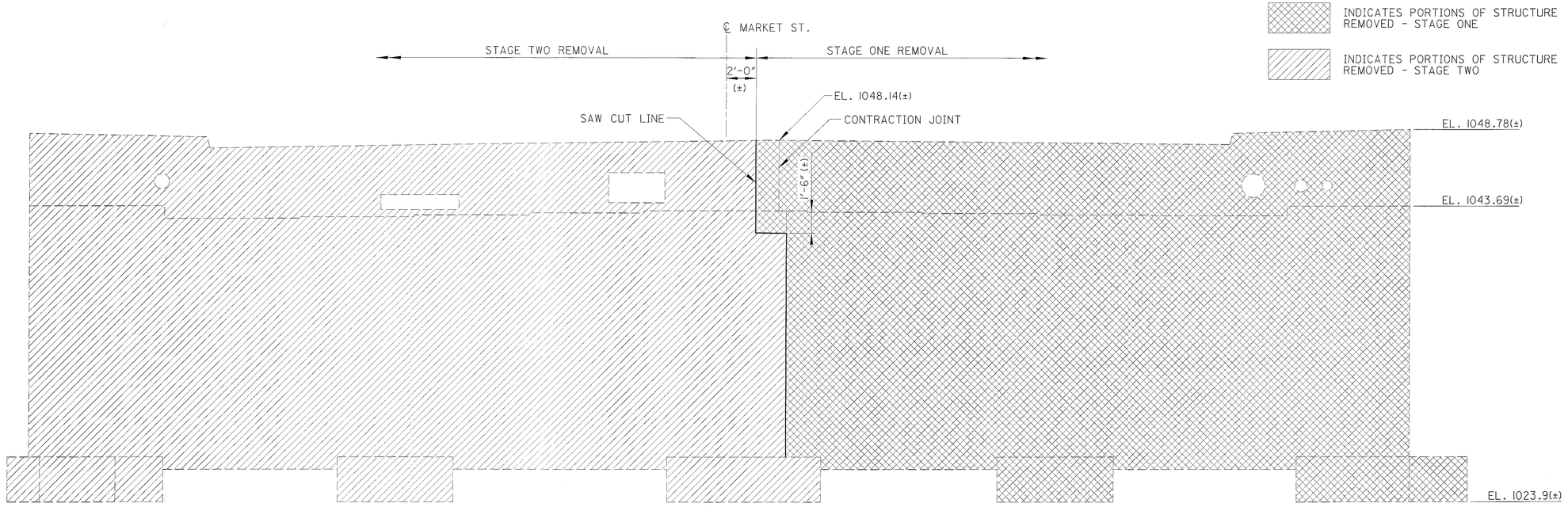

ELEVATION

LEGEND:

INDICATES PORTIONS OF STRUCTURE REMOVED - STAGE ONE

INDICATES PORTIONS OF STRUCTURE REMOVED - STAGE TWO

NOTES

1. FOR SUPERSTRUCTURE REMOVAL, SEE SHEETS 5/31 & 6/31.
2. FOR TEMPORARY SHORING, SEE SHEET 9/31.

DLZ
1000 ROCKEFELLER BLDG • 614 ▼ SUPERIOR AVE • CLEVELAND, OH 44113

DESIGNED	DRAWN	CHECKED	REVIEWED	DATE
AJM	DJC	JWB	GWM	1/29/02

REVISED

STRUCTURE FILE NUMBER 7708297

FORWARD ABUTMENT REMOVAL DETAILS
BRIDGE NO. SUM-8-0148
MARKET STREET OVER S.R. 8

SUM-8-0.63

8 / 31

958
1088

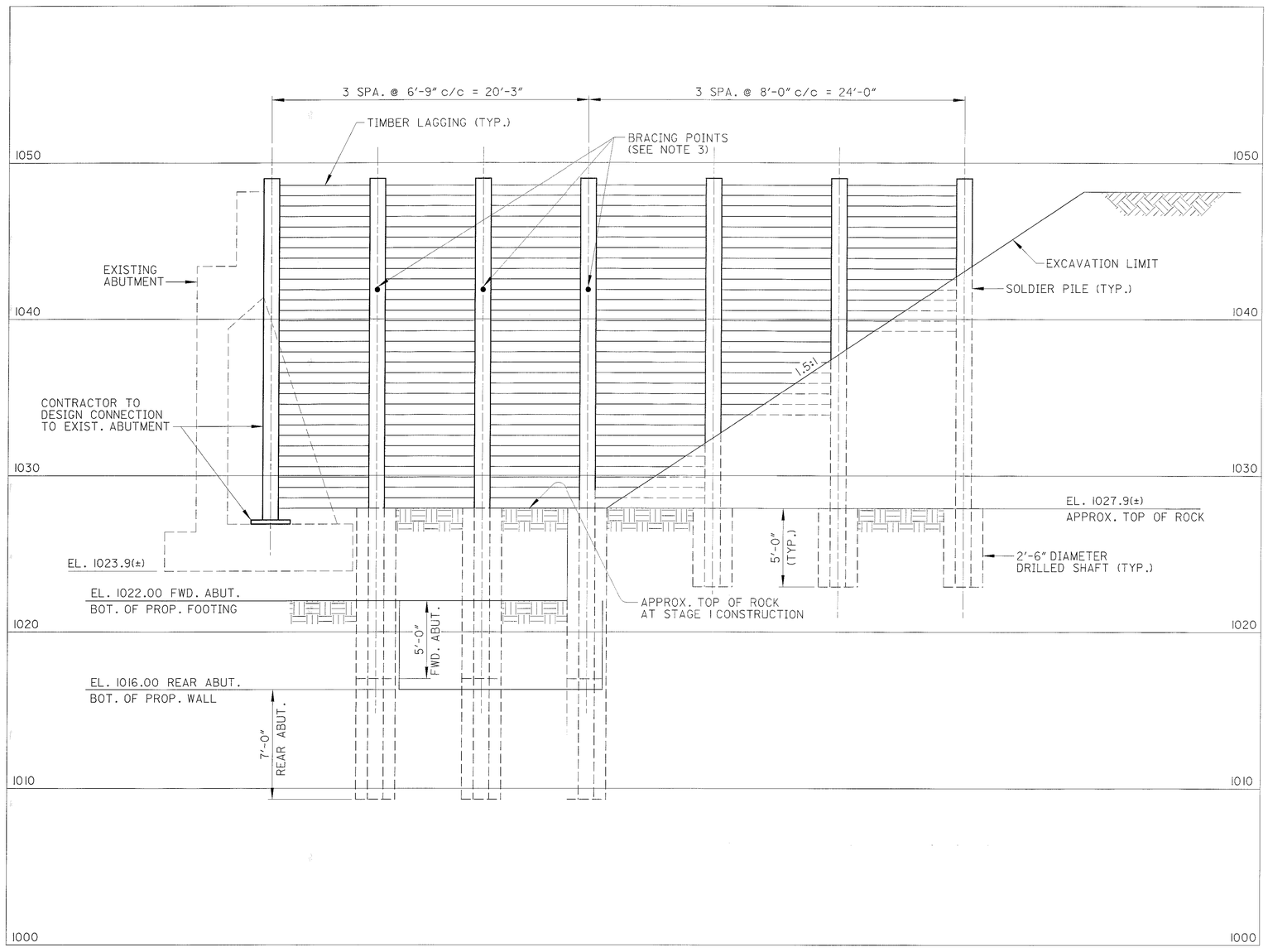

ELEVATION - STAGE I SHEETING

NOTES

1. THE MINIMUM SECTION MODULUS FOR TEMPORARY CANTILEVERED SOLDIER PILES (FOR YIELD STRENGTH 50 ksi) SHALL BE 260 in^3.
2. TIMBER LAGGING SHALL BE 8"x8" TIMBERS, WITH A MINIMUM ALLOWABLE BENDING STRESS OF 1000 psi.
3. SOLDIER PILES REQUIRE BRACING DURING STAGE ONE CONSTRUCTION FOR MINIMUM SECTION MODULUS INDICATED.
4. TEMPORARY SHORING SHALL BE PROVIDED TO SUPPORT THE APPROACH ROADWAYS FOR BOTH STAGES OF CONSTRUCTION.
5. THE SHORING PLAN OUTLINED ABOVE AND ON THIS SHEET ARE A SUGGESTED PROCEDURE. THE CONTRACTOR SHALL BE RESPONSIBLE FOR DESIGNING, INSTALLING, MAINTAINING, AND ABANDONING/REMOVING A MEANS OF SHORING FOR STAGED CONSTRUCTION IN ACCORDANCE WITH ITEM 503. DESIGN CALCULATIONS AND DRAWINGS SHALL BE PREPARED BY AN OHIO REGISTERED PROFESSIONAL ENGINEER AND SUBMITTED TO THE DIRECTOR FOR APPROVAL.
6. ALL MATERIALS, EQUIPMENT, LABOR AND INCIDENTALS NECESSARY TO DESIGN, INSTALL, MAINTAIN, AND REMOVE/ABANDON THE TEMPORARY SHORING SHALL BE INCLUDED FOR PAYMENT IN THE LUMP SUM PRICE BID FOR ITEM 503 - COFFERDAMS, CRIBS AND SHEETING, AS PER PLAN.

DLZ
1000 ROCKEFELLER BLDG • 614 W SUPERIOR AVE • CLEVELAND, OH 44113

DESIGNED AJM | DRAWN PAT | REVIEWED GWM | DATE 1/29/02
CHECKED JWB | REVISED | STRUCTURE FILE NUMBER 7708297

TEMPORARY SHORING FOR STAGE CONSTRUCTION
BRIDGE NO. SUM-8-0148
MARKET STREET OVER S.R. 8

SUM-8-0.63

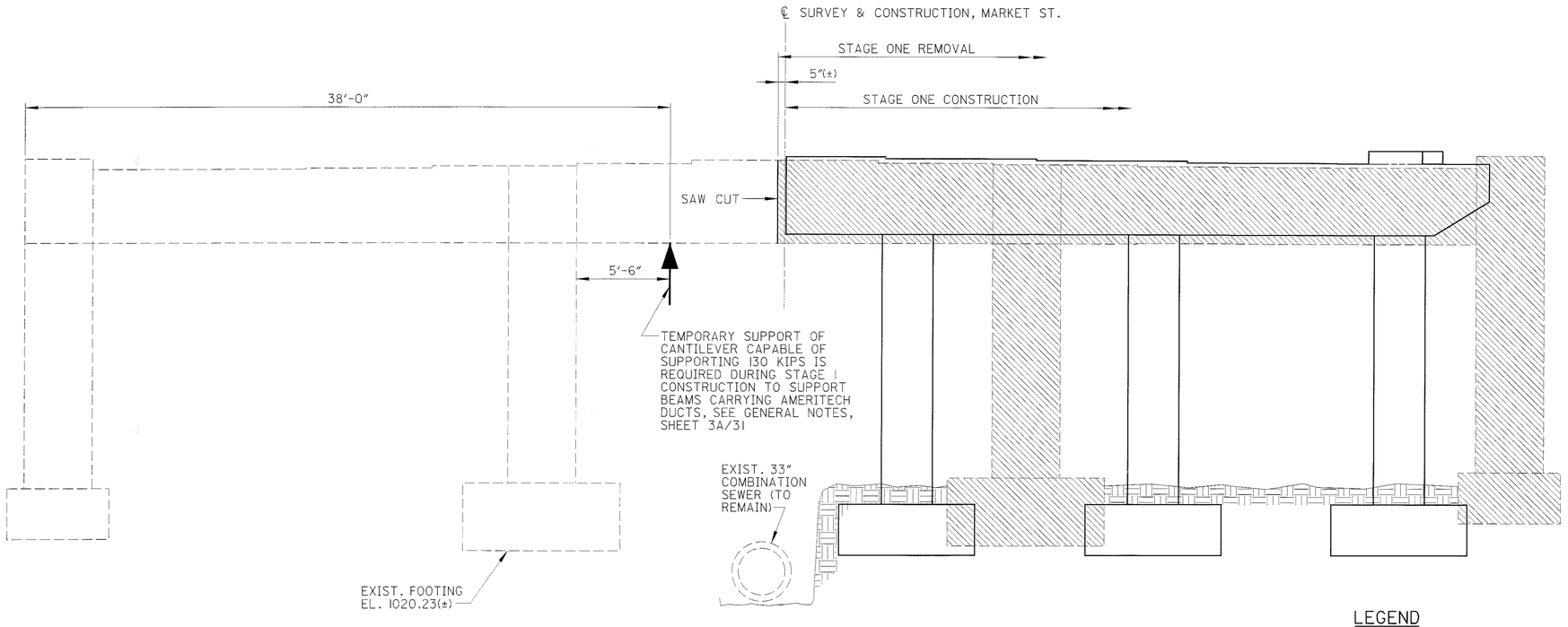

STAGE ONE CONSTRUCTION

LEGEND

INDICATES PORTIONS OF STRUCTURE REMOVED

NOTES

1. FOR SUPERSTRUCTURE REMOVAL AND STAGE CONTRUCTION DETAILS, SEE SHEETS 5/31 & 6/31.

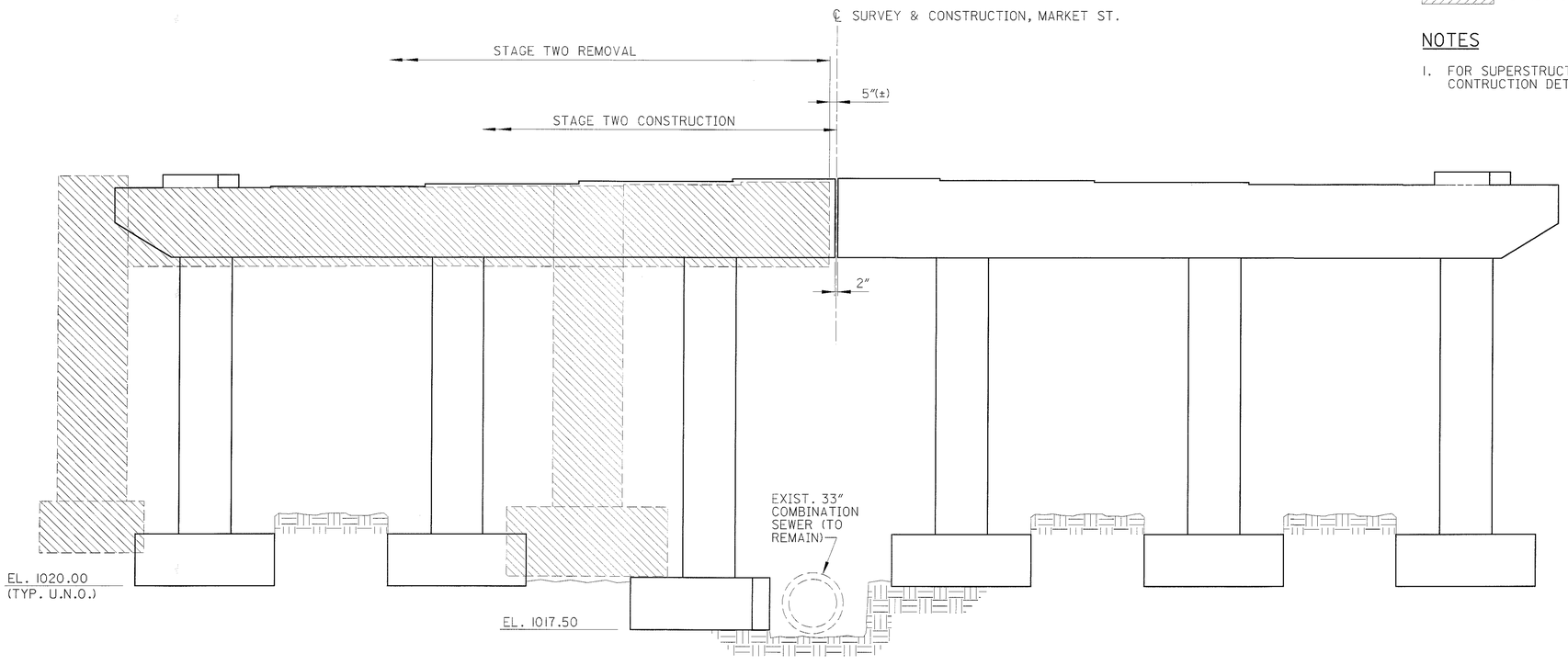

STAGE TWO CONSTRUCTION

DLZ
1000 ROCKEFELLER BLDG ★ 614 W SUPERIOR AVE ★ CLEVELAND, OH 44113

DESIGNED	DRAWN	REVIEWED	DATE
DJC	DJC	GWM	1/29/02
CHECKED	REVISED	STRUCTURE FILE NUMBER	
JWB		7708297	

PIER STAGE CONSTRUCTION DETAILS
BRIDGE NO. SUM-8-0148
MARKET STREET OVER S.R. 8

SUM-8-0.63

10 / 31

960
1088

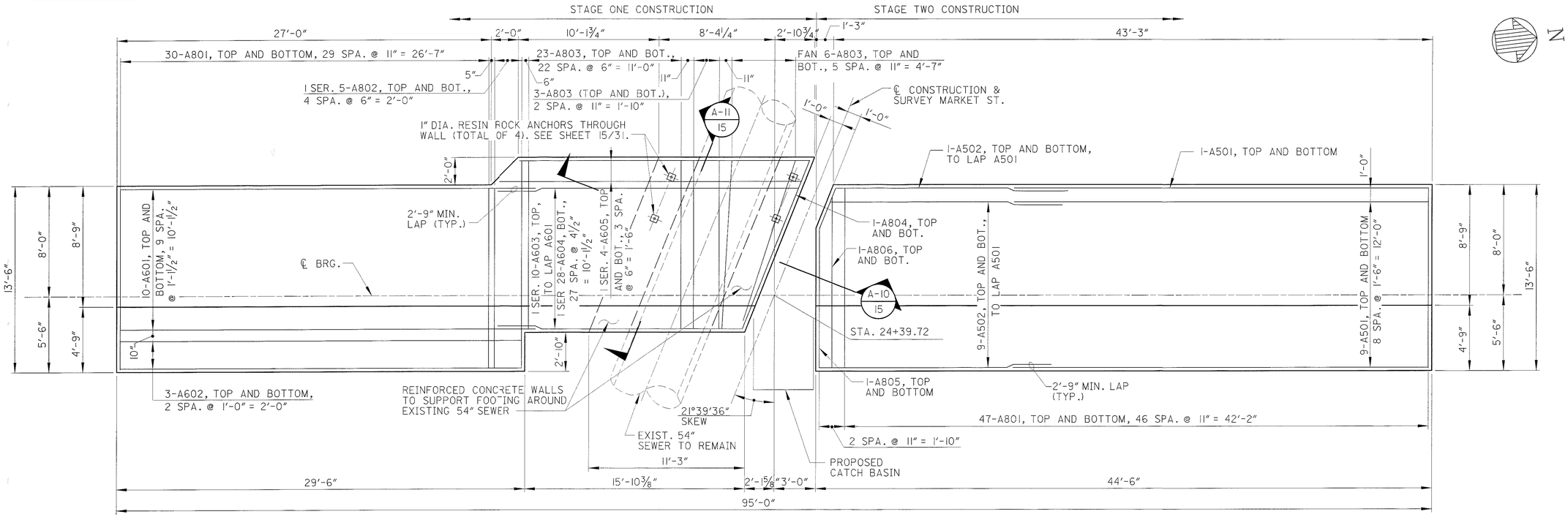

SECTION A-7 / 12

REAR ABUTMENT FOOTING PLAN

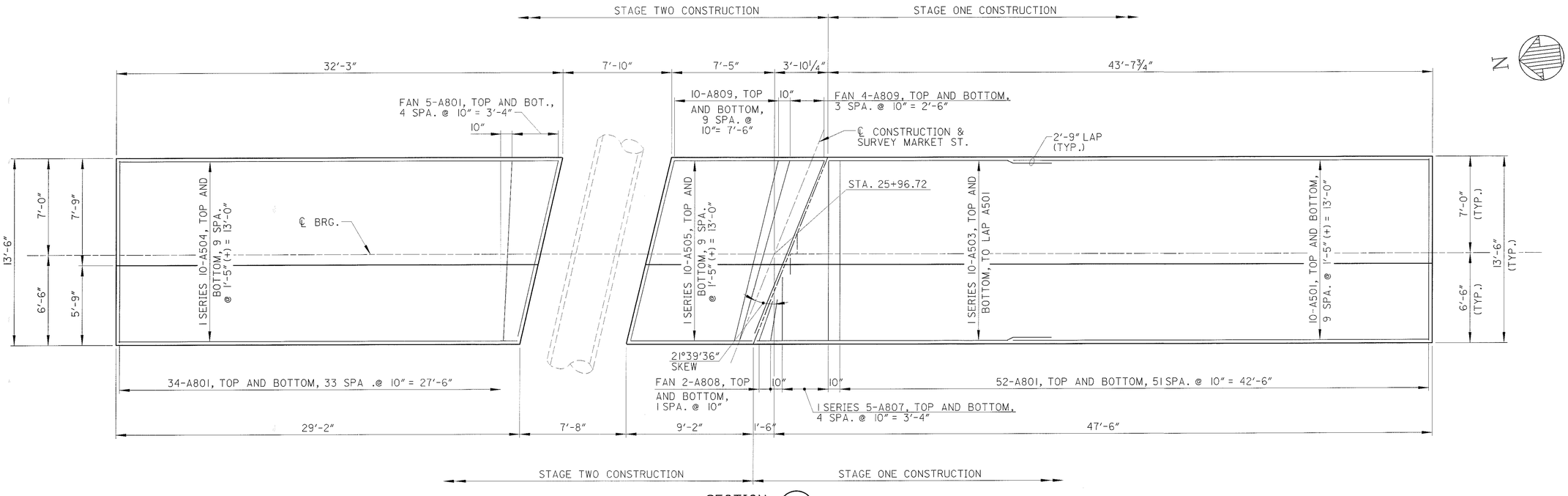

SECTION A-8 / 13

FORWARD ABUTMENT FOOTING PLAN

DLZ
800 ROCKEFELLER BLDG • 614 W SUPERIOR AVE • CLEVELAND, OH 44113

DESIGNED	DRAWN	REVIEWED	DATE
AJM	RCK	GWM	1/29/02
CHECKED	REVISED	STRUCTURE FILE NUMBER	
JWB		7708297	

ABUTMENT FOOTING PLANS
BRIDGE NO. SUM-8-0148
MARKET STREET OVER S.R. 8

SUM-8-0.63

11 / 31

961 / 1088

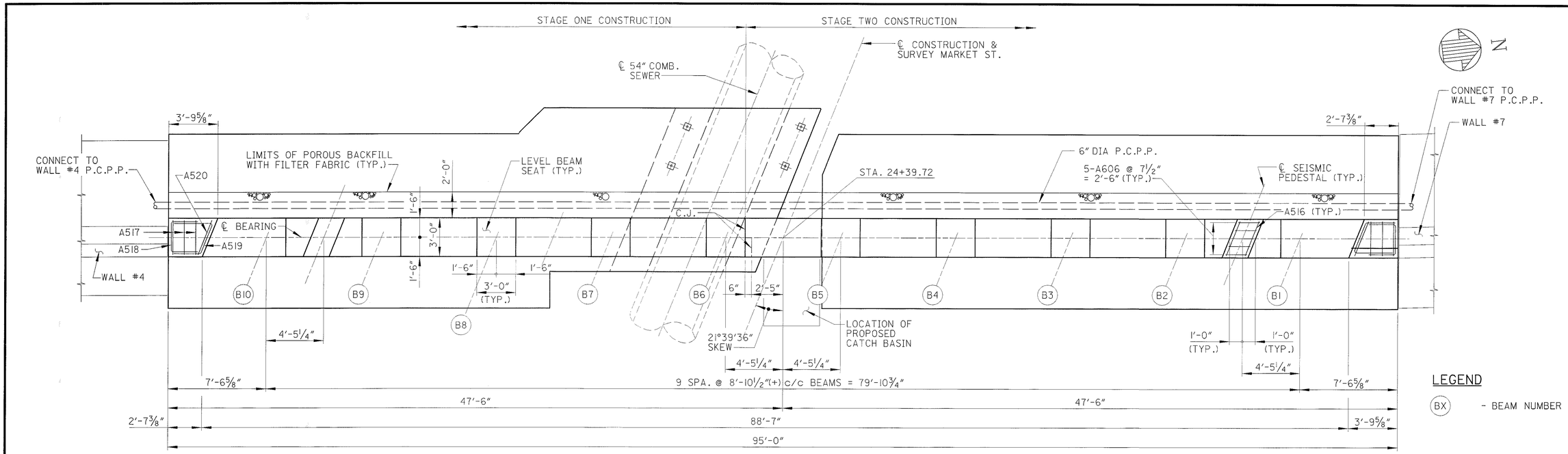

PLAN

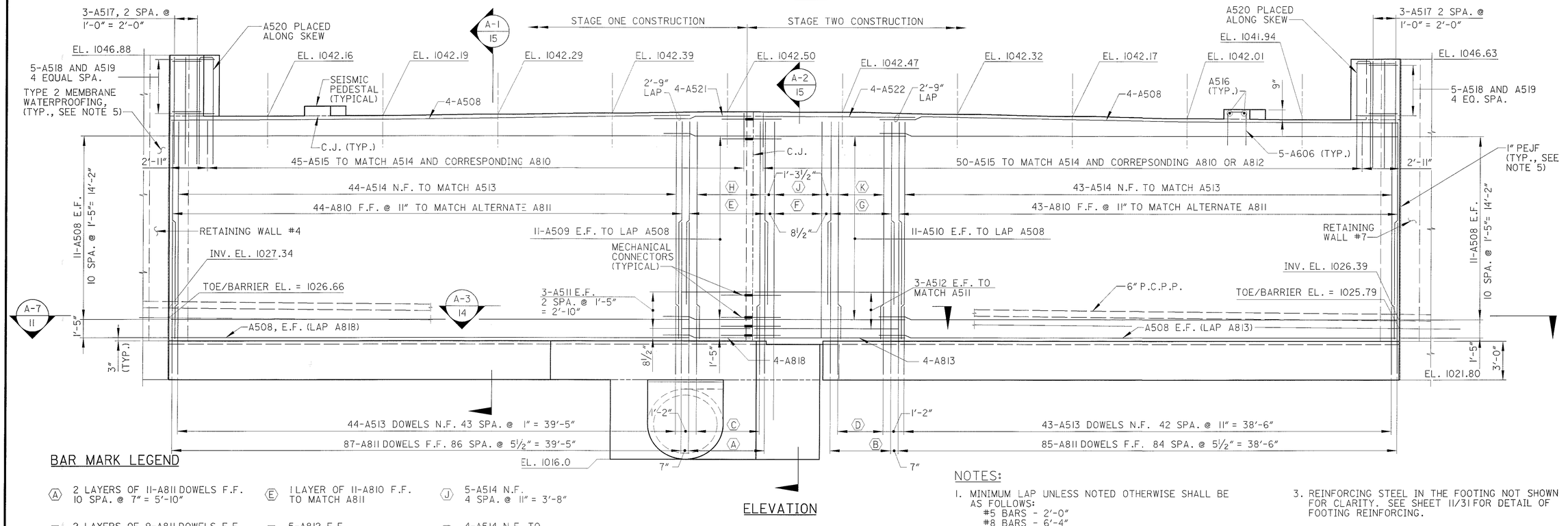

ELEVATION

BAR MARK LEGEND

- (A) 2 LAYERS OF 11-A811 DOWELS F.F. 10 SPA. @ 7" = 5'-10"
- (B) 2 LAYERS OF 9-A811 DOWELS F.F. 8 SPA. @ 7" = 4'-8"
- (C) 5-A513 DOWELS N.F. 4 SPA. @ 1'-2" = 4'-8"
- (D) 4-A513 DOWELS N.F. 3 SPA. @ 1'-2" = 3'-6"
- (E) 1 LAYER OF 11-A810 F.F. TO MATCH A811
- (F) 5-A812 F.F. 4 SPA. @ 11" = 3'-8"
- (G) 1 LAYER OF 9-A810 F.F. TO MATCH A811
- (H) 5-A514 N.F. TO MATCH A513
- (J) 5-A514 N.F. 4 SPA. @ 11" = 3'-8"
- (K) 4-A514 N.F. TO MATCH A513
- (L) 4-A515 TO MATCH A514 AND ALTERNATE A810

NOTES:

1. MINIMUM LAP UNLESS NOTED OTHERWISE SHALL BE AS FOLLOWS:
   #5 BARS - 2'-0"
   #8 BARS - 6'-4"
2. POROUS BACKFILL WITH FILTER FABRIC 2'-0" THICK SHALL EXTEND UP TO THE BOTTOM OF THE APPROACH SLAB AND TO THE LIMITS SHOWN. GEOTEXTILE FABRIC SHALL CONFORM WITH 712.09, TYPE A.
3. REINFORCING STEEL IN THE FOOTING NOT SHOWN FOR CLARITY. SEE SHEET 11/31 FOR DETAIL OF FOOTING REINFORCING.
4. FOR 1" PEJF AND MEMBRANE WATERPROOFING OF JOINTS BETWEEN THE WALLS AND ABUTMENT, REFER TO RETAINING WALL #4 AND RETAINING WALL #7 PLANS.
5. REFER TO STANDARD DWG. SICD-1-96 FOR ADDITIONAL DETAILS.

DLZ
1000 ROCKEFELLER BLDG. • 614 W. SUPERIOR AVE. • CLEVELAND, OH 44113

DESIGNED AJM | DRAWN RCK | CHECKED JWB | REVIEWED GWM | DATE 1/29/02 | REVISED | STRUCTURE FILE NUMBER 7708297

REAR ABUTMENT

BRIDGE NO. SUM-8-0148
MARKET STREET OVER S.R. 8

SUM-8-0.63

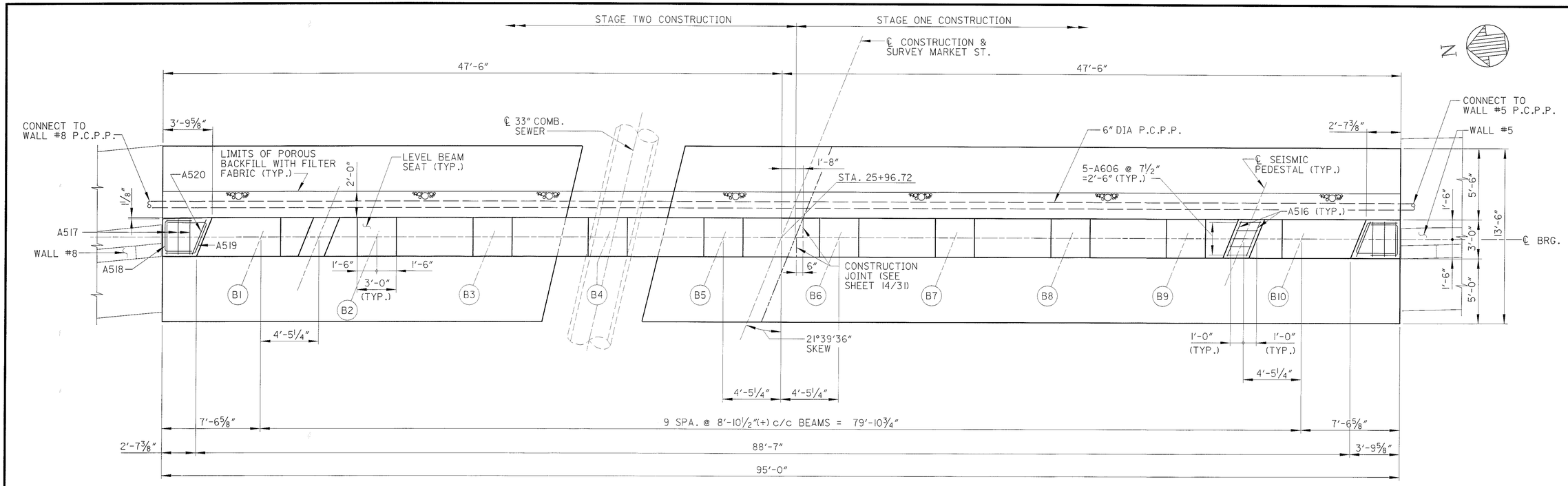

PLAN

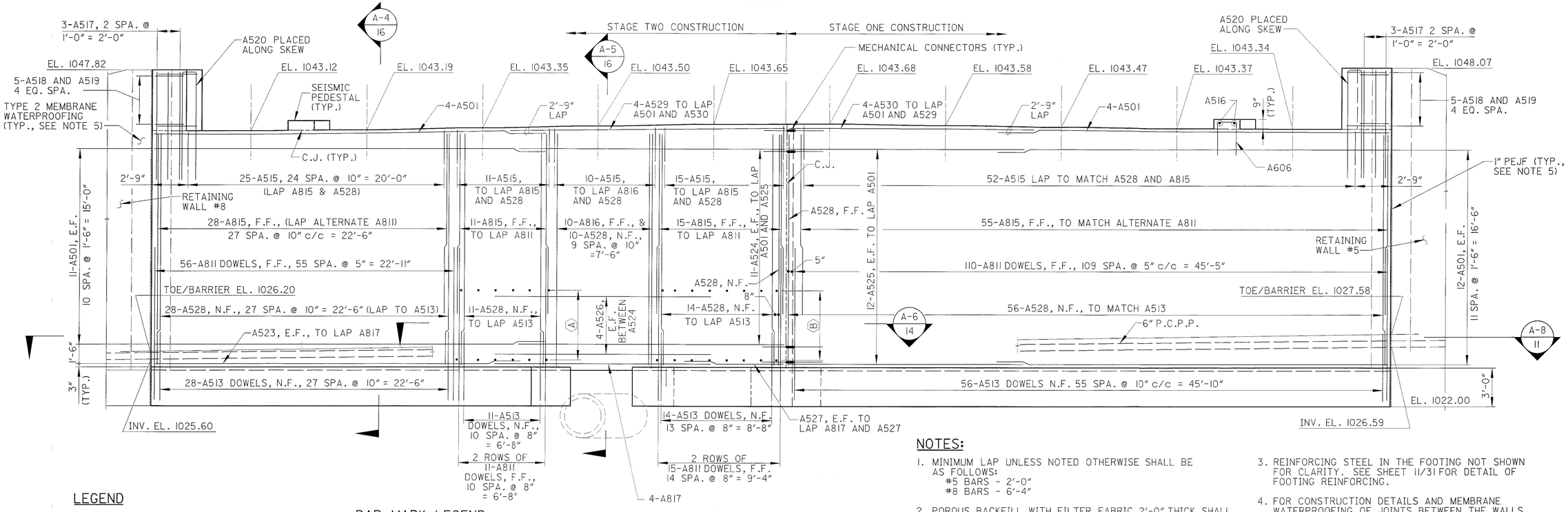

ELEVATION

LEGEND

(BX) - BEAM NUMBER

BAR MARK LEGEND

Ⓐ 5 ROWS OF 6-A401 TIES 4 SPA. @ 1'-4" = 5'-4" SEE SECTION A-6/14 FOR DETAIL

Ⓑ 5 ROWS OF 8-A401 TIES 4 SPA. @ 1'-4" = 5'-4" SEE SECTION A-6/14 FOR DETAIL

NOTES:

1. MINIMUM LAP UNLESS NOTED OTHERWISE SHALL BE AS FOLLOWS:
   #5 BARS - 2'-0"
   #8 BARS - 6'-4"
2. POROUS BACKFILL WITH FILTER FABRIC 2'-0" THICK SHALL EXTEND UP TO THE BOTTOM OF THE APPROACH SLAB AND TO THE LIMITS SHOWN. GEOTEXTILE FABRIC SHALL CONFORM WITH 712.09, TYPE A.
3. REINFORCING STEEL IN THE FOOTING NOT SHOWN FOR CLARITY. SEE SHEET 11/31 FOR DETAIL OF FOOTING REINFORCING.
4. FOR CONSTRUCTION DETAILS AND MEMBRANE WATERPROOFING OF JOINTS BETWEEN THE WALLS AND THE MARKET STREET FORWARD ABUTMENT SEE RETAINING WALL #5 & RETAINING WALL #8 PLANS
5. REFER TO STANDARD DWG. SICD-1-96 FOR ADDITIONAL DETAILS.

DLZ
800 ROCKEFELLER BLDG • 614 W. SUPERIOR AVE • CLEVELAND, OH 44113

DESIGNED AJM
DRAWN RCK
CHECKED JWB
REVIEWED GWM
DATE 1/29/02
STRUCTURE FILE NUMBER 7708297
REVISED

FORWARD ABUTMENT
BRIDGE NO. SUM-8-0148
MARKET STREET OVER S.R. 8

SUM-8-0.63

13/31

963/1088

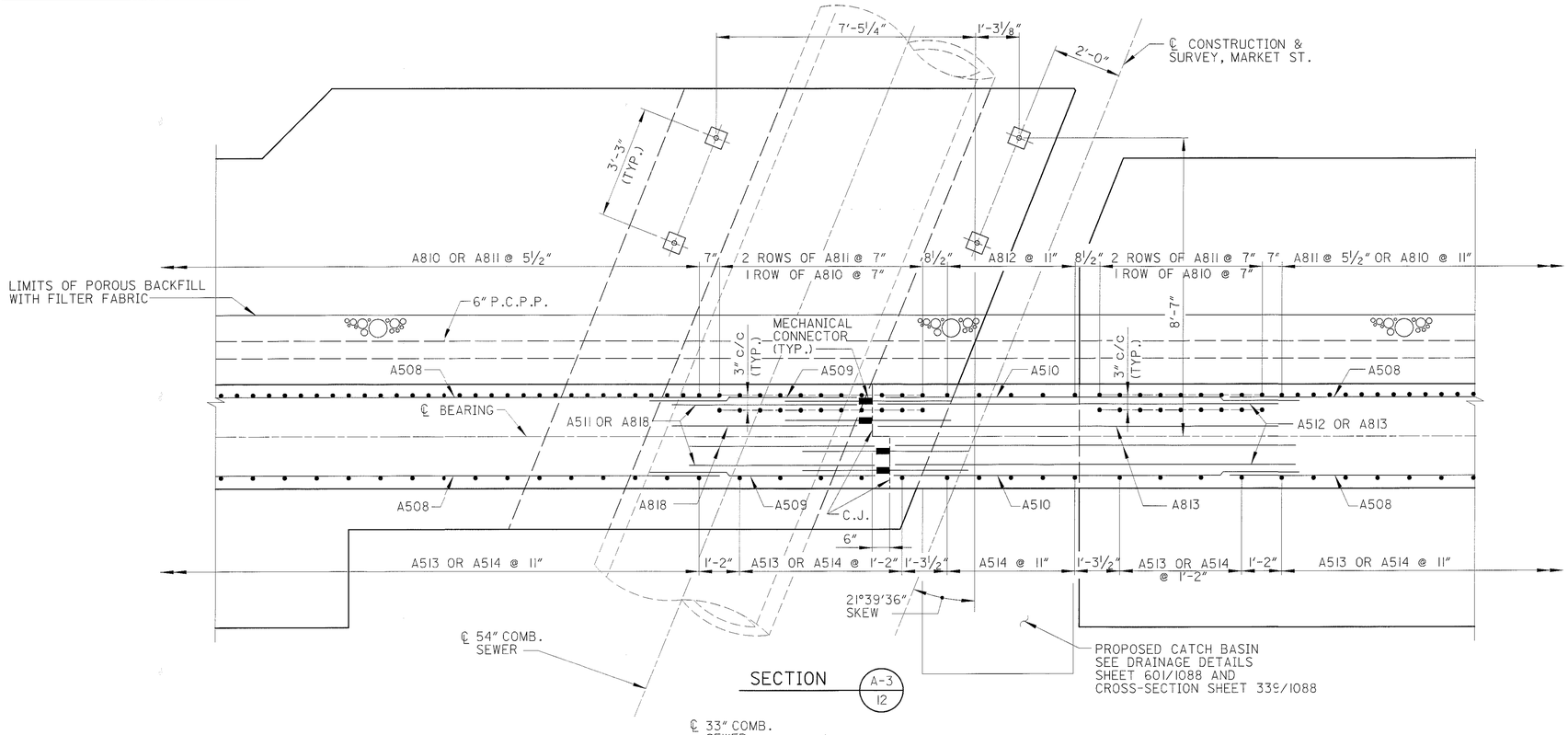

NOTES:

FOR REAR ABUTMENT NOTES AND DETAILS SEE SHEET 12/31.

FOR FORWARD ABUTMENT NOTES AND DETAILS SEE SHEET 13/31.

DLZ
3000 ROCKEFELLER BLDG • 614 W SUPERIOR AVE • CLEVELAND, OH 44113

DESIGNED	DRAWN	REVIEWED	DATE
AJM	RCK	GWM	1/29/02
CHECKED	REVISED	STRUCTURE FILE NUMBER	
JWB		7708297	

ABUTMENT DETAILS
BRIDGE NO. SUM-8-0148
MARKET STREET OVER S.R. 8

SUM-8-0.63

14 / 31

964
1088

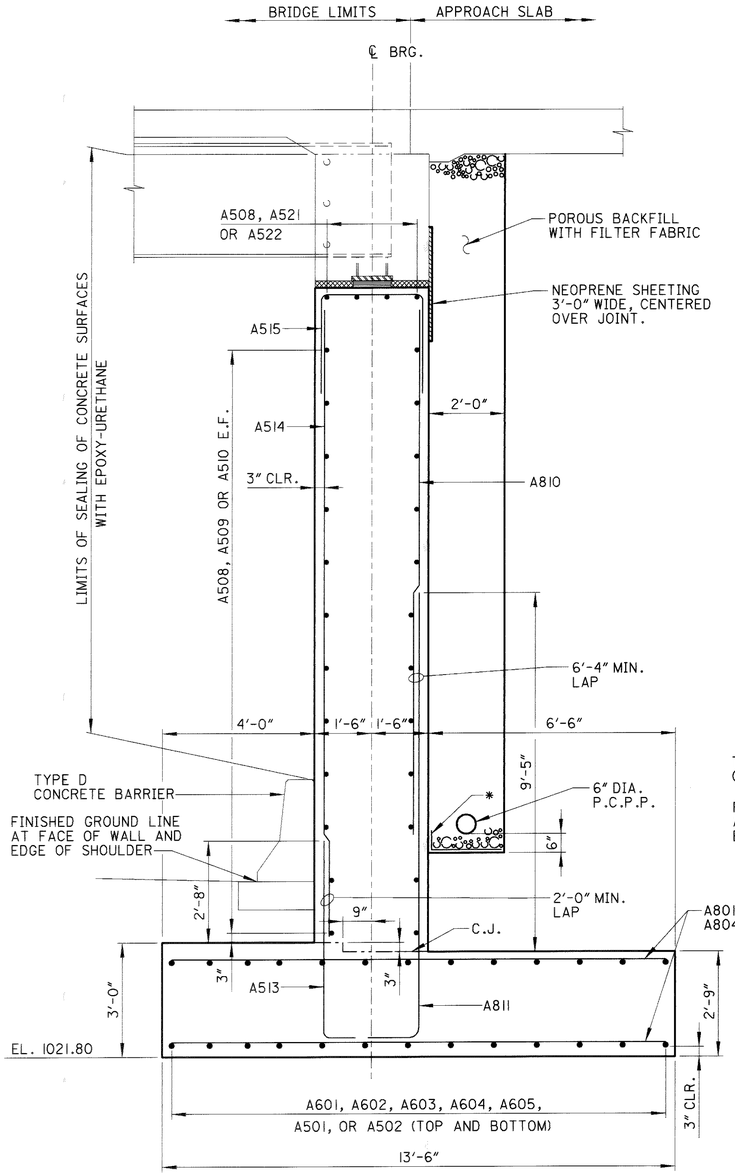

SECTION A-1 / 12

* FILTER FABRIC SHALL BE TURNED UP 6" AT BACK FACE OF ABUTMENT WALL

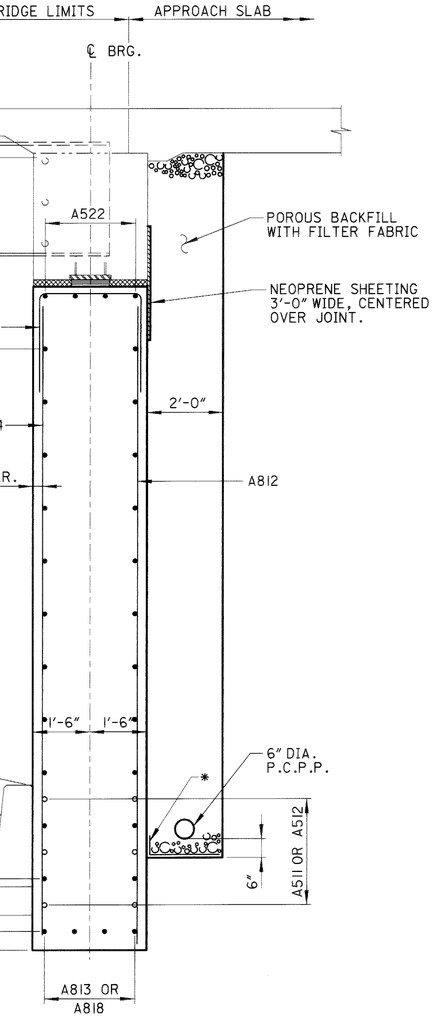

SECTION A-2 / 12

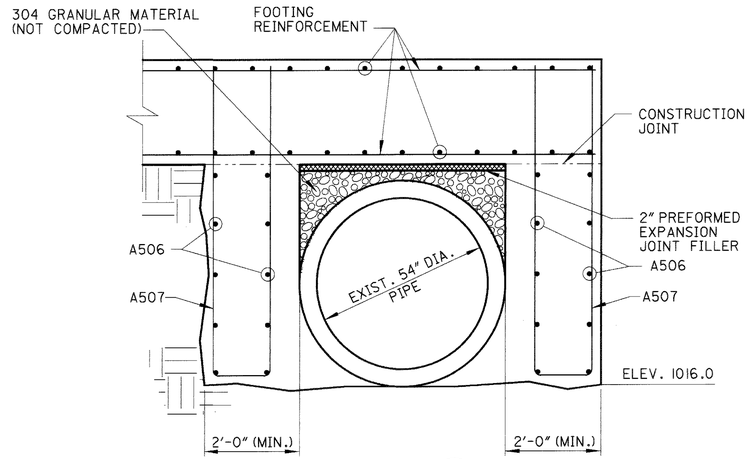

SECTION A-10 / 11

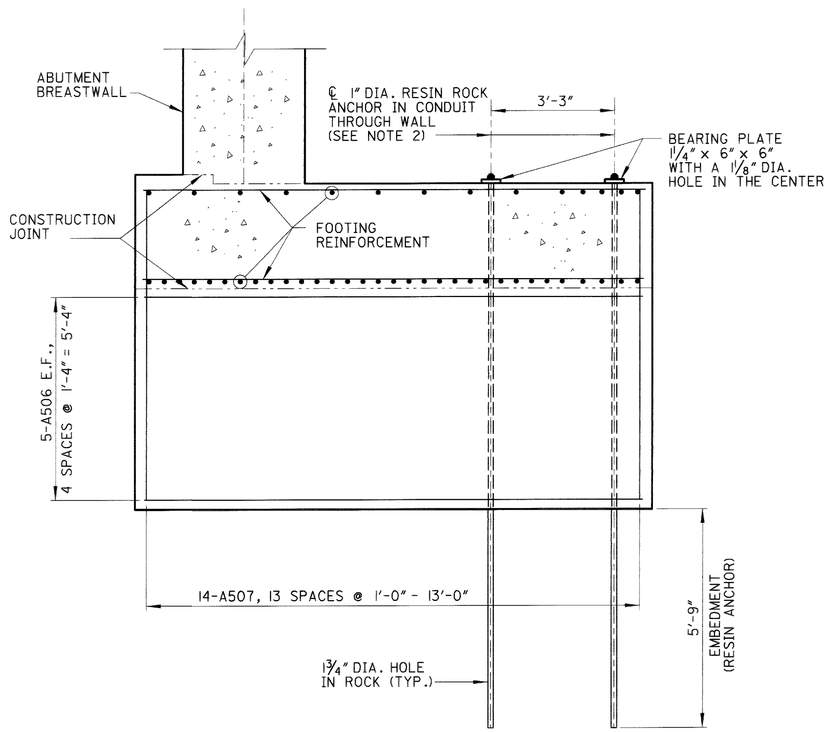

SECTION A-11 / 11

NOTES:

1. SEE SUPERSTRUCTURE DETAIL SHEETS 25/31 & 26/31 FOR DETAIL OF END DIAPHRAGMS.
2. RESIN BONDED ROCK ANCHORS SHALL BE INCLUDED IN THE UNIT PRICE BID FOR ITEM 842, CLASS C CONCRETE, FOOTING, AS PER PLAN. SEE NOTE ON SHEET 3A/31.
3. SEE SHEET 16/31 FOR TYPICAL FORM LINER DETAILS.

REVISIONS: 05/15/2002 by AGW

DLZ
8000 ROCKEFELLER BLDG • 614 W SUPERIOR AVE • CLEVELAND, OH 44113

DESIGNED	DRAWN	CHECKED	REVISED	REVIEWED	DATE
AJM	RCK	JWB		GWM	1/29/02

STRUCTURE FILE NUMBER 7708297

REAR ABUTMENT DETAILS

BRIDGE NO. SUM-8-0148
MARKET STREET OVER S.R. 8

SUM-8-0.63

15 / 31

965 / 1088

01:43:26 PM
06/12/2002
u:\00-010sr-8\\bridge\dwg\market\0148r-a04.dgn

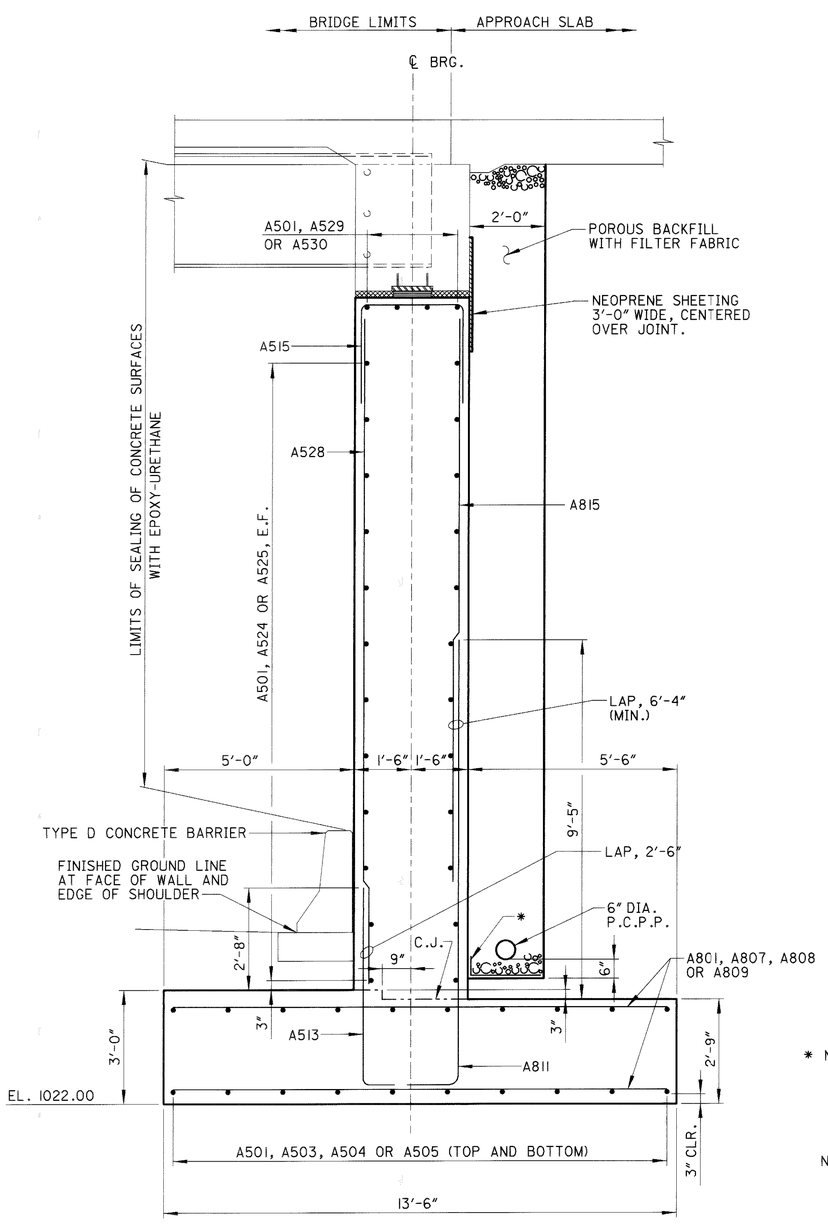

SECTION A-4 / 13

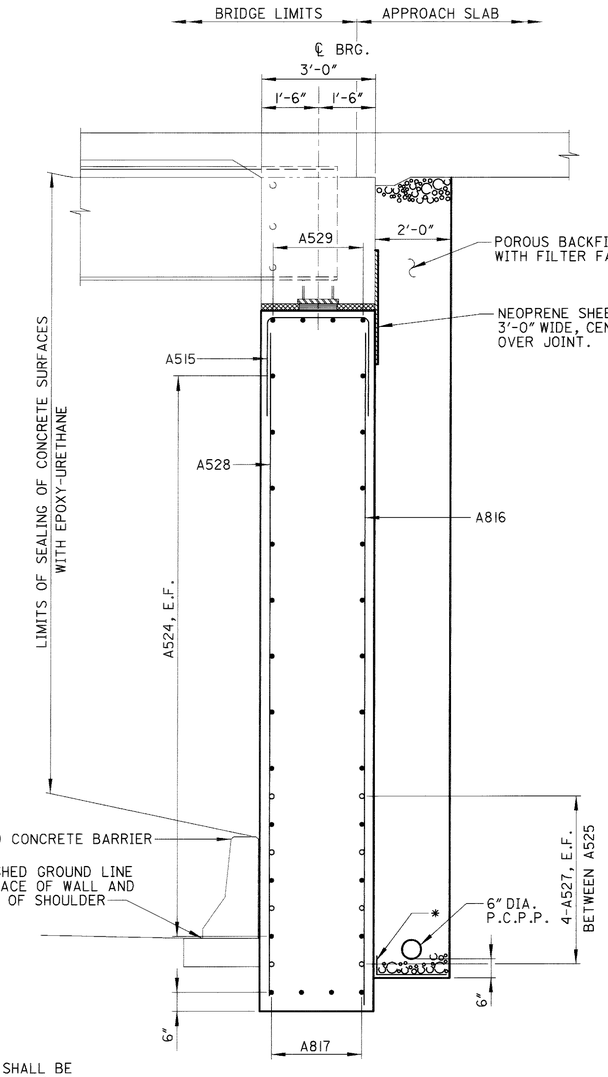

SECTION A-5 / 13

* NOTE: FILTER FABRIC SHALL BE TURNED UP 6" AT BACK FACE OF ABUTMENT WALL

NOTE: SEE SUPERSTRUCTURE DETAIL SHEETS 25/31 & 26/31 FOR DETAIL OF END DIAPHRAGMS.

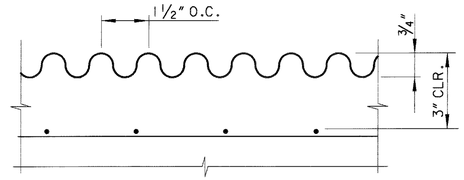

SECTION A-A

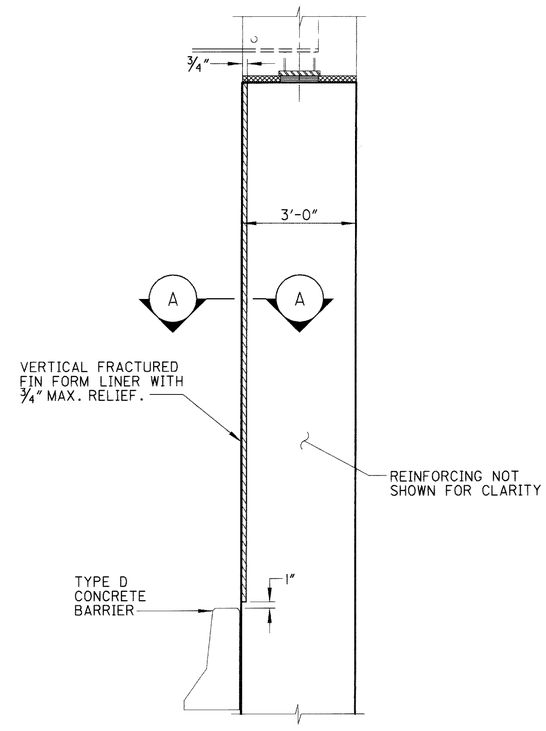

TYPICAL ABUTMENT TREATMENT

(REAR AND FORWARD ABUTMENT)

ITEM SPECIAL - FORM LINER

A VERTICAL FRACTURED FIN FORM LINER SHALL BE PROVIDED WERE INDICATED BY THE TYPICAL ABUTMENT TREATMENT DETAIL. THE COST OF THE FORM LINER, INCLUDING ALL LABOR, MATERIALS, EQUIPMENT AND INCIDENTALS SHALL BE INCLUDED WITH THE UNIT PRICE BID, PER SQUARE FOOT, FOR ITEM SPECIAL - FORM LINER.

REVISIONS: 05/15/2002 by AGW

DLZ
1000 ROCKEFELLER BLDG • 614 W SUPERIOR AVE • CLEVELAND, OH 44113

DESIGNED	DRAWN	REVIEWED	DATE
AJM	RCK	GWM	1/29/02
CHECKED	REVISED	STRUCTURE FILE NUMBER	
JWB		7708297	

FORWARD ABUTMENT DETAILS
BRIDGE NO. SUM-8-0148
MARKET STREET OVER S.R. 8

SUM-8-0.63

16 / 31

966
1088

01:43:27 PM
06/12/2002
u:\00-00sr-8\1\bridge\dwg\market\0148fc03.dgn

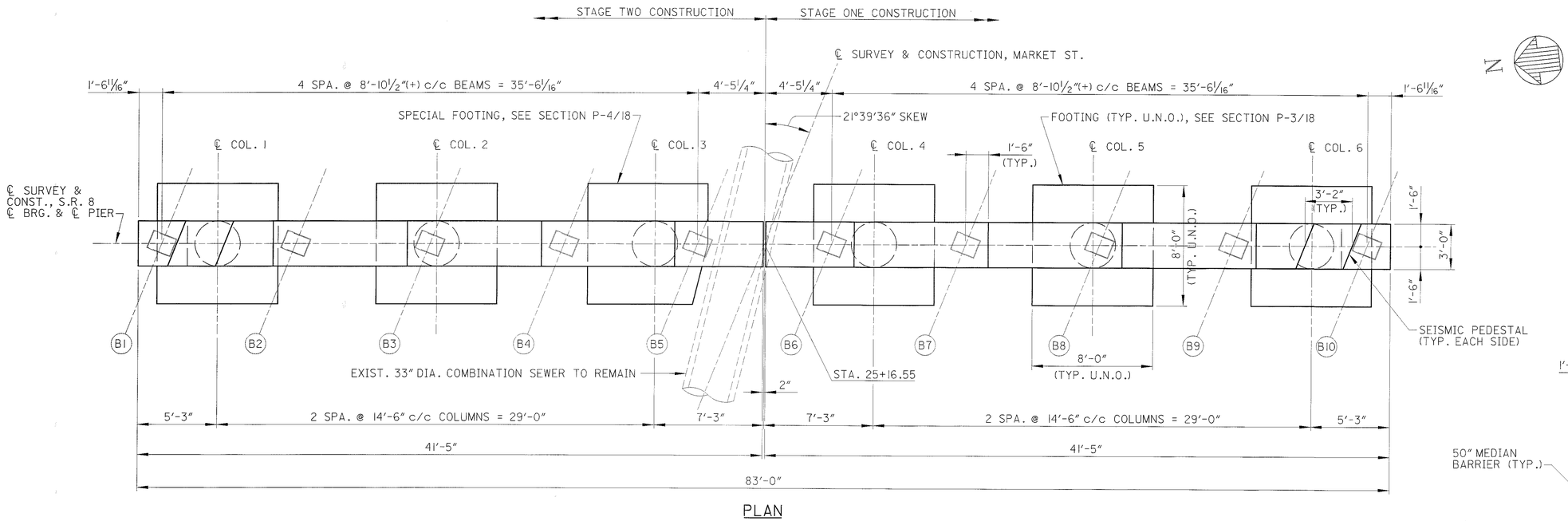

PLAN

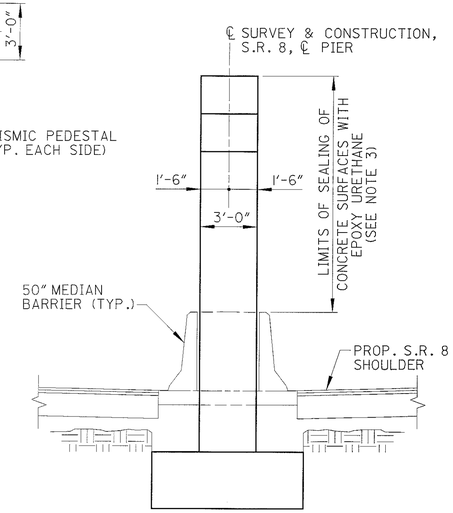

TYPICAL END ELEVATION

NOTE: PIER CAP REINFORCING SHOWN IS TYPICAL FOR BOTH CAPS.

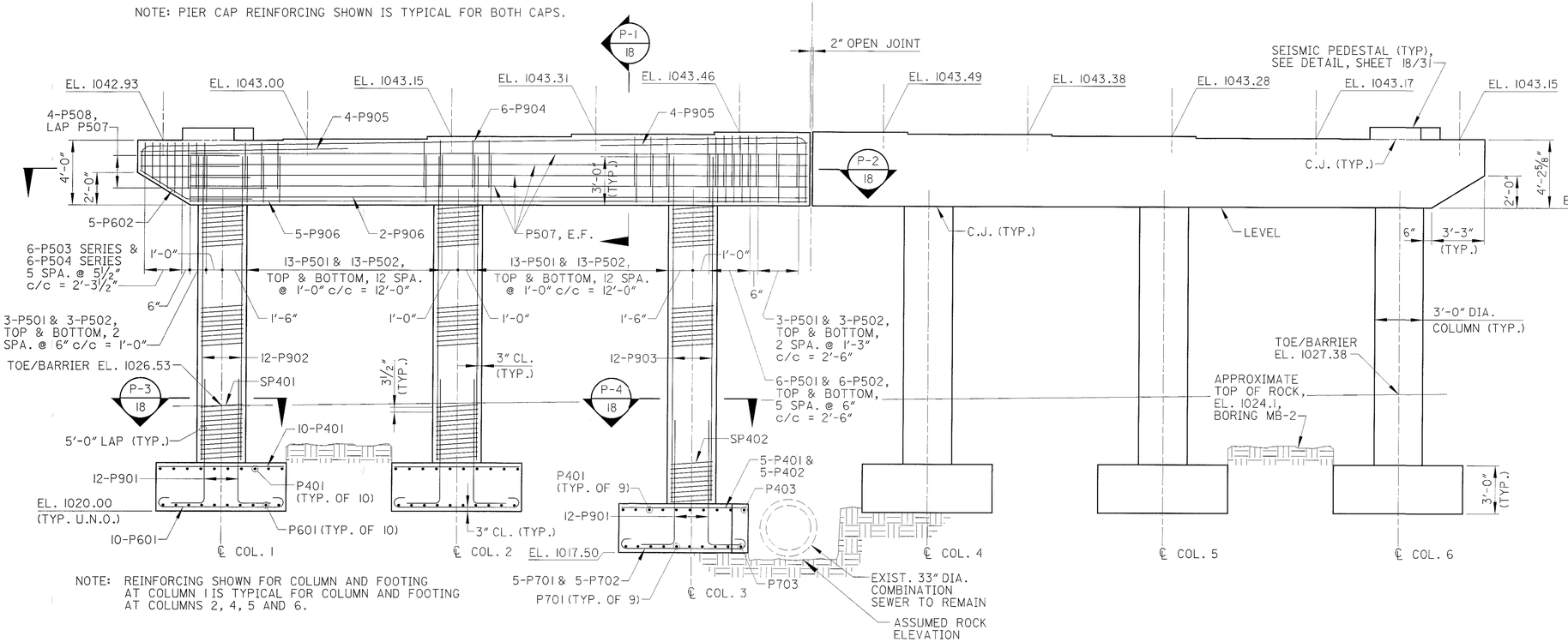

ELEVATION

NOTE: REINFORCING SHOWN FOR COLUMN AND FOOTING AT COLUMN 1 IS TYPICAL FOR COLUMN AND FOOTING AT COLUMNS 2, 4, 5 AND 6.

NOTES

1. REINFORCING SPLICE LENGTHS SHALL BE 2'-0" FOR #5 BARS AND 3'-0" FOR #9 BARS UNLESS OTHERWISE SHOWN.
2. SPIRAL REINFORCEMENT SHALL EXTEND A MINIMUM OF 2" INTO THE PIER CAP.
3. SEALING OF CONCRETE SURFACES: ALL EXPOSED SURFACES OF THE PIER CAP AND COLUMNS SHALL BE SEALED WITH EPOXY-URETHANE SEALER, EXCLUDING THE TOP SURFACE OF THE CAP.
4. FOR BEARING DETAILS, SEE SHEET 27/31.

DLZ
1000 ROCKEFELLER BLDG • 614 W SUPERIOR AVE • CLEVELAND, OH 44113

DESIGNED	DRAWN	REVIEWED	DATE
DJC	DJC	GWM	1/29/02
CHECKED	REVISED	STRUCTURE FILE NUMBER	
PAT		7708297	

PIER PLAN AND ELEVATION
BRIDGE NO. SUM-8-0148
MARKET STREET OVER S.R. 8

SUM-8-0.63

17/31

967/1088

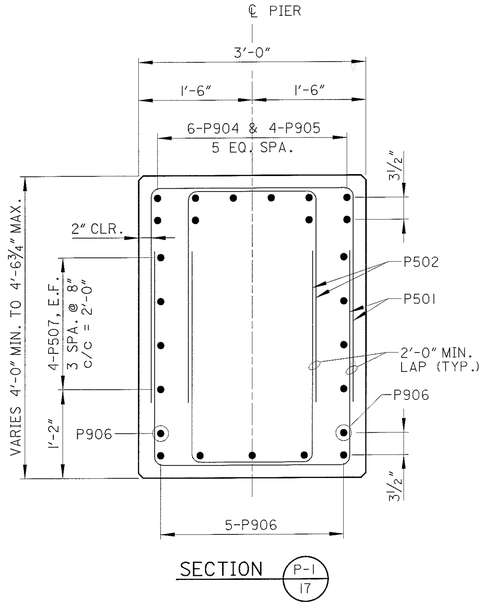

SECTION P-1 / 17

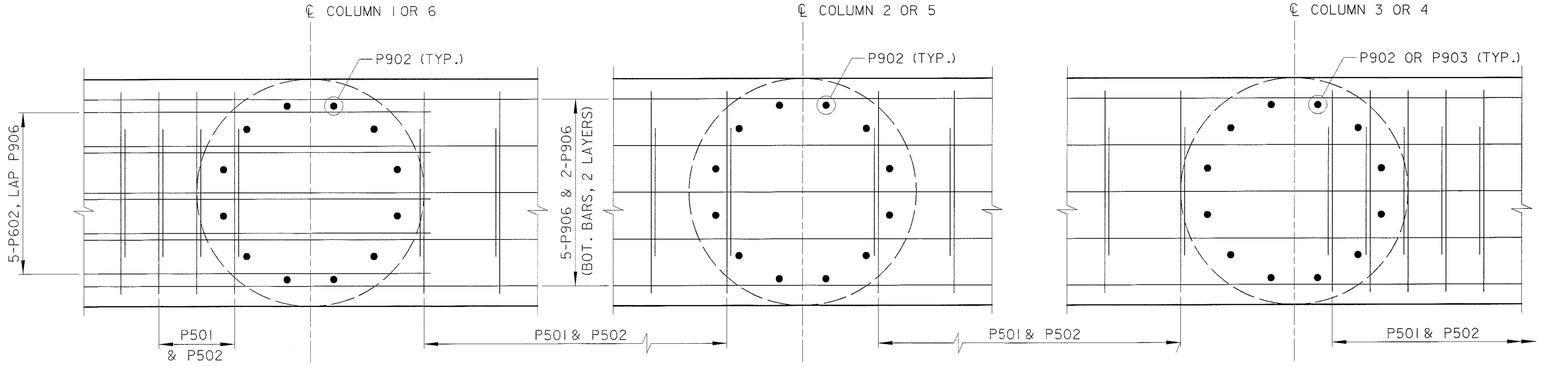

SECTION P-2 / 17

LEFT SIDE PIER CAP, AS SHOWN
RIGHT SIDE PIER CAP, OPPOSITE HAND

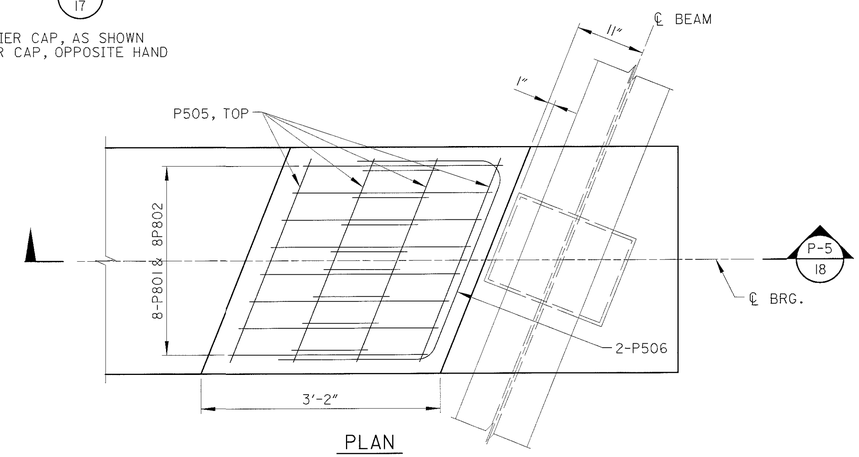

PLAN

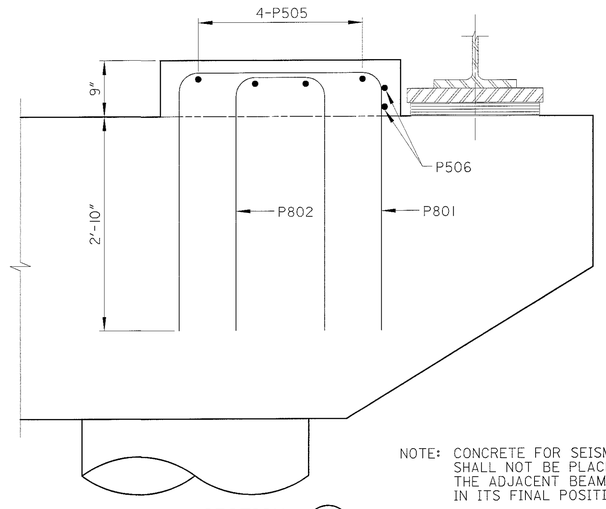

SECTION P-5 / 18

NOTE: CONCRETE FOR SEISMIC PEDESTALS SHALL NOT BE PLACED UNTIL AFTER THE ADJACENT BEAM HAS BEEN SET IN ITS FINAL POSITION.

SEISMIC PEDESTAL DETAILS
(TYP. @ PIER)

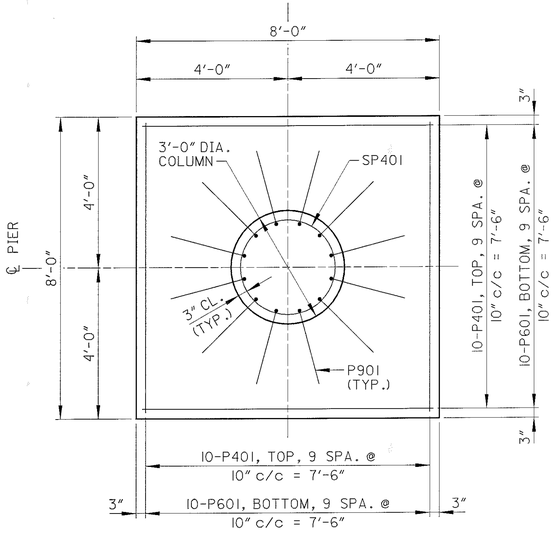

SECTION P-3 / 17

TYPICAL FOR COLUMNS 1, 2, 4, 5 & 6

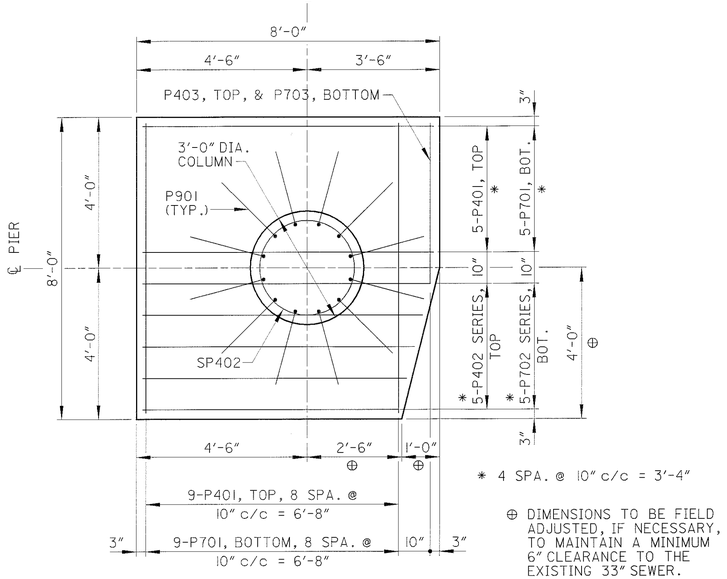

SECTION P-4 / 17

COLUMN 3 ONLY

* 4 SPA. @ 10" c/c = 3'-4"

⊕ DIMENSIONS TO BE FIELD ADJUSTED, IF NECESSARY, TO MAINTAIN A MINIMUM 6" CLEARANCE TO THE EXISTING 33" SEWER.

DLZ
1000 ROCKEFELLER BLDG ★ 614 W SUPERIOR AVE ★ CLEVELAND, OH 44113

DESIGNED	DRAWN	REVIEWED	DATE
DJC	DJC	GWM	1/29/02
CHECKED	REVISED	STRUCTURE FILE NUMBER	
PAT		7708297	

PIER DETAILS
BRIDGE NO. SUM-8-0148
MARKET STREET OVER S.R. 8

SUM-8-063

18 / 31

968
1088

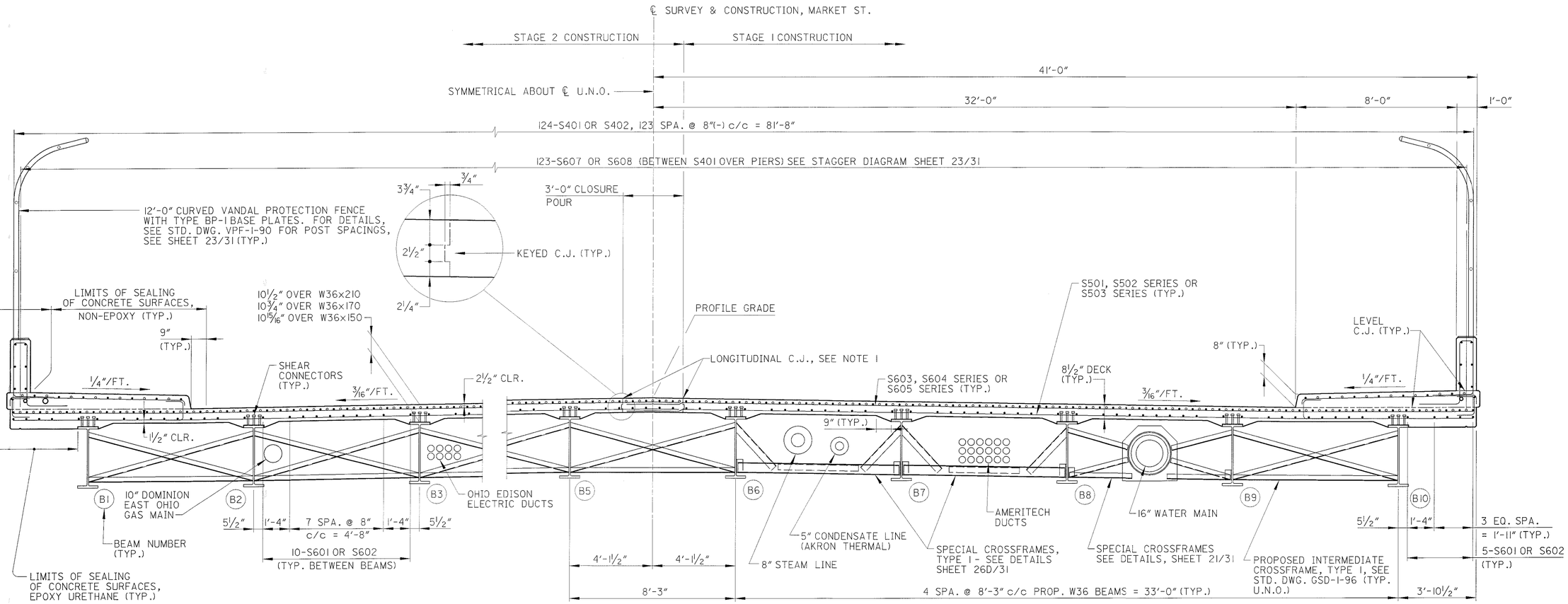

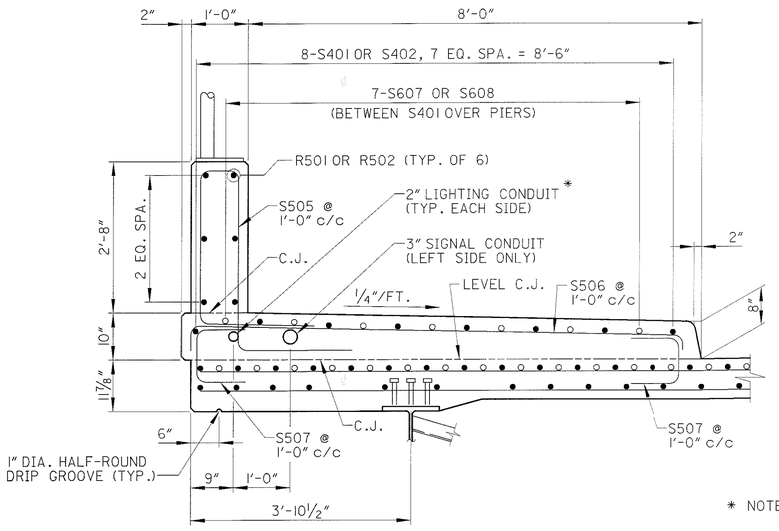

TYPICAL SIDEWALK & RAILING DETAIL

EACH RUN OF LONGITUDINAL SIDEWALK REINFORCING, EXCEPT ADDITIONAL BARS OVER THE PIERS, SHALL BE COMPRISED OF THE FOLLOWING:
TOP BARS: 5-S401 & 1-S402, LAP = 2'-0"

* NOTE: SEE STD. CONSTRUCTION DWG. HL-20.14M FOR CONNECTION OF LIGHTING CONDUIT TO JUNCTION BOX AND STANDARD LIGHT POLE PILASTER FOR BRIDGE WITH SIDEWALK RAILING.

TRANSVERSE SECTION

EACH RUN OF LONGITUDINAL DECK REINFORCING, EXCEPT ADDITIONAL BARS OVER THE PIERS, SHALL BE COMPRISED OF THE FOLLOWING:
TOP BARS: 5-S401 & 1-S402, LAP = 2'-0"
BOTTOM BARS: 5-S601 & 1-S602, LAP = 2'-6"
PARAPET BARS: 5-R501 & 1-R502, LAP = 2'-6"

NOTES:

1. LONGITUDINAL CONSTRUCTION JOINTS SHALL BE SEALED WITH HIGH MOLECULAR WEIGHT METHACRYLATE (HMWM). WIDTH OF SEALING SHALL BE TWO FEET (2') CENTERED OVER THE JOINT. PAYMENT SHALL BE INCLUDED WITH ITEM 844 - HIGH PERFORMANCE CONCRETE SUPERSTRUCTURE (DECK), AS PER PLAN.
2. DECK SLAB DEPTH FOR CONCRETE QUANTITY: THE DECK THICKNESS, 8½", HAS BEEN USED FOR COMPUTING THE DECK CONCRETE QUANTITIES. CONCRETE REQUIRED TO FILL THE HAUNCHES, INCLUDING ADDITIONAL OR LESS MATERIAL REQUIRED DUE TO HAUNCH CONSTRUCTION TOLERANCES, SHALL BE CONSIDERED AS INCIDENTAL AND WILL NOT BE INCLUDED IN THE QUANTITY CALCULATIONS FOR PAYMENT.
3. A HAUNCH WIDTH OF 9 INCHES SHALL BE USED. HOWEVER, THE HAUNCH WIDTH MAY VARY BETWEEN 6 INCHES AND 12 INCHES.

DLZ
1000 ROCKEFELLER BLDG • 614 W SUPERIOR AVE • CLEVELAND, OH 44113

DESIGNED	DRAWN	REVIEWED	DATE
DJC	DJC	GWM	1/29/02
CHECKED	REVISED	STRUCTURE FILE NUMBER	
JWB		7708297	

TRANSVERSE SECTION
BRIDGE NO. SUM-8-0148
MARKET STREET OVER S.R. 8

SUM-8-0.63

19/31

969
1088

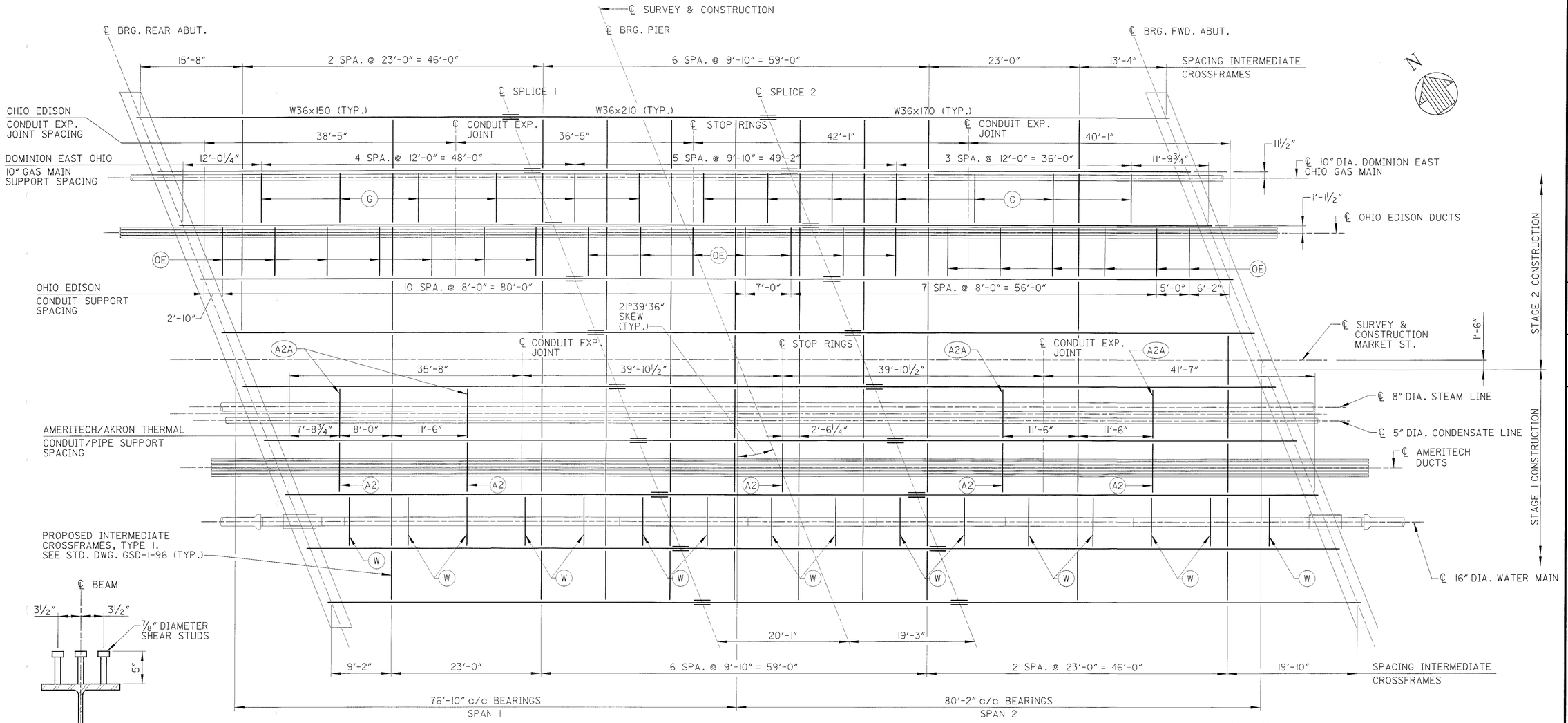

SHEAR STUD DETAIL
(NOT TO SCALE)

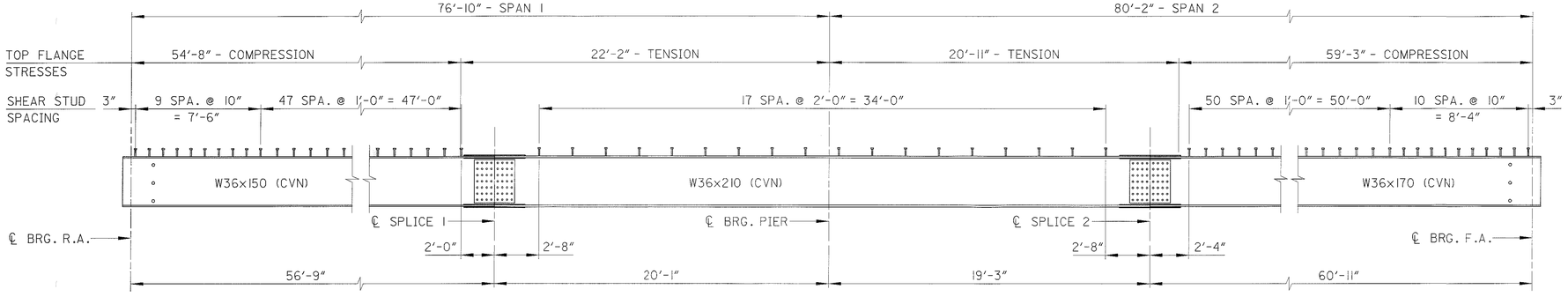

TYPICAL BEAM ELEVATION

NOTES

1. CVN: WHERE A SHAPE OR PLATE IS DESIGNATED (CVN) THE MATERIAL SHALL MEET SPECIFIED MINIMUM NOTCH TOUGHNESS REQUIREMENTS AS SPECIFIED IN 711.01.
2. WELDED ATTACHMENT OF SUPPORTS FOR CONCRETE DECK FINISHING MACHINE MAY BE MADE TO AREAS OF THE FACIA STRINGER FLANGES DESIGNATED "COMPRESSION". ATTACHMENTS SHALL NOT BE MADE TO AREAS DESIGNATED "TENSION". FILLET WELDS TO COMPRESSION FLANGES SHALL BE NOT CLOSER THAN 1" FROM EDGE OF FLANGE, BE NOT MORE THAN 2" LONG AND BE NOT SMALLER THAN 1/4" FOR THICKNESS UP TO 3/4" AND 5/16" FOR GREATER THAN 3/4" THICK.
3. FOR BOLTED FIELD SPLICE DETAIL AND CAMBER DIAGRAM, SEE SHEET 22/31.
4. FOR SPECIAL UTILITY SUPPORT DETAILS, SEE SHEET 26A THROUGH 26E/31.
5. FOR SPECIAL CROSSFRAME DETAILS, SEE SHEET 21, 26D & 26E/31.

LEGEND

- (A2) AMERITECH DUCT SUPPORT, TYPE 2
- (A2A) AKRON THERMAL SUPPORT, TYPE 2
- (W) WATER MAIN SUPPORT
- (OE) OHIO EDISON SUPPORT
- (G) DOMINION EAST OHIO 10" GAS MAIN SUPPORT

DLZ
3000 ROCKEFELLER BLDG • 614 W SUPERIOR AVE • CLEVELAND, OH 44113

DESIGNED DJC | DRAWN DJC | CHECKED PAT | REVISED | REVIEWED GWM 1/29/02 | DATE | STRUCTURE FILE NUMBER 7708297

FRAMING PLAN AND BEAM ELEVATION
BRIDGE NO. SUM-8-0148
MARKET STREET OVER S.R. 8

SUM-8-0.63

20/31

970/1088

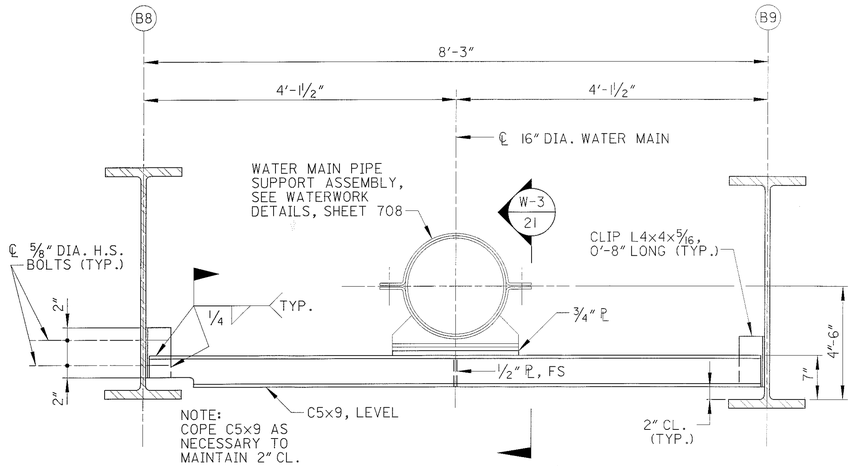

WATER MAIN SUPPORT DETAIL

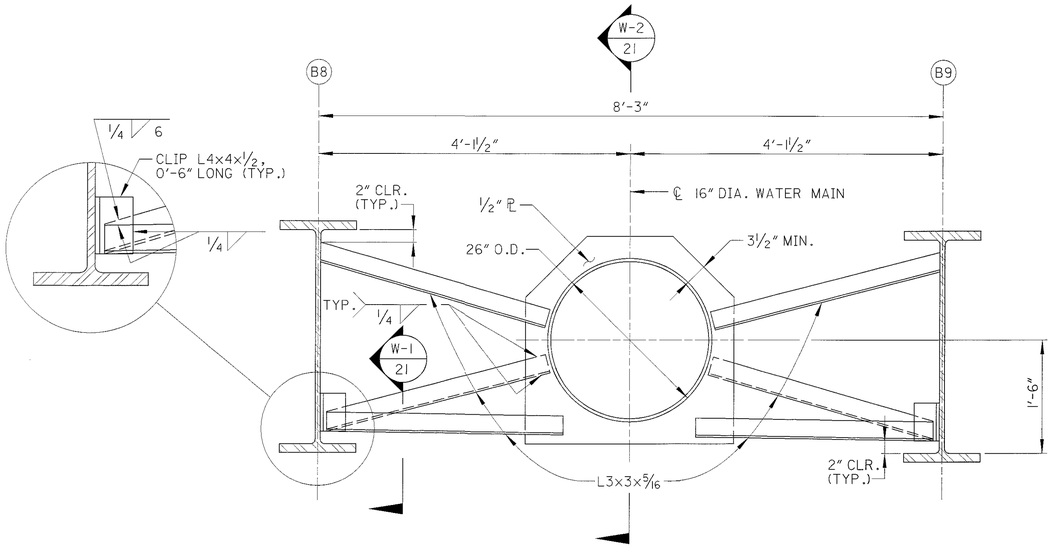

WATER INTERMEDIATE CROSSFRAME DETAIL

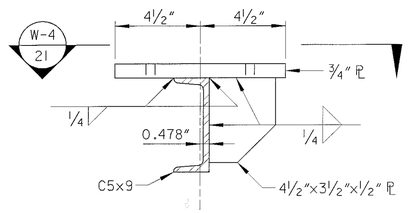

SECTION W-3 21

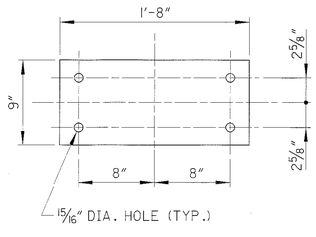

SECTION W-4 21

¾" PLATE DETAIL

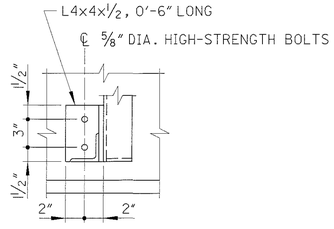

SECTION W-1 21

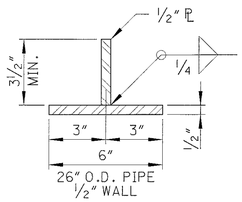

SECTION W-2 21

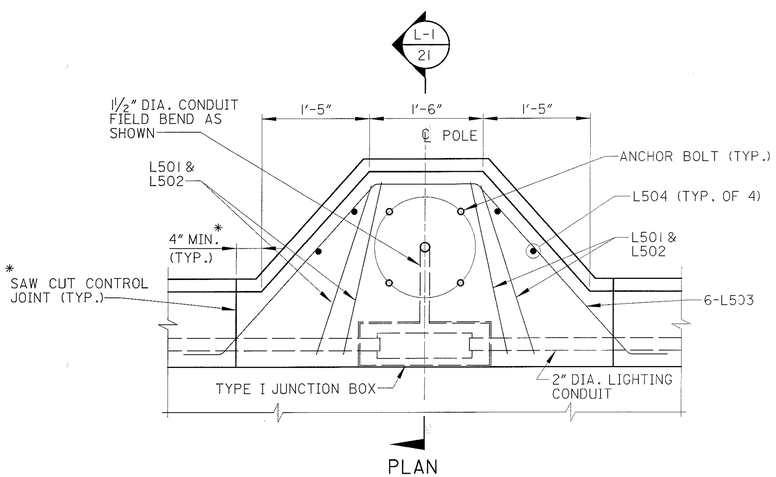

PLAN

* FOR SAW CUT SPACING, SEE DECK PLAN SHEET 23/31

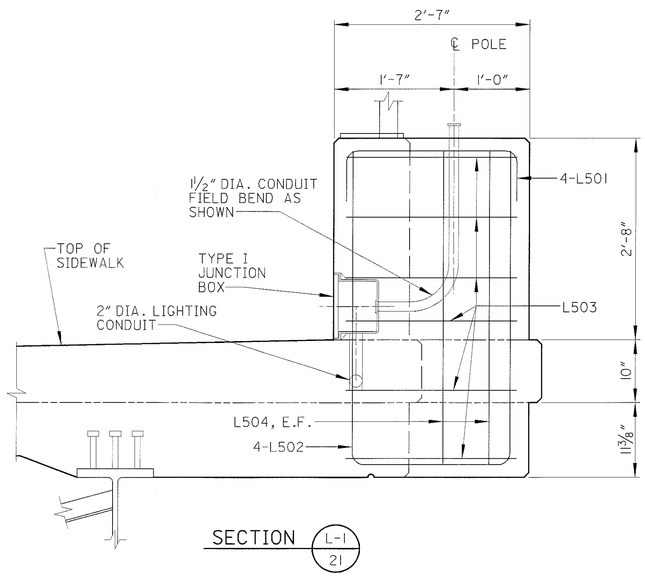

SECTION L-1 21

NOTES

1. FOR FRAMING PLAN, SEE SHEET 20/31.
2. FOR DETAILS OF STANDARD TYPE I INTERMEDIATE CROSSFRAMES, AND OTHER CROSSFRAME DETAILS NOT SHOWN, SEE STANDARD DRAWING GSD-1-96.
3. THE REINFORCING BARS SHOWN "L" SERIES BAR MARKS ARE ADDITIONAL REINFORCING BARS REQUIRED FOR THE LIGHT POLE PILASTER. TRANSVERSE AND LONGITUDINAL REINFORCING BARS AS SHOWN ON THE TYPICAL BRIDGE PARAPET DETAIL, SHEET 19/31, SHALL ALSO BE PROVIDED CONTINUOUS THROUGH THE PILASTER.
4. FOR ADDITIONAL LIGHT POLE PILASTER DETAILS NOT SHOWN, SEE ODOT STD. DWG. HL-20.14M.

LIGHT POLE PILASTER DETAILS

DLZ
9000 ROCKEFELLER BLDG • 614 W SUPERIOR AVE • CLEVELAND, OH 44113

DESIGNED	DRAWN	REVIEWED	DATE
PAT	PAT	GWM	1/29/02
CHECKED	REVISED	STRUCTURE FILE NUMBER	
JWB		7708297	

SUPERSTRUCTURE DETAILS
BRIDGE NO. SUM-8-0148
MARKET STREET OVER S.R. 8

SUM-8-063

21 / 31

971
1088

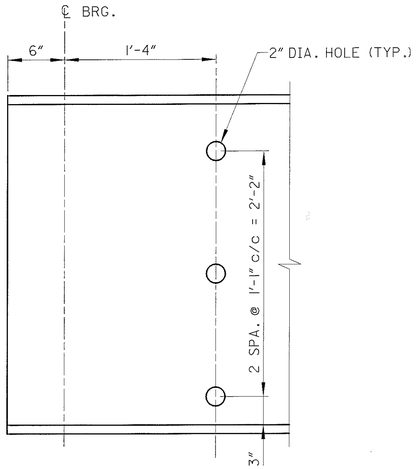

BEAM END DETAIL
(TYP. ALL BEAMS)

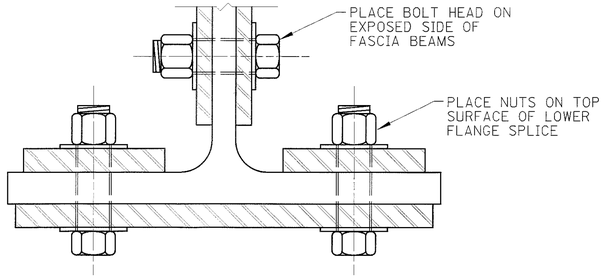

PARTIAL SECTION
(AT ℄ OF BEAM SPLICE)

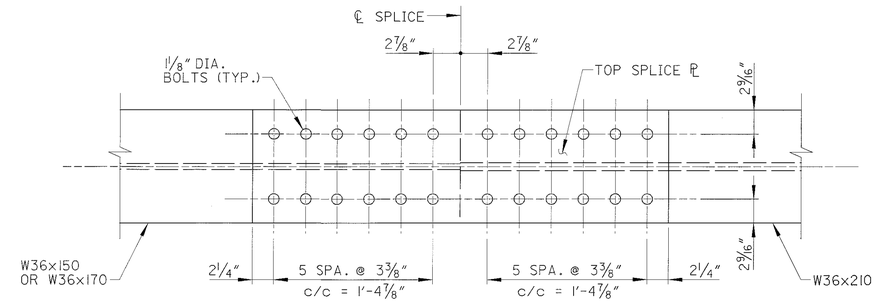

PLAN

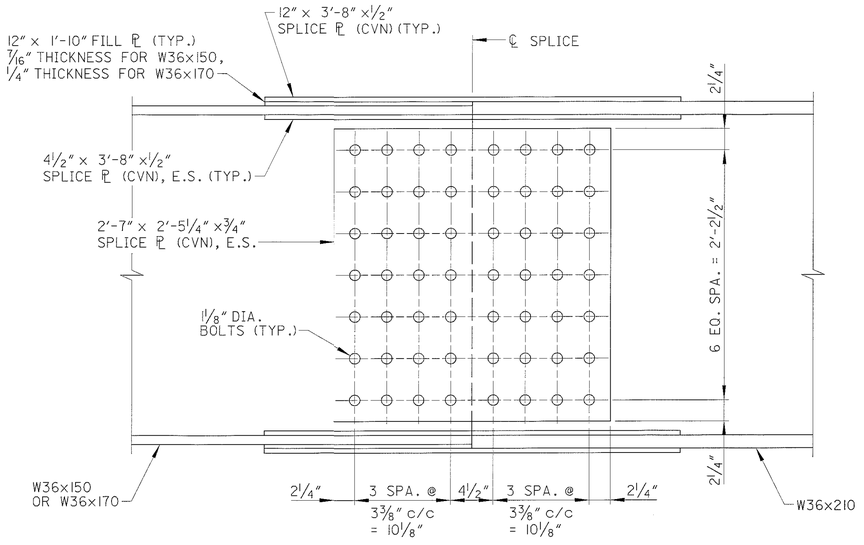

ELEVATION

BOLTED FIELD SPLICE DETAIL

DEFLECTION AND CAMBER (IN INCHES)								
CAMBER DESCRIPTION	SPAN 1				SPAN 2			
	0.25	0.50	℄ FIELD SPLICE 1	0.75	℄ FIELD SPLICE 2	0.25	0.50	0.75
DEFLECTION DUE TO WEIGHT OF STEEL	3⁄16	3⁄16	⅛	⅛	⅛	⅛	¼	¼
DEFLECTION DUE TO REMAINING DEAD LOAD	1	1⅛	7⁄16	7⁄16	9⁄16	⅝	15⁄16	1⅛
REQUIRED SHOP CAMBER	1⅜16	15⁄16	9⁄16	9⁄16	1⅛16	¾	19⁄16	1⅜

NOTE: POSITIVE DIMENSIONS INDICATE DOWNWARD DEFLECTION AND UPWARD CAMBER.

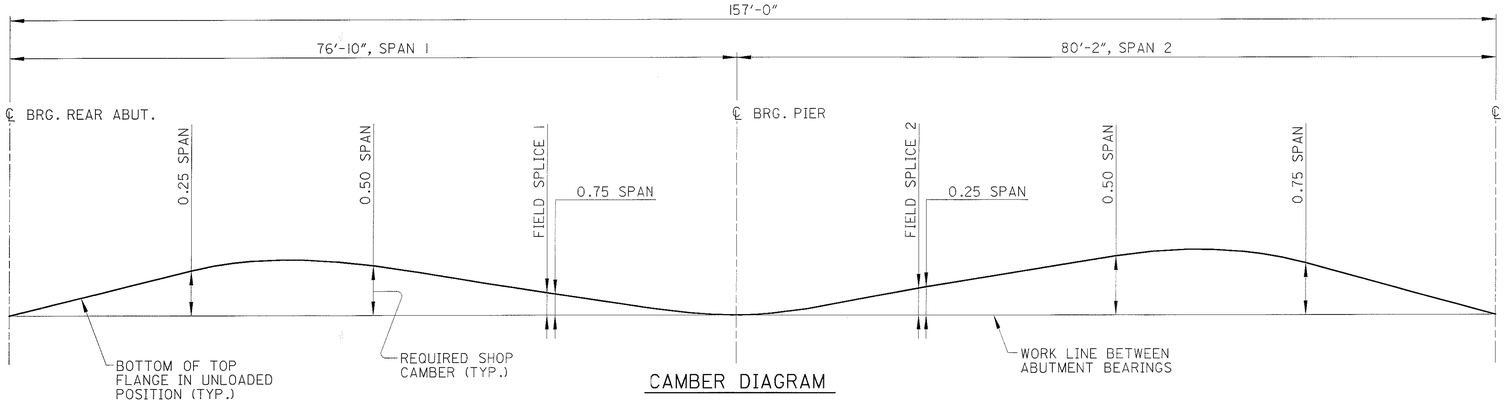

CAMBER DIAGRAM

NOTES

1. CVN: WHERE A SHAPE OR PLATE IS DESIGNATED (CVN) THE MATERIAL SHALL MEET SPECIFIED MINIMUM NOTCH TOUGHNESS REQUIREMENTS AS SPECIFIED IN 711.01.
2. FOR FRAMING PLAN, BEAM ELEVATION, AND ADDITIONAL NOTES, SEE SHEET 20/31.

DLZ
8000 ROCKEFELLER BLDG • 614 W SUPERIOR AVE • CLEVELAND, OH 44113

DESIGNED	DRAWN	REVIEWED	DATE
DJC	DJC	GWM	1/29/02
CHECKED	REVISED	STRUCTURE FILE NUMBER	
JWB		7708297	

SUPERSTRUCTURE DETAILS
BRIDGE NO. SUM-8-0148
MARKET STREET OVER S.R. 8

SUM-8-0.63

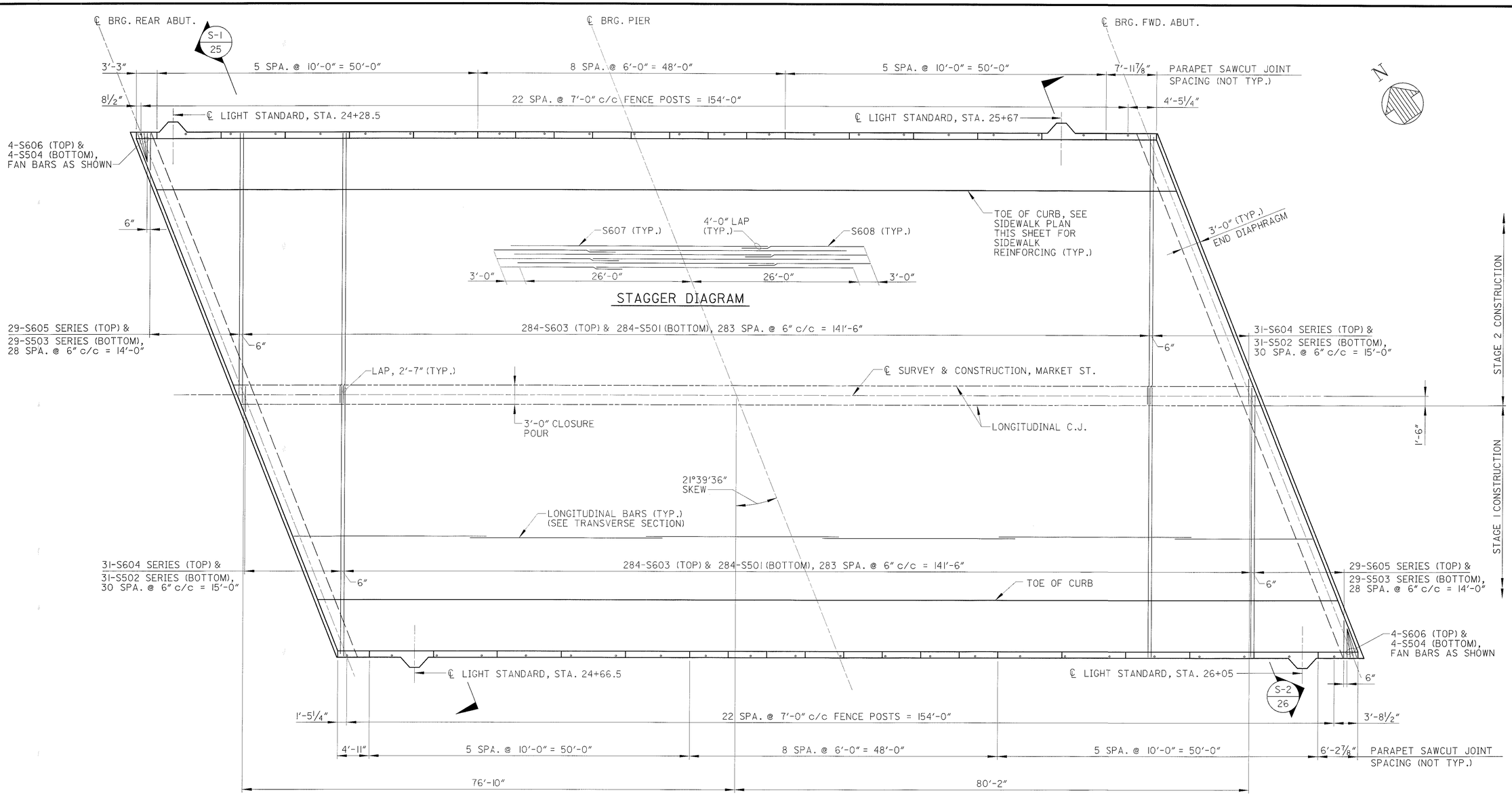

DECK SLAB PLAN

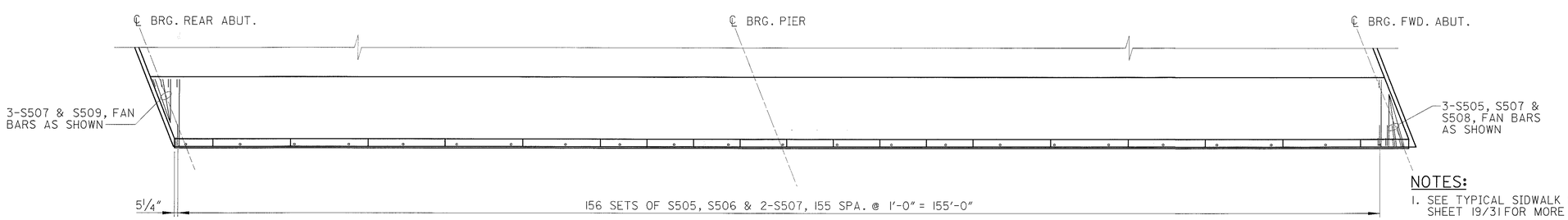

SIDEWALK PLAN

EASTBOUND SIDEWALK SHOWN, WESTBOUND OPPOSITE HAND

NOTES:

1. SEE TYPICAL SIDWALK & RAILING DETAIL, SHEET 19/31 FOR MORE INFORMATION
2. SEE SHEETS 25/31 & 26/31 FOR CONCRETE END DIAPHRAGM DETAILS.
3. SEE SHEET 21/31 FOR LIGHT POLE PILASTER DETAILS.

DLZ
8000 ROCKEFELLER BLDG • 614 W SUPERIOR AVE • CLEVELAND, OH 44113

DESIGNED DJC
DRAWN DJC
CHECKED JWB
REVISED
REVIEWED GWM 1/29/02
STRUCTURE FILE NUMBER 7708297

DECK SLAB PLAN
BRIDGE NO. SUM-8-0148
MARKET STREET OVER S.R. 8

SUM-8-0.63

23/31

973/1088

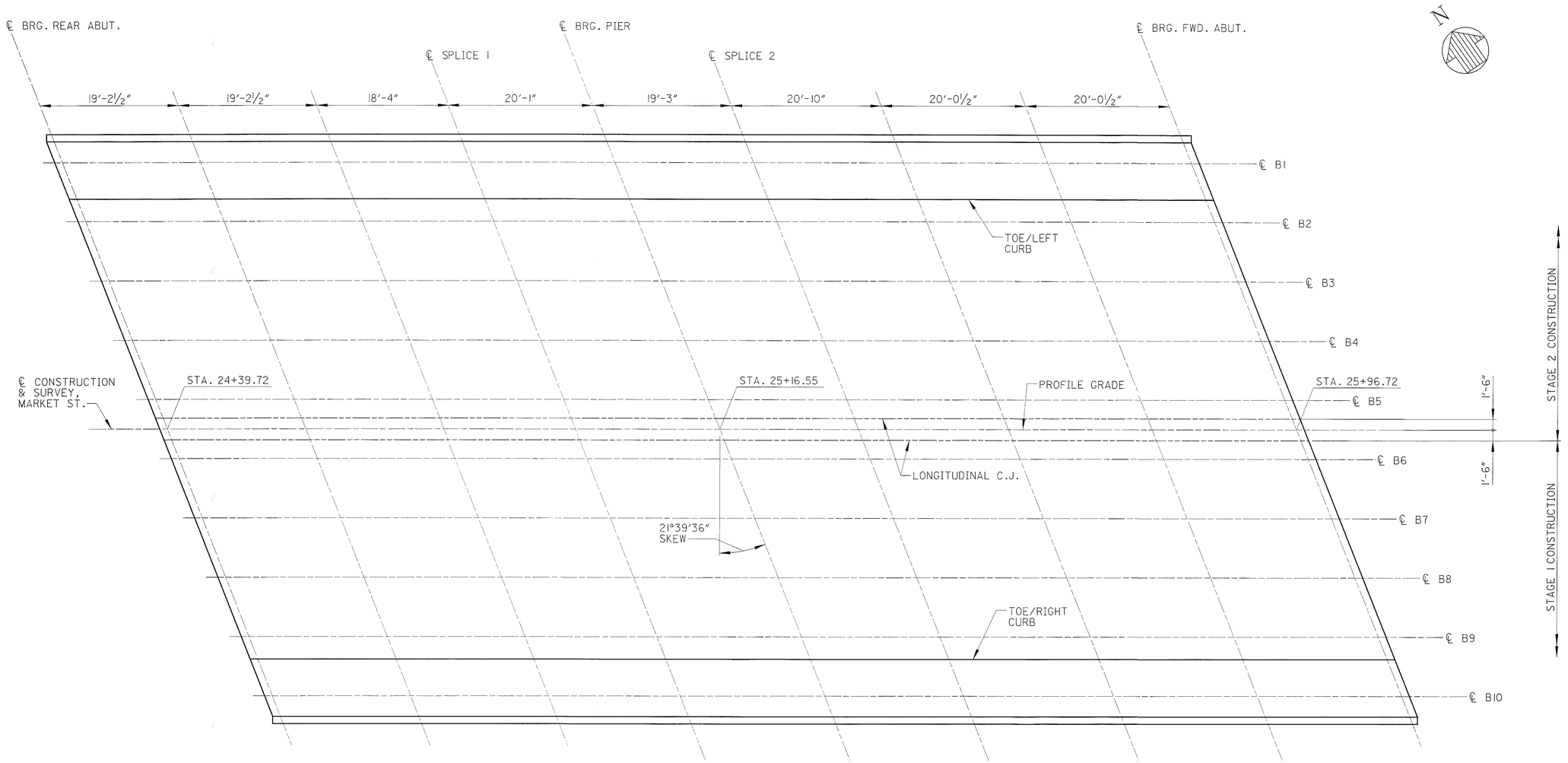

SCREED ELEVATION LOCATION DIAGRAM

TABLE OF SCREED ELEVATIONS (IN FEET)

LOCATION	SPAN 1					SPAN 2			
	℄ BRG REAR ABUT	0.25	0.50	℄ FIELD SPLICE 1	℄ PIER	℄ FIELD SPLICE 2	0.50	0.75	℄ BRG FWD ABUT
BEAM 1 *	1046.64	1046.87	1047.03	1047.11	1047.22	1047.42	1047.64	1047.77	1047.83
TOE / LEFT CURB	1046.66	1046.89	1047.04	1047.12	1047.24	1047.43	1047.65	1047.79	1047.85
BEAM 2	1046.71	1046.94	1047.10	1047.18	1047.30	1047.49	1047.71	1047.85	1047.91
BEAM 3	1046.87	1047.10	1047.25	1047.33	1047.45	1047.64	1047.86	1048.00	1048.06
BEAM 4	1047.02	1047.25	1047.41	1047.49	1047.60	1047.80	1048.02	1048.15	1048.21
BEAM 5	1047.17	1047.40	1047.56	1047.64	1047.76	1047.95	1048.17	1048.31	1048.37
LONGITUDINAL C.J. (STAGE 2)	1047.22	1047.45	1047.61	1047.69	1047.81	1048.00	1048.22	1048.36	1048.42
PROFILE GRADE	1047.25	1047.48	1047.64	1047.73	1047.84	1048.03	1048.25	1048.38	1048.45
LONGITUDINAL C.J. (STAGE 1)	1047.23	1047.46	1047.62	1047.70	1047.82	1048.01	1048.23	1048.37	1048.42
BEAM 6	1047.20	1047.43	1047.59	1047.67	1047.78	1047.98	1048.20	1048.33	1048.39
BEAM 7	1047.10	1047.33	1047.48	1047.56	1047.68	1047.87	1048.09	1048.23	1048.29
BEAM 8	1046.99	1047.22	1047.38	1047.46	1047.58	1047.77	1047.99	1048.13	1048.18
BEAM 9	1046.89	1047.12	1047.27	1047.36	1047.47	1047.66	1047.88	1048.02	1048.08
TOE / RIGHT CURB	1046.85	1047.08	1047.23	1047.32	1047.43	1047.62	1047.85	1047.98	1048.04
BEAM 10 *	1046.86	1047.09	1047.25	1047.33	1047.45	1047.64	1047.86	1048.00	1048.06

SCREED ELEVATIONS SHOWN ARE FOR THE DECK SLAB SURFACE PRIOR TO CONCRETE PLACEMENT. ALLOWANCE HAS BEEN MADE FOR ANTICIPATED CALCULATED DEAD LOAD DEFLECTIONS.

* ELEVATIONS SHOWN ARE FOR THE TOP OF DECK SLAB BEFORE PLACEMENT OF SIDEWALK.

DLZ
1000 ROCKEFELLER BLDG • 614 W SUPERIOR AVE • CLEVELAND, OH 44113

DESIGNED DJC | DRAWN DJC | CHECKED JWB | REVISED | REVIEWED GWM | DATE 1/29/02 | STRUCTURE FILE NUMBER 7708297

SCREED ELEVATIONS
BRIDGE NO. SUM-8-0148
MARKET STREET OVER S.R. 8

SUM-8-0.63

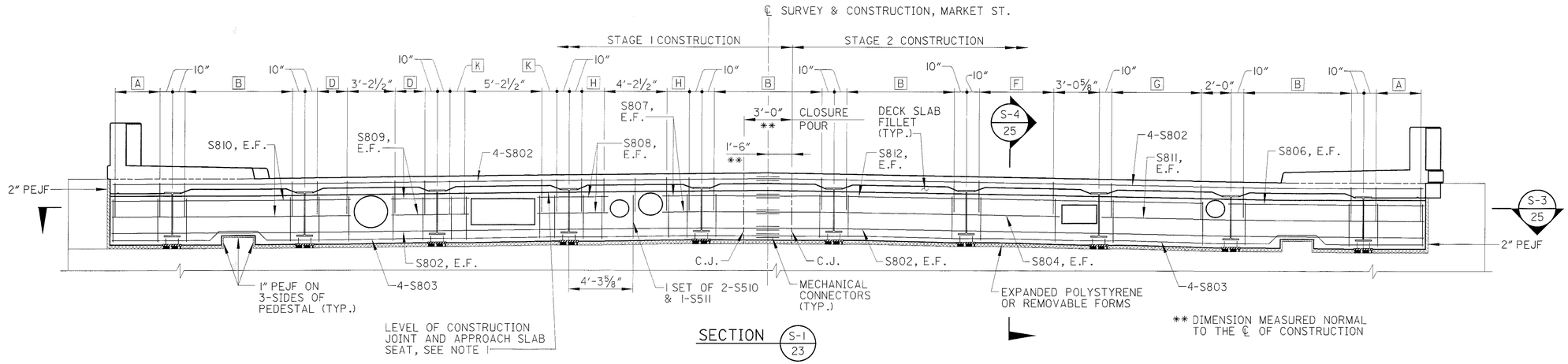

SECTION S-1 / 23

REAR END DIAPHRAGM

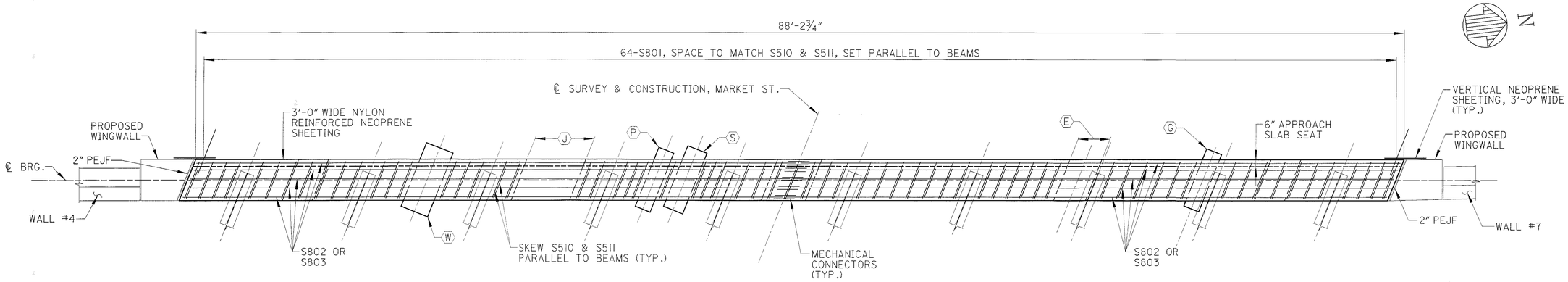

SECTION S-3 / 25

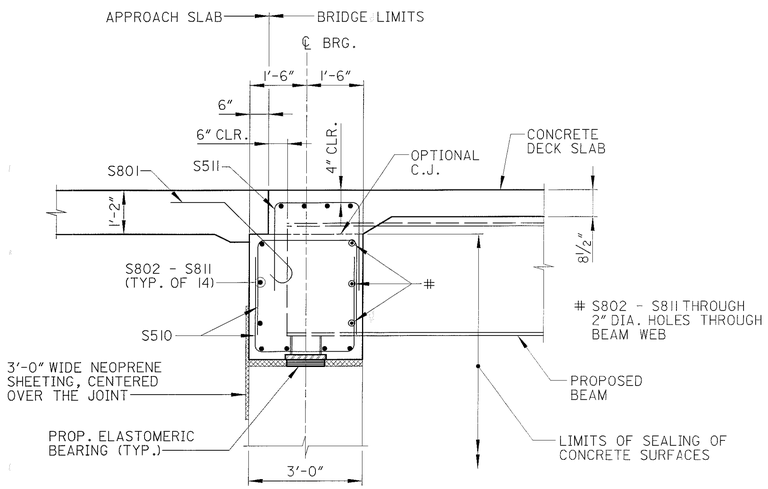

SECTION S-4 / 25

NOTE: DECK SLAB REINFORCING NOT SHOWN

NOTES

1. APPROACH SLAB SEAT AND CONSTRUCTION JOINT SHALL BE 1'-2" BELOW AND PARALLEL TO THE TOP OF DECK.
2. FOR DECK SLAB AND SIDEWALK REINFORCEMENT, SEE SHEET 23/31.
3. HORIZONTAL DIMENSIONS SHOWN ARE MEASURED ALONG ABUTMENT CENTER LINE OF BEARINGS UNLESS NOTED OTHERWISE.
4. CONCRETE FOR THE END DIAPHRAGMS MAY BE PLACED SEPARATE OF OR WITH THE DECK CONCRETE. IF THE CONTRACTOR CHOOSES TO PLACE THE DIAPHRAGM CONCRETE SEPARATELY, THEY SHALL HAVE AT LEAST 48 HOURS OF SET TIME BEFORE DECK CONCRETE CAN BE PLACED.
5. EXPANDED POLYSTYRENE OR REMOVABLE FORMS SHALL BE CONSIDERED INCIDENTAL AND INCLUDED FOR PAYMENT WITH ITEM 844 - HIGH PERFORMANCE CONCRETE SUPERSTRUCTURE (DECK), AS PER PLAN.

UTILITY LEGEND

- (S) 18" O.D. PIPE SLEEVE FOR 8" STEAM LINE
- (P) 14" O.D. PIPE SLEEVE FOR 5" CONDENSATE LINE
- (W) 26" O.D. PIPE SLEEVE FOR 16" WATER MAIN
- (G) 14" O.D. PIPE SLEEVE FOR 10" GAS MAIN
- (E) 2'-2" x 1'-3" BLOCKOUT FOR OHIO EDISON DUCTS
- (J) 4'-0" x 1'-9" BLOCKOUT FOR AMERITECH DUCTS

BAR MARK LEGEND

- A 4 SETS OF 2-S510 & 1-S511, 3 SPA. @ 1'-0" c/c = 3'-0"
- B 7 SETS OF 2-S510 & 1-S511, 6 SPA. @ 1'-2½"(-) c/c = 7'-2½"
- D 3 SETS OF 2-S510 & 1-S511, 2 SPA. @ 1'-0" c/c = 2'-0"
- F 6 SETS OF 2-S510 & 1-S511, 5 SPA. @ 1'-0" c/c = 5'-0"
- G 6 SETS OF 2-S510 & 1-S511, 5 SPA. @ 1'-2½" c/c = 6'-0½"
- H 3 SETS OF 2-S510 & 1-S511, 2 SPA. @ 9" c/c = 1'-6"
- K 2 SETS OF 2-S510 & 1-S511, 1 SPA. @ 1'-0" c/c = 1'-0"

DLZ
1000 ROCKEFELLER BLDG • 614 ♥ SUPERIOR AVE. • CLEVELAND, OH 44113

DESIGNED	DRAWN	REVIEWED	DATE
DJC	PAT	GWM	1/29/02
CHECKED	REVISED	STRUCTURE FILE NUMBER	
JWB		7708297	

SUPERSTRUCTURE DETAILS
BRIDGE NO. SUM-8-0148
OVER S.R. 8
MARKET STREET OVER

SUM-8-0.63

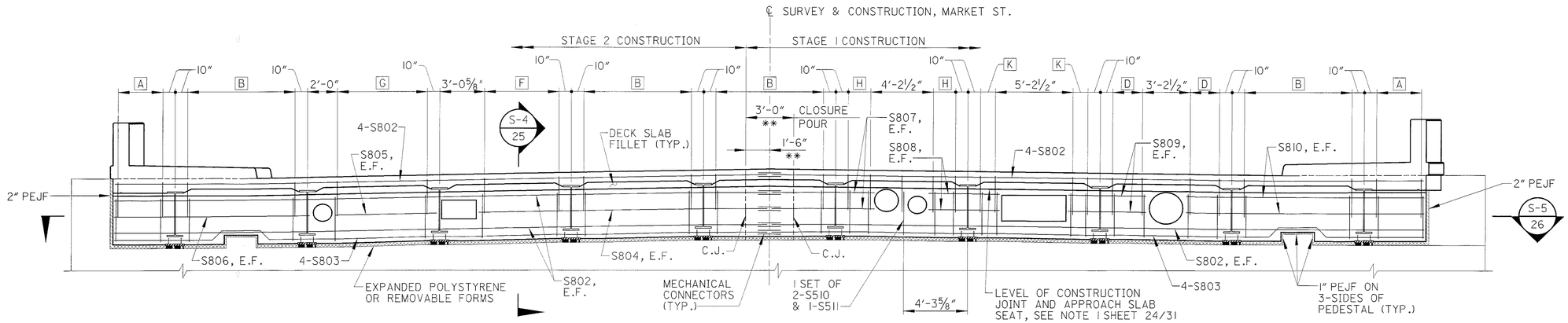

SECTION S-2 / 23

** DIMENSION MEASURED NORMAL TO THE ℄ OF CONSTRUCTION

FORWARD END DIAPHRAGM

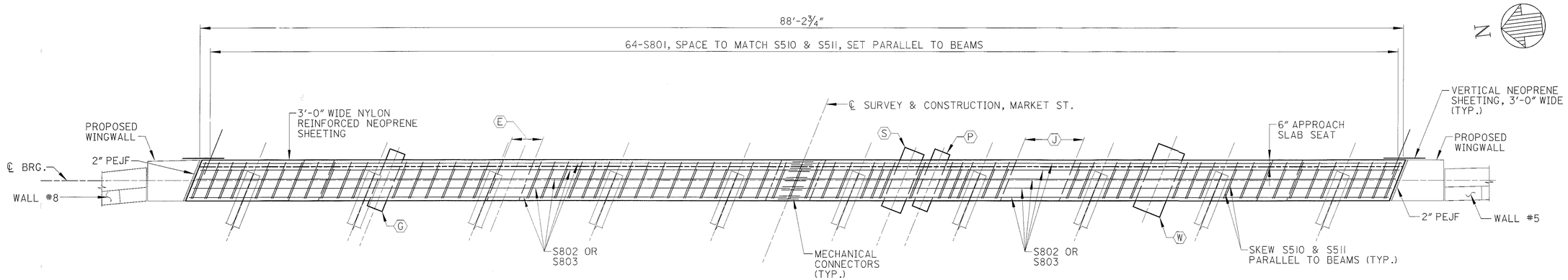

SECTION S-5 / 26

TABLE OF BLOCKOUT ELEVATIONS

UTILITY	⟨G⟩	⟨E⟩	⟨S⟩	⟨P⟩	⟨J⟩	⟨W⟩
ELEVATION	"A"	"B"	"C"	"D"	"E"	"F"
REAR ABUT.	1044.44	1043.88	1044.39	1044.26	1043.75	1043.56
FWD. ABUT.	1045.05	1045.08	1045.58	1045.45	1044.96	1044.75

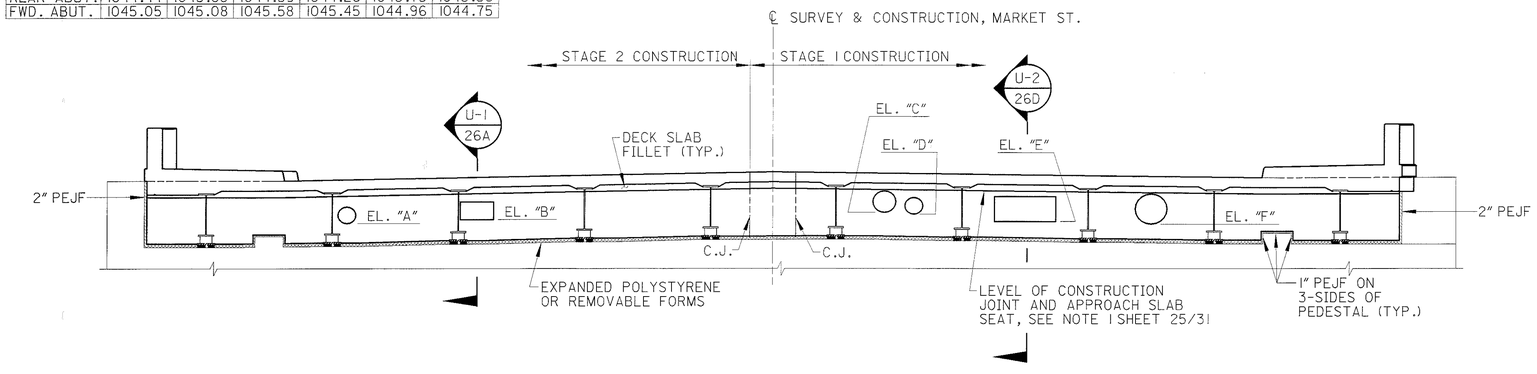

ELEVATION OF END DIAPHRAGM UTILITY BLOCKOUTS

FORWARD ABUTMENT SHOWN, REAR ABUTMENT OPPOSITE HAND

UTILITY LEGEND

- ⟨S⟩ 18" O.D. PIPE SLEEVE FOR 8" STEAM LINE
- ⟨P⟩ 14" O.D. PIPE SLEEVE FOR 5" CONDENSATE LINE
- ⟨W⟩ 26" O.D. PIPE SLEEVE FOR 16" WATER MAIN
- ⟨G⟩ 14" O.D. PIPE SLEEVE FOR 10" GAS MAIN
- ⟨E⟩ 2'-2" x 1'-3" BLOCKOUT FOR OHIO EDISON DUCTS
- ⟨J⟩ 4'-0" x 1'-9" BLOCKOUT FOR AMERITECH DUCTS

BAR MARK LEGEND

- [A] 4 SETS OF 2-S510 & 1-S511, 3 SPA. @ 1'-0" c/c = 3'-0"
- [B] 7 SETS OF 2-S510 & 1-S511, 6 SPA. @ 1'-2½"(-) c/c = 7'-2½"
- [D] 3 SETS OF 2-S510 & 1-S511, 2 SPA. @ 1'-0" c/c = 2'-0"
- [F] 6 SETS OF 2-S510 & 1-S511, 5 SPA. @ 1'-0" c/c = 5'-0"
- [G] 6 SETS OF 2-S510 & 1-S511, 5 SPA. @ 1'-2½" c/c = 6'-0½"
- [H] 3 SETS OF 2-S510 & 1-S511, 2 SPA. @ 9" c/c = 1'-6"
- [K] 2 SETS OF 2-S510 & 1-S511, 1 SPA. @ 1'-0" c/c = 1'-0"

NOTE: SEE NOTES ON SHEET 25/31

DLZ
3000 ROCKEFELLER BLDG • 614 W SUPERIOR AVE • CLEVELAND, OH 44113

DESIGNED DJC | DRAWN PAT | CHECKED JWB | REVIEWED GWM | DATE 1/29/02 | REVISED | STRUCTURE FILE NUMBER 7708297

SUPERSTRUCTURE DETAILS
BRIDGE NO. SUM-8-0148
MARKET STREET OVER S.R. 8

SUM-8-0.63

26 / 31

976 / 1088

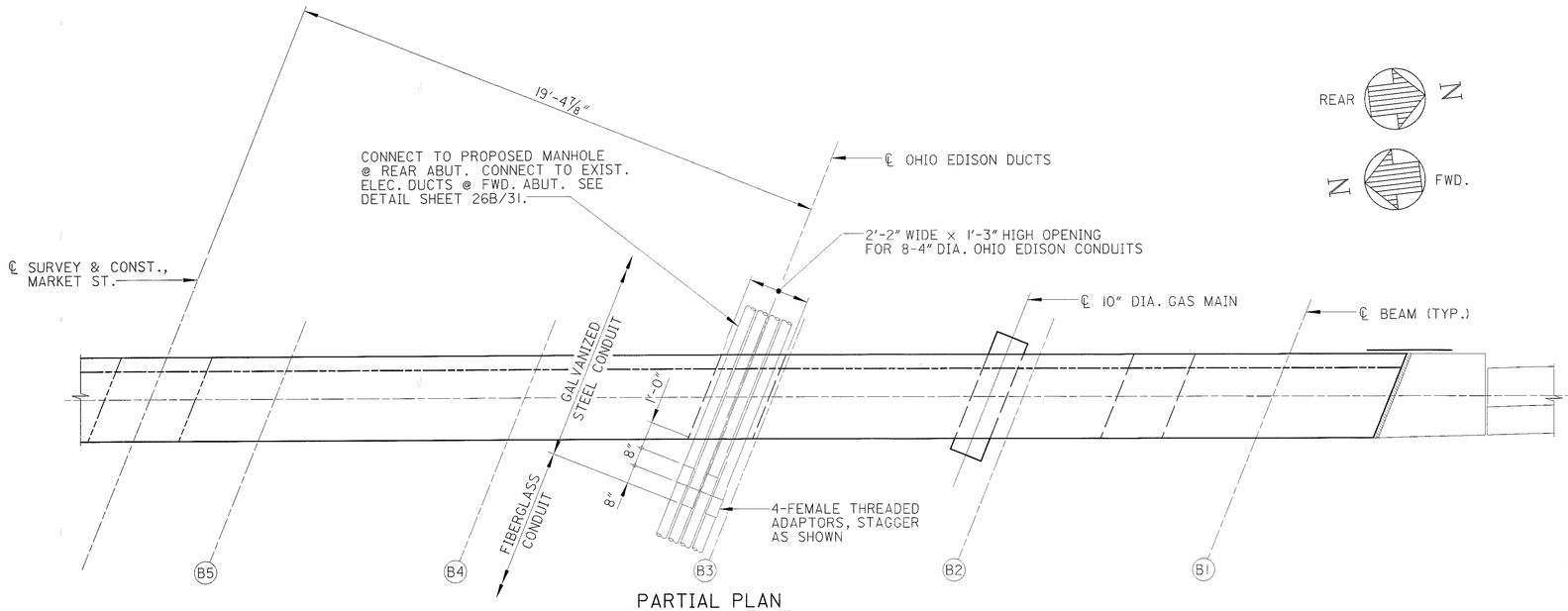

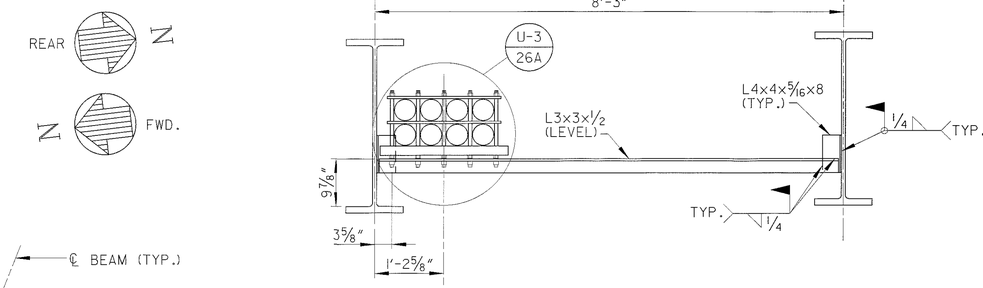

PARTIAL PLAN

REAR ABUTMENT SHOWN
FWD. ABUTMENT OPPOSITE HAND

OHIO EDISON DUCT SUPPORT DETAIL

(20 PLACES)

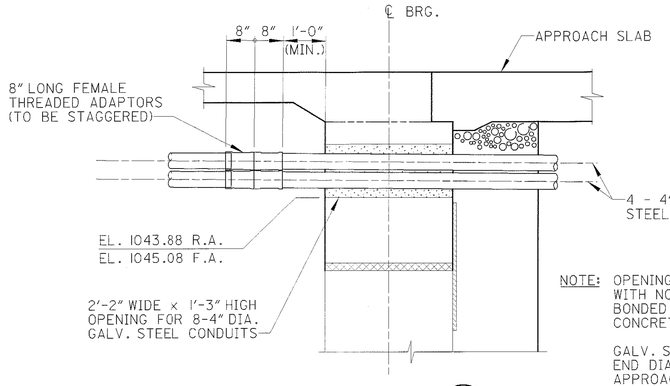

SECTION U-1 / 26

(AT OHIO EDISON DUCTS)

NOTE: OPENING IN ABUTMENTS SHALL BE FILLED WITH NON-SHRINK, NON-METALLIC GROUT, BONDED TO PROPOSED END DIAPHRAGM CONCRETE.

GALV. STEEL CONDUIT PASSING THROUGH THE END DIAPHRAGM SHALL EXTEND BEYOND THE APPROACH SLABS.

NOTES:

1. FIBERGLASS CONDUIT SHALL BE TYPE 4" IPS, WALL THICKNESS = .070 INCHES.
2. EXPANSION JOINT FITTINGS SHALL HAVE O-RINGS.
3. COUPLINGS AND/OR FITTINGS SHALL BE STAGGERED.
4. CONDUIT ONLY SHALL PASS THROUGH THE CONDUIT SUPPORT ASSEMBLY. COUPLINGS AND/OR FITTINGS SHALL CLEAR THE CONDUIT SUPPORT ASSEMBLY BY A MINIMUM OF 2 FEET.
5. THE MANUFACTURER'S TEMPERATURE RESTRICTIONS FOR USE OF EPOXY ADHESIVE SHALL BE CAREFULLY OBSERVED.
6. LOCK WASHERS AND/OR DOUBLE NUTS SHALL BE USED ON THE CONDUIT SUPPORT ASSEMBLY.
7. ALL JOINTS SHALL BE GLUED WITH EPOXY. SAND THE SPIGOT END OF THE CONDUIT BEFORE APPLYING THE EPOXY.
8. THE CONDUIT MUST BE LOOSE AND PROPERLY ALIGNED IN THE SUPPORT ASSEMBLY.
9. ALL JOINTS SHALL BE SEATED BY USING A BLOCK OF WOOD AND A HAMMER. CARE SHALL BE TAKEN NOT TO USE EXCESSIVE FORCE.
10. MATERIALS TO BE SUPPLIED BY R.C. CHILDS COMPANY (PHONE NO.: 440-835-3500), OR BY APPROVED ALTERNATE EQUAL.
11. SEE FRAMING PLAN SHEET 20/31 FOR UTILITY SUPPORT LOCATIONS.
12. SEE GENERAL PLAN SHEET 2/31 FOR UTILITY ALIGNMENTS.

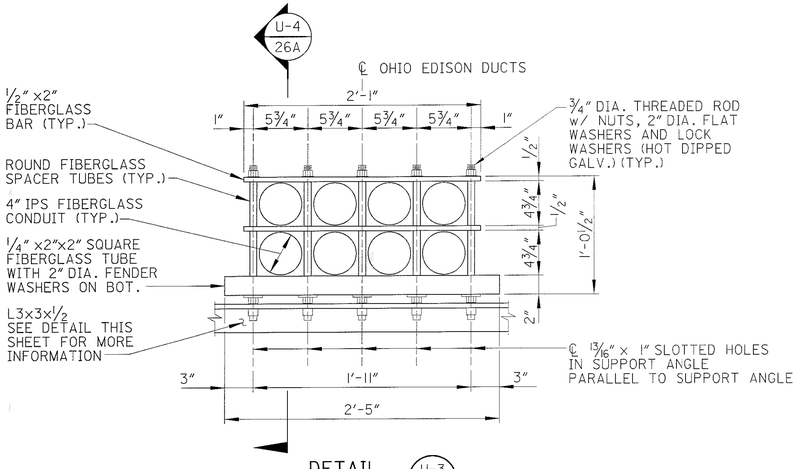

DETAIL U-3 / 26A

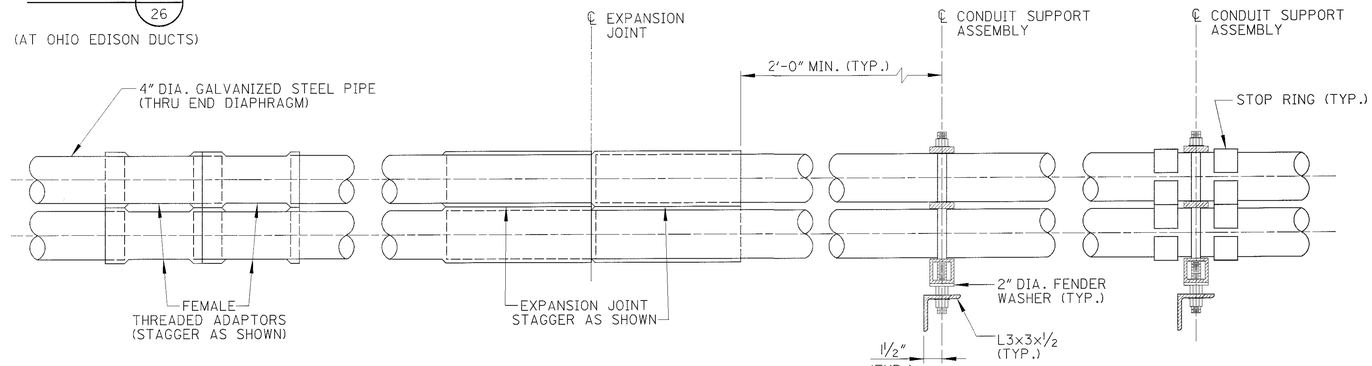

NOTE: FOR DETAILS OF OHIO EDISON CONDUITS THROUGH END DIAPHRAGMS, SEE PARTIAL PLAN & SECTION S-11 THIS SHEET.

SECTION U-4 / 26A

DLZ
1000 ROCKEFELLER BLDG • 614 W SUPERIOR AVE • CLEVELAND, OH 44113

DESIGNED DJC
DRAWN DJC
CHECKED JWB
REVIEWED GWM
DATE 1/29/02
REVISED
STRUCTURE FILE NUMBER 7708297

OHIO EDISON DUCT INSTALLATION DETAILS
BRIDGE NO. SUM-8-0148
MARKET STREET OVER S.R. 8

SUM-8-063

26A / 31

976A
1088

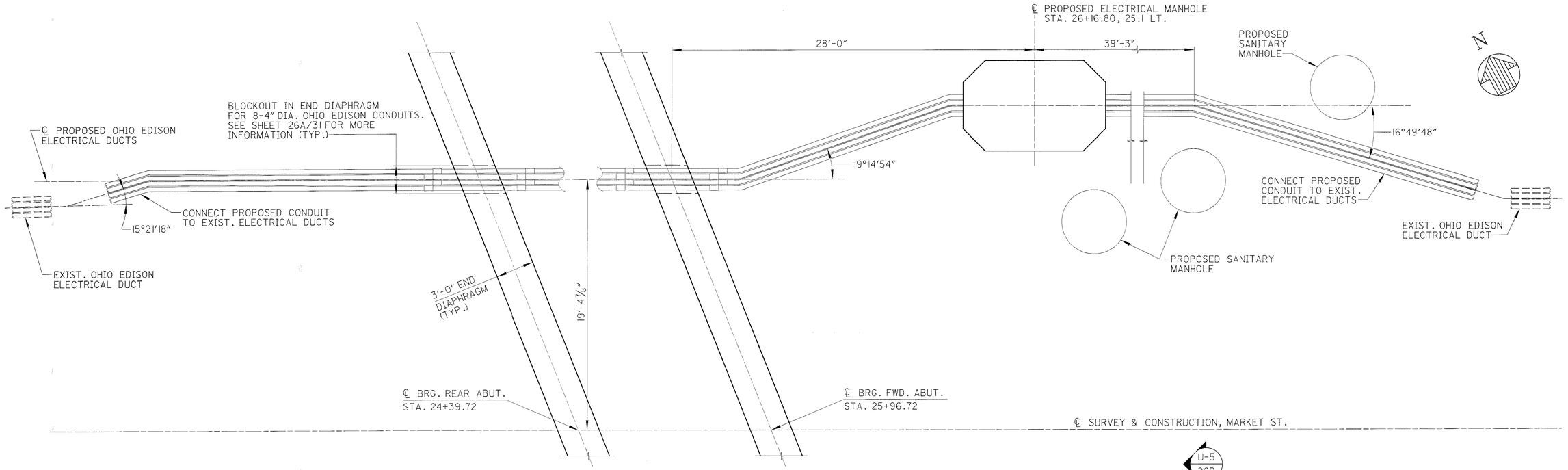

OHIO EDISON DUCT INSTALLATION PLAN

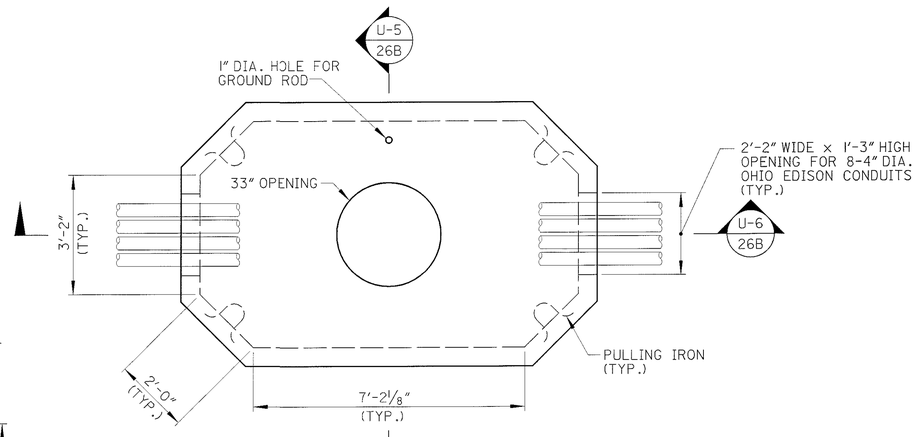

PLAN

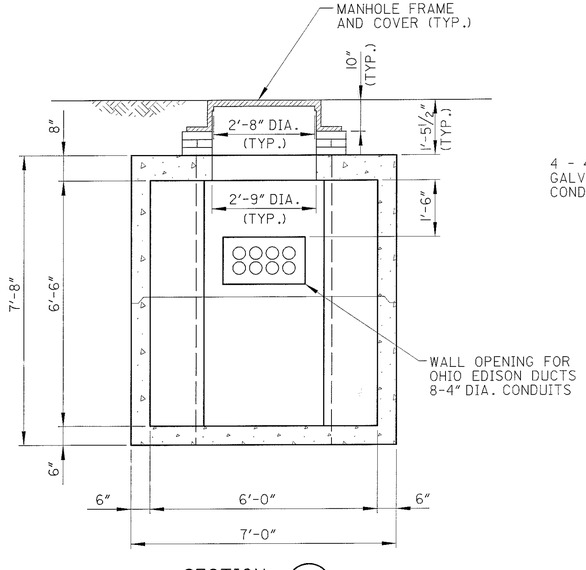

SECTION U-5 26B

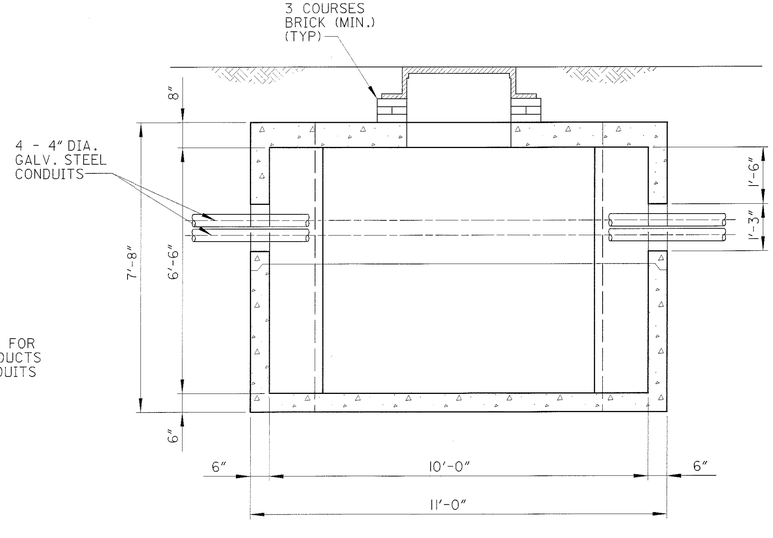

SECTION U-6 26B

NOTES:

1. MANHOLE FRAME AND COVER TO BE HEAVY DUTY E. AKRON CASTING CAT. NO. 169-B-32 OR NEENAH R-1640-C WITH O.E. CO. AND ELECTRIC CAST IN COVER. COVER TO BE FURNISHED WITH HOLES. NO OTHER FRAME AND COVER WILL BE ACCEPTABLE (O.E. ID. NO. 3690725).
2. ALL REBAR SHALL BE GRADE 60 (DEFORMED) PLACE TO MEET H-20 LOADING.
3. CONCRETE TO HAVE MINIMUM CMPRESSIVE STRENGTH OF 4500 P.S.I. AT 28 DAYS.
4. PULLING IRONS SHALL BE LOCATED 12" ABOVE MANHOLE FLOOR.
5. MANHOLE TO BE PLACED LONG WAYS WITH DIRECTION OF TRAFFIC.
6. CONDUIT SHALL ENTER MANHOLE WALL 18" (MIN.) BELOW CEILING.
7. DUCTS IN GROUND SHALL BE CONCRETE ENCASED WITH A 3" ENVELOPE ALL AROUND.

DLZ
1000 ROCKEFELLER BLDG • 614 W SUPERIOR AVE • CLEVELAND, OH 44113

DESIGNED	DRAWN	REVIEWED	DATE
DJC	DJP	GWM	1/29/02
CHECKED	REVISED	STRUCTURE FILE NUMBER	
JWB		7708297	

OHIO EDISON INSTALLATION DETAILS
BRIDGE NO. SUM-8-0148
MARKET STREET OVER S.R. 8

SUM-8-0.63

26B / 31

976B
1088

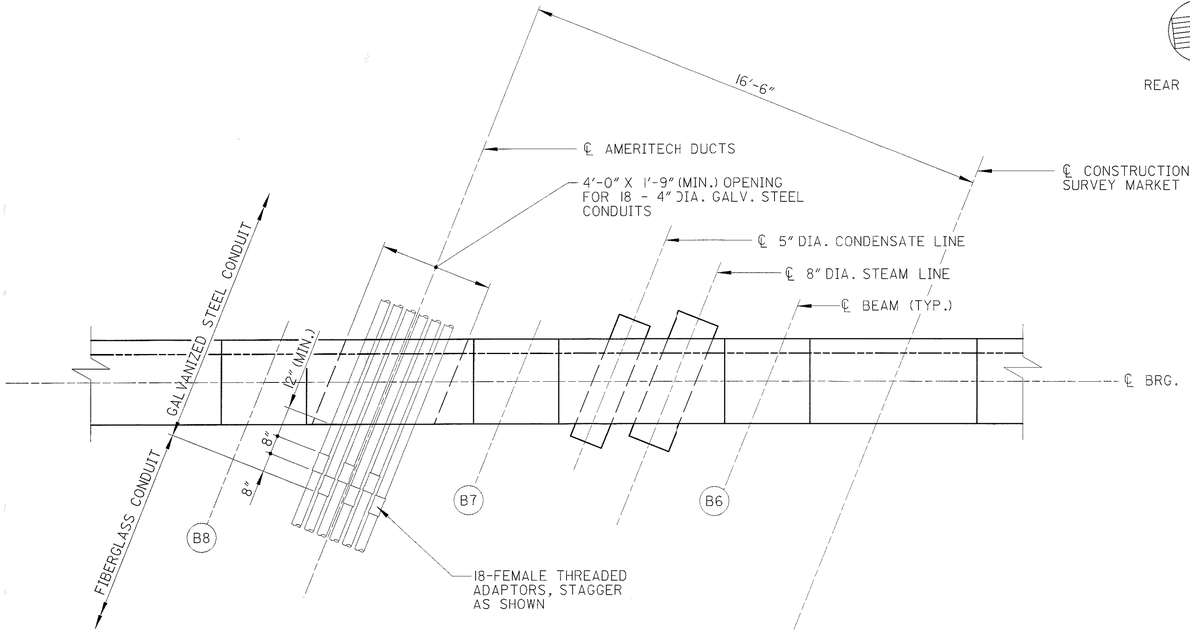

PARTIAL PLAN

REAR ABUTMENT - CONDUIT LOCATION AS SHOWN
FORWARD ABUTMENT - CONDUIT LOCATION OPPOSITE HAND

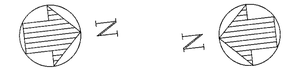

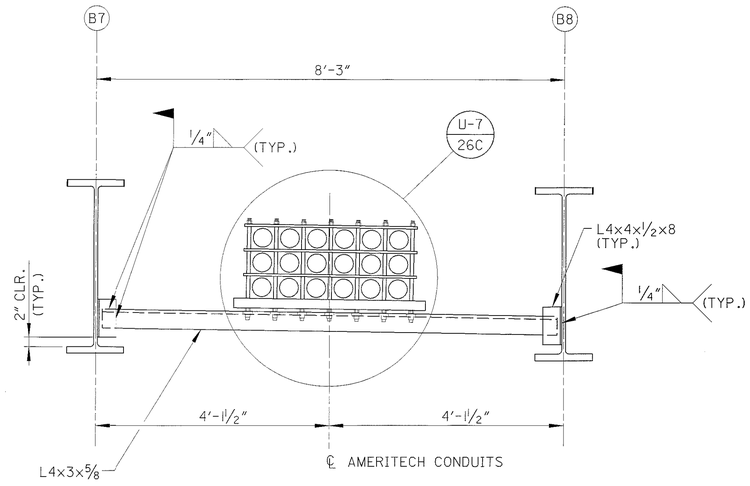

AMERITECH DUCT SUPPORT DETAIL, TYPE 2

(5 PLACES)

NOTES:

1. FIBERGLASS CONDUIT SHALL BE TYPE 4" IPS, WALL THICKNESS = .070 INCHES.
2. EXPANSION JOINT FITTINGS SHALL HAVE O-RINGS.
3. COUPLINGS AND/OR FITTINGS SHALL BE STAGGERED.
4. CONDUIT ONLY SHALL PASS THROUGH THE CONDUIT SUPPORT ASSEMBLY. COUPLINGS AND/OR FITTINGS SHALL CLEAR THE CONDUIT SUPPORT ASSEMBLY BY A MINIMUM OF 2 FEET.
5. THE MANUFACTURER'S TEMPERATURE RESTRICTIONS FOR USE OF EPOXY ADHESIVE SHALL BE CAREFULLY OBSERVED.
6. LOCK WASHERS AND/OR DOUBLE NUTS SHALL BE USED ON THE CONDUIT SUPPORT ASSEMBLY.
7. ALL JOINTS SHALL BE GLUED WITH EPOXY. SAND THE SPIGOT END OF THE CONDUIT BEFORE APPLYING THE EPOXY.
8. THE CONDUIT MUST BE LOOSE AND PROPERLY ALIGNED IN THE SUPPORT ASSEMBLY.
9. ALL JOINTS SHALL BE SEATED BY USING A BLOCK OF WOOD AND A HAMMER. CARE SHALL BE TAKEN NOT TO USE EXCESSIVE FORCE.
10. MATERIALS TO BE SUPPLIED BY R.C. CHILDS COMPANY (PHONE NO.: 440-835-3500), OR BY APPROVED ALTERNATE EQUAL.
11. SEE FRAMING PLAN SHEET 20/31 FOR UTILITY SUPPORT LOCATIONS.
12. SEE GENERAL PLAN SHEET 2/31 FOR UTILITY ALIGNMENTS.

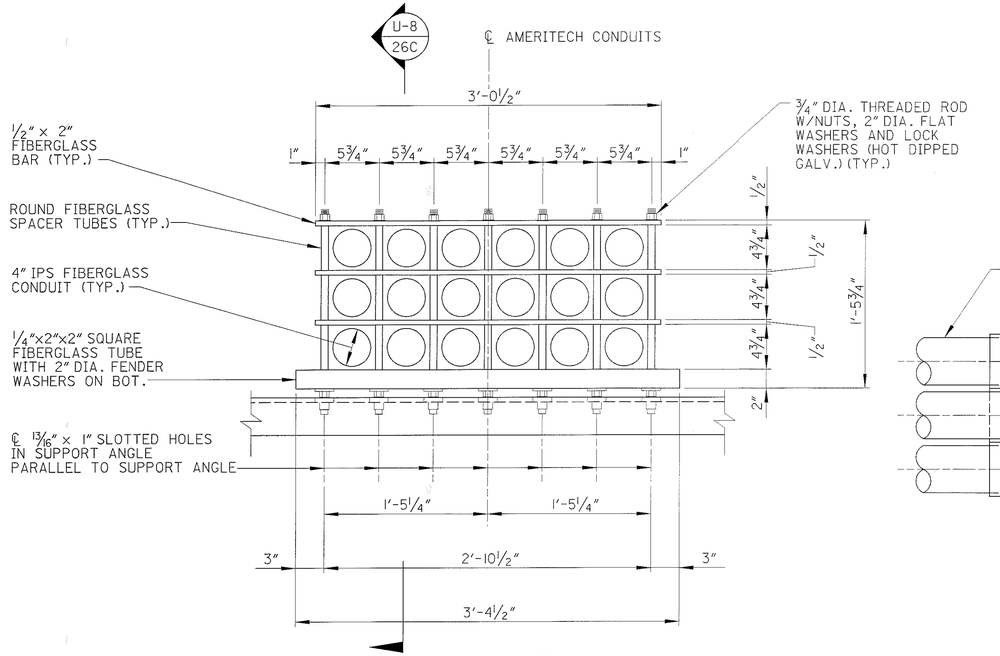

DETAIL U-7 / 26C

CONDUIT SUPPORT ASSEMBLY

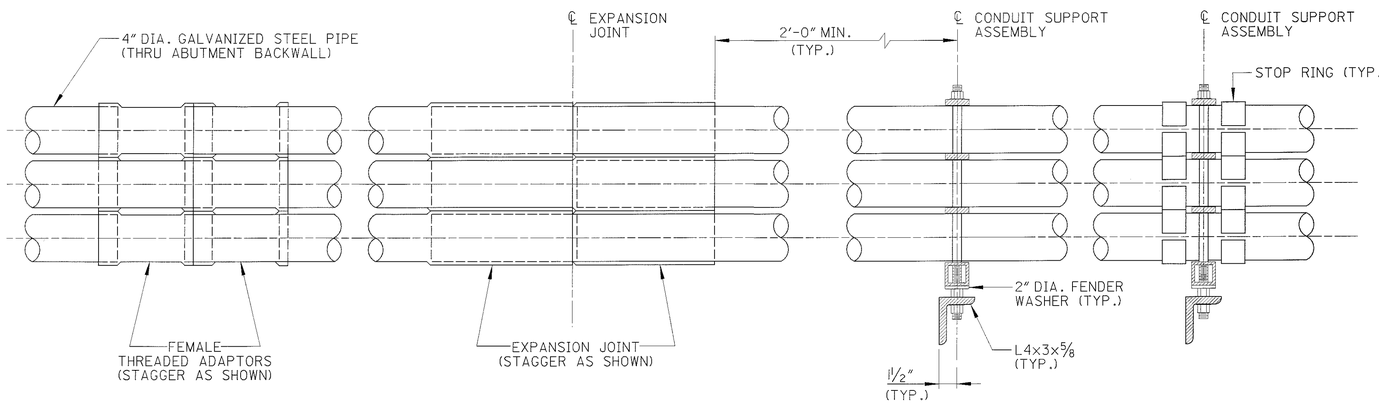

SECTION U-8 / 26C

NOTE: FOR DETAILS OF AMERITECH CONDUITS THROUGH ABUTMENT BACKWALLS SEE THIS SHEET AND SHEET 26D/31.

DLZ
1000 ROCKEFELLER BLDG • 614 W SUPERIOR AVE • CLEVELAND, OH 44113

DESIGNED DJP | DRAWN DJP | REVIEWED GWM | DATE 1/29/02
CHECKED JWB | REVISED | STRUCTURE FILE NUMBER 7700261

AMERITECH DUCT INSTALLATION DETAILS

BRIDGE NO. SUM-8-0148
MARKET STREET OVER S.R. 8

SUM-8-0.63

26C / 31

976C
1088

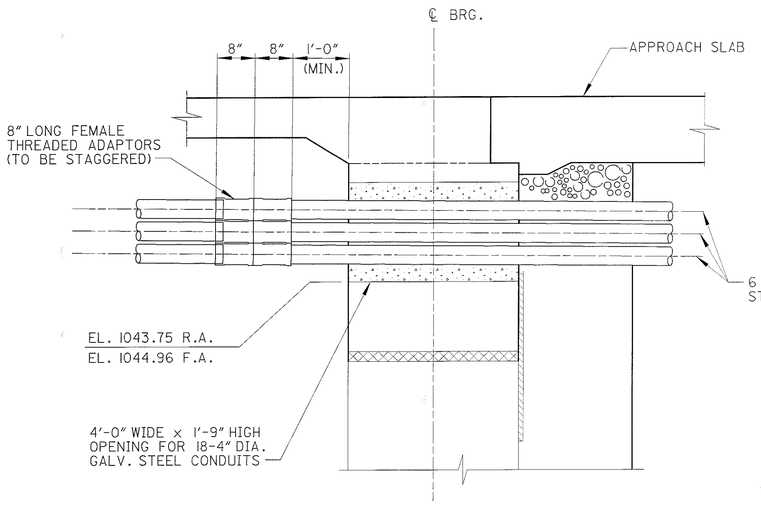

SECTION U-2 / 26

(AT AMERITECH DUCTS)

NOTE: OPENING IN ABUTMENTS SHALL BE FILLED WITH NON-SHRINK, NON-METALLIC GROUT, BONDED TO PROPOSED END DIAPHRAGM CONCRETE.

GALV. STEEL CONDUIT PASSING THROUGH THE END DIAPHRAGM SHALL EXTEND BEYOND THE APPROACH SLABS.

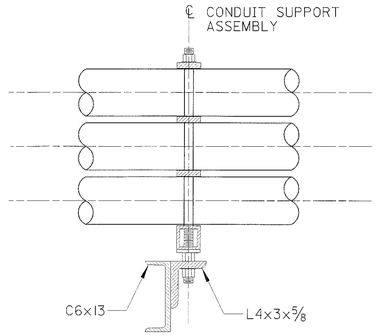

SECTION U-9 / 26D

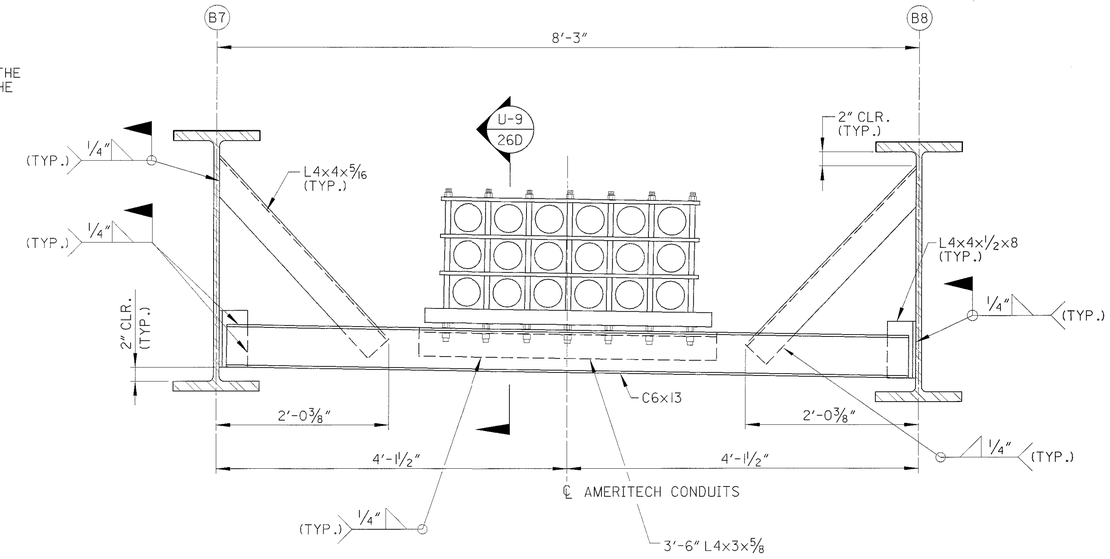

AMERITECH CROSSFRAME SUPPORT DETAIL, TYPE I

(10 PLACES)

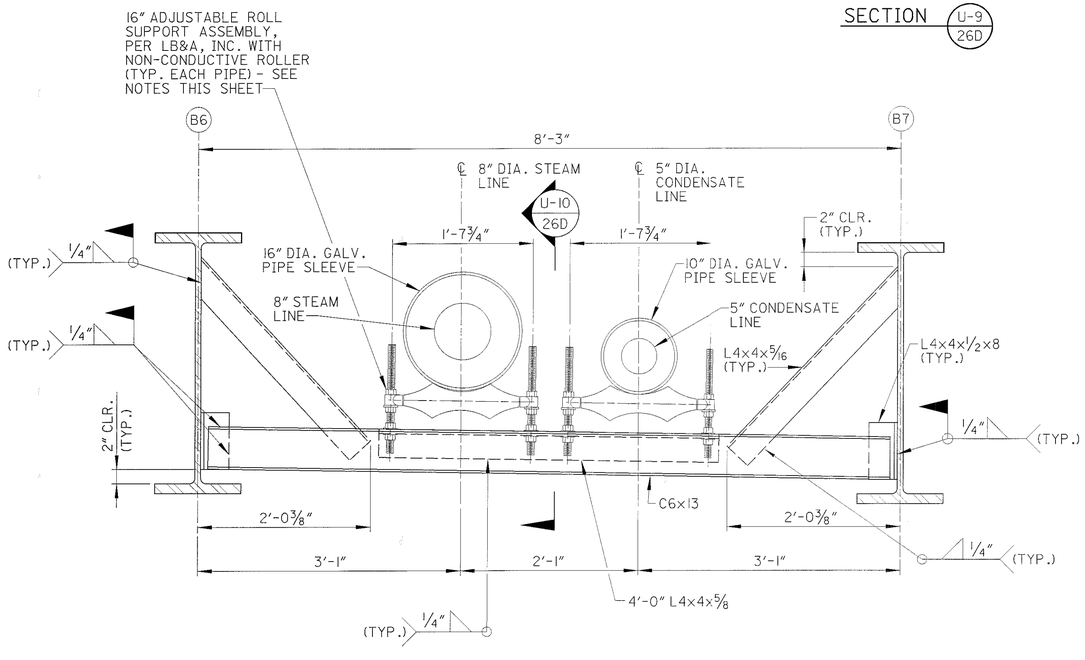

AKRON THERMAL CROSSFRAME SUPPORT DETAIL, TYPE I

(10 PLACES)

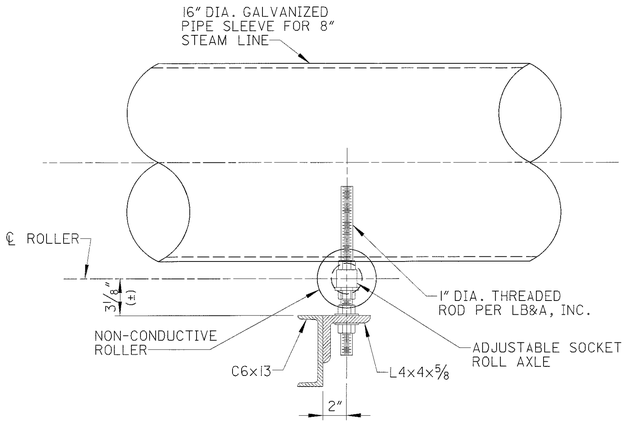

SECTION U-10 / 26D

8" DIA. STEAM LINE SHOWN
5" CONDENSATE LINE SIMILAR

ADJUSTABLE ROLL SUPPORT NOTES:

1. A NON-CONDUCTIVE ROLLER SHALL REPLACE THE CAST IRON ROLLER DETAILED IN THE SPECIFICATIONS FOR THE ADJUSTABLE ROLL SUPPORT BY LB&A, INC.
2. ADJUSTABLE ROLL SUPPORT SHALL INCLUDE:

   2 ADJUSTABLE SOCKETS - 1 ROLL AXLE
   2 VERTICAL THREADED RODS - 8 HEX NUTS
   1 NON-CONDUCTIVE ROLL
3. THE DIMENSION FROM THE TOP OF THE SUPPORT ANGLE TO THE CENTERLINE OF THE NON-CONDUCTIVE ROLLER IS APPROXIMATE. PLACEMENT OF THE PIPE SHALL BE ADJUSTED IN THE FIELD AS NECESSARY.
4. THE DESIGN OF THE ADJUSTABLE ROLL SUPPORT DETAIL SHALL BE PER SPECIFICATIONS PROVIDED BY LB&A, INC., P.O. BOX 540, WESTTOWN, PA 19395-9220, (610) 696-9220, OR APPROVED EQUAL. SEE GENERAL NOTES SHEET 3A/31 FOR PAYMENT.

DLZ
8000 ROCKEFELLER BLDG • 614 W SUPERIOR AVE • CLEVELAND, OH 44113

DESIGNED	DRAWN	REVIEWED	DATE
DJP	DJP	GWM	1/29/02
CHECKED	REVISED	STRUCTURE FILE NUMBER	
JWB		7700261	

AMERITECH DUCT & AKRON THERMAL INSTALLATION DETAILS

BRIDGE NO. SUM-8-0148
MARKET STREET OVER S.R. 8

SUM-8-0.63

26D / 31

976D / 1088

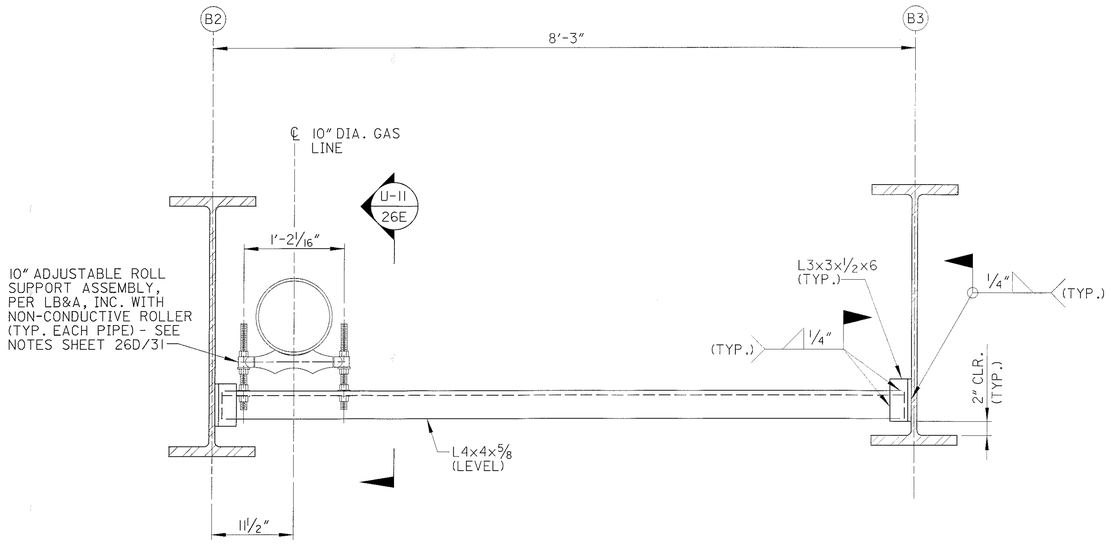

DOMINION EAST OHIO SUPPORT DETAIL

(13 PLACES)

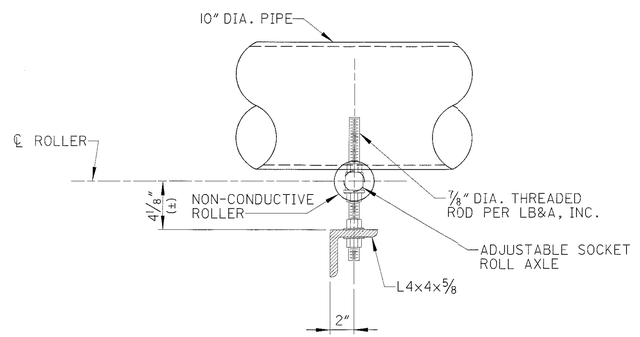

SECTION U-11 / 26E

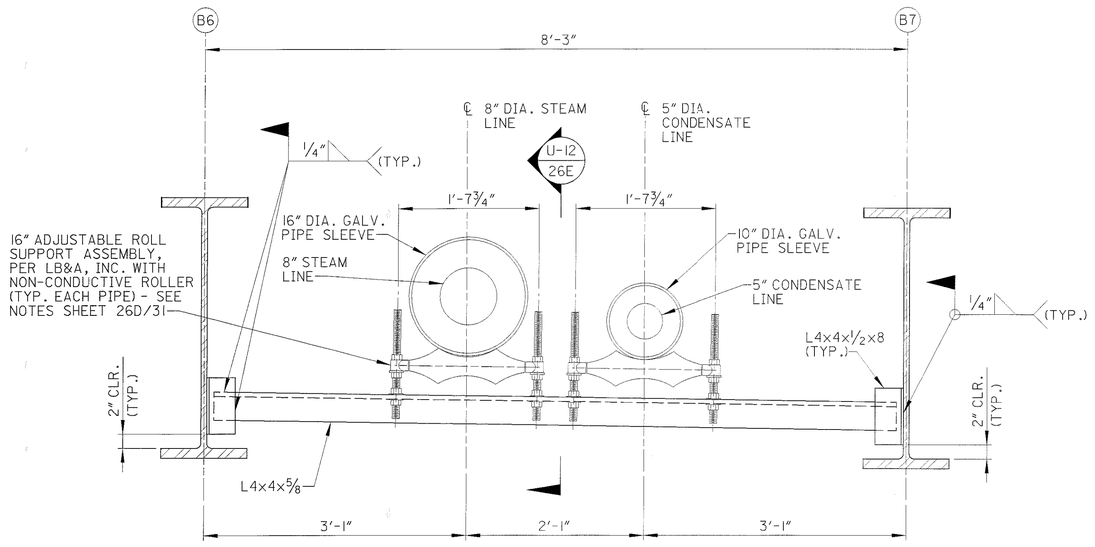

AKRON THERMAL SUPPORT DETAIL, TYPE 2

(4 PLACES)

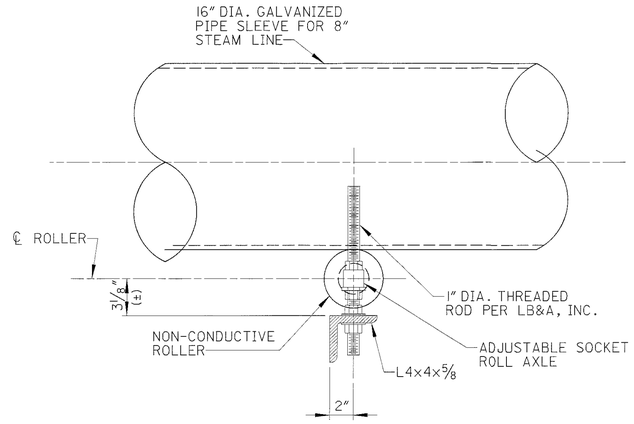

SECTION U-12 / 26E

8" DIA. STEAM LINE SHOWN
5" CONDENSATE LINE SIMILAR

DLZ

8000 ROCKEFELLER BLDG • 614 W SUPERIOR AVE • CLEVELAND, OH 44113

DESIGNED	DRAWN	REVIEWED	DATE
DJC	DJC	GWM	1/29/02
CHECKED	REVISED	STRUCTURE FILE NUMBER	
JWB		7700261	

DOMINION EAST OHIO/AKRON THERMAL INSTALLATION DETAILS

BRIDGE NO. SUM-8-0148

MARKET STREET OVER S.R. 8

SUM-8-0.63

26E / 31

976E / 1088

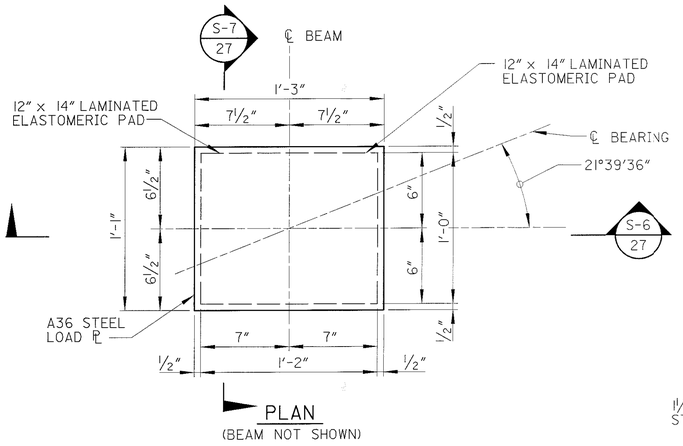

PLAN
(BEAM NOT SHOWN)

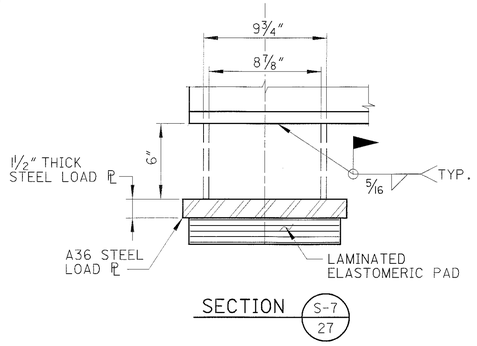

SECTION S-7 27

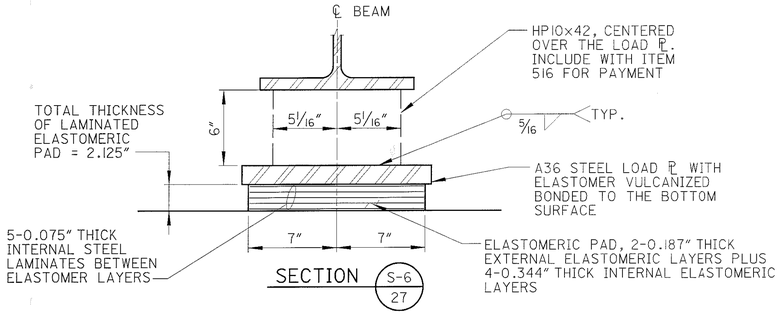

SECTION S-6 27

EXPANSION BEARING
(ABUTMENTS, 20 REQUIRED)

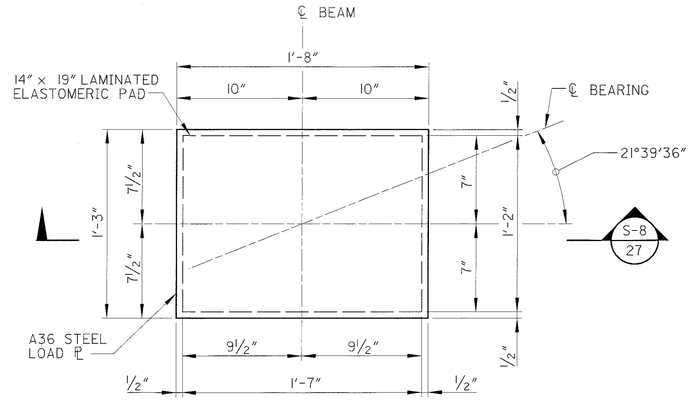

PLAN
(BEAM NOT SHOWN)

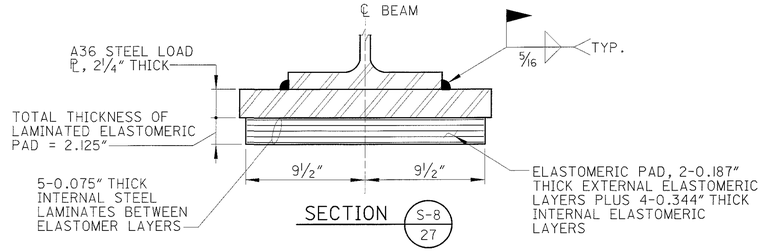

SECTION S-8 27

EXPANSION BEARING
(PIER - 10 REQUIRED)

NOTES:

1. BEARING DESIGN LOADS:

	EXPANSION BEARING (ABUTMENTS)	EXPANSION BEARING (PIER)
DEAD LOADS	75.5 K	187.2 K
LIVE LOADS (NO IMPACT)	59.2 K	78.6 K
TOTAL DESIGN LOAD	134.7 K	265.8 K

2. A36 STEEL LOAD PLATES SHALL BE USED FOR ALL BEARINGS. THE LOAD PLATE SHALL BE VULCANIZED BONDED TO THE LAMINATED ELASTOMERIC PAD DURING THE MOLDING PROCESS.

3. WELDING OF THE LOAD PLATE TO THE SUPERSTRUCTURE SHALL BE CONTROLLED SO THAT THE PLATE TEMPERATURE AT THE ELASTOMER BONDED SURFACE DOES NOT EXCEED 300°F AS DETERMINED BY USE OF PYROMETRIC STICKS OR OTHER TEMPERATURE MONITORING DEVICES.

4. BASIS OF PAYMENT: THE UNIT PRICE BID SHALL INCLUDE ALL MATERIALS, LABOR AND INCIDENTALS NECESSARY TO FURNISH AND INSTALL THE LAMINATED ELASTOMERIC BEARINGS, STEEL LOAD PLATES AND HP SHAPES. PAYMENT WILL BE MADE AT THE CONTRACT PRICE FOR ITEM 516 - ELASTOMERIC BEARING WITH INTERNAL LAMINATES AND LOAD PLATE (NEOPRENE), AS PER PLAN.

5. ELASTOMERIC BEARINGS SHALL COMPLY WITH ITEM 516 AND AASHTO STANDARD SPECIFICATION FOR HIGHWAY BRIDGES, SECTION 18, BEARING DEVICES, DIVISION II, CONSTRUCTION, ARTICLES 18.4.5.1 AND 18.5.6.2. BEARINGS SHALL BE GRADE 3, 50 DUROMETER ELASTOMER, AND SHALL BE SUBJECTED TO THE LOAD TESTING REQUIREMENTS DEFINED IN ARTICLE 18.7.4.5 OF THE AASHTO DOCUMENT LISTED ABOVE. BEARINGS WERE DESIGNED UNDER SECTION 14.6.6 OF SECTION 14, BEARINGS, DIVISION I, DESIGN. TESTING SHALL BE INCLUDED IN THE UNIT PRICE BID FOR THE BEARINGS, EACH.

DLZ
1000 ROCKEFELLER BLDG • 614 W SUPERIOR AVE • CLEVELAND, OH 44113

DESIGNED DJC
DRAWN DJC
CHECKED JWB
REVIEWED GWM
DATE 1/29/02
REVISED
STRUCTURE FILE NUMBER 7708297

BEARING DETAILS
BRIDGE NO. SUM-8-0148
MARKET STREET OVER S.R. 8

SUM-8-0.63

27 / 31

977
1088

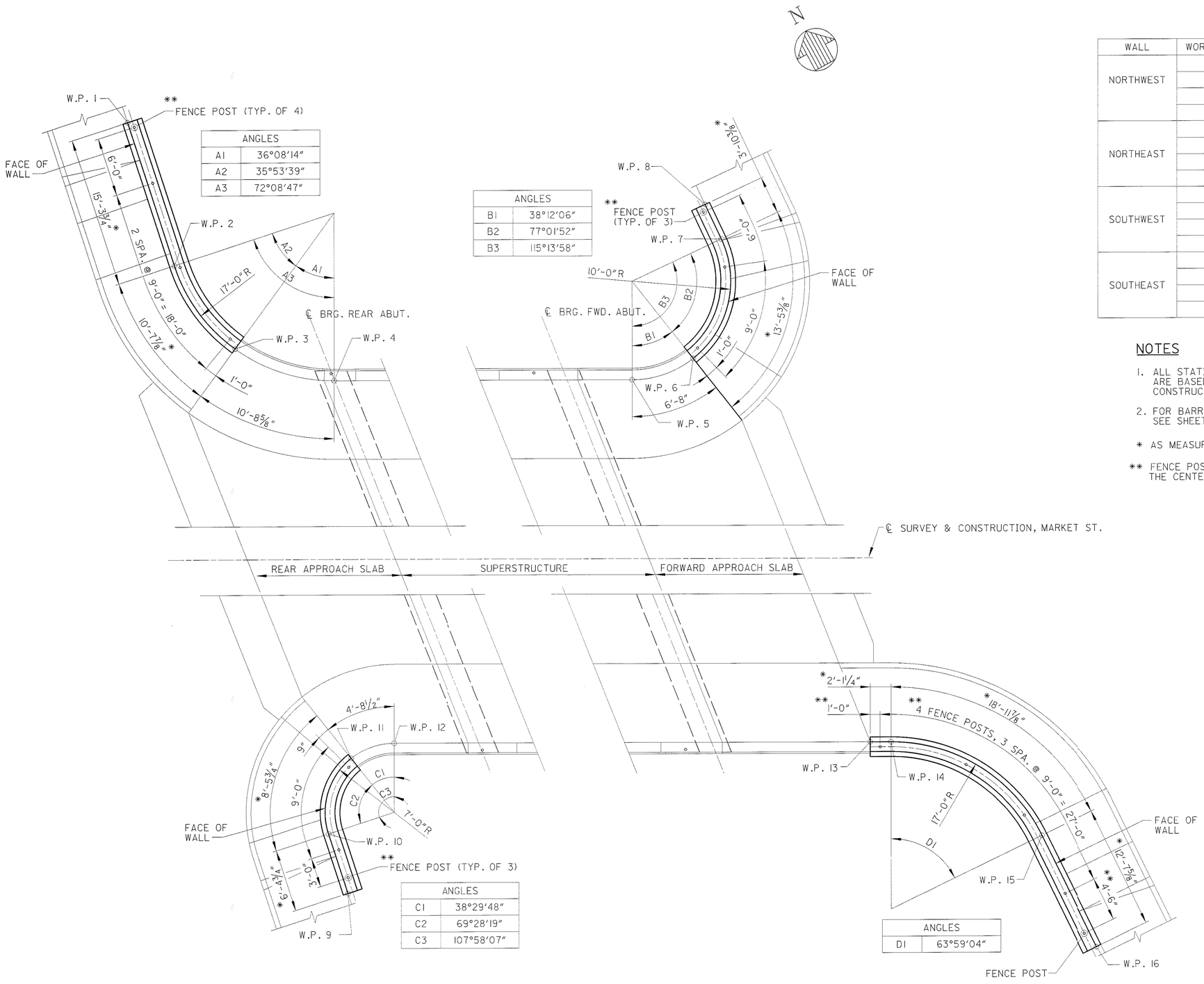

TABLE OF WORK POINTS

WALL	WORK POINT	DESCRIPTION	STATION	OFFSET
NORTHWEST	1	BEGIN WALL	24+02.87	66.32' LT.
	2	PC	24+07.60	51.76' LT.
	3	PCC	24+13.74	43.27' LT.
	4	END WALL	24+23.77	40.00' LT.
NORTHEAST	5	PC	25+87.42	40.00' LT.
	6	BEGIN WALL	25+93.61	42.14' LT.
	7	PT	25+96.47	54.26' LT.
	8	END WALL	25+94.82	57.76' LT.
SOUTHWEST	9	BEGIN WALL	24+42.30	55.24' RT.
	10	PC	24+40.33	49.16' RT.
	11	END WALL	24+42.63	41.52' RT.
	12	PT	24+40.98	40.00' RT.
SOUTHEAST	13	BEGIN WALL	26+28.68	40.00' RT.
	14	PC	26+30.79	40.00' RT.
	15	PT	26+46.06	49.54' RT.
	16	END WALL	26+51.61	60.90' RT.

NOTES

1. ALL STATIONS AND OFFSETS GIVEN ON THIS SHEET ARE BASED ON THE CENTERLINE OF SURVEY AND CONSTRUCTION, MARKET STREET.
2. FOR BARRIER WALL ELEVATIONS AND SECTIONS, SEE SHEET 29/31.

* AS MEASURED ALONG THE FACE OF THE WALL

** FENCE POST SPACINGS ARE AS MEASURED ALONG THE CENTERLINE OF THE BARRIER WALLS.

APPROACH BARRIER WALL LAYOUT PLAN

DLZ
1000 ROCKEFELLER BLDG ★ 614 W SUPERIOR AVE ★ CLEVELAND, OH 44113

DESIGNED PAT | DRAWN RCK | CHECKED JWB | REVIEWED GWM | DATE 1/29/02 | REVISED | STRUCTURE FILE NUMBER 7708297

APPROACH BARRIER WALL LAYOUT PLAN
BRIDGE NO. SUM-8-0148
MARKET SATREET OVER S.R. 8

SUM-8-0.63

28/31

978
1088

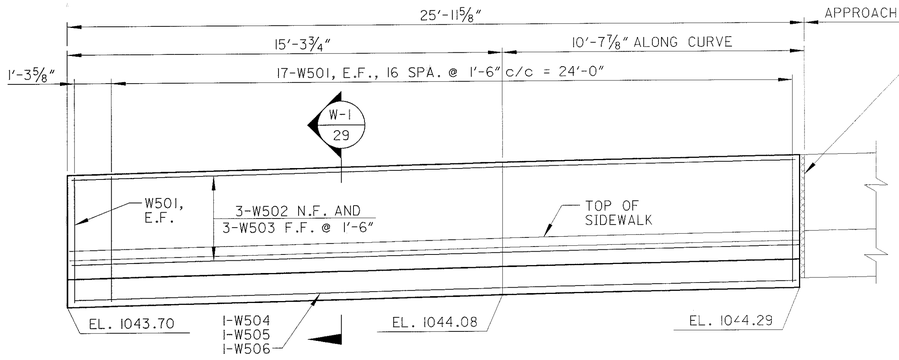

NORTHWEST BARRIER WALL

DEVELOPED ELEVATION

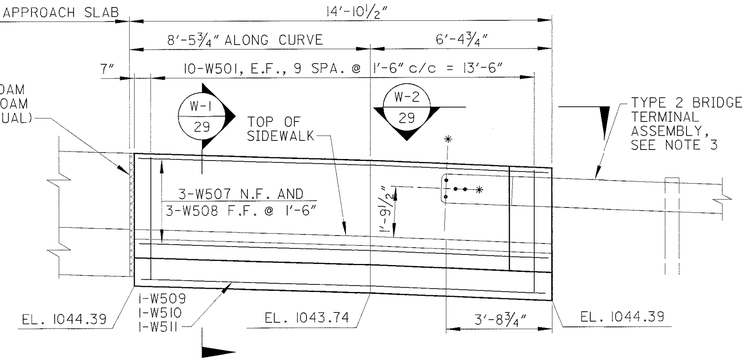

SOUTHWEST BARRIER WALL

DEVELOPED ELEVATION

* CENTERLINE OF 1" DIA. CAST HOLES FOR TYPE 2 BRIDGE TERMINAL ASSEMBLY CONNECTION, SEE HOLE LAYOUT DETAIL THIS SHEET FOR DIMENSIONS NOT SHOWN.

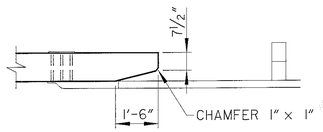

VIEW (W-2 / 29)

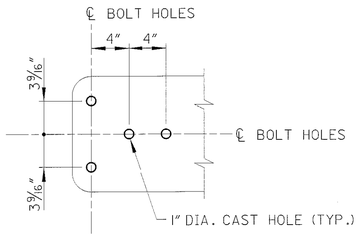

HOLE LAYOUT DETAIL

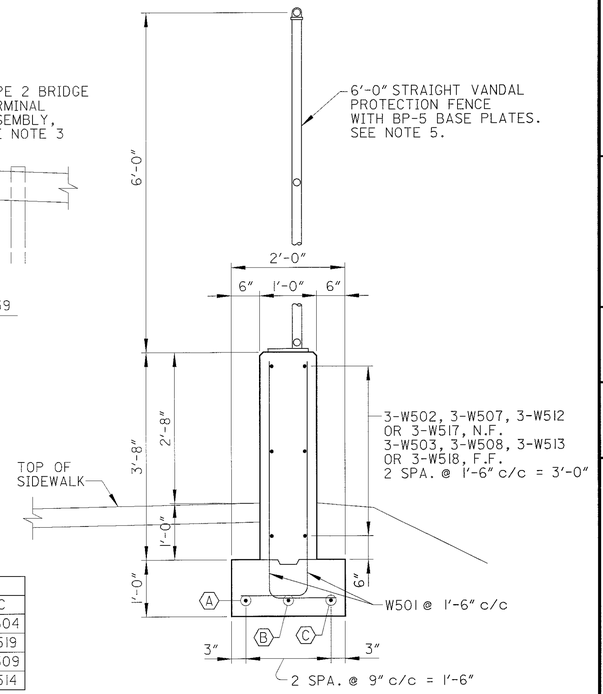

SECTION (W-1 / 29)

TYPICAL BARRIER WALL SECTION

WALL	DESIGNATION		
	A	B	C
NORTHWEST	W506	W505	W504
NORTHEAST	W521	W520	W519
SOUTHWEST	W511	W510	W509
SOUTHEAST	W516	W515	W514

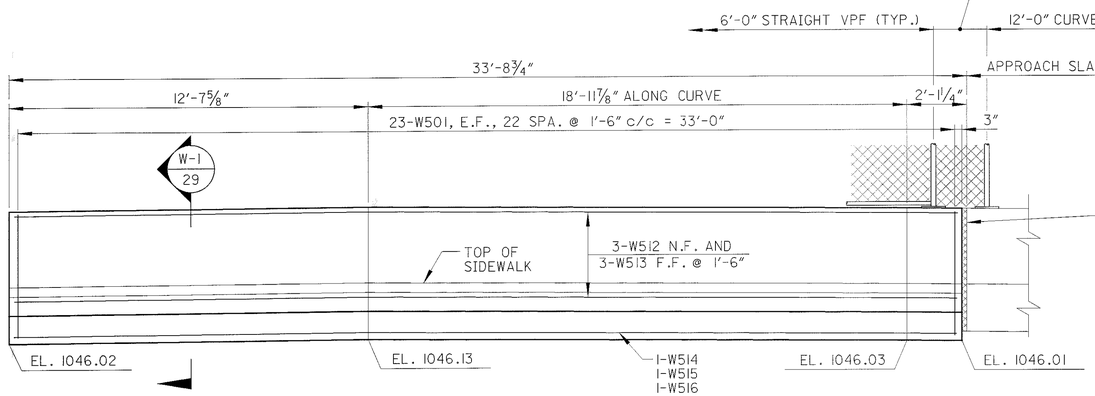

SOUTHEAST BARRIER WALL

DEVELOPED ELEVATION

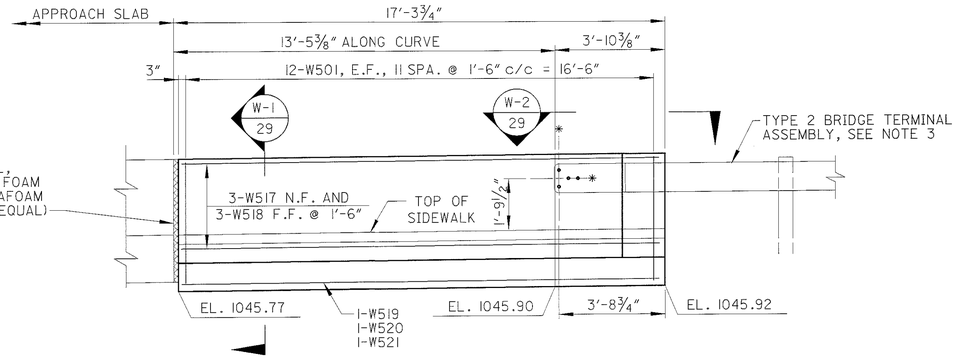

NORTHEAST BARRIER WALL

DEVELOPED ELEVATION

NOTES

1. ALL DIMENSIONS SHOWN IN DEVELOPED ELEVATIONS ARE AS MEASURED ALONG THE FRONT FACE OF THE WALL.
2. FOR BARRIER WALL LAYOUT PLAN, SEE SHEET 28/31.
3. FOR DETAILS OF TYPE 2 BRIDGE TERMINAL ASSEMBLY, REFER TO STANDARD DRAWING GR-3.2M.
4. FENCE POSTS NOT SHOWN FOR CLARITY. SEE PLAN VIEW SHEET 28/31.
5. HORIZONTAL RAIL POSTS FOR VANDAL PROTECTION FENCE SHALL BE FABRICATED TO MATCH THE CURVATURE OF THE BARRIER WALLS.
6. 2"-CLOSED CELL FOAM SHALL BE INSTALLED WHERE SHOWN ON THE PLANS AND IN ACCORDANCE WITH MANUFACTURER'S SPECIFICATIONS. CLOSED CELL FOAM SHALL BE INSTALLED IN THE 2"-OPEN JOINT BETWEEN THE COMPLETED APPROACH SLAB SIDEWALK PARAPET AND APPROACH BARRIER WALL. ALL COSTS ASSOCIATED WITH FURNISHING AND INSTALLING THE 2"-CLOSED CELL POLYETHYLENE FOAM SHALL BE INCLUDED FOR PAYMENT WITH ITEM 842, CLASS C CONCRETE, AS PER PLAN.

DLZ
1000 ROCKEFELLER BLDG • 614 W SUPERIOR AVE • CLEVELAND, OH 44113

DESIGNED PAT | DRAWN RCK | CHECKED JWB | REVIEWED GWM | DATE 1/29/02 | STRUCTURE FILE NUMBER 7708297 | REVISED

APPROACH BARRIER WALL DETAILS
BRIDGE NO. SUM-8-0148
MARKET STREET OVER S.R. 8

SUM-8-0.63

29/31

979
1088

REINFORCING STEEL LIST

MARK	NUMBER REAR	NUMBER FWD.	NUMBER TOTAL	LENGTH	WEIGHT (LBS.)	TYPE	DIMENSIONS A	B	C	D	E	SER INC.
ABUTMENTS												
A401		70	70	3'-5"	160	6A	2'-7"					
A501	20	74	94	30'-0"	2941	STR						
A502	20		20	16'-9"	349	STR						
		2	2	16'-0"								
A503		SER OF	SER OF		389	STR						7"
		10	10	21'-3"								
		2	2	28'-8"								
A504		SER OF	SER OF		629	STR						4"
		10	10	31'-8"								
		2	2	8'-7"								
A505		SER OF	SER OF		202	STR						3"
		10	10	10'-9"								
A506	20		20	13'-0"	271	STR						
A507	28		28	17'-3"	504	4	1'-6"	8'-0"				
A508	56		56	40'-0"	2336	STR						
A509	22		22	6'-9"	155	STR						
A510	22		22	12'-1"	277	STR						
A511	6		6	5'-0"	31	STR						
A512	6		6	11'-2"	70	STR						
A513	96	109	205	5'-11"	1265	3	5'-3"	10"				
A514	101		101	16'-9"	1764	STR						
A515	95	113	208	7'-6"	1645	4	2'-7"	2'-7"				
A516	4	4	8	2'-10"	24	STR						
A517	6	6	12	18'-9"	235	4	2'-6"	8'-3"				
A518	10	10	20	6'-3"	130	4	2'-6"	2'-0"				
A519	10	10	20	8'-2"	170	17	2'-6"	3'-5"	1'-0"	2'-3"		
A520	2	2	4	19'-2"	80	4	2'-11"	8'-3"				
A521	4		4	7'-6"	31	STR						
A522	4		4	12'-10"	54	STR						
A523		2	2	28'-10"	60	STR						
A524		22	22	20'-10"	478	STR						
A525		24	24	18'-0"	451	STR						
A526		8	8	16'-7"	138	STR						
A527		2	2	9'-0"	19	STR						
A528		121	121	17'-9"	2240	STR						
A529		4	4	21'-7"	90	STR						
A530		4	4	18'-9"	78	STR						
A601	20		20	30'-0"	901	STR						
A602	6		6	29'-0"	261	STR						
	1		1	17'-7"								
A603	SER OF		SER OF		295	STR						5 1/2"
	10		10	21'-8"								
	1		1	17'-7"								
A604	SER OF		SER OF		825	STR						1 7/8"
	28		28	21'-8"								
	2		2	20'-9"								
A605	SER OF		SER OF		255	STR						3 5/8"
	4		4	21'-8"								
A606	10	10	20	7'-3"	218	4	1'-7"	3'-0"				
A801	154	182	336	13'-0"	11663	STR						
	2		2	13'-0"								
A802	SER OF		SER OF		374	STR						6"
	5		5	15'-0"								
A803	64		64	12'-2"	2079	STR						
A804	2		2	13'-1"	70	STR						
A805	2		2	13'-1"	70	12	10'-0"	1'-2"	2'-11"			
A806	2		2	12'-3"	65	STR						
		2	2	4'-6"								
A807		SER OF	SER OF		233	STR						2'-1 1/4"
		5	5	12'-11"								
A808		4	4	3'-0"	32	STR						
A809		28	28	13'-4"	997	STR						
A810	107		107	14'-3"	4071	STR						
A811	212	218	430	12'-10"	14734	3	11'-8"	1'-4"				
A812	5		5	17'-7"	235	STR						
A813	4		4	12'-1"	129	STR						
A814	NOT	USED										
A815		109	109	15'-1"	4390	STR						
A816		10	10	18'-0"	481	STR						
A817		4	4	16'-7"	177	STR						
A818	4		4	7'-0"	75	STR						
		ABUTMENT TOTAL =			59896	LBS.						

REINFORCING STEEL LIST

MARK	NUMBER	LENGTH	WEIGHT (LBS.)	TYPE	DIMENSIONS A	B	C	D	E	SER INC.
SUPERSTRUCTURE										
R501	60	30'-0"	1877	STR						
R502	12	21'-2"	265	STR						
S401	700	30'-0"	14028	STR						
S402	140	18'-8"	1746	STR						
S501	568	42'-2"	24981	STR						
	2	4'-0"								
S502	SER OF		1479	STR						1'-3 1/8"
	31	41'-9"								
	2	5'-9"								
S503	SER OF		1414	STR						1'-3 1/8"
	29	41'-0"								
S504	8	4'-6"	38	STR						
S505	318	10'-1"	3344	25	3'-2"	8"	2'-9"	2'-0"		
S506	312	9'-5"	3064	4	8'-8"	6"				
S507	636	2'-11"	1935	4	1'-2"	1'-0"				
S508	6	7'-2"	45	3	6'-10"	6"				
S509	6	5'-11"	37	3	5'-7"	6"				
S510	260	7'-7"	2056	4	2'-8"	2'-7"				
S511	130	6'-7"	893	4	2'-2"	2'-4"				
S512	4	9'-11"	41	7	1'-0"	3'-8"				
S601	500	30'-0"	22530	STR						
S602	100	21'-2"	3179	STR						
S603	568	42'-2"	35974	STR						
	2	4'-0"								
S604	SER OF		2130	STR						1'-3 1/8"
	31	41'-9"								
	2	5'-9"								
S605	SER OF		2036	STR						1'-3 1/8"
	29	41'-0"								
S606	8	4'-6"	54	STR						
S607	137	40'-0"	8231	STR						
S608	137	19'-0"	3910	STR						
S801	128	5'-0"	1709	10	2'-8"	1'-0"	1'-0"			
S802	26	43'-10"	3043	STR						
S803	16	44'-2"	1887	31	6'-6"	7"	7"	2'-7"	33'-7"	
S804	4	19'-7"	209	STR						
S805	2	6'-9"	36	STR						
S806	4	13'-1"	140	STR						
S807	8	7'-0"	150	STR						
S808	8	4'-8"	100	STR						
S809	8	5'-2"	110	STR						
S810	8	15'-11"	340	STR						
S811	2	21'-7"	115	STR						
S812	2	29'-2"	156	STR						
L501	16	3'-2"	53	4	2'-1"	8"				
L502	16	10'-0"	167	4	2'-1"	4'-1"				
L503	24	8'-1"	202	15	6"	2'-1"	2'-1"	1'-4"		
L504	16	4'-1"	68	STR						
SUPERSTRUCTURE TOTAL =			143772	LBS.						

BENDING DIAGRAMS

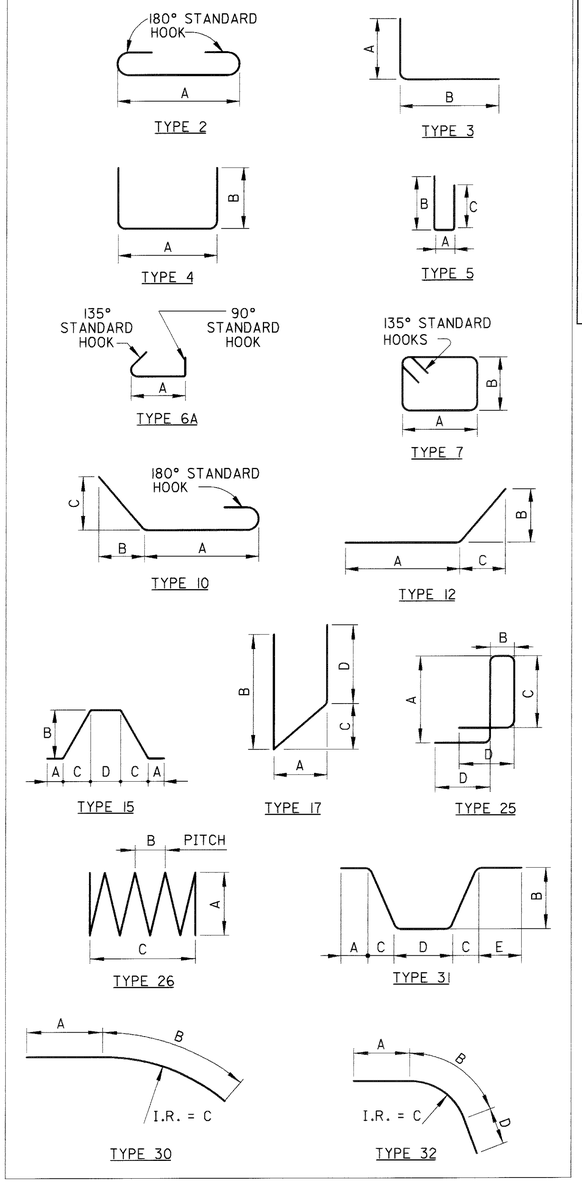

REINFORCING STEEL NOTES:

1. SERIES BARS - EACH BAR VARIES BY TABULATED AMOUNT.
2. ALL DIMENSIONS ARE OUT TO OUT.
3. TYPE 'STR' INDICATES A STRAIGHT BAR.
4. THE BAR SIZE NUMBER IS SPECIFIED IN THE 'MARK' COLUMN. THE FIRST DIGIT INDICATES THE BAR SIZE NUMBER. FOR EXAMPLE, A501 IS A #5 BAR SIZE.
5. ALL BARS SHALL BE EPOXY COATED UNLESS NOTED OTHERWISE.
6. SUBTOTALS AND TOTAL WEIGHTS ARE FOR INFORMATIONAL PURPOSES ONLY. IF THE REINFORCING LIST PROVIDED IN THE PLANS IS USED IT SHALL BE VERIFIED BY THE CONTRACTOR. ANY REVISIONS IN THE REINFORCING STEEL LIST AS SHOWN IN THE PLANS WILL NOT BE REASON FOR ADJUSTMENT IN THE BID PRICE FOR STRUCTURAL CONCRETE.

REVISIONS: 05/15/2002 by AGW

DLZ
3000 ROCKEFELLER BLDG • 614 W SUPERIOR AVE • CLEVELAND, OH 44113

DESIGNED DJC | DRAWN MWD | CHECKED PAT | REVIEWED GWM | DATE 1/29/02 | REVISED | STRUCTURE FILE NUMBER 7708297

REINFORCING STEEL LIST
BRIDGE NO. SUM-8-0148
MARKET STREET OVER S.R. 8

SUM-8-0.63

30/31

980/1088

01:43:28 PM
06/12/2002
u:\00-010sr-8\1\bridge\dwg\market\0148r101.dgn

REINFORCING STEEL LIST

MARK	NUMBER	LENGTH	WEIGHT (LBS.)	TYPE	DIMENSIONS A	B	C	D	E	SER INC.
PIER										
SP401	5	456'-8"	1525	26	2'-6"	3½"	16'-1"			
SP402	1	524'-0"	350	26	2'-6"	3½"	18'-7"			
P401	114	7'-8"	584	STR						
	1	6'-9"								
P402	SER OF		24	STR						2½"
	5	7'-7"								
P403	1	4'-3"	3	STR						
P501	152	8'-7"	1361	4	2'-8"	3'-1"				
P502	152	7'-7"	1202	4	1'-8"	3'-1"				
	2	12'-6"				3'-4"				
P503	SER OF		139	7	2'-8"			"B" VARIES BY 3½"		
	6	9'-8"				1'-11"				
	2	10'-6"				3'-4"				
P504	SER OF		114	7	1'-8"			"B" VARIES BY 3½"		
	6	7'-8"				1'-11"				
P505	8	2'-11"	24	STR						
P506	4	6'-8"	28	17	2'-8"	2'-0"	1'-1"	2'-0"		
P507	16	38'-0"	634	STR						
P508	8	14'-7"	122	4	2'-8"	6'-1"				
P601	100	9'-0"	1352	2	7'-8"					
P602	10	7'-4"	110	12	4'-0"	1'-9"	2'-10"			
P701	14	9'-4"	267	2	7'-8"					
	1	8'-5"			6'-9"					
P702	SER OF		90	2				"A" VARIES BY 2½"		
	5	9'-3"			7'-7"					
P703	1	5'-11"	12	2	4'-3"					
P801	16	9'-2"	392	4	2'-9"	3'-5"				
P802	16	7'-6"	320	4	1'-1"	3'-5"				
P901	72	9'-6"	2326	3	2'-0"	7'-9"				
P902	60	18'-9"	3825	STR						
P903	12	21'-3"	867	STR						
P904	12	46'-5"	1894	5	41'-1"	4'-2"	1'-9"			
P905	16	12'-9"	694	STR						
P906	14	38'-0"	1809	STR						
	PIER TOTAL =		20068	LBS.						
APPROACH BARRIER WALLS										
W501	126	5'-2"	679	3	4'-2"	1'-2"				
W502	3	25'-2"	79	30	15'-2"	10'-0"	16'-2½"			
W503	3	25'-6"	80	30	15'-2"	10'-4"	16'-9½"			
W504	1	24'-10"	26	30	15'-2"	9'-8"	15'-9"			
W505	1	25'-4"	26	30	15'-2"	10'-2"	16'-6"			
W506	1	25'-10"	27	30	15'-2"	10'-8"	17'-3"			
W507	3	13'-7"	43	30	6'-3"	7'-4"	6'-2½"			
W508	3	14'-4"	45	30	6'-3"	8'-1"	6'-9½"			
W509	1	13'-1"	14	30	6'-3"	6'-10"	5'-9"			
W510	1	13'-11"	15	30	6'-3"	7'-8"	6'-6"			
W511	1	14'-10"	15	30	6'-3"	8'-7"	7'-3"			
W512	3	32'-5"	101	32	1'-11"	18'-1"	16'-2½"	12'-5"		
W513	3	33'-1"	104	32	1'-11"	18'-9"	16'-9½"	12'-5"		
W514	1	31'-11"	33	32	1'-11"	17'-7"	15'-9"	12'-5"		
W515	1	32'-9"	34	32	1'-11"	18'-5"	16'-6"	12'-5"		
W516	1	33'-7"	35	32	1'-11"	19'-3"	17'-3"	12'-5"		
W517	3	15'-10"	50	30	3'-8"	12'-2"	9'-2½"			
W518	3	16'-8"	52	30	3'-8"	13'-0"	9'-9½"			
W519	1	15'-3"	16	30	3'-8"	11'-7"	8'-9"			
W520	1	16'-3"	17	30	3'-8"	12'-7"	9'-6"			
W521	1	17'-3"	18	30	3'-8"	13'-7"	10'-3"			
BARRIER WALL TOTAL =			1509	LBS.						

BENDING DIAGRAMS

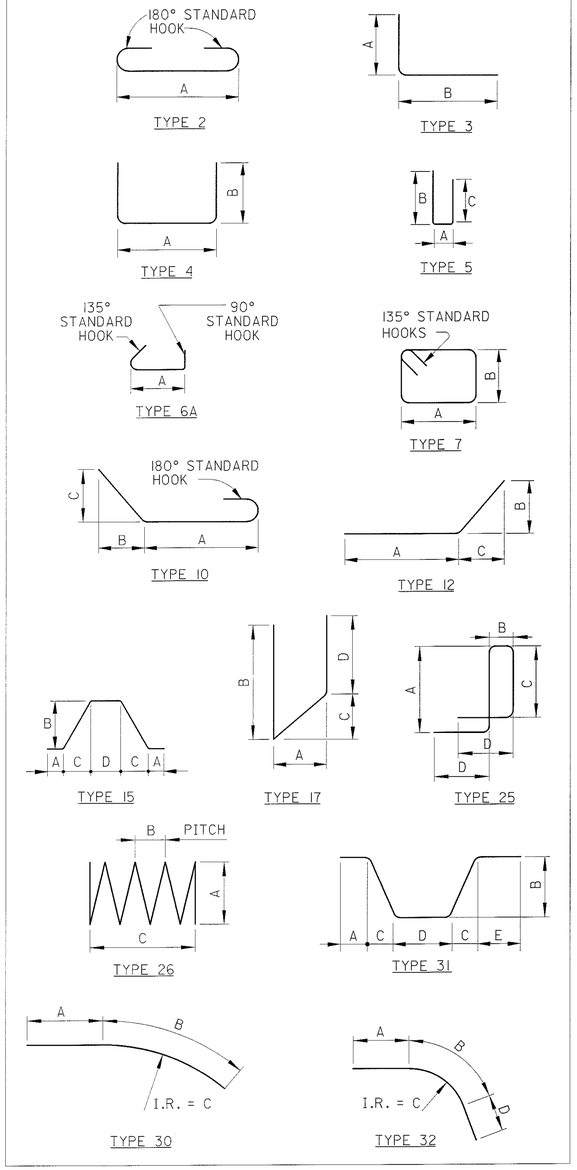

REINFORCING STEEL NOTES:

1. SERIES BARS - EACH BAR VARIES BY TABULATED AMOUNT.
2. ALL DIMENSIONS ARE OUT TO OUT.
3. TYPE 'STR' INDICATES A STRAIGHT BAR.
4. THE BAR SIZE NUMBER IS SPECIFIED IN THE 'MARK' COLUMN. THE FIRST DIGIT INDICATES THE BAR SIZE NUMBER. FOR EXAMPLE, P501 IS A #5 BAR SIZE.
5. ALL BARS SHALL BE EPOXY COATED UNLESS NOTED OTHERWISE.
6. SUBTOTALS AND TOTAL WEIGHTS ARE FOR INFORMATIONAL PURPOSES ONLY. IF THE REINFORCING LIST PROVIDED IN THE PLANS IS USED IT SHALL BE VERIFIED BY THE CONTRACTOR. ANY REVISIONS IN THE REINFORCING STEEL LIST AS SHOWN IN THE PLANS WILL NOT BE REASON FOR ADJUSTMENT IN THE BID PRICE FOR STRUCTURAL CONCRETE.

DLZ
1000 ROCKEFELLER BLDG • 614 W SUPERIOR AVE • CLEVELAND, OH 44113

DESIGNED DJC | DRAWN MWD | CHECKED PAT | REVIEWED GWM | DATE 1/29/02 | REVISED | STRUCTURE FILE NUMBER 7708297

REINFORCING STEEL LIST
BRIDGE NO. SUM-8-0148
MARKET STREET OVER S.R. 8

SUM-8-0.63

981/1088

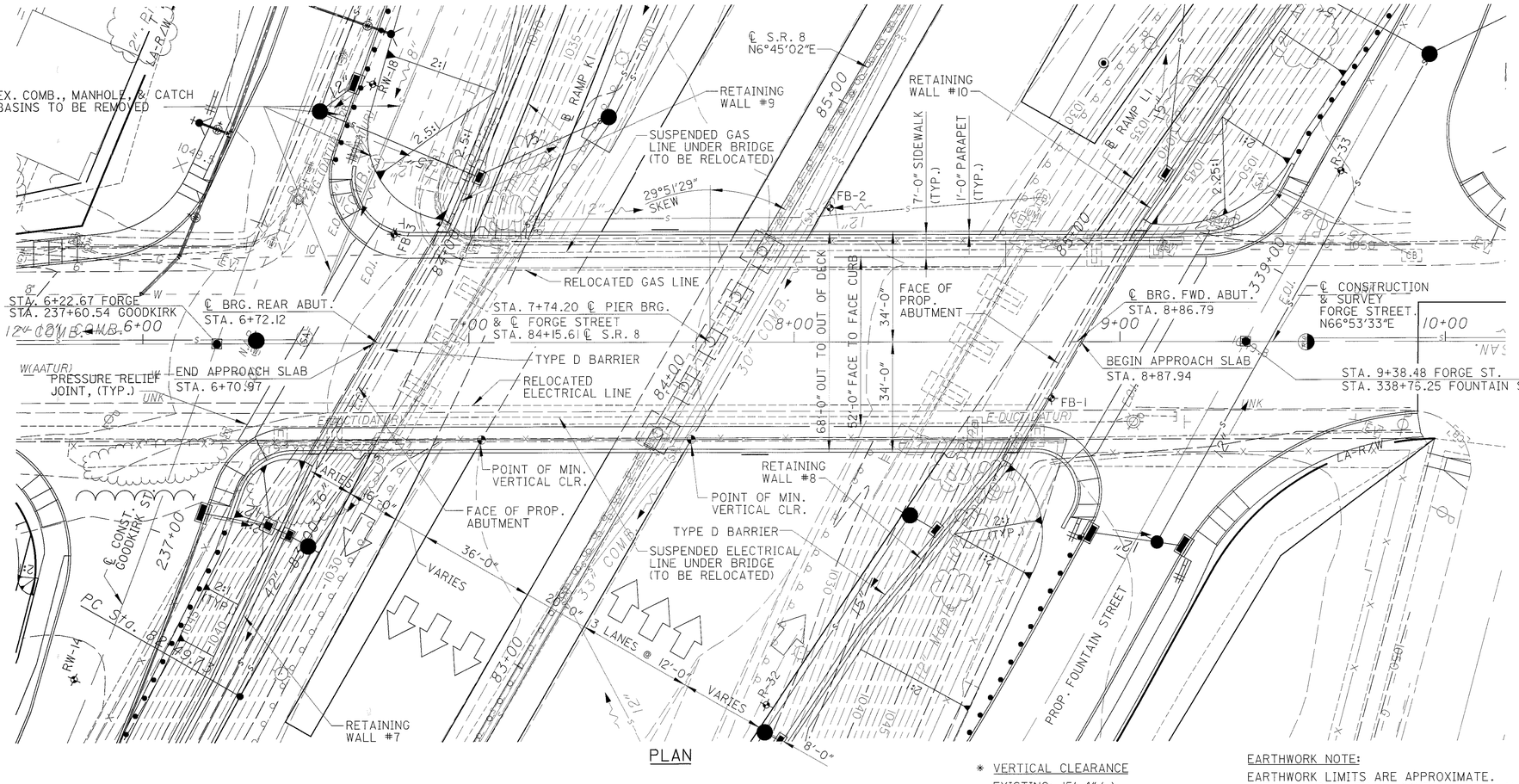

PLAN

* VERTICAL CLEARANCE
EXISTING: 15'-4" (±)
PROPOSED: 15'-6" (SB LANES)
16'-5" (NB LANES)
REQUIRED: 15'-6"

EARTHWORK NOTE:
EARTHWORK LIMITS ARE APPROXIMATE. ACTUAL SLOPES SHALL CONFORM TO PLAN CROSS-SECTIONS.

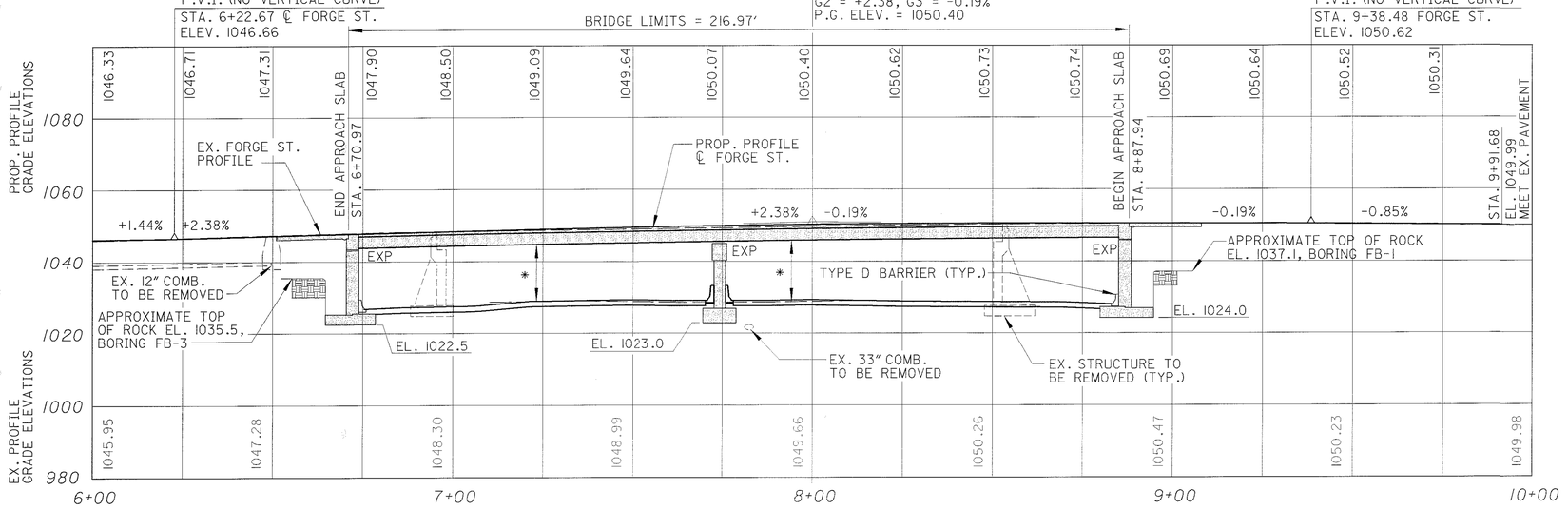

PROFILE

LEGEND

⊕	SOIL BORING
℄	CENTERLINE
COMB.	COMBINED
EX.	EXISTING
FWD.	FORWARD
NB.	NORTHBOUND
PROP.	PROPOSED
TC	TRAFFIC CONTROL
SB.	SOUTHBOUND
STORM	STORM SEWER

** HORIZONTAL CLEARANCE:
(OUTSIDE SHOULDERS)

EXISTING: 5'-0"(±) (TO FACE OF GUARDRAIL)
PROPOSED: 6'-0" (TOE OF BARRIER) REAR
REQUIRED: 6'-0" (TOE OF BARRIER) REAR
PROPOSED: 8'-0" (TOE OF BARRIER) FWD.
REQUIRED: 8'-0" (TOE OF BARRIER) FWD.

*** HORIZONTAL CLEARANCE:
(MEDIAN SHOULDERS)

EXISTING: 6'-3"(±) (TO FACE OF CURB)
PROPOSED: 7'-3" (TO TOE OF BARRIER)
REQUIRED: 10'-0" (PLUS BARRIER WIDTH)

BENCHMARK #3

CHISELED "X" ON CURB SIDE CORNER OF CONC. SIDEWALK ON NORTH SIDE OF FORGE ST., 61.5' WEST OF INTERSECTION OF FORGE AND PARK, 23.9' NORTH OF ℄ FORGE STREET.
STA. 237+11.37, 210.31 LT. ℄ GOODKIRK ST.

ELEV: 1044.09

BENCHMARK #21

CHISELED "X" ON NW BOLT OF PARKING LOT LIGHT POLE @ SE CORNER OF FORGE AND ADOLPH STREETS
STA. 339+31.45, 165.49 RT. ℄ FOUNTAIN ST.

ELEV: 1051.28

TRAFFIC DATA

FORGE STREET

CURRENT ADT (2004) = 6900
CURRENT ADTT (2004) = 207
DESIGN ADT (2024) = 7130
DESIGN ADTT (2024) = 214

EXISTING STRUCTURE

TYPE: CONTINUOUS STEEL BEAM WITH REINFORCED CONCRETE DECK AND SUBSTRUCTURE
SPANS: 2 @ 77'-6½"(±) C/C BEARINGS.
ROADWAY: 46'-0"(±) FACE TO FACE OF CURBS WITH 6'-11¼"(±) SIDEWALK EACH SIDE, 62'-2½"(±) OUT TO OUT OF DECK.
SKEW: 29°51'29"(±) LEFT FORWARD
ALIGNMENT: TANGENT
LOADING: HS 20-44 (CASE II) AND THE ALTERNATE MILITARY LOADING
WEARING SURFACE: 1" MONOLITHIC CONCRETE
APPROACH SLABS: AS-1-81 , 15' LONG
CROWN: ¼"/FT.(±)
DATE BUILT: c.1953 MAJOR REHABILITATION: c.1989
STRUCTURE FILE NUMBER: 7700245

PROPOSED STRUCTURE

PROPOSED WORK: REMOVE EXISTING STRUCTURE AND CONSTRUCT NEW BRIDGE
TYPE: CONTINUOUS STEEL BEAM BRIDGE WITH COMPOSITE CONCRETE DECK, SEMI-INTEGRAL FULL-HEIGHT ABUMENTS, AND CAP AND COLUMN PIER.
SPANS: 102'-1" AND 112'-7" C/C BEARINGS
ROADWAY: 52'-0" FACE TO FACE OF CURBS WITH 7'-0" SIDEWALK EACH SIDE 68'-0" OUT TO OUT OF DECK.
SKEW: 29°51'29"(±) LEFT FORWARD
ALIGNMENT: TANGENT
LOADING: HS 25 (CASE II) AND THE ALTERNATE MILITARY LOADING
WEARING SURFACE: MONOLITHIC CONCRETE
APPROACH SLABS: 20' LONG, AS PER PLAN
CROWN: 3/16"/FT.
LATITUDE: N 41°50'00"
LONGITUDE: W 81°30'18"

DLZ
3100 ROCKEFELLER BLDG • 614 W SUPERIOR AVE • CLEVELAND, OH 44113

DESIGNED JWB | DRAWN JWB | CHECKED PAT | REVIEWED GWM | DATE 2/5/01 | REVISED | STRUCTURE FILE NUMBER 7700261

SUMMIT COUNTY
STA. 6+70.97
STA. 8+87.94

SITE PLAN
BRIDGE NO. SUM-8-0159
FORGE STREET OVER S.R. 8

SUM-8-0.63

1 / 21

982
1088

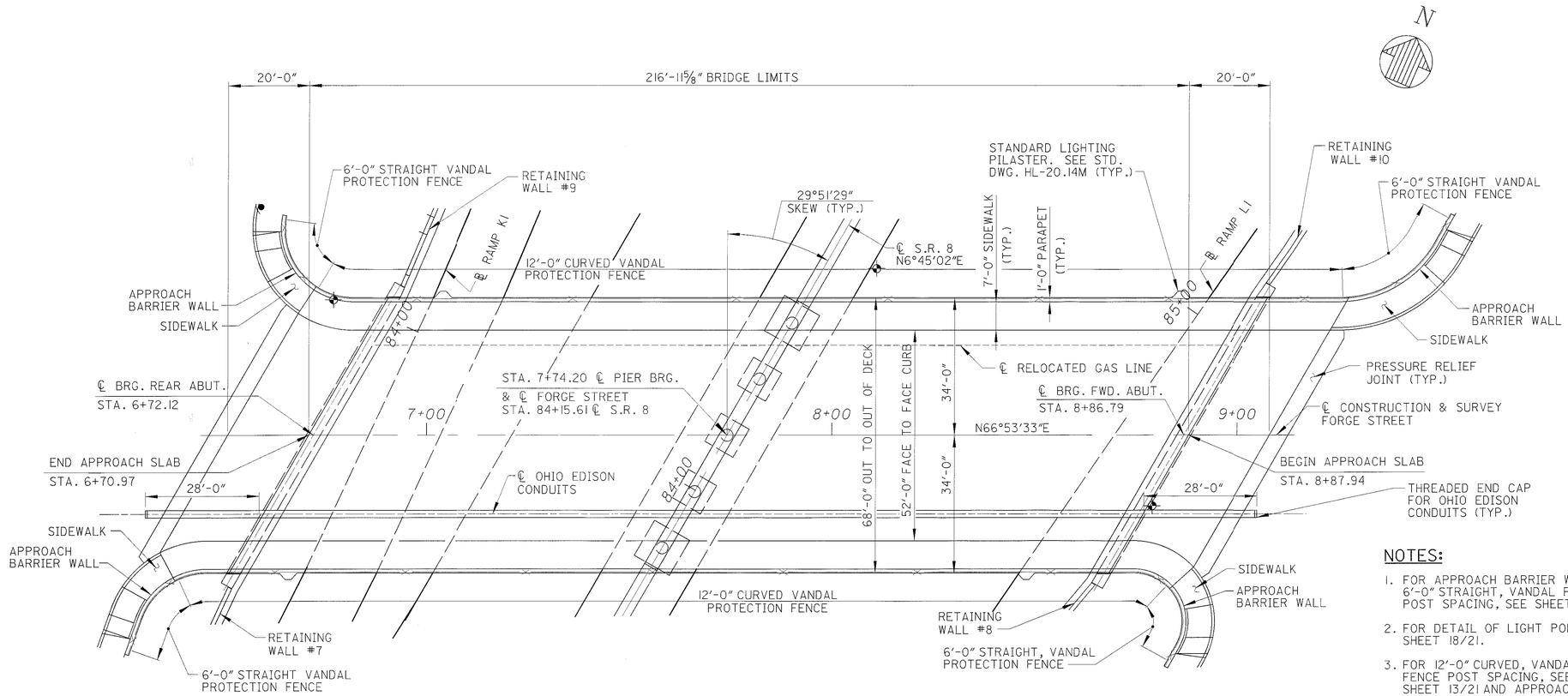

PLAN

NOTES:

1. FOR APPROACH BARRIER WALL PLANS AND 6'-0" STRAIGHT, VANDAL PROTECTION FENCE POST SPACING, SEE SHEETS 19 & 20/21.
2. FOR DETAIL OF LIGHT POLE PILASTERS, SEE SHEET 18/21.
3. FOR 12'-0" CURVED, VANDAL PROTECTION FENCE POST SPACING, SEE DECK PLAN SHEET 13/21 AND APPROACH SLAB PLANS.

DLZ
1000 ROCKEFELLER BLDG. ● 614 ● SUPERIOR AVE. ● CLEVELAND, OH 44113

DESIGNED JWB
DRAWN RCK
CHECKED JWB
REVIEWED GWM
DATE 6/5/01
REVISED
STRUCTURE FILE NUMBER 7700261

GENERAL PLAN
BRIDGE NO. SUM-8-0159
FORGE STREET OVER S.R. 8

SUM-8-0.63

2 / 21

983
1088

REFERENCE SHALL BE MADE TO STANDARD DRAWINGS:

	DATED:
GSD-1-96	4/20/01
SICD-1-96	4/20/01
VPF-1-90M	3/20/95

AND TO THE SUPPLEMENTAL SPECIFICATIONS:

	DATED:		DATED:
816	4/21/97	905	4/1/98
842	1/6/99	907	10/21/98
844	1/6/99	910	7/11/00
863	10/12/99	911	7/10/97
864	7/11/00	954	9/9/97
899	10/21/98		

DESIGN SPECIFICATIONS
THIS STRUCTURE CONFORMS TO "STANDARD SPECIFICATIONS FOR HIGHWAY BRIDGES" ADOPTED BY THE AMERICAN ASSOCIATION OF STATE HIGHWAY AND TRANSPORTATION OFFICIALS, 1996, INCLUDING THE 1997, 1998 AND 1999 INTERIM SPECIFICATIONS AND THE ODOT BRIDGE DESIGN MANUAL.

DESIGN LOADING
HS25, CASE II, AND THE ALTERNATE MILITARY LOADING.
FUTURE WEARING SURFACE OF 60 psf

DESIGN STRESSES
CONCRETE CLASS C - COMPRESSIVE STRENGTH 4000 psi (SUBSTRUCTURE)
HIGH PERFORMANCE CONCRETE HPC 844 - COMPRESSIVE STRENGTH 4500 psi (SUPERSTRUCTURE)
STRUCTURAL STEEL - ASTM A572/A709 GRADE 50 - YIELD STRENGTH 50,000 psi
STRUCTURAL STEEL FOR BEARING LOAD PLATES AND HP SUPPORT POSTS
A36 / A709, GRADE 36 - YIELD STRENGTH 36,000 psi.
REINFORCING STEEL - ASTM A615, A616, OR A617
GRADE 60 MINIMUM YIELD STRENGTH 60,000 psi.
SPIRAL REINFORCEMENT MAY BE PLAIN BARS, ASTM A82 OR A615

DECK PROTECTION METHOD
EPOXY COATED REINFORCING STEEL
2-1/2" CONCRETE COVER

MONOLITHIC WEARING SURFACE IS ASSUMED, FOR DESIGN PURPOSES, TO BE 1" THICK.

MAINTENANCE OF TRAFFIC:
MAINTENANCE OF TRAFFIC FOR THE STRUCTURE WORK SHALL BE COORDINATED WITH THE OVERALL PROJECT. REFER TO MAINTENANCE OF TRAFFIC NOTES AND DETAILS ELSEWHERE IN THE PLANS.

ITEM 202, STRUCTURE REMOVED, OVER 20' SPAN, AS PER PLAN:

DESCRIPTION
WORK TO BE PAID FOR UNDER THIS ITEM SHALL INCLUDE THE REMOVAL OF EXISTING STRUCTURE.

THE USE OF EXPLOSIVES AND/OR HEADACHE BALLS AND/OR HOE RAM TYPE OF EQUIPMENT WILL NOT BE PERMITTED.

PROTECTION OF TRAFFIC: THE CONTRACTOR SHALL PROVIDE ALL NECESSARY TEMPORARY SUPPORTS UNDER THE STRUCTURE DURING REMOVAL, RECONSTRUCTION AND CONSTRUCTION OPERATIONS AS REQUIRED TO MAINTAIN A COMPLETELY STABLE STRUCTURE AT ALL TIMES. IF IN THE OPINION OF THE ENGINEER, ADDITIONAL SUPPORTS ARE REQUIRED, THEY SHALL BE PROVIDED BY THE CONTRACTOR ENTIRELY AT HIS EXPENSE. NO FULL DEPTH BRIDGE REPAIR SHALL BE PERFORMED OVER AN OPEN LANE.

IN ORDER TO PROTECT VEHICULAR TRAFFIC AND PAVEMENT AGAINST DAMAGE FROM FALLING MATERIAL, DEBRIS AND OTHER DEMOLITION OPERATIONS, WHILE SUPERSTRUCTURE CONCRETE IS BEING REMOVED OR WHILE THE CONTRACTOR IS WORKING OVERHEAD, THE CONTRACTOR SHALL FURNISH AND ERECT A TEMPORARY PROTECTIVE STRUCTURE UNDER THE SPANS THAT ARE DIRECTLY OVER THE ROADWAY AND SHOULDER AREAS PLUS ENOUGH ADDITIONAL COVERAGE IN THE AREA TO PREVENT ANY FALLING MATERIAL FROM ANY SPAN FROM REACHING THESE AREAS.

IN ADDITION TO THE TEMPORARY PROTECTIVE STRUCTURE, THE CONTRACTOR SHALL PROVIDE PLASTIC SHEETING OR OTHER APPROVED METHODS TO CONTROL WATER USED IN THE SAW CUTTING OPERATION FROM FALLING ON VEHICULAR TRAFFIC.

THE PROTECTIVE STRUCTURE(S) SHALL MEET THE APPROVAL OF THE ENGINEER. THE FLOORING AND SIDING OF THE STRUCTURE(S) SHALL HAVE NO CRACKS OR OPENINGS THROUGH WHICH MATERIAL PARTICLES MAY FALL. AS A MINIMUM, TWO LAYERS OF ¾ INCH PLYWOOD WITH LAPPED JOINTS OR AN EQUIVALENT DESIGN SHALL BE PLACED BETWEEN THE LOWER FLANGES OF THE STRUCTURAL STEEL BEAMS ABOVE THE PAVEMENT AND SHOULDERS OF ROADWAYS ON WHICH VEHICULAR TRAFFIC IS BEING MAINTAINED ON THE EXISTING LANES OR BY PARTIAL LANE CLOSURES. THE PROTECTION IN ALL CASES SHALL EXTEND BEYOND THE EXISTING AND/OR NEW EXTERIOR STRUCTURAL BEAMS A SUFFICIENT DISTANCE TO PROTECT UNDER THE EXISTING AND PROPOSED PARAPETS AND SHALL HAVE SIDEWALLS EXTENDING UP TO 4 FEET MINIMUM. SIDEWALLS SHALL BE BRACED SUBSTANTIALLY TO RESIST WIND LOADS. DURING SAW CUTTING AND DECK REMOVAL OPERATIONS, TEMPORARY SHIELDS ATTACHED TO THE SIDEWALLS AND EXTENDING 1 FOOT ABOVE THE TOP OF THE PARAPET SHALL BE INSTALLED TO LIMITS AS DIRECTED BY THE ENGINEER. TEMPORARY SHIELDS SHALL BE REMOVED IMMEDIATELY AFTER THEY HAVE SERVED THEIR PURPOSE. DEBRIS SHALL NOT BE PERMITTED TO COLLECT ON THEIR PROTECTED STRUCTURES.

ITEM 202, STRUCTURE REMOVED, AS PER PLAN (CONT.):

WHEN SUPPORTING THE PROTECTIVE STRUCTURE(S) FROM THE STEEL WORK OF THE BRIDGE, ALL CONNECTIONS THERETO SHALL BE MADE BY MEANS OF APPROVED CLAMPS ON BOTH SIDES OF THE BEAM FLANGE. THE DRILLING OF HOLES IN THE STEEL WORK OR WELDING THERETO, FOR THIS PURPOSE WILL NOT BE PERMITTED. NO PORTION OF THE TEMPORARY SUPPORT SYSTEM AND/OR PROTECTIVE STRUCTURE(S) (INCLUDING CONNECTION DEVICES) SHALL EXTEND MORE THAN 10 INCHES BELOW THE BOTTOM FLANGE OF THE STEEL STRINGERS OR COVER PLATES THAT IS OVER THE TRAVELED WAY (PAVEMENT, SHOULDERS) OF A HIGHWAY ON WHICH TRAFFIC IS BEING MAINTAINED. HOWEVER, IN NO INSTANCE SHALL THE UNDERCLEARANCE BE LESS THAN 14 FEET. DISTRICT PUBLIC RELATIONS OFFICE (EXT. 209 OR 211) SHALL BE NOTIFIED 18 DAYS IN ADVANCE OF RESTRICTION.

AFTER THE FALSEWORK, TEMPORARY BRACING AND PROTECTIVE STRUCTURE(S) HAVE SERVED THEIR PURPOSE AND WHEN SO DIRECTED BY THE ENGINEER, THEY SHALL BE REMOVED. PROTECTIVE STRUCTURE(S), INCLUDING SIDEWALLS SHALL NOT BE REMOVED UNTIL THE PARAPETS ARE COMPLETED. ALL MATERIAL SHALL BECOME THE PROPERTY OF THE CONTRACTOR AND SHALL BE REMOVED FROM THE JOB SITE AND DISPOSED OF BY THE CONTRACTOR AT HIS OWN EXPENSE.

THE CONTRACTOR SHALL SUBMIT IN QUADRUPLET A DEMOLITION PLAN AND DETAILS OF THE FALSEWORK, TEMPORARY BRACING AND PROTECTIVE STRUCTURES FOR CATCHING BROKEN CONCRETE AND OTHER MATERIALS. THESE PLANS AND DETAILS SHALL BE SUBMITTED 18 DAYS PRIOR TO COMMENCING ANY DEMOLITION TO THE DIRECTOR FOR APPROVAL. THE DETAILS SHALL INCLUDE THE EXISTING AND PROPOSED TEMPORARY UNDERCLEARANCES TO THE TRAVELED WAY.

PAYMENT: THIS WORK WILL BE PAID FOR AT THE CONTRACT LUMP SUM PRICE BID, WHICH PRICE AND PAYMENT SHALL BE FULL COMPENSATION FOR ALL LABOR, EQUIPMENT, MATERIALS AND INCIDENTALS NECESSARY TO COMPLETE THE WORK IN CONFORMANCE WITH THESE REQUIREMENTS, WITH PERTINENT PROVISIONS OF 202, AND TO THE SATISFACTION OF THE ENGINEER.

ASBESTOS NOTIFICATION:

AN ASBESTOS SURVEY OF THE FORGE STREET BRIDGE OVER S.R. 8 SCHEDULED FOR REPLACEMENT WAS CONDUCTED BY A CERTIFIED ASBESTOS HAZARD EVALUATION SPECIALIST. THE SURVEY DETERMINED THAT NO ASBESTOS IS PRESENT ON THE BRIDGE.

A COPY OF THE OHIO ENVIRONMENTAL PROTECTION AGENCY (OEPA) NOTIFICATION OF THE DEMOLITION AND RENOVATION FORM, PARTIALLY COMPLETED AND SIGNED BY THE BRIDGE OWNER, WILL BE PROVIDED TO THE SUCCESSFUL BIDDER. THE CONTRACTOR SHALL COMPLETE THE FORM AND SUBMIT IT TO:

AKRON REGIONAL AIR QUALITY MANAGEMENT DISTRICT
146 S. HIGH ST., SUITE 904
AKRON, OH 44308
ATTN: LYNN M. MALCOLM, ADMIN.
PHONE: 330-375-2480
FAX: 330-375-2402

AT LEAST TEN (10) WORKING DAYS PRIOR TO START OF THE BRIDGE DEMOLITION WORK. THE CONTRACTOR SHALL PROVIDE A COPY OF THE COMPLETED FORM TO THE ENGINEER.

INFORMATION REQUIRED ON THE FORM WILL INCLUDE: THE CONTRACTOR'S NAME AND ADDRESS, THE SCHEDULED DATES FOR THE START AND COMPLETION OF THE BRIDGE REMOVAL OR RENOVATION AND A DESCRIPTION OF THE PLANNED DEMOLITION OR RENOVATION WORK AND THE METHOD(S) TO BE USED. A COPY OF THE OEPA FORM IS AVAILABLE FOR INSPECTION AT THE ODOT DISTRICT 4 OFFICE, 705 OAKWOOD STREET, RAVENNA, OHIO 44266.

BASIS FOR PAYMENT: THE CONTRACTOR SHALL FURNISH ALL FEES, LABOR, AND MATERIAL NECESSARY TO COMPLETE AND SUBMIT THE OEPA NOTIFICATION FORM. PAYMENT FOR THIS WORK SHALL BE INCLUDED IN ITEM 202 - STRUCTURE REMOVED, OVER 20' SPAN, AS PER PLAN.

ITEM 503, UNCLASSIFIED EXCAVATION, AS PER PLAN
ITEM 503, ROCK EXCAVATION, AS PER PLAN
UNCLASSIFIED EXCAVATION SHALL BE IN ACCORDANCE WITH 503 EXCEPT THAT THE BACKFILL MATERIAL FOR THE ABUTMENTS SHALL BE 304 GRANULAR MATERIAL PLACED IN 6" LIFTS AND COMPACTED IN ACCORDANCE WITH 304.05.

CONSTRUCTION CONSTRAINTS:
AFTER THE FOOTING AND THE BREASTWALL HAVE BEEN CONSTRUCTED, THE VOID BEHIND EACH ABUTMENT SHALL BE FILLED UP TO WITHIN THREE FEET FROM BEAM SEAT ELEVATION AND ON A 1:1 SLOPE TO THE SUBGRADE ELEVATION PRIOR TO SETTING THE BEAMS ON THE ABUTMENT.

FOUNDATION BEARING PRESSURE:
ABUTMENT FOOTINGS, AS DESIGNED, PRODUCE A MAXIMUM BEARING PRESSURE OF 4.1 tsf (TONS PER SQUARE FOOT). PIER FOOTINGS, AS DESIGNED, PRODUCE A MAXIMUM BEARING PRESSURE OF 9.7 tsf. THE ALLOWABLE BEARING PRESSURE IS 10 tsf.

FOOTINGS: SHALL BE PLACED IN BEDROCK AT THE ELEVATION SHOWN.

ITEM 864, SEALING OF CONCRETE SURFACES (EPOXY-URETHANE)

CONCRETE SURFACES INCLUDING PARAPETS, ABUTMENTS, WINGWALLS, PIERS, AND END DIAPHRAGMS AS DETAILED IN THE PLANS SHALL BE SEALED WITH AN EPOXY-URETHANE SEALER OF A COLOR CONFORMING TO FEDERAL COLOR No. 13522 - BUFF.

ITEM 816, FIELD PAINTING OF NEW STEEL, INTERMEDIATE AND FINISH COAT, SYSTEM IZEU

ALL SURFACES OF EXPOSED STEEL SHALL BE COATED WITH "BROWN" PAINT, FEDERAL COLOR NO. 10080.

CONCRETE PARAPETS:

AS SOON AS A CONCRETE SAW CAN BE OPERATED WITHOUT DAMAGING THE FRESHLY PLACED CONCRETE, 1¼" DEEP CONTROL JOINTS SHALL BE SAWED INTO THE PERIMETER OF THE CONCRETE PARAPET. THE SAW CUT SHALL BE MADE IN THE COMPLETE CIRCUMFERENCE OF THE PARAPET, STARTING AND ENDING AT THE ELEVATION OF THE CONCRETE DECK. THE SAWCUTS SHALL BE PLACED AT A MINIMUM OF 6 FEET AND A MAXIMUM OF 10 FEET CENTERS. THE USE OF AN EDGE GUIDE, FENCE, OR JIG IS REQUIRED TO INSURE THAT THE CUT JOINT IS STRAIGHT, TRUE, AND ALIGNED ON ALL FACES OF THE PARAPET. THE JOINT WIDTH SHALL BE THE WIDTH OF THE SAW BLADE, A NOMINAL WIDTH OF ¼". THE PERIMETER OF THE DEFLECTION CONTROL JOINT SHALL BE SEALED WITH A CAULKING MATERIAL CONFORMING TO FEDERAL SPEFICATION TT-S-00227E TO A MINIMUM DEPTH OF 1 INCH. THE BOTTOM ½ INCH OF THE INSIDE AND OUTSIDE FACE SHALL BE LEFT UNSEALED TO ALLOW WATER TO ESCAPE.

CONVERSION OF STANDARD BRIDGE DRAWINGS:

SOME OF THE STANDARD BRIDGE DRAWINGS REFERENCED IN THIS PLAN ARE METRIC. ANY CONVERSIONS OF DIMENSIONS REQUIRED TO CONSTRUCT THE ITEMS SHOWN ON THE STANDARDS SHALL BE THE RESPONSIBILITY OF THE CONTRACTOR. CONVERSIONS SHALL BE MADE USING SI (METRIC) TO ENGLISH CONVERSION FACTORS PROVIDED IN SECTION 109.01 OF THE 1997 CONSTRUCTION AND MATERIALS SPECIFICATIONS. THE APPENDIX OF ASTM E380 SHALL BE UTILIZED FOR ANY ADDITIONAL CONVERSION FACTORS REQUIRED. CONVERSIONS SHALL BE APPROPRIATELY PRECISE AND SHALL REFLECT INDUSTRY ENGLISH VALUES WHERE SUITABLE.

ITEM 844, HIGH PERFORMANCE CONCRETE SUPERSTRUCTURE (DECK), AS PER PLAN:

THIS ITEM SHALL INCLUDE ALL SUPERSTRUCTURE CONCRETE IN THE DECK, END DIAPHRAGMS, SIDEWALKS, AND PARAPETS.

ITEM SPECIAL - UTILITY RELOCATION: DOMINION EAST OHIO FACILITY

WORK PERFORMED UNDER THIS ITEM SHALL INCLUDE THE CONSTRUCTION OF NEW UTILITY SUPPORT STRUCTURES AND FACILITIES AS DETAILED IN THE PLANS. THE WORK SHALL INCLUDE, BUT NOT NECESSARILY BE LIMITED TO, FURNISHING AND INSTALLING PIPE SLEEVES THROUGH THE ABUTMENTS AND SUPPORTS ACROSS THE STRUCTURE, AS DETAILED ON SHEETS 11 AND 12A/21.

PAYMENT FOR WORK AS LISTED ABOVE AND DETAILED IN THE PLANS SHALL BE INCLUDED IN THE LUMP SUM PRICE BID FOR ITEM SPECIAL - UTILITY RELOCATION: DOMINION EAST OHIO FACILITY, AND SHALL INCLUDE ALL LABOR, EQUIPMENT, MATERIALS AND INCIDENTALS NECESSARY TO COMPLETE THE WORK IN CONFORMANCE WITH THESE REQUIREMENTS, AND TO THE SATISFACTION OF THE ENGINEER AND DOMINION EAST OHIO.

ITEM SPECIAL - UTILITY RELOCATION: OHIO EDISON FACILITY

WORK PERFORMED UNDER THIS ITEM SHALL INCLUDE THE REMOVAL OF EXISTING AND CONSTRUCTION OF NEW UTILITY SUPPORT STRUCTURES AND FACILITIES AS DETAILED IN THE PLANS. THE WORK SHALL INCLUDE, BUT NOT NECESSARILY BE LIMITED TO, CONDUIT AND SUPPORTS ACROSS THE STRUCTURE, AND CONDUIT INSTALLATION AND CONNECTION TO THE EXISTING CONDUITS BEYOND THE BRIDGE LIMITS AS DETAILED ON SHEETS 11, 12A AND 12B/21.

PAYMENT FOR WORK AS LISTED ABOVE AND DETAILED IN THE PLANS SHALL BE INCLUDED IN THE LUMP SUM PRICE BID FOR ITEM SPECIAL - UTILITY RELOCATION: OHIO EDISON FACILITY, AND SHALL INCLUDE ALL LABOR, EQUIPMENT, MATERIALS AND INCIDENTALS NECESSARY TO COMPLETE THE WORK IN CONFORMANCE WITH THESE REQUIREMENTS, AND TO THE SATISFACTION OF THE ENGINEER AND OHIO EDISON.

DLZ
1000 ROCKEFELLER BLDG • 614 W. SUPERIOR AVE • CLEVELAND, OH 44113

DESIGNED DP | DRAWN DP | CHECKED JWB | REVISED | REVIEWED GWM | DATE 6/5/01 | STRUCTURE FILE NUMBER 7700261

STRUCTURE GENERAL NOTES
BRIDGE NO. SUM-8-0159
FORGE STREET OVER S.R. 8

SUM-8-0.63

ESTIMATED QUANTITIES

CALCULATED BY: DP 2/2/01
CHECKED BY: DJC 5/30/01

ITEM	ITEM EXTENSION	TOTAL	UNIT	DESCRIPTION	REAR ABUTMENT	FORWARD ABUTMENT	PIER	SUPER.	GENERAL	REF. SHEET NO.	AS-BUILT
202	11003	LUMP		STRUCTURE REMOVED, OVER 20' SPAN, AS PER PLAN					LUMP	3	
503	21101	736	CU YD	UNCLASSIFIED EXCAVATION, AS PER PLAN	303	359	74			3	
503	31101	788	CU YD	ROCK EXCAVATION, AS PER PLAN	375	401	12			3	
516	13600	48	SQ FT	1" PREFORMED EXPANSION JOINT FILLER	24	24					
516	13900	89	SQ FT	2" PREFORMED EXPANSION JOINT FILLER	33	33		23			
516	44100	9	EACH	ELASTOMERIC BEARING WITH INTERNAL LAMINATES AND LOAD PLATE (NEOPRENE 3.0"x1'-7"x1'-7"), (LOAD PLATE 2 3/8" (avg.) x1'-8"x1'-8")			9				
516	44101	18	EACH	ELASTOMERIC BEARING WITH INTERNAL LAMINATES AND LOAD PLATE (NEOPRENE 2.5"x1'-4"x1'-2"), (LOAD PLATE 1 1/2"x1'-5"x1'-3"), AS PER PLAN	9	9				17	
518	21201	274	CU YD	POROUS BACKFILL WITH FILTER FABRIC, AS PER PLAN	133	141				5-7	
518	40000	172	LIN FT	6" PERFORATED CORRUGATED PLASTIC PIPE	86	86					
SPECIAL	53013000	2382	SQ FT	FORM LINER Δ	1127	1255				7	
SPECIAL	60739900	99	LIN FT	VANDAL PROTECTION FENCE, 6' STRAIGHT, COATED FABRIC					99	20	
SPECIAL	60739930	503	LIN FT	VANDAL PROTECTION FENCE, 12' CURVED, COATED FABRIC				434	69	10, 13	
SPECIAL	69020030	LUMP		UTILITY RELOCATION: DOMINION EAST OHIO FACILITY *				LUMP		3	
SPECIAL	69020030	LUMP		UTILITY RELOCATION: OHIO EDISON FACILITY **				LUMP		3	
816	00600	LUMP		FIELD PAINTING OF NEW STEEL, INTERMEDIATE AND FINISH COAT, SYSTEM IZEU				LUMP			
842	41000	68	CU YD	CLASS C CONCRETE, PIER ABOVE FOOTINGS			68				
842	44101	353	CU YD	CLASS C CONCRETE, ABUTMENT NOT INCLUDING FOOTING, AS PER PLAN	170	183				3	
842	46201	21	CU YD	CLASS C CONCRETE, AS PER PLAN					21	20	
842	46500	290	CU YD	CLASS C CONCRETE, FOOTING	118	128	44				
844	48001	596	CU YD	HIGH PERFORMANCE CONCRETE SUPERSTRUCTURE (DECK), AS PER PLAN				596		3, 10, 14	
844	49000	LUMP		HIGH PERFORMANCE CONCRETE TRIAL MIX				LUMP			
844	49010	LUMP		HIGH PERFORMANCE CONCRETE TESTING				LUMP			
863	10040	LUMP		STRUCTURAL STEEL MEMBERS, LEVEL TWO (2) FABRICATION				LUMP			
863	20000	5436	EACH	WELDED STUD SHEAR CONNECTORS				5436			
864	10050	406	SQ YD	SEALING OF CONCRETE SURFACES (NON-EPOXY)				406			
864	10100	1002	SQ YD	SEALING OF CONCRETE SURFACES (EPOXY-URETHANE)	133	147	149	573			

* ITEMS TO BE REIMBURSED TO THE STATE OF OHIO BY DOMINION EAST OHIO
** ITEMS TO BE REIMBURSED TO THE STATE OF OHIO BY OHIO EDISON
Δ 100% LOCAL COST

ITEM 842, CLASS C CONCRETE, ABUTMENT NOT INCLUDING FOOTING, AS PER PLAN

INSTALL A 3-FOOT WIDE STRIP, 3/32" THICK, GENERAL PURPOSE, HEAVY DUTY NEOPRENE SHEET WITH NYLON FABRIC REINFORCEMENT AT LOCATIONS SHOWN IN THE PLANS. SECURE THE 3-FOOT WIDE NEOPRENE SHEETING TO THE CONCRETE WITH 1 1/4" x #10 GAGE (LENGTH x SHANK DIAMETER) GALVANIZED BUTTON HEAD SPIKES THROUGH A 1 INCH OUTSIDE DIAMETER, #10 GAGE GALVANIZED WASHER. MAXIMUM FASTENER SPACING IS 9 INCHES. OTHER SIMILAR GALVANIZED DEVICES WHICH WILL NOT DAMAGE EITHER THE NEOPRENE OR THE CONCRETE MAY BE USED SUBJECT TO THE APPROVAL OF THE ENGINEER.

CENTER THE NEOPRENE STRIPS ON ALL JOINTS. FOR HORIZONTAL JOINTS, SECURE THE HORIZONTAL NEOPRENE STRIP BY USING A SINGLE LINE OF FASTENERS, STARTING AT 6 INCHES, +/-, FROM THE TOP OF THE NEOPRENE STRIP. FOR THE VERTICAL JOINTS SECURE THE VERTICAL NEOPRENE STRIP BY USING A SINGLE VERTICAL LINE OF FASTENERS, STARTING AT 6 INCHES, +/-, FROM THE VERTICAL EDGE OF THE NEOPRENE STRIP NEAREST TO THE CENTERLINE OF ROADWAY. FOR VERTICAL JOINTS, INSTALL 2 ADDITIONAL FASTENERS AT 6 INCHES, CENTER TO CENTER, ACROSS THE TOP OF THE NEOPRENE STRIP ON THE SAME SIDE OF THE VERTICAL JOINT AS THE SINGLE VERTICAL ROW OF FASTENERS IS LOCATED.

THE VERTICAL NEOPRENE STRIPS SHOULD COMPLETELY OVERLAP THE HORIZONTAL STRIPS. LAPS IN THE LENGTH OF THE HORIZONTAL STRIPS DUE TO MATERIAL MANUFACTURING SHALL BE AT LEAST 1 FOOT IN LENGTH, IF NOT VULCANIZED OR ADHESIVE BONDED, OR 6 INCHES IN LENGTH IF THE LAP IS VULCANIZED OR ADHESIVE BONDED. NO LAPS ARE ACCEPTABLE IN VERTICALLY INSTALLED NEOPRENE STRIPS.

THE NEOPRENE SHEETING SHALL BE 3/32" THICK GENERAL PURPOSE, HEAVY DUTY NEOPRENE SHEET WIT NYLON FABRIC REINFORCEMENT. THE SHEETING SHALL BE "FAIRPRENE NUMBER NN-0003", BY E.I. DUPONT DE NEMOURS AND COMPANY, INC., "WINGPRENE" BY THE GOODYEAR TIRE AND RUBBER COMPANY, OR AN APPROVED ALTERNATE. THE NEOPRENE SHEETING SHALL CONFORM TO THE FOLLOWING:

DESCRIPTION OF TEST	ASTM METHOD	REQUIREMENT
THICKNESS, INCHES	D 751	0.094" +/- 0.01
BREAKING STRENGTH, GRAB WXF, LBS, MINIMUM	D 751	700 x 700
ADHESIVE 1" STRIP, 2" MINIMUM, LBS, MINIMUM	D 751	9
BURST STRENGTH (MULLEN) PSI, MINIMUM	D 751	1400
HEAT AGING 70 HOURS T 212°F, 180 BEND WITHOUT CRACKING	D 2136	NO CRACKING OF COATING
LOW TEMPERATURE BRITTLENESS 1 HOUR AT -40°F, BEND AROUND 1/4" MANDREL	D 2136	NO CRACKING OF COATING

IN LIEU OF THE NEOPRENE SHEETING THE CONTRACTOR MAY CHOOSE TO SUPPLY TYPE 3 MEMBRANE, 711.29.

PAYMENT FOR LABOR, MATERIALS AND INSTALLATION OF THESE ITEMS SHALL BE INCLUDED IN ITEM 842, CLASS C CONCRETE, ABUTMENT NOT INCLUDING FOOTING, AS PER PLAN.

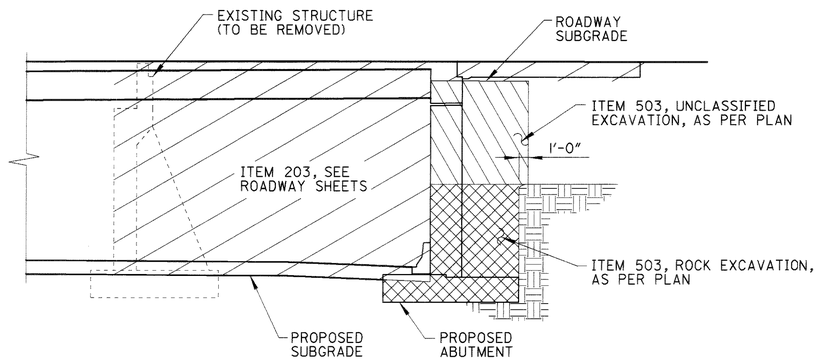

EXCAVATION DIAGRAM

DIAGRAM SHOWING LIMITS OF STRUCTURE EXCAVATION FOR DETERMINING ESTIMATED QUANTITIES.

PLAN ABBREVIATIONS:

ABUT.	ABUTMENT
BRG.	BEARING
BOT.	BOTTOM
c/c	CENTER-TO-CENTER
C.J.	CONSTRUCTION JOINT
℄	CENTERLINE
CLR.	CLEAR COVER
CONC.	CONCRETE
DIA.	DIAMETER
E.F.	EACH FACE
EL.	ELEVATION
ES	EACH SIDE
EXIST.	EXISTING
FA	FORWARD ABUTMENT
F.F.	FAR FACE
FWD.	FORWARD
GALV.	GALVANIZED
HMWM	HIGH MOLECULAR WEIGHT METHACRYLATE
INV.	INVERT
N.F.	NEAR FACE
N.P.C.P.P.	NON-PERFORATED CORRUGATED PLASTIC PIPE
MAX.	MAXIMUM
MIN.	MINIMUM
P.C.P.P.	PERFORATED CORRUGATED PLASTIC PIPE
PEJF	PREFORMED EXPANSION JOINT FILLER
PROP.	PROPOSED
RA	REAR ABUTMENT
SPA.	SPACE, SPACES
STA.	STATION
REINF.	REINFORCING, REINFORCED
TYP.	TYPICAL

REVISIONS: 05/15/2002 by AGW

DLZ
4000 ROCKEFELLER BLDG • 614 W SUPERIOR AVE • CLEVELAND, OH 44113

DESIGNED DP | DRAWN DP | CHECKED JWB | REVISED | REVIEWED GWM 6/5/01 | DATE 6/5/01 | STRUCTURE FILE NUMBER 7700261

STRUCTURE GENERAL NOTES AND ESTIMATED QUANTITIES
BRIDGE NO. SUM-8-0159
FORGE STREET OVER S.R. 8

SUM-8-0.63

4 / 21

985
1088

04:0:28 PM
07/09/2002
u:\00-00SR-8\bridge\dwg\Forge\0159eq01.dgn

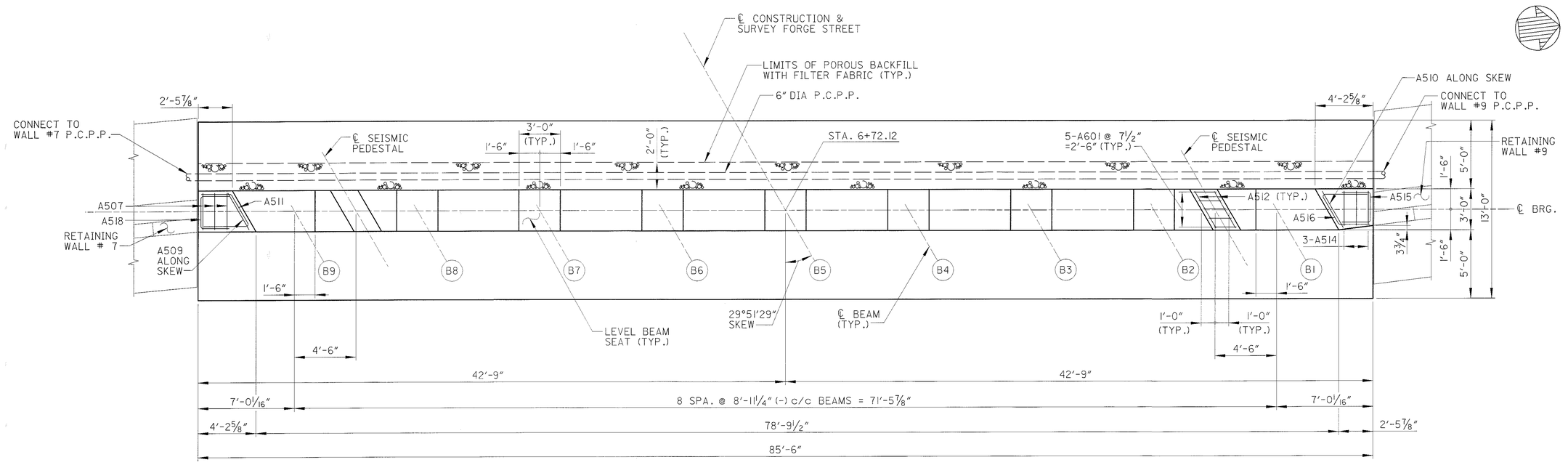

PLAN

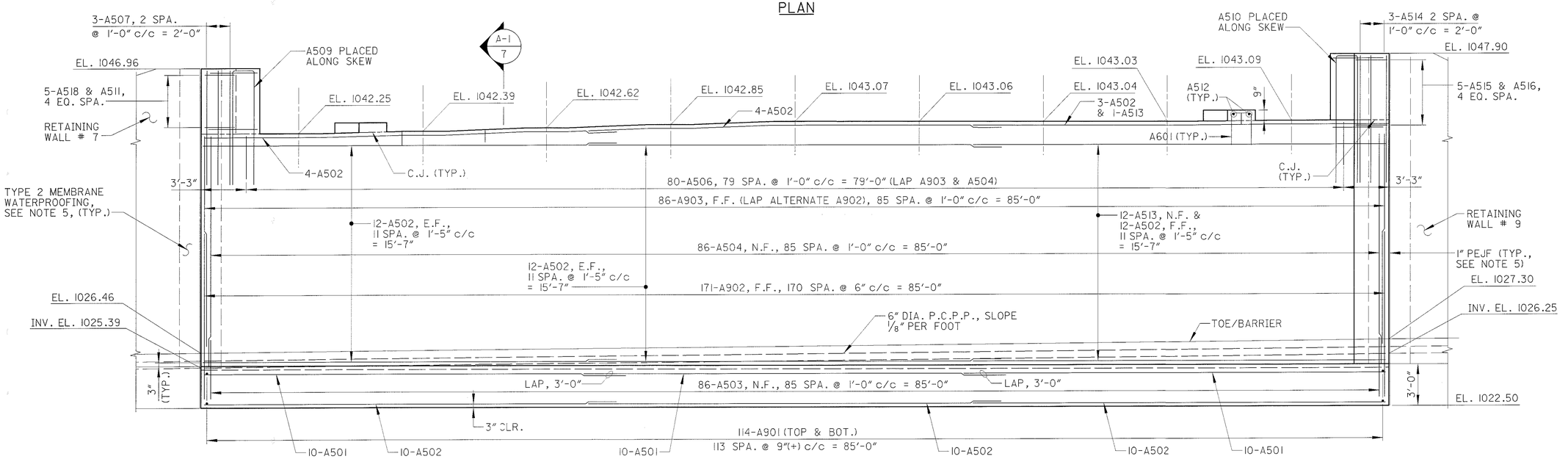

ELEVATION

NOTES

1. FOOTING SHALL BE PLACED IN BEDROCK AT THE ELEVATION SHOWN.
2. MINIMUM LAP UNLESS NOTED OTHERWISE SHALL BE AS FOLLOWS
   # 5 BARS - 2'-0"
   # 9 BARS - 8'-1"
3. POROUS BACKFILL WITH FILTER FABRIC 2'-0" THICK SHALL EXTEND UP TO THE BOTTOM OF THE APPROACH SLAB AND TO THE LIMITS SHOWN. GEOTEXTILE FABRIC SHALL CONFORM WITH 712.09, TYPE A.
4. REFER TO SHEET 14/21 AND STANDARD DWG. SICD-1-96 FOR ADDITIONAL DETAILS.
5. FOR 1" PEJF AND MEMBRANE WATERPROOFING BETWEEN ABUTMENTS AND WALLS, REFER TO RETAINING WALL PLANS.

LEGEND

(BX) - BEAM NUMBER

DLZ
1000 ROCKEFELLER BLDG • 614 W SUPERIOR AVE • CLEVELAND, OH 44113

DESIGNED DP | DRAWN DP | CHECKED JWB | REVISED | REVIEWED GWM | DATE 6/5/01 | STRUCTURE FILE NUMBER 7700261

REAR ABUTMENT

BRIDGE NO. SUM-8-0159
FORGE STREET OVER S.R. 8

SUM-8-0.63

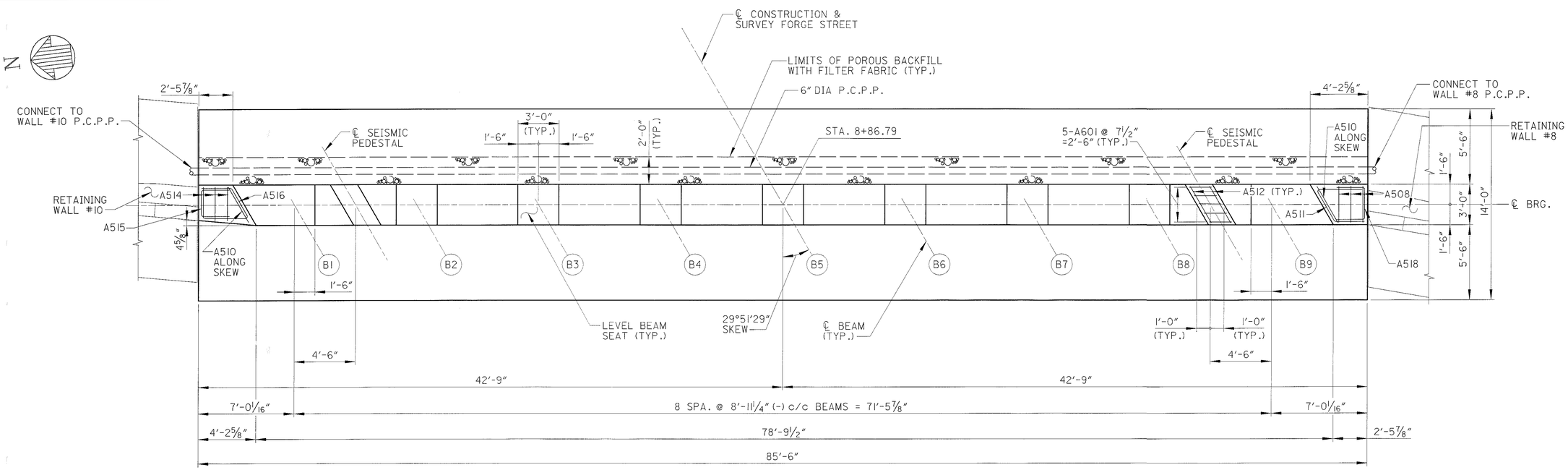

PLAN

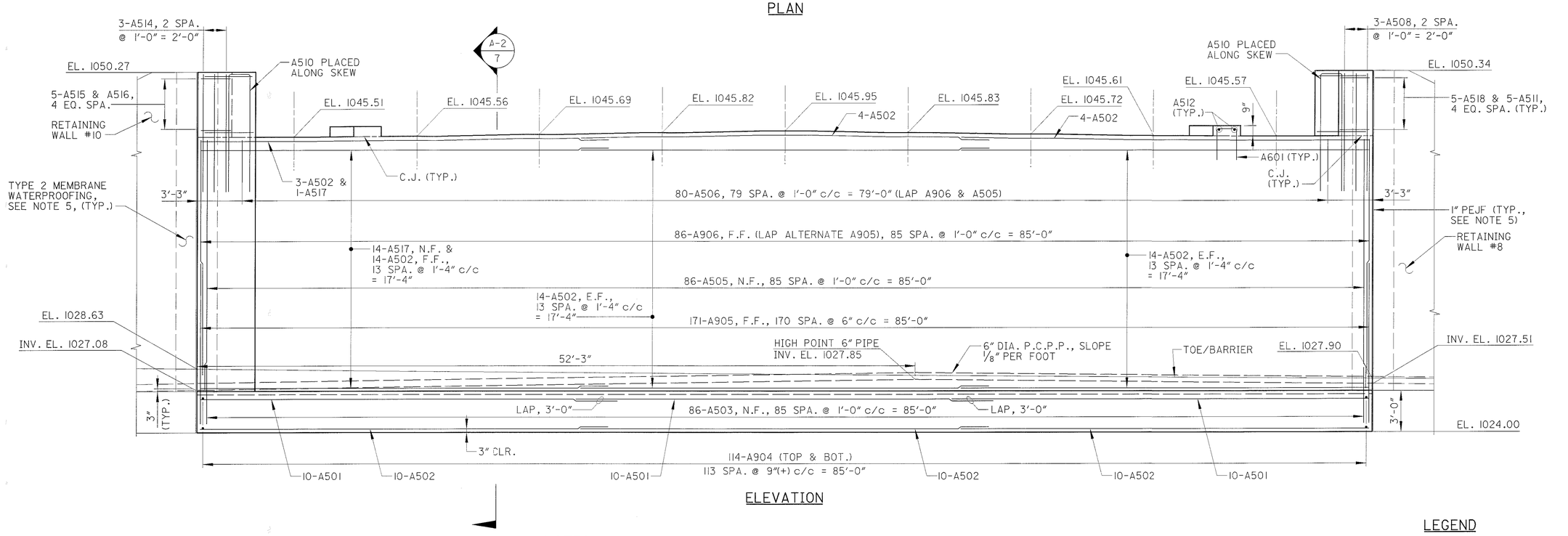

ELEVATION

NOTES

1. FOOTING SHALL BE PLACED IN BEDROCK AT THE ELEVATION SHOWN.
2. MINIMUM LAP UNLESS NOTED OTHERWISE SHALL BE AS FOLLOWS
   # 5 BARS - 2'-0"
   # 9 BARS - 8'-1"
3. POROUS BACKFILL WITH FILTER FABRIC 2'-0" THICK SHALL EXTEND UP TO THE BOTTOM OF THE APPROACH SLAB AND TO THE LIMITS SHOWN. GEOTEXTILE FABRIC SHALL CONFORM WITH 712.09, TYPE A.
4. REFER TO SHEET 14/21 AND STANDARD DWG. SICD-1-96 FOR ADDITIONAL DETAILS.
5. FOR 1" PEJF AND MEMBRANE WATERPROOFING BETWEEN ABUTMENTS AND WALLS, REFER TO RETAINING WALL PLANS.

LEGEND

(BX) - BEAM NUMBER

DLZ
800 ROCKEFELLER BLDG ★ 614 ★ SUPERIOR AVE ★ CLEVELAND, OH 44113

DESIGNED DP | DRAWN DP | CHECKED JWB | REVISED | REVIEWED GWM | DATE 6/5/01 | STRUCTURE FILE NUMBER 7700261

FORWARD ABUTMENT
BRIDGE NO. SUM-8-0159
FORGE STREET OVER S.R. 8

SUM-8-0.63

6 / 21

987
1088

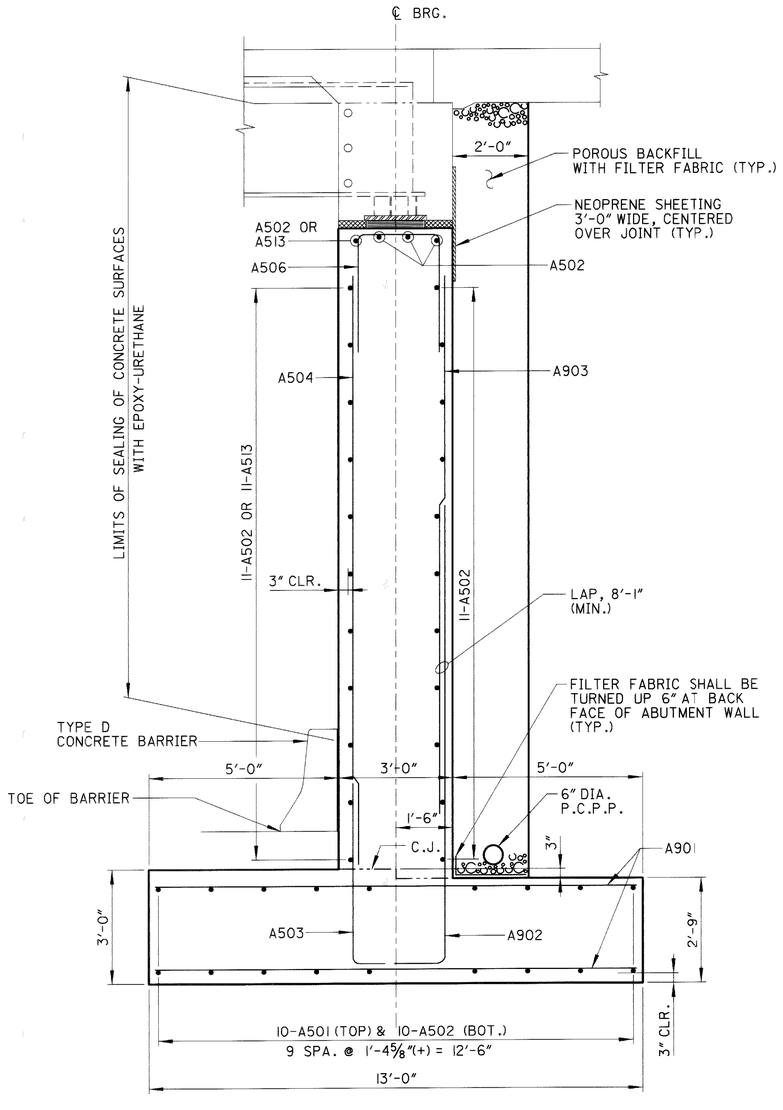

SECTION A-1 / 5

(REAR ABUTMENT)

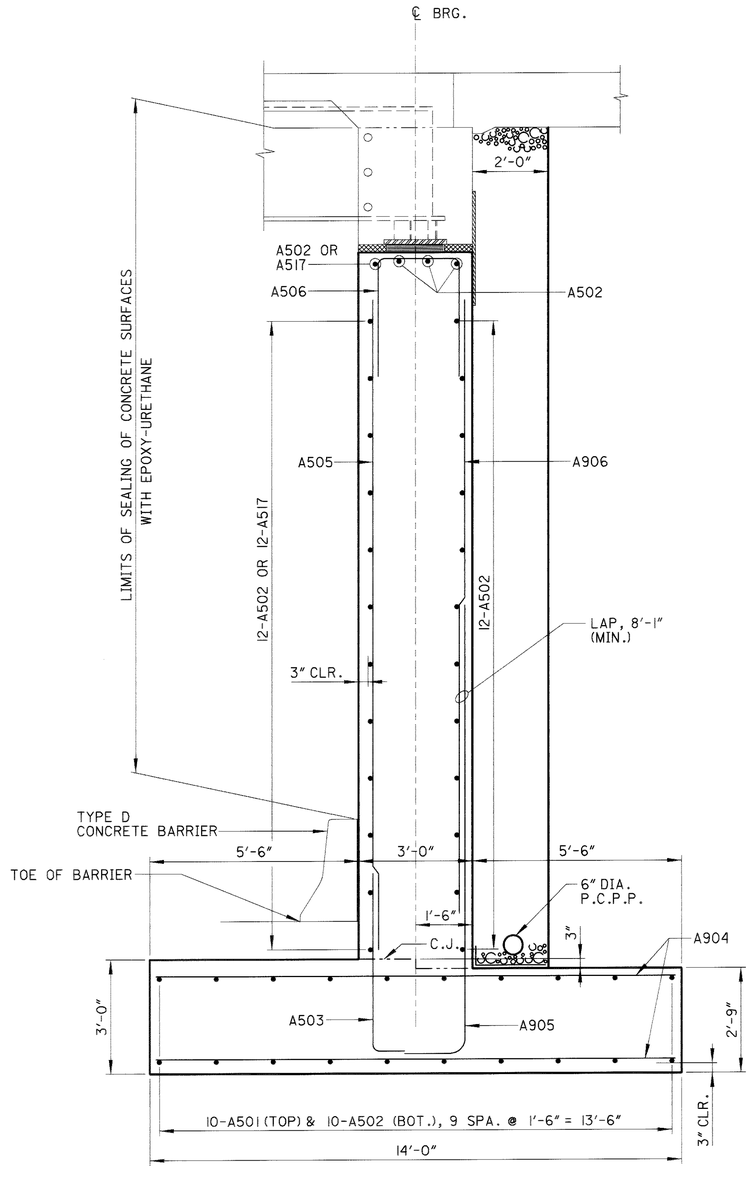

SECTION A-2 / 6

(FORWARD ABUTMENT)

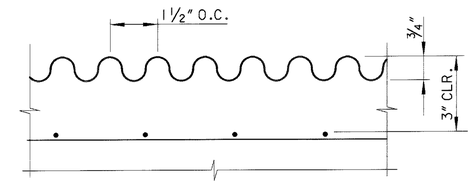

SECTION A-A

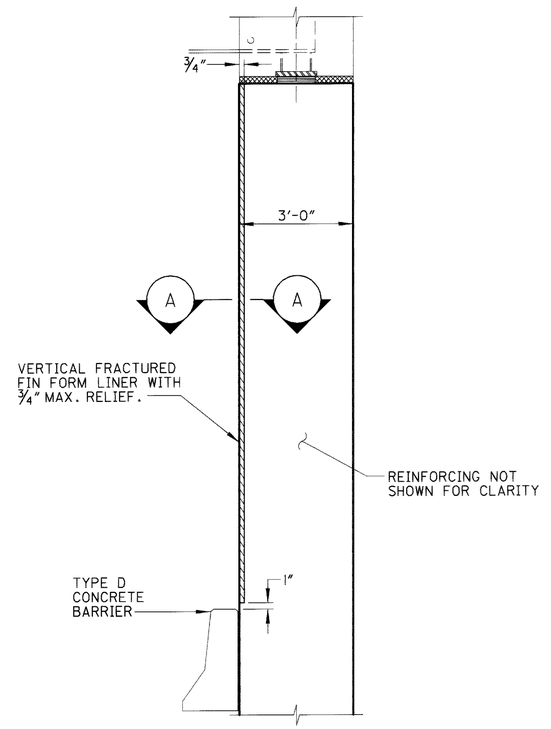

TYPICAL ABUTMENT TREATMENT

ITEM SPECIAL - FORM LINER

A VERTICAL FRACTURED FIN FORM LINER SHALL BE PROVIDED WERE INDICATED BY THE TYPICAL ABUTMENT TREATMENT DETAIL. THE COST OF THE FORM LINER, INCLUDING ALL LABOR, MATERIALS, EQUIPMENT AND INCIDENTALS SHALL BE INCLUDED WITH THE UNIT PRICE BID, PER SQUARE FOOT, FOR ITEM SPECIAL - FORM LINER

NOTES

1. NEOPRENE SHEETING SHALL BE FURNISHED AND INSTALLED IN ACCORDANCE WITH STANDARD DRAWING SICD-1-96. ALL COSTS SHALL BE INCLUDED WITH THE UNIT PRICE BID FOR ITEM 842, CLASS C CONCRETE, ABUTMENT NOT INCLUDING FOOTING, AS PER PLAN.
2. PVC WATERSTOP SHALL BE CONSIDERED INCIDENTAL TO AND INCLUDED WITH THE UNIT PRICE BID FOR ITEM 842, CLASS C CONCRETE, ABUTMENT NOT INCLUDING FOOTING, AS PER PLAN.

REVISIONS: 05/15/2002 by AGW

DLZ
1000 ROCKEFELLER BLDG • 614 W SUPERIOR AVE • CLEVELAND, OH 44113

DESIGNED	DRAWN	REVIEWED	DATE
DP	DP	GWM	6/5/01
CHECKED	REVISED	STRUCTURE FILE NUMBER	
JWB		7700261	

ABUTMENT DETAILS
BRIDGE NO. SUM-8-0159
FORGE STREET OVER S.R. 8

SUM-8-0.63

7 / 21

988 / 1088

01:43:29 PM
06/12/2002
u:\00-010sr-8\bridge\dwg\forge\0159-a02.dgn

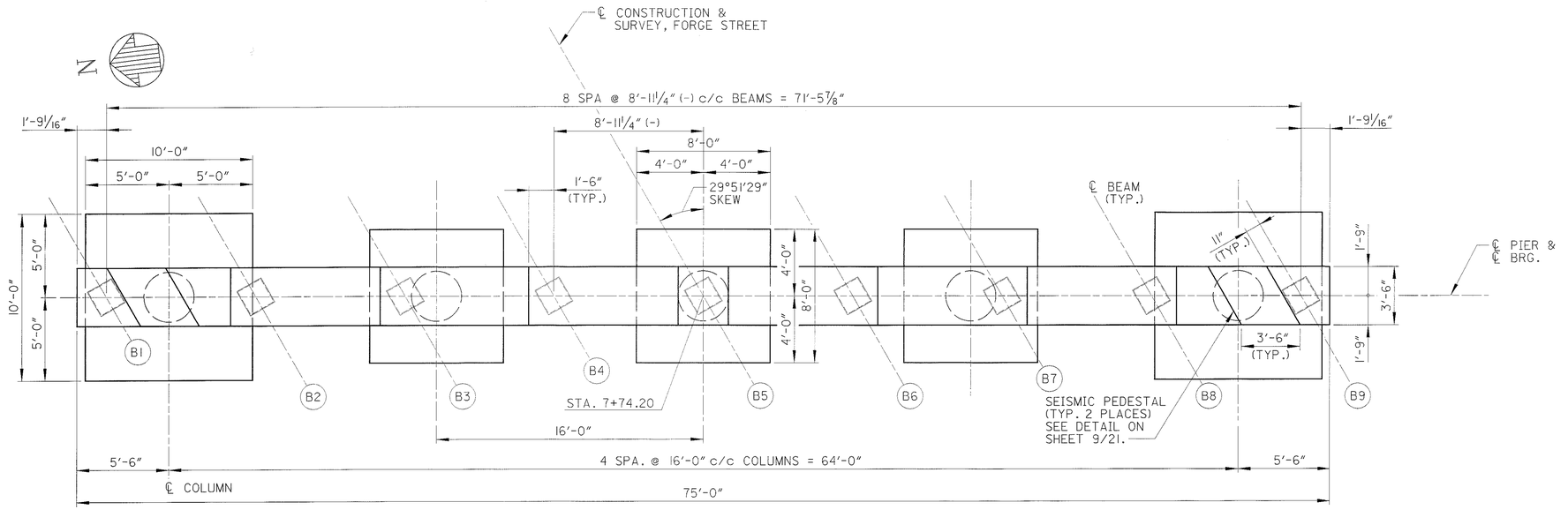

PIER PLAN VIEW

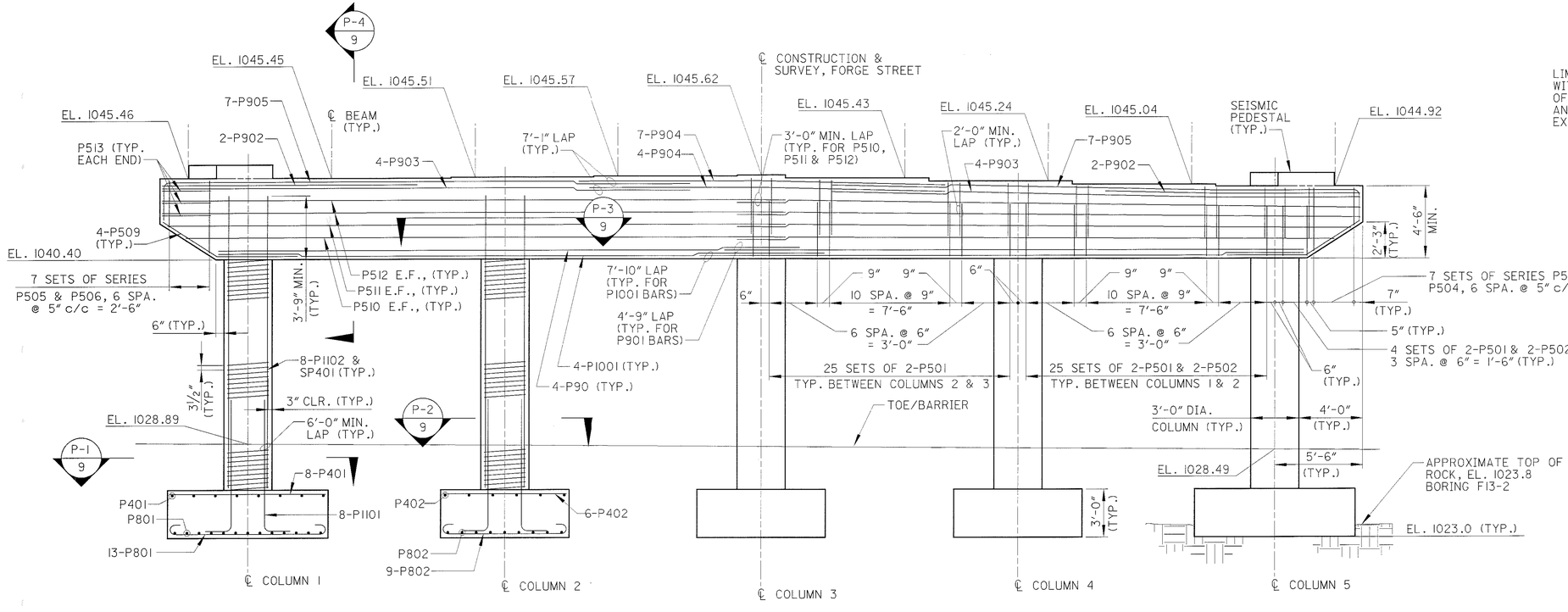

PIER ELEVATION

NOTE: BARRIER NOT SHOWN

NOTE:
VERTICAL BAR SPACING IN THE PIER CAP IS SYMMETRICAL ABOUT THE ℄ OF COLUMN 3.

LIMITS OF SEALING OF CONCRETE SURFACES WITH EPOXY-URETHANE. INCLUDE ALL SURFACES OF THE COLUMNS ABOVE MEDIAN BARRIER AND ALL SURFACES OF PIER CAPS WITH THE EXCEPTION OF THE TOP SURFACE OF THE CAP.

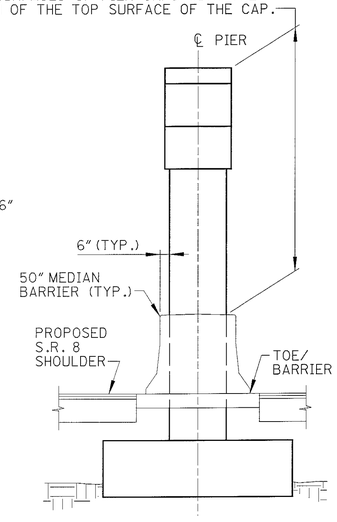

PIER END ELEVATION

LEGEND

(BX) - BEAM NUMBER

DLZ
1000 ROCKEFELLER BLDG • 614 W SUPERIOR AVE • CLEVELAND, OH 44113

DESIGNED	DRAWN	REVIEWED	DATE
DP	DP	GWM	6/5/01
CHECKED	REVISED	STRUCTURE FILE NUMBER	
JWB		7700261	

PIER
BRIDGE NO. SUM-8-0159
FORGE STREET OVER S.R. 8

SUM-8-0.63

8 / 21

989
1088

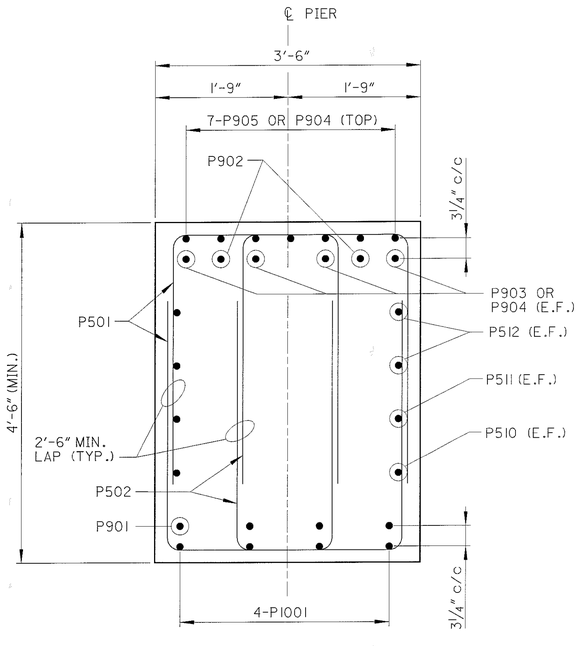

SECTION P-4 / 8

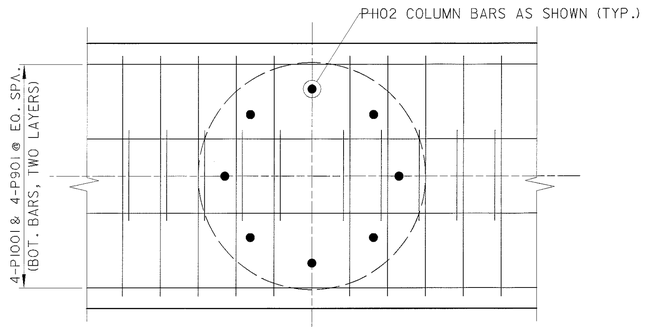

SECTION P-3 / 8

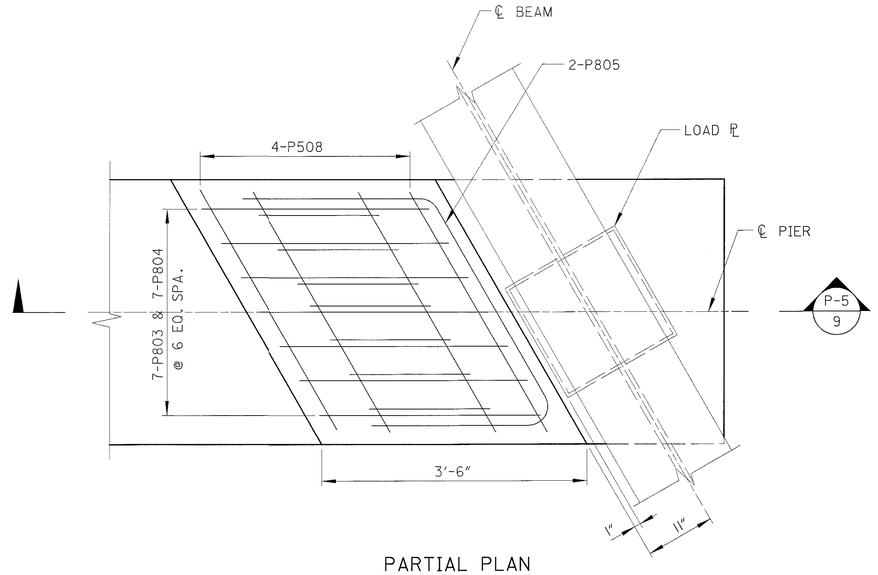

P-5 / 9

PARTIAL PLAN

SEISMIC PEDESTAL DETAILS
(TYP. AT PIER)

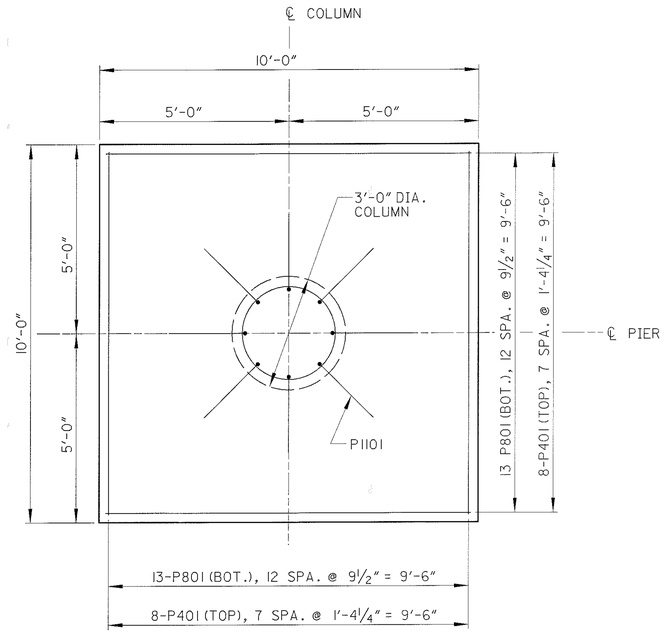

SECTION P-1 / 8

(TYP. OF COLUMN 1 & 5 FOOTINGS)

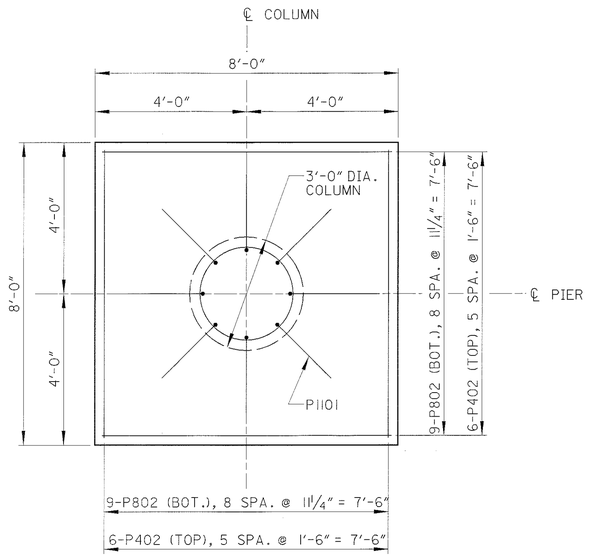

SECTION P-2 / 8

(TYP. OF COLUMNS 2,3 & 4)

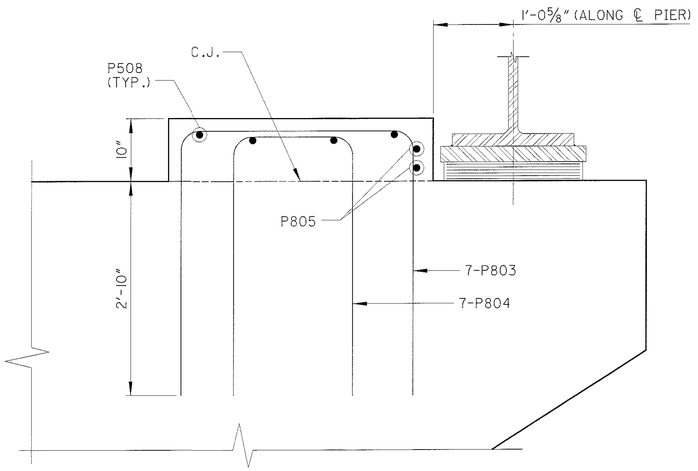

SECTION P-5 / 9

DLZ
8000 ROCKEFELLER BLDG • 614 W SUPERIOR AVE • CLEVELAND, OH 44113

DESIGNED	DRAWN	REVIEWED	DATE
DP	DP	GWM	6/5/01
CHECKED	REVISED	STRUCTURE FILE NUMBER	
JWB		7700261	

PIER DETAILS
BRIDGE NO. SUM-8-0159
FORGE STREET OVER S.R. 8

SUM-8-0.63

9 / 21

990
1088

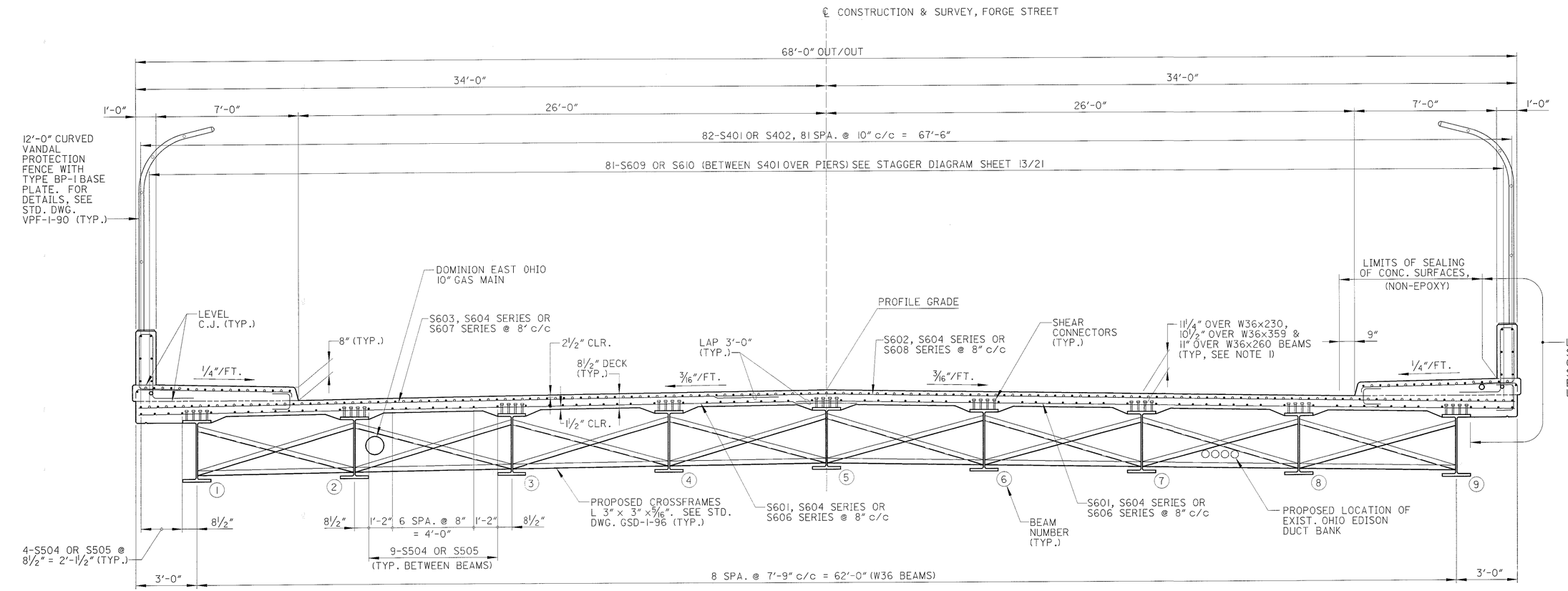

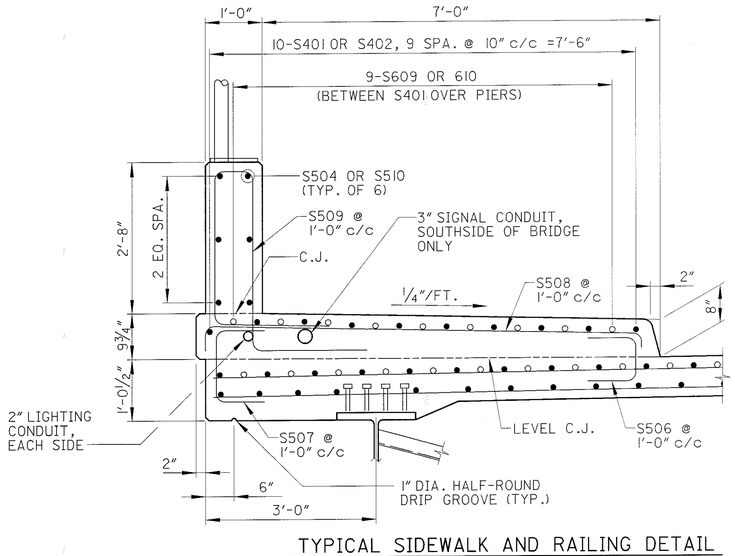

TYPICAL SIDEWALK AND RAILING DETAIL

TRANSVERSE SECTION

EACH RUN OF LONGITUDINAL DECK REINFORCING, EXCEPT ADDITIONAL BARS OVER THE PIERS, SHALL BE COMPRISED OF THE FOLLOWING:
TOP BARS: 7-S401 & 1-S402, LAP = 2'-0"
BOTTOM BARS: 7-S504 & 1-S505, LAP = 2'-6"
SIDEWALK BARS: 7-S401 & 1-S402, LAP = 2'-0"
PARAPET BARS: 7-S504 & 1-S510, LAP = 2'-9"

NOTES:

1. DECK SLAB DEPTH FOR CONCRETE QUANTITY: THE DECK THICKNESS, 8½", HAS BEEN USED FOR COMPUTING THE DECK CONCRETE QUANTITIES. CONCRETE REQUIRED TO FILL THE HAUNCHES, INCLUDING ADDITIONAL OR LESS MATERIAL REQUIRED DUE TO HAUNCH CONSTRUCTION TOLERANCES, SHALL BE CONSIDERED AS INCIDENTAL AND WILL NOT BE INCLUDED IN THE QUANTITY CALCULATIONS FOR PAYMENT.
2. A HAUNCH WIDTH OF 9 INCHES SHALL BE USED. HOWEVER, THE HAUNCH WIDTH MAY VARY BETWEEN 6 AND 12 INCHES.
3. DRIP GROOVES SHALL TERMINATE 2'-0" FROM THE FACE OF THE ABUTMENT.
4. FOR INTERMEDIATE CROSSFRAME DETAILS, REFER TO STANDARD DWG. GSD-1-96.

DLZ
1000 ROCKEFELLER BLDG • 614 W SUPERIOR AVE • CLEVELAND, OH 44113

DESIGNED DP | DRAWN DP | REVISED | CHECKED DJC
REVIEWED GWM | DATE 6/5/01
STRUCTURE FILE NUMBER 7700261

TRANSVERSE SECTION
BRIDGE NO. SUM-8-0159
FORGE STREET OVER S.R. 8

SUM-8-0.63

10 / 21

991
1088

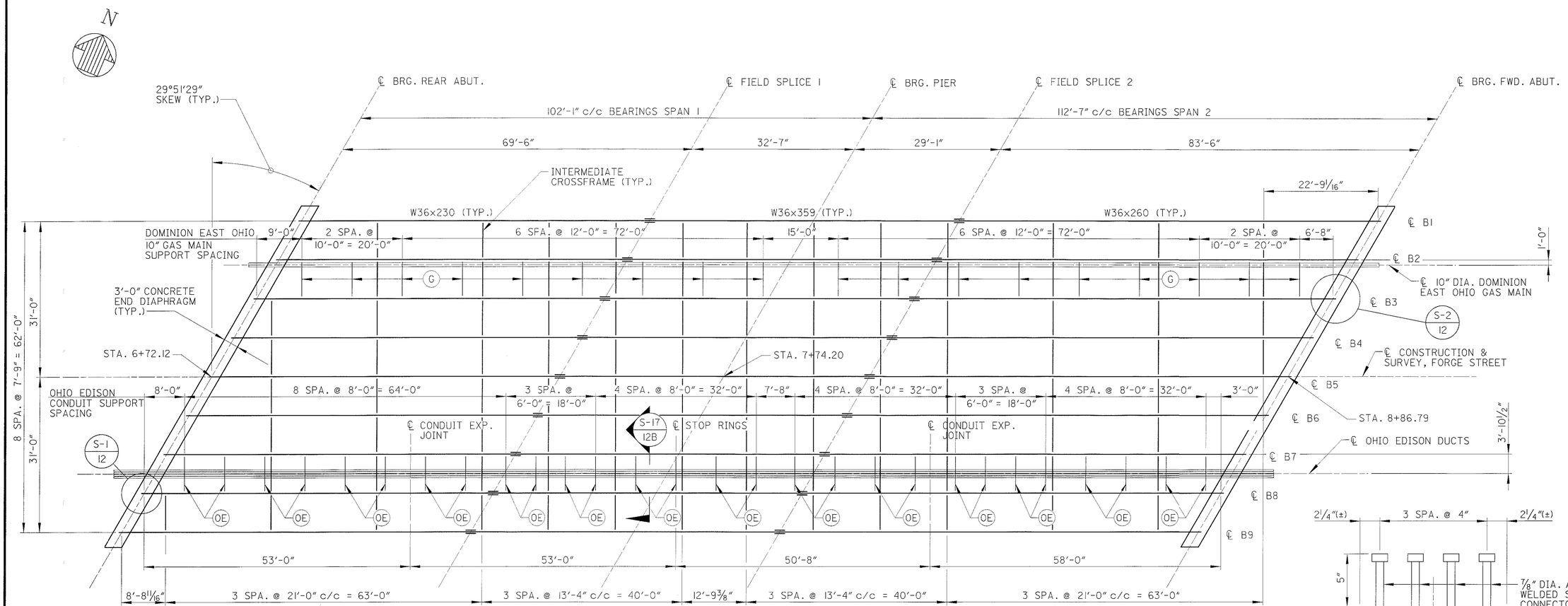

FRAMING PLAN

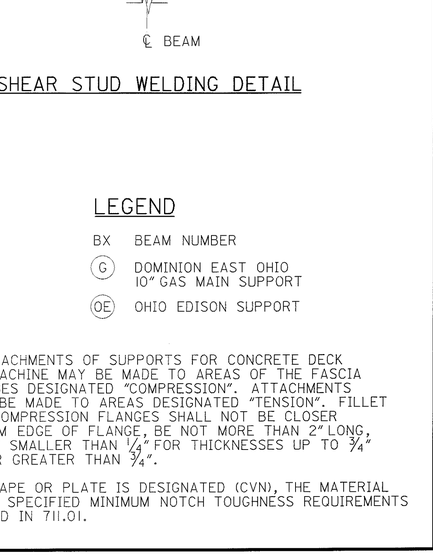

SHEAR STUD WELDING DETAIL

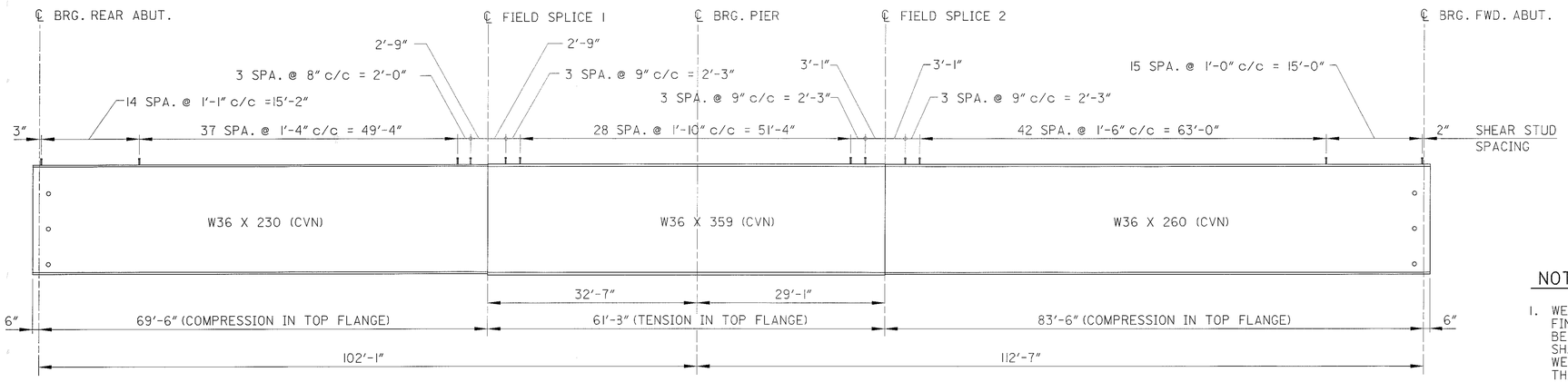

BEAM ELEVATION

TYPICAL PROPOSED BEAM

LEGEND

BX BEAM NUMBER

(G) DOMINION EAST OHIO 10" GAS MAIN SUPPORT

(OE) OHIO EDISON SUPPORT

NOTES:

1. WELDED ATTACHMENTS OF SUPPORTS FOR CONCRETE DECK FINISHING MACHINE MAY BE MADE TO AREAS OF THE FASCIA BEAM FLANGES DESIGNATED "COMPRESSION". ATTACHMENTS SHALL NOT BE MADE TO AREAS DESIGNATED "TENSION". FILLET WELDS TO COMPRESSION FLANGES SHALL NOT BE CLOSER THAN 1" FROM EDGE OF FLANGE, BE NOT MORE THAN 2" LONG, AND BE NOT SMALLER THAN 1/4" FOR THICKNESSES UP TO 3/4" AND 5/16" FOR GREATER THAN 3/4".
2. WHERE A SHAPE OR PLATE IS DESIGNATED (CVN), THE MATERIAL SHALL MEET SPECIFIED MINIMUM NOTCH TOUGHNESS REQUIREMENTS AS SPECIFIED IN 711.01.

DLZ
1000 ROCKEFELLER BLDG ● 614 W SUPERIOR AVE ● CLEVELAND, OH 44113

DESIGNED PAT
DRAWN PAT
CHECKED DP
REVIEWED GWM
DATE 6/5/01
REVISED
STRUCTURE FILE NUMBER 7700261

FRAMING PLAN
BRIDGE NO. SUM-8-0159
FORGE STREET OVER S.R. 8

SUM-8-0.63

11 / 21

992
1088

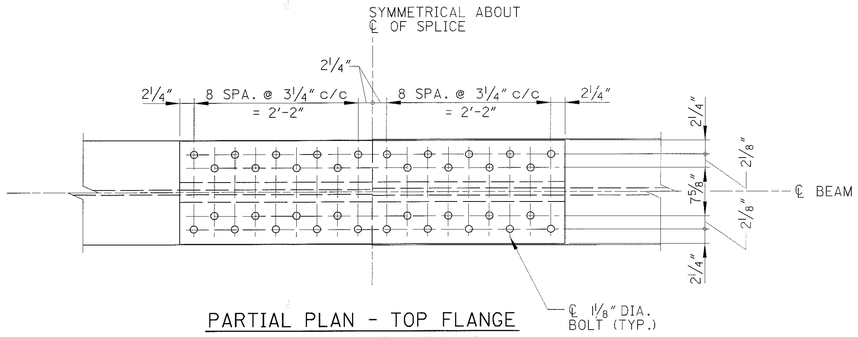

PARTIAL PLAN - TOP FLANGE

SPLICE 1 (BOTTOM FLANGE SAME)

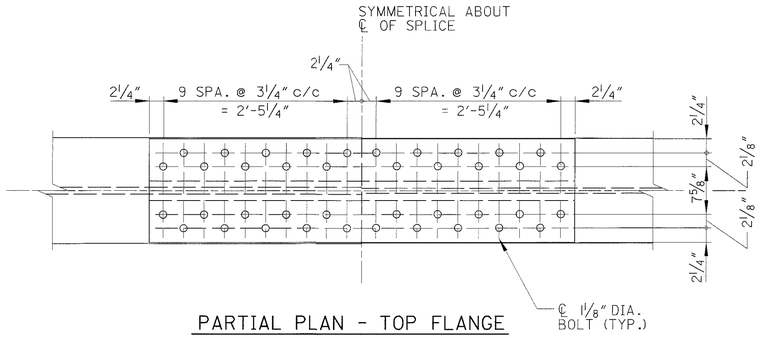

PARTIAL PLAN - TOP FLANGE

SPLICE 2 (BOTTOM FLANGE SAME)

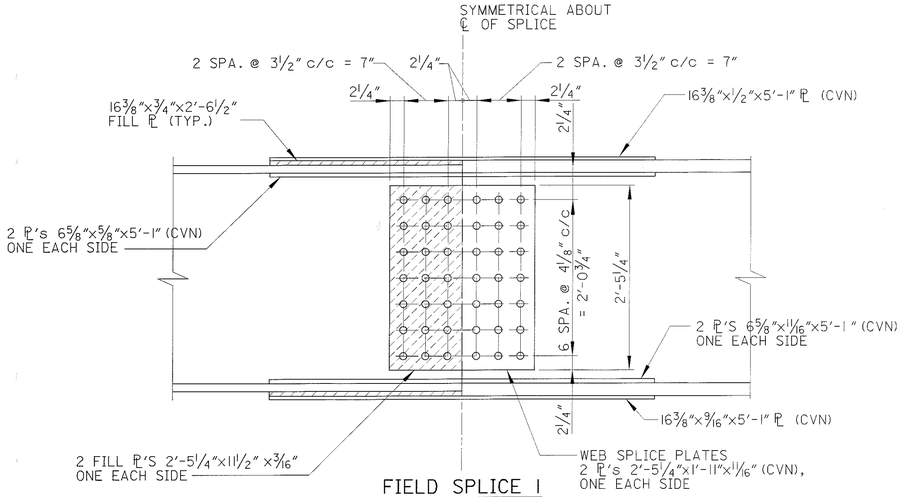

FIELD SPLICE 1

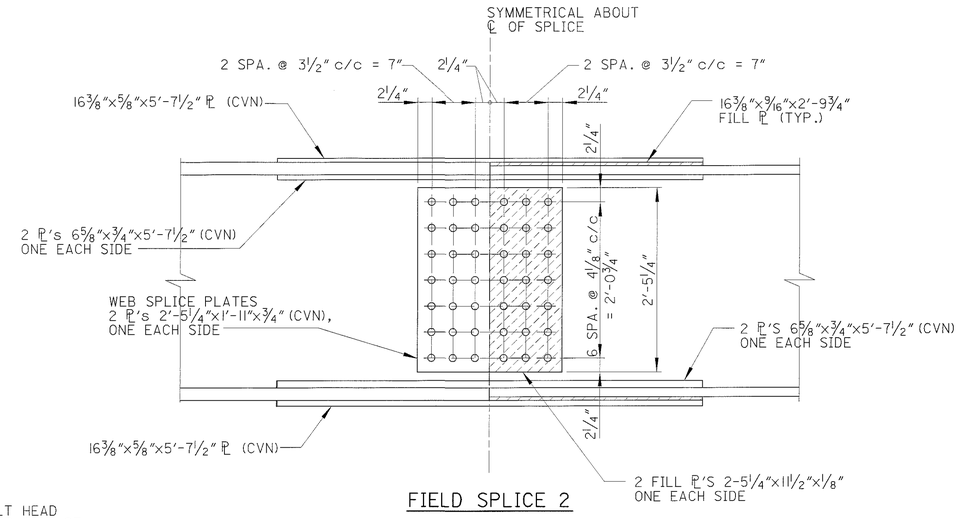

FIELD SPLICE 2

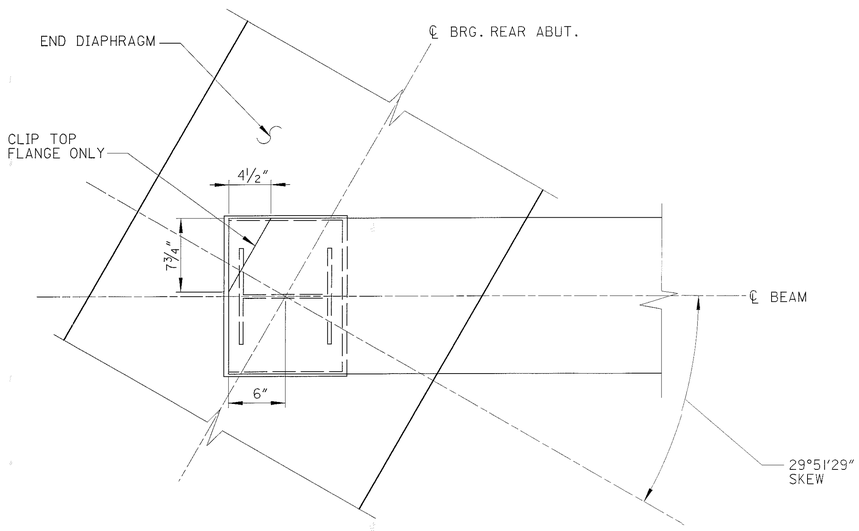

PARTIAL PLAN END DETAIL

(TYPICAL OF ALL BEAMS) S-1 II S-2 II OPPOSITE HAND

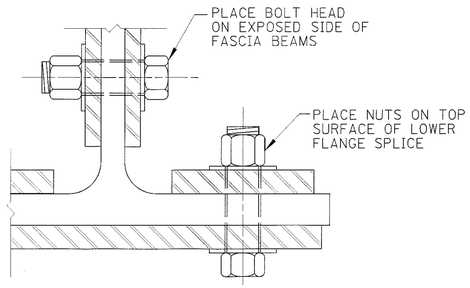

PARTIAL SECTION

(AT ℄ OF BEAM SPLICE)

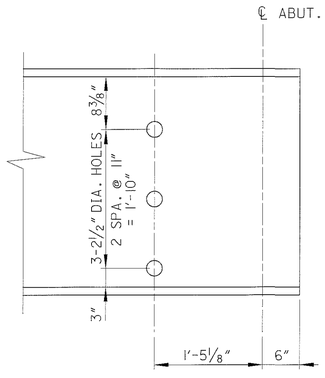

BEAM END DETAIL

(REAR & FORWARD, TYP. OF ALL BEAMS)

NOTES:

1. ALL SPLICE BOLTS ARE 1⅛" DIAMETER, HIGH STRENGTH BOLTS (A325).
2. FOR CVN REQUIREMENTS, SEE NOTE ON SHEET 11/21.

DLZ
8000 ROCKEFELLER BLDG • 614 W SUPERIOR AVE • CLEVELAND, OH 44113

DESIGNED	DRAWN	REVIEWED	DATE
DP	MWD	GWM	6/5/01
CHECKED	REVISED	STRUCTURE FILE NUMBER	
DJC		7700261	

SUPERSTRUCTURE DETAILS
BRIDGE NO. SUM-8-0159
FORGE STREET OVER S.R. 8

SUM-8-0.63

12/21

993
1088

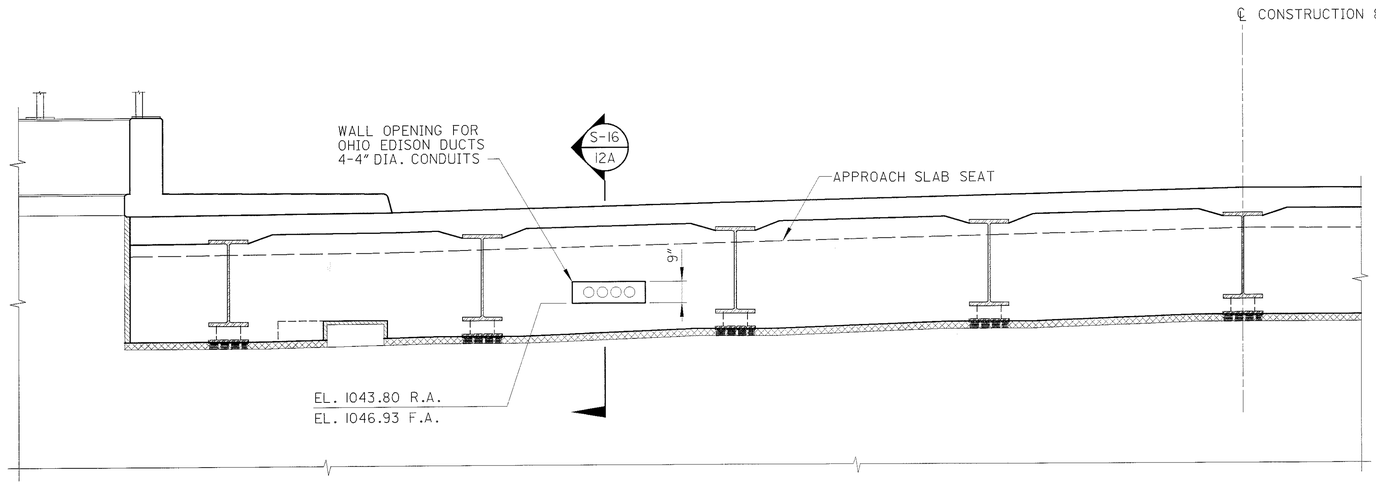

PARTIAL ELEVATION

REAR ABUTMENT SHOWN
FWD. ABUTMENT OPPOSITE HAND

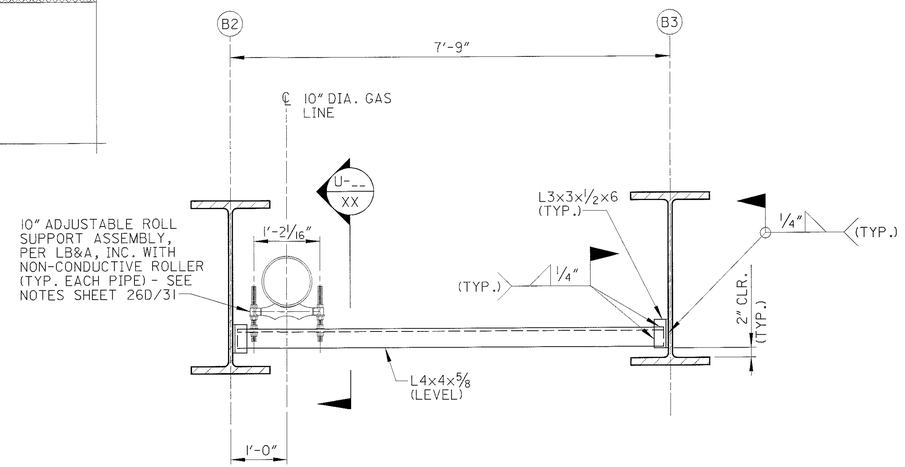

DOMINION EAST OHIO SUPPORT DETAIL

(18 PLACES)

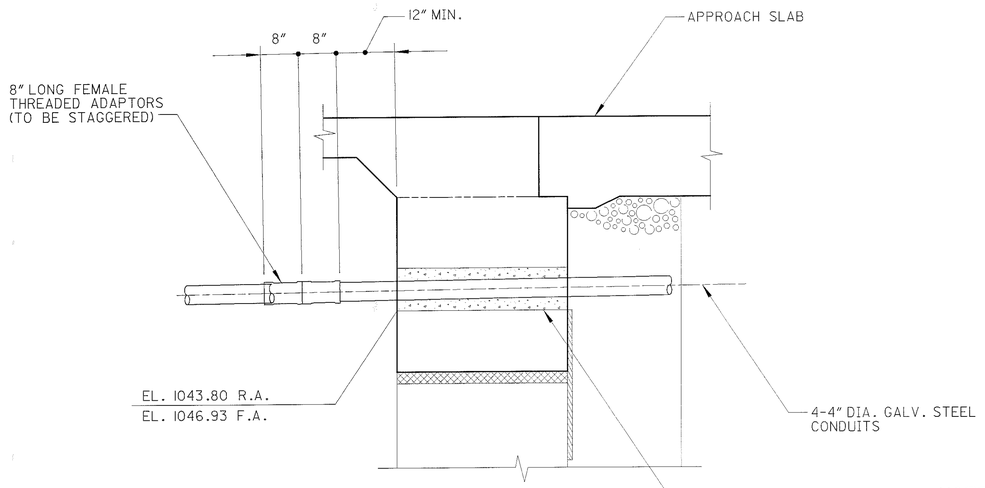

SECTION S-16 / 12A

NOTE: OPENING IN ABUTMENTS SHALL BE FILLED WITH NON-SHRINK, NON-METALLIC GROUT, BONDED TO PROPOSED END DIAPHRAGM CONCRETE.

GALV. STEEL CONDUIT PASSING THROUGH THE END DIAPHRAGM SHALL EXTEND BEYOND THE APPROACH SLABS.

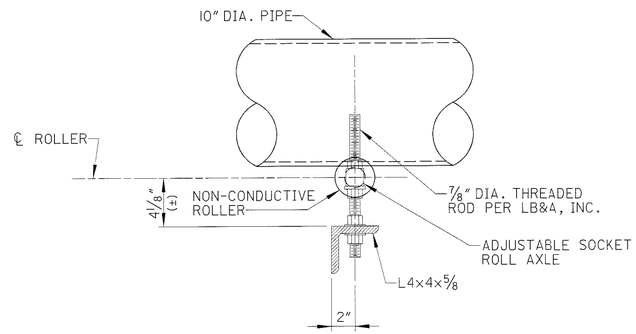

SECTION U- / 26E

ADJUSTABLE ROLL SUPPORT NOTES:

1. A NON-CONDUCTIVE ROLLER SHALL REPLACE THE CAST IRON ROLLER DETAILED IN THE SPECIFICATIONS FOR THE ADJUSTABLE ROLL SUPPORT BY LB&A, INC.
2. ADJUSTABLE ROLL SUPPORT SHALL INCLUDE:

   2 ADJUSTABLE SOCKETS - 1 ROLL AXLE
   2 VERTICAL THREADED RODS - 8 HEX NUTS
   1 NON-CONDUCTIVE ROLL
3. THE DIMENSION FROM THE TOP OF THE SUPPORT ANGLE TO THE CENTERLINE OF THE NON-CONDUCTIVE ROLLER IS APPROXIMATE. PLACEMENT OF THE PIPE SHALL BE ADJUSTED IN THE FIELD AS NECESSARY.
4. THE DESIGN OF THE ADJUSTABLE ROLL SUPPORT DETAIL SHALL BE PER SPECIFICATIONS PROVIDED BY LB&A, INC., P.O. BOX 540, WESTTOWN, PA 19395-9220, (610) 696-9220, OR APPROVED EQUAL. SEE GENERAL NOTES SHEET 3/21 FOR PAYMENT.

DLZ
3000 ROCKEFELLER BLDG • 614 W SUPERIOR AVE • CLEVELAND, OH 44113

DESIGNED DJP | DRAWN DJP | REVIEWED GWM | DATE 11/16/01
CHECKED JWB | REVISED | STRUCTURE FILE NUMBER 7700261

SUPERSTRUCTURE DETAILS
BRIDGE NO. SUM-8-0159
FORGE ST. OVER S.R. 8

SUM-8-0.63

12A / 21

993A / 1088

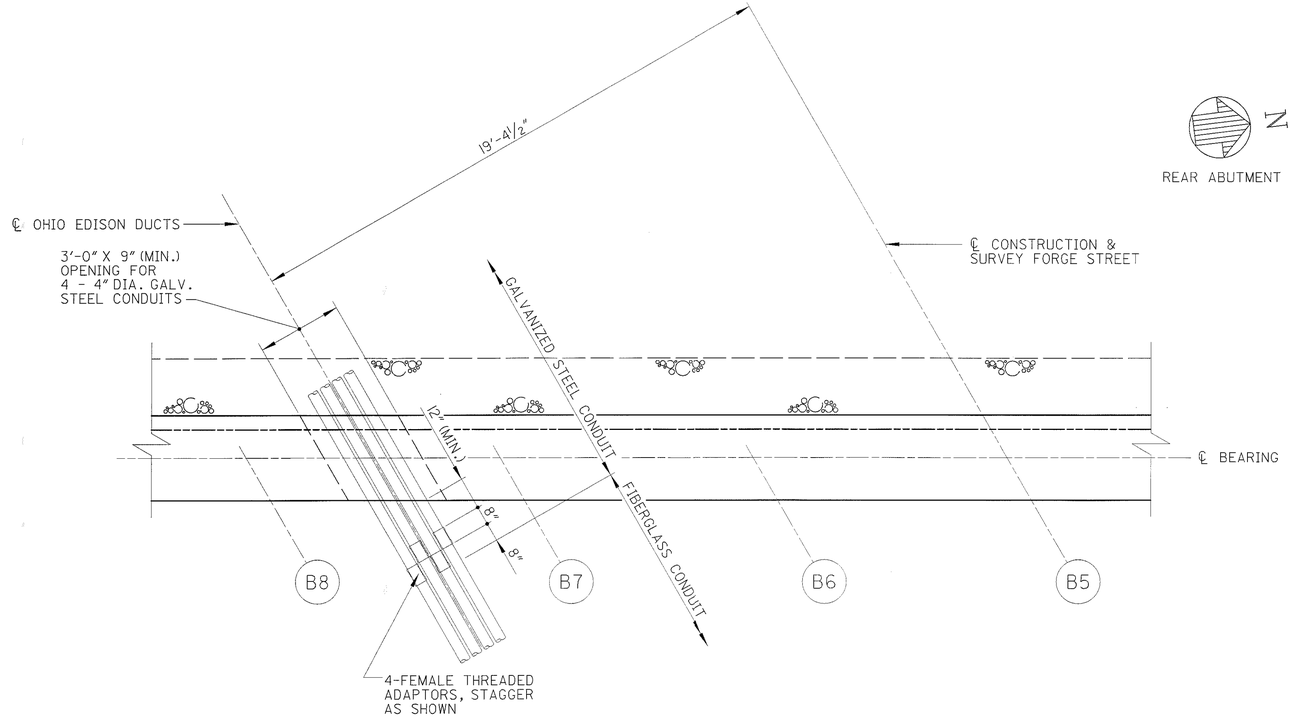

PARTIAL PLAN

REAR ABUTMENT - CONDUIT LOCATION AS SHOWN
FORWARD ABUTMENT - CONDUIT LOCATION OPPOSITE HAND

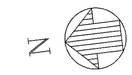

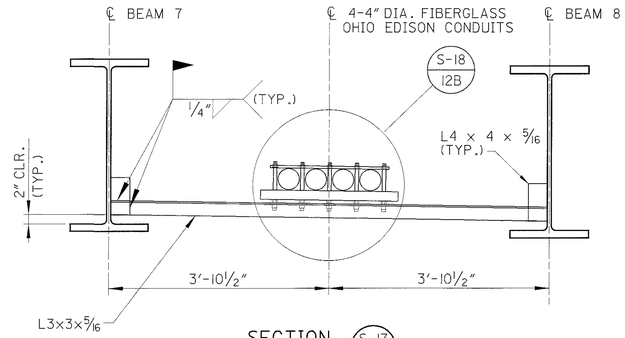

OHIO EDISON CONDUIT SUPPORT
(28 PLACES)

NOTES:

1. FIBERGLASS CONDUIT SHALL BE TYPE 4" IPS, WALL THICKNESS = .070 INCHES.
2. EXPANSION JOINT FITTINGS SHALL HAVE O-RINGS.
3. COUPLINGS AND/OR FITTINGS SHALL BE STAGGERED.
4. CONDUIT ONLY SHALL PASS THROUGH THE CONDUIT SUPPORT ASSEMBLY. COUPLINGS AND/OR FITTINGS SHALL CLEAR THE CONDUIT SUPPORT ASSEMBLY BY A MINIMUM OF 2 FEET.
5. THE MANUFACTURER'S TEMPERATURE RESTRICTIONS FOR USE OF EPOXY ADHESIVE SHALL BE CAREFULLY OBSERVED.
6. LOCK WASHERS AND/OR DOUBLE NUTS SHALL BE USED ON THE CONDUIT SUPPORT ASSEMBLY.
7. ALL JOINTS SHALL BE GLUED WITH EPOXY. SAND THE SPIGOT END OF THE CONDUIT BEFORE APPLYING THE EPOXY.
8. THE CONDUIT MUST BE LOOSE AND PROPERLY ALIGNED IN THE SUPPORT ASSEMBLY.
9. ALL JOINTS SHALL BE SEATED BY USING A BLOCK OF WOOD AND A HAMMER. CARE SHALL BE TAKEN NOT TO USE EXCESSIVE FORCE.
10. MATERIALS SUPPLIED BY R.C. CHILDS COMPANY (PHONE NO.: 440-835-3500), OR BY APPROVED ALTERNATE EQUAL.

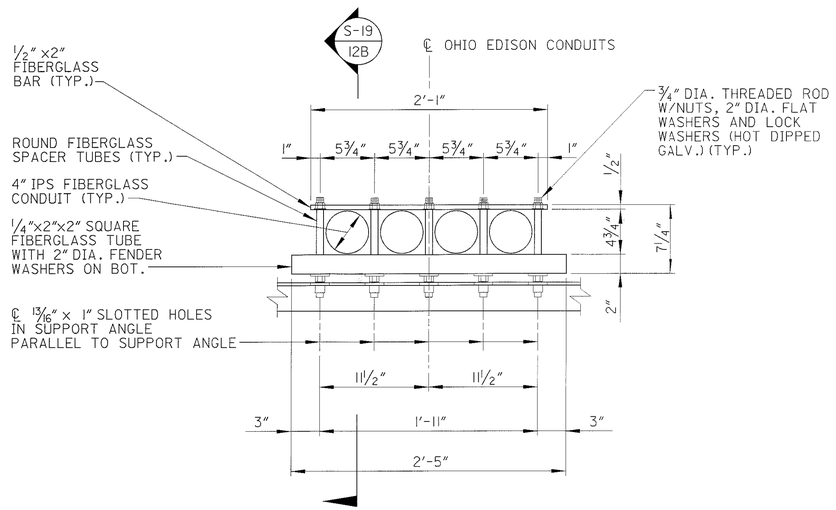

DETAIL S-18 / 12B

CONDUIT SUPPORT ASSEMBLY

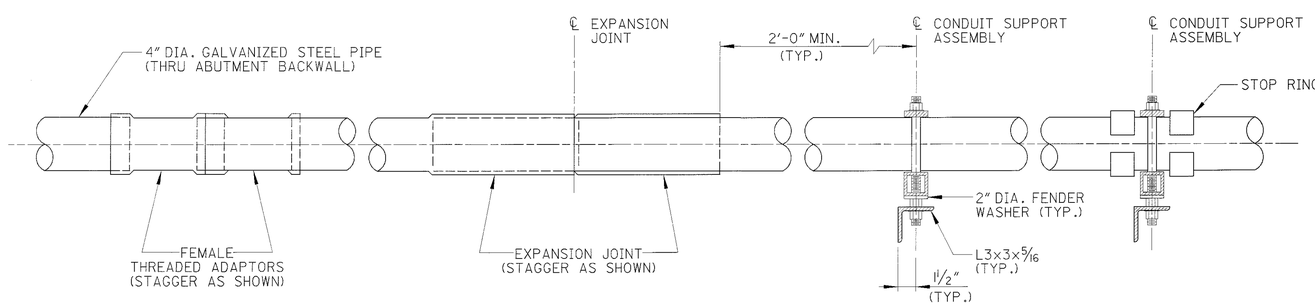

SECTION S-19 / 12B

DLZ
8000 ROCKEFELLER BLDG • 614 W. SUPERIOR AVE • CLEVELAND, OH 44113

DESIGNED	DRAWN	CHECKED	REVIEWED	DATE
DJP	DJP	JWB	GWM	11/16/01

REVISED

STRUCTURE FILE NUMBER 7700261

SUPERSTRUCTURE DETAILS
BRIDGE NO. SUM-8-0159
FORGE ST. OVER S.R. 8

SUM-8-0.63

12B / 21

993B / 1088

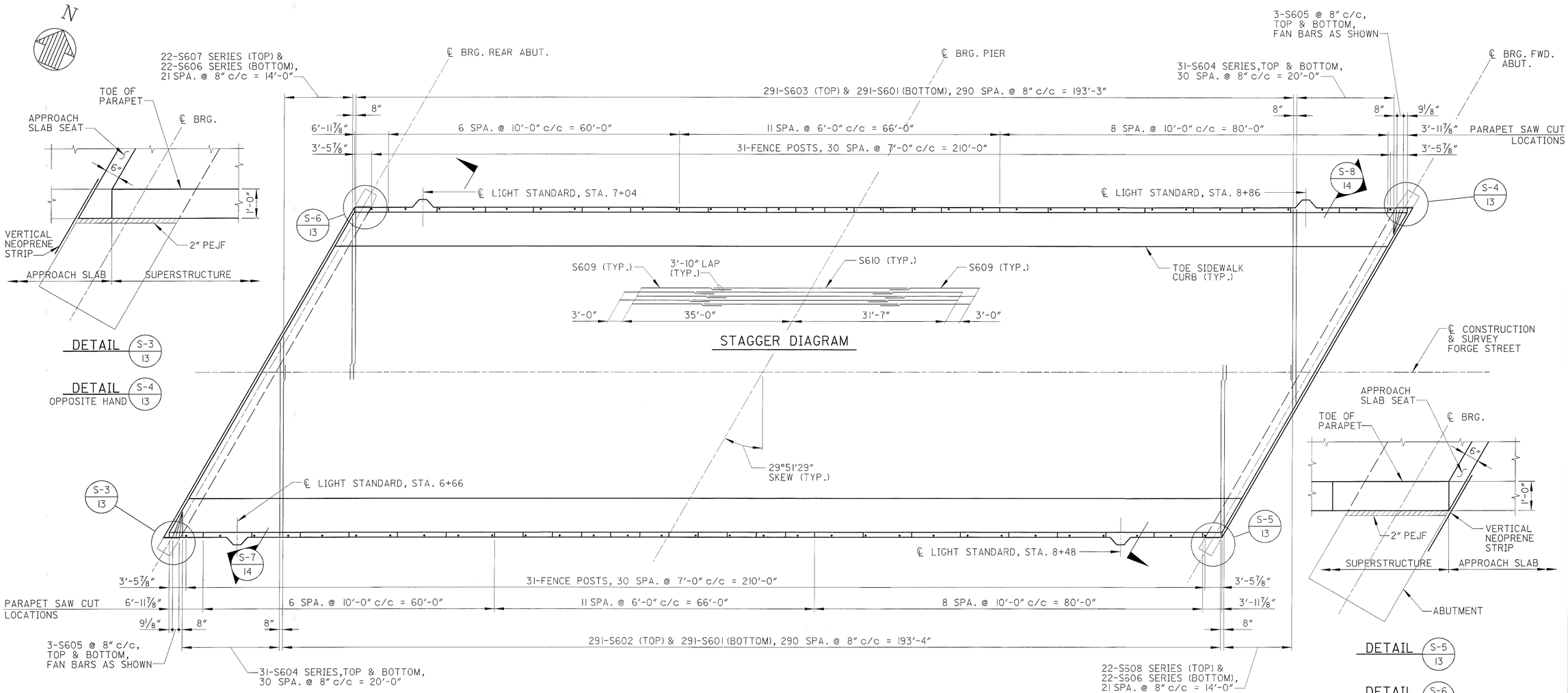

DECK SLAB PLAN

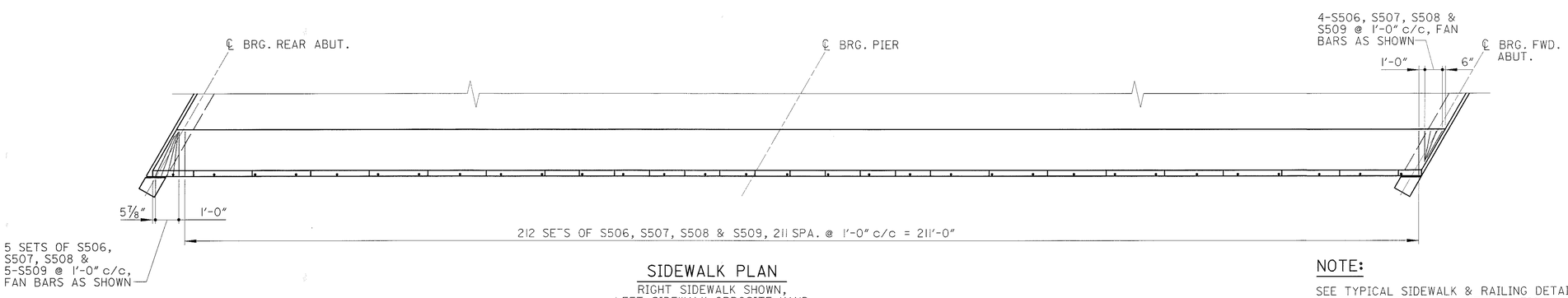

SIDEWALK PLAN

RIGHT SIDEWALK SHOWN,
LEFT SIDEWALK OPPOSITE HAND

NOTE:

SEE TYPICAL SIDEWALK & RAILING DETAIL, SHEET 10/21 FOR MORE INFORAMATION

DLZ
800 ROCKEFELLER BLDG • 614 W SUPERIOR AVE • CLEVELAND, OH 44113

DESIGNED	DRAWN	REVIEWED	DATE
DP	DP	GWM	6/5/01
CHECKED	REVISED	STRUCTURE FILE NUMBER	
JWB		7700261	

DECK SLAB PLAN
BRIDGE NO. SUM-8-0159
FORGE STREET OVER S.R. 8

SUM-8-0.63

13 / 21

994
1088

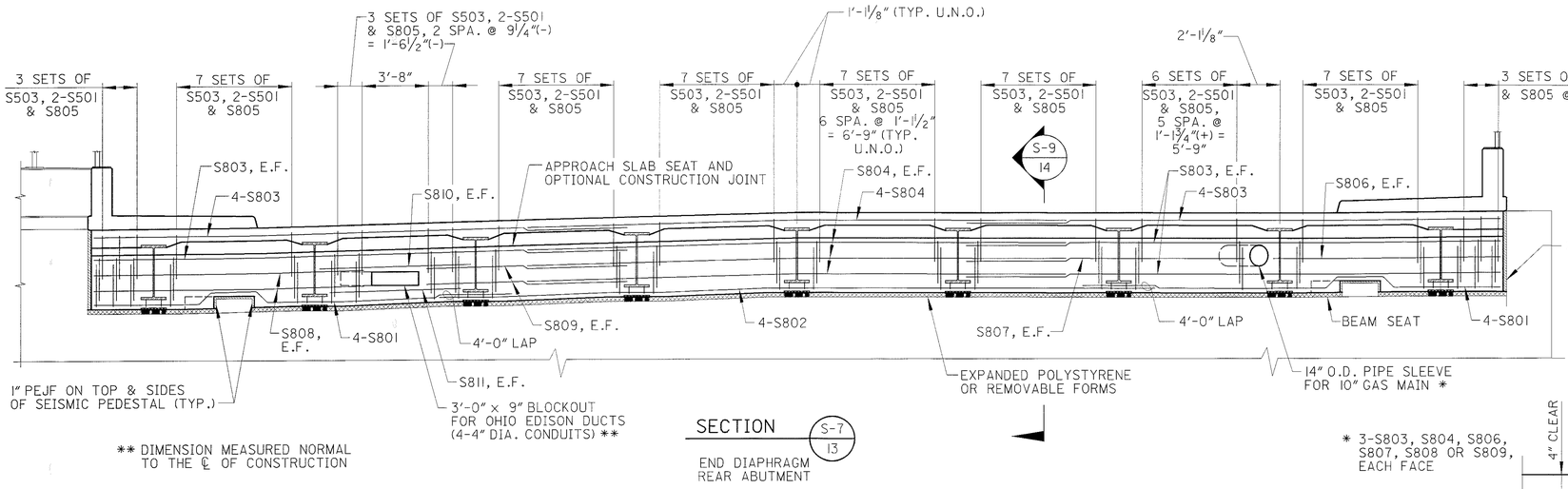

** DIMENSION MEASURED NORMAL TO THE ℄ OF CONSTRUCTION

SECTION S-7 / 13

END DIAPHRAGM REAR ABUTMENT

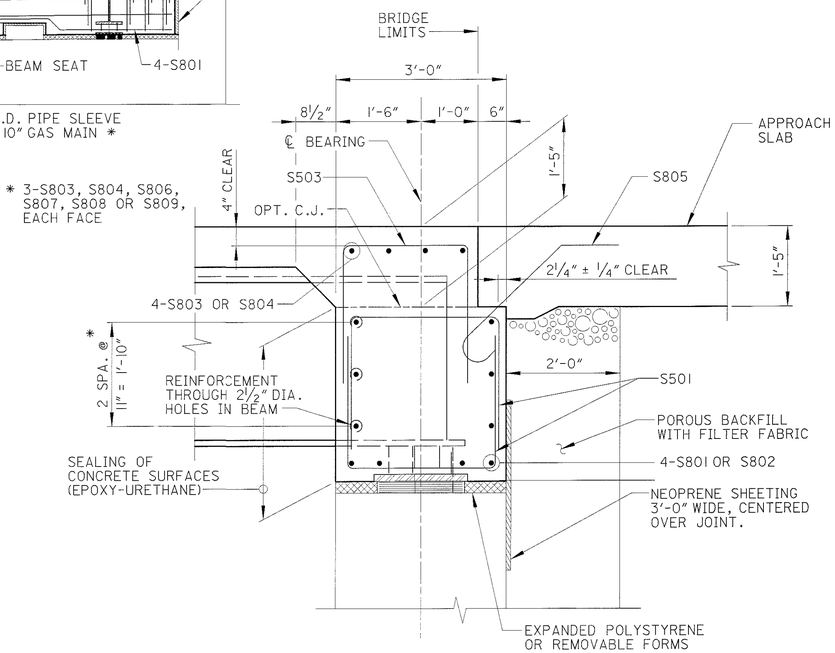

* 3-S803, S804, S806, S807, S808 OR S809, EACH FACE

SECTION S-9 / 14

NOTES:

1. VERTICAL BARS SHALL BE PLACED PARALLEL TO BEAMS.
2. HORIZONTAL MEASUREMENTS ARE ALONG ABUTMENT CENTERLINE OF BEARINGS.
3. PLACEMENT OF VERTICAL REBAR SHALL BE ADJUSTED AROUND THE SEISMIC PEDESTALS.
4. MINIMUM LAP SPLICES, UNLESS NOTED OTHERWISE, SHALL BE AS FOLLOWS:

   #5 BARS - 2'-0"
   #8 BARS - 5'-6"

5. REFER TO STANDARD DRAWING SICD-1-96 FOR ADDITIONAL DETAILS.
6. CONCRETE FOR THE END DIAPHRAGMS MAY BE PLACED SEPARATE OF OR WITH THE DECK CONCRETE. IF THE CONTRACTOR CHOOSES TO PLACE THE DIAPHRAGM CONCRETE SEPARATELY, THEY SHALL HAVE AT LEAST 48 HOURS OF SET TIME BEFORE DECK CONCRETE CAN BE PLACED.
7. EXPANDED POLYSTYRENE OR REMOVABLE FORMS SHALL BE CONSIDERED INCIDENTAL AND INCLUDED FOR PAYMENT WITH ITEM 844 - HIGH PERFORMANCE CONCRETE SUPERSTRUCTURE (DECK), AS PER PLAN.
8. OPENING IN ABUTMENTS SHALL BE FILLED WITH NON-SHRINK, NON-METALLIC GROUT, BONDED TO EXISTING CONCRETE.
9. GALV. STEEL CONDUIT PASSING THROUGH THE ABUTMENT BACKWALL SHALL EXTEND BEYOND THE APPROACH SLABS.

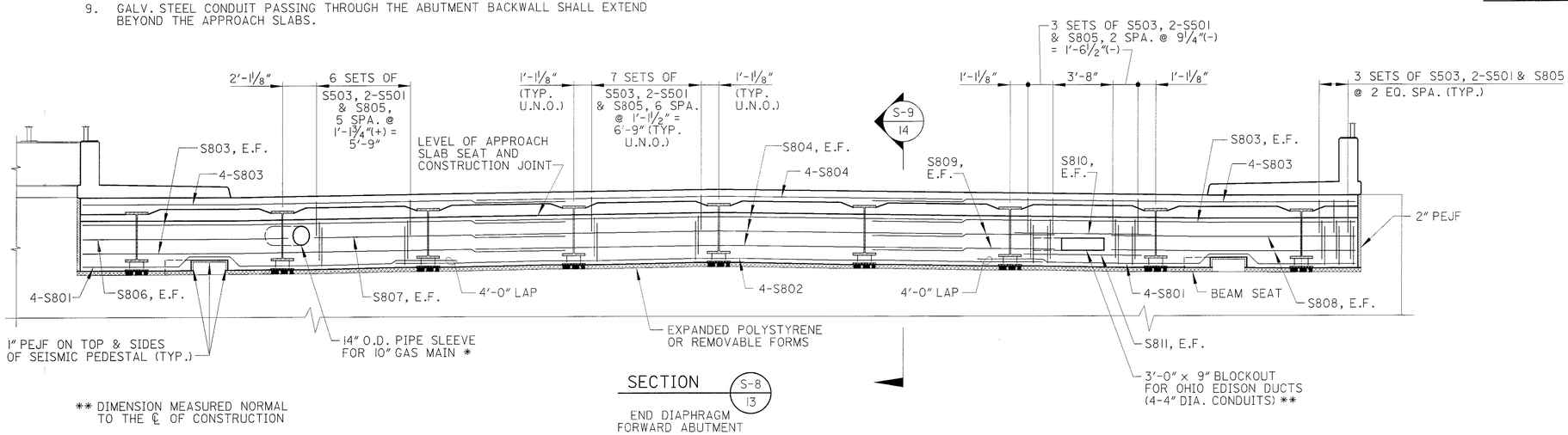

** DIMENSION MEASURED NORMAL TO THE ℄ OF CONSTRUCTION

SECTION S-8 / 13

END DIAPHRAGM FORWARD ABUTMENT

DLZ
1000 ROCKEFELLER BLDG • 614 W. SUPERIOR AVE. • CLEVELAND, OH 44113

DESIGNED	DRAWN	REVIEWED	DATE
DP	MWD	GWM	6/5/01
CHECKED	REVISED	SIGNATURE FILE NUMBER	
JWB		7700261	

END DIAPHRAGM DETAILS
BRIDGE NO. SUM-8-0159
FORGE STREET OVER S.R. 8

SUM-8-0.63

14 / 21

995
1088

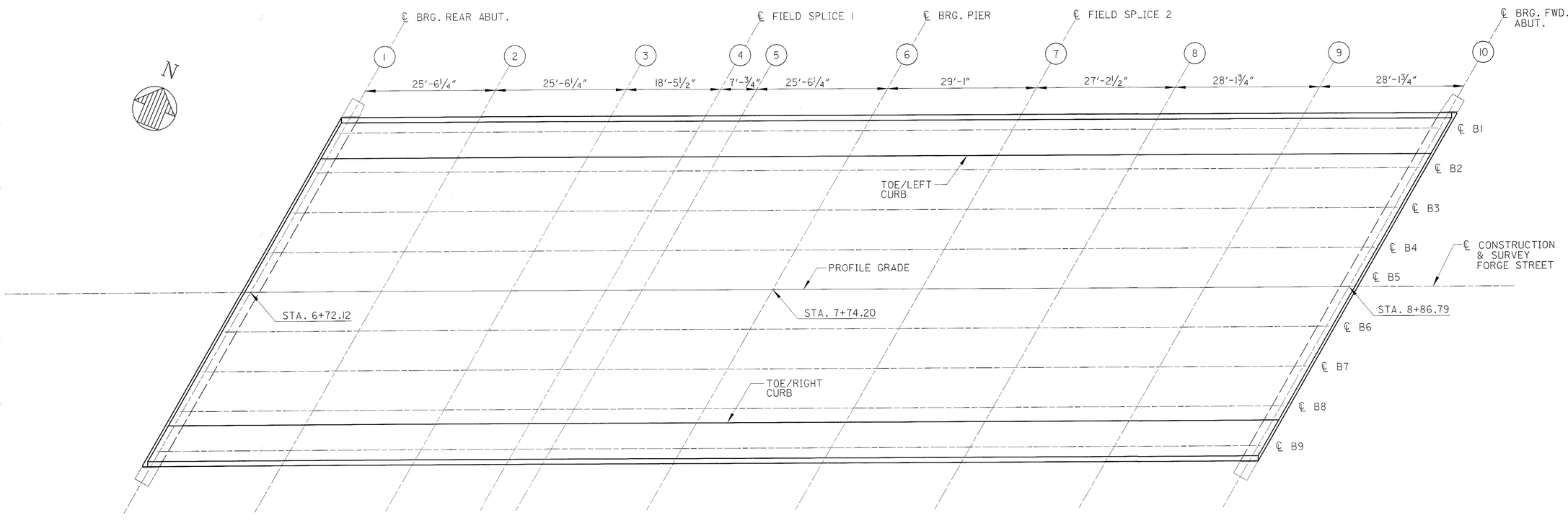

SCREED ELEVATION LOCATION DIAGRAM

SCREED ELEVATION (FEET)										
LOCATION	SPAN 1						SPAN 2			
	1 (℄ BRG. REAR ABUT.)	2 (0.25)	3 (0.50)	4 (℄ F.S. 1)	5 (0.75)	6 (℄ PIER)	7 (℄ F.S. 2)	8 (0.50)	9 (0.75)	10 (℄ BRG. FWD. ABUT.)
GIRDER 1 *	1047.85	1048.58	1049.18	1049.48	1049.58	1049.90	1050.31	1050.56	1050.53	1050.28
TOE / LEFT CURB	1047.79	1048.52	1049.13	1049.43	1049.53	1049.86	1050.29	1050.57	1050.55	1050.28
GIRDER 2	1047.79	1048.53	1049.14	1049.45	1049.55	1049.89	1050.32	1050.61	1050.60	1050.33
GIRDER 3	1047.81	1048.54	1049.16	1049.48	1049.59	1049.95	1050.41	1050.72	1050.73	1050.46
GIRDER 4	1047.82	1048.56	1049.18	1049.52	1049.63	1050.00	1050.49	1050.82	1050.85	1050.59
GIRDER 5, CROWN & PROFILE GRADE	1047.84	1048.57	1049.19	1049.55	1049.66	1050.06	1050.56	1050.91	1050.97	1050.72
GIRDER 6	1047.61	1048.35	1048.97	1049.33	1049.45	1049.87	1050.40	1050.77	1050.84	1050.60
GIRDER 7	1047.38	1048.12	1048.74	1049.11	1049.24	1049.67	1050.22	1050.61	1050.71	1050.49
GIRDER 8	1047.16	1047.89	1048.51	1048.89	1049.02	1049.48	1050.05	1050.46	1050.58	1050.38
TOE / RIGHT CURB	1047.08	1047.81	1048.43	1048.81	1048.94	1049.40	1049.98	1050.40	1050.53	1050.34
GIRDER 9 *	1047.01	1047.73	1048.35	1048.73	1048.87	1049.35	1049.95	1050.38	1050.52	1050.34

SCREED ELEVATIONS SHOWN ARE FOR THE DECK SLAB SURFACE PRIOR TO CONCRETE PLACEMENT.
ALLOWANCE HAS BEEN MADE FOR ANTICIPATED CALCULATED DEAD LOAD DEFLECTIONS.

* ELEVATIONS SHOWN ARE FOR THE TOP/DECK SLAB BEFORE PLACEMENT OF SIDEWALK.

DLZ
3000 ROCKEFELLER BLDG • 614 W SUPERIOR AVE • CLEVELAND, OH 44113

DESIGNED DP | DRAWN DP | CHECKED DJC | REVISED | REVIEWED GWM | DATE 6/5/01 | STRUCTURE FILE NUMBER 7700261

SCREED ELEVATIONS
BRIDGE NO. SUM-8-0159
FORGE STREET OVER S.R. 8

SUM-8-0.63

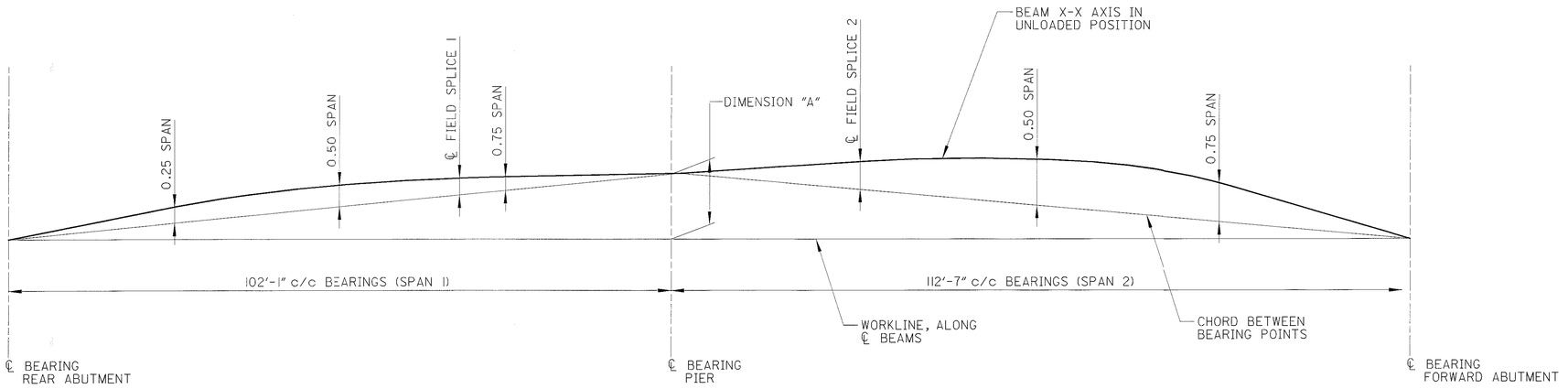

CAMBER AND BLOCKING DIAGRAM

NOTE:

ALL INFORMATION GIVEN WITH RESPECT TO ℄ OF ROLLED SECTIONS (BEAM X-X AXIS)

DEFLECTION AND CAMBER (IN INCHES)

BEAM NO.	CAMBER DESCRIPTION	SPAN 1				SPAN 2		
		0.25	0.50	FS	0.75	FS	0.50	0.75
1	DEFLECTION DUE TO WEIGHT OF STEEL	3/8	7/16	3/16	1/8	7/16	7/8	3/4
	DEFLECTION DUE TO REMAINING DEAD LOAD	1 7/16	1 9/16	7/8	9/16	1 7/16	2 7/8	2 7/16
	ADJUST. FOR VERTICAL CURVATURE	1 3/16	2	1 5/16	1 1/16	2 5/16	2 13/16	1 3/4
	REQUIRED SHOP CAMBER	3	4	3	2 3/8	4 3/16	6 9/16	4 15/16
2	DEFLECTION DUE TO WEIGHT OF STEEL	3/8	7/16	3/16	1/8	7/16	7/8	3/4
	DEFLECTION DUE TO REMAINING DEAD LOAD	1 9/16	1 11/16	1 5/16	5/8	1 9/16	3 1/8	2 5/8
	ADJUST. FOR VERTICAL CURVATURE	1 1/16	1 7/8	1 7/8	1 5/8	2 3/8	2 15/16	1 15/16
	REQUIRED SHOP CAMBER	3	4	3	2 3/8	4 3/8	6 15/16	5 5/16
3	DEFLECTION DUE TO WEIGHT OF STEEL	3/8	7/16	3/16	1/8	7/16	7/8	3/4
	DEFLECTION DUE TO REMAINING DEAD LOAD	1 9/16	1 11/16	1 5/16	5/8	1 9/16	3 1/8	2 5/8
	ADJUST. FOR VERTICAL CURVATURE	7/8	1 11/16	1 3/4	1 1/2	2 7/16	3 1/16	2 1/8
	REQUIRED SHOP CAMBER	2 13/16	3 13/16	2 7/8	2 1/4	4 7/16	7 1/16	5 1/2
4	DEFLECTION DUE TO WEIGHT OF STEEL	3/8	7/16	3/16	1/8	7/16	7/8	3/4
	DEFLECTION DUE TO REMAINING DEAD LOAD	1 9/16	1 11/16	1 5/16	5/8	1 9/16	3 1/8	2 5/8
	ADJUST. FOR VERTICAL CURVATURE	3/4	1 7/16	1 5/8	1 3/8	2 7/16	3 1/8	2 1/4
	REQUIRED SHOP CAMBER	2 1/16	3 9/16	2 3/4	2 1/8	4 7/16	7 1/8	5 5/8
5	DEFLECTION DUE TO WEIGHT OF STEEL	3/8	7/16	3/16	1/8	7/16	7/8	3/4
	DEFLECTION DUE TO REMAINING DEAD LOAD	1 9/16	1 11/16	1 5/16	5/8	1 9/16	3 1/8	2 5/8
	ADJUST. FOR VERTICAL CURVATURE	5/8	1 1/4	1 7/16	1 5/16	2 1/2	3 3/16	2 5/16
	REQUIRED SHOP CAMBER	2 9/16	3 3/8	2 9/16	2 1/16	4 1/2	7 3/16	5 1/16
6	DEFLECTION DUE TO WEIGHT OF STEEL	3/8	7/16	3/16	1/8	7/16	7/8	3/4
	DEFLECTION DUE TO REMAINING DEAD LOAD	1 9/16	1 11/16	1 5/16	5/8	1 9/16	3 1/8	2 5/8
	ADJUST. FOR VERTICAL CURVATURE	9/16	1	1 5/16	1 3/16	2 1/2	3 1/4	2 3/8
	REQUIRED SHOP CAMBER	2 1/2	3 1/8	2 7/16	1 5/16	4 1/2	7 1/4	5 3/4
7	DEFLECTION DUE TO WEIGHT OF STEEL	3/8	7/16	3/16	1/8	7/16	7/8	3/4
	DEFLECTION DUE TO REMAINING DEAD LOAD	1 9/16	1 1/2	1 5/16	5/8	1 9/16	3 1/8	2 5/8
	ADJUST. FOR VERTICAL CURVATURE	7/16	1 3/16	1 1/8	1	2 1/2	3 1/4	2 7/16
	REQUIRED SHOP CAMBER	2 3/8	2 15/16	2 1/4	1 3/4	4 1/2	7 1/4	5 13/16
8	DEFLECTION DUE TO WEIGHT OF STEEL	3/8	7/16	3/16	1/8	7/16	7/8	3/4
	DEFLECTION DUE TO REMAINING DEAD LOAD	1 9/16	1 1/16	1 5/16	5/8	1 9/16	3 1/8	2 5/8
	ADJUST. FOR VERTICAL CURVATURE	3/8	5/8	1 5/16	7/8	2 9/16	3 1/4	2 7/16
	REQUIRED SHOP CAMBER	2 5/16	2 3/4	2 1/16	1 5/8	4 3/16	7 1/4	5 13/16
9	DEFLECTION DUE TO WEIGHT OF STEEL	3/8	7/16	3/16	1/8	7/16	7/8	3/4
	DEFLECTION DUE TO REMAINING DEAD LOAD	1 7/16	1 9/16	7/8	9/16	1 9/16	3 1/8	2 5/8
	ADJUST. FOR VERTICAL CURVATURE	1/4	1/2	1 1/16	3/4	2 9/16	3 1/4	2 7/16
	REQUIRED SHOP CAMBER	2 1/16	2 1/2	1 3/4	1 7/16	4 3/16	7 1/4	5 13/16

NOTE: POSITIVE DIMENSIONS INDICATE DOWNWARD DEFLECTION AND UPWARD CAMBER

TABLE OF BLOCKING DIMENSIONS

BEAM NO.	DIMENSION "A"
1	10 1/16
2	10 5/8
3	10 3/16
4	10 7/16
5	10 1/4
6	10
7	9 3/4
8	9 7/16
9	9 1/8

NOTE:
ALL DIMENSIONS ARE ABOVE THE WORKLINE AND
ALL DIMENSIONS ARE IN INCHES.

DLZ
3000 ROCKEFELLER BLDG • 614 W SUPERIOR AVE • CLEVELAND, OH 44113

DESIGNED DP | DRAWN DP | CHECKED DJC | REVISED | REVIEWED GWM | DATE 6/5/01 | STRUCTURE FILE NUMBER 7700261

CAMBER DIAGRAM
BRIDGE NO. SUM-8-0159
FORGE STREET OVER S.R. 8

SUM-8-0.63

997
1088

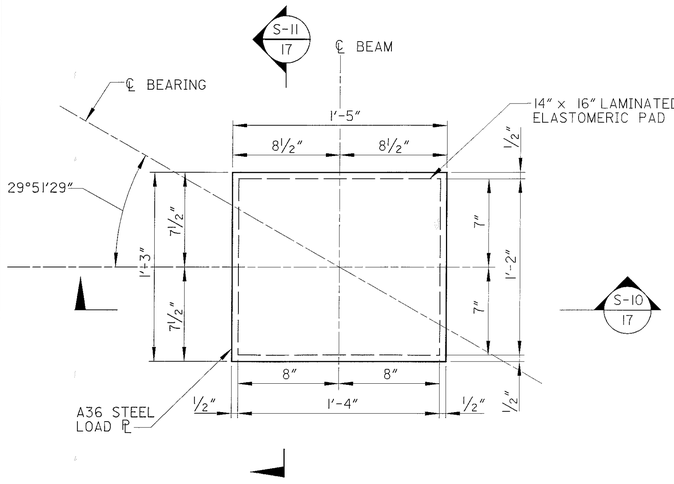

PLAN
(BEAM NOT SHOWN)

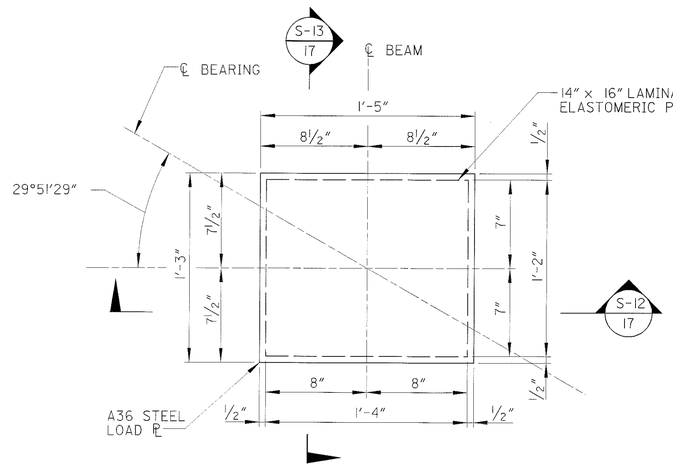

PLAN
(BEAM NOT SHOWN)

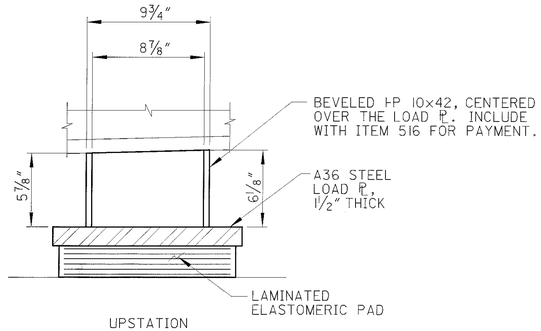

SECTION S-11 17

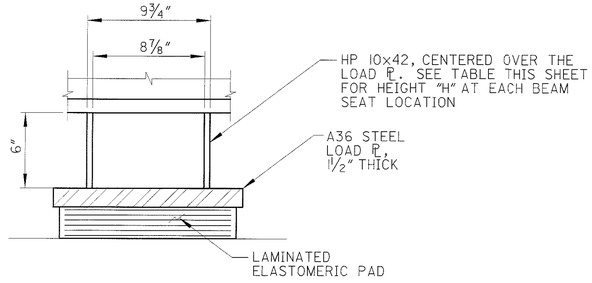

SECTION S-13 17

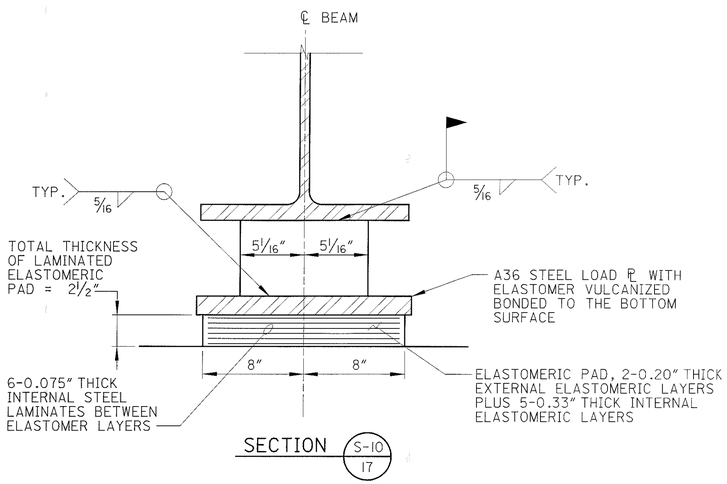

SECTION S-10 17

EXPANSION BEARING
(REAR ABUTMENT, 9 REQUIRED)

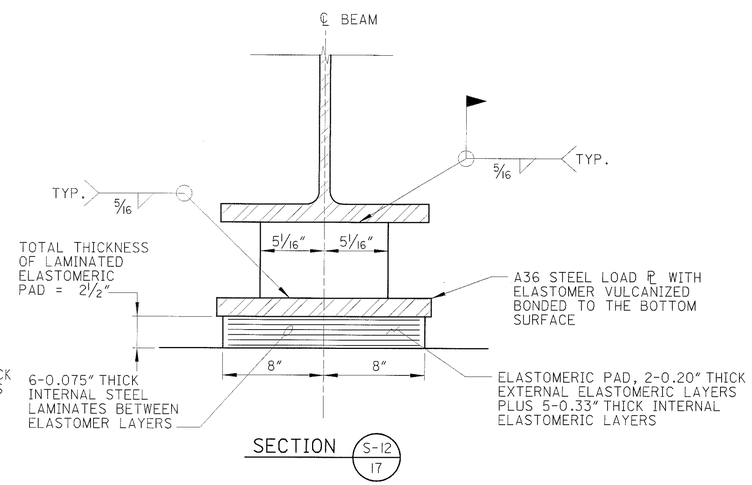

SECTION S-12 17

EXPANSION BEARING
(FORWARD ABUTMENT, 9 REQUIRED)

NOTES:

1. BEARING LOAD DESIGNS:

	EXPANSION BEARING (REAR ABUTMENT)	EXPANSION BEARING (FORWARD ABUTMENT)
DEAD LOADS	95.9K	109.5K
LIVE LOADS (NO IMPACT)	61.9K	62.2K
TOTAL DESIGN LOAD	161.9K	176.4K

2. A36 STEEL LOAD PLATES SHALL BE USED FOR ALL ABUTMENT BEARINGS. THE LOAD PLATE SHALL BE VULCANIZED BONDED TO THE LAMINATED ELASTOMERIC PAD DURING THE MOLDING PROCESS.
3. WELDING OF THE HP SECTION TO THE LOAD PLATE AND TO THE SUPERSTRUCTURE SHALL BE CONTROLLED SO THAT THE PLATE TEMPERATURE AT THE ELASTOMER BONDED SURFACE DOES NOT EXCEED 300°F AS DETERMINED BY USE OF PYROMETRIC STICKS OR OTHER TEMPERATURE MONITORING DEVICES.
4. BEARING REPOSITIONING: IF THE STEEL IS ERECTED AT AN AMBIENT TEMPERATURE HIGHER THAN 80°F OR LOWER THAN 40°F AND THE BEARING SHEAR DEGFLECTION EXCEEDS 1/6 OF THE BEARING HEIGHT AT 60°F (±) 10°F THE BEAMS OR GIRDERS SHALL BE RAISED TO ALLOW THE BEARINGS TO RETURN TO THIER UNDEFORMED SHAPE AT 60°F (±) 10°F.
5. BASIS OF PAYMENT: THE UNIT PRICE BID SHALL INCLUDE ALL MATERIALS, LABOR AND INCIDENTALS NECESSARY TO FURNISH AND INSTALL THE LAMINATED ELASTOMERIC BEARINGS, STEEL LOAD PLATES AND HP SHAPES. PAYMENT WILL BE MADE AT THE CONTRACT PRICE FOR ITEM 516 - ELASTOMERIC BEARING WITH INTERNAL LAMINATES AND LOAD PLATE (NEOPRENE), AS PER PLAN
6. ELASTOMERIC BEARINGS SHALL COMPLY WITH ITEM 516 AND AASHTO STANDARD SPECIFICATION FOR HIGHWAY BRIDGES, SECTION 18, BEARING DEVICES, DIVISION II, CONSTRUCTION, ARTICLES 18.4.5.1 AND 18.5.6.2. BEARINGS SHALL BE GRADE 3, 50 DUROMETER ELASTOMER, AND SHALL BE SUBJECTED TO THE LOAD TESTING REQUIREMENTS DEFINED IN ARTICLE 18.7.4.5 OF THE AASHTO DOCUMENT LISTED ABOVE. BEARINGS WERE DESIGNED UNDER SECTION 14.6.6 OF SECTION 14, BEARINGS, DIVISION I, DESIGN. TESTING SHALL BE INCLUDED IN THE UNIT PRICE BED FOR THE BEARINGS EACH.

DLZ
1000 ROCKEFELLER BLDG • 614 W SUPERIOR AVE • CLEVELAND, OH 44113

DESIGNED DP | DRAWN MWD | REVIEWED GWM | DATE 6/5/01
CHECKED JWB | REVISED | STRUCTURE FILE NUMBER 7700261

BEARING DETAILS
BRIDGE NO. SUM-8-0159
FORGE STREET OVER S.R. 8

SUM-8-0.63

17/21

998
1088

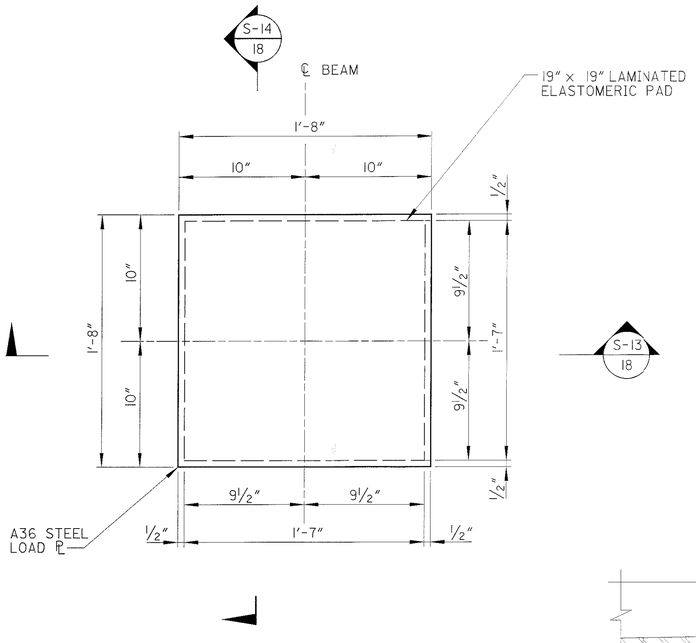

PLAN

(BEAM NOT SHOWN)

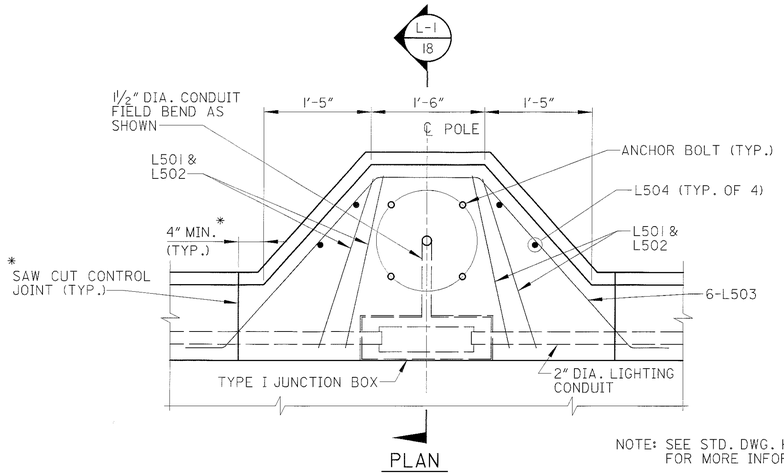

PLAN

* FOR SAW CUT SPACING, SEE DECK PLAN SHEET 13/21

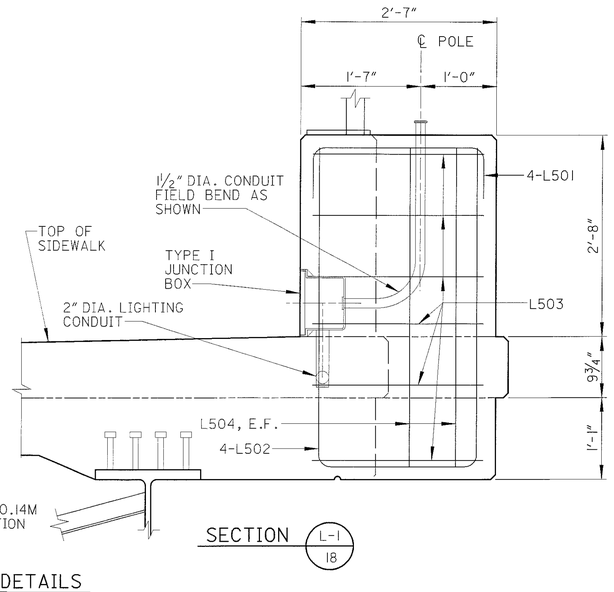

NOTE: SEE STD. DWG. HL-20.14M FOR MORE INFORMATION

SECTION L-1 / 18

LIGHT POLE PILASTER DETAILS

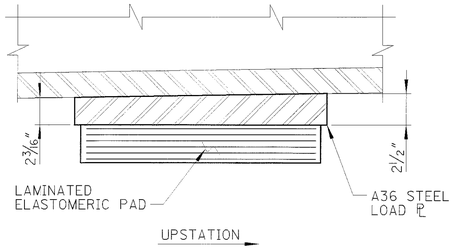

SECTION S-14 / 18

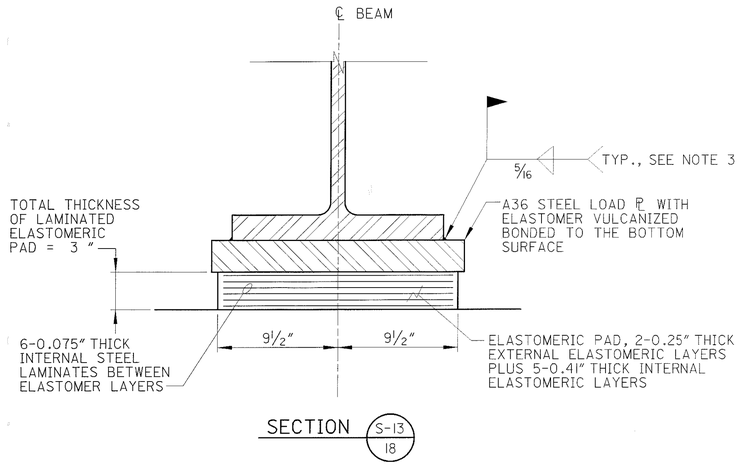

SECTION S-13 / 18

EXPANSION BEARING

(PIER, 9 REQUIRED)

LIGHT POLE PILASTER NOTES:

1. THE REINFORCING BARS SHOWN "L" SERIES BAR MARKS ARE ADDITIONAL REINFORCING BARS REQUIRED FOR THE LIGHT POLE PILASTER. TRANSVERSE AND LONGITUDINAL REINFORCING BARS AS SHOWN ON THE TYPICAL BRIDGE PARAPET DETAIL, SHEET 10/21, SHALL ALSO BE PROVIDED CONTINUOUS THROUGH THE PILASTER.
2. FOR ADDITIONAL DETAILS NOT SHOWN, SEE ODOT STANDARD DRAWING HL-20.14M.

NOTES:

1. BEARING LOAD DESIGNS:

	EXPANSION BEARING (PIER)
DEAD LOADS	260.0K
LIVE LOADS (NO IMPACT)	93.7K
TOTAL DESIGN LOAD	369.2K

2. A36 STEEL LOAD PLATES SHALL BE USED FOR ALL PIER BEARINGS. THE LOAD PLATE SHALL BE VULCANIZED BONDED TO THE LAMINATED ELASTOMERIC PAD DURING THE MOLDING PROCESS.
3. WELDING OF THE LOAD PLATE TO THE SUPERSTRUCTURE SHALL BE CONTROLLED SO THAT THE PLATE TEMPERATURE AT THE ELASTOMER BONDED SURFACE DOES NOT EXCEED 300°F AS DETERMINED BY USE OF PYROMETRIC STICKS OR OTHER TEMPERATURE MONITORING DEVICES.
4. BEARING REPOSITIONING: IF THE STEEL IS ERECTED AT AN AMBIENT TEMPERATURE HIGHER THAN 80°F OR LOWER THAN 40°F AND THE BEARING SHEAR DEGFLECTION EXCEEDS 1/6 OF THE BEARING HEIGHT AT 60°F (±) 10°F THE BEAMS OR GIRDERS SHALL BE RAISED TO ALLOW THE BEARINGS TO RETURN TO THIER UNDEFORMED SHAPE AT 60°F (±) 10°F.
5. BASIS OF PAYMENT: THE UNIT PRICE BID SHALL INCLUDE ALL MATERIALS, LABOR AND INCIDENTALS NECESSARY TO FURNISH AND INSTALL THE LAMINATED ELASTOMERIC BEARINGS, AND STEEL LOAD PLATES. PAYMENT WILL BE MADE AT THE CONTRACT PRICE FOR ITEM 516 - ELASTOMERIC BEARING WITH INTERNAL LAMINATES AND LOAD PLATE (NEOPRENE).
6. ELASTOMERIC BEARINGS SHALL COMPLY WITH ITEM 516 AND AASHTO STANDARD SPECIFICATION FOR HIGHWAY BRIDGES, SECTION 18, BEARING DEVICES, DIVISION II, CONSTRUCTION, ARTICLES 18.4.5.1 AND 18.5.6.2. BEARINGS SHALL BE GRADE 3, 50 DUROMETER ELASTOMER, AND SHALL BE SUBJECTED TO THE LOAD TESTING REQUIREMENTS DEFINED IN ARTICLE 18.7.4.5 OF THE AASHTO DOCUMENT LISTED ABOVE. BEARINGS WERE DESIGNED UNDER SECTION 14.6.6 OF SECTION 14, BEARINGS, DIVISION I, DESIGN. TESTING SHALL BE INCLUDED IN THE UNIT PRICE BED FOR THE BEARINGS EACH.

DLZ
1000 ROCKEFELLER BLDG • 614 W SUPERIOR AVE • CLEVELAND, OH 44113

DESIGNED DP | DRAWN MWD | CHECKED JWB | REVIEWED GWM | DATE 6/5/01 | REVISED | STRUCTURE FILE NUMBER 7700261

BEARING & LIGHTING PILASTER DETAILS
BRIDGE NO. SUM-8-0159
FORGE STREET OVER S.R. 8

SUM-8-0.63

18 / 21

999
1088

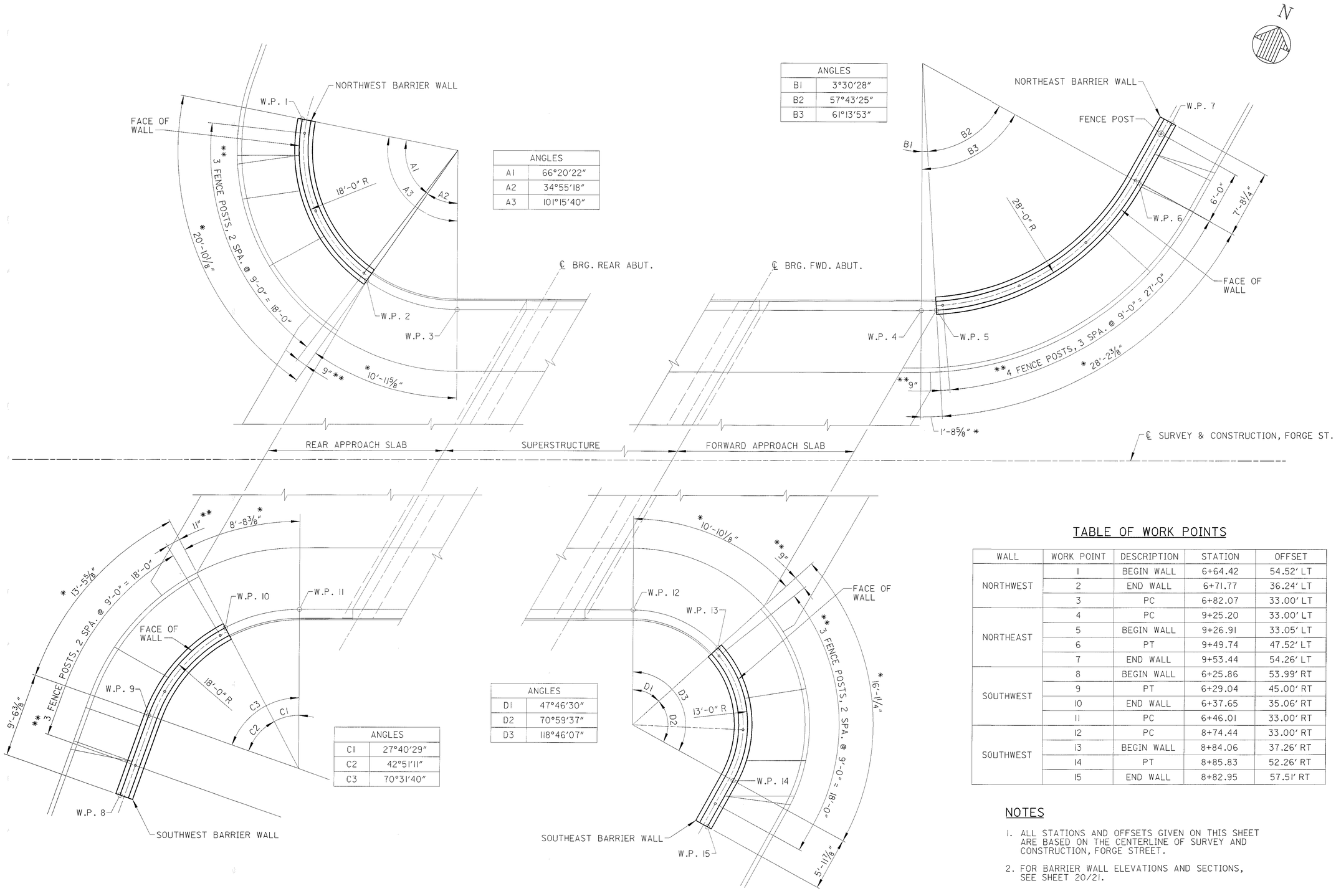

APPROACH BARRIER WALL LAYOUT PLAN

TABLE OF WORK POINTS

WALL	WORK POINT	DESCRIPTION	STATION	OFFSET
NORTHWEST	1	BEGIN WALL	6+64.42	54.52' LT
	2	END WALL	6+71.77	36.24' LT
	3	PC	6+82.07	33.00' LT
NORTHEAST	4	PC	9+25.20	33.00' LT
	5	BEGIN WALL	9+26.91	33.05' LT
	6	PT	9+49.74	47.52' LT
	7	END WALL	9+53.44	54.26' LT
SOUTHWEST	8	BEGIN WALL	6+25.86	53.99' RT
	9	PT	6+29.04	45.00' RT
	10	END WALL	6+37.65	35.06' RT
	11	PC	6+46.01	33.00' RT
SOUTHWEST	12	PC	8+74.44	33.00' RT
	13	BEGIN WALL	8+84.06	37.26' RT
	14	PT	8+85.83	52.26' RT
	15	END WALL	8+82.95	57.51' RT

NOTES

1. ALL STATIONS AND OFFSETS GIVEN ON THIS SHEET ARE BASED ON THE CENTERLINE OF SURVEY AND CONSTRUCTION, FORGE STREET.
2. FOR BARRIER WALL ELEVATIONS AND SECTIONS, SEE SHEET 20/21.

* AS MEASURED ALONG THE FACE OF WALL

** FENCE POST SPACINGS ARE AS MEASURED ALONG THE CENTERLINE OF THE BARRIER WALLS.

DLZ
8000 ROCKEFELLER BLDG • 614 W SUPERIOR AVE • CLEVELAND, OH 44113

DESIGNED PAT
DRAWN PAT
CHECKED JWB
REVISED
REVIEWED GWM
DATE 6/5/01
STRUCTURE FILE NUMBER 7700261

APPROACH BARRIER WALL LAYOUT PLAN
BRIDGE NO. SUM-8-0159
FORGE STREET OVER S.R. 8

SUM-8-0.63

1000
1088

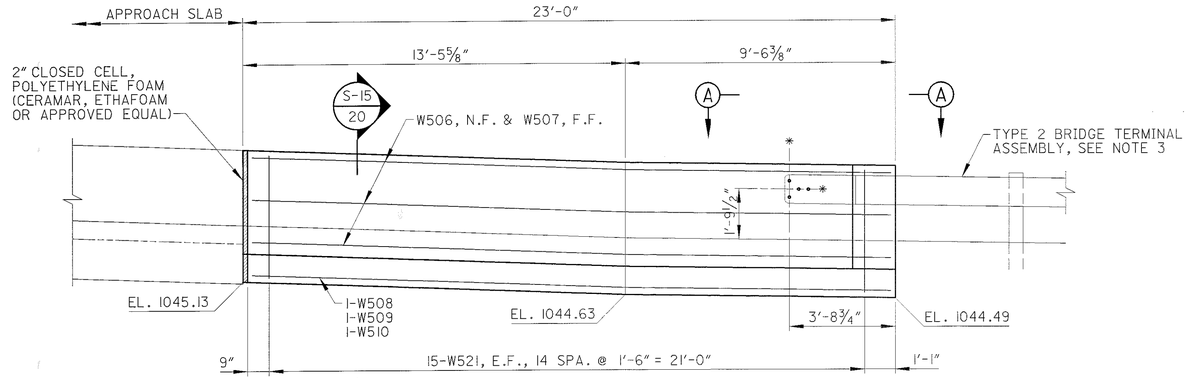

SOUTHWEST BARRIER WALL

DEVELOPED ELEVATION

EXTEND 6'-0" STRAIGHT FENCE (FABRIC ONLY) TO FIRST POST ON APPROACH SLAB LEAVING FOR 1" EXPANSION OR CONTRACTION (TYP.)

* CENTERLINE OF 1" DIA. CAST HOLES FOR TYPE 2 BRIDGE TERMINAL ASSEMBLY CONNECTION, SEE HOLE LAYOUT DETAIL THIS SHEET FOR DIMENSIONS NOT SHOWN.

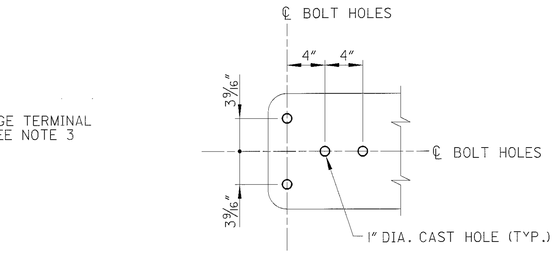

HOLE LAYOUT DETAIL

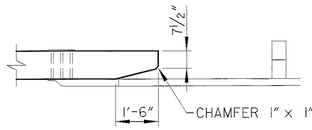

VIEW A-A

WALL	DESIGNATION		
	A	B	C
NORTHWEST	W505	W504	W503
NORTHEAST	W515	W514	W513
SOUTHWEST	W510	W509	W508
SOUTHEAST	W520	W519	W518

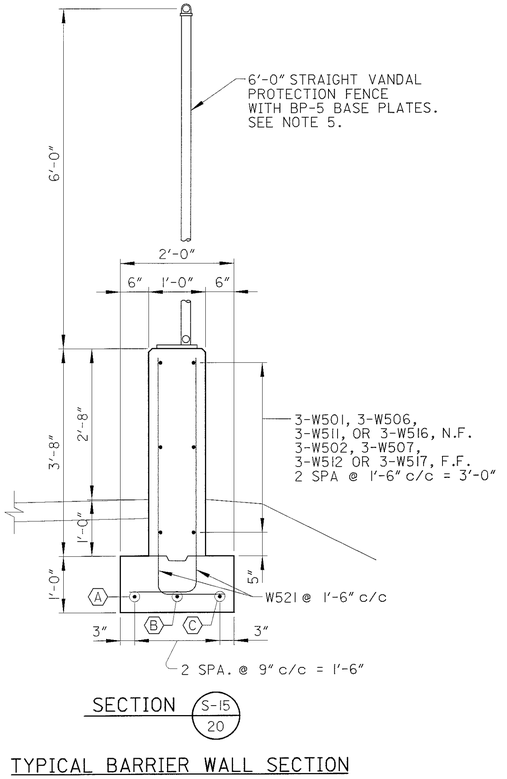

SECTION S-15 20

TYPICAL BARRIER WALL SECTION

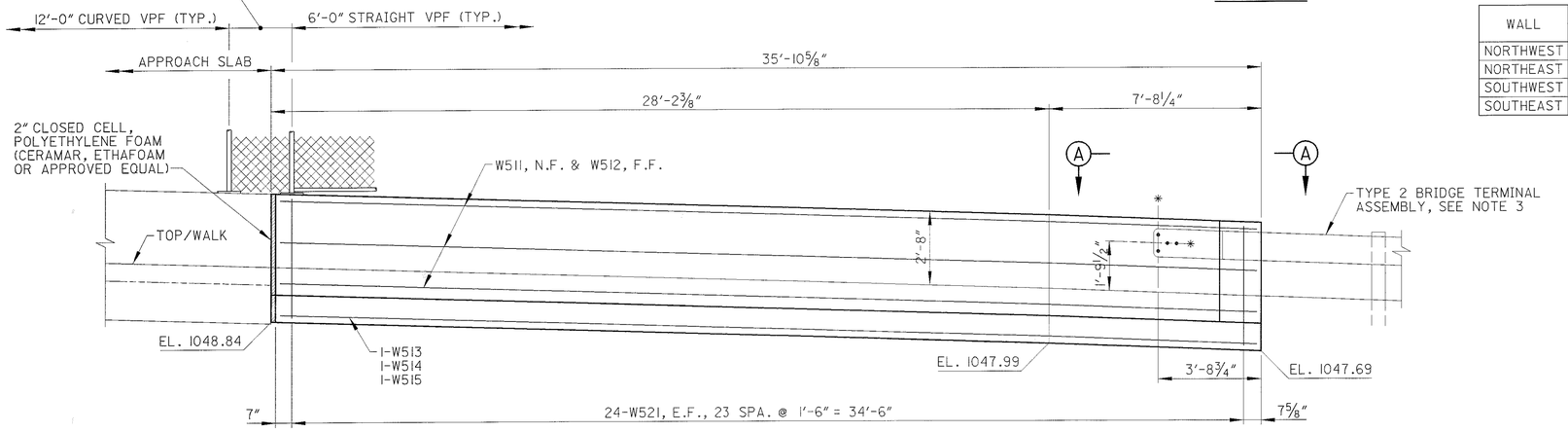

NORTHEAST BARRIER WALL

DEVELOPED ELEVATION

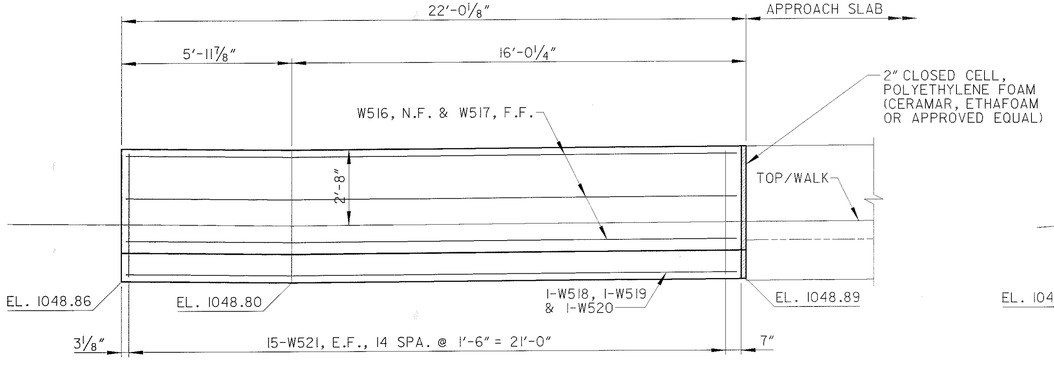

SOUTHEAST BARRIER WALL

DEVELOPED ELEVATION

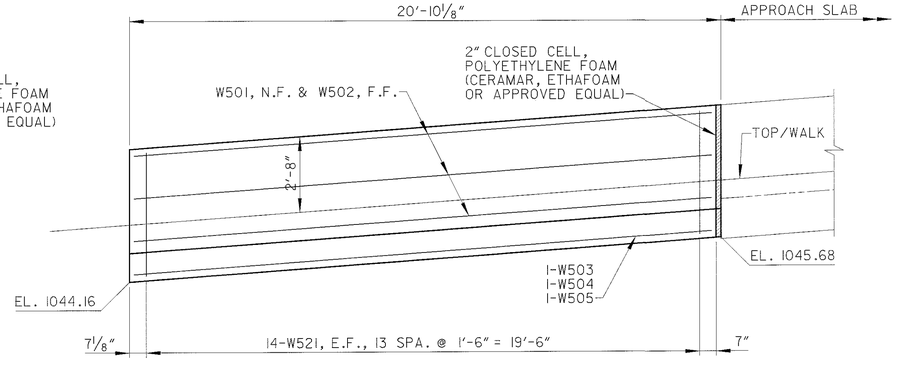

NORTHWEST BARRIER WALL

DEVELOPED ELEVATION

NOTES

1. ALL DIMENSIONS SHOWN IN DEVELOPED ELEVATIONS ARE AS MEASURED ALONG THE FRONT FACE OF THE WALL.
2. FOR BARRIER WALL LAYOUT PLAN, SEE SHEET 19/21.
3. FOR DETAILS OF TYPE 2 BRIDGE TERMINAL ASSEMBLY, REFER TO STANDARD DRAWING GR-3.2M.
4. FENCE POSTS NOT SHOWN FOR CLARITY. SEE PLAN VIEW SHEET 19/21.
5. HORIZONTAL RAIL POSTS FOR VANDAL PROTECTION FENCE SHALL BE FABRICATED TO MATCH THE CURVATURE OF THE BARRIER WALLS.
6. 2"-CLOSED CELL FOAM SHALL BE INSTALLED WHERE SHOWN ON THE PLANS AND IN ACCORDANCE WITH MANUFACTURER'S SPECIFICATIONS. CLOSED CELL FOAM SHALL BE INSTALLED IN THE 2"-OPEN JOINT BETWEEN THE COMPLETED APPROACH SLAB SIDEWALK PARAPET AND APPROACH BARRIER WALL. ALL COSTS ASSOCIATED WITH FURNISHING AND INSTALLING THE 2"-CLOSED CELL POLYETHYLENE FOAM SHALL BE INCLUDED FOR PAYMENT WITH ITEM 842, CLASS C CONCRETE, AS PER PLAN.

DLZ
1000 ROCKEFELLER BLDG • 614 W SUPERIOR AVE • CLEVELAND, OH 44113

DESIGNED PAT | DRAWN PAT | REVIEWED GWM | DATE 6/5/01
CHECKED JWB | REVISED | STRUCTURE FILE NUMBER 7700261

APPROACH BARRIER WALL DETAILS
BRIDGE NO. SUM-8-0159
FORGE STREET OVER S.R. 8

SUM-8-0.63

20/21

1001
1088

REINFORCING STEEL LIST

MARK	NUMBER REAR	NUMBER FWD.	NUMBER TOTAL	LENGTH	WEIGHT (LBS.)	TYPE	DIMENSIONS A	B	C	D	E	SER INC.
ABUTMENTS												
A501	30	30	60	30'-4"	1898	STR						
A502	101	111	212	29'-8"	6560	STR						
A503	86	86	172	5'-4"	957	3	4'-8"	10"				
A504	86		86	16'-3"	1458	STR						
A505		86	86	18'-0"	1615	STR						
A506	80	80	160	8'-5"	1405	4	2'-6"	3'-1"				
A507	3		3	19'-9"	62	4	2'-6"	8'-9"				
A508		3	3	21'-7"	68	4	2'-6"	9'-8"				
A509	1		1	20'-2"	21	4	2'-11"	8'-9"				
A510	1	2	3	22'-0"	69	4	2'-11"	9'-8"				
A511	5	5	10	8'-4"	87	17	2'-6"	3'-7"	1'-3"	2'-1"		
A512	4	4	8	3'-1"	26	STR						
A513	12		12	29'-8"	371	12	27'-2"	3 3/4"	2'-6"			
A514	3	3	6	21'-3"	133	4	2'-2"	9'-8"				
A515	5	5	10	6'-1"	63	4	2'-2"	2'-1"				
A516	5	5	10	8'-0"	83	17	2'-2"	3'-7"	1'-2"	2'-1"		
A517		13	13	29'-8"	402	12	25'-5"	4 5/8"	4'-3"			
A518	5	5	10	6'-5"	67	4	2'-6"	2'-1"				
A601	10	10	20	7'-0"	210	4	1'-8"	2'-10"				
A901	228		228	12'-6"	9690	STR						
A902	171		171	13'-2"	7655	3	12'-1"	1'-4"				
A903	86		86	15'-1"	4410	STR						
A904		228	228	13'-6"	10465	STR						
A905		171	171	12'-11"	7510	3	11'-10"	1'-4"				
A906		86	86	17'-2"	5020	STR						
		ABUTMENTS TOTAL =			60305	LBS.						
PIERS												
P401			32	9'-8"	207	STR						
P402			36	7'-8"	184	STR						
P501			216	10'-2"	2197	4	3'-2"	3'-5"				
P502			116	8'-1"	948	4	1'-3"	3'-5"				
			1	12'-2"			2'-5"	3'-2"				
P503			SER		97	7						3"
			7	15'-2"			3'-11"	3'-2"				
			1	7'-10"			2'-4"	1'-3"				
P504			SER		68	7						3"
			7	10'-10"			3'-10"	1'-3"				
			1	13'-4"			3'-0"	3'-2"				
P505			SER		106	7						3"
			7	16'-4"			4'-6"	3'-2"				
			1	9'-0"			2'-11"	1'-3"				
P506			SER		77	7						3"
			7	12'-0"			4'-5"	1'-3"				
P507	NOT	USED										
P508			8	3'-7"	30	STR						
P509			8	8'-10"	74	12	5'-0"	2'-2"	3'-4"			
P510			4	37'-6"	156	STR						
P511			4	38'-7"	161	STR						
P512			8	38'-10"	324	STR						
P513			6	8'-9"	55	4	3'-0"	3'-0"				
P801			52	11'-6"	1597	2	9'-8"					
P802			54	9'-6"	1370	2	7'-8"					
P803			14	9'-7"	358	4	3'-0"	3'-6"				
P804			14	8'-1"	302	4	1'-6"	3'-6"				
P805			4	9'-3"	99	17	3'-2"	3'-0"	1'-7"	3'-0"		
P901			8	36'-5"	991	STR						
P902			4	14'-6"	197	STR						
P903			8	32'-10"	893	STR						
P904			11	23'-3"	870	STR						
P905			14	34'-7"	1646	3	2'-0"	32'-10"				
P1001			8	37'-11"	1305	STR						
P1101			40	10'-9"	2214	3	2'-0"	8'-9"				
P1102			40	18'-2"	3861	STR						
SP401			5	411'-9"	1375	26	2'-6"	3 1/2"	14'-5"			
			PIER TOTAL =		21762	LBS.						

REINFORCING STEEL LIST

MARK	NUMBER REAR	NUMBER FWD.	NUMBER TOTAL	LENGTH	WEIGHT (LBS.)	TYPE	DIMENSIONS A	B	C	D	E	SER INC.
SUPERSTRUCTURE												
S401			714	30'-0"	14309	STR						
S402			102	18'-6"	1267	STR						
S501			240	7'-8"	1919	4	3'-1"	2'-5"				
S502	NOT	USED										
S503			120	7'-1"	887	4	2'-6"	2'-5"				
S504			644	30'-0"	20151	STR						
S505			80	22'-0"	1836	STR						
S506			442	2'-3"	1037	4	10"	10"				
S507			442	2'-8"	1229	4	15"	10"				
S508			442	8'-1"	3726	4	7'-8"	4"				
S509			442	9'-1"	4187	25	3'-1"	8"	2'-10"	1'-6"		
S510			12	23'-9"	297	STR						
S601			582	35'-5"	30960	STR						
S602			291	39'-3"	17155	STR						
S603			291	31'-7"	13804	STR						
			4	5'-1"								
S604			SER		4206	STR						1'-2"
			31	40'-1"								
S605			12	5'-2"	93	STR						
			2	9'-0"								
S606			SER		1404	STR						1'-2"
			22	33'-6"								
			1	5'-1"								
S607			SER		573	STR						1'-2"
			22	29'-7"								
			1	12'-10"								
S608			SER		829	STR						1'-2"
			22	37'-4"								
S609			198	18'-6"	5502	STR						
S610			99	40'-0"	5948	STR						
S801			16	23'-7"	1007	31	5'-10"	8"	8"	2'-6"	13'-6"	
S802			8	39'-10"	851	STR						
S803			28	29'-7"	2212	STR						
S804			20	30'-0"	1602	STR						
S805			120	5'-7"	1789	10	3'-3"	1'-0"	1'-0"			
S806			4	12'-7"	134	STR						
S807			4	15'-4"	164	STR						
S808			8	14'-11"	319	STR						
S809			8	11'-2"	239	STR						
S810			4	8'-4"	89	STR						
S811			4	7'-2"	77	STR						
L501			16	3'-2"	53	4	2'-1"	8"				
L502			16	10'-2"	170	4	2'-1"	4'-2"				
L503			24	6'-3"	156	15	6"	2'-1"	2'-1"	1'-4"		
L504			16	4'-2"	70	STR						
		SUPERSTRUCTURE TOTAL =			140251	LBS.						
APPROACH BARRIER WALLS												
W501			3	19'-7"	61	32	19'-7"	17'-2 1/2"				
W502			3	20'-3"	63	32	20'-3"	17'-9 1/2"				
W503			1	19'-0"	20	32	19'-0"	16'-9"				
W504			1	19'-11"	21	32	19'-11"	17'-6"				
W505			1	20'-10"	22	32	20'-10"	18'-3"				
W506			3	22'-0"	69	30	9'-4"	12'-8"	17'-2 1/2"			
W507			3	22'-5"	70	30	9'-4"	13'-1"	17'-9 1/2"			
W508			1	21'-8"	23	30	9'-4"	12'-4"	16'-9"			
W509			1	22'-3"	23	30	9'-4"	12'-11"	17'-6"			
W510			1	22'-10"	24	30	9'-4"	13'-6"	18'-3"			
W511			3	34'-9"	109	30	7'-6"	27-3"	27'-2 1/2"			
W512			3	35'-4"	111	30	7'-6"	27'-10"	27'-9 1/2"			
W513			1	34'-3"	36	30	7'-6"	26'-9"	26'-9"			
W514			1	35'-0"	37	30	7'-6"	27'-6"	27'-6"			
W515			1	35'-9"	37	30	7'-6"	28'-3"	28'-3"			
W516			3	20'-9"	65	30	5'-10"	14'-11"	12'-2 1/2"			
W517			3	21'-6"	67	30	5'-10"	15'-8"	12'-9 1/2"			
W518			1	20'-3"	21	30	5'-10"	14'-5"	11'-9"			
W519			1	21'-2"	22	30	5'-10"	15'-4"	12'-6"			
W520			1	22'-1"	23	30	5'-10"	16'-3"	11'-3"			
W521			136	5'-2"	733	3	4'-2"	1'-2"				
		APPROACH BARRIER WALL TOTAL =			1657	LBS.						

BENDING DIAGRAMS

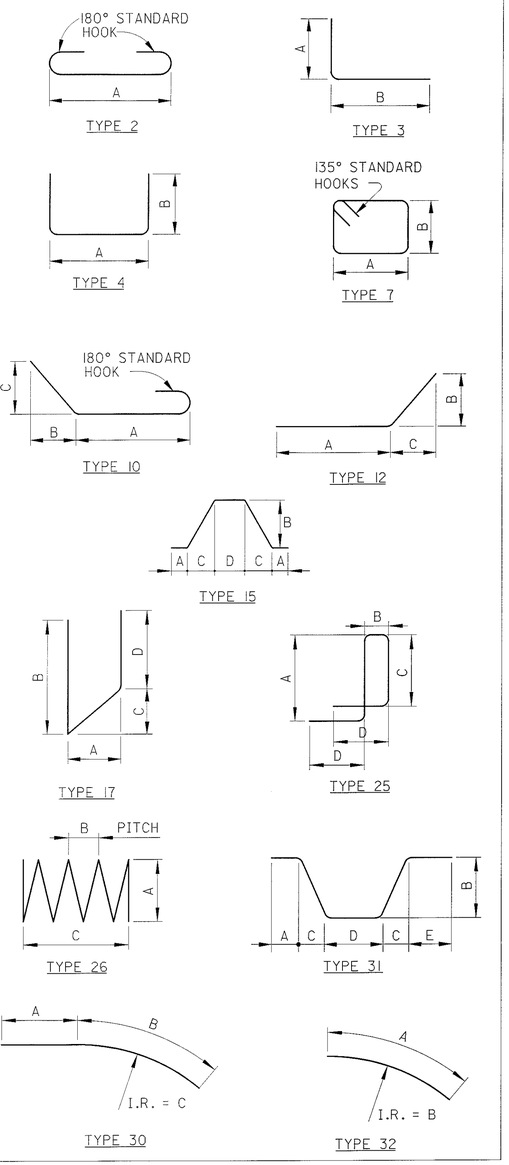

REINFORCING STEEL NOTES:

1. SERIES BARS - EACH BAR VARIES BY TABULATED AMOUNT.
2. ALL DIMENSIONS ARE OUT TO OUT.
3. TYPE 'STR' INDICATES A STRAIGHT BAR.
4. THE BAR SIZE NUMBER IS SPECIFIED IN THE 'MARK' COLUMN. THE FIRST DIGIT INDICATES THE BAR SIZE NUMBER. FOR EXAMPLE, A501 IS A #5 BAR SIZE.
5. ALL BARS SHALL BE EPOXY COATED UNLESS NOTED OTHERWISE.
6. SUBTOTALS AND TOTAL WEIGHTS ARE FOR INFORMATIONAL PURPOSES ONLY. IF THE REINFORCING LIST PROVIDED IN THE PLANS IS USED IT SHALL BE VERIFIED BY THE CONTRACTOR. ANY REVISIONS IN THE REINFORCING STEEL LIST AS SHOWN IN THE PLANS WILL NOT BE REASON FOR ADJUSTMENT IN THE BID PRICE FOR STRUCTURAL CONCRETE.

DLZ
8000 ROCKEFELLER BLDG • 614 • SUPERIOR AVE • CLEVELAND, OH 44113

DESIGNED DP | DRAWN DP | CHECKED JWB | REVIEWED GWM | DATE 6/5/01 | REVISED | STRUCTURE FILE NUMBER 7700261

REINFORCING STEEL LIST
BRIDGE NO. SUM-8-0159
FORGE STREET OVER S.R. 8

SUM-8-0.63

21/21

1002
1088

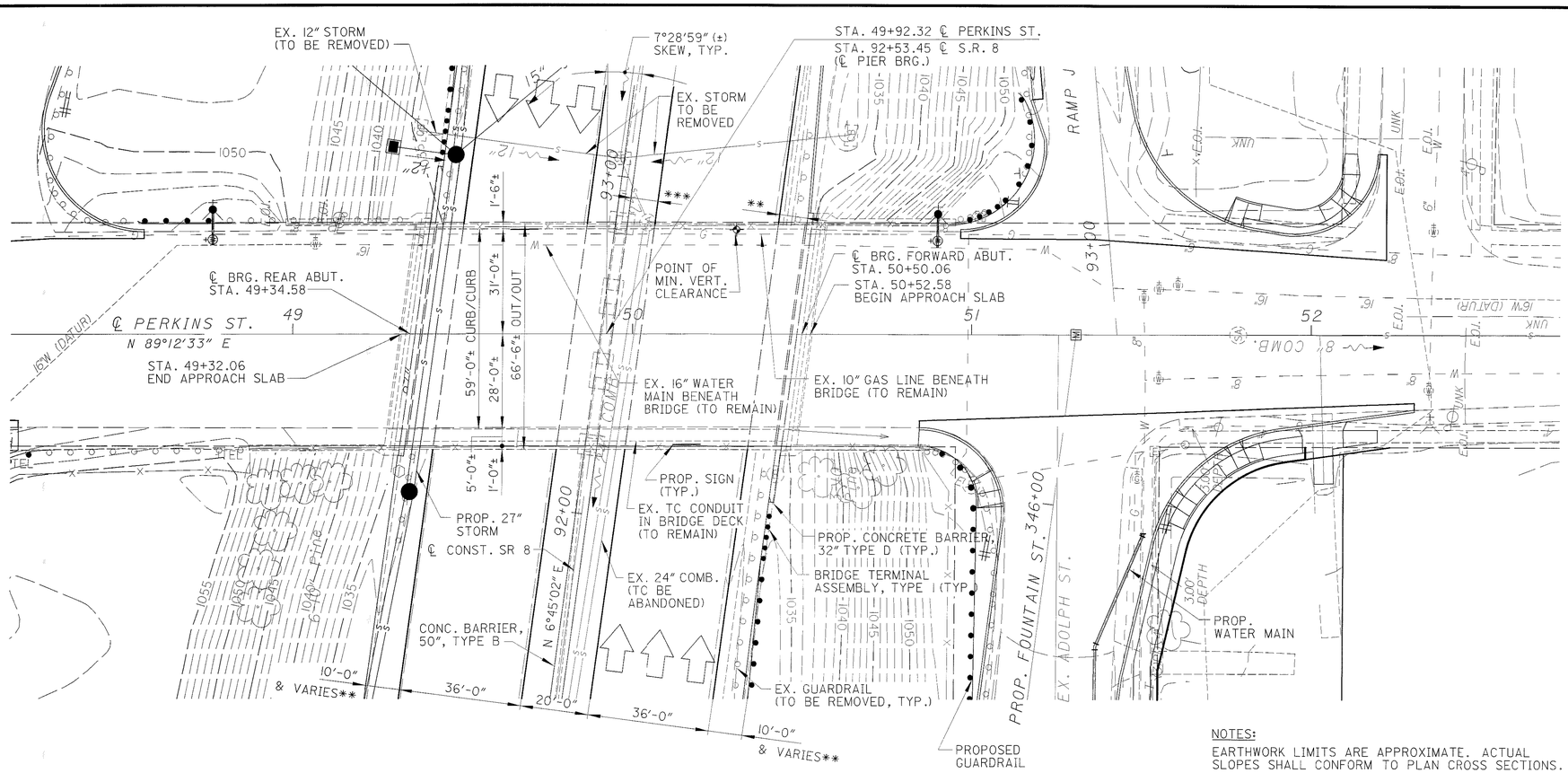

PLAN

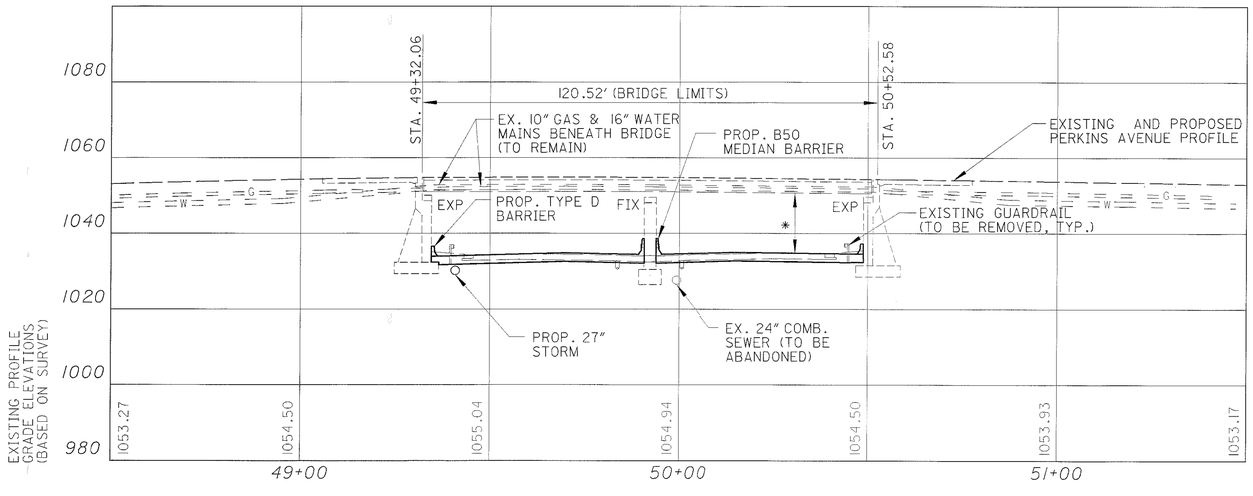

PROFILE ALONG ℄ PERKINS STREET

NOTES:

EARTHWORK LIMITS ARE APPROXIMATE. ACTUAL SLOPES SHALL CONFORM TO PLAN CROSS SECTIONS.

* VERTICAL CLEARANCE:
EXISTING: 15'-6¼"
PROPOSED: 15'-7¾"
REQUIRED: 14'-6"

** HORIZONTAL CLEARANCE: (OUTSIDE SHOULDERS)
EXISTING: 5'-0"± (TO FACE OF GUARDRAIL)
PROPOSED: 8'-3½" (TO TOE OF BARRIER)
REQUIRED: 10'-0" (TO TOE OF BARRIER)

*** HORIZONTAL CLEARANCE: (MEDIAN SHOULDERS)
EXISTING: 6'-3"± (TO FACE OF CURB)
PROPOSED: 7'-2 " (TO TOE OF BARRIER)
REQUIRED: 10'-0" (TO TOE OF BARRIER)

LEGEND

COMB.	COMBINED SEWER
EL.	ELEVATION
EX.	EXISTING
PROP.	PROPOSED
TC	TRAFFIC CONTROL
STORM	STORM SEWER

BENCHMARK #1

CHISELED "□" IN NW CORNER OF CONCRETE CURB IN PARKING LOT OF 360 PERKINS ST. 41.5' SOUTH OF ℄ PERKINS & 67.5' NW OF NW CORNER OF BLDG. STA. 245+84.83, 185.73 LT. ℄ GOODKIRK ST.

ELEV: 1048.01

BENCHMARK #22

CHISELED "□" IN SIDEWALK IN FRONT OF HOUSE AT 420 PERKINS ST. AT SE CORNER OF PERKINS AND ADOLPH STREETS.
STA. 346+43.35, 156.04 RT. ℄ FOUNTAIN ST.

ELEV: 1053.68

TRAFFIC DATA

PERKINS STREET

CURRENT ADT (2004) = 15,110
DESIGN ADT (2024) = 15,630
ADTT = 469

EXISTING STRUCTURE

TYPE: CONTINUOUS STEEL BEAM WITH REINFORCED CONCRETE DECK AND SUBSTRUCTURE
SPANS: 57-8⅞"(±), 57'-8⅞"(±), CENTER-TO-CENTER OF BEARINGS
ROADWAY: 59'-0"(±) (FACE OF CURB TO TOE OF DEFLECTOR PARAPET) WITH A 5'-0"(±) SIDEWALK (SOUTH SIDE). 66'-6"(±) OUT TO OUT OF DECK.
SKEW: 7° 28' 59" (±) LEFT FORWARD
ALIGNMENT: TANGENT
LOADING: HS 20-44 (CASE II) AND THE ALTERNATE MILITARY LOADING
WEARING SURFACE: 1¼" LATEX MODIFIED CONCRETE
APPROACH SLABS: 25'
CROWN: ¼"/FT.(±)
DATE BUILT: c.1954 MAJOR REHABILITATION: c.1986
STRUCTURE FILE NUMBER: 7700334

PROPOSED STRUCTURE

PROPOSED WORK: PAINT EXISTING SUPERSTRUCTURE (SYSTEM OZEU), REPLACE STRIP SEAL GLANDS, REHABILITATE EXISTING SUBSTRUCTURE
TYPE: EXISTING
SPANS: EXISTING
ROADWAY: EXISTING
SKEW: EXISTING
ALIGNMENT: EXISTING
LOADING: EXISTING
WEARING SURFACE: EXISTING
APPROACH SLABS: EXISTING
CROWN: EXISTING
LATITUDE: N 41°05'00"
LONGITUDE: W 81°30'12"

DLZ
2000 ROCKEFELLER BLDG • 614 W SUPERIOR AVE • CLEVELAND, OH 44113

DESIGNED JWB | DRAWN JWB | CHECKED PAT | REVISED | REVIEWED CWM | DATE 04/6/00 | STRUCTURE FILE NUMBER 7700334

SUMMIT COUNTY
STA. 49+32.06
STA. 50+52.58

SITE PLAN
BRIDGE NO. SUM-8-0175
PERKINS STREET OVER S.R. 8

SUM-8-0.63

1 / 5

1003
1088

REFERENCE SHALL BE MADE TO STANDARD DRAWINGS:

AS-1-81	DATED	4/20/01
EXJ-4-87	DATED	4/20/01
VPF-1-90M	DATED	3/20/95

AND TO THE SUPPLEMENTAL SPECIFICATIONS:

815	DATED	5/30/96
843	DATED	5/5/98
846	DATED	9/9/97
863	DATED	10/12/99
864	DATED	7/11/00
954	DATED	9/9/97

DESIGN SPECIFICATIONS
NOT APPLICABLE

DESIGN LOADING
NOT APPLICABLE

DESIGN STRESSES
NOT APPLICABLE

EXISTING STRUCTURE VERIFICATION:

DETAILS AND DIMENSIONS SHOWN ON THESE PLANS PERTAINING TO THE EXISTING STRUCTURE HAVE BEEN OBTAINED FROM PLANS OF THE EXISTING STRUCTURE AND FROM FIELD OBSERVATIONS AND MEASUREMENTS. CONSEQUENTLY, THEY ARE INDICATIVE OF THE EXISTING STRUCTURE AND THE PROPOSED WORK BUT THEY SHALL BE CONSIDERED TENTATIVE AND APPROXIMATE. THE CONTRACTOR IS REFERRED TO CMS SECTIONS 102.05 AND 105.02.

CONTRACT BID PRICES SHALL BE BASED UPON A RECOGNITION OF UNCERTAINTIES DESCRIBED ABOVE AND UPON A PREBID EXAMINATION OF THE EXISTING STRUCTURE BY THE CONTRACTOR. HOWEVER, ALL PROJECT WORK SHALL BE BASED UPON ACTUAL DETAILS AND DIMENSIONS WHICH HAVE BEEN VERIFIED BY THE CONTRACTOR IN THE FIELD.

DESCRIPTION OF WORK:
THE WORK PERFORMED SHALL INCLUDE BUT NOT NECESSARILY BE LIMITED TO THE FOLLOWING:

1. REPLACE ELASTOMERIC STRIP SEAL GLANDS.
2. RETROFIT EXISTING VANDAL PROTECTION FENCE TO PROVIDE STAINLESS STEEL CLOSURE PLATES.
3. PATCH EXISTING SUBSTRUCTURE UNITS.
4. PAINT STRUCTURAL STEEL.
5. SEAL CONCRETE SURFACES.

MAINTENANCE OF TRAFFIC:
MAINTENANCE OF TRAFFIC FOR THE STRUCTURE WORK SHALL BE COORDINATED WITH THE OVERALL PROJECT. REFER TO MAINTENANCE OF TRAFFIC NOTES AND DETAILS ELSEWHERE IN THE PLANS.

ASBESTOS NOTIFICATION:
SEE NOTE SHEET 34

ITEM 864, SEALING OF CONCRETE SURFACES (EPOXY-URETHANE):

CONCRETE SURFACES AS DETAILED IN THE PLANS SHALL BE SEALED WITH FEDERAL COLOR NO. 13522, "BUFF".

ITEM 516, ELASTOMERIC STRIP SEAL WITHOUT STEEL EXTRUSIONS, AS PER PLAN:

THIS ITEM SHALL INCLUDE REMOVAL AND REPLACEMENT OF THE EXISTING 3" STRIP SEAL GLANDS FROM FACE-TO-FACE OF CURB. THE CONSTRUCTION PLANS INDICATE THAT THE ELASTOMERIC SEAL WAS INSTALLED WITH AN ADHESIVE. UPON REMOVAL OF THE SEAL, THE CONTRACTOR SHALL ATTEMPT TO MATCH THE REPLACEMENT SEAL AS CLOSELY AS POSSIBLE WITH THE EXISTING SO AS TO PROVIDE A SNUG, WATERTIGHT SEAL. THE STRIP SEAL AND INSTALLATION SHALL MEET THE REQUIREMENTS OF STANDARD DRAWING EXJ-4-87.

THIS WORK WILL BE PAID FOR AT THE CONTRACT PRICE BID, PER LINEAL FOOT, WHICH PRICE AND PAYMENT SHALL BE FULL COMPENSATION FOR ALL LABOR, EQUIPMENT, MATERIALS AND INCIDENTALS NECESSARY TO COMPLETE THE WORK IN CONFORMANCE WITH THESE REQUIREMENTS, WITH THE PERTINENT PROVISIONS OF 516, AND TO THE SATISFACTION OF THE ENGINEER.

ITEM 815, FIELD PAINTING OF EXISTING STEEL, FINISH COAT, SYSTEM OZEU:

ALL EXPOSED STEEL SURFACES SHALL BE COATED WITH BROWN PAINT, FEDERAL COLOR NO. 10080.

ITEM 846, TREATING CONCRETE BRIDGE DECKS WITH HMWM RESIN:

A 1'-0" STRIP OF THE DECK, ADJACENT TO THE CURBS AND THE FULL LENGTH OF THE BRIDGE BETWEEN EXPANSION JOINTS, SHALL SEALED WITH HMWM RESIN. CARE SHALL BE TAKEN TO FILL THE JOINT AT THE FACE OF CURB.

ITEM 863, STRUCTURAL STEEL, MISCELLANEOUS LEVEL FABRICATION, AS PER PLAN:

THIS ITEM SHALL INCLUDE THE FABRICATION AND INSTALLATION OF STAINLESS STEEL FENCE CLOSURE PLATES, IN ACCORDANCE WITH STANDARD DRAWING VPF-1-90M, TO THE EXISTING VANDAL PROTECTION FENCE. THE CONTRACTOR SHALL FIELD MEASURE THE EXISTING BRIDGE RAILING AND FENCE POST SPACINGS BEFORE FABRICATING THE CLOSURE PLATES.

THIS WORK WILL BE PAID FOR AT THE CONTRACT LUMP SUM PRICE BID, WHICH PRICE AND PAYMENT SHALL BE FULL COMPENSATION FOR ALL LABOR, EQUIPMENT, MATERIALS AND INCIDENTALS NECESSARY TO COMPLETE THE WORK IN CONFORMANCE WITH THESE REQUIREMENTS, WITH PERTINENT PROVISIONS OF 863, AND TO THE SATISFACTION OF THE ENGINEER.

CONVERSION OF STANDARD BRIDGE DRAWINGS:

SOME OF THE STANDARD BRIDGE DRAWINGS REFERENCED IN THIS PLAN ARE METRIC. ANY CONVERSIONS OF DIMENSIONS REQUIRED TO CONSTRUCT THE ITEMS SHOWN ON THE STANDARDS SHALL BE THE RESPONSIBILITY OF THE CONTRACTOR. CONVERSIONS SHALL BE MADE USING SI (METRIC) TO ENGLISH CONVERSION FACTORS PROVIDED IN SECTION 109.011 OF THE 1997 CONSTRUCTION AND MATERIALS SPECIFICATIONS. THE APPENDIX OF ASTM E380 SHALL BE UTILIZED FOR ANY ADDITIONAL CONVERSION FACTORS REQUIRED. CONVERSIONS SHALL BE APPROPRIATELY PRECISE AND SHALL REFLECT INDUSTRY ENGLISH VALUES WHERE SUITABLE.

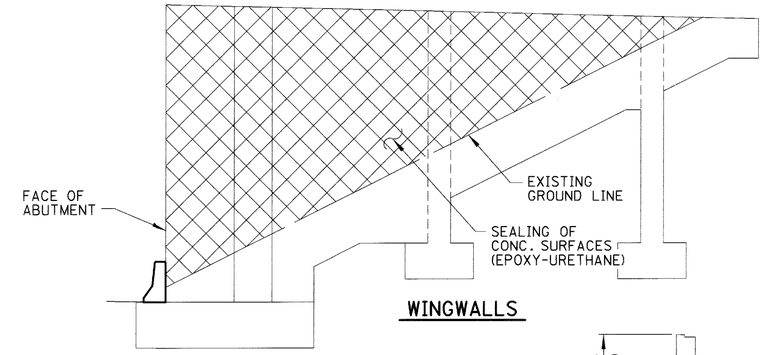

WINGWALLS

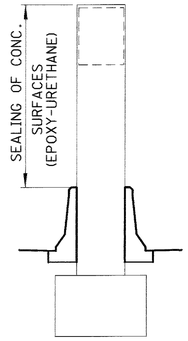

PIER

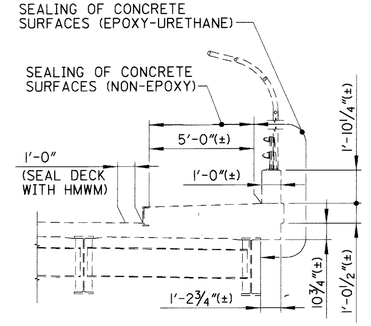

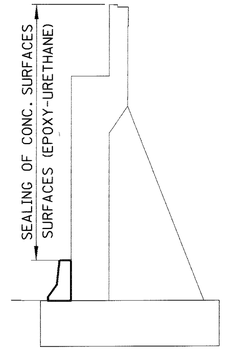

ABUTMENT

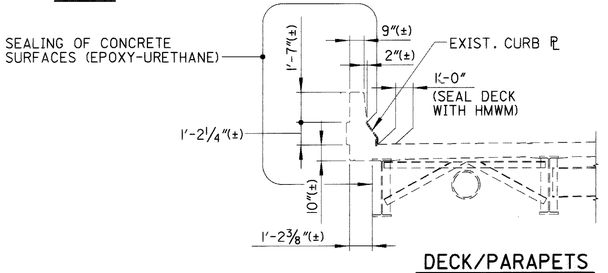

DECK/PARAPETS

CONCRETE SEALING DETAILS

ESTIMATED QUANTITIES

CALCULATED BY: JWB 12/08/00
CHECKED BY: DJC 12/12/00

ITEM	ITEM EXTENSION	TOTAL	UNIT	DESCRIPTION	REAR ABUTMENT	FORWARD ABUTMENT	PIERS	SUPER.	GENERAL	AS PER PLAN SHEET REF.
516	01301	122	LIN. FT.	ELASTOMERIC STRIP SEAL WITHOUT STEEL EXTRUSIONS, AS PER PLAN				122		2
519	11100	22	SQ. FT.	PATCHING CONCRETE STRUCTURES			22			
815	00100	LUMP	SUM	SURFACE PREPARATION OF EXISTING STEEL, SYSTEM OZEU					LUMP	
815	00200	LUMP	SUM	FIELD PAINTING OF EXISTING STEEL, PRIME COAT, SYSTEM OZEU					LUMP	
815	00300	LUMP	SUM	FIELD PAINTING OF EXISTING STEEL, INTERMEDIATE COAT, SYSTEM OZEU					LUMP	
815	00400	LUMP	SUM	FIELD PAINTING OF EXISTING STEEL, FINISH COAT, SYSTEM OZEU					LUMP	
843	50000	221	SQ FT	PATCHING CONCRETE STRUCTURES WITH TROWELABLE MORTAR	49	71	101			
846	73000	27	SQ YD	TREATING CONCRETE BRIDGE DECKS WITH HMWM RESIN				27		
863	10001	LUMP	SUM	STRUCTURAL STEEL MEMBERS, MISCELLANEOUS LEVEL FABRICATION, AS PER PLAN					LUMP	2
864	10050	67	SQ YD	SEALING OF CONCRETE SURFACES (NON-EPOXY)				67		
864	10100	1066	SQ YD	SEALING OF CONCRETE SURFACES (EPOXY-URETHANE)	343	346	167	210		

DLZ
2000 ROCKEFELLER BLDG • 614 W SUPERIOR AVE • CLEVELAND, OH 44113

DESIGNED JWB | DRAWN JWB | REVIEWED GWM | DATE 7/23/01
CHECKED DJC | REVISED | STRUCTURE FILE NUMBER 7700334

STRUCTURE GENERAL NOTES & ESTIMATED QUANTITIES
BRIDGE NO. SUM-8-0175
PERKINS STREET OVER S.R. 8

SUM-8-0.63

2 / 5

1004
1088

$TIME$
$DATE$
$FILE$

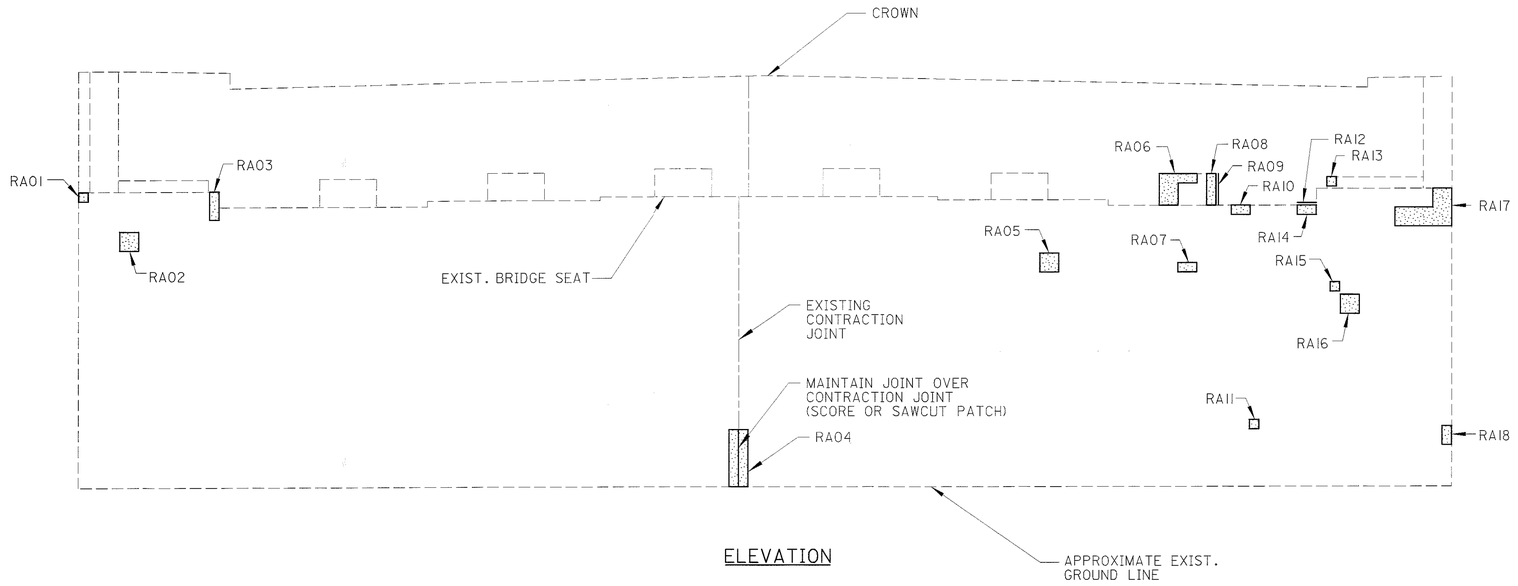

ELEVATION

REPAIR QUANTITIES				ITEM 843
REF. NUM.	DIMENSIONS			AREA SQ. FT.
RA01	0'-6"	x	0'-6"	0.25
RA02	1'-0"	x	1'-0"	1.00
RA03	0'-6"	x	1'-6"	0.75
RA04	1'-0"	x	3'-0"	3.00
RA05	1'-0"	x	1'-0"	1.00
RA06	1'-0"	x	1'-8"	1.67
	1'-0"	x	0'-6"	0.50
RA07	1'-0"	x	0'-6"	0.50
RA08	0'-6"	x	1'-8"	0.84
RA09	0'-6"	x	1'-8"	0.84
RA10	1'-0"	x	0'-6"	0.50
RA11	0'-6"	x	0'-6"	0.25
RA12	1'-0"	x	0'-6"	0.50
RA13	0'-6"	x	0'-6"	0.25
RA14	1'-0"	x	0'-6"	0.50
RA15	0'-6"	x	0'-6"	0.25
RA16	1'-0"	x	1'-0"	1.00
RA17	3'-0"	x	1'-0"	3.00
	2'-0"	x	2'-0"	4.00
RA18	0'-6"	x	1'-0"	0.50
RA19	0'-6"	x	1'-6"	0.75
RA20	1'-0"	x	1'-0"	1.00
RA21	0'-6"	x	0'-6"	0.25
RA22	1'-6"	x	2'-0"	3.00
RA23	0'-6"	x	5'-0"	2.50
RA24	1'-0"	x	0'-6"	0.50
RA25	0'-6"	x	0'-6"	0.25
RA26	0'-6"	x	3'-0"	1.50
RA27	1'-0"	x	1'-0"	1.00
RA28	1'-0"	x	1'-0"	1.00
SUBTOTAL, PIER				32.84
ESTIMATION FACTOR				1.5
TOTAL CARRIED TO QUANTITIES				49

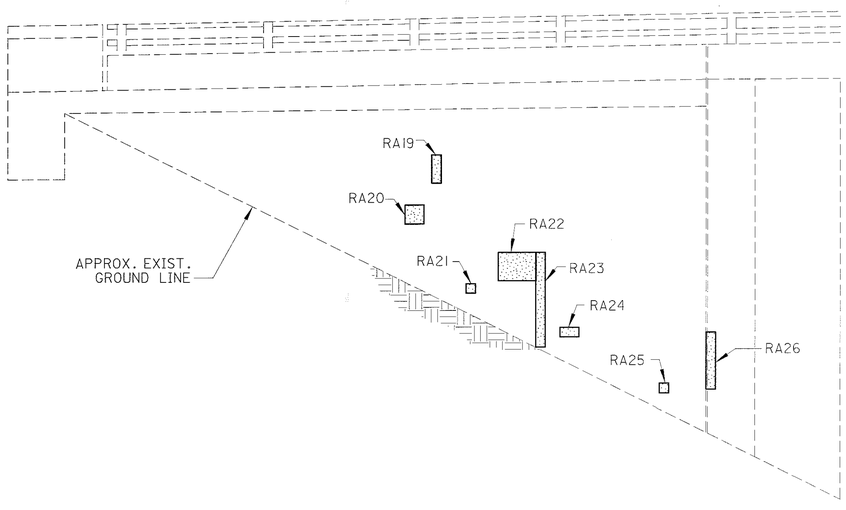

ELEVATION - SOUTHWEST WINGWALL

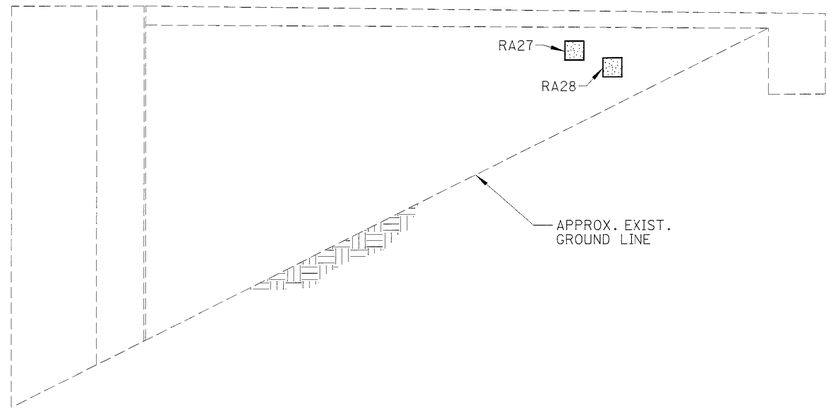

ELEVATION - NORTHWEST WINGWALL

DLZ
800 ROCKEFELLER BLDG • 614 • SUPERIOR AVE • CLEVELAND, OH 44113

DESIGNED RCK
DRAWN RCK
CHECKED JWB
REVISED
REVIEWED GWM
DATE 7/23/01
STRUCTURE FILE NUMBER 7700334

CONCRETE PATCHING AT REAR ABUTMENT
BRIDGE NO. SUM-8-0175
PERKINS STREET OVER S.R. 8

SUM-8-0.63

3 / 5

1005
1088

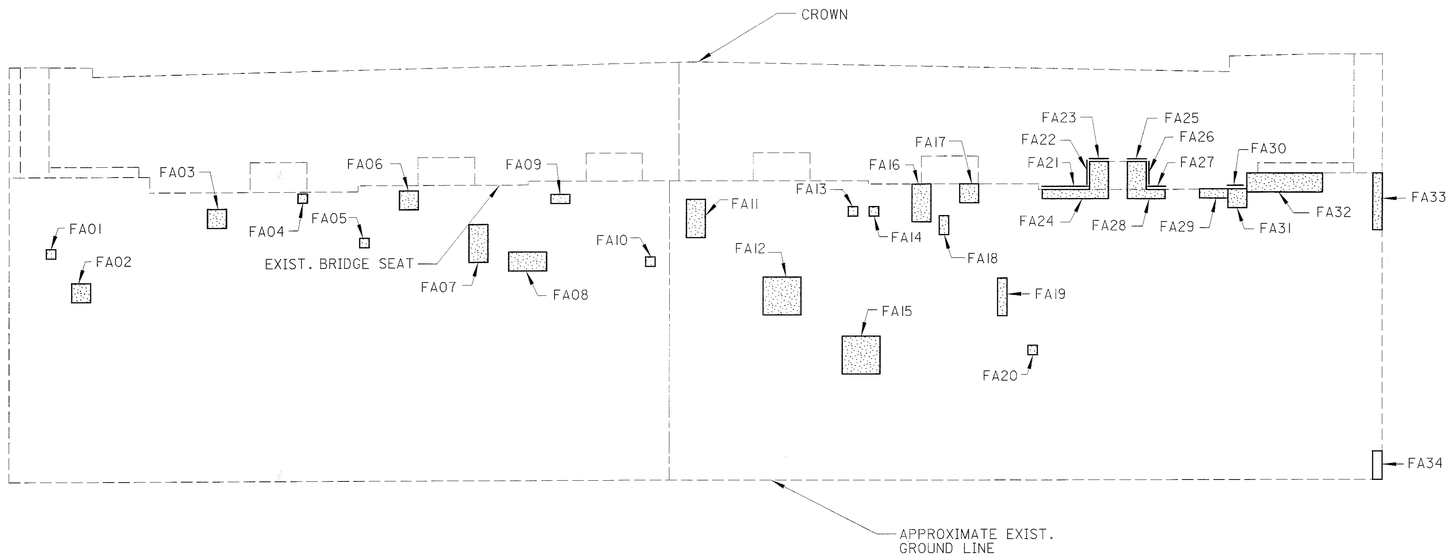

ELEVATION

REPAIR QUANTITIES				ITEM 843
REF. NUM.	DIMENSIONS			AREA SQ. FT.
FA01	0'-6"	x	0'-6"	0.25
FA02	1'-0"	x	1'-0"	1.00
FA03	1'-0"	x	1'-0"	1.00
FA04	0'-6"	x	0'-6"	0.25
FA05	0'-6"	x	0'-6"	0.25
FA06	1'-0"	x	1'-0"	1.00
FA07	1'-0"	x	2'-0"	2.00
FA08	2'-0"	x	1'-0"	2.00
FA09	1'-0"	x	0'-6"	0.50
FA10	0'-6"	x	0'-6"	0.25
FA11	1'-0"	x	2'-0"	2.00
FA12	2'-0"	x	2'-0"	4.00
FA13	0'-6"	x	0'-6"	0.25
FA14	0'-6"	x	0'-6"	0.25
FA15	2'-0"	x	2'-0"	4.00
FA16	1'-0"	x	2'-0"	2.00
FA17	1'-0"	x	1'-0"	1.00
FA18	0'-6"	x	1'-0"	0.50
FA19	0'-6"	x	2'-0"	1.00
FA20	0'-6"	x	0'-6"	0.25
FA21	1'-0"	x	2'-6"	2.50
FA22	1'-8"	x	1'-0"	1.67
FA23	0'-6"	x	1'-0"	0.50
FA24	3'-6"	x	0'-6"	1.75
	1'-8"	x	1'-0"	1.67
FA25	1'-0"	x	0'-6"	0.50
FA26	1'-0"	x	1'-8"	1.67
FA27	0'-6"	x	1'-0"	0.50
FA28	1'-0"	x	2'-2"	2.17
	0'-6"	x	1'-0"	0.50
FA29	1'-6"	x	0'-6"	0.75
FA30	1'-0"	x	1'-0"	1.00
FA31	1'-0"	x	0'-6"	0.50
FA32	4'-0"	x	1'-0"	4.00
FA33	0'-6"	x	3'-0"	1.50
FA34	0'-3"	x	1'-6"	0.38
FA35	0'-6"	x	3'-0"	1.50
FA36	0'-3"	x	1'-6"	0.38
SUBTOTAL, PIER				47.18
ESTIMATION FACTOR				1.5
TOTAL CARRIED TO QUANTITIES				71

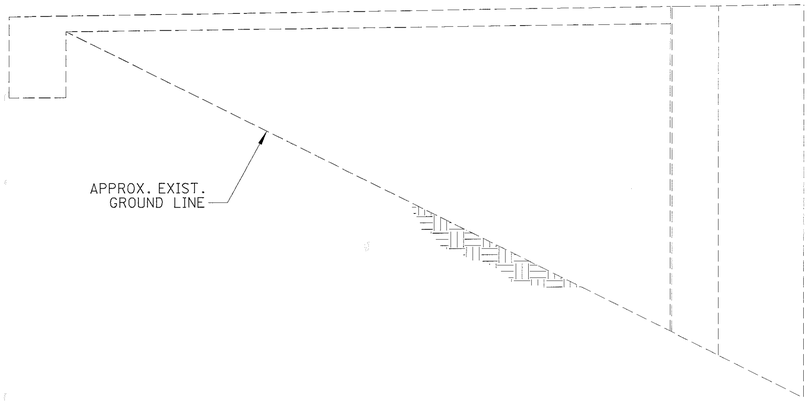

ELEVATION - NORTHEAST WINGWALL

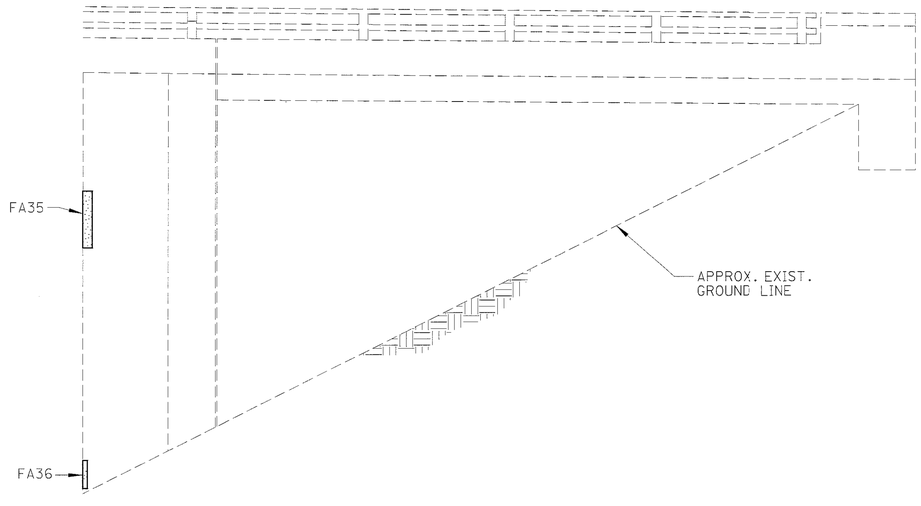

ELEVATION - SOUTHEAST WINGWALL

DLZ
1000 ROCKEFELLER BLDG • 614 W SUPERIOR AVE • CLEVELAND, OH 44113

DESIGNED RCK
DRAWN RCK
CHECKED JWB
REVISED
REVIEWED GWM
DATE 7/23/01
STRUCTURE FILE NUMBER 7700334

CONCRETE PATCHING AT FORWARD ABUTMENT
BRIDGE NO. SUM-8-0175
PERKINS STREET OVER S.R. 8

SUM-8-0.63

4 / 5

1006
1088

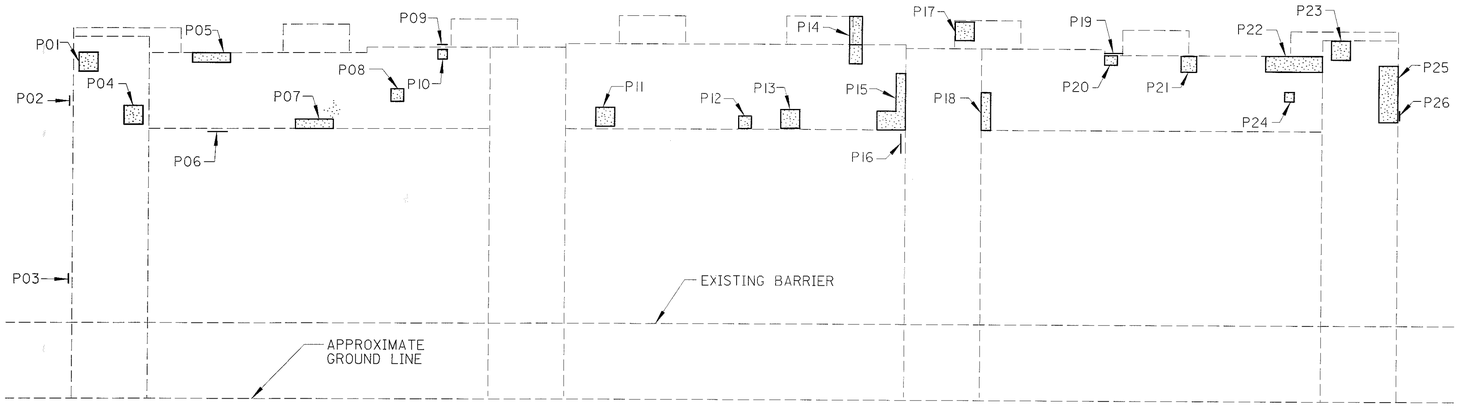

ELEVATION

EAST FACE - LOOKING WEST

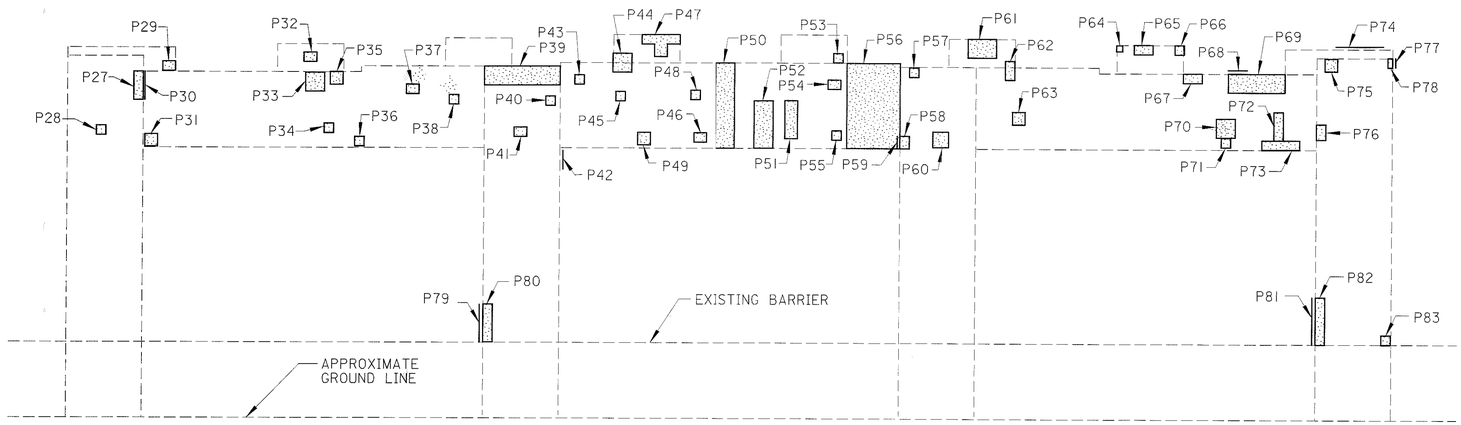

ELEVATION

WEST FACE - LOOKING EAST

REPAIR QUANTITIES				ITEM 519	ITEM 843
REF. NUM.	DIMENSIONS			AREA SQ. FT.	AREA SQ. FT.
P01	1′-0″	x	1′-0″		1.00
P02	0′-6″	x	0′-6″		0.25
P03	0′-6″	x	0′-6″		0.25
P04	1′-0″	x	1′-0″		1.00
P05	2′-0″	x	0′-6″		1.00
P06	1′-0″	x	1′-0″		1.00
P07	2′-0″	x	0′-6″		1.00
P08	0′-8″	x	0′-8″		0.45
P09	0′-6″	x	0′-6″		0.25
P10	0′-6″	x	0′-6″		0.25
P11	1′-0″	x	1′-0″		1.00
P12	0′-8″	x	0′-8″		0.45
P13	1′-0″	x	1′-0″		1.00
P14	0′-8″	x	2′-6″	1.68	
P15	1′-0″	x	1′-0″		1.00
	0′-6″	x	3′-0″		1.50
P16	0′-6″	x	1′-0″		0.50
P17	1′-0″	x	1′-0″	1.00	
P18	0′-6″	x	2′-0″		1.00
P19	1′-0″	x	3′-0″		3.00
P20	0′-8″	x	0′-6″		0.34
P21	0′-10″	x	0′-10″		0.69
P22	3′-0″	x	0′-10″		2.49
P23	1′-0″	x	1′-0″		1.00
P24	0′-6″	x	0′-6″		0.25
P25	1′-0″	x	3′-0″		3.00
P26	4′-0″	x	0′-6″		2.00
P27	0′-6″	x	1′-6″		0.75
P28	0′-6″	x	0′-6″		0.25
P29	0′-8″	x	0′-6″		0.34
P30	0′-6″	x	1′-6″		0.75
P31	0′-8″	x	0′-8″		0.45
P32	0′-8″	x	0′-6″		0.34
P33	1′-0″	x	1′-0″		1.00
P34	0′-6″	x	0′-6″		0.25
P35	0′-8″	x	0′-8″		0.45
P36	0′-6″	x	0′-6″		0.25
P37	0′-8″	x	0′-6″		0.34
P38	0′-6″	x	0′-6″		0.25
P39	4′-0″	x	1′-0″		4.00
P40	0′-6″	x	0′-6″		0.25
P41	0′-8″	x	0′-6″		0.34
P42	0′-6″	x	1′-0″		0.50
P43	0′-6″	x	0′-6″		0.25
P44	0′-6″	x	0′-8″		0.34
P45	0′-6″	x	0′-6″		0.25
P46	0′-8″	x	0′-8″		0.45

REPAIR QUANTITIES				ITEM 519	ITEM 843
REF. NUM.	DIMENSIONS			AREA SQ. FT.	AREA SQ. FT.
P47	0′-6″	x	0′-8″		0.34
	0′-8″	x	1′-2″		0.78
	0′-8″	x	0′-6″		0.34
P48	0′-6″	x	0′-6″		0.25
P49	0′-8″	x	0′-6″		0.34
P50	1′-0″	x	4′-0″		4.00
P51	1′-0″	x	2′-6″		2.50
P52	0′-8″	x	2′-0″		1.34
P53	0′-6″	x	0′-6″		0.25
P54	0′-8″	x	0′-6″		0.34
P55	0′-6″	x	0′-6″		0.25
P56	3′-0″	x	4′-0″	12.00	
P57	0′-6″	x	0′-6″		0.25
P58	0′-6″	x	0′-8″		0.34
P59	0′-6″	x	0′-8″		0.34
P60	0′-10″	x	0′-10″		0.69
P61	1′-6″	x	1′-0″		1.50
P62	0′-6″	x	1′-0″		0.50
P63	0′-8″	x	0′-8″		0.45
P64	0′-4″	x	0′-4″		0.11
P65	1′-0″	x	0′-6″		0.50
P66	0′-6″	x	0′-6″		0.25
P67	1′-0″	x	0′-6″		0.50
P68	1′-0″	x	0′-6″		0.50
P69	3′-0″	x	1′-0″		3.00
P70	1′-0″	x	1′-0″		1.00
P71	0′-6″	x	0′-6″		0.25
P72	0′-6″	x	1′-6″		0.75
P73	2′-0″	x	0′-6″		1.00
P74	2′-6″	x	0′-6″		1.25
P75	0′-8″	x	0′-8″		0.45
P76	0′-6″	x	0′-10″		0.42
P77	0′-3″	x	0′-3″		0.06
P78	0′-6″	x	0′-3″		0.13
P79	0′-6″	x	2′-0″		1.00
P80	0′-6″	x	2′-0″		1.00
P81	0′-6″	x	2′-6″		1.25
P82	0′-6″	x	2′-6″		1.25
P83	0′-6″	x	0′-6″		0.25
SUBTOTAL, PIER				14.68	67.12
ESTIMATION FACTOR				1.5	1.5
TOTAL CARRIED TO QUANTITIES				22	101

DLZ
2000 ROCKEFELLER BLDG • 614 W SUPERIOR AVE • CLEVELAND, OH 44113

DESIGNED RCK
DRAWN RCK
CHECKED JWB
REVISED
REVIEWED GWM
DATE 7/23/01
STRUCTURE FILE NUMBER 7700334

CONCRETE PATCHING AT PIER
BRIDGE NO. SUM-8-0175
PERKINS STREET OVER S.R. 8

SUM-8-0.63

5 / 5

1007
1088

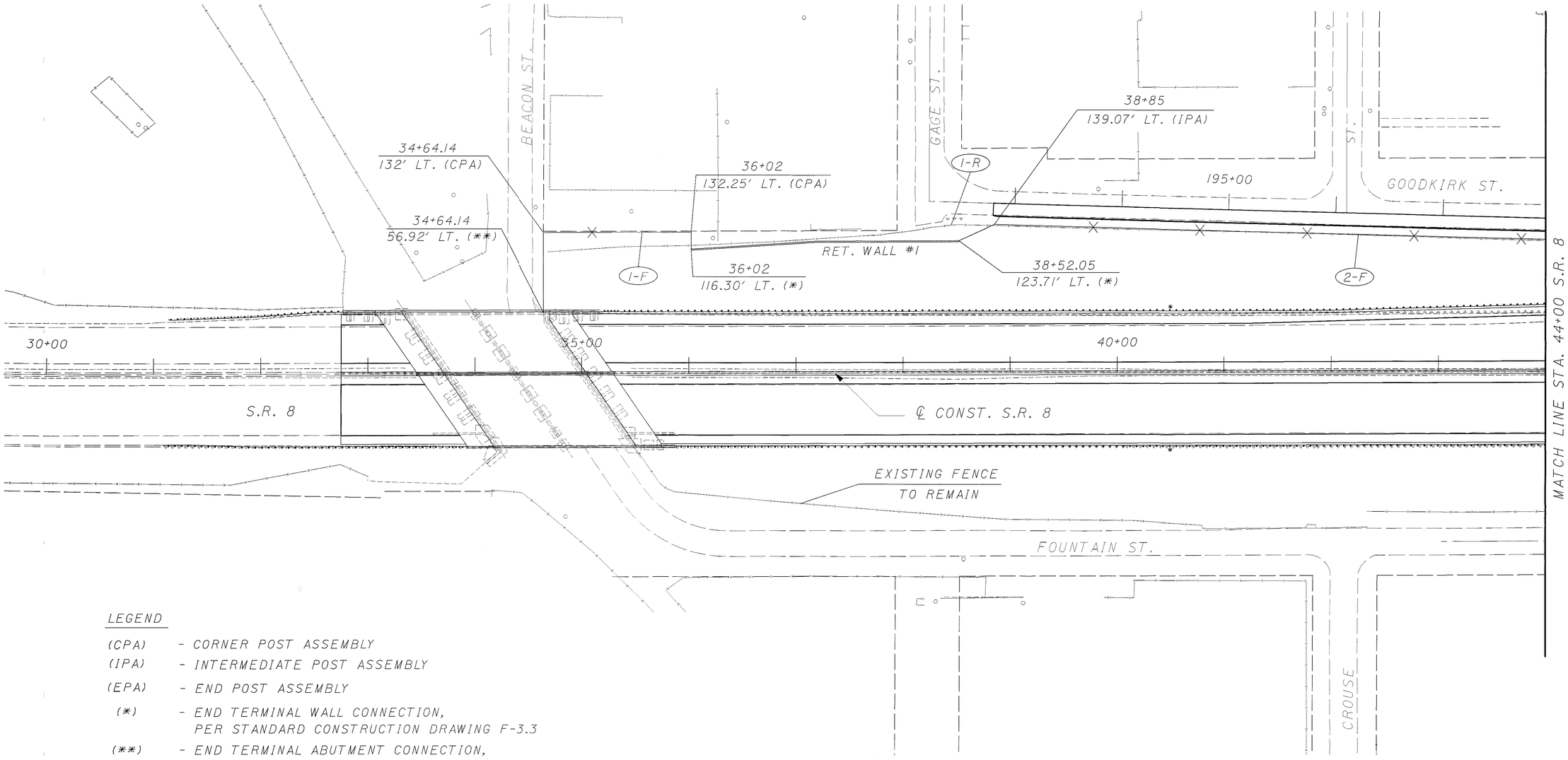

LEGEND

(CPA) - CORNER POST ASSEMBLY
(IPA) - INTERMEDIATE POST ASSEMBLY
(EPA) - END POST ASSEMBLY
(*) - END TERMINAL WALL CONNECTION, PER STANDARD CONSTRUCTION DRAWING F-3.3
(**) - END TERMINAL ABUTMENT CONNECTION, PER STANDARD CONSTRUCTION DRAWING F-3.1

N

HORIZONTAL SCALE IN FEET
0 25 50 100

CALCULATED KME
CHECKED TRB

FENCE PLAN

SUM-8-0.63

1008
1088

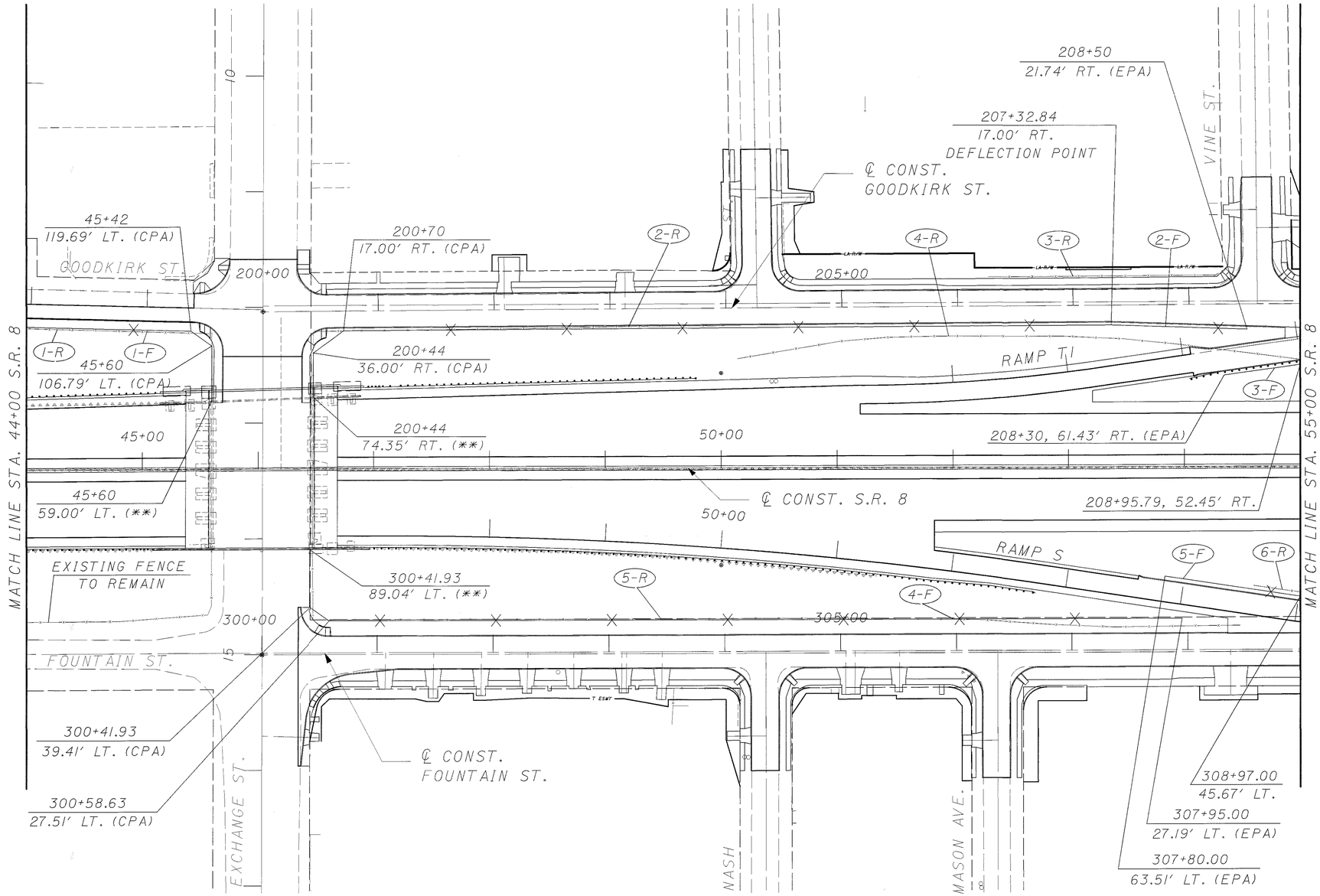

LEGEND

(CPA) - CORNER POST ASSEMBLY
(IPA) - INTERMEDIATE POST ASSEMBLY
(EPA) - END POST ASSEMBLY
(*) - END TERMINAL WALL CONNECTION, PER STANDARD CONSTRUCTION DRAWING F-3.3
(**) - END TERMINAL ABUTMENT CONNECTION, PER STANDARD CONSTRUCTION DRAWING F-3.1

N

0 25 50 100 HORIZONTAL SCALE IN FEET

CALCULATED KME
CHECKED TRB

FENCE PLAN

SUM-8-0.63

1009
1088

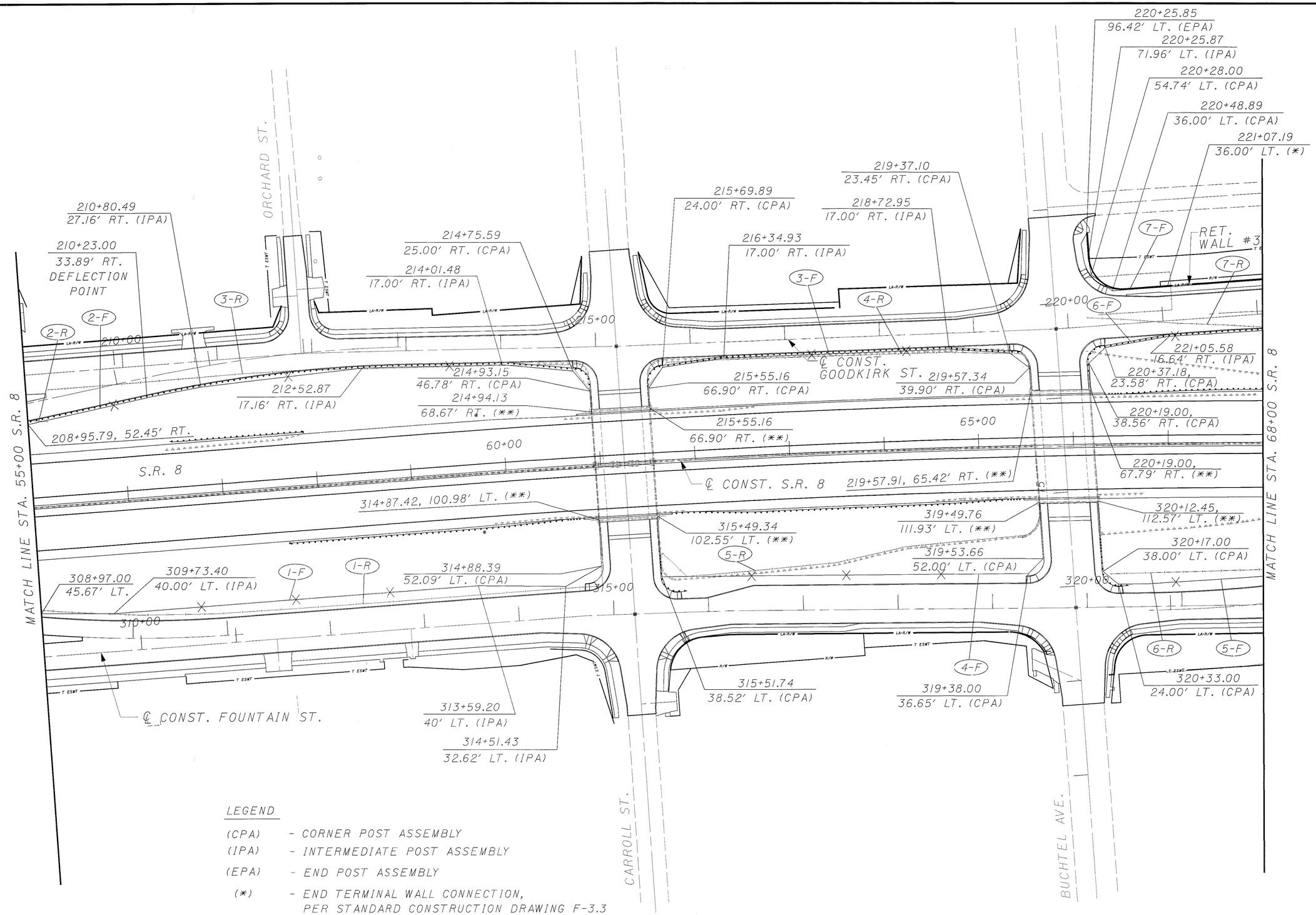

LEGEND

(CPA)	- CORNER POST ASSEMBLY
(IPA)	- INTERMEDIATE POST ASSEMBLY
(EPA)	- END POST ASSEMBLY
(*)	- END TERMINAL WALL CONNECTION, PER STANDARD CONSTRUCTION DRAWING F-3.3
(**)	- END TERMINAL ABUTMENT CONNECTION, PER STANDARD CONSTRUCTION DRAWING F-3.1

N

HORIZONTAL SCALE IN FEET
0 25 50 100

CALCULATED KME
CHECKED TRB

FENCE PLAN

SUM-8-0.63

1010
1088

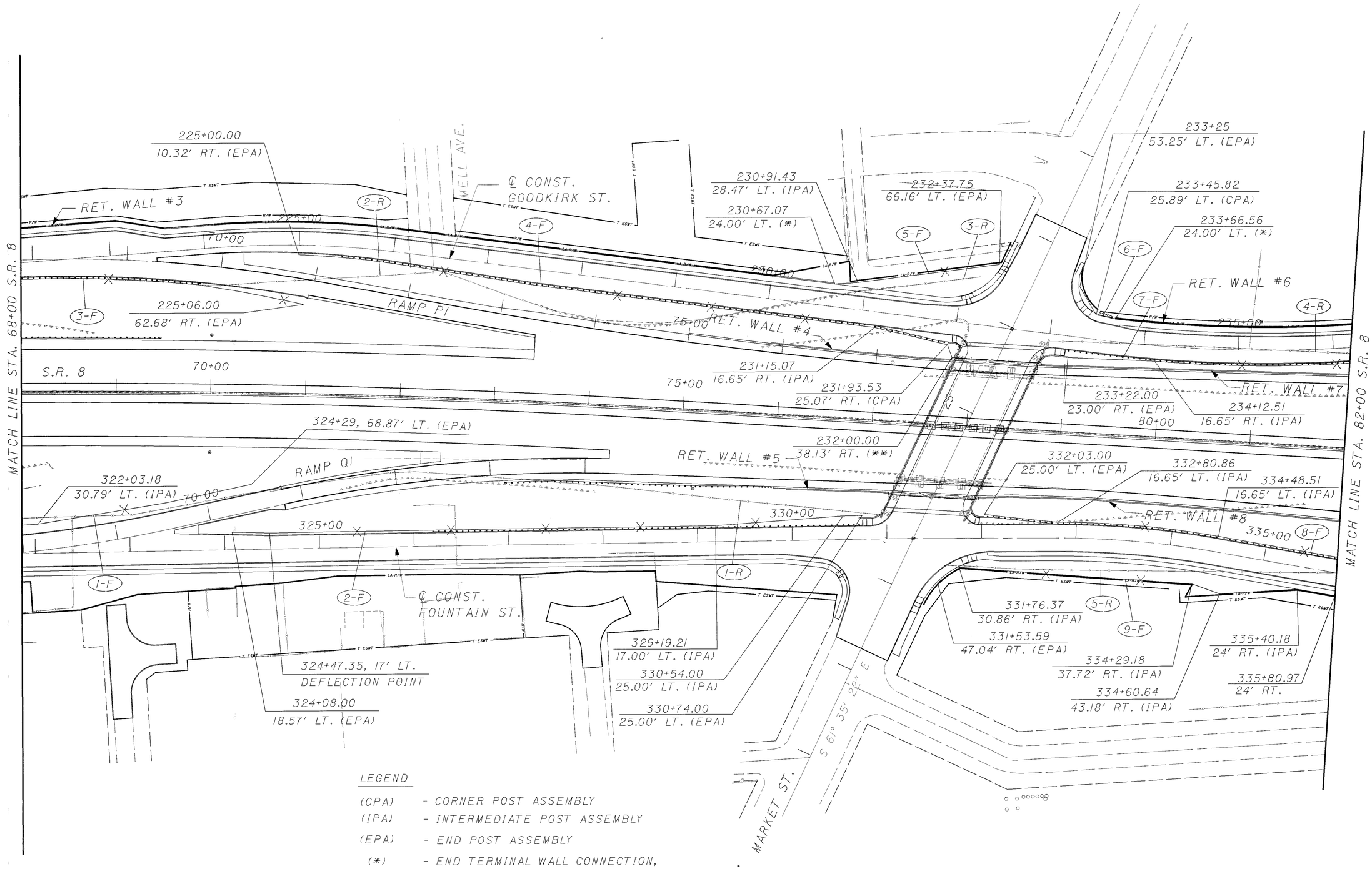

LEGEND

(CPA)	- CORNER POST ASSEMBLY
(IPA)	- INTERMEDIATE POST ASSEMBLY
(EPA)	- END POST ASSEMBLY
(*)	- END TERMINAL WALL CONNECTION, PER STANDARD CONSTRUCTION DRAWING F-3.3
(**)	- END TERMINAL ABUTMENT CONNECTION, PER STANDARD CONSTRUCTION DRAWING F-3.1

N

HORIZONTAL SCALE IN FEET
0 25 50 100

CALCULATED KME
CHECKED TRB

FENCE PLAN

SUM-8-0.63

1011
1088

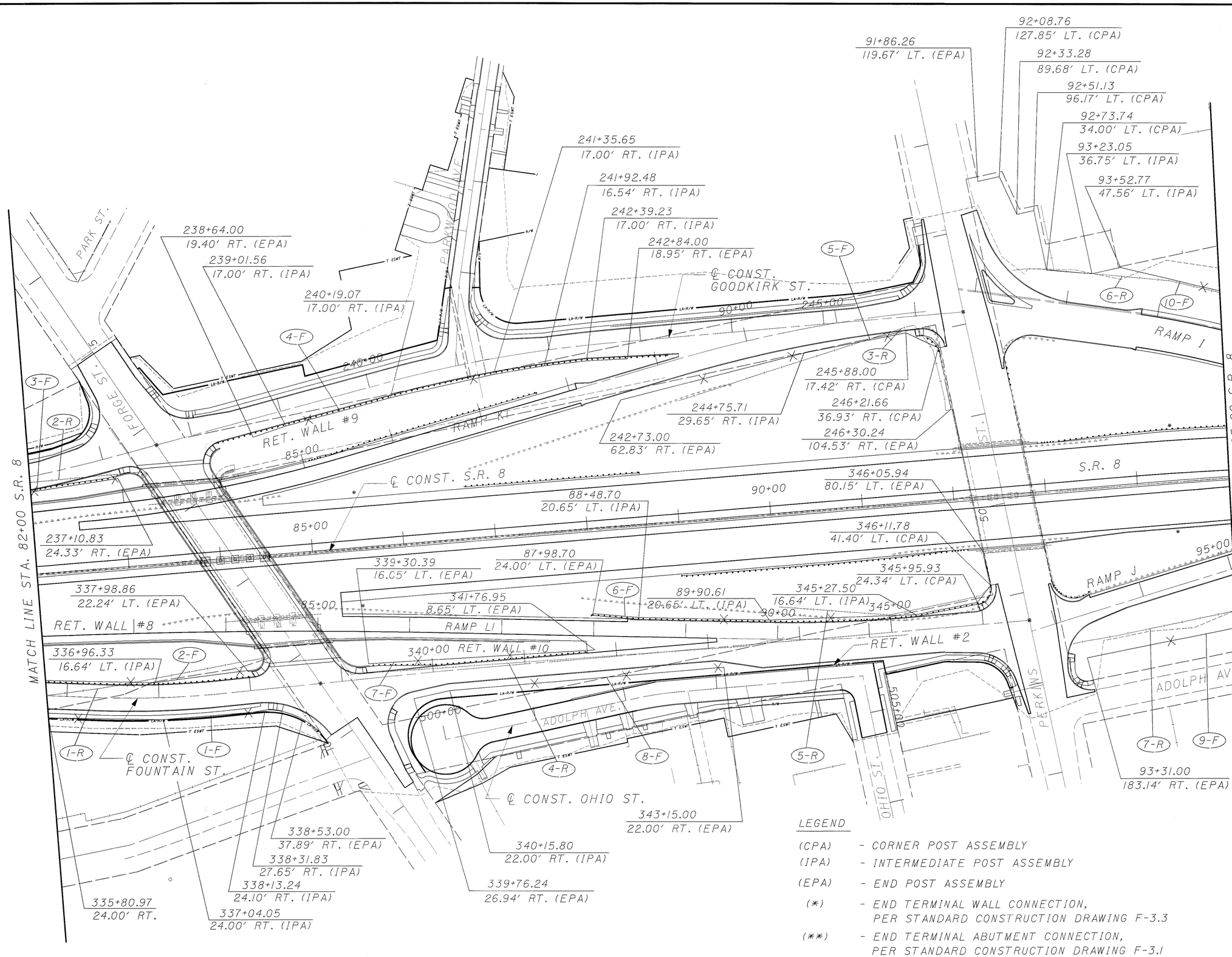

LEGEND

(CPA)	- CORNER POST ASSEMBLY
(IPA)	- INTERMEDIATE POST ASSEMBLY
(EPA)	- END POST ASSEMBLY
(*)	- END TERMINAL WALL CONNECTION, PER STANDARD CONSTRUCTION DRAWING F-3.3
(**)	- END TERMINAL ABUTMENT CONNECTION, PER STANDARD CONSTRUCTION DRAWING F-3.1

N

0 25 50 100
HORIZONTAL SCALE IN FEET

CALCULATED KME
CHECKED TRB

FENCE PLAN

SUM-8-0.63

1012
1088

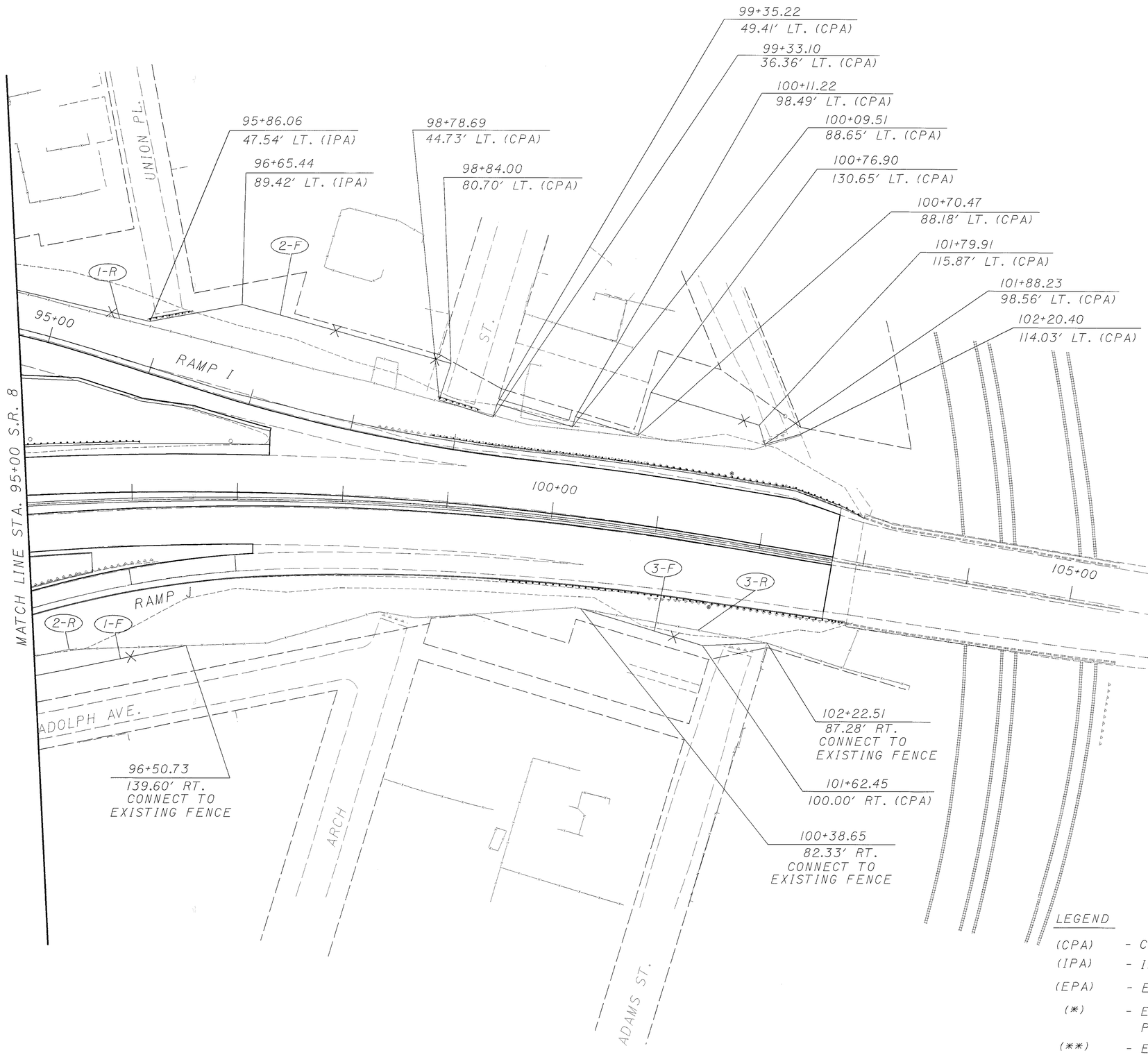

LEGEND

(CPA)	- CORNER POST ASSEMBLY
(IPA)	- INTERMEDIATE POST ASSEMBLY
(EPA)	- END POST ASSEMBLY
(*)	- END TERMINAL WALL CONNECTION, PER STANDARD CONSTRUCTION DRAWING F-3.3
(**)	- END TERMINAL ABUTMENT CONNECTION, PER STANDARD CONSTRUCTION DRAWING F-3.1

N

HORIZONTAL SCALE IN FEET
0 25 50 100

CALCULATED KME
CHECKED TRB

FENCE PLAN

SUM-8-0.63

1013
1088

SUM-8-0.63

CITY OF AKRON
ORIGINAL PORTAGE TOWNSHIP
TRACT 7 & TRACT 8
TOWNSHIP 2 NORTH, RANGE 11 WEST
SUMMIT COUNTY, OHIO

54535226
Page: 1 of 4
04/19/2001 01:08P
PL 56.40
FRANK WILLIAMS, SUMMIT CO AUDITOR

BEGIN WORK
STA. 32+75.00

BEGIN PROJECT
STA. 32+75.00
S.L.M. 0.63

STP

EXIST. S.R. 8 CURVE DATA
P.I. STA. = 27+35.64
D = 6° 51′ 07″ (LT)
Dc = 1° 00′ 41″
R = 5,664.59′
T = 339.11′
L = 677.41′
E = 10.14′

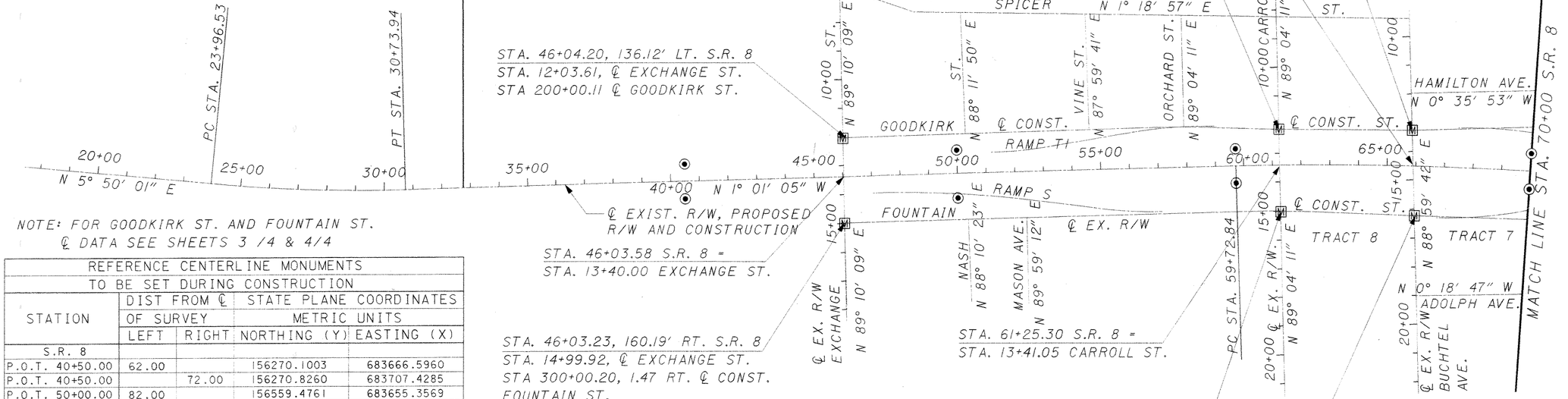

NOTE: FOR GOODKIRK ST. AND FOUNTAIN ST. ℄ DATA SEE SHEETS 3 /4 & 4/4

MONUMENT LEGEND

- ◉ PROPOSED REFERENCE MONUMENT
- Ⓜ PROPOSED MONUMENT BOX
- Ⓜ EXISTING MONUMENT BOX
- ○ EXISTING IRON PIN/PK NAIL FOUND
- ● ¾″ x 30″ REINFORCING ROD WITH ALUMINUM CAP STAMPED ODOT R/W DLZ OHIO 8058.

BASIS OF BEARING

THE PROJECT (GROUND LEVEL) COORDINATE VALUES ARE RELATIVE TO OHIO NORTH ZONE STATE PLANE COORDINATES, NAD83 (95), BY A PROJECT ADJUSTMENT FACTOR (PAF) = 1.00010629 AND IS BASED ON A MEAN PROJECT LATITUDE OF 41°04′27.03″ N AND AN ELEVATION OF 289.534 METERS. THOSE COORDINATE VALUES ARE FROM AN ACTUAL GPS SURVEY MADE BY ROBERT C. CANTER, P.S. IN 1999. TO OBTAIN GRID DISTANCES FOR STATE PLANE COORDINATES, DIVIDE THE PROJECT DISTANCES OR COORDINATES BY THE P.A.F.

NOTE: THE EXISTING R/W WIDTH AND LOCATION WERE DETERMINED USING DOCUMENTATION ON FILE FROM THE OHIO DEPARTMENT OF TRANSPORTATION, DISTRICT 4 OFFICE, RAVENNA, OHIO. SUM-8-0.38A, SUM-5-10.95, SUM-5-11.94 AND SUM-8-1.73/1.95.

REFERENCE CENTERLINE MONUMENTS TO BE SET DURING CONSTRUCTION				
STATION	DIST FROM ℄ OF SURVEY		STATE PLANE COORDINATES METRIC UNITS	
	LEFT	RIGHT	NORTHING (Y)	EASTING (X)
S.R. 8				
P.O.T. 40+50.00	62.00		156270.1003	683666.5960
P.O.T. 40+50.00		72.00	156270.8260	683707.4285
P.O.T. 50+00.00	82.00		156559.4761	683655.3569
P.O.T. 50+00.00		84.00	156560.3751	683705.9404
P.C. 59+72.84	62.00		156856.0290	683656.1829
P.C. 59+72.84		62.00	156856.7005	683693.9682
P.O.T. 70+00.00	62.00		157170.5554	683664.7957
P.O.T. 70+00.00		62.00	157167.8170	683702.4876
TOTAL (THIS SHEET)				8

ADJUSTIBLE CENTERLINE MONUMENTS TO BE SET DURING CONSTRUCTION				
STATION	DIST FROM ℄ OF SURVEY		STATE PLANE COORDINATES METRIC UNITS	
	LEFT	RIGHT	NORTHING (Y)	EASTING (X)
EXCHANGE ST.				
P.O.T. 46+04.20	136.12		156438.5743	683641.0093
P.O.T. 46+03.23		160.19	156439.8839	683731.3071
CARROLL ST.				
P.O.T. 61+23.83	124.88		156902.2074	683636.5028
P.O.T. 61+27.22		159.32	156903.6137	683723.1130
BUCHTEL AVE.				
P.O.T. 65+83.93	124.52		157043.9374	683638.8440
P.O.T. 65+99.99		170.95	157045.5191	683729.0120
TOTAL (THIS SHEET)				6

THE PROPOSED RIGHT OF WAY SHALL BE REFERENCED FROM THE CENTERLINE OF THE RIGHT OF WAY.

ADJUSTABLE CENTERLINE MONUMENTS, REFERENCE MONUMENTS AND RIGHT OF WAY MONUMENTS ARE SHOWN ON STANDARD CONSTRUCTION DRAWING RM 1.1M (REV. 4-29-99) OF THE OHIO DEPARTMENT OF TRANSPORTATION. THE PLACING OF THE MONUMENTS SHALL BE UNDER THE DIRECTION OF A REGISTERED SURVEYOR AND ARE TO BE SET, AS SHOWN BY THE HIGHWAY CONTRACTOR AT THE TIME OF CONSTRUCTION. ANY ALTERATIONS, WITH PRIOR APPROVAL OF THE OHIO DEPARTMENT OF TRANSPORTATION, SHALL BE NOTED AND O.D.O.T. SHALL BE NOTIFIED OF THE NEW LOCATIONS.

I HEREBY CERTIFY THAT THIS PLAT IS A TRUE DELINEATION OF A SURVEY PERFORMED FOR THE OHIO DEPARTMENT OF TRANSPORTATION IN 1999 BY DODSON-STILSON, INC.

THE ESTABLISHMENT OF THE PROPERTY LINES AND EXISTING RIGHT OF WAY LINES SHOWN ON THIS PLAN AS OF THIS DATE WAS PERFORMED BY ME OR UNDER MY DIRECT SUPERVISION.

Adam D. Treat — 12-20-2000
ADAM D. TREAT P.S. 8058 DATE

TRANSFER NOT NECESSARY
SEC.319.202 REV. CODE COMPLIED WITH
Consideration
FRANK WILLIAMS County Auditor
BY Deputy Auditor

TRANSFER NOT NECESSARY
4-19-01
Frank Williams County Auditor

R. TURNBAUGH
Plat Approved By
TAX MAP DEPARTMENT
4-12-01 T.N.

EXIST. S.R. 8 CURVE DATA
P.I. STA. = 67+45.23
D = 7° 46′ 07″ (RT)
Dc = 0° 30′ 13″
R = 11,375.75′
T = 772.39′
L = 1,542.41′
E = 26.19′

PORTIONS OF THIS IMPROVEMENT HAVE BEEN DECLARED A LIMITED ACCESS HIGHWAY OR FREEWAY BY ACTION OF THE DIRECTOR IN ACCORDANCE WITH PROVISIONS OF SECTION 5511.02 OF THE REVISED CODE OF OHIO.

RECEIVED _____ , 20___
RECORDED _____ , 20___
BOOK _____ , PAGE ___
_____
COUNTY RECORDER

STATE OF OHIO
ADAM D. TREAT
8058
REGISTERED SURVEYOR

SCALE IN FEET
0 50 200 400

PID NO. 20356

R/W DESIGNER A.D.T.
R/W REVIEWER T.R.B.

CENTERLINE PLAT

SUM-8-0.63

1/4
1/71
1015/1088

54535226
Pages: 2 of 4
04/19/2001 01:08P
PL 56.40
FRANK WILLIAMS, SUMMIT CO AUDITOR

SUM-8-0.63

CITY OF AKRON
ORIGINAL PORTAGE TOWNSHIP, TRACT 7
TOWNSHIP 2 NORTH, RANGE 11 WEST
SUMMIT COUNTY, OHIO

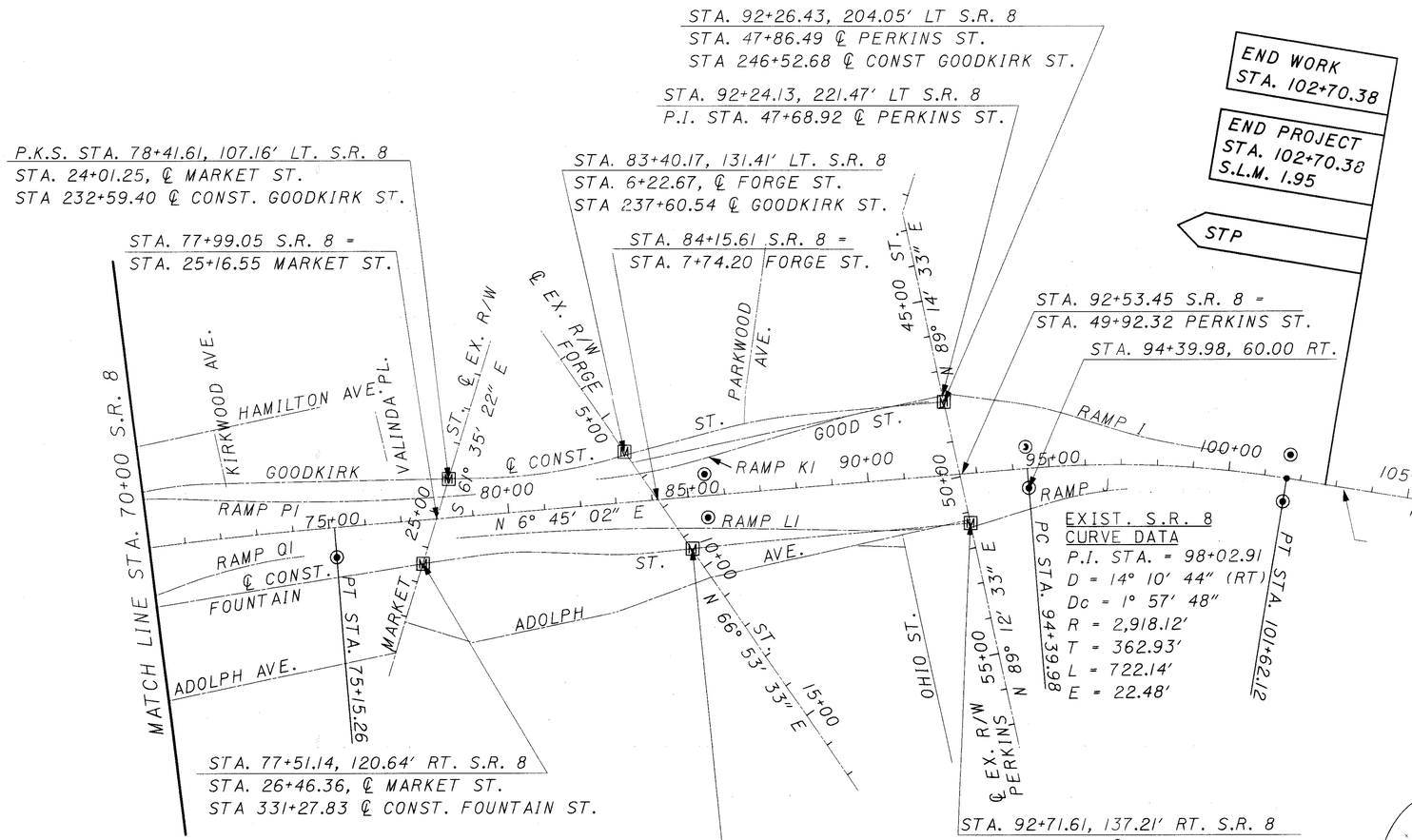

BASIS OF BEARING

THE PROJECT (GROUND LEVEL) COORDINATE VALUES ARE RELATIVE TO OHIO NORTH ZONE STATE PLANE COORDINATES, NAD83 (95), BY A PROJECT ADJUSTMENT FACTOR (PAF) = 1.00010629 AND IS BASED ON A MEAN PROJECT LATITUDE OF 41°04'27.03" N AND AN ELEVATION OF 289.534 METERS. THOSE COORDINATE VALUES ARE FROM AN ACTUAL GPS SURVEY MADE BY ROBERT C. CANTER, P.S. IN 1999. TO OBTAIN GRID DISTANCES FOR STATE PLANE COORDINATES, DIVIDE THE PROJECT DISTANCES OR COORDINATES BY THE P.A.F.

NOTE: THE EXISTING R/W WIDTH AND LOCATION WERE DETERMINED USING DOCUMENTATION ON FILE FROM THE OHIO DEPARTMENT OF TRANSPORTATION, DISTRICT 4 OFFICE, RAVENNA, OHIO. SUM-8-0.38A, SUM-5-10.95, SUM-5-11.94 AND SUM-8-1.73/1.95.

MONUMENT LEGEND

- ⊙ PROPOSED REFERENCE MONUMENT
- Ⓜ PROPOSED MONUMENT BOX
- Ⓜ EXISTING MONUMENT BOX
- ○ EXISTING IRON PIN/PK NAIL FOUND
- ● ¾" × 30" REINFORCING ROD WITH ALUMINUM CAP STAMPED ODOT R/W DLZ OHIO 8058

EXIST. S.R. 8 CURVE DATA
P.I. STA. = 98+02.91
D = 14° 10' 44" (RT)
Dc = 1° 57' 48"
R = 2,918.12'
T = 362.93'
L = 722.14'
E = 22.48'

REFERENCE CENTERLINE MONUMENTS TO BE SET DURING CONSTRUCTION				
STATION	DIST FROM ℄ OF SURVEY		STATE PLANE COORDINATES METRIC UNITS	
	LEFT	RIGHT	NORTHING (Y)	EASTING (X)
S.R. 8				
P.T. 75+15.26		82.00	157322.5581	683723.3805
P.O.T. 85+50.00	62.00		157640.8878	683716.8670
P.O.T. 85+50.00		62.00	157636.4456	683754.3963
P.C. 94+39.98	62.00		157910.2456	683748.7498
P.C. 94+39.98		54.00	157906.0900	683783.8579
P.T. 101+62.12	66.00		158128.3613	683801.2394
P.T. 101+62.12		63.00	158114.3173	683837.9606
TOTAL (PREVIOUS SHEET)				8
TOTAL (THIS SHEET)				7
GRAND TOTAL				15

ADJUSTIBLE CENTERLINE MONUMENTS TO BE SET DURING CONSTRUCTION				
STATION	DIST FROM ℄ OF SURVEY		STATE PLANE COORDINATES METRIC UNITS	
	LEFT	RIGHT	NORTHING (Y)	EASTING (X)
MARKET ST.				
P.O.T. 78+41.61	107.16		157428.1073	683677.8223
P.O.T. 77+51.14		120.64	157392.5655	683743.5267
FORGE ST.				
P.O.T. 83+40.17	131.41		157579.8696	683688.3421
P.O.T. 84+97.40		142.47	157617.6427	683776.8674
PERKINS ST.				
P.O.T. 92+26.43	204.05		157850.7029	683698.1080
P.O.T. 92+71.61		137.21	157852.1510	683803.0117
TOTAL (PREVIOUS SHEET)				6
TOTAL (THIS SHEET)				6
GRAND TOTAL				12

NOTE:
FOR GOODKIRK ST. AND FOUNTAIN ST ℄ DATA SEE SHEETS 3 & 4/4

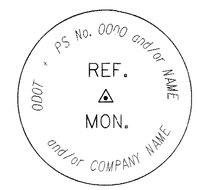

3" [75] MIN. DIA. ALUMINUM CAP PLAN VIEW

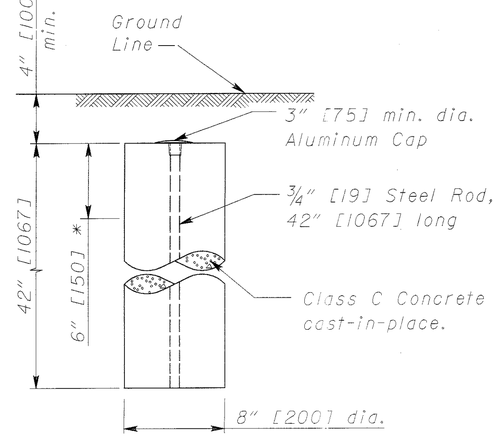

REFERENCE MONUMENT DETAILS

RECEIVED _____ , 20 ___
RECORDED _____ , 20 ___
BOOK _____ , PAGE ___
_____
COUNTY RECORDER

N

0 50 100 200 SCALE IN FEET

PID NO. 20356

R/W DESIGNER A.D.T
R/W REVIEWER T.R.B.

CENTERLINE PLAT

SUM-8-0.63

2/4
2/71

1016/1088

54535226
Page: 3 of 4
04/19/2001 01:05P
PL 66.40
FRANK WILLIAMS, SUMMIT CO AUDITOR

SUM-8-0.63

CITY OF AKRON
ORIGINAL PORTAGE TOWNSHIP
TRACT 7 & TRACT 8
TOWNSHIP 2 NORTH, RANGE 11 WEST
SUMMIT COUNTY, OHIO

BASIS OF BEARING

THE PROJECT (GROUND LEVEL) COORDINATE VALUES ARE RELATIVE TO OHIO NORTH ZONE STATE PLANE COORDINATES, NAD83 (95), BY A PROJECT ADJUSTMENT FACTOR (PAF) = 1.00010629 AND IS BASED ON A MEAN PROJECT LATITUDE OF 41°04'27.03" N AND AN ELEVATION OF 289.534 METERS. THOSE COORDINATE VALUES ARE FROM AN ACTUAL GPS SURVEY MADE BY ROBERT C. CANTER, P.S. IN 1999. TO OBTAIN GRID DISTANCES FOR STATE PLANE COORDINATES, DIVIDE THE PROJECT DISTANCES OR COORDINATES BY THE P.A.F.

NOTE: THE EXISTING R/W WIDTH AND LOCATION WERE DETERMINED USING DOCUMENTATION ON FILE FROM THE OHIO DEPARTMENT OF TRANSPORTATION, DISTRICT 4 OFFICE, RAVENNA, OHIO. SUM-8-0.38A, SUM-5-10.95, SUM-5-11.94 AND SUM-8-1.73/1.95.

MONUMENT LEGEND

- ◉ PROPOSED REFERENCE MONUMENT
- Ⓜ PROPOSED MONUMENT BOX
- Ⓜ EXISTING MONUMENT BOX
- ○ EXISTING IRON PIN/PK NAIL FOUND
- ● ¾" x 30" REINFORCING ROD WITH ALUMINUM CAP STAMPED ODOT R/W DLZ OHIO 8058.

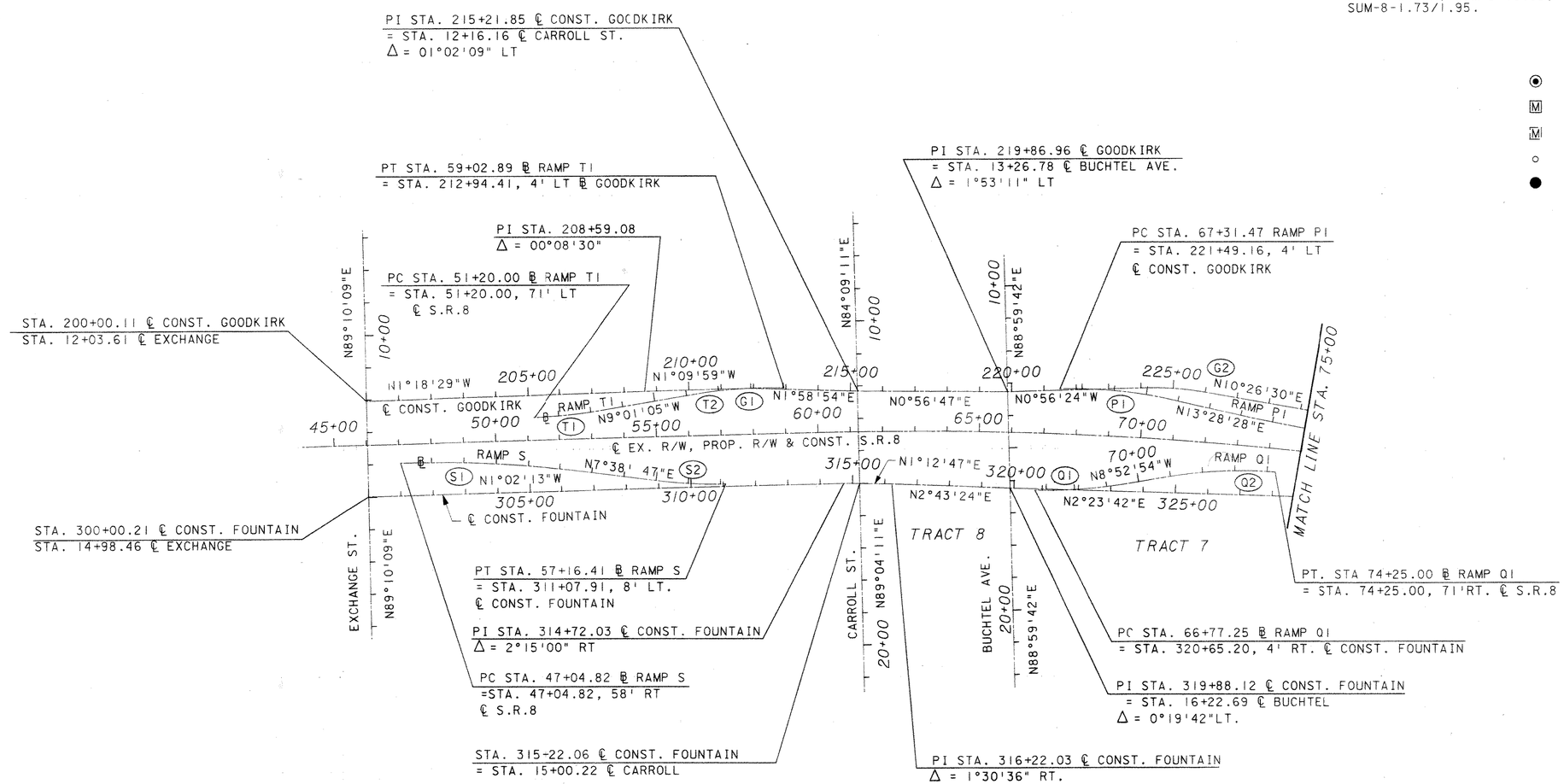

NOTE: FOR S.R. 8 ℄ DATA AND MONMENT LOCATION SEE SHEETS 1 & 2

CURVE NO.	LOCATION	PI STATION	DELTA	Dc	R	T	L	E	PC STATION	PT STATION
G1	GOODKIRK	211+88.54	3°08'52" RT	4°00'00"	1,432.39'	39.36'	78.70'	0.54'	211+49.18	212+27.88
G2	GOODKIRK	225+07.25	11°22'54" RT	6°00'00"	954.93'	95.16'	189.70'	4.73'	224+12.09	226+01.79
S1	RAMP S	49+94.40	8°40'15" RT	1°30'00"	3,819.72'	289.58'	578.05'	0.96'	47+04.82	52+82.87
S2	RAMP S	56+06.87	8°40'59" LT	3°57'21"	1,448.39'	109.96'	219.50'	4.17'	54+96.91	57+16.41
T1	RAMP T1	52+20.16	8°00'00" LT	4°00'00"	1,432.39'	100.16'	200.00'	3.50'	51+20.00	53+20.00
T2	RAMP T1	57+65.82	10°59'59" RT	4°00'00"	1,432.39'	137.92'	274.99'	6.62'	56+27.90	59+02.89
P1	RAMP P1	69+12.61	14°24'52" RT	4°00'00"	1,432.39'	181.14'	360.36'	11.41'	67+31.47	70+91.83
Q1	RAMP Q1	68+18.66	11°16'35" LT	4°00'00"	1,432.39'	141.41'	281.91'	6.96'	66+77.25	69+59.16
Q2	RAMP Q1	72+54.01	13°44'43" RT	4°00'00"	1,432.39'	172.65'	343.63'	10.37'	70+81.37	74+25.00

RECEIVED _____ , 20___
RECORDED _____ , 20___
BOOK _____ , PAGE ___
_____
COUNTY RECORDER

SCALE IN FEET 0 200 400 50

PID NO. 20356

R/W DESIGNER A.D.T.
R/W REVIEWER T.R.B.

CENTERLINE PLAT

3 / 4
2A / 71
1017 / 1088

54535226
Page: 4 of 4
04/19/2001 01:08P
PL 86.48
FRANK WILLIAMS, SUMMIT CO AUDITOR

SUM-8-0.63

CITY OF AKRON
ORIGINAL PORTAGE TOWNSHIP
TRACT 7
TOWNSHIP 2 NORTH, RANGE 11 WEST
SUMMIT COUNTY, OHIO

BASIS OF BEARING

THE PROJECT (GROUND LEVEL) COORDINATE VALUES ARE RELATIVE TO OHIO NORTH ZONE STATE PLANE COORDINATES, NAD83 (95), BY A PROJECT ADJUSTMENT FACTOR (PAF) = 1.00010629 AND IS BASED ON A MEAN PROJECT LATITUDE OF 41°04'27.03" N AND AN ELEVATION OF 289.534 METERS. THOSE COORDINATE VALUES ARE FROM AN ACTUAL GPS SURVEY MADE BY ROBERT C. CANTER, P.S. IN 1999. TO OBTAIN GRID DISTANCES FOR STATE PLANE COORDINATES, DIVIDE THE PROJECT DISTANCES OR COORDINATES BY THE P.A.F.

NOTE: THE EXISTING R/W WIDTH AND LOCATION WERE DETERMINED USING DOCUMENTATION ON FILE FROM THE OHIO DEPARTMENT OF TRANSPORTATION, DISTRICT 4 OFFICE, RAVENNA, OHIO. SUM-8-0.38A, SUM-5-10.95, SUM-5-11.94 AND SUM-8-1.73/1.95.

MONUMENT LEGEND

- ⊙ PROPOSED REFERENCE MONUMENT
- Ⓜ PROPOSED MONUMENT BOX
- Ⓜ EXISTING MONUMENT BOX
- ○ EXISTING IRON PIN/PK NAIL FOUND
- ● ¾" x 30" REINFORCING ROD WITH ALUMINUM CAP STAMPED ODOT R/W DLZ OHIO 8058.

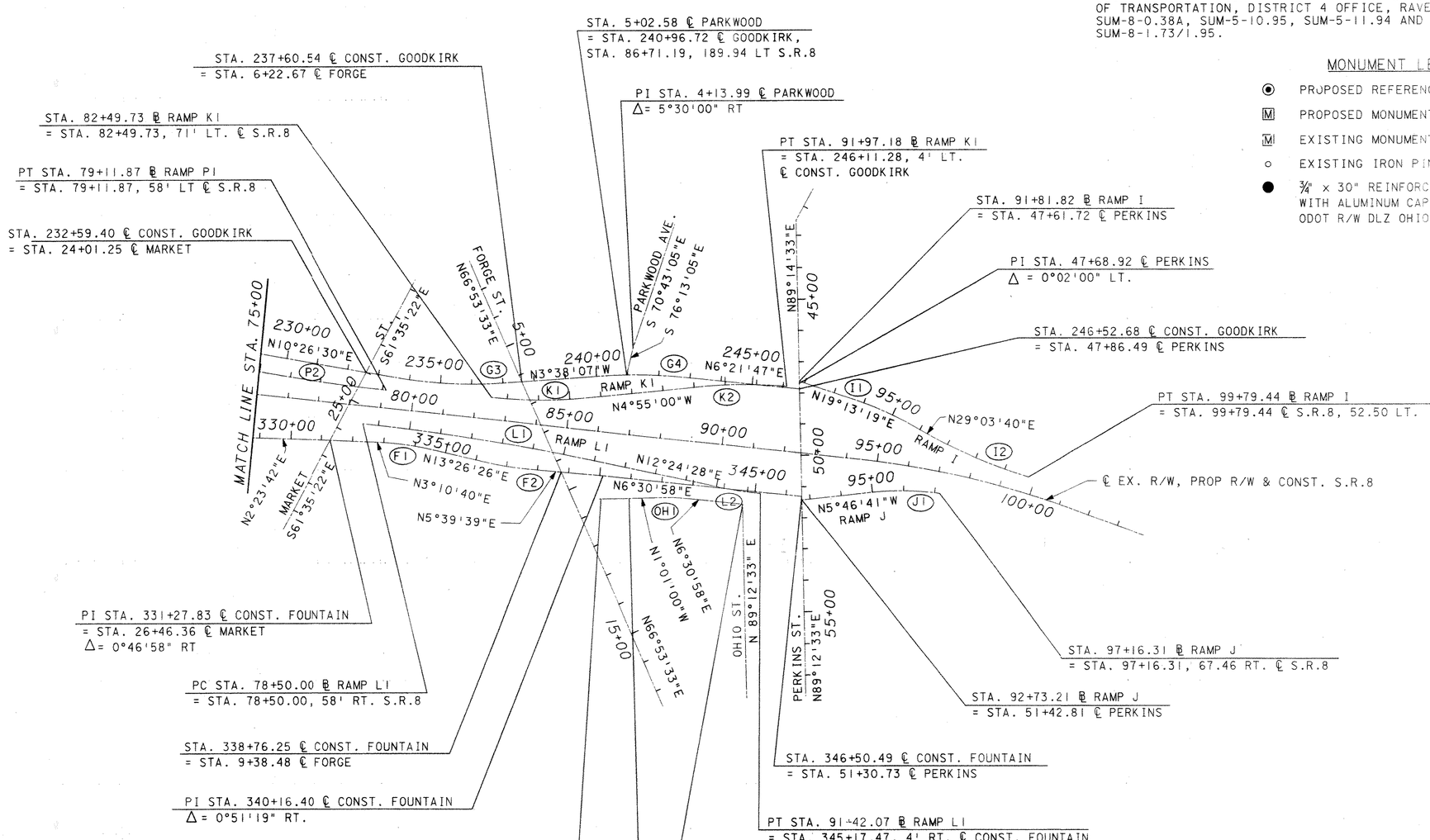

NOTE: FOR S.R. 8 DATA AND MONUMENT LOCATIONS SEE SHEETS 1 & 2.

CURVE NO.	LOCATION	PI STATION	DELTA	Dc	R	T	L	E	PC STATION	PT STATION
F1	FOUNTAIN	333+63.21	10°15'46" RT	6°00'00"	954.93'	85.75'	171.05'	3.84'	332+77.46	334+48.51
F2	FOUNTAIN	337+04.15	7°46'47" LT	6°00'00"	954.93'	64.93'	129.66'	2.20'	336+39.22	337+68.88
G3	GOODKIRK	235+30.84	14°04'38" LT	4°00'00"	1,432.39'	176.86'	351.93'	10.88'	233+53.98	237+05.91
G4	GOODKIRK	241+44.37	9°59'55" RT	4°00'00"	1,432.39'	125.30'	249.96'	5.47'	240+19.07	242+69.03
P2	RAMP P1	75+76.06	6°43'26" LT	1°00'00"	5,729.58'	336.59'	672.40'	9.88'	72+39.47	79+11.87
K1	RAMP K1	83+96.07	11°40'01" LT	4°00'00"	1,432.39'	146.34'	291.68'	7.46'	82+49.73	85+41.41
K2	RAMP K1	90+61.02	10°47'23" RT	3°57'01"	1,450.39'	136.97'	273.13'	6.45'	89+24.05	91+97.18
L1	RAMP L1	82+38.61	5°49'27" RT	0°45'00"	7,639.44'	388.61'	776.54'	9.88'	78+50.00	86+26.54
L2	RAMP L1	90+66.41	6°03'30" LT	4°00'00"	1,432.39'	75.80'	151.46'	2.00'	89+90.61	91+42.07
I1	RAMP I	94+56.12	9°50'21" RT	5°30'00"	1,041.74'	89.67'	178.89'	3.85'	93+66.45	95+45.34
I2	RAMP I	98+15.76	11°29'45" LT	3°30'00"	1,637.02'	164.78'	328.46'	8.27'	96+50.98	99+79.44
J1	RAMP J	96+03.36	13°52'02" RT	6°06'31"	937.94'	114.06'	227.01'	6.91'	94+89.30	97+16.31
OH1	OHIO	502+34.78	7°31'58" RT	15°00'00"	381.97'	25.15'	50.22'	0.83'	502+09.64	502+59.86

RECEIVED _____ , 20___
RECORDED _____ , 20___
BOOK _____ , PAGE ___
_____
COUNTY RECORDER

SCALE IN FEET: 0, 50, 200, 400

PID NO. 20356

R/W DESIGNER A.D.T.
R/W REVIEWER T.R.B.

CENTERLINE PLAT

SUM-8-0.63

4 / 4
2B / 71
1018
1088

CITY OF AKRON
ORIGINAL PORTAGE TOWNSHIP, TRACT8
TOWNSHIP 2 NORTH, RANGE 11 WEST
SUMMIT COUNTY

UTILITIES:

1. OHIO EDISON
   1910 W. MARKET ST.
   AKRON, OH 44313
   (330) 384-4711
2. CITY OF AKRON DEPT. OF PUBLIC SAFETY
   DIV. OF TRAFFIC ENGINEERING
   1420 TRIPLETT BLVD.
   AKRON, OH 44306
   (330) 375-2851
3. TIME WARNER CABLE
   1655 BRITTAIN RD.
   AKRON, OH 44310
   (330) 630-7950
4. AMERITECH
   50 W. BOWERY ST., 4TH FLOOR
   AKRON, OH 44308
   (330) 384-8057
5. AKRON PUBLIC WORKS
   1436 TRIPLETT BLVD.
   AKRON, OH 44306
   (330) 375-2831
6. AT&T
   229 WEST 7TH ST., 10TH FLOOR
   CINCINNATI, OH 45202
   (513) 784-3238
7. BP OIL PIPELINE CO.
   4421 BRADLEY RD.
   CLEVELAND, OH 44109
   (216) 586-2080
8. EAST OHIO GAS
   2100 EASTWOOD AVE.
   AKRON, OH 44305
   (330) 798-7104
9. AKRON WATER/SEWER DEPT.
   146 S. HIGH ST. CITICENTER
   AKRON, OH 44308
   (330) 375-2690
   AKRON THERMAL
10. 226 OPPORTUNITY PARKWAY
    AKRON, OH 44307
    (330) 375-6491
    UNIVERSITY OF AKRON
11. 100 LINCOLN ST.
    AKRON, OH 44325-0405
    (330) 972-6298

THE LOCATION OF THE UNDERGROUND UTILITIES SHOWN ON THE PLANS ARE AS OBTAINED FROM THE OWNERS OF THE UTILITY AS REQUIRED BY SECTION 153. 64 O.R.C.

STRUCTURES KEY:

- RESIDENTIAL BUILDING
- COMMERCIAL BUILDING
- OUTBUILDING

CONVENTIONAL SIGNS

County Line
Township Line
Section Line
Corporation Line or
Fence Line (existing) (proposed)
Center Line
Trees, Stumps (to be removed)
Utility Poles: Telephone, Power, Light
Limited Access (only) LA
Right of Way (only) R/W
Limited Access & Right of Way LA-R/W
Exist. Right of Way R/W
Temp. Right of Way T ESMT
Slope Easement SL ESMT
Utility Easement U ESMT
Property Line (in existing fence)
Railroad or
Guardrail (existing) (proposed)
Construction Limits Construction Limits

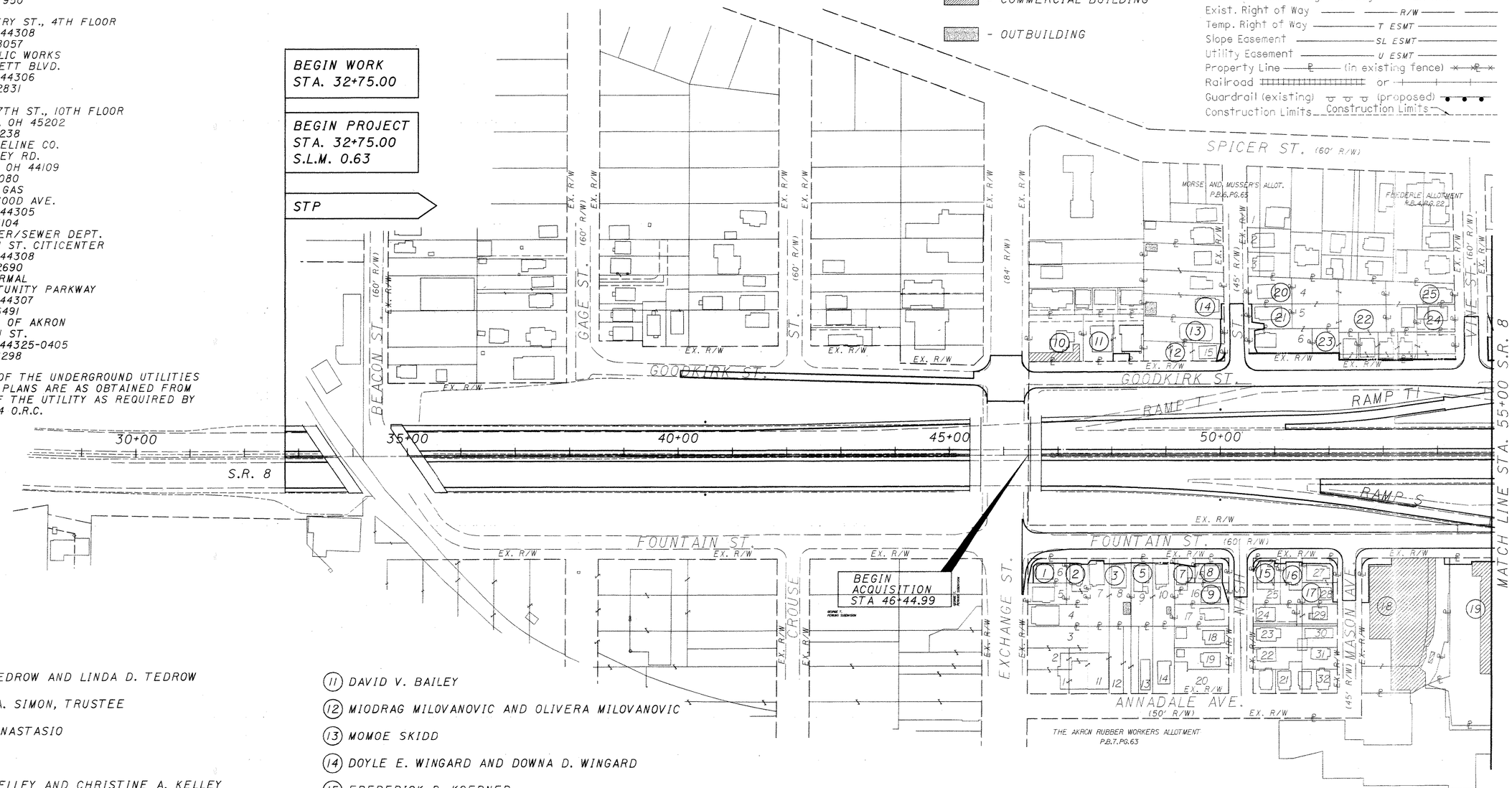

1. JOHN L. TEDROW AND LINDA D. TEDROW
2. RICHARD A. SIMON, TRUSTEE
3. AURELIO ANASTASIO
4. NOT USED
5. JOHN R. KELLEY AND CHRISTINE A. KELLEY
6. NOT USED
7. GEORGE DUDICH, JR.
8. MICHAEL J. POWERS
9. TERRY M. STIFFLER AND KARLA K. STIFFLER
10. D.M.R. PROPERTIES, L.L.C.
11. DAVID V. BAILEY
12. MIODRAG MILOVANOVIC AND OLIVERA MILOVANOVIC
13. MOMOE SKIDD
14. DOYLE E. WINGARD AND DOWNA D. WINGARD
15. FREDERICK P. KOERNER
16. RICHARD A. GIBSON AND NANCY A. GIBSON
17. AKROCHEM, INC.
18. THE AKRON CHEMICAL COMPANY
19. U-HAUL REAL ESTATE COMPANY
20. GORDON C. McBRIDE
21. WILMAR PROPERTIES LTD., AN OHIO LIMITED LIABILITY COMPANY
22. TRIAD INVESTMENTS
23. G. MATTHEW WESTFALL AND TERI WESTFALL
24. NANCY RIDDLE
25. GREGORY MICHAEL BILLS AND JUDITH LYNN BILLS, CO-TRUSTEES

REV.	DATE	DESCRIPTION

DATE OF COMPLETION

HORIZONTAL SCALE IN FEET 0 50 100 200

PID NO. 20356

R/W DESIGNER
R/W REVIEWER

PROPERTY MAP
STA 32+75.00 TO STA 55+00

SUM-8-0.63

1019 / 1088

:₽projects₽99221001₽civildscl.dgn

CITY OF AKRON
ORIGINAL PORTAGE TOWNSHIP, TRACT 7, & TRACT 8
TOWNSHIP 2 NORTH, RANGE 11 WEST
SUMMIT COUNTY

STRUCTURES KEY:
- RESIDENTIAL BUILDING
- COMMERCIAL BUILDING
- OUTBUILDING

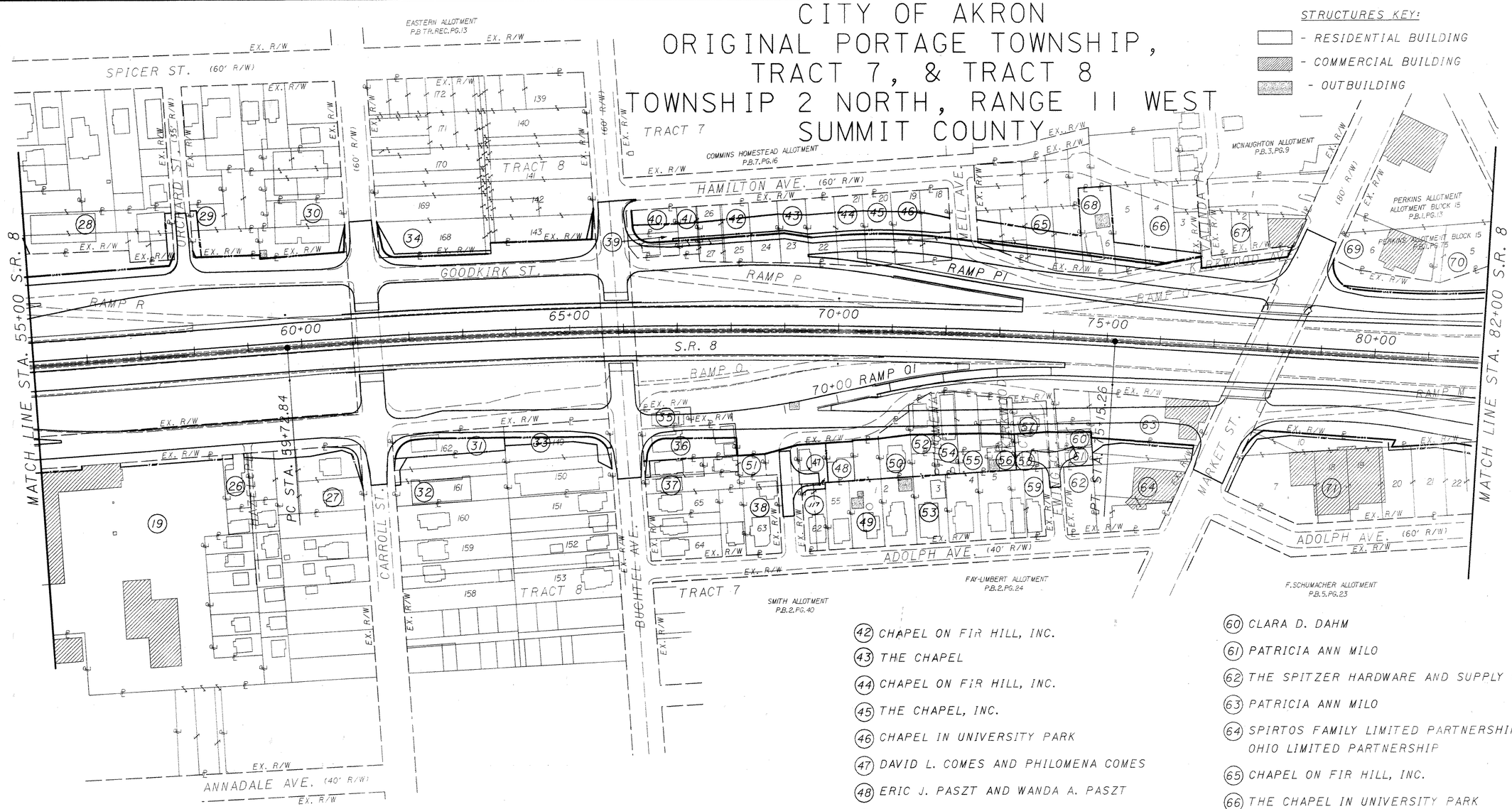

(19) U-HAUL REAL ESTATE COMPANY

(26) ROBERT LEE NEVLING AND MICHELLE NEVLING

(27) G. MATTHEW WESTFALL AND JOSEPH M. KESSLER

(28) SHERMAN HALL PARTNERSHIP, LTD.

(29) THE UNIVERSITY OF AKRON, A STATE UNIVERSITY

(30) PHI SIGMA KAPPA CLUB OF AKRON, INC., A CORPORATION

(31) RICHARD A. GIBSON

(32) BELLA DORA MANAGEMENT, INC.

(33) EDWARD J. WALTER

(34) THE UNIVERSITY OF AKRON, A STATE UNIVERSITY

(35) TIMOTHY A. WOLF

(36) THOMAS R. MERRYWEATHER AND TIMOTHY S. MERRYWEATHER

(37) G. MATTHEW WESTFALL AND JOSEPH M. KESSLER

(38) THOMAS R. MERRYWEATHER AND TIMOTHY S. MERRYWEATHER

(39) LYN M. BROACH

(40) THE CHAPEL, INC.

(41) CHAPEL IN UNIVERSITY PARK, A NON-PROFIT ORGANIZATION

(42) CHAPEL ON FIR HILL, INC.

(43) THE CHAPEL

(44) CHAPEL ON FIR HILL, INC.

(45) THE CHAPEL, INC.

(46) CHAPEL IN UNIVERSITY PARK

(47) DAVID L. COMES AND PHILOMENA COMES

(48) ERIC J. PASZT AND WANDA A. PASZT

(49) JAMES P. VECHERY

(50) STEPHEN T. GALLAGHER (1/2 INT.) BERNARD M. GALLAGHER, TRUSTEE (1/2 INT.)

(51) G. MATTHEW WESTFALL AND TERI WESTFALL

(52) CLAIRE M. REINKE

(53) JACK F. SMYLIE AND ANNE J. SMYLIE

(54) KENNETH F. ROTH

(55) THOMAS W. CLARK AND SARAH M. CLARK

(56) EMANUEL J. JANIKIS AND LESLIE C. JANIKIS

(57) WILLIAM D. McKOWN

(58) DORIS P. GOMOLL

(59) GREGORY MICHAEL BILLS AND JUDITH LYNN BILLS, CO-TRUSTEES

(60) CLARA D. DAHM

(61) PATRICIA ANN MILO

(62) THE SPITZER HARDWARE AND SUPPLY COMPANY

(63) PATRICIA ANN MILO

(64) SPIRTOS FAMILY LIMITED PARTNERSHIP, AN OHIO LIMITED PARTNERSHIP

(65) CHAPEL ON FIR HILL, INC.

(66) THE CHAPEL IN UNIVERSITY PARK

(67) THE CHAPEL, INC.

(68) DAVID A. GREY

(69) SHELBY BUNIN

(70) SUMMA HEALTH SYSTEM

(71) THE SPITZER HARDWARE AND SUPPLY COMPANY

(117) DAVID L. COMES AND PHILOMENA COMES

REV.	DATE	DESCRIPTION
	5/8/2001	REVISE LIMITS PAR 47 AND ADD PARCEL 117

DATE OF COMPLETION

HORIZONTAL SCALE IN FEET: 0, 50, 100, 200

PID NO. 20356

R/W DESIGNER

R/W REVIEWER

PROPERTY MAP
STA 55+00 TO STA 82+00

SUM-8-0.63

4 / 71

1020 / 1088

i:\projects\992100\civildsc2.dgn

CITY OF AKRON
ORIGINAL PORTAGE TOWNSHIP, TRACT 7
TOWNSHIP 2 NORTH, RANGE 11 WEST
SUMMIT COUNTY

STRUCTURE KEY:
- RESIDENTIAL BUILDING
- COMMERCIAL BUILDING
- OUTBUILDING

HORIZONTAL SCALE IN FEET: 0, 50, 100, 200

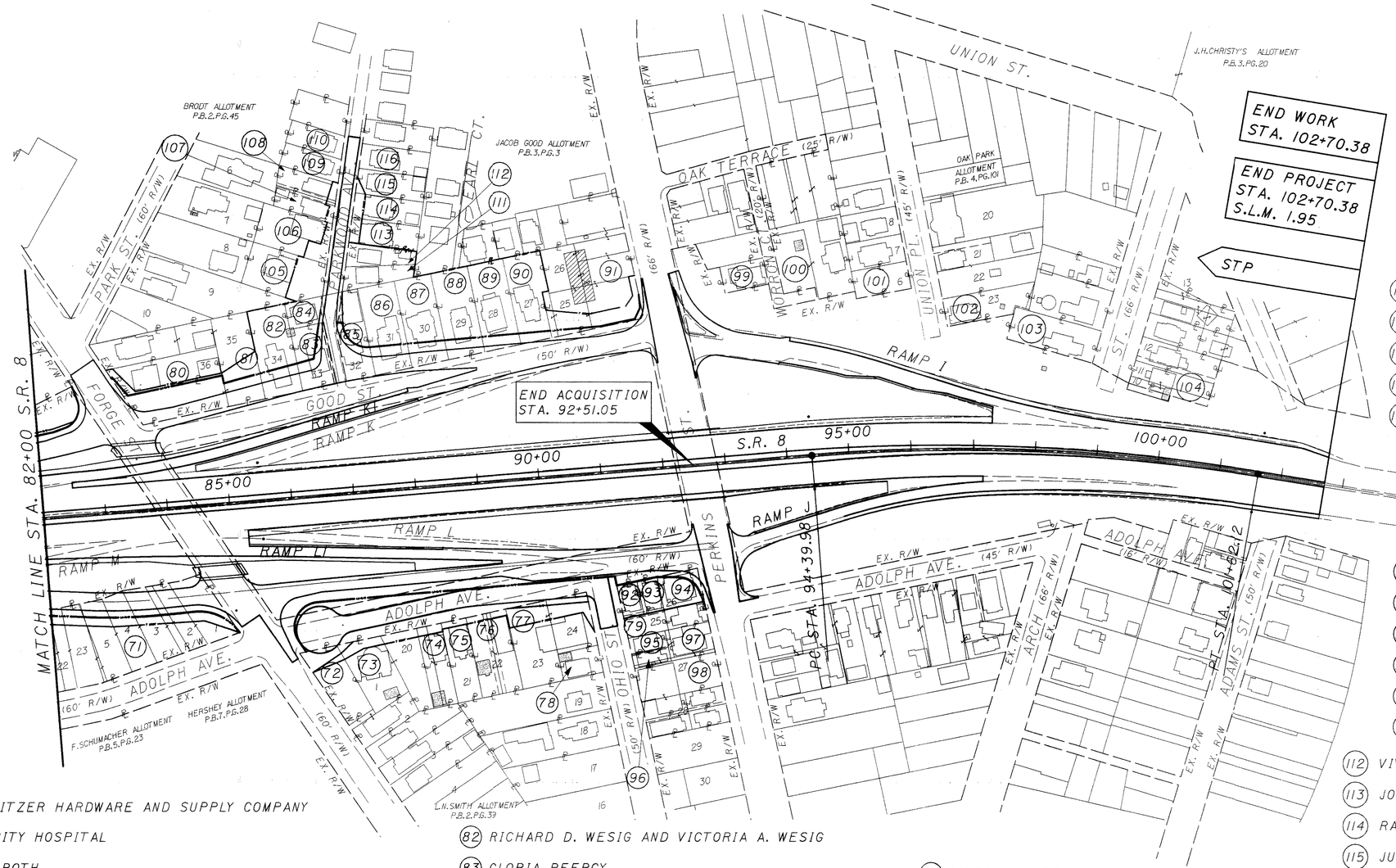

(101) IDA MAE JAMES
(102) MICHAEL WASSAM
(103) ROBERT DAVID POPE
(104) ROBERT CALAWAY
(105) DONALD W. PAPES
(106) RICHARD D. WESIG AND VICTORIA A. WESIG
(107) KAREN BARRIOS AND MICHAEL BARRIOS
(108) NORMAN E. WILCOX
(109) JON D. MARR, JR.
(110) LINDA MORGAN
(111) JACQUELYN MICK CLUPPER
(112) VIVIAN G. AMATO
(113) JOHN L. PEARL AND INEZE G. PEARL, TRUSTEES
(114) RANA ZAMIL AND KATHRYN M. ZAMIL
(115) JULIE A. BARKER
(116) ARLIE L. WORTMAN, TRUSTEE

(71) THE SPITZER HARDWARE AND SUPPLY COMPANY
(72) AKRON CITY HOSPITAL
(73) ARNOLD ROTH
(74) CONSTANCE M. BENNINGTON
(75) GREGORY L. EISENBREI AND CAROL L. EISENBREI
(76) DONALD J. E. COFFMAN AND LINDA L. MOORE
(77) F&S PARTNERSHIP
(78) SUMMA HEALTH SYSTEM HOSPITALS
(79) JULIE A. WISE AND CHRISTOPHER A. WISE
(80) DAVID E. HUGHES
(81) MICHAEL L. CURRENCE
(82) RICHARD D. WESIG AND VICTORIA A. WESIG
(83) GLORIA PEERCY
(84) JOSEPH MICHAEL NORRIS AND LEAH A. NORRIS
(85) DANIEL R. HUNT
(86) SAVA STROJNIC
(87) TODD T. BAUGHMAN AND ALISON J. BAUGHMAN
(88) CHARLES J. POWERS AND KAY R. POWERS
(89) LISA M. KAZEMPOUR
(90) JON MIDDENDORF
(91) MARK R. McLEAN
(92) LINDA K. WISE
(93) KEITH SNOCK
(94) WILLIAM F. MILLER AND PATRICIA M. MILLER, CO-TRUSTEES
(95) RON E. MEYERS, JR.
(96) FREDA DICKENSON
(97) CORNELIU MIHALCA
(98) LEONARD J. STANEK AND MARILYN STANEK, TRUSTEES
(99) DAVID J. ZELENKA
(100) ROBERT L. WILLEY

REV.	DATE	DESCRIPTION
	10/29/01	REVISE PCL'S PARCEL 89
DATE OF COMPLETION		

R/W DESIGNER
R/W REVIEWER

PID NO. 20356

PROPERTY MAP
STA 82+00 TO STA 102+70.38

SUM-8-0.63

5 / 71

1021
1088

i:\projects\9922100\civildsc3.dgn

CITY OF AKRON
ORIGINAL PORTAGE TOWNSHIP, TRACT 8
TOWNSHIP 2 NORTH, RANGE 11 WEST
SUMMIT COUNTY, OHIO

- RESIDENTIAL BUILDING
- COMMERCIAL BUILDING

HORIZONTAL SCALE IN FEET
0 50 100 200

PID NO. 20356

UTILITY MAP
STA 32+75.00 TO STA 55+00

SUM-8-0.63

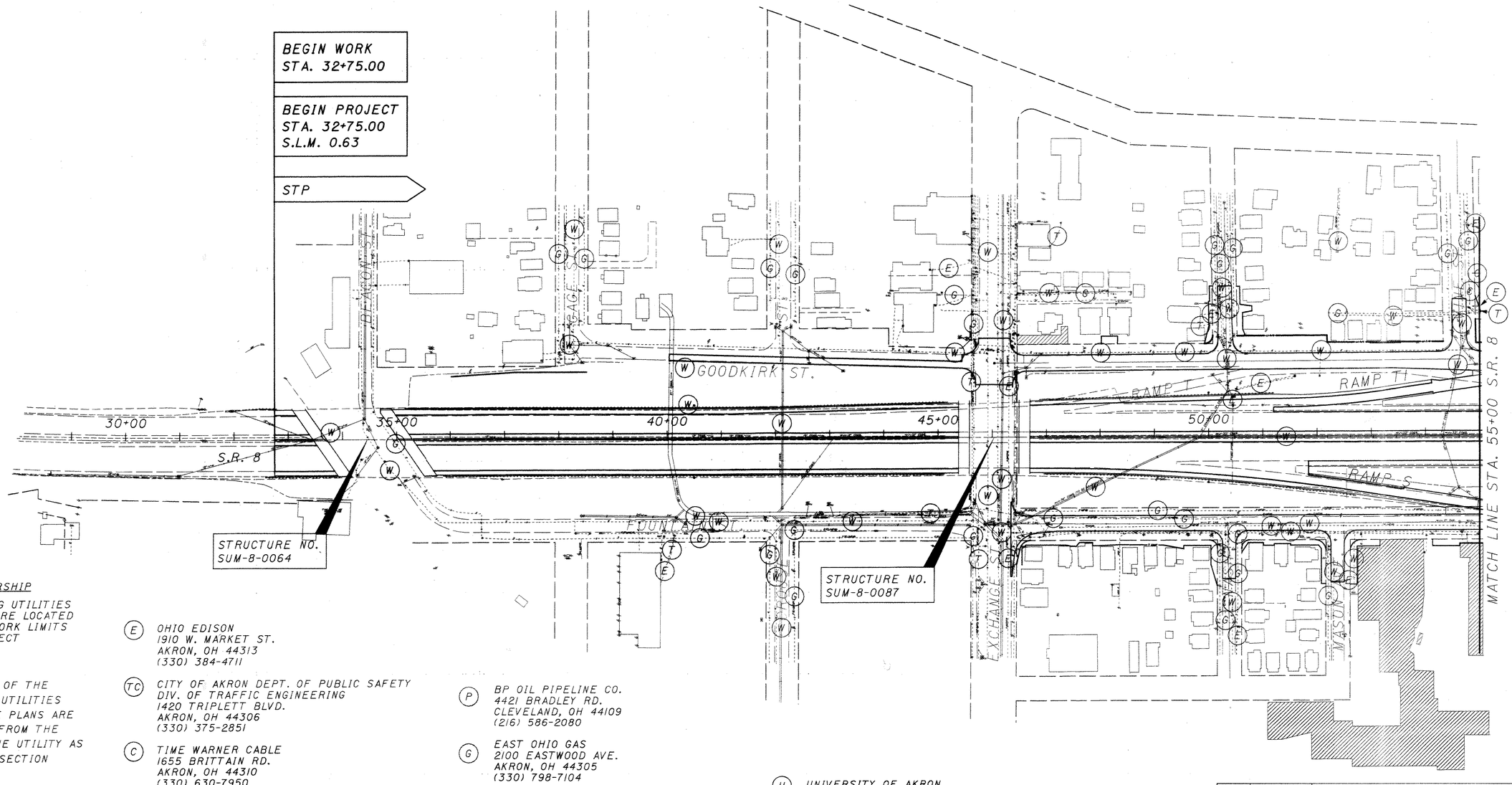

UTILITY OWNERSHIP

THE FOLLOWING UTILITIES AND OWNERS ARE LOCATED WITHIN THE WORK LIMITS OF THIS PROJECT

THE LOCATION OF THE UNDERGROUND UTILITIES SHOWN OF THE PLANS ARE AS OBTAINED FROM THE OWNERS OF THE UTILITY AS REQUIRED BY SECTION 153.64 O.R.C.

(E) OHIO EDISON
1910 W. MARKET ST.
AKRON, OH 44313
(330) 384-4711

(TC) CITY OF AKRON DEPT. OF PUBLIC SAFETY
DIV. OF TRAFFIC ENGINEERING
1420 TRIPLETT BLVD.
AKRON, OH 44306
(330) 375-2851

(C) TIME WARNER CABLE
1655 BRITTAIN RD.
AKRON, OH 44310
(330) 630-7950

(T) AMERITECH
50 W. BOWERY ST., 4TH FLOOR
AKRON, OH 44308
(330) 384-8057

(L) AKRON PUBLIC WORKS
1436 TRIPLETT BLVD.
AKRON, OH 44306
(330) 375-2831

(P) BP OIL PIPELINE CO.
4421 BRADLEY RD.
CLEVELAND, OH 44109
(216) 586-2080

(G) EAST OHIO GAS
2100 EASTWOOD AVE.
AKRON, OH 44305
(330) 798-7104

(W) AKRON WATER/SEWER DEPT.
146 S. HIGH ST. CITICENTER
AKRON, OH 44308
(330) 375-2690

(TH) AKRON THERMAL
226 OPPORTUNITY PARKWAY
AKRON, OH 44307
(330) 375-6491

(U) UNIVERSITY OF AKRON
100 LINCOLN ST.
AKRON, OH 44325-0405
(330) 972-6298

REV.	DATE	DESCRIPTION
DATE OF COMPLETION		

1022
1088

C:\Projects\99221001\civildscl.dgn

CITY OF AKRON
ORIGINAL PORTAGE TOWNSHIP,
TRACT 7 & TRACT 8
TOWNSHIP 2 NORTH, RANGE 11 WEST
SUMMIT COUNTY, OHIO

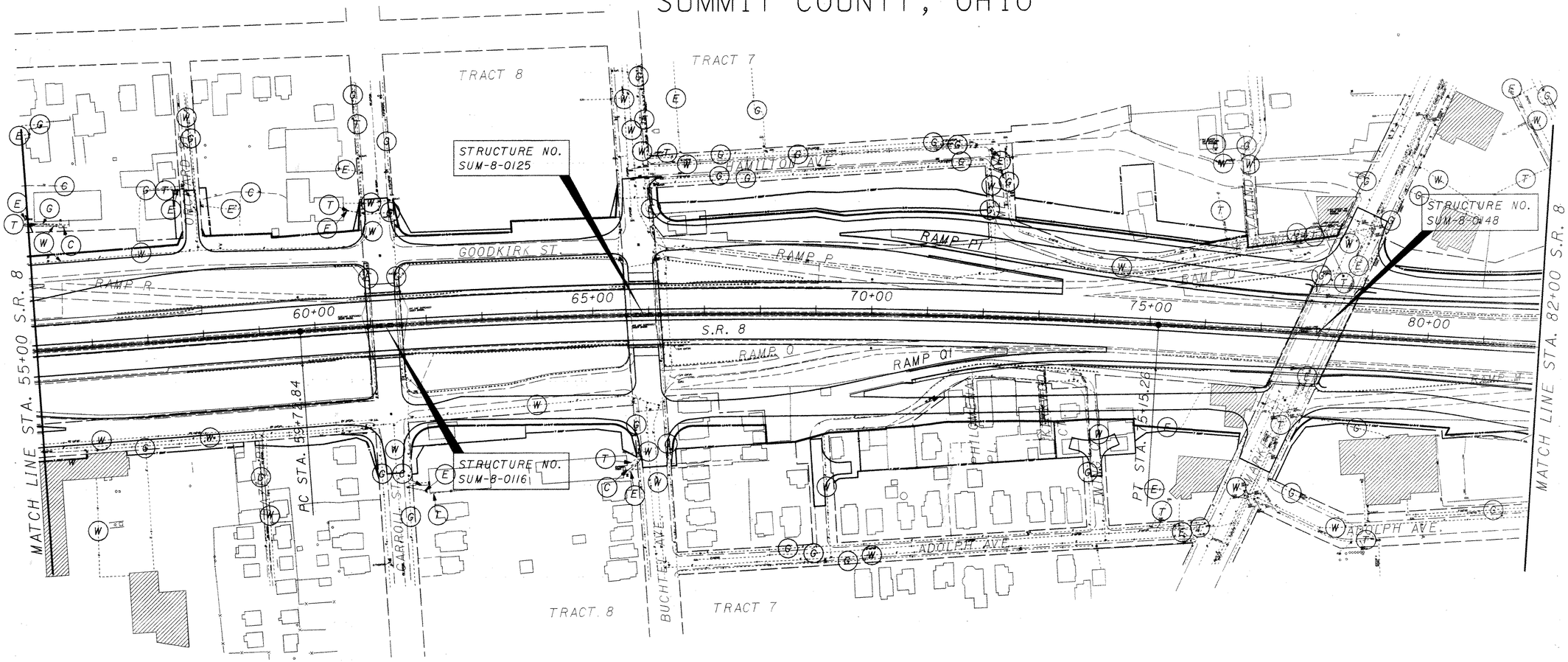

UTILITY OWNERSHIP

THE FOLLOWING UTILITIES AND OWNERS ARE LOCATED WITHIN THE WORK LIMITS OF THIS PROJECT

THE LOCATION OF THE UNDERGROUND UTILITIES SHOWN OF THE PLANS ARE AS OBTAINED FROM THE OWNERS OF THE UTILITY AS REQUIRED BY SECTION 153.64 O.R.C.

(E) *OHIO EDISON*
1910 W. MARKET ST.
AKRON, OH 44313
(330) 384-4711

(TC) *CITY OF AKRON DEPT. OF PUBLIC SAFETY*
DIV. OF TRAFFIC ENGINEERING
1420 TRIPLETT BLVD.
AKRON, OH 44306
(330) 375-2851

(C) *TIME WARNER CABLE*
1655 BRITTAIN RD.
AKRON, OH 44310
(330) 630-7950

(T) *AMERITECH*
50 W. BOWERY ST., 4TH FLOOR
AKRON, OH 44308
(330) 384-8057

(L) *AKRON PUBLIC WORKS*
1436 TRIPLETT BLVD.
AKRON, OH 44306
(330) 375-2831

(U) *UNIVERSITY OF AKRON*
100 LINCOLN ST.
AKRON , OHIO 44325-0405
(330) 972-6298

(P) *BP OIL PIPELINE CO.*
4421 BRADLEY RD.
CLEVELAND, OH 44109
(216) 586-2080

(G) *EAST OHIO GAS*
2100 EASTWOOD AVE.
AKRON, OH 44305
(330) 798-7104

(W) *AKRON WATER/SEWER DEPT.*
146 S. HIGH ST. CITICENTER
AKRON, OH 44308
(330) 375-2690

(TH) *AKRON THERMAL*
226 OPPORTUNITY PARKWAY
AKRON, OH 44307
(330) 375-6491

REV.	DATE	DESCRIPTION

DATE OF COMPLETION

HORIZONTAL SCALE IN FEET
0 50 100 200

PID NO. 20356

UTILITY MAP
STA 55+00 TO STA 82+00

SUM-8-0.63

7 / 71

1023
1088

\projects\9922100\civil\dsc2.dgn

CITY OF AKRON
ORIGINAL PORTAGE TOWNSHIP, TRACT 7
TOWNSHIP 2 NORTH, RANGE 11 WEST
SUMMIT COUNTY, OHIO

- RESIDENTIAL BUILDING
- COMMERCIAL BUILDING

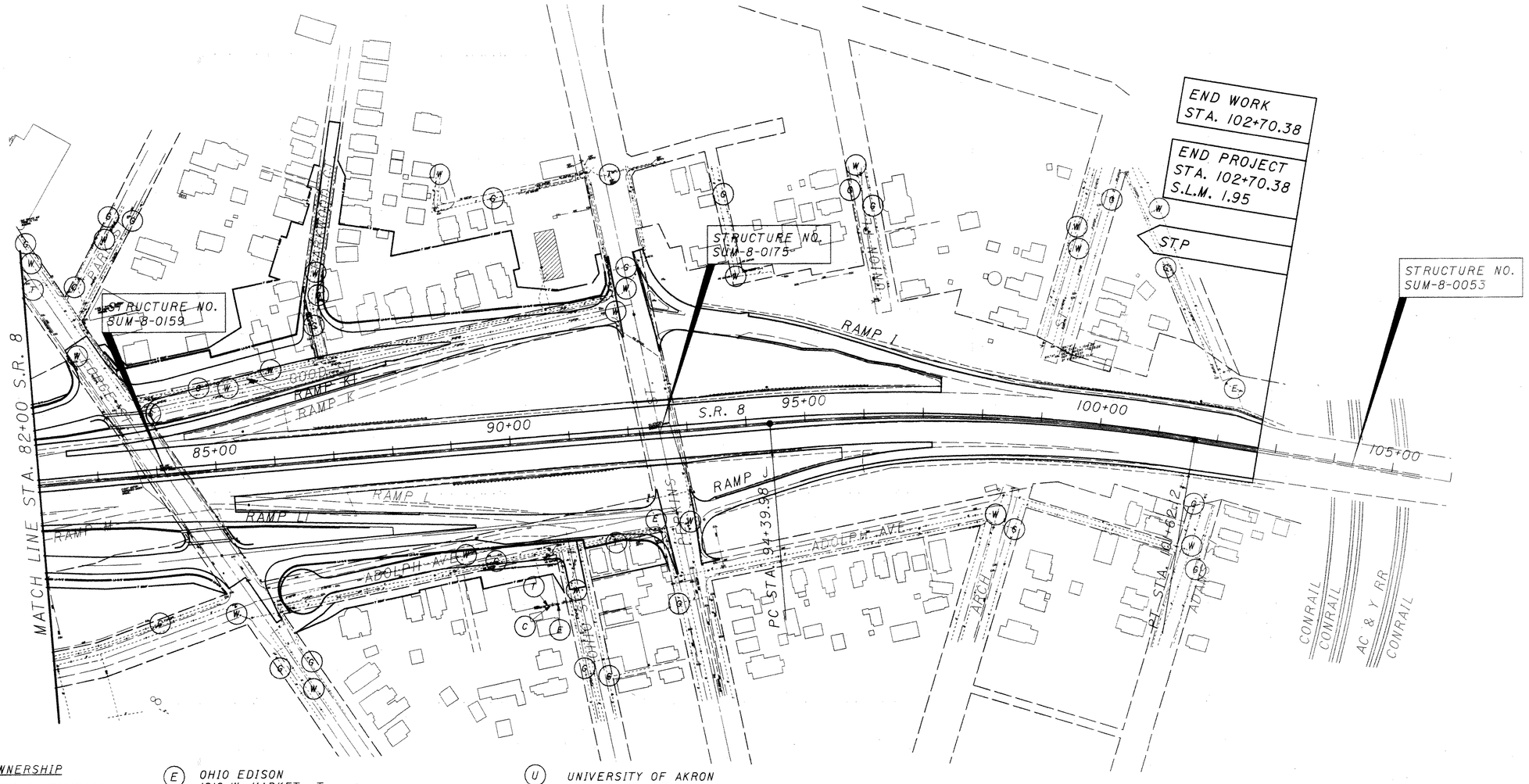

UTILITY OWNERSHIP

THE FOLLOWING UTILITIES AND OWNERS ARE LOCATED WITHIN THE WORK LIMITS OF THIS PROJECT

THE LOCATION OF THE UNDERGROUND UTILITIES SHOWN OF THE PLANS ARE AS OBTAINED FROM THE OWNERS OF THE UTILITY AS REQUIRED BY SECTION 153.64 O.R.C.

(E) *OHIO EDISON*
1910 W. MARKET ST.
AKRON, OH 44313
(330) 384-4711

(TC) *CITY OF AKRON DEPT. OF PUBLIC SAFETY*
DIV. OF TRAFFIC ENGINEERING
1420 TRIPLETT BLVD.
AKRON, OH 44306
(330) 375-2851

(C) *TIME WARNER CABLE*
1655 BRITTAIN RD.
AKRON, OH 44310
(330) 630-7950

(T) *AMERITECH*
50 W. BOWERY ST., 4TH FLOOR
AKRON, OH 44308
(330) 384-8057

(L) *AKRON PUBLIC WORKS*
1436 TRIPLETT BLVD.
AKRON, OH 44306
(330) 375-2831

(U) *UNIVERSITY OF AKRON*
100 LINCOLN ST.
AKRON, OHIO 44325-0405
(330) 972-6298

(P) *BP OIL PIPELINE CO.*
4421 BRADLEY RD.
CLEVELAND, OH 44109
(216) 586-2080

(G) *EAST OHIO GAS*
2100 EASTWOOD AVE.
AKRON, OH 44305
(330) 798-7104

(W) *AKRON WATER/SEWER DEPT.*
146 S. HIGH ST. CITICENTER
AKRON, OH 44308
(330) 375-2690

(TH) *AKRON THERMAL*
226 OPPORTUNITY PARKWAY
AKRON, OH 44307
(330) 375-6491

HORIZONTAL SCALE IN FEET
0 50 100 200

PID NO. 20356

UTILITY MAP
STA 82+00 TO STA 102+70.38

SUM-8-0.63

8 / 71

1024
1088

REV.	DATE	DESCRIPTION

DATE OF COMPLETION

C:\projects\9922100\civildsc3.dgn

TOTAL NUMBER OF :

OWNERSHIPS 89 — OWNERSHIPS WITH STRUCTURES INVOLVED 31
PARCELS 114 — OWNERSHIPS WITH "P" ITEMS 0
TOTAL TAKES 7

NET RESIDUE = RECORD AREA - TOTAL PRO - NET TAKE

ALL AREAS IN ACRES

GRANTEE:
ALL RIGHT-OF-WAY ACQUIRED IN THE NAME OF THE STATE OF OHIO DEPARTMENT OF TRANSPORTATION UNLESS OTHERWISE SHOWN.

PARCEL NO.	OWNER	SHEET NO.	OWNERS RECORD BOOK	OWNERS RECORD PAGE	AUDITOR'S PARCEL	RECORD AREA	TOTAL P.R.O.	GROSS TAKE	P.R.O. IN TAKE	NET TAKE	STRUCTURE	NET RESIDUE LEFT	NET RESIDUE RIGHT	TYPE FUND	REMARKS AND PERSONALTY	AS ACQUIRED BOOK	AS ACQUIRED PAGE
1WDV**	JOHN L. TEDROW AND LINDA D.	26,27	OR 2039	1363	67-36893	0.073	0	0.006	0	0.006	NO		0.067	STATE	LOT 6, (P.B.7, PG.63)		
	TEDROW																
1T**								0.017	0	0.017					CONSTRUCT DRIVE		
2T	RICHARD A. SIMON, TRUSTEE	26,27	OR 2280	664	68-18379	0.078	0	0.009	0	0.009	NO				LOTS 5&6, (P.B.7, PG.63)		
															CONSTRUCT DRIVE		
3T	AURELIO ANASTASIO	26.27	54335899		68-18380	0.115	0	0.013	0	0.013	NO				LOT 7, (P.B.7, PG.63)		
			54408530		68-06669	0.115	0								LOT 8, (P.B.7, PG.63)		
				TOTAL		0.230	0								CONSTRUCT DRIVE		
4	NOT USED														NOT USED		
5T	JOHN R. KELLEY AND	26,27	54478717		67-18756	0.115	0	0.016	0	0.016	NO				LOT 9, (P.B.7, PG.63)		
	CHRISTINE A. KELLEY		54478731		68-15740	0.115	0								LOT 10, (P.B.7, PG.63)		
				TOTAL		0.230	0								CONSTRUCT DRIVES, GRADE AND SEED		
6	NOT USED														NOT USED		
7T	GEORGE DUDICH, JR.	26,27	OR 686	513	67-20815	0.047	0	0.011	0	0.011	NO				LOTS 15&16, (P.B.7, PG.63)		
															CONSTRUCT DRIVE		
8WDV**	MICHAEL J. POWERS	26,27	54408944		67-12483	0.064	0	0.001	0	0.001	NO		0.063		LOT 15, (P.B.7, PG.63)		
		30,31															
8T**								0.023	0	0.023					FENCE REMOVAL, GRADE AND SEED		
9T	TERRY M. STIFFLER AND KARLA	26,27	OR 1957	2308	67-49126	0.084	0	0.006	0	0.006					LOT 16, (P.B.7, PG.63)		
	K. STIFFLER	30,31													CONSTRUCT DRIVE		
10	D.M.R. PROPERTIES, L.L.C.	28,29	54465863		68-16718	0.210	0								NO TAKE		
11T	DAVID V. BAILEY	28,29	54277691		68-32446	0.110	0	0.010	0	0.010	NO				CONSTRUCT DRIVE		
			54277695		68-19535	0.110	0										
				TOTAL		0.220	0										
12WDV**	MIODRAG MILOVANOVIC AND	28,29	OR 780	607	67-02431	0.121	0	0.001	0	0.001	NO	0.120			LOT 15, (P.B.6, PG.65)		
12T	OLIVERA MILOVANOVIC	32,33						0.007	0	0.007					GRADE AND SEED		
13T	MOMOE SKIDD	28,29	OR 195	683	68-13005	0.162	0	0.007	0	0.007	NO				CONSTRUCT DRIVE		
		32,33												STATE			

NOTE:
ALL TEMPORARY PARCELS TO BE OF 24 MONTHS DURATION.

** ACQUIRED IN THE NAME OF THE CITY OF AKRON

NOTE:
UNDER NO CIRCUMSTANCES ARE TEMPORARY EASEMENTS TO BE USED FOR STORAGE OF MATERIAL OR EQUIPMENT BY THE CONTRACTOR UNLESS NOTED OTHERWISE.

REV.	DATE	DESCRIPTION

FIELD REVIEW BY DATE
OWNERSHIP VERIFIED BY DATE
DATE OF COMPLETION DATE

FEDERAL PROJECT NO. TE 21-(0)
PID NO. 20356
STATE JOB NO. 442230
R/W DESIGNER ADT
R/W REVIEWER TRB

SUMMARY OF ADDITIONAL RIGHT OF WAY

SUM-8-0.63

1025
1088

NET RESIDUE = RECORD AREA - TOTAL PRO - NET TAKE

GRANTEE:
ALL RIGHT-OF-WAY ACQUIRED IN THE NAME OF THE STATE OF OHIO DEPARTMENT OF TRANSPORTATION UNLESS OTHERWISE SHOWN.

ALL AREAS IN ACRES

PARCEL NO.	OWNER	SHEET NO.	OWNERS RECORD BOOK	OWNERS RECORD PAGE	AUDITOR'S PARCEL	RECORD AREA	TOTAL P.R.O.	GROSS TAKE	P.R.O. IN TAKE	NET TAKE	STRUCTURE	NET RESIDUE LEFT	NET RESIDUE RIGHT	TYPE FUND	REMARKS AND PERSONALTY	AS ACQUIRED BOOK	AS ACQUIRED PAGE
14T	DOYLE E. WINGARD AND DOWNA D.	28,29	6445	765	68-31545	0.145	0	0.003	0	0.003	NO			STATE	GRADE AND SEED		
	WINGARD	32,33			68-31544	0.154	0										
					68-31531	0.171	0										
				TOTAL		0.470	0										
15WDV**	FREDERICK P. KOERNER	30,31	OR 612	149	68-13799	0.143	0	0.001	0	0.001	NO		0.142		LOTS 25 & 26, (P.B.7, PG.63)		
15T**								0.008	0	0.008					CONSTRUCT DRIVE		
16T	RICHARD A. GIBSON AND NANCY A.	30,31	7079	551	68-01839	0.078	0	0.007	0	0.007	NO				LOTS 25 & 26, (P.B.7, PG.63)		
	GIBSON														CONSTRUCT DRIVE		
17WDV**	AKROCHEM, INC.	30,31	OR 598	942	68-01840	0.067	0	0.002	0	0.002	NO				LOTS 27 & 28, (P.B.7, PG.63)		
					68-01841	0.060	0										
						0.127	0	0.002	0	0.002			0.125		CONSTRUCT DRIVE		
17T**								0.027	0	0.027					CONSTRUCT DRIVE		
18WDV**	THE AKRON CHEMICAL COMPANY	30,31	2168	77	67-01019	0.870	0	0.002	0		NO						
					67-01020	0.480	0										
					67-01021	0.170	0										
					68-06587	0.360	0										
					68-06592	0.150	0										
				TOTAL		2.030	0	0.002	0	0.002			2.028				
18T**								0.033	0	0.033					GRADE AND SEED		
18T1**								0.003	0	0.003					CONSTRUCT DRIVE		
19T	U-HAUL REAL ESTATE COMPANY	30,31	OR 309	060	68-41109	3.820	0	0.029	0	0.029	NO				CONSTRUCT DRIVE		
19T1		34,35			68-41110	0.050	0	0.035	0	0.035					CONSTRUCT DRIVE		
				TOTAL		3.870	0	0.064	0	0.064							
20	GORDON C. MCBRIDE	32,33	OR 798	718	67-19329	0.096	0								LOT 4, (P.B.6, PG.65)		
															NO TAKE		
21T	WILMAR PROPERTIES LTD., AN OHIO	32,33	54039924		68-19540	0.083	0	0.012	0	0.012					LOT 5, (P.B.6, PG.65)		
	LIMITED LIABILITY COMPANY		54029925												CONSTRUCT DRIVE		
22LA	TRIAD INVESTMENTS	32,33	54251930		67-32383	0.120	0								LOT 6, (P.B.6, PG.65)		
			54014266		67-29431	0.100	0								LOT 6, (P.B.6, PG.65)		
					67-29432	0.178	0								LOT 5, (P.B.6, PG.65)		
22LA-1					67-32382	0.092	0								LOT 4, (P.B.6, PG.65)		
			54014267		67-04439	0.041	0								LOT 1, (P.B.4, PG.22)		
					67-32384	0.041	0								BUILDING ENCROACHMENT,		
					67-11711	0.041	0								REVOKABLE PERMIT NO. ____		
			54014268		68-37797	0.080	0								CLOSE ACCESS TO GOODKIRK STREET		
22T				TOTAL		0.693	0	0.012	0	0.012					GRADE AND SEED		
23LA	G. MATTHEW WESTFALL AND	32,33	54376709		67-09385	0.052	0								LOT 6, (P.B.6, PG.65)		
	TERI WESTFALL				67-09384	0.041	0								LOT 1, (P.B.4, PG.22)		
				TOTAL		0.093	0								CLOSE ACCESS TO GOODKIRK STREET		
														STATE			

NOTE:
ALL TEMPORARY PARCELS TO BE OF 24 MONTHS DURATION.

** ACQUIRED IN THE NAME OF THE CITY OF AKRON

NOTE:
UNDER NO CIRCUMSTANCES ARE TEMPORARY EASEMENTS TO BE USED FOR STORAGE OF MATERIAL OR EQUIPMENT BY THE CONTRACTOR UNLESS NOTED OTHERWISE.

REV.	DATE	DESCRIPTION
TRB	03/07/01	17WDV NET TAKE AREA

FIELD REVIEW BY DATE
OWNERSHIP VERIFIED BY DATE
DATE OF COMPLETION DATE

FEDERAL PROJECT NO. TE 21-(0)
PID NO. 20356
STATE JOB NO. 442230
R/W DESIGNER ADT
R/W REVIEWER TRB
SUMMARY OF ADDITIONAL RIGHT OF WAY
SUM-8-0.63
10 / 71
1026 1088

NET RESIDUE = RECORD AREA - TOTAL PRO - NET TAKE

GRANTEE:
ALL RIGHT-OF-WAY ACQUIRED IN THE NAME OF THE STATE OF OHIO DEPARTMENT OF TRANSPORTATION UNLESS OTHERWISE SHOWN.

ALL AREAS IN ACRES

PARCEL NO.	OWNER	SHEET NO.	OWNERS RECORD BOOK	OWNERS RECORD PAGE	AUDITOR'S PARCEL	RECORD AREA	TOTAL P.R.O.	GROSS TAKE	P.R.O. IN TAKE	NET TAKE	STRUCTURE	NET RESIDUE LEFT	NET RESIDUE RIGHT	TYPE FUND	REMARKS AND PERSONALTY	AS ACQUIRED BOOK	AS ACQUIRED PAGE
24	NANCY RIDDLE	32,33	OR 1670	390	68-10217	0.080	0							STATE	NO TAKE		
25	GREGORY MICHAEL BILLS, AND	32,33	54066918		67-60586	0.121	0								NO TAKE		
	JUDITH LYNN BILLS, CO-TRUSTEES		54066919		68-44294	0.063	0										
				TOTAL		0.184	0										
26T	ROBERT LEE NEVLING AND MICHELLE	34,35	6508	246	68-14738	0.080	0	0.004	0	0.004	NO				GRADE AND SEED		
26TI	NEVLING							0.001	0	0.001					GRADE AND SEED		
27WDV**	G. MATTHEW WESTFALL AND	34,35	OR 2310	2070	68-12812	0.165	0				NO						
	JOSEPH M. KESSLER	38,39			67-15201	0.116	0										
					67-15200	0.165	0	0.013	0	0.013							
					67-00836	0.102	0	0.001	0	0.001							
				TOTAL		0.548	0	0.014	0	0.014			0.534				
27T**								0.062	0	0.062					GRADE AND SEED		
28WL	SHERMAN HALL PARTNERSHIP, LTD.	36,37	54110694		67-07618	0.110	0				NO						
		32,33			67-07619	0.170	0								*ASPHALT PARKING LOT		
					67-07620	0.160	0										
			54110691		68-38625	0.050	0										
					68-38626	0.110	0										
					68-38627	0.049	0	0.001	0	0.001							
				TOTAL		0.649	0	0.001	0	0.001			0.648				
28T								0.008	0	0.008					CONSTRUCT DRIVE, GRADE AND SEED		
28TI								0.023	0	0.023					CONSTRUCT DRIVE, GRADE AND SEED		
29LA	THE UNIVERSITY OF AKRON, A	36,37	5167	181	68-41359	0.180	0				NO				CLOSE ACCESS TO GOODKIRK STREET		
	STATE UNIVERSITY				68-41464	0.068	0								*LIGHT POLE, *GRAVEL PARKING LOT		
29WL			5266	516	68-41469	0.142	0	0.001	0	0.001							
				TOTAL		0.390	0	0.001	0	0.001			0.389				
29T								0.026	0	0.026					CONSTRUCT DRIVE, GRADE AND SEED		
30WL	PHI SIGMA KAPPA CLUB OF AKRON,	36,37	4901	236	68-19362	0.349	0	0.003	0	0.003	NO	0.346					
30LA	INC., A CORPORATION	40,41													CLOSE ACCESS TO GOODKIRK STREET		
30T								0.006	0	0.006					GRADE AND SEED		
31WL	RICHARD A. GIBSON	38,39	6996	501	67-35958	0.211	0	0.079	0	0.079	YES						
31WD								0.132	0	0.132					LOT 162, (P.B. T.R. REC. PG.13)		
				TOTAL		0.211(c)	0	0.211	0	0.211			0.000		TOTAL TAKE		
															2 STORY FRAME RES. (W/B) #519 CARROLL ST.		
32WL	BELLA DORA MANAGEMENT, INC.	38,39	5894	814	67-06611	0.202	0				NO				LOT 162, (P.B. T.R. REC. PG. 13)		
					67-06805	0.197	0	0.001	0	0.001							
				TOTAL		0.399	0	0.001	0	0.001			0.398				
32T								0.014	0	0.014					RECONSTRUCT DRIVEWAY		
33WL	EDWARD J. WALTER	38,39	4876	147	68-43414	0.280	0	0.129	0	0.129	S				SIGN		
33WD		42,43			68-43414			0.002	0	0.002					LOT 149, (P.B. T.R. REC. PG.13)		
					68-43413	0.298	0	0.001	0	0.001					LOT 150, (P.B. T.R. REC. PG.13)		
				TOTAL		0.578	0	0.132	0	0.132			0.446				
33T								0.067	0	0.067					RECONSTRUCT DRIVEWAY		
														STATE			

NOTE:
ALL TEMPORARY PARCELS TO BE OF 24 MONTHS DURATION.

** ACQUIRED IN THE NAME OF THE CITY OF AKRON

NOTE:
UNDER NO CIRCUMSTANCES ARE TEMPORARY EASEMENTS TO BE USED FOR STORAGE OF MATERIAL OR EQUIPMENT BY THE CONTRACTOR UNLESS NOTED OTHERWISE.

(C) CALCULATED AREA

* DENOTES R/W ENCROACHMENT TO BE REMOVED

REV.	DATE	DESCRIPTION
TRB	03/07/01	29T AREA

FIELD REVIEW BY DATE
OWNERSHIP VERIFIED BY DATE
DATE OF COMPLETION DATE

FEDERAL PROJECT NO. TE 21-(0)
PID NO. 20356
STATE JOB NO. 442230
R/W DESIGNER ADT
R/W REVIEWER TRB

SUMMARY OF ADDITIONAL RIGHT OF WAY

SUM-8-0.63

1027
1088

NET RESIDUE = RECORD AREA - TOTAL PRO - NET TAKE

GRANTEE:
ALL RIGHT-OF-WAY ACQUIRED IN THE NAME OF THE STATE OF OHIO DEPARTMENT OF TRANSPORTATION UNLESS OTHERWISE SHOWN.

ALL AREAS IN ACRES

PARCEL NO.	OWNER	SHEET NO.	OWNERS RECORD BOOK	OWNERS RECORD PAGE	AUDITOR'S PARCEL	RECORD AREA	TOTAL P.R.O.	GROSS TAKE	P.R.O. IN TAKE	NET TAKE	STRUCTURE	NET RESIDUE LEFT	NET RESIDUE RIGHT	TYPE FUND	REMARKS AND PERSONALTY	AS ACQUIRED BOOK	AS ACQUIRED PAGE
34WL	THE UNIVERSITY OF AKRON,	40,41	4677	289	68-41393	3.050	0	0.009	0	0.009				STATE	* SIGN LOT 139 TO 143 & 168 TO 172		
34WL1	A STATE UNIVERSITY	44,45						0.005	0	0.005					(P.B. T.R. REC. PG.13)		
34LA				TOTAL		3.050	0	0.014	0	0.014			3.036		CLOSE ACCESS TO GOODKIRK STREET		
34T								0.039	0	0.039					GRADE AND SEED		
34T1								0.007	0	0.007					GRADE AND SEED		
35WL	TIMOTHY A. WOLF	42,43	OR 153	759	67-39219	0.076(c)	0	0.076	0	0.076	YES		0		TOTAL TAKE, 2 STORY FRAME RES. (W/B)		
															#497 BUCHTEL AVE.		
36WL	THOMAS R. MERRYWEATHER AND	42,43	OR 2171	285	67-32555	0.240	0	0.102	0	0.102	YES(3)		0.138		2 STORY BR. APT., 2 STORY FR. DUPLEX, AND		
36T	TIMOTHY S. MERRYWEATHER							0.138	0	0.138					GARAGE, # 503 & # 505 BUCHTELL AVE.		
36E								0.138	0	0.138					REMOVE STRUCTURE, GRADE AND SEED.		
36LA															LAND LOCKED		
37WD	G. MATTHEW WESTFALL AND	42,43	7362	195	68-27899	0.076	0	0.002	0	0.002							
	JOSEPH M. KESSLER				68-27900	0.130	0								LOT 65, (P.B.2, PG.40)		
					68-27901	0.120	0										
				TOTAL		0.326	0	0.002	0	0.002			0.416				
37T								0.005	0	0.005					GRADE AND SEED.		
38	THOMAS R. MERRYWEATHER AND	42,43	OR 2171	285	68-32929	0.222	0								NO TAKE LOT 63, (P.B.2, PG.40)		
	TIMOTHY S. MERRYWEATHER																
39WL	LYN M. BROACH	44,45	54420077		67-55479	0.091(c)	0	0.063	0	0.063	YES				2 STORY FRAME RES. (W/B) #467 BUCHTELL AVE.		
39WD								0.001	0	0.001					LOTS 26 & 27, (P.B.7, PG.16)		
				TOTAL		0.091(c)	0	0.064	0	0.064		0.027					
39T								0.027	0	0.027					REMOVE STRUCTURE, GRADE AND SEED.		
39E								0.027	0	0.027					LAND LOCKED		
40WL	THE CHAPEL, INC.	44,45	6913	414	68-55231	0.095	0	0.011	0	0.011	NO	0.084			LOT 26, (P.B.7, PG.16)		
40T								0.030	0	0.030					GRADE AND SEED.		
41WL	CHAPEL IN UNIVERSITY PARK	44.45	6188	752	68-54157	0.073	0	0.022	0	0.022	NO				LOTS 26 & 27, (P.B.7, PG.16)		
	A NON- PROFIT ORGANIZATION				68-53526	0.004	0	0.002	0	0.002							
41WD					68-54157			0.003	0	0.003							
					68-53526			0.001	0	0.001							
				TOTAL		0.077	0	0.028	0	0.028		0.049					
41T								0.023	0	0.023					CONSTRUCT RETAINING WALL		
42WL	CHAPEL ON FIR HILL, INC.	44,45	5301	186	67-55807	0.120	0	0.046	0	0.046	NO				LOTS 26 & 27, (P.B.7, PG.16)		
			4873	19	67-15918	0.131	0	0.054		0.054					LOT 25, (P.B.7, PG.16)		
			4914	389	67-15453	0.134	0	0.064	0	0.064					LOT 24, (P.B.7, PG.16)		
42WD					67-55807			0.005	0	0.005							
					67-15918			0.006	0	0.006							
					67-15453			0.006	0	0.006							
				TOTAL		0.385	0	0.181	0	0.181		0.204					
42T								0.096	0	0.096					CONSTRUCT RETAINING WALL		
														STATE			

NOTE:
ALL TEMPORARY PARCELS TO BE OF 24 MONTHS DURATION.

(c) CALCULATED AREA

NOTE:
UNDER NO CIRCUMSTANCES ARE TEMPORARY EASEMENTS TO BE USED FOR STORAGE OF MATERIAL OR EQUIPMENT BY THE CONTRACTOR UNLESS NOTED OTHERWISE.

REV.	DATE	DESCRIPTION

FIELD REVIEW BY DATE
OWNERSHIP VERIFIED BY DATE
DATE OF COMPLETION DATE

FEDERAL PROJECT NO. TE 21-(0)
PID NO. 20356
STATE JOB NO. 442230
R/W DESIGNER ADT
R/W REVIEWER TRB
SUMMARY OF ADDITIONAL RIGHT OF WAY
SUM-8-0.63
12/71
1028/1088

NET RESIDUE = RECORD AREA - TOTAL PRO - NET TAKE

GRANTEE:
ALL RIGHT-OF-WAY ACQUIRED IN THE NAME OF THE STATE OF OHIO DEPARTMENT OF TRANSPORTATION UNLESS OTHERWISE SHOWN.

ALL AREAS IN ACRES

PARCEL NO.	OWNER	SHEET NO.	OWNERS RECORD BOOK	OWNERS RECORD PAGE	AUDITOR'S PARCEL	RECORD AREA	TOTAL P.R.O.	GROSS TAKE	P.R.O. IN TAKE	NET TAKE	STRUCTURE	NET RESIDUE LEFT	NET RESIDUE RIGHT	TYPE FUND	REMARKS AND PERSONALTY	AS ACQUIRED BOOK	AS ACQUIRED PAGE
43WL	THE CHAPEL	44,45	6601	582	67-57154	0.142	0	0.064	0	0.064	NO			STATE	LOT 23, (P.B.7, PG.16)		
43WD								0.006	0	0.006							
				TOTAL		0.142	0	0.070	0	0.070		0.072					
43T								0.038	0	0.038					CONSTRUCT RETAINING WALL		
44WL	CHAPEL ON FIR HILL, INC.	44,45	5106	655	67-57214	0.146	0	0.062	0	0.062	NO				LOT 22, (P.B.7, PG.16)		
		48,49	5260	211	67-15469	0.152	0	0.069	0	0.069					LOT 21, (P.B.7, PG.16)		
44WD					67-57214			0.008	0	0.008							
					67-15469			0.009	0	0.009							
				TOTAL		0.298	0	0.148	0	0.148		0.150					
44T								0.084	0	0.084					CONSTRUCT RETAINING WALL		
45WL	THE CHAPEL, INC.	48,49	OR 379	498	67-24917	0.161	0	0.072	0	0.072	NO				LOT 20, (P.B.7, PG.16)		
			6913	97	67-57215	0.110	0	0.003	0	0.003					LOT 18, (P.B.7, PG.16)		
			OR 7593	110	68-09758	0.102	0	0.102	0	0.102					LOTS 18 & 19, (P.B.7, PG.16)		
45WD					67-24917			0.008	0	0.008							
45WD1					67-57215			0.010	0	0.010							
				TOTAL		0.373(c)		0.195	0	0.195		0.178					
45T								0.042	0	0.042					CONSTRUCT RETAINING WALL		
45T1								0.038	0	0.038					CONSTRUCT RETAINING WALL		
46WL	CHAPEL IN UNIVERSITY PARK	48,49	5859	461	67-15464	0.110	0	0.014	0	0.014	NO				LOT 19, (P.B.7, PG.16)		
46WD								0.008	0	0.008							
				TOTAL		0.110	0	0.022	0	0.022		0.088					
46T								0.042	0	0.042					CONSTRUCT RETAINING WALL		
47WD	DAVID L. COMES AND PHILOMENA COMES	42,43	54187435		68-47001	0.089	0	0.089	0	0.089	YES		0		2 STORY FRAME RES. (W/B) #398 EWING CT.		
48T	ERIC J. PASZT AND WANDA A.	42,43	OR 841	821	67-42037	0.084(c)	0	0.084	0	0.084	YES				2 STORY FR. DUPLEX (W/B) # 404 EWING CT.		
48E	PASZT	46,47						0.084	0	0.084					REMOVE STRUCTURE, GRADE AND SEED.		
48LA															LAND LOCKED		
49T	JAMES P. VECHERY	46,47	OR 2101	1145	68-09451	0.082	0	0.082	0	0.082	NO						
					68-09450	0.171	0		0						LOT 1, (P.B.2, PG.24)		
				TOTAL		0.253(c)		0.082		0.082					GRADE AND SEED		
49LA																	
50WL	STEPHEN T. GALLAGHER (1/2 INT.)	46,47	7279	308	68-04462	0.140(c)	0	0.035	0	0.035	YES		0.105		2 STORY FRAMED DUPLEX #414 EWING COURT		
50T	BERNARD M. GALLAGHER,		54151634					0.105	0	0.105					REMOVE STRUCTURE		
50E	TRUSTEE (1/2 INT.)							0.105	0	0.105					LAND LOCKED		
51LA	G. MATTHEW WESTFALL	42,43	54376687		67-28303	0.045	0								CLOSE ACCESS TO FOUNTAIN STREET		
	TERI WESTFALL				67-28302	0.047	0										
				TOTAL		0.092	0							STATE			

(c) - CALCULATED AREA

NOTE:
ALL TEMPORARY PARCELS TO BE OF 24 MONTHS DURATION.

NOTE:
UNDER NO CIRCUMSTANCES ARE TEMPORARY EASEMENTS TO BE USED FOR STORAGE OF MATERIAL OR EQUIPMENT BY THE CONTRACTOR UNLESS NOTED OTHERWISE.

REV.	DATE	DESCRIPTION
	1-3-2001	DELETE 47 LA LINE
	5-08-2001	REVISE AREA PARCEL 47

FIELD REVIEW BY DATE
OWNERSHIP VERIFIED BY DATE
DATE OF COMPLETION DATE

FEDERAL PROJECT NO. TE 21-(0)
PID NO. 20356
STATE JOB NO. 442230
R/W DESIGNER ADT
R/W REVIEWER TRB

SUMMARY OF ADDITIONAL RIGHT OF WAY

SUM-8-0.63

13/71

1029
1088

NET RESIDUE = RECORD AREA - TOTAL PRO - NET TAKE

GRANTEE:
ALL RIGHT-OF-WAY ACQUIRED IN THE NAME OF THE STATE OF OHIO DEPARTMENT OF TRANSPORTATION UNLESS OTHERWISE SHOWN.

ALL AREAS IN ACRES

PARCEL NO.	OWNER	SHEET NO.	OWNERS RECORD BOOK	OWNERS RECORD PAGE	AUDITOR'S PARCEL	RECORD AREA	TOTAL P.R.O.	GROSS TAKE	P.R.O. IN TAKE	NET TAKE	STRUCTURE	NET RESIDUE LEFT	NET RESIDUE RIGHT	TYPE FUND	REMARKS AND PERSONALTY	AS ACQUIRED BOOK	AS ACQUIRED PAGE
52WL	CLAIRE M. REINKE	46,47	OR 1067	532	68-12655	0.102(c)	0	0.067	0	0.067	YES		0.035	STATE	2 STORY FRAME, 3 FAMILY #420 EWING COURT		
								0.035	0	0.035							
52T								0.035	0	0.035					GRADE AND SEED.		
52E																	
53T	JACK F. SMYLIE AND ANNE J.	46,47	6682	235	68-10321	0.208	0	0.041	0	0.041	NO		0.166		REMOVE WALLS, GRADE AND SEED		
	SMYLIE														LOT 3, (P.B.2, PG.24)		
54WL	KENNETH F. ROTH	46.47	54435762		68-55253	0.255(c)	0	0.148	0	0.148	YES		0.107		2 STORY FR. APT.-#452-458 EWING CT.		
54T								0.107	0	0.107					REMOVE STRUCTURE, GRADE AND SEED		
54E								0.107	0	0.107					LAND LOCKED		
55WL	THOMAS W. CLARK AND	46,47	54353489		68-53726	0.191	0	0.103	0	0.103	YES				DRIVE EASEMENT, VOL. 54353489, 2 STORY		
	SARAH M. CLARK		54355744		68-37701	0.173	0								BRICK DUPLEX (W/B), #16, 18 EWING CT.		
				TOTAL		0.364(c)	0	0.103	0	0.103			0.261				
55T								0.088	0	0.088					GRADE AND SEED		
56T	EMANUEL J. JANIKIS AND	46,47	5402288		68-36405	0.053	0	0.053	0	0.053	YES(2)				2 STORY FRAME RES. (W/B) #20 KIRKWOOD CT.		
	LESLIE C. JANIKIS														REMOVE STRUCTURE, GRADE AND SEED		
56E Y						0.053	—	0.053	—	0.053					8' DRIVE EASEMENT, VOL. 5402288		
57WL	WILLIAM D. MCKOWN	46,47	OR 307	262	68-41171	0.084(c)	0	0.084	0	0.084	YES		0		TOTAL TAKE, 2 STORY FRAMED RES. (W/B) #452 KIRKWOOD CT.		
58WDV**	DORIS P. GOMOLL	46,47	5076	683	67-34442	0.049	0	0.049	0	0.049	YES				2 STORY FRAME RES. (W/B) #456 EWING CT.		
					67-34441	0.048	0	0.048	0	0.048							
				TOTAL		0.097	0	0.097	0	0.097			0		TOTAL TAKE		
59	GREGORY MICHAEL BILLS AND	46,47	54461359		68-18015	0.100	0								NO TAKE		
	JUDITH LYNN BILLS, CO-TRUSTEES				68-18016	0.071	0										
						0.178	0										
60WL	CLARA D. DAHM	46,47	7179	557	67-21499	0.022	0	0.022	0	0.022	YES				2½ STORY FRAME RES., #455 EWING CT.		
					67-21498	0.048	0	0.006	0	0.006							
								0.042	0	0.042							
60WD				TOTAL		0.070(c)	0	0.070	0	0.070			0		TOTAL TAKE		
61WDV**	PATRICIA ANN MILO	46,47	OR 1140	720	68-46650	0.050(c)	0	0.050	0	0.050	YES		0		2 STORY FRAME RES. #457 EWING CT.		
															TOTAL TAKE		
62	THE SPITZER HARDWARE AND SUPPLY	46,47	6526	679	67-16067	0.158	0								NO TAKE		
	COMPANY																
63WL	PATRICIA ANN MILO	46,47	OR 1116	814	68-11290	0.432	0	0.432	0	0.432	YES				1 STORY BRICK OFFICE, #452 MARKET.		
		50,51			68-11291	0.084	0	0.084	0	0.084					TOTAL TAKE		
				TOTAL		0.516(c)	0	0.516	0	0.516			0.000				
64WL	SPIRTOS FAMILY LIMITED	50,51	OR 1831	1561	67-55394	0.572	0	0.003	0	0.003	NO		0.569				
	PARTNERSHIP, AND OHIO LIMITED																
64T	PARTNERSHIP							0.036	0	0.036				STATE	GRADE AND SEED		

(c) - CALCULATED AREA

NOTE:
ALL TEMPORARY PARCELS TO BE OF 24 MONTHS DURATION.

** ACQUIRED IN THE NAME OF THE CITY OF AKRON

NOTE:
UNDER NO CIRCUMSTANCES ARE TEMPORARY EASEMENTS TO BE USED FOR STORAGE OF MATERIAL OR EQUIPMENT BY THE CONTRACTOR UNLESS NOTED OTHERWISE.

REV.	DATE	DESCRIPTION
DS	7/26/01	ADD PARCEL 56E Y

FIELD REVIEW BY DATE
OWNERSHIP VERIFIED BY DATE
DATE OF COMPLETION DATE

FEDERAL PROJECT NO. TE 21-(0)
PID NO. 20356
STATE JOB NO. 442230
R/W DESIGNER ADT
R/W REVIEWER TRB

SUMMARY OF ADDITIONAL RIGHT OF WAY

SUM-8-0.63

1030/1088

NET RESIDUE = RECORD AREA - TOTAL PRO - NET TAKE

GRANTEE:
ALL RIGHT-OF-WAY ACQUIRED IN THE NAME OF THE STATE OF OHIO DEPARTMENT OF TRANSPORTATION UNLESS OTHERWISE SHOWN.

ALL AREAS IN ACRES

PARCEL NO.	OWNER	SHEET NO.	OWNERS RECORD BOOK	OWNERS RECORD PAGE	AUDITOR'S PARCEL	RECORD AREA	TOTAL P.R.O.	GROSS TAKE	P.R.O. IN TAKE	NET TAKE	STRUCTURE	NET RESIDUE LEFT	NET RESIDUE RIGHT	TYPE FUND	REMARKS AND PERSONALTY	AS ACQUIRED BOOK	AS ACQUIRED PAGE
65WL	CHAPEL ON FIR HILL, INC.	48,49	5344	714	67-56700	0.043	0	0.0295	0	0.0295	NO			STATE			
					67-15457	0.129	0	0.0372	0	0.0372							
					67-15454	0.141	0	0.0398	0	0.0398							
					67-15459	0.120	0	0.0002	0	0.0002							
65WD					67-56700			0.0079	0	0.0079							
					67-15457			0.0060	0	0.0060							
					67-15454			0.0059	0	0.0059							
					67-15459			0.0027									
					67-15460	0.092	0										
					67-15463	0.087	0										
					67-15458	0.088	0										
				TOTAL		0.700(c)	0	0.129	0	0.129		0.571					
65T								0.144	0	0.144					CONSTRUCT RETAINING WALL		
66WL	THE CHAPEL IN UNIVERSITY PARK	52,53	6503	488	67-57220	0.205	0	0.024	0	0.024	NO						
					68-55239	0.194	0	0.004	0	0.004							
					67-57219	0.087	0	0.002	0	0.002					LOT 3, (P.B.3, PG.9)		
66WD					67-57220	-	0	0.007	0	0.007					LOT 5, (P.B.3, PG.9)		
					68-55239	-	0	0.003	0	0.003					LOT 4, (P.B.3, PG.9)		
					68-26527	0.369	0										
					67-02547	0.063	0								LOT 3, (P.B.3, PG.9)		
				TOTAL		0.918	0	0.040	0	0.040		0.878					
66T								0.079	0	0.079					CONSTRUCT RETAINING WALL		
67	THE CHAPEL, INC.	52,53	OR 2066	563	67-20436	0.072	0								NO TAKE LOTS 1 & 2, (P.B.3, PG.9)		
			54058548		68-19738	0.055	0								CANOPY ENCROACHMENT, REVOKABLE		
					68-19739	0.050	0								PERMIT NO. ---		
			OR681	758	68-14585	0.000	0										
			6997	534	68-35233	0.331	0										
				TOTAL		0.508	0										
68WL	DAVID A. GREY	48,49	5893	556	67-35840	0.217(c)	0	0.041	0	0.041	YES(2)				2 STORY FRAME DUPLEX, #36 KIRKWOOD AVE.		
68WD								0.007	0	0.007					LOT 6, (P.B.3, PG.9)		
				TOTAL		0.217(c)	0	0.048	0	0.048		0.169					
68T								0.169	0	0.169					REMOVE STRUCTURE, GRADE AND SEED		
68E								0.169	0	0.169					LAND LOCKED		
69	SHELBY BUNIN	52,53	OR 410	842	67-42120	0.384									NO TAKE LOT 6, (P.B.1, PG.75)		
		56,57															
70	SUMMA HEALTH SYSTEM	56,57	54101067		68-59193	1.169								STATE	NO TAKE LOT 5, (P.B.1, PG.75)		

(c) - CALCULATED AREA

NOTE:
ALL TEMPORARY PARCELS TO BE OF 24 MONTHS DURATION.

NOTE:
UNDER NO CIRCUMSTANCES ARE TEMPORARY EASEMENTS TO BE USED FOR STORAGE OF MATERIAL OR EQUIPMENT BY THE CONTRACTOR UNLESS NOTED OTHERWISE.

REV.	DATE	DESCRIPTION

FIELD REVIEW BY DATE
OWNERSHIP VERIFIED BY DATE
DATE OF COMPLETION DATE

FEDERAL PROJECT NO. TE 21-(0)
PID NO. 20356
STATE JOB NO. 442230
R/W DESIGNER ADT
R/W REVIEWER TRB

SUMMARY OF ADDITIONAL RIGHT OF WAY

SUM-8-0.63

1031/1088

NET RESIDUE = RECORD AREA - TOTAL PRO - NET TAKE

GRANTEE:
ALL RIGHT-OF-WAY ACQUIRED IN THE NAME OF THE STATE OF OHIO DEPARTMENT OF TRANSPORTATION UNLESS OTHERWISE SHOWN.

ALL AREAS IN ACRES

PARCEL NO.	OWNER	SHEET NO.	OWNERS RECORD BOOK	OWNERS RECORD PAGE	AUDITOR'S PARCEL	RECORD AREA	TOTAL P.R.O.	GROSS TAKE	P.R.O. IN TAKE	NET TAKE	STRUCTURE	NET RESIDUE LEFT	NET RESIDUE RIGHT	TYPE FUND	REMARKS AND PERSONALTY	AS ACQUIRED BOOK	AS ACQUIRED PAGE
71WL	THE SPITZER HARDWARE AND SUPPLY	50,51	6526	679	67-16065	0.061	0	0.003	0	0.003	S			FEDERAL	BILLBOARD LOT 10, (P.B.1, PG.75)		
	COMPANY	54,55			67-16066	0.132	0	0.002	0	0.002				▲	LOT 10, (P.B.1, PG.75)		
71WL1					67-16069	0.121	0	0.001	0	0.001					LOT 22, (P.B.5, PG.23)		
					67-16071	0.121	0	0.008	0	0.008					LOTS 22 & 23, (P.B.5, PG.23)		
71LA					67-16070	0.110	0	0.013	0	0.013					LOT 23, (P.B.5, PG.23)		
					67-16064	0.356	0	0	0	0					LOT 7, (P.B.5, PG.23)		
					67-16063	0.182	0	0	0	0					LOT 18, (P.B.5, PG.23)		
					67-16062	0.182	0	0	0	0					LOT 19, (P.B.5, PG.23)		
					67-16061	0.182	0	0	0	0					LOT 20, (P.B.5, PG.23)		
					67-16060	0.182	0	0	0	0					LOT 21, (P.B.5, PG.23)		
					67-16072	0.010	0	0	0	0					LOT 5, (P.B.7, PG.28)		
			6526	706	68-33778	0.130	0	0.023	0	0.023					LOT 5, (P.B.7, PG.28)		
					68-33780	0.118	0	0.033	0	0.033					LOT 4, (P.B.7, PG.28)		
					68-33779	0.150	0	0.087	0	0.087					LOTS 2 & 3, (P.B.7, PG.28)		
					68-33777	0.213	0	0.079	0	0.079					LOTS 1 & 2, (P.B.7, PG.28)		
				TOTAL		2.250	0	0.249	0	0.249			2.001		* LIGHTS (3), TRASH BIN		
71T								0.193	0	0.193					GRADE AND SEED		
72WDV**	AKRON CITY HOSPITAL	58,59	OR 190	775	68-47510	0.154	0	0.034	0	0.034	NO		0.120		LOT 1, (P.B.2, PG.39)		
72T**								0.007	0	0.007					GRADE AND SEED		
73WDV**	ARNOLD ROTH	58,59	6665	748	68-25705	0.173	0	0.004	0	0.004	NO				LOTS 1 & 20, (P.B.2, PG.39)		
			6669	571	68-25704	0.127	0		0								
				TOTAL		0.300(c)	0	0.004	0	0.004			0.296				
73T**								0.042	0	0.042					CONSTRUCT DRIVEWAY		
74T	CONSTANCE M. BENNINGTON	58,59	5424587	1	68-45376	0.124	0	0.013	0	0.013	NO				CONSTRUCT DRIVEWAY		
															LOTS 20 & 21, (P.B.2, PG.39)		
75T	GREGORY L. EISENBREI AND CAROL L. EISENBREI	58,59	5425195	1	68-27499	0.124	0	0.009	0	0.009	NO				CONSTRUCT DRIVEWAY, LOT 21,(P.B.2, PG. 39)		
76T	DONALD J. E. COFFMAN AND LINDA		6925	129	68-38069	0.100	0	0.015	0	0.015	NO				CONSTRUCT DRIVEWAY		
	L. MOORE		6709	238	68-38017	0.100	0								LOT 22, (P.B.2, PG.39)		
77WDV**	F & S PARTNERSHIP	58,59	OR 1136	512	68-41038	0.200	0	0.006	0	0.006	NO				LOT 23, (P.B.2, PG.39)		
		62,63	OR 1136	514	67-47110	0.136	0	0.018	0	0.018					LOT 24, (P.B.2, PG.39)		
				TOTAL		0.336	0	0.024	0	0.024			0.312				
77T**								0.075	0	0.075					CONSTRUCT DRIVEWAY		
78	SUMMA HEALTH SYSTEM HOSPITALS	62,63	5446271	1	67-42538	0.064	0								NO TAKE LOT 24, (P.B.2, PG.39)		
79	JULIE A. WISE AND CHRISTOPHER A. WISE	62,63	OR 368	42	68-30260	0.050	0								NO TAKE LOT 25, (P.B.2, PG.39)		
80WL	DAVID E. HUGHES	56,57	OR 1341	423	68-32660	0.185(c)	0	0.004	0	0.004	NO	0.182			LOT 36, (P.B.1, PG.3)		
		60,61															
80T								0.027	0	0.027					GRADE AND SEED		
81WL	MICHAEL L. CURRENCE	56,57	OR 1342	394	68-03249	0.177(c)	0	0.177	0	0.177	NO				LOT 36, (P.B.1, PG.3)		
		60,61			68-03253	0.196	0	0.055	0	0.055					LOT 35, (P.B.1, PG.3)		
					68-03254	0.062	0	0		0					LOT 36, (P.B.1, PG.3)		
			OR 580	958	67-08701	0.133	0	0		0					LOT 36, (P.B.1, PG.3)		
				TOTAL		0.568(c)	0	0.232	0	0.232		0.336		▼			
81T								0.036	0	0.036				STATE	GRADE AND SEED		

(c) - CALCULATED AREA

NOTE:
ALL TEMPORARY PARCELS TO BE OF 24 MONTHS DURATION.

** ACQUIRED IN THE NAME OF THE CITY OF AKRON

NOTE:
UNDER NO CIRCUMSTANCES ARE TEMPORARY EASEMENTS TO BE USED FOR STORAGE OF MATERIAL OR EQUIPMENT BY THE CONTRACTOR UNLESS NOTED OTHERWISE.

REV.	DATE	DESCRIPTION
DS	7/24/01	REVISE RECORD AREA : RESIDUE FOR PARCEL 81
TRB	03/07/01	71WL TAKE AREA

FIELD REVIEW BY DATE
OWNERSHIP VERIFIED BY DATE
DATE OF COMPLETION DATE

FEDERAL PROJECT NO. TE 21-(0)
PID NO. 20356
STATE JOB NO. 442230
R/W DESIGNER ADT
R/W REVIEWER TRB

SUMMARY OF ADDITIONAL RIGHT OF WAY

SUM-8-0.63

16/71

1032/1088

NET RESIDUE = RECORD AREA - TOTAL PRO - NET TAKE

GRANTEE:
ALL RIGHT-OF-WAY ACQUIRED IN THE NAME OF THE STATE OF OHIO DEPARTMENT OF TRANSPORTATION UNLESS OTHERWISE SHOWN.

ALL AREAS IN ACRES

PARCEL NO.	OWNER	SHEET NO.	OWNERS RECORD BOOK	OWNERS RECORD PAGE	AUDITOR'S PARCEL	RECORD AREA	TOTAL P.R.O.	GROSS TAKE	P.R.O. IN TAKE	NET TAKE	STRUCTURE	NET RESIDUE LEFT	NET RESIDUE RIGHT	TYPE FUND	REMARKS AND PERSONALTY	AS ACQUIRED BOOK	AS ACQUIRED PAGE
82WL	RICHARD D. WESIG AND VICTORIA	60,61	OR 410	598	68-03257	0.201(c)	0	0.061	0	0.061	YES	0.140		STATE	2 STORY FRAME RES. (W/B) #94 GOOD ST.		
	A. WESIG													▲	LOT 34, (P.B.3, PG.3)		
82T								0.140	0	0.140					REMOVE STRUCTURE, GRADE AND SEED		
82E								0.140	0	0.140					LAND LOCKED		
83WL	GLORIA PEERCY	60,61	5763	209	68-18395	0.126(c)	0	0.080	0	0.080	YES(2)	0.046			2 STORY FRAME RES. (W/B) #98 GOOD ST.		
83T								0.047	0	0.047					LOT 33, (P.B.3, PG.3) 3' WALK EASEMENT,		
83E								0.047	0	0.047					VOL. 428, PG. 477 REMOVE STRUCTURE,		
															GRADE AND SEED LAND LOCKED		
84WDV**	JOSEPH MICHAEL NORRIS AND	60,61	54086494		67-10965	0.055(c)	0	0.002	0	0.002	YES	0.053			2 STORY FRAME DUPLEX #370 PARKWOOD		
84T**	LEAH A. NORRIS							0.053	0	0.053					LOT 33, (P.B.3, PG.3)		
84E								0.053	0	0.053					REMOVE STRUCTURE, GRADE AND SEED		
85WL	DANIEL R. HUNT	60,61	54297121		67-00196	0.139(c)	0	0.071	0	0.071	YES(2)				2 STORY BRICK DUPLEX (W/B) #104 GOOD ST.		
85WD								0.004	0	0.004					2 STORY FRAME DUPLEX PARKWOOD		
				TOTAL		0.139(c)	0	0.075	0	0.075		0.064			LOT 32, (P.B.3, PG.3)		
85T								0.064	0	0.064					REMOVE STRUCTURES, GRADE AND SEED		
85EV								0.064		0.064							
86WL	SAVA STROJNIC	60,61	OR 1878	629	68-45459	0.196	0	0.059	0	0.059	YES	0.137			2 STORY FRAME APT. (W/B) #110 GOOD ST.		
															LOT 31, (P.B.3, PG.3)		
86T								0.137	0	0.137					REMOVE STRUCTURE, GRADE AND SEED		
86E								0.137	0	0.137					LAND LOCKED		
87WL	TODD T. BAUGHMAN AND ALISON J.	60,61	54129463		68-05166	0.196	0	0.049	0	0.049	YES	0.147			2 STORY FRAME, 3 FAMILY RES. (W/B) #118 GOOD ST.		
	BAUGHMAN														LOT 30, (P.B.3, PG.3)		
87T								0.147	0	0.147					REMOVE STRUCTURE, GRADE AND SEED		
87E								0.147	0	0.147					LAND LOCKED		
88WL	CHARLES J. POWERS AND KAY R.	60,61	54270886		67-12609	0.196	0	0.039	0	0.039	YES	0.157			2 STORY FRAME DUPLEX (W/B) #122 GOOD ST.		
	POWERS														LOT 29, (P.B.3, PG.3)		
88T								0.156	0	0.156					REMOVE STRUCTURE, GRADE AND SEED		
88E								0.156	0	0.156					LAND LOCKED		
89WL	LISA M. KAZEMPOUR	60,61	54386445		67-05533	0.195	0	0.029	0		YES	0.166			2 STORY FRAME DUPLEX (W/B) #128 GOOD ST.		
89E								0.166	0	0.166							
89T								0.166	0	0.166					REMOVE STRUCTURE, GRADE AND SEED		
90WL	JON MIDDENDORF	60,61 64,66	OR 1795	1012	67-36772	0.181(c)	0	0.017	0	0.017	YES	0.164			2 STORY FRAME APT. (W/B) #134 GOOD ST.		
															LOT 27, (P.B.3, PG.3)		
90T								0.164	0	0.164					REMOVE STRUCTURE, GRADE AND SEED		
90E								0.164	0	0.164					LAND LOCKED		
														▼			
														STATE			

(c) CALCULATED AREA

NOTE:
ALL TEMPORARY PARCELS TO BE OF 24 MONTHS DURATION.

** ACQUIRED IN THE NAME OF THE CITY OF AKRON

NOTE:
UNDER NO CIRCUMSTANCES ARE TEMPORARY EASEMENTS TO BE USED FOR STORAGE OF MATERIAL OR EQUIPMENT BY THE CONTRACTOR UNLESS NOTED OTHERWISE.

REV.	DATE	DESCRIPTION
	10/29/01	REVISE RECORD AREA PAR 89-ADD 89E
	8/9/01	ADD PARCEL 85EV
	7/17/2001	ADD PARCEL 84E
TRB	03/07/01	84WDV AREAS

FIELD REVIEW BY DATE
OWNERSHIP VERIFIED BY DATE
DATE OF COMPLETION DATE

FEDERAL PROJECT NO. TE 21-(0)
PID NO. 20356
STATE JOB NO. 44230
R/W DESIGNER ADT
R/W REVIEWER TRB

SUMMARY OF ADDITIONAL RIGHT OF WAY

SUM-8-0.63

1033
1088

NET RESIDUE = RECORD AREA - TOTAL PRO - NET TAKE

GRANTEE:
ALL RIGHT-OF-WAY ACQUIRED IN THE NAME OF THE STATE OF OHIO DEPARTMENT OF TRANSPORTATION UNLESS OTHERWISE SHOWN.

ALL AREAS IN ACRES

PARCEL NO.	OWNER	SHEET NO.	OWNERS RECORD BOOK	OWNERS RECORD PAGE	AUDITOR'S PARCEL	RECORD AREA	TOTAL P.R.O.	GROSS TAKE	P.R.O. IN TAKE	NET TAKE	STRUCTURE	NET RESIDUE LEFT	NET RESIDUE RIGHT	TYPE FUND	REMARKS AND PERSONALTY	AS ACQUIRED BOOK	AS ACQUIRED PAGE
91WL	MARK R. MCLEAN	64,65	OR 2268	790	67-18180	0.020	0				NO			STATE	LOT 26, (P.B.3, PG.3)		
					67-18181	0.120	0							▲			
					67-18182	0.057	0								LOT 26, (P.B.3, PG.3)		
					67-18183	0.203	0	0.011	0	0.011					LOTS 25 & 26, (P.B.3, PG.3)		
					67-18184	0.074	0								LOT 25, (P.B.3, PG.3)		
					67-18185	0.005	0								LOT 26, (P.B.3, PG.3)		
					67-52040	0.133	0	0.008	0	0.008					LOT 25, (P.B.3, PG.3)		
				TOTAL		0.613	0	0.019	0	0.019		0.594					
91T								0.095	0	0.095					GRADE SEED AND REPLACE DRIVE		
92LA	LINDA K. WISE	62,63	7092	380	68-47326	0.041	0	0	0	0	YES				CLOSED ACCESS TO FOUNTAIN STREET		
															? STORY FRAMED RES. (W/B) #145 ADOLPH AVE.		
92T								0.041	0	0.041					REMOVE STRUCTURE		
92E								0.041	0	0.041					LOT 25, (P.B. 2, PG. 39)		
93LA	KEITH SNOCK	62,63	54468158		68-25703	0.041	0				YES				CLOSED ACCESS TO FOUNTAIN STREET		
															2 STORY FRAMED RES. (W/B) #149 ADOLPH AVE.		
93T								0.041	0	0.041					REMOVE STRUCTURE		
93E								0.041	0	0.041					LOT 25, (P.B. 2, PG. 39)		
94WL	WILLIAM F. MILLER AND PATRICIA	62,63	54435602		68-11157	0.132	0	0.017	0	0.017	YES				2 STORY FRAMED DUPLEX (W/B) #151, #153		
	M. MILLER, CO-TRUSTEES														ADOLPH AVE. LOT 26, (P.B. 2, PG. 39)		
94WD								0.001	0	0.001							
				TOTAL		0.132	0	0.018	0	0.018			0.114				
94T								0.064	0	0.064					REMOVE STRUCTURE		
95	RON E. MEYERS, JR.	62,63	OR 1905	1004	68-01336	0.038	0								NO TAKE LOT 25, (P.B. 2, PG. 3)		
96	FREDA DICKENSON	62,63	54012297		68-39999	0.032	0								NO TAKE - LOTS 25 & 27, (P.B. 2, PG. 3)		
97	CORNELIU MIHALCA	62,63	OR 1985	438	67-00175	0.083	0								NO TAKE LOT 26, (P.B. 2, PG. 3)		
98	LEONARD J. STANEK AND MARILYN	62,63	OR 1359	330	68-38662	0.167	0								NO TAKE LOT 27, (P.B. 2, PG. 3)		
	STANEK, TRUSTEES				68-38663	0.048	0										
99	DAVID J. ZELENKA	64,65	6439	701	68-49304	0.070	0								NO TAKE		
100	ROBERT L. WILLEY	64,65	5885	578	68-45860	0.115	0								NO TAKE		
			5420	628	68-46038	0.138	0								* GRAVEL DRIVE		
			OR 344	116	67-57551	0.275	0							▼			
														STATE			

NOTE:
ALL TEMPORARY PARCELS TO BE OF 24 MONTHS DURATION.

NOTE:
UNDER NO CIRCUMSTANCES ARE TEMPORARY EASEMENTS TO BE USED FOR STORAGE OF MATERIAL OR EQUIPMENT BY THE CONTRACTOR UNLESS NOTED OTHERWISE.

* DENOTES R/W ENCROACHMENT TO BE REMOVED

REV.	DATE	DESCRIPTION
	7/17/2001	ADD PARCELS 92E AND 93E

FIELD REVIEW BY DATE
OWNERSHIP VERIFIED BY DATE
DATE OF COMPLETION DATE

FEDERAL PROJECT NO. TE 21-(0)
PID NO. 20356
STATE JOB NO. 442230
R/W DESIGNER ADT
R/W REVIEWER TRB

SUMMARY OF ADDITIONAL RIGHT OF WAY

SUM-8-0.63

1034
1088

NET RESIDUE = RECORD AREA - TOTAL PRO - NET TAKE

GRANTEE:
ALL RIGHT-OF-WAY ACQUIRED IN THE NAME OF THE STATE OF OHIO DEPARTMENT OF TRANSPORTATION UNLESS OTHERWISE SHOWN.

ALL AREAS IN ACRES

PARCEL NO.	OWNER	SHEET NO.	OWNERS RECORD BOOK	OWNERS RECORD PAGE	AUDITOR'S PARCEL	RECORD AREA	TOTAL P.R.O.	GROSS TAKE	P.R.O. IN TAKE	NET TAKE	STRUCTURE	NET RESIDUE LEFT	NET RESIDUE RIGHT	TYPE FUND	REMARKS AND PERSONALTY	AS ACQUIRED BOOK	AS ACQUIRED PAGE
														STATE			
101	IDA MAE JAMES	67	4908	247	67-44405	0.093	0							↓	NO TAKE LOT 6, (P.B. 1, PG. 13)		
				249													
				251													
				253													
102	MICHAEL WASSAM	67	54403371		68-58717	0.140	0								NO TAKE LOT 23, (P.B. 4, PG. 104)		
103	ROBERT DAVID POPE	67	OR 748	935	68-26415	0.176	0								NO TAKE * FENCE AND TREE HOUSE		
104	ROBERT CALAWAY	67,69	54315874		67-41935	0.115	0								NO TAKE DECK AND DRIVE ENCROACHMENT REVOKABLE PERMIT NO. ___ * FENCE LOTS 10 & 11, (P.B. 3, PG. 20)		
105T	DONALD W. PAPES	70,71	OR 855	725	68-31976	0.120(c)	0	D.120	0	0.120	YES				REMOVE 2 STORY FRAME APARTMENT WITH BASEMENT		
105E V							0	0.120	0	0.120					LOT 8, (P.B. 2, PG. 45)		
106T	RICHARD D. WESIG AND VICTORIA A. WESIG	70,71	7184	581	67-32337	0.178	0	0.034	0	0.034	NO				GRADE, SEED AND CONSTRUCT DRIVE LOT 7, (P.B. 2, PG. 45)		
** 106 SLV						0.178	0	0.034	0	0.034		0.144					
107T	KAREN BARRIOS AND MICHAEL BARRIOS	70,71	OR 2159	1030	68-48145	0.075	0	0.008	0	0.008	NO				GRADE, SEED AND CONSTRUCT DRIVE LOT 6, (P.B. 2, PG. 45) 4' DRIVE EASEMENT		
108T	NORMAN E. WILCOX	70,71	OR 2145	242	68-48144	0.075	0	0.009	0	0.009	NO				GRADE, SEED AND CONTRUCT DRIVE LOT 6, (P.B. 2, PG. 45) 4' DRIVE EASEMENT		
109	JON D. MARR, JR.	70,71	54322560		68-48143	0.086	0								NO TAKE		
110	LINDA MORGAN	70,71	OR 2103	519	68-48140	0.087	0								NO TAKE		
111WDV **	JACQUELYN MICK CLUPPER	70,71	OR 2079	581	68-12921	0.079(c)	0	0.079	0	0.079	YES			↓	2 STORY FRAME RES. (W/B) #373 PARKWOOD AVE. REMOVE STRUCTURE, (TOTAL TAKE).		
														STATE			

(c) CALCULATED AREA

NOTE:
ALL TEMPORARY PARCELS TO BE OF 24 MONTHS DURATION.

** ACQUIRED IN THE NAME OF THE CITY OF AKRON

NOTE:
UNDER NO CIRCUMSTANCES ARE TEMPORARY EASEMENTS TO BE USED FOR STORAGE OF MATERIAL OR EQUIPMENT BY THE CONTRACTOR UNLESS NOTED OTHERWISE.

* DENOTES R/W ENCROACHMENT TO BE REMOVED

REV.	DATE	DESCRIPTION
DS.	11/28/01	DELETE PCL 105 SLV - INCREASE 105-T ADD 105 E
DS	7/26/01	ADD PARCELS 105SLV AND 106 SLV
DS	7/25/01	REVISE 111T to 111WDV - 'TOTAL TAKE'

FIELD REVIEW BY DATE
OWNERSHIP VERIFIED BY DATE
DATE OF COMPLETION DATE

FEDERAL PROJECT NO. TE 21-(0)
PID NO. 20356
STATE JOB NO. 442230
R/W DESIGNER ADT
R/W REVIEWER TRB

SUMMARY OF ADDITIONAL RIGHT OF WAY

SUM-8-0.63

19 / 71

(1035 / 1088)

NET RESIDUE = RECORD AREA - TOTAL PRO - NET TAKE

GRANTEE:
ALL RIGHT-OF-WAY ACQUIRED IN THE NAME OF THE STATE OF OHIO DEPARTMENT OF TRANSPORTATION UNLESS OTHERWISE SHOWN.

ALL AREAS IN ACRES

PARCEL NO.	OWNER	SHEET NO.	OWNERS RECORD BOOK	OWNERS RECORD PAGE	AUDITOR'S PARCEL	RECORD AREA	TOTAL P.R.O.	GROSS TAKE	P.R.O. IN TAKE	NET TAKE	STRUCTURE	NET RESIDUE LEFT	NET RESIDUE RIGHT	TYPE FUND	REMARKS AND PERSONALTY	AS ACQUIRED BOOK	AS ACQUIRED PAGE
** 112WDV	VIVIAN G. AMATO	70,71	5418	52	67-02678	0.077(c)	0	0.077	0	0.077	YES			STATE	2 STORY FRAME RES. (W/B) AND GARAGE		
														↓	# 369 PARKWOOD AVE. REMOVE STRUCTURE, (TOTAL TAKE)		
113T	JOHN L. PEARL AND INEZE G. PEARL, TRUSTEES	70,71	54108304		68-18269	0.101	0	0.015	0	0.015	NO				GRADE AND SEED		
114T	RANA ZAMIL AND KATHRYN M. ZAMIL	70,71	OR 1928	454	68-28780	0.101	0	0.015	0	0.015	NO				GRADE, SEED AND CONSTRUCT DRIVE		
115T	JULIE A. BARKER	70,71	OR 1926	819	67-45180	0.101	0	0.005	0	0.005	NO				GRADE AND SEED		
116	ARLIE L. WORTMAN, TRUSTEE	70,71	OR 778	473	68-48146	0.101	0								NO TAKE		
117WD	DAVID L. COMES AND PHILOMENA COMES	42,43	54187427		68-47000	0.125	0	0.012	0	0.012	NO		0.113		PART OF S.L. 55 & 62 - L.N. SMITH ALLOT. PB 2 P 40		
														↓			
														STATE			

(C) CALCULATED AREA

NOTE:
ALL TEMPORARY PARCELS TO BE OF 24 MONTHS DURATION.

** ACQUIRED IN THE NAME OF THE CITY OF AKRON

NOTE:
UNDER NO CIRCUMSTANCES ARE TEMPORARY EASEMENTS TO BE USED FOR STORAGE OF MATERIAL OR EQUIPMENT BY THE CONTRACTOR UNLESS NOTED OTHERWISE.

REV.	DATE	DESCRIPTION
	10/26/01	ADD "WD" to PARCEL 117
DS	7/25/01	REVISE 112T to 112WDV - TOTAL TAKE
JS	5-8-2001	ADD PARCEL 117

FIELD REVIEW BY DATE
OWNERSHIP VERIFIED BY DATE
DATE OF COMPLETION DATE

FEDERAL PROJECT NO. TE 21-(0)
PID NO. 20356
STATE JOB NO. 442230
R/W DESIGNER ADT
R/W REVIEWER TRB

SUMMARY OF ADDITIONAL RIGHT OF WAY

SUM-8-0.63

19A/71

1036
1088

CITY OF AKRON
ORIGINAL PORTAGE TOWNSHIP, TRACT 8
TOWNSHIP 2 NORTH, RANGE 11 WEST
SUMMIT COUNTY, OHIO

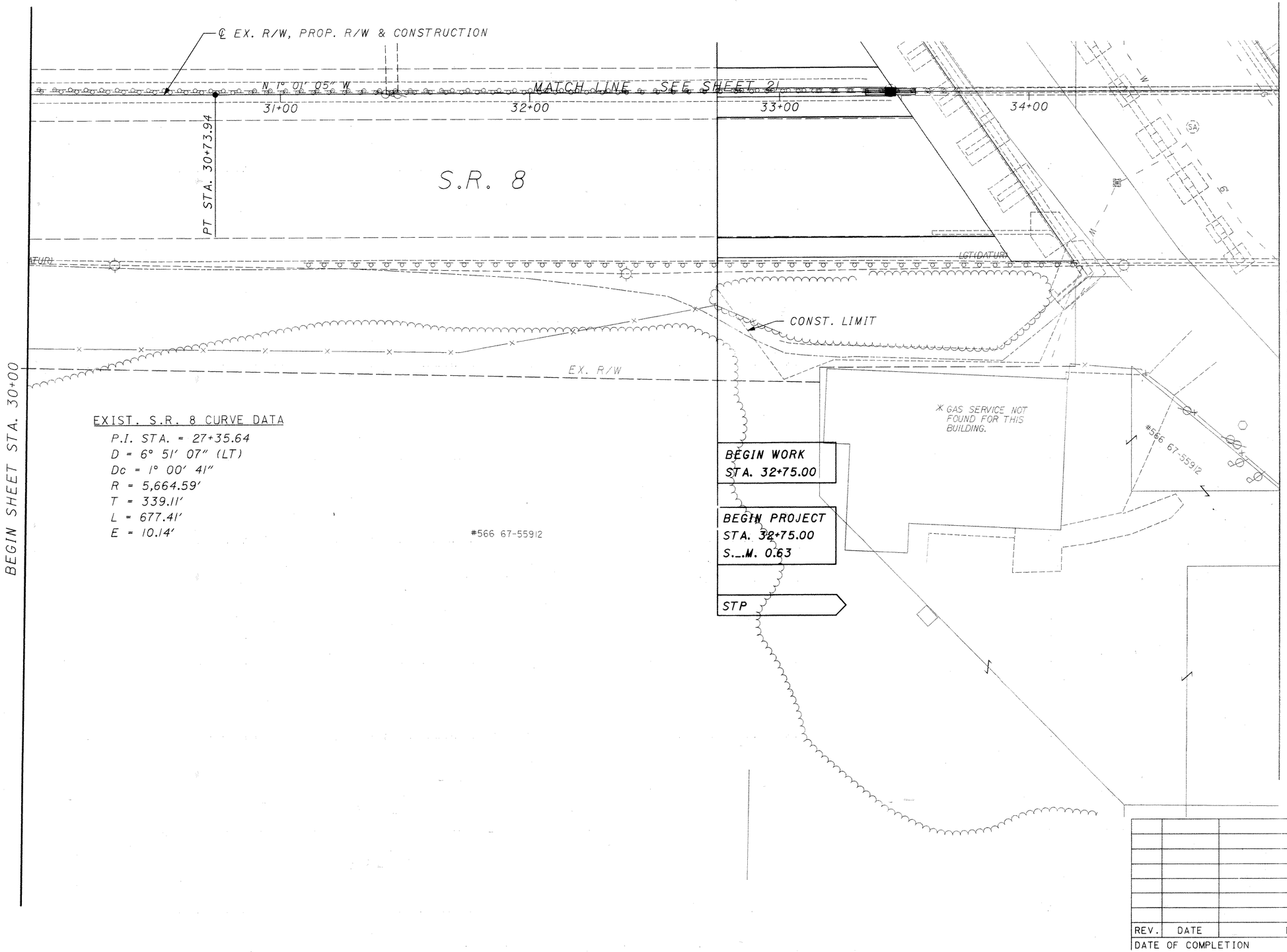

REV.	DATE	DESCRIPTION
DATE OF COMPLETION		

N

SCALE IN FEET 0 10 20 40

PID NO. 20356

R/W DESIGNER ADT
R/W REVIEWER TRB

S.R. 8 RIGHT OF WAY PLAN
STA. 30+00 TO STA. 35+00 (EAST)

SUM-8-0.63

20/71

1037
1088

CITY OF AKRON
ORIGINAL PORTAGE TOWNSHIP, TRACT 8
TOWNSHIP 2 NORTH, RANGE 11 WEST
SUMMIT COUNTY, OHIO

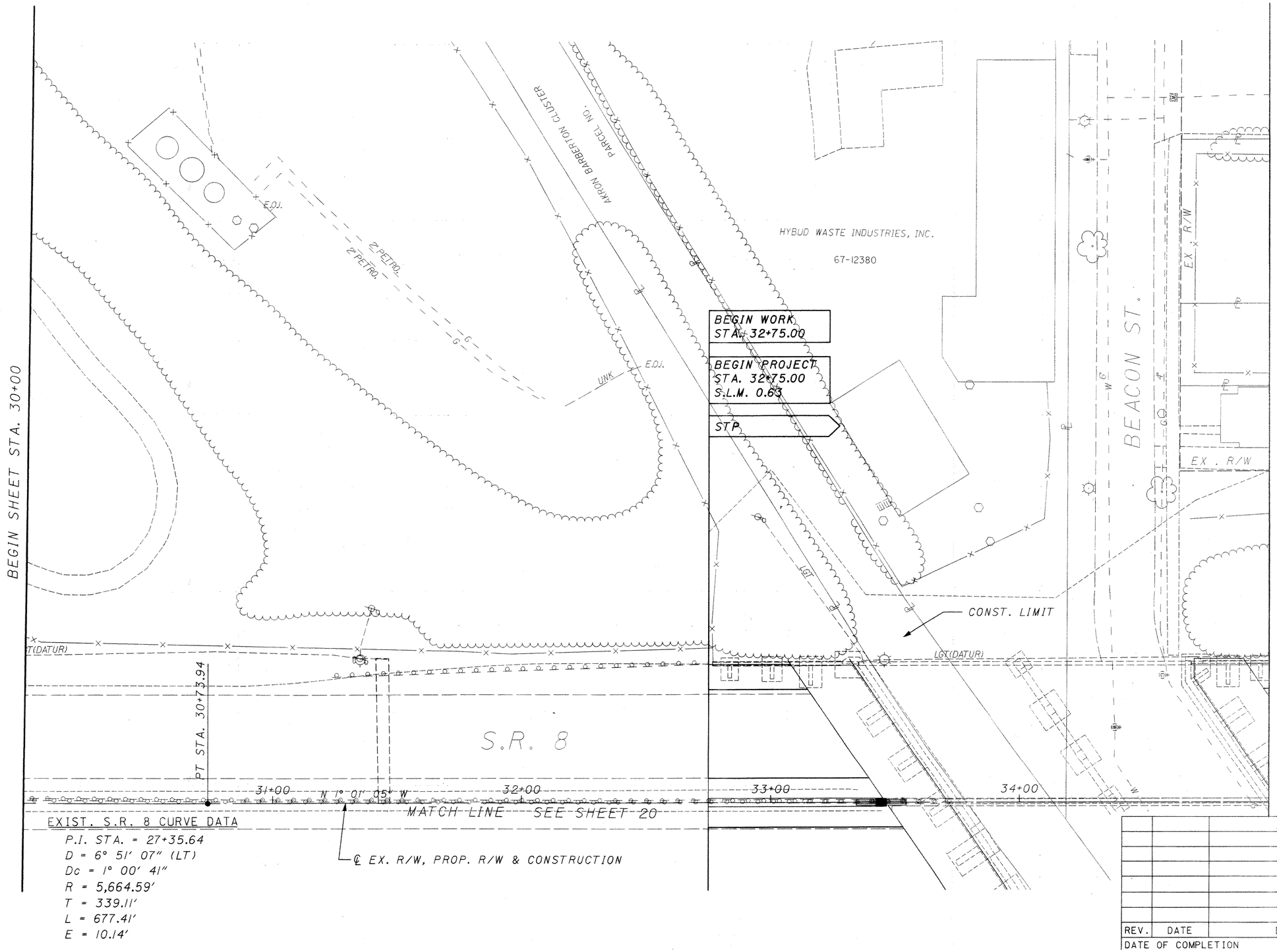

EXIST. S.R. 8 CURVE DATA
P.I. STA. = 27+35.64
D = 6° 51' 07" (LT)
Dc = 1° 00' 41"
R = 5,664.59'
T = 339.11'
L = 677.41'
E = 10.14'

N

SCALE IN FEET 0 10 20 40

PID NO. 20356

R/W DESIGNER ADT
R/W REVIEWER TRB

S.R. 8 RIGHT OF WAY PLAN
STA. 30+00 TO STA. 35+00 (WEST)

SUM-8-0.63

21 / 71

1038
1088

REV.	DATE	DESCRIPTION

DATE OF COMPLETION

CITY OF AKRON
ORIGINAL PORTAGE TOWNSHIP, TRACT 8
TOWNSHIP 2 NORTH, RANGE 11 WEST
SUMMIT COUNTY, OHIO

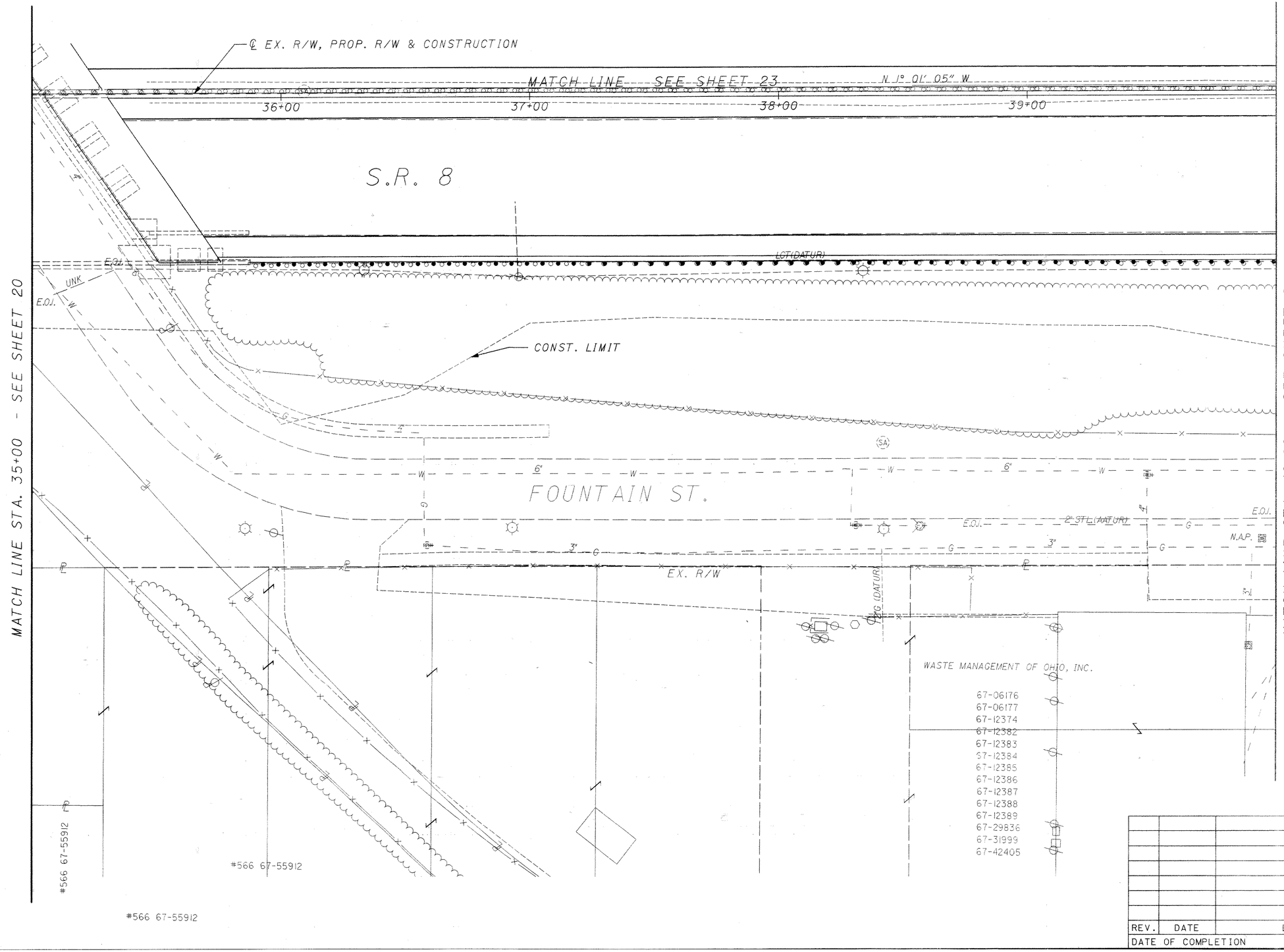

REV.	DATE	DESCRIPTION
DATE OF COMPLETION		

N

SCALE IN FEET 0 10 20 40

PID NO. 20356

R/W DESIGNER ADT
R/W REVIEWER TRB

S.R. 8 RIGHT OF WAY PLAN
STA. 35+00 TO STA. 40+00 (EAST)

SUM-8-0.63

22 / 71

1039
1088

CITY OF AKRON
ORIGINAL PORTAGE TOWNSHIP, TRACT 8
TOWNSHIP 2 NORTH, RANGE 11 WEST
SUMMIT COUNTY, OHIO

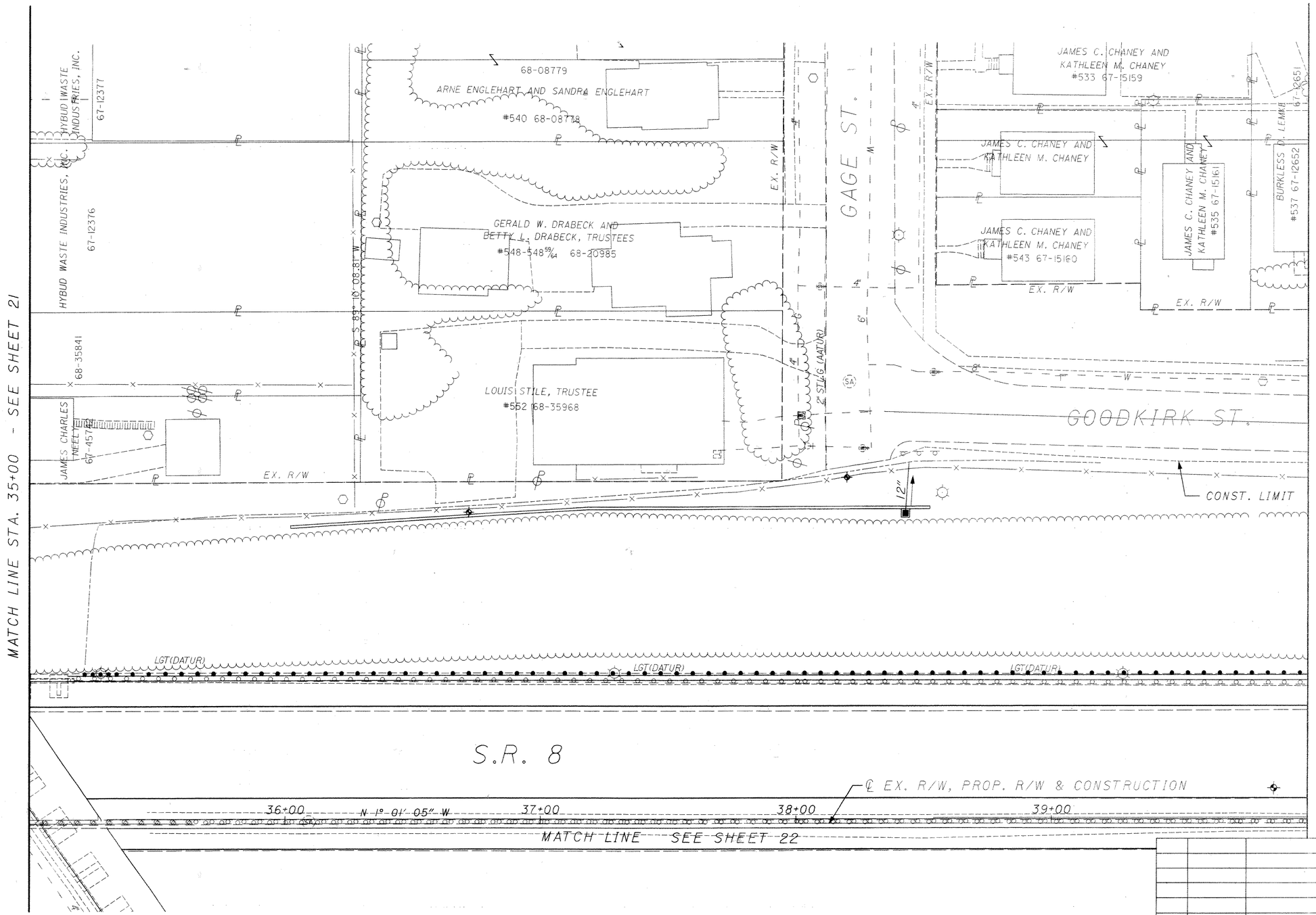

REV.	DATE	DESCRIPTION
DATE OF COMPLETION		

N

SCALE IN FEET
0 10 20 40

PID NO. 20356

R/W DESIGNER ADT
R/W REVIEWER TRB

S.R. 8 RIGHT OF WAY PLAN
STA. 35+00 TO STA. 40+00 (WEST)

SUM-8-0.63

23 / 71

1040
1088

CITY OF AKRON
ORIGINAL PORTAGE TOWNSHIP, TRACT 8
TOWNSHIP 2 NORTH, RANGE 11 WEST
SUMMIT COUNTY, OHIO

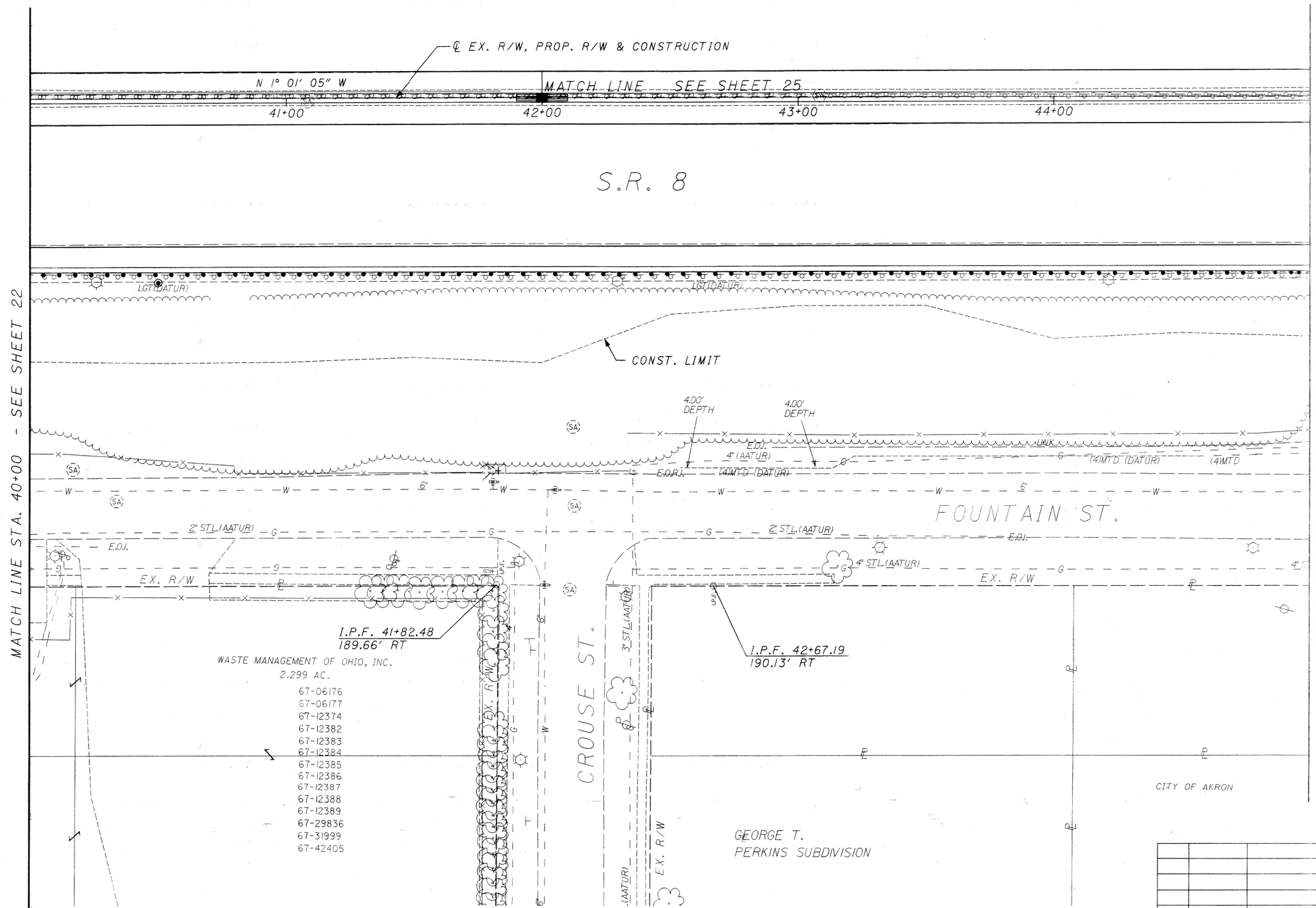

REV.	DATE	DESCRIPTION
DATE OF COMPLETION		

N

SCALE IN FEET
0 10 20 40

PID NO. 20356

R/W DESIGNER ADT
R/W REVIEWER TRB

S.R. 8 RIGHT OF WAY PLAN
STA. 40+00 TO STA. 45+00 (EAST)

24 / 71

1041
1088

CITY OF AKRON
ORIGINAL PORTAGE TOWNSHIP, TRACT 8
TOWNSHIP 2 NORTH, RANGE 11 WEST
SUMMIT COUNTY, OHIO

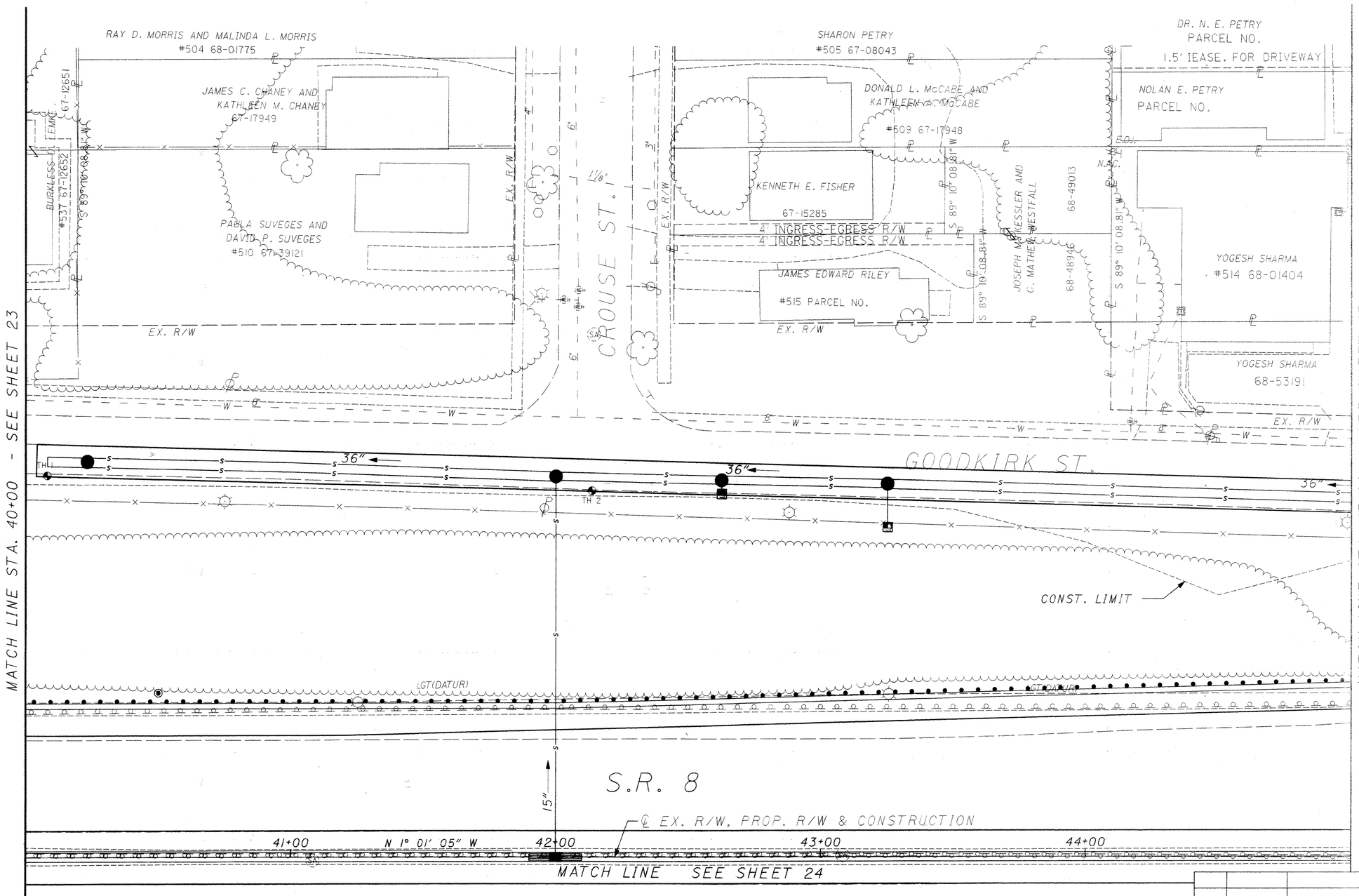

SCALE IN FEET: 0, 10, 20, 40

PID NO. 20356

R/W DESIGNER: ADT
R/W REVIEWER: TRB

S.R. 8 RIGHT OF WAY PLAN
STA. 40+00 TO STA. 45+00 (WEST)

SUM-8-0.63

25 / 71

1042
1088

REV.	DATE	DESCRIPTION
DATE OF COMPLETION		

CITY OF AKRON
ORIGINAL PORTAGE TOWNSHIP, TRACT 8
TOWNSHIP 2 NORTH, RANGE 11 WEST
SUMMIT COUNTY, OHIO

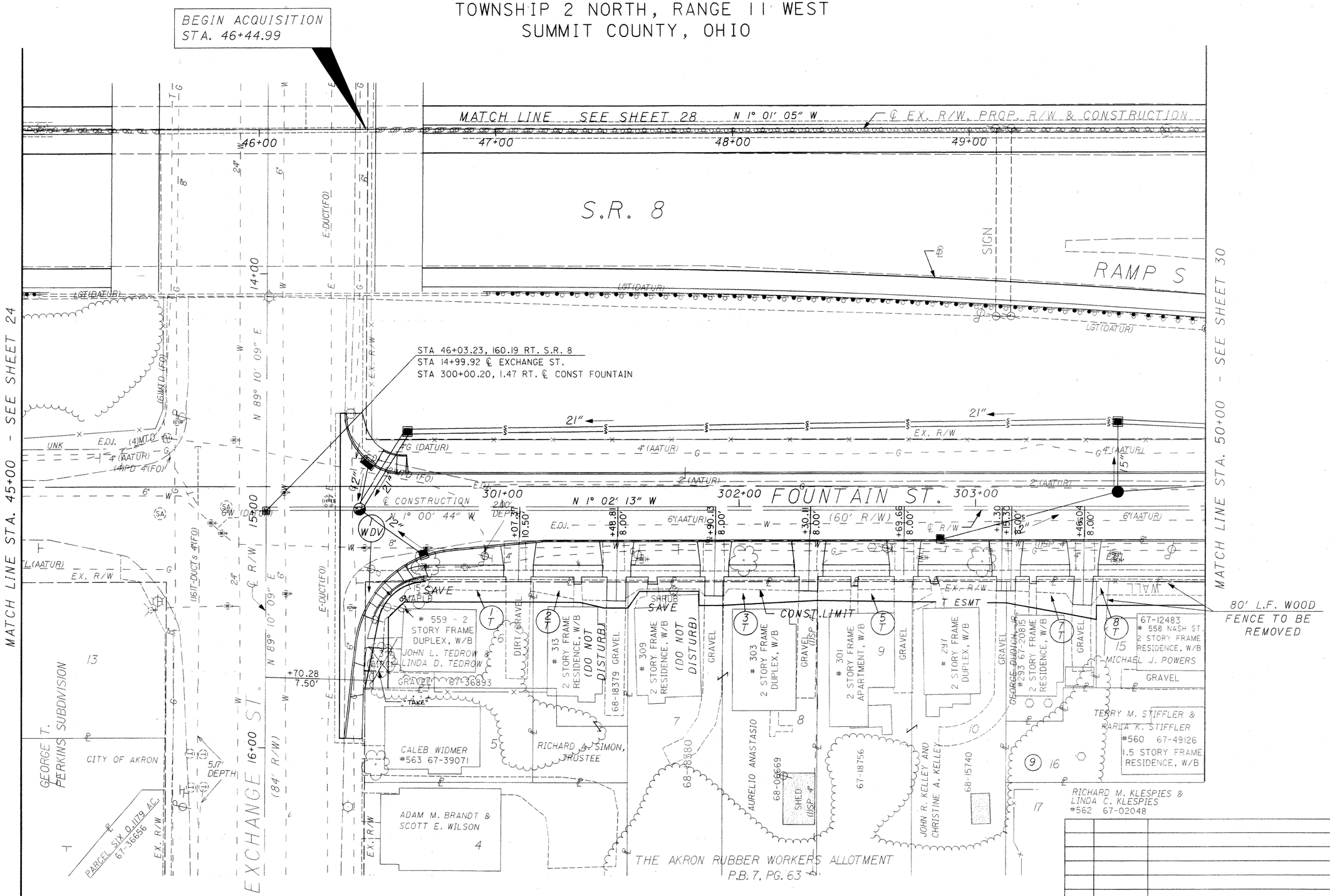

FOR RAMP DATA
SEE SHEETS 2A & 2B

FOR BEARINGS, DISTANCES AND STATIONS/OFFSETS SEE DETAIL SHEET No. 27

REV.	DATE	DESCRIPTION
	10/26/01	REVISE BIRCH TREE TO "TAKE" ON PARCEL 1

DATE OF COMPLETION

SCALE IN FEET

PID NO. 20356

R/W DESIGNER ADT
R/W REVIEWER TRB

S.R. 8 RIGHT OF WAY PLAN
STA. 45+00 TO STA. 50+00 (EAST)

SUM-8-0.63

CITY OF AKRON
ORIGINAL PORTAGE TOWNSHIP, TRACT 8
TOWNSHIP 2 NORTH, RANGE 11 WEST
SUMMIT COUNTY, OHIO

BEGIN ACQUISITION
STA. 46+44.99

POT Sta. 13+39.73

MATCH LINE SEE SHEET 29

℄ EX. R/W, PROP. R/W & CONSTRUCTION

46+00 47+00 48+00 49+00

N 1° 01' 05" W

S.R. 8

℄ RAMP S

RAMP S

EX. R/W

℄ TAKE DISTANCE

LINE	LENGTH	BEARING
1	10.63	S 12°07'13" W
2	10.00	S 1°00'44" E
3	25.13	S 1°00'44" E
4	8.53	S 56°11'09" E
5	6.00	S 88°59'16" W
6	10.00	S 1°00'44" E

14+00

N 89° 10' 09" E

MATCH LINE STA. 45+00 - SEE SHEET 24

MATCH LINE STA. 50+00 - SEE SHEET 31

BASIS OF BEARING

THE PROJECT (GROUND LEVEL) COORDINATE VALUES ARE RELATIVE TO OHIO NORTH ZONE STATE PLANE COORDINATES, NAD83 (95), BY A PROJECT ADJUSTMENT FACTOR (PAF) = 1.00010629 AND IS BASED ON A MEAN PROJECT LATITUDE OF 41°04'27.03" N AND AN ELEVATION OF 289.534 METERS. THOSE COORDINATE VALUES ARE FROM AN ACTUAL GPS SURVEY MADE BY ROBERT C. CANTER, P.S. IN 1999. TO OBTAIN GRID DISTANCES FOR STATE PLANE COORDINATES, DIVIDE THE PROJECT DISTANCES OR COORDINATES BY THE P.A.F.

NOTE: THE EXISTING R/W WIDTH AND LOCATION WERE DETERMINED USING DOCUMENTATION ON FILE FROM THE OHIO DEPARTMENT OF TRANSPORTATION, DISTRICT 4 OFFICE, RAVENNA, OHIO. SUM-8-0.38A, SUM-5-10.95, SUM-5-11.94, AND SUM-8-1.73/1.95.

SET IRON PIN
ALL SET IRON PINS ARE ¾" x 30" REBARS WITH ALUMINUM I.D. CAPS INSCRIBED "ODOT R/W DLZ OH 6950".

STA 46+03.23, 160.19 RT. S.R. 8
STA 14+99.92 ℄ EXCHANGE ST.
STA 300+00.20, 1.47 RT. ℄ CONST FOUNTAIN

EXCHANGE ST. (84' R/W)

℄ R/W

EX. R/W

16+00

N 89° 10' 09" E

GEORGE T. PERKINS SUBDIVISION

13

14

CITY OF AKRON

67-36656

EX. R/W

301+00 302+00 303+00

FOUNTAIN ST. (60' R/W)

N 1° 02' 13" W

℄ CONSTRUCTION

℄ EX. R/W

N 1° 00' 44" W

R= 20.00
L= 27.35
C= 25.27
CB= S 40° 11' 10" E

WDV

1 T

2 T

3 T

5 T

7 T

8 T

46+45.13 190.20 RT
46+50.98 206.16 RT
15+45.73 47.90 LT
N 79° 21' 34" W 29.65
15+74.79 42.00 LT
46+44.99 235.20 RT
46+61.78 198.71 RT
46+70.57 190.20 RT
N 1° 00' 44" W 45.57
S 0° 57' 12" E 54.35
S 45° 06' 24" E 9.33
46+55.08 205.20 RT
46+54.99 235.20 RT
47+16.13 235.21 RT
47+16.13 190.21 RT
47+16.13 198.77 RT
47+46.13 201.21 RT
47+35.78 198.79 RT
47+56.13 190.21 RT
47+56.13 201.21 RT
47+61.00 194.21 RT
47+86.13 200.21 RT
47+86.13 194.21 RT
47+96.13 190.21 RT
47+96.13 200.21 RT
48+36.13 190.22 RT
48+36.13 198.22 RT
48+76.13 198.72 RT
48+76.13 190.22 RT
49+16.13 190.23 RT
49+16.13 199.23 RT
49+54.13 190.23 RT
49+54.13 200.23 RT
49+54.13 206.23 RT

25.43 45.00 30.00 45.57 8.57 36.43 40.00 19.65 11.00 40.00 10.00 40.00 40.05 8.00 40.00 40.00 8.50 40.00 T ESMT 40.00 9.00 38.00 38.64 10.00 47.00 50.00 6.00

S 3° 52' 29" E
S 0° 17' 46" E
S 9° 25' 30" W
S 1° 00' 44" E

71.14 S 1° 00' 44" E

10.00

JOHN L. TEDROW & LINDA D. TEDROW 67-36893

CALEB WIDMER 67-39071

RICHARD A. SIMON, TRUSTEE 68-18379

ADAM M. BRANDT & SCOTT E. WILSON 68-18380

AURELIO ANASTASIO 68-06669

67-18756

JOHN R. KELLEY AND CHRISTINE A. KELLEY 68-15740

GEORGE DUDICH, JR. 67-20815

MICHAEL J. POWERS 67-12483

TERRY M. STIFFLER & KARLA K. STIFFLER 67-49126

RICHARD M. KLESPIES & LINDA C. KLESPIES 67-02048

THE AKRON RUBBER WORKERS ALLOTMENT P.B.7, PG.63

MONUMENT LEGEND

- Ⓜ CENTERLINE AJUSTABLE MONUMENT
- ◉ R/W REFERENCE MONUMENT
- • ¾" x 30" REBAR SET
- ○ EXISTING I.P.'S SPIKES OR PIPES

FOR RAMP DATA SEE SHEETS 2A & 2B

REV.	DATE	DESCRIPTION

DATE OF COMPLETION

N

SCALE IN FEET 0 10 20 40

P.I.D. NO. 20356

R/W DESIGNER ADT
R/W REVIEWER TRB

S.R. 8 RIGHT OF WAY PLAN
STA. 45+00 TO STA. 50+00 (EAST)

SUM-8-0.63

27 / 71

1044
1080

CITY OF AKRON
ORIGINAL PORTAGE TOWNSHIP, TRACT 8
TOWNSHIP 2 NORTH, RANGE 11 WEST
SUMMIT COUNTY, OHIO

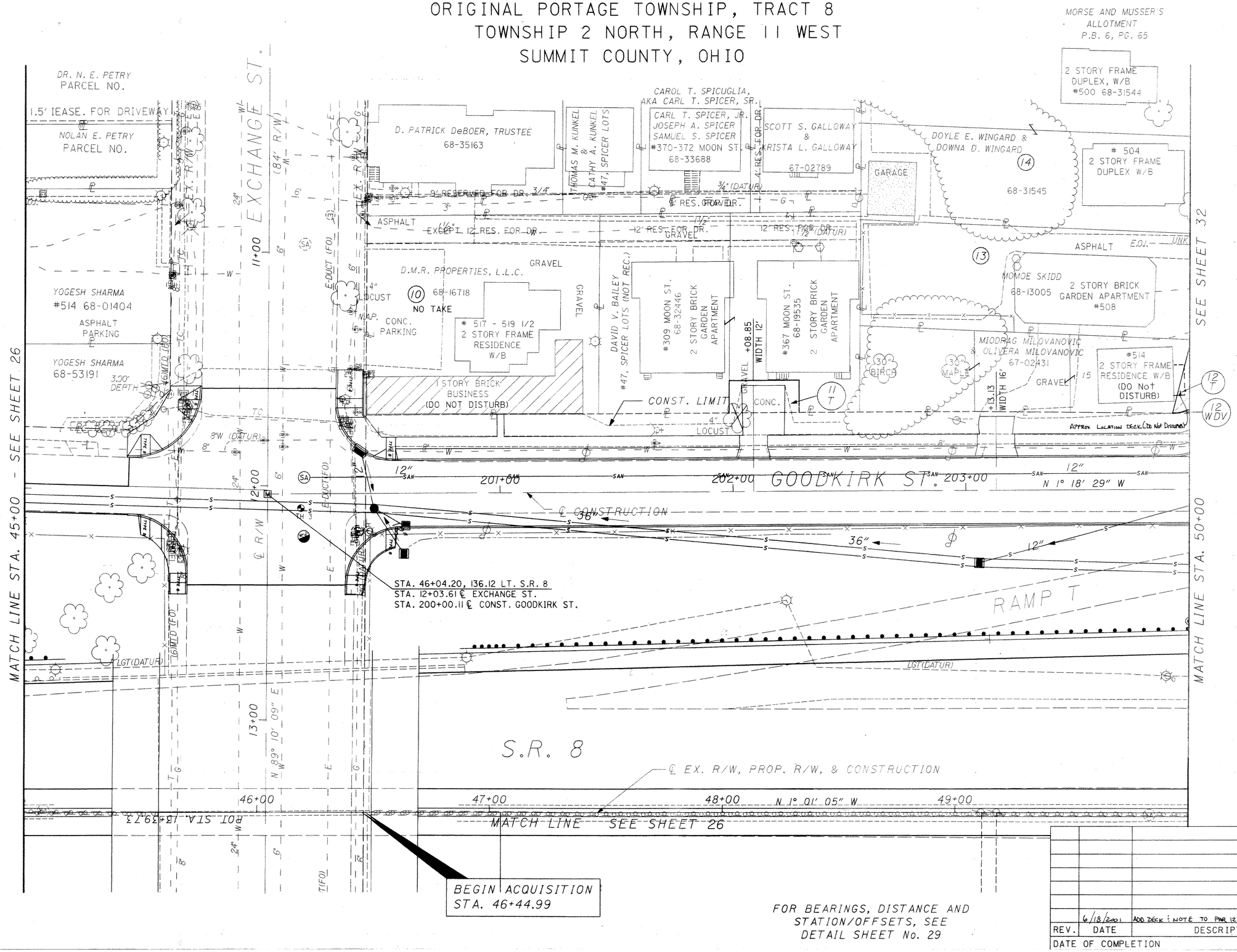

REV.	DATE	DESCRIPTION
	6/18/2001	ADD DECK ; NOTE TO PAR 12-T
DATE OF COMPLETION		

SCALE IN FEET 0 10 20 40

PID NO. 20356

R/W DESIGNER ADT
R/W REVIEWER TRB

S.R. 8 RIGHT OF WAY PLAN
STA. 45+00 TO STA. 50+00 (WEST)

SUM-8-0.63

28 / 71

1045
1088

CITY OF AKRON
ORIGINAL PORTAGE TOWNSHIP, TRACT 8
TOWNSHIP 2 NORTH, RANGE 11 WEST
SUMMIT COUNTY, OHIO

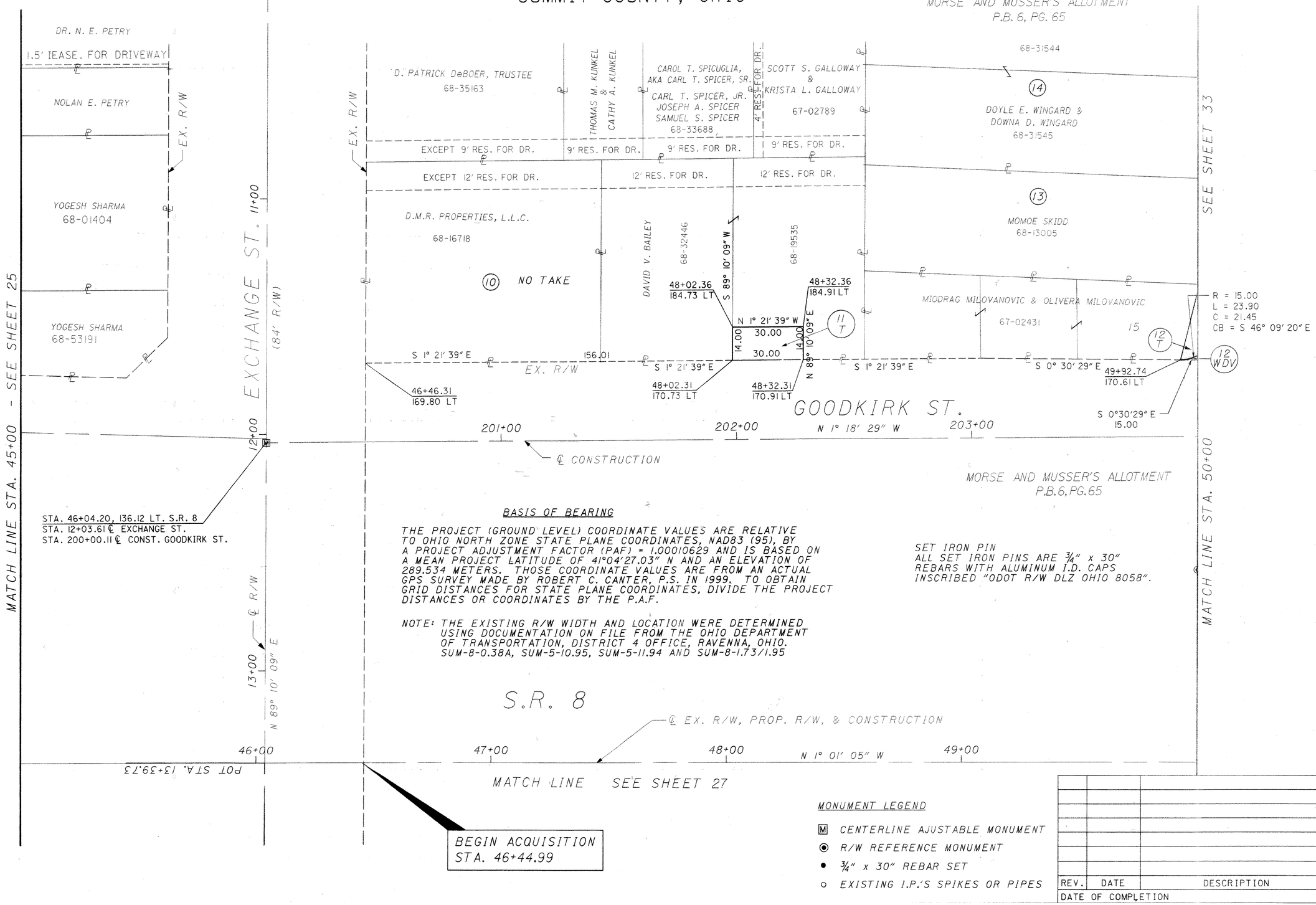

MORSE AND MUSSER'S ALLOTMENT
P.B.6, PG.65

SET IRON PIN
ALL SET IRON PINS ARE ¾" x 30"
REBARS WITH ALUMINUM I.D. CAPS
INSCRIBED "ODOT R/W DLZ OHIO 8058".

BASIS OF BEARING

THE PROJECT (GROUND LEVEL) COORDINATE VALUES ARE RELATIVE TO OHIO NORTH ZONE STATE PLANE COORDINATES, NAD83 (95), BY A PROJECT ADJUSTMENT FACTOR (PAF) = 1.00010629 AND IS BASED ON A MEAN PROJECT LATITUDE OF 41°04'27.03" N AND AN ELEVATION OF 289.534 METERS. THOSE COORDINATE VALUES ARE FROM AN ACTUAL GPS SURVEY MADE BY ROBERT C. CANTER, P.S. IN 1999. TO OBTAIN GRID DISTANCES FOR STATE PLANE COORDINATES, DIVIDE THE PROJECT DISTANCES OR COORDINATES BY THE P.A.F.

NOTE: THE EXISTING R/W WIDTH AND LOCATION WERE DETERMINED USING DOCUMENTATION ON FILE FROM THE OHIO DEPARTMENT OF TRANSPORTATION, DISTRICT 4 OFFICE, RAVENNA, OHIO. SUM-8-0.38A, SUM-5-10.95, SUM-5-11.94 AND SUM-8-1.73/1.95

MONUMENT LEGEND

- Ⓜ CENTERLINE AJUSTABLE MONUMENT
- ◉ R/W REFERENCE MONUMENT
- • ¾" x 30" REBAR SET
- ○ EXISTING I.P.'S SPIKES OR PIPES

REV.	DATE	DESCRIPTION
DATE OF COMPLETION		

N

SCALE IN FEET 0 10 20 40

PID NO. 20356

R/W DESIGNER ADT
R/W REVIEWER TRB

S.R. 8 RIGHT OF WAY PLAN
STA. 45+00 TO STA. 50+00 (WEST)

SUM-8-0.63

29 / 71

1046
1088

CITY OF AKRON
ORIGINAL PORTAGE TOWNSHIP, TRACT 8
TOWNSHIP 2 NORTH, RANGE 11 WEST
SUMMIT COUNTY, OHIO

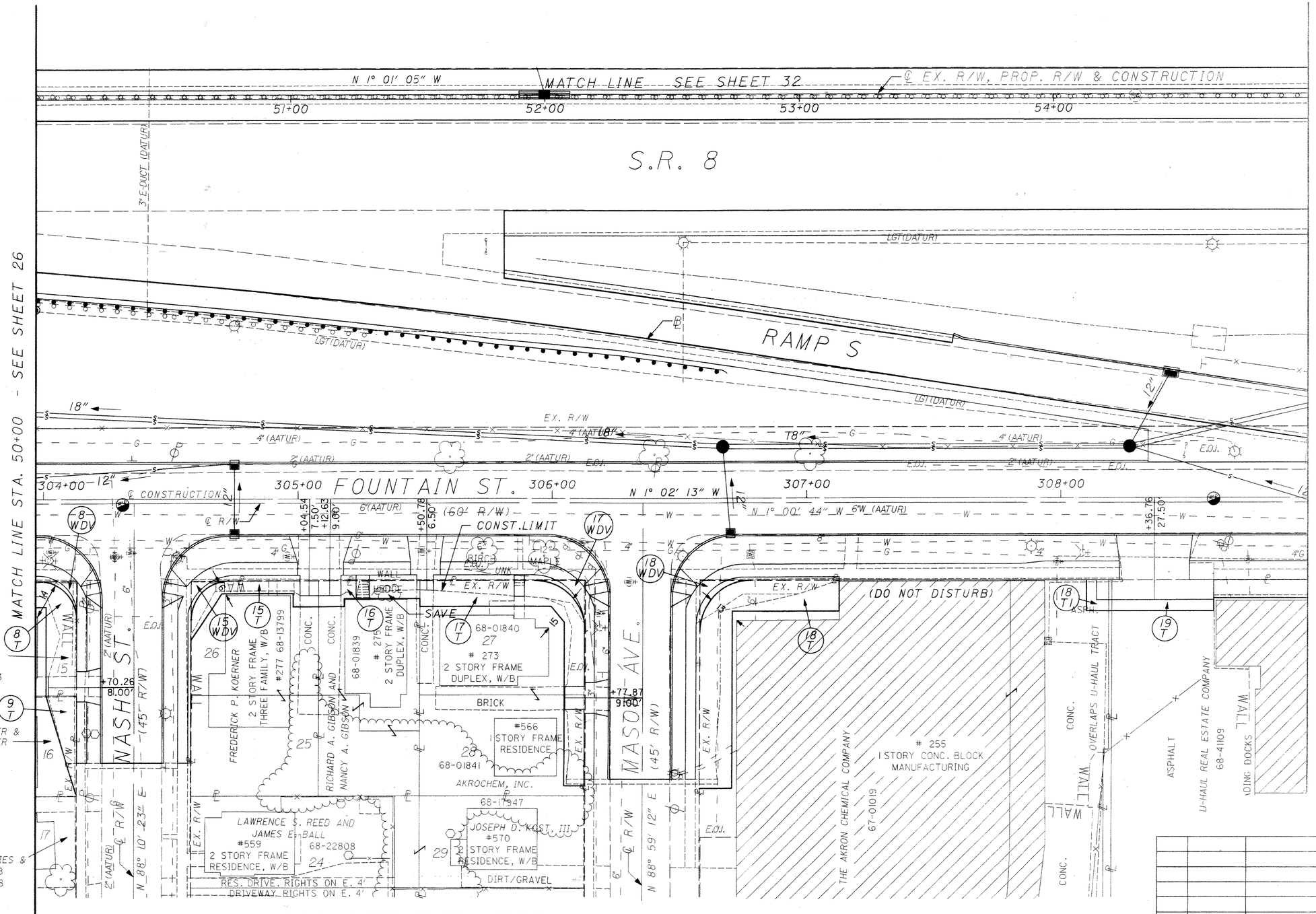

THE AKRON RUBBER WORKERS ALLOTMENT
P.B. 7, FG. 63

FOR RAMP DATA
SEE SHEETS 2A & 2B

FOR BEARINGS, DISTANCES AND
STATIONS/OFFSETS SEE DETAIL
SHEET No. 31

REV.	DATE	DESCRIPTION
DATE OF COMPLETION		

N

SCALE IN FEET
0 10 20 40

PID NO. 20356

R/W DESIGNER ADT
R/W REVIEWER TRB

S.R. 8 RIGHT OF WAY PLAN
STA. 50+00 TO STA. 55+00 (EAST)

SUM-8-0.63

30 / 71

1047
1088

CITY OF AKRON
ORIGINAL PORTAGE TOWNSHIP, TRACT 8
TOWNSHIP 2 NORTH, RANGE 11 WEST
SUMMIT COUNTY, OHIO

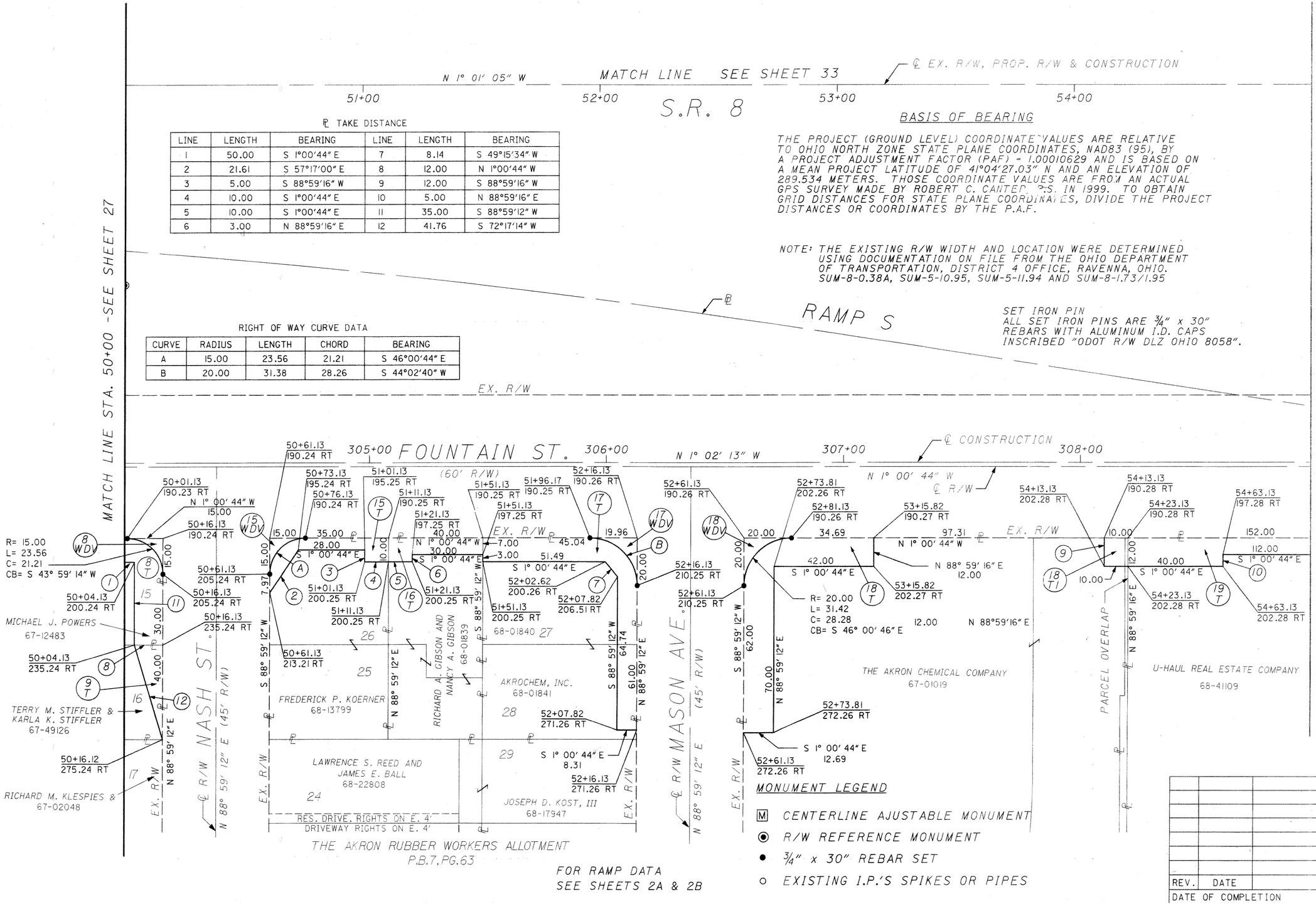

FOR RAMP DATA SEE SHEETS 2A & 2B

SCALE IN FEET 0 10 20 40

PID NO. 20356

R/W DESIGNER ADT
R/W REVIEWER TRB

S.R. 8 RIGHT OF WAY PLAN
STA. 50+00 TO STA. 55+00 (EAST)

SUM-8-0.63

31 / 71

1048 / 1088

REV.	DATE	DESCRIPTION

DATE OF COMPLETION

CITY OF AKRON
ORIGINAL PORTAGE TOWNSHIP, TRACT 8
TOWNSHIP 2 NORTH, RANGE 11 WEST
SUMMIT COUNTY, OHIO

P.I. STA. = 208+59.08,
℄ CONST. GOODKIRK ST.
DEFLECTION = 00° 08' 32"
NO CURVE

GORDON C. McBRIDE
67-19329
501
2 STORY FRAME
RESIDENCE, W/B

MORSE AND MUSSER'S
ALLOTMENT
P.B. 6, PG. 65

FEEDERLE ALLOTMENT
P.B. 4, PG. 22

68-31545

DOYLE E. WINGARD &
DOWNA D. WINGARD
68-31545

NO TAKE

TRIAD INVESTMENTS
67-32382

GREGORY MICHAEL BILLS, AND
JUDITH LYNN BILLS, CO-TRUSTEES
67-60586

NO TAKE
502
2 STORY FRAME
DUPLEX, W/B

NO TAKE

TRIAD INVESTMENTS
67-29432 67-29431

GREGORY MICHAEL BILLS,
AND JUDITH LYNN BILLS,
CO-TRUSTEES
292
2 STORY FR
RES, W/B
68-44294

GARAGE

NO TAKE
506
2 STORY FRAME
RESIDENCE, W/B
NANCY RIDDLE
68-10217

505
2 STORY FRAME
RESIDENCE, W/B

WILMAR PROPERTIES LTD
68-19540

BRICK

CONC.

MOMOE SKIDD
68-13005

MAPLE

509
2 STORY FRAME
RESIDENCE, W/B
(DO NOT
DISTURB)

GRAVEL
PARKING

TRIAD INVESTMENTS
67-32383

67-09385

G. MATTHEW WESTFALL
& TERI WESTFALL

ASPHALT

GRAVEL

DRIVE EASE. ON E. 5'

DRIVE EASE. ON W. 5'

67-09384
305 ARBAWR CT.
2 STORY FRAME
RESIDENCE, W/B

67-04439
303 ARBAWR CT.
2 STORY FRAME
RESIDENCE, W/B

TRIAD INVESTMENTS
301 ARBAWR CT.
2 STORY FRAME
RESIDENCE W/B
67-32384

29 ARBAWR CT.
2 STORY FRAME
RESIDENCE, W/B
67-11711

TRIAD INVESTMENTS
68-37797

MIODRAG MILOVANOVIC
& OLIVERA MILOVANOVIC
67-02431

WASH ST. (45' R/W)

℄ R/W VINE ST. (60' R/W)

EX. R/W

LA R/W

EX. R/W

CONST. LIMIT

WALL

AREA TO BE
VACATED
BY THE CITY OF AKRON
AFTER CONSTRUCTION

GOODKIRK ST.

℄ CONSTRUCTION

BUILDING ENCROACHMENT
REVOCABLE PERMIT No.----

P.I. STA. 208+59.08

RAMP T

RAMP TI

S.R. 8

℄ EX. R/W, PROP. R/W, & CONSTRUCTION

MATCH LINE STA. 50+00 - SEE SHEET 28

MATCH LINE STA. 55+00 - SEE SHEET 36

MATCH LINE SEE SHEET 30

FOR RAMP DATA
SEE SHEETS 2A & 2B

FOR BEARINGS, DISTANCES AND
STATIONS/OFFSETS SEE DETAIL
SHEET No. 33

REV.	DATE	DESCRIPTION
	11/6/01	ADD VACATION NOTE TO PARCEL 22

DATE OF COMPLETION

R/W DESIGNER: ADT
R/W REVIEWER: TRB

PID NO. 20356

SCALE IN FEET

S.R. 8 RIGHT OF WAY PLAN
STA. 50+00 TO STA. 55+00 (WEST)

SUM-8-0.63

32 / 71

1049
1088

CITY OF AKRON
ORIGINAL PORTAGE TOWNSHIP, TRACT 8
TOWNSHIP 2 NORTH, RANGE 11 WEST
SUMMIT COUNTY, OHIO

P.I. STA. = 208+59.08,
℄ CONST. GOODKIRK ST.
DEFLECTION = 00° 08' 32"
NO CURVE

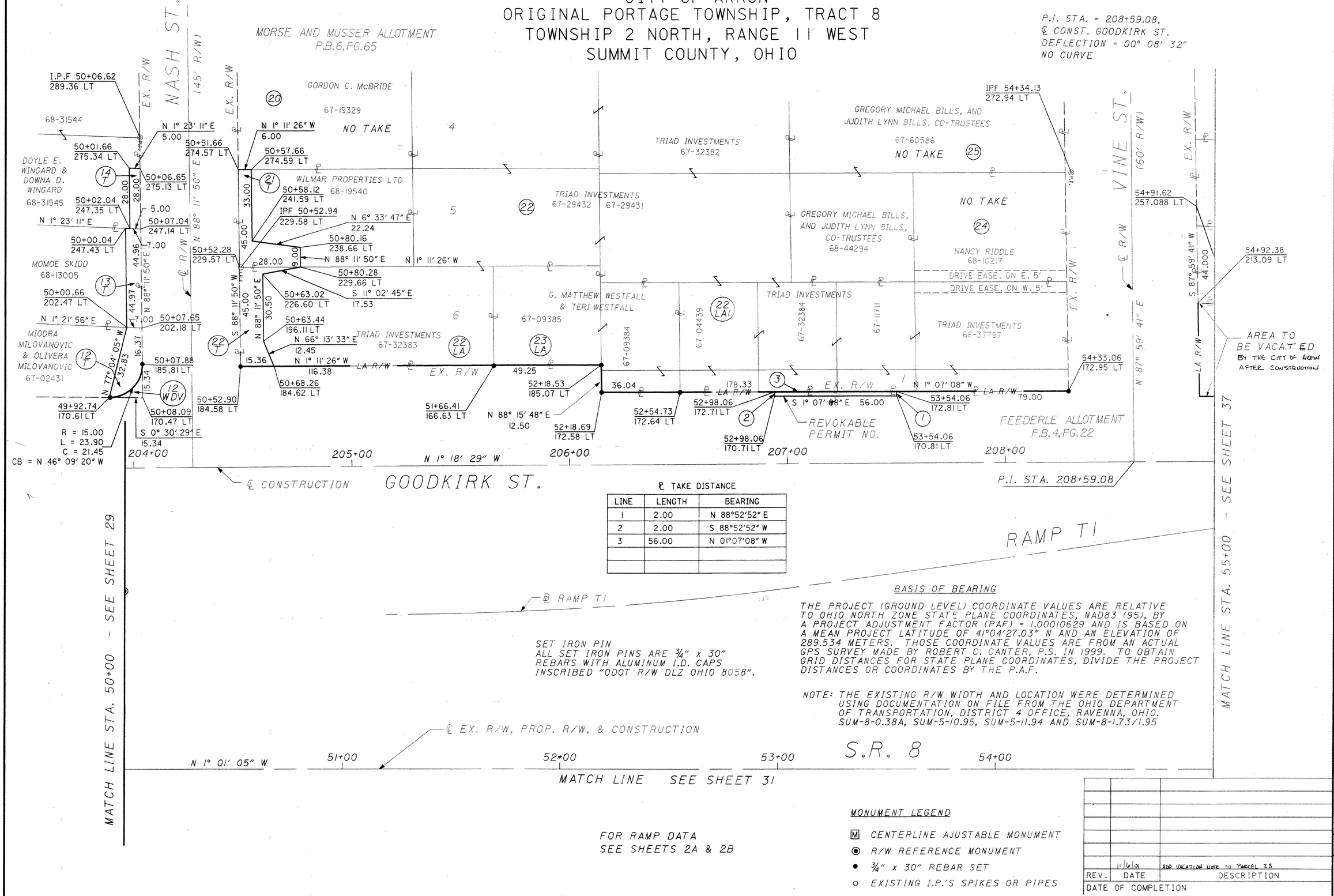

℄ TAKE DISTANCE

LINE	LENGTH	BEARING
1	2.00	N 88°52'52" E
2	2.00	S 88°52'52" W
3	56.00	N 01°07'08" W

SET IRON PIN
ALL SET IRON PINS ARE ¾" x 30" REBARS WITH ALUMINUM I.D. CAPS INSCRIBED "ODOT R/W DLZ OHIO 8058".

BASIS OF BEARING

THE PROJECT (GROUND LEVEL) COORDINATE VALUES ARE RELATIVE TO OHIO NORTH ZONE STATE PLANE COORDINATES, NAD83 (95), BY A PROJECT ADJUSTMENT FACTOR (PAF) = 1.00010629 AND IS BASED ON A MEAN PROJECT LATITUDE OF 41°04'27.03" N AND AN ELEVATION OF 289.534 METERS. THOSE COORDINATE VALUES ARE FROM AN ACTUAL GPS SURVEY MADE BY ROBERT C. CANTER, P.S. IN 1999. TO OBTAIN GRID DISTANCES FOR STATE PLANE COORDINATES, DIVIDE THE PROJECT DISTANCES OR COORDINATES BY THE P.A.F.

NOTE: THE EXISTING R/W WIDTH AND LOCATION WERE DETERMINED USING DOCUMENTATION ON FILE FROM THE OHIO DEPARTMENT OF TRANSPORTATION, DISTRICT 4 OFFICE, RAVENNA, OHIO. SUM-8-0.38A, SUM-5-10.95, SUM-5-11.94 AND SUM-8-1.73/1.95

FOR RAMP DATA SEE SHEETS 2A & 2B

MONUMENT LEGEND

- Ⓜ CENTERLINE AJUSTABLE MONUMENT
- ◉ R/W REFERENCE MONUMENT
- • ¾" x 30" REBAR SET
- ○ EXISTING I.P.'S SPIKES OR PIPES

REV.	DATE	DESCRIPTION
	11/6/01	ADD VACATION NOTE TO PARCEL 23
DATE OF COMPLETION		

SCALE IN FEET 0 10 20 40

PID NO. 20356

R/W DESIGNER ADT
R/W REVIEWER TRB

S.R. 8 RIGHT OF WAY PLAN
STA. 50+00 TO STA. 55+00 (WEST)

SUM-8-0.63

33 / 71

1050
1088

EXIST. S.R. 8 CURVE DATA
P.I. STA. = 67+45.23
D = 7° 46′ 07″ (RT)
Dc = 0° 30′ 13″
R = 11,375.75′
T = 772.39′
L = 1,542.41′
E = 26.19′

CITY OF AKRON
ORIGINAL PORTAGE TOWNSHIP, TRACT 8
TOWNSHIP 2 NORTH, RANGE 11 WEST
SUMMIT COUNTY, OHIO

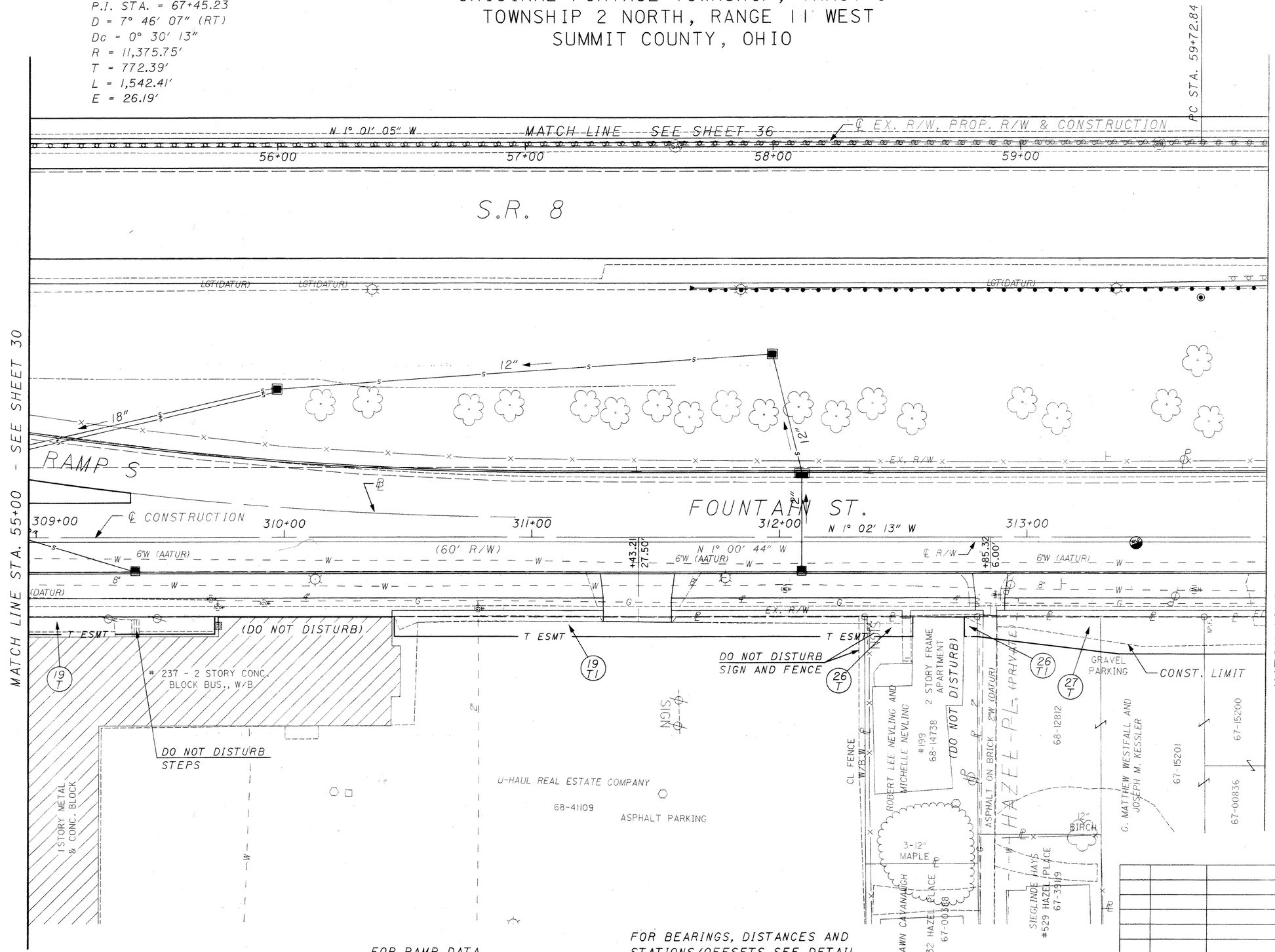

FOR RAMP DATA SEE SHEETS 2A & 2B

FOR BEARINGS, DISTANCES AND STATIONS/OFFSETS SEE DETAIL SHEET No. 35

REV.	DATE	DESCRIPTION

DATE OF COMPLETION

SCALE IN FEET (0, 10, 20, 40)

PID NO. 20356

R/W DESIGNER ADT
R/W REVIEWER TRB

S.R. 8 RIGHT OF WAY PLAN
STA. 55+00 TO STA. 60+00 (EAST)

SUM-8-0.63

34 / 71

1051
1088

CITY OF AKRON
ORIGINAL PORTAGE TOWNSHIP, TRACT 8
TOWNSHIP 2 NORTH, RANGE 11 WEST
SUMMIT COUNTY, OHIO

EXIST. S.R. 8 CURVE DATA
P.I. STA. = 67+45.23
D = 7° 46' 07" (RT)
Dc = 0° 30' 13"
R = 11,375.75'
T = 772.39'
L = 1,542.41'
E = 26.19'

PC STA. 59+72.84

N 1° 01' 05" W

MATCH LINE SEE SHEET 37

EX. R/W, PROP. R/W & ℄ CONSTRUCTION

56+00 57+00 58+00 59+00

S.R. 8

SET IRON PIN
ALL SET IRON PINS ARE ¾" x 30"
REBARS WITH ALUMINUM I.D. CAPS
INSCRIBED "ODOT R/W DLZ OHIO 8058".

BASIS OF BEARING

THE PROJECT (GROUND LEVEL) COORDINATE VALUES ARE RELATIVE TO OHIO NORTH ZONE STATE PLANE COORDINATES, NAD83 (95), BY A PROJECT ADJUSTMENT FACTOR (PAF) = 1.00010629 AND IS BASED ON A MEAN PROJECT LATITUDE OF 41°04'27.03" N AND AN ELEVATION OF 289.534 METERS. THOSE COORDINATE VALUES ARE FROM AN ACTUAL GPS SURVEY MADE BY ROBERT C. CANTER, P.S. IN 1999. TO OBTAIN GRID DISTANCES FOR STATE PLANE COORDINATES, DIVIDE THE PROJECT DISTANCES OR COORDINATES BY THE P.A.F.

NOTE: THE EXISTING R/W WIDTH AND LOCATION WERE DETERMINED USING DOCUMENTATION ON FILE FROM THE OHIO DEPARTMENT OF TRANSPORTATION, DISTRICT 4 OFFICE, RAVENNA, OHIO. SUM-8-0.38A, SUM-5-10.95, SUM-5-11.94 AND SUM-8-1.73/1.95

MATCH LINE STA. 55+00 - SEE SHEET 31

MATCH LINE STA. 60+00 - SEE SHEET 39

RAMP S

℄ CONSTRUCTION

℄ R/W

FOUNTAIN ST.

310+00 311+00 312+00 313+00

N 1° 00' 44" W (60' R/W)

N 1° 02' 13" W

EX. R/W

N 1° 00' 44" W 152.00 T ESMT

112.00 S 1° 00' 44" E

19 T

N 1° 00' 44" W 72.40

55+75.13 190.29 RT

S 88° 59' 16" W 8.00

N 88° 59' 16" E 7.00

55+75.13 197.29 RT

56+47.53 190.30 RT

56+47.53 198.30 RT

N 1° 00' 44" W 189.93 ℄

190.00 S 1° 00' 44" E

19 T1

58+37.46 190.32 RT

I.P.F 58+37.46 190.43 RT

8.00 T ESMT

19.50 19.43

26 T

58+37.53 198.32 RT

4

58+56.96 198.32 RT

58+56.96 190.32 RT

2

5.25

20.75

1

26 T1

58+77.77 198.32 RT

3

8.00

58+77.71 190.32 RT

I.P.F. 58+82.88 190.33 RT

58+82.96 190.32 RT

I.P.F. 59+74.65 190.33 RT

N 1° 00' 44" W 150.45

58.00 S 5° 55' 11" W

58+83.02 198.32 RT

27 T

60.00 N 1° 00' 44" W

59+40.59 205.33 RT

℄ TAKE DISTANCE

LINE	LENGTH	BEARING
1	8.00	N 88°59'16" E
2	8.00	S 88°34'15" W
3	5.25	S 1°00'40" E
4	19.43	S 1°00'40" E

U-HAUL REAL ESTATE COMPANY

68-41109

N 88° 30' 56" E

ROBERT LEE NEVLING AND MICHELLE NEVLING

68-14738

N 88° 34' 15" E

℄ HAZEL PL. (PRIVATE)

68-12812

G. MATTHEW WESTFALL AND JOSEPH M. KESSLER

67-15201

67-15200

67-00836

SHAWN CAVANAUGH

67-00388

SIEGLINDE HAYS

67-39119

FOR RAMP DATA
SEE SHEETS 2A & 2B

MONUMENT LEGEND

- ▣ CENTERLINE AJUSTABLE MONUMENT
- ◉ R/W REFERENCE MONUMENT
- • ¾" x 30" REBAR SET
- ○ EXISTING I.P.'S SPIKES OR PIPES

REV.	DATE	DESCRIPTION
DATE OF COMPLETION		

N

0 10 20 40 SCALE IN FEET

PID NO. 20356

R/W DESIGNER ADT

R/W REVIEWER TRB

S.R. 8 RIGHT OF WAY PLAN
STA. 55+00 TO STA. 60+00 (EAST)

SUM-8-0.63

35 / 71

1052
1088

CITY OF AKRON
ORIGINAL PORTAGE TOWNSHIP, TRACT 8
TOWNSHIP 2 NORTH, RANGE 11 WEST
SUMMIT COUNTY, OHIO

CURVE DATA

P.I. STA. = 211+88.54, ℄ CONST. GOODKIRK ST.
Δ = 3° 08′ 52″ (RT)
Dc = 4° 00′ 00″
R = 1,432.39′
T = 39.36′
L = 78.70′
E = 0.54′
e_{max} = NC

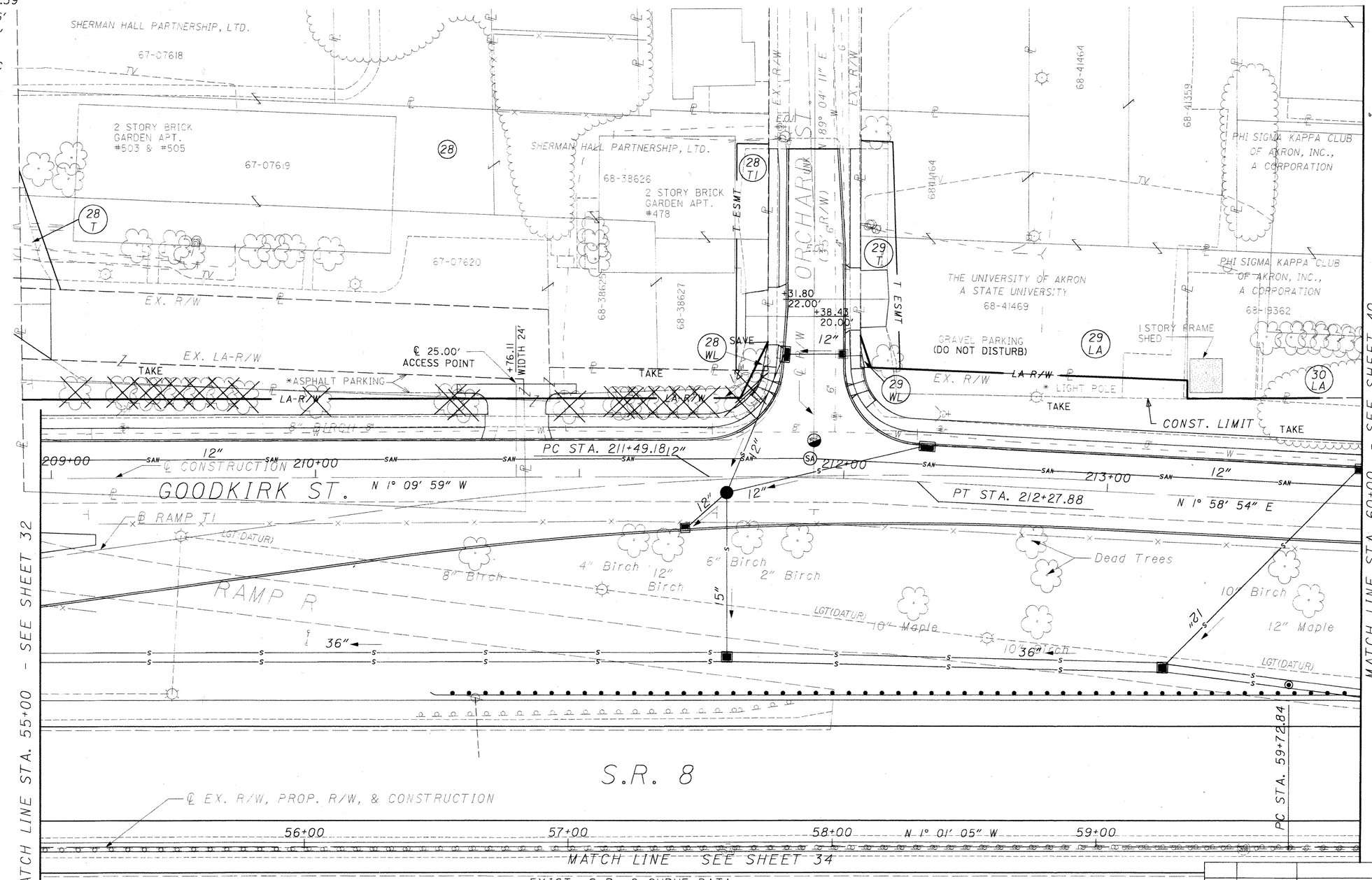

FOR BEARINGS, DISTANCES AND STATIONS/OFFSETS SEE DETAIL SHEET No. 37

FOR RAMP DATA SEE SHEETS 2A & 2B

EXIST. S.R. 8 CURVE DATA

P.I. STA. = 67+45.23
D = 7° 46′ 07″ (RT)
Dc = 0° 30′ 13″
R = 11,375.75′
T = 772.39′
L = 1,542.41′
E = 26.19′

* DENOTES R/W ENCROACHMENT TO BE REMOVED

REV.	DATE	DESCRIPTION
TRB	5/3/02	ADD EXIST. L/A TO PARCEL 28
TRB	5/3/02	DELETE PARCEL 28 VACATION NOTE
	11/6	ADD VACATION NOTE TO PARCEL 28

DATE OF COMPLETION

SCALE IN FEET: 0, 10, 20, 40

PID NO. 20356

R/W DESIGNER: ADT
R/W REVIEWER: TRB

S.R. 8 RIGHT OF WAY PLAN
STA. 55+00 TO STA. 60+00 (WEST)

SUM-8-0.63

36 / 71

1053
1088

CITY OF AKRON
ORIGINAL PORTAGE TOWNSHIP, TRACT 8
TOWNSHIP 2 NORTH, RANGE 11 WEST
SUMMIT COUNTY, OHIO

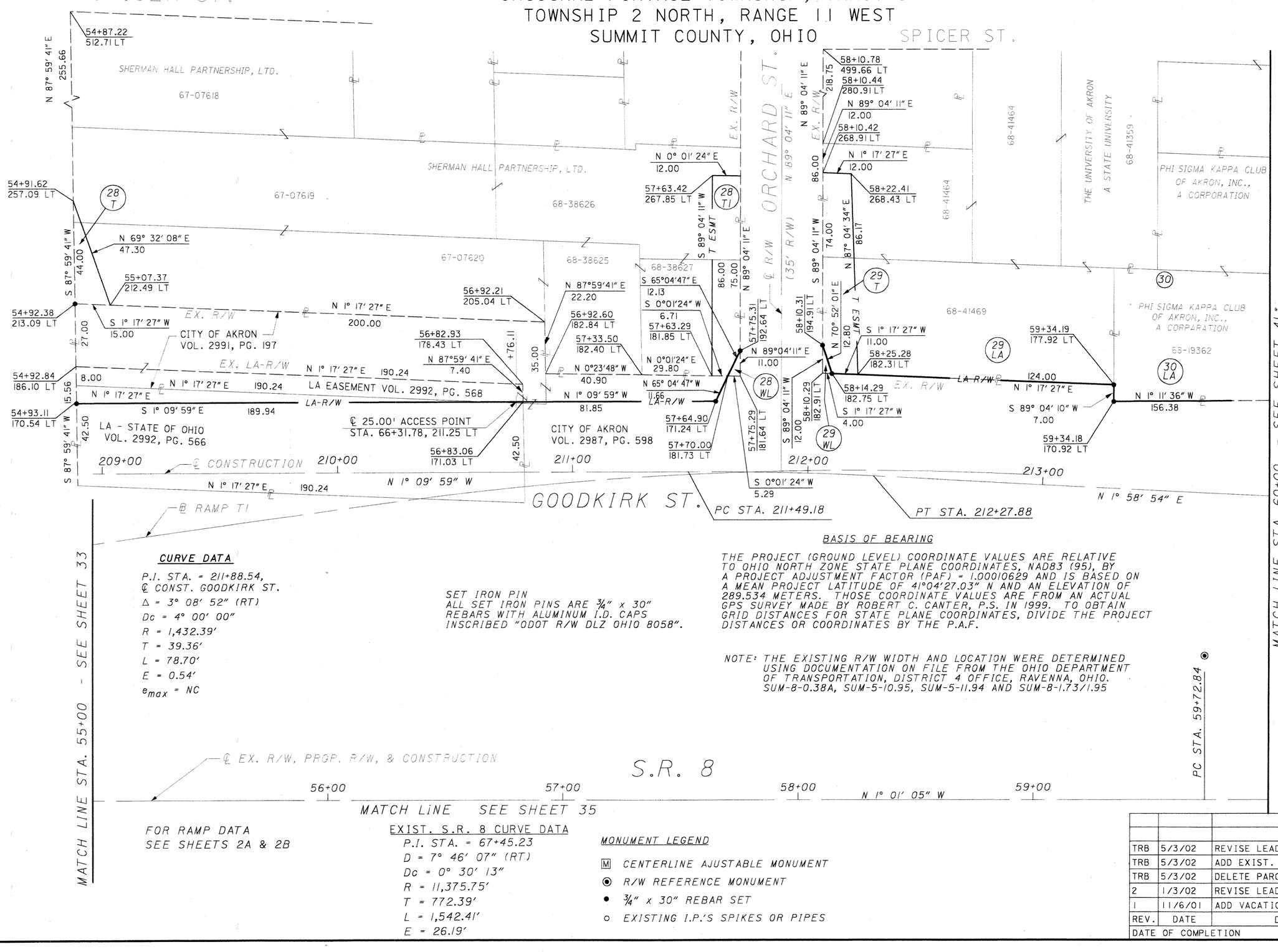

CURVE DATA

P.I. STA. = 211+88.54,
℄ CONST. GOODKIRK ST.
Δ = 3° 08' 52" (RT)
Dc = 4° 00' 00"
R = 1,432.39'
T = 39.36'
L = 78.70'
E = 0.54'
e_{max} = NC

SET IRON PIN
ALL SET IRON PINS ARE ¾" x 30"
REBARS WITH ALUMINUM I.D. CAPS
INSCRIBED "ODOT R/W DLZ OHIO 8058".

BASIS OF BEARING

THE PROJECT (GROUND LEVEL) COORDINATE VALUES ARE RELATIVE TO OHIO NORTH ZONE STATE PLANE COORDINATES, NAD83 (95), BY A PROJECT ADJUSTMENT FACTOR (PAF) = 1.00010629 AND IS BASED ON A MEAN PROJECT LATITUDE OF 41°04'27.03" N AND AN ELEVATION OF 289.534 METERS. THOSE COORDINATE VALUES ARE FROM AN ACTUAL GPS SURVEY MADE BY ROBERT C. CANTER, P.S. IN 1999. TO OBTAIN GRID DISTANCES FOR STATE PLANE COORDINATES, DIVIDE THE PROJECT DISTANCES OR COORDINATES BY THE P.A.F.

NOTE: THE EXISTING R/W WIDTH AND LOCATION WERE DETERMINED USING DOCUMENTATION ON FILE FROM THE OHIO DEPARTMENT OF TRANSPORTATION, DISTRICT 4 OFFICE, RAVENNA, OHIO. SUM-8-0.38A, SUM-5-10.95, SUM-5-11.94 AND SUM-8-1.73/1.95

FOR RAMP DATA
SEE SHEETS 2A & 2B

EXIST. S.R. 8 CURVE DATA

P.I. STA. = 67+45.23
D = 7° 46' 07" (RT)
Dc = 0° 30' 13"
R = 11,375.75'
T = 772.39'
L = 1,542.41'
E = 26.19'

MONUMENT LEGEND

- Ⓜ CENTERLINE AJUSTABLE MONUMENT
- ◉ R/W REFERENCE MONUMENT
- • ¾" x 30" REBAR SET
- ○ EXISTING I.P.'S SPIKES OR PIPES

REV.	DATE	DESCRIPTION
TRB	5/3/02	REVISE LEAD-IN PARCEL 28
TRB	5/3/02	ADD EXIST. L/A TO PARCEL 28
TRB	5/3/02	DELETE PARCEL 28 VACATION NOTE
2	1/3/02	REVISE LEAD-INS PARCEL 29
1	11/6/01	ADD VACATION NOTE TO PARCEL 28

DATE OF COMPLETION

SCALE IN FEET (0, 20, 40)

PID NO. 20356

R/W DESIGNER ADT
R/W REVIEWER TRB

S.R. 8 RIGHT OF WAY PLAN
STA. 55+00 TO STA. 60+00 (WEST)

SUM-8-0.63

37 / 71

1054
1088

CITY OF AKRON
ORIGINAL PORTAGE TOWNSHIP, TRACT 8
TOWNSHIP 2 NORTH, RANGE 11 WEST
SUMMIT COUNTY, OHIO

EXIST. S.R. 8 CURVE DATA
P.I. STA. = 67+45.23
D = 7° 46' 07" (RT)
Dc = 0° 30' 13"
R = 11,375.75'
T = 772.39'
L = 1,542.41'
E = 26.19'

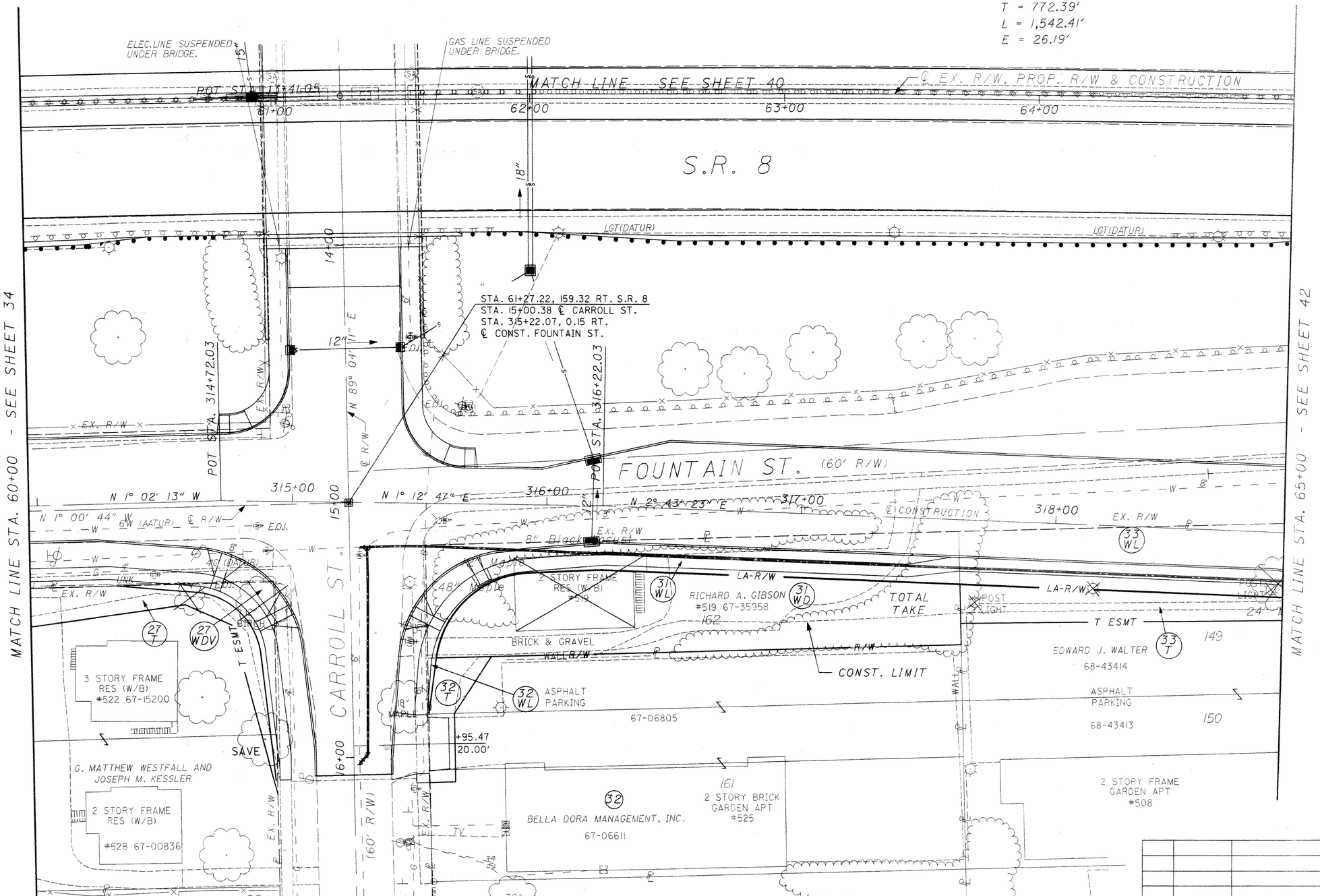

P.I. STA. = 314+72.03,
℄ CONST. FOUNTAIN ST.
DEFLECTION = 2° 15' 00"
NO CURVE

P.I. STA. = 316+22.03,
℄ CONST. FOUNTAIN ST.
DEFLECTION = 1° 30' 36"
NO CURVE

EASTERN ALLOTMENT
P.B. 2, PG. 3

FOR BEARINGS, DISTANCES AND STATIONS/OFFSETS SEE DETAIL SHEET No. 39

REV.	DATE	DESCRIPTION

DATE OF COMPLETION

SCALE IN FEET
0 10 20 40

PID NO. 20356

R/W DESIGNER ADT
R/W REVIEWER TRB

S.R. 8 RIGHT OF WAY PLAN
STA. 60+00 TO STA. 65+00 (EAST)

SUM-8-0.63

38 / 71

1055
1088

CITY OF AKRON
ORIGINAL PORTAGE TOWNSHIP, TRACT 8
TOWNSHIP 2 NORTH, RANGE 11 WEST
SUMMIT COUNTY, OHIO

EXIST. S.R. 8 CURVE DATA
P.I. STA. = 67+45.23
D = 7° 46' 07" (RT)
Dc = 0° 30' 13"
R = 11,375.75'
T = 772.39'
L = 1,542.41'
E = 26.19'

RIGHT OF WAY CURVE DATA

CURVE	RADIUS	LENGTH	CHORD	BEARING
A	28.00	38.24	35.33	S 44°07'02" W
B	38.00	53.17	48.94	S 42°07'42" E

MATCH LINE SEE SHEET 41

℄ EX. R/W, PROP. R/W & CONSTRUCTION

POT STA. 13+41.05

62+00 63+00 64+00

S.R. 8

℄ TAKE DISTANCE			℄ TAKE DISTANCE			℄ TAKE DISTANCE		
LINE	LENGTH	BEARING	LINE	LENGTH	BEARING	LINE	LENGTH	BEARING
1	27.00	S 89° 04' 11" W	6	28.44	S 2° 02' 28" E	11	27.01	N 89° 04' 11" E
2	22.00	S 89° 04' 11" W	7	30.00	S 0° 55' 49" E	12	10.00	S 0° 55' 49" E
3	22.26	N 82° 12' 57" W	8	3.37	S 0° 59' 37" E	13	20.00	S 24° 23' 09" W
4	44.00	S 89° 04' 11" W	9	21.63	N 0° 59' 37" W	14	61.60	N 1° 00' 44" W
5	30.04	S 89° 04' 11" W	10	26.64	S 56° 39' 49" E	15	31.15	S 4° 59' 51" W

SET IRON PIN
ALL SET IRON PINS ARE ¾" x 30"
REBARS WITH ALUMINUM I.D. CAPS
INSCRIBED "ODOT R/W DLZ OHIO 8058".

MATCH LINE STA. 60+00 - SEE SHEET 35

EX. R/W

POT STA. 314+72.03

℄ R/W N 89° 04' 11" E

14+00

STA. 61+27.22, 159.32 RT. S.R. 8
STA. 15+00.38 ℄ CARROLL ST.
STA. 315+22.07, 0.15 RT.
℄ CONST. FOUNTAIN ST.

POT STA. 316+22.03

EX. R/W

FOUNTAIN ST.

℄ CONSTRUCTION

N 1° 02' 13" W

315+00

61+57.90
176.26 RT

N 1° 02' 47" E

316+00

℄ CONSTRUCTION

317+00

N 2° 43' 24" E

63+70.31
170.99 RT

318+00

196.00

N 1° 00' 44" W (60' R/W)

℄ R/W

60+65.96
193.23 RT.

15+33.80
59.98 RT

60+97.08
189.68 RT

EX. R/W
150.45

N 1° 00' 44" W

60.00
S 7° 42' 43" E

60+34.43
190.18 RT.

60+01.10
205.30 RT

60+61.73
198.00 RT

60+80.20
206.43 RT

T ESMT

83.68

60+91.58
218.04 RT.

15+58.73
35.66 RT

61+58.56
220.25 RT

15+83.72
30.00 LT

61+58.89
242.25 RT

61+59.04
269.25 RT

S 83° 14' 14" W
55.66

S 75° 04' 00" W
69.14

60+97.88
273.36 RT.

16+14.11
30.00 RT

67-15200

67-00836 (27)

G. MATTHEW WESTFALL AND
JOSEPH M. KESSLER

℄ EX. R/W

161.10
℄ S 1° 00' 44" E

N 89° 04' 11" W

S 89° 04' 11" W

CARROLL ST.
(60' R/W)

16+00

15+29.48
70.19 LT

61+62.00
220.20 RT

61+84.05
219.83 RT

61+69.11
242.09 RT

61+69.54
269.10 RT

(I.P.F) 61+60.56
308.23 RT

67-06611

BELLA DORA MANAGEMENT, INC.

61+98.94
187.3537 RT

62+27.77
186.24 RT

RICHARD A. GIBSON
67-35958

162

(TOTAL TAKE)

205.91
S 0° 59' 37" E

℄ R/W

N 0° 59' 37" W
209.23

EX. R/W

LA-R/W

N 2° 43' 24" E
140.91

20.42

63+71.03
191.40 RT

EDWARD J. WALTER
68-43414

LA-R/W
155.45

15.28

T ESMT
S 0° 05' 51" E
127.00

23.58

63+71.86
214.97 RT

149

67-06805

68-43413

81.53

N 88° 59' 42" E

150

161

63+75.01
302.91 RT

196.00
S 0° 59' 37" E

209.40
℄ S 0° 59' 37" E

BELLA DORA MANAGEMENT, INC.

EASTERN ALLOTMENT
P.B. 2, PG. 3

MATCH LINE STA. 65+00 - SEE SHEET 43

P.I. STA. = 314+72.03,
℄ CONST. FOUNTAIN ST.
DEFLECTION = 2° 15' 00"
NO CURVE

P.I. STA. = 316+22.03,
℄ CONST. FOUNTAIN ST.
DEFLECTION = 1° 30' 36"
NO CURVE

BASIS OF BEARING

THE PROJECT (GROUND LEVEL) COORDINATE VALUES ARE RELATIVE TO OHIO NORTH ZONE STATE PLANE COORDINATES, NAD83 (95), BY A PROJECT ADJUSTMENT FACTOR (PAF) = 1.00010629 AND IS BASED ON A MEAN PROJECT LATITUDE OF 41°04'27.03" N AND AN ELEVATION OF 289.534 METERS. THOSE COORDINATE VALUES ARE FROM AN ACTUAL GPS SURVEY MADE BY ROBERT C. CANTER, P.S. IN 1999. TO OBTAIN GRID DISTANCES FOR STATE PLANE COORDINATES, DIVIDE THE PROJECT DISTANCES OR COORDINATES BY THE P.A.F.

NOTE: THE EXISTING R/W WIDTH AND LOCATION WERE DETERMINED USING DOCUMENTATION ON FILE FROM THE OHIO DEPARTMENT OF TRANSPORTATION, DISTRICT 4 OFFICE, RAVENNA, OHIO. SUM-8-0.38A, SUM-5-10.95, SUM-5-11.94 AND SUM-8-1.73/1.95

MONUMENT LEGEND

- Ⓜ CENTERLINE AJUSTABLE MONUMENT
- ◉ R/W REFERENCE MONUMENT
- • ¾" x 30" REBAR SET
- ○ EXISTING I.P.'S SPIKES OR PIPES

REV.	DATE	DESCRIPTION
DATE OF COMPLETION		

N

SCALE IN FEET 0 10 20 40

PID NO. 20356

R/W DESIGNER ADT
R/W REVIEWER TRB

S.R. 8 RIGHT OF WAY PLAN
STA. 60+00 TO STA. 65+00 (EAST)

SUM-8-0.63

39 / 71

1056
1088

CITY OF AKRON
ORIGINAL PORTAGE TOWNSHIP, TRACT 8
TOWNSHIP 2 NORTH, RANGE 11 WEST
SUMMIT COUNTY, OHIO

P.I. STA. = 215+21.85
℄ CONST. GOODKIRK ST.
DEFLECTION = 01° 02′ 09″
NO CURVE

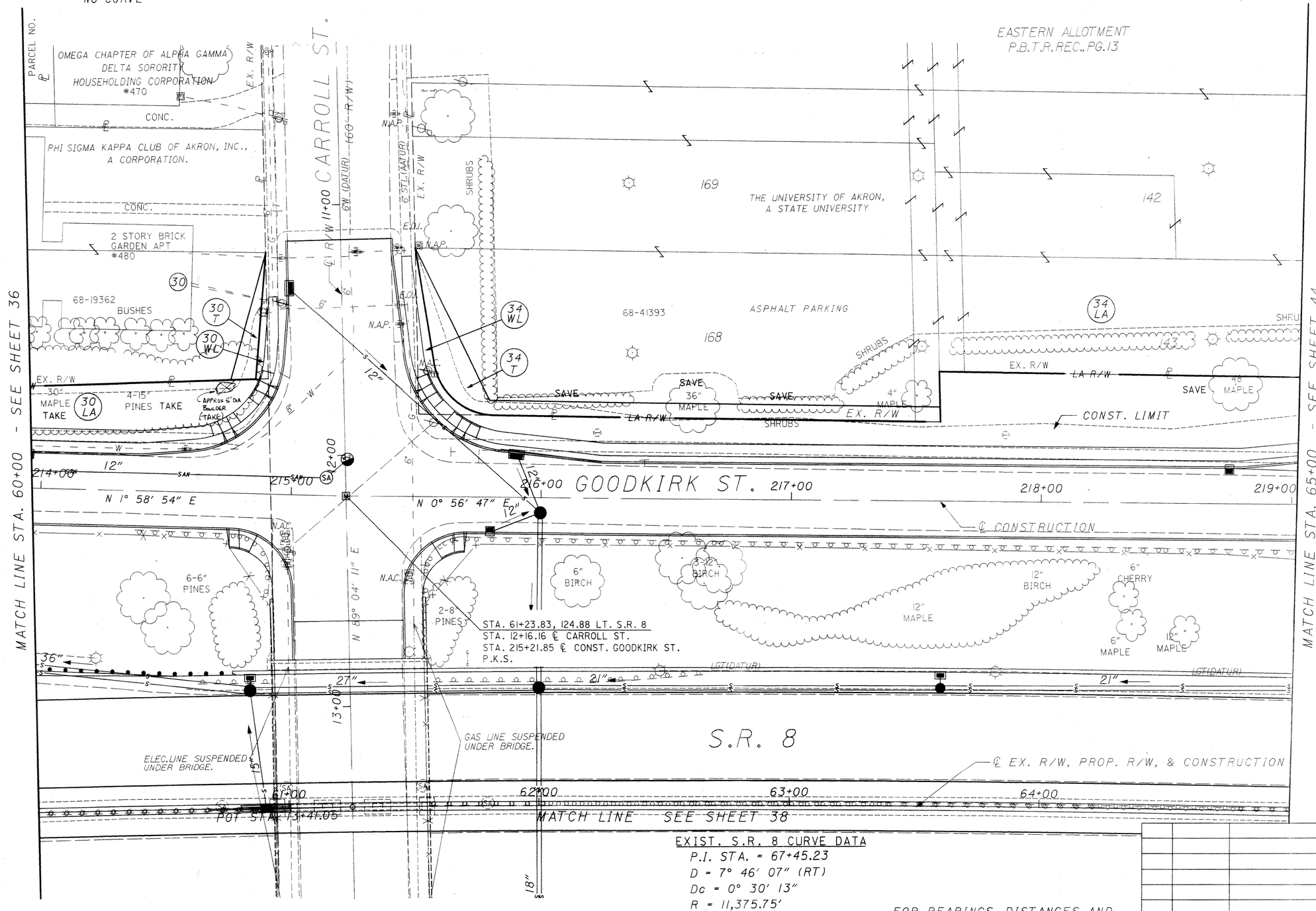

EXIST. S.R. 8 CURVE DATA
P.I. STA. = 67+45.23
D = 7° 46′ 07″ (RT)
Dc = 0° 30′ 13″
R = 11,375.75′
T = 772.39′
L = 1,542.41′
E = 26.19′

FOR BEARINGS, DISTANCES AND STATIONS/OFFSETS SEE DETAIL SHEET No. 41

REV.	DATE	DESCRIPTION
	3/12/2001	MARK BOULDER "TAKE" PARCEL 30
DATE OF COMPLETION		

SCALE IN FEET: 0, 10, 20, 40

PID NO. 20356

R/W DESIGNER: ADT
R/W REVIEWER: TRB

S.R. 8 RIGHT OF WAY PLAN
STA. 60+00 TO STA. 65+00 (WEST)

SUM-8-0.63

40 / 71

1057
1088

CITY OF AKRON
ORIGINAL PORTAGE TOWNSHIP, TRACT 8
TOWNSHIP 2 NORTH, RANGE 11 WEST
SUMMIT COUNTY, OHIO

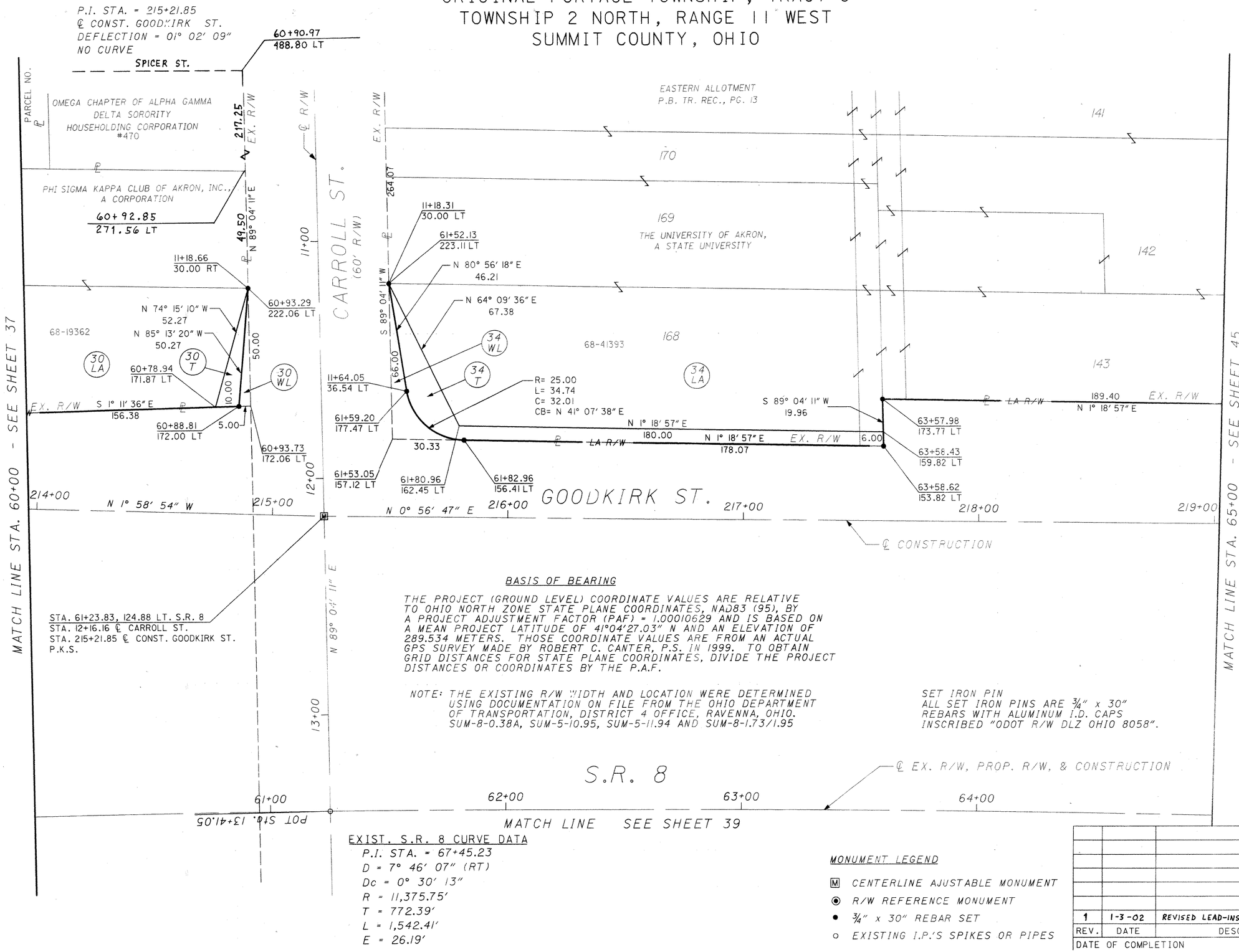

EXIST. S.R. 8 CURVE DATA
P.I. STA. = 67+45.23
D = 7° 46' 07" (RT)
Dc = 0° 30' 13"
R = 11,375.75'
T = 772.39'
L = 1,542.41'
E = 26.19'

MONUMENT LEGEND
- M — CENTERLINE AJUSTABLE MONUMENT
- ◉ — R/W REFERENCE MONUMENT
- • — 3/4" x 30" REBAR SET
- ○ — EXISTING I.P.'S SPIKES OR PIPES

REV.	DATE	DESCRIPTION
1	1-3-02	REVISED LEAD-INS PARCEL 30
DATE OF COMPLETION		

N

SCALE IN FEET 0 10 20 40

PID NO. 20356

R/W DESIGNER

R/W REVIEWER

S.R. 8 RIGHT OF WAY PLAN
STA. 60+00 TO STA. 65+00 (WEST)

SUM-8-0.63

41 / 71

1058
1088

P.I. STA. = 319+88.12,
℄ CONST. FOUNTAIN ST
DEFLECTION = 0° 19' 42"
NO CURVE

CITY OF AKRON
ORIGINAL PORTAGE TOWNSHIP, TRACT 7 & TRACT8
TOWNSHIP 2 NORTH, RANGE II WEST
SUMMIT COUNTY, OHIO

FOR RAMP DATA
SEE SHEETS 2A & 2B

MATCH LINE SEE SHEET 44

℄ EX. R/W, PROP. R/W & CONSTRUCTION

POT STA. 14+51.18

66+00 67+00 68+00 69+00

S.R. 8

GAS LINE SUSPENDED UNDER BRIDGE

CITY OF AKRON

TRACT 8

TRACT 7

RAMP Q

RAMP QI

FOUNTAIN ST

BUCHTEL AVE. (60' R/W)

EWING CT.

CURVE DATA

P.I. = STA. 67+45.23, ℄ S.R. 8
Δ = 7° 46' 07" (RT)
Dc = 0° 30' 13"
R = 11,375.75'
T = 772.39'
L = 1,542.41'
E = 26.19'

STA. 65+99.99 I 70.35' PT S.R. 8
STA. 16+22.69 ℄ BUCHTEL AVE.
STA. 319+88.12 ℄ FOUNTAIN ST.

MATCH LINE STA. 65+00 - SEE SHEET 38

MATCH LINE STA. 70+00 - SEE SHEET 46

TAKE
TOTAL TAKE
NO TAKE
CONST. LIMIT
EX. R/W
PROP. R/W
LA-R/W
T ESMT
R ESMT 995 S.F. INGRESS-EGRESS EASE.
CONC. R ESMT 195 S.F. INGRESS-EGRESS EASE.

EDWARD J. WALTER 149 68-43414
150 68-43413
2 STORY FRAME GARDEN APT. #508
2 STORY FRAME RES (W/B) #512
2 STORY FRAME RES (W/B) #513
2 STORY FRAME DUPLEX (W/B) #519 SMITH ALLOTMENT P.B. 2, PG 40
2 STORY BRICK APT (W/B) #503
2 STORY FRAME RES (W/B) #507
2 STORY FRAME RES (W/B) #511
THOMAS A. WOLF 67-39219 2 STORY FRAME RES (W/B) #497
THOMAS R. MERRYWEATHER AND TIMOTHY S. MERRYWEATHER #505
68-27899
G. MATTHEW WESTFALL AND TERI WESTFALL 67-28303 #509
G. MATTHEW WESTFALL AND JOSEPH M. KESSLER 68-27901
65 68-27900
67-28302
1.5 STORY FRAME RES (W/B) #76 68-32928
DAVID L. GOMES AND PHILOMENA GOMES 68-47000 #64
DAVID L. GOMES AND PHILOMENA GOMES 68-47000 #398 2 STORY FRAME RES (W/B)
ERIC J. PASZT & AMANDA A. PASZT 67-42084 #404
*SUMMIT COUNTY BOARD OF ELECTIONS
FRAME SHED
GARAGE
GRAVEL PARKING
GRAVEL
ASPHALT
BRICK
CONC.
EXPOSED CABLE
POST SIGN
SIGN
6" Birch
3-10" Pines
6" Black Cherry
15" Big Berry
6" Apple
8" Maple
24" Maple
12" Birch
48" Oak
18" MAPLE
30" MAPLE
4-24" MAPLES
12 X 12"
6-12" Bushes
LGT(DATUR)
E.O.R.J.
1¼"W (DATUR)
IC
E.O.P.
E.O.W.
E.O.G.
E.O.C.
12"
15"
+00.30 23.50'
17+00
16+00
N 88° 59' 42" E
N 2° 43' 23" E
N 2° 23' 42" E
S 89° 28' 13" W
319+00
320+00
321+00
322+00
323+00
(35 WL) (36 WL) (33 WL) (33 T) (33 WD) (36 T) (36 E) (36 LA) (37 T) (37 WD) (38) (47 WD) (48 LA) (48 T) (48 E) (51 LA) (117 WD) (117)

*DENOTES R/W ENCROACHMENT TO BE REMOVED.

FOR BEARINGS, DISTANCES AND STATIONS/OFFSETS SEE DETAIL SHEET No. 43

REV.	DATE	DESCRIPTION
	7-3-2001	DELETE 47 L/A LINE
	5-8-01	ADD PAR 117 - REVISE AREA 47 WD
DATE OF COMPLETION		

SCALE IN FEET 0 10 20 40

PID NO. 20356

R/W DESIGNER ADT
R/W REVIEWER TRB

S.R. 8 RIGHT OF WAY PLAN
STA. 65+00 TO STA. 70+00 (EAST)

SUM-8-0.63

42/71

1059/1088

CITY OF AKRON
ORIGINAL PORTAGE TOWNSHIP, TRACT 7 & TRACT 8
TOWNSHIP 2 NORTH, RANGE 11 WEST
SUMMIT COUNTY, OHIO

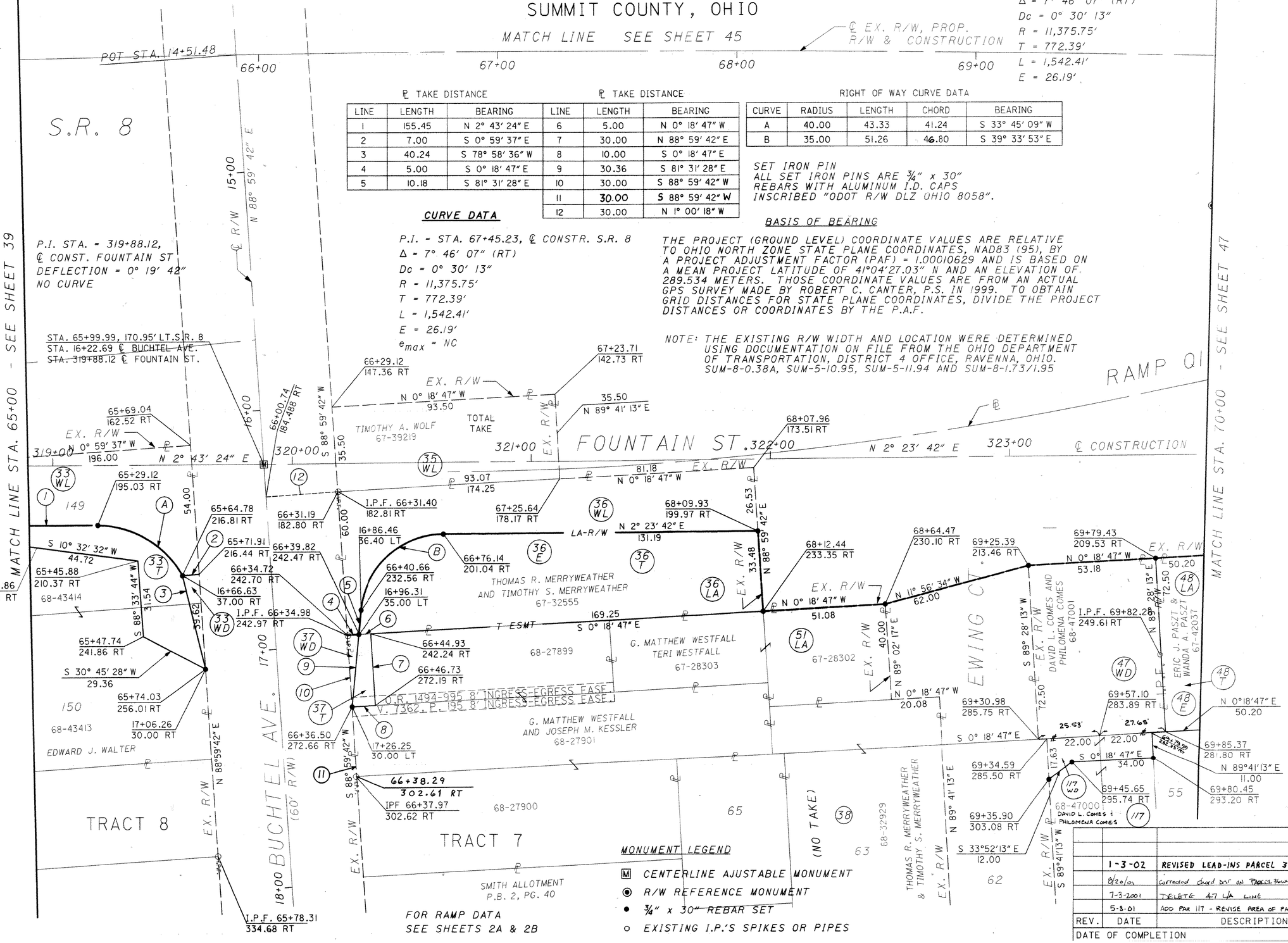

℄ TAKE DISTANCE			℄ TAKE DISTANCE		
LINE	LENGTH	BEARING	LINE	LENGTH	BEARING
1	155.45	N 2° 43' 24" E	6	5.00	N 0° 18' 47" W
2	7.00	S 0° 59' 37" E	7	30.00	N 88° 59' 42" E
3	40.24	S 78° 58' 36" W	8	10.00	S 0° 18' 47" E
4	5.00	S 0° 18' 47" E	9	30.36	S 81° 31' 28" E
5	10.18	S 81° 31' 28" E	10	30.00	S 88° 59' 42" W
			11	30.00	S 88° 59' 42" W
			12	30.00	N 1° 00' 18" W

RIGHT OF WAY CURVE DATA

CURVE	RADIUS	LENGTH	CHORD	BEARING
A	40.00	43.33	41.24	S 33° 45' 09" W
B	35.00	51.26	46.80	S 39° 33' 53" E

CURVE DATA

P.I. = STA. 67+45.23, ℄ CONSTR. S.R. 8
Δ = 7° 46' 07" (RT)
Dc = 0° 30' 13"
R = 11,375.75'
T = 772.39'
L = 1,542.41'
E = 26.19'
e_{max} = NC

CURVE DATA

P.I. = STA. 67+45.23, ℄ S.R. 8
Δ = 7° 46' 07" (RT)
Dc = 0° 30' 13"
R = 11,375.75'
T = 772.39'
L = 1,542.41'
E = 26.19'

SET IRON PIN
ALL SET IRON PINS ARE ¾" x 30"
REBARS WITH ALUMINUM I.D. CAPS
INSCRIBED "ODOT R/W DLZ OHIO 8058".

BASIS OF BEARING

THE PROJECT (GROUND LEVEL) COORDINATE VALUES ARE RELATIVE TO OHIO NORTH ZONE STATE PLANE COORDINATES, NAD83 (95), BY A PROJECT ADJUSTMENT FACTOR (PAF) = 1.000/0629 AND IS BASED ON A MEAN PROJECT LATITUDE OF 41°04'27.03" N AND AN ELEVATION OF 289.534 METERS. THOSE COORDINATE VALUES ARE FROM AN ACTUAL GPS SURVEY MADE BY ROBERT C. CANTER, P.S. IN 1999. TO OBTAIN GRID DISTANCES FOR STATE PLANE COORDINATES, DIVIDE THE PROJECT DISTANCES OR COORDINATES BY THE P.A.F.

NOTE: THE EXISTING R/W WIDTH AND LOCATION WERE DETERMINED USING DOCUMENTATION ON FILE FROM THE OHIO DEPARTMENT OF TRANSPORTATION, DISTRICT 4 OFFICE, RAVENNA, OHIO. SUM-8-0.38A, SUM-5-10.95, SUM-5-11.94 AND SUM-8-1.73/1.95

MONUMENT LEGEND

- Ⓜ CENTERLINE AJUSTABLE MONUMENT
- ◉ R/W REFERENCE MONUMENT
- • ¾" x 30" REBAR SET
- ○ EXISTING I.P.'S SPIKES OR PIPES

REV.	DATE	DESCRIPTION
	1-3-02	REVISED LEAD-INS PARCEL 37
	8/20/01	Corrected chord dist on Parcel 36WD (Curve 'B')
	7-3-2001	DELETE 47 LA LINE
	5-8-01	ADD PAR 117 - REVISE AREA OF PAR 47 WD

DATE OF COMPLETION

N

SCALE IN FEET 0 10 20 40

PID NO. 20356

R/W DESIGNER ADT
R/W REVIEWER TRB

R/W PLAN
STA. 65+00 TO STA. 70+00 (EAST)
S.R. 8 RIGHT OF WAY

SUM-8-0.63

43 / 71

1060
1088

CITY OF AKRON
ORIGINAL PORTAGE TOWNSHIP, TRACT 7 & TRACT 8
TOWNSHIP 2 NORTH, RANGE 11 WEST
SUMMIT COUNTY, OHIO

P.I. STA. = 219+86.96
℄ CONST. GOODKIRK ST.
DEFLECTION = 1° 53′ 11″
NO CURVE

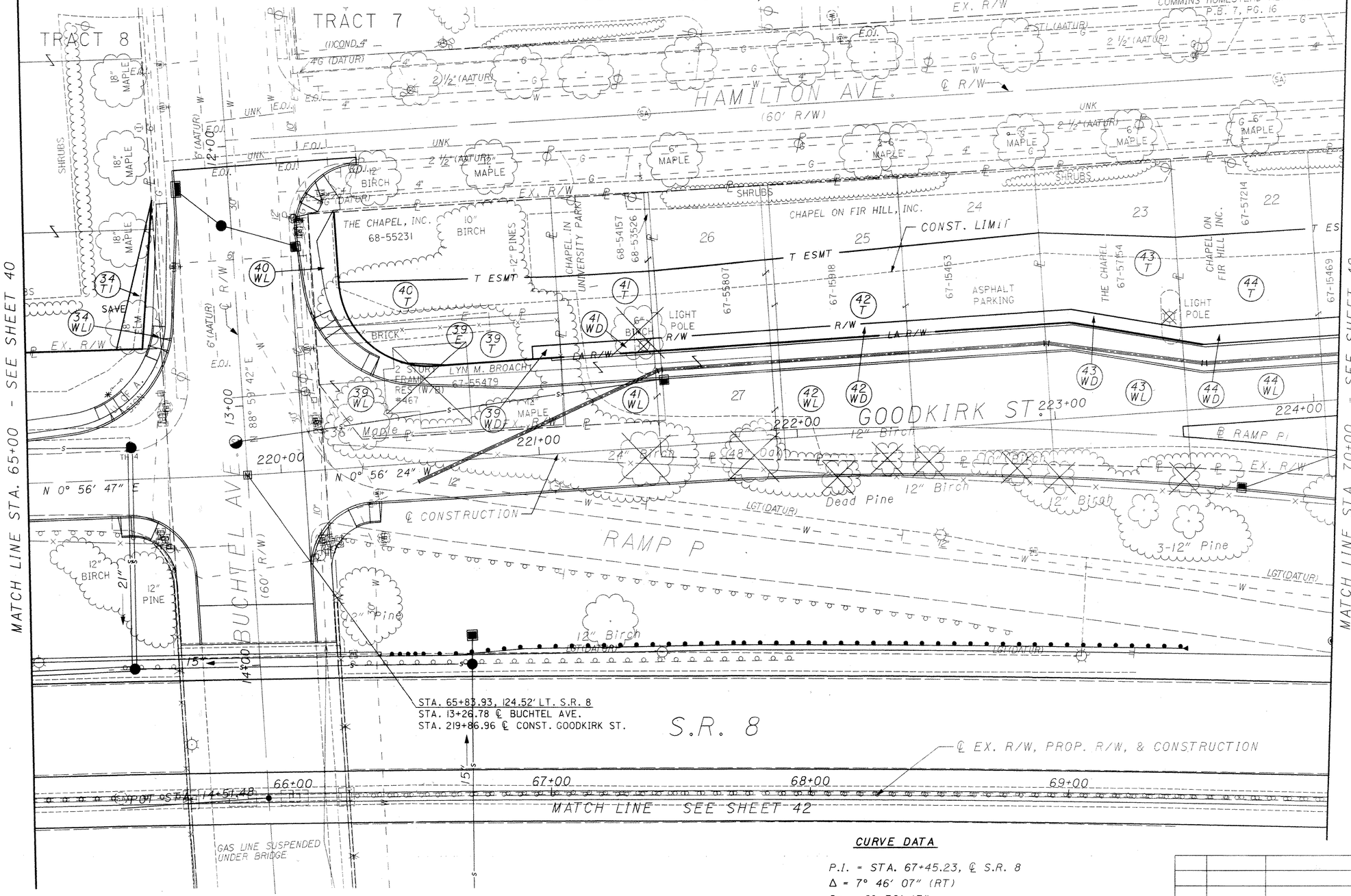

* DENOTES R/W ENCROACHMENT TO BE REMOVED

FOR BEARINGS, DISTANCES AND STATIONS/OFFSETS SEE DETAIL SHEET No. 45

CURVE DATA

P.I. = STA. 67+45.23, ℄ S.R. 8
Δ = 7° 46′ 07″ (RT)
Dc = 0° 30′ 13″
R = 11,375.75′
T = 772.39′
L = 1,542.41′
E = 26.19′

REV.	DATE	DESCRIPTION
	10/26/01	REMOVE "TOTAL TAKE" DESIGNATION FROM PARCEL 39
DATE OF COMPLETION		

R/W DESIGNER: ADT
R/W REVIEWER: TRB

PID NO. 20356

S.R. 8 RIGHT OF WAY PLAN
STA. 65+00 TO STA. 70+00 (WEST)

SUM-8-0.63

44 / 71

1061
1088

CITY OF AKRON
ORIGINAL PORTAGE TOWNSHIP, TRACT 7 & TRACT 8
TOWNSHIP 2 NORTH, RANGE 11 WEST
SUMMIT COUNTY, OHIO

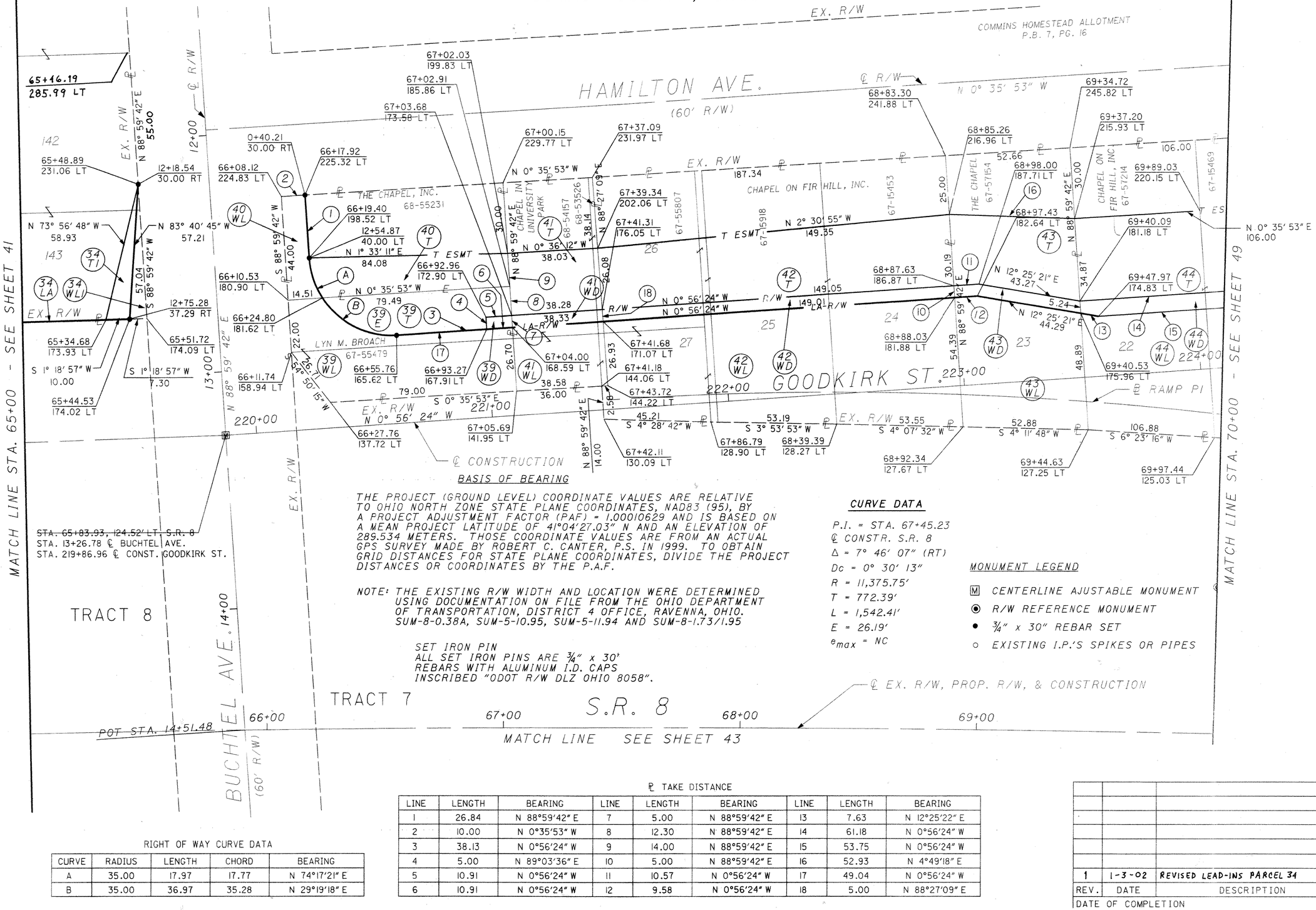

BASIS OF BEARING

THE PROJECT (GROUND LEVEL) COORDINATE VALUES ARE RELATIVE TO OHIO NORTH ZONE STATE PLANE COORDINATES, NAD83 (95), BY A PROJECT ADJUSTMENT FACTOR (PAF) = 1.00010629 AND IS BASED ON A MEAN PROJECT LATITUDE OF 41°04'27.03" N AND AN ELEVATION OF 289.534 METERS. THOSE COORDINATE VALUES ARE FROM AN ACTUAL GPS SURVEY MADE BY ROBERT C. CANTER, P.S. IN 1999. TO OBTAIN GRID DISTANCES FOR STATE PLANE COORDINATES, DIVIDE THE PROJECT DISTANCES OR COORDINATES BY THE P.A.F.

NOTE: THE EXISTING R/W WIDTH AND LOCATION WERE DETERMINED USING DOCUMENTATION ON FILE FROM THE OHIO DEPARTMENT OF TRANSPORTATION, DISTRICT 4 OFFICE, RAVENNA, OHIO. SUM-8-0.38A, SUM-5-10.95, SUM-5-11.94 AND SUM-8-1.73/1.95

SET IRON PIN
ALL SET IRON PINS ARE ¾" x 30'
REBARS WITH ALUMINUM I.D. CAPS
INSCRIBED "ODOT R/W DLZ OHIO 8058".

CURVE DATA

P.I. = STA. 67+45.23
℄ CONSTR. S.R. 8
Δ = 7° 46' 07" (RT)
Dc = 0° 30' 13"
R = 11,375.75'
T = 772.39'
L = 1,542.41'
E = 26.19'
e_{max} = NC

MONUMENT LEGEND

- Ⓜ CENTERLINE AJUSTABLE MONUMENT
- ◉ R/W REFERENCE MONUMENT
- • ¾" x 30" REBAR SET
- ○ EXISTING I.P.'S SPIKES OR PIPES

RIGHT OF WAY CURVE DATA

CURVE	RADIUS	LENGTH	CHORD	BEARING
A	35.00	17.97	17.77	N 74°17'21" E
B	35.00	36.97	35.28	N 29°19'18" E

℄ TAKE DISTANCE

LINE	LENGTH	BEARING	LINE	LENGTH	BEARING	LINE	LENGTH	BEARING
1	26.84	N 88°59'42" E	7	5.00	N 88°59'42" E	13	7.63	N 12°25'22" E
2	10.00	N 0°35'53" W	8	12.30	N 88°59'42" E	14	61.18	N 0°56'24" W
3	38.13	N 0°56'24" W	9	14.00	N 88°59'42" E	15	53.75	N 0°56'24" W
4	5.00	N 89°03'36" E	10	5.00	N 88°59'42" E	16	52.93	N 4°49'18" E
5	10.91	N 0°56'24" W	11	10.57	N 0°56'24" W	17	49.04	N 0°56'24" W
6	10.91	N 0°56'24" W	12	9.58	N 0°56'24" W	18	5.00	N 88°27'09" E

REV.	DATE	DESCRIPTION
1	1-3-02	REVISED LEAD-INS PARCEL 34

DATE OF COMPLETION

SCALE IN FEET 0 10 20 40

PID NO. 20356

R/W DESIGNER ADT
R/W REVIEWER TRB

S.R. 8 RIGHT OF WAY PLAN
STA. 65+00 TO STA. 70+00 (WEST)

SUM-8-0.63

45 / 71

1062
1088

CITY OF AKRON
ORIGINAL PORTAGE TOWNSHIP, TRACT 7
TOWNSHIP 2 NORTH, RANGE 11 WEST
SUMMIT COUNTY, OHIO

MATCH LINE SEE SHEET 48

℄ EX. R/W, PROP. R/W & CONSTRUCTION

71+00 72+00 73+00 74+00

EXIST. S.R. 8 CURVE DATA
P.I. STA. = 67+45.23
D = 7° 46' 07" (RT)
Dc = 0° 30' 13"
R = 11,375.75'
T = 772.39'
L = 1,542.41'
E = 26.19'

MATCH LINE STA. 70+00 - SEE SHEET 42

MATCH LINE STA. 75+00 - SEE SHEET 50

FOUNTAIN ST.

N 2° 23' 42" E

PHILLIPINA PL.

KENNETH F. ROTH

RAMP QI

RAMP QI

LGT(DATUR)

Black Locust
12" Maple
6" Maple
12" Birch
18" Black Locust
6" Maple
Black Locust
Black Locust
6" Maple
Maples
10" Black
6" pine
12" Black Locusts
24" Spruce
15" Oak
12" Maple
12" Pine
6" Oak
12"Oak
324+00
325+00
327+00
328+00

EX. R/W
PROP. R/W
℄
CONSTRUCTION
15"
6" PINE
4W (DATUR)
4" G
6" G
4" W
6" W
4" SA
6" SA
4" W (DATUR)
6" W (DATUR)
4" G (DATUR)
6" G (DATUR)
4" SA (DATUR)
6" SA (DATUR)

PATRICIA ANN MILO
68-11291
68-11290

54 WL
68-55253
55 WL
52 WL
57 WL #452 68-41171 TOTAL TAKE
WILLIAM D. MCKOWN #452 68-41171
2 STORY FRAME RESIDENCE W/B
63 WL TOTAL TAKE
60 WL 67-21499 TOTAL TAKE
#455 CLARA D. DAHM 67-21498 2½ STORY FRAME RESIDENCE W/B
64 T
SPIRTOS FAMILY LIMITED PARTNERSHIP 67-55394
50 WL
50 E
50 T
52 T
52 E
49 LA
48 LA
48 T
49 T
48 E
53 T
54 T
54 E
55 T
56
56 EV
58 WDV
61 WDV
59
62 (NO TAKE)
63 T

FENCE CORNER
#420 68-12655 DENISE M. REINKE 2 STORY FRAME 3 FAMILY W/B
#414 68-04462 BERNARD M. GALLAGHER-TRUSTEE 2 STORY FRAME DUPLEX W/B
#404 67-42037 ERIC J. PASZT AND WANDA A. PASZT 2 STORY FRAME DUPLEX W/B
#430 68-12655 2 STORY FRAME APARTMENT
#418 68-37200 THOMAS W. & SARAH M. CLARK 2 STORY BRICK DUPLEX W/B
#20 KIRKWOOD CT 68-36405 EMANUEL J. JANIKIS LESLIE E. JANIKIS 2 STORY FRAMES RESIDENCE W/B
#456 67-34442 2 STORY FRAME RESIDENCE W/B
DORIS P. GOMOLL 67-34441 TOTAL TAKE
#457 68-46650 PATRICIA ANN MILO 2 STORY FRAME RESIDENCE W/B
#44 2 STORY FRAME RESIDENCE W/B
#46 68-10321 JACK F. SMYLIE AND ANNE J. SMYLIE 2 STORY BRICK RESIDENCE W/B
#50 LARRY NELSON STEELE 2 STORY FRAME RESIDENCE W/B
#54 68-09450 JAMES P VECHERY 2 STORY FRAME RESIDENCE W/B
#24 68-18015 #28 68-18016 GREGORY MICHAEL BILLS AND JUDITH LYNN BILLS, CO-TRUSTEES 2 STORY FRAME RESIDENCE W/B
#32 68-37792 DIANE J. SEIPLE AND WILLIAM H. SEIPLE 2 STORY FRAME RESIDENCE W/B
#38 68-37201 THOMAS W. CLARK AND SARAH M. CLARK 2 STORY FRAME RESIDENCE W/B
THE SPITZER HARDWARE AND SUPPLY COMPANY 67-16067
S AND A PROPERTIES, INC. 67-37368
68-09451

8' DR. EASE. V5402281
V4353489
V4353487
114' W (DATUR) 14' (DATUR)

CONCRETE WALLS TO BE REMOVED
CONST. LIMIT
LAND LOCKED
LA-R/W
ESMT
GRAVEL PARKING
GARAGE
SHED
FRAME GARAGE
GRAVEL
BRUSH
GRASS
Pine
Gravel
12-12" Pines

FOR RAMP DATA SEE SHEETS 2A & 2B

FAY & LIMBERT ALLOTMENT P.B. 2, PG. 24

FOR BEARINGS, DISTANCES AND STATIONS/OFFSETS SEE DETAIL SHEET No. 47

REV.	DATE	DESCRIPTION
DS	7/26/01	ADD PARCEL 56 E V
DATE OF COMPLETION		

N

SCALE IN FEET
0 10 20 40

PID NO. 20356

R/W DESIGNER ADT
R/W REVIEWER TRB

S.R. 8 RIGHT OF WAY PLAN
STA. 70+00 TO STA. 75+00 (EAST)

SUM-8-0.63

46 / 71

1063
1088

CITY OF AKRON
ORIGINAL PORTAGE TOWNSHIP, TRACT 7
TOWNSHIP 2 NORTH, RANGE 11 WEST
SUMMIT COUNTY, OHIO

MATCH LINE SEE SHEET 49

℄ EX. R/W, PROP. R/W & CONSTRUCTION

71+00 72+00 73+00 74+00

MATCH LINE STA. 75+00 - SEE SHEET 51

MATCH LINE STA. 70+00 - SEE SHEET 43

EXIST. S.R. 8 CURVE DATA
P.I. STA. = 67+45.23
D = 7° 46' 07" (RT)
Dc = 0° 30' 13"
R = 11,375.75'
T = 772.39'
L = 1,542.41'
E = 26.19'

BASIS OF BEARING

THE PROJECT (GROUND LEVEL) COORDINATE VALUES ARE RELATIVE TO OHIO NORTH ZONE STATE PLANE COORDINATES, NAD83 (95), BY A PROJECT ADJUSTMENT FACTOR (PAF) = 1.00010629 AND IS BASED ON A MEAN PROJECT LATITUDE OF 41°04'27.03" N AND AN ELEVATION OF 289.534 METERS. THOSE COORDINATE VALUES ARE FROM AN ACTUAL GPS SURVEY MADE BY ROBERT C. CANTER, P.S. IN 1999. TO OBTAIN GRID DISTANCES FOR STATE PLANE COORDINATES, DIVIDE THE PROJECT DISTANCES OR COORDINATES BY THE P.A.F.

NOTE: THE EXISTING R/W WIDTH AND LOCATION WERE DETERMINED USING DOCUMENTATION ON FILE FROM THE OHIO DEPARTMENT OF TRANSPORTATION, DISTRICT 4 OFFICE, RAVENNA, OHIO. SUM-8-0.38A, SUM-5-10.95, SUM-5-11.94 AND SUM-8-1.73/1.95

℄ TAKE DISTANCE

LINE	LENGTH	BEARING
1	8.60	S 89° 28' 13" W
2	41.25	S 0° 36' 25" E
3	40.17	N 89° 28' 14" E
4	1.84	N 0° 18' 49" W
5	40.17	N 89° 41' 13" E

SET IRON PIN
ALL SET IRON PINS ARE ¾" x 30" REBARS WITH ALUMINUM I.D. CAPS INSCRIBED "ODOT R/W DLZ OHIO 8058".

℄ RAMP 01

℄ CONSTRUCTION

FOUNTAIN ST

MONUMENT LEGEND
- Ⓜ CENTERLINE AJUSTABLE MONUMENT
- ◉ R/W REFERENCE MONUMENT
- • ¾" x 30" REBAR SET
- ○ EXISTING I.P.'S SPIKES OR PIPES

FOR RAMP DATA SEE SHEETS 2A & 2B

FAY & LIMBERT ALLOTMENT P.B. 2, PG. 24

PAT	03/05/02	Pcl. 60, 61 & 63 Add Lead In Course
DS	7/26/01	ADD PARCEL 56E V
REV.	DATE	DESCRIPTION
DATE OF COMPLETION		

R/W DESIGNER ADT
R/W REVIEWER TRB

PID NO. 20356

SCALE IN FEET 0 10 20 40

S.R. 8 RIGHT OF WAY PLAN
STA. 70+00 TO STA. 75+00 (EAST)

SUM-8-0.63

47 / 71

1064
1088

CITY OF AKRON
ORIGINAL PORTAGE TOWNSHIP, TRACT 7
TOWNSHIP 2 NORTH, RANGE 11 WEST
SUMMIT COUNTY, OHIO

CURVE DATA

P.I. STA. = 225+07.25, ℄ CONST. GOODKIRK ST.
Δ = 11° 22′ 54″ (RT)
Dc = 6° 00′ 00″
R = 954.93′
T = 95.16′
L = 189.70′
E = 4.73′
e_{max} = NC

COMMINGS HOMSTEAD ALLOTMENTS P.B. 7, PG. 16

McNAUGHTON ALLOTMENT P.B. 3, PG. 9

HAMILTON AVE. (60′ R/W)
N 0° 35′ 53″ W
℄ R/W
EX. R/W
MELL AVE. (50′ R/W)
N 0° 35′ 53″ W
GOODKIRK ST.
RAMP P1
RAMP P
RAMP O
S.R. 8
MATCH LINE STA. 70+00 - SEE SHEET 44
MATCH LINE STA. 75+00 - SEE SHEET 52
MATCH LINE SEE SHEET 46
℄ EX. R/W, PROP. R/W, & CONSTRUCTION
71+00
72+00
73+00
74+00
AC STA. 224+12.09
225+00
226+00
227+00
228+00
229+00
N 10° 26′ 30″ W
N 88° 59′ 42″ E
226.01.79
CHAPEL ON FIR HILL, INC. 67-51458
67-15463
67-15460
67-15459
67-15457
67-15454
67-15469
67-15464
67-24917
67-57215
67-56700
67-35840
68-09758
68-55236
68-55237
68-57220
68-26527
THE CHAPEL, INC.
THE CHAPEL IN UNIVERSITY PARK
CHAPEL IN UNIVERSITY PARK
DAVID A. GREY
ASPHALT PARKING
EXIST. EDGE OF PARKING LOT
CONST. LIMIT
T ESMT
LAND LOCKED
SAVE
MAPLE
12″ Birch
36′ 2 STORY FRAME DUPLEX N/B
FRAME GARAGE
LIGHT POLE
BUSHES
Pine
Shrubs
SHRUBS
12″ MAPLE
15″ MAPLE
18″ SAN
21″ SAN
8″ SAN
12″ W
12″ S
LGT(DATUR)
BT SHL
EOL
EOP
EOS

EXIST. S.R. 8 CURVE DATA
P.I. STA. = 67+45.23
D = 7° 46′ 07″ (RT)
Dc = 0° 30′ 13″
R = 11,375.75′
T = 772.39′
L = 1,542.41′
E = 26.19′

FOR RAMP DATA SEE SHEETS 2A & 2B

FOR BEARINGS, DISTANCES AND STATIONS/OFFSETS SEE DETAIL SHEET No. 49

REV.	DATE	DESCRIPTION
	9/15/21	ADD PARCEL 45WD-1
DATE OF COMPLETION		

R/W DESIGNER ADT
R/W REVIEWER TRB
PID NO. 20356
SCALE IN FEET 0 10 20 40

S.R. 8 RIGHT OF WAY PLAN
STA. 70+00 TO STA. 75+00 (WEST)

SUM-8-0.63

48 / 71

1065
1088

CITY OF AKRON
ORIGINAL PORTAGE TOWNSHIP, TRACT 7
TOWNSHIP 2 NORTH, RANGE 11 WEST
SUMMIT COUNTY, OHIO

CURVE DATA

P.I. STA. = 225+07.25,
℄ CONST. GOODKIRK ST.
Δ = 11° 22′ 54″ (RT)
Dc = 6° 00′ 00″
R = 954.93′
T = 95.16′
L = 189.70′
E = 4.73′
e_{max} = NC

FOR RAMP DATA
SEE SHEETS 2A & 2B

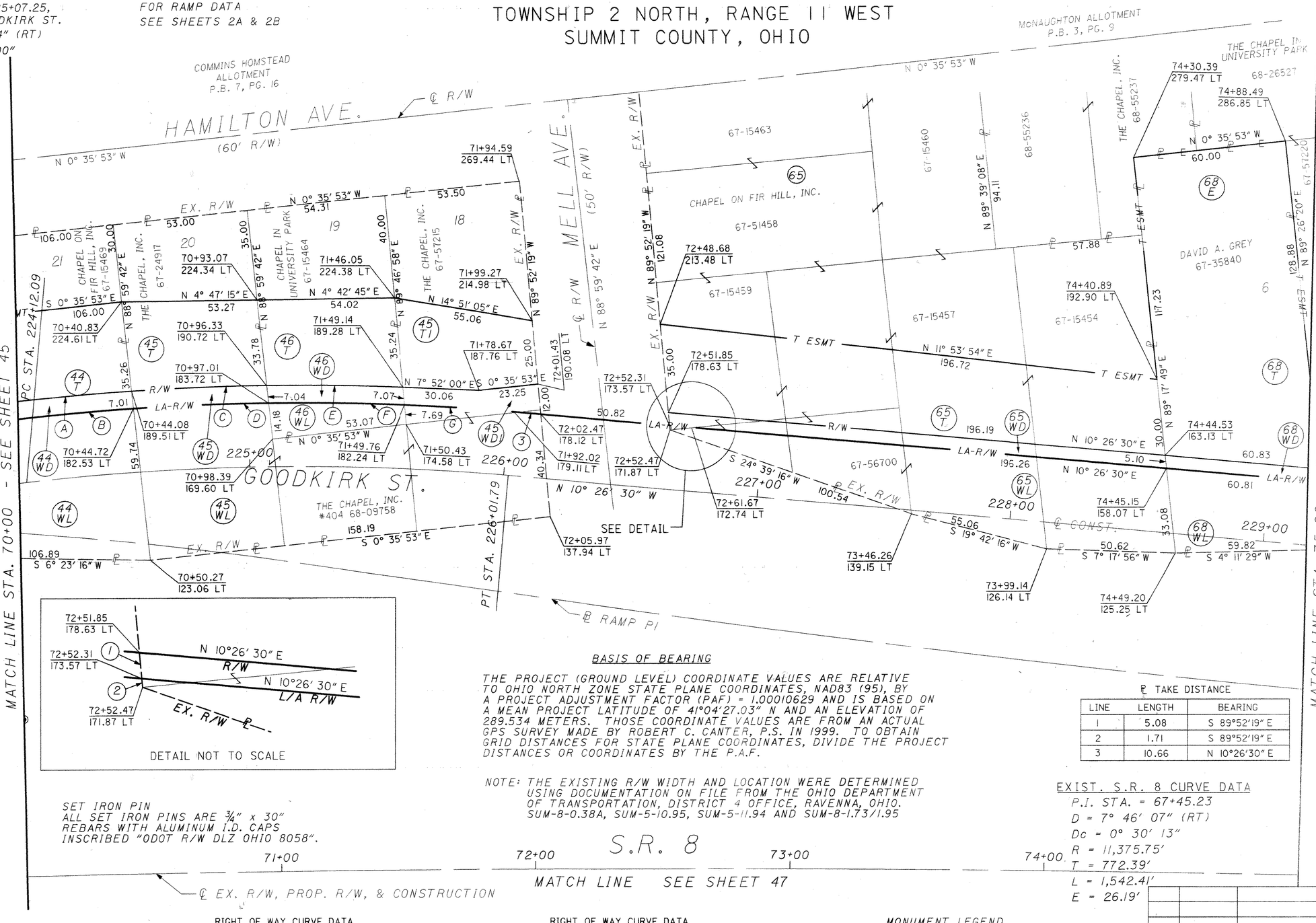

SET IRON PIN
ALL SET IRON PINS ARE ¾″ x 30″ REBARS WITH ALUMINUM I.D. CAPS INSCRIBED "ODOT R/W DLZ OHIO 8058".

BASIS OF BEARING

THE PROJECT (GROUND LEVEL) COORDINATE VALUES ARE RELATIVE TO OHIO NORTH ZONE STATE PLANE COORDINATES, NAD83 (95), BY A PROJECT ADJUSTMENT FACTOR (PAF) = 1.00010629 AND IS BASED ON A MEAN PROJECT LATITUDE OF 41°04′27.03″ N AND AN ELEVATION OF 289.534 METERS. THOSE COORDINATE VALUES ARE FROM AN ACTUAL GPS SURVEY MADE BY ROBERT C. CANTER, P.S. IN 1999. TO OBTAIN GRID DISTANCES FOR STATE PLANE COORDINATES, DIVIDE THE PROJECT DISTANCES OR COORDINATES BY THE P.A.F.

NOTE: THE EXISTING R/W WIDTH AND LOCATION WERE DETERMINED USING DOCUMENTATION ON FILE FROM THE OHIO DEPARTMENT OF TRANSPORTATION, DISTRICT 4 OFFICE, RAVENNA, OHIO. SUM-8-0.38A, SUM-5-10.95, SUM-5-11.94 AND SUM-8-1.73/1.95

℄ TAKE DISTANCE

LINE	LENGTH	BEARING
1	5.08	S 89°52′19″ E
2	1.71	S 89°52′19″ E
3	10.66	N 10°26′30″ E

EXIST. S.R. 8 CURVE DATA

P.I. STA. = 67+45.23
D = 7° 46′ 07″ (RT)
Dc = 0° 30′ 13″
R = 11,375.75′
T = 772.39′
L = 1,542.41′
E = 26.19′

RIGHT OF WAY CURVE DATA

CURVE	RADIUS	LENGTH	CHORD	BEARING
A	986.93	44.83	44.83	N 0°21′41″ E
B	979.93	44.84	44.84	N 0°22′16″ E
C	986.93	53.15	53.14	N 3°12′20″ E
D	979.93	53.15	53.14	N 3°14′09″ E

RIGHT OF WAY CURVE DATA

CURVE	RADIUS	LENGTH	CHORD	BEARING
E	986.93	53.71	53.71	N 6°18′27″ E
F	979.93	53.62	53.61	N 6°21′26″ E
G	979.93	43.05	43.04	N 9°11′00″ E

MONUMENT LEGEND

- ▣ CENTERLINE AJUSTABLE MONUMENT
- ◉ R/W REFERENCE MONUMENT
- • ¾″ x 30″ REBAR SET
- ○ EXISTING I.P.'S SPIKES OR PIPES

REV.	DATE	DESCRIPTION
DATE OF COMPLETION		

N

SCALE IN FEET 0 10 20 40

PID NO. 20356

R/W DESIGNER ADT
R/W REVIEWER TRB

S.R. 8 RIGHT OF WAY PLAN
STA. 70+00 TO STA. 75+00 (WEST)

SUM-8-0.63

49 / 71

1066
1088

CITY OF AKRON
ORIGINAL PORTAGE TOWNSHIP, TRACT 7
TOWNSHIP 2 NORTH, RANGE 11 WEST
SUMMIT COUNTY, OHIO

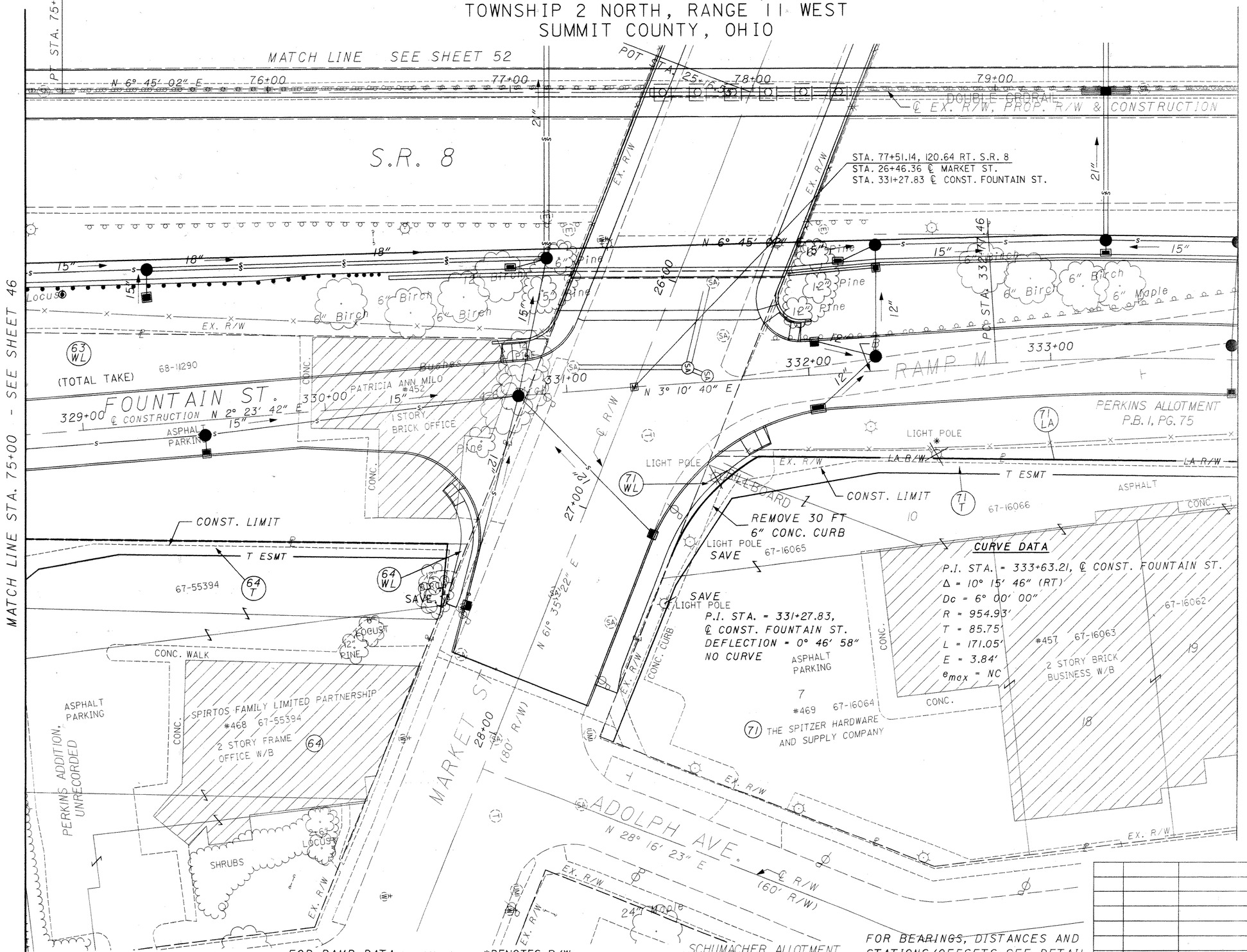

FOR RAMP DATA SEE SHEETS 2A & 2B

*DENOTES R/W ENCROACHMENTTO BE REMOVED

FOR BEARINGS, DISTANCES AND STATIONS/OFFSETS SEE DETAIL SHEET No. 51

REV.	DATE	DESCRIPTION
DATE OF COMPLETION		

SCALE IN FEET

PID NO. 20356

R/W DESIGNER ADT
R/W REVIEWER TRB

S.R. 8 RIGHT OF WAY PLAN
STA. 75+00 TO STA. 80+00 (EAST)

SUM-8-0.63

1067/1088

CITY OF AKRON
ORIGINAL PORTAGE TOWNSHIP, TRACT 7
TOWNSHIP 2 NORTH, RANGE 11 WEST
SUMMIT COUNTY, OHIO

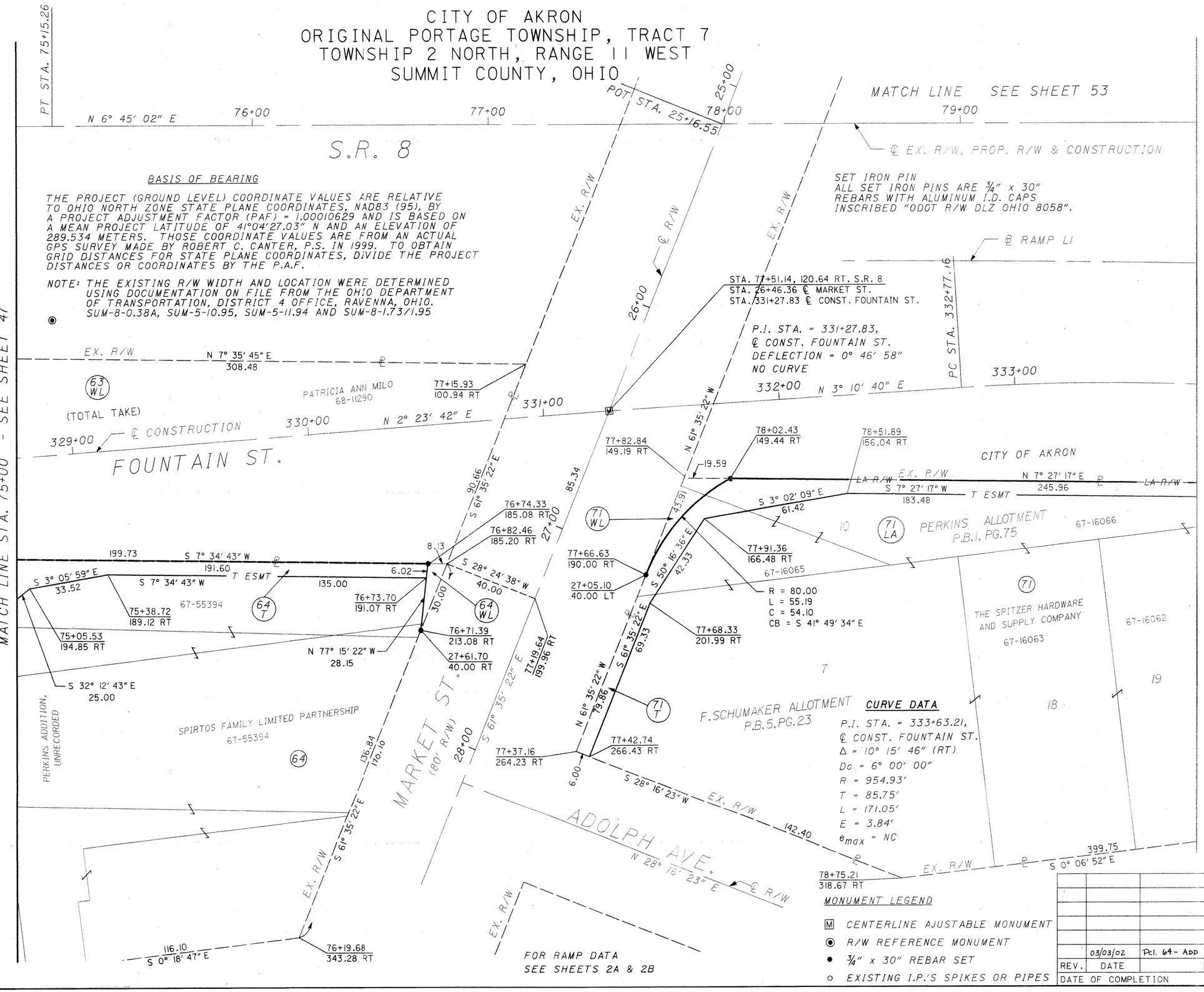

MONUMENT LEGEND

- Ⓜ CENTERLINE AJUSTABLE MONUMENT
- ◉ R/W REFERENCE MONUMENT
- • ¾" x 30" REBAR SET
- ○ EXISTING I.P.'S SPIKES OR PIPES

REV.	DATE	DESCRIPTION
	03/03/02	Pcl. 64 - Add Lead in Course

DATE OF COMPLETION

SCALE IN FEET: 0, 10, 20, 40

PID NO. 20356

R/W DESIGNER ADT
R/W REVIEWER TRB

S.R. 8 RIGHT OF WAY PLAN
STA. 75+00 TO STA. 80+00 (EAST)

SUM-8-0.63

51 / 71

1068
1088

CITY OF AKRON
ORIGINAL PORTAGE TOWNSHIP, TRACT 7
TOWNSHIP 2 NORTH, RANGE 11 WEST
SUMMIT COUNTY, OHIO

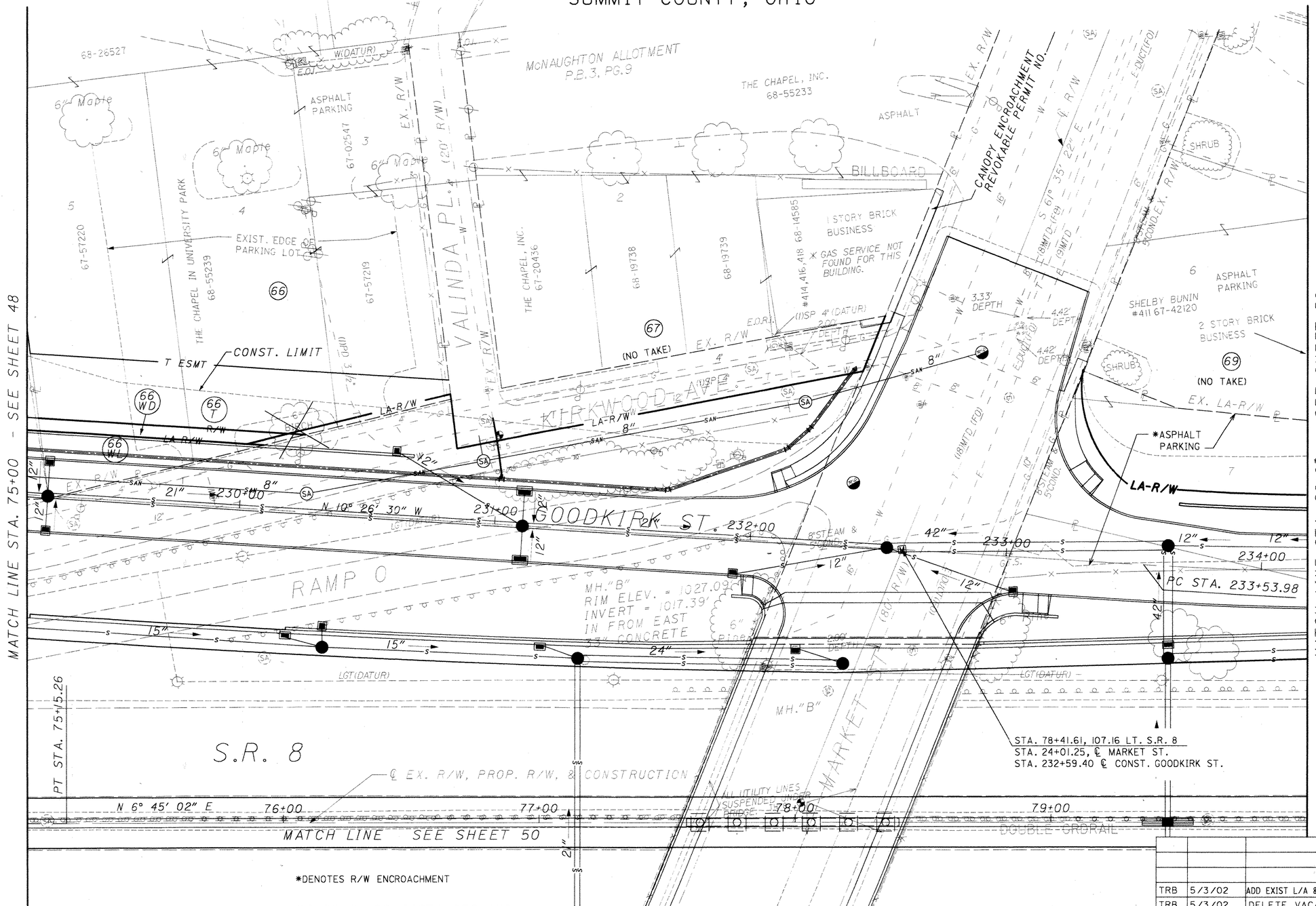

*DENOTES R/W ENCROACHMENT

FOR BEARINGS, DISTANCES AND STATIONS/OFFSETS SEE DETAIL SHEET No. 53

REV.	DATE	DESCRIPTION
TRB	5/3/02	ADD EXIST L/A & REV. PROP. L/A - PARCEL 69
TRB	5/3/02	DELETE VACATION NOTE
	12/06/01	ADD NOTE TO VACATION NOTE
		(AREA EAST OF PCL. 69)

DATE OF COMPLETION

SCALE IN FEET 0 10 20 40

PID NO. 20356

R/W DESIGNER ADT
R/W REVIEWER TRB

S.R. 8 RIGHT OF WAY PLAN
STA. 75+00 TO STA. 80+00 (WEST)

SUM-8-0.63

52 / 71

1069
1088

CITY OF AKRON
ORIGNAL PORTAGE TOWNSHIP, TRACT 7
TOWNSHIP 2 NORTH, RANGE 11 WEST
SUMMIT COUNTY, OHIO

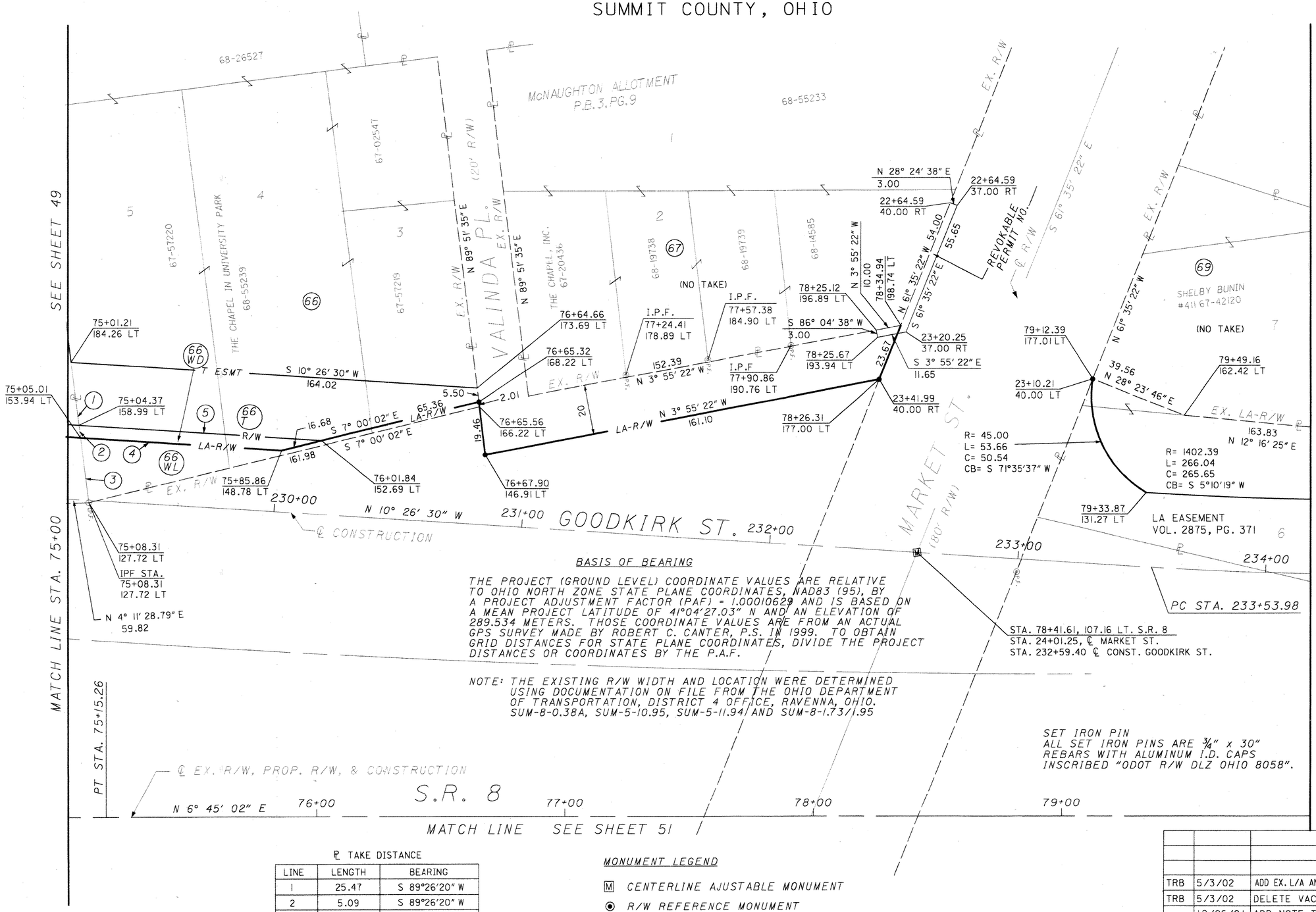

BASIS OF BEARING

THE PROJECT (GROUND LEVEL) COORDINATE VALUES ARE RELATIVE TO OHIO NORTH ZONE STATE PLANE COORDINATES, NAD83 (95), BY A PROJECT ADJUSTMENT FACTOR (PAF) = 1.00010629 AND IS BASED ON A MEAN PROJECT LATITUDE OF 41°04'27.03" N AND AN ELEVATION OF 289.534 METERS. THOSE COORDINATE VALUES ARE FROM AN ACTUAL GPS SURVEY MADE BY ROBERT C. CANTER, P.S. IN 1999. TO OBTAIN GRID DISTANCES FOR STATE PLANE COORDINATES, DIVIDE THE PROJECT DISTANCES OR COORDINATES BY THE P.A.F.

NOTE: THE EXISTING R/W WIDTH AND LOCATION WERE DETERMINED USING DOCUMENTATION ON FILE FROM THE OHIO DEPARTMENT OF TRANSPORTATION, DISTRICT 4 OFFICE, RAVENNA, OHIO. SUM-8-0.38A, SUM-5-10.95, SUM-5-11.94 AND SUM-8-1.73/1.95

SET IRON PIN
ALL SET IRON PINS ARE ¾" x 30" REBARS WITH ALUMINUM I.D. CAPS INSCRIBED "ODOT R/W DLZ OHIO 8058".

℄ TAKE DISTANCE

LINE	LENGTH	BEARING
1	25.47	S 89°26'20" W
2	5.09	S 89°26'20" W
3	26.43	S 89°26'20" W
4	80.93	N 10°26'30" E
5	97.82	N 10°26'30" E

MONUMENT LEGEND

- Ⓜ CENTERLINE AJUSTABLE MONUMENT
- ⦿ R/W REFERENCE MONUMENT
- • ¾" x 30" REBAR SET
- ○ EXISTING I.P.'S SPIKES OR PIPES

REV.	DATE	DESCRIPTION
TRB	5/3/02	ADD EX. L/A AND REV. PROP. L/A PARCEL 69
TRB	5/3/02	DELETE VACATION NOTE
	12/06/01	ADD NOTE TO VACATION NOTE
		(AREA EAST OF PCL 69)

DATE OF COMPLETION

SCALE IN FEET: 0, 10, 20, 40

PID NO. 20356

R/W DESIGNER: ADT
R/W REVIEWER: TRB

S.R. 8 RIGHT OF WAY PLAN
STA. 75+00 TO STA. 80+00 (WEST)

SUM-8-0.63

53 / 71

1070 / 1088

CITY OF AKRON
ORIGINAL PORTAGE TOWNSHIP, TRACT 7
TOWNSHIP 2 NORTH, RANGE 11 WEST
SUMMIT COUNTY, OHIO

CURVE DATA

P.I. STA. = 333+63.21,
℄ CONST. FOUNTAIN ST.
Δ = 10° 15′ 46″ (RT)
Dc = 6° 00′ 00″
R = 954.93′
T = 85.75′
L = 171.05′
E = 3.84′

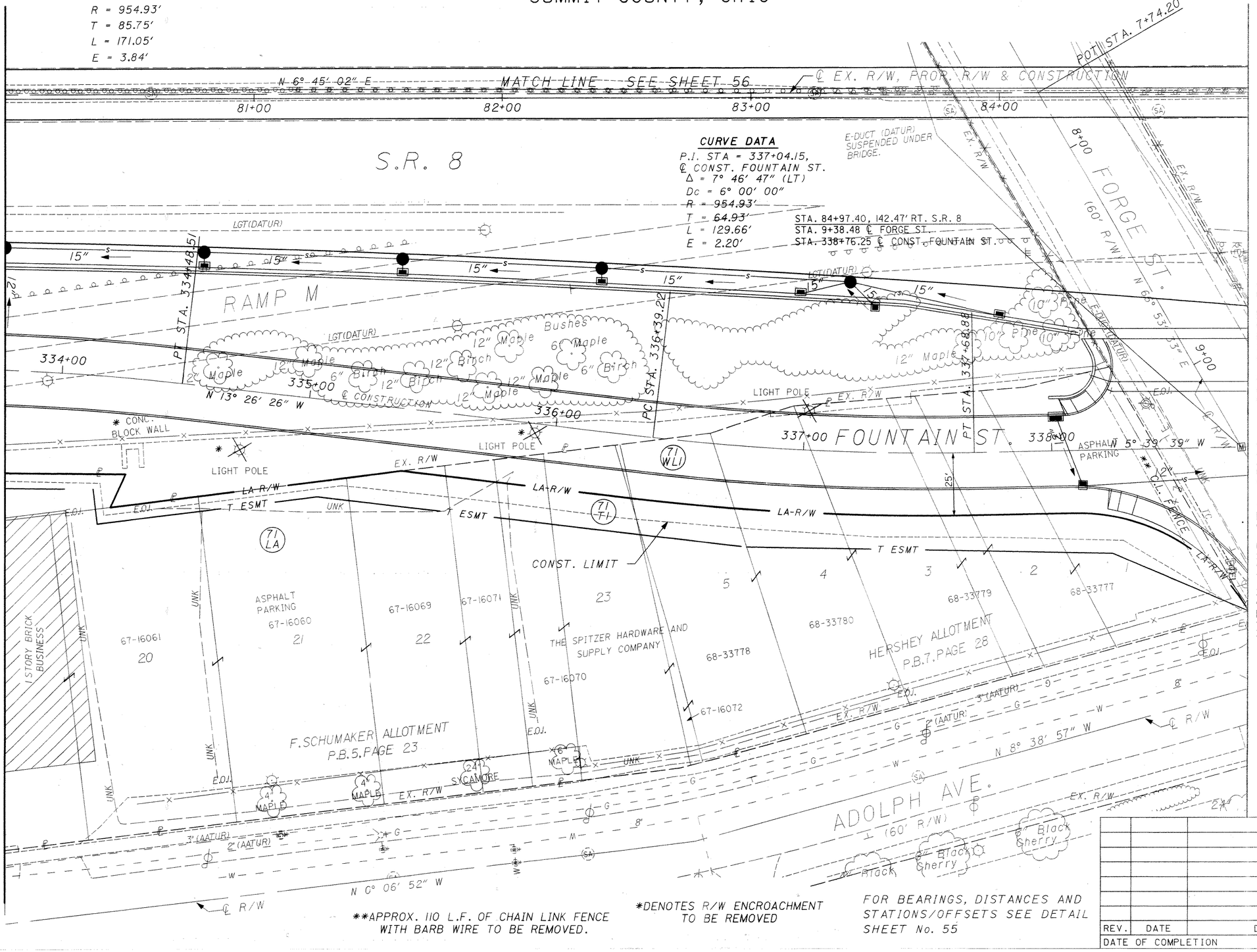

**APPROX. 110 L.F. OF CHAIN LINK FENCE WITH BARB WIRE TO BE REMOVED.

*DENOTES R/W ENCROACHMENT TO BE REMOVED

FOR BEARINGS, DISTANCES AND STATIONS/OFFSETS SEE DETAIL SHEET No. 55

REV.	DATE	DESCRIPTION
DATE OF COMPLETION		

SCALE IN FEET: 0, 10, 20, 40

PID NO. 20356

R/W DESIGNER ADT
R/W REVIEWER TRB

S.R. 8 RIGHT OF WAY PLAN
STA. 80+00 TO STA. 85+00 (EAST)

SUM-8-0.63

54 / 71

1071
1088

CITY OF AKRON
ORIGINAL PORTAGE TOWNSHIP, TRACT 7
TOWNSHIP 2 NORTH, RANGE 11 WEST
SUMMIT COUNTY, OHIO

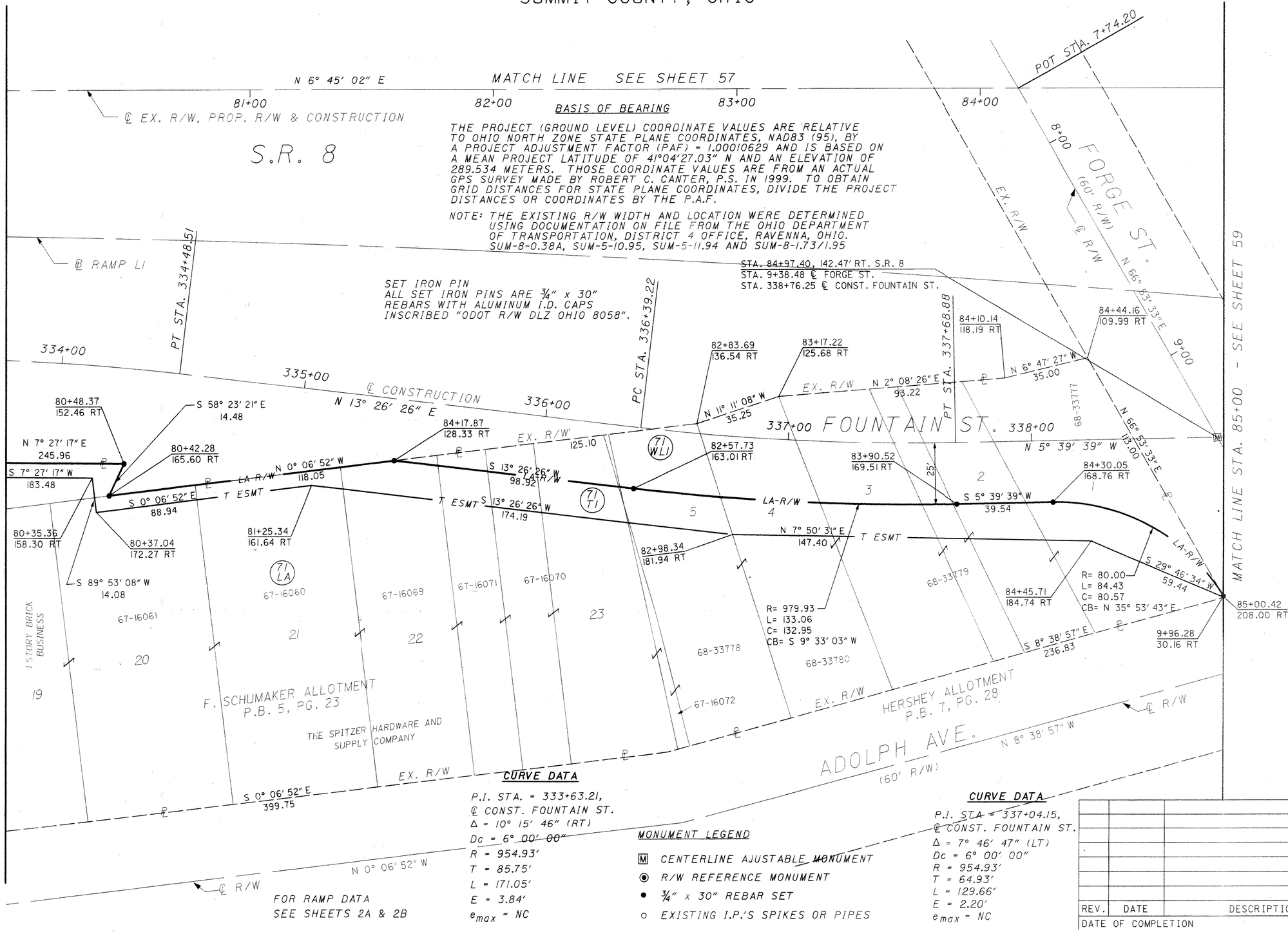

CURVE DATA

P.I. STA. = 333+63.21,
℄ CONST. FOUNTAIN ST.
Δ = 10° 15' 46" (RT)
Dc = 6° 00' 00"
R = 954.93'
T = 85.75'
L = 171.05'
E = 3.84'
e_{max} = NC

FOR RAMP DATA
SEE SHEETS 2A & 2B

MONUMENT LEGEND

- Ⓜ CENTERLINE AJUSTABLE MONUMENT
- ◉ R/W REFERENCE MONUMENT
- • ¾" x 30" REBAR SET
- ○ EXISTING I.P.'S SPIKES OR PIPES

CURVE DATA

P.I. STA = 337+04.15,
℄ CONST. FOUNTAIN ST.
Δ = 7° 46' 47" (LT)
Dc = 6° 00' 00"
R = 954.93'
T = 64.93'
L = 129.66'
E = 2.20'
e_{max} = NC

REV.	DATE	DESCRIPTION
DATE OF COMPLETION		

N

SCALE IN FEET 0 10 20 40

PID NO. 20356

R/W DESIGNER ADT
R/W REVIEWER TRB

S.R. 8 RIGHT OF WAY PLAN
STA. 80+00 TO STA. 85+00 (EAST)

SUM-8-0.63

55 / 71

1072
1088

CITY OF AKRON
ORIGINAL PORTAGE TOWNSHIP, TRACT 7
TOWNSHIP 2 NORTH, RANGE 11 WEST
SUMMIT COUNTY, OHIO

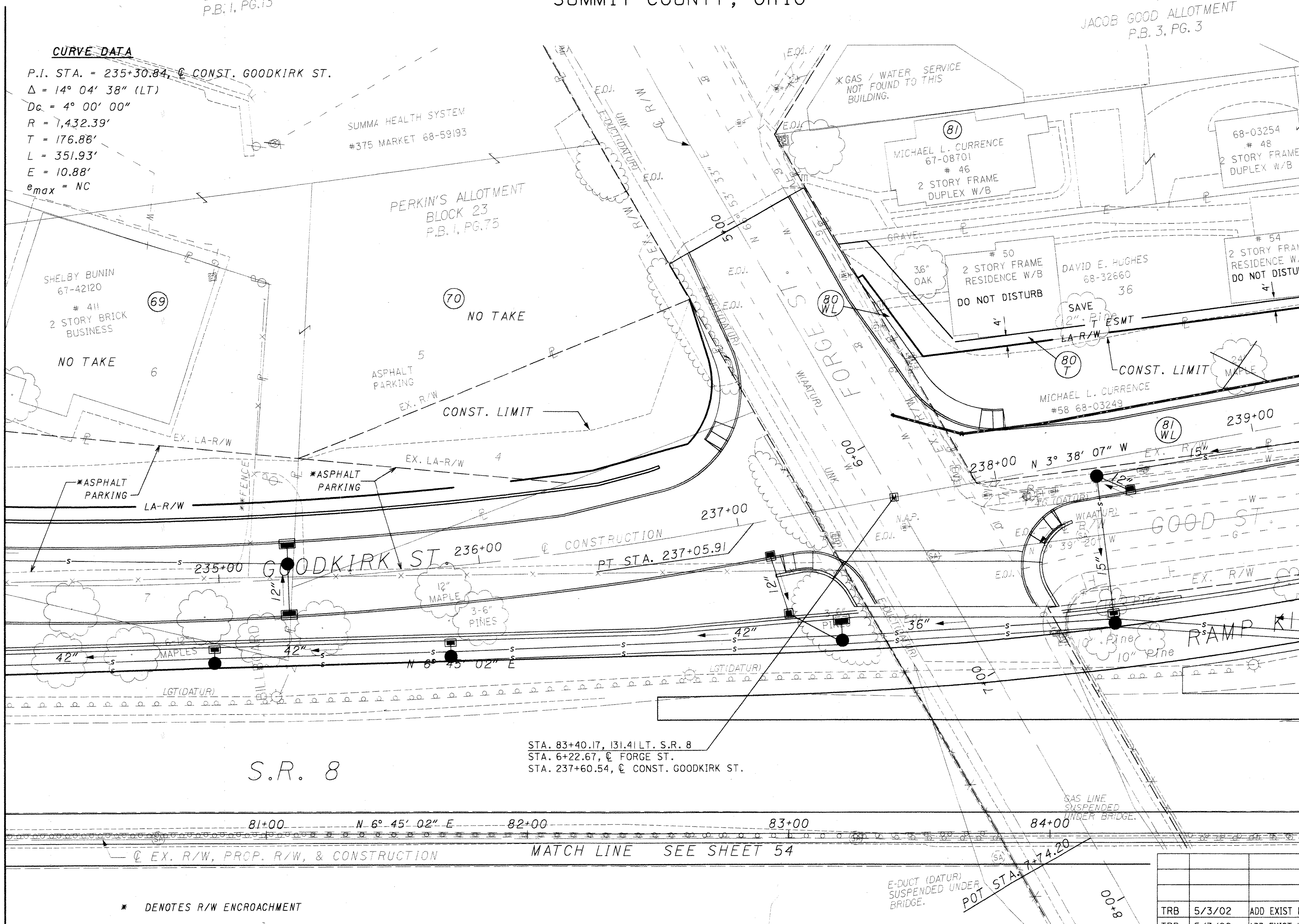

* DENOTES R/W ENCROACHMENT

** REMOVE APPROX. 47 L.F. CHAIN LINK FENCE

FOR RAMP DATA SEE SHEETS 2A & 2B

FOR BEARINGS, DISTANCES AND STATIONS/OFFSETS SEE DETAIL SHEET No. 57

REV.	DATE	DESCRIPTION
TRB	5/3/02	ADD EXIST L/A & REV. PROP. L/A - PARCEL 70
TRB	5/3/02	ADD EXIST L/A & REV. PROP. L/A - PARCEL 69
TRB	5/3/02	DELETE VACATION NOTE
	12/06/01	ADD NOTE TO VACATION AREA (EAST OF PCL 69 &70)

DATE OF COMPLETION

SCALE IN FEET 0 10 20 40

PID NO. 20356

R/W DESIGNER ADT
R/W REVIEWER TRB

S.R. 8 RIGHT OF WAY PLAN
STA. 80+00 TO STA. 85+00 (WEST)

SUM-8-0.63

56/71

1073/1088

CITY OF AKRON
ORIGINAL PORTAGE TOWNSHIP, TRACT 7
TOWNSHIP 2 NORTH, RANGE 11 WEST
SUMMIT COUNTY, OHIO

NOTE: THE EXISTING R/W WIDTH AND LOCATION WERE DETERMINED USING DOCUMENTATION ON FILE FROM THE OHIO DEPARTMENT OF TRANSPORTATION, DISTRICT 4 OFFICE, RAVENNA, OHIO. SUM-8-0.38A, SUM-5-10.95, SUM-5-11.94 AND SUM-8-1.73/1.95

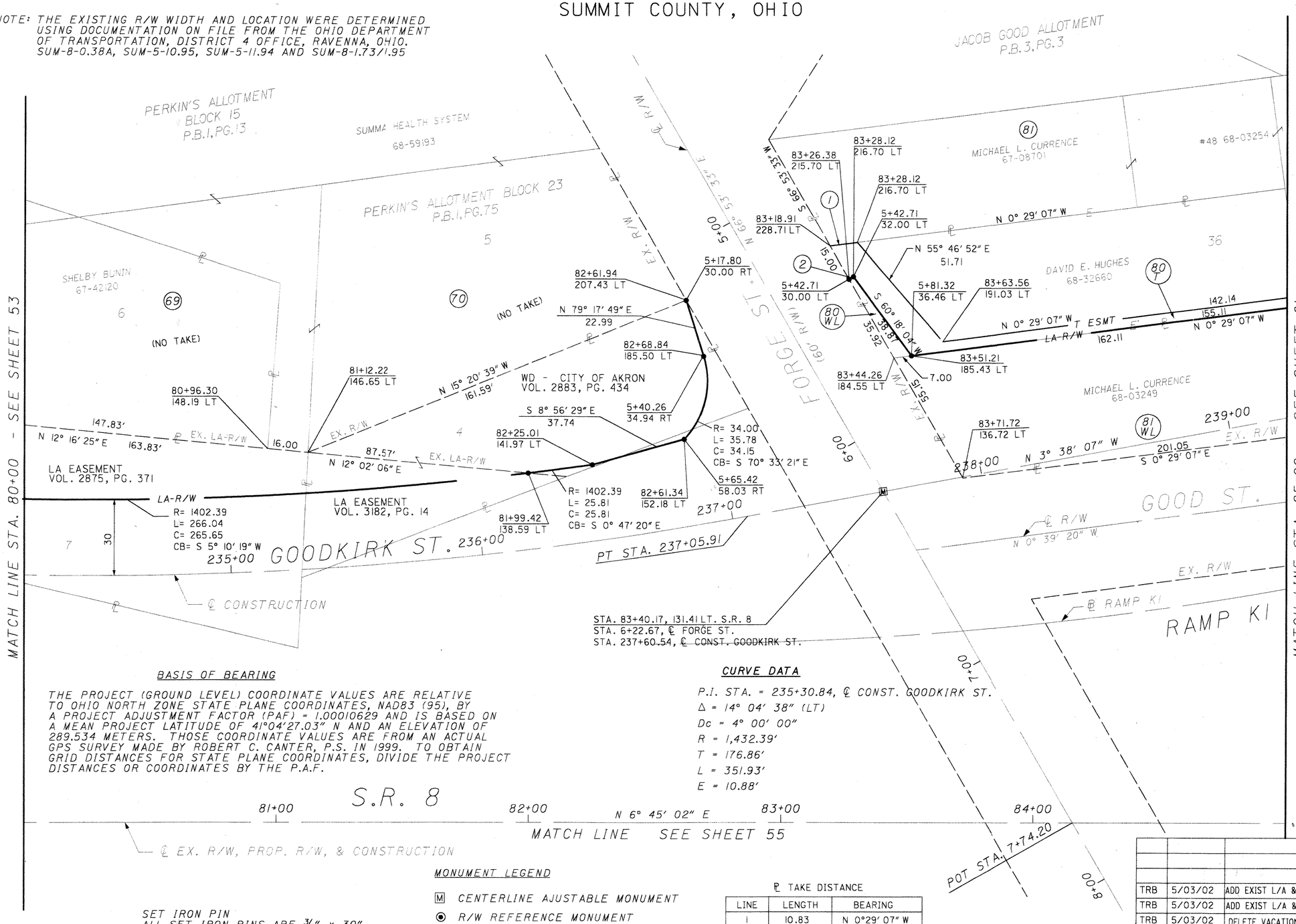

BASIS OF BEARING

THE PROJECT (GROUND LEVEL) COORDINATE VALUES ARE RELATIVE TO OHIO NORTH ZONE STATE PLANE COORDINATES, NAD83 (95), BY A PROJECT ADJUSTMENT FACTOR (PAF) = 1.00010629 AND IS BASED ON A MEAN PROJECT LATITUDE OF 41°04'27.03" N AND AN ELEVATION OF 289.534 METERS. THOSE COORDINATE VALUES ARE FROM AN ACTUAL GPS SURVEY MADE BY ROBERT C. CANTER, P.S. IN 1999. TO OBTAIN GRID DISTANCES FOR STATE PLANE COORDINATES, DIVIDE THE PROJECT DISTANCES OR COORDINATES BY THE P.A.F.

CURVE DATA

P.I. STA. = 235+30.84, ℄ CONST. GOODKIRK ST.
Δ = 14° 04' 38" (LT)
Dc = 4° 00' 00"
R = 1,432.39'
T = 176.86'
L = 351.93'
E = 10.88'

SET IRON PIN
ALL SET IRON PINS ARE ¾" x 30" REBARS WITH ALUMINUM I.D. CAPS INSCRIBED "ODOT R/W DLZ OHIO 8058".

MONUMENT LEGEND

- Ⓜ CENTERLINE AJUSTABLE MONUMENT
- ◉ R/W REFERENCE MONUMENT
- • ¾" x 30" REBAR SET
- ○ EXISTING I.P.'S SPIKES OR PIPES

℄ TAKE DISTANCE

LINE	LENGTH	BEARING
1	10.83	N 0°29' 07" W
2	2.00	N 23°06' 27" W

FOR RAMP DATA SEE SHEETS 2A & 2B

REV.	DATE	DESCRIPTION
	12/06/01	ADD NOTE TO VACATION AREA (EAST OF PCL 69 &70)
TRB	5/03/02	DELETE VACATION NOTE
TRB	5/03/02	ADD EXIST L/A & REV. PROP. L/A - PARCEL 69
TRB	5/03/02	ADD EXIST L/A & REV. PROP. L/A - PARCEL 70

DATE OF COMPLETION

SCALE IN FEET (0, 10, 20, 40)

PID NO. 20356

R/W DESIGNER ADT
P/M REVIEWER TRB

S.R. 8 RIGHT OF WAY PLAN
STA. 80+00 TO STA. 85+00 (WEST)

SUM-8-0.63

57 / 71

1074
1088

CITY OF AKRON
ORIGINAL PORTAGE TOWNSHIP, TRACT 7
TOWNSHIP 2 NORTH, RANGE 11 WEST
SUMMIT COUNTY, OHIO

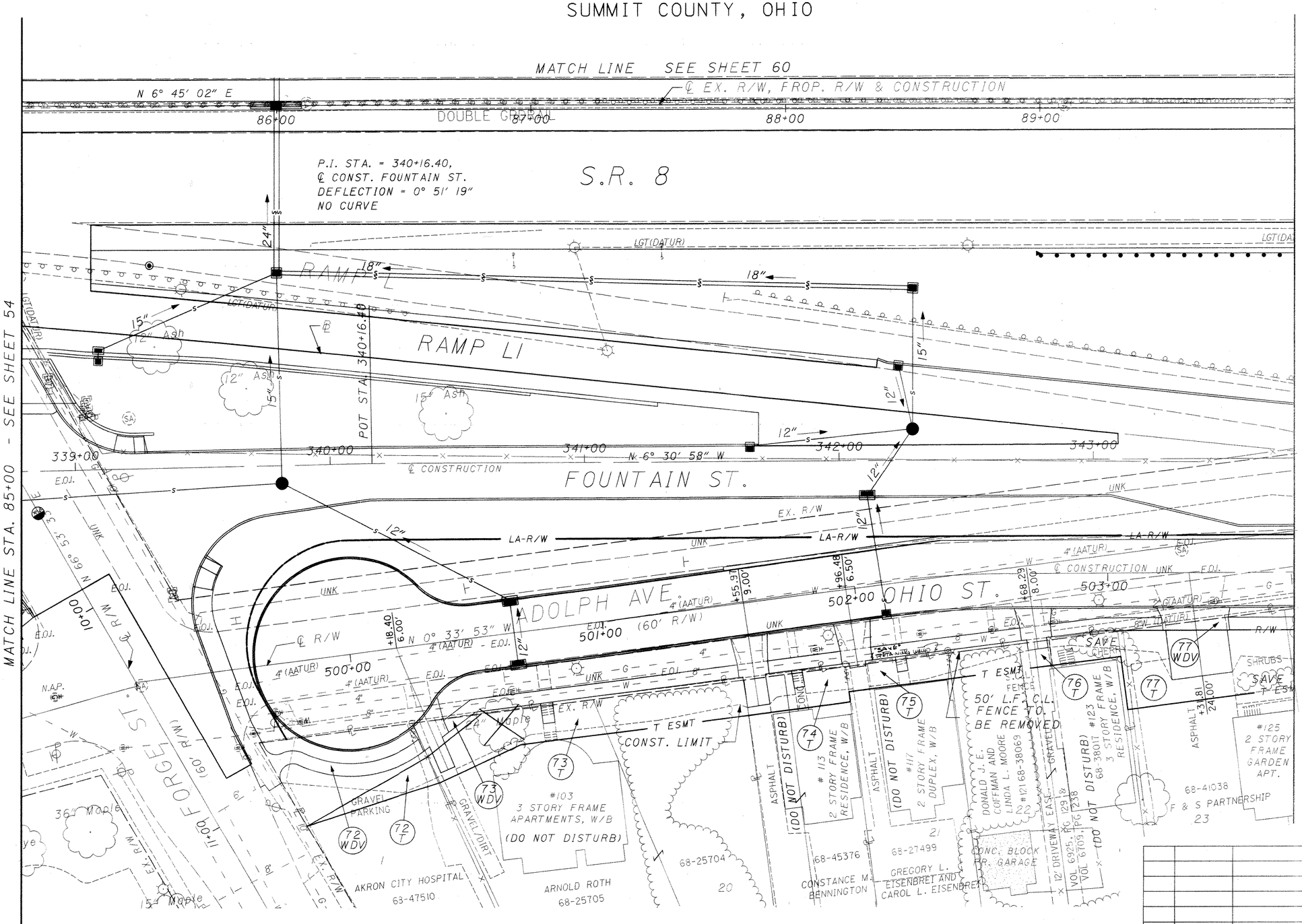

FOR BEARINGS, DISTANCES AND STATIONS/OFFSETS SEE DETAIL SHEET No. 59

L.N. SMITH ALLOTMENT
P.B. 2, PG. 39

FOR RAMP DATA SEE SHEETS 2A & 2B

REV.	DATE	DESCRIPTION
	11/28/01	MARKED RETAINING WALL "SAVE" RCL 75-T

DATE OF COMPLETION

SCALE IN FEET
0 10 20 40

PID NO. 20356

R/W DESIGNER ADT
R/W REVIEWER TRB

S.R. 8 RIGHT OF WAY PLAN
STA. 85+00 TO STA. 90+00 (EAST)

SUM-8-0.63

58 / 71

1075
1088

CITY OF AKRON
ORIGINAL PORTAGE TOWNSHIP, TRACT 7
TOWNSHIP 2 NORTH, RANGE 11 WEST
SUMMIT COUNTY, OHIO

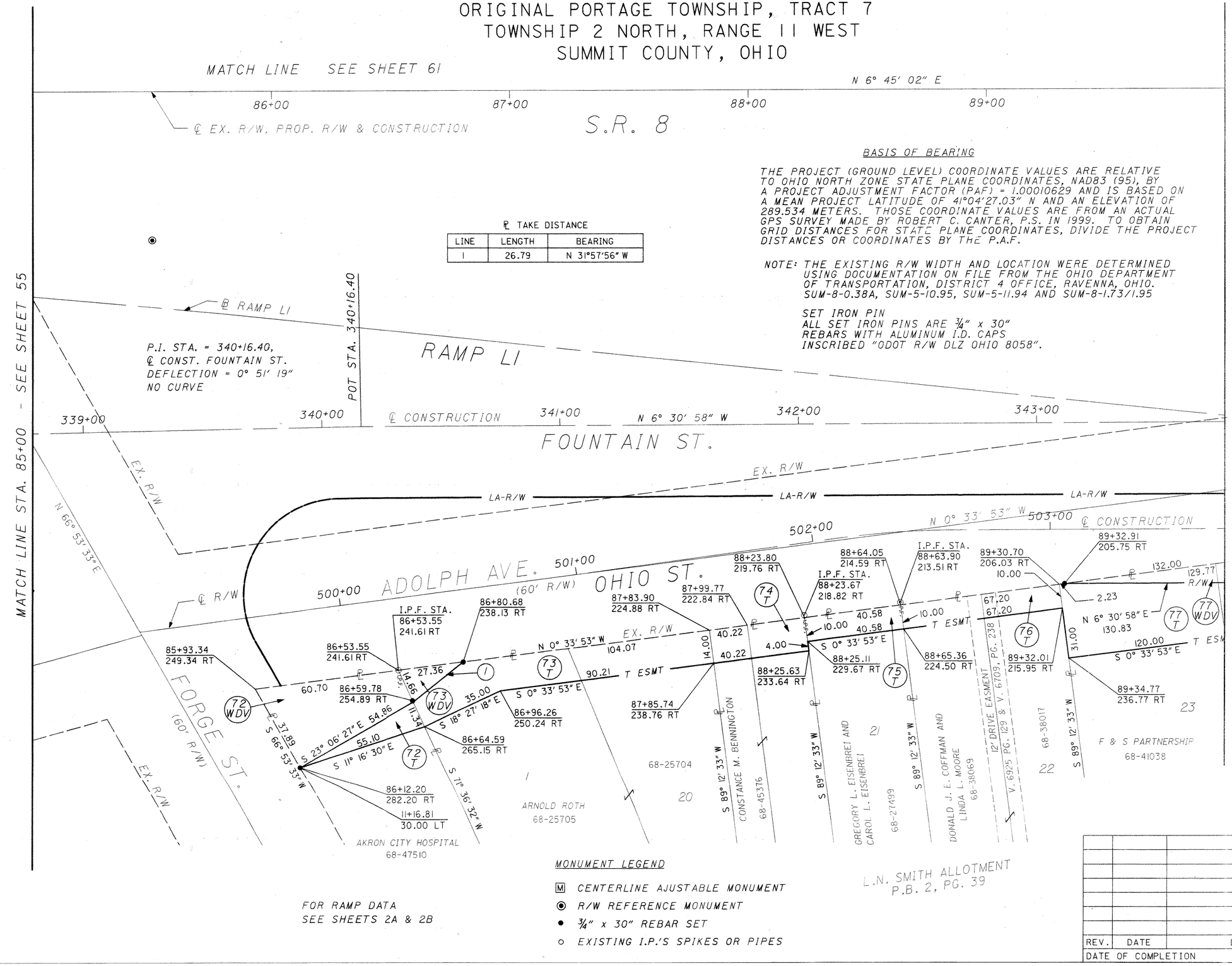

BASIS OF BEARING

THE PROJECT (GROUND LEVEL) COORDINATE VALUES ARE RELATIVE TO OHIO NORTH ZONE STATE PLANE COORDINATES, NAD83 (95), BY A PROJECT ADJUSTMENT FACTOR (PAF) = 1.00010629 AND IS BASED ON A MEAN PROJECT LATITUDE OF 41°04'27.03" N AND AN ELEVATION OF 289.534 METERS. THOSE COORDINATE VALUES ARE FROM AN ACTUAL GPS SURVEY MADE BY ROBERT C. CANTER, P.S. IN 1999. TO OBTAIN GRID DISTANCES FOR STATE PLANE COORDINATES, DIVIDE THE PROJECT DISTANCES OR COORDINATES BY THE P.A.F.

NOTE: THE EXISTING R/W WIDTH AND LOCATION WERE DETERMINED USING DOCUMENTATION ON FILE FROM THE OHIO DEPARTMENT OF TRANSPORTATION, DISTRICT 4 OFFICE, RAVENNA, OHIO. SUM-8-0.38A, SUM-5-10.95, SUM-5-11.94 AND SUM-8-1.73/1.95

SET IRON PIN
ALL SET IRON PINS ARE ¾" x 30"
REBARS WITH ALUMINUM I.D. CAPS
INSCRIBED "ODOT R/W DLZ OHIO 8058".

℄ TAKE DISTANCE

LINE	LENGTH	BEARING
1	26.79	N 31°57'56" W

FOR RAMP DATA
SEE SHEETS 2A & 2B

MONUMENT LEGEND

- Ⓜ CENTERLINE AJUSTABLE MONUMENT
- ◉ R/W REFERENCE MONUMENT
- • ¾" x 30" REBAR SET
- ○ EXISTING I.P.'S SPIKES OR PIPES

REV.	DATE	DESCRIPTION
DATE OF COMPLETION		

SCALE IN FEET: 0, 10, 20, 40

PID NO. 20356

R/W DESIGNER: ADT
R/W REVIEWER: TRB

S.R. 8 RIGHT OF WAY PLAN
STA. 85+00 TO STA. 90+00 (EAST)

SUM-8-0.63

59 / 71

1076
1088

CITY OF AKRON
ORIGINAL PORTAGE TOWNSHIP, TRACT 7
TOWNSHIP 2 NORTH, RANGE 11 WEST
SUMMIT COUNTY, OHIO

CURVE DATA

P.I. STA. = 241+44.37, ℄ CONST. GOODKIRK ST.
Δ = 9° 59′ 55″ (RT)
Dc = 4° 00′ 00″
R = 1,432.39′
T = 125.30′
L = 249.96′
E = 5.47′
emax = NC

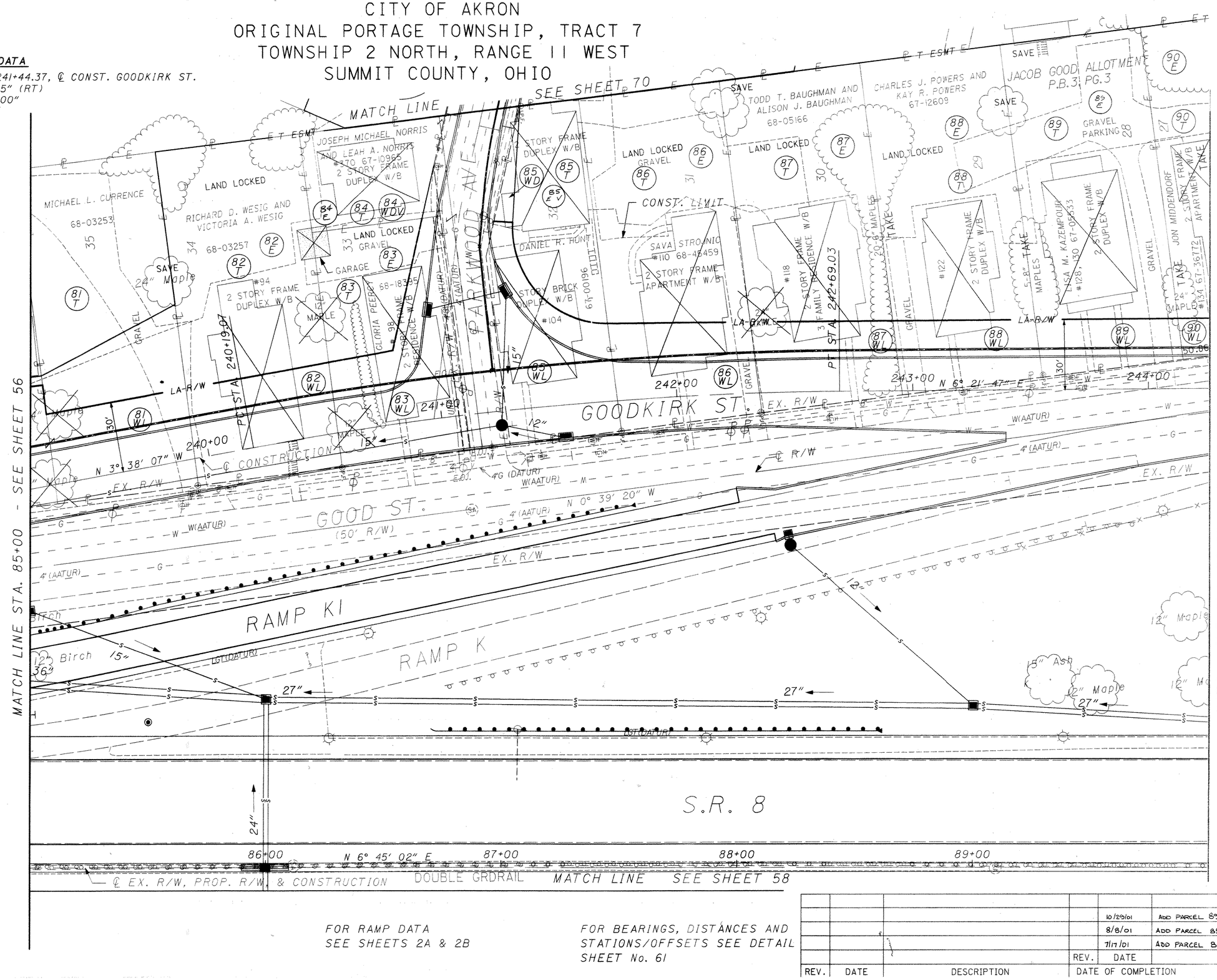

FOR RAMP DATA
SEE SHEETS 2A & 2B

FOR BEARINGS, DISTANCES AND STATIONS/OFFSETS SEE DETAIL SHEET No. 61

REV.	DATE	DESCRIPTION
	10/29/01	ADD PARCEL 89E
	8/8/01	ADD PARCEL 85 E V
	7/17/01	ADD PARCEL 84 E

DATE OF COMPLETION

R/W DESIGNER: ADT
R/W REVIEWER: TRB

PID NO. 20356

S.R. 8 RIGHT OF WAY PLAN
STA. 85+00 TO STA. 90+00 (WEST)

SUM-8-0.63

60 / 71

1077
1088

CITY OF AKRON
ORIGINAL PORTAGE TOWNSHIP, TRACT 7
TOWNSHIP 2 NORTH, RANGE 11 WEST
SUMMIT COUNTY, OHIO

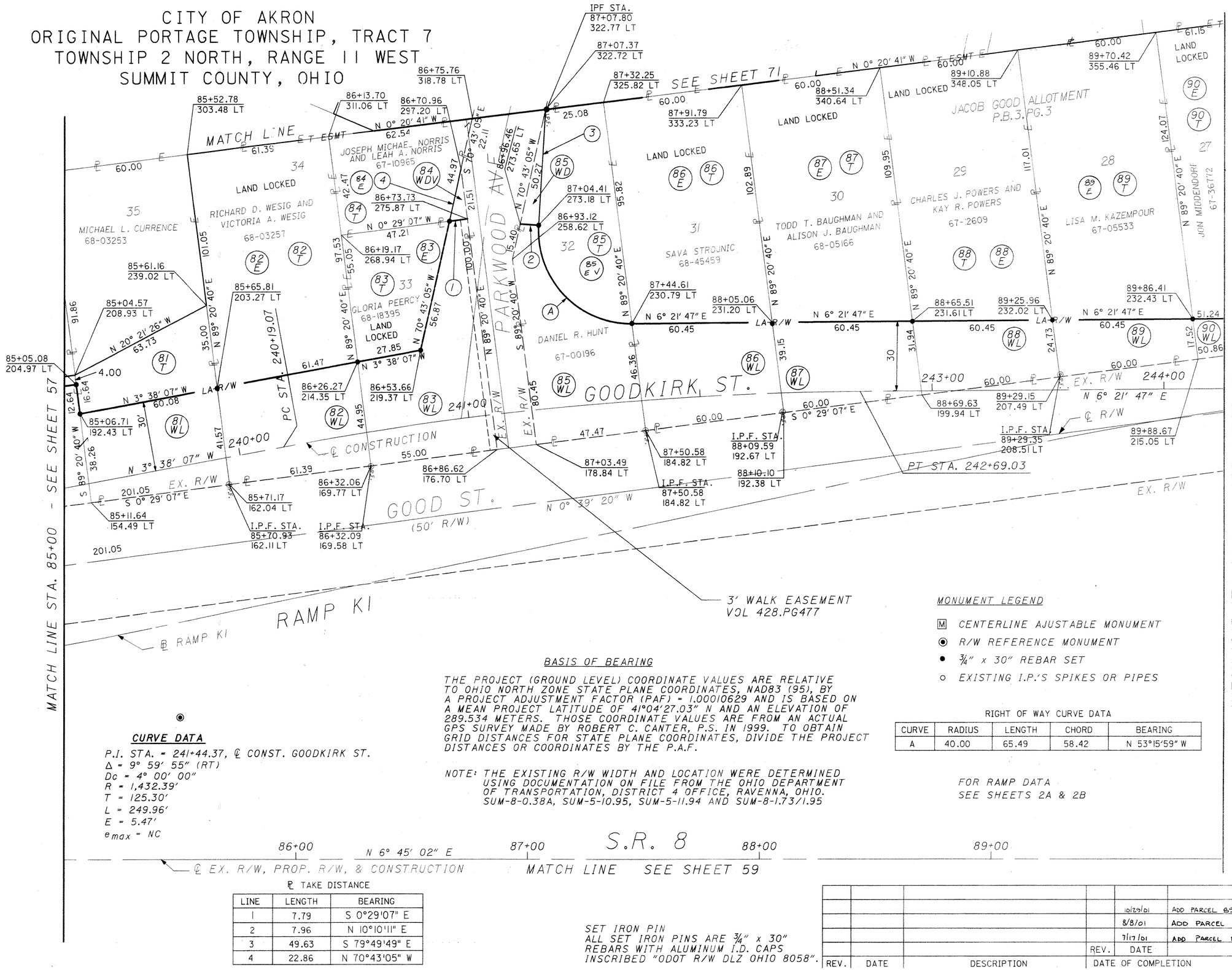

CURVE DATA

P.I. STA. = 241+44.37, ℄ CONST. GOODKIRK ST.
Δ = 9° 59' 55" (RT)
Dc = 4° 00' 00"
R = 1,432.39'
T = 125.30'
L = 249.96'
E = 5.47'
e_{max} = NC

BASIS OF BEARING

THE PROJECT (GROUND LEVEL) COORDINATE VALUES ARE RELATIVE TO OHIO NORTH ZONE STATE PLANE COORDINATES, NAD83 (95), BY A PROJECT ADJUSTMENT FACTOR (PAF) = 1.00010629 AND IS BASED ON A MEAN PROJECT LATITUDE OF 41°04'27.03" N AND AN ELEVATION OF 289.534 METERS. THOSE COORDINATE VALUES ARE FROM AN ACTUAL GPS SURVEY MADE BY ROBERT C. CANTER, P.S. IN 1999. TO OBTAIN GRID DISTANCES FOR STATE PLANE COORDINATES, DIVIDE THE PROJECT DISTANCES OR COORDINATES BY THE P.A.F.

NOTE: THE EXISTING R/W WIDTH AND LOCATION WERE DETERMINED USING DOCUMENTATION ON FILE FROM THE OHIO DEPARTMENT OF TRANSPORTATION, DISTRICT 4 OFFICE, RAVENNA, OHIO. SUM-8-0.38A, SUM-5-10.95, SUM-5-11.94 AND SUM-8-1.73/1.95

MONUMENT LEGEND

- [M] CENTERLINE AJUSTABLE MONUMENT
- ◉ R/W REFERENCE MONUMENT
- • ¾" x 30" REBAR SET
- ○ EXISTING I.P.'S SPIKES OR PIPES

RIGHT OF WAY CURVE DATA

CURVE	RADIUS	LENGTH	CHORD	BEARING
A	40.00	65.49	58.42	N 53°15'59" W

FOR RAMP DATA
SEE SHEETS 2A & 2B

86+00 N 6° 45' 02" E 87+00 S.R. 8 88+00 89+00
℄ EX. R/W, PROP. R/W, & CONSTRUCTION
MATCH LINE SEE SHEET 59

℄ TAKE DISTANCE

LINE	LENGTH	BEARING
1	7.79	S 0°29'07" E
2	7.96	N 10°10'11" E
3	49.63	S 79°49'49" E
4	22.86	N 70°43'05" W

SET IRON PIN
ALL SET IRON PINS ARE ¾" x 30" REBARS WITH ALUMINUM I.D. CAPS INSCRIBED "ODOT R/W DLZ OHIO 8058".

REV.	DATE	DESCRIPTION
	10/29/01	ADD PARCEL 85E
	8/8/01	ADD PARCEL 85EV
	7/17/01	ADD PARCEL 84E
REV.	DATE	DESCRIPTION

DATE OF COMPLETION

SCALE IN FEET 0 10 20 40

PID NO. 20356

R/W DESIGNER ADT
R/W REVIEWER TRB

S.R. 8 RIGHT OF WAY PLAN
STA. 85+00 TO STA. 90+00 (WEST)

SUM-8-0.63

61 / 71

1078 / 1088

CITY OF AKRON
ORIGINAL PORTAGE TOWNSHIP, TRACT 7
TOWNSHIP 2 NORTH, RANGE 11 WEST
SUMMIT COUNTY, OHIO

END ACQUISITION
STA. 92+51.05

PC STA. 94+39.98

ALL UTILITIES SUSPENDED UNDER BRIDGE.

℄ EX. R/W, PROP. R/W & CONSTRUCTION

N 6° 45' 02" E MATCH LINE SEE SHEET 64

91+00 92+00 50+00 93+00 94+00

S.R. 8

EX. R/W

PERKINS ST.

15"

LGT(DATUR)

STA. 92+71.61, 137.21' RT. S.R. 8
STA. 51+30.73 ℄ PERKINS ST.
STA. 346+50.49 ℄ CONST. FOUNTAIN ST.

6" Birch
Birch
12" Maple
16"

51+00 PRC

N 89° 12' 33" E (66' R/W)

EX. R/W

RAMP J

N 5° 47' 27" W

B

344+00 345+00 FOUNTAIN ST. 346+00

℄ CONSTRUCTION
E.O.I.
℄ R/W
(SA)
(60' R/W)

N 6° 30' 48" W
R= 45.00
L= 64.95
C= 59.45
CB= N 47° 51' 46" E

24" MAPLE
CONST. LIMIT

ADOLPH AVE.

LA-R/W
(4)PD 4"
(2)PD 4"
3.00' DEPTH
E.O.I.
(50' R/W)
SAVE
CONC. BIRCH
MAPLE
(77 WDV)
(77 T)
#125 2 STORY FRAME GARDEN APARTMENT F & S PARTNERSHIP 67-47110
(DO NOT DISTURB) 24
SAVE
TOTH
INGRESS EGRESS EASEMENT V. 561, PG. 238
(78)
SUMMA HEALTH SYSTEM HOSPITALS #480 67-42538 (NO TAKE)
19
N 89° 12' 33" E
℄ R/W
EX. R/W
(92 LA)
(93 LA)
K. WISE #145 68-47326 1 STORY FRAME RESIDENCE W/B
KEITH SNOOK #149 68-25803 2 STORY FRAME RESIDENCE W/B
GRAVEL
BRICK
WILLIAM F. MILLER AND PATRICIA M. MILLER CO-TRUSTEES 68-11167
3.00' DEPTH
#151 2 STORY FRAME DUPLEX, W/B
(94 WL)
(92 T)
(93 E)
(93 T)
(94 WD)
MAPLE
(DO NOT DISTURB)
25
(79)
(NO TAKE)
ASPHALT
JULIE A. WISE AND CHRISTOPHER A. WISE
26
#416 2 STORY FRAME RESIDENCE, W/B
52+00
+02.56
5.50'
(NO TAKE) #479 2 STORY FRAME RESIDENCE, W/B RON E. MEYERS, JR. 68-00336
(95)
3' WALK EASE
FREDA DICKINSON 68-39999 #481 2 STORY FRAME DUPLEX, W/B
(96)
(97)
1 STORY BRICK COMM. (NO TAKE) #420 2 STORY FRAME RESIDENCE, W/B CORNELIU MIHALCA 67-00175
(98)
(NO TAKE)
53+00
GUILLERMO GAMBOA AND EUGENIA GAMBOA #421 68-39975
2
MATTHEW COOLEY #171 68-25719
SCOTT D. BARRICKMAN #175 68-10780
3
UNK
16" (DATUR)
8" W
6" G
6" E
E.O.I.

- SEE SHEET 58
MATCH LINE STA. 90+00
- SEE SHEET 66
MATCH LINE STA. 95+00

L.N. SMITH ALLOTMENT P.B. 2, PG. 39

FOR RAMP DATA SEE SHEETS 2A & 2B

FOR BEARINGS, DISTANCES AND STATIONS/OFFSETS SEE DETAIL SHEET No. 63

BRYAN ALLOTMENT P.B. 4, PG. 13

REV.	DATE	DESCRIPTION
	7/17/01	ADD PARCELS 92E AND 93E
DATE OF COMPLETION		

SCALE IN FEET 0 10 20 40

PID NO. 20356

R/W DESIGNER ADT
R/W REVIEWER TRB

S.R. 8 RIGHT OF WAY PLAN
STA. 90+00 TO STA. 95+00 (EAST)

SUM-8-0.63

62 / 71

1079
1088

CITY OF AKRON
ORIGINAL PORTAGE TOWNSHIP, TRACT 7
TOWNSHIP 2 NORTH, RANGE 11 WEST
SUMMIT COUNTY, OHIO

END ACQUISITION
STA. 92+51.05

PC STA. 94+39.98

N 6° 45' 02" E

MATCH LINE SEE SHEET 65

91+00 92+00 93+00 94+00

S.R. 8

℄ EX. R/W, PROP. R/W & CONSTRUCTION

STA. 92+71.61, 137.21' RT. S.R. 8
STA. 51+30.73 ℄ PERKINS ST.
STA. 346+50.49 ℄ CONST. FOUNTAIN ST.

PERKINS ST. (66' R/W)

50+00

51+00

N 89° 12' 33" E

BASIS OF BEARING

THE PROJECT (GROUND LEVEL) COORDINATE VALUES ARE RELATIVE TO OHIO NORTH ZONE STATE PLANE COORDINATES, NAD83 (95), BY A PROJECT ADJUSTMENT FACTOR (PAF) = 1.00010629 AND IS BASED ON A MEAN PROJECT LATITUDE OF 41°04'27.03" N AND AN ELEVATION OF 289.534 METERS. THOSE COORDINATE VALUES ARE FROM AN ACTUAL GPS SURVEY MADE BY ROBERT C. CANTER, P.S. IN 1999. TO OBTAIN GRID DISTANCES FOR STATE PLANE COORDINATES, DIVIDE THE PROJECT DISTANCES OR COORDINATES BY THE P.A.F.

NOTE: THE EXISTING R/W WIDTH AND LOCATION WERE DETERMINED USING DOCUMENTATION ON FILE FROM THE OHIO DEPARTMENT OF TRANSPORTATION, DISTRICT 4 OFFICE, RAVENNA, OHIO. SUM-8-0.38A, SUM-5-10.95, SUM-5-11.94 AND SUM-8-1.73/1.95

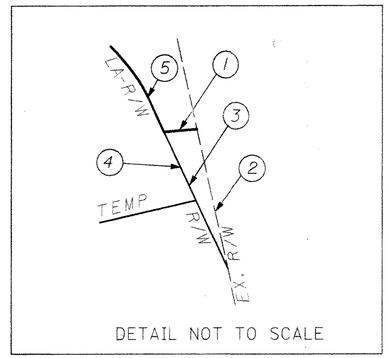

DETAIL NOT TO SCALE

MATCH LINE STA. 90+00 - SEE SHEET 59

EX. R/W

344+00 N 6° 30' 48" W 345+00 FOUNTAIN ST. 346+00

℄ CONSTRUCTION

℄ RAMP L1

℄ R/W

ADOLPH AVE. (60' R/W)

LA-R/W

90+61.62
189.23 RT

91+11.22
182.86 RT

91+43.94
178.66 RT

91+76.68
174.46 RT

92+12.31
177.88 RT

92+42.14
166.05 RT

S 12° 13' 50" W
35.80

R= 35.00
L= 42.12
C= 39.62
CB= N 46° 42' 01" E

N 0° 33' 53" W
33.00

66.00

33.00

EX. R/W
N 0° 33' 53" W
S 6° 30' 58" W
130.83

132.00
129.77
16.15

77 WDV

77 T

120.00
N 0° 33' 53" E

90+63.74
205.22 RT

90+53.79
221.49 RT

S 10° 17' 05" W
37.00
49.83
N 89° 12' 33" E

24

F & S PARTNERSHIP
67-47110

90+70.28
254.61 RT

IPF STA.
90+72.39
278.99 RT

78

"J-1"

SUMMA HEALTH SYSTEM HOSPITALS
67-42538

(NO TAKE)

19

L.N. SMITH ALLOTMENT
P.B. 2, PG. 39

OHIO ST. (50' R/W)

℄ R/W

N 89° 12' 33" E

7' INGRESS EGGRESS EASMT.
V. 561, PG. 238

S 89° 12' 33" W
54.28

92 LA

92 E

92 T

LINDA K. WISE
68-47326

54.28

N 89° 12' 33" E

93 LA

93 E

93 T

KEITH SNOCK
68-25103

54.28

N 89° 12' 33" E

94 LA

94 E

94 T

WILLIAM F. MILLER AND PATRICIA M. MILLER, CO-TRUSTEES
68-11157

42.84

94 WL

94 WD

51+63.26
64.12 RT

92+42.69
203.32 RT

51+92.47
37.35 RT

64.07

S 0° 41' 27" E

92+44.29
209.05 RT

92+47.33
219.97 RT

92+47.76
208.52 RT

52+00

N 89° 12' 33" E

SEE DETAIL

S 0° 33' 53" E
33.00

91+18.34
236.67 RT

91+51.07
232.47 RT

91+83.80
228.27 RT

63-30260
JULIE A. WISE AND CHRISTOPHER A. WISE

79

(NO TAKE)

25

26

52+23.29
33.00 RT

92+51.05
233.30 RT

RON E. MEYERS, JR.
68-01336

(NO TAKE)

95

V. 5401297
3' WAR EASE.

96

FREDA DICKINSON
68-39999

(NO TAKE)

97

CORNELIU MIHALCA
67-00175

(NO TAKE)

98

N 89° 12' 33" E

℄ R/W

SET IRON PIN
ALL SET IRON PINS ARE ¾" x 30" REBARS WITH ALUMINUM I.D. CAPS INSCRIBED "ODOT R/W DLZ OHIO 8058".

MONUMENT LEGEND

- M CENTERLINE AJUSTABLE MONUMENT
- ◉ R/W REFERENCE MONUMENT
- • ¾" x 30" REBAR SET
- ○ EXISTING I.P.'S SPIKES OR PIPES

℄ RAMP J

℄ TAKE DISTANCE

LINE	LENGTH	BEARING
1	3.53	N 0°47'27" W
2	25.00	N 89°12'33" E
3	25.25	S 81°10'26" W
4	11.41	N 81°10'26" E
5	5.88	S 81°10'26" W

FOR RAMP DATA SEE SHEETS 2A & 2B

EX. R/W

ADOLPH AVE. (50' R/W)

EX. R/W

GUILLERMO GAMBOA AND EUGENIA GAMBOA
68-39975

2

MATTHEW COOLEY
68-25719

SCOTT D. BARRICKMAN
68-10780

3

BRYAN ALLOTMENT
P.B. 4, PG. 13

MATCH LINE STA. 95+00 - SEE SHEET 66

REV.	DATE	DESCRIPTION
	7/17/01	ADD PARCELS 92E AND 93E
DATE OF COMPLETION		

N

SCALE IN FEET
0 10 20 40

PID NO. 20356

R/W DESIGNER ADT
R/W REVIEWER TRB

S.R. 8 RIGHT OF WAY PLAN
STA. 90+00 TO STA. 95+00 (EAST)

SUM-8-0.63

63 / 71

1080
1088

CITY OF AKRON
ORIGINAL PORTAGE TOWNSHIP, TRACT 7
TOWNSHIP 2 NORTH, RANGE 11 WEST
SUMMIT COUNTY, OHIO

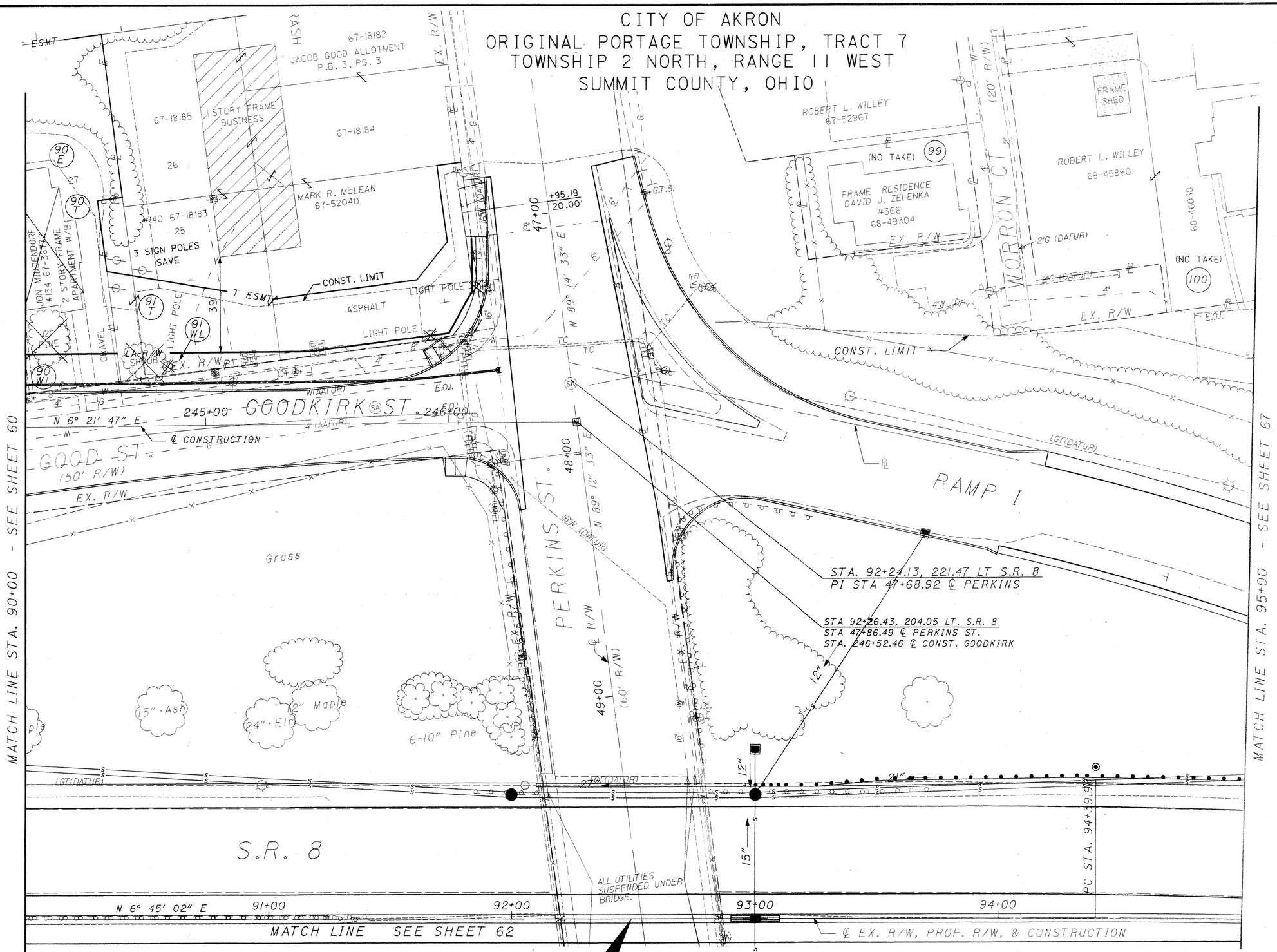

FOR BEARINGS, DISTANCES AND STATIONS/OFFSETS SEE DETAIL SHEET No. 65

END ACQUISITION STA. 92+51.05

FOR RAMP DATA SEE SHEETS 2A & 2B

REV.	DATE	DESCRIPTION	REV.	DATE	DESCRIPTION
			DATE OF COMPLETION		

SCALE IN FEET

PID NO. 20356

R/W DESIGNER ADT
R/W REVIEWER TRB

S.R. 8 RIGHT OF WAY PLAN
STA. 90+00 TO STA. 95+00 (WEST)

SUM-8-0.63

1081/1088

CITY OF AKRON
ORIGINAL PORTAGE TOWNSHIP, TRACT 7
TOWNSHIP 2 NORTH, RANGE 11 WEST
SUMMIT COUNTY, OHIO

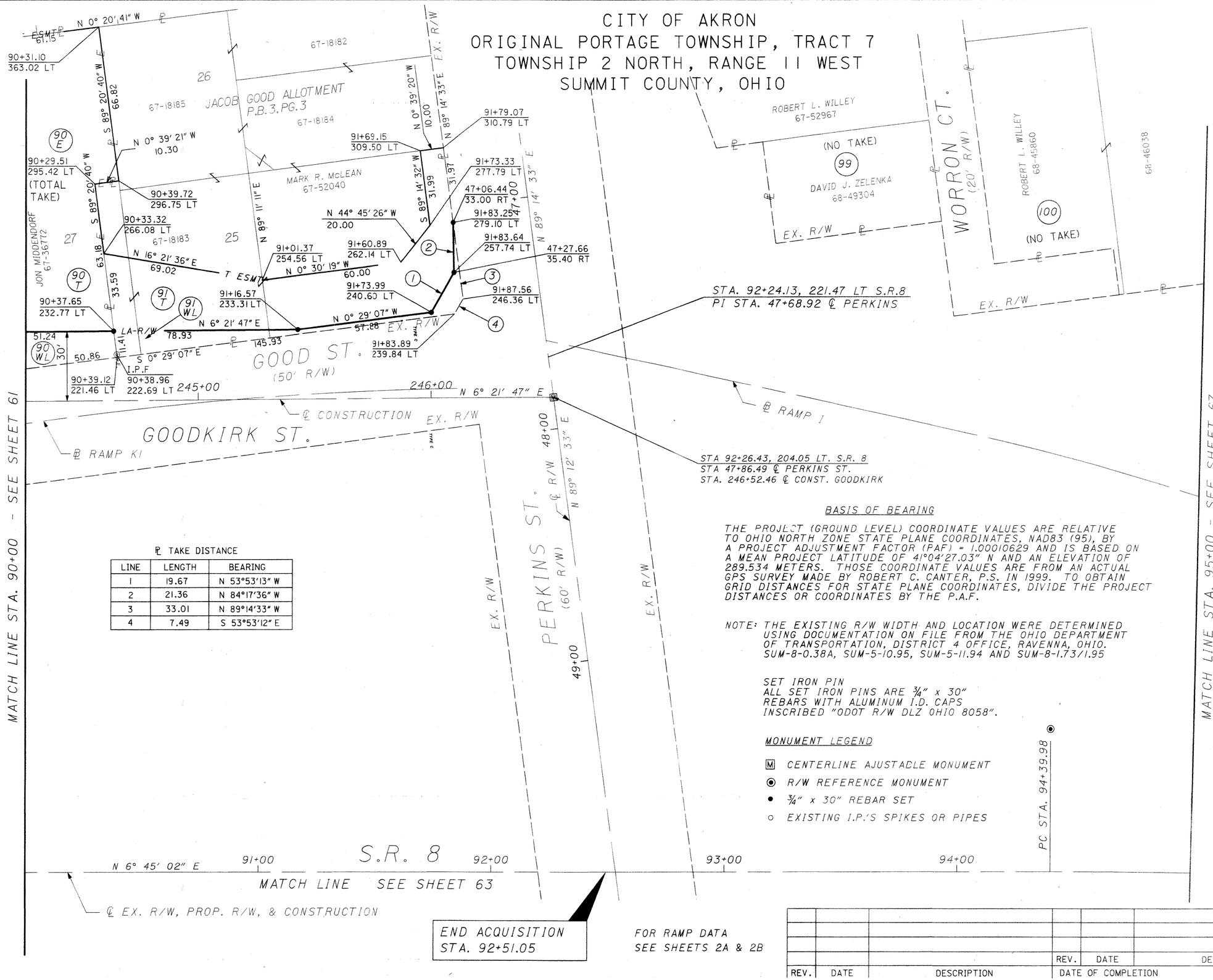

℄ TAKE DISTANCE

LINE	LENGTH	BEARING
1	19.67	N 53°53'13" W
2	21.36	N 84°17'36" W
3	33.01	N 89°14'33" W
4	7.49	S 53°53'12" E

END ACQUISITION
STA. 92+51.05

FOR RAMP DATA
SEE SHEETS 2A & 2B

BASIS OF BEARING

THE PROJECT (GROUND LEVEL) COORDINATE VALUES ARE RELATIVE TO OHIO NORTH ZONE STATE PLANE COORDINATES, NAD83 (95), BY A PROJECT ADJUSTMENT FACTOR (PAF) = 1.00010629 AND IS BASED ON A MEAN PROJECT LATITUDE OF 41°04'27.03" N AND AN ELEVATION OF 289.534 METERS. THOSE COORDINATE VALUES ARE FROM AN ACTUAL GPS SURVEY MADE BY ROBERT C. CANTER, P.S. IN 1999. TO OBTAIN GRID DISTANCES FOR STATE PLANE COORDINATES, DIVIDE THE PROJECT DISTANCES OR COORDINATES BY THE P.A.F.

NOTE: THE EXISTING R/W WIDTH AND LOCATION WERE DETERMINED USING DOCUMENTATION ON FILE FROM THE OHIO DEPARTMENT OF TRANSPORTATION, DISTRICT 4 OFFICE, RAVENNA, OHIO. SUM-8-0.38A, SUM-5-10.95, SUM-5-11.94 AND SUM-8-1.73/1.95

SET IRON PIN
ALL SET IRON PINS ARE ¾" x 30" REBARS WITH ALUMINUM I.D. CAPS INSCRIBED "ODOT R/W DLZ OHIO 8058".

MONUMENT LEGEND

- [M] CENTERLINE AJUSTABLE MONUMENT
- ◉ R/W REFERENCE MONUMENT
- ● ¾" x 30" REBAR SET
- ○ EXISTING I.P.'S SPIKES OR PIPES

REV.	DATE	DESCRIPTION	REV.	DATE	DESCRIPTION

DATE OF COMPLETION

SCALE IN FEET: 0, 10, 20, 40

PID NO. 20356

R/W DESIGNER ADT
R/W REVIEWER TRB

S.R. 8 RIGHT OF WAY PLAN
STA. 90+00 TO STA. 95+00 (WEST)

SUM-8-0.63

CURVE DATA

P.I. STA. = 98+02.91, ℄ CONST. S.R. 8
Δ = 14° 10′ 44″ (RT)
Dc = 1° 57′ 48″
R = 2,918.12′
T = 362.93′
L = 722.14′
E = 22.48′
e_{max} = 0.035 (NDC 0.045)
NO SPIRAL (NDC 1°30′, SPIRAL)

CITY OF AKRON
ORIGINAL PORTAGE TOWNSHIP, TRACT 7
TOWNSHIP 2 NORTH, RANGE 11 WEST
SUMMIT COUNTY, OHIO

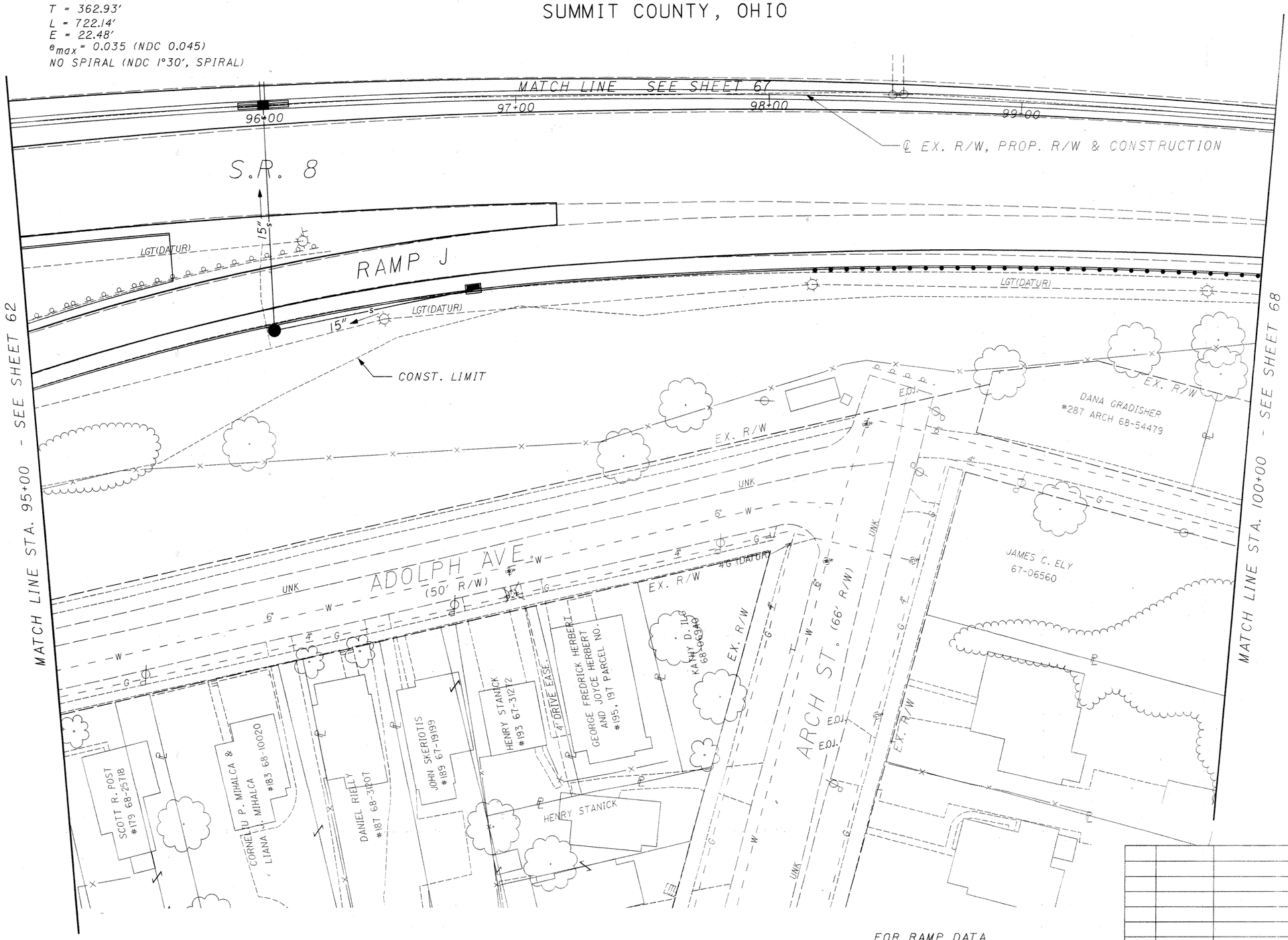

FOR RAMP DATA
SEE SHEETS 2A & 2B

REV.	DATE	DESCRIPTION

DATE OF COMPLETION

N

SCALE IN FEET
0 10 20 40

PID NO. 20356

R/W DESIGNER ADT
R/W REVIEWER TRB

S.R. 8 RIGHT OF WAY PLAN
STA. 95+00 TO STA. 100+00 (EAST)

SUM-8-0.63

66 / 71

1083
1088

CITY OF AKRON
ORIGINAL PORTAGE TOWNSHIP, TRACT 7
TOWNSHIP 2 NORTH, RANGE 11 WEST
SUMMIT COUNTY, OHIO

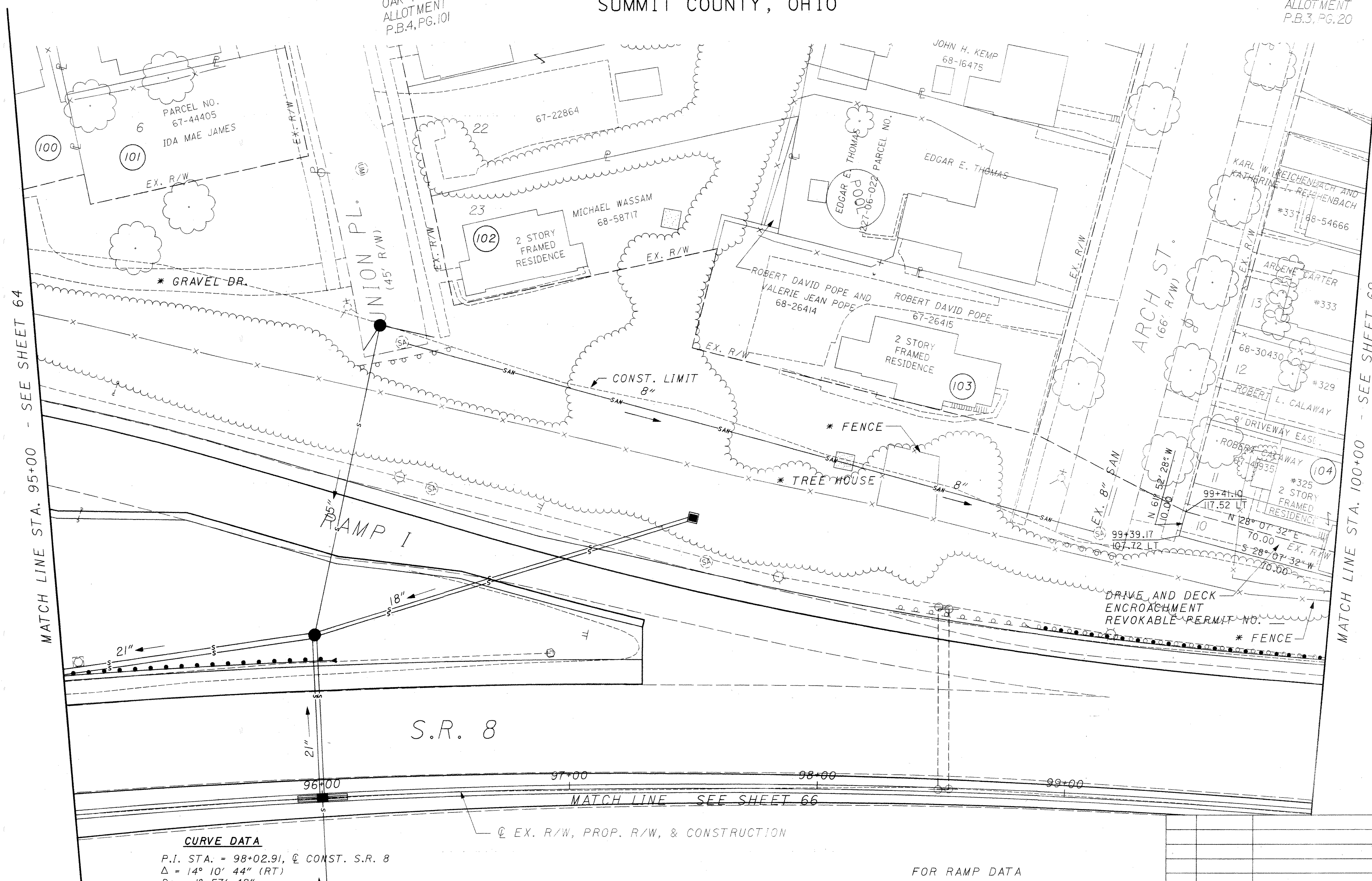

CURVE DATA

P.I. STA. = 98+02.91, ℄ CONST. S.R. 8
Δ = 14° 10' 44" (RT)
Dc = 1° 57' 48"
R = 2,918.12'
T = 362.93'
L = 722.14'
E = 22.48'

* DENOTES R/W ENCROACHMENT TO BE REMOVED

FOR RAMP DATA SEE SHEETS 2A & 2B

REV.	DATE	DESCRIPTION

DATE OF COMPLETION

SCALE IN FEET 0 10 20 40

PID NO. **20356**

R/W DESIGNER **ADT**
R/W REVIEWER **TRB**

S.R. 8 RIGHT OF WAY PLAN
STA. 95+00 TO STA. 100+00 (WEST)

SUM-8-0.63

CURVE DATA

P.I. STA. = 98+02.91, ℄ CONST. S.R. 8
Δ = 14° 10' 44" (RT)
Dc = 1° 57' 48"
R = 2,918.12'
T = 362.93'
L = 722.14'
E = 22.48'

CITY OF AKRON
ORIGINAL PORTAGE TOWNSHIP, TRACT 7
TOWNSHIP 2 NORTH, RANGE 11 WEST
SUMMIT COUNTY, OHIO

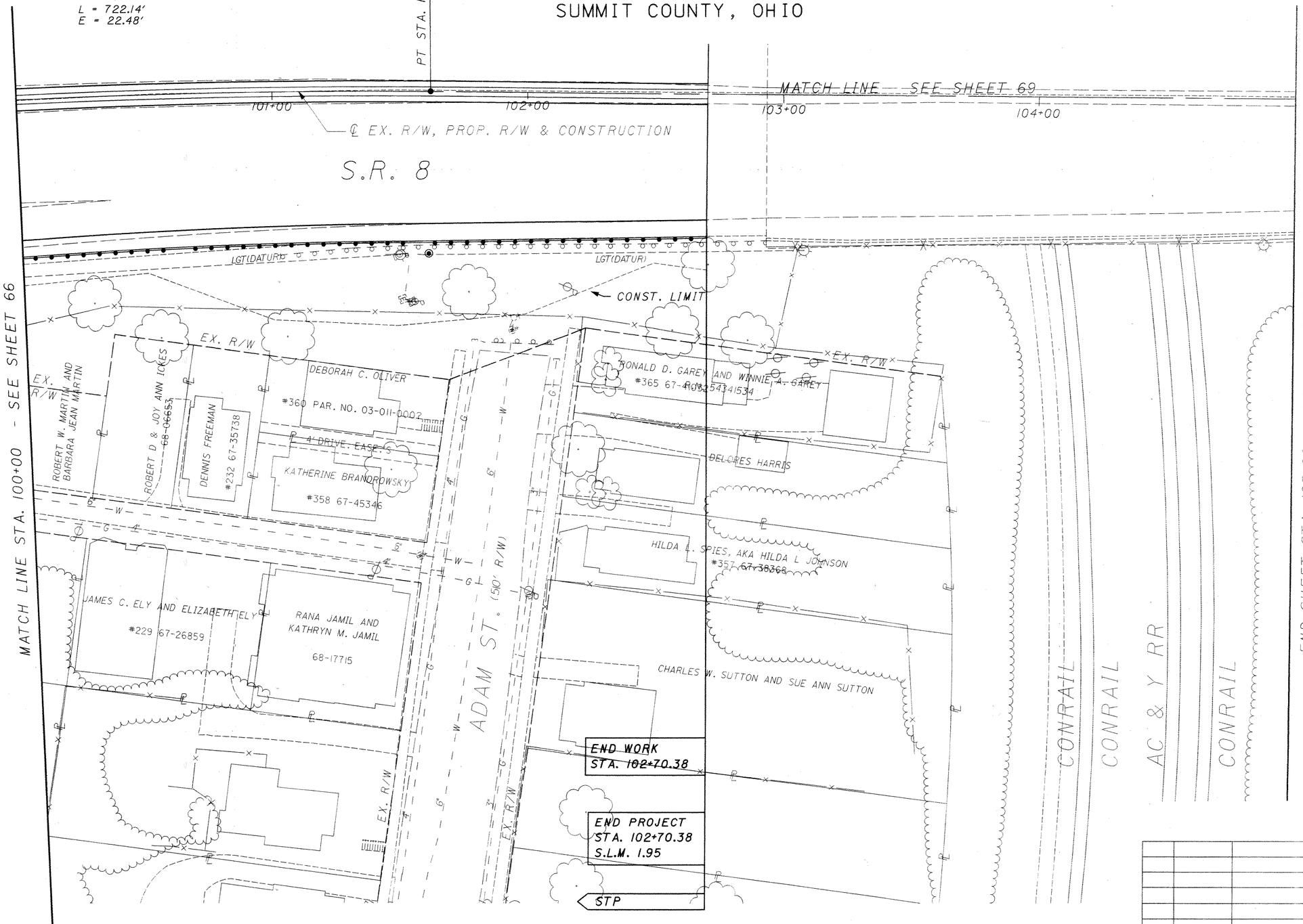

REV.	DATE	DESCRIPTION

DATE OF COMPLETION

N

SCALE IN FEET 0 10 20 40

PID NO. 20356

R/W DESIGNER ADT
R/W REVIEWER TRB

S.R. 8 RIGHT OF WAY PLAN
STA. 100+00 TO STA. 105+00 (EAST)

SUM-8-0.63

68 / 71

1085
1088

CITY OF AKRON
ORIGINAL PORTAGE TOWNSHIP, TRACT 7
TOWNSHIP 2 NORTH, RANGE 11 WEST
SUMMIT COUNTY, OHIO

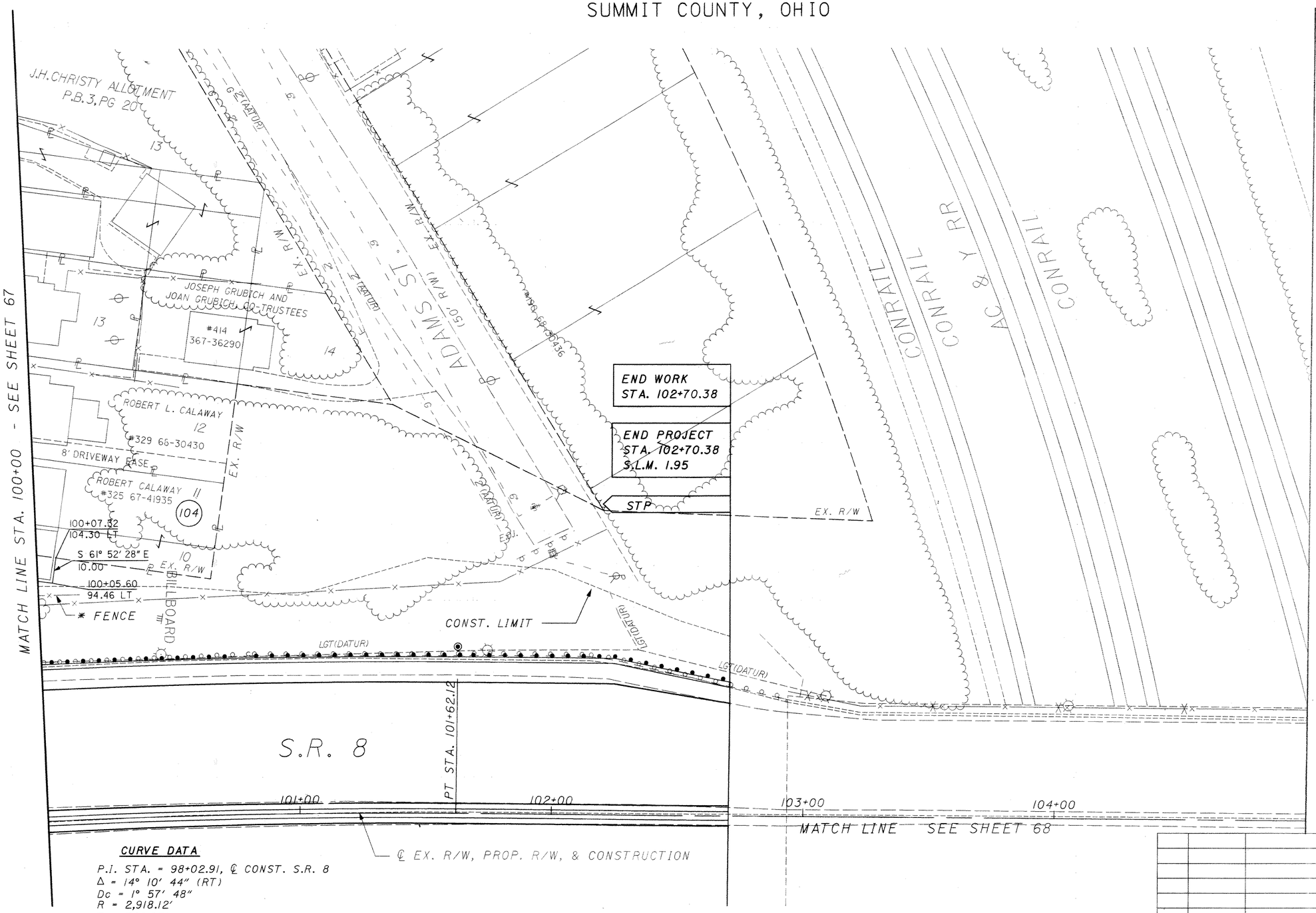

CURVE DATA

P.I. STA. = 98+02.91, ℄ CONST. S.R. 8
Δ = 14° 10' 44" (RT)
Dc = 1° 57' 48"
R = 2,918.12'
T = 362.93'
L = 722.14'
E = 22.48'

* DENOTES R/W ENCROACHMENT TO BE REMOVED

REV.	DATE	DESCRIPTION
DATE OF COMPLETION		

SCALE IN FEET 0 10 20 40

PID NO. 20356

R/W DESIGNER ADT
R/W REVIEWER TRB

S.R. 8 RIGHT OF WAY PLAN
STA. 100+00 TO STA. 105+00 (WEST)

SUM-8-0.63

69 / 71

1086
1088

CITY OF AKRON
ORIGINAL PORTAGE TOWNSHIP, TRACT 7
TOWNSHIP 2 NORTH, RANGE 11 WEST
SUMMIT COUNTY, OHIO

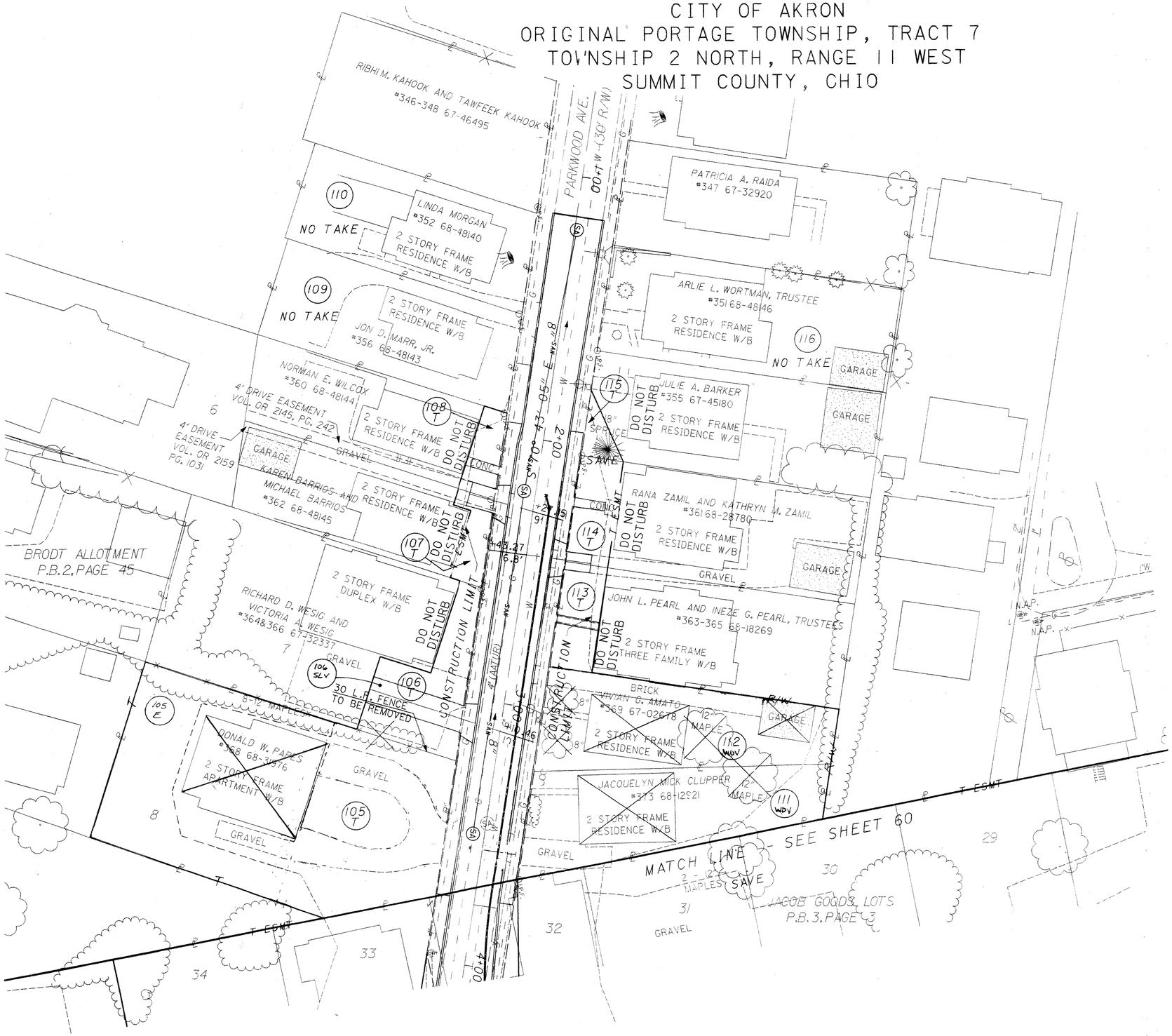

	11/28/01	DELETE 105SL, INCREASE AREA OF 106T ADD 105E
DS	7/25/01	REVISE 111T, 112T TO 111WDV, 112WDV - TOTAL TAKE ADD 105SLV ; 106 SLV
REV.	DATE	DESCRIPTION

DATE OF COMPLETION

R/W DESIGNER: ADT
R/W REVIEWER: TRB

PID NO. 20356

S.R. 8 RIGHT OF WAY PLAN
PARKWOOD AVENUE

SUM-8-0.63

70 / 71

1087
1088

CITY OF AKRON
ORIGINAL PORTAGE TOWNSHIP, TRACT 7
TOWNSHIP 2 NORTH, RANGE 11 WEST
SUMMIT COUNTY, OHIO

℄ TAKE DISTANCE

LINE	LENGTH	BEARING
1	26.06	N 61°20'03" W
2	7.23	S 28°39'57" W
3	6.50	N 61°22'48" W
4	20.00	N 28°39'57" E

REV.	DATE	DESCRIPTION
	11/29/01	DELETE 105SL - INCREASE 105T ADD 105E
DD	7/25/01	REVISE 111T, 112T TO 111WOV, 112WOV - TOTAL TAKE ADD 103SLV & 106SLV
DATE OF COMPLETION		

SCALE IN FEET: 0, 10, 20, 40

PID NO. 20356

R/W DESIGNER ADT

R/W REVIEWER TRB

S.R. 8 RIGHT OF WAY PLAN
STA. 105+00 TO STA. 108+92 (WEST)
SUM-8-0.63

71 / 71

1088
1088

GENERAL INFORMATION

INTRODUCTION

THIS PROJECT CONSISTS OF THE IMPROVEMENT OF APPROXIMATELY 1.4 MILES OF ROADWAY ON STATE ROUTE 8 IN THE CITY OF AKRON, OHIO, BEGINNING AT ABOUT JOHNSTON STREET EXTENDING NORTHWARD, AND TERMINATING AT PERKINS STREET. THE PROJECT ALSO CONSISTS OF APPROXIMATELY 1.1 MILES OF NEW ROADWAY FOR RAMPS AND 1.4 MILES OF NEW SERVICE ROADS.

GEOLOGY AND OBSERVATIONS

GENERALIZED GEOLOGICAL REFERENCES REPORT THAT THE SITE WAS GLACIATED BY BOTH THE ILLINOIAN AND WISCONSIN GLACIERS. OVERBURDEN AT THE SITE CONSISTS OF GLACIAL GROUND MORAINE DEPOSITS TYPICALLY RANGING FROM 15 TO 30 FEET IN THICKNESS. THE UNDERLYING BEDROCK IS REPORTED TO BE SANDSTONE AND SHALE OF PENNSYLVANIAN AND MISSISSIPPIAN AGE. THE SHARON CONGLOMERATE OF PENNSYLVANIAN AGE IS REPORTED TO OUTCROP IN THE VALLEY WALLS OF THE LITTLE CUYAHOGA RIVER, IMMEDIATELY NORTH OF THE PROJECT AREA.

THE NATURAL RELIEF AT THE SITE VARIES FROM APPROXIMATE ELEVATION 1027 FEET TO 1079 FEET ALONG THE MAINLINE. THE SOUTHERN PORTION OF THE HIGHWAY IS ELEVATED, WITH THE EMBANKMENT GENERALLY 25 TO 35 FEET HIGH. BETWEEN THE EAST EXCHANGE STREET AND CARROLL STREET BRIDGES, THE ROAD TRANSITIONS TO A DEPRESSED HIGHWAY. AT THE NORTH END OF THE PROJECT, THE HIGHWAY IS GENERALLY 20 TO 25 FEET LOWER THAN THE ADJACENT STREETS. THE ENTIRE PROJECT AREA IS DEVELOPED FOR COMMERCIAL, RESIDENTAL, AND INSTITUTIONAL USE.

EXPLORATION

EXPLORATION BORINGS WERE MADE BY MEANS OF EITHER A TRUCK-MOUNTED OR TRACK-MOUNTED (ATV) ROTARY-TYPE DRILL USING HOLLOWSTEM AUGERS. THE BORINGS WERE DRILLED BETWEEN MARCH 24, 1999 AND SEPTEMBER 14, 2000.

INVESTIGATIONAL FINDINGS

THE BORINGS DRILLED ENCOUNTERED WIDELY VARYING SUBSURFACE CONDITIONS WITH THE SUBSURFACE SOILS CONSISTING PRIMARILY OF GRAVEL WITH SAND AND SILT (A-2-4), SANDY SILT (A-4a), SILT (A-4b), SILT AND CLAY (A-6a), AND SILTY CLAY (A-6b). HOWEVER, GRAVEL WITH SAND (A-1-b), COARSE AND FINE SAND (A-3a), AND CLAY (A-7-6) WERE ALSO ENCOUNTERED. THE MOISTURE CONTENTS OF THE COHESIVE SOILS WERE GENERALLY NEAR THE PLASTIC LIMIT.

FILL, AND/OR POSSIBLE FILL WAS ENCOUNTERED IN A NUMBER OF BORINGS. SOUTH OF THE STATE ROUTE 8 OVERPASS AT EAST EXCHANGE STREET, FILL WAS ENCOUNTERED TO DEPTHS UP TO 43 FEET WHERE BORINGS WERE DRILLED ON THE EXISTING EMBANKMENT.

BEDROCK OR WEATHERED BEDROCK IS ANTICIPATED IN THE FOLLOWING EXCAVATION AREAS:

RAMP K1	83+00	TO	89+00
FOUNTAIN STREET	340+50	TO	344+00

POSSIBLE BEDROCK EXCAVATION MAY BE ENCOUNTERED ALONG THE ENTIRE LENGTHS OF PROPOSED RAMPS L1 AND P1. THE EXISTING RAMPS WERE CONSTRUCTED ON TOP OF A ROCKCUT, SO THE ROCK DEPTHS ENCOUNTERED IN ADJACENT EXPLORATORY BORINGS IS PROBABLY ARTIFICALLY LOW. CONSEQUENTLY, THE DEPTH OF ROCK WITHIN THE ZONE OF CONSTRUCTION FOR EITHER RAMP MAY BE SHALLOWER THAN THE BORINGS ENCOUNTERED.

SILT IS ANTICIPATED NEAR THE PROPOSED SUBGRADE LEVEL IN THE FOLLOWING EXCAVATION AREAS:

RAMP Q1	71+40		
FOUNTAIN STREET	325+27	TO	327+67
GOODKIRK STREET	229+62		

LEGEND FOR PROJECT - AVERAGE RESULTS OF TESTS - 73 SAMPLES TESTED

DESCRIPTION	ODOT CLASS	% AGG.	% C.SAND	% F.SAND	% SILT	% CLAY	LIQUID LIMIT	PLASTICITY INDEX	WATER CONTENT	SAMPLES TESTED
GRAVEL WITH SAND	A-1-b(0)	42	15	24	19		21	3	13	2
GRAVEL WITH SAND AND SILT	A-2-4(0)	13	11	48	19	9	22	2	10	10
GRAVEL W/ SAND, SILT AND CLAY	A-2-6				VISUAL CLASSIFICATION					
FINE SAND	A-3				VISUAL CLASSIFICATION					
COARSE AND FINE SAND	A-3a(0)	13	19	49	19		---	---	8	6
SANDY SILT	A-4a(5)	9	9	26	41	15	21	5	14	32
SILT	A-4b(9)	1	4	21	60	14	23	4	18	10
SILT AND CLAY	A-6a(7)	5	10	22	40	23	29	13	17	9
SILTY CLAY	A-6b(10)	3	5	23	39	30	33	19	18	18
CLAY	A-7-6(13)	0	0	1	63	36	41	23	23	1
WEATHERED SANDSTONE	- - -				VISUAL CLASSIFICATION					
WEATHERED SHALE	- - -				VISUAL CLASSIFICATION					
SANDSTONE	- - -				VISUAL CLASSIFICATION					
SHALE	- - -				VISUAL CLASSIFICATION					
RANDOM FILL	- - -				VISUAL CLASSIFICATION					

TR TOP OF ROCK

AUGER BORING - PLAN VIEW

DRIVE SAMPLE AND/OR CORE BORING - PROFILE VIEW

W FREE WATER

STATIC WATER LEVEL

WATER CONTENT NEARLY EQUAL TO OR GREATER THAN LIQUID LIMIT

INDICATES A NON PLASTIC MATERIAL WITH A HIGH WATER CONTENT

X/Y/Z NUMBER OF BLOWS FOR "STANDARD PENETRATION" TEST
X=NUMBER OF BLOWS FOR FIRST 6 INCHES
Y=NUMBER OF BLOWS FOR SECOND 6 INCHES
Z=NUMBER OF BLOWS FOR THIRD 6 INCHES

W.O.H. WEIGHT OF HAMMER

NOTE: FIGURES BESIDE BORINGS INDICATE WATER CONTENT IN PERCENT e.g. 15

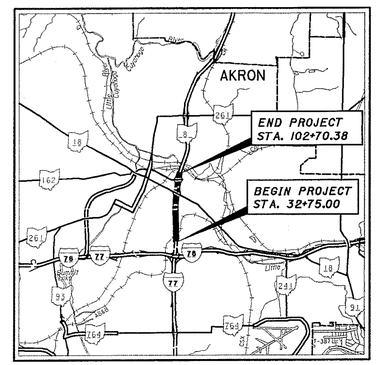

LOCATION MAP
SCALE IN MILES
0 1 2 3 4

NOTES

ALL AVAILABLE SOIL AND BEDROCK INFORMATION WHICH CAN BE CONVENIENTLY SHOWN ON THE SOIL PROFILE SHEETS HAS BEEN SO REPORTED. ADDITIONAL SUBSURFACE INVESTIGATIONS, SOIL TESTS, AND BEDROCK BORINGS MAY HAVE BEEN MADE TO STUDY SOME SPECIAL ASPECT OF THE PROJECT. COPIES OF THIS DATA, IF ANY, MAY BE INSPECTED IN THE DISTRICT DEPUTY DIRECTOR'S OFFICE, THE OFFICE OF MATERIALS MANAGEMENT AT 1600 WEST BROAD STREET, THE OFFICE OF ROADWAY ENGINEERING OR THE OFFICE OF STRUCTURAL ENGINEERING AT 1980 WEST BROAD STREET.

CALCULATED RJH
CHECKED BEW

SOIL PROFILE LEGEND

SUM-8-0.63

PROJECT INDEX

STATE ROUTE 8					
FROM	TO	PLAN VIEW SHEET	PROFILE SHEET	CUT MAX.(FT.)	FILL EMB. MAX.(FT.)
30+00	42+50	12	12	1	1
42+50	55+00	13	13	–	1
55+00	67+50	14	14	–	1
67+50	80+00	15	15	3	–
80+00	92+50	16	16	–	–
92+50	105+00	17	17	–	2

RAMP K1					
FROM	TO	PLAN VIEW SHEET	PROFILE SHEET	CUT MAX.(FT.)	FILL EMB. MAX.(FT.)
---	---	18	18	14	–

RAMP L1					
FROM	TO	PLAN VIEW SHEET	PROFILE SHEET	CUT MAX.(FT.)	FILL EMB. MAX.(FT.)
---	---	19	19	14	–

RAMP P1					
FROM	TO	PLAN VIEW SHEET	PROFILE SHEET	CUT MAX.(FT.)	FILL EMB. MAX.(FT.)
---	---	20	20	14	–

RAMP Q1					
FROM	TO	PLAN VIEW SHEET	PROFILE SHEET	CUT MAX.(FT.)	FILL EMB. MAX.(FT.)
---	---	21	21	19	–

RAMP S					
FROM	TO	PLAN VIEW SHEET	PROFILE SHEET	CUT MAX.(FT.)	FILL EMB. MAX.(FT.)
---	---	22	22	–	2

RAMP T					
FROM	TO	PLAN VIEW SHEET	PROFILE SHEET	CUT MAX.(FT.)	FILL EMB. MAX.(FT.)
---	---	23	23	2	2

GOODKIRK STREET					
FROM	TO	PLAN VIEW SHEET	PROFILE SHEET	CUT MAX.(FT.)	FILL EMB. MAX.(FT.)
191+00	204+00	24	24	–	1
204+00	216+50	25	25	1	–
216+50	229+00	26	26	11	–
229+00	241+50	27	27	12	5

FOUNTAIN STREET					
FROM	TO	PLAN VIEW SHEET	PROFILE SHEET	CUT MAX.(FT.)	FILL EMB. MAX.(FT.)
298+50	311+00	28	28	–	–
311+00	323+50	29	29	16	–
323+50	336+00	30	30	15	10
336+00	346+51	31	31	14	4

CROSS SECTIONS – STATE ROUTE 8					
FROM	TO	PLAN VIEW SHEET	PROFILE SHEET	CUT MAX.(FT.)	FILL EMB. MAX.(FT.)
51+00	---	---	32	6	–
55+50	---	---	33	5	2
68+50	---	---	34	10	–
81+50	---	---	35	7	11
87+00	---	---	36	17	–
92+00	---	---	37	7	–

CALCULATED RJH
CHECKED BEW

SOIL PROFILE

SUM-8-0.63

SUMMARY OF SOIL TEST DATA
STATE ROUTE 8

Station & Offset	Depth From	To	% Agg	% C.S.	% F.S.	% Silt	% Clay	LL	PI	% W.C.	ODOT Class
32+31	0.0	0.8	ASPHALT CONCRETE, CONCRETE (VISUAL)								VISUAL
40.6 ft. Lt.	0.8	3.5	39	12	14	24	11	25	8	12	A-2-4
	3.5	8.5	BROWN SILT AND CLAY (VISUAL)								A-6a
	8.5	10.0	BROWN WEATHERED SANDSTONE (VISUAL)								VISUAL
35+77	0.0	1.0	ASPHALT CONCRETE, CONCRETE (VISUAL)								VISUAL
53.7 ft. Rt.	1.0	3.5	36	12	17	24	11	21	6	12	A-2-4
	3.5	8.5	FILL: BROWN COARSE AND FINE SAND (VISUAL)								A-3a
	8.5	21.0	8	10	18	45	19	22	6	14	A-4a
	21.0	25.0	POSSIBLE FILL: BROWN AND GRAY SANDY SILT (VISUAL)								A-4a
	25.0	38.5	BROWN SILTY CLAY (VISUAL)								A-6b
	38.5	54.0	GRAY SILT AND CLAY (VISUAL)								A-6a
	54.0	58.7	DARK GRAY WEATHERED SHALE (VISUAL)								VISUAL
39+87	0.0	1.0	ASPHALT CONCRETE, AGG. BASE (VISUAL)								VISUAL
13.8 ft. Lt.	1.0	3.5	FILL: BROWN COARSE AND FINE SAND (VISUAL)								A-3a
	3.5	10.0	4	8	25	48	15	30	15	12	A-6a
40+70	0.0	0.8	ASPHALT CONCRETE AND AGG. BASE (VISUAL)								VISUAL
48.1 ft. Lt.	0.8	3.0	FILL: GRAY SILT AND CLAY (VISUAL)								A-6a
	3.0	5.5	13	8	37	31	11	17	3	12	A-4a
	5.5	8.0	FILL: BROWN FINE SAND (VISUAL)								A-3
	8.0	10.5	FILL: BROWN SILT AND CLAY (VISUAL)								A-6a
	10.5	13.0	FILL: BROWN SANDY SILT (VISUAL)								A-4a
	13.0	15.5	FILL: BROWN SILT AND CLAY (VISUAL)								A-6a
	15.5	18.0	FILL: BLACK SILT AND CLAY (VISUAL)								A-6a
	18.0	23.0	FILL: GRAYISH BROWN SILT AND CLAY (VISUAL)								A-6a
	23.0	25.5	FILL: GRAY FINE SAND (VISUAL)								A-3
	25.5	28.0	FILL: BROWN COARSE AND FINE SAND (VISUAL)								A-3a
	28.0	32.0	FILL: BROWN GRAVEL WITH SAND AND SILT (VISUAL)								A-2-4
	32.0	47.0	BROWN SILT AND CLAY (VISUAL)								A-6a
	47.0	53.0	GRAY WEATHERED SHALE (VISUAL)								VISUAL
	53.0	58.5	DARK GRAY SHALE (VISUAL)								VISUAL
42+17	0.0	1.0	ASPHALT CONCRETE AND AGG. BASE (VISUAL)								VISUAL
47.5 ft. Lt.	1.0	3.0	FILL: BROWN SILT AND CLAY (VISUAL)								A-6a
	3.0	5.5	8	7	27	45	13	20	4	14	A-4a
	5.5	8.0	13	8	42	29	8	NP	NP	14	A-4a
	8.0	10.5	FILL: BROWN COARSE AND FINE SAND (VISUAL)								A-3a
	10.5	15.5	FILL: BROWN SANDY SILT (VISUAL)								A-4a
	15.5	20.5	FILL: BROWN SILT AND CLAY (VISUAL)								A-6a
	20.5	23.0	FILL: BROWN GRAVEL WITH SAND, SILT, AND CLAY (VISUAL)								A-2-6
	23.0	25.0	FILL: BROWN SANDY SILT (VISUAL)								A-4a
	25.0	28.0	FILL: BROWN GRAVEL WITH SAND, SILT, AND CLAY (VISUAL)								A-2-6
	28.0	37.0	FILL: BROWN SILT AND CLAY (VISUAL)								A-6a
	37.0	40.5	FILL: BLACK SILT AND CLAY (VISUAL)								A-6a
	40.5	43.0	FILL: FRACTURED CONCRETE (VISUAL)								VISUAL
	43.0	47.0	BROWN SILT AND CLAY (VISUAL)								A-6a
	47.0	58.5	GRAY WEATHERED SHALE								VISUAL
	58.5	63.5	GRAY SHALE								VISUAL

Station & Offset	Depth From	To	% Agg	% C.S.	% F.S.	% Silt	% Clay	LL	PI	% W.C.	ODOT Class
43+57	0.0	1.0	ASPHALT CONCRETE, AGG. BASE, CONCRETE (VISUAL)								VISUAL
49.9 ft. Lt.	1.0	3.0	FILL: BROWN SILT AND CLAY (VISUAL)								A-6a
	3.0	11.5	8	7	24	50	11	21	3	18	A-4a
	11.5	25.0	FILL: BROWN SILT AND CLAY (VISUAL)								A-6a
	25.0	28.0	BROWN SILT AND CLAY (VISUAL)								A-6a
	28.0	32.0	BLACK SILT AND CLAY (VISUAL)								A-6a
	32.0	37.0	GRAYISH BROWN SILT AND CLAY (VISUAL)								A-6a
	37.0	43.5	GRAY WEATHERED SHALE (VISUAL)								VISUAL
	43.5	48.5	DARK GRAY SHALE (VISUAL)								VISUAL
44+94	0.0	1.5	CONCRETE (VISUAL)								VISUAL
52.3 ft. Lt.	1.5	28.0	10	11	29	39	11	18	2	15	A-4a
	28.0	30.5	FILL: BROWN COARSE AND FINE SAND (VISUAL)								A-3a
	30.5	32.0	FILL: BROWN SANDY SILT (VISUAL)								A-4a
	32.0	33.0	FILL: BROWN SILT AND CLAY								A-6a
	33.0	34.5	GRAY SILT AND CLAY								A-6a
47+24	0.0	1.8	CONCRETE, AGG. BASE (VISUAL)								VISUAL
59.3 ft. Lt.	1.8	6.7	3	6	23	48	20	22	7	15	A-4a
48+38	0.0	1.3	CONCRETE, AGG. BASE (VISUAL)								VISUAL
80.2 ft. Lt.	1.3	3.0	FILL: BROWN GRAVEL (VISUAL)								A-1-a
	3.0	5.5	4	6	19	48	23	24	8	19	A-4a
	5.5	9.0	FILL: BROWN SILT AND CLAY (VISUAL)								A-6a
	9.0	9.5	FILL: BROWN AND GRAY GRAVEL (VISUAL)								A-1-a
	9.5	10.5	FILL: BROWN AND RED GRAVEL WITH SAND AND SILT (VISUAL)								A-2-4
	10.5	13.0	BROWN SILT AND CLAY (VISUAL)								A-6a
	13.0	15.5	BLACK SILT AND CLAY (VISUAL)								A-6a
	15.5	18.0	BROWN AND GRAY SILT AND CLAY (VISUAL)								A-6a
	18.0	20.5	GRAY COARSE AND FINE SAND (VISUAL)								A-3a
	20.5	23.5	BROWN GRAVEL WITH SAND (VISUAL)								A-1-b
	23.5	28.5	BROWN SANDSTONE (VISUAL)								VISUAL
51+25	0.0	0.9	TOPSOIL (VISUAL)								VISUAL
77.7 ft. Lt.	0.9	6.0	13	16	27	31	13	21	7	13	A-4a
	6.0	11.0	BROWN AND BLACK WEATHERED SHALE (VISUAL)								VISUAL
	11.0	13.5	BROWN WEATHERED SHALE (VISUAL)								VISUAL
	13.5	28.8	GRAY WEATHERED SHALE (VISUAL)								VISUAL
52+21	0.0	0.9	ASPHALT CONCRETE, CONCRETE, AGG. BASE (VISUAL)								VISUAL
12.9 ft. Rt.	0.9	6.0	14	14	30	26	16	21	8	11	A-4a
	6.0	7.6	BROWN SILT AND CLAY (VISUAL)								A-6a
55+81	0.0	0.8	ASPHALT CONCRETE, AGG. BASE (VISUAL)								VISUAL
13.8 ft. Lt.	0.8	6.0	22	13	35	30		NP	NP	8	A-2-4
	6.0	8.8	GRAY WEATHERED SHALE (VISUAL)								VISUAL
59+74	0.0	0.6	CONCRETE, AGG. BASE (VISUAL)								VISUAL
41.0 ft. Rt.	0.6	5.7	WEATHERED SANDSTONE (VISUAL)								VISUAL

Station & Offset	Depth From	To	% Agg	% C.S.	% F.S.	% Silt	% Clay	LL	PI	% W.C.	ODOT Class
63+87	0.0	0.8	ASPHALT CONCRETE, CONCRETE (VISUAL)								VISUAL
13.7 ft. Lt.	0.8	3.5	17	16	32	25	10	19	3	10	A-2-4
	3.5	6.0	BROWN WEATHERED SANDSTONE (VISUAL)								VISUAL
	6.0	8.6	BROWN SANDY SILT (VISUAL)								A-4a
70+88	0.0	0.9	TOPSOIL (VISUAL)								VISUAL
69.9 ft. Lt.	0.9	6.0	24	7	20	37	12	20	5	14	A-4a
	6.0	10.9	BROWN SANDY SILT (VISUAL)								A-4a
72+31	0.0	1.3	ASPHALT CONCRETE, CONCRETE, AGG. BASE (VISUAL)								VISUAL
13.0 ft. Lt.	1.3	8.8	14	9	27	45	5	NP	NP	17	A-4a
75+32	0.0	0.3	TOPSOIL (VISUAL)								VISUAL
57.5 ft. Lt.	0.3	14.1	21	10	42		27	NP	NP	9	A-3a
75+60	0.0	0.8	ASPHALT CONCRETE, CONCRETE (VISUAL)								VISUAL
14.3 ft. Rt.	0.8	4.9	2	14	56	21	7	NP	NP	7	A-3a
78+56	0.0	0.4	TOPSOIL (VISUAL)								VISUAL
50.9 ft. Rt.	0.4	3.5	5	7	26	49	13	19	3	13	A-4a
	3.5	8.5	LIGHT BROWN WEATHERED SANDSTONE (VISUAL)								VISUAL
	8.5	14.0	LIGHT BROWN SANDSTONE (VISUAL)								VISUAL
79+61	0.0	0.8	TOPSOIL (VISUAL)								VISUAL
42.4 ft. Rt.	0.8	5.4	17	12	33	24	13	19	7	11	A-4a
81+42	0.0	0.8	ASPHALT CONCRETE, CONCRETE (VISUAL)								VISUAL
12.3 ft. Lt.	0.8	9.4	BROWN WEATHERED SANDSTONE (VISUAL)								VISUAL
8+11	0.0	0.9	ASPHALT CONCRETE, CONCRETE (VISUAL)								VISUAL
41.2 ft. Lt.	0.9	3.0	BROWN COARSE AND FINE SAND (VISUAL)								A-3a
	3.0	5.5	27	6	58		9	NP	NP	5	A-3
	5.5	8.5	GRAYISH BROWN WEATHERED SANDSTONE (VISUAL)								VISUAL
	8.5	13.5	BROWN SANDSTONE (VISUAL)								VISUAL
88+24	0.0	0.8	ASPHALT CONCRETE, CONCRETE (VISUAL)								VISUAL
13.1 ft. Rt.	0.8	6.2	BROWN WEATHERED SANDSTONE (VISUAL)								VISUAL
91+77	0.0	0.8	ASPHALT CONCRETE, CONCRETE (VISUAL)								VISUAL
40.4 ft. Lt.	0.8	8.5	BROWN WEATHERED SANDSTONE (VISUAL)								VISUAL

CALCULATED R.J.H
CHECKED B.E.W

SOIL PROFILE

SUM-8-0.63

SUMMARY OF SOIL TEST DATA
RAMP K1

Station & Offset	Depth From	To	% Agg	% C.S.	% F.S.	% Silt	% Clay	LL	PI	% W.C.	ODOT Class
86+94	0.0	0.7	TOPSOIL (VISUAL)								VISUAL
23.4 ft. Rt.	0.7	5.0	LIGHT BROWN WEATHERED SANDSTONE (VISUAL)								VISUAL
	5.0	10.0	LIGHT BROWN SANDSTONE (VISUAL)								VISUAL
89+20	0.0	-	ASPHALT CONCRETE, BRICK								VISUAL
8.5 ft. Lt.	-5.5		BROWN SILT AND CLAY (VISUAL)								A-6a
	5.5	9.3	1	5	27	52	15	22	6	13	A-4a
	9.3	12.0	BROWN WEATHERED SANDSTONE (VISUAL)								VISUAL
	12.0	24.0	BROWN SANDSTONE (VISUAL)								VISUAL
90+61	0.0	0.6	ASPHALT CONCRETE, BRICK (VISUAL)								VISUAL
4.7 ft. Lt.	0.6	8.6	2	3	13	53	29	27	9	16	A-4b

CALCULATED RJH
CHECKED BEW

SOIL PROFILE

SUM-8-0.63

SUMMARY OF SOIL TEST DATA
RAMP L1

Station & Offset	Depth From	To	% Agg	% C.S.	% F.S.	% Silt	% Clay	LL	PI	% W.C.	ODOT Class
79+61	0.0	0.8	TOPSOIL (VISUAL)								VISUAL
16.5 ft. Lt.	0.8	5.4	17	12	33	24	13	19	7	11	A-4a
83+28	0.0	0.3	TOPSOIL (VISUAL)								VISUAL
2.3 ft. Lt.	0.3	6.3	10	7	24	40	19	21	7	12	A-4a
84+61	0.0	0.9	ASPHALT CONCRETE, CONCRETE (VISUAL)								VISUAL
76.2 ft. Lt.	0.9	3.0	BROWN COARSE AND FINE SAND (VISUAL)								A-3a
	3.0	5.5	27	6	58		9	NP	NP	5	A-3
	5.5	8.5	GRAYISH BROWN WEATHERED SANDSTONE (VISUAL)								VISUAL
	8.5	13.5	BROWN SANDSTONE (VISUAL)								VISUAL
87+54	0.0	0.6	TOPSOIL (VISUAL)								VISUAL
14.6 ft. Lt.	0.6	4.1	3	8	22	43	24	26	11	15	A-6a
	4.1	6.0	LIGHT BROWN WEATHERED SANDSTONE (VISUAL)								VISUAL
89+83	0.0	0.8	ASPHALT CONCRETE, AGG. BASE (VISUAL)								VISUAL
12.1 ft. Rt.	0.8	8.5	2	5	32	38	23	30	16	18	A-6b
	8.5	10.0	BROWN FINE SAND (VISUAL)								A-3

CALCULATED RJH
CHECKED BEW

SOIL PROFILE

SUM-8-0.63

SUMMARY OF SOIL TEST DATA
RAMP P1

Station & Offset	Depth From	To	% Agg	% C.S.	% F.S.	% Silt	% Clay	LL	PI	% W.C.	ODOT Class
67+41	0.0	0.6	ASPHALT CONCRETE, AGG. BASE (VISUAL)								VISUAL
11.4 ft. Lt.	0.6	3.5	1	8	32	45	14	18	5	13	A-4a
	3.5	13.5	4	7	21	35	33	35	20	18	A-6b
	13.5	16.0	BROWN SILT (VISUAL)								A-4b
	16.0	21.2	BROWN SILT AND CLAY (VISUAL)								A-6a
	21.2	25.0	GRAY SANDY SILT (VISUAL)								A-4a
	25.0	30.0	BROWN SANDY SILT (VISUAL)								
	30.0	40.0	LIGHT GRAY SANDSTONE (VISUAL)								VISUAL
69+00	0.0	0.6	ASPHALT CONCRETE, AGG. BASE (VISUAL)								VISUAL
25.9 ft. Lt.	0.6	3.0	FILL: BLACK COARSE AND FINE SAND (VISUAL)								A-3a
	3.0	10.5	BROWN SILT AND CLAY (VISUAL)								A-6a
	10.5	13.0	BROWN COARSE AND FINE SAND (VISUAL)								A-3a
	13.0	15.5	0	5	30	57	8	NP	NP	20	A-4b
	15.5	18.0	GRAY WEATHERED SHALE (VISUAL)								VISUAL
	18.0	23.5	LIGHT BROWN WEATHERED SANDSTONE (VISUAL)								VISUAL
	23.5	29.5	BROWN SANDSTONE (VISUAL)								VISUAL
70+64	0.0	0.5	ASPHALT CONCRETE, AGG. BASE (VISUAL)								VISUAL
19.9 ft. Lt.	0.5	3.5	2	6	25	48	19	20	5	19	A-4a
	3.5	8.5	BROWN SANDY SILT (VISUAL)								A-4a
	8.5	18.5	16	8	11	47	18	26	7	18	A-4a
	18.5	21.0	BROWN COARSE AND FINE SAND (VISUAL)								A-3a
	21.0	25.0	LIGHT BROWN WEATHERED SANDSTONE (VISUAL)								VISUAL
	25.0	30.0	LIGHT BROWN SANDSTONE (VISUAL)								VISUAL
70+89	0.0	0.9	TOPSOIL (VISUAL)								VISUAL
53.6 ft. Rt.	0.9	6.0	24	7	20	37	12	20	5	14	A-4a
	6.0	10.9	BROWN SANDY SILT (VISUAL)								A-4a
75+33	0.0	0.3	TOPSOIL (VISUAL)								VISUAL
13.1 ft. Rt.	0.3	14.1	21	10	42	27		NP	NP	9	A-3a

CALCULATED RJH
CHECKED BEW

SOIL PROFILE

SUM-8-0.63

SUMMARY OF SOIL TEST DATA
RAMP Q1

Station & Offset	Depth From	To	% Agg	% C.S.	% F.S.	% Silt	% Clay	LL	PI	% W.C.	ODOT Class
68+83	0.0	0.6	CONCRETE (VISUAL)								VISUAL
61.2 ft. Rt.	0.6	2.5	4	11	27	36	22	25	11	14	A-6a
	2.5	10.0	5	23	50	22		NP	NP	6	A-3a
71+44	0.0	0.8	TOPSOIL (VISUAL)								VISUAL
2.4 ft. Rt.	0.8	6.0	BROWN SILT AND CLAY (VISUAL)								A-6a
	6.0	23.5	0	1	5	87	7	NP	NP	22	A-4b
	23.5	29.1	LIGHT BROWN WEATHERED SANDSTONE (VISUAL)								VISUAL

CALCULATED R.JH
CHECKED B.E.W

SOIL PROFILE

SUM-8-0.63

SUMMARY OF SOIL TEST DATA
RAMP S

Station & Offset	Depth From	To	% Agg	% C.S.	% F.S.	% Silt	% Clay	LL	PI	% W.C.	ODOT Class
52+12	0.0	0.9	ASPHALT CONCRETE, CONCRETE, AGG. BASE (VISUAL)								VISUAL
79.4 ft. Lt.	0.9	6.0	14	14	30	26	16	21	8	11	A-4a
	6.0	7.6	BROWN SILT AND CLAY (VISUAL)								A-6a
56+15	0.0	0.6	ASPHALT CONCRETE, BRICK (VISUAL)								VISUAL
7.0 ft. Rt.	0.6	5.5	15	18	27	25	15	21	3	11	A-4a
	5.5	9.0	FILL: BROWN GRAVEL WITH SAND AND SILT (VISUAL)								A-2-4

CALCULATED R.JH
CHECKED B.E.W.

SOIL PROFILE

SUM-8-0.63

SUMMARY OF SOIL TEST DATA
RAMP T1

Station & Offset	Depth From	To	% Agg	% C.S.	% F.S.	% Silt	% Clay	LL	PI	% W.C.	ODOT Class
51+25	0.0	0.9	TOPSOIL (VISUAL)								VISUAL
6.7 ft. Lt.	0.9	6.0	13	16	27	31	13	21	7	13	A-4a
	6.0	11.0	BROWN AND BLACK WEATHERED SHALE (VISUAL)								VISUAL
	11.0	13.5	BROWN WEATHERED SHALE (VISUAL)								VISUAL
	13.5	28.8	GRAY WEATHERED SHALE (VISUAL)								VISUAL
55+34	0.0	1.0	ASPHALT CONCRETE (VISUAL)								VISUAL
36.1 ft. Lt.	1.0	5.5	1	10	64	19	6	NP	NP	11	A-2-4
	5.5	8.0	BROWN WEATHERED SANDSTONE (VISUAL)								VISUAL
	8.0	8.8	BROWN SANDSTONE (VISUAL)								VISUAL
	8.8	12.4	GRAY SANDSTONE (VISUAL)								VISUAL
	12.4	13.1	BROWN SANDSTONE (VISUAL)								VISUAL
	13.1	15.0	GRAY SANDSTONE (VISUAL)								VISUAL
56+48	0.0	0.7	ASPHALT CONCRETE, CONCRETE (VISUAL)								VISUAL
20.1 ft. Lt.	0.7	6.0	11	9	28	39	13	18	4	14	A-4a
	6.0	8.8	BROWN WEATHERED SANDSTONE (VISUAL)								VISUAL

CALCULATED R.J.H.
CHECKED B.E.W.

SOIL PROFILE

SUM-8-0.63

9 / 37

SUMMARY OF SOIL TEST DATA
GOODKIRK STREET

Station & Offset	Depth From	To	% Agg	% C.S.	% F.S.	% Silt	% Clay	LL	PI	% W.C.	ODOT Class
194+59	0.0	1.0	ASPHALT CONCRETE								VISUAL
5.6 ft. Rt.	1.0	3.0	FILL: GRAY SILT AND CLAY (VISUAL)								A-6a
	3.0	5.5	FILL: DARK GRAY SILT AND CLAY (VISUAL)								A-6a
	5.5	8.0	6	12	23	32	27	33	16	23	A-6a
	8.0	18.8	DARK GRAY WEATHERED SHALE (VISUAL)								VISUAL
199+50	0.0	1.5	TOPSOIL (VISUAL)								VISUAL
43.6 ft. Rt.	1.5	5.5	7	22	33	29	9	18	6	13	A-4a
	5.5	8.0	BROWN COARSE AND FINE SAND (VISUAL)								A-3a
	8.0	10.5	BROWN SILT AND CLAY (VISUAL)								A-6a
	10.5	18.0	GRAY WEATHERED SHALE (VISUAL)								VISUAL
	18.0	28.0	GRAY SHALE (VISUAL)								VISUAL
200+50	0.0	1.3	TOPSOIL (VISUAL)								VISUAL
37.5 ft. Rt.	1.3	3.0	6	18	35	28	13	19	7	13	A-4a
	3.0	8.0	RANDOM FILL (VISUAL)								VISUAL
	8.0	18.0	GRAY SHALE (VISUAL))								VISUAL
204+86	0.0	1.0	ASPHALT CONCRETE (VISUAL)								VISUAL
10.3 ft. Lt.	1.0	8.0	13	9	23	39	16	19	4	14	A-4a
	8.0	9.5	GRAY WEATHERED SANDSTONE (VISUAL)								VISUAL
206+74	0.0	0.5	ASPHALT CONCRETE, CONCRETE (VISUAL)								VISUAL
10.1 ft. Lt.	0.5	6.0	BROWN WEATHERED SHALE AND SANDSTONE (VISUAL)								VISUAL
	6.0	8.7	BROWN SANDY SILT (VISUAL)								A-4a
209+22	0.0	1.0	ASPHALT CONCRETE (VISUAL)								VISUAL
9.9 ft. Lt.	1.0	5.5	1	10	64	19	6	NP	NP	11	A-2-4
	5.5	8.0	BROWN WEATHERED SANDSTONE (VISUAL)								VISUAL
	8.0	8.8	BROWN SANDSTONE (VISUAL)								VISUAL
	8.8	12.4	GRAY SANDSTONE (VISUAL)								VISUAL
	12.4	13.1	BROWN SANDSTONE (VISUAL)								VISUAL
	13.1	15.0	GRAY SANDSTONE (VISUAL)								VISUAL
210+38	0.0	0.7	ASPHALT CONCRETE, CONCRETE (VISUAL)								VISUAL
9.5 ft. Lt.	0.7	6.0	11	9	28	39	13	18	4	14	A-4a
	6.0	8.8	BROWN WEATHERED SANDSTONE (VISUAL)								VISUAL
214+43	0.0	0.8	ASPHALT CONCRETE, CONCRETE, AGG. BASE (VISUAL)								VISUAL
10.2 ft. Lt.	0.8	6.0	13	15	33	27	12	20	5	15	A-4a
	6.0	8.6	BROWN WEATHERED SANDSTONE (VISUAL)								VISUAL
214+76	0.0	1.0	ASPHALT CONCRETE (VISUAL)								VISUAL
5.3 ft. Rt.	1.0	3.0	BROWN SANDY SILT (VISUAL)								A-4a
	3.0	8.0	14	13	29	31	13	27	15	17	A-6a
	8.0	10.5	LIGHT BROWN WEATHERED SANDSTONE (VISUAL)								VISUAL
	10.5	15.0	LIGHT BROWN SANDSTONE (VISUAL)								VISUAL
	15.0	20.0	BROWN SANDSTONE (VISUAL)								VISUAL
	20.0	25.0	GRAY SANDSTONE (VISUAL)								VISUAL
	25.0	27.0	LIGHT BROWN SANDSTONE (VISUAL)								VISUAL
221+59	0.0	0.6	ASPHALT CONCRETE, AGG. BASE (VISUAL)								VISUAL
15.4 ft. Lt.	0.6	3.5	1	8	32	45	14	18	5	13	A-4a
	3.5	13.5	4	7	21	35	33	35	20	18	A-6b
	13.5	16.0	BROWN SILT (VISUAL)								A-4b
	16.0	21.2	BROWN SILT AND CLAY (VISUAL)								A-6a
	21.2	30.0	BROWN SANDY SILT (VISUAL)								A-4a
	30.0	40.0	LIGHT GRAY SANDSTONE (VISUAL)								VISUAL

Station & Offset	Depth From	To	% Agg	% C.S.	% F.S.	% Silt	% Clay	LL	PI	% W.C.	ODOT Class
223+20	0.0	0.6	ASPHALT CONCRETE, AGG. BASE (VISUAL)								VISUAL
18.9 ft. Lt.	0.6	3.0	FILL: BLACK COARSE AND FINE SAND (VISUAL)								A-3a
	3.0	10.5	BROWN SILT AND CLAY (VISUAL)								A-6a
	10.5	13.0	BROWN COARSE AND FINE SAND (VISUAL)								A-3a
	13.0	15.5	0	5	30	57	8	NP	NP	20	A-4b
	15.5	18.0	GRAY WEATHERED SHALE (VISUAL)								VISUAL
	18.0	23.5	LIGHT BROWN WEATHERED SANDSTONE (VISUAL)								VISUAL
	23.5	29.5	BROWN SANDSTONE (VISUAL)								VISUAL
224+84	0.0	0.5	ASPHALT CONCRETE, AGG. BASE (VISUAL)								VISUAL
12.4 ft. Rt.	0.5	3.5	2	6	25	48	19	20	5	19	A-4a
	3.5	8.5	BROWN SANDY SILT (VISUAL)								A-4a
	8.5	18.5	16	8	11	47	18	26	7	18	A-4a
	18.5	21.0	BROWN COARSE AND FINE SAND (VISUAL)								A-3a
	21.0	25.0	LIGHT BROWN WEATHERED SANDSTONE (VISUAL)								VISUAL
	25.0	30.0	LIGHT BROWN SANDSTONE (VISUAL)								VISUAL
226+50	0.0	0.9	CONCRETE, ASPHALT CONCRETE (VISUAL)								VISUAL
24.9 ft. Lt.	0.9	3.0	BROWN SILT AND CLAY (VISUAL)								A-6a
	3.0	5.5	BROWN COARSE AND FINE SAND (VISUAL)								A-3a
	5.5	8.0	BROWN SILT AND CLAY (VISUAL)								A-6a
	8.0	10.5	0	10	69	15	6	NP	NP	15	A-2-4
	10.5	15.5	BROWN SILT AND CLAY (VISUAL)								A-6a
	15.5	18.0	0	0	15	80	5	NP	NP	26	A-4b
	18.0	19.0	GRAY SILT AND CLAY (VISUAL)								A-6a
	19.0	21.0	LIGHT BROWN WEATHERED SANDSTONE (VISUAL)								VISUAL
	21.0	26.0	LIGHT BROWN SANDSTONE (VISUAL)								VISUAL
228+25	0.0	0.5	ASPHALT CONCRETE (VISUAL)								VISUAL
32.0 ft. Lt	0.5	3.0	FILL: BLACK SILT AND CLAY (VISUAL)								A-6a
	3.0	5.5	2	8	26	46	18	21	7	16	A-4a
	5.5	15.5	BROWN SANDY SILT (VISUAL)								A-4a
	15.5	16.5	BROWN SILT AND CLAY (VISUAL)								A-6a
	16.5	18.0	LIGHT BROWN WEATHERED SANDSTONE (VISUAL)								VISUAL
	18.0	25.0	LIGHT BROWN SANDSTONE (VISUAL)								VISUAL
229+01	0.0	1.1	CONCRETE, ASPHALT CONCRETE (VISUAL)								VISUAL
30.9 ft. Rt.	1.1	14.0	4	6	24	47	19	22	16	15	A-4a
	14.0	15.0	LIGHT BROWN WEATHERED SANDSTONE (VISUAL)								VISUAL
	15.0	30.0	LIGHT BROWN SANDSTONE (VISUAL)								VISUAL
229+62	0.0	0.5	ASPHALT CONCRETE (VISUAL)								VISUAL
33.8 ft. Lt.	0.5	10.5	0	2	38	53	7	NP	NP	13	A-4b
	10.5	12.0	BROWN AND GRAY SILT AND CLAY (VISUAL)								A-6a
	12.0	14.0	LIGHT BROWN WEATHERED SANDSTONE (VISUAL)								VISUAL
	14.0	21.0	LIGHT BROWN SANDSTONE (VISUAL)								VISUAL
232+84	0.0	0.9	ASPHALT CONCRETE, CONCRETE (VISUAL)								VISUAL
4.7 ft. Rt.	0.9	3.0	FILL: BROWN FINE SAND (VISUAL)								A-3
	3.0	5.5	FILL: BROWN SANDY SILT (VISUAL)								A-4a
	5.5	8.0	FILL: BROWN SILT AND CLAY (VISUAL)								A-6a
	8.0	10.5	FILL: BROWN COARSE AND FINE SAND (VISUAL)								A-3a
	10.5	13.0	12	11	21	41	15	22	6	16	A-4a
	13.0	15.5	FILL: BROWN COARSE AND FINE SAND (VISUAL)								A-3a
	15.5	18.5	BROWN WEATHERED SANDSTONE (VISUAL)								VISUAL
	18.5	28.5	BROWN SANDSTONE (VISUAL)								VISUAL
233+30	0.0	0.5	ASPHALT CONCRETE, AGG. BASE (VISUAL)								VISUAL
10.2 ft. Lt.	0.5	14.0	11	30	49	8	2	NP	NP	6	A-3a
	14.0	18.5	BROWN WEATHERED SANDSTONE (VISUAL)								VISUAL
	18.5	23.5	GRAYISH BROWN SANDSTONE (VISUAL)								VISUAL

Station & Offset	Depth From	To	% Agg	% C.S.	% F.S.	% Silt	% Clay	LL	PI	% W.C.	ODOT Class
235+56	0.0	0.7	ASPHALT CONCRETE, AGG. BASE (VISUAL)								VISUAL
6.8 ft. Lt.	0.7	3.5	BROWN SILT AND CLAY (VISUAL)								A-6a
	3.5	11.0	4	4	16	55	21	24	7	16	A-4b
	11.0	21.0	LIGHT REDDISH BROWN WEATHERED SANDSTONE (VISUAL)								VISUAL
	21.0	40.0	REDDISH BROWN SANDSTONE (VISUAL)								VISUAL
236+48	0.0	0.5	ASPHALT CONCRETE, AGG. BASE (VISUAL)								VISUAL
5.4 ft. Lt.	0.5	3.0	POSSIBLE FILL: BROWN SILT AND CLAY (VISUAL)								A-6a
	3.0	5.5	BLACK SILT AND CLAY (VISUAL)								A-6a
	5.5	13.0	2	14	20	47	17	23	8	16	A-4a
	13.0	16.0	LIGHT BROWN WEATHERED SANDSTONE (VISUAL)								VISUAL
	16.0	21.0	LIGHT BROWN SANDSTONE (VISUAL)								VISUAL
238+52	0.0	0.7	ASPHALT CONCRETE, BRICK (VISUAL)								VISUAL
18.5 ft. Rt.	0.7	3.0	BROWN SANDY SILT (VISUAL)								A-4a
	3.0	4.5	BROWN SILT AND CLAY (VISUAL)								A-6a
	4.5	8.5	1	8	67	12	12	NP	NP	3	A-3a
	8.5	13.5	LIGHT BROWN SANDSTONE (VISUAL)								VISUAL
239+76	0.0	0.7	ASPHALT CONCRETE, BRICK (VISUAL)								VISUAL
25.3 ft. Rt.	0.7	5.5	BROWN SILT AND CLAY (VISUAL)								A-6a
	5.5	6.5	6	19	24	40	11	26	5	16	A-6a
	6.5	8.5	LIGHT BROWN WEATHERED SANDSTONE (VISUAL)								VISUAL
	8.5	14.5	BROWN SANDSTONE (VISUAL)								VISUAL
241+25	0.0	0.8	ASPHALT CONCRETE, AGG. BASE (VISUAL)								VISUAL
2.1 ft. Rt.	0.8	8.5	2	4	16	44	34	33	19	18	A-6b
	8.5	10.0	BROWN SANDY SILT (VISUAL)								A-4a

CALCULATED R.JH CHECKED BEW

SOIL PROFILE

SUM-8-0.63

10/37

SUMMARY OF SOIL TEST DATA
FOUNTAIN STREET

Station & Offset	Depth From	To	% Agg	% C.S.	% F.S.	% Silt	% Clay	LL	PI	% W.C.	ODOT Class
299+27	0.0	0.8	ASPHALT CONCRETE, BRICK (VISUAL)								VISUAL
12.9' Rt.	0.8	3.0	FILL: BROWN SILT AND CLAY (VISUAL)								A-6a
	3.0	5.5	BROWN GRAVEL WITH SAND (VISUAL)								A-1-b
	5.5	10.5	2	4	21	53	20	21	5	17	A-4a
	10.5	23.5	DARK GRAY WEATHERED SHALE (VISUAL)								VISUAL
305+02	0.0	0.3	TOPSOIL (VISUAL)								VISUAL
19.5' Lt.	0.3	3.0	BROWN COARSE AND FINE SAND (VISUAL)								A-3a
	3.0	5.5	43	18	19	14	6	21	6	11	A-1-b
	5.5	7.0	BROWN SILT AND CLAY (VISUAL)								A-6a
	7.0	7.9	BROWN SANDSTONE (VISUAL)								VISUAL
	7.9	10.0	GRAY SANDSTONE (VISUAL)								VISUAL
310+06	0.0	0.6	ASPHALT CONCRETE, BRICK (VISUAL)								VISUAL
4.7' Lt.	0.6	5.5	15	18	27	25	15	21	3	11	A-4a
	5.5	9.0	FILL: BROWN GRAVEL WITH SAND AND SILT (VISUAL)								A-2-4
316+00	0.0	0.6	ASPHALT CONCRETE, AGG. BASE (VISUAL)								VISUAL
9.4' Lt.	0.6	6.5	28	14	38		20	NP	NP	13	A-3a
	6.5	10.0	BROWN SILTY CLAY (VISUAL)								A-6b
317+64	0.0	1.0	ASPHALT CONCRETE (VISUAL)								VISUAL
25.4' Lt.	1.0	10.5	13	25	56	6	0	NP	NP	7	A-3a
	10.5	15.0	BROWN SANDY SILT (VISUAL)								A-4a
319+12	0.0	1.0	ASPHALT CONCRETE, CONCRETE (VISUAL)								VISUAL
38.2' Lt.	1.0	6.0	40	13	28		19	NP	NP	15	A-2-4
	6.0	10.0	BROWN COARSE AND FINE SAND (VISUAL)								A-3a
322+79	0.0	0.6	CONCRETE (VISUAL)								VISUAL
49.9 ft. Rt.	0.6	2.5	4	11	27	36	22	25	11	14	A-6a
	2.5	10.0	5	23	50	22		NP	NP	6	A-3a
325+28	0.0	0.8	TOPSOIL (VISUAL)								VISUAL
56.1' Lt.	0.8	6.0	BROWN SILT AND CLAY (VISUAL)								A-6a
	6.0	23.5	0	1	5	87	7	NP	NP	22	A-4b
	23.5	29.1	LIGHT BROWN WEATHERED SANDSTONE (VISUAL)								VISUAL
327+84	0.0	1.2	CONCRETE, AGG. BASE (VISUAL)								VISUAL
2.4' Lt.	1.2	3.5	BROWN SILT AND CLAY (VISUAL)								A-6a
	3.5	11.0	3	5	22	50	20	23	7	15	A-4b
	11.0	23.5	4	6	25	55	10	19	16	13	A-4b
	23.5	25.0	BROWN SILT (VISUAL)								A-4b
	25.0	28.5	BROWN FINE SAND (VISUAL)								A-3
	28.5	38.3	LIGHT REDDISH BROWN WEATHERED SANDSTONE (VISUAL)								VISUAL
329+69	0.0	0.7	ASPHALT CONCRETE (VISUAL)								VISUAL
32.9' Lt.	0.7	3.0	BROWN SILT AND CLAY (VISUAL)								A-6a
	3.0	5.5	BROWN SILT AND CLAY (VISUAL)								A-6a
	5.5	15.5	0	4	13	59	24	25	9	17	A-4b
	15.5	18.0	GRAY WEATHERED SHALE (VISUAL)								VISUAL
	18.0	25.0	LIGHT BROWN SANDSTONE (VISUAL)								VISUAL

Station & Offset	Depth From	To	% Agg	% C.S.	% F.S.	% Silt	% Clay	LL	PI	% W.C.	ODOT Class
330+10	0.0	1.0	ASPHALT CONCRETE, AGGREGATE BASE (VISUAL)								VISUAL
19.2 ft. Lt.	1.0	3.0	GRAY COARSE AND FINE SAND (VISUAL)								A-3a
	3.0	10.5	BROWN SILT AND CLAY (VISUAL)								A-6a
	10.5	13.0	LIGHT BROWN COARSE AND FINE SAND (VISUAL)								A-3a
	13.0	18.0	12	11	26	38	13	22	5	13	A-4a
	18.0	20.5	LIGHT BROWN FINE SAND (VISUAL)								A-3
	20.5	23.5	LIGHT BROWN WEATHERED SANDSTONE (VISUAL)								VISUAL
	23.5	33.5	LIGHT BROWN SANDSTONE (VISUAL)								VISUAL
335+10	0.0	0.6	ASPHALT CONCRETE, AGG. BASE (VISUAL)								VISUAL
20.8' Rt.	0.6	11.0	4	7	22	42	25	28	13	15	A-6a
	11.0	13.5	BROWN SANDY SILT (VISUAL)								A-4a
	13.5	18.6	LIGHT BROWN WEATHERED SANDSTONE (VISUAL)								VISUAL
	18.6	40.6	LIGHT BROWN SANDSTONE (VISUAL)								VISUAL
336+60	0.0	0.6	ASPHALT CONCRETE, AGG. BASE (VISUAL)								VISUAL
7.5' Lt.	0.6	11.0	2	8	30	51	9	18	3	17	A-4a
	11.0	13.5	BROWN SANDY SILT (VISUAL)								A-4a
	13.5	18.6	LIGHT BROWN WEATHERED SANDSTONE								VISUAL
	18.6	40.6	LIGHT BROWN SANDSTONE (VISUAL)								VISUAL
339+36	0.0	1.2	TOPSOIL (VISUAL)								VISUAL
0.4' Rt.	1.2	6.0	3	14	51	17	15	21	7	14	A-2-4
	6.0	8.5	BROWN SANDY SILT (VISUAL)								A-4a
	8.5	11.0	BROWN SILT AND CLAY (VISUAL)								A-6a
	11.0	38.6	LIGHT BROWN TO BROWN WEATHERED SANDSTONE (VISUAL)								VISUAL
340+98	0.0	0.2	TOPSOIL (VISUAL)								VISUAL
7.6' Rt.	0.2	10.5	7	15	25	38	15	21	8	13	A-4a
	10.5	12.5	LIGHT BROWN WEATHERED SANDSTONE (VISUAL)								VISUAL
	12.5	18.5	LIGHT BROWN SANDSTONE (VISUAL)								VISUAL
342+58	0.0	0.2	TOPSOIL (VISUAL)								VISUAL
10.7' Rt.	0.2	5.9	3	13	23	30	31	31	17	20	A-6a
	5.9	6.9	COBBLES & BOULDERS, GRANITE (VISUAL)								VISUAL
	10.0	20.0	LIGHT BROWN SANDSTONE (VISUAL)								VISUAL
343+57	0.0	1.0	TOPSOIL (VISUAL)								VISUAL
7.3' Rt.	1.0	8.6	0	0	6	56	38	34	20	20	A-6a
	8.6	13.5	LIGHT BROWN WEATHERED SANDSTONE (VISUAL)								VISUAL
	13.5	30.0	LIGHT BROWN SANDSTONE (VISUAL)								VISUAL
344+77	0.0	0.8	ASPHALT CONCRETE, AGG. BASE (VISUAL)								VISUAL
6.2' Rt.	0.8	8.5	2	5	32	38	23	30	16	18	A-6b
	8.5	10.0	BROWN FINE SAND (VISUAL)								A-3
345+85	0.0	1.6	ASPHALT CONCRETE (VISUAL)								VISUAL
7.2' Lt.	1.6	5.5	BROWN SILT AND CLAY (VISUAL)								A-6a
	5.5	9.0	10	7	22	37	24	25	9	7	A-4a
	9.0	13.0	LIGHT BROWN SANDSTONE (VISUAL)								VISUAL

CALCULATED R.JH CHECKED B.E.W

SOIL PROFILE

SUM-8-0.63

11/37

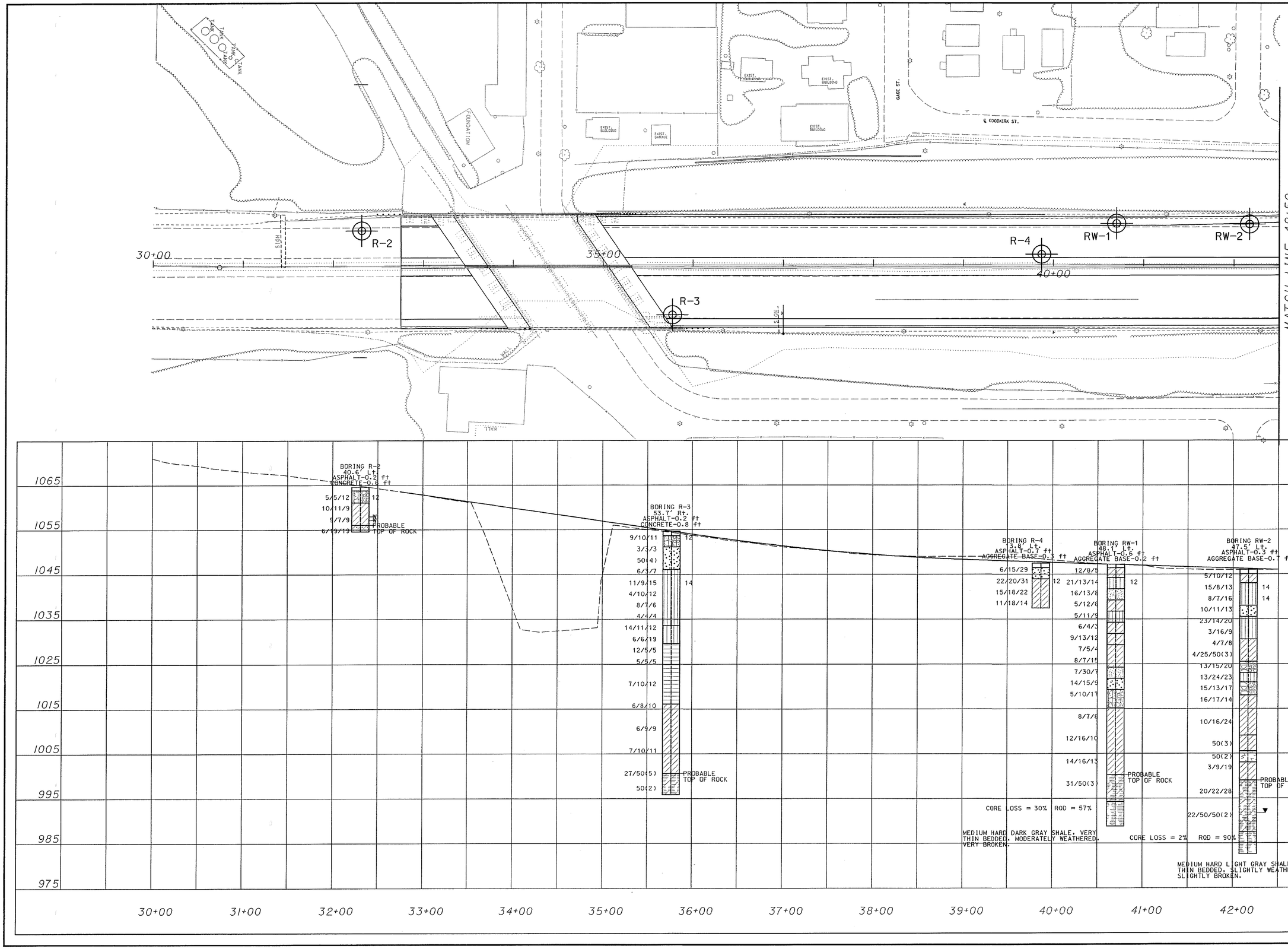

N

HORIZONTAL SCALE IN FEET
0 25 50 100

CALCULATED RJH
CHECKED BEW

SOIL PROFILE
STA. 30+00 TO STA. 42+50

SUM-8-0.63

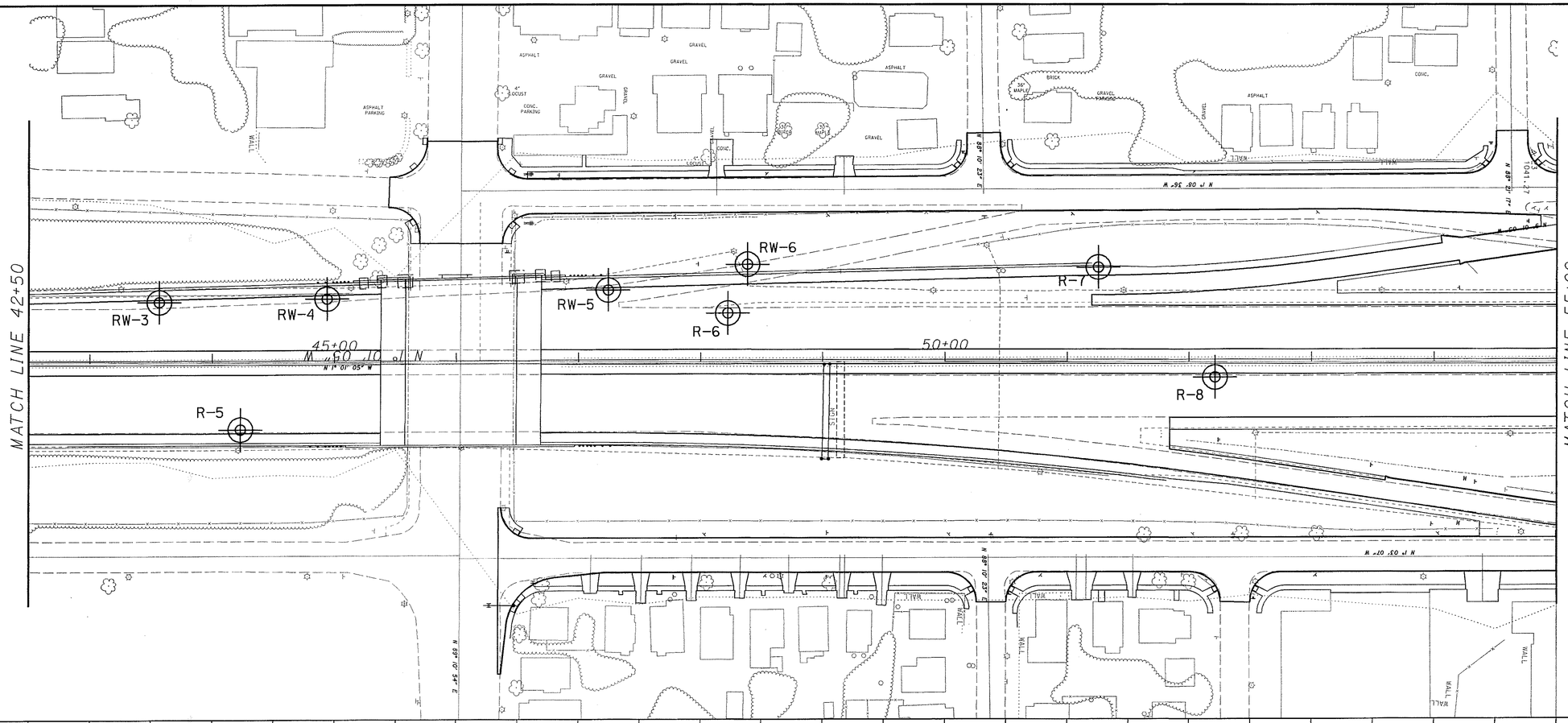

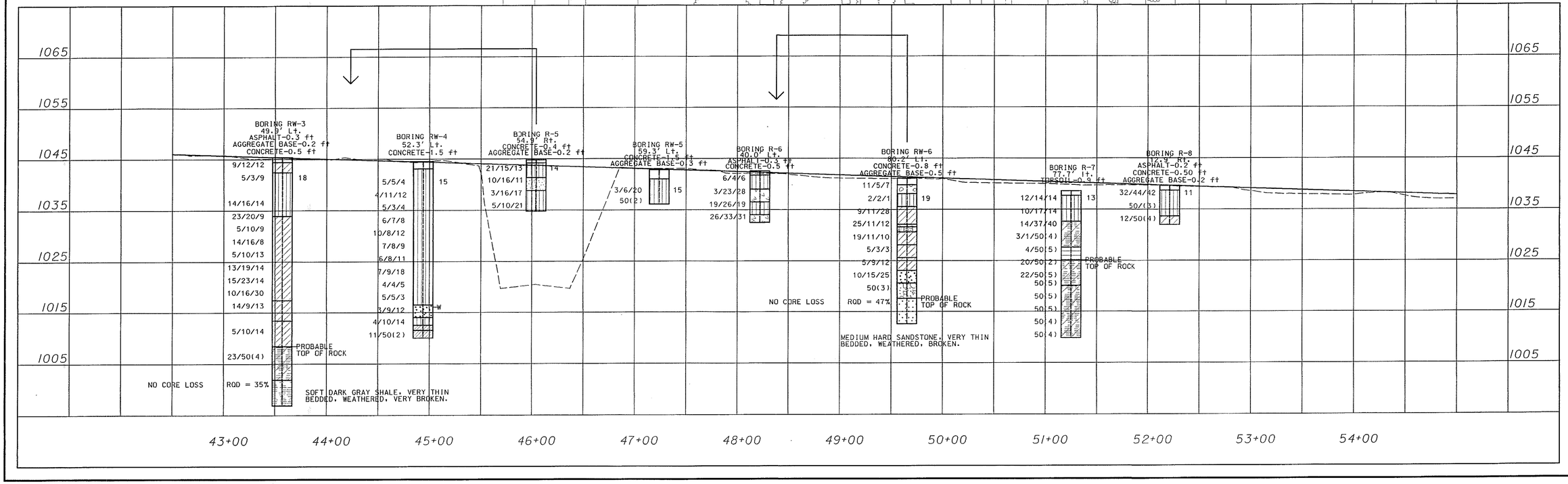

SOIL PROFILE
STA. 42+50 TO STA. 55+00

HORIZONTAL SCALE IN FEET
0 25 50 100

CALCULATED R.JH
CHECKED B.E.W.

STA. 42+50 TO STA. 55+00

SUM-8-0.63

13/37

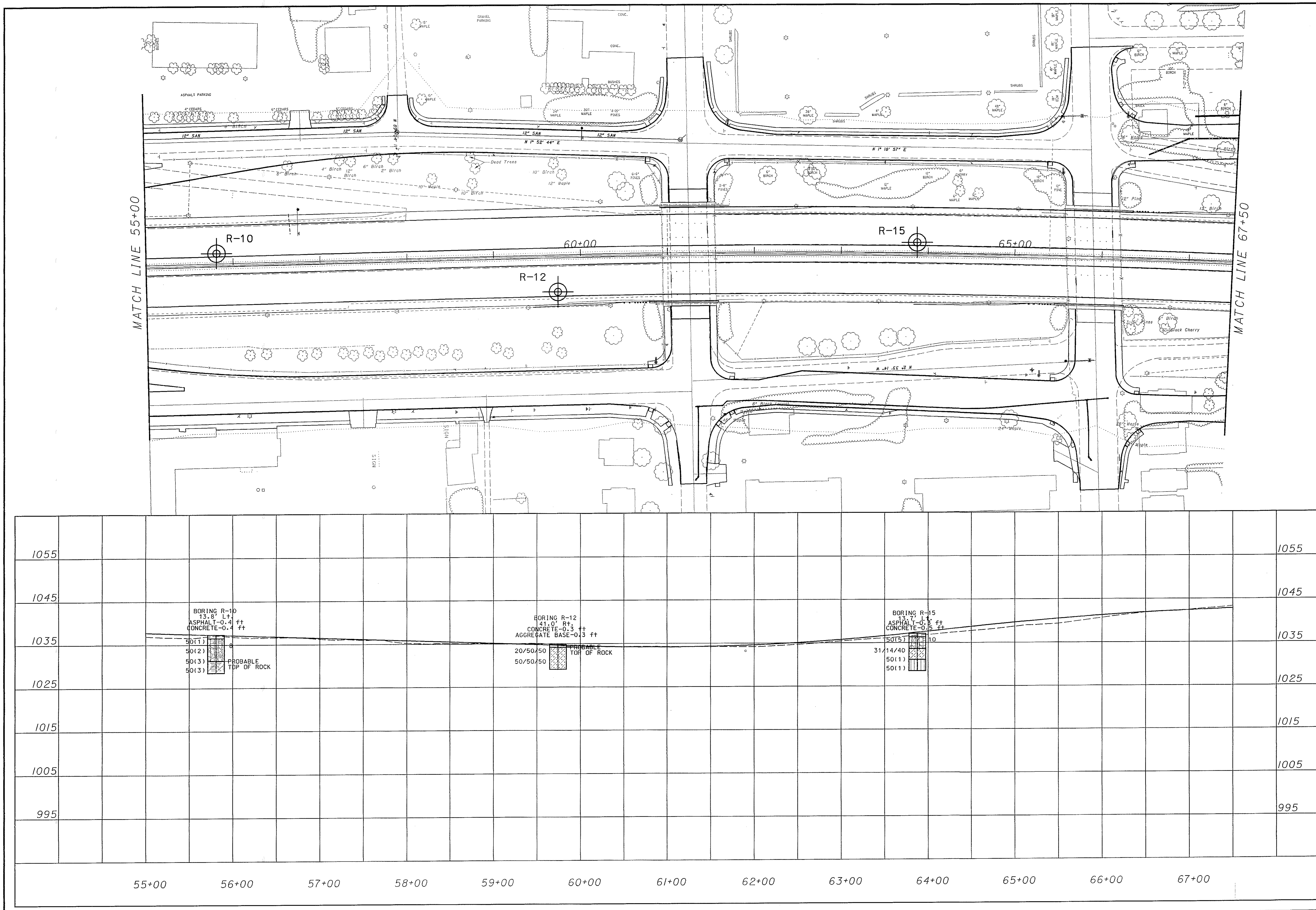

N

0 25 50 100
HORIZONTAL SCALE IN FEET

CALCULATED RJH
CHECKED BEW

SOIL PROFILE
STA. 55+00 TO STA. 67+50

SUM-8-0.63

14/37

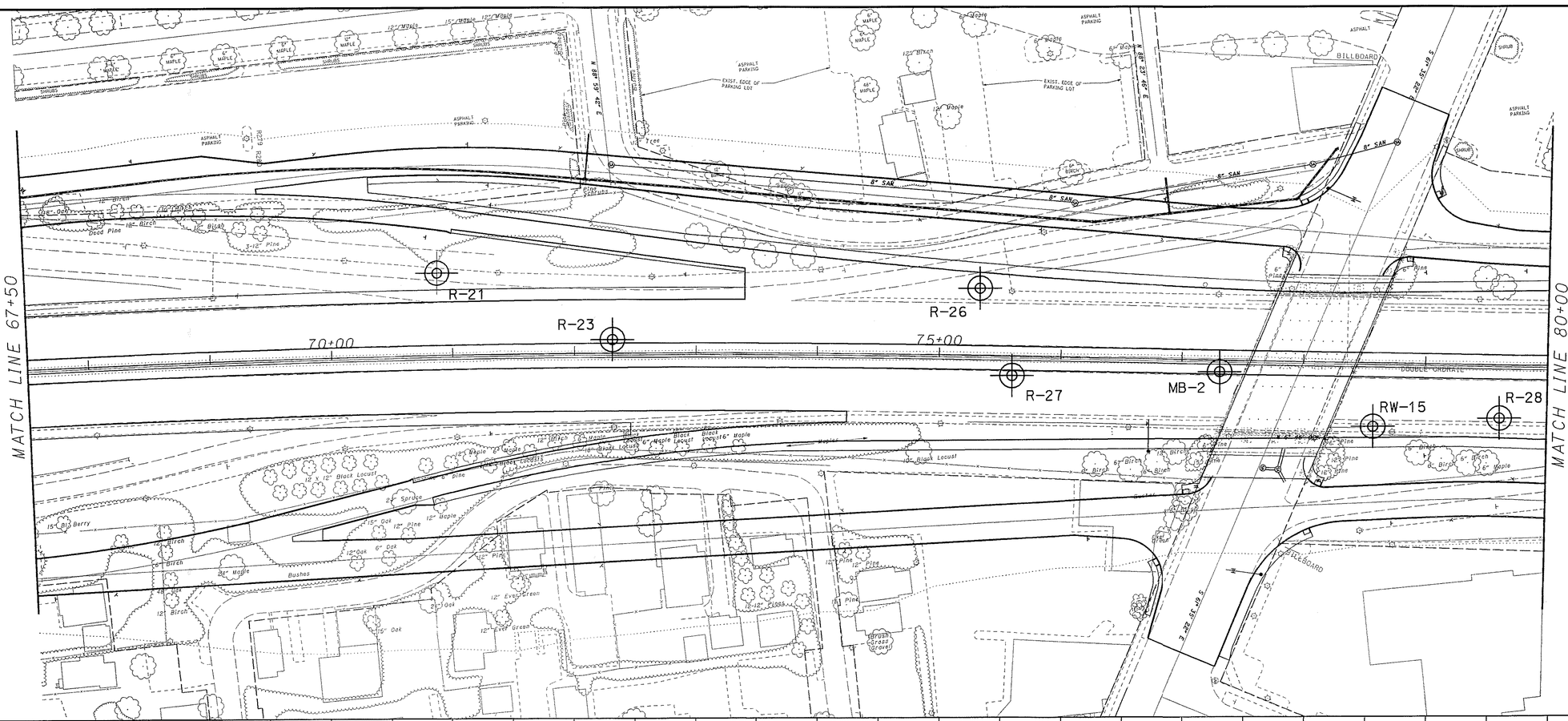

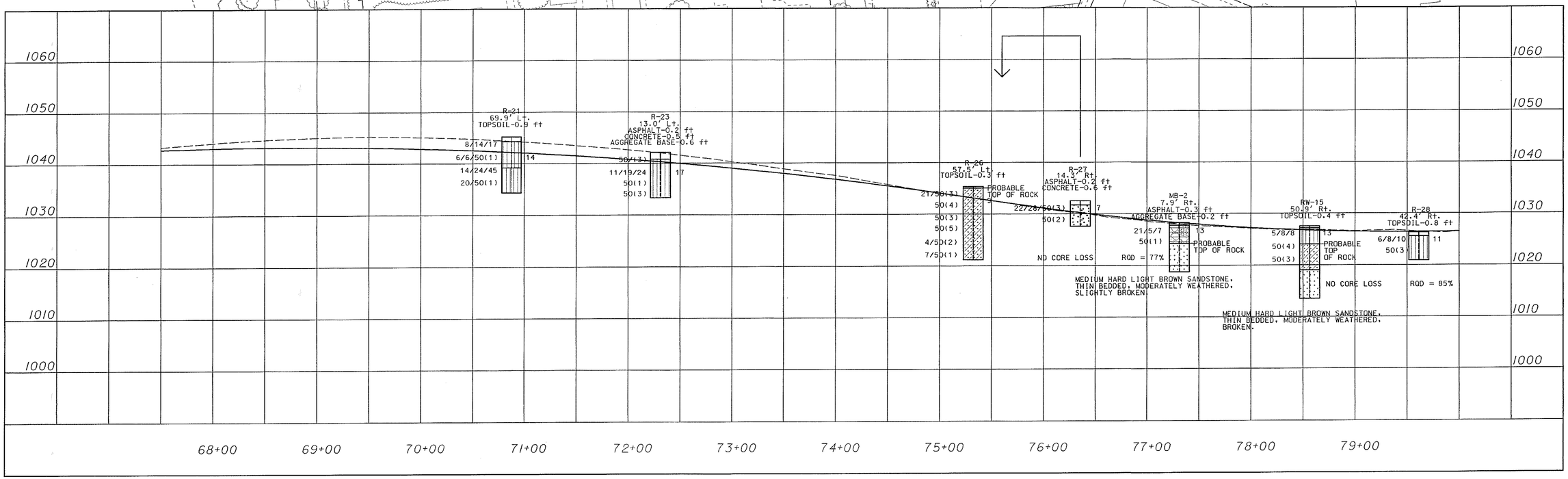

SOIL PROFILE
STA. 67+50 TO STA. 80+00

HORIZONTAL SCALE IN FEET
0 25 50 100

CALCULATED R.JH
CHECKED BEW

SUM-8-0.63

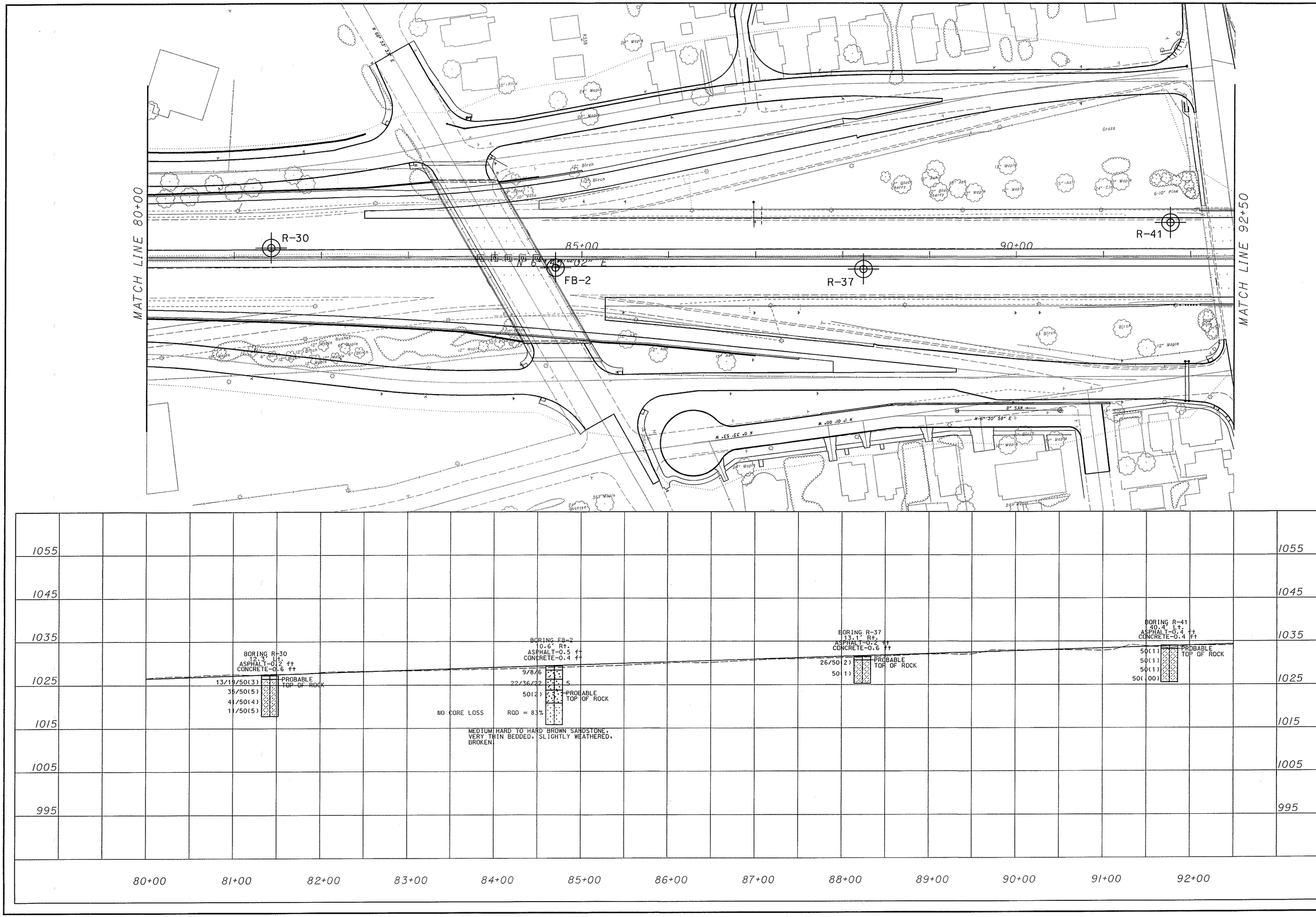

HORIZONTAL SCALE IN FEET
0 25 50 100

CALCULATED RJH
CHECKED BEW

SOIL PROFILE
STA. 80+00 TO STA. 92+50

SUM-8-0.63

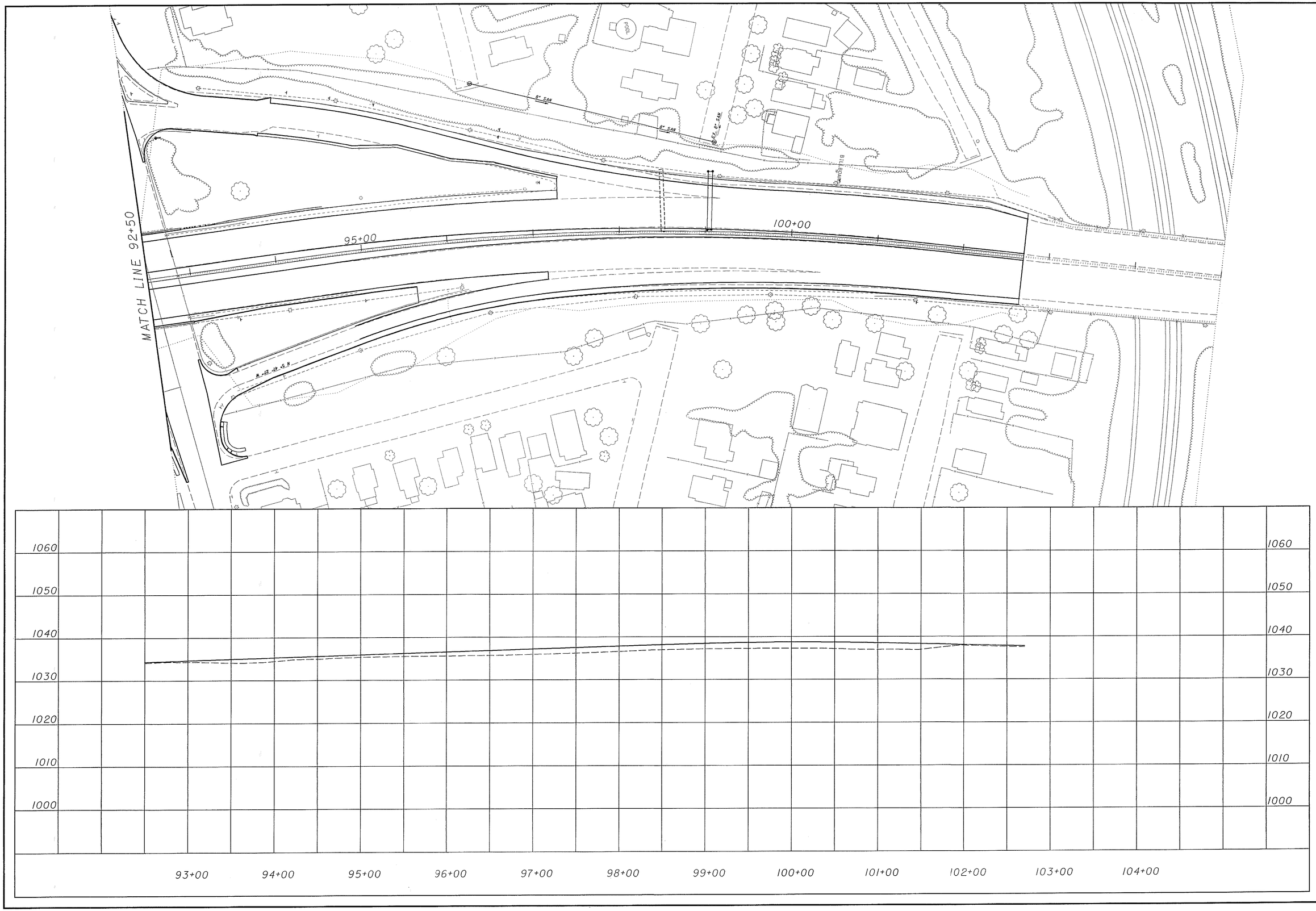

0 25 50 100
HORIZONTAL SCALE IN FEET

CALCULATED RJH
CHECKED BEW

SOIL PROFILE
STA. 92+50 TO STA. 105+00

SUM-8-0.63

SOIL PROFILE - RAMP K1

SUM-8-0.63

HORIZONTAL SCALE IN FEET
0 25 50 100

CALCULATED R.JH
CHECKED BEW

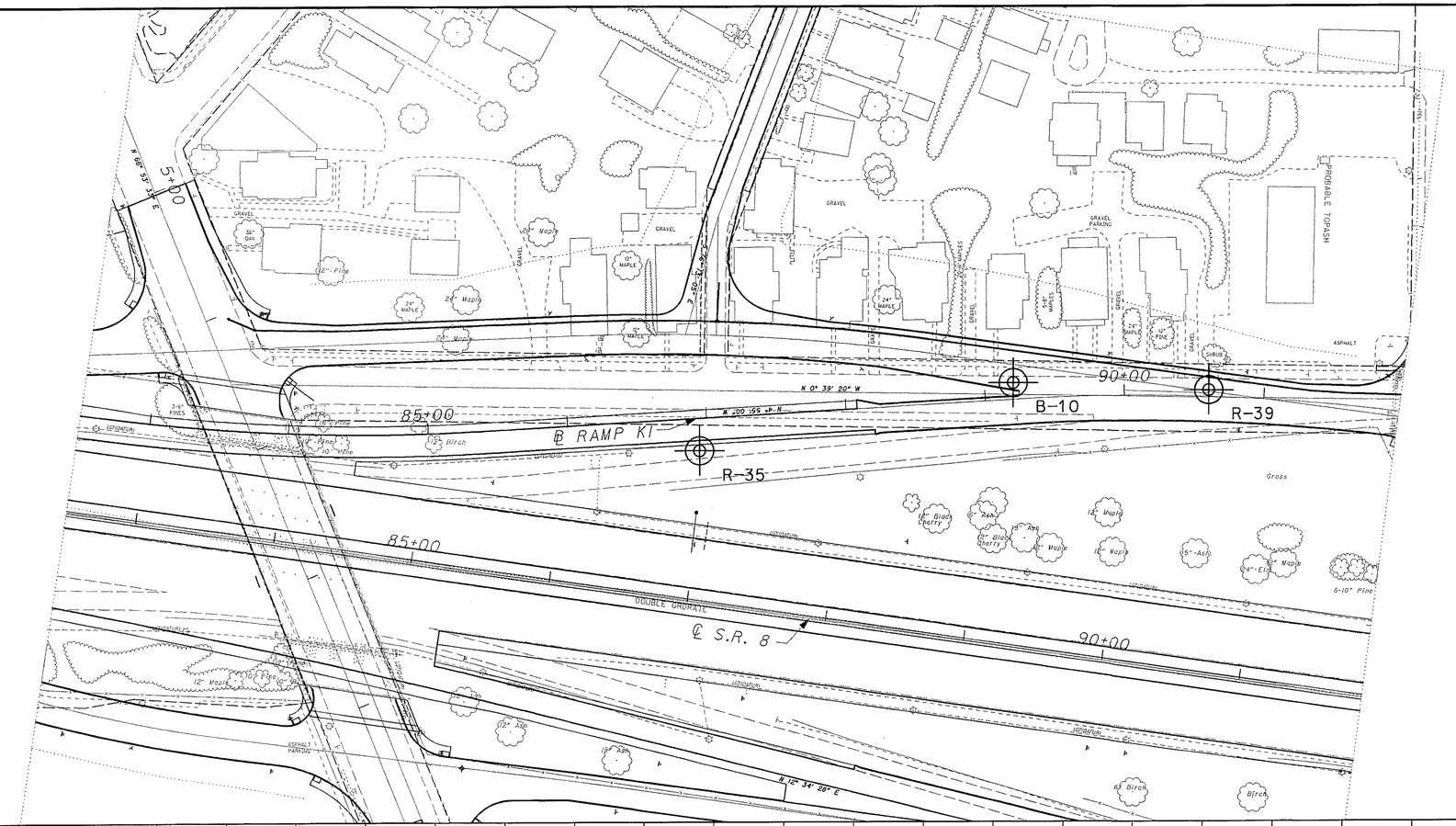

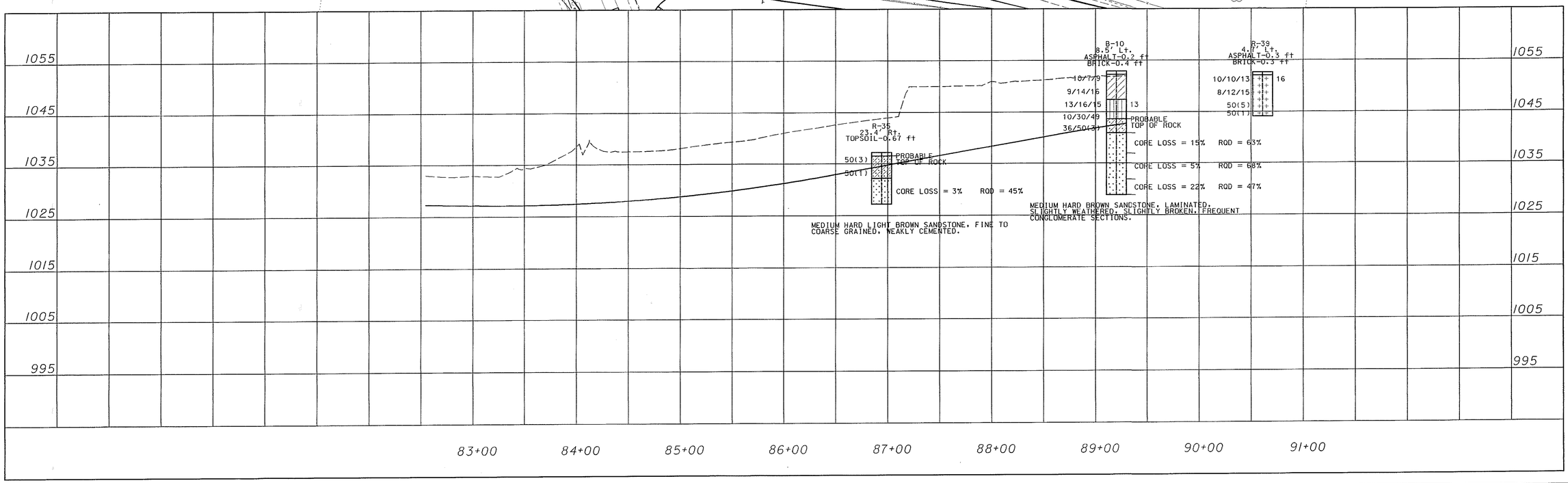

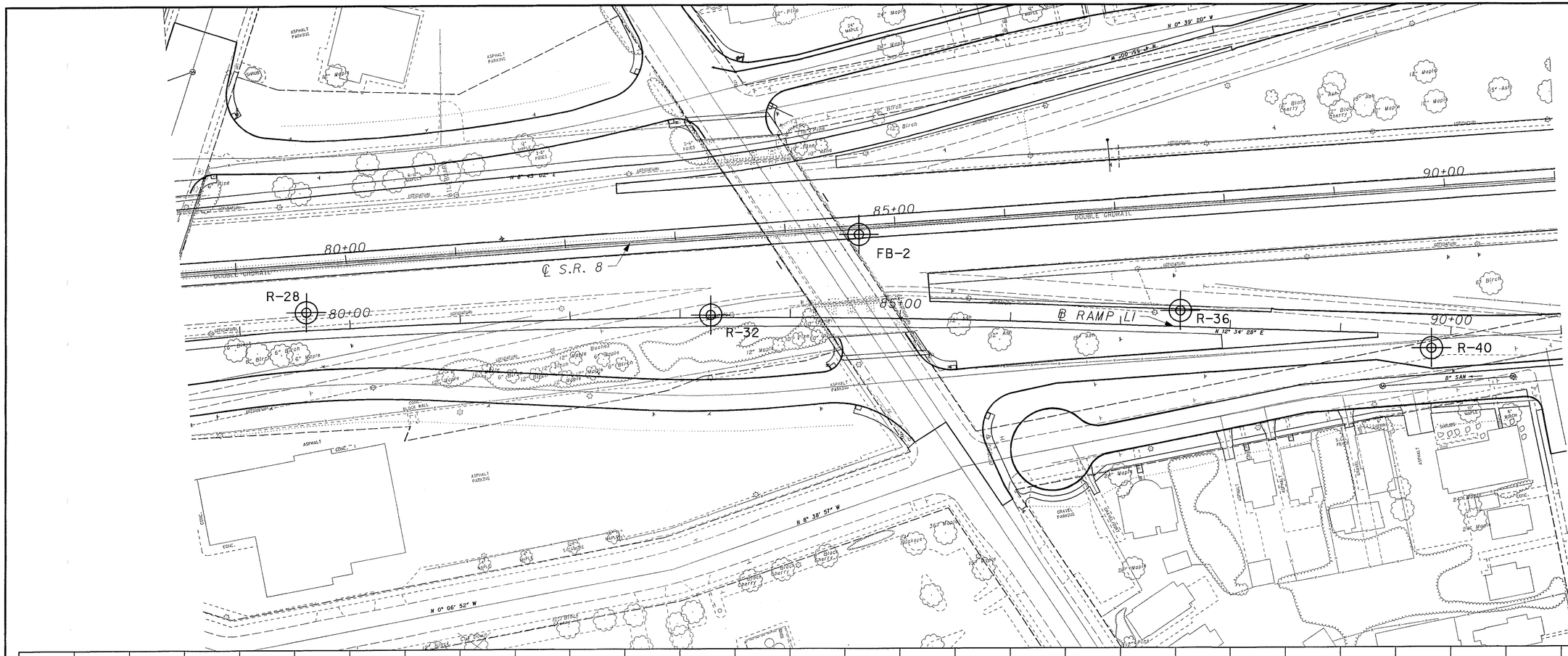

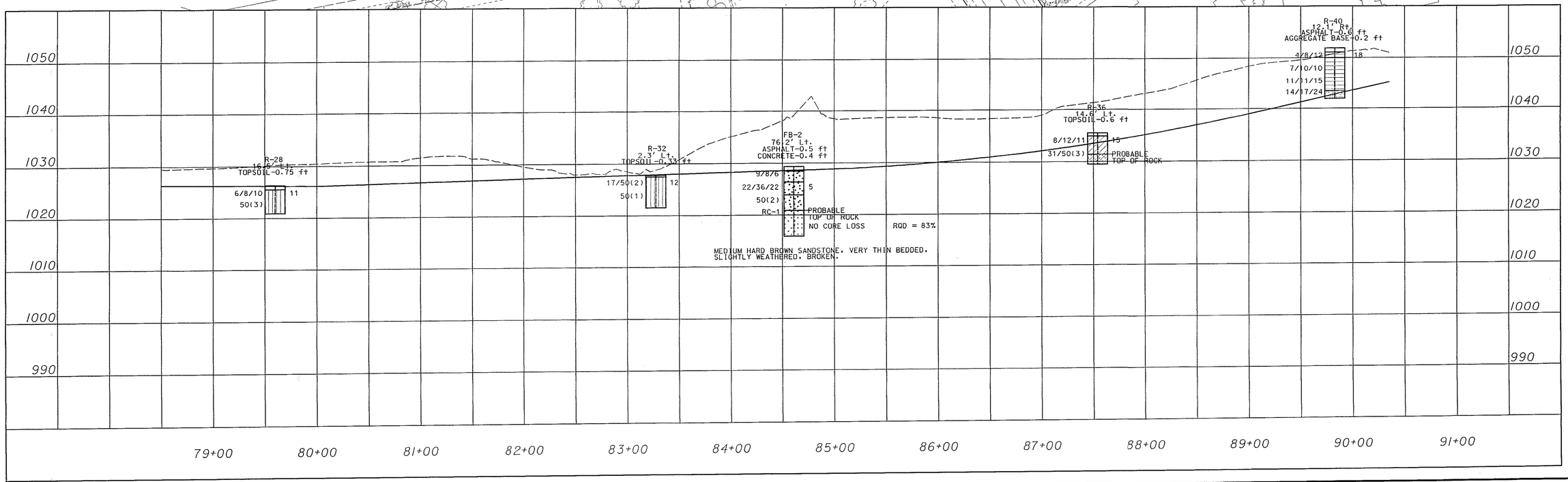

N

0 50 100
HORIZONTAL SCALE IN FEET

CALCULATED RJH
CHECKED BEW

PROFILE - RAMP L1

SUM-8-0.63

SOIL PROFILE - RAMP P1

SUM-8-0.63

CALCULATED RJH
CHECKED BEW

HORIZONTAL SCALE IN FEET
0 25 50 100

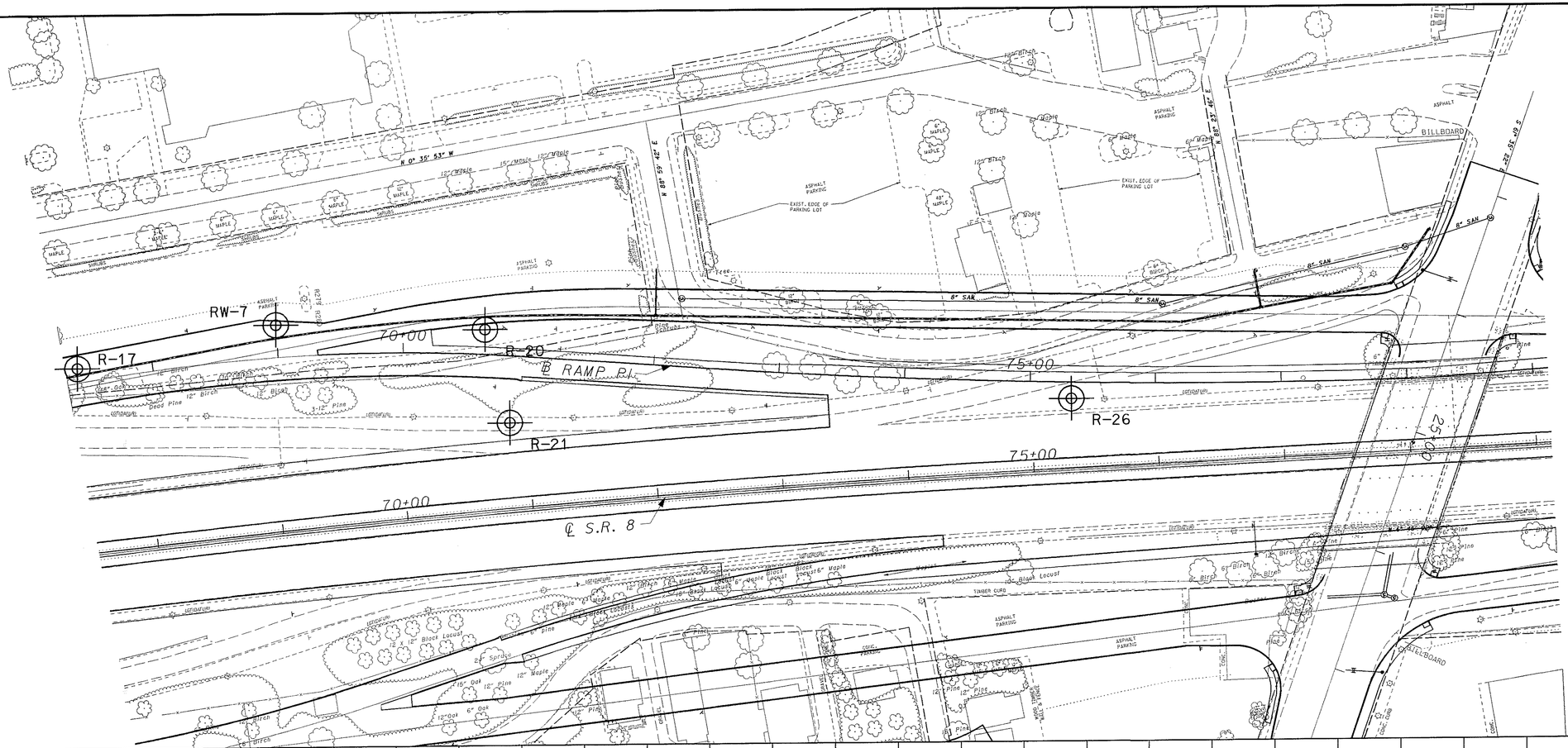

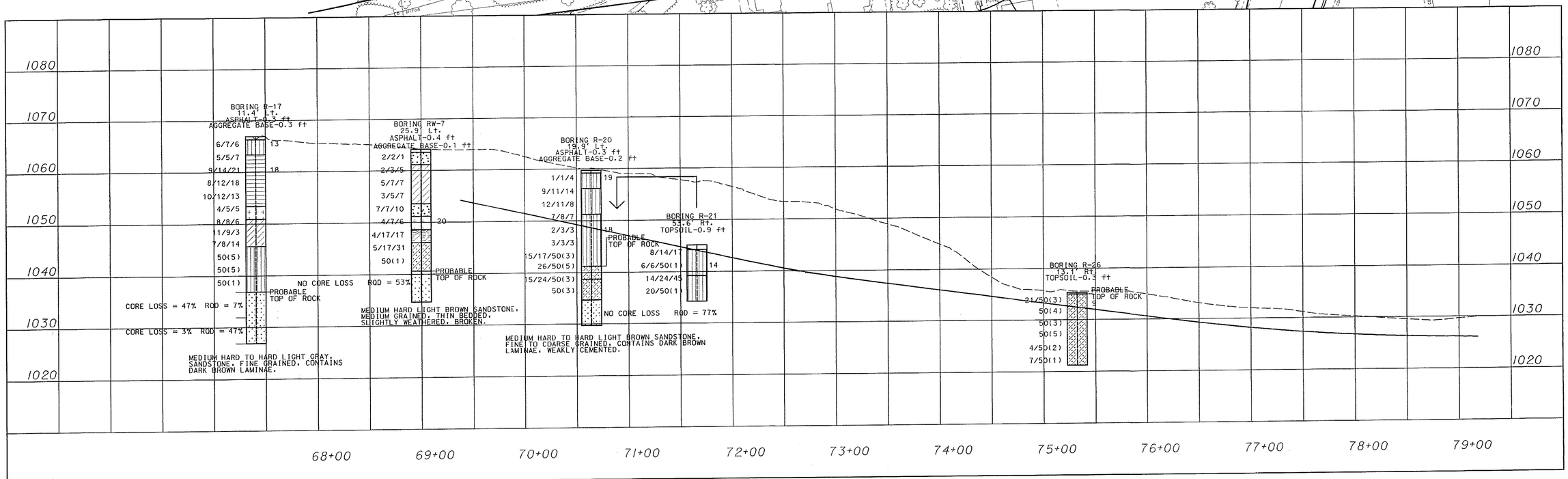

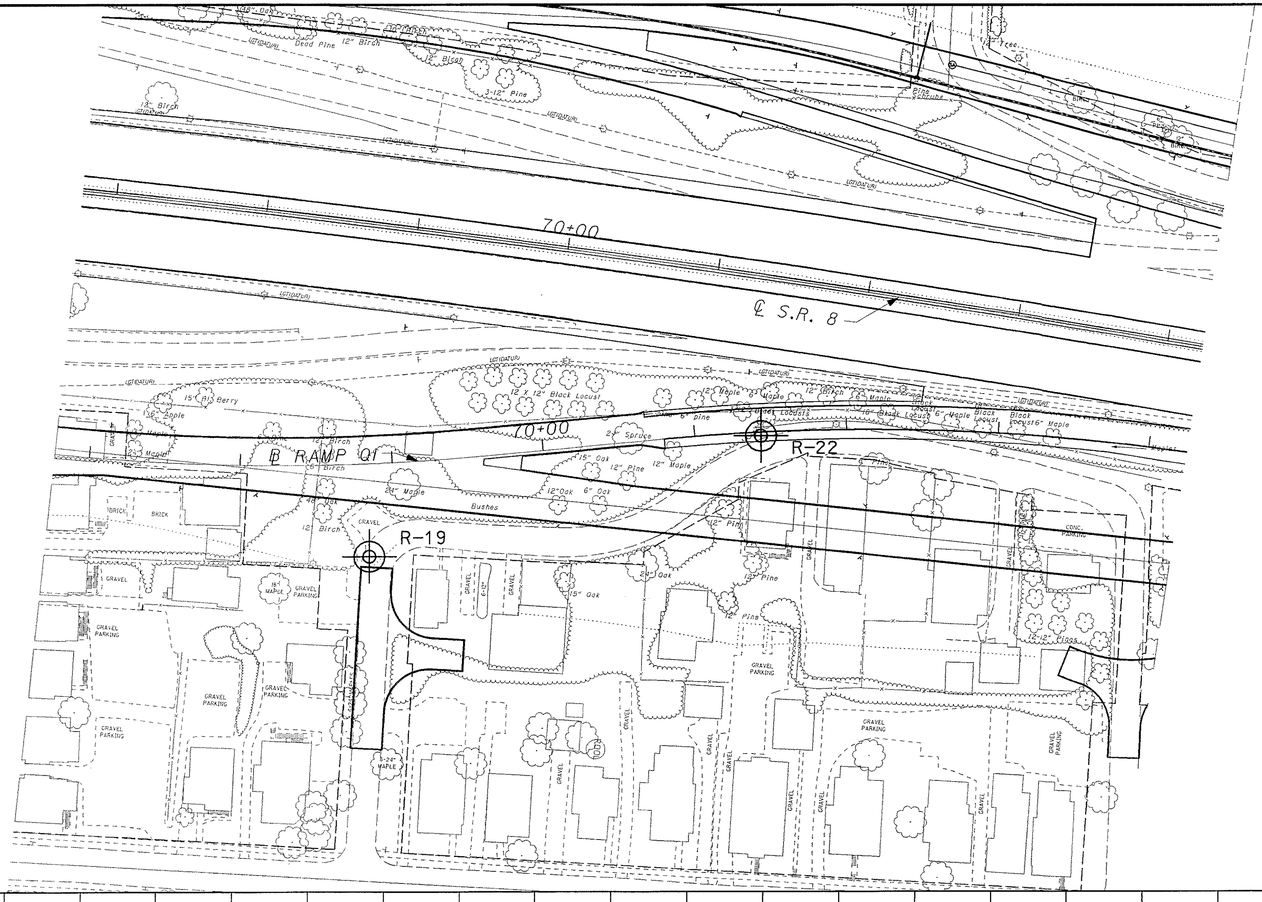

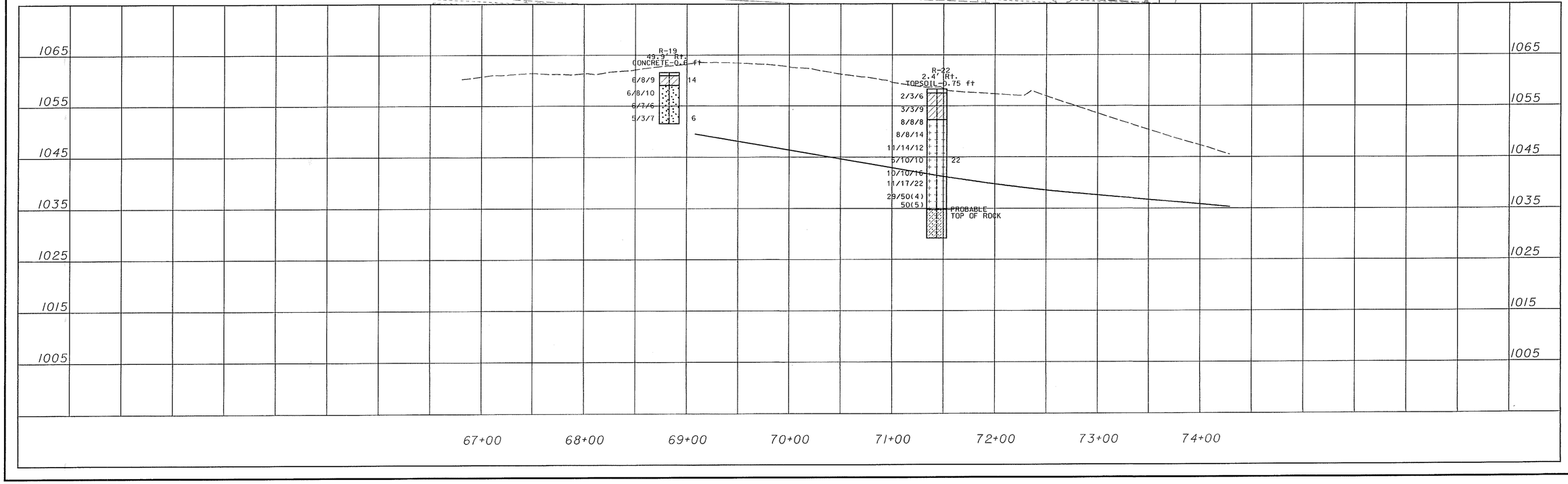

HORIZONTAL SCALE IN FEET
0 25 50 100

CALCULATED R.JH
CHECKED BEW

SOIL PROFILE - RAMP Q1

SUM-8-0.63

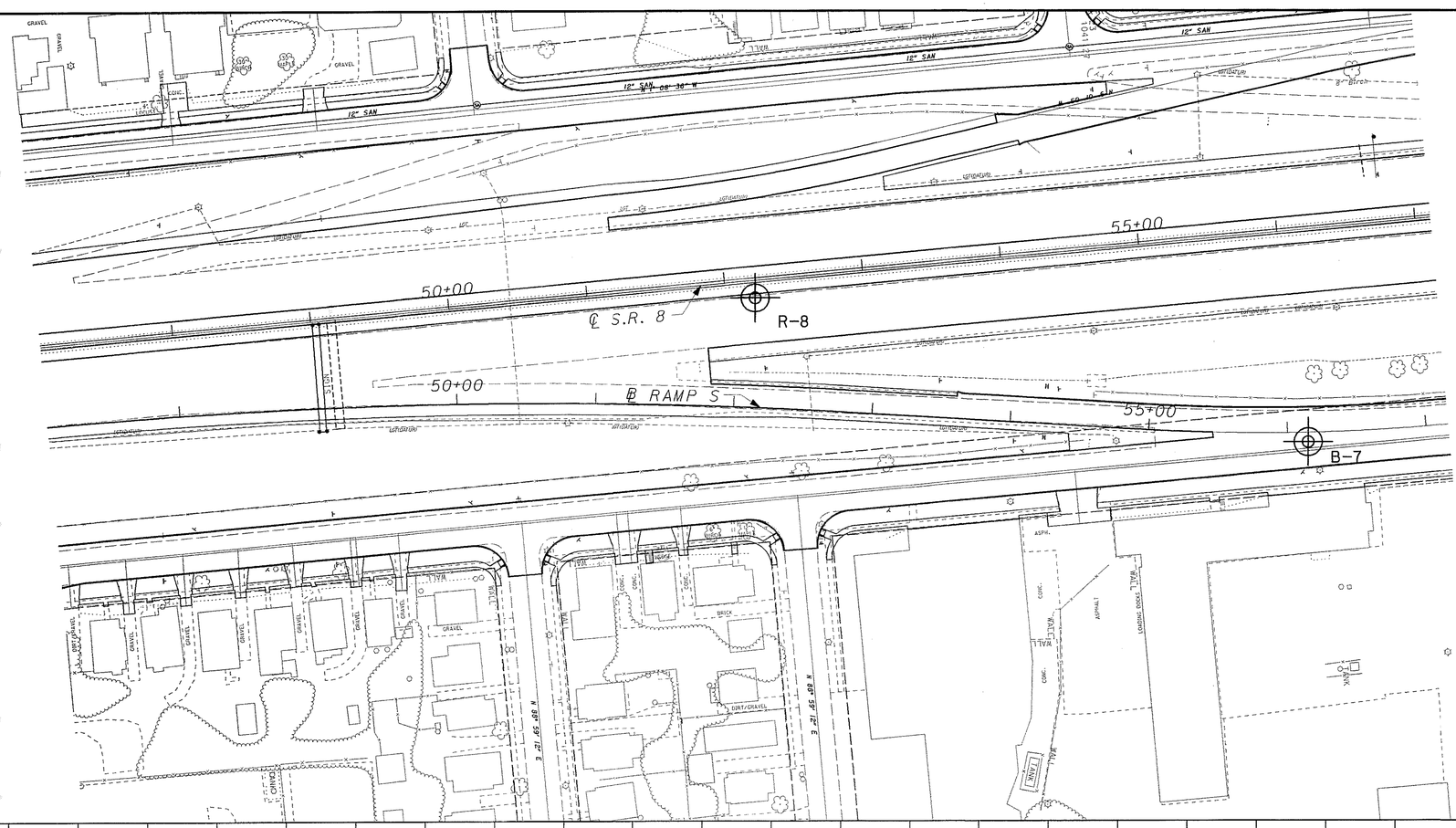

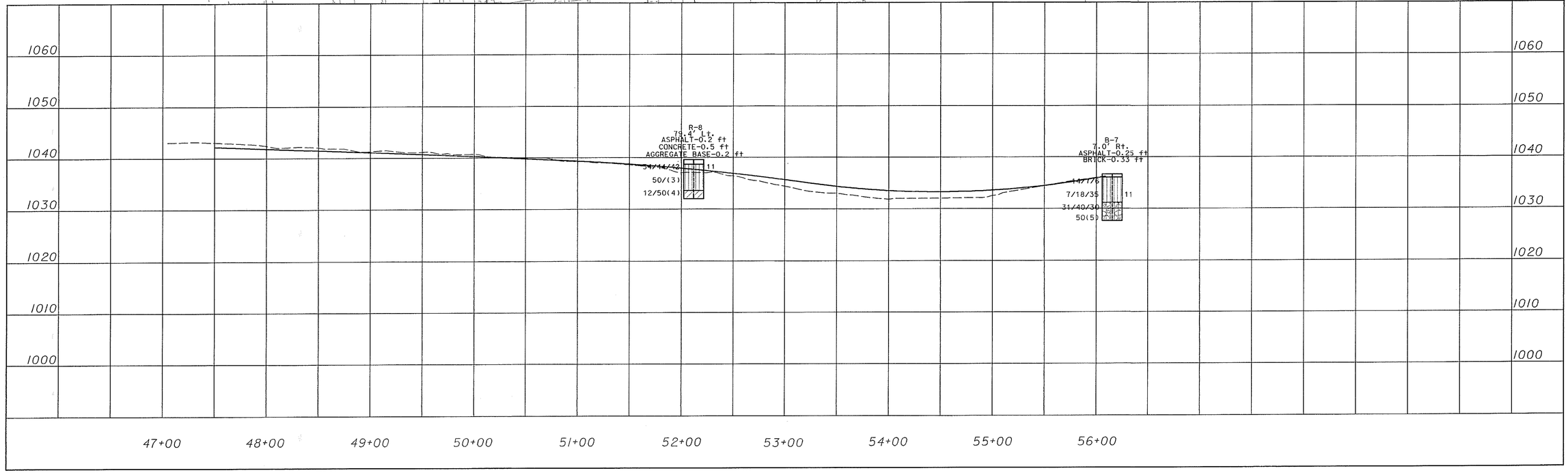

N

0 25 50 100
HORIZONTAL SCALE IN FEET

CALCULATED R.JH
CHECKED BEW

SOIL PROFILE - RAMP S

SUM-8-0.63

22/37

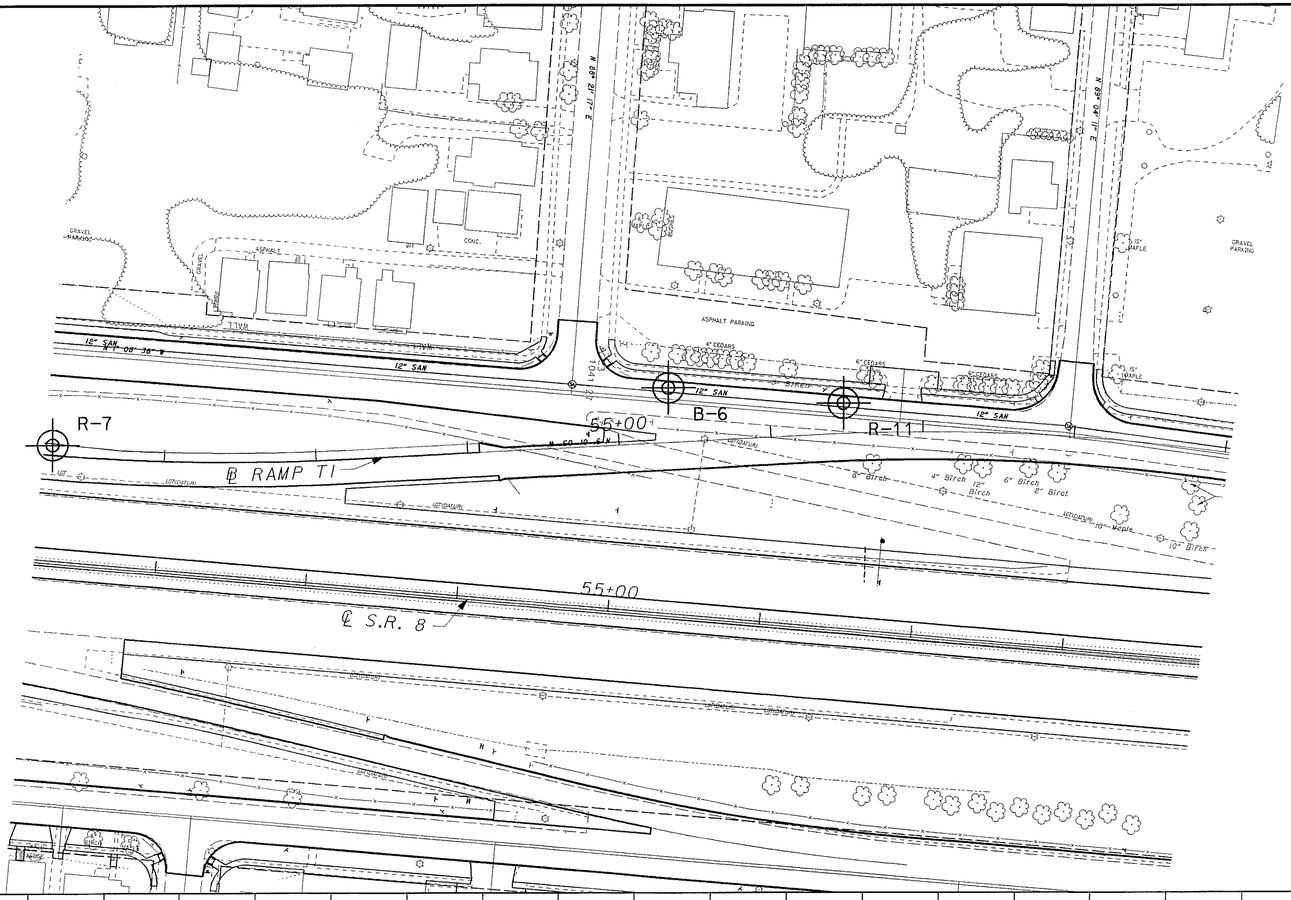

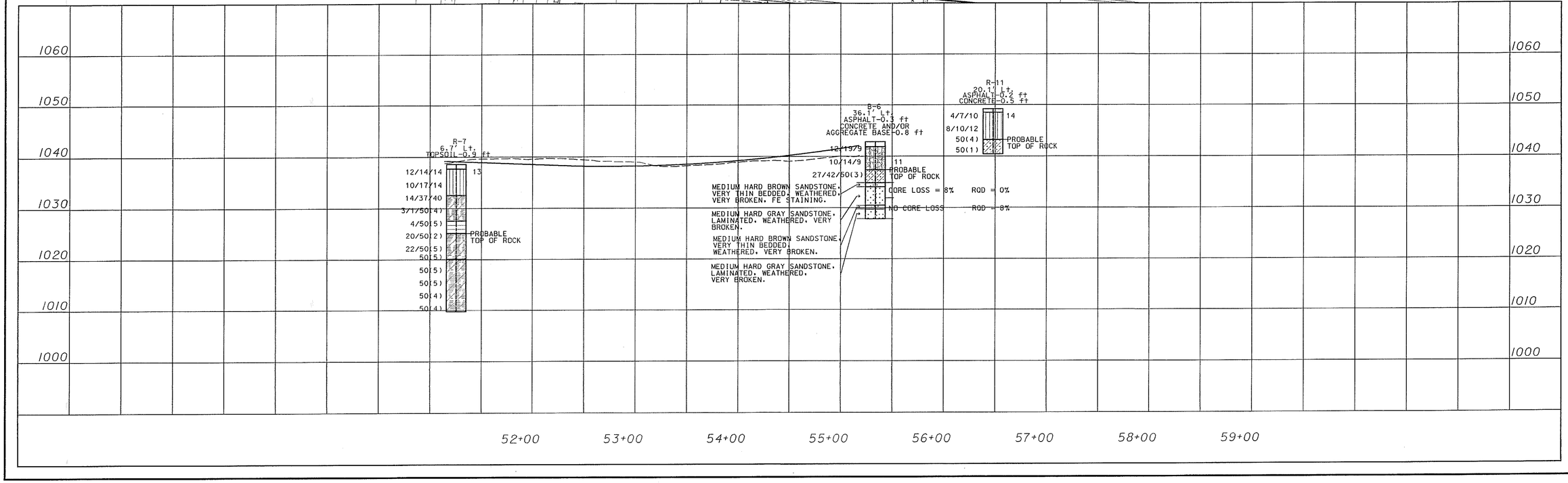

HORIZONTAL SCALE IN FEET
0 25 50 100

CALCULATED RJH
CHECKED BEW

SOIL PROFILE - RAMP T1

SUM-8-0.63

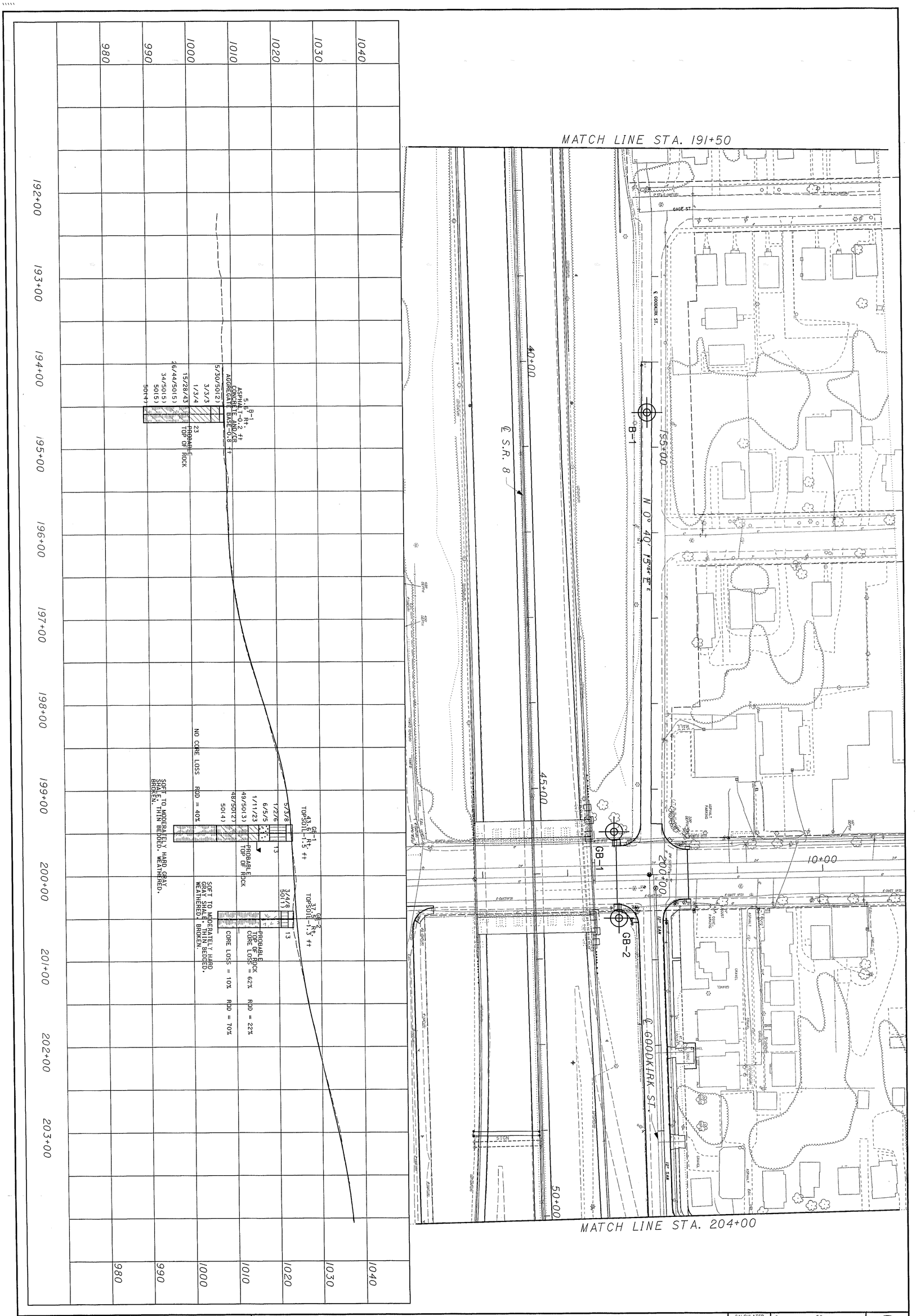

24/37	SUM-8-0.63	SOIL PROFILE - GOODKIRK STREET STA. 191+50 TO STA. 204+00	CALCULATED RJH / CHECKED BEW	0 50 25 100 HORIZONTAL SCALE IN FEET

SOIL PROFILE - GOODKIRK STREET
STA. 204+00 TO STA. 216+50

SUM-8-0.63

CALCULATED R.JH
CHECKED BEW

HORIZONTAL SCALE IN FEET
0 25 50 100

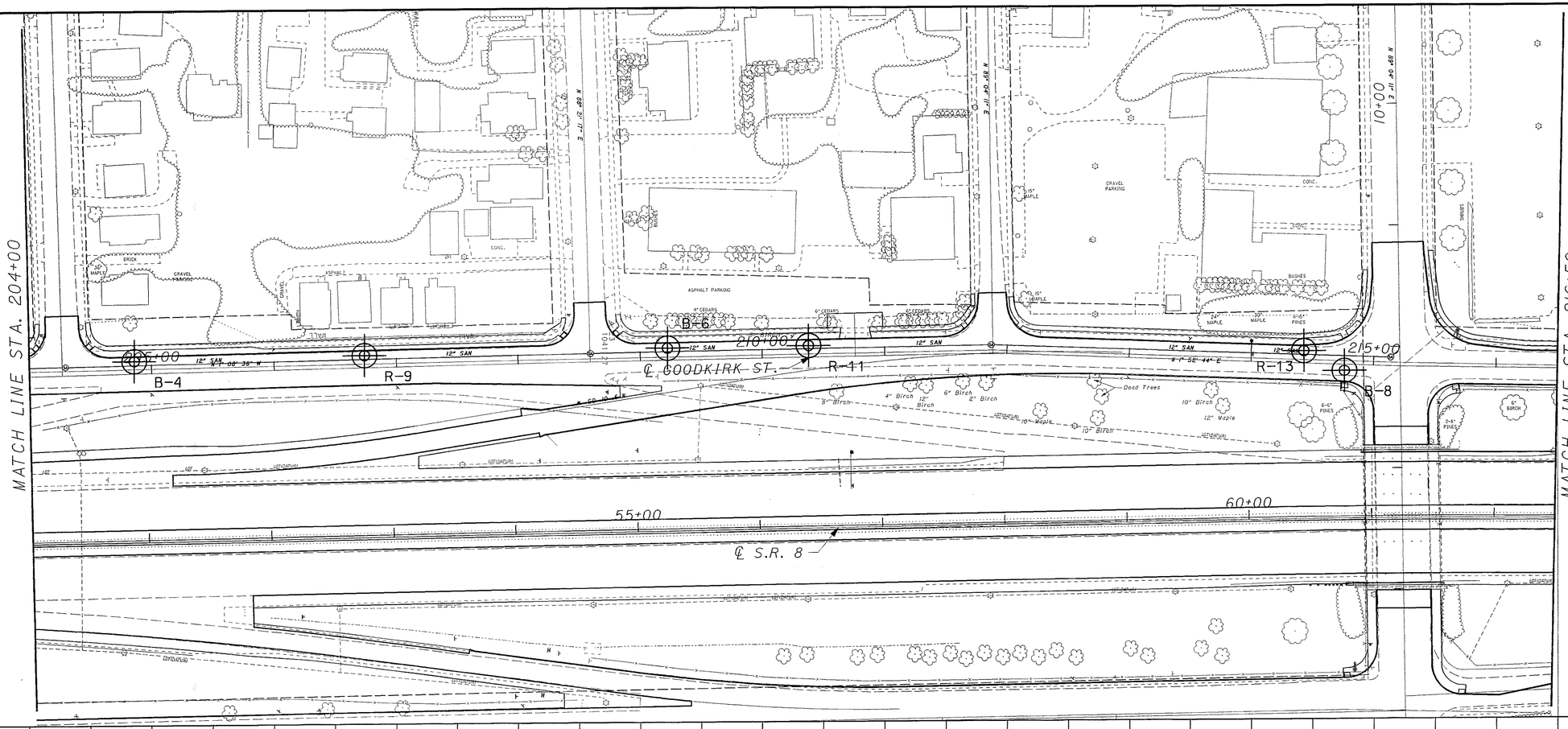

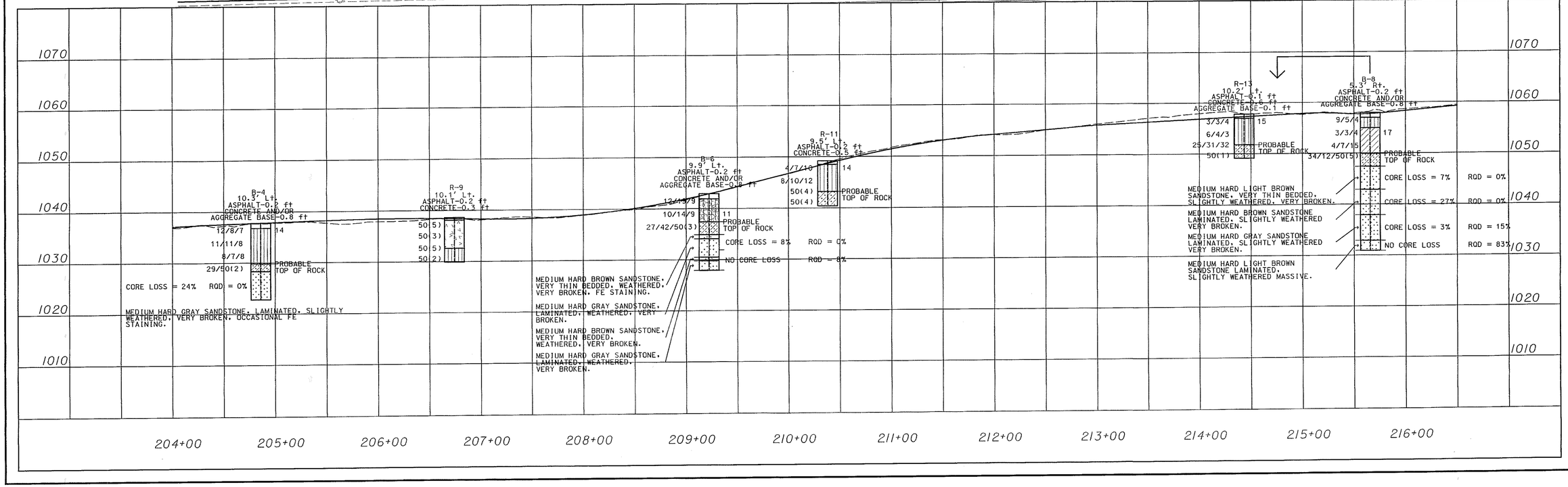

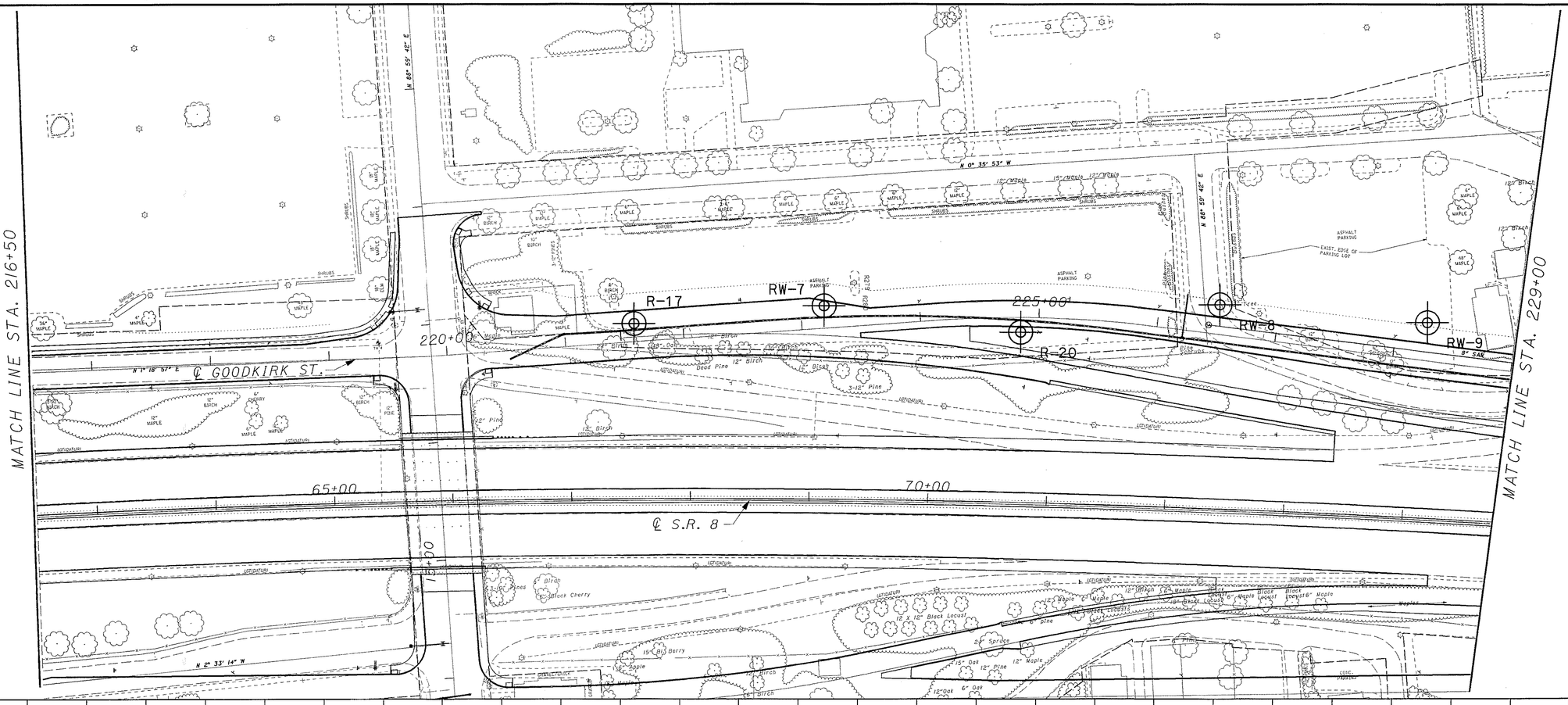

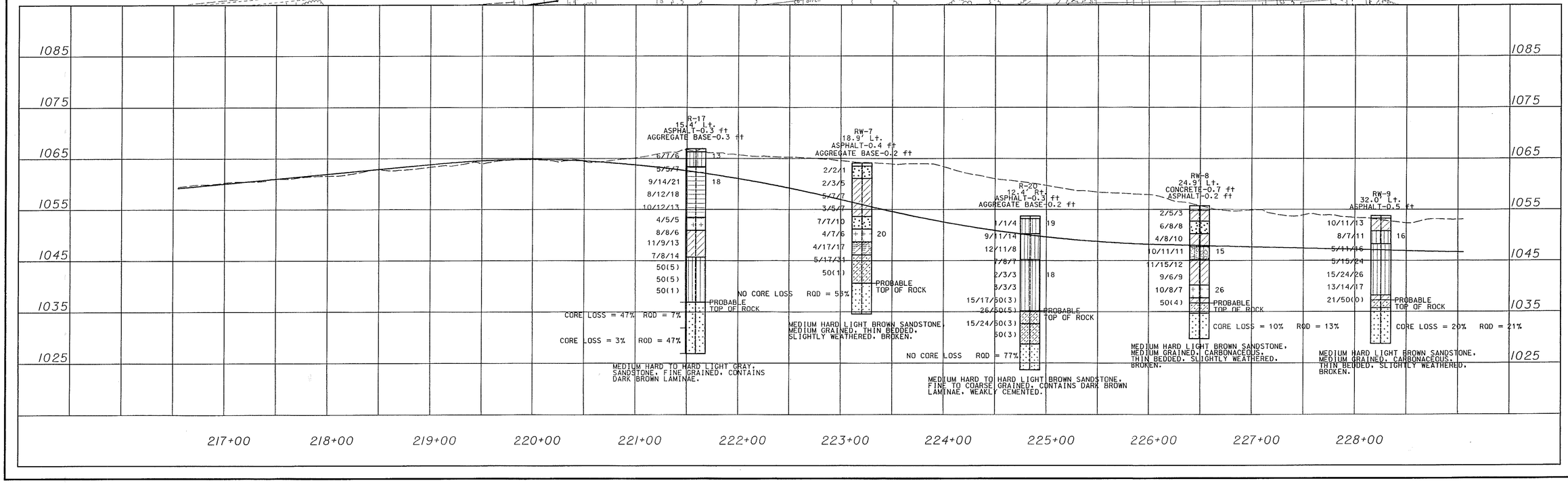

N

HORIZONTAL SCALE IN FEET
0 25 50 100

CALCULATED RJH
CHECKED BEW

SOIL PROFILE - GOODKIRK STREET STA. 216+50 TO STA. 229+00

SUM-8-0.63

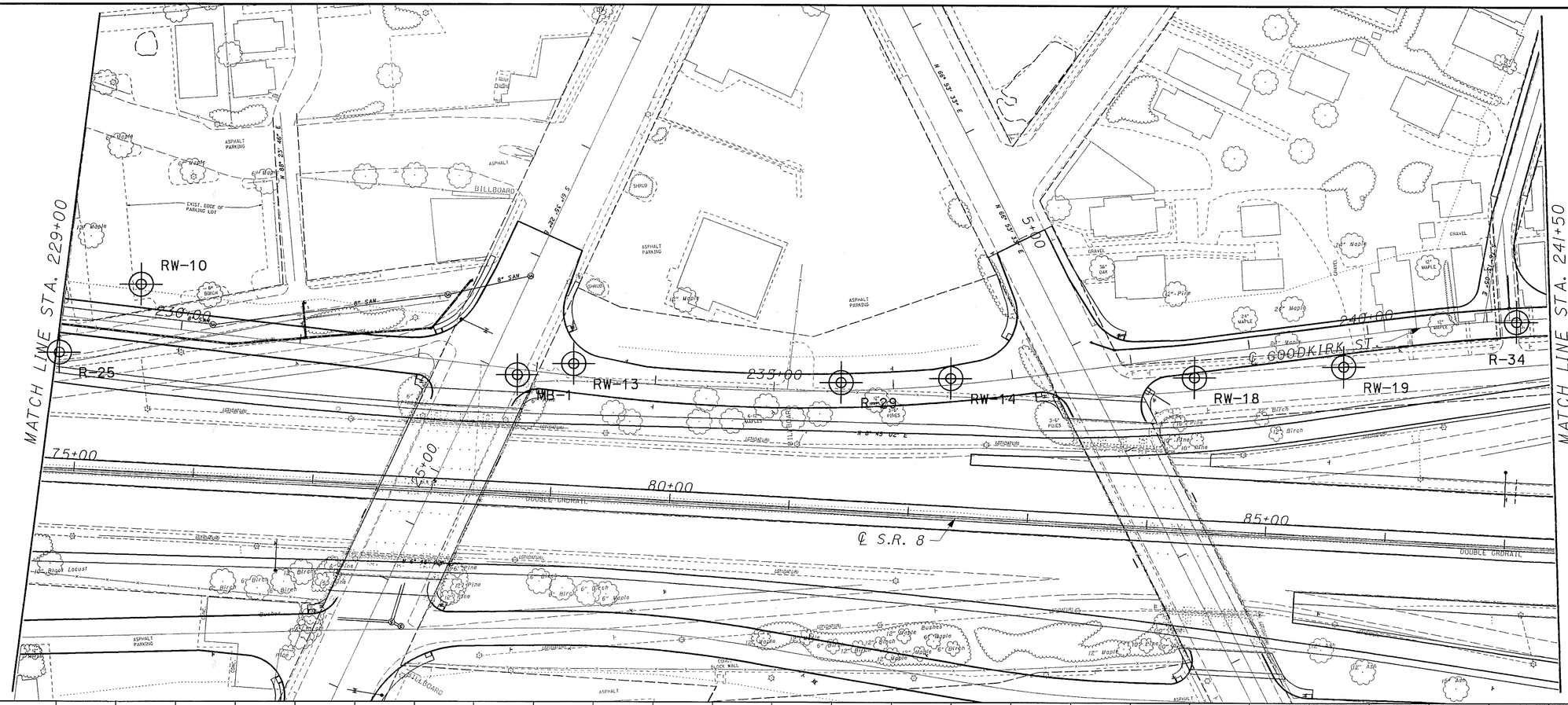

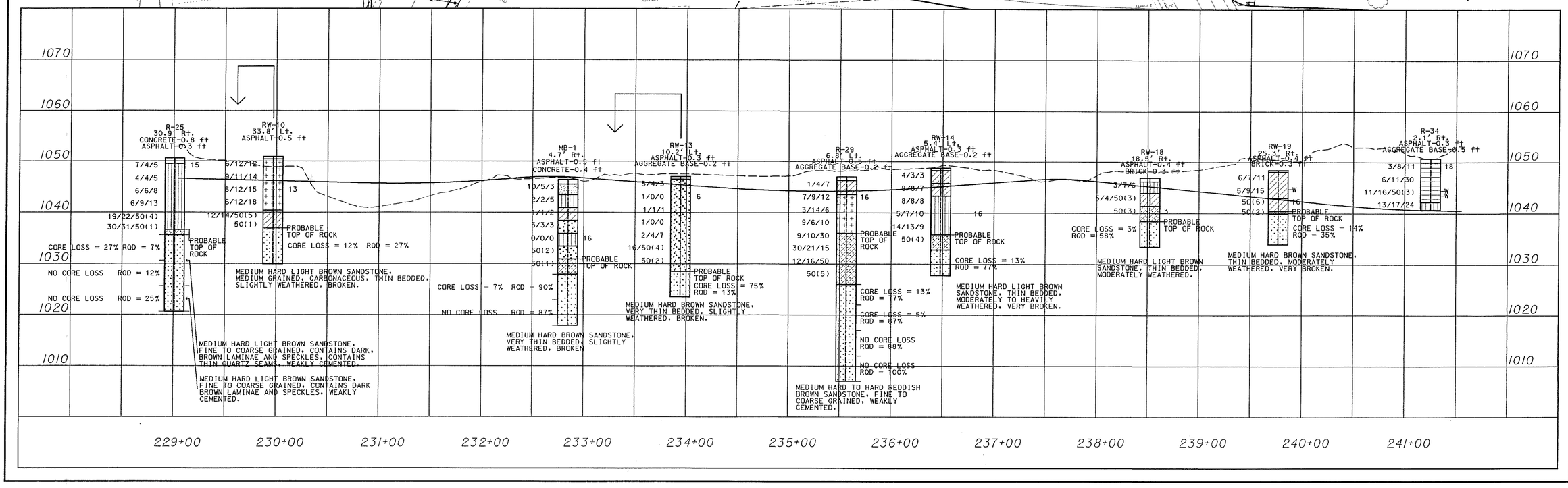

SOIL PROFILE - GOODKIRK STREET
STA. 229+00 TO STA. 241+50

HORIZONTAL SCALE IN FEET
0 25 50 100

CALCULATED RJH
CHECKED BEW

SUM-8-0.63

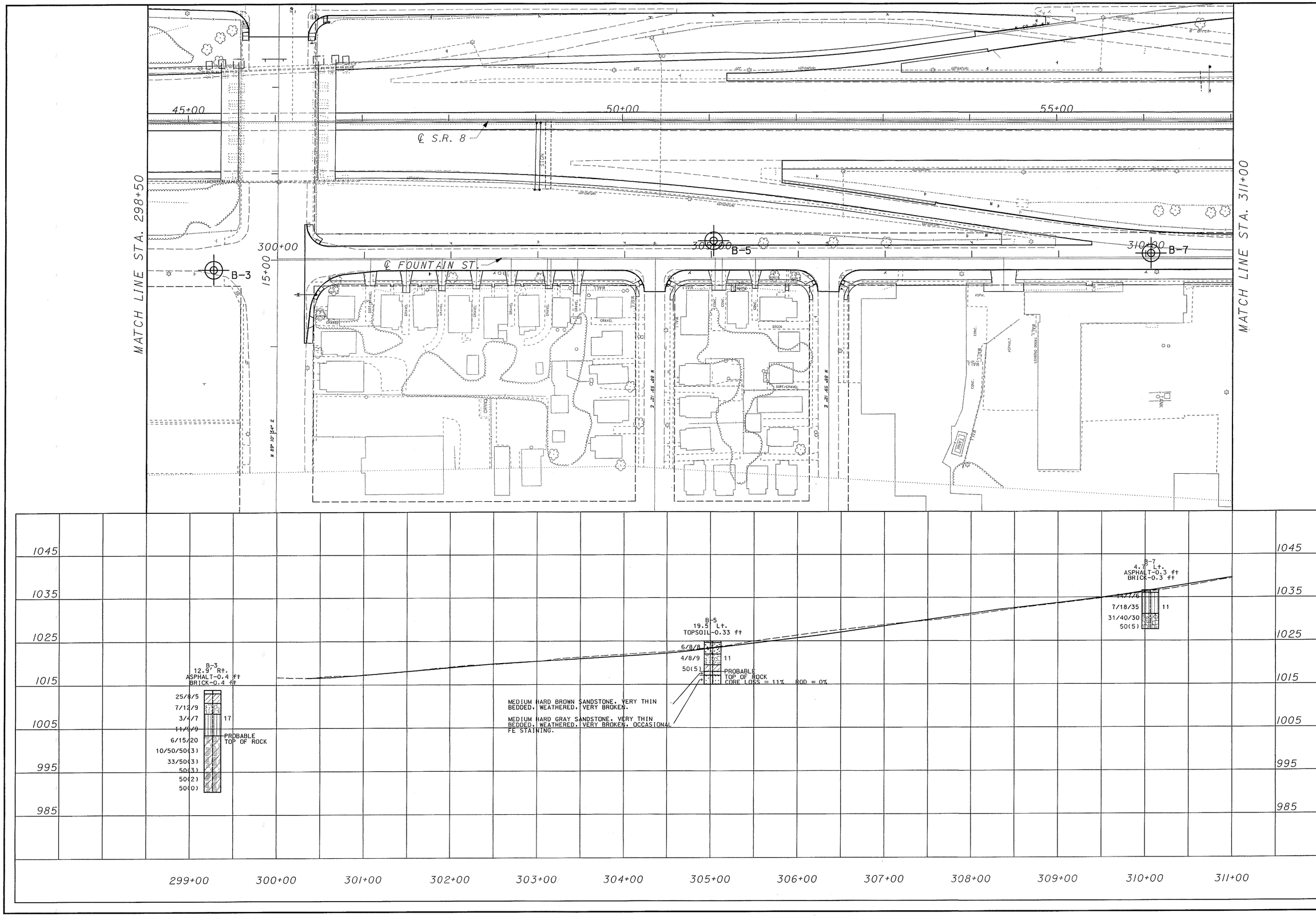

HORIZONTAL SCALE IN FEET
0 25 50 100

CALCULATED RJH
CHECKED BEW

SOIL PROFILE - FOUNTAIN STREET
STA. 298+50 TO STA. 311+00

SUM-8-0.63

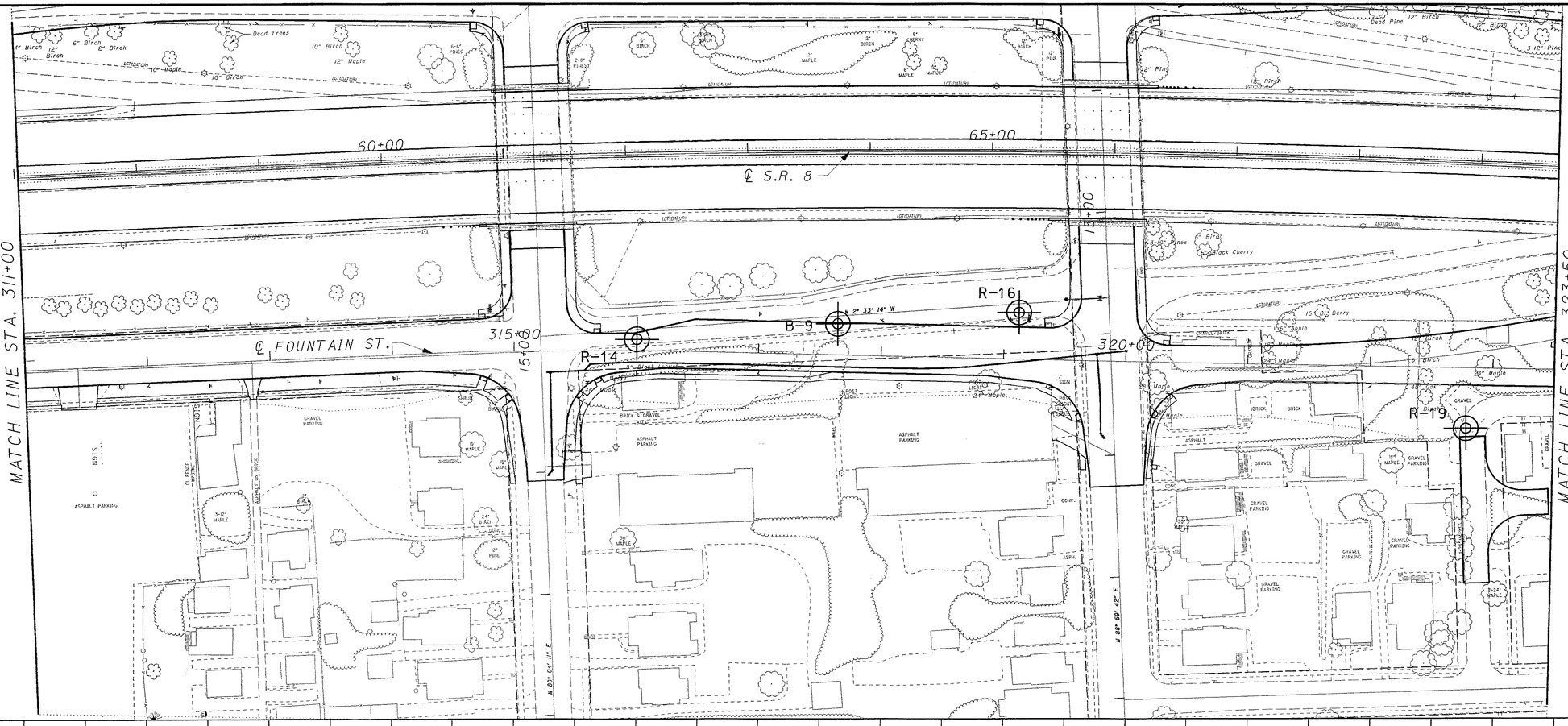

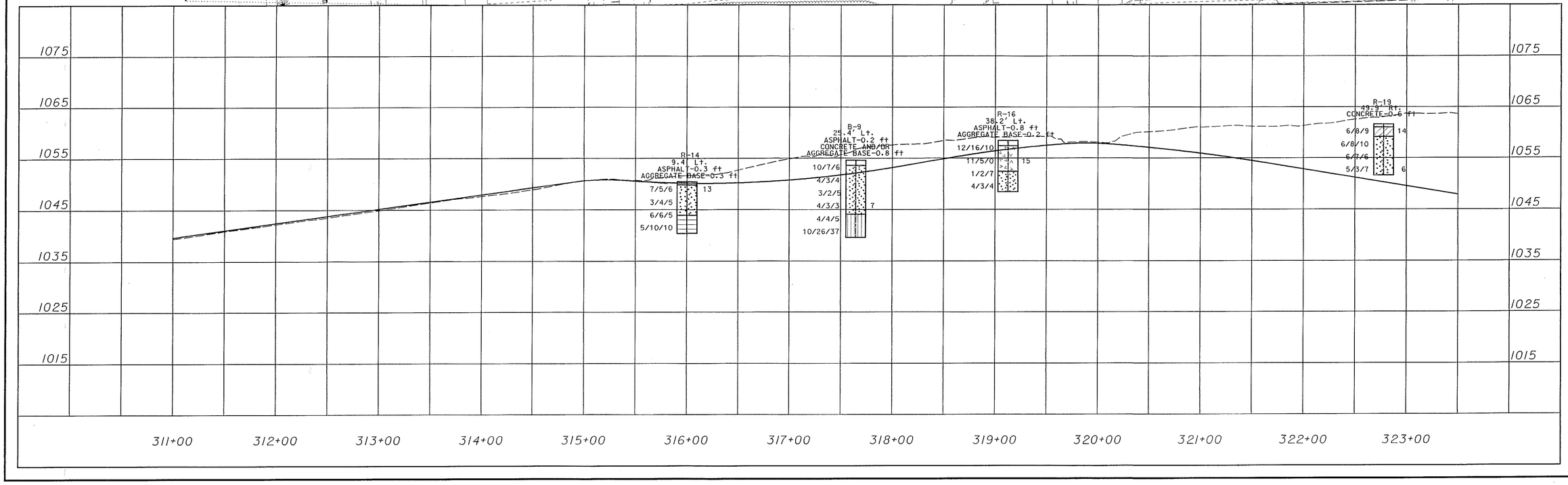

HORIZONTAL SCALE IN FEET
0 25 50 10

CALCULATED RJH
CHECKED BEW

SOIL PROFILE - FOUNTAIN STREET
STA. 311+00 TO STA. 323+50

SUM-8-0.63

MATCH LINE STA. 323+50

MATCH LINE STA. 336+00

70+00 75+00 80+00

℄ S.R. 8

DOUBLE ORDHALT

325+00 330+00 335+00

℄ FOUNTAIN ST.

R-22 R-24 RW-12 MB-3 R-31

N 0° 06' 52" W

N 68° 16' 23" E

S 21° 15' 52" E

N 0° 16' 47" W

N 0° 06' 52" W

N 6° 45' 02" E

ASPHALT PARKING

GRAVEL PARKING

CONC. WALK

CONC. BLOCK WALL

WOOD FENCE

CHAIN LINK FENCE

SHRUBS

TREES & SHRUBS

BRUSH GRASS (GRASS)

TIMBER CURB

CONC. CURB

GUIDERAIL

SCRUBS

8" SAN

12" WATER

3-6" PINES

R-22
56.1' Lt.
TOPSOIL-0.8 ft

2/3/6
3/3/9
8/8/8
8/8/14
11/14/12
5/10/10 22
10/10/16
11/17/22
26/50(4)
50(5)
50(2)
8/50(1)

PROBABLE TOP OF ROCK

R-24
3.4' Lt.
CONCRETE-0.9 ft
AGGREGATE BASE-0.5 ft

4/5/4
8/12/13 15
7/10/14
5/10/12
8/12/14 13
7/8/12
7/12/12
11/12/17
6/7/19
20/11/8
50(5)
12/50(3)
50(4)

PROBABLE TOP OF ROCK

RW-12
32.9' Lt.
ASPHALT-0.7 ft

2/4/9
5/9/9
7/10/12 17
6/16/19
16/14/16
11/18/43
30/50(2)

PROBABLE TOP OF ROCK

CORE LOSS = 14%
RQD = 60%

MEDIUM HARD LIGHT BROWN SANDSTONE, MEDIUM GRAINED, CARBONACEOUS, THIN BEDDED, SLIGHTLY WEATHERED, SLIGHTLY BROKEN.

BORING MB-3
19.2' Lt.
ASPHALT-0.8 ft
AGGREGATE BASE-0.2 ft

6/6/4
33/10/8
4/7/9
9/9/9
50(3)
7/4/9 13
20/23/24
36/41/13
50(2)

PROBABLE TOP OF ROCK
CORE LOSS = 12% RQD = 75%

CORE LOSS = 2% RQD = 85%

MEDIUM HARD TO HARD LIGHT BROWN SANDSTONE, VERY THIN BEDDED, SLIGHTLY TO MODERATELY WEATHERED, BROKEN.

R-31
20.8' Rt.
ASPHALT-0.3 ft
AGGREGATE BASE-0.3 ft

3/6/10 15
9/12/13
6/6/6
7/7/9
16/16/21
18/12/11
50(1)
50(1)

PROBABLE TOP OF ROCK

CORE LOSS = 50% RQD = 0%
CORE LOSS = 3% RQD = 43%
CORE LOSS = 3% RQD = 67%
NO CORE LOSS RQD = 58%
CORE LOSS = 5% RQD = 82%

MEDIUM HARD LIGHT BROWN SANDSTONE, FINE TO COARSE GRAINED, CONTAINS DARK BROWN LAMINAE AND THIN QUARTZ SEAMS, WEAKLY CEMENTED.

1070 1060 1050 1040 1030 1020 1010

324+00 325+00 326+00 327+00 328+00 329+00 330+00 331+00 332+00 333+00 334+00 335+00 336+00

N

0 25 50 10

HORIZONTAL SCALE IN FEET

CALCULATED RJH

CHECKED BEW

SOIL PROFILE - FOUNTAIN STREET STA. 323+50 TO STA. 336+00

SUM-8-0.63

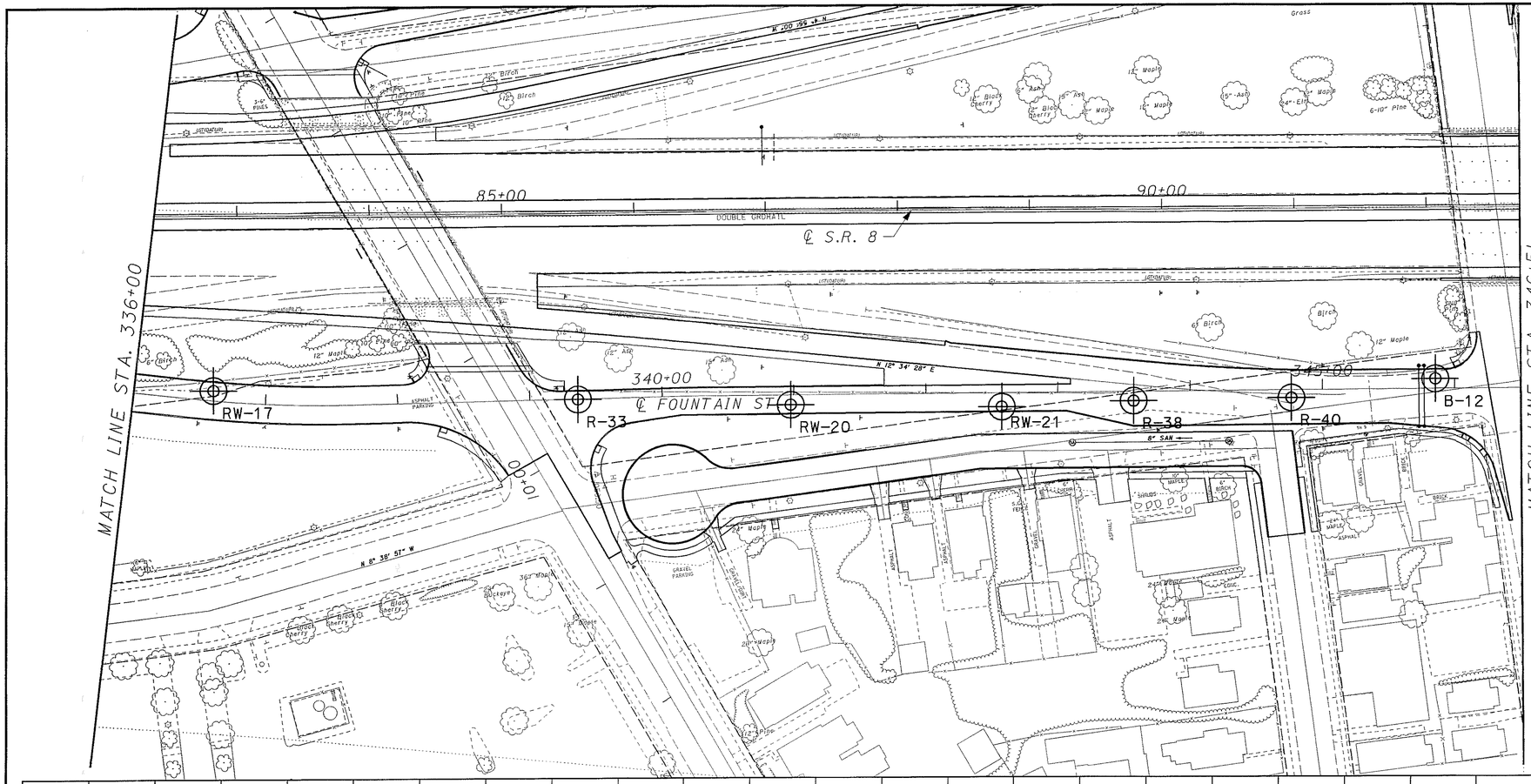

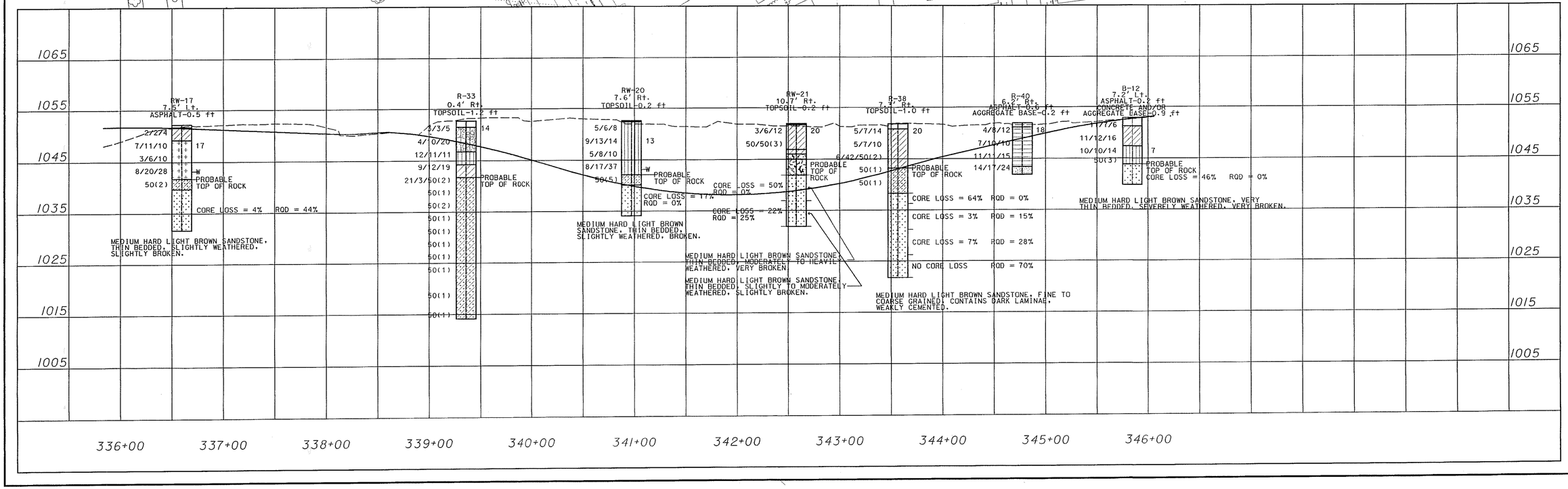

N

HORIZONTAL SCALE IN FEET
0 25 50 100

CALCULATED RJH
CHECKED BEW

SOIL PROFILE - FOUNTAIN STREET STA. 336+00 TO STA. 346+51

SUM-8-0.63

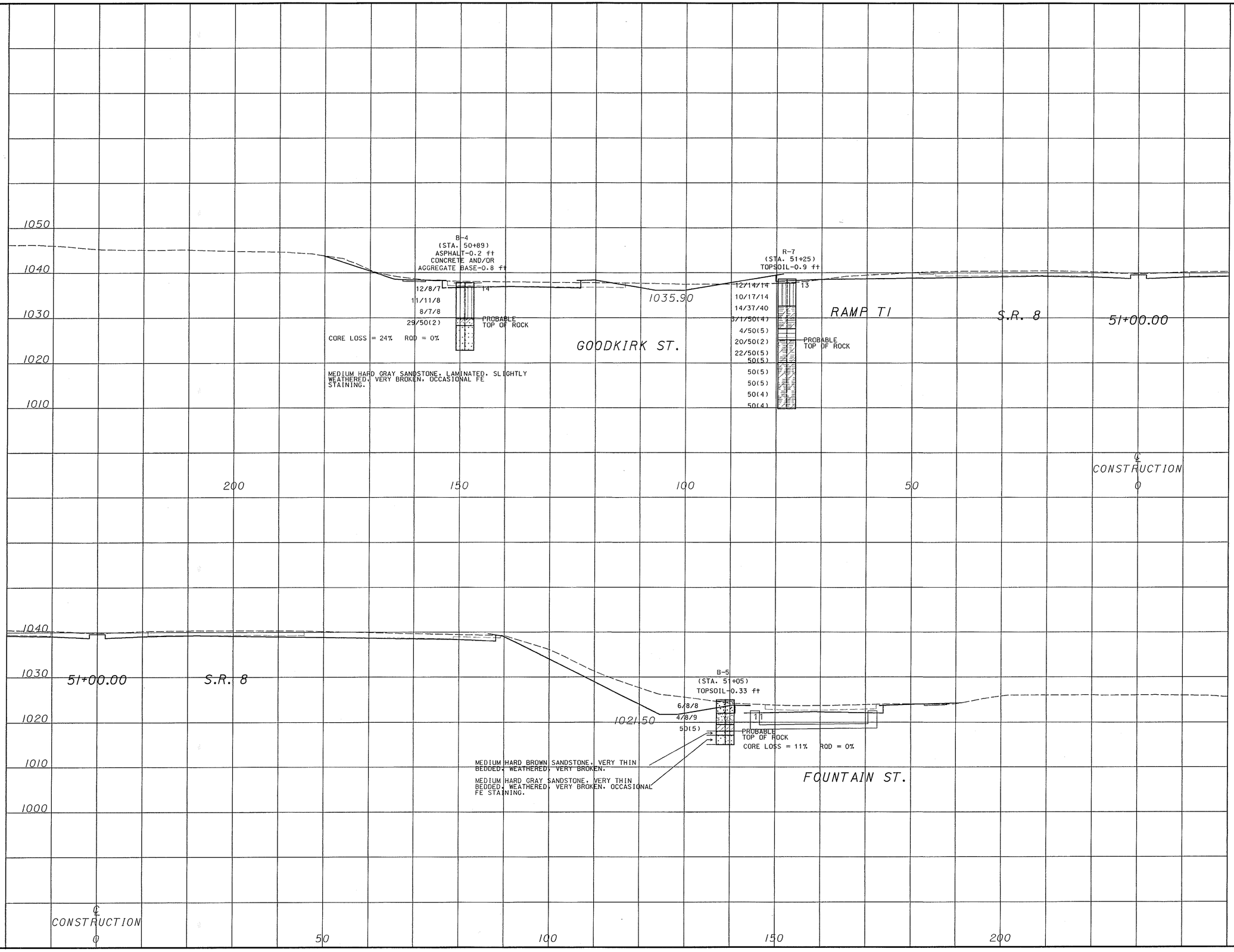

CALCULATED RJH
CHECKED BEW

CROSS SECTIONS - S.R. 8 STA. 51+00

SUM-8-0.63

32/37

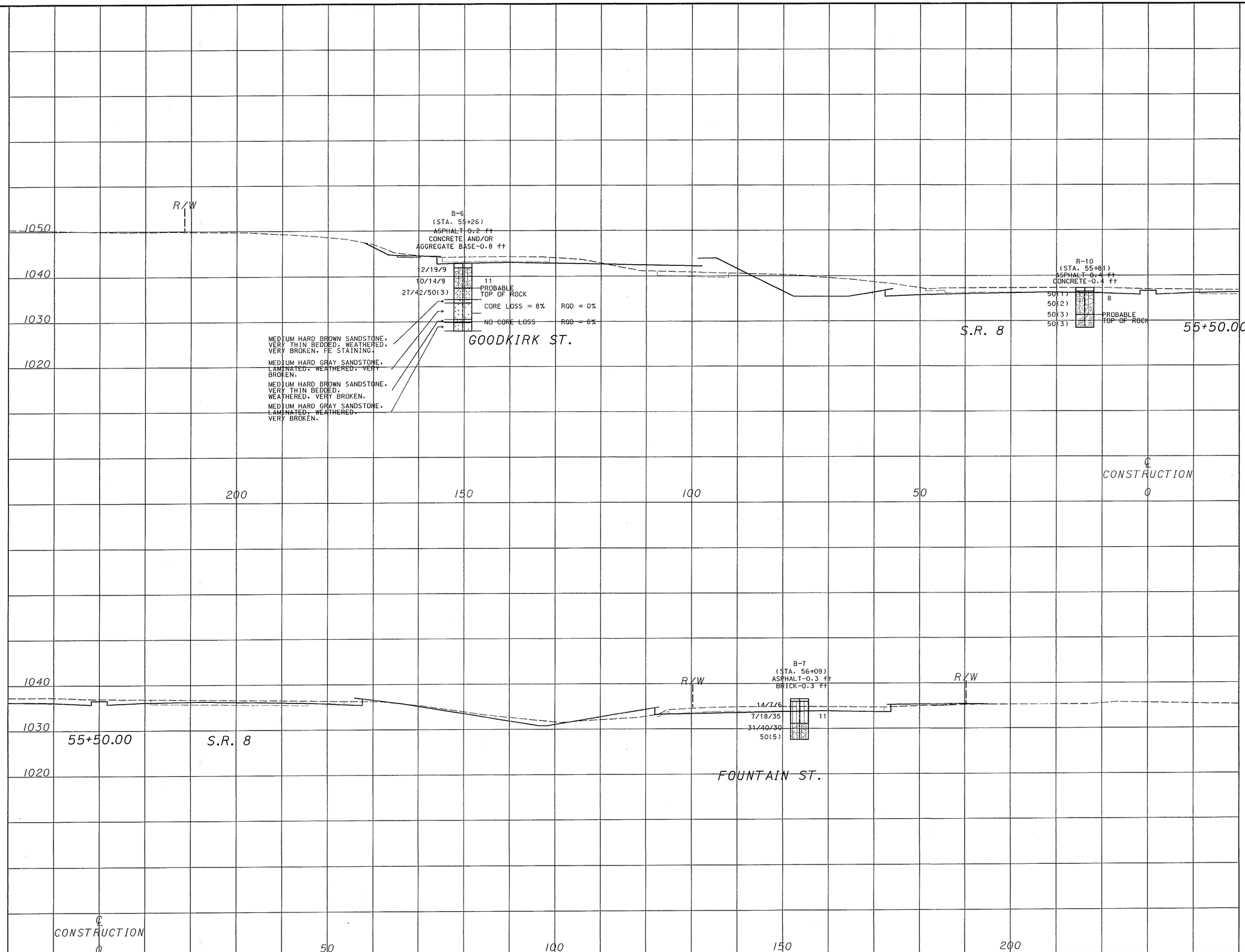

CALCULATED R.J.H.
CHECKED B.E.W.

CROSS SECTIONS - S.R. 8 STA. 55+50

SUM-8-0.63

33/37

RETAINING WALL #3

R-17
(STA. 67+52)
ASPHALT-0.3 ft
AGGREGATE BASE-0.3 ft

6/7/6	13
5/5/7	
9/14/21	18
8/12/18	
10/12/13	
4/5/5	
8/8/6	
11/9/13	
7/8/14	
50(5)	
50(5)	
50(1)	

PROBABLE TOP OF ROCK

CORE LOSS = 47% ROD = 7%

CORE LOSS = 3% ROD = 47%

MEDIUM HARD TO HARD LIGHT GRAY, SANDSTONE, FINE GRAINED, CONTAINS DARK BROWN LAMINAE.

GOODKIRK ST.

S.R. 8

68+50.00

℄ CONSTRUCTION

1070
1060
1050
1040
1030

200 150 100 50 0

R-19
(STA. 68+96)
CONCRETE-0.6 ft

6/8/9	14
6/8/10	
6/7/6	
5/3/7	6

FOUNTAIN ST.

68+50.00

S.R. 8

℄ CONSTRUCTION

1060
1050
1040
1030
1020

0 50 100 150 200

CALCULATED R.JH
CHECKED BEW

CROSS SECTIONS - S.R. 8
STA. 68+50

SUM-8-0.63

34/37

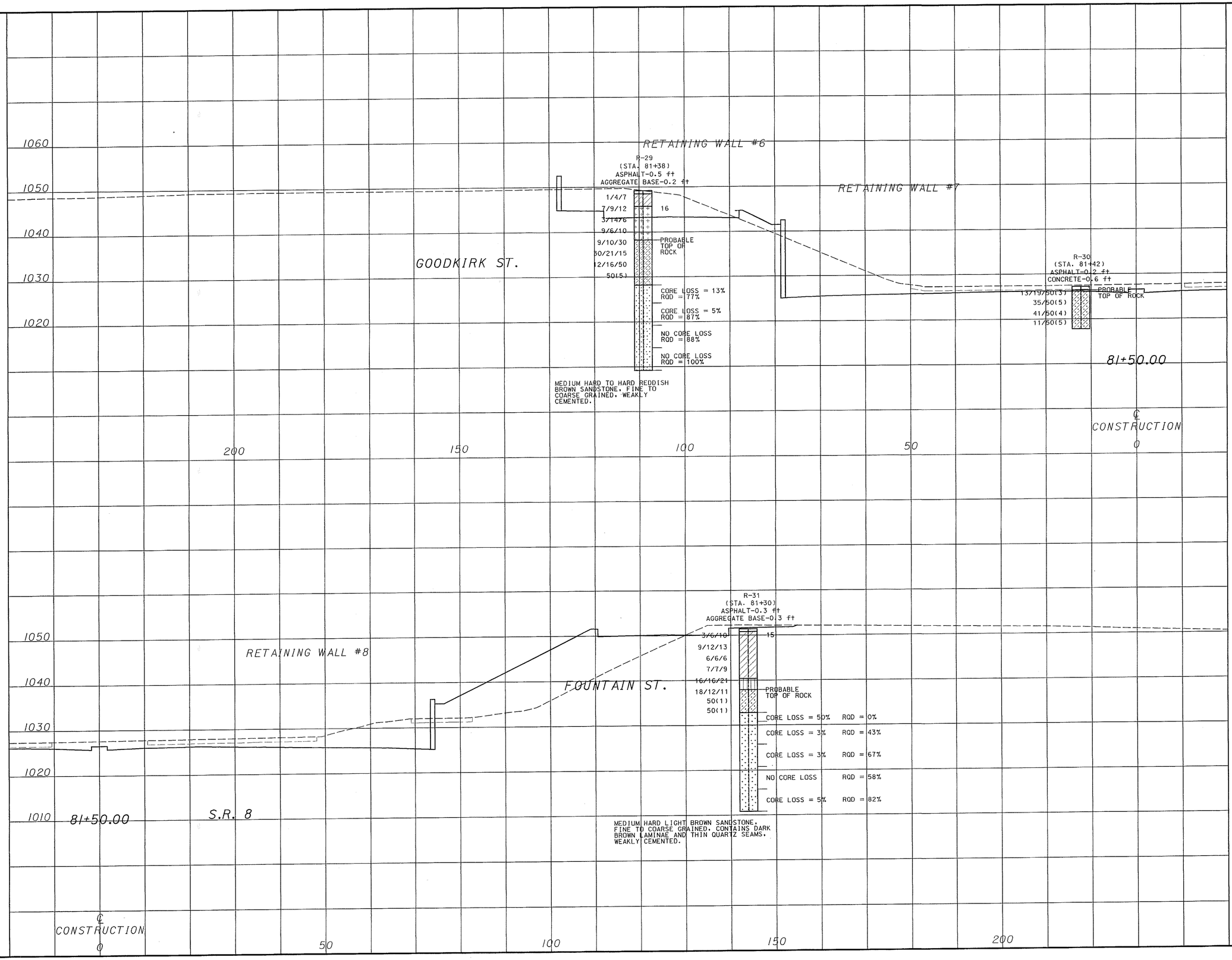

CALCULATED RJH
CHECKED BEW

CROSS SECTIONS - S.R. 8 STA. 81+50

SUM-8-0.63

35/37

R-34
(STA. 86+99)
ASPHALT-0.3 ft
AGGREGATE BASE-0.5 ft
378/11 18
6/11/30
11/16/50(3)
13/17/24
W
W

R-35
(STA. 86+93)
TOPSOIL-0.67 ft
50(3)
50(1)
PROBABLE TOP OF ROCK
CORE LOSS = 3% ROD = 45%

MEDIUM HARD LIGHT BROWN SANDSTONE, FINE TO COARSE GRAINED, WEAKLY CEMENTED.

1050
1040
1030
1020

GOODKIRK ST.

RAMP KI

S.R. 8

87+00.00

℄ CONSTRUCTION

200 150 100 50 0

1060
1050
1040
1030
1020

RETAINING WALL #10

R-36
(STA. 87+53)
TOPSOIL-0.6 ft
8/12/11 15
31/50(3)
PROBABLE TOP OF ROCK

RAMP LI

FOUNTAIN ST.

87+00.00

S.R. 8

℄ CONSTRUCTION

0 50 100 150 200

CALCULATED R.J.H.
CHECKED B.E.W.

CROSS SECTIONS - S.R. 8
STA. 87+00

SUM-8-0.63

36/37

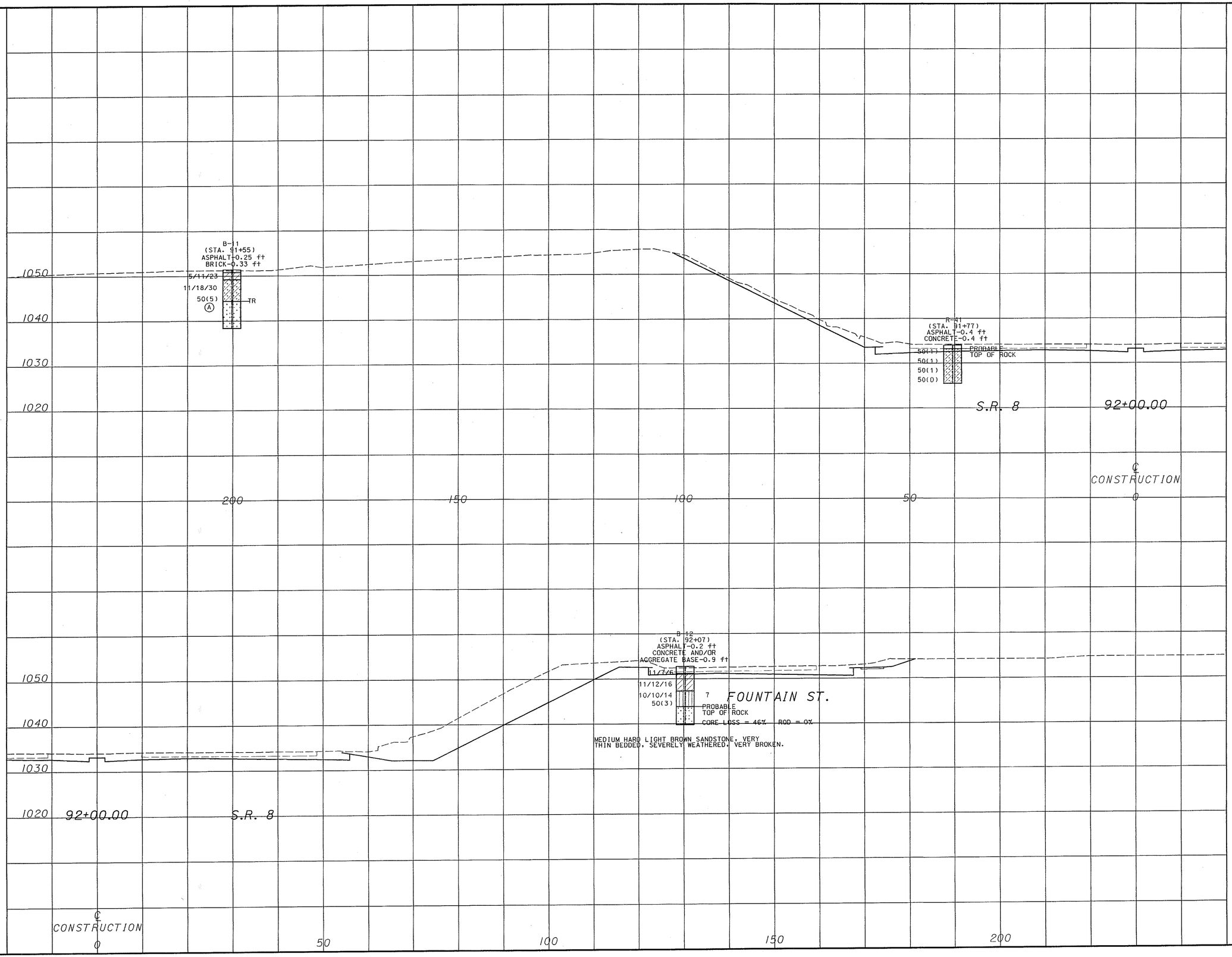

CALCULATED RJH
CHECKED DEW

CROSS SECTIONS - S.R. 8
STA. 92+00

SUM-8-0.63

37/37

GEOLOGY OF THE SITE

GENERALIZED GEOLOGIC REFERENCES REPORT THAT THE SITE WAS GLACIATED BY THE WISCONSIN GLACIER. THE GLACIAL DRIFT IS RELATIVELY THIN, REPORTEDLY AVERAGING LESS THAN 25 FEET. HOWEVER, A BURIED VALLEY PASSES THROUGH THE WESTERN PORTION OF AKRON. THE VALLEY FILL VARIES FROM APPROXIMATELY 150 TO 300 FEET IN THICKNESS. THE BEDROCK IN THE AREA CONSISTS OF THE SHARON CONGLOMERATE OR, IN ITS ABSENCE, INTERBEDDED SANDSTONE AND SHALE OF THE PENNSYLVANIAN AGE.

EXPLORATION

THE EXPLORATION CONSISTED OF DRILLING TWO BORINGS. THE BORINGS WERE DRILLED ON DECEMBER 9, 1999 USING A TRUCK-MOUNTED ROTARY DRILL RIG. THE BORINGS WERE ADVANCED TO DEPTHS RANGING FROM 28.0 TO 18.0 FEET FOR THE PROPOSED BRIDGE ABUTMENT EXTENSIONS.

INVESTIGATIONAL FINDINGS AND OBSERVATIONS

1. SOILS

THE BORINGS ENCOUNTERED 15 TO 18 INCHES OF TOPSOIL AT THE SURFACE. BENEATH THE TOPSOIL, BORING GB-1 ENCOUNTERED INTERBEDDED LAYERS OF VERY STIFF SILT AND CLAY, LOOSE TO MEDIUM DENSE SAND, AND MEDIUM DENSE SANDY SILT TO A DEPTH 10.5 FEET WHERE WEATHERED SHALE WAS ENCOUNTERED. BORING GB-2 ENCOUNTERED MEDIUM DENSE SANDY SILT FILL BENEATH THE OVERLYING TOPSOIL TO A DEPTH OF 3.0 FEET WHERE SAMPLER REFUSAL WAS ENCOUNTERED.

2. BEDROCK

IN BORING GB-1, WEATHERED SHALE WAS ENCOUNTERED AT A DEPTH OF 10.5 FEET. SPLIT SPOON SAMPLES WERE OBTAINED IN THE UPPER 7.5 FEET OF THE WEATHERED ROCK. AUGER REFUSAL WAS ENCOUNTERED AT A DEPTH OF 18.0 FEET AND TEN FEET OF ROCK WAS CORED. THE BEDROCK CONSISTED OF SOFT TO MODERATELY HARD GRAY SHALE.

REFUSAL WAS ENCOUNTERED IN BORING GB-2 AT A DEPTH OF 3.0 FEET AND CONTINUOUS CORING WAS PERFORMED TO A DEPTH OF 18.0 FEET. RECOVERY WAS POOR IN THE UPPER TEN FEET AND THE MATERAL CONSISTED OF SHALE, CONCRETE, AND SANDSTONE. THE POOR RECOVERY AND VARIABILITY ARE BELIEVED TO BE INDICTATIVE OF RANDOM ROCK/SOIL FILL PLACED DURING PREVIOUS CONSTRUCTION ACTIVITIES. AT GREATER DEPTH, THE ROCK CONSISTED OF SOFT TO MODERATELY HARD SHALE.

3. GROUNDWATER

SEEPAGE WAS ENCOUNTERED AT A DEPTH OF 8.5 FEET IN BORING GB-1. NO SEEPAGE WAS ENCOUNTERED IN BORING GB-2. THE WATER LEVEL PRIOR TO CORING ROCK IN BORING GB-1 WAS AT A DEPTH OF 8.5 FEET. IT SHOULD BE NOTED THAT THESE OBSERVATIONS WERE MADE INSIDE THE HOLLOWSTEM AUGERS, AND CONSEQUENTLY, MAY NOT REPRESENT ACTUAL GROUNDWATER CONDITIONS AT THE SITE.

SYMBOLS OF ROCK TYPES

SHALE

PARTICLE SIZE DEFINITIONS

12"	3"	2.0 mm		0.42 mm		0.074 mm	0.005 mm
Boulders	Cobbles	Gravel	Coarse Sand		Fine Sand	Silt	Clay
		No. 10 SIEVE		No. 40 SIEVE		No. 200 SIEVE	

NOTES

ALL AVAILABLE SOIL AND BEDROCK INFORMATION WHICH CAN BE CONVENIENTLY SHOWN ON THE STRUCTURE FOUNDATION INVESTIGATION SHEETS HAS BEEN SO REPORTED. ADDITIONAL SUBSURFACE INVESTIGATION MAY HAVE BEEN MADE TO STUDY SOME SPECIAL ASPECT OF THE PROJECT. COPIES OF THIS DATA, IF ANY, MAY BE INSPECTED IN THE DISTRICT DEPUTY DIRECTOR'S OFFICE, THE OFFICE OF MATERIALS MANAGEMENT AT 1600 WEST BROAD STREET, THE OFFICE OF ROADWAY ENGINEERING OR THE OFFICE STRUCTURAL ENGINEERING AT 25 SOUTH FRONT STREET, COLUMBUS, OHIO 43215.

INFORMATION SHOWN BY THIS SUBSURFACE INVESTIGATION WAS OBTAINED SOLELY FOR USE IN ESTABLISHING DESIGN CONTROLS FOR THE PROJECT. THE STATE OF OHIO DOES NOT GUARANTEE THE ACCURACY OF THIS DATA AND IT IS NOT TO BE CONSTRUED AS A PART OF THE PLAN GOVERNING CONSTRUCTION OF THIS PROJECT.

GENERAL INFORMATION

DRIVE SAMPLES

DRIVE SAMPLE BORINGS ARE MADE BY MEANS OF A MECHANICALLY-POWERED, ROTARY-TYPE DRILL RIG EMPLOYING A 2" O.D., 1-3/8" I.D., SPLIT-SPOON SAMPLER, AT CONTINUOUS, 2-1/2' AND/OR 5' DEPTH INTERVALS, DRIVEN BY MEANS OF A 140 lb HAMMER WITH A FREE FALL OF 30 INCHES. THE NUMBER OF BLOWS REQUIRED TO DRIVE THE SAMPLER THREE 6-INCH INCREMENTS IS CONSIDERED THE STANDARD PENETRATION TEST.

PRESS SAMPLES

PRESS SAMPLES ARE TAKEN BY MEANS OF A MECHANICALLY POWERED, ROTARY-TYPE DRILL RIG, EMPLOYING A 3-INCH O.D. THIN-WALL PRESSSAMPLING TUBE. THE PRESS SAMPLING TUBE IS ADVANCED BY CONTINUOUS UNIFORM PRESSURE APPLIED BY THE DRILL RIG.

CORE BORINGS

CORE BORINGS ARE MADE BY MEANS OF A MECHANICALLY-POWERED, ROTARY-TYPE DRILL RIG, EMPLOYING A NQ2 OR NXM CORE BARREL WITH AN INDUSTRIAL DIAMOND CUTTING HEAD.

SAMPLING AND TESTING

THE BORING LOG SHEETS SHOW A GRAPHIC PLOT OF THE INFORMATION OBTAINED, INCLUDING DEPTH AND ELEVATION OF THE SAMPLE, TYPE OF SAMPLE, NUMBER OF BLOWS FOR THE STANDARD PENETRATION TEST IN THREE 6-INCH INCREMENTS, AND A SAMPLE DESCRIPTION BASED ON LABORATORY TEST RESULTS, UTILIZING THE ODOT CLASSIFICATION SYSTEM. RESULTS OF STRENGTH AND CONSOLIDATION TESTING, IF PERFORMED ON UNDISTURBED SAMPLES, APPEAR GRAPHICALLY ON SEPARATE ENCLOSURES. ROCK SAMPLES ARE DISPLAYED ON THE LOG SHEETS, INCLUDING DEPTH AND ELEVATION OF THE SAMPLE, AMOUNT OF RECOVERY, AND A VISUAL CLASSIFICATION BASED ON TYPE, COLOR, DEGREE OF HARDNESS, GRAIN SIZE, DETERIORATION, BEDDING, ACID REACTION, AND OTHER QUALIFYING FACTORS.

AT DEPTHS WHERE MATERIALS ARE BOULDERY OR GRAVELLY TO THE EXTENT THAT A SAMPLER CANNOT BE UTILIZED, A WASH SAMPLE IS PROCURED AND VISUALLY CLASSIFIED, IN ORDER TO DETERMINE THE GENERAL CHARACTERISTICS OF THE MATERIAL. THESE SAMPLES ARE NOT CONSIDERED SUFFICIENTLY REPRESENTATIVE TO WARRANT LABORATORY TESTING.

LEGEND

PRESS SAMPLE, DRIVE SAMPLE, AND/OR CORE BORING LOCATION

w—— INDICATES FREE WATER ELEVATION

▼—— INDICATES STATIC WATER ELEVATION

X/Y/Z — FIGURES BESIDE THE BORING IN PROFILE INDICATE THE NUMBER OF BLOWS FOR STANDARD PENETRATION TEST
X = NUMBER OF BLOWS FOR FIRST 6 INCHES
Y = NUMBER OF BLOWS FOR SECOND 6 INCHES
Z = NUMBER OF BLOWS FOR THIRD 6 INCHES

50(n) — INDICATES NUMBER OF BLOWS (50) TO DRIVE A SPLIT-BARREL SAMPLER A DEPTH OF (n) INCHES OTHER THAN THE NORMAL 6 INCH INCREMENT.

DLZ OHIO, INC.

CALCULATED	CHECKED BY
RJH	BEW
DATE	
REVIEWED BY	
RJH	
DRAWN BY	
RJH	

STRUCTURE FOUNDATION INVESTIGATION
BRIDGE NO. SUM-8-0087
S.R. 8 OVER EXCHANGE STREET

SUM-8-0.63

1 / 3

1

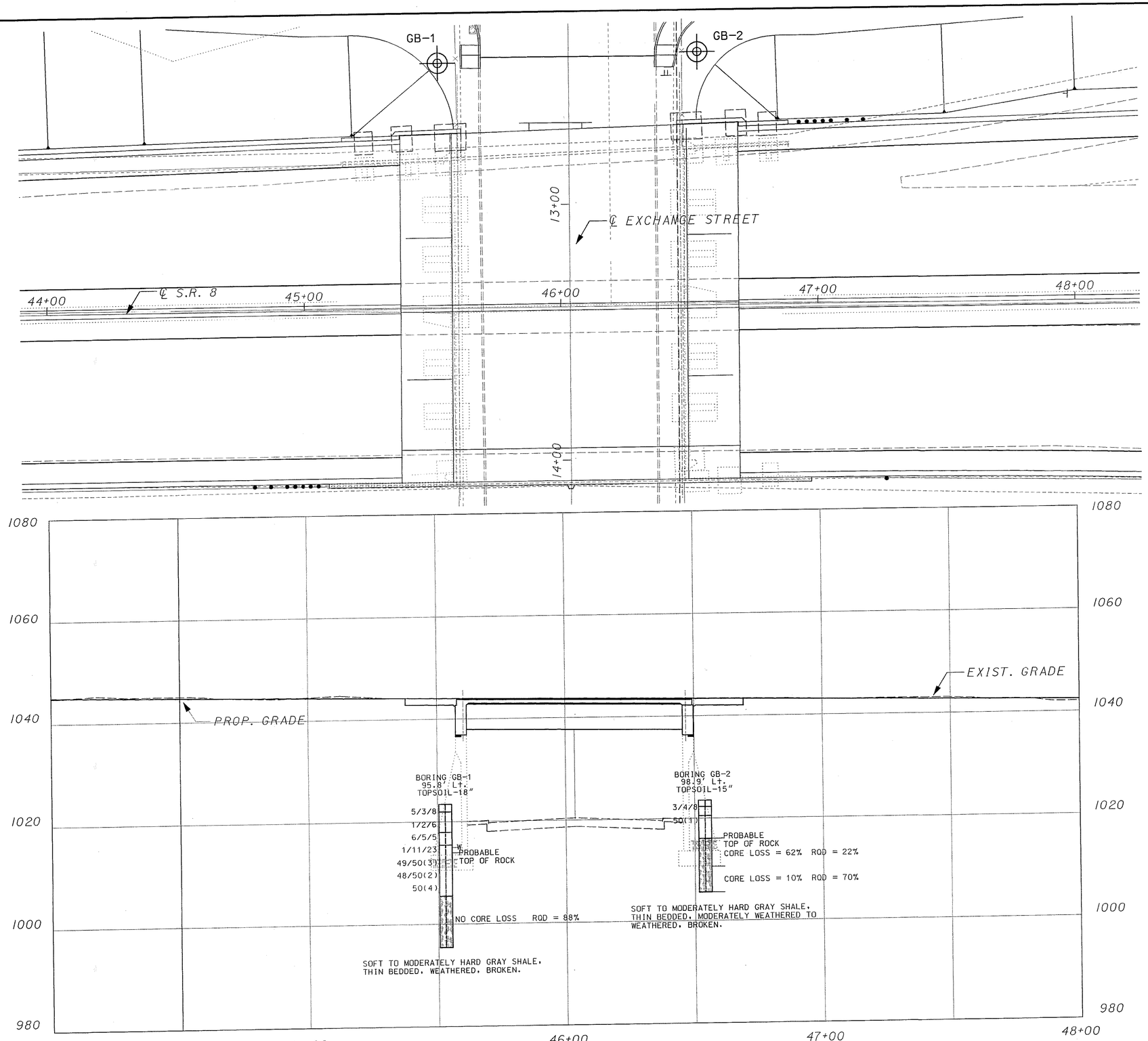

PROFILE ALONG ℄ S.R. 8

DLZ OHIO, INC.

0 20 40
HORIZONTAL SCALE
1" = 40'

DRAWN BY	REVIEWED BY	DATE	CALCULATED	CHECKED BY
RJH	RJH		RJH	BEW

STRUCTURE FOUNDATION INVESTIGATION
BRIDGE NO. SUM-8-0087
S.R. 8 OVER EXCHANGE STREET

SUM-8-0.63

2 / 3

Client: ODOT | Project: SUM - 8 - 0087 | Job No. 9921-3077.00

LOG OF: Boring GB-1 | Location: Station 45+53, 95.8' Left | Date Drilled: 12/9/99

WATER OBSERVATIONS:
Water seepage at: 8.5'
Water level at completion: 8.5' (prior to coring)

Depth (ft)	Elev. (ft)	Blows per 6"	Recovery (in)	Sample No. Drive	Sample No. Press	Hand Penetrometer (tsf)	DESCRIPTION	% Aggregate	% C. Sand	% M. Sand	% F. Sand	% Silt	% Clay	STANDARD PENETRATION (N) Blows per foot 10 20 30 40	Moisture Content - % PL Natural LL 10 20 30 40
0	1023.4						Topsoil - 18"								
1.5	1021.9	5 3 8 7		1											
5	1017.9	1 2 6 11		2		1.25	Medium dense brown SANDY SILT (A-4a), trace gravel; damp to moist.	7	22	—	33	29	9		
5.5		6 5 5 12		3			Loose to medium dense brown COARSE AND FINE SAND (A-3a), some silty clay, somer gravel; damp.								
8.0	1015.4	1 11 23 12		4		2.25	Very stiff brown SILT AND CLAY (A-6a), trace gravel; wet. (Decomposed SHALE)								
10	1012.9														
10.5		49 50/3 10		5			Gray weathered SHALE.								
15		48 50/2 8		6											
		50/4 4		7											
18.0	1005.4	Core 120"	Rec 120"	RQD 88%			Soft to moderately hard gray SHALE; thin bedded; weathered, broken.								
20															
25	998.4														

Client: ODOT | Project: SUM - 8 - 0087 | Job No. 9921-3077.00

LOG OF: Boring GB-2 | Location: Station 46+54, 98.9' Left | Date Drilled: 12/9/99

WATER OBSERVATIONS:
Water seepage at: None
Water level at completion: ---

Depth (ft)	Elev. (ft)	Blows per 6"	Recovery (in)	Sample No. Drive	Sample No. Press	Hand Penetrometer (tsf)	DESCRIPTION	% Aggregate	% C. Sand	% M. Sand	% F. Sand	% Silt	% Clay	STANDARD PENETRATION (N) Blows per foot 10 20 30 40	Moisture Content - % PL Natural LL 10 20 30 40
0	1023.5						Topsoil - 15"								
1.3	1022.2	3 4 8 9		1		---	FILL: Medium dense brown SANDY SILT (A-4a); damp.	6	18	—	35	28	13		
3.0	1020.5	50/1					Began coring at 3.0'.								
5		Core 60"	Rec 18"	RQD 13%			FILL: Cored through apparent random fill. Recovered material consisted of SHALE, SANDSTONE, CONCRETE fragments and gravel. Loss believed to be due to washing away of soil matrix.								
8.0	1015.5														
10		Core 60"	Rec 23"	RQD 22%			Soft to moderately hard gray SHALE; thin bedded; moderately weathered to weathered; broken.								
15		Core 60"	Rec 54"	RQD 70%											
18.0	1005.5						Bottom of Boring - 18.0'								
20															
25															

Client: ODOT | Project: SUM - 8 - 0087 | Job No. 9921-3077.00

LOG OF: Boring GB-1 | Location: Station 45+53, 95.8' Left | Date Drilled: 12/9/99

WATER OBSERVATIONS:
Water seepage at: 8.5'
Water level at completion: 8.5' (prior to coring)

Depth (ft)	Elev. (ft)	Blows per 6"	Recovery (in)	Sample No. Drive	Sample No. Press	Hand Penetrometer (tsf)	DESCRIPTION	% Aggregate	% C. Sand	% M. Sand	% F. Sand	% Silt	% Clay	STANDARD PENETRATION (N) Blows per foot 10 20 30 40	Moisture Content - % PL Natural LL 10 20 30 40
25	998.4						Soft to moderately hard gray SHALE; thin bedded; weathered, broken.								
28.0	995.4						Bottom of Boring - 28.0'								
30															
35															
40															
45															
50															

DLZ OHIO, INC.

CALCULATED RJH | CHECKED BY BEW
DATE
REVIEWED BY RJH
DRAWN BY RJH

STRUCTURE FOUNDATION INVESTIGATION
BRIDGE NO. SUM-8-0087
S.R. 8 OVER EXCHANGE STREET

SUM-8-0.63

3 / 3

GEOLOGY OF THE SITE

GENERALIZED GEOLOGIC REFERENCES REPORT THAT THE SITE WAS GLACIATED BY THE WISCONSIN GLACIER. THE GLACIAL DRIFT IS RELATIVELY THIN, REPORTEDLY AVERAGING LESS THAN 25 FEET. HOWEVER, A BURIED VALLEY PASSES THROUGH THE WESTERN PORTION OF AKRON. THE VALLEY FILL VARIES FROM APPROXIMATELY 150 TO 300 FEET IN THICKNESS. THE BEDROCK IN THE AREA CONSISTS OF THE SHARON CONGLOMERATE OR, IN ITS ABSENCE, INTERBEDDED SANDSTONE AND SHALE OF THE PENNSYLVANIAN AGE.

EXPLORATION

THE EXPLORATION CONSISTED OF DRILLING FIVE BORINGS. THE BORINGS WERE DRILLED BETWEEN JANUARY 12 AND FEBRUARY 10, 2000 USING A TRUCK-MOUNTED ROTARY DRILL RIG. STRUCTURE BORINGS FB-1 THROUGH FB-3 WERE NEAR THE EXISTING BRIDGE ABUTMENTS AND PIER. ROADWAY BORINGS FR-1 AND FR-2 WERE DRILLED APPROXIMATELY 216 AND 273 FEET FROM THE EASTERN AND WESTERN ABUTMENTS, RESPECTIVELY. THE STRUCTURE BORINGS WERE ADVANCED TO DEPTHS RANGING FROM 13.5 TO 23.7 FEET AND THE ROADWAY BORINGS WERE ADVANCED TO DEPTHS OF 10 FEET EACH.

INVESTIGATIONAL FINDINGS AND OBSERVATIONS

1. SOILS

BORINGS FB-1 AND FB-2 ENCOUNTERED 4 TO 6 INCHES OF ASPHALT CONCRETE OVER 5 TO 10 INCHES OF PORTLAND CEMENT CONCRETE. BORING FB-3 ENCOUNTERED 2.5 FEET OF PORTLAND CEMENT CONCRETE. OVERLYING ASPHALT CONCRETE. BENEATH THE PAVEMENT, THE BORINGS ENCOUNTERED INTERBEDDED LAYERS OF VERY STIFF TO HARD SILTY CLAYS, MEDIUM DENSE TO DENSE SANDS, AND VERY STIFF TO HARD SANDY SILTS TO DEPTHS OF 8.5 TO 13.7 FEET WHERE WEATHERED BEDROCK WAS ENCOUNTERED

BORINGS FR-1 AND FR-2 WERE DRILLED IN THE ROADWAY EAST AND WEST OF THE BRIDGE, RESPECTIVELY. BORING FR-1 ENCOUNTERED 4 INCHES OF ASPHALT CONCRETE OVERLYING 20 INCHES OF PORTLAND CEMENT CONCRETE. BORING FR-2 ENCOUNTERED 4 INCHES OF ASPHALT CONCRET OVER 12 INCHES OF RED COBBLESTONE AND 3 INCHES OF CINDERS. BENEATH THE PAVEMENT LAYERS, THESE BORING GENERALLY ENCOUNTERED MEDIUM DENSE TO DENSE SANDY SILT AND VERY STIFF SILTY CLAY. HOWEVER, BORING FR-1 ENCOUNTERED WEATHERED SANDSTONE AT A DEPTH OF 7.0 FEET.

2. BEDROCK

THE STRUCTURE BORINGS, FB-1 THROUGH FB-3, WERE ALL ADVANCED TO SPLIT SPOON/AUGER REFUSAL AND 5.0 TO 10.0 FEET OF ROCK WAS CORED. THE BEDROCK CONSISTED OF MODERATELY HARD TO HARD SANDSTONE. THE BEDROCK WAS BROKEN TO SLIGHTLY BROKEN AS INDICATED BY THE RQD VALUES WHICH RANGED FROM 59 TO 83 PERCENT.

3. GROUNDWATER

NO SEEPAGE WAS ENCOUNTERED IN THE BORINGS AND THERE WERE NO MEASURABLE WATER LEVELS IN THE BORINGS BEFORE ROCK CORING. IT SHOULD BE NOTED THAT THESE OBSERVATIONS WERE MADE INSIDE THE HOLLOWSTEM AUGERS, AND CONSEQUENTLY, MAY NOT REPRESENT ACTUAL GROUNDWATER CONDITIONS AT THE SITE. WATER WAS USED IN THE BRIDGE BORINGS DURING ROCK CORING OPERATIONS AND MASKED ANY SEEPAGE THAT MAY EXIST IN THE BEDROCK.

SYMBOLS OF ROCK TYPES

SANDSTONE

PARTICLE SIZE DEFINITIONS

12"	3"	2.0 mm		0.42 mm		0.074 mm	0.005 mm
Boulders	Cobbles	Gravel	Coarse Sand		Fine Sand	Silt	Clay
		No. 10 SIEVE		No. 40 SIEVE		No. 200 SIEVE	

NOTES

ALL AVAILABLE SOIL AND BEDROCK INFORMATION WHICH CAN BE CONVENIENTLY SHOWN ON THE STRUCTURE FOUNDATION INVESTIGATION SHEETS HAS BEEN SO REPORTED. ADDITIONAL SUBSURFACE INVESTIGATION MAY HAVE BEEN MADE TO STUDY SOME SPECIAL ASPECT OF THE PROJECT. COPIES OF THIS DATA, IF ANY, MAY BE INSPECTED IN THE DISTRICT DEPUTY DIRECTOR'S OFFICE, THE OFFICE OF MATERIALS MANAGEMENT AT 1600 WEST BROAD STREET, THE OFFICE OF ROADWAY ENGINEERING OR THE OFFICE STRUCTURAL ENGINEERING AT 25 SOUTH FRONT STREET, COLUMBUS, OHIO 43215.

INFORMATION SHOWN BY THIS SUBSURFACE INVESTIGATION WAS OBTAINED SOLELY FOR USE IN ESTABLISHING DESIGN CONTROLS FOR THE PROJECT. THE STATE OF OHIO DOES NOT GUARANTEE THE ACCURACY OF THIS DATA AND IT IS NOT TO BE CONSTRUED AS A PART OF THE PLAN GOVERNING CONSTRUCTION OF THIS PROJECT.

GENERAL INFORMATION

DRIVE SAMPLES

DRIVE SAMPLE BORINGS ARE MADE BY MEANS OF A MECHANICALLY-POWERED, ROTARY-TYPE DRILL RIG EMPLOYING A 2" O.D., 1-3/8" I.D., SPLIT-SPOON SAMPLER, AT CONTINUOUS, 2-1/2' AND/OR 5' DEPTH INTERVALS, DRIVEN BY MEANS OF A 140 lb HAMMER WITH A FREE FALL OF 30 INCHES. THE NUMBER OF BLOWS REQUIRED TO DRIVE THE SAMPLER THREE 6-INCH INCREMENTS IS CONSIDERED THE STANDARD PENETRATION TEST.

PRESS SAMPLES

PRESS SAMPLES ARE TAKEN BY MEANS OF A MECHANICALLY POWERED, ROTARY-TYPE DRILL RIG, EMPLOYING A 3-INCH O.D. THIN-WALL PRESSSAMPLING TUBE. THE PRESS SAMPLING TUBE IS ADVANCED BY CONTINUOUS UNIFORM PRESSURE APPLIED BY THE DRILL RIG.

CORE BORINGS

CORE BORINGS ARE MADE BY MEANS OF A MECHANICALLY-POWERED, ROTARY-TYPE DRILL RIG, EMPLOYING A NQ2 OR NXM CORE BARREL WITH AN INDUSTRIAL DIAMOND CUTTING HEAD.

SAMPLING AND TESTING

THE BORING LOG SHEETS SHOW A GRAPHIC PLOT OF THE INFORMATION OBTAINED, INCLUDING DEPTH AND ELEVATION OF THE SAMPLE, TYPE OF SAMPLE, NUMBER OF BLOWS FOR THE STANDARD PENETRATION TEST IN THREE 6-INCH INCREMENTS, AND A SAMPLE DESCRIPTION BASED ON LABORATORY TEST RESULTS, UTILIZING THE ODOT CLASSIFICATION SYSTEM. RESULTS OF STRENGTH AND CONSOLIDATION TESTING, IF PERFORMED ON UNDISTURBED SAMPLES, APPEAR GRAPHICALLY ON SEPARATE ENCLOSURES. ROCK SAMPLES ARE DISPLAYED ON THE LOG SHEETS, INCLUDING DEPTH AND ELEVATION OF THE SAMPLE, AMOUNT OF RECOVERY, AND A VISUAL CLASSIFICATION BASED ON TYPE, COLOR, DEGREE OF HARDNESS, GRAIN SIZE, DETERIORATION, BEDDING, ACID REACTION, AND OTHER QUALIFYING FACTORS.

AT DEPTHS WHERE MATERIALS ARE BOULDERY OR GRAVELLY TO THE EXTENT THAT A SAMPLER CANNOT BE UTILIZED, A WASH SAMPLE IS PROCURED AND VISUALLY CLASSIFIED, IN ORDER TO DETERMINE THE GENERAL CHARACTERISTICS OF THE MATERIAL. THESE SAMPLES ARE NOT CONSIDERED SUFFICIENTLY REPRESENTATIVE TO WARRANT LABORATORY TESTING.

LEGEND

PRESS SAMPLE, DRIVE SAMPLE, AND/OR CORE BORING LOCATION

W—— INDICATES FREE WATER ELEVATION

▼—— INDICATES STATIC WATER ELEVATION

X/Y/Z — FIGURES BESIDE THE BORING IN PROFILE INDICATE THE NUMBER OF BLOWS FOR STANDARD PENETRATION TEST
X = NUMBER OF BLOWS FOR FIRST 6 INCHES
Y = NUMBER OF BLOWS FOR SECOND 6 INCHES
Z = NUMBER OF BLOWS FOR THIRD 6 INCHES

50(n) — INDICATES NUMBER OF BLOWS (50) TO DRIVE A SPLIT-BARREL SAMPLER A DEPTH OF (n) INCHES OTHER THAN THE NORMAL 6 INCH INCREMENT.

DLZ OHIO, INC.

CALCULATED RJH | CHECKED BY BEW
DATE
REVIEWED BY RJH
DRAWN BY RJH

STRUCTURE FOUNDATION INVESTIGATION
BRIDGE NO. SUM-8-0159
FORGE STREET OVER S.R. 8

SUM-8-0.63

1 / 4

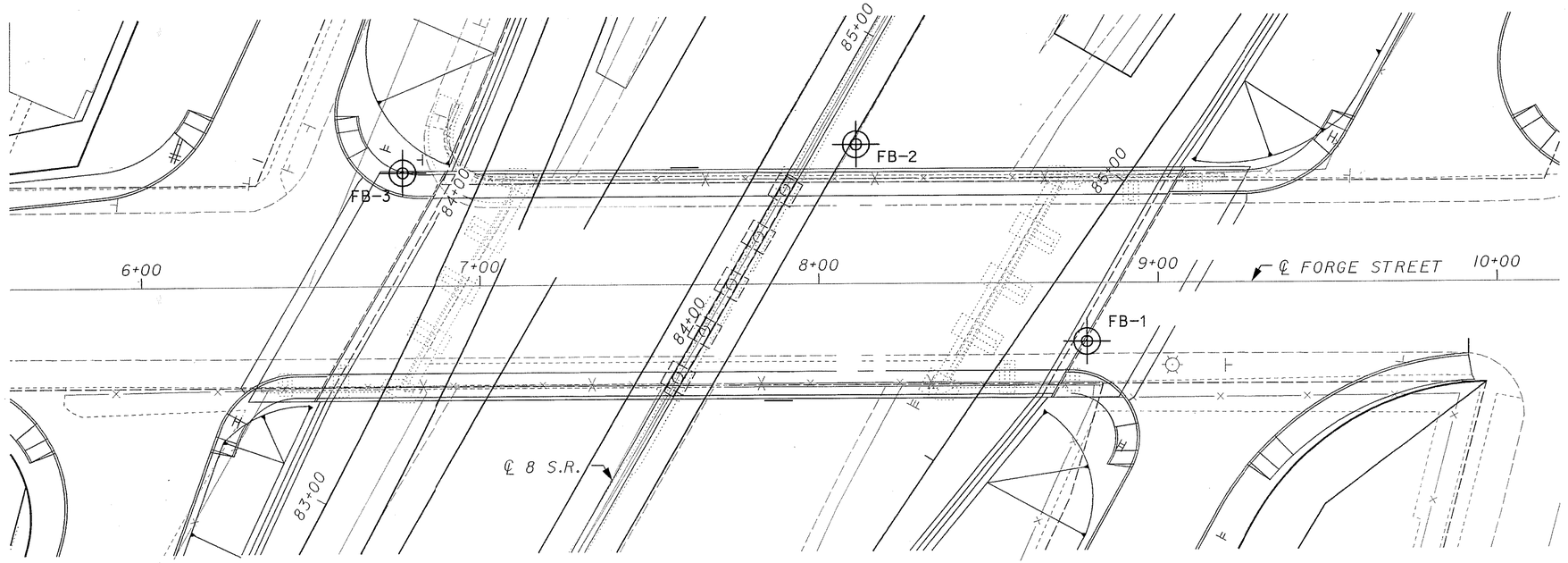

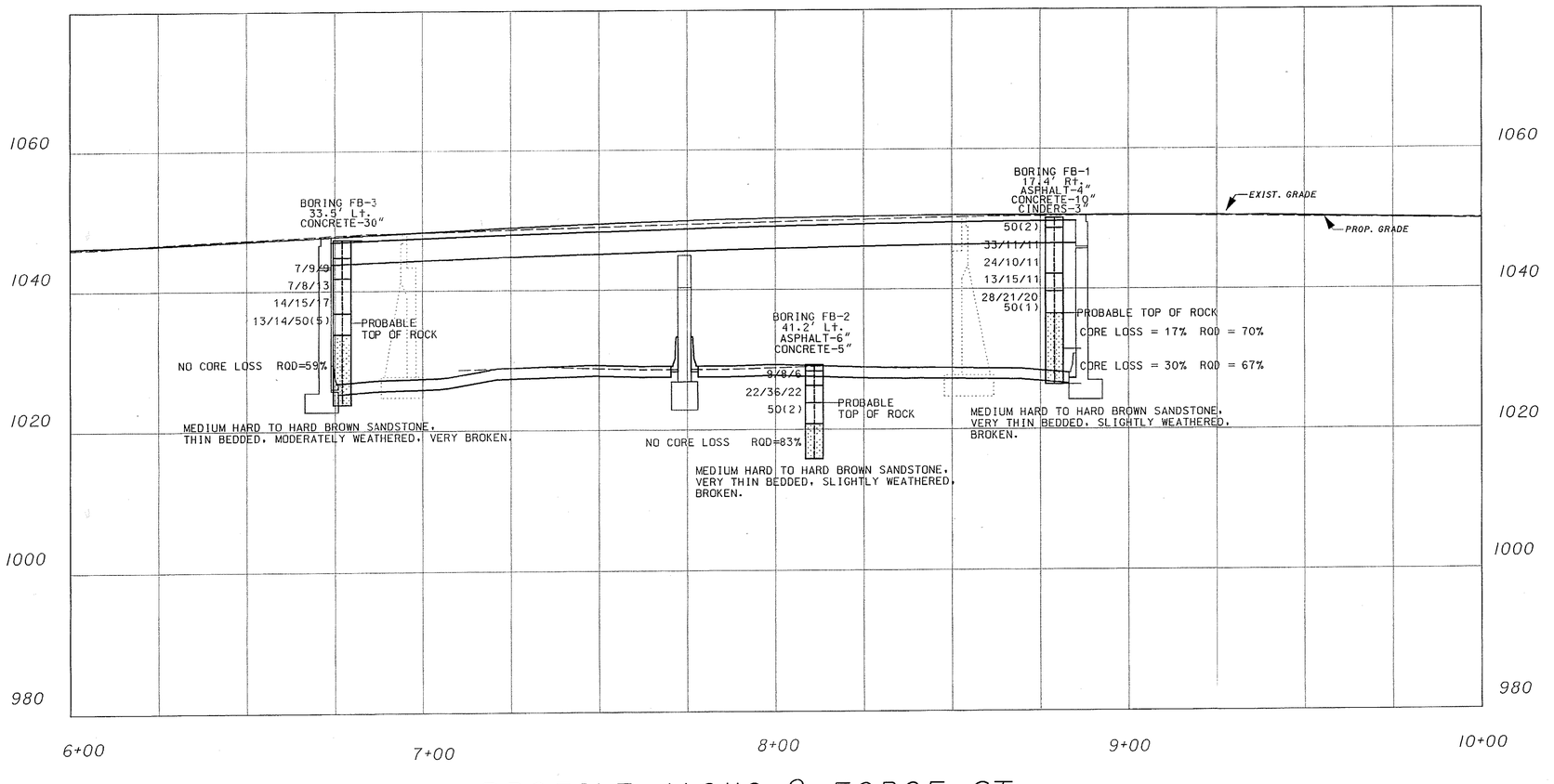

PROFILE ALONG ℄ FORGE ST.

DLZ OHIO, INC.

0 20 40
HORIZONTAL SCALE
1" = 40'

DRAWN BY	REVIEWED BY	DATE	CALCULATED	CHECKED BY
RJH	RJH		RJH	BEW

STRUCTURE FOUNDATION INVESTIGATION
BRIDGE NO. SUM-8-0159
FORGE STREET OVER S.R. 8

SUM-8-0.63

2/4

Client: ODOT | Project: SUM - 8 - 0159 | Job No. 9921-3077.00

LOG OF: Boring FB-1 | Location: Forge Street Sta. 8+79, 17.4' Right | Date Drilled: 2/10/00

WATER OBSERVATIONS: Water seepage at: None; Water level at completion: None (prior to coring)

Depth (ft)	Elev. (ft)	Blows per 6"	Recovery (ft)	Sample No. Drive	Sample No. Press	Hand Penetrometer (tsf)	DESCRIPTION	% Aggregate	% C. Sand	% M. Sand	% F. Sand	% Silt	% Clay	Moisture Content - % PL / Natural / LL
0	1050.1						DESCRIPTION							
1.4	1048.7	5 0/2	1	1			Asphalt Concrete Pavement - 4" Portland Cement Concrete - 10" Aggregate Base - 3"							
5		33 11 11	18	2		3.25	Very stiff brown SILT AND CLAY (A-6a), little to some fine to coarse sand, trace gravel; damp. @ 5.5', stiff to very stiff.							
8.0	1042.1	24 10 11	7	3		2.0								
10 10.5	1039.6	13 15 11	18	4		---	Dense brown GRAVEL WITH SAND AND SILT (A-2-4); damp.	28	15	--	28	24	7	
13.0	1037.1	28 21 20	18	5		3.5	Dense brown COARSE AND FINE SAND (A-3a), little silty clay; damp.							
13.7	1036.4	50/1	1	6		---	Weathered brown SANDSTONE.							
15		Core 60"	Rec 50"	RQD 70%			Medium hard to hard brown SANDSTONE; very thin bedded; slightly weathered; broken. @ 17.3', 5" vertical fracture.							
20		Core 60"	Rec 42"	RQD 67%			@ 18.7' - 23.7', slightly broken. @ 20.1', vertical fracture. @ 21.0', vertical fracture.							
23.7	1026.4						Bottom of Boring - 23.7'							
25														

STANDARD PENETRATION (N) Blows per foot: 10 20 30 40

Moisture Content - % PL X — Natural ● — X LL; 10 20 30 40

Client: ODOT | Project: SUM - 8 - 0159 | Job No. 9921-3077.00

LOG OF: Boring FB-3 | Location: Forge Street Sta. 6+77, 33.5' Left | Date Drilled: 1/12/00

WATER OBSERVATIONS: Water seepage at: None; Water level at completion: None (prior to coring)

Depth (ft)	Elev. (ft)	Blows per 6"	Recovery (ft)	Sample No. Drive	Sample No. Press	Hand Penetrometer (tsf)	DESCRIPTION	% Aggregate	% C. Sand	% M. Sand	% F. Sand	% Silt	% Clay	Moisture Content - % PL / Natural / LL
0	1047.3						DESCRIPTION							
2.5	1044.8						Portland Cement Concrete - 2.5"							
5 5.5	1041.8	7 9 9	14	1		2.5	Very stiff brown SANDY SILT (A-4a), some fine to coarse sand, trace gravel; damp to moist.							
10 10.5	1036.8	7 8 13	18	2		4.5	Hard brown SILT AND CLAY (A-6a), "and" fine to coarse sand, trace gravel; contains siltstone fragments; damp.							
11.8	1035.5	14 15 17	18	3		4.5+	Hard brown SANDY SILT (A-4a), some gravel, some fine to coarse sand; damp.	25	10	--	15	34	16	
13.5	1033.8	13 14 50/5	12	4			Very dense light reddish brown COARSE AND FINE SAND (A-3a), little silty clay, trace fine gravel; damp.							
15		Core 120"	Rec 120"	RQD 59%			Weathered brown SANDSTONE. Medium hard to hard brown SANDSTONE; thin bedded; moderately weathered; very broken.							
20							@ 18.8', mid-angle fracture. @ 20.0', light brown. @ 21.7', mid-angle fracture.							
23.5	1023.8						Bottom of Boring - 23.5'							
25														

STANDARD PENETRATION (N) Blows per foot: 10 20 30 40

Moisture Content - % PL X — Natural ● — X LL; 10 20 30 40

Client: ODOT | Project: SUM - 8 - 0159 | Job No. 9921-3077.00

LOG OF: Boring FB-2 | Location: Forge Street Sta. 8+11, 41.2' Left | Date Drilled: 2/9/00

WATER OBSERVATIONS: Water seepage at: None; Water level at completion: None (prior to coring)

Depth (ft)	Elev. (ft)	Blows per 6"	Recovery (ft)	Sample No. Drive	Sample No. Press	Hand Penetrometer (tsf)	DESCRIPTION	% Aggregate	% C. Sand	% M. Sand	% F. Sand	% Silt	% Clay	Moisture Content - % PL / Natural / LL
0	1029.3						DESCRIPTION							
0.9	1028.4						Asphalt Concrete Pavement - 6" Portland Cement Concrete - 5"							
3.0	1026.3	9 8 6	12	1			Medium dense brown COARSE AND FINE SAND (A-3a), little silty clay, trace gravel; contains rock fragments; damp.							
5 5.5	1023.8	22 36 22	18	2			Very dense light brown FINE SAND (A-3), some gravel, trace silty clay; damp.	27	6	--	58	9		Non-plastic
8.5	1020.8	50/2	2	3			Weathered grayish brown SANDSTONE.							50+
10		Core 60"	Rec 60"	RQD 83%			Medium hard to hard brown SANDSTONE; very thin bedded; slightly weathered; broken. @ 8.7', vertical fracture.							
13.5	1015.8						@ 12.1' & 12.2', clay healed horizontal fractures.							
15							Bottom of Boring - 13.5'							
20														
25														

STANDARD PENETRATION (N) Blows per foot: 10 20 30 40

Moisture Content - % PL X — Natural ● — X LL; 10 20 30 40

Client: ODOT | Project: SUM - 8 - 0159 | Job No. 9921-3077.00

LOG OF: Boring FR-1 | Location: Forge Street Sta. 10+86, 7.0' Right | Date Drilled: 1/25/00

WATER OBSERVATIONS: Water seepage at: None; Water level at completion: None

Depth (ft)	Elev. (ft)	Blows per 6"	Recovery (ft)	Sample No. Drive	Sample No. Press	Hand Penetrometer (tsf)	DESCRIPTION	% Aggregate	% C. Sand	% M. Sand	% F. Sand	% Silt	% Clay	Moisture Content - % PL / Natural / LL
0	1049.9						DESCRIPTION							
2.0	1047.9	0		1			Asphalt Concrete Pavement - 4" Portland Cement Concrete - 20"							
5 5.5	1044.4	3 5 6	12	2			Medium dense brown SANDY SILT (A-4a), trace gravel; damp to moist.	5	9	--	33	42	11	
7.0	1042.9	8 22 18	14	3			Dense grayish brown SANDY SILT (A-4a), little gravel; moist.							
10	1039.9	14 19 16	10	4			Weathered light brown SANDSTONE.							
15							Bottom of Boring - 10.0'							
20														
25														

STANDARD PENETRATION (N) Blows per foot: 10 20 30 40

Moisture Content - % PL X — Natural ● — X LL; 10 20 30 40

DLZ OHIO, INC.

CALCULATED RJH | CHECKED BY BEW

DATE

REVIEWED BY RJH

DRAWN BY RJH

STRUCTURE FOUNDATION INVESTIGATION
BRIDGE NO. SUM-8-0159
FORGE STREET OVER S.R. 8

SUM-8-0.63

3/4

Client: ODOT | Project: SUM - 8 - 0159 | Job No. 9921-3077.00

LOG OF: Boring FR-2 | Location: Forge Street Sta. 4+24, 15.3' Right | Date Drilled: 1/25/00

WATER OBSERVATIONS: Water seepage at: None; Water level at completion: None

Depth (ft)	Elev. (ft)	Blows per 6"	Recovery (in)	Sample No. Drive	Sample No. Press	Hand Penetrometer (tsf)	DESCRIPTION	% Aggregate	% C. Sand	% M. Sand	% F. Sand	% Silt	% Clay
0	1043.9						Asphalt Concrete Pavement - 4"						
							Red Cobblestone - 12"						
1.0	1042.3		0	1			Cinders - 3"						
		1											
		2											
5		3	12	2		2.25	Very stiff grayish brown SILT AND CLAY (A-6a), some fine to coarse sand, some gravel; damp to moist.	22	7	—	15	36	20
		9											
		10					@ 5.5', hard, little to some fine to coarse sand; damp.						
8.0	1035.9	11	18	3		4.25							
		5											
		7											
10	1033.9	9	16	4			Medium dense brown SANDY SILT (A-4a), trace gravel; contains sandstone fragments; moist.						
							Bottom of Boring - 10.0'						
15													
20													
25													

STANDARD PENETRATION (N) — Blows per foot: 10 20 30 40

Moisture Content - %: PL X—●— Natural —X LL; 10 20 30 40

DLZ OHIO, INC.

CALCULATED R.JH | CHECKED BY BEW

DATE

REVIEWED BY R.JH

DRAWN BY R.JH

STRUCTURE FOUNDATION INVESTIGATION
BRIDGE NO. SUM-8-0159
FORGE STREET OVER S.R. 8

SUM-8-0.63

4 / 4

GEOLOGY OF THE SITE

GENERALIZED GEOLOGIC REFERENCES REPORT THAT THE SITE WAS GLACIATED BY THE WISCONSIN GLACIER. THE GLACIAL DRIFT IS RELATIVELY THIN, REPORTEDLY AVERAGING LESS THAN 25 FEET. HOWEVER, A BURIED VALLEY PASSES THROUGH THE WESTERN PORTION OF AKRON. THE VALLEY FILL VARIES FROM APPROXIMATELY 150 TO 300 FEET IN THICKNESS. THE BEDROCK IN THE AREA CONSISTS OF THE SHARON CONGLOMERATE OR, IN ITS ABSENCE, INTERBEDDED SANDSTONE AND SHALE OF THE PENNSYLVANIAN AGE.

EXPLORATION

THE EXPLORATION CONSISTED OF DRILLING FOUR BORINGS. THE BORINGS WERE DRILLED BETWEEN JANUARY 18 AND FEBRUARY 10, 2000 USING A TRUCK-MOUNTED DRILL RIG. BORINGS MB-1 THROUGH MB-3 WERE NEAR THE EXISTING BRIDGE ABUTMENTS AND PIER. BORING MR-2 WAS DRILLED TO DETERMINE PAVEMENT RECOMMENDATIONS. THE BORINGS WERE ADVANCED TO DEPTHS RANGING FROM 9.5 TO 33.5 FEET FOR THE PROPOSED BRIDGE, AND 10 FEET FOR THE PAVEMENT BORING.

INVESTIGATIONAL FINDINGS AND OBSERVATIONS

1. SOILS

BORINGS MB-1, MB-2, AND MB-3 ENCOUNTERED 3 TO 10 INCHES OF ASPHALT CONCRETE OVER 2 TO 3 INCHES OF AGGREGATE BASE EXCEPT BORING MB-1 WHICH ENCOUNTERED 5 INCHES OF PORTLAND CEMENT CONCRETE UNDERLYING THE ASPHALT CONCRETE. BENEATH THE PAVEMENT, THE BORINGS ENCOUNTERED INTERBEDDED LAYERS OF MEDIUM STIFF TO VERY STIFF SILTS AND CLAYS, LOOSE TO VERY DENSE SANDS, AND LOOSE SANDY SILTS TO DEPTHS OF 4.0 TO 20.5 FEET WHERE WEATHERED BEDROCK WAS ENCOUNTERED. IT SHOULD BE NOTED THAT BORING MB-1 ENCOUNTERED FILL TO A DEPTH OF APPROXIMATELY 15.5 FEET. THE FILL CONSISTED OF LOOSE TO VERY DENSE SANDS, MEDIUM STIFF SILTY CLAY, AND SOFT CLAY. AT A DEPTH OF 13.5 FEET, THE RECOVERED SAMPLE CONTAINED FRAGMENTS OF BRICK AND RUBBER.

BORING MR-2 WAS DRILLED APPROXIMATELY 248 FEET FROM THE WESTERN ABUTMENT. THE BORING ENCOUNTERED 4 INCHES OF ASPHALT CONCRETE OVERLYING 20 INCHES OF PORTLAND CEMENT CONCRETE. BENEATH THE PAVEMENT, THE BORING ENCOUNTERED MEDIUM DENSE SANDY SILT TO ITS COMPLETION DEPTH OF 10 FEET.

2. BEDROCK

THE BRIDGE BORINGS, MB-1 THROUGH MB-3, WERE ALL ADVANCED TO SPLIT SPOON/AUGER REFUSAL AND 5.0 TO 10.0 FEET OF ROCK WAS CORED. THE BEDROCK CONSISTED OF MODERATELY HARD TO HARD SANDSTONE. THE BEDROCK WAS SLIGHTLY BROKEN AS INDICATED BY THE RQD VALUES WHICH RANGED FROM 75 TO 90 PERCENT.

BORING MR-2 WAS DRILLED IN THE ROADWAY EAST OF THE BRIDGE. THE ROADWAY BORING ENCOUNTERED 4 INCHES OF ASPHALT CONCRETE OVERLYING 20 INCHES OF PORTLAND CEMENT CONCRETE. BENEATH THE PAVEMENT, THE BORING ENCOUNTERED MEDIUM DENSE SANDY SILT TO ITS COMPLETION DEPTH OF 10 FEET.

3. GROUNDWATER

SEEPAGE WAS ENCOUNTERED IN BORING MB-3 AT A DEPTH OF 8.5 FEET. NO SEEPAGE WAS ENCOUNTERED IN THE OTHER BORINGS. THERE WERE NO MEASURABLE WATER LEVELS BEFORE ROCK CORING IN ANY OF THE BORINGS. IT SHOULD BE NOTED THAT THESE OBSERVATIONS WERE MADE INSIDE THE HOLLOWSTEM AUGERS, AND CONSEQUENTLY, MAY NOT REPRESENT ACTUAL GROUNDWATER CONDITIONS AT THE SITE. WATER WAS USED IN THE BRIDGE BORINGS DURING ROCK CORING OPERATIONS AND MASKED ANY SEEPAGE THAT MAY EXIST IN THE BEDROCK.

PARTICLE SIZE DEFINITIONS

SANDSTONE

PARTICLE SIZE DEFINITIONS

12"	3"	2.0 mm		0.42 mm		0.074 mm	0.005 mm
Boulders	Cobbles	Gravel	Coarse Sand		Fine Sand	Silt	Clay
		No. 10 SIEVE		No. 40 SIEVE		No. 200 SIEVE	

NOTES

ALL AVAILABLE SOIL AND BEDROCK INFORMATION WHICH CAN BE CONVENIENTLY SHOWN ON THE STRUCTURE FOUNDATION INVESTIGATION SHEETS HAS BEEN SO REPORTED. ADDITIONAL SUBSURFACE INVESTIGATION MAY HAVE BEEN MADE TO STUDY SOME SPECIAL ASPECT OF THE PROJECT. COPIES OF THIS DATA, IF ANY, MAY BE INSPECTED IN THE DISTRICT DEPUTY DIRECTOR'S OFFICE, THE OFFICE OF MATERIALS MANAGEMENT AT 1600 WEST BROAD STREET, THE OFFICE OF ROADWAY ENGINEERING OR THE OFFICE STRUCTURAL ENGINEERING AT 25 SOUTH FRONT STREET, COLUMBUS, OHIO 43215.

INFORMATION SHOWN BY THIS SUBSURFACE INVESTIGATION WAS OBTAINED SOLELY FOR USE IN ESTABLISHING DESIGN CONTROLS FOR THE PROJECT. THE STATE OF OHIO DOES NOT GUARANTEE THE ACCURACY OF THIS DATA AND IT IS NOT TO BE CONSTRUED AS A PART OF THE PLAN GOVERNING CONSTRUCTION OF THIS PROJECT.

GENERAL INFORMATION

DRIVE SAMPLES

DRIVE SAMPLE BORINGS ARE MADE BY MEANS OF A MECHANICALLY-POWERED, ROTARY-TYPE DRILL RIG EMPLOYING A 2" O.D., 1-3/8" I.D., SPLIT-SPOON SAMPLER, AT CONTINUOUS, 2-1/2' AND/OR 5' DEPTH INTERVALS, DRIVEN BY MEANS OF A 140 lb HAMMER WITH A FREE FALL OF 30 INCHES. THE NUMBER OF BLOWS REQUIRED TO DRIVE THE SAMPLER THREE 6-INCH INCREMENTS IS CONSIDERED THE STANDARD PENETRATION TEST.

PRESS SAMPLES

PRESS SAMPLES ARE TAKEN BY MEANS OF A MECHANICALLY POWERED, ROTARY-TYPE DRILL RIG, EMPLOYING A 3-INCH O.D. THIN-WALL PRESSSAMPLING TUBE. THE PRESS SAMPLING TUBE IS ADVANCED BY CONTINUOUS UNIFORM PRESSURE APPLIED BY THE DRILL RIG.

CORE BORINGS

CORE BORINGS ARE MADE BY MEANS OF A MECHANICALLY-POWERED, ROTARY-TYPE DRILL RIG, EMPLOYING A NQ2 OR NXM CORE BARREL WITH AN INDUSTRIAL DIAMOND CUTTING HEAD.

SAMPLING AND TESTING

THE BORING LOG SHEETS SHOW A GRAPHIC PLOT OF THE INFORMATION OBTAINED, INCLUDING DEPTH AND ELEVATION OF THE SAMPLE, TYPE OF SAMPLE, NUMBER OF BLOWS FOR THE STANDARD PENETRATION TEST IN THREE 6-INCH INCREMENTS, AND A SAMPLE DESCRIPTION BASED ON LABORATORY TEST RESULTS, UTILIZING THE ODOT CLASSIFICATION SYSTEM. RESULTS OF STRENGTH AND CONSOLIDATION TESTING, IF PERFORMED ON UNDISTURBED SAMPLES, APPEAR GRAPHICALLY ON SEPARATE ENCLOSURES. ROCK SAMPLES ARE DISPLAYED ON THE LOG SHEETS, INCLUDING DEPTH AND ELEVATION OF THE SAMPLE, AMOUNT OF RECOVERY, AND A VISUAL CLASSIFICATION BASED ON TYPE, COLOR, DEGREE OF HARDNESS, GRAIN SIZE, DETERIORATION, BEDDING, ACID REACTION, AND OTHER QUALIFYING FACTORS.

AT DEPTHS WHERE MATERIALS ARE BOULDERY OR GRAVELLY TO THE EXTENT THAT A SAMPLER CANNOT BE UTILIZED, A WASH SAMPLE IS PROCURED AND VISUALLY CLASSIFIED, IN ORDER TO DETERMINE THE GENERAL CHARACTERISTICS OF THE MATERIAL. THESE SAMPLES ARE NOT CONSIDERED SUFFICIENTLY REPRESENTATIVE TO WARRANT LABORATORY TESTING.

LEGEND

PRESS SAMPLE, DRIVE SAMPLE, AND/OR CORE BORING LOCATION

W—— INDICATES FREE WATER ELEVATION

▼—— INDICATES STATIC WATER ELEVATION

X/Y/Z — FIGURES BESIDE THE BORING IN PROFILE INDICATE THE NUMBER OF BLOWS FOR STANDARD PENETRATION TEST
X = NUMBER OF BLOWS FOR FIRST 6 INCHES
Y = NUMBER OF BLOWS FOR SECOND 6 INCHES
Z = NUMBER OF BLOWS FOR THIRD 6 INCHES

50(n) — INDICATES NUMBER OF BLOWS (50) TO DRIVE A SPLIT-BARREL SAMPLER A DEPTH OF (n) INCHES OTHER THAN THE NORMAL 6 INCH INCREMENT.

DLZ OHIO, INC.

CALCULATED	CHECKED BY
RJH	BEW
DATE	
REVIEWED BY	
RJH	
DRAWN BY	
RJH	

STRUCTURE FOUNDATION INVESTIGATION
BRIDGE NO. SUM-8-0148
MARKET STREET OVER S.R. 8

SUM-8-0.63

1 / 4

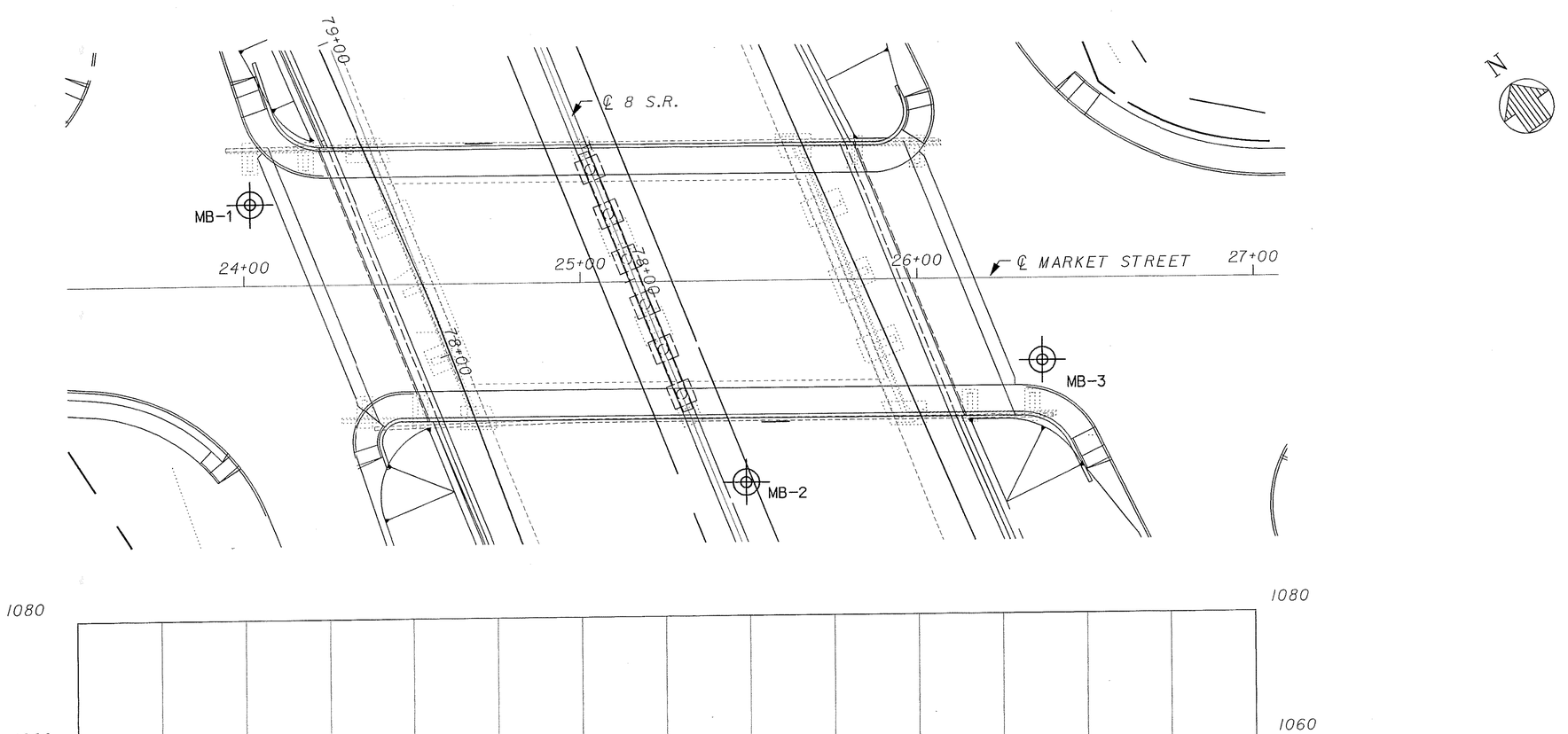

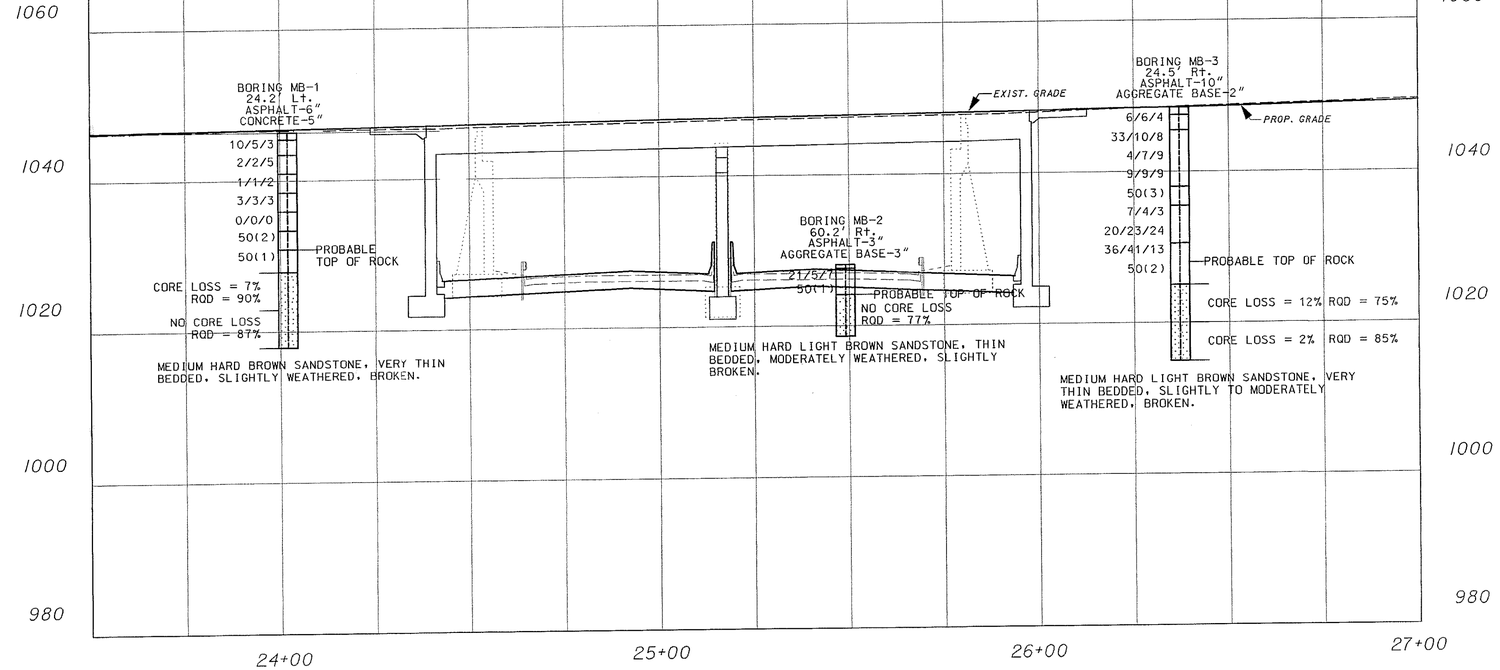

PROFILE ALONG ℄ MARKET ST.

DLZ OHIO, INC.

0 20 40
HORIZONTAL SCALE
1" = 40'

DRAWN BY	REVIEWED BY	DATE	CALCULATED	CHECKED BY
RJH	RJH		RJH	BEW

STRUCTURE FOUNDATION INVESTIGATION
BRIDGE NO. SUM-8-0148
MARKET STREET OVER S.R. 8

SUM-8-0.63

2/4

Client: ODOT | Project: SUM - 8 - 1065 | Job No. 9921-3077.00

LOG OF: Boring MB-1 | Location: Market Street Sta 24+02, 25.3' Left | Date Drilled: 2/10/00

WATER OBSERVATIONS: Water seepage at: None; Water level at completion: None

Depth (ft)	Elev. (ft)	Sample No.	Blows per 6"	Recovery (in)	Drive	Press	Hand Penetrometer (tsf)	DESCRIPTION	% Aggregate	% C. Sand	% M. Sand	% F. Sand	% Silt	% Clay	Moisture Content - % PL / Natural / LL	STANDARD PENETRATION (N) Blows per foot
0	1046.4							DESCRIPTION								
0.9	1045.5							Asphalt Concrete Pavement - 6" Portland Cement Concrete - 5"								
3.0	1043.4	1	10 5 3	11				FILL: Loose brown FINE SAND (A-3), little silty clay, trace gravel; contains rock fragments; damp.								
5 5.5	1040.9	2	2 2 5	2				FILL: Medium stiff brown SANDY SILT (A-4a), trace gravel; damp.								
8.0	1038.4	3	1 1 2	2			---	FILL: Soft brown SILT AND CLAY (A-6a), "and" fine to coarse sand, trace gravel; damp.								
10 10.5	1035.9	4	3 3 3	7				FILL: Loose brown COARSE AND FINE SAND (A-3a), some silty clay, little gravel; moist.								
13.0	1033.4	5	WOH WOH WOH	3			0.5	FILL: Soft to medium stiff brown SANDY SILT (A-4a), little clay, little gravel; damp.	12	11	---	21	41	15	X	
15 15.5	1030.9	6	50/2	2				FILL: Very dense brown COARSE AND FINE SAND (A-3a); contains brick and rubber fragments; damp.								50+
18.5	1027.9	7	50/1	1				Very dense light brown COARSE AND FINE SAND (A-3a); damp. Advanced augers to 18.5' and began coring.								50+
20			Core 60"	Rec 56"			RQD 90%	Medium hard to hard brown SANDSTONE; very thin bedded; slightly weathered; broken. @ 21.5' - 23.5', slightly to moderately weathered.								
25	1021.4		Core 60"	Rec 60"			RQD 67%	@ 23.5' - 24.2', slightly to moderately weathered. @ 24.2' - 28.5', slightly weathered. @ 24.3', clay healed horizontal fracture.								

Client: ODOT | Project: SUM - 8 - 1065 | Job No. 9921-3077.00

LOG OF: Boring MB-2 | Location: Market Street Sta. 25+49, 60.2' Right | Date Drilled: 1/18/00

WATER OBSERVATIONS: Water seepage at: None; Water level at completion: None

Depth (ft)	Elev. (ft)	Sample No.	Blows per 6"	Recovery (in)	Drive	Press	Hand Penetrometer (tsf)	DESCRIPTION	% Aggregate	% C. Sand	% M. Sand	% F. Sand	% Silt	% Clay	Moisture Content - % PL / Natural / LL	STANDARD PENETRATION (N) Blows per foot
0	1028.1							DESCRIPTION								
0.5	1027.6							Asphalt Concrete Pavement - 3" Aggregate Base - 3"								
4.0	1024.1	1	21 5 7	7			---	FILL: Medium dense dark brown GRAVEL WITH SAND SILT, AND CLAY (A-2-6); contains brick fragments; damp.	21	17	---	27	27	8	X	
5		2	50/1 Core 66"	1 Rec 66"			RQD 77%	Medium hard to hard light brown SANDSTONE; thin bedded; moderately weathered; slightly broken. @ 4.1', 4.3', 5.7', 7.5', 8.4', 9.0' horizontal fractures. @ 6.1', 6.3' mid-angle fractures. @ 7.9', low angle fracture.								50+
9.5	1018.6							Bottom of Boring - 9.5'								

Client: ODOT | Project: SUM - 8 - 1065 | Job No. 9921-3077.00

LOG OF: Boring MB-1 | Location: Market Street Sta 24+02, 25.3' Left | Date Drilled: 2/10/00

WATER OBSERVATIONS: Water seepage at: None; Water level at completion: None

Depth (ft)	Elev. (ft)	Blows per 6"	Recovery (in)	Sample No.	Drive	Press	Hand Penetrometer (tsf)	DESCRIPTION	% Aggregate	% C. Sand	% M. Sand	% F. Sand	% Silt	% Clay	Moisture Content - % PL / Natural / LL	STANDARD PENETRATION (N) Blows per foot
25	1021.4							DESCRIPTION								
28.5	1017.9	Core 60"	Rec 60"	RQD 87%				Medium hard brown SANDSTONE; very thin bedded; slightly weathered; broken.								
30								Bottom of Boring - 28.5'								
35																
40																
45																
50																

DLZ OHIO, INC.

CALCULATED RJH | CHECKED BY BEW

DATE

DRAWN BY RJH | REVIEWED BY RJH

STRUCTURE FOUNDATION INVESTIGATION
BRIDGE NO. SUM-8-0148
MARKET STREET OVER S.R. 8

SUM-8-0.63

3 / 4

Client: ODOT | Project: SUM - 8 - 1065 | Job No. 9921-3077.00

LOG OF: Boring MB-3 | Location: Market Street Sta. 26+37, 24.5' Right | Date Drilled: 2/8/00

WATER OBSERVATIONS: Water seepage at: 8.5'; Water level at completion: None

Depth (ft)	Elev. (ft)	Blows per 6"	Recovery (in)	Sample No.	Drive	Press	Hand Penetrometer (tsf)	DESCRIPTION	% Aggregate	% C. Sand	% M. Sand	% F. Sand	% Silt	% Clay	STANDARD PENETRATION (N) Blows per foot 10 20 30 40	Moisture Content - % PL X Natural LL X 10 20 30 40
0	1048.5							DESCRIPTION								
1.0	1047.5							Asphalt Concrete Pavement - 10" Aggregate Base - 2"								
		6 6 4 3		1				Loose to medium dense gray COARSE AND FINE SAND (A-3a), little silty clay, trace gravel; damp.								
3.0	1045.5															
		33 10 8 10		2			---	Very stiff brown SILT AND CLAY (A-6a), "and" fine to coarse sand, trace gravel; contains sandstone fragments; damp.								
5								@ 5.5', no sandstone fragments.								
		4 7 9 18		3			2.5									
								@ 8.5', stiff; wet.								
10		9 9 9 18		4			1.25									
10.5	1038.0															
		50/3	2	5				Very dense light brown COARSE AND FINE SAND (A-3a), little silty clay, trace fine gravel; damp.								
13.0	1035.5															
		7 4 3 11		6			---	Medium stiff brown SANDY SILT (A-4a), little clay; little gravel; damp.	12	11	---	26	38	13		
15								@ 15.5', very stiff.								
		20 23 24 18		7			3.5									
18.0	1030.5															
		38 41 13 14		8				Very dense light brown FINE SAND (A-3), trace to little silty clay; damp.								
20																
20.5	1028.0															
		50/2	2	9				Weathered light brown SANDSTONE. Set augers at 23.5' and began coring.								
23.5	1025.0															
		Core 60"	Rec 53"	RQD 75%				Medium hard to hard light brown SANDSTONE; very thin bedded; slightly to moderately weathered; broken.								
25	1023.5															

Client: ODOT | Project: SUM - 8 - 1065 | Job No. 9921-3077.00

LOG OF: Boring MB-3 | Location: Market Street Sta. 26+37, 24.5' Right | Date Drilled: 2/8/00

WATER OBSERVATIONS: Water seepage at: 8.5'; Water level at completion: None

Depth (ft)	Elev. (ft)	Blows per 6"	Recovery (in)	Sample No.	Drive	Press	Hand Penetrometer (tsf)	DESCRIPTION	% Aggregate	% C. Sand	% M. Sand	% F. Sand	% Silt	% Clay	STANDARD PENETRATION (N) Blows per foot 10 20 30 40	Moisture Content - % PL X Natural LL X 10 20 30 40
25	1023.5							DESCRIPTION								
		Core 60"	Rec 53"	RQD 75%				Medium hard to hard light brown SANDSTONE; very thin bedded; slightly to moderately weathered; broken.								
								@ 26.6', partially healed horizontal fracture.								
		Core 60"	Rec 59"	RQD 85%				@ 28.5' - 29.2', stained.								
30								@ 29.8', mid-angle fracture.								
33.5	1015.0															
								Bottom of Boring - 33.5'								
35																
40																
45																
50																

Client: ODOT | Project: SUM - 8 - 1065 | Job No. 9921-3077.00

LOG OF: Boring MR-2 | Location: Market Street Sta. 27+90, 20.6' Right | Date Drilled: 1/25/00

WATER OBSERVATIONS: Water seepage at: None; Water level at completion: None

Depth (ft)	Elev. (ft)	Blows per 6"	Recovery (in)	Sample No.	Drive	Press	Hand Penetrometer (tsf)	DESCRIPTION	% Aggregate	% C. Sand	% M. Sand	% F. Sand	% Silt	% Clay	STANDARD PENETRATION (N) Blows per foot 10 20 30 40	Moisture Content - % PL X Natural LL X 10 20 30 40
0	1050.2							DESCRIPTION								
			0	1				Asphalt Concrete Pavement - 4" Portland Cement Concrete - 20"								
2.0	1048.2															
		5 7 10 15		2			2.25	Medium dense brown SANDY SILT (A-4a), trace gravel; little to some clay; damp to moist.	12	5	---	20	44	19		
5																
		4 8 11 18		3			2.5									
8.0	1042.2															
		5 6 5 16		4			0.4	Medium dense brown SANDY SILT (A-4a), trace gravel; gravel; moist to wet.								
10	1040.2							Bottom of Boring - 10.0'								
15																
20																
25																

DLZ OHIO, INC.

CALCULATED RJH | CHECKED BY BEW

DATE

REVIEWED BY RJH

DRAWN BY RJH

STRUCTURE FOUNDATION INVESTIGATION
BRIDGE NO. SUM-8-0148
MARKET STREET OVER S.R. 8

SUM-8-0.63

4 / 4

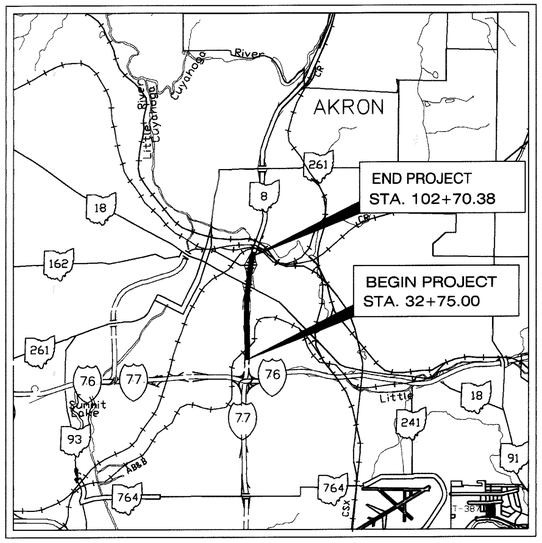

LOCATION MAP

LATITUDE: 41°04'30" LONGITUDE: 81°30'30"

SCALE IN MILES

0 1 2 3 4

N

PORTION TO BE IMPROVED _____

INTERSTATE & DIVIDED HIGHWAY _____

UNDIVIDED STATE & FEDERAL ROUTES _____

OTHER ROADS _____

STATE OF OHIO

DEPARTMENT OF TRANSPORTATION

SUM-8-0.63

PART 2 OF 2 PARTS

CITY OF AKRON

SUMMIT COUNTY

INDEX OF SHEETS:

TITLE SHEET	1
GENERAL NOTES	2
DRAWING LA-2	3
PLAN SHEETS	4-10

UNDERGROUND UTILITIES
TWO WORKING DAYS
BEFORE YOU DIG
CALL 1-800-362-2764 (TOLL FREE)
OHIO UTILITIES PROTECTION SERVICE
NON-MEMBERS
MUST BE CALLED DIRECTLY

PLAN PREPARED BY:

THE CITY OF AKRON
DEPT. OF PUBLIC SERVICE
AKRON ENGINEERING BUREAU
166 S. HIGH STREET
AKRON, OHIO 44308
MAIN: 330-375-2355
FAX: 330-375-2288

ENGINEERS SEAL:

STATE OF OHIO
ANDREW J. DAVIS
E-57905
REGISTERED PROFESSIONAL ENGINEER

SIGNED: Andrew J Davis
DATE: 5-29-02

STANDARD CONSTRUCTION DRAWINGS

SUPPLEMENTAL SPECIFICATIONS

REFER TO PART 1

CITY OF AKRON SPECIFICATIONS

SPECIAL PROVISIONS

PROJECT DESCRIPTION

RECONSTRUCTION OF 1.3 MILES OF STATE ROUTE 8 IN THE CITY OF AKRON FROM NORTH OF THE CENTRAL INTERCHANGE TO THE NORTH EXPRESSWAY VIADUCT. CONSTRUCTION/ RECONSTRUCTION OF SERVICE ROADS ALONG THE EAST AND WEST SIDES OF STATE ROUTE 8. CONSTRUCTION OF RETAINING WALLS AND CONSTRUCTION/RECONSTRUCTION OF INTERCHANGE RAMPS BETWEEN THE SERVICE ROADS AND STATE ROUTE 8. RECONSTRUCTION OF STRUCTURES AT BEACON STREET, EXCHANGE STREET, FORGE STREET, AND MARKET STREET INSTALLATION OF DRAINAGE FACILITIES TRAFFIC CONTROL DEVICES AND LIGHTING.

PART 2 IS FOR THE LANDSCAPING OF THE ABOVE REFERENCED PROJECT AREA.

FOR ALL OTHER WORK, SEE PART 1.

1997 SPECIFICATIONS

THE STANDARD SPECIFICATIONS OF THE STATE OF OHIO, DEPARTMENT OF TRANSPORTATION, INCLUDING CHANGES AND SUPPLEMENTAL SPECIFICATIONS LISTED IN THE PROPOSAL SHALL GOVERN THIS IMPROVEMENT.

I HEREBY APPROVE THESE PLANS AND DECLARE THAT THE MAKING OF THIS IMPROVEMENT WILL NOT REQUIRE THE CLOSING TO TRAFFIC OF THE HIGHWAY AND THAT PROVISIONS FOR THE MAINTENANCE AND SAFETY OF TRAFFIC WILL BE AS SET FORTH ON THE PLANS AND ESTIMATES.

UNDER AUTHORITY OF SECTION 4511.21, DIVISION (1) OF THE OHIO REVISED CODE, THE REVISED PRIMA FACIE SPEED LIMITS AS INDICATED HEREIN ARE DETERMINED TO BE REASONABLE AND SAFE, AND ARE HEREBY ESTABLISHED FOR THE DURATION OF THIS PROJECT. THE PRIMA FACIE SPEED LIMIT OR LIMITS HEREBY ESTABLISHED SHALL BECOME EFFECTIVE WHEN APPROPRIATE SIGNS GIVING NOTICE THEREOF ARE ERECTED.

APPROVED Fred Ritter
DATE 5/29/02 DIRECTOR OF PUBLIC SERVICE, CITY OF AKRON

APPROVED _____
DATE 6-4-02 DISTRICT DEPUTY DIRECTOR

APPROVED Gordon Proctor
DATE 7-16-02 DIRECTOR, DEPARTMENT OF TRANSPORTATION

LIMITED ACCESS

THIS IMPROVEMENT IS ESPECIALLY DESIGNED FOR THROUGH TRAFFIC AND HAS BEEN DECLARED A LIMITED ACCESS HIGHWAY OR FREEWAY BY ACTION OF THE DIRECTOR IN ACCORDANCE WITH THE PROVISIONS OF SECTION 5511.02 OF THE OHIO REVISED CODE.

FEDERAL PROJECT NO. TE21-G020(376)

PID NO. 20356

CONSTRUCTION PROJECT NO.

RAILROAD INVOLVEMENT NONE

SUM-8-0.63

1 / 10

CITY OF AKRON ITEMS 661, 662 AND 663
PLANTING VINES, SHRUBS AND TREES

NOTES:

ALL WORK FOR THIS SECTION SHALL BE PER THE STANDARD CONSTRUCTION DRAWINGS, LATEST REVISIONS AND THE "CONSTRUCTION AND MATERIAL SPECIFICATIONS" OF THE CITY OF AKRON, OHIO, DEPARTMENT OF PUBLIC SERVICE, AKRON ENGINEERING BUREAU, 1999 EDITION, INCLUDING CHANGES AND SUPPLEMENTAL SPECIFICATIONS LISTED IN THE PROPOSAL.

1. PROPOSED TREES SHALL BE PLANTED AS PER CITY OF AKRON STANDARD DRAWING NO. LA-2.
2. TREE REMOVALS ALONG WITH NEW TREE PLANTINGS, TOPSOIL AND SEEDING, SODDING, RENOVATION WITH SEEDING OR SODDING, SHALL BE AS DIRECTED BY THE ENGINEER.
3. ALL AREAS NOT PLANTED WITH MATERIALS SPECIFIED IN THIS SECTION WHERE VEGETATION HAS BEEN DISTURBED BY CONSTRUCTION ACTIVITY OF EITHER PART 1 OR PART 2 OF THE SUM 8-0.63 PROJECT SHALL BE RESTORED IN ACCORDANCE WITH ODOT ITEM 870, TO THE SATISFACTION OF THE ENGINEER. THE COST FOR THIS WORK SHALL BE INCLUDED IN THE COST OF ODOT ITEM 870 IN PART 1 OF THE SUM 8-0.63 PROJECT.
4. ALL EROSION CONTROL IS TO BE PROVIDED BY THE CONTRACTOR IN ACCORDANCE WITH ODOT ITEM 877. THE COST FOR THIS WORK SHALL BE INCLUDED IN THE COST OF ODOT ITEM 877 IN PART 1 OF THE SUM 8-0.63 PROJECT.
5. ITEMS 661 BOSTON IVY AND SILVER LACE VINES ARE NOT SHOWN ON THE PLANS, BUT ARE TO BE PLACED ALONG THE RETAINING WALLS AT THE DIRECTION OF THE ENGINEER.
6. ALL PLANT MATERIAL TO BE INSTALLED PER ITEM 661, 662, OR 663 UNLESS OTHERWISE DESCRIBED HEREIN. CONTRACTOR SHALL PROVIDE AN ONLA (OHIO NURSERY AND LANDSCAPE ASSOCIATION) CERTIFIED TECHNICIAN TO SUPERVISE THE PLANTING OPERATION.
7. THE CONTRACTOR SHALL CONTACT THE CITY ARBORIST BILL HAHN AT (330) 375-2373 48 HOURS BEFORE PLANTING OPERATION BEGINS.
8. BEFORE SUB-FINAL INSPECTION AND ACCEPTANCE, ALL PLANTINGS SHALL BE IN PLACE AND UNDER THE CARE OF THE CONTRACTOR FOR A PERIOD OF ESTABLISHMENT. THIS PERIOD SHALL BEGIN IMMEDIATELY UPON COMPLETION OF THE PLANTING OPERATION FOR ANY PLANT OR SPECIES GROUP AND CONTINUE UNTIL FINAL INSPECTION AND ACCEPTANCE. IN NO CASE SHALL IT BE LESS THAN ONE YEAR.

   DURING THIS PERIOD OF ESTABLISHMENT, IT SHALL BE THE CONTRACTOR'S RESPONSIBILITY TO FOLLOW SUCH HORTICULTURAL PRACTICES AS REQUIRED TO ASSURE THE VIGOR AND GROWTH OF THE TRANSPLANTED MATERIAL. THIS CARE SHALL INCLUDE WATERING, REMULCHING, RESTAKING, GUYING AND WEEDING. THERE SHALL BE A MINIMUM OF THREE WEEDING AND MOWING (BED EDGES, AROUND TREES AND GUY STAKES) PROGRAMS OF SUCH INTENSITY AS TO COMPLETELY RID THE PLANTED AND MULCHED AREAS OF WEEDS AND GRASSES. THE PROGRAMS SHALL OCCUR AT LEAST ONCE IN THE SPRING, ONCE IN THE SUMMER AND ONCE IN THE FALL.

   EACH PLANT SHALL HAVE SUFFICIENT WATER TO KEEP IT IN A HEALTHY, GROWING CONDITION. IF LOCAL WEATHER CONDITIONS WARRANT, WEEKLY WATERING MAY BE REQUIRED. A SCHEDULE FOR WATERING EACH PLANT AND REQUIRED MAINTENANCE AS DESCRIBED IN THE FOLLOWING PARAGRAPH SHALL BE SUPPLIED TO AND APPROVED BY THE ENGINEER OR HORTICULTURIST BEFORE PLANTING BEGINS. SOIL MIXTURE TO BE TESTED IN EACH PLANTING ZONE BY A SOIL MOISTURE METER APPROVED BY THE ENGINEER OR HORTICULTURIST.

   WATERING IS TO BE DONE IN CONFORMANCE WITH THE WATERING TABLE WHEN NEED IS INDICATED BY METER READINGS. THE WATER SHALL BE APPLIED IN SUCH A MANNER AS TO SATURATE THE ROOT AND MULCHED AREA OF EACH PLANT WITHOUT CAUSING RUN-OFF (PER WATERING TABLE, ODOT ITEM 662.03). IN CASE OF FALL PLANTINGS, THESE WATERINGS SHALL CONTINUE UNTIL SOIL FREEZES UP AND RECOMMENCE AFTER THE SPRING THAW UNLESS OTHERWISE DIRECTED.

   APPROXIMATELY FOUR MONTHS AFTER THE SUB-FINAL INSPECTION AND ACCEPTANCE, THE ENGINEER SHALL INSPECT AND SUPPLY THE CONTRACTOR A LISTING OF THOSE PLANTS HAVING DIED, DIED BACK BEYOND NORMAL PRUNING LINES OR ARE MISSING FROM THE PLANTING. THE CONTRACTOR SHALL MAKE THE REPLANTING REQUIRED IN ACCORDANCE WITH THE SPECIFICATIONS FOR THE ORIGINAL MATERIAL. THESE REPLACEMENTS ARE SUBJECT TO THE REMAINDER OF THE PERIOD OF ESTABLISHMENT.

   ON OR NEAR FINAL INSPECTION AND ACCEPTANCE, THE ENGINEER SHALL INSPECT THE PLANTING AND SUPPLY THE CONTRACTOR WITH A LISTING OF THOSE PLANTS HAVING DIED OR DIED BACK BEYOND NORMAL PRUNING LINES THE CONTRACTOR SHALL MAKE THE REPLANTING AS REQUIRED IN ACCORDANCE WITH THE SPECIFICATIONS FOR THE ORIGINAL MATERIAL. THESE REPLACEMENTS ARE NOT SUBJECT TO THE PERIOD OF ESTABLISHMENT.

   AFTER THESE REPLACEMENTS HAVE BEEN PLANTED, THE FINAL INSPECTION SHALL BE MADE AND THE FINAL COUNT OF ACCEPTED PLANTINGS OF EACH VARIETY AND SPECIES LISTED FOR PAYMENT.
9. WATER SHALL BE FURNISHED BY THE CONTRACTOR AND ALL PLANT MATERIAL SHALL BE WATERED THOROUGHLY AT THE TIME OF PLANTING REGARDLESS OF AMPLE MOISTURE CONTENT OF THE SURROUNDING SOIL. SUSPENSION OF WATERING OPERATIONS BECAUSE OF RAINFALL WILL BE DETERMINED BY THE ENGINEER OR HORTICULTURIST. AN AVERAGE OF ONE INCH OF RAINFALL PER WEEK SHALL BE CONSIDERED ADEQUATE. DETERMINATION OF RAINFALL SHALL BE BASED UPON THE USE OF A RAIN GAUGE APPROVED BY THE PROJECT ENGINEER OR HORTICULTURIST.
10. TOPSOIL FAILING CURRENT TEST STANDARDS MAY BE ALTERED, UPON APPROVAL OF THE HORTICULTURIST, OR ENGINEER BY ADDING APPROVED CONDITIONERS TO CORRECT THE DEFICIENCIES. TOPSOIL SHALL BE FREE OF QUACK GRASS AS DETERMINED BY THE HORTICULTURIST OR ENGINEER.
11. ALL PLANTS SHALL BE DELIVERED ON TRUCKS WITH THE ENTIRE LOAD COMPLETELY COVERED WITH TARPS MANUFACTURED FOR PLANT PROTECTION. PLANTS WIND BURNED OR OTHERWISED DAMAGED IN TRANSPORT WILL BE REJECTED BY THE ENGINEER OR HORTICULTURIST.
12. MULCH SHALL BE AS PER ITEM 661.04 WITH THE FOLLOWING EXCEPTIONS, WOOD SHAVINGS OR PEAT MOSS OR CORN COBS SHALL NOT BE USED AS A TOP MULCH. WOOD CHIPS SHALL BE AGED (STOCKPILED) AT LEAST SIX MONTHS PRIOR TO PLACEMENT AROUND PLANTS. MULCH SHALL BE THREE INCHES LOOSE MEASUREMENT AFTER MULCHING.
13. FERTILIZING SHALL BE DONE IN ACCORDANCE WITH 663.13.
14. 2-3 WEEKS PRIOR TO CULTIVATION AND PLANTING ALL SHRUB BEDS WILL BE TREATED WITH ROUNDUP BRAND HERBICIDE OR AN APPROVED EQUAL IF VEGETATION IS PRESENT. AFTER VEGETATION PLACEMENT AND FERTILIZING HAVE BEEN COMPLETED AND APPROVED, THE SHRUB BEDS WILL BE TREATED WITH SURFLAN BRAND HERBICIDE OR AN APPROVED EQUAL. THE RATE AND METHOD OF APPLICATION SHALL BE IN STRICT CONFORMANCE WITH THE MANUFACTURER'S PRODUCT LABEL AND CONSISTENT WITH CURRENT PRACTICES FOR ROADSIDE MANAGEMENT. THIS WORK SHALL BE ACCOMPLISHED UNDER THE DIRECT SUPERVISION OF A PESTICIDE APPLICATOR LICENSED BY THE STATE OF OHIO, AND COST INCLUDED IN ITEM 661, 662, OR 663. TREE AND SHRUB PLANTING.
15. ALL INCIDENTALS REQUIRED BY ITEMS 661, 662 OR 663 SUCH AS WATER, MULCH, HERBICIDES, RAIN GAUGES, SOIL MOISTURE METERS, ETC. ARE INCLUDED IN THE BID PRICE FOR THOSE ITEMS.

THE TREES, SHRUBS AND PLANTS LISTED BELOW SHALL BE FURNISHED AND PLANTED BY THE CONTRACTOR. THE PROPOSED LOCATIONS SHOWN ON THE PLANS ARE APPROXIMATE. THE FINAL LOCATION WILL BE MARKED IN THE FIELD BY THE ENGINEER.

ITEM	EXTENSION	TOTAL	UNITS	DESCRIPTION	SYMBOL	AKRON CMS
661	99000	643	EACH	PLANTING, MISC. : 5'-6' B&B PINUS NIGRA 12' OC(AUSTRIAN PINE)	AP	663
661	99000	106	EACH	PLANTING, MISC. : 2-1/2" B&B ULMUS X 'WILSONII' 20' OC(PROSPECTOR ELM)	PE	663
661	99000	92	EACH	PLANTING, MISC. : 2-1/2" B&B ULMUS X 'FRONTIER' 20' OC(FRONTIER ELM)	FE	663
661	99000	48	EACH	PLANTING, MISC. : 2-1/2" B&B ULMUS AMERICANA 'DELAWARE' 20' OC(DELAWARE II ELM)	DE	663
661	99000	5	EACH	PLANTING, MISC. : 2" B&B POPULUS X EURAMERICANA 'ROBUSTA' 20' OC(HYBRID POPLAR)	HP	663
661	99000	94	EACH	PLANTING, MISC. : 2-1/2" B&B GLEDITSIA TICANTHOS VAR. INERMIS 'SKYLINE' 20' OC(SKYLINE HONEY LOCUST)	SH	663
661	99000	59	EACH	PLANTING, MISC. : CLUMP 7'-8' B&B ACER GINNALA 12' OC(AMUR MAPLE)	AM	663
661	99000	134	EACH	PLANTING, MISC. : CLUMP 7'-8' B&B CRATAEGUS CRUSGALLI VAR. INERMIS 12' OC(THORNLESS COCKSPUR HAWTHORN)	TCH	663
661	99000	168	EACH	PLANTING, MISC. : 2" B&B PRUNUS VIRGINIANA 'SHUBERT' 12' OC(CANADA RED CHERRY)	CRC	663
661	99000	292	EACH	PLANTING, MISC. : 2" B&B SYRINGA RETICULATA 'IVORY SILK' 12' OC(IVORY SILK JAP. LILAC TREE)	ISTL	663
661	99000	2628	EACH	PLANTING, MISC. : 3' #3 CONT. DIERVILLA LONICERA 3' OC(DWARF BUSH HONEYSUCKLE)	DBH	662
661	99000	676	EACH	PLANTING, MISC. : 3' #3 CONT. LONICERA FRAGRANTISSIMA 5' OC(WINTER HONEYSUCKLE)	WH	662
661	99000	5821	EACH	PLANTING, MISC. : 3' #3 CONT. PENNISETUM ALOPECUROIDES 'HAMELN' 2' OC(DWARF FOUNTAIN GRASS)	DFG	662
661	99000	12,374	EACH	PLANTING, MISC. : 3' #2 CONT. RHUS AROMATICA 3' OC(FRAGANT SUMAC)	FS	662
661	99000	5184	EACH	PLANTING, MISC. : #2 CONT. RUDBECKIA FULGIDA VAR. SULLIVANTII ' GOLDSTRUM' 2' OC(BLACK EYED SUSAN)	BES	662
661	99000	12,355	EACH	PLANTING, MISC. : 3' #3 CONT. FORSYTHIA OVATA 'OTTAWA' 3' OC(OTTAWA FORSYTHIA)	OF	662
661	99000	1145	EACH	PLANTING, MISC. : #2 CONT. HEMEROCALIS 'LITTLE BUSINESS' 2' OC(LITTLE BUSINESS DAY LILY)	LBDL	662
661	99000	25,314	EACH	PLANTING, MISC. : #1 12CM NARCISUS 'DUTCHMASTER' 1'OC(DUTCH MASTER DAFFODIL)	DMD	661
661	99000	562	EACH	PLANTING, MISC. : #2 CONT. PARTHENOCISSUS TRICUSPIDATA 6' OC(BOSTON IVY)	BI	661
661	99000	55	EACH	PLANTING, MISC. : #3 CONT. POLYGONUM AUBERTII 66' OC(SILVER LACE VINE)	SLV	661
661	99000	70	EACH	PLANTING, MISC. : 3' #3 CONT. SYRINGA PATULA 'MISS KIM' 6' OC(MISS KIM LILAC)	MKL	662

SCALE = NONE

CALCULATED DLH
CHECKED AJD

LANDSCAPING PLAN
GENERAL NOTES

SUM-8-0.63

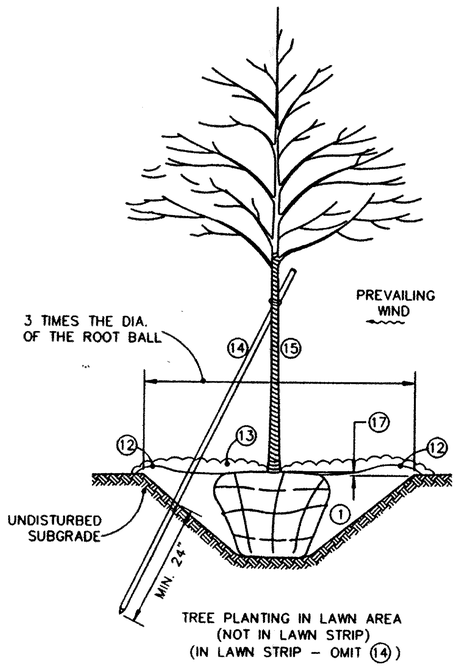

TREE PLANTING IN LAWN AREA
(NOT IN LAWN STRIP)
(IN LAWN STRIP – OMIT (14))

1. BACKFILL LAWNSTRIPS & BED PLANTINGS: SOIL EXCAVATED FROM TREE HOLE WITH 20% TECHNAGRO OR APPROVED TOPSOIL PER 653.02 AS DETERMINED BY THE ENGINEER.
2. BACKFILL TREE GRATES & BRICK AREA: BACKFILL SHALL CONSIST OF SAME SOIL MAKE-UP AS TREE BALL (TYPE & PERCENTAGE)
3. FORMED SHELF TO BEAR TREE GRATE
4. CONCRETE CURB
5. TREE GRATE 5'X5' OR 6'X6'- FOR INSTALLATION DETAILS SEE DWG LA-1
6. CONCRETE WALK
7. BRICK WALK
8. AREA BRICK
9. 18"(OUTSIDE DIMENSION) SQUARE WOODEN INSERT, 40 CCA TREATED 1"x3, FILLED WITH SHREDDED HARDWOOD BARK, AS PER 661.07
10. 2-4" PERFORATED PLASTIC PIPES FILLED WITH 1/4" WASHED SILICA GRAVEL, FROM BOTTOM OF PLANTING HOLE TO EVEN WITH THE TOP OF BRICK
11. 1-6" PERFORATED PLASTIC PIPE FILLED WITH 1/4" WASHED SILICA GRAVEL, FROM BOTTOM OF PLANTING HOLE TO BOTTOM OF GRATE
12. FORMED SOIL SAUCER, 3" HIGH
13. MULCHING MATERIAL, 3" THICK, AS PER 661.07
14. BRACING STAKE, WHEN REQUIRED, AS PER 663.05
15. WRAPPING AND TYING, AS PER 663.05
16. BEDDING SAND, 1" THICK
17. TOP OF BALL 1"-2" ABOVE FINISH GRADE DEPENDING ON SOIL TYPE AND WATER TABLE

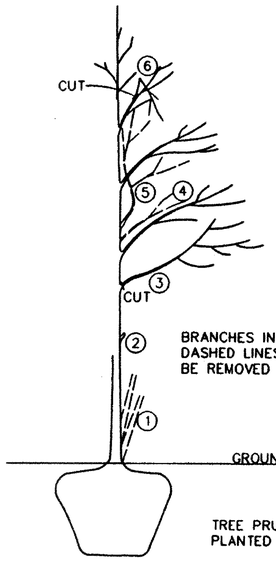

TREE PRUNING FOR NEWLY PLANTED OR EXISTING TREES

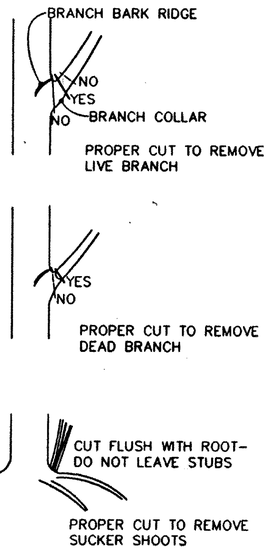

NEWLY PLANTED TREES SHALL BE PRUNED AS FOLLOWS, OR AS DIRECTED BY THE ENGINEER

1. REMOVE SUCKER SHOOTS EMANATING FROM SURFACE ROOTS, TRUNK OR BALL
2. STUBS RESULTING FROM PREVIOUS PRUNINGS OR BROKEN BRANCHES SHALL BE CUT SLIGHTLY ABOVE BRANCH COLLAR AND NEARLY PERPENDICULAR TO ℄ OF BRANCH BEING REMOVED.
3. GENERALLY, BRANCHES LOWER THAN 5'-6"(NEW TREES) AND 7'-0"(EXISTING TREES) SHOULD BE REMOVED.
4. DUPLICATING BRANCHES (BRANCHES GENERALLY PARALLELING AND IN CLOSE PROXIMITY). REMOVE BRANCHES OF POOREST QUALITY OR ONES HAVING LEAST VALUE TO OVERALL BRANCHING STRUCTURE
5. REMOVE BRANCHES INTERFERING WITH OR CROSSING OVER PRIMARY BRANCHING STRUCTURE, AND THOSE HAVING A TENDENCY TO BECOME A SECONDARY LEADER
6. REMOVE BROKEN BRANCHES BACK TO LIVE LEADER OR SIDE LATERAL

EXISTING TREES SHALL BE PRUNED AS ABOVE, WITH THE FOLLOWING EXCEPTIONS, OR AS DIRECTED BY THE ENGINEER.

3. BRANCHES SHALL BE REMOVED TO THE HEIGHT THAT CIRCUMSTANCES REQUIRE.

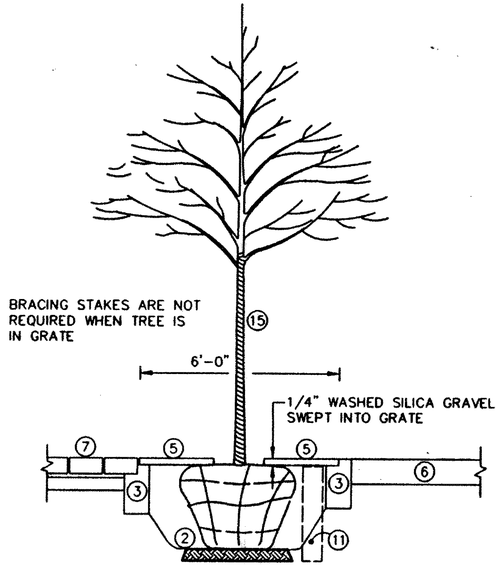

TREEE PLANTING IN GRATE
(IN LAWN STRIP)

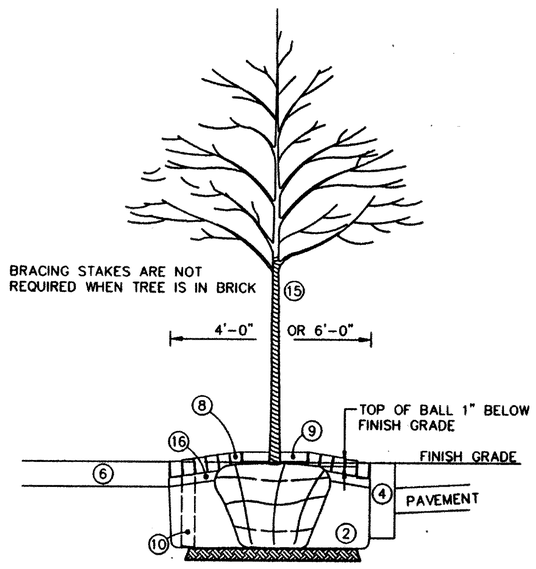

TREE PLANTING IN BRICK AREA
(IN LAWN STRIP)

DO NOT SCALE - USE DIMENSIONS ONLY

CITY OF AKRON BUREAU OF ENGINEERING	CONSTRUCTION STANDARD DWG. No. LA-2
Dan Nolik 4-29-98 MANAGER, DESIGN DIVISION Pawan K. Khaitan 5/1/98 MANAGER, CONSTRUCTION DIVISION C David Hand 5/1/98 CITY ENGINEER	TREE PLANTING TREE PRUNING AUTOCAD DRAWING - STD_LA-2.DWG April 28, 1998 REVISIONS:

NOT TO SCALE

CALCULATED DLH CHECKED AJD

CITY OF AKRON STANDARD DRAWING LA-2

SUM-8-0.63

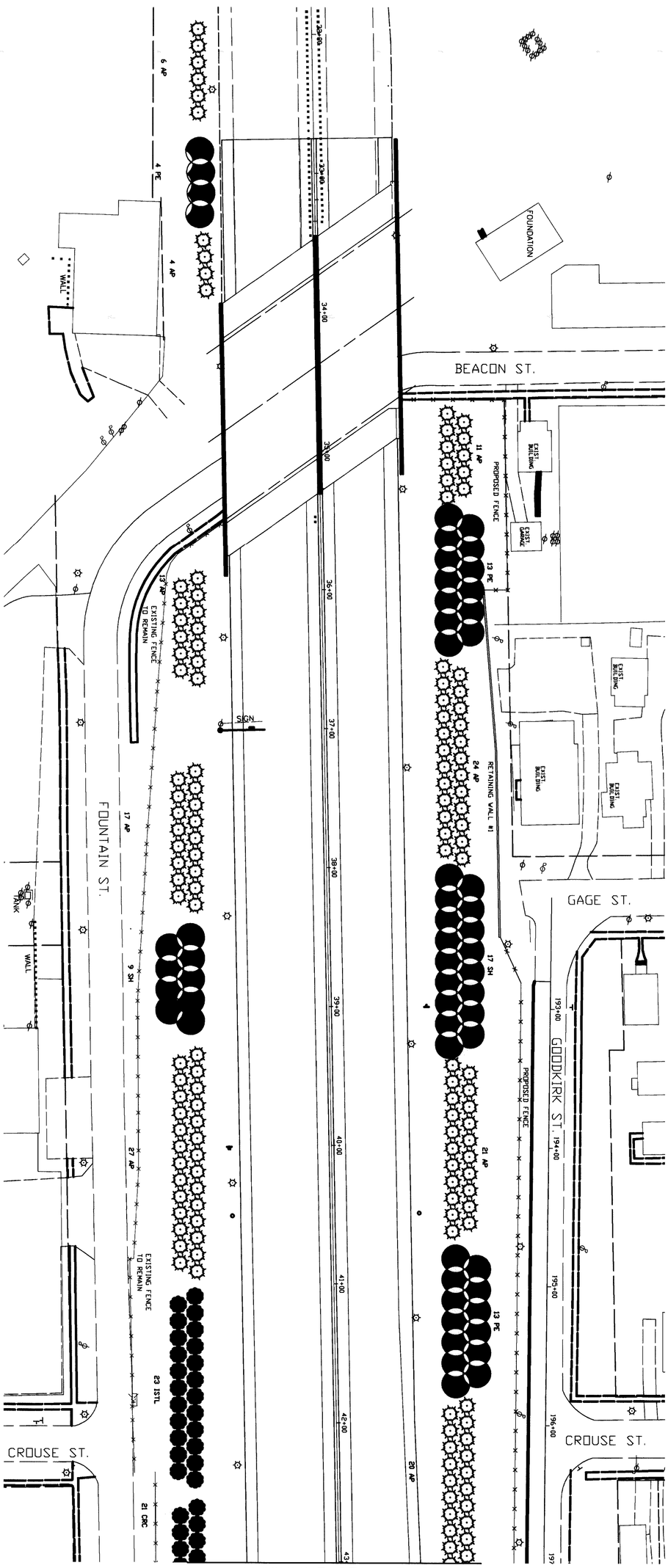

MATCHLINE STA. 43+00
SEE SHEET 5

4/10	SUM-8-0.63	LANDSCAPING PLAN STA 32+00 TO 43+00	CALCULATED DLH CHECKED AJD	HORZ. SCALE = 1" = 40'

SEE SHEET 4
MATCHLINE STA. 43+00

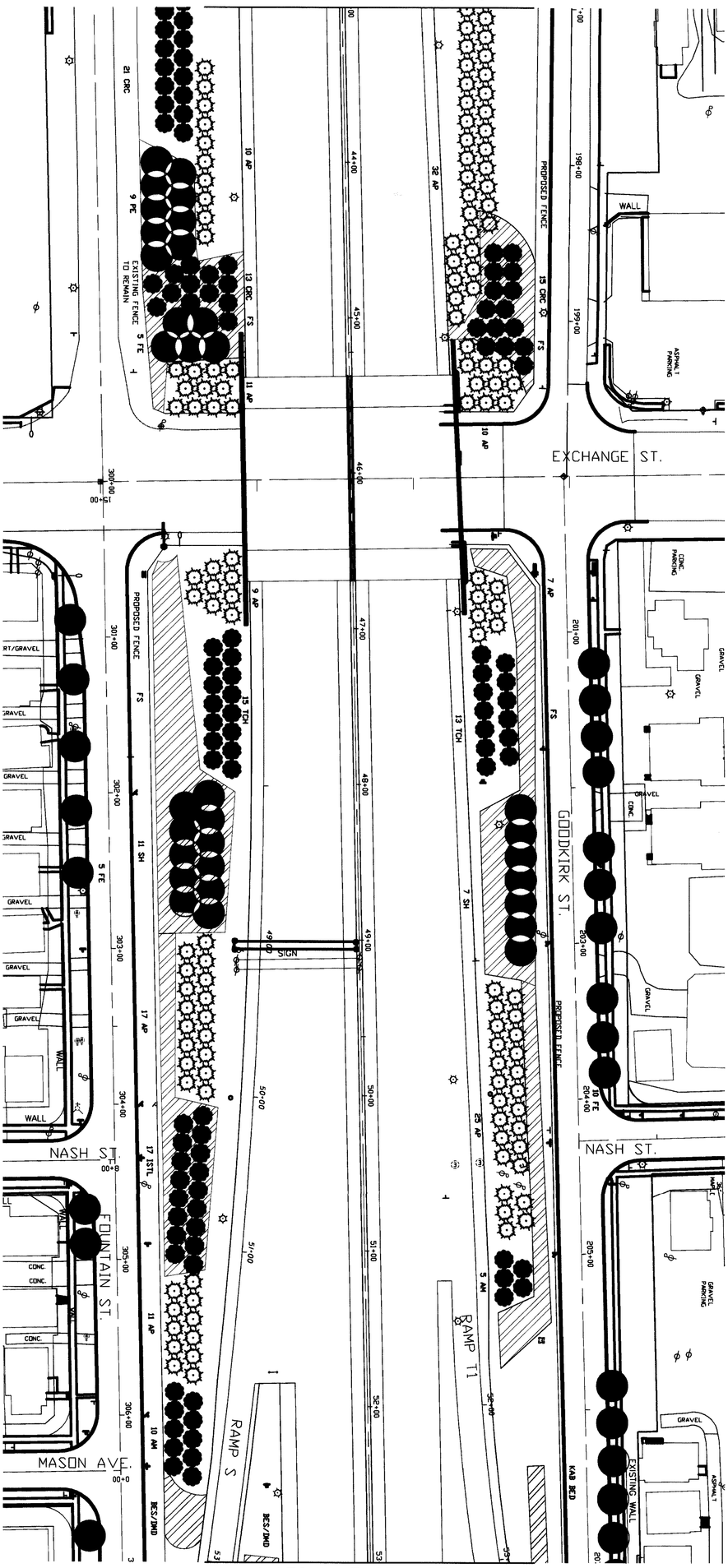

MATCHLINE STA. 53+00
SEE SHEET 6

5/10	SUM-8-0.63	LANDSCAPING PLAN STA 43+00 TO 53+00	CALCULATED DLH CHECKED AJD	HORZ. SCALE = 1" = 40'

SEE SHEET 5
MATCHLINE STA. 53+00

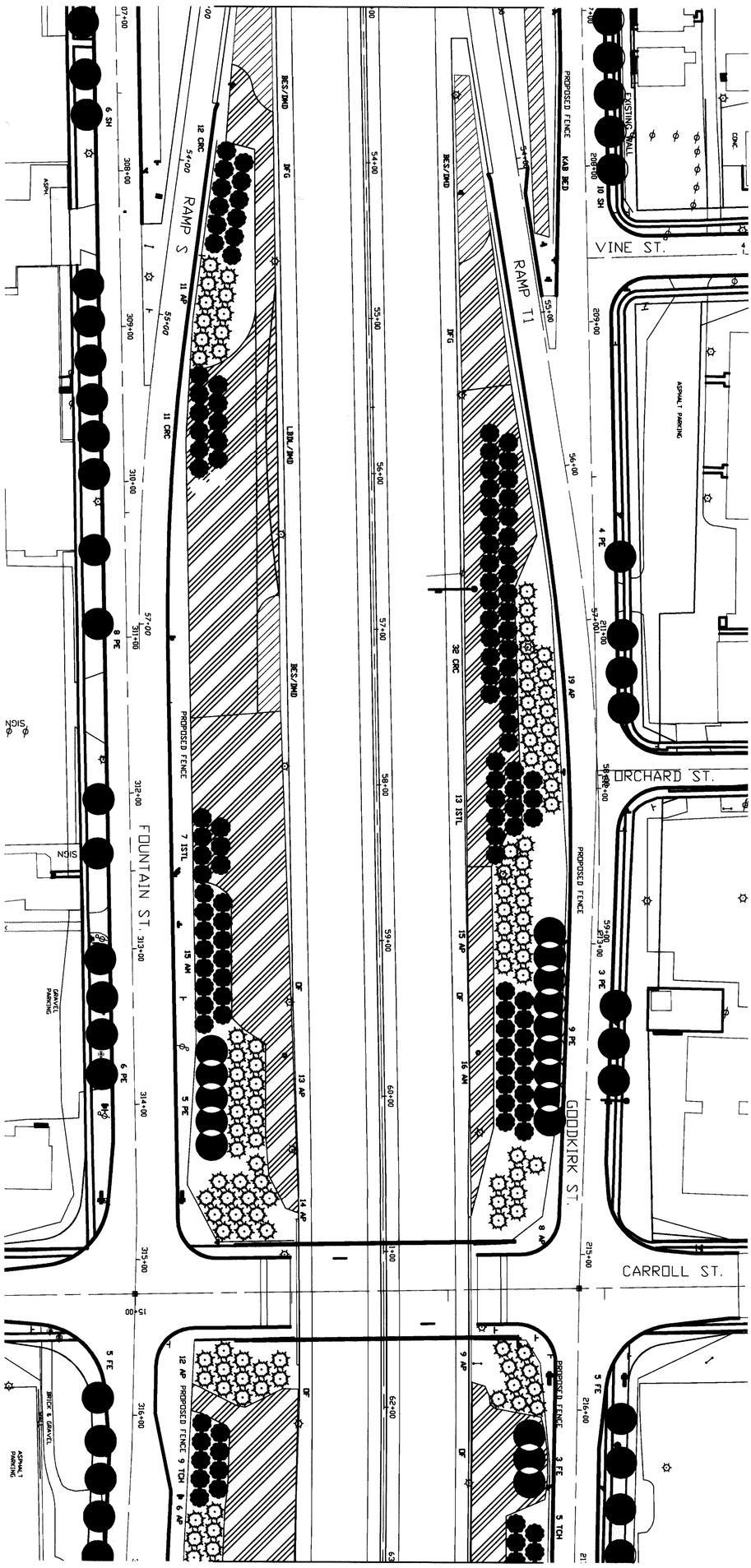

MATCHLINE STA. 63+00
SEE SHEET 7

6 / 10	SUM-8-0.63	LANDSCAPING PLAN STA 53+00 TO 63+00	CALCULATED DLH CHECKED AJD	HORZ. SCALE = 1" = 40'

SEE SHEET 6
MATCHLINE STA. 63+00

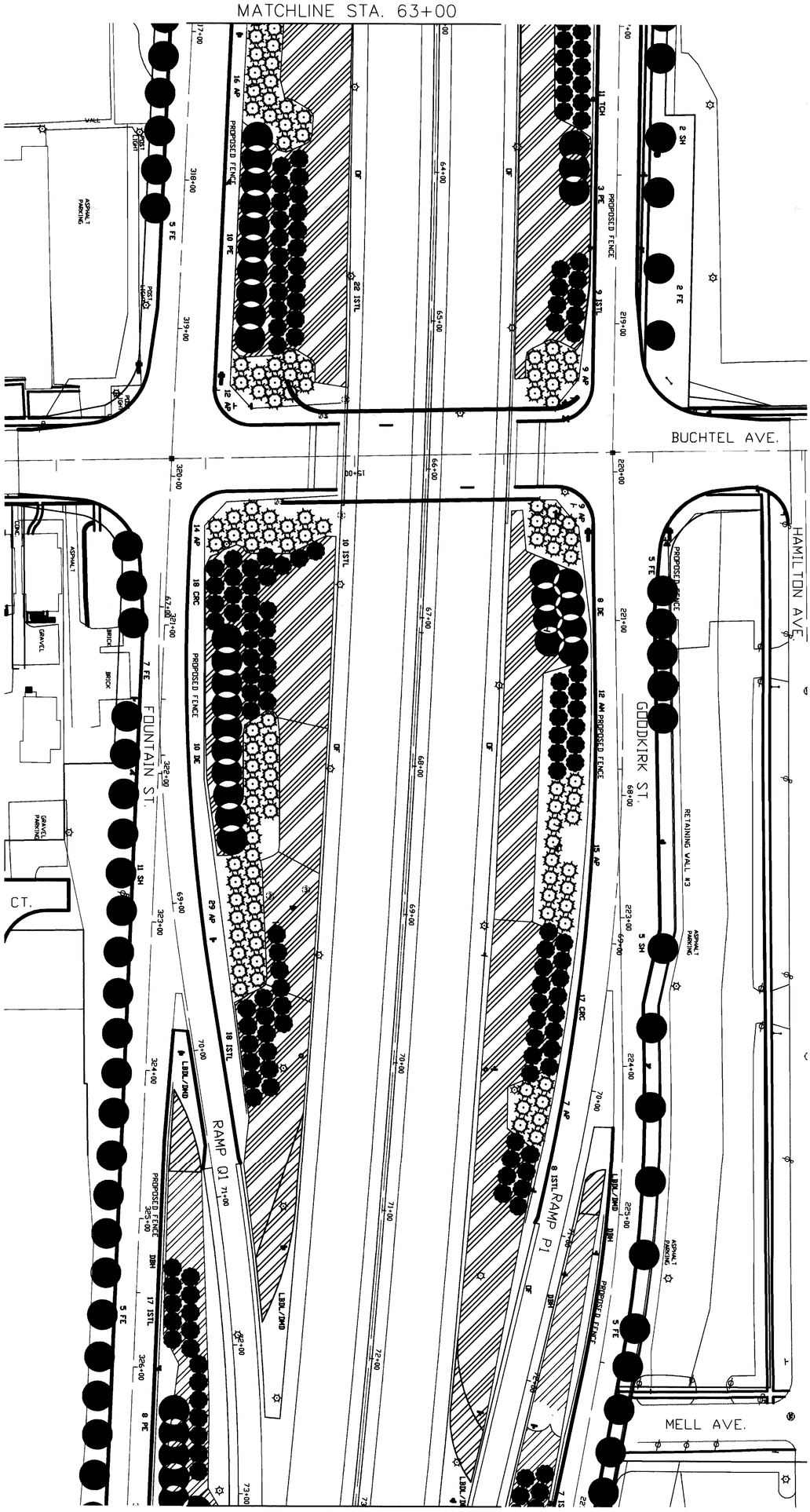

MATCHLINE STA. 73+00
SEE SHEET 8

7/10	SUM-8-0.63	LANDSCAPING PLAN STA 63+00 TO 73+00	CALCULATED DLH CHECKED AJD	HORZ. SCALE = 1" = 40'

SEE SHEET 7
MATCHLINE STA. 73+00

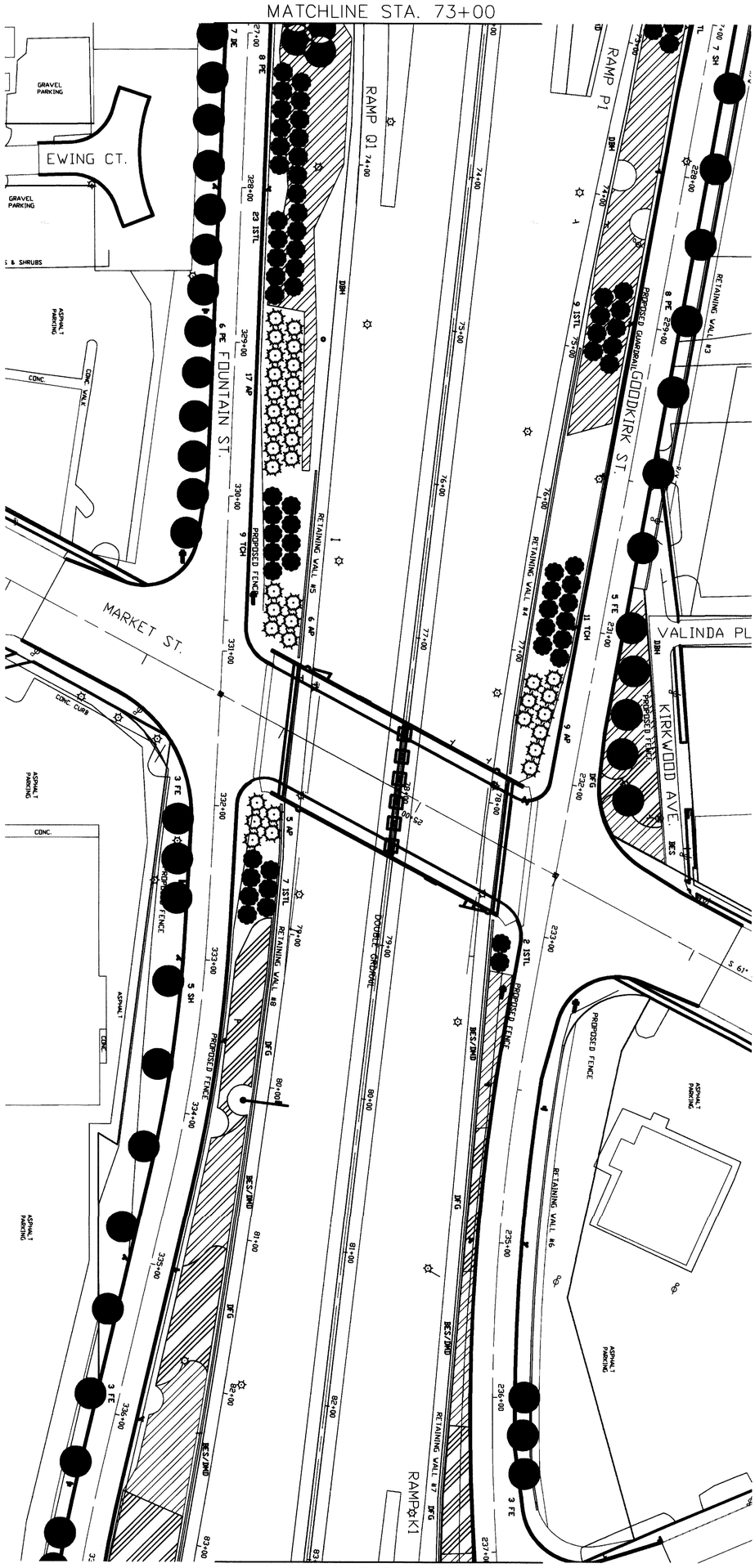

MATCHLINE STA. 83+00
SEE SHEET 9

10 / 8	SUM-8-0.63	LANDSCAPING PLAN STA 73+00 TO 83+00	CALCULATED DLH CHECKED AJD	HORZ. SCALE = 1" = 40'

SEE SHEET 8
MATCHLINE STA. 83+00

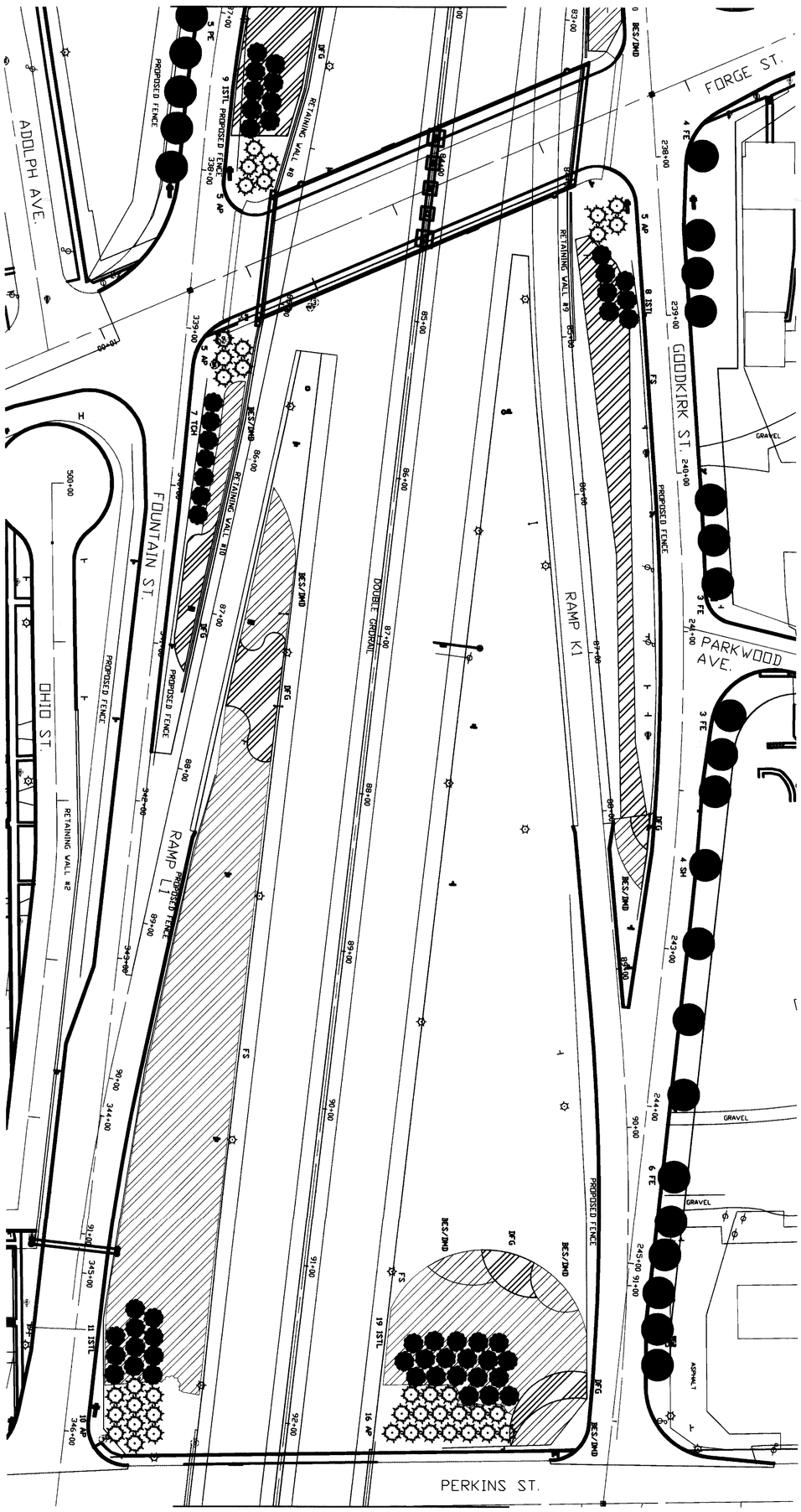

MATCHLINE STA 92+53.45
SEE SHEET 10

9 / 10	SUM-8-0.63	LANDSCAPING PLAN STA 83+00 TO 92+53.45	CALCULATED DLH CHECKED AJD	HORZ. SCALE = 1" = 40'

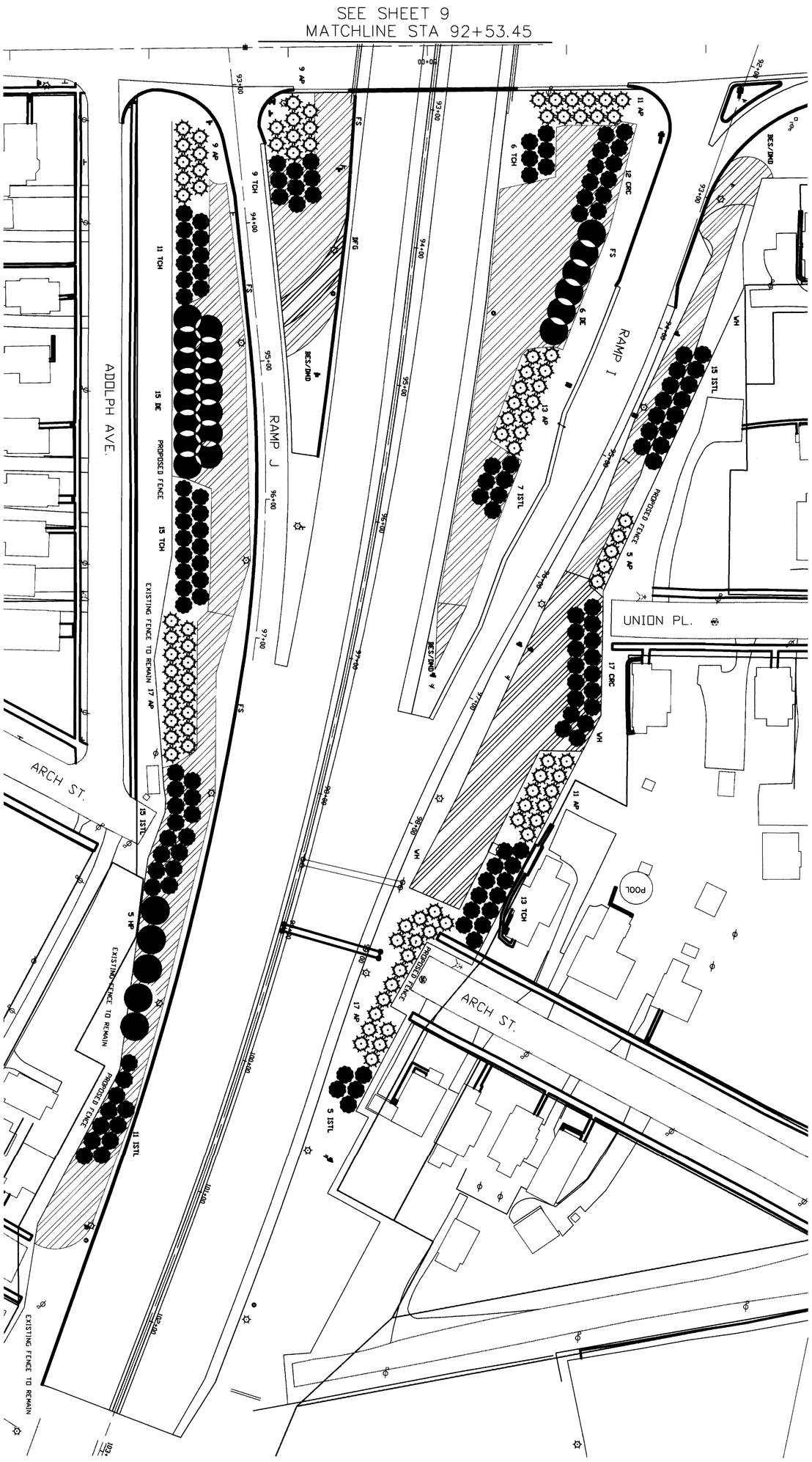

10 / 10	SUM-8-0.63	LANDSCAPING PLAN STA 92+53.45 TO 103+00	CALCULATED DLH CHECKED AJD	HORZ. SCALE = 1" = 40'