SUM-8/18/59/261/77 - 1.16/9.68/0.58/8.19/ 10.22/16.60	OHIO	1/12
	FHWA REGION 5	

IR-77-4(86)123
F-54(27)
M-1T62(4)

STATE OF OHIO
DEPARTMENT OF TRANSPORTATION

SUM - 8/18/59/261/77 - 1.16/9.68/0.58/8.19/10.22/16.60

BRIDGE OVERPASS SCREENING

CITY OF AKRON
SUMMIT COUNTY

INDEX OF SHEETS

TITLE SHEET	SHEET 1
GENERAL NOTES	SHEET 2
ESTIMATED QUANTITIES AND GENERAL SUMMARY	SHEET 3
TRAFFIC MAINTENANCE (STD. DWGS)	SHEET 4A-E
BRIDGE LAYOUTS	SHEETS 5-8
ACCESS PANEL DETAILS AND BRIDGE LAYOUT	SHEET 9
BASE PLATE DETAILS	SHEET 10
FENCE DETAILS	SHEETS 11,12

SHEET 4 HAS BEEN DELETED

1	SR. 18 O/ SR. 59 & OH. CANAL	SUM-18-0968
2	LOCUST ST.	SUM-59-0179
3	STATE ST.	SUM-59-0171
4	EUCLID AVE.	SUM-59-0096
5	SR. 261 O/ S.R. 59	SUM-261-0819
6	BARTGES AVE.	SUM-59-0058
7	PERKINS ST.	SUM-8-0175
8	S.R. 18 O/ S.R. 8	SUM-18-1065
9	BUCHTEL AVE.	SUM-8-0125
10	CARROLL ST.	SUM-8-0116
11	LOVERS LANE	SUM-77-1151
12	COLE AVE.	SUM-77-1132
13	CATAWBA AVE.	SUM-77-1022
14	STONER ST.	SUM-77-1660

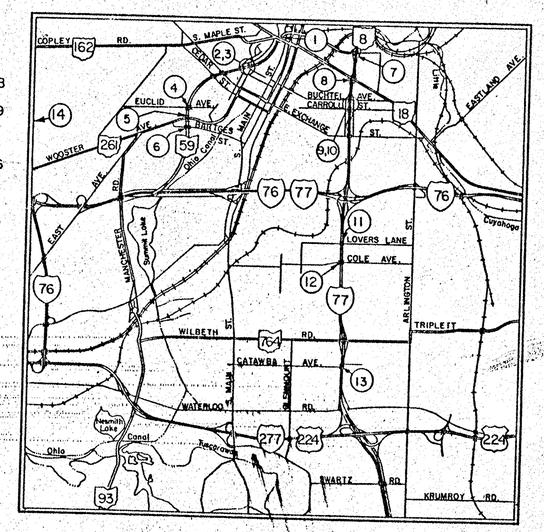

LOCATION MAP
SCALE IN FEET
0 4000 8000 12000 16000

UNDERGROUND UTILITIES
TWO WORKING DAYS
BEFORE YOU DIG
Call-800-362-2764 (Toll free)
OHIO UTILITIES PROTECTION SERVICE
NON-MEMBERS
MUST BE CALLED DIRECTLY

1987 SPECIFICATIONS

The standard specifications of the State of Ohio, Department of Transportion, including changes and supplemental specifications listed in the proposal shall govern this improvement.

I hereby approve these plans and declare that the making of this improvement will not require the closing to traffic of the highway and that provisions for the maintenance and safety of traffic will be as set forth on the plans and estimates.

Approved J. Beckett
Date 7/19/88 Design Manager, City of Akron

Approved C. David Hauf
Date 7/19/88 City Engineer, City of Akron

Approved Roy Kepler
Date 7/19/88 Service Director, City of Akron

Approved William Brinkley
Date 8/23/88 District Deputy Director of Transportation

Approved B.D. Hankemeier / WTZ
Date 9/12/88 Engineer, Bureau of Bridges and Structural Design

Approved George E. Schramm
Date 10-5-88 Chief Engineer, Planning and Design

Approved Bernard B. Hunt
Date 10-5-88 Director, Department of Transportation

WORK LIMITS

TOTAL LENGTH OF WORK = 3271 L.F. OR 0.619 MI.
(SEE SHEET 3)

SUPPLEMENTAL PRINTS OF STANDARD CONSTRUCTION DRAWINGS								SUPPLEMENTAL SPECIFICATIONS		
AR-1-57	3-1-58	TC-3510	8-29-84					852	6-10-87	
BR-2-67	10-15-71							853	6-26-78	
								952	6-10-87	
								956	6-26-78	

Plan prepared by:
THE CITY OF AKRON
DEPARTMENT OF
PUBLIC SERVICE
BUREAU OF ENGINEERING

12-23-87
DATE

FIL №	SUMMIT COUNTY
	DATE OF LETTING _____
	CONTRACT № _____

12-13-89

GENERAL NOTES

WORK DESCRIPTION
THIS WORK SHALL CONSIST OF SUPPLYING ALL EQUIPMENT, MATERIAL AND LABOR REQUIRED TO INSTALL 1" X 1" MESH X 11 GAGE CORE WIRE, PVC COATED CHAIN LINK SCREENING ON FOURTEEN (14) OVERPASS BRIDGES IN THE CITY OF AKRON. WORK WILL BE PERFORMED OVER EXISTING EXPRESSWAY SYSTEMS WITH DISRUPTIONS TO THE TRAFFIC FLOW BEING KEPT TO A MINIMUM. THEREFORE, THE CONTRACTOR SHALL EXERCISE EXTREME CARE IN HANDLING MATERIAL AND ABIDE BY TRAFFIC MAINTENANCE INSTRUCTIONS AS WRITTEN HEREIN.

DIMENSIONS VERIFICATION
THE LENGTHS PERTAINING TO THE EXISTING BRIDGE RAILING HAVE BEEN OBTAINED FROM PLANS OF THE EXISTING STRUCTURES AND/OR FROM FIELD OBSERVATIONS AND MEASUREMENTS. LENGTHS OF VERTICAL AND CURVED FENCE SHOWN ON THESE PLANS ARE RELATED TO THE EXISTING BRIDGE RAILS. CONSEQUENTLY, THEY ARE INDICATIVE OF THE EXISTING BRIDGE RAILING AND THE PROPOSED WORK, BUT THEY SHALL BE CONSIDERED TENTATIVE AND APPROXIMATE. THE CONTRACTOR IS REFERRED TO CMS SECTIONS 102.05, 105.02 AND 513.02.

CONTRACT BID PRICES SHALL BE BASED UPON A RECOGNITION OF THE UNCERTAINTIES DESCRIBED ABOVE AND UPON A PREBID EXAMINATION OF THE EXISTING BRIDGE RAILINGS BY THE CONTRACTOR. HOWEVER, ALL PROJECT WORK SHALL BE BASED UPON ACTUAL DETAILS AND DIMENSIONS WHICH HAVE BEEN VERIFIED BY THE CONTRACTOR IN THE FIELD.

ORIGINAL PLANS MAY BE REVIEWED AT THE OFFICES OF THE CITY OF AKRON, BUREAU OF ENGINEERING, 166 SOUTH HIGH STREET, ROOM 701, AKRON, OHIO DURING NORMAL BUSINESS HOURS.

ESTIMATED QUANTITIES
SPECIFIC LOCATIONS AND USAGE OF ESTIMATED QUANTITIES SET UP ON THIS PLAN TO BE USED AS DIRECTED BY THE ENGINEER SHALL BE MADE A MATTER OF RECORD BY INCORPORATION INTO THE FINAL CHANGE ORDER GOVERNING COMPLETION OF PROJECT. ESTIMATED QUANTITIES OF MATERIALS SHALL NOT BE ORDERED FOR DELIVERY TO THE PROJECT UNLESS AUTHORIZED BY THE ENGINEER.

FENCE POSTS, TOP RAILS AND POST BRACES
FENCE POST SHALL MEET THE REQUIREMENTS OF 710.03 STATE OF OHIO CONSTRUCTION AND MATERIAL SPECIFICATIONS (CMS) WITH THE FOLLOWING CHANGES: ALL POSTS SHALL BE 2.875" OUTSIDE DIAMETER PIPE, SCHEDULE 40 AT 5.79 LBS./FT. ALL POSTS SHALL BE GALVANIZED PER AASHTO M181. POSTS SHALL BE PLUMB AFTER INSTALLATION.

FENCE TOP RAILS AND POST BRACES SHALL MEET REQUIREMENTS OF 710.03 CMS, 1.66" OUTSIDE DIAMETER PIPE SCHEDULE 40 AT 2.27 LBS./FT. AND SHALL BE GALVANIZED PER AASHTO M181.

BASE PLATES AND ANCHOR BOLTS
BASE PLATES SHALL BE 1/2" THICK ASTM A36 STEEL, GALVANIZED AS REQUIRED BY 711.02 CMS.

FILLET WELD LEG SIZE SHALL BE 1/4" FOR SCHEDULE 40 POST TO BASE PLATE WELD.

5/8" ø H.S. THREADED ANCHORS, NUTS AND WASHERS SHALL CONFORM TO THE PHYSICAL PROPERTIES OF ASTM A325 EXCEPT THAT THE MINIMUM ELONGATION SHALL BE 10%. THE CHEMICAL PROPERTIES ARE WAIVED. ALL HARDWARE IS TO BE GALVANIZED PER 711.02 CMS. 5/8" ø H.S. THREADED ANCHORS ARE TO BE EMBEDDED 5" AND GROUTED WITH POLYESTER VINYLESTER MORTAR PER SUPPLEMENTAL SPECIFICATIONS (SS)852/952 OR NONSHRINKING EPOXY MORTAR PER SS 853/956. 3" THREADED ENDS OF ANCHORS SHALL EXTEND ABOVE THE ANCHOR PLATE A MINIMUM OF 1-1/2" AFTER THE FENCE POSTS HAVE BEEN SET PLUMB.

5/8" ø H.S. BOLTS SHALL CONFORM TO 711.09 CMS.

BASE PLATES - INSTALLATIONS
EXISTING RAILING TO BE REMOVED SHALL BE CAREFULLY REMOVED FROM THE RAILING ARM SUPPORTS AND STORED IN A SAFE PLACE FOR REINSTALLATION. SHIMS SHALL BE USED WHERE REQUIRED TO INSTALL THE FENCE POSTS PLUMB. SHIMS SHALL BE 1/4" OR 1/16" THICK AS REQUIRED. THE SHIMS SHALL BE MADE OF A MULTI-POLYMER PLASTIC MATERIAL WITH A MINIMUM COMPRESSIVE STRENGTH OF 5,000 PSI. A SUITABLE CAULKING COMPOUND, AS APPROVED BY THE ENGINEER, SHALL BE USED TO SEAL THE GAP BETWEEN THE BASE PLATE AND THE TOP OF THE PARAPET AFTER INSTALLATION OF THE BASE PLATE. FOR SHIM DETAIL, SEE FENCE DETAILS.

FENCE FABRIC
THE 11 GAGE CORE WIRES SHALL BE UNIFORMLY GALVANIZED WITH 0.30 OZ./FT^2 MINIMUM WEIGHT OF ZINC METAL IN ACCORDANCE WITH ASTM A-641-82. THE GALVANIZED WIRE SHALL THEN BE COATED WITH A 7-MIL COATING OF VIRGIN PVC APPLIED BY FUSION METHOD OVER A THERMOSET PLASTIC BONDING AGENT IN ACCORDANCE WITH ASTM F-668-84. THE BOND SHALL EXHIBIT EQUAL OR GREATER STRENGTH THAN THE COHESIVE STRENGTH OF PVC COATING. ALL CUT ENDS SHALL BE COATED WITH PVC AT THE FACTORY DURING THE WEAVING PROCESS. THE PVC COATING SHALL BE GRAY IN COLOR, CLOSELY APPROACHING FEDERAL STANDARD NO. 595A-16251. THE FINISHED FABRIC SHALL BE COMPOSED OF A 1" DIAMOND PATTERN IN WHICH THE INDIVIDUAL PICKETS ARE HELICALLY WOVEN AND INTERWOVEN IN THE FORM OF A CONTINUOUS CHAIN LINK MESH WITH KNUCKLED SELVAGES TOP AND BOTTOM. ALL PVC COATED FABRIC SHALL BE HANDLED WITH CARE. IF PVC COATING IS DAMAGED, THE CONTRACTOR SHALL REPAIR OR REPLACE THE FABRIC AS DIRECTED BY THE ENGINEER AT THE CONTRACTOR'S OWN EXPENSE.

SCREENING INSTALLATION
LINE POST RAILS SHALL BE INSTALLED AS PER PLAN AND CHAIN LINK FABRIC SHALL BE STRETCHED AND SECURELY FASTENED TO TERMINAL AND LINE POSTS IN ACCORDANCE WITH PLAN DETAILS.

FABRIC TIES AND HOG RINGS SHALL BE 9 GAGE SOLID GALVANIZED STEEL WIRE OF THE CHAIN LINK FENCE INDUSTRY STANDARDS. DOUBLE WRAP FABRIC TIES SHALL BE 13 GAGE SOLID GALVANIZED STEEL WIRE 15" LONG OF THE CHAIN LINK INDUSTRY STANDARDS. FABRIC TIES FOR CONNECTION TO INTERIOR POSTS SHALL BE SPACED 12" C/C MAX. DOUBLE WRAP FABRIC TIES FOR CONNECTION TO THE TOP AND BRACE RAILS SHALL BE SPACED 18" C/C MAX. AND 2" TO 3" ON EACH SIDE OF POST.

TENSION WIRE SHALL BE ALUMINIZED 7 GAGE STEEL COIL SPRING WIRE CONFORMING TO AASHTO M181. TENSION WIRE SHALL BE PLACED AS CLOSE TO THE CONCRETE PARAPET AS PRACTICAL AND SHALL NOT EXCEED 2" MAXIMUM. TO CONNECT FABRIC TO THE TENSION WIRE, USE HOG RINGS, 2" TO 3" ON EACH SIDE OF POST AND AT SPACING NOT TO EXCEED 18" C/C BETWEEN POSTS.

STRETCHER BARS, TENSION BANDS, BRACE BANDS, LINE RAIL CLAMPS, CAP FITTINGS, END FITTINGS AND 3/8" ø CARRIAGE BOLTS SHALL BE THAT OF THE CHAIN LINK FENCE INDUSTRY STANDARDS. ALL FENCE PARTS, FITTINGS AND BOLTS SHALL BE GALVANIZED, AND ALL WORK SHALL CONFORM TO ITEM 607 - FENCE, TYPE CL, OF ODOT SPECIFICATIONS EXCEPT AS NOTED ON DETAIL PLANS.

ITEM 607 - FENCE, TYPE CL, AS PER PLAN
THIS WORK SHALL CONSIST OF FURNISHING AND ERECTING FENCE OF THIS TYPE AS DETAILED IN THESE PLANS. END POSTS SHALL BE FURNISHED OF A LENGTH AS DESIGNATED IN THE FENCE DETAILS OF THESE PLANS.

ITEM 607 - FENCE, TYPE CL, AS PER PLAN (5'-0" HIGH)
THIS WORK SHALL CONSIST OF FURNISHING AND ERECTING FENCE OF THIS TYPE AS DETAILED IN THESE PLANS. BASE PLATES, EPOXY GROUTED ANCHOR BOLTS AND A 1-1/4" BOTTOM RAIL SHALL BE INCLUDED IN THIS ITEM.

ITEM 607 - FENCE, TYPE CL, AS PER PLAN (6'-0" HIGH)
ITEM 607 - FENCE, TYPE CL, AS PER PLAN (CURVED)
THIS WORK SHALL CONSIST OF FURNISHING AND ERECTING FENCE OF THIS TYPE AS DETAILED IN THESE PLANS. BASE PLATES, EPOXY GROUTED ANCHOR BOLTS AND ACCESS PANELS SHALL BE INCLUDED IN THIS ITEM.

ACCESS PANEL
BAR REINFORCEMENT AND ACCESS COVER SHALL BE ASTM A36 STEEL, GALVANIZED AS REQUIRED BY 711.02 CMS.

ALL MACHINE SCREWS, HEX NUTS AND WASHERS SHALL MEET THE PROVISIONS OF 711.10 CMS.

GALVANIZING SHALL BE DONE AFTER THE TACK WELDING IS COMPLETED.

ITEM SPECIAL - REMOVAL AND REINSTALLATION OF ALUMINUM RAILS
THIS ITEM SHALL CONSIST OF REMOVING, STORING AND REINSTALLING THE EXISTING ALUMINUM RAILS. THE RAILS SHALL BE CAREFULLY DISMANTLED AND STORED AS DIRECTED BY THE ENGINEER. AFTER INSTALLATION OF FENCE, THE RAILS SHALL BE REINSTALLED. ALL RAILS SHALL BE HANDLED WITH CARE. ANY RAILS DAMAGED BY THE CONTRACTOR SHALL BE REPLACED WITH NEW RAILS AT HIS COST.

PAYMENT FOR THIS ITEM SHALL BE AT THE LINEAL FOOT PRICE BID FOR ITEM SPECIAL - REMOVAL AND REINSTALLATION OF ALUMINUM RAILS. THIS PAYMENT SHALL CONSTITUTE FULL COMPENSATION FOR ALL LABOR, TOOLS, EQUIPMENT AND INCIDENTALS NECESSARY TO SATISFACTORILY COMPLETE THIS ITEM.

THE TYPE OF ALUMINUM RAILS FOR EACH BRIDGE IS GIVEN IN THE ESTIMATED QUANTITIES TABLE. FOR DETAILS AND NOTES REGARDING EACH TYPE OF RAIL, SEE THE FENCE DETAILS.

TRAFFIC MAINTENANCE
THE SAFETY OF THE TRAVELING PUBLIC AND MINIMIZING THE INCONVENIENCE TO HIGHWAY USERS SHALL BE OF THE UTMOST IMPORTANCE TO THE CONTRACTOR WHILE PERFORMING THE NECESSARY WORK. THE FOLLOWING CONDITIONS AND RESTRICTIONS SHALL BE ENFORCED AND SHALL BE ADHERED TO DURING THE SCOPE OF THIS PROJECT.

A. TWO-WAY TRAFFIC SHALL BE MAINTAINED OVER BRIDGES (WITH THE EXCEPTION OF LOCUST STREET BRIDGE WHICH IS ONE-WAY) AT ALL TIMES DURING THE CONSTRUCTION PERIOD. DURING THE HOURS OF 9:00 A.M. TO 3:00 P.M., AND 7:00 P.M. TO 6:00 A.M., ONE LANE OF TRAFFIC MAY BE CLOSED OVER THE BRIDGES, OR AS DIRECTED BY THE ENGINEER. PEDESTRIAN TRAFFIC SHALL BE MAINTAINED ON ONE SIDE OF THE BRIDGE AT ALL TIMES, WITH THE EXCEPTION OF THE PERKINS STREET BRIDGE. FOR SHORT PERIODS OF TIME, PERKINS STREET PEDESTRIAN TRAFFIC MAY BE DETOURED TO THE FORGE STREET BRIDGE.

B. IF THE TRAFFIC RAILING IS TO BE REMOVED FOR MORE THAN ONE WORK DAY, THEN A TEMPORARY FENCE SHALL BE ERECTED ALONG THE LENGTH OF REMOVED RAILING TO PROTECT PEDESTRIANS. THE TYPE OF FENCE AND METHOD OF ERECTION SHALL BE APPROVED BY THE DIRECTOR.

C. ALL TRAFFIC CONTROL DEVICES SHALL BE FURNISHED BY THE CONTRACTOR AND SHALL BE ERECTED AND MAINTAINED IN COMPLIANCE WITH THE STATE OF OHIO "MANUAL OF UNIFORM TRAFFIC CONTROL DEVICES FOR STREETS AND HIGHWAYS" (OMUTCD), CURRENT EDITION, LATEST REVISION.

D. THE CONTRACTOR SHALL BE RESPONSIBLE AT ALL TIMES FOR PROVIDING AND MAINTAINING LIGHTS, SIGNS AND BARRICADES FOR THE MAINTENANCE OF TRAFFIC AND THE SAFETY OF THE TRAVELING PUBLIC AT THE BRIDGE SITE OR AS DIRECTED BY THE ENGINEER. SIGNING FOR PEDESTRIAN GUIDANCE AND CONTROL IS REQUIRED, AND PROJECT LIGHTING USED AT NIGHT SHALL BE DIRECTED AWAY FROM TRAFFIC.

E. NO RAILING SHALL BE REMOVED UNTIL THE REPLACEMENT FENCE INCLUDING POSTS, BRACES, FABRIC, BASE PLATES AND MISCELLANEOUS HARDWARE IS ON THE SITE, READY FOR INSTALLATION. FAILURE TO COMPLY WITH THIS REQUIREMENT SHALL BE DEEMED SUFFICIENT CAUSE TO ORDER WORK SUSPENDED ON THIS PROJECT UNTIL SUCH TIME THAT THE ENGINEER IS ASSURED OF SAID COMPLIANCE.

F. TRAFFIC ON EXPRESSWAYS UNDER THE BRIDGES SHALL BE MAINTAINED AT ALL TIMES BY USE OF THE EXISTING PAVEMENT AND SHOULDERS. TRAFFIC LANES ON THE EXPRESSWAY DIRECTLY UNDER THE WORK AREA SHALL BE CLOSED AT THE TIME WORK IS BEING DONE. DURING THE HOURS OF 9:00 A.M. TO 3:00 P.M. ON WEEKDAYS, ONE LANE OF TRAFFIC MAY BE CLOSED IN EACH DIRECTION. DURING THE HOURS OF 7:00 P.M. TO 6:00 A.M. AND ON WEEKENDS, TWO LANES OF TRAFFIC MAY BE CLOSED IN EACH DIRECTION. ALL LANE CLOSURES SHALL BE IN ACCORDANCE WITH OMUTCD AND THE STANDARD DRAWINGS SHOWN ON SHEETS 4A THRU 4E.

G. A SAFETY NET OR PLATFORM SHALL BE REQUIRED TO PROTECT THE ROADWAY DURING THE PARAPET AND/OR FENCING WORK ON ALL STRUCTURES. THE CONTRACTOR SHALL PROVIDE A SAFETY NET OR PLATFORM OF SUITABLE STRENGTH ON THE UNDERSIDE OF THE DECK. THE DESIGN OF THE NET OR PLATFORM SHALL CONFORM WITH OSHA REQUIREMENTS AND SHALL MEET WITH THE APPROVAL OF THE ENGINEER. THE SAFETY NET OR PLATFORM SHALL REMAIN IN PLACE UNTIL THE WORK HAS BEEN COMPLETED AND ACCEPTED OR AS DIRECTED BY THE ENGINEER. PARAPET AND/OR FENCING WORK SHALL NOT BE PERFORMED ABOVE THE ROADWAY LANE THAT IS OPEN TO TRAFFIC.

H. THE CONTRACTOR SHALL SUBMIT TO THE ENGINEER AND TO THE CITY OF AKRON'S TRAFFIC ENGINEER A COMPLETE SCHEDULE OF CONSTRUCTION OPERATIONS AND A DETAILED MAINTENANCE-OF-TRAFFIC PLAN. THE MAINTENANCE-OF-TRAFFIC PLAN SHALL COVER THE VARIOUS PHASES OUTLINED IN THE CONSTRUCTION SCHEDULE AND MUST BE SUBMITTED AND APPROVED BY THE DIRECTOR PRIOR TO COMMENCING THE WORK.

THE FOLLOWING QUANTITIES ARE PROVIDED FOR THE OPERATIONS DESCRIBED ABOVE AND ARE CARRIED TO THE GENERAL SUMMARY:

ITEM 614 - MAINTAINING TRAFFIC ..... LUMP SUM

FIELD OFFICE
THE CONTRACTOR SHALL PROVIDE A SUITABLE FIELD OFFICE HAVING A MINIMUM OF 300 SQ.FT. OF FLOOR SPACE. PAYMENT SHALL BE AT THE LUMP SUM PRICE BID FOR ITEM 619, FIELD OFFICE.

ESTIMATED QUANTITIES AND GENERAL SUMMARY

GENERAL SUMMARY

FUNDING IR	FUNDING F	FUNDING M	ITEM	QUANTITY	UNIT	DESCRIPTION
73	62	70	607	205	L.F.	FENCE, TYPE CL, AS PER PLAN
	123		607	123	L.F.	FENCE, TYPE CL, AS PER PLAN, (5'-0" HIGH)
344	205	470	607	1019	L.F.	FENCE, TYPE CL, AS PER PLAN, (6'-0" HIGH)
1396	1071	2297	607	4764	L.F.	FENCE, TYPE CL, AS PER PLAN, (CURVED)
LUMP	LUMP	LUMP	614	LUMP	—	MAINTAINING TRAFFIC
1803	1453	2820	SPECIAL	6076	L.F.	REMOVAL AND REINSTALLATION OF ALUMINUM RAILS
LUMP	LUMP	LUMP	619	LUMP	—	FIELD OFFICE
LUMP	LUMP	LUMP	624	LUMP	—	MOBILIZATION

ESTIMATED QUANTITIES

BRIDGE NAME AND NUMBER	BRIDGE SIDE	EXISTING RAILING	LENGTH OF FENCE TYPE CL, A.P.P.	NO. OF POSTS LINE	NO. OF POSTS END	LENGTH OF FENCE TYPE CL, A.P.P. (5' HIGH)	NO. OF POSTS LINE	NO. OF POSTS END	LENGTH OF FENCE TYPE CL, A.P.P. (6' HIGH)	NO. OF POSTS LINE	NO. OF POSTS END	LENGTH OF FENCE TYPE CL, A.P.P. (CURVED)	NO. OF POSTS LINE	NO. OF POSTS END	WORK LENGTHS	FED. PART.
STONER ST. SUM-77-1660	NORTH	TYPE Z	—	—	—	—	—	—	—	—	—	208'-4"	28	—	218	1R
	SOUTH	"	—	—	—	—	—	—	—	—	—	208'-4"	28	—		
BARTGES AVE. SUM-59-0058	NORTH	TYPE X	13'-2 1/2"	—	2	—	—	—	—	—	—	186'-1"	26 ③	—	214	M
	SOUTH	"	13'-7 1/2"	—	2	—	—	—	—	—	—	189'-9 1/4"	26	—		
EUCLID AVE. SUM-59-0096	NORTH	"	5'-1 3/4"	—	1	—	—	—	45'-11"	7	—	307'-9 1/2"	45	—	371	M
	SOUTH	"	5'-11"	—	1	—	—	—	50'-1 1/4"	8	—	304'-8 1/2"	45 ③	—		
STATE ST. SUM-59-0171	NORTH	"	—	—	—	—	—	—	—	—	—	166'-10"	22	—	176	M
	SOUTH	"	—	—	—	—	—	—	—	—	—	166'-10"	22	—		
LOCUST ST. SUM-59-0179	NORTH	"	—	—	—	—	—	—	71'-2"	9	—	160'-0"	21	—	241	M
	SOUTH	"	—	—	—	—	—	—	71'-2"	9	—	160'-0"	21	—		
S.R. 261 O/ S.R. 59 SUM-261-0819	NORTH	"	11'-6 1/4"	—	2	—	—	—	—	—	—	150'-2 5/16"	24 ③	—	173	M
	SOUTH	"	12'-8 1/2"	—	2	—	—	—	—	—	—	150'-0 1/4"	24	—		
CATAWBA AVE. SUM-77-1022	NORTH	"	5'-3"	—	1	—	—	—	52'-6 1/4"	7	—	168'-0"	25	—	257	IR
	SOUTH	"	11'-6"	—	2	—	—	—	67'-3 3/4"	9	—	167'-9 1/4"	25	—		
COLE AVE. SUM-77-1132	NORTH	TYPE 3	13'-10 7/8"	—	2	—	—	—	46'-0 1/2"	7 ①	—	165'-6 1/2"	26 ①	—	256	IR
	SOUTH	"	16'-11 1/2"	—	2	—	—	—	66'-11 1/4"	10 ①	—	161'-7 1/2"	25	—		
LOVERS LANE SUM-77-1151	NORTH	"	12'-8 3/4"	—	2	—	—	—	59'-9 7/8"	9 ②	—	158'-2 1/2"	25 ①	—	241	IR
	SOUTH	"	12'-4 3/4"	—	2	—	—	—	51'-2 7/8"	7 ②	—	158'-6"	25	—		
CARROLL ST. SUM-8-0116	NORTH	TYPE Y	15'-1 1/2"	—	2	—	—	—	—	—	—	162'-4 1/2"	23	—	188	F
	SOUTH	"	16'-2"	—	2	—	—	—	—	—	—	162'-4 1/2"	23	—		
BUCHTEL AVE SUM-8-0125	NORTH	"	—	—	—	—	—	—	46'-6 1/2"	7	—	133'-7 1/8"	20	—	217	F
	SOUTH	"	15'-9 5/16"	—	2	—	—	—	56'-10 1/2"	8	—	134'-0 1/2"	20	—		
S.R. 18 O/ S.R. 8 SUM-18-1055	NORTH	"	7'-9"	—	1	—	—	—	50'-8 7/16"	6	—	146'-5 5/16"	22	—	215	F
	SOUTH	"	5'-2"	—	1	—	—	—	51'-2 5/8"	6	—	144'-10 1/4"	22	—		
PERKINS ST. SUM-8-0175	NORTH	"	3'-0"	—	2 ④	123'-2"	16	—	—	—	—	—	—	—	204	F
	SOUTH	"	6'-11"	—	2	—	—	—	—	—	—	187'-5 7/16"	26	—		
S.R. 18 O/ S.R. 59 SUM-18-0968	NORTH	TYPE X	—	—	—	—	—	—	131'-7 7/8"	16	—	165'-0"	23	—	300	M
	SOUTH	"	—	—	—	—	—	—	100'-0 5/16"	14	—	189'-9 1/8"	27	—		
TOTALS			204'-9 3/16"	0	33	123'-2"	16	0	1,019'-3"	139	0	4764'-5 5/16"	633	0	3271	—

① TWO OF THESE LINE POSTS HAVE TYPE 4 BASE PLATES. SEE DETAIL "A" ON SHEET 10 OF 12

② TWO OF THESE LINE POSTS HAVE TYPE 4 BASE PLATES. SEE DETAIL "B" ON SHEET 10 OF 12.

③ TWO OF THESE LINE POSTS HAVE TYPE 5 BASE PLATES. SEE DETAIL "C" ON SHEET 10 OF 12

④ THESE POSTS HAVE TYPE 6 BASE PLATES

A.P.P. - AS PER PLAN

FED. RD. DIVISION	STATE	PROJECT	
5	OHIO		

SUM-8/18/59/261/77-1.16/9.68/0.58/8.19/10.22/16.60

4A
12

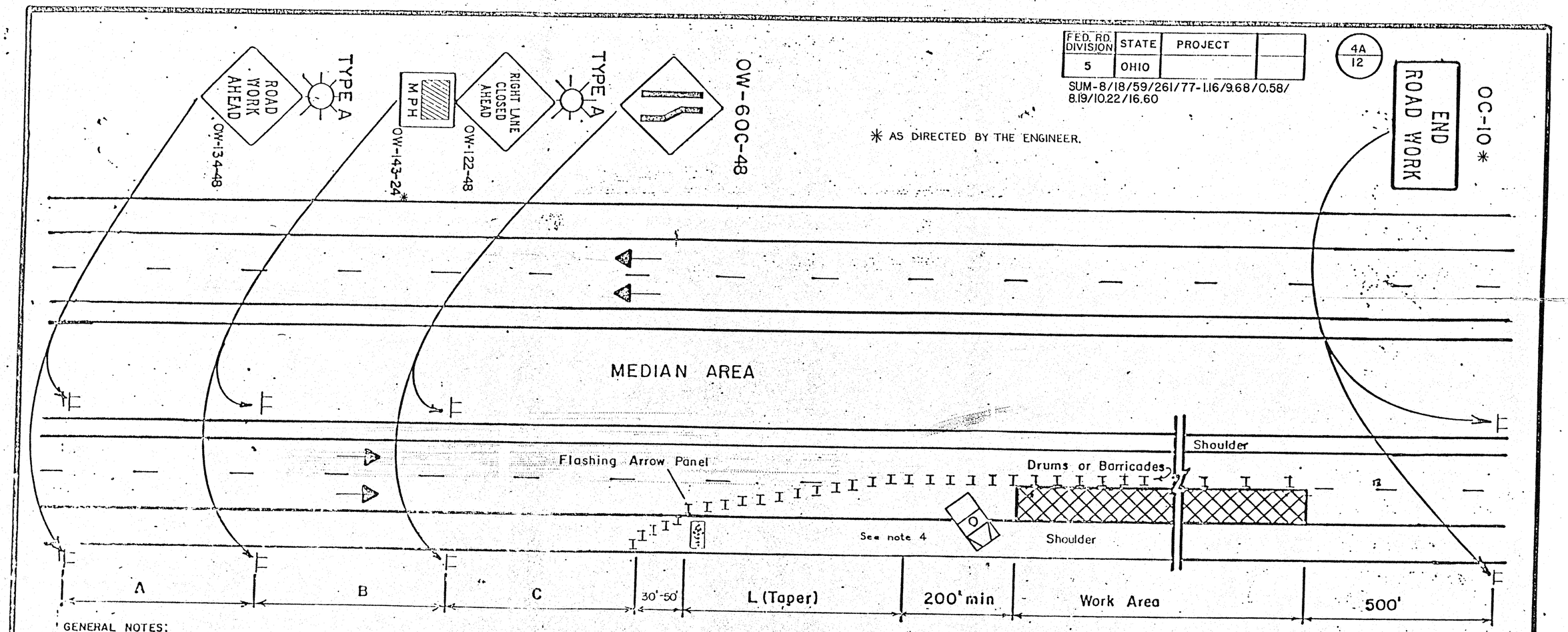

GENERAL NOTES:

1. The taper length (L) shall be in accordance with Section 7F-17 of the OMUTCD. The location of the transition taper and location of the advance warning signs should be adjusted to provide for adequate sight distance for the existing vertical and horizontal roadway alignment. In order to determine the minimum number of channelizing devices for the transition taper see Table 7-5 OMUTCD. For a 55 MPH prevailing speed and a 12 ft. lane, not less than thirteen (13) drums or barricades shall be used to form the lane transition taper in advance of the work area. Not less than five (5) drums or barricades shall be used to form the taper on the shoulder. Drums or barricades shall be spaced approximately 50' to 60' center to center for the first 1000 feet of the work area and at a maximum of 100 to 120 feet for the balance of the work area. Cones may be substituted for barricades or drums for short term lane closures. Cones Shall Not Be Used For Night Lane Closures.

2. The major standard level warning sign sizes may be used on divided streets or highways that are not classified as freeways or expressways.

3. When work is being performed in the lane adjacent to the median on a divided highway an OW-123-48 sign(s) shall be substituted for the OW-122-48 sign(s) and an OW-60D-48 sign(s) shall be substituted for the OW-60C sign(s).

4. The work vehicle shown at the beginning of the work area shall be in place and unoccupied whenever workers are in the work area. This work vehicle shall be removed from the pavement whenever workers are not in the work area. Other protective devices may be used in lieu of the work vehicle shown when approved by the Engineer. The vehicle shall be equipped with a 360° rotating or flashing amber beacon clearly visible for a minimum of a ¼ mile. Where ever possible, the work vehicle shall be replaced with an additional 300 feet of parallel work zone length prior to the work area.

5. The flashing arrow panel shall meet requirements contained in TC 35.10.

6. Type C steady burning barricade warning lights shall be erected on drums or barricades for night lane closures. The maximum spacing shall be identical to the channelizing device spacing requirements described in Note 1 for the taper length. Spacings shall be at 100 foot intervals for the next 1000 feet. No lights are required beyond that point.

MINIMUM DISTANCE	A	B	C
MAJOR STANDARD	500'	500'	500'
URBAN FREEWAY & EXPRESSWAY	500' TO 1000'	500' TO 1000'	500' TO 1000'
RURAL FREEWAY & EXPRESSWAY	2600'	1600'	1000'

7. Type A flashing barricade warning lights shown on the "Road Work Ahead" and the "Right Lane Closed Ahead" signs are required whenever a night lane closure is necessary.

8. Some work area locations may require more than just static or conventional signs to enhance communication with the driver. At these locations Portable Changeable Message Signs (PCMS) units are recommended. These devices should be located approximately 2000-4000 ft. in advance of a lane closure or other point of required action. See Section 7G-8.1, OMUTCD for further guidance on use of PCMS units.

OHIO DEPARTMENT OF TRANSPORTATION

CLOSING ONE LANE OF A FOUR LANE DIVIDED HIGHWAY

DATE 2/82

TT-1a

Rev. EEF 9/84 Rev. JKP 11/8

FED. RD. DIVISION	STATE	PROJECT	
5	OHIO		

SUM-8/18/59/261/77-1.16/9.68/0.58/8.19/10.22/16.60

4B
12

TYPICAL APPLICATIONS OF TRAFFIC CONTROL DEVICES FOR MULTIPLE LANE CLOSING

DISTANCE	A	B	C	E
Urban	200'	200'	200'	850'
Major Standard	500'	500'	500'	1200'
Expressway & Freeway	2500'	1000'	1000'	1680'

NOTE: See Section 7F-17 to determine L (taper length)

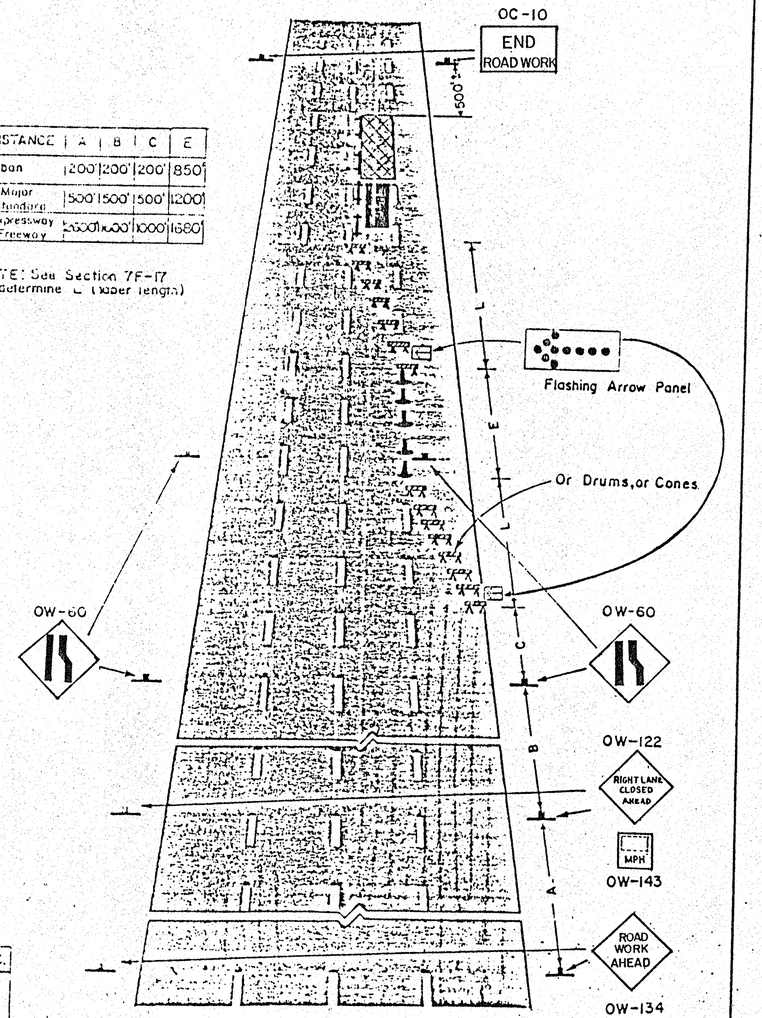

REF. SEC.
7D-23
7F-16
7G-8
7E-11

C-20

(Rev. 12)

T-15A

SUM-8/18/59/261/77-1.16/9.68/0.58/8.19/10.22/16.60

FHWA REGION	STATE	PROJECT	
5	OHIO		

4C
12

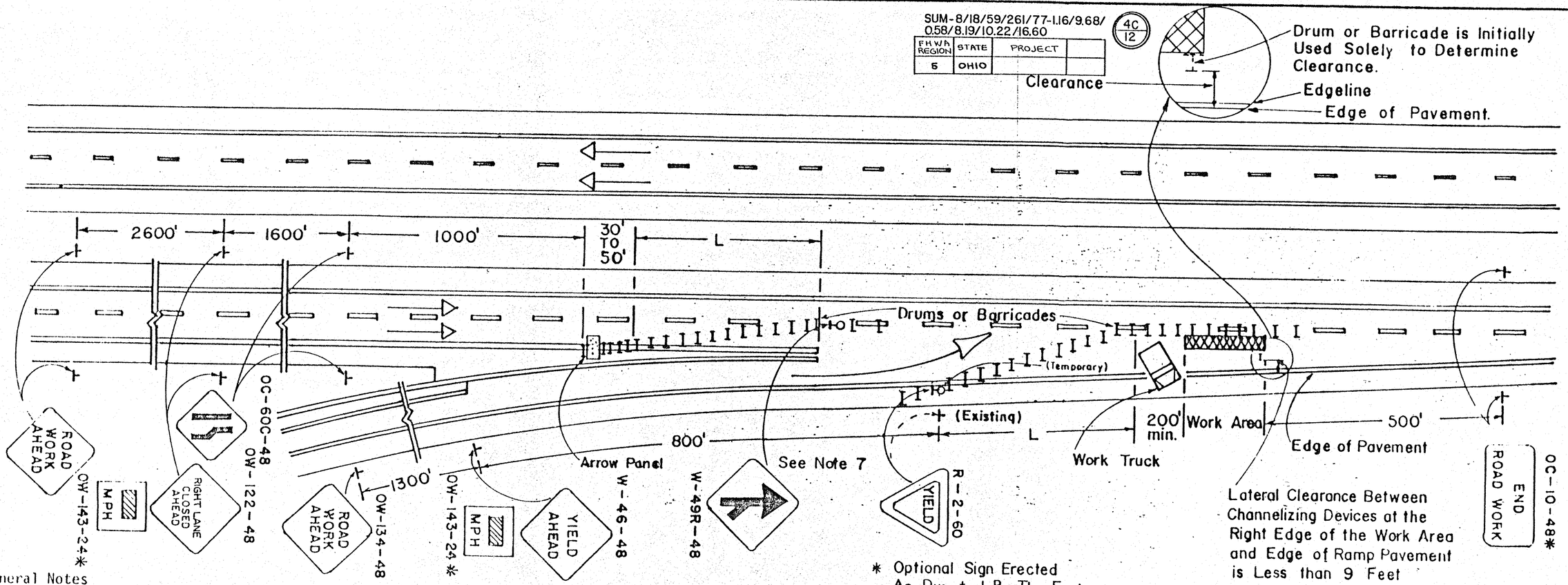

* Optional Sign Erected As Directed By The Engineer.

General Notes

1. This work area traffic control application shall be employed when the lateral clearance between channelizing devices at the right edge of the work area and the edge of the ramp pavement is less than 9 feet. When the clearance is more than 9 feet, the traffic control on "Lane Closure at Entrance Ramp: Plan A" should be used.

2. Thirteen (13) drums or barricades shall be used to form the lane transition taper in advance of the work area. Five (5) channelizing devices shall be used to form the taper on the shoulder. Cones, drums, or barricades shall be spaced at 50 foot centers. Cones may be substituted for barricades or drums for the lane closures during daylight hours only.

3. Ramp signs shall be dual mounted on multi-lane ramps. When the ramp is not long enough to allow placement as specified above, the signs may be spaced proportionately within the space available as determined by the Engineer (a 200' minimum spacing must be maintained).

4. The flashing arrow panel shall be in accordance with TC 35.10.

5. The work truck shown at the beginning of the work area shall be in place and unoccupied whenever men are working within the work area. This truck shall be moved from the pavement whenever workmen are not in the work area. Other protective devices may be used in lieu of work truck shown when approved by the Engineer.

6. Type C steady burning barricade warning lights shall be erected on drums or barricades for night lane closures. Maximum spacing shall be 50' center to center in advance of the work area and 100' center to center within the limits of the work area.

7. It may be necessary to move the location of an existing Yield condition In these cases, the permanent R-2 sign installation shall be covered and the temporary installation shall be mounted upon a drive post which shall be banded to a drum with stainless steel strapping material or other techniques subject to the approval of the Engineer.

8. Taper Formula Shall Be In Accordance With OMUTCD, Section 7F-17.

10. FOR NIGHT CLOSURES EACH OF THE FIRST TWO SIGNS IN THE SEQUENCE (ROAD WORK AHEAD AND CENTER LANE CLOSED AHEAD) IS REQUIRED TO BE SUPPLEMENTED BY A TYPE A FLASHING BARRICADE WARNING LIGHT.

11. THE SPACINGS BETWEEN CONSTRUCTION AND MAINTENANCE SIGNS SHOWN ON THIS DETAIL MAY REQUIRE ADJUSTMENTS (INCREASES OR DECREASES) TO ASSURE THAT THEY ARE POSITIONED NO CLOSER THAN 200 FEET TO EXISTING SIGNS AS DETERMINED BY THE ENGINEER.

12. WORK VEHICLES SHALL BE EQUIPPED WITH A 360° ROTATING OR FLASHING AMBER BEACON CLEARLY VISIBLE A MINIMUM OF 1/4 MILE.

OHIO DEPARTMENT OF TRANSPORTATION

LANE CLOSURE AT ENTRANCE RAMP PLAN B	DATE 8-3-79 11-86

REGION	STATE	PROJECT	
5	OHIO		

4D
12

SUM-8/18/59/261/77-1.16/
9.68/0.58/8.19/10.22/16.60

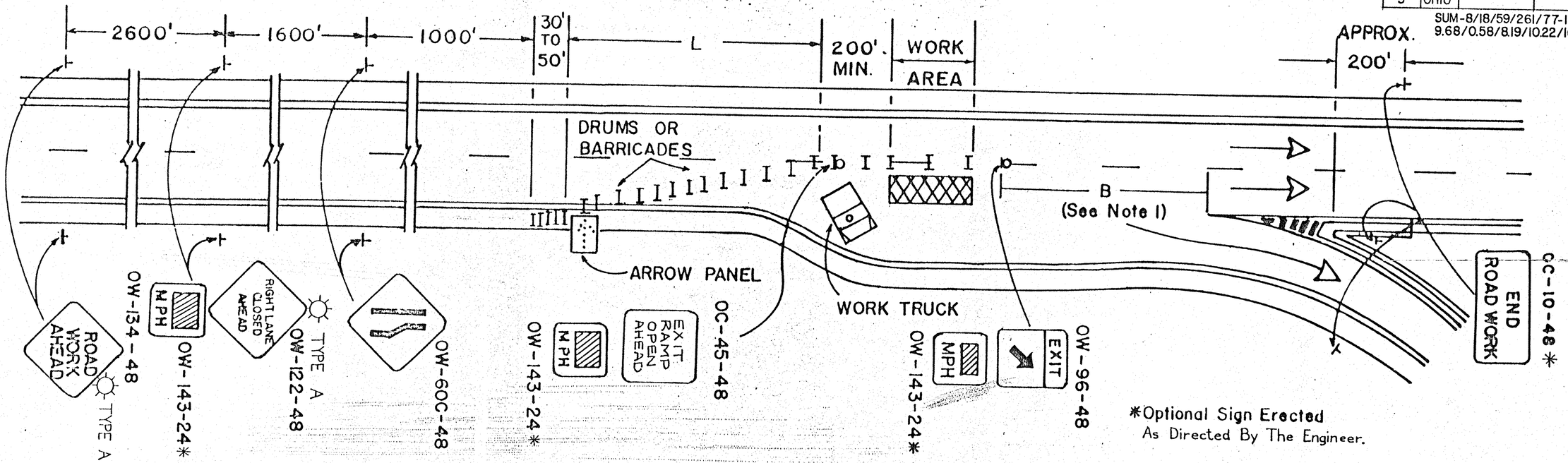

*Optional Sign Erected As Directed By The Engineer.

GENERAL NOTES

1. THIS WORK AREA TRAFFIC CONTROL APPLICATION SHALL ONLY BE USED WHEN THE DISTANCE "B" IS 100 FEET OR GREATER. WHEN "B" IS LESS THAN 100 FEET, THE TRAFFIC CONTROL SHOWN ON THE "LANE CLOSURE AT EXIT GORE" DETAIL SHOULD BE USED. WHENEVER POSSIBLE THE WORK VEHICLE SHALL BE REPLACED WITH AN ADDITIONAL 300 FEET OF PARALLEL WORK ZONE LENGTH PRIOR TO THE WORK AREA.

2. WHEN WORK IS BEING PERFORMED IN THE LANE ADJACENT TO THE MEDIAN ON A DIVIDED HIGHWAY, REFER TO THE TYPICAL WORK AREA TRAFFIC CONTROL SHOWN IN FIGURE C-21 OF THE OHIO MANUAL OF UNIFORM TRAFFIC CONTROL DEVICES.

3. THE WORK TRUCK SHOWN AT THE BEGINNING OF THE WORK AREA SHALL BE IN PLACE AND UNOCCUPIED WHENEVER MEN ARE WORKING WITHIN THE WORK AREA. THIS TRUCK SHALL BE MOVED FROM THE PAVEMENT WHENEVER WORKMEN ARE NOT IN THE WORK AREA. OTHER PROTECTIVE DEVICES MAY BE USED IN LIEU OF THE WORK TRUCK SHOWN WHEN APPROVED BY THE ENGINEER.

4. THE FLASHING ARROW PANEL SHALL BE IN ACCORDANCE WITH TC-35.10.

5. THIRTEEN (13) DRUMS OR BARRICADES SHALL BE USED TO FORM THE LANE TRANSITION TAPER IN ADVANCE OF THE WORK AREA. FIVE (5) CHANNELIZING DEVICES SHALL BE USED TO FORM THE TAPER ON THE SHOULDER. DRUMS OR BARRICADES SHALL BE SPACED AT 50 FOOT CENTERS. CONES MAY BE SUBSTITUTED FOR BARRICADES OR DRUMS FOR THE LANE CLOSURES DURING DAYLIGHT HOURS ONLY.

6. TYPE C STEADY BURNING BARRICADE WARNING LIGHTS SHALL BE ERECTED ON DRUMS OR BARRICADES FOR NIGHT LANE CLOSURES. MAXIMUM SPACING SHALL BE 50' CENTER TO CENTER IN ADVANCE OF THE WORK AREA AND 100' CENTER TO CENTER WITHIN THE LIMITS OF THE WORK AREA.

7. TAPER FORMULA SHALL BE IN ACCORDANCE WITH OMUTCD SECTION 7F-17.

8. THE SPACINGS BETWEEN CONSTRUCTION AND MAINTENANCE SIGNS SHOWN ON THIS DETAIL MAY REQUIRE ADJUSTMENTS (INCREASES OR DECREASES) TO ASSURE THAT THEY ARE POSITIONED NO CLOSER THAN 200 FEET TO EXISTING SIGNS AS DETERMINED BY THE ENGINEER.

9. CONES SHALL NOT BE USED FOR NIGHT LANE CLOSURES.

10. FOR NIGHT CLOSURES EACH OF THE FIRST TWO SIGNS IN THE SEQUENCE (ROAD WORK AHEAD AND CENTER LANE CLOSED AHEAD) IS REQUIRED TO BE SUPPLEMENTED BY A TYPE A FLASHING BARRICADE WARNING LIGHT.

11. WORK VEHICLES SHALL BE EQUIPPED WITH A 360° ROTATING OR FLASHING AMBER BEACON CLEARLY VISIBLE A MINIMUM OF 1/4 MILE.

OHIO DEPARTMENT OF TRANSPORTATION

LANE CLOSURE BEFORE EXIT GORE

DATE 8-3-79 11-86

SUM-8/18/59/261/77-1.16/
9.68/0.58/8.19/10.22/16.60

FHWA REGION	STATE	PROJECT	
5	OHIO		

4E
12

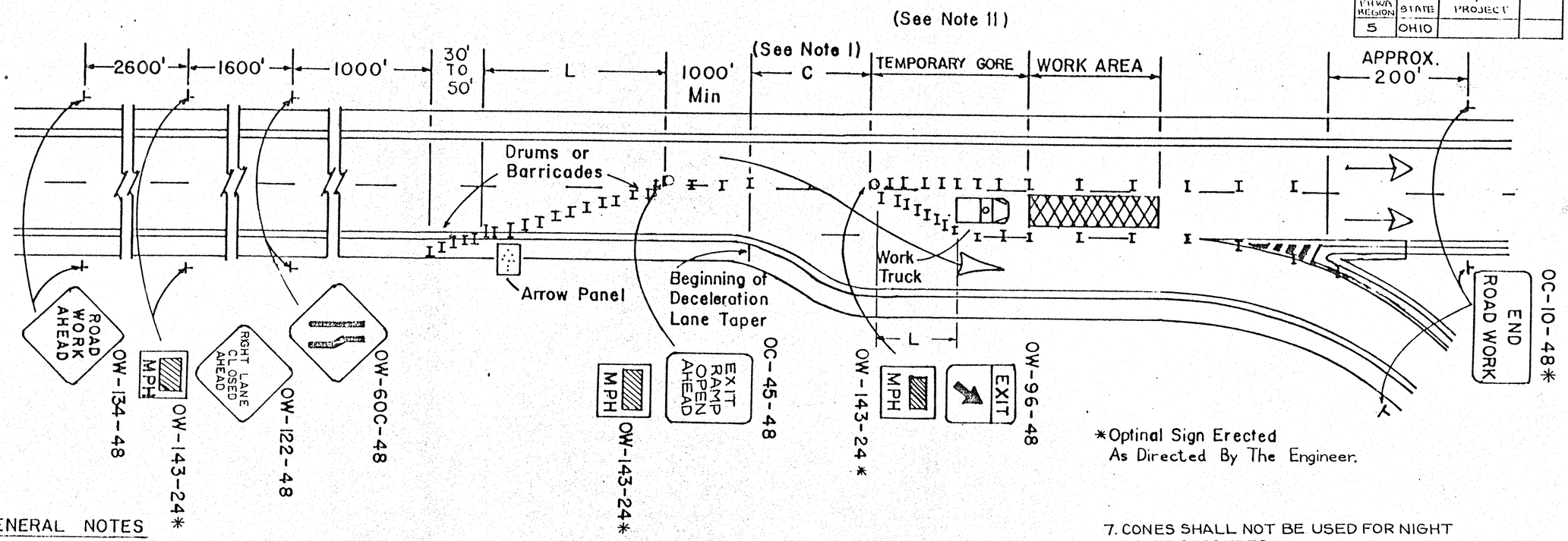

*Optinal Sign Erected As Directed By The Engineer.

GENERAL NOTES *

1. THIS WORK AREA TRAFFIC CONTROL APPLICATION SHALL ONLY BE USED WHEN THE DISTANCE "C" IS 100 FEET OR GREATER. WHEN "C" IS LESS THAN 100 FEET, THE TRAFFIC CONTROL SHOWN ON THE "LANE CLOSURE BEFORE EXIT GORE" DETAIL SHOULD BE USED.

2. WHEN WORK IS BEING PERFORMED IN ONLY THE LANE ADJACENT TO THE MEDIAN ON A DIVIDED HIGHWAY, REFER TO THE TYPICAL WORK AREA TRAFFIC CONTROL SHOWN IN FIGURE C-21 OF THE OHIO MANUAL OF UNIFORM TRAFFIC CONTROL DEVICES.

3. THE WORK TRUCK SHOWN AT THE BEGINNING OF THE WORK AREA SHALL BE IN PLACE AND UNOCCUPIED WHENEVER MEN ARE WORKING WITHIN THE WORK AREA. THIS TRUCK SHALL BE MOVED FROM THE PAVEMENT WHENEVER WORKMEN ARE NOT IN THE WORK AREA. OTHER PROTECTIVE DEVICES MAY BE USED IN LIEU OF THE WORK TRUCK SHOWN WHEN APPROVED BY THE ENGINEER. A TRUCK MOUNTED IMPACT ATTENUATOR MAY BE EMPLOYED.

4. THE FLASHING ARROW PANEL SHALL BE IN ACCORDANCE WITH TC-35.10.

5. THIRTEEN (13) DRUMS OR BARRICADES SHALL BE USED TO FORM THE LANE TRANSITION TAPER IN ADVANCE OF THE WORK AREA. FIVE (5) CHANNELIZING DEVICES SHALL BE USED TO FORM THE TAPER ON THE SHOULDER. DRUMS OR BARRICADES SHALL BE SPACED AT 50 FOOT CENTERS. CONES MAY BE SUBSTITUTED FOR BARRICADES OR **DRUMS FOR THE LANE** CLOSURES DURING DAYLIGHT HOURS ONLY.

6. TYPE C STEADY BURNING BARRICADE WARNING LIGHTS SHALL BE ERECTED ON DRUMS OR BARRICADES FOR NIGHT LANE CLOSURES. MAXIMUM SPACING SHALL BE 50' CENTER TO CENTER IN ADVANCE OF THE WORK AREA AND 200' CENTER TO CENTER WITHIN THE LIMITS OF THE WORK AREA.

7. CONES SHALL NOT BE USED FOR NIGHT LANE CLOSURES.

8. FOR NIGHT CLOSURES EACH OF THE FIRST TWO SIGNS IN THE SEQUENCE (ROAD WORK AHEAD AND CENTER LANE CLOSED AHEAD) IS REQUIRED TO BE SUPPLEMENTED BY A TYPE A FLASHING BARRICADE WARNING LIGHT.

9. WORK VEHICLES SHALL BE EQUIPPED WITH A 360° ROTATING OR FLASHING AMBER BEACON CLEARLY VISIBLE A MINIMUM OF 1/4 MILE.

10. TAPER FORMULA SHALL BE IN ACCORDANCE WITH OMUTCD, SECTION 7F-17.

11. WHEN CREATING A TEMPORARY GORE, CHANNELIZING DEVICES SHOULD BE SPACED 25' CENTER TO CENTER SO AS TO CREATE A "SOLID GORE" **EFFECT.**

12. THE SPACINGS BETWEEN CONSTRUCTION AND MAINTENANCE SIGNS SHOWN ON THIS DETAIL MAY REQUIRE ADJUSTMENTS (INCREASES OR DECREASES) TO ASSURE THAT THEY ARE POSITIONED NO CLOSER THAN 200 FEET TO EXISTING SIGNS AS DETERMINED BY THE ENGINEER.

OHIO DEPARTMENT OF TRANSPORTATION

LANE CLOSURE AT EXIT GORE

DATE 8-3-79 11/86

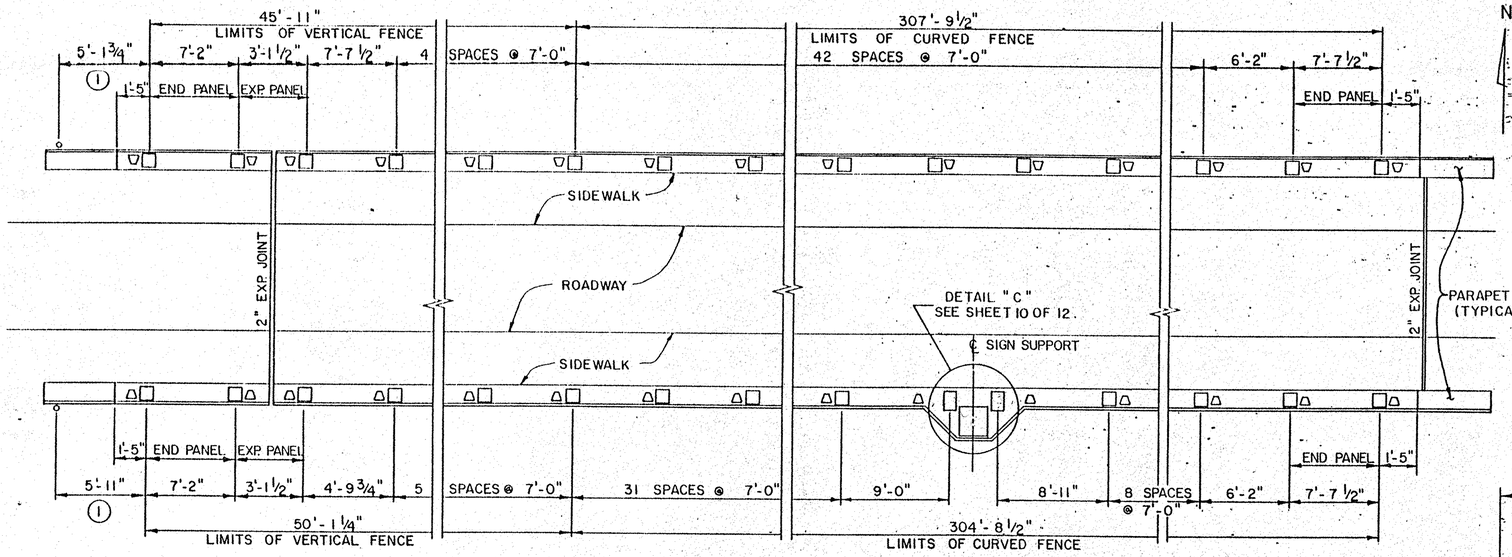

EUCLID AVE. BRIDGE LAYOUT
SUM - 59 - 0096

	BARTGES DR. SUM-59-0058		SR.261 O/ SR.59 SUM-261-0819		STATE STREET SUM-59-0171	
	SOUTH	NORTH	SOUTH	NORTH	SOUTH	NORTH
A	6'-10¾"	6'-5¾"	6'-7½"	6'-2½"	—	—
B	1'-6⅞"	1'-6⅞"	1'-2½"	1'-2½"	1'-5"	1'-5"
C	7'-10¼"	7'-10¼"	6'-6⅝"	6'-6⅝"	7'-10"	7'-10"
D	23	—	21	—	19	19
E	7'-7¼"	7'-7¼"	6'-9"	6'-9"	8'-0"	8'-0"
F	7'-0¼"	7'-0¼"	5'-8⅝"	5'-8 7/16"	7'-0"	7'-0"
G	—	18	—	12	—	—
H	—	9'-7"	—	8'-0"	—	—
J	—	9'-6½"	—	8'-5¼"	—	—
K	—	2	—	6	—	—
L	6'-8¾"	6'-8¾"	6'-1"	5'-3¾"	—	—

NOTES:

1. CONNECTOR PANEL, TYPE 1. SEE SHEET 12 OF 12 FOR DETAIL.
2. FOR FENCE DETAILS, SEE SHEETS 11 AND 12 OF 12.
3. FOR BASE PLATE DETAILS, SEE SHEET 10 OF 12.
4. FOR ACCESS PANEL DETAILS, SEE SHEET 9 OF 12.

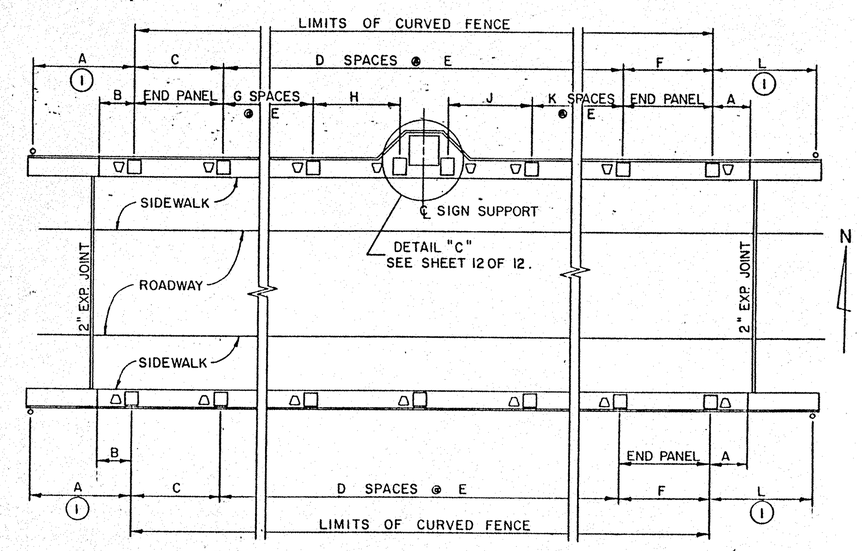

BRIDGE LAYOUT

SUM -59-0058 (BARTGES ST.)
SUM -261-0819 (SR. 261 O/ S.R. 59)
SUM -59-0171 (STATE ST.)

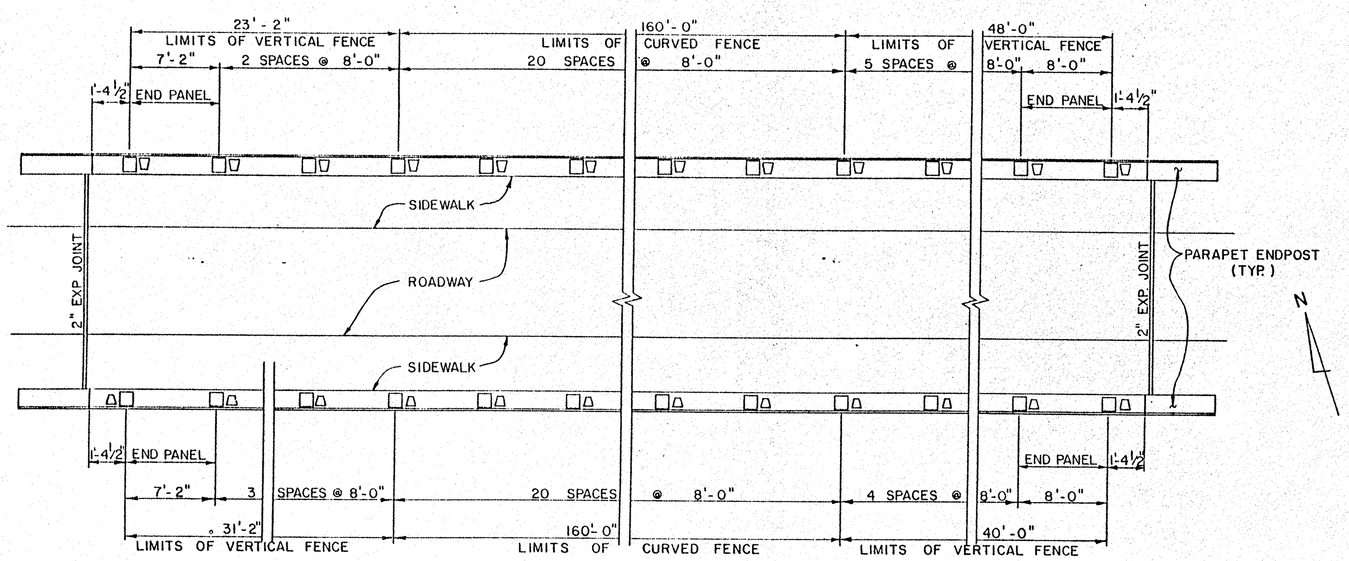

LOCUST STREET BRIDGE LAYOUT
SUM - 59 - 0179

CITY OF AKRON, OHIO
DEPARTMENT OF PUBLIC SERVICE
BUREAU OF ENGINEERING

BRIDGE LAYOUTS

SUM - 59 - 0096
SUM - 59 - 0179
SUM - 59 - 0058
SUM - 59 - 0171
SUM - 261 - 0819

BRIDGE OVERPASS SCREENING

DESIGNED	DRAWN	CHECKED	REVIEWED	DATE	REVISED
B.K.R.	R.W.F.	MGZM	DJC	12/23/87	

SUM-8/18/59/261/77-1.16/9.68/0.58/8.19/10.22/16.60	OHIO FHWA REGION 5	6/12

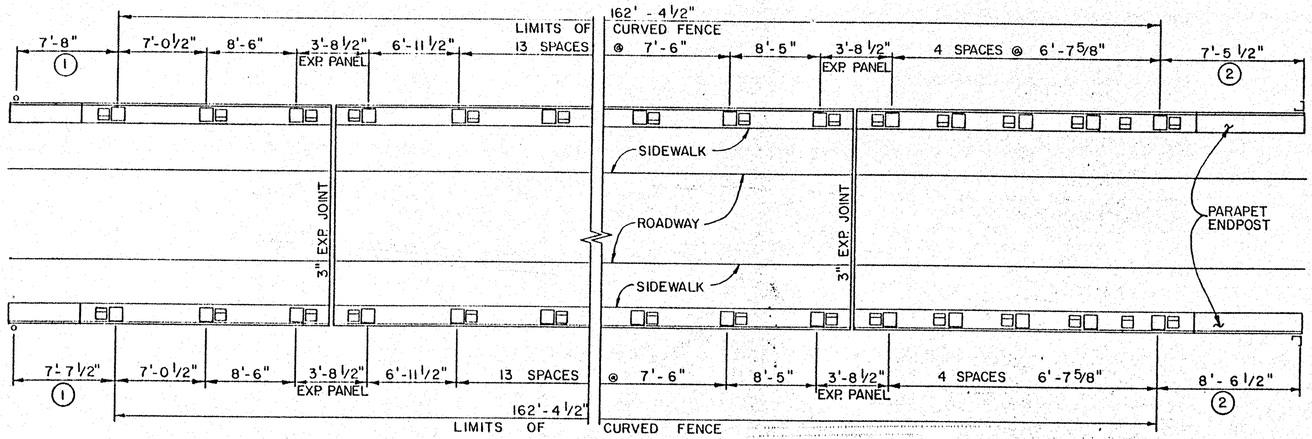

CARROLL STREET BRIDGE LAYOUT
SUM - 8 - 0116

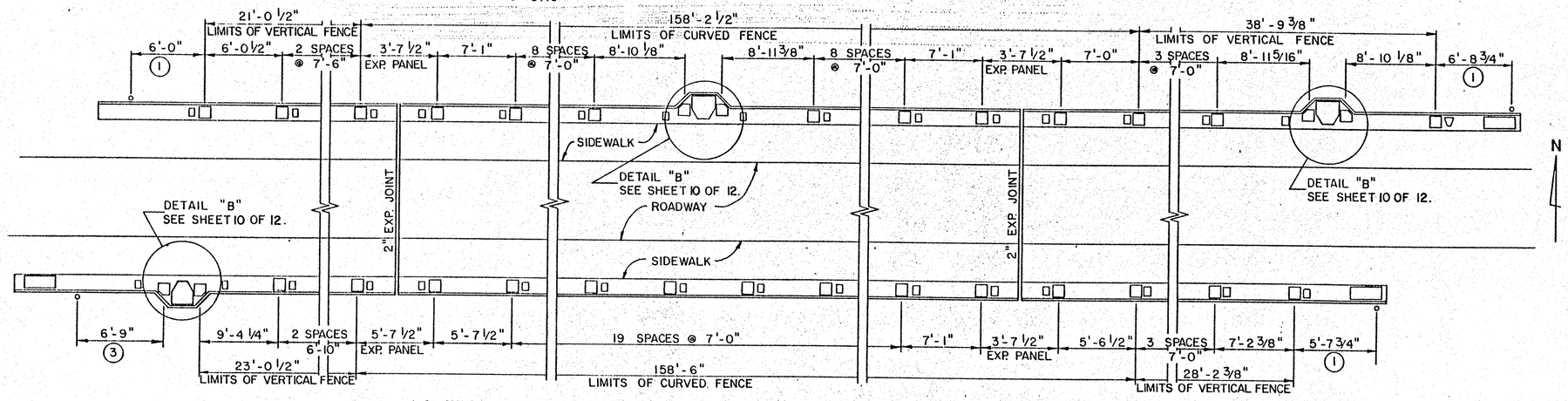

LOVERS LANE BRIDGE LAYOUT
SUM - 77 - 1151

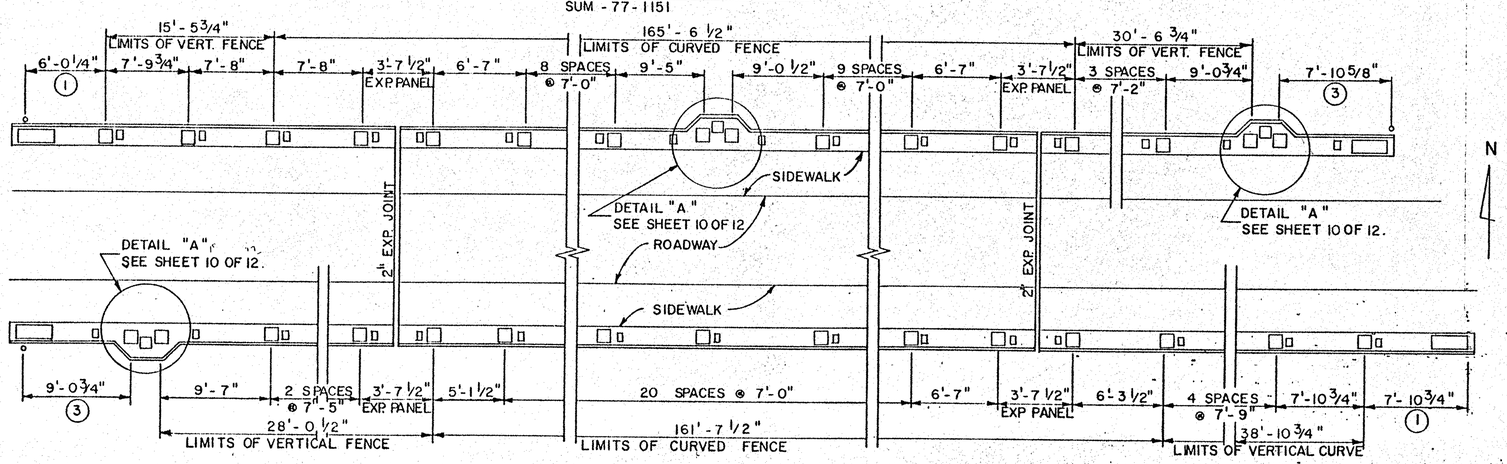

COLE AVENUE BRIDGE LAYOUT
SUM - 77 - 1132

NOTES:

1. CONNECTOR PANEL, TYPE 1. SEE SHEET 12 OF 12 FOR DETAIL.
2. CONNECTOR PANEL, TYPE 2. SEE SHEET 12 OF 12 FOR DETAIL.
3. CONNECTOR PANEL, TYPE 3. SEE SHEET 12 OF 12 FOR DETAIL.
4. FOR FENCE DETAILS, SEE SHEETS 11 AND 12 OF 12.
5. FOR BASE PLATE DETAILS, SEE SHEET 10 OF 12.
6. FOR ACCESS PANEL DETAILS, SEE SHEET 9 OF 12.

CITY OF AKRON, OHIO
DEPARTMENT OF PUBLIC SERVICE
BUREAU OF ENGINEERING

BRIDGE LAYOUTS

SUM - 8 - 0116
SUM - 77 - 1151
SUM - 77 - 1132

BRIDGE OVERPASS SCREENING

DESIGNED	DRAWN	CHECKED	REVIEWED	DATE	REVISED
B.K.R.	R.W.F.	MBSM	DDC	12/23/87	

SUM-8/18/59/261/77-1.16/9.68/0.58/8.19/10.22/16.60

OHIO
FHWA REGION 5

7/12

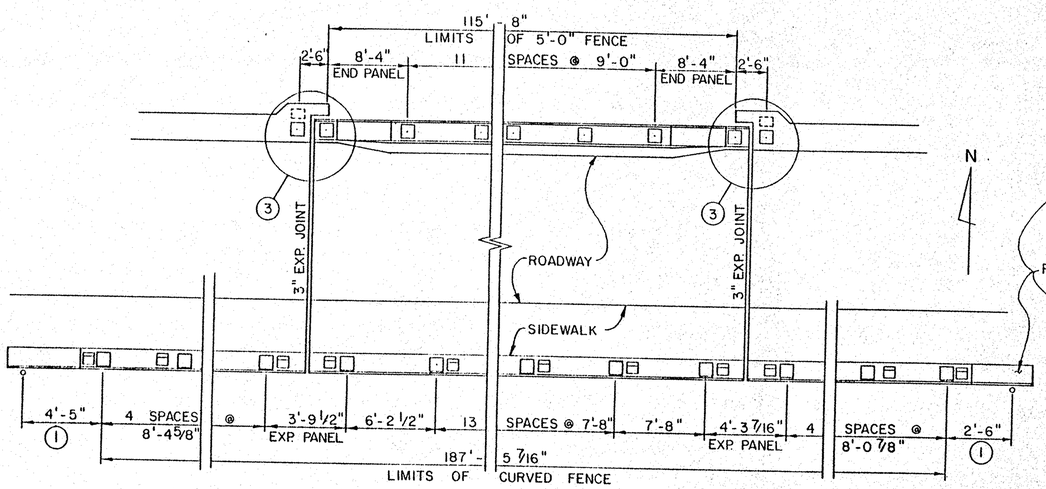

PERKINS STREET BRIDGE LAYOUT

SUM - 8 - 0175

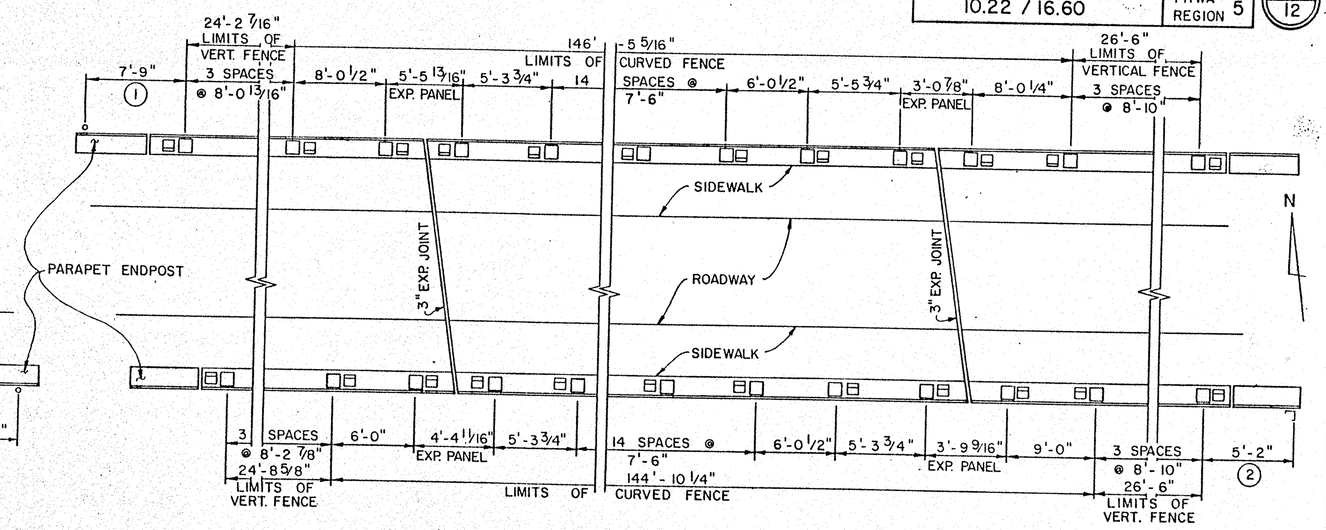

S.R. 18 OVER S.R. 8 BRIDGE LAYOUT

SUM - 18 - 1065

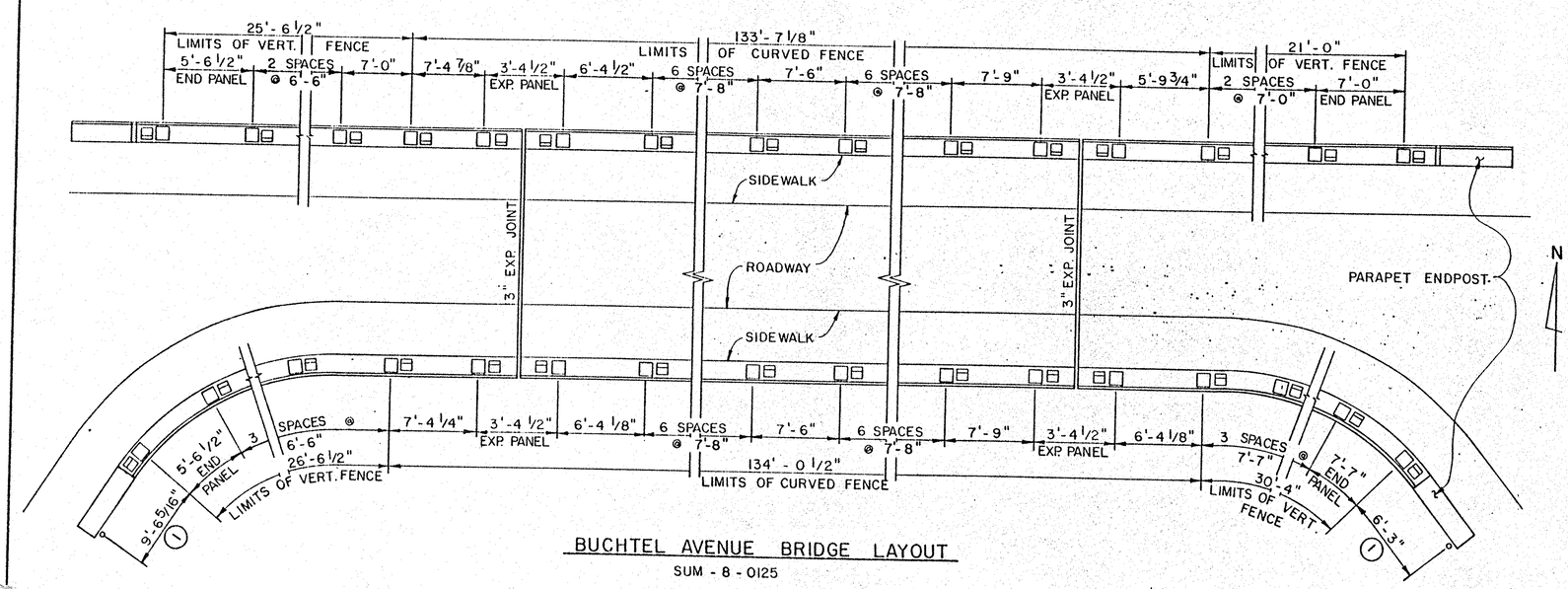

BUCHTEL AVENUE BRIDGE LAYOUT

SUM - 8 - 0125

NOTES:

1. CONNECTOR PANEL, TYPE 1. SEE SHEET 12 OF 12 FOR DETAIL.
2. CONNECTOR PANEL, TYPE 2. SEE SHEET 12 OF 12 FOR DETAIL.
3. FOR 5'-0" FENCE DETAILS, SEE SHEET 12 OF 12.
4. FOR FENCE DETAILS, SEE SHEETS 11 AND 12 OF 12.
5. FOR BASE PLATE DETAILS, SEE SHEET 10 OF 12.
6. FOR ACCESS PANEL DETAILS, SEE SHEET 9 OF 12.

CITY OF AKRON, OHIO
DEPARTMENT OF PUBLIC SERVICE
BUREAU OF ENGINEERING

BRIDGE LAYOUTS

SUM - 8 - 0125
SUM - 8 - 0175
SUM - 18 - 1065

BRIDGE OVERPASS SCREENING

DESIGNED	DRAWN	CHECKED	REVIEWED	DATE	REVISED
B.K.R.	R.W.F.	[illegible]	DJC	12/23/87	

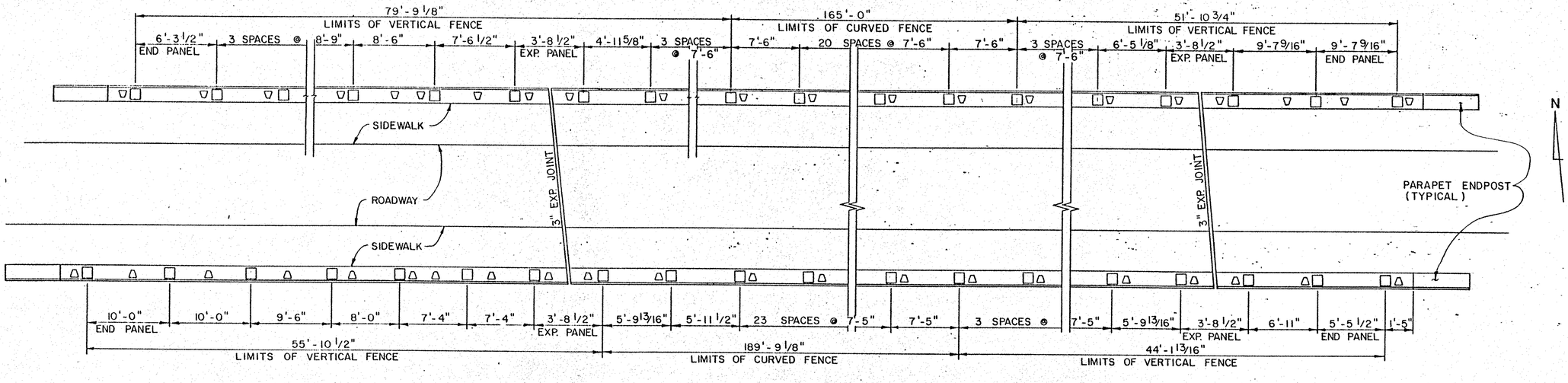

S.R. 18 OVER S.R. 59 & OHIO CANAL BRIDGE LAYOUT

SUM - 18 - 0968

NOTES:

1. CONNECTOR PANEL, TYPE I. SEE SHEET 12 OF 12 FOR DETAIL.
2. FOR FENCE DETAILS, SEE SHEETS 11 AND 12 OF 12.
3. FOR BASE PLATE DETAILS, SEE SHEET 10 OF 12
4. FOR ACCESS PANEL DETAILS, SEE SHEET 9 OF 12

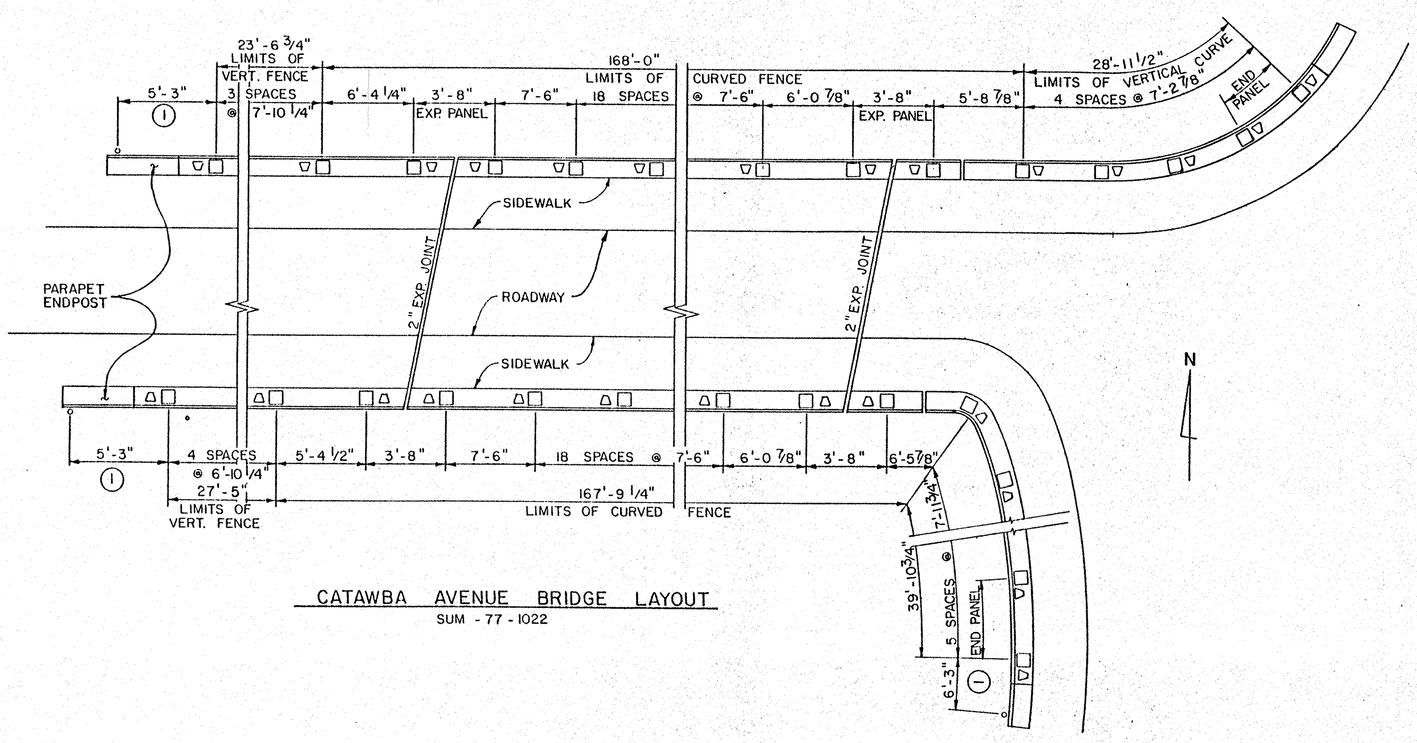

CATAWBA AVENUE BRIDGE LAYOUT

SUM - 77 - 1022

CITY OF AKRON, OHIO
DEPARTMENT OF PUBLIC SERVICE
BUREAU OF ENGINEERING

BRIDGE LAYOUTS

SUM - 18 - 0968
SUM - 77 - 1022

BRIDGE OVERPASS SCREENING

DESIGNED	DRAWN	CHECKED	REVIEWED	DATE	REVISED
B.K.R.	R.W.F.	MSM	DJC	12/23/87	

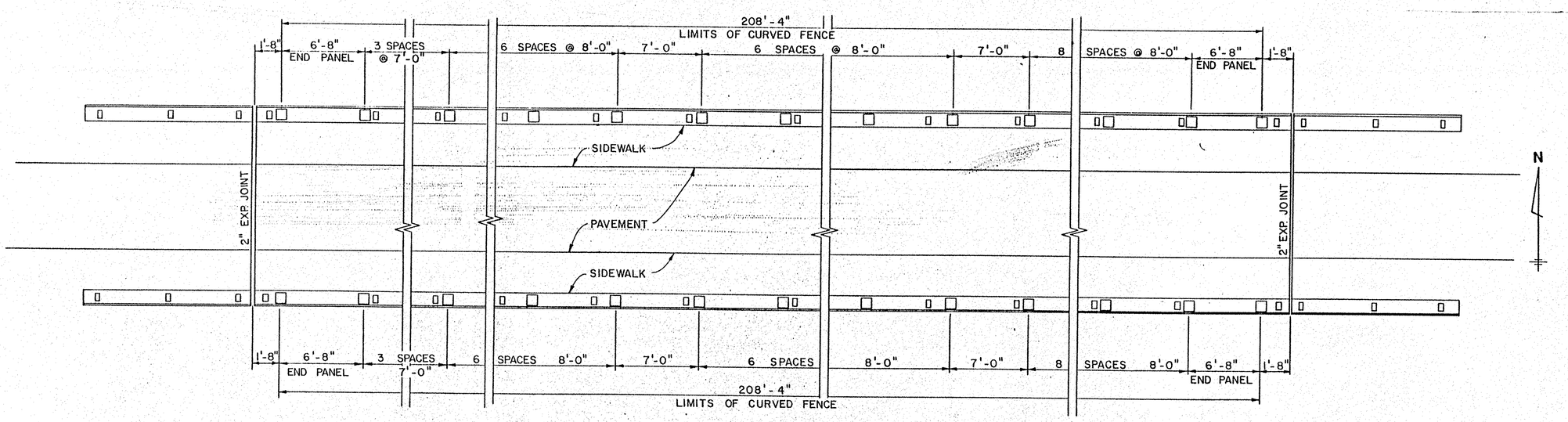

STONER STREET BRIDGE LAYOUT

SUM-77-1660

NOTES:

1. FOR FENCE DETAILS, SEE SHEETS 11 AND 12 OF 12
2. FOR BASE PLATE DETAIL, SEE SHEET 10 OF 12

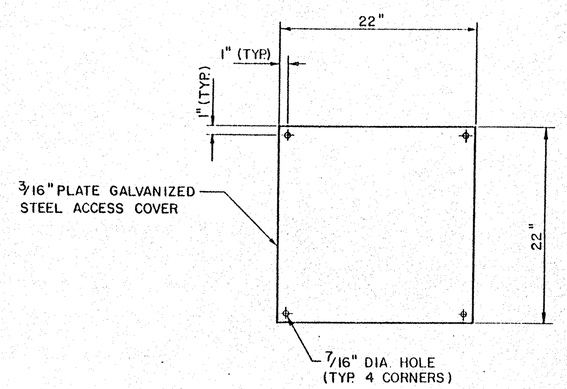

ACCESS PANEL COVER

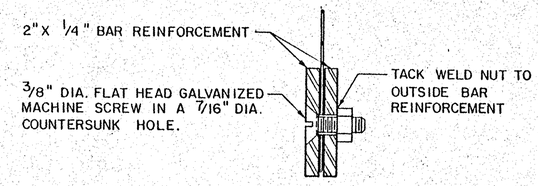

SECTION A-A

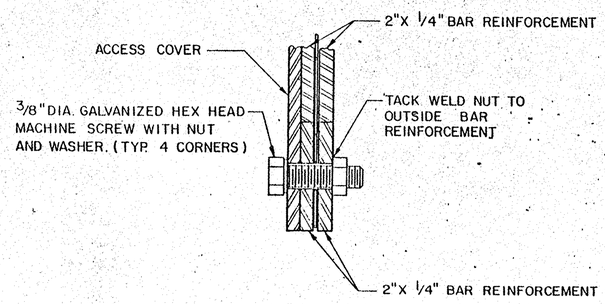

SECTION B-B

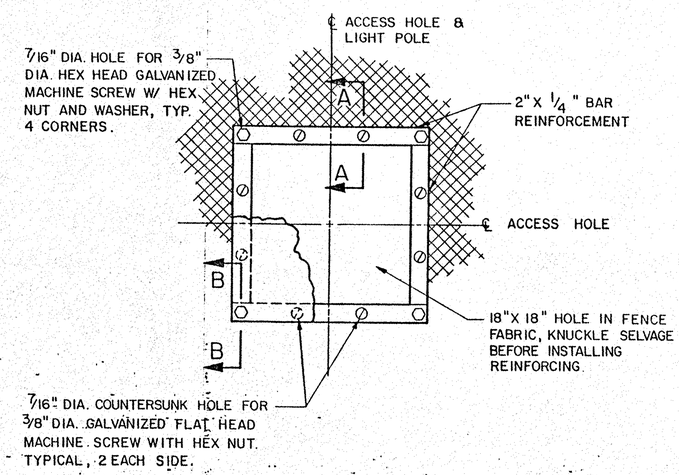

ACCESS PANEL DETAIL

ACCESS PANELS	
BRIDGE	NO. REQUIRED
S.R. 18 O/ S.R. 59 & OH. CANAL	0
LOCUST ST.	1
STATE ST.	1
EUCLID AVE.	3
S.R. 261 O/ S.R. 59	2
BARTGES ST.	2
PERKINS ST.	1
S.R. 18 O/ S.R. 8	0
BUCHTEL AVE.	1
CARROLL ST.	0
LOVERS LANE	0
CATAWBA AVE.	1
STONER ST.	0
TOTAL	12

CITY OF AKRON, OHIO
DEPARTMENT OF PUBLIC SERVICE
BUREAU OF ENGINEERING

ACCESS PANEL DETAILS AND BRIDGE LAYOUT

SUM-77-1660

BRIDGE OVERPASS SCREENING

DESIGNED	DRAWN	CHECKED	REVIEWED	DATE	REVISED
B.K.R.	R.W.F.	MKM	DJC	12/23/87	

SUM -8/18/59/261/77 - 1.16/9.68/0.58/8.19/ 10.22 / 16.60

OHIO

FHWA REGION 5

10/12

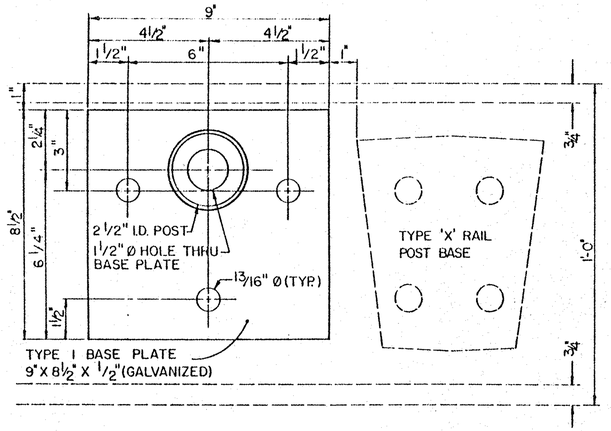

TYPE 1 BASE PLATE

SUM-18-0968
SUM-77-1022
SUM-261-0819
SUM-59-0058
SUM-59-0096
SUM-59-0171
SUM-59-0179

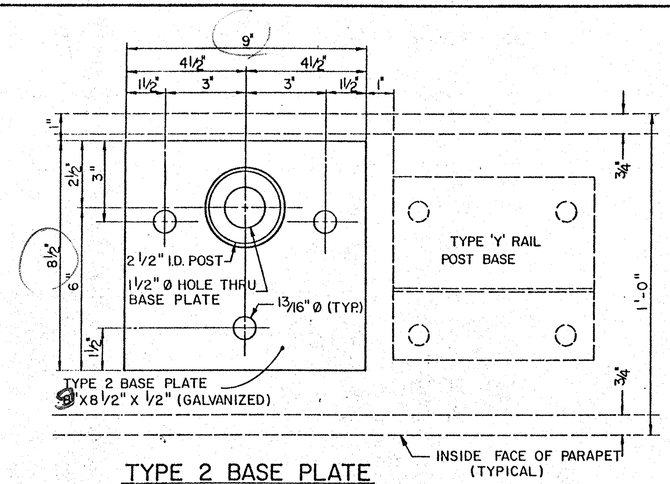

TYPE 2 BASE PLATE

SUM-8-0116
SUM-8-0125
SUM-8-0175 SOUTH PARAPET ONLY
SUM-18-1065

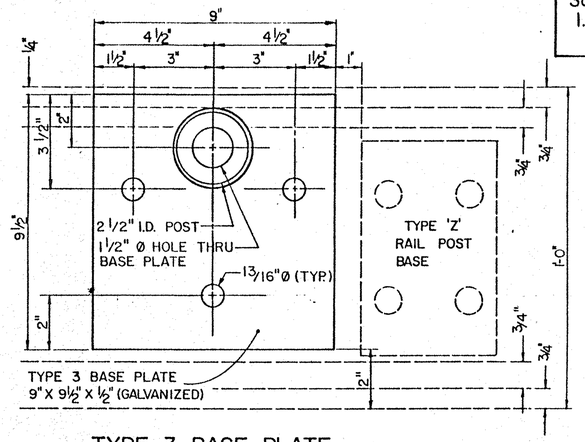

TYPE 3 BASE PLATE

SUM-77-1132
SUM-77-1660
SUM-77-1151

(1) FOR SHIM DETAIL SEE SHEET 11 OF 12

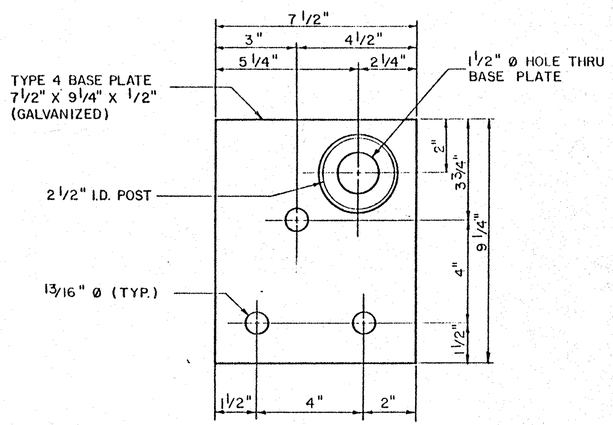

TYPE 4L BASE PLATE

TYPE 4R SIMILAR BUT OPPOSITE

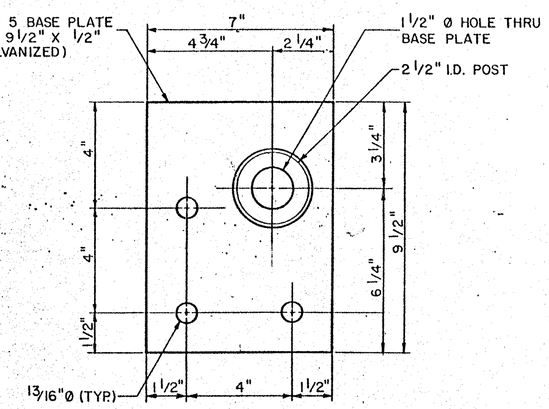

TYPE 5L BASE PLATE

TYPE 5R SIMILAR BUT OPPOSITE

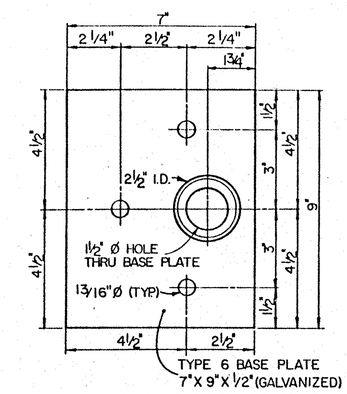

TYPE 6 BASE PLATE

SUM-8-0175 NORTH PARAPET ONLY

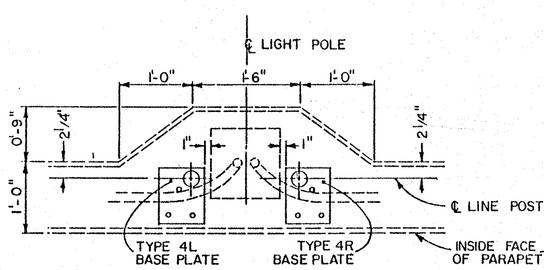

DETAIL 'A'

SUM-77-1132

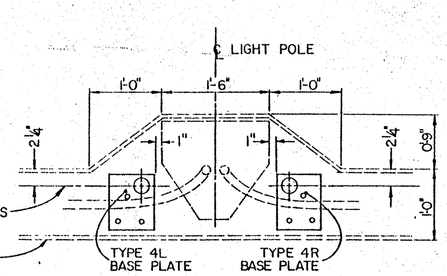

DETAIL 'B'

SUM-77-1151

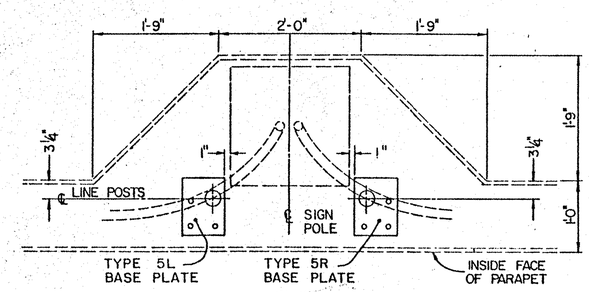

DETAIL 'C'

SUM-59-0058
SUM-59-0096
SUM-261-0819

CITY OF AKRON, OHIO
DEPARTMENT OF PUBLIC SERVICE
BUREAU OF ENGINEERING

BASE PLATE DETAILS

BRIDGE OVERPASS SCREENING

DESIGNED	DRAWN	CHECKED	REVIEWED	DATE	REVISED
B.K.R.	E.A.B.	MKM	DJC	12/23/87	

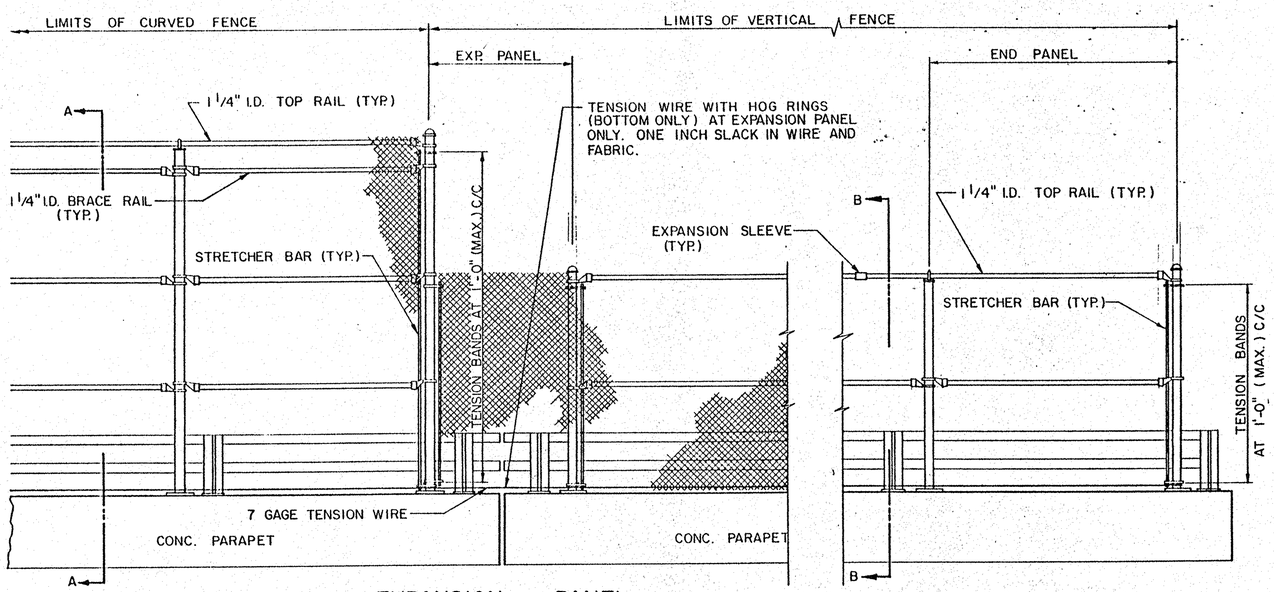

EXPANSION PANEL
VERTICAL FENCE

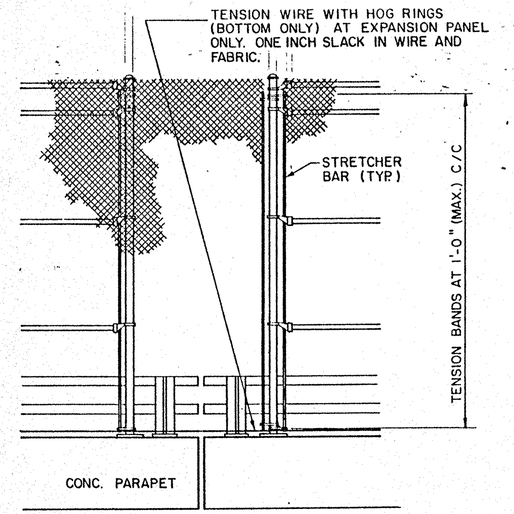

EXPANSION PANEL
CURVED FENCE

(1) TYPE "Y" RAILING SHOWN. OTHER BRIDGES HAVE TYPE "X" AND TYPE "Z" RAILING.

(2) FOR DETAILS AND NOTES REGARDING TYPE "X" AND TYPE "Z" RAILINGS, SEE OHIO STANDARD DWGS: BR-2-67, DATED 10-15-71, AND AR-1-57, DATED 3-1-58. FOR DETAILS REGARDING TYPE 'Y' RAILINGS SEE DECK RECONST. PLANS FOR BRIDGE NUMBERS SUM-8-0116, 0125, 0175 OR SUM-18-1065.

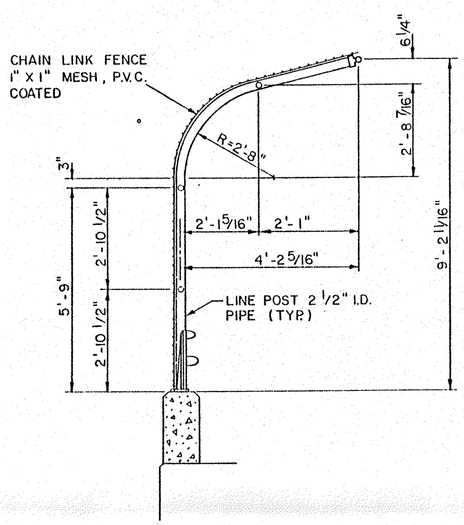

SECTION 'A'-'A'

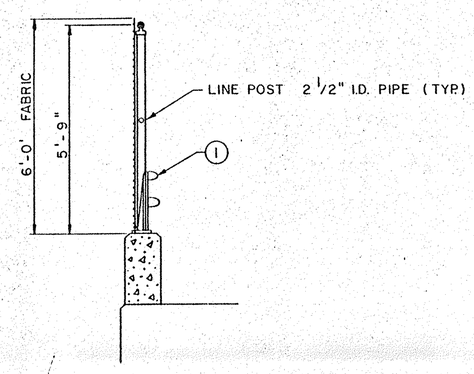

SECTION 'B'-'B'

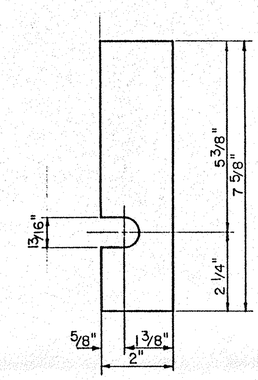

SHIM DETAIL

CITY OF AKRON, OHIO
DEPARTMENT OF PUBLIC SERVICE
BUREAU OF ENGINEERING

FENCE DETAILS

BRIDGE OVERPASS SCREENING

DESIGNED	DRAWN	CHECKED	REVIEWED	DATE	REVISED
B.K.R.	R.W.F.	MKM	DJC	12/23/87	

SUM-8/18/59/261/77-1.16/9.68/0.58/8.19/10.22/16.60 | OHIO | FHWA REGION 5 | 12/12

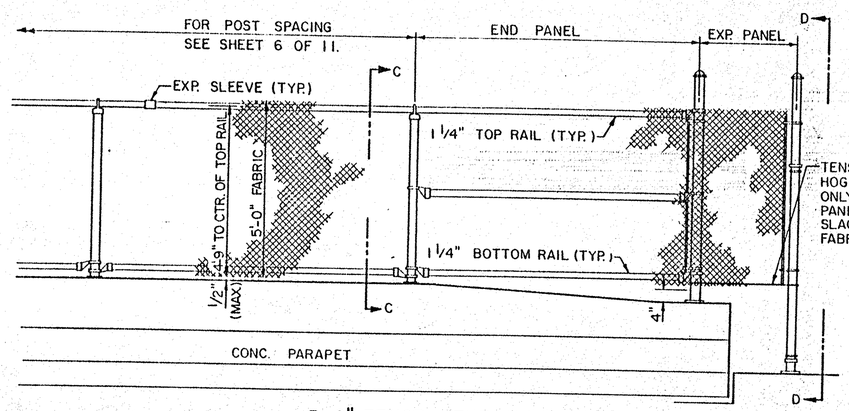

5-0" FENCE ELEVATION
SUM - 8 - 0175 NORTH PARAPET ONLY

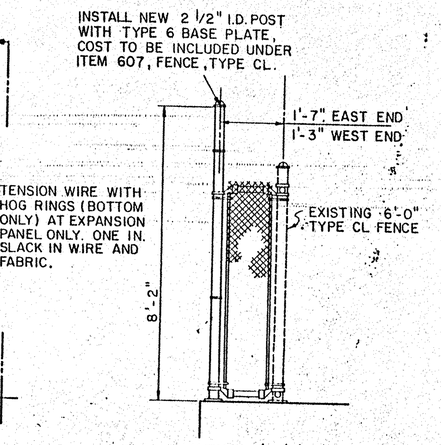

VIEW 'D'-'D'

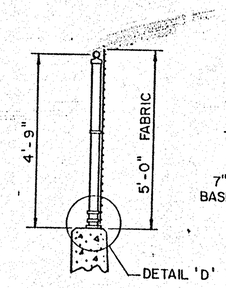

SECTION 'C'-'C'

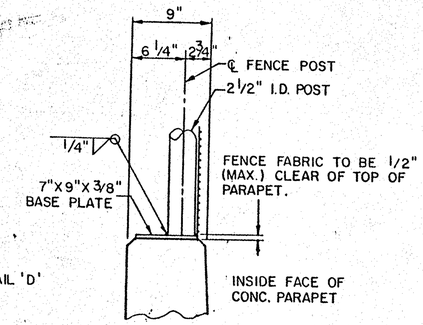

DETAIL 'D'

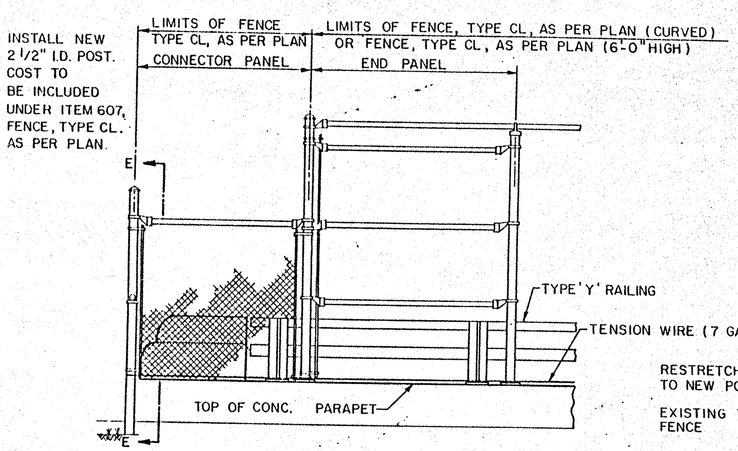

CONNECTOR PANEL, TYPE 1

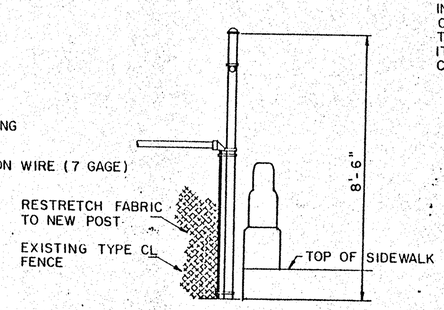

SECTION 'E'-'E'

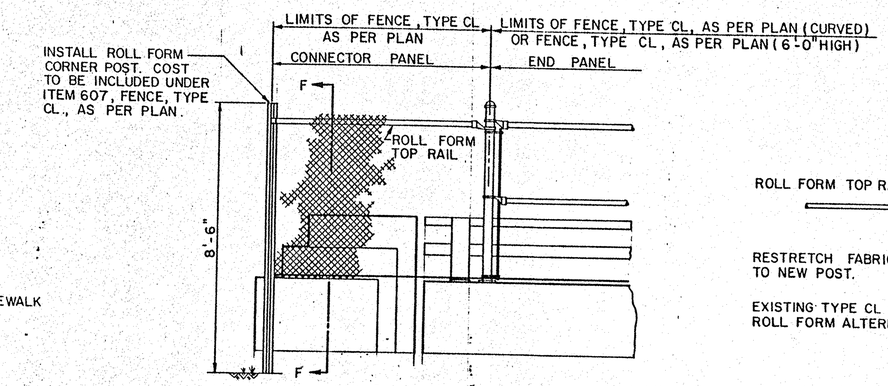

CONNECTOR PANEL TYPE 2

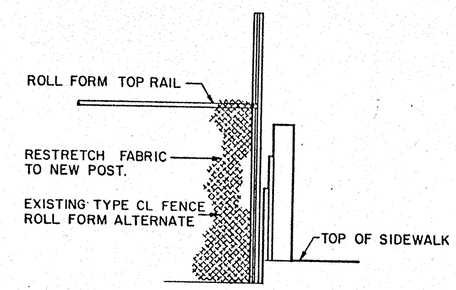

SECTION 'F'-'F'

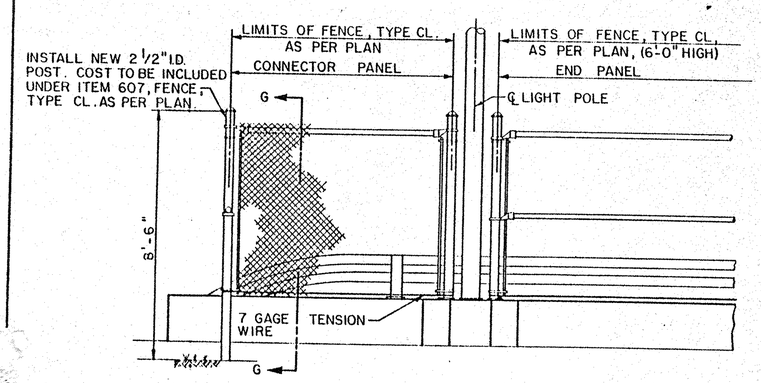

CONNECTOR PANEL, TYPE 3

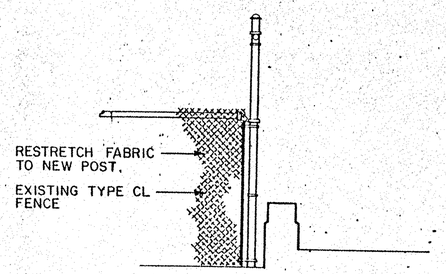

SECTION 'G'-'G'

CITY OF AKRON, OHIO
DEPARTMENT OF PUBLIC SERVICE
BUREAU OF ENGINEERING

FENCE DETAILS

BRIDGE OVERPASS SCREENING

DESIGNED	DRAWN	CHECKED	REVIEWED	DATE	REVISED
B.K.R.	R.W.F.	DMKM	DJC	12/23/87	